STATE OF OHIO
DEPARTMENT OF TRANSPORTATION

F-53(20)

TRUMBULL COUNTY TRU-5B-0.00	OHIO	1 / 213
	FHWA REGION 5	
F-53 (20)	FEDERAL PROJECT	

MICROFILMED
SEP 10 1993

TRU-5B-0.00

WARREN, CHAMPION & BAZETTA TOWNSHIPS
TRUMBULL COUNTY

CONVENTIONAL SIGNS

County Line
Township Line
Section Line
Corporation Line or
Fence Line (existing) (proposed)
Center Line 352 353
Trees, Stumps, (to be removed)
Utility Poles: Telephone, Power, Light.

Limited Access (only) LA
Right of Way (only) RW
Limited Access & Right of Way LA & RW
Existing Right of Way
Property Line (in existing fence)
Railroad or
Guardrail (existing) (proposed)

INDEX OF SHEETS

Title Sheet	1	General Summary	36-37
Schematic Plan & Design Designation	2-3	Summary of Plan Sheets	38
Typical Sections	4-7	Plan Sheets	39-66, 59-A&B
General Notes	8-9	Guardrail Table	67-68
Pavement Tables	10-13	Median Cross-Sections	69-97
Pavement Computations	14-24, 24-A	Median Cross-Overs	98
Pavement Repair	25	Landslides	99-133
Center Line References & Miscellaneous Computations	26	Maintenance of Traffic	134-148, 134-A
Undersealing Details	27	Pavement Marking	149-152
Transition Details	28-29	Signing	153-162
Curb Removal Details	30-32	Lighting	163-167
Miscellaneous Details	33-35	Structures Over 20'	168-211
Sheet 68 A - deleted		Right of Way	212-213

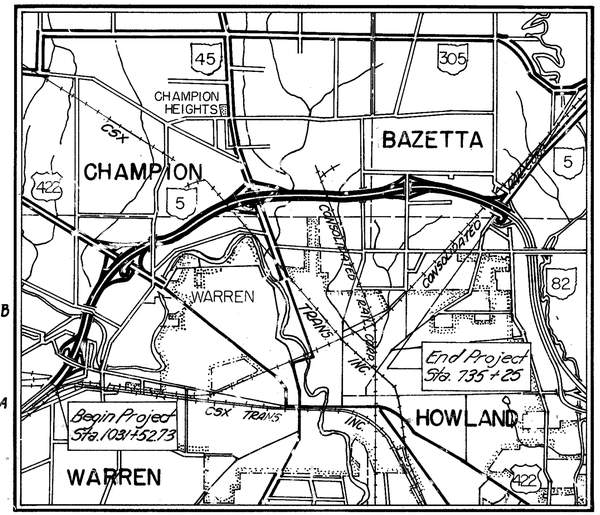

LOCATION MAP

SCALE IN MILES
0 1 2 3 4

Portion to be improved
State & Federal Routes
Other Roads

SCALES

Plan 0' 50' 100'
Profile: Horizontal, Vertical
Cross Section: Horizontal 0 5 10, Vertical 0 5 10'

LINE DATA

S.R. 5 Begin Project Sta 1051+52.73
End Project Sta 735+25.00
(Sta Eqn. - Sta 1230+89.58 Bk = Sta 534+31.06 Ahd)
(Sta. Eqn. - Sta 721+79.20 Bk = Sta 721+76.83 Ahd)
Total Length of Project = 40,033.16 Lin. Ft. = 7.582 Miles

S.R. 5 Begin Work Sta 1023+37.83
End Work Sta 736+05.53
(Sta Eqn - Sta 1230+89.58 Bk = Sta 534+31.06 Ahd)
(Sta. Eqn. - Sta. 721+79.20 Bk = Sta. 721+76.83 Ahd)
S.R. 5 Length of Work = 40,113.99 Lin. Ft.

S.R. 82 Begin Work Sta 721+76.83
End Work Sta. 729+45.64
S.R. 82 Length of Work = 768.81 Lin. Ft. = 0.146 Miles
TOTAL LENGTH OF WORK = 41,697.70 Lin Ft or 7.90 Miles

UNDERGROUND UTILITIES
TWO WORKING DAYS
BEFORE YOU DIG
Call---800-362-2764 (Toll free)
OHIO UTILITIES PROTECTION SERVICE
NON-MEMBERS MUST BE CALLED DIRECTLY

Plan Prepared By:
DISTRICT 7
OHIO DEPARTMENT OF TRANSPORTATION

Project: TRU-5B-0.00
Date of Letting _____ 19__, Contract No. _____

SEAL

LD 0300 Rev. 1-1-81

1989 SPECIFICATIONS

The standard specifications of the State of Ohio, Department of Transportation, including changes and supplemental specifications listed in the proposal shall govern this improvement.

I hereby approve these plans and declare that the making of this improvement will not require the closing to traffic of the highway and that provisions for the maintenance and safety of traffic will be as set forth on the plans and estimates.

Approved _____ District Deputy Director of Transportation
Date 12-07-87

Approved _____ Engineer, Bureau of Bridges and Structural Design
Date 2-19-88

Approved _____ Chief Engineer, PLANNING & DESIGN
Date 4-29-88

Approved _____ Director, Department of Transportation
Date 4-29-88

REVISED 3-30-89
Revised 11-30-88

DEPARTMENT OF TRANSPORTATION
FEDERAL HIGHWAY ADMINISTRATION

APPROVED:

DIVISION ADMINISTRATOR DATE

SUPPLEMENTAL SPECIFICATIONS			
805	1-13-77	903	1-1-69
		956	6-26-78
845	5-31-88	940	6-10-87
		942	10-29-86
847	10-17-83	944	10-1-87
853	6-26-78		
924	12-14-88		
947	10-17-63	802	5-4-88
953	8-21-80		

SUPPLEMENTAL PRINTS OF STANDARD CONSTRUCTION DRAWINGS

BP-5	10-1-87	GR-4A	1-30-84	HL-60.11	5-1-87	TC-51.11	1-20-84	TC-32.10	3-8-79
BP-13	5-8-87	GR-5	2-5-82	HL-10.13	5-1-87	TC-52.20	4-3-79	TC-32.11	3-21-73
CB-2-2-A&B	5-1-79	GR-6	2-5-82	HL-20.14	5-1-87	TC-71.10	4-9-79	TC-52.10	4-3-79
CB-4	11-10-83	GR-6A	2-5-82	TC-18.21	4-25-79	TC-72.20	2-26-82		
CB-5	11-10-83	HW-45	4-1-80	TC-18.26	5-31-79	BR-1	5-24-79		
CB-8	11-10-83	MC-4	7-26-76	TC-21.10	1-20-84	SD-1-69	6-12-69		
F-2	5-1-76	MC-6	1-30-84	TC-35.10	8-29-84	MC-11	8-1-78		
F-5	5-1-76	MC-9	1-30-84	MT-99.10	11-14-86	TC-7.65	3-1-79		
GR-1	1-11-85	MC-9A	1-11-85	TC-41.10	8-29-84	TC-12.30	1-20-84		
GR-2B	2-5-82	HL-20.14	5-1-87	TC-41.20	3-26-79	TC-22.10	3-1-79		
GR-3	1-21-85	HL-30.11	5-1-87	TC-42.10	8-19-77	TC-22.20	3-1-79		
GR-3B	1-21-85	HL-30.31	5-1-87	TC-42.20	3-26-79	TC-31.20	3-1-79		
GR-4	2-5-82	HL-50.21	5-1-87	TC-51.10	1-20-84	TC-31.21	3-6-79		

MICROFILMED
OCT 28 1992

SCHEMATIC PLAN
S.R. 5 (BYPASS)

SCALE : 0' 400' 800'

FHWA REGION	STATE	PROJECT	
5	OHIO		

2/213

TRUMBULL COUNTY
TRU-5B-0.00

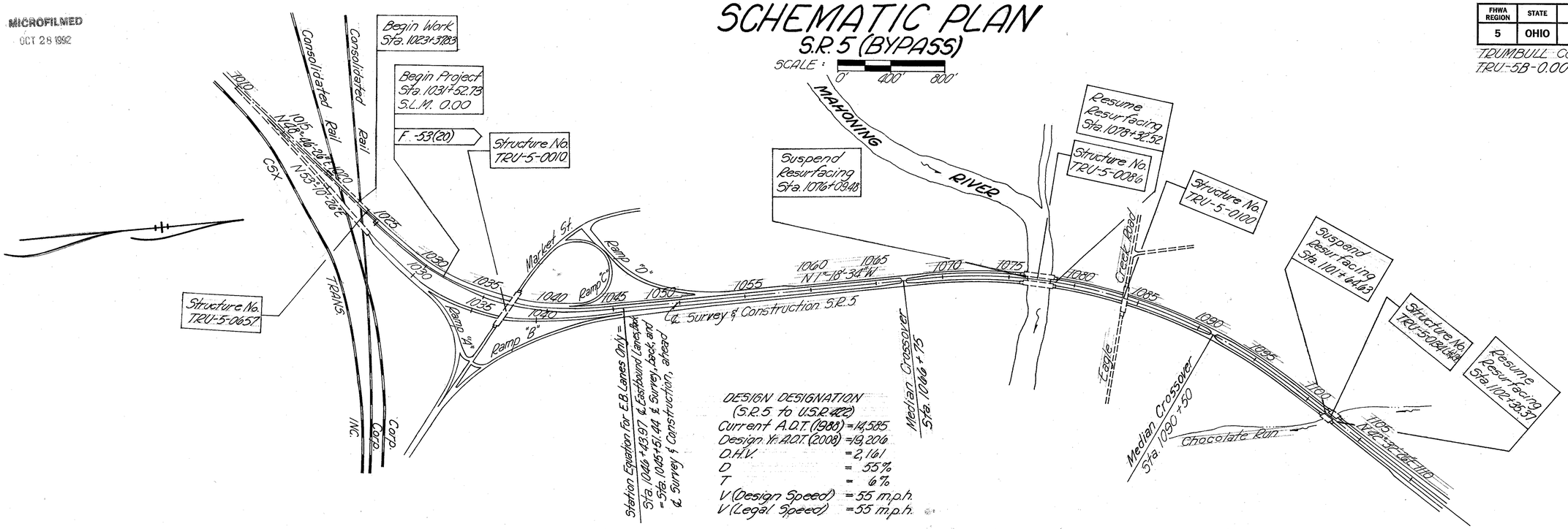

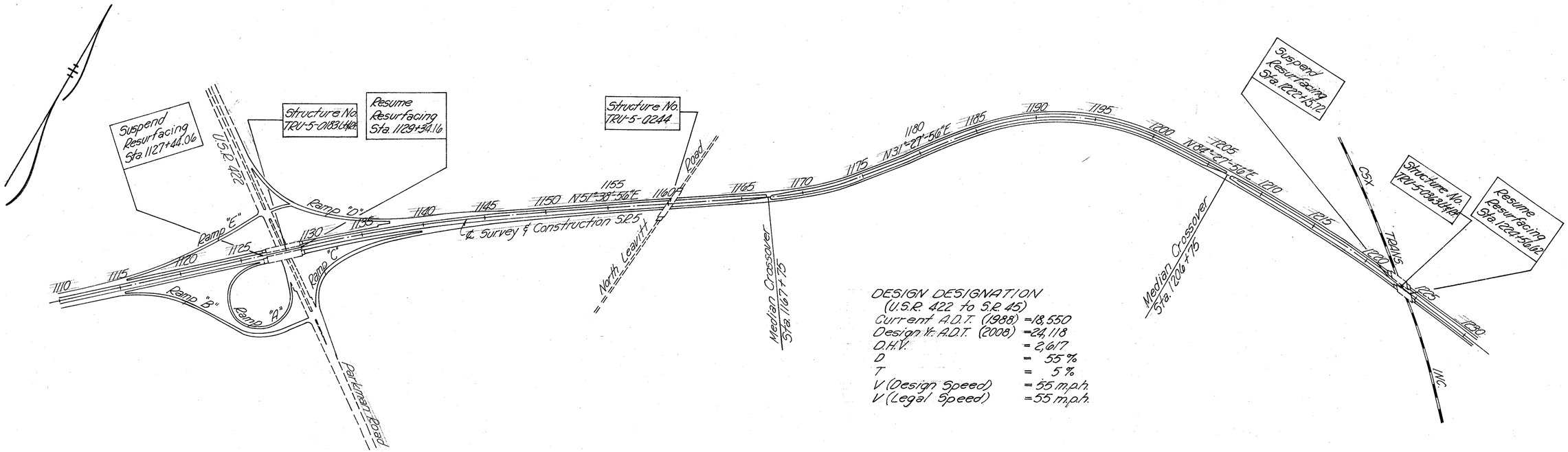

SCHEMATIC PLAN

MICROFILMED
OCT 28 1992

SCHEMATIC PLAN
S.R. 5 (BYPASS)

SCALE: 0' 400' 800'

FHWA REGION	STATE	PROJECT	
5	OHIO		

3/213

TRUMBULL COUNTY
TRU-5B-0.00

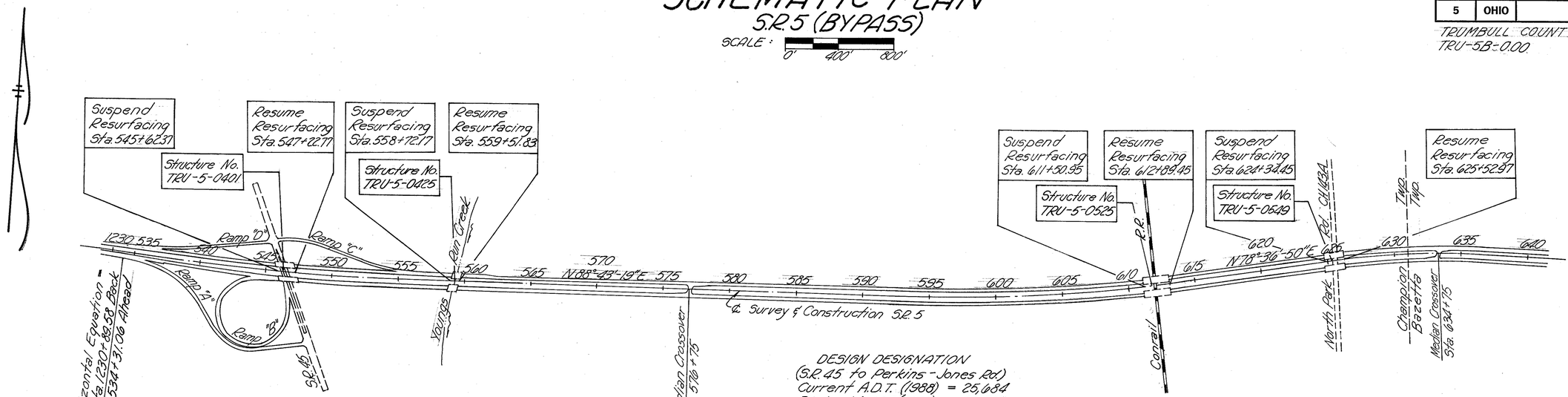

DESIGN DESIGNATION
(S.R. 45 to Perkins - Jones Rd.)

Current A.D.T. (1988)	=	25,684
Design Yr. A.D.T. (2008)	=	32,767
D.H.V.	=	3,408
D	=	55%
T	=	4%
V (Design Speed)	=	55 m.p.h.
V (Legal Speed)	=	55 m.p.h.

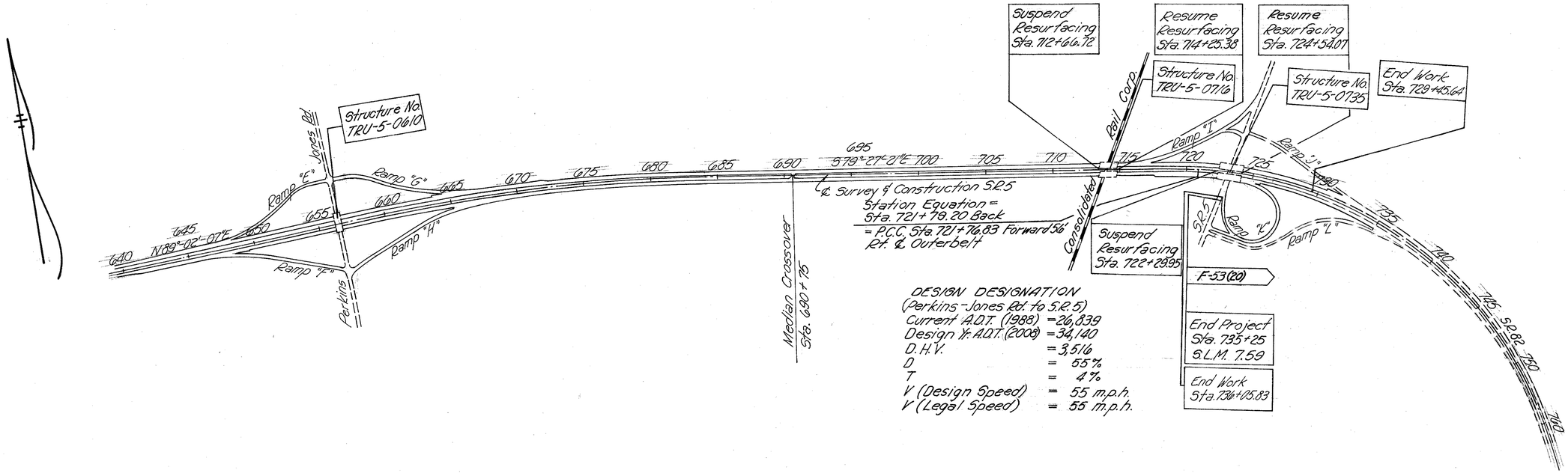

DESIGN DESIGNATION
(Perkins - Jones Rd. to S.R. 5)

Current A.D.T. (1988)	=	26,839
Design Yr. A.D.T. (2008)	=	34,140
D.H.V.	=	3,516
D	=	55%
T	=	4%
V (Design Speed)	=	55 m.p.h.
V (Legal Speed)	=	55 m.p.h.

TYPICAL SECTION
TYPE 446

FHWA REGION	STATE	PROJECT	
5	OHIO		

4 / 213

TRUMBULL COUNTY
TRU-5B-0.00

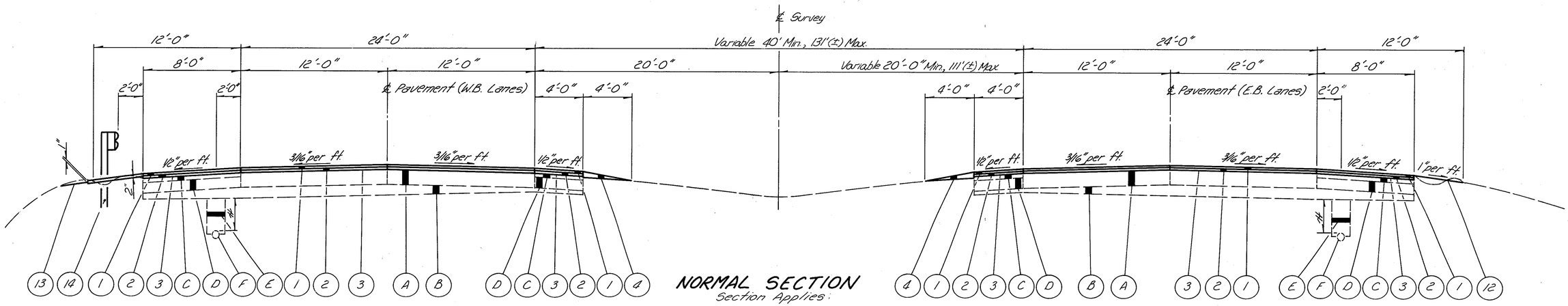

NORMAL SECTION

Section Applies:

Sta. 1024+00.00 to 1025+25.00 = 125.00 Lin. Ft. WB Lanes
Sta. 1025+44.46 to 1026+50.00 = 105.54 Lin. Ft. E.B. Lanes
Sta. 1045+00.00 to 1045+51.44 = 51.44 Lin. Ft. W.B. Lanes
Sta. 1042+75.00 to 1046+43.97 = 368.97 Lin. Ft. E.B. Lanes
Sta. 1045+51.44 to 1068+00.00 = 2248.56 Lin. Ft.
Sta. 1098+75.00 to 1165+75.00 = 6700.00 Lin. Ft.
Sta. 1178+75.00 to 1182+75.00 = 400.00 Lin. Ft.
Sta. 1203+50.00 to 545+36.12 = 3844.64 Lin. Ft.
Sta. 547+48.00 to 558+47.17 = 1098.57 Lin. Ft.
Sta. 559+76.83 to 611+24.70 = 5147.87 Lin. Ft.
Sta. 613+15.70 to 624+09.45 = 1093.75 Lin. Ft.
Sta. 638+17.92 to 712+40.47 = 7422.55 Lin. Ft.
Sta. 714+51.63 to 716+82.47 = 230.84 Lin. Ft.
28,837.73 Lin. Ft.

Deduct for Str. No. Tru-0134 & Approach Slabs = 123.24 Lin. Ft.
Deduct for Str. No. Tru-0183 & Approach Slabs = 242.60 Lin. Ft.
Deduct for Str. No. Tru-0363 & Approach Slabs = 293.41 Lin. Ft.
659.25 Lin. Ft.

Sub total = 28,837.73 Lin. Ft.
- 659.25 Lin. Ft.
Total Length = 28,178.48 Lin. Ft.

Note: Guardrail Detail Applies Either Side

* Varies 30" to 50"

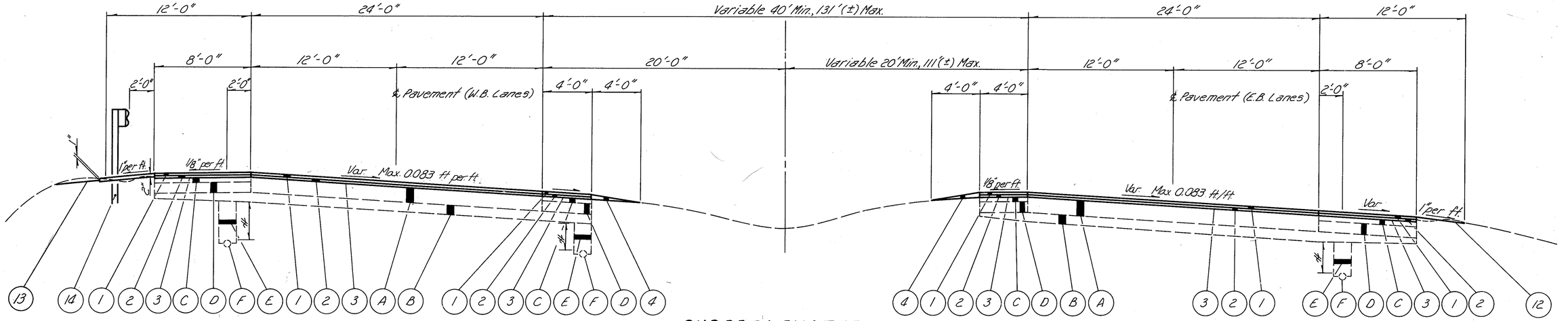

SUPERELEVATED SECTION

Section Applies

Sta. 1025+25.00 to 1045+00.00 = 1975.00 Lin. Ft.
Sta. 1026+50.00 to 1042+75.00 = 1625.00 Lin. Ft.
Sta. 1068+00.00 to 1098+75.00 = 3075.00 Lin. Ft.
Sta. 1165+75.00 to 1178+75.00 = 1300.00 Lin. Ft.
Sta. 1182+75.00 to 1203+50.00 = 2075.00 Lin. Ft.
Sta. 625+77.97 to 638+17.92 = 1239.95 Lin. Ft.
11,289.95 Lin. Ft.

Deduct for Str. No. Tru-5-0086 & Approach Slabs = 275.54 Lin. Ft.
Total Length = 11,014.41 Lin. Ft.

EXISTING LEGEND

- (A) 10" Reinforced Portland Cement Concrete Pavement
- (B) Subbase
- (C) Asphalt Concrete
- (D) Aggregate Base
- (E) Drainage Material
- (F) 6" Pipe Underdrain

PROPOSED LEGEND

- (1) Item 446 1 1/4" Asphalt Concrete Surface Course, Type I, AC-20
- (2) Item 446 1 3/4" Asphalt Concrete Intermediate Course, Type 2, AC-20
- (3) Item 407 Tack Coat, As per plan.
- (4) Item 617 Reconditioning Shoulders Including Shoulder Preparation, Compacted Aggregate & Water
- (12) Item 203 Linear Grading Method 1, See Sheet 34
- (13) Item 203 Linear Grading Method 2, See Sheet 34
- (14) Item 606 Guardrail, Type 5

Revised 11-30-88

TYPICAL SECTION (TYPE 446)

FHWA REGION	STATE	PROJECT	
5	OHIO		

5/213

TRUMBULL COUNTY
TRU-5B-0.00

TYPICAL SECTION - RAMPS
TYPE 446

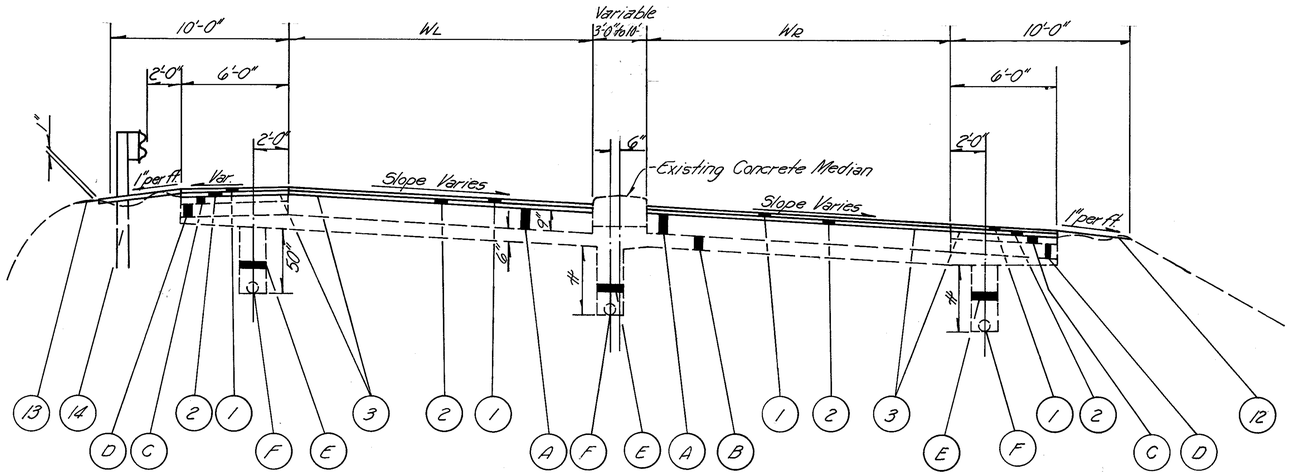

SUPERELEVATED TWO WAY RAMP

Section Applies:
Sta. 546+00.00 to Sta. 548+47.00, Ramp "A" S.R.45
Sta. 730+11 to Sta. 733+10 Ramp "K" S.R.5 (See Sht 32 for Median Removal and Replacement)
(Ramp "L", adjacent to Ramp "K" will not be resurfaced)

Varies 30" to 50"
WL & WR Varies

	WL		WR	
	Min.	Max.	Min.	Max.
RAMP "A"	16'	18'	16'	25'
RAMP "K"			16'	45'

EXISTING LEGEND

- (B) Subbase
- (C) Asphalt Concrete
- (D) Aggregate Base
- (E) Drainage Material
- (F) 6" Pipe Underdrain
- (G) 9" Reinforced Portland Cement Concrete Pavement

PROPOSED LEGEND

- (1) Item 446 1¼" Asphalt Concrete Surface Course, Type 1, AC-20
- (2) Item 446 1¾" Asphalt Concrete Intermediate Course, Type 2, AC-20
- (3) Item 407 Tack Coat, As per plan.
- (12) Item 203 Linear Grading Method 1, See Detail Sht 34
- (13) Item 203 Linear Grading Method 2, See Detail Sht. 34
- (14) Item 606 Guard Rail, Type 5

Revised 11-30-88

FHWA REGION	STATE	PROJECT	
5	OHIO		

6 / 213

TRUMBULL COUNTY
TRU-5B-0.00

TYPICAL SECTION - RAMPS & MARKET ST.
TYPE 446

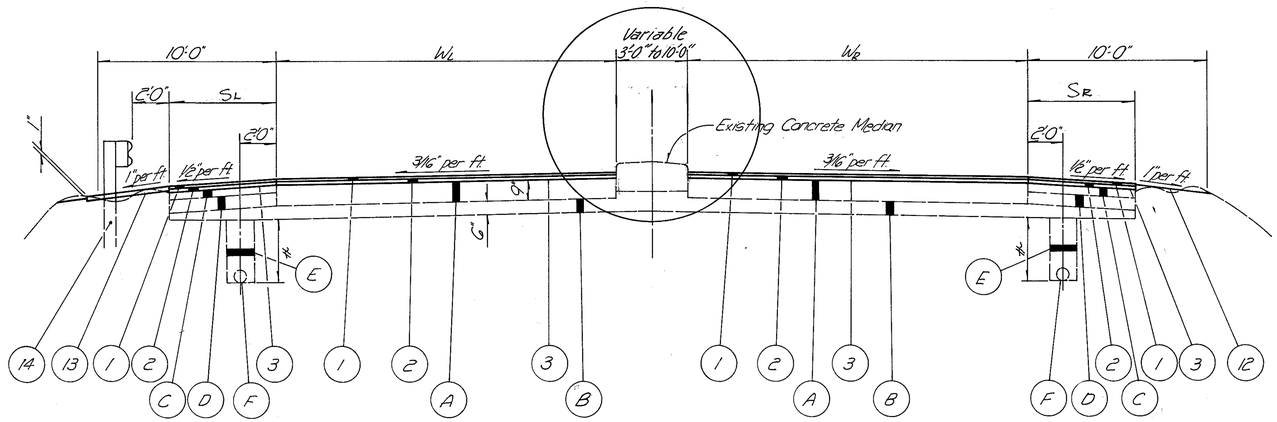

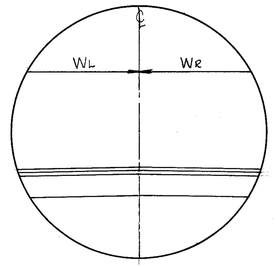

MARKET ST. ONLY
LIMITING STATIONS
STA.1019+50 TO STA.1047+50

STA. 1038+69.52	TO	STA. 1040+6.50	EXISTING 3' CONCRETE MEDIAN
STA. 1041+88	TO	STA. 1044+7	
STA. 1045+40	TO	STA. 1047+50	

* - Varies 30" to 50"

WL & WR vary

	WL Min.	WL Max.	WR Min.	WR Max.	SL	SR
RAMP "A"	18'	18'	25'	25'	6'	6'
RAMP "D"	17'	17'	15'	17'	6'	6'

NORMAL TWO WAY RAMP & MARKET ST.

Section Applies:

Sta. 548+47.00 to Sta. 550+53.02, Ramp A, SR 45
(See Sht. No. 32 for Median Removal and Replacement)
Sta. 1041+97.76 to Sta. 1043+81.90, Ramp D, Market St.
(See Detail, Sht No. 32 For Barrier Median Removal)
Sta. 1019+50 to Sta. 1047+50, Market St.

LIMITING STATION	WL MIN.	WL MAX.	WR MIN.	WR MAX.	SL	SR
1019+50 TO 1021+97.86	12'	12'	12'	12'	4'	4'
1021+97.86 TO 1027+06.16	12'	45'	12'	12'	4'	4'
1027+06.16 TO 1028+55.35	12'	12'	12'	12'	4'	4'
1031+79.15 TO 1036+13.21	12'	12'	12'	12'	4'	4'
1036+13.21 TO 1041+11.02	22'	46'	12'	33.5'	0'-8'	0'-8'
1041+11.02 TO 1047+50'	26.5'	26.5'	26.5'	26.5'	4'-8'	4'-8'

EXISTING LEGEND

- (B) Subbase
- (C) Asphalt Concrete
- (D) Aggregate Base
- (E) Drainage Material
- (F) 6" Pipe Underdrain
- (G) 9" Reinforced Portland Cement Concrete Pavement

PROPOSED LEGEND

- (1) Item 446 - 1½" Asphalt Concrete Surface Course, Type 1, AC-20
- (2) Item 446 - 1¾" Asphalt Concrete Intermediate Course, Type 2, AC-20
- (3) Item 407 - Tack Coat, As Per plan
- (12) Item 203 - Linear Grading Method 1, See Detail Sht. 34
- (13) Item 203 - Linear Grading Method 2, See Detail Sht. 34
- (14) Item 606 - Guardrail, Type 5

Revised 11-30-88

TYPICAL SECTION - RAMPS

TYPICAL SECTIONS - RAMPS
TYPE 446

FHWA REGION	STATE	PROJECT	
5	OHIO		

7/213

TRUMBULL COUNTY
TRU-5B-0.00

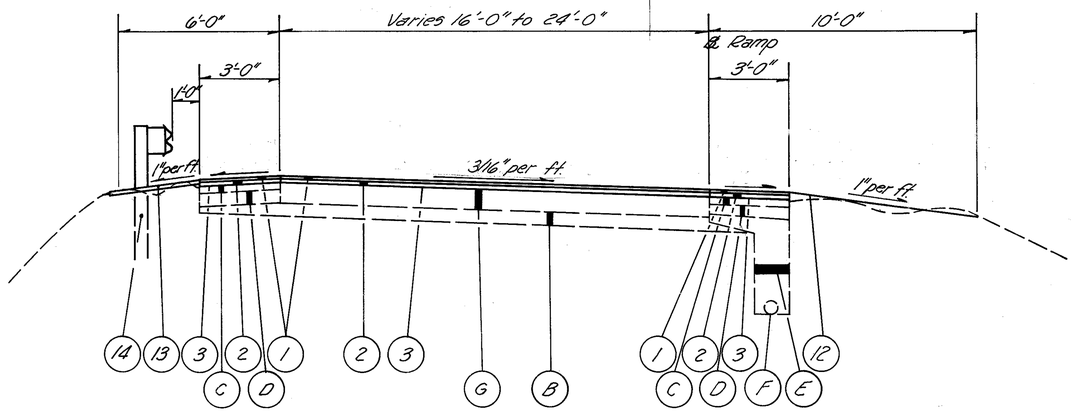

NORMAL RAMP

Applies:

S.R. 422
Ramp "B" Sta. 1122+00 to Sta. 1123+00 = 100 Lin. Ft.
Sta. 1128+79.06 to Sta. 1130+10.02 = 130.96 Lin. Ft.
Ramp "E" Sta. 1121+75 to Sta. 1126+44.49 = 469.49 Lin. Ft.

S.R. 45
Ramp "D" Sta. 539+33.70 to Sta. 543+54.26 = 420.56 Lin. Ft.

Perkins Jones Rd.
Ramp "F" Sta. 652+00 to Sta. 655+30.79 = 330.79 Lin. Ft.
Ramp "H" Sta. 658+26.86 to Sta. 662+61.14 = 434.28 Lin. Ft.

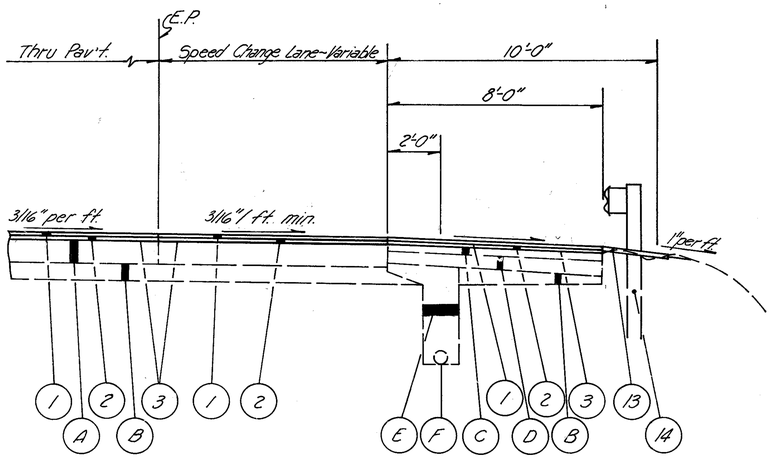

SPEED CHANGE LANE

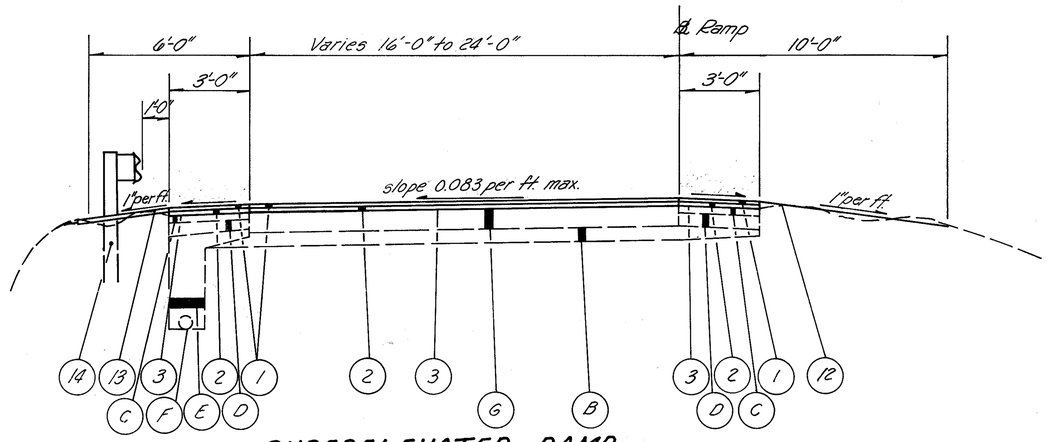

SUPERELEVATED RAMP

Applies:

Market St
Ramp "A" Sta. 1031+88.82 to Sta. 1039+12 = = 723.18 Lin. Ft.
Ramp "B" Sta. 1033+23 to Sta. 1046+43.97 = 1320.97 Lin. Ft.
Ramp "C" Sta. 1041+51.19 to Sta. 1051+08 = 956.81 Lin. Ft.
Ramp "D" Sta. 1043+81.90 to Sta. 1050+78.15 = 696.25 Lin. Ft.

S.R. 422
Ramp "A" Sta. 1113+86 to Sta. 1126+68.83 = 1282.83 Lin. Ft.
Ramp "B" Sta. 1116+14.50 to Sta. 1122+00 = 585.50 Lin. Ft.
Sta. 1123+00 to Sta. 1128+79.06 = 579.06 Lin. Ft.
Ramp "C" Sta. 1128+55 to Sta. 1139+66.97 = 1111.97 Lin. Ft.
Ramp "D" Sta. 1127+20 to Sta. 1137+16.27 = 996.27 Lin. Ft.
Ramp "E" Sta. 1115+26.29 to Sta. 1121+75 = 648.71 Lin. Ft.

S.R. 45
Ramp "A" Sta. 536+13.71 to Sta. 546+00 = 986.29 Lin. Ft.
Ramp "B" Sta. 532+50.79 to Sta. 545+31.90 = 1281.11 Lin. Ft.
Ramp "C" Sta. 546+73.88 to Sta. 554+52.01 = 778.13 Lin. Ft.
Ramp "D" Sta. 534+31.06 to Sta. 539+33.70 = 502.64 Lin. Ft.

Perkins Jones Rd.
Ramp "E" Sta. 647+08.93 to Sta. 655+51.17 = 842.24 Lin. Ft.
Ramp "F" Sta. 648+48.52 to Sta. 652+00 = 351.48 Lin. Ft.
Ramp "G" Sta. 657+33 to Sta. 664+79.98 = 746.98 Lin. Ft.
Ramp "H" Sta. 656+92 to Sta. 658+26.86 = 134.86 Lin. Ft.
Sta. 662+61.14 to Sta. 667+00 = 438.86 Lin. Ft.

S.R. 5
Ramp "I" Sta. 715+20.31 to Sta. 725+90 = 1069.69 Lin. Ft.
Ramp "M" Sta. 722+84.54 to Sta. 723+34.08 = 49.54 Lin. Ft.
Ramp "K" Sta. 725+02.77 to Sta. 735+30.83 = 1028.06 Lin. Ft.

PROPOSED LEGEND

1	Item	446	1 1/4" Asphalt Concrete Surface Course, Type 1, AC-20
2	Item	446	1 3/4" Asphalt Concrete Intermediate Course, Type 2, AC-20
3	Item	407	Tack Coat, As per plan.
12	Item	203	Linear Grading Method 1, See Detail Sheet 34
13	Item	203	Linear Grading Method 2, See Detail Sheet 34
14	Item	606	Guard Rail, Type 5

EXISTING LEGEND

A	10" Reinforced Portland Cement Concrete Pavement
B	Subbase
C	Asphalt Concrete
D	Aggregate Base
E	Drainage Material
F	6" Pipe Underdrain
G	9" Reinforced Portland Cement Concrete Pavement

Rev. 11-30-89

TYPICAL SECTIONS ~ RAMPS

MICROFILMED
OCT 28 1992

GENERAL NOTES

Computations By Initials BMS Date 12/2/87	FHWA REGION	STATE	PROJECT	
Computations Checked By Initials JMK Date 12/2/87	5	OHIO		
Final Revisions By Initials Date				

8
213

TRUMBULL COUNTY
TRU-5B-0.00

STATIONING

THE STATIONS WITHIN THE LIMITS OF THIS PROJECT HAVE BEEN ESTABLISHED FROM THE PLANS OF FORMER CONSTRUCTION PROJECTS. COPIES OF THESE PLANS ARE ON FILE AT THE DISTRICT FOUR OFFICE OF THE OHIO DEPARTMENT OF TRANSPORTATION, RAVENNA, OHIO.

FIELD OFFICE

THE CONTRACTOR SHALL PROVIDE A SUITABLE FIELD OFFICE HAVING A MINIMUM OF 800 SQ. FT. OF FLOOR SPACE. PAYMENT SHALL BE AT THE LUMP SUM PRICE BID FOR ITEM 619, FIELD OFFICE.

CONTINGENCY QUANTITIES

THE CONTRACTOR SHALL NOT ORDER MATERIALS OR PERFORM WORK LISTED IN THE GENERAL SUMMARY FOR ITEMS DESIGNATED BY PLAN NOTE TO BE USED "AS DIRECTED BY THE ENGINEER" UNLESS AUTHORIZED BY THE ENGINEER. THE ACTUAL WORK LOCATIONS AND QUANTITIES USED AT THE ENGINEER'S DISCRETION SHALL BE MADE A MATTER OF RECORD BY INCORPORATION INTO THE FINAL CHANGE ORDER GOVERNING COMPLETION OF THIS PROJECT.

PROFILE AND ALIGNMENT

THE PROPOSED PAVEMENT RESURFACING COURSE SHALL FOLLOW THE ALIGNMENT AND PROFILE OF THE EXISTING PAVEMENT. PREVIOUS CONSTRUCTION PLANS SHOWING THE ORIGINAL ALIGNMENT AND PROFILE GRADE ARE ON FILE FOR INSPECTION IF NECESSARY AT THE O.D.O.T. DISTRICT 4 OFFICE AS PROJECT NO. TRU-5-06.65, TRU-5-08.33 AND TRU-5-10.74.
THE PROPOSED ASPHALT CONCRETE OVERLAYS SHALL BE APPROXIMATELY 3.0" (INCHES) ABOVE THAT OF THE EXISTING PAVEMENT EXCEPT AS OTHERWISE NOTED.

ELEVATION DATUM

ALL ELEVATIONS ARE BASED ON U.S.G.S. DATUM.

UNDERGROUND UTILITIES

THE LOCATIONS OF UNDERGROUND UTILITIES SHOWN ON THE PLANS ARE AS OBTAINED FROM THE OWNERS OF THE UTILITY AS REQUIRED BY SECTION 153.64 ORC.

SEEDING

QUANTITIES FOR SEEDING ARE CALCULATED FOR THE SOIL AREAS BETWEEN TEN (10) FEET OUTSIDE THE WORK LIMITS, AS SHOWN ON THE CROSS SECTIONS, OR TO THE RIGHT-OF-WAY LINE, IF SUCH LINE IS LESS THAN TEN (10) FEET FROM THE WORK LIMITS.

CONNECTION TO EXISTING PIPE

WHERE THE PLANS PROVIDE FOR PROPOSED CONDUIT TO BE CONNECTED TO, OR TO CROSS EITHER OVER OR UNDER AN EXISTING SEWER, IT SHALL BE THE RESPONSIBILITY OF THE CONTRACTOR TO LOCATE THE EXISTING PIPE BOTH AS TO LINE AND GRADE BEFORE HE STARTS TO LAY THE PROPOSED CONDUIT.

PAYMENT FOR ALL OPERATIONS DESCRIBED ABOVE SHALL BE INCLUDED IN THE UNIT PRICE BID FOR THE PERTINENT 603 CONDUIT ITEMS.

ITEM 310 SUBBASE TYPE 1 AS PER PLAN

THIS ITEM SHALL BE USED IN THE AREAS OF LANDSLIDE PROBLEMS AS SHOWN IN THE PLANS AND THE METHOD OF CONSTRUCTION SHALL BE AS PER 203.09. ANY ADDITIONAL COST ASSOCIATED WITH THIS METHOD SHALL BE INCLUDED IN THE UNIT PRICE BID FOR ITEM 310 SUBBASE TYPE 1, AS PER PLAN.

UTILITY OWNERSHIP

THE FOLLOWING UTILITIES AND OWNERS ARE LOCATED WITHIN THE WORK LIMITS OF THIS PROJECT:

ELECTRIC	OHIO EDISION COMPANY 76 S. MAIN ST. AKRON, OHIO 44308 ATTN: BENJAMIN McCOY 216-384-4702	
GAS	EAST OHIO GAS CO. 1165 W. RAYEN AVE. YOUNGSTOWN, OHIO 44502 ATTN: ADAM FRANCIS DIV. ENGR. 216-742-8140	
TELEPHONE	UNITED TELEPHONE CO. 220 SO. PARK AVE. WARREN, OHIO 44483 ATTN: MONICA MEGYESI, ASST. ADM., R/W 216-841-1214	
WATER AND SANITARY	CITY OF WARREN, OHIO DEPARTMENT OF WATER P.O. BOX 670 WARREN, OHIO 44482 ATTN: MANUEL MICHELAKIS, SUPT. 216-841-2531	CHARLES MILLER TRUMBULL COUNTY SANITARY ENGINEER 7500 ANDERSON AVE. WARREN, OHIO 44484 216-856-5530
CABLE TV	MAHONING VALLEY CABLEVISION 5030 YOUNGSTOWN-WARREN RD. NILES, OHIO 44446 ATTN: STEFAN KWIECINSKI 216-545-9606	

TWO WORKING DAYS BEFORE YOU DIG Call. 800-362-2764 TOLL FREE OHIO UTILITIES PROTECTION SERVICE NON-MEMBERS MUST BE CALLED DIRECTLY

TWO WORKING DAYS BEFORE YOU DIG Call. 800-362-2764 TOLL FREE OHIO UTILITIES PROTECTION SERVICE NON-MEMBERS MUST BE CALLED DIRECTLY

TWO WORKING DAYS BEFORE YOU DIG Call. 800-362-2764 TOLL FREE OHIO UTILITIES PROTECTION SERVICE NON-MEMBERS MUST BE CALLED DIRECTLY

ITEM 407 TACK COAT, AS PER PLAN

TACK COAT MATERIAL WILL CONSIST OF RUBBERIZED ASPHALT EMULSION AS PER SUPPLEMENTAL SPECIFICATION 924. THE RATE OF APPLICATION SHALL BE SUBJECT TO ADJUSTMENT AS DIRECTED BY THE ENGINEER.

PLAN QUANTITIES INDICATE AN AVERAGE APPLICATION RATE OF 0.075 GALLONS PER SQUARE YARD OF TACK COAT FOR ESTIMATING PURPOSES ONLY.

ITEM 301 BITUMINOUS AGGREGATE BASE

THE PLANT MIX DESIGN SHALL BE FOR LIGHT TRAFFIC VOLUMES.

ITEM 446 ASPHALT CONCRETE

ON THIS PROJECT, SUPPLEMENTAL SPECIFICATION 846 SHALL BE CONSIDERED TO READ 446. THE PLANT MIX DESIGN SHALL BE FOR HEAVY TRAFFIC VOLUMES.

ITEM 805 RUBBERIZED SAND-ASPHALT AS PER PLAN

THIS ITEM SHALL BE USED TO SEAL ALL LONGITUDINAL AND TRANSVERSE CRACKS 3/4" WIDE AND WIDER. THE ITEM SHALL INCLUDE THOROUGHLY CLEANING THE CRACK BY AN APPROVED METHOD TO REMOVE DUST, DIRT, MOISTURE, VEGETATION, AND OTHER FOREIGN MATERIAL THAT WILL PREVENT BONDING OF THE SEALANT. THESE AREAS SHALL BE KEPT CLEAN AND DRY UNTIL PLACEMENT OF THE 805 MATERIAL, ALL OF THIS WORK SHALL BE INCLUDED IN THE UNIT PRICE BID FOR ITEM 805 RUBBERIZED SAND-ASPHALT, AS PER PLAN.

SUSPENSION OF RESURFACING OVER WINTER

IF THIS PROJECT SHOULD CARRY OVER THE WINTER SEASON. THE INTERMEDIATE COURSE(S) SHALL NOT BE ALLOWED TO LAY EXPOSED TO TRAFFIC OVER THE WINTER. ALL ASPHALT PAVING WORK SHALL BE SCHEDULED FOR COMPLETION BY OCTOBER 31. AFTER OCTOBER 31, IF WEATHER PERMITS AS PER 401.05. A PERMISSIVE CHANGE ORDER MAY BE WRITTEN BY THE DISTRICT CONSTRUCTION ENGINEER WHICH SHALL INCLUDE THE FOLLOWING :

ANY INTERMEDIATE COURSE LAID SHALL BE COVERED BY THE SURFACE COURSE WITHIN TWO (2) WORK DAYS.

ALSO, ALL FINAL PAVEMENT MARKINGS SHALL BE APPLIED TO THE NEW SURFACE COURSE BEFORE WINTER. IF THIS CANNOT BE ACCOMPLISHED UNDER SPECIFICATION CONDITIONS, THE CONTRACTOR SHALL APPLY TEMPORARY LANE AND EDGE LINES, CLASS I, AT HIS EXPENSE. THE PERMANENT PAVEMENT MARKINGS SHALL THEN BE APPLIED THE NEXT SPRING.

ITEM 617 COMPACTED AGGREGATE, TYPE A

IN ADDITION TO THE CALCULATED QUANTITIES, AN ESTIMATED QUANTITY OF 500 CU.YD. OF ITEM 617 COMPACTED AGGREGATE IS INCLUDED TO BE USED AS DIRECTED BY THE ENGINEER FOR THE PURPOSE OF FILLING RUTS AND DEPRESSIONS IN THE AREA ADJACENT TO THE PAVED SHOULDER. A 15 M. GAL. OF ITEM 617 WATER IS CARRIED FORWARD IN THE GEN. SUMMARY TO BE AS DIRECTED BY THE ENGINEER.

UNDERDRAIN OUTLETS

A QUANTITY OF 200 LIN.FT. OF ITEM 603 8" CONDUIT, TYPE F IS INCLUDED IN THE GENERAL SUMMARY TO BE USED AS DIRECTED BY THE ENGINEER FOR REPLACEMENT OF ANY DAMAGED UNDERDRAIN OUTLETS ENCOUNTERED WITHIN THE LIMITS OF THE PROJECT.

TEMPORARY SOIL EROSION AND SEDIMENT CONTROL

THE FOLLOWING ESTIMATED QUANTITIES ARE TO BE USED AS DIRECTED BY THE ENGINEER, FOR TEMPORARY EROSION AND SEDIMENT CONTROL MEASURES:

207	TEMPORARY SEEDING AND MULCHING	7198 SQ. YD.
207	STRAW OR HAY BALES	500 EACH
659	COMMERCIAL FERTILIZER	0.65 TON

REVISED 3-29-89
Rev. 11-30-88

MICROFILMED
OCT 28 1992

Computations By Initials KMS Date 12/2/97
Computations Checked By Initials JMK Date 12/6/97
Final Revisions By Initials Date

FHWA REGION	STATE	PROJECT	
5	OHIO		

TRUMBULL COUNTY
TRU-5B-0.00

GENERAL NOTES

LOCATION OF GUARDRAIL

THE LOCATIONS OF GUARDRAIL RUNS, AS SHOWN IN THESE PLANS, ARE SUBJECT TO ADJUSTMENT PRIOR TO FINAL ACCEPTANCE. THE ENGINEER SHALL BE SATISFIED THAT ALL INSTALLATIONS WILL AFFORD MAXIMUM PROTECTION FOR TRAFFIC.

GUARDRAIL REPLACEMENT

NO HAZARD SHALL BE LEFT UNPROTECTED EXCEPT FOR ACTUAL TIME NECESSARY TO REMOVE, GRADE, AND REINSTALL GUARDRAIL IN A CONTINUOUS OPERATION. THE REMOVAL OF ALL GUARDRAIL SHALL AT ALL TIMES BE AS DIRECTED BY THE ENGINEER. NO GUARDRAIL SHALL BE REMOVED UNTIL THE REPLACEMENT MATERIAL IS ON THE SITE, READY FOR INSTALLATION. FAILURE TO COMPLY WITH THIS REQUIREMENT SHALL BE DEEMED SUFFICIENT CAUSE TO ORDER WORK SUSPENDED ON THIS PROJECT UNTIL SUCH TIME THAT THE ENGINEER IS ASSURED OF SAID COMPLIANCE.

ITEM 202 GUARDRAIL REMOVED FOR STORAGE

& GUARDRAIL BARRIER DESIGN AS PER PLAN

ALL GUARDRAIL DESIGNATED FOR REMOVAL SHALL BE REMOVED AS PER 202.07 AND DELIVERED BY CONTRACTOR TO THE ODOT GARAGE IN RAVENA, OHIO. PAYMENT FOR THE ABOVE WORK SHALL BE INCLUDED IN THE UNIT PRICE BID FOR ITEM 202 GUARDRAIL REMOVED FOR STORAGE. THIS ITEM SHALL BE 100% STATE FUNDED.

ITEM 606 GUARDRAIL, TYPE 5, AS PER PLAN "A"

THIS ITEM SHALL APPLY TO GUARDRAIL ON DEEP FILL SECTIONS. ALL POSTS SHALL BE 9 FT. LONG AND ALL POST HOLES SHALL BE DRILLED, EVEN IF LOCATED IN THE PAVED SHOULDER. ALL ADDITIONAL COSTS ASSOCIATED WITH THESE MATERIALS AND PLACING THESE MATERIALS SHALL BE INCLUDED IN THE UNIT PRICE BID FOR ITEM 606 GUARDRAIL TYPE 5 AS PER PLAN "A".

ITEM 606 GUARDRAIL, TYPE 5, AS PER PLAN "B"

THIS ITEM SHALL BE USED AT OBSTACLES CLOSER THAN 4 FT. BEHIND THE FACE OF RAIL. THE POST SPACING SHALL BE 3 FT. 1 1/2 IN. BEGINNING AT A POST AT LEAST 12 FT. 6 IN. BEFORE THE OBSTACLE TO THE FIRST POST BEYOND THE OBSTACLE. SEE THE APPROPRIATE PLAN SHEETS FOR THE LOCATIONS OF THIS ITEM. ALL COSTS FOR THE ADDITIONAL POSTS AND ANY REQUIRED HARDWARE AND FOR THE PLACING OF THESE ADDITIONAL POSTS SHALL BE INCLUDED IN THE UNIT PRICE BID FOR ITEM 606 GUARDRAIL TYPE 5 AS PER PLAN "B".

ITEM 606 BRIDGE TERMINAL ASSEMBLY, STD. TYPE "J" MODIFIED AS PER PLAN

THIS ITEM SHALL BE AS DETAILED IN STD. DRAWING GR-3B EXCEPT 7/8 IN. X 1 1/2 IN. BOLTS WITH STD. WASHERS IN SELF DRILLING ANCHORS SHALL BE USED INSTEAD OF 7/8 IN X 14 IN. HEXHEAD BOLTS AND NUTS WITH 3 IN. X 3 IN. X 1/2 IN. PL WASHERS. THE COST OF THE BOLTS, WASHERS AND ANCHORS AND PLACING THEM SHALL BE INCLUDED IN THE PRICE BID FOR ITEM 606 BRIDGE TERMINAL ASSEMBLY, STD. TYPE "J" MODIFIED AS PER PLAN.

ITEM 203 EMBANKMENT, AS PER PLAN

THIS ITEM SHALL BE USED AT EXISTING CATCH BASIN LOCATIONS SHOWN IN THE PLANS WHERE A WASHOUT HAS OCCURRED AND WHERE NO WORK IS PROPOSED FOR CATCH BASIN. SOD WILL BE USED AT ALL THESE LOCATIONS TO PROTECT THE NEW EMBANKMENT FROM FURTHER WASHOUTS. THE COST OF EMBANKMENT, SOD AND FERTILIZER SHALL BE INCLUDED IN THE UNIT PRICE BID FOR ITEM 203 EMBANKMENT AS PER PLAN.

ITEM 604 CATCH BASIN REPAIRED

THIS ITEM APPLIES TO CATCH BASINS WHERE THE CONCRETE CAP HAS BEEN MOVED OFF OF THE BASIN. THE WORK SHALL CONSIST OF REPOSITIONING THE EXISTING CAP AND GRATE BACK TO ITS PROPER LOCATION. ALL WORK SHALL BE INCLUDED IN THE UNIT PRICE BID FOR ITEM 604 CATCH BASIN REPAIRED.

ITEM 604 CATCH BASIN, AS PER PLAN

ANY EMBANKMENT REQUIRED AROUND PROPOSED CATCH BASINS SHALL BE PROTECTED WITH SOD. THE COST OF THE EMBANKMENT, SOD AND FERTILIZER SHALL BE INCLUDED IN THE UNIT PRICE BID FOR ITEM 604 CATCH BASIN AS PER PLAN.

ITEM 202 CATCH BASIN REMOVED

THE EXISTING CONCRETE PADS AROUND THE CATCH BASINS TO BE REMOVED ARE CONSIDERED TO BE PART OF THE CATCH BASIN AND WILL BE REMOVED WITH THE CATCH BASIN. THE PAD SIZES ARE GENERALLY 5 FT. X 6.7 FT. X 6 INCHES OR 8 FT. X 9 FT. X 6 INCHES. CASTINGS OF CATCH BASINS TO BE REMOVED SHALL BE SALVAGED AND REMAIN THE PROPERTY OF THE STATE OF OHIO. THE CASTINGS SHALL BE STORED ON THE JOB IN AN AREA DESIGNATED BY THE ENGINEER TO BE LATER REMOVED BY STATE FORCES.

PRE-CAST CATCH BASINS

IN THE EVENT THE CONTRACTOR ELECTS TO USE PRE-CAST CATCH BASINS, IT SHALL BE THE RESPONSIBILITY OF THE CONTRACTOR TO DETERMINE FROM ELEVATIONS IN THE PLANS WHETHER OR NOT THE PRE-CAST CATCH BASIN TOP WILL CLEAR THE CONDUIT IN THE CATCH BASIN. SHOULD ADEQUATE CLEARANCE NOT EXIST, THE CONTRACTOR SHALL PROVIDE CLEARANCE BY SAWING THE PRE-CAST TOP TO FIT OVER THE CONDUIT AT NO ADDITIONAL COST TO THE STATE.

ITEM 604 CATCH BASIN PAD, AS PER PLAN

WHERE THE PLANS REQUIRE CONCRETE PADS AROUND EXISTING CATCH BASINS TO BE REPLACED, ALL VOIDS DUE TO WASHOUTS, SHALL BE FILLED WITH CLASS C CONCRETE. THE COST OF CONCRETE SHALL BE INCLUDED IN THE UNIT PRICE BID FOR ITEM 604 CATCH BASIN PAD, AS PER PLAN. THE PROPOSED PAD SIZE SHALL BE THE SAME AS THE EXISTING PAD SIZE, WHICH IS GENERALLY 5 FT. x 6.7 FT. OR 8 FT. x 9 FT.. SEE PLAN SHEETS FOR LOCATIONS AND QUANTITIES.

ITEM 202 CONCRETE PAD REMOVED, TYPE 1 AND TYPE 2

CONCRETE PADS REMOVED TYPE 1 ARE GENERALLY 5 FT. X 6.7 FT. X 6 INCHES IN SIZE AND CONCRETE PADS REMOVED TYPE 2 ARE GENERALLY 8 FT. X 9 FT. X 6 INCHES. ANY CATCH BASINS DAMAGED BY REMOVING THE EXISTING PADS SHALL BE REPLACED BY THE CONTRACTOR AT NO ADDITIONAL COST TO THE STATE.

PROTECTION OF AERIAL LINES AND TRACK:

RAILROAD AERIAL LINES WILL NOT BE RELOCATED BY THE RAILROAD. THE CONTRACTOR SHALL USE ALL PRECAUTIONS NECESSARY TO SEE THAT THE LINES AND TRACK ARE SHIELDED OR PROTECTED AND ARE DISTURBED DURING THE CONSTRUCTION STAGE AND SHALL COOPERATE WITH THE RAILROAD IN THE PROTECTION OF THESE LINES. PLANS AND METHOD OF PROTECTING OR SHIELDING THE AERIAL LINES AND TRACK SHALL **BE APPROVED** BY THE RAILROAD PRIOR TO STARTING WORK.

REMOVAL AND REERECTION OF OVERHEAD SIGNS AND SUPPORTS

THE CONTRACTOR SHALL BE RESPONSIBLE FOR TYING DOWN THE LOCATION OF THE SIGNS AND SUPPORTS THAT ARE ATTACHED TO THE PARAPETS WHICH ARE TO BE RECONSTRUCTED. THESE SIGNS AND SUPPORTS SHALL BE REERECTED AT THE EXACT LOCATIONS.

JOINT SEALERS

ALL REFERENCES TO 705.01 OR 705.02, APPEARING ON STANDARD DRAWINGS OR ON THE PLANS, SHALL BE CONSIDERED TO READ 705.04.

FOR DETAILS OR DESCRIPTION OF ITEMS:

202 CURB REMOVED AS PER PLAN A, SEE SHEET 30
202 CURB REMOVED AS PER PLAN B, SEE SHEET 30
203 EMBANKMENT AS PER PLAN, SEE SHEET 9
203 LINEAR GRADING, TYPE 1, SEE SHEET 34
203 LINEAR GRADING, TYPE 2, SEE SHEET 34
407 TACK COAT AS PER PLAN SEE SHEET 8

604 CATCH BASIN REPAIRED, SEE SHEET 9
604 CATCH BASIN AS PER PLAN, SEE SHEET 9
604 CATCH BASIN PAD AS PER PLAN, SEE SHEET 9
605 LONGITUDINAL AGGREGATE DRAIN AS PER PLAN, SEE SHEET 35
606 GUARDRAIL TYPE 5 AS PER PLAN A, SEE SHEET 9
606 GUARDRAIL TYPE 5 AS PER PLAN B, SEE SHEET 9
606 BRIDGE TERMINAL ASSEMBLY STD., TYPE J MODIFIED AS PER PLAN, SEE SHEET 9
622 CONCRETE BARRIER TYPE D MODIFIED AS PER PLAN, SEE SHEET 33
SPEC. - ASPHALT UNDERSEALING, SEE SHEET 27

TRAFFIC CONTROL STANDARD CONSTRUCTION DRAWINGS

References to Supplemental Specifications 857, 858, 861, 957, 958 and 961 on the Traffic Control Standard Construction Drawings in these plans shall be considered to read as respective references to Items 630, 631, 633, 730, 731 and 733.

630 OVERHEAD SIGN SUPPORT MODIFICATION, BY TYPE

Overhead sign supports shall be modified as shown in the plans. The modification shall consist of the replacement of existing arms with new arms of 25 feet.
Payment will be at the contract unit price for the modification of the overhead sign support, including all necessary material, parts, equipment and labor.

PAVEMENT TABLE

MAINLINE

Computations By Initials KMS Date 12/3/87
Computations Checked By Initials KLS Date 12-3-87
Final Revisions By Initials Date

FHWA REGION	STATE	PROJECT	
5	OHIO		

TRUMBULL COUNTY
TRU-5B-0.00

(10) 213

STATION FROM	STATION TO	LENGTH	446 ASPHALT CONCRETE SURFACE COURSE TYPE 1	446 ASPHALT CONCRETE INTERMEDIATE COURSE TYPE 2	407 TACK COAT AS PER PLAN	617 SHOULDER PREPARATION	617 COMPACTED AGGREGATE	202 WEARING COURSE REMOVED
		LIN. FT.	CU. YD.	CU. YD.	GAL.	SQ.YD.	CU. YD.	SQ.YD.
S.R.5 MAINLINE								
WESTBOUND LANES								
STA. 1023+83.75	STA. 1024+08.75	25.00				11.11	0.92	240.00
PAVEMENT (TAPER)			2.31	2.78	5.00			
INSIDE SHOULDER (TAPER)			0.39	0.46	0.83			
OUTSIDE SHOULDER (TAPER)			0.77	0.93	1.67			
STA. 1024+08.75	STA. 1045+51.44	2114.72				939.88	78.32	
PAVEMENT			195.81	274.13	422.94			
INSIDE SHOULDER			32.63	45.69	70.49			
OUTSIDE SHOULDER			29.35	41.09	63.39			
S.R.5 MAINLINE								
EASTBOUND LANES								
STA. 1025+18.21	STA.1025+43.21	25.00				11.11	0.92	240.00
PAVEMENT (TAPER)			2.31	2.78	5.00			
INSIDE SHOULDER (TAPER)			0.39	0.46	0.83			
OUTSIDE SHOULDER (TAPER)			0.77	0.93	1.67			
STA. 1025+43.21	STA. 1046+43.97	2100.76				933.67	77.80	
PAVEMENT			194.51	272.32	420.15			
INSIDE SHOULDER			32.42	45.39	70.03			
OUTSIDE SHOULDER			39.48	55.27	85.27			
STA.1046+43.97 E.B. LANES,BACK=								
STA.1045+51.44 C/L SURVEY,BACK								
& C/L SURVEY AHEAD								
S.R.5 MAINLINE								
EASTBOUND&WESTBOUND LANES								
STA. 1045+51.44	STA. 1075+71.98	3020.54				2471.76	205.98	
PAVEMENT			559.36	783.10	1208.22			
INSIDE SHOULDER			85.83	120.15	185.38			
OUTSIDE SHOULDER			130.14	182.19	281.10			
STA. 1075+71.98	STA. 1076+09.48							
TRANSITION AT STRUCTURE 0086								
WITH 1 3/4" S.P.C. OVERLAY(EXIST.)		37.50				33.33	2.90	200.00
PAVEMENT (TAPER)			8.68	3.82	15.00			
INSIDE SHOULDER (TAPER)			1.45	0.64	2.50			
OUTSIDE SHOULDER (TAPER)			2.89	1.27	5.00			
STA. 1076+09.48	STA. 1078+32.52							
BRIDGE NO.TRU-5-0086 LT.&RT.~		223.04						
NO RESURFACING								
STA. 1078+32.52	STA. 1078+70.02							
TRANSITION AT STRUCTURE 0086								
WITH 1 3/4" S.P.C. OVERLAY(EXIST.)		37.50				33.33	2.90	200.00
PAVEMENT (TAPER)			8.68	3.82	15.00			
INSIDE SHOULDER (TAPER)			1.45	0.64	2.50			
OUTSIDE SHOULDER (TAPER)			2.89	1.27	5.00			
STA. 1078+70.02	STA. 1101+27.13	2257.11				1793.16	149.43	
PAVEMENT			417.98	585.18	902.84			
INSIDE SHOULDER			62.26	87.17	134.49			
OUTSIDE SHOULDER			139.33	195.06	300.95			

STATION FROM	STATION TO	LENGTH	446 ASPHALT CONCRETE SURFACE COURSE TYPE 1	446 ASPHALT CONCRETE INTERMEDIATE COURSE TYPE 2	407 TACK COAT AS PER PLAN	617 SHOULDER PREPARATION	617 COMPACTED AGGREGATE	202 WEARING COURSE REMOVED
		LIN. FT.	CU. YD.	CU. YD.	GAL.	SQ.YD.	CU. YD.	SQ.YD.
STA. 1101+27.13	STA. 1101+64.63							
TRANSITION AT STRUCTURE 0134								
WITH 1 3/4" S.P.C. OVERLAY(EXIST.)		37.50				33.33	2.90	200.00
PAVEMENT (TAPER)			8.68	3.82	15.00			
INSIDE SHOULDER (TAPER)			1.45	0.64	2.50			
OUTSIDE SHOULDER (TAPER)			2.89	1.27	5.00			
STA. 1101+64.63	STA. 1102+35.37							
BRIDGE NO. TRU-5-0134 LT.&RT.~		70.74						
NO RESURFACING								
STA. 1102+35.37	STA. 1102+72.87							
TRANSITION AT STRUCTURE 0134								
WITH 1 3/4" S.P.C. OVERLAY(EXIST.)		37.50				33.33	2.90	200.00
PAVEMENT (TAPER)			8.68	3.82	15.00			
INSIDE SHOULDER (TAPER)			1.45	0.64	2.50			
OUTSIDE SHOULDER (TAPER)			2.89	1.27	5.00			
STA. 1102+72.87	STA. 1127+06.56	2433.69				2163.28	180.27	
PAVEMENT			450.68	630.96	973.48			
INSIDE SHOULDER			75.11	105.16	162.25			
OUTSIDE SHOULDER			83.18	116.45	179.66			
STA. 1127+06.56	STA. 1127+44.06							
TRANSITION AT STRUCTURE 0183								
WITH 1 3/4" S.P.C. OVERLAY(EXIST.)		37.50				33.33	2.90	177.78
PAVEMENT (TAPER)			8.68	3.82	15.00			
INSIDE SHOULDER (TAPER)			1.45	0.64	2.50			
OUTSIDE SHOULDER (TAPER)			1.45	0.64	2.50			
STA. 1127+44.06	STA. 1129+34.16							
BRIDGE NO.TRU-5-0183 LT.&RT.~		190.10						
NO RESURFACING								
STA. 1129+34.16	STA. 1129+71.66							
TRANSITION AT STRUCTURE 0183								
WITH 1 3/4" S.P.C. OVERLAY(EXIST.)		37.50				33.33	2.90	177.78
PAVEMENT (TAPER)			8.68	3.82	15.00			
INSIDE SHOULDER (TAPER)			1.45	0.64	2.50			
OUTSIDE SHOULDER (TAPER)			1.45	0.64	2.50			
STA. 1129+71.66	STA. 1221+65.72	9194.06				7746.17	645.51	
PAVEMENT			1702.60	2383.65	3677.62			
INSIDE SHOULDER			268.96	376.55	580.96			
OUTSIDE SHOULDER			503.10	704.34	1086.70			
STA.1221+65.72	STA. 1222+15.72							
TRANSITION AT STRUCTURE 0363								
WITH 1 1/4" L.M.C. OVERLAY(EXIST.)		50.00				44.44	3.55	177.78
PAVEMENT (TAPER)			11.00	3.82	20.00			
INSIDE SHOULDER (TAPER)			1.83	0.64	3.33			
OUTSIDE SHOULDER (TAPER)			1.83	0.64	3.33			
STA.1222+15.72	STA. 1224+56.62							
BRIDGE NO. TRU-5-0363 LT.&RT.~		240.90						
NO RESURFACING								
STA. 1224+56.62	STA. 1225+06.62							
TRANSITION AT STRUCTURE 0363								
WITH 1 1/4" L.M.C. OVERLAY(EXIST.)		50.00				44.44	3.55	155.56
PAVEMENT (TAPER)			11.00	3.82	20.00			
INSIDE SHOULDER (TAPER)			1.83	0.64	3.33			
OUTSIDE SHOULDER (TAPER)								
SUBTOTALS (THIS SHEET)			5112.40	7054.87	11000.91	16359.00	1363.65	1968.90

Rev. 11-30-88

REVISED 11-30-88

PAVEMENT TABLE

MAINLINE

Computations By Initials KMS Date 12/3/87
Computations Checked By Initials RLS Date 12-3-87
Final Revisions By Initials Date

FHWA REGION	STATE	PROJECT	
5	OHIO		

TRUMBULL COUNTY
TRU-5B-0.00

(11/23)

STATION FROM	STATION TO	LENGTH	446 ASPHALT CONCRETE SURFACE COURSE TYPE 1	446 ASPHALT CONCRETE INTERMEDIATE COURSE TYPE 2	407 TACK COAT AS PER PLAN	617 SHOULDER PREPARATION	617 COMPACTED AGGREGATE	202 WEARING COURSE REMOVED
		LIN. FT.	CU. YD.	CU. YD.	GAL.	SQ.YD.	CU. YD.	SQ.YD.
S.R. 5 MAINLINE (CONT.)								
EASTBOUND&WESTBOUND LANES								
STA. 1225+06.62	STA. 545+12.37	1664.27						
STA.1230+89.58,BK.	STA.534+31.06,AHD.					1479.36	123.28	
PAVEMENT			308.20	431.48	665.71			
INSIDE SHOULDER			51.37	71.91	110.95			
OUTSIDE SHOULDER			57.42	80.39	124.03			
STA. 545+12.37	STA. 545+62.37							
TRANSITION AT STRUCTURE 0401								
WITH 1 1/4" L.M.C. OVERLAY(EXIST.)		50.00				33.33	3.55	177.78
PAVEMENT (TAPER)			11.00	3.82	20.00			
INSIDE SHOULDER (TAPER)			1.83	0.64	3.33			
OUTSIDE SHOULDER (TAPER)			1.83	0.64	3.33			
STA. 545+62.37	STA. 547+22.77							
BRIDGE NO. TRU-5-0401 LT.&RT.~		160.40						
NO RESURFACING								
STA. 547+22.77	STA. 547+72.77							
TRANSITION AT STRUCTURE 0401								
WITH 1 1/4" L.M.C. OVERLAY(EXIST.)		50.00				33.33	3.55	177.78
PAVEMENT (TAPER)			11.00	3.82	20.00			
INSIDE SHOULDER (TAPER)			1.83	0.64	3.33			
OUTSIDE SHOULDER (TAPER)			1.83	0.64	3.33			
STA. 547+72.77	STA. 558+34.67	1061.90				943.91	78.66	
PAVEMENT			196.65	275.31	424.76			
INSIDE OVERLAY			32.77	45.88	70.79			
OUTSIDE OVERLAY			30.25	42.35	65.33			
STA 558+34.67	STA. 558+72.17							
TRANSITION AT STRUCTURE 0425								
WITH 1 3/4" S.P.C. OVERLAY(EXIST.)		37.50				33.33	2.90	177.78
PAVEMENT (TAPER)			8.68	3.82	15.00			
INSIDE SHOULDER (TAPER)			1.45	0.64	2.50			
OUTSIDE SHOULDER (TAPER)			1.45	0.64	2.50			
STA. 558+72.17	STA. 559+51.83							
BRIDGE NO. TRU-5-0425 LT.&RT.~		79.66						
NO RESURFACING								
STA. 559+51.83	STA. 559+89.33							
TRANSITION AT STRUCTURE 0425								
WITH 1 3/4" L.M.C. OVERLAY(EXIST.)		37.50				33.33	2.90	177.78
PAVEMENT (TAPER)			8.68	3.82	15.00			
INSIDE SHOULDER (TAPER)			1.45	0.64	2.50			
OUTSIDE SHOULDER (TAPER)			1.45	0.64	2.50			
STA. 559+89.33	STA. 611+00.95	5111.62				4330.50	360.87	
PAVEMENT			946.60	1325.23	2044.65			
INSIDE SHOULDER			150.36	210.51	324.79			
OUTSIDE SHOULDER			307.49	430.38	664.17			
STA. 611+00.95	STA. 611+50.95							
TRANSITION AT STRUCTURE 0525								
WITH 1 1/4" L.M.C. OVERLAY(EXIST.)		50.00				44.44	3.55	200.00
PAVEMENT (TAPER)			11.00	3.82	20.00			
INSIDE SHOULDER (TAPER)			1.83	0.64	3.33			
OUTSIDE SHOULDER (TAPER)			3.67	1.27	6.67			

STATION FROM	STATION TO	LENGTH	446 ASPHALT CONCRETE SURFACE COURSE TYPE 1	446 ASPHALT CONCRETE INTERMEDIATE COURSE TYPE 2	407 TACK COAT AS PER PLAN	617 SHOULDER PREPARATION	617 COMPACTED AGGREGATE	202 WEARING COURSE REMOVED
		LIN. FT.	CU. YD.	CU. YD.	GAL.	SQ.YD.	CU. YD.	SQ.YD.
STA.611+50.95	STA. 612+89.45							
BRIDGE NO. TRU-5-0525 LT.&RT.~		138.50						
NO RESURFACING								
STA. 612+89.45	STA. 613+39.45							
TRANSITION AT STRUCTURE 0525								
WITH 1 1/4" L.M.C. OVERLAY(EXIST.)		50.00				44.44	3.55	200.00
PAVEMENT (TAPER)			11.00	3.82	20.00			
INSIDE SHOULDER (TAPER)			1.83	0.64	3.33			
OUTSIDE SHOULDER (TAPER)			3.67	1.27	6.67			
STA. 613+39.45	STA. 623+84.45	1045.00					928.89	77.41
PAVEMENT			193.52	270.93	418.00			
INSIDE SHOULDER			32.25	45.15	69.67			
OUTSIDE SHOULDER			64.51	90.31	139.33			
STA.623+84.45	STA. 624+34.45							
TRANSITION AT STRUCTURE 0549								
WITH 1 1/4" L.M.C. OVERLAY(EXIST.)		50.00				44.44	3.55	200.00
PAVEMENT (TAPER)			11.00	3.82	20.00			
INSIDE SHOULDER (TAPER)			1.83	0.64	3.33			
OUTSIDE SHOULDER (TAPER)			3.67	1.27	6.67			
STA. 624+34.45	STA. 625+52.97							
BRIDGE NO. TRU-5-0549 LT.&RT.~		118.52						
NO RESURFACING								
STA. 625+52.97	STA. 626+02.97							
TRANSITION AT STRUCTURE 0549								
WITH 1 1/4" L.M.C. OVERLAY(EXIST.)		50.00				44.44	3.55	200.00
PAVEMENT (TAPER)			11.00	3.82	20.00			
INSIDE SHOULDER (TAPER)			1.83	0.64	3.33			
OUTSIDE SHOULDER (TAPER)			3.67	1.27	6.67			
STA.626+02.97	STA. 712+16.72	8613.75					7230.34	602.53
PAVEMENT			1595.14	2233.19	3445.50			
INSIDE SHOULDER			251.05	351.47	542.28			
OUTSIDE SHOULDER			389.43	545.20	841.16			
STA. 712+16.72	STA. 712+66.72							
TRANSITION AT STRUCTURE 0716								
WITH 1 1/4" L.M.C. OVERLAY(EXIST.)		50.00				33.33	2.66	177.78
PAVEMENT (TAPER)			11.00	3.82	20.00			
INSIDE SHOULDER (TAPER)			1.83	0.64	3.33			
OUTSIDE SHOULDER (TAPER)			1.83	0.64	3.33			
STA. 712+66.72	STA. 714+25.38							
BRIDGE NO. TRU-5-0716 LT.&RT.~		158.66						
NO RESURFACING								
STA. 714+25.38	STA.714+75.38							
TRANSITION AT STRUCTURE 0716								
WITH 1 1/4" L.M.C. OVERLAY(EXIST.)		50.00				33.33	2.66	177.78
PAVEMENT (TAPER)			11.00	3.82	20.00			
INSIDE SHOULDER (TAPER)			1.83	0.64	3.33			
OUTSIDE SHOULDER (TAPER)			1.83	0.64	3.33			
SUBTOTAL (THIS SHEET)			4754.81	6503.31	10217.76		15290.74	1275.17

Revised 11-30-88

PAVEMENT TABLE

MAINLINE & RAMPS

Computations By Initials KMS Date 11/3/87
Computations Checked By Initials RLS Date 12-3-87
Final Revisions By Initials Date

FHWA REGION	STATE	PROJECT	
5	OHIO		

TRUMBULL COUNTY
TRU-5B-0.00

STATION FROM	STATION TO	LENGTH	446 ASPHALT CONCRETE SURFACE COURSE TYPE 1	446 ASPHALT CONCRETE INTERMEDIATE COURSE TYPE 2	407 TACK COAT AS PER PLAN	617 SHOULDER PREPARATION	617 COMPACTED AGGREGATE	202 WEARING COURSE REMOVED
		LIN. FT.	CU. YD.	CU. YD.	GAL.	SQ.YD.	CU. YD.	SQ.YD.
S.R. 5 MAINLINE (CONT.)								
EASTBOUND&WESTBOUND LANES								
STA. 714+75.38	STA. 721+92.45	717.07				637.40	53.12	
PAVEMENT			132.79	185.91	286.83			
INSIDE SHOULDER			22.13	30.98	47.80			
OUTSIDE SHOULDER			23.36	32.70	50.45			
STA. 721+92.45	STA. 722+29.95							
TRANSITION AT STRUCTURE 0735								
WITH 1 3/4" S.P.C. OVERLAY(EXIST.)		37.50				33.33	2.90	177.78
PAVEMENT (TAPER)			8.68	3.82	15.00			
INSIDE SHOULDER (TAPER)			1.45	0.64	2.50			
OUTSIDE SHOULDER (TAPER)			2.89	1.27	5.00			
STA. 722+29.95	STA. 724+54.07							
BRIDGE NO.TRU-5-0735 LT,&RT.~		224.12						
NO RESURFACING								
STA. 724+54.07	STA. 724+91.57							
TRANSITION AT STRUCTURE 0735								
WITH 1 3/4" S.P.C. OVERLAY(EXIST.)		37.50				50.00	4.34	177.78
PAVEMENT (TAPER)			8.68	3.82	15.00			
INSIDE SHOULDER (TAPER)			1.45	0.64	2.50			
OUTSIDE SHOULDER (TAPER)			2.89	1.27	5.00			
STA. 724+91.57	STA. 725+71.00	79.43				130.92	10.91	
PAVEMENT			14.71	20.59	31.77			
INSIDE SHOULDER			2.45	3.43	5.30			
OUTSIDE SHOULDER			4.19	5.86	9.05			
STA. 725+71.00	STA. 726+46.00							
TRANSITION AT END PROJECT		75.00				133.33	8.80	200.00
PAVEMENT (TAPER)			12.85	3.82	30.00			
INSIDE SHOULDER (TAPER)			2.14	0.64	5.00			
OUTSIDE SHOULDER (TAPER)			4.28	1.27	10.00			
MAINLINE SUBTOTAL (THIS SHEET)			244.94	296.66	521.20	984.98	80.07	555.56
MAINLINE SUBTOTAL (SHEET 11)			4754.81	6503.31	10217.76	15290.74	1275.17	1866.68
MAINLINE SUBTOTAL (SHEET 10)			5112.40	7054.87	11000.91	16359.00	1363.65	1968.90
MAINLINE TOTALS			10112.15	13854.84	21739.87	32634.72	2718.89	4391.14
RAMPS								
MARKET ST. INTERCHANGE								
RAMP A								
PAVEMENT			105.15	147.21	227.12			
SHOULDERS			40.09	56.13	86.60			
RAMP B								104.46
PAVEMENT			155.10	217.15	335.03			
SHOULDERS			65.31	91.43	141.06			
RAMP C								
PAVEMENT			156.42	219.00	337.88			
SHOULDERS			58.99	82.58	127.41			
RAMP D								
PAVEMENT			111.00	155.40	239.77			
SHOULDERS			49.19	68.87	106.25			

STATION FROM	STATION TO	LENGTH	446 ASPHALT CONCRETE SURFACE COURSE TYPE 1	446 ASPHALT CONCRETE INTERMEDIATE COURSE TYPE 2	407 TACK COAT AS PER PLAN	617 SHOULDER PREPARATION	617 COMPACTED AGGREGATE	202 WEARING COURSE REMOVED
		LIN. FT.	CU. YD.	CU. YD.	GAL.	SQ.YD.	CU. YD.	SQ.YD.
S.R.422 INTERCHANGE								
RAMP A								207.97
PAVEMENT			130.17	167.65	275.79			
SHOULDERS			57.12	75.21	120.82			
RAMP B								124.17
PAVEMENT			141.78	188.99	303.64			
SHOULDERS			62.14	84.62	133.57			
RAMP C								94.69
PAVEMENT			137.05	185.12	294.21			
SHOULDERS			59.36	80.73	127.58			
RAMP D								
PAVEMENT			138.03	183.31	299.73			
SHOULDERS			53.32	70.72	115.80			
RAMP E								98.78
PAVEMENT			124.19	166.96	266.31			
SHOULDERS			58.90	80.08	126.57			
S.R.45 INTERCHANGE								
RAMP A								
PAVEMENT			139.86	188.43	303.27			
SHOULDERS			55.73	76.25	120.65			
RAMP B								229.83
PAVEMENT			158.55	191.45	341.50			
SHOULDERS			55.95	72.37	120.05			
RAMP C								96.04
PAVEMENT			105.61	136.05	227.08			
SHOULDERS			43.27	55.67	92.32			
RAMP D								68.22
PAVEMENT			114.11	152.93	246.55			
SHOULDERS			47.01	60.30	100.54			
PERKINS JONES RD. INTERCHANGE								
RAMP E								
PAVEMENT			114.27	154.83	247.64			
SHOULDERS			51.80	70.74	112.16			
RAMP F								
PAVEMENT			89.05	119.95	193.11			
SHOULDERS			43.26	58.79	93.72			
RAMP G								
PAVEMENT			105.64	140.82	229.31			
SHOULDERS			44.84	61.00	97.13			
RAMPS H&N								
PAVEMENT			205.16	277.26	340.56			
SHOULDERS			60.09	80.60	130.35			
RAMP SUBTOTAL (THIS SHEET)			3137.51	4218.60	6661.08			1024.16

Rev. 11-30-88

PAVEMENT TABLE

MAINLINE & RAMPS

Computations By	
Initials HMS	Date 12/3/87
Computations Checked By	
Initials RLS	Date 12-3-87
Final Revisions By	
Initials	Date

FHWA REGION	STATE	PROJECT	
5	OHIO		

13/213

TRUMBULL COUNTY
TRU-5B-0.00

STATION FROM	STATION TO	LENGTH		446 ASPHALT CONCRETE SURFACE COURSE TYPE 1	446 ASPHALT CONCRETE INTERMEDIATE COURSE TYPE 2		407 TACK COAT AS PER PLAN		617 SHOULDER PREPARATION	617 COMPACTED AGGREGATE		202 WEARING COURSE REMOVED
		LIN. FT.		CU. YD.	CU. YD.		GAL.		SQ.YD.	CU. YD.		SQ.YD.
RAMPS (CONT.)												
S.R.5 INTERCHANGE												
RAMPS I&M												220.59
PAVEMENT				137.64	169.78		295.41					
SHOULDERS				48.12	60.92		103.14					
RAMP K												230.13
PAVEMENT				124.15	155.77		266.18					
SHOULDERS				45.83	59.11		98.10					
RAMP SUBTOTAL (THIS SHEET)				355.74	445.58		762.83					450.72
RAMP SUBTOTAL (SHEET 12)				3137.51	4218.60		6661.08					1024.16
RAMP TOTALS				3493.25	4664.18		7423.91					1474.88
MARKET STREET												
STA. 1019+50 TO 1020+25 (TRANSITION AT BEGIN WORK)		75.00										
PAVEMENT				6.42	1.91		15.00					
LEFT SHOULDER				1.07	0.32		2.50					
RIGHT SHOULDER				1.07	0.32		2.50					
STA 1020+25 TO 1027+80.35		755.35										
PAVEMENT				69.94	97.92		151.07					
LEFT SHOULDER				2.99	4.19		6.47					
RIGHT SHOULDER				10.50	14.70		22.68					
STA 1027+80.35 TO 1028+55.35 TRANSITION BEFORE STRUCTURE		75.00										
PAVEMENT				6.42	1.91		15.00					
LEFT SHOULDER				1.07	0.32		2.50					
RIGHT SHOULDER				1.07	0.32		2.50					
STA 1031+79.15 TO 1032+54.15 TRANSITION AFTER STRUCTURE		75.00										
PAVEMENT				6.42	1.91		15.00					
LEFT SHOULDER				1.07	0.32		2.50					
RIGHT SHOULDER				1.07	0.32		2.50					
STA 1032+54.15 TO 1036+13.21		359.06										
PAVEMENT				33.25	46.54		71.81					
LEFT SHOULDER				6.03	8.44		13.02					
RIGHT SHOULDER				4.92	6.89		10.64					
STA 1036+13.21 TO 1039+48.41		335.20										
PAVEMENT				61.48	86.07		132.79					
LEFT SHOULDER				7.26	10.16		15.68					
RIGHT SHOULDER				6.39	8.95		13.80					

STATION FROM	STATION TO	LENGTH		446 ASPHALT CONCRETE SURFACE COURSE TYPE 1	446 ASPHALT CONCRETE INTERMEDIATE COURSE TYPE 2		407 TACK COAT AS PER PLAN		617 SHOULDER PREPARATION	617 COMPACTED AGGREGATE		202 WEARING COURSE REMOVED
		LIN. FT.		CU. YD.	CU. YD.		GAL.		SQ.YD.	CU. YD.		SQ.YD.
MARKET STREET (CONT.)												
STA 1039+48.41 TO 1046+75		726.59										
PAVEMENT				148.57	208.00		320.91					
LEFT SHOULDER				19.65	27.51		42.45					
RIGHT SHOULDER				13.94	19.51		30.11					
STA 1046+75 TO 1047+50 TRANSITION AT END WORK		75.00										
PAVEMENT				14.19	4.22		33.13					
LEFT SHOULDER				2.14	0.64		5.00					
MARKET STREET TOTALS (THIS SHEET)				426.93	551.39		929.56					
MAINLINE TOTALS (SHEET 12)				10112.15	13854.84		21739.87		32634.72	2718.89		4391.14
RAMP TOTALS (THIS SHEET)				3493.25	4664.18		7423.91		0	0		1474.88
GRAND TOTALS (CARRIED TO GENERAL SUMMARY)				14032.33	19070.41		30093.34		32634.72	2718.89		5866.02

Rev. 11-30-88

PAVEMENT COMPUTATIONS
"MAINLINE"

Computations By Initials GMA Date 11/30/87
Computations Checked By Initials WMS Date 11/30/87
Final Revisions By Initials Date

FHWA REGION	STATE	PROJECT	
5	OHIO		

14
213

TRUMBULL COUNTY
TRU-5B-0.00

**** PAVEMENT FACTORS ****

MAINLINE FACTORS-(WIDTH = 24 FT.) :

446 TYPE 1 : (1.25)(1/12)(24)(1)(1/27)	=	0.0925926	CU. YD./LIN. FT.
446 TYPE 2 : (1.75)(1/12)(24)(1)(1/27)	=	0.1296296	CU. YD./LIN. FT.
407 TACK COAT, AS PER PLAN : (24)(1)(1/9)(0.075)	=	0.2000000	GAL./LIN. FT.

INSIDE SHOULDER FACTORS-(WIDTH = 4 FT.) :

446 TYPE 1 : (1.25)(1/12)(4)(1)(1/27)	=	0.0154321	CU. YD./LIN. FT.
446 TYPE 2 : (1.75)(1/12)(4)(1)(1/27)	=	0.0216049	CU. YD./LIN. FT.
407 TACK COAT, AS PER PLAN : (4)(1)(1/9)(0.075)	=	0.0333333	GAL./LIN. FT.

OUTSIDE SHOULDER FACTORS-(WIDTH= 8 FT.) :

446 TYPE 1 : (1.25)(1/12)(8)(1)(1/27)	=	0.0308642	CU. YD./LIN. FT.
446 TYPE 2 : (1.75)(1/12)(8)(1)(1/27)	=	0.0432099	CU. YD./LIN. FT.
407 TACK COAT, AS PER PLAN : (8)(1)(1/9)(0.075)	=	0.0666667	GAL./LIN. FT.

SHOULDER RECONDITIONING FACTORS-(WIDTH= 4 FT.) :

617 SHOULDER PREPARATION : (4)(1)(1/9)	=	0.4444444	SQ. YD./LIN. FT.
617 COMPACTED AGGREGATE :(3)(1/12)(4)(1)(1/27)	=	0.0370370	CU. YD./LIN. FT.

**** TRANSITION FACTORS ****

BEGIN WORK LENGTH = 25.00 LIN. FT.

446 TYPE 1 : (1.25)(1/12)(25)(1)(1/27)	=	0.0964506	CU. YD./FT. WIDTH
446 TYPE 2 : (0.5)(1.75 + 1.25)(1/12)(25)(1)(1/27)	=	0.1157407	CU. YD./FT. WIDTH
407 TACK COAT, AS PER PLAN : (25.00)(1)(1/9)(0.075)	=	0.2083333	GAL./FT. WIDTH
617 SHOULDER PREPARARTION : (25.00)(1)(1/9)	=	2.7777778	SQ. YD./FT. WIDTH
617 COMPACTED AGGREGATE : (3)(1/12)(25.00)(1/27)	=	0.2314815	CU. YD./FT. WIDTH

BRIDGE WITH LMC OVERLAY LENGTH = 50.00 LIN. FT.

446 TYPE 1 : [(1.25)(1/12)(18.75)+(0.5)(1.25 + 1 + 1) (1/12)(50.00 - 18.75)](1)(1/27)	=	0.2290702	CU. YD./FT. WIDTH
446 TYPE 2 : (0.5)(1.75 + 1)(1/12)(18.75)(1)(1/27)	=	0.0795718	CU. YD./FT. WIDTH
407 TACK COAT, AS PER PLAN : (50.00)(1)(1/9)(0.075)	=	0.4166667	GAL./FT. WIDTH
617 SHOULDER PREPARARTION : (50.00)(1)(1/9)	=	5.5555556	SQ. YD./FT. WIDTH
617 COMPACTED AGGREGATE : (0.5)[(2)(3) -(1.25 - 1)](1/12)(50.00)(1/27)	=	0.4436728	CU. YD./FT. WIDTH

BRIDGE WITH SPC OVERLAY LENGTH = 37.50 LIN. FT.

446 TYPE 1 : [(1.25)(1/12)(18.75)+(0.5)(1.25 + 1 + 1.5) (1/12)(37.50 - 18.75)] (1)(1/27)	=	0.1808449	CU. YD./FT. WIDTH
446 TYPE 2 : (0.5)(1.75 + 1)(1/12)(18.75)(1)(1/27)	=	0.0795718	CU. YD./FT. WIDTH
407 TACK COAT, AS PER PLAN : (37.50)(1)(1/9)(0.075)	=	0.3125000	GAL./FT. WIDTH
617 SHOULDER PREPARARTION : (37.50)(1)(1/9)	=	4.1666667	SQ. YD./FT. WIDTH
617 COMPACTED AGGREGATE : (0.5)[(2)(3) -(1.25 - 1.5)](1/12)(37.50)(1/27)	=	0.3616898	CU. YD./FT. WIDTH

END WORK LENGTH = 75.00 LIN. FT.

446 TYPE 1 : [(1.25)(1/12)(18.75)+(0.5)(1.25 + 1 + 0) (1/12)(75.00 - 18.75)+(0)(1/12)(0)](1)(1/27)	=	0.2676505	CU. YD./FT. WIDTH
446 TYPE 2 : (0.5)(1.75 + 1)(1/12)(18.75)(1)(1/27)	=	0.0795718	CU. YD./FT. WIDTH
407 TACK COAT, AS PER PLAN : (75.00)(1)(1/9)(0.075)	=	0.6250000	GAL./FT. WIDTH
617 SHOULDER PREPARARTION : (75.00)(1)(1/9)	=	8.3333333	SQ. YD./FT. WIDTH
617 COMPACTED AGGREGATE : (0.5)[(2)(3) -(1.25 - 0)](1/12)(75.00)(1/27)	=	0.5497685	CU. YD./FT. WIDTH

**** PAVEMENT COMPUTATIONS ****

STATION 1023 + 83.75 TO STATION 1024 + 8.75 (TRANSITION AT BEGIN WORK)
(WESTBOUND ONLY) LENGTH = 25.00 LIN. FT.

PAVEMENT :

446 TYPE 1 : (24)(0.0964506)	=	2.31	CU. YD.
446 TYPE 2 : (24)(0.1157407)	=	2.78	CU. YD.
407 TACK COAT, AS PER PLAN : (24)(0.2083333)	=	5.00	GAL.

INSIDE SHOULDER :

446 TYPE 1 : (4)(0.0964506)	=	0.39	CU. YD.
446 TYPE 2 : (4)(0.1157407)	=	0.46	CU. YD.
407 TACK COAT, AS PER PLAN : (4)(0.2083333)	=	0.83	GAL.

OUTSIDE SHOULDER :

446 TYPE 1 : (8)(0.0964506)	=	0.77	CU. YD.
446 TYPE 2 : (8)(0.1157407)	=	0.93	CU. YD.
407 TACK COAT, AS PER PLAN : (8)(0.2083333)	=	1.67	GAL.

SHOULDER RECONDITIONING :

617 SHOULDER PREPARATION : (4)(2.7777778)	=	11.11	SQ. YD.
617 COMPACTED AGGREGATE : (4)(0.2314815)	=	0.92	CU. YD.

REMOVAL :

202 WEARING COURSE REMOVED : (60)(36)(1/9)	=	240.00	SQ. YD.

STATION 1024 + 8.75 TO STATION 1045 + 51.44
(WESTBOUND ONLY) LENGTH = 2114.72 LIN. FT.

PAVEMENT :

446 TYPE 1 : (2114.72)(0.0925926)	=	195.81	CU. YD.
446 TYPE 2 : (2114.72)(0.1296296)	=	274.13	CU. YD.
407 TACK COAT, AS PER PLAN : (2114.72)(0.2000000)	=	422.94	GAL.

INSIDE SHOULDER : LENGTH = 2114.72 LIN. FT.

446 TYPE 1 : (2114.72)(0.0154321)	=	32.63	CU. YD.
446 TYPE 2 : (2114.72)(0.0216049)	=	45.69	CU. YD.
407 TACK COAT, AS PER PLAN : (2114.72)(0.0333333)	=	70.49	GAL.

OUTSIDE SHOULDER : LENGTH = 950.91 LIN. FT.

446 TYPE 1 : (950.91)(0.0308642)	=	29.35	CU. YD.
446 TYPE 2 : (950.91)(0.0432099)	=	41.09	CU. YD.
407 TACK COAT, AS PER PLAN : (950.91)(0.0666667)	=	63.39	GAL.

SHOULDER RECONDITIONING : LENGTH = 2114.72 LIN. FT.

617 SHOULDER PREPARATION : (2114.72)(0.4444444)	=	939.88	SQ. YD.
617 COMPACTED AGGREGATE : (2114.72)(0.0370370)	=	78.32	CU. YD.

STATION 1025 + 18.21 TO STATION 1025 + 43.21 (TRANSITION AT BEGIN WORK)
(EASTBOUND ONLY) LENGTH = 25.00 LIN. FT.

PAVEMENT :

446 TYPE 1 : (24)(0.0964506)	=	2.31	CU. YD.
446 TYPE 2 : (24)(0.1157407)	=	2.78	CU. YD.
407 TACK COAT, AS PER PLAN : (24)(0.2083333)	=	5.00	GAL.

INSIDE SHOULDER :

446 TYPE 1 : (4)(0.0964506)	=	0.39	CU. YD.
446 TYPE 2 : (4)(0.1157407)	=	0.46	CU. YD.
407 TACK COAT, AS PER PLAN : (4)(0.2083333)	=	0.83	GAL.

OUTSIDE SHOULDER :

446 TYPE 1 : (8)(0.0964506)	=	0.77	CU. YD.
446 TYPE 2 : (8)(0.1157407)	=	0.93	CU. YD.
407 TACK COAT, AS PER PLAN : (8)(0.2083333)	=	1.67	GAL.

SHOULDER RECONDITIONING :

617 SHOULDER PREPARATION : (4)(2.7777778)	=	11.11	SQ. YD.
617 COMPACTED AGGREGATE : (4)(0.2314815)	=	0.92	CU. YD.

REMOVAL :

202 WEARING COURSE REMOVED : (60)(36)(1/9)	=	240.00	SQ. YD.

STATION 1025 + 43.21 TO STATION 1046 + 43.97
(EASTBOUND ONLY) LENGTH = 2100.76 LIN. FT.

PAVEMENT :

446 TYPE 1 : (2100.76)(0.0925926)	=	194.51	CU. YD.
446 TYPE 2 : (2100.76)(0.1296296)	=	272.32	CU. YD.
407 TACK COAT, AS PER PLAN : (2100.76)(0.2000000)	=	420.15	GAL.

INSIDE SHOULDER : LENGTH = 2100.76 LIN. FT.

446 TYPE 1 : (2100.76)(0.0154321)	=	32.42	CU. YD.
446 TYPE 2 : (2100.76)(0.0216049)	=	45.39	CU. YD.
407 TACK COAT, AS PER PLAN : (2100.76)(0.0333333)	=	70.03	GAL.

OUTSIDE SHOULDER : LENGTH = 1279.01 LIN. FT.

446 TYPE 1 : (1279.01)(0.0308642)	=	39.48	CU. YD.
446 TYPE 2 : (1279.01)(0.0432099)	=	55.27	CU. YD.
407 TACK COAT, AS PER PLAN : (1279.01)(0.0666667)	=	85.27	GAL.

SHOULDER RECONDITIONING : LENGTH = 2100.76 LIN. FT.

617 SHOULDER PREPARATION : (2100.76)(0.4444444)	=	933.67	SQ. YD.
617 COMPACTED AGGREGATE : (2100.76)(0.0370370)	=	77.80	CU. YD.

STATION EQUATION :
STA. 1046+43.97 EB LANES, BK. = STA. 1045+51.44 C/L SURVEY, BK. & C/L SURVEY AHD.

STATION 1045 + 51.44 TO STATION 1075 + 71.98
LENGTH = 3020.54 LIN. FT.

PAVEMENT :

446 TYPE 1 : (2)(3020.54)(0.0925926)	=	559.36	CU. YD.
446 TYPE 2 : (2)(3020.54)(0.1296296)	=	783.10	CU. YD.
407 TACK COAT, AS PER PLAN : (2)(3020.54)(0.2000000)	=	1208.22	GAL.

INSIDE SHOULDER : LENGTH = 5561.46 LIN. FT.

446 TYPE 1 : (5561.46)(0.0154321)	=	85.83	CU. YD.
446 TYPE 2 : (5561.46)(0.0216049)	=	120.15	CU. YD.
407 TACK COAT, AS PER PLAN : (5561.46)(0.0333333)	=	185.38	GAL.

OUTSIDE SHOULDER : LENGTH = 4216.50 LIN. FT.

446 TYPE 1 : (4216.50)(0.0308642)	=	130.14	CU. YD.
446 TYPE 2 : (4216.50)(0.0432099)	=	182.19	CU. YD.
407 TACK COAT, AS PER PLAN : (4216.50)(0.0666667)	=	281.10	GAL.

SHOULDER RECONDITIONING : LENGTH = 5561.46 LIN. FT.

617 SHOULDER PREPARATION : (5561.46)(0.4444444)	=	2471.76	SQ. YD.
617 COMPACTED AGGREGATE : (5561.46)(0.0370370)	=	205.98	CU. YD.

STATION 1075 + 71.98 TO STATION 1076 + 9.48
(TRANSITION AT BRIDGE WITH SPC OVERLAY)
LENGTH = 37.50 LIN. FT.

PAVEMENT :

446 TYPE 1 : (2)(24)(0.1808449)	=	8.68	CU. YD.
446 TYPE 2 : (2)(24)(0.0795718)	=	3.82	CU. YD.
407 TACK COAT, AS PER PLAN : (2)(24)(0.3125000)	=	15.00	GAL.

INSIDE SHOULDER :

446 TYPE 1 : (2)(4)(0.1808449)	=	1.45	CU. YD.
446 TYPE 2 : (2)(4)(0.0795718)	=	0.64	CU. YD.
407 TACK COAT, AS PER PLAN : (2)(4)(0.3125000)	=	2.50	GAL.

OUTSIDE SHOULDER :

446 TYPE 1 : (2)(8)(0.1808449)	=	2.89	CU. YD.
446 TYPE 2 : (2)(8)(0.0795718)	=	1.27	CU. YD.
407 TACK COAT, AS PER PLAN : (2)(8)(0.3125000)	=	5.00	GAL.

SHOULDER RECONDITIONING :

617 SHOULDER PREPARATION : (2)(4)(4.1666667)	=	33.33	SQ. YD.
617 COMPACTED AGGREGATE : (2)(4)(0.3616898)	=	2.90	CU. YD.

REMOVAL :

202 WEARING COURSE REMOVED : (25)(36+36)(1/9)	=	200.00	SQ. YD.

STATION 1076 + 9.48 TO STATION 1078 + 32.52
LENGTH = 223.04 LIN. FT.

BRIDGE NUMBER TRU-5-0086 LT. & RT.
NO WORK

Revised 11-30-88

PAVEMENT COMPUTATIONS
"MAINLINE"

Computations By Initials DMS Date 11/30/87			
Computations Checked By Initials KMS Date 11/30/87			
Final Revisions By Initials Date			

FHWA REGION	STATE	PROJECT	
5	OHIO		

15
213

TRUMBULL COUNTY
TRU-5B-0.00

STATION 1078 + 32.52 TO STATION 1078 + 70.02
(TRANSITION AT BRIDGE WITH SPC OVERLAY)
LENGTH = 37.50 LIN. FT.

PAVEMENT :			
446 TYPE 1 : (2)(24)(0.1808449)	=	8.68	CU. YD.
446 TYPE 2 : (2)(24)(0.0795718)	=	3.82	CU. YD.
407 TACK COAT, AS PER PLAN : (2)(24)(0.3125000)	=	15.00	GAL.
INSIDE SHOULDER :			
446 TYPE 1 : (2)(4)(0.1808449)	=	1.45	CU. YD.
446 TYPE 2 : (2)(4)(0.0795718)	=	0.64	CU. YD.
407 TACK COAT, AS PER PLAN : (2)(4)(0.3125000)	=	2.50	GAL.
OUTSIDE SHOULDER :			
446 TYPE 1 : (2)(8)(0.1808449)	=	2.89	CU. YD.
446 TYPE 2 : (2)(8)(0.0795718)	=	1.27	CU. YD.
407 TACK COAT, AS PER PLAN : (2)(8)(0.3125000)	=	5.00	GAL.
SHOULDER RECONDITIONING :			
617 SHOULDER PREPARATION : (2)(4)(4.1666667)	=	33.33	SQ. YD.
617 COMPACTED AGGREGATE : (2)(4)(0.3616898)	=	2.90	CU. YD.
REMOVAL :			
202 WEARING COURSE REMOVED : (25)(36+36)(1/9)	=	200.00	SQ. YD.

STATION 1078 + 70.02 TO STATION 1101 + 27.13
LENGTH = 2257.11 LIN. FT.

PAVEMENT :			
446 TYPE 1 : (2)(2257.11)(0.0925926)	=	417.98	CU. YD.
446 TYPE 2 : (2)(2257.11)(0.1296296)	=	585.18	CU. YD.
407 TACK COAT, AS PER PLAN : (2)(2257.11)(0.2000000)	=	902.84	GAL.
INSIDE SHOULDER : LENGTH = 4034.60 LIN. FT.			
446 TYPE 1 : (4034.60)(0.0154321)	=	62.26	CU. YD.
446 TYPE 2 : (4034.60)(0.0216049)	=	87.17	CU. YD.
407 TACK COAT, AS PER PLAN : (4034.60)(0.0333333)	=	134.49	GAL.
OUTSIDE SHOULDER : LENGTH = 4514.22 LIN. FT.			
446 TYPE 1 : (4514.22)(0.0308642)	=	139.33	CU. YD.
446 TYPE 2 : (4514.22)(0.0432099)	=	195.06	CU. YD.
407 TACK COAT, AS PER PLAN : (4514.22)(0.0666667)	=	300.95	GAL.
SHOULDER RECONDITIONING : LENGTH = 4034.60 LIN. FT.			
617 SHOULDER PREPARATION : (4034.60)(0.4444444)	=	1793.16	SQ. YD.
617 COMPACTED AGGREGATE : (4034.60)(0.0370370)	=	149.43	CU. YD.

STATION 1101 + 27.13 TO STATION 1101 + 64.63
(TRANSITION AT BRIDGE WITH SPC OVERLAY)
LENGTH = 37.50 LIN. FT.

PAVEMENT :			
446 TYPE 1 : (2)(24)(0.1808449)	=	8.68	CU. YD.
446 TYPE 2 : (2)(24)(0.0795718)	=	3.82	CU. YD.
407 TACK COAT, AS PER PLAN : (2)(24)(0.3125000)	=	15.00	GAL.
INSIDE SHOULDER :			
446 TYPE 1 : (2)(4)(0.1808449)	=	1.45	CU. YD.
446 TYPE 2 : (2)(4)(0.0795718)	=	0.64	CU. YD.
407 TACK COAT, AS PER PLAN : (2)(4)(0.3125000)	=	2.50	GAL.
OUTSIDE SHOULDER :			
446 TYPE 1 : (2)(8)(0.1808449)	=	2.89	CU. YD.
446 TYPE 2 : (2)(8)(0.0795718)	=	1.27	CU. YD.
407 TACK COAT, AS PER PLAN : (2)(8)(0.3125000)	=	5.00	GAL.
SHOULDER RECONDITIONING :			
617 SHOULDER PREPARATION : (2)(4)(4.1666667)	=	33.33	SQ. YD.
617 COMPACTED AGGREGATE : (2)(4)(0.3616898)	=	2.90	CU. YD.
REMOVAL :			
202 WEARING COURSE REMOVED : (25)(36+36)(1/9)	=	200.00	SQ. YD.

STATION 1101 + 64.63 TO STATION 1102 + 35.37
LENGTH = 70.74 LIN. FT.

BRIDGE NUMBER TRU-5-0134 LT. & RT.
NO WORK

STATION 1102 + 35.37 TO STATION 1102 + 72.87
(TRANSITION AT BRIDGE WITH SPC OVERLAY)
LENGTH = 37.50 LIN. FT.

PAVEMENT :			
446 TYPE 1 : (2)(24)(0.1808449)	=	8.68	CU. YD.
446 TYPE 2 : (2)(24)(0.0795718)	=	3.82	CU. YD.
407 TACK COAT, AS PER PLAN : (2)(24)(0.3125000)	=	15.00	GAL.
INSIDE SHOULDER :			
446 TYPE 1 : (2)(4)(0.1808449)	=	1.45	CU. YD.
446 TYPE 2 : (2)(4)(0.0795718)	=	0.64	CU. YD.
407 TACK COAT, AS PER PLAN : (2)(4)(0.3125000)	=	2.50	GAL.
OUTSIDE SHOULDER :			
446 TYPE 1 : (2)(8)(0.1808449)	=	2.89	CU. YD.
446 TYPE 2 : (2)(8)(0.0795718)	=	1.27	CU. YD.
407 TACK COAT, AS PER PLAN : (2)(8)(0.3125000)	=	5.00	GAL.
SHOULDER RECONDITIONING :			
617 SHOULDER PREPARATION : (2)(4)(4.1666667)	=	33.33	SQ. YD.
617 COMPACTED AGGREGATE : (2)(4)(0.3616898)	=	2.90	CU. YD.
REMOVAL :			
202 WEARING COURSE REMOVED : (25)(36+36)(1/9)	=	200.00	SQ. YD.

STATION 1102 + 72.87 TO STATION 1127 + 6.56
LENGTH = 2433.69 LIN. FT.

PAVEMENT :			
446 TYPE 1 : (2)(2433.69)(0.0925926)	=	450.68	CU. YD.
446 TYPE 2 : (2)(2433.69)(0.1296296)	=	630.96	CU. YD.
407 TACK COAT, AS PER PLAN : (2)(2433.69)(0.2000000)	=	973.48	GAL.
INSIDE SHOULDER : LENGTH = 4867.38 LIN. FT.			
446 TYPE 1 : (4867.38)(0.0154321)	=	75.11	CU. YD.
446 TYPE 2 : (4867.38)(0.0216049)	=	105.16	CU. YD.
407 TACK COAT, AS PER PLAN : (4867.38)(0.0333333)	=	162.25	GAL.
OUTSIDE SHOULDER : LENGTH = 2694.88 LIN. FT.			
446 TYPE 1 : (2694.88)(0.0308642)	=	83.18	CU. YD.
446 TYPE 2 : (2694.88)(0.0432099)	=	116.45	CU. YD.
407 TACK COAT, AS PER PLAN : (2694.88)(0.0666667)	=	179.66	GAL.
SHOULDER RECONDITIONING : LENGTH = 4867.38 LIN. FT.			
617 SHOULDER PREPARATION : (4867.38)(0.4444444)	=	2163.28	SQ. YD.
617 COMPACTED AGGREGATE : (4867.38)(0.0370370)	=	180.27	CU. YD.

STATION 1127 + 6.56 TO STATION 1127 + 44.06
(TRANSITION AT BRIDGE WITH SPC OVERLAY)
LENGTH = 37.50 LIN. FT.

PAVEMENT :			
446 TYPE 1 : (2)(24)(0.1808449)	=	8.68	CU. YD.
446 TYPE 2 : (2)(24)(0.0795718)	=	3.82	CU. YD.
407 TACK COAT, AS PER PLAN : (2)(24)(0.3125000)	=	15.00	GAL.
INSIDE SHOULDER :			
446 TYPE 1 : (2)(4)(0.1808449)	=	1.45	CU. YD.
446 TYPE 2 : (2)(4)(0.0795718)	=	0.64	CU. YD.
407 TACK COAT, AS PER PLAN : (2)(4)(0.3125000)	=	2.50	GAL.
OUTSIDE SHOULDER :			
446 TYPE 1 : (1)(8)(0.1808449)	=	1.45	CU. YD.
446 TYPE 2 : (1)(8)(0.0795718)	=	0.64	CU. YD.
407 TACK COAT, AS PER PLAN : (1)(8)(0.3125000)	=	2.50	GAL.
SHOULDER RECONDITIONING :			
617 SHOULDER PREPARATION : (2)(4)(4.1666667)	=	33.33	SQ. YD.
617 COMPACTED AGGREGATE : (2)(4)(0.3616898)	=	2.90	CU. YD.
REMOVAL :			
202 WEARING COURSE REMOVED : (25)(36+28)(1/9)	=	177.78	SQ. YD.

STATION 1127 + 44.06 TO STATION 1129 + 34.16
LENGTH = 190.10 LIN. FT.

BRIDGE NUMBER TRU-5-0183 LT. & RT.
NO WORK

STATION 1129 + 34.16 TO STATION 1129 + 71.66
(TRANSITION AT BRIDGE WITH SPC OVERLAY)
LENGTH = 37.50 LIN. FT.

PAVEMENT :			
446 TYPE 1 : (2)(24)(0.1808449)	=	8.68	CU. YD.
446 TYPE 2 : (2)(24)(0.0795718)	=	3.82	CU. YD.
407 TACK COAT, AS PER PLAN : (2)(24)(0.3125000)	=	15.00	GAL.
INSIDE SHOULDER :			
446 TYPE 1 : (2)(4)(0.1808449)	=	1.45	CU. YD.
446 TYPE 2 : (2)(4)(0.0795718)	=	0.64	CU. YD.
407 TACK COAT, AS PER PLAN : (2)(4)(0.3125000)	=	2.50	GAL.
OUTSIDE SHOULDER :			
446 TYPE 1 : (1)(8)(0.1808449)	=	1.45	CU. YD.
446 TYPE 2 : (1)(8)(0.0795718)	=	0.64	CU. YD.
407 TACK COAT, AS PER PLAN : (1)(8)(0.3125000)	=	2.50	GAL.
SHOULDER RECONDITIONING :			
617 SHOULDER PREPARATION : (2)(4)(4.1666667)	=	33.33	SQ. YD.
617 COMPACTED AGGREGATE : (2)(4)(0.3616898)	=	2.90	CU. YD.
REMOVAL :			
202 WEARING COURSE REMOVED : (25)(36+28)(1/9)	=	177.78	SQ. YD.

STATION 1129 + 71.66 TO STATION 1221 + 65.72
LENGTH = 9194.06 LIN. FT.

PAVEMENT :			
446 TYPE 1 : (2)(9194.06)(0.0925926)	=	1702.60	CU. YD.
446 TYPE 2 : (2)(9194.06)(0.1296296)	=	2383.65	CU. YD.
407 TACK COAT, AS PER PLAN : (2)(9194.06)(0.2000000)	=	3677.62	GAL.
INSIDE SHOULDER : LENGTH = 17428.88 LIN. FT.			
446 TYPE 1 : (17428.88)(0.0154321)	=	268.96	CU. YD.
446 TYPE 2 : (17428.88)(0.0216049)	=	376.55	CU. YD.
407 TACK COAT, AS PER PLAN : (17428.88)(0.0333333)	=	580.96	GAL.
OUTSIDE SHOULDER : LENGTH = 16300.49 LIN. FT.			
446 TYPE 1 : (16300.49)(0.0308642)	=	503.10	CU. YD.
446 TYPE 2 : (16300.49)(0.0432099)	=	704.34	CU. YD.
407 TACK COAT, AS PER PLAN : (16300.49)(0.0666667)	=	1086.70	GAL.
SHOULDER RECONDITIONING : LENGTH = 17428.88 LIN. FT.			
617 SHOULDER PREPARATION : (17428.88)(0.4444444)	=	7746.17	SQ. YD.
617 COMPACTED AGGREGATE : (17428.88)(0.0370370)	=	645.51	CU. YD.

STATION 1221 + 65.72 TO STATION 1222 + 15.72
(TRANSITION AT BRIDGE WITH LMC OVERLAY)
LENGTH = 50.00 LIN. FT.

PAVEMENT :			
446 TYPE 1 : (2)(24)(0.2290702)	=	11.00	CU. YD.
446 TYPE 2 : (2)(24)(0.0795718)	=	3.82	CU. YD.
407 TACK COAT, AS PER PLAN : (2)(24)(0.4166667)	=	20.00	GAL.
INSIDE SHOULDER :			
446 TYPE 1 : (2)(4)(0.2290702)	=	1.83	CU. YD.
446 TYPE 2 : (2)(4)(0.0795718)	=	0.64	CU. YD.
407 TACK COAT, AS PER PLAN : (2)(4)(0.4166667)	=	3.33	GAL.
OUTSIDE SHOULDER :			
446 TYPE 1 : (1)(8)(0.2290702)	=	1.83	CU. YD.
446 TYPE 2 : (1)(8)(0.0795718)	=	0.64	CU. YD.
407 TACK COAT, AS PER PLAN : (1)(8)(0.4166667)	=	3.33	GAL.
SHOULDER RECONDITIONING :			
617 SHOULDER PREPARATION : (2)(4)(5.5555556)	=	44.44	SQ. YD.
617 COMPACTED AGGREGATE : (2)(4)(0.4436728)	=	3.55	CU. YD.
REMOVAL :			
202 WEARING COURSE REMOVED : (25)(36+28)(1/9)	=	177.78	SQ. YD.

STATION 1222 + 15.72 TO STATION 1224 + 56.62
LENGTH = 240.90 LIN. FT.

BRIDGE NUMBER TRU-5-0363 LT. & RT.
NO WORK

Revised 11-30-88

PAVEMENT COMPUTATIONS
"MAINLINE"

Computations By Initials JMS Date 11/30/87			
Computations Checked By Initials KMS Date 11/30/87			
Final Revisions By Initials Date			

FHWA REGION	STATE	PROJECT	
5	OHIO		

16
213

TRUMBULL COUNTY
TRU-5B-0.00

STATION 1224 + 56.62 TO STATION 1225 + 6.62
(TRANSITION AT BRIDGE WITH LMC OVERLAY)
LENGTH = 50.00 LIN. FT.

PAVEMENT :
446 TYPE 1 : (2)(24)(0.2290702) = 11.00 CU. YD.
446 TYPE 2 : (2)(24)(0.0795718) = 3.82 CU. YD.
407 TACK COAT, AS PER PLAN : (2)(24)(0.4166667) = 20.00 GAL.

INSIDE SHOULDER :
446 TYPE 1 : (2)(4)(0.2290702) = 1.83 CU. YD.
446 TYPE 2 : (2)(4)(0.0795718) = 0.64 CU. YD.
407 TACK COAT, AS PER PLAN : (2)(4)(0.4166667) = 3.33 GAL.

OUTSIDE SHOULDER :

SHOULDER RECONDITIONING :
617 SHOULDER PREPARATION : (2)(4)(5.5555556) = 44.44 SQ. YD.
617 COMPACTED AGGREGATE : (2)(4)(0.4436728) = 3.55 CU. YD.

REMOVAL :
202 WEARING COURSE REMOVED : (25)(28+28)(1/9) = 155.56 SQ. YD.

STATION 1225 + 6.62 TO STATION 545 + 12.37
LENGTH = 1664.27 LIN. FT.
STA. 1230+89.58 BK.= STA. 534+31.06 AHD.

PAVEMENT :
446 TYPE 1 : (2)(1664.27)(0.0925926) = 308.20 CU. YD.
446 TYPE 2 : (2)(1664.27)(0.1296296) = 431.48 CU. YD.
407 TACK COAT, AS PER PLAN : (2)(1664.27)(0.2000000) = 665.71 GAL.

INSIDE SHOULDER : LENGTH = 3328.55 LIN. FT.
446 TYPE 1 : (3328.55)(0.0154321) = 51.37 CU. YD.
446 TYPE 2 : (3328.55)(0.0216049) = 71.91 CU. YD.
407 TACK COAT, AS PER PLAN : (3328.55)(0.0333333) = 110.95 GAL.

OUTSIDE SHOULDER : LENGTH = 1860.42 LIN. FT.
446 TYPE 1 : (1860.42)(0.0308642) = 57.42 CU. YD.
446 TYPE 2 : (1860.42)(0.0432099) = 80.39 CU. YD.
407 TACK COAT, AS PER PLAN : (1860.42)(0.0666667) = 124.03 GAL.

SHOULDER RECONDITIONING : LENGTH = 3328.55 LIN. FT.
617 SHOULDER PREPARATION : (3328.55)(0.4444444) = 1479.36 SQ. YD.
617 COMPACTED AGGREGATE : (3328.55)(0.0370370) = 123.28 CU. YD.

STATION 545 + 12.37 TO STATION 545 + 62.37
(TRANSITION AT BRIDGE WITH LMC OVERLAY)
LENGTH = 50.00 LIN. FT.

PAVEMENT :
446 TYPE 1 : (2)(24)(0.2290702) = 11.00 CU. YD.
446 TYPE 2 : (2)(24)(0.0795718) = 3.82 CU. YD.
407 TACK COAT, AS PER PLAN : (2)(24)(0.4166667) = 20.00 GAL.

INSIDE SHOULDER :
446 TYPE 1 : (2)(4)(0.2290702) = 1.83 CU. YD.
446 TYPE 2 : (2)(4)(0.0795718) = 0.64 CU. YD.
407 TACK COAT, AS PER PLAN : (2)(4)(0.4166667) = 3.33 GAL.

OUTSIDE SHOULDER :
446 TYPE 1 : (1)(8)(0.2290702) = 1.83 CU. YD.
446 TYPE 2 : (1)(8)(0.0795718) = 0.64 CU. YD.
407 TACK COAT, AS PER PLAN : (1)(8)(0.4166667) = 3.33 GAL.

SHOULDER RECONDITIONING :
617 SHOULDER PREPARATION : (2)(4)(5.5555556) = 33.33 SQ. YD.
617 COMPACTED AGGREGATE : (2)(4)(0.4436728) = 3.55 CU. YD.

REMOVAL :
202 WEARING COURSE REMOVED : (25)(36+28)(1/9) = 177.78 SQ. YD.

STATION 545 + 62.37 TO STATION 547 + 22.77
LENGTH = 160.40 LIN. FT.

BRIDGE NUMBER TRU-4-0401 LT. & RT.
NO WORK

STATION 547 + 22.77 TO STATION 547 + 72.77
(TRANSITION AT BRIDGE WITH LMC OVERLAY)
LENGTH = 50.00 LIN. FT.

PAVEMENT :
446 TYPE 1 : (2)(24)(0.2290702) = 11.00 CU. YD.
446 TYPE 2 : (2)(24)(0.0795718) = 3.82 CU. YD.
407 TACK COAT, AS PER PLAN : (2)(24)(0.4166667) = 20.00 GAL.

INSIDE SHOULDER :
446 TYPE 1 : (2)(4)(0.2290702) = 1.83 CU. YD.
446 TYPE 2 : (2)(4)(0.0795718) = 0.64 CU. YD.
407 TACK COAT, AS PER PLAN : (2)(4)(0.4166667) = 3.33 GAL.

OUTSIDE SHOULDER :
446 TYPE 1 : (1)(8)(0.2290702) = 1.83 CU. YD.
446 TYPE 2 : (1)(8)(0.0795718) = 0.64 CU. YD.
407 TACK COAT, AS PER PLAN : (1)(8)(0.4166667) = 3.33 GAL.

SHOULDER RECONDITIONING :
617 SHOULDER PREPARATION : (2)(4)(5.5555556) = 33.33 SQ. YD.
617 COMPACTED AGGREGATE : (2)(4)(0.4436728) = 3.55 CU. YD.

REMOVAL :
202 WEARING COURSE REMOVED : (25)(36+28)(1/9) = 177.78 SQ. YD.

STATION 547 + 72.77 TO STATION 558 + 34.67
LENGTH = 1061.90 LIN. FT.

PAVEMENT :
446 TYPE 1 : (2)(1061.90)(0.0925926) = 196.65 CU. YD.
446 TYPE 2 : (2)(1061.90)(0.1296296) = 275.31 CU. YD.
407 TACK COAT, AS PER PLAN : (2)(1061.90)(0.2000000) = 424.76 GAL.

INSIDE SHOULDER : LENGTH = 2123.80 LIN. FT.
446 TYPE 1 : (2123.80)(0.0154321) = 32.77 CU. YD.
446 TYPE 2 : (2123.80)(0.0216049) = 45.88 CU. YD.
407 TACK COAT, AS PER PLAN : (2123.80)(0.0333333) = 70.79 GAL.

OUTSIDE SHOULDER : LENGTH = 980.00 LIN. FT.
446 TYPE 1 : (980.00)(0.0308642) = 30.25 CU. YD.
446 TYPE 2 : (980.00)(0.0432099) = 42.35 CU. YD.
407 TACK COAT, AS PER PLAN : (980.00)(0.0666667) = 65.33 GAL.

SHOULDER RECONDITIONING : LENGTH = 2123.80 LIN. FT.
617 SHOULDER PREPARATION : (2123.80)(0.4444444) = 943.91 SQ. YD.
617 COMPACTED AGGREGATE : (2123.80)(0.0370370) = 78.66 CU. YD.

STATION 558 + 34.67 TO STATION 558 + 72.17
(TRANSITION AT BRIDGE WITH SPC OVERLAY)
LENGTH = 37.50 LIN. FT.

PAVEMENT :
446 TYPE 1 : (2)(24)(0.1808449) = 8.68 CU. YD.
446 TYPE 2 : (2)(24)(0.0795718) = 3.82 CU. YD.
407 TACK COAT, AS PER PLAN : (2)(24)(0.3125000) = 15.00 GAL.

INSIDE SHOULDER :
446 TYPE 1 : (2)(4)(0.1808449) = 1.45 CU. YD.
446 TYPE 2 : (2)(4)(0.0795718) = 0.64 CU. YD.
407 TACK COAT, AS PER PLAN : (2)(4)(0.3125000) = 2.50 GAL.

OUTSIDE SHOULDER :
446 TYPE 1 : (1)(8)(0.1808449) = 1.45 CU. YD.
446 TYPE 2 : (1)(8)(0.0795718) = 0.64 CU. YD.
407 TACK COAT, AS PER PLAN : (1)(8)(0.3125000) = 2.50 GAL.

SHOULDER RECONDITIONING :
617 SHOULDER PREPARATION : (2)(4)(4.1666667) = 33.33 SQ. YD.
617 COMPACTED AGGREGATE : (2)(4)(0.3616898) = 2.90 CU. YD.

REMOVAL :
202 WEARING COURSE REMOVED : (25)(36+28)(1/9) = 177.78 SQ. YD.

STATION 558 + 72.17 TO STATION 559 + 51.83
LENGTH = 79.66 LIN. FT.

BRIDGE NUMBER TRU-5-0425 LT. & RT.
NO WORK

STATION 559 + 51.83 TO STATION 559 + 89.33
(TRANSITION AT BRIDGE WITH SPC OVERLAY)
LENGTH = 37.50 LIN. FT.

PAVEMENT :
446 TYPE 1 : (2)(24)(0.1808449) = 8.68 CU. YD.
446 TYPE 2 : (2)(24)(0.0795718) = 3.82 CU. YD.
407 TACK COAT, AS PER PLAN : (2)(24)(0.3125000) = 15.00 GAL.

INSIDE SHOULDER :
446 TYPE 1 : (2)(4)(0.1808449) = 1.45 CU. YD.
446 TYPE 2 : (2)(4)(0.0795718) = 0.64 CU. YD.
407 TACK COAT, AS PER PLAN : (2)(4)(0.3125000) = 2.50 GAL.

OUTSIDE SHOULDER :
446 TYPE 1 : (1)(8)(0.1808449) = 1.45 CU. YD.
446 TYPE 2 : (1)(8)(0.0795718) = 0.64 CU. YD.
407 TACK COAT, AS PER PLAN : (1)(8)(0.3125000) = 2.50 GAL.

SHOULDER RECONDITIONING :
617 SHOULDER PREPARATION : (2)(4)(4.1666667) = 33.33 SQ. YD.
617 COMPACTED AGGREGATE : (2)(4)(0.3616898) = 2.90 CU. YD.

REMOVAL :
202 WEARING COURSE REMOVED : (25)(36+28)(1/9) = 177.78 SQ. YD.

STATION 559 + 89.33 TO STATION 611 + 0.95
LENGTH = 5111.62 LIN. FT.

PAVEMENT :
446 TYPE 1 : (2)(5111.62)(0.0925926) = 946.60 CU. YD.
446 TYPE 2 : (2)(5111.62)(0.1296296) = 1325.23 CU. YD.
407 TACK COAT, AS PER PLAN : (2)(5111.62)(0.2000000) = 2044.65 GAL.

INSIDE SHOULDER : LENGTH = 9743.62 LIN. FT.
446 TYPE 1 : (9743.62)(0.0154321) = 150.36 CU. YD.
446 TYPE 2 : (9743.62)(0.0216049) = 210.51 CU. YD.
407 TACK COAT, AS PER PLAN : (9743.62)(0.0333333) = 324.79 GAL.

OUTSIDE SHOULDER : LENGTH = 9962.57 LIN. FT.
446 TYPE 1 : (9962.57)(0.0308642) = 307.49 CU. YD.
446 TYPE 2 : (9962.57)(0.0432099) = 430.48 CU. YD.
407 TACK COAT, AS PER PLAN : (9962.57)(0.0666667) = 664.17 GAL.

SHOULDER RECONDITIONING : LENGTH = 9743.62 LIN. FT.
617 SHOULDER PREPARATION : (9743.62)(0.4444444) = 4330.50 SQ. YD.
617 COMPACTED AGGREGATE : (9743.62)(0.0370370) = 360.87 CU. YD.

STATION 611 + 0.95 TO STATION 611 + 50.95
(TRANSITION AT BRIDGE WITH LMC OVERLAY)
LENGTH = 50.00 LIN. FT.

PAVEMENT :
446 TYPE 1 : (2)(24)(0.2290702) = 11.00 CU. YD.
446 TYPE 2 : (2)(24)(0.0795718) = 3.82 CU. YD.
407 TACK COAT, AS PER PLAN : (2)(24)(0.4166667) = 20.00 GAL.

INSIDE SHOULDER :
446 TYPE 1 : (2)(4)(0.2290702) = 1.83 CU. YD.
446 TYPE 2 : (2)(4)(0.0795718) = 0.64 CU. YD.
407 TACK COAT, AS PER PLAN : (2)(4)(0.4166667) = 3.33 GAL.

OUTSIDE SHOULDER :
446 TYPE 1 : (2)(8)(0.2290702) = 3.67 CU. YD.
446 TYPE 2 : (2)(8)(0.0795718) = 1.27 CU. YD.
407 TACK COAT, AS PER PLAN : (2)(8)(0.4166667) = 6.67 GAL.

SHOULDER RECONDITIONING :
617 SHOULDER PREPARATION : (2)(4)(5.5555556) = 44.44 SQ. YD.
617 COMPACTED AGGREGATE : (2)(4)(0.4436728) = 3.55 CU. YD.

REMOVAL :
202 WEARING COURSE REMOVED : (25)(36+36)(1/9) = 200.00 SQ. YD.

STATION 611 + 50.95 TO STATION 612 + 89.45
LENGTH = 138.50 LIN. FT.

BRIDGE NUMBER TRU-5-0525 LT. & RT.
NO WORK

Revised 11-30-88

PAVEMENT COMPUTATIONS
"MAINLINE"

Computations By Initials GMS Date 11/30/87	FHWA REGION	STATE	PROJECT		17
Computations Checked By Initials KMS Date 11/30/87	5	OHIO			28
Final Revisions By Initials Date	TRUMBULL COUNTY TRU-5B-0.00				

STATION 612 + 89.45 TO STATION 613 + 39.45
(TRANSITION AT BRIDGE WITH LMC OVERLAY)
LENGTH = 50.00 LIN. FT.

PAVEMENT :
446 TYPE 1 : (2)(24)(0.2290702) = 11.00 CU. YD.
446 TYPE 2 : (2)(24)(0.0795718) = 3.82 CU. YD.
407 TACK COAT, AS PER PLAN : (2)(24)(0.4166667) = 20.00 GAL.

INSIDE SHOULDER :
446 TYPE 1 : (2)(4)(0.2290702) = 1.83 CU. YD.
446 TYPE 2 : (2)(4)(0.0795718) = 0.64 CU. YD.
407 TACK COAT, AS PER PLAN : (2)(4)(0.4166667) = 3.33 GAL.

OUTSIDE SHOULDER :
446 TYPE 1 : (2)(8)(0.2290702) = 3.67 CU. YD.
446 TYPE 2 : (2)(8)(0.0795718) = 1.27 CU. YD.
407 TACK COAT, AS PER PLAN : (2)(8)(0.4166667) = 6.67 GAL.

SHOULDER RECONDITIONING :
617 SHOULDER PREPARATION : (2)(4)(5.5555556) = 44.44 SQ. YD.
617 COMPACTED AGGREGATE : (2)(4)(0.4436728) = 3.55 CU. YD.

REMOVAL :
202 WEARING COURSE REMOVED : (25)(36+36)(1/9) = 200.00 SQ. YD.

STATION 613 + 39.45 TO STATION 623 + 84.45
LENGTH = 1045.00 LIN. FT.

PAVEMENT :
446 TYPE 1 : (2)(1045.00)(0.0925926) = 193.52 CU. YD.
446 TYPE 2 : (2)(1045.00)(0.1296296) = 270.93 CU. YD.
407 TACK COAT, AS PER PLAN : (2)(1045.00)(0.2000000) = 418.00 GAL.

INSIDE SHOULDER : LENGTH = 2090.00 LIN. FT.
446 TYPE 1 : (2090.00)(0.0154321) = 32.25 CU. YD.
446 TYPE 2 : (2090.00)(0.0216049) = 45.15 CU. YD.
407 TACK COAT, AS PER PLAN : (2090.00)(0.0333333) = 69.67 GAL.

OUTSIDE SHOULDER : LENGTH = 2090.00 LIN. FT.
446 TYPE 1 : (2090.00)(0.0308642) = 64.51 CU. YD.
446 TYPE 2 : (2090.00)(0.0432099) = 90.31 CU. YD.
407 TACK COAT, AS PER PLAN : (2090.00)(0.0666667) = 139.33 GAL.

SHOULDER RECONDITIONING : LENGTH = 2090.00 LIN. FT.
617 SHOULDER PREPARATION : (2090.00)(0.4444444) = 928.89 SQ. YD.
617 COMPACTED AGGREGATE : (2090.00)(0.0370370) = 77.41 CU. YD.

STATION 623 + 84.45 TO STATION 624 + 34.45
(TRANSITION AT BRIDGE WITH LMC OVERLAY)
LENGTH = 50.00 LIN. FT.

PAVEMENT :
446 TYPE 1 : (2)(24)(0.2290702) = 11.00 CU. YD.
446 TYPE 2 : (2)(24)(0.0795718) = 3.82 CU. YD.
407 TACK COAT, AS PER PLAN : (2)(24)(0.4166667) = 20.00 GAL.

INSIDE SHOULDER :
446 TYPE 1 : (2)(4)(0.2290702) = 1.83 CU. YD.
446 TYPE 2 : (2)(4)(0.0795718) = 0.64 CU. YD.
407 TACK COAT, AS PER PLAN : (2)(4)(0.4166667) = 3.33 GAL.

OUTSIDE SHOULDER :
446 TYPE 1 : (2)(8)(0.2290702) = 3.67 CU. YD.
446 TYPE 2 : (2)(8)(0.0795718) = 1.27 CU. YD.
407 TACK COAT, AS PER PLAN : (2)(8)(0.4166667) = 6.67 GAL.

SHOULDER RECONDITIONING :
617 SHOULDER PREPARATION : (2)(4)(5.5555556) = 44.44 SQ. YD.
617 COMPACTED AGGREGATE : (2)(4)(0.4436728) = 3.55 CU. YD.

REMOVAL :
202 WEARING COURSE REMOVED : (25)(36+36)(1/9) = 200.00 SQ. YD.

STATION 624 + 34.45 TO STATION 625 + 52.97
LENGTH = 118.52 LIN. FT.

BRIDGE NUMBER TRU-5-0549 LT. & RT.
NO WORK

STATION 625 + 52.97 TO STATION 626 + 2.97
(TRANSITION AT BRIDGE WITH LMC OVERLAY)
LENGTH = 50.00 LIN. FT.

PAVEMENT :
446 TYPE 1 : (2)(24)(0.2290702) = 11.00 CU. YD.
446 TYPE 2 : (2)(24)(0.0795718) = 3.82 CU. YD.
407 TACK COAT, AS PER PLAN : (2)(24)(0.4166667) = 20.00 GAL.

INSIDE SHOULDER :
446 TYPE 1 : (2)(4)(0.2290702) = 1.83 CU. YD.
446 TYPE 2 : (2)(4)(0.0795718) = 0.64 CU. YD.
407 TACK COAT, AS PER PLAN : (2)(4)(0.4166667) = 3.33 GAL.

OUTSIDE SHOULDER :
446 TYPE 1 : (2)(8)(0.2290702) = 3.67 CU. YD.
446 TYPE 2 : (2)(8)(0.0795718) = 1.27 CU. YD.
407 TACK COAT, AS PER PLAN : (2)(8)(0.4166667) = 6.67 GAL.

SHOULDER RECONDITIONING :
617 SHOULDER PREPARATION : (2)(4)(5.5555556) = 44.44 SQ. YD.
617 COMPACTED AGGREGATE : (2)(4)(0.4436728) = 3.55 CU. YD.

REMOVAL :
202 WEARING COURSE REMOVED : (25)(36+36)(1/9) = 200.00 SQ. YD.

STATION 626 + 2.97 TO STATION 712 + 16.72
LENGTH = 8613.75 LIN. FT.

PAVEMENT :
446 TYPE 1 : (2)(8613.75)(0.0925926) = 1595.14 CU. YD.
446 TYPE 2 : (2)(8613.75)(0.1296296) = 2233.19 CU. YD.
407 TACK COAT, AS PER PLAN : (2)(8613.75)(0.2000000) = 3445.50 GAL.

INSIDE SHOULDER : LENGTH = 16268.26 LIN. FT.
446 TYPE 1 : (16268.26)(0.0154321) = 251.05 CU. YD.
446 TYPE 2 : (16268.26)(0.0216049) = 351.47 CU. YD.
407 TACK COAT, AS PER PLAN : (16268.26)(0.0333333) = 542.28 GAL.

OUTSIDE SHOULDER : LENGTH = 12617.43 LIN. FT.
446 TYPE 1 : (12617.43)(0.0308642) = 389.43 CU. YD.
446 TYPE 2 : (12617.43)(0.0432099) = 545.20 CU. YD.
407 TACK COAT, AS PER PLAN : (12617.43)(0.0666667) = 841.16 GAL.

SHOULDER RECONDITIONING : LENGTH = 16268.26 LIN. FT.
617 SHOULDER PREPARATION : (16268.26)(0.4444444) = 7230.34 SQ. YD.
617 COMPACTED AGGREGATE : (16268.26)(0.0370370) = 602.53 CU. YD.

STATION 712 + 16.72 TO STATION 712 + 66.72
(TRANSITION AT BRIDGE WITH LMC OVERLAY)
LENGTH = 50.00 LIN. FT.

PAVEMENT :
446 TYPE 1 : (2)(24)(0.2290702) = 11.00 CU. YD.
446 TYPE 2 : (2)(24)(0.0795718) = 3.82 CU. YD.
407 TACK COAT, AS PER PLAN : (2)(24)(0.4166667) = 20.00 GAL.

INSIDE SHOULDER :
446 TYPE 1 : (2)(4)(0.2290702) = 1.83 CU. YD.
446 TYPE 2 : (2)(4)(0.0795718) = 0.64 CU. YD.
407 TACK COAT, AS PER PLAN : (2)(4)(0.4166667) = 3.33 GAL.

OUTSIDE SHOULDER :
446 TYPE 1 : (1)(8)(0.2290702) = 1.83 CU. YD.
446 TYPE 2 : (1)(8)(0.0795718) = 0.64 CU. YD.
407 TACK COAT, AS PER PLAN : (1)(8)(0.4166667) = 3.33 GAL.

SHOULDER RECONDITIONING :
617 SHOULDER PREPARATION : (2)(4)(5.5555556) = 33.33 SQ. YD.
617 COMPACTED AGGREGATE : (2)(4)(0.4436728) = 2.66 CU. YD.

REMOVAL :
202 WEARING COURSE REMOVED : (25)(36+28)(1/9) = 177.78 SQ. YD.

STATION 712 + 66.72 TO STATION 714 + 25.38
LENGTH = 158.66 LIN. FT.

BRIDGE NUMBER TRU-5-0716 LT. & RT.
NO WORK

STATION 714 + 25.38 TO STATION 714 + 75.38
(TRANSITION AT BRIDGE WITH LMC OVERLAY)
LENGTH = 50.00 LIN. FT.

PAVEMENT :
446 TYPE 1 : (2)(24)(0.2290702) = 11.00 CU. YD.
446 TYPE 2 : (2)(24)(0.0795718) = 3.82 CU. YD.
407 TACK COAT, AS PER PLAN : (2)(24)(0.4166667) = 20.00 GAL.

INSIDE SHOULDER :
446 TYPE 1 : (2)(4)(0.2290702) = 1.83 CU. YD.
446 TYPE 2 : (2)(4)(0.0795718) = 0.64 CU. YD.
407 TACK COAT, AS PER PLAN : (2)(4)(0.4166667) = 3.33 GAL.

OUTSIDE SHOULDER :
446 TYPE 1 : (1)(8)(0.2290702) = 1.83 CU. YD.
446 TYPE 2 : (1)(8)(0.0795718) = 0.64 CU. YD.
407 TACK COAT, AS PER PLAN : (1)(8)(0.4166667) = 3.33 GAL.

SHOULDER RECONDITIONING :
617 SHOULDER PREPARATION : (2)(4)(5.5555556) = 33.33 SQ. YD.
617 COMPACTED AGGREGATE : (2)(4)(0.4436728) = 2.66 CU. YD.

REMOVAL :
202 WEARING COURSE REMOVED : (25)(36+28)(1/9) = 177.78 SQ. YD.

STATION 714 + 75.38 TO STATION 721 + 92.45
LENGTH = 717.07 LIN. FT.

PAVEMENT :
446 TYPE 1 : (2)(717.07)(0.0925926) = 132.79 CU. YD.
446 TYPE 2 : (2)(717.07)(0.1296296) = 185.91 CU. YD.
407 TACK COAT, AS PER PLAN : (2)(717.07)(0.2000000) = 286.83 GAL.

INSIDE SHOULDER : LENGTH = 1434.14 LIN. FT.
446 TYPE 1 : (1434.14)(0.0154321) = 22.13 CU. YD.
446 TYPE 2 : (1434.14)(0.0216049) = 30.98 CU. YD.
407 TACK COAT, AS PER PLAN : (1434.14)(0.0333333) = 47.80 GAL.

OUTSIDE SHOULDER : LENGTH = 756.79 LIN. FT.
446 TYPE 1 : (756.79)(0.0308642) = 23.36 CU. YD.
446 TYPE 2 : (756.79)(0.0432099) = 32.70 CU. YD.
407 TACK COAT, AS PER PLAN : (756.79)(0.0666667) = 50.45 GAL.

SHOULDER RECONDITIONING : LENGTH = 1434.14 LIN. FT.
617 SHOULDER PREPARATION : (1434.14)(0.4444444) = 637.40 SQ. YD.
617 COMPACTED AGGREGATE : (1434.14)(0.0370370) = 53.12 CU. YD.

STATION 721 + 92.45 TO STATION 722 + 29.95
(TRANSITION AT BRIDGE WITH SPC OVERLAY)
LENGTH = 37.50 LIN. FT.

PAVEMENT :
446 TYPE 1 : (2)(24)(0.1808449) = 8.68 CU. YD.
446 TYPE 2 : (2)(24)(0.0795718) = 3.82 CU. YD.
407 TACK COAT, AS PER PLAN : (2)(24)(0.3125000) = 15.00 GAL.

INSIDE SHOULDER :
446 TYPE 1 : (2)(4)(0.1808449) = 1.45 CU. YD.
446 TYPE 2 : (2)(4)(0.0795718) = 0.64 CU. YD.
407 TACK COAT, AS PER PLAN : (2)(4)(0.3125000) = 2.50 GAL.

OUTSIDE SHOULDER :
446 TYPE 1 : (1)(8)(0.1808449) = 1.45 CU. YD.
446 TYPE 2 : (1)(8)(0.0795718) = 0.64 CU. YD.
407 TACK COAT, AS PER PLAN : (1)(8)(0.3125000) = 2.50 GAL.

SHOULDER RECONDITIONING :
617 SHOULDER PREPARATION : (2)(4)(4.1666667) = 33.33 SQ. YD.
617 COMPACTED AGGREGATE : (2)(4)(0.3616898) = 2.90 CU. YD.

REMOVAL :
202 WEARING COURSE REMOVED : (25)(36+28)(1/9) = 177.78 SQ. YD.

STATION 722 + 29.95 TO STATION 724 + 54.07
LENGTH = 224.12 LIN. FT.

BRIDGE NUMBER TRU-5-0735 LT. & RT.
NO WORK

Revised 11-30-88

PAVEMENT COMPUTATIONS

PAVEMENT COMPUTATIONS
"MAINLINE & RAMPS"

Computations By Initials GMB Date 11/30/87
Computations Checked By Initials HMS Date 11/30/87
Final Revisions By Initials Date

FHWA REGION	STATE	PROJECT		18 / 213
5	OHIO			

TRUMBULL COUNTY
TRU-5B-0.00

STATION 724 + 54.07 TO STATION 724 + 91.57
(TRANSITION AT BRIDGE WITH SPC OVERLAY)
LENGTH = 37.50 LIN. FT.

PAVEMENT :
446 TYPE 1 : (2)(24)(0.1808449) = 8.68 CU. YD.
446 TYPE 2 : (2)(24)(0.0795718) = 3.82 CU. YD.
407 TACK COAT, AS PER PLAN : (2)(24)(0.3125000) = 15.00 GAL.

INSIDE SHOULDER :
446 TYPE 1 : (2)(4)(0.1808449) = 1.45 CU. YD.
446 TYPE 2 : (2)(4)(0.0795718) = 0.64 CU. YD.
407 TACK COAT, AS PER PLAN : (2)(4)(0.3125000) = 2.50 GAL.

OUTSIDE SHOULDER :
446 TYPE 1 : (1)(8)(0.1808449) = 1.45 CU. YD.
446 TYPE 2 : (1)(8)(0.0795718) = 0.64 CU. YD.
407 TACK COAT, AS PER PLAN : (1)(8)(0.3125000) = 2.50 GAL.

SHOULDER RECONDITIONING :
617 SHOULDER PREPARATION : (2)(4)(4.1666667) = 33.33 SQ. YD.
617 COMPACTED AGGREGATE : (2)(4)(0.3616898) = 2.90 CU. YD.

REMOVAL :
202 WEARING COURSE REMOVED : (25)(36+28)(1/9) = 177.78 SQ. YD.

STATION 724 + 91.57 TO STATION 725 + 71.00
LENGTH = 79.43 LIN. FT.

PAVEMENT :
446 TYPE 1 : (2)(79.43)(0.0925926) = 14.71 CU. YD.
446 TYPE 2 : (2)(79.43)(0.1296296) = 20.59 CU. YD.
407 TACK COAT, AS PER PLAN : (2)(79.43)(0.2000000) = 31.77 GAL.

INSIDE SHOULDER : LENGTH = 158.86 LIN. FT.
446 TYPE 1 : (158.86)(0.0154321) = 2.45 CU. YD.
446 TYPE 2 : (158.86)(0.0216049) = 3.43 CU. YD.
407 TACK COAT, AS PER PLAN : (158.86)(0.0333333) = 5.30 GAL.

OUTSIDE SHOULDER : LENGTH = 135.71 LIN. FT.
446 TYPE 1 : (135.71)(0.0308642) = 4.19 CU. YD.
446 TYPE 2 : (135.71)(0.0432099) = 5.86 CU. YD.
407 TACK COAT, AS PER PLAN : (135.71)(0.0666667) = 9.05 GAL.

SHOULDER RECONDITIONING : LENGTH = 158.86 LIN. FT.
617 SHOULDER PREPARATION : (158.86)(0.4444444) = 70.60 SQ. YD.
617 COMPACTED AGGREGATE : (158.86)(0.0370370) = 5.88 CU. YD.

STATION 725 + 71.00 TO STATION 726 + 46.00 (TRANSITION AT END WORK)
LENGTH = 75.00 LIN. FT.

PAVEMENT :
446 TYPE 1 : (2)(24)(0.2676505) = 12.85 CU. YD.
446 TYPE 2 : (2)(24)(0.0795718) = 3.82 CU. YD.
407 TACK COAT, AS PER PLAN : (2)(24)(0.6250000) = 30.00 GAL.

INSIDE SHOULDER :
446 TYPE 1 : (2)(4)(0.2676505) = 2.14 CU. YD.
446 TYPE 2 : (2)(4)(0.0795718) = 0.64 CU. YD.
407 TACK COAT, AS PER PLAN : (2)(4)(0.6250000) = 5.00 GAL.

OUTSIDE SHOULDER :
446 TYPE 1 : (2)(8)(0.2676505) = 4.28 CU. YD.
446 TYPE 2 : (2)(8)(0.0795718) = 1.27 CU. YD.
407 TACK COAT, AS PER PLAN : (2)(8)(0.6250000) = 10.00 GAL.

SHOULDER RECONDITIONING :
617 SHOULDER PREPARATION : (2)(4)(8.3333333) = 66.67 SQ. YD.
617 COMPACTED AGGREGATE : (2)(4)(0.5497685) = 4.40 CU. YD.

REMOVAL :
202 WEARING COURSE REMOVED : (25)(1/2)(36+36)(1/9) = 200.00 SQ. YD.

*** RAMP COMPUTATIONS ***

- MARKET STREET INTERCHANGE : RAMP A
FULL DEPTH :
AREA OF FULL DEPTH RAMP PAVEMENT = 3028.23 SQ. YD.
AREA OF FULL DEPTH RAMP SHOULDERS = 1154.71 SQ. YD.

PAVEMENT :
446 TYPE 1 : (3028.23)(1.25)(1/36) = 105.15 CU. YD.
446 TYPE 2 : (3028.23)(1.75)(1/36) = 147.21 CU. YD.
407 TACK COAT, AS PER PLAN : (3028.23)(0.075) = 227.12 GAL.

SHOULDERS :
446 TYPE 1 : (1154.71)(1.25)(1/36) = 40.09 CU. YD.
446 TYPE 2 : (1154.71)(1.75)(1/36) = 56.13 CU. YD.
407 TACK COAT, AS PER PLAN : (1154.71)(0.075) = 86.60 GAL.

MARKET STREET INTERCHANGE: RAMP A TOTALS:
PAVEMENT:

446 TYPE 1: = 105.15 CU. YD.
446 TYPE 2: = 147.21 CU. YD.
407 TACK COAT, AS PER PLAN = 227.12 GAL.

SHOULDERS:
446 TYPE 1: = 40.09 CU. YD.
446 TYPE 2: = 56.13 CU. YD.
407 TACK COAT, AS PER PLAN = 86.60 GAL.

- MARKET STREET INTERCHANGE : RAMP B
FULL DEPTH :
AREA OF FULL DEPTH RAMP PAVEMENT = 4467.00 SQ. YD.
AREA OF FULL DEPTH RAMP SHOULDERS = 1880.82 SQ. YD.

PAVEMENT :
446 TYPE 1 : (4467.00)(1.25)(1/36) = 155.00 CU. YD.
446 TYPE 2 : (4467.00)(1.75)(1/36) = 217.15 CU. YD.
407 TACK COAT, AS PER PLAN : (4467.00)(0.075) = 335.03 GAL.

SHOULDERS :
446 TYPE 1 : (1880.82)(1.25)(1/36) = 65.31 CU. YD.
446 TYPE 2 : (1880.82)(1.75)(1/36) = 91.43 CU. YD.
407 TACK COAT, AS PER PLAN : (1880.82)(0.075) = 141.06 GAL.

AREA OF WEARING COURSE REMOVED (RAMP PAVEMENT) = 66.22 SQ. YD.

AREA OF WEARING COURSE REMOVED (RAMP SHOULDERS) = 38.24 SQ. YD.

WEARING COURSE REMOVAL :
202 WEARING COURSE REMOVED : 66.22 + 38.24 = 104.46 SQ. YD.

MARKET STREET INTERCHANGE : RAMP B TOTALS :
PAVEMENT :
446 TYPE 1 = 155.10 CU. YD.
446 TYPE 2 = 217.15 CU. YD.
407 TACK COAT, AS PER PLAN = 335.03 GAL.

SHOULDERS :
446 TYPE 1 = 65.31 CU. YD.
446 TYPE 2 = 91.43 CU. YD.
407 TACK COAT, AS PER PLAN = 141.06 GAL.

WEARING COURSE REMOVAL :
202 WEARING COURSE REMOVED = 104.46 SQ. YD.

Revised 11-30-88

PAVEMENT COMPUTATIONS
"RAMPS"

Computations By Initials CMS Date 11/30/87
Computations Checked By Initials BMS Date 11/30/87
Final Revisions By Initials Date

FHWA REGION	STATE	PROJECT	
5	OHIO		

19
213

TRUMBULL COUNTY
TRU-5B-0.00

- MARKET STREET INTERCHANGE : RAMP C

FULL DEPTH :

AREA OF FULL DEPTH RAMP PAVEMENT	= 4505.11	SQ. YD.
AREA OF FULL DEPTH RAMP SHOULDERS	= 1698.82	SQ. YD.

PAVEMENT :

446 TYPE 1 : (4505.11)(1.25)(1/36)	= 156.42	CU. YD.
446 TYPE 2 : (4505.11)(1.75)(1/36)	= 219.00	CU. YD.
407 TACK COAT, AS PER PLAN : (4505.11)(0.075)	= 337.88	GAL.

SHOULDERS :

446 TYPE 1 : (1698.82)(1.25)(1/36)	= 58.99	CU. YD.
446 TYPE 2 : (1698.82)(1.75)(1/36)	= 82.58	CU. YD.
407 TACK COAT, AS PER PLAN : (1698.82)(0.075)	= 127.41	GAL.

MARKET STREET INTERCHANGE : RAMP C TOTALS :

PAVEMENT :

446 TYPE 1	= 156.42	CU. YD.
446 TYPE 2	= 219.00	CU. YD.
407 TACK COAT, AS PER PLAN	= 337.88	GAL.

SHOULDERS :

446 TYPE 1	= 58.99	CU. YD.
446 TYPE 2	= 82.58	CU. YD.
407 TACK COAT, AS PER PLAN	= 127.41	GAL.

- MARKET STREET INTERCHANGE : RAMP D

FULL DEPTH :

AREA OF FULL DEPTH RAMP PAVEMENT	= 3196.90	SQ. YD.
AREA OF FULL DEPTH RAMP SHOULDERS	= 1416.70	SQ. YD.

PAVEMENT :

446 TYPE 1 : (3196.90)(1.25)(1/36)	= 111.00	CU. YD.
446 TYPE 2 : (3196.90)(1.75)(1/36)	= 155.40	CU. YD.
407 TACK COAT, AS PER PLAN : (3196.90)(0.075)	= 239.77	GAL.

SHOULDERS :

446 TYPE 1 : (1416.70)(1.25)(1/36)	= 49.19	CU. YD.
446 TYPE 2 : (1416.70)(1.75)(1/36)	= 68.87	CU. YD.
407 TACK COAT, AS PER PLAN : (1416.70)(0.075)	= 106.25	GAL.

MARKET STREET INTERCHANGE : RAMP D TOTALS :

PAVEMENT :

446 TYPE 1	= 111.00	CU. YD.
446 TYPE 2	= 155.40	CU. YD.
407 TACK COAT, AS PER PLAN	= 239.77	GAL.

SHOULDERS :

446 TYPE 1	= 49.19	CU. YD.
446 TYPE 2	= 68.87	CU. YD.
407 TACK COAT, AS PER PLAN	= 106.25	GAL.

- S.R. 422 INTERCHANGE : RAMP A

FULL DEPTH :

AREA OF FULL DEPTH RAMP PAVEMENT	= 3352.53	SQ. YD.
AREA OF FULL DEPTH RAMP SHOULDERS	= 1515.91	SQ. YD.

PAVEMENT :

446 TYPE 1 : (3352.53)(1.25)(1/36)	= 116.41	CU. YD.
446 TYPE 2 : (3352.53)(1.75)(1/36)	= 162.97	CU. YD.
407 TACK COAT, AS PER PLAN : (3352.53)(0.075)	= 251.44	GAL.

SHOULDERS :

446 TYPE 1 : (1515.91)(1.25)(1/36)	= 52.64	CU. YD.
446 TYPE 2 : (1515.91)(1.75)(1/36)	= 73.69	CU. YD.
407 TACK COAT, AS PER PLAN : (1515.91)(0.075)	= 113.69	GAL.

PARTIAL DEPTH :

AREA OF 446 TYPE 1 ONLY IN PAVEMENT TRANSITION	= 106.72	SQ. YD.
AREA OF 446 TYPE 1 ONLY IN BRIDGE TRANSITION	= 95.32	SQ. YD.
AREA OF 446 TYPE 2 IN PAVEMENT TRANSITION	= 122.59	SQ. YD.
AREA OF WEARING COURSE REMOVED (RAMP PAVEMENT)	= 165.18	SQ. YD.
AREA OF 446 TYPE 1 ONLY IN PAVEMENT TRANSITION (SHOULDERS	= 37.50	SQ. YD.
AREA OF 446 TYPE 1 ONLY IN BRIDGE TRANSITION (SHOULDERS)	= 30.37	SQ. YD.
AREA OF 446 TYPE 2 IN PAVEMENT TRANSITION (SHOULDERS)	= 39.76	SQ. YD.
AREA OF WEARING COURSE REMOVED (RAMP SHOULDERS)	= 42.79	SQ. YD.

PAVEMENT (PARTIAL DEPTH) :

446 TYPE 1 : (122.59)(1.25)(1/36) +(106.72)(1/2)(1.25 + 1 + 0)(1/36) +(95.32)(1/2)(1.5 + 1 + 1.25)(1/36) +(69.86)(.625)(1/36)	= 13.76	CU. YD.
446 TYPE 2 : (122.59)(1/2)(1.75 + 1)(1/36)	= 4.68	CU. YD.
407 TACK COAT, AS PER PLAN : (106.72 + 95.32 + 122.59)(0.075)	= 24.35	GAL.

SHOULDERS (PARTIAL DEPTH) :

446 TYPE 1 : (39.76)(1.25)(1/36) +(25)(1/2)(1.25 + 1 + 0)(1/36) +(30.37)(1/2)(1.5 + 1 + 1.25)(1/36) +(42.79)(.625)(1/36)	= 4.48	CU. YD.
446 TYPE 2 : (39.76)(1/2)(1.75 + 1)(1/36)	= 1.52	CU. YD.
407 TACK COAT, AS PER PLAN : (25 + 30.37 + 39.76)(0.075)	= 7.13	GAL.

WEARING COURSE REMOVAL :

202 WEARING COURSE REMOVED : 165.18 + 42.79	= 207.97	SQ. YD.

S.R. 422 INTERCHANGE : RAMP A TOTALS :

PAVEMENT :

446 TYPE 1	= 130.17	CU. YD.
446 TYPE 2	= 167.65	CU. YD.
407 TACK COAT, AS PER PLAN	= 275.79	GAL.

SHOULDERS :

446 TYPE 1	= 57.12	CU. YD.
446 TYPE 2	= 75.21	CU. YD.
407 TACK COAT, AS PER PLAN	= 120.82	GAL.

WEARING COURSE REMOVAL :

202 WEARING COURSE REMOVED	= 207.97	SQ. YD.

Revised 11-30-88

PAVEMENT COMPUTATIONS
"RAMPS"

Computations By Initials CMS Date 11/30/87	FHWA REGION	STATE	PROJECT
Computations Checked By Initials BJMS Date 11/30/87	5	OHIO	
Final Revisions By Initials Date	TRUMBULL COUNTY TRU-5B-0.00		

– S.R. 422 INTERCHANGE : RAMP B

FULL DEPTH :

AREA OF FULL DEPTH RAMP PAVEMENT	=	3848.51	SQ. YD.
AREA OF FULL DEPTH RAMP SHOULDERS	=	1730.98	SQ. YD.

PAVEMENT :

446 TYPE 1 : (3848.51)(1.25)(1/36)	=	133.63	CU. YD.
446 TYPE 2 : (3848.51)(1.75)(1/36)	=	187.08	CU. YD.
407 TACK COAT, AS PER PLAN : (3848.51)(0.075)	=	288.64	GAL.

SHOULDERS :

446 TYPE 1 : (1730.98)(1.25)(1/36)	=	60.10	CU. YD.
446 TYPE 2 : (1730.98)(1.75)(1/36)	=	84.14	CU. YD.
407 TACK COAT, AS PER PLAN : (1730.98)(0.075)	=	129.82	GAL.

PARTIAL DEPTH :

AREA OF 446 TYPE 1 ONLY IN PAVEMENT TRANSITION	=	150.00	SQ. YD.
AREA OF 446 TYPE 2 IN PAVEMENT TRANSITION	=	50.00	SQ. YD.
AREA OF WEARING COURSE REMOVED (RAMP PAVEMENT)	=	99.33	SQ. YD.
AREA OF 446 TYPE 1 ONLY IN PAVEMENT TRANSITION (SHOULDERS)	=	37.50	SQ. YD.
AREA OF 446 TYPE 2 IN PAVEMENT TRANSITION (SHOULDERS)	=	12.50	SQ. YD.
AREA OF WEARING COURSE REMOVED (RAMP SHOULDERS)	=	24.84	SQ. YD.

PAVEMENT (PARTIAL DEPTH) :

446 TYPE 1 : (50)(1.25)(1/36) +(150)(1/2)(1.25 + 1 + 0)(1/36) +(99.33)(.625)(1/36)	=	8.15	CU. YD.
446 TYPE 2 : (50)(1/2)(1.75 + 1)(1/36)	=	1.91	CU. YD.
407 TACK COAT, AS PER PLAN : (150 + 50)(0.075)	=	15.00	GAL.

SHOULDERS (PARTIAL DEPTH) :

446 TYPE 1 : (12.5)(1.25)(1/36) +(37.5)(1/2)(1.25 + 1 + 0)(1/36) +(24.84)(.625)(1/36)	=	2.04	CU. YD.
446 TYPE 2 : (12.5)(1/2)(1.75 + 1)(1/36)	=	0.48	CU. YD.
407 TACK COAT, AS PER PLAN : (37.5 + 12.5)(0.075)	=	3.75	GAL.

WEARING COURSE REMOVAL :

202 WEARING COURSE REMOVED : 99.33 + 24.84	=	124.17	SQ. YD.

S.R. 422 INTERCHANGE : RAMP B TOTALS :

PAVEMENT :

446 TYPE 1	=	141.78	CU. YD.
446 TYPE 2	=	188.99	CU. YD.
407 TACK COAT, AS PER PLAN	=	303.64	GAL.

SHOULDERS :

446 TYPE 1	=	62.14	CU. YD.
446 TYPE 2	=	84.62	CU. YD.
407 TACK COAT, AS PER PLAN	=	133.57	GAL.

WEARING COURSE REMOVAL :

202 WEARING COURSE REMOVED	=	124.17	SQ. YD.

– S.R. 422 INTERCHANGE : RAMP C

FULL DEPTH :

AREA OF FULL DEPTH RAMP PAVEMENT	=	3779.09	SQ. YD.
AREA OF FULL DEPTH RAMP SHOULDERS	=	1651.00	SQ. YD.

PAVEMENT :

446 TYPE 1 : (3779.09)(1.25)(1/36)	=	131.22	CU. YD.
446 TYPE 2 : (3779.09)(1.75)(1/36)	=	183.71	CU. YD.
407 TACK COAT, AS PER PLAN : (3779.09)(0.075)	=	283.43	GAL.

SHOULDERS :

446 TYPE 1 : (1651)(1.25)(1/36)	=	57.33	CU. YD.
446 TYPE 2 : (1651)(1.75)(1/36)	=	80.26	CU. YD.
407 TACK COAT, AS PER PLAN : (1651)(0.075)	=	123.83	GAL.

PARTIAL DEPTH :

AREA OF 446 TYPE 1 ONLY IN PAVEMENT TRANSITION	=	106.66	SQ. YD.
AREA OF 446 TYPE 2 IN PAVEMENT TRANSITION	=	37.11	SQ. YD.
AREA OF WEARING COURSE REMOVED (RAMP PAVEMENT)	=	69.85	SQ. YD.
AREA OF 446 TYPE 1 ONLY IN PAVEMENT TRANSITION (SHOULDERS)	=	37.48	SQ. YD.
AREA OF 446 TYPE 2 IN PAVEMENT TRANSITION (SHOULDERS)	=	12.50	SQ. YD.
AREA OF WEARING COURSE REMOVED (RAMP SHOULDERS)	=	24.84	SQ. YD.

PAVEMENT (PARTIAL DEPTH) :

446 TYPE 1 : (37.11)(1.25)(1/36) +(106.66)(1/2)(1.25 + 1 + 0)(1/36) +(69.85)(.625)(1/36)	=	5.83	CU. YD.
446 TYPE 2 : (37.11)(1/2)(1.75 + 1)(1/36)	=	1.42	CU. YD.
407 TACK COAT, AS PER PLAN : (106.66 + 37.11)(0.075)	=	10.78	GAL.

SHOULDERS (PARTIAL DEPTH) :

446 TYPE 1 : (12.5)(1.25)(1/36) +(37.48)(1/2)(1.25 + 1 + 0)(1/36) +(24.84)(.625)(1/36)	=	2.04	CU. YD.
446 TYPE 2 : (12.5)(1/2)(1.75 + 1)(1/36)	=	0.48	CU. YD.
407 TACK COAT, AS PER PLAN : (37.48 + 12.5)(0.075)	=	3.75	GAL.

WEARING COURSE REMOVAL :

202 WEARING COURSE REMOVED : 69.85 + 24.84	=	94.69	SQ. YD.

S.R. 422 INTERCHANGE : RAMP C TOTALS :

PAVEMENT :

446 TYPE 1	=	137.05	CU. YD.
446 TYPE 2	=	185.12	CU. YD.
407 TACK COAT, AS PER PLAN	=	294.21	GAL.

SHOULDERS :

446 TYPE 1	=	59.36	CU. YD.
446 TYPE 2	=	80.73	CU. YD.
407 TACK COAT, AS PER PLAN	=	127.58	GAL.

WEARING COURSE REMOVAL :

202 WEARING COURSE REMOVED	=	94.69	SQ. YD.

– S.R. 422 INTERCHANGE : RAMP D

FULL DEPTH :

AREA OF FULL DEPTH RAMP PAVEMENT	=	3715.39	SQ. YD.
AREA OF FULL DEPTH RAMP SHOULDERS	=	1433.36	SQ. YD.

PAVEMENT :

446 TYPE 1 : (3715.39)(1.25)(1/36)	=	129.01	CU. YD.
446 TYPE 2 : (3715.39)(1.75)(1/36)	=	180.61	CU. YD.
407 TACK COAT, AS PER PLAN : (3715.39)(0.075)	=	278.65	GAL.

SHOULDERS :

446 TYPE 1 : (1433.36)(1.25)(1/36)	=	49.77	CU. YD.
446 TYPE 2 : (1433.36)(1.75)(1/36)	=	69.68	CU. YD.
407 TACK COAT, AS PER PLAN : (1433.36)(0.075)	=	107.50	GAL.

PARTIAL DEPTH :

AREA OF 446 TYPE 1 ONLY IN PAVEMENT TRANSITION	=	210.34	SQ. YD.
AREA OF 446 TYPE 2 IN PAVEMENT TRANSITION	=	70.70	SQ. YD.
AREA OF 446 TYPE 1 ONLY IN PAVEMENT TRANSITION (SHOULDERS)	=	83.18	SQ. YD.
AREA OF 446 TYPE 2 IN PAVEMENT TRANSITION (SHOULDERS)	=	27.42	SQ. YD.

PAVEMENT (PARTIAL DEPTH) :

446 TYPE 1 : (70.7)(1.25)(1/36) +(210.34)(1/2)(1.25 + 1 + 0)(1/36)	=	9.03	CU. YD.
446 TYPE 2 : (70.7)(1/2)(1.75 + 1)(1/36)	=	2.70	CU. YD.
407 TACK COAT, AS PER PLAN : (210.34 + 70.7)(0.075)	=	21.08	GAL.

SHOULDERS (PARTIAL DEPTH) :

446 TYPE 1 : (27.42)(1.25)(1/36) +(83.18)(1/2)(1.25 + 1 + 0)(1/36)	=	3.55	CU. YD.
446 TYPE 2 : (27.42)(1/2)(1.75 + 1)(1/36)	=	1.05	CU. YD.
407 TACK COAT, AS PER PLAN : (83.18 + 27.42)(0.075)	=	8.30	GAL.

S.R. 422 INTERCHANGE : RAMP D TOTALS :

PAVEMENT :

446 TYPE 1	=	138.03	CU. YD.
446 TYPE 2	=	183.31	CU. YD.
407 TACK COAT, AS PER PLAN	=	299.73	GAL.

SHOULDERS :

446 TYPE 1	=	53.32	CU. YD.
446 TYPE 2	=	70.72	CU. YD.
407 TACK COAT, AS PER PLAN	=	115.80	GAL.

Revised 11-30-88

PAVEMENT COMPUTATIONS

PAVEMENT COMPUTATIONS
"RAMPS"

Computations By Initials KMS Date 11/30/87			
Computations Checked By Initials KMS Date 11/30/87			
Final Revisions By Initials Date			

FHWA REGION	STATE	PROJECT	
5	OHIO		

TRUMBULL COUNTY
TRU-5B-0.00

– S.R. 422 INTERCHANGE : RAMP E

FULL DEPTH :

AREA OF FULL DEPTH RAMP PAVEMENT	=	3408.51	SQ. YD.
AREA OF FULL DEPTH RAMP SHOULDERS	=	1637.63	SQ. YD.

PAVEMENT :

446 TYPE 1 : (3408.51)(1.25)(1/36)	=	118.35	CU. YD.
446 TYPE 2 : (3408.51)(1.75)(1/36)	=	165.69	CU. YD.
407 TACK COAT, AS PER PLAN : (3408.51)(0.075)	=	255.64	GAL.

SHOULDERS :

446 TYPE 1 : (1637.63)(1.25)(1/36)	=	56.86	CU. YD.
446 TYPE 2 : (1637.63)(1.75)(1/36)	=	79.61	CU. YD.
407 TACK COAT, AS PER PLAN : (1637.63)(0.075)	=	122.82	GAL.

PARTIAL DEPTH :

AREA OF 446 TYPE 1 ONLY IN PAVEMENT TRANSITION	=	108.89	SQ. YD.
AREA OF 446 TYPE 2 IN PAVEMENT TRANSITION	=	33.33	SQ. YD.
AREA OF WEARING COURSE REMOVED (RAMP PAVEMENT)	=	73.94	SQ. YD.
AREA OF 446 TYPE 1 ONLY IN PAVEMENT TRANSITION (SHOULDERS)	=	37.50	SQ. YD.
AREA OF 446 TYPE 2 IN PAVEMENT TRANSITION (SHOULDERS)	=	12.50	SQ. YD.
AREA OF WEARING COURSE REMOVED (RAMP SHOULDERS)	=	24.84	SQ. YD.

PAVEMENT (PARTIAL DEPTH) :

446 TYPE 1 : (33.33)(1.25)(1/36) +(108.89)(1/2)(1.25 + 1 + 0)(1/36) +(73.94)(.625)(1/36)	=	5.84	CU. YD.
446 TYPE 2 : (33.33)(1/2)(1.75 + 1)(1/36)	=	1.27	CU. YD.
407 TACK COAT, AS PER PLAN : (108.89 + 33.33)(0.075)	=	10.67	GAL.

SHOULDERS (PARTIAL DEPTH) :

446 TYPE 1 : (12.5)(1.25)(1/36) +(37.5)(1/2)(1.25 + 1 + 0)(1/36) +(24.84)(.625)(1/36)	=	2.04	CU. YD.
446 TYPE 2 : (12.5)(1/2)(1.75 + 1)(1/36)	=	0.48	CU. YD.
407 TACK COAT, AS PER PLAN : (37.5 + 12.5)(0.075)	=	3.75	GAL.

WEARING COURSE REMOVAL :

202 WEARING COURSE REMOVED : 73.94 + 24.84	=	98.78	SQ. YD.

S.R. 422 INTERCHANGE : RAMP E TOTALS :

PAVEMENT :

446 TYPE 1	=	124.19	CU. YD.
446 TYPE 2	=	166.96	CU. YD.
407 TACK COAT, AS PER PLAN	=	266.31	GAL.

SHOULDERS :

446 TYPE 1	=	58.90	CU. YD.
446 TYPE 2	=	80.08	CU. YD.
407 TACK COAT, AS PER PLAN	=	126.57	GAL.

WEARING COURSE REMOVAL :

202 WEARING COURSE REMOVED	=	98.78	SQ. YD.

– S.R. 45 INTERCHANGE : RAMP A

FULL DEPTH :

AREA OF FULL DEPTH RAMP PAVEMENT	=	3835.29	SQ. YD.
AREA OF FULL DEPTH RAMP SHOULDERS	=	1558.69	SQ. YD.

PAVEMENT :

446 TYPE 1 : (3835.29)(1.25)(1/36)	=	133.17	CU. YD.
446 TYPE 2 : (3835.29)(1.75)(1/36)	=	186.44	CU. YD.
407 TACK COAT, AS PER PLAN : (3835.29)(0.075)	=	287.65	GAL.

SHOULDERS :

446 TYPE 1 : (1558.69)(1.25)(1/36)	=	54.12	CU. YD.
446 TYPE 2 : (1558.69)(1.75)(1/36)	=	75.77	CU. YD.
407 TACK COAT, AS PER PLAN : (1558.69)(0.075)	=	116.90	GAL.

PARTIAL DEPTH :

AREA OF 446 TYPE 1 ONLY IN PAVEMENT TRANSITION	=	156.25	SQ. YD.
AREA OF 446 TYPE 2 IN PAVEMENT TRANSITION	=	52.08	SQ. YD.
AREA OF 446 TYPE 1 ONLY IN PAVEMENT TRANSITION (SHOULDERS)	=	37.50	SQ. YD.
AREA OF 446 TYPE 2 IN PAVEMENT TRANSITION (SHOULDERS)	=	12.50	SQ. YD.

PAVEMENT (PARTIAL DEPTH) :

446 TYPE 1 : (52.08)(1.25)(1/36) +(156.25)(1/2)(1.25 + 1 + 0)(1/36)	=	6.69	CU. YD.
446 TYPE 2 : (52.08)(1/2)(1.75 + 1)(1/36)	=	1.99	CU. YD.
407 TACK COAT, AS PER PLAN : (156.25 + 52.08)(0.075)	=	15.62	GAL.

SHOULDERS (PARTIAL DEPTH) :

446 TYPE 1 : (12.5)(1.25)(1/36) +(37.5)(1/2)(1.25 + 1 + 0)(1/36)	=	1.61	CU. YD.
446 TYPE 2 : (12.5)(1/2)(1.75 + 1)(1/36)	=	0.48	CU. YD.
407 TACK COAT, AS PER PLAN : (37.5 + 12.5)(0.075)	=	3.75	GAL.

S.R. 45 INTERCHANGE : RAMP A TOTALS :

PAVEMENT :

446 TYPE 1	=	139.86	CU. YD.
446 TYPE 2	=	188.43	CU. YD.
407 TACK COAT, AS PER PLAN	=	303.27	GAL.

SHOULDERS :

446 TYPE 1	=	55.73	CU. YD.
446 TYPE 2	=	76.25	CU. YD.
407 TACK COAT, AS PER PLAN	=	120.65	GAL.

– S.R. 45 INTERCHANGE : RAMP B

FULL DEPTH :

AREA OF FULL DEPTH RAMP PAVEMENT	=	3806.98	SQ. YD.
AREA OF FULL DEPTH RAMP SHOULDERS	=	1465.95	SQ. YD.

PAVEMENT :

446 TYPE 1 : (3806.98)(1.25)(1/36)	=	132.19	CU. YD.
446 TYPE 2 : (3806.98)(1.75)(1/36)	=	185.06	CU. YD.
407 TACK COAT, AS PER PLAN : (3806.98)(0.075)	=	285.52	GAL.

SHOULDERS :

446 TYPE 1 : (1465.95)(1.25)(1/36)	=	50.90	CU. YD.
446 TYPE 2 : (1465.95)(1.75)(1/36)	=	71.26	CU. YD.
407 TACK COAT, AS PER PLAN : (1465.95)(0.075)	=	109.95	GAL.

PARTIAL DEPTH :

AREA OF 446 TYPE 1 ONLY IN PAVEMENT TRANSITION	=	402.23	SQ. YD.
AREA OF 446 TYPE 1 ONLY IN BRIDGE TRANSITION	=	176.82	SQ. YD.
AREA OF 446 TYPE 2 IN PAVEMENT TRANSITION	=	167.40	SQ. YD.
AREA OF WEARING COURSE REMOVED (RAMP PAVEMENT)	=	176.82	SQ. YD.
AREA OF 446 TYPE 1 ONLY IN PAVEMENT TRANSITION (SHOULDERS)	=	53.01	SQ. YD.
AREA OF 446 TYPE 1 ONLY IN BRIDGE TRANSITION (SHOULDERS)	=	53.01	SQ. YD.
AREA OF 446 TYPE 2 IN PAVEMENT TRANSITION (SHOULDERS)	=	27.77	SQ. YD.
AREA OF WEARING COURSE REMOVED (RAMP SHOULDERS)	=	53.01	SQ. YD.

PAVEMENT (PARTIAL DEPTH) :

446 TYPE 1 : (167.4)(1.25)(1/36) +(176.82)(1/2)(1 + 1 + 1.25)(1/36) +(402.23)(1/2)(1.25 + 1 + 0)(1/36)	=	26.36	CU. YD.
446 TYPE 2 : (167.4)(1/2)(1.75 + 1)(1/36)	=	6.39	CU. YD.
407 TACK COAT, AS PER PLAN : (402.23 + 176.82 + 167.4)(0.075)	=	55.98	GAL.

SHOULDERS (PARTIAL DEPTH) :

446 TYPE 1 : (27.77)(1.25)(1/36) +(53.01)(1/2)(1 + 1 + 1.25)(1/36) +(53.01)(1/2)(1.25 + 1 + 0)(1/36)	=	5.01	CU. YD.
446 TYPE 2 : (27.77)(1/2)(1.75 + 1)(1/36)	=	1.06	CU. YD.
407 TACK COAT, AS PER PLAN : (53.01 + 27.77)(0.075)	=	6.06	GAL.

WEARING COURSE REMOVAL :

202 WEARING COURSE REMOVED : 176.82 + 53.01	=	229.83	SQ. YD.

S.R. 45 INTERCHANGE : RAMP B TOTALS :

PAVEMENT :

446 TYPE 1	=	158.55	CU. YD.
446 TYPE 2	=	191.45	CU. YD.
407 TACK COAT, AS PER PLAN	=	341.50	GAL.

SHOULDERS :

446 TYPE 1	=	55.95	CU. YD.
446 TYPE 2	=	72.37	CU. YD.
407 TACK COAT, AS PER PLAN	=	120.05	GAL.

WEARING COURSE REMOVAL :

202 WEARING COURSE REMOVED	=	229.83	SQ. YD.

Revised: 11-30-88

PAVEMENT COMPUTATIONS

PAVEMENT COMPUTATIONS
"RAMPS"

Computations By Initials GMS Date 11/30/87				
Computations Checked By Initials BMS Date 11/30/87				
Final Revisions By Initials Date				

FHWA REGION	STATE	PROJECT		22 / 213
5	OHIO			

TRUMBULL COUNTY
TRU-5B-0.00

– S.R. 45 INTERCHANGE : RAMP C

FULL DEPTH :

AREA OF FULL DEPTH RAMP PAVEMENT	=	2720.16	SQ. YD.
AREA OF FULL DEPTH RAMP SHOULDERS	=	1109.19	SQ. YD.

PAVEMENT :

446 TYPE 1 : (2720.16)(1.25)(1/36)	=	94.45	CU. YD.
446 TYPE 2 : (2720.16)(1.75)(1/36)	=	132.23	CU. YD.
407 TACK COAT, AS PER PLAN : (2720.16)(0.075)	=	204.01	GAL.

SHOULDERS :

446 TYPE 1 : (1109.19)(1.25)(1/36)	=	38.51	CU. YD.
446 TYPE 2 : (1109.19)(1.75)(1/36)	=	53.92	CU. YD.
407 TACK COAT, AS PER PLAN : (1109.19)(0.075)	=	83.19	GAL.

PARTIAL DEPTH :

AREA OF 446 TYPE 1 ONLY IN PAVEMENT TRANSITION	=	150.00	SQ. YD.
AREA OF 446 TYPE 1 ONLY IN BRIDGE TRANSITION	=	57.62	SQ. YD.
AREA OF 446 TYPE 2 IN PAVEMENT TRANSITION	=	100.00	SQ. YD.
AREA OF WEARING COURSE REMOVED (RAMP PAVEMENT)	=	57.62	SQ. YD.
AREA OF 446 TYPE 1 ONLY IN PAVEMENT TRANSITION (SHOULDERS)	=	37.50	SQ. YD.
AREA OF 446 TYPE 1 ONLY IN BRIDGE TRANSITION (SHOULDERS)	=	38.42	SQ. YD.
AREA OF 446 TYPE 2 IN PAVEMENT TRANSITION (SHOULDERS)	=	45.84	SQ. YD.
AREA OF WEARING COURSE REMOVED (RAMP SHOULDERS)	=	38.42	SQ. YD.

PAVEMENT (PARTIAL DEPTH) :

446 TYPE 1 : (100)(1.25)(1/36) +(57.62)(1/2)(1.5 + 1 + 1.25)(1/36) +(150)(1/2)(1.25 + 1 + 0)(1/36)	=	11.16	CU. YD.
446 TYPE 2 : (100)(1/2)(1.75 + 1)(1/36)	=	3.82	CU. YD.
407 TACK COAT, AS PER PLAN : (150 + 100 + 57.62)(0.075)	=	23.07	GAL.

SHOULDERS (PARTIAL DEPTH) :

446 TYPE 1 : (45.84)(1.25)(1/36) +(38.42)(1/2)(1.5 + 1 + 1.25)(1/36) +(37.5)(1/2)(1.25 + 1 + 0)(1/36)	=	4.76	CU. YD.
446 TYPE 2 : (45.84)(1/2)(1.75 + 1)(1/36)	=	1.75	CU. YD.
407 TACK COAT, AS PER PLAN : (37.5 + 45.84 + 38.40)(0.075)	=	9.13	GAL.

WEARING COURSE REMOVAL :

202 WEARING COURSE REMOVED : 57.62 + 38.42	=	96.04	SQ. YD.

S.R. 45 INTERCHANGE : RAMP C TOTALS :

PAVEMENT :

446 TYPE 1	=	105.61	CU. YD.
446 TYPE 2	=	136.05	CU. YD.
407 TACK COAT, AS PER PLAN	=	227.08	GAL.

SHOULDERS :

446 TYPE 1	=	43.27	CU. YD.
446 TYPE 2	=	55.67	CU. YD.
407 TACK COAT, AS PER PLAN	=	92.32	GAL.

WEARING COURSE REMOVAL :

202 WEARING COURSE REMOVED	=	96.04	SQ. YD.

– S.R. 45 INTERCHANGE : RAMP D

FULL DEPTH :

AREA OF FULL DEPTH RAMP PAVEMENT	=	3106.43	SQ. YD.
AREA OF FULL DEPTH RAMP SHOULDERS	=	1217.59	SQ. YD.

PAVEMENT :

446 TYPE 1 : (3106.43)(1.25)(1/36)	=	107.86	CU. YD.
446 TYPE 2 : (3106.43)(1.75)(1/36)	=	151.01	CU. YD.
407 TACK COAT, AS PER PLAN : (3106.43)(0.075)	=	232.98	GAL.

SHOULDERS :

446 TYPE 1 : (1217.59)(1.25)(1/36)	=	42.28	CU. YD.
446 TYPE 2 : (1217.59)(1.75)(1/36)	=	59.19	CU. YD.
407 TACK COAT, AS PER PLAN : (1217.59)(0.075)	=	91.32	GAL.

PARTIAL DEPTH :

AREA OF 446 TYPE 1 ONLY IN PAVEMENT TRANSITION	=	100.00	SQ. YD.
AREA OF 446 TYPE 1 ONLY IN BRIDGE TRANSITION	=	30.65	SQ. YD.
AREA OF 446 TYPE 2 IN PAVEMENT TRANSITION	=	50.26	SQ. YD.
AREA OF WEARING COURSE REMOVED (RAMP PAVEMENT)	=	30.65	SQ. YD.
AREA OF 446 TYPE 1 ONLY IN PAVEMENT TRANSITION (SHOULDERS)	=	37.50	SQ. YD.
AREA OF 446 TYPE 2 IN PAVEMENT TRANSITION (SHOULDERS)	=	29.17	SQ. YD.
AREA OF WEARING COURSE REMOVED (RAMP SHOULDERS)	=	37.57	SQ. YD.

PAVEMENT (PARTIAL DEPTH) :

446 TYPE 1 : (50.26)(1.25)(1/36) +(30.65)(1/2)(1 + 1 + 1.25)(1/36) +(100.00)(1/2)(1.25 + 1 + 0)(1/36)	=	6.25	CU. YD.
446 TYPE 2 : (50.26)(1/2)(1.75 + 1)(1/36)	=	1.92	CU. YD.
407 TACK COAT, AS PER PLAN : (100.00 + 37.50 + 50.26)(0.075)	=	13.57	GAL.

SHOULDERS (PARTIAL DEPTH) :

446 TYPE 1 : (29.17)(1.25)(1/36) +(56.32)(1/2)(1 + 1 + 1.25)(1/36) +(37.50)(1/2)(1.25 + 1 + 0)(1/36)	=	4.73	CU. YD.
446 TYPE 2 : (29.17)(1/2)(1.75 + 1)(1/36)	=	1.11	CU. YD.
407 TACK COAT, AS PER PLAN : (56.32 + 37.50 + 29.17)(0.075)	=	9.22	GAL.

WEARING COURSE REMOVAL :

202 WEARING COURSE REMOVED : 30.65 + 37.57	=	68.22	SQ. YD.

S.R. 45 INTERCHANGE : RAMP D TOTALS :

PAVEMENT :

446 TYPE 1	=	114.11	CU. YD.
446 TYPE 2	=	152.93	CU. YD.
407 TACK COAT, AS PER PLAN	=	246.55	GAL.

SHOULDERS :

446 TYPE 1	=	47.01	CU. YD.
446 TYPE 2	=	60.30	CU. YD.
407 TACK COAT, AS PER PLAN	=	100.54	GAL.

WEARING COURSE REMOVAL :

202 WEARING COURSE REMOVED	=	68.22	SQ. YD.

– PERKINS JONES RD. INTERCHANGE : RAMP E

FULL DEPTH :

AREA OF FULL DEPTH RAMP PAVEMENT	=	3158.80	SQ. YD.
AREA OF FULL DEPTH RAMP SHOULDERS	=	1445.48	SQ. YD.

PAVEMENT :

446 TYPE 1 : (3158.8)(1.25)(1/36)	=	109.68	CU. YD.
446 TYPE 2 : (3158.8)(1.75)(1/36)	=	153.55	CU. YD.
407 TACK COAT, AS PER PLAN : (3158.8)(0.075)	=	236.91	GAL.

SHOULDERS :

446 TYPE 1 : (1445.48)(1.25)(1/36)	=	50.19	CU. YD.
446 TYPE 2 : (1445.48)(1.75)(1/36)	=	70.27	CU. YD.
407 TACK COAT, AS PER PLAN : (1445.48)(0.075)	=	108.41	GAL.

PARTIAL DEPTH :

AREA OF 446 TYPE 1 ONLY IN PAVEMENT TRANSITION	=	109.73	SQ. YD.
AREA OF 446 TYPE 2 IN PAVEMENT TRANSITION	=	33.33	SQ. YD.
AREA OF 446 TYPE 1 ONLY IN PAVEMENT TRANSITION (SHOULDERS)	=	37.50	SQ. YD.
AREA OF 446 TYPE 2 IN PAVEMENT TRANSITION (SHOULDERS)	=	12.50	SQ. YD.

PAVEMENT (PARTIAL DEPTH) :

446 TYPE 1 : (33.33)(1.25)(1/36) +(109.73)(1/2)(1.25 + 1 + 0)(1/36)	=	4.59	CU. YD.
446 TYPE 2 : (33.33)(1/2)(1.75 + 1)(1/36)	=	1.27	CU. YD.
407 TACK COAT, AS PER PLAN : (109.73 + 33.33)(0.075)	=	10.73	GAL.

SHOULDERS (PARTIAL DEPTH) :

446 TYPE 1 : (12.5)(1.25)(1/36) +(37.5)(1/2)(1.25 + 1 + 0)(1/36)	=	1.61	CU. YD.
446 TYPE 2 : (12.5)(1/2)(1.75 + 1)(1/36)	=	0.48	CU. YD.
407 TACK COAT, AS PER PLAN : (37.5 + 12.5)(0.075)	=	3.75	GAL.

PERKINS JONES RD. INTERCHANGE : RAMP E TOTALS :

PAVEMENT :

446 TYPE 1	=	114.27	CU. YD.
446 TYPE 2	=	154.83	CU. YD.
407 TACK COAT, AS PER PLAN	=	247.64	GAL.

SHOULDERS :

446 TYPE 1	=	51.80	CU. YD.
446 TYPE 2	=	70.74	CU. YD.
407 TACK COAT, AS PER PLAN	=	112.16	GAL.

Revised 11-30-88

PAVEMENT COMPUTATIONS

PAVEMENT COMPUTATIONS
"RAMPS"

Computations By Initials JMS Date 11/30/87			
Computations Checked By Initials JMS Date 11/30/87			
Final Revisions By Initials Date			

FHWA REGION	STATE	PROJECT	
5	OHIO		

23
213

TRUMBULL COUNTY
TRU-58-0.00

– PERKINS JONES RD. INTERCHANGE : RAMP F

FULL DEPTH :

AREA OF FULL DEPTH RAMP PAVEMENT	=	2441.51	SQ. YD.
AREA OF FULL DEPTH RAMP SHOULDERS	=	1199.56	SQ. YD.

PAVEMENT :

446 TYPE 1 : (2441.51)(1.25)(1/36)	=	84.77	CU. YD.
446 TYPE 2 : (2441.51)(1.75)(1/36)	=	118.68	CU. YD.
407 TACK COAT, AS PER PLAN : (2441.51)(0.075)	=	183.11	GAL.

SHOULDERS :

446 TYPE 1 : (1199.56)(1.25)(1/36)	=	41.65	CU. YD.
446 TYPE 2 : (1199.56)(1.75)(1/36)	=	58.31	CU. YD.
407 TACK COAT, AS PER PLAN : (1199.56)(0.075)	=	89.97	GAL.

PARTIAL DEPTH :

AREA OF 446 TYPE 1 ONLY IN PAVEMENT TRANSITION	=	100.00	SQ. YD.
AREA OF 446 TYPE 2 IN PAVEMENT TRANSITION	=	33.33	SQ. YD.
AREA OF 446 TYPE 1 ONLY IN PAVEMENT TRANSITION (SHOULDERS)	=	37.50	SQ. YD.
AREA OF 446 TYPE 2 IN PAVEMENT TRANSITION (SHOULDERS)	=	12.50	SQ. YD.

PAVEMENT (PARTIAL DEPTH) :

446 TYPE 1 : (33.33)(1.25)(1/36) +(100)(1/2)(1.25 + 1 + 0)(1/36)	=	4.28	CU. YD.
446 TYPE 2 : (33.33)(1/2)(1.75 + 1)(1/36)	=	1.27	CU. YD.
407 TACK COAT, AS PER PLAN : (100 + 33.33)(0.075)	=	10.00	GAL.

SHOULDERS (PARTIAL DEPTH) :

446 TYPE 1 : (12.5)(1.25)(1/36) +(37.5)(1/2)(1.25 + 1 + 0)(1/36)	=	1.61	CU. YD.
446 TYPE 2 : (12.5)(1/2)(1.75 + 1)(1/36)	=	0.48	CU. YD.
407 TACK COAT, AS PER PLAN : (37.5 + 12.5)(0.075)	=	3.75	GAL.

PERKINS JONES RD. INTERCHANGE : RAMP F TOTALS :

PAVEMENT :

446 TYPE 1	=	89.05	CU. YD.
446 TYPE 2	=	119.95	CU. YD.
407 TACK COAT, AS PER PLAN	=	193.11	GAL.

SHOULDERS :

446 TYPE 1	=	43.26	CU. YD.
446 TYPE 2	=	58.79	CU. YD.
407 TACK COAT, AS PER PLAN	=	93.72	GAL.

– PERKINS JONES RD. INTERCHANGE : RAMP G

FULL DEPTH :

AREA OF FULL DEPTH RAMP PAVEMENT	=	2857.52	SQ. YD.
AREA OF FULL DEPTH RAMP SHOULDERS	=	1245.10	SQ. YD.

PAVEMENT :

446 TYPE 1 : (2857.52)(1.25)(1/36)	=	99.22	CU. YD.
446 TYPE 2 : (2857.52)(1.75)(1/36)	=	138.91	CU. YD.
407 TACK COAT, AS PER PLAN : (2857.52)(0.075)	=	214.31	GAL.

SHOULDERS :

446 TYPE 1 : (1245.1)(1.25)(1/36)	=	43.23	CU. YD.
446 TYPE 2 : (1245.1)(1.75)(1/36)	=	60.53	CU. YD.
407 TACK COAT, AS PER PLAN : (1245.1)(0.075)	=	93.38	GAL.

PARTIAL DEPTH :

AREA OF 446 TYPE 1 ONLY IN PAVEMENT TRANSITION	=	150.00	SQ. YD.
AREA OF 446 TYPE 2 IN PAVEMENT TRANSITION	=	50.00	SQ. YD.
AREA OF 446 TYPE 1 ONLY IN PAVEMENT TRANSITION (SHOULDERS)	=	37.50	SQ. YD.
AREA OF 446 TYPE 2 IN PAVEMENT TRANSITION (SHOULDERS)	=	12.50	SQ. YD.

PAVEMENT (PARTIAL DEPTH) :

446 TYPE 1 : (50)(1.25)(1/36) +(150)(1/2)(1.25 + 1 + 0)(1/36)	=	6.42	CU. YD.
446 TYPE 2 : (50)(1/2)(1.75 + 1)(1/36)	=	1.91	CU. YD.
407 TACK COAT, AS PER PLAN : (150 + 50)(0.075)	=	15.00	GAL.

SHOULDERS (PARTIAL DEPTH) :

446 TYPE 1 : (12.5)(1.25)(1/36) +(37.5)(1/2)(1.25 + 1 + 0)(1/36)	=	1.61	CU. YD.
446 TYPE 2 : (12.5)(1/2)(1.75 + 1)(1/36)	=	0.48	CU. YD.
407 TACK COAT, AS PER PLAN : (37.5 + 12.5)(0.075)	=	3.75	GAL.

PERKINS JONES RD. INTERCHANGE : RAMP G TOTALS :

PAVEMENT :

446 TYPE 1	=	105.64	CU. YD.
446 TYPE 2	=	140.82	CU. YD.
407 TACK COAT, AS PER PLAN	=	229.31	GAL.

SHOULDERS :

446 TYPE 1	=	44.84	CU. YD.
446 TYPE 2	=	61.00	CU. YD.
407 TACK COAT, AS PER PLAN	=	97.13	GAL.

– PERKINS JONES RD. INTERCHANGE : RAMPS H & N

FULL DEPTH :

AREA OF FULL DEPTH RAMP PAVEMENT	=	4262.23	SQ. YD.
AREA OF FULL DEPTH RAMP SHOULDERS	=	1641.50	SQ. YD.

PAVEMENT :

446 TYPE 1 : (4262.23)(1.25)(1/36)	=	147.99	CU. YD.
446 TYPE 2 : (4262.23)(1.75)(1/36)	=	207.19	CU. YD.
407 TACK COAT, AS PER PLAN : (4262.23)(0.075)	=	319.67	GAL.

SHOULDERS :

446 TYPE 1 : (1641.50)(1.25)(1/36)	=	57.00	CU. YD.
446 TYPE 2 : (1641.50)(1.75)(1/36)	=	79.80	CU. YD.
407 TACK COAT, AS PER PLAN : (1641.50)(0.075)	=	123.11	GAL.

PARTIAL DEPTH :

AREA OF 446 TYPE 1 ONLY IN PAVEMENT TRANSITION	=	211.79	SQ. YD.
AREA OF 446 TYPE 2 IN PAVEMENT TRANSITION	=	66.75	SQ. YD.
AREA OF 446 TYPE 1 ONLY IN PAVEMENT TRANSITION (SHOULDERS)	=	75.56	SQ. YD.
AREA OF 446 TYPE 2 IN PAVEMENT TRANSITION (SHOULDERS)	=	20.97	SQ. YD.

PAVEMENT (PARTIAL DEPTH) :

446 TYPE 1 : (66.75)(1.25)(1/36) +(211.79)(1/2)(1.25 + 1 + 0)(1/36)	=	8.94	CU. YD.
446 TYPE 2 : (66.75)(1/2)(1.75 + 1)(1/36)	=	2.55	CU. YD.
407 TACK COAT, AS PER PLAN : (211.79 + 66.75)(0.075)	=	20.89	GAL.

SHOULDERS (PARTIAL DEPTH) :

446 TYPE 1 : (20.97)(1.25)(1/36) +(75.56)(1/2)(1.25 + 1 + 0)(1/36)	=	3.09	CU. YD.
446 TYPE 2 : (20.97)(1/2)(1.75 + 1)(1/36)	=	0.80	CU. YD.
407 TACK COAT, AS PER PLAN : (75.56 + 20.97)(0.075)	=	7.24	GAL.

PERKINS JONES RD. INTERCHANGE : RAMPS H & N TOTALS :

PAVEMENT :

446 TYPE 1	=	205.16	CU. YD.
446 TYPE 2	=	277.26	CU. YD.
407 TACK COAT, AS PER PLAN	=	340.56	GAL.

SHOULDERS :

446 TYPE 1	=	60.09	CU. YD.
446 TYPE 2	=	80.60	CU. YD.
407 TACK COAT, AS PER PLAN	=	130.35	GAL.

Revised: 11-30-88

PAVEMENT COMPUTATIONS
"RAMPS"

Computations By Initials WMJ Date 11-30-87	FHWA REGION	STATE	PROJECT
Computations Checked By Initials WMS Date 11/30/87	5	OHIO	
Final Revisions By Initials Date			

24
213

TRUMBULL COUNTY
TRU-5B-0.00

– S.R. 5 INTERCHANGE : RAMPS I & M

FULL DEPTH :

AREA OF FULL DEPTH RAMP PAVEMENT	=	3365.79	SQ. YD.
AREA OF FULL DEPTH RAMP SHOULDERS	=	1218.92	SQ. YD.

PAVEMENT :

446 TYPE 1 : (3365.79)(1.25)(1/36)	=	116.87	CU. YD.
446 TYPE 2 : (3365.79)(1.75)(1/36)	=	163.61	CU. YD.
407 TACK COAT, AS PER PLAN : (3365.79)(0.075)	=	252.43	GAL.

SHOULDERS :

446 TYPE 1 : (1218.92)(1.25)(1/36)	=	42.32	CU. YD.
446 TYPE 2 : (1218.92)(1.75)(1/36)	=	59.25	CU. YD.
407 TACK COAT, AS PER PLAN : (1218.92)(0.075)	=	91.42	GAL.

PARTIAL DEPTH :

AREA OF 446 TYPE 1 ONLY IN PAVEMENT TRANSITION	=	245.62	SQ. YD.
AREA OF 446 TYPE 1 ONLY IN BRIDGE TRANSITION	=	165.98	SQ. YD.
AREA OF 446 TYPE 2 IN PAVEMENT TRANSITION	=	161.42	SQ. YD.
AREA OF WEARING COURSE REMOVED (RAMP PAVEMENT)	=	165.98	SQ. YD.
AREA OF 446 TYPE 1 ONLY IN PAVEMENT TRANSITION (SHOULDERS)	=	58.06	SQ. YD.
AREA OF 446 TYPE 1 ONLY IN BRIDGE TRANSITION (SHOULDERS)	=	54.61	SQ. YD.
AREA OF 446 TYPE 2 IN PAVEMENT TRANSITION (SHOULDERS)	=	43.66	SQ. YD.
AREA OF WEARING COURSE REMOVED (RAMP SHOULDERS)	=	54.61	SQ. YD.

PAVEMENT (PARTIAL DEPTH) :

446 TYPE 1 : (161.42)(1.25)(1/36) +(165.98)(1/2)(1 + 1 + 1.25)(1/36) +(245.62)(1/2)(1.25 + 1 + 0)(1/36)	=	20.77	CU. YD.
446 TYPE 2 : (161.42)(1/2)(1.75 + 1)(1/36)	=	6.17	CU. YD.
407 TACK COAT, AS PER PLAN : (245.62 + 165.98 + 161.42)(0.075)	=	42.98	GAL.

SHOULDERS (PARTIAL DEPTH) :

446 TYPE 1 : (43.66)(1.25)(1/36) +(54.61)(1/2)(1 + 1 + 1.25)(1/36) +(58.06)(1/2)(1.25 + 1 + 0)(1/36)	=	5.80	CU. YD.
446 TYPE 2 : (43.66)(1/2)(1.75 + 1)(1/36)	=	1.67	CU. YD.
407 TACK COAT, AS PER PLAN : (58.06 + 54.61 + 43.66)(0.075)	=	11.72	GAL.

WEARING COURSE REMOVAL :

202 WEARING COURSE REMOVED : 165.98 + 54.61	=	220.59	SQ. YD.

S.R. 5 INTERCHANGE : RAMPS I & M TOTALS :

PAVEMENT :

446 TYPE 1	=	137.64	CU. YD.
446 TYPE 2	=	169.78	CU. YD.
407 TACK COAT, AS PER PLAN	=	295.41	GAL.

SHOULDERS :

446 TYPE 1	=	48.12	CU. YD.
446 TYPE 2	=	60.92	CU. YD.
407 TACK COAT, AS PER PLAN	=	103.14	GAL.

WEARING COURSE REMOVAL :

202 WEARING COURSE REMOVED	=	220.59	SQ. YD.

– S.R. 5 INTERCHANGE : RAMP K

FULL DEPTH :

AREA OF FULL DEPTH RAMP PAVEMENT	=	3059.03	SQ. YD.
AREA OF FULL DEPTH RAMP SHOULDERS	=	1177.75	SQ. YD.

PAVEMENT :

446 TYPE 1 : (3059.03)(1.25)(1/36)	=	106.22	CU. YD.
446 TYPE 2 : (3059.03)(1.75)(1/36)	=	148.70	CU. YD.
407 TACK COAT, AS PER PLAN : (3059.03)(0.075)	=	229.43	GAL.

SHOULDERS :

446 TYPE 1 : (1177.75)(1.25)(1/36)	=	40.89	CU. YD.
446 TYPE 2 : (1177.75)(1.75)(1/36)	=	57.25	CU. YD.
407 TACK COAT, AS PER PLAN : (1177.75)(0.075)	=	88.33	GAL.

PARTIAL DEPTH :

AREA OF 446 TYPE 1 ONLY IN PAVEMENT TRANSITION	=	226.28	SQ. YD.
AREA OF 446 TYPE 1 ONLY IN BRIDGE TRANSITION	=	98.22	SQ. YD.
AREA OF 446 TYPE 2 IN PAVEMENT TRANSITION	=	165.54	SQ. YD.
AREA OF WEARING COURSE REMOVED (RAMP PAVEMENT)	=	164.44	SQ. YD.
AREA OF 446 TYPE 1 ONLY IN PAVEMENT TRANSITION (SHOULDERS)	=	48.25	SQ. YD.
AREA OF 446 TYPE 1 ONLY IN BRIDGE TRANSITION (SHOULDERS)	=	33.34	SQ. YD.
AREA OF 446 TYPE 2 IN PAVEMENT TRANSITION (SHOULDERS)	=	48.64	SQ. YD.
AREA OF WEARING COURSE REMOVED (RAMP SHOULDERS)	=	65.69	SQ. YD.

PAVEMENT (PARTIAL DEPTH) :

446 TYPE 1 : (165.54)(1.25)(1/36) +(98.22)(1/2)(1.5 + 1 + 1.25)(1/36) +(226.28)(1/2)(1.25 + 1 + 0)(1/36)	=	17.93	CU. YD.
446 TYPE 2 : (226.28)(1/2)(1.75 + 1)(1/36)	=	7.07	CU. YD.
407 TACK COAT, AS PER PLAN : (226.28 + 98.22 + 165.54)(0.075)	=	36.75	GAL.

SHOULDERS (PARTIAL DEPTH) :

446 TYPE 1 : (48.64)(1.25)(1/36) +(33.34)(1/2)(1.5 + 1 + 1.25)(1/36) +(48.25)(1/2)(1.25 + 1 + 0)(1/36)	=	4.94	CU. YD.
446 TYPE 2 : (48.64)(1/2)(1.75 + 1)(1/36)	=	1.86	CU. YD.
407 TACK COAT, AS PER PLAN : (48.25 + 33.34 + 48.64)(0.075)	=	9.77	GAL.

WEARING COURSE REMOVAL :

202 WEARING COURSE REMOVED : 164.44 + 65.69	=	230.13	SQ. YD.

S.R. 5 INTERCHANGE : RAMP K TOTALS :

PAVEMENT :

446 TYPE 1	=	124.15	CU. YD.
446 TYPE 2	=	155.77	CU. YD.
407 TACK COAT, AS PER PLAN	=	266.18	GAL.

SHOULDERS :

446 TYPE 1	=	45.83	CU. YD.
446 TYPE 2	=	59.11	CU. YD.
407 TACK COAT, AS PER PLAN	=	98.10	GAL.

WEARING COURSE REMOVAL :

202 WEARING COURSE REMOVED	=	230.13	SQ. YD.

REV 11 —, 1988

Revised 11-30-88

PAVEMENT COMPUTATIONS

MARKET STREET

F.H.W.A. REGION	STATE	PROJECT NO.	FUNDS
5	OHIO		

24A 2.13

TRU-5B-0.00

MARKET STREET
STATION 1019+50 TO 1020+25 (TRANSITION)
LENGTH = 75.00 LIN. FT.
PAVEMENT (WIDTH = 24 FT.)
446 TYPE I: (24)(0.2676505) = 6.42 CU.YD.
446 TYPE 2: (24)(0.0795718) = 1.91 CU.YD.
407 TACK COAT,AS PER PLAN: (24)(0.6250000) = 15.00 GAL.

LEFT SHOULDER: (WIDTH = 4 FT.)
446 TYPE I: (4)(0.2676505) = 1.07 CU.YD.
446 TYPE 2: (4)(0.0795718) = 0.32 CU.YD.
407 TACK COAT, AS PER PLAN: (4)(0.6250000) = 2.50 GAL.

RIGHT SHOULDER (WIDTH = 4 FT.)
446 TYPE I: (4)(0.2676505) = 1.07 CU.YD.
446 TYPE 2: (4)(0.0795718) = 0.32 CU.YD.
407 TACK COAT, AS PER PLAN: (4)(0.6250000) = 2.50 GAL.

STATION 1020+25 TO 1027+80.35
LENGTH = 755.35 LIN. FT.
PAVEMENT (WIDTH = 24 FT.)
446 TYPE I:(755.35)(0.0925926) = 69.94 CU.YD.
446 TYPE 2: (755.35)(0.1296296) = 97.92 CU.YD.
407 TACK COAT, AS PER PLAN: (755.35)(0.2000) = 151.07 GAL.

LEFT SHOULDER (TAPER SECTION AND 74.19 LIN. FT.,WIDTH= 4 FT.)
446 TYPE I: [(4+8)/2]80(1.25/12)/27 = 1.85 CU.YD.
446 TYPE 2: [(4+8)/2]80(1.75/12)/27 = 2.59 CU.YD.
407 TACK COAT, AS PER PLAN: [(4+8)/2](80/9)(0.075) = 4.00 GAL.

446 TYPE I:(74.19)(0.0154321) = 1.14 CU.YD.
446 TYPE 2: (74.19)(0.0216049) = 1.60 CU.YD.
407 TACK COAT, AS PER PLAN: (74.19)(0.033333) = 2.47 GAL.

RIGHT SHOULDER (680.35 LIN. FT., WIDTH = 4 FT.)
446 TYPE I: (680.35)(0.0154321) = 10.50 CU.YD
446 TYPE 2: (680.35)(0.0216049) = 14.70 CU.YD.
407 TACK COAT, AS PER PLAN: (680.35)(0.033333) = 22.68 GAL.

STATION 1027+80.35 TO 1028+55.35(TRANSITION)
LENGTH = 75.00 LIN. FT.
PAVEMENT (WIDTH = 24 FT.)
446 TYPE I: (24)(0.2676505) = 6.42 CU.YD.
446 TYPE 2: (24)(0.0795718) = 1.91 CU.YD.
407 TACK COAT,AS PER PLAN: (24)(0.6250000) = 15.00 GAL.

LEFT SHOULDER: (WIDTH = 4 FT.)
446 TYPE I: (4)(0.2676505) = 1.07 CU.YD.
446 TYPE 2: (4)(0.0795718) = 0.32 CU.YD.
407 TACK COAT, AS PER PLAN: (4)(0.6250000) = 2.50 GAL.

RIGHT SHOULDER: (WIDTH = 4 FT.)
446 TYPE I: (4)(0.2676505) = 1.07 CU.YD.
446 TYPE 2: (4)(0.0795718) = 0.32 CU.YD.
407 TACK COAT, AS PER PLAN: = 2.50 GAL.

STATION 1031+79.15 TO 1032 +54.15 (TRANSITION)
LENGTH = 75.00 LIN. FT.
PAVEMENT (WIDTH = 24 FT.)
446 TYPE I: (24)(0.2676505) = 6.42 CU.YD.
446 TYPE 2: (24)(0.0795718) = 1.91 CU.YD.
407 TACK COAT, AS PER PLAN: (24)(0.6250000) = 15.00 GAL.

LEFT SHOULDER: (WIDTH = 4 FT.)
446 TYPE I: (4)(0.2676505) = 1.07 CU.YD.
446 TYPE 2: (4)(0.0795718) = 0.32 CU.YD.
407 TACK COAT, AS PER PLAN: (4)(0.6250000) = 2.50 GAL.

RIGHT SHOULDER (WIDTH = 4 FT.)
446 TYPE I: (4)(0.2676505) = 1.07 CU.YD.
446 TYPE 2: (4)(0.0795718) = 0.32 CU.YD.
407 TACK COAT, AS PER PLAN: (4)(0.6250000) = 2.50 GAL.

STATION 1032+54.15 TO 1036+13.21
LENGTH = 359.06 LIN.FT.
PAVEMENT (WIDTH = 24 FT.)
446 TYPE I: (359.06)(0.0925926) = 33.25 CU.YD.
446 TYPE 2: (359.06)(0.1296296) = 46.54 CU.YD.
407 TACK COAT, AS PER PLAN: (359.06)(0.2000000) = 71.81 GAL.

LEFT SHOULDER(215.85 LIN. FT.,WIDTH= 4 FT. AND TAPER SECTION)
446 TYPE I: (215.85)(0.0154321) = 3.33 CU.YD.
446 TYPE 2: (215.85)(0.0216049) = 4.66 CU.YD.
407 TACK COAT, AS PER PLAN: (215.85)(0.0333333) = 7.19 GAL.

446 TYPE I: [(4+10)/2]100(1.25/12)/27 = 2.70 CU.YD.
446 TYPE 2: [(4+10)/2]100(1.75/12)/27 = 3.78 CU.YD.
407 TACK COAT, AS PER PLAN: [(4+10)/2](100/9)(0.075) = 5.83 GAL.

RIGHT SHOULDER (319.06 LIN. FT.,WIDTH = 4 FT.)
446 TYPE I: (319.06)(0.0154321) = 4.92 CU.YD.
446 TYPE 2: (319.06)(0.0216049) = 6.89 CU.YD.
407 TACK COAT, AS PER PLAN: (319.06)(0.0333333) = 10.64 GAL.

STATION 1036+13.21 TO 1039 +48.41
LENGTH = 335.20 FT.
PAVEMENT (IRREGULAR SECTION)
(34)(100)+[(56+53)/2](230) =15935.00 SQ.FT.
446 TYPE I: (15935)(1.25/12)/27 = 61.48 CU.YD.
446 TYPE 2: (15935)(1.75/12)/27 = 86.07 CU.YD.
407 TACK COAT, AS PER PLAN: (15935/9)(0.075) = 132.79 GAL.

LEFT SHOULDER (235.2 LIN. FT.,WIDTH= 8 FT.)
446 TYPE I: (235.2)(0.0308642) = 7.26 CU.YD.
446 TYPE 2: (235.2)(0.0432099) = 10.16 CU.YD.
407 TACK COAT, AS PER PLAN: (235.2)(0.0666667) = 15.68 GAL.

RIGHT SHOULDER (256.31 LIN. FT.,WIDTH = 4 FT.;78.89 LIN. FT.,WIDTH = 8 FT.)
446 TYPE I:(256.31)(0.0154321)+(78.89)(0.0308642) = 6.39 CU.YD.
446 TYPE 2: (256.31)(0.0216049)+(78.89)(0.0432099) = 8.95 CU.YD.
407 TACK COAT, AS PER PLAN: (256.31)(0.0333333)+(78.89)(0.0666667) = 13.80 GAL.

STATION 1039+48.41 TO 1046+75
LENGTH = 726.59 LIN. FT.
PAVEMENT (WIDTH=53FT.)
446 TYPE I: (53)(726.59)(1.25/12)/27 = 148.57 CU.YD.
446 TYPE 2: (53)(726.59)(1.75/12)/27 = 208.00 CU.YD.
407 TACK COAT, AS PER PLAN: (53)(726.59)(1/9)(0.075) = 320.91 GAL.

LEFT SHOULDER (636.75 LIN. FT., WIDTH = 8 FT.)
446 TYPE I: (636.75)(0.0308642) = 19.65 CU.YD.
446 TYPE 2: (636.75)(0.0432099) = 27.51 CU.YD.
407 TACK COAT, AS PER PLAN: (636.75)(0.0666667) = 42.45 GAL.

RIGHT SHOULDER (451.59 LIN. FT.,WIDTH = 8 FT.)
446 TYPE I: (451.59)(0.0308642) = 13.94 CU.YD.
446 TYPE 2: (451.59)(0.0432099) = 19.51 CU.YD.
407 TACK COAT,AS PER PLAN: (451.59)(0.0666667) = 30.11 GAL.

STATION 1046+75 TO 1047+50 (TRANSITION)
LENGTH = 75.00 LIN. FT.
PAVEMENT (WIDTH= 53 FT.)
446 TYPE I: (53)(0.2676505) = 14.19 CU.YD.
446 TYPE 2: (53)(0.0795718) = 4.22 CU.YD.
407 TACK COAT,AS PER PLAN:(53)(0.6250000) = 33.13 GAL.

LEFT SHOULDER (WIDTH = 8 FT.)
446 TYPE I: (8)(0.267505) = 2.14 CU.YD.
446 TYPE 2: (8)(0.0795718) = 0.64 CU.YD.
407 TACK COAT, AS PER PLAN: (8)(0.6250000) = 5.00 GAL.

Revised: 11-30-88

PAVEMENT REPLACEMENT QUANTITIES

Computations By Initials KMS Date 12/4/87
Computations Checked By Initials MMK Date 12/4/87
Final Revisions By Initials Date

FHWA REGION	STATE	PROJECT	
5	OHIO		

TRUMBULL COUNTY
TRU-5B-0.00

25/213

FULL DEPTH PAV. REPAIR

EB/WB	STATION FROM	STATION TO	LANE	605 LONGITUDINAL AGGREGATE DRAIN LIN. FT.	252 FULL DEPTH RIGID PAVEMENT REMOVAL AND FLEXIBLE REPLACEMENT SQ. YD.	252 FULL DEPTH PAVEMENT SAWING LIN. FT.
EB	1028+90		DRIVE		2	22
EB	1029+30		DRIVE		1	12
EB	1030+34		SCL		1	14
EB	1030+00	1031+40	PASS	101	133	124
EB	1030+80	1031+20	DRIVE		53	104
EB	1031+67		PASS		1	14
EB	1031+90		DRIVE		11	40
EB	1037+17		DRIVE		4	30
EB	1046+90		PASS		1	12
EB	1050+85		DRIVE		1	10
EB	1055+72		DRIVE		1	12
EB	1068+16		PASS		3	20
EB	1073+42		DRIVE		1	14
EB	1074+98		DRIVE		1	12
EB	1080+30		DRIVE		1	14
EB	1084+88		DRIVE,PASS		1	14
EB	1086+65		PASS		7	34
EB	1102+62		DRIVE,PASS	3	2	26
EB	1103+03		PASS	5	5	28
EB	1103+03		DRIVE,PASS	3	4	28
EB	1116+42		DRIVE		1	12
EB	1116+70	1116+85	DRIVE	16	20	54
EB	1117+10		DRIVE	9	11	32
EB	1117+28		PASS		7	34
EB	1117+28		DRIVE		1	14
EB	1122+80		PASS	3	1	10
EB	1124+79		PASS		1	14
EB	1154+50		PASS		3	24
EB	1165+10		PASS		3	24
EB	1176+95		PASS		2	22
EB	1179+35		DRIVE		2	22
EB	1185+28		PASS		2	22
EB	1189+50		DRIVE	5	4	26
EB	1189+75		DRIVE		4	30
EB	1190+25		DRIVE		2	22
EB	1193+44		PASS		7	34
EB	1198+05		DRIVE		1	10
EB	1209+50	1210+15	DRIVE	66	25	72
EB	544+55		DRIVE		1	14
EB	553+70	554+50	DRIVE		27	60
EB	564+10	564+70	DRIVE		20	40
EB	592+65		PASS	2	1	14
EB	599+75		DRIVE		1	14
EB	601+40		DRIVE		3	20
EB	614+74		DRIVE		1	14
EB	626+27		PASS	4	2	18
EB	628+46		DRIVE		1	12
EB	716+42		PASS		1	14
EB	719+90		DRIVE		1	14
EB	720+32		DRIVE		1	14
EB	720+71		DRIVE		2	20
	EASTBOUND SUB-TOTAL			217	393	1316
WB	716+26		DRIVE		1	14
WB	706+56		PASS	7	8	30
WB	650+00	651+53	DRIVE		4	30
WB	648+15	648+53	DRIVE		3	28
WB	628+62		DRIVE		1	14
WB	615+42		PASS		1	14
WB	613+51		PASS	3	3	26
WB	591+31		PASS		1	12

FULL DEPTH PAV. REPAIR (CONT.')

EB/WB	STATION FROM	STATION TO	LANE	605 LONGITUDINAL AGGREGATE DRAIN LIN. FT.	252 FULL DEPTH RIGID PAVEMENT REMOVAL AND FLEXIBLE REPLACEMENT SQ. YD.	252 FULL DEPTH PAVEMENT SAWING LIN. FT.
WB	586+49		PASS		1	12
WB	585+36		PASS		1	12
WB	565+67		DRIVE		1	12
WB	560+52		DRIVE,PASS,SCL	7	12	72
WB	558+43		SCL	4	4	27
WB	558+00		SCL	3	3	26
WB	548+62		PASS	3	1	10
WB	544+43	544+91	DRIVE	49	64	72
WB	544+43	544+64	PASS	22	28	45
WB	542+10	542+71	DRIVE		4	30
WB	1217+95		DRIVE		1	14
WB	1211+00	1211+27	DRIVE		36	78
WB	1190+75		DRIVE		2	20
WB	1159+49		PASS	9	11	32
WB	1152+25		PASS	7	8	42
WB	1150+29		DRIVE		1	12
WB	1149+02		PASS		1	14
WB	1135+90		PASS	13	3	36
WB	1135+56		PASS	7	8	30
WB	1126+68		PASS	4	4	27
WB	1117+93		DRIVE		1	14
WB	1106+34		DRIVE		2	20
WB	1100+10		DRIVE,PASS	5	11	52
WB	1088+65		PASS		2	22
WB	1080+44		PASS		2	22
WB	1080+90	1081+16	DRIVE		6	30
WB	1075+08		PASS	7	8	30
WB	1073+50		PASS	61	80	84
WB	1068+92	1069+78	DRIVE	87	115	110
WB	1057+10		PASS		3	26
WB	1047+04	1047+28	PASS	25	32	48
WB	1041+10		DRIVE		2	24
WB	1039+66		DRIVE		3	28
WB	1039+35		DRIVE		1	12
WB	1039+10		DRIVE		1	10
WB	1037+63		DRIVE		4	30
	WESTBOUND SUB-TOTAL			323	489	1353
MARKET ST.	1039+10		RAMP A		1	14
	1049+00	1049+27	RAMP C		24	70
U.S.R. 422	1115+39		RAMP E		2	19
	1117+11		RAMP E	7	5	22
	1117+39		RAMP E		1	12
	1121+98		RAMP E		1	14
	1137+53		RAMP C		3	19
PERKINS JONES RD.	647+10		RAMP E	3	3	28
	648+47		RAMP F	3	3	26
	658+36		RAMP F		2	20
	657+38		RAMP G	9	11	32
	657+71		RAMP G		20	54
	658+10		RAMP G	17	29	48
	664+82		RAMP G	4	4	27
	665+35		RAMP G		4	28
S.R. 5	723+00		RAMP L	8	10	33
	731+34		RAMP K		1	14
	RAMP SUB-TOTAL			51	124	480
	FULL DEPTH TOTALS			591	1006	3149
	25% OF TOTAL FOR FUTURE DETERIORATION			148	252	787
	GRAND TOTALS			739	1258	3936
	QUANTITIES CARRIED TO GENERAL SUMMARY					

PARTIAL DEPTH PAV. REPAIR

STATION FROM	STATION TO	251 PARTIAL DEPTH PAVEMENT JOINT REPAIR SQ. YD.
MAINLINE PAVEMENT		
EASTBOUND LANES		
1026+00	1046+44	259
1045+51	1076+00	271
1078+00	1101+00	205
1102+00	1127+00	222
1129+00	1141+00	152
1141+00	1223+00	875
1226+00	1230+89	52
534+31	722+60	1513
EASTBOUND SUB-TOTAL		3549
WESTBOUND LANES		
1024+00	1069+00	300
1076+00	1103+50	293
1129+00	1190+00	793
1190+00	1210+00	293
1210+00	1222+50	272
1226+00	1230+89	106
534+31	722+60	1484
WESTBOUND SUB-TOTAL		3541
RAMPS		
MARKET ST.		751
U.S.R. 422		908
S.R. 45		764
PERKINS-JONES RD.		633
S.R. 5		364
RAMP SUB-TOTAL		3420
PARTIAL DEPTH TOTALS		10510
25% OF TTL. FOR FUTURE DETERIORATION		2628
GRAND TOTAL		13138
QUANTITIES CARRIED TO GENERAL SUMMARY		

LEGEND

DRIVE - Driving Lane
PASS - Passing Lane
SCL - Speed Change Lane
RAMP - Ramp Lane

Revised: 11-30-88

Computations By Initials KJM Date 11/26/97
Computations Checked By Initials KMS Date 11/30/97
Final Revisions By Initials Date

FHWA REGION	STATE	PROJECT	
5	OHIO		

TRUMBULL COUNTY
TRU-5B- 0.00

SEEDING

SHEET	659 SEEDING & MULCHING SQ. YD.
102	200
103	408
104	478
105	176
106	360
107	555
108	579
109	518
111	340
112	635
113	657
114	643
115	571
117	343
118	770
119	789
120	883
121	634
122	669
123	689
124	452
125	129
126	755
127	835
128	911
129	612
130	663
131	678
132	599
133	157
69	417
70	1073
72	628
73	554
74	256
75	639
76	554
77	717
78	603
79	558
80	523
81	565
82	472
83	367
84	513
85	327
86	339
87	629
88	279
89	482
90	473
91	338
92	612
93	415
94	482
95	590
96	440
97	639
TOTAL (CARRIED TO GEN. SUM.)	31,172

EARTHWORK

SHEET	203 EXCAVATION CU. YD.	203 EMBANKMENT CU. YD.
102	612	357
103	1266	762
104	1560	939
105	534	279
106	1491	932
107	2250	1425
108	2440	1598
109	2121	1380
111	988	622
112	1967	1264
113	1989	1276
114	2032	1319
115	1700	1117
117	36	156
118	150	528
119	164	695
120	116	792
121	118	671
122	69	749
123	77	759
124	30	382
125	7	60
126	45	560
127	53	679
128	52	792
129	90	569
130	114	604
131	105	696
132	52	517
133	6	98
69	3	29
70	113	52
72	6	97
73	13	85
74	4	36
75	5	86
76	27	55
77	39	51
78	56	34
79	38	31
80	3	71
81	3	65
82	11	11
83	16	15
84	18	26
85	4	12
86	17	22
87	7	60
88	0	8
89	10	31
90	36	20
91	3	6
92	37	19
93	13	26
94	25	18
95	43	24
96	16	33
97	14	38
TOTALS (CARRIED TO GENERAL SUMMARY)	22,814	23638

EXISTING CENTERLINE MONUMENT LOCATION TABLE

CONTROL PT.	STATION	CONTROL PT.	STATION	CONTROL PT.	STATION
T.S.	1024+82.00	P.T.	1149+77.90	P.O.T.	570+00.00
S.C.	1028+82.00	P.O.T.	1155+00.00	P.O.T.	579+80.64
P.O.C.	1032+80.00	P.O.T.	1162+00.00	P.C.	592+73.92
C.S.	1041+51.44	T.S.	1165+22.53	P.O.C.	604+98.61
S.T.	1045+51.44	P.O.C.	1172+27.11	P.T.	614+39.93
P.O.T.	1050+00.00	S.T.	1179+31.83 BACK	P.C.	626+42.73
P.O.T.	1055+00.00		1179+31.70 AHEAD	P.O.C.	630+93.91
P.O.T.	1060+00.00	T.S.	1182+29.49	P.T.	636+84.87
P.C.	1068+47.55	P.O.C.	1190+00.00	P.O.T.	645+00.00
P.O.C.	1080+00.00	P.O.C.	1195+00.00	P.O.T.	653+00.00
P.O.C.	1085+00.00	C.S.	1199+96.16	P.C.	659+48.11
P.O.C.	1090+00.00	S.T.	1203+96.16	P.O.C.	666+22.77
P.T.	1098+37.32	P.C.	1208+16.34	P.O.C.	675+00.00
P.O.T.	1104+00.00	P.O.C.	1215+00.00	P.T.	684+14.30
P.O.T.	1115+00.00	P.O.C.	1221+50.00	P.O.T.	710+00.00
P.O.T.	1120+00.00	P.O.C.	1225+00.00	P.C.	718+57.47
P.O.T.	1127+00.00	P.T.	1230+89.58 BACK	P.C.C.	720+57.48
P.C.	1130+26.11		534+31.06 AHEAD	P.O.C.	728+82.93
P.O.C.	1135+00.00	P.C.	539+80.10	P.O.C.	737+77.48
P.O.C.	1140+00.00	P.T.	553+41.29		
P.O.C.	1145+00.00	P.O.T.	561+00.00		

RAISED PAVEMENT MARKERS REMOVED

LOCATION	202 RAISED PAVEMENT MARKERS REMOVED FOR STORAGE EACH
EASTBOUND MAINLINE	464
WESTBOUND MAINLINE	472
MARKET STREET	
RAMP A	70
RAMP B	52
RAMP C	20
RAMP D	23
U.S.R. 422	
RAMP A	16
RAMP B	20
RAMP C	30
RAMP D	23
RAMP E	30
S.R. 45	
RAMP A	24
RAMP B	17
RAMP C	24
RAMP D	38
PERKINS-JONES ROAD	
RAMP E	33
RAMP F	24
RAMP G	20
RAMP H	35
TOTAL (CARRIED TO GENERAL SUMMARY)	1435

JOINT TREATMENT (Cont.)

SAWING AND SEALING ASPHALT CONCRETE PAVEMENT JOINTS

General Information:
- Transverse Joint Spacing = 40'
- Length of Joint Including Paved Berm
  - ~Mainline Pavement = 36'
  - ~Ramp Pavement = 22'
  - ~Speed Change Lane = 20'

Mainline
E.B. Lanes
~Sta. 1023+75 to Sta. 1046+43.97, Length = 2268.97 Lin.Ft.
W.B. Lanes
~Sta. 1023+75 to Sta. 1045+51.44, Length = 2176.44 Lin.Ft.
E.B. and W.B. Lanes
~Sta. 1045+51.44 to Sta. 1230+89.58,
Length = (2)(18,538.14) = 37,076.28 Lin.Ft.
Sta. Equa. ~ Sta. 1230+89.58(Bk.) = Sta. 534+31.06(Ahd)
~Sta. 534+31.06 to Sta. 735+25,
Length = (2)(20,093.94) = 40,187.88 Lin.Ft.
Subtotal = 81,709.57 Lin.Ft.
Deduct for Mainline Bridges = -2127.22 Lin.Ft.
Total = 79,582.35 Lin.Ft.

Number of Mt. Transverse Contraction Joints
79,582.35 ÷ 40 = 1990 Joints
Quantity (Mt.) = (1990)(36) = 71,640 Lin.Ft.

Ramps and Speed Change Lanes
Market Street Interchange
~Length of Speed Change Lanes = 3275.18 Lin.Ft.
~Length of Ramps = 3880.82 Lin.Ft.

U.S.R. 422 Interchange
~Length of Speed Change Lanes = 4155.67 Lin.Ft.
~Length of Ramps = 6432.06 Lin.Ft.

S.R. 45 Interchange
~Length of Speed Change Lanes = 3159.03 Lin.Ft.
~Length of Ramps = 4629.13 Lin.Ft.

Perkins-Jones Road Interchange
~Length of Speed Change Lanes = 3397.92 Lin.Ft.
~Length of Ramps = 3614.31 Lin.Ft.

S.R. 5 Interchange
~Length of Speed Change Lanes = 1214.99 Lin.Ft.
~Length of Ramps = 2145.56 Lin.Ft.

Total Length of Speed Change Lanes = 15,202.79 Lin.Ft.
Total Length of Ramps = 20,701.88 Lin.Ft.

Number of Ramp & SCL. Transverse Contraction Joints
~Speed Change Lanes = 15,202.79 ÷ 40 = 381 Joints
~Ramps = 20,701.88 ÷ 40 = 518 Joints

Quantity (Ramp & SCL) = (381)(20)+(518)(22) = 19,016 Lin.Ft.
Quantity (Mt.) - from Above = 71,640 Lin.Ft.
Total = 90,656 Lin.Ft.

CRACK SEALING

Transverse Cracks
~From Survey performed by District 4 Construction Department, 34,000 lbs. total of Crack Sealant should be used. Use 65% of this for cracks 3/4" and wider.

CRACK SEALING (CONT.)

Transverse Cracks (Cont)
Quantity:
Item Special - Crack Sealing, Hot Applied,
705.04 = (34,000)(0.75) = 25,500 Lbs.
Item 805 - Rubberized Sand-Asphalt as per plan
= (34,000)(0.25)(1/2000) = 4.25 Tons

Longitudinal Joint
~The Longitudinal Joint at the centerline of pavement will be sealed using Item Special-Crack Sealing, Hot Applied, 705.04

Quantity: (79,582.35)(1/5280)(6.5)(550) = 53,884 Lbs.

Total Quantities:
Item Special - Crack Sealing, Hot Applied, 705.04
= 25,500 + 53,884 = 79,384 Lbs.
Item 805 - Rubberized Sand-Asphalt as per plan
= 4.25 Tons

SUMMARY OF JOINT TREATMENT QUANTITIES
(Carried to General Summary)

Item Special - Sawing and Sealing Asphalt Concrete Pavement Joints, 705.04 = 90,656 Lin.Ft.
Item Special - Crack Sealing, Hot Applied, 705.04 = 79,384 Lbs.
Item 805 - Rubberized Sand-Asphalt as per plan = 4.25 Tons

MISCELLANEOUS COMPUTATIONS

659 Seeding and Mulching
From Seeding Table (this sheet) = 31,172 Sq Yds.
From Sheet 38 = 1914 Sq Yds.
From Sheet 98 = 2904 Sq Yds.
Net Seeding & Mulching = 35,990 Sq Yds.

659 Commercial Fertilizer
Net Seeding and Mulching = 35,990 Sq Yds.
Quantity: (35990)(9)(1/1000)(20)(1/2000) = 3.24 Tons
(Carried to General Summary)

FHWA REGION	STATE	PROJECT	
5	OHIO		

27/213

Computations By Initials K.M.S.	Date 12/4/87
Computations Checked By Initials DJM	Date 12/4/87
Final Revisions By Initials	Date

TRUMBULL COUNTY
TRU-58-000

ITEM SPECIAL-ASPHALT UNDERSEALING OF EXISTING CONCRETE PAVEMENT.

THIS WORK SHALL CONSIST OF FURNISHING AND PUMPING AN ASPHALT MATERIAL UNDER PORTLAND CEMENT CONCRETE PAVEMENT.

ASPHALT MATERIAL SHALL MEET THE REQUIREMENTS OF AASHTO DESIGNATION M-238 "ASPHALT FOR UNDERSEALING PORTLAND CEMENT CONCRETE PAVEMENT" EXPECT THE FLASH POINT WHICH SHALL BE A MINIMUM OF 500 F.

PRESSURE DISTRIBUTOR TANKS SHALL HAVE A MINIMUM CAPACITY OF 500 GALLONS. THEY SHALL BE FULLY INSULATED, EQUIPPED WITH A REMOVABLE MANHOLE COVER, AND SHALL HAVE SUITABLE STRAINERS AT THE OUTLET TO THE PUMPS. THE DISTRIBUTOR SHALL HAVE AN ACCURATE VOLUME MEASURING DEVISE OR A CALIBRATED TANK FOR MEASURING THE CONTENTS OF THE TANK.

THE DISTRIBUTOR SHALL BE CAPABLE OF HEATING THE ASPHALT MATERIAL TO THE REQUIRED TEMPERATURE AND CIRCULATING IT DURING THE ENTIRE HEATING PROCESS. ALL NECESSARY EQUIPMENT FOR ACCURATELY DETERMINING THE TEMPERATURE OF THE ASPHALT SHALL BE PROVIDED. THE DISTRIBUTOR SHALL BE EQUIPED WITH PUMPS CAPABLE OF APPLYING ASPHALT MATERIAL AT A PRESSURE OF 25 P.S.I. TO 60 P.S.I. A METALLIC HOSE SHALL CONNECT THE ASPHALT TANK THROUGH THE ASPHALT PUMP TO A ONE INCH NOZZLE AND A RETURN METALLIC HOSE SHALL CONNECT THE NOZZLE TO THE ASPHALT DISTRIBUTOR TANK.

A TAPERED NOZZLE SHALL BE USED IN PUMPING THE ASPHALT MATERIAL UNDER THE PAVEMENT. THE NOZZLE SHALL BE EQUIPPED WITH A 3-WAY VALVE DESIGNED TO CIRCULATE THE ASPHALT BACK TO THE DISTRIBUTOR TANK WHEN PUMPING OPERATIONS ARE NOT IN PROGRESS. A COMBINATION FOOT STAND AND SHIELD SHALL BE ATTACHED TO THE NOZZLE IN SUCH A WAY THAT AFTER THE NOZZLE HAS BEEN FIRMLY WEDGED INTO THE HOLE, THE OPERATOR CAN HOLD IT IN POSITION BY STANDING ON THE WINGS OF THE STAND.

AIR OR FLECTRIC POWERED DRILLS CAPABLE OF DRILLING HOLES NOT TO EXCEED 1-1/2 INCH IN DIAMETER THROUGH THE PAVEMENT SHALL BE USED. THE DRILLS SHALL BE OPERATED IN SUCH A MANNER THAT "OUT-OF-ROUND" HOLES WILL NOT BE PRODUCED.

AIR COMPRESSORS TO BE USED FOR BLOWING AIR INTO CAVITIES BENEATH THE PAVEMENT SHALL BE CAPABLE OF DELIVERING A MINIMUM OF 105 CU. FT. OF AIR PER MINUTE.

ALL STORAGE TANKS, PIPES, BOOSTER TANKS, AND DISTRIBUTORS USED IN STORING AND HANDLING THE ASPHALT SHALL BE KEPT CLEAN AND IN GOOD OPERATING CONDITION AT ALL TIMES SO THERE WILL BE NO CONTAMINATION OF THE ASPHALT WITH FOREIGN MATIERIAL.

ASPHALT INJECTION HOLES SHALL BE DRILLED IN A PATTERN INDICATED ON THE PLANS OR DESIGNATED BY THE ENGINEER. THEY SHALL NOT BE LARGER THAN 1-1/2 INCH IN DIAMETER. THEY SHALL BE DRILLED VERTICALLY AND ROUND AND TO A DEPTH SUFFICIENT TO PENETRATE ANY STABILIZED BASE BUT SHALL NOT PENETRATE A GRANULAR SUBBASE MORE THAN 2 INCHES. IN CASE OF AN EXISTING BITUMINOUS OVERLAY ON THE RIGID PAVEMENT, HOLES SHALL BE DRILLED THROUGH THE OVERLAY AND THE UNDERLYING CONCRETE AND THE NOZZLE SHALL BE OF SUFFICIENT LENGTH THAT IT CAN BE DRIVEN TO A SNUG FIT INTO THE CONCRETE SLAB WITHOUT THE UPPER PART OF THE NOZZLE BEING BELOW THE ELEVATION OF THE EXISTING BITUMINOUS SURFACE. UNSATISFACTORY OR "OUT-OF-ROUND" HOLES THAT DO NOT ACCOMODATE THE NOZZLE SHALL BE PLUGGED AND NEW HOLES DRILLED.

THE ASPHALT MATERIAL SHALL BE HEATED TO A TEMPERATURE OF 400 F TO 450 F BEFORE PUMPING OPERATIONS BEGIN. WHEN PUMPED UNDER THE PAVEMENT, THE TEMPERATURE OF THE ASPHALT SHALL NOT BE LESS THAN 350 F. THE ASPHALT SHALL BE CIRCULATED THROUGH THE NOZZLE PRIOR TO PUMPING IN ORDER TO FREE AND WARM THE NOZZLE AND HOSES. ASPHALT HEATED TO A TEMPERATURE OF 500 F OR MORE WILL BE REJECTED.

WATER, LIMEWATER, OR SAND SHALL BE SPRINKLED AROUND THE HOLE PRIOR TO PUMPING TO PREVENT ANY ASPHALT THAT MAY LEAK FROM AROUND THE NOZZLE FROM STICKING TO THE PAVEMENT. PRIOR TO PUMPING THE ASPHALT, COMPRESSED AIR AT APPROXIMATELY 70 P.S.I. PRESSURE SHALL BE BLOWN THROUGH THE HOLE FOR NOT LESS THAN 15 SECONDS NOR MORE THAN 60 SECONDS. THE AIR HOSE NOZZLE SHALL BE FIRMLY WEDGED INTO THE HOLE.

THE ASPHALT NOZZLE SHALL BE INSERTED IN THE HOLE, DRIVEN TO A SNUG FIT, AND PUMPING OF THE ASPHALT CONTINUED UNTIL THE UNDERSEALING IS COMPLETE. A POSITIVE MEANS OF MONITORING LIFT FROM A STABLE REFERENCE POINT SHALL BE PERFORMED BY THE CONTRACTOR USING EQUIPMENT SATISFACTORY TO THE ENGINEER. PAVEMENT WHICH HAS BEEN RAISED IN EXCESS OF 1/8 INCH SHALL BE DEEMED UNACCEPTABLE. NO PAYMENT FOR ANY UNDERSEALING MATERIAL AT THE SUBJECT LOCATION SHALL BE MADE WHEN THIS TOLERANCE HAS BEEN EXCEEDED. IF ASPHALT SEEPS FROM THE JOINTS OR CRACKS BEFORE THE UNDERSEALING IS COMPLETE, THE PUMPING SHALL BE STOPPED UNTIL THE EXTRUDED ASPHALT HAS CONGEALED.

UPON COMPLETION OF THE PUMPING OPERATION, THE NOZZLE SHALL BE REMOVED AND A TEMPORARY PLUG DRIVEN INTO THE HOLE WITHOUT AN EXCESSIVE BACK-FLOW OF ASPHALT. AFTER THE ASPHALT HAS HARDENED, THE PLUG SHALL BE REMOVED AND A HARDWOOD PLUG AT LEAST 3 INCHES LONG AND A MINIMUM OF 1/16 INCH LARGER THAN THE DIAMETER OF THE DRILLED HOLE SHALL BE DRIVEN FLUSH WITH THE SURFACE OF THE CONCRETE PAVEMENT. ANY ASPHALT EXTRUDED DURING THE PUMPING OPERATIONS SHALL BE IMMEDIATELY CLEANED FROM THE PAVEMENT SURFACE AND REMOVED FROM THE PROJECT.

ASPHALT UNDERSEALING SHALL NOT BE PERFORMED WHEN DAYTIME TEMPERATURES ARE BELOW 40 F OR IF THE SUBGRADE OR BASE MATERIAL IS FROZEN OR CONTAINS AN ABNORMAL AMOUNT OF MOISTURE FROM RECENT RAINFALL. THE DRILLING AND PUMPING OPERATIONS SHALL BE DONE ONLY WHEN GENERAL WETHER ARE SUITABLE.

WHERE TRAFFIC IS MAINTAINED, A MOVABLE SHIELD AT LEAST 4 FT. BY 4 FT. IN SIZE SHALL BE PLACED BETWEEN THE PUMPING OPERATIONS AND TRAFFIC. TRAFFIC MAY BE PERMITTED TO USE THE PUMPED AREAS UPON REMOVAL OF THE TEMPORARY PLUGS AND AFTER THE HARDWOOD PLUGS ARE DRIVEN.

HOLES DRILLED THROUGH THE EXISTING PAVEMENT, AT THE LOCATION AND TO THE DEPTH SHOWN ON THE PLANS OR AS DIRECTED BY THE ENGINEER, WILL BE MEASURED AS THE NUMBER OF HOLES. PAYMENT FOR EACH HOLE WILL BE FULL COMPENSATION FOR DRILLING, TEMPORARY PLUGGING, AND FINAL PLUGGING OF THE HOLE.

ASPHALT MATERIAL WILL BE MEASURED BY THE GALLON AT THE APPLIED TEMPERATURE AND CONVERTED TO 60 F BY THE APPROPRIATE COLUMN OF TABLE 25 OF "ASTM-IP PETROLEUM MEASUREMENT TABLES", ASTM DESIGNATION D-1250. THE UNIT PRICE PER GALLON SHALL BE FULL COMPENSATION FOR THE FURNISHING OF ALL LABOR, MATERIALS, EQUIPMENT AND TOOLS, AND ALL OTHER COSTS NECESSARY FOR AND INCIDENTAL TO THE UNDERSEALING OF THE PAVEMENT AT THE DESIGNATED LOCATIONS IN ACCORDANCE WITH THESE SPECIFICATIONS AND THE PLAN REQUIREMENTS OR AS DESIGNATED BY THE ENGINEER.
PAYMENT WILL BE MADE AT THE CONTRACT PRICE FOR:

ITEM	UNIT	DESCRIPTION
SPECIAL 3750	EACH	HOLES FOR UNDERSEALING
SPECIAL 52,800	GALLONS	UNDERSEALING MATERIAL

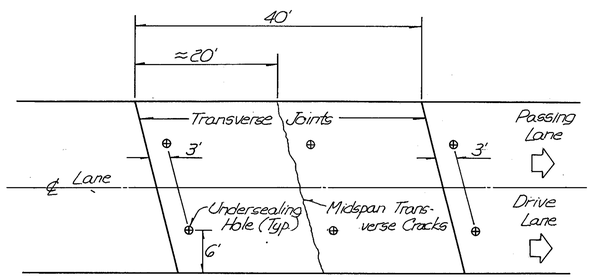

NOTE: ALL TRANSVERSE JOINTS AND MIDSPAN TRANSVERSE CRACKS AT ALL LOCATIONS LISTED ABOVE WILL BE UNDERSEALED. JOINT SPACING IS 40' WITH MIDSPAN CRACKS AT APPROXIMATELY 20'. UNDERSEALING HOLES SHALL BE DRILLED NOT MORE THAN 3' PAST EACH TRANSVERSE JOINT & CRACK AND IN THE CENTER OF EACH LANE AS SHOWN IN THE DIAGRAM ABOVE. FOR QUANTITIES SEE THIS SHEET.

ASPHALT UNDERSEALING LOCATIONS

EASTBOUND

Driving Lane :
Sta. 1025+25 to Sta. 1059+45
Sta. 1113+83 to Sta. 1118+60
Sta. 1131+78 to Sta. 1140+23
Sta. 1193+50 to Sta. 1230+89*

Passing Lane :
Sta. 1034+50 to Sta. 1061+00
Sta. 1114+75 to Sta. 1117+50
Sta. 1134+50 to Sta. 1138+00
Sta. 1202+50 to Sta. 1222+00

Ramp Lane :
Sta. 1026+90 to Sta. 1031+90
Sta. 1045+50 to Sta. 1052+50
Sta. 1113+50 to Sta. 1116+14
Sta. 1227+50 to Sta. 1230+00

DRIVING LANE
STA. 562+35 to STA. 591+75
STA. 600+40 to STA. 644+20

PASSING LANE
STA. 572+40 to STA. 582+00
STA. 615+25 to STA. 644+00

WESTBOUND

Driving Lane :
Sta. 1024+50 to Sta. 1059+45
Sta. 1113+83 to Sta. 1118+60
Sta. 1131+78 to Sta. 1140+23
Sta. 1193+50 to Sta. 1230+89*

Passing Lane :
Sta. 1036+00 to Sta. 1047+00
Sta. 1114+75 to Sta. 1117+50
Sta. 1134+50 to Sta. 1138+00
Sta. 1202+50 to Sta. 1222+00

Ramp Lane :
Sta. 1036+66 to Sta. 1041+50
Sta. 1050+75 to Sta. 1058+00
Sta. 1226+50 to Sta. 1230+00

DRIVING LANE
STA. 558+50 to STA. 578+30
STA. 602+50 to STA. 619+30
STA. 629+75 to STA. 649+75

PASSING LANE
STA. 558+75 to 577+95
STA. 602+50 to 619+30
STA. 630+00 to 649+80

ESTIMATED QUANTITIES: CARRIED TO GENERAL SUMMARY
HOLES = 3750 HOLES
ASPHALT UNDERSEALING MATERIAL = 52,800 GAL.
* DEDUCT FOR STRUCTURE.

5/29/86

FHWA REGION	STATE	PROJECT	
5	OHIO		

28
213

TRUMBULL COUNTY
TRU-5B-0.00

TRANSITION DETAILS

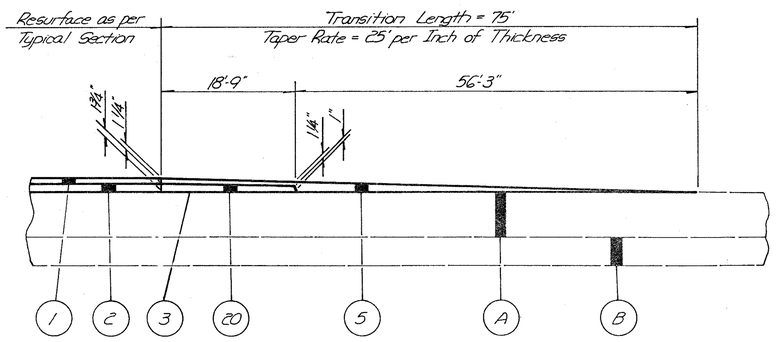

END WORK

AND ALL TRANSITIONS ON MARKET ST.

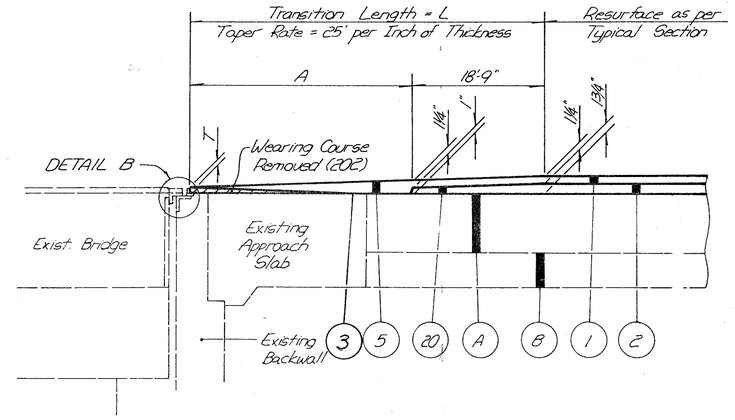

L=37'6", A=18'9", T=0'1½"
for Structures:

TRU-5-0086 Rt. & Lt.
TRU-5-0183 Rt. & Lt.
TRU-5-0735 Rt. & Lt.

L=50', A=31'3", T=0'1"
for Structures:

TRU-5-0363 Rt. & Lt.
TRU-5-0401 Rt. & Lt.
TRU-5-0525 Rt. & Lt.
TRU-5-0716 Rt. & Lt.

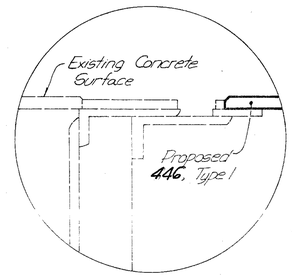

DETAIL B

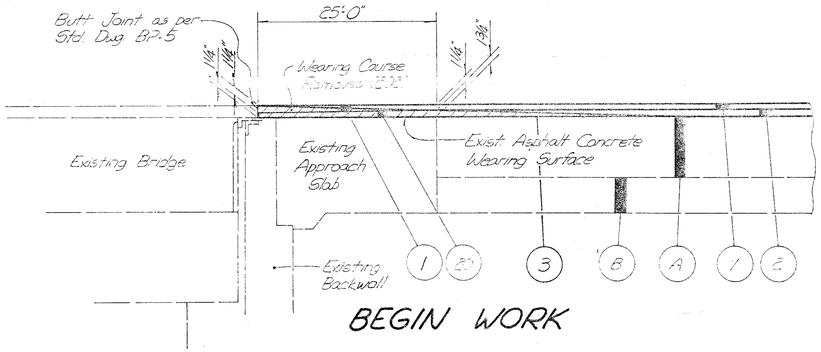

BEGIN WORK

EXISTING LEGEND

(A) 10" Reinforced Portland Cement Concrete Pavement

(B) Subbase

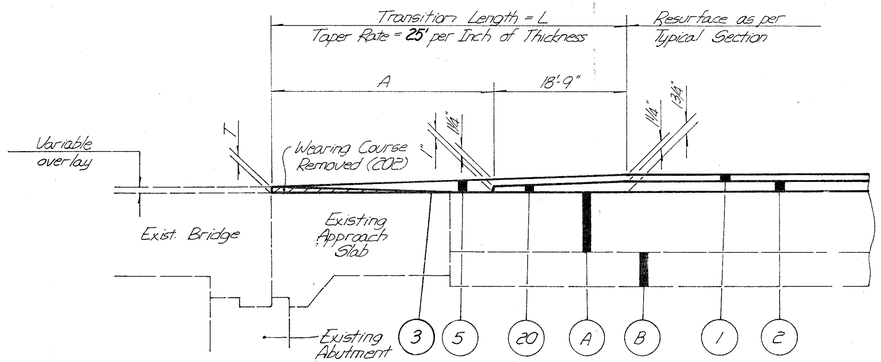

L=37'6", A=18'9", T=0'1½"
for Structures:

TRU-5-0134 Rt. & Lt.
TRU-5-0425 Rt. & Lt.

L=50', A=31'3", T=0'1"
for Structures:

TRU-5-0549 Rt. & Lt.

PROPOSED LEGEND

(1) Item 446 1½" Asphalt Concrete Surface Course, Type 1, AC-20

(2) Item 446 1¾" Asphalt Concrete Intermediate Course, Type 2, AC-20

(3) Item 407 Tack Coat as per plan

(5) Item 446 Asphalt Concrete, Surface Course, Type 1 (Variable Thickness)

(20) Item 446 Asphalt Concrete, Intermediate Course, Type 2 (Variable Thickness)

Revised: 11-30-88

TRANSITION DETAILS

FHWA REGION	STATE	PROJECT	
5	OHIO		

29/213

TRUMBULL COUNTY
TRU-5B-0.00

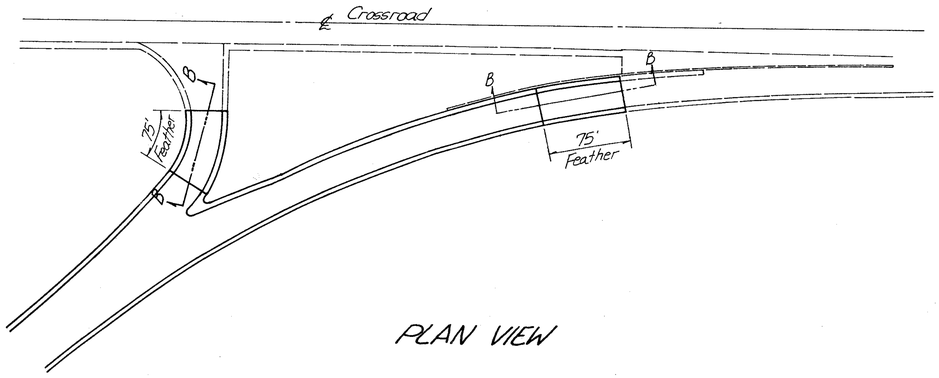

PLAN VIEW

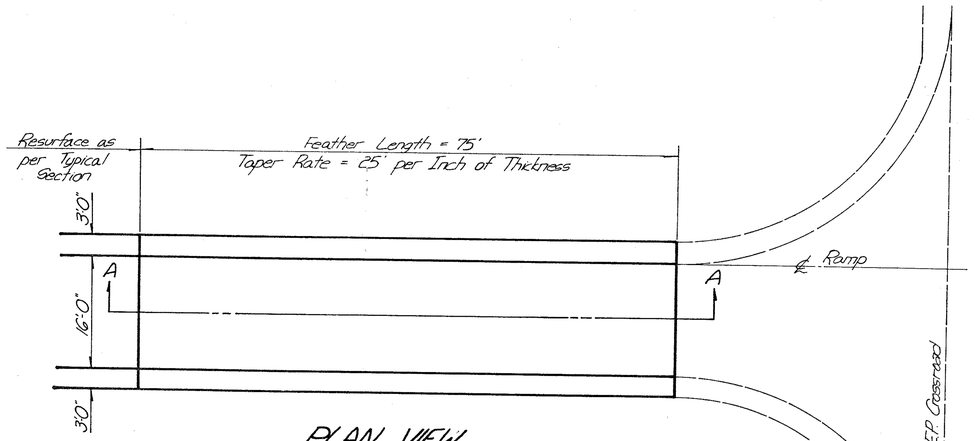

PLAN VIEW

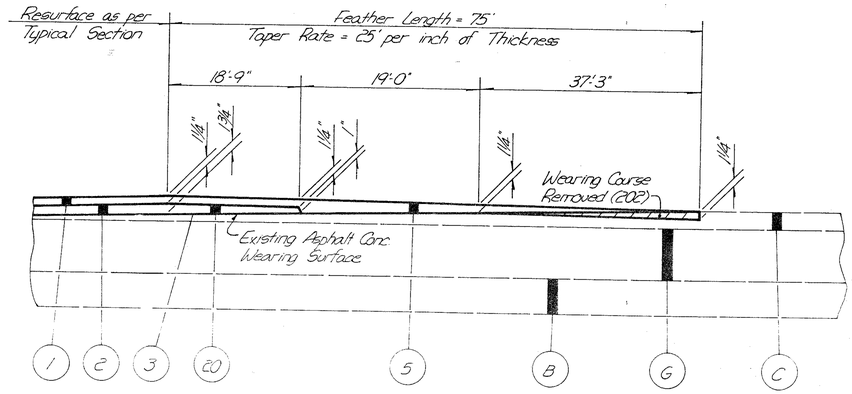

SECTION B-B
Detail Applies @

S.R. 422 ~ Ramp - A, B, C, E
S.R. 5 ~ Ramp - K

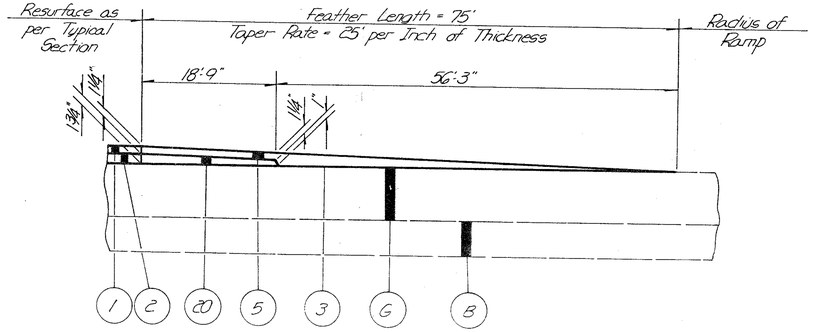

SECTION A-A
Detail Applies @

S.R. 422 ~ Ramp - D, D Connector
S.R. 45 ~ Ramp - A, B, C, D
Perkins-Jones Rd ~ Ramp - E, F, G, H, N
S.R. 5 ~ Ramp - I, K - Connector, M

EXISTING LEGEND

- (B) Subbase
- (C) Asphalt Concrete
- (G) 9" Reinforced Portland Cement Concrete Pavement

PROPOSED LEGEND

- (1) Item 446 1 1/4" Asphalt Concrete Surface Course, Type 1, AC-20
- (2) Item 446 1 3/4" Asphalt Concrete Intermediate Course, Type 2, AC-20
- (3) Item 407 Tack Coat, as per plan
- (5) Item 446 Asphalt Concrete, Surface Course, Type 1 (Variable Thickness) AC-20
- (20) Item 446 Asphalt Concrete, Intermediate Course, Type 2 (Variable Thickness) AC-20

Revised: 11-30-88

FHWA REGION	STATE	PROJECT	
5	OHIO		

30/213

TRUMBULL COUNTY
TRU-5B-000

CURB REMOVAL DETAILS

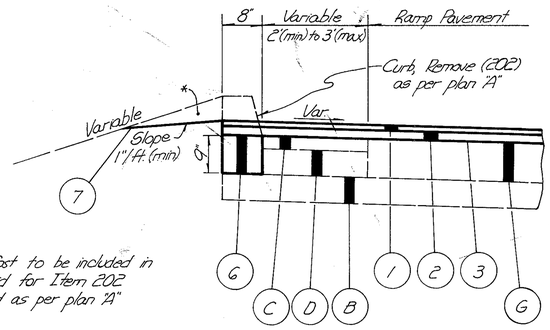

*-Excavation Cost to be included in unit price bid for Item 202 Curb Removed as per plan "A"

Detail Applies @

Market St. Ramp "A" (Sta. 1038+10)
Market St. Ramp "B" (Sta. 1043+07)
Market St. Ramp "C" (Sta. 1043+17)
U.S. 422 Ramp "C" (Sta 1135+35)
U.S. 422 Ramp "D" (Sta. 1126+51)
U.S. 422 Ramp "E" (Sta. 1117+14)
S.R. 45 Ramp "D" (Sta. 536+21)
Perkins Jones Rd. Ramp "E" (Sta. 648+50)
Perkins Jones Rd. Ramp "H" (Sta. 664+50)
S.R. 5 Ramp "K" (Sta. 733+31)

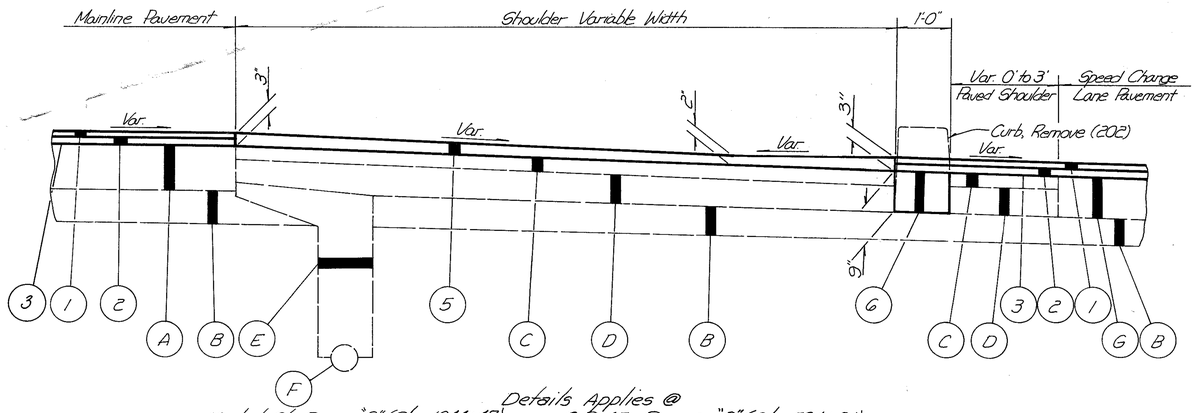

Details Applies @

Market St. Ramp "B" (Sta. 1044+47)
Market St. Ramp "C" (Sta. 1041+57)
U.S. 422 Ramp "C" (Sta. 1137+28)
U.S. 422 Ramp "E" (Sta. 1115+27)
S.R. 45 Ramp "D" (Sta. 534+31)
Perkins Jones Rd. Ramp "E" (Sta. 647+09)
Perkins Jones Rd. Ramp "H" (Sta. 665+55)
S.R. 5 Ramp "K" (Sta. 734+55)

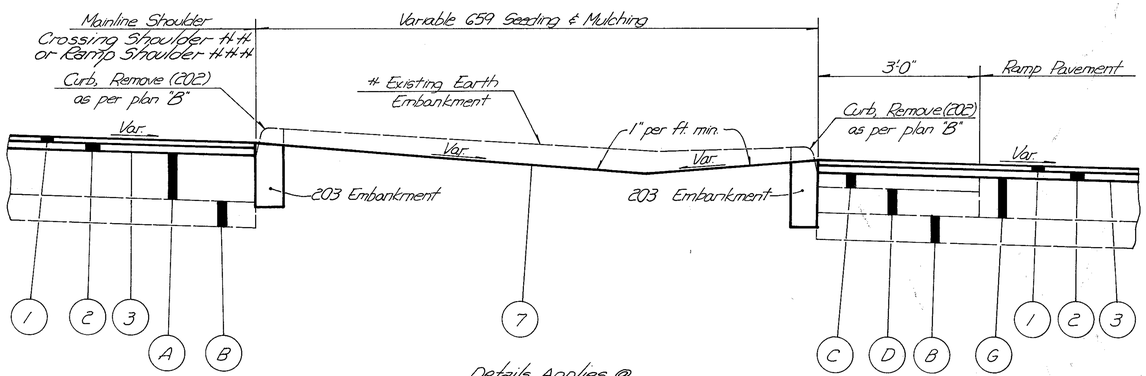

Market St. Ramp "B" (Sta. 1033+23)
U.S. 422 Ramp "A" (Sta. 1113+44)
U.S. 422 Ramp "B" (Sta. 1116+56)
U.S. 422 Ramp "C" (Sta. 1128+12)
U.S. 422 Ramp "D" (Sta. 1127+76)

Details Applies @

U.S. 422 Ramp "D" (Sta. 1136+14)
U.S. 45 Ramp "A" (Sta. 536+48)
U.S. 45 Ramp "C" (Sta. 553+50)
Perkins Jones Rd. Ramp "F" (Sta. 648+79.5)
Perkins Jones Rd. Ramp "G" (Sta. 663+82)

* - Excavation, and 203 Embankment to be included with the unit bid price for 202 Curb Removed as per plan "B".

H.H. - Where crossroad shoulder exists, no 846 pavement overlay.

H.H.H. - Where ramp shoulder exists, existing pavement is the same as opposite side of detail.

PROPOSED LEGEND

1. Item 446 1¼" Asphalt Concrete Surface Course, Type 1, AC-20
2. Item 446 1¾" Asphalt Concrete Intermediate Course, Type 2, AC-20
3. Item 407 Tack Coat as per plan
5. Item 446 Asphalt Concrete Surface Course, Type 1, (Variable Thickness) AC-20
6. Item 301 Bituminous Aggregate Base, AC-20
7. Item 659 Seeding and Mulching (See General Notes)

EXISTING LEGEND

- A. 10" Reinforced Portland Cement Concrete Pavement
- B. Subbase
- C. Asphalt Concrete
- D. Aggregate Base
- E. Drainage Material
- F. 6" Pipe Underdrain
- G. 9" Reinforced Portland Cement Concrete Pavement

Revised: 11-30-88

FHWA REGION	STATE	PROJECT	
5	OHIO		

31/213

TRUMBULL COUNTY
TRU-5B-0.00

CURB & PAVEMENT REMOVAL DETAILS

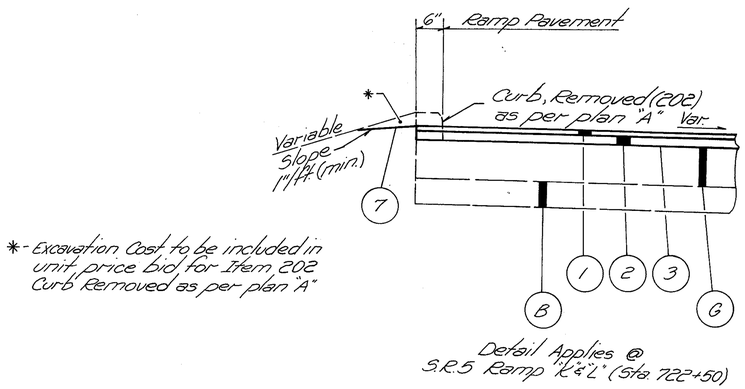

* - Excavation Cost to be included in unit price bid for Item 202 Curb Removed as per plan "A"

Detail Applies @
S.R.5 Ramp "K & L" (Sta. 722+50)

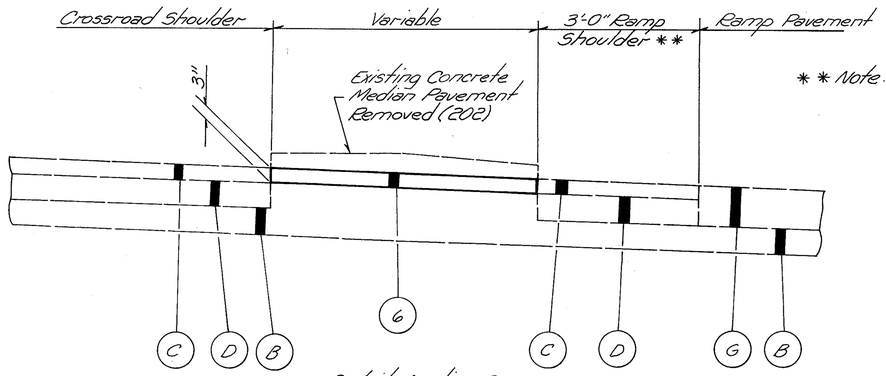

** Note: No existing shoulder at Ramp "C"

Detail Applies @
Market St. Ramp "B" (Sta. 1032+79)
Market St. Ramp "C" (Sta. 1050+78)

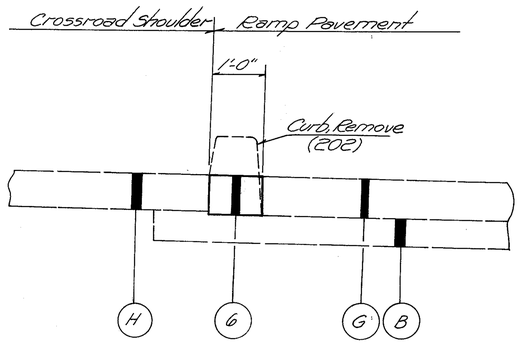

Detail Applies @
Market St. Ramp "A" (Sta. 1039+12)
U.S.422 Ramp "D" (Sta. 1121+43)

PROPOSED LEGEND

(1) Item 446 1¼" Asphalt Concrete Surface Course, Type 1, AC-20
(2) Item 446 1¾" Asphalt Concrete Intermediate Course, Type 2, AC-20
(3) Item 407 Tack Coat, as per plan
(6) Item 301 Bituminous Aggregate Base, AC-20
(7) Item 659 Seeding and Mulching (See General Notes)

EXISTING LEGEND

(B) Subbase
(C) Asphalt Concrete
(D) Aggregate Base
(G) 9" Reinforced Portland Cement Concrete Pavement
(H) Existing Concrete

Revised: 11-30-88

FHWA REGION	STATE	PROJECT	
5	OHIO		

32/213

TRUMBULL COUNTY
TRU-5B-000

MEDIAN BARRIER, CURB, AND PAVEMENT REMOVAL

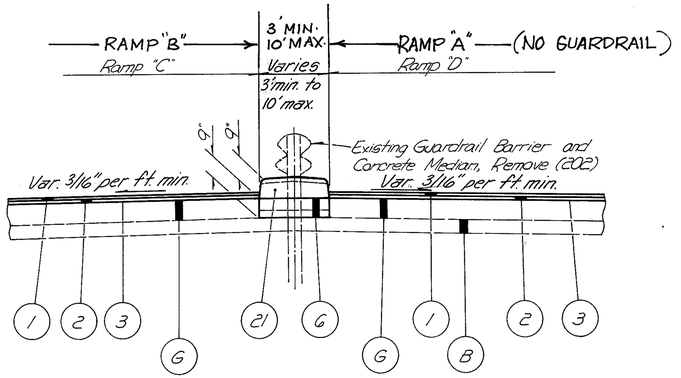

Detail Applies @
Market St. Ramp "C&D" (Sta. 1041+72 to Sta 1044+33)
S.R. 45 RAMP A&B (STA. 546+00 to STA 550+53 ℄ RAMP "A")

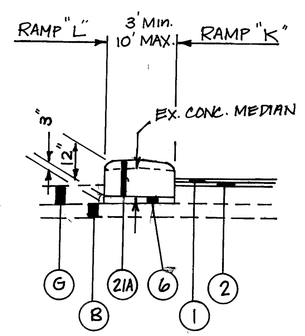

SR 5 RAMP K&L (STA. 730+16 to 731+23.64 ℄ "K")
(STA 725+48.32 to 722+49.70 ℄ "L")

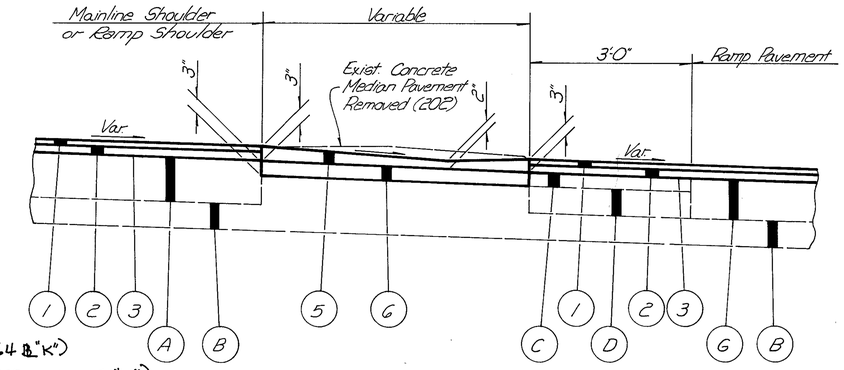

Detail Applies @
Market St. Ramp "A" (Sta. 1031+84)
Market St. Ramp "A" (Sta 1036+68)
Market St. Ramp "D" (Sta 1050+39)
U.S. 422 Ramp "A" (Sta. 1131+11)

Detail Applies @
U.S. 422 Ramp "B" (Sta. 1116+14)
U.S. 422 Ramp "C" (Sta. 1127+80)
U.S. 422 Ramp "D" (Sta. 1128+49)
U.S. 422 Ramp "D" (Sta. 1136+74)

Detail Applies @
S.R. 45 Ramp "A" (Sta. 536+15)
S.R. 45 Ramp "C" (Sta. 554+20)
Perkins Jones Rd. Ramp "F" (Sta. 648+48.5)
Perkins Jones Rd. Ramp "G" (Sta. 644+52)
S.R. 5 Ramp "K" (Sta. 733+10)

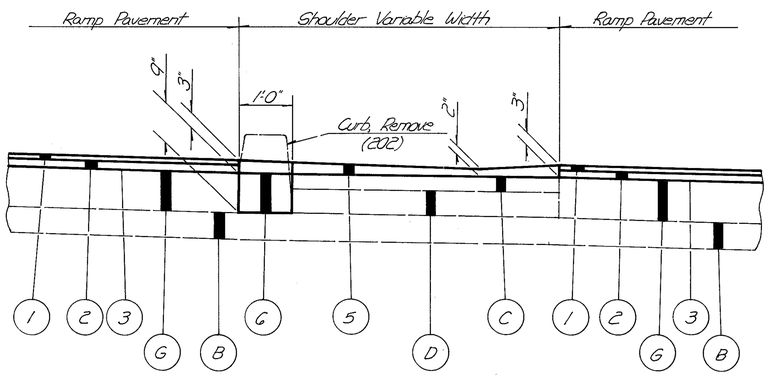

Detail Applies @
Perkins Jones Rd. Ramp "N&H" (Sta. 657+30)

PROPOSED LEGEND

(1) Item 446 1¼" Asphalt Concrete Surface Course, Type 1, AC-20
(2) Item 446 1¾" Asphalt Concrete Intermediate Course, Type 2, AC-20
(3) Item 407 Tack Coat, as per plan
(5) Item 446 Asphalt Concrete Surface Course, Type 1 (Variable Thickness), AC-20
(6) Item 301 Bituminous Aggregate Base, AC-20
(21) Item 612 Concrete Median
(21A) Item 612 Concrete Median, As Per Plan.

EXISTING LEGEND

(A) 10" Reinforced Portland Concrete Pavement
(B) Subbase
(C) Asphalt Concrete
(D) Aggregate Base
(G) 9" Reinforced Portland Cement Concrete Pavement

Revised: 11-30-88

CONCRETE BARRIER OBSTRUCTION PROTECTION

Computations By Initials RJS Date 11/30/87	
Computations Checked By Initials MMS Date 11/30/87	
Final Revisions By Initials Date	

FHWA REGION	STATE	PROJECT	
5	OHIO		

33
213

TRUMBULL COUNTY
TRU-5B-0.00

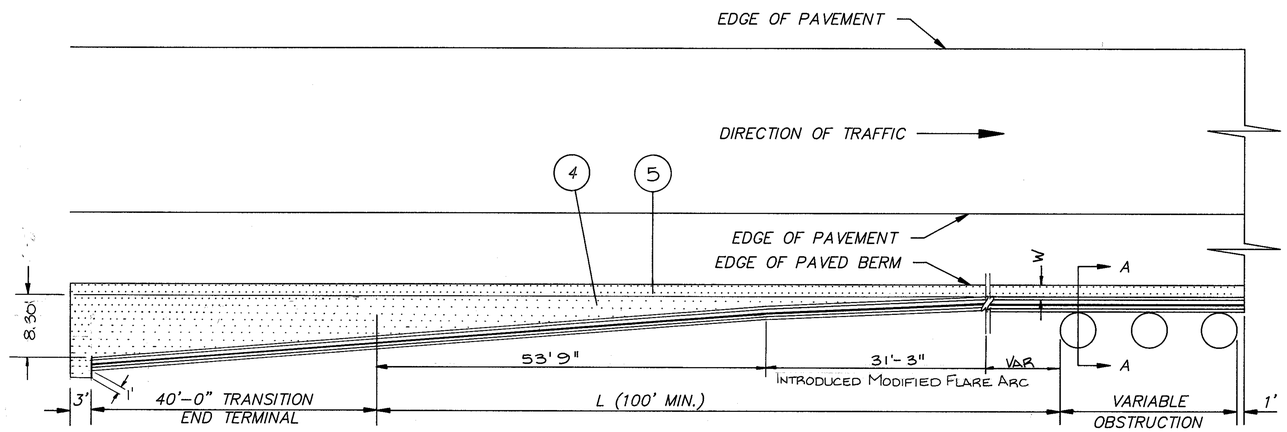

PLAN VIEW

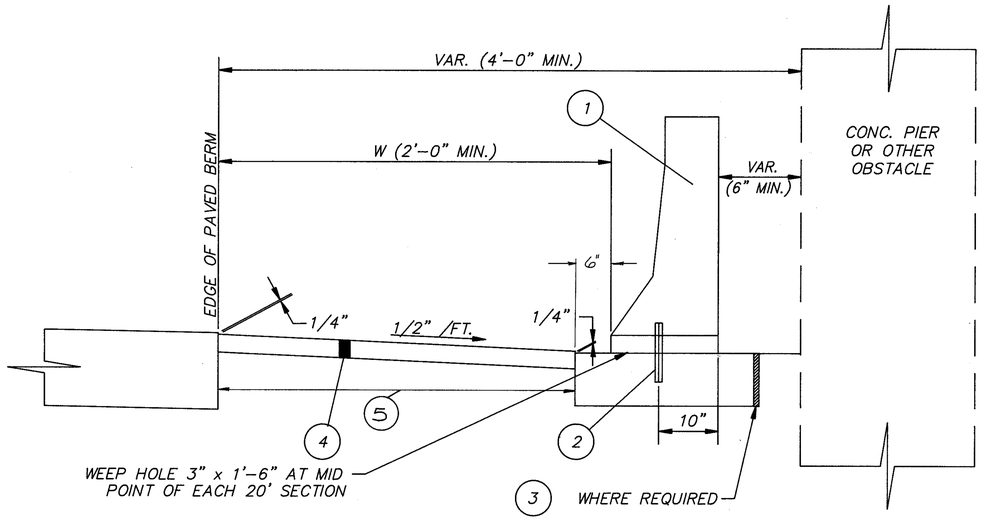

SECTION A-A

FOR QUANTITIES SEE SHEETS 67 & 68

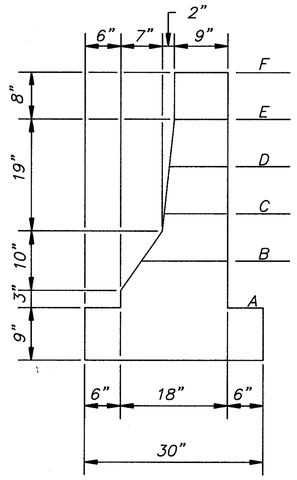

END VIEW

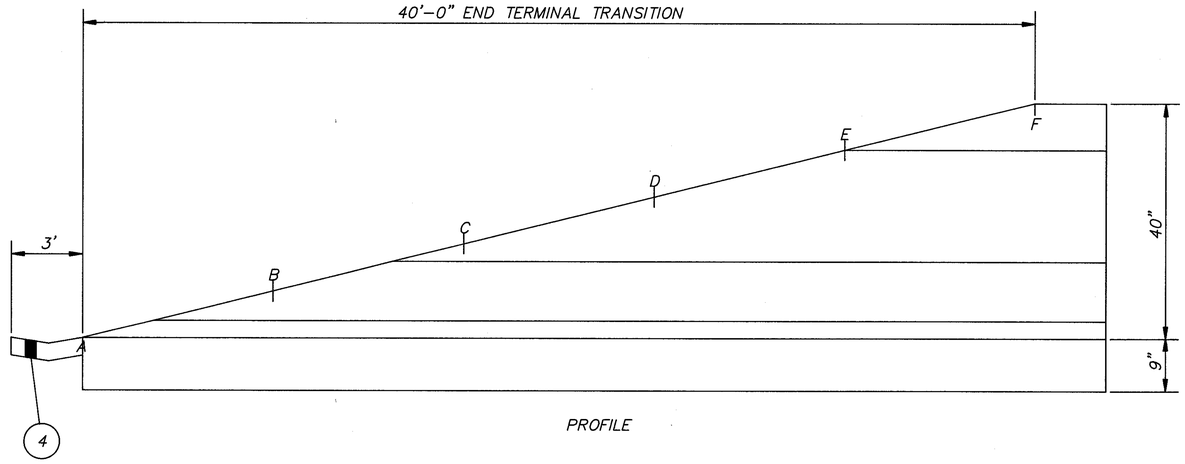

PROFILE

END TERMINAL DETAIL

CONCRETE BARRIER VARIABLES

OVERHEAD ROUTE	SIDE	W	L
MARKET ST.	Outside$^{\phi}$	6.62'	100'
	Median$^{\phi}$	13.62'	100'
	Median*	13.62'	100'
	Outside*	2.0'	120'
EAGLE CREEK RD.	LT.	2.42	120'
	RT.	2.83'	120'
LEAVITT RD.	LT.	2.0'	220'
	RT.	2.0'	120'
PERKINS-JONES RD.	LT.	2.0'	120'
	RT.	2.0'	120'

* = E.B. STATIONING
ϕ = W.B. STATIONING

LEGEND

(1) ITEM 622 CONCRETE BARRIER, TYPE D, AS PER PLAN

(2) NO. 8 DEFORMED BARS 12" LONG SPACED ON 4' CENTERS. THE END TERMINAL WILL REQUIRE SHORTER DOWELS BETWEEN POINTS A & B OMIT DOWELS WHEN TOP IS CONSTRUCTED INTEGRAL WITH THE BASE. PAYMENT INCLUDED WITH 622 CONCRETE BARRIER, TYPE D, AS PER PLAN.

(3) EXPANSION JOINT, 3/4" MIN. PREFORMED FILLER 705.03. PAYMENT INCLUDED WITH 622 CONCRETE BARRIER, TYPE D, MODIFIED AS PER PLAN.

(4) ITEM 448 ASPHALT SURFACE COURSE, TYPE 1, AC-20 2"

(5) ITEM 203 LINEAR GRADING METHOD 2.

Rev., 11/30/88
REVISED 4-5-89

CONCRETE BARRIER OBSTRUCTION PROTECTION

LINEAR GRADING

FHWA REGION	STATE	PROJECT		
5	OHIO			

34
213

TRUMBULL COUNTY
TRU-5B-0.00

METHOD 1

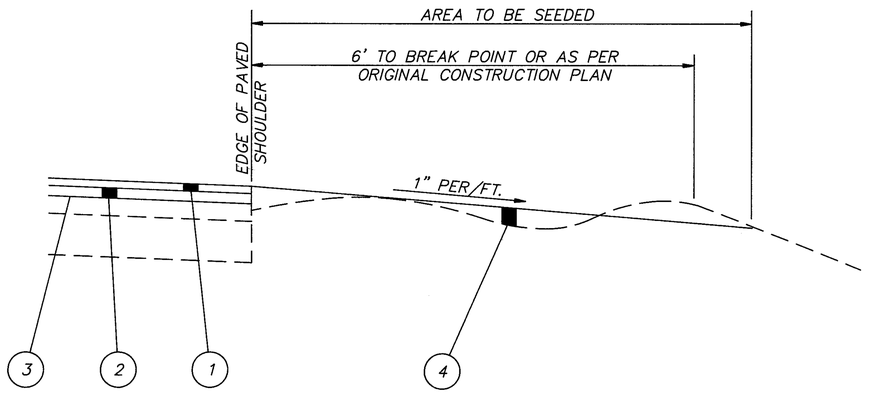

LINEAR GRADING – METHOD ONE
THIS WORK SHALL CONSIST OF REGRADING THE EXISTING SHOULDER ON NON–GUARDRAIL AREAS ON MAINLINE OUTSIDE SHOULDERS AND RAMPS (BOTH INSIDE AND OUTSIDE SHOULDERS) AS INDICATED IN THE SKETCH. REGRADING WILL BE ACCOMPLISHED BY REMOVING EXCESS TURF BETWEEN THE EDGE OF THE PAVED SHOULDER AND THE BREAK OVER POINT USING A SLOPE OF APPROXIMATELY 1"/FT.

EXCESS MATERIAL SHALL BE WINDROWED ON THE SHOULDER AND REMOVED BY THE CONTRACTOR. ANY VOIDS OR IRREGULARITIES BETWEEN THE EDGE OF PAVED SHOULDER AND BREAK POINT SHALL BE FILLED AND ADEQUATELY COMPACTED USING THE EXCESS MATERIAL. EXISTING RUTTED AREAS CAUSED BY SURFACE EROSION SHALL BE SCARIFIED PRIOR TO FILLING. ITEM 617 COMPACTED AGGREGATE SHALL BE PROVIDED WHERE WINDROWED MATERIAL IS NOT AVAILABLE. QUANTITY SHALL BE AS REQUIRED TO COMPLETE THE TYPICAL SECTION AS SHOWN.

AFTER GRADING OPERATION IS COMPLETED, ANY DISTURBED SOIL SHALL BE SEEDED AND MULCHED AS PER ITEM 659. ALL COMPACTION SHALL BE AS PER ITEM 203.

THE METHOD OF MEASUREMENT SHALL BE CONSIDERED AS ONE STATION EQUAL TO 100 LIN. FT. MEASURED SEPARATELY FOR EACH DIRECTIONAL LANE AND SHALL INCLUDE ALL WORK AND MATERIAL REQUIRED AS DESCRIBED ABOVE INCLUDING THE NECESSARY SEEDING.

THERE MAY BE AREAS WHERE LINEAR GRADING MAY NOT BE REQUIRED IN THE FIELD. THE ENGINEER SHALL DETERMINE THESE LOCATIONS AND APPROPRIATE DEDUCTIONS MADE AS A RESULT OF THIS FIELD INVESTIGATION.

THE COST OF THE ABOVE OPERATION SHALL BE INCLUDED IN THE PRICE BID ITEM 203, LINEAR GRADING METHOD 1.

ESTIMATED QUANTITIES: FOR QUANTITIES SEE SHEET 68.

PROPOSED LEGEND

1. ITEM 446 1 1/4" ASPHALT CONCRETE SURFACE COURSE, TYPE 1, AC–20
2. ITEM 446 1 3/4" ASHPALT CONRETE INTERMEDIATE COURSE, TYPE 2, AC–20
3. ITEM 407 TACK COAT, AS PER PLAN
4. ITEM 617 COMPACTED AGGREGATE, TYPE A
8. ITEM 448 2" ASPHALT CONCRETE SURFACE COURSE, TYPE 1, AC–20
9. ITEM 408 BITUMINOUS PRIME COAT (SEE SPEC. THIS SHEET)
10. SOIL STERILIZER (SEE SPEC. THIS SHEET)
11. ITEM 203 Borrow

METHOD 2

* NOTE: 1'–0" RAMP SHOULDER
0'–0" SPEED CHANGE LANE

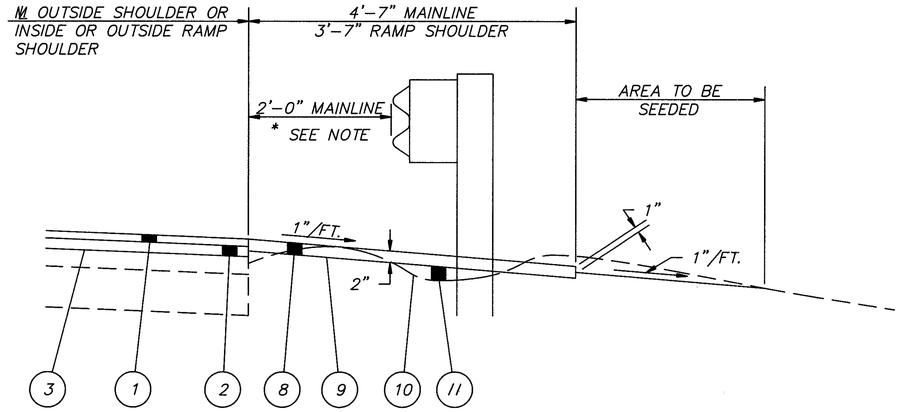

LINEAR GRADING – METHOD TWO
THIS WORK SHALL CONSIST OF REGRADING THE EXISTING SHOULDER ON GUARDRAIL AREAS** ON MAINLINE OUTSIDE SHOULDERS AND RAMPS (BOTH INSIDE AND OUTSIDE SHOULDERS). IT SHALL CONSIST OF REMOVING THE EXCESS TURF IN THE VICINITY OF THE GUARDRAIL TO PROVIDE A POSITIVE SLOPE AWAY FROM THE PAVED SHOULDER. ITEM 203 BORROW SHALL BE PROVIDED WHERE WINDROWED MATERIAL IS NOT AVAILABLE. QUANTITY SHALL BE AS REQUIRED TO COMPLETE THE TYPICAL SECTION AS SHOWN. A SLOPE OF APPROXIMATELY 1"/FT. SHALL BE PROVIDED IN THESE AREAS.

THE AREA BETWEEN THE PAVED SHOULDER AND 1 FT. BEYOND THE REAR OF THE EXISTING GUARDRAIL POSTS SHALL BE EXCAVATED SUFFICIENTLY IN DEPTH TO PROVIDE A 2 IN. ITEM 448 ASPHALT CONCRETE SURFACE COURSE, TYPE1, AC-20.

A DROP OF APPROXIMATELY 1 IN. BETWEEN THIS 448 TREATMENT AND THE TURF SHALL BE MAINTAINED AS INDICATED IN THE SKETCH. EXCESS MATERIAL BEYOND THE EXISTING GUARDRAIL MAY BE WASTED OVER THE SLOPE, AT THE DIRECTION OF THE ENGINEER. PRIOR TO PLACING THIS MATERIAL A SOIL STERILIZER, USING EITHER OF THE FOLLOWING BRANDS, SHALL BE APPLIED BETWEEN THE PAVED SHOULDER AND 1 FT. BEYOND THE POST AT THE RATE AND METHOD RECOMMENDED BY THE MANUFACTURER: (1) PRAMITOL 25E BY CIBA–GEIGY, (2) KOVAR BY DIAMOND SHAMROCK, OR APPROVED EQUAL. A PRIME COAT SHALL BE APPLIED AT THE RATE OF 0.5 GAL./S.Y. BEFORE APPLYING THE ASPHALT CONCRETE.

AREAS DISTURBED BEYOND THE 448 LIMIT SHALL BE SEEDED AND MULCHED AS PER 659. COMPACTION SHALL BE AS PER ITEM 203.

THE METHOD OF MEASUREMENT SHALL BE CONSIDERED AS ONE STATION EQUAL TO 100 LIN. FT. AND SHALL INCLUDE ALL WORK AND MATERIAL REQUIRED AS DESCRIBED ABOVE EXCEPT FOR ITEM 448 ASPHALT CONCRETE AND 408 PRIME COAT.

THE COST FOR THE ABOVE OPERATION SHALL BE INCLUDED IN THE PRICE BID ITEM 203 LINEAR GRADING METHOD 2.

** NOTE: FOR ADDITIONAL METHOD 2 LINEAR GRADING DETAILS SEE SHEET NUMBER 33 FOR CONCRETE BARRIER AREAS ON MAINLINE OUTSIDE AND INSIDE SHOULDERS

ESTIMATED QUANTITIES: FOR QUANTITIES SEE SHEET 68.

Revised: 11-30-88
Revised 4-5-89

LINEAR GRADING METHODS 1 AND 2

LONGITUDINAL AGGREGATE DRAIN, AS PER PLAN

FHWA REGION	STATE	PROJECT	
5	OHIO		

35/213

TRUMBULL COUNTY
TRU -5B- 0.00

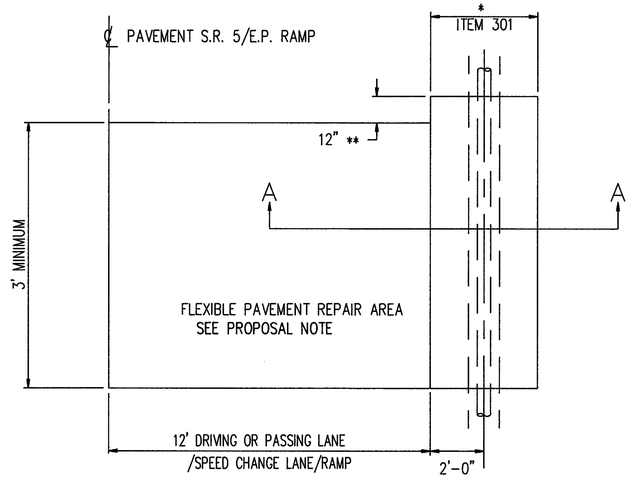

PLAN VIEW

* – SEE DETAILS AT RIGHT FOR WIDTH OF ITEM 301

** – THE 12" ADDITIONAL LONGITUDINAL AGGREGATE DRAIN LENGTH SHALL APPLY AT THE UP-GRADE END OF THE FLEXIBLE PAVEMENT REPAIR AREA.

– COST OF FURNISHING AND PLACING ITEM 301 SHALL BE INCLUDED IN THE UNIT COST BID PER LINEAR FOOT OF ITEM 605 LONGITUDINAL AGGREGATE DRAIN, AS PER PLAN.

– 4'-0" FOR INSIDE SHOULDER ON THE MAINLINE, 3'-0" FOR RAMP SHOULDERS.

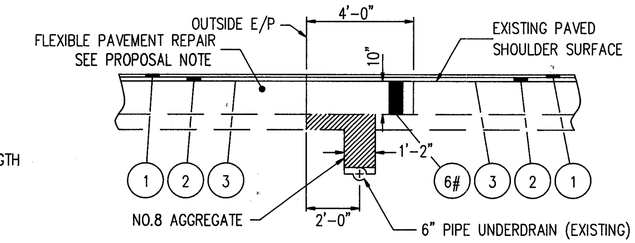

SECTION A–A
OUTSIDE SHOULDERS MAINLINE /SPEED CHANGE LANE

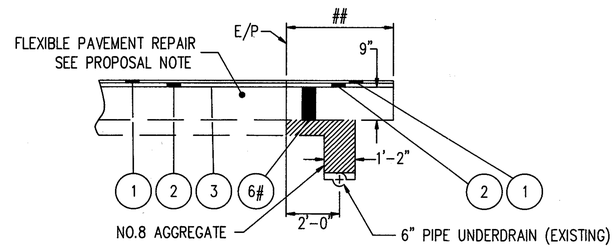

SECTION A–A
RAMP/INSIDE SHOULDERS MAINLINE

605 LONGITUDINAL AGGREGATE DRAIN, AS PER PLAN – IN ADDITION TO THE PROVISIONS OF ITEM 605, THE FOLLOWING SHALL APPLY TO THIS ITEM: THE CROSS-HATCHED AREAS NOTED AT RIGHT SHALL BE EXCAVATED TO THE BOTTOM OF DEPTHS SHOWN AND BACKFILLED EXCLUSIVELY WITH NO. 8 NATURAL AGGREGATE. NO SAND OR SLAG WILL BE PERMITTED. PAYMENT FOR THE ABOVE EXCAVATION, DISPOSAL OF EXCAVATED MATERIAL NO. 8 AGGREGATE, PLACING NO. 8 AGGREGATE, 301 MATERIAL AS NOTED, AND PLACING OF 301 MATERIAL AS NOTED SHALL ALL BE INCLUDED IN THE UNIT PRICE BID PER LINEAR FOOT OF "ITEM 605 LONGITUDINAL AGGREGATE DRAIN, AS PER PLAN" MEASURED PARALLEL TO THE PAVEMENT EDGE.

PROPOSED LEGEND

(1)	ITEM 446	1 1/4" ASPHALT CONCRETE SURFACE COURSE, TYPE 1, AC-20
(2)	ITEM 446	1 3/4" ASPHALT CONCRETE INTERMEDIATE COURSE, TYPE 2, AC-20
(3)	ITEM 407	TACK COAT, AS PER PLAN
(6)	ITEM 301	BITUMINOUS AGGREGATE BASE, AC-20
(8)	ITEM 605	LONGITUDINAL AGGREGATE DRAIN, AS PER PLAN

NOTE: FOR QUANTITIES SEE SHEET 25.

Revised: 11-30-88

MICROFILMED
OCT 28 1992

GENERAL SUMMARY

Computations By Initials KMS	Date 12/3/87
Computations Checked By Initials JMK	Date 12/3/87
Final Revisions By Initials	Date

FHWA REGION	STATE	PROJECT	
5	OHIO		

TRUMBULL COUNTY
TRU-5B-0.00

ITEM	SHEET NUMBER																		100 % STATE	25 % STATE 75 % FEDERAL	ITEM	QUANT.	UNIT	DESCRIPTION
			8	68		13	134-A	25	26	27	38	68	98	101	110	116	134	150						
																								ROADWAY
201																				LUMP	201	LUMP		CLEARING AND GRUBBING
202						5866														5866	202	5866	SQ.YD.	WEARING COURSE REMOVED
202											884									884	202	884	SQ.YD.	PAVEMENT REMOVED
202											1867									1867	202	1867	LIN.FT.	CURB REMOVED
202											1171									1171	202	1171	LIN.FT.	CURB REMOVED, AS PER PLAN "A"
202											1448									1448	202	1448	LIN.FT.	CURB REMOVED, AS PER PLAN "B"
202												28950.00							28950.00		202	28950.00	LIN.FT.	GUARDRAIL REMOVED FOR STORAGE, AS PER PLAN
202												1700.00							1700.00		202	1700.00	LIN.FT.	GUARDRAIL BARRIER DESIGN, REMOVED FOR STORAGE, AS PER PLAN.
202																535				535	202	535	LIN.FT.	FENCE REMOVED
202											21									21	202	21	EACH	CATCH BASIN REMOVED
202											6									6	202	6	EACH	CONCRETE PAD REMOVED, TYPE 1
202											1									1	202	1	EACH	CONCRETE PAD REMOVED, TYPE 2
202									1435											1435	202	1435	EACH	RAISED PAVEMENT MARKERS REMOVED FOR STORAGE
203									22814				57							22871	203	22871	CU.YD.	EXCAVATION NOT INCLUDING EMBANKMENT CONSTRUCTION
203									23638											23638	203	23638	CU.YD.	EMBANKMENT
203											7									7	203	7	CU.YD.	EMBANKMENT, AS PER PLAN
203												50								50	203	50	CU.YD.	BORROW
203												884								884	203	884	STATION	LINEAR GRADING, METHOD 1
203												238								238	203	238	STATION	LINEAR GRADING, METHOD 2
517												50.00								50.00	517	50.00	LIN.FT.	RAILING (NEW DEEP BEAM RAIL WITH EXISTING TUBULAR BACKUP AND EXISTING POSTS ON EXISTING ANCHORS) REBUILT
606												5743.75								5743.75	606	5743.75	LIN.FT.	GUARDRAIL, TYPE 5
606												19775.00								19775.00	606	19775.00	LIN.FT.	GUARDRAIL, TYPE 5 AS PER PLAN "A"
606												131.25								131.25	606	131.25	LIN.FT.	GUARDRAIL, TYPE 5 AS PER PLAN "B"
606												325.00								325.00	606	325.00	LIN.FT.	GUARDRAIL, BARRIER DESIGN, TYPE 5
606												31								31	606	31	EACH	ANCHOR ASSEMBLY, TYPE A
606												29								29	606	29	EACH	ANCHOR ASSEMBLY, TYPE T
606												21								21	606	21	EACH	ANCHOR ASSEMBLY, BARRIER DESIGN, TYPE A
606												46								46	606	46	EACH	BRIDGE TERMINAL ASSEMBLY, TYPE A
606												15								15	606	15	EACH	BRIDGE TERMINAL ASSEMBLY, TYPE B
606												2								2	606	2	EACH	BRIDGE TERMINAL ASSEMBLY, TYPE H
606												1								1	606	1	EACH	BRIDGE TERMINAL ASSEMBLY, TYPE J AS PER PLAN
607																519				519	607	519	LIN.FT.	FENCE, TYPE 47
615																	212			212	615	212	SQ.YD.	TEMPORARY PAVEMENT, CLASS B
																								EROSION CONTROL
207			500																	500	207	500	EACH	STRAW OR HAY BALES
207			7198																	7198	207	7198	SQ.YD.	TEMPORARY SEEDING AND MULCHING
601														7		80				87	601	87	CU.YD.	ROCK CHANNEL PROTECTION, TYPE C WITH FILTER
659									31172		1914		2904							35990	659	35990	SQ.YD.	SEEDING AND MULCHING
659			0.65						3.24											3.89	659	3.89	TON	COMMERCIAL FERTILIZER
																								DRAINAGE
602														0.3		2.2				2.5	602	2.5	CU.YD.	CONCRETE MASONRY
603														32						32	603	32	LIN.FT.	18" CONDUIT, TYPE A, 706.02
603																60				60	603	60	LIN.FT.	48" CONDUIT, TYPE A, AS PER PLAN 706.02
603											10									10	603	10	LIN.FT.	12" CONDUIT, TYPE B
603											10									10	603	10	LIN.FT.	15" CONDUIT, TYPE B
603											5									5	603	5	LIN.FT.	18" CONDUIT, TYPE B
603											5									5	603	5	LIN.FT.	21" CONDUIT, TYPE B
603											10									10	603	10	LIN.FT.	24" CONDUIT, TYPE B
603											5									5	603	5	LIN.FT.	27" CONDUIT, TYPE B
603											25									25	603	25	LIN.FT.	12" CONDUIT, TYPE C
603											5									5	603	5	LIN.FT.	15" CONDUIT, TYPE C
603											15									15	603	15	LIN.FT.	18" CONDUIT, TYPE C
603											20									20	603	20	LIN.FT.	21" CONDUIT, TYPE C
603											15									15	603	15	LIN.FT.	24" CONDUIT, TYPE C
603											5									5	603	5	LIN.FT.	27" CONDUIT, TYPE C
603											10									10	603	10	LIN.FT.	30" CONDUIT, TYPE C
603											10									10	603	10	LIN.FT.	33" CONDUIT, TYPE C
603											100									100	603	100	LIN.FT.	6" CONDUIT, TYPE F
603			200								10			20	20					250	603	250	LIN.FT.	8" CONDUIT, TYPE F (DRAINAGE CONT. SHEET 37)
																								TRAFFIC CONTROL (from Sht. 37)
802				374																374	802	374	EACH	BARRIER REFLECTORS, TYPE A
802				135																135	802	135	EACH	BARRIER REFLECTORS, TYPE B
614							291													291	614	291	EACH	BARRIER REFLECTORS, TYPE B

Revised 11-30-88

MICROFILMED
OCT 29 1992

GENERAL SUMMARY

Computations By Initials KMS Date 12/3/87
Computations Checked By Initials JMK Date 12/5/87
Final Revisions By Initials Date

FHWA REGION	STATE	PROJECT	
5	OHIO		

37
213

TRUMBULL COUNTY
TRU-5B-0.00

ITEM	SHEET NUMBER																		100 % STATE	25 % STATE 75 % FEDERAL	ITEM	QUANT.	UNIT	DESCRIPTION
			8			13		25	26	27	38	68	98	101	110	116	134	150						
																								DRAINAGE (CONT.)
604											1									1	604	1	EACH	CATCH BASIN, NO. 2-2-B AS PER PLAN
604											5									5	604	5	EACH	CATCH BASIN, NO. 4 AS PER PLAN
604											7									7	604	7	EACH	CATCH BASIN, NO. 5 AS PER PLAN
604											8									8	604	8	EACH	CATCH BASIN, NO. 8 AS PER PLAN
604											4									4	604	4	EACH	CATCH BASIN REPAIR
604											5									5	604	5	EACH	CATCH BASIN ADJUSTED TO GRADE
604											3									3	604	3	EACH	CATCH BASIN RECONSTRUCTED TO GRADE
604											7									7	604	7	EACH	CATCH BASIN PAD AS PER PLAN
605														472	316					788	605	788	LIN.FT.	6" SHALLOW PIPE UNDERDRAINS
605								739												739	605	739	LIN.FT.	LONGITUDINAL AGGREGATE DRAINS AS PER PLAN
SPEC.														52	22	60				134	SPEC.	134	CU.YD.	DRAINAGE CONNECTION, USING NO. 8 AGGREGATE (SEE PROPOSAL NOTE)
																								PAVEMENT
301											242		49	37	27	70				425	301	425	CU.YD.	BITUMINOUS AGGREGATE BASE: AC-20
304														68	48	129				245	304	245	CU.YD.	AGGREGATE BASE
310														54	38	103				195	310	195	CU.YD.	SUBBASE, TYPE I, GRADING A
310														4308	3045					7353	310	7353	CU.YD.	SUBBASE, TYPE I, AS PER PLAN
407						30093							222							30315	407	30315	GAL.	TACK COAT, AS PER PLAN
612											181									181	612	181	SQ.YD.	CONCRETE MEDIAN, AS PER PLAN.
408												5500		178	124	338				6140	408	6140	GAL.	BITUMINOUS PRIME COAT
448												611								611	448	611	CU.YD.	ASPHALT CONCRETE SURFACE COURSE, TYPE I (AC-20)
612											307									307	612	307	SQ.YD.	CONCRETE MEDIAN,
617						32635							48							32683	617	32683	SQ.YD.	SHOULDER PREPARATION
617			500			2719							71							3290	617	3290	CU.YD.	COMPACTED AGGREGATE, TYPE "A"
617			15																	15	617	15	M.GAL	WATER
622												2036								2036	622	2036	LIN.FT.	CONCRETE BARRIER, TYPE "D", AS PER PLAN
622																	3520			3520	622	3520	LIN.FT.	TEMPORARY CONCRETE BARRIER, AS PER PLAN. A
622																	2850			2850	622	2850	LIN.FT.	TEMPORARY CONCRETE BARRIER, AS PER PLAN B
805									4											4	805	4	TON	RUBBERIZED SAND-ASPHALT, AS PER PLAN
SPEC.										3750										3750	SPEC.	3750	EACH	HOLES FOR UNDERSEALING
446						14032						27	118							14177	446	14177	CU.YD.	ASPHALT CONCRETE SURFACE COURSE, TYPE-1, AC-20.
446						19070							166							19236	446	19236	CU.YD.	ASPHALT CONCRETE INTERMEDIATE COURSE, TYPE-2, AC-20.
SPEC.										52800										52800	SPEC.	57800	GAL.	UNDERSEALING MATERIAL
251								13138												13138	251	13138	SQ.YD.	PARTIAL DEPTH PAVEMENT JOINT REPAIR
252		15						1258												1258	252	1258	SQ.YD.	FULL DEPTH RIGID PAVEMENT REMOVAL AND FLEXIBLE REPLACEMENT
252								3936												3936	252	3936	LIN.FT.	FULL DEPTH PAVEMENT SAWING
SPEC.									90656											90656	SPEC.	90656	LIN.FT.	SAWING AND SEALING ASPHALT CONCRETE PAVEMENT JOINTS 705.04 (SEE PROPOSAL NOTE)
SPEC.									79384											79384	SPEC.	79384	LB.	CRACK SEALING, HOT APPLIED, 705.04 (SEE PROPOSAL NOTE)
																								TRAFFIC CONTROL (See Sht 36 for Additional Traffic Cont. Quantities)
																		375		375	621	375	LIN.FT.	TRANSVERSE LINES, 12"
614																		30.24		30.24	614	30.24	MILES	TEMPORARY LANE LINES, CLASS II
614																		6678		6678	614	6678	LIN.FT.	TEMPORARY CHANNELIZING LINES, CLASS I
614																		2400		2400	614	2400	LIN.FT.	TEMPORARY GORE MARKINGS, CLASS II
614																		18		18	614	18	EACH	WORK ZONE MARKING SIGN
621																		38.50		38.50	621	38.50	MILE	EDGE LINES
621																		16.09		16.09	621	16.09	MILE	LANE LINES
621																		16		16	621	16	LIN.FT.	STOP LINES
621																		7411		7411	621	7411	LIN.FT.	CHANNELIZING LINES
621																		2311		2311	621	2311	LIN.FT.	TRANSVERSE LINES, 24"
621																		13		13	621	13	EACH	LANE ARROWS
621																		12		12	621	12	EACH	WORD ON PAVEMENT, 96 INCH
614																				LUMP	614	LUMP		MAINTAINING TRAFFIC
619			LUMP																	LUMP	619	LUMP		FIELD OFFICE
623																				LUMP	623	LUMP		CONSTRUCTION LAYOUT STAKES
624																				LUMP	624	LUMP		MOBILIZATION
																								FOR SIGNING QUANTITIES, SEE SHEET 153
																								FOR LIGHTING QUANTITIES, SEE SHEET 163
																								STRUCTURES (OVER 20' SPAN)
																								FOR QUANTITIES FOR BRIDGE TRU-5-0086 UPGRADING, SEE SHEET 168
																								FOR QUANTITIES FOR BRIDGE TRU-5-0134 UPGRADING, SEE SHEET 168
																								FOR QUANTITIES FOR BRIDGE TRU-5-0183 UPGRADING, SEE SHEET 176
																								FOR QUANTITIES FOR BRIDGE TRU-5-0363 UPGRADING, SEE SHEET 181
																								FOR QUANTITIES FOR BRIDGE TRU-5-0401 UPGRADING, SEE SHEET 187
																								FOR QUANTITIES FOR BRIDGE TRU-5-0425 UPGRADING, SEE SHEET 192
																								FOR QUANTITIES FOR BRIDGE TRU-5-0525 UPGRADING, SEE SHEET 196
																								FOR QUANTITIES FOR BRIDGE TRU-5-0549 UPGRADING, SEE SHEET 200
																								FOR QUANTITIES FOR BRIDGE TRU-5-0716 UPGRADING, SEE SHEET 204
																								FOR QUANTITIES FOR BRIDGE TRU-5-0735 UPGRADING, SEE SHEET 208

Rev. 11-30-88

SUMMARY of PLAN SHEETS

Computations By Initials KMS Date 12/4/87
Computations Checked By Initials DMK Date 12/4/87
Final Revisions By Initials Date

FHWA REGION	STATE	PROJECT	
5	OHIO		

38
213

TRUMBULL COUNTY
TRU-5B-0.00

DESCRIPTION	ITEM	QUANT.	UNIT	SHEET NUMBERS 39	40	43	44	45	48	49	50	51	53	55	56	57	58	60	61	62	63	64	65	66			ITEM
ROADWAY																											
Pavement Removed	202	883.77	Sq.Yd.	36.59	34.48	38.48	31.89			24.81	27.03			23.25	24.03			44.06	131.03	26.11	38.78	2.02		201.23			202
Curb Removed	202	1867	Lin.Ft.		365	187	239			190				140	145			138			208		104	151			202
Curb Removed As Per Plan "A"	202	1171	Lin.Ft.		207	144	193			161				130	107			102			52			75			202
Curb Removed As Per Plan "B"	202	1448	Lin.Ft.			120	120			140	140			140	140			118		140	245			145			202
Catch Basin Removed	202	21	Each	1	1	2					1	1	1	3	2	3	1			1	1	1	1	1			202
Concrete Pad Removed, Type 1	202	6	Each	2	1	1		1						1													202
Concrete Pad Removed, Type 2	202	1	Each	1																							202
Embankment As Per Plan	203	7	Cu.Yd.						2					3					2								203
EROSION CONTROL																											
Seeding And Mulching	659	1913.51	Sq.Yd.		92.00	194.00	195.78			207.67	136.11			197.78	191.45			145.33		136.11	311.17			106.11			659
DRAINAGE																											
12" Conduit, Type B	603	10	Lin.Ft.									5															603
15" Conduit, Type B	603	10	Lin.Ft.												5	5											603
18" Conduit, Type B	603	5	Lin.Ft.																					5			603
21" Conduit, Type B	603	5	Lin.Ft.											5													603
24" Conduit, Type B	603	10	Lin.Ft.		10																						603
27" Conduit, Type B	603	5	Lin.Ft.												5												603
12" Conduit, Type C	603	25	Lin.Ft.			10					10		5														603
15" Conduit, Type C	603	5	Lin.Ft.													5											603
18" Conduit, Type C	603	15	Lin.Ft.	5												5					5						603
21" Conduit, Type C	603	20	Lin.Ft.													10	10										603
24" Conduit, Type C	603	15	Lin.Ft.																	10		5					603
27" Conduit, Type C	603	5	Lin.Ft.	5																							603
30" Conduit, Type C	603	10	Lin.Ft.											10													603
33" Conduit, Type C	603	10	Lin.Ft.											10													603
6" Conduit, Type F	603	100	Lin.Ft.												40		20				10	10		20			603
8" Conduit, Type F	603	10	Lin.Ft.	10																							603
Catch Basin, No. 2-2-B As Per Plan	604	1	Each								1																604
Catch Basin, No. 4 As Per Plan	604	5	Each											3	1		1										604
Catch Basin, No. 5 As Per Plan	604	7	Each	1											1					1	1	1	1	1			604
Catch Basin, No. 8 As Per Plan	604	8	Each		1	2						1	1			3											604
Catch Basin Repair	604	4	Each											1			1							2			604
Catch Basin Adjusted To Grade	604	5	Each		1	1	1															1	1				604
Catch Basin Reconstructed To Grade	604	3	Each											1				1				1					604
Catch Basin Pad As Per Plan	604	7	Each	3	1	1		1						1													604
PAVEMENT																											
Bituminous Aggregate Base AC-20	301	242.46	Cu.Yd.	3.05	16.85	11.07	12.87			10.33	2.25			8.24	8.01			9.39	28.49	2.17	9.97	51	2.89	65.88			301
Concrete Median	612	307.44	SQ.YD.																105.44			202					612
Concrete Median, As Per Plan	612	181	SQ.YD.																					181			
Asphalt Concrete Surface Course, Type 1	446	27.43	Cu.Yd.	2.54	2.39	2.67	2.21			1.72	1.88			1.61	1.67			3.06	1.78	1.81	2.69			1.40			446

Rev. 11-30-88

SUMMARY of PLAN SHEETS

FHWA REGION	STATE	PROJECT	
5	OHIO		

39
213

TRUMBULL COUNTY
TRU-5B-000

Computations By Initials	H M S Date 11/30/87
Computations Checked By Initials	MK Date 12/8/87
Final Revisions By Initials	Date

B.M.#1, USGS Vert. Brass Disc, in S. face of West End of S Center Pier, Truss Bridge, E.B.S., Elev. 909.65

B.M.#2, Sta. 1025+60, SE. Cor. Curb at Edge of Apron, Truss Bridge, E.B.S., 100'± Rt., Elev. 933.40

B.M.#3, Sta. 1028+82, Top of ℄ Monument, Elev. 920.77

Begin Work Sta. 1023+37.83

Begin Sheet

Sta. 1020+00

Conrail R.R.

Exist. R/W

B.T.A. Type "H"

T.S. Sta. 1024+82.00

1-G

LA R/W

+80.16 555' Lt.

SC. Sta. 1028+82.00

Sta. 1030+00

Type 5 Guardrail as per plan "A"

6"7

1021 ℄ W.B. Lanes 1022 N48°-46'-26"E

1023 1024 1025 1026 1027 ℄ Survey S.R. 5 (Bypass) 1028 1029

Type 5 Guardrail

Type 5 Barrier Guardrail

For Earthwork, See Median Cross-Sections

+80.62 229.24' Rt.

T.S. Sta. 1025+59.07

2-G

℄ Survey Eastbound

1021 1022 ℄ E.B. Lanes 1022

N53°-10'-26"E

1023 1024 1025 1026 1027 ℄ E.B. Lanes 1028 1029 1030

6"7

SC. Sta. 1029+59.07

+43.25 (℄ Survey) 88' Rt.

Match Line

Conrail R.R.

Exist. R/W

B.T.A. Type "J" Modified as per plan

3-G

LA R/W

Type 5 Guardrail as per plan "A"

P.C. Sta. 1029+59.07 ℄ E.B. Lanes

Curve A1

Sta. 1030+00

Revise with new high intensity route shields.

5 82 EAST Youngstown Sharon Pa

W Market St Warren

Begin Project Sta. 1031+52.73 S.L.M. 000

F-53(20)

LA R/W

Sta. 1030+00

3-D

1137+00 ℄ Survey 68' Lt.

18"X15"C 8"X10"F

27"X15"C

18"7

6"7

+81.53 77' Lt.

1027

1028

5-G

Sta. 1040+00

1031 1032 1033 1034 1035 ℄ Ramp "C" 1036 1037 1038 1039

+51.63 3.46' Rt.

+74.50 2.08' Lt.

69°-47'-24"

Guardrail, Type 5, as per Plan "B"

4-G

1-D

2-D

Type 5 Guardrail

+35.16 (℄ Survey) 104' Rt.

15'7

Pavement, Remove (202)

+76.36 39.42' Lt.

℄ Survey 5R. 5 (Bypass)

Sta. 1036+94.25 S.R. 5 (Bypass) = Sta. 1029+87.10 Market St.

Match Line

1031 1032 1033 1034 1035 ℄ E.B. Lanes 1036 1037 1038 1039 1040

6"7

+35.29 27.5' Rt.

+56.13 33.98' Lt.

55°-25'-06"E

SC. Sta. 1038+00

7-G

6-G

4-D

Curve A-1

Guardrail, Type 5, as per Plan "B"

1-C

℄ Ramp "A" 1032 1033

For Details of Sign Relocation, See Sheet 157

3 See Sheet 60 for Ramp Sign

8-G

+28.09 22' Rt.

* Type "D" Concrete Barrier Modified as per plan. See Detail Sheet 33.

For Guardrail and Barrier Quantities See Sheets 67 thru 68.

Match Line

Ramp "C" Sta. 1040+00

LS. Sta. 1031+88.82

2

Curve A-2

LA R/W

Type 5 Guardrail as per plan "A"

SC. Sta. 1033+88.82 Match Line Sta. 1034+00

Market St ℄

B.M.#4, Sta. 1032+80, Top of ℄ Monument, Elev. 911.68

B.M.#5, Sta. 1038+00, Top Stamped "W.B. Ramp C", Elev. 904.86

CURVE DATA

℄ Survey	℄ Eastbound Lanes
P.I. = Sta. 1035+75.83	P.I. = Sta. 1034+98.80
Δ = 50°-05'-00" Lt.	Δ = 54°-29'-00" Lt.
L_s = 400'	L_s = 400'
D_c = 3°	D_c = 4°
θ_s = 6°	θ_s = 8°
p = 3.49'	p = 4.65'
k = 199.93'	k = 199.87'
x_c = 399.56'	x_c = 399.22'
y_c = 13.95'	y_c = 18.59'
T_s = 1093.83'	T_s = 939.73'
E_s = 202.01'	E_s = 183.93'
Δ_c = 38°-05'-00"	Δ_c = 38°-29'-00"
L_c = 1269.44'	L_c = 962.08'
R_c = 1909.86'	R_c = 1432.39'

Curve A-1	Curve A-2
D_c = 1°	L_s = 200'
R_c = 5729.58'	P_2 = 4.35'
Δ_c = 2°-17'-51" Rt.	L.T. = 130.28'
L_c = 229.75'	S.T. = 71.20'
T_c = 114.89'	
E_c = 1.15'	

CATCH BASIN & CONDUIT ELEVATION

Station		Grate Elevation	℄ Elev. 18" Conduit Back @ C.B.	℄ Elev. 8" Conduit Fr. @ C.B.	℄ Elev. 27" Conduit Ahd @ C.B.
1036+25		902.39	898.95	900.10	898.95

CURB REMOVAL "C"

446	Asphalt Concrete Surface Course Type 1	Cu. Yds.		254		254
301	Bituminous Aggregate Base	Cu. Yds.		305		305
202	Pavement Removed	Sq. Yds.		36.59		36.59
Ramp	Station	From	To			Totals
		1031+84	1032+24	A		
Ref. No.				I-C		

SIGN LEGEND

- New
- Existing, to Remain
- Existing, to be Relocated
- Existing, to be Removed
- Existing, to be Removed and Reerected (See General Note)

DRAINAGE "D"

604	Catch Basin Pad, as per Plan	Each						1	1	3
	Std. No. 5 Catch Basin, as per plan	Each						1	1	
603	Conduit Lin. Ft.	Type C	27"					5	5	5
			18"					5	5	5
		F	8"					10	10	5
202	Concrete Pad Removed, Type 2	Each						1		1
	Concrete Pad Removed, Type 1	Each						1	1	2
	Catch Basin Removed	Each						1		1
	Side			℄		℄				
	Station	To		1032+00	Rt.	1032+00	Lt.			Totals
				1036+25		1036+25	Rt.			
				1038+00						
	Ref. No.			1-D		2-D		3-D	4-D	

REV

Rev. 11-30-88

Sta. 1020+00 to Sta. 1040+00

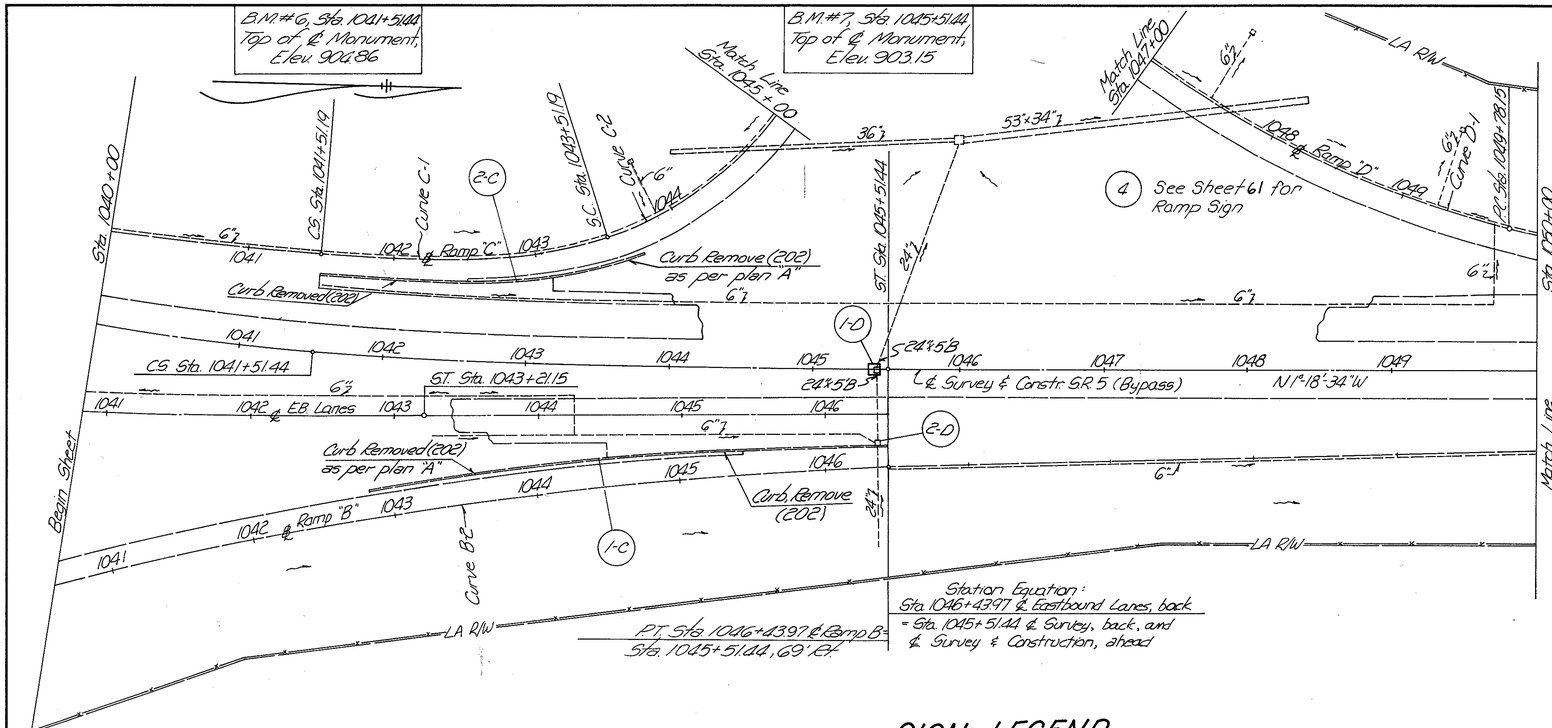

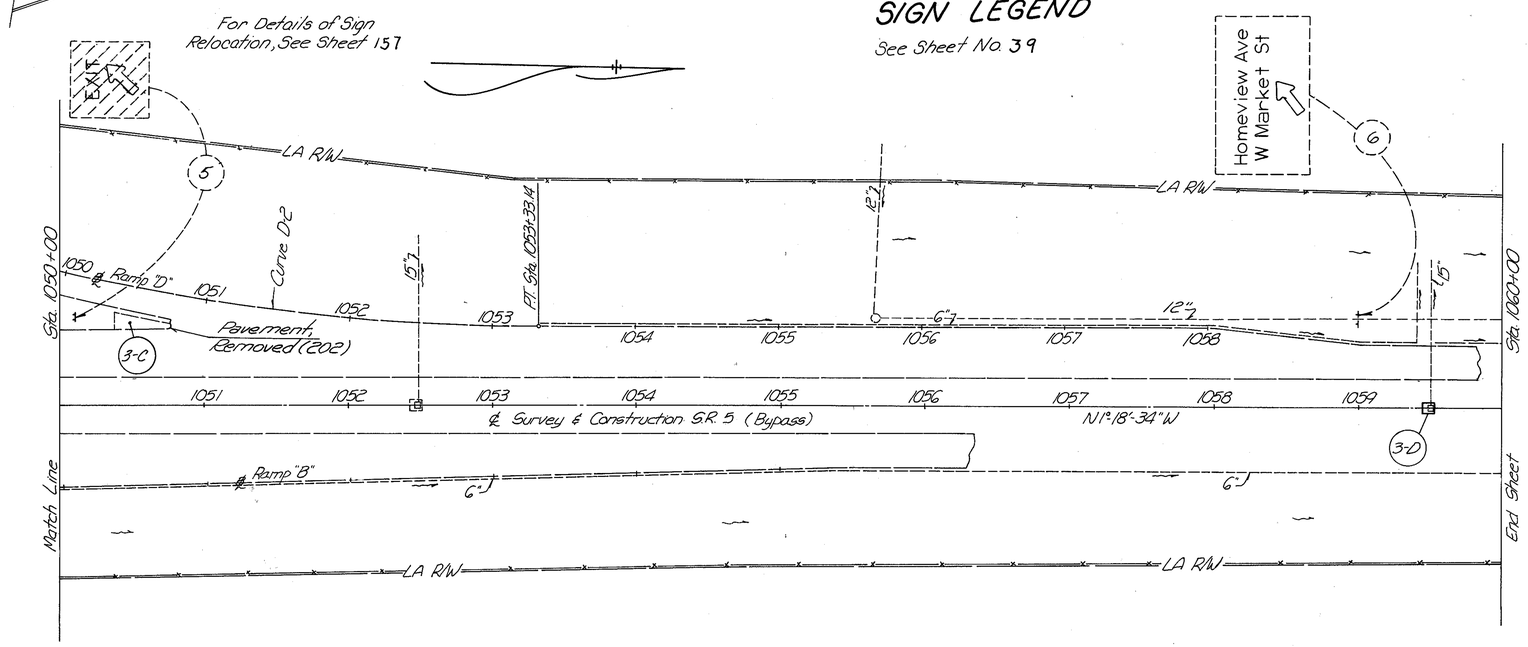

B.M.#8, Sta. 1050+00
Top of ℄ Monument,
Elev. 901.98

B.M.#9, Sta. 1055+00
Top of ℄ Monument,
Elev. 900.52

B.M.#10, Sta. 1060+00
Top of ℄ Monument,
Elev. 898.12

CURVE DATA

℄ Survey	℄ Eastbound Lanes
P.I. = Sta. 1035+75.83	P.I. = Sta. 1034+98.80
Δ = 50°-05'-00" Lt.	Δ = 54°-29'-00" Lt.
L_s = 400'	L_s = 400'
D_c = 3°	D_c = 4°
θ_s = 6°	θ_s = 8°
p = 3.49'	p = 4.65'
k = 199.93'	k = 199.87'
x_c = 399.56'	x_c = 399.22'
y_c = 13.95'	y_c = 18.59'
T_s = 1093.83'	T_s = 939.73'
E_s = 20.20.1'	E_s = 183.93'
Δ_c = 38°-05'-00"	Δ_c = 38°-27'-00"
L_c = 1269.44'	L_c = 962.08'
R_c = 1909.86'	R_c = 1432.39'

Curve B-2
Δ = 48°-40'-36"
D_c = 2°-15'
R_c = 2546.48'
Δ_c = 23°-01'-31" Rt.
L_c = 1023.35'
T_c = 518.67'
E_c = 52.29'

Curve C-1
θ_s = 23°-30' Lt.
L_s = 200'
x_s = 196.66'
y_s = 27.02'
p = 6.79'
L.T. = 134.53'
S.T. = 67.75'
k = 99.44'

Curve C-2
D_c = 23°-30'
R_c = 243.81'
Δ_c = 177°-25'-27" Lt.
L_c = 755.00'

Curve D-2
Δ = 61°-53'-52" Lt. L_c = 354.99'
D_c = 4° T_c = 178.41'
R_c = 1432.39' E_c = 11.07'
Δ_c = 14°-11'-59"

Curve D-1
Δ = 47°-42'-00" Lt.
D_c = 8°
R_c = 716.20'
T_c = 178.41'
L_c = 354.99'
E_c = 11.07'

CURB REMOVAL "C"

				From Sta.	To Sta.	
446	Asphalt Concrete Surface Course Type 1	Cu. Yds.				239
659	Seeding & Mulching	Sq. Yds.	6267			2933
301	Bituminous Aggregate Base	Cu. Yds.	817			581
	Pavement Removed	Sq. Yds.				34.18
202	Curb Removed, as per plan "A"	Lin. Ft.	141			66
	Curb Removed	Lin. Ft.	200			165
Ramp			8	C		D
Totals						
Ref. No.				1-C	1043+07	1046+47
				2-C	1041+57	1043+83
				3-C	1050+39	1050+79

DRAINAGE "D"

604	Catch Basin Pad, as per plan	Each				1
	Catch Basin Adjusted to Grade	Each				1
	Std. No. 8 Catch Basin, as per plan	Each	1			1
603	Conduit Lin. Ft. Type B 24"		10			10
202	Concrete Pad Removed, Type 1	Each				1
	Catch Basin Removed	Each	1			1
Side			℄	℄	℄	
Station			1045+45	1045+45	1059+50	Totals
Ref. No.			1-D	2-D	3-D	

CATCH BASIN & CONDUIT ELEVATION

Station		Grate Elevation	Ft. Elev. 24" Conduit Lf. @ C.B.	Ft. Elev. 24" Conduit Rt. @ C.B.
1045+45		902.65	898.12	898.19

FHWA REGION	STATE	PROJECT	
5	OHIO		

40
213

TRUMBULL COUNTY
TRU-5B-0.00

Computations By Initials	K.M.S Date 11/30/87
Computations Checked By Initials	JMK Date 11/30/87
Final Revisions By Initials	Date

Rev. 11-30-88

Sta. 1040+00 to Sta. 1060+00

FHWA REGION	STATE	PROJECT	
5	OHIO		

41
213

TRUMBULL COUNTY
TRU-5B-0.00

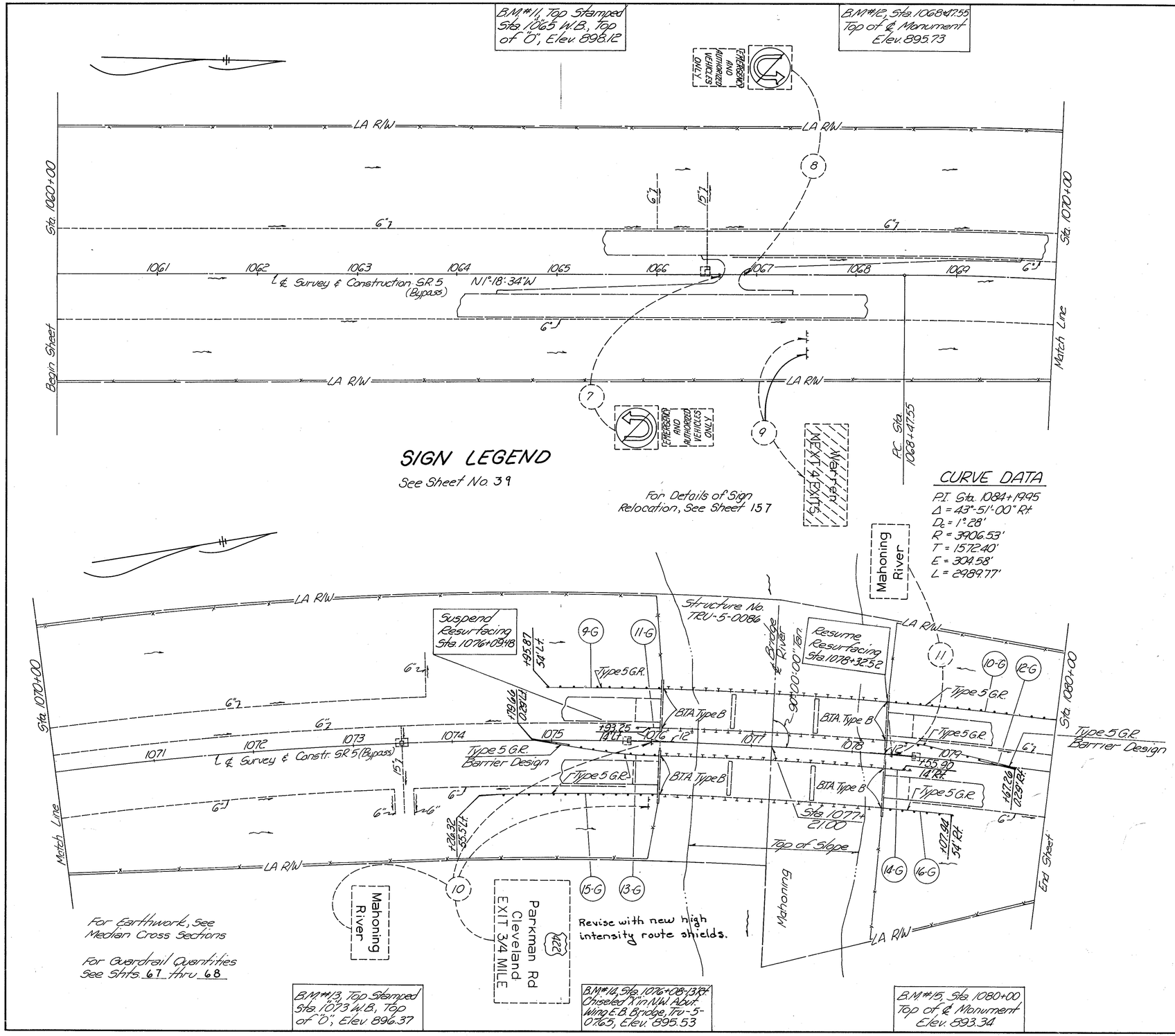

SIGN LEGEND

See Sheet No. 39

For Details of Sign Relocation, See Sheet 157

CURVE DATA

P.I. Sta. 1084+19.95
Δ = 43°-51'-00" Rt.
D_c = 1°28'
R = 3906.53'
T = 1572.40'
E = 304.58'
L = 2989.77'

For Earthwork, See Median Cross Sections

For Guardrail Quantities See Shts. 67 thru 68

Sta. 1060+00 to Sta. 1080+00

FHWA REGION	STATE	PROJECT	
5	OHIO		

42/213

TRUMBULL COUNTY
TRU-5B-0.00

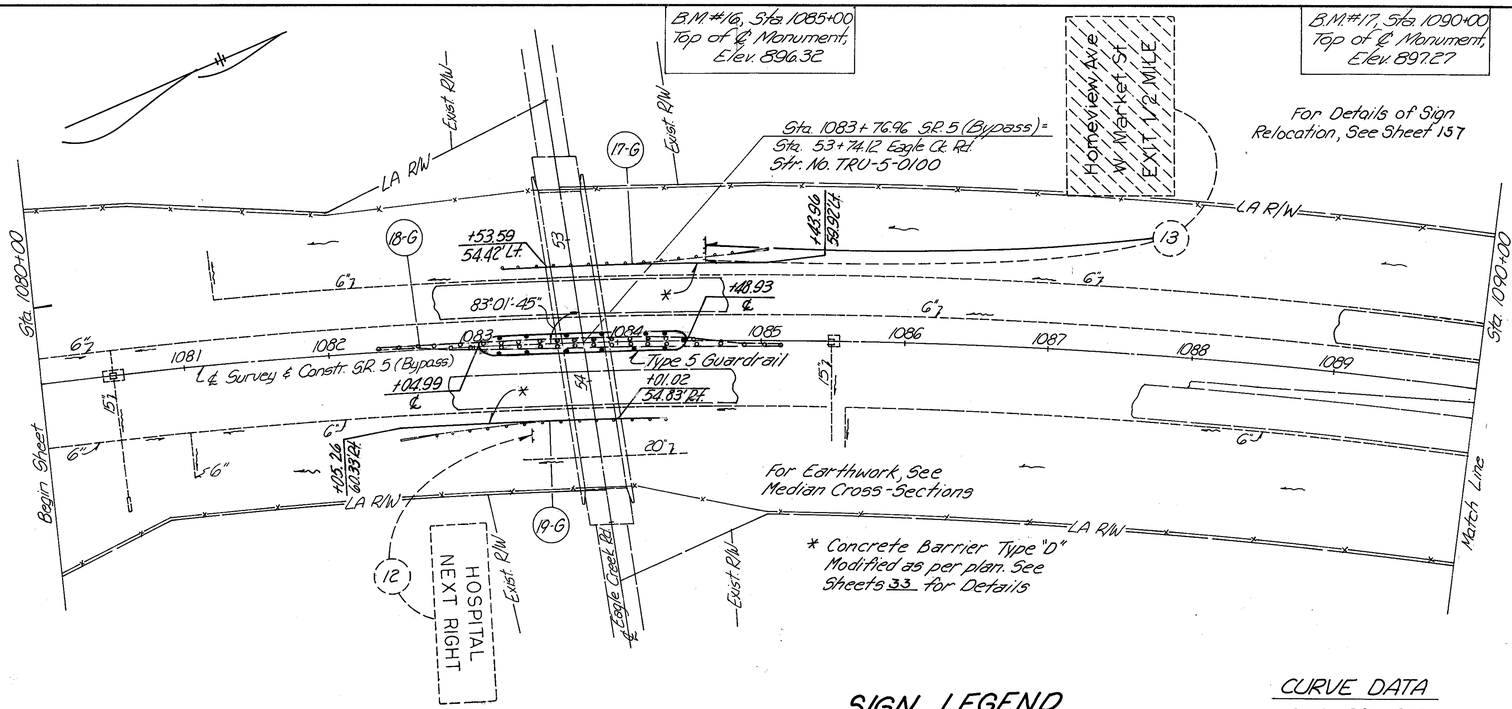

SIGN LEGEND

See Sheet No. 39

CURVE DATA

P.I. Sta. 1084+19.95
Δ = 43°-51'-00" Rt.
D_c = 1°-28'
R = 3906.53'
T = 157.240'
E = 30.458'
L = 298.977'

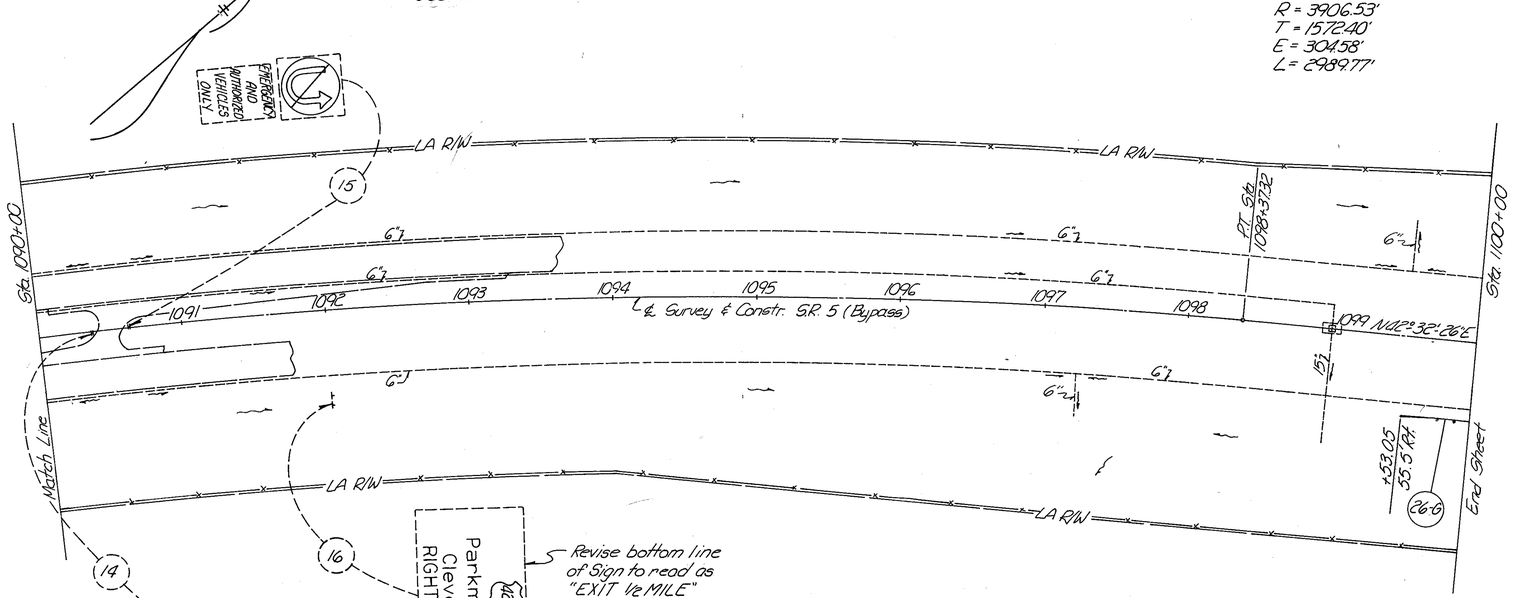

Sta. 1080+00 to Sta. 1100+00

FHWA REGION	STATE	PROJECT	
5	OHIO		

43/213

TRUMBULL COUNTY
TRU-5B-0.00

Computations By Initials KMS Date 11/30/87
Computations Checked By Initials DMK Date 11/30/87
Final Revisions By Initials Date

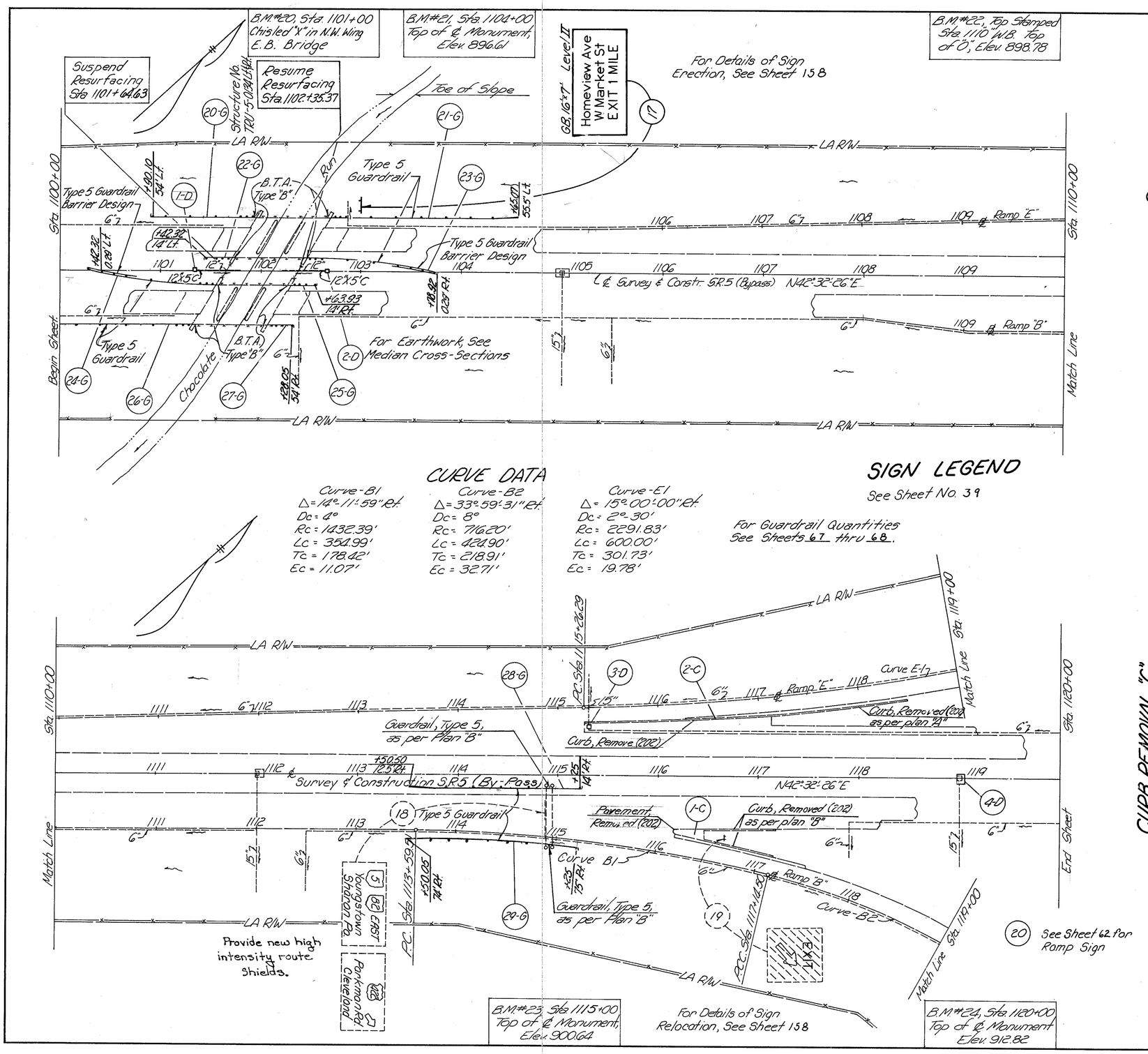

CATCH BASIN & CONDUIT ELEVATIONS

Station		Grate Elevation	℄ Elev. 12" Conduit @ CB		
1101+35		894.53	890.61		
1102+66		892.89	890.61		

CURVE DATA

Curve-B1
Δ = 14°-11'-59" Rt.
Dc = 4°
Rc = 1432.39'
Lc = 354.99'
Tc = 178.42'
Ec = 11.07'

Curve-B2
Δ = 33°-59'-31" Rt.
Dc = 8°
Rc = 716.20'
Lc = 424.90'
Tc = 218.91'
Ec = 32.71'

Curve-E1
Δ = 15°-00'-00" Rt.
Dc = 2°-30'
Rc = 2291.83'
Lc = 600.00'
Tc = 301.73'
Ec = 19.78'

SIGN LEGEND

See Sheet No. 39

For Guardrail Quantities See Sheets 67 thru 68.

CURB REMOVAL "C"

Ref. No.	Station From	Station To	Ramp	Curb Removed (202) Lin. Ft.	Curb, Removed as per Plan "A" (202) Lin. Ft.	Pavement Removed (202) Sq. Yd.	Curb, Removed as per Plan "B" (202) Lin. Ft.	Bituminous Aggregate Base (301) Cu. Yd.	Seeding & Mulching (659) Sq. Yd.	Asphalt Concrete Surface Course Type 1 (446) Cu. Yd.
1-C	1116+14	1117+16	B							
2-C	1115+27	1118+57	E	187	144	38.48	120	3.21	130	2.67
								7.86	64	
Totals				187	144	38.48	120	11.07	194	2.67

DRAINAGE "D"

Ref. No.	Station	Side	Catch Basin Removed (202) Each	Concrete Pad Removed, Type 1 (202) Each	Conduit Lin. Ft. (603) Type C 12"	Catch Basin Adjusted to Grade (604) Each	Std. No. 8 Catch Basin, as per plan (604) Each	Catch Basin Pad, as per Plan (604) Each
1-D	1101+35	℄	1		5	1		
2-D	1102+66	℄	1		5	1		
3-D	1115+31	Lt.		1		1		1
4-D	1119+00	℄		1	10		2	1

Rev. 11/30/88

Sta 1100+00 to Sta 1120+00

FHWA REGION	STATE	PROJECT	
5	OHIO		

44
213

TRUMBULL COUNTY
TRU-5B-0.00

Computations By Initials KMS	Date 11/30/87
Computations Checked By Initials JJK	Date 11/30/87
Final Revisions By Initials	Date

B.M.#25, Top Stamped Sta. 1124"W.B., Top of "L", Elev. 928.11

B.M.#26, Sta. 1127+00 Top of ℄ Monument, Elev. 927.55

Resume Resurfacing Sta. 1129+38.76

Structure No. TRU-5-0183 (44.87)

Suspend Resurfacing Sta. 1127+44.06

(22) See Sheet 63 for Ramp Sign

Provide new high intensity route shields

Sta. 1120+00

Sta. 1130+00

Sta. 1140+00

Begin Sheet

+06.34 54' Lt.

GR., Type 5 as per plan "A"

+08.27 47.20' Lt.

BTA Type A

Sta. 1128+48.59 ℄ SR. 5 (Bypass) = Sta. 27+36.69 USR 422

29 ℄ USR 422

28°

Type 5 GR. as per plan "A"

Type 5 GR.

For Earthwork, See Median Cross Sections

Type 5 GR. Barrier Design

Match Line

1121 1122 1123 1124 1125 1126 1127 1128 1129

℄ Survey & Construction SR. 5 (Bypass) N42°-32'-26"E

6"

1124 ℄ Ramp "A"

Curve-A4

Curve-A3

Type 5 GR. as per plan "A"

Sta. 1123+00

Match Line

Sta. 1133+00

Sta. 1134 ℄ Ramp "D"

LA R/W

Guardrail, Type 5, as per Plan "B"

+47.16 555' Lt.

Curb, Removed (202) as per plan "B"

Pavement Removed (202)

+23.50 147' Lt.

+88.50 127' Lt.

Type 5 GR.

Sta. 1131 1132 1133 1134 1135 1136 1137 1138 1139

℄ Survey & Construction SR. 5 (Bypass)

+67.84 267' Rt.

+75.83 54' Rt.

Curb, Removed (202) as per plan "A"

Curb, Removed (202)

Match Line

P.C. Sta. 1130+26.11

Sta. 1132+00

℄ Ramp "C"

℄ Curve-C3

℄ Curve-C2

+33.36 Rt.

+99.66 97' Rt.

P.C.C. Sta. 1133+36.11

P.C.C. Sta. 1137+99.66

End Sheet

Pankhan Rd. (7) Cleveland

(82) West Ravenna Akron (5)

Provide new high intensity route shields

FOR GUARDRAIL QUANTITIES See Shts. 67 thru 68

For Details of Signs Relocated, See Sheet 158

CURVE DATA

Curve-A3
Δ = 219°-48'-57" Rt.
Dc = 23°
Rc = 249.11'
Lc = 955.71'

Curve-A4
Δs = 23°00'00"
Ls = 200'
L.T. = 134.48'
S.T. = 67.71'

℄ Survey
P.I. = 1140+04.06
Δ = 9°-06'-30" Rt.
Dc = 0°-28'
Rc = 12,277.67'
Lc = 1951.79'
Tc = 977.95'
Ec = 38.89'

Curve-C2
Δ = 72°-42'-22" Rt.
Dc = 16°
Rc = 358.10'
Lc = 454.41'
Tc = 263.56'
Ec = 86.53'

Curve-C3
Δ = 12°-36'-36" Rt.
Dc = 2°
Rc = 2864.79'
Lc = 630.50'
Tc = 316.53'
Ec = 17.43'

Curve-D4
Δ = 25°-46'-39" Lt.
Dc = 2°-30'
Rc = 2291.83'
Lc = 1031.10'
Tc = 524.43'
Ec = 59.24'

DRAINAGE "D"

Ref. No.	Station	Side	Catch Basin Adjusted to Grade	
			Each	604
1-D	1139+60	Rt.	1	1
		Total		

CURB REMOVAL "C"

Ref. No.	Station From	Station To		202 Curb, Removed as per Plan "A" Lin. Ft.	202 Curb Removed Lin. Ft.	202 Pavement Removed Sq. Yds.	202 Curb, Removed as per Plan "B" Lin. Ft.	301 Bituminous Aggregate Base Cu. Yds.	659 Seeding & Mulching Sq. Yds.	446 Asphalt Concrete Surface Course, Type 1 Cu. Yds.
1-C	1135+35	1139+67	C	193	239	31.89		10.21	85.78	22.1
2-C	1136+14	1137+16	D				120	2.66	11.00	2.1
		Totals		193	239	31.89	120	12.87	195.78	22.1

SIGN LEGEND

See Sheet No. 39

B.M.#27, Sta. 1130+26.11 Top of ℄ Monument, Elev. 927.14

B.M.#28, Sta. 1135+00 Top of ℄ Monument, Elev. 917.79

B.M.#29, Sta. 1140+00 Top of ℄ Monument, Elev. 909.23

Rev. 11/30/88

Sta. 1120+00 to Sta. 1140+00

FHWA REGION	STATE	PROJECT	
5	OHIO		

45
213

TRUMBULL COUNTY
TRU-5B-0.00

Computations By Initials KMS Date 11/30/87
Computations Checked By Initials DMK Date 11/30/87
Final Revisions By Initials Date

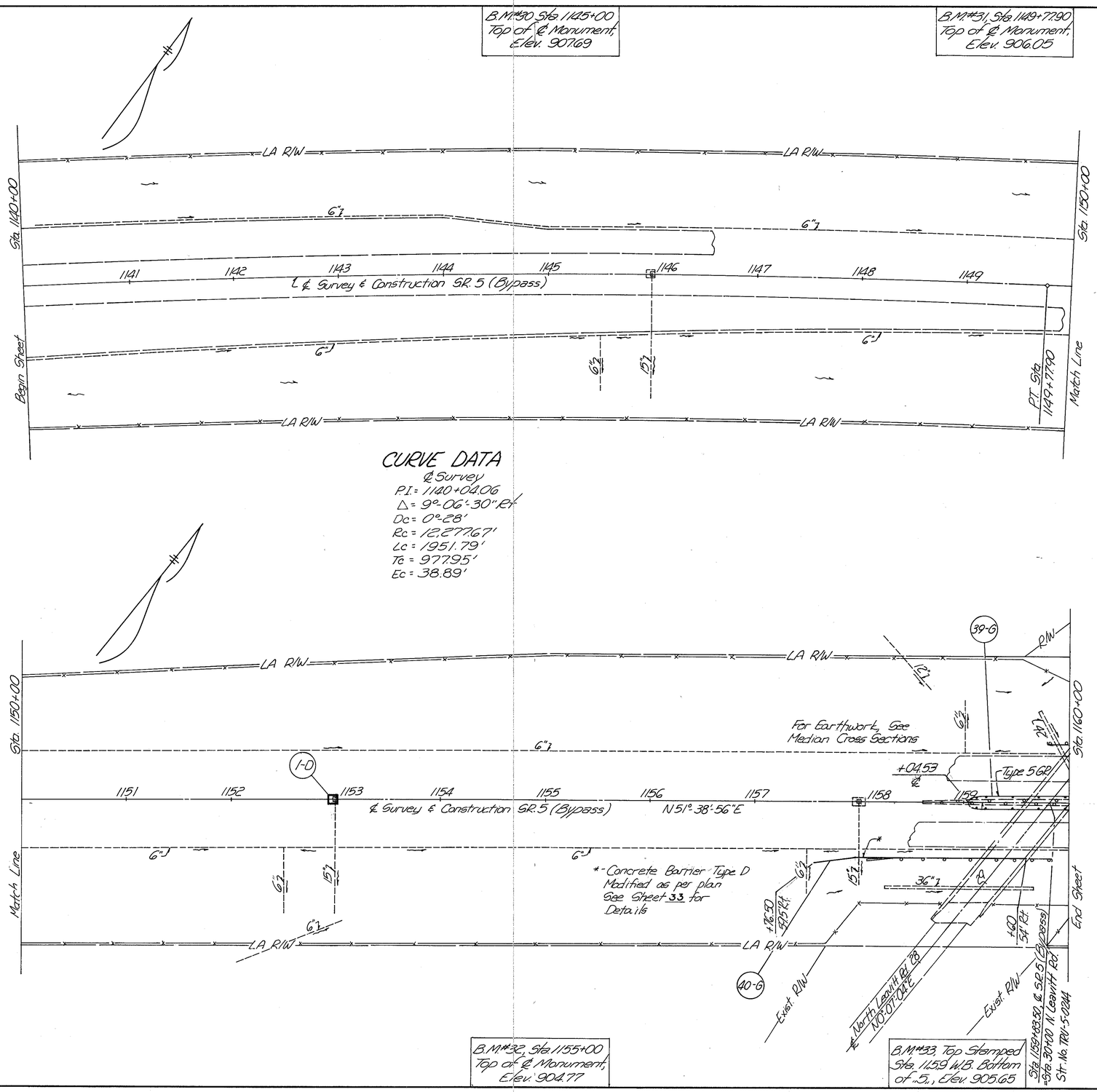

FOR GUARDRAIL AND BARRIER QUANTITIES, See Shts. 67 and 68

ORAINAGE "D"

Ref. No.	Station	Side	202 Concrete Pad Removed, Type 1	604 Catch Basin Pad, as per Plan
1-D	1153+00	℄	1	1
	Totals		1	1
		Each	Each	Each

Sta. 1140+00 to Sta. 1160+00

FHWA REGION	STATE	PROJECT	
5	OHIO		

46
213

TRUMBULL COUNTY
TRU-5B-000

B.M.#34, Sta. 1162+00
Top of ℄ Monument,
Elev. 904.67

B.M.#35, Sta. 1165+22.53
Top of ℄ Monument,
Elev. 906.20

B.M.#36, Top Stamped
Sta. 1170' WB, Top
of O', Elev. 907.83

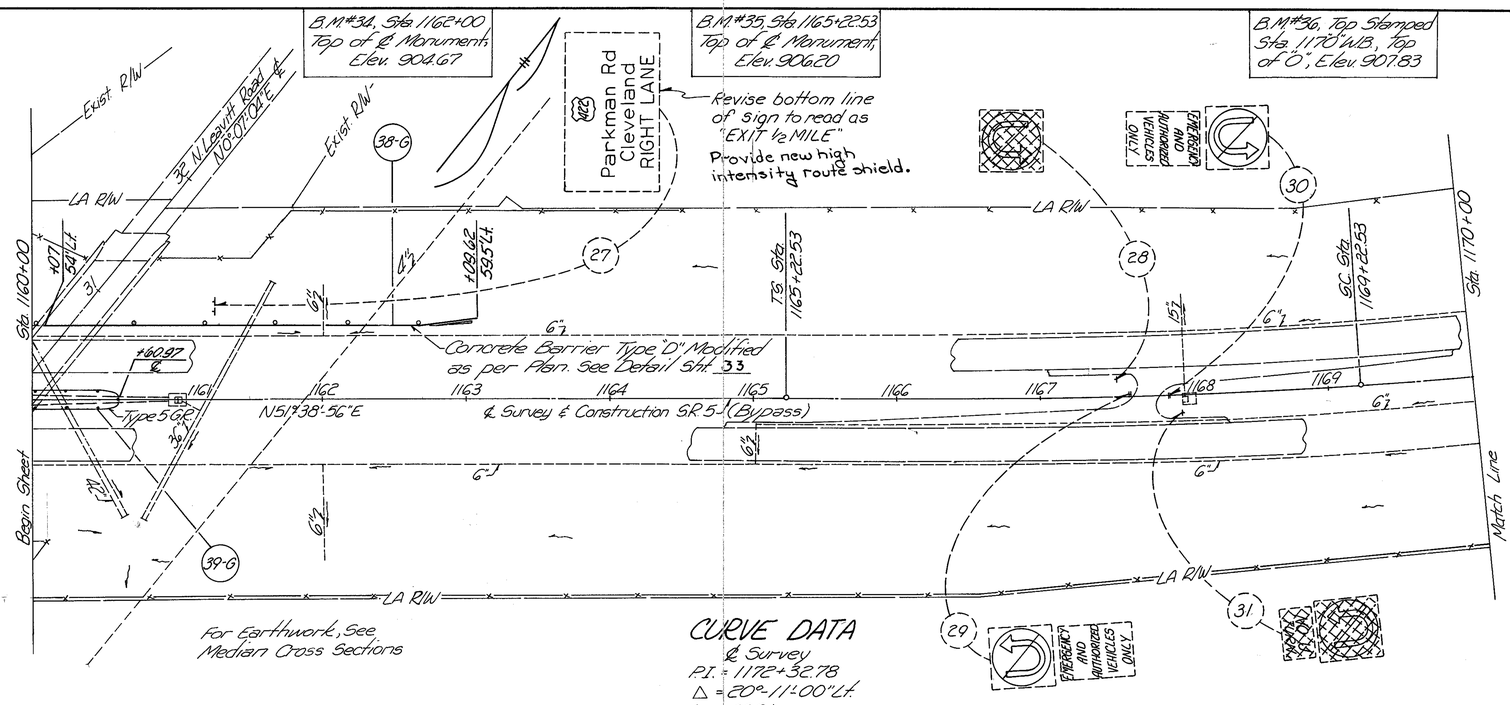

CURVE DATA

℄ Survey
P.I. = 1172+32.78
Δ = 20°-11'-00" Lt.
Ls = 400'
Dc = 2°
θs = 4°
P = 2.32'
K = 199.97'
Xc = 399.80'
Yc = 9.30'
Ts = 710.25'
Es = 47.38'
Δc = 12°11'-00"
Lc = 609.17'
Rc = 2864.79'

SIGN LEGEND

See Sheet No. 39

FOR GUARDRAIL AND BARRIER QUANTITIES SEE SHEETS 67 & 68.

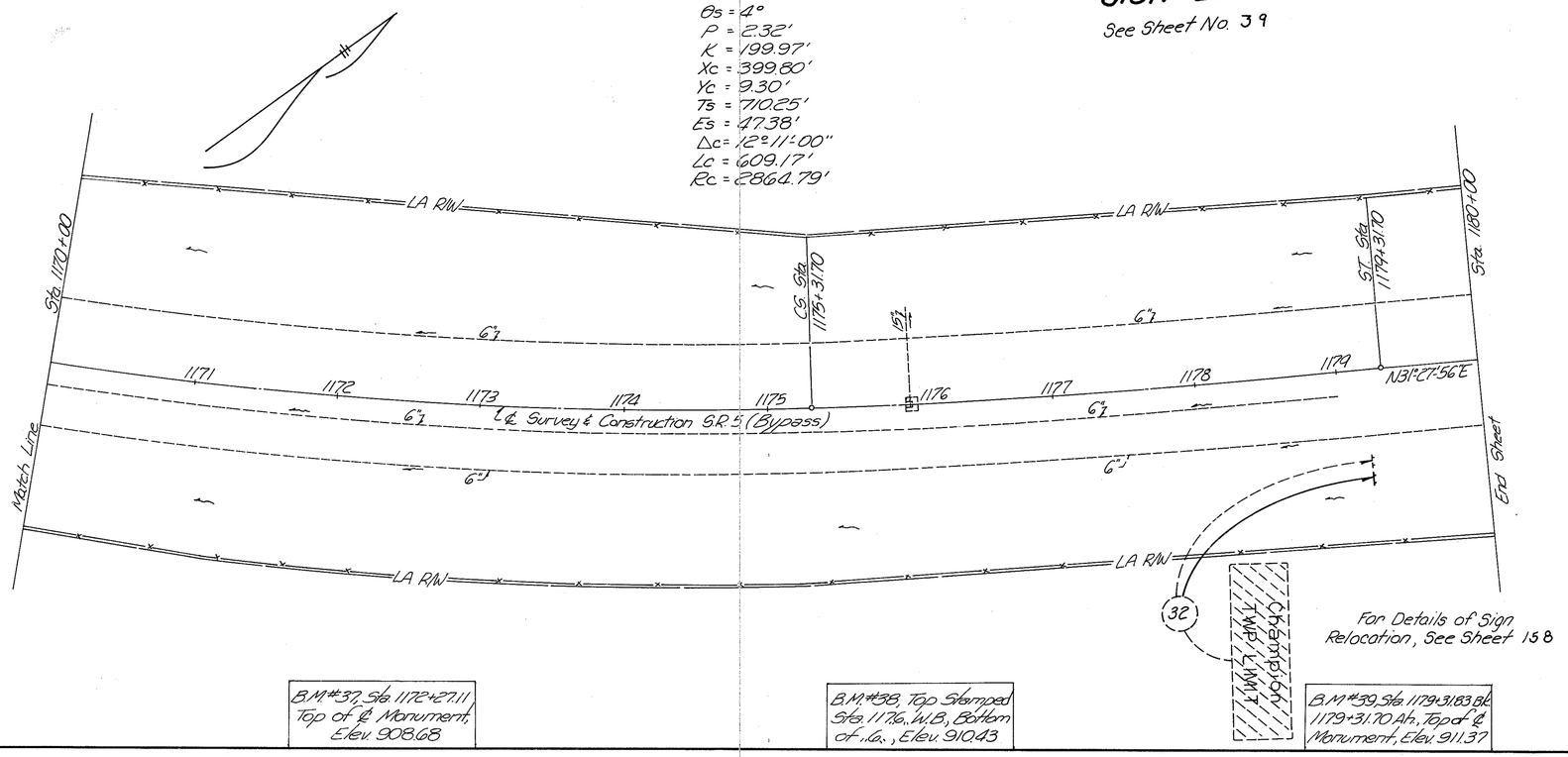

B.M.#37, Sta. 1172+27.11
Top of ℄ Monument,
Elev. 908.68

B.M.#38, Top Stamped
Sta. 1176, W.B., Bottom
of ..., Elev. 910.43

B.M.#39, Sta. 1179+31.83 Bk.
1179+31.70 Ah., Top of ℄
Monument, Elev. 911.37

Sta. 1160+00 to Sta. 1180+00

FHWA REGION	STATE	PROJECT	
5	OHIO		

47
213

TRUMBULL COUNTY
TRU-5B-0.00

B.M.#40, Sta. 1182+29.49
Top of ℄ Monument,
Elev. 912.57

B.M.#41, Top Stamped
Sta. 1185+, W.B., Bottom
of ..6.., Elev. 915.81

B.M.#42, Sta. 1190+00
Top of ℄ Monument,
Elev. 910.83

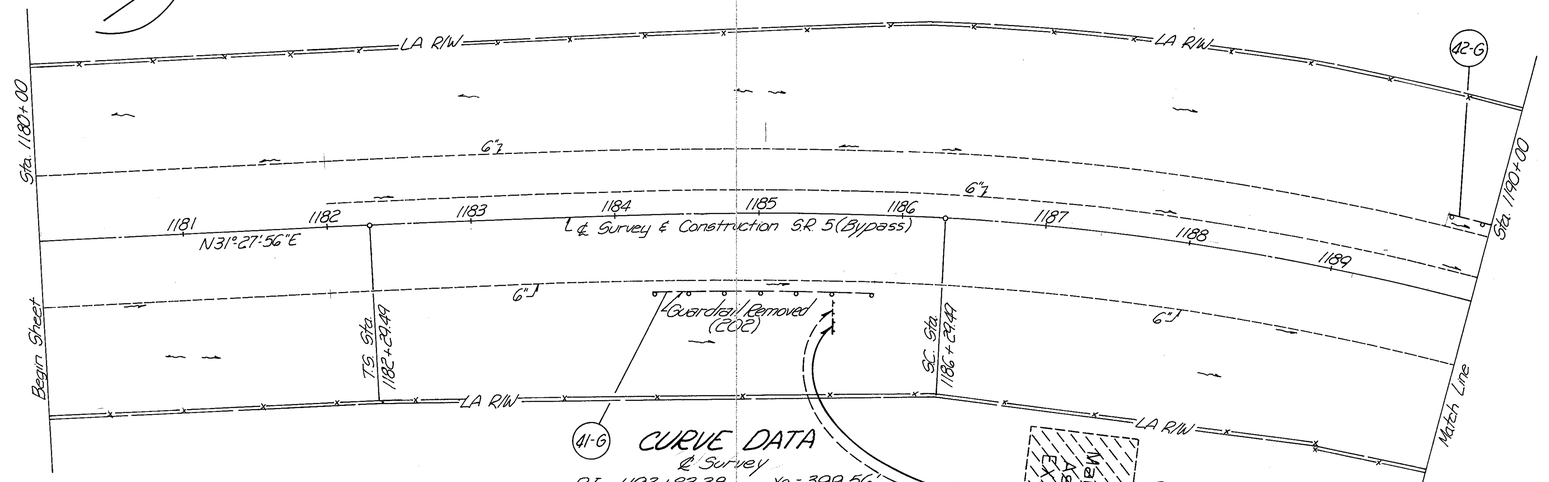

CURVE DATA

℄ Survey

P.I. = 1193+83.38
Δ = 53°-00' Rt.
Ls = 400'
Dc = 3°
θs = 6°
P = 3.49'
K = 199.93'

Xc = 399.56'
Yc = 13.95'
Ts = 1153.89'
Es = 228.12'
Δc = 41°-00'-00"
Lc = 1366.67'
Rc = 1909.86'

For Details of Signs Relocated, See Sheets 158 & 159

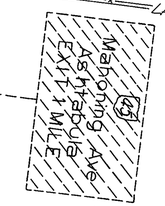

Provide new high intensity route shield.

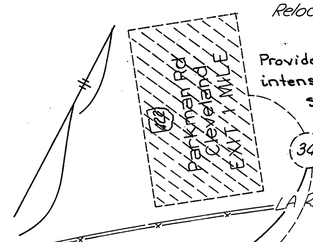

Provide new high intensity route shield.

SIGN LEGEND

See Sheet No. 39

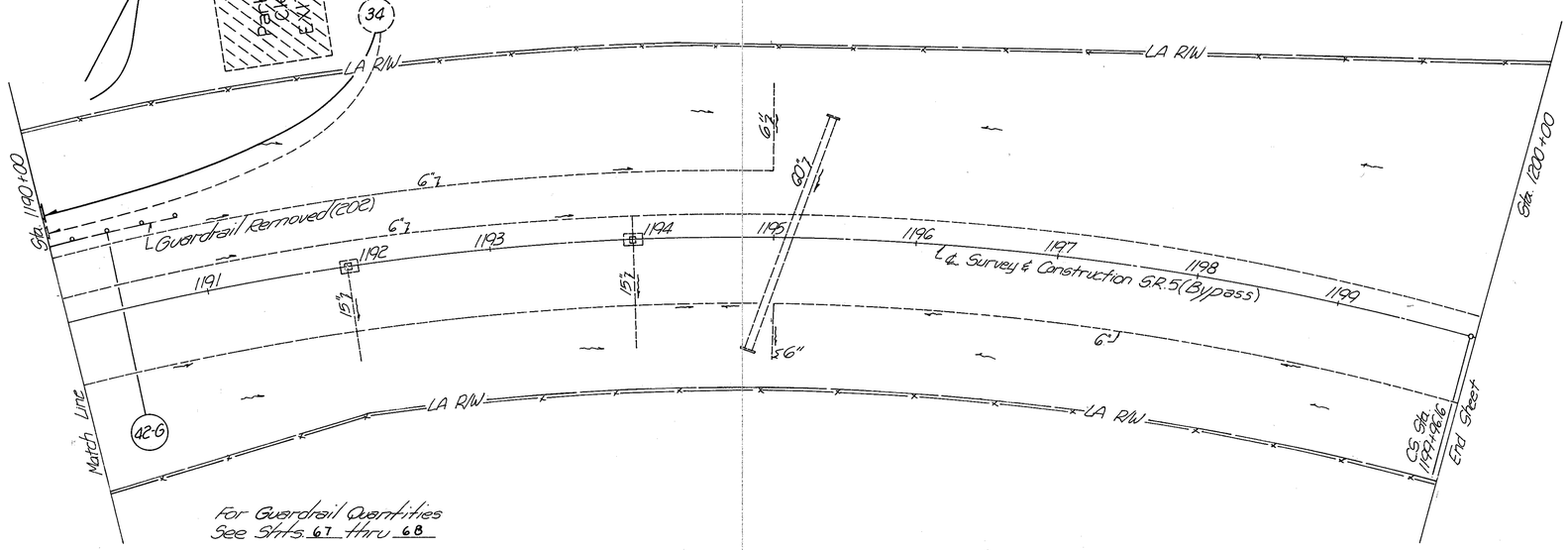

For Guardrail Quantities
See Shts. 67 thru 68

B.M.#43, Sta. 1195+00
Top of ℄ Monument,
Elev. 910.07

B.M.#44, Sta. 1199+96.16
Top of ℄ Monument,
Elev. 912.16

Sta. 1180+00 to Sta. 1200+00

Computations By Initials HMS Date 11/30/87
Computations Checked By Initials JMK Date 11/30/87
Final Revisions By Initials Date

FHWA REGION	STATE	PROJECT	
5	OHIO		

48/213

TRUMBULL COUNTY
TRU-5B-0.00

B.M.#45, Sta. 1203+96.16
Top of ℄ Monument
Elev. 912.49

B.M.#46, Sta. 1208+16.34
Top of ℄ Monument
Elev. 914.08

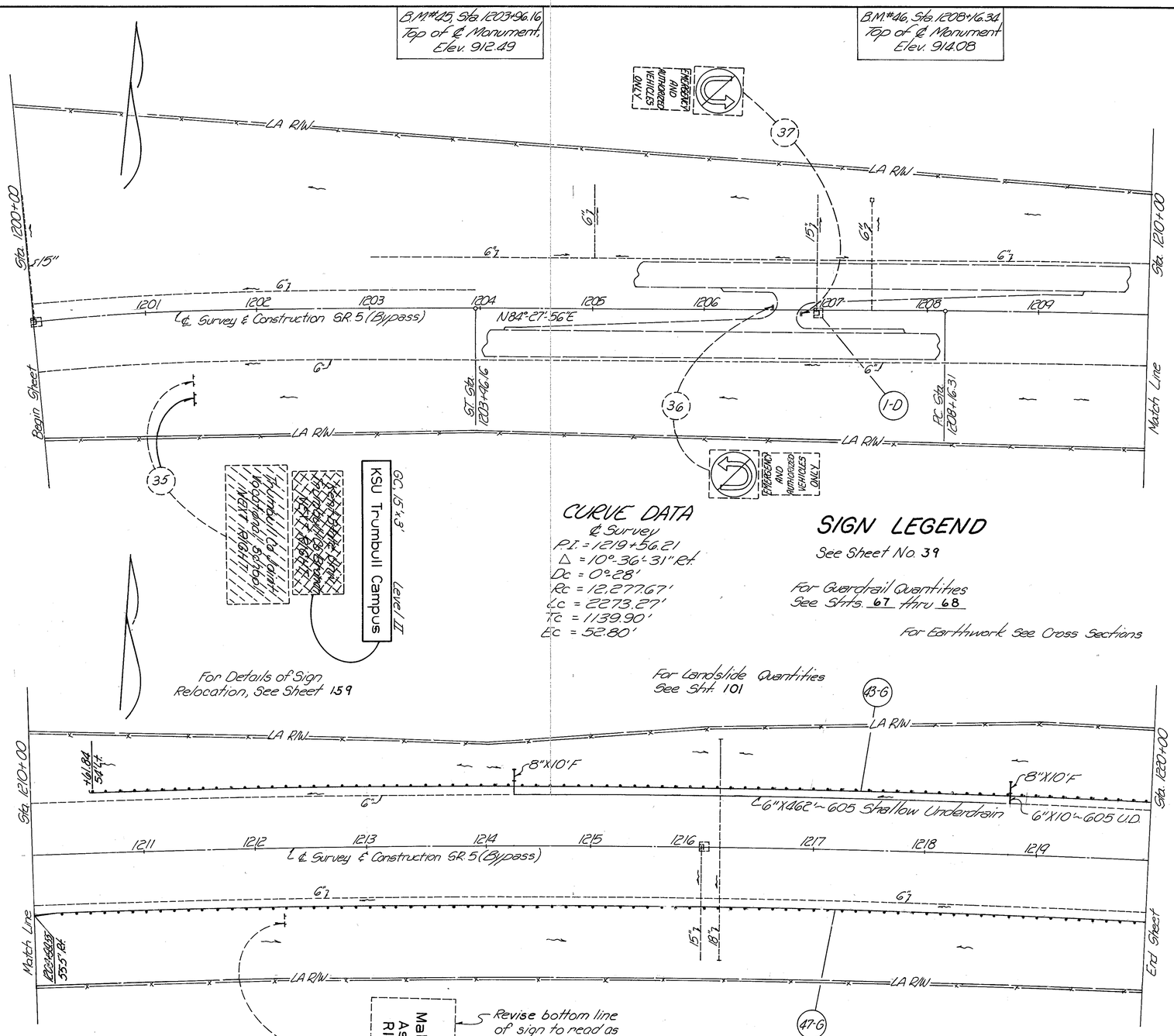

CURVE DATA

℄ Survey
P.I. = 1219+56.21
△ = 10°-36'-31" Rt.
Dc = 0°-28'
Rc = 12,277.67'
Lc = 2273.27'
Tc = 1139.90'
Ec = 52.80'

SIGN LEGEND

See Sheet No. 39

For Guardrail Quantities See Shts. 67 thru 68

For Earthwork See Cross Sections

B.M.#47, Top Stamped Sta. 1212 WB, Top of Last 2, Elev. 921.51

B.M.#48, Sta. 1215+00 Top of ℄ Monument, Elev. 928.50

B.M.#49, Top Stamped Sta. 1219 WB, Top of "9", Elev. 938.56

DRAINAGE "D"

Ref. No.	To	Side	203 Embankment as per plan Cu. Yds.	
1-D	1207+00	Rt.	2	
	Totals		2	

Sta. 1200+00 to Sta. 1220+00

Computations By Initials BMS Date 11/30/87
Computations Checked By Initials JJK Date 11/30/87
Final Revisions By Initials Date

FHWA REGION	STATE	PROJECT	
5	OHIO		

49
213

TRUMBULL COUNTY
TRU-5B-0.00

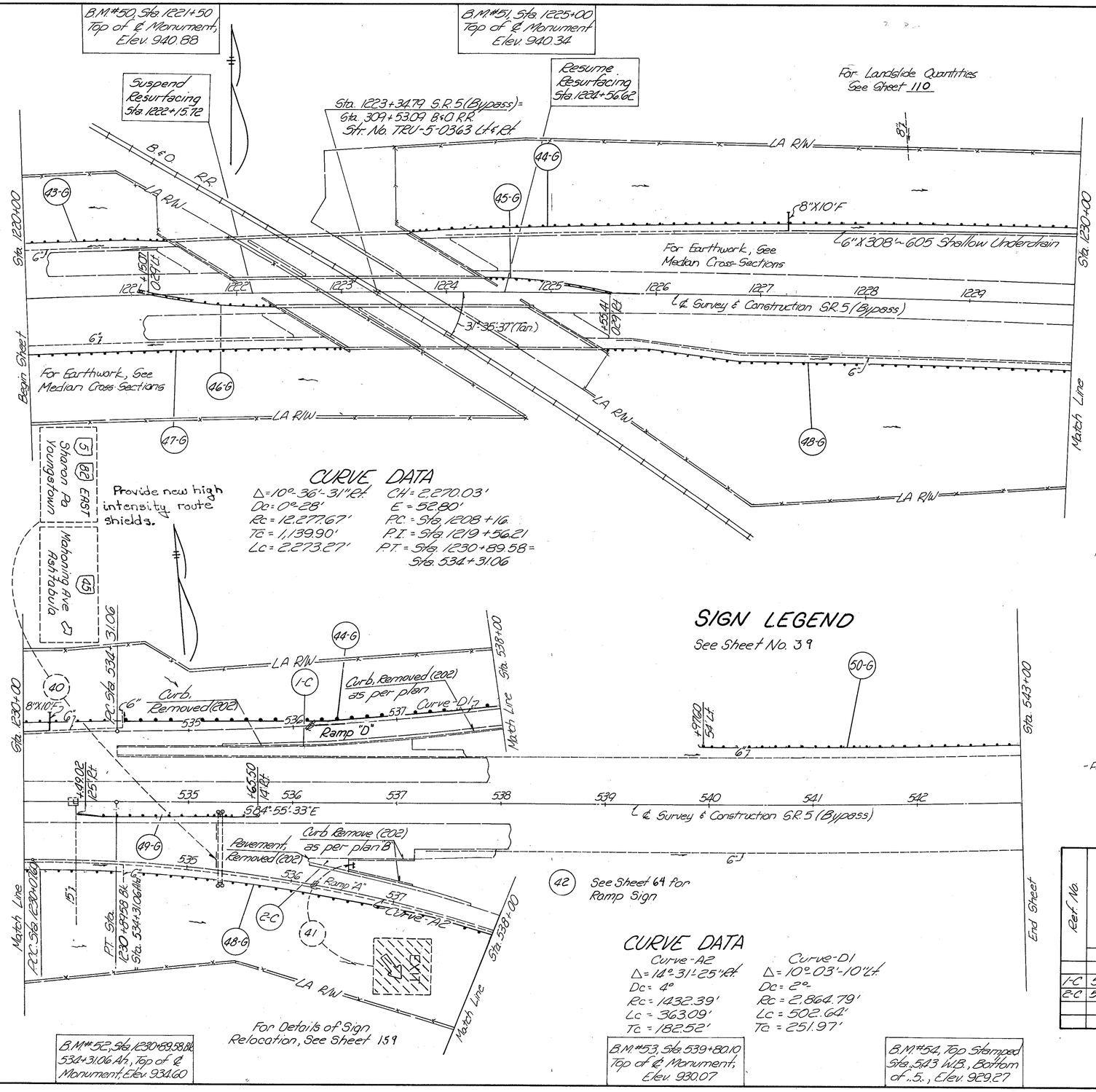

FOR GUARDRAIL QUANTITIES
See Shts. 67 and 68

-For Earthwork, See Cross Sections

CURB REMOVAL "C"

Ref. No.	Station From	Station To	Ramp	202 Curb, Removed as per plan "A" Lin. Ft.	202 Curb Removed Lin. Ft.	202 Curb Removed as per plan "B" Lin. Ft.	202 Pavement Removed Sq. Yds.		301 Bituminous Aggregate Base Cu. Yds.	659 Seeding & Mulching Sq. Yds.	446 Asphalt Concrete Surface Course Type 1 Cu. Yds.
1-C	534+31	537+80	D	161	190				8.26	71.56	
2-C	536+15	537+18	A			140	24.81		2.07	136.11	1.72
Totals				161	190	140	24.81		10.33	207.67	1.72

Revised: 11/30/88

Sta. 1220+00 to Sta. 543+00

Computations By initials MS Date 11/30/87
Computations Checked By initials JMK Date 11/30/87
Final Revisions By initials Date

FHWA REGION	STATE	PROJECT	
5	OHIO		

50/213

TRUMBULL COUNTY
TRU-5B-0.00

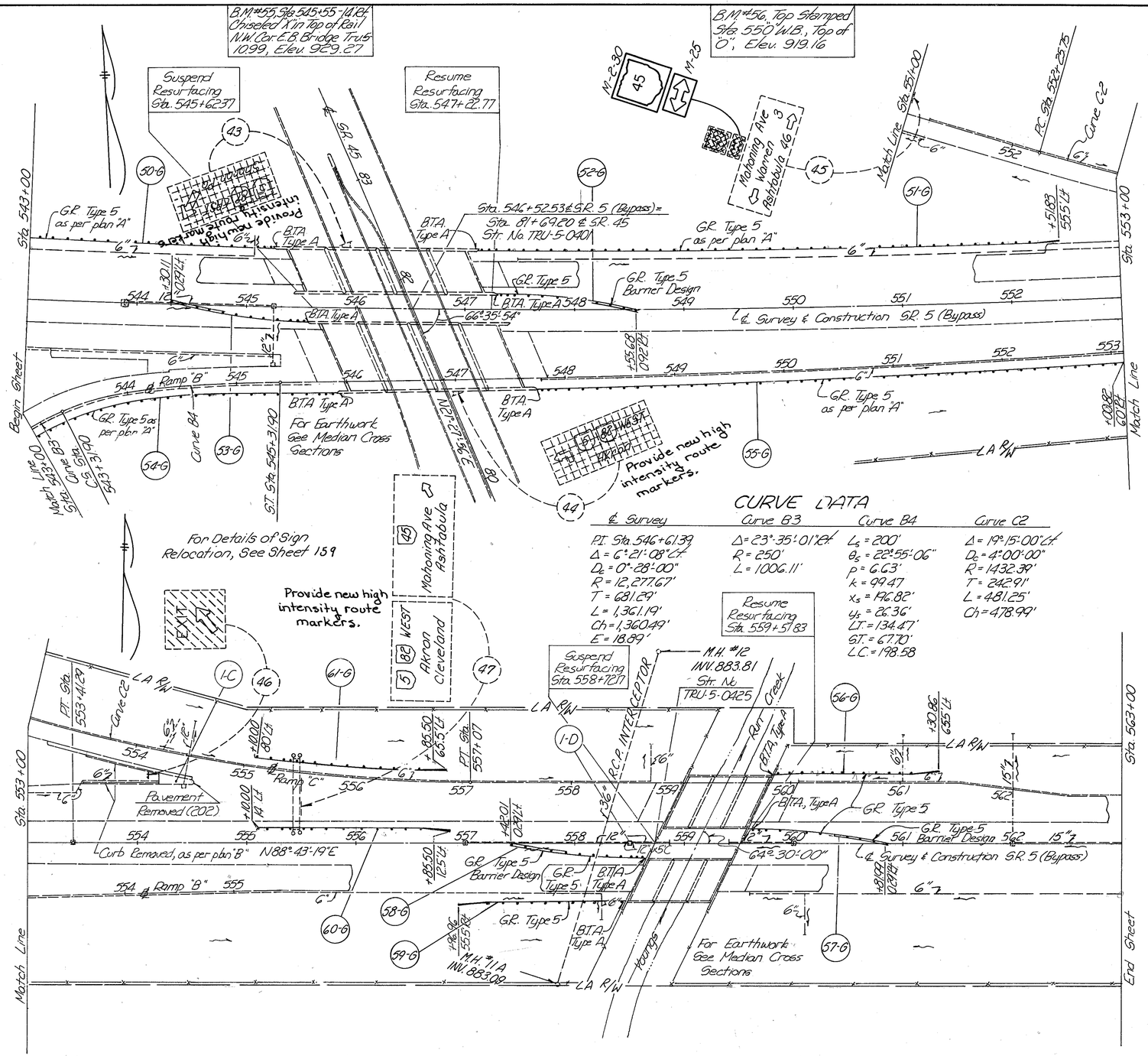

CURVE DATA

℄ Survey	Curve B3	Curve B4	Curve C2
P.I. Sta. 546+61.39	Δ = 23°-35'-01" Lt.	L_s = 200'	Δ = 19°-15'-00" Lt.
Δ = 6°-21'-08" Lt.	R = 250'	θ_s = 22°-55'-06"	D_c = 4°-00'-00"
D_c = 0°-28'-00"	L = 1006.11'	p = 6.63'	R = 1432.39'
R = 12,277.67'		k = 99.47	T = 242.91'
T = 681.89'		x_s = 196.82'	L = 481.25'
L = 1,361.19'		y_s = 26.36'	Ch = 478.99'
Ch = 1,360.49'		LT = 134.47'	
E = 18.89'		ST = 67.70'	
		LC = 198.58	

FOR GUARDRAIL QUANTITIES
See Sheets 67 and 68

CATCH BASIN & CONDUIT ELEVATIONS

Station		Grate Elevation	℄ Elev 12" Conduit Back @ CB		
558+50		900.73	898.34		

CURB REMOVAL "C"

Ref. No	Station From	Station To	Ramp	202 Curb, Removed as per plan "B" Lin. Ft.	202 Pavement Removed Sq. Yd.		301 Bituminous Aggregate Base Cu. Yd.	659 Seeding & Mulching Sq. Yd.		446 Asphalt Concrete Surface Course Type 1 Cu. Yd.
1-C	553+50	554+64	C	140	27.03		2.25	136.11		1.88
Totals				140	27.03		2.25	136.11		1.88

DRAINAGE "D"

Ref. No	Station	Side		202 Catch Basin Removed Each		603 Conduit Lin. Ft. Type C 12"		604 Std. No. 228 Catch Basin, as per plan Each	
1-D	558+50	℄		1		10		1	
Totals				1		10		1	

SIGN LEGEND

See Sheet No. 39

B.M.#57, Sta. 553+41.29, Top of ℄ Monument, Elev. 909.67

B.M.#58, Top Stamped Sta. 557 W.B., Bottom of Middle .S., Elev. 905.95

B.M.#59, Sta. 558+67-14.1Rt. Chiseled X in NW Wing E.B. Bridge Tru 5-10.39 Elev. 904.71

B.M.#60, Sta. 561+00 Top of ℄ Monument, Elev. 907.71

Revised: 11/30/88

Sta. 543+00 to Sta. 563+00

Computations By Initials HMS Date 11/30/87
Computations Checked By Initials JMR Date 11/30/87
Final Revisions By Initials Date

FHWA REGION	STATE	PROJECT	
5	OHIO		

51
213

TRUMBULL COUNTY
TRU-5B-000

B.M. #61, Top Stamped Sta. 5.66 W.B., Bottom of Middle .6., Elev 903.10

B.M. #62, Sta. 570+00 Top of ℄ Monument, Elev. 903.05

Sta. 563+00

Sta. 573+00

LA R/W

6"7

12"7

℄ Survey & Construction SR 5 (BYPASS)

564 565 566 567 568 569 570 571 572

N 88° 43' 19" E

15"

Begin Sheet

Match Line

For Details of Sign Relocation, See Sheet 159

SIGN LEGEND

See Sheet No. 39

HOSPITAL NEXT RIGHT

Move sign to Sta. 602+50

48

EMERGENCY AND AUTHORIZED VEHICLES ONLY

49

45 Mahoning Ave Ashtabula NEXT RIGHT

Revise bottom line of sign to read as "EXIT ½ MILE" Provide new high intensity route shield.

52

Sta. 573+00

Sta. 583+00

574 575 576 577 578 579 580 581 582

℄ Survey & Construction SR 5 (Bypass)

N 88° 43' 19" E

12"x 5'8

6"

1-D

End Sheet

50

EMERGENCY AND AUTHORIZED VEHICLES ONLY

51

Sharon Pa 21 Youngstown 19

B.M. #63, Top Stamped Sta. 5.75 W.B., Bottom of 15"S, Elev. 907.56

B.M. #64, Sta. 579+80.64 Top of ℄ Monument Elev. 908.14

CATCH BASIN & CONDUIT ELEVATIONS

Station		Grate Elevation	Lt. Elev. 12" Conduit Lt @ C.B.
577+00		906.26	903.92

DRAINAGE "D"

Ref. No.	Station		202 Catch Basin Removed		603 Conduit Lin. Ft. TYPE B 12"		604 Std. No. 8 Catch Basin as per plan
	To		Each				Each
1-D	577+00	Rt.	1		5		1
	Totals		1		5		1

Sta. 563+00 to Sta. 583+00

FHWA REGION	STATE	PROJECT	
5	OHIO		

52
213

TRUMBULL COUNTY
TRU-5B-0.00

B.M.#65, Top Stamped Sta. 585 WB, Bottom of .8., Elev. 912.63

B.M.#66, Top Stamped Sta. 589 WB, Bottom of .8., Elev. 914.65

B.M.#67, Sta. 592+73.92 Top of ℄ Monument Elev. 914.70

Level II
KSU Trumbull Campus
GC 15'x3'

Trumbull Co Joint Vocational School NEXT RIGHT

53

PC Sta. 592+73.92

Sta. 583+00

LA R/W

6"Z

12"Z

16"Z

℄ Survey & Construction 5.R.5 (BYPASS)

584 585 586 587 588 589 590 591 592

N88°43'19"E

Sta. 593+00

Begin Sheet

Match Line

LA R/W

CURVE DATA

Δ = 10°-06'-29" Lt.
Dc = 0°-28'-00"
R = 12,277.67'
T = 1,085.82'
L = 2,166.01'
CH = 2,163.20'
E = 47.92'

SIGN LEGEND

See Sheet No. 39

For Guardrail Quantities See Shts. 67 thru 68

Moved from Sta. 573+96

48

For Details of Sign Relocation, See Sheet 159

Sta. 593+00

LA R/W

62-6

445.33
54' Lt.

Sta. 603+00

6"Z

Guardrail Type 5 as per Plan "A"

℄ Survey & Construction 5.R.5 (BYPASS)

594 595 596 597 598 599 600 601 602

Guardrail Type 5 as per Plan "A"

12"Z

577.11
55.5' Rt.

66-6

54

Match Line

LA R/W

GR 2'x 2'
Level II
Perkins-Jones Rd
Larchmont Ave Ext
EXIT 3/4 MILE

End Sheet

Larchmont Ave Ext
3/4 MILE

For Details of Sign Erection, See Sheet 160

B.M.#68, Top Stamped Sta. 597 WB, Bottom of .5., Elev. 918.64

B.M.#69, Top Stamped Sta. 601 WB, Top of "O", Elev. 923.03

Sta. 583+00 to Sta. 603+00

FHWA REGION	STATE	PROJECT	
5	OHIO		

53/213

TRUMBULL COUNTY
TRU-5B-0.00

Computations By Initials KMS Date 11/30/87
Computations Checked By Initials DMK Date 11/30/87
Final Revisions By Initials Date

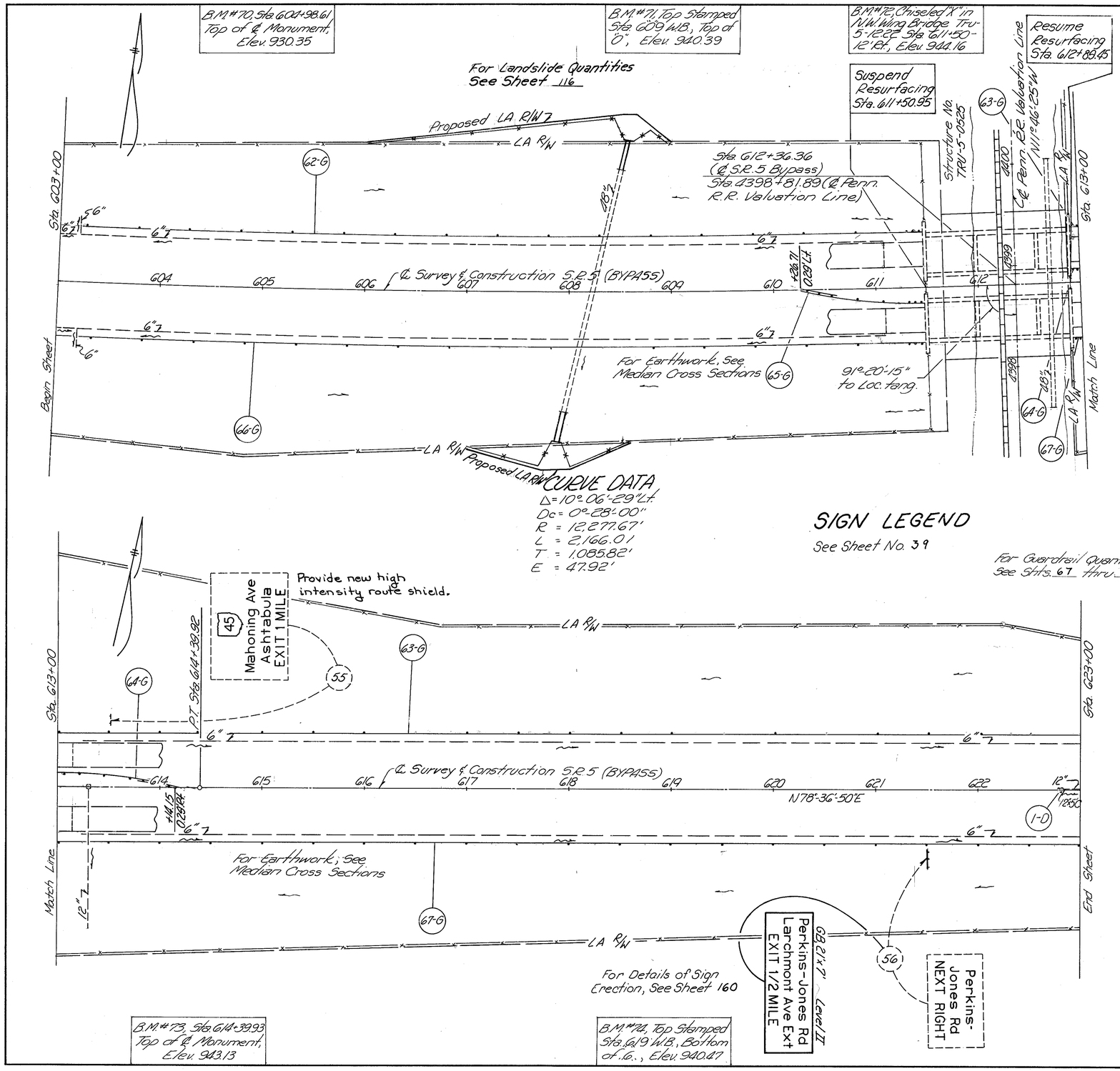

CATCH BASIN & CONDUIT ELEVATIONS

Station		Grate Elevation	℄ Elev. 12" Conduit @ C.B.		
622+80		933.61	930.99		

For Earthwork See Cross Sections

DRAINAGE "D"

Ref. No.	Station	Side	202 Catch Basin Removed	603 Conduit Lin. Ft. Type C 12"	604 Std. No. 8 Catch Basin, as per plan	Each
1-D	622+80	℄	1	5		1
	Totals		1	5		1

Sta. 603+00 to Sta. 623+00

FHWA REGION	STATE	PROJECT	
5	OHIO		

54
213

TRUMBULL COUNTY
TRU-5B-0.00

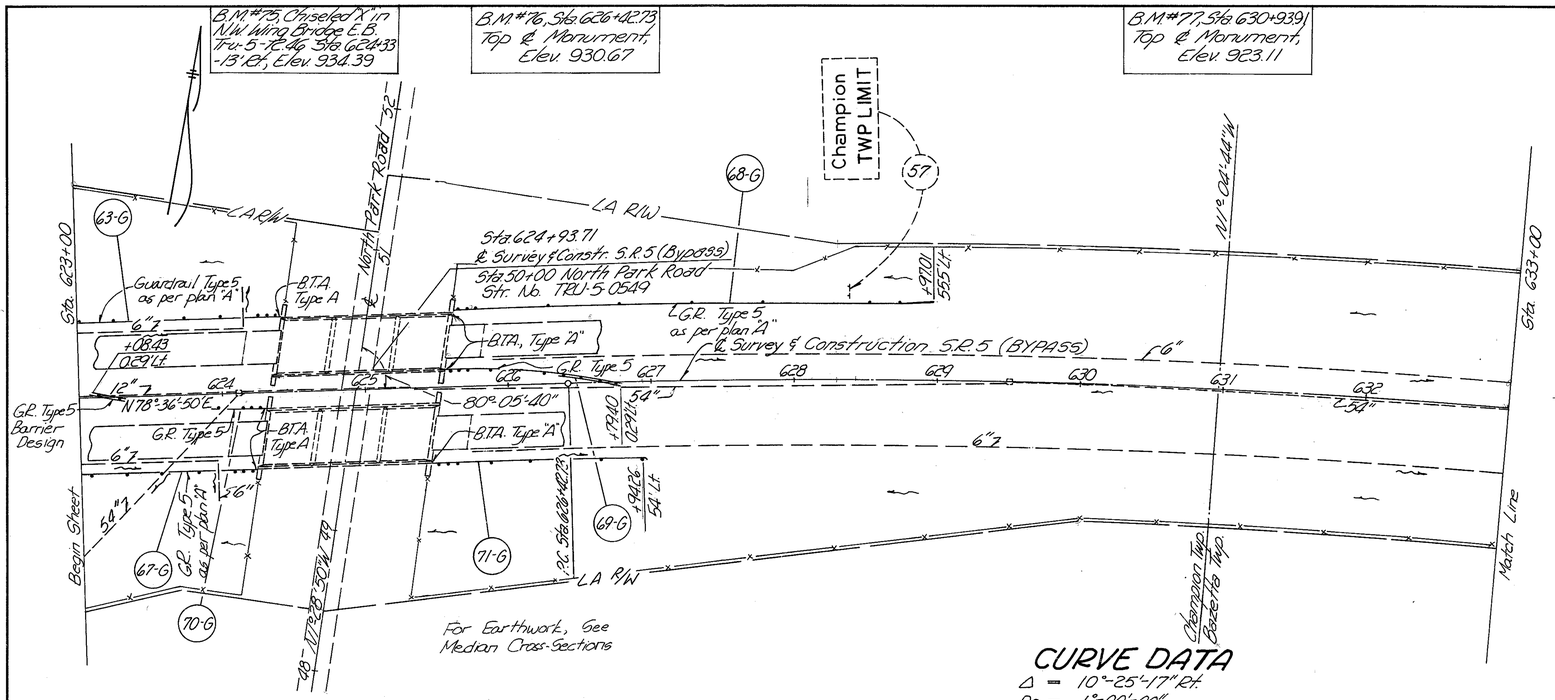

CURVE DATA

Δ = 10°-25'-17" Rt.
Dc = 1°-00'-00"
R = 5,729.58'
T = 522.51'
L = 1,042.14'
CH = 1,040.70'
E = 23.78'

FOR GUARDRAIL QUANTITIES
See Shts. 67 and 68

SIGN LEGEND

See Sheet No. 39

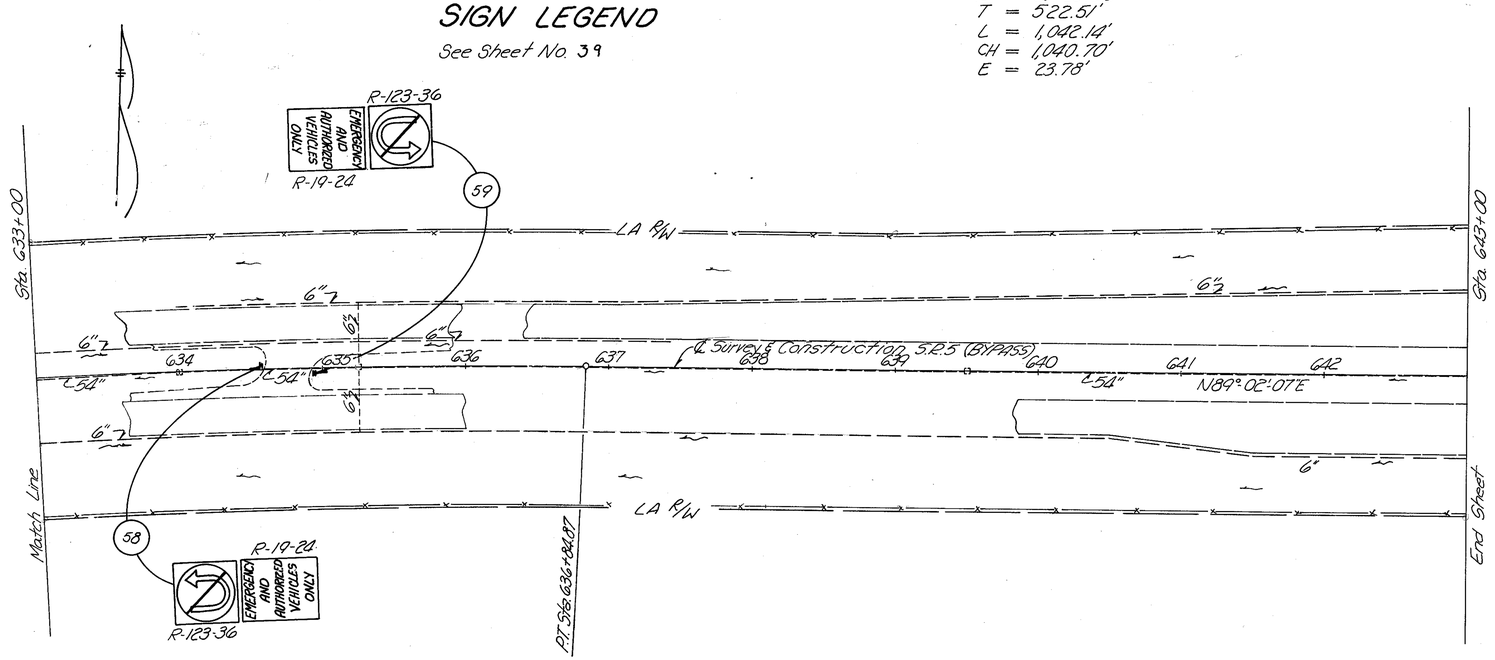

B.M.#78, Sta. 636+84.87 Top & Monument, Elev. 921.99

B.M.#79, Top Stamped Sta. 641+00 W.B. Bottom of "6", Elev. 925.29

Sta. 623+00 to Sta. 643+00

Computations By Initials MMS Date 11/30/87
Computations Checked By Initials MK Date 11/30/87
Final Revisions By Initials Date

FHWA REGION	STATE	PROJECT		
5	OHIO			

55
213

TRUMBULL COUNTY
TRU-5B-0.00

CATCH BASIN & CONDUIT ELEVATION

Station		Grate Elevation	Ft. Elev. 21" Conduit Ref. @ C.B.	Ft. Elev. 33" Conduit Back @ C.B.	Ft. Elev. 33" Conduit Ahd @ C.B.	Ft. Elev. 30" Conduit Back @ C.B.	Ft. Elev. 30" Conduit Ahd @ C.B.
643+50		923.90					
649+66, Rt. "E"		928.33	923.54				
653+50		928.31		919.39	919.66		
660+50		930.61				922.65	922.95

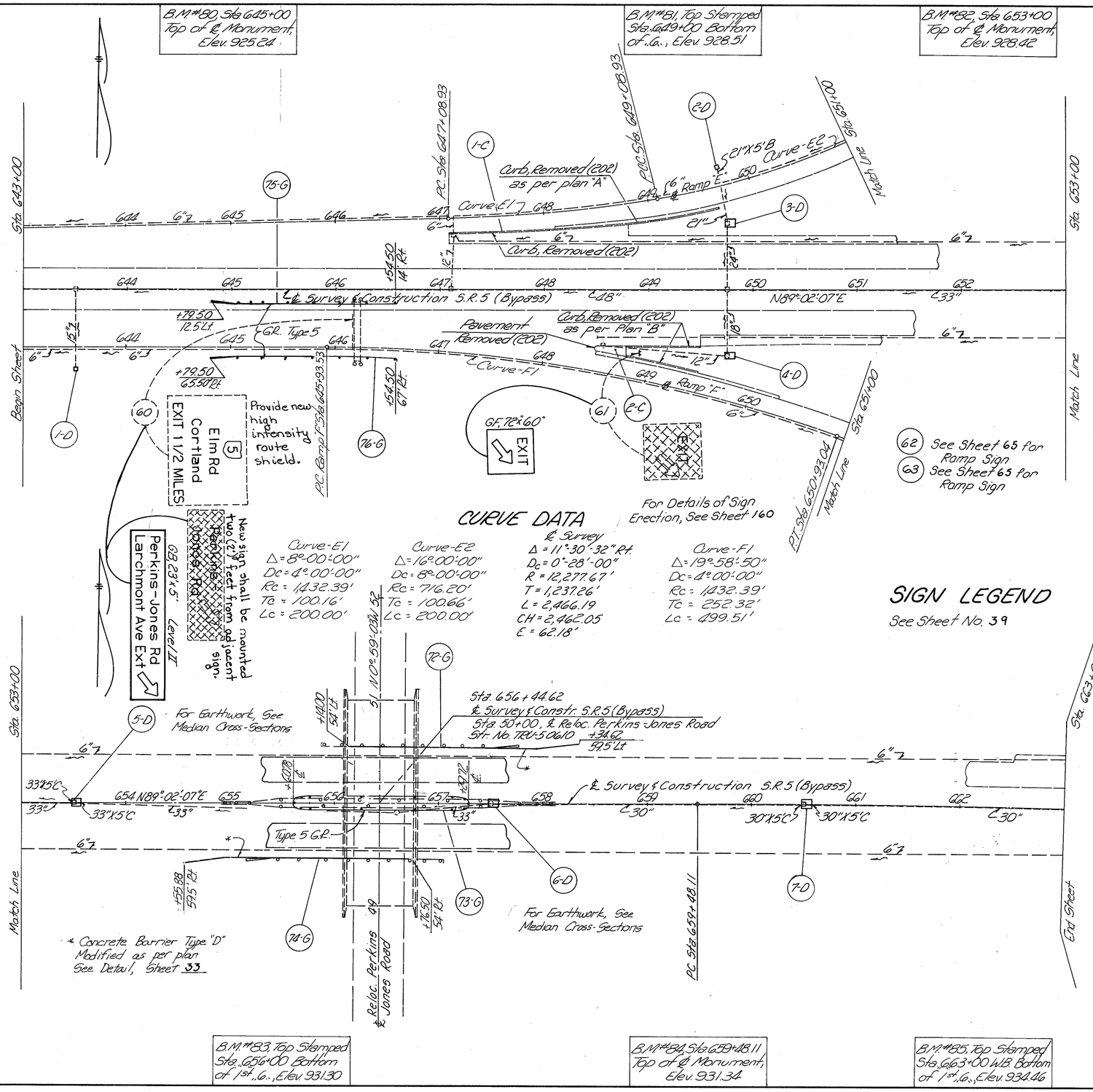

CURVE DATA

Curve-E1	Curve-E2	℄ Survey	Curve-F1
Δ = 8°-00'-00"	Δ = 16°-00'-00"	Δ = 11°-30'-32" Rt.	Δ = 19°-58'-50"
Dc = 4°-00'-00"	Dc = 8°-00'-00"	D_c = 0°-28'-00"	Dc = 4°-00'-00"
Rc = 1,432.39'	Rc = 716.20'	R = 12,277.67'	Rc = 1,432.39'
Tc = 100.16'	Tc = 100.66'	T = 1,237.26'	Tc = 252.32'
Lc = 200.00'	Lc = 200.00'	L = 2,466.19	Lc = 499.51'
		CH = 2,462.05	
		E = 62.18'	

SIGN LEGEND

See Sheet No. 39

B.M. #83, Top Stamped Sta. 656+00 Bottom of 1st "L", Elev. 931.30

B.M. #84, Sta. 659+48.11 Top of ℄ Monument, Elev. 931.34

B.M. #85, Top Stamped Sta. 663+00 W.B. Bottom of 1st "L", Elev. 934.46

FOR GUARDRAIL AND BARRIER QUANTITIES, See Sht's. 67 and 68

CURB REMOVAL "C"

Ref. No.	Station	From	To	446 Asphalt Concrete Surface Course Type 1	659 Seeding & Mulching	301 Bituminous Aggregate Base	202 Pavement Removed	202 Curb, Removed as per Plan "A"	202 Curb Removed	202 Curb, Removed as per Plan "B"	202 Ramp
				Cu. Yds.	Sq. Yds.	Cu. Yds.	Sq. Yds.	Lin. Ft.	Lin. Ft.	Lin. Ft.	E / F
1-C											
2-C		647+09	648+48.5	161	1778	194	2325	130	140	140	130 /
	Totals			161	19778	824	2325	130	140	140	130 /

DRAINAGE "D"

Ref. No.	Station		202 Side	202 Concrete Pad Removed, Type 1	202 Catch Basin Removed	603 Conduit in Ft. Type C	603 Conduit in Ft. Type B	203 Embankment, as per plan	604 Catch Basin Reconstructed to Grade	604 Catch Basin Pad, as per plan	604 Catch Basin Repair	604 Std. No. 4 Catch Basin, as per plan
			Ea.	Each	Each	30"	21"	Cu. Yds.	Each	Each	Each	Each
1-D	643+50						5		1			1
2-D	649+66, Rpt. "E"						5			1	1	
3-D	649+75											
4-D	649+75											
5-D	653+50					10		3				3
6-D	657+50				1						1	
7-D	660+50					10		3				3
	Totals				1	10	10	3	1	1	1	3

Revised: 11/30/88

Sta. 643+00 to Sta. 663+00

FHWA REGION	STATE	PROJECT	
5	OHIO		

56
213

TRUMBULL COUNTY
TRU-5B-0.00

Computations By Initials K.M.S. Date 11/30/87
Computations Checked By Initials JMK Date 11/30/87
Final Revisions By Initials Date

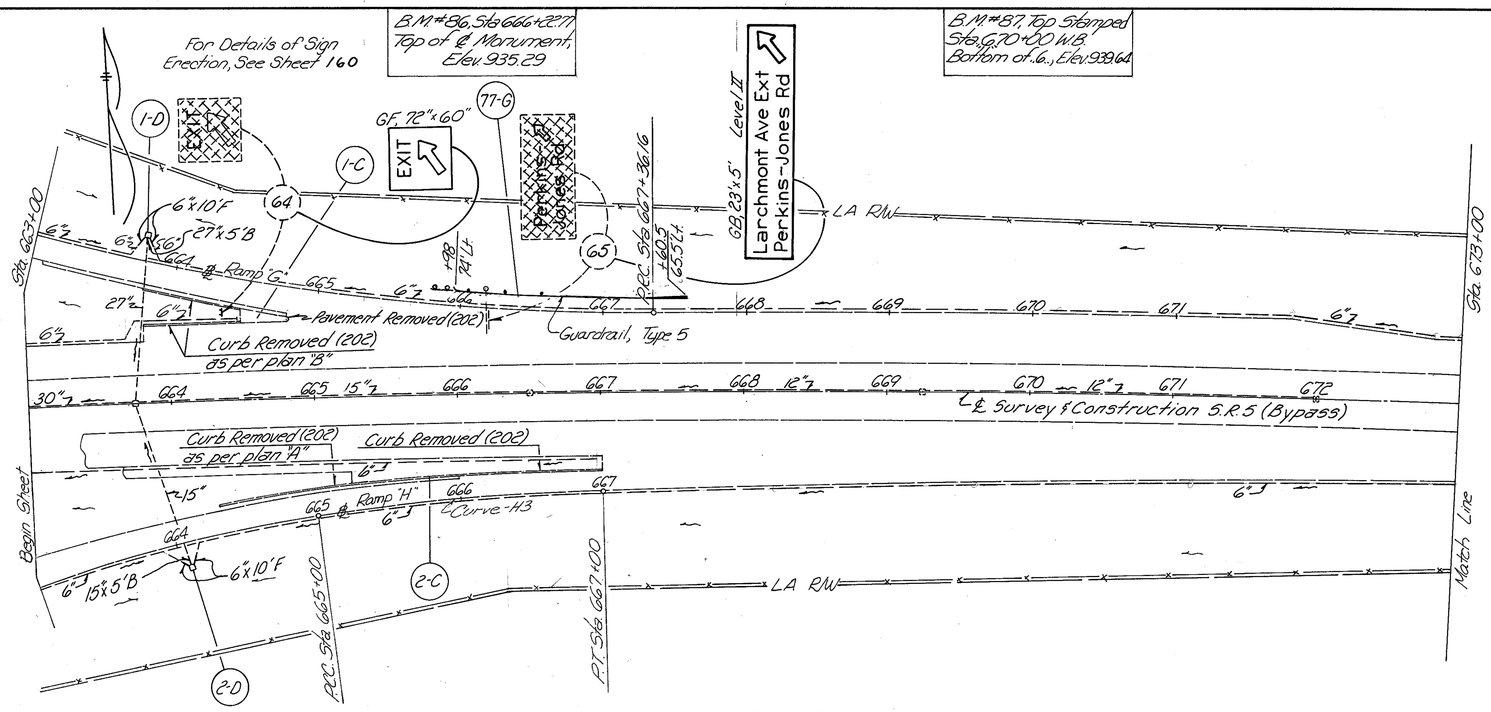

CURVE DATA

$\Delta = 11°30'-32''$ Rt.
$D_c = 0°-28'-00''$
$R = 12,277.67'$
$T = 1,237.26'$
$L = 2,466.19'$
$CH = 2,462.05'$
$E = 62.18'$

Curve-H3
$\Delta = 8°00'-00''$
$D_c = 4°00'-00''$
$R_c = 1,432.39'$
$T_c = 100.16'$
$L_c = 200.'$

SIGN LEGEND

See Sheet No. 39

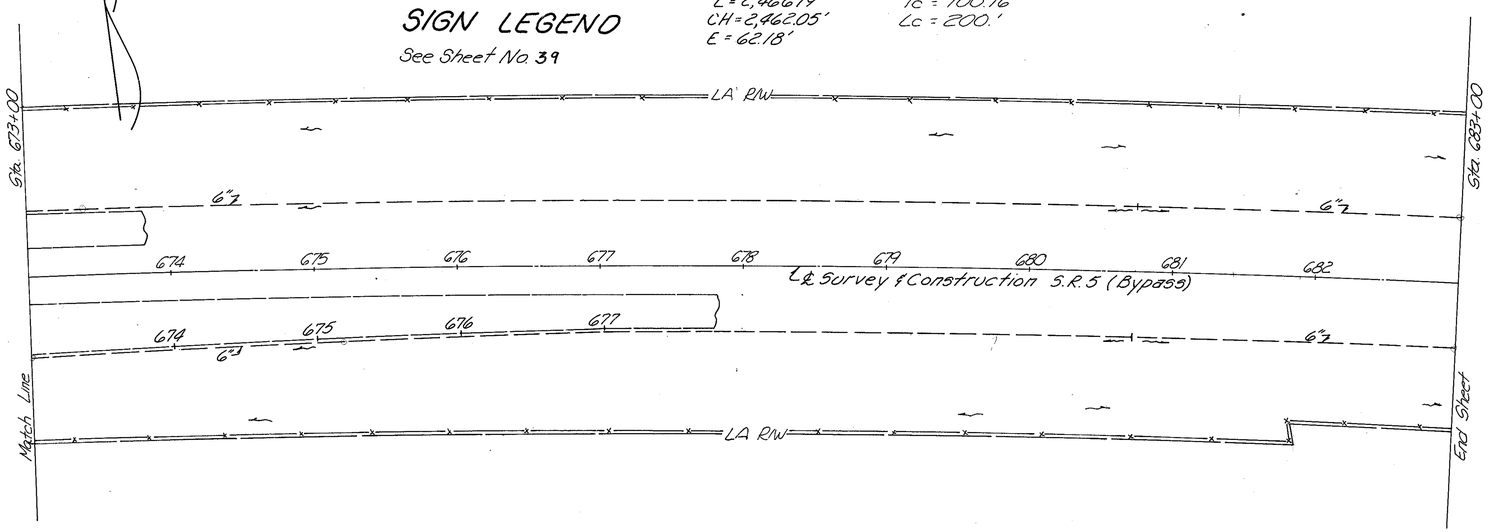

B.M.#88, Sta. 675+00 Top of ℄ Monument, Elev. 941.70

B.M.#89, Top Stamped Sta. 680+00 W.B. Bottom of .6., Elev. 946.12

DRAINAGE "D"

Ref. No.	Station	Side	202 Catch Basin Removed (Each)	603 Conduit Lin. Ft. TYPE F 6"	603 TYPE B 27"	603 TYPE B 15"	604 Std. No. 4 Catch Basin as per plan (Each)	604 Std. No. 5 Catch Basin as per plan (Each)
1-D	663+74, Rp. G	Lt.	1	20	5		1	
2-D	664+05, Rp. H	Rt.	1	20		5		1
	Totals		2	40	5	5	1	1

CURB REMOVAL "C"

Ref. No.	Station From	Station To	Ramp	202 Curb Removed as per plan "A" (Lin. Ft.)	202 Curb Removed (Lin. Ft.)	202 Curb Removed as per plan "B" (Lin. Ft.)	202 Pavement Removed (Sq. Yd.)	301 Bituminous Aggregate Base (Cu. Yd.)	659 Seeding & Mulching (Sq. Yd.)	446 Asphalt Concrete Surface Course Type 1 (Cu. Yd.)
1-C	663+82	664+84	G			140	24.03	2.00	143.89	1.67
2-C	664+50	667+00	H	107	145			6.01	47.56	
	Totals			107	145	140	24.03	8.01	191.45	1.67

FOR GUARDRAIL QUANTITIES
See Sheets 67 and 68

CATCH BASIN & CONDUIT ELEVATIONS

Station		Grate Elev.	℄ Elev. 6" Conduit Back @ C.B.	℄ Elev. 6" Conduit Ahd @ C.B.	℄ Elev. 27" Conduit Rt. @ C.B.	℄ Elev. 15" Conduit Lt. @ C.B.	
663+74, Rp. G		931.51	928.04	928.24	925.99		
664+05, Rp. H		931.26	928.62	928.58		927.98	

Revised: 11/30/88

Sta. 663+00 to Sta. 683+00

Computations By Initials WMS Date 11/30/07
Computations Checked By Initials DMR Date 11/30/07
Final Revisions By Initials Date

FHWA REGION	STATE	PROJECT	
5	OHIO		

57
213

TRUMBULL COUNTY
TRU-5B-0.00

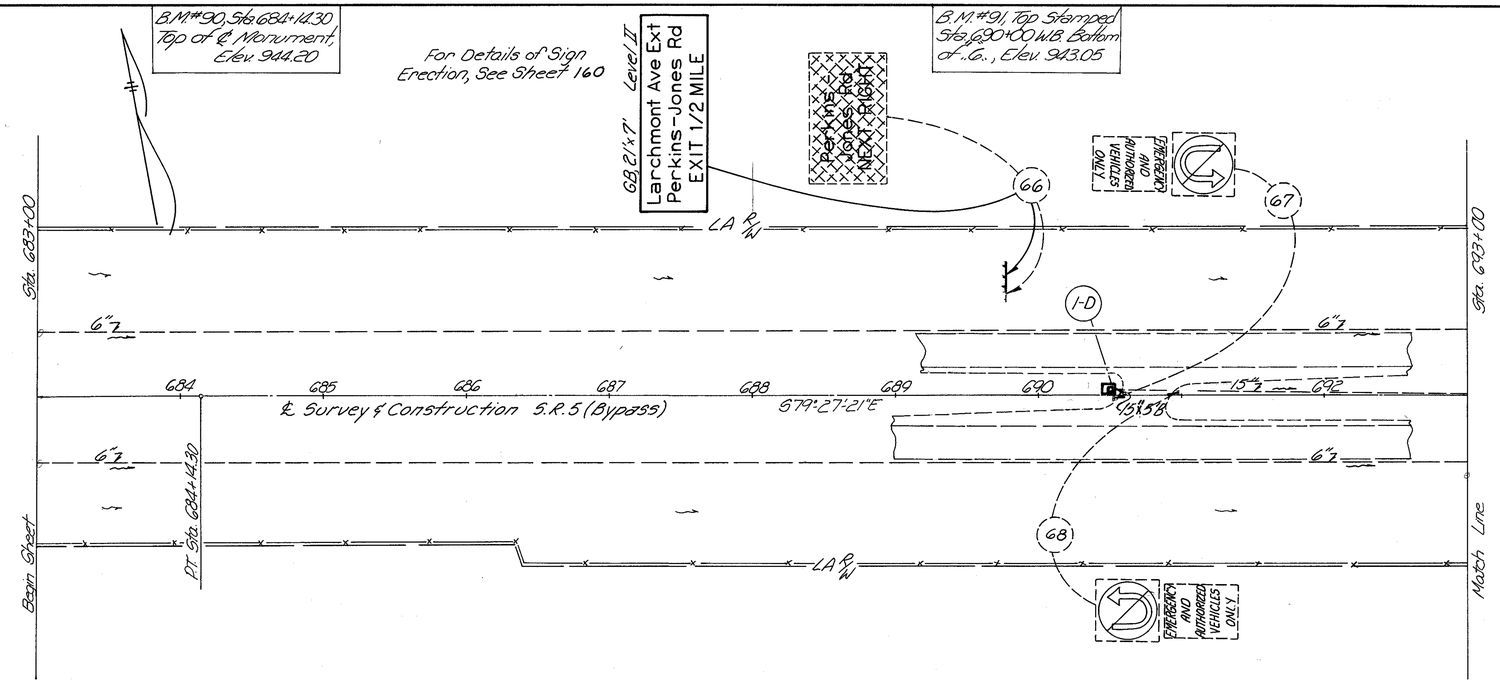

CURVE DATA

Δ = 11°-30'-32" Rt.
D_c = 0°-28'-00"
R = 12,277.67'
T = 1,237.26'
L = 2,466.19'
CH = 2,462.05'
E = 62.18'

SIGN LEGEND

See Sheet No. 39

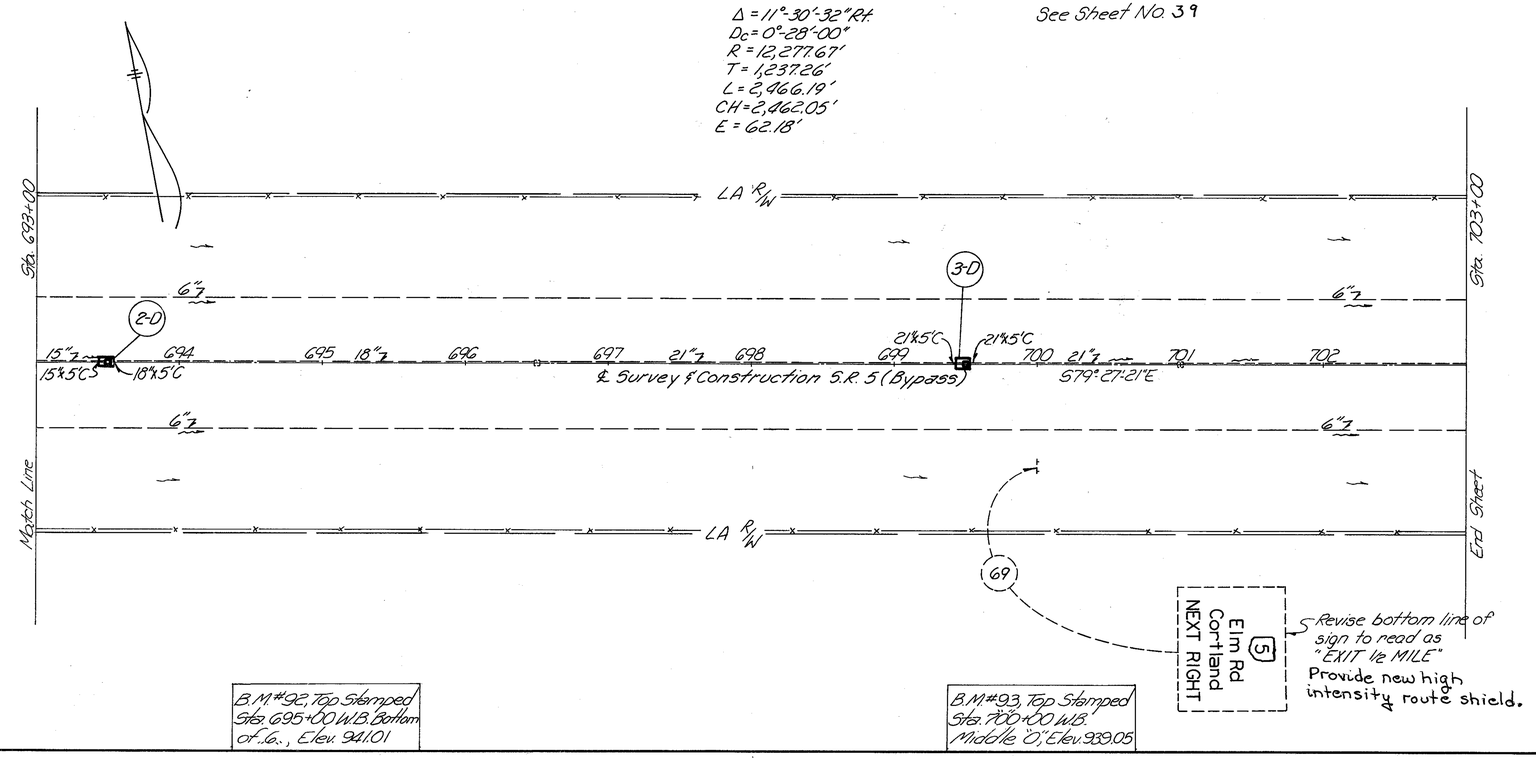

B.M.#92, Top Stamped Sta. 695+00 W.B. Bottom of ..G.., Elev. 941.01

B.M.#93, Top Stamped Sta. 700+00 W.B. Middle "D," Elev. 939.05

CATCH BASIN & CONDUIT ELEVATIONS

Station		Grate Elevation	℄ Elev. 15" Conduit AHD @ C.B.	℄ Elev. 15" Conduit Back @ C.B.	℄ Elev. 18" Conduit AHD @ C.B.	℄ Elev. 21" Conduit Back @ C.B.	℄ Elev. 21" Conduit AHD @ C.B.
690+50		940.99	938.78				
693+50		939.83		936.78	936.64		
699+50		937.70				934.04	934.00

DRAINAGE "D"

| | | | | | | |

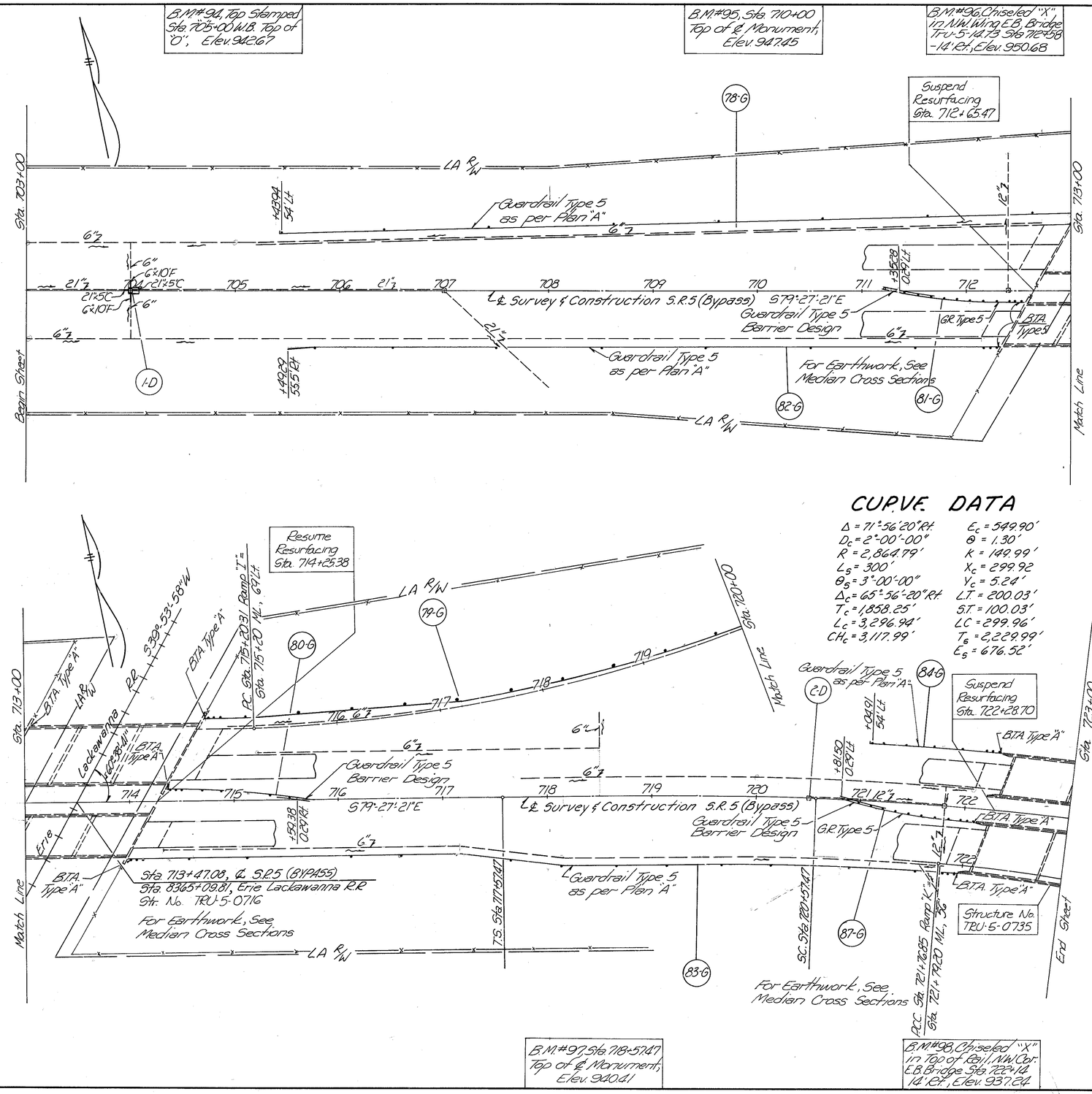
B.M.#94, Top Stamped Sta. 705+00 W.B. Top of "O", Elev. 942.67
B.M.#95, Sta. 710+00 Top of ℄ Monument, Elev. 947.45
B.M.#96, Chiseled "X" in NW Wing E.B. Bridge Tru-5-14.73 Sta. 712+58 -14' Rt., Elev. 950.68
Suspend Resurfacing Sta. 712+65.47
Sta. 703+00
Sta. 713+00
Match Line
LA R/W
Guardrail Type 5 as per Plan "A"
44.94 54' Lt.
6"
6"
6"

FHWA REGION	STATE	PROJECT	
5	OHIO		

59
213

TRUMBULL COUNTY
TRU-5B-0.00

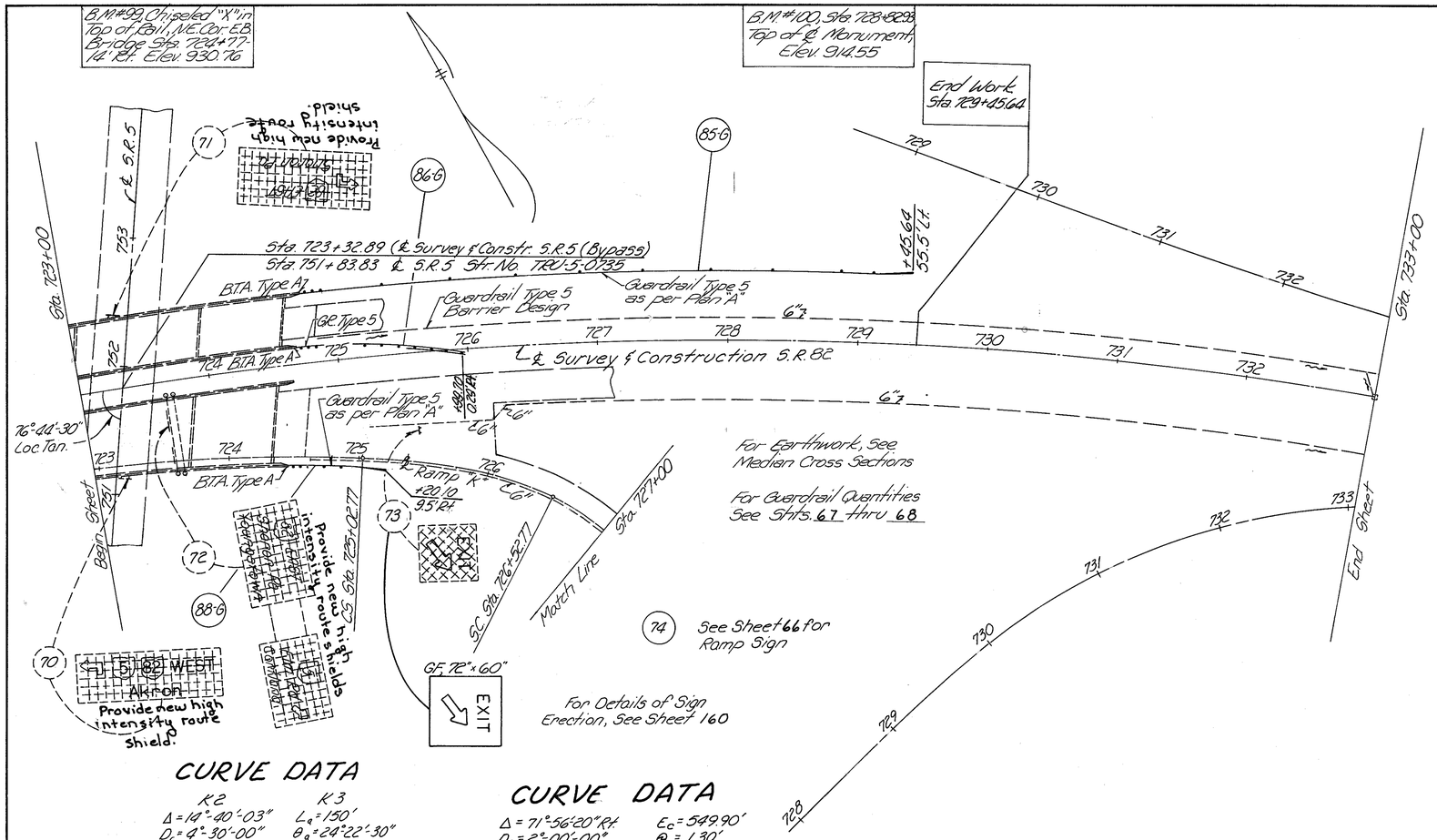

CURVE DATA

K2
$\Delta = 14°-40'-03''$
$D_c = 4°-30'-00''$
$R = 1,273.24'$
$T = 163.87'$
$L = 325.94$
$CH = 325.06'$

K3
$L_s = 150'$
$\theta_s = 24°22'-30''$
$T_1 = 94.35'$
$T_2 = 57.96$
$\Delta_1 = 3°-22'-30''$
$\Delta_2 = 21°-00'-00''$
$P_s = 3.83$

K4
$\Delta = 224°-51'-27''$
$D_c = 28°-00'-00''$
$R = 204.63$
$L = 803.06'$

CURVE DATA

$\Delta = 71°-56'-20''$ Rt.
$D_c = 2°-00'-00''$
$R = 2,864.79'$
$L_s = 300'$
$\theta_s = 3°-00'-00''$
$\Delta_c = 65°-56'-20''$ Rt.
$T_c = 1,858.25'$
$L_c = 3,296.94'$
$CH_c = 3,117.99$

$E_c = 549.90'$
$\Theta = 1.30'$
$k = 149.99'$
$X_c = 299.92$
$Y_c = 5.24'$
$L.T. = 200.03'$
$S.T. = 100.03'$
$LC = 299.96'$
$T_s = 2,229.99'$
$E_s = 676.52'$

SIGN LEGEND

See Sheet No. 39

Sta. 723+00 to Sta. 733+00

FED. RD. DIVISION	STATE	PROJECT	
5	OHIO		

TRU-5B-0.00

59A
213

1024+82.00 T.S.
1025
T.S. 1025+59.07
Begin Deceleration Lane 1025+59.07 ℄ Eastbound
1028+82.00 S.C.
1030
S.C. 1029+59.07
1029+59.07 P.C.
End Acceleration Lane 1031+27.61 ℄ Survey
℄ Survey S.R.5
1036+94.25 S.R.5 ℄ Survey
1029+87.10 Market St.
1035
1037+21.41 S.R.5 ℄ Eastbd
1031+00.58 Market St.
S.C.
P.C.C.
1035
1035+56.24 P.C.
RAMP "A-1" Market
1036+72.38 P.C.C.
RAMP "B-1"
C.S.
S.T. 1040+46.07 Ramp "A"
=1038+71.02
1040
1030+50.59 Ramp "B"
=1039+44.41
1041+41.92 T.S.
RAMP "A"
1041+11.02 Ramp "CD"
1020+87.98 ℄
1024+56.16
1025
Street ℄ Construction
Begin Decel. Lane 1027+06.16
1027+75.05 S.T.
P.C.C.
1050
P.C.C. 1052+55.32 Ramp "C"
1024+75.05 C.S.
1041+51.19 C.S.
RAMP "C"
1045
S.C.
Homeview Ave.
1015
1020
1047
RAMP "CD"
S.C. 1019+39.17
1043+61.90 back Ramp "CD"
1043+61.30 P.C. Ramp "D" ahead
T.S. 1016+39.17
RAMP "D"
1045+51.44 S.T.
1046+43.97 P.T. Ramp "B"
℄ Eastbound Lanes back
1045+51.44 ℄ Survey ahead,
℄ Constr. ahead,
℄ Survey, back
P.C.C.
1050
1053+33.14 P.T.
Begin Deceleration Lane
1059+00
C.S. 1039+21.15
1040
S.T. 1043+21.15
C.S. 1041+51.44
1045
Westbound Lanes
1050
℄ Survey & Constr.
1055
℄ Eastbound Lanes
End Acceleration Lane
1055+51.44

GENERAL PLAN
MARKET STREET INTERCHANGE

0 50 100 200 300 400 500
SCALE IN FEET

F.H.W.A. REGION	STATE	PROJECT NO.	FUNDS
5	OHIO		

598
213

TRU-5B-0.00

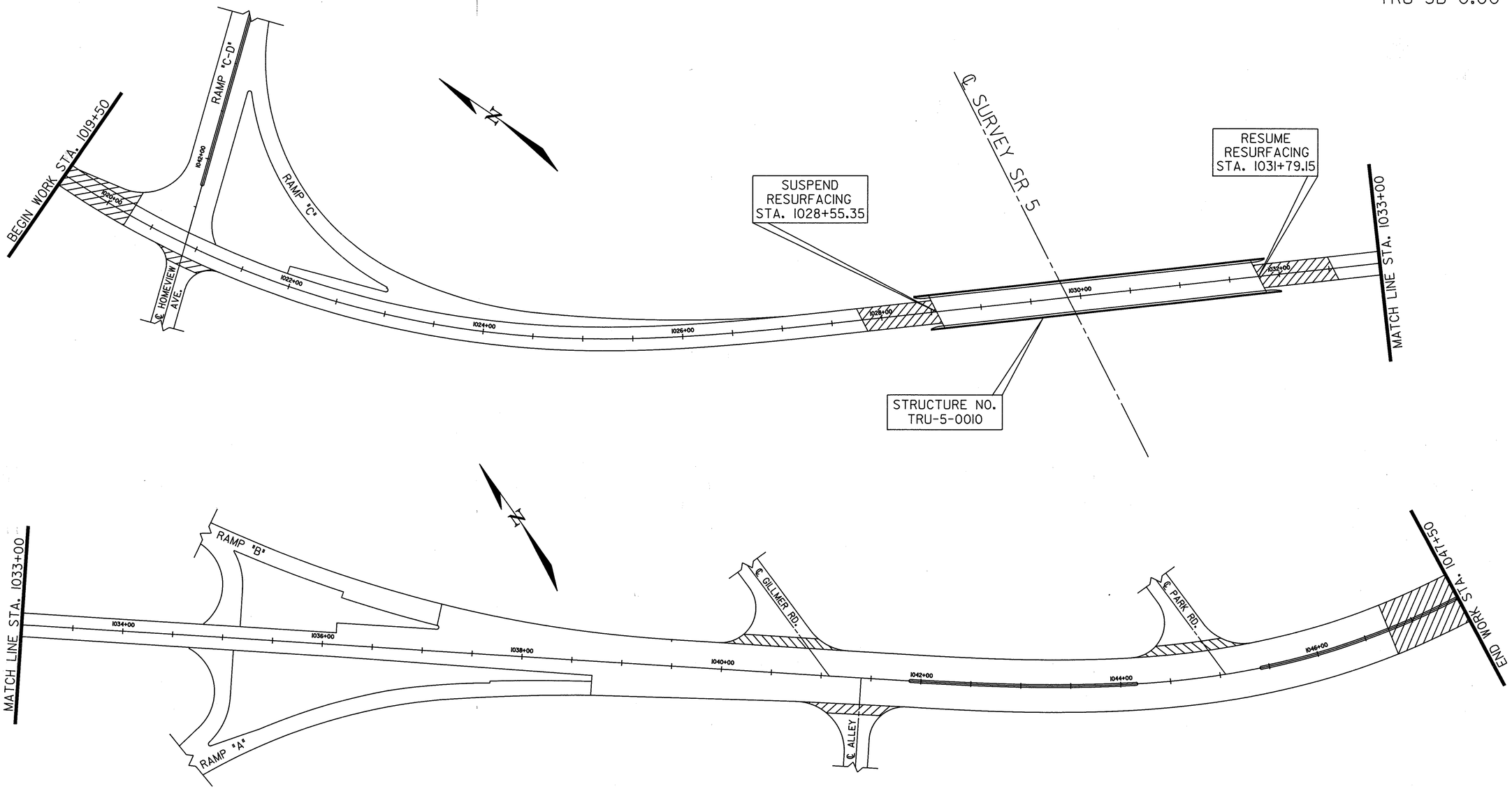

MARKET ST. STA. 1019+50 TO 1047+50

FHWA REGION	STATE	PROJECT	
5	OHIO		

60/213

TRUMBULL COUNTY
TRU-5B-0.00

Computations By Initials	B.M.S. Date 11/30/87
Computations Checked By Initials	DJK Date 11/30/87
Final Revisions By Initials	Date

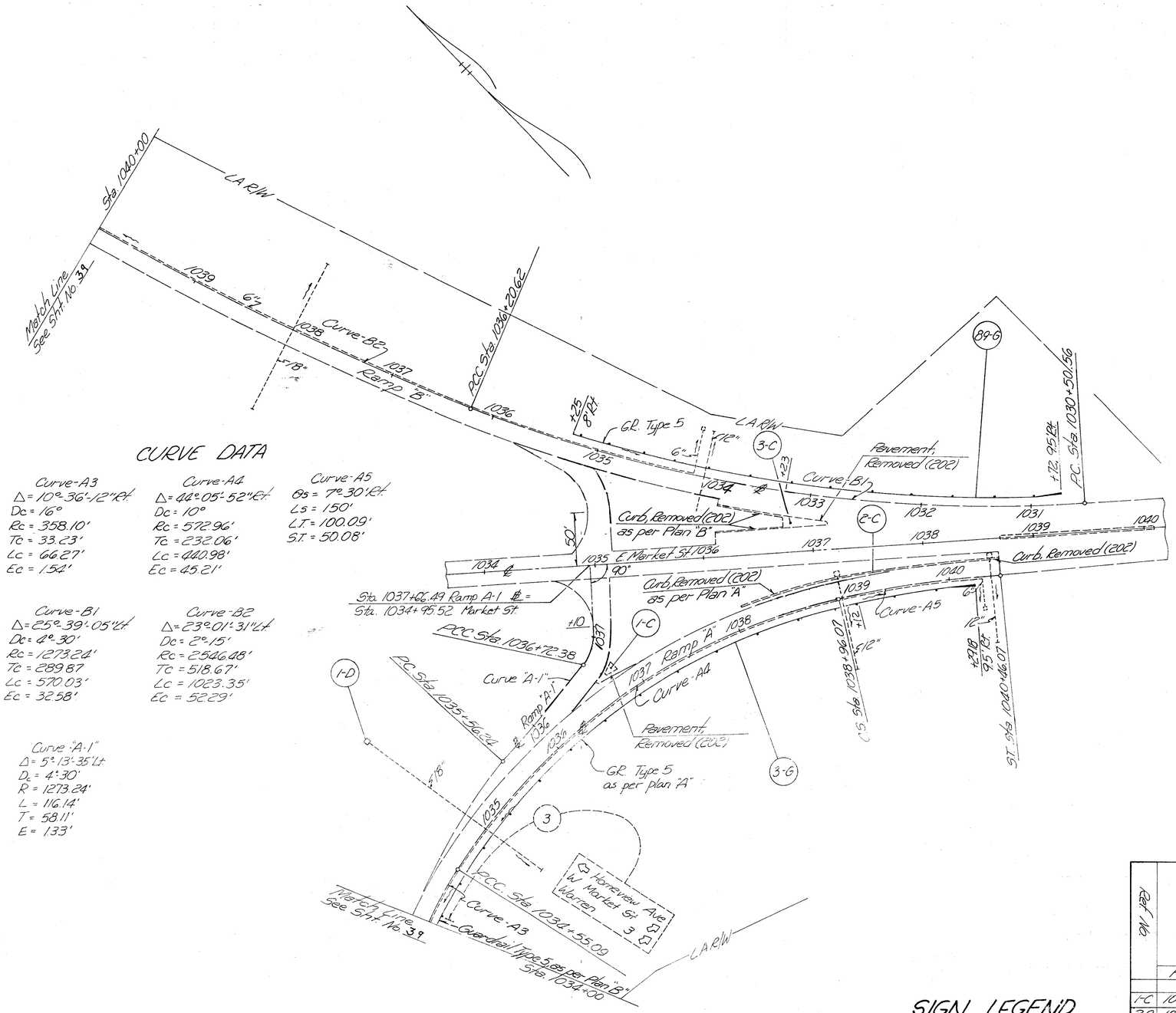

CURVE DATA

Curve-A3
Δ = 10°-36'-12" Rt
Dc = 16°
Rc = 358.10'
Tc = 33.23'
Lc = 66.27'
Ec = 1.54'

Curve-A4
Δ = 44°-05'-52" Rt
Dc = 10°
Rc = 572.96'
Tc = 232.06'
Lc = 440.98'
Ec = 45.21'

Curve-A5
θs = 7°-30' Rt
Ls = 150'
LT = 100.09'
ST = 50.08'

Curve-B1
Δ = 25°-39'-05" Lt
Dc = 4°-30'
Rc = 1273.24'
Tc = 289.87
Lc = 570.03'
Ec = 32.58'

Curve-B2
Δ = 23°-01'-31" Lt
Dc = 2°-15'
Rc = 2546.48'
Tc = 518.67'
Lc = 1023.35'
Ec = 52.29'

Curve "A-1"
Δ = 5°-13'-35" Lt
D_c = 4°-30'
R = 1273.24'
L = 116.14'
T = 58.11'
E = 1.33'

FOR GUARDRAIL QUANTITIES
See Shts 67 and 68

SIGN LEGEND

See Sheet No. 3.9

DRAINAGE "D"

Ref No	Station	Side	604 Catch Basin Reconstructed to Grade Each	604	
1-D	1035+00	Lt	1		
	Total		1		

CURB REMOVAL "C"

Ref No	Station From	Station To	Ramp	202 Curb, Removed as per Plan "A" Lin. Ft.	202 Curb Removed Lin. Ft.	202 Curb, Removed as per Plan "B" Lin. Ft.	202 Pavement Removed Sq. Yds.		301 Bituminous Aggregate Base Cu. Yds.	659 Seeding & Mulching Sq. Yds.	446 Asphalt Concrete Surface Course Type 1 Cu. Yds.
1-C	1036+68	1036+78	A				6.03		0.50		0.42
2-C	1038+10	1040+50	A	102	138				5.72	45.33	
3-C	1032+79	1033+82	B			118	38.03		3.17	100.00	2.64
	Totals			102	138	118	44.06		9.39	145.33	3.06

Revised: 11/30/88

RAMP "A & B" MARKET ST. INTERCHANGE

FHWA REGION	STATE	PROJECT	
5	OHIO		

61
213

TRUMBULL COUNTY
TRU-5B-000

Computations By Initials HMS	Date 11/30/87
Computations Checked By Initials MK	Date 11/30/87
Final Revisions By Initials	Date

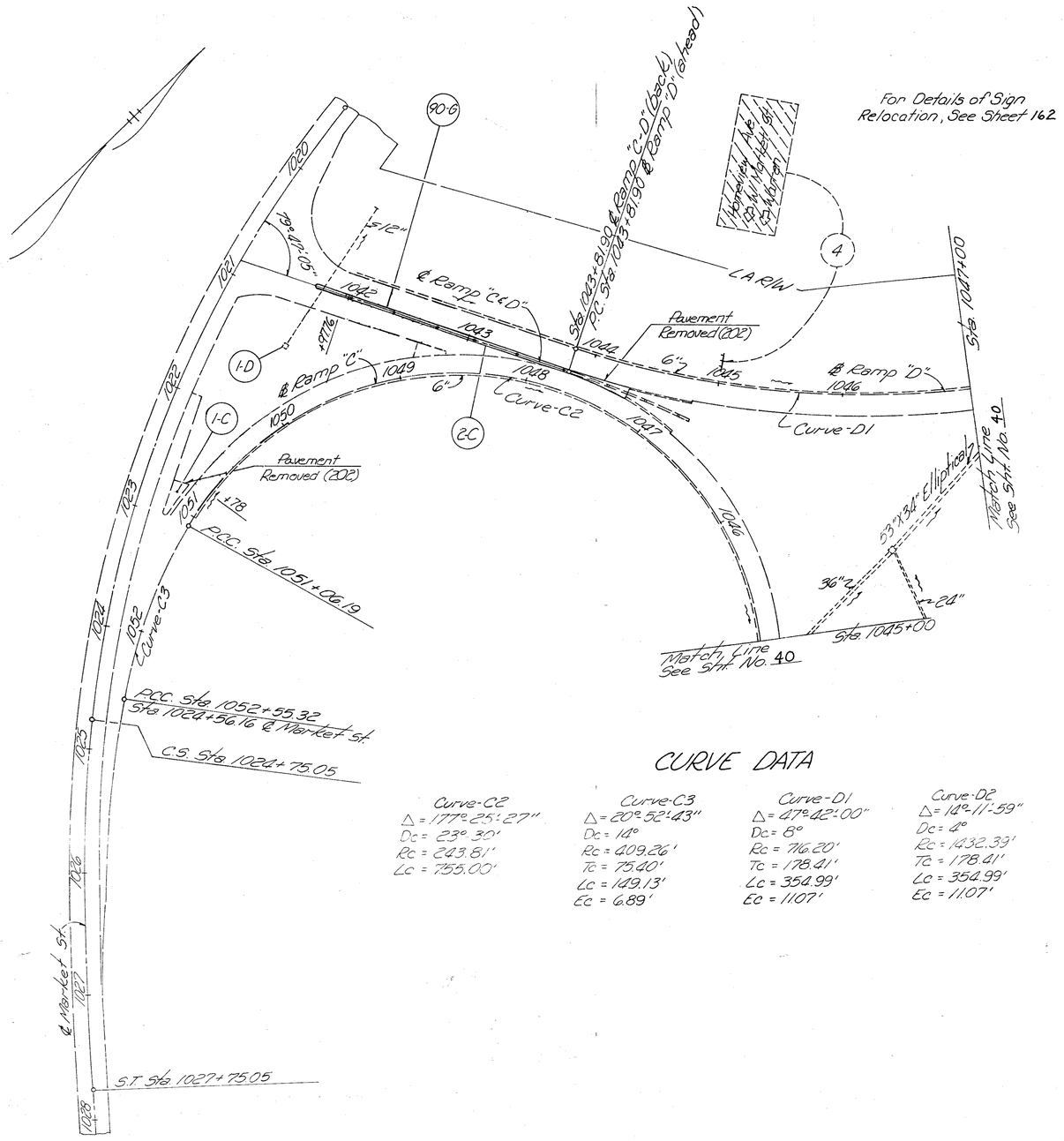

DRAINAGE "D"

Ref. No	Station	Side		203	
				Embankment as per plan	
				Cu. Yd.	
1-D	1041+67	Lt.		2	
Totals				2	

CURB REMOVAL "C"

Ref. No	Station From	Station To	Ramp		202 Pavement Removed		301 Bituminous Aggregate Base	612 Concrete Median	446 Asphalt Concrete Surface Course Type 1	
					Sq. Yd.		Cu. Yd.	Sq. Yd.	Cu. Yd.	
1-C	1050+78	1051+08	C		25.59		2.13		1.78	
2-C	1041+72	1044+30	C-D		105.44		26.36	105.44		
Totals					131.03		28.49	105.44	1.78	

For Guardrail Quantities
See Sheets 67 thru 68

CURVE DATA

Curve-C2
Δ = 177°-25'-27"
Dc = 23°-30'
Rc = 243.81'
Lc = 755.00'

Curve-C3
Δ = 20°-52'-43"
Dc = 14°
Rc = 409.26'
Tc = 75.40'
Lc = 149.13'
Ec = 6.89'

Curve-D1
Δ = 47°-42'-00"
Dc = 8°
Rc = 716.20'
Tc = 178.41'
Lc = 354.99'
Ec = 11.07'

Curve-D2
Δ = 14°-11'-59"
Dc = 4°
Rc = 1432.39'
Tc = 178.41'
Lc = 354.99'
Ec = 11.07'

SIGN LEGEND

See Sheet No. 39

Revised: 11/30/88

RAMP "C" & "D" MARKET ST. INTERCHANGE

Computations By Initials K.M.S Date 11/30/87
Computations Checked By Initials JMR Date 11/30/87
Final Revisions By Initials Date

FHWA REGION	STATE	PROJECT	
5	OHIO		

62/213

TRUMBULL COUNTY
TRU-5B-0.00

CURVE DATA

Curve-E1
Δ = 15°-00'-00" Rt.
Dc = 2°-30'
Rc = 2291.83'
Tc = 301.73'
Lc = 600.00'
Ec = 19.78'

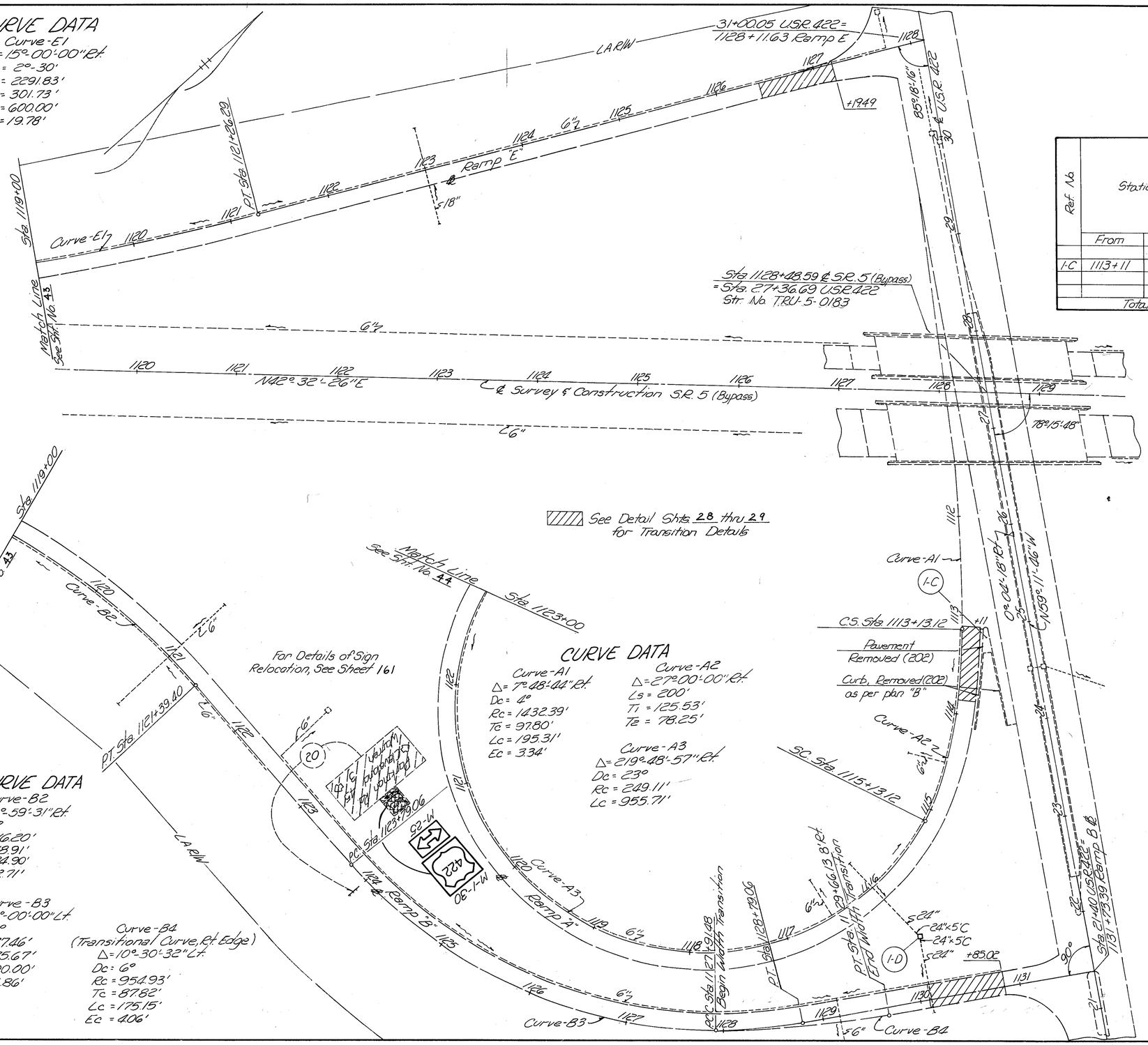

CURVE DATA

Curve-B2
Δ = 33°-59'-31" Rt.
Dc = 8°
Rc = 716.20'
Tc = 218.91'
Lc = 424.90'
Ec = 32.71'

Curve-B3
Δ = 60°-00'-00" Lt.
Dc = 12°
Rc = 477.46'
Tc = 275.67'
Lc = 500.00'
Ec = 73.86'

Curve-B4
(Transitional Curve, Rt. Edge)
Δ = 10°-30'-32" Lt.
Dc = 6°
Rc = 954.93'
Tc = 87.82'
Lc = 175.15'
Ec = 4.06'

CURVE DATA

Curve-A1
Δ = 7°-48'-44" Rt.
Dc = 4°
Rc = 1432.39'
Tc = 97.80'
Lc = 195.31'
Ec = 3.34'

Curve-A2
Δ = 27°-00'-00" Rt.
Ls = 200'
TT = 125.53'
Te = 78.25'

Curve-A3
Δ = 219°-48'-57" Rt.
Dc = 23°
Rc = 249.11'
Lc = 955.71'

CURB REMOVAL "C"

Ref. No.	Station From	Station To	Ramp	202 Curb, Removed as per plan "B" (Lin. Ft.)	202 Pavement Removed (Sq. Yd.)		301 Bituminous Aggregate Base (Cu. Yd.)	659 Seeding & Mulching (Sq. Yd.)	446 Asphalt Concrete Surface Course Type 1 (Cu. Yd.)	
1-C	1113+11	1114+14	A	140	26.11		2.17	136.11	1.81	
Totals				140	26.11		2.17	136.11	1.81	

CATCH BASIN & CONDUIT ELEVATIONS

Station		Grate Elevation	Inf. Elev. 24" Conduit Lt. @ C.B.	Inf. Elev. 24" Conduit Rt. @ C.B.	Inf. Elev. 6" Conduit Ahd @ C.B.
1116+00, Rt. "A"		903.70	901.42	901.42	902.37

DRAINAGE "D"

Ref. No.	Station	Side	202 Catch Basin Removed		603 Conduit Lin. Ft. Type C 24"	603 Conduit Lin. Ft. Type F 6"	604 Std. No. 5 Catch Basin as per plan
1-D	1116+00	Lt.	1		10	10	1
Totals			1		10	10	1

SIGN LEGEND

See Sheet No. 39

Revised: 11/30/88

RAMP "A", "B", "E" U.S.R. 422 INTERCHANGE

FHWA REGION	STATE	PROJECT	
5	OHIO		

63
213

TRUMBULL COUNTY
TRU-5B-000

Computations By Initials H.M.S	Date 11/30/87
Computations Checked By Initials DAK	Date 11/30/87
Final Revisions By Initials	Date

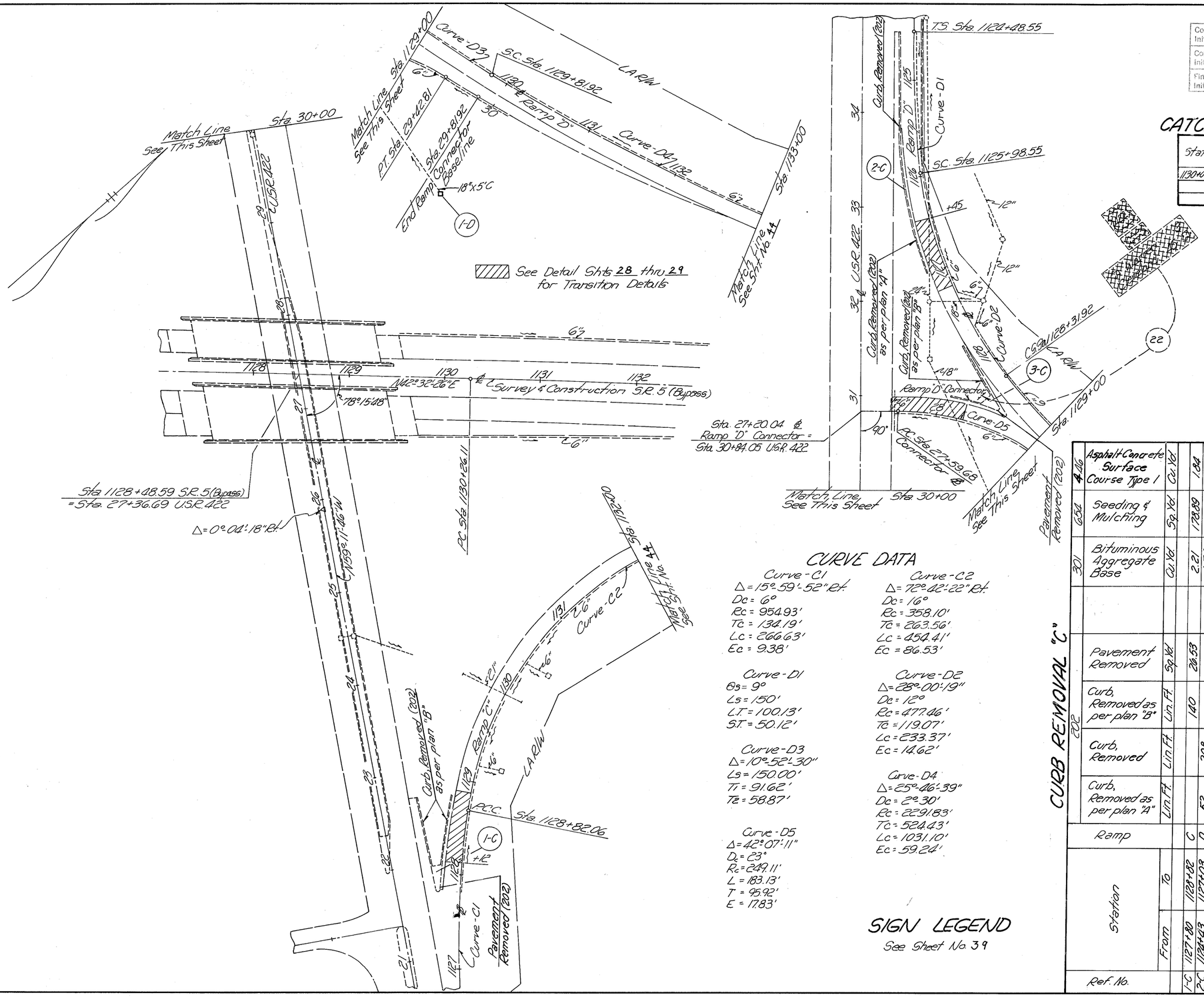

CATCH BASIN & CONDUIT ELEVATIONS

Station		Grate Elevation	℄ Elev. 18" Conduit Lt. ℄ C.B.	
1130+00 Rt. 27		902.45	899.86	

CURVE DATA

Curve-C1
Δ = 15°59'-52" Rt.
Dc = 6°
Rc = 954.93'
Tc = 134.19'
Lc = 266.63'
Ec = 9.38'

Curve-C2
Δ = 72°42'-22" Rt.
Dc = 16°
Rc = 358.10'
Tc = 263.56'
Lc = 454.41'
Ec = 86.53'

Curve-D1
Ds = 9°
Ls = 150'
L.T. = 100.13'
S.T. = 50.12'

Curve-D2
Δ = 28°-00'-19"
Dc = 12°
Rc = 477.46'
Tc = 119.07'
Lc = 233.37'
Ec = 14.62'

Curve-D3
Δ = 10°-52'-30"
Ls = 150.00'
Ti = 91.62'
Te = 58.87'

Curve-D4
Δ = 25°-46'-39"
Dc = 2°30'
Rc = 2291.83'
Tc = 524.43'
Lc = 1031.10'
Ec = 59.24'

Curve-D5
Δ = 42°07'-11"
Dc = 23°
Rc = 249.11'
L = 183.13'
T = 95.92'
E = 17.83'

SIGN LEGEND

See Sheet No. 39

CURB REMOVAL "C"

Ref. No.	Station From	Station To	Ramp	Curb, Removed as per plan "A" Lin. Ft.	Curb, Removed Lin. Ft.	Curb, Removed as per plan "B" Lin. Ft.	Pavement Removed Sq. Yd.	Bituminous Aggregate Base Cu. Yd.	Seeding & Mulching Sq. Yd.	Asphalt Concrete Surface Course Type 1 Cu. Yd.
1-C	1127+80	1128+82	C	52	208	140	38.53	2.21	178.89	1.84
2-C	1128+43	1127+03	D	52	208	105	12.25	6.74	23.11	0.65
3-C	1127+76	1128+58	D					1.02	109.17	2.69
		Totals		52	208	245	38.78	9.97	311.17	5.18

DRAINAGE "D"

Ref. No.	Station	Side	202 Catch Basin Removed Each	603 Conduit Lin. Ft. Type C 18"	Std. No. 5 Catch Basin, as per plan Each	604
1-D	1130+00	Lt.	1	5	1	1
	Totals		1	5	1	1

Revised: 11/30/88

RAMP "C" & "D" U.S.R. 422 INTERCHANGE

FHWA REGION	STATE	PROJECT	
5	OHIO		

64
213

TRUMBULL COUNTY
TRU-5B-000

Computations By Initials	H.M.S Date 11/30/17
Computations Checked By Initials	JMK Date 11/30/17
Final Revisions By Initials	Date

CURVE DATA

Curve-D1
Δ = 10°-03'-10" Lt.
Dc = 2°-00'-00"
Rc = 2,864.79'
Tc = 251.97'
Lc = 501.99

CURVE DATA

Curve-C1
Δ = 22°-26'-15" Rt.
Dc = 10°-00'-00"
Rc = 572.96'
Tc = 124.07'
Lc = 224.38'

Sta. 538+00
Match Line See Sht. No. 49
Curve-D1
P.T. Sta. 539+33.70
Ramp "D"
Sta. 545+53.36 Ramp D = Sta. 84+26.77 S.R. 45
Sta. 545+26.19 Ramp C = Sta. 84+39.19 S.R. 45
Ramp "C"
Curve-C1
P.C. Sta. 546+28.82
P.T. Sta. 548+73.20
Sta. 551+00
Match Line See Sht. No. 50
CA/RW

See Detail Shts. 28 thru 29 for Transition Details

℄ SR 5 (Bypass) Sta. 546+52.54
℄ S.R. 45 Sta. 81+69.19
Str. No. TRU-5-0401

Begin Ramp "B" P.C. Sta. 529+77.77
45' Lt. ℄ S.R. 45 Sta. 81+28.22
63°35'54" Loc. Tan.

Sta. 538+00
Match Line See Sht. No. 49
Curve-A3
P.T. Sta. 541+01.59
Ramp "A"
Curve-A4
Curve-A5
Sta. 543+00
Match Line See Sht. No. 50
Curve-B1
Curve-B2
Curve-B3
Ramp "B"
C.S. Sta. 531+75.79
Curve-B3
P.C. Sta. 527+31.75 ℄ Ramp A = ℄ Ramp B
Sta. 535+98.88 45' Lt. ℄ Ramp "A"
P.T. Sta. 543+07.65
Sta. 551+22.56 Ramp A = Sta. 76+13.97 S.R. 45
LA/RW

CURVE DATA

Curve-A3
Δ = 38°-47'-17" Rt.
Dc = 10°-00'-00"
Rc = 572.96'
Tc = 201.70'
Lc = 387.88'

Curve-A4
Δ = 67°-51'-20" Lt.
Dc = 16°-00'-00"
Rc = 358.10'
Tc = 240.89'
Lc = 424.10'

Curve-A5
Δ = 31°-33'-43" Lt.
Dc = 15°-00'-00"
Rc = 381.97'
Tc = 107.95'
Lc = 210.41'

Curve-B1
Δ = 15°-50'-31" Rt.
Dc = 8°-00'-00"
Rc = 716.20'
Tc = 99.65'
Lc = 198.02'

Curve-B2
Θs = 23°-11'-19"
Ls = 150'
L.T. = 88.15'
S.T. = 63.93'
Dc = 8°-00'-00"

Curve-B3
Δ = 230°-35'-01" Rt.
Rc = 250'
Lc = 1,006.11'

SIGN LEGEND

See Sheet No. 39

Matching Five 45 Markings Reflectorized Warrant
M1-25
M1-2-30
45

		FROM	TO	202 PAVEMENT REMOVED SQ.YD.	301 BITUMINOUS AGGREGATE BASE CU.YD.	612 CONCRETE MEDIAN SQ.YD.
1-C		546+00	550+53	202	51	202
TOTALS				202	51	202

DRAINAGE "D"

604 Ref No.	Station	Side	202 Catch Basin Removed	603 Conduit Lin. Ft. TYPE 6" F	603 Conduit Lin. Ft. TYPE 24" C	604 Catch Basin Reconstructed To Grade	604 Std. No. 5 Catch Basin as per plan
			Each			Each	Each
1-D	540+60.88	12" Lt.	1	10	5	1	1
2-D	533+06.88	24" Rt.				1	1
	Totals		1	10	5	2	2

CATCH BASIN & CONDUIT ELEVATION

Station	Grate Elevation	R. Elev. & Conduit Lt. @ C.B.	R. Elev. & Conduit Bac貼 @
533+06.88	898.98	895.90	895.90

RAMP "A", "B", "C" & "D" SR 45 INTERCHANGE

FHWA REGION	STATE	PROJECT	
5	OHIO		

65 / 213

TRUMBULL COUNTY
TRU-5B-0.00

Sta 657+07.90 Ramp E =
Sta 53+50.00 Perkins Jones Rd.

Sta 655+76.36 Ramp G =
Sta 53+50.00 Perkins Jones Rd

L.A. R/W

Curve-E4

Ramp "E"

Curve-E3

Sta 653+08.93

Sta 653+83.30

P.T. Sta 655+91.90

P.C. Sta 656+85.36

Curve-G1

Ramp "G"

P.T. Sta 658+72.86

P.C. Sta 659+35.06

Curve-G2

Sta 663+00

Match Line
See Sht. No. 55

Sta 650+00.93

Sta 651+00

Match Line
See Sht. No. 55

Sta 656+44.62 S.R. 5 (Bypass)
= Sta. 50+00 Perkins Jones Rd.
Str. No. TRU-5-0610

Sta 656+91.54 Ramp F =
Sta. 46+53.28 Perkins Jones Rd.

Perkins Jones Rd

Ramp "F"

Ramp "N"

Curve-H1

Curve-H2

Sta 658+39.45 Ramp N =
Sta 658+39.45 Ramp H

P.T. Sta 668+26.86

Sta 656+09.67 Ramp N =
Sta. 46+42.56 Perkins Jones Rd.

P.C. Sta. 654+78.04 Ramp H =
Sta. 44+28.24, 24' Rt. Perkins Jones Rd.

Match Line
See Sht. No. 56

Sta 663+00

Sta 661+14

90°-01'-10"

S.R. 5 (Bypass)

Curb Removed (202)

1-C

1-D

2-D

63

62

Perkins-Jones Rd
Larchmont Ave Ext
Warren

0-48, 14'x4'

0-48, 14'x4'

Perkins-Jones Rd
Larchmont Ave Ext
Warren

0-48, 14'x4'

0-44, 14'x2'

Perkins-Jones Rd
Larchmont Ave Ext
Warren

0-48, 14'x4'

0-44, 14'x2'

See Detail Shts 28 thru 29
for Transition Details

For Details of Signs
Relocated, See Sheets 162

CURVE DATA

Curve-E3
Ds = 8°-00'-00"
Ls = 200'
LT = 133.47'
ST = 66.79'

Curve-E4
Δ = 33°-24'-47"
Dc = 16°-00'-00"
Rc = 358.10'
Tc = 107.48'
Lc = 208.43'

CURVE DATA

Curve-G1
Δ = 30°-00'-00"
Dc = 16°-00'-00"
Rc = 358.10'
Tc = 95.95'
Lc = 187.50'

Curve-G2
Δ = 26°-17'-18"
Dc = 3°-30'-00"
Rc = 1637.02'
Tc = 382.28'
Lc = 751.10'

CURVE DATA

Curve-H1
Δ = 69°-45'-53"
Dc = 20°-00'-00"
Rc = 286.48'
Tc = 199.72'
Lc = 348.82'

Curve-H2
Δ = 14°-19'-53"
Dc = 6°-00'-00"
Rc = 954.93'
Tc = 120.05'
Lc = 238.86'

DRAINAGE "D"

Ref. No.	Station	Side	Catch Basin Removed (202)	Conduit Lin. Ft. Type 8"	Conduit Lin. Ft. Type 12"	Std. No. 5 Catch Basin as per plan (604)	Catch Basin Adjusted to Grade (604)
1-D	656+82.11	20' Rt.	1		5	1	1
2-D	658+60.10	24' Rt.	1			1	1
	Totals		2		5	2	2

CURB REMOVAL "C"

Ref. No.	Station From	Station To	Ramp	Curb Removed (202) Lin. Ft.		Bituminous Aggregate Base (301) Cu. Yds.	
1-C	657+30	658+34	H	104		2.89	
	Totals			104		2.89	

CATCH BASIN & CONDUIT ELEVATIONS

Station		Grate Elevation	N. Elev. 12" Conduit @ CB.	
656+82.11		941.15	939.59	

SIGN LEGEND

See Sheet No. 39

Computations By
Initials M M S Date 11/30/87

Computations Checked By
Initials DAK Date 11/30/87

Final Revisions By
Initials Date

RAMP "E, F, G, H & N" PERKINS JONES RD. INTERCHANGE

Computations By Initials	Date
Computations Checked By Initials	Date
Final Revisions By Initials	Date

FHWA REGION	STATE	PROJECT	
5	OHIO		

66 / 213

TRUMBULL COUNTY
TRU-5B-000

CATCH BASIN & CONDUIT ELEVATIONS

Station		Grate Elevation	Ft. Eleu 18" Conduit Lt @ CB	Ft. Eleu 6" Conduit Bk. @ CB	Ft. Eleu 6" Conduit Ahd. @ CB	
730+70, Rp "K"		900.86	898.91	898.91	898.91	

DRAINAGE "D"

Ref. No.	Station	Side	202 Catch Basin Removed (Each)		603 Conduit Lin. Ft. Type B 18" (Each)	603 Conduit Lin. Ft. Type F 6" (Each)	604 Catch Basin Adjusted to Grade (Each)	604 Std. No. 5 Catch Basin as per plan (Each)	604 Catch Basin Repair (Each)
1-D	722+46, Rp "K"	Lt					1		
2-D	722+50, Rp "K"	Lt							1
3-D	724+26, Rp "I"	Rt							1
4-D	730+70, Rp "K"	Rt	1		5	20		1	
Totals			1		5	20	1	1	2

CURB REMOVAL "C"

446	Asphalt Concrete Surface Course Type 1	Cu. Yd.					1.40			1.20
659	Seeding & Mulching	Sq. Yd.					64.44	41.67		106.11
301	Bituminous Aggregate Base	Cu. Yd.					5.88	33	27	65.88
612	Concrete Median As Per Plan	Sq. Yd.						100	81	1.81
202	Pavement Removed	Sq. Yd.					20.23			201.23
	Curb, Removed as per plan "A"	Lin. Ft.					75	100	81	75
	Curb, Removed	Lin. Ft.	151						151	151
	Curb, Removed as per plan "B"	Lin. Ft.	145							145
Ramp			K	K						
Station	From	16	736+67	723+25						
			722+50	722+49						
			730+11	731+23.64						
			Totals							
Ref. No.			1-C	2-C	3-C	4-C				

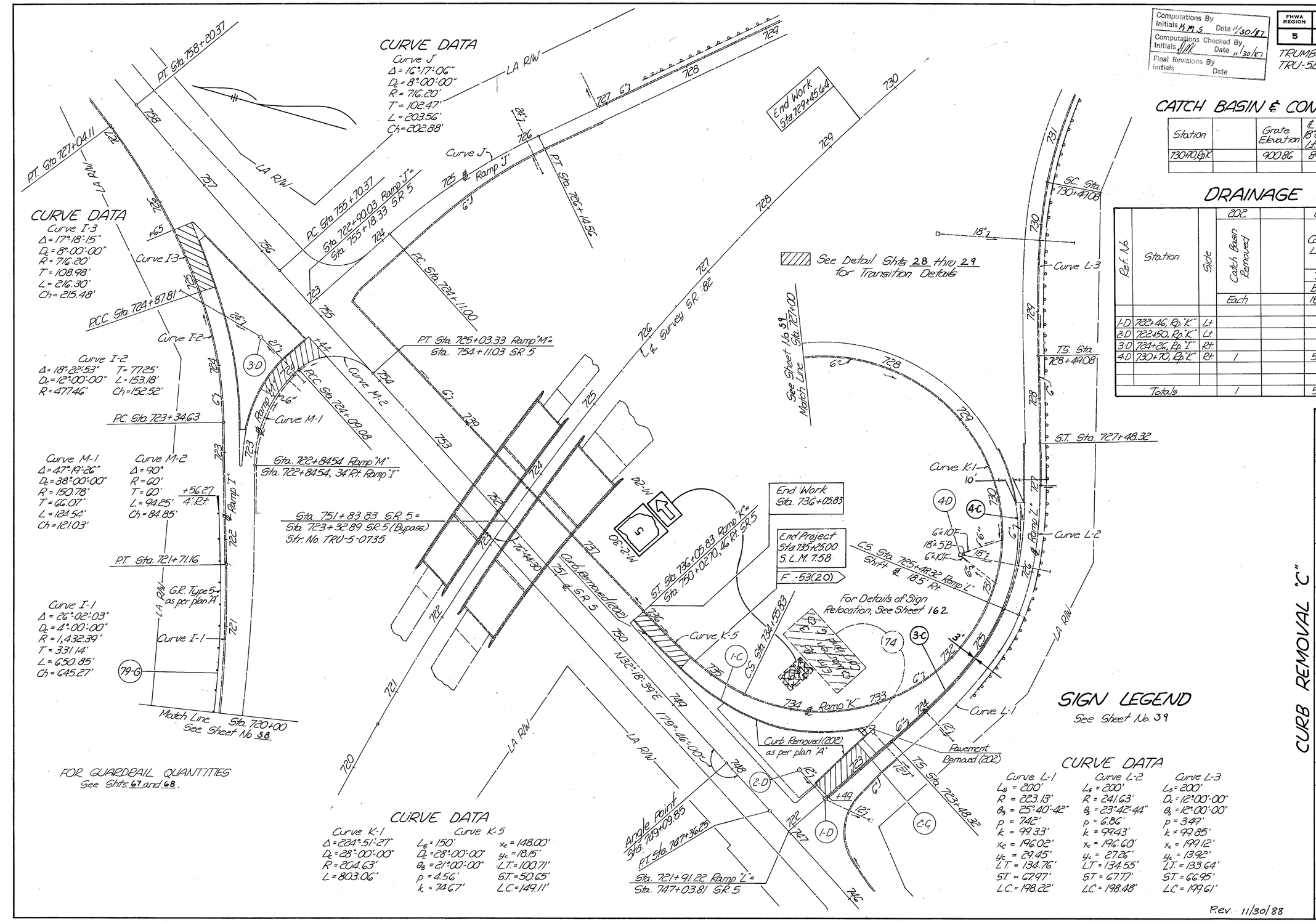

Rev. 11/30/88

Ramps I, J, K, L & M S.R. 5 Interchange

Computations By Initials RLS Date 11/30/87
Computations Checked By Initials MJS Date 11/30/87
Final Revisions By Initials Date

FHWA REGION	STATE	PROJECT	
5	OHIO		

TRUMBULL COUNTY
TRU-5B-0.00

(67/213)

GUARDRAIL TABLE

REF. NO.	STATION FROM	STATION TO	SIDE	202 GUARDRAIL REMOVED FOR STORAGE	202 GUARDRAIL BARRIER DESIGN, REMOVED FOR STORAGE	606 GUARDRAIL TYPE 5	606 GUARDRAIL TYPE 5, AS PER PLAN A	606 GUARDRAIL TYPE 5, AS PER PLAN B	606 GUARDRAIL BARRIER DESIGN TYPE 5	606 ANCHOR ASSEMBLY STD. TYPE A	606 ANCHOR ASSEMBLY STD. TYPE T	606 ANCHOR ASSEMBLY, BARRIER DESIGN STD. TYPE A	606 BRIDGE TERMINAL ASSEMBLY, STD. TYPE A	606 BRIDGE TERMINAL ASSEMBLY, STD. TYPE B	606 BRIDGE TERMINAL ASSEMBLY, STD. TYPE H	606 BRIDGE TERMINAL ASSEMBLY, STD. TYPE J MODIFIED AS PER PLAN	517 RAILING (NEW DEEP BEAM RAIL W/EXIST. TUBULAR BACKUP & EXIST. POSTS ON EXIST. ANCHORS) REBUILT	802 TYPE B W	802 TYPE B Y	622 CONCRETE BARRIER TYPE D MODIFIED AS PER PLAN	802 TYPE A W	802 TYPE A Y
				LIN. FT.	LIN. FT.	LIN. FT.	LIN. FT.	LIN. FT.	LIN. FT.	EACH	EACH	EACH	EACH	EACH	EACH	EACH	LIN. FT.	EA.	EA.	LIN. FT.	EA.	EA.
1-G	1023+37.83	1028+80.61	LT.	512.50			487.50			1					1						7	
2-G	1023+79.83	1026+80.62	LT.	175.00	100.00	175.00			75.00			1			1							4
3-G	1025+19.27	1040+29.18*	RT.	1500.00			1437.50	37.50		1						1					22	
4-G	1029+59.50	1031+25.00	RT.	125.00		106.25		18.75		1	1											3
5-G	1036+74.00	1038+81.62	LT.	187.50														3		176.00		
6-G	1036+47.00	1038+51.62	LT.	187.50														3		176.00		
7-G	1035+76.36*	1037+86.00#	LT.	187.50														3		176.00		
8-G	1035+35.29*	1037+56.00#	RT.	187.50															3	176.00		
9-G	1074+95.87	1076+06.84	LT.	112.50		100.00					1				1						7•	
10-G	1078+29.00	1080+13.93	LT.	187.50θ		156.25				1					1		6.25					
11-G	1075+93.25	1076+05.71	LT.	25.00							1											6•
12-G	1078+30.06	1079+67.26	LT.	87.50θ	37.50	93.75			12.50			1			1		6.25					
13-G	1074+79.66	1076+04.92	RT.	75.00	37.50	87.50			12.50			1			1							7•
14-G	1078+30.81	1078+55.90	RT.	37.50θ		6.25					1				1		6.25					
15-G	1074+26.32	1076+03.78	RT.	175.00		150.00				1					1						6•	
16-G	1078+31.88	1079+07.94	RT.	75.00θ		56.25					1				1		6.25					
17-G	1083+21.50	1085+43.96	LT.	187.50														3		192.00		
18-G	1082+33.00	1085+15.00	℄	475.00	50.00	300.00π																8
19-G	1082+05.26	1084+32.50	RT.	187.50														3		192.00		
20-G	1100+90.70	1101+90.70	LT.	100.00		87.50					1				1						5•	
21-G	1102+65.70	1104+65.70	LT.	187.50θ		168.75				1					1		6.25					
22-G	1101+42.32	1101+67.32	LT.	25.00		12.50					1				1							4•
23-G	1102+42.32	1103+78.92	LT.	87.50θ	37.50	93.75			12.50			1			1		6.25					
24-G	1100+27.33	1101+51.43	RT.	75.00	37.50	87.50			12.50			1			1							4•
25-G	1102+26.43	1102+63.93	RT.	37.50θ		18.75					1				1		6.25					
26-G	1099+53.05	1101+28.05	RT.	175.00		150.00				1					1						4•	
27-G	1102+03.05	1102+28.05	RT.	25.00θ		6.25					1				1		6.25					
28-G	1113+50.50	1115+25.50	RT.	125.00		118.75		18.75		1	1											3
29-G	1113+50.50	1115+25.50	RT.	125.00		118.75		18.75		1	1										3	
30-G	1122+06.34	1127+20.57	LT.	512.50			500.00				1		1					4•			11•	
31-G	1129+35.00	1135+97.16	LT.	562.50			537.50			1			1									
32-G	1129+43.52	1130+82.00	LT.	75.00	62.50	87.50			12.50			1	1						4•			3•
33-G	1125+95.00	1127+34.10	RT.	75.00	62.50	87.50			12.50			1	1						4•			3•
34-G	1123+89.88μ	1127+47.36μ	RT.	350.00			325.00			1			1					4•			8•	
35-G	1129+60.50	1132+75.83	RT.	312.50			300.00				1		1									
36-G	1138+23.50	1139+98.50	LT.	125.00		118.75		18.75		1											3	
37-G	1138+23.50	1139+98.50	LT.	125.00		118.75		18.75		1												3
38-G	1159+80.00	1163+09.62	LT.	325.00														4		303.00		
39-G	1158+59.00	1160+85.00	℄	350.00	50.00	325.00π																6
40-G	1157+57.38	1159+84.00	RT.	175.00														3		203.00		
41-G	1184+25.00	1185+80.00	RT.	150.00																		
42-G	1189+69.00	1190+92.00	LT.	125.00																		
43-G	1210+61.84	1221+33.86	LT.	1075.00			1062.50				1		1									
44-G	1223+61.34	541+88.87γ	LT.	1475.00			1462.50			1			1					4•			27•	
45-G	1224+28.76	1225+79.00	LT.	75.00	62.50	87.50			12.50			1	1						4•			3•
46-G	1221+02.00	1222+41.72	RT.	75.00	62.50	87.50			12.50			1	1						4•			4•
47-G	1209+99.55	1223+07.02	RT.	1300.00			1275.00			1			1					4•			36•	
48-G	1225+43.68	547+35.17Φ	RT.	1850.00			1837.50				1		1									
49-G	1230+49.02	535+65.50	RT.	162.50			137.50			1	1											
50-G	539+97.60	545+26.65	LT.	525.00			512.50				1		1					3•			12•	
51-G	547+10.22	552+51.83	LT.	550.00			512.50			1			1									
52-G	547+28.87	548+55.68	LT.	75.00	62.50	87.50			12.50			1	1						3•			3•
53-G	544+30.11	545+56.76	RT.	75.00	62.50	87.50			12.50			1	1						3•			3•
54-G	539+96.01ε	545+79.98ε	RT.	575.00			550.00			1			1					3•			15•	
55-G	547+64.38	553+00.82	RT.	525.00			525.00				1		1									
SUBTOTALS				17,250.00	725.00	3181.25	11462.50	131.25	200.00	18	18	11	18	15	2	1	50.00	44	25	1594.00	156	67

• Includes Bridges & Both Sides

* - EASTBOUND STATIONING
• - RAMP A STATIONING (MARKET ST.)
μ - RAMP A STATIONING (USR 422)
Φ - RAMP A STATIONING (SR 45)
ε - RAMP B STATIONING (SR 45)
γ - RAMP D STATIONING (SR 45)
θ - INCLUDES THE REMOVAL OF EXISTING DEEP BEAM RAIL 6'-3" ONTO THE STRUCTURE
π - INCLUDES 25' OF 5' RADIUS GUARDRAIL AND 50' OF 40' RADIUS GUARDRAIL

RADIUS GUARDRAIL SUMMARY

SUBTOTALS : 5' RADIUS GUARDRAIL - 50'
(THIS SHEET) 40' RADIUS GUARDRAIL - 100'

Revised 11-30-88

GUARDRAIL TABLE

Computations By Initials RLS Date 11/30/87
Computations Checked By Initials KMS Date 11/30/87
Final Revisions By Initials Date

FHWA REGION	STATE	PROJECT	
5	OHIO		

TRUMBULL COUNTY
TRU-5B-0.00

(GS 213)

GUARDRAIL TABLE (CONTINUED)

REF. NO.	STATION FROM	STATION TO	SIDE	202 GUARDRAIL REMOVED FOR STORAGE LIN. FT.	202 GUARDRAIL BARRIER DESIGN, REMOVED FOR STORAGE LIN. FT.	606 GUARDRAIL TYPE 5 LIN. FT.	606 GUARDRAIL TYPE 5 AS PER PLAN A LIN. FT.	606 GUARDRAIL TYPE 5 AS PER PLAN B LIN. FT.	606 GUARDRAIL BARRIER DESIGN TYPE 5 LIN. FT.	606 ANCHOR ASSEMBLY, TYPE A EACH	606 ANCHOR ASSEMBLY, TYPE T EACH	606 ANCHOR ASSEMBLY, BARRIER DESIGN TYPE A EACH	606 BRIDGE TERMINAL ASSEMBLY, TYPE A EACH	606 BRIDGE TERMINAL ASSEMBLY, TYPE B EACH	606 BRIDGE TERMINAL ASSEMBLY, TYPE H EACH	606 BRIDGE TERMINAL ASSEMBLY, TYPE J, AS PER PLAN EACH	517 RAILING (NEW DEEP BEAM RAIL W/EXIST. TUBULAR BACKUP & EXIST. POSTS ON EXIST. ANCHORS) REBUILT LIN. FT.	802 TYPE B W EA.	802 TYPE B Y EA.	622 CONCRETE BARRIER TYPE D AS PER PLAN LIN. FT.	802 TYPE A W EA.	802 TYPE A Y EA.
56-G	559+79.13	561+30.86	LT.	150.00		125.00				1			1					3•			3•	
57-G	559+56.16	560+92.00	LT.	75.00	62.50	87.50			12.50			1	1						3•			3•
58-G	557+29.00	558+67.84	RT.	75.00	62.50	87.50			12.50			1	1						3•			3•
59-G	556+96.96	558+48.69	RT.	150.00		125.00				1			1					3•			3•	
60-G	555+03.00	556+85.50	LT.	162.50		137.50				1	1										3	
61-G	555+07.00	556+85.50	LT.	162.50		137.50				1	1										3	
62-G	601+45.33	611+51.48	LT.	1000.00			987.50				1		1					6•			27•	
63-G	612+86.40	624+45.87	LT.	1162.50			1162.50						2									
64-G	612+87.34	614+25.00	LT.	75.00	62.50	87.50			12.50			1	1						3•			3•
65-G	610+15.00	611+53.52	RT.	75.00	62.50	87.50			12.50			1	1						3•			3•
66-G	601+57.11	611+54.46	RT.	1000.00			975.00			1			1					6•			24•	
67-G	612+87.34	624+27.24	RT.	1137.50			1137.50						2									
68-G	625+60.18	628+97.01	LT.	337.50			312.50			1			1									
69-G	625+53.16	626+79.40	LT.	75.00	62.50	87.50			12.50			1	1						3•			3•
70-G	623+08.43	624+34.26	RT.	75.00	62.50	87.50			12.50			1	1						3•			3•
71-G	625+42.04	626+94.26	RT.	150.00			137.50				1		1									
72-G	655+87.00	658+34.62	LT.	187.50														3		221.00		
73-G	654+92.00	658+08.00	℄	525.00	50.00	350.00π																8•
74-G	654+55.88	657+00.00	RT.	187.50														3		221.00		
75-G	644+79.50	646+57.00	RT.	162.50		137.50				1	1											3
76-G	644+79.50	646+57.00	RT.	162.50		137.50				1	1										3	
77-G	665+83.00	667+60.00	LT.	162.50		125.00				1	1										3	
78-G	705+43.94	713+08.17	LT.	762.50			750.00				1		1					3•			17•	
79-G	714+64.94ϕ	722+56.27ϕ	LT.	787.50			762.50			1			1									
80-G	714+30.99	715+72.50	LT.	75.00	62.50	87.50			12.50			1	1						3			3
81-G	711+20.00	712+61.11	RT.	75.00	62.50	87.50			12.50			1	1						3			3
82-G	705+49.29	712+38.52	RT.	687.50			662.50			1			1					4•			3	
83-G	713+92.74	721+98.09ϵ	RT.	800.00			800.00						2									
84-G	721+04.91	722+29.33	LT.	125.00			112.50				1		1					4•			7•	
85-G	724+77.69	729+45.64	LT.	475.00			450.00			1			1									
86-G	724+73.32	725+99.70	LT.	75.00	62.50	87.50			12.50			1	1					4•			3•	
87-G	720+81.50	722+08.58	RT.	75.00	75.00	87.50			12.50			1	1						3•			3•
88-G	724+42.95	725+20.10ϵ	RT.	62.50			62.50				1		1									
89-G	1030+72.00••	1035+25.00••	RT.	450.00		412.50				1	1										6	
90-G	1042+00.00•••	1044+87.50•••	℄		287.50																	8
SUBTOTALS				11,700.00	975.00	2562.50	8312.50	0.00	125.00	13	11	10	28	0	0	0	0.00	39	27	442.00	102	49
SUBTOTALS (FROM SHT. 67)				17,250.00	725.00	3181.25	11462.50	131.25	200.00	18	18	11	18	15	2	1	50.00	44	25	1594.00	156	67
TOTALS (Carried to General Summary)				28,950.00	1700.00	5743.75	19775.00	131.25	325.00	31	29	21	46	15	2	1	50.00	83	52	2036.00	258	116

• Includes Bridges & Both Sides.

• - RAMP B STATIONING (MARKET ST)

•• - RAMP D STATIONING (MARKET ST)

ϕ - RAMP I STATIONING (SR 5)

ϵ - RAMP K STATIONING (SR 5)

π - INCLUDES 25'OF 5'RADIUS GUARDRAIL AND 50'OF 40'RADIUS GUARDRAIL

RADIUS GUARDRAIL SUMMARY

SUBTOTALS : (THIS SHEET) 5' RADIUS GUARDRAIL - 25'
40' RADIUS GUARDRAIL - 50'

SUBTOTALS : (SHEET 67) 5' RADIUS GUARDRAIL - 50'
40' RADIUS GUARDRAIL - 100'

TOTALS : 5' RADIUS GUARDRAIL - 75'
40' RADIUS GUARDRAIL - 150'

LINEAR GRADING QUANTITIES

LOCATION	203 LINEAR GRADING METHOD 1 STATION	203 LINEAR GRADING METHOD 2 STATION	408 BITUMINOUS PRIME COAT GAL.	448 ASPHALT CONCRETE SURFACE COURSE TYPE 1 CU. YD.	LOCATION	203 LINEAR GRADING METHOD 1 STATION	203 LINEAR GRADING METHOD 2 STATION	408 BITUMINOUS PRIME COAT GAL.	448 ASPHALT CONCRETE SURFACE COURSE TYPE 1 CU. YD.
EASTBOUND MAINLINE	233	60	1526.66	169.63	S.R. 45 INTERCHANGE	62	49	974.55	108.28
WESTBOUND MAINLINE	219	78	1984.66	220.52	PERKINS-JONES RD INTERCHGE.	100	3	59.66	6.63
MARKET ST INTERCHANGE	86	17	338.11	37.57	S.R. 5 INTERCHANGE	28	21	417.66	46.41
U.S.R. 422 INTERCHANGE	156	10	198.89	22.10	TOTALS (Carried to General Summary)	884	238	5500.19	611.14

Estimated Quantities for Item 203 Borrow = 50 Cu.Yd. (Carried to General Summary)

NOTE- FOR DETAILS OF METHOD 1 AND METHOD 2, SEE SHEET 34

Revised 11-30-88

GUARDRAIL TABLE AND LINEAR GRADING QUANTITIES

Computations By	
Initials DRS	Date 11-30-87
Computations Checked By	
Initials N.J.V.	Date 11-30-87
Final Revisions By	
Initials	Date

FED. ROAD DIVISION	STATE	PROJECT	
2	OHIO		

69
213

TRUMBULL COUNTY
TRU-5B-0.00

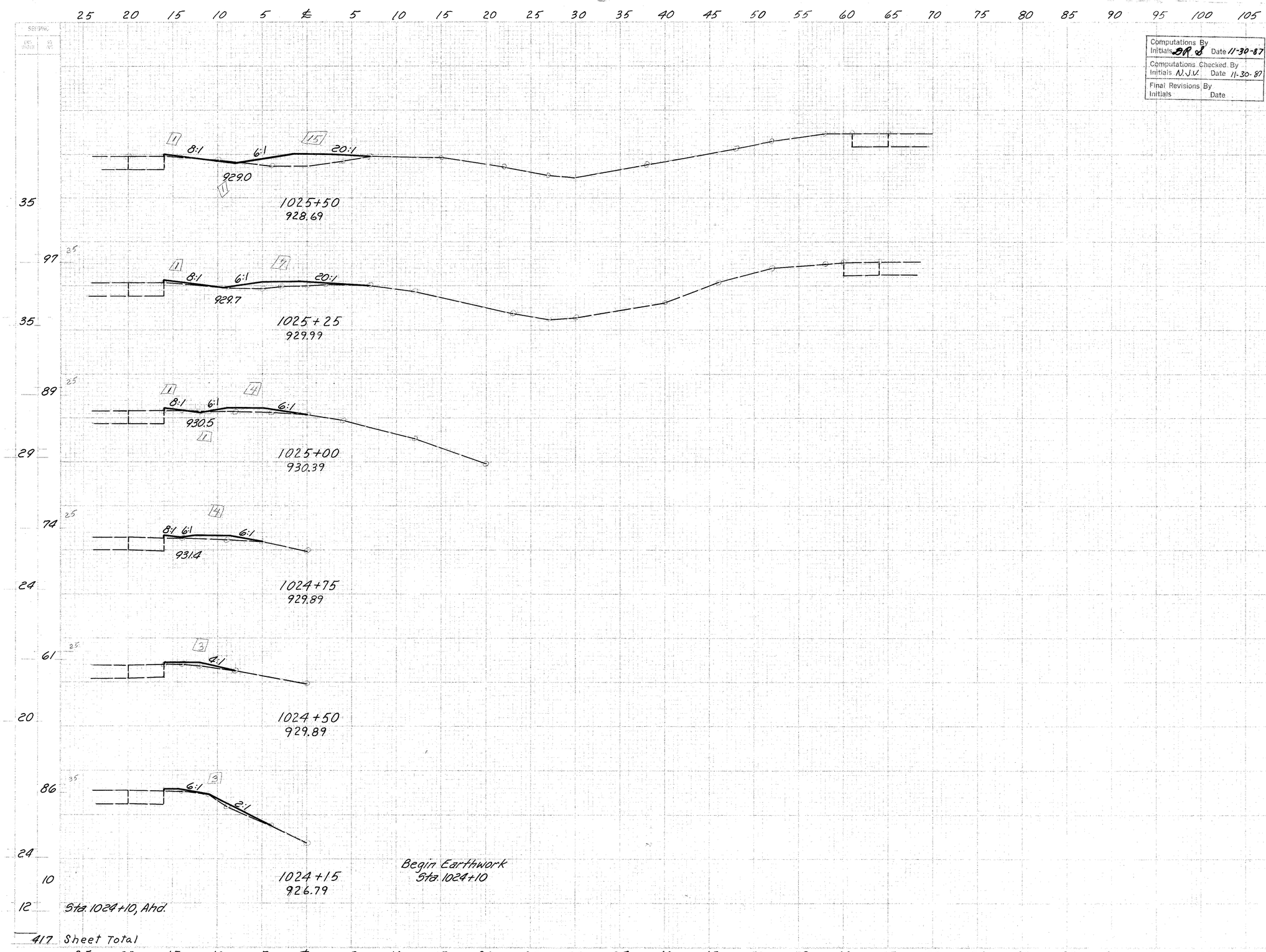

	END AREA CUT	END AREA FILL	VOLUME CUT	VOLUME FILL
Sta. 1025+50	1	16		
			1	11
Sta. 1025+25	0	8		
			1	6
Sta. 1025+00	1	5		
			1	4
Sta. 1024+75	0	4		
			0	3
Sta. 1024+50	0	3		
			0	4
Sta. 1024+15	0	3		
			0	1
Sta. 1024+10	0	0		

06.57, Sta. 1024+15 to Sta. 1025+50

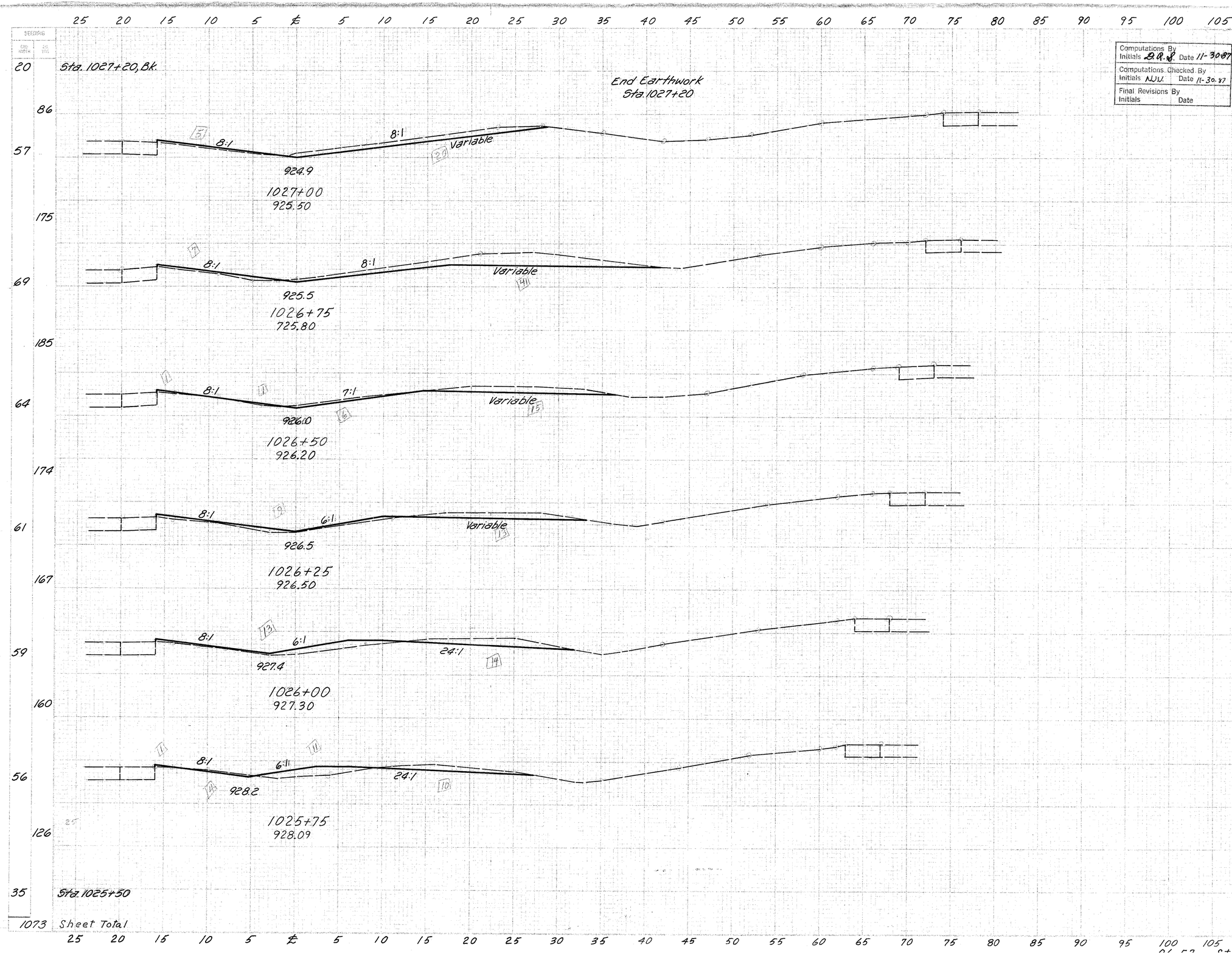

Computations By	Date
Initials D.R.S.	11-30-87
Computations Checked By	Date
Initials N.J.V.	11-30-87
Final Revisions By	Date
Initials	

Field Division	State	Project
2	OHIO	

70
213

TRUMBULL COUNTY
TRU-5B-0.00

	End Area Cut	End Area Fill	Volume Cut	Volume Fill
Sta. 1027+20	0	0		
			7	2
Sta. 1027+00	20	5		
			28	6
Sta. 1026+75	41	7		
			29	4
Sta. 1026+50	21	2		
			16	5
Sta. 1026+25	13	9		
			13	10
Sta. 1026+00	14	13		
			13	12
Sta. 1025+75	14	12		
			7	13
Sta. 1025+50	1	16		

25 20 15 10 5 ℄ 5 10 15 20 25 30 35 40 45 50 55 60 65 70 75 80 85 90 95 100 105

SEEDING

END WIDTH	SIDE

Computations By Initials D.A.S.	Date 11-30-87
Computations Checked By Initials N.J.V.	Date 11-30-87
Final Revisions By Initials	Date

FED. RD. DIVISION	STATE	PROJECT	
2	OHIO		

71
213

TRUMBULL COUNTY
TRU-5B-0.00

END AREA		VOLUME	
CUT	FILL	CUT	FILL

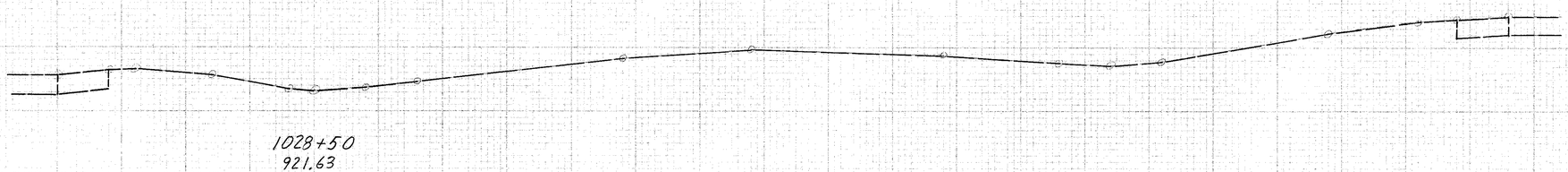

1028+50
921.63

1028+25
922.32

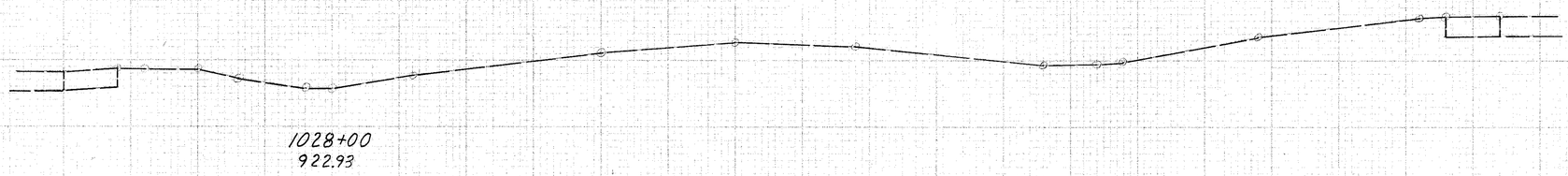

1028+00
922.93

1027+75
923.73

1027+50
924.33

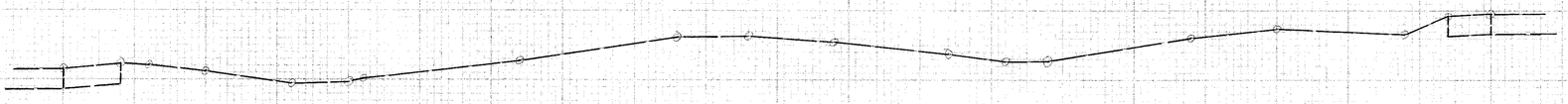

1027+25
924.83

25 20 15 10 5 ℄ 5 10 15 20 25 30 35 40 45 50 55 60 65 70 75 80 85 90 95 100 105 110 115 120 125

6.57, Sta. 1027+25 to Sta. 1078+50

FED. RD. DIVISION	STATE	PROJECT	
5	OHIO		

72/213

TRUMBULL COUNTY
TRU-5B-0.00

Computations By	
Initials D.R.S.	Date 11-30-87
Computations Checked By	
Initials NJV	Date 11-30-87
Final Revisions By	
Initials	Date

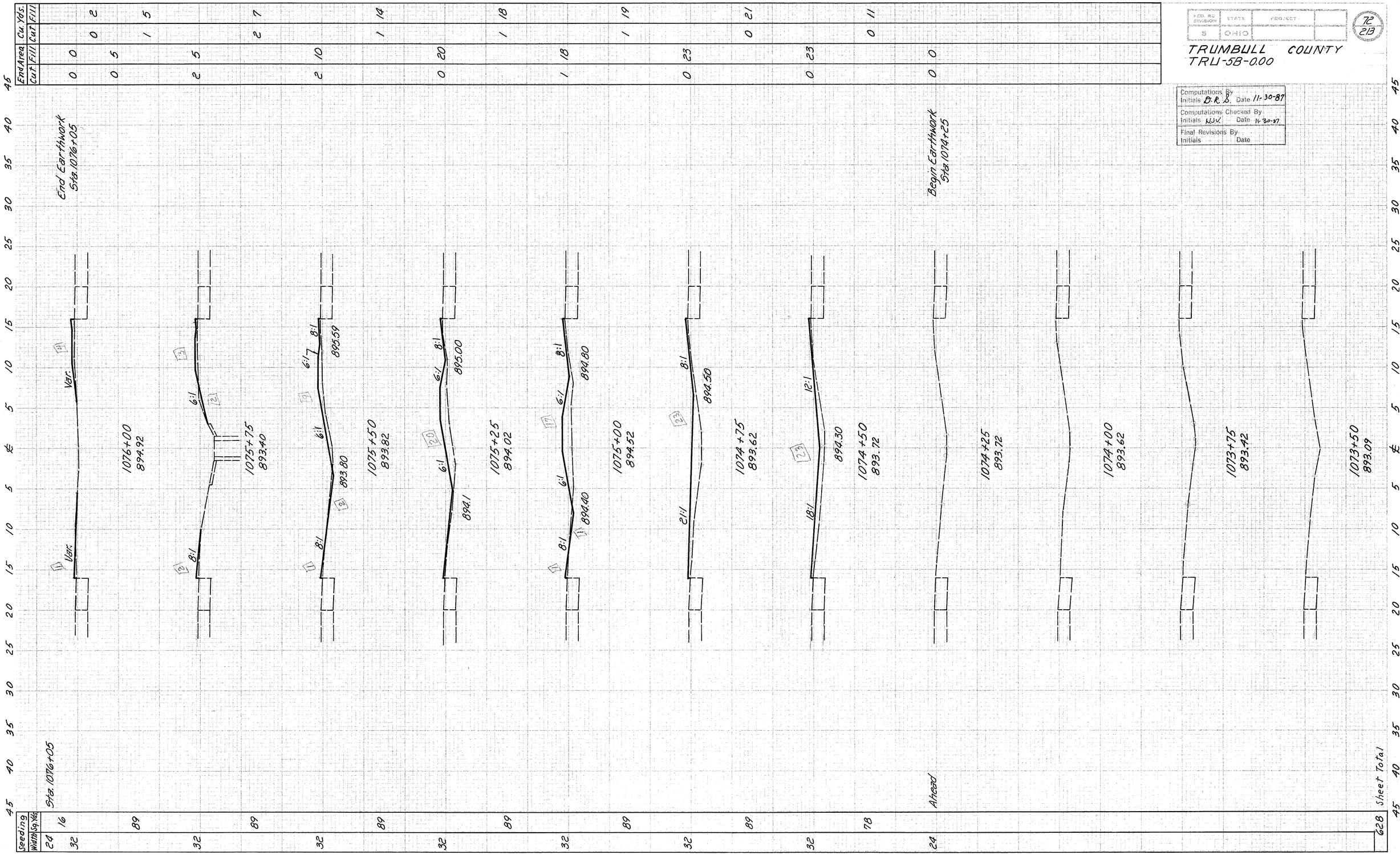

0.86, MAHONING RIVER Area – Sta. 1073+50 to Sta. 1076+00

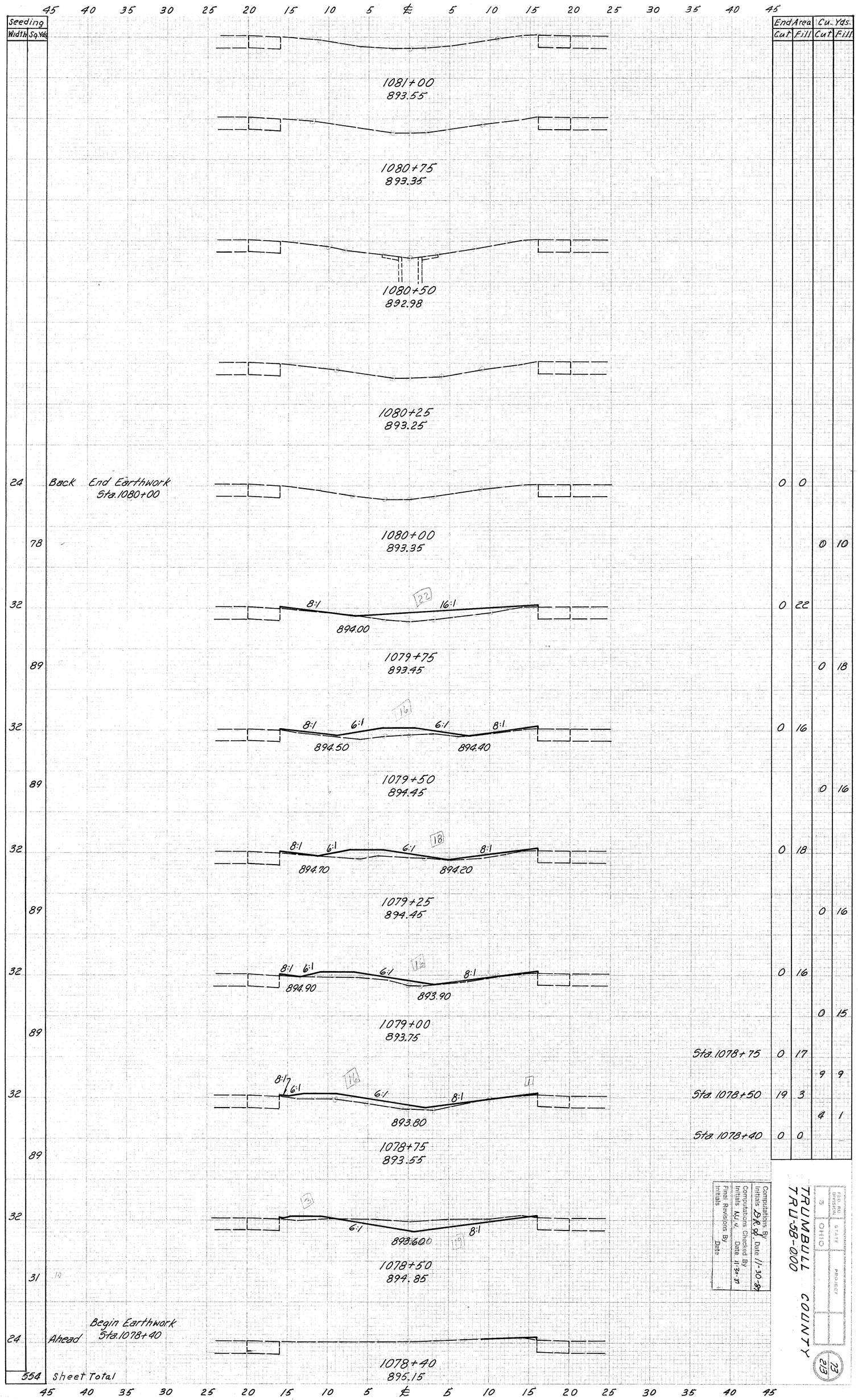

0.86, MAHONING RIVER Area - Sta.1078+40 to Sta.1081+00

Computations By Initials DRJ Date 11-30-87
Computations Checked By Initials NJ.V. Date 11-30-87
Final Revisions By Initials Date

FED. RD. DIVISION 5 | STATE OHIO | PROJECT

TRUMBULL COUNTY
TRU-58-0.00

73
213

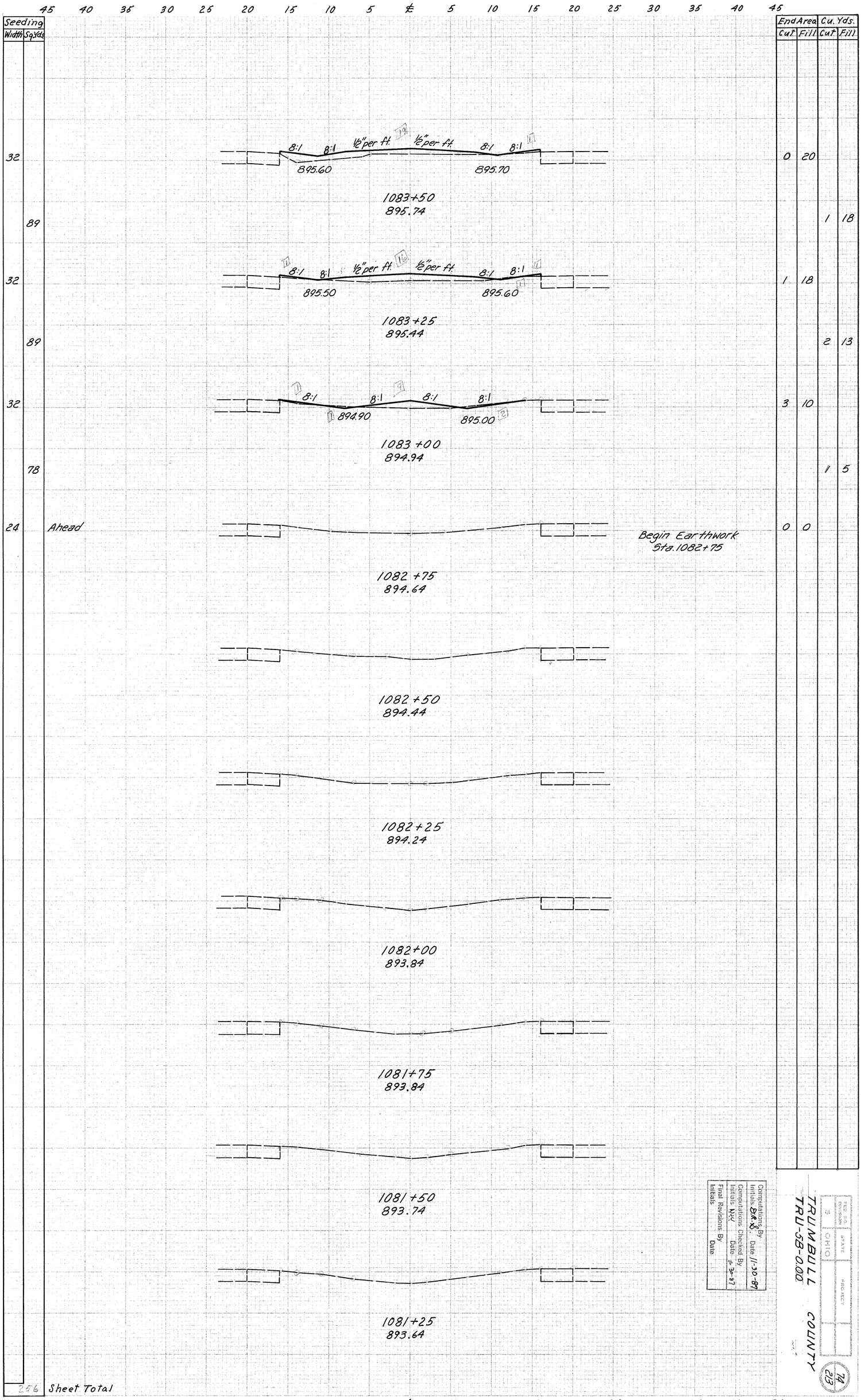

45 40 35 30 25 20 15 10 5 ℄ 5 10 15 20 25 30 35 40 45
Seeding
Width Sq.Yds.
End Area Cu. Yds.
Cut Fill Cut Fill
32
89
32
89
32
78
24
Ahead
8:1 8:1 1/2" per ft. 1/2" per ft. 8:1 8:1
895.60
895.70
1083+50
895.74
8:1 8:1 1/2" per ft. 1/2" per ft. 8:1 8:1
895.50
895.60
1083+25
895.44
8:1 8:1 8:1 8:1
894.90
895.00
1083+00
894.94
Begin Earthwork
Sta. 1082+75
1082+75
894.64
1082+50
894.44
1082+25
894.24
1082+00
893.84
1081+75
893.84
1081+50
893.74
1081+25
893.64
0 20
1 18
1 18
2 13
3 10
1 5
0 0
256 Sheet Total
1.00, EAGLE CREEK Rd. Area - Sta. 1081+25 to Sta. 1083+50
Computations By
Initials B.R.K. Date 11-30-87
Computations Checked By
Initials N.V. Date 11-30-87
Final Revisions By
Initials Date
FED. RD. DIVISION 5
STATE OHIO
PROJECT
TRUMBULL COUNTY
TRU-5B-0.00
74
213

45 40 35 30 25 20 15 10 5 ℄ 5 10 15 20 25 30 35 40 45

Seeding Width	Seeding Sq.Yds.	
		1086+00 895.93
		1085+75 895.83
		1085+50 895.25
24		Sta. 1085+30, Bk.
16		
		1085+25 896.23
32		896.30
89		
		1085+00 896.33
32		896.25
89		
		1084+75 896.13
32		8:1 8:1 Var. Var. 8:1 8:1 896.10 896.10
89		
		1084+50 896.13
32		8:1 8:1 Ve"per ft. Ve"per ft. 8:1 8:1 896.00 896.00
89		
		1084+25 896.03
32		8:1 8:1 Ve"per ft. Ve"per ft. 8:1 8:1 895.98 895.90
89		
		1084+00 896.23
32		8:1 8:1 Ve"per ft. Ve"per ft. 8:1 8:1 895.70 895.80
89		
		1083+75 896.03
32		Sta. 1083+50
639		Sheet Total

End Area Cut	End Area Fill	Cu. Yds. Cut	Cu. Yds. Fill	
				End Earthwork Sta. 1085+30
0	0			
		0	1	
0	7			
		1	7	
1	9			
		1	12	
0	16			
		1	13	
2	11			
		1	10	
1	11			Sta. 1084+25
		1	12	
0	14			Sta. 1084+00
		0	14	
0	16			Sta. 1083+75
		0	17	
0	20			Sta. 1083+50

Computations By: Initials SKA Date 11-30-87
Computations Checked By: Initials NJV Date 1-3-88
Final Revisions By: Initials Date

TRUMBULL COUNTY
TRU-58-0.00

SHEET NO.	STATE	PROJECT
5	OHIO	

75
28

1.00, EAGLE CREEK Rd. Area - Sta. 1083+75 to Sta. 1086+00

45 40 35 30 25 20 15 10 5 ℄ 5 10 15 20 25 30 35 40 45

Seeding Width	Seeding Sq. Yds.		End Area Cut	End Area Fill	Cu. Yds. Cut	Cu. Yds. Fill
24	31	Sta. 1101+60, Bk.				
32			0	0		
					3	1
		Sta. 1101+50	17	3		
	64				6	4
32			0	10		
	114				1	12
32			2	11		
	89				4	10
32			7	10		
	89				6	10
32			6	11		
	89				5	12
32			4	14		
	78				2	6
24		Ahd.	0	0		

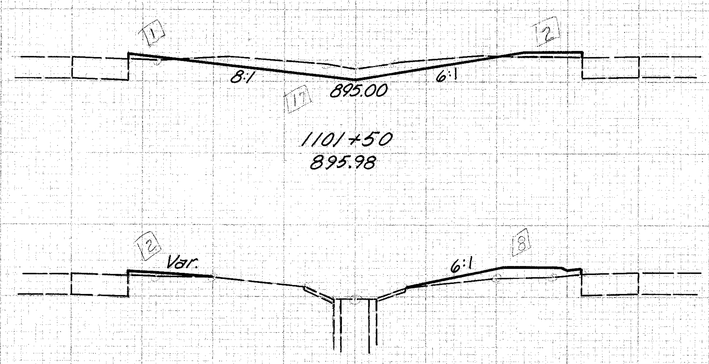

End Earthwork
Sta. 1101+60

1101+50
895.98

1101+32
894.79

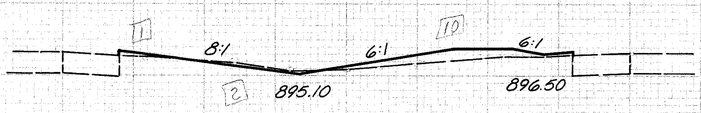

1101+00
895.48

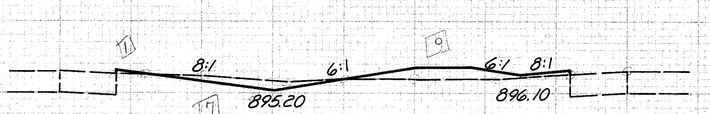

1100+75
895.98

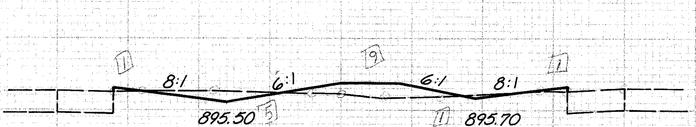

1100+50
896.08

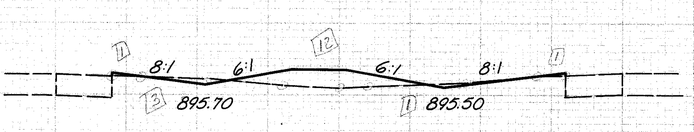

1100+25
895.48

Begin Earthwork
Sta. 1100+00

1100+00
895.38

1099+75
895.28

1099+50
895.28

1099+25
894.98

1099+00
894.35

554 Sheet Total

45 40 35 30 25 20 15 10 5 ℄ 5 10 15 20 25 30 35 40 45

1.34, CHOCOLATE RUN Area – Sta. 1099+00 to Sta. 1101+50

Computations By: Initials: R.R.S. Date: 12-1-87
Computations Checked By: Initials: N.V.V. Date: 12-1-87
Final Revisions By: Initials: Date:

TRUMBULL COUNTY
TRU-5B-0.00

OHIO DEPARTMENT OF TRANSPORTATION
STATE ROUTE
ADDENDUM
R.A. 5

76
29

End Area	Cu. Yds.
Cut	Fill	Cut	Fill
0		3	1
6	2	5	2
5	2	4	7
3	13	3	12
4	12	4	10
5	9	5	8
6	9	10	6
13	3	5	4
0	6	0	1
0	0		

FED. RD. DIVISION	STATE	PROJECT	
5	OHIO		

77
213

TRUMBULL COUNTY
TRU-5B-0.00

Computations By
Initials B.R.S. Date 12-1-78

Computations Checked By
Initials N.J.V. Date 12-1-87

Final Revisions By
Initials Date

Sta. 1102+71

Sta. 1102+50

Sta. 1102+45

1104+75
895.97

1104+50
896.37

1104+25
896.57

1104+00
896.57

1103+75
896.57

1103+50
896.97

1103+25
896.87

1103+00
895.97

1102+71
896.13

1102+50
894.68

15:1

13:1

135:1

175:1

8:1

6:1

896.40

896.45

896.60

896.30

896.20

896.80

895.80

896.95

895.50

895.30

End Earthwork
Sta. 1104+50

Begin Earthwork
Sta. 1102+45

Sta. 1102+71

Sta. 1102+50

Sta. 1102+45, Ahd

Sheet Total

Seeding Width Sq. Yds.
24
78
32
89
32
89
32
89
32
89
32
89
32
103
32
75
32
16
24
717

1.34, CHOCOLATE RUN Area - Sta. 1102+71 to Sta. 1104+75

End Area		Cu. Yds.	
Cut	Fill	Cut	Fill
11	6	1	1
0	0	1	1
0	0	1	1
17	2	15	4
13	5	11	5
11	6	8	6
6	7	5	6
5	7	7	5
10	3	7	5
5	7	1	1
0	0		

Ahd. Sta. 1129+45

Bk

Exp. Earthwork Sta. 1127+30

Begin Earthwork Sta. 1125+65

FED. PROJ. DIVISION	STATE	PROJECT	
5	OHIO		

78
213

TRUMBULL COUNTY
TRU-5B-0.00

Computations By
Initials B.R.S. Date 12-1-87

Computations Checked By
Initials W.V. Date 12-1-87

Final Revisions By
Initials Date

10:1 6:1 92680 — 1129+52 — 927.65

Begin Earthwork Sta. 1129+45

Ahd.

Sta. 1127+30, Bk.

10:1 7.5:1 92650 — 1127+27 — 927.53

10:1 7.5:1 92640 — 1127+00 — 927.53

9:1 7.5:1 92630 — 1126+75 — 927.43

9:1 6:1 92620 — 1126+50 — 927.53

8:1 6:1 92610 — 1126+25 — 927.23

6:1 92600 — 1126+00 — 926.73

6:1 92580 — 1125+75 — 926.23

Sta. 1125+65, Ahd.

1125+50 — 925.63

1125+25 — 924.83

1125+00 — 924.33

Seeding Width	Sq. Yds.
32	22
24	07
24	
32	96
32	89
32	89
32	89
32	89
32	89
32	31
24	
603	Sheet Total

1.83, U.S. 422 Area - Sta. 1125+00 to Sta. 1129+52

End Area	Cu. Yds.
Cut	Fill	Cut	Fill
0	0	1	1
1	6	3	6
5	7	5	7
5	8	5	6
6	6	6	5
6	4	8	3
12	2	10	3
11	6		

Sta. 1131+10 | Sta. 1130+00 | Sta. 1129+75 | Sta. 1129+52

FED. RD. DIVISION 5 | STATE OHIO | PROJECT | 79 / 213

TRUMBULL COUNTY
TRU-58-1.000

Computations By Initials D.R.B.	Date 12-1-87
Computations Checked By Initials N.J.W.	Date 12-1-87
Final Revisions By Initials	Date

1132+00 924.45

1131+75 924.85

1131+50 926.35

1131+25 925.85

End Earthwork Sta. 1131+10

1131+00 926.35

1130+75 926.85

1130+50 927.25

1130+25 927.15

1130+00 927.25

1129+75 927.55

Seeding Width Sq.Yds.									
24	31	89	89	89	89	89	89	82	558

Sheet Total

Sta. 1129+52

1.83, U.S. 422 Area — Sta. 1129+75 to Sta. 1132+00

45 40 35 30 25 20 15 10 5 ℄ 5 10 15 20 25 30 35 40 45

Seeding Width	Sq.Yds.	End Area Cut	End Area Fill	Cu. Yds. Cut	Cu. Yds. Fill
32		4	4		
	89 25			2	7 25
32		1	12		
	89 25			1	13 25
32		0	17		
	89 25			0	16 25
32		0	18		
	89 25			0	17 25
32		0	18		
	89 25			0	13 25
32		0	11		
	78 25			0	5 25
24	Ahd.	0	0		

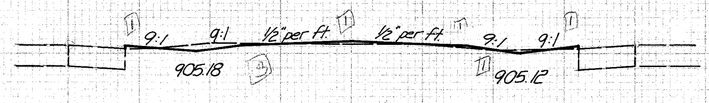

1159+50
905.69

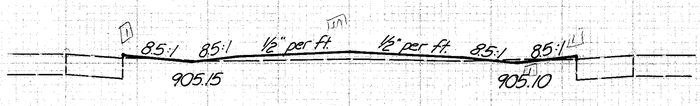

1159+25
905.29

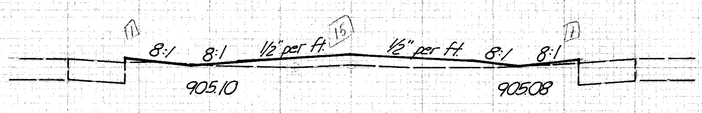

1159+00
905.09

1158+75
904.09

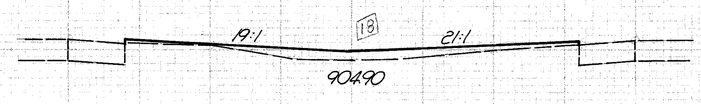

1158+50
904.29

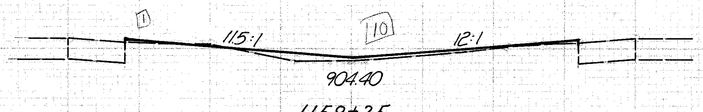

1158+25
904.09

Begin Earthwork
Sta. 1158+00

1158+00
903.84

1157+75
903.89

1157+50
904.09

1157+25
904.09

1157+00
904.09

523 Sheet Total

45 40 35 30 25 20 15 10 5 ℄ 5 10 15 20 25 30 35 40 45

2.44, LEAVITT Rd. – Sta. 1157+00 to Sta. 1159+50

Computations By Initials: D.K.B. Date: 12-1-87
Computations Checked By Initials: M.J.V Date: 12-1-87
Final Revisions By: Initials: Date:

TRUMBULL
TRU-55-000
COUNTY

FED. ROAD DIVISION | STATE | PROJECT
5 | OHIO |

80
213

End Area	Cu. Yds.
Cut / Fill	Cut / Fill
0 / 0	0 / 0
0 / 5	0 / 11
0 / 19	0 / 18
0 / 19	0 / 14
0 / 11	0 / 9
0 / 9	1 / 7
1 / 6	2 / 5
4 / 4	

FED. RD. DIVISION	STATE	PROJECT	
5	OHIO		

81
213

TRUMBULL COUNTY
TRU-5B-0.00

Computations By
Initials B.R.S. Date 12-1-87

Computations Checked By
Initials N.J.V. Date 12-1-87

Final Revisions By
Initials Date

Sta. 1161+10

END EARTHWORK
Sta. 1161+10

Sta. 1160+00

Sta. 1159+75

Sta. 1159+50

1162+00
904.70

1161+75
904.70

1161+50
904.50

1161+25
904.30

1161+10
903.86

1160+75
904.60

1160+50
905.40

1160+25
905.90

1160+00
905.50

1159+75
905.70

Sta. 1161+10

Sta. 1159+50

Sheet Total

Seeding Width Sq. Yds.
24 / 31 / 32 / 89 / 32 / 89 / 32 / 89 / 32 / 89 / 32 / 89 / 32 / 89 / 32 / 565

2.44, LEAVITT Rd. — Sta. 1159+75 to Sta. 1162+00

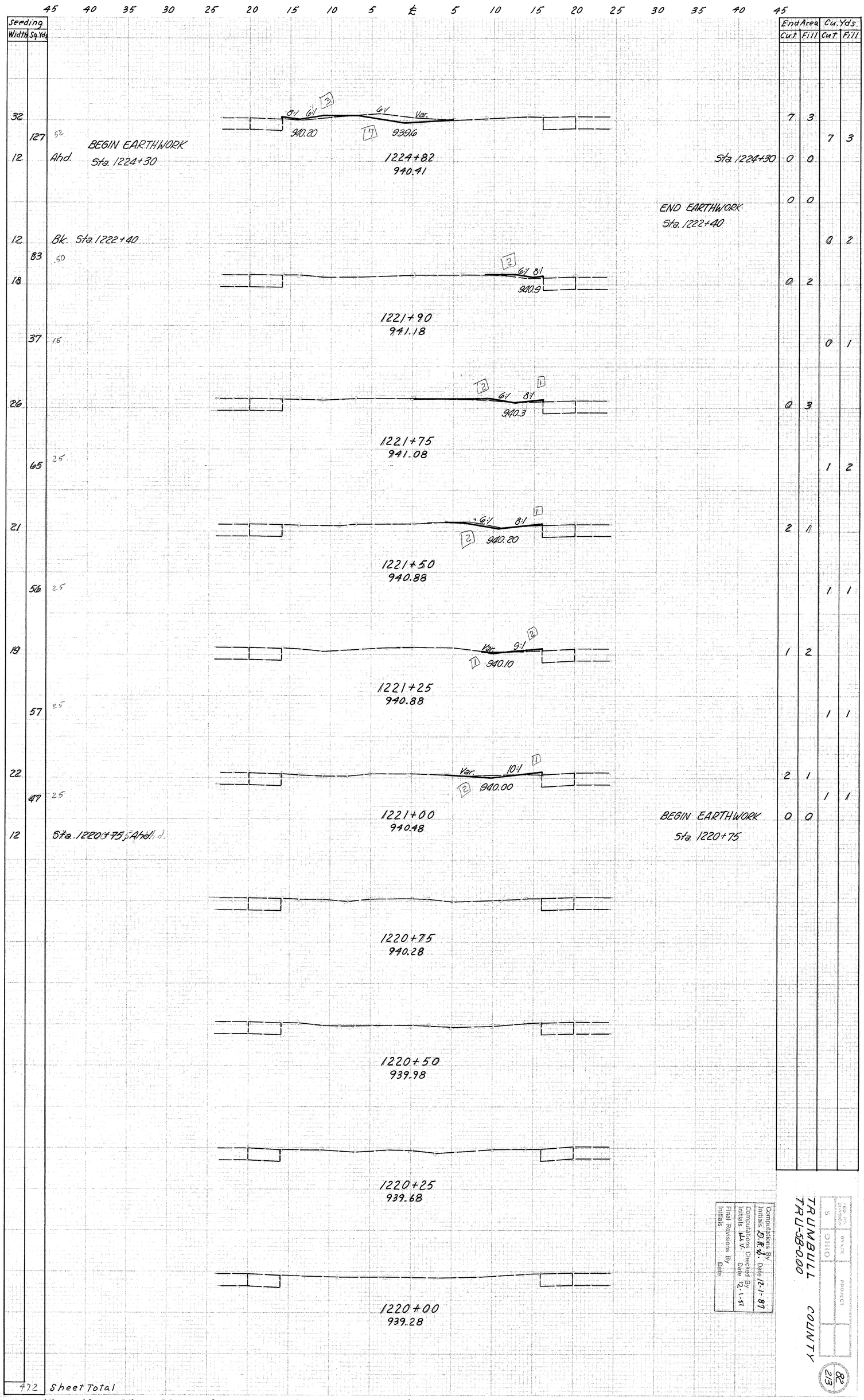

45 40 35 30 25 20 15 10 5 ℄ 5 10 15 20 25 30 35 40 45
Seeding
Width Sq.Yds.
End Area Cu.Yds.
Cut Fill Cut Fill
32 127 52
12 Ahd.
BEGIN EARTHWORK
Sta. 1224+30
8:1 6:1 3 6:1 Var.
940.20 7 939.6
1224+82
940.41
Sta. 1224+30
7 3
7 3 50
0 0
0 0
END EARTHWORK
Sta. 1222+40
12 Bk. Sta. 1222+40
83 50
0 2 50
18
2 6:1 8:1
940.9
1221+90
941.18
0 2
37 15
0 1 15
26
2 6:1 8:1 1
940.3
1221+75
941.08
0 3
65 25
1 2 25
21
6:1 8:1 1
2 940.20
1221+50
940.88
2 1
56 25
1 1 25
19
Var. 9:1 2
1 940.10
1221+25
940.88
1 2
57 25
1 1 25
22
Var. 10:1 1
2 940.00
1221+00
940.48
2 1
47 25
1 1 25
12 Sta. 1220+75, Ahd.
BEGIN EARTHWORK
Sta. 1220+75
0 0
1220+75
940.28
1220+50
939.98
1220+25
939.68
1220+00
939.28
472 Sheet Total
3.63, B&O. R.R. - Sta. 1220+00 to Sta. 1224+82
Computations By Initials D.R.S. Date 12-1-87
Computations Checked By Initials W.V. Date 12-1-87
Final Revisions By Initials Date
FED. RD. DIVISION 5
STATE OHIO
PROJECT
TRUMBULL COUNTY
TRU-5B-0.00
82
213

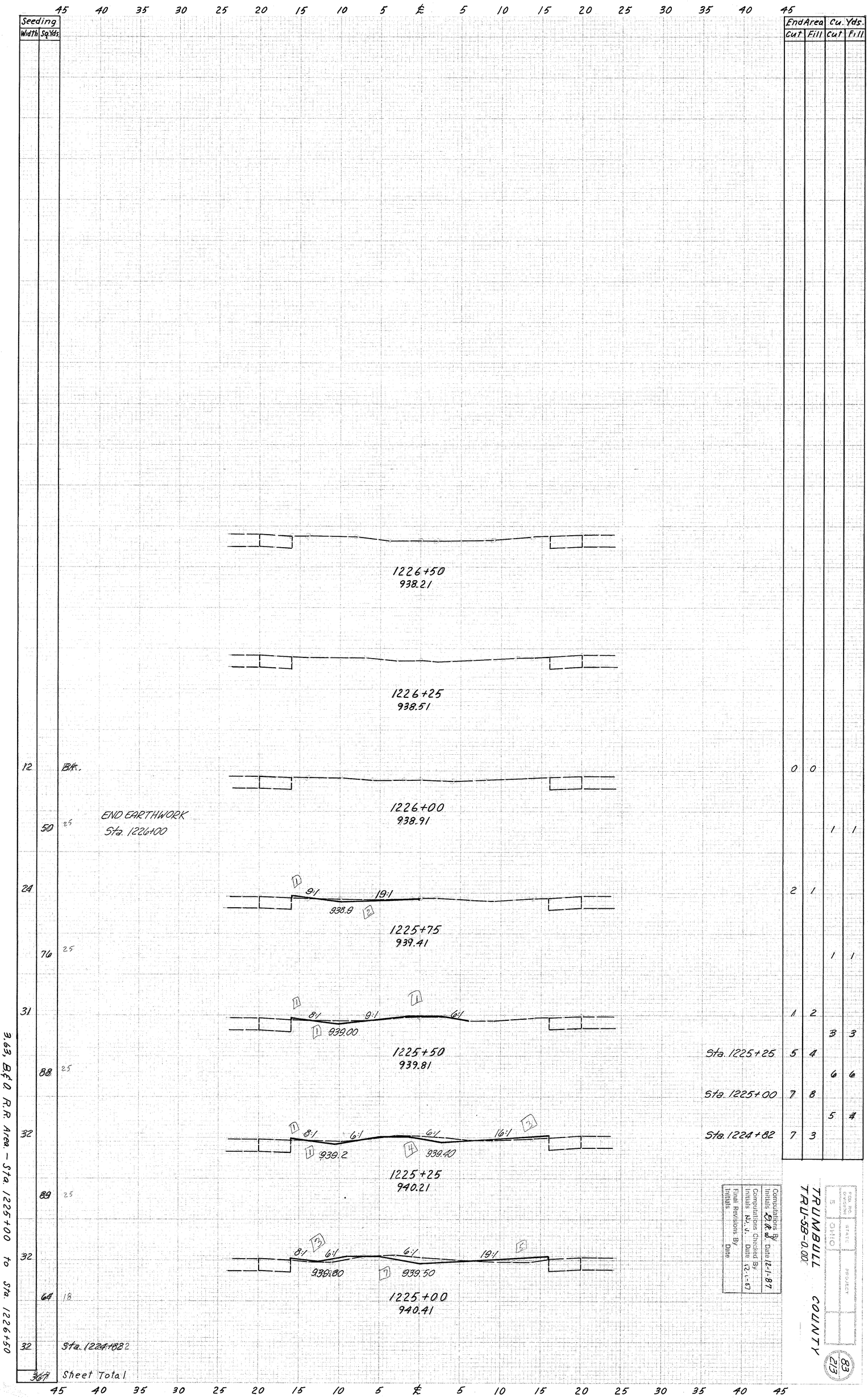

45 40 35 30 25 20 15 10 5 ℄ 5 10 15 20 25 30 35 40 45
Seeding
Width Sq.Yds.
End Area Cu. Yds.
Cut Fill Cut Fill
1226+50
938.21
1226+25
938.51
1226+00
938.91
END EARTHWORK
Sta. 1226+00
1225+75
939.41
1225+50
939.81
1225+25
940.21
1225+00
940.41
Sta. 1225+25
Sta. 1225+00
Sta. 1224+82
Sta. 1224+82
Sheet Total
Computations By Initials D.R.J. Date 12-1-87
Computations Checked By Initials N.J.J. Date 12-1-87
Final Revisions By Initials Date
TRUMBULL COUNTY
TRU-5B-0.00
83
213
3.63, B&O R.R. Area - Sta. 1225+00 to Sta. 1226+50

Seeding Width	Seeding Sq. Yds.		End Area Cut	End Area Fill	Cu. Yds. Cut	Cu. Yds. Fill
12		Sta. 545+55, Bk.	0	0		
	28	16			0	1
20			0	3		
	43	17			0	2
25			0	3		
	70	22			0	6
32			0	11		
	89	25			1	8
32			2	7		
	89	25			3	5
32			4	4		
	82	25			4	2
27			4	1		
	81	25			7	1
31			11	1		
	31	13			3	1
12		Ahd.	0	0		
	513	Sheet Total				

END EARTHWORK
Sta. 545+55

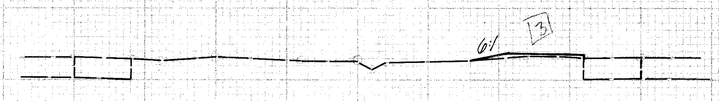

545+39
926.31

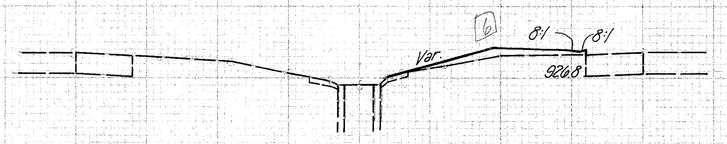

545+22
924.51

545+00
925.41

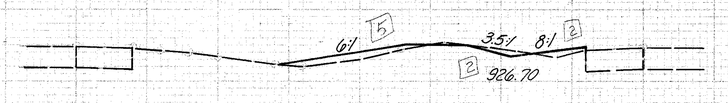

544+75
926.51

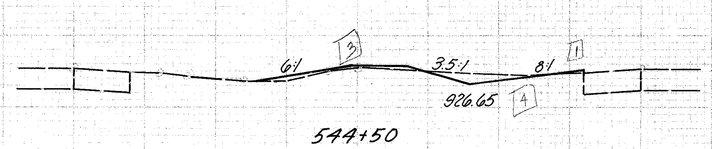

544+50
927.71

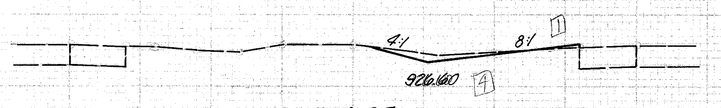

544+25
927.91

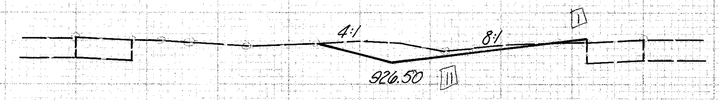

544+00
928.01

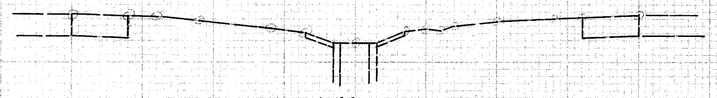

543+87
926.44

BEGIN EARTHWORK
Sta. 543+87.00

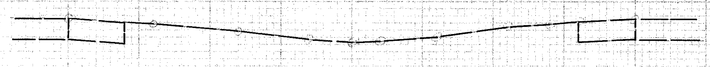

543+50
927.21

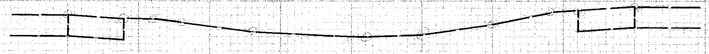

543+25
927.51

543+00
927.71

Computations By Initials D.R.S. Date 12-1-87
Computations Checked By Initials N.J.J. Date 12-1-87
Final Revisions By Initials Date

TRUMBULL COUNTY
TRU-5B-0.00

FED. RD. DIVISION 5 | STATE OHIO | PROJECT

84
213

4.01, S.R. 45 - Sta. 543+00 to Sta. 545+39

45 40 35 30 25 20 15 10 5 ℄ 5 10 15 20 25 30 35 40 45

Seeding Width	Seeding Sq Yds
12	
24	10
32	
83	25
28	
72	25
24	
60	25
19	
70	34
18	
18	11
12	
327	Sheet Total

549+75
917.29

549+50
918.19

549+25
918.89

549+00
919.49

548+75
920.99

END EARTHWORK
Sta. 548+60

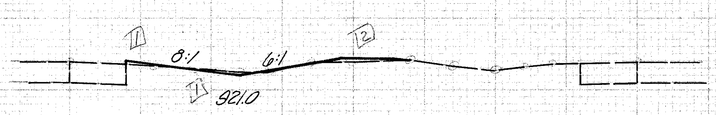

548+50
921.99

548+25
922.49

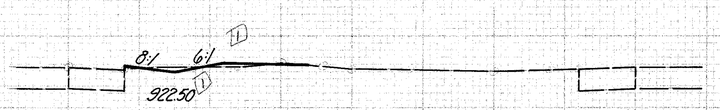

548+00
922.69

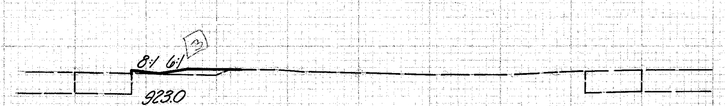

547+75
923.09

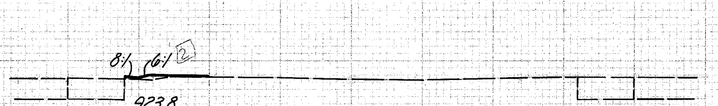

BEGIN EARTHWORK
Sta. 547+30

547+41
923.69

	End Area Cut	End Area Fill	Cu. Yds. Cut	Cu. Yds. Fill	
Sta. 548+60	0	0			
			1	1	10
	1	3			
			1	3	25
	1	4			
			1	2	25
Sta. 548+00	1	1			
			1	2	25
Sta. 547+75	0	3			
			0	3	34
Sta. 547+41	0	2			
			0	1	11
Sta. 547+30	0	0			

Computations By: Initials D.A.S. Date 12-1-87
Computations Checked By: Initials N.J.T. Date 12-1-87
Final Revisions By: Initials
Date

TRUMBULL
TRU-534-0.00
COUNTY

OHIO
STATE

FED. ROAD DIVISION

PROJECT

SHEET NO. 23

U.S. 422, S.R. 45 Area - Sta. 547+41 to Sta. 549+75

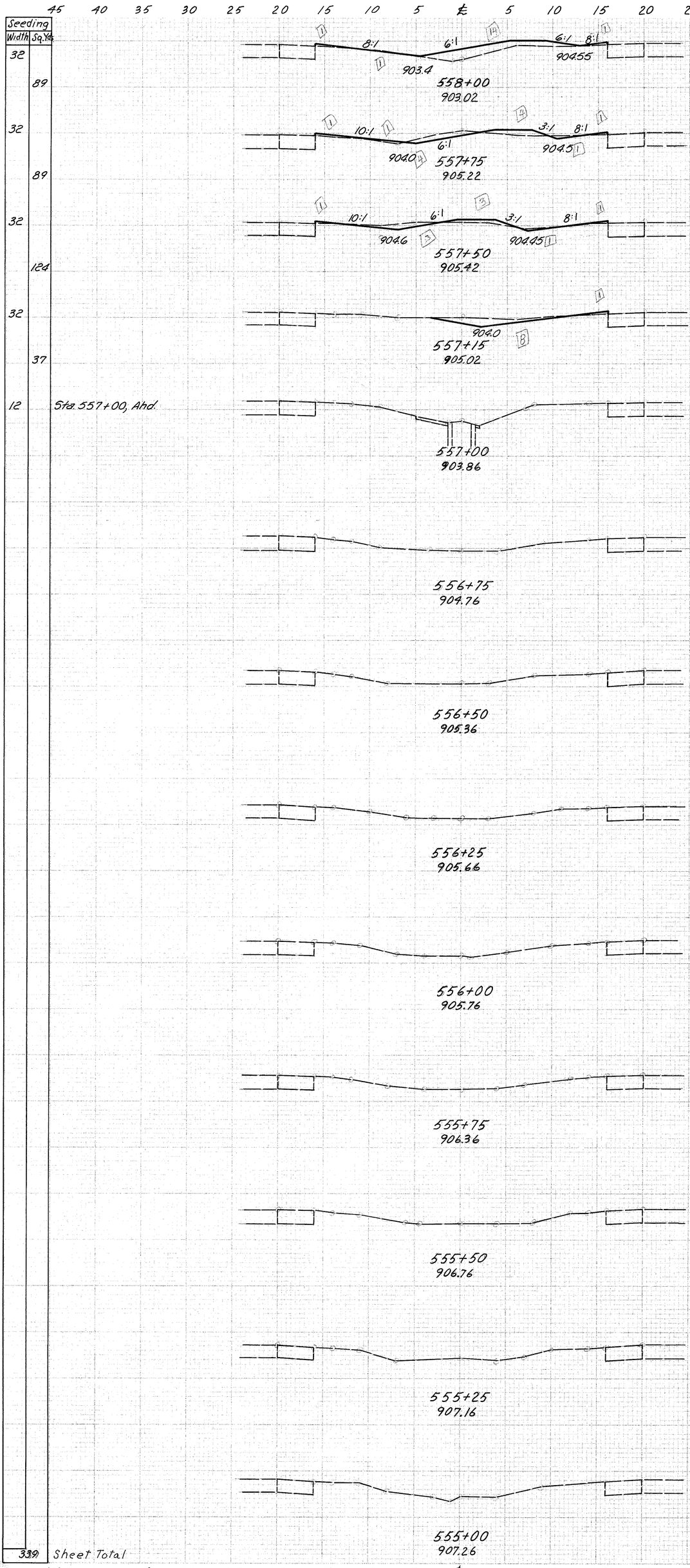

Seeding Width	Seeding Sq.Yds.
32	
	89
32	
	89
32	
	124
32	
	37
12	
339	Sheet Total

End Area Cut	End Area Fill	Cu.Yds. Cut	Cu.Yds. Fill
1	16		
		3	11
5	7		
		4	6
4	5		
		8	4
8	1		
		2	1
0	0		

Computations By Initials D.R.B. Date 12-1-87
Computations Checked By Initials N.J.J. Date 12-1-87
Final Revisions By Initials ____ Date ____

TRUMBULL
TRU-88-0.00
COUNTY

DISTRICT 5 STATE OHIO PROJECT

86
23

4.25, YOUNGS RUN CREEK Area - Sta. 555+00 to Sta. 558+00

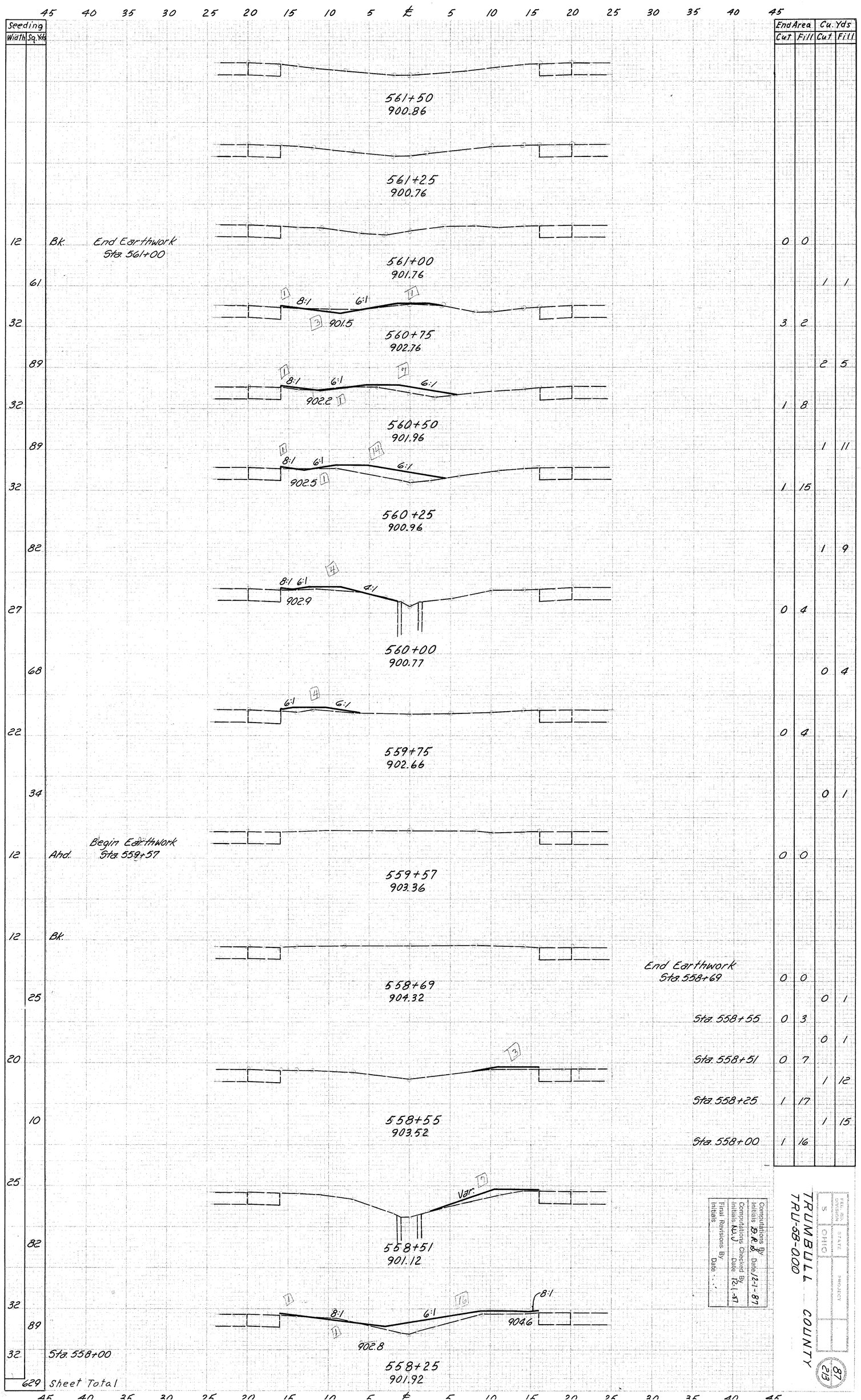

45 40 35 30 25 20 15 10 5 ℄ 5 10 15 20 25 30 35 40 45
Seeding
Width Sq. Yds
End Area Cu. Yds
Cut Fill Cut Fill
561+50
900.86
561+25
900.76
Bk. End Earthwork
Sta. 561+00
561+00
901.76
8:1 6:1
901.5
560+75
902.76
8:1 6:1 6:1
902.2
560+50
901.96
8:1 6:1 6:1
902.5
560+25
900.96
8:1 6:1 4:1
902.9
560+00
900.77
6:1 6:1
559+75
902.66
Begin Earthwork
Ahd. Sta. 559+57
559+57
903.36
Bk.
558+69
904.32
End Earthwork
Sta. 558+69
558+55
903.52
Var.
558+51
901.12
8:1 6:1 8:1
904.6
902.8
558+25
901.92
Sta. 558+00
Sheet Total
12 0 0
61 1 1
32 3 2
89 2 5
32 1 8
89 1 11
32 1 15
82 1 9
27 0 4
68 0 4
22 0 4
34 0 1
12 0 0
12
25 0 1
Sta. 558+55 0 3
0 1
20 Sta. 558+51 0 7
1 12
Sta. 558+25 1 17
10 1 15
Sta. 558+00 1 16
25
82
32
89
32
629
Computations By Initials D.R.B. Date 12-1-87
Computations Checked By Initials M.J. Date 12-1-87
Final Revisions By Initials Date
FED. RD. DIVISION 5
STATE OHIO
PROJECT
TRUMBULL COUNTY
TRU-58-0.00
87
213
4.25, YOUNGS RUN CREEK Area - Sta. 558+25 to Sta. 561+50

45 40 35 30 25 20 15 10 5 ℄ 5 10 15 20 25 30 35 40 45

Seeding Width	Seeding Sq.Yds.
22	
60	25
21	
63	25
24	
78	25
32	
78	25
24	Ahd.

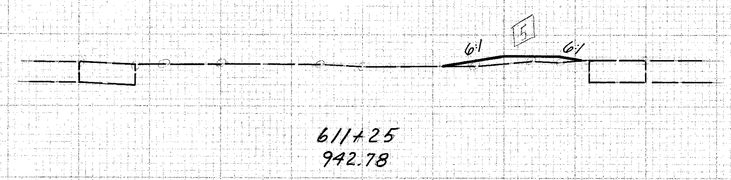

611+25
942.78

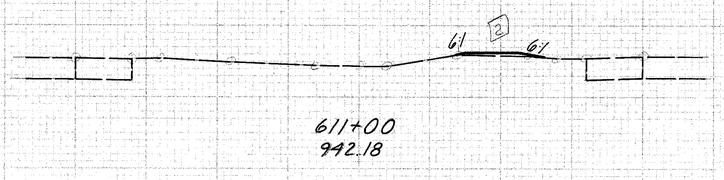

611+00
942.18

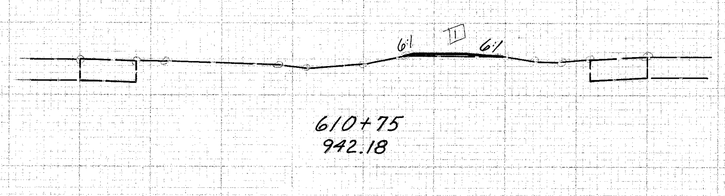

610+75
942.18

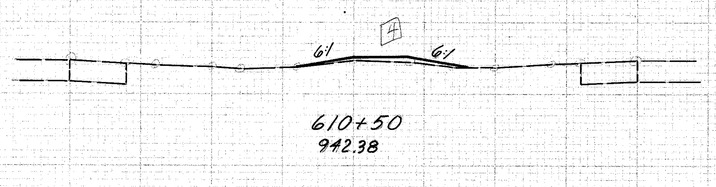

610+50
942.38

BEGIN EARTHWORK
Sta. 610+25

610+25
941.78

610+00
940.58

609+75
940.28

609+50
939.88

609+25
939.48

609+00
938.98

End Area Cut	End Area Fill	Cu. Yds. Cut	Cu. Yds. Fill
0	5		
		0	3
0	2		
		0	1
0	1		
		0	2
0	4		
		0	2
0	0		

279 Sheet Total

Computations By Initials B.K.S. Date 12-1-87
Computations Checked By Initials M.J. Date 12-1-87
Final Revisions By Initials Date

TRUMBULL COUNTY
TRU-5B-0.00
OHIO STATE
PROJECT

88
213

5.25, PENN. R.R. Area - Sta. 609+00 to Sta. 611+25

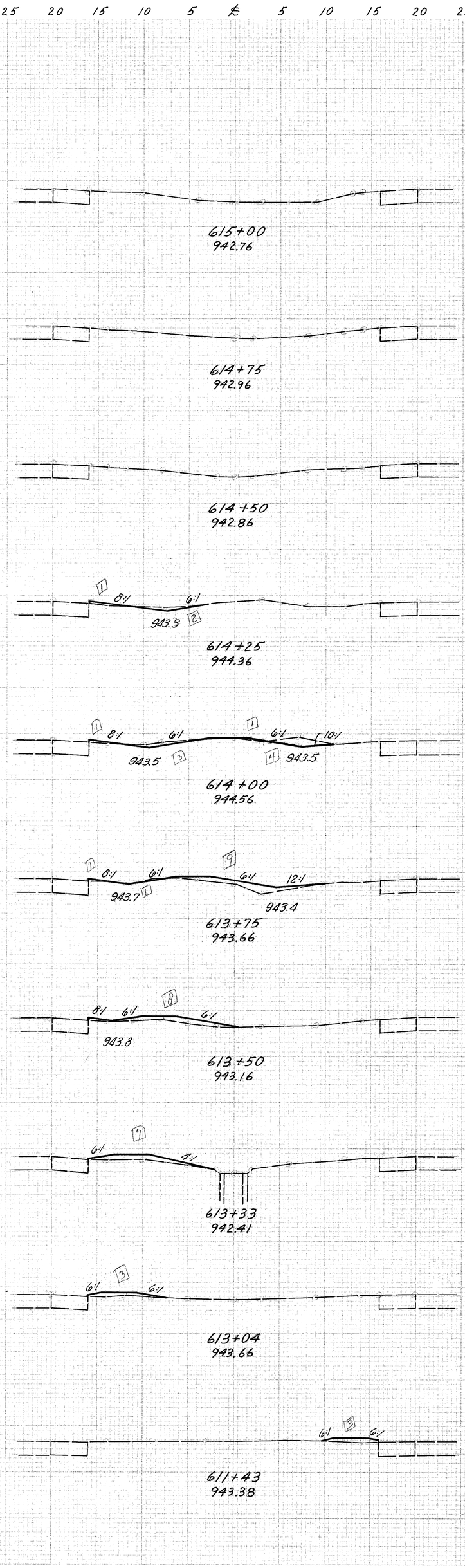

Seeding Width	Seeding Sq. Yds.			End Area Cut	End Area Fill	Cu. Yds. Cut	Cu. Yds. Fill	
12		END EARTHWORK Bk. Sta. 614+35	Sta. 614+35	0	0			
	21	10				1	1	10
25				2	1			
	79	25				4	1	25
32				7	2			
	89	25				4	6	25
32				1	10			
	85	25				1	8	25
29				0	8			
	51	17				0	5	17
25				0	7			
						0	5	29
			Sta. 613+04	0	3			
	74	29	Sta. 612+90	0	0	0	1	14
			Sta. 611+52	0	0			
			Sta. 611+43	0	3	0	1	09
21			Sta. 611+25	0	5	0	3	18
	26	14						
12		Ahd. BEGIN EARTHWORK Sta. 612+90						
12		Sta. 611+52, Bk.	END EARTHWORK Sta. 611+52					
	16	09						
19								
	41	18						
22		Sta. 611+25						
	482	Sheet Total						

5.25, PENN. R.R. Area - Sta. 611+43 to Sta. 615+00

TRUMBULL COUNTY
TRU-58-0.00

FED. RD. DIVISION	STATE	PROJECT
5	OHIO	

Computations By Initials D.R.S. Date 12-1-87
Computations Checked By Initials N.V. Date 12-1-87
Final Revisions By Initials Date

89
213

| | | |

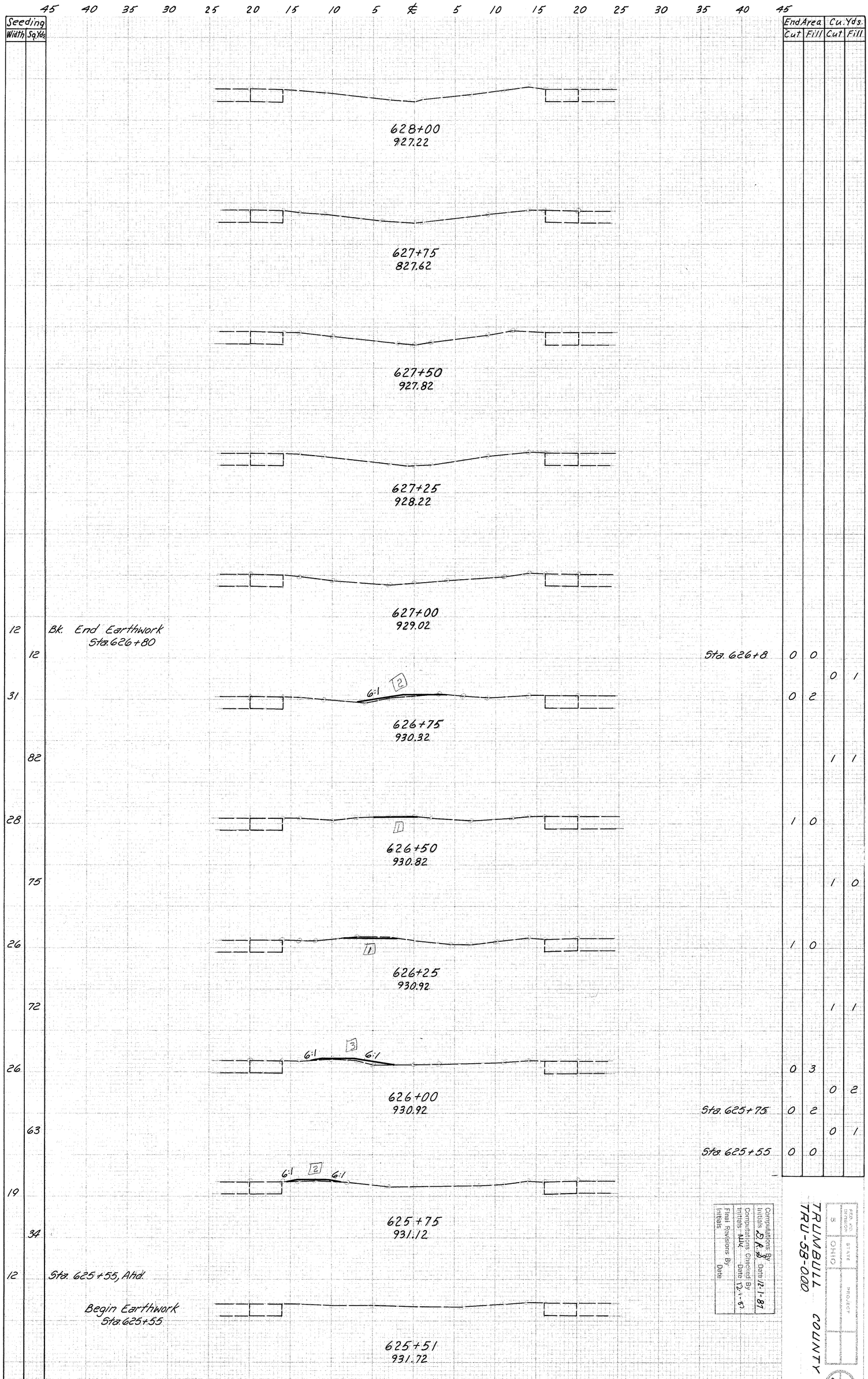

Seeding Width	Seeding Sq.Yds.	End Area Cut	End Area Fill	Cu.Yds. Cut	Cu.Yds. Fill
12	12	Sta. 626+8 0	0	0	1
31		0	2		
	82			1	1
28		1	0		
	75			1	0
26		1	0		
	72			1	1
26		0	3		
				0	2
	63	Sta. 625+75 0	2		
				0	1
19		Sta. 625+55 0	0		
	34				
12					
	338	Sheet Total			

Computations By Initials D.A.S. Date 12-1-87
Computations Checked By Initials RJW Date 12-1-87
Final Revisions By Initials
Date

FED. ROAD DIVISION 5 | STATE OHIO | PROJECT

TRUMBULL COUNTY
TRU-58-0.00

5.49, PARK Rd. Area - Sta. 625+51 to Sta. 628+00

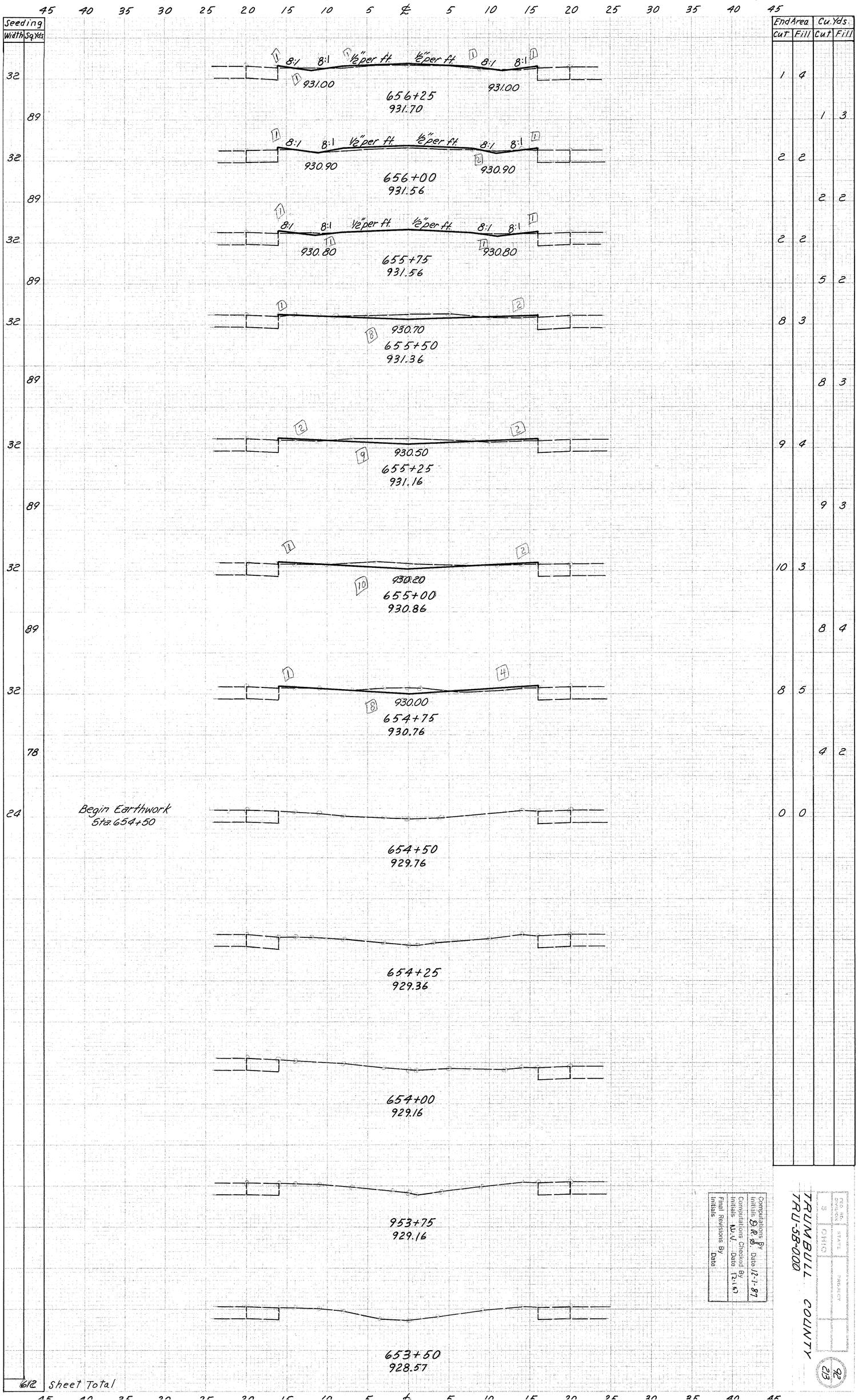

Seeding Width	Seeding Sq.Yds.	End Area Cut	End Area Fill	Cu.Yds. Cut	Cu.Yds. Fill
32		1	4		
	89			1	3
32		2	2		
	89			2	2
32		2	2		
	89			5	2
32		8	3		
	89			8	3
32		9	4		
	89			9	3
32		10	3		
	89			8	4
32		8	5		
	78			4	2
24		0	0		
612					

Computations By Initials D.R.S. Date 12-7-87
Computations Checked By Initials W.V. Date 12-1-87
Final Revisions By Initials Date

TRUMBULL COUNTY
TRU-5B-000

FED. RD. DIVISION	STATE	PROJECT
5	OHIO	

92
213

6.10, PERKINS-JONES Rd. Area - Sta. 653+50 to Sta. 656+25

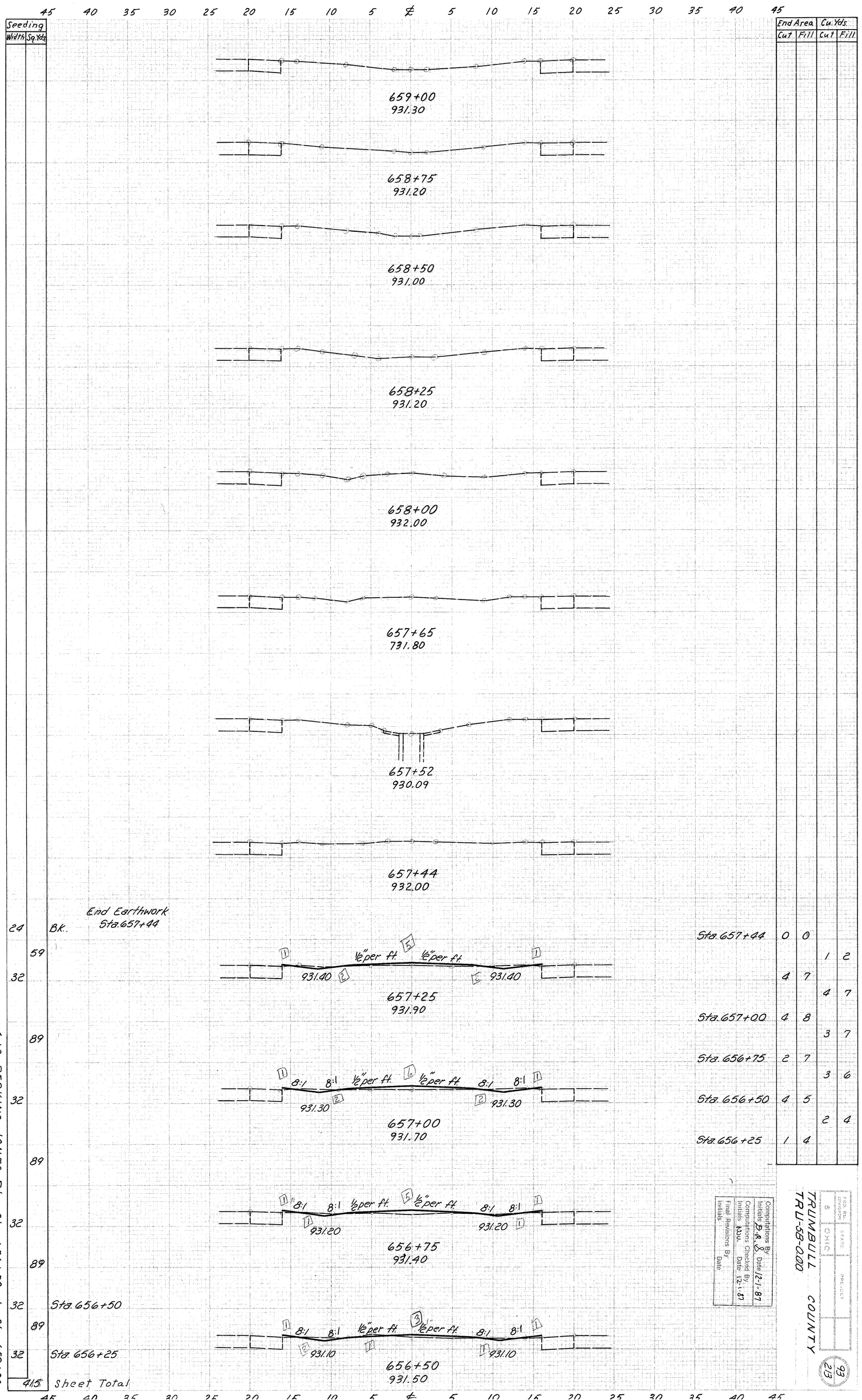

45 40 35 30 25 20 15 10 5 ℄ 5 10 15 20 25 30 35 40 45
Seeding
Width Sq.Yds
End Area Cu.Yds.
Cut Fill Cut Fill
659+00
931.30
658+75
931.20
658+50
931.00
658+25
931.20
658+00
932.00
657+65
731.80
657+52
930.09
657+44
932.00
End Earthwork
Sta.657+44
24 Bk.
59
32
89
32
89
32
89
32 Sta.656+50
89
32 Sta.656+25
415 Sheet Total
1/2" per ft.
931.40
657+25
931.90
8:1
931.30
657+00
931.70
931.20
656+75
931.40
931.10
656+50
931.50
Sta.657+44 0 0
1 2
4 7
4 7
Sta.657+00 4 8
3 7
Sta.656+75 2 7
3 6
Sta.656+50 4 5
2 4
Sta.656+25 1 4
Computations By Initials D.A.S. Date 12-1-87
Computations Checked By Initials RJU. Date 12-1-87
Final Revisions By Initials Date
TRUMBULL COUNTY
TRU-58-0.00
FED. RD. DIVISION 5
STATE OHIO
PROJECT
93
213
6.10, PERKINS-JONES Rd. - Sta. 656+50 to Sta. 659+00

Seeding Width	Seeding Sq. Yds.		End Area Cut	End Area Fill	Cu. Yds. Cut	Cu. Yds. Fill
12		Sta. 712+60, Bk.				
	7	04	0	0		
19					0	1
			0	2		
	43	17			0	2
26			0	5		
	121	39			1	7
30			1	4		
	86	25			3	3
32			5	2		
	89	25			6	2
32			8	2		
	89	25			11	2
32			16	2		
	47	15			4	1
24		Sta. 711+10	0	0		
	482	Sheet Total				

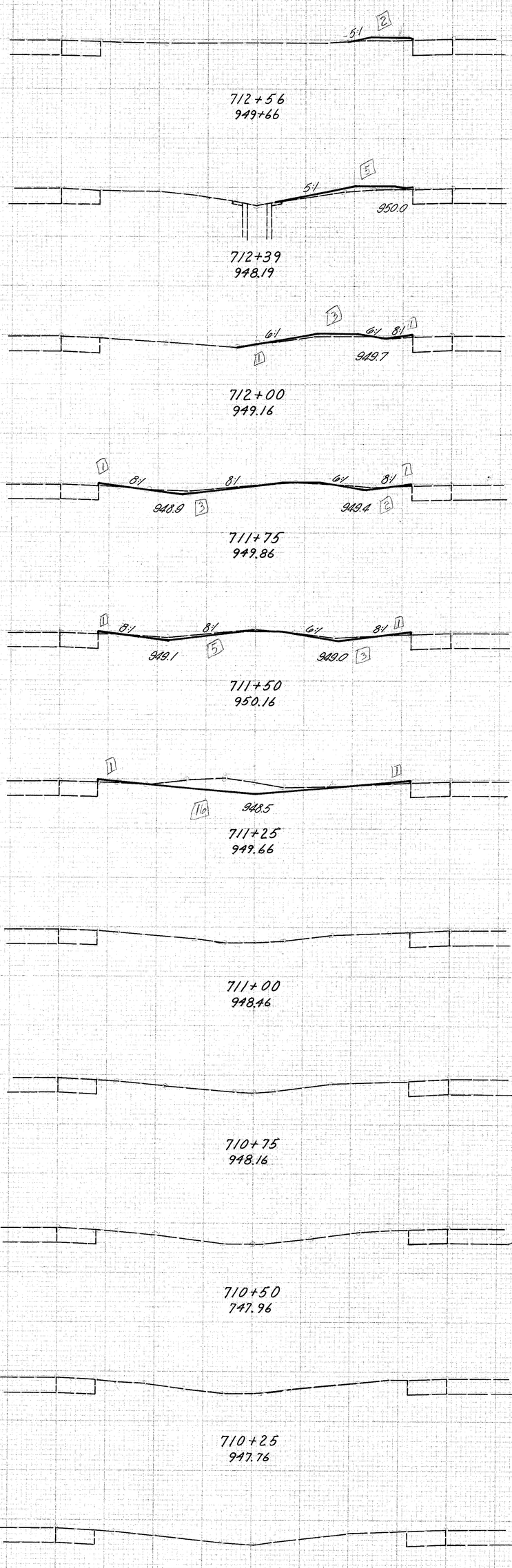

END EARTHWORK
Sta. 712+60

BEGIN EARTHWORK
Sta 711+10

Computations By
Initials D.R.O. Date 12-1-87
Computations Checked By
Initials W.J.U. Date 12-1-87
Final Revisions By
Initials Date

TRUMBULL COUNTY
TRU-58-0.00

SEQ. NO. DIVISION	STATE	PROJECT
5	OHIO	

94
213

Sta. 710+00 to Sta. 712+56

End Areas	Sq. Yds.
Cut	Fill
0	0
10	2
6	2
8	3
6	3
8	7
9	8
0	0

Cut	Fill
5	1
7	2
6	2
6	3
6	5
11	10
2	1

FED. NO. DIVISION	STATE	PROJECT	
5	OHIO		

95
213

TRUMBULL COUNTY
TRU-5B-0.00

Computations By Initials D.R.S.	Date 12-1-87
Computations Checked By Initials R.V.	Date 12-1-87
Final Revisions By Initials	Date

Sta. 715+00
Sta. 714+75
Sta. 714+39
Sta. 714+30

7/17+00
943.85

7/16+75
944.35

7/16+50
944.75

7/16+25
945.15

End Earthwork
Sta. 716+00

7/16+00
945.68

7/15+75
946.78

7/15+50
947.88

7/15+25
948.08

7/15+00
947.78

7/14+75
947.98

Begin Earthwork
Sta. 714+30

7/14+39
948.48

Seeding Width Sq. Yds.	
24	78
32	89
32	89
32	89
32	89
32	89
32	128
28	32
24	590

Sheet Total

Sta. 714+39 to Sta. 717+00

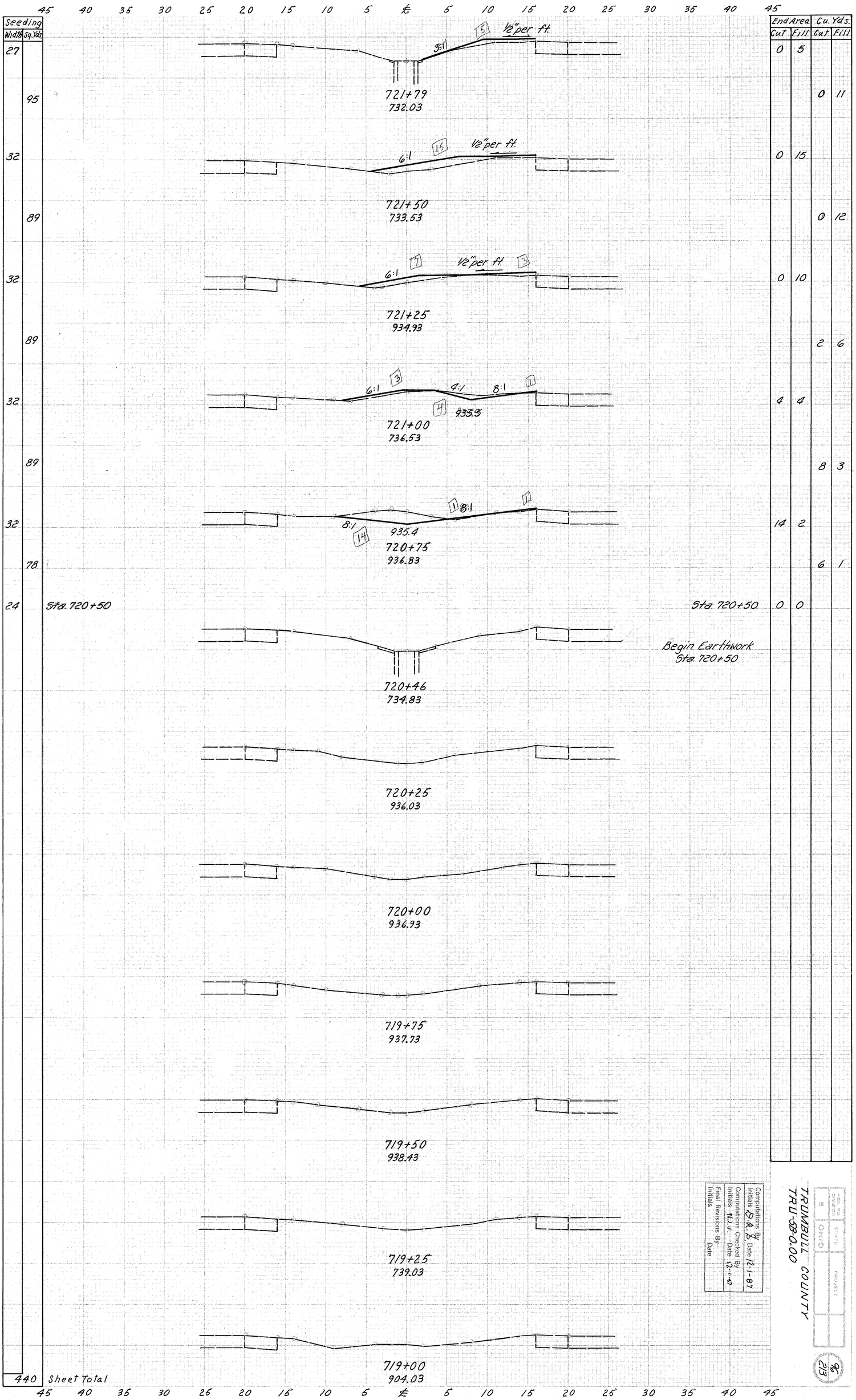

45 40 35 30 25 20 15 10 5 ℄ 5 10 15 20 25 30 35 40 45
Seeding
Width Sq. Yds.
27
95
32
89
32
89
32
89
32
78
24
Sta. 720+50
440 Sheet Total
Sta. 719+00 to Sta. 721+79
End Area
Cut Fill
Cu. Yds.
Cut Fill
0 5
0 11
0 15
0 12
0 10
2 6
4 4
8 3
14 2
6 1
0 0
Sta. 720+50
Begin Earthwork
Sta. 720+50
3:1
5
1/2" per ft.
721+79
732.03
6:1
15
1/2" per ft.
721+50
733.53
6:1
7
1/2" per ft.
3
721+25
934.93
6:1
3
4:1
8:1
1
4
935.5
721+00
736.53
1
8:1
1
8:1
14
935.4
720+75
936.83
720+46
734.83
720+25
936.03
720+00
936.93
719+75
937.73
719+50
938.43
719+25
739.03
719+00
904.03
Computations By
Initials D.R.S. Date 12-1-87
Computations Checked By
Initials N.J.J. Date 12-1-87
Final Revisions By
Initials Date
TRUMBULL COUNTY
TRU-5B-0.00
STATE
OHIO
PROJECT
96
213

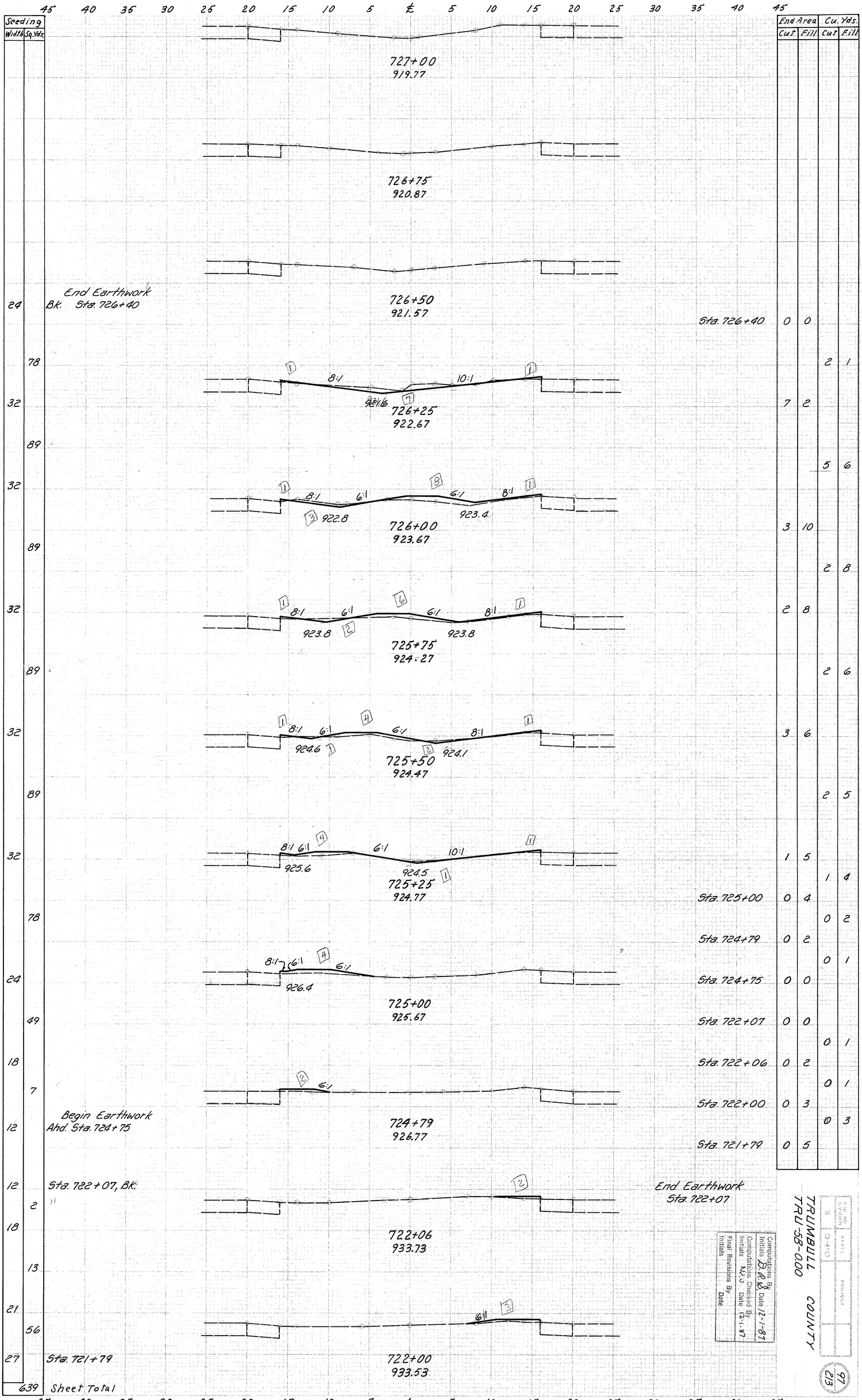

Seeding Width	Seeding Sq. Yds.	
		End Earthwork Bk. Sta. 726+40
24	78	
32	89	
32	89	
32	89	
32	89	
32	78	
24	49	
18	7	
12	2	Begin Earthwork Ahd. Sta. 724+75
12	18	Sta. 722+07, Bk.
13	21	
56	27	Sta. 721+79
639		Sheet Total

	End Area Cut	End Area Fill	Cu. Yds. Cut	Cu. Yds. Fill
Sta. 726+40	0	0		
			2	1
	7	2		
			5	6
	3	10		
			2	8
	2	8		
			2	6
	3	6		
			2	5
	1	5		
Sta. 725+00	0	4	1	4
Sta. 724+79	0	2	0	2
Sta. 724+75	0	0	0	1
Sta. 722+07	0	0		
Sta. 722+06	0	2	0	1
Sta. 722+00	0	3	0	1
Sta. 721+79	0	5	0	3

End Earthwork Sta. 722+07

Sta. 722+00 to Sta. 727+00

Computations By Initials DRB Date 12-1-87
Computations Checked By Initials NJJ Date 12-1-87
Final Revisions By Initials Date

TRUMBULL COUNTY
TRU-88-0.00

FED. RD. DIVISION | STATE | PROJECT
S | 0410

97 23

Computations By Initials	Date
WMS	11/30/87
Computations Checked By Initials	Date
JMK	11/30/87
Final Revisions By Initials	Date

FHWA REGION	STATE	PROJECT	
5	OHIO		

98
213

TRUMBULL COUNTY
TRU-5B-0.00

MEDIAN CROSSOVER DETAIL

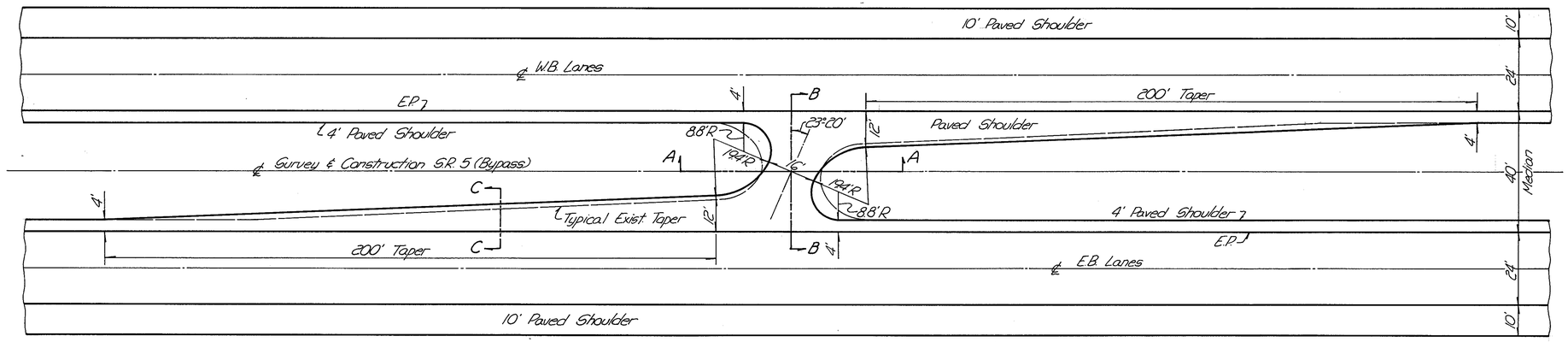

MEDIAN CROSSOVER UPGRADE DETAIL

See Median Crossover Quantities Table for Applicable Stations

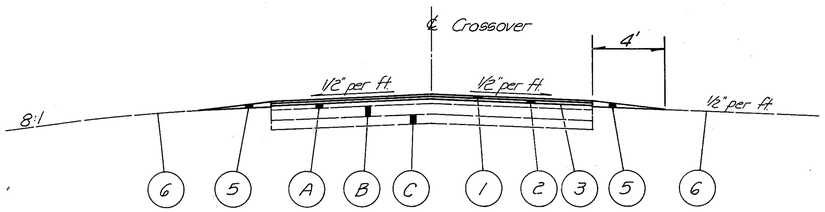

SECTION A-A

PROPOSED LEGEND

1. Item 446 1 1/4" Asphalt Concrete, Surface Course, Type 1, AC-20
2. Item 446 1 3/4" Asphalt Concrete, Intermediate Course, Type 2, AC-20
3. Item 407 Tack Coat as per plan
4. Item 301 8" Bituminous Aggregate Base AC-20
5. Item 617 Reconditioning Shoulders Including Shoulder Preparation, Compacted Aggregate & Water
6. Item 659 Seeding & Mulching

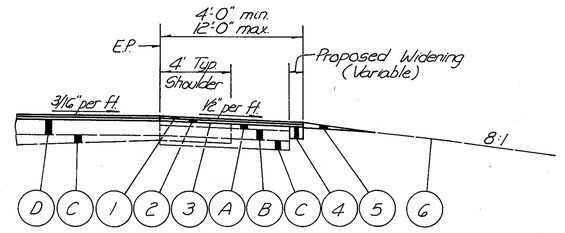

SECTION C-C

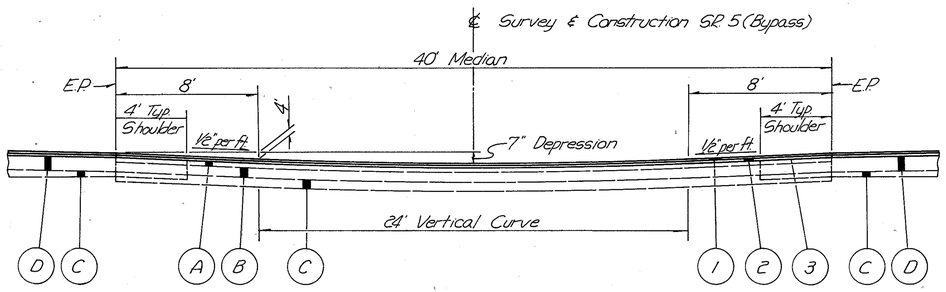

SECTION B-B

EXISTING LEGEND

- A Bituminous Aggregate Base
- B Aggregate Base
- C Subbase
- D 10" Reinforced Portland Cement Conc. Pavement

MEDIAN CROSSOVER QUANTITIES

Station	203 Excavation not Including Embankment Construction (Cu. Yd.)	301 Bituminous Aggregate Base (Cu. Yd.)	407 Tack Coat as per plan (Gal.)	617 Shoulder Preparation (Sq. Yd.)	617 Compacted Aggregate (Cu. Yd.)	659 Seeding & Mulching (Sq. Yd.)	446 Asphalt Concrete Surface Course Type 1, AC-20 (Cu. Yd.)	446 Asphalt Concrete Intermediate Course Type 2, AC-20 (Cu. Yd.)	Comments
1066+75	25.87	23.10	28.73	12.44	23.63	968.00	16.91	23.68	Upgrading Required as shown in details
1090+50			29.24				16.91	23.68	No Upgrading Required
1167+75			32.40				16.91	23.68	No Upgrading Required
1206+75			33.03				16.91	23.68	No Upgrading Required
576+75			33.65				16.91	23.68	No Upgrading Required
634+75	15.64	11.34	33.67	26.15	23.63	968.00	16.91	23.68	Upgrading Required as shown in details
690+75	15.35	14.10	31.77	9.78	23.63	968.00	16.91	23.68	Upgrading Required as shown in details
Totals	56.86	48.54	222.49	48.37	70.89	2904.00	118.37	165.76	

(Quantities Carried to General Summary)

Revised: 11/30/88

MEDIAN CROSSOVER DETAIL

LANDSLIDE REPAIR DETAILS

Computations By Initials KMS Date 12/3/87
Computations Checked By Initials DMK Date 12/3/87
Final Revisions By Initials Date

FHWA REGION	STATE	PROJECT	
5	OHIO		

TRUMBULL COUNTY
TRU-5B-0.00

99
213

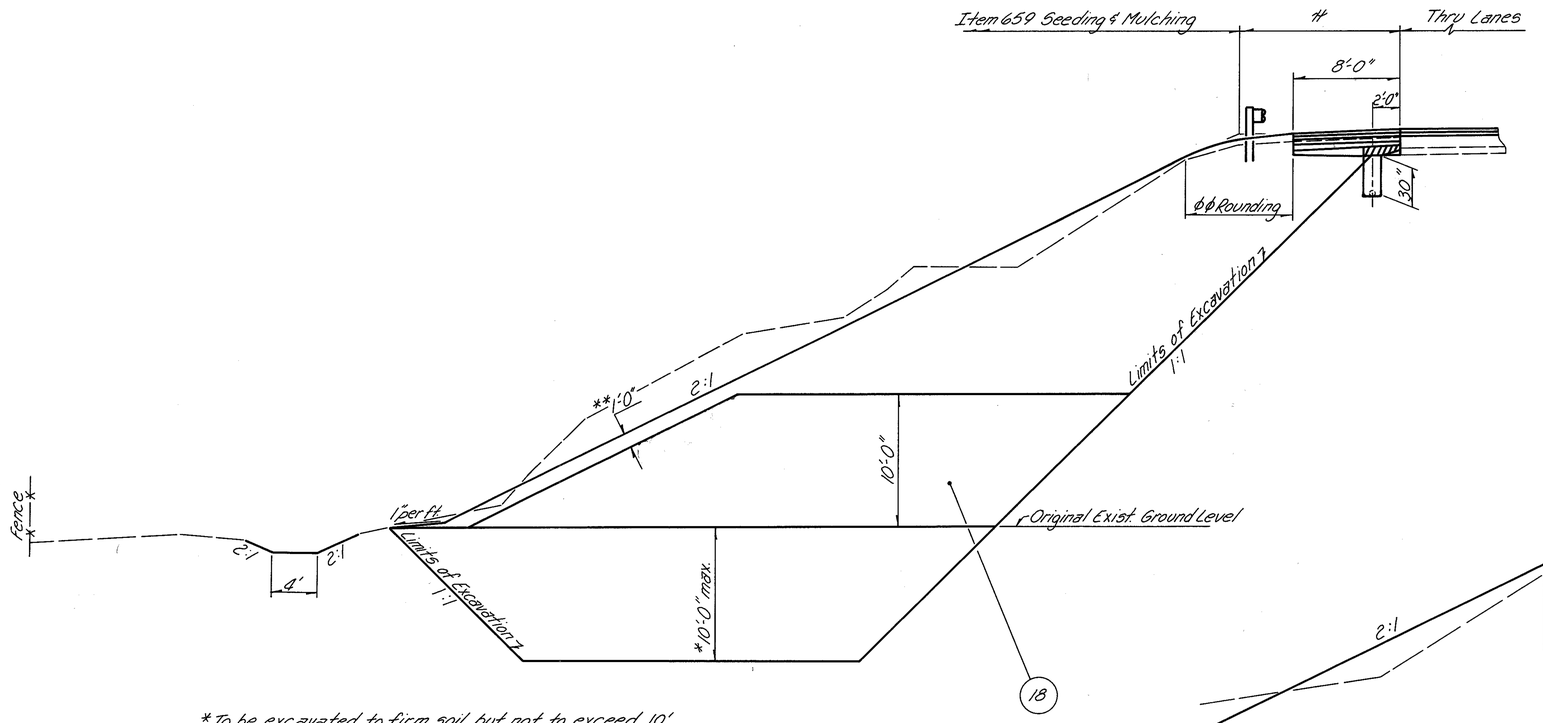

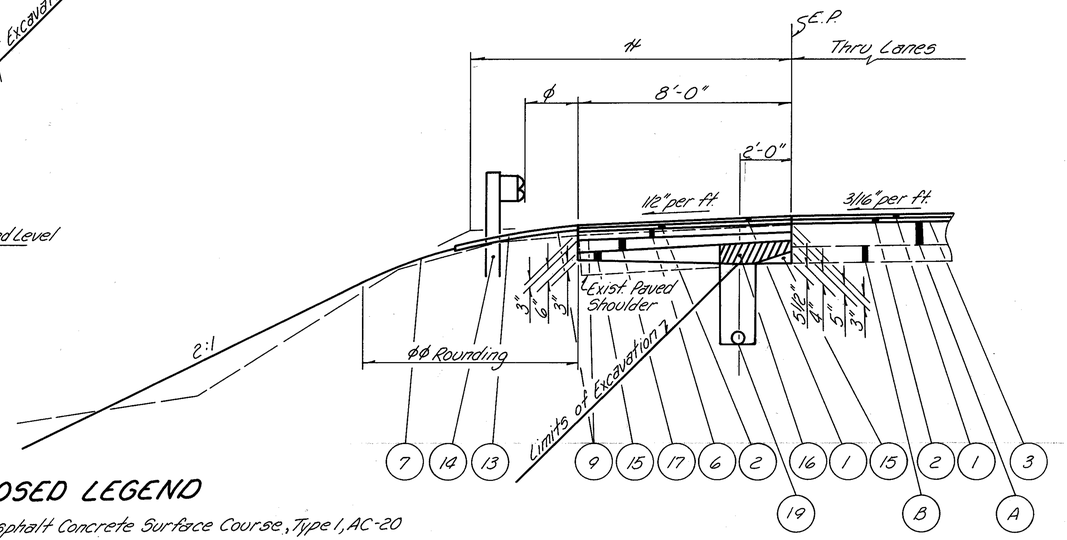

SHOULDER DETAIL

*To be excavated to firm soil, but not to exceed 10' below original existing ground level. Bottom limits of excavation will be determined in the field by the engineer. Quantity to be paid for shall be the cu. yds. of excavation to the actual depth, at the Contract Unit Price bid for Item 203 Excavation.

** This part of embankment to be placed concurrently with the Granulated Slag Item 310 Subbase, 703.08.

EXISTING LEGEND

(A) 10" Reinforced Portland Cement Concrete Pavement

(B) Subbase

PROPOSED LEGEND

(1) Item 446 1 1/4" Asphalt Concrete Surface Course, Type 1, AC-20

(2) Item 446 1 3/4" Asphalt Concrete Intermediate Course, Type 2, AC-20

(3) Item 407 Tack Coat, as per plan

(6) Item 301 Bituminous Aggregate Base, AC-20

(7) Item 659 Seeding & Mulching (See General Notes)

(9) Item 408 Bituminous Prime Coat

(13) Item 203 Linear Grading Method 2,

(14) Item 606 Guardrail Type 5

(15) Item 310 Subbase Type 1, Grading A

(16) Item Special Drainage Connection using No. 8 Aggregate (See Note in Proposal)

(17) Item 304 Aggregate Base

(18) Item 310 Subbase Type 1, as per plan

(19) Item 605 6" Shallow Pipe Underdrain

DIMENSIONS

Station From	Station To	Side	H Ft.	ϕ Ft.	ϕϕ Ft.
1214+00	1219+00	Lt.	12	2	8
1227+00	1230+50	Lt.	10	0	4

Revised: 11/30/88

LANDSLIDE REPAIR DETAIL

LANDSLIDE REPAIR DETAILS

Computations By Initials K.M.S. Date 11/30/87
Computations Checked By Initials JMK Date 11/30/87
Final Revisions By Initials Date

FHWA REGION	STATE	PROJECT	
5	OHIO		

100/213

TRUMBULL COUNTY
TRU-5B-0.00

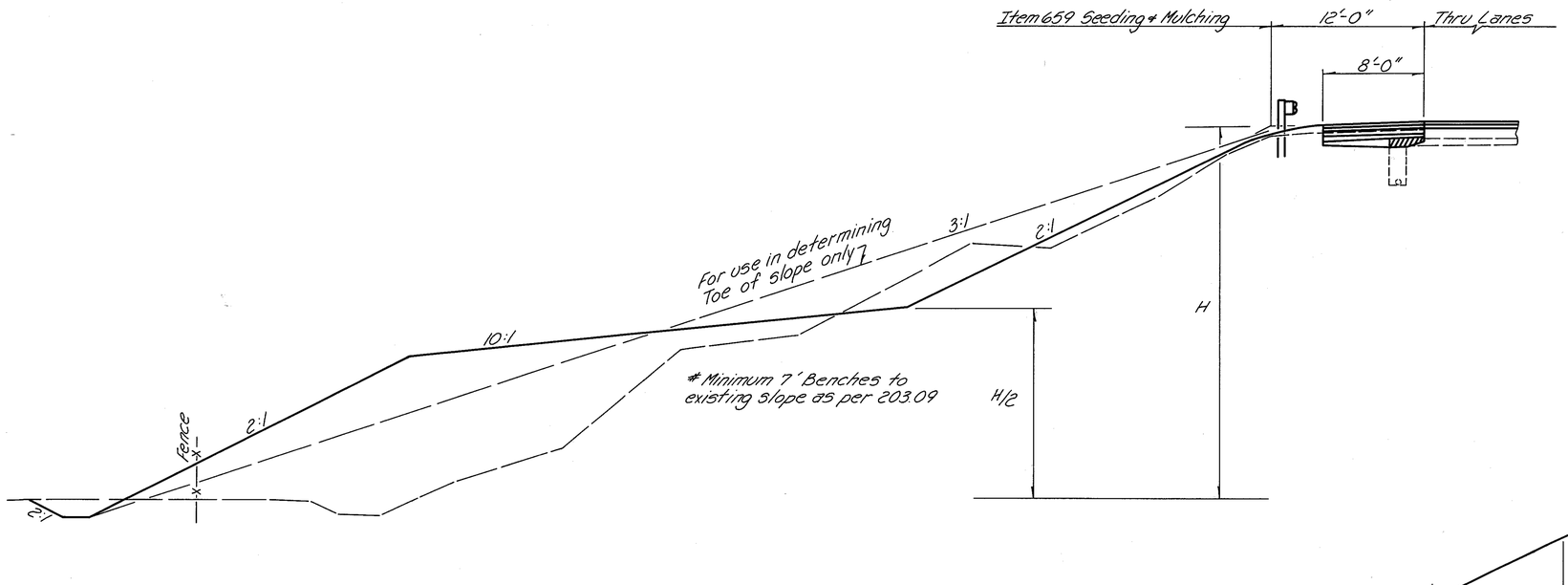

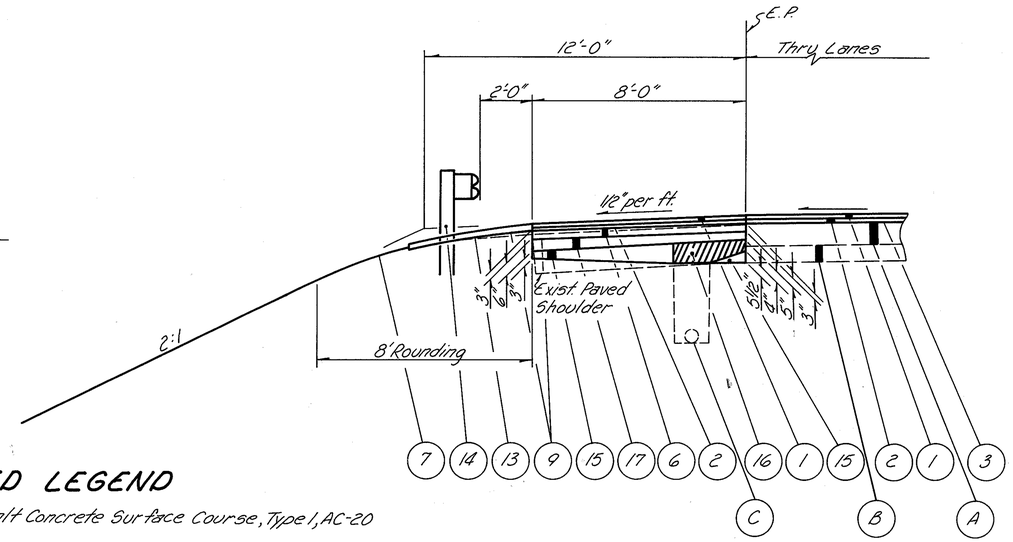

SHOULDER DETAIL

Applies:
Sta. 604+50 to Sta. 609+25 Lt.
Sta. 604+25 to Sta. 609+00 Rt.

EXISTING LEGEND

- (A) 10" Reinforced Portland Cement Concrete Pavement
- (B) Subbase
- (C) 6" Pipe Underdrain

PROPOSED LEGEND

- (1) Item 446 1 1/4" Asphalt Concrete Surface Course, Type 1, AC-20
- (2) Item 446 1 3/4" Asphalt Concrete Intermediate Course, Type 2, AC-20
- (3) Item 407 Tack Coat, as per plan
- (6) Item 301 Bituminous Aggregate Base, AC-20
- (7) Item 659 Seeding & Mulching (See General Notes)
- (9) Item 408 Bituminous Prime Coat
- (13) Item 203 Linear Grading, Method 2
- (14) Item 606 Guardrail, Type 5
- (15) Item 310 Subbase, Type 1, Grading A
- (16) Item Special Drainage Connection using No. 8 Aggregate (See Note in Proposal)
- (17) Item 304 Aggregate Base

Revised: 11/30/88

LANDSLIDE REPAIR DETAILS

FHWA REGION	STATE	PROJECT	
5	OHIO		

101
213

TRUMBULL COUNTY
TRU-5B-000

Computations By Initials AMS Date 12/2/87
Computations Checked By Initials JMK Date 12/2/87
Final Revisions By Initials Date

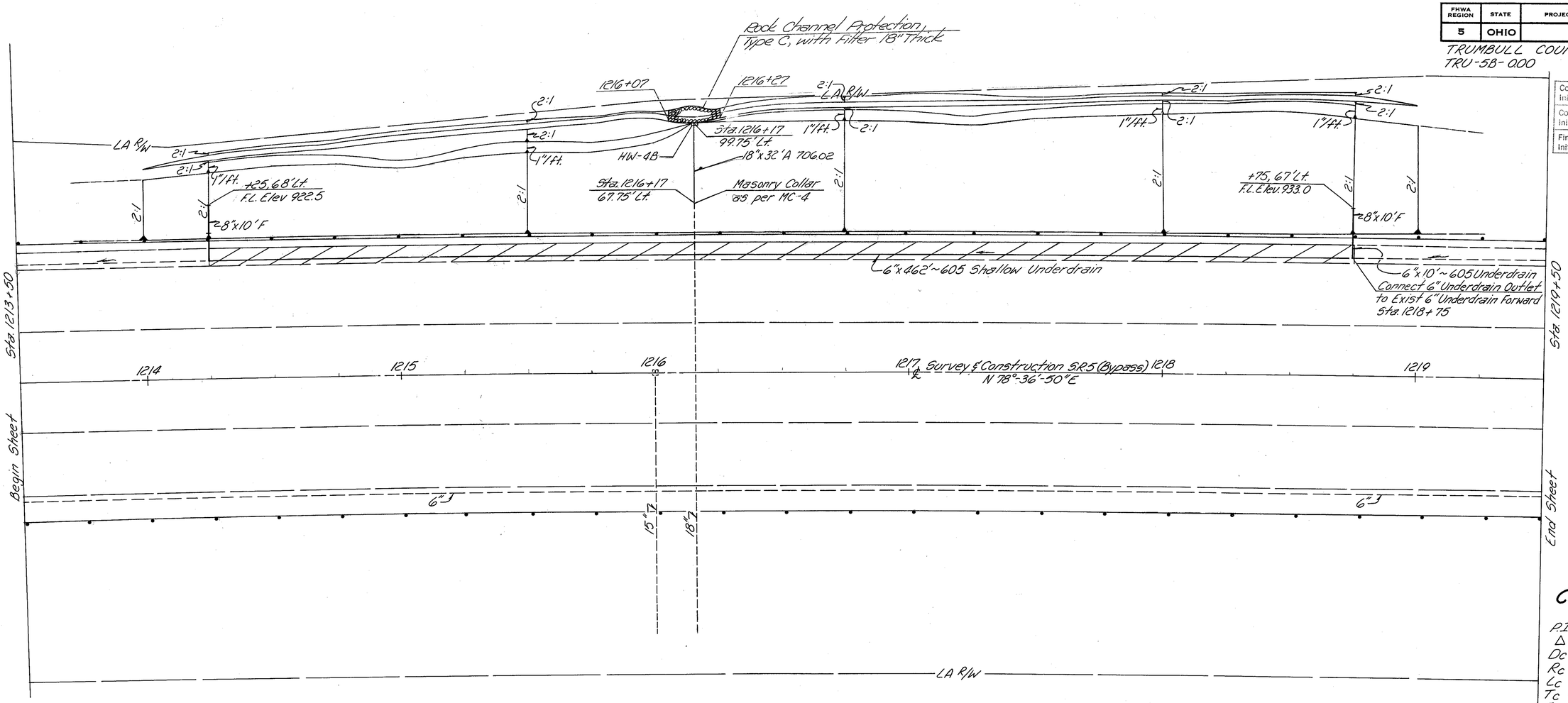

CURVE DATA

℄ Survey
P.I. = 1219+56.21
Δ = 10°-36'-31" Rt.
Dc = 0°-28'
Rc = 12,277.67'
Lc = 2273.27'
Tc = 1139.90'
Ec = 52.80'

8' Paved Shoulder Replacement
Refer to Typical Section Sheet 99

ESTIMATED QUANTITIES

Station From	Station To	Side	603 8" Conduit Type "F" Lin. Ft.	602 Concrete Masonry Cu. Yd.	603 18" Conduit Type "A" 16GA CC Lin. Ft.	301 Bituminous Aggregate Base Cu. Yd.	304 Aggregate Base Cu. Yd.	310 Subbase Type 1 Grading A Cu. Yd.	310 Subbase Type 1 as per Plan Cu. Yd.	408 Bituminous Prime Coat Gal.	605 6" Shallow Pipe Underdrains Lin. Ft.	Special Drainage Connection Cu. Yd.	601 Rock Channel Protection Type C with Filter 18" Thick Cu. Yd.
1214+00	1219+00	Lt.	20	0.31	32	37.04	67.90	54.28	43.08	177.78	472	51.82	6.67
Totals			20	0.31	32	37.04	67.90	54.28	43.08	177.78	472	51.82	6.67

(Totals Carried to General Summary)

LANDSLIDE GRADING PLAN SHEET Sta. 1213+50 to Sta. 1219+50

Computations By Initials D.R.S.	Date 12-2-87
Computations Checked By Initials N.V.	Date 12-2-87
Final Revisions By Initials	Date

2	OHIO		

102
213

TRUMBULL COUNTY
TRU-58-0.00

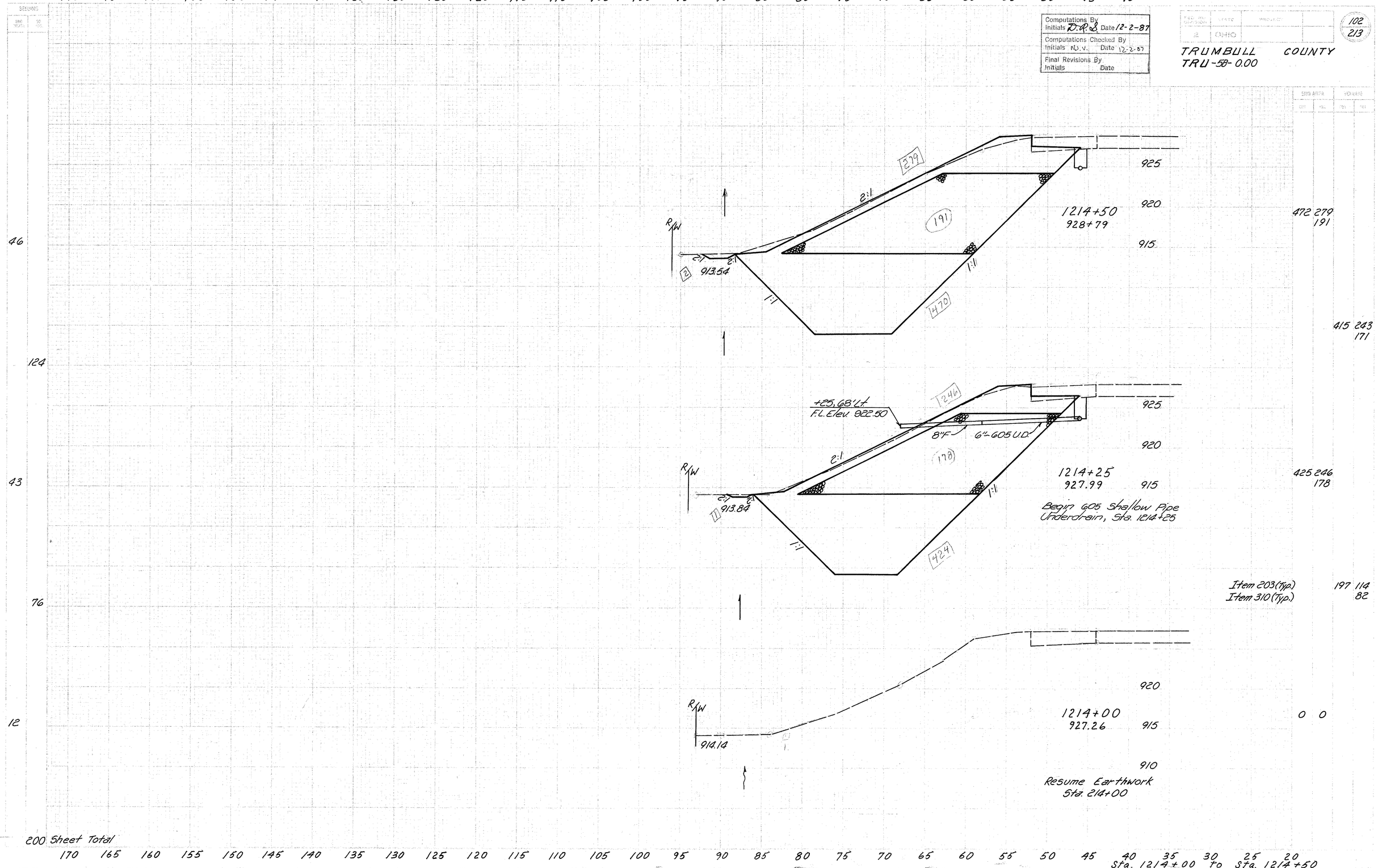

Computations By Initials D.A.S. Date 12-2-87
Computations Checked By Initials N.J.V. Date 12-2-87
Final Revisions By Initials Date

FED. RD. DIV. NO.	STATE	PROJECT	
2	OHIO		

103
213

TRUMBULL COUNTY
TRU-5B-0.00

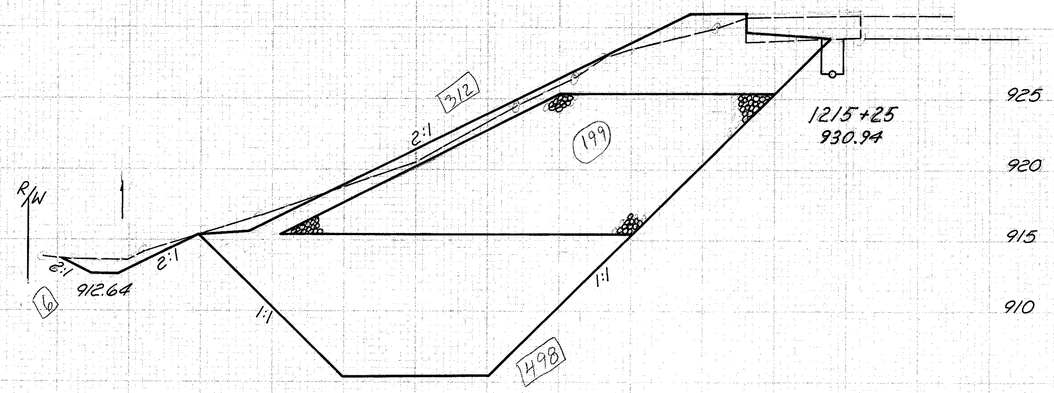

1215+25
930.94

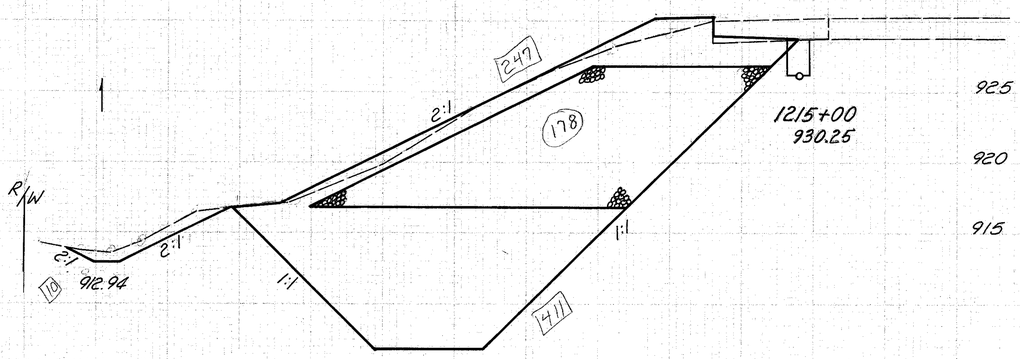

1215+00
930.25

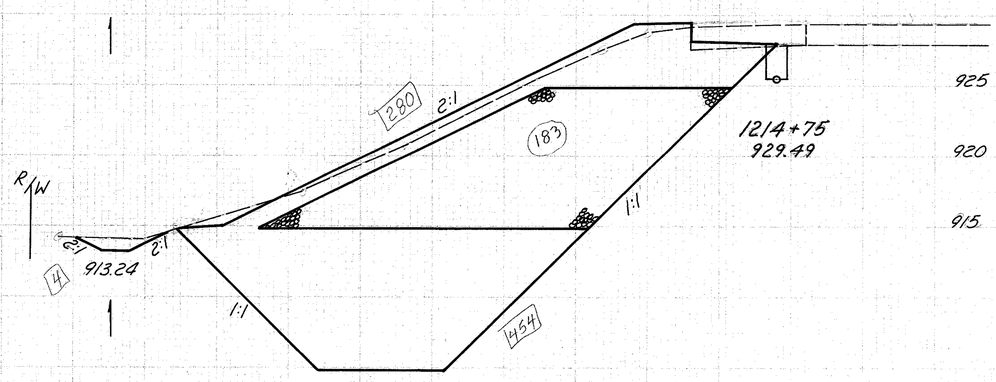

1214+75
929.49

Item 203 (Typ.)
Item 310 (Typ.)

Sta. 1214+50

Sheet Total

	END AREA		VOLUME	
	CUT	FILL	CUT	FILL
	504	312		
		199		
	428	259		
		175		
	421	247		
		178		
	407	244		
		167		
	458	280		
		183		
	431	259		
		173		
Sta. 1214+50	472	279		
		191		

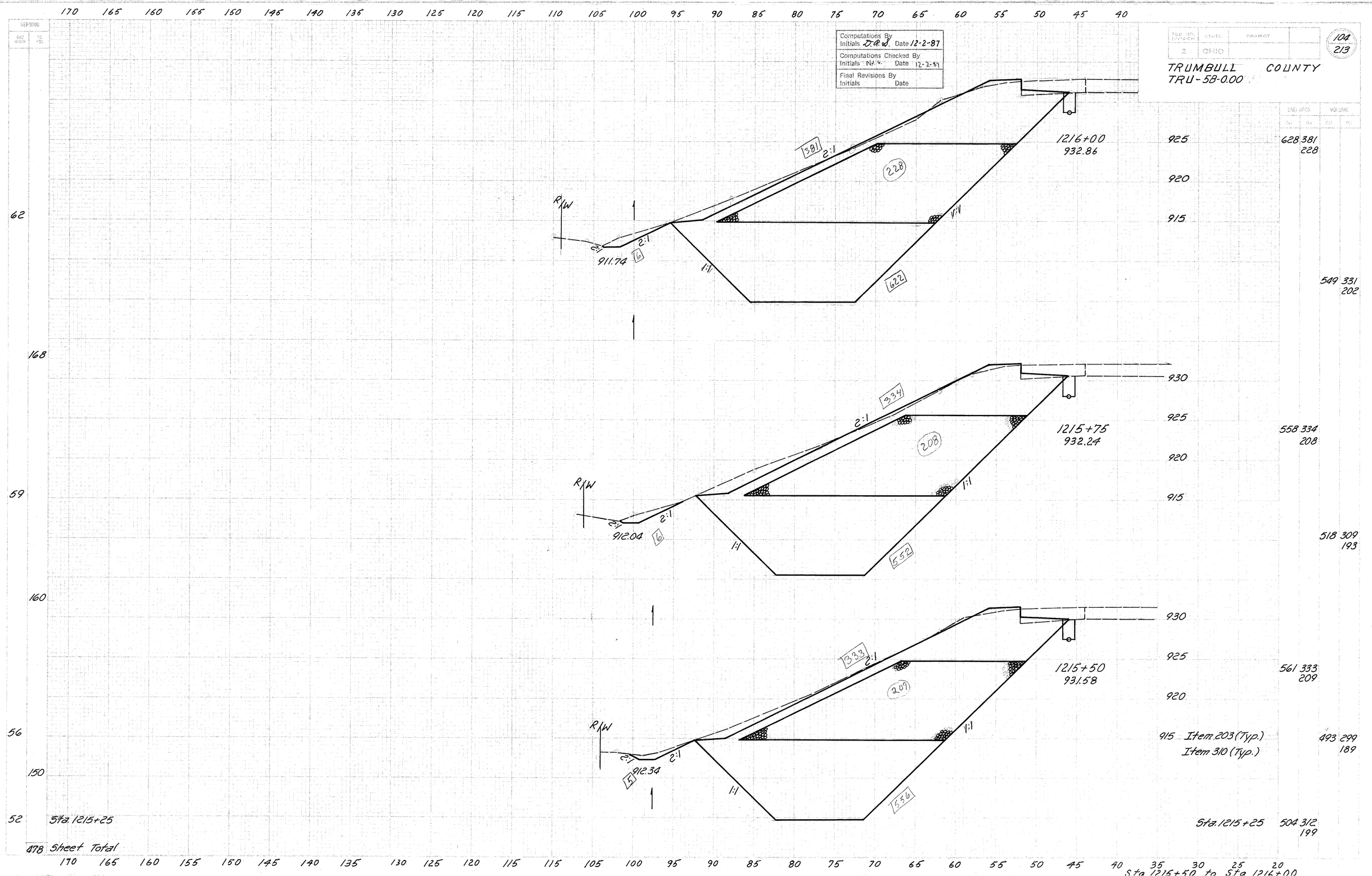

Computations By Initials D.A.S. Date 12-2-87
Computations Checked By Initials N.V. Date 12-2-87
Final Revisions By Initials Date
FED. RD. DIVISION 2
STATE OHIO
PROJECT
104
213
TRUMBULL COUNTY
TRU-5B-0.00
1216+00
932.86
911.74
1215+75
932.24
912.04
1215+50
931.58
912.34
R/W
2:1
1:1
381
228
622
334
208
552
333
209
556
Item 203 (Typ.)
Item 310 (Typ.)
Sta. 1215+25
Sheet Total
Sta. 1215+25 504 312 199
628 381 228
549 331 202
558 334 208
518 309 193
561 333 209
493 299 189

170 165 160 155 150 145 140 135 130 125 120 115 110 105 100 95 90 85 80 75 70 65 60 55 50 45 40

Computations By Initials D.R.S. Date 12-2-87
Computations Checked By Initials N.J.V. Date 12-2-87
Final Revisions By Initials Date

RES. ENGR. DIVISION	STATE	PROJECT	
2	OHIO		

105
213

TRUMBULL COUNTY
TRU-5B-0.00

SEEDING

END AREA		VOLUME	
CUT	FILL	CUT	FILL

64

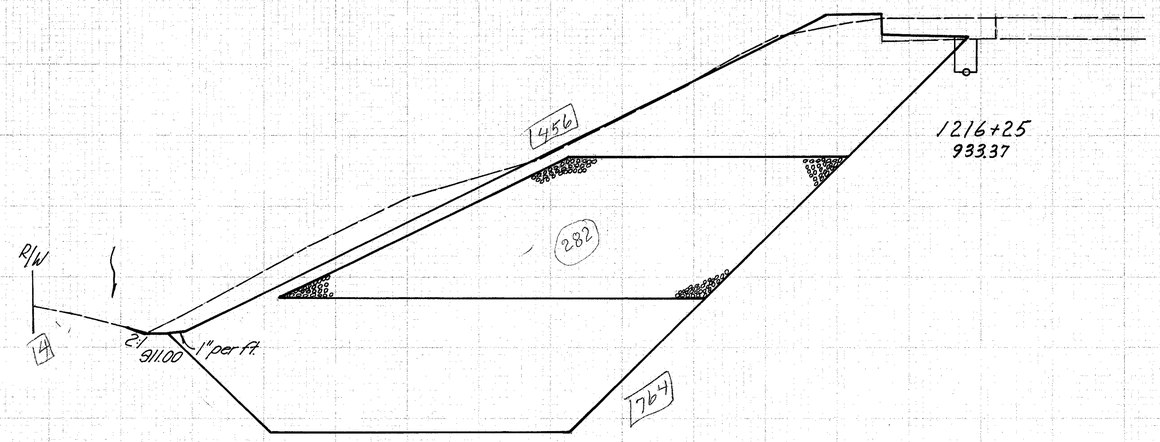

1216+25
933.37

930
925
920

768 456
282

185 97
80

57
64
119
62

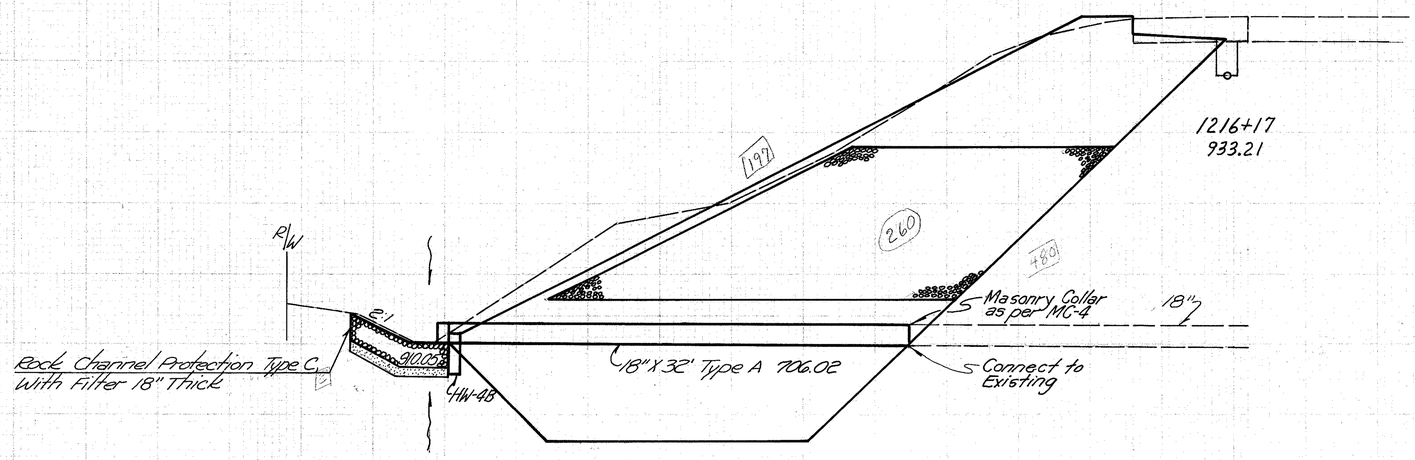

1216+17
933.21

930
925
920
915

482 197
260

Items 203 (Typ) 349 182
Item 310 (Typ) 154

Sta. 1216+00 628 381
228

Sta. 1216+00

176 Sheet Total

170 165 160 155 150 145 140 135 130 125 120 115 110 105 100 95 90 85 80 75 70 65 60 55 50 45 40 35 30 25 20

Sta. 1216+17 to Sta. 1216+25

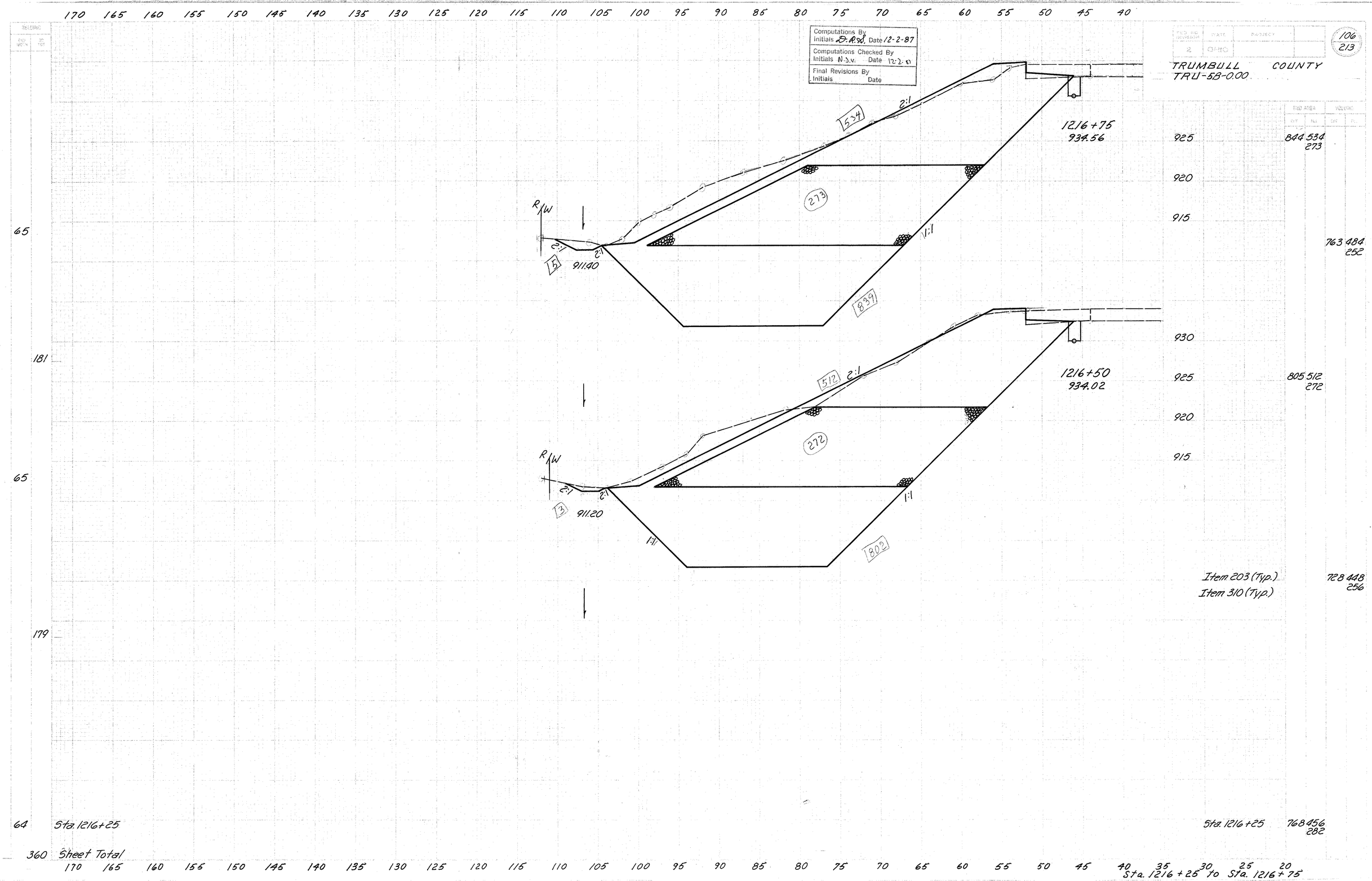

Computations By Initials D.R.S. Date 12-2-87
Computations Checked By Initials N.S.V. Date 12-2-87
Final Revisions By Initials Date
TRUMBULL COUNTY
TRU-5B-0.00
106
213
1216+75
934.56
1216+50
934.02
911.40
911.20
R/W
2:1
1:1
534
273
839
512
272
802
5
3
925
920
915
930
844 534
273
763 484
252
805 512
272
Item 203 (Typ.)
Item 310 (Typ.)
728 448
256
Sta. 1216+25
768 456
282
Sheet Total
Sta. 1216+25 to Sta. 1216+75

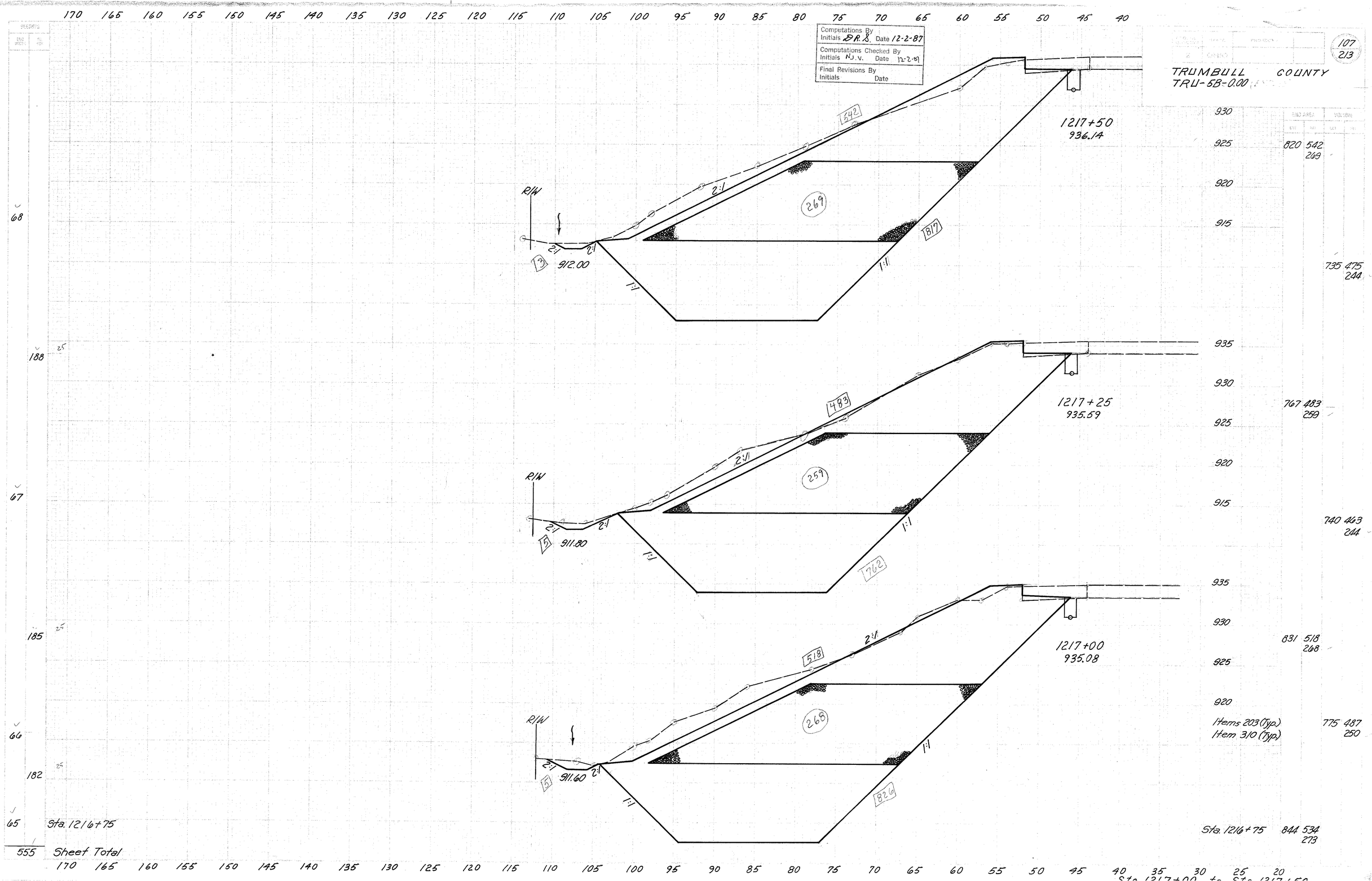

Computations By
Initials D.R.S. Date 12-2-87
Computations Checked By
Initials N.J.V. Date 12-2-87
Final Revisions By
Initials Date
107
213
TRUMBULL COUNTY
TRU-5B-0.00
1217+50
936.14
542
269
817
R/W
2:1
1:1
3
912.00
1217+25
935.59
483
259
762
5
911.80
1217+00
935.08
518
268
826
911.60
Items 203 (Typ.)
Item 310 (Typ.)
Sta. 1216+75
Sheet Total
555
820 542
269
735 475
244
767 483
259
740 463
244
831 518
268
775 487
250
844 534
273

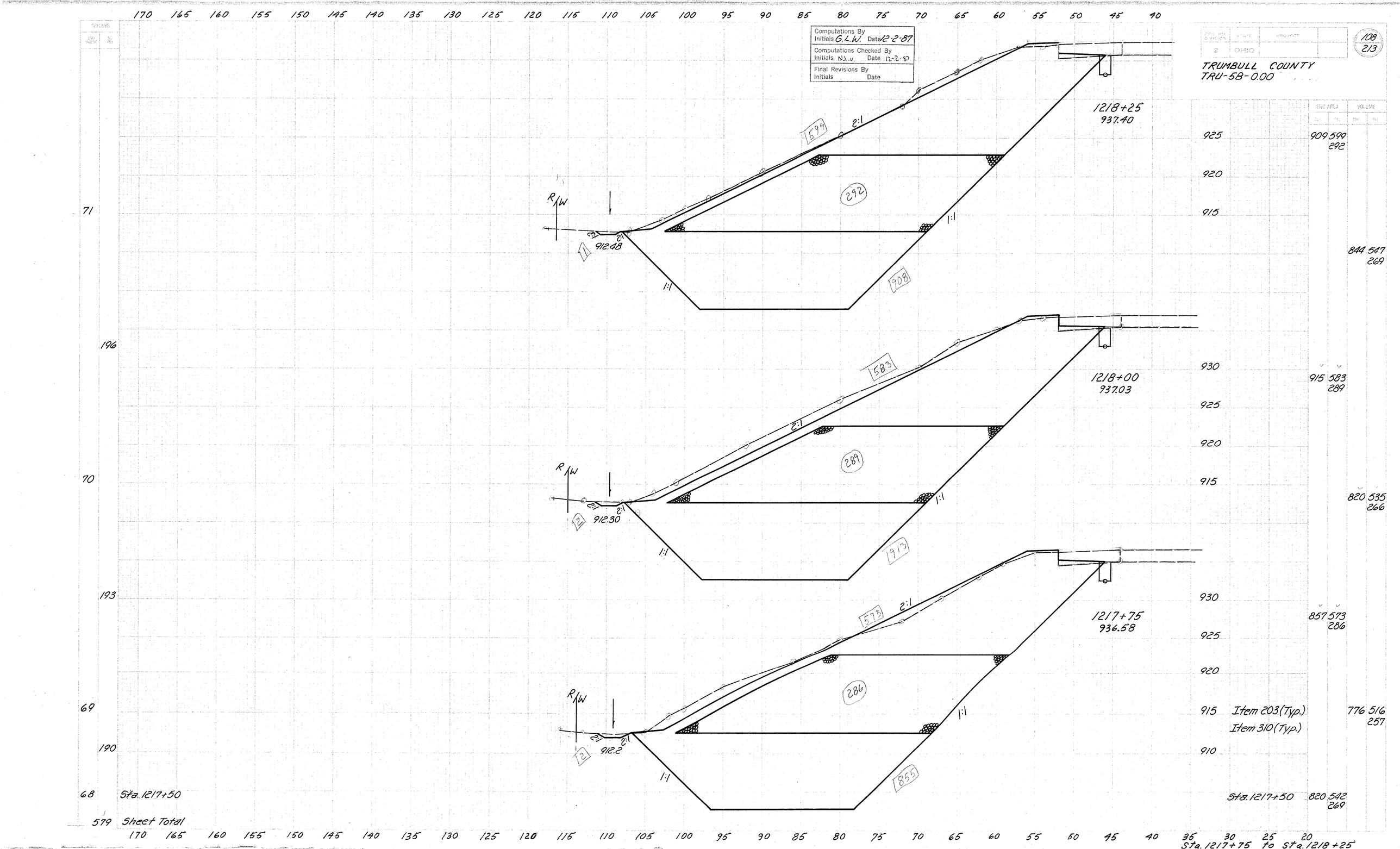

Computations By Initials G.L.W. Date 12-2-87
Computations Checked By Initials N.J.V. Date 12-2-87
Final Revisions By Initials Date
2 OHIO
108/213
TRUMBULL COUNTY
TRU-5B-0.00
1218+25
937.40
1218+00
937.03
1217+75
936.58
912.48
912.30
912.2
R/W
2:1
1:1
599
292
908
583
289
913
573
286
855
909 599 292
844 547 269
915 583 289
820 535 266
857 573 286
776 516 257
820 542 269
Item 203 (Typ.)
Item 310 (Typ.)
Sta. 1217+50
Sheet Total
Sta. 1217+75 to Sta. 1218+25

Computations By Initials D.A.S. Date 12-2-87
Computations Checked By Initials N.J.V. Date 12-2-87
Final Revisions By Initials Date

FED. ROAD PROJECT	STATE	PROJECT	
	OHIO		

109
213

TRUMBULL COUNTY
TRU-5B-0.00

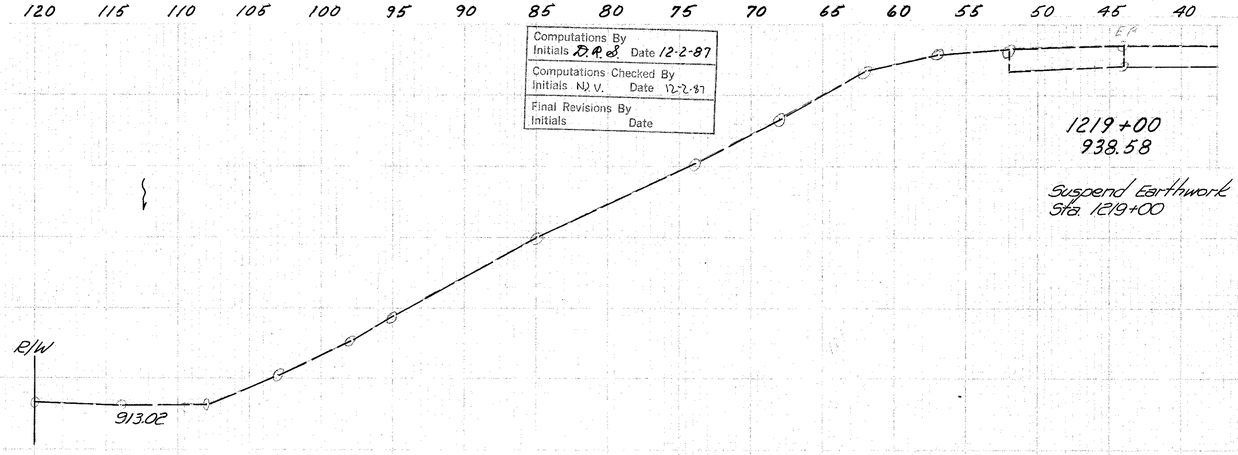

	END AREA		VOLUME	
	CUT	FILL	CUT	FILL
	0	0		
			425	269
				136
			917	580
				293
			850	551
				274
			919	610
				299
			846	560
				274
Sta. 1218+25			909	599
				292

Sta. 1218+50 to Sta. 1219+00

FHWA REGION	STATE	PROJECT	
5	OHIO		

110
213

TRUMBULL COUNTY
TRU-5B-0.00

Computations By Initials KMS	Date 12/2/87
Computations Checked By Initials DMK	Date 12/2/87
Final Revisions By Initials	Date

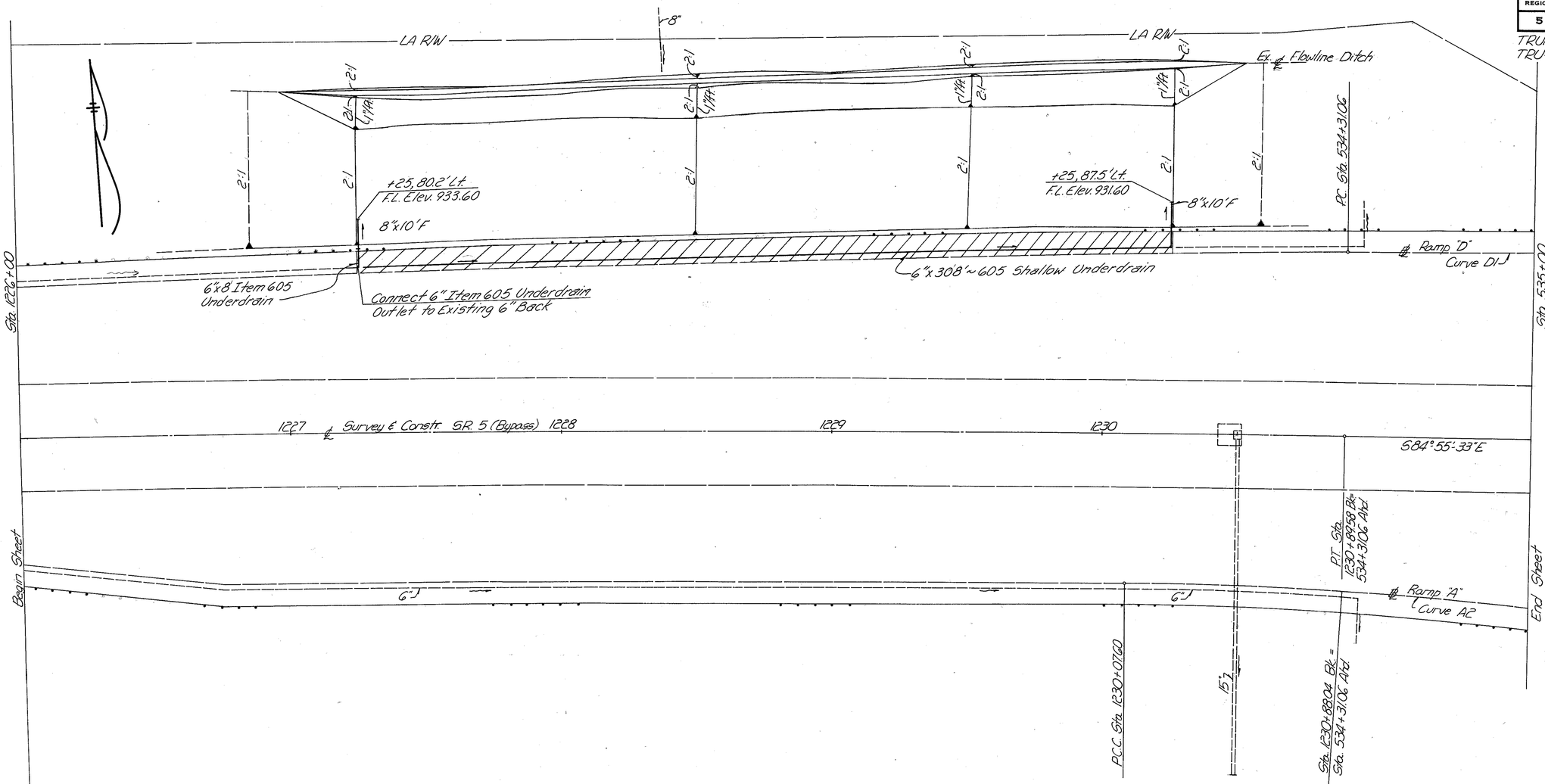

CURVE DATA

Curve D1
$\Delta = 10°-03'-10"$ Lt
$D_c = 2°$
$R_c = 2,864.79'$
$L_c = 502.64'$
$T_c = 251.97'$

℄ Curve
P.I. Sta. 1219+56.21
$\Delta = 10°-36'-31"$ Rt
$D_c = 0°-28'$
$R_c = 12,227.67'$
$T_c = 1,139.90'$
$L_c = 2,273.27'$
CH = 2,270.03'
E = 52.80'

Curve A2
$\Delta = 14°-31'-25"$ Rt
$D_c = 4°$
$R_c = 1432.39'$
$L_c = 363.09'$
$T_c = 182.52'$

ESTIMATED QUANTITIES

Station From	Station To	Side	603 Conduit Lin. Ft. Type F 8"	605 6" Shallow Pipe Underdrains	301 Bituminous Aggregate Base	304 Aggregate Base	310 Subbase Type 1, Grading A	310 Subbase Type 1 as per Plan	408 Bituminous Prime Coat		Special Drainage Connection
			Lin. Ft.	Lin. Ft.	Cu. Yd.	Cu. Yd.	Cu. Yd.	Cu. Yd.	Gal.		Cu. Yd.
1227+00	1230+50	Lt.	20	316	26.93	47.53	37.75	3045	124.44		22.24
Totals			20	316	26.93	47.53	37.75	3045	124.44		22.24

LANDSLIDE GRADING PLAN SHEET Sta. 1226+00 to 535+00

DISTRICT	STATE	PROJECT	
2	OHIO		

111
213

TRUMBULL COUNTY
TRU-5B-0.00

Computations By Initials G.L.W.	Date 12-2-87
Computations Checked By Initials N.J.V.	Date 12-2-87
Final Revisions By Initials	Date

END AREA		VOLUME	
CUT	FILL	CUT	FILL
708	454		
	248		
		658	416
			228
		714	444
			244
		330	206
			113
0	0		

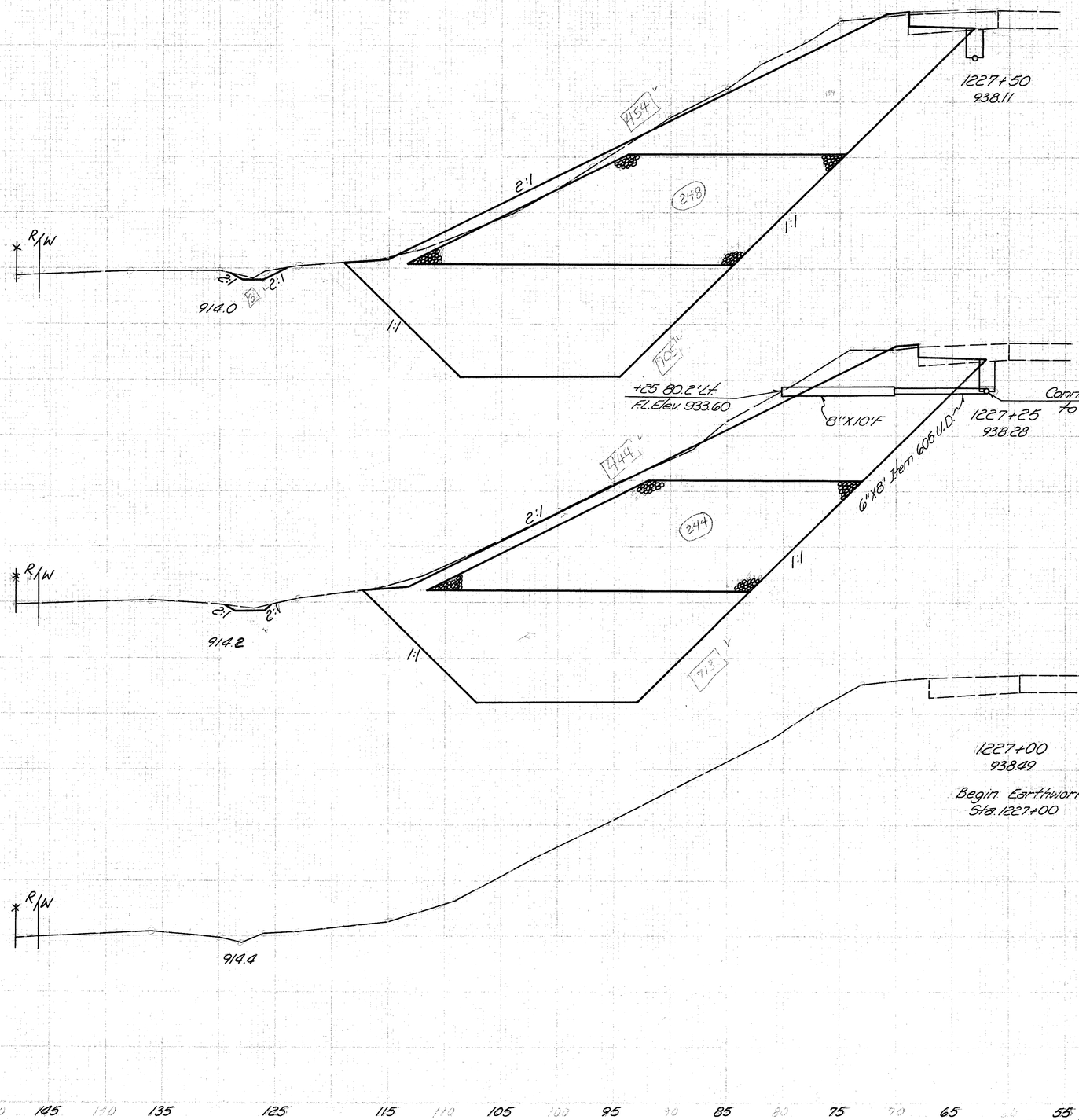

77
215
78
125
12
340 Sheet Total

185 180 175 170 165 160 155 150 145 140 135 125 115 110 105 100 95 90 85 80 75 70 65 55 50 45 40 35

Sta. 1227+00 to Sta. 1227+50

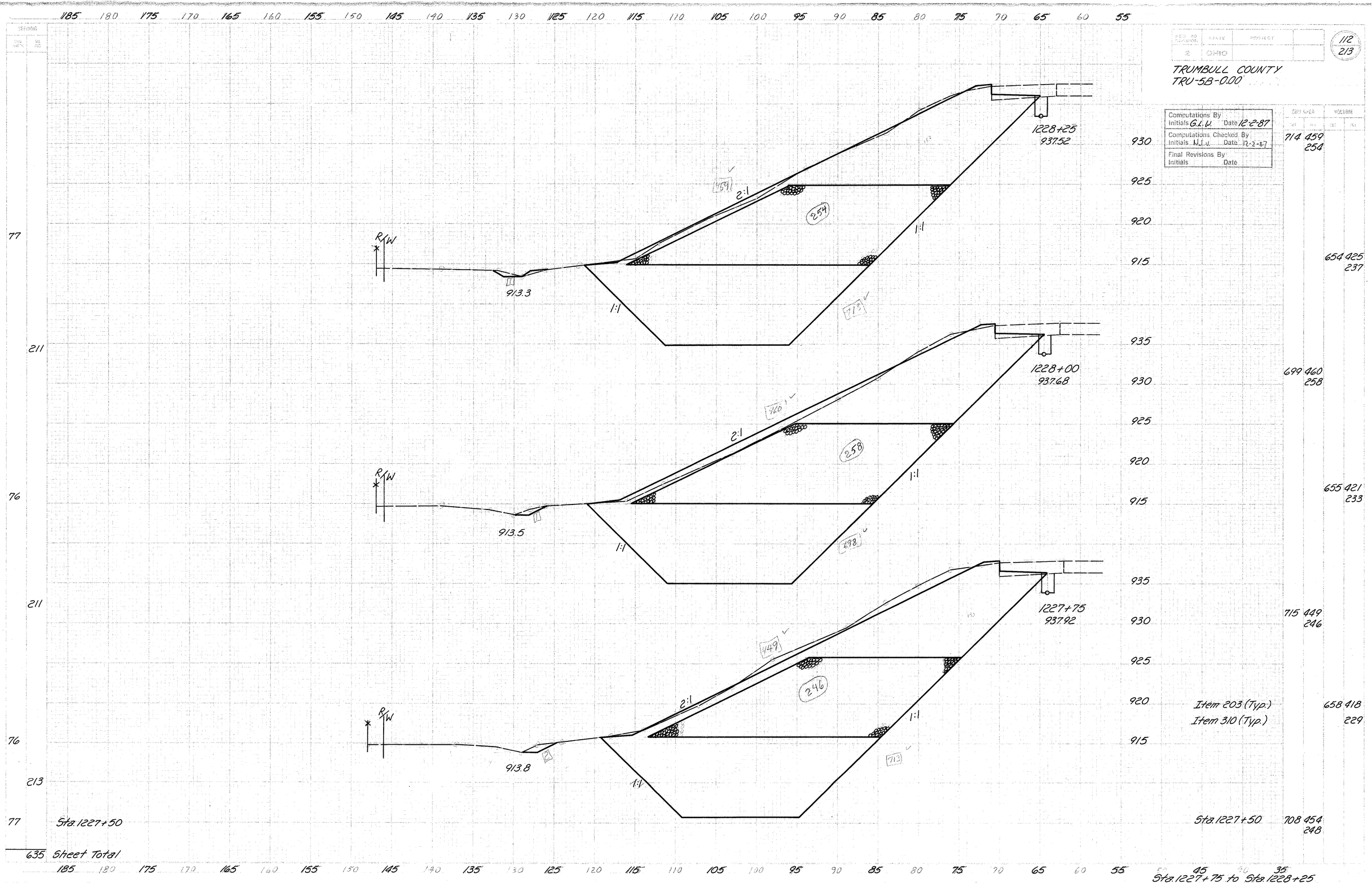

TRUMBULL COUNTY
TRU-5B-0.00
112
213
Computations By
Initials G.L.W. Date 12-2-87
Computations Checked By
Initials N.J.J. Date 12-2-87
Final Revisions By
Initials Date
1228+25
937.52
1228+00
937.68
1227+75
937.92
913.3
913.5
913.8
R/W
2:1
1:1
Item 203 (Typ.)
Item 310 (Typ.)
Sta. 1227+50
Sheet Total
Sta. 1227+75 to Sta. 1228+25

Computations By	
Initials G.L.W.	Date 12-2-87
Computations Checked By	
Initials N.J.V.	Date 12-2-87
Final Revisions By	
Initials	Date

FED. RD. DIVISION	STATE	PROJECT
2	OHIO	

113
213

TRUMBULL COUNTY
TRU-5B-0.00

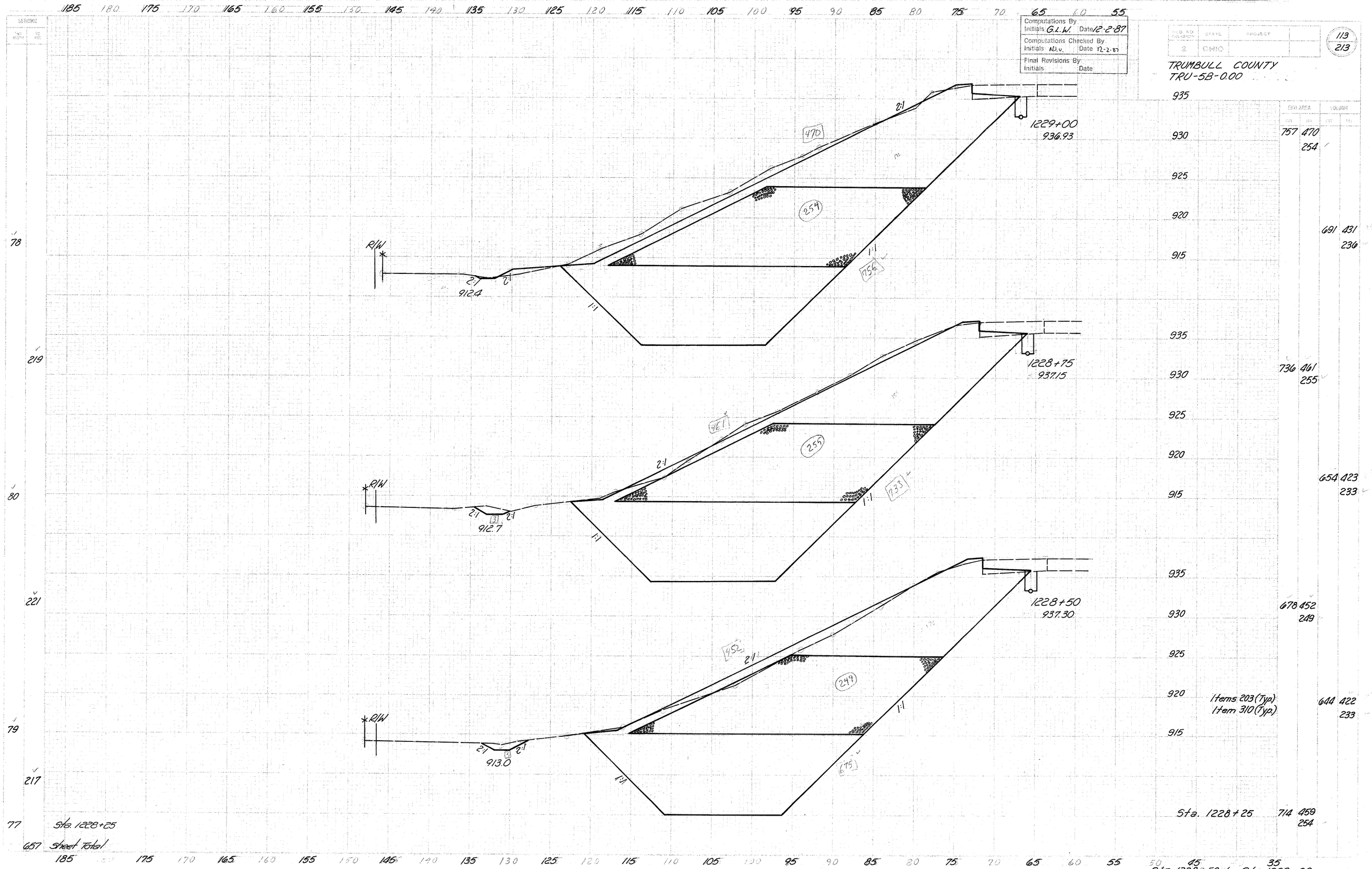

END AREA		VOLUME	
757	470		
	254		
		691	431
			236
736	461		
	255		
		654	423
			233
678	452		
	249		
		644	422
			233
714	459		
	254		

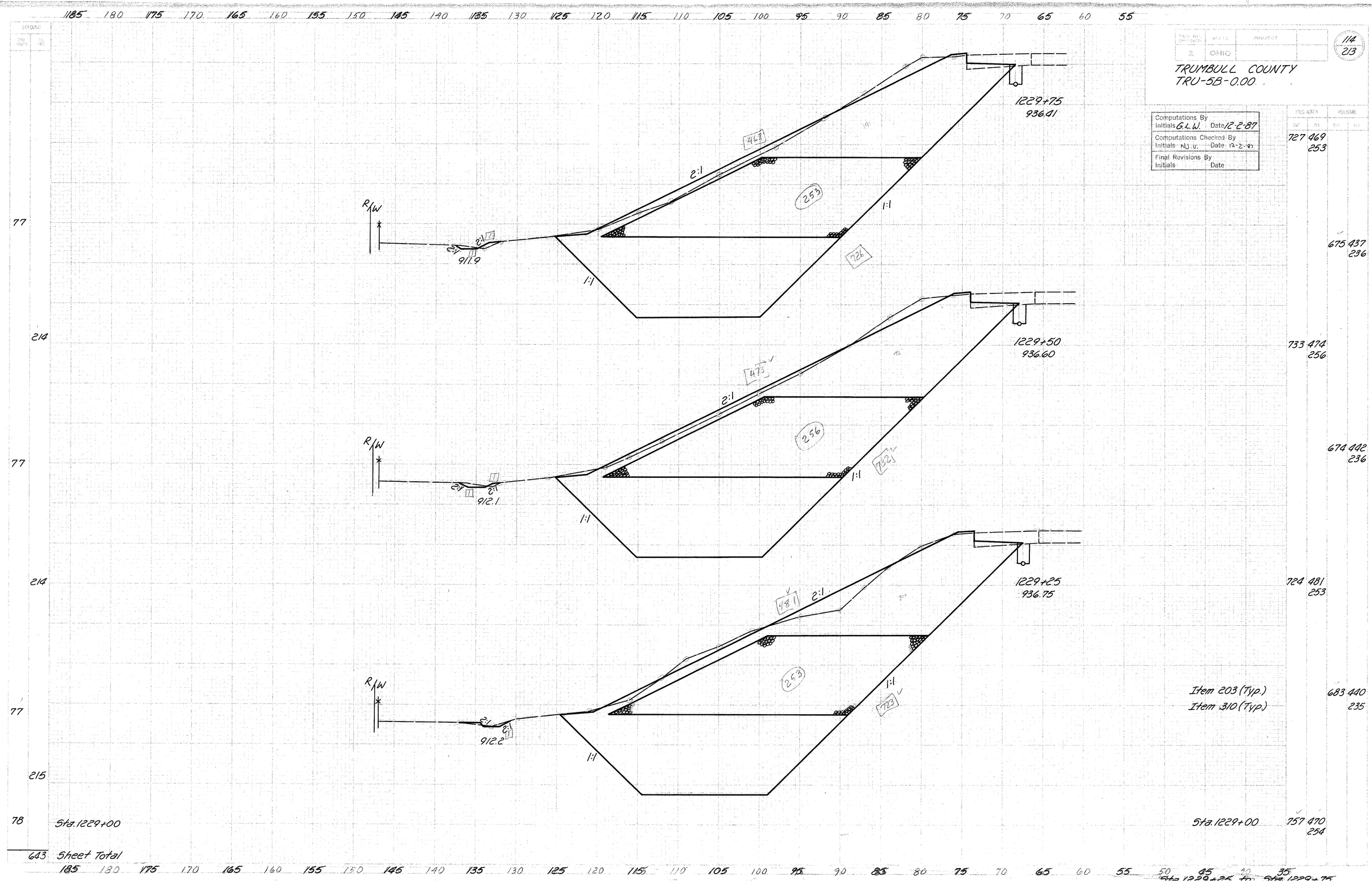

114
213
TRUMBULL COUNTY
TRU-5B-0.00
Computations By
Initials G.L.W. Date 12-2-87
Computations Checked By
Initials NJ.U. Date 12-2-87
Final Revisions By
Initials Date
1229+75
936.41
911.9
1229+50
936.60
912.1
1229+25
936.75
912.2
Item 203 (Typ.)
Item 310 (Typ.)
Sta. 1229+00
Sheet Total
Sta. 1229+25 to Sta. 1229+75

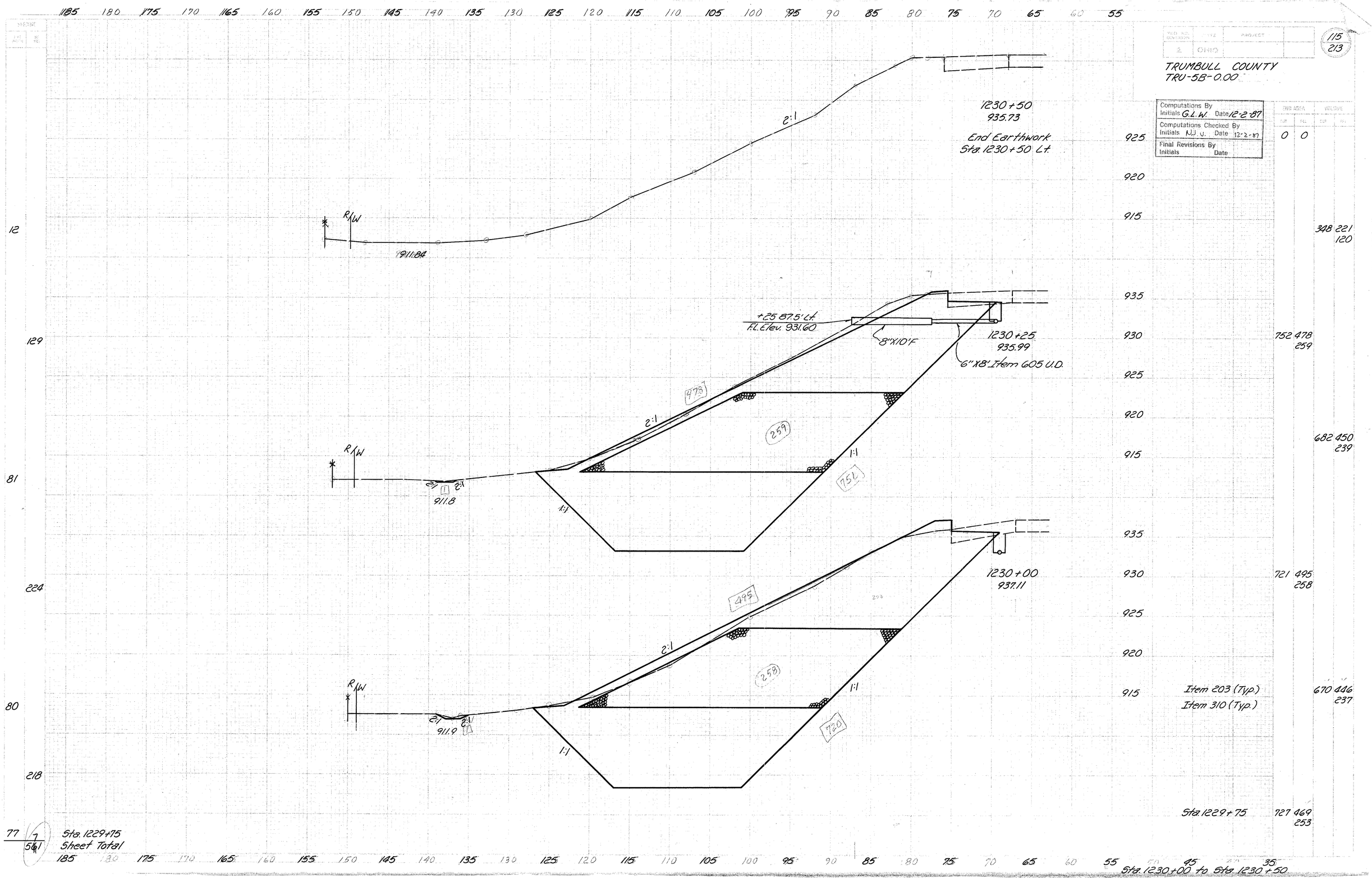

115
213
TRUMBULL COUNTY
TRU-5B-0.00
Computations By Initials G.L.W. Date 12-2-87
Computations Checked By Initials N.J.U. Date 12-2-87
Final Revisions By Initials Date
END AREA
VOLUME
0 0
1230+50
935.73
End Earthwork
Sta. 1230+50 Lt.
2:1
R/W
911.84
+25 87.5' Lt.
F.L. Elev. 931.60
8"X10'F
1230+25
935.99
6"X8' Item 605 U.D.
478
259
1:1
752
911.8
1230+00
937.11
495
258
720
911.9
Item 203 (Typ.)
Item 310 (Typ.)
Sta. 1229+75
Sheet Total
Sta. 1230+00 to Sta. 1230+50
348 221 120
752 478 259
682 450 239
721 495 258
670 446 237
727 469 253

FHWA REGION	STATE	PROJECT	
5	OHIO		

116/213

TRUMBULL COUNTY
TRU-5B-0.00

Computations By Initials K M S Date 11/30/87
Computations Checked By Initials DMK Date 11/30/87
Final Revisions By Initials Date

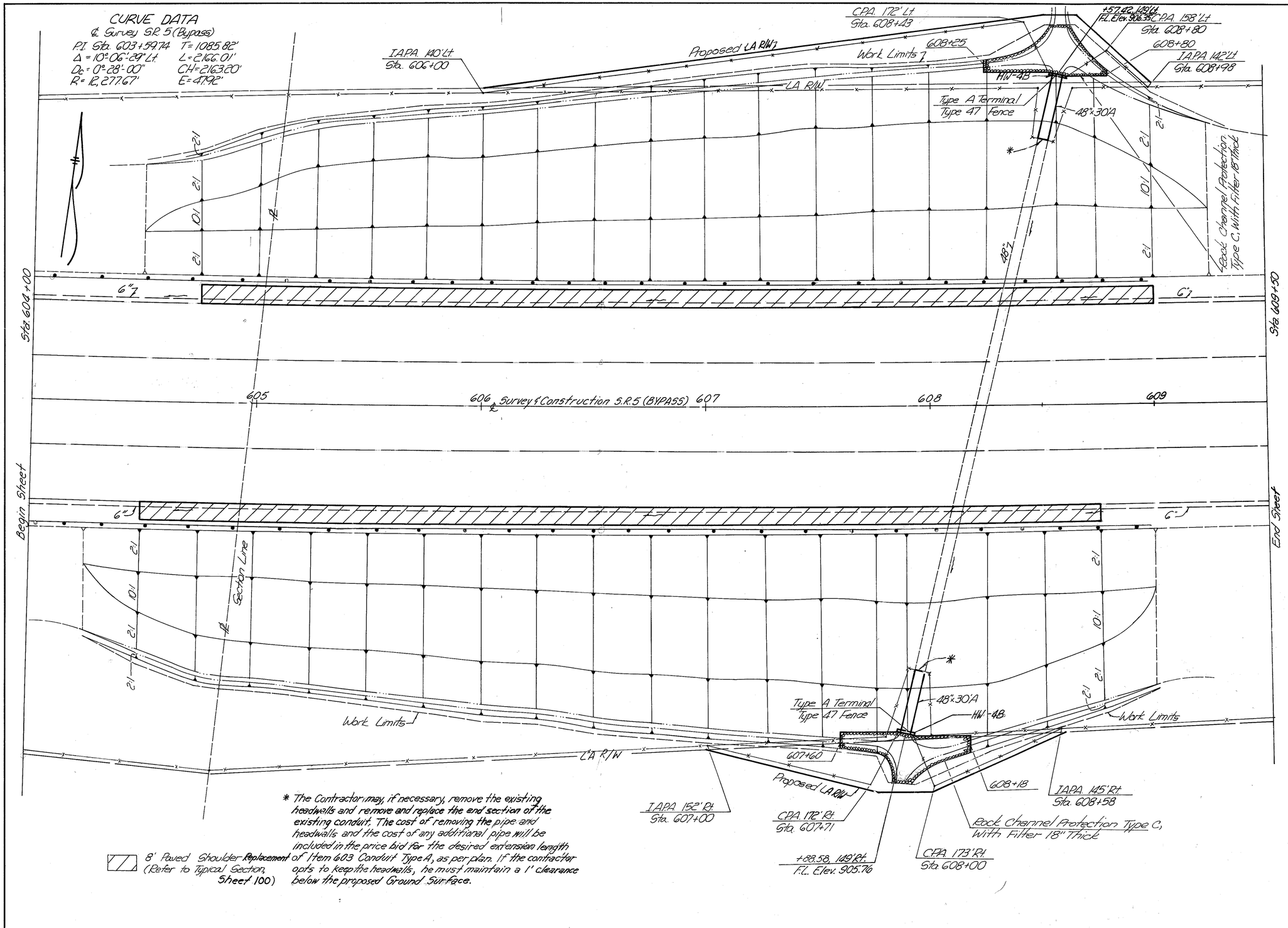

* The Contractor may, if necessary, remove the existing headwalls and remove and replace the end section of the existing conduit. The cost of removing the pipe and headwalls and the cost of any additional pipe will be included in the price bid for the desired extension length of Item 603 Conduit Type A, as per plan. If the contractor opts to keep the headwalls, he must maintain a 1' clearance below the proposed Ground Surface.

8' Paved Shoulder Replacement (Refer to Typical Section, Sheet 100)

#-706.02

ESTIMATED QUANTITIES

Station From	Station To	Side	202 Fence Removed Lin. Ft.	301 Bituminous Aggregate Base Cu. Yd.	304 Aggregate Base Cu. Yd.	310 Subbase Type 1, Grading A Cu. Yd.	408 Bituminous Prime Coat Gal.	602 Concrete Masonry Cu. Yd.	607 Fence Type 47 Lin. Ft.	601 Rock Channel Protection Type C, with Filter 18" Thick Cu. Yd.	Special Drainage Connection using No. 8 Aggregate Cu. Yd.	603 48" Conduit Type A # as per plan Lin. Ft.
604+50	609+25	Lt.	332	35.19	64.51	51.56	168.89	1.09	322	38.33	30.18	30
604+25	609+00	Rt.	203	35.19	64.51	51.56	168.89	1.09	197	41.94	30.18	30
Totals (Carried to General Summary)			535	70.38	129.02	103.12	337.78	2.18	519	80.27	60.36	60

LANDSLIDE GRADING PLAN SHEET Sta 604+00 to Sta 609+00

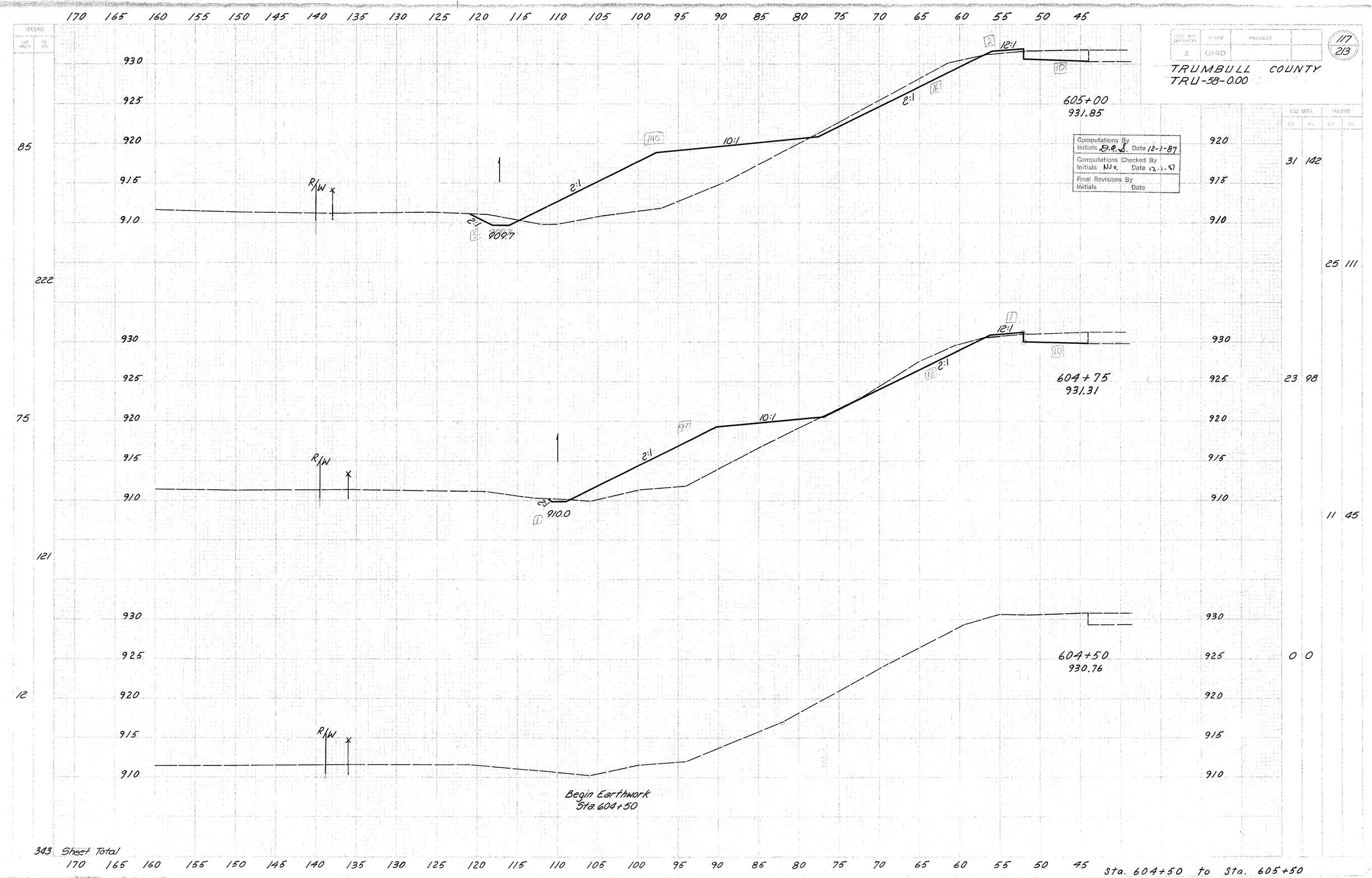

FED. RD. DIVISION	STATE	PROJECT	
2	OHIO		

117
213

TRUMBULL COUNTY
TRU-5B-0.00

Computations By	
Initials D.R.S.	Date 12-1-87
Computations Checked By	
Initials NJV.	Date 12-1-87
Final Revisions By	
Initials	Date

END AREA CUT	END AREA FILL	VOLUME CUT	VOLUME FILL
31	142		
		25	111
23	98		
		11	45
0	0		

Sta. 604+50 to Sta. 605+50

SHEET NO.	STATE	PROJECT	
2	OHIO		

118
213

TRUMBULL COUNTY
TRU-5B-000

END AREA		VOLUME	
CUT	FILL	CUT	FILL
54	236		
		53	204
60	204		
		55	176
59	177		
		42	148
Sta. 605+00, Lt.		31	142

FED. RD. DIVISION	STATE	PROJECT	
2	OHIO		

TRUMBULL COUNTY
TRU-58-000

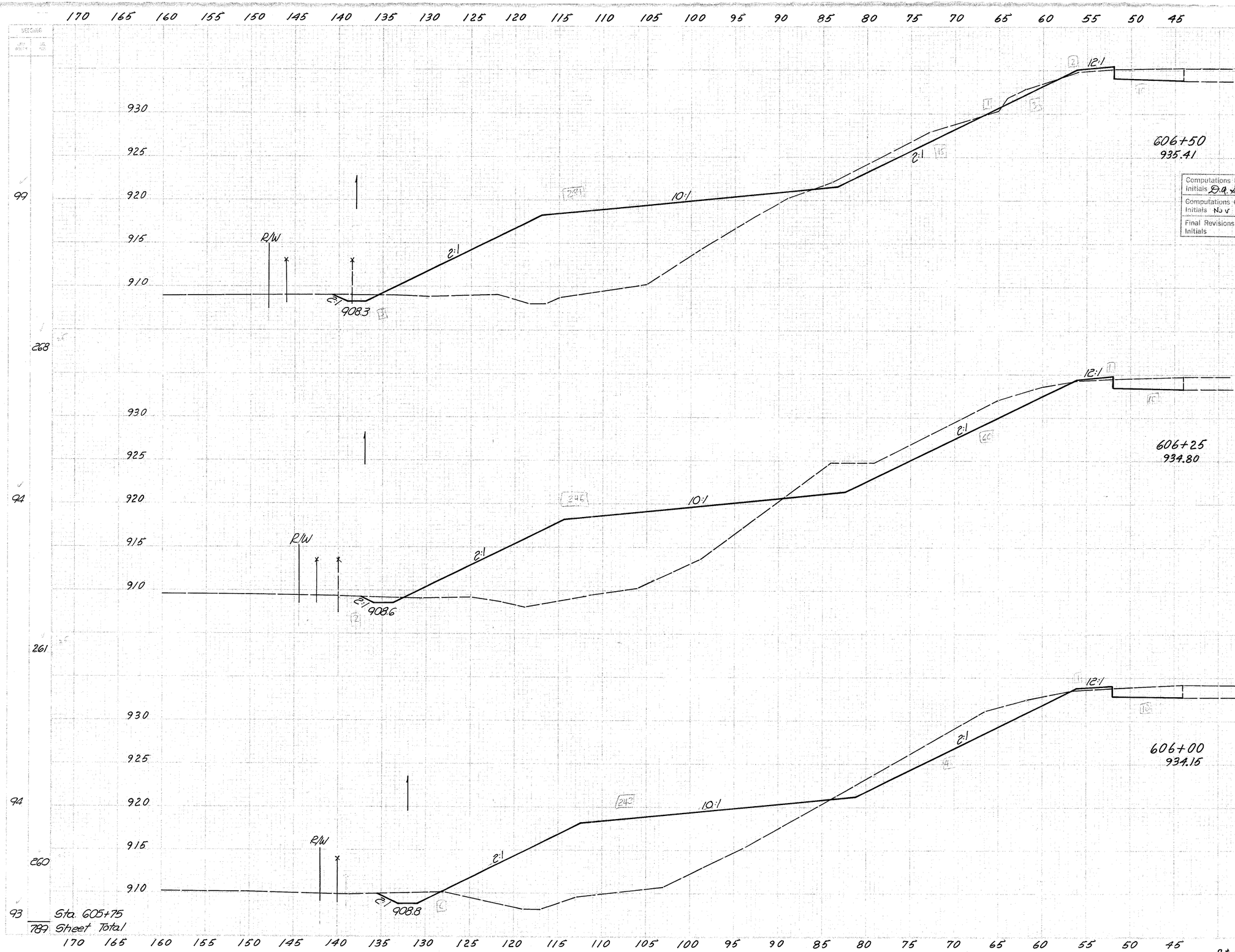

Computations By	Initials D.A.S.	Date 12-1-87
Computations Checked By	Initials NJV	Date 12-1-87
Final Revisions By	Initials	Date

END AREA		VOLUME	
FILL	CUT	CUT	FILL
31	284		
		48	246
72	247		
		62	227
62	244		
		54	222
54	236		

Sta. 606+00 to Sta. 606+50

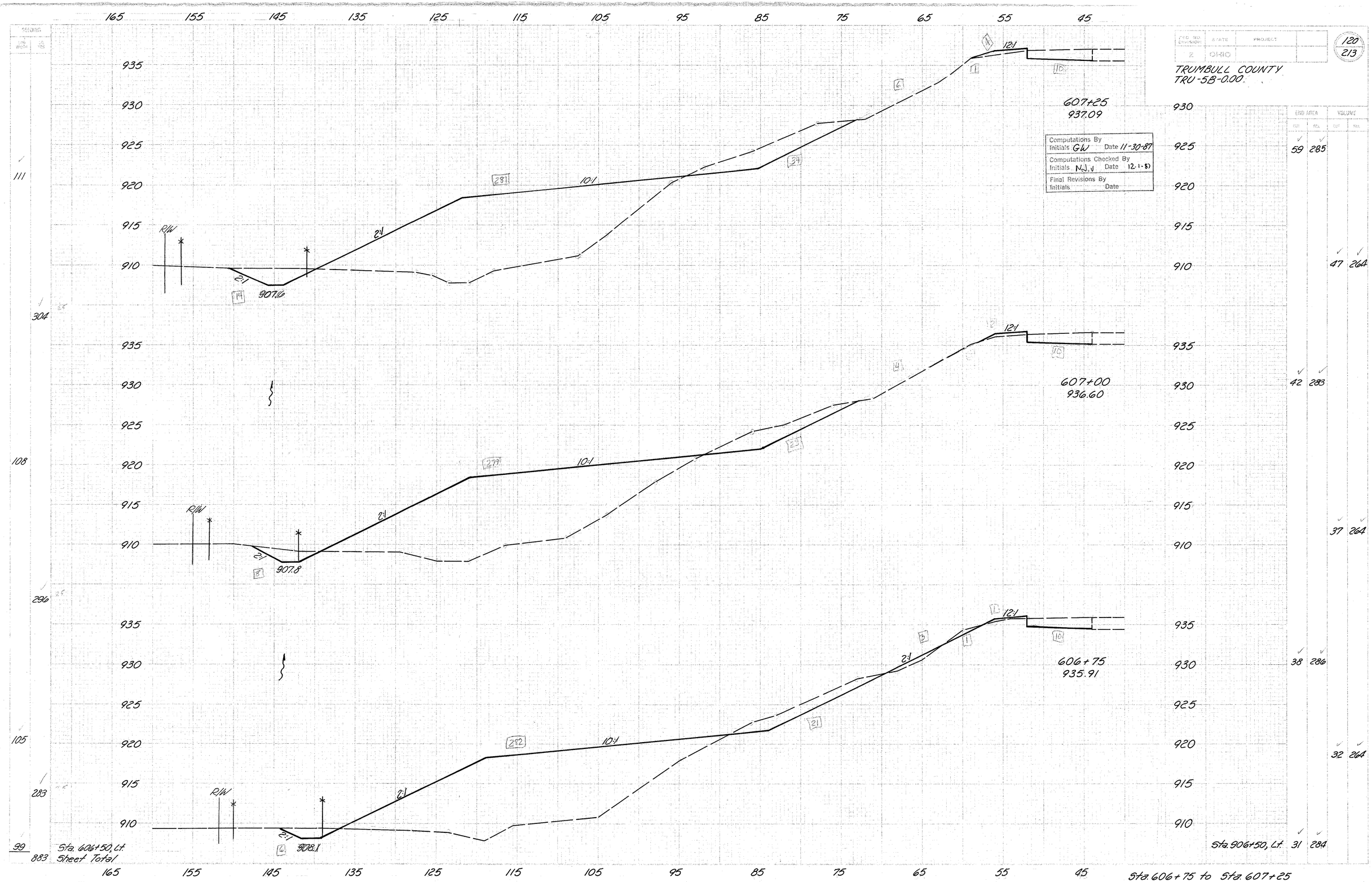

FED. RD. DIVISION
STATE
PROJECT
2
OHIO
120
213
TRUMBULL COUNTY
TRU-5B-0.00
Computations By
Initials GW Date 11-30-87
Computations Checked By
Initials N.J.V Date 12-1-87
Final Revisions By
Initials Date
607+25
937.09
607+00
936.60
606+75
935.91
R/W
907.6
907.8
908.1
2:1
10:1
12:1
Sta. 606+50, Lt.
Sheet Total
Sta. 906+50, Lt.
Sta. 606+75 to Sta. 607+25

Computations By	
Initials GW	Date 11-30-87
Computations Checked By	
Initials NJW	Date 12-1-87
Final Revisions By	
Initials	Date

FED. RD. DIVISION	STATE	PROJECT
2	OHIO	

121
213

TRUMBULL COUNTY
TRU-5B-0.00

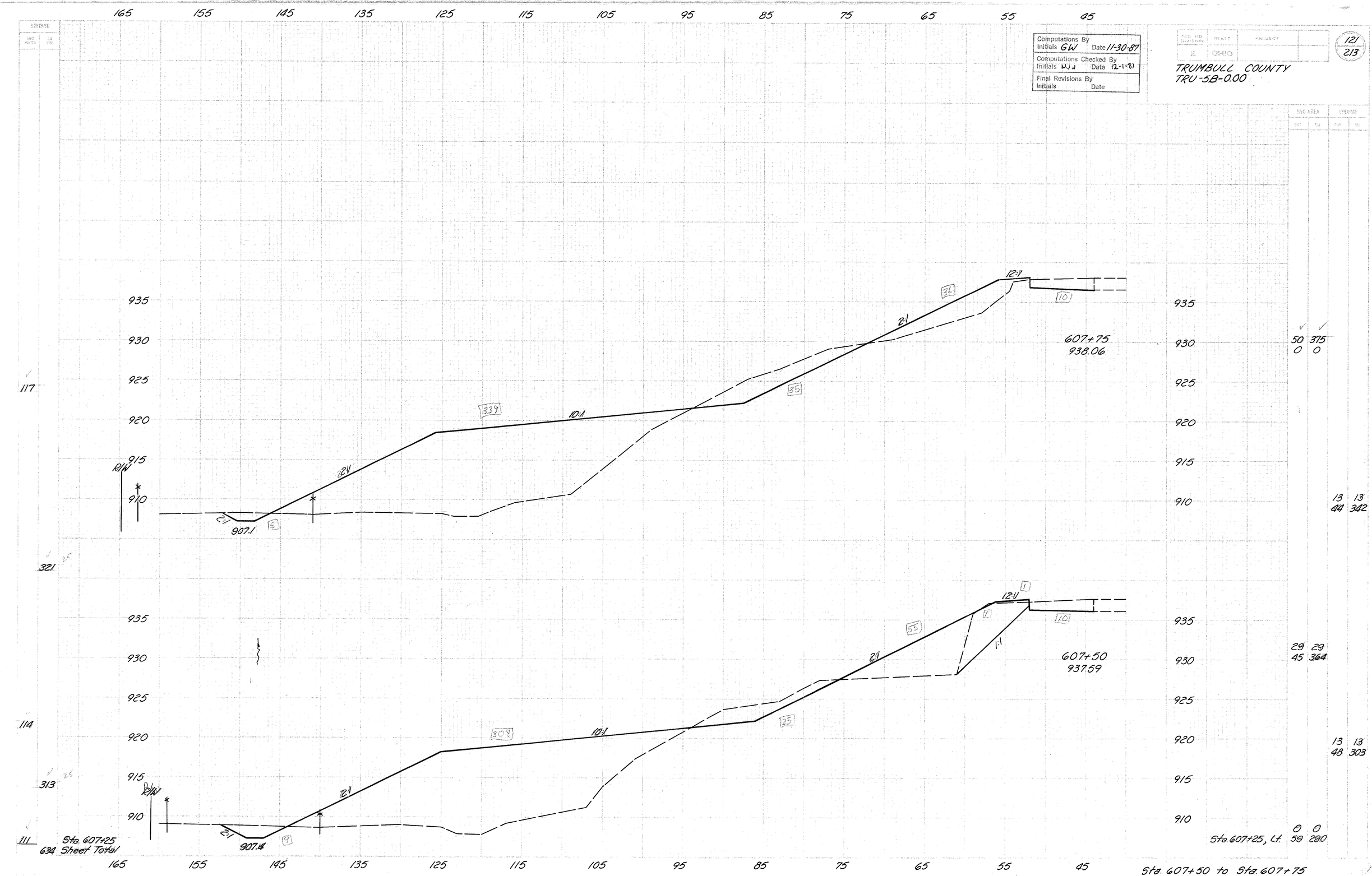

	END AREA		VOLUME	
	CUT	FILL	CUT	FILL
	50	375		
	0	0		
			13	13
			44	342
	29	29		
	45	364		
			13	13
			48	303
	0	0		
Sta. 607+25, Lt.	59	290		

Sta. 607+50 to Sta. 607+75

Computations By	
Initials G.W.	Date 11-30-87
Computations Checked By	
Initials N.J.V.	Date 12-1-87
Final Revisions By	
Initials	Date

FED. RD. DIVISION	STATE	PROJECT
2	OHIO	

122/213

TRUMBULL COUNTY
TRU-5B-0.00

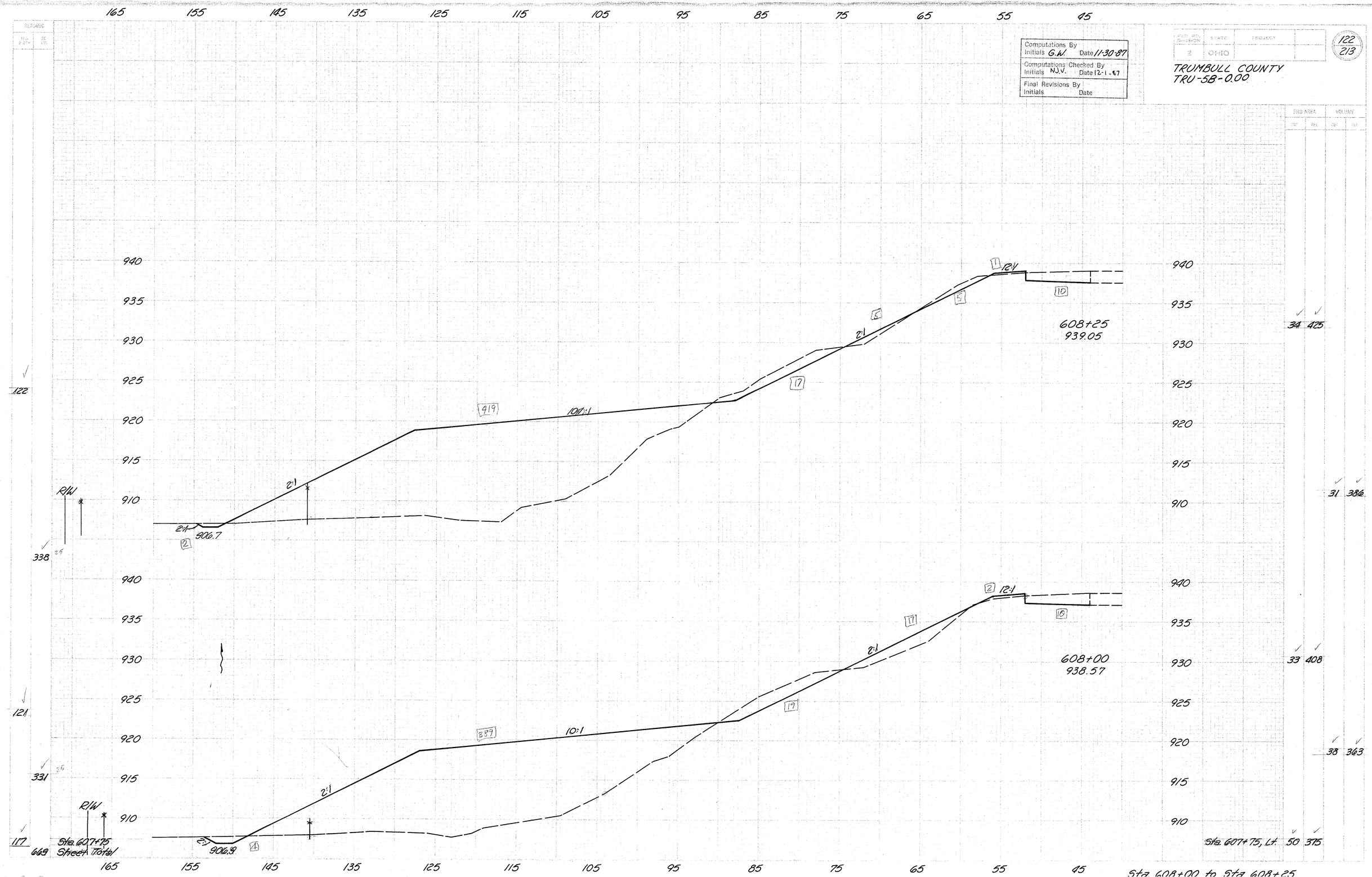

Sta. 608+00 to Sta. 608+25

Computations By	
Initials GW	Date 11-30-87
Computations Checked By	
Initials NJV.	Date 12-1-87
Final Revisions By	
Initials	Date

FED. RD. DIVISION	STATE	PROJECT
2	OHIO	

123
213

TRUMBULL COUNTY
TRU-5B-0.00

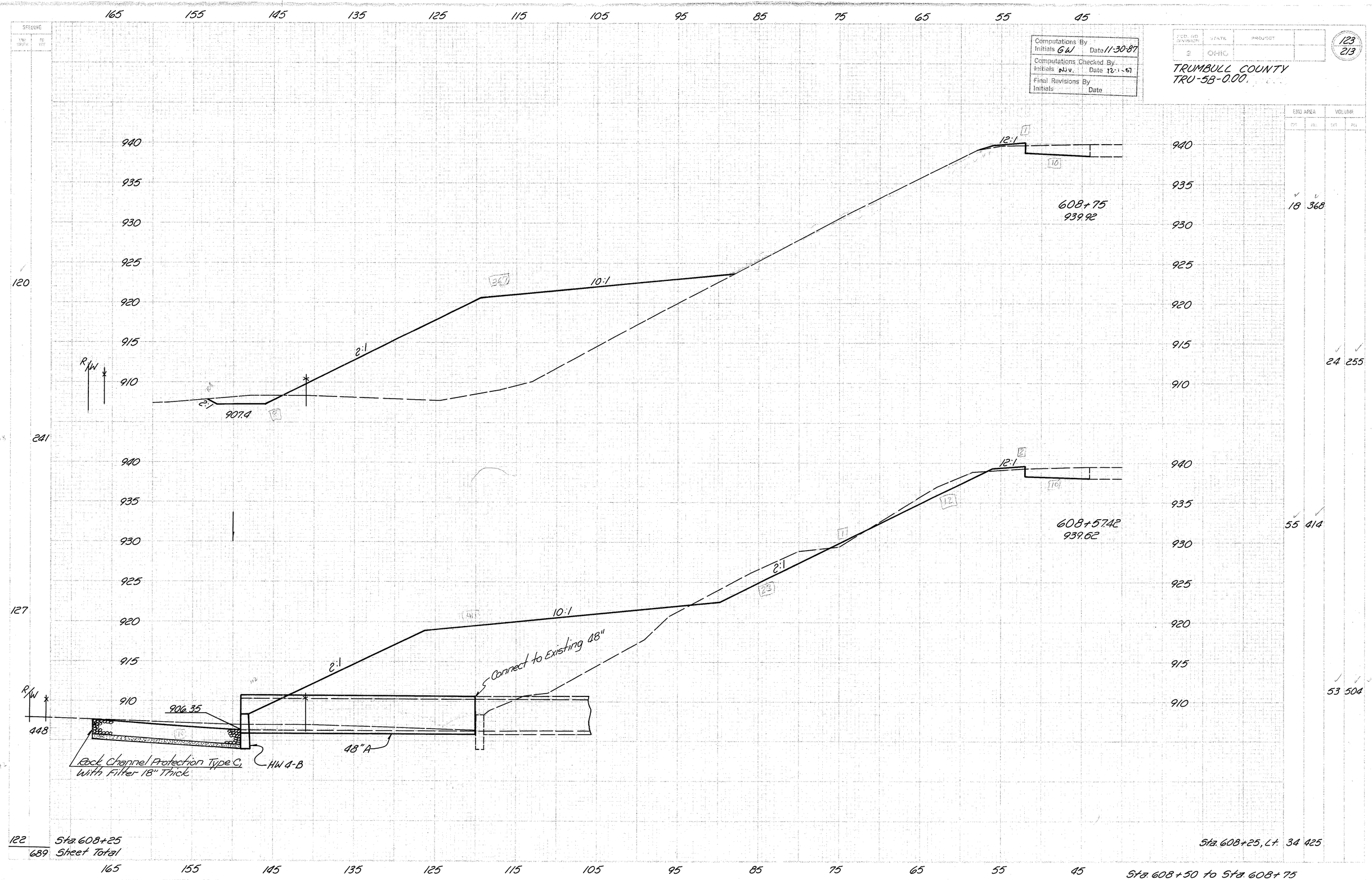

END AREA CUT	END AREA FILL	VOLUME CUT	VOLUME FILL
18	368		
		24	255
55	414		
		53	504

SECTIONS

END AREA		VOLUME	
CUT	FILL	CU	FILL

SEEDING

ENG. (ACRES)	SC. (ACRES)
81	
12	

40 50 60 70 80 90 100 110 120 130 140 150 160 170

Computations By Initials D.R.S.	Date 12-1-87
Computations Checked By Initials MJV.	Date 12-1-87
Final Revisions By Initials	Date

SEQ. OF DIVISION	STATE	PROJECT	
2	OHIO		

125
213

TRUMBULL COUNTY
TRU-5B-0.00

END AREA		VOLUME	
CUT	FILL	CUT	FILL
15	129	7	60
0	0		

930
925
920
915
910

12:1 2
10
604+50
930.79
10:1
127
2:1
5
909.50
2:1
R/W

930
925
920
915
910

604+25
930.22
909.80
R/W

Begin Earthwork, Rt
Sta. 604+25

930
925
920
915
910

604+00
929.42

129 Sheet Total

40 50 60 70 80 90 100 110 120 130 140 150 160 170

Sta. 604+00 to Sta. 604+50

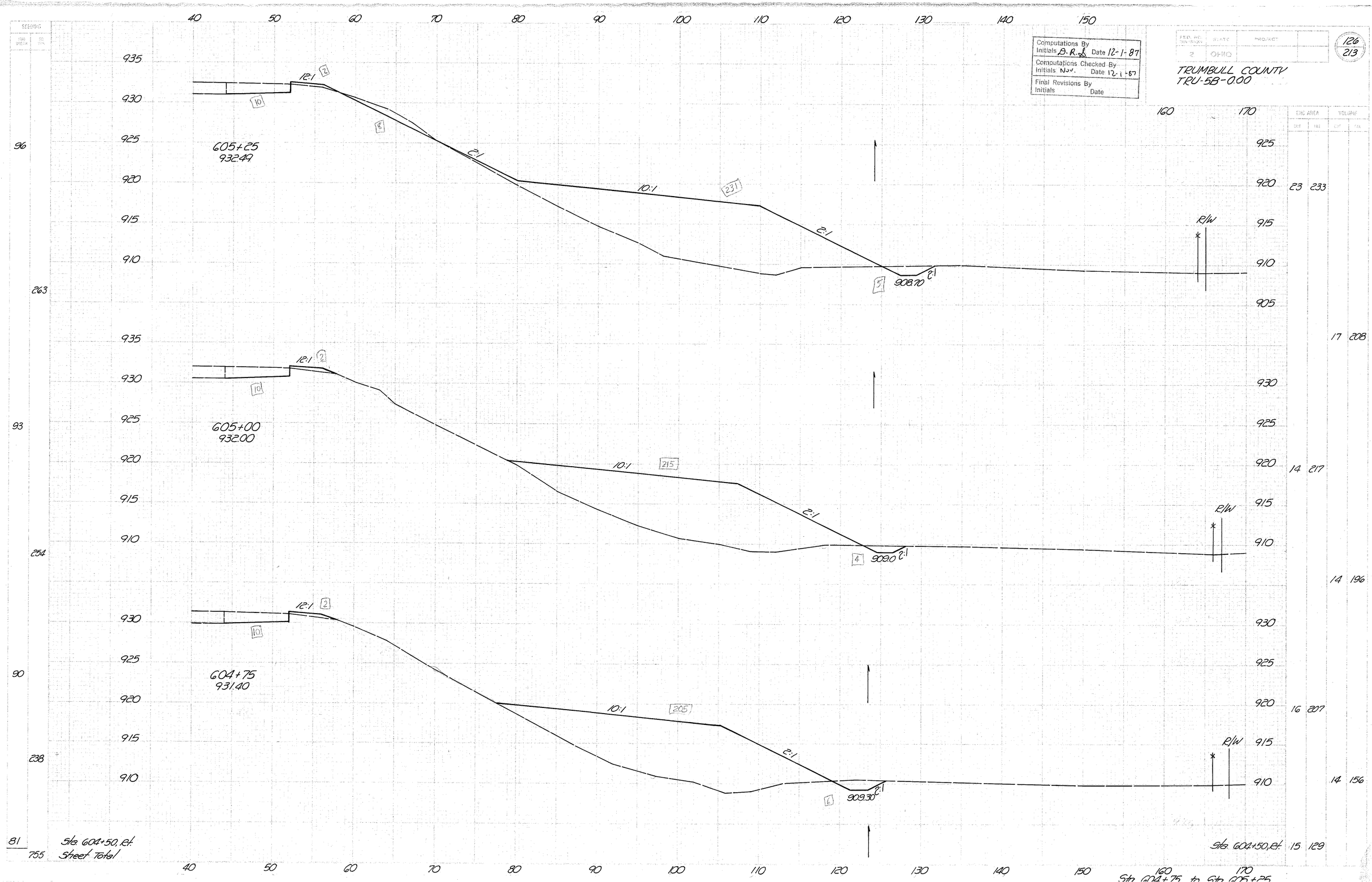

Station	Sheet Total	End Area Cut	End Area Fill	Volume Cut	Volume Fill
96		23	233		
	263			17	208
93		14	217		
	254			14	196
90		16	207		
	238			14	156
81	755	15	129		

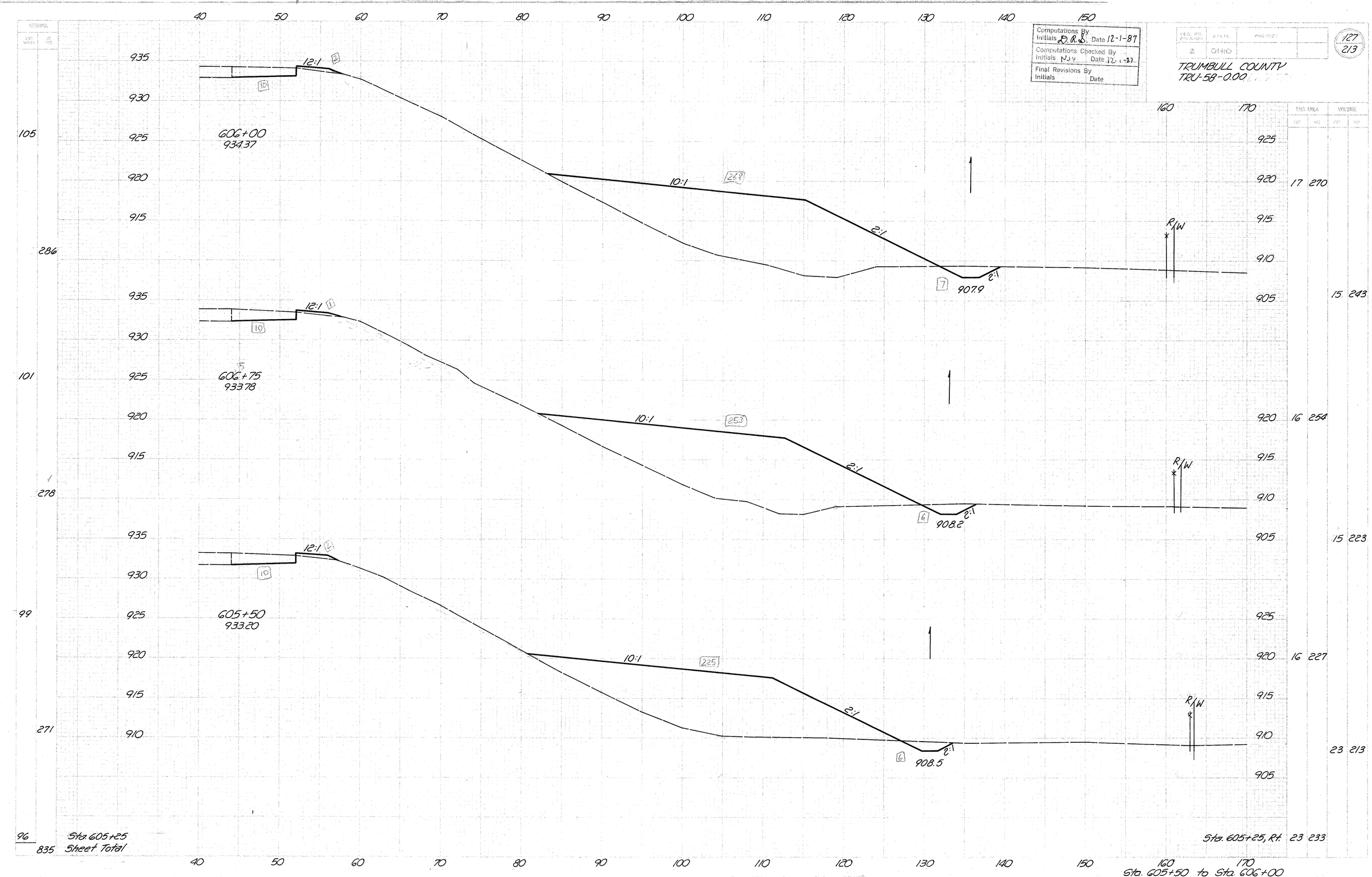

Computations By Initials D.R.S. Date 12-1-87
Computations Checked By Initials NJV Date 12-1-87
Final Revisions By Initials Date
FED. RD. DIVISION 2
STATE OHIO
PROJECT
127/213
TRUMBULL COUNTY
TRU-58-0.00
606+00
934.37
606+75
933.78
605+50
933.20
12:1
10:1
2:1
R/W
907.9
908.2
908.5
Sta. 605+25
Sheet Total
Sta. 605+25, Rt.
Sta. 605+50 to Sta. 606+00

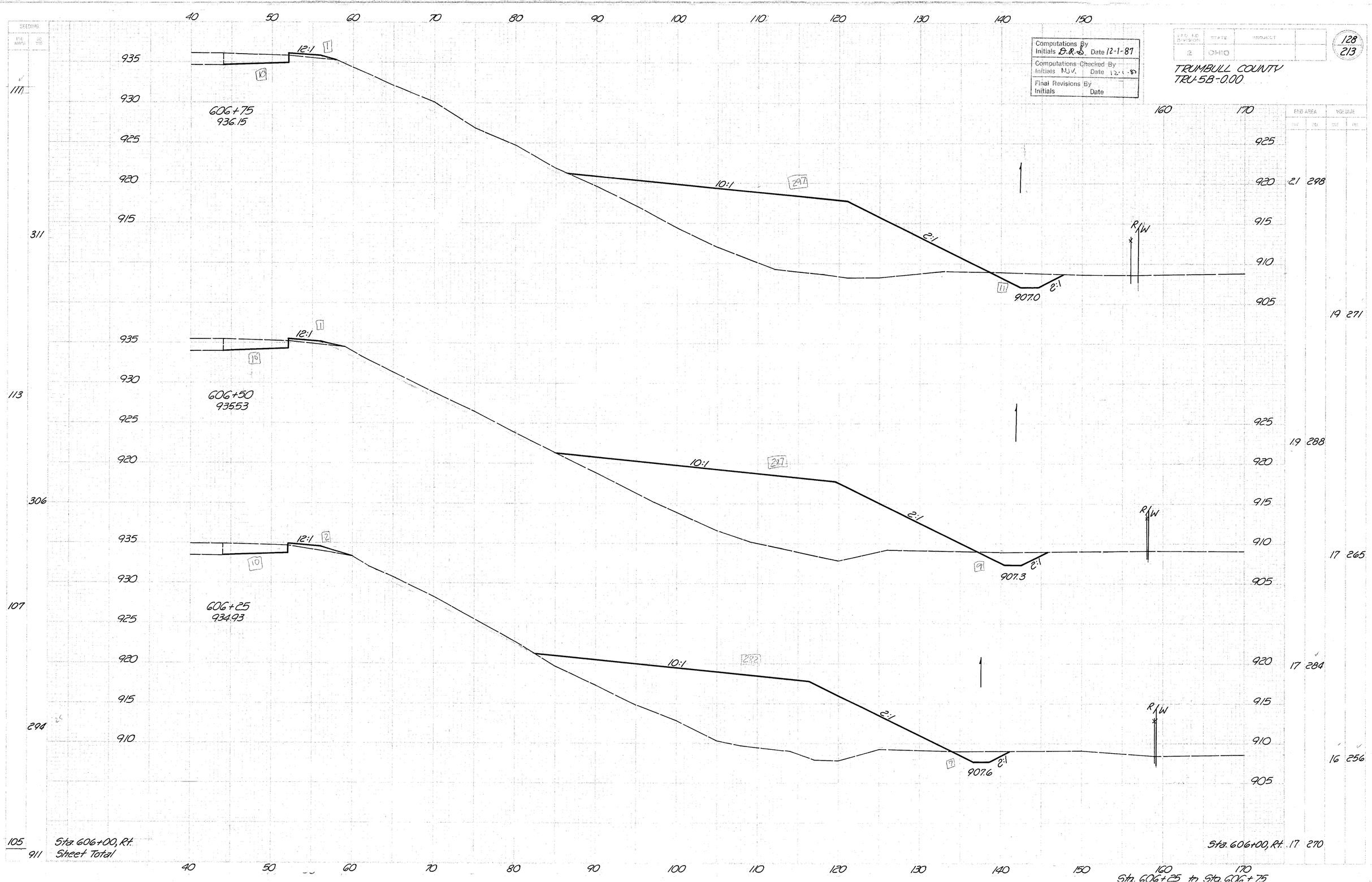

Computations By Initials D.R.S. Date 12-1-87
Computations Checked By Initials NJV. Date 12-1-87
Final Revisions By Initials Date
FED. RD. DIVISION 2
STATE OHIO
PROJECT
128
213
TRUMBULL COUNTY
TRU-5B-0.00
606+75
936.15
606+50
935.53
606+25
934.93
12:1
10:1
2:1
907.0
907.3
907.6
R/W
END AREA
VOLUME
Sta. 606+00, Rt.
Sheet Total
Sta. 606+00, Rt.
Sta. 606+25 to Sta. 606+75

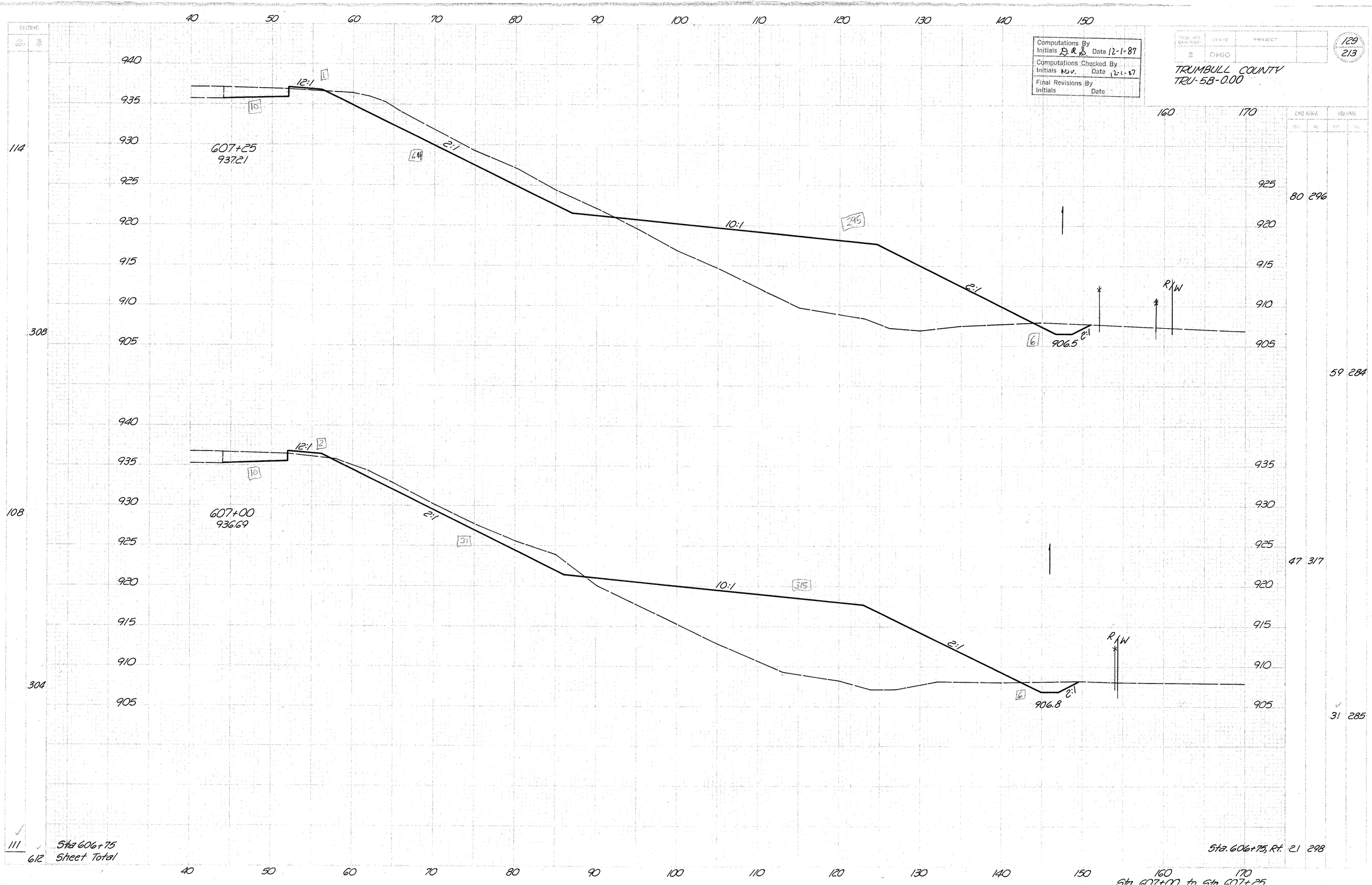

Computations By Initials D.R.S. Date 12-1-87
Computations Checked By Initials NJV. Date 12-1-87
Final Revisions By Initials Date
FED. RD. DIVISION 2
STATE OHIO
PROJECT
129
213
TRUMBULL COUNTY
TRU-5B-0.00
607+25
937.21
12:1
2:1
10:1
906.5
607+00
936.69
906.8
R/W
114
308
108
304
111
612
Sta 606+75
Sheet Total
Sta. 606+75, Rt. 21 298
80 296
59 284
47 317
31 285
Sta. 607+00 to Sta. 607+25

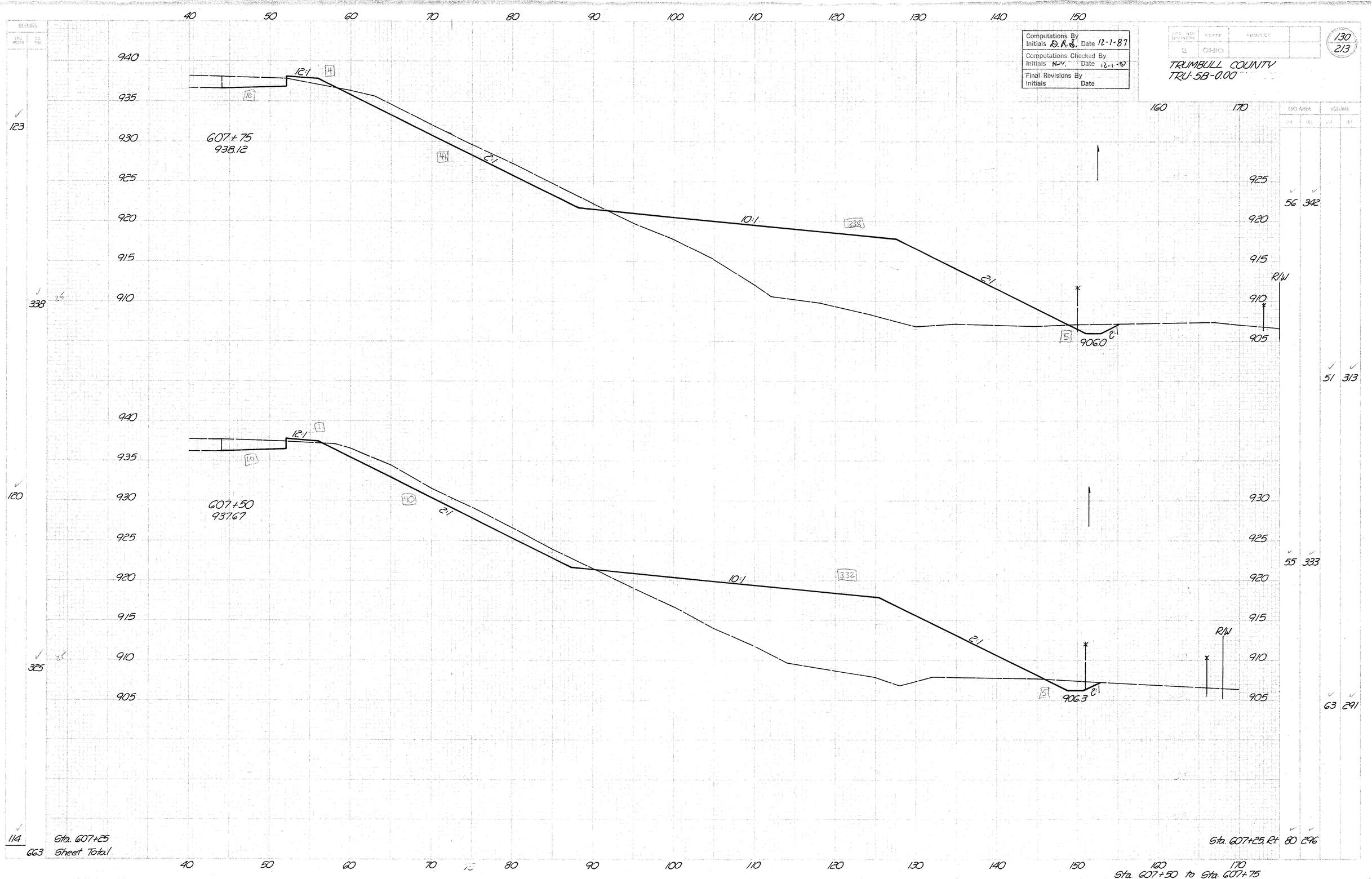

Computations By Initials D.R.S. Date 12-1-87
Computations Checked By Initials NDV. Date 12-1-87
Final Revisions By Initials Date
SEC. NO. DIVISION 2
STATE OHIO
PROJECT
130
213
TRUMBULL COUNTY
TRU-5B-0.00
607+75
938.12
12:1
10:1
2:1
906.0
R/W
607+50
937.67
906.3
Sta. 607+25
Sheet Total
Sta. 607+25, Rt.
Sta. 607+50 to Sta. 607+75

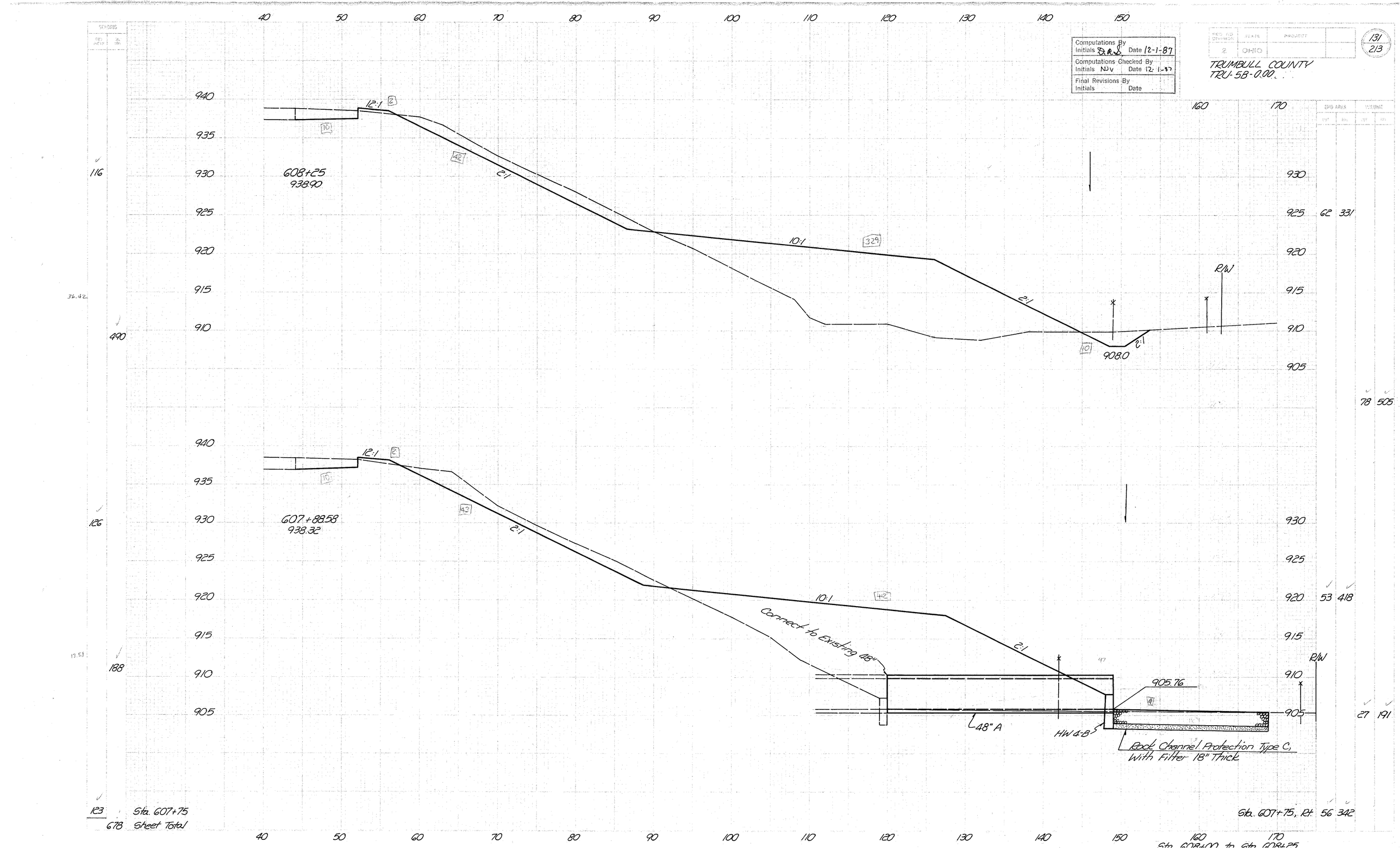

Computations By Initials D.R.S. Date 12-1-87
Computations Checked By Initials NJV Date 12-1-87
Final Revisions By Initials Date
FED. RD. DIVISION 2
STATE OHIO
PROJECT
131/213
TRUMBULL COUNTY
TRU-5B-0.00
608+25
938.90
12:1
2:1
10:1
329
908.0
R/W
607+88.58
938.32
Connect to Existing 48"
905.76
48" A
HW 4-B
Rock Channel Protection Type C, With Filter 18" Thick
116
490
126
188
123
678
Sta. 607+75
Sheet Total
Sta. 607+75, Rt. 56 342
62 331
78 505
53 418
27 191
Sta. 608+00 to Sta. 608+25

Computations By
Initials D.R.S Date 12-1-87
Computations Checked By
Initials NJV Date 12-1-87
Final Revisions By
Initials Date

SHEET NO. OF SHEETS	STATE	PROJECT	
2	OHIO		

132
213

TRUMBULL COUNTY
TRU-5B-0.00

END AREA		VOLUME	
CUT	FILL	CUT	FILL
14	212		
15	231		
18	287		
37	286		
6C	331		

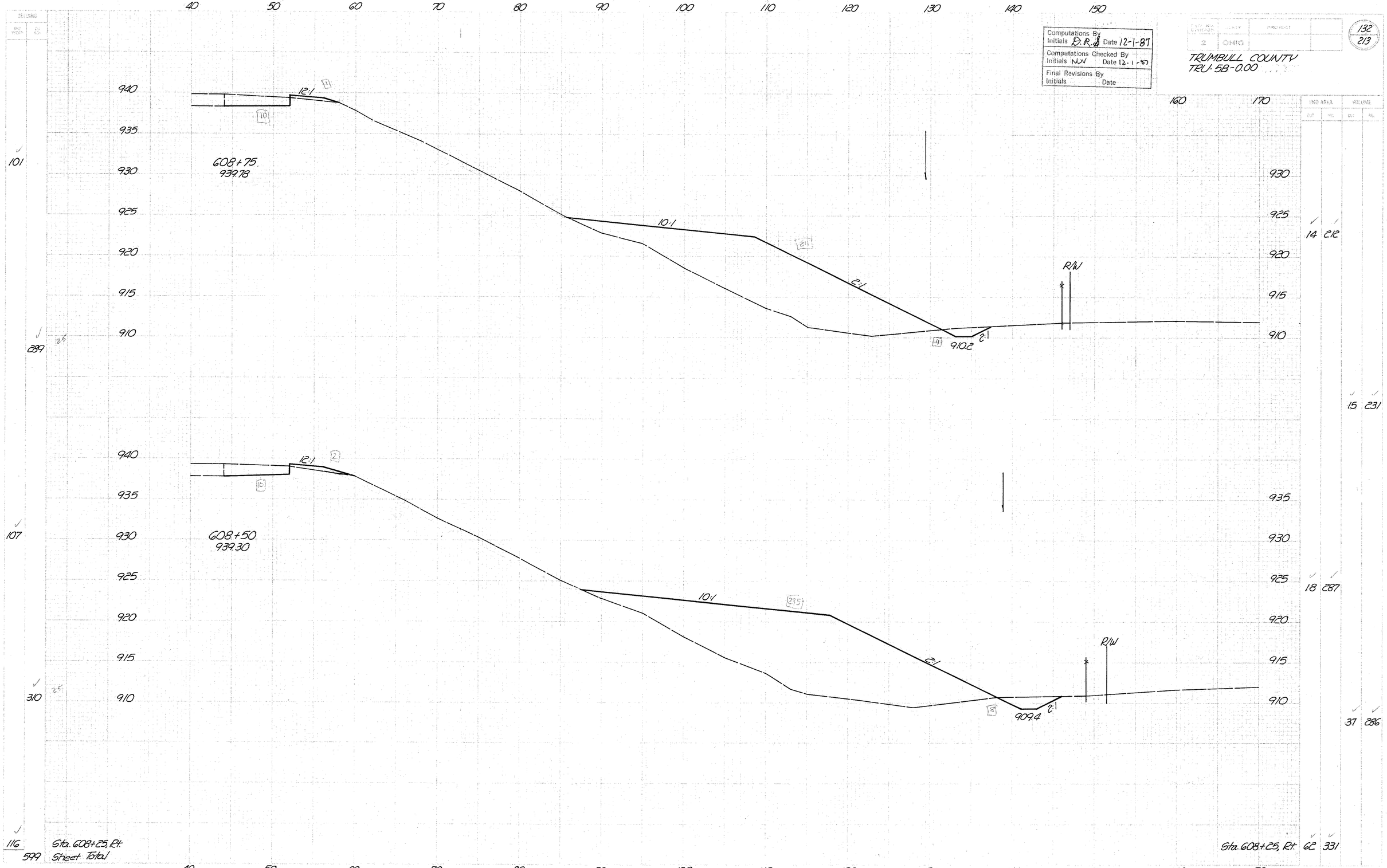

Computations By
Initials BR.B Date 12-1-89

Computations Checked By
Initials NJV Date 12-1-87

Final Revisions By
Initials Date

133
213

TRUMBULL COUNTY
TRU-5B-0.00

END AREA | VOLUME
CUT | FILL | CUT | FILL

12

157

940
935
930
925
920
915
910

609+00
940.38

R/W

End Earthwork
Sta. 609+00

0 0

6 98

101 Sta. 608+75 Rt
157 Sheet Total

Sta. 608+75 14 212

40 50 60 70 80 90 100 110 120 130 140 150 160 170
Sta. 609+00

Computations By Initials QMS Date 12-4-87
Computations Checked By Initials KMS Date 12/4/87
Final Revisions By Initials Date

FHWA REGION	STATE	PROJECT	
5	OHIO		

TRUMBULL COUNTY
TRU-5B-0.00

MAINTENANCE OF TRAFFIC NOTES AND DETAILS

TRAFFIC MAINTENANCE - THE CONTRACTOR SHALL MAINTAIN TRAFFIC AT ALL TIMES IN ACCORDANCE WITH ITEM 614. TRAFFIC SHALL BE CONTROLLED WITH TEMPORARY TRAFFIC CONTROL DEVICES ARRANGED AS INDICATED IN THE "OHIO MANUAL OF UNIFORM TRAFFIC CONTROL DEVICES FOR STREETS AND HIGHWAYS", CURRENT EDITION, AND THE TRAFFIC CONTROL DETAILS APPEARING IN THESE PLANS. THE CONTRACTOR SHALL FURNISH, PLACE, AND MAINTAIN YELLOW ALTERNATING FLASHER BEACON LIGHTS ON ALL "ROAD CONSTRUCTION AHEAD" SIGNS WHEN AND AS DIRECTED BY THE ENGINEER. IT SHALL BE UNDERSTOOD THAT THE COST OF ELECTRICAL SERVICES SHALL BE INCLUDED IN THE LUMP SUM BID FOR ITEM 614 MAINTAINING TRAFFIC.

ALL MAINLINE LANES, EASTBOUND AND WESTBOUND, ARE TO BE OPEN TO 2-LANE TRAFFIC AT THE END OF EACH WORK DAY WITH THE ONLY EXCEPTIONS BEING AT LANDSLIDE CORRECTION LOCATIONS AND PARAPET REPLACEMENT LOCATIONS.

THE MAXIMUM LENGTH OF ANY ONE LANE TRAFFIC ZONE SHALL BE TWO MILES. THE MINIMUM DISTANCE BETWEEN ONE LANE TRAFFIC ZONES SHALL BE TWO MILES.

NO WORK ON S.R. 5 OR BERMS OR CONNECTING RAMPS SHALL BE PERFORMED BY THE CONTRACTOR 24 HOURS PRECEDING AND SUCCEEDING THE FOLLOWING HOLIDAYS: NEW YEARS DAY, MEMORIAL DAY, INDEPENDENCE DAY, LABOR DAY, THANKSGIVING DAY, AND CHRISTMAS DAY.

PAYMENT FOR PROVIDING WATCHMEN, ERECTING, MAINTAINING AND REMOVING SIGNS, BARRICADES, CONES, MARKERS, SPECIAL LIGHTING, ETC. SHALL BE INCLUDED IN THE LUMP SUM BID ITEM 624 MAINTAINING TRAFFIC.

EACH PAVEMENT COURSE SHALL BE COMPLETED FOR ITS ENTIRE WIDTH ACROSS THE PAVEMENT AND SHOULDERS BEFORE ANY OVERLYING COURSE IS PLACED.

DRUMS AND BARRICADES USED AS CHANNELIZING DEVICES FOR TRAFFIC AND PLACED ADJACENT TO A LANE IN USE BY TRAFFIC SHALL NOT BE EQUIPPED WITH TYPE "C" STEADY BURN BARRICADE WARNING LIGHTS. REFER TO LANE CLOSURE DRAWINGS INCLUDED IN PLANS FOR FURTHER DETAILS OF "SET-UPS" REQUIRED FOR THE ABOVE CLOSURES. LANE WIDTH FOR ALL PHASES SHALL BE A MINIMUM OF 14 FEET.

EXISTING SIGNS WITHIN THE WORK LIMITS SHALL REMAIN IN USE DURING THE CONSTRUCTION PERIOD UNLESS OTHERWISE SPECIFIED ON THE PLANS. IF THE CONTRACTOR NEEDS TO RELOCATE OR MODIFY EXISTING SIGNS, HE SHALL PROVIDE SUITABLE SUPPORTS, WITH APPROVAL OF THE ENGINEER.

EXISTING SIGNS MOUNTED ON THE OVERHEAD PARAPETS, WHEN REMOVED AND OUTOF SERVICE , SHALL BE TEMPORARILY REPLACED WITH GROUND MOUNTED SIGNS (M-45 OR ROUTE MARKERS). THE SIGNS SHALL THEN BE PLACED IN ADVANCE OF THE STRUCTURE IN EACH DIRECTION, WITH LOCATION DESIGNATED BY THE ENGINEER, AND SHALL BE IN ACCORDANCE WITH THE OHIO MANUAL OF UNIFORM TRAFFIC CONTROL DEVICES. THE COST OF THESE SIGNS INCLUDING LABOR AND MAINTENANCE OF, SHALL BE INCLUDED IN THE LUMP SUM PRICE BID FOR ITEM 614 MAINTAINING TRAFFIC.

TRAFFIC, INCLUDING CONSTRUCTION VEHICLES, SHALL NOT BE CROSSED OVER THE MEDIAN AT ANY TIME.

ALTERNATE METHODS - IF THE CONTRACTOR SO ELECTS, HE MAY SUBMIT ALTERNATE METHODS FOR MAINTENANCE OF TRAFFIC PROVIDED THE INTENT OF THE ABOVE PROVISIONS IS FOLLOWED AND NO ADDITIONAL INCONVENIENCE TO THE TRAVELING PUBLIC RESULTS THERE FROM. NO ALTERNATE PLAN SHALL BE PLACED INTO EFFECT UNTIL APPROVAL HAS BEEN GRANTED, IN WRITING, BY THE DIRECTOR OF TRANSPORTATION.

TEMPORARY CONCRETE BARRIER - TWO TYPES OF TEMPORARY CONCRETE BARRIER WILL BE USED ON THIS PROJECT TO CLOSE ONE LANE OF THE ROADWAY DURING THE RECONSTRUCTION OF THE EXISTING PARAPETS WITH THE PROPOSED SAFETY SHAPE PARAPET. ITEM 622 TEMPORARY CONCRETE BARRIER, STD. TYPE SHALL BE USED AT ALL LOCATIONS REQUIRED OFF THE STRUCTURES. SEE STD. CONSTRUCTION DRAWING MC-9A FOR DETAILS. ITEM 622 TEMPORARY CONCRETE BARRIER MODIFIED AS PER PLAN WILL BE USED AT ALL LOCATIONS DIRECTLY ON THE STRUCTURES. SEE STD. CONSTRUCTION DRAWING MC-9A AND THIS SHEET FOR DETAILS.

THESE ITEMS SHALL BE PAID FOR BY THE ACTUAL LINEAL FEET OF ITEM 622 TEMPORARY CONCRETE BARRIER AND ITEM 622 TEMPORARY CONCRETE BARRIER AS PER PLAN INSTALLED AT A PARTICULAR STRUCTURE. ANY COSTS ASSOCIATED WITH REMOVING AND RESETTING THE TEMPORARY CONCRETE BARRIER AT A STRUCTURE, SO THAT THE CLOSED LANE MAY BE OPEN AND THE OPEN LANE CLOSED, SHALL BE INCLUDED IN THE UNIT PRICE BID. ALL TEMPORARY CONCRETE BARRIER DEVICES MAY BE REUSED FROM STRUCTURE TO STRUCTURE.

THE FOLLOWING ESTIMATED QUANTITY OF TEMPORARY CONCRETE BARRIER SHALL BE FURNISHED, INSTALLED, MAINTAINED AND SUBSEQUENTLY REMOVED BY THE CONTRACTOR:

ITEM 622 TEMPORARY CONCRETE BARRIER # = 3520 LIN. FT., AS PER PLAN.
ITEM 622 TEMPORARY CONCRETE BARRIER, MODIFIED AS PER PLAN* = 2850 LIN. FT.
(Carried to General Summary)

FOR LOCATIONS OF THE TEMPORARY CONCRETE BARRIER SEE SHEET 135 THRU 139.

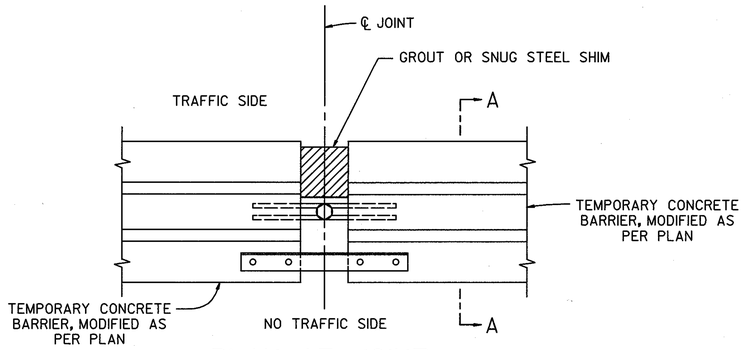

PLAN AT JOINT

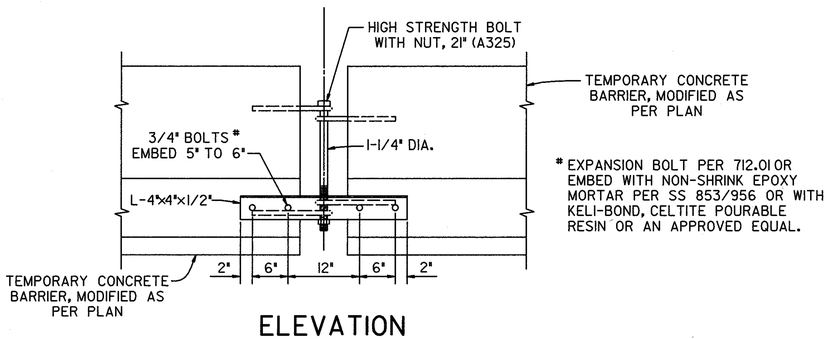

* EXPANSION BOLT PER 712.01 OR EMBED WITH NON-SHRINK EPOXY MORTAR PER SS 853/956 OR WITH KELI-BOND, CELTITE POURABLE RESIN OR AN APPROVED EQUAL.

ELEVATION

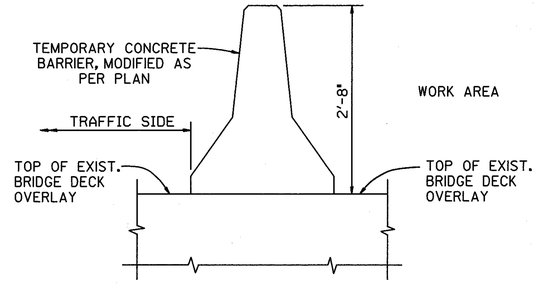

SECTION A-A

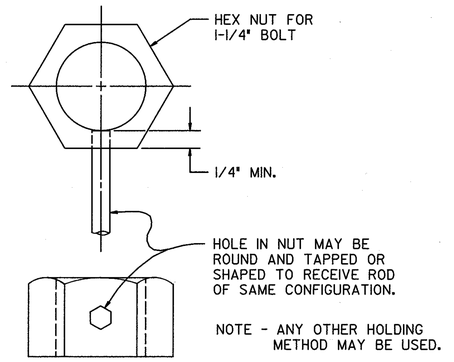

EXAMPLE OF METHOD FOR HOLDING NUT DURING THREADED ROD INSTALLATION

TEMPORARY PAVEMENT - THE TEMPORARY PAVEMENT DETAILED ON SHEET 139 SHALL MEET THE SPECIFICATIONS OF 615.05, CLASS B FLEXIBLE PAVEMENT. TEMPORARY EDGE LINES CONFORMING TO ITEM 614 SHALL BE PLACED ON THE TEMPORARY PAVEMENT. THE COST OF THE TEMPORARY EDGE LINES SHALL BE INCLUDED IN THE LUMP SUM PRICE BID FOR ITEM 614 MAINTAINING TRAFFIC.

AFTER THE TRAFFIC CONTROL OPERATION REQUIRING TEMPORARY PAVEMENT IS COMPLETED, THE TEMPORARY PAVEMENT SHALL BE SAW CUT AT THE LIMITS OF THE EXISTING SHOULDERS. TEMPORARY PAVEMENT SHALL THEN BE REMOVED AND THE AREA RESTORED AS PER 615.03. THE FOLLOWING ESTIMATED QUANTITY IS GIVEN FOR USE AS DESCRIBED ABOVE.

ITEM 615 TEMPORARY PAVEMENT, CLASS B = 212 SQ. YD.
(Carried to General Summary)

 # All items 622 Temp. Concrete Barrier As per plan shown in the plans should read item 622 Temp. Conc. Barrier, As Per Plan A.
** All items 622 Temp. Conc. Barrier Modified As Per Plan, shown in the plans should read item 622 Temp. Conc. Barrier, As Per Plan B.*

TCMB LENGTHS

STRUCTURE	PARAPET	TCMB	TCMB, AS PER PLAN	STRUCTURE	PARAPET	TCMB	TCMB, AS PER PLAN
TRU-5-0183 LT.	OUTSIDE	220'*	220'*	TRU-5-0525 LT.	OUTSIDE	220'*	140'*
TRU-5-0183 LT.	MEDIAN	220'	220'	TRU-5-0525 LT.	MEDIAN	220'	140'
TRU-5-0183 RT.	MEDIAN	220'*	220'*	TRU-5-0525 RT.	MEDIAN	220'*	140'*
TRU-5-0183 RT.	OUTSIDE	70'	220'	TRU-5-0525 RT.	OUTSIDE	220'	140'
TRU-5-0363 LT.	OUTSIDE	220'*	240'*	TRU-5-0549 LT.	OUTSIDE	220'*	120'*
TRU-5-0363 LT.	MEDIAN	220'	240'	TRU-5-0549 LT.	MEDIAN	220'	120'
TRU-5-0363 RT.	MEDIAN	220'	240'	TRU-5-0549 RT.	MEDIAN	220'*	120'*
TRU-5-0363 RT.	OUTSIDE	220'*	250'*	TRU-5-0549 RT.	OUTSIDE	220'	120'
TRU-5-0401 LT.	OUTSIDE	220'*	190'*	TRU-5-0716 LT.	OUTSIDE	70'	170'*
TRU-5-0401 LT.	MEDIAN	220'	190'	TRU-5-0716 LT.	MEDIAN	220'*	160'
TRU-5-0401 RT.	MEDIAN	220'*	190'*	TRU-5-0716 RT.	MEDIAN	220'*	160'*
TRU-5-0401 RT.	OUTSIDE	70'	190'	TRU-5-0716 RT.	OUTSIDE	220'	160'
TRU-5-0425 LT.	OUTSIDE	220'*	80'*	TRU-5-0735 LT.	OUTSIDE	220'	250'*
TRU-5-0425 LT.	MEDIAN	220'	80'	TRU-5-0735 LT.	MEDIAN	220'*	260'*
TRU-5-0425 RT.	MEDIAN	220'*	80'*	TRU-5-0735 RT.	MEDIAN	220'*	270'*
TRU-5-0425 RT.	OUTSIDE	220'	80'	TRU-5-0735 RT.	OUTSIDE	220'	260'

* NOTE - LENGTHS USED IN CALCULATING ESTIMATED QUANTITIES FOR GENERAL SUMMARY

614 BARRIER REFLECTORS

TRU-5B-0.00

134A / 213

THIS ITEM SHALL CONSIST OF FURNISHING AND INSTALLING BARRIER REFLECTORS (TYPE A) ON GALVANIZED STEEL GUARDRAIL AND/OR BARRIER REFLECTORS (TYPE B) ON CONCRETE BARRIERS IN ACCORDANCE WITH PLANS AND SPECIFICATIONS.

MATERIAL

THE BARRIER REFLECTOR SHALL BE AS MANUFACTURED BY STIMSONITE, REFLEXITE OR AN APPROVED FUNCTIONAL EQUIVALENT AS DESCRIBED BELOW:

STIMSONITE– MODEL 965 (WHITE & YELLOW) OR
REFLEXITE– MODEL 650 (WHITE & YELLOW)

THE ADHESIVE SHALL BE FRANKLIN PANEL AND METAL FRAMING ADHESIVE AS MANUFACTURED BY FRANKLIN CHEMICAL INDUSTRIES, PR–365 AS MANUFACTURED BY PRODUCTS RESEARCH AND CHEMICAL CORPORATION OR AN APPROVED EQUAL.

ALL ADHESIVES SHALL HAVE A SHELF LIFE OF 6 MONTHS AT 75 DEGREES F STORAGE MINIMUM GUARANTEED.

LAYOUT

THE CONTRACTOR SHALL LAYOUT ALL LOCATIONS TO ASSURE PROPER PLACEMENT. THE LAYOUT SHALL BE APPROVED BY THE ENGINEER BEFORE INSTALLATIONS ARE STARTED. THE LAYOUT SHALL BE INCIDENTAL TO THE INSTALLATION OPERATION.

INSTALLATION

1) ON CONCRETE BARRIERS THE HEIGHT OF THE TOP OF THE REFLECTOR SHALL BE 26 INCHES ABOVE THE NEAR EDGE OF PAVEMENT, BUT IN NO CASE SHALL THE TOP OF THE REFLECTOR BE LESS THAN 3 INCHES BELOW THE TOP OF THE CONCRETE BARRIER. ATTACHMENT SHALL BE BY THE ABOVE REFERENCED ADHESIVE AND APPLIED PER MANUFACTURER'S RECOMMENDATION.

2) GUARDRAIL REFLECTORS SHALL BE INSTALLED WITHIN THE CONCAVE SURFACE OF THE GUARDRAIL. ATTACHMENT MAY BE BY BRACKET WHICH FITS UNDER THE HEAD OF THE CENTER GUARDRAIL BOLT OR BY THE ABOVE REFERENCED ADHESIVE AND APPLIED PER MANUFACTURER'S RECOMMENDATION.

3) THE ABOVE REFERENCED ADHESIVE SHALL BE FLASHED WHEN APPLIED TO ACHIEVE MAXIMUM BONDING STRENGTH.

4) WHEN MOUNTED ON A FLAT SURFACE, THE REFLECTOR SHOULD BE TILTED UPWARD FROM THE VERTICAL OR PLUMB POSITION 2–3 DEGREES TO FACILITATE "RAIN WASHING" OF THE REFLECTOR FACE.

5) TWO–LANE HIGHWAY – WHITE UNITS SHALL BE PLACED ON THE RIGHT SIDE OF APPROACHING TRAFFIC.

FOUR–LANE DIVIDED HIGHWAY – WHITE UNITS SHALL BE PLACED ON THE RIGHT SIDE OF APPROACHING TRAFFIC AND YELLOW ON THE LEFT.

BASIS OF PAYMENT

BASIS OF PAYMENT SHALL BE AT THE UNIT PRICE BID FOR EACH REFLECTOR AND SHALL INCLUDE ALL LABOR, EQUIPMENT, HARDWARE AND INCIDENTALS REQUIRED TO PERFORM THE WORK.

ITEM	UNIT	DESCRIPTION
614	EACH	BARRIER REFLECTOR, TYPE A
614	EACH	BARRIER REFLECTOR, TYPE B A

A BARR–REF

STATIONING (FROM–TO) (SIDE)	SPACING	TYPE A W	TYPE A Y	TYPE B W	TYPE B Y	TYPE B W	TYPE B Y			REMARKS
(BRIDGE No.)										
TRU-5-0183	50			10						OUTSIDE
TRU-5-0183	50				10					MEDIAN
TRU-5-0183 RT.	50				10					MEDIAN
TRU-5-0183 RT.	50			7						OUTSIDE
TRU-5-0363 LT.	50			11						OUTSIDE
TRU-5-0363 LT.	50				11					MEDIAN
TRU-5-0363 RT.	50				11					MEDIAN
TRU-5-0363 RT.	50			11						OUTSIDE
TRU-5-0401 LT.	50			10						OUTSIDE
TRU-5-0401 LT.	50				10					MEDIAN
TRU-5-0401 RT.	50				10					MEDIAN
TRU-5-0401 RT.	50			7						OUTSIDE
TRU-5-0425 LT.	50			7						OUTSIDE
TRU-5-0425 LT.	50				7					MEDIAN
TRU-5-0425 RT.	50				7					MEDIAN
TRU-5-0425 RT.	50			7						OUTSIDE
TRU-5-0525 LT.	50			9						OUTSIDE
TRU-5-0525 LT.	50				9					MEDIAN
TRU-5-0525 LT.	50				9					MEDIAN
TRU-5-0525 RT	50				9					MEDIAN
TRU-5-0525 RT.	50			9						OUTSIDE
TRU-5-0549 LT.	50			8						OUTSIDE
TRU-5-0549 LT.	50				8					MEDIAN
TRU-5-0549 RT.	50				8					MEDIAN
TRU-5-0549 RT.	50			8						OUTSIDE
TRU-5-0716 LT.	50			6						OUTSIDE
TRU-5-0716 LT.	50				9					MEDIAN
TRU-5-0716 RT.	50				9					MEDIAN
TRU-5-0716 RT.	50			9						OUTSIDE
TRU-5-0735 LT.	50			11						OUTSIDE
TRU-5-0735 LT.	50				11					MEDIAN
TRU-5-0735 RT	50				11					MEDIAN
TRU-5-0735 RT	50			11						OUTSIDE
TOTALS				141	150					
				291*						

*QUANTITIES CARRIED TO GENERAL SUMMARY

614 BARRIER REFLECTORS
These reflectors and their mounting shall conform to Supplemental Specification 802 except that spacing shall be as shown in the subsummary table.

Revised 11-30-88

STATE OF OHIO
DEPARTMENT OF TRANSPORTATION

614 BARRIER REFLECTORS

DESIGNED	DRAWN	CHECKED	DATE	REVISED
			5-12-87	

FHWA REGION	STATE	PROJECT	
5	OHIO		

135
213

TRUMBULL COUNTY
TRU-5B-000

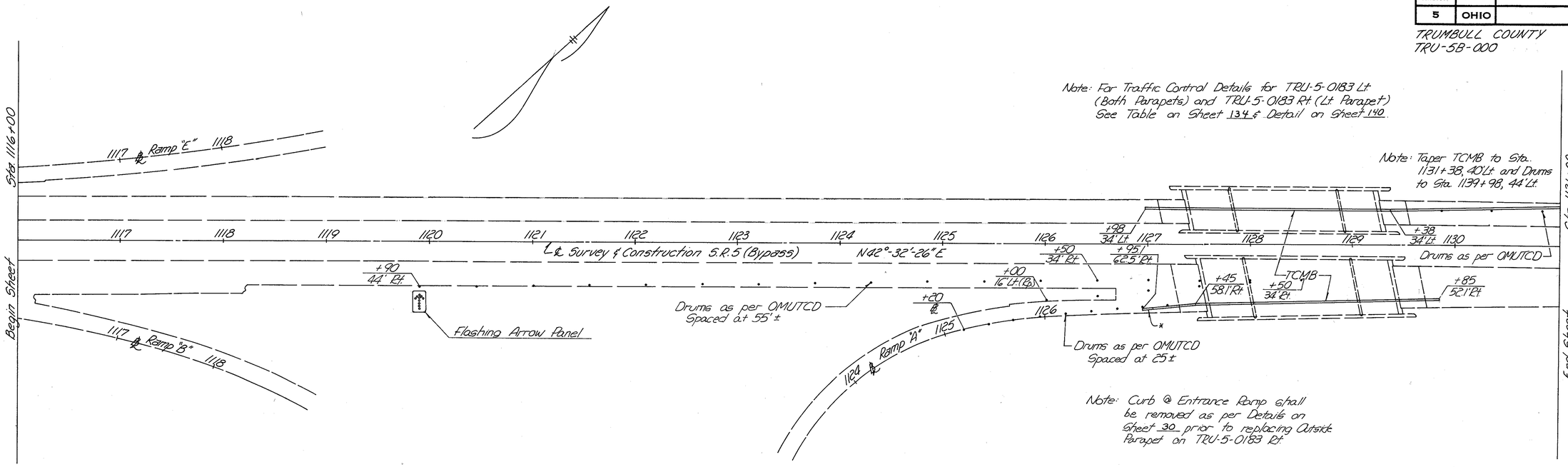

Note: For Traffic Control Details for TRU-5-0183 Lt (Both Parapets) and TRU-5-0183 Rt (Lt. Parapet) See Table on Sheet 134 & Detail on Sheet 140

Note: Taper TCMB to Sta. 1131+38, 40' Lt. and Drums to Sta. 1139+98, 44' Lt.

Note: Curb @ Entrance Ramp shall be removed as per Details on Sheet 30 prior to replacing Outside Parapet on TRU-5-0183 Rt.

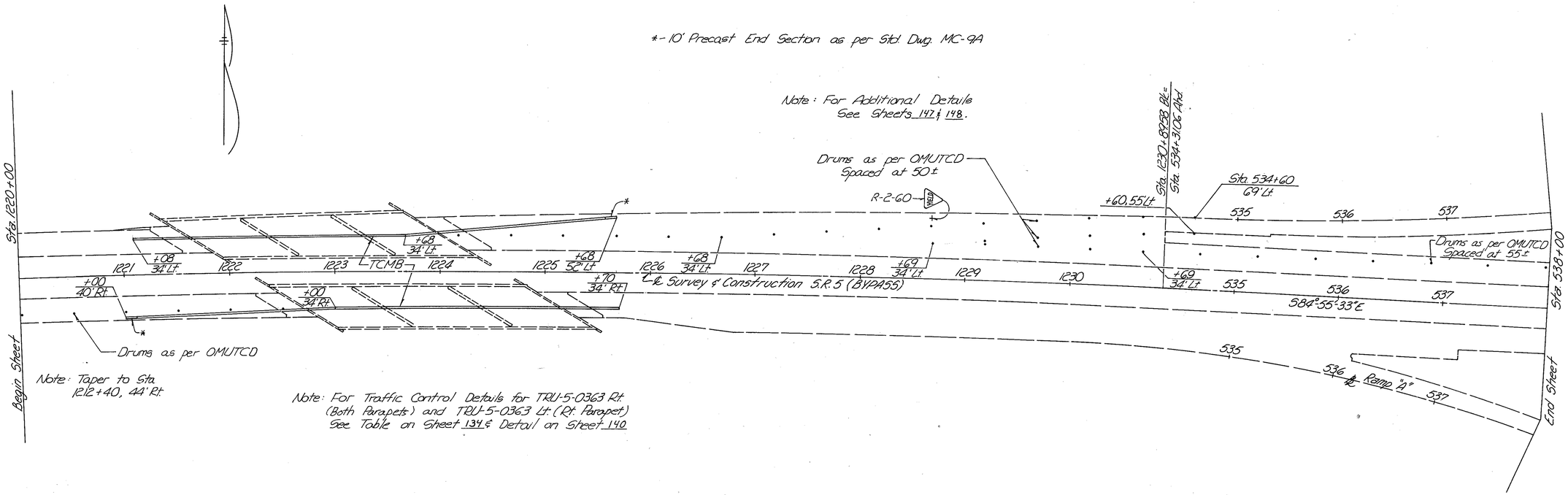

MAINTENANCE OF TRAFFIC

Sta 1116+00 to Sta. 1113+00 , Sta. 1220+00 to Sta. 538+00

FHWA REGION	STATE	PROJECT	
5	OHIO		

136
213

TRUMBULL COUNTY
TRU-5B0.00

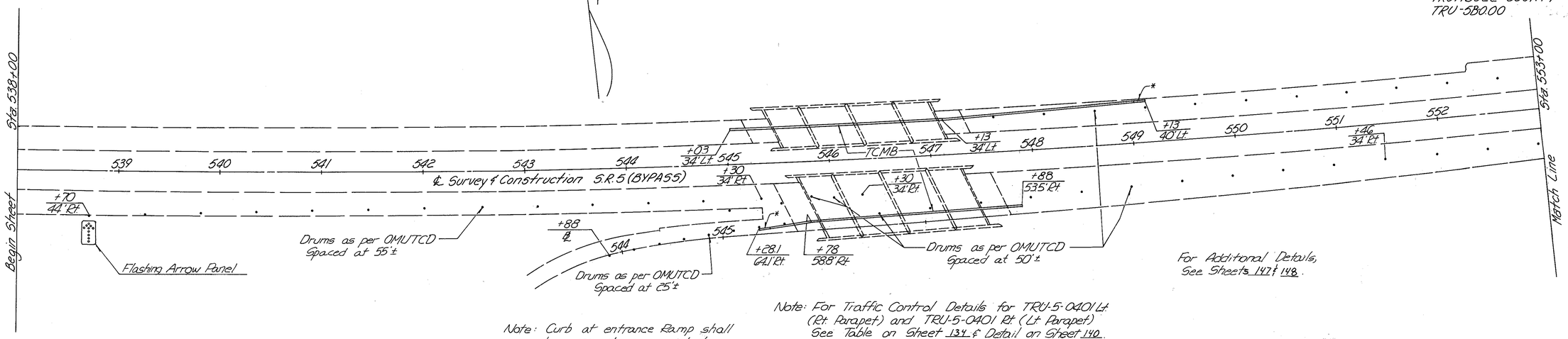

Note: Curb at entrance Ramp shall be removed as per details on Sheet 30 prior to replacing Outside parapet on TRU-5-0401 Rt.

Note: For Traffic Control Details for TRU-5-0401 Lt. (Rt. Parapet) and TRU-5-0401 Rt. (Lt. Parapet) See Table on Sheet 134 & Detail on Sheet 140.

* - 10' Precast End Section as per Std. Dwg. MC-9A

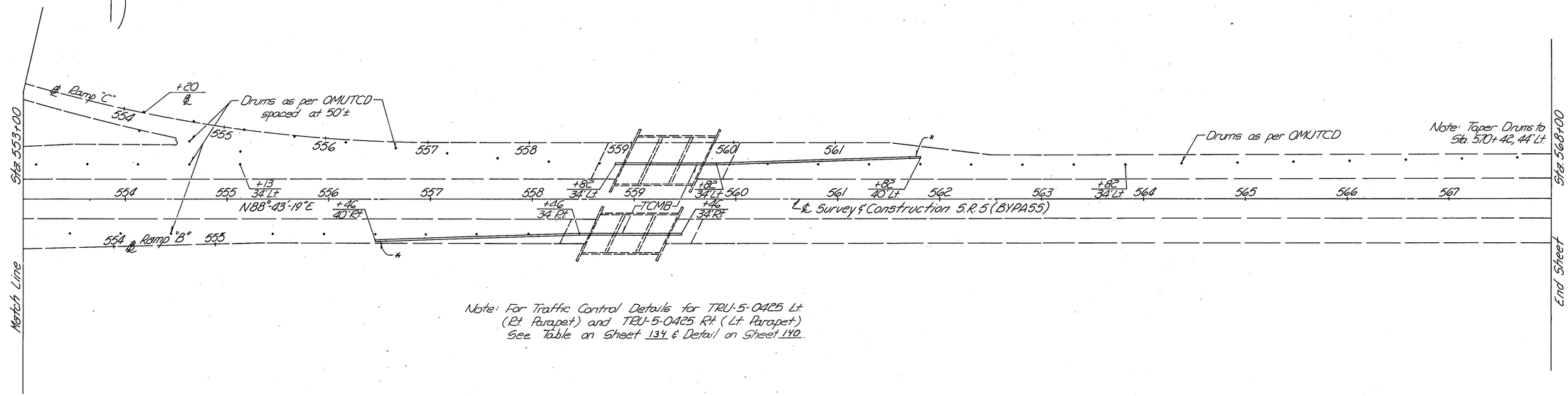

Note: For Traffic Control Details for TRU-5-0425 Lt. (Rt. Parapet) and TRU-5-0425 Rt. (Lt. Parapet) See Table on Sheet 134 & Detail on Sheet 140.

MAINTENANCE OF TRAFFIC

Sta. 538+00 to Sta. 568+00

FHWA REGION	STATE	PROJECT	
5	OHIO		

137/213

TRUMBULL COUNTY
TRU-5B-000

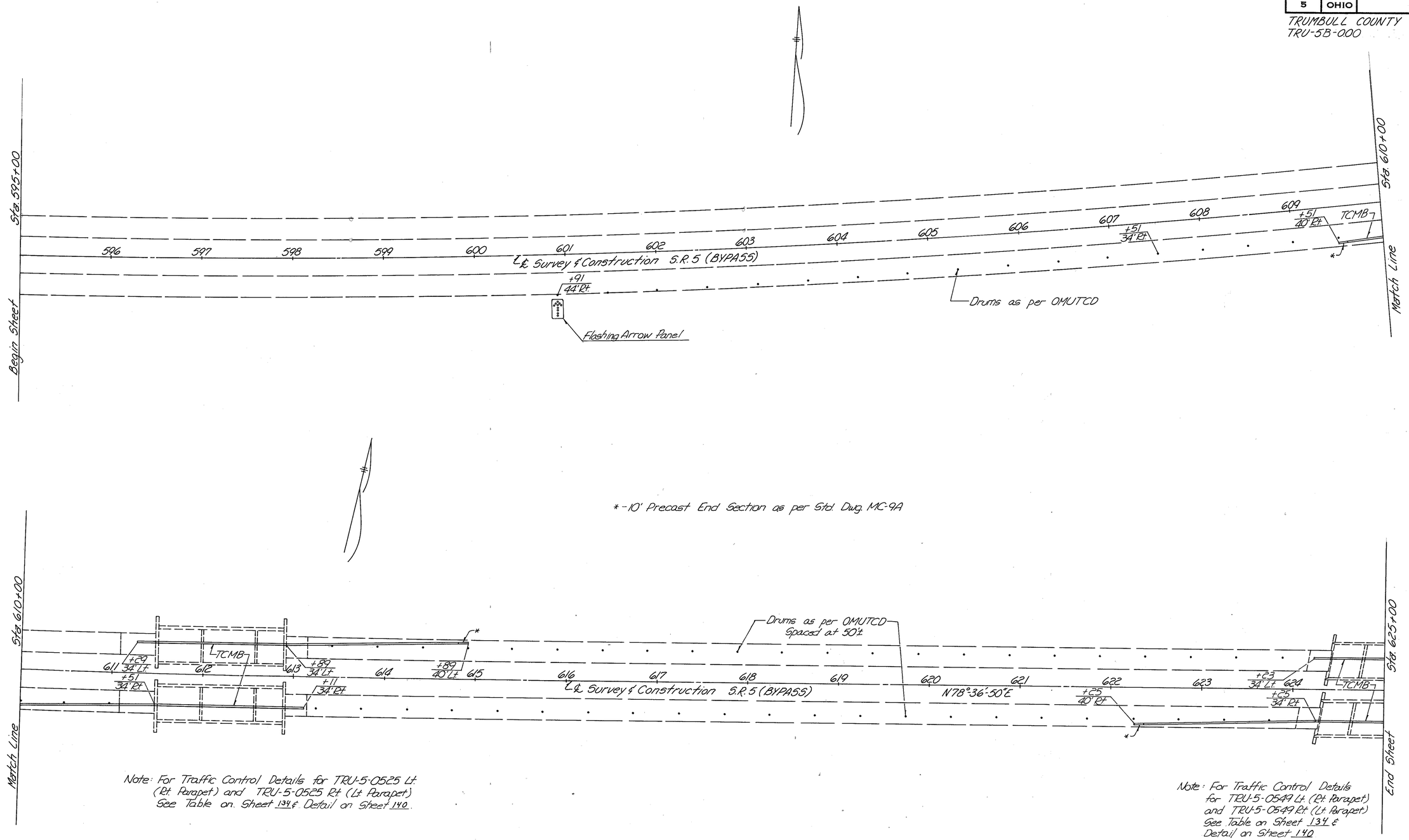

Note: For Traffic Control Details for TRU-5-0525 Lt. (Rt. Parapet) and TRU-5-0525 Rt. (Lt. Parapet) See Table on Sheet 134 & Detail on Sheet 140.

Note: For Traffic Control Details for TRU-5-0549 Lt. (Rt. Parapet) and TRU-5-0549 Rt. (Lt. Parapet) See Table on Sheet 134 & Detail on Sheet 140

MAINTENANCE OF TRAFFIC

Sta. 595+00 to Sta. 625+00

FHWA REGION	STATE	PROJECT	
5	OHIO		

138
213

TRUMBULL COUNTY
TRU-5B-000

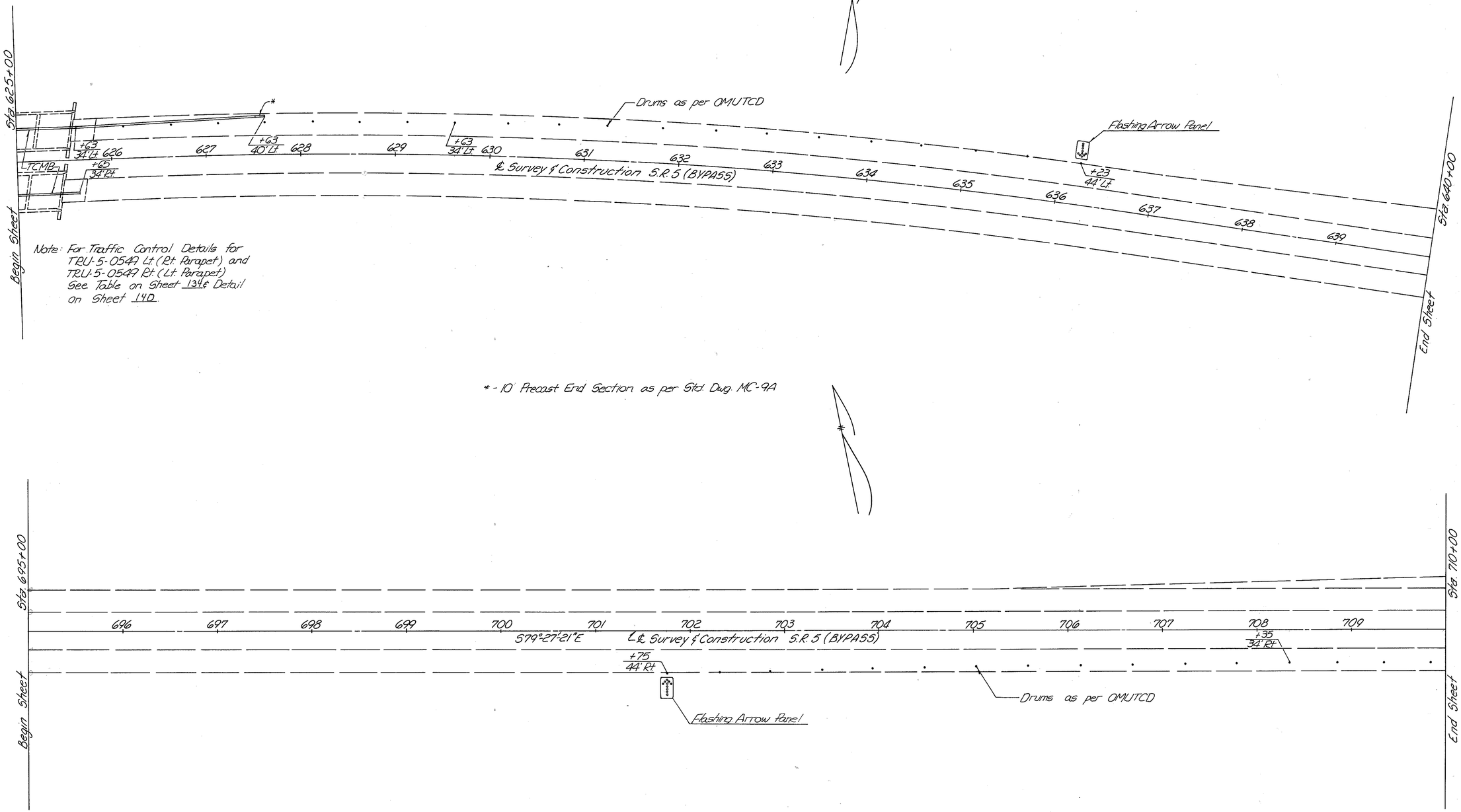

MAINTENANCE OF TRAFFIC

Sta. 625+00 to Sta. 640+00, Sta. 695+00 to Sta. 710+00

FHWA REGION	STATE	PROJECT	
5	OHIO		

TRUMBULL COUNTY
TRU-5B-000

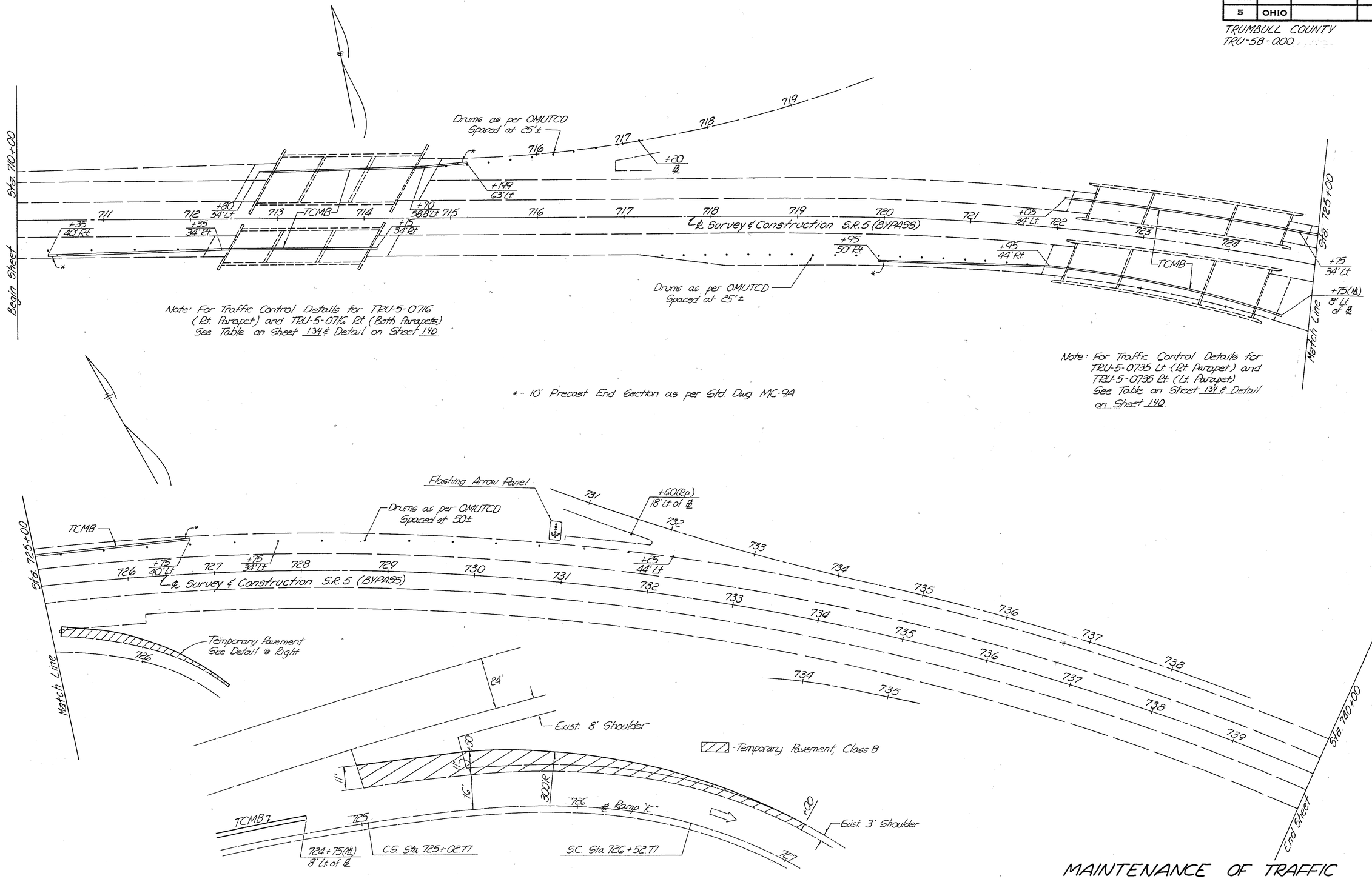

MAINTENANCE OF TRAFFIC
Sta. 710+00 to Sta 740+00

F.H.W.A. REGION	STATE	PROJECT	
5	OHIO		

140
2/3

TRUMBULL COUNTY
TRU-5B-.000

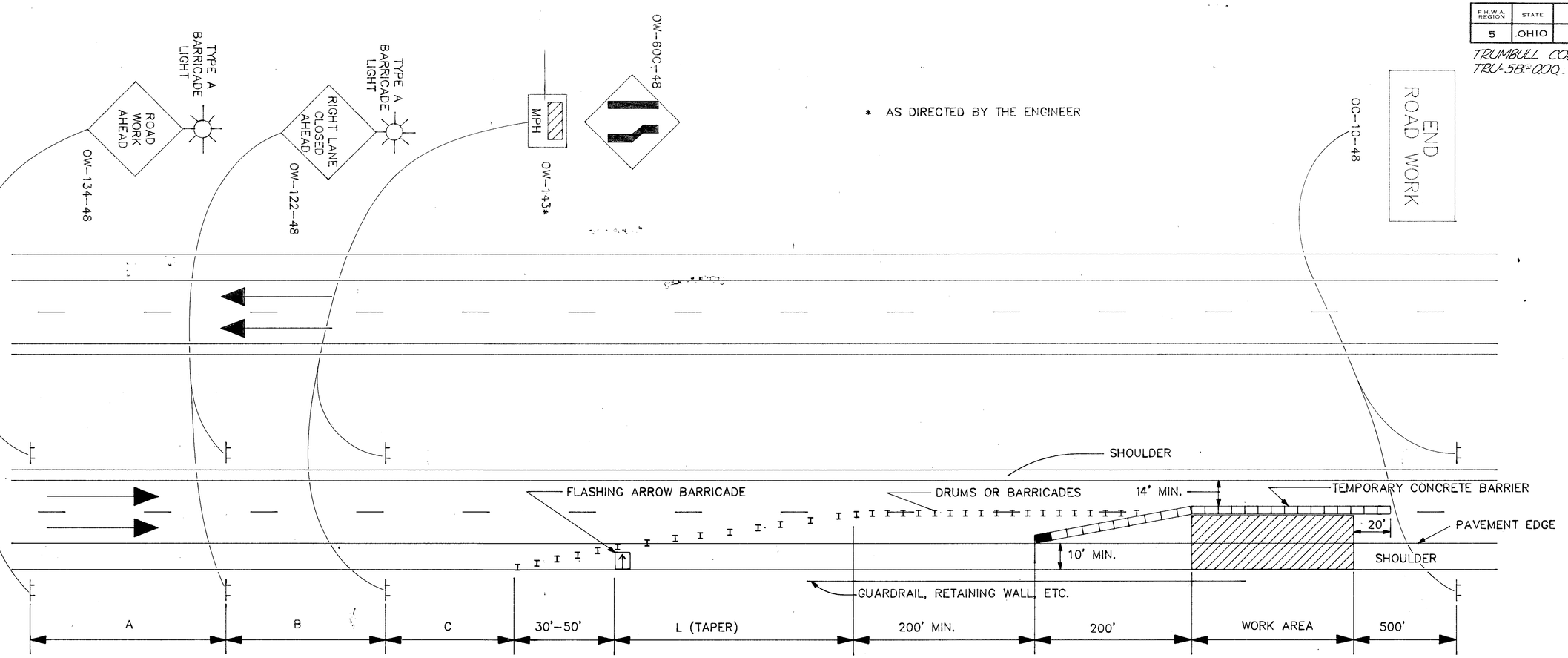

■ STANDARD MC-9A END TERMINAL

GENERAL NOTES

1. THE TAPER LENGTH (L) SHALL BE IN ACCORDANCE WITH SECTION 7F-17 OF THE OMUTCD. THE LOCATION OF THE TRANSITION TAPER AND LOCATION OF THE ADVANCE WARNING SIGNS SHOULD BE ADJUSTED TO PROVIDE FOR ADEQUATE SIGHT DISTANCE FOR THE EXISTING VERTICAL AND HORIZONTAL ROADWAY ALIGNMENT. IN ORDER TO DETERMINE THE MINIMUM NUMBER OF CHANNELIZING DEVICES FOR THE TRANSITION TAPER SEE TABLE 7-5 OMUTCD. FOR A 55 MPH PREVAILING SPEED AND A 12 FT. LANE, NOT LESS THAN THIRTEEN (13) DRUMS OR BARRICADES SHALL BE USED TO FORM THE LANE TRANSITION TAPER IN ADVANCE OF THE WORK AREA. NOT LESS THAN FIVE (5) DRUMS OR BARRICADES SHALL BE USED TO FORM THE TAPER ON THE SHOULDER. DRUMS OR BARRICADES SHALL BE SPACED APPROXIMATELY 50' CENTER TO CENTER. CONES SHALL NOT BE USED FOR NIGHT LANE CLOSURES.

2. WHEN WORK IS BEING PERFORMED IN THE LANE ADJACENT TO THE MEDIAN, OW-123-48 SIGNS SHALL BE SUBSTITUTED FOR THE OW-122-48 SIGNS AND OW-60D-48 SIGNS SHALL BE SUBSTITUTED FOR THE OW-60C-48 SIGNS.

3. THE FLASHING ARROW PANEL SHALL MEET THE REQUIRMENTS CONTAINED IN STANDARD CONSTRUCTION DRAWING TC-35.10.

4. TYPE C STEADY BURNING BARRICADE WARNING LIGHTS SHALL BE ERECTED ON DRUMS OR BARRICADES FOR NIGHT LANE CLOSURES. TYPE C LIGHT SHALL BE MOUNTED ON ALL DRUMS OR BARRICADES USED TO FORM THE SHOULDERS AND ROADWAY TAPERS. TYPE C LIGHTS SHALL ALSO BE INSTALLED AT 100 FOOT INTERVALS FOR THE FIRST 1000 FEET OF A LANE REDUCTION.

5. TYPE A FLASHING BARRICADE WARNING LIGHTS SHOWN ON THE "ROAD WORK AREA" AND THE "RIGHT LANE CLOSED AHEAD" SIGNS ARE REQUIRED WHENEVER A NIGHT LANE CLOSURE IS NECESSARY.

6. ALL TEMPORARY CONCRETE BARRIER SECTIONS WITH IN THE WORK AREA SHALL BE PROVIDED WITH SIDE MOUNTED REFLECTORS AT 10 FOOT SPACINGS, MOUNTED 26 INCHES ABOVE THE BASE OF THE TEMPORARY CONCRETE BARRIER. THE REFLECTOR SHALL BE AN ACRYLIC PRISMATIC REFLECTOR IN A PLASTIC HOUSING. A COLORLESS REFLECTOR SHALL BE USED WHEN THE BARRIER IS TO THE RIGHT OF ON COMING TRAFFIC. A YELLOW REFLECTOR SHALL BE USED WHEN THE BARRIER IS TO THE LEFT OF ON COMING TRAFFIC.

7. SIDE MOUNTED REFLECTORS SHALL BE MOUNTED ON THE GUARD RAIL AND PARAPET OPPOSITE THE TEMPORARY CONCRETE BARRIER. THE REFLECTORS AS DESCRIBED IN NOTE 6, SHALL BE INSTALLED AT 10 FOOT SPACINGS AND MOUNTED 21 +/- INCHES ABOVE THE EDGE OF PAVEMENT. YELLOW REFLECTORS SHALL BE INSTALLED ON THE GUARDAIL AND PARAPET ON THE MEDIAN SIDE OF THE ROADWAY. COLORLESS REFLECTORS SHALL BE INSTALLED ON THE GUARD-RAIL AND PARAPET TO THE RIGHT SIDE (OUTSIDE) OF THE ROADWAY.

8. PAYMENT FOR THE REFLECTORS SHALL BE INCLUDED IN THE PRICE BID FOR ITEM 622 TEMPORARY CONCRETE BARRIER, AS PER PLAN.

MINIMUM DISTANCE	A	B	C
MAJOR STANDARD	500'	500'	500'
URBAN FREEWAY & EXPRESSWAY.	500' TO 1000'	500' TO 1000'	500' TO 1000'
RURAL FREEWAY & EXPRESSWAY	2600'	1600'	1000'

CLOSING ONE LANE OF A FOUR LANE DIVIDED HIGHWAY WITH TEMPORARY CONCRETE BARRIER

MT4LDTCB

FED. RD. DIVISION	STATE	PROJECT	
5	OHIO		

TRUMBULL COUNTY
TRU-5B-0.00

141
213

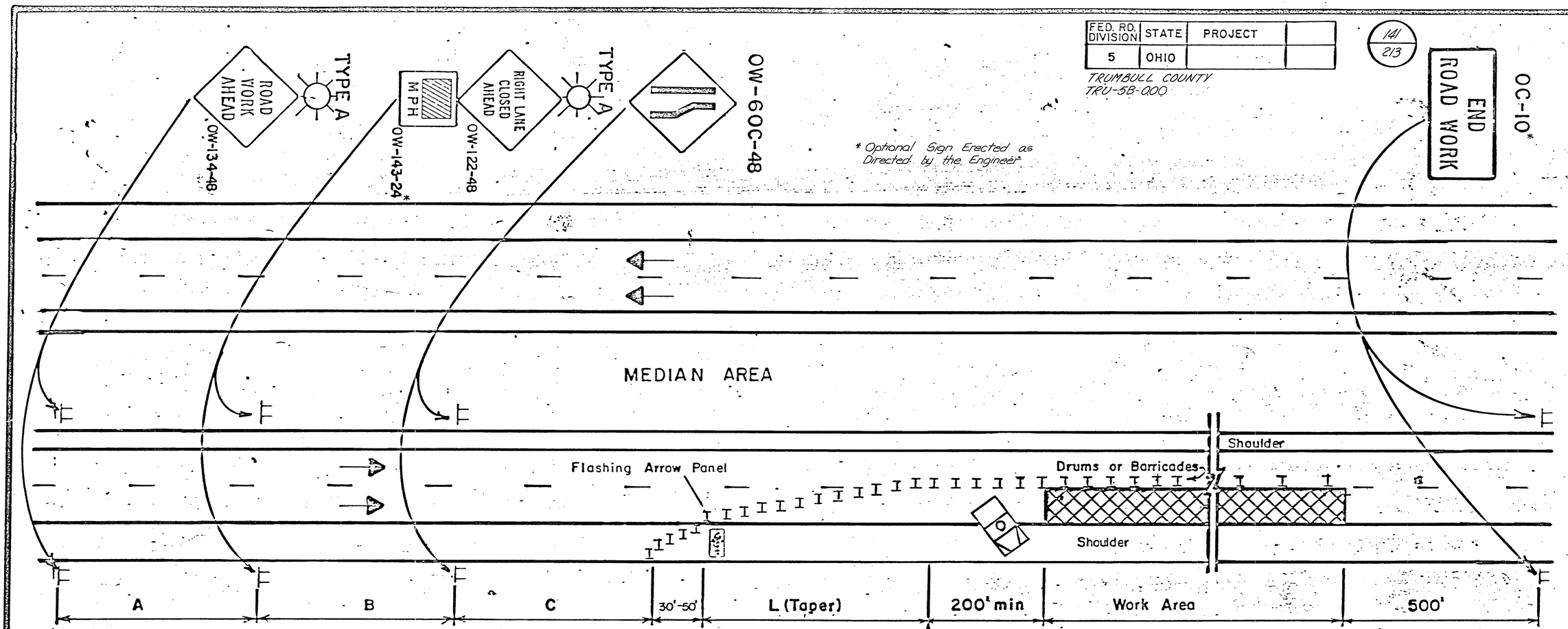

GENERAL NOTES:

1. The taper length (L) shall be in accordance with Section 7F-17 of the OMUTCD. The location of the transition taper and location of the advance warning signs should be adjusted to provide for adequate sight distance for the existing vertical and horizontal roadway alignment. In order to determine the minimum number of channelizing devices for the transition taper see Table 7-5 OMUTCD. For a 55 MPH prevailing speed and a 12 ft. lane, not less than thirteen (13) drums or barricades shall be used to form the lane transition taper in advance of the work area. Not less than five (5) drums or barricades shall be used to form the taper on the shoulder. Drums or barricades shall be spaced approximately 50' to 60' center to center for the first 1000 feet of the work area and at a maximum of 100 to 120 feet for the balance of the work area. Cones may be substituted for barricades or drums for short term lane closures during daylight hours only.

2. The major standard level warning sign sizes may be used on divided streets or highways that are not classified as freeways or expressways.

3. When work is being performed in the lane adjacent to the median on a divided highway an OW-123-48 sign(s) shall be substituted for the OW-122-48 sign(s) and an OW-60D-48 sign(s) shall be substituted for the OW-60C sign(s).

4. The work vehicle shown at the beginning of the work area shall be in place and unoccupied whenever workers are in the work area. This work vehicle shall be removed from the pavement whenever workers are not in the work area. Other protective devices may be used in lieu of the work vehicle shown when approved by the Engineer. The vehicle shall be equipped with a 360° rotating or flashing amber beacon clearly visible a minimum of a ½ mile.

5. The flashing arrow panel shall meet requirements contained in TC-35.10

6. ~~Type C steady burning barricade warning lights shall be erected on drums or barricades for night lane closures. The maximum spacing shall be identical to the channelizing device spacing requirements described in Note 1.~~

MINIMUM DISTANCE	A	B	C
MAJOR STANDARD	500'	500'	500'
URBAN FREEWAY & EXPRESSWAY	500' TO 1000'	500' TO 1000'	500' TO 1000'
RURAL FREEWAY & EXPRESSWAY	2600'	1600'	1000'

7. Type A flashing barricade warning lights shown on the "Road Work Ahead" and the "Right Lane Closed Ahead" signs are required whenever a night lane closure is necessary.

8. Some work area locations may require more than just static or conventional signs to enhance communication with the driver. At these locations Portable Changeable Message Signs (PCMS) units are recommended. These devices should be located approximately 2000-4000 ft. in advance of a lane closure or other point of required action. See Section 7G-8.1, OMUTCD for further guidance on use of PCMS units.

OHIO DEPARTMENT OF TRANSPORTATION

CLOSING ONE LANE OF A FOUR LANE DIVIDED HIGHWAY

DATE 12/82

7I-1a

Rev. EEF 9/84

FED. RD. DIVISION	STATE	PROJECT	
5	OHIO		

TRUMBULL COUNTY
TRU-5B-000

142
213

9. ~~Cones may be substituted for drums or barricades at night for short term lane closures. Cones used at night shall be reflectorized or equipped with lighting devices for maximum visibility.~~

10. For night closures, each of the first two signs in the sequence (ROAD WORK AHEAD and RIGHT LANE CLOSED AHEAD) is required to be supplemented by a Type A flashing barricade warning light.

11. Work vehicles shall be equipped with a 360° rotating or flashing amber beacon clearly visible a minimum of 1/4 mile.

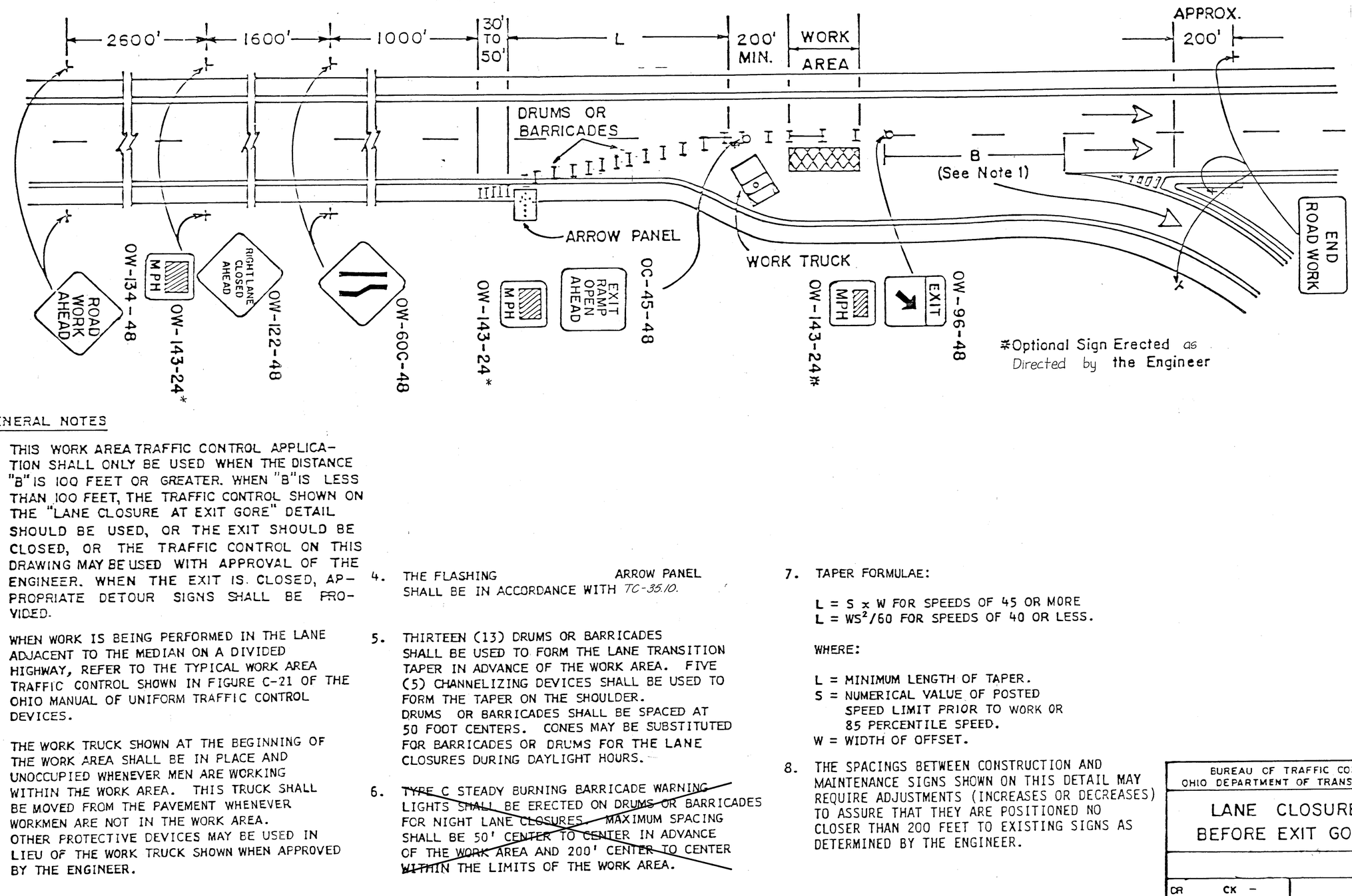

*Optional Sign Erected as Directed by the Engineer

GENERAL NOTES

1. THIS WORK AREA TRAFFIC CONTROL APPLICATION SHALL ONLY BE USED WHEN THE DISTANCE "B" IS 100 FEET OR GREATER. WHEN "B" IS LESS THAN 100 FEET, THE TRAFFIC CONTROL SHOWN ON THE "LANE CLOSURE AT EXIT GORE" DETAIL SHOULD BE USED, OR THE EXIT SHOULD BE CLOSED, OR THE TRAFFIC CONTROL ON THIS DRAWING MAY BE USED WITH APPROVAL OF THE ENGINEER. WHEN THE EXIT IS CLOSED, APPROPRIATE DETOUR SIGNS SHALL BE PROVIDED.

2. WHEN WORK IS BEING PERFORMED IN THE LANE ADJACENT TO THE MEDIAN ON A DIVIDED HIGHWAY, REFER TO THE TYPICAL WORK AREA TRAFFIC CONTROL SHOWN IN FIGURE C-21 OF THE OHIO MANUAL OF UNIFORM TRAFFIC CONTROL DEVICES.

3. THE WORK TRUCK SHOWN AT THE BEGINNING OF THE WORK AREA SHALL BE IN PLACE AND UNOCCUPIED WHENEVER MEN ARE WORKING WITHIN THE WORK AREA. THIS TRUCK SHALL BE MOVED FROM THE PAVEMENT WHENEVER WORKMEN ARE NOT IN THE WORK AREA. OTHER PROTECTIVE DEVICES MAY BE USED IN LIEU OF THE WORK TRUCK SHOWN WHEN APPROVED BY THE ENGINEER.

4. THE FLASHING ARROW PANEL SHALL BE IN ACCORDANCE WITH *TC-35.10.*

5. THIRTEEN (13) DRUMS OR BARRICADES SHALL BE USED TO FORM THE LANE TRANSITION TAPER IN ADVANCE OF THE WORK AREA. FIVE (5) CHANNELIZING DEVICES SHALL BE USED TO FORM THE TAPER ON THE SHOULDER. DRUMS OR BARRICADES SHALL BE SPACED AT 50 FOOT CENTERS. CONES MAY BE SUBSTITUTED FOR BARRICADES OR DRUMS FOR THE LANE CLOSURES DURING DAYLIGHT HOURS.

6. ~~TYPE C STEADY BURNING BARRICADE WARNING LIGHTS SHALL BE ERECTED ON DRUMS OR BARRICADES FOR NIGHT LANE CLOSURES. MAXIMUM SPACING SHALL BE 50' CENTER TO CENTER IN ADVANCE OF THE WORK AREA AND 200' CENTER TO CENTER WITHIN THE LIMITS OF THE WORK AREA.~~

7. TAPER FORMULAE:

   $L = S \times W$ FOR SPEEDS OF 45 OR MORE
   $L = WS^2/60$ FOR SPEEDS OF 40 OR LESS.

   WHERE:

   L = MINIMUM LENGTH OF TAPER.
   S = NUMERICAL VALUE OF POSTED SPEED LIMIT PRIOR TO WORK OR 85 PERCENTILE SPEED.
   W = WIDTH OF OFFSET.

8. THE SPACINGS BETWEEN CONSTRUCTION AND MAINTENANCE SIGNS SHOWN ON THIS DETAIL MAY REQUIRE ADJUSTMENTS (INCREASES OR DECREASES) TO ASSURE THAT THEY ARE POSITIONED NO CLOSER THAN 200 FEET TO EXISTING SIGNS AS DETERMINED BY THE ENGINEER.

BUREAU OF TRAFFIC CONTROL
OHIO DEPARTMENT OF TRANSPORTATION

LANE CLOSURE BEFORE EXIT GORE

DATE 3-3-79

DR CK –

7K-3

Rev. EEF 9/84

FED. RD. DIVISION	STATE	PROJECT	
5	OHIO		

TRUMBULL COUNTY
TRU-58-000

~~10. Cones may be substituted for drums or barricades at night for short-term lane closures. Cones used at night shall be reflectorized or equipped with lighting devices for maximum visibility.~~

11. For night closures, each of the first two signs in the sequence (ROAD WORK AHEAD and RIGHT LANE CLOSED AHEAD) is required to be supplemented by a Type A flashing barricade warning light.

12. Work vehicles shall be equipped with a 360° rotating or flashing amber beacon clearly visible a minimum of 1/4 mile.

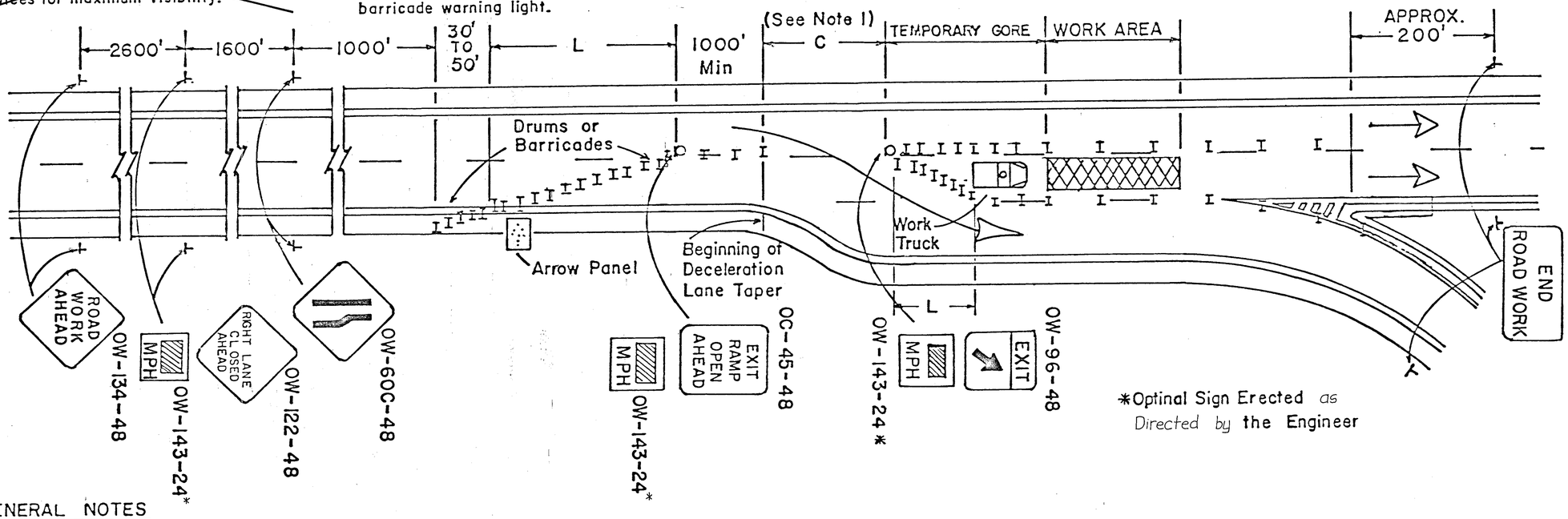

*Optinal Sign Erected as Directed by the Engineer

GENERAL NOTES

1. THIS WORK AREA TRAFFIC CONTROL APPLICATION SHALL ONLY BE USED WHEN THE DISTANCE "C" IS 100 FEET OR GREATER. WHEN "C" IS LESS THAN 100 FEET, THE TRAFFIC CONTROL SHOWN ON THE "LANE CLOSURE BEFORE EXIT GORE" DETAIL SHOULD BE USED, OR THE EXIT SHOULD BE CLOSED, OR THE TRAFFIC CONTROL ON THIS DRAWING MAY BE USED WITH APPROVAL OF THE ENGINEER. WHEN THE EXIT IS CLOSED, APPROPRIATE DETOUR SIGNS SHALL BE PROVIDED.

2. WHEN WORK IS BEING PERFORMED IN ONLY THE LANE ADJACENT TO THE MEDIAN ON A DIVIDED HIGHWAY, REFER TO THE TYPICAL WORK AREA TRAFFIC CONTROL SHOWN IN FIGURE C-21 OF THE OHIO MANUAL OF UNIFORM TRAFFIC CONTROL DEVICES.

3. THE WORK TRUCK SHOWN AT THE BEGINNING OF THE WORK AREA SHALL BE IN PLACE AND UNOCCUPIED WHENEVER MEN ARE WORKING WITHIN THE WORK AREA. THIS TRUCK SHALL BE MOVED FROM THE PAVEMENT WHENEVER WORKMEN ARE NOT IN THE WORK AREA. OTHER PROTECTIVE DEVICES MAY BE USED IN LIEU OF THE WORK TRUCK SHOWN WHEN APPROVED BY THE ENGINEER. A TRUCK MOUNTED IMPACT ATTENUATOR MAY BE EMPLOYED.

4. THE FLASHING ARROW PANEL SHALL BE IN ACCORDANCE WITH *TC-35.10*

5. THIRTEEN (13) DRUMS OR BARRICADES SHALL BE USED TO FORM THE LANE TRANSITION TAPER IN ADVANCE OF THE WORK AREA. FIVE (5) CHANNELIZING DEVICES SHALL BE USED TO FORM THE TAPER ON THE SHOULDER. DRUMS OR BARRICADES SHALL BE SPACED AT 50 FOOT CENTERS. CONES MAY BE SUBSTITUTED FOR BARRICADES OR DRUMS FOR THE LANE CLOSURES DURING DAYLIGHT HOURS.

6. ~~TYPE C STEADY BURNING BARRICADE WARNING LIGHTS SHALL BE ERECTED ON DRUMS OR BARRICADES FOR NIGHT LANE CLOSURES. MAXIMUM SPACING SHALL BE 50' CENTER TO CENTER IN ADVANCE OF THE WORK AREA AND 200' CENTER TO CENTER WITHIN THE LIMITS OF THE WORK AREA.~~

7. TAPER FORMULAE:

   $L = S \times W$ FOR SPEEDS OF 45 OR MORE.
   $L = WS^2/60$ FOR SPEEDS OF 40 OR LESS.

   WHERE:

   L = MINIMUM LENGTH OF TAPER.
   S = NUMERICAL VALUE OF POSTED SPEED LIMIT PRIOR TO WORK OR 85 PERCENTILE SPEED.
   W = WIDTH OF OFFSET.

8. WHEN CREATING A TEMPORARY GORE, CHANNELIZING DEVICES SHOULD BE SPACED 25' CENTER TO CENTER SO AS TO CREATE A "SOLID GORE" EFFECT.

9. THE SPACINGS BETWEEN CONSTRUCTION AND MAINTENANCE SIGNS SHOWN ON THIS DETAIL MAY REQUIRE ADJUSTMENTS (INCREASES OR DECREASES) TO ASSURE THAT THEY ARE POSITIONED NO CLOSER THAN 200 FEET TO EXISTING SIGNS AS DETERMINED BY THE ENGINEER.

OHIO DEPARTMENT OF TRANSPORTATION

LANE CLOSURE AT EXIT GORE	DATE 8-3-79

Rev. EEF 9/84

FED. RD. DIVISION	STATE	PROJECT.	
5	OHIO		

TRUMBULL COUNTY
TRU-58-000

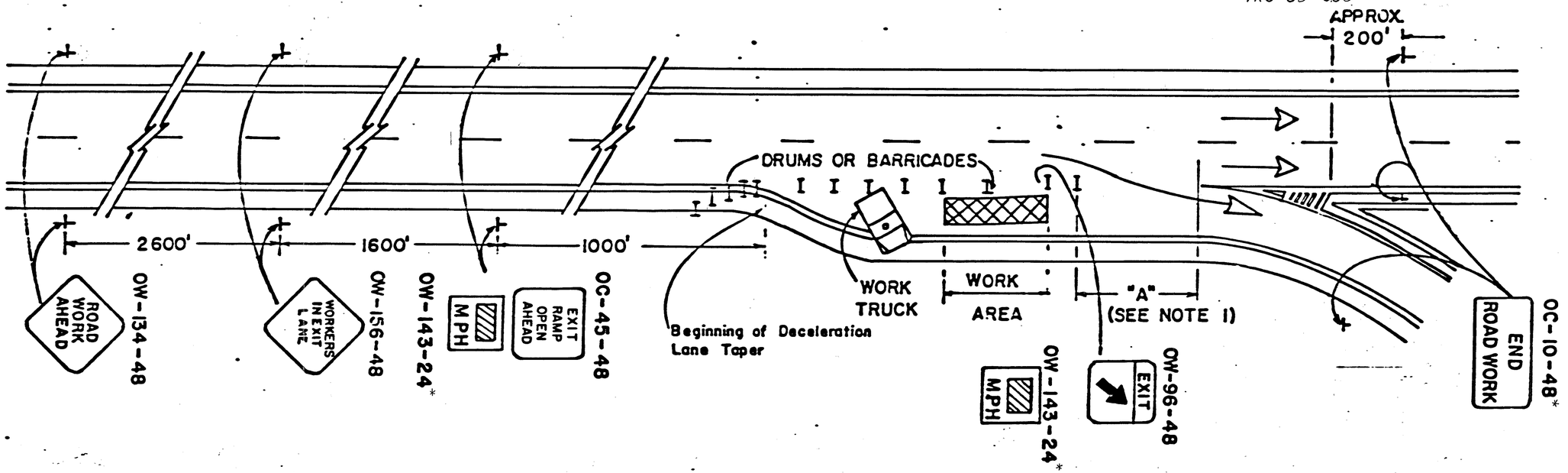

*OPTIONAL SIGN ERECTED AS DIRECTED BY THE ENGINEER.

GENERAL NOTES.

1. THIS WORK AREA TRAFFIC CONTROL APPLICATION SHALL ONLY APPLY WHEN THE DISTANCE "A" IS GREATER THAN 100'. WHEN DISTANCE "A" IS LESS THAN 100', THE RAMP SHALL BE CLOSED. WHEN THE RAMP IS CLOSED, THE TRAFFIC CONTROL SHALL INCLUDE DETOUR SIGNING FOR EXIT RAMP CLOSURES IN ACCORDANCE WITH OMUTCD.

2. DRUMS OR BARRICADES SHALL BE SPACED AT 50 FOOT CENTERS. CONES MAY BE SUBSTITUTED FOR BARRICADES OR DRUMS FOR THE LANE CLOSURES DURING DAYLIGHT HOURS.

3. ~~TYPE C STEADY BURNING BARRICADE WARNING LIGHTS SHALL BE ERECTED ON DRUMS OR BARRICADES FOR NIGHT LANE CLOSURES. MAXIMUM SPACING SHALL BE 50' CENTER TO CENTER IN ADVANCE OF THE WORK AREA AND 200' CENTER TO CENTER WITHIN THE LIMITS OF THE WORK AREA.~~

4. THE WORK TRUCK SHOWN AT THE BEGINNING OF THE WORK AREA SHALL BE IN PLACE AND UNOCCUPIED WHENEVER MEN ARE WORKING WITHIN THE WORK AREA. THIS TRUCK SHALL BE MOVED FROM THE PAVEMENT WHENEVER WORKMEN ARE NOT IN THE WORK AREA. OTHER PROTECTIVE DEVICES MAY BE USED IN LIEU OF THE WORK TRUCK SHOWN WHEN APPROVED BY THE ENGINEER.

5. THE SPACINGS BETWEEN CONSTRUCTION AND MAINTENANCE SIGNS SHOWN ON THIS DETAIL MAY REQUIRE ADJUSTMENTS (INCREASES OR DECREASES) TO ASSURE THAT THEY ARE POSITIONED NO CLOSER THAN 200 FEET TO EXISTING SIGNS AS DETERMINED BY THE ENGINEER.

6. SEE SHEET 145 WHEN WORK CAN BE CONFINED TO 8 FEET FROM EDGE OF PAVEMENT.

8. *FOR NIGHT CLOSURES, EACH OF THE FIRST TWO SIGNS IN THE SEQUENCE (ROAD WORK AHEAD AND WORKERS IN EXIT LANE) IS REQUIRED TO BE SUPPLEMENTED BY A TYPE A FLASHING BARRICADE WARNING LIGHT.*

9. *WORK VEHICLES SHALL BE EQUIPPED WITH A 360° ROTATING OR FLASHING AMBER BEACON CLEARLY VISIBLE A MINIMUM OF ¼ MILE.*

OHIO DEPARTMENT OF TRANSPORTATION

LANE CLOSURE IN DECELERATION LANE

DATE 8-3-79

7K-2

Rev. EEF 9/84

FED. RD. DIVISION	STATE	PROJECT	
5	OHIO		

PLAN NO.

145
213

TRUMBULL COUNTY
TRU-5B-0.00

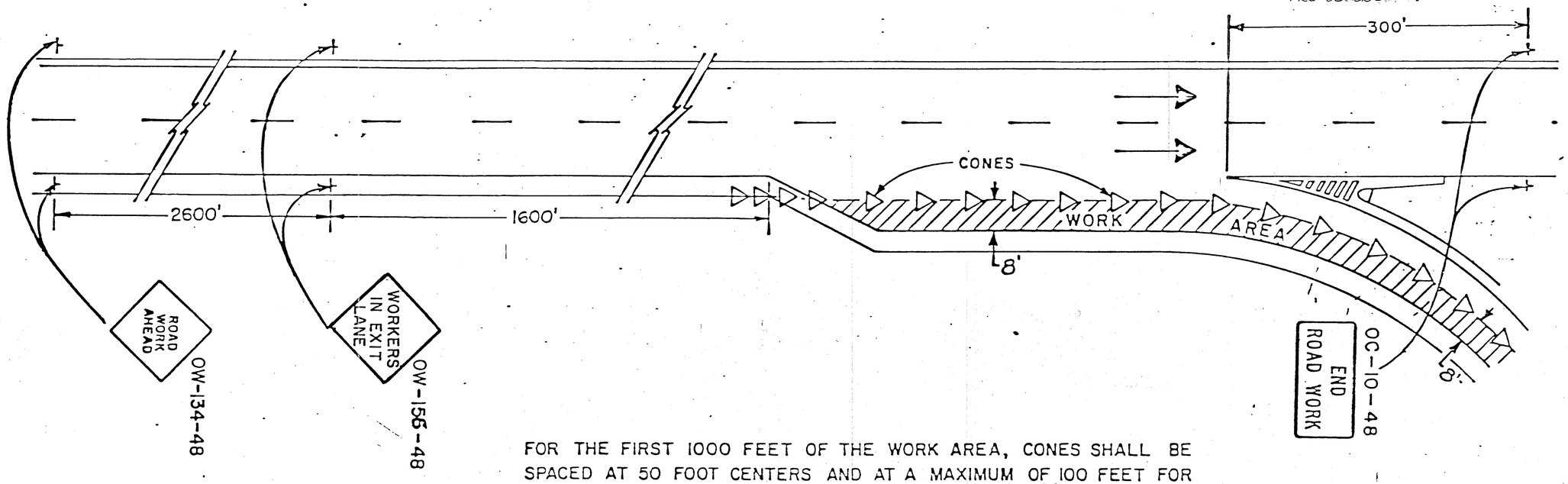

FOR THE FIRST 1000 FEET OF THE WORK AREA, CONES SHALL BE SPACED AT 50 FOOT CENTERS AND AT A MAXIMUM OF 100 FEET FOR THE BALANCE OF THE WORK AREA. ALL CONES SHALL BE A MINIMUM OF 36 INCHES IN HEIGHT.

RAMP TRAFFIC SHALL BE MAINTAINED AT ALL TIMES.

SEE SHEET 144 WHEN THE WORK CAN NOT BE CONFINED TO 8 FEET FROM EDGE OF PAVEMENT.

DAYTIME ONLY

OHIO DEPARTMENT OF TRANSPORTATION

TYPICAL LANE CLOSURE IN DECELERATION LANE AND RAMP - FOR CLOSING INSIDE PORTION OF CURVE

DATE 11/77

Rev. 9/84

FED. RD. DIVISION	STATE	PROJECT.	
5	OHIO		

PLAN NO.

TRUMBULL COUNTY
TRU-5B-.000

146
213

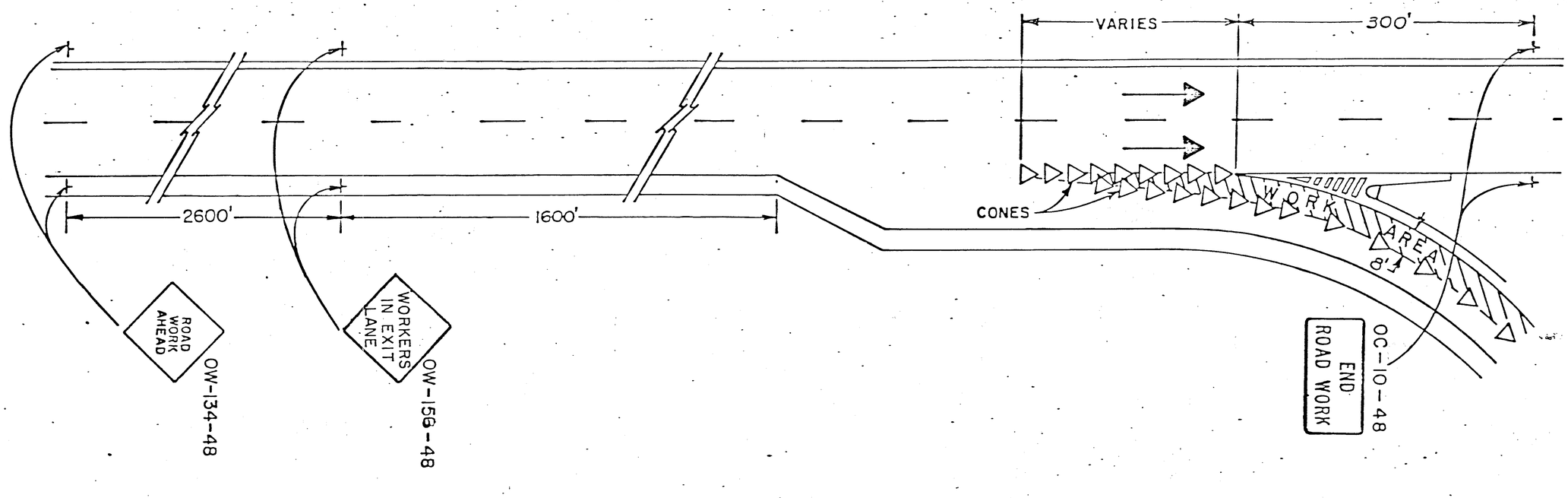

FOR THE FIRST 1000 FEET OF THE WORK AREA, CONES SHALL BE SPACED AT 50 FOOT CENTERS AND AT A MAXIMUM OF 100 FEET FOR THE BALANCE OF THE WORK AREA. ALL CONES SHALL BE A MINIMUM OF 36 INCHES IN HEIGHT.

RAMP TRAFFIC SHALL BE MAINTAINED AT ALL TIMES.

DAYTIME ONLY

OHIO DEPARTMENT OF TRANSPORTATION

TYPICAL LANE CLOSURE IN RAMP - FOR CLOSING OUTSIDE PORTION OF CURVE.

DATE 11/77

Rev. 9/84

FHWA REGION	STATE	PROJECT	
5	OHIO		

147
213

TRUMBULL COUNTY
TRU-58-000

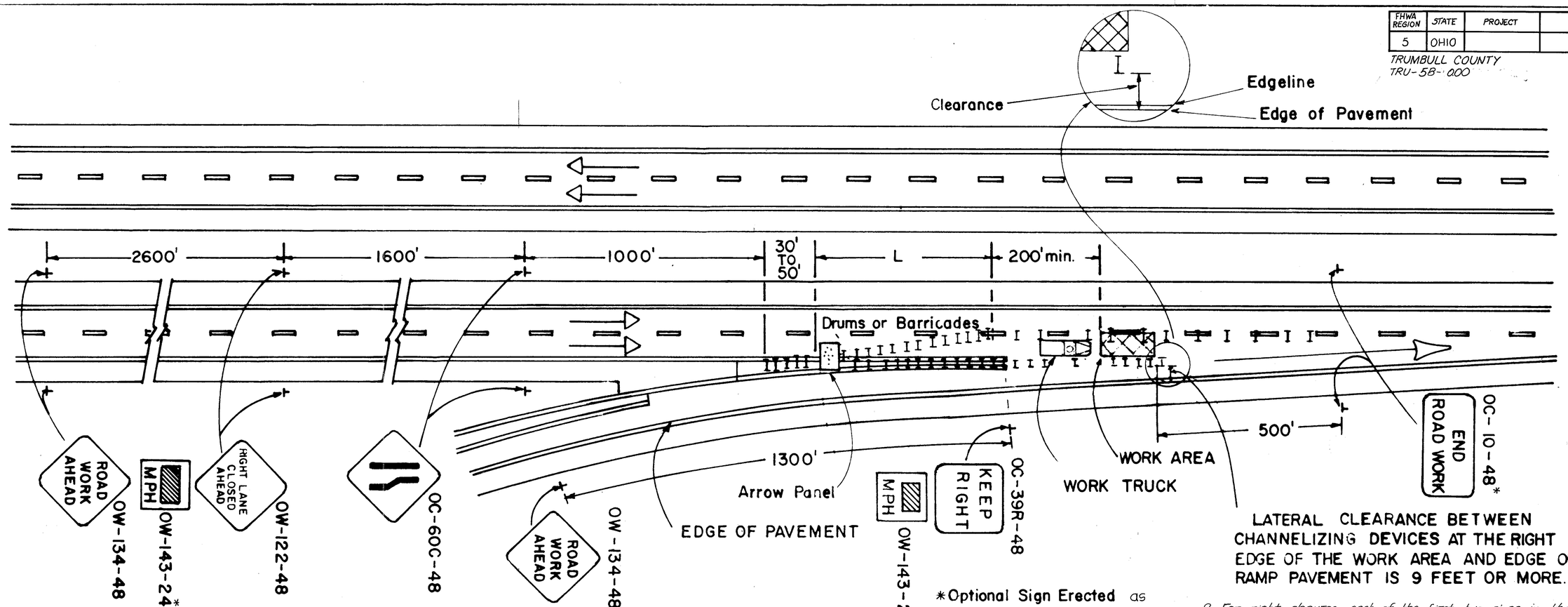

LATERAL CLEARANCE BETWEEN CHANNELIZING DEVICES AT THE RIGHT EDGE OF THE WORK AREA AND EDGE OF RAMP PAVEMENT IS 9 FEET OR MORE.

*Optional Sign Erected as Directed by the Engineer

9. *For night closures, each of the first two signs in the sequence (ROAD WORK AHEAD and RIGHT LANE CLOSED AHEAD) is required to be supplemented by a Type A flashing barricade warning light.*
Work vehicles shall be equipped with a 360° rotating or flashing amber beacon clearly visible a minimum of ¼ mile.

GENERAL NOTES

1. **THIS WORK AREA TRAFFIC CONTROL APPLICATION SHALL BE EMPLOYED WHEN THE LATERAL CLEARANCE BETWEEN THE CHANNELIZING DEVICES AT THE RIGHT EDGE OF THE WORK AREA AND THE EDGE OF THE RAMP PAVEMENT IS 9 FEET OR MORE. WHEN THE CLEARANCE IS LESS THAN 9 FEET, THE TRAFFIC CONTROL ON "LANE CLOSURE AT ENTRANCE RAMP: PLAN B" SHOULD BE USED, OR THE RAMP SHOULD BE CLOSED, OR ALLOWING RAMP TRAFFIC TO USE THE BERM SHOULD BE CONSIDERED PROVIDED THE OPERATION IS "SHORT" IN DURATION. WHEN THE RAMP IS CLOSED, APPROPRIATE DETOUR SIGNS SHALL BE PROVIDED.**

2. THIRTEEN (13) DRUMS OR BARRICADES SHALL BE USED TO FORM THE LANE TRANSITION TAPER IN ADVANCE OF THE WORK AREA. FIVE (5) CHANNELIZING DEVICES SHALL BE USED TO FORM THE TAPER ON THE SHOULDER. DRUMS OR BARRICADES SHALL BE SPACED AT 50 FOOT CENTERS. CONES MAY BE SUBSTITUTED FOR BARRICADES OR **DRUMS FOR** THE LANE CLOSURES DURING DAYLIGHT HOURS ONLY.

3. RAMP SIGNS SHALL BE DUAL MOUNTED ON MULTILANE RAMPS.

4. THE FLASHING ARROW PANEL SHALL BE IN ACCORDANCE WITH *TC-3510*.

5. THE WORK TRUCK SHOWN AT THE BEGINNING OF THE WORK AREA SHALL BE IN PLACE AND UNOCCUPIED WHENEVER MEN ARE WORKING WITHIN THE WORK AREA. THIS TRUCK SHALL BE MOVED FROM THE PAVEMENT WHENEVER WORKMAN ARE NOT IN THE WORK AREA. OTHER PROTECTIVE DEVICES MAY BE USED IN LIEU OF WORK TRUCK SHOWN WHEN APPROVED BY THE ENGINEER. A TRUCK MOUNTED IMPACT ATTENUATOR MAY BE EMPLOYED.

6. ~~TYPE C STEADY BURNING BARRICADE WARNING LIGHTS SHALL BE ERECTED ON DRUMS OR BARRICADES FOR NIGHT LANE CLOSURES. MAXIMUM SPACING SHALL BE 50' CENTER TO CENTER IN ADVANCE OF THE WORK AREA AND 200' CENTER TO CENTER WITHIN THE LIMITS OF THE WORK AREA.~~

7. TAPER FORMULAE:

$L = S \times W$ FOR SPEEDS OF 45 OR MORE.
$L = WS^2/60$ FOR SPEEDS OF 40 OR LESS.

WHERE:

L = MINIMUM LENGTH OF TAPER.
S = NUMERICAL VALUE OF POSTED SPEED LIMIT PRIOR TO WORK OR 85 PERCENTILE SPEED.
W = WIDTH OF OFFSET.

8. THE SPACINGS BETWEEN CONSTRUCTION AND MAINTENANCE SIGNS SHOWN ON THIS DETAIL MAY REQUIRE ADJUSTMENTS (INCREASES OR DECREASES) TO ASSURE THAT THEY ARE POSITIONED NO CLOSER TNAN 200 FEET TO EXISTING SIGNS AS DETERMINED BY THE ENGINEER.

OHIO DEPARTMENT OF TRANSPORTATION

LANE CLOSURE AT ENTRANCE RAMP: PLAN A

DATE 8-3-79

FHWA REGION	STATE	PROJECT	
5	OHIO		

148
213

TRUMBULL COUNTY
TRU-58-000

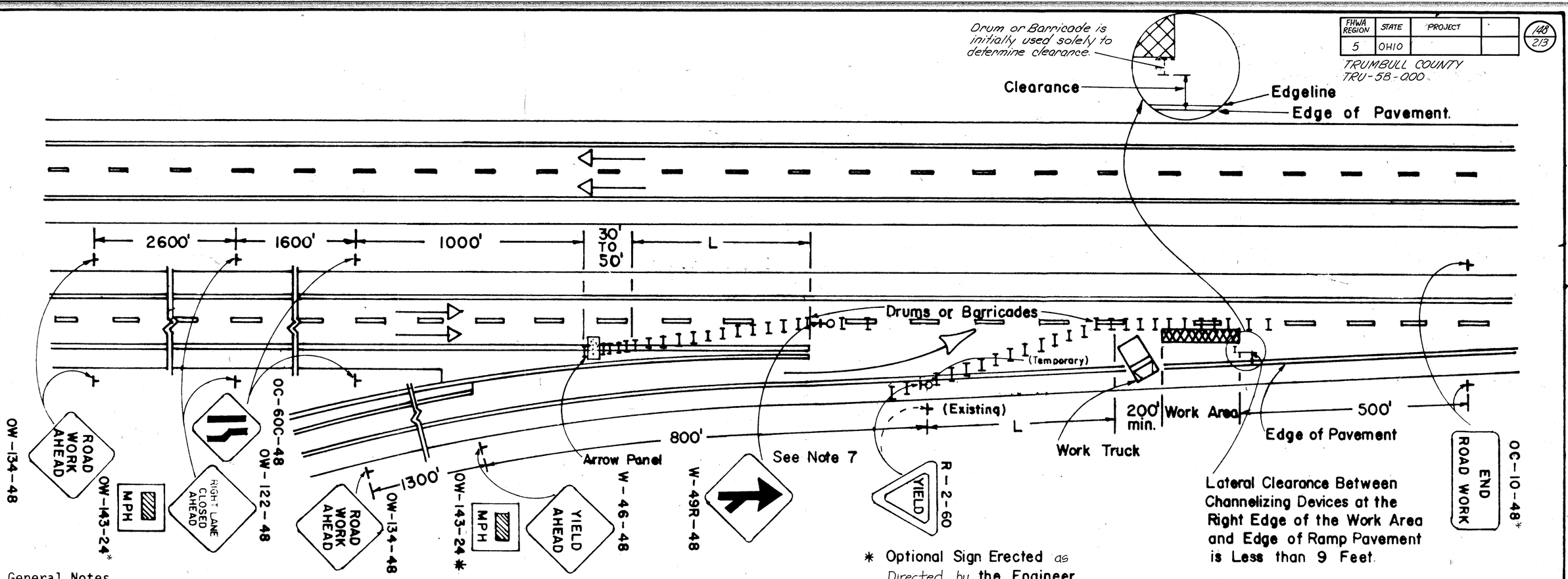

* Optional Sign Erected as Directed by the Engineer.

General Notes

1. This work area traffic control application shall be employed when the lateral clearance between channelizing devices at the right edge of the work area and the edge of the ramp pavement is less than 9 feet. When the clearance is more than 9 feet, the traffic control on "Lane Closure at Entrance Ramp: Plan A" should be used, or the ramp should be closed. When the ramp is closed, appropriate detour signs shall be provided.

2. Thirteen (13) drums or barricades shall be used to form the lane transition taper in advance of the work area. Five (5) channelizing devices shall be used to form the taper on the shoulder. Drums, or barricades shall be spaced at 50 foot centers. Cones may be substituted for barricades or drums for the lane closures during daylight hours only.

3. Ramp signs shall be dual mounted on multi-lane ramps. When the ramp is not long enough to allow placement as specified above, the signs may be spaced proportionately within the space available as determined by the Engineer (a 200' minimum spacing must be maintained).

4. The flashing arrow panel shall be in accordance with *TC-35.10*.

5. The work truck shown at the beginning of the work area shall be in place and unoccupied whenever men are working within the work area. This truck shall be moved from the pavement whenever workmen are not in the work area. Other protective devices may be used in lieu of work truck shown when approved by the Engineer.

6. Type C steady burning barricade warning lights shall be erected on drums or barricades for night lane closures. Maximum spacing shall be 50' center to center in advance of the work area and 200' center to center within the limits of the work area.

7. It may be necessary to move the location of an existing Yield condition In these cases, the permanent R-2 sign installation shall be covered and the temporary installation shall be mounted upon a drive post which shall be banded to a drum with stainless steel strapping material or other techniques subject to the approval of the Engineer.

8. Taper Formulae:

   $L = S \times W$ for Speeds of 45 or more.
   $L = WS^2/60$ for Speeds 40 or less.

   Where:

   L = Minimum length of taper.
   S = Numerical value of posted speed limit prior to work or 85 percentile speed.
   W = Width of offset.

9. THE SPACINGS BETWEEN CONSTRUCTION AND MAINTENANCE SIGNS SHOWN ON THIS DETAIL MAY REQUIRE ADJUSTMENTS (INCREASES OR DECREASES) TO ASSURE THAT THEY ARE POSITIONED NO CLOSER THAN 200 FEET TO EXISTING SIGNS AS DETERMINED BY THE ENGINEER.

10. *For night closures, each of the first two signs in the sequence (ROAD WORK AHEAD and RIGHT LANE CLOSED AHEAD) is required to be supplemented by a Type A flashing barricade warning light.*

Work vehicles shall be equipped with a 360° rotating or flashing amber beacon clearly visible a minimum of ¼ mile.

OHIO DEPARTMENT OF TRANSPORTATION

LANE CLOSURE AT ENTRANCE RAMP PLAN B	DATE 8 3-79

ITEM 621 TRAFFIC ZONE PAVEMENT MARKING

Computations By Initials N.J.W. Date 12-3-87
Computations Checked By Initials K.M.S Date 12/3/87
Final Revisions By Initials Date

FHWA REGION	STATE	PROJECT	
5	OHIO		

149
213

TRUMBULL COUNTY
TRU-58-0.00

4" EDGE LINE

Location	Station	White	Yellow
S.R. 5 (Bypass) E.B.	1024+81 to 1025+59.07	78	
" " "	Station Equation		
" " "	1032+86.85 to 1046+43.97 (Bk)=	1357	
" " "	1045+51.44 (Ahd) to 1047+51	200	
" " "	1055+51.44 to 1108+00	5249	
" " "	1117+17.23 to 1128+69	1152	
" " "	1136+71.14 to 1141+67	496	
" " "	1149+70.57 to 1225+75	7604	
" " "	537+16.48 to 547+32	1016	
" " "	555+31.90 to 640+50.52	8519	
" " "	649+50.52 to 669+00	1949	
" " "	677+00 to 717+14.72	4015	
" " "	726+14.72 to 726+46	31	
S.R. 5 (Bypass) E.B.	Station Equations		
" " "	1024+81 to 1046+43.97 (Bk) =		2163
" " "	1045+51.44 (Ahd) to 1230+89.58 (Bk)=		18,538
" " "	534+31.06 (Ahd) to 726+46		19,215
S.R. 5 (Bypass) W.B.	1023+75 to 1031+27.61	753	
" " "	1039+51 to 1049+75.42	1024	
" " "	1059+00 to 1105+26.29	4626	
" " "	1113+26 to 1136+16	2290	
" " "	1145+00 to 1220+93.15	7593	
" " "	Station Equation		
" " "	1228+90 to 1230+89.58 (Bk)=	200	
" " "	534+31.06 (Ahd) to 553+50	1919	
" " "	562+50 to 637+07.65	7458	
" " "	645+09 to 663+81.74	1873	
" " "	672+81.74 to 705+20	3238	
" " "	713+20 to 726+46	1326	
S.R. 5 (Bypass) W.B.	Station Equation		
" " "	1024+00 to 1230+89.58 (Bk)=		20,690
" " "	534+31.06 (Ahd) to 726+46		19,215
Ramp "A" Market St. E.B.	1025+59.07 (ML) to 1039+12 (Ramp)	1353	
" " "	1032+28 (Ramp) to 1034+10		182
" " "	1036+86 to 1039+12		226
Ramp "A-1" Market St. E.B.	1036+84 to 1037+10		26
" " "	1034+10 (Rp "A") to 1037+10 (Rp "A-1")		300
Ramp "B" Market St. E.B.	Station Equation		
" " "	1032+81 to 1046+43.97 (Ramp) Bk=	1363	
" " "	1045+51.44 (ML) Ahd to 1055+51.44 (ML)	1000	
" " "	1033+23 to 1034+96		173
" " "	1035+79 to 1046+43.97 (Ramp)		1065
Ramp "B-1" Market St. E.B.	1034+96 (Rp "B") to 1035+17 (Market St)	80 *	
" " "	1034+80 (Market St) to 1035+79 (Ramp "B")		145 *
Ramp "B" U.S.R. 422 E.B.	1108+00 (ML) to 1130+85.02 (Ramp)	2285	
" " "	1116+54 (Ramp) to 1130+85.02		1431
Ramp "A" U.S.R. 422 E.B.	1113+11 (Ramp) to 1136+71.14 (ML)	2360	
" " "	1113+42 to 1126+68.83 (Ramp)		1327
Ramp "C" U.S.R. 422 E.B.	1127+80 (Ramp) to 1149+70.57 (ML)	2191	
" " "	1128+12 to 1139+66.97 (Ramp)		1155
Ramp "A" S.R. 45 E.B.	Station Equation		
" " "	1225+75 (ML) to 1230+89.58 Bk =	515	
" " "	534+31.06 (Rp) Ahd to 550+35.40	1604	
" " "	536+45 (Ramp) to 550+35.40		1340

4" EDGE LINE (Continued)

Location	Station	White	Yellow
Ramp "B" S.R. 45 E.B.	531+78 (Ramp "B") to 555+31.90 (ML)	2354	
" " "	548+21 (Ramp "A") to 550+35.40 (Rp "A")	214	
" " "	Station Equation		
" " "	550+35.40 (Rp "A") to 547+31.75 (Rp "A") Bk=		304
" " "	535+98.88 (Rp "B") Ahd to 545+31.90 (Rp "B")		933
" " "	531+78 (Ramp "B") to 535+12 (Ramp "B")		334
Ramp "F" Park-Jones E.B.	640+50.52 (ML) to 656+05.79 (Ramp)	1555	
" " "	648+80 (Ramp) to 656+05.79		726
Ramp "H" Park-Jones E.B.	656+17 (Ramp) to 677+00 (ML)	2083	
" " "	656+17 to 658+36.45		219
" " "	658+36.45 to 667+00		864
Ramp "N" Park-Jones E.B.	Station Equation		
" " "	656+83.70 to 658+36.45 (Rp "N") Bk=	153	
" " "	658+36.45 (Rp "H") Ahd to 659+25 (Rp "H")	89	
" " "	656+83.70 to 658+36.45		153
Ramp "K-L" S.R. 5 Inter. E.B.	717+14.72 (ML) to 736+05.83 (Rp "K")	1891	
" " "	722+49 (Rp "L") to 723+32 (Rp "L")	83	
" " "	Station Equation		
" " "	725+35 (Rp "K") to 731+23.64 (Rp "K") Bk=		589
" " "	725+48.32 (Rp "L") Ahd to 722+49 (Rp "L")		699
" " "	733+28 (Rp "K") to 736+05.83 (Rp "K")		278
Ramp "C" Market St. W.B.	1031+27.61 (ML) to 1051+08 (Ramp)	1980	
" " "	1041+51.19 (Rp.) to 1047+73.21		622
" " "	1048+56 to 1050+78		222
Ramp "D" Market St. W.B.	1043+81.90 (Rp.) to 1059+00 (ML)	1518	
" " "	1043+81.90 to 1050+38 (Rp.)		656
Ramp "C-D" Market St. W.B. R.A.	1041+97.76 to 1042+95	97	
" " " Lt.	1041+97.76 to 1043+81.90	184	
" " " Rt.	1041+97.76 to 1043+81.90		184
" " " Lt.	1041+97.76 to 1043+81.90		184
Ramp "E" U.S.R. 422 W.B.	1105+26.29 (ML) to 1127+19.49 (Ramp)	2193	
" " "	1115+26.29 (Ramp) to 1127+19.49		1193
	1126+45		
Ramp "D" U.S.R. 422 W.B.	1126+45 (Ramp) to 1145+00 (ML)	1855	
" " "	1126+45 to 1128+43		198
" " "	1129+81.92 to 1136+77		695
Ramp "D" Connector 422 W.B.	27+53 to 28+45	92	
" " "	27+53 to 29+81.92		229
Ramp "D" S.R. 45 W.B.	Station Equation		
" " "	1220+93.15 (ML) to 1230+89.58 (ML) Bk=	996	
" " "	534+31.06 (Rp.) Ahd to 544+29.26	998	
" " "	534+31.06 to 544+29.29		998
Ramp "C" S.R. 45 W.B.	545+98.88 (Ramp) to 562+50 (ML)	1651	
" " "	545+98.88 to 554+23 (Ramp)		824
Ramp "E" Park-Jones W.B.	637+08.97 (ML) to 656+26.17 (Ramp)	1917	
" " "	647+08.93 (Rp.) to 656+26.17		917
Ramp "G" Park-Jones W.B.	656+57.73 (Rp.) to 672+81.74 (ML)	1624	
" " "	656+57.73 to 664+49 (Ramp)		791
Ramp "I" S.R. 5 Inter. W.B.	705+20 (ML) to 725+65 (Ramp)	2045	
" " "	715+20.31 (Ramp) to 722+84.54		764
" " "	723+22 to 725+40		218
Ramp "M" S.R. 5 Inter. W.B.	722+72 (Rp. "I") to 724+44 (Rp. "M")	172	
" " "	722+84.54 to 724+44		154
	Total Lin. Ft.	102,461	100,794
	Total Lin. Ft.	203,255	
	Total Miles	38.50	

WHITE LANE LINE (10'-30')

Location	Station	Lin. Ft.
S.R. 5 (Bypass) E.B.	1024+81 to 1046+43.97 (Bk)=	2163
" " "	1045+51.44 (Ahd) to 1230+89.58 (Bk)=	18,538
" " "	534+31.06 (Ahd) to 726+46	19,215
S.R. 5 (Bypass) W.B.	Station Equation	
" " "	1023+85 to 1230+89.58 (Bk)=	20,705
" " "	534+31.06 (Ahd) to 726+46	19,215
Exit Rp "A" Market St. E.B.	1028+71 (ML) to 1030+83 (ML)	212
Ent. Rp. "B" " "	1047+51 (ML) to 1049+91	240
Exit Rp "B" U.S.R. 422 E.B.	1111+93 (ML) to 1114+87	294
Ent. Rp. "A" " "	1128+69 (ML) to 1131+09 (ML)	240
Ent. Rp. "C" " "	1141+67 (ML) to 1144+07 (ML)	240
Exit Rp "A" S.R. 45 E.B.	Station Equation	
" " "	1228+62 (ML) to 1230+89.58 (ML) Bk=	228
" " "	534+31.06 (ML) Ahd to 534+91 (ML)	60
Ent. Rp. "B" " "	547+32 (ML) to 549+72 (ML)	240
Exit Rp "F" Park-Jones E.B.	644+38 (ML) to 647+26 (ML)	288
Ent. Rp. "H" " "	659+25 to 660+45	120 *
" " "	669+00 (ML) to 671+40 (ML)	240
Exit Rp "K" S.R. 5 E.B.	720+92 (ML) to 723+70 (ML)	278
Ent. Rp "C" Market St. W.B.	1037+11 (ML) to 1039+51 (ML)	240
Exit Rp "D" " "	1051+95 (ML) to 1054+98 (ML)	303
Ent. Rp "E" U.S.R. 422 W.B.	1110+86 (ML) to 1113+26 (ML)	240
Exit Rp "D" " "	1138+51 (ML) to 1141+26 (ML)	275
Ent. Rp "D" S.R. 45 W.B.	1226+50 (ML) to 1228+90 (ML)	240
Exit Rp "C" " "	555+75 (ML) to 558+63 (ML)	288
Ent. Rp "E" Park-Jones W.B.	642+69 (ML) to 645+09 (ML)	240
Exit Rp "G" " "	666+07 (ML) to 668+95 (ML)	288
Ent. Rp "I" S.R. 5 W.B.	710+80 (ML) to 713+20 (ML)	240
	721+72 to 722+72	100 *
	Total Lin. Ft.	84,970
	Total Miles	16.09

12" TRANSVERSE LINES (W)

Location	Station	Lin. Ft.
Exit Rp "A" Market St. E.B.	1036+16 to 1036+86	120
" Rp "K" S.R. 5 "	732+78 to 733+28	90
" Rp "D" U.S.R. 422 W.B.	1128+43 to 1129+05	165
	Total Lin. Ft.	375

24" STOP LINE

Location	Station	
Exit Rp "D" Connector U.S.R. 422 W.B.	27+65	16
	Total Lin. Ft.	16

8" CHANNELIZING LINE

Location	Station	Lin. Ft.
Exit Rp "A" Market St. E.B.	1030+83 (ML) to 1032+86.85 (ML)	204
" " " "	1030+83 (ML) to 1032+28 (Ramp)	145
" " " "	1035+50 to 1036+86	136 *
" " " "	1036+00 (Rp "A-1") to 1036+84 (Rp "A-1")	84 *
Ent. Rp "B" " "	1045+51.44 (Ramp) to 1047+51 (ML)	200
Exit Rp "B" U.S.R. 422 E.B.	1114+87 (ML) to 1117+17.23 (ML)	230
" " " "	1114+87 (ML) to 1116+54 (Ramp)	167
" " " "	1129+66 to 1130+85.02	119 *
Ent. Rp "A" " "	1126+68.83 (Ramp) to 1128+69 (ML)	200
" Rp "C" " "	1139+66.97 (Ramp) to 1141+67 (ML)	200
Exit Rp "A" S.R. 45 E.B.	534+91 (ML) to 537+16.48	225
" " " "	534+91 (ML) to 536+45 (Ramp)	154
" " " "	547+32 to 550+35.40	303 *
Ent. Rp "B" " "	545+31.90 (Ramp) to 547+32 (ML)	200
Exit Rp "F" Park-Jones E.B.	647+26 (ML) to 649+50.52 (ML)	225
" " " "	647+26 (ML) to 648+80 (Ramp)	154
Ent. Rp "H" " "	667+00 (Ramp) to 669+00	200
" " " "	658+36.45 to 659+25	89
Exit Rp "K" S.R. 5 E.B.	723+70 (ML) to 726+14.72 (ML)	245
" " " "	723+70 (ML) to 725+35 (Ramp)	165
" " " "	732+78 to 733+28	100 **
Ent. Rp "C" Market St. W.B.	1039+51 (ML) to 1041+51.19 (Ramp)	200
Exit Rp "D" " "	1049+75.12 (ML) to 1051+95 (ML)	220
" " " "	1050+38 (Ramp) to 1051+95 (ML)	157
Ent. Rp "E" U.S.R. 422 W.B.	1113+26 (ML) to 1115+26.29 (Ramp)	200
Exit Rp "D" " "	1136+16 (ML) to 1138+51 (ML)	235
" " " "	1136+77 (Ramp) to 1138+51 (ML)	174
" " " "	1128+43 to 1130+25	182 *
Rp "D" Connector "	28+45 to 29+15	70 *
Ent. Rp "D" S.R. 45 W.B.	1228+90 (ML) to 1230+89.58 (Ramp)	200
Exit Rp "C" " "	553+50 (ML) to 555+75 (ML)	225
	554+23 (Ramp) to 555+75 (ML)	152
	545+98.88 to 549+75	376 *
Ent. Rp "E" Park-Jones W.B.	645+09 (ML) to 647+08.93 (Ramp)	200
Exit Rp "G" " "	663+81.74 (ML) to 666+07 (ML)	225
" " " "	664+49 (Ramp) to 666+07 (ML)	158
" " " "	656+57.73 to 661+00	442 *
Ent. Rp "I" S.R. 5 W.B.	713+20 (ML) to 715+20.31 (Rp.)	200
	722+72 to 723+22	50
	Total Lin. Ft.	7411

* See Detail Sheets 151 & 152.
** Quantity includes both sides of transverse markings

24" TRANSVERSE LINES (W)

Location	Station	Lin. Ft.
Exit Rp "A" Market St. E.B.	1030+83 (ML) to 1032+26.85 (ML)	243
" Rp "B" U.S.R. 422 "	1114+87 (ML) to 1116+55.23 (ML)	270
" Rp "A" S.R. 45 "	534+91 (ML) to 536+36.48 (ML)	237
" Rp "F" Park-Jones "	647+26 (ML) to 648+80.52 (ML)	243
" Rp "K" S.R. 5 "	723+70 (ML) to 725+47.72 (ML)	300
Exit Rp "D" Market St. W.B.	1050+37.42 (ML) to 1051+95 (ML)	251
" Rp "D" U.S.R. 422 "	1136+77.5 (ML) to 1138+51 (ML)	281
" Rp "C" S.R. 45 "	554+20 (ML) to 555+75 (ML)	243
" Rp "G" Park-Jones "	664+51.74 (ML) to 666+07 (ML)	243
	Total Lin. Ft.	2311

ITEM 621 TRAFFIC ZONE PAVEMENT MARKING

ITEM 614 TEMPORARY PAVEMENT MARKING

Computations By Initials N.J.V.	Date 12-3-87
Computations Checked By Initials K.M.S.	Date 12/3/87
Final Revisions By Initials	Date

FHWA REGION	STATE	PROJECT	
5	OHIO		

150/213

TRUMBULL COUNTY
TRU-58-000

LANE LINE 4"x48" (40'c/c)

Location	Station	Lin. Ft.
S.R. 5 (Bypass) E.B.	Station Equations	
" " "	1024+81 to 1046+43.97 (Bk)=	4336
" " "	1045+51.44 (Ahd) to 1230+89.58 (Bk)=	37,076
" " "	534+31.06 (Ahd) to 726+46	38,430
S.R. 5 (Bypass) W.B.	Station Equation	
" " "	1023+85 to 1230+89.58 (Bk)=	41,409
" " "	534+31.06 (Ahd) to 726+46	38,430
	Total Lin. Ft.	159,671
	Total Miles	30.24

GORE LINES 2-4"x50' CONTINUOUS

Location	Station	Lin. Ft.
Exit Rp. "A" Market St. E.B.	1030+83 to 1031+33	200
" " "	1036+16 to 1036+66	200
" Rp. "B" U.S.R. 422 "	1114+87 to 1115+37	200
" Rp. "A" S.R. 45 "	534+91 to 535+41	200
" Rp. "F" Park-Jones "	647+26 to 647+76	200
" Rp. "K" S.R. 5 "	723+70 to 724+20	200
" " " "	732+78 to 733+28	200
Exit Rp. "D" Market St. W.B.	1051+45 to 1051+95	200
" Rp. "D" U.S.R. 422 "	1138+01 to 1038+51	200
" " " "	1128+55 to 1129+05	200
" Rp. "C" S.R. 45 "	555+25 to 555+75	200
" Rp. "G" Park-Jones "	665+57 to 666+07	200
	Total Lin. Ft.	2400

CHANNELIZING LINE 4"x12"(20'c/c)

Location	Station	Lin. Ft.
Ent. Rp. "B" Market St. E.B.	1045+51.44 to 1047+51	400
" Rp. "C" U.S.R. 422 "	1139+66.97 to 1141+67	400
" Rp. "B" S.R. 45 "	545+31.90 to 547+32	400
" Rp. "H" Park-Jones "	667+00 to 669+00	400
" " " "	658+36.45 to 659+25	178
Ent. Rp. "C" Market St. W.B.	1037+51 to 1041+51.19	400
" Rp. "E" U.S.R. 422 "	1113+26 to 1115+26.39	400
" Rp. "D" S.R. 45 "	1228+90 to 1230+89.58	400
" Rp. "E" Park-Jones "	645+09 to 647+08.93	400
" Rp. "I" S.R. 5 "	713+20 to 715+20.31	400
" " " "	722+72 to 723+22	100
Exit Rp. "A" Market St. E.B.	1035+50 to 1036+00	100
" Rp. "B" U.S.R. 422 "	1129+66 to 1130+85.02	238
" Rp. "A" S.R. 45 "	547+32 to 550+35.40	606
Exit Rp. "D" U.S.R. 422 W.B.	1129+15 to 1130+25	220
" Rp. "C" S.R. 45 "	545+98.88 to 549+75	752
" Rp. "G" Park-Jones "	656+57.73 to 661+00	884
	Total Lin. Ft.	6678

Note: Quantities shown are for a two course application

PAVEMENT MARKING SUMMARY

ITEM	SHEET No. 150	149	151	152	ITEM	TOTAL	UNIT	DESCRIPTION
614	30.24				614	30.24	Miles	Temporary Lane Lines, Class II
614	66.78				614	66.78	Lin. Ft.	Temporary Channelizing Lines, Class I
614	2400				614	2400	Lin. Ft.	Temporary Gore Markings, Class II
614	18				614	18	Each	Work Zone Marking Sign
621		375			621	375	Lin. Ft.	Transverse Lines, 12"
621		38.50			621	38.50	Miles	Edge Lines
621		16.09			621	16.09	Miles	Lane Lines
621		16			621	16	Lin. Ft.	Stop Lines
621		74.11			621	74.11	Lin. Ft.	Channelizing Lines
621		23.11			621	23.11	Lin. Ft.	Transverse Lines, 24"
621			6	7	621	13	Each	Lane Arrows
621			6	6	621	12	Each	Word "ONLY" on Pavement, 96x96 inch
						Quantities Carried to General Summary		

WORK ZONE MARKING SIGN LOCATIONS

Eastbound Lanes		Westbound Lanes	
Station	Station	Station	Station
1025+00	1225+00	1041+50 Ramp "C"	620+00
1045+50 (M.L.) Ramp "B"	545+30 Ramp "B"	1105+00	647+10 Ramp "E"
1120+00	635+00	1115+25 Ramp "E"	715+20 Ramp "I"
1126+70 Ramp "A"	667+00 Ramp "H"	1210+00	725+00
1139+70 Ramp "C"		534+30 Ramp "D"	

Total No. of Signs = 18

FHWA REGION	STATE	PROJECT	
5	OHIO		

151/213

TRUMBULL COUNTY
TRU-5B-000

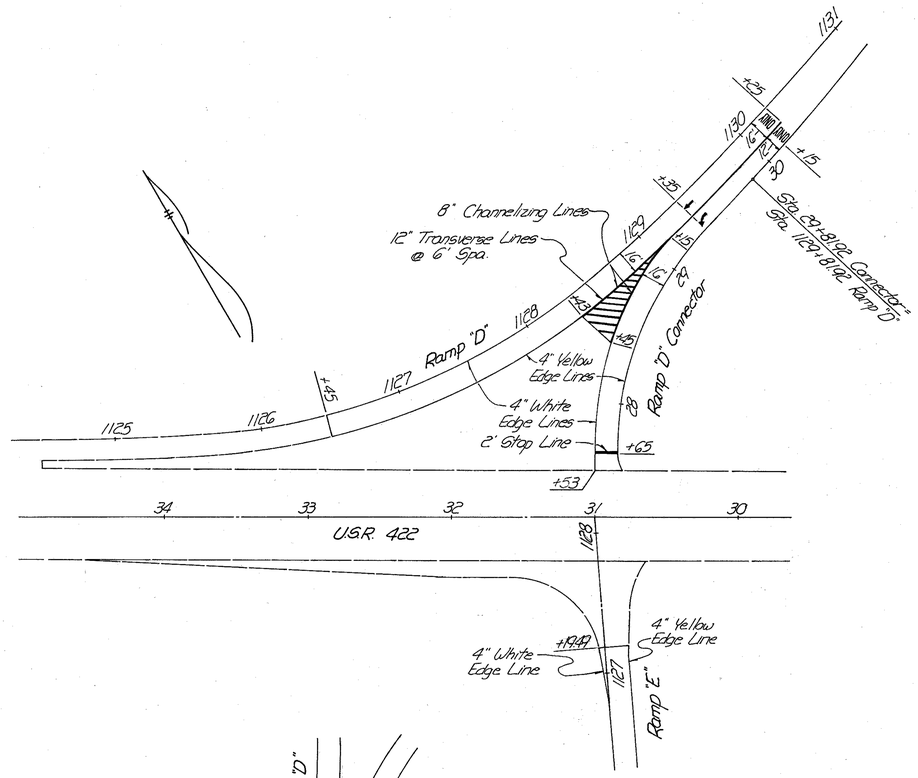

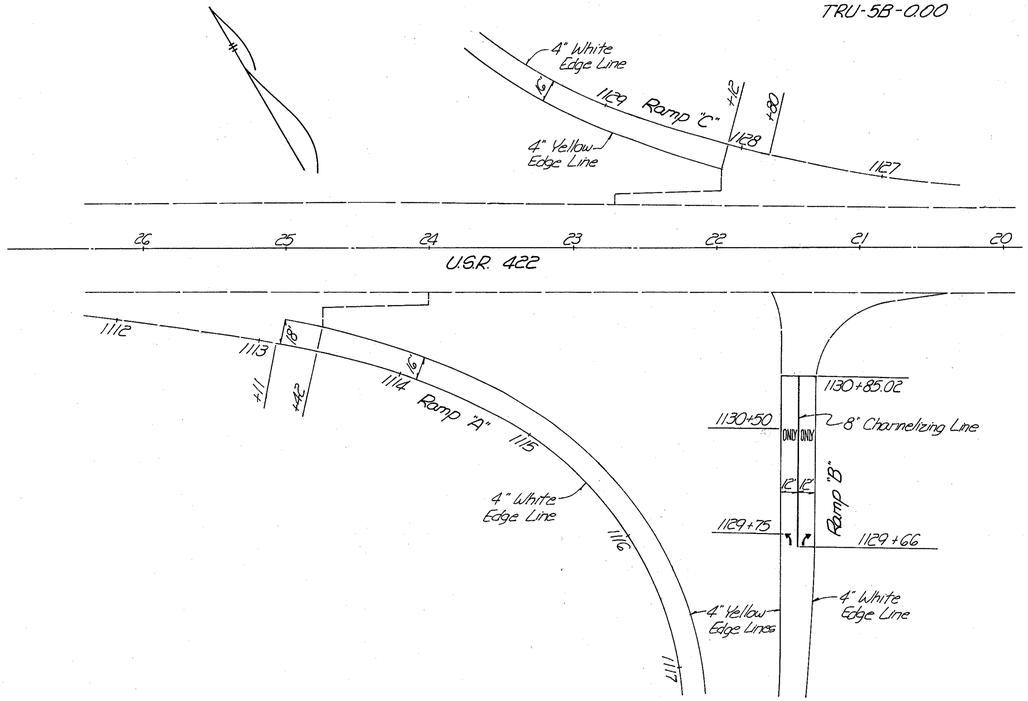

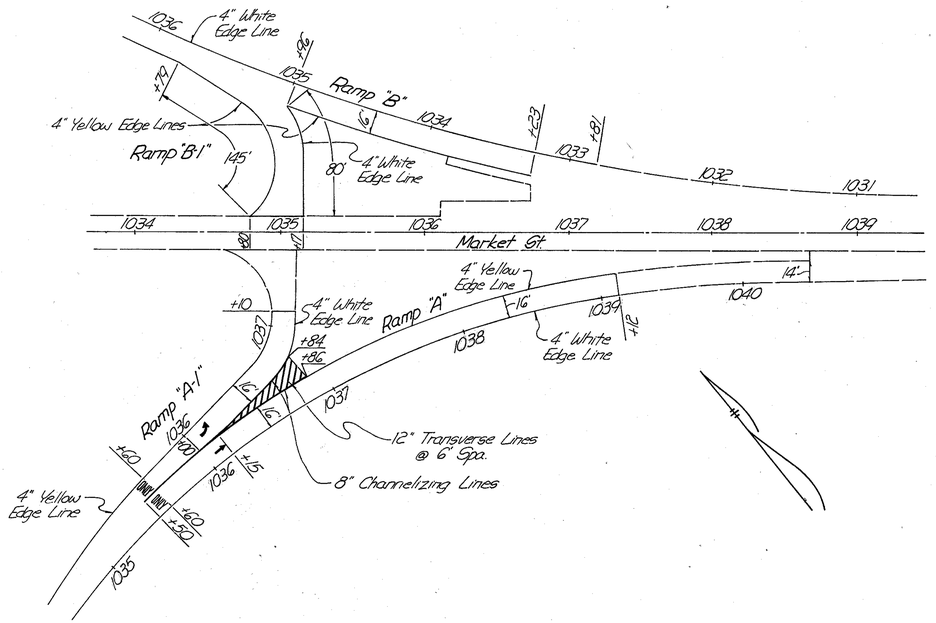

PAVEMENT MARKING DETAILS

FHWA REGION	STATE	PROJECT	
5	OHIO		

152
213

TRUMBULL COUNTY
TRU-5B-0.00

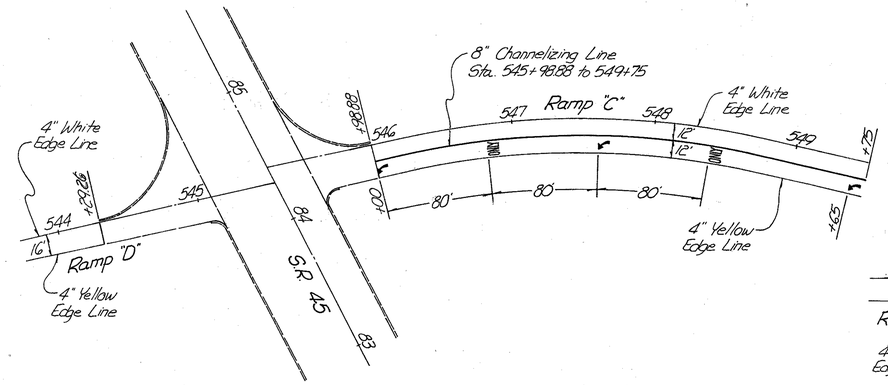

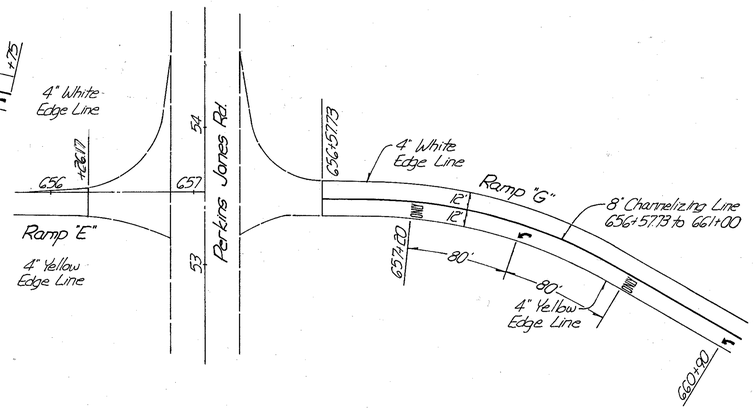

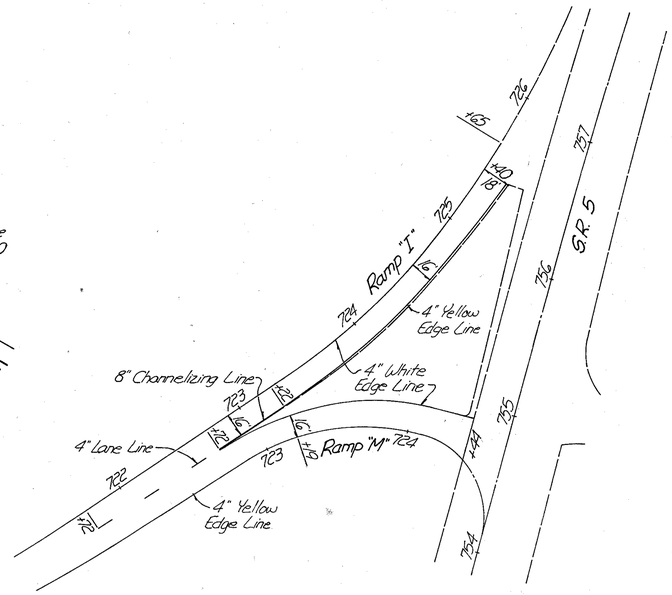

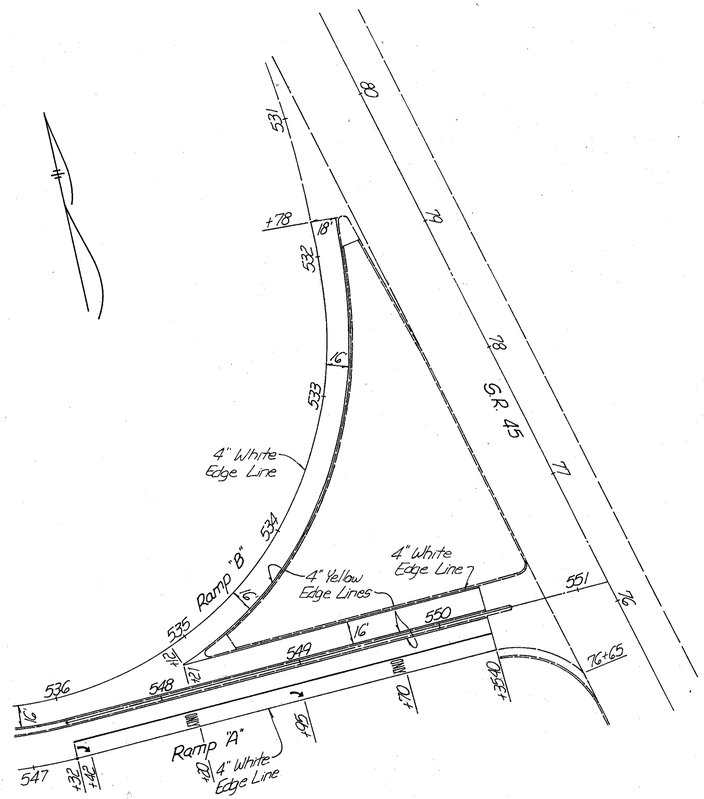

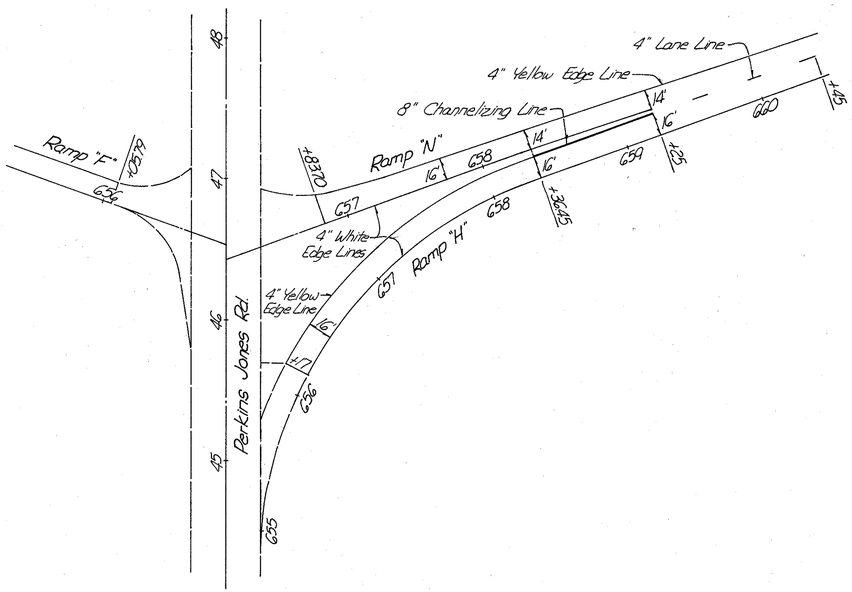

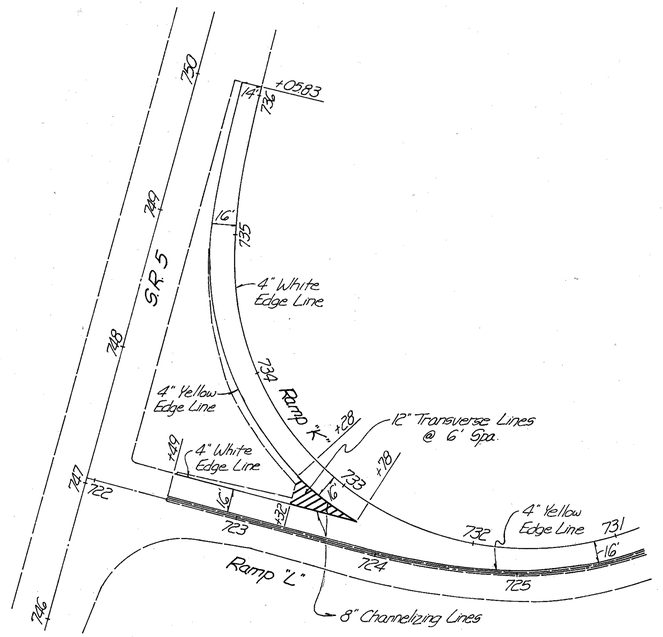

PAVEMENT MARKING DETAILS

GENERAL SUMMARY

Computations By
Initials REH Date 11-30-87
Computations Checked By
Initials WMS Date 11/30/87
Final Revisions By
Initials Date

FHWA REGION	STATE	PROJECT	
5	OHIO		

153
213

TRUMBULL COUNTY
TRU-5B-0.00

ITEM	SHEET NUMBER 154	155	156	ITEM	QUANT.	UNIT	DESCRIPTION
							TRAFFIC SIGNING
630	32.3	11.5		630	43.8	CU.YD.	CONCRETE FOR EMBEDDED FOUNDATIONS
630	25			630	25	LIN.FT.	GROUND MOUNTED SUPPORTS, NO. 4 POST
630	255	98		630	353	LIN.FT.	GROUND MOUNTED SUPPORTS, S4x7.7 BEAMS
630	162	119		630	281	LIN.FT.	GROUND MOUNTED SUPPORTS, W10x12 BEAMS
630	302			630	302	LIN.FT.	GROUND MOUNTED SUPPORTS, W10x22 BEAMS
630	85.5	66.5		630	152	LIN.FT.	GROUND MOUNTED SUPPORTS, W8x18 BEAMS
630	28	15		630	43	EACH	BREAKAWAY BEAM CONNECTION
630			8	630	8	EACH	SIGN ATTACHMENT ASSEMBLY
630			6	630	6	EACH	LUMINAIRE SUPPORT ASSEMBLY, TYPE TC-31.21
630	68.2	9.25		630	77.45	SQ.FT.	SIGNS, FLAT SHEET, TYPE G
630	496	405		630	901	SQ.FT.	SIGNS, EXTRUSHEET
630			253	630	253	SQ.FT.	SIGNS, EXTRUSHEET, TYPE G
630			1	630	1	EACH	OVERHEAD SIGN SUPPORT MODIFICATION, TYPE TC-12.30, DESIGN 5, NEW ARMS 25 FEET
630	8	1	18	630	27	EACH	EXISTING SIGNS REVISED WITH DEMOUNTABLE COPY
630	8			630	8	EACH	REMOVAL OF GROUND MOUNTED SIGN AND REERECTION
630	13	7		630	20	EACH	REMOVAL OF GROUND MOUNTED SIGN AND STORAGE
630	6	1		630	7	EACH	REMOVAL OF GROUND MOUNTED MAJOR SIGN AND DISPOSAL
630	12	2		630	14	EACH	REMOVAL OF GROUND MOUNTED MAJOR SIGN AND REERECTION
630	51	15		630	66	EACH	REMOVAL OF GROUND MOUNTED POST SUPPORT AND DISPOSAL
630	2	2		630	4	EACH	REMOVAL OF GROUND MOUNTED BEAM SUPPORT AND DISPOSAL
630			8	630	8	EACH	REMOVAL OF OVERHEAD MOUNTED SIGN AND REERECTION
630			2	630	2	EACH	REMOVAL OF OVERHEAD MOUNTED SIGN AND STORAGE
630			1	630	1	EACH	REMOVAL OF OVERHEAD SIGN SUPPORT AND REERECTION TYPE 7.65
630			2	630	2	EACH	REMOVAL OF OVERHEAD SIGN SUPPORT AND REERECTION TYPE 18.24
630			4	630	4	EACH	REMOVAL OF OVERHEAD SIGN SUPPORT AND REERECTION TYPE 18.26
631			4	631	4	EACH	SIGNS WIRED
631			6	631	6	EACH	BALLAST, INTEGRAL, TYPE CMRI-100-480
631			6	631	6	EACH	MERCURY VAPOR LUMINAIRE, TYPE TC-31.21 , WITH 100 WATT LAMP
631			14	631	14	EACH	REMOVAL OF LUMINAIRE AND REERECTION
631			4	631	4	EACH	REMOVAL OF LUMINAIRE AND STORAGE
631			6	631	6	EACH	SIGNS WIRED, OVERPASS STRUCTURE MOUNTED
631			1	631	1	EACH	SIGN SERVICE

Revised 11-30-88

TRAFFIC CONTROL QUANTITIES

Computations By	
Initials REH	Date 11-30-87
Computations Checked By	
Initials RMS	Date 11/30/87
Final Revisions By	
Initials	Date

FHWA REGION	STATE	PROJECT	
5	OHIO		

154
213

TRUMBULL COUNTY
TRU-5B-0.00

GROUND MOUNTED SIGNS

630

REF. NO.	STATION	SIDE	CODE	SIZE	SIGNS			GROUND MOUNTED SIGN SUPPORTS														
					FLAT SHEET TYPE "G"	EXTRU SHEET	EXISTING SIGNS REVISED WITH DEMOUNTABLE COPY	NO. 4 POST	S4x7.7	W10x22	W10x12	W8x18		SIGN BACKING ASSEMBLY	CONCRETE FOR EMBEDDED FOUNDATION	BREAKAWAY BEAM CONNECTION	REMOVAL OF GRD. MTD. SIGN AND REERECTION	REMOVAL OF GRD. MTD. SIGN AND STORAGE	REMOVAL OF GRD. MTD. MAJOR SIGN AND DISPOSAL	REMOVAL OF GRD. MTD. MAJOR SIGN AND REERECT.	REMOVAL OF GRD. MTD. BEAM SUPPORT AND DISPOSAL	REMOVAL OF GRD. MT POST SUPPO AND DISPOS
					SQ.FT.	SQ.FT.	EACH	LIN.FT.	LIN.FT.	LIN.FT.	LIN.FT.	LIN.FT.		EACH	CU.YD.	CU.YD.	EACH	EACH	EACH	EACH	EACH	EACH
2	1032+00	RT.							16.0/16.0						.27/.27	2	1					2
3	1034+09 RAMP A	RT.	NO WORK																			
4	1045+00 RAMP D	LT.									20.5/20.0				1.10/1.10	2				1		3
5	1050+10	LT.							16.0/16.0						.27/.27	2	1					2
6	1059+00	LT.	NO WORK																			
7	1066+63	MED.	NO WORK																			
8	1066+89	MED.	NO WORK																			
9	1067+50	RT.									20.0/17.5				1.10/1.10	2				1		3
10	1076+00	RT.&MED.					1															
11	1078+40	MED.	NO WORK																			
12	1083+37	RT.	NO WORK																			
13	1084+62	LT.										21.5/21.0			1.10/1.10					1		4
14	1090+37	MED.	NO WORK																			
15	1090+62	MED.	NO WORK																			
16	1092+00	RT.	REVISE				1													1		
17	1103+00	LT.	GB	192"x84"		112.0				25.5/22.5					1.23/1.23							
19	1116+67	RT.							16.0/16.0						.27/.27	2	1					2
20	1124+00 RAMP B	RT.	M-1-30	37 1/2" x 30"	7.8																	
			M-25	24" x 18"	3.0						20.0/20.5				1.10/1.10	2		2		1		3
22	1128+26 RAMP D	RT.																2	1			2
24	1133+00 RAMP D	LT.	M-1-30	37 1/2" x 30"	7.8																	
			M-25	24" x 18"	3.0						22.5/21.0				1.10/1.10	2		2		1		3
25	1136+69	LT.							16.0/16.0						.27/.27	2	1					2
27	1161+25	LT.	REVISE				1													1		
28	1167+54	MED.																1				1
29	1167+62	MED.	NO WORK																			
30	1167+90	MED.	NO WORK																			
31	1167+98	MED.																2				1
32	1179+19	RT.							14.5/14.0						.27/.27	2	1					2
33	1185+52	RT.					1			25.0/23.5					1.23/1.23	2				1		2
34	1190+00	LT.					1			24.0/25.0					1.23/1.23	2				1		2
35	1201+40	RT.	GC	180" x 36"		45.0						21.5/21.5			1.10/1.10	2			1	1		3
36	1206+62	MED.	NO WORK																			
37	1206+88	MED.	NO WORK																			
38	1212+24	RT.	REVISE				1													1		
39	532+17 RAMP B	RT.																	1			3
41	536+58	RT.							16.0/16.0						.27/.27	2	1					2
42	544+25 RAMP A	RT.	M-2-2	30" x 30"	6.3																	
			M-25	24" x 18"	3.0													2				
45	551+00 RAMP C	LT.	M-2-2	30" x 30"	6.3																	
			M-25	24" x 18"	3.0													2				
46	554+09	LT.							16.0/16.0						.27/.27	2	1					2
48	573+96	LT.	MOVE TO STA. 602+50, LT.						18.5/16.0						.27/.27		1					2
49	576+62	MED.	NO WORK																			
50	576+86	MED.	NO WORK																			
51	580+00	RT.	NO WORK																			
52	581+76	LT.	REVISE				1													1		
53	591+49	LT.	GC	180" x 36"		45.0													1			
54	602+08	RT.	GB	252" x 84"		147.0				22.0/25.5/27.5					1.23/1.23/1.23				1			5
55	613+51	LT.	NO WORK				1															
56	621+50	RT.	GB	252" x 84"		147.0				23.5/27.0/31.0					1.23/1.23/1.23				1		2	
57	628+38	LT.	NO WORK																			
58	634+58	MED.	R-19-24	24" x 30"	5.0																	
			R-123-36	36" x 36"	9.0			12.5														
59	634+94	MED.	R-19-24	24" x 30"	5.0																	
			R-123-36	36" x 36"	9.0			12.5														
	SUB-TOTAL				68.2	496.0	8	25.0	255.0	302	162.0	85.5			32.28	28	8	13	6	12	2	51

SIGN QUANTITIES

TRAFFIC CONTROL QUANTITIES

Computations By	
Initials REH	Date 11-30-87
Computations Checked By	
Initials KMS	Date 11/30/87
Final Revisions By	
Initials	Date

FHWA REGION	STATE	PROJECT	
5	OHIO		

155
213

TRUMBULL COUNTY
TRU-58-0.00

GROUND MOUNTED SIGNS

REF. NO.	STATION	SIDE	CODE	SIZE	630 SIGNS: FLAT SHEET TYPE "G" SQ.FT.	630 SIGNS: EXTRU SHEET SQ.FT.	630 SIGNS: EXISTING SIGNS REVISED WITH DEMOUNTABLE COPY EACH	630 GROUND MOUNTED SIGN SUPPORTS: NO. 4 POST LIN.FT.	S4x7.7 LIN.FT.	W10x22 LIN.FT.	W10x12 LIN.FT.	W8x18 LIN.FT.		SIGN BACKING ASSEMBLY EACH	CONCRETE FOR EMBEDDED FOUNDATION CU.YD.	BREAKAWAY BEAM CONNECTION CU.YD.	REMOVAL OF GRD. MTD. SIGN AND REERECTION EACH	REMOVAL OF GRD. MTD. SIGN AND STORAGE EACH	REMOVAL OF GRD. MTD. MAJOR SIGN AND DISPOSAL EACH	REMOVAL OF GRD. MTD. MAJOR SIGN AND REERECT. EACH	REMOVAL OF GRD. MTD. BEAM SUPPORT AND DISPOSAL EACH	REMOVAL OF GRD. MTD. POST SUPPORT AND DISPOSAL EACH
61	648+91	RT.	GF	72" x 60"		30.0			16.0/16.0						.27/.27	2		1				2
62	652+00 RAMP F	RT.	D4-B	168" x 48"		56.0																
			D4-A	168" x 24"		28.0					20.5/19.0				1.10/1.10	2		1				3
63	661+51 RAMP G	LT.	D4-B	168" x 48"		56.0																
			D4-A	168" x 24"		28.0					19.5/22.0				1.10/1.10	2		1				3
64	664+37	LT.	GF	72" x 60"		30.0			16.0/16.0						.27/.27	2		1				2
66	689+76	LT.	GB	252" x 84"		147.0						20.0/22.0/24.5			1.10/1.10/1.10	3			1		2	
67	690+52	MED.	NO WORK																			
68	690+98	MED.	NO WORK																			
69	700+00	RT.	REVISE				1													1		
73	725+56	RT.	GF	72" x 60"		30.0			17.0/17.0						.27/.27	2		1				2
74	723+30 RAMP L	LT.	M-2-2	30" x 30"	6.25																	
			M-24	24" x 18"	3.0						19.0/19.0				1.10/1.10	2		2		1		3
	SUB-TOTAL				9.25	405.0	1	0	98.0	0	119.0	66.5			11.52	15	0	7	1	2	2	15
	SUB-TOTAL FROM SHT. 154				68.2	496.0	8	25.0	255.0	302	162.0	85.5			32.28	28	8	13	6	12	2	51
	TOTALS				77.45	901.0	9	25.0	353.0	302	281.0	152			43.8	43	8	20	7	14	4	66

SIGN QUANTITIES

TRAFFIC CONTROL QUANTITIES

Computations By	
Initials REH	Date 11-30-87
Computations Checked By	
Initials HMS	Date 11/30/87
Final Revisions By	
Initials	Date

FHWA REGION	STATE	PROJECT	
5	OHIO		

156 / 213

TRUMBULL COUNTY
TRU-5B-0.00

OVERHEAD SIGN SUPPORTS

REF. NO.	ROADWAY	SIDE	STATION	CODE	SIZE	LEVEL	SIGN EXTRU SHEET TYPE G	630									631						
								LUMINAIRE SUPPORT ASSEMBLY TYPE TC-31.21	SIGN ATTACHMENT ASSEMBLY	EXISTING SIGNS REVISED WITH DEMOUNTABLE COPY	OVERHEAD SIGN SUPPORT MONTIC., TYPE 12.30 DESIGN 5, NEW ARMS 25 FEET	REMOVAL OF OVERHEAD MOUNTED SIGN AND REERECTION	REMOVAL OF OVERHEAD SIGN SUPPORT AND REERECTION, TYPE TC-7.65	REMOVAL OF OVERHEAD SIGN SUPPORT AND REERECTION, TYPE TC-18.24	REMOVAL OF OVERHEAD SIGN SUPPORT AND REERECTION, TYPE TC-18.26	REMOVAL OF OVERHEAD MOUNTED SIGN AND STORAGE	REMOVAL OF LUMINAIRE AND REERECTION	REMOVAL OF LUMINAIRE AND STORAGE	SIGNS WIRED, OVERPASS STRUCTURE MOUNTED	SIGNS WIRED	BALLAST TYPE CMRI-100 -480, INTEGRAL	MERCURY VAPOR LUMINAIRE, TYPE TC-31.21 WITH 100 WATT LAMP	SIGN SERVICE	
							SQ.FT.	EACH	EACH	EACH	EACH	EACH	EACH	EACH	EACH	EACH	EACH	EACH	EACH	EACH	EACH	EACH	EACH	
1	SR5, EB	RT	1031+00							1													
18	SR5, EB	RT	1114+91							2													
21	US422	LT	1128+14							1		1		1			2		1				
23	US422	RT	1128+77							1		1		1			2		1				
26	SR5, WB	LT	1138+59							2													
40	SR5, EB	RT	535+30							2													
43	SR45	LT	545+84							1		1			1		1		1				
44	SR45	RT	546+86							1		1			1		2		1				
47	SR5, WB	LT	555+45							2													
60	SR5, EB	RT	646+20	GE	276" x 66"	II	126.5	3	4	1						1		2			1	3	3	
65	SR5, WB	LT	666+22.77	GE	276" x 66"	II	126.5	3	4		1					1		2			1	3	3	
70	SR5	RT	723+15							1		1			1		2		1				
71	SR5	LT	723+34							1		1			1		1		1				
72	SR5, EB	RT	723+67							2		2	1				4			2			1
	TOTALS						253	6	8	18	1	8	1	2	4	2	14	4	6	4	6	6	1

OVERHEAD SIGN SUPPORT QUANTITIES

FHWA REGION	STATE	PROJECT		157 2/3
5	OHIO			

TRUMBULL COUNTY
TRU-5B-0.00

SIGNING

SIGN #2

STA.1032+00, 137'RT. S.R.5
SIGN AREA – 6'x5' = 30.0 SQ.FT.

BREAKAWAY SUPPORTS
2 – S4x7.7

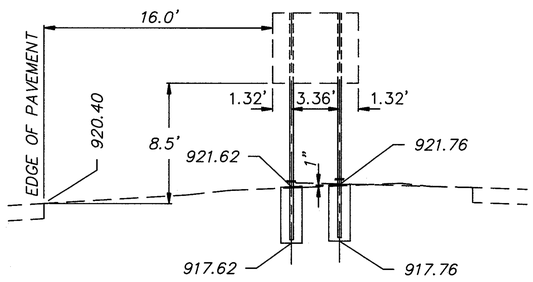

SIGN #5

STA.1050+10, 44'LT. S.R.5
SIGN AREA – 6'x5' = 30.0 SQ.FT.

BREAKAWAY SUPPORTS
2 – S4x7.7

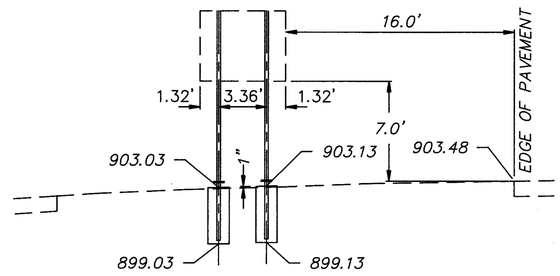

SIGN #9

STA.1067+50, 44'RT. S.R.5
SIGN AREA – 12'x4.5' = 54.0 SQ.FT.

BREAKAWAY SUPPORTS
2 – W10x12

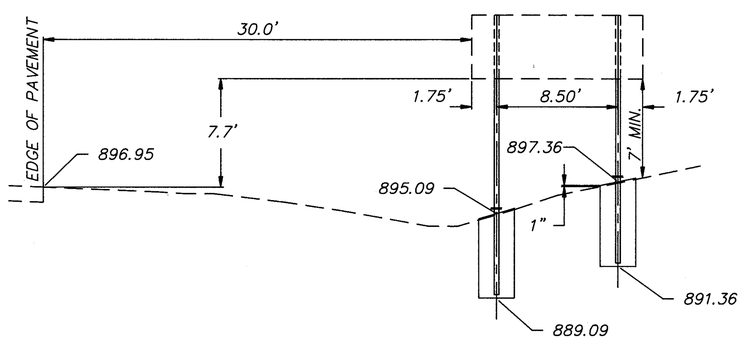

SIGN #13

STA.1084+62, 44'LT. S.R.5
SIGN AREA – 16'x7' = 112.0 SQ.FT.

BEAM SUPPORTS
2 – W8x18

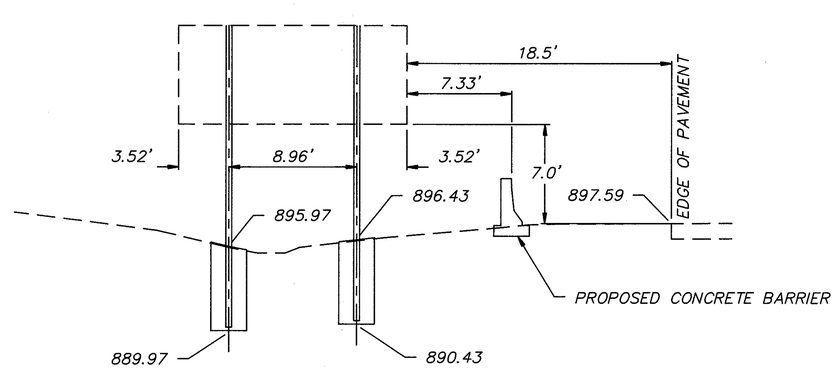

FHWA REGION	STATE	PROJECT		158
5	OHIO			213

TRUMBULL COUNTY
TRU-5B-0.00

SIGNING

SIGN #17

STA.1103+00, 44'LT. S.R.5
SIGN AREA – 16'x7' = 112.0 SQ.FT.

BEAM SUPPORTS
2 – W10 x 22

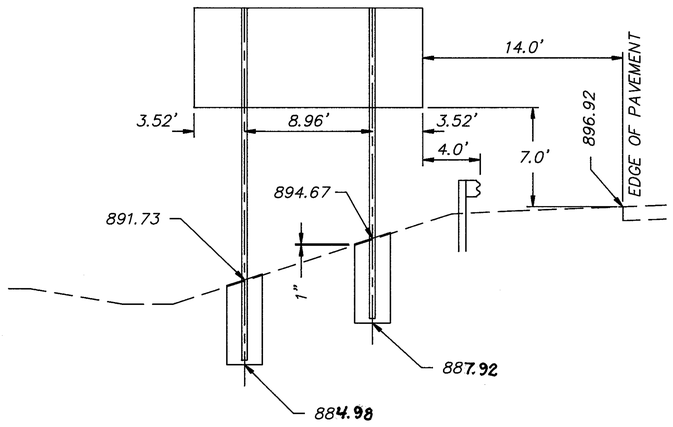

SIGN #19

STA.1116+67, 44'RT. S.R.5
SIGN AREA – 6'x5' = 30.0 SQ.FT.

BREAKAWAY SUPPORTS
2 – S4x7.7

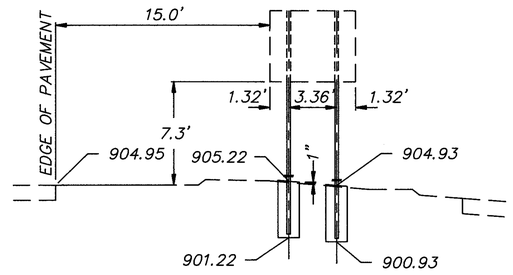

SIGN #25

STA.1136+69, 44'LT. S.R.5
SIGN AREA – 6'x5' = 30.0 SQ.FT.

BREAKAWAY SUPPORTS
2 – S4x7.7

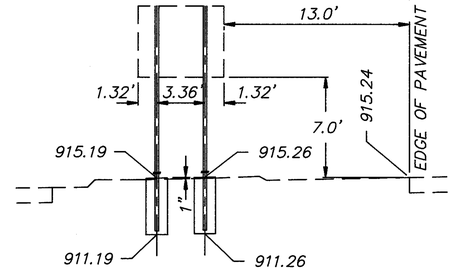

SIGN #32

STA.1179+19, 44'RT. S.R.5
SIGN AREA – 7'x3' = 21.0 SQ.FT.

BREAKAWAY SUPPORTS
2 – S4x7.7

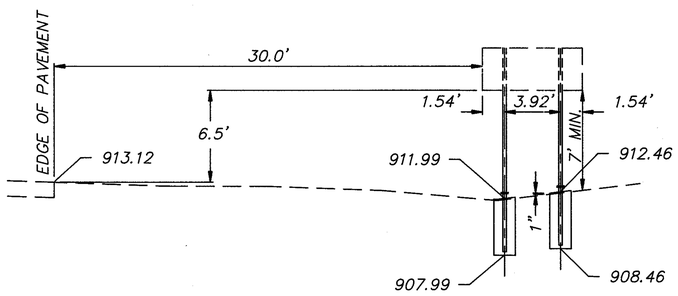

SIGN #33

STA.1185+52, 44'RT. S.R.5
SIGN AREA – 16'x9.5' = 152.0 SQ.FT.

BREAKAWAY SUPPORTS
2 – W10x22

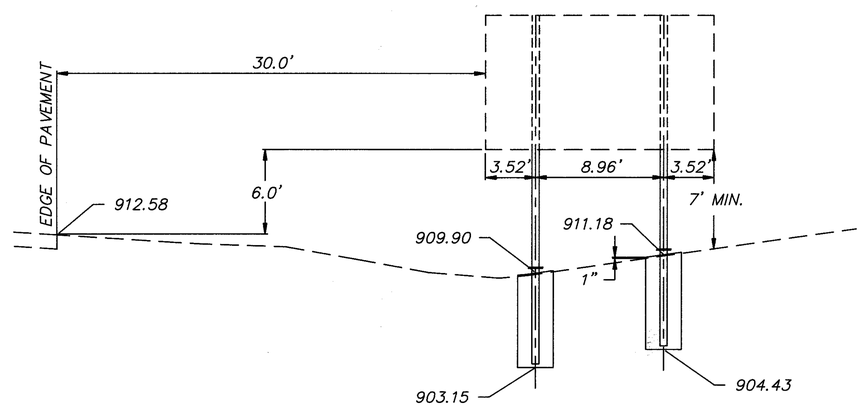

SIGNING

SIGN #34

STA.1190+00, 44'LT. S.R.5
SIGN AREA – 15'x9.5' = 142.5 SQ.FT.

BREAKAWAY SUPPORTS
2 – W10x22

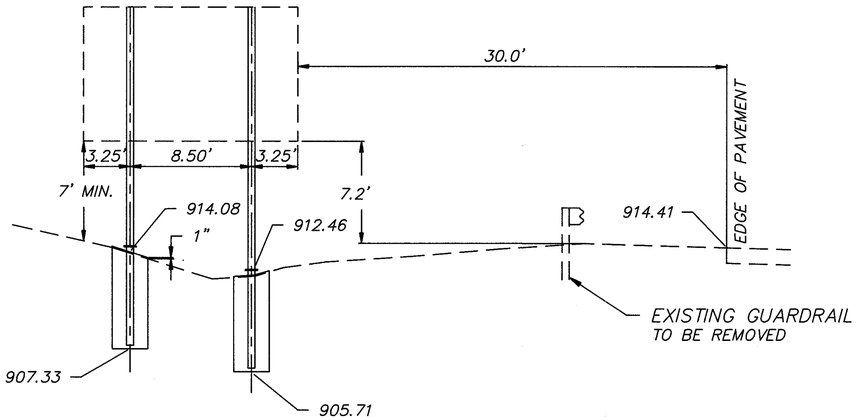

SIGN #35

STA.1201+40, 44'RT. S.R.5
SIGN AREA – 15'x3' = 45.0 SQ.FT.
SIGN AREA – 15'x5.5' = 82.5 SQ.FT.

BREAKAWAY SUPPORTS
2 – W8x18

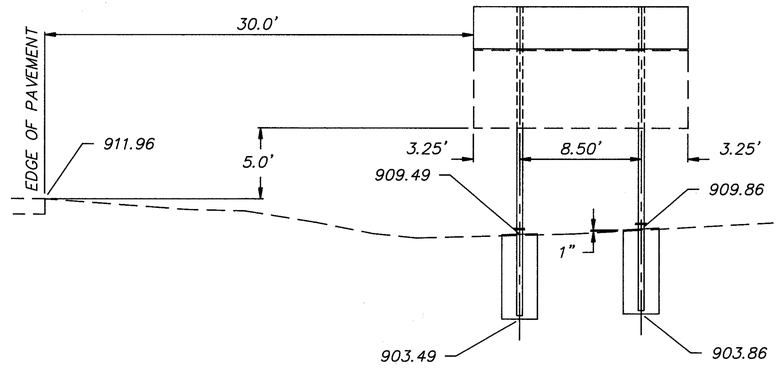

SIGN #41

STA.536+58, 44'RT. S.R.5
SIGN AREA – 6'x5' = 30.0 SQ.FT.

BREAKAWAY SUPPORTS
2 – S4x7.7

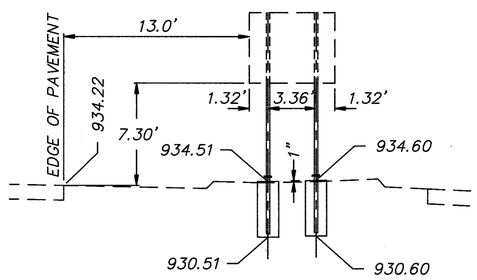

SIGN #46

STA.554+09, 44'LT. S.R.5
SIGN AREA – 6'x5' = 30.0 SQ.FT.

BREAKAWAY SUPPORTS
2 – S4x7.7

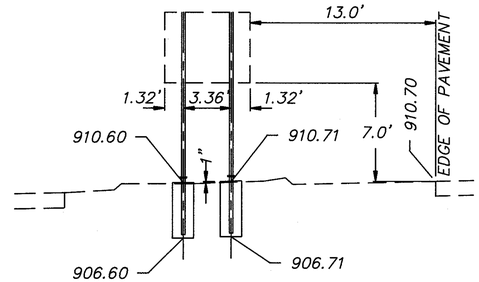

SIGN #54

STA.602+08, 44'RT. S.R.5
SIGN AREA – 21'x7' = 147.0 SQ.FT.

BEAM SUPPORTS
3 – W10x22

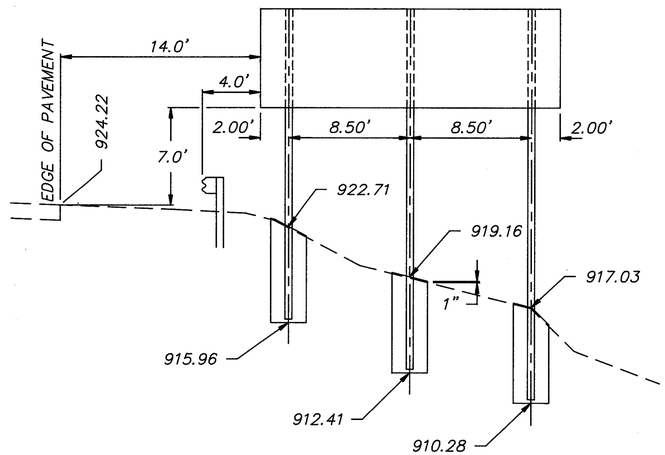

FHWA REGION	STATE	PROJECT	
5	OHIO		

160
213

TRUMBULL COUNTY
TRU-5B-0.00

SIGNING

SIGN. #48

STA.602+50, 44'LT. S.R.5
SIGN AREA – 8'x3' = 24.0 SQ.FT.

BEAM SUPPORTS
2 – S4x7.7

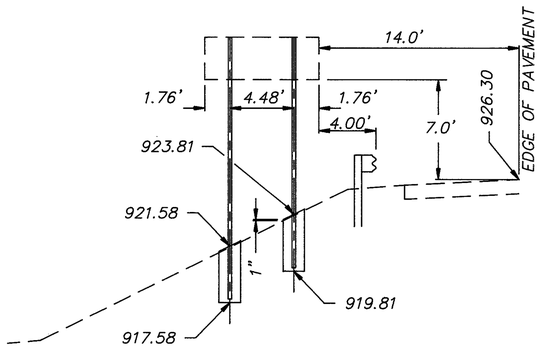

SIGN #56

STA.621+50, 44'RT. S.R.5
SIGN AREA – 21'x7' = 147.0 SQ.FT.

BEAM SUPPORTS
3 – W10x22

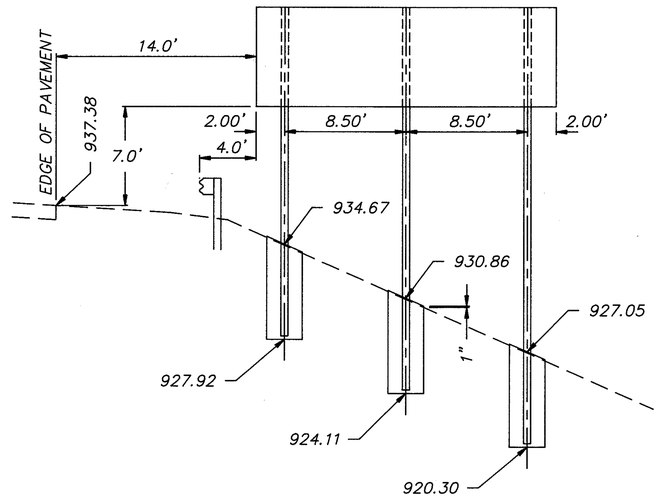

SIGN #61

STA.648+91, 44'RT. S.R.5
SIGN AREA – 6'x5' = 30.0 SQ.FT.

BREAKAWAY SUPPORTS
2 – S4x7.7

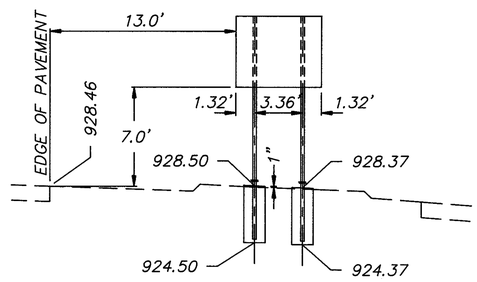

SIGN #64

STA.664+37, 44'LT. S.R.5
SIGN AREA – 6'x5' = 30.0 SQ.FT.

BREAKAWAY SUPPORTS
2 – S4x7.7

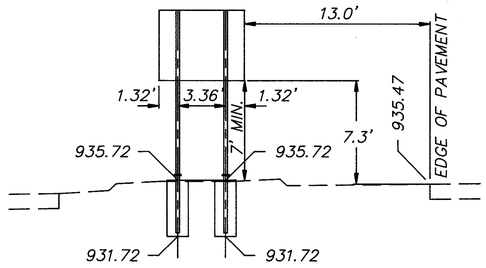

SIGN. #66

STA.689+76, 44'LT. S.R.5
SIGN AREA – 21'x7' = 147.0 SQ.FT.

BREAKAWAY SUPPORTS
3 – W8x18

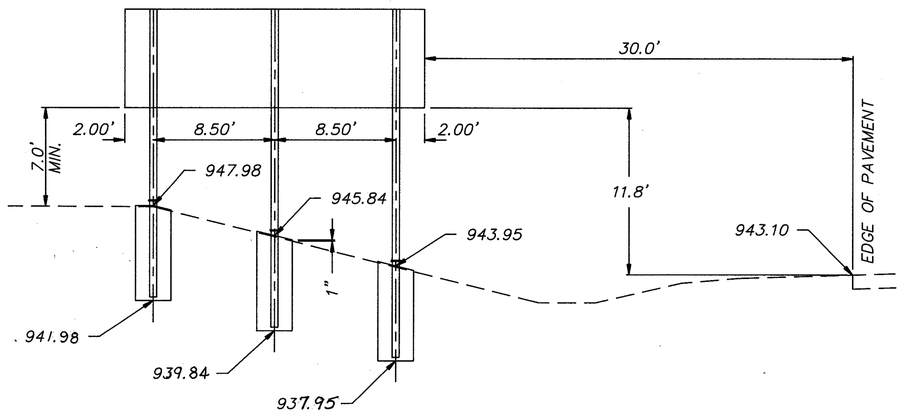

SIGN #73

STA.725+56, 44'RT. S.R.5
SIGN AREA – 6'x5' = 30.0 SQ.FT.

BREAKAWAY SUPPORTS
2 – S4x7.7

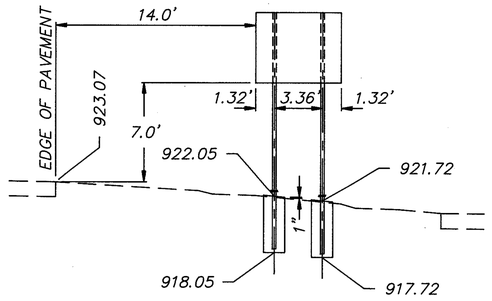

FHWA REGION	STATE	PROJECT		
5	OHIO			

TRUMBULL COUNTY
TRU-5B-0.00

SIGNING
(RAMPS)

SIGN #4

STA.1045+00, LT. RAMP D
SIGN AREA – 11'x6' = 66.0 SQ.FT.

BREAKAWAY SUPPORTS
2 – W10x12

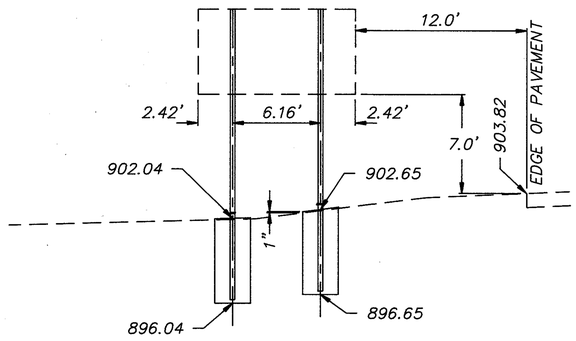

SIGN #24

STA.1133+00, LT. RAMP D
SIGN AREA – 11'x6' = 66.0 SQ.FT.

BREAKAWAY SUPPORTS
2 – W10x12

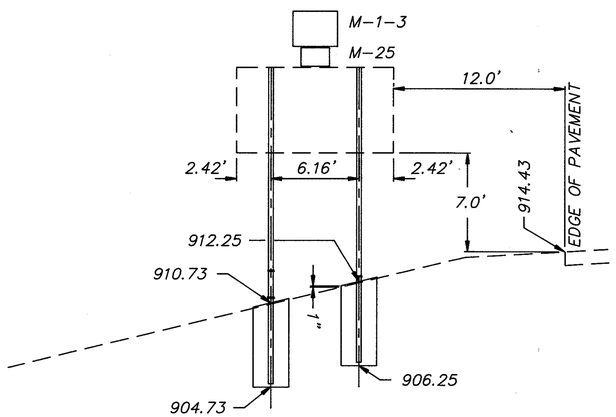

SIGN. #20

STA.1124+00, RT. RAMP B
SIGN AREA – 11'x6' = 66.0 SQ.FT.

BREAKAWAY SUPPORTS
2 – W10x12

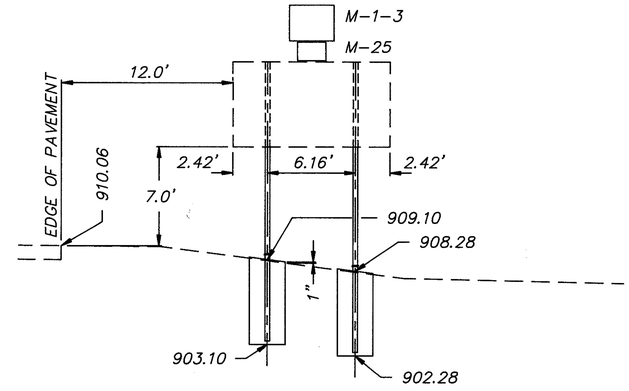

FHWA REGION	STATE	PROJECT	
5	OHIO		

162
213

TRUMBULL COUNTY
TRU-5B-0.00

SIGNING
(RAMPS)

SIGN. #62

STA.652+00, RT. RAMP F
SIGN AREA – 14'x4' = 56.0 SQ.FT.
SIGN AREA – 14'x2' = 28.0 SQ.FT.

BREAKAWAY SUPPORTS
2 – W10x12

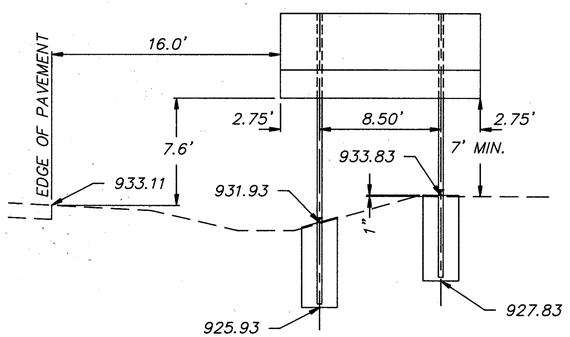

SIGN. #63

STA.661+51, LT. RAMP G
SIGN AREA – 14'x4' = 56.0 SQ.FT.
SIGN AREA – 14'x2' = 28.0 SQ.FT.

BREAKAWAY SUPPORTS
2 – W10x12

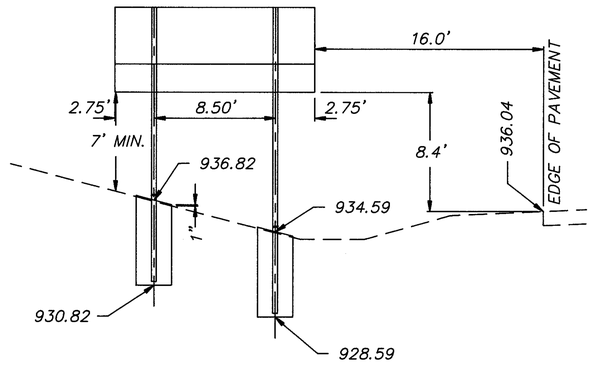

SIGN. #74

STA.723+30, LT. RAMP L
SIGN AREA – 10'x6' = 60.0 SQ.FT.

BREAKAWAY SUPPORTS
2 – W10x12

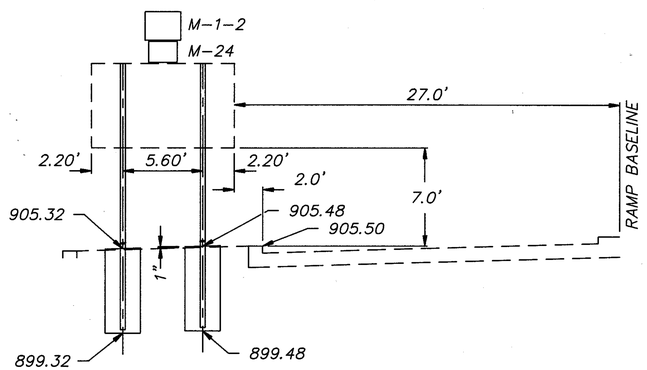

LIGHTING GENERAL NOTES

SPECIFICATIONS

THESE NOTES ARE SUPPLEMENTAL TO ITEMS 625 AND 713 OF THE STATE OF OHIO DEPARTMENT OF TRANSPORTATION CONSTRUCITON AND MATERIAL SPECIFICATIONS.

REFERENCE SHALL BE MADE TO STANDARD CONSTRUCTION DRAWINGS LISTED ON THE TITLE SHEET OF THESE PLANS.

625.03 – GENERAL

THE POWER SUPPLYING AGENCY FOR THIS PROJECT IS:

OHIO EDISON CO.
76 S. MAIN ST.
AKRON, OH 44308

CONDUIT ON STRUCTURE

EXPANSION FITTINGS FOR CONDUIT ON STRUCTURES SHALL BE OZ TYPE AX, CROUSE–HINDS TYPE XJ–4, APPLETON TYPE XJ–4, OR EQUAL APPROVED BY THE ENGINEER FOR THE FOLLOWING BRIDGES:

TRU 5 – 0183 LT.
TRU 5 – 0183 RT.
TRU 5 – 0401 LT.
TRU 5 – 0401 RT.
TRU 5 – 0735 LT.
TRU 5 – 0735 RT.

EACH EXPANSION FITTING SHALL HAVE A COPPER EXTERNAL BONDING JUMPER.

625.02 HAZARDOUS MATERIALS

NO MATERIAL FURNISHED UNDER THIS SPECIFICATION SHALL CONTAIN POLYCHLORINATED BIPHENYLS (PCB's). TRANSFORMERS, BALLASTS AND CAPACITORS SHALL BE MARKED "NO PCBs" IN ACCORDANCE WITH FEDERAL ENVIRONMENTAL PROTECTION AGENCY REGULATION 40 CFR 761.

ITEM 625 – REMOVE STRUCTURE MOUNTED LIGHT POLE AND REERECT

THIS ITEM SHALL CONSIST OF REMOVING THE LIGHT POLE, INCLUDING THE SHAFT, BRACKET ARM, LUMINAIRE, POLE AND BRACKET CABLES AND OTHER HARDWARE FROM THE STRUCTURE PILASTER, AND STORE ON THE PROJECT AT A SITE APPROVED BY THE ENGINEER. THE LIGHT POLE WILL THEN BE REERECTED AFTER COMPLETION OF CONSTRUCTION OF THE PROPOSED BRIDGE PARAPETS.

ITEM SPECIAL – MAINTAINING EXISTING LIGHTING

ALL EXISTING LIGHTING, EXCEPT FOR THOSE LIGHTS MOUNTED DIRECTLY ON THE STRUCTURE, SHALL BE MAINTAINED AT ALL TIMES BY USING TEMPORARY CONDUCTORS APPROVED BY THE ENGINEER ACROSS THE STRUCTURE WHILE THE PARAPETS ARE BEING REBUILT. ALL THE ABOVE WORK SHALL BE INCLUDED IN THE LUMP SUM PRICE BID FOR ITEM SPECIAL – MAINTAINING EXISTING LIGHTING.

ITEM 625 – STRUCTURE GROUNDING SYSTEM AS PER PLAN

THIS ITEM SHALL CONSIST OF CONNECTING THE PROPOSED ELECTRICAL ELEMENTS IN THE PROPOSED CONCRETE PARAPETS TO THE EXISTING GROUNDING SYSTEM IN EACH STRUCTURE AS DETAILED ON SHEETS 163 & 164. THIS ITEM SHALL ALSO INCLUDE THE TESTING OF THE EXISTING STRUCTURE GROUNDING SYSTEM AS PER 625.22(a). SHOULD THE EXISTING SYSTEM BE INADEQUATE, THE CONTRACTOR SHALL REPLACE IT AS DESCRIBED IN STANDARD DRAWING HL–50.21 PAYMENT FOR ALL OF THE ABOVE WORK, MATERIALS AND INCIDENTALS SHALL BE INCLUDED IN THE UNIT PRICE BID FOR ITEM 625 – STRUCTURE GROUNDING SYSTEM AS PER PLAN.

THIS ITEM SHALL APPLY TO THE FOLLOWING STRUCTURES:

TRU–5–0183 LT.
TRU–5–0183 RT.
TRU–5–0363 LT.
TRU–5–0363 RT.
TRU–5–0401 LT.
TRU–5–0401 RT.
TRU–5–0716 LT.
TRU–5–0716 RT.
TRU–5–0735 LT.
TRU–5–0735 RT.

UNDERDRAINS FOR PULL BOXES

REFERENCE IS MADE TO STANDARD DRAWING HL 30.11 FOR DETAILS OF DRAINING PULL BOXES. UNDERDRAINS FOR PULL BOXES SHALL BE USED AS DIRECTED BY THE ENGINEER AND SHALL BE PROVIDED WHERE THE LENGTH REQUIRED FOR A SATISFACTORY OUTLET DOES NOT EXCEED APPROXIMATELY 20 FEET. AN ESTIMATED QUANTITY OF 60 LINEAR FEET OF ITEM 603, 4" CONDUIT TYPE E IS INCLUDED IN THE LIGHTING GENERAL SUMMARY FOR THIS PURPOSE.

LIGHTING GENERAL SUMMARY

Computations By Initials JJK Date 11/30/17
Computations Checked By Initials JMS Date 11/30/17
Final Revisions By Initials Date

FHWA REGION	STATE	PROJECT	
5	OHIO		

163 2/3

TRUMBULL COUNTY
TRU–58–0.00

ITEM	SHEET NUMBER						ITEM	QUANT.	UNIT	DESCRIPTION
		163	164							
625			4				625	4	EACH	REMOVE STRUCTURE MOUNTED LIGHT POLE AND REERECT
625			2315				625	2315	LIN.FT.	NO. 4 AWG 5000 VOLT DISTRIBUTION CABLE
625			2355				625	2355	LIN.FT.	2" CONDUIT, 713.04
625			5				625	5	EACH	CONNECTOR KIT, TYPE II
625			5				625	5	EACH	CONNECTOR KIT, TYPE III
625			22				625	22	EACH	CABLE SPLICING KIT
625			5				625	5	EACH	PULL BOX, 18" SQUARE CONCRETE 713.08
625			9				625	9	EACH	JUNCTION BOX, TYPE II
625			32				625	32	EACH	LIGHT POLE ANCHOR L–BOLTS FOR STRUCTURE
625		1					625	1	EACH	STRUCTURE GROUNDING SYSTEM AS PER PLAN STR. TRU–5–0183 LT.
625		1					625	1	EACH	STRUCTURE GROUNDING SYSTEM AS PER PLAN STR. TRU–5–0183 RT.
625		1					625	1	EACH	STRUCTURE GROUNDING SYSTEM AS PER PLAN STR. TRU–5–0363 LT.
625		1					625	1	EACH	STRUCTURE GROUNDING SYSTEM AS PER PLAN STR. TRU–5–0363 RT.
625		1					625	1	EACH	STRUCTURE GROUNDING SYSTEM AS PER PLAN STR. TRU–5–0401 LT.
625		1					625	1	EACH	STRUCTURE GROUNDING SYSTEM AS PER PLAN STR. TRU–5–0401 RT.
625		1					625	1	EACH	STRUCTURE GROUNDING SYSTEM AS PER PLAN STR. TRU–5–0716 LT.
625		1					625	1	EACH	STRUCTURE GROUNDING SYSTEM AS PER PLAN STR. TRU–5–0716 RT.
625		1					625	1	EACH	STRUCTURE GROUNDING SYSTEM AS PER PLAN STR. TRU–5–0735 LT.
625		1					625	1	EACH	STRUCTURE GROUNDING SYSTEM AS PER PLAN STR. TRU–5–0735 RT.
625							625	LUMP	LUMP	HIGH VOLTAGE TEST
SPEC.		LUMP					SPEC.	LUMP	LUMP	MAINTAINING EXISTING LIGHTING
603		60					603	60	LIN.FT.	4" CONDUIT, TYPE E

POLE LIGHTING SUB-SUMMARY

Computations By Initials DMR Date 11/30/87
Computations Checked By Initials WMS Date 11/30/87
Final Revisions By Initials Date

FHWA REGION	STATE	PROJECT	
5	OHIO		

TRUMBULL COUNTY
TRU-58-000

164
213

625

REF. NO.	STATION FROM	STATION TO	ROUTE, RAMP, OR LANE	SIDE	CIRCUIT	REMOVE AND REERECT STRUCTURE MOUNTED LIGHT POLE EACH	DISTRIBUTION CABLE, NO.4 AWG 5000 VOLT LIN.FT.	2" CONDUIT 713.04 LIN.FT.	CONNECTOR KIT TYPE II EACH	CONNECTOR KIT TYPE III EACH	CABLE SPLICING KIT EACH	JUNCTION BOX TYPE II EACH	PULL BOX 18" SQUARE CONCRETE, 713.08 EACH	LIGHT POLE ANCHOR L-BOLTS FOR STRUCTURE EACH
	SHEET NO. 165													
	STR. TRU-5-0183 LT. & RT.													
1-L	1127+14	1127+50	SR-5	LT.				40				1		4
2-L	1127+50	1129+41	SR-5	LT.				194						
3-L	1127+34	1128+21	SR-5	RT.	1D		200	90	1	1	2	1		4
4-L	1128+21	1129+66	SR-5	RT.	1D		318	149			2			
	SHEET NO. 166													
	STR. TRU-5-0363 LT. & RT.													
5-L	1221+37	1222+00	SR-5	LT.	2RD			63						
6-L	1222+00	1223+69	SR-5	LT.	2RD	1	356	168	1	1	2	1		4
7-L	1223+03	1224+67	SR-5	RT.	2RD			164						
8-L	1224+67	1225+55	SR-5	RT.	2RD	1	200	76	1	1	2	1		4
	STR. TRU-5-0401 LT. & RT.													
9-L	545+20	547+15	SR-5	LT.				202					2	
10-L	545+80	547+18	SR-5	RT.	1RD		304	142			2			
11-L	547+18	547+75	SR-5	RT.	1RD	1	136	58	1	1	2	1		4
	STR. TRU-5-0425 LT. & RT.													
12-L	558+97	559+88	SR-5	LT.	1RD		206	80			4			
13-L	558+46	559+26	SR-5	RT.				80						
	SHEET NO. 167													
	STR. TRU-5-0716 LT. & RT.													
14-L	712+98	713+17.56	SR-5	LT.	6SR	1	64	14	1	1	2	1		4
15-L	713+17.56	714+75	SR-5	LT.	6SR		341	144			2			
16-L	712+36	713+94	SR-5	RT.				158						
	STR. TRU-5-0735 LT. & RT.													
17-L	722+28	724+27	SR-5	LT.				205					1	
18-L	724+27	724+85	SR-5	LT.				65				1	1	4
19-L	721+95	723+12	SR-5	RT.	5SR			120				1	1	4
20-L	723+12	723+70	SR-5	RT.	5SR			58						
21-L	723+70	724+50	SR-5	RT.	5SR		190	85			2	1		
TOTALS						4	2315	2355	5	5	22	9	5	32

FHWA REGION	STATE	PROJECT	
5	OHIO		

165
213

TRUMBULL COUNTY
TRU-5B-000

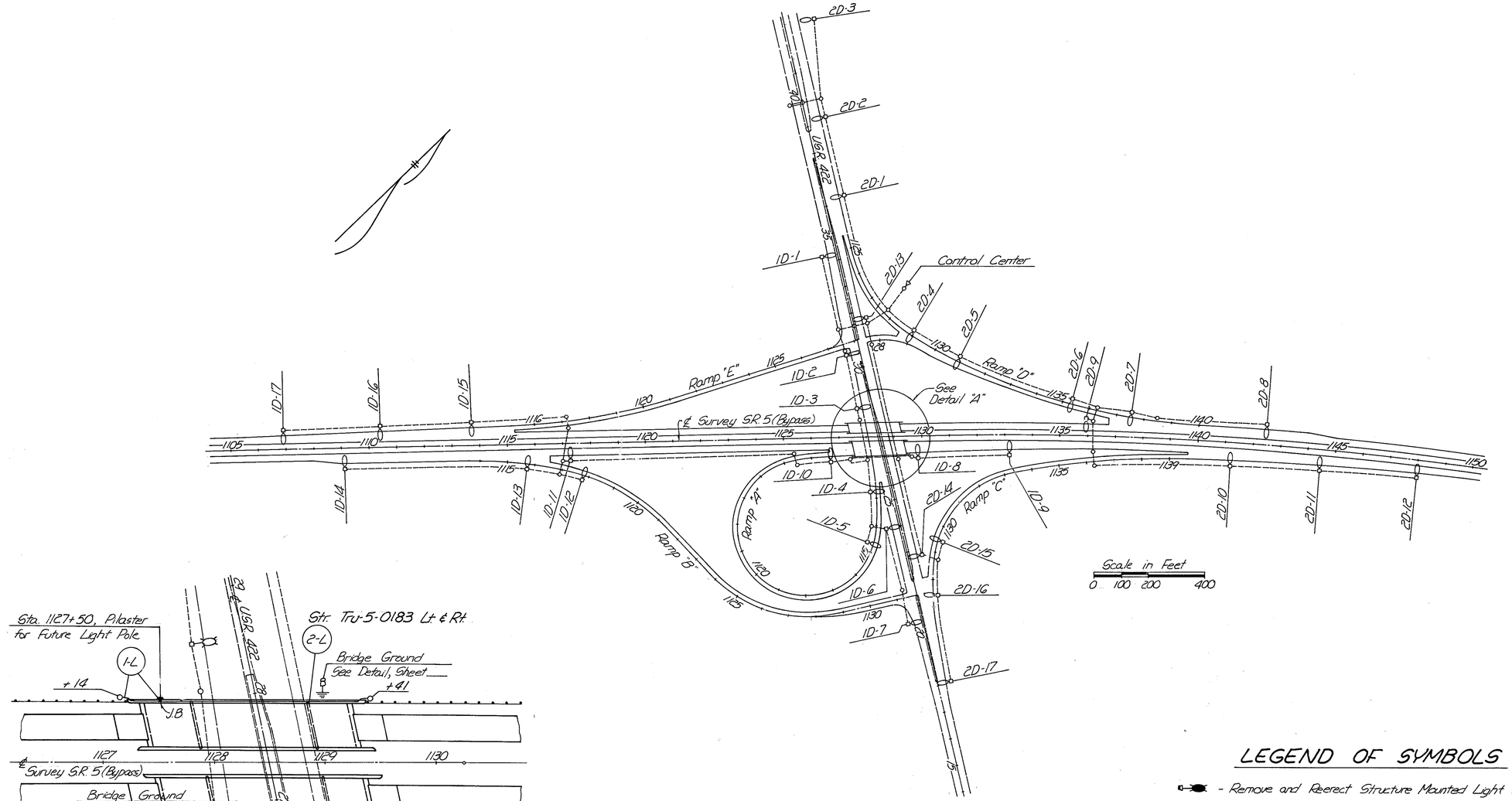

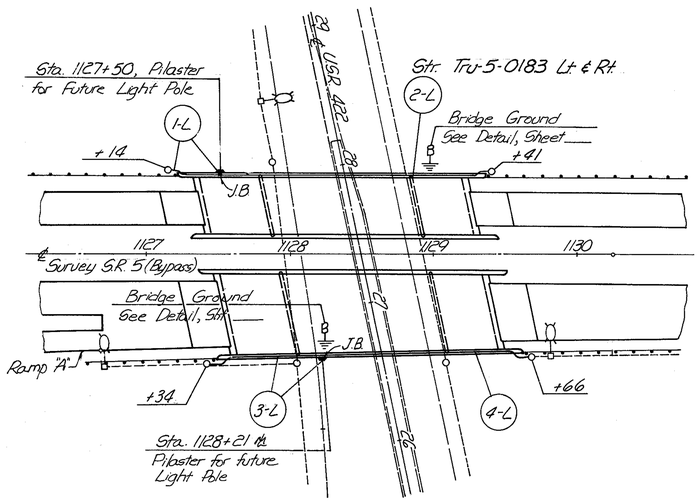

DETAIL "A"

Scale in Feet
0 25 50 100

LIGHT POLE IDENTIFICATION

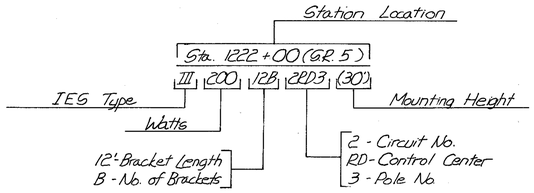

LEGEND OF SYMBOLS

- Remove and Reerect Structure Mounted Light Pole (See General Note)
- Existing Light Pole to remain in place
- Existing 24" Diameter Pull Box
- Proposed Pilaster for Future Structure Mounted Light Pole
- J.B. - Type II Junction Box - Proposed
- Existing Control Center
- Existing Duct Cable
- Proposed 2" Conduit (empty)
- Proposed 2" Conduit with Distribution Cable
- Proposed 18" Square Concrete Pull Box, 713.08

LIGHTING PLAN SHEET

FHWA REGION	STATE	PROJECT	
5	OHIO		

166
213

TRUMBULL COUNTY
TRU-5B-000

* Route proposed 2" Conduit from existing conduit at the back abutment to the existing conduit at the forward abutment. For details of connection to existing conduit, See Sheet 171.

Str. Tru-5-0425 Lt & Rt.

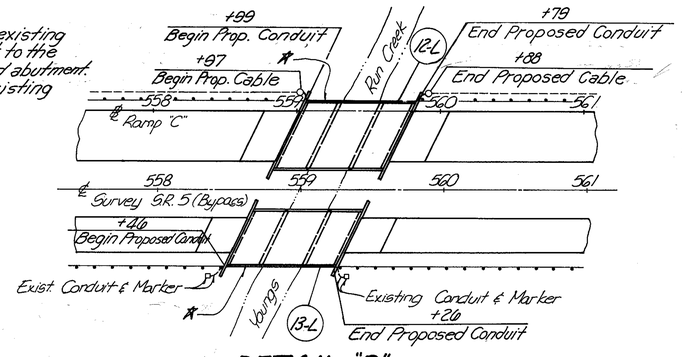

DETAIL "D"
Scale in Feet
0 25 50 100

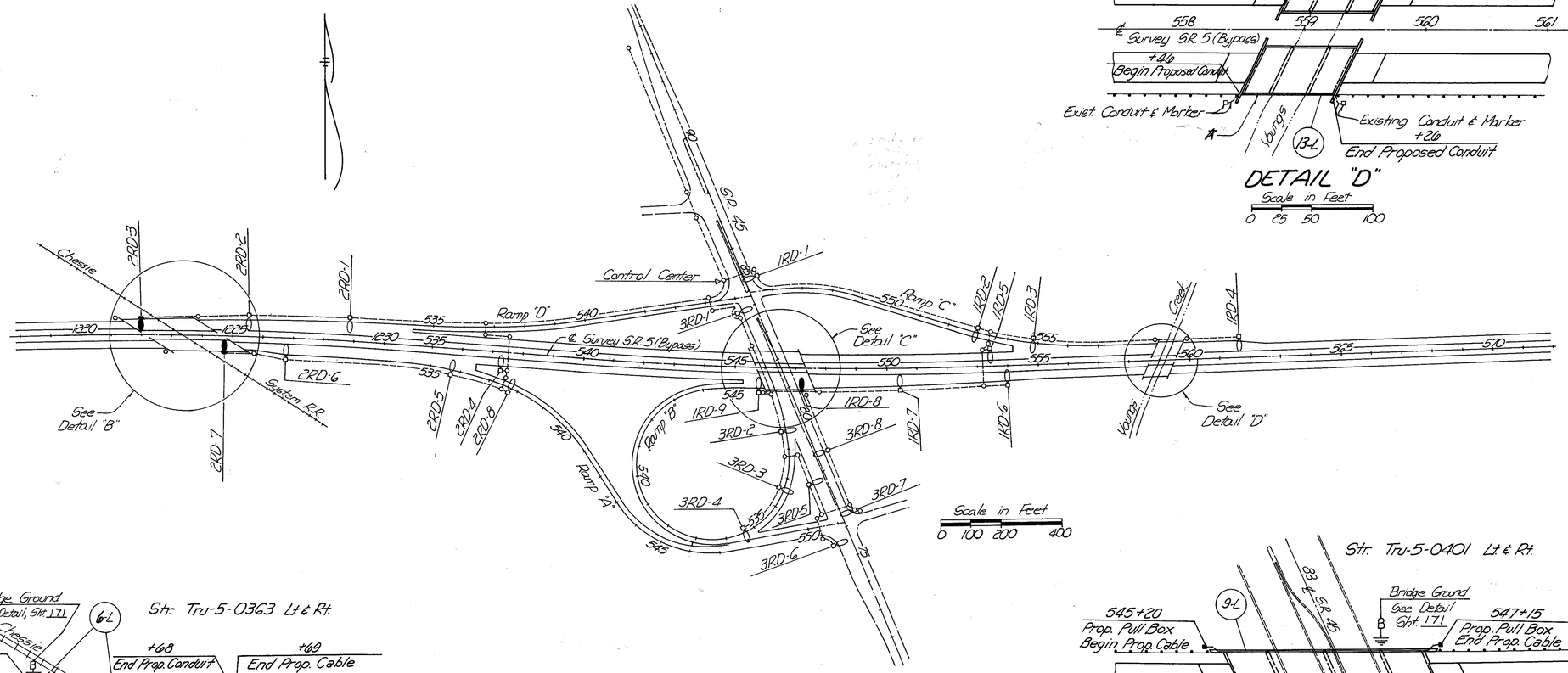

Scale in Feet
0 100 200 400

Str. Tru-5-0363 Lt & Rt.

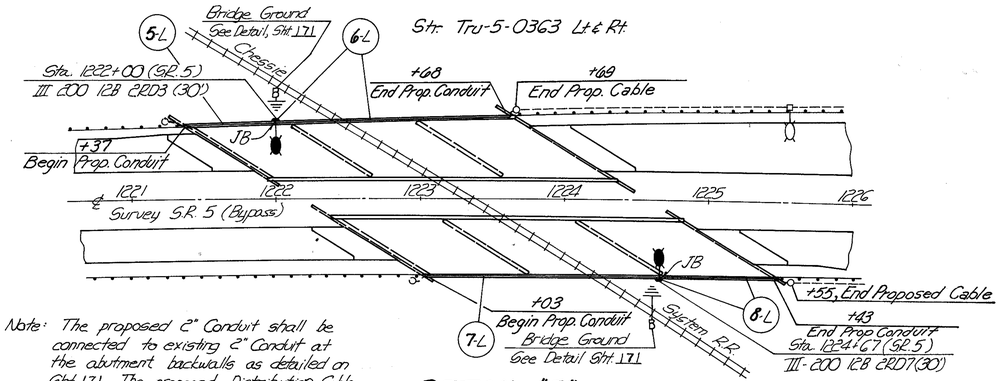

Note: The proposed 2" Conduit shall be connected to existing 2" Conduit at the abutment backwalls as detailed on Sht 171. The proposed Distribution Cable shall run from the Junction Box on each outside parapet to the existing pull boxes on the East end of the structures and connect to the existing Duct Cable.

DETAIL "B"
Scale in Feet
0 25 50 100

For Legend of Symbols & Light Pole Identification, see Sheet 165

Str. Tru-5-0401 Lt & Rt.

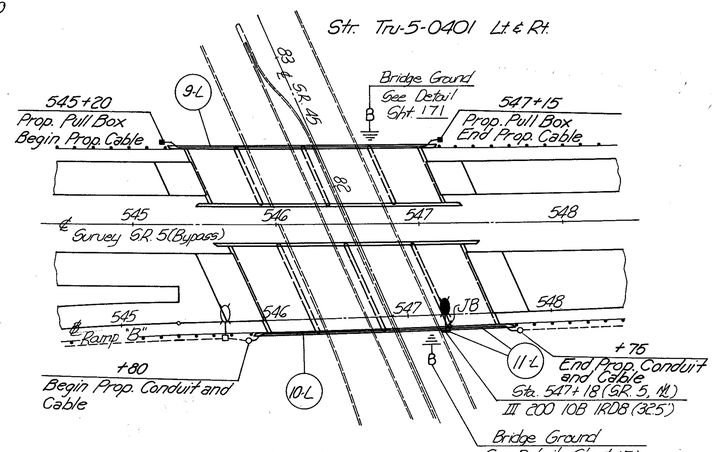

DETAIL "C"
Scale in Feet
0 25 50 100

LIGHTING PLAN SHEET

FHWA REGION	STATE	PROJECT	
5	OHIO		

167
213

TRUMBULL COUNTY
TRU-5B-000

* Connect Proposed 2" Conduit to Existing Conduit at Abutment (See Detail Sheet 171)
# Relocated From Sta. 713+14

Str. Tru-5-0716 Lt & Rt

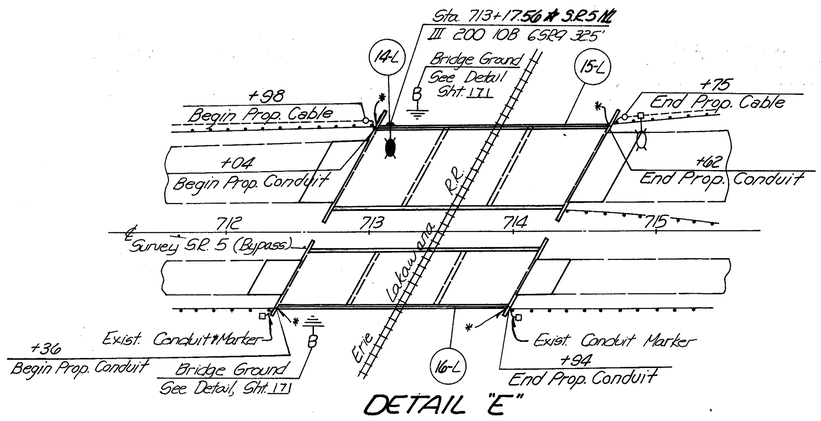

DETAIL "E"

For Legend of Symbols & Light Pole Identification, see Sht 165

Str. Tru-5-0735 Lt & Rt

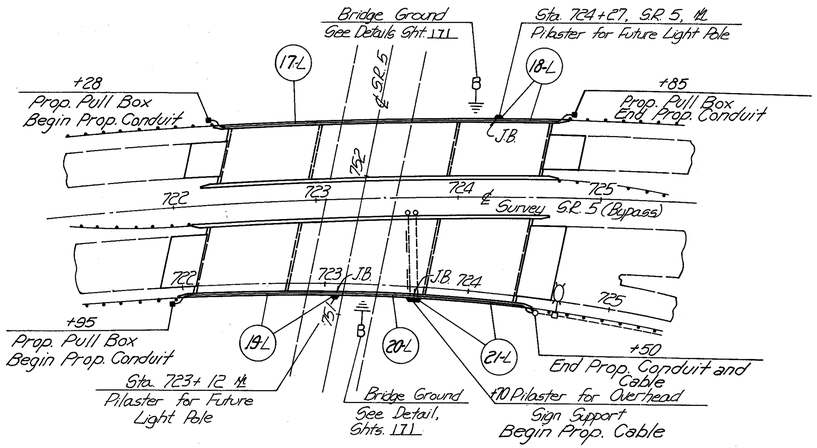

DETAIL "F"

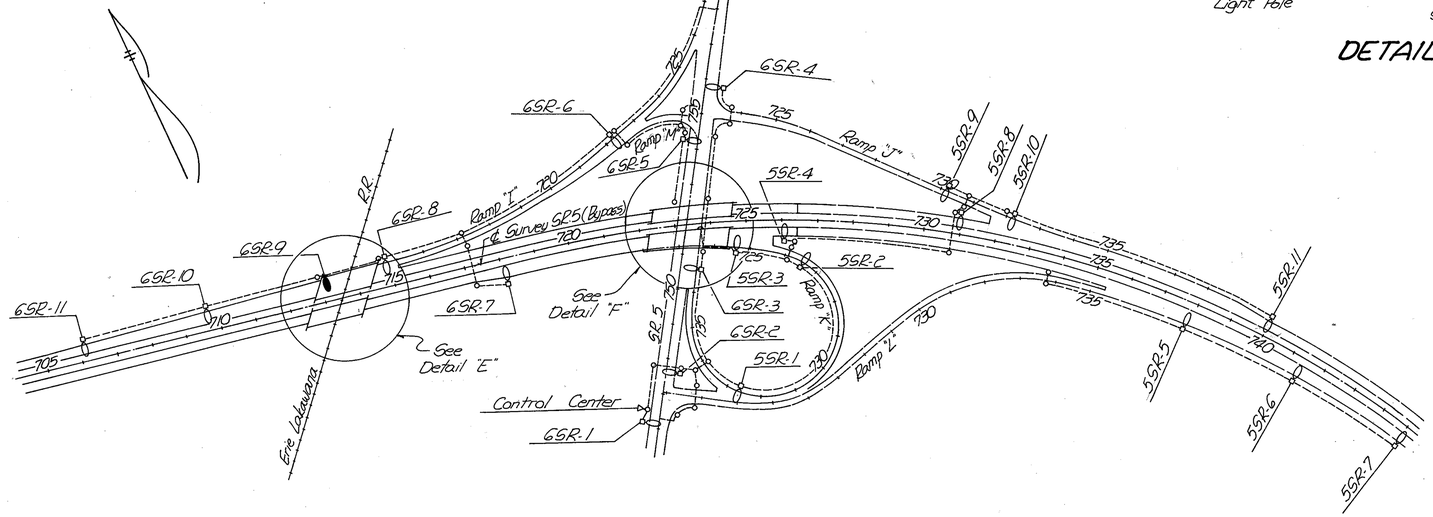

LIGHTING PLAN SHEET

MICROFILMED
OCT 29 1992

T5BGN.DWG

Computations By Initials LMS Date 11/30/87
Computations Checked By Initials JMK Date 11/30/87
Final Revisions By Initials Date

FHWA REGION	STATE	PROJECT		168
5	OHIO			213

TRUMBULL COUNTY
TRU-5B-0.00

BRIDGE GENERAL NOTES

REFERENCE SHALL BE MADE TO STANDARD DRAWINGS :
BR-1 DATED 5-29-79
SD-1-69 DATED 6-12-69
HL-10.13 DATED 5-1-87
HL-20.14 DATED 5-1-87
HL-30.31 DATED 5-1-87
HL-50.21 DATED 5-1-87
AND TO SUPPLEMENTAL SPECIFICATIONS:

845 DATED 2-25-86
853 DATED 6-26-78
956 DATED 6-26-78

EXISTING STRUCTURE VERIFICATION –

DETAILS AND DIMENSIONS SHOWN ON THESE PLANS PERTAINING TO THE EXISTING STRUCTURE HAVE BEEN OBTAINED FROM PLANS OF THE EXISTING STRUCTURE AND/OR FROM FIELD OBSERVATIONS AND MEASUREMENTS. CONSEQUENTLY, THEY ARE INDICATIVE OF THE EXISTING STRUCTURE AND THE PROPOSED WORK BUT THEY SHALL BE CONSIDERED TENTATIVE AND APPROXIMATE. THE CONTRACTOR IS REFERRED TO CMS SECTIONS 102.05, 105.02 AND 513.02.

CONTRACT BID PRICES SHALL BE BASED UPON A RECOGNITION OF THE UNCERTAINTIES DESCRIBED ABOVE AND UPON A PREBID EXAMINATION OF THE EXISTING STRUCTURES BY THE CONTRACTOR. HOWEVER, ALL PROJECT WORK SHALL BE BASED UPON ACTUAL DIMENSIONS WHICH HAVE BEEN VERIFIED BY THE CONTRACTOR IN THE FIELD.

COPIES OF THE EXISTING BRIDGE PLANS ARE ON FILE AT THE DISTRICT 4 OFFICE OF THE OHIO DEPARTMENT OF TRANSPORTATION.

MAINTENANCE OF TRAFFIC –

SEE MAINTENANCE OF TRAFFIC NOTES AND DETAILS ON SHEETS 134 TO 148 FOR DETAILS OF MINIMUM WIDTHS OF TRAFFIC LANES TO BE MAINTAINED FOR EACH STRUCTURE FOR EACH PHASE OF THE BRIDGE WORK.

REPLACEMENT OF EXISTING REINFORCING STEEL –

ANY EXISTING REINFORCING BARS WHICH ARE TO BE INCORPORATED INTO THE NEW WORK AND WHICH ARE MADE UNUSABLE BY THE CONTRACTOR'S CONCRETE REMOVAL OPERATIONS SHALL BE REPLACED WITH NEW STEEL AT HIS COST. ANY EXISTING REINFORCING BARS DEEMED BY THE ENGINEER TO BE UNUSABLE BECAUSE OF CORROSION SHALL BE REPLACED WITH NEW STEEL. AN ALLOWANCE OF 100 POUNDS IS INCLUDED UNDER ITEM 509 IN EACH BRIDGE SUMMARY FOR THIS PURPOSE.

ITEM SPECIAL – REMOVAL AND REPLACE-MENT OF EXPANSION JOINT FILLER

THIS ITEM SHALL CONSIST OF THE REMOVAL OF EXISTING EXPANSION JOINT FILLER IN THE EXISTING STRUCTURAL EXPANSION JOINTS AND THE REPLACEMENT OF AS PER 516.04. ALL LABOR MATERIAL AND INCIDENTALS SHALL BE INCLUDED IN THE PRICE BID PER LIN.FT. OF ITEM SPECIAL, REMOVAL AND REPLACEMENT OF EXPANSION JOINT FILLER.

ITEM SPECIAL – HORIZONTAL EXTENSION OF STRUCTURAL EXPANSION JOINT TYPES A AND B

THIS ITEM SHALL CONSIST OF ALL WORK SHOWN IN DETAIL SHTS. 172 THRU 173. THE COST OF LABOR, MATERIAL AND INCIDENTALS SHALL BE INCLUDED IN PRICE BID PER LIN.FT. OF HORIZONTAL EXTENSION OF STRUCTURAL EXPANSION JOINT TYPE A OR B.

REMOVAL OF EXISTING BRIDGE PARAPET:

A. GENERAL:
DURING REMOVAL WORK ON ALL PARAPETS, THE CONTRACTOR SHALL NOT PERMIT REMOVED CONCRETE AND DEBRIS TO DROP TO THE GROUND. MEANS SHALL BE PROVIDED FOR CATCHING BROKEN CONCRETE. THE CONTRACTOR SHALL SUBMIT DETAILS TO THE DIRECTOR FOR APPROVAL OF THE METHOD HE PROPOSES TO USE TO CATCH THE CONCRETE WITHIN THESE DESIGNATED AREAS. THE CONTRACTOR MUST TAKE ALL NECESSARY PRECAUTIONS TO PREVENT ANY MATERIAL FROM FALLING INTO YOUNGS RUN CREEK, OR ONTO THE CREEKS' BANKS.

B. REMOVAL OF EXISTING BRIDGE PARAPET OVER RAILROADS:
A DEMOLITION PLAN FOR THE REMOVAL OF THE PARAPETS OVER ALL RAILROADS SHALL BE PREPARED BY AND CARRY THE SEAL OF A PROFESSIONAL ENGINEER. THE CONTRACTOR SHALL ALSO SUBMIT DETAILS OF THE PROTECTION SHIELD FOR THE RAILROAD TRACKS AND COMMUNICATION LINES. THESE PLANS SHALL BE APPROVED BY THE RAILROAD PRIOR TO ANY DEMOLITION WORK ON RAILROAD PROPERTY.

C. CONCRETE REMOVAL:
CONCRETE SHALL BE REMOVED BY MEANS OF APPROVED PNEUMATIC HAMMERS EMPLOYING POINTED AND BLUNT CHISEL TOOLS. THE WEIGHT OF HAMMER SHALL BE APPROVED BY THE ENGINEER AND SHALL NOT WEIGH MORE THAN 35 POUNDS FOR REMOVAL WITHIN 18 INCHES OF PORTIONS TO BE PRESERVED. OUTSIDE THE 18 INCH LIMIT, A HAMMER HEAVIER THAN 35 POUNDS, BUT NOT TO EXCEED 85 POUNDS, MAY BE USED AT THE APPROVAL OF THE ENGINEER. PNEUMATIC HAMMERS SHALL NOT BE PLACED IN DIRECT CONTACT WITH REINFORCING STEEL THAT IS TO BE RETAINED IN THE REBUILT STRUCTURE. EXPOSED REINFORCING STEEL SHALL BE CLEANED BY WIRE BRUSH TO REMOVE ALL LOOSE PARTICLES OF CONCRETE OR OTHER LOOSE MATERIAL. EXISTING REINFORCING STEEL SHALL BE CUT AND/OR MAINTAINED AS INDICATED IN THE PLANS, OR AS DIRECTED BY THE ENGINEER, TO SERVE AS DOWELS OR AS PRINCIPAL REINFORCEMENT IN THE RE-BUILT STRUCTURE. THESE BARS SHALL BE CLEANED OF ALL CONCRETE FRAGMENTS AND FOREIGN MATTER. CARE SHOULD BE TAKEN TO PRESERVE THE BOND OF SUCH DOWELS OR PRINCIPAL REINFORCEMENT TO THE EXISTING CONCRETE. WHERE BOND BETWEEN EXISTING CONCRETE AND REINFORCING STEEL THAT IS TO BE RETAINED HAS BEEN DESTROYED, THE UNBONDED CONCRETE ADJACENT TO THE BAR SHALL BE REMOVED TO A MINIMUM DEPTH WHICH WILL PERMIT NEW CONCRETE TO BOND TO THE ENTIRE PERIPHERY OF THE BAR SO DEBONDED, A MINIMUM OF 1-1/2-INCHES CLEARANCE AROUND THE PERIMETER OF THE STEEL SHALL BE PROVIDED. DAMAGED AREAS OF REINFORCEMENT THAT ARE TO REMAIN SHALL BE CUT, AND STRESS TRANSFER SHALL BE ACCOMPLISHED BY EITHER A LAPPED OR MECHANICAL SPLICE AS APPROVED BY THE ENGINEER. OTHER EXISTING REINFORCEMENT WITHIN THE REMOVAL LIMITS SHALL BE REMOVED AND CLEAN EXISTING STEEL SHALL BE PROVIDED BY THE CONTRACTOR AND INCLUDED WITH ITEM 202, PORTIONS OF STRUCTURE REMOVED, FOR PAYMENT. LAPPED OR MECHANICAL SPLICES REQUIRED FOR STRESS TRANSFER WHERE EXISTING REINFORCEMENT IS DAMAGED SHALL BE PROVIDED BY THE CONTRACTOR AT HIS EXPENSE.

ESTIMATED QUANTITIES STR.–0086 RT. & LT. OVER MAHONING RIVER

ITEM	ABUT.	GEN.	ITEM	TOTAL	UNIT	DESCRIPTION
SPEC.		160	SPEC.	160	LIN.FT.	REMOVAL AND REPLACEMENT OF
						EXPANSION JOINT FILLER
519*		200	519*	200	SQ.FT.	PATCHING CONCRETE STRUCTURES

ESTIMATED QUANTITIES STR.–0134 RT. & LT. OVER CHOCOLATE RUN

ITEM	ABUT.	GEN.	ITEM	TOTAL	UNIT	DESCRIPTION
519*		150	519*	150	SQ.FT.	PATCHING CONCRETE STRUCTURES

* 50% FEDERAL PARTICIPATION

REV. 11-15-88

MICROFILMED
OCT 29 1992

FHWA REGION	STATE	PROJECT	
5	OHIO		

169
213

TRUMBULL COUNTY
TRU – 5B – 0.00

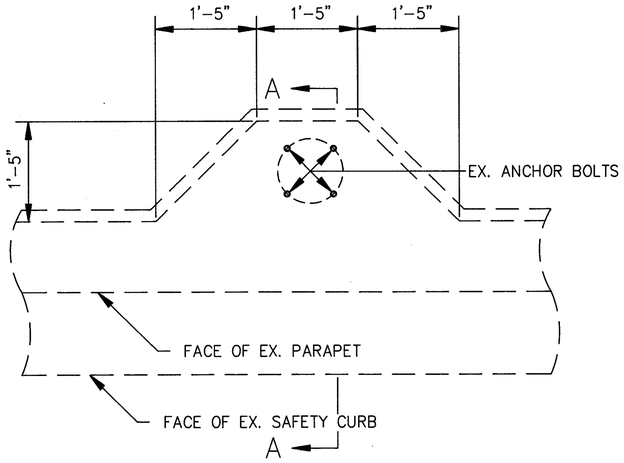

PLAN VIEW EXISTING PILASTER

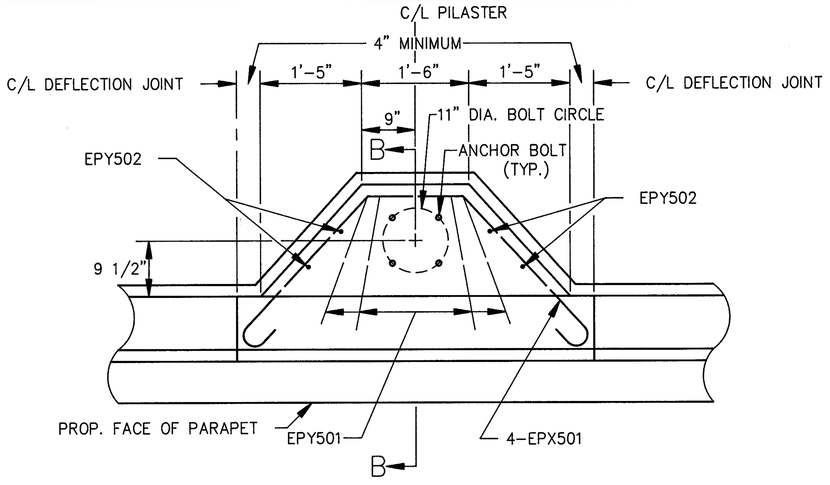

PLAN VIEW PROPOSED PILASTER

– REMOVE EX. CONCRETE, REINFORCING STEEL, ANCHOR BARS, ELECTRICAL CONDUIT AND PULL BOX TO LINES SHOWN.

ϕ – LMC OVERLAY, THICKNESS "P" (SEE PILASTER TABLE ON THIS SHEET FOR THICKNESS "P")

** – CONSTRUCTION JOINT

NOTE : EXISTING PILASTER ON STRUCTURE TRU-5-0716 LT. TO BE RELOCATED AS SHOWN IN END SECTION DETAILS SHEET 206.

NOTE : SEE PARAPET DETAILS FOR LOCATIONS OF DEFLECTION JOINTS.

PILASTER TABLE

STRUCTURE	PARAPET	"P"	"D"	"T"
TRU-5-0183 LT.	LEFT	1 1/2"	1'-2 1/2"	1 3/4"
TRU-5-0183 RT.	RIGHT	1 1/2"	1'-2 1/2"	1 3/4"
TRU-5-0363 LT.	LEFT	1"	1'-2"	1 1/4"
TRU-5-0363 RT.	RIGHT	1"	1'-2"	1 1/4"
TRU-5-0401 RT.	RIGHT	1"	1'-2"	1 1/4"
TRU-5-0716 LT.	LEFT	1"	1'-2"	1 1/4"
TRU-5-0735 LT.	LEFT	1 1/2"	1'-2 1/2"	1 3/4"
TRU-5-0735 RT.	RIGHT	1 1/2"	1'-2 1/2"	1 3/4"

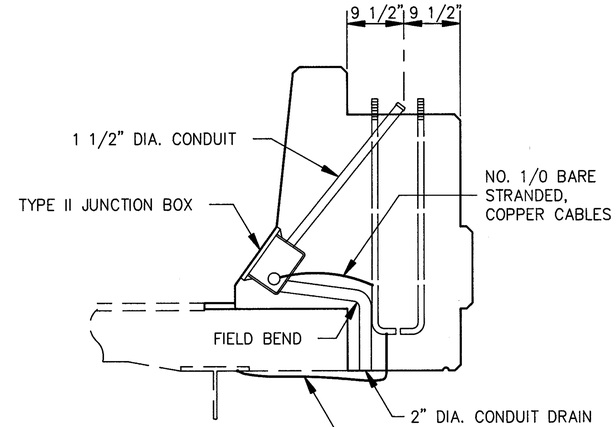

PROPOSED SECTION B–B (ELECTRICAL)

NOTE: FOR ADDITIONAL NOTES AND DETAILS, SEE STD. DWGS. HL-10.13 HL-20.14 AND BR-1.

NOTE: FOR THE LOCATIONS OF E*Y501 AND E*Y502 BARS, SEE THE LONGITUDINAL SECTION OF DEFLECTOR PARAPET FOR THE APPROPRIATE BRIDGE.

NOTE: WHERE PILASTERS ARE PROVIDED FOR FUTURE LIGHTING INSTALLATIONS, THE 1 1/2" CONDUIT SHALL BE CAPPED APPROX. 2" ABOVE THE TOP OF THE PILASTER.

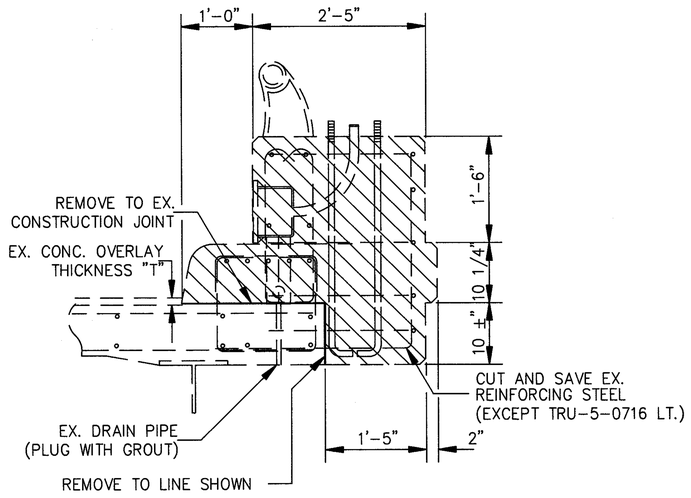

EXISTING SECTION A–A

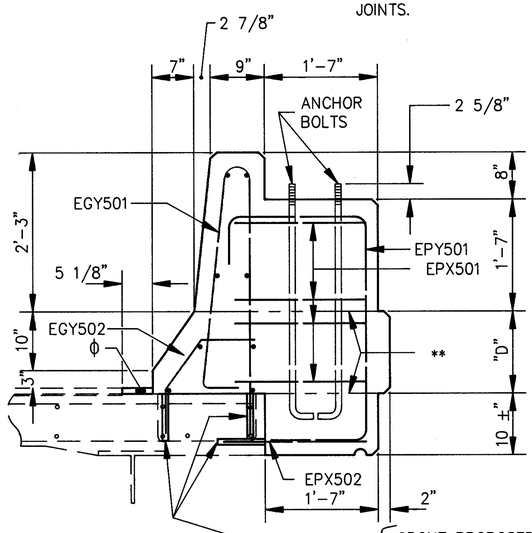

PROPOSED SECTION B–B TRU–5–0716 LT. (REINFORCING)

GROUT PROPOSED REINFORCING STEEL INTO HOLES DRILLED IN EX. CONCRETE DECK IN ACCORDANCE WITH SUPPLEMENTAL SPECIFICATIONS 853 AND 956. HOLES SHALL HAVE A MAXIMUM DIAMETER OF 1" AND SHALL BE 8" DEEP.

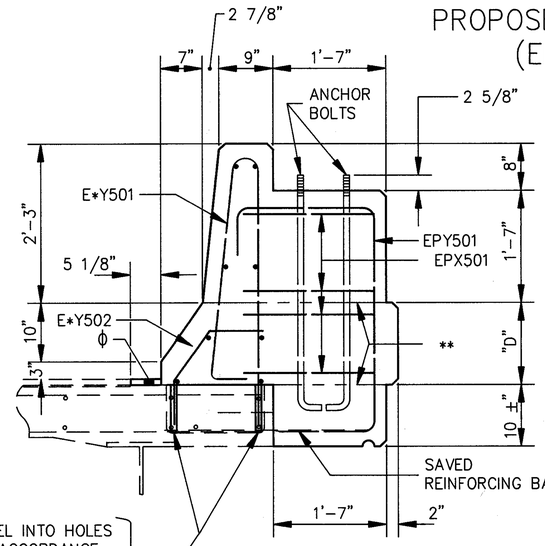

PROPOSED SECTION B–B (REINFORCING)

STATE OF OHIO
DEPARTMENT OF TRANSPORTATION
DISTRICT ONE PLANNING AND DESIGN DEPARTMENT

PILASTER DETAILS
TRU–5–0183 LT. & RT.
TRU–5–0363 LT. & RT.
TRU–5–0401 RT., TRU–5–0716 LT.
TRU–5–0735 LT. & RT.

DESIGNED	DRAWN	TRACED	CHECKED	REVIEWED	DATE	REVISED
JMS	JMS	JMS	KMS			

MICROFILMED
OCT 29 '92

FHWA REGION	STATE	PROJECT	
5	OHIO		

170
2/3

TRUMBULL COUNTY
TRU – 5B – 0.00

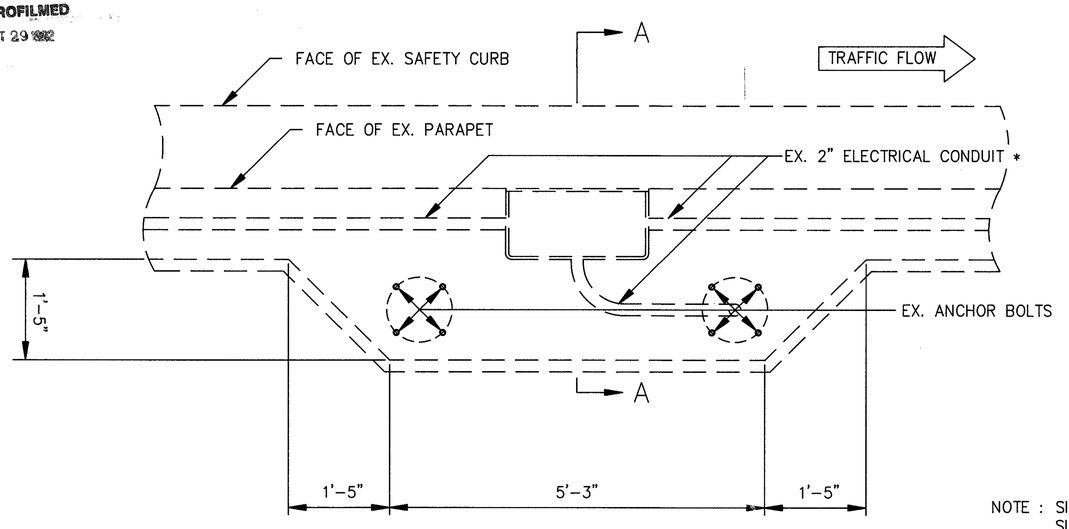

PLAN VIEW EXISTING SIGN SUPPORT

NOTE : SEE PARAPET DETAILS FOR LOCATIONS OF DEFLECTION JOINTS.

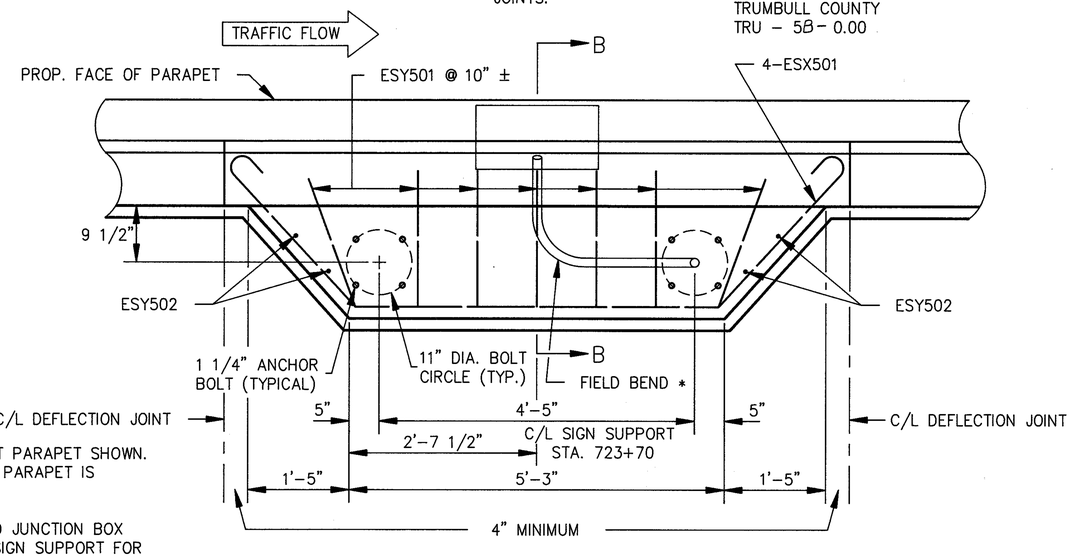

PLAN VIEW PROPOSED SIGN SUPPORT

NOTE : SIGN SUPPORT FOR RIGHT PARAPET SHOWN. SIGN SUPPORT FOR LEFT PARAPET IS SIMILAR.

* – ELECTRICAL CONDUIT AND JUNCTION BOX DETAILS APPLY TO THE SIGN SUPPORT FOR THE RIGHT PARAPET ONLY.

NOTE : FOR ADDITIONAL NOTES AND DETAILS, SEE STD. DWGS. HL-10.13 HL-20.14 AND BR-1.

NOTE : FOR LOCATIONS OF EHY501 AND EHY502 BARS, SEE THE LONGITUDINAL SECTIONS OF TRU-5-0735.

NOTE : ALL ELECTRICAL DETAILS APPLY ONLY TO THE RIGHT PARAPET.

– REMOVE EX. CONCRETE, REINFORCING STEEL, ANCHOR BOLTS, ELECTRICAL CONDUIT AND PULL BOX TO LINES SHOWN.

ϕ – 1 1/2" LMC OVERLAY

** – CONSTRUCTION JOINT

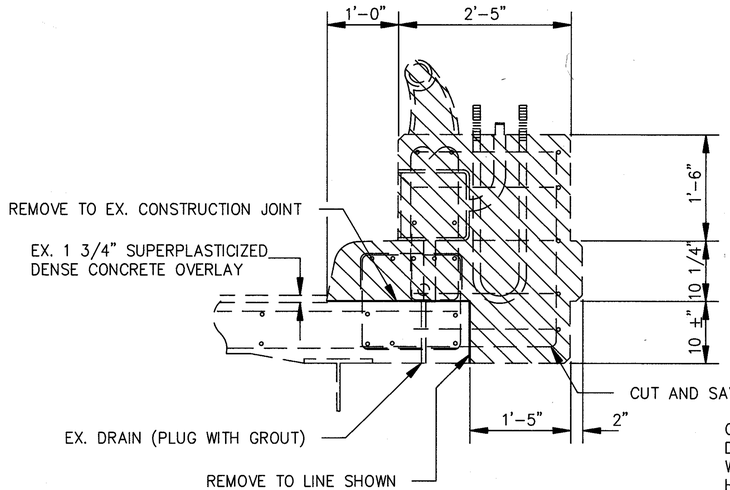

EXISTING SECTION A–A

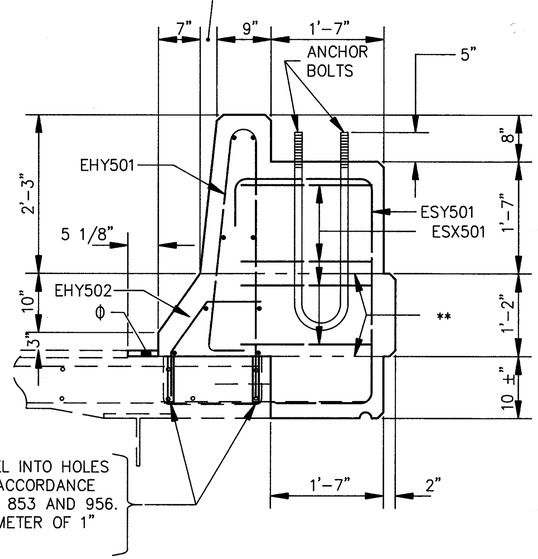

GROUT PROPOSED REINFORCING STEEL INTO HOLES DRILLED IN EX. CONCRETE DECK IN ACCORDANCE WITH SUPPLEMENTAL SPECIFICATIONS 853 AND 956. HOLES SHALL HAVE A MAXIMUM DIAMETER OF 1" AND SHALL BE 8" DEEP.

PROPOSED SECTION B–B (REINFORCING)

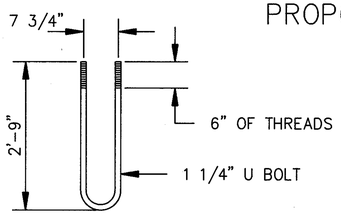

U BOLT DETAIL

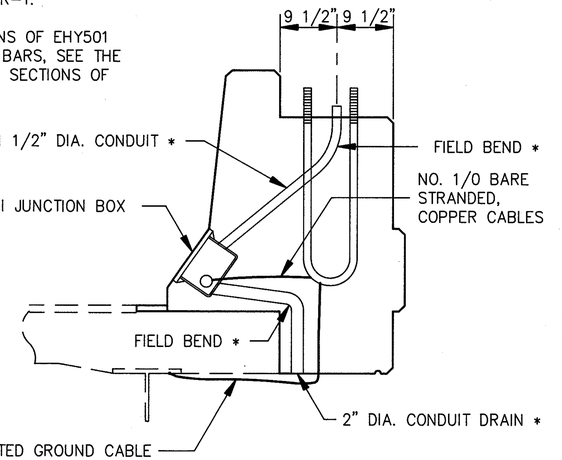

PROPOSED SECTION B–B (ELECTRICAL)

STATE OF OHIO
DEPARTMENT OF TRANSPORTATION
DISTRICT ONE PLANNING AND DESIGN DEPARTMENT

SIGN SUPPORT DETAILS

TRU–5–0735 RT.
RT. & LT. PARAPET

DESIGNED	DRAWN	TRACED	CHECKED	REVIEWED	DATE	REVISED
JMS	JMS	JMS	KMS			

MICROFILMED
OCT 29 1992

FHWA REGION	STATE	PROJECT	
5	OHIO		

171/213

TRUMBULL COUNTY
TRU – 5B – 0.00

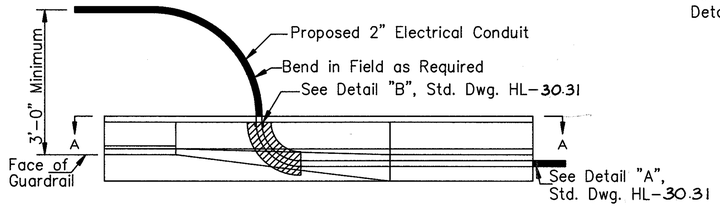

CONDUIT IN TURNED BACK WINGWALLS

PLAN VIEW

DETAIL APPLIES :
TRU-5-0183 LT. & RT.
TRU-5-0401 LT. & RT.
TRU-5-0735 LT. & RT.

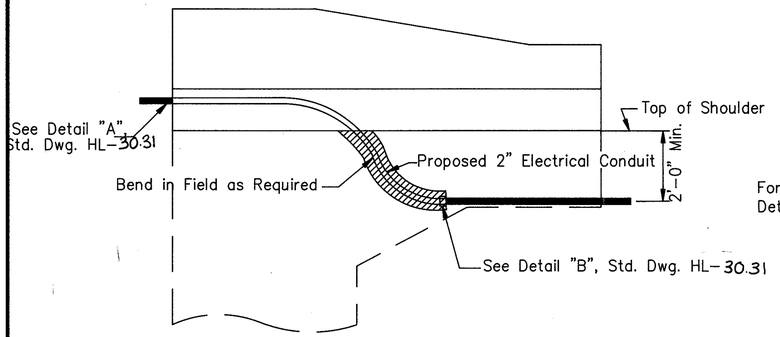

SECTION A–A
CONDUIT IN TURNED BACK WINGWALLS

DETAIL APPLIES :
TRU-5-0183 LT. & RT.
TRU-5-0401 LT. & RT.
TRU-5-0735 LT. & RT.

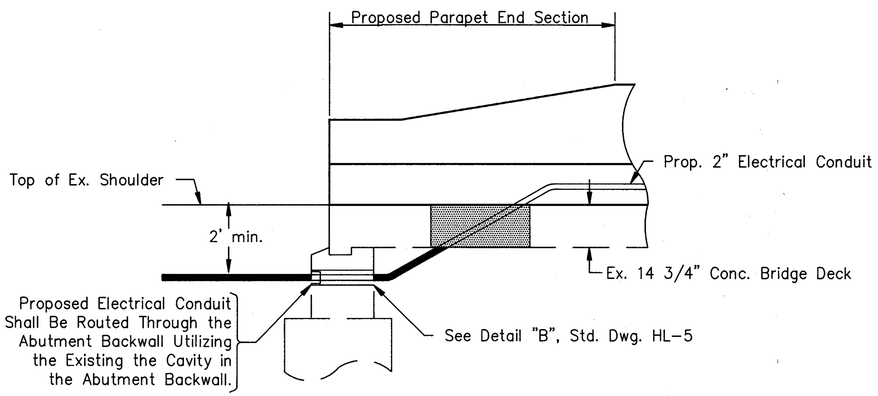

CONDUIT AT ABUTMENT OF SLAB BRIDGE WITH STRAIGHT WINGWALLS

DETAIL APPLIES :
TRU-5-0425 LT. & RT.

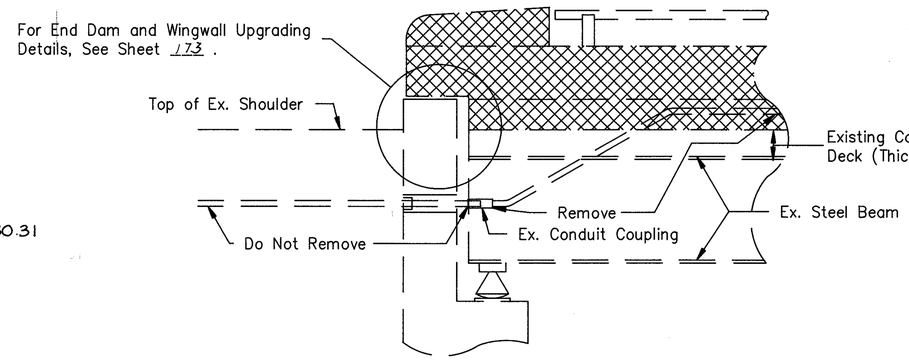

CONDUIT AT ABUTMENTS WITH STRAIGHT WINGWALLS (REMOVAL)

DETAIL APPLIES :
TRU-5-0363 LT. & RT.,

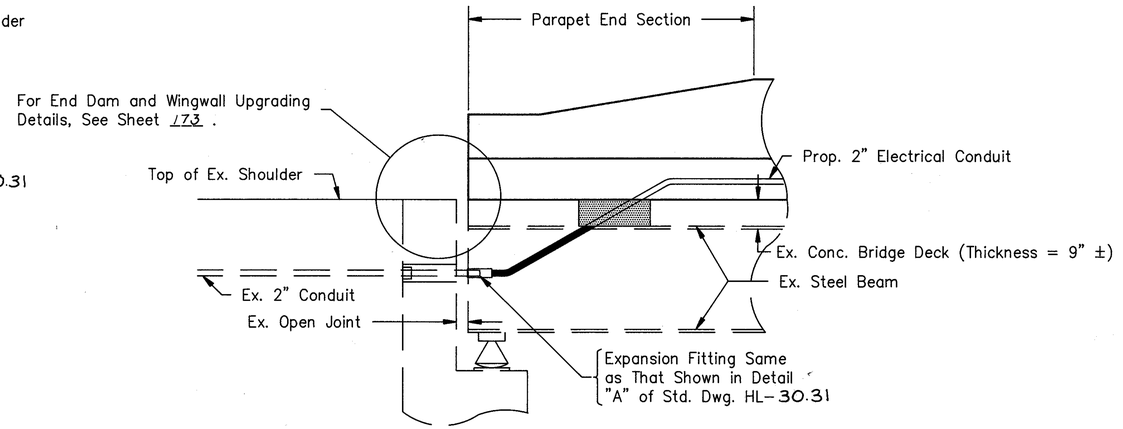

CONDUIT AT ABUTMENTS WITH STRAIGHT WINGWALLS (PROPOSED)

DETAIL APPLIES :
TRU-5-0363 LT. & RT.,
TRU-5-0716 LT. & RT.

– Remove Ex. Conc. Parapet and Steel Bridge Railing to Limits Shown. Also Remove Electrical Conduit to Expansion Coupling at Bridge Backwall, as Shown.

– Remove Existing Concrete and Replace with Class C Concrete to Facilitate Placement of Proposed 2" Conduit. The Cost of All Work and Materials Involved in the Concrete Removal and Replacement Shall be Included in the Unit Price Bid per Cu. Yd. of Item 511, Class C Concrete Abutment, As per plan.

– Remove Existing Concrete and Replace with Class S Concrete to Facilitate Placement of Proposed 2" Conduit. The Cost of All Work and Materials Involved in the Concrete Removal and Replacement Shall be Included in the Unit Price Bid per Cu. Yd. of Item 511, Class S Concrete Superstructure, As per plan.

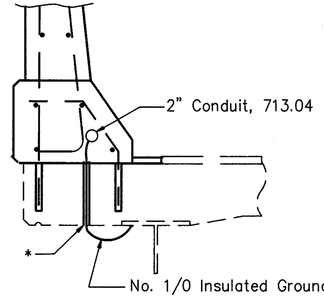

GROUNDING CONDUIT IN PROPOSED BRIDGE PARAPET

DETAIL APPLIES :
TRU-5-0183 LT. & RT., TRU-5-0363 LT. & RT.,
TRU-5-0401 LT. & RT., TRU-5-0716 LT. & RT.,
TRU-5-0735 LT. & RT.

NOTE : Copper Grounding Cable Shall be Connected to Structural Steel by Means of Exothermic Welding. Two Coats of Insulating Varnish Shall be Applied Over the Exothermic Weld and Exposed Cable.

NOTE : The Cost of All 2" Electrical Conduit in Bridge Parapets Shall be Included in the Unit Price Bid For Item 625 2" Conduit, 713.04.

NOTE : On Structure TRU-5-0425 Lt. & Rt. Electrical Continuity Shall be Obtained by Providing Approved Type Copper Jumpers for Each Conduit Coupling at the Abutments.

NOTE : For Additional Notes and Details, See Std. Dwgs. HL-30.31& HL-50.21

* – Drill 1" Diameter Hole Through Bridge Deck to Allow Connection of Grounding Cable to Steel Beam. Patch Hole with Concrete Meeting the Requirements of Item Special, Patching Concrete Bridge Deck, Type II. The Cost of All Materials and Work Involved in This Connection Shall be Included in the Unit Price Bid per Cu. Yd. of Item 511 Class S Concrete Superstructure.

STATE OF OHIO
DEPARTMENT OF TRANSPORTATION
DISTRICT ONE PLANNING AND DESIGN DEPARTMENT

ELECTRICAL CONDUIT IN BRIDGE PARAPETS AND STRUCTURE GROUNDING DETAILS

TRU-5-0183 LT. & RT., TRU-5-0363 LT. & RT.,
TRU-5-0401 LT. & RT., TRU-5-0425 LT. & RT.,
TRU-5-0716 LT. & RT., TRU-5-0735 LT. & RT.

DESIGNED	DRAWN	TRACED	CHECKED	REVIEWED DATE	REVISED
JMS	JMS	JMS	DMK		

MICROFILMED
OCT 29 1982

FHWA REGION	STATE	PROJECT	
5	OHIO		

172/213

TRUMBULL COUNTY
TRU-5B-0.00

FOR DETAILS OF STRUCTURAL STEEL IN EX. EXPANSION JOINT, SEE SECTION B-B.

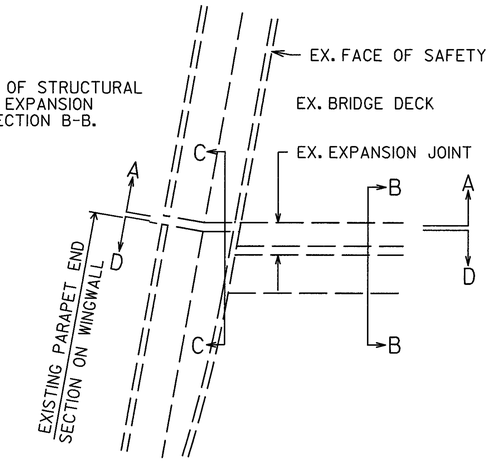

EXISTING PLAN VIEW

FOR DETAILS OF STRUCTURAL STEEL IN EXPANSION JOINT EXTENSION, SEE PROPOSED SECTION C-C.

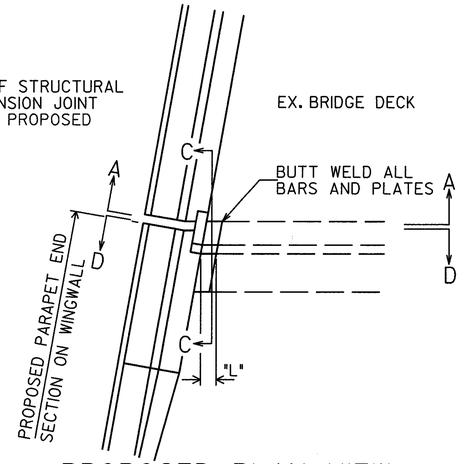

PROPOSED PLAN VIEW

▨ - REMOVE EXISTING PARAPET, SAFETY CURB, AND BACKWALL TO LINES SHOWN. SEE PARAPET END SECTION DETAILS FOR DETAILS NOT SHOWN. ANY EXISTING EXPOSED REINFORCING STEEL NOT NOTED OTHERWISE SHALL BE CUT OFF EVEN WITH THE REMOVAL LINES. (PAYMENT UNDER ITEM 202 PORTIONS OF STRUCTURE REMOVED)

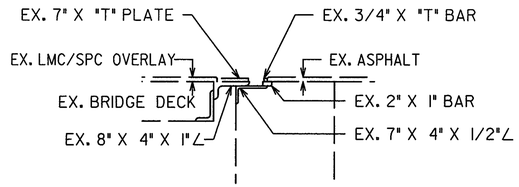

EXISTING SECTION B-B

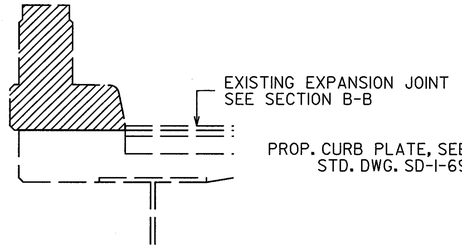

EXISTING SECTION A-A

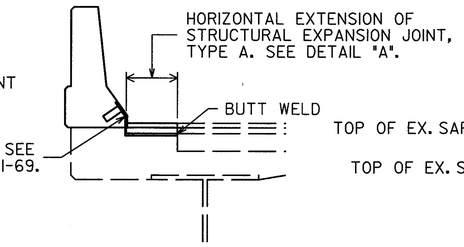

PROPOSED SECTION A-A

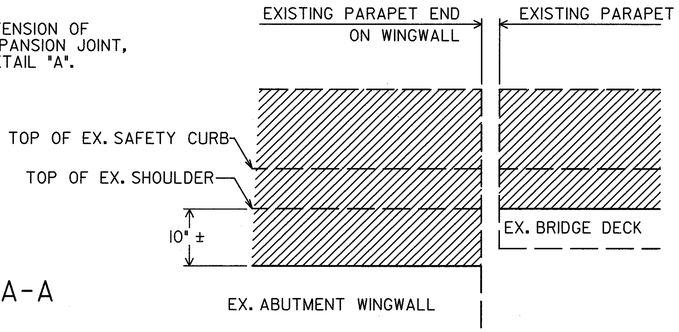

EXISTING SECTION C-C

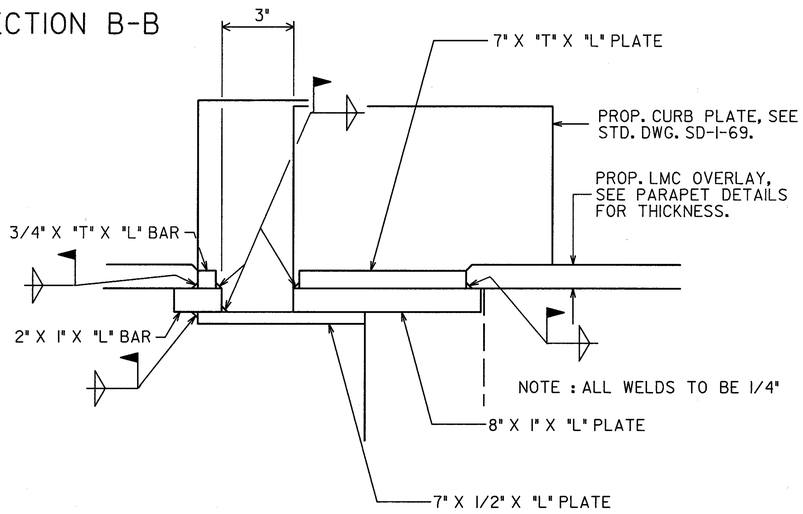

DETAIL "A"

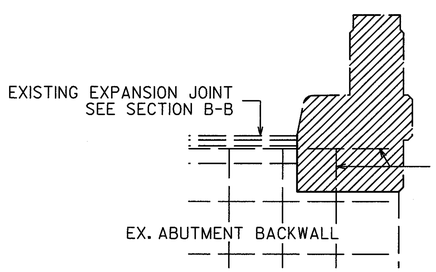

EXISTING SECTION D-D

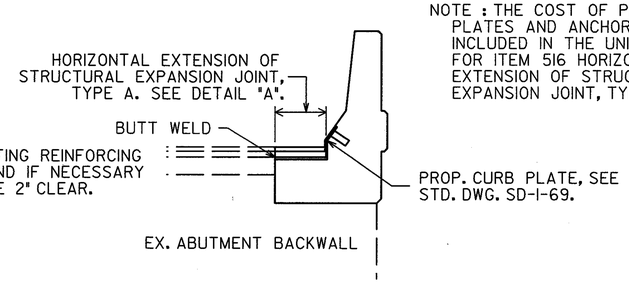

PROPOSED SECTION D-D

NOTE : THE COST OF PROPOSED CURB PLATES AND ANCHORS SHALL BE INCLUDED IN THE UNIT PRICE BID FOR ITEM 516 HORIZONTAL EXTENSION OF STRUCTURAL EXPANSION JOINT, TYPE A.

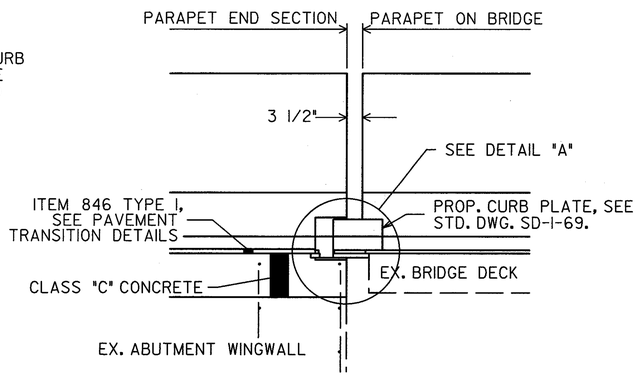

PROPOSED SECTION C-C

DIMENSION "L"

STRUCTURE	"T"	"L"
TRU-5-0183 LT. & RT.	1 1/4"	0'-5 1/4"
TRU-5-0401 LT. & RT.	3/4"	0'-5 5/8"
TRU-5-0735 LT. & RT.	1 1/4"	0'-5 1/4"

STATE OF OHIO
DEPARTMENT OF TRANSPORTATION
DISTRICT ONE PLANNING AND DESIGN DEPARTMENT

HORIZONTAL EXTENSION OF STRUCTURAL EXPANSION JOINT, TYPE A

TRU-5-0183 LT. & RT., TRU-5-0401 LT. & RT.
TRU-5-0735 LT. & RT.

DESIGNED	DRAWN	TRACED	CHECKED	REVIEWED	DATE	REVISED
JMS	JMS	JMS	DMK			

MICROFILMED
OCT 29 1992

FHWA REGION	STATE	PROJECT	
5	OHIO		

173
213

TRUMBULL COUNTY
TRU-5B-0.00

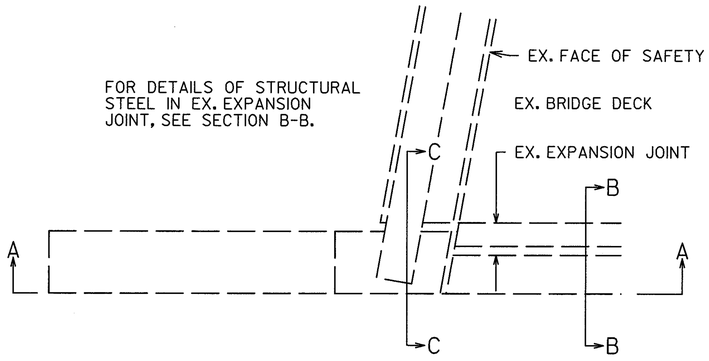

EXISTING PLAN VIEW

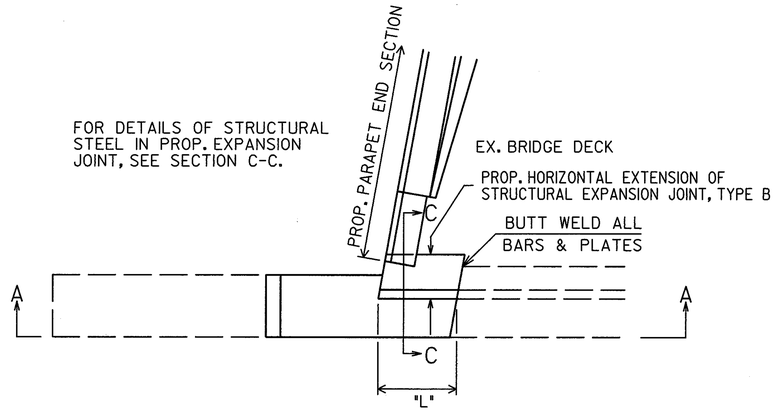

PROPOSED PLAN VIEW

DIMENSION "L"

STRUCTURE	"L"
TRU-5-0363 LT. & RT.	3'-0 1/2"
TRU-5-0525 LT. & RT.	1'-7 1/8"
TRU-5-0716 LT. & RT.	1'-10"

- REMOVE EXISTING WINGWALL TO LINES SHOWN. ANY EXISTING EXPOSED REINFORCING STEEL NOT NOTED OTHERWISE SHALL BE CUT OFF EVEN WITH THE REMOVAL LINES. (PAYMENT UNDER ITEM 202 PORTIONS OF STRUCTURE REMOVED)

- REMOVE EXISTING PARAPET AND SAFETY CURB. (SEE PARAPET DETAILS)

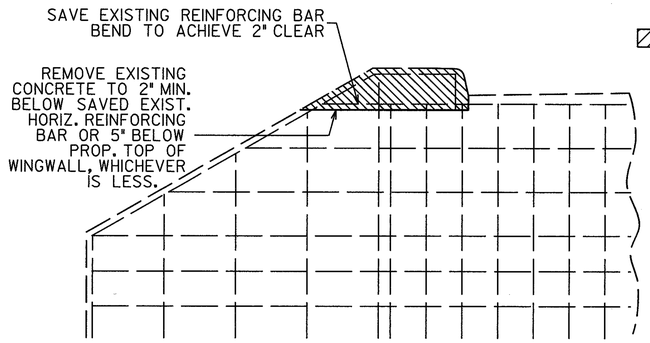

EXISTING SECTION A-A

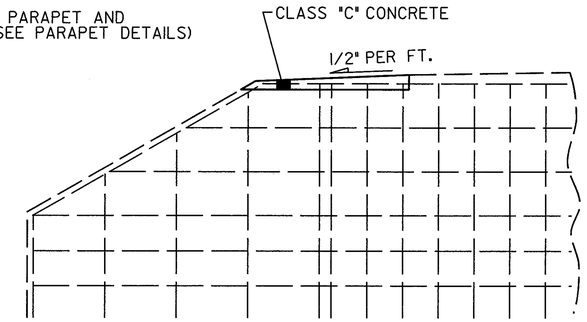

PROPOSED SECTION A-A

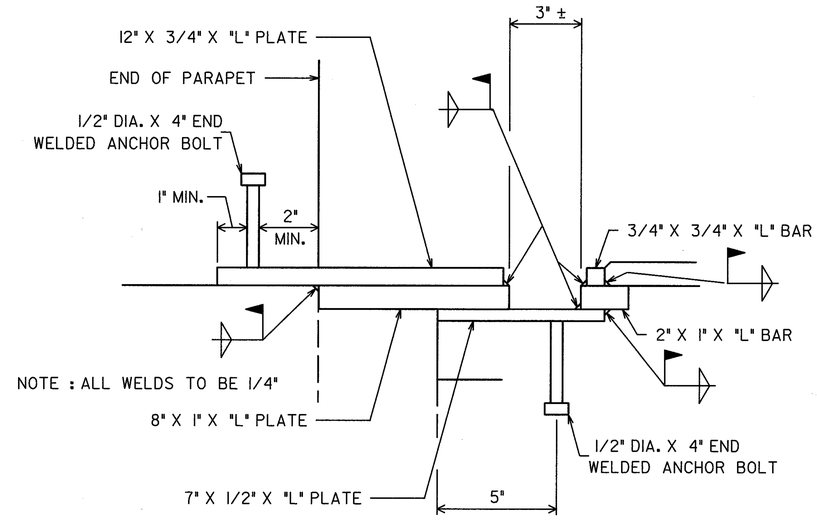

DETAIL "A"

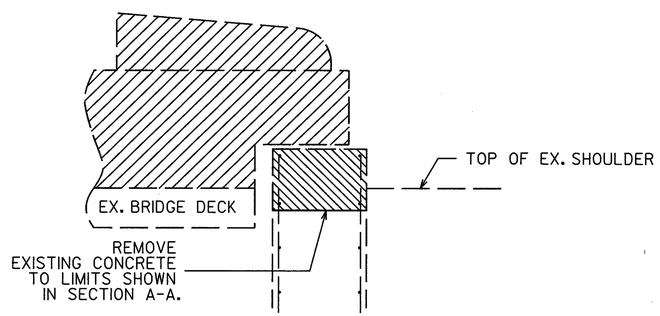

EXISTING SECTION C-C

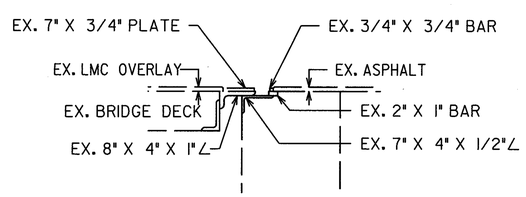

EXISTING SECTION B-B

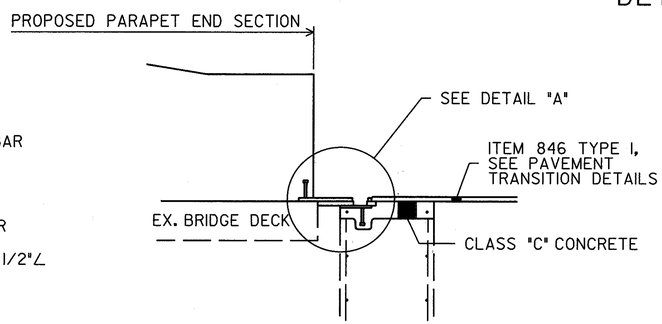

PROPOSED SECTION C-C

NOTE : PROPOSED ANCHOR BOLTS SHALL BE APPROX. 6" FROM THE OUTSIDE EDGE OF THE PLATE. THE COST OF THE PROPOSED ANCHOR BOLTS SHALL BE INCLUDED IN THE UNIT PRICE BID FOR ITEM SPECIAL HORIZONTAL EXTENSION OF STRUCTURAL EXPANSION JOINT, TYPE B.

STATE OF OHIO
DEPARTMENT OF TRANSPORTATION
DISTRICT ONE PLANNING AND DESIGN DEPARTMENT

HORIZONTAL EXTENSION OF STRUCTURAL EXPANSION JOINT, TYPE B & WINGWALL UPGRADING DETAILS

TRU-5-0363 LT. & RT., TRU-5-0525 LT. & RT.
TRU-5-0716 LT. & RT.

DESIGNED	DRAWN	TRACED	CHECKED	REVIEWED	DATE	REVISED
JMS	JMS	JMS	DMK			

MICROFILMED
OCT 29 1992

FHWA REGION	STATE	PROJECT	
5	OHIO		

174
2/3

TRUMBULL COUNTY
TRU-5B-0.00

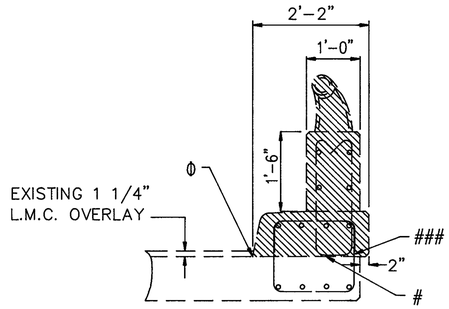

TYPICAL EXISTING SECTION THRU SAFETY SHAPE PARAPET ON STRUCTURE

DETAILS OF SAFETY SHAPE PARAPET ON STRUCTURE WITH 1 1/4" LATEX MODIFIED CONCRETE OVERLAY APPLIES TO STRUCTURES:
STR NO. 0363 LT. & RT.
STR NO. 0401 LT. & RT.
STR NO. 0525 LT. & RT.
STR NO. 0549 LT. & RT.
STR NO. 0716 LT. & RT.

* – FOR INDIVIDUAL BAR NO., SEE APPROPRIATE STRUCTURE.

** – CONSTRUCTION JOINT

\# – EXISTING CONSTRUCTION JOINT

– GROUT PROPOSED REINFORCING BARS INTO HOLES DRILLED INTO EXISTING CONCRETE IN ACCORDANCE WITH SUPPLEMENTAL SPECIFICATIONS 853 & 956. HOLES SHALL HAVE A MAXIMUM DIAMETER OF 1" AND SHALL BE 8" DEEP.

– SAVE EXISTING REINFORCING BAR AND BEND UP (PROVIDING 2" CLEAR IF NECESSARY) TO INCORPORATE INTO PROPOSED VERTICAL REINFORCING WHEREVER POSSIBLE.

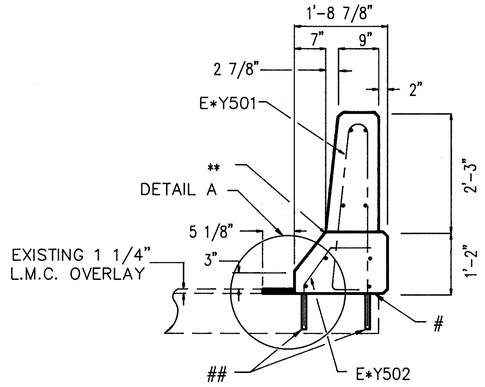

TYPICAL PROPOSED SECTION THRU SAFETY SHAPE PARAPET ON STRUCTURE

▨ SECTION TO BE REMOVED

Φ – REMOVE EXISTING CONCRETE PARAPET AND CURB TO EXISTING CONSTRUCTION JOINT. ANY EXISTING EXPOSED REINFORCING STEEL NOT NOTED OTHERWISE, SHALL BE CUT OFF EVEN WITH THE REMOVAL LINES. (PAYMENT UNDER ITEM 202 PORTIONS OF STRUCTURE REMOVED).

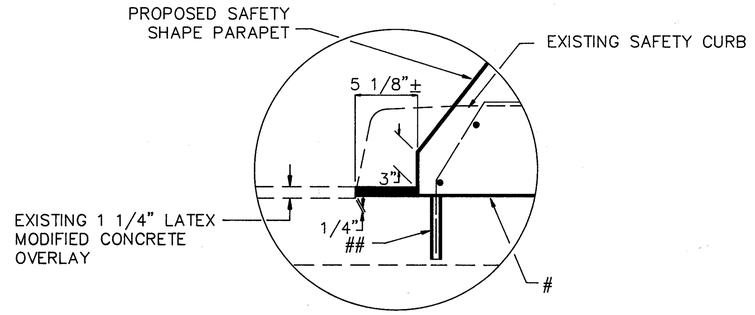

■ PROPOSED 1" ITEM 845 LATEX MODIFIED CONCRETE OVERLAY

DETAIL A

NOTE: DRAWINGS NOT TO SCALE

NOTE: ALL BARS SHALL MAINTAIN A 2" MINIMUM CLEARANCE FROM OUTSIDE EDGE OF PARAPET UNLESS OTHERWISE NOTED.

NOTE: FOR DETAILS OF END SECTIONS ON STRUCTURE, SEE END SECTION DETAILS FOR APPROPRIATE STRUCTURES.

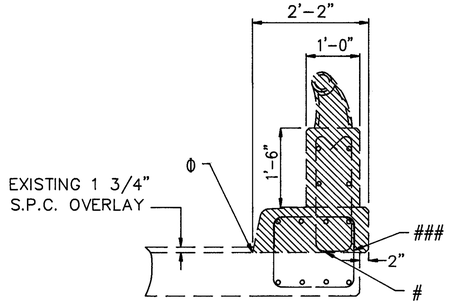

TYPICAL EXISTING SECTION THRU SAFETY SHAPE PARAPET ON STRUCTURE

DETAILS OF SAFETY SHAPE PARAPET ON STRUCTURE WITH 1 3/4" SUPERPLASTICIZED DENCE CONCRETE OVERLAY APPLIES TO STRUCTURES:
STR NO. 0183 LT. & RT.
STR NO. 0425 LT. & RT.
STR NO. 0735 LT. & RT.

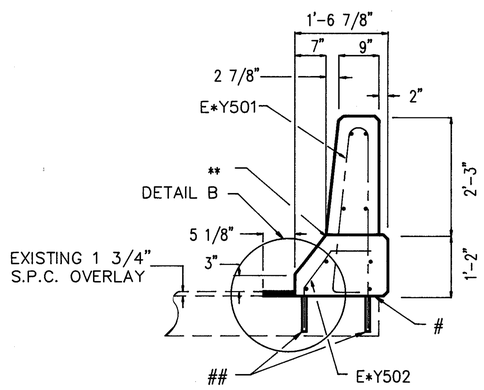

TYPICAL PROPOSED SECTION THRU SAFETY SHAPE PARAPET ON STRUCTURE

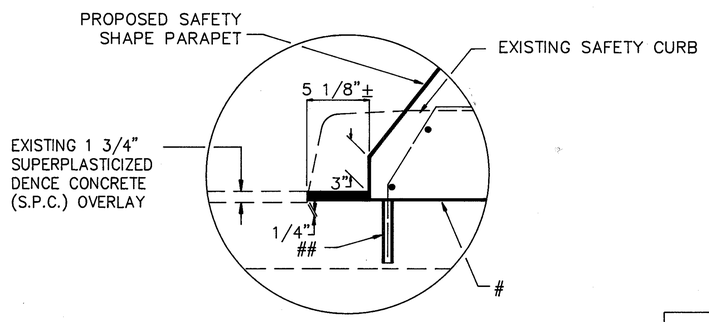

■ PROPOSED 1 1/2" ITEM 845 LATEX MODIFIED CONCRETE OVERLAY

DETAIL A

STATE OF OHIO
DEPARTMENT OF TRANSPORTATION
DISTRICT ONE PLANNING AND DESIGN DEPARTMENT

REMOVAL AND RECONSTRUCTION DETAILS OF PARAPETS ON STRUCTURES:

TRU-5-0183, TRU-5-0363, TRU-5-0401, TRU-5-0425, TRU-5-0525, TRU-5-0549, TRU-5-0716, TRU-5-0735

DESIGNED	DRAWN	TRACED	CHECKED	REVIEWED	DATE	REVISED
KMS	MJM	MJM	DJK			

SUPERSEDED
OCT 30 1992

FHWA REGION	STATE	PROJECT	
5	OHIO		

175/213

TRUMBULL COUNTY
TRU-5B-0.00

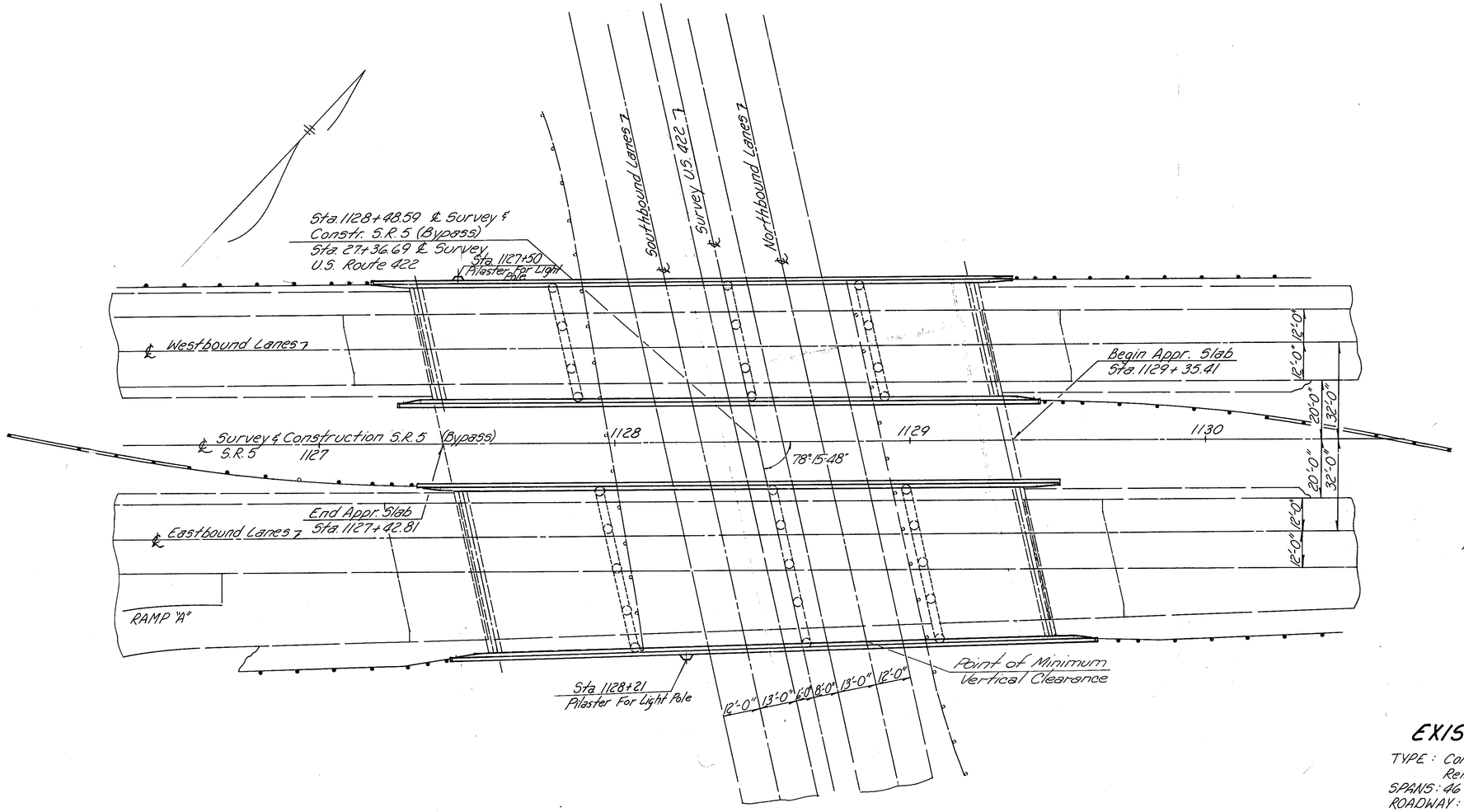

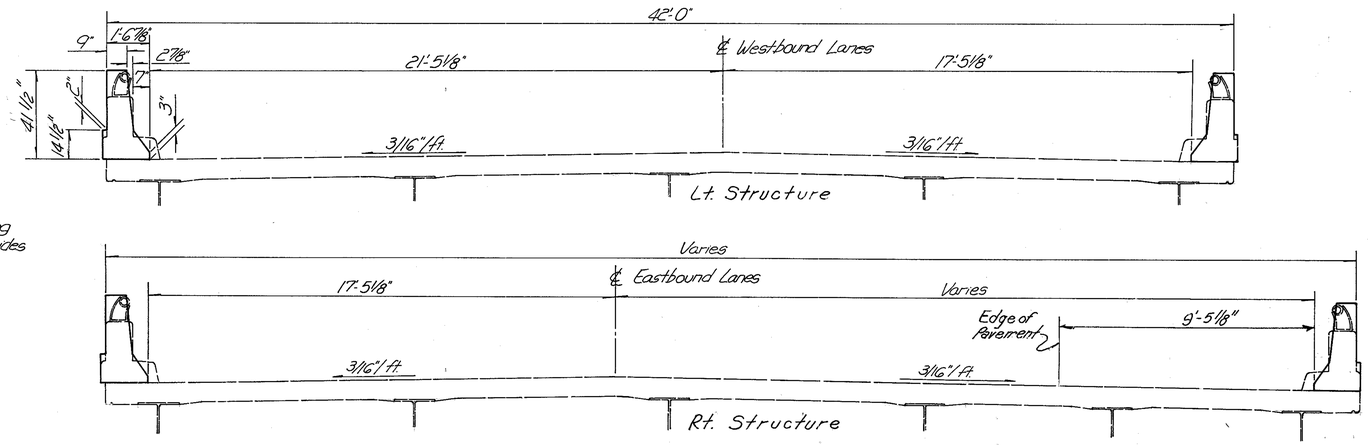

TRANSVERSE SECTION

Note: Parapet dimensioning is typical of both sides of each structure

PROPOSED WORK

1. Rebuild Bridge Parapets
2. Seal Parapets
3. Replace Expansion Joint Sealer in all End Dams.

PROPOSED STRUCTURE

ROADWAY: Lt. Structure: 38'-10 1/8" f-f parapets curbs
Rt. Structure: Variable

EXISTING STRUCTURE

TYPE: Continuous Steel Beam Bridge with Reinforced Concrete Deck and Substructure
SPANS: 46'-6", 58'-0", 46'-6", 37'-0" c/c Brgs.
ROADWAY: Left Structure: 40'-0" f-f parapet
Right Structure: Variable
LOAD FREQUENCY: CF = 2000
SKEW: 11°-44'-12" Right Forward
WEARING SURFACE: 1 3/4" Superplasticized Dense Conc.
APPROACH SLABS: 25'-0" Long
ALIGNMENT: Tangent
CURBS: 1'-0" each side (Lt. & Rt. Bridges)

STATE OF OHIO
DEPARTMENT OF TRANSPORTATION
DISTRICT ONE PLANNING AND DESIGN DEPARTMENT

1 / 5

SITE PLAN

TRU-5-0183 L & R
Over U.S. 422
TRUMBULL Co. Lt. Str. Sta 1127+36.16 - 1129+28.76
Rt. Str. Sta. 1127+49.46 - 1129+42.06

DESIGNED	DRAWN	TRACED	CHECKED	REVIEWED	DATE	REVISED
K.M.S.	K.M.S.	G.W.				

MICROFILMED
OCT 30 1992

FHWA REGION	STATE	PROJECT	
5	OHIO		

176
213

TRUMBULL COUNTY
TRU-5B-0.00

REINFORCING STEEL LIST

MARK	NO.	LENGTH	WEIGHT	SHAPE
EAX501	64	10'-4"	689.77	ST
EAX502	188	7'-1"	1388.93	ST
EAX503	8	4'-7"	38.24	ST
EAX504	4	11'-1"	46.24	ST
EAX505	28	13'-7"	396.69	ST
EAX506	32	7'-10"	261.45	ST
EAX507	12	11'-7"	144.98	ST
EAX508	6	11'-5"	71.45	ST**
EAX509	2	12'-1"	25.21	ST**
EAX510	2	11'-8"	24.34	ST**
EAX511	4	11'-3"	46.94	ST**
EAX512	2	11'-0"	22.95	ST**
EAX513	6	11'-6"	71.97	BT**
EAX514	2	12'-2"	25.38	BT**
EAX515	2	11'-9"	24.51	BT**
EAX516	4	11'-4"	47.28	BT**
EAX517	2	11'-1"	23.12	BT**
EAX518	64	4'-4"	289.26	ST
EAX519	4	10'-7"	44.15	ST
EAX601	96	30'-0"	4325.76	ST**
EAX602	12	21'-0"	378.50	ST**
EAX603	12	11'-5"	205.77	ST**
EAX604	4	12'-1"	72.60	ST**
EAX605	4	11'-8"	70.09	ST**
EAX606	8	11'-3"	135.18	ST**
EAX607	4	11'-0"	66.09	ST**
EAX608	4	20'-0"	120.16	ST**
EAY501	635	7'-9"	5132.86	BT
EAY502	532	2'-1"	1155.99	BT
EAY503	8	3'-8"	30.59	BT
EAY504	8	3'-6"	29.20	BT
EAY505	8	3'-3"	27.12	BT
EAY506	8	3'-0"	25.03	BT
EAY507	8	2'-9"	22.95	BT
EAY508	8	3'-9"	31.29	ST
EAY509	8	3'-7"	29.90	ST
EAY510	8	3'-4"	27.81	ST
EAY511	8	3'-1"	25.73	ST
EAY512	32	2'-10"	94.57	ST
EAY601	41	3'-0"	184.75	BT
EAY602	8	2'-11"	35.05	BT
EAY603	8	2'-11"	35.05	BT
EAY604	8	2'-10"	34.05	BT
EAY605	8	2'-10"	34.05	BT
EAY606	24	3'-8"	132.18	ST
EPX501	8	7'-10"	65.36	BT
EPY501	8	6'-9"	56.32	BT
EPY502	8	3'-2"	26.42	ST
TOTALS			16293.28	

BENDING DIAGRAMS

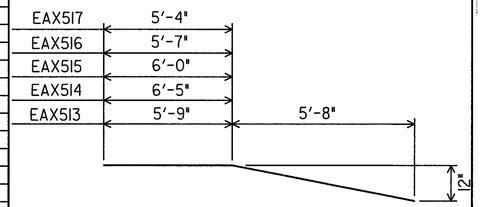

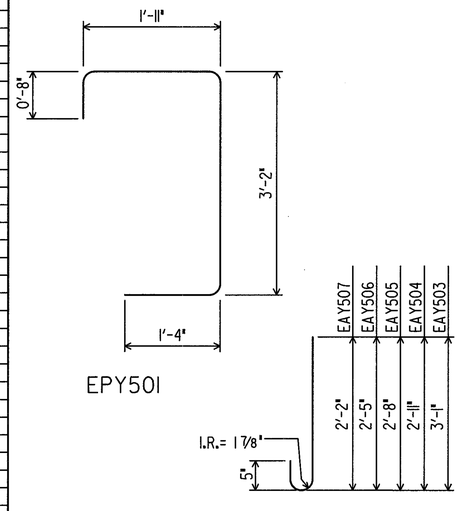

EPY501

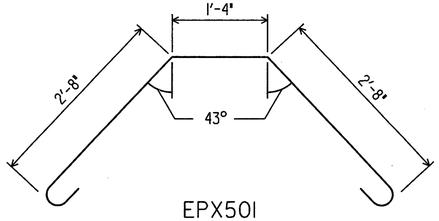

EPX501

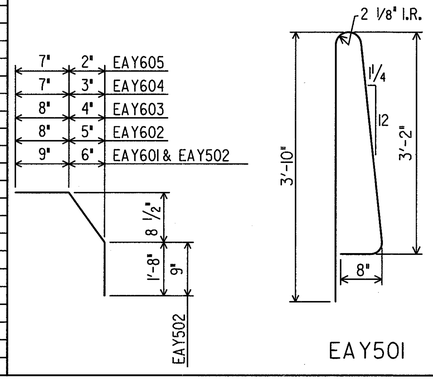

EAY501

** BEND AS REQUIRED IN FIELD WHERE NECESSARY.

ESTIMATED QUANTITIES

ITEM	ABUTMENTS	SUPER-STRUCTURE	GENERAL	ITEM	TOTAL	UNIT	DESCRIPTION
202		LUMP		202	LUMP	LUMP	PORTIONS OF STRUCTURE REMOVED
510	97	1129		510	1226	EACH	DOWEL HOLES
511	19			511	19	CU.YD.	CLASS C CONCRETE, ABUTMENT, AS PER PLAN
511		108		511	108	CU.YD.	CLASS S CONCRETE, SUPERSTRUCTURE, AS PER PLAN.
SPEC.	4			SPEC.	4	LIN.FT.	HORIZONTAL EXTENSION OF STRUCTURAL EXPANSION JOINTS (TYPE "A")
519*	10			519*	10	SQ.FT.	PATCHING CONCRETE STRUCTURES
509	2329	13965	100	509	16394	LB.	EPOXY COATED REINFORCING STEEL
845		36		845	36	SQ.YD.	LATEX MODIFIED CONCRETE OVERLAY (1 1/2 INCH THICK)
SPEC.		762		SPEC.	762	SQ.YD.	SEALING OF CONCRETE SURFACES (SEE PROPOSAL NOTE)
SPEC.			192	SPEC.	192	LIN.FT.	REMOVE AND REPLACE EXPANSION JOINT SEALER

* 50% FEDERAL PARTICIPATION

STATE OF OHIO
DEPARTMENT OF TRANSPORTATION
DISTRICT ONE PLANNING AND DESIGN DEPARTMENT

2 / 5

ESTIMATED QUANTITIES AND REINFORCING STEEL TABLE

TRU-5-0.00
STRUCTURE-0183, LT. & RT.
OVER S.R.422

DESIGNED	DRAWN	TRACED	CHECKED	REVIEWED	DATE	REVISED
KMS	KMS	GW	DMK			

REV. 11-15-88

MICROFILMED
OCT 30 1992

FHWA REGION	STATE	PROJECT	
5	OHIO		

177
213

TRUMBULL COUNTY
TRU-5B-0.00

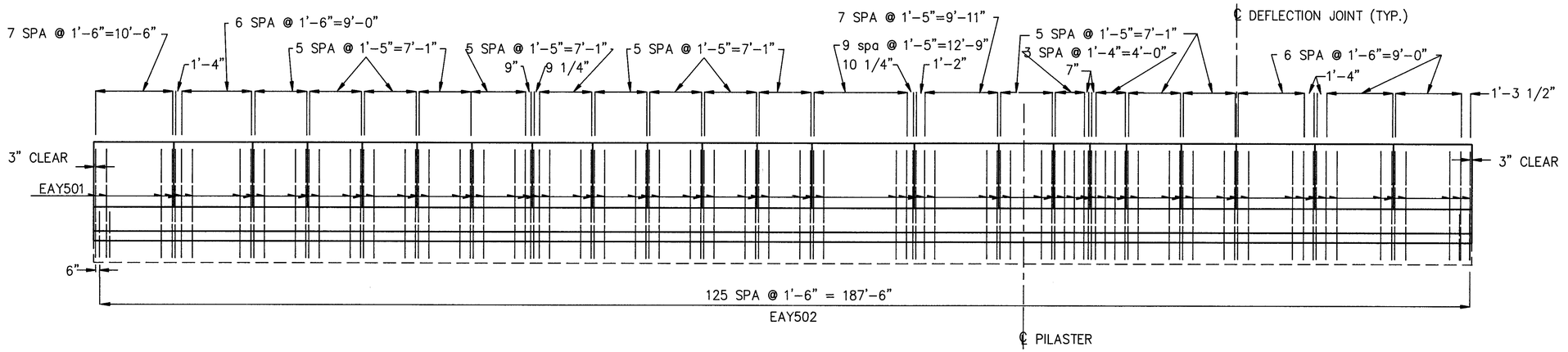

LONGITUDINAL SECTION
VERTICAL STEEL IN DEFLECTOR PARAPET

NOTE: DRAWINGS NOT TO SCALE

NOTE: ALL SPACING BETWEEN DEFLECTION JOINT AND VERTICAL REINFORCING BARS SHALL BE A MINIMUM OF 2 1/2" UNLESS OTHERWISE NOTED.

NOTE: REINFORCING BARS SHALL NOT EXTEND THRU DEFLECTION JOINT.

NOTE: CONCRETE PARAPETS ABOVE THE CONSTRUCTION JOINT SHALL BE PLACED IN ALTERNATE SECTIONS BY THE USE OF BULKHEADS. CLOSING SECTIONS SHALL BE PLACED AFTER THE REMOVAL OF BULKHEADS AND AFTER PLACEMENT OF EXPANSION JOINT FILLER. EXPOSED EDGES OF THE FILLER SHALL BE FLUSH WITH THE SURFACE OF CONCRETE AND SHALL BE FREE OF MORTAR.

NOTE: SECTION VIEWING FACE OF PARAPET

NOTE: FOR DETAILS OF REMOVING EXISTING PARAPET AND RECONSTRUCTION OF PROPOSED SAFETY SHAPE PARAPET ON STRUCTURE, SEE SHT. 174.

NOTE: FOR PILASTER DETAILS, SEE SHT. 169.

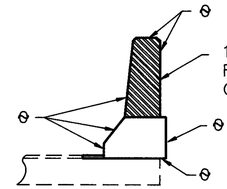

SECTION THRU DEFLECTION JOINT

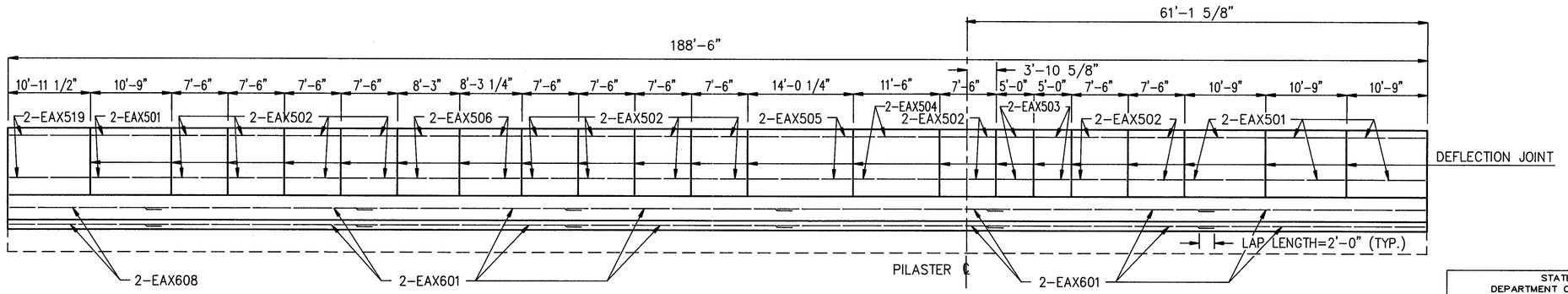

LONGITUDINAL SECTION
HORIZONTAL STEEL IN DEFLECTOR PARAPET

STATE OF OHIO
DEPARTMENT OF TRANSPORTATION
DISTRICT ONE PLANNING AND DESIGN DEPARTMENT

3/5

PARAPET DETAILS
TRU-5-0183
RT. STRUCTURE OUTSIDE PARAPET
OVER S.R. 422

DESIGNED	DRAWN	TRACED	CHECKED	REVIEWED	DATE	REVISED
H.M.S.	MJM	MJM	DJK			

MICROFILMED
OCT 30 1992

FHWA REGION	STATE	PROJECT	
5	OHIO		

178
213

TRUMBULL COUNTY
TRU-5B - 0.00

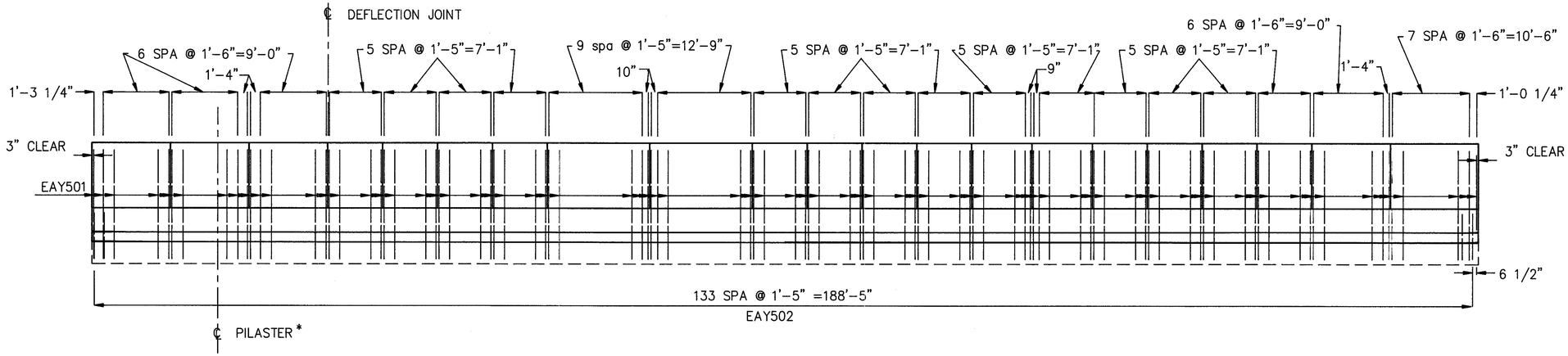

LONGITUDINAL SECTION

VERTICAL STEEL IN DEFLECTOR PARAPET

NOTE: DRAWINGS NOT TO SCALE

NOTE: REINFORCING BARS SHALL NOT EXTEND THRU DEFLECTION JOINT.

NOTE: ALL SPACING BETWEEN DEFLECTION JOINT AND VERTICAL REINFORCING BARS SHALL BE A MINIMUM OF 2 1/2" UNLESS OTHERWISE NOTED.

NOTE: FOR PILASTER DETAILS, SEE SHT. 169.

NOTE: FOR DETAILS OF REMOVING EXISTING PARAPET AND RECONSTRUCTION OF PROPOSED SAFETY SHAPE PARAPET ON STRUCTURE, SEE SHT. 174.

NOTE: SECTIONS VIEWING FACE OF PARAPET EXCEPT FOR LEFT STRUCTURE, RT. PARAPET (VIEWS BACK OF PARAPET).

NOTE: CONCRETE PARAPETS ABOVE THE CONSTRUCTION JOINT SHALL BE PLACED IN ALTERNATE SECTIONS BY THE USE OF BULKHEADS. CLOSING SECTIONS SHALL BE PLACED AFTER THE REMOVAL OF BULKHEADS AND AFTER PLACEMENT OF EXPANSION JOINT FILLER. EXPOSED EDGES OF THE FILLER SHALL BE FLUSH WITH THE SURFACE OF CONCRETE AND SHALL BE FREE OF MORTAR.

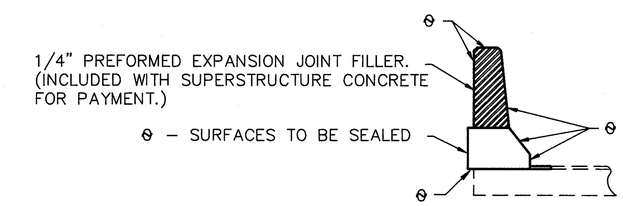

SECTION THRU DEFLECTION JOINT

* – LT. STRUCTURE OUTSIDE PARAPET

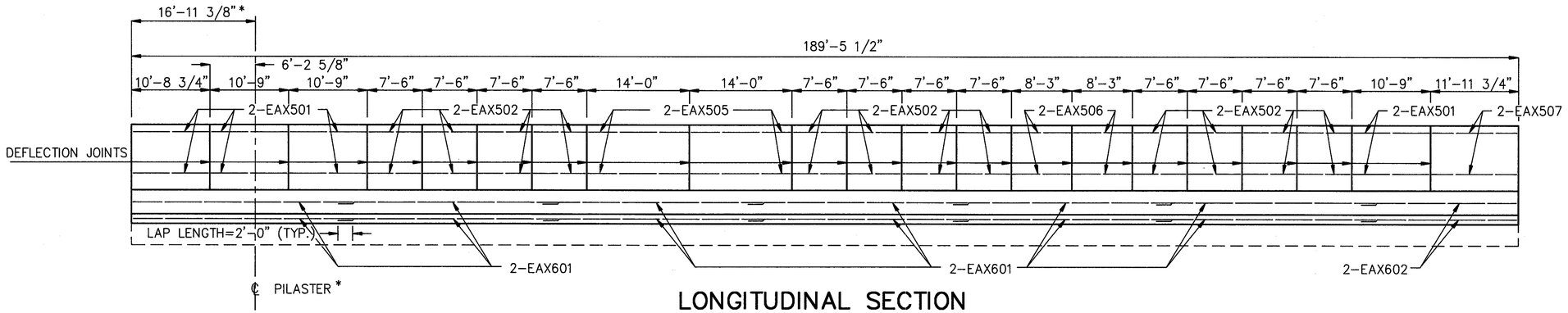

LONGITUDINAL SECTION

HORIZONTAL STEEL IN DEFLECTOR PARAPET

STATE OF OHIO
DEPARTMENT OF TRANSPORTATION
DISTRICT ONE PLANNING AND DESIGN DEPARTMENT

4 / 5

PARAPET DETAILS

TRU-5-0183
LT. STRUCTURE OUTSIDE PARAPET
LT. STRUCTURE INSIDE PARAPET,
RT. STRUCTURE INSIDE PARAPET
OVER S.R. 422

DESIGNED	DRAWN	TRACED	CHECKED	REVIEWED	DATE	REVISED
KMS	MJM	MJM	DMK			

MICROFILMED
OCT 30 1992

FHWA REGION	STATE	PROJECT	
5	OHIO		

178
2/3

TRUMBULL COUNTY
TRU-5B - 0.00

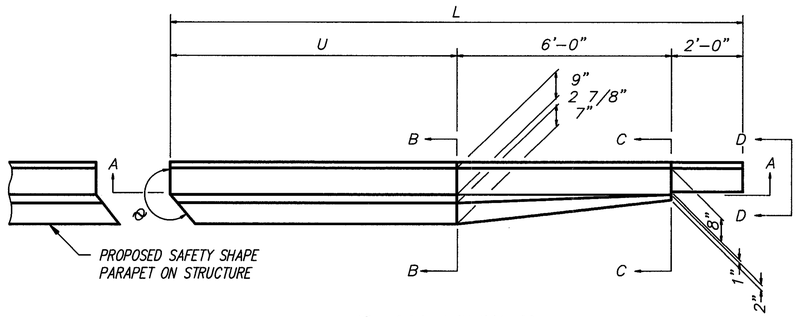

PLAN VIEW B

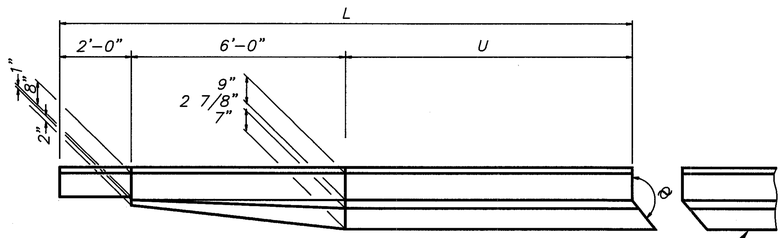

PLAN VIEW A

NOTE: ALL SECTIONS ASSOCIATED WITH PLAN VIEW A (NOT SHOWN), WILL BE SIMILAR TO THOSE OF PLAN VIEW B.

* – EXISTING CONSTRUCTION JOINT

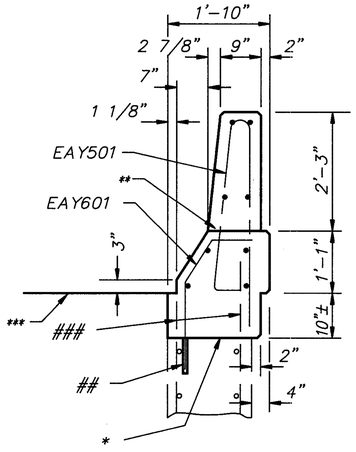

SECTION B–B
(PROPOSED)

– GROUT PROPOSED REINFORCING BARS INTO HOLES DRILLED INTO EXISTING CONCRETE IN ACCORDANCE WITH SUPPLEMENTAL SPECIFICATIONS 853 & 956. HOLES SHALL HAVE A MAXIMUM DIAMETER OF 1" AND SHALL BE 8" DEEP.

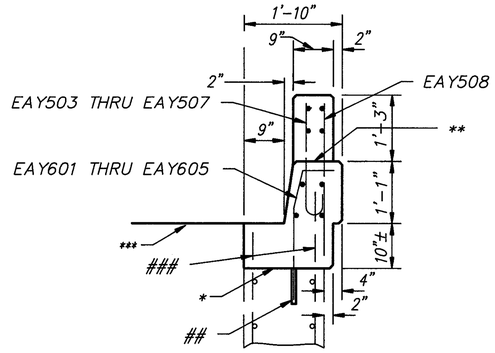

SECTION C–C
(PROPOSED)

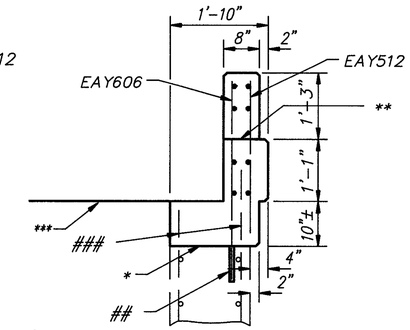

SECTION D–D
(PROPOSED)

NOTE: ALL BARS SHALL MAINTAIN A 2" MINIMUM CLEARANCE FROM OUTSIDE EDGE OF PARAPET UNLESS OTHERWISE NOTED.

*** – PAVED SHOULDER SURFACE

PLAN VIEW	ABUTMENT	STRUCTURE	WINGWALL	L LENGTH	∅ ANGLE	K SPACE	M	N	P	Q	R	S	T	U	BAR # V	BAR # W	BAR # Z
A	FORWARD	RT.	RT.	13'-11 3/8"	169°41'43.55"	8 3/8"	4	1'-4"	5'-4"	10 3/8"	7	1'-6"	10'-6"	5'-11 3/8"	EAX508	EAX513	EAX603
	FORWARD	LT.	RT.	14'-0 1/4"	168°15'48"	9 1/4"	4	1'-4"	5'-4"	11 1/4"	7	1'-6"	10'-6"	6'-0 1/4"	EAX508	EAX513	EAX603
	REAR	RT.	LT.	14'-8 1/8"	168°15'48"	9 1/8"	4	1'-6"	6'-0"	9 1/8"	8	1'-5"	11'-4"	6'-8 1/8"	EAX509	EAX514	EAX604
	REAR	LT.	LT.	14'-0 1/4"	168°15'48"	9 1/4"	4	1'-4"	5'-4"	11 1/4"	7	1'-6"	10'-6"	6'-0 1/4"	EAX508	EAX513	EAX603
B	FORWARD	RT.	LT.	14'-3 1/8"	191°44'12"	1'-0 1/8"	4	1'-4"	5'-4"	1'-2 1/8"	7	1'-6"	10'-6"	6'-3 1/8"	EAX510	EAX515	EAX605
	FORWARD	LT.	LT.	13'-9 3/4"	191°44'12"	1'-4 3/4"	3	1'-6"	4'-6"	1'-3 3/4"	7	1'-5"	9'-11"	5'-9 3/4"	EAX511	EAX516	EAX606
	REAR	RT.	RT.	13'-7"	190°18'16.45"	0	4	1'-5"	5'-8"	1'-1"	7	1'-5"	9'-11"	5'-7"	EAX512	EAX517	EAX607
	REAR	LT.	RT.	13'-9 3/4"	191°44'12"	1'-4 3/4"	3	1'-6"	4'-6"	1'-3 3/4"	7	1'-5"	9'-11"	5'-9 3/4"	EAX511	EAX516	EAX606

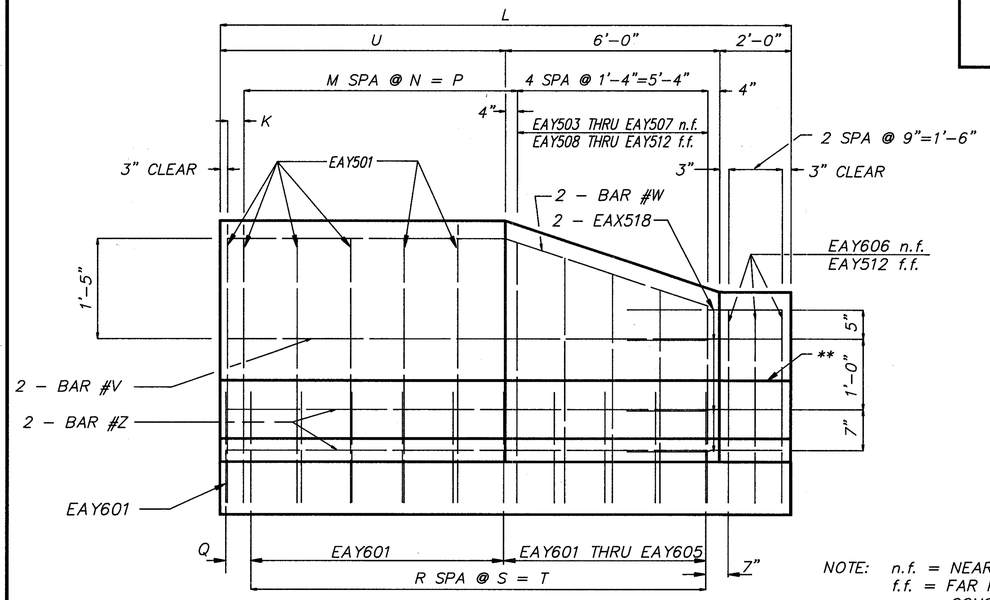

SECTION A–A

NOTE: n.f. = NEAR FACE
f.f. = FAR FACE
** = CONSTRUCTION JOINT

– SAVE EXISTING REINFORCING BAR AND BEND (PROVIDING 2" CLEAR IF NECESSARY) TO INCORPORATE INTO PROPOSED VERTICAL REINFORCING WHEREVER POSSIBLE.

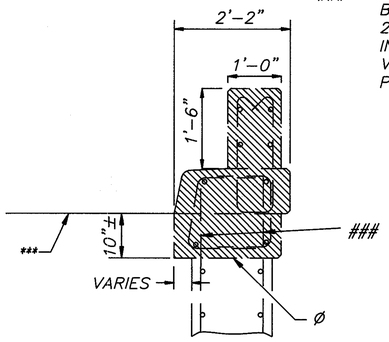

SECTION B–B
(EXISTING)

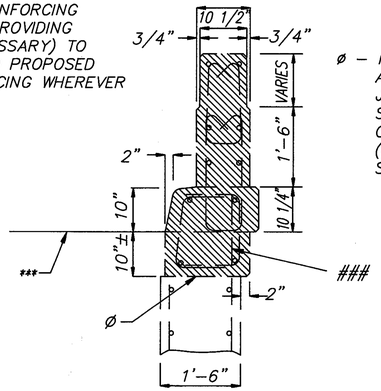

SECTION C–C
(EXISTING)

∅ – REMOVE EXISTING CONCRETE PARAPET AND CURB TO EXISTING CONSTRUCTION JOINT. ANY EXISTING EXPOSED REINFORCING STEEL NOT NOTED OTHERWISE, SHALL BE CUT OFF EVEN WITH THE REMOVAL LINES. (PAYMENT UNDER ITEM 202 PORTIONS OF STRUCTURE REMOVED).

▨ SECTION TO BE REMOVED

STATE OF OHIO
DEPARTMENT OF TRANSPORTATION
DISTRICT ONE PLANNING AND DESIGN DEPARTMENT

5 / 5

END SECTION DETAILS
TRU-5-0183 LT. & RT.
OVER S.R.422

DESIGNED	DRAWN	TRACED	CHECKED	REVIEWED	DATE	REVISED
HMS	MJM	MJM	DJR			

MICROFILMED
OCT 30 1992

FHWA REGION	STATE	PROJECT	
5	OHIO		

180
2/3

TRUMBULL COUNTY
TRU-5B-0.00

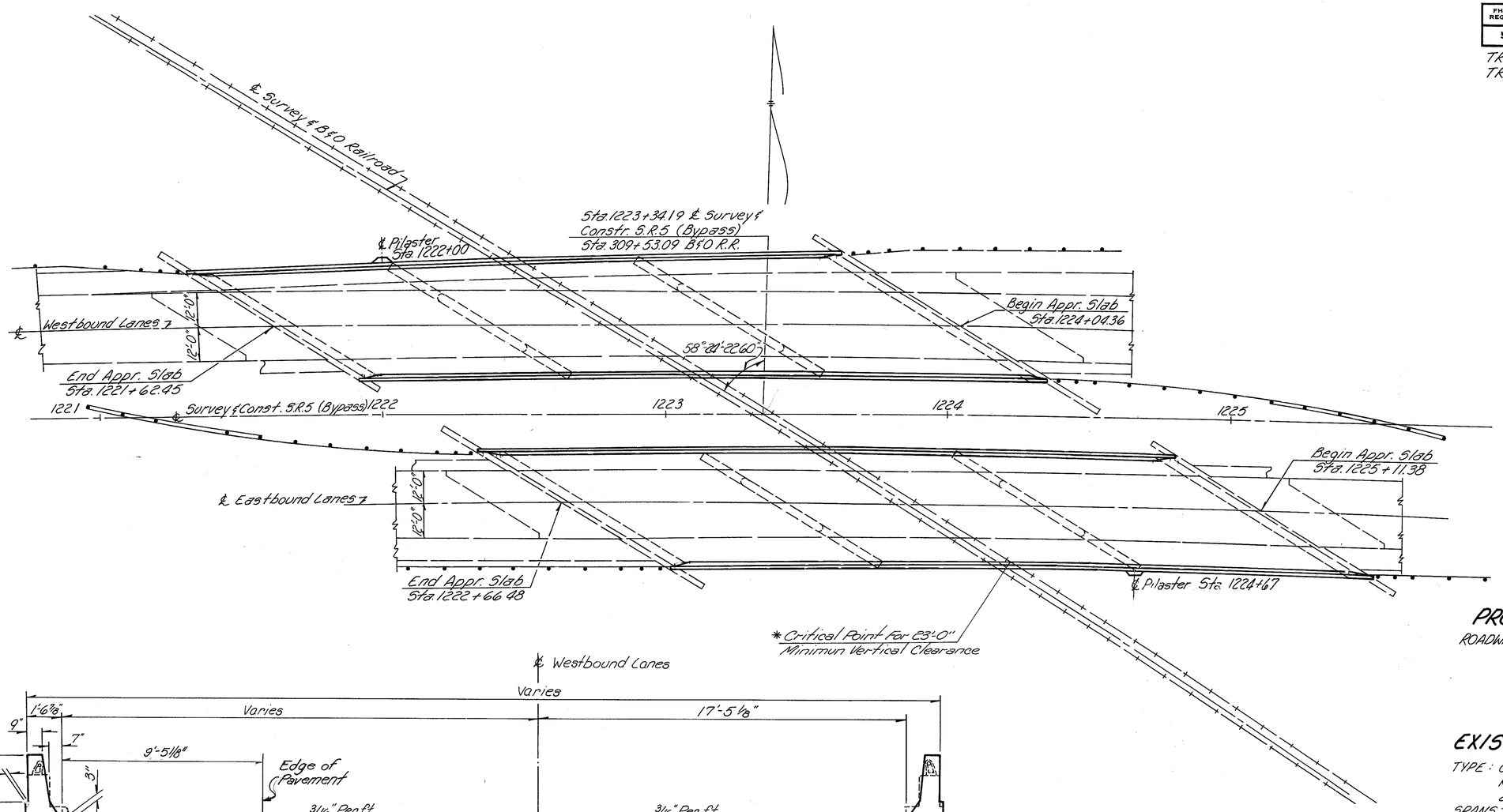

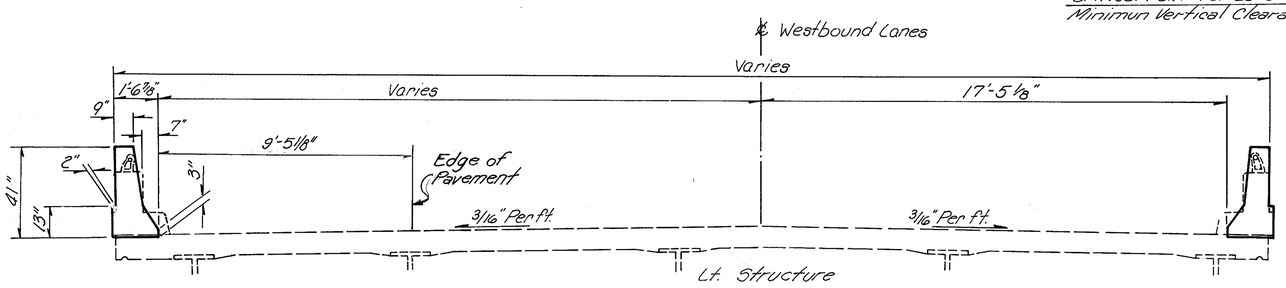

Note: Parapet Dimensioning is Typical Both Sides of each Structure.

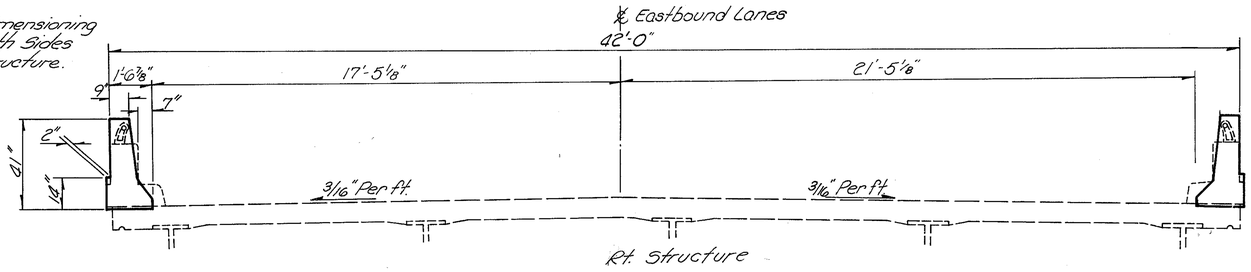

TRANSVERSE SECTIONS

PROPOSED WORK

1. Rebuild Bridge Parapets
2. Seal Parapets
3. Replace Expansion Sealer in all End Dams.

PROPOSED STRUCTURE

ROADWAY: Rt. Structure: 38'-10 1/4" f-f of parapet curbs
Lt. Structure: Variable

EXISTING STRUCTURE

TYPE: Continuous Steel Beam with Reinforced Concrete Deck and Substructure
SPANS: 72'-0", 90'-0", 72'-0" (Lt. & Rt.)
ROADWAY: Rt. Bridge: 40'-0" f-f of parapets
Lt. Bridge: Variable
℄ West Abutment 38.61' (radial) (Min.)
℄ East Abutment 42.70' (radial) (Max.)
LOAD FREQUENCY: CF = 2000 (1957)
SKEW: 58°-24'-22.6" Rt. Forward
WEARING SURFACE: 1 1/4" Latex Modified Concrete
APPROACH SLABS: 25'-0" Long
ALIGNMENT: Horizontal Curve
CURBS: 1'-0" (Typ.) Lt. & Rt. Structures

* Note: Existing minimum bridge vertical clearance will not change since no major work will be performed on the underside of deck.

Note: Existing deck width will remain the same, since the proposed safety shape parapet will not increase the outside to outside dimension.

STATE OF OHIO
DEPARTMENT OF TRANSPORTATION
DISTRICT ONE PLANNING AND DESIGN DEPARTMENT

1 | 6

SITE PLAN

TRU-5-03.63 L & R
Over CSX Trans. Inc.
TRUMBULL Co. Sta. Lt. 1221+62.45 - 1224+04.36
Rt. 1222+66.48 - 1225+11.38

DESIGNED	DRAWN	TRACED	CHECKED	REVIEWED	DATE	REVISED
K.M.S.	K.M.S.	G.W.	W.K.			

MICROFILMED
OCT 30 1992

FHWA REGION	STATE	PROJECT	
5	OHIO		

TRUMBULL COUNTY
TRU-5B-0.00

REINFORCING STEEL LIST

MARK	NO.	LENGTH	WEIGHT	SHAPE
EBX501	72	15'-7"	1170.25	ST
EBX502	216	7'-1"	1595.79	ST
EBX503	4	13'-8"	57.02	ST
EBX504	4	13'-0"	54.24	ST
EBX505	16	14'-11"	248.93	ST
EBX506	4	12'-11"	53.89	ST
EBX507	8	11'-0"	91.78	ST
EBX508	4	10'-1"	42.07	ST
EBX509	12	4'-7"	57.37	ST
EBX510	16	9'-8"	161.32	ST**
EBX511	16	9'-9"	162.71	BT**
EBX512	64	4'-4"	289.26	ST
EBX601	124	30'-0"	5587.44	ST**
EBX602	4	10'-10"	65.09	ST**
EBX603	4	26'-1"	156.71	ST**
EBX604	4	8'-11"	53.57	ST**
EBX605	4	8'-9"	52.57	ST**
EBY501	680	7'-9"	5496.61	BT
EBY502	586	2'-1"	1273.33	BT
EBY503	8	3'-8"	30.59	BT
EBY504	8	3'-6"	29.20	BT
EBY505	8	3'-3"	27.12	BT
EBY506	8	3'-0"	25.03	BT
EBY507	8	2'-9"	22.95	BT
EBY508	8	3'-9"	31.29	ST
EBY509	8	3'-7"	29.90	ST
EBY510	8	3'-4"	27.81	ST
EBY511	8	3'-1"	25.73	ST
EBY512	32	2'-10"	94.57	ST
EBY601	8	2'-1"	25.03	BT
EBY602	8	2'-0"	24.03	BT
EBY603	8	2'-0"	24.03	BT
EBY604	8	1'-11"	23.03	BT
EBY605	8	1'-11"	23.03	BT
EBY606	24	2'-10"	102.14	ST
EPX501	8	7'-10"	65.36	BT
EPY501	8	6'-9"	56.32	BT
EPY502	8	3'-2"	26.42	ST
TOTALS			17383.53	

BENDING DIAGRAMS

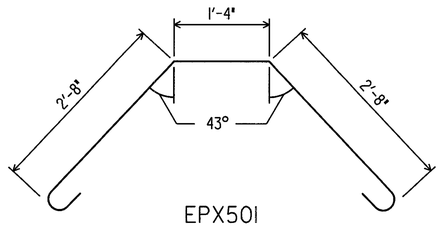

EPX501

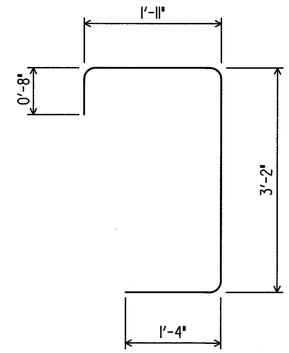

EPY501

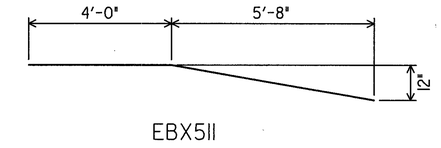

EBX511

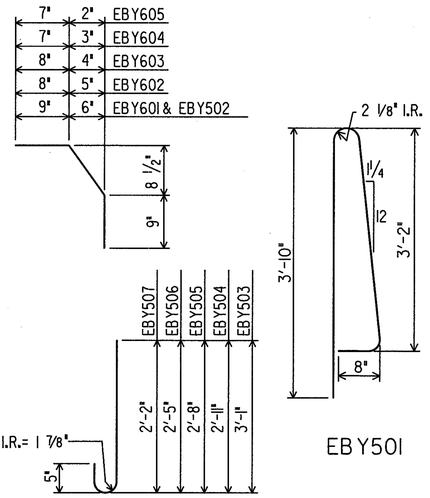

EBY501

** BEND AS REQUIRED IN FIELD WHERE NECESSARY.

ESTIMATED QUANTITIES

ITEM	ABUTMENTS	SUPER-STRUCTURE	GENERAL	ITEM	TOTAL	UNIT	DESCRIPTION
202		LUMP		202	LUMP	LUMP	PORTIONS OF STRUCTURE REMOVED
510		1402		510	1402	EACH	DOWEL HOLES
511	2			511	2	CU.YD.	CLASS C CONCRETE, ABUTMENT, AS PER PLAN.
511		129		511	129	CU.YD.	CLASS S CONCRETE, SUPERSTRUCTURE, AS PER PLAN.
SPEC.	24			SPEC.	24	LIN.FT.	HORIZONTAL EXTENSION OF STRUCTURAL EXPANSION JOINT (TYPE "B")
519*	42			519*	42	SQ.FT.	PATCHING CONCRETE STRUCTURES
509		17384	100	509	17484	LB.	EPOXY COATED REINFORCING STEEL
845		48		845	48	SQ.YD.	LATEX MODIFIED CONCRETE OVERLAY (1 INCH THICK)
SPEC.		820		SPEC.	820	SQ.YD.	SEALING OF CONCRETE SURFACES (SEE PROPOSAL NOTE)
SPEC.			323	SPEC.	323	LIN.FT.	REMOVE AND REPLACE EXPANSION JOINT SEALER

* 50% FEDERAL PARTICIPATION

REV. 11-15-88

STATE OF OHIO
DEPARTMENT OF TRANSPORTATION
DISTRICT ONE PLANNING AND DESIGN DEPARTMENT

ESTIMATED QUANTITIES AND REINFORCING STEEL TABLE

TRU-5-0.00
STRUCTURE-0363 LT. & RT.
OVER CSX TRANS. INC.

DESIGNED	DRAWN	TRACED	CHECKED	REVIEWED	DATE	REVISED
KMS	KMS	GW	JAK			

MICROFILMED
OCT 30 1992

FHWA REGION	STATE	PROJECT	
5	OHIO		

182
213

TRUMBULL COUNTY
TRU-5B-0.00

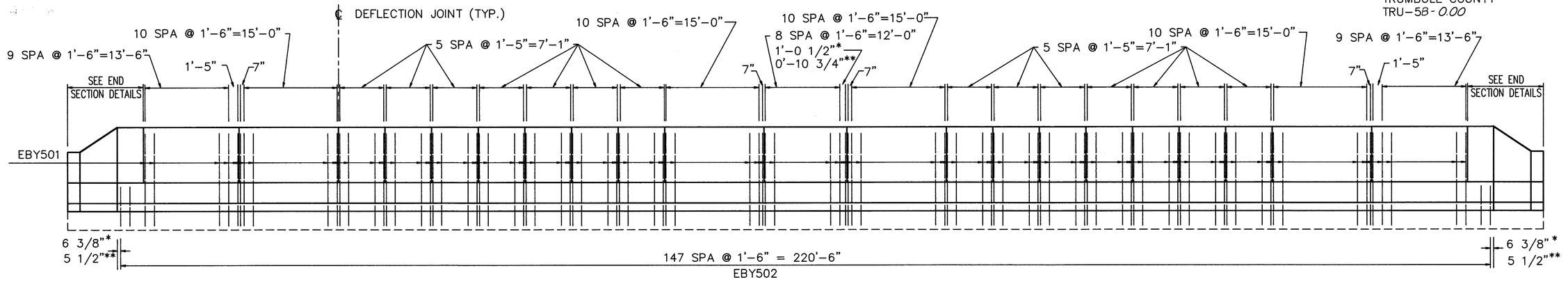

LONGITUDINAL SECTION

VERTICAL STEEL IN DEFLECTOR PARAPET

NOTE: ALL SPACING BETWEEN DEFLECTION JOINT AND VERTICAL REINFORCING BARS SHALL BE A MINIMUM OF 2 1/2" UNLESS OTHERWISE NOTED.

NOTE: CONCRETE PARAPETS ABOVE THE CONSTRUCTION JOINT SHALL BE PLACED IN ALTERNATE SECTIONS BY THE USE OF BULKHEADS. CLOSING SECTIONS SHALL BE PLACED AFTER THE REMOVAL OF BULKHEADS AND AFTER PLACEMENT OF EXPANSION JOINT FILLER. EXPOSED EDGES OF THE FILLER SHALL BE FLUSH WITH THE SURFACE OF CONCRETE AND SHALL BE FREE OF MORTAR.

NOTE: REINFORCING BARS SHALL NOT EXTEND THRU DEFLECTION JOINT.

NOTE: DRAWINGS NOT TO SCALE

NOTE: FOR DETAILS OF REMOVING EXISTING PARAPET AND RECONSTRUCTION OF PROPOSED SAFETY SHAPE PARAPET ON STRUCTURE, SEE SHT. 174.

NOTE: SECTIONS VIEWING FACE OF PARAPET

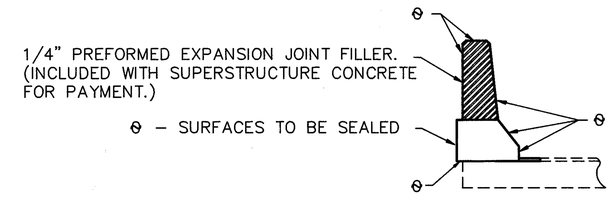

SECTION THRU DEFLECTION JOINT

* – LT. STRUCTURE INSIDE PARAPET
** – RT. STRUCTURE INSIDE PARAPET

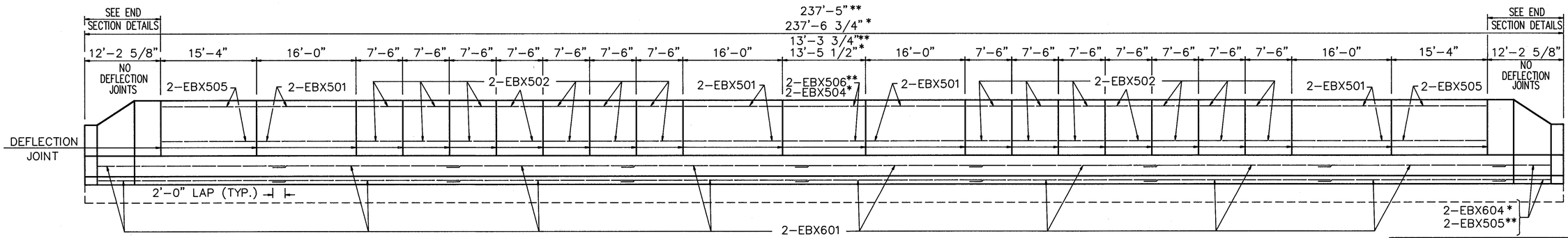

LONGITUDINAL SECTION

HORIZONTAL STEEL IN DEFLECTOR PARAPET

STATE OF OHIO
DEPARTMENT OF TRANSPORTATION
DISTRICT ONE PLANNING AND DESIGN DEPARTMENT

3 / 6

PARAPET DETAILS

TRU-5-0363
LT. STRUCTURE INSIDE PARAPET
RT. STRUCTURE INSIDE PARAPET
OVER CSX TRANS. INC.

DESIGNED	DRAWN	TRACED	CHECKED	REVIEWED	DATE	REVISED
KMS	MJM	MJM	DJR			

MICROFILMED
OCT 30 1992

FHWA REGION	STATE	PROJECT	
5	OHIO		

183
213

TRUMBULL COUNTY
TRU-5B-0.00

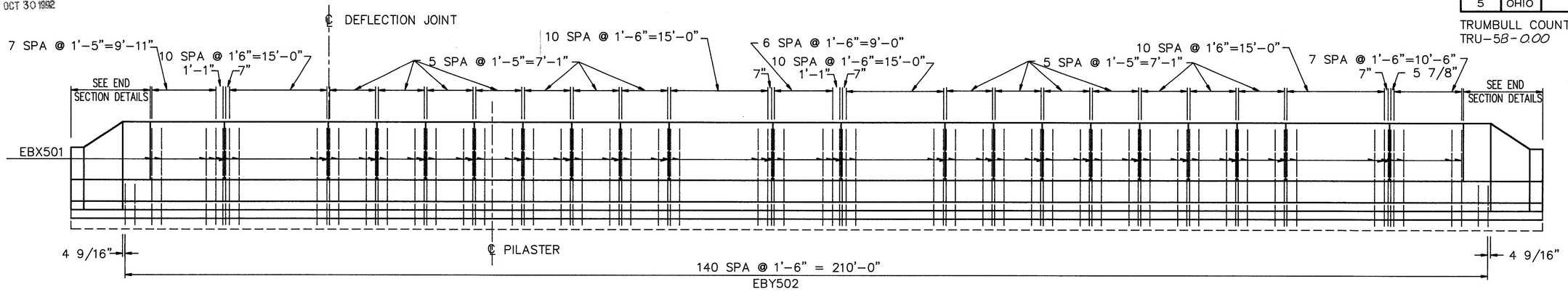

LONGITUDINAL SECTION
VERTICAL STEEL IN DEFLECTOR PARAPET

NOTE: ALL SPACING BETWEEN DEFLECTION JOINT AND VERTICAL REINFORCING BARS SHALL BE A MINIMUM OF 2 1/2" UNLESS OTHERWISE NOTED.

NOTE: CONCRETE PARAPETS ABOVE THE CONSTRUCTION JOINT SHALL BE PLACED IN ALTERNATE SECTIONS BY THE USE OF BULKHEADS. CLOSING SECTIONS SHALL BE PLACED AFTER THE REMOVAL OF BULKHEADS AND AFTER PLACEMENT OF EXPANSION JOINT FILLER. EXPOSED EDGES OF THE FILLER SHALL BE FLUSH WITH THE SURFACE OF CONCRETE AND SHALL BE FREE OF MORTAR.

NOTE: FOR DETAILS OF REMOVING EXISTING PARAPET AND RECONSTRUCTION OF PROPOSED SAFETY SHAPE PARAPET ON STRUCTURE, SEE SHT. 174.

NOTE: SECTIONS VIEWING FACE OF PARAPET

NOTE: DRAWINGS NOT TO SCALE

NOTE: REINFORCING BARS SHALL NOT EXTEND THRU DEFLECTION JOINT.

NOTE: FOR PILASTER DETAILS SEE SHT. 169.

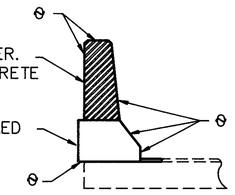

SECTION THRU DEFLECTION JOINT

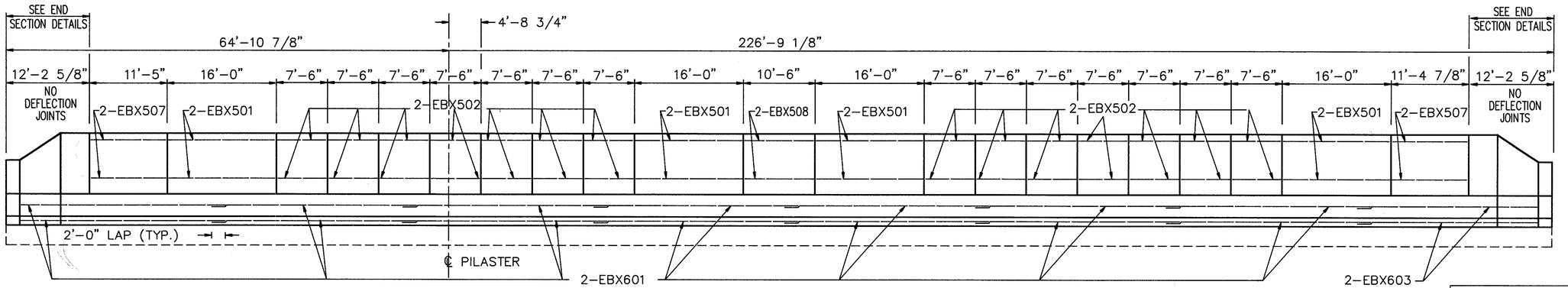

LONGITUDINAL SECTION
HORIZONTAL STEEL IN DEFLECTOR PARAPET

STATE OF OHIO
DEPARTMENT OF TRANSPORTATION
DISTRICT ONE PLANNING AND DESIGN DEPARTMENT

4/6

PARAPET DETAILS
TRU-5-0363
LT. STRUCTURE OUTSIDE PARAPET
OVER CSX TRANS. INC.

DESIGNED	DRAWN	TRACED	CHECKED	REVIEWED	DATE	REVISED
K.M.S	MJM	MJM	DJR			

MICROFILMED
OCT 30 1992

FHWA REGION	STATE	PROJECT	
5	OHIO		

184
213

TRUMBULL COUNTY
TRU-5B-0.00

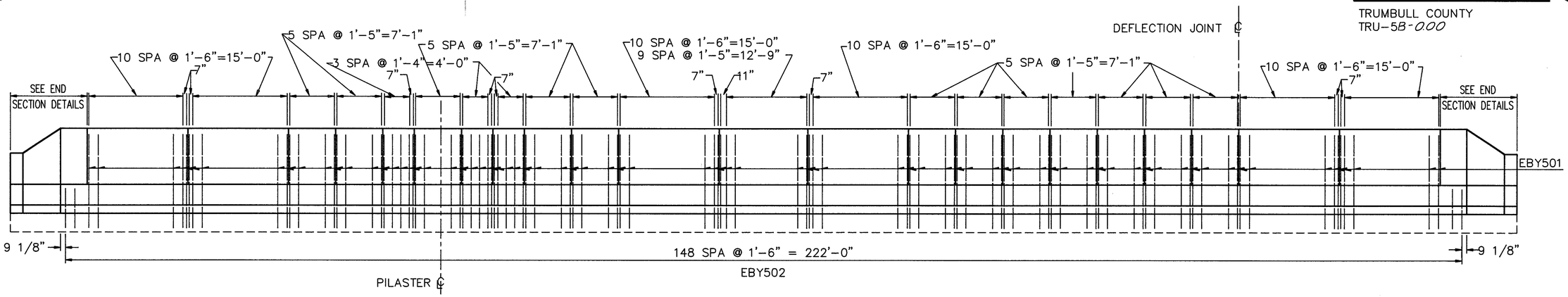

LONGITUDINAL SECTION
VERTICAL STEEL IN DEFLECTOR PARAPET

NOTE: ALL SPACING BETWEEN DEFLECTION JOINT AND VERTICAL REINFORCING BARS SHALL BE A MINIMUM OF 2 1/2" UNLESS OTHERWISE NOTED.

NOTE: CONCRETE PARAPETS ABOVE THE CONSTRUCTION JOINT SHALL BE PLACED IN ALTERNATE SECTIONS BY THE USE OF BULKHEADS. CLOSING SECTIONS SHALL BE PLACED AFTER THE REMOVAL OF BULKHEADS AND AFTER PLACEMENT OF EXPANSION JOINT FILLER. EXPOSED EDGES OF THE FILLER SHALL BE FLUSH WITH THE SURFACE OF CONCRETE AND SHALL BE FREE OF MORTAR.

NOTE: DRAWINGS NOT TO SCALE

NOTE: REINFORCING BARS SHALL NOT EXTEND THRU DEFLECTION JOINT.

NOTE: SECTION VIEWING FACE OF PARAPETS

NOTE: FOR PILASTER DETAILS SEE SHT. 169.

NOTE: FOR DETAILS OF REMOVING EXISTING PAARAPET AND RECONSTRUCTION OF PROPOSED SAFETY SHAPE PARAPET ON STRUCTURE, SEE SHT. 174.

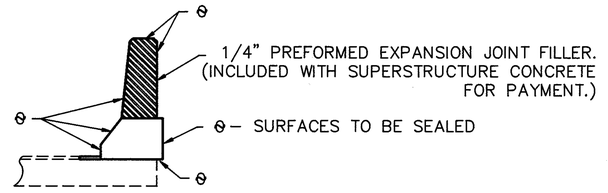

SECTION THRU DEFLECTION JOINT

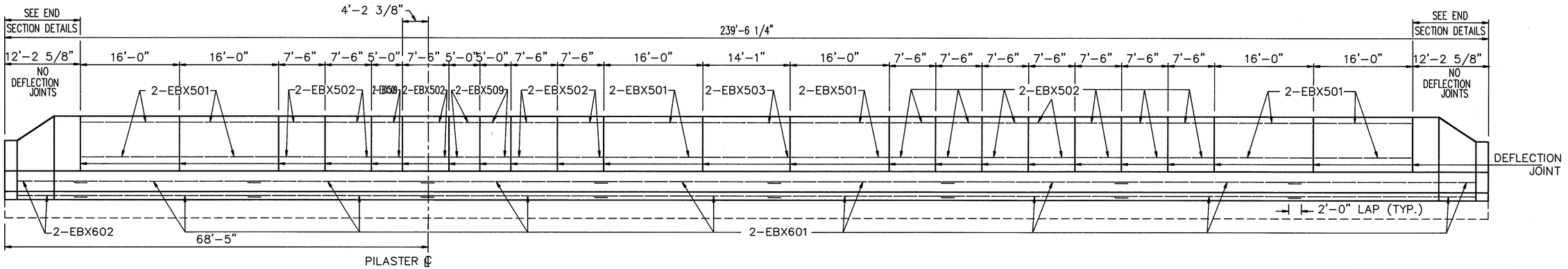

LONGITUDINAL SECTION
HORIZONTAL STEEL IN DEFLECTOR PARAPET

STATE OF OHIO
DEPARTMENT OF TRANSPORTATION
DISTRICT ONE PLANNING AND DESIGN DEPARTMENT

5/6

PARAPET DETAILS
TRU-5-0363
RT. STRUCTURE OUTSIDE PARAPET
OVER CSX TRANS. INC.

DESIGNED	DRAWN	TRACED	CHECKED	REVIEWED	DATE	REVISED
KMS	MJM	MJM	DMK			

MICROFILMED
OCT 30 1992

FHWA REGION	STATE	PROJECT	
5	OHIO		

185/213

TRUMBULL COUNTY
TRU-5B-000

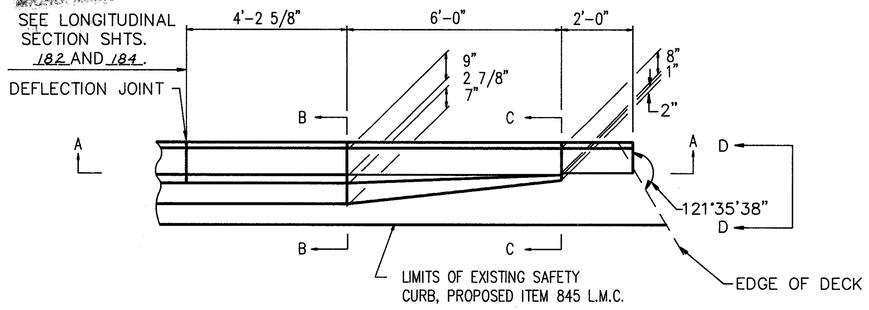

PLAN VIEW

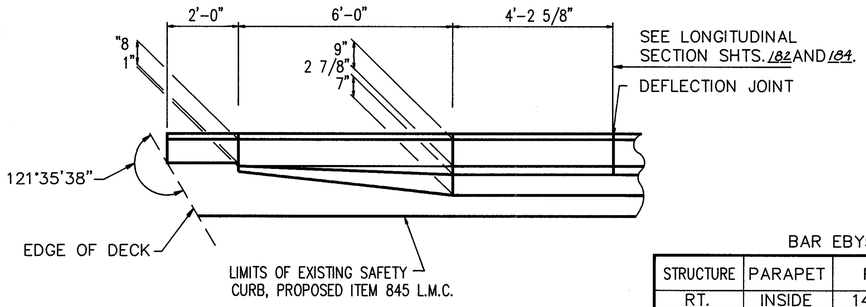

PLAN VIEW

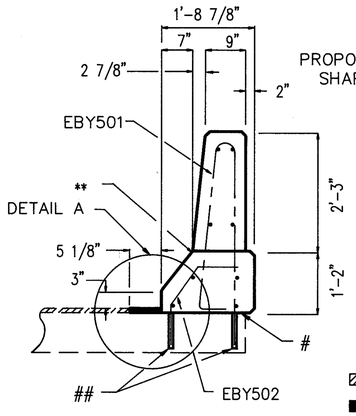

SECTION B–B (PROPOSED)

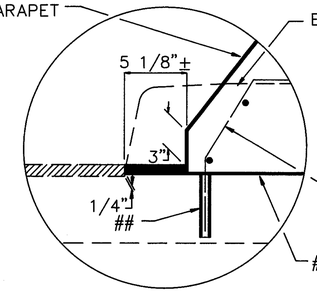

DETAIL A

SECTION C–C (PROPOSED)

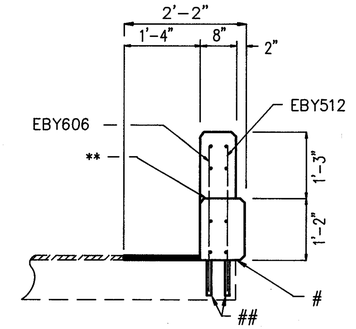

SECTION D–D (PROPOSED)

SECTION B–B (EXISTING)

STRUCTURE	PARAPET	R	S	T	Q
RT.	INSIDE	147	1'-6"	220'-6"	9 1/2"
RT.	OUTSIDE	148	1'-6"	222'-0"	1'-1 1/8"
LT.	INSIDE	147	1'-6"	220'-6"	10 3/8"
LT.	OUTSIDE	140	1'-6"	210'-0"	8 9/16"

BAR EBY502 SPACING

** – CONSTRUCTION JOINT

– EXISTING CONSTRUCTION JOINT

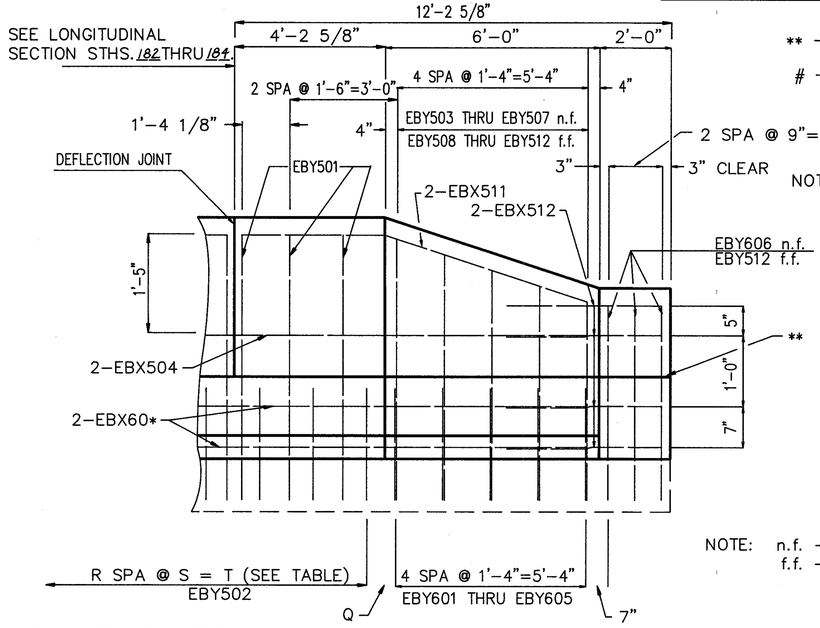

SECTION A–A

* – NOTE: FOR ACTUAL BAR NO. SEE LONGITUDINAL SECTION SHTS. 182 THRU 184.

NOTE: n.f. – NEAR FACE
f.f. – FAR FACE

NOTE: ALL BARS SHALL MAINTAIN A 2" MINIMUM CLEARANCE FROM OUTSIDE EDGE OF PARAPET UNLESS OTHERWISE NOTED.

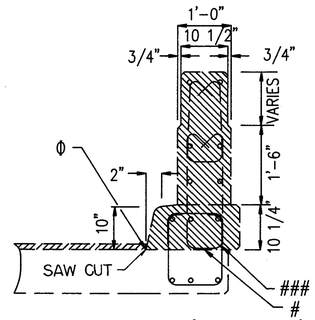

SECTION C–C (EXISTING)

– SAVE EXISTING REINFORCING BAR AND BEND UP (PROVIDING 2" CLEAR IF NECESSARY) TO INCORPORATE INTO PROPOSED VERTICAL REINFORCING WHEREVER POSSIBLE.

SECTION TO BE REMOVED

Φ – REMOVE EXISTING CONCRETE PARAPET AND CURB TO EXISTING CONSTRUCTION JOINT. ANY EXISTING EXPOSED REINFORCING STEEL NOT NOTED OTHERWISE, SHALL BE CUT OFF EVEN WITH THE REMOVAL LINES. (PAYMENT UNDER ITEM 202 PORTIONS OF STRUCTURE REMOVED).

NOTE: DRAWINGS NOT TO SCALE

1 1/4" EXISTING LATEX MODIFIED CONCRETE OVERLAY

PROPOSED ITEM 845 1" ITEM 845 LATEX MODIFIED CONCRETE OVERLAY

– GROUT PROPOSED REINFORCING BARS INTO HOLES DRILLED INTO EXISTING CONCRETE IN ACCORDANCE WITH SUPPLEMENTAL SPECIFICATIONS 853 & 956. HOLES SHALL HAVE A MAXIMUM DIAMETER OF 1" AND SHALL BE 8" DEEP.

STATE OF OHIO
DEPARTMENT OF TRANSPORTATION
DISTRICT ONE PLANNING AND DESIGN DEPARTMENT

6/6

END SECTION DETAILS

TRU-5-0363
LT. & RT. STRUCTURES
OVER CSX TRANS. INC.

DESIGNED	DRAWN	TRACED	CHECKED	REVIEWED	DATE	REVISED
KMS	MJM	MJM	DJK			

RECEIVED
OCT 30 1992
HIGHWAYS

FHWA REGION	STATE	PROJECT	
5	OHIO		

186/213

TRUMBULL COUNTY
TRU-5B-0.00

CURVE DATA

S.R. 5 (Bypass)
Δ = 6°-21'-08" Lt.
Dc = 0°-28'-00"
Rc = 12,277.67'
Tc = 681.29'
Lc = 1361.19'
Ec = 18.89'

Ramp B (Curve B-1)
Δ = 15°-50'-31"
Dc = 8°-00'-00"
Rc = 716.20'
Tc = 99.65'
Lc = 198.02'

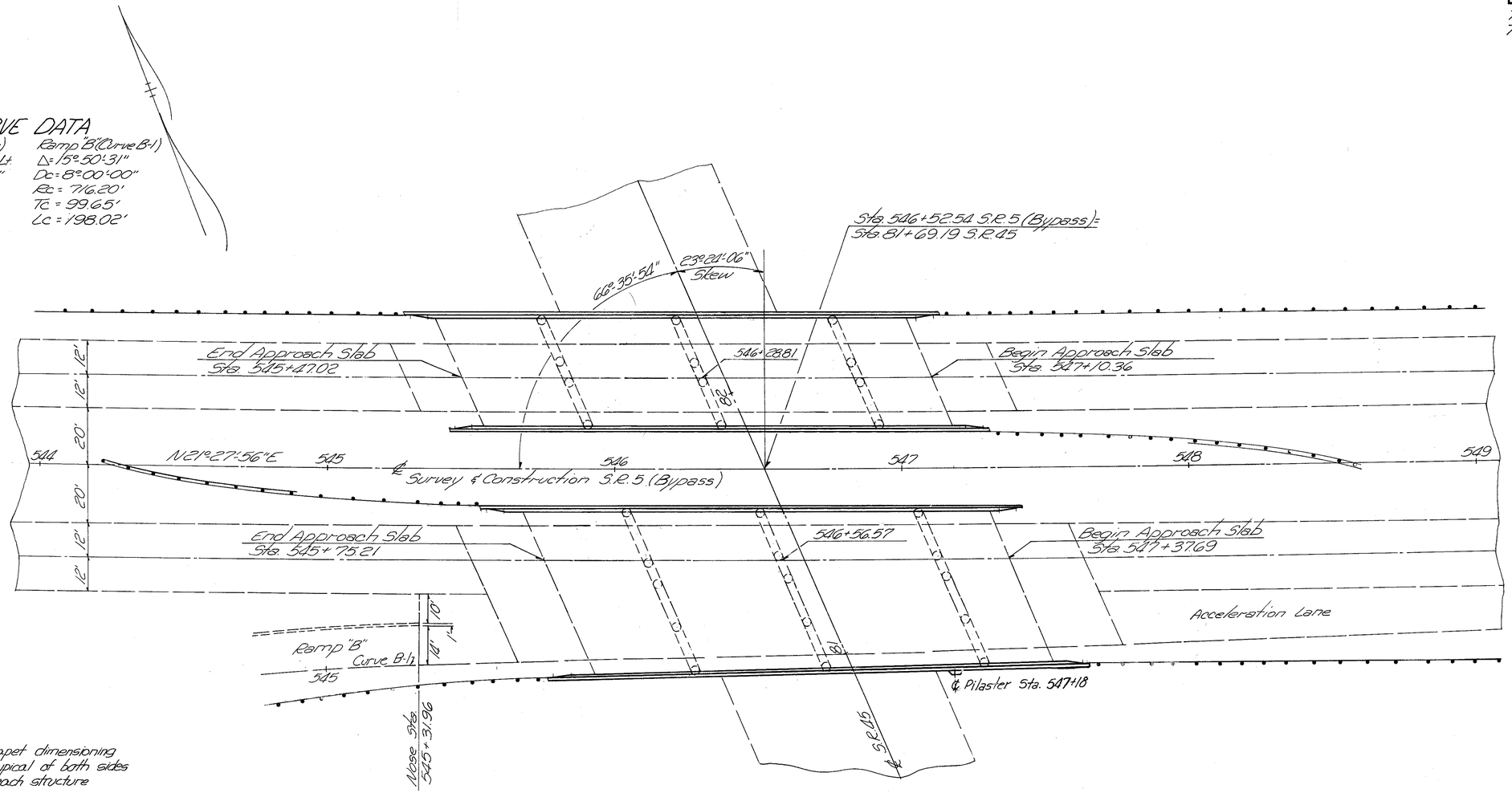

Note: Parapet dimensioning is typical of both sides of each structure

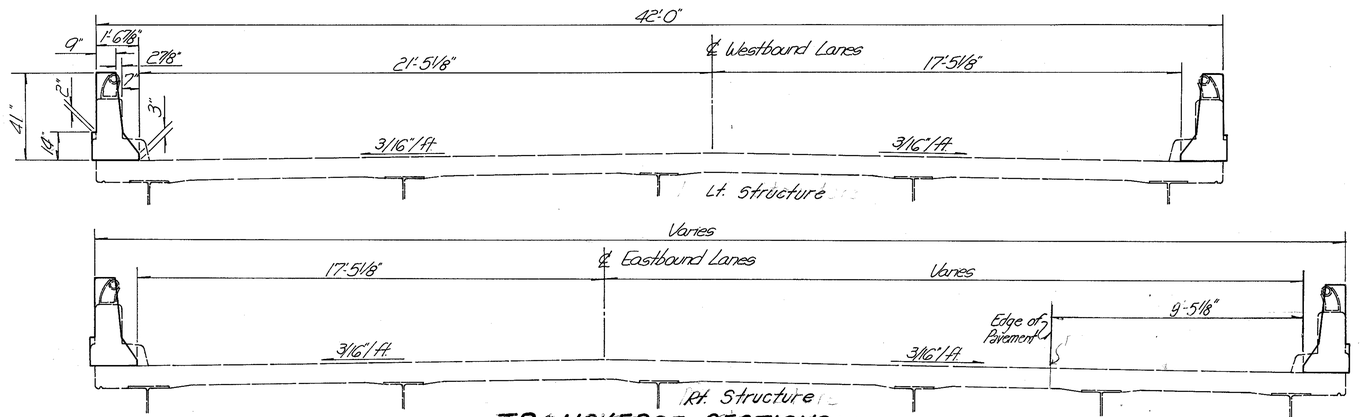

TRANSVERSE SECTIONS

EXISTING STRUCTURE

TYPE: Continuous Steel Beam with Reinforced Concrete Deck and Substructure
SPANS: 32'-6", 46'-6", 46'-6", 32'-6" c/c of Brgs.
ROADWAY: Lt. Structure: 40'-0" f/f of parapets
Rt. Structure: Avg. of 57'-2" f/f of parapets
LOAD FREQUENCY: CF = 2000 (1957)
SKEW: 23°-24'-06" R.F.
WEARING SURFACE: 1 1/4" Latex Modified Concrete
APPROACH SLABS: 25'-0" Long
ALIGNMENT: 0°-28'-00"
SUPERELEVATION - None

PROPOSED WORK

1. Rebuild Bridge Parapets
2. Seal Parapets
3. Replace Expansion Sealer in all End Dams.

PROPOSED STRUCTURE

ROADWAY: Rt. Structure: Varies f/f parapet curbs
Lt. Structure: 38'-10 1/4" f/f parapet curbs

STATE OF OHIO
DEPARTMENT OF TRANSPORTATION
DISTRICT ONE PLANNING AND DESIGN DEPARTMENT

1 / 5

SITE PLAN

TRU-5-0401 L & R
Over S.R. 45
TRUMBULL CO. S.R. 5 (BYPASS)
Sta. 546+52.54

DESIGNED	DRAWN	TRACED	CHECKED	REVIEWED	DATE	REVISED
K.M.S.	K.M.S.	M.J.M.	D.M.R.			

MICROFILMED
OCT 30 1992

FHWA REGION	STATE	PROJECT	
5	OHIO		

187 / 213

TRUMBULL COUNTY
TRU-5B-0.00

REINFORCING STEEL LIST

MARK	NO.	LENGTH	WEIGHT	SHAPE
ECX501	4	8'-6"	35.46	ST
ECX502	68	11'-1"	786.07	ST
ECX503	184	5'-7"	1071.51	ST
ECX504	4	10'-7"	44.15	ST
ECX505	4	5'-9"	23.99	ST
ECX506	4	7'-1"	29.55	ST
ECX507	4	6'-3"	26.08	ST
ECX508	16	9'-10"	164.10	ST
ECX509	24	10'-1"	252.41	ST
ECX510	8	11'-2"	93.17	ST**
ECX511	8	10'-5"	86.92	ST**
ECX512	8	11'-3"	93.87	BT**
ECX513	8	10'-6"	87.61	BT**
ECX514	64	4'-4"	289.26	ST
ECX515	8	9'-11"	82.74	ST
ECX601	80	30'-0"	3604.80	ST**
ECX602	4	17'-4"	104.14	ST**
ECX603	12	19'-0"	342.46	ST**
ECX604	16	11'-2"	268.36	ST**
ECX605	16	10'-5"	250.33	ST**
ECY501	544	7'-9"	4397.29	BT
ECY502	427	2'-1"	927.84	BT
ECY503	8	3'-8"	30.59	BT
ECY504	8	3'-6"	29.20	BT
ECY505	8	3'-3"	27.12	BT
ECY506	8	3'-0"	25.03	BT
ECY507	8	2'-9"	22.95	BT
ECY508	8	3'-9"	31.29	ST
ECY509	8	3'-7"	29.90	ST
ECY510	8	3'-4"	27.81	ST
ECY511	8	3'-1"	25.73	ST
ECY512	32	2'-10"	94.57	ST
ECY601	36	3'-0"	162.22	BT
ECY602	8	2'-11"	35.05	BT
ECY603	8	2'-11"	35.05	BT
ECY604	8	2'-10"	34.05	BT
ECY605	8	2'-10"	34.05	BT
ECY606	24	3'-8"	132.18	ST
EPX501	4	7'-10"	32.68	BT
EPY501	4	6'-9"	28.16	BT
EPY502	4	3'-2"	13.21	ST
TOTALS			13912.95	

BENDING DIAGRAMS

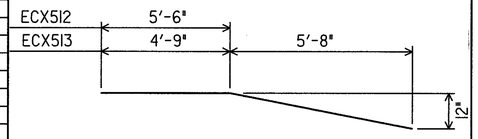

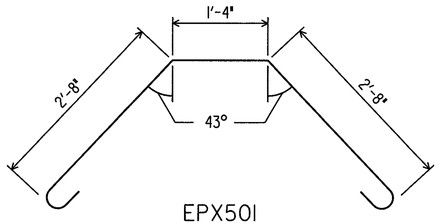

EPX501

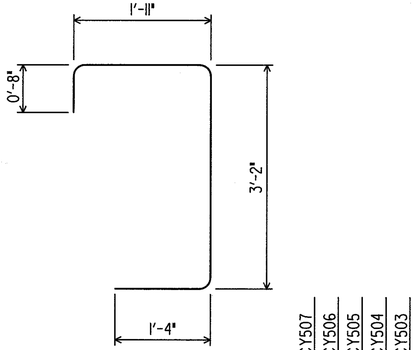

EPY501

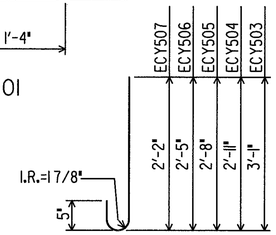

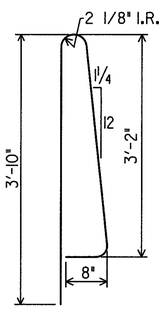

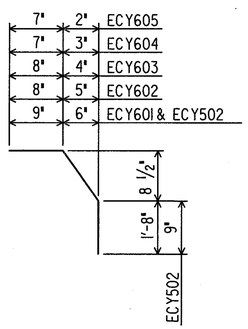

ECY501

** BEND AS REQUIRED IN FIELD WHERE NECESSARY.

ESTIMATED QUANTITIES

ITEM	ABUTMENTS	SUPER-STRUCTURE	GENERAL	ITEM	TOTAL	UNIT	DESCRIPTION
202		LUMP		202	LUMP	LUMP	PORTIONS OF STRUCTURE REMOVED
510	92	939		510	1031	EACH	DOWEL HOLES
511	18			511	18	CU.YD.	CLASS C CONCRETE, ABUTMENT, AS PER PLAN.
511		89		511	89	CU.YD.	CLASS S CONCRETE, SUPERSTRUCTURE, AS PER PLAN.
SPEC.	4			SPEC.	4	LIN.FT.	HORIZONTAL EXTENSION OF STRUCTURAL EXPANSION JOINTS (TYPE"A")
519*	14			519*	14	SQ.FT.	PATCHING CONCRETE STRUCTURES
509	2205	11708	100	509	14013	LB.	EPOXY COATED REINFORCING STEEL
845		30		845	30	SQ.YD.	LATEX MODIFIED CONCRETE OVERLAY (1 INCH THICK)
SPEC.		645		SPEC.	645	SQ.YD.	SEALING OF CONCRETE SURFACES (SEE PROPOSAL NOTE)
SPEC.			207	SPEC.	207	LIN.FT.	REMOVE AND REPLACE EXPANSION JOINT SEALER

* 50% FEDERAL PARTICIPATION

REV. 11-15-88

STATE OF OHIO
DEPARTMENT OF TRANSPORTATION
DISTRICT ONE PLANNING AND DESIGN DEPARTMENT

2 / 5

ESTIMATED QUANTITIES AND REINFORCING STEEL TABLE

TRU-5-0.00
STRUCTURE-0401 LT.& RT.
OVER S.R.45

DESIGNED	DRAWN	TRACED	CHECKED	REVIEWED	DATE	REVISED
KMS	KMS	GW				

MICROFILMED
OCT 30 1992

FHWA REGION	STATE	PROJECT	
5	OHIO		

188
213

TRUMBULL COUNTY
TRU-5B-0.00

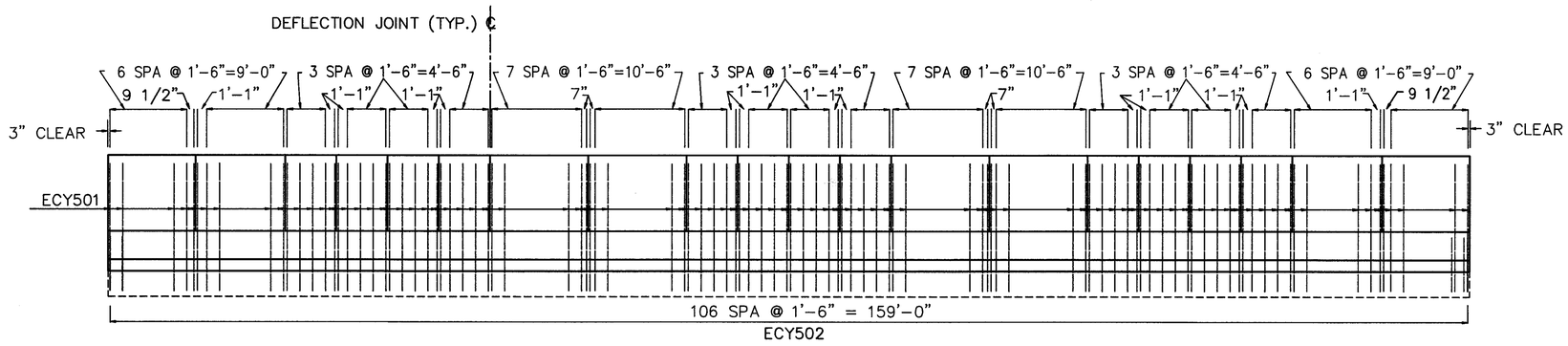

LONGITUDINAL SECTION
VERTICAL STEEL IN DEFLECTOR PARAPETS

NOTE: SECTIONS VIEWING FACE OF PARAPETS

NOTE: DRAWINGS NOT TO SCALE

NOTE: ALL SPACING BETWEEN DEFLECTION JOINT AND VERTICAL REINFORCING BARS SHALL BE A MINIMUM OF 2 1/2" UNLESS OTHERWISE NOTED.

NOTE: REINFORCING BARS SHALL NOT EXTEND THRU DEFLECTION JOINT.

NOTE: CONCRETE PARAPETS ABOVE THE CONSTRUCTION JOINT SHALL BE PLACED IN ALTERNATE SECTIONS BY THE USE OF BULKHEADS. CLOSING SECTIONS SHALL BE PLACED AFTER THE REMOVAL OF BULKHEADS AND AFTER PLACEMENT OF EXPANSION JOINT FILLER. EXPOSED EDGES OF THE FILLER SHALL BE FLUSH WITH THE SURFACE OF CONCRETE AND SHALL BE FREE OF MORTAR.

NOTE: FOR DETAILS OF REMOVING EXISTING PARAPET AND RECONSTRUCTION OF PROPOSED SAFETY SHAPE PARAPET ON STRUCTURE, SEE SHT. 174.

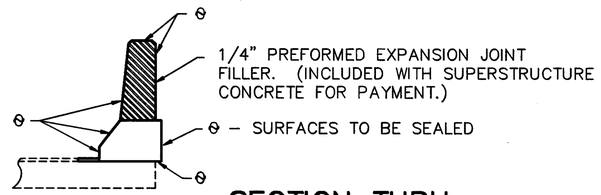

SECTION THRU DEFLECTION JOINT

* – TRU-5-0401 LT. STRUCTURE, RT. PARAPET
** – TRU-5-0401 RT. STRUCTURE, LT. PARAPET
*** – TRU-5-0401 LT. STRUCTURE, LT. PARAPET

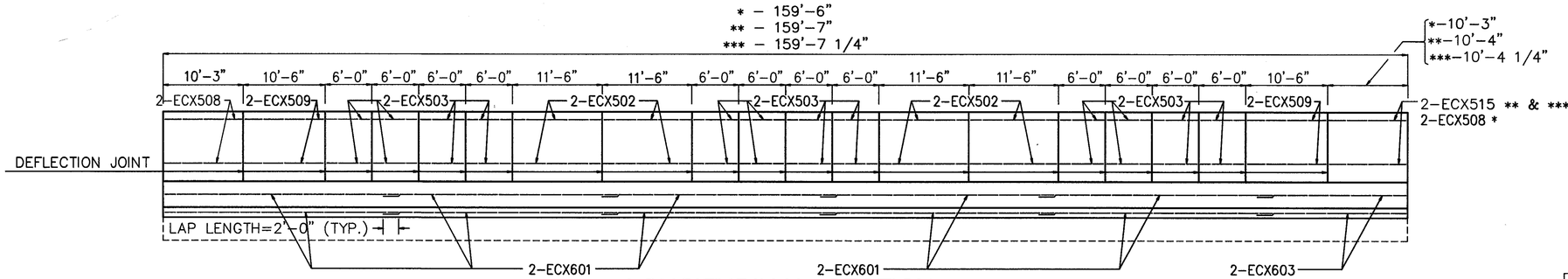

LONGITUDINAL SECTION
HORIZONTAL STEEL IN DEFLECTOR PARAPET

STATE OF OHIO
DEPARTMENT OF TRANSPORTATION
DISTRICT ONE PLANNING AND DESIGN DEPARTMENT

3/5

PARAPET DETAILS
TRU-5-0401
LT. STRUCTURE, LT. PARAPET
LT. STRUCTURE, RT. PARAPET
RT. STRUCTURE, LT. PARAPET
OVER S.R. 45

DESIGNED	DRAWN	TRACED	CHECKED	REVIEWED	DATE	REVISED
KMS	MJM	MJM				

MICROFILMED
OCT 30 1992

FHWA REGION	STATE	PROJECT	
5	OHIO		

188
213

TRUMBULL COUNTY
TRU-58-0.00

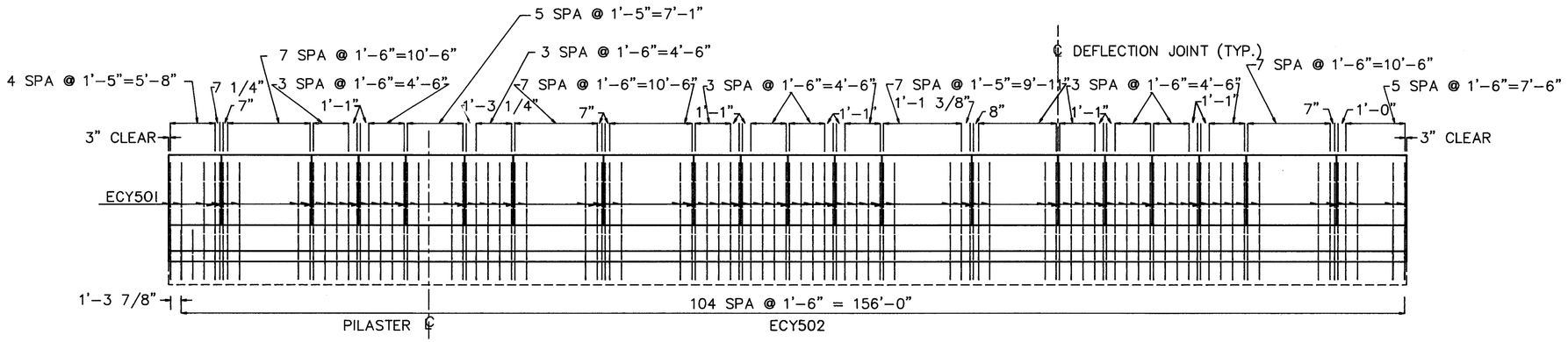

LONGITUDINAL SECTION
VERTICAL STEEL IN DEFLECTOR PARAPET

NOTE: DRAWINGS NOT TO SCALE

NOTE: FOR DETAILS OF REMOVING EXISTING PARAPET AND RECONSTRUCTION OF PROPOSED SAFETY SHAPE PARAPET ON STRUCTURE, SEE SHT. 174.

NOTE: FOR PILASTER DETAILS,SEE SHT. 169.

NOTE: REINFORCING BARS SHALL NOT EXTEND THRU DEFLECTION JOINT.

NOTE: SECTIONS VIEWING FACE OF PARAPETS

NOTE: CONCRETE PARAPETS ABOVE THE CONSTRUCTION JOINT SHALL BE PLACED IN ALTERNATE SECTIONS BY THE USE OF BULKHEADS. CLOSING SECTIONS SHALL BE PLACED AFTER THE REMOVAL OF BULKHEADS AND AFTER PLACEMENT OF EXPANSION JOINT FILLER. EXPOSED EDGES OF THE FILLER SHALL BE FLUSH WITH THE SURFACE OF CONCRETE AND SHALL BE FREE OF MORTAR.

NOTE: ALL SPACING BETWEEN DEFLECTION JOINT AND VERTICAL REINFORCING BARS SHALL BE A MINIMUM OF 2 1/2" UNLESS OTHERWISE NOTED.

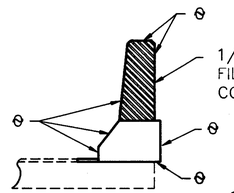

1/4" PREFORMED EXPANSION JOINT FILLER. (INCLUDED WITH SUPERSTRUCTURE CONCRETE FOR PAYMENT.)

℄ - SURFACES TO BE SEALED

SECTION THRU DEFLECTION JOINT

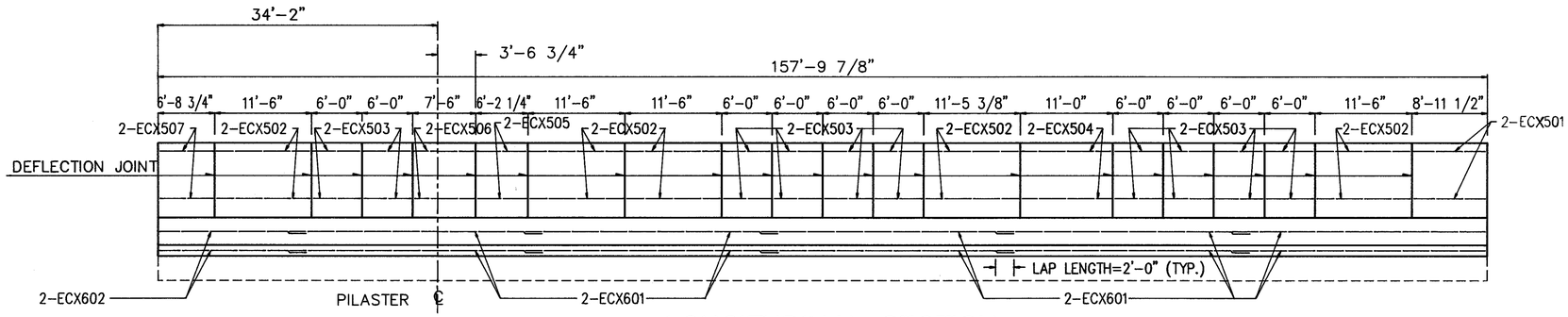

LONGITUDINAL SECTION
HORIZONTAL STEEL IN DEFLECTOR PARAPET

STATE OF OHIO
DEPARTMENT OF TRANSPORTATION
DISTRICT ONE PLANNING AND DESIGN DEPARTMENT

4 / 5

PARAPET DETAILS
TRU-5-0401
RT. STRUCTURE OUTSIDE PARAPET
OVER S.R. 45

DESIGNED	DRAWN	TRACED	CHECKED	REVIEWED	DATE	REVISED
K.M.S	MJM	MJM	JMK			

MICROFILMED
OCT 30 1992

FHWA REGION	STATE	PROJECT	
5	OHIO		

190
213

TRUMBULL COUNTY
TRU-5B-000

* – EXISTING CONSTRUCTION JOINT

– GROUT PROPOSED REINFORCING BARS INTO HOLES DRILLED INTO EXISTING CONCRETE IN ACCORDANCE WITH SUPPLEMENTAL SPECIFICATIONS 853 & 956. HOLES SHALL HAVE A MAXIMUM DIAMETER OF 1" AND SHALL BE 8" DEEP.

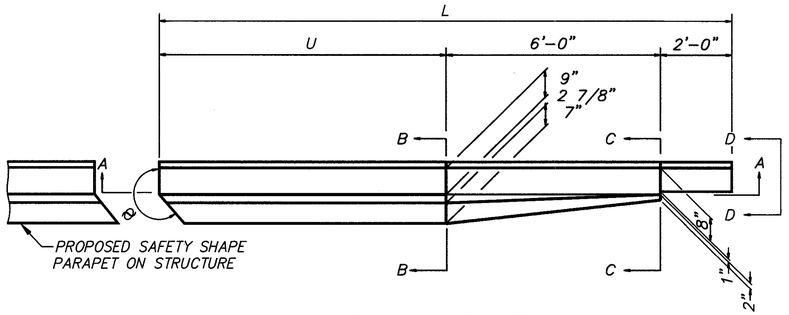

PLAN VIEW B

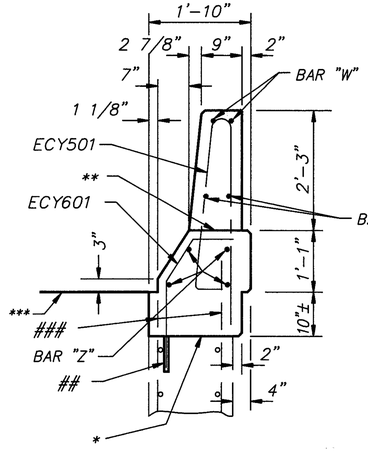

SECTION B–B
(PROPOSED)

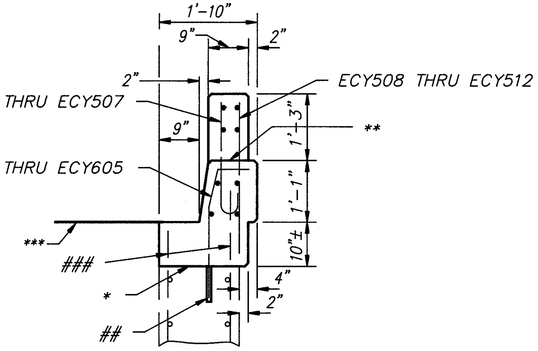

SECTION C–C
(PROPOSED)

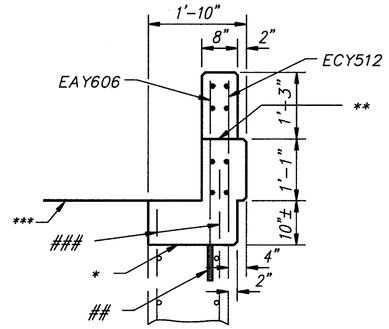

SECTION D–D
(PROPOSED)

*** – PAVED SHOULDER SURFACE

NOTE: ALL BARS SHALL MAINTAIN A 2" MINIMUM CLEARANCE FROM OUTSIDE EDGE OF PARAPET UNLESS OTHERWISE NOTED.

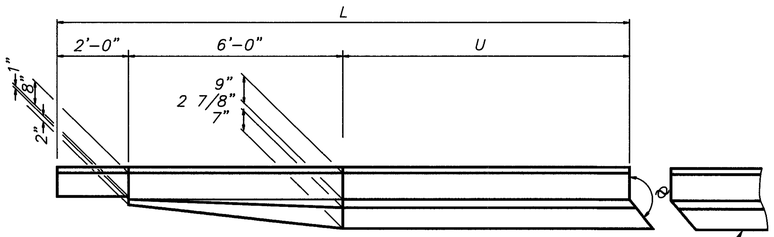

PLAN VIEW A

NOTE: ALL SECTIONS ASSOCIATED WITH PLAN VIEW A (NOT SHOWN), WILL BE SIMILAR TO THOSE OF PLAN VIEW B.

PLAN VIEW	ABUTMENT	STRUCTURE	WINGWALL	L LENGTH	ø ANGLE	K SPACE	M	N	P	Q	R	S	T	U	BAR # V	BAR # W	BAR # Z
A	FORWARD	RT.	RT.	13'-9 3/16"	156°37'00"	1'-4 3/16"	3	1'–6"	4'–6"	1'-3 3/16"	7	1'–5"	9'–11"	5'-9 3/16"	ECX510	ECX512	ECX604
	FORWARD	LT.	RT.	13'-9 3/16"	156°29'13"	1'-4 3/16"	3	1'–6"	4'–6"	1'-3 3/16"	7	1'–5"	9'–11"	5'-9 3/16"	ECX510	ECX512	ECX604
	REAR	RT.	LT.	13'-9 3/16"	156°37'00"	1'-4 3/16"	3	1'–6"	4'–6"	1'-3 3/16"	7	1'–5"	9'–11"	5'-9 3/16"	ECX510	ECX512	ECX604
	REAR	LT.	LT.	13'-9 3/16"	156°29'13"	1'-4 3/16"	3	1'–6"	4'–6"	1'-3 3/16"	7	1'–5"	9'–11"	5'-9 3/16"	ECX510	ECX512	ECX604
B	FORWARD	RT.	LT.	13'-0"	203°23'00"	1'–1"	3	1'–4"	4'–0"	1'–5"	6	1'–6"	9'–0"	5'–0"	ECX511	ECX513	ECX605
	FORWARD	LT.	LT.	13'-0"	203°30'47"	1'–1"	3	1'–4"	4'–0"	1'–5"	6	1'–6"	9'–0"	5'–0"	ECX511	ECX513	ECX605
	REAR	RT.	RT.	13'-0"	203°23'00"	1'–1"	3	1'–4"	4'–0"	1'–5"	6	1'–6"	9'–0"	5'–0"	ECX511	ECX513	ECX605
	REAR	LT.	RT.	13'-0"	203°30'47"	1'–1"	3	1'–4"	4'–0"	1'–5"	6	1'–6"	9'–0"	5'–0"	ECX511	ECX513	ECX605

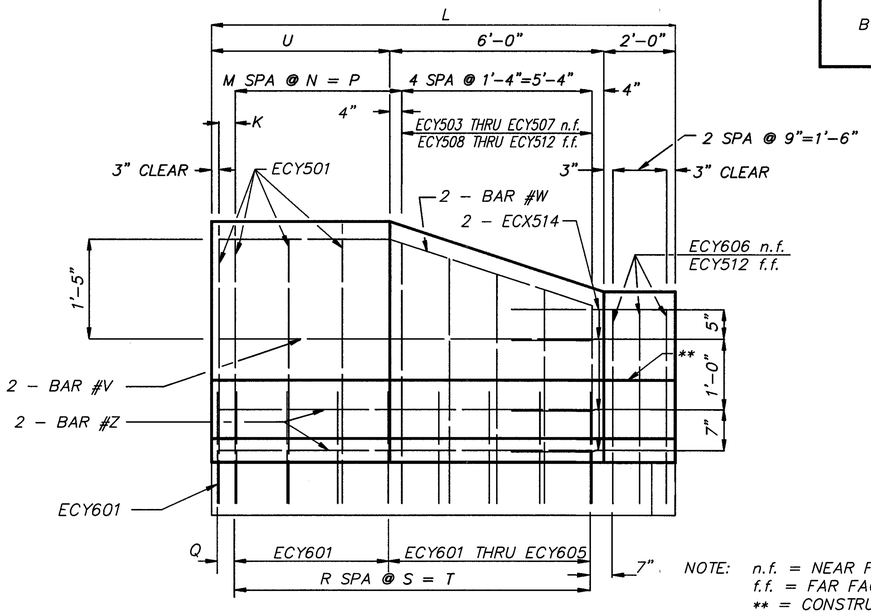

SECTION A–A

NOTE: n.f. = NEAR FACE
f.f. = FAR FACE
** = CONSTRUCTION JOINT

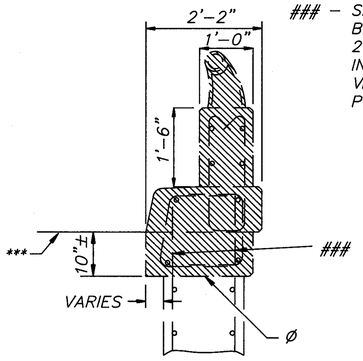

SECTION B–B
(EXISTING)

– SAVE EXISTING REINFORCING BAR AND BEND (PROVIDING 2" CLEAR IF NECESSARY) TO INCORPORATE INTO PROPOSED VERTICAL REINFORCING WHEREVER POSSIBLE.

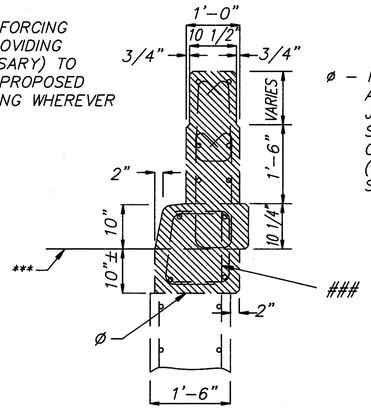

SECTION C–C
(EXISTING)

ø – REMOVE EXISTING CONCRETE PARAPET AND CURB TO EXISTING CONSTRUCTION JOINT. ANY EXISTING EXPOSED REINFORCING STEEL NOT NOTED OTHERWISE, SHALL BE CUT OFF EVEN WITH THE REMOVAL LINES. (PAYMENT UNDER ITEM 202 PORTIONS OF STRUCTURE REMOVED).

▨ SECTION TO BE REMOVED

STATE OF OHIO
DEPARTMENT OF TRANSPORTATION
DISTRICT ONE PLANNING AND DESIGN DEPARTMENT

5/5

END SECTION DETAILS
TRU-5-0401 LT. & RT.
OVER S.R.45

DESIGNED	DRAWN	TRACED	CHECKED	REVIEWED	DATE	REVISED
KMS	MJM	MJM	MJK			

MICROFILMED
OCT 30 1992

FHWA REGION	STATE	PROJECT	
5	OHIO		

191
213

TRUMBULL COUNTY
TRU-5B-0.00

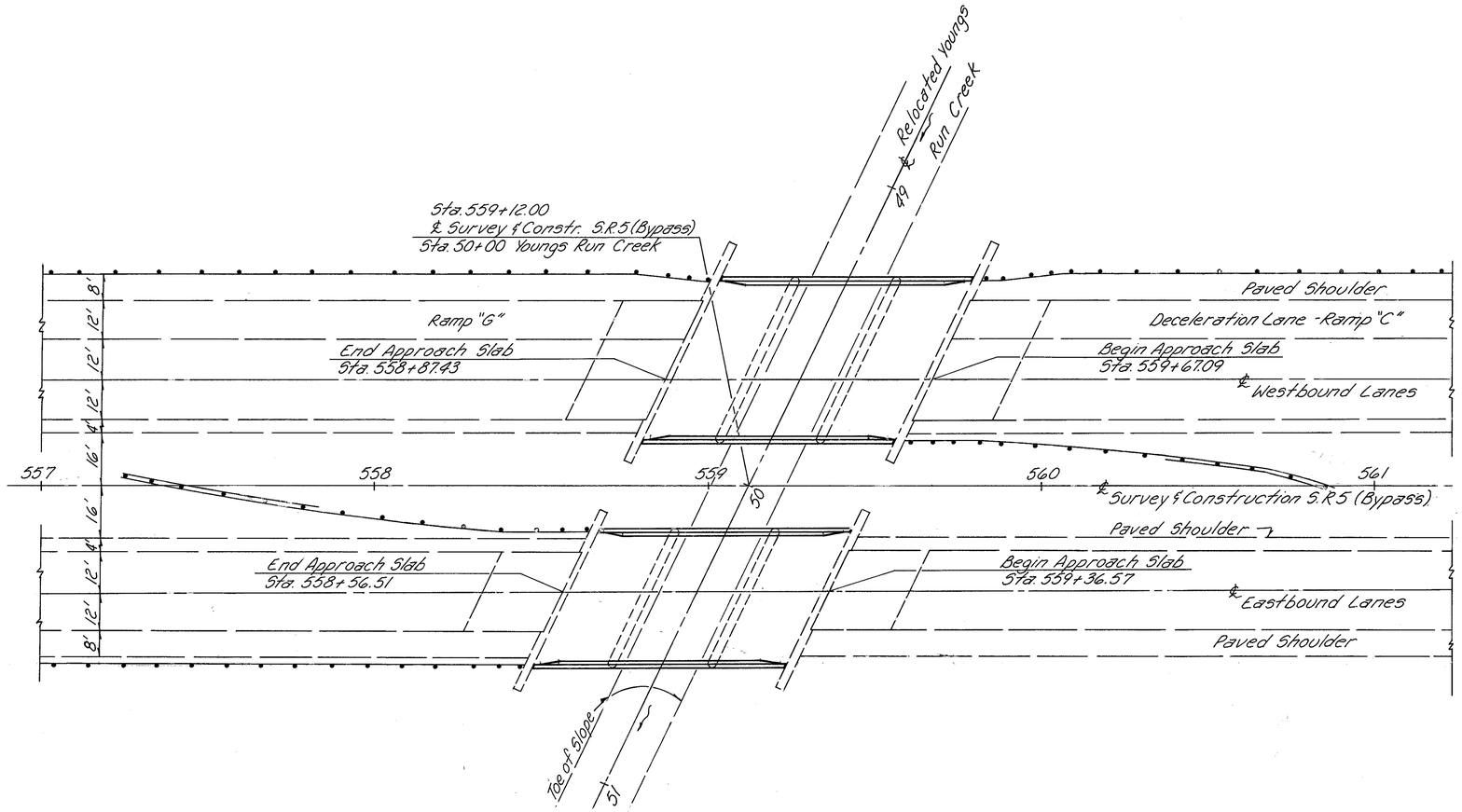

Note: Parapet dimensioning is typical of both sides of each structure

TRANSVERSE SECTIONS

PROPOSED WORK

1. Rebuild Bridge Parapets
2. Seal Parapets

PROPOSED STRUCTURE

ROADWAY: Lt. Structure: 46'-10 1/4" f-f of parapet curbs
Rt. Structure: 38'-10 1/4" f-f of parapet curbs

EXISTING STRUCTURE

TYPE: Continuous Slab with with Reinforced Concrete Deck and Substructure
SPANS: 24'-0", 30'-0", 24'-0" ℄ Assumed Brgs.
ROADWAY: Lt. Structure: 48'-0" f-f of parapets
Rt. Structure: 40'-0" f-f of parapets
LOAD FREQUENCY: C.F. = 2000 (1957)
SKEW: 25°-30'-00" L.F.
WEARING SURFACE: 1 3/4" Superplasticized Dense Concrete
APPROACH SLAB: 25'-0" Long
ALIGNMENT: Straight
SUPERELEVATION: None

STATE OF OHIO
DEPARTMENT OF TRANSPORTATION
DISTRICT ONE PLANNING AND DESIGN DEPARTMENT

1 / 4

SITE PLAN

TRU-5-0425 L&R
Over Youngs Run Creek
TRUMBULL Co. S.R.5 (BYPASS)
Sta. 559+12.00

DESIGNED	DRAWN	TRACED	CHECKED	REVIEWED	DATE	REVISED
K.M.S	K.M.S	G.W	J.M.K			

MICROFILMED
OCT 30 1992

FHWA REGION	STATE	PROJECT	
5	OHIO		

192
213

TRUMBULL COUNTY
TRU-58-000.00

REINFORCING STEEL LIST

MARK	NO.	LENGTH	WEIGHT	SHAPE
EDX501	32	6'-4"	211.38	ST
EDX502	96	7'-1"	709.24	ST
EDX503	16	8'-0"	133.50	ST**
EDX504	16	8'-1"	134.89	BT**
EDX505	64	4'-4"	289.26	ST
EDX601	32	30'-0"	1441.92	ST**
EDX602	16	18'-11"	454.61	ST**
EDY501	208	7'-9"	1681.32	BT
EDY502	180	2'-1"	391.13	BT
EDY503	8	3'-8"	30.59	BT
EDY504	8	3'-6"	29.20	BT
EDY505	8	3'-3"	27.12	BT
EDY506	8	3'-0"	25.03	BT
EDY507	8	2'-9"	22.95	BT
EDY508	8	3'-9"	31.29	ST
EDY509	8	3'-7"	29.90	ST
EDY510	8	3'-4"	27.81	ST
EDY511	8	3'-1"	25.73	ST
EDY512	32	2'-10"	94.57	ST
EDY601	8	2'-1"	25.03	BT
EDY602	8	2'-0"	24.04	BT
EDY603	8	2'-0"	24.04	BT
EDY604	8	1'-11"	23.03	BT
EDY605	8	1'-11"	23.03	BT
EDY606	24	2'-10"	102.14	ST
TOTALS			6012.75	

BENDING DIAGRAMS

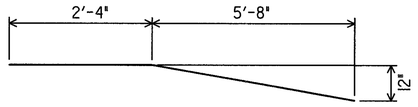

EDX504

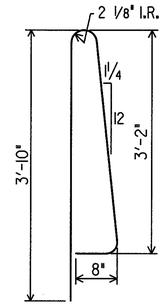

EDY501

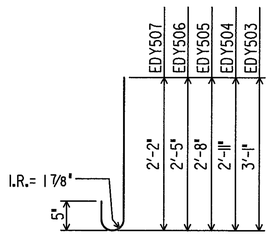

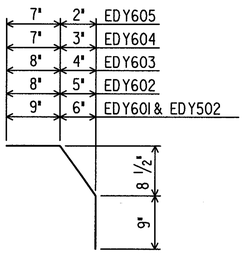

** BEND AS REQUIRED IN FIELD WHERE NECESSARY.

ESTIMATED QUANTITIES

ITEM	ABUTMENTS	SUPER-STRUCTURE	GENERAL	ITEM	TOTAL	UNIT	DESCRIPTION
202		LUMP		202	LUMP	LUMP	PORTIONS OF STRUCTURE REMOVED
510		516		510	516	EACH	DOWEL HOLES
511		42		511	42	CU.YD.	CLASS S CONCRETE,SUPERSTRUCTURE
509		6013	100	509	6113	LB.	EPOXY COATED REINFORCING STEEL
845		18		845	18	SQ.YD.	LATEX MODIFIED CONCRETE OVERLAY (1 1/2 INCH THICK)
SPEC.		272		SPEC.	272	SQ.YD.	SEALING OF CONCRETE SURFACES (SEE PROPOSAL NOTE)

REV. 11-15-88

STATE OF OHIO
DEPARTMENT OF TRANSPORTATION
DISTRICT ONE PLANNING AND DESIGN DEPARTMENT

2/4

ESTIMATED QUANTITIES AND REINFORCING STEEL TABLE

TRU-5-0.00
STRUCTURE-0425 Lt.& Rt.
OVER YOUNGS RUN CREEK

DESIGNED	DRAWN	TRACED	CHECKED	REVIEWED	DATE	REVISED
KMS	KMS	GW	JMK			

MICROFILMED
OCT 30 1992

FHWA REGION	STATE	PROJECT	
5	OHIO		

193
213

TRUMBULL COUNTY
TRU-5B- 0.00

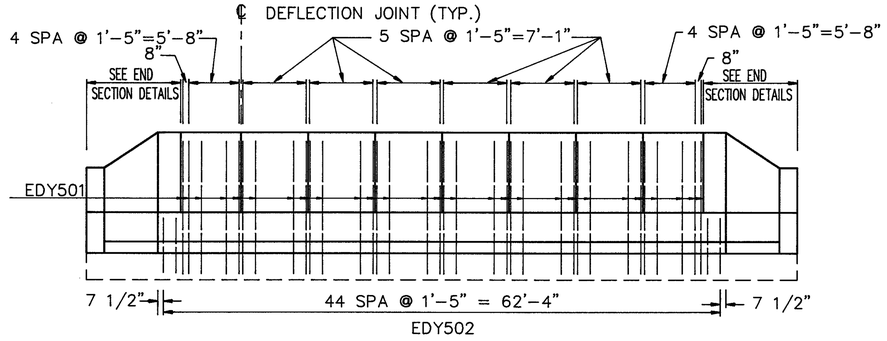

LONGITUDINAL SECTION
VERTICAL STEEL IN DEFLECTOR PARAPET

NOTE: REINFORCING BARS SHALL NOT EXTEND THRU DEFLECTION JOINT.

NOTE: ALL SPACING BETWEEN DEFLECTION JOINT AND VERTICAL REINFORCING BARS SHALL BE A MINIMUM OF 2 1/2" UNLESS OTHERWISE NOTED.

NOTE: FOR DETAILS OF REMOVING EXISTING PARAPET AND RECONSTRUCTION OF PROPOSED SAFETY SHAPE PARAPET ON STRUCTURE, SEE SHT. 174.

NOTE: CONCRETE PARAPETS ABOVE THE CONSTRUCTION JOINT SHALL BE PLACED IN ALTERNATE SECTIONS BY THE USE OF BULKHEADS. CLOSING SECTIONS SHALL BE PLACED AFTER THE REMOVAL OF BULKHEADS AND AFTER PLACEMENT OF EXPANSION JOINT FILLER. EXPOSED EDGES OF THE FILLER SHALL BE FLUSH WITH THE SURFACE OF CONCRETE AND SHALL BE FREE OF MORTAR.

NOTE: SECTIONS VIEWING FACE OF PARAPET

NOTE: DRAWINGS NOT TO SCALE

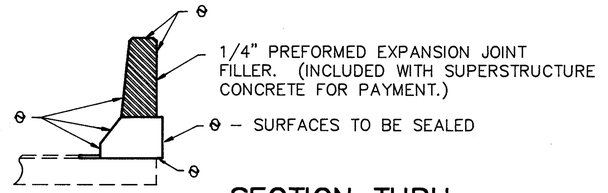

SECTION THRU DEFLECTION JOINT

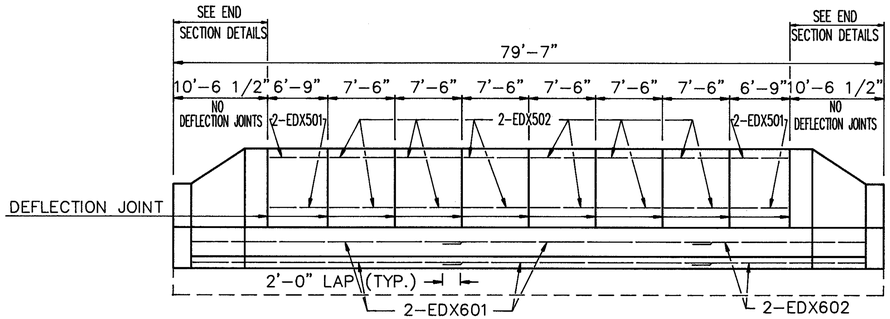

LONGITUDINAL SECTION
HORIZONTAL STEEL IN DEFLECTOR PARAPET

STATE OF OHIO
DEPARTMENT OF TRANSPORTATION
DISTRICT ONE PLANNING AND DESIGN DEPARTMENT

3/4

PARAPET DETAILS
TRU-5-0425
LT. & RT. STRUCTURES
OVER YOUNGS RUN CREEK

DESIGNED	DRAWN	TRACED	CHECKED	REVIEWED	DATE	REVISED
K.M.S	MJM	MJM	DJK			

MICROFILMED
OCT 30 1992

FHWA REGION	STATE	PROJECT	
5	OHIO		

194
213

TRUMBULL COUNTY
TRU-5B-0.00

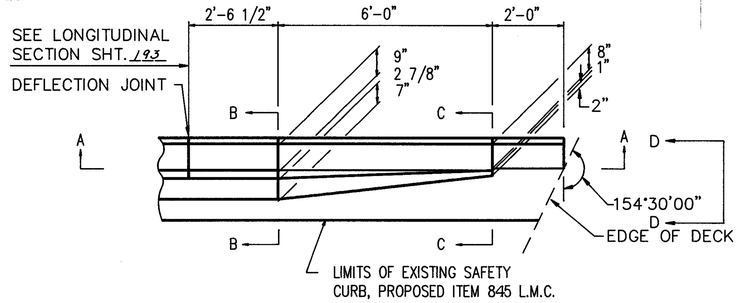

PLAN VIEW

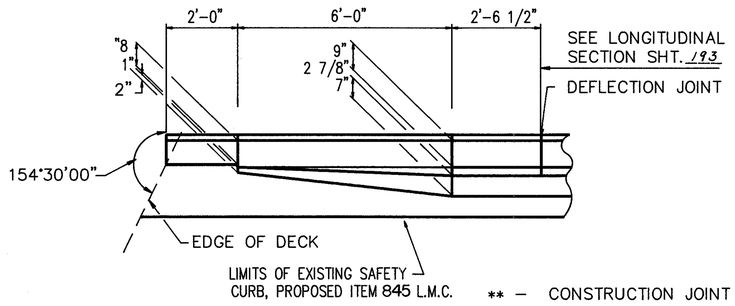

** – CONSTRUCTION JOINT

– EXISTING CONSTRUCTION JOINT

PLAN VIEW

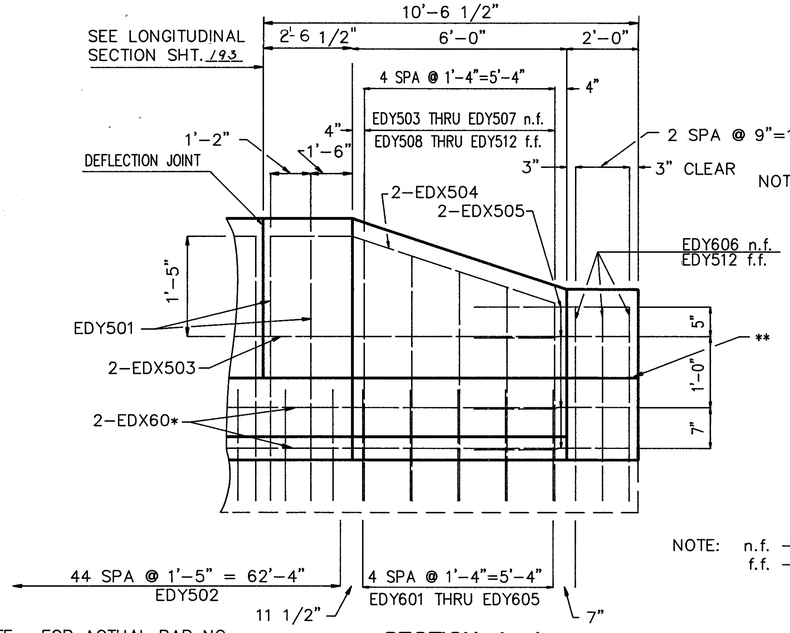

NOTE: n.f. – NEAR FACE
f.f. – FAR FACE

* – NOTE: FOR ACTUAL BAR NO. SEE LONGITUDINAL SECTION SHT. 193

SECTION A–A

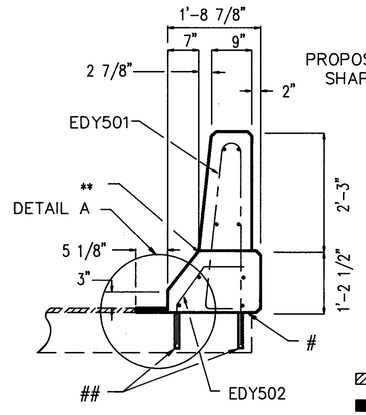

SECTION B–B (PROPOSED)

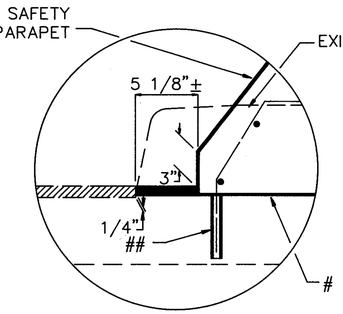

DETAIL A

– GROUT PROPOSED REINFORCING BARS INTO HOLES DRILLED INTO EXISTING CONCRETE IN ACCORDANCE WITH SUPPLEMENTAL SPECIFICATIONS 853 & 956. HOLES SHALL HAVE A MAXIMUM DIAMETER OF 1" AND SHALL BE 8" DEEP.

▨ 1 3/4" EXISTING LATEX MODIFIED CONCRETE OVERLAY

■ PROPOSED ITEM 845 1 1/2" LATEX MODIFIED CONCRETE OVERLAY

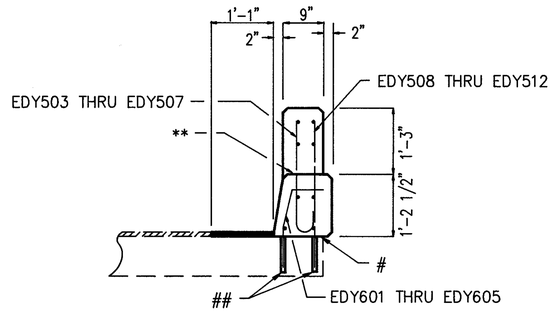

SECTION C–C (PROPOSED)

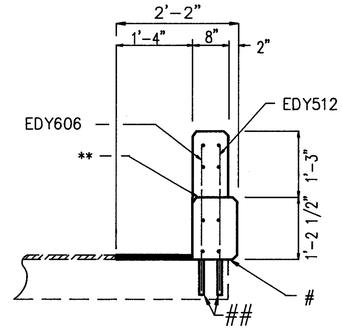

SECTION D–D (PROPOSED)

NOTE: ALL BARS SHALL MAINTAIN A 2" MINIMUM CLEARANCE FROM OUTSIDE EDGE OF PARAPET UNLESS OTHERWISE NOTED.

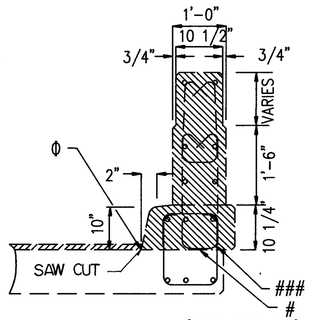

SECTION C–C (EXISTING)

– SAVE EXISTING REINFORCING BAR AND BEND UP (PROVIDING 2" CLEAR IF NECESSARY) TO INCORPORATE INTO PROPOSED VERTICAL REINFORCING WHEREVER POSSIBLE.

▨ SECTION TO BE REMOVED

Φ – REMOVE EXISTING CONCRETE PARAPET AND CURB TO EXISTING CONSTRUCTION JOINT. ANY EXISTING EXPOSED REINFORCING STEEL NOT NOTED OTHERWISE, SHALL BE CUT OFF EVEN WITH THE REMOVAL LINES. (PAYMENT UNDER ITEM 202 PORTIONS OF STRUCTURE REMOVED).

NOTE: DRAWINGS NOT TO SCALE

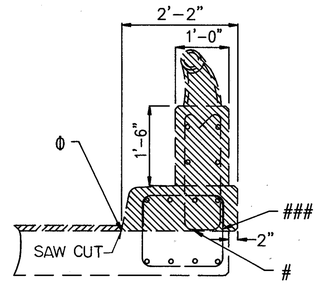

SECTION B–B (EXISTING)

STATE OF OHIO
DEPARTMENT OF TRANSPORTATION
DISTRICT ONE PLANNING AND DESIGN DEPARTMENT

4/4

END SECTION DETAILS

TRU-5-0425
LT. & RT. STRUCTURES
OVER YOUNGS RUN CREEK

DESIGNED	DRAWN	TRACED	CHECKED	REVIEWED	DATE	REVISED
KMS	MJM	MJM	DJR			

MICROFILMED
OCT 30 1992

FHWA REGION	STATE	PROJECT	
5	OHIO		

195
213

TRUMBULL COUNTY
TRU-5B-0.00

*Note: Existing minimum bridge vertical clearance will not change since no major work will be performed on the underside of deck.

Note: Existing deck width will remain the same since the proposed safety shape parapet will not increase the outside to outside dimension.

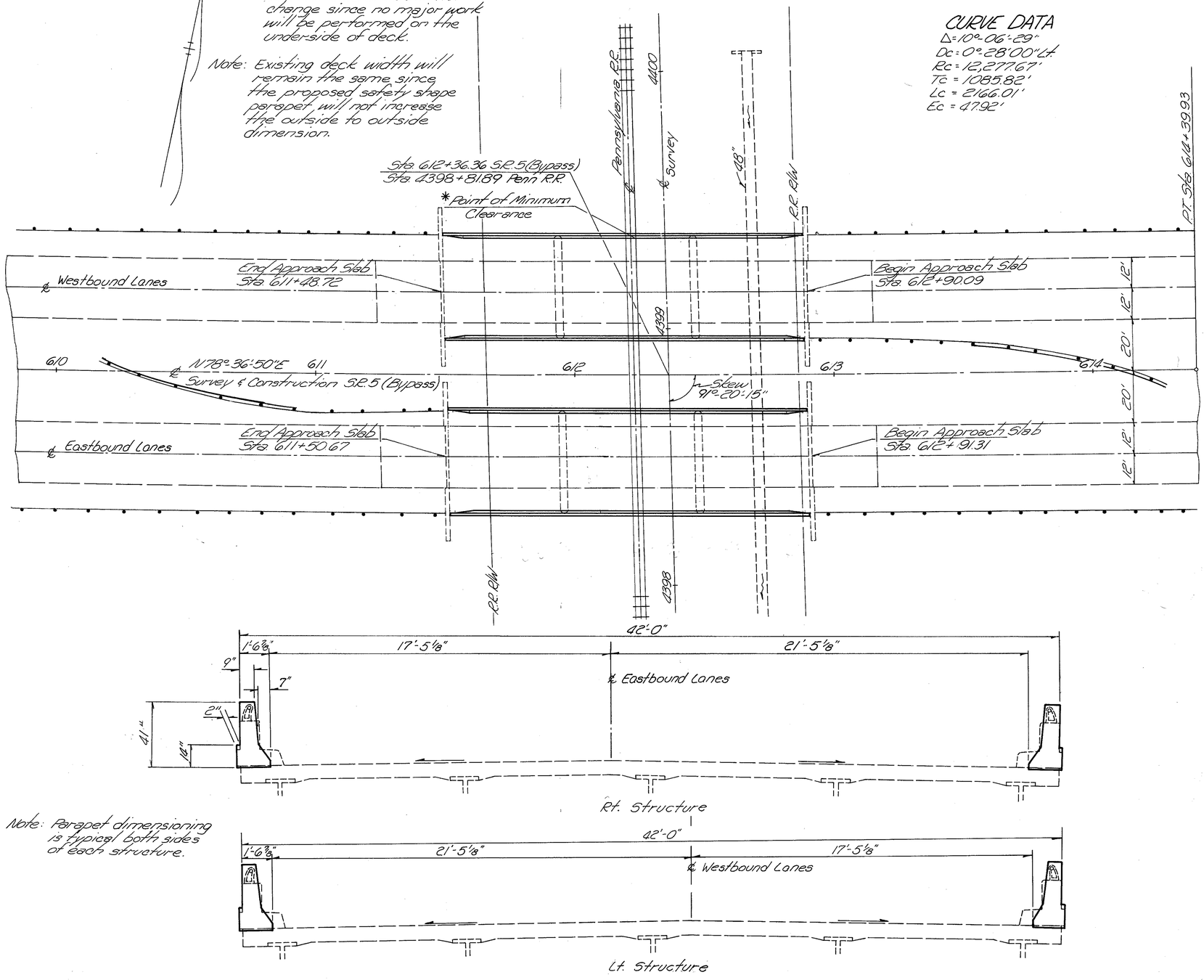

Note: Parapet dimensioning is typical both sides of each structure.

TRANSVERSE SECTIONS

PROPOSED WORK

1. Rebuild Bridge Parapets
2. Seal Parapets
3. Replace Expansion Joint Sealer in all End Dams.

PROPOSED STRUCTURE

ROADWAY: 38'-10½" f/f parapet curbs

EXISTING STRUCTURE

TYPE: Continuous Steel Beam with Reinforced Concrete Deck and Substructure
SPANS: 42'-0", 52'-6", 42'-0" ℄ of bearings
ROADWAY: 40'-0" f/f of parapets
LOAD FREQUENCY: CF=2000 (1957)
SKEW: 1°-20'-15" RF.
WEARING SURFACE: 1¼" Latex Modified Concrete
APPROACH SLABS: 25'-0" Long AS-1-54
ALIGNMENT: Straight
Superelevation: None

STATE OF OHIO
DEPARTMENT OF TRANSPORTATION
DISTRICT ONE PLANNING AND DESIGN DEPARTMENT

1 | 4

SITE PLAN

TRU-5-0525 L&R
Over Conrail Railroad
Trumbull S.R.5 (Bypass)
Sta 612+36.36

DESIGNED	DRAWN	TRACED	CHECKED	REVIEWED	DATE	REVISED
K.M.S.	K.M.S.	M.T.M.	J.J.R.			

MICROFILMED
OCT 30 1992

FHWA REGION	STATE	PROJECT	
5	OHIO		

196/213

TRUMBULL COUNTY
TRU-5B-0.00

REINFORCING STEEL LIST

MARK	NO.	LENGTH	WEIGHT	SHAPE
EEX501	32	10'-10"	361.57	ST
EEX502	128	7'-1"	945.65	ST
EEX503	32	15'-7"	520.11	ST
EEX504	16	9'-2"	152.97	ST**
EEX505	16	9'-3"	154.36	BT**
EEX506	64	4'-4"	289.26	ST
EEX601	64	30'-0"	2883.84	ST**
EEX602	16	21'-3"	510.68	ST**
EEY501	384	7'-9"	3103.97	BT
EEY502	368	2'-1"	799.63	BT
EEY503	8	3'-8"	30.59	BT
EEY504	8	3'-6"	29.20	BT
EEY505	8	3'-3"	27.12	BT
EEY506	8	3'-0"	25.03	BT
EEY507	8	2'-9"	22.95	BT
EEY508	8	3'-9"	31.29	ST
EEY509	8	3'-7"	29.90	ST
EEY510	8	3'-4"	27.81	ST
EEY511	8	3'-1"	25.73	ST
EEY512	32	2'-10"	94.57	ST
EEY601	8	2'-1"	25.03	BT
EEY602	8	2'-0"	24.03	BT
EEY603	8	2'-0"	24.03	BT
EEY604	8	1'-11"	23.03	BT
EEY605	8	1'-11"	23.03	BT
EEY606	24	2'-10"	102.14	ST
TOTALS			10287.52	

BENDING DIAGRAMS

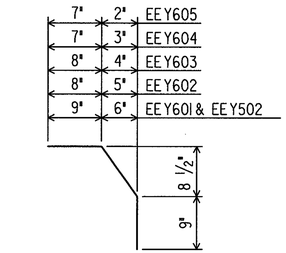

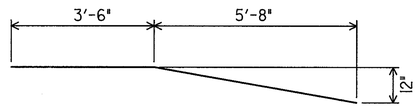

EEX505

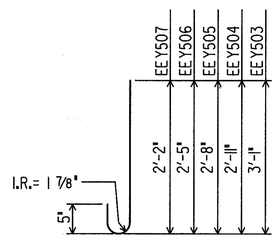

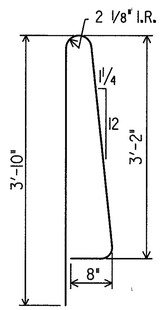

EEY501

ESTIMATED QUANTITIES

ITEM	ABUTMENTS	SUPER-STRUCTURE	GENERAL	ITEM	TOTAL	UNIT	DESCRIPTION
202		LUMP		202	LUMP	LUMP	PORTIONS OF STRUCTURE REMOVED
510		880		510	880	EACH	DOWEL HOLES
511	1			511	1	CU.YD.	CLASS C CONCRETE, ABUTMENT
511		74		511	74	CU.YD.	CLASS S CONCRETE,SUPERSTRUCTURE
SPEC.	13			SPEC.	13	LIN.FT.	HORIZONTAL EXTENSION OF STRUCTURAL EXPANSION JOINT (TYPE "B")
509		10288	100	509	10388	LB.	EPOXY COATED REINFORCING STEEL
845		29		845	29	SQ.YD.	LATEX MODIFIED CONCRETE OVERLAY (1 INCH THICK)
SPEC.		475		SPEC.	475	SQ.YD.	SEALING OF CONCRETE SURFACES (SEE PROPOSAL NOTE)
SPEC.			168	SPEC.	168	LIN.FT.	REMOVE AND REPLACE EXPANSION JOINT SEALER

** BEND AS REQUIRED IN FIELD WHERE NECESSARY.

REV. 11-15-88

STATE OF OHIO
DEPARTMENT OF TRANSPORTATION
DISTRICT ONE PLANNING AND DESIGN DEPARTMENT

2/4

ESTIMATED QUANTITIES AND REINFORCING STEEL TABLE

TRU-5-0.00
STRUCTURE-0525 LT. & RT.
OVER CONSOLIDATED RAIL CORP.

DESIGNED	DRAWN	TRACED	CHECKED	REVIEWED	DATE	REVISED
KMS	KMS	GW	DR			

MICROFILMED
NOV 2 1992

FHWA REGION	STATE	PROJECT	
5	OHIO		

197
213

TRUMBULL COUNTY
TRU-5B-0.00

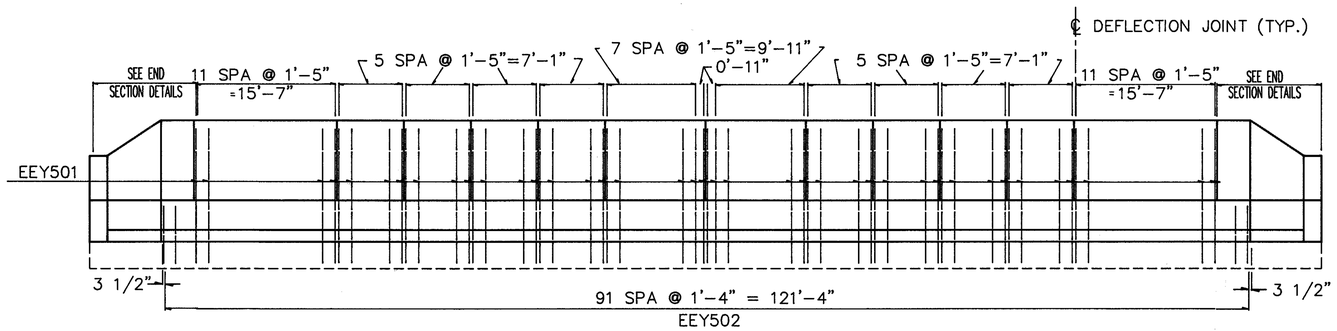

LONGITUDINAL SECTION

VERTICAL STEEL IN DEFLECTOR PARAPET

NOTE: DRAWINGS NOT TO SCALE

NOTE: ALL SPACING BETWEEN DEFLECTION JOINT AND VERTICAL REINFORCING BARS SHALL BE A MINIMUM OF 2 1/2" UNLESS OTHERWISE NOTED.

NOTE: REINFORCING BARS SHALL NOT EXTEND THRU DEFLECTION JOINT.

NOTE: SECTIONS VIEWING FACE OF PARAPET

NOTE: CONCRETE PARAPETS ABOVE THE CONSTRUCTION JOINT SHALL BE PLACED IN ALTERNATE SECTIONS BY THE USE OF BULKHEADS. CLOSING SECTIONS SHALL BE PLACED AFTER THE REMOVAL OF BULKHEADS AND AFTER PLACEMENT OF EXPANSION JOINT FILLER. EXPOSED EDGES OF THE FILLER SHALL BE FLUSH WITH THE SURFACE OF CONCRETE AND SHALL BE FREE OF MORTAR.

NOTE: FOR DETAILS OF REMOVING EXISTING PARAPET AND RECONSTRUCTION OF PROPOSED SAFETY SHAPE PARAPET ON STRUCTURE, SEE SHT. 174.

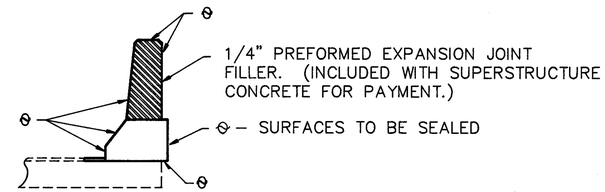

SECTION THRU DEFLECTION JOINT

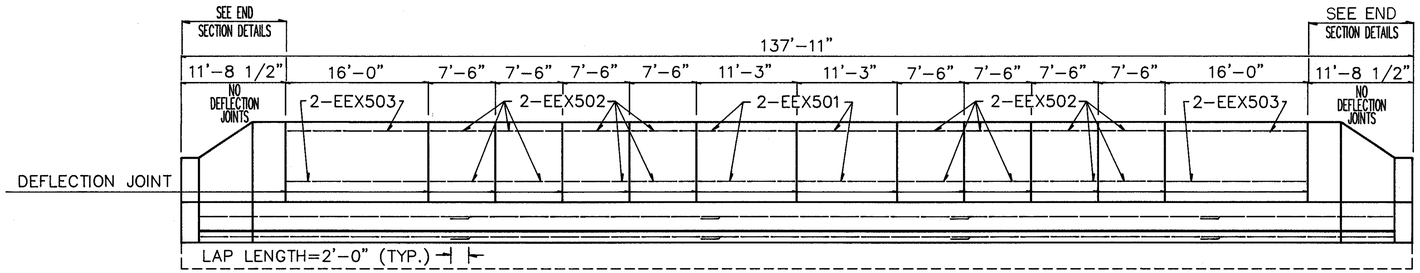

LONGITUDINAL SECTION

HORIZONTAL STEEL IN DEFLECTOR PARAPET

STATE OF OHIO
DEPARTMENT OF TRANSPORTATION
DISTRICT ONE PLANNING AND DESIGN DEPARTMENT

3/4

PARAPET DETAILS

TRU-5-0525
LT. & RT. STRUCTURES
OVER CONSOLIDATED RAIL CORP.

DESIGNED	DRAWN	TRACED	CHECKED	REVIEWED	DATE	REVISED
KMS	MJM	MJM	JJK			

MICROFILMED
NOV 2 1992

FHWA REGION	STATE	PROJECT	
5	OHIO		

198
213

TRUMBULL COUNTY
TRU-5B-0.00

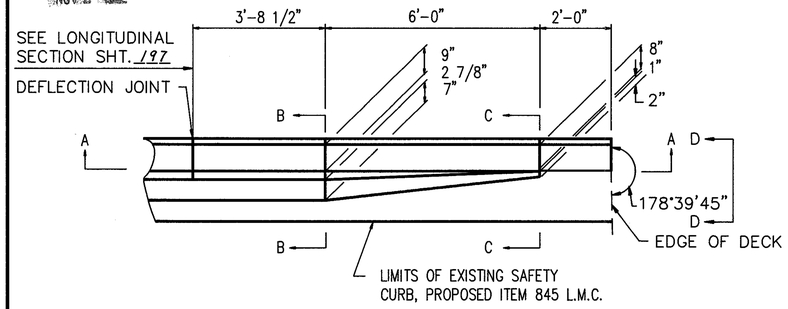

PLAN VIEW

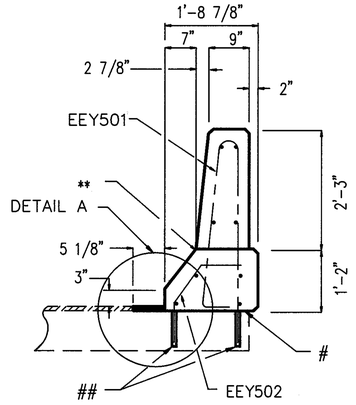

SECTION B–B (PROPOSED)

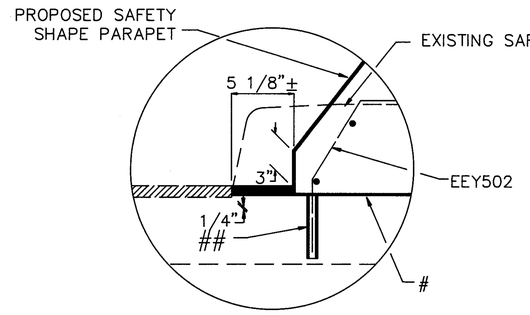

1 1/4" EXISTING LATEX MODIFIED CONCRETE OVERLAY

PROPOSED 1" ITEM 845 LATEX MODIFIED CONCRETE OVERLAY

DETAIL A

NOTE: ALL BARS SHALL MAINTAIN A 2" MINIMUM CLEARANCE FROM OUTSIDE EDGE OF PARAPET UNLESS OTHERWISE NOTED.

\# – EXISTING CONSTRUCTION JOINT

** – CONSTRUCTION JOINT

NOTE: DRAWINGS NOT TO SCALE

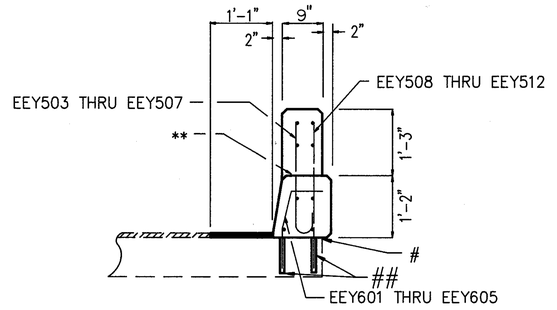

SECTION C–C (PROPOSED)

– GROUT PROPOSED REINFORCING BARS INTO HOLES DRILLED INTO EXISTING CONCRETE IN ACCORDANCE WITH SUPPLEMENTAL SPECIFICATIONS 853 & 956. HOLES SHALL HAVE A MAXIMUM DIAMETER OF 1" AND SHALL BE 8" DEEP.

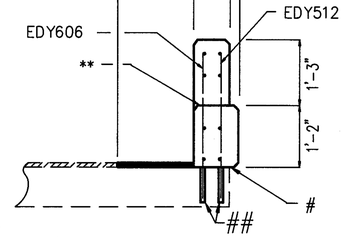

SECTION D–D (PROPOSED)

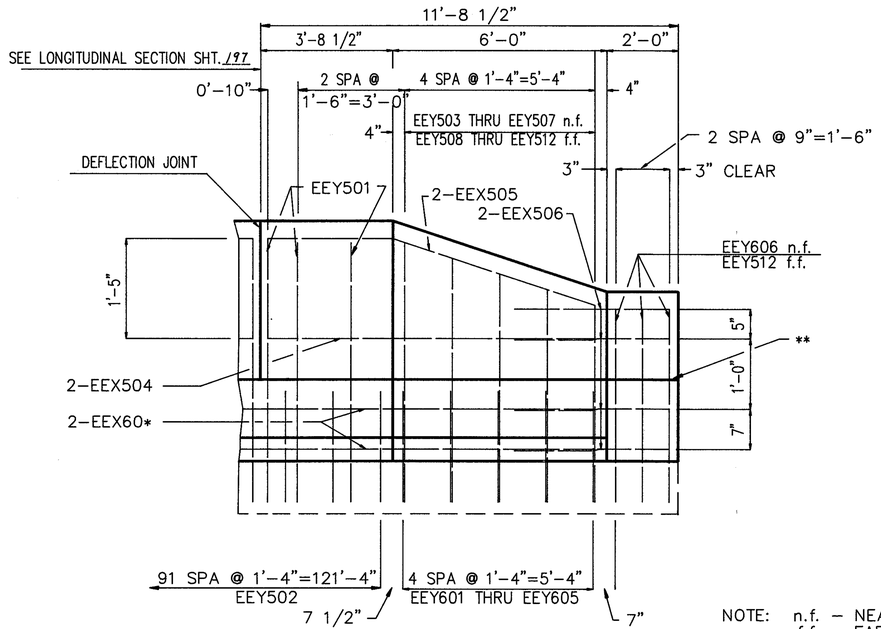

SECTION A–A

* – NOTE: FOR ACTUAL BAR NO. SEE LONGITUDINAL SECTION SHT. 197

NOTE: n.f. – NEAR FACE
f.f. – FAR FACE

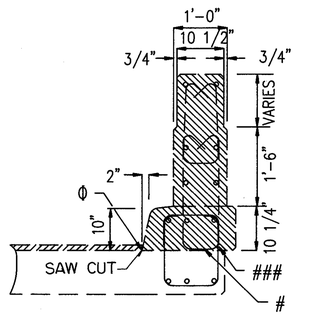

SECTION C–C (EXISTING)

– SAVE EXISTING REINFORCING BAR AND BEND UP (PROVIDING 2" CLEAR IF NECESSARY) TO INCORPORATE INTO PROPOSED VERTICAL REINFORCING WHEREVER POSSIBLE.

SECTION TO BE REMOVED

Φ – REMOVE EXISTING CONCRETE PARAPET AND CURB TO EXISTING CONSTRUCTION JOINT. ANY EXISTING EXPOSED REINFORCING STEEL NOT NOTED OTHERWISE, SHALL BE CUT OFF EVEN WITH THE REMOVAL LINES. (PAYMENT UNDER ITEM 202 PORTIONS OF STRUCTURE REMOVED).

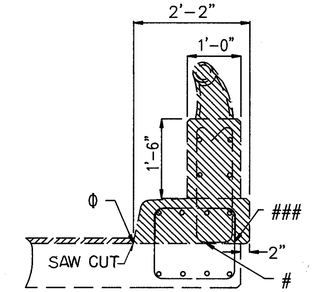

SECTION B–B (EXISTING)

STATE OF OHIO
DEPARTMENT OF TRANSPORTATION
DISTRICT ONE PLANNING AND DESIGN DEPARTMENT

4/4

END SECTION DETAILS

TRU-5-0525
LT. & RT. STRUCTURES
OVER CONSOLIDATED RAIL CORP.

DESIGNED	DRAWN	TRACED	CHECKED	REVIEWED	DATE	REVISED
K.M.S.	M.J.M.	M.J.M.				

FHWA REGION	STATE	PROJECT	
5	OHIO		

199
213

TRUMBULL COUNTY
TRU-5B-0.00

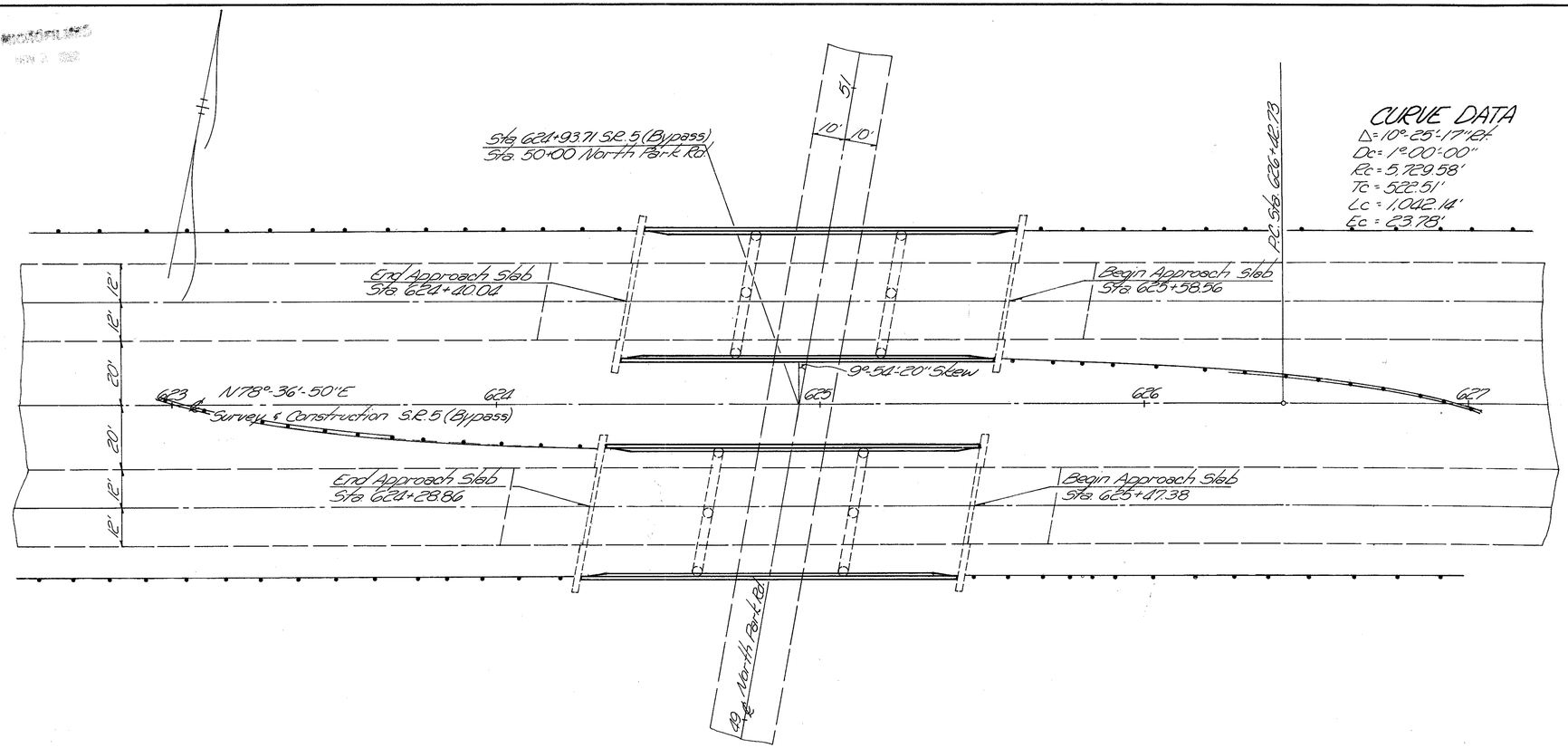

CURVE DATA

Δ = 10°-25'-17" Rt.
Dc = 1°-00'-00"
Rc = 5,729.58'
Tc = 522.51'
Lc = 1,042.14'
Ec = 23.78'

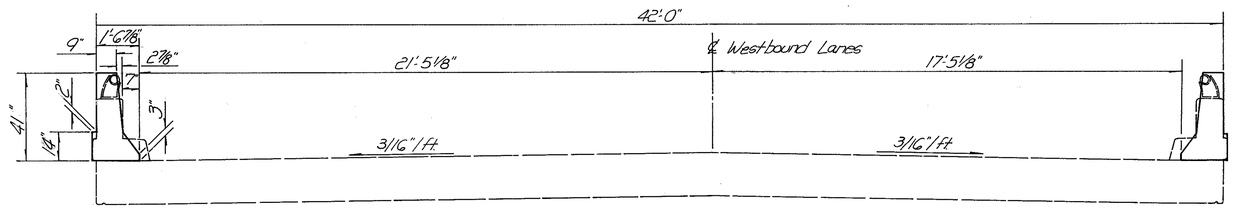

Lt. Structure

Note: Parapet dimensioning is typical of both sides of each structure

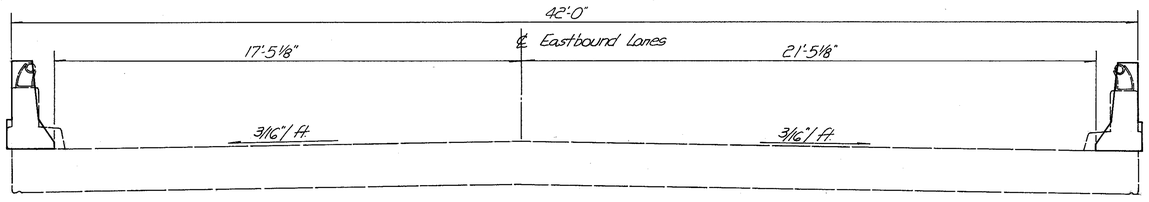

Rt. Structure

TRANSVERSE SECTIONS

EXISTING STRUCTURE

TYPE: Continuous Slab with Reinforced Concrete Deck and Substructure
SPANS: 36'-0", 45'-0", 36'-0" c/c assumed Brgs.
ROADWAY: 40'-0" f/f of Parapets
LOAD FREQUENCY: CF 2000 (1957)
SKEW: 9°-54'-20" L.F.
WEARING SURFACE: 1 1/4" Latex Modified Concrete
APPROACH SLAB: 25' Long AS-1-54
ALIGNMENT: Straight
SUPERELEVATION: None

PROPOSED WORK

1. Rebuild Bridge Parapets
2. Seal Parapets

PROPOSED STRUCTURE

ROADWAY: 38'-10 1/8" f/f parapet curbs

STATE OF OHIO
DEPARTMENT OF TRANSPORTATION
DISTRICT ONE PLANNING AND DESIGN DEPARTMENT

1 | 4

SITE PLAN

TRU-5-0549 L&R
Over North Park Rd.
Trumbull Co. SR 5 (Bypass)
Sta 621+93.71

DESIGNED	DRAWN	TRACED	CHECKED	REVIEWED	DATE	REVISED
K.M.S.	K.M.S.	M.J.M.	D.M.R.			

MICROFILMED
NOV 2 1992

FHWA REGION	STATE	PROJECT	
5	OHIO		

200
213

TRUMBULL COUNTY
TRU-5B-0.00

REINFORCING STEEL LIST

MARK	NO.	LENGTH	WEIGHT	SHAPE
EFX501	32	10'-10"	361.57	ST
EFX502	128	7'-1"	945.65	ST
EFX503	16	14'-7"	243.37	ST
EFX504	16	8'-0"	133.50	ST**
EFX505	16	8'-1"	134.89	BT**
EFX506	64	4'-4"	289.26	ST
EFX601	64	28'-0"	2691.58	ST**
EFX602	16	9'-10"	236.31	ST**
EFY501	324	7'-9"	2618.97	BT
EFY502	308	2'-1"	669.26	BT
EFY503	8	3'-8"	30.59	BT
EFY504	8	3'-6"	29.20	BT
EFY505	8	3'-3"	27.12	BT
EFY506	8	3'-0"	25.03	BT
EFY507	8	2'-9"	22.95	BT
EFY508	8	3'-9"	31.29	ST
EFY509	8	3'-7"	29.90	ST
EFY510	8	3'-4"	27.81	ST
EFY511	8	3'-1"	25.73	ST
EFY512	32	2'-10"	94.57	ST
EFY601	8	2'-1"	25.03	BT
EFY602	8	2'-0"	24.04	BT
EFY603	8	2'-0"	24.04	BT
EFY604	8	1'-11"	23.03	BT
EFY605	8	1'-11"	23.03	BT
EFY606	24	2'-10"	102.14	ST
TOTALS			8889.86	

BENDING DIAGRAMS

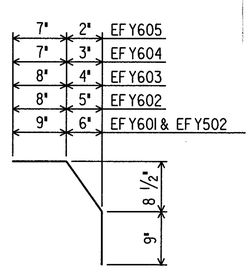

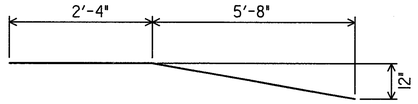

EFX505

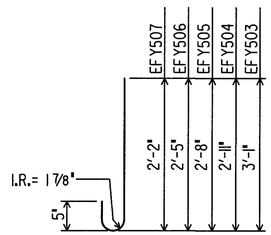

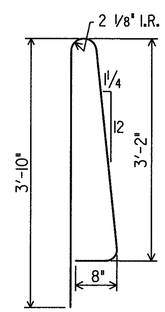

EFY501

** BEND AS REQUIRED IN FIELD WHERE NECESSARY.

ESTIMATED QUANTITIES

ITEM	ABUTMENTS	SUPER-STRUCTURE	GENERAL	ITEM	TOTAL	UNIT	DESCRIPTION
202		LUMP		202	LUMP	LUMP	PORTIONS OF STRUCTURE REMOVED
510		760		510	760	EACH	DOWEL HOLES
511		63		511	63	CU.YD.	CLASS S CONCRETE,SUPERSTRUCTURE
519*	40			519*	40	SQ.FT.	PATCHING CONCRETE STRUCTURES
509		8890	100	509	8990	LB.	EPOXY COATED REINFORCING STEEL
845		26		845	26	SQ.YD.	LATEX MODIFIED CONCRETE OVERLAY (1 INCH THICK)
SPEC.		407		SPEC.	407	SQ.YD.	SEALING OF CONCRETE SURFACES (SEE PROPOSAL NOTE)

* 50% FEDERAL PARTICIPATION

REV. 11-15-88

STATE OF OHIO
DEPARTMENT OF TRANSPORTATION
DISTRICT ONE PLANNING AND DESIGN DEPARTMENT

2/4

ESTIMATED QUANTITIES AND REINFORCING STEEL TABLE

TRU-5-0.00
STRUCTURE-0549 LT. & RT.
OVER NORTH PARK Rd.

DESIGNED	DRAWN	TRACED	CHECKED	REVIEWED	DATE	REVISED
KMS	KMS	GW	JMK			

MICROFILMED
NOV 2 1992

FHWA REGION	STATE	PROJECT	
5	OHIO		

201/213

TRUMBULL COUNTY
TRU-5B-0.00

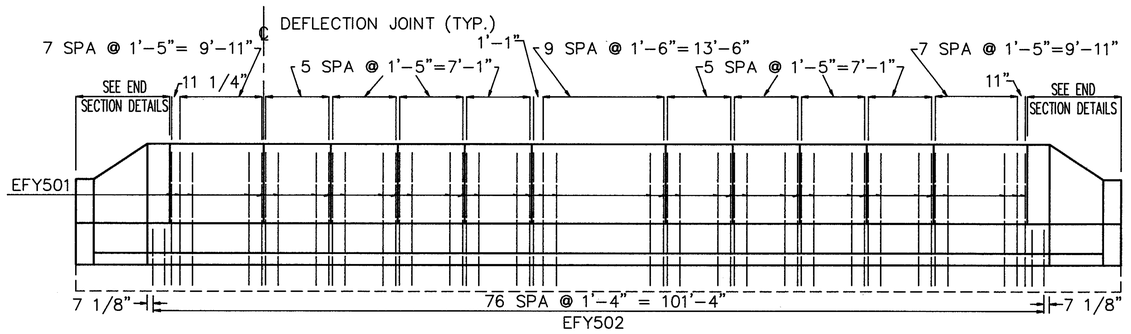

LONGITUDINAL SECTION
VERTICAL STEEL IN DEFLECTOR PARAPET

NOTE: REINFORCING BARS SHALL NOT EXTEND THRU DEFLECTION JOINT.

NOTE: ALL SPACING BETWEEN DEFLECTION JOINT AND VERTICAL REINFORCING BARS SHALL BE A MINIMUM OF 2 1/2" UNLESS OTHERWISE NOTED.

NOTE: SECTIONS VIEWING FACE OF PARAPET

NOTE: CONCRETE PARAPETS ABOVE THE CONSTRUCTION JOINT SHALL BE PLACED IN ALTERNATE SECTIONS BY THE USE OF BULKHEADS. CLOSING SECTIONS SHALL BE PLACED AFTER THE REMOVAL OF BULKHEADS AND AFTER PLACEMENT OF EXPANSION JOINT FILLER. EXPOSED EDGES OF THE FILLER SHALL BE FLUSH WITH THE SURFACE OF CONCRETE AND SHALL BE FREE OF MORTAR.

NOTE: DRAWINGS NOT TO SCALE

NOTE: FOR DETAILS OF EXISTING PARAPET REMOVAL AND RECONSTRUCTION OF PROPOSED SAFETY SHAPE PARAPET ON STRUCTURE, SEE SHT. 174.

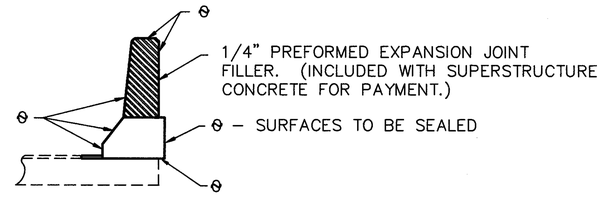

SECTION THRU DEFLECTION JOINT

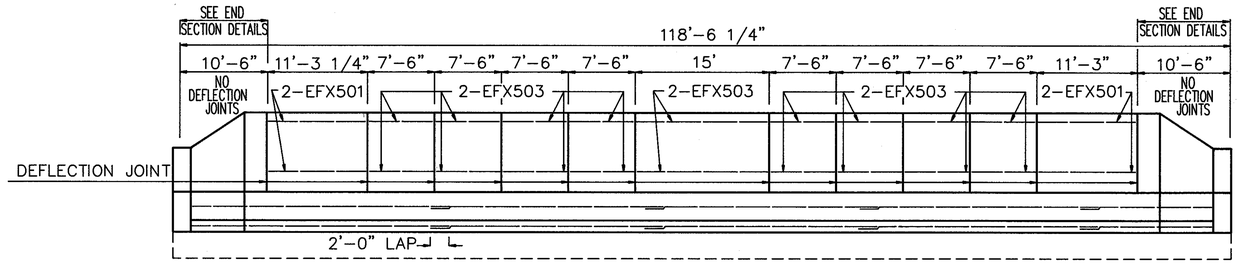

LONGITUDINAL SECTION
HORIZONTAL STEEL IN DEFLECTOR PARAPET

STATE OF OHIO
DEPARTMENT OF TRANSPORTATION
DISTRICT ONE PLANNING AND DESIGN DEPARTMENT

3/4

PARAPET DETAILS
TRU-5-0549 LT. & RT. STRUCTURE
OVER NORTH PARK ROAD

DESIGNED	DRAWN	TRACED	CHECKED	REVIEWED	DATE	REVISED
K.M.S	M.J.M	M.J.M	J.M.K			

MICROFILMED
NOV 2

FHWA REGION	STATE	PROJECT	
5	OHIO		

202
213

TRUMBULL COUNTY
TRU-5B-0.00

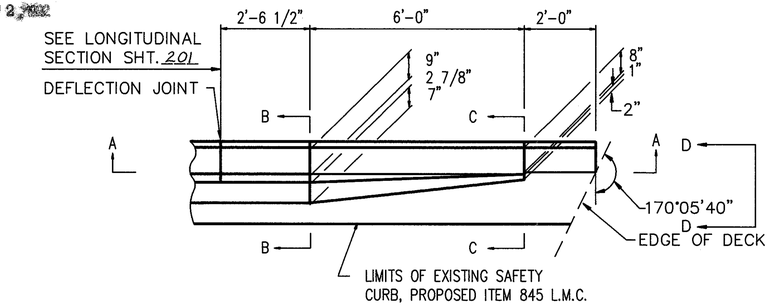

PLAN VIEW

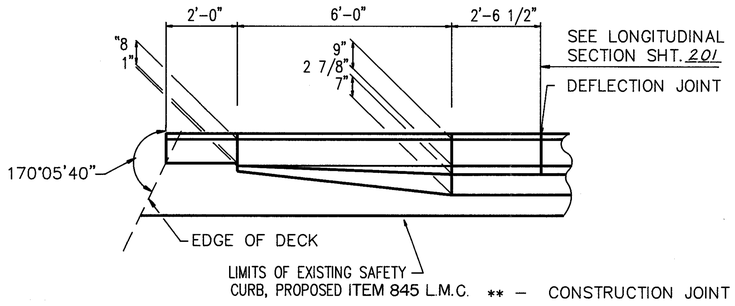

PLAN VIEW

** – CONSTRUCTION JOINT

– EXISTING CONSTRUCTION JOINT

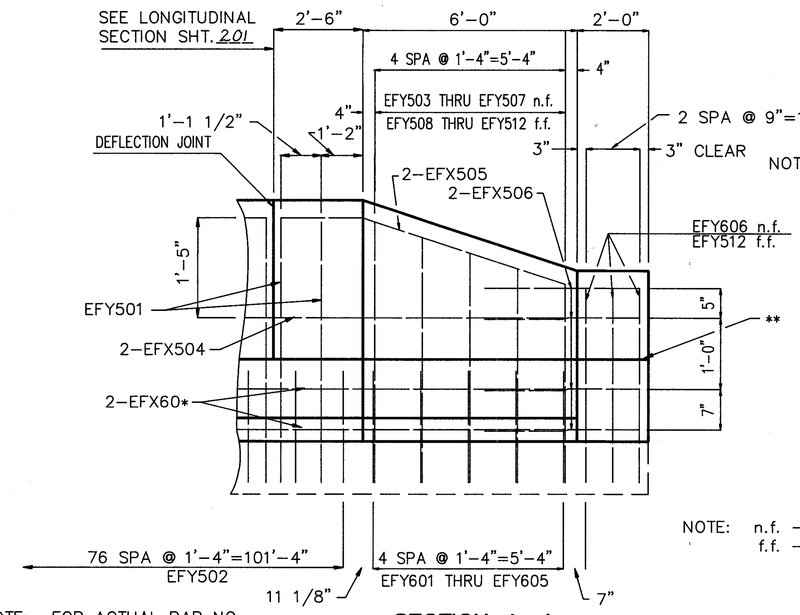

NOTE: n.f. – NEAR FACE
f.f. – FAR FACE

* – NOTE: FOR ACTUAL BAR NO. SEE LONGITUDINAL SECTION SHT. 201

SECTION A–A

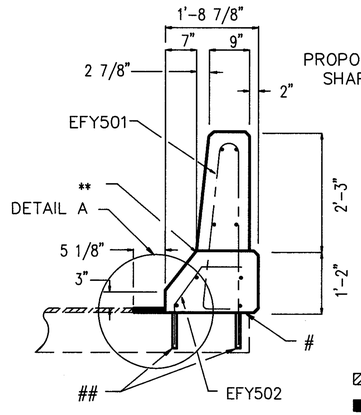

SECTION B–B (PROPOSED)

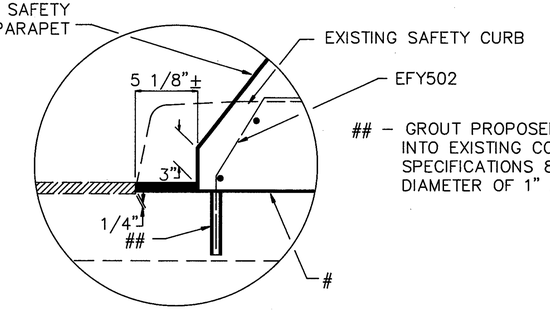

DETAIL A

– GROUT PROPOSED REINFORCING BARS INTO HOLES DRILLED INTO EXISTING CONCRETE IN ACCORDANCE WITH SUPPLEMENTAL SPECIFICATIONS 853 & 956. HOLES SHALL HAVE A MAXIMUM DIAMETER OF 1" AND SHALL BE 8" DEEP.

1 1/4" EXISTING LATEX MODIFIED CONCRETE OVERLAY

PROPOSED 1" ITEM 845 LATEX MODIFIED CONCRETE OVERLAY

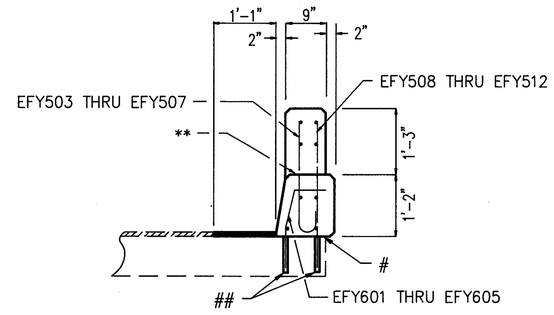

SECTION C–C (PROPOSED)

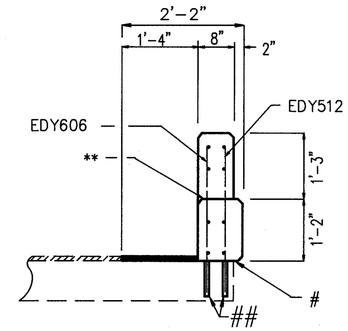

SECTION D–D (PROPOSED)

– SAVE EXISTING REINFORCING BAR AND BEND UP (PROVIDING 2" CLEAR IF NECESSARY) TO INCORPORATE INTO PROPOSED VERTICAL REINFORCING WHEREVER POSSIBLE.

SECTION TO BE REMOVED

Φ – REMOVE EXISTING CONCRETE PARAPET AND CURB TO EXISTING CONSTRUCTION JOINT. ANY EXISTING EXPOSED REINFORCING STEEL NOT NOTED OTHERWISE, SHALL BE CUT OFF EVEN WITH THE REMOVAL LINES. (PAYMENT UNDER ITEM 202 PORTIONS OF STRUCTURE REMOVED).

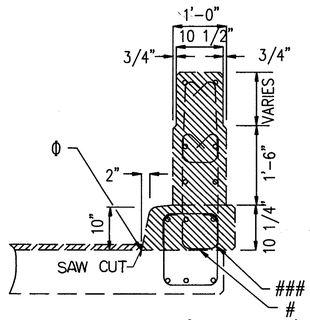

SECTION C–C (EXISTING)

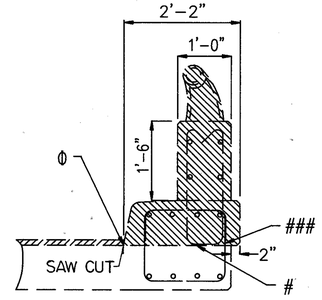

SECTION B–B (EXISTING)

NOTE: DRAWINGS NOT TO SCALE

STATE OF OHIO
DEPARTMENT OF TRANSPORTATION
DISTRICT ONE PLANNING AND DESIGN DEPARTMENT

4/4

END SECTION DETAILS

TRU-5-0549
LT. & RT. STRUCTURES
OVER NORTH PARK RD.

DESIGNED	DRAWN	TRACED	CHECKED	REVIEWED	DATE	REVISED
K.M.S	MJM	MJM	DMK			

FHWA REGION	STATE	PROJECT	
5	OHIO		

203
213

TRUMBULL COUNTY
TRU-5B-0.00

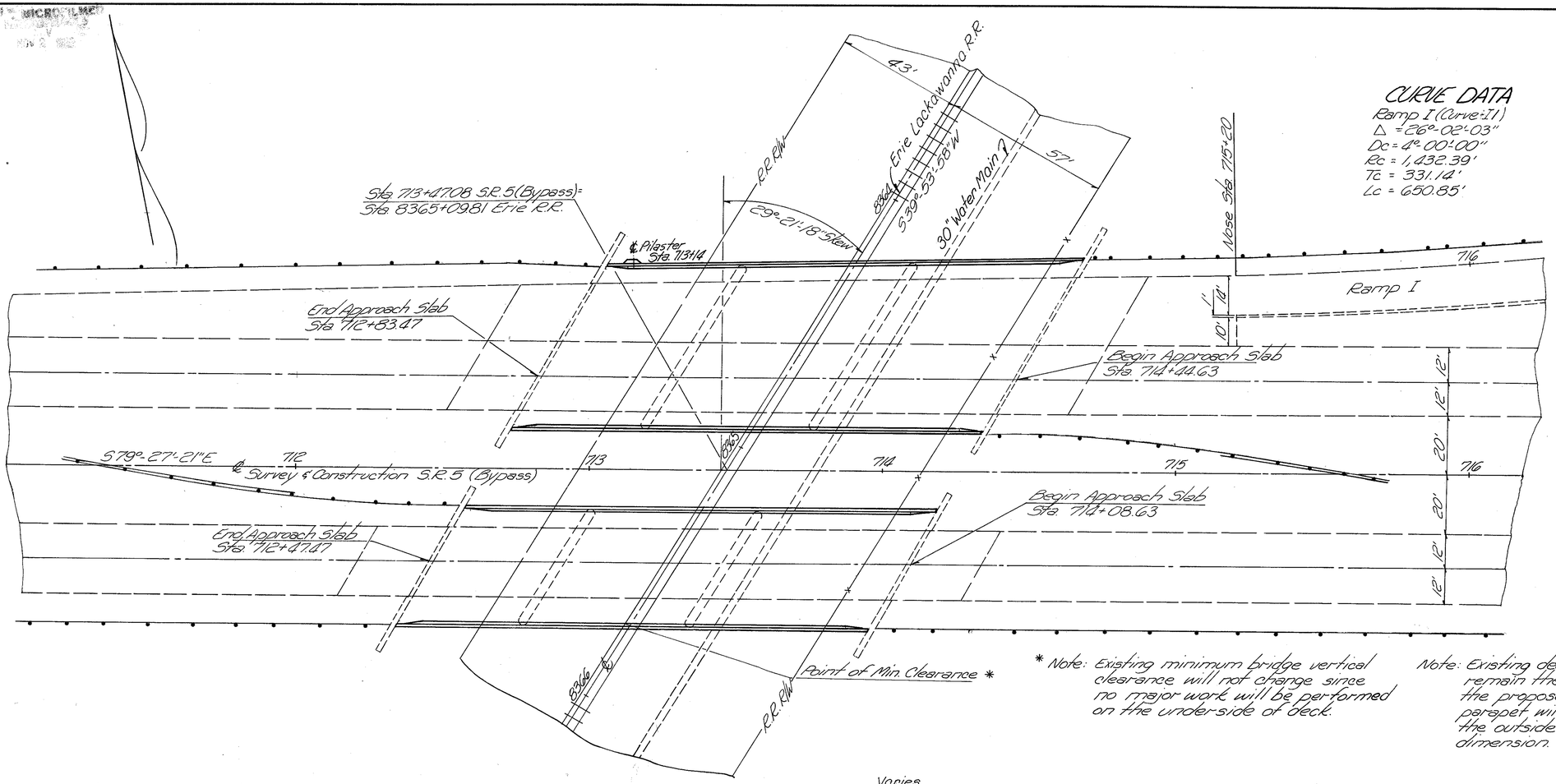

CURVE DATA

Ramp I (Curve: I1)
Δ = 26°-02'-03"
Dc = 4°-00'-00"
Rc = 1,432.39'
Tc = 331.14'
Lc = 650.85'

* Note: Existing minimum bridge vertical clearance will not change since no major work will be performed on the underside of deck.

Note: Existing deck width will remain the same since the proposed safety shape parapet will not increase the outside to outside dimension.

PROPOSED WORK

1. Rebuild Bridge Parapets
2. Seal Parapets
3. Replace Expansion Joint Sealer in all End Dams

PROPOSED STRUCTURE

ROADWAY: Rt Structure: 38'-10⅛" Ht parapet curbs
Lt Structure: Variable

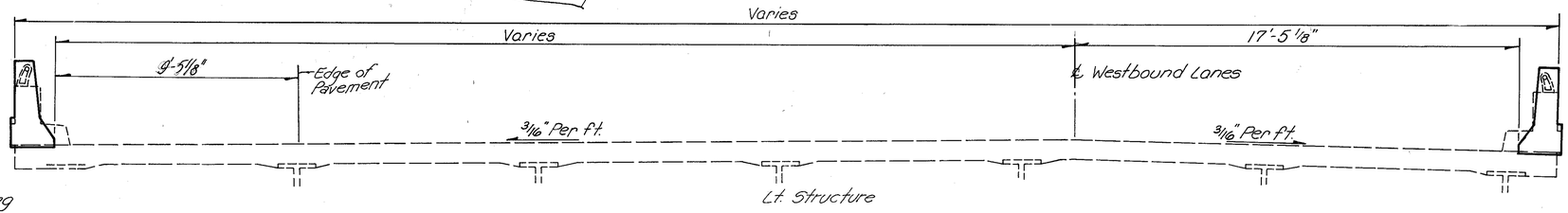

Note: Parapet dimensioning is typical both sides of each structure.

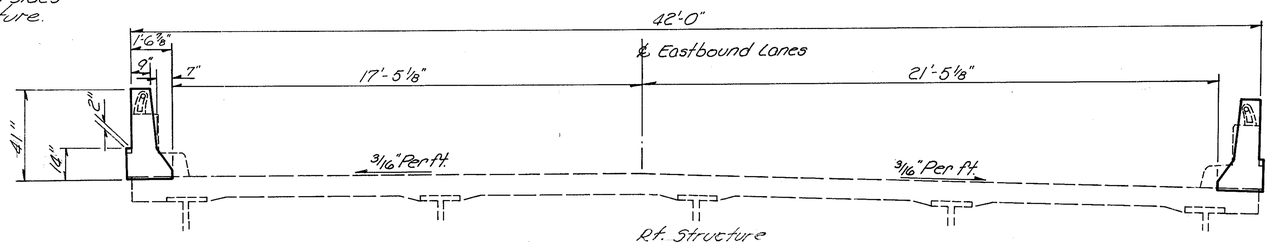

TRANSVERSE SECTION

EXISTING STRUCTURE

TYPE: Continuous Steel Beam with Reinforced Concrete Deck and Substructure
SPANS: 42'-6", 60'-0", 53'-6" c/c of bearings
ROADWAY: Lt Structure: Varies (see plan)
Rt Structure: 40'-0" Ht of parapets
LOAD FREQUENCY: CF = 2000 (1957)
SKEW: 29°-21'-19" L.F.
WEARING SURFACE: 1½" Latex Modified Conc.
APPROACH SLAB: 25' Long
ALIGNMENT: Straight
Superelevation: None

STATE OF OHIO
DEPARTMENT OF TRANSPORTATION
DISTRICT ONE PLANNING AND DESIGN DEPARTMENT

1 | 4

SITE PLAN

TRU-5-07.16 L&R
Over Consolidated Rail Corp.
Trumbull Co. SR.5 (Bypass)
Sta. 713+47.08

DESIGNED	DRAWN	TRACED	CHECKED	REVIEWED	DATE	REVISED
K.M.S.	K.M.S.	M.T.M.	D.M.K.			

MICROFILMED
NOV 2 1992

FHWA REGION	STATE	PROJECT	
5	OHIO		

204
213

TRUMBULL COUNTY
TRU-5B-0.00

REINFORCING STEEL LIST

MARK	NO.	LENGTH	WEIGHT	SHAPE
EGX501	12	12'-2"	152.28	ST
EGX502	4	14'-5"	60.15	ST
EGX503	128	7'-1"	945.65	ST
EGX504	32	14'-7"	486.73	ST
EGX505	16	13'-1"	218.33	ST
EGX506	16	9'-8"	161.32	ST
EGX507	16	13'-3"	221.12	ST**
EGX508	16	13'-4"	222.51	BT**
EGX509	64	4'-4"	289.26	ST
EGX601	80	30'-0"	3604.80	ST**
EGX602	12	13'-0"	234.31	ST**
EGX603	4	15'-3"	91.62	ST**
EGY501	441	7'-9"	3564.71	BT
EGY502	381	2'-1"	827.88	BT
EGY503	8	3'-8"	30.59	BT
EGY504	8	3'-6"	29.20	BT
EGY505	8	3'-3"	27.12	BT
EGY506	8	3'-0"	25.03	BT
EGY507	8	2'-9"	22.95	BT
EGY508	8	3'-9"	31.29	ST
EGY509	8	3'-7"	29.90	ST
EGY510	8	3'-4"	27.81	ST
EGY511	8	3'-1"	25.73	ST
EGY512	32	2'-10"	94.57	ST
EGY601	8	2'-1"	25.03	BT
EGY602	8	2'-0"	24.04	BT
EGY603	8	2'-0"	24.04	BT
EGY604	8	1'-11"	23.03	BT
EGY605	8	1'-11"	23.03	BT
EGY606	24	2'-10"	102.14	ST
EPY501	4	6'-9"	28.16	BT
EPY502	4	3'-2"	13.21	ST
EPX501	4	7'-10"	32.68	BT
TOTALS			11720.22	

BENDING DIAGRAMS

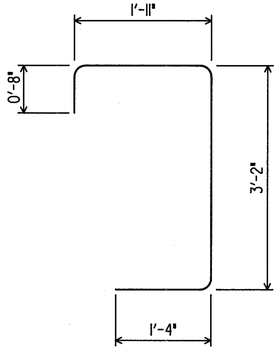

EPY501

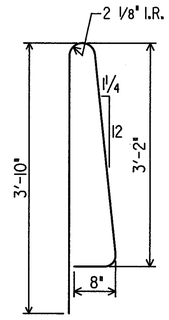

EGY501

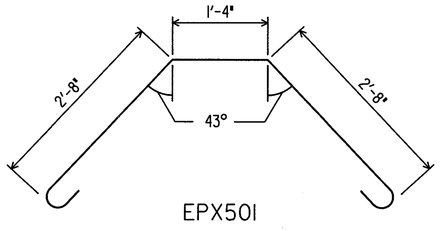

EPX501

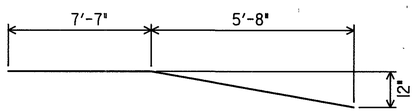

EGX508

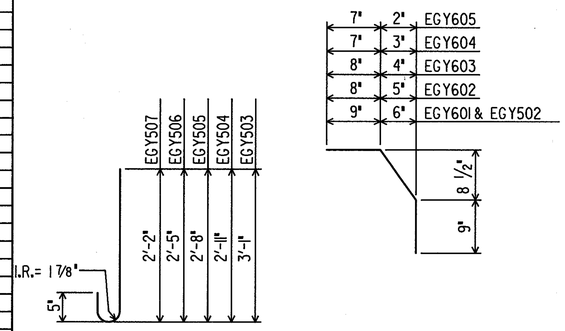

ESTIMATED QUANTITIES

ITEM	ABUTMENTS	SUPER-STRUCTURE	GENERAL	ITEM	TOTAL	UNIT	DESCRIPTION
202		LUMP		202	LUMP	LUMP	PORTIONS OF STRUCTURE REMOVED
510		948		510	948	EACH	DOWEL HOLES
511	1			511	1	CU.YD.	CLASS C CONCRETE, ABUTMENT, AS PER PLAN.
511		86		511	86	CU.YD.	CLASS S CONCRETE, SUPERSTRUCTURE, AS PER PLAN.
SPEC.	15			SPEC.	15	LIN.FT.	HORIZONTAL EXTENSION OF STRUCTURAL EXPANSION JOINT (TYPE "B")
509		11720	100	509	11820	LB.	EPOXY COATED REINFORCING STEEL
845		33		845	33	SQ.YD.	LATEX MODIFIED CONCRETE OVERLAY (1 INCH THICK)
SPEC.		548		SPEC.	548	SQ.YD.	SEALING OF CONCRETE SURFACES (SEE PROPOSAL NOTE)
SPEC.			233	SPEC.	233	LIN.FT.	REMOVE AND REPLACE EXPANSION JOINT SEALER

** BEND AS REQUIRED IN FIELD WHERE NECESSARY.

REV. 11-15-88

STATE OF OHIO
DEPARTMENT OF TRANSPORTATION
DISTRICT ONE PLANNING AND DESIGN DEPARTMENT

2/4

ESTIMATED QUANTITIES AND REINFORCING STEEL TABLE

TRU-5-0.00
STRUCTURE-0716, LT. & RT.
OVER CONSOLIDATED RAIL CORP.

DESIGNED	DRAWN	TRACED	CHECKED	REVIEWED	DATE	REVISED
KMS	KMS	GW				

RECOMPILED
NOV 3 1992

FHWA REGION	STATE	PROJECT	
5	OHIO		

205
213

TRUMBULL COUNTY
TRU-5B-000

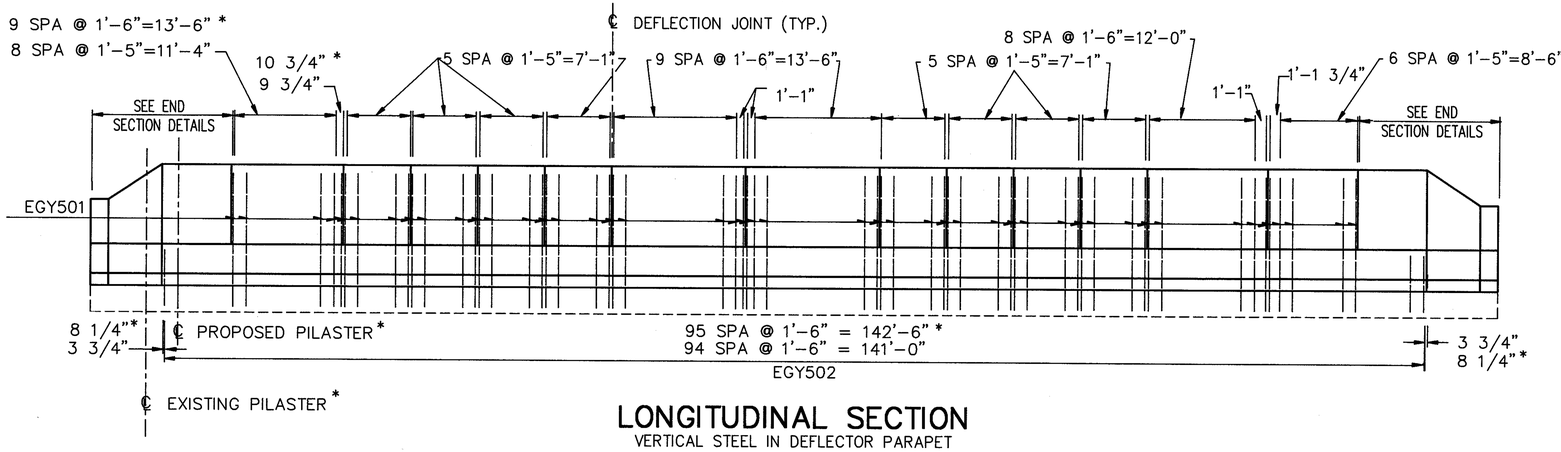

LONGITUDINAL SECTION
VERTICAL STEEL IN DEFLECTOR PARAPET

NOTE: SECTIONS VIEWING FACE OF PARAPET

NOTE: DRAWINGS NOT TO SCALE

NOTE: ALL SPACING BETWEEN DEFLECTION JOINT AND VERTICAL REINFORCING BARS SHALL BE A MINIMUM OF 2 1/2" UNLESS OTHERWISE NOTED.

NOTE: PILASTER RELOCATION APPLIES TO LEFT STRUCTURE OUTSIDE PARAPET ONLY.

NOTE: REINFORCING BARS SHALL NOT EXTEND THRU DEFLECTION JOINT.

NOTE: EXISTING PILASTER TO BE RELOCATED AS SHOWN, FOR PILASTER DETAILS, SEE SHT. 169.

NOTE: CONCRETE PARAPETS ABOVE THE CONSTRUCTION JOINT SHALL BE PLACED IN ALTERNATE SECTIONS BY THE USE OF BULKHEADS. CLOSING SECTIONS SHALL BE PLACED AFTER THE REMOVAL OF BULKHEADS AND AFTER PLACEMENT OF EXPANSION JOINT FILLER. EXPOSED EDGES OF THE FILLER SHALL BE FLUSH WITH THE SURFACE OF CONCRETE AND SHALL BE FREE OF MORTAR.

NOTE: FOR DETAILS OF REMOVING EXISTING PARAPET AND RECONSTRUCTION OF PROPOSED SAFETY SHAPE PARAPET ON STRUCTURE, SEE SHT. 174.

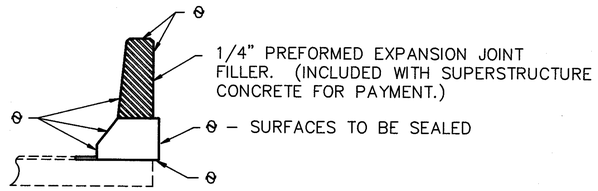

SECTION THRU DEFLECTION JOINT

* – LT. STRUCTURE OUTSIDE PARAPET

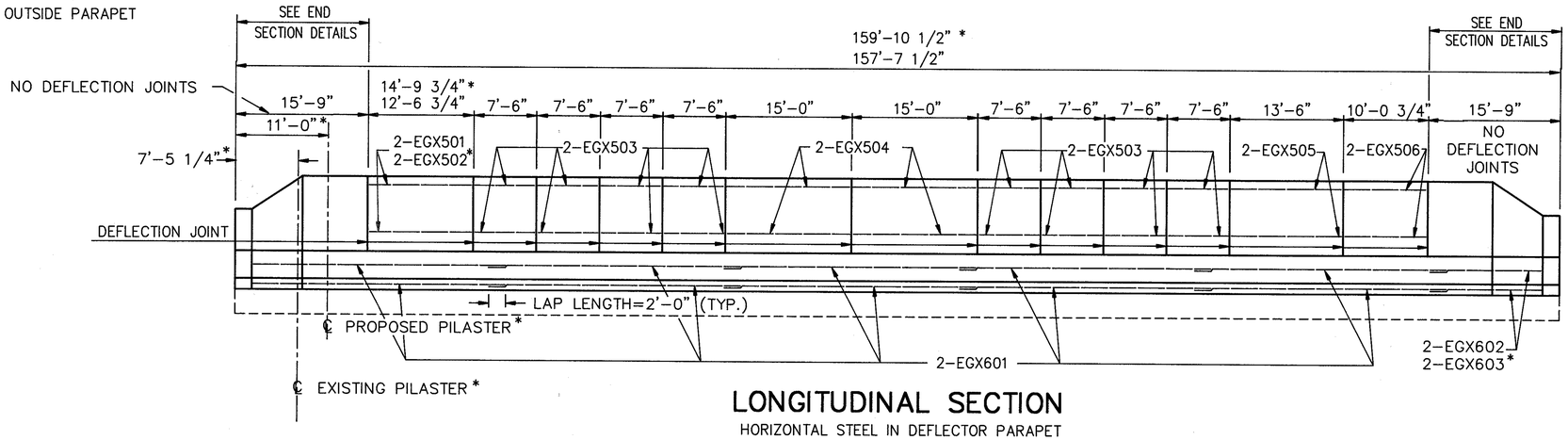

LONGITUDINAL SECTION
HORIZONTAL STEEL IN DEFLECTOR PARAPET

STATE OF OHIO
DEPARTMENT OF TRANSPORTATION
DISTRICT ONE PLANNING AND DESIGN DEPARTMENT

3 / 4

PARAPET DETAILS
TRU-5-0716
LT. & RT. STRUCTURES
OVER CONSOLIDATED RAIL CORP.

DESIGNED	DRAWN	TRACED	CHECKED	REVIEWED	DATE	REVISED
H M S	MJM	MJM				

MICROFILMED
NOV 2 1995

FHWA REGION	STATE	PROJECT	
5	OHIO		

206
213

TRUMBULL COUNTY
TRU-5B-0.00

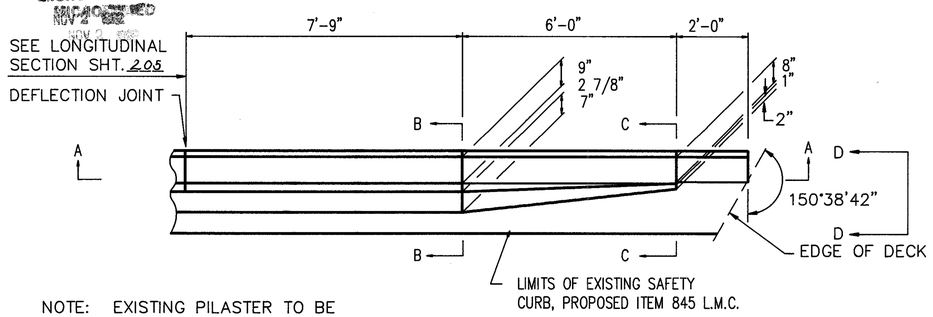

NOTE: EXISTING PILASTER TO BE RELOCATED AS SHOWN

PLAN VIEW

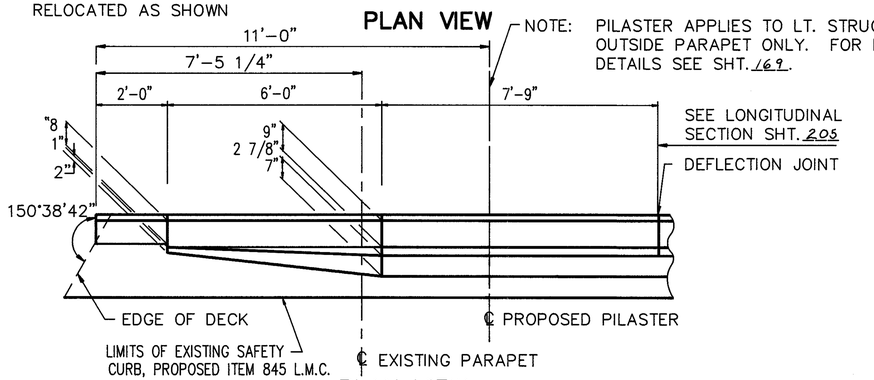

PLAN VIEW

** – CONSTRUCTION JOINT
# – EXISTING CONSTRUCTION JOINT

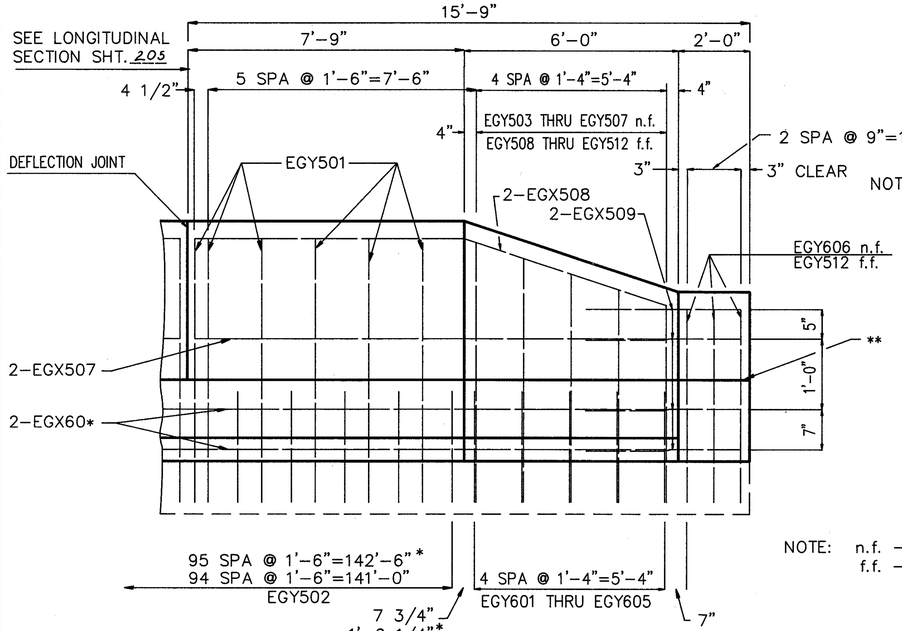

SECTION A–A

* – NOTE: FOR ACTUAL BAR NO. SEE LONGITUDINAL SECTION SHT. 205.

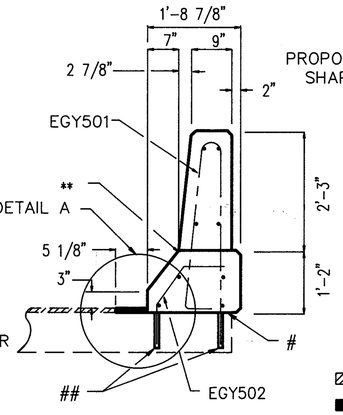

SECTION B–B (PROPOSED)

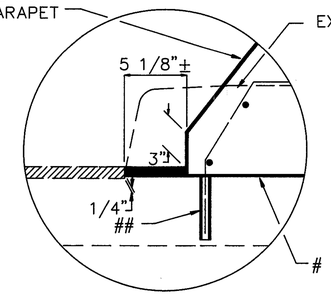

DETAIL A

– GROUT PROPOSED REINFORCING BARS INTO HOLES DRILLED INTO EXISTING CONCRETE IN ACCORDANCE WITH SUPPLEMENTAL SPECIFICATIONS 853 & 956. HOLES SHALL HAVE A MAXIMUM DIAMETER OF 1" AND SHALL BE 8" DEEP.

1 1/4" EXISTING LATEX MODIFIED CONCRETE OVERLAY
PROPOSED 1" ITEM 845 LATEX MODIFIED CONCRETE OVERLAY

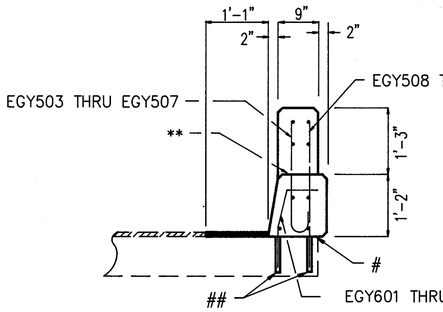

SECTION C–C (PROPOSED)

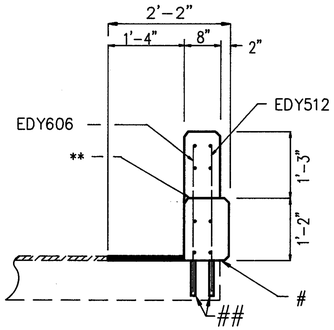

SECTION D–D (PROPOSED)

– SAVE EXISTING REINFORCING BAR AND BEND UP (PROVIDING 2" CLEAR IF NECESSARY) TO INCORPORATE INTO PROPOSED VERTICAL REINFORCING WHEREVER POSSIBLE.

SECTION TO BE REMOVED

NOTE: ALL BARS SHALL MAINTAIN A 2" MINIMUM CLEARANCE FROM OUTSIDE EDGE OF PARAPET UNLESS OTHERWISE NOTED.

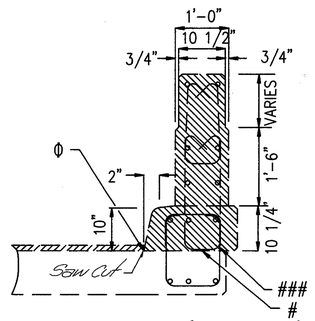

SECTION C–C (EXISTING)

Φ – REMOVE EXISTING CONCRETE PARAPET AND CURB TO EXISTING CONSTRUCTION JOINT. ANY EXISTING EXPOSED REINFORCING STEEL NOT NOTED OTHERWISE, SHALL BE CUT OFF EVEN WITH THE REMOVAL LINES. (PAYMENT UNDER ITEM 202 PORTIONS OF STRUCTURE REMOVED).

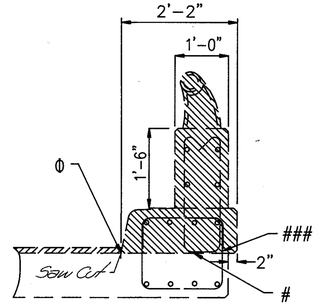

SECTION B–B (EXISTING)

NOTE: n.f. – NEAR FACE
f.f. – FAR FACE

NOTE: DRAWINGS NOT TO SCALE

STATE OF OHIO
DEPARTMENT OF TRANSPORTATION
DISTRICT ONE PLANNING AND DESIGN DEPARTMENT

4/4

END SECTION DETAILS

TRU-5-0716
LT. & RT. STRUCTURES
OVER CONSOLIDATED RAIL CORP.

DESIGNED	DRAWN	TRACED	CHECKED	REVIEWED	DATE	REVISED
K.M.S	MJM	MJM	JMK			

MICROFILMED
ARCHIVED
NOV 2 2020

FHWA REGION	STATE	PROJECT	
5	OHIO		

207/213

TRUMBULL COUNTY
TRU-5B-0.00

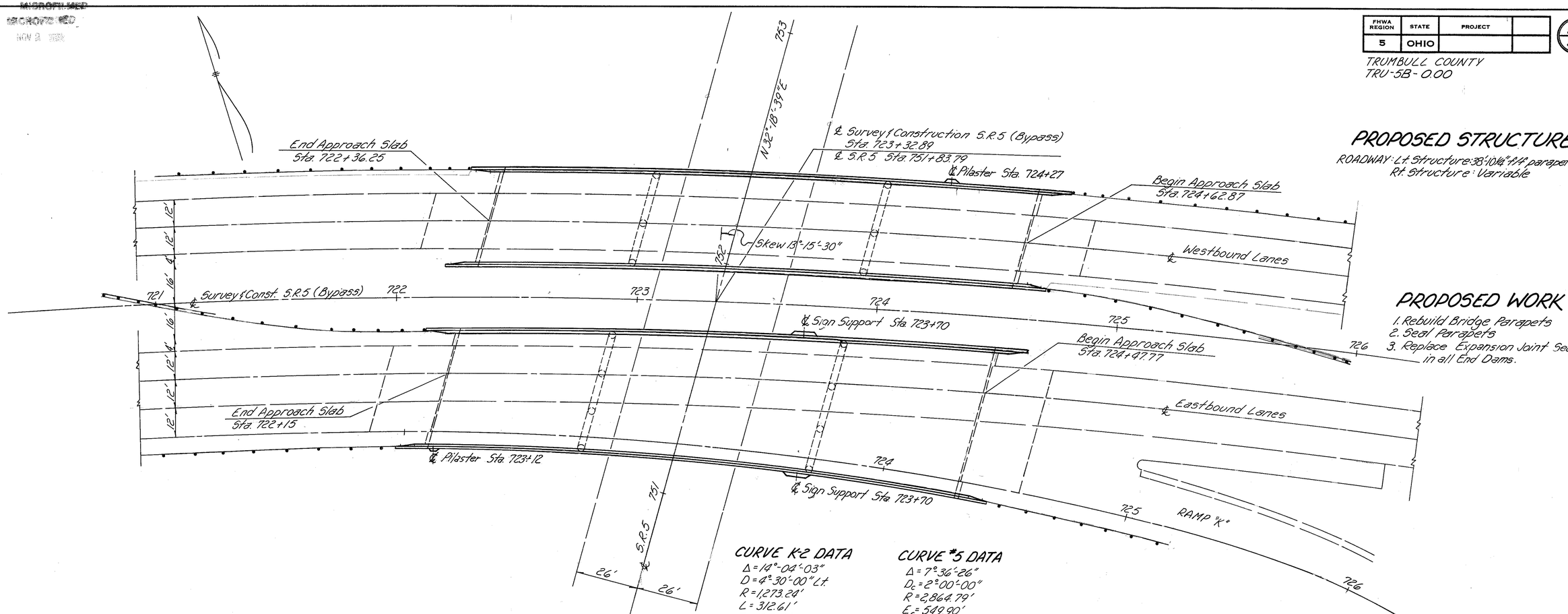

PROPOSED STRUCTURE

ROADWAY: Lt. Structure: 38'-10½" ± 44 parapet curbs
Rt. Structure: Variable

PROPOSED WORK

1. Rebuild Bridge Parapets
2. Seal Parapets
3. Replace Expansion Joint Sealer in all End Dams.

CURVE K-2 DATA

Δ = 14°-04'-03"
D = 4°-30'-00" Lt.
R = 1,273.24'
L = 312.61'
T = 157.10'
E = 9.65'

CURVE #5 DATA

Δ = 7°-36'-26"
D_c = 2°-00'-00"
R = 2,864.79'
E_c = 549.90'
L_c = 3,296.94'
T = 1,858.25'

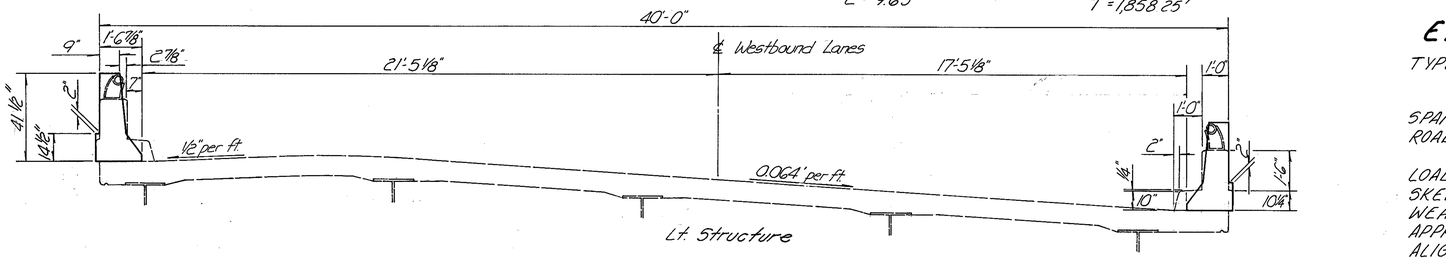

TRANSVERSE SECTION

EXISTING STRUCTURE

TYPE: Continuous Steel Girder with Reinforced Concrete Deck and Substructure
SPANS: 63'-0", 96'-0", 63'-0" ℄ bearings
ROADWAY: Lt. Structure: 40'-0" ± 4" of parapets
Rt. Structure: Variable (see plan)
LOAD FREQUENCY: CF = 2000 (1957)
SKEW: 13°-15'-30" L.F.
WEARING SURFACE: 1¾" Superplasticized Dense Concrete
APPROACH SLABS: 25'-0" Long AS-1-54 & Special
ALIGNMENT: 2°-00'-00" R.T.
SUPERELEVATION: .064 ft/ft

STATE OF OHIO
DEPARTMENT OF TRANSPORTATION
DISTRICT ONE PLANNING AND DESIGN DEPARTMENT

1/5

SITE PLAN

TRU-5-0735 L & R
Over S.R.5
Trumbull Co. SR 45 (Bypass)
Sta. 723 + 32.89

DESIGNED	DRAWN	TRACED	CHECKED	REVIEWED	DATE	REVISED
K.M.S.	K.M.S.	G.W.				

MICROFILMED
NOV 2 1992

FHWA REGION	STATE	PROJECT	
5	OHIO		

208
213

TRUMBULL COUNTY
TRU-5B-0.00

REINFORCING STEEL LIST

MARK	NO.	LENGTH	WEIGHT	SHAPE
EHX501	80	13'-4"	1112.53	ST
EHX502	124	7'-1"	916.10	ST
EHX503	4	6'-7"	27.47	ST
EHX504	4	10'-3"	42.76	ST
EHX505	4	6'-1"	25.38	ST
EHX506	4	8'-7"	35.81	ST
EHX507	8	12'-3"	102.21	ST
EHX508	12	9'-7"	119.95	ST
EHX509	24	15'-7"	390.08	ST
EHX510	12	13'-7"	170.01	ST
EHX511	8	13'-5"	111.95	ST**
EHX512	2	17'-11"	37.37	ST**
EHX513	2	16'-6"	34.42	ST**
EHX514	2	14'-3"	29.73	ST**
EHX515	2	19'-9"	41.20	ST**
EHX516	2	15'-2"	31.64	ST**
EHX517	2	17'-4"	36.16	ST**
EHX518	4	13'-6"	56.32	BT**
EHX519	2	18'-0"	37.55	BT**
EHX520	2	16'-7"	34.59	BT**
EHX521	2	14'-4"	29.90	BT**
EHX522	2	19'-10"	41.37	BT**
EHX523	2	15'-3"	31.81	BT**
EHX524	2	17'-5"	36.33	BT**
EHX525	64	4'-4"	289.26	ST
EHX526	24	5'-7"	139.76	ST
EHX527	12	12'-7"	157.49	ST
EHX528	20	13'-3"	276.40	ST
EHX601	112	30'-0"	5046.72	ST**
EHX602	4	24'-7"	147.70	ST**
EHX603	8	26'-11"	323.43	ST**
EHX604	4	27'-1"	162.72	ST**
EHX605	8	13'-5"	161.21	ST**
EHX606	4	17'-11"	107.64	ST**
EHX607	4	16'-6"	99.13	ST**
EHX608	4	14'-3"	85.61	ST**
EHX609	4	19'-9"	118.66	ST**
EHX610	4	15'-2"	91.12	ST**
EHX611	4	17'-4"	104.14	ST**
EHY501	763	7'-9"	6167.52	BT
EHY502	598	2'-1"	1299.40	BT
EHY503	8	3'-8"	30.59	BT
EHY504	8	3'-6"	29.20	BT
EHY505	8	3'-3"	27.12	BT
EHY506	8	3'-0"	25.03	BT
EHY507	8	2'-9"	22.95	BT
EHY508	8	3'-9"	31.29	ST
EHY509	8	3'-7"	29.90	ST
EHY510	8	3'-4"	27.81	ST
EHY511	8	3'-1"	25.73	ST
EHY512	32	2'-10"	94.57	ST
EHY601	67	3'-0"	301.90	BT
EHY602	8	2'-11"	35.05	BT
EHY603	8	2'-11"	35.05	BT
EHY604	8	2'-10"	34.05	BT
EHY605	8	2'-10"	34.05	BT
EHY606	24	3'-8"	132.18	ST
EPX501	8	7'-10"	65.36	BT
EPY501	8	6'-9"	56.32	BT
EPY502	8	3'-2"	26.42	ST
ESX501	8	11'-7"	96.65	BT
ESY501	14	6'-9"	98.56	BT
ESY502	8	3'-2"	26.42	ST
TOTALS			19596.75	

BENDING DIAGRAMS

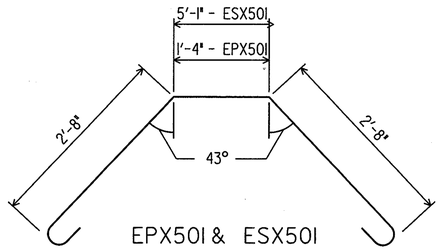

EPX501 & ESX501

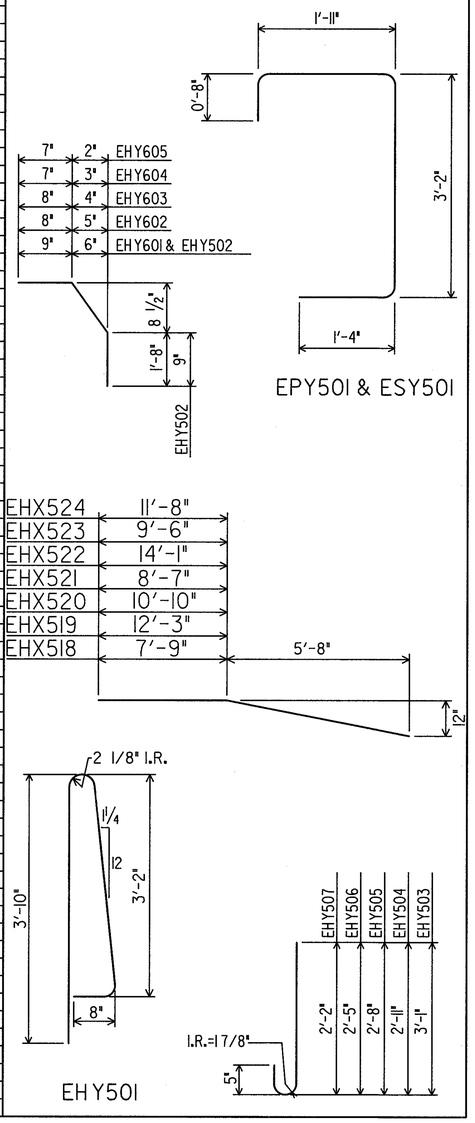

EPY501 & ESY501

EHY501

** BEND AS REQUIRED IN FIELD WHERE NECESSARY.

ESTIMATED QUANTITIES

ITEM	ABUTMENTS	SUPER-STRUCTURE	GENERAL	ITEM	TOTAL	UNIT	DESCRIPTION
202		LUMP		202	LUMP	LUMP	PORTIONS OF STRUCTURE REMOVED
510	91	1300		510	1391	EACH	DOWEL HOLES
511	26			511	26	CU.YD.	CLASS C CONCRETE, ABUTMENT, AS PER PLAN.
511		130		511	130	CU.YD.	CLASS S CONCRETE, SUPERSTRUCTURE, AS PER PLAN.
SPEC.	4			SPEC.	4	LIN.FT.	HORIZONTAL EXTENSION OF STRUCTURAL EXPANSION JOINTS (TYPE "A")
519*	40			519*	40	SQ.FT.	PATCHING CONCRETE STRUCTURES
509	3001	16596	100	509	19697	LB.	EPOXY COATED REINFORCING STEEL
845		42		845	42	SQ.YD.	LATEX MODIFIED CONCRETE OVERLAY (1 1/2 INCH THICK)
SPEC.		919		SPEC.	919	SQ.YD.	SEALING OF CONCRETE SURFACES (SEE PROPOSAL NOTE)
SPEC.			195	SPEC.	195	LIN.FT.	REMOVE AND REPLACE EXPANSION JOINT SEALER

* 50% FEDERAL PARTICIPATION

REV. 11-15-88

STATE OF OHIO
DEPARTMENT OF TRANSPORTATION
DISTRICT ONE PLANNING AND DESIGN DEPARTMENT

2 / 5

ESTIMATED QUANTITIES AND REINFORCING STEEL TABLE

TRU-5-0.00
STRUCTURE-0735 LT.& RT.
OVER S.R.5

DESIGNED	DRAWN	TRACED	CHECKED	REVIEWED	DATE	REVISED
KMS	KMS	GW	DMK			

MICROFILMED
NOV 2 1982

FHWA REGION	STATE	PROJECT	
5	OHIO		

209
213

TRUMBULL COUNTY
TRU-5B-0.00

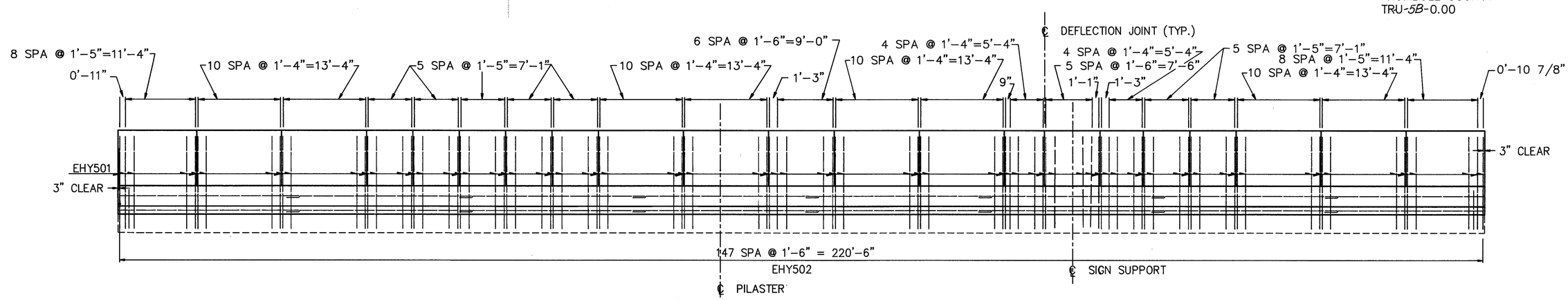

LONGITUDINAL SECTION
VERTICAL STEEL IN DEFLECTOR PARAPET

NOTE: DRAWINGS NOT TO SCALE

NOTE: REINFORCING BARS SHALL NOT EXTEND THRU DEFLECTION JOINT.

NOTE: ALL SPACING BETWEEN DEFLECTION JOINT AND VERTICAL REINFORCING BARS SHALL BE A MINIMUM OF 2 1/2" UNLESS OTHERWISE NOTED.

NOTE: SECTIONS VIEWING FACE OF PARAPET

NOTE: FOR DETAILS OF REMOVING EXISTING PARAPET AND RECONSTRUCTION OF PROPOSED SAFETY SHAPE PARAPET ON STRUCTURE, SEE SHT. 174.

NOTE: CONCRETE PARAPETS ABOVE THE CONSTRUCTION JOINT SHALL BE PLACED IN ALTERNATE SECTIONS BY THE USE OF BULKHEADS. CLOSING SECTIONS SHALL BE PLACED AFTER THE REMOVAL OF BULKHEADS AND AFTER PLACEMENT OF EXPANSION JOINT FILLER. EXPOSED EDGES OF THE FILLER SHALL BE FLUSH WITH THE SURFACE OF CONCRETE AND SHALL BE FREE OF MORTAR.

NOTE: FOR PILASTER DETAILS, SEE SHT. 169.

NOTE: FOR SIGN SUPPORT DETAILS, SEE SHT. 170.

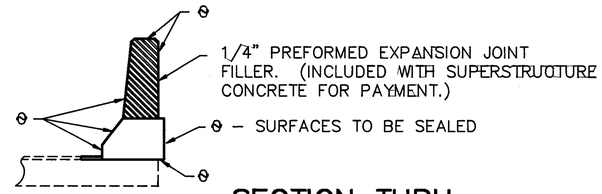

SECTION THRU DEFLECTION JOINT

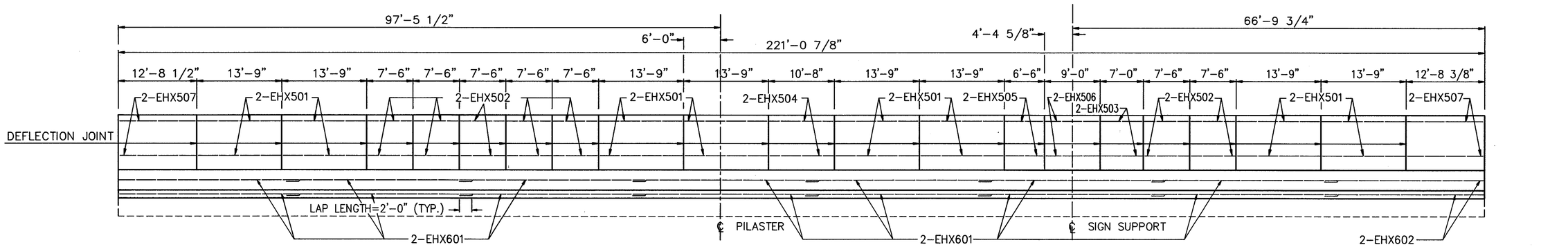

LONGITUDINAL SECTION
HORIZONTAL STEEL IN DEFLECTOR PARAPET

STATE OF OHIO
DEPARTMENT OF TRANSPORTATION
DISTRICT ONE PLANNING AND DESIGN DEPARTMENT

3/5

PARAPET DETAILS
TRU-5-0735
RT. STRUCTURE OUTSIDE PARAPET
OVER S.R. 5

DESIGNED	DRAWN	TRACED	CHECKED	REVIEWED	DATE	REVISED
HMS	MJM	MJM				

MICROFILMED
NOV 2 1982

FHWA REGION	STATE	PROJECT	
5	OHIO		

2/0
2/3

TRUMBULL COUNTY
TRU-5B-0.00

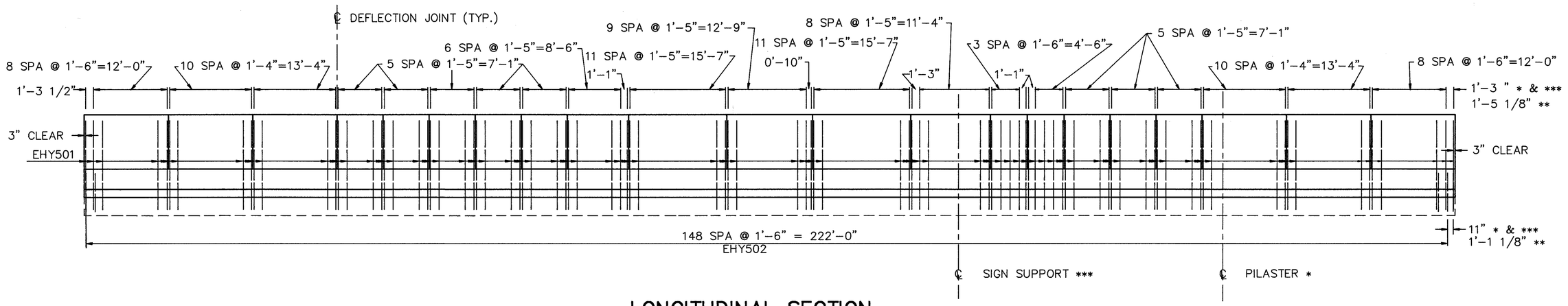

LONGITUDINAL SECTION
VERTICAL STEEL IN DEFLECTOR PARAPET

NOTE: FOR DETAILS OF REMOVING EXISTING PARAPET AND RECONSTRUCTION OF PROPOSED SAFETY SHAPE PARAPET ON STRUCTURE, SEE SHT. 174.

NOTE: FOR PILASTER DETAILS, SEE SHT. 169.

NOTE: FOR SIGN SUPPORT DETAILS, SEE SHT. 170.

* LT. PARAPET – LT. STRUCTRE
** RT. PARAPET – LT. STRUCTURE
*** LT. PARAPET – RT. STRUCTURE

NOTE: REINFORCING BARS SHALL NOT EXTEND THRU DEFLECTION JOINT.

NOTE: DRAWINGS NOT TO SCALE

NOTE: ALL SPACING BETWEEN DEFLECTION JOINT AND VERTICAL REINFORCING BARS SHALL BE A MINIMUM OF 2 1/2" UNLESS OTHERWISE NOTED.

1/4" PREFORMED EXPANSION JOINT FILLER. (INCLUDED WITH SUPERSTRUCTURE CONCRETE FOR PAYMENT.)

θ – SURFACES TO BE SEALED

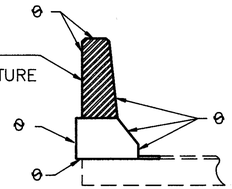

SECTION THRU DEFLECTION JOINT

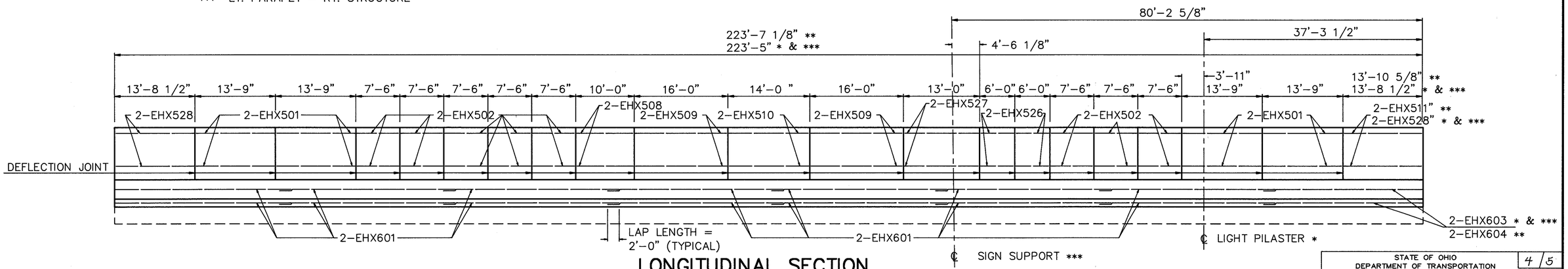

LONGITUDINAL SECTION
HORIZONTAL STEEL IN DEFLECTOR PARAPET

NOTE: CONCRETE PARAPETS ABOVE THE CONSTRUCTION JOINT SHALL BE PLACED IN ALTERNATE SECTIONS BY THE USE OF BULKHEADS. CLOSING SECTIONS SHALL BE PLACED AFTER THE REMOVAL OF BULKHEADS AND AFTER PLACEMENT OF EXPANSION JOINT FILLER. EXPOSED EDGES OF THE FILLER SHALL BE FLUSH WITH THE SURFACE OF CONCRETE AND SHALL BE FREE OF MORTAR.

STATE OF OHIO
DEPARTMENT OF TRANSPORTATION
DISTRICT ONE PLANNING AND DESIGN DEPARTMENT

4/5

PARAPET DETAILS
TRU-5-0735
LT. STRUCTURE OUTSIDE PARAPET
LT. STRUCTURE INSIDE PARAPET
RT. STRUCTURE INSIDE PARAPET
OVER S.R. 5

DESIGNED	DRAWN	TRACED	CHECKED	REVIEWED	DATE	REVISED
W.M.S	MJM	MJM				

MICROFILMED
NOV 2 1982

T5WWDET2.DWG

FHWA REGION	STATE	PROJECT	
5	OHIO		

TRUMBULL COUNTY
TRU-5B-0.00

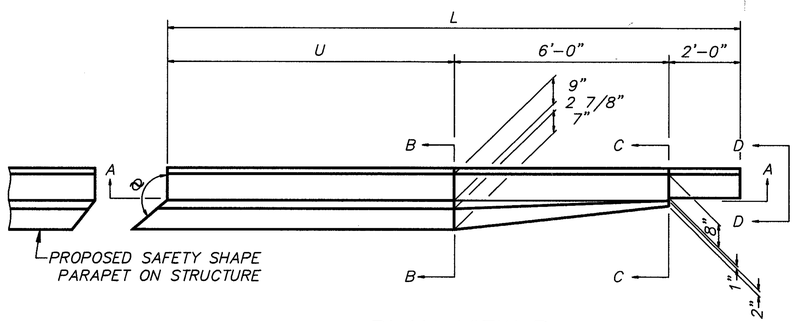

PLAN VIEW B

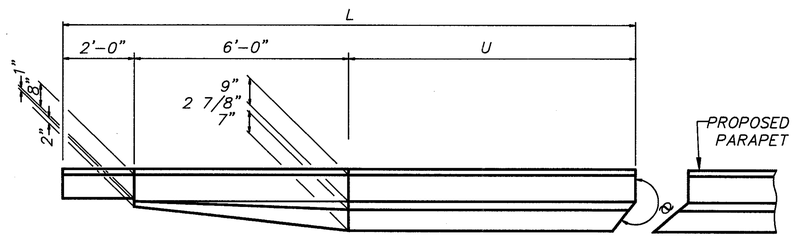

PLAN VIEW A

NOTE: ALL SECTIONS ASSOCIATED WITH PLAN VIEW A (NOT SHOWN), WILL BE SIMILAR TO THOSE OF PLAN VIEW B.

* – EXISTING CONSTRUCTION JOINT

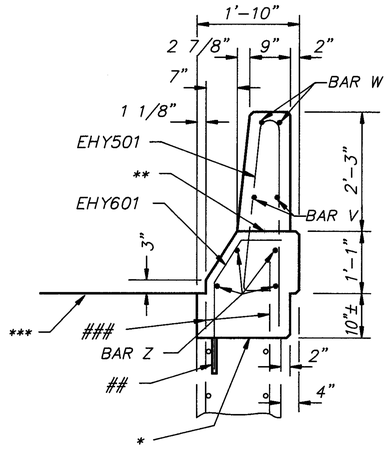

SECTION B–B
(PROPOSED)

– GROUT PROPOSED REINFORCING BARS INTO HOLES DRILLED INTO EXISTING CONCRETE IN ACCORDANCE WITH SUPPLEMENTAL SPECIFICATIONS 853 & 956. HOLES SHALL HAVE A MAXIMUM DIAMETER OF 1" AND SHALL BE 8" DEEP.

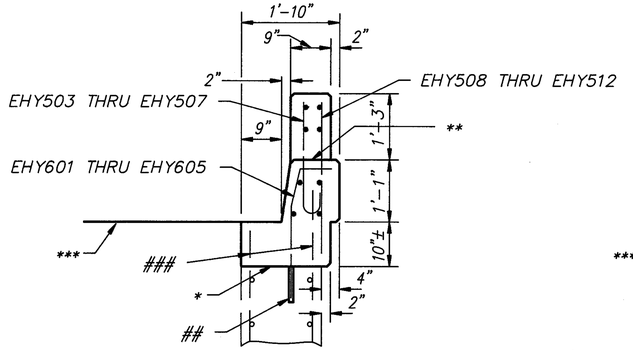

SECTION C–C
(PROPOSED)

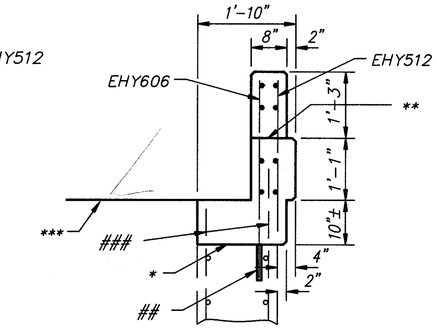

SECTION D–D
(PROPOSED)

*** – PAVED SHOULDER SURFACE

NOTE: ALL BARS SHALL MAINTAIN A 2" MINIMUM CLEARANCE FROM OUTSIDE EDGE OF PARAPET UNLESS OTHERWISE NOTED.

PLAN VIEW	ABUTMENT	STRUCTURE	WINGWALL	L LENGTH	℄ ANGLE	K SPACE	M	N	P	Q	R	S	T	U	BAR # V	BAR # W	BAR # Z
A	FORWARD	RT.	RT.	16'-0"	193°14'06"	1'-0"	5	1'-5"	7'-1"	1'-5"	8	1'-6"	12'-0"	8'-0"	EHX511	EHX518	EHX605
	FORWARD	LT.	RT.	20'-6"	192°56'12"	1'-3"	8	1'-5"	11'-4"	1'-5"	11	1'-6"	16'-6"	12'-6"	EHX512	EHX519	EHX606
	REAR	RT.	LT.	19'-1"	193°14'06"	1'-3"	7	1'-5"	9'-11"	0	11	1'-6"	16'-6"	11'-1"	EHX513	EHX520	EHX607
	REAR	LT.	LT.	16'-10"	192°56'12"	1'-5"	5	1'-6"	7'-6"	9"	9	1'-6"	13'-6"	8'-10"	EHX514	EHX521	EHX608
B	FORWARD	RT.	LT.	22'-4"	166°45'54"	11"	9	1'-6"	13'-6"	1'-4"	13	1'-5"	18'-5"	14'-4"	EHX515	EHX522	EHX609
	FORWARD	LT.	LT.	16'-0"	167°03'48"	1'-0"	5	1'-5"	7'-1"	1'-5"	8	1'-6"	12'-0"	8'-0"	EHX511	EHX518	EHX605
	REAR	RT.	RT.	17'-9"	166°45'54"	10"	6	1'-6"	9'-0"	1'-0"	10	1'-5"	14'-2"	9'-9"	EHX516	EHX523	EHX610
	REAR	LT.	RT.	19'-11"	167°03'48"	0	8	1'-6"	12'-0"	0	13	1'-4"	17'-4"	11'-11"	EHX517	EHX524	EHX611

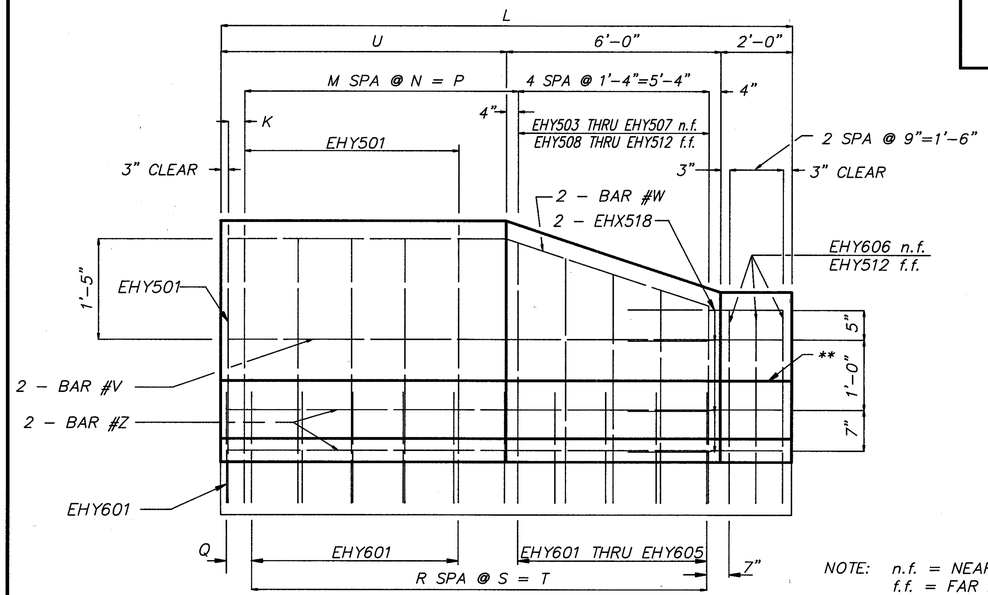

SECTION A–A

NOTE: n.f. = NEAR FACE
f.f. = FAR FACE
** = CONSTRUCTION JOINT

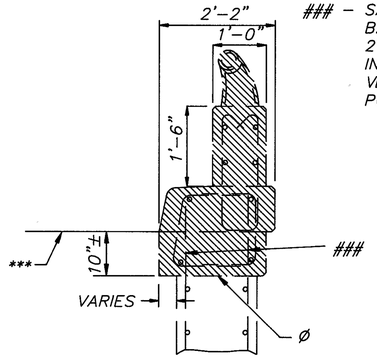

SECTION B–B
(EXISTING)

– SAVE EXISTING REINFORCING BAR AND BEND (PROVIDING 2" CLEAR IF NECESSARY) TO INCORPORATE INTO PROPOSED VERTICAL REINFORCING WHEREVER POSSIBLE.

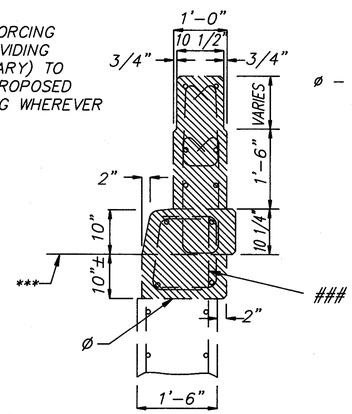

SECTION C–C
(EXISTING)

ø – REMOVE EXISTING CONCRETE PARAPET AND CURB TO EXISTING CONSTRUCTION JOINT. ANY EXISTING EXPOSED REINFORCING STEEL NOT NOTED OTHERWISE, SHALL BE CUT OFF EVEN WITH THE REMOVAL LINES. (PAYMENT UNDER ITEM 202 PORTIONS OF STRUCTURE REMOVED).

▨ SECTION TO BE REMOVED

STATE OF OHIO
DEPARTMENT OF TRANSPORTATION
DISTRICT ONE PLANNING AND DESIGN DEPARTMENT

END SECTION DETAILS
TRU-5-0735 LT. & RT.
OVER S.R.5

DESIGNED	DRAWN	TRACED	CHECKED	REVIEWED	DATE	REVISED
K.M.S.	M.J.M.	M.J.M.	J.M.			

State Job No. 043750

FHWA REGION	STATE	PROJECT	
5	OHIO	FR-53(	

43

1/2

TRUMBULL COUNTY
TRU-5-0.00 (BYPASS)
R/W PLANS ONLY

TOTAL NUMBER OF
1 OWNERSHIPS
0 TOTAL TAKES
0 OWNERSHIPS WITH STRUCTURES INVOLVED
0 OWNERSHIPS WITH "P" ITEMS

SUMMARY OF ADDITIONAL RIGHT OF WAY

PARCEL	OWNER	SHEET NO.	OWNERS RECORD BOOK	OWNERS RECORD PAGE	RECORD AREA	TOTAL P.R.O.	GROSS TAKE	P.R.O. IN TAKE	NET TAKE	STRUCTURE	NET RESIDUE LEFT	NET RESIDUE RIGHT	TYPE FUND	REMARKS AND PERSONALTY	AS ACQUIRED BOOK	AS ACQUIRED PAGE
101 LA	The Pittsburgh, Youngstown & Ashtabula Railroad Company *	2	30	50	13.275	2.145	0.110		0.110	NO	11.020					
101-1 LA	The Pittsburgh, Youngstown & Ashtabula Railroad Company*	2	30	50	27.241	2.351	0.053		0.053	NO		24.837				

* Penn Central Company, Lessee

PROPERTY MAP

The Utilities shown throughout the Plans are based on information supplied by the utility companies as to type, size, and Location of the utilities.

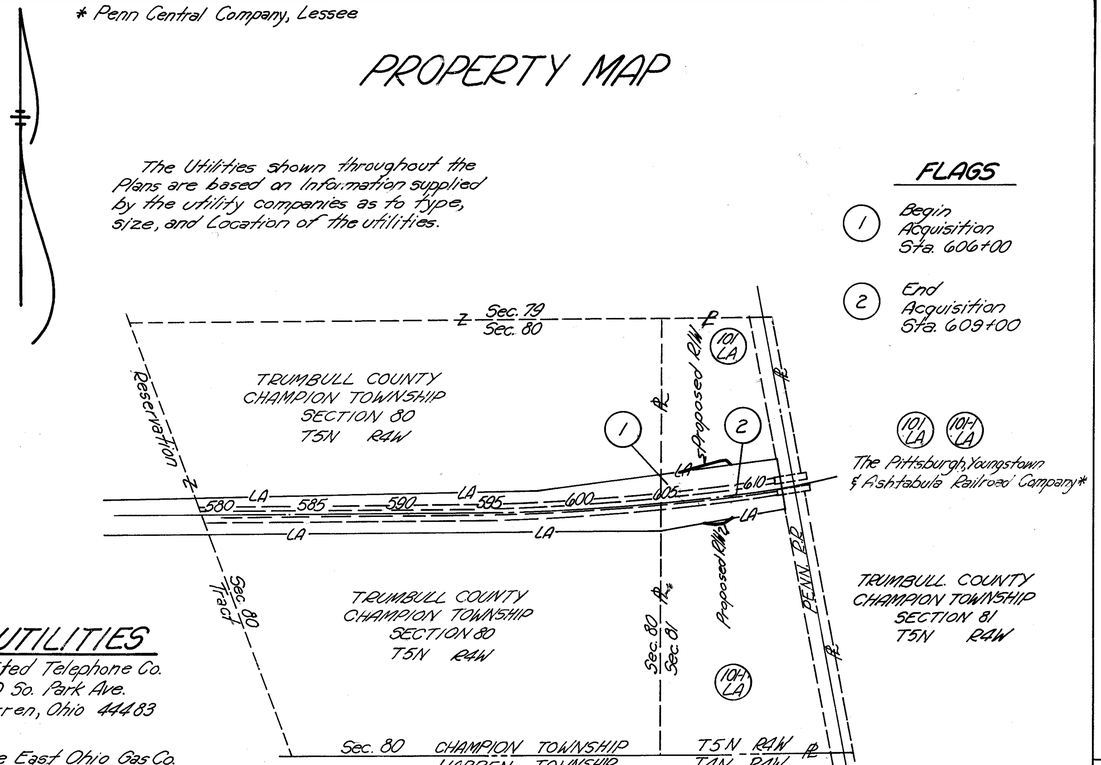

FLAGS

(1) Begin Acquisition Sta. 606+00

(2) End Acquisition Sta. 609+00

UTILITIES

United Telephone Co.
220 So. Park Ave.
Warren, Ohio 44483

The East Ohio Gas Co.
1165 W. Rayen Ave.
Youngstown, Ohio 44502

City of Warren
Department of Water
P.O Box 670
Warren, Ohio 44482

Ohio Edison Co.
730 S. Ave.
Yo., Ohio 44502

Mah. Valley Cablevision
5030 Yo.-Warren Rd.
Niles, Ohio 44446

UTILITIES-(CONT.)

Tru. County Sanitary Engr.
7500 Anderson Ave.
Warren, Ohio 44484

Ohio Edison Co.
76 S. Main St.
Akron, Ohio 44308

SCALE IN FEET
0' 400' 800'

Note: Due to the small scale of this Drawing, the R/W is not Drawn to Scale.

CENTERLINE SURVEY PLAT

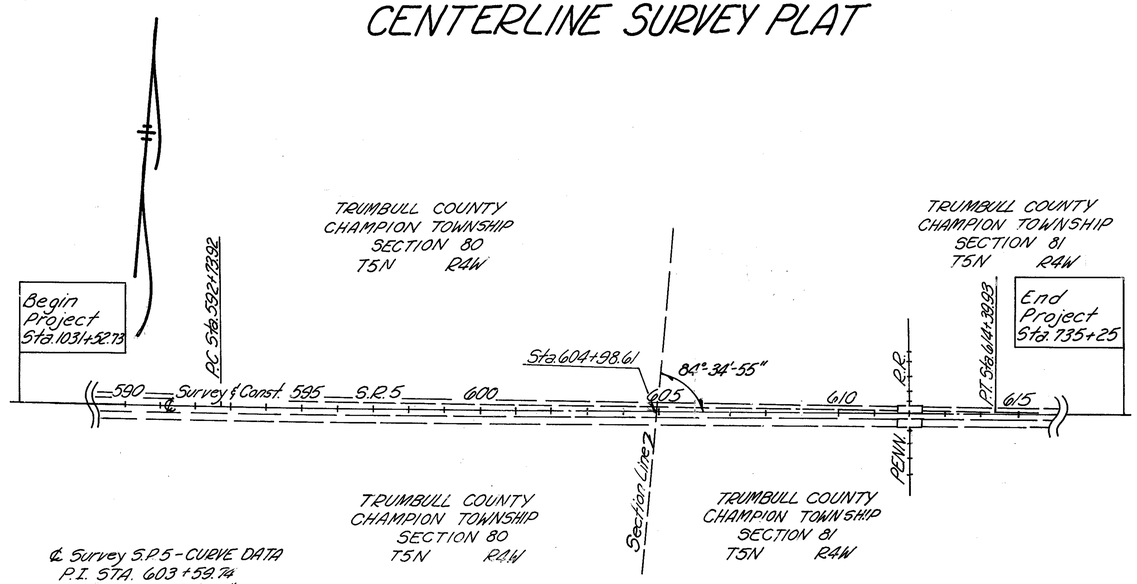

SCALE IN FEET
0' 200' 400'

℄ Survey S.R.5 - CURVE DATA
P.I. STA. 603+59.74
Δ = 10°-06'-20" Lt.
Dc = 0°-28'-00"
R = 12,277.67'
T = 1,085.82'
L = 2,166.01'
CH = 2,163.20'
E = 47.92'

EXISTING CENTERLINE MONUMENTS at the following Stations
592+73.92
604+98.61
614+39.93

Note: This ℄ Survey Plat covers a portion of the ℄ as recorded in Vol. 30 Page 50,51 and is being shown for Clarification Only.

Rev.	Date	Description

Date of Completion

R/W PLANS TRU-5-0.00 SUMMARY OF ADDITIONAL RIGHT OF WAY, PROPERTY MAP & CENTERLINE SURVEY PLAT

FHWA REGION	STATE	PROJECT	
5	OHIO	FR-53(	

TRUMBULL COUNTY
TRU-5-0.00 (BYPASS)

2/2

CURVE DATA
℄ Survey S.R. 5 (Bypass)
P.I. Sta. 603+59.74 T=1085.82'
Δ = 10°-06'-29" Lt. L=2166.01'
D_c = 0°28'-00" CH=2163.20'
R=12,277.67' E=47.92

Begin Acquisition
Sta. 606+00.00

605+12.05
140' Lt.
N 81°-25'-37"E
86.96'

+00.00
141.99' Lt.

N 74°-19'-54" E 248.97'

Work Limits

(101 LA)

LA R/W

S 81°-25'-37" W 296.50'

+50
175.00' Lt.

N 81°-19'-55" E, 14.79'

+65
175.00' Lt.

Type A Terminal
S 56°-58'-07" E, 46.35'

HW-48

48"A

+00
144.10' Lt.

TRUMBULL COUNTY
CHAMPION TOWNSHIP
SECTION 81
T5N R4W

(101 LA)

The Pittsburgh, Youngstown & Ashtabula R.R. Co. *
TBA = 0.110 Acres

End Acquisition
Sta. 609+00.00

Sta 604+00.00

Sta 610+00.00

6" ℄

N 1°-34'-31" W
140.63'

48"A

6" ℄

Sta. 604+98.61

605

606 ℄ Survey & Construction S.R. 5 (BYPASS) 607

608

609

Begin Sheet

167.38'

6" ℄

6" ℄

End Sheet

N 1°-34'-31" W
Section Line

(101-1 LA)

The Pittsburgh, Youngstown & Ashtabula R.R. Co. *
TBA = 0.053 Acres

TRUMBULL COUNTY
CHAMPION TOWNSHIP
SECTION 81
T5N R4W

* Penn Central Co., Lessee

Work Limits

S 79°-14'-06" W 220.24'

LA R/W

+00
154.41' Rt.

78.74'

(101-1 LA)

N 82°-57'-14" W

N 79°-14'-06" E, 162.12'

48"A
HW-48
Type A Terminal

Work Limits

S 57°-05'-16" W
66.74'

+60
147.46' Rt.

+75
175.00' Rt.

+00
175.00' Rt.

S 81°-39'-31" W
25.36'

604+82.87
167.24' Rt.

N 1°-34'-31" W
122.38'

Section Line

SW Corner Section 81
Section Line

I.F. & U. (ie 1965-66)

Rev.	Date	Description

Date of Completion

TRU-5-0.00 R/W PLAN SHEET Sta. 604+00.00 to Sta. 610+00.00