T9159TTL/1

MICROFILMED
OCT 10 1996

TUS-259-0.11	OHIO FHWA REGION 5	1 / 26
BHO-93-1(11)	FEDERAL PROJECT	

CONVENTIONAL SIGNS

Centerline — 10 — Trees
Township Line
Corporation Line
Existing Right Of Way — EX R/W —
Railroad
Guardrail: Proposed — Existing
Existing Signs

STATE OF OHIO
DEPARTMENT OF TRANSPORTATION

TUS-259-0.11

GOSHEN TOWNSHIP
TUSCARAWAS COUNTY

BHO-93-1(11)

DESIGN DESIGNATION

CURRENT ADT (1992)	=	2900
DESIGN YEAR ADT (2012)	=	4870
DHV (2012)	=	487
D	=	55%
T	=	5%
DESIGN SPEED	=	55 M.P.H.
LEGAL SPEED	=	55 M.P.H.
FUNCTIONAL CLASSIFICATION	=	URBAN COLLECTOR

DESIGN EXCEPTIONS – NONE

INDEX OF SHEETS

TITLE SHEET ---------- 1
TYPICAL SECTIONS ---------- 2
GENERAL NOTES ---------- 3–4
CALCULATIONS ---------- 5
GENERAL SUMMARY ---------- 6
MAINTENANCE OF TRAFFIC ---------- 7–9
PLAN AND PROFILE ---------- 10–11
STRUCTURES OVER 20' SPAN ---------- 12–26

LINE DATA

S.R. 259

BEGIN PROJECT ---------- STA. 5+64.75

END PROJECT ---------- STA. 11+47.84

TOTAL LENGTH OF PROJECT ---------- 583.09 LIN. FT. OR 0.110 MILE

ADD FOR APPROACHES

STA. 4+10 TO STA. 5+64.75 ---------- 154.75 LIN. FT.

STA. 11+47.84 TO STA. 13+00 ---------- 152.16 LIN. FT.

TOTAL LENGTH OF WORK ---------- 890.00 LIN. FT. OR 0.169 MILE

STRUCTURE PLANS REVIEWED BY:
Burgess & Niple, Limited
Engineers and Architects

Plan Prepared By:
W. E. QUICKSALL AND ASSOCIATES INC.
CONSULTING ENGINEERS
New Philadelphia, Ohio

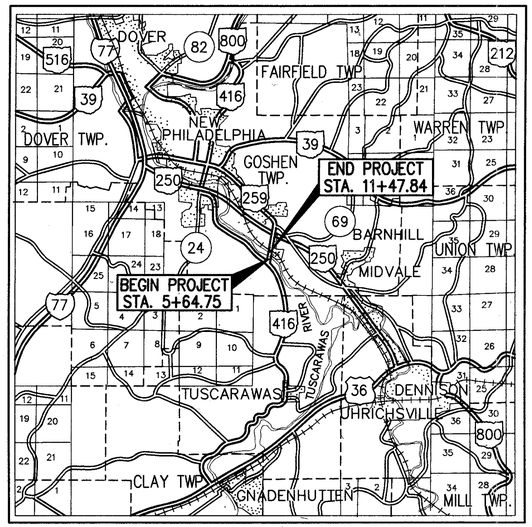

LOCATION MAP
Scale in Miles
0 1 2 3 4 5 6

Portion To Be Improved
State and Federal Routes
Other Roads
Scale
Plan 0 20 40
Profile Horizontal 0 20 40 Vertical 0 10 20

UNDERGROUND UTILITIES
TWO WORKING DAYS
BEFORE YOU DIG
Call...800–362–2764
(Toll Free)
OHIO UTILITIES PROTECTION SERVICE
NON–MEMBERS
MUST BE CALLED DIRECTLY

SUPPLEMENTAL SPECIFICATION		
802	4–13–90	✓
910	5-20-91	

1993 SPECIFICATIONS

The standard specifications of the State of Ohio, Department of Transportation, including changes and supplemental specifications listed in the proposal shall govern this improvement.

I hereby approve these plans and declare that the making of this improvement will not require the closing to traffic of the highway and that provisions for the maintenance and safety of traffic will be as set forth on the plans and estimates.

Approved John H. McClain
Date 11-9-92 District Deputy Director of Transportation

B & N REVIEW
Approved B.D. Hanklammi / HEH
Date 12-14-92 Engineer, Bureau of Bridges and Structural Design

Approved George L. Burgess
Date 1/18/93 Deputy Director, Design

Approved Jerry Wray
Date 1-18-93 Director, Department of Transportation

SUPPLEMENTAL PRINTS OF STANDARD CONSTRUCTION DRAWINGS							
BP–3.1	2–21–92	MT–96.11	9–9–88	GR–1.1	5–6–91		
TC-41.10	8-29-84	MT–96.20	9–9–88	GR–1.2	10–30–92		
TC-52.10	4-3-79	MT–96.25	9–9–88	GR–2.1	5–6–91		
TC-52.20	4-3-79	MT–99.10	11–14–86	GR–3.4	5–6–91		
MC-9A	1-11-85	TC–41.20	3–26–79				
MC–9.2	5–6–91	TC–42.20	3–26–79				
MC–11	8–1–78	SD-1-69	6-12-69				
MT-105.10	7-1-92	AS–1–81	11–27–81				
MT-105.11	7-1-92	DBR–2–73	4–10–73				
TC-71.10	9-10-91	EXJ–4–87	1–5–89	PCB–91	4–24–92		

REVISED 3-30-93

DEPARTMENT OF TRANSPORTATION
FEDERAL HIGHWAY ADMINISTRATION

APPROVED: _____ _____
DIVISION ADMINISTRATOR DATE

Project: TUS–259–0.11
Date of Letting _____ 19___ Contract No. _____

TUS-259-0.11	OHIO FHWA REGION 5	2 / 26

TYPICAL SECTIONS

TYPE 611

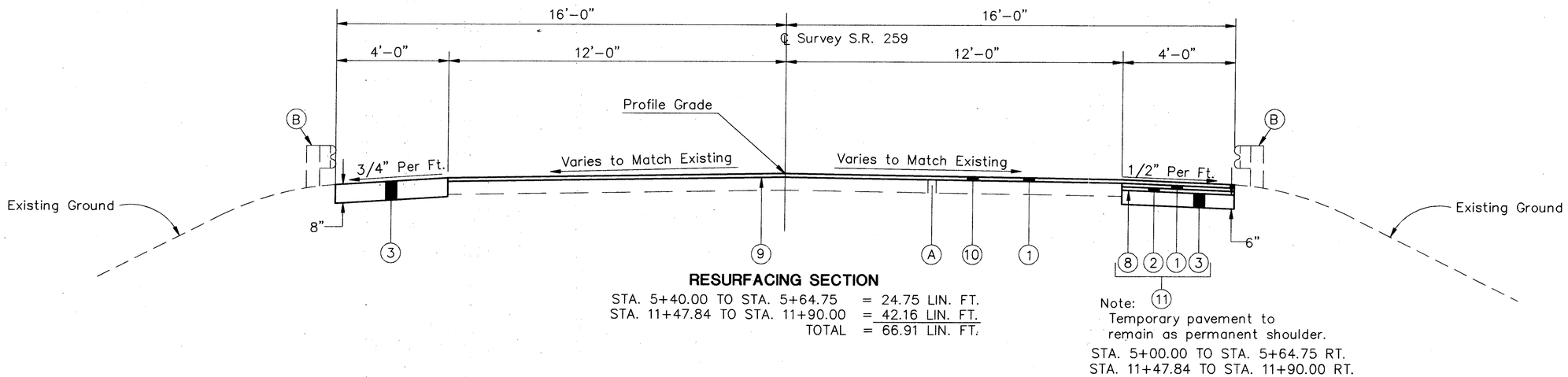

RESURFACING SECTION

STA. 5+40.00 TO STA. 5+64.75 = 24.75 LIN. FT.
STA. 11+47.84 TO STA. 11+90.00 = 42.16 LIN. FT.
TOTAL = 66.91 LIN. FT.

Note: (11)
Temporary pavement to remain as permanent shoulder.
STA. 5+00.00 TO STA. 5+64.75 RT.
STA. 11+47.84 TO STA. 11+90.00 RT.

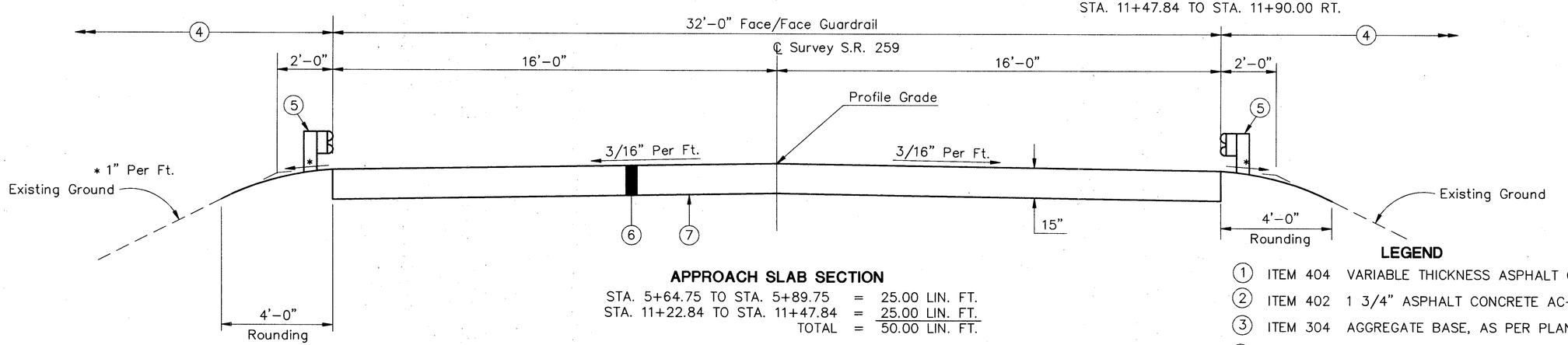

APPROACH SLAB SECTION

STA. 5+64.75 TO STA. 5+89.75 = 25.00 LIN. FT.
STA. 11+22.84 TO STA. 11+47.84 = 25.00 LIN. FT.
TOTAL = 50.00 LIN. FT.

LEGEND

(1) ITEM 404 VARIABLE THICKNESS ASPHALT CONCRETE, AC-20 (1 1/4" MIN.)
(2) ITEM 402 1 3/4" ASPHALT CONCRETE AC-20
(3) ITEM 304 AGGREGATE BASE, AS PER PLAN (SEE SHEET NO. 3)
(4) ITEM 659 SEEDING AND MULCHING (SEE GENERAL NOTES SHEET NO. 4)
(5) ITEM 606 GUARDRAIL, TYPE 5
(6) ITEM 611 REINFORCED CONCRETE APPROACH SLAB (T=15")
(7) ITEM 203 SUBGRADE COMPACTION
(8) ITEM 408 BITUMINOUS PRIME COAT (APPLIED AT THE RATE OF 0.40 GAL. PER SQ. YD.)
(9) ITEM 407 TACK COAT (SEE GENERAL NOTES SHEET NO. 3)
(10) ITEM 202 WEARING COURSE REMOVED
(11) ITEM 615 TEMPORARY PAVEMENT, AS PER PLAN (SEE GENERAL NOTES, SHEET NO. 4.)
(A) 6" EXISTING ASPHALT CONCRETE
(B) EXISTING GUARDRAIL

GENERAL NOTES

CALC. BY: FDH DATE 7/13/92
CHKD. BY: WCR DATE 7/23/92

MAINTAINING TRAFFIC

THE CONTRACTOR SHALL MAINTAIN TRAFFIC AT ALL TIMES IN ACCORDANCE WITH THE REQUIREMENTS OF SPEC. 614 AND THE CONSTRUCTION SEQUENCE DESCRIBED BELOW. TWO-WAY TRAFFIC SHALL BE MAINTAINED AT ALL TIMES BY USE OF THE EXISTING PAVEMENT, ITEM 410 TRAFFIC COMPACTED SURFACE, ITEM 615 TEMPORARY PAVEMENT, AS PER PLAN AND PORTIONS OF THE EXISTING AND NEW BRIDGE.

ALTERNATING ONE-WAY TRAFFIC SHALL BE MAINTAINED BY USE OF TEMPORARY SIGNALS AS SHOWN ON SHEET NOS. 7, AND 8. TRAFFIC SHALL BE SEPARATED FROM THE WORK AREA BY MEANS OF ITEM 622 PORTABLE CONCRETE BARRIER.

PAYMENT FOR ALL OF THE ABOVE EXCEPT ITEM 615, 410 AND 622 SHALL BE INCLUDED IN THE PRICE BID FOR ITEM 614 MAINTAINING TRAFFIC.

CONSTRUCTION SEQUENCE

PHASE 1:
BEFORE STARTING ANY BRIDGE RECONSTRUCTION WHICH REQUIRES THE CLOSING OF A PORTION OF THE EXISTING PAVEMENT TO TRAFFIC, ALL PORTABLE CONCRETE BARRIER, SIGNALS, SIGNS, LIGHTS, ITEM 410, AND TEMPORARY PAVEMENT MARKINGS SHOWN FOR PHASE 1 SHALL BE FURNISHED AND ERECTED BY THE CONTRACTOR. FLAGGERS SHALL BE UTILIZED FOR THE PROTECTION OF VEHICULAR TRAFFIC UNTIL ERECTION OF THE PORTABLE CONCRETE BARRIERS, SIGNALS, SIGNS, LIGHTS, ITEM 410, AND TEMPORARY PAVEMENT MARKINGS ARE COMPLETE.

WHEN THE ABOVE REQUIREMENTS HAVE BEEN SATISFIED, THE SOUTH-BOUND LANE OF S.R. 259 SHALL BE OPENED FOR TRAFFIC AND CONSTRUCTION OF THE NORTHBOUND PORTION OF THE BRIDGE, AND APPROACH SLABS SHALL PROCEED IN ACCORDANCE WITH THE SEQUENCE SHOWN ON SHEET NOS. 7, AND 25. THE CONTRACTOR IS REQUIRED TO CONSTRUCT THE TEMPORARY PAVEMENT, AS PER PLAN REQUIRED FOR PHASE 2.

PHASE 2:
AFTER ALL PHASE 1 CONSTRUCTION HAS BEEN COMPLETED, THE CONTRACTOR SHALL PLACE THE PORTABLE CONCRETE BARRIER, AND SIGNS AS SHOWN FOR PHASE 2.

MOVEMENT OF PORTABLE CONCRETE BARRIERS, AND SIGNS BETWEEN PHASES SHALL BE ACCOMPLISHED IN ONE (1) WORKING DAY. FLAGGERS SHALL BE UTILIZED FOR THE PROTECTION OF VEHICULAR TRAFFIC UNTIL RELOCATION OF THE PORTABLE CONCRETE BARRIER, AND SIGNS ARE COMPLETE.

THE COMPLETED PORTION OF THE NEW BRIDGE, APPROACH SLABS, AND TEMPORARY PAVEMENT SHALL BE OPENED TO TRAFFIC AND CONSTRUCTION OF THE REMAINING PORTION OF THE BRIDGE AND APPROACH SLABS SHALL PROCEED IN ACCORDANCE WITH THE SEQUENCE SHOWN ON SHEET NOS. 8 AND 25.

UTILITY OWNERSHIP

THE FOLLOWING UTILITIES AND OWNERS ARE LOCATED WITHIN THE WORK LIMITS OF THIS PROJECT:

OHIO POWER COMPANY
301 CLEVELAND AVE. S.W.
P.O. BOX 24400
CANTON, OHIO 44701-4400
(216) 438-7040

UNDERGROUND UTILITIES

THERE ARE NO KNOWN UNDERGROUND UTILITIES ON THIS PROJECT.

ITEM 642 PAVEMENT MARKING

THE FOLLOWING QUANTITIES HAVE BEEN CARRIED TO THE GENERAL SUMMARY FOR THE PURPOSE OF ADDING PAVEMENT MARKING TO S.R. 259 FROM STA. 4+10 TO STA. 13+00.

ITEM 642 – 4" CENTER LINE, TYPE 2 DOUBLE SOLID, DOUBLE YELLOW ----0.17 MILE
ITEM 642 – 4" EDGE LINE TYPE 2 (WHITE) ----------0.34 MILE
ITEM 642 – RAILROAD SYMBOL MARKING, TYPE 2 ----------1 EACH
(FROM STA. 5+40 TO STA 5+90 NORTHBOUND LANE)

DATUM ELEVATIONS

ALL ELEVATIONS ARE BASED ON U.S.G.S. DATUM.

ITEM 407 TACK COAT

THE RATE OF APPLICATION OF 407 TACK COAT SHALL BE SUBJECT TO ADJUSTMENT, AS DIRECTED BY THE ENGINEER. PLAN QUANTITIES INDICATE AVERAGE APPLICATION RATES OF 0.075 GALLONS PER SQUARE YARD OF TACK COAT FOR ESTIMATING PURPOSES ONLY.

ITEM 614 BARRIER REFLECTORS

THESE REFLECTORS AND THEIR MOUNTING SHALL CONFORM TO SUPPLEMENTAL SPECIFICATION 802 EXCEPT THAT SPACING SHALL BE AS PER STANDARD DRAWING MT-96.11.

ITEM 304 – AGGREGATE BASE, AS PER PLAN

MATERIALS FURNISHED FOR THIS ITEM SHALL EXCLUDE ALL SLAG EXCEPT GRANULATED SLAG OR CRUSHED AIR-COOLED BLAST FURNACE SLAG.

EXISTING SIGNS

THE FOLLOWING SIGNS SHALL BE CAREFULLY REMOVED AND STORED BY THE CONTRACTOR AT THE DIRECTION OF THE ENGINEER.

ITEM 630 – REMOVAL OF GROUND MOUNTED SIGN AND STORAGE ---- 4 EACH
STA. 5+96 LT. (X-6L) BRIDGE END MARKER
STA. 11+33 LT. (X-6R) BRIDGE END MARKER
STA. 5+76 RT. (X-6R) BRIDGE END MARKER
STA. 11+19 RT. (X-6L) BRIDGE END MARKER

ITEM 630 – REMOVAL OF GROUND MOUNTED POST SUPPORT AND STORAGE – 4 EACH

ITEM 802 BARRIER REFLECTOR

THIS ITEM SHALL CONSIST OF INSTALLING BARRIER REFLECTORS AS PER OHIO DEPARTMENT OF TRANSPORTATION SUPPLEMENTAL SPECIFICATION 802 AS DIRECTED BY THE ENGINEER.

STATIONING (FROM-TO)	(SIDE)	SPACING	TYPE A W	TYPE A 2	TYPE B W	TYPE B 2	REMARKS
5+72.50 TO 11+60	LT.	100'	7				
5+52.50 TO 11+40	RT.						USE 614 REFLECTORS
TOTAL			7				

THE FOLLOWING QUANTITY HAS BEEN CARRIED TO THE GENERAL SUMMARY FOR THIS WORK:

ITEM 802 – BARRIER REFLECTOR, TYPE A ---------- 7 EACH

GENERAL NOTES

CALC. BY: FDH DATE 7/13/92
CHKD. BY: WCR DATE 7/23/92

CONTINGENCY QUANTITIES

THE CONTRACTOR SHALL NOT ORDER MATERIALS OR PERFORM WORK LISTED IN THE GENERAL SUMMARY FOR ITEMS DESIGNATED BY PLAN NOTE TO BE USED "AS DIRECTED BY THE ENGINEER" UNLESS AUTHORIZED BY THE ENGINEER. THE ACTUAL WORK LOCATIONS AND QUANTITIES USED AT THE ENGINEER'S DISCRETION SHALL BE MADE A MATTER OF RECORD BY INCORPORATION INTO THE FINAL CHANGE ORDER GOVERNING COMPLETION OF THIS PROJECT.

LOCATION OF GUARDRAIL

THE LOCATIONS OF GUARDRAIL RUNS, AS SHOWN IN THESE PLANS, ARE SUBJECT TO ADJUSTMENT PRIOR TO FINAL ACCEPTANCE. THE ENGINEER SHALL BE SATISFIED THAT ALL INSTALLATIONS WILL AFFORD MAXIMUM PROTECTION FOR TRAFFIC.

CONNECTIONS TO EXISTING GUARDRAIL

WHEN IT IS NECESSARY TO SPLICE PROPOSED GUARDRAIL TO EXISTING GUARDRAIL, ONLY THE EXISTING GUARDRAIL SHALL BE CUT, DRILLED, OR PUNCHED. THE CONNECTION SHALL BE MADE USING A "BEAM RAIL SPLICE" AS SHOWN ON STANDARD DRAWINGS GR-1.1 AND GR-1.2 PAYMENT SHALL BE INCLUDED IN THE UNIT PRICE BID FOR THE RESPECTIVE GUARDRAIL RUNS.

TEMPORARY SOIL EROSION AND SEDIMENT CONTROL

THE FOLLOWING ESTIMATED QUANTITIES ARE TO BE USED AS DIRECTED BY THE ENGINEER, FOR TEMPORARY EROSION AND SEDIMENT CONTROL MEASURES:

ITEM 207 - STRAW OR HAY BALES ---------- 50 EACH

WATERING PERMANENT SEEDED AREAS

THE FOLLOWING ESTIMATED QUANTITY IS TO BE USED AS DIRECTED BY THE ENGINEER TO PROMOTE GROWTH AND TO CARE FOR THE PERMANENT SEEDED AREAS, AS PER 659.09:

659 WATER 1 M GAL.

SEEDING AND MULCHING

QUANTITIES FOR SEEDING ARE CALCULATED FOR THE SOIL AREAS FOUR (4) FEET BEHIND THE APPROACH SLABS AND TWO (2) FEET BEHIND THE ABUTMENTS.

ITEM 622 PORTABLE CONCRETE BARRIER, 32", BRIDGE MOUNTED, AS PER PLAN

BARRIER PLACED ON THE BRIDGE FOR PHASE 2 SHALL BE UNANCHORED AND THE BASE RESTRAINT REQUIRED AS PER MC-9A IS WAIVED. SEE SHEET NO. 25 FOR DETAILS. PHASE 2 BARRIER PLACED ON THE BRIDGE SHALL BE PAID FOR IN THE UNIT PRICE BID FOR ITEM 622 PORTABLE CONCRETE BARRIER, 32" BRIDGE MOUNTED, AS PER PLAN.

ITEM 615 TEMPORARY PAVEMENT, AS PER PLAN

TEMPORARY PAVEMENT COURSE MAKE-UP FOR THIS PROJECT SHALL CONSIST OF THE FOLLOWING:

1 1/4" OF ITEM 404 ASPHALT CONCRETE, AC-20

1 3/4" OF ITEM 402 ASPHALT CONCRETE, AC-20

ITEM 408 BITUMINOUS PRIME COAT (APPLIED AT THE RATE OF 0.40 GAL. PER SQ. YD.)

6" OF 304 AGGREGATE BASE, AS PER PLAN

TEMPORARY PAVEMENT, AS PER PLAN SHALL BE CONSTRUCTED AS SHOWN ON SHEETS 2 AND 7. THE TEMPORARY PAVEMENT, AS PER PLAN SHALL REMAIN IN PLACE AND BECOME PART OF THE PERMANENT SHOULDER.

CALC. BY FDH 7-7-92
CHKD. BY WCR 7-23-92

TUS-259-0.11	OHIO	5
	FHWA REGION 5	26

PAVEMENT CALCULATIONS

ITEM 404 – ASPHALT CONCRETE, AC-20

STA. 5+40 TO STA. 5+64.75:

24.75' X 28' X 1.25"/12" ÷ 27 = 2.67 CU. YD.

STA. 11+47.84 TO STA. 11+52.75:

4.91' X 28' X $\frac{(1.25"+1.50")}{2}$ ÷ 12" ÷ 27 = 0.58 CU. YD.

STA. 11+52.75 TO STA. 11+90.00:

37.25' X 28' X 1.25"/12" ÷ 27 = 4.02 CU. YD.

TOTAL = 7.27 CU. YD.

ITEM 407 – TACK COAT

STA. 5+40 TO STA. 5+64.75:

24.75' X 28' ÷ 9 X 0.075 = 5.78 GAL.

STA. 11+47.84 TO STA. 11+90.00:

42.16' X 28' ÷ 9 X 0.075 = 9.84 GAL.

TOTAL = 15.62 GAL.

ITEM 304 – AGGREGATE BASE, AS PER PLAN

STA. 5+40 TO STA. 5+72.83 LT.:

32.83' X 4' X 8"/12" ÷ 27 = 3.24 CU. YD.

STA. 11+55.92 TO STA. 11+90 LT.:

34.08' X 4' X 8"/12" ÷ 27 = 3.37 CU. YD.

TOTAL = 6.61 CU. YD.

ITEM 611 – REINFORCED CONCRETE APPROACH SLAB (T=15")

STA. 5+64.75 TO STA. 5+89.75:

25.00' X 32' ÷ 9 = 88.89 SQ. YD.

STA. 11+22.84 TO STA. 11+47.84:

25.00' X 32' ÷ 9 = 88.89 SQ. YD.

TOTAL = 177.78 SQ. YD.

* PLANIMETERED AREA

ITEM 203 – SUBGRADE COMPACTION

STA. 5+64.75 TO STA. 5+89.75:

25.00' X 32' ÷ 9 = 88.89 SQ. YD.

STA. 11+22.84 TO STA. 11+47.84:

25.00' X 32' ÷ 9 = 88.89 SQ. YD.

TOTAL = 177.78 SQ. YD.

ITEM 203 – EXCAVATION NOT INCLUDING EMBANKMENT CONSTRUCTION

STA. 5+40 TO STA. 5+72.83 LT.(SHOULDER):

32.83' X 4' X 8"/12" ÷ 27 = 3.24 CU. YD.

REAR APPROACH SLAB LEFT SIDE:

25.00' X 6' X 15"/12" ÷ 27 = 6.94 CU. YD.

REAR APPROACH SLAB RIGHT SIDE:

25.00' X 6' X 15"/12" ÷ 27 = 6.94 CU. YD.

FWD. APPROACH SLAB LEFT SIDE:

25.00' X 6' X 15"/12" ÷ 27 = 6.94 CU. YD.

FWD. APPROACH SLAB RIGHT SIDE:

25.00' X 6' X 15"/12" ÷ 27 = 6.94 CU. YD.

STA. 11+55.92 TO STA. 11+90 LT.(SHOULDER):

34.08' X 4' X 8"/12" ÷ 27 = 3.37 CU. YD.

TOTAL = 34.37 CU. YD.

ITEM 659 – SEEDING AND MULCHING

REAR APPROACH LEFT SIDE:

0.28 SQ. IN.* X 20^2 ÷ 9 = 12.44 SQ. YD.

REAR APPROACH RIGHT SIDE:

0.27 SQ. IN.* X 20^2 ÷ 9 = 12.00 SQ. YD.

FWD. APPROACH LEFT SIDE:

0.26 SQ. IN.* X 20^2 ÷ 9 = 11.56 SQ. YD.

FWD. APPROACH RIGHT SIDE:

0.27 SQ. IN.* X 20^2 ÷ 9 = 12.00 SQ. YD.

TOTAL = 48.00 SQ. YD.

EARTHWORK AND SEEDING			
STATION TO STATION	203		659
	EXCAVATION NOT INCLUDING EMBANKMENT CONSTRUCTION		SEEDING AND MULCHING
	CU. YD.		SQ. YD.
SEE CALCULATIONS THIS SHEET	34		48
TOTALS	34		48

ITEM 659 AGRICULTURAL LIMING

$\frac{48 \text{ SQ.YD. X } 9 \text{ X } 100}{1000 \text{ X } 2000}$ = 0.02 TON

ITEM 659 COMMERCIAL FERTILIZER

$\frac{48 \text{ SQ.YD. X } 9 \text{ X } 20}{1000 \text{ X } 2000}$ = 0.01 TON

ITEM 410 – TRAFFIC COMPACTED SURFACE, TYPE A OR B

STA. 5+40 TO STA. 5+97 LT:

57' X 2' X 1.35' ÷ 27 = 5.70 CU. YD.

STA. 11+34 TO STA. 11+90 LT:

56' X 2' X 1.35' ÷ 27 = 5.60 CU. YD.

TOTAL = 11.30 CU. YD.

ITEM 615 – TEMPORARY PAVEMENT, AS PER PLAN

STA. 5+00 TO STA. 5+56.67 RT:

56.67' X 4' ÷ 9 = 25.19 SQ. YD.

STA. 11+39.76 TO STA. 11+90 RT:

50.24' X 4' ÷ 9 = 22.33 SQ. YD.

TOTAL = 54.93 SQ. YD.

QUANTITIES CARRIED TO SHEET NO. 7.

GENERAL SUMMARY

CALC. BY: FDH 7-14-92
CHKD. BY: WCR 7-23-92

TUS-259-0.11 | OHIO | FHWA REGION 5 | 6 / 26

FROM SHEET NO. 3	4	5	7	8	10	11	ITEM	ITEM EXT.	GRAND TOTAL	UNIT	DESCRIPTION
											ROADWAY
					56	56	202	22900	112	Sq.Yd.	Approach Slab Removed
					77	116	202	23500	193	Sq.Yd.	Wearing Course Removed
					54	52	202	38000	106	Lin. Ft.	Guardrail Removed
		34					203	12000	34	Cu.Yd.	Excavation Not Including Embankment Construction
		178					203	50000	178	Sq.Yd.	Subgrade Compaction
					50.00	50.00	606	13000	100.00	Lin. Ft.	Guardrail, Type 5
					2	2	606	35140	4	Each	Bridge Terminal Assembly, Type 4
											EROSION CONTROL
	50						207	70000	50	Each	Straw Or Hay Bales
		48					659	10000	48	Sq. Yd.	Seeding and Mulching
		0.01					659	20000	0.01	Ton	Commercial Fertilizer
		0.02					659	30000	0.02	Ton	Agricultural Liming
	1						659	35000	1	M Gal.	Water
											PAVEMENT
		7					304	20001	7	Cu. Yd.	Aggregate Base, As Per Plan (See Sheet No. 3)
		7					404	20000	7	Cu.Yd.	Asphalt Concrete, AC-20
		16					407	10000	16	Gal.	Tack Coat
		178					611	25000	178	Sq. Yd.	Reinforced Concrete Approach Slab (T=15")
											TRAFFIC CONTROL
4							630	85000	4	Each	Removal Of Ground Mounted Sign & Storage
4							630	86006	4	Each	Removal Of Ground Mounted Post Support And Storage
0.34							642	00102	0.34	Mile	Edge Line, Type 2
0.17							642	00302	0.17	Mile	Center Line, Type 2
1							642	01002	1	Each	Railroad Symbol Marking, Type 2
7							802	00100	7	Each	Barrier Reflector, Type A
											MAINTENANCE OF TRAFFIC
			2				404	35000	2	Cu. Yd.	Bituminous Concrete For Maintaining Traffic
			11				410	12000	11	Cu. Yd.	Traffic Compacted Surface, Type A or B
			454	566			614	12800	1020	Each	Temporary Raised Pavement Marker
			16	16			614	13202	32	Each	Barrier Reflector, Type A2
			31	31			614	13302	62	Each	Barrier Reflector, Type B2
			0.06				614	21300	0.06	Mile	Temporary Center Line, Class I, 740.05 Type C
			60	60			614	13350	120	Each	Object Markers
				0.17			614	21400	0.17	Mile	Temporary Center Line, Class II
			0.02	0.02			614	22300	0.04	Mile	Temporary Edge Line, Class I, 740.05 Type C
			24				614	26600	24	Lin. Ft.	Temporary Stop Line, Class I, 740.05 Type C
			1				614	32600	1	Each	Temporary Railroad Symbol Marking, Class I, 740.05 Type C
			55				615	35001	55	Sq. Yd.	Temporary Pavement, As Per Plan (See Sheet No. 4)
			1				616	10000	1	M Gal.	Water
			1				616	20000	1	Ton	Calcium Chloride
			200	200			622	40020	400	Lin. Ft.	Portable Concrete Barrier, 32"
			540				622	40040	540	Lin. Ft.	Portable Concrete Barrier, 32" Bridge Mounted
				540			622	40041	540	Lin. Ft.	Portable Concrete Barrier, 32" Bridge Mounted, As Per Plan (See Sheet No. 4).
											FOR STRUCTURE OVER 20' SPAN, SEE SHEET NO. 16.
Lump							614	11000	Lump		Maintaining Traffic
							619	15010	Lump		Field Office, Type B
							623	10000	Lump		Construction Layout Stakes
							624	10000	Lump		Mobilization

TUS-259-0.11	OHIO	7
	FHWA REGION 5	26

CALC. BY: FDH 7-9-92
CHKD. BY: WCR 7-23-92

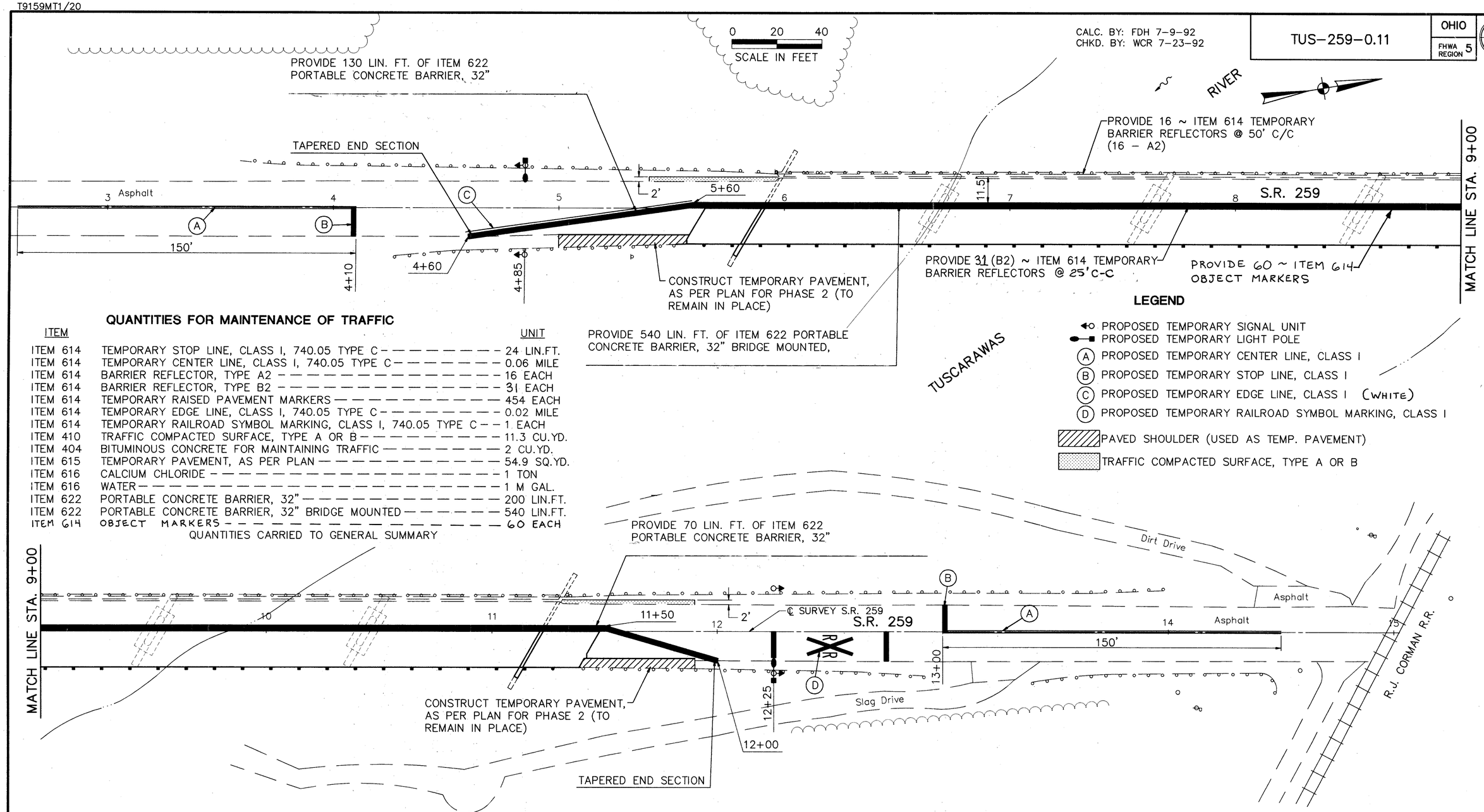

QUANTITIES FOR MAINTENANCE OF TRAFFIC

ITEM		UNIT
ITEM 614	TEMPORARY STOP LINE, CLASS I, 740.05 TYPE C	24 LIN.FT.
ITEM 614	TEMPORARY CENTER LINE, CLASS I, 740.05 TYPE C	0.06 MILE
ITEM 614	BARRIER REFLECTOR, TYPE A2	16 EACH
ITEM 614	BARRIER REFLECTOR, TYPE B2	31 EACH
ITEM 614	TEMPORARY RAISED PAVEMENT MARKERS	454 EACH
ITEM 614	TEMPORARY EDGE LINE, CLASS I, 740.05 TYPE C	0.02 MILE
ITEM 614	TEMPORARY RAILROAD SYMBOL MARKING, CLASS I, 740.05 TYPE C	1 EACH
ITEM 410	TRAFFIC COMPACTED SURFACE, TYPE A OR B	11.3 CU.YD.
ITEM 404	BITUMINOUS CONCRETE FOR MAINTAINING TRAFFIC	2 CU.YD.
ITEM 615	TEMPORARY PAVEMENT, AS PER PLAN	54.9 SQ.YD.
ITEM 616	CALCIUM CHLORIDE	1 TON
ITEM 616	WATER	1 M GAL.
ITEM 622	PORTABLE CONCRETE BARRIER, 32"	200 LIN.FT.
ITEM 622	PORTABLE CONCRETE BARRIER, 32" BRIDGE MOUNTED	540 LIN.FT.
ITEM 614	OBJECT MARKERS	60 EACH

QUANTITIES CARRIED TO GENERAL SUMMARY

FOR ADDITIONAL DETAILS AND INFORMATION, SEE ST'D. DWG. MT-96.11

PHASING AND SIGNAL TIMING SETTINGS

	ALL RED	Ø1G	Ø1Y	ALL RED	Ø2G	Ø2Y
SECONDS	31	15	4	31	15	4

100 SECOND CYCLE

PHASE 1 MAINTENANCE OF TRAFFIC PLAN

NOTES:
FOR MAINTENANCE OF TRAFFIC NOTES, SEE SHEET NO. 3.
FOR PORTABLE CONCRETE BARRIER NOTE, SEE SHEET NO. 4.

TUS-259-0.11	OHIO	8
	FHWA REGION 5	26

CALC. BY: FDH 7-9-92
CHKD. BY: WCR 7-23-92

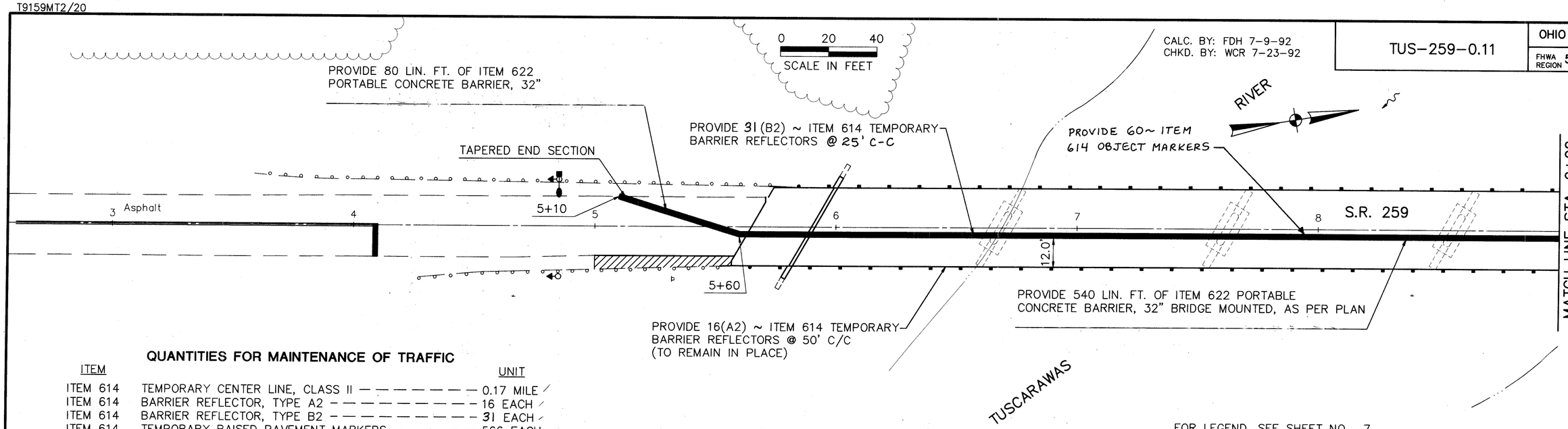

FOR LEGEND, SEE SHEET NO. 7.

QUANTITIES FOR MAINTENANCE OF TRAFFIC

ITEM		UNIT
ITEM 614	TEMPORARY CENTER LINE, CLASS II	0.17 MILE
ITEM 614	BARRIER REFLECTOR, TYPE A2	16 EACH
ITEM 614	BARRIER REFLECTOR, TYPE B2	31 EACH
ITEM 614	TEMPORARY RAISED PAVEMENT MARKERS	566 EACH
ITEM 614	TEMPORARY EDGE LINE, CLASS 1, 740.05 TYPE C	0.02 MILE
ITEM 622	PORTABLE CONCRETE BARRIER, 32"	200 LIN.FT.
ITEM 622	PORTABLE CONCRETE BARRIER, 32" BRIDGE MOUNTED, AS PER PLAN	540 LIN.FT.
ITEM 614	OBJECT MARKERS	60 EACH

QUANTITIES CARRIED TO GENERAL SUMMARY

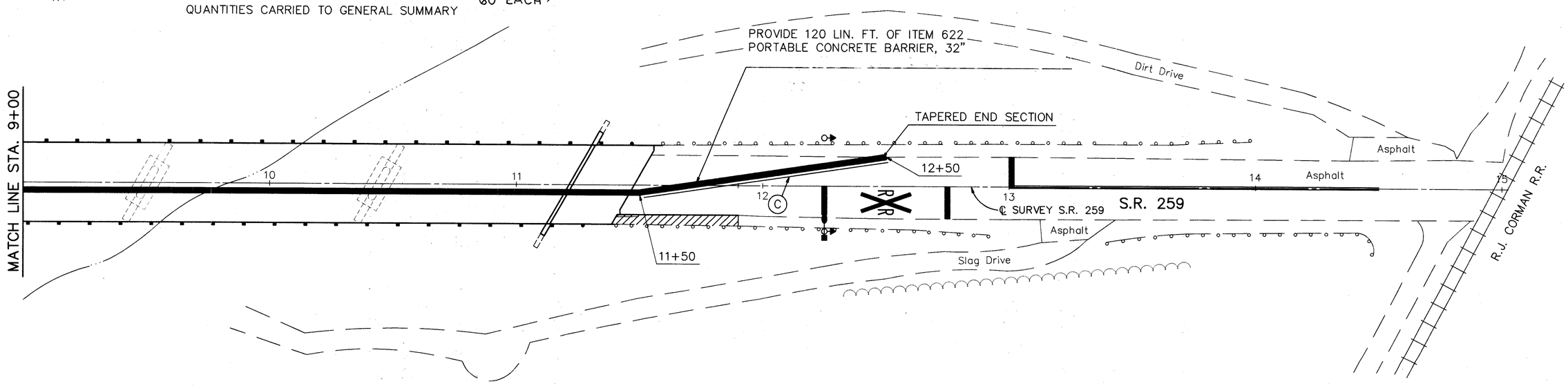

FOR ADDITIONAL DETAILS AND INFORMATION, SEE ST'D. DWG. MT-96.11

NOTE: ALL MAINTENANCE OF TRAFFIC SHALL REMAIN AS ON PHASE 1 UNLESS SHOWN OTHERWISE.

PHASE 2 MAINTENANCE OF TRAFFIC PLAN

NOTES:
FOR MAINTENANCE OF TRAFFIC NOTES, SEE SHEET NO. 3.
FOR PORTABLE CONCRETE BARRIER NOTE, SEE SHEET NO. 4.

PHASING AND SIGNAL TIMING SETTINGS FOR PHASE 2 SHALL REMAIN AS PER PHASE 1.

614 TEMPORARY RAISED PAVEMENT MARKERS

THIS ITEM OF WORK SHALL CONSIST OF FURNISHING, INSTALLING, MAINTAINING, AND SUBSEQUENTLY REMOVING TEMPORARY RAISED PAVEMENT MARKERS (TRPM'S). THE TRPM'S SHALL BE YELLOW OR WHITE, AS DESCRIBED IN THE PLAN.

MATERIAL
ALL UNITS SHALL BE OF SUFFICIENT STRENGTH AND PROPERLY SHAPED SO AS NOT TO BE DISLODGED OR BROKEN, OR THE REFLECTOR DISLODGED OR BROKEN, OR THE REFLECTOR DISLODGED OR DAMAGED BY IMPACTS FROM VEHICLES TIRES, INCLUDING THOSE OF HIGH PRESSURE TRUCK TIRES LOADED TO 4500 POUNDS.

RETROREFLECTORS SHALL BE PROVIDED IN ONE OR TWO DIRECTIONS ON EACH UNIT AS REQUIRED BY THE USAGE AND SHALL RETURN WHITE OR YELLOW LIGHT AS IS APPROPRIATED FOR THE APPLICATION.

THE REFLECTOR SHALL HAVE AN EFFECTIVE AREA OF 0.35 SQUARE INCH FOR TYPE A OR 3.0 SQUARE INCH FOR TYPE B. ITS BRIGHTNESS OR SPECIFIC INTENSITY (WHEN TESTED AT 0.2 DEGREE ANGLE OF OBSERVATION AND THE FOLLOWING ANGLES OF INCIDENCE) SHALL MEET OR EXCEED THE FOLLOWING:

SPECIFIC INTENSITY

INCIDENCE ANGLE (DEGREES)	TYPE A WHITE	TYPE A YELLOW
0	1.0	0.6
20	0.4	0.24
45	–	–

	TYPE B WHITE	TYPE B YELLOW
0	3.0	1.8
20	1.2	0.72
45	0.3	0.2

ANGLE OF INCIDENCE FORMED BY A RAY FROM LIGHT SOURCE TO THE MARKER AND THE NORMAL TO THE LEADING EDGE OF THE MARKER FACE (ALSO HORIZONTAL ENTRANCE ANGLE).

ANGLE OF OBSERVATION FORMED BY A RAY FROM LIGHT SOURCE TO THE MARKER AND THE RETURNED RAY FROM THE MARKER TO THE MEASURING RECEPTOR.

SPECIFIC INTENSITY IS THE MEAN CANDLEPOWER OF THE REFLECTED LIGHT (AT GIVEN INCIDENCE AND DIVERGENCE ANGLES) FOR EACH FOOT-CANDLE AT THE REFLECTOR (ON A PLANE PERPENDICULAR TO THE INCIDENT LIGHT).

TYPE A UNITS ARE INTENDED TO PROVIDE HIGH VISIBILITY BOTH AT NIGHT AND DURING DAYLIGHT. THEIR DAY TIME VISIBILITY SHALL BE ASSURED BY SIZE, SHAPE AND COLOR AS FOLLOWS:

1) THE UNITS SHALL BE A HIGH VISIBILITY YELLOW OR WHITE COLOR WHICH WILL NOT DEGRADE SUBSTANTIALLY DUE TO TRAFFIC WEAR AND WHICH WILL MATCH THE COLOR OF THE REFLECTOR.

2) WHEN VIEWED FROM ABOVE, THE UNITS SHALL HAVE A VISIBLE AREA OF NOT LESS THAN 14 SQUARE INCHES.

3) WHEN VIEWED FROM THE FRONT, PARALLEL TO THE PAVEMENT, AS FROM APPROACHING TRAFFIC, THE UNIT SHALL HAVE A WIDTH OF APPROXIMATELY 4 INCHES AND A VISIBLE AREA OF NOT LESS THAN 1.5 SQUARE INCHES.

TYPE B UNITS ARE INTENDED TO PROVIDE HIGH VISIBILITY AT NIGHT BY RETRO-REFLECTING AUTOMOTIVE HEADLIGHT BACK TO THE DRIVER.

INSTALLATION: THEY SHALL BE ATTACHED TO CLEAN, DRY PAVEMENT BY A BUTYL ADHESIVE PAD, A BITUMINOUS ADHESIVE OR OTHER CONSTRUCTION GRADE ADHESIVES (SUCH AS FRANKLIN PANEL AND METAL ADHESIVE) SUITABLE TO ANCHOR THE UNIT UNDER THE ABOVE CONDITIONS. WHEN IT IS NECESSARY TO ATTACH UNITS TO NEW CONCRETE WITH CURING COMPOUND REMAINING, THE CURING COMPOUND MEMBRANE SHALL BE REMOVED BY SANDBLASTING OR OTHER MECHANICAL CLEANING METHOD. THEY SHALL BE INSTALLED IN ACCORDANCE WITH THE MANUFACTURER'S RECOMMENDATIONS.

THE CONTRACTOR SHALL IMMEDIATELY REPLACE, AT HIS COST, ANY UNITS WHICH FAIL (BROKEN HOUSING, HOUSING WORN TO THE EXTENT THAT DAYTIME VISIBILITY IS SIGNIFICANTLY DIMINISHED OR OF AN UNACCEPTABLE COLOR, DETACHED OR BROKEN REFLECTOR, HOUSING DETACHED FROM ADHESIVE).

TRPM'S ARE LIKELY TO BE REMOVED BY SNOW PLOWING OPERATIONS, THUS THEY ARE NOT CONSIDERED SUITABLE FOR USE DURING THE PERIOD FROM OCTOBER 15 UNTIL APRIL 30. THE CONTRACTOR IS ADVISED TO SCHEDULE HIS WORK AND/OR THE USE OF THESE DEVICES TO AVOID THIS PERIOD. SHOULD THE CONTRACTOR CHOOSE TO USE TRPM'S DURING THIS PERIOD AND THEY ARE SUBSEQUENTLY REMOVED OR DESTROYED BY SNOW AND ICE CONTROL ACTIVITIES, THE CONTRACTOR SHALL IMMEDIATELY, AT HIS COST, PROVIDE A SUBSTITUTE TRAFFIC GUIDANCE SYSTEM EFFECTIVE DURING LIGHT AND DARK AND WHICH IS ACCEPTABLE TO THE ENGINEER.

THE UNITS SHALL BE PLACED ACCURATELY TO DEPICT STRAIGHT OR UNIFORMLY CURVING LINES. WHEN USED TO SUPPLEMENT TEMPORARY PAVEMENT MARKINGS, THEY MAY BE PLACED ON OR IMMEDIATELY ADJACENT TO THE PAVEMENT MARKING. LOCATIONS SHALL BE ADJUSTED UP TO ONE FOOT LONGITUDINALLY OR SIX INCHES LATERALLY TO AVOID PLACEMENT ON JOINTS, CRACKED OR DETERIORATED PAVEMENT. THEY SHALL NOT BE PLACED DIRECTLY ON PAVEMENT MARKINGS IF THIS WILL DETRACT FROM THEIR ABILITY TO REMAIN ATTACHED TO THE PAVEMENT.

APPLICATION
1) WHEN REQUIRED TO SUPPLEMENT PAVEMENT MARKING; THEY SHALL BE PLACED AS FOLLOWS:

LINE	TYPE	SPACING
EDGE LINE	A OR B	20' C/C
LANE LINE	A OR B	40' C/C*
CENTER LINE (SINGLE/BROKEN)	A OR B	40' C/C *
CENTER LINE (DOUBLE/SOLID)	A OR B	2 UNITS SIDE BY SIDE 4 INCHES APART 20' C/C
CHANNELIZING LINE (INCLUDES EXIT GORE NOSE)	A OR B	10' C/C

* CENTERED IN GAP

2) WHEN USED TO SIMULATE (REPLACE) PAVEMENT MARKING THEY SHALL BE PLACED AS FOLLOWS:

LINE	TYPE	SPACING
EDGE LINE	A	5' C/C
LANE LINE	A	4@3.33' C/C 30' GAP (40' CYCLE)
CENTER LINE (DOUBLE SOLID)	A	2 UNITS SIDE BY SIDE 5' C/C
CENTER LINE (SINGLE BROKEN)	A	4@3.33' C/C 30' GAP (40' CYCLE)
CHANNELIZING LINE (INCLUDES EXIT GORE NOSE)	A	5' C/C
EDGE LINE (TWO COLOR) (WHITE/YELLOW)	A	BACK TO BACK 5' C/C

YELLOW TRPM'S USED TO SEPARATE OPPOSITE FLOWS OF TRAFFIC (CENTER LINES) SHALL INCLUDE REFLECTIONS FOR BOTH DIRECTIONS. ALL OTHER YELLOW TRPM'S AND WHITE TRPM'S SHALL PROVIDE RETROREFLECTIVITY FOR ONE DIRECTION.

REMOVAL
REMOVAL SHALL BE ACCOMPLISHED IN A MANNER THAT LITTLE OR NONE OF THE ADHESIVE REMAINS ON THE PAVEMENT AND PERMANENT PAVEMENT SURFACES SHALL NOT BE SCARRED, BROKEN OR ROUGHENED SIGNIFICANTLY.

PAYMENT
BASIS OF PAYMENT SHALL BE AT THE CONTRACT UNIT PRICE PER EACH TRPM AND SHALL INCLUDE ALL LABOR, EQUIPMENT, HARDWARE AND INCIDENTALS REQUIRED TO PERFORM THE WORK. IT SHALL ALSO INCLUDE REPLACEMENT AT NO ADDITIONAL COST OF ALL TRPM'S WHICH, IN THE JUDGEMENT OF THE ENGINEER, FAIL FOR ANY REASON, EXCEPT DUE TO FAILURE OF THE PAVEMENT TO WHICH THEY ARE ATTACHED.

ITEM	UNIT	DESCRIPTION
614	EACH	TEMPORARY RAISED PAVEMENT MARKERS

STATIONING (FROM-TO) (SIDE)	SPACING	TYPE A W	TYPE A Y	TYPE A Y/Y		TYPE B W	TYPE B Y	TYPE B Y/Y		REMARKS (LINE TYPE)
PHASE 1										
5+60 TO 11+50 RT.	5'C/C	119	119							
5+95 TO 11+30 LT.	5'C/C	108	108							
		227	227							
TOTAL		454								
PHASE 2										
4+10 TO 13+00 RT.	5'C/C	179	149							
5+60 TO 11+50 LT.	5'C/C	119	119							
		298	298							
TOTAL		566								
TOTALS										

STATE OF OHIO
DEPARTMENT OF TRANSPORTATION

614 TEMPORARY RAISED PAVEMENT MARKERS

DESIGNED	DRAWN	CHECKED	DATE 5-12-87	REVISED

T9159PN2/20

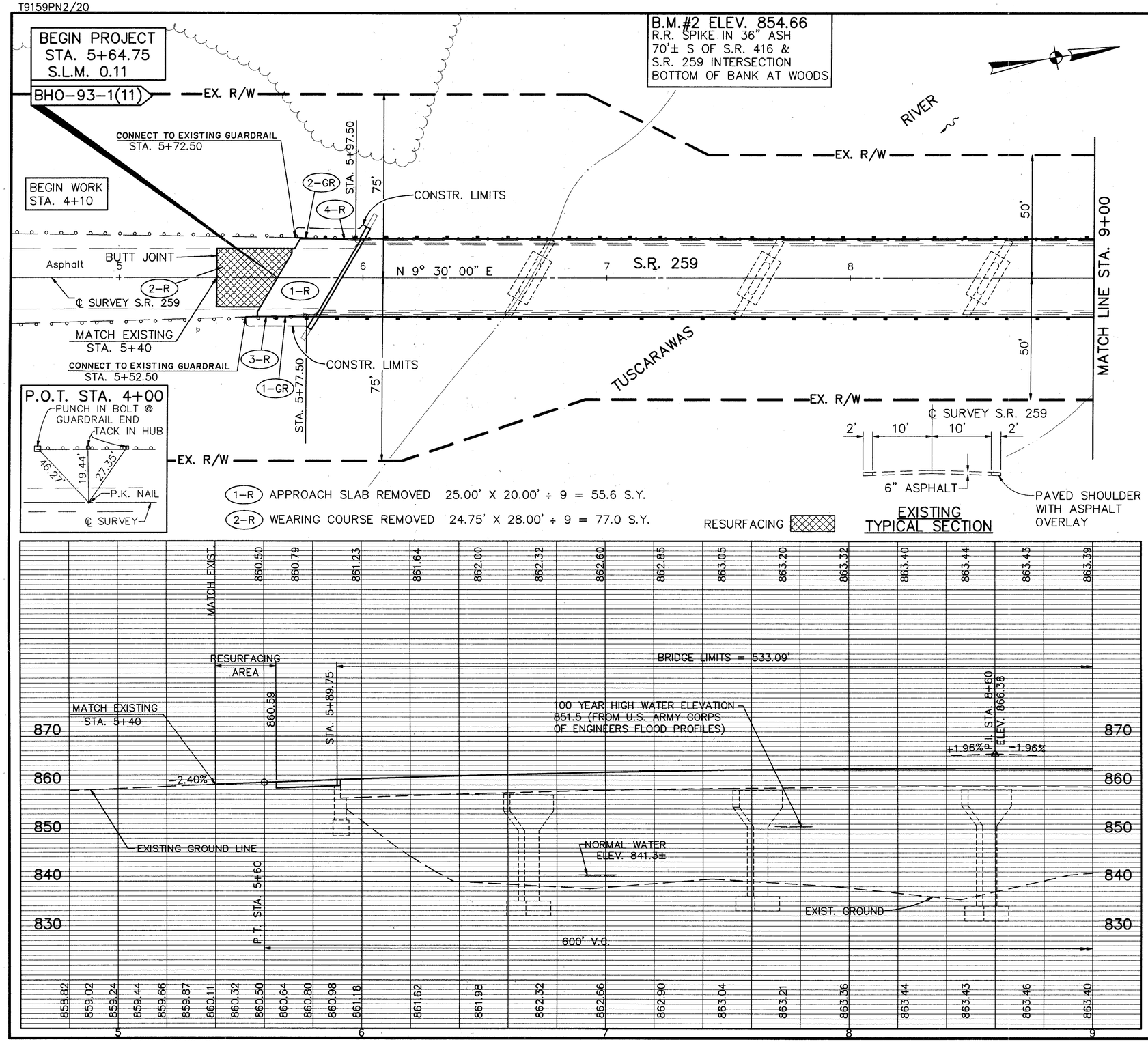

CALC. BY: FDH 7-7-92
CHKD. BY: WCR 7-23-92

TUS-259-0.11

OHIO
FHWA REGION 5

10
26

| | | |

B.M.#1 ELEV. 854.07
MINE SPIKE IN 8" ELM
@ NW CORNER WOODS
STA 13+74 ~ 33'±RT.

(7-R) APPROACH SLAB REMOVED 25.00' X 20.00' ÷ 9 = 55.6 S.Y.
(8-R) WEARING COURSE REMOVED 37.25' X 28.00' ÷ 9 = 115.9 S.Y.

CALC. BY: FDH 7-7-92
CHKD. BY: WCR 7-23-92

TUS-259-0.11

OHIO
FHWA REGION 5

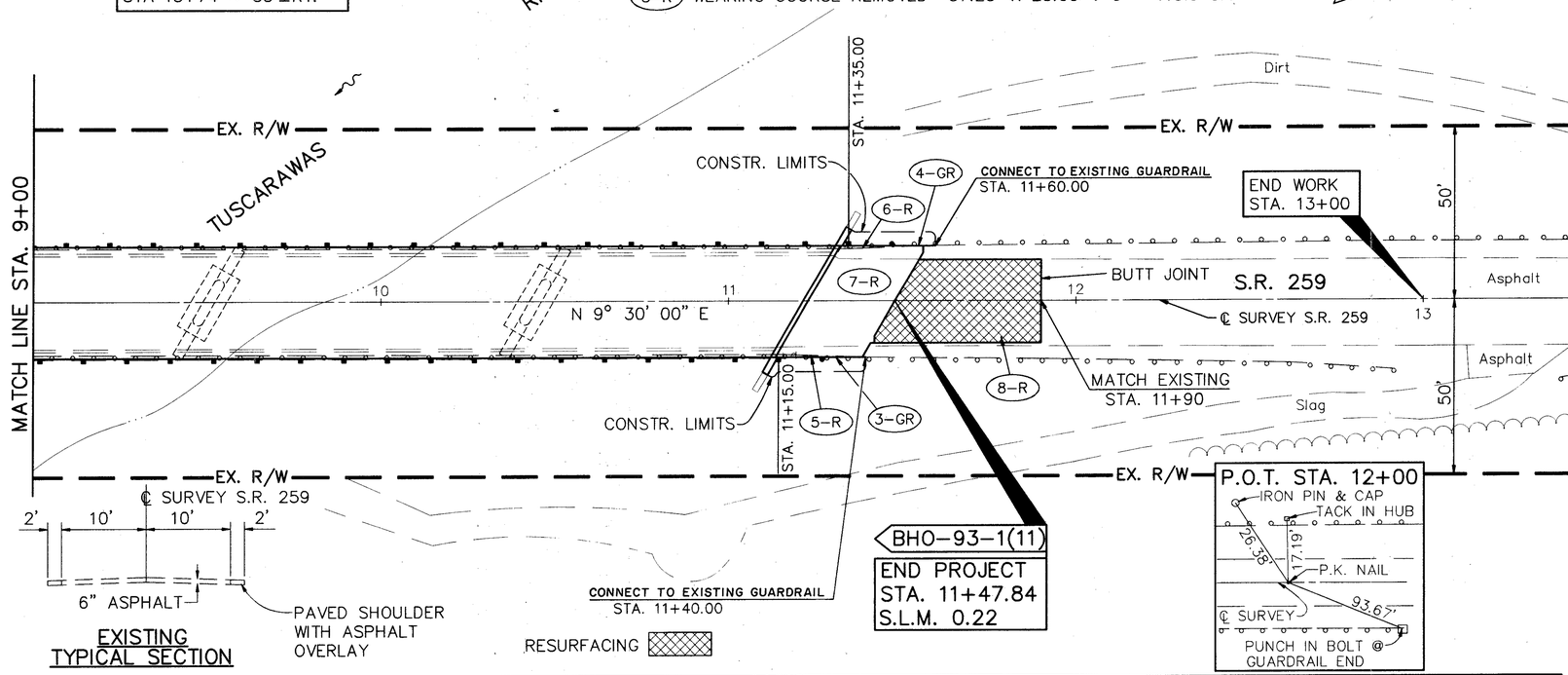

EXISTING
TYPICAL SECTION

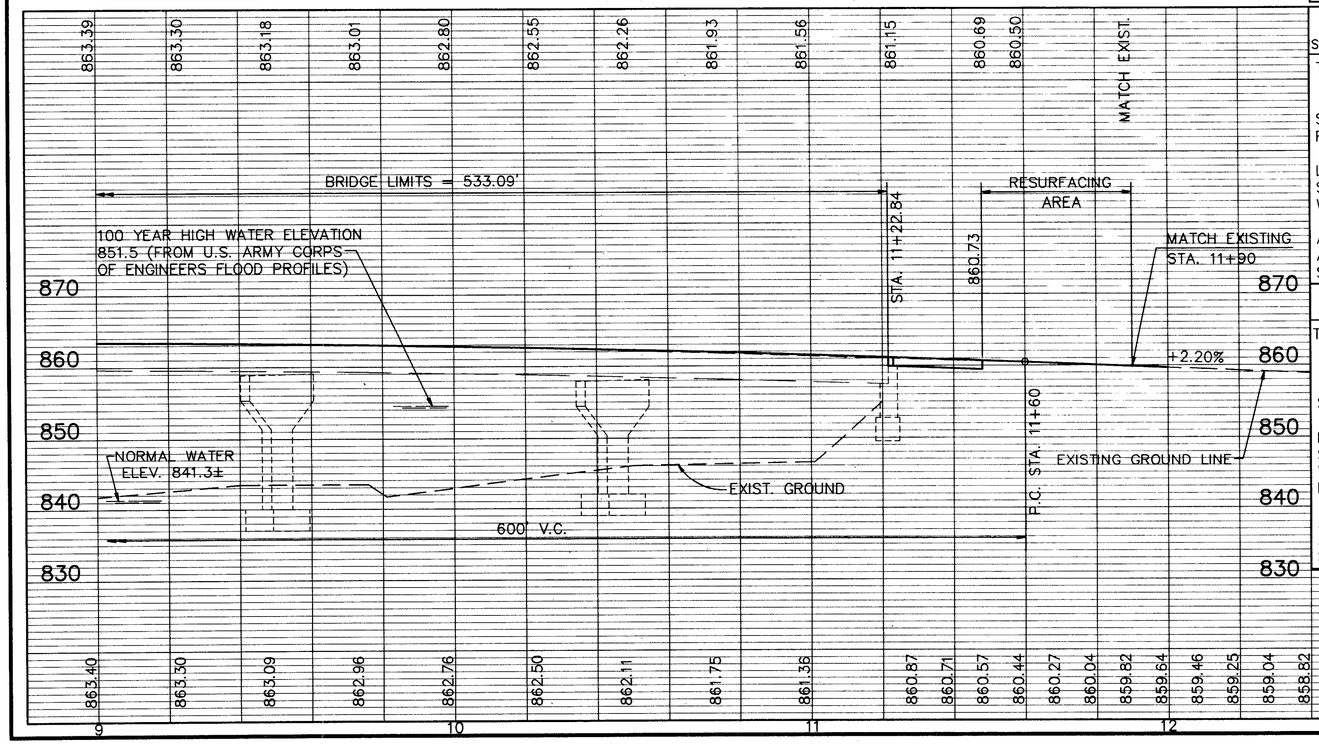

EXISTING STRUCTURE DATA

SFN 7905785 (PARTIALLY REMOVED) DATE BUILT: 1961

TYPE: SIX SPAN CONTINUOUS STEEL BEAM WITH REINFORCED CONCRETE DECK AND SUBSTRUCTURE.
SPANS: 76'±-94'±-94'±-94'±-94'±-76'±
ROADWAY: 28'-0± F/F CURB WITH 2'-3± SAFETY CURBS
LOADING: CF130(57)
SKEW: 30° L.F.
WEARING SURFACE: 3/4" MONOLITHIC CONC. WITH 3"± ASPHALT CONCRETE
APPROACH SLAB: AS-1-54 (25'-0)
ALIGNMENT: TANGENT
SUPERELEVATION: NONE

PROPOSED STRUCTURE

TYPE: SIX SPAN COMPOSITE REINFORCED CONCRETE DECK ON EXISTING STEEL BEAMS AND PIERS WITH MODIFIED ABUTMENTS.
SPANS: 76'±-94'±-94'±-94'±-94'±-76'± C/C BEARINGS
ROADWAY: 32'-0 F/F GUARDRAIL
SKEW: 30°-00'± L.F.
WEARING SURFACE: MONOLITHIC CONC.
LOADING: HS20-44 CASE II AND THE ALTERNATE MILITARY LOADING
APPROACH SLABS: AS-1-81, 25' LONG
ALIGNMENT: TANGENT
SUPERELEVATION: NONE CROWN: 3/16"/FT.

ESTIMATED QUANTITIES

| REF. NO. | STATION TO STATION | SIDE | SEE SHEET NO. | | |

TUS-259-0.11	OHIO FHWA REGION 5	12/26

0.47 MILE SOUTH OF NEW PHILADELPHIA

B.M.#1 ELEV. 854.07
Mine Spike in 8" Elm
@ N.W. Corner of woods
Sta. 13+74 ~ 33' Rt.

B.M.#2 ELEV. 854.66
R.R. Spike in 36" Ash
70'± S of S.R. 416 &
S.R. 259 Intersection,
Bottom of bank at woods.

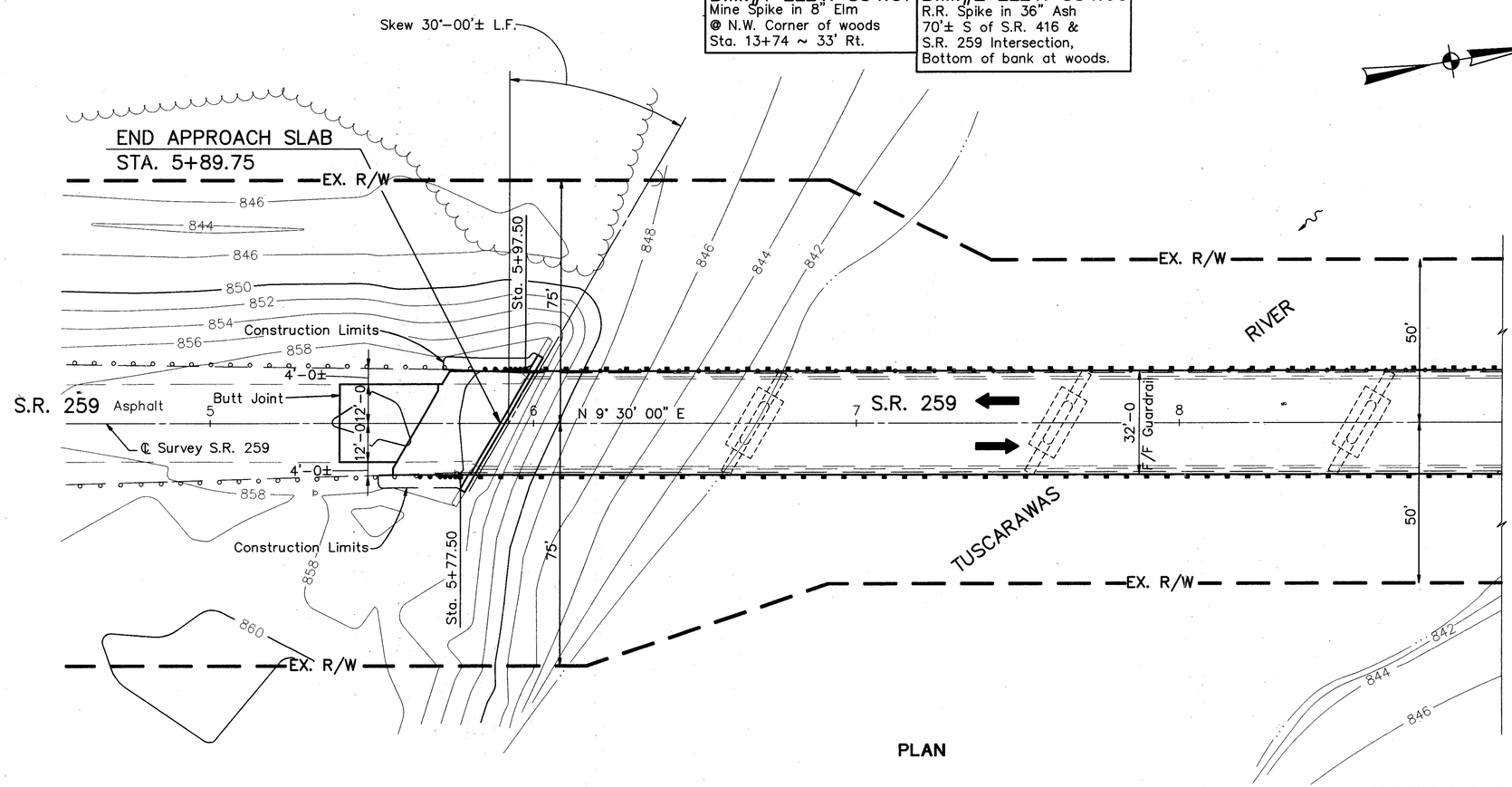

PLAN

REVIEWED BY BURGESS & NIPLE, LTD.
R.G.S. 11-2-92

EARTHWORK LIMITS SHOWN ARE APPROXIMATE. ACTUAL SLOPES SHALL CONFORM TO PLAN CROSS-SECTIONS.

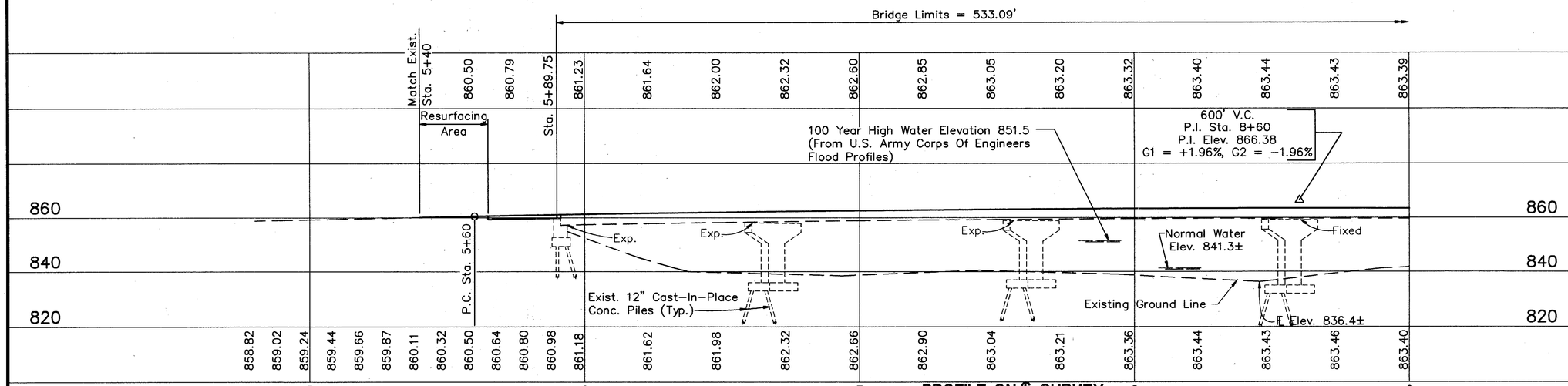

PROFILE ON ℄ SURVEY

DESIGN DESIGNATION

1992 ADT	2900
2012 ADT	4870
2012 ADTT	234

STREAM DATA

DRAINAGE AREA: 1,872 SQ. MI.
Q100 = 14,700± C.F.S.

HIGH WATER REGULATED BY FOUR FLOOD CONTROL RESERVOIRS.

BANKFULL STAGE ELEVATIONS REGULATED BY THE U.S. ARMY CORPS OF ENGINEERS

100 YEAR HIGH WATER ELEVATION 851.5 (FROM U.S. ARMY CORPS OF ENGINEERS FLOOD PROFILES)

EXISTING STRUCTURE DATA

SFN 7905785 (PARTIALLY REMOVED) DATE BUILT: 1961

TYPE: SIX SPAN CONTINUOUS STEEL BEAM WITH REINFORCED CONCRETE DECK AND SUBSTRUCTURE.
SPANS: 76'±-94'±-94'±-94'±-94'±-76'± C/C BEARINGS
ROADWAY: 28'-0± F/F CURB WITH 2'-3± SAFETY CURBS
LOADING: CF130(57)
SKEW: 30° L.F.
WEARING SURFACE: 3/4" MONOLITHIC CONC. WITH 3"± ASPHALT CONCRETE
APPROACH SLAB: AS-1-54 (25'-0)
ALIGNMENT: TANGENT
SUPERELEVATION: NONE

PROPOSED STRUCTURE

TYPE: SIX SPAN COMPOSITE REINFORCED CONCRETE DECK ON EXISTING STEEL BEAMS AND PIERS WITH MODIFIED ABUTMENTS.
SPANS: 76'±-94'±-94'±-94'±-94'±-76'± C/C BEARINGS
ROADWAY: 32'-0 F/F GUARDRAIL
SKEW: 30°-00'± L.F.
WEARING SURFACE: MONOLITHIC CONC.
LOADING: HS20-44 CASE II AND THE ALTERNATE MILITARY LOADING
APPROACH SLABS: AS-1-81, 25' LONG
ALIGNMENT: TANGENT
SUPERELEVATION: NONE CROWN: 3/16"/FT.

SHEET 1/15

W.E. QUICKSALL AND ASSOCIATES, INC.
NEW PHILADELPHIA, OHIO

SFN 7905785

SITE PLAN

BRIDGE NO. TUS-259-0011
S.R. 259 OVER TUSCARAWAS RIVER

TUSCARAWAS COUNTY — STA. 5+89.75 STA. 11+22.84

EXIST. TOPO		PROPOSED			
SURVEY	DRAWN	DESIGN	DRAWN	CHECKED	REVIEWED
WEQ	FDH	FDH	FDH	ZRD	wda 10/92

B.M.#1 ELEV. 854.07	B.M.#2 ELEV. 854.66
Mine Spike in 8" Elm @ N.W. Corner of woods Sta. 13+74 ~ 33' Rt.	R.R. Spike in 36" Ash 70'± S of S.R. 416 & S.R. 259 Intersection, Bottom of bank at woods.

TUS-259-0.11	OHIO	13
	FHWA REGION 5	26

0.47 MILE SOUTH OF NEW PHILADELPHIA

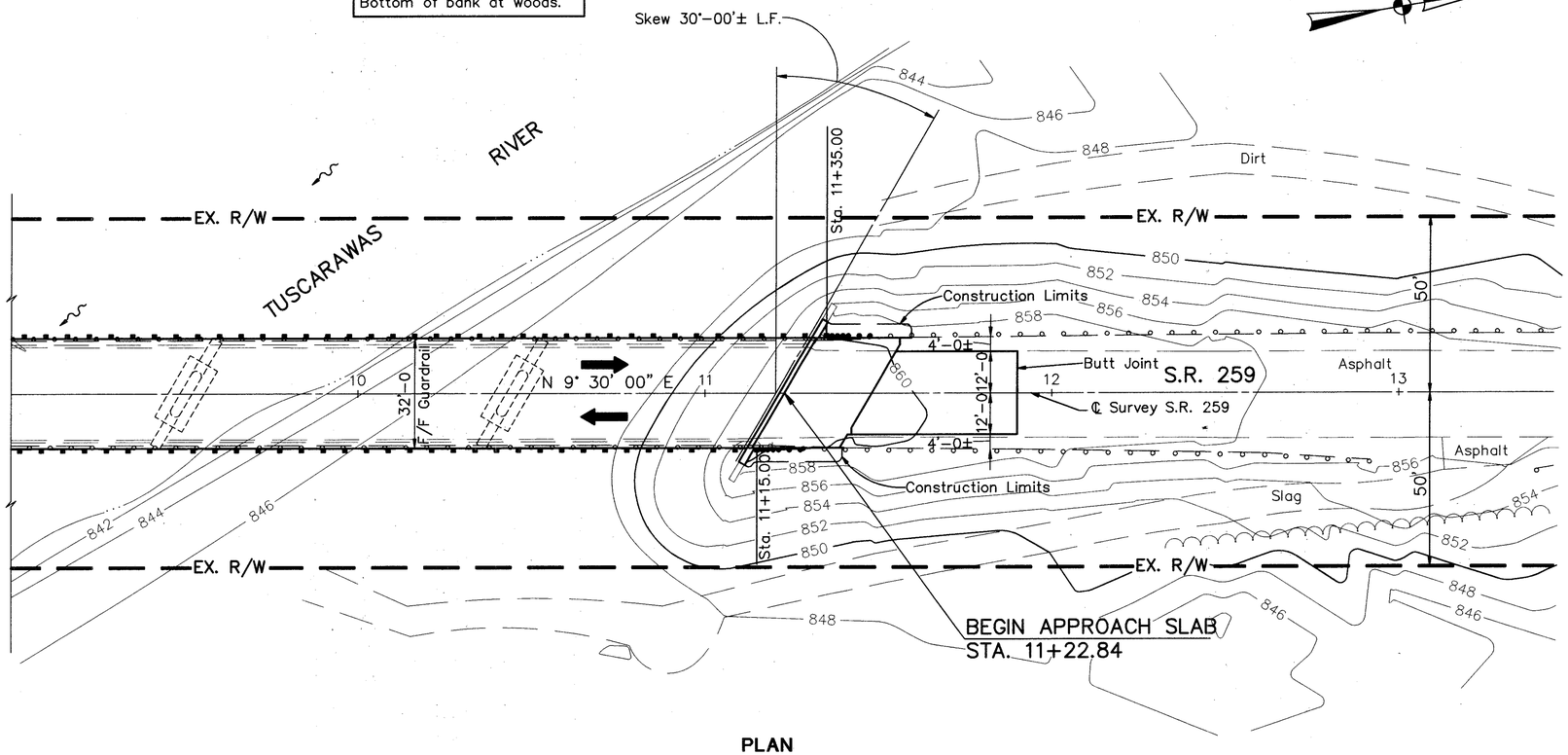

PLAN

EARTHWORK LIMITS SHOWN ARE APPROXIMATE. ACTUAL SLOPES SHALL CONFORM TO PLAN CROSS-SECTIONS.

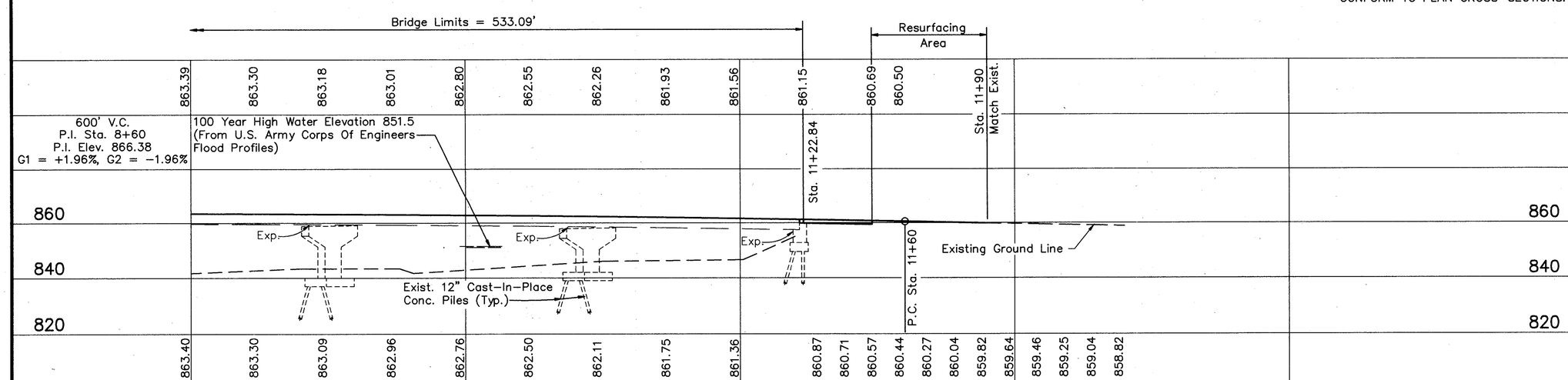

PROFILE ON ℄ SURVEY

SHEET 2 /15

W.E. QUICKSALL AND ASSOCIATES, INC.
NEW PHILADELPHIA, OHIO

SFN 7905785

SITE PLAN

BRIDGE NO. TUS-259-0011
S.R. 259 OVER TUSCARAWAS RIVER

TUSCARAWAS COUNTY

STA. 5+89.75
STA. 11+22.84

EXIST. TOPO		PROPOSED			
SURVEY	DRAWN	DESIGN	DRAWN	CHECKED	REVIEWED
WEQ	FDH	FDH	FDH	ZRD	wda 10/98

TUS-259-0.11	OHIO	14/26
	FHWA REGION 5	

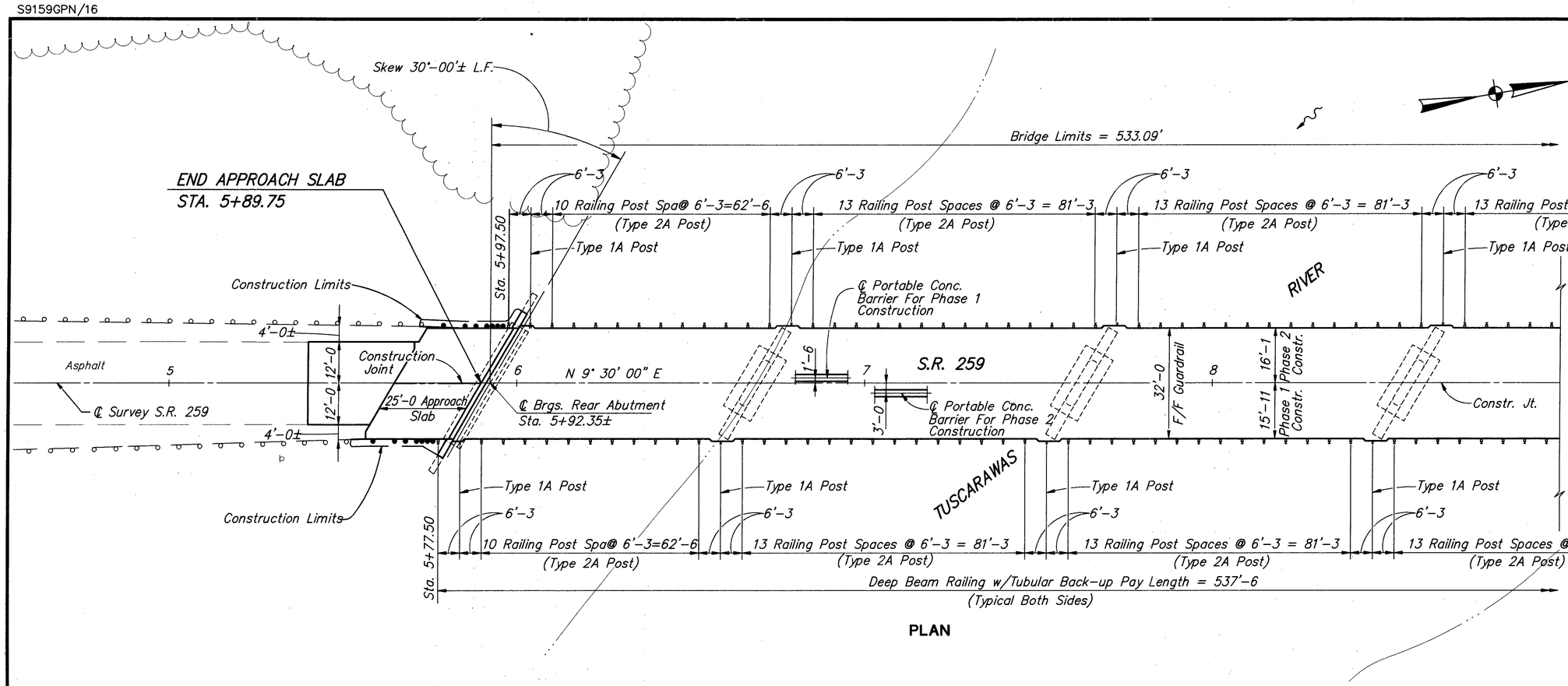

PLAN

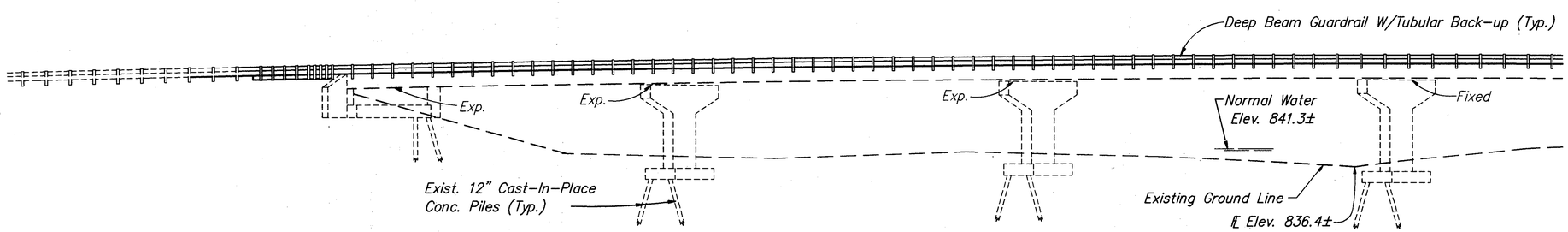

ELEVATION

SHEET 3/15

W.E. QUICKSALL AND ASSOCIATES, INC.
NEW PHILADELPHIA, OHIO

GENERAL PLAN & ELEVATION

BRIDGE NO. TUS-259-0011
S.R. 259 OVER TUSCARAWAS RIVER

TUSCARAWAS COUNTY — STA. 5+89.75 STA. 11+22.84

DESIGNED	DRAWN	TRACED	CHECKED	REVIEWED	DATE	REVISED
FDH	FDH		ZRD	wda	10/92	

TUS-259-0.11	OHIO	15 / 26
	FHWA REGION 5	

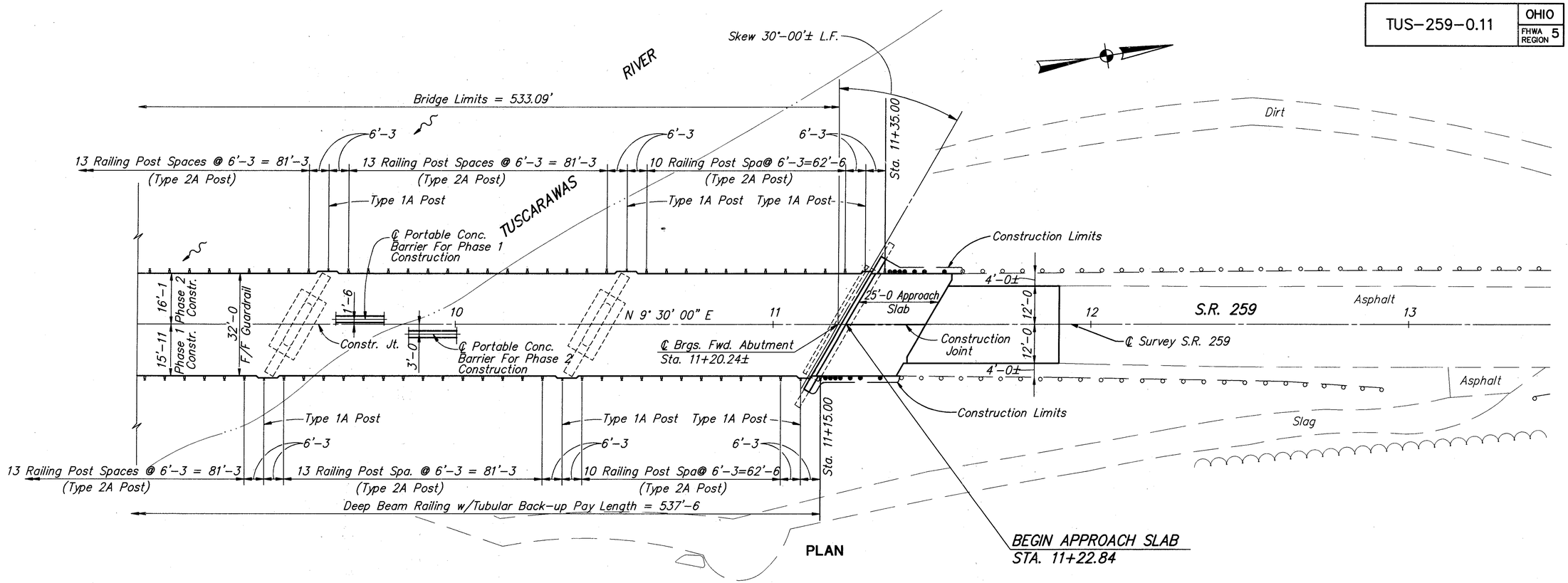

PLAN

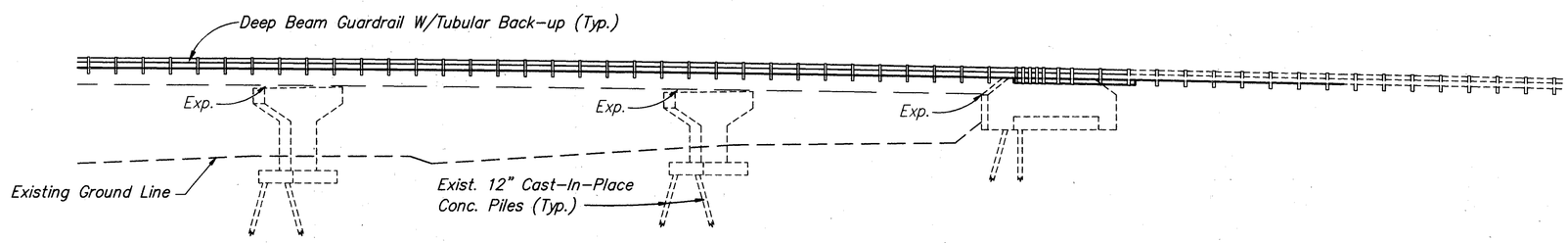

ELEVATION

SHEET 4 / 15

W.E. QUICKSALL AND ASSOCIATES, INC.
NEW PHILADELPHIA, OHIO

GENERAL PLAN & ELEVATION

BRIDGE NO. TUS-259-0011
S.R. 259 OVER TUSCARAWAS RIVER

TUSCARAWAS COUNTY — STA. 5+89.75 STA. 11+22.84

DESIGNED	DRAWN	TRACED	CHECKED	REVIEWED	DATE	REVISED
FDH	FDH		ZRD	wda	10/92	

ESTIMATED QUANTITIES

CALC. BY: CFD DATE 7/29/92
CHKD. BY: ZRD DATE 9/30/92

ITEM	ITEM EXT.	TOTAL	UNIT	DESCRIPTION	ABUTS	PIERS	SUPER	GEN'L.		
202	11202	LUMP	SUM	PORTIONS OF STRUCTURE REMOVED, OVER 20 FOOT SPAN				LUMP		
503	21300	LUMP	SUM	UNCLASSIFIED EXCAVATION	LUMP					
509	15800	119353	POUND	EPOXY COATED REINFORCING STEEL, GRADE 60	699		118554	100		
510	11101	50	EACH	DOWEL HOLE, AS PER PLAN	50					
** 511	33405	506	CU.YD.	CLASS S CONCRETE, SUPERSTRUCTURE (USING			506			
				SHRINKAGE COMPENSATING CEMENT), AS PER PLAN *						
** 511	33410	LUMP	SUM	CLASS S CONCRETE, USING SHRINKAGE COMPENSATING			LUMP			
				CEMENT, FOR PRE-PLACE TESTING *						
511	34401	506	CU.YD.	CLASS S CONCRETE, SUPERSTRUCTURE, AS PER PLAN			506			
511	45700	8	CU.YD.	CLASS C CONCRETE, ABUTMENT	8					
SPECIAL	51267500	377	SQ.YD.	SEALING OF CONCRETE SURFACES *		59	318			
SPECIAL	51267502	111	SQ.YD.	SEALING OF CONCRETE SURFACES (EPOXY) *	111					
513	15901	1447	POUND	STRUCTURAL STEEL, REPLACEMENT OF DETERIORATED			1447			
				END CROSS FRAMES, AS PER PLAN						
513	16001	250	POUND	STRUCTURAL STEEL FOR REHABILITATION,				250		
				AS PER PLAN						
513	20000	3380	EACH	WELDED STUD SHEAR CONNECTOR			3380			
SPECIAL	51400050	27000	SQ.FT.	SURFACE PREPARATION OF EXISTING STEEL ,			27000			
				SYSTEM OZEU *						
SPECIAL	51400056	27000	SQ.FT.	FIELD PAINTING OF EXISTING STEEL, PRIME COAT,			27000			
				SYSTEM OZEU *						
SPECIAL	51400060	27000	SQ.FT.	FIELD PAINTING OF EXISTING STEEL, INTERMEDIATE			27000			
				COAT, SYSTEM OZEU *						
SPECIAL	51400066	27000	SQ.FT.	FIELD PAINTING OF EXISTING STEEL, FINISH COAT,			27000			
				SYSTEM OZEU *						
SPECIAL	51400402	LUMP	SUM	FIELD PAINTING OF NEW STEEL, SYSTEM OZEU			LUMP			
SPECIAL	51400504	80	MAN HR.	GRINDING FINS, TEARS, SLIVERS *			80			
516	11210	77	LIN.FT.	STRUCTURAL EXPANSION JOINT INCLUDING			77			
				ELASTOMERIC STRIP SEAL						
517	72300	1075	LIN.FT.	RAILING (DEEP BEAM RAIL WITH STEEL TUBULAR			1075			
				BACKUP AND TYPE 2 STEEL POSTS AND ANCHOR						
				BOLTS) ***						

* (SEE PROPOSAL NOTE)

** ALTERNATE BID ITEM. THESE TWO ITEMS SHALL CONSTITUTE ONE ALTERNATE BID TO CLASS S CONCRETE, SUPERSTRUCTURE, AS PER PLAN.

*** CONTAINS 14 TYPE 1A STEEL POSTS. FOR TYPE 1A POST LOCATIONS, SEE SHEETS 3/15 & 4/15.

GENERAL NOTES

DESIGN SPECIFICATIONS

THIS STRUCTURE CONFORMS TO "STANDARD SPECIFICATIONS FOR HIGHWAY BRIDGES" ADOPTED BY THE AMERICAN ASSOCIATION OF STATE HIGHWAY AND TRANSPORTATION OFFICIALS, 1989 INCLUDING THE 1990 AND 1991 INTERIM SPECIFICATIONS AND THE OHIO "SUPPLEMENT" TO THESE SPECIFICATIONS.

DESIGN DATA

DESIGN LOADING: HS20-44 CASE II AND THE ALTERNATE MILITARY LOADING

CONCRETE CLASS S: COMPRESSIVE STRENGTH 4500 P.S.I. (SUPERSTRUCTURE)

CONCRETE CLASS C: COMPRESSIVE STRENGTH 4000 P.S.I. (SUBSTRUCTURE)

REINFORCING STEEL: ASTM A615, A616, A617 – GRADE 60 MINIMUM YIELD STRENGTH 60,000 P.S.I.

STRUCTURAL STEEL: ASTM A36 – YIELD STRENGTH 36,000 P.S.I.

DECK PROTECTION METHOD

EPOXY COATED REINFORCING STEEL, TOP AND BOTTOM MAT AND SEALING OF CONCRETE SURFACES TO LIMITS SHOWN IN THESE PLANS.

MONOLITHIC WEARING SURFACE IS ASSUMED, FOR DESIGN PURPOSES, TO BE 1" THICK.

REFERENCE SHALL BE MADE TO:

STANDARD DRAWINGS			SUPPLEMENTAL SPECIFICATIONS
AS-1-81	DATED	11-27-81	836 DATED 11-12-85
DBR-2-73	DATED	4-10-73	
EXJ-4-87	DATED	1-5-89	
PCB-91	DATED	4-24-92	
SD-1-69	DATED	6-12-69	

REINFORCING STEEL SPLICES

REINFORCING BAR SPLICE LENGTHS SHALL CONFORM TO THE MINIMUM LENGTHS SPECIFIED IN 509.08 UNLESS OTHERWISE NOTED ON THE PLANS.

MECHANICAL CONNECTORS:

AN APPROVED TYPE OF MECHANICAL CONNECTOR FOR REINFORCING BARS SHALL BE PROVIDED. INSTALLATION OF CONNECTORS SHALL CONFORM WITH MANUFACTURER'S RECOMMENDED PROCEDURES. IF A DOWEL BAR SPLICE TYPE OF CONNECTOR IS FURNISHED, UNLESS SHOWN OTHERWISE ON THE PLAN, THE MINIMUM DOWEL BAR LENGTH TO BE INCLUDED WITH THE CONNECTOR SHALL BE AS LISTED IN THE LAP LENGTHS FOR SPLICES IN THE NOTE ON THIS SHEET.

CONNECTORS AND DOWEL BARS USED WITH EPOXY COATED BARS SHALL BE EPOXY COATED. COATING FOR BOTH CONNECTORS AND BARS SHALL CONFORM TO THE SAME SPECIFICATIONS. COATINGS WHICH HAVE BEEN DAMAGED OR WHICH OTHERWISE DO NOT MEET SPECIFICATIONS WITH RESPECT TO COLOR, CONTINUITY AND UNIFORMITY MAY BE REPAIRED AS DIRECTED BY THE ENGINEER OR THEY SHALL BE REPLACED WITH MATERIAL WHICH MEETS THE SPECIFICATIONS.

CONNECTORS AND DOWEL BAR EXTENSIONS SHALL CONFORM WITH ITEM 509 AND BE INCLUDED IN THE BID PRICE PER POUND FOR ITEM 509.

FIELD PAINTING OF EXISTING STEEL, SYSTEM OZEU

THE SURFACE AREA PAY QUANTITY IS BASED ON THE SURFACE AREA OF THE MAIN MEMBERS INCREASED BY 15% TO ACCOUNT FOR THE AREA OF THE CROSS FRAMES, BEARINGS AND OTHER STRUCTURAL STEEL INCIDENTALS TO BE CLEANED AND PAINTED.

DECK EXPANSION JOINTS

THE DECK EXPANSION JOINTS SHALL BE SEALED WITH ELASTOMERIC STRIP SEALS, AS SHOWN ON SHEET 12/15.

JOINT ARMOR

STEEL MEMBERS SHALL BE FURNISHED TO THE LIMITS SHOWN IN THESE PLANS. FOR LIMITS OF JOINT ARMOR, SEE SHEET 12/15.

NEW CONCRETE

NEW CONCRETE WHICH IS FORMED FOR ABUTMENT BACKWALL AND WINGWALLS SHALL BE INCLUDED WITH ITEM 511 "CLASS C CONCRETE, ABUTMENT".

EXISTING STRUCTURE VERIFICATION

DETAILS AND DIMENSIONS SHOWN ON THESE PLANS PERTAINING TO THE EXISTING STRUCTURE HAVE BEEN OBTAINED FROM PLANS OF THE EXISTING STRUCTURE AND/OR FROM FIELD OBSERVATIONS AND MEASUREMENTS. CONSEQUENTLY, THEY ARE INDICATIVE OF THE EXISTING STRUCTURE AND THE PROPOSED WORK BUT THEY SHALL BE CONSIDERED TENTATIVE AND APPROXIMATE. THE CONTRACTOR IS REFERRED TO CMS SECTIONS 102.05, 105.02 AND 513.02.

CONTRACT BID PRICES SHALL BE BASED UPON A RECOGNITION OF THE UNCERTAINTIES DESCRIBED ABOVE AND UPON A PREBID EXAMINATION OF THE EXISTING STRUCTURE BY THE CONTRACTOR. HOWEVER, ALL PROJECT WORK SHALL BE BASED UPON ACTUAL DETAILS AND DIMENSIONS WHICH HAVE BEEN VERIFIED BY THE CONTRACTOR IN THE FIELD.

EXISTING PLANS

PLANS OF THE EXISTING STRUCTURE ARE AVAILABLE FOR INSPECTION AT THE OHIO DEPARTMENT OF TRANSPORTATION DISTRICT 11 OFFICE, WEST HIGH AVENUE, NEW PHILADELPHIA, OHIO 44663.

REMOVAL OF EXISTING STRUCTURE

WHEN NO LONGER NEEDED TO MAINTAIN TRAFFIC, THE EXISTING STRUCTURE SHALL BE REMOVED TO THE LIMITS SPECIFIED ON SHEET 7/15 & 14/15. SUITABLE WASTE MASONRY MAY BE PLACED AS BANK PROTECTION AS DIRECTED BY THE ENGINEER.

EXISTING GUARDRAIL SHALL BE CAREFULLY DISMANTLED AND PILED ALONG THE RIGHT-OF-WAY FOR DISPOSAL BY STATE FORCES.

PROPOSED WORK

FOR ITEMIZATION AND SEQUENCE OF PROPOSED WORK, SEE PHASE CONSTRUCTION DETAILS SHEET 14/15.

UTILITY LINES

ALL EXPENSE INVOLVED IN RELOCATING OR ADJUSTING THE AFFECTED UTILITY LINES SHALL BE BORNE BY THE OWNER. THE CONTRACTOR AND OWNER ARE REQUESTED TO COOPERATE BY ARRANGING THEIR WORK IN SUCH A MANNER THAT INCONVENIENCE TO EITHER WILL BE HELD TO A MINIMUM.

SHEET 5/15

W.E. QUICKSALL AND ASSOCIATES, INC.
NEW PHILADELPHIA, OHIO

ESTIMATED QUANTITIES AND GENERAL NOTES

BRIDGE NO. TUS-259-0011
S.R. 259 OVER TUSCARAWAS RIVER
STA. 5+89.75
STA. 11+22.84
TUSCARAWAS COUNTY

DESIGNED	DRAWN	TRACED	CHECKED	REVIEWED	DATE	REVISED
CFD	CFD		ZRD	wda	10/92	9/92

GENERAL NOTES

PORTION OF STRUCTURE REMOVED, OVER 20 FOOT SPAN

DESCRIPTION :

THIS WORK SHALL CONSIST OF THE REMOVAL OF THE CONCRETE DECK INCLUDING RAILINGS, DECK JOINTS AND OTHER APPURTENANCES FROM STEEL SUPPORTING SYSTEMS (BEAMS, CROSSFRAMES, ETC.). CARE SHALL BE TAKEN DURING DECK REMOVAL TO PROTECT PORTIONS OF SUCH SYSTEMS THAT ARE TO BE SALVAGED AND INCORPORATED INTO THE PROPOSED STRUCTURE. IN THIS RESPECT, THE USE OF EXPLOSIVES, HEADACHE BALLS AND/OR HOE RAM TYPE OF EQUIPMENT IS PROHIBITED.

PROTECTION OF TRAFFIC :

PRIOR TO DEMOLITION OF ANY PORTIONS OF THE EXISTING SUPERSTRUCTURE, THE CONTRACTOR SHALL SUBMIT HIS PLANS FOR THE PROTECTION OF TRAFFIC (VEHICULAR, PEDESTRIAN, BOAT, ETC.) UNDER THE STRUCTURE TO THE DIRECTOR FOR APPROVAL. THESE PLANS SHALL INCLUDE PROVISIONS FOR ANY DEVICES AND STRUCTURES THAT MAY BE NECESSARY TO ENSURE SUCH PROTECTION.

PROTECTION OF STEEL SUPPORT SYSTEMS :

BEFORE DECK SLAB CUTTING IS PERMITTED, THE OUTLINE OF PRIMARY STEEL MEMBERS IN CONTACT WITH THE BOTTOM OF THE DECK SHALL BE DRAWN ON THE SURFACE OF THE DECK. SMALL DIAMETER PILOT HOLES SHALL BE DRILLED 2 INCHES OUTSIDE THESE LINES TO CONFIRM THE LOCATION OF FLANGE EDGES. DECK CUTS OVER OR WITHIN 2 INCHES OF FLANGE EDGES SHALL NOT EXTEND LOWER THAN THE BOTTOM LAYER OF DECK SLAB REINFORCING STEEL. CUTS MADE OUTSIDE 2 INCHES OF FLANGE EDGES MAY EXTEND THE FULL DEPTH OF THE DECK. DURING CUTTING OF THE DECK SLAB, CARE SHALL BE TAKEN NOT TO DAMAGE STEEL MEMBERS THAT ARE TO BE INCORPORATED INTO THE PROPOSED STRUCTURE.

REMOVAL METHODS :

UNLESS NOTED OTHERWISE CONCRETE MAY BE REMOVED BY CUTTING AND BY MEANS OF HAND OPERATED PHNEUMATIC HAMMERS EMPLOYING POINTED OR BLUNTED CHISEL TYPE TOOLS. FOR REMOVALS ABOVE STEEL MEMBERS, LIGHT HAMMERS APPROVED BY THE ENGINEER SHALL BE USED TO ENSURE ADEQUATE DEPTH CONTROL AND TO PREVENT NICKING OR GOUGING PRIMARY STEEL MEMBERS.

DECK REMOVAL :

DUE TO THE POSSIBLE PRESENCE OF WELDED ATTACHMENTS TO EXISTING STRUCTURAL STEEL (FINISHING MACHINE, SCUPPER AND FORM SUPPORTS, ETC.), CARE SHALL BE TAKEN DURING DECK REMOVAL TO AVOID DAMAGING STRINGERS WHICH ARE TO REMAIN. STRINGERS DAMAGED BY THE CONTRACTOR'S REMOVAL OPERATIONS SHALL, AT NO COST TO THE PROJECT, BE REPLACED OR REPAIRED. PROPOSED REPAIRS, DEVELOPED BY A REGISTERED PROFESSIONAL ENGINEER, SHALL BE SUBMITTED IN WRITING FOR REVIEW AND APPROVAL BY THE DIRECTOR.

STRUCTURAL STEEL REMOVALS :

EXISTING EXTRANEOUS MEMBERS (I.E., FINISHING MACHINE AND FORM SUPPORTS, ETC. AND THE SUPPORTS FOR SCUPPERS AND BULB ANGLES WHICH ARE TO BE REMOVED) ATTACHED BY WELDED CONNECTIONS TO TOP FLANGES DESIGNATED "TENSION" SHALL BE REMOVED AND FLANGE SURFACES GROUND SMOOTH. GRINDING SHALL BE IN A DIRECTION PARALLEL WITH THE BEAM SPAN. COST OF REMOVALS INCLUDING GRINDING SHALL BE INCLUDED WITH ITEM 202, PORTIONS OF STRUCTURE REMOVED, OVER 20 FOOT SPAN, AS PER PLAN, FOR PAYMENT.

SUBSTRUCTURE CONCRETE REMOVAL :

SUBSTRUCTURE CONCRETE REMOVAL SHALL BE BY MEANS OF APPROVED PNEUMATIC HAMMERS EMPLOYING POINTED AND BLUNT CHISEL TOOLS. HYDRAULIC HOE-RAM TYPE HAMMERS WILL NOT BE PERMITTED. THE WEIGHT OF THE HAMMER SHALL NOT BE MORE THAN 35 POUNDS FOR REMOVAL WITHIN 18-INCHES OF PORTIONS TO BE PRESERVED. OUTSIDE THE 18-INCH LIMIT, A HAMMER HEAVIER THAN 35 POUNDS, BUT NOT TO EXCEED 85 POUNDS, MAY BE USED AT THE APPROVAL OF THE ENGINEER. PNEUMATIC HAMMERS SHALL NOT BE PLACED IN DIRECT CONTACT WITH REINFORCING STEEL THAT IS TO BE RETAINED IN THE REBUILT STRUCTURE.

LOADING LIMITATIONS :

NO PART OF THE STRUCTURE SHALL BE SUBJECTED TO UNIT STRESSES THAT EXCEED BY MORE THAN ONE-THIRD THE ALLOWABLE UNIT STRESSES GIVEN IN THE AASHTO STANDARD SPECIFICATIONS FOR HIGHWAY BRIDGES DUE EITHER TO DEMOLITION, ERECTION OR CONSTRUCTION METHODS, OR TO THE USE OR MOVEMENT OF DEMOLITION OR ERECTION EQUIPMENT ON OR ACROSS THE STRUCTURE. STRUCTURAL ANALYSIS COMPUTATIONS, BY AN ENGINEER REGISTERED BY THE STATE OF OHIO, SHOWING THE ALLOWABLE STRESSES AND THE MAXIMUM STRESSES PRODUCED BY THE CONTRACTOR'S METHODS OR EQUIPMENT SHALL BE SUBMITTED TO THE DIRECTOR FOR REVIEW AND APPROVAL AT LEAST TWO WEEKS PRIOR TO THE START OF THE WORK.

PROPOSED REPAIRS, DEVELOPED BY A REGISTERED PROFESSIONAL ENGINEER, SHALL BE SUBMITTED IN WRITING FOR REVIEW AND APPROVAL BY THE DIRECTOR.

PORTIONS OF THE EXISTING STRUCTURE TO BE REMOVED :

THE FOLLOWING PORTIONS OF THE EXISTING STRUCTURE SHALL BE REMOVED TO THE LIMITS SHOWN ON THE PLANS.

1. COMPLETE REINFORCED CONCRETE DECK, SAFETY CURBS, RAILING, AND ASPHALT WEARING SURFACE.
2. PORTIONS OF REAR AND FORWARD ABUTMENT BACKWALLS, SAFETY CURBS AND WINGWALLS TO THE LIMITS SHOWN IN THESE PLANS.

SEE SHEET 14/15 FOR REMOVAL AND CONSTRUCTION PHASE SEQUENCE NOTES.

PAYMENT :

THIS WORK WILL BE PAID FOR AT THE CONTRACT LUMP SUM PRICE BID, WHICH PRICE AND PAYMENT SHALL BE FULL COMPENSATION FOR ALL LABOR, EQUIPMENT, MATERIALS AND INCIDENTALS NECESSARY TO COMPLETE THE WORK IN CONFORMANCE WITH THESE REQUIREMENTS, WITH PERTINENT PROVISIONS OF 202, AND TO THE SATISFACTION OF THE ENGINEER.

EXISTING REINFORCING STEEL

EXISTING REINFORCING STEEL PARTIALLY EXPOSED BY CONCRETE REMOVAL SHOULD BE LEFT IN PLACE, EXCEPT THAT IT SHALL BE BENT AS NECESSARY TO CLEAR PROPOSED CONCRETE SURFACES BY AT LEAST 2-INCHES.

REPLACEMENT OF EXISTING REINFORCING STEEL

ANY EXISTING REINFORCING BARS WHICH ARE TO BE INCORPORATED INTO THE NEW WORK AND WHICH ARE MADE UNUSABLE BY THE CONTRACTOR'S CONCRETE REMOVAL OPERATIONS SHALL BE REPLACED WITH NEW STEEL AT HIS COST. ANY EXISTING REINFORCING BARS DEEMED BY THE ENGINEER TO BE UNUSABLE BECAUSE OF CORROSION SHALL BE REPLACED WITH NEW STEEL. AN ALLOWANCE OF 100 POUNDS IS INCLUDED IN ITEM 509 FOR THIS PURPOSE.

FIELD BENDING AND CUTTING OF ANY NEW OR EXISTING REINFORCING STEEL SHALL BE IN ACCORDANCE WITH SECTION 509 AND SHALL BE INCLUDED IN THE BASE BID UNIT PRICE FOR ITEM 509, REINFORCING STEEL.

INSPECTION OF STRUCTURAL STEEL

THE ENGINEER SHALL BE GIVEN THE OPPORTUNITY TO VISUALLY INSPECT ALL EXISTING BUTT-WELDED TOP FLANGE SPLICES AND/OR TOP FLANGE COVER PLATE FILLET WELDS TO ENSURE THAT THEY ARE FREE OF DEFECTS. THE DECK SLAB HAUNCH FORMS IMMEDIATELY ADJACENT TO SUCH WELDS SHALL NOT BE ERECTED UNTIL AFTER THE ENGINEER HAS COMPLETED THIS INSPECTION. THIS INSPECTION SHALL NOT TAKE PLACE UNTIL AFTER THE TOP FLANGES ARE CLEANED AS SPECIFIED IN 511.08, BUT IT SHALL BE DONE BEFORE THE DECK SLAB REINFORCEMENT IS INSTALLED. THE COST ASSOCIATED WITH THIS INSPECTION SHALL BE INCLUDED WITH ITEM 511, SUPERSTRUCTURE CONCRETE FOR PAYMENT.

STRUCTURAL STEEL

NEW STEEL SHALL BE CLEANED AND IT SHALL BE PRIME PAINTED IN THE FIELD. AT THE CONTRACTOR'S OPTION, NEW STEEL MAY BE GIVEN A PRELIMINARY CLEANING IN THE SHOP. THE COST OF CLEANING AND PRIME PAINTING SHALL BE INCLUDED IN THE UNIT PRICE BID FOR SPECIAL ITEM "FIELD PAINTING OF NEW STEEL, SYSTEM OZEU".

REPLACEMENT OF EXISTING STRUCTURAL STEEL

ANY EXISTING STRUCTURAL STEEL INCLUDING CROSSFRAMES, BEARINGS, ETC. DEEMED BY THE ENGINEER TO BE DETERIORATED BEYOND ITS STRUCTURAL ABILITY TO PROVIDE THE NECESSARY STRENGTH IT WAS INTENDED, DUE TO CORROSION AND/OR DAMAGE, SHALL BE REPLACED WITH NEW STEEL.

ALL NEW STRUCTURAL STEEL REPLACEMENTS SHALL BE ASTM A36, GRADE 36, AND SHALL BE PAID FOR AT THE BASE BID UNIT PRICE FOR ITEM 513 - STRUCTURAL STEEL FOR REHABILITATION, AS PER PLAN. FOR BID PURPOSES A QUANTITY OF 250 POUNDS HAS BEEN ESTIMATED TO BE REPLACED. THE CONTRACTOR SHALL BE PAID FOR THE ACTUAL AMOUNT OF STRUCTURAL STEEL REPLACED.

FIELD PAINTING OF NEW STEEL, ITEMS 513 15901 & 513 16001 :

NEW STEEL SHALL BE PROVIDED BARE FOR PREPARATION AND PAINTING IN THE FIELD. FOR PURPOSES OF FIELD PAINTING, NEWLY ERECTED STEEL SHALL BE CONSIDERED EXISTING STEEL AND SHALL BE PREPARED AND PAINTED WITH A PRIME, INTERMEDIATE AND FINISH COAT OF PAINT IN CONFORMANCE WITH PROPOSAL NOTE "FIELD PAINTING OF EXISTING STEEL, SYSTEM OZEU." COST OF CLEANING AND PAINTING OF NEW STEEL WITH THE OZEU PAINT SYSTEM SHALL BE INCLUDED IN A SINGLE SPECIAL ITEM "FIELD PAINTING OF NEW STEEL, SYSTEM OZEU." AT THE CONTRACTOR'S OPTION, NEW STEEL MAY BE GIVEN A PRELIMINARY CLEANING IN THE SHOP.

FIELD PAINTING OF EXISTING STEEL

ALL EXISTING STEEL SHALL BE FIELD PAINTED USING A THREE COAT SYSTEM "OZEU". COLOR OF FINISH COAT SHALL BE GREY FS-595A-15450, SEE PROPOSAL NOTE.

ITEM 511, CLASS S CONCRETE, SUPERSTRUCTURE, AS PER PLAN

MEMBRANE CURING PER SUPPLEMENTAL SPECIFICATION 836 WILL NOT BE PERMITTED. CONCRETE SHALL BE CURED BY METHOD (A), WATER CURING.

ITEM SPECIAL - SEALING OF CONCRETE SURFACES

A CONCRETE SEALER SHALL BE APPLIED TO THE DECK TO THE LIMITS SHOWN ON THE TRANSVERSE SECTION ON SHEET 8/15, AND TO THE ABUTMENTS AS SHOWN ON SHEET 7/15 AND TO THE SURFACES OF THE CANTILEVERED PORTIONS OF THE PIER CAPS AS SHOWN ON THE DETAIL BELOW. SEE THE PROPOSAL NOTE FOR SURFACE PREPARATION REQUIREMENTS, APPLICATION RATES, MATERIAL REQUIREMENTS AND APPLICATION PROCEDURES.

CUT LINE CONSTRUCTION JOINT PREPARATION

SAW CUT BOUNDARIES OF PROPOSED CONCRETE REMOVALS 1" DEEP. REMOVE CONCRETE TO A ROUGH SURFACE. WHERE PRACTICABLE, AT LEAST 2'-0 LENGTH OF PROTRUDING REINFORCING STEEL SHALL BE LEFT IN PLACE. INSTALL DOWEL BARS AS SPECIFIED. PRIOR TO CONCRETE PLACEMENT, ABRASIVELY CLEAN JOINT SURFACE AND EXPOSED REINFORCEMENT TO REMOVE LOOSE AND DISINTEGRATED CONCRETE AND LOOSE RUST. THEN, THE JOINT SURFACE AND EXPOSED REINFORCEMENT SHALL BE THOROUGHLY CLEANED OF ALL DIRT, DUST, OR OTHER FOREIGN MATERIAL BY USE OF WATER, AIR UNDER PRESSURE, OR OTHER METHODS THAT PRODUCE SATISFACTORY RESULTS. CONCRETE BONDING SURFACES SHALL BE WET WITHOUT FREE WATER AS CONCRETE IS PLACED.

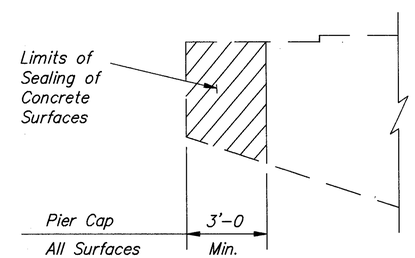

TYPICAL CONCRETE SEALER LIMITS AT PIERS

SHEET 6/15

W.E. QUICKSALL AND ASSOCIATES, INC.
NEW PHILADELPHIA, OHIO

GENERAL NOTES

BRIDGE NO. TUS-259-0011
S.R. 259 OVER TUSCARAWAS RIVER

TUSCARAWAS COUNTY — STA. 5+89.75 STA. 11+22.84

DESIGNED	DRAWN	TRACED	CHECKED	REVIEWED	DATE	REVISED
CFD	CFD		ZRD	wda	12/92	9/92

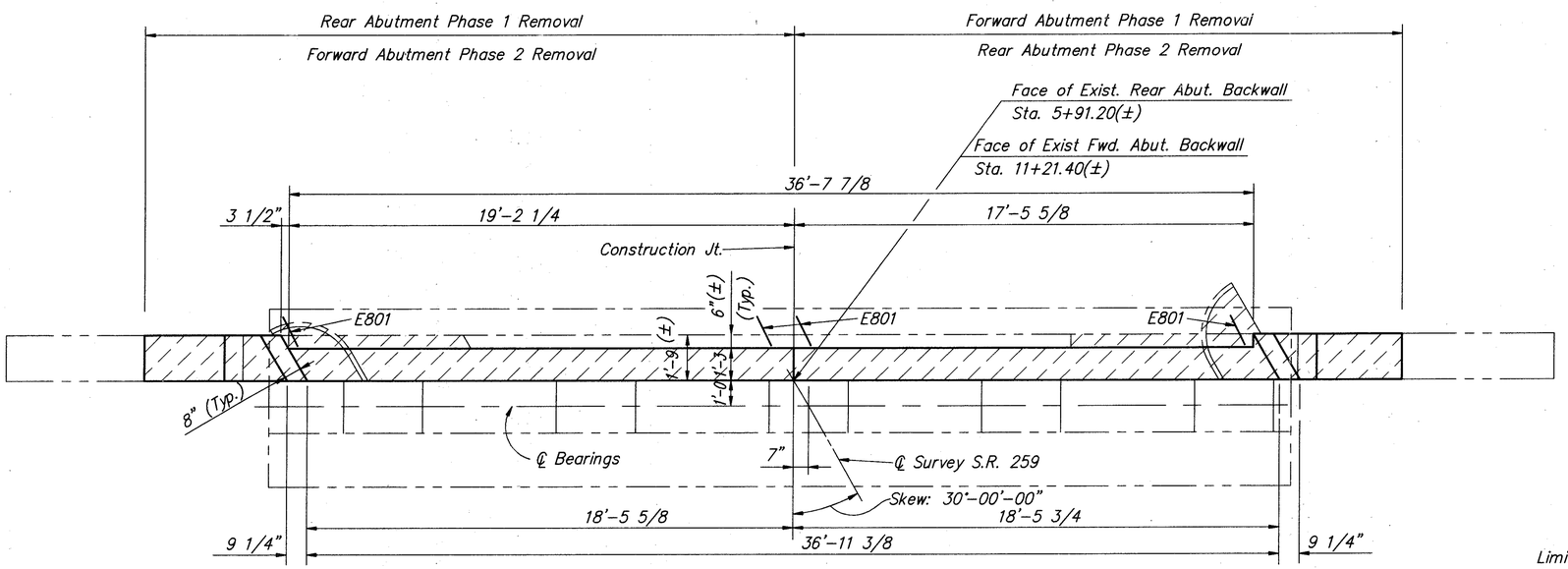

PLAN

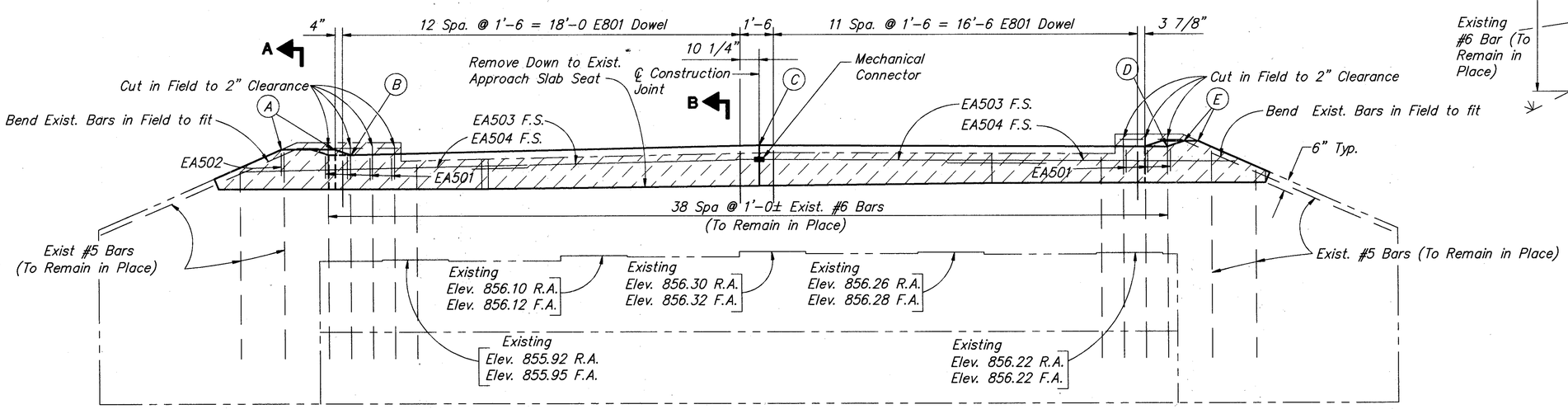

ELEVATION

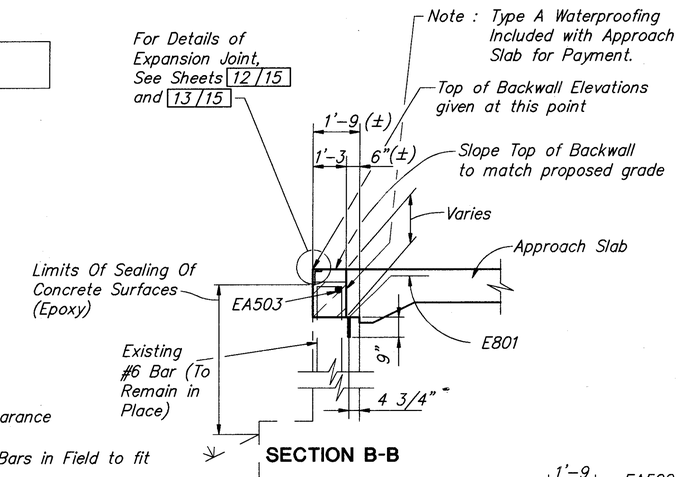

SECTION B-B

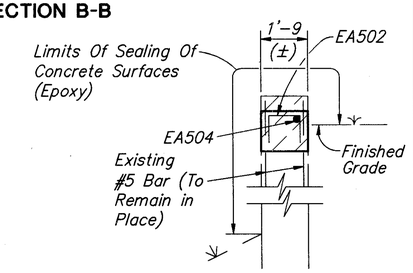

SECTION A-A

F.S. ~ Denotes Far Side
R.A. ~ Denotes Rear Abutment
F.A. ~ Denotes Fwd. Abutment

– To Be Removed

ELEVATIONS

LOCATION	A	B	C	D	E
REAR ABUTMENT	860.91	860.67	861.08	860.99	861.25
FWD. ABUTMENT	861.04	860.80	861.21	861.11	861.37

SHEET 7/15

W.E. QUICKSALL AND ASSOCIATES, INC.
NEW PHILADELPHIA, OHIO

ABUTMENT DETAILS

BRIDGE NO. TUS-259-0011
S.R. 259 OVER TUSCARAWAS RIVER

TUSCARAWAS COUNTY — STA. 5+89.75 STA. 11+22.84

DESIGNED	DRAWN	TRACED	CHECKED	REVIEWED	DATE	REVISED
FDH	FDH		ZRD	wda	10/92	9/92

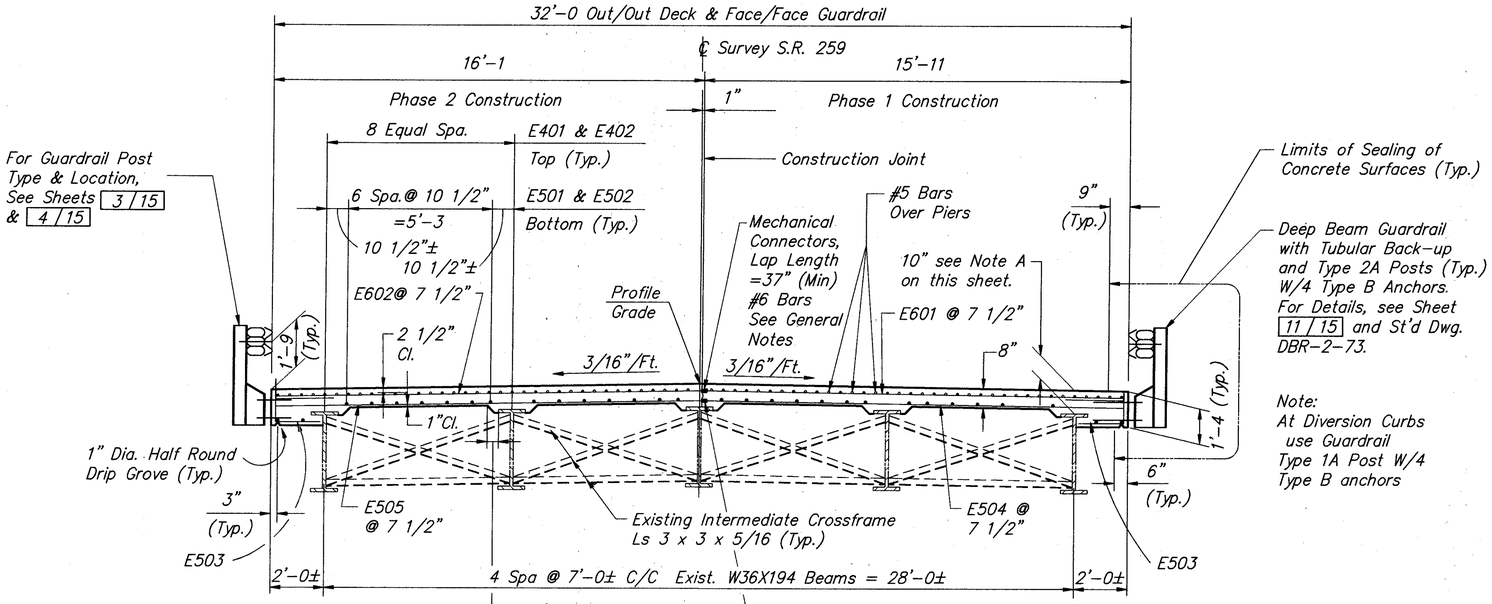

TRANSVERSE SECTION

Note A : The nominal deck slab depth over beams is 10". The actual slab depth may be more; it should not be less. After complete removal of the existing deck slab, the contractor shall determine, at various locations along the spans, actual top of beam elevations and deduct them from proposed screed elevations over the beams (or the proposed surface elevations over the beams determined from adjacent screed elevations) to obtain actual slab depths. For depths less than 10", the proposed grade line and deck surface may have to be raised to provide the nominal depth, as directed by the Engineer.

The quantity of deck concrete to be paid for shall be based on the nominal deck slab depth given above.

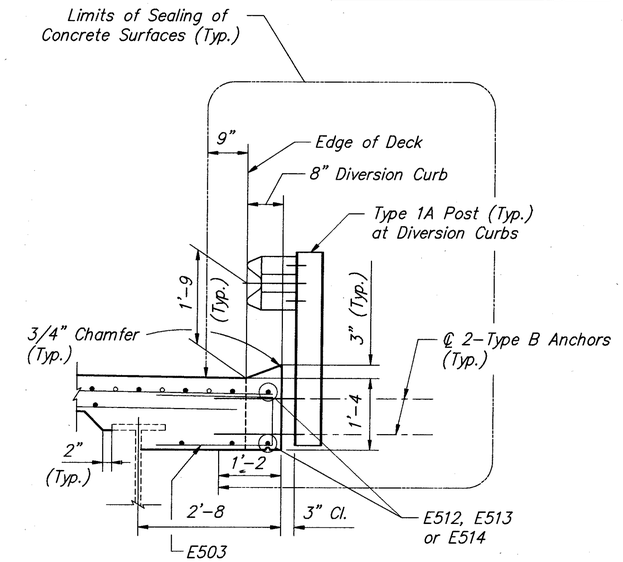

TYPICAL DIVERSION CURB SECTION AT PIERS & DECK ENDS

TOP OF SLAB ELEVATIONS (SCREED ELEVATIONS)

PT.	A STATION	A ELEVATION	B STATION	B ELEVATION	C STATION	C ELEVATION	PT.	A STATION	A ELEVATION	B STATION	B ELEVATION	C STATION	C ELEVATION
BRG.	6+01.59	861.01	5+92.35	861.10	5+83.11	860.69	BRG.	8+65.53	863.19	8+56.29	863.44	8+47.05	863.18
1/5	6+16.78	861.29	6+07.54	861.39	5+98.30	860.99	1/5	8+84.33	863.19	8+75.09	863.45	8+65.85	863.21
2/5	6+31.96	861.54	6+22.73	861.65	6+13.49	861.26	2/5	9+03.13	863.18	8+93.89	863.45	8+84.65	863.22
3/5	6+47.15	861.75	6+37.91	861.87	6+28.68	861.48	3/5	9+21.93	863.11	9+12.69	863.40	9+03.45	863.18
4/5	6+62.34	861.93	6+53.10	862.06	6+43.87	861.68	4/5	9+40.73	863.00	9+31.49	863.29	9+22.25	863.08
BRG.	6+77.53	862.10	6+68.29	862.24	6+59.05	861.87	BRG.	9+59.53	862.87	9+50.29	863.17	9+41.05	862.98
1/5	6+96.33	862.33	6+87.09	862.48	6+77.85	862.12	1/5	9+78.33	862.75	9+69.09	863.07	9+59.85	862.88
2/5	7+15.13	862.55	7+05.89	862.71	6+96.65	862.36	2/5	9+97.13	862.62	9+87.89	862.95	9+78.65	862.78
3/5	7+33.93	862.72	7+24.69	862.89	7+15.45	862.55	3/5	10+15.93	862.44	10+06.69	862.78	9+97.45	862.62
4/5	7+52.73	862.83	7+43.49	863.02	7+34.25	862.69	4/5	10+34.73	862.21	10+25.49	862.56	10+16.25	862.41
BRG.	7+71.53	862.93	7+62.29	863.13	7+53.05	862.82	BRG.	10+53.53	861.97	10+44.29	862.33	10+35.05	862.19
1/5	7+90.33	863.05	7+81.09	863.26	7+71.85	862.96	1/5	10+68.72	861.78	10+59.48	862.16	10+50.24	862.02
2/5	8+09.13	863.15	7+99.89	863.37	7+90.65	863.08	2/5	10+83.91	861.59	10+74.67	861.98	10+65.43	861.85
3/5	8+27.93	863.20	8+18.69	863.43	8+09.45	863.15	3/5	10+99.10	861.37	10+89.86	861.77	10+80.62	861.65
4/5	8+46.73	863.20	8+37.49	863.44	8+28.25	863.18	4/5	11+14.29	861.11	11+05.05	861.51	10+95.81	861.41
							BRG.	11+29.48	860.82	11+20.24	861.23	11+11.00	861.13

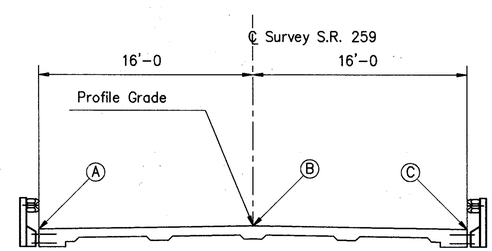

Note:
Elevations at the top of concrete slab are those required before deck concrete is placed. Allowance has been made for dead load deflection caused by the weight of the concrete.

For Guardrail Post Details, See Sheet 11 / 15

For Phase Construction Details, See Sheet 14 / 15

For Deck Plan, See Sheet 10 / 15

SHEET 8 / 15

W.E. QUICKSALL AND ASSOCIATES, INC.
NEW PHILADELPHIA, OHIO

SUPERSTRUCTURE DETAILS
BRIDGE NO. TUS-259-0011
S.R. 259 OVER TUSCARAWAS RIVER

TUSCARAWAS COUNTY — STA. 5+89.75 STA. 11+22.84

DESIGNED	DRAWN	TRACED	CHECKED	REVIEWED	DATE	REVISED
CFD	CFD		ZRD	wda	10/92	8/92

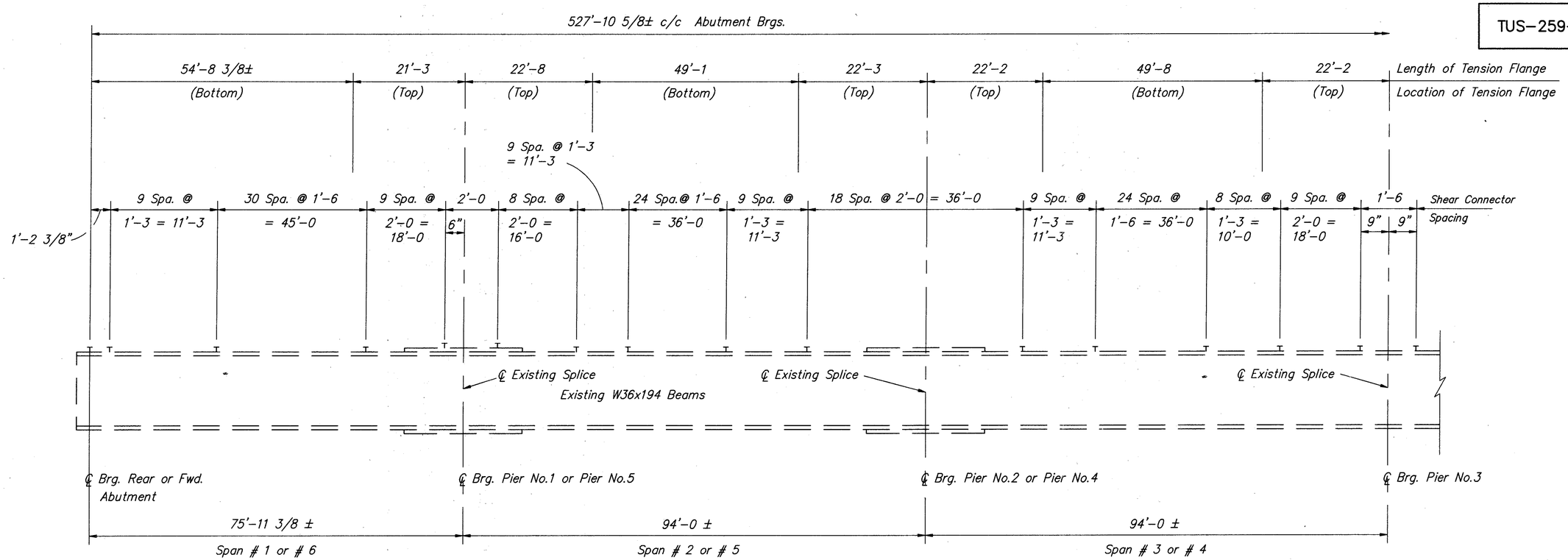

TYPICAL BEAM ELEVATION

(Symmetrical About ℄ Pier No. 3)

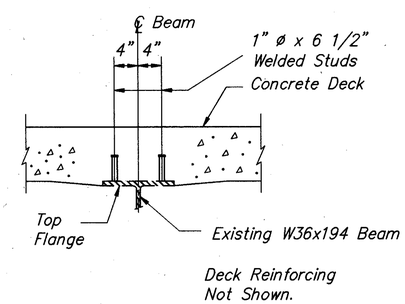

TYPICAL SECTION
SHEAR CONNECTOR DETAIL

For Deck Plan, See Sheet 10/15

STEEL NOTES

WELDED ATTACHMENTS OF SUPPORTS FOR CONCRETE DECK FINISHING MACHINE MAY BE MADE TO AREAS OF THE FASCIA STRINGER FLANGES DESIGNATED "COMPRESSION". ATTACHMENTS SHALL NOT BE MADE TO AREAS DESIGNATED "TENSION". FILLET WELDS TO COMPRESSION FLANGES SHALL BE NOT CLOSER THAN 1" FROM EDGE OF FLANGE, BE NOT MORE THAN 2" LONG, AND BE NOT SMALLER THAN THE MINIMUM SIZE REQUIRED BY AASHTO/AWS BRIDGE WELDING CODE.

AT THE CONTRACTOR'S OPTION, THE BOTTOM MAT OF DECK REINFORCING STEEL MAY BE PLACED PRIOR TO ATTACHING THE SHEAR CONNECTOR STUDS TO AVOID INTERFERENCE WITH THE REINFORCING STEEL.

SHEET 9/15

W.E. QUICKSALL AND ASSOCIATES, INC.
NEW PHILADELPHIA, OHIO

SUPERSTRUCTURE DETAILS
BRIDGE NO. TUS-259-0011
S.R. 259 OVER TUSCARAWAS RIVER

TUSCARAWAS COUNTY — STA. 5+89.75 STA. 11+22.84

DESIGNED	DRAWN	TRACED	CHECKED	REVIEWED	DATE	REVISED
CFD	CFD		wda	ZRD	8/92	8/92

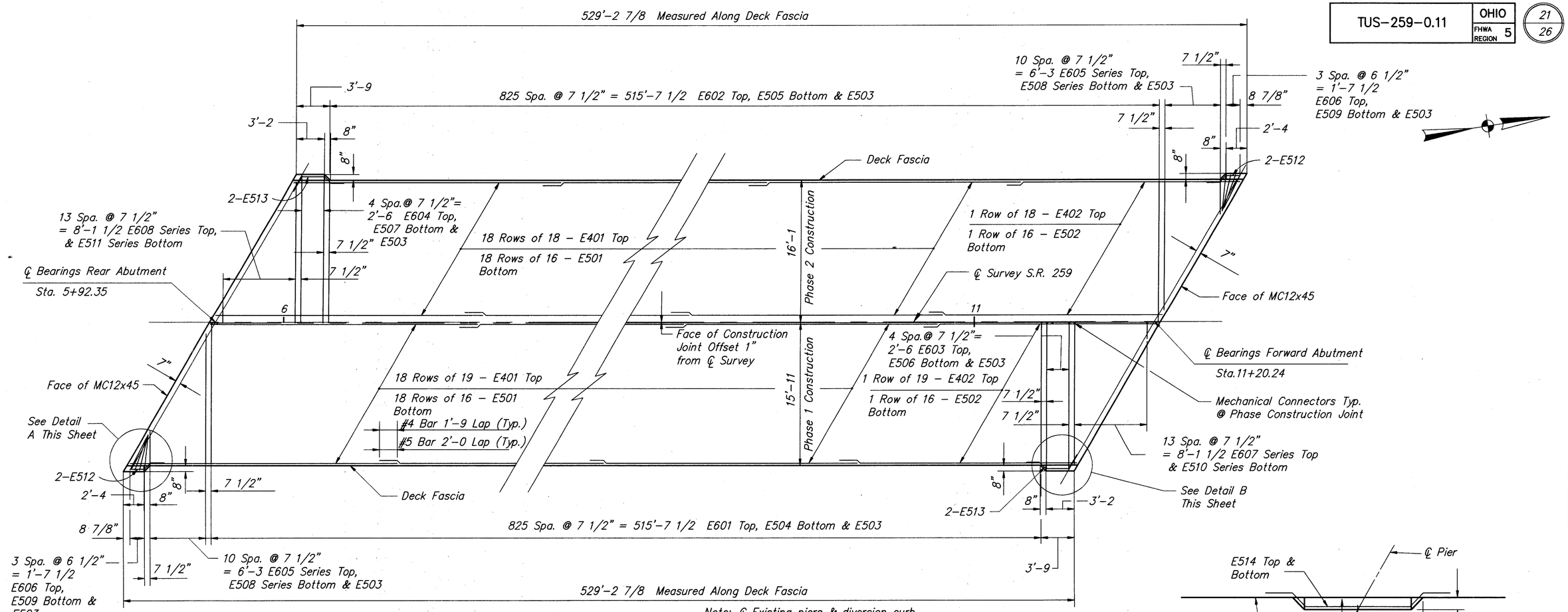

PLAN OF DECK REINFORCING

Note: ℄ Existing piers & diversion curb at piers not shown. See detail plan of diversion curb at piers on this sheet.

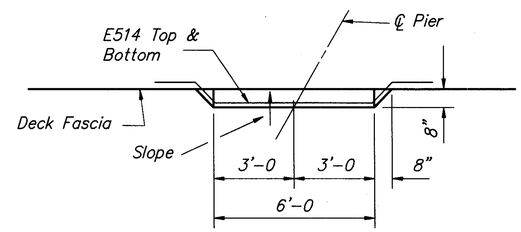

TYPICAL PLAN OF DIVERSION CURB AT PIERS

For Diversion Curb Typical Section, See Sheet 8/15

For Transverse Section, See Sheet 8/15

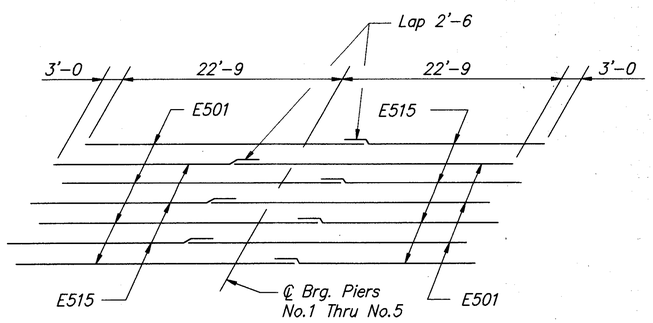

STAGGER SYSTEM OF E501 & E515 BARS OVER PIERS

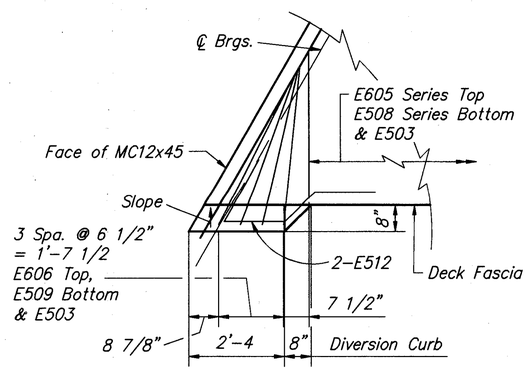

DETAIL A

(Typical Right Rear & Left Fwd. Deck Ends)

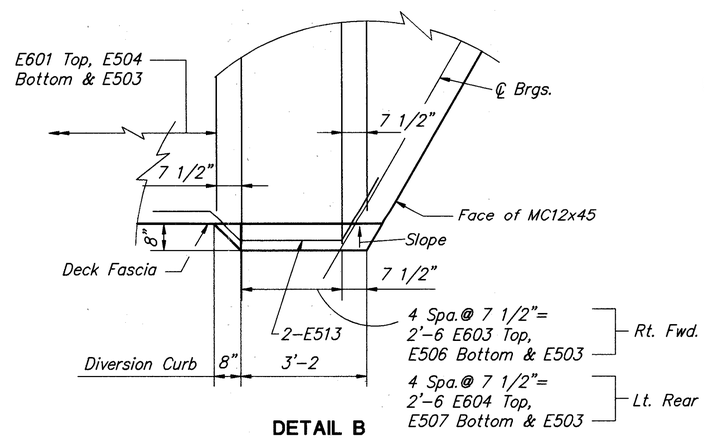

DETAIL B

(Typical Left Rear & Right Fwd. Deck Ends)

SHEET 10/15

W.E. QUICKSALL AND ASSOCIATES, INC.
NEW PHILADELPHIA, OHIO

SUPERSTRUCTURE DETAILS

BRIDGE NO. TUS-259-0011
S.R. 259 OVER TUSCARAWAS RIVER

TUSCARAWAS COUNTY — STA. 5+89.75 STA. 11+22.84

DESIGNED	DRAWN	TRACED	CHECKED	REVIEWED	DATE	REVISED
CFD	CFD		wda	ZRD	9/92	9/92

D:\DWG\S91590V/R4.dwg - SEPT 24, 1992 - 08:00:01

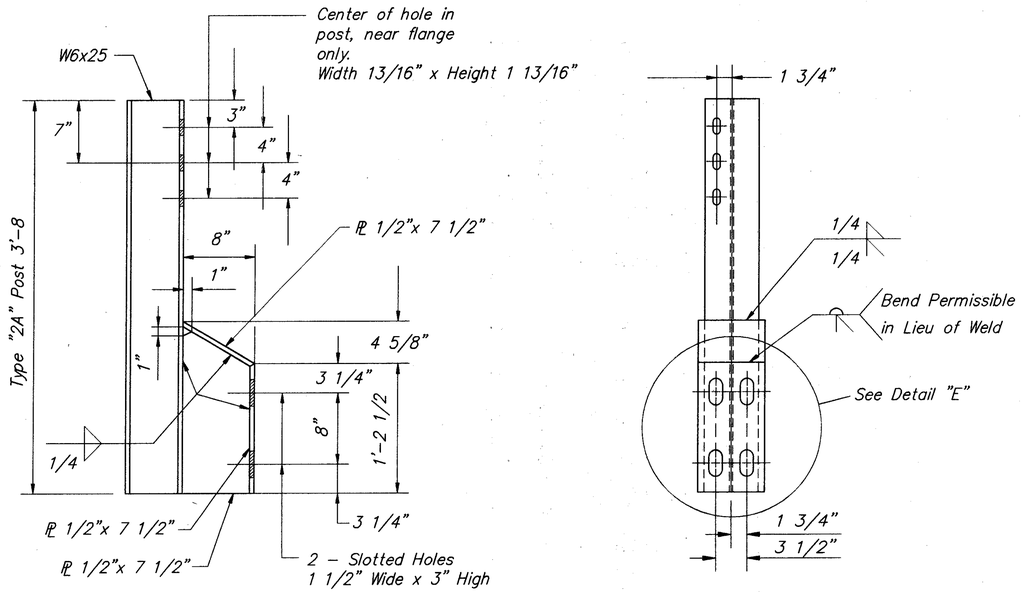

TYPE 2A POST DETAILS

(For Standard Deck Mounting)

GUARDRAIL POST DETAILS

BRIDGE RAIL POST NOTES

ALL DIMENSIONS FOR SHAPES AND PLATES SHOWN ON THESE RAIL POST DRAWINGS SUPERSEDE THOSE SHOWN ON STANDARD DRAWING DBR-2-73, DATED 5-10-73.

STRUCTURAL STEEL SHAPES AND PLATES SHALL CONFORM TO ASTM A36.

GALVANIZING: ALL SHAPES AND PLATES SHALL BE GALVANIZED IN ACCORDANCE WITH 711.02.

ALL POSTS SHALL BE SHOP MARKED TO SHOW TYPE AND LENGTH. FOR EXAMPLE, "2A" INDICATES A TYPE 2 POST THAT IS 3'-8" LONG.

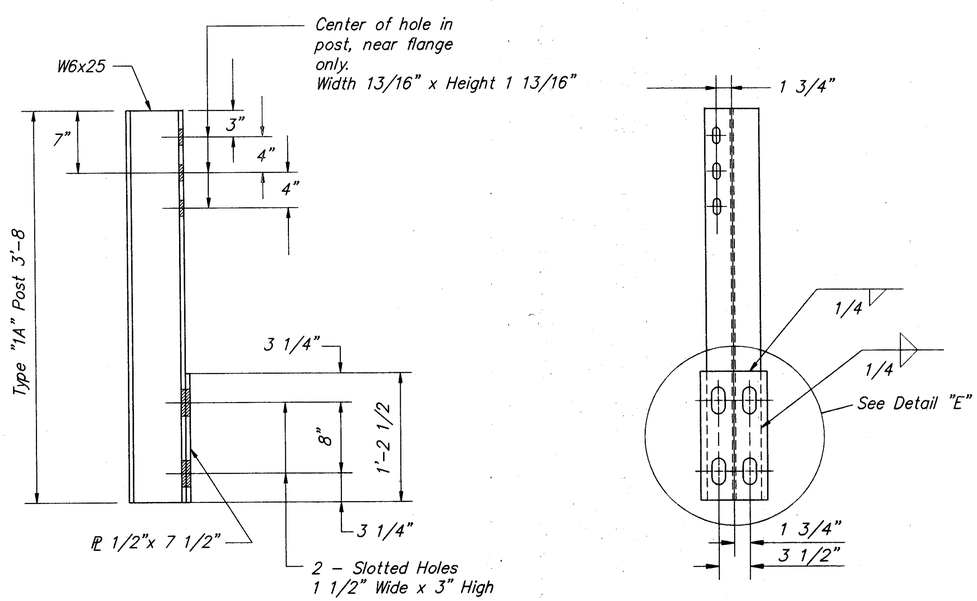

TYPE 1A POST DETAILS

(Typical For Mounting To Diversion Curbs)

Note: For details not shown see St'd. Drawing DBR-2-73

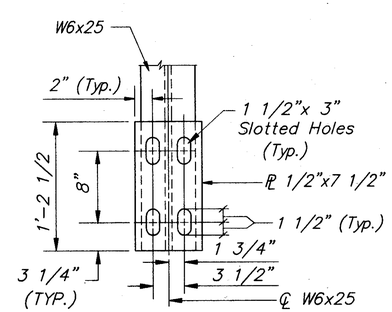

DETAIL "E"
GUARDRAIL POST ANCHORAGE PLATE

(Type 1A Post As Shown / Type 2A Post Similar)

(For Vertical Adjustment)

For Type and Location of Posts see General Plan Sheets 3/15 & 4/15

SHEET 11/15

W.E. QUICKSALL AND ASSOCIATES, INC.
NEW PHILADELPHIA, OHIO

GUARDRAIL POST DETAILS

BRIDGE NO. TUS-259-0011
S.R. 259 OVER TUSCARAWAS RIVER

TUSCARAWAS COUNTY — STA. 5+89.75 STA. 11+22.84

DESIGNED	DRAWN	TRACED	CHECKED	REVIEWED	DATE	REVISED
CFD	CFD		wda	ZRD	8/92	8/92

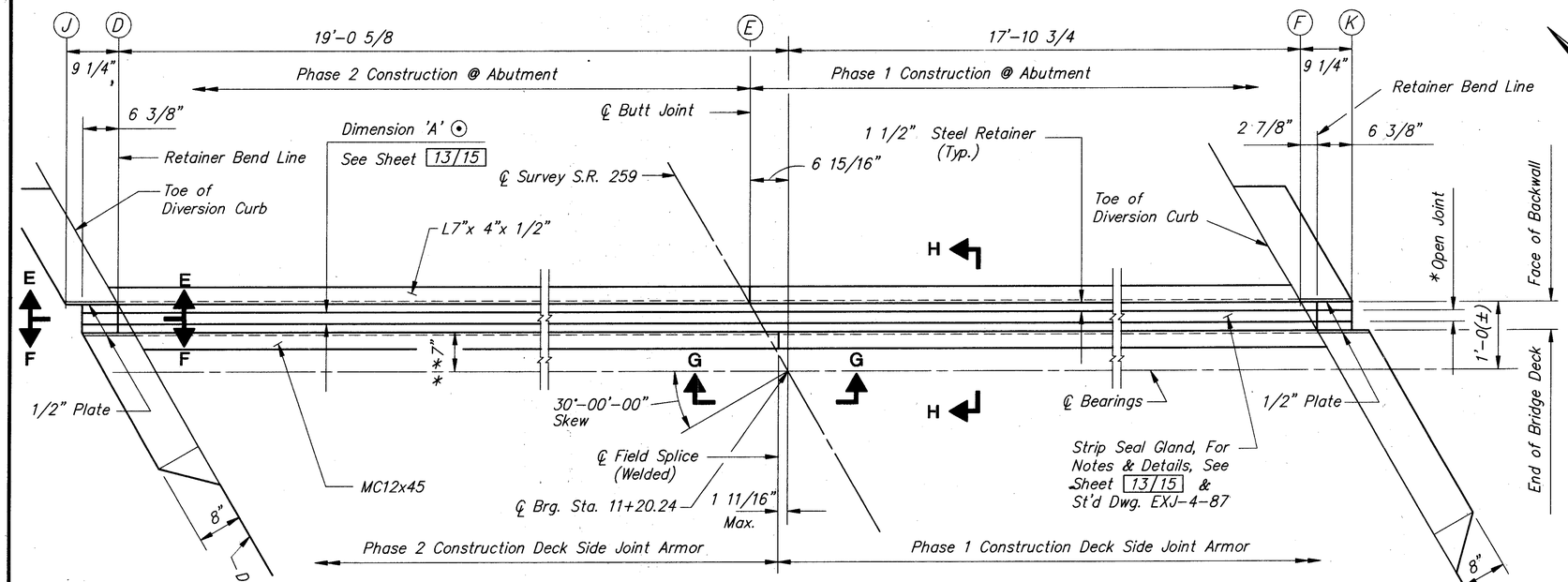

PLAN AT FORWARD ABUTMENT

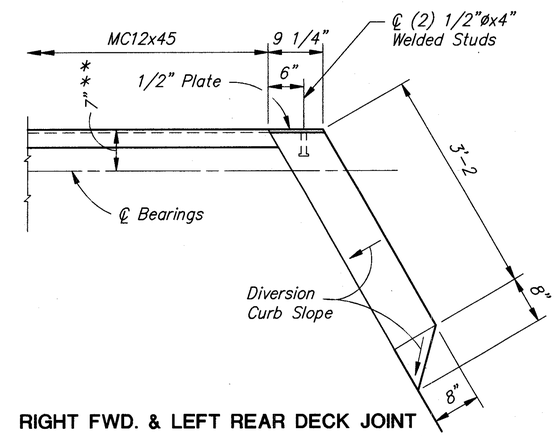

RIGHT FWD. & LEFT REAR DECK JOINT EXTENSION PLAN DETAIL

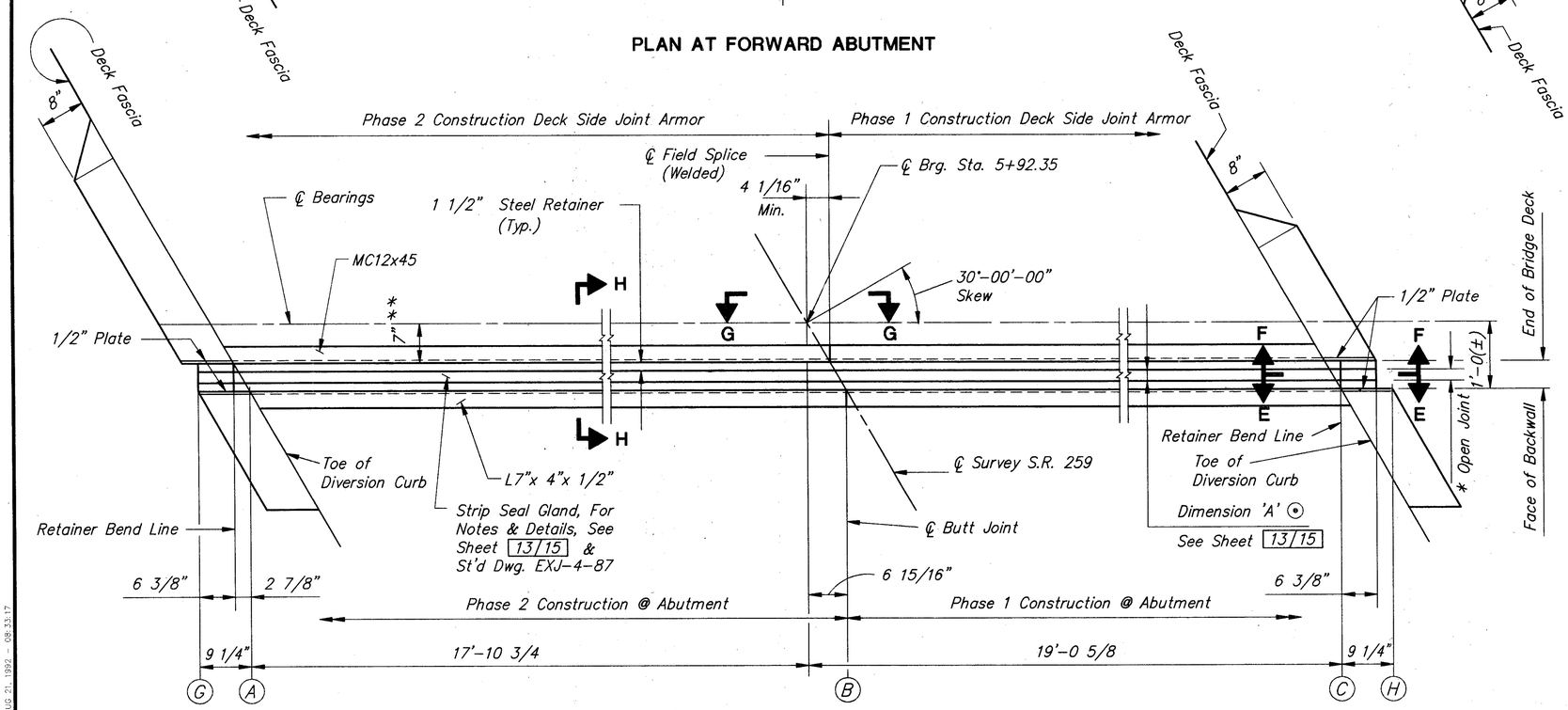

PLAN AT REAR ABUTMENT

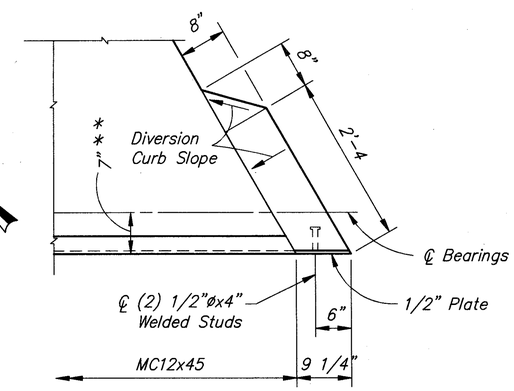

RIGHT REAR & LEFT FWD. DECK JOINT EXTENSION PLAN DETAIL

POINT	ELEVATION									
	A	B	C	D	E	F	G	H	J	K
REAR ABUTMENT	860.99	861.08	860.67	–	–	–	861.25	860.91	–	–
FWD. ABUTMENT	–	–	–	860.80	861.21	861.11	–	–	861.04	861.37

* Width of Open Joint Equal to Dimension 'A' ⊙

** @ 60° F

For Typical Section Thru Diversion Curb, See Sheet 8/15

For Sections E-E, F-F, G-G, & H-H See Sheet 13/15

SHEET 12/15

W.E. QUICKSALL AND ASSOCIATES, INC.
NEW PHILADELPHIA, OHIO

EXPANSION JOINT DETAILS - 1

BRIDGE NO. TUS-259-0011
S.R. 259 OVER TUSCARAWAS RIVER

TUSCARAWAS COUNTY — STA. 5+89.75 — STA. 11+22.84

DESIGNED	DRAWN	TRACED	CHECKED	REVIEWED	DATE	REVISED
CFD	CFD		wda	ZRD	9/92	9/92

D:\DWG\39159-P/12.dwg - AUG 21, 1992 - 08:33:17

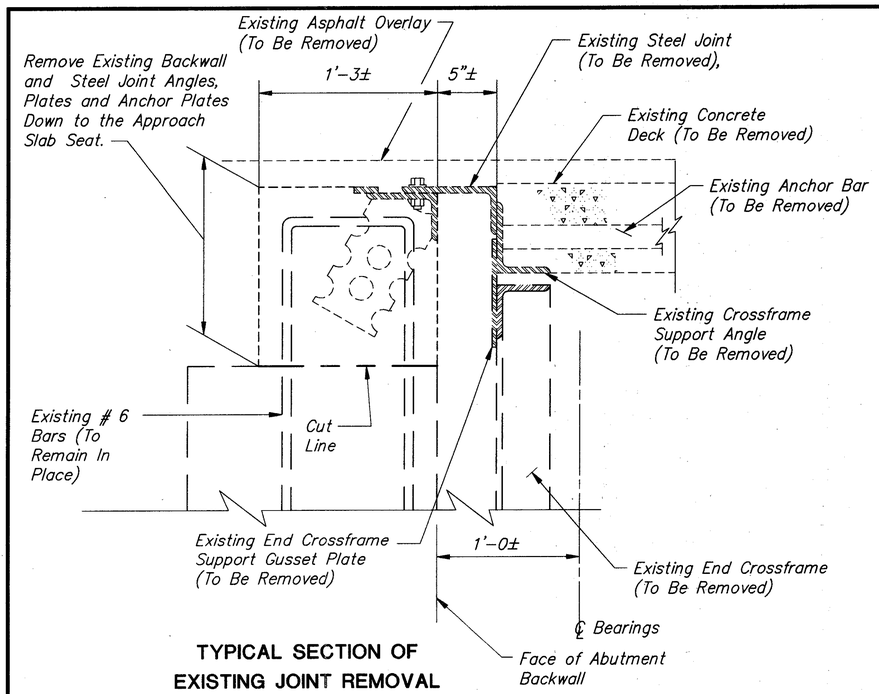

TYPICAL SECTION OF EXISTING JOINT REMOVAL

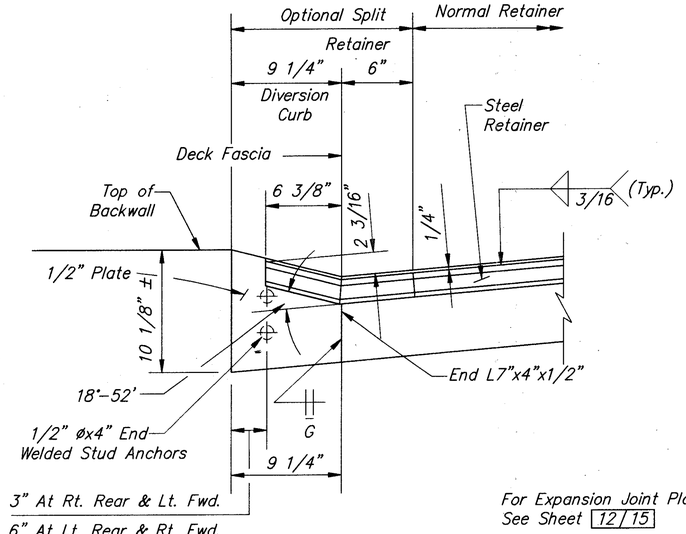

For Expansion Joint Plan, See Sheet 12/15

SECTION E-E

Right Rear & Left Forward Abutment Shown. Left Rear & Right Forward Abutment Similar To Section F-F.

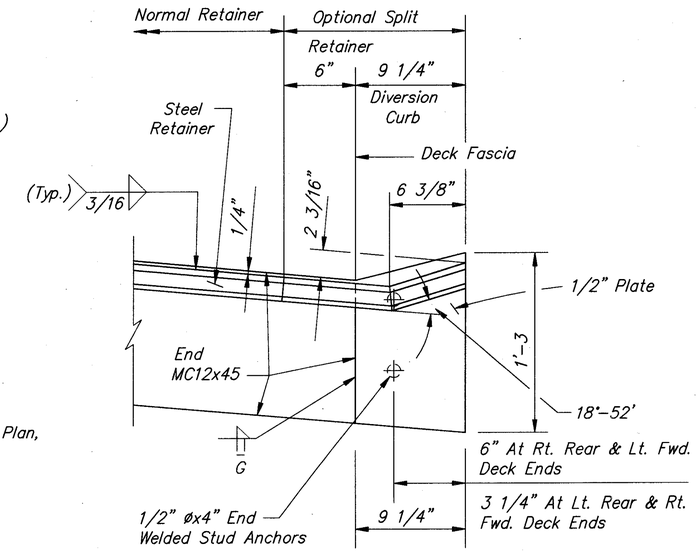

SECTION F-F

Right Rear & Left Forward Deck End Shown. Left Rear & Right Forward Deck End Similar To Section E-E.

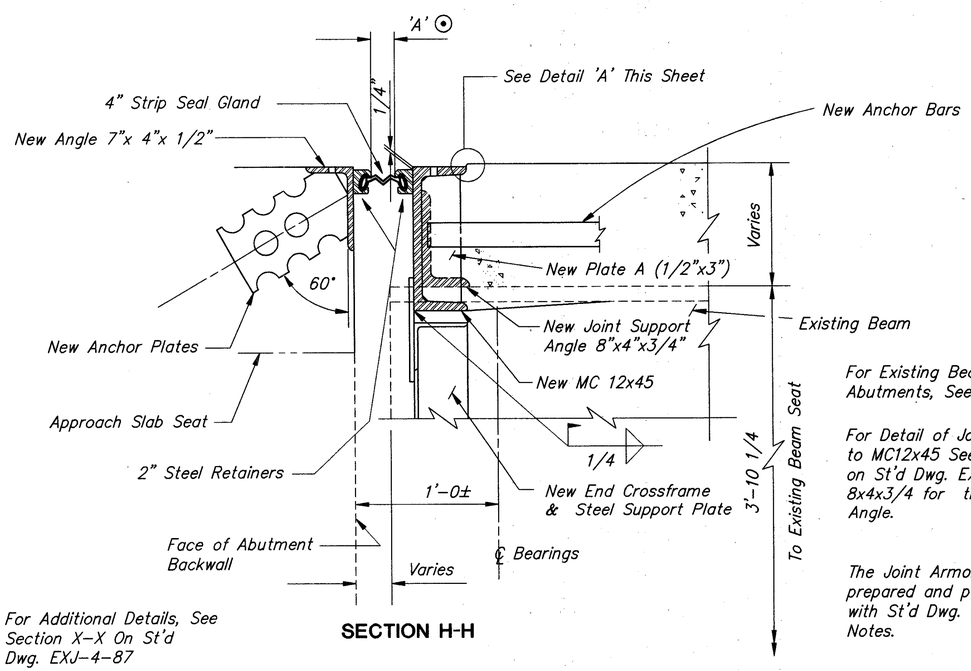

For Additional Details, See Section X-X On St'd Dwg. EXJ-4-87

SECTION H-H

For Existing Beam Seat Elevations at Abutments, See Sheet 7/15

For Detail of Joint Support Attachment to MC12x45 See Detail A & Section C-C on St'd Dwg. EXJ-4-87 Substituting 8x4x3/4 for the 6x4x3/4 Support Angle.

The Joint Armor shall be Sandblasted, prepared and painted in accordance with St'd Dwg. EXJ-4-87 General Notes.

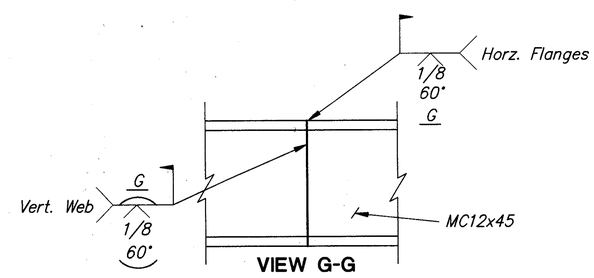

VIEW G-G

WELDED CONNECTIONS: All superstructure field splices shall have a complete penetration butt weld. Welds in contact with seal shall be ground flush. Welds shall conform to standard AWS and AASHTO specifications for highway bridges.

DIMENSION 'A' ⊙ FOR VARIOUS INSTALLATION TEMPERATURES		
TEMP. °F	DIMENSION 'A' ⊙ REAR ABUT.	DIMENSION 'A' ⊙ FWD. ABUT.
30°	2 9/16"	2 9/16"
40°	2 3/8"	2 3/8"
50°	2 3/16"	2 3/16"
60°	2"	2"
70°	1 13/16"	1 13/16"
80°	1 5/8"	1 5/8"
90°	1 7/16"	1 7/16"

Dimensions 'A' ⊙ measured normal to ℄ Bearings.

For Dimension 'A' ⊙ Location, See Expansion Joint Plan Sheet 12/15 and Section H-H

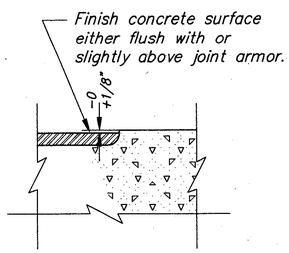

DETAIL 'A'

For Location of Section E-E, G-G, F-F & H-H, See Sheet 12/15

For Strip Seal Joint Details And Notes, See St'd Dwg. EXJ-4-87

Note:
Joint seal glands shall have a 4" movement rating at both rear and forward abutment.

SHEET 13/15

W.E. QUICKSALL AND ASSOCIATES, INC.
NEW PHILADELPHIA, OHIO

EXPANSION JOINT DETAILS - 2

BRIDGE NO. TUS-259-0011
S.R. 259 OVER TUSCARAWAS RIVER

TUSCARAWAS COUNTY — STA. 5+89.75 — STA. 11+22.84

DESIGNED	DRAWN	TRACED	CHECKED	REVIEWED	DATE	REVISED
CFD	CFD		wda	ZRD	9/92	9/92

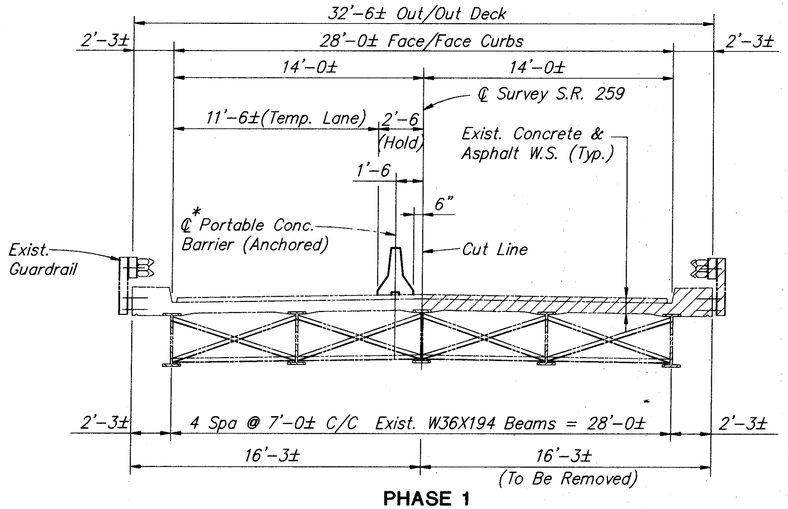

PHASE 1
(LOOKING NORTH)

*For Additional Details, See Standard Drawing PCB-91.

NOTE:
ITEM 622-PORTABLE CONCRETE BARRIER, 32", BRIDGE MOUNTED.
IS CARRIED WITH THE ROADWAY QUANTITIES.

Note: All existing dimensions (±) are approximate. Reinforcing not shown.

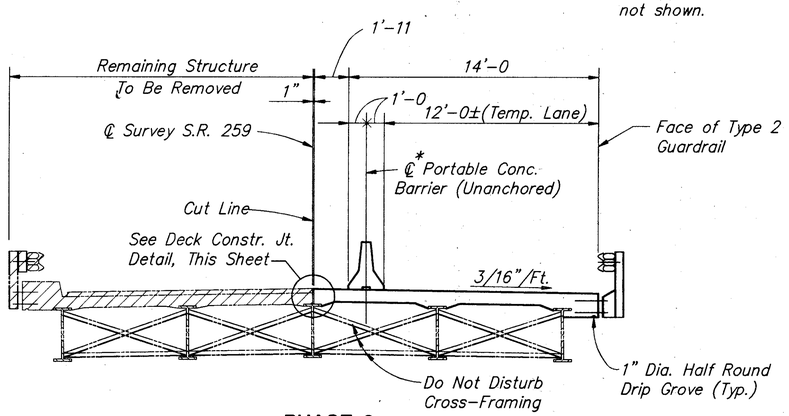

PHASE 2
(LOOKING NORTH)

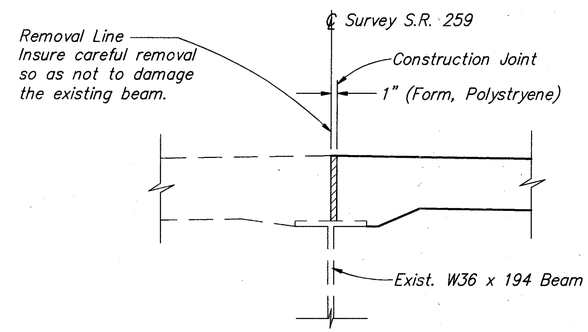

DECK CONSTRUCTION JOINT DETAIL

CONSTRUCTION PHASE SEQUENCE

THE BRIDGE AND APPROACH SLABS SHALL BE CONSTRUCTED IN ACCORDANCE WITH THE FOLLOWING SEQUENCE OF OPERATIONS:

1 INSTALL PHASE 1 PORTABLE CONCRETE BARRIER WITH TWO ANCHORS PER SEGMENT.

2. CUT DECK ALONG CUT LINE AND REMOVE PORTION OF EXISTING SUPERSTRUCTURE TO THE LIMITS SHOWN UNDER PHASE 1 ON THIS SHEET.

3. REMOVE PORTIONS OF EXISTING ABUTMENTS TO THE LIMITS SHOWN UNDER PHASE 1 ON SHEET 7/15. SPECIAL CARE SHALL BE TAKEN TO PROTECT ALL PORTIONS OF EXISTING STRUCTURE TO BE USED AS TEMPORARY ROADWAY DURING PHASE 1 CONSTRUCTION.

4. INSTALL NEW EXPANSION JOINT ARMOR AS SHOWN IN THESE PLANS FOR PHASE 1 CONSTRUCTION, SEE SHEETS 12/15 & 13/15.

5. CONSTRUCT THAT PORTION OF THE CONCRETE DECK (INCLUDING EXPANSION JOINT ARMOR AND GUARDRAIL, BUT EXCLUDING STRIP SEALS), TO THE LIMITS SHOWN UNDER PHASE 1 ON THESE PLANS.

6. CONSTRUCT THOSE PORTIONS OF THE ABUTMENT BACKWALL AND WING, INCLUDING EXPANSION JOINT ARMOR, TO THE LIMITS OF THE PROPOSED CONSTRUCTION JOINTS UNDER PHASE 1 CONSTRUCTION.

7. CONSTRUCT THAT PORTION OF THE APPROACH SLABS SHOWN UNDER PHASE 1 ON SHEETS 3/15 & 4/15.

8. INSTALL PHASE 2 PORTABLE CONCRETE BARRIER AS SHOWN ON THIS SHEET AND REMOVE PHASE 1 PORTABLE CONCRETE BARRIER, AS PER SHEET 7 & 8 OF THE ROADWAY PLANS.

9. REMOVE REMAINING PORTIONS OF THE EXISTING SUPERSTRUCTURE AND ABUTMENTS TO THE LIMITS SHOWN UNDER PHASE 2 ON SHEET 7/15.

10. COMPLETE CONSTRUCTION FOR PHASE 2, IN THE SAME SEQUENCE AS NOTED ABOVE IN ITEMS #4 THRU #7 FOR PHASE 1.

11. THE STRIP SEALS ARE TO BE INSTALLED IN ONE CONTINUOUS PIECE AFTER THE TWO PHASES OF THE STRUCTURE ARE COMPLETE.

SHEET 14/15

W.E. QUICKSALL AND ASSOCIATES, INC.
NEW PHILADELPHIA, OHIO

PHASE CONSTRUCTION DETAILS
BRIDGE NO. TUS-259-0011
S.R. 259 OVER TUSCARAWAS RIVER

TUSCARAWAS COUNTY
STA. 5+89.75
STA. 11+22.84

DESIGNED	DRAWN	TRACED	CHECKED	REVIEWED	DATE	REVISED
FDH	CFD		ZRD	wda	10/92	9/92

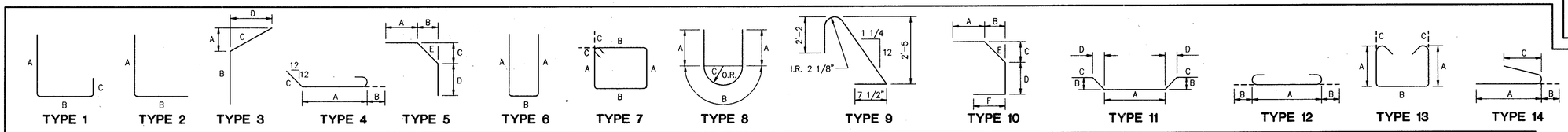

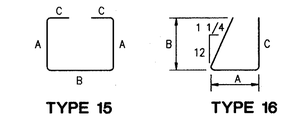

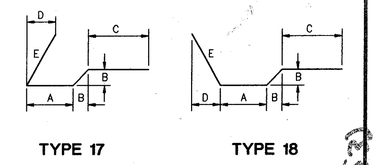

SUPERSTRUCTURE

	MARK	TYPE	A	B	C	D	E		NUMBER			TOTAL	LENGTH	WEIGHT
**	E601	Str.										826	15'-9	19540
**	E602	Str.										826	15'-11	19747
**	E603	Str.										5	16'-5	123
**	E604	Str.										5	16'-7	125
	E605	Str.	Length Varies By 1'-1									2 Series 11	3'-8 To 14'-6	300
	E606	Str.										8	4'-0	48
**	E607	Str.	Length Varies By 1'-1									1 Series 14	1'-8 To 15'-9	183
**	E608	Str.	Length Varies By 1'-1									1 Series 14	1'-10 To 15'-11	187
													SUBTOTAL	40253
	E501	Str.										756	30'-0	23655
	E502	Str.										32	24'-10	829
	E503	1	2'-2	10"	1'-8							1692	4'-5	7794
**	E504	Str.										826	15'-9	13569
**	E505	Str.										826	15'-11	13713
**	E506	Str.										5	16'-5	86
**	E507	Str.										5	16'-7	86
	E508	Str.	Length Varies By 1'-1									2 Series 11	3'-8 To 14'-6	208
	E509	Str.										8	4'-0	33
**	E510	Str.	Length Varies By 1'-1									1 Series 14	1'-8 To 15'-9	127
**	E511	Str.	Length Varies By 1'-1									1 Series 14	1'-10 To 15'-11	130
	E512	17	1'-9	8"	1'-6	11"	1'-10					4	5'-8	24
	E513	18	2'-9	8"	1'-6	11"	1'-10					4	6'-8	28
	E514	11	5'-10	9"	1'-6	9"						20	10'-10	226
	E515	Str.										180	21'-0	3943
													SUBTOTAL	64451
	E401	Str.										666	30'-0	13347
	E402	Str.										37	20'-4	503
													SUBTOTAL	13850
												SUPERSTRUCTURE	TOTAL	118554

ABUTMENTS

	MARK	TYPE	A	B	C	D	E	NUMBER REAR	NUMBER FORWARD	TOTAL	LENGTH	WEIGHT
	EA801	5	1'-5	1'-5 3/4	1'-5 3/4	9"	2'-1	25	25	50	4'-1	545
											SUBTOTAL	545
	EA501	6	1'-0	11"				7	7	14	2'-8	39
	EA502	6	1'-0	1'-5				1	1	2	3'-2	7
**	EA503	Str.						2	2	4	13'-0	54
	EA504	Str.						2	2	4	13'-0	54
											SUBTOTAL	154
										ABUTMENTS	TOTAL	699

NOTES

ALL DIMENSIONS ARE OUT-TO-OUT.

STR. IN THE 'TYPE' COLUMN INDICATES STRAIGHT BARS.

AN 'E' PRECEDING THE BAR MARK DENOTES EPOXY COATED BARS, (ALL BARS ARE EPOXY COATED).

** REINFORCING MECHANICALLY CONNECTED AS PER 509.08. SEE GENERAL NOTE.

SHEET 15/15

W.E. QUICKSALL AND ASSOCIATES, INC.
NEW PHILADELPHIA, OHIO

REINFORCING BAR SCHEDULE

BRIDGE NO. TUS-259-0011
S.R. 259 OVER TUSCARAWAS RIVER

TUSCARAWAS COUNTY — STA. 5+89.75 STA. 11+22.84

DESIGNED	DRAWN	TRACED	CHECKED	REVIEWED	DATE	REVISED
CFD	CFD		ZRD	wda	10/92	9/92