Fed. Rd. Dist. No.	State	Fed. Aid Proj. No.	Fiscal Year
10	OHIO		

2/2

I.C.H. 238 - Sec. C - Bridge - Union Co.
Delaware - Marysville Road.

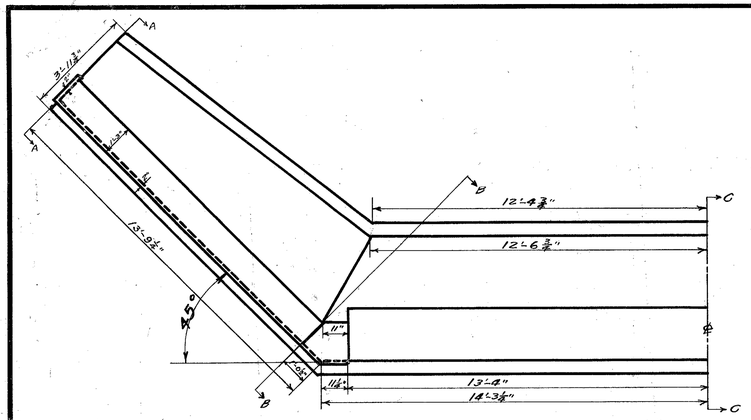

HALF PLAN OF WEST ABUTMENT

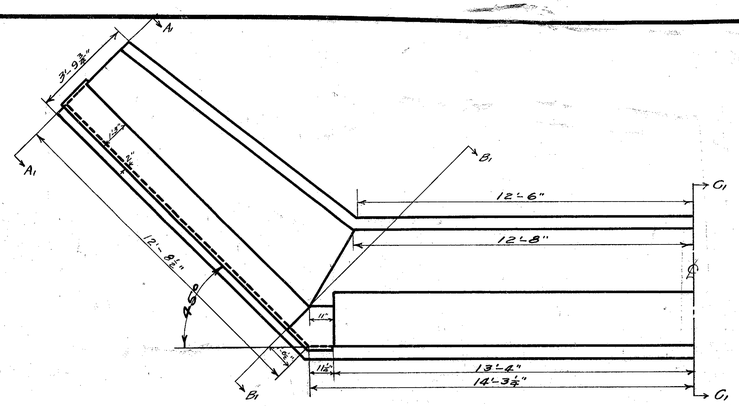

HALF PLAN OF EAST ABUTMENT

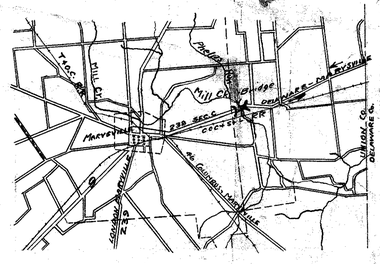

LOCATION PLAN

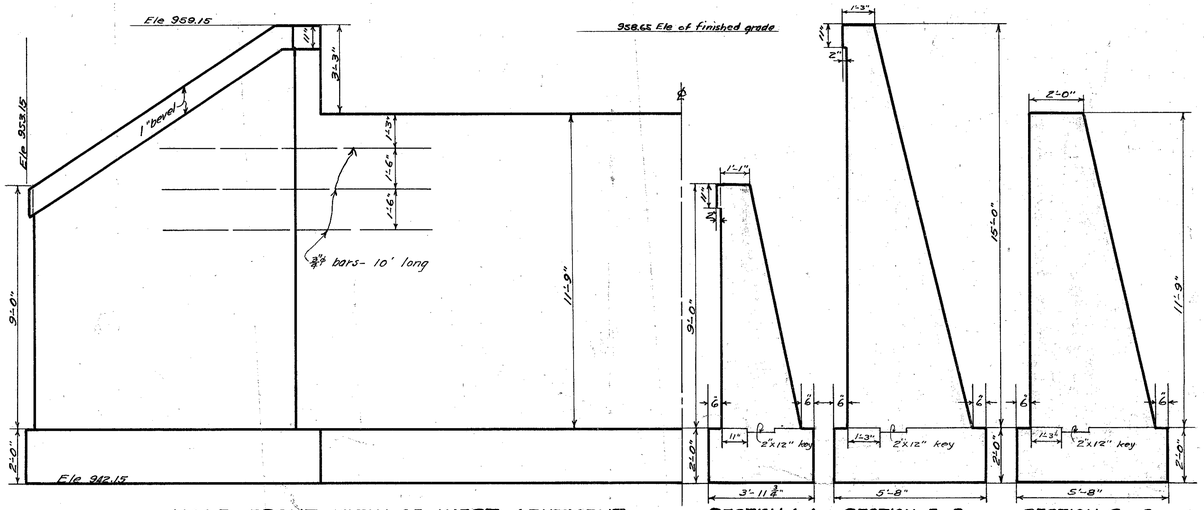

HALF FRONT VIEW OF WEST ABUTMENT

SECTION A-A SECTION B-B SECTION C-C

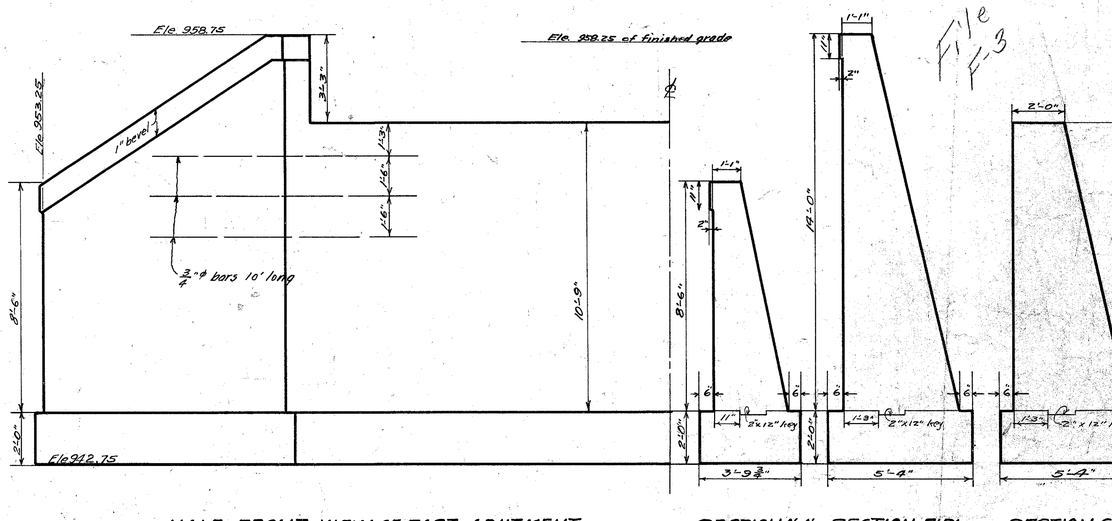

HALF FRONT VIEW OF EAST ABUTMENT

SECTION A'-A' SECTION B'-B' SECTION C'-C'

File F-3

NOTE:- The Super-Structure shall be the Standard Concrete Beam Bridge Span 36 FT Rd-way 24 FT B-36-24

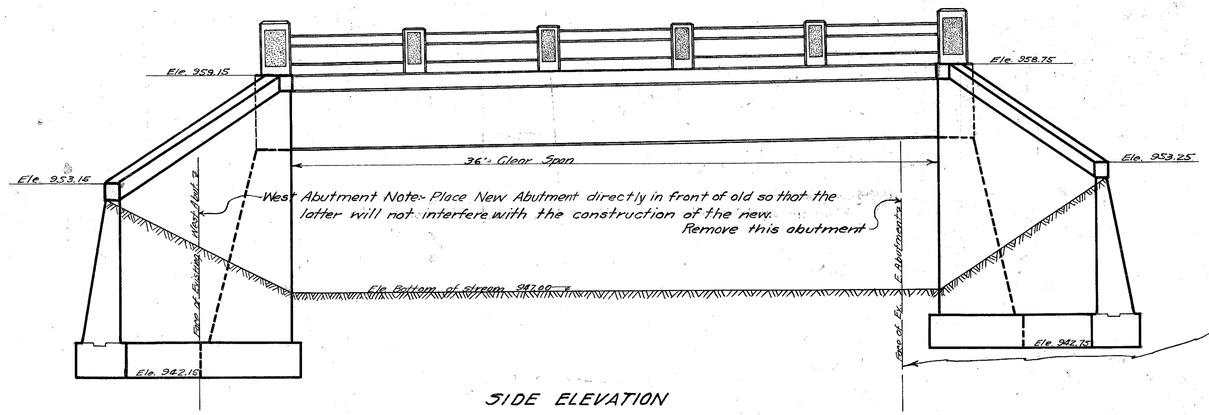

SIDE ELEVATION

Note:- Place stone from old E. abutment along the North side of fill.

ESTIMATED QUANTITIES

SUPER-STRUCTURE

1·2·4 Concrete	52.3 cu.yds.
Reinforcing Steel	11260 lbs.
Railing	79.0 lin.ft.
Wearing Surface	105.2 sq.yds.

SUB-STRUCTURE

Excavation	215 cu.yds.
1·3·6 Concrete	39.6 cu.yds.
1·2½·5 Concrete	126.6 cu.yds.
Reinforcing Steel	180 lbs.

CONSTRUCTION BUREAU MAY 17 1956 GROUND PHOTOLAB

Approved: Date: Resident Engineer

Approved: Date 11-10-24 G. C. Snyder Division Engineer

Approved: Date A. H. Gesigen Chief Eng. Bureau of Bridges.

Approved: Date 11/10/24 G. F. Ihlesinger State Highway Engineer

Approved: Date 11/10/24 La Boulay Director of Highways & Public Works.

Approved: Date L. O. Mapes
F. H. Cameron
W. M. Staley
Union County Commissioners.

GRAVITY CONCRETE ABUTMENTS FOR STANDARD BEAM BRIDGE

SPAN 36 FT. RDWY 24 FT. I.C.H. 238 - SEC. C. "Bridge" - UNION COUNTY, OHIO.

DEP'T OF HIGHWAYS AND PUBLIC WORKS
DIVISION OF HIGHWAYS
AUGUST 1924 BUREAU OF BRIDGES

178 ~~75~~ UNION - 238 - C - BRIDGE
1924

Des. by C.L.M. Drn. & Trd. E.H.B. Ckd. Appvd.