OHIO DEPARTMENT OF TRANSPORTATION

PLAN NO.

metric units

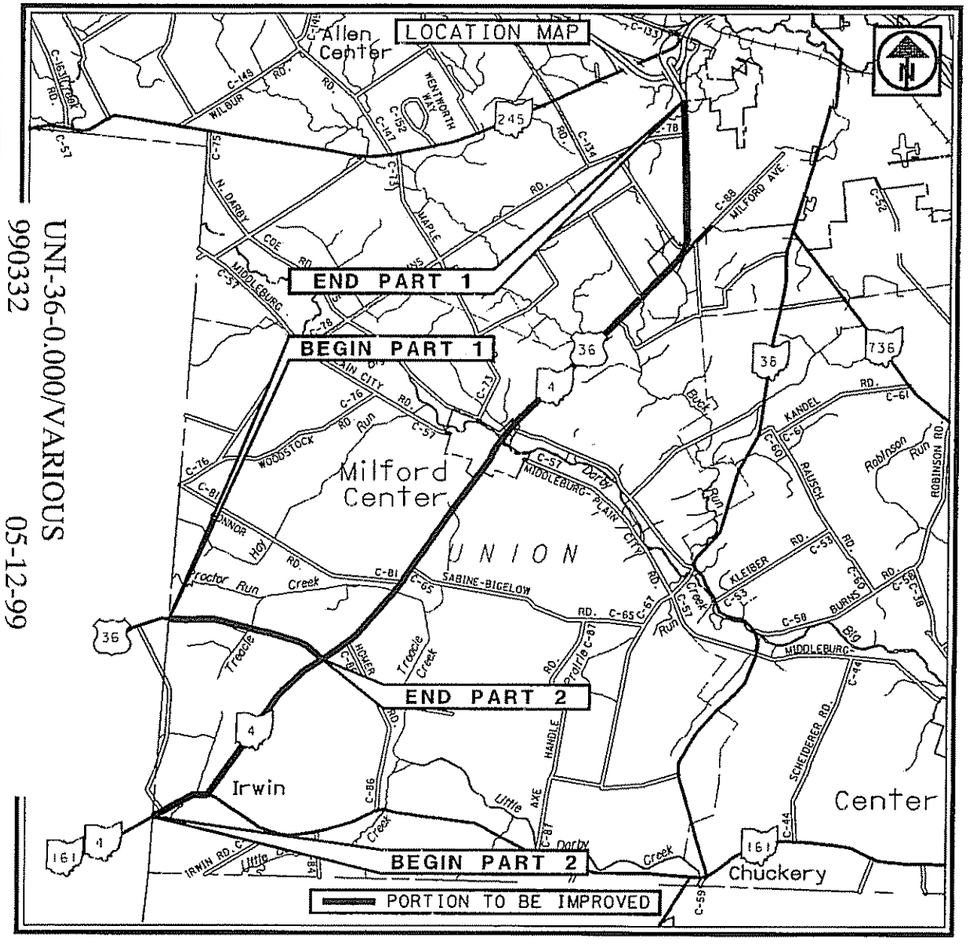

PART	COUNTY	ROUTE	SECTIONS	PROJECT LIMITS BEGIN	PROJECT LIMITS END	NET LENGTH km	CITY / VILLAGE
1	UNI	36	(0.000-12.360)	0.000	14.838	14.838	MILFORD CENTER
							MARYSVILLE
2	UNI	4	(0.000-0.177)	0.000	4.136	4.136	
TOTAL						18.974	

PART	PROJECT CENTROID LATITUDE	PROJECT CENTROID LONGITUDE
1	40°10'49"	83°26'15"
2	40°07'56"	83°29'10"

Production 332-99

INDEX OF SHEETS	
TITLE SHEET	1
ROADWAY AND SHOULDER	2-4
EXTRA AREA AND TYPICALS	5
PAVEMENT MARKING	6-7
RAISED PAVEMENT MARKERS	8
GENERAL NOTES	9
BRIDGE JOINT NOTES	10
DROP OFF IN WORK ZONES	11
GENERAL SUMMARY	12

PROJECT DECRIPTION:
UPGRADING 14.838 km OF US-36 BY RESURFACING
UPGRADING 4.136 km OF SR-4 BY RESURFACING

1997 SPECIFICATIONS
The standard specifications of the State of Ohio, Department of Transportation, including changes and supplemental specifications listed in the proposal shall govern this improvement.

I hereby approve these plans and declare that the making of this improvement will not require the closing to traffic of the highway and that provisions for the maintenance and safety will be as set forth on plans and estimates.

STATE OF OHIO
DAVID P POLING
56872
REGISTERED PROFESSIONAL ENGINEER

Signed: David P. Poling
Date: 2-3-99

PLAN PREPARED BY:
O.D.O.T. - DISTRICT SIX
IN-HOUSE DESIGN

STANDARD DRAWINGS	
BP-3.1M	10-28-94
BP-7.1M	10-28-94
DS-1-94M	12-15-94
RM-1.1M	04-08-97
MT-97.10M	04-25-94
MT-97.11M	01-30-95
MT-99.20M	01-30-95
MT-105.10M	04-25-94
MT-105.11M	04-25-94
TC-65.10M	11-01-95
TC-65.12M	11-01-95
TC-71.10M	09-01-93

SUPPLEMENTAL SPECIFICATIONS	
806	09-09-97

PLANS CERTIFIED BY:
NAME: Thomas L. Cordery DATE: 2/3/99
DISTRICT 6
OHIO DEPT. OF TRANSPORTATION

Approved Jack R. Marshall
Date 2/3/99 District Deputy Director of Transportation

Approved Gordon Proctor
Date 2-13-99 Director, Department of Transportation

UNDERGROUND UTILITIES
TWO WORKING DAYS
BEFORE YOU DIG
CALL 1-800-362-2764 (TOLL FREE)
OHIO UTILITIES PROTECTION SERVICE
NON-MEMBERS
MUST BE CALLED DIRECTLY

UNI-36-0.000/VARIOUS
990332 05-12-99
DIST. 06 PID # 18320

03-FEB-1999
I:\2lane_fy99\uni\36\000000.999\title.dgn

FEDERAL PROJECT NO. NON-FEDERAL
PID NO. 18320
CONSTRUCTION PROJECT NO.
RAILROAD INVOLVEMENT NONE
UNI-36-0.000

PART 1 SCHEMATIC

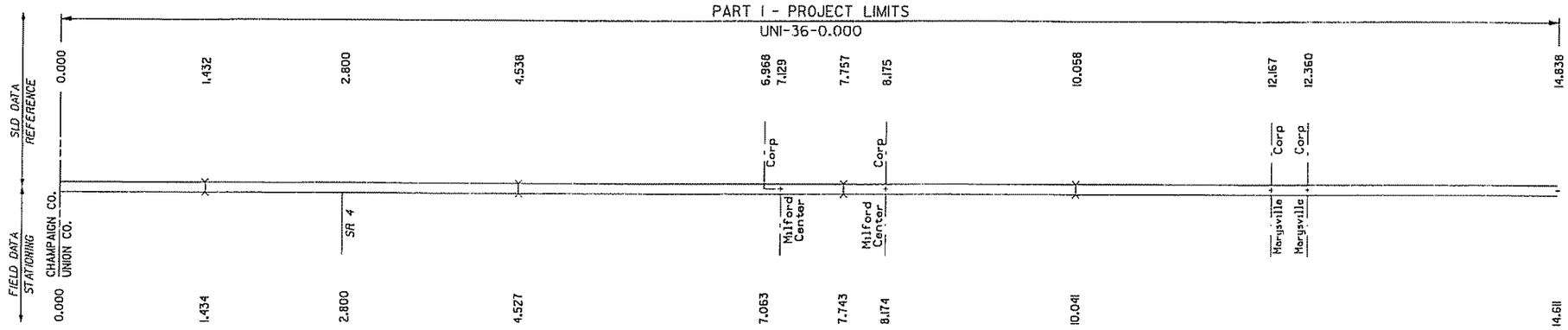

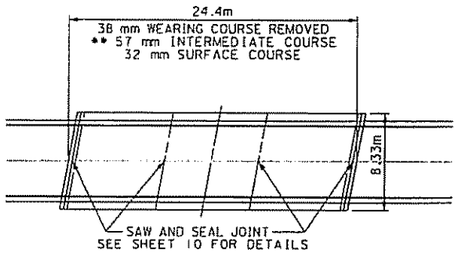

THE FOLLOWING QUANTITIES HAVE BEEN PROVIDED FOR THIS STRUCTURE AND ARE CARRIED TO THE GENERAL SUMMARY:

TYPE 3 WATERPROOFING	= 203 sq m
STEEL DRIP STRIP	= 55 m

1.434 — STRUCTURE UNI-36-1.432 — 1.458

** 57 mm INTERMEDIATE COURSE TO BE PLACED IN 2 LIFTS

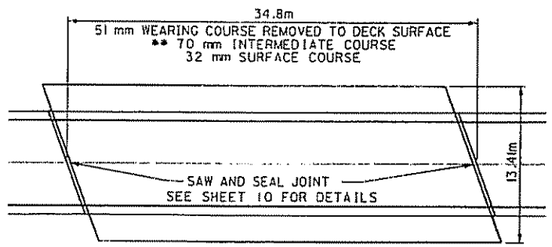

THE FOLLOWING QUANTITIES HAVE BEEN PROVIDED FOR THIS STRUCTURE AND ARE CARRIED TO THE GENERAL SUMMARY

PATCHING CONCRETE BRIDGE DECK - TYPE B	= 17 sq m
TYPE 3 WATERPROOFING	= 466 sq m
STEEL DRIP STRIP	= 80 m

4.527 — STRUCTURE UNI-36-4.538 — 4.561

** 70 mm INTERMEDIATE COURSE TO BE PLACED IN 2 LIFTS

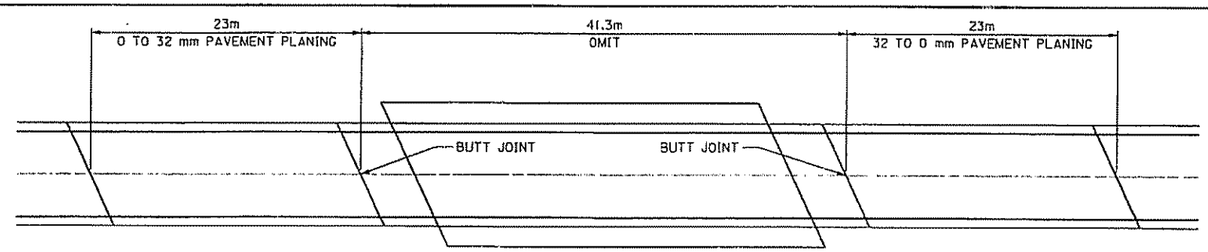

10.013 — 10.036 — 10.041 — STRUCTURE UNI-36-10.058 — 10.073 — 10.078 — 10.101

PAVEMENT DATA

PART	COUNTY	ROUTE	FROM	TO	LENGTH		TYPICAL SEE SHEET 5	AVERAGE WIDTH OF PAVEMENT A	B	C	AREA	(1) 407 TACK COAT AT 0.35 liter/sq. m	(2) 407 TACK COAT FOR INTERMEDIATE COURSE AT 0.25 liter/sq. m	(3) 448 ASPHALT CONCRETE INTERMEDIATE COURSE TYPE 1, PG64-22 AVG. THICK		(4) 448 ASPHALT CONCRETE SURFACE COURSE TYPE 1, PG64-22 AVG. THICK		(5) 617 COMPACTED AGGREGATE TYPE A 75 mm AVERAGE THICKNESS	(6) 254 PAVEMENT PLANING BITUMINOUS DEPTH		202 WEARING COURSE REMOVED	REMARKS
			STATION	STATION	km	m		m	m	m	sq m	liter	liter	mm	cu m	mm	cu m	cu m	mm	sq m	sq m	
1	UNI	36	0.000	0.023	0.023	23.0	1	0.46	6.10	0.46	161	56				32	5	1	32 TO 0	161		BUTT JOINT AT CHAMPAIGN CO. LINE
1	UNI	36	0.023	1.434	1.411	1411.0	1	0.46	6.10	0.46	9905	3467	2476	19	188	32	317	63				
1	UNI	36	1.434	1.458	0.024	24.4			8.33		203	71	51	57	12	32	6				203	STRUCTURE UNI-36-1.432
1	UNI	36	1.458	2.800	1.342	1342.0	1	0.46	6.10	0.46	9421	3297	2355	19	179	32	301	60				
1	UNI	36	2.800	4.527	1.727	1727.0	1	0.76	7.32	0.76	15267	5343	3817	19	290	32	489	78				
1	UNI	36	4.527	4.561	0.034	34.8	1		13.41		466	163	117	70	33	32	15				466	STRUCTURE UNI-36-4.538
1	UNI	36	4.561	7.063	2.502	2502.0	1	0.76	7.32	0.76	22118	7741	5530	19	420	32	708	113				TO MILFORD CENTER CORP.
1	UNI	36	7.063	8.174																		SEE NEXT SHEET
1	UNI	36	8.174	10.013	1.839	1839.0	1	0.76	7.32	0.76	16257	5690	4064	19	309	32	520	83				FROM MILFORD CENTER CORP.
1	UNI	36	10.013	10.036	0.023	23.0	1	0.76	7.32	0.76	203	71				32	6	1	0 to 32	203		BUTT JOINT AT APPROACH SLAB
1	UNI	36	10.036	10.078	0.042	41.3																OMIT STRUCTURE UNI-36-10.058
1	UNI	36	10.078	10.101	0.023	23.0	1	0.76	7.32	0.76	203	71				32	6	1	32 TO 0	203		BUTT JOINT AT APPROACH SLAB
1	UNI	36	10.101	14.283	4.182	4182.0	1	0.76	7.32	0.76	36969	12939	9242	19	702	32	1183	188				
1	UNI	36	14.283	14.346	0.063	63.0	1	0.76	10.72	0.76	771	270	193	19	15	32	25	3				INCLUDES TURN LANE
1	UNI	36	14.346	14.429	0.083	83.0	1	0.76	9.15	0.76	885	310	221	19	17	32	28	4				INCLUDES TURN LANE TAPER
1	UNI	36	14.429	14.588	0.159	159.0	1	0.76	7.32	0.76	1406	492	352	19	27	32	45	7				
1	UNI	36	14.588	14.611	0.023	23.0	1	0.76	7.32	0.76	203	71				32	6	1	0 to 32	203		BUTT JOINT AT END OF PART 1
TOTALS												40052	28418		2192		3660	603		770	669	

CALCULATED | CHECKED

PLAN NO.

ROADWAY AND SHOULDERS

UNI-36-0.000

2
12

03-FEB-1999
T:\2LANE_FY99\UNI36\000000.999\448as.dgn

THE FOLLOWING QUANTITIES HAVE BEEN PROVIDED FOR THE WORK INVOLVED IN THE CONSTRUCTION OF THE CURB RAMP INDICATED ON THIS PAGE AND HAVE BEEN CARRIED TO THE GENERAL SUMMARY:

ITEM 202 - WALK REMOVED	=	8.0 SQ METERS
ITEM 202 - CURB REMOVED	=	5.2 METERS
ITEM 608 - CURB RAMP , TYPE I	=	8.0 SQ METERS

THE CONTRACTOR SHALL NOTIFY, COLUMBIA GAS OF OHIO, 3 DAYS PRIOR TO ANY WORK IN AREA OF THIS LOCATION. COLUMBIA GAS WILL BE RESPONSIBLE FOR ADJUSTING THE GAS VALVE TO GRADE.

THE CONTACT IS:
FRED L. KENDRICK
PLANT/SERVICE SUPERVISOR
227 E.5TH ST.
MARYSVILLE, OH 43040-0111
PHONE: (937)642-6090

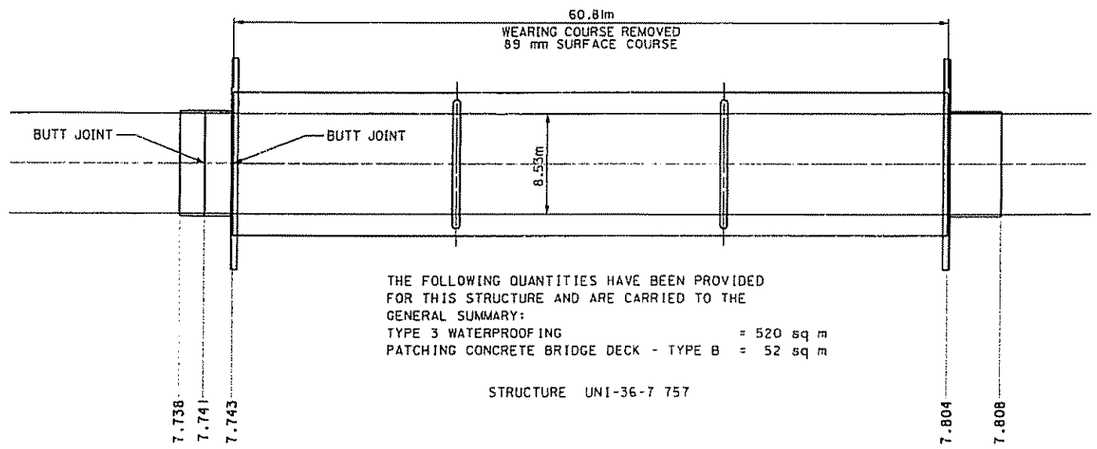

THE FOLLOWING QUANTITIES HAVE BEEN PROVIDED FOR THIS STRUCTURE AND ARE CARRIED TO THE GENERAL SUMMARY:

TYPE 3 WATERPROOFING	=	520 sq m
PATCHING CONCRETE BRIDGE DECK - TYPE B	=	52 sq m

STRUCTURE UNI-36-7 757

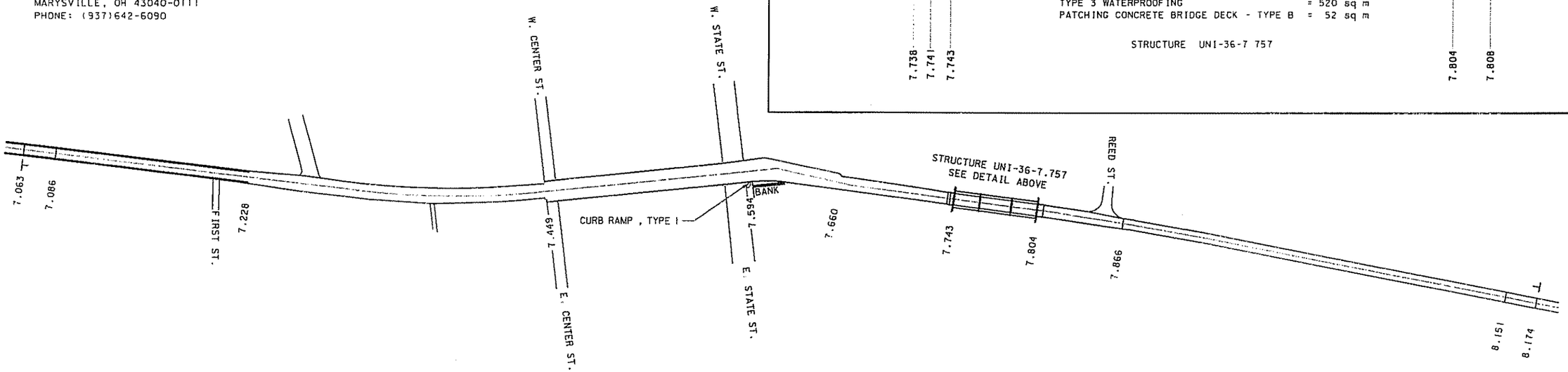

** TO BE PLACED IN 2 LIFTS

PAVEMENT DATA

PART	COUNTY	ROUTE	FROM	TO	LENGTH		TYPICAL SEE PAGES 5	AVERAGE WIDTH OF PAVEMENT A	B	C	AREA	(1) 407 TACK COAT AT 0.35 liter/sq.m	(4) 448 ASPHALT CONCRETE SURFACE COURSE TYPE 1, PG64-22 AVG. THICK		(5) 617 COMPACTED AGGREGATE TYPE A 75 mm AVERAGE THICKNESS	(6) 254 PAVEMENT PLANING BITUMINOUS DEPTH		202 WEARING COURSE REMOVED	REMARKS
			STATION	STATION	km	m		m	m	m	sq m	liter	mm	cu m	cu m	mm	sq m	cu m	
1	UNI	36	7.063	7.086	0.023	23	3	0.76	7.32	0.76	203	71	32	6		0 TO 32	203		ENTER CORP.
1	UNI	36	7.086	7.228	0.142	142	3	0.76	7.32	0.76	1255	439	32	40		32	1255		
1	UNI	36	7.228	7.449	0.221	221	4		11.00		2431	851	32	78		32	2431		BEGIN CURBED AREA
1	UNI	36	7.449	7.660	0.211	211	4		15.00		3165	1108	32	101		32	3165		
1	UNI	36	7.660	7.741	0.081	81	4		8.53		691	242	32	22		32	691		BUTT TO CONCRETE PATCH
1	UNI	36	7.741	7.743	0.002	2.4													OMIT CONCRETE PATCH
1	UNI	36	7.743	7.804	0.061	61	4		8.53		520	182	** 89	46				520	REMOVE DOWN TO CONCRETE DECK (APROX. 89 mm)
1	UNI	36	7.804	7.827	0.023	23	4		8.53		196	69	** 61	12		89 TO 32	196		
1	UNI	36	7.827	7.866	0.039	39	4		8.53		333	117	32	11		32	333		END CURBED AREA
1	UNI	36	7.866	8.151	0.285	285	3	0.76	7.32	0.76	2519	882	32	81		32	2519		
1	UNI	36	8.151	8.174	0.023	23	3	0.76	7.32	0.76	203	71	32	6		32 TO 0	203		LEAVE CORP.
TOTALS												4032		403			10996	520	

ROADWAY AND SHOULDERS

PLAN NO.

UNI-36-0.000

3
12

CALCULATED

CHECKED

11-FEB-1999
T:\2LANE_FY99\UNI\36\000000.999\448as2.dgn

PART 2 SCHEMATIC

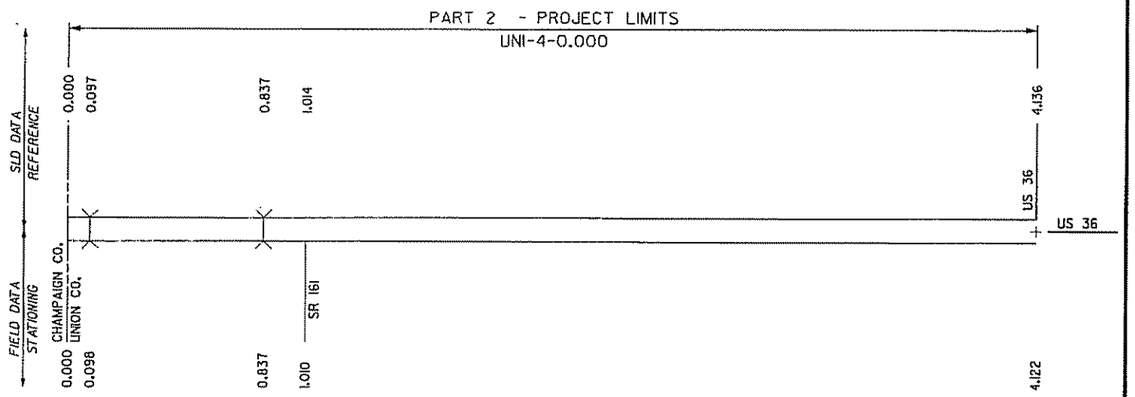

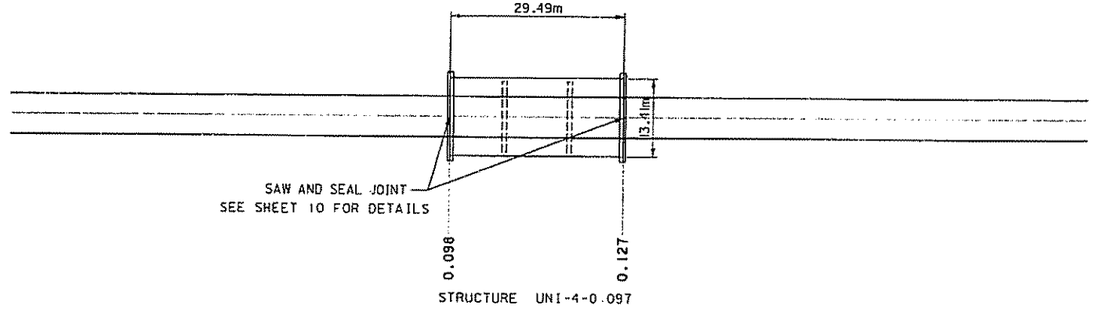

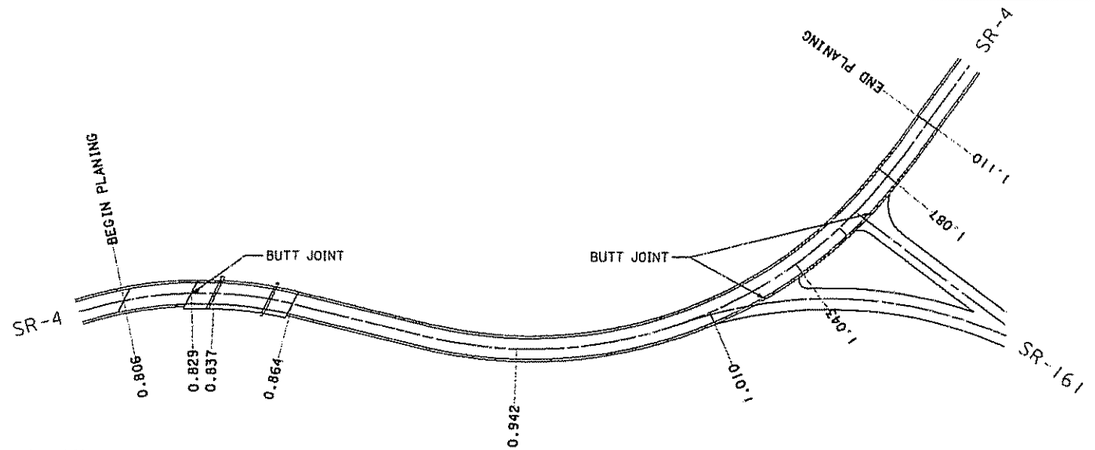

PAVEMENT DATA

PART	COUNTY	ROUTE	FROM	TO	LENGTH		TYPICAL SEE PAGES 5	AVERAGE WIDTH OF PAVEMENT			AREA	(1) 407 TACK COAT AT 0.35 liter/sq. m	(2) 407 TACK COAT FOR INTERMEDIATE COURSE AT 0.25 liter/sq. m	(3) 448 ASPHALT CONCRETE INTERMEDIATE COURSE TYPE 1, PG64-22		(4) 448 ASPHALT CONCRETE SURFACE COURSE TYPE 1, PG64-22		(5) 617 COMPACTED AGGREGATE TYPE A 75 mm AVERAGE THICKNESS	(6) 254 PAVEMENT PLANING BITUMINOUS		REMARKS
								A	B	C				* AVG. THICK		AVG. THICK			DEPTH		
			STATION	STATION	km	m		m	m	m	sq m	liter	liter	mm	cu m	mm	cu m	cu m	mm	sq m	
2	UNI	4	0.000	0.023	0.023	23	2		7.01		161	56				32	5	2	32 TO 0	161	BEGIN PART 2 - BUTT JOINT AT CO. LINE
2	UNI	4	0.023	0.098	0.075	75	2		7.01		526	184	132	19	10	32	17	7			
2	UNI	4	0.098	0.127	0.029	29.49			13.41		395	138	99	19	8	32	13				STRUCTURE UNI-4-0.097
2	UNI	4	0.127	0.806	0.679	679	2		7.01		4760	1666	1190	19	90	32	152	61			
2	UNI	4	0.806	0.829	0.023	23	3	0.76	7.32	0.76	203	71				32	6	1	0 TO 32	203	BUTT JOINT AT APPROACH SLAB
2	UNI	4	0.829	0.864	0.035	35															OMIT STRUCTURE UNI-4-0.837
2	UNI	4	0.864	1.087	0.223	223	3	0.76	7.32	0.76	1971	690				32	63	10	32	1971	BUTT JOINT AT APPROACH SLAB AND ROADWAY
2	UNI	4	1.087	1.110	0.023	23	3	0.76	7.32	0.76	203	71				32	6	1	32 TO 0	203	END PLANING TAPER
2	UNI	4	1.110	4.122	3.012	3012	1	0.76	7.32	0.76	26626	9319	6657	19	506	32	852	136			END PART 2 AT US-36
TOTALS												12195	8078		614		1114	218		2538	

CALCULATED | CHECKED

PLAN NO.

ROADWAY AND SHOULDERS

UNI-36-0.000

03-FEB-1999
T:\2LANE_FY99\UNI\36000000.99Y\448as3.dgn

TYPICAL 1

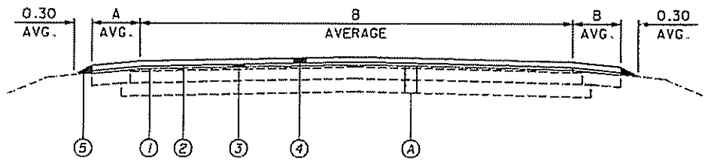

TYPICAL 2

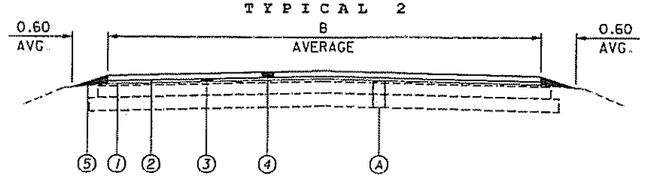

TYPICAL 3

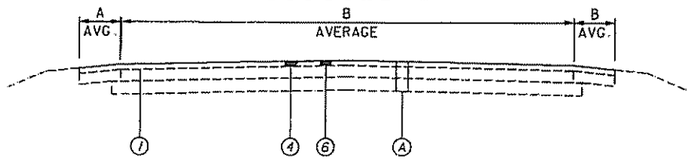

TYPICAL 4

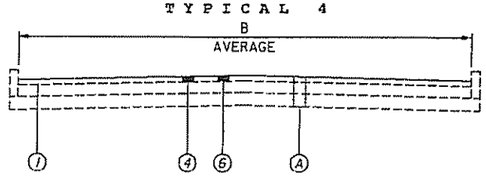

(1) ITEM 407 - TACK COAT at 0.35 liters/sq m

(2) ITEM 407 - TACK COAT FOR INTERMEDIATE COURSE at 0.25 liters/sq m

(3) ITEM 448 - ASPHALT CONCRETE INTERMEDIATE COURSE TYPE 1, PG64-22

(4) ITEM 448 - ASPHALT CONCRETE SURFACE COURSE TYPE 1, PG64-22

(5) ITEM 617 - COMPACTED AGGREGATE TYPE A

(6) ITEM 254 - PAVEMENT PLANING BITUMINOUS

(7) ITEM 301 - BITUMINOUS AGGREGATE BASE, PG64-22, 150 mm THICK

(A) EXISTING ASPHALT PAVEMENT

PAVEMENT DATA

										(1)	(2)	(3)		(4)		(5)	(6)	(7)		
										407	407	448		448		617	203	301	254	
PART	COUNTY	ROUTE	FROM	TO	SIDE	DESCRIPTION	LENGTH		AVERAGE WIDTH OF PAVEMENT	PAVEMENT AREA	TACK COAT AT 0.35 liter/sq. m	TACK COAT FOR INTERMEDIATE COURSE AT 0.25 liter/sq. m	ASPHALT CONCRETE INTERMEDIATE COURSE TYPE 1, PG64-22		ASPHALT CONCRETE SURFACE COURSE TYPE 1, PG64-22		COMPACTED AGGREGATE TYPE A	LINEAR GRADING AT 150 mm AVG. DEPTH	BITUMINUS AGGREGATE BASE	PAVEMENT PLANING BITUMINOUS	
												AVG. THICK		AVG. THICK		75 mm AVERAGE THICKNESS		150 mm THICK	DEPTH	
			SLD	SLD			km	m	m	sq m	liter	liter	mm	cu m	mm	cu m	cu m	km	cu m		sq m
1	UNI	36	VARIOUS			INTERSECTION - BITUMINOUS				900.00	315	225	19	12	32	29					
1	UNI	36	VARIOUS			DRIVES - BITUMINOUS				220.00	77	55	19	3	32	7					
1	UNI	36	VARIOUS			DRIVES - AGGREGATE				1040.00							78				
1	UNI	36	VARIOUS			"TO BE USED AS DIRECTED"				630.00	221	158	19	8	32	20					
2	UNI	4	VARIOUS			INTERSECTION - BITUMINOUS				300.00	105	75	19	4	32	10					
2	UNI	4	VARIOUS			DRIVES - BITUMINOUS				60.00	21	15	19	1	32	2					
2	UNI	4	VARIOUS			DRIVES - AGGREGATE				380.00							29				
2	UNI	4	VARIOUS			"TO BE USED AS DIRECTED"				174.00	61	44	19	2	32	6					
TOTALS											800	572		30		74	107				

CALCULATED | CHECKED

PLAN NO.

TYPICALS AND EXTRA AREAS

UNI-36-0.000

03-FEB-1999
I:\2lane_fy99\uni\36\000000.999\ex_areal.dgn

ITEM 642 - CENTER LINE QUANTITIES

PART	COUNTY	ROUTE	FROM	TO	DASHED	SOLID	TOTAL	REMARKS
			SLD	SLD	km	km	km	
1	UNI	36	0.000	14.611	13.160	8.047	14.611	
2	UNI	4	0.000	4.122	3.590	2.271	4.122	
TOTALS							18.733	

ITEM 642 - EDGE LINE QUANTITIES

PART	COUNTY	ROUTE	FROM	TO	WHITE			YELLOW			REMARKS
					HIGHWAY	RAMP	TOTAL	DASHED	SOLID	TOTAL	
			SLD	SLD	km	km	km	km	km	km	
1	UNI	36	0.000	7.288	(x2) 7.288		14.576				
1	UNI	36	7.866	14.611	(x2) 6.745		13.490				
2	UNI	4	0.000	4.122	(x2) 4.122		8.244				
TOTALS							36.310				

ITEM 644 - AUXILIARY MARKING QUANTITIES

PART	COUNTY	ROUTE	FROM	TO	CHANNELIZING LINES	600 mm TRANSVERSE LINES		STOP LINES	CROSSWALK LINES	WORD ON PAVEMENT ONLY		SCHOOL SYMBOL MARKING		LANE ARROWS				RAILROAD SYMBOL MARKING	REMARKS
														TURN		THRU. COMB.			
					200 mm	WHITE	YELLOW	600 mm	300 mm WHITE	1800 mm	2500 mm	1800 mm	2500 mm	LEFT	RIGHT				
			SLD	SLD	m	m	m	m	m	each	each	each	each	each	each	each	each	each	
1	UNI	36	2.792					12.0											@ SR-4
1	UNI	36	7.569					5.5											@ STATE ST.
1	UNI	36	7.572						14.6										@ STATE ST.
1	UNI	36	7.594						14.6										@ STATE ST.
1	UNI	36	7.596					9.2											@ STATE ST.
1	UNI	36	14.293	14.346	53														
2	UNI	4																	NO AUX. MARKINGS
TOTALS					53			26.7	29.2										

CALCULATED

CHECKED

PLAN NO.

PAVEMENT MARKING

UNI-36-0.000

03-FEB-1999
T:\2LAWE_F\99\UNI\36\000000.999\pavemrkt.dgn

FREEWAY & EXPRESSWAY MAINLINE MARKINGS

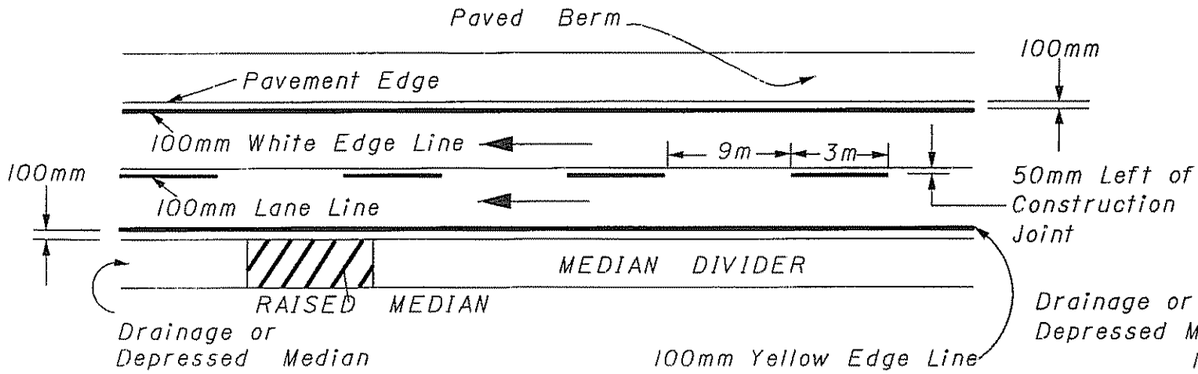

MULTILANE DIVIDED & UNDIVIDED HIGHWAY MARKINGS

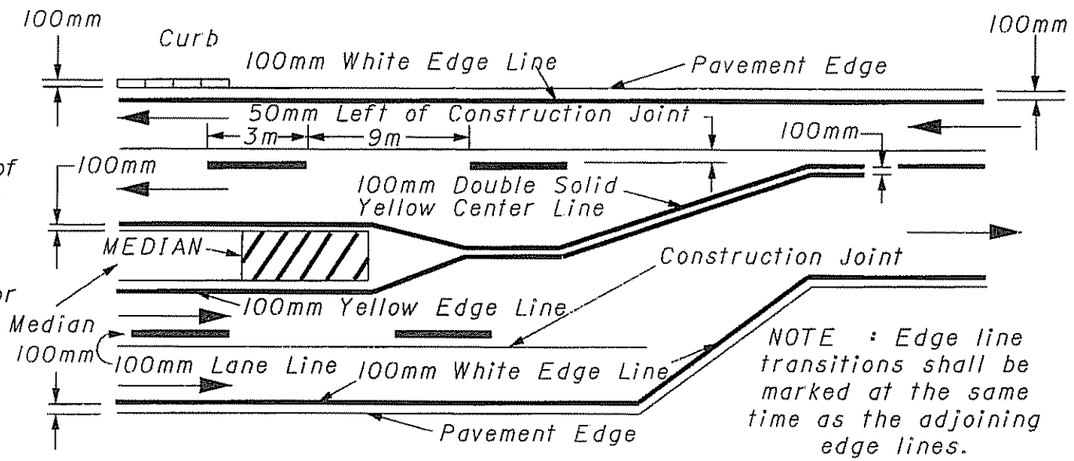

TWO LANE MARKINGS

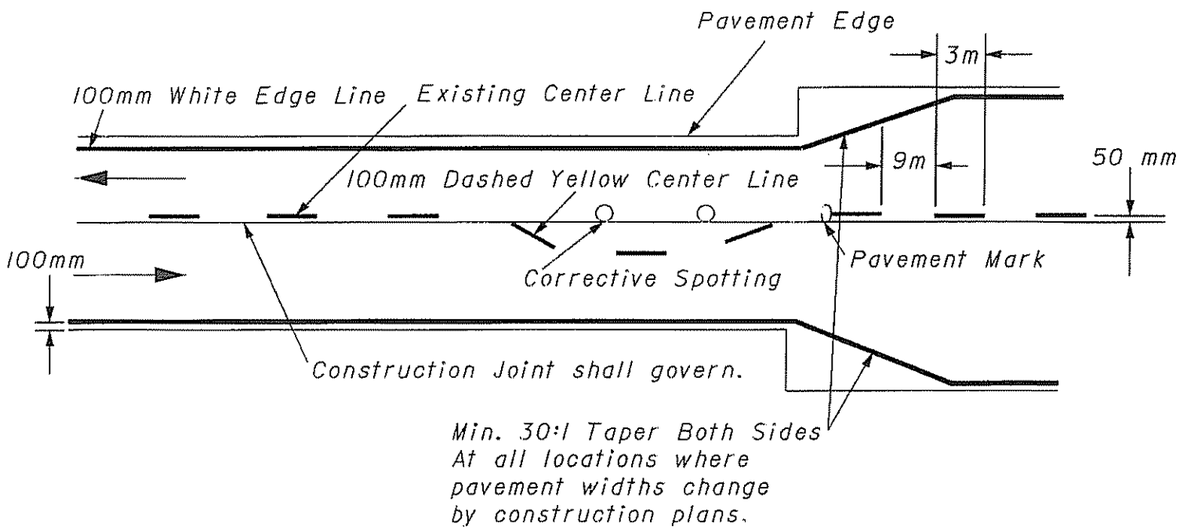

NOTES :

1. The distance from the pavement edge to the nearside edge of the edgeline may be increased with the approval of the engineer in order to maintain uniform lane width.
2. See TC-72.20M for entrance and exit ramp markings.
3. The cycle length for dashed lines shall be 12 meters plus or minus 150mm. The minimum length of dash shall be sufficiently long to maintain a 3:1 ratio between length of gap and length of dash.

CALCULATED | CHECKED

PLAN NO.

PAVEMENT MARKING TYPICAL DETAILS

UNI-36-0.000

03-FEB-1999
I:\2lane_fy99\uni\36\000000.999\pavmrkty.dgn

MATERIALS SUPPLIED BY THE DEPARTMENT:
ALL MATERIALS ARE TO BE CONTRACTOR FURNISHED, EXCEPT THAT THE DEPARTMENT SHALL SUPPLY RPM MATERIALS IN THE QUANTITIES SHOWN HEREIN TO THE CONTRACTOR. PAY ITEMS FOR THE DEPARTMENT SUPPLIED MATERIALS SHALL BE INDICATED AS "INSTALLATION ONLY". THE QUANTITY AND TYPE OF DEPARTMENT SUPPLIED MATERIALS ARE SHOWN ON THIS SHEET.

THE CONTRACTOR SHALL PICK UP THE DEPARTMENT SUPPLIED RPM MATERIALS AT THE OPI WAREHOUSE, 315 PHILLIPI ROAD, COLUMBUS, OHIO 43228. FOR SOME PROJECTS HAVING QUANTITIES OF LESS THAN 20 RPMS, THE CONTRACTOR MAY PICK UP RPM MATERIALS AT THE DISTRICT OFFICES. QUANTITIES OVER 20 RPMS WILL BE PICKED UP AT THE RECYCLER'S WAREHOUSE OR AS ARRANGED WITH THE DISTRICT. THE CONTRACTOR SHALL PICK UP DEPARTMENT SUPPLIED RPM MATERIALS AT THE SPECIFIED LOCATION(S) FOR TRANSPORT TO THE WORK SITE OR TO THE CONTRACTOR'S STORAGE FACILITY. THE RECYCLED RAISED PAVEMENT MARKER (RPM) AUTHORIZATION FORM IS TO BE SIGNED BY THE DISTRICT CONSTRUCTION ENGINEER PRIOR TO PICK UP OF THE RPMS. THE CONTRACTOR SHALL NOTIFY THE DISTRICT AND/OR THE PARTIES LISTED ON THE AUTHORIZATION FORM IN WRITING AT LEAST FIVE (5) CALENDAR DAYS PRIOR TO PICK UP OF THE DEPARTMENT SUPPLIED MATERIALS. THE CONTRACTOR SHALL STORE THE RPMS WITHOUT DAMAGE OR CONTAMINATION WITH FOREIGN MATTER. A DEDUCTION IN THE AMOUNT OF THE ACTUAL COST TO THE DEPARTMENT SHALL BE MADE FOR MATERIALS DAMAGED BY THE CONTRACTOR OR FOR CASTINGS RECEIVED BY THE CONTRACTOR WHICH WERE NOT INSTALLED AND WERE NOT RETURNED TO THE DEPARTMENT.

RETURN OF NON-PERFORMED RAISED PAVEMENT MARKER MATERIALS SUPPLIED BY THE DEPARTMENT:
RAISED PAVEMENT MARKER MATERIALS SUPPLIED BY THE DEPARTMENT, THAT ARE NON-PERFORMED SHALL BE CAREFULLY REPACKED OR PACKED IN THE BOXES IN THE SAME STYLE AND QUANTITY AS ORIGINALLY RECEIVED FROM THE DEPARTMENT. CASTING STYLES SHALL NOT BE MIXED WITHIN ANY ONE CONTAINER. THE CONTRACTOR SHALL CLEARLY MARK ON THE OUTSIDE OF EACH CONTAINER, THE COLOR OF THE PRISMATIC RETRO-REFLECTOR, THE STYLE OF CASTING. BOXES SHALL BE PLACED ON SKIDS OR PALLETS IN THE SAME STYLE (LOW PROFILE OR CONVENTIONAL, REFLECTORISED OR NON REFLECTORISED) AND NO MORE THAN 420 RPMS (OR 21 BOXES) ON ONE SKID.

ONLY USE THE BOXES SUPPLIED BY THE RAISED PAVEMENT MARKER RECYCLER. BOXES MUST BE MARKED WITH THE RECYCLER'S PART OR CATALOG NUMBER AND THE PROJECT NUMBER. THE RECYCLER'S CATALOG OR PART NUMBERS MAY BE OBTAINED FROM THE OFFICE OF TRAFFIC ENGINEERING IN COLUMBUS, OHIO OR FROM THE RECYCLER. BOXES NOT MARKED WITH THE PROPER RECYCLER'S CATALOG OR PART NUMBERS, AND THE DEPARTMENT'S PROJECT NUMBER WILL NOT BE ACCEPTED AT THE RECYCLER'S WAREHOUSE.

NON PERFORMED MATERIALS WILL BE RETURNED TO THE LOCATION AS SPECIFIED BY THE DISTRICT CONSTRUCTION ENGINEER WITHIN 30 DAYS OF THE COMPLETION OF THE PROJECT.

THE ABOVE WORK INCLUDING ALL LABOR, EQUIPMENT AND MATERIAL NEEDED TO PERFORM THE WORK, SHALL BE CONSIDERED INCIDENTAL TO THE RESPECTIVE PAY ITEM.

IF THE DEPARTMENT HAS TO REPACKAGE THE RPMS CORRECTLY, THE CONTRACTOR WILL BE ASSESSED THE ACTUAL COST FOR REPACKAGING THE MATERIALS BY THE DEPARTMENT'S FORCES.

LOADING OF MATERIALS SUPPLIED BY THE DEPARTMENT AT THE RECYCLER'S WAREHOUSE:

TRUCKS SHALL HAVE A LOADING HEIGHT OF 48 INCHES AND BE ABLE TO BACK UP FLUSH TO THE LOADING DOCK.
TRUCKS SHALL NOT HAVE ANY OBSTRUCTIONS OR PROTRUSIONS THAT PREVENT THE LOADING BY A STANDARD FORKLIFT OR LIFT TRUCK.

SEMI TRUCKS OR 20 FOOT COMMERCIAL TRUCKS ARE THE MOST APPROPRIATE TRUCKS FOR LOADS IN EXCESS OF 4 PALLETS (ONE PALLET = 21 BOXES = 2100 LBS).

STAKE BODY TRUCKS ARE APPROPRIATE TO LOAD LESS THAN 4 PALLETS, PROVIDED THE TRUCK IS RATED FOR THE LOAD AND THE LOAD CAN BE SAFELY SECURED FOR TRANSPORT BY CHAINING OR STRAPPING DOWN AS NEEDED.

PICKUP TRUCKS ARE APPROPRIATE FOR LOADS OF APPROXIMATELY ONE PALLET, PROVIDED THE PICKUP TRUCK IS RATED FOR THE LOAD AND THE LOAD CAN BE SAFELY SECURED FOR TRANSPORT.

THE RECYCLERS WAREHOUSE WILL NOT LOAD DUMP TRUCKS, TILT BED TRUCKS, AND NON COMMERCIAL MOVING VANS.
THE WAREHOUSE SUPERVISOR WILL REFUSE TO LOAD ANY TRUCK THAT IS UNSAFE TO LOAD OR UNSUITABLE FOR THE LOAD BEING PLACED ON THE TRUCK.

DETAIL		DETAIL		DETAIL		DETAIL	
1	MAINLINE UNDIVIDED	5	MULTILANE DIVIDED/EXPRESSWAY	10	4 LANE DIVIDED TO 2 LANE TRANSITION	15	HORIZONTAL CURVE
1	TYPICAL SPACING	6	STOP APPROACH	11	4 LANE UNIDIVIDED TO 2 LANE TRANS.	16	HORIZONTAL CURVE ALTERNATE
2	TAPERED ACCELERATION LANE	7	1 LANE APPROACH W/ LT. TURN LANE	12	TWO LANE NARROW BRIDGE	17	STOP APPROACH ALTERNATE
3	DECELERATION LANE	8	THRU APPROACH	13	TWO WAY LEFT TURN LANE	GAP	CENTERLINE AT 24 m TYP.
4	PARALLEL ACCELERATION LANE	9	2 LANE APPROACH W/ LT. TURN LANE	14	ONE LANE BRIDGE		

PART	COUNTY	ROUTE	FROM	TO	DETAIL	PRISMATIC RETRO-REFLECTOR COLORS					202	621	621	REMARKS
						ONE-WAY		TWO-WAY			RAISED PAVEMENT MARKER REMOVED FOR STORAGE	RAISED PAVEMENT MARKER INSTALL ONLY	PRISMATIC RETRO REFLECTOR	
						WHITE	YELLOW	YELLOW /RED	YELLOW/ YELLOW	WHITE/ RED				
			SLD	SLD		EACH	EACH	EACH	EACH	EACH	EACH	EACH	EACH	
1	UNI	36	0.000	0.596	GAP				25			25		FROM COUNTY LINE ---
1	UNI	36	0.596	0.933	15				33			33		PC=0.74 , PT=0.789
1	UNI	36	0.933	2.222	GAP				54			54		
1	UNI	36	2.222	2.590	15				38			38		PC=2.366 , PT=2.446
1	UNI	36	2.528	2.792	6	16			3			19	16	@ SR-4 (SECTION OVERLAPS WITH CURVE ABOVE)
1	UNI	36	2.792	3.444	GAP				28			28		
1	UNI	36	3.444	3.524	15				4			4		PC=3.444 , PT=3.524
1	UNI	36	3.524	7.063	GAP				148			148		--- TO MILFORD CENTER CORP.
1	UNI	36	8.174	14.611	GAP				269			269		FROM MILFORD CENTER TO END PART 1
1	UNI	36									765			
2	UNI	4	0.000	0.628	GAP				27			27		FROM COUNTY LINE ---
2	UNI	4	0.628	0.981	15				35			35		PC=0.772 , PT=0.837
2	UNI	4	0.981	1.222	15				27			27		PC=0.998 , PT=1.078 (SECTION OVERLAP WITH CURVE ABOVE)
2	UNI	4	1.222	3.170	GAP				82			82		
2	UNI	4	3.170	3.235	15				6			6		PC=3.17 , PT=3.235
2	UNI	4	3.235	3.782	GAP				23			23		
2	UNI	4	3.782	3.830	15				4			4		PC=3.782 , PT=3.83
2	UNI	4	3.830	4.122	GAP				13			13		--- TO US-36
2	UNI	4									242			
TOTALS											1007	835	16	

CALCULATED | CHECKED

PLAN NO.

RAISED PAVEMENT MARKERS

UNI-36-0.000

03-FEB-1999
i:\2lane_fy99\uni\36\0000000599rpmi.dgn

GENERAL:
THE CONTRACTOR SHALL SUBMIT IN WRITING A SCHEDULE OF OPERATIONS TO THE ENGINEER (SEE 101.18) AND RECEIVE APPROVAL IN WRITING BEFORE WORK IS STARTED ON THIS PROJECT. ALL TRAFFIC CONTROL DEVICES SHALL BE FURNISHED, ERECTED, MAINTAINED, AND REMOVED BY THE CONTRACTOR IN ACCORDANCE WITH THE OHIO MANUAL OF UNIFORM TRAFFIC CONTROL DEVICES. THE CONTRACTOR SHALL NOT ORDER MATERIALS OR PERFORM WORK LISTED IN THE GENERAL SUMMARY FOR ITEMS DESIGNATED BY PLAN NOTE TO BE USED "AS DIRECTED BY THE ENGINEER" UNLESS AUTHORIZED BY THE ENGINEER.

CONSTRUCTION INITIATION:
THE CONTRACTOR SHALL ADVISE THE DISTRICT OFFICE OF COMMUNICATIONS AT 1 (614) 363-1251, EXTENSION 469 OR BY FAX AT 1 (614) 369-7437 FOURTEEN DAYS PRIOR TO THE START OF CONSTRUCTION ACTIVITIES. THE CONTRACTOR WILL IMMEDIATELY INFORM THE DISTRICT OFFICE OF COMMUNICATIONS AND THE DISTRICT MAINTENANCE OF TRAFFIC ENGINEER (EXTENSION 323) OF ANY AND ALL DELAYS AND/OR CHANGES REGARDING THE CONSTRUCTION PROJECT. THE PROJECT ENGINEER WILL PROVIDE CLARIFICATION FOR ANY QUESTIONS ABOUT THIS NOTIFICATION REQUIREMENT.

TRAFFIC:
TRAFFIC SHALL BE MAINTAINED AT ALL TIMES. THE LENGTH OF RESTRICTED TRAFFIC ZONES SHALL BE KEPT TO A MINIMUM CONSISTENT WITH THE SPECIFICATION REQUIREMENTS FOR PROTECTION OF COMPLETED COURSES.

ALIGNMENT AND PROFILE:
THE WORK PROPOSED BY THIS PROJECT IS FOR THE RESURFACING OF THE EXISTING PAVEMENT. THE ALIGNMENT OF THE EXISTING PAVEMENT WILL NOT BE CHANGED, AND THE PROFILE OF THE PROPOSED SURFACE WILL BE SIMILAR TO THAT OF THE EXISTING PAVEMENT EXCEPT THAT IT MAY BE RAISED AN AMOUNT EQUAL TO THE THICKNESS OF THE RESURFACING COURSE OR COURSES SPECIFIED IN THESE PLANS.

TACK COAT:
THE TACK COAT OPERATION SHALL BE AS DETERMINED AT A PRE CONSTRUCTION CONFERENCE AS PER 407.05 AND APPLICATION RATES SHALL NOT EXCEED 0.35 LITER PER SQ. METER.

THERMOPLASTIC PAVEMENT MARKING APPLICATION:
DURING THE PLACEMENT OF THERMOPLASTIC PAVEMENT MARKINGS, THE LANE SHALL BE CLOSED AS PER APPLICABLE STANDARD DRAWING. THE COST OF THESE CLOSURES SHALL BE INCLUDED IN THE COST OF ITEM 614 - MAINTAINING TRAFFIC

ITEM 251 PARTIAL DEPTH PAVEMENT REPAIR:
THE FOLLOWING QUANTITY IS TO BE USED AS DIRECTED.
THIS QUANTITY HAS BEEN PROVIDED TO REMOVE HUMPS AT JOINT LOCATIONS.
PART 1 : FROM UNI-36-11.925 TO UNI-36-14.611:
8.84 m (AVG. LENGTH) X 0.93 m (WIDTH) X 0.15 m (DEPTH) X 84 (JOINTS) = 104 CUBIC METERS

THE FOLLOWING QUANTITIES ARE FOR MISCELLANEOUS LOCATIONS AND TO BE USED AS DIRECTED. THE DEPTH OF REPAIRS SHALL BE APPROXIMATELY 75 mm.
THE FOLLOWING QUANTITIES HAVE BEEN PROVIDED:
PART 1 : 6 CUBIC METERS
PART 2 : 3 CUBIC METERS
TOTAL TO GENERAL SUMMARY = 113 CUBIC METERS

ITEM 253 PAVEMENT REPAIR:
THIS ITEM SHALL BE USED WHERE DIRECTED. THE EDGE OF THE PAVEMENT REMOVAL SHALL BE SAWED FULL DEPTH WITH A DIAMOND SAW PRIOR TO REMOVAL. THE ITEM 301 SHALL BE PLACED IN TWO EQUAL LIFTS.
THE FOLLOWING QUANTITIES HAVE BEEN PROVIDED:
PART 1 6 CUBIC METERS
PART 2 3 CUBIC METERS
TOTAL TO GENERAL SUMMARY = 9 CUBIC METERS

ITEM 254 PAVEMENT PLANING, BITUMINOUS:
THE EXISTING WEARING COURSE SHALL BE REMOVED TO A DEPTH EQUAL TO THE DEPTH OF THE PROPOSED NEW PAVEMENT. THE CONTRACTOR SHALL BE TOTALLY RESPONSIBLE FOR ANY AND ALL DAMAGE THAT MAY RESULT FROM THE PLANING OPERATION, INCLUDING CASTINGS. THE DEPTH OF PLANING CLOSE TO THE CASTINGS SHALL BE AS DIRECTED, TO ACHIEVE A SMOOTH RIDING FINISHED PAVEMENT. THE PLANED AREA SHALL NOT BE EXPOSED TO TRAFFIC FOR MORE THAN FIVE DAYS PRIOR TO RESURFACING. FAILURE TO COMPLY WITH THE FIVE-DAY LIMIT SHALL SUBJECT THE CONTRACTOR TO LIQUIDATED DAMAGES AS PER SECTION 108.07 OF THE CMS.

ITEM 604 MONUMENT ASSEMBLY:
THIS WORK SHALL CONSIST OF FURNISHING AND PLACING ADJUSTABLE CENTERLINE MONUMENTS AT THE FOLLOWING INTERSECTIONS:

PART 1:
1.) U.S. 36 AND UNION-CHAMPAIGN COUNTY LINE
2.) U.S. 36 AND CO. RD. 86 (HOMER RD.)
3.) U.S. 36 AND CO. RD. 81 (CONNOR RD.)
4.) U.S. 36 AND TWP. RD. 65 (SABINE-BIGELOW RD.)
5.) U.S. 36 AND TWP. RD. 70 (BOERGER RD.)
6.) U.S. 36 AND CO. RD. 74 (PHILIP-HERR RD.)
PART 2:
1.) S.R. 4 AND CO. RD. 77 (CHAMPAIGN CO. LINE RD.)
2.) S.R. 4 AND U.S. 36

A REGISTERED SURVEYOR FROM DISTRICT SIX SURVEY DEPARTMENT SHALL BE RESPONSIBLE FOR REFERENCING AND VERIFYING THE LOCATIONS OF THE CENTERLINE MONUMENTS. THE CONTRACTOR SHALL NOTIFY THE SURVEY DEPARTMENT (614-363-1251) 48 HOURS PRIOR TO START OF MONUMENT WORK. PAYMENT FOR THIS ITEM SHALL INCLUDE ALL NECESSARY LABOR, MISCELLANEOUS HARDWARE, AND EQUIPMENT REQUIRED FOR PLACEMENT. PAYMENT WILL BE AT CONTRACT BID PRICE PER EACH.
TOTAL CARRIED TO GENERAL SUMMARY = 8 EACH

ITEM 614 - WORK ZONE MARKING SIGNS:
THE FOLLOWING QUANTITIES HAVE BEEN PROVIDED AS PER 614.04 OF THE CMS.
PART 1:
R-33-30 "DO NOT PASS" = 25
R-34-30 "PASS WITH CARE" = 24
OW-167-36 "NO EDGE LINES" = 16

PART 2:
R-33-30 "DO NOT PASS" = 6
R-34-30 "PASS WITH CARE" = 6
OW-167-36 "NO EDGE LINES" = 6

TOTAL CARRIED TO GENERAL SUMMARY = 83

ITEM 614 - TEMPORARY CENTERLINE, CLASS II:
THE FOLLOWING QUANTITIES HAVE BEEN PROVIDED AS PER 614.10 OF THE CMS.
PART 1: STA. 0.000 TO STA. 14.611 = 14.611 x2 = 29.222 km
PART 2: STA. 0.000 TO STA. 4.122 = 4.122 x2 = 8.244 km
TOTAL CARRIED TO GENERAL SUMMARY = 37.466 km

ITEM 806, FIELD OFFICE TYPE A, AS PER PLAN:
UNDER THIS ITEM, THE CONTRACTOR SHALL PROVIDE A FIELD OFFICE MEETING ALL REQUIREMENTS OF ITEM 806, FIELD OFFICE, TYPE A WITH THE FOLLOWING MODIFICATION. THE CONTRACTOR SHALL PROVIDE A MINIMUM OF TWO SEPARATE PHONE LINES FOR THE FIELD OFFICE ON THIS PROJECT.
TOTAL CARRIED TO GENERAL SUMMARY:
ITEM 806 FIELD OFFICE, TYPE A, AS PER PLAN = 2 MONTHS

ITEM 623 - CONSTRUCTION LAYOUT STAKES, AS PER PLAN:
THIS ITEM SHALL CONSIST OF STATIONING USING 1 m LATH STAKES. THE STAKES SHALL BE SPACED AT 50 m INTERVALS AND SHALL EXTEND THROUGHOUT THE LENGTH OF THE PROJECT AND THROUGHOUT THE LENGTH OF ALL RAMPS. PLACEMENT OF THE STAKES SHALL BE AS DIRECTED BY THE ENGINEER. THE CONTRACTOR IS RESPONSIBLE FOR REPLACING ANY DAMAGED OR MISSING STAKES. CONSTRUCTION LAYOUT STAKES, AS PER PLAN WILL BE PAID FOR AT THE CONTRACT LUMP SUM BID, WHICH PRICE SHALL BE FULL COMPENSATION FOR ALL SERVICES, MATERIALS, LABOR, EQUIPMENT, TOOLS, AND INCIDENTALS, INCLUDING THE REMOVAL, NECESSARY TO COMPLETE THIS ITEM.

O.D.N.R. NOTIFICATION:
NO TOXIC OR HAZARDOUS MATERIALS (ASPHALT, SEALANT, PAINT, ETC.) EARTHEN MATERIAL, WASTE WATER OR DEBRIS OF ANY SORT SHALL BE DISCHARGED TO THE BIG OR LITTLE DARBY CREEK. ALL ASPHALT GRINDINGS, EXCESS ASPHALTIC MATERIAL OR ANY OTHER DEBRIS GENERATED DURING RESURFACING SHALL BE REMOVED FROM WITHIN 1,000 FEET OF THE BIG OR LITTLE DARBY CREEK AND DISPOSED OF AT AN APPROPRIATE FACILITY ABOVE THE 100 YEAR FLOOD ELEVATION OF EITHER THE BIG OR LITTLE DARBY CREEK.

BOB GABLE (937-854-0350) OF THE OHIO DEPARTMENT OF NATURAL RESOURCES SHALL BE INVITED TO THE PRE-CONSTRUCTION MEETING.

CALCULATED | CHECKED

PLAN NO.

GENERAL NOTES

UNI-36-0.000

03-FEB-1999
f:\2lane_fy99\uni\36\0000000.999\notel.dgn

DETAIL FOR STRUCTURE
UNI-36-1.432

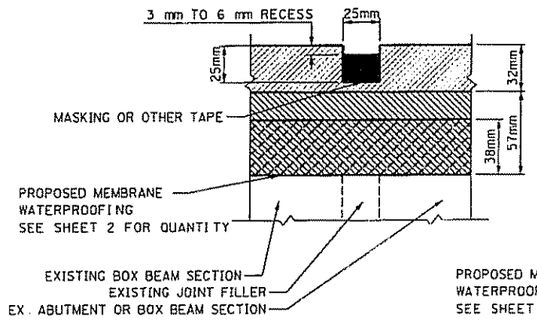

DETAIL FOR STRUCTURE
UNI-36-4.538

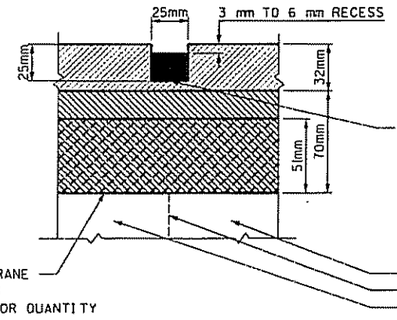

DETAIL FOR STRUCTURE
UNI-4-0.097

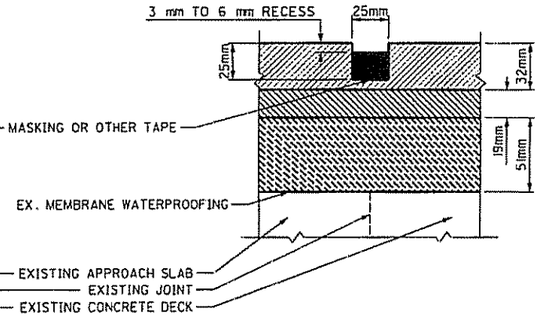

EXISTING WEARING COURSE REMOVED (38 mm) SEE SHEET 2 FOR QUANTITY
PROPOSED INTERMEDIATE COURSE (57 mm) SEE SHEET 2 FOR QUANTITY
PROPOSED SURFACE COURSE (32 mm) SEE SHEET 2 FOR QUANTITY
PROPOSED ITEM SPECIAL - SAWING AND SEALING BITUMINOUS CONCRETE JOINT

EXISTING WEARING COURSE REMOVED (51 mm) SEE SHEET 2 FOR QUANTITY
PROPOSED INTERMEDIATE COURSE (70 mm) SEE SHEET 2 FOR QUANTITY
PROPOSED SURFACE COURSE (32 mm) SEE SHEET 2 FOR QUANTITY
PROPOSED ITEM SPECIAL - SAWING AND SEALING BITUMINOUS CONCRETE JOINT

EXISTING ASPHALT OVERLAY (51 mm)
PROPOSED INTERMEDIATE COURSE (19 mm) SEE SHEET 2 FOR QUANTITY
PROPOSED SURFACE COURSE (32 mm) SEE SHEET 2 FOR QUANTITY
PROPOSED ITEM SPECIAL - SAWING AND SEALING BITUMINOUS CONCRETE JOINT

1) Description:

This work shall consist of cutting and sealing transverse joints on the new bituminous concrete overlay of bridges. Bituminous concrete joints shall be constructed directly over, and in line with, the existing underlying transverse joints of the structure (as detailed above).

2) Materials:

The joint sealant shall meet the requirements of ASTM Specification D3405, Joint sealants, Hot-poured, for Concrete and Asphalt Pavements. Acceptable alternate materials are:

Roof-Flex 176, polyurethane, as produced by the Carboline Company, 350 Hanley Industrial Court, St. Louis, Missouri 63144 (Roger Zubal, 614-877-3406); a silicone sealant meeting Federal Specifications TT-S-001543A Class A (one-part silicone sealants) and TT-S-00230C Class A (one-component sealants), such as those manufactured by General Electric, Silicone Products Division, 6155 Rockside Rd., Rockside Square I, Independence, Ohio 44131 (John Fromholtz, 216-447-1750) or Dow Corning, 3737 Park East, Beachwood, Ohio 44122 (Robert Ruppel, 216-464-2330); or Sof-Seal, a cold-applied, low-modulus, two-component polymeric compound horizontal sealant as manufactured by W. R. Meadows, Inc., P.O. Box 543, Elgin, Illinois 60121 (Robert Cameron, 312-683-4500). Sealant will be accepted on the basis of the manufacturer's certification that it conforms to the requirements of these specifications.

3) Construction Details:

A) General: The contractor shall conduct his operation so that the cutting, cleaning and sealing of transverse joints is a continuous operation that will be performed as soon as practical after the paving, but no later than four (4) days after placement of the asphalt concrete surface course. Traffic shall not be allowed to Knead together or damage the joint cut prior to sealing.

B) Cutting of Transverse Joints: The contractor shall saw or rout transverse joints to the dimensions shown in the details on this sheet. The cut joints shall lie directly above each transverse joint (as detailed above). The joint location shall be marked on the new asphalt surface with a chalk line, or by some other acceptable method, before cutting. Details of the method for locating and accurately marking the proposed cuts shall be subject to the approval of the Engineer prior to starting any cutting or paving operations.

The blade or blades shall be of such size that the full width and depth of the cut can be made with one pass. Dry or wet cutting will be allowed. Joints shall extend the full width of the bridge.

C) Cleaning Joints: Dry sawed joints shall be thoroughly cleaned with a sufficient amount of compressed air to remove any dirt, dust, or deleterious matter. Wet sawed joints shall be washed clean of all cuttings by flushing with a jet of water and with other tools as necessary. After flushing, the joint shall be blown out with compressed air. When the surfaces are thoroughly clean and dry, and just prior to placing the joint sealer, compressed air having a pressure of at least 63 g/sq mm shall be used to blow out the joint and remove all traces of dust.

In the event freshly cut joints become contaminated before they are sealed, they shall be recleaned of all foreign material by high pressure water jet.

D) Sealing Joints: The joint shall be thoroughly dried before the sealant is placed. After cleaning and drying, a bond-breaker (tape) shall be applied to the bottom of the groove.

Hot-poured joint sealant material shall be heated in a kettle or melter constructed as a double boiler, with the space between the inner and outer shells filled with oil or other heat transfer medium. Positive temperature control and mechanical agitation shall be provided. Heating must be in strict accordance with the manufacturer's recommendation. Joint sealer material shall never be kept heated at the pouring temperature for more than four (4) hours and shall never be reheated. Sealer left in the applicator at the end of a day's work shall be removed and discarded.

Hot-poured sealant shall be applied immediately through a nozzle, which must project into the sawed joint, filling from the bottom up. The seal shall completely fill the joint in such a manner that, after cooling, the level of the sealer will not be higher than 3 mm below the pavement surface. Any depression in the cooled seal greater than 5 mm shall be brought up to the specified limit for further addition of hot-poured sealant. Care shall be taken in the sealing of the joints so that the final appearance will present a neat fine line.

The cold applied sealant materials (polyurethane, silicone, and polymeric compounds) shall be installed as per manufacturers' recommendations, or as directed by the Engineer. The sealant shall be installed when the ambient temperature is 4 degrees C or higher. Traffic shall not be allowed on the joint for one hour after application of the sealant.

4) Method of Measurement:

The quantity to be paid for under this item will be the number of meters of joints sawed and sealed as per the above requirements.

5) Basis of Payment:

The unit price per meter for Item Special - "Sawing and sealing bituminous concrete joints" shall include the cost of all labor, materials, and equipment necessary to complete the work, including the furnishing and placing of the joint sealer material.

ITEM SPECIAL 516M31200 SAWING AND SEALING BITUMINOUS CONCRETE JOINTS:
The following quantities have been provided for:
Part 1
Bridge No. UNI-36-1.432:
8.5 m (joint length) x 4 (joints) = 34 m
Bridge No. UNI-36-4.538:
9.5 m (joint length) x 2 (joints) = 19 m
Part 2
Bridge No. UNI-4-0.097
7.3 m (joint length) x 2 (joints) = 15 m
Total carried to General Summary = 68 m

CALCULATE | CHECKED
PLAN NO.
SAW AND SEAL BRIDGE JOINT
UNI-36-0.000
10/12

03-FEB-1999
T:\2LAWE_F199\UNI\36\000000.999\sawseal.dgn

GENERAL NOTES

1. It is intended that this drawing be used for treatment of drop-offs that develop during construction operations, and that are not otherwise provided for in the construction plans. Where the plans do not provide specific items for labor, equipment, or materials to implement the drop-off treatments specified hereon, they shall be included for payment in the lump sum bid for Item 614 - Maintaining Traffic.
2. While the need for certain advisory signing is noted hereon, it is not intended that this be indicative of all signing that may be required to advise or warn motorists, and all requirements of the Ohio Manual of Uniform Traffic Control Devices (OMUTCD) must be fulfilled.
3. In urban or otherwise heavily developed areas where pedestrians and/or bicyclists may be present in significant numbers, additional signing and protective measures other than those shown hereon may be required.
4. The drop-off treatment selected for use at any given location shall be as appropriate for the prevailing conditions at the site.
5. Where concrete barrier is specified, it shall be in accordance with Standard Construction Drawing MC-9.2M and Item 622.
6. When drums are specified for a dropoff condition, a minimum number of four drums shall be used. Spacing shall be as indicated in the plans or as specified in the OMUTCD.
7. When OW-151 (Low Shoulder) signs or OW-171 (Uneven Lanes) and OWP-171 signs are required, they shall be placed 230 meters in advance of the condition, on all intersecting entrance ramps within the limits of the condition and immediately beyond all intersecting roadways within the limits of the condition. When the dropoff condition extends more than 800 meters, additional signs should be erected at intervals of 1.6 kilometer or less.
8. For locations, such as at ramps, lane shifts, lane closures, etc., where traffic is required to negotiate any difference in elevation between pavements, a 3:1 slope treatment similar to the Optional Wedge Treatment shall be provided.
9. Portable concrete barrier shall be placed on the same level as the traffic surface and shall not encroach on lane width(s) designated as the minimum required for traffic use. Where drums are used, and their presence would reduce traveled lane widths to less than 3.0 m, drums may be placed on the opposite level from that of traffic provided the dropoff depth does not exceed 127 mm and approval is granted by the Project Engineer.
10. Pavement Repairs (or similar work):
    a. Lengths greater than 20 meters - utilize appropriate treatment from Condition I.
    b. Lengths of 20 meters or less - repairs shall be effected in accordance with Item 255.08. Drums may be used as a seperator adjacent to the traveled lane.

OPTIONAL WEDGE TREATMENT
(MILLING OR RESURFACING)

1. This treatment may be used when permitted for Condition I only.
2. OW-171 and OWP-171 signs required.

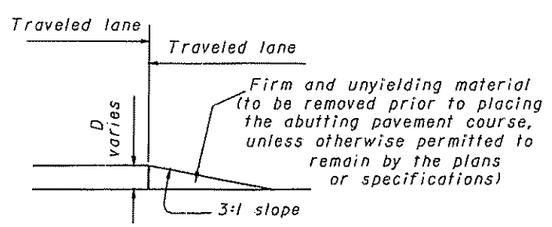

CONDITION I
DROPOFFS BETWEEN TRAVELED LANES

1. These treatments are to be used for resurfacing, pavement planing, excavation, etc. between or within traveled lanes.

D (mm.)	Treatment
≤38	Erect OW-171 and OWP-171 signs.
>38-76	1) Lane closure utilizing drums * as shown below OR 2) Optional Wedge Treatment
>76-127	Lane closure utilizing drums as shown below.
>127	Lane closure utilizing portable concrete barrier as shown below.

* Cones may be used for daytime only conditions.

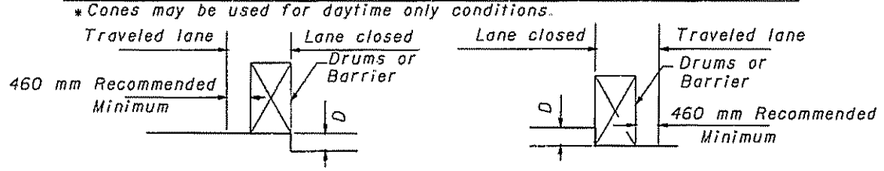

CONDITION II
DROPOFFS WITHIN GRADED SHOULDER AREA

1. The treatments indicated below are for use in conjunction with resurfacing, planing, or excavations within the graded shoulder area.
2. The graded shoulder area is that flat or gradually sloping area between the edge of a normally traveled lane and the more steeply sloping ditch foreslope or embankment area (improved with aggregates, asphaltic materials, or concrete). For the purposes herein, its maximum width shall be considered to be 3.6 meters.

D (mm	Treatment
≤38	1) If edgelines are present, no treatment necessary OR 2) Erect OW-171 and OWP-171 signs.
>38-127	1) If min. lane width * requirements can be met, maintain lanes utilizing drums as shown below OR 2) If min. lane width * requirements cannot be met, close adjacent lane utilizing drums OR 3) Optional Shoulder Treatment.
>76-305 Daylight only	If min. lane width * requirements can be met, maintain lanes utilizing drums as shown below.
>76-610	1) If min. lane width * requirements can be met, maintain lanes utilizing portable concrete barrier as shown below. OR 2) If min. lane width * requirements cannot be met, close adjacent lane utilizing drums.
>610	Lane closure utilizing portable concrete barrier as shown below.

* Minimum lane widths shall be 3.0 meters unless otherwise specified in the plans.

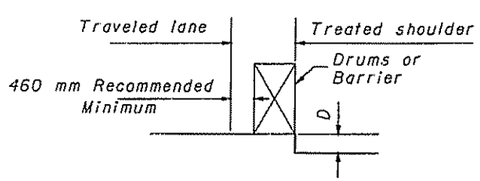

OPTIONAL SHOULDER TREATMENT

1. This treatment may not be used within a bituminous shoulder where a hot longitudnal joint per Item 401.15 is required.
2. OW-151 signs required.

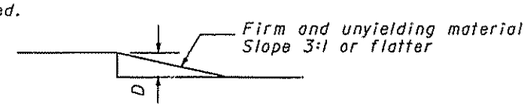

CONDITION III
DROPOFFS BEYOND GRADED SHOULDER OR BACK OF CURB

1. See Note 2 under Condition II.
2. Use Chart A or B below, as applicable.

CHART A

USE FOR: 1. Uncurbed Facilities.
2. Curbed Facilities, where:
   a. Curbs are less than 150 mm in height.
   b. Curbs are 150 mm or greater in height and the legal speed is 70 km/h or greater.

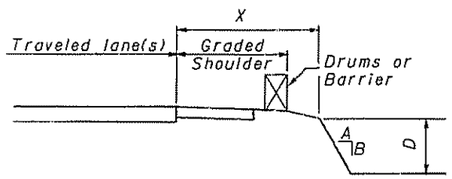

X (m)	D (mm)	A/B	Treatment Required	
			Day	Night
0-1.2	Any	Any	(a)	(a)
1.2-9.1	Any	3:1 or Flatter	None	None
1.2-3.6	≤76	Steeper than 3:1	None	None
1.2-3.6	>76-≤305	Steeper than 3:1	Drums	Drums
1.2-3.6	>305	Steeper than 3:1	Drums	Barrier
>3.6-6.1	≤305	Steeper than 3:1	None	None
>3.6-6.1	>305-≤610	Steeper than 3:1	Drums	Drums
>3.6-6.1	>610	Steeper than 3:1	Drums	Barrier
>6.1-9.1	<610	Steeper than 3:1	None	Drums
>6.1-9.1	≥610	Steeper than 3:1	Drums	Barrier
>9.1	Any	Any	None	None
(a) Use treatment specified under Condition II.				

CHART B

USE FOR: Curbed facilities, where the curb is 150 mm or greater in height and the legal speed less than 70 km/h.

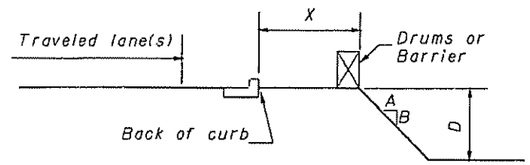

X (m)	D (mm)	A/B	Treatment Required	
			Day	Night
0-3.0	<305	Any	None	Drums
0-3.0	>305	Any	Drums	Drums
>3.0	Any	Any	None	None

METRIC

CALCULATED | CHECKED

PLAN NO.

DROPOFFS IN WORK ZONES

UNI-36-0.000

11
12

03-FEB-1999
T:\2LANE_FY99\UNI\36\000000.999\dropoff.dgn

SHEET NUMBER											ITEM	ITEM EXT.	GRAND TOTAL	UNIT	DESCRIPTION	SEE SHEET NO.
2	3	4	5	6	8	9	10									
669	520										202	23500	1189	SQ METER	WEARING COURSE REMOVED	
	8										202	30000	8	SQ METER	WALK REMOVED	
	5.2										202	32000	5.2	METER	CURB REMOVED	
					1007						202	54100	1007	EACH	RAISED PAVEMENT MARKER REMOVED FOR STORAGE	
						113					251	01002	113	CU METER	PARTIAL DEPTH PAVEMENT REPAIR	
						9					253	02000	9	CU METER	PAVEMENT REPAIR	
770	10996	2538									254	01000	14304	SQ METER	PAVEMENT PLANING, BITUMINOUS	
40052	4032	12195	800								407	10000	57079	LITER	TACK COAT	
28418		8078	572								407	14000	37068	LITER	TACK COAT FOR INTERMEDIATE COURSE	
2192		614	30								448	46020	2836	CU METER	ASPHALT CONCRETE INTERMEDIATE COURSE, TYPE 1, PG64-22	
3660	403	1114	74								448	47020	5251	CU METER	ASPHALT CONCRETE SURFACE COURSE, TYPE 1, PG64-22	
669	520										512	33010	1189	SQ METER	TYPE 3 WATERPROOFING	
						8					604	38500	8	EACH	MONUMENT ASSEMBLY	
	8										608	53000	8	SQ METER	CURB RAMP, TYPE 1	
						83					614	12460	83	EACH	WORK ZONE MARKING SIGN	
						37.466					614	21400	37.466	KILOMETER	TEMPORARY CENTER LINE, CLASS II	
603		218	107								617	10100	928	CU METER	COMPACTED AGGREGATE, TYPE A	
											617	25000	50	CU METER	WATER	
					835						621	00200	835	EACH	RAISED PAVEMENT MARKER, INSTALLATION ONLY	
					16						621	00300	16	EACH	PRISMATIC RETROREFLECTOR	
				36.310							642	00102	36.310	KILOMETER	EDGE LINE, TYPE 2	
				18.733							642	00302	18.733	KILOMETER	CENTER LINE, TYPE 2	
				53							644	00400	53	METER	CHANNELIZING LINE	
				26.7							644	00500	26.7	METER	STOP LINE	
				29.2							644	00600	29.2	METER	CROSSWALK LINE	
							68				SPECIAL	51631200	68	METER	SAWING AND SEALING BITUMINOUS CONCRETE JOINTS	
135											SPECIAL	51822300	135	METER	STEEL DRIP STRIP (SEE STD DS-1-94M)	
17	52										SPECIAL	51912300	69	SQ METER	PATCHING CONCRETE BRIDGE DECK - TYPE B (SEE PROPOSAL NOTE)	
						2					614	11000	LUMP		MAINTAINING TRAFFIC	
						LUMP					806	16001	2	MONTH	FIELD OFFICE, TYPE A, AS PER PLAN	
											623	10001	LUMP		CONSTRUCTION LAYOUT STAKES, AS PER PLAN	
											624	10000	LUMP		MOBILIZATION	

CALCULATE

CHECKED

PLAN NO.

GENERAL SUMMARY

UNI-36-0.000

12
12

11-FEB-1999
T:\2LANE_FY99\UNI\36\0000000.999\gensum.dgn