UNI - US 36-0.00/UNI-SR 4-0.00 (PART 1&2)
158026 PID - 91053
Dist 6 7/16/2015
Contract Proposal Available @ www.contracts.dot.state.oh.us/home

STATE OF OHIO

DEPARTMENT OF TRANSPORTATION

UNI-36-0.00
UNI-4-0.00
PART 1

CITY OF MARYSVILLE
VILLAGE OF MILFORD CENTER
UNION, PARIS, AND DOVER TOWNSHIPS

UNION COUNTY

FOR PART 2, SEE UNI-36-8.74

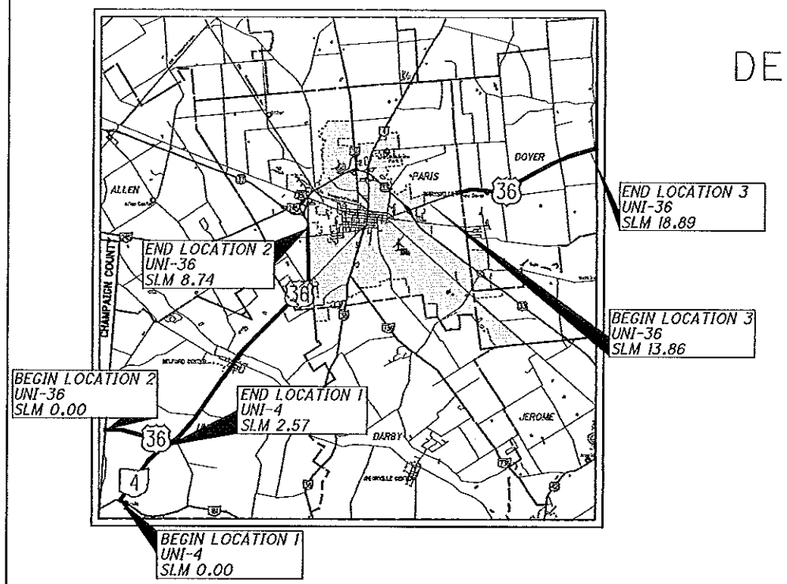

LOCATION MAP

LATITUDE: 40° 13' 05" LONGITUDE: 83° 23' 50"

SCALE IN MILES

0 1 2 3 4

N

PORTION TO BE IMPROVED
INTERSTATE & DIVIDED HIGHWAYS
UNDIVIDED STATE & FEDERAL ROUTES
OTHER ROADS

DESIGN DESIGNATION	*UNI-4*	*UNI-36*
CURRENT ADT (2016)	*3,100*	*5,000*
DESIGN YEAR ADT (2028)	*3,400*	*6,400*
DESIGN HOURLY VOLUME (2028)	*340*	*580*
DIRECTIONAL DISTRIBUTION	*53%*	*53%*
TRUCKS (24 HOUR B&C)	*13%*	*8%*
DESIGN SPEED	*60*	*60*
LEGAL SPEED	*55*	*35/55*

DESIGN FUNCTIONAL CLASSIFICATION:

UNI-36: 0.00-1.74: RURAL MAJOR COLLECTOR
1.74-6.95: RURAL PRINCIPAL ARTERIAL
6.95-9.63: URBAN PRINCIPAL ARTERIAL
13.48-13.97: URBAN MINOR ARTERIAL
13.97-18.89: RURAL MINOR ARTERIAL
UNI-4: RURAL PRINCIPAL ARTERIAL

UNDERGROUND UTILITIES

CONTACT BOTH SERVICES
CALL TWO WORKING DAYS
BEFORE YOU DIG

CALL
1-800-362-2764
(TOLL FREE)
OHIO UTILITIES PROTECTION SERVICE
NON-MEMBERS
MUST BE CALLED DIRECTLY

OIL & GAS PRODUCERS UNDERGROUND PROTECTION SERVICE CALL: 1-800-925-0988

PLAN PREPARED BY:
ODOT DISTRICT 6 PLANNING AND ENGINEERING

ENGINEERS SEAL:

STATE OF OHIO
KEVIN R. FIANT
E-64877
REGISTERED PROFESSIONAL ENGINEER

SIGNED: Kevin Fiant
DATE: 4/3/15

INDEX OF SHEETS:

TITLE	*1*
SCHEMATIC PLAN	*2*
TYPICAL SECTIONS	*3 - 8*
TYPICAL DETAILS	*9 - 13*
GENERAL NOTES	*14 - 16*
MAINTENANCE OF TRAFFIC NOTES	*17 - 18*
GENERAL SUMMARY	*19 - 20*
PLAN SUBSUMMARIES (MILFORD CENTER)	*21 - 22*
PAVEMENT REPAIR SUBSUMMARIES	*23 - 24*
PAVEMENT SUBSUMMARY (SR-4)	*25*
PAVEMENT SUBSUMMARY (US-36)	*26*
PLAN SHEETS (MILFORD CENTER)	*27 - 30*
TRAFFIC CONTROL SUBSUMMARIES	*31 - 32*
TRAFFIC CONTROL PLANS	*33 - 42*
STRUCTURES OVER 20'	*43 - 50*

STANDARD CONSTRUCTION DRAWINGS

CB-2.2	01/17/14	MT-95.50	07/19/13	TC-52.20	07/18/14		
		MT-97.10	07/18/14	TC-61.10	01/17/14		
DM-1.1	01/18/13	MT-97.12	07/18/14	TC-65.10	01/17/14		
DM-1.2	01/18/13	MT-99.20	07/19/13	TC-65.11	07/18/14		
DM-4.3	07/19/13	MT-99.30	01/16/15	TC-71.10	01/17/14		
		MT-101.90	07/18/14	TC-82.10	10/18/13		
BP-3.1	07/18/14	MT-105.10	07/19/13	TC-83.10	01/17/14		
BP-4.1	07/19/13			TC-84.20	10/18/13		
BP-5.1	07/19/13	TC-41.20	10/18/13	TC-84.21	10/18/13		
BP-7.1	07/18/14	TC-41.50	10/18/13	TC-85.21	01/16/15		
		TC-42.10	10/18/13	TC-85.22	01/16/15		
RM-1.1	07/18/14	TC-42.20	10/18/13				
RM-4.2	06/04/14	TC-52.10	10/18/13				

SUPPLEMENTAL SPECIFICATIONS

800	04/17/15
821	04/20/12
832	01/17/14
878	10/12/13
921	04/20/12

SPECIAL PROVISIONS

PROJECT DESCRIPTION

PAVEMENT PLANING AND RESURFACING OF US-36 IN UNION COUNTY BEGINNING AT THE CHAMPAIGN COUNTY LINE (SLM 0.00) TO THE SR-4 JUNCTION (SLM 1.74).

PAVEMENT PLANING AND RESURFACING OF SR-4 IN UNION COUNTY BEGINNING AT THE CHAMPAIGN COUNTY LINE (SLM 0.00) TO THE US-36 JUNCTION (SLM 2.57).

PAVEMENT PLANING AND RESURFACING OF US-36 (SR-4) IN UNION COUNTY BEGINNING AT THE US-36/SR-4 JUNCTION (SLM 2.57), CONTINUING THROUGH THE VILLAGE OF MILFORD CENTER TO SUSPEND AT SLM 8.74 (SEE PART 2).

RESUME PAVEMENT PLANING AND RESURFACING OF US-36 IN UNION COUNTY BEGINNING AT SLM 13.86 AND ENDING AT THE DELAWARE COUNTY LINE (SLM 18.89).

CURB REPLACEMENT AT VARIOUS LOCATIONS WITHIN THE VILLAGE OF MILFORD CENTER.

CATCH BASIN REPLACEMENT AT VARIOUS LOCATIONS WITHIN THE VILLAGE OF MILFORD CENTER.

EARTH DISTURBED AREA:

PROJECT EARTH DISTURBED AREA	*0.133 ACRES*
EST. CONTRACTOR EARTH DISTURBED AREA	*0.125 ACRES*
NOTICE OF INTENT EARTH DISTURBED AREA	*N/A*

** MAINTENANCE PROJECT*

2013 SPECIFICATIONS

THE STANDARD SPECIFICATIONS OF THE STATE OF OHIO, DEPARTMENT OF TRANSPORTATION, INCLUDING CHANGES AND SUPPLEMENTAL SPECIFICATIONS LISTED IN THE PROPOSAL SHALL GOVERN THIS IMPROVEMENT.

I HEREBY APROVE THESE PLANS AND DECLARE THAT THE MAKING OF THIS IMPROVEMENT WILL NOT REQUIRE THE CLOSING TO TRAFFIC OF THE HIGHWAY AND THAT PROVISIONS FOR THE MAINTENANCE AND SAFETY OF TRAFFIC WILL BE SET FORTH ON THE PLANS AND ESTIMATES.

PLANS CERTIFIED BY:
NAME: David K. Barbin *DATE:* 04/03/15
DISTRICT 6
OHIO DEPT. OF TRANSPORTATION

APPROVED [signature] *DISTRICT DEPUTY DIRECTOR*
DATE 4-3-15

APPROVED [signature] *DIRECTOR, DEPARTMENT OF TRANSPORTATION*
DATE 4-28-15

FEDERAL PROJECT NO. E130611
PID NO. 91053
CONSTRUCTION PROJECT NO.
RAILROAD INVOLVEMENT NONE

UNI-36-0.00
UNI-4-0.00

1
50

I:\Projects\uni\036\0000.016\91053\production\ROADWAY\SHEETS\TITLE SHEETS.dgn

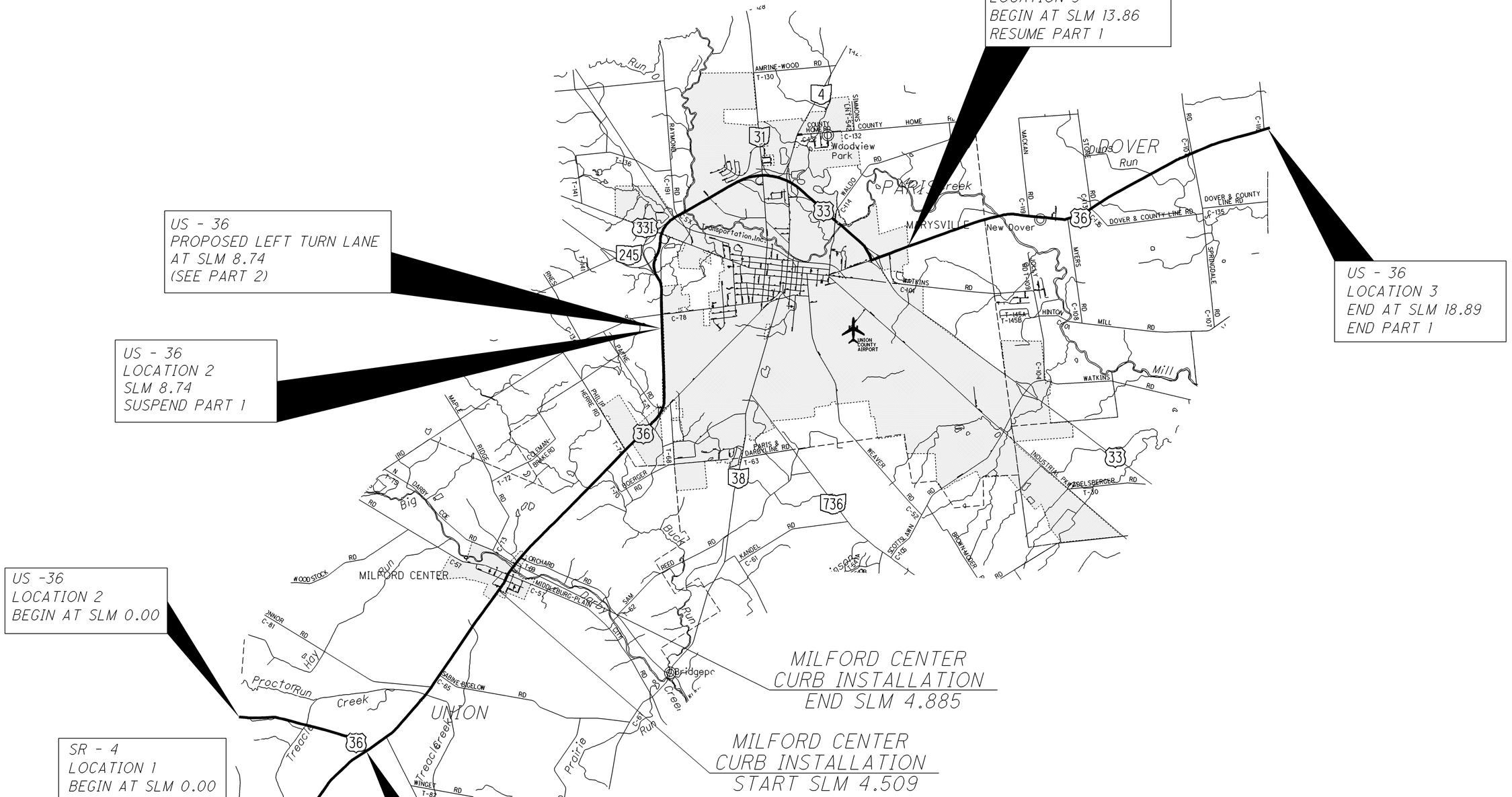

Category	Group	Responsible Entity	Plan Split Code	Description
STP Rural	Pavement	State	01/STR/PV	D6 federal/state funding for STP Rural portion: UNI-36: 0-1.74 UNI-36: 13.99-18.89
STP < 200000	Pavement	State	02/S<2/PV	D6 federal/state funding for STP route in Marysville: UNI-36: 13.86-13.99
NHS	Pavement	State	03/NHS/PV	D6 fed/state funding for NHS portion: UNI-4: 0-2.57 UNI-36: 1.74-6.94 & 7.68-8.74
NHS	Pavement	Non-State	04/NHS/PV/Mary	Urban Paving - D6 federal and Marysville funding for NHS portion within City of Marysville: UNI-36: 6.94-7.68
NHS	Pavement	Non-State	05/NHS/PV/MILF	100% Village of Milford Center for catch basins and curb replaced
STP Rural	Bridge	State	06/STR/BR	bridge work on UNI-36-0.89 (SFN 8001634)
NHS	Bridge	State	07/NHS/BR	

CALCULATED | CHECKED

SCHEMATIC PLAN

UNI-36-0.00
UNI-4-0.00

I:\Projects\uni\036\0000.016\91053\production\ROADWAY\sheets\SCHEMATIC PLANS.dgn 10-APR-2015 8:18PM drankin SHEET_GB001

PAVEMENT CORE DATA IS AVAILABLE BY REQUEST

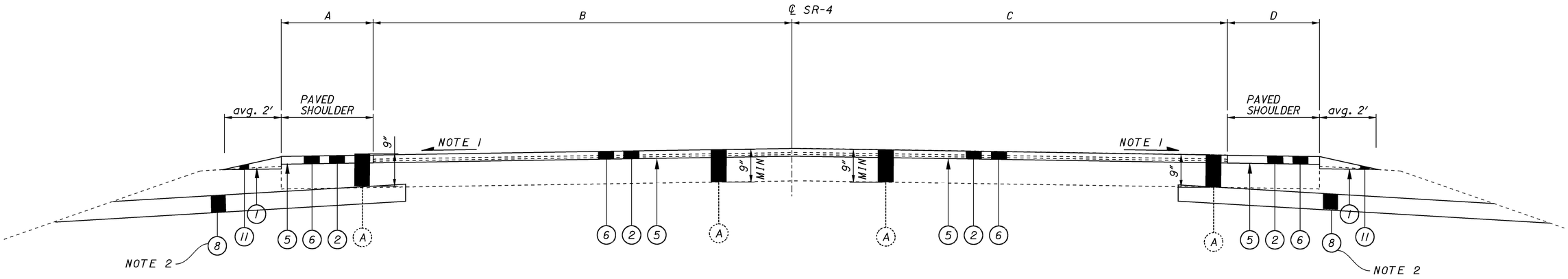

TYPICAL SECTION #1 - S.R. 4

SECTION APPLIES TO THE FOLLOWING LOCATIONS:

SLM	0.00	TO SLM	2.57	2.57
			TOTAL	2.57

LEGEND:

- (A) EXISTING ASPHALT CONCRETE
- (B) EXISTING CURB
- (C) EXISTING SIDEWALK
- (D) EXISTING CONCRETE
- (1) ITEM 209 - LINEAR GRADING
- (2) ITEM 254 - (1.5") PAVEMENT PLANING
- (3) ITEM 254 - (3") PAVEMENT PLANING
- (4) ITEM 301 - ASPHALT CONCRETE BASE, PG64-22
- (5) ITEM 407 - TACK COAT @ .075 GAL/ SQ YD
- (6) ITEM 441 - (1.5") ASPHALT CONCRETE SURFACE COURSE, TYPE 1, PG64-22 (446)
- (7) ITEM 516 - 1/4" PREFORMED EXPANSION JOINT FILLER
- (8) ITEM 605 - AGGREGATE DRAINS, AS PER PLAN
- (9) ITEM 608 - 4" CONCRETE WALK
- (10) ITEM 609 - CURB, TYPE 4-C
- (11) ITEM 617 - COMPACTED AGGREGATE
- (12) ITEM 659 - SEEDING AND MULCHING, CLASS 1

NOTE 1:
PROPOSED PAVEMENT CROSS SLOPES AT THIS LOCATION TO REMAIN SAME AS EXISTING.

NOTE 2:
SEE SHEET 9/50 FOR AGGREGATE DRAINS, AS PER PLAN.

CALCULATED | CHECKED

TYPICAL SECTION

UNI-36-0.00
UNI-4-0.00

3
50

I:\Projects\uni\036\0000.016\91053\production\ROADWAY\sheets\TYPICAL SECTIONS.dgn 10-APR-2015 8:18PM drankin SHEET_GY001

PAVEMENT CORE DATA IS AVAILABLE BY REQUEST

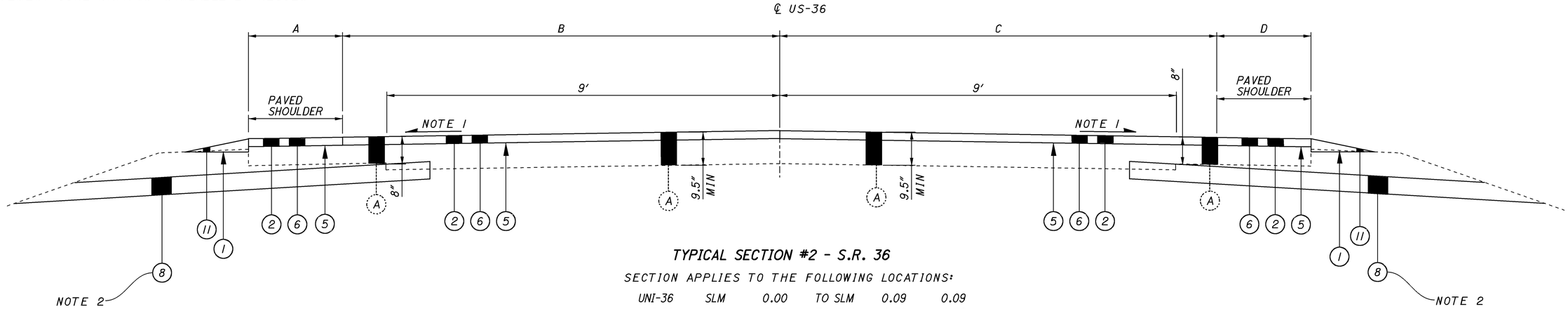

TYPICAL SECTION #2 - S.R. 36

SECTION APPLIES TO THE FOLLOWING LOCATIONS:

UNI-36	SLM	0.00	TO SLM	0.09	0.09
UNI-36	SLM	0.29	TO SLM	0.38	0.09
UNI-36	SLM	0.56	TO SLM	0.85	0.29
UNI-36	SLM	1.00	TO SLM	1.08	0.08
UNI-36	SLM	1.24	TO SLM	1.36	0.12
				TOTAL	0.67

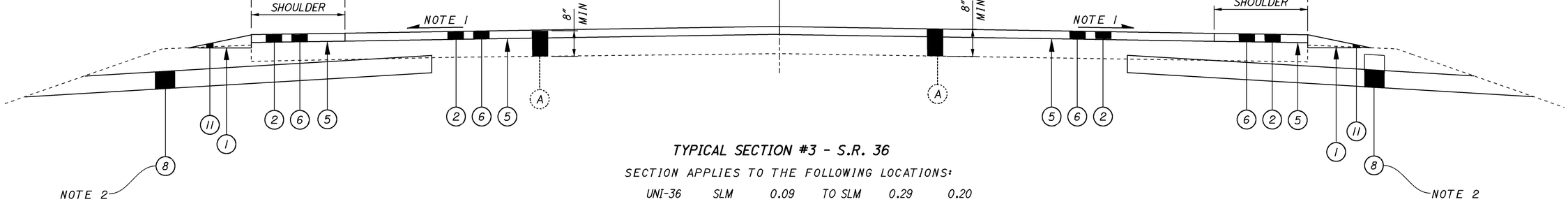

TYPICAL SECTION #3 - S.R. 36

SECTION APPLIES TO THE FOLLOWING LOCATIONS:

UNI-36	SLM	0.09	TO SLM	0.29	0.20
UNI-36	SLM	0.38	TO SLM	0.56	0.18
UNI-36	SLM	0.85	TO SLM	1.00	0.15
UNI-36	SLM	1.08	TO SLM	1.24	0.16
UNI-36	SLM	1.36	TO SLM	1.74	0.38
				TOTAL	1.07

LEGEND:

(A) EXISTING ASPHALT CONCRETE
(B) EXISTING CURB
(C) EXISTING SIDEWALK
(D) EXISTING CONCRETE
(1) ITEM 209 - LINEAR GRADING
(2) ITEM 254 - (1.5") PAVEMENT PLANING
(3) ITEM 254 - (3") PAVEMENT PLANING
(4) ITEM 301 - ASPHALT CONCRETE BASE, PG64-22
(5) ITEM 407 - TACK COAT @ .075 GAL/ SQ YD
(6) ITEM 441 - (1.5") ASPHALT CONCRETE SURFACE COURSE, TYPE 1, PG64-22 (446)
(7) ITEM 516 - 1/4" PREFORMED EXPANSION JOINT FILLER
(8) ITEM 605 - AGGREGATE DRAINS
(9) ITEM 608 - 4" CONCRETE WALK
(10) ITEM 609 - CURB, TYPE 4-C
(11) ITEM 617 - COMPACTED AGGREGATE
(12) ITEM 659 - SEEDING AND MULCHING, CLASS 1

NOTE 1:
PROPOSED PAVEMENT CROSS SLOPES AT THIS LOCATION TO REMAIN SAME AS EXISTING.

NOTE 2:
SEE SHEET 9 /50 FOR AGGREGATE DRAINS, AS PER PLAN.

CALCULATED | CHECKED

TYPICAL SECTION

UNI-36-0.00
UNI-4-0.00

4
50

I:\Projects\uni\036\0000.016\91053\production\ROADWAY\SHEETS\TYPICAL SECTIONS.dgn 13-APR-2015 12:33PM vpatel SHEET_GY101

PAVEMENT CORE DATA IS AVAILABLE BY REQUEST

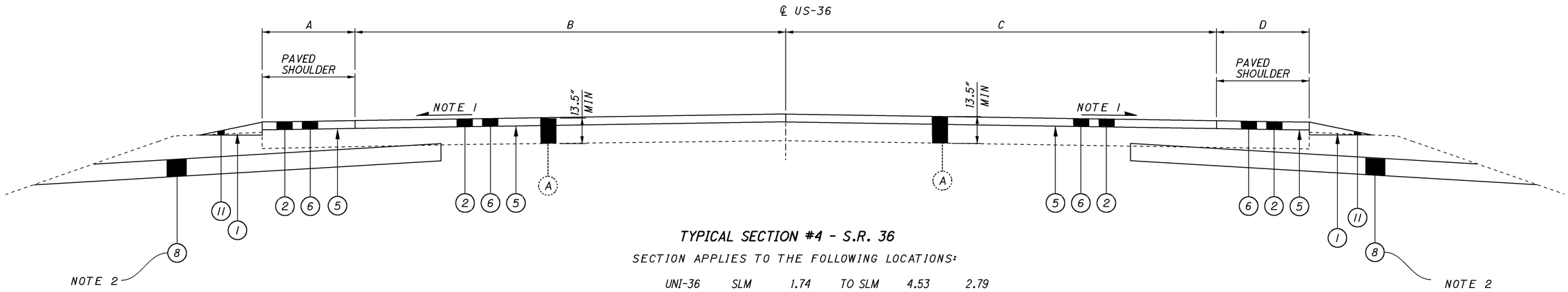

TYPICAL SECTION #4 - S.R. 36

SECTION APPLIES TO THE FOLLOWING LOCATIONS:

UNI-36	SLM	1.74	TO SLM	4.53	2.79
				TOTAL	2.79

MILFORD CENTER

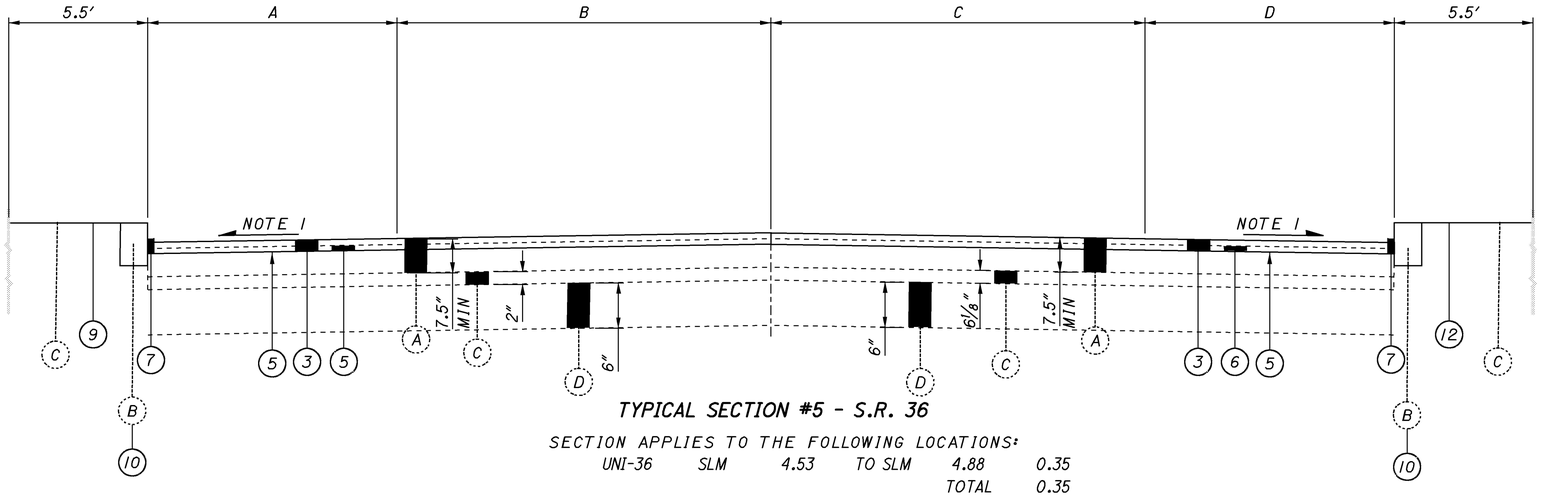

TYPICAL SECTION #5 - S.R. 36

SECTION APPLIES TO THE FOLLOWING LOCATIONS:

UNI-36	SLM	4.53	TO SLM	4.88	0.35
				TOTAL	0.35

LEGEND:

- (A) EXISTING ASPHALT CONCRETE
- (B) EXISTING CURB
- (C) EXISTING SIDEWALK
- (D) EXISTING CONCRETE
- (1) ITEM 209 - LINEAR GRADING
- (2) ITEM 254 - (1.5") PAVEMENT PLANING
- (3) ITEM 254 - (3") PAVEMENT PLANING
- (4) ITEM 301 - ASPHALT CONCRETE BASE, PG64-22
- (5) ITEM 407 - TACK COAT @ .075 GAL/ SQ YD
- (6) ITEM 441 - (1.5") ASPHALT CONCRETE SURFACE COURSE, TYPE 1, PG64-22 (446)
- (7) ITEM 516 - 1/4" PREFORMED EXPANSION JOINT FILLER
- (8) ITEM 605 - AGGREGATE DRAINS
- (9) ITEM 608 - 4" CONCRETE WALK
- (10) ITEM 609 - CURB, TYPE 4-C
- (11) ITEM 617 - COMPACTED AGGREGATE
- (12) ITEM 659 - SEEDING AND MULCHING, CLASS 1

NOTE 1:
PROPOSED PAVEMENT CROSS SLOPES AT THIS LOCATION TO REMAIN SAME AS EXISTING.

NOTE 2:
SEE SHEET 9 /50 FOR AGGREGATE DRAINS, AS PER PLAN.

CALCULATED | CHECKED

TYPICAL SECTION

UNI-36-0.00
UNI-4-0.00

5
50

I:\Projects\uni\036\0000.016\91053\production\ROADWAY\SHEETS\TYPICAL SECTIONS.dgn 11-APR-2015 7:54 AM drankin SHEET_GY102

PAVEMENT CORE DATA IS AVAILABLE BY REQUEST

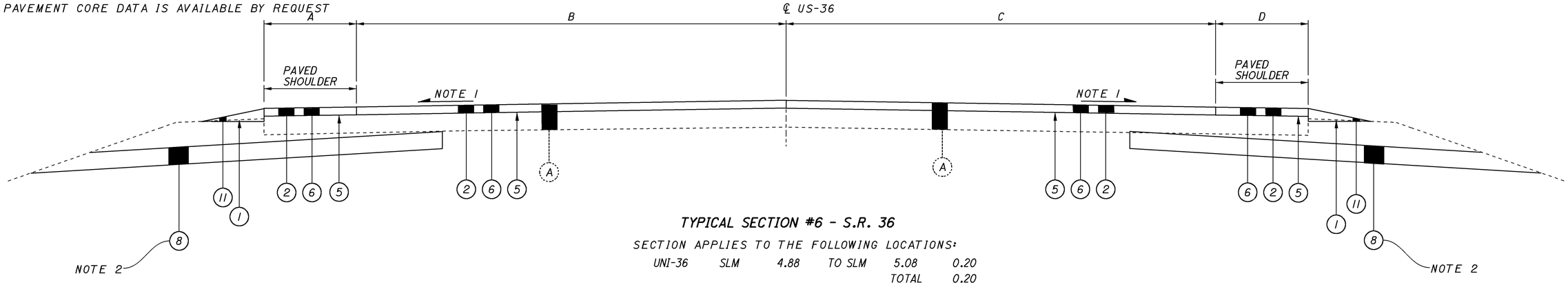

TYPICAL SECTION #6 - S.R. 36

SECTION APPLIES TO THE FOLLOWING LOCATIONS:

UNI-36	SLM	4.88	TO SLM	5.08	0.20
				TOTAL	0.20

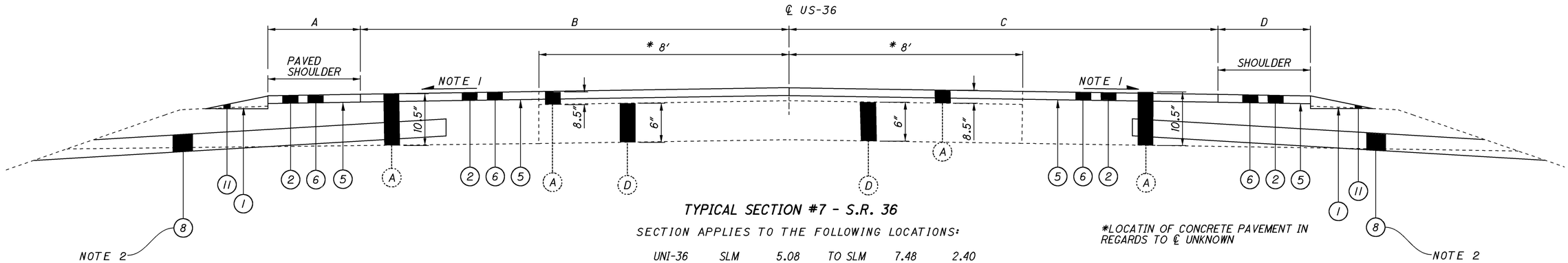

TYPICAL SECTION #7 - S.R. 36

SECTION APPLIES TO THE FOLLOWING LOCATIONS:

UNI-36	SLM	5.08	TO SLM	7.48	2.40
				TOTAL	2.40

*LOCATIN OF CONCRETE PAVEMENT IN REGARDS TO ℄ UNKNOWN

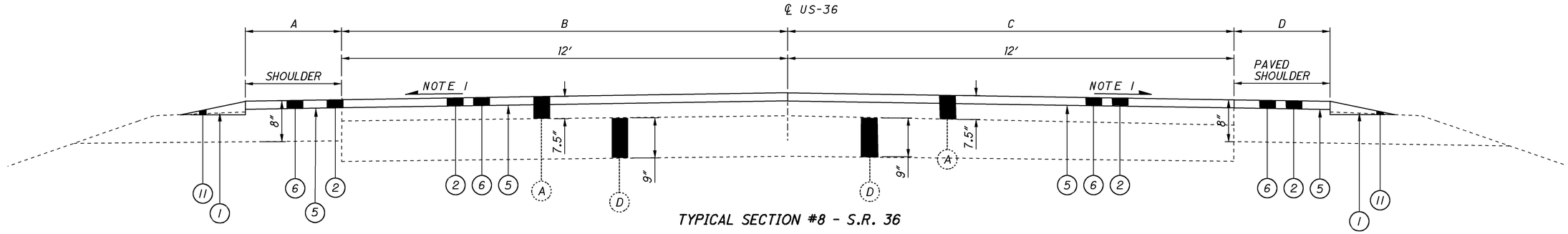

TYPICAL SECTION #8 - S.R. 36

SECTION APPLIES TO THE FOLLOWING LOCATIONS:

UNI-36	SLM	7.48	TO SLM	8.74	1.26
				TOTAL	1.26

LEGEND:

- (A) EXISTING ASPHALT CONCRETE
- (B) EXISTING CURB
- (C) EXISTING SIDEWALK
- (D) EXISTING CONCRETE
- (1) ITEM 209 - LINEAR GRADING
- (2) ITEM 254 - (1.5") PAVEMENT PLANING
- (3) ITEM 254 - (3") PAVEMENT PLANING
- (4) ITEM 301 - ASPHALT CONCRETE BASE, PG64-22
- (5) ITEM 407 - TACK COAT @ .075 GAL/ SQ YD
- (6) ITEM 441 - (1.5") ASPHALT CONCRETE SURFACE COURSE, TYPE 1, PG64-22 (446)
- (7) ITEM 516 - 1/4" PREFORMED EXPANSION JOINT FILLER
- (8) ITEM 605 - AGGREGATE DRAINS
- (9) ITEM 608 - 4" CONCRETE WALK
- (10) ITEM 609 - CURB, TYPE 4-C
- (11) ITEM 617 - COMPACTED AGGREGATE
- (12) ITEM 659 - SEEDING AND MULCHING, CLASS 1

NOTE 1:
PROPOSED PAVEMENT CROSS SLOPES AT THIS LOCATION TO REMAIN SAME AS EXISTING.

NOTE 2:
SEE SHEET 9 /50 FOR AGGREGATE DRAINS, AS PER PLAN.

CALCULATED | CHECKED

TYPICAL SECTION

UNI-36-0.00
UNI-4-0.00

6
50

I:\Projects\uni\036\0000.016\91053\production\ROADWAY\SHEETS\TYPICAL SECTIONS.dgn 13-APR-2015 2:12PM vpatel SHEET_GY103

PAVEMENT CORE DATA IS AVAILABLE BY REQUEST

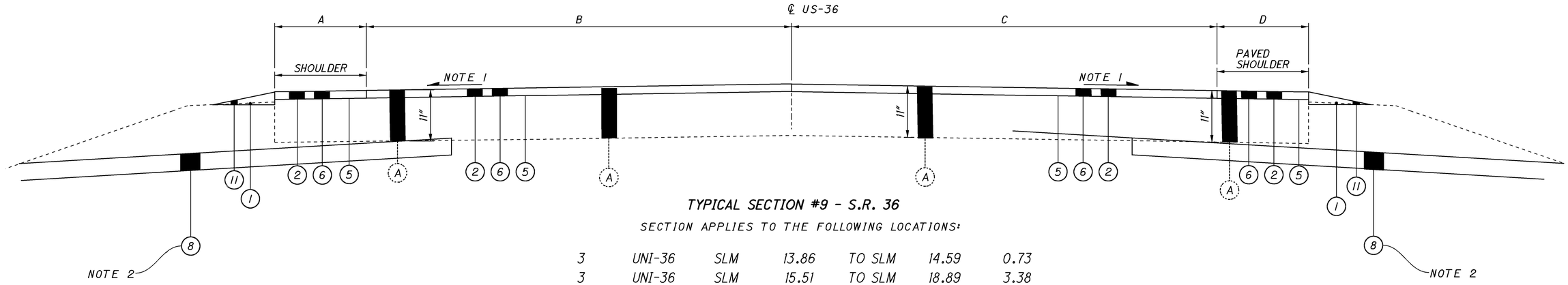

TYPICAL SECTION #9 - S.R. 36

SECTION APPLIES TO THE FOLLOWING LOCATIONS:

3	UNI-36	SLM	13.86	TO SLM	14.59	0.73
3	UNI-36	SLM	15.51	TO SLM	18.89	3.38
					TOTAL	4.11

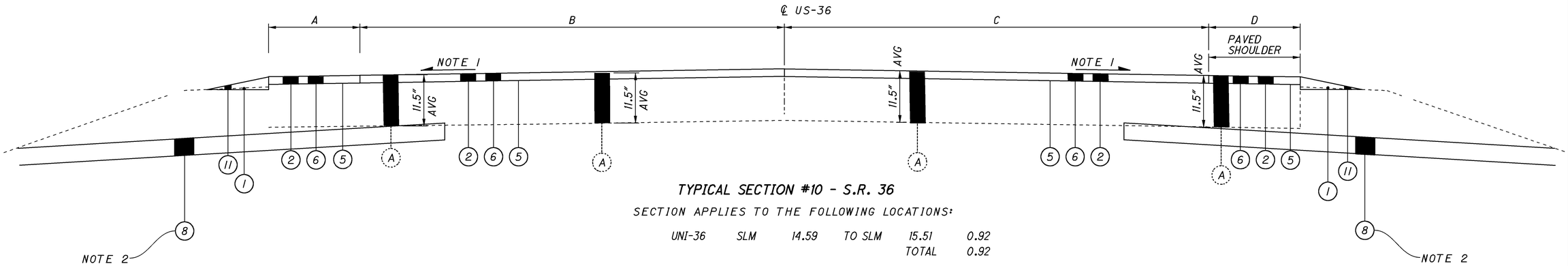

TYPICAL SECTION #10 - S.R. 36

SECTION APPLIES TO THE FOLLOWING LOCATIONS:

UNI-36	SLM	14.59	TO SLM	15.51	0.92	
				TOTAL	0.92	

LEGEND:

- (A) EXISTING ASPHALT CONCRETE
- (B) EXISTING CURB
- (C) EXISTING SIDEWALK
- (D) EXISTING CONCRETE
- (1) ITEM 209 - LINEAR GRADING
- (2) ITEM 254 - (1.5") PAVEMENT PLANING
- (3) ITEM 254 - (3") PAVEMENT PLANING
- (4) ITEM 301 - ASPHALT CONCRETE BASE, PG64-22
- (5) ITEM 407 - TACK COAT @ .075 GAL/ SQ YD
- (6) ITEM 441 - (1.5") ASPHALT CONCRETE SURFACE COURSE, TYPE 1, PG64-22 (446)
- (7) ITEM 516 - 1/4" PREFORMED EXPANSION JOINT FILLER
- (8) ITEM 605 - AGGREGATE DRAINS
- (9) ITEM 608 - 4" CONCRETE WALK
- (10) ITEM 609 - CURB, TYPE 4-C
- (11) ITEM 617 - COMPACTED AGGREGATE
- (12) ITEM 659 - SEEDING AND MULCHING, CLASS 1

NOTE 1:
PROPOSED PAVEMENT CROSS SLOPES AT THIS LOCATION TO REMAIN SAME AS EXISTING.

NOTE 2:
SEE SHEET 9 /50 FOR AGGREGATE DRAINS, AS PER PLAN.

CALCULATED | CHECKED

TYPICAL SECTION

UNI-36-0.00
UNI-4-0.00

7
50

I:\Projects\uni\036\0000.016\91053\production\ROADWAY\SHEETS\TYPICAL SECTIONS.dgn 13-APR-2015 2:18PM vpatel SHEET_GY104

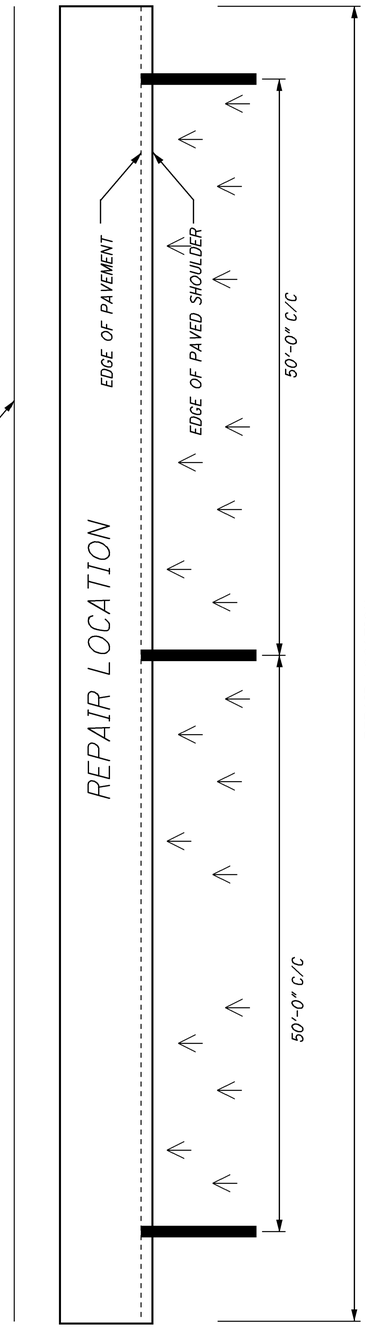

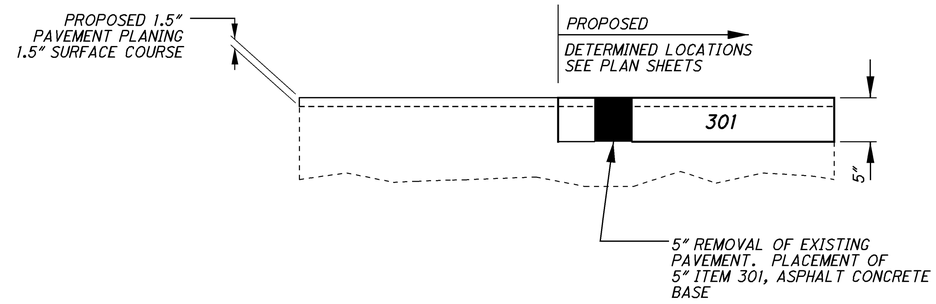

PARTIAL DEPTH PAVEMENT REPAIR DETAIL

SEE GENERAL NOTES FOR MORE INFORMATION REGARDING ITEM 251-PARTIAL DEPTH PAVEMENT REPAIR, AS PER PLAN.

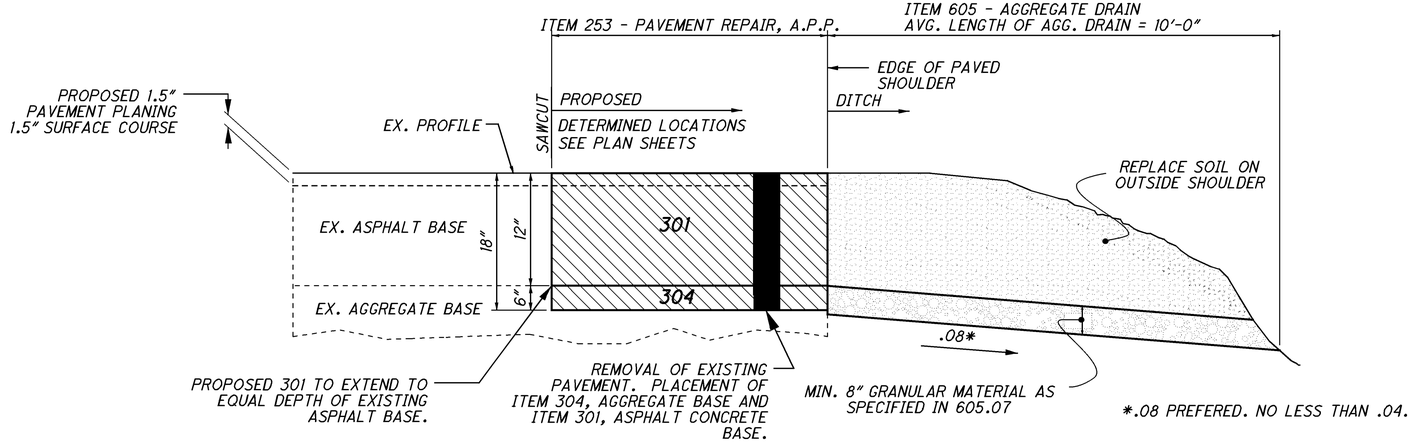

PAVEMENT REPAIR, A.P.P. DETAIL

AGGREGATE DRAIN DETAIL

AGGREGATE DRAINS SHALL BE PLACED AT 50 FOOT INTERVALS IN PAVEMENT REPAIR LOCATIONS, REGARDLESS OF THE LENGTH OF REPAIR. AT LEAST ONE AGGREGATE DRAIN SHALL BE PLACED AT EACH REPAIR LOCATION. AGGREGATE DRAINS ARE NOT TO BE INSTALLED AT PARTIAL DEPTH REPAIR LOCATIONS. FOR REPAIR LOCATIONS WITH LENGTHS LESS THAN 50', AN AGGREGATE DRAIN SHALL BE PLACED IN THE MIDDLE OF THE REPAIR LOCATION.

CALCULATED | CHECKED

PAVEMENT REPAIR TYPICAL DETAILS

UNI-36-0.00
UNI-4-0.00

I:\Projects\uni\036\0000.016\91053\production\ROADWAY\sheets\TYPICAL SECTIONS.dgn 10-APR-2015 8:18PM drankin SHEET_GY105

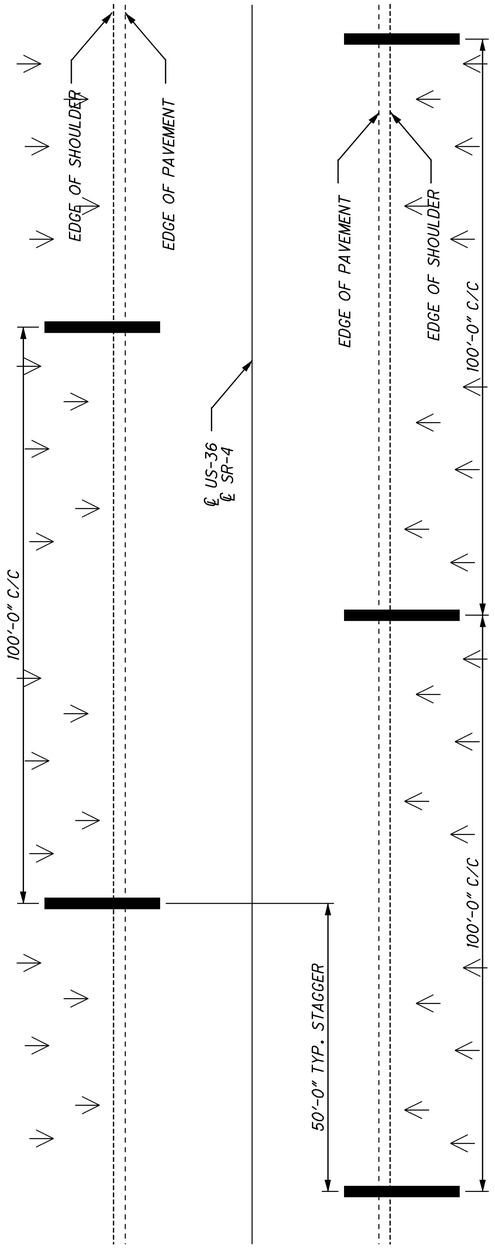

AGGREGATE DRAIN SPACING DETAIL

AGGREGATE DRAINS SHALL BE PLACED AT 100 FOOT INTERVALS ON EACH SIDE OF NORMAL CROWNED SECTIONS, STAGGERED SO THAT EACH DRAIN IS 50 FEET FROM THE ADJACENT DRAIN ON THE OPPOSITE SIDE, AND AT 50 FEET INTERVALS ON THE LOW SIDE ONLY OF SUPERELEVATED SECTIONS. AN AGGREGATE DRAIN SHALL BE PLACED AT THE LOW POINT OF EACH SAG VERTICAL CURVE.

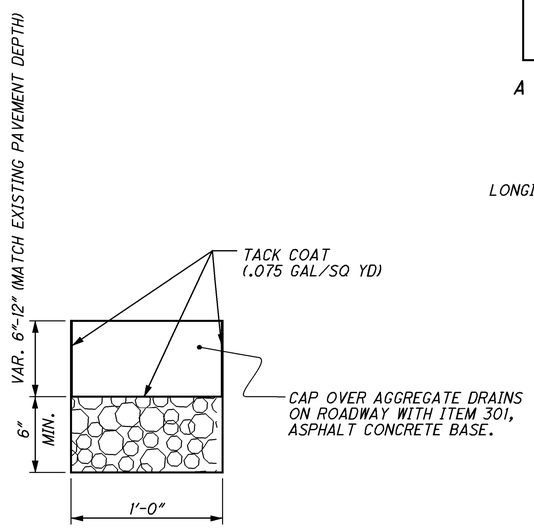

SECTION B-B

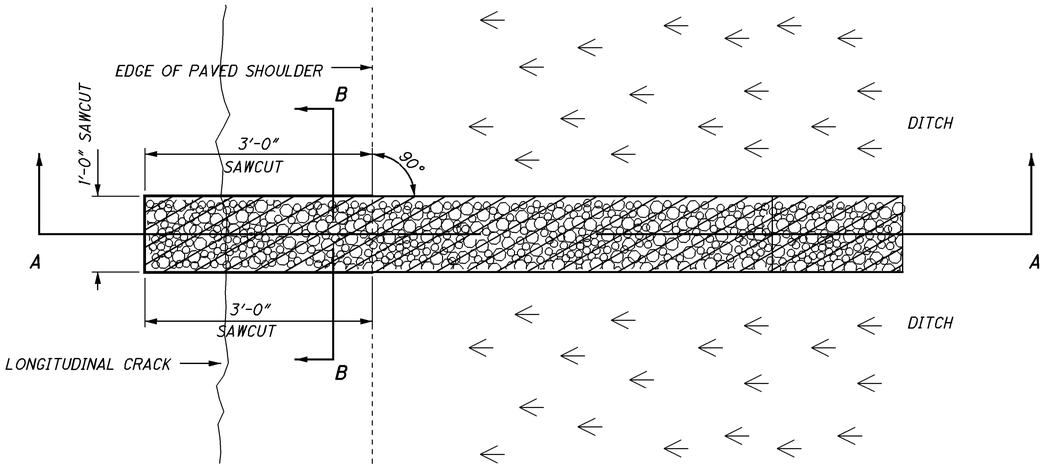

AGGREGATE DRAIN PLAN VIEW

EXCAVATION TO BE INCLUDED IN ITEM 605-AGGREGATE DRAINS, AS PER PLAN.

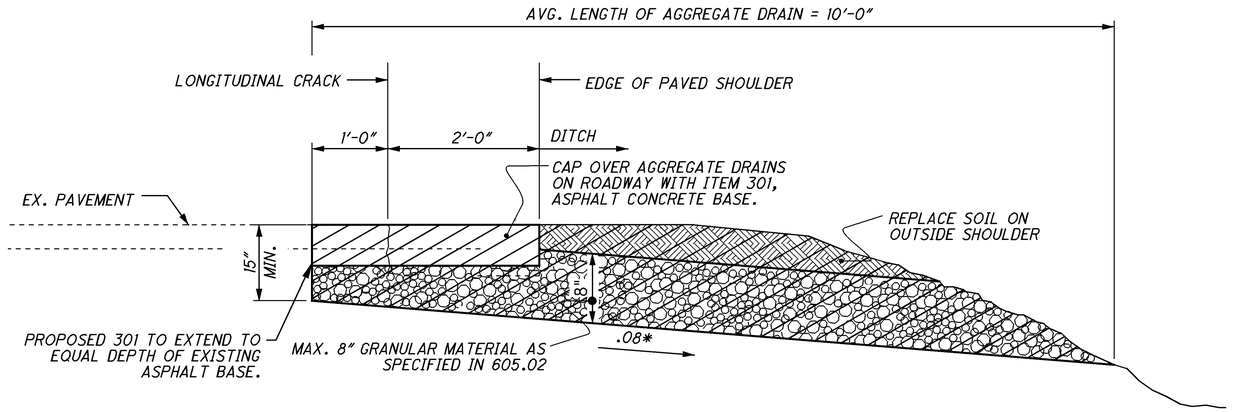

*.08 PREFERED. NO LESS THAN .04.

SECTION A-A

AGGREGATE DRAIN, AS PER PLAN DETAIL

CALCULATED | CHECKED

TYPICAL DETAILS
AGGREGATE DRAINS, AS PER PLAN

UNI-36-0.00
UNI-4-0.00

9
50

I:\Projects\uni\036\0000.016\91053\production\ROADWAY\sheets\TYPICAL SECTIONS.dgn SHEET_GY003 10-APR-2015 8:18PM drankin

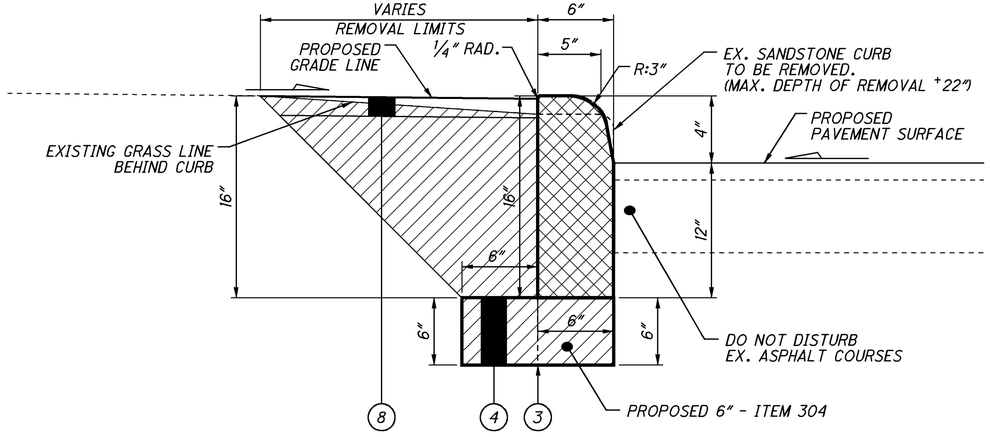

CURB DETAIL #1
TYPE 4-C CURB REPLACEMENT (GRASS MEDIAN)

(3) ITEM 204 - SUBGRADE COMPACTION
(4) ITEM 304 - AGGREGATE BASE
(8) ITEM 659 - TOPSOIL

ITEM 202 - CURB REMOVED, AS PER PLAN
ITEM 609 - CURB, TYPE 4-C, AS PER PLAN

FOR INFORMATION NOT SHOWN, SEE STANDARD CONSTRUCTION DRAWING BP-5.1.

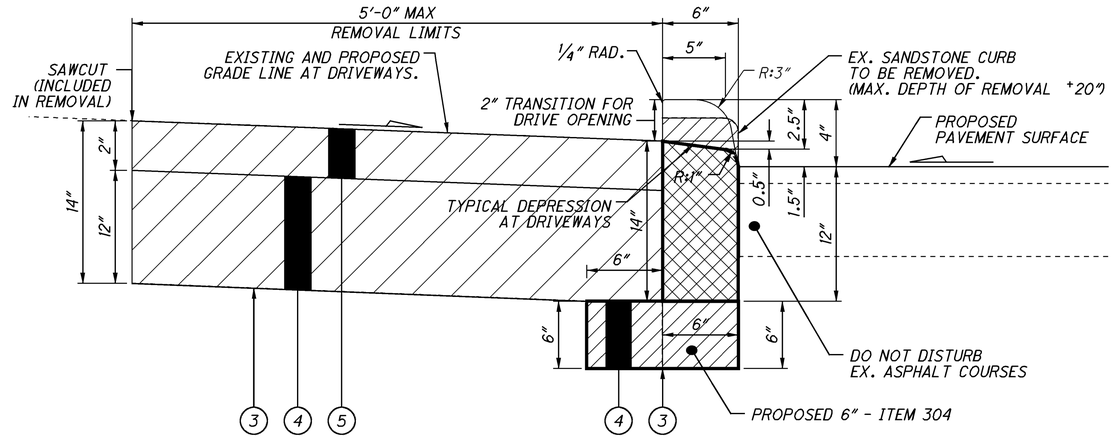

CURB DETAIL #2
TYPE 4-C CURB REPLACEMENT (ASPHALT DRIVES)

(3) ITEM 204 - SUBGRADE COMPACTION
(4) ITEM 304 - AGGREGATE BASE
(5) ITEM 441 - ASPHALT CONCRETE SURFACE COURSE, TYPE I, (446), PG64-22

ITEM 202 - PAVEMENT REMOVED, ASPHALT, AS PER PLAN
ITEM 202 - CURB REMOVED, AS PER PLAN
ITEM 609 - CURB, TYPE 4-C, AS PER PLAN

FOR INFORMATION NOT SHOWN, SEE STANDARD CONSTRUCTION DRAWING BP-5.1.

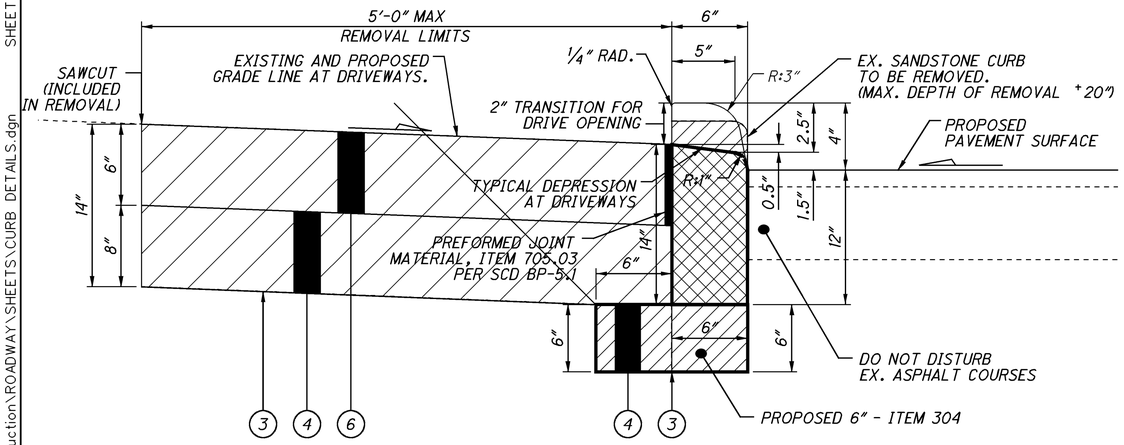

CURB DETAIL #3
TYPE 4-C CURB REPLACEMENT (CONCRETE DRIVES)

(3) ITEM 204 - SUBGRADE COMPACTION
(4) ITEM 304 - AGGREGATE BASE
(6) ITEM 452 - 6" NON-REINFORCED CONCRETE PAVEMENT, CLASS QC1

ITEM 202 - PAVEMENT REMOVED, AS PER PLAN (CONCRETE)
ITEM 202 - CURB REMOVED, AS PER PLAN
ITEM 609 - CURB, TYPE 4-C, AS PER PLAN

FOR INFORMATION NOT SHOWN, SEE STANDARD CONSTRUCTION DRAWING BP-5.1.

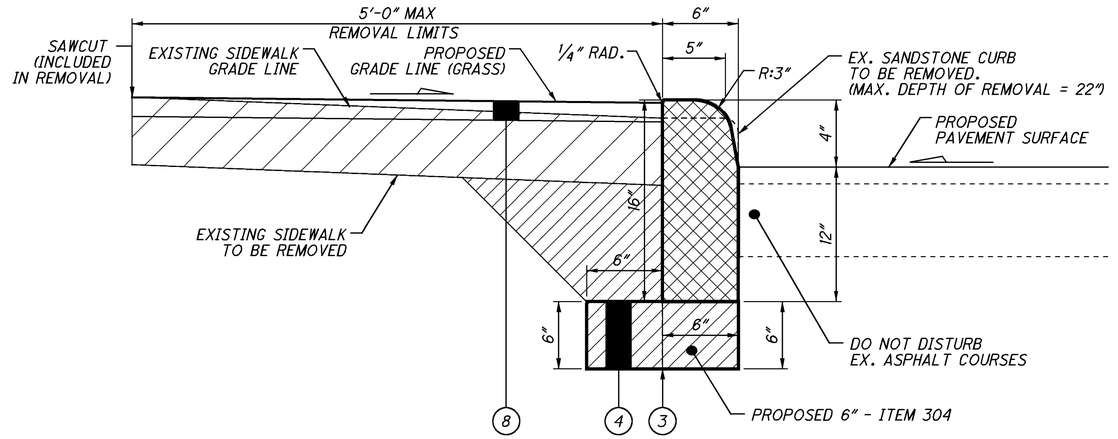

CURB DETAIL #4
TYPE 4-C CURB REPLACEMENT (ABANDON SIDEWALK)

(3) ITEM 204 - SUBGRADE COMPACTION
(4) ITEM 304 - AGGREGATE BASE
(8) ITEM 659 - TOPSOIL

ITEM 202 - WALK REMOVED, AS PER PLAN
ITEM 202 - CURB REMOVED, AS PER PLAN
ITEM 609 - CURB, TYPE 4-C, AS PER PLAN

FOR INFORMATION NOT SHOWN, SEE STANDARD CONSTRUCTION DRAWING BP-5.1.

CALCULATED DKR CHECKED

TYPE 4-C CURB REPLACEMENT DETAILS

UNI-36-0.00
UNI-4-0.00

10
50

I:\Projects\uni\036\0000.016\91053\production\ROADWAY\SHEETS\CURB DETAILS.dgn 13-MAY-2015 3:16PM drankin SHEET_CURB4C

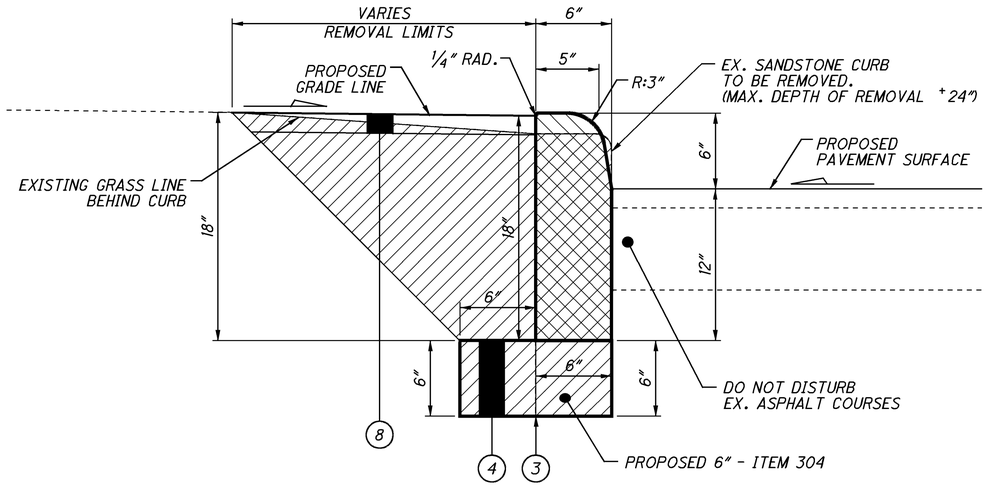

CURB DETAIL #5
TYPE 6 CURB REPLACEMENT (GRASS MEDIAN)

(3) ITEM 204 - SUBGRADE COMPACTION
(4) ITEM 304 - AGGREGATE BASE
(8) ITEM 659 - TOPSOIL

ITEM 202 - CURB REMOVED, AS PER PLAN
ITEM 609 - CURB, TYPE 6, AS PER PLAN

FOR INFORMATION NOT SHOWN, SEE STANDARD CONSTRUCTION DRAWING BP-5.1.

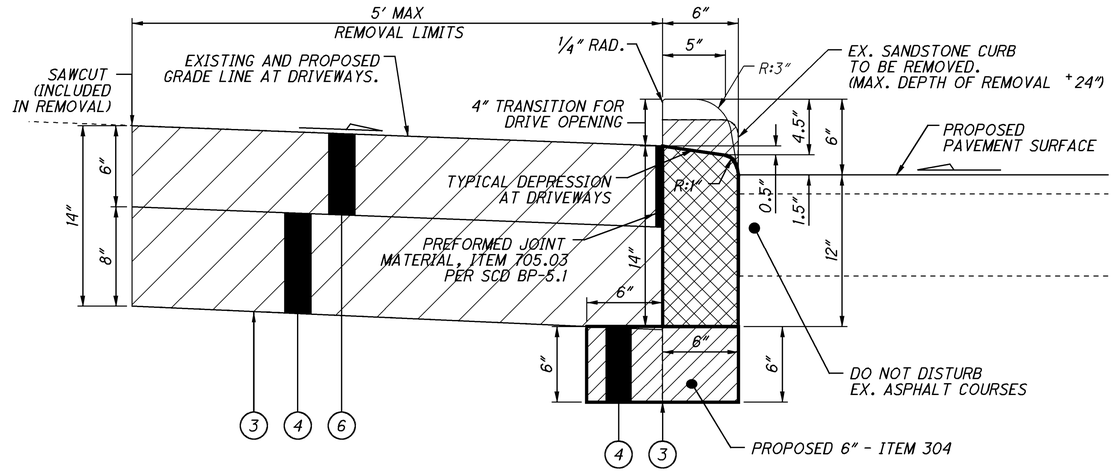

CURB DETAIL #6
TYPE 6 CURB REPLACEMENT (CONCRETE DRIVES)

(3) ITEM 204 - SUBGRADE COMPACTION
(4) ITEM 304 - AGGREGATE BASE
(6) ITEM 452 - 6" NON-REINFORCED CONCRETE PAVEMENT, CLASS QC1

ITEM 202 - PAVEMENT REMOVED, AS PER PLAN (CONCRETE)
ITEM 202 - CURB REMOVED, AS PER PLAN
ITEM 609 - CURB, TYPE 6, AS PER PLAN

FOR INFORMATION NOT SHOWN, SEE STANDARD CONSTRUCTION DRAWING BP-5.1.

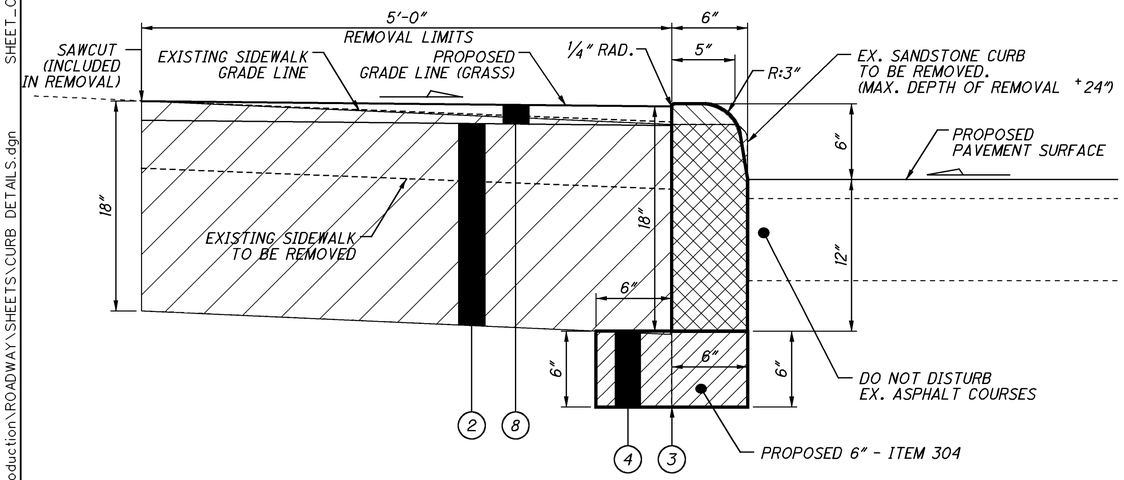

CURB DETAIL #7
TYPE 6 CURB REPLACEMENT (ABANDON SIDEWALK)

(2) ITEM 203 - EMBANKMENT
(3) ITEM 204 - SUBGRADE COMPACTION
(4) ITEM 304 - AGGREGATE BASE
(8) ITEM 659 - TOPSOIL

ITEM 202 - WALK REMOVED, AS PER PLAN
ITEM 202 - CURB REMOVED, AS PER PLAN
ITEM 609 - CURB, TYPE 6, AS PER PLAN

FOR INFORMATION NOT SHOWN, SEE STANDARD CONSTRUCTION DRAWING BP-5.1.

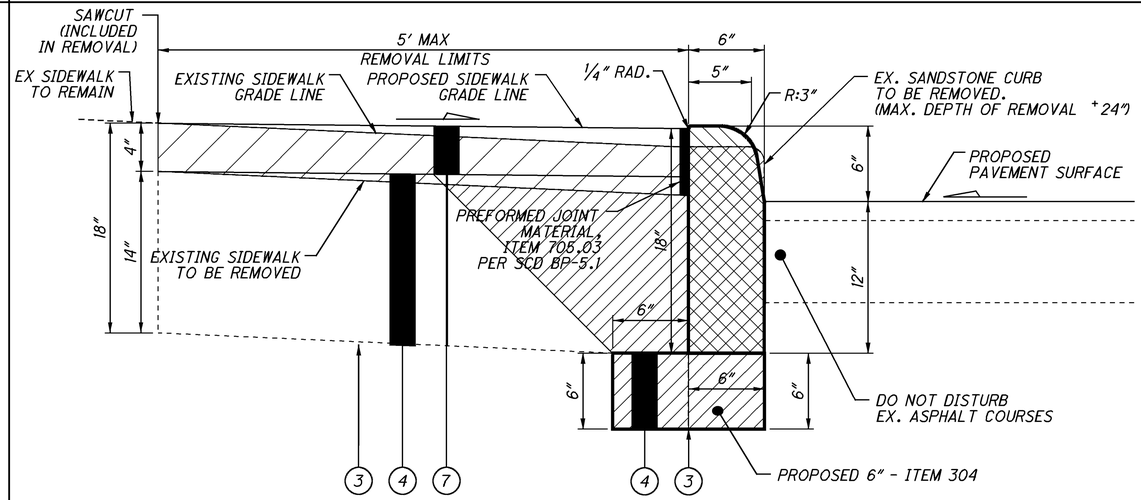

CURB DETAIL #8
TYPE 6 CURB REPLACEMENT (SIDEWALK)

(3) ITEM 204 - SUBGRADE COMPACTION
(4) ITEM 304 - AGGREGATE BASE
(7) ITEM 608 - 4" CONCRETE WALK

ITEM 202 - WALK REMOVED, AS PER PLAN
ITEM 202 - CURB REMOVED, AS PER PLAN
ITEM 609 - CURB, TYPE 6, AS PER PLAN

FOR INFORMATION NOT SHOWN, SEE STANDARD CONSTRUCTION DRAWING BP-5.1.

CALCULATED DKR CHECKED

TYPE 6 CURB REPLACEMENT DETAILS

UNI-36-0.00
UNI-4-0.00

11
50

13-MAY-2015 3:16PM drankin

SHEET_CURB6

I:\Projects\uni\036\0000.016\91053\production\ROADWAY\SHEETS\CURB DETAILS.dgn

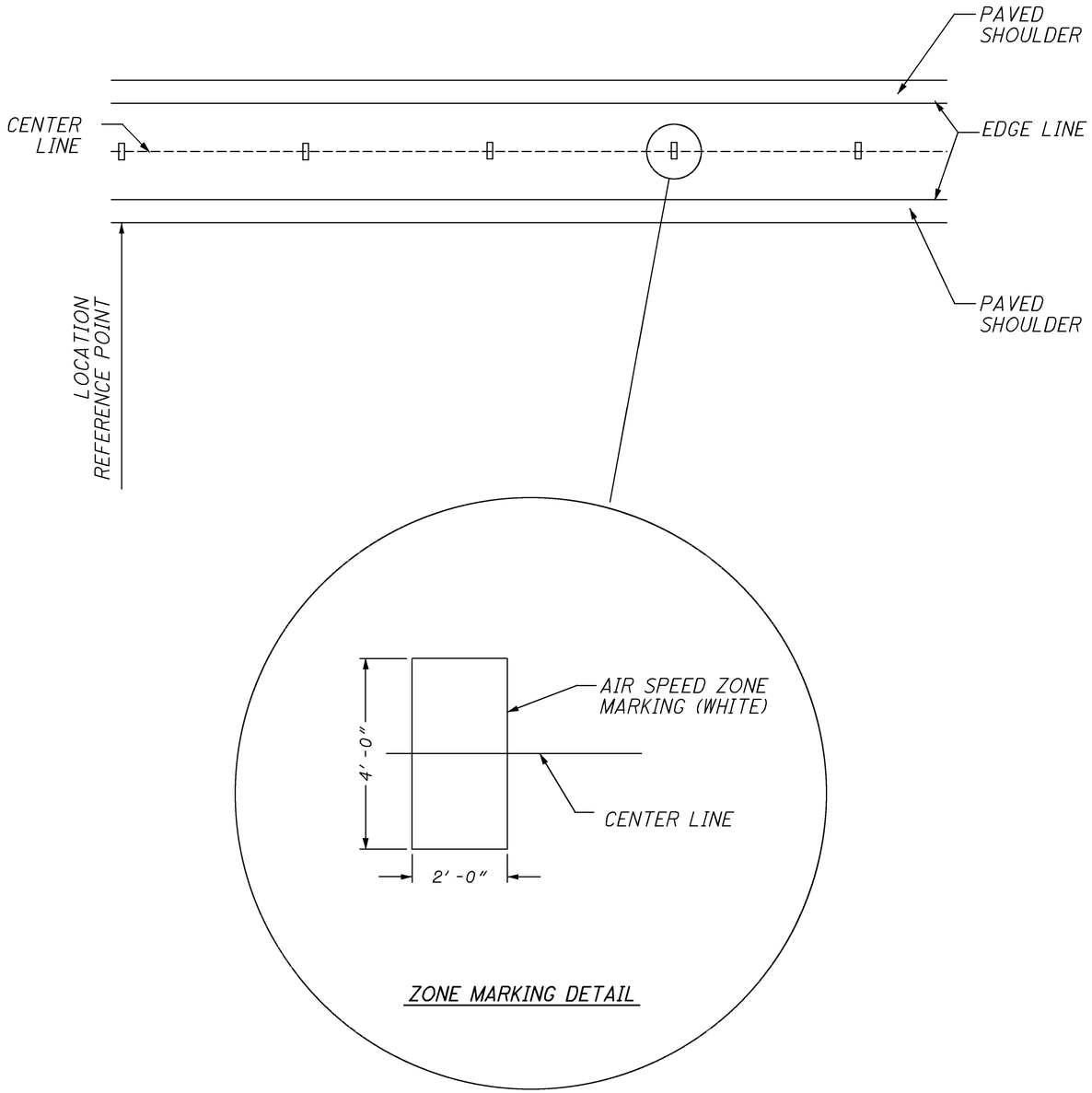

ZONE MARKING DETAIL

NOTES:

1. ON 2-LANE ROADWAYS, THE MARKINGS EVENLY STRADDLE THE CENTER LINE.
2. EACH AIR SPEED ZONE SHALL CONSIST OF WHITE 24" X 48" TRANSVERSE PAVEMENT MARKINGS.
3. THE MARKINGS SHALL BE PLACED IN QUARTER MILE INTERVALS OVER A 1 MILE LENGTH OF ROADWAY.
4. IT IS THE CONCTRACTOR'S RESPONBILITY TO HAVE THE MARKINGS LAID OUT BY A REGISTERED SURVEYOR.
5. THE QUARTER MILE SURFACE MEASUREMENTS (NOT HORIZONTAL PROJECTION) SHALL BE VERIFIED BY THE REGISTERED SURVEYOR.
6. A LETTER OF VERIFICATION SHALL BE FILED WITH THE LOCAL OR NEAREST STATE HIGHWAY PATROL OFFICE WHICH OVERSEES SAID ZONES. A RECORD IS TO BE KEPT AND ONE ORGINIAL SIGNED AND SEALED DOCUMENT IS TO BE SENT TO THE DISTRICT TRAFFIC ENGINEER AND ONE COPY IS TO BE SENT TO THE DISTRICT CONSTRUCTION ENGINEER.
7. SEE GENERAL NOTES FOR QUANTITIES.

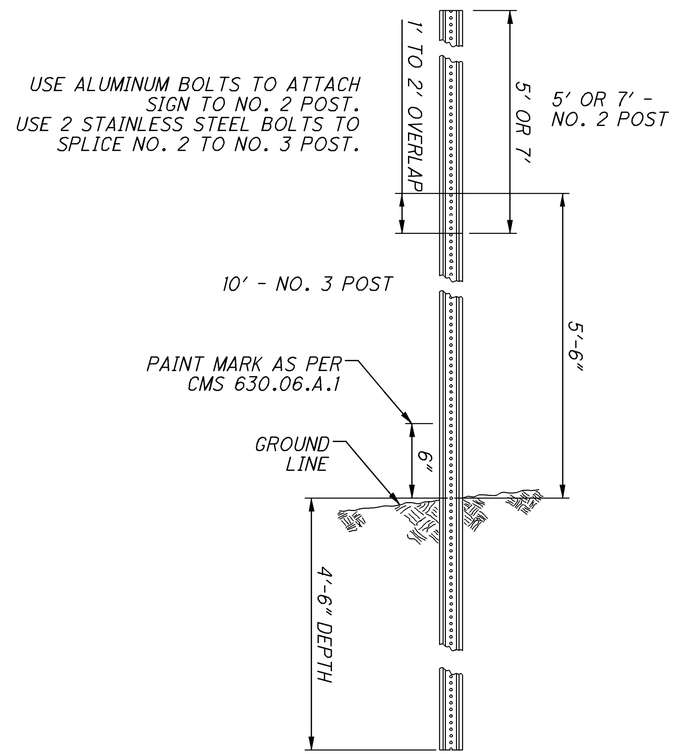

TYPICAL NO.2 & NO. 3 U CHANNEL SPLICE DETAIL WITH 10' DRIVEN SECTION INSTALLATION

CALCULATED | CHECKED

TYPICAL DETAILS
TRAFFIC CONTROL

UNI-36-0.00
UNI-4-0.00

12
50

10-APR-2015 8:18PM drankin

I:\Projects\uni\036\0000.016\91053\production\ROADWAY\sheets\TYPICAL DETAILS.dgn SHEET_TM101

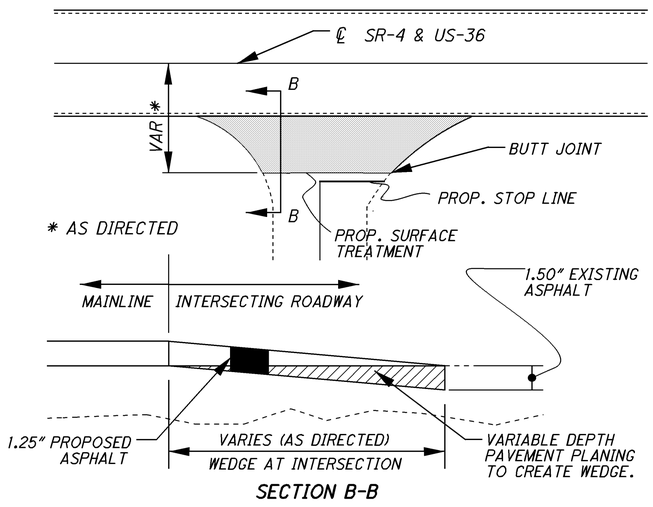

SECTION B-B

TYPICAL INTERSECTION DETAIL

SR-04	SLM	0.105	AT	CHAMPAIGN CO. LINE RD	LT
SR-04	SLM	0.646	AT	IRWIN	RT
US-36	SLM	1.714	AT	SR-4	RT
US-36	SLM	2.075	AT	HMMER RD	RT
US-36	SLM	2.938	AT	CR 81	LT
US-36	SLM	3.137	AT	CR 65	RT
US-36	SLM	4.624	AT	E CENTER RD	LT & RT
US-36	SLM	4.709	AT	E STATE RD	LT & RT
US-36	SLM	4.874	AT	CR 75	LT
US-36	SLM	4.979	AT	CR 69	RT
US-36	SLM	6.585	AT	CR 70	RT
US-36	SLM	6.939	AT	PHILLIP HERRE RD	LT
US-36	SLM	7.104	AT	SCHOOL	RT
US-36	SLM	7.259	AT	SCHOOL	RT
US-36	SLM	7.549	AT	CR 88	RT
US-36	SLM	7.663	AT	CR 71	LT & RT
US-36	SLM	15.510	AT	MACKAN RD	LT
US-36	SLM	15.819	AT	SCHOOL DR	LT
US-36	SLM	15.849	AT	CHURCH ST	LT
US-36	SLM	16.019	AT	CR 108	RT
US-36	SLM	16.354	AT	CR 113	LT & RT
US-36	SLM	17.854	AT	CR 107	LT & RT
US-36	SLM	18.050	AT	NEW DOVER ESTATE MOBILE HOME PARK	LT
US-36	SLM	18.835	AT	CR110	LT

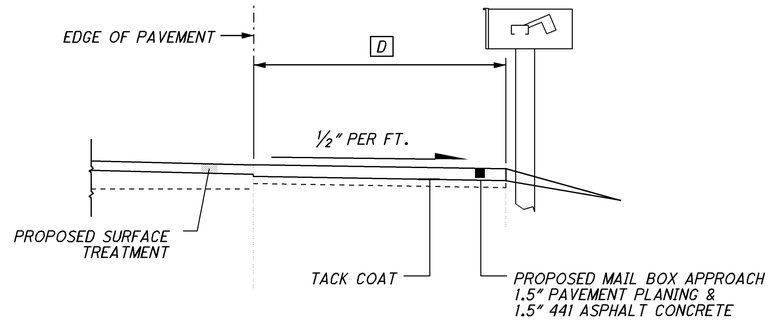

SECTION A-A
MAILBOX APPROACH DETAIL

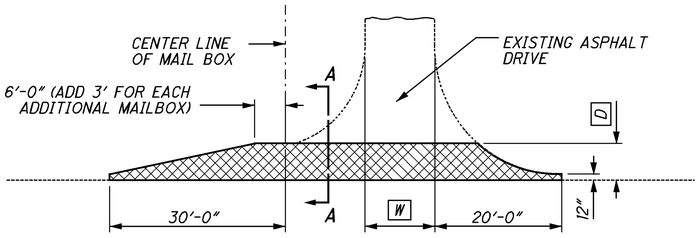

TYPICAL APPROACH #1
COMBINED DRIVEWAY & MAIL BOX APPROACH

MAIL BOX POSITIONED PAST DRIVE SHOWN. MIRROR FOR MAILBOX PRECEDING DRIVE.

THE EXISTING MAIL BOX POSITION SHALL REMAIN. DIMENSION [D] SHALL NOT EXCEED 6'.

[W] = WIDTH OF EXISTING DRIVEWAY.

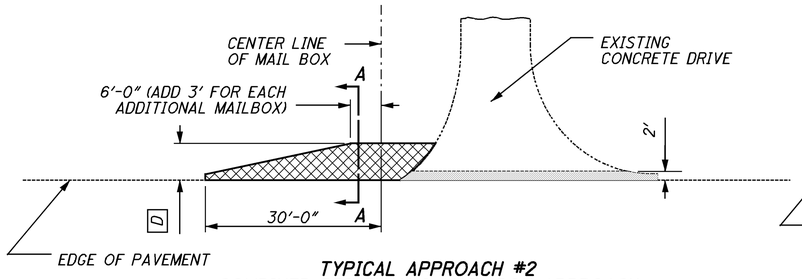

TYPICAL APPROACH #2
COMBINED DRIVEWAY & MAIL BOX APPROACH

MAIL BOX POSITIONED PAST DRIVE SHOWN. MIRROR FOR MAILBOX PRECEDING DRIVE.

THE EXISTING MAIL BOX POSITION SHALL REMAIN. DIMENSION [D] SHALL NOT EXCEED 6'.

[W] = WIDTH OF EXISTING DRIVEWAY.

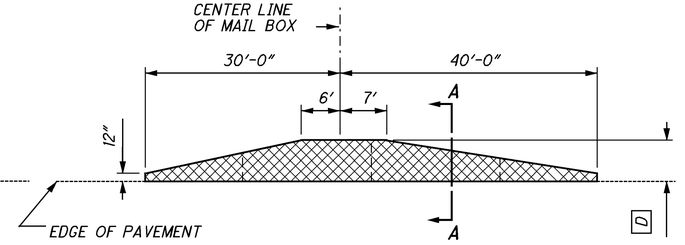

TYPICAL APPROACH #3
TYPICAL MAIL BOX APPROACH

THE EXISTING MAIL BOX POSITION SHALL REMAIN. DIMENSION [D] SHALL NOT EXCEED 6'.

*FOR TYPICAL MAIL BOX APPROACH AND OTHER ADDITIONAL INFORMATION SEE STA. DWG. BP 4.1 (07/16/04)

[W] = WIDTH OF EXISTING DRIVEWAY.

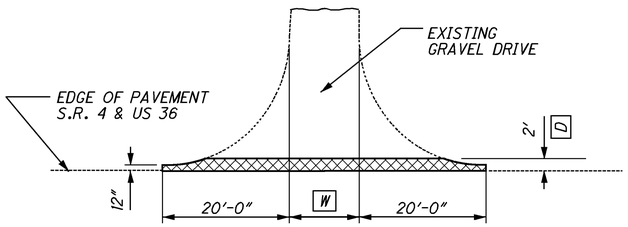

TYPICAL APPROACH #4
TYPICAL DRIVEWAY APPROACH

DIMENSION [D] SHALL BE 2' UNLESS OTHERWISE SPECIFIED.

[W] = WIDTH OF EXISTING DRIVEWAY.

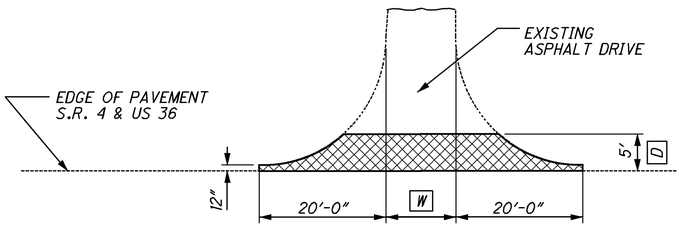

TYPICAL APPROACH #5
TYPICAL DRIVEWAY APPROACH

DIMENSION [D] SHALL BE 5'.

[W] = WIDTH OF EXISTING DRIVEWAY.

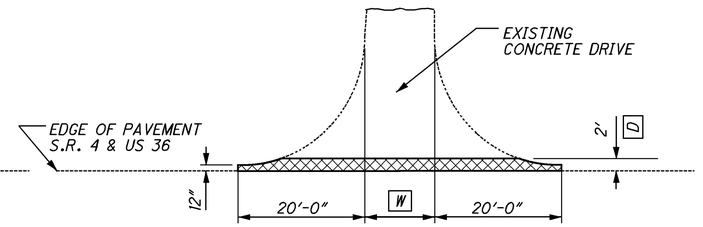

TYPICAL APPROACH #6
TYPICAL DRIVEWAY APPROACH

DIMENSION [D] SHALL BE 2'.

[W] = WIDTH OF EXISTING DRIVEWAY.

CALCULATED | CHECKED

TYPICAL DETAILS
PAVEMENT

UNI-36-0.00
UNI-4-0.00

13
50

I:\Projects\uni\036\0000.016\91053\production\ROADWAY\sheets\TYPICAL DETAILS.dgn 10-APR-2015 8:18PM drankin SHEET_GD101

NOTIFICATION OF CONSTRUCTION INITIATION:
AT LEAST FOURTEEN DAYS PRIOR TO ANY CONSTRUCTION ACTIVITIES, THE CONTRACTOR SHALL ADVISE THE DISTRICT OFFICE OF COMMUNICATIONS VIA EMAIL AT d06.pio@dot.state.oh.us, THE DISTRICT WORK ZONE TRAFFIC MANAGER VIA EMAIL AT d06.mot@dot.state.oh.us AND THE CITY OF GROVE CITY (FOR WORK WITHIN CITY LIMITS) OF THE ANTICIPATED START DATE OF ANY CONSTRUCTION ACTIVITIES, INCLUDING BUT NOT LIMITED TO THE PLACING OF WORK ZONE SIGNS. THE NOTIFICATION SHALL ALSO INCLUDE THE PROJECT NUMBER, PID, NAME AND PHONE NUMBER OF THE CONTRACTOR, A POINT OF CONTACT AND THE ANTICIPATED IMPACT ON TRAFFIC. THE CONTRACTOR WILL IMMEDIATELY INFORM THE DISTRICT OFFICE OF COMMUNICATIONS AND THE DISTRICT WORK ZONE TRAFFIC MANAGER OF ANY AND ALL DELAYS AND/OR CHANGES REGARDING THE CONSTRUCTION INITIATION DATE.

GENERAL:
THE CONTRACTOR SHALL SUBMIT IN WRITING A SCHEDULE OF OPERATIONS TO THE ENGINEER (SEE 108.02) AND RECEIVE APPROVAL IN WRITING BEFORE WORK IS STARTED ON THIS PROJECT. ALL TRAFFIC CONTROL DEVICES SHALL BE FURNISHED, ERECTED, MAINTAINED, AND REMOVED BY THE CONTRACTOR IN ACCORDANCE WITH THE OHIO MANUAL OF UNIFORM TRAFFIC CONTROL DEVICES.

ALIGNMENT AND PROFILE:
THE MAJORITY OF WORK INVOLVED IN THIS PROJECT IS TO PLANE PAVEMENT AT AN EQUAL DEPTH TO THE PROPOSED PAVEMENT WHILE MAINTAINING THE EXISTING CROSS-SLOPE (CROWN). EXISTING PROFILE WILL BE LOWERED 1.5" IN MILFORD CENTER FROM STA. 239+04.59 TO STA. 245+71.40 BY PLANING 3" AND RESURFACING 1.5". SEE MILFORD CENTER PLAN FOR MORE DETAILS OF THIS WORK.

CONTRACTORS EQUIPMENT - OPERATION AND STORAGE:
THE CONTRACTOR'S EQUIPMENT SHALL BE OPERATED IN THE DIRECTION OF TRAFFIC WHERE PRACTICAL. EQUIPMENT SHALL HAVE AT LEAST ONE AMBER FLASHING LIGHT. WHEN PARKED ALONG THE HIGHWAY, THE EQUIPMENT SHALL BE LOCATED EITHER A MINIMUM OF THIRTY FEET FROM THE EDGE OF PAVEMENT OR SIX FEET BEHIND GUARDRAIL WITH A MINIMUM OF 125 FEET OF GUARDRAIL PRECEDING THE EQUIPMENT. ALL OTHER EQUIPMENT, INCLUDING PRIVATE VEHICLES, SHALL BE STORED AT AN APPROVED CONTRACTOR'S STORAGE AREA.

CONTINGENCY QUANTITIES:
THE CONTRACTOR SHALL NOT ORDER MATERIALS OR PERFORM WORK FOR ITEMS DESIGNATED BY PLAN NOTE TO BE USED "AS DIRECTED BY THE ENGINEER" UNLESS AUTHORIZED BY THE ENGINEER. THE ACTUAL WORK LOCATIONS AND QUANTITIES USED FOR SUCH ITEMS SHALL BE INCORPORATED INTO THE FINAL CHANGE ORDER GOVERNING COMPLETION OF THIS PROJECT.

REMOVAL ITEMS:
UNLESS OTHERWISE INSTRUCTED, ASPHALT AND ANY OTHER MISCELLANEOUS ITEMS DESIGNATED FOR REMOVAL BECOME PROPERTY OF THE CONTRACTOR AND SHALL BE DISPOSED OF. PAYMENT FOR THE ABOVE SHALL BE INCLUDED IN THE UNIT PRICE BID FOR THE REMOVED ITEM.

PART-WIDTH CONSTRUCTION:
BECAUSE OF THE NECESSITY TO BUILD THIS PROJECT UNDER TRAFFIC AND TO CONSTRUCT THE FULL PAVEMENT WIDTH IN STAGES, EXTREME CARE SHALL BE TAKEN TO PREVENT THE CONSTRUCTION OF A BUTT JOINT IN THE BASE COURSES. LONGITUDINAL JOINTS SHALL BE LAPPED AS SHOWN ON STANDARD CONSTRUCTION DRAWING BP-3.1.

WORK LIMITS:
THE WORK LIMITS SHOWN ON THESE PLANS ARE FOR PHYSICAL CONSTRUCTION ONLY. THE INSTALLATION AND OPERATION OF ALL TEMPORARY TRAFFIC CONTROL AND TEMPORARY TRAFFIC CONTROL DEVICES REQUIRED BY THESE PLANS SHALL BE PROVIDED BY THE CONTRACTOR WHETHER INSIDE OR OUTSIDE THESE WORK LIMITS.

FIRE HYDRANTS:
THE CONTRACTOR SHALL BE RESPONSIBLE FOR OBTAINING ANY PERMITS AND FEES THAT ARE REQUIRED FOR THE USE OF ANY FIRE HYDRANTS. A SIAMESE VALVE IS TO BE USED ON THE HYDRANT OUTLET IF A HOSE IS TO BE LEFT CONNECTED AND UNATTENDED.

UNDERGROUND UTILITIES:
THE IDENTITY AND THE LOCATION OF SOME OF THE EXISTING UNDERGROUND FACILITIES KNOWN TO BE LOCATED IN THE CONSTRUCTION AREA HAVE BEEN IDENTIFIED. THE CONTRACTOR SHALL GIVE NOTICE OF INTENT TO CONSTRUCT TO THE OHIO UTILITIES PROTECTION SERVICE, PRODUCERS UNDERGROUND PROTECTION SERVICE, AND OWNERS OF UNDERGROUND FACILITIES THAT ARE NOT MEMBERS OF A REGISTERED PROTECTION SERVICE IN ACCORDANCE WITH SECTION 153.64 OF THE OHIO REVISED CODE. THE ABOVE, MENTIONED NOTICE SHALL BE GIVEN AT LEAST TWO WORKING DAYS PRIOR TO THE START OF CONSTRUCTION THE FOLLOWING UTILITIES ARE LOCATED WITHIN THE WORK LIMITS OF THE PROJECT AND THE OWNERS SUBSCRIBE TO REGISTERED UNDERGROUND PROTECTION SERVICE.

OHIO UTILITY PROTECTION SERVICE 1-800-362-2764
PRODUCERS UNDERGROUND PROTECTION SERVICE 1-614-587-0486
NON-MEMBERS MUST BE CALLED DIRECTLY.

UTILITIES OWNERSHIP:
LISTED BELOW ARE THE KNOWN UTILITIES LOCATED WITHIN THE PROJECT CONSTRUCTION LIMITS TOGETHER WITH THEIR RESPECTIVE OWNERS.

COLUMBIA GAS OF OHIO
1600 DUBLIN ROAD
COLUMBUS, OH
614.481.1057

ODOT - DISTRICT 6
400 EAST WILLIAM STREET
DELAWARE, OH 43015
740.833.8332

SUNOCO PIPELINE LP
525 FRITZTOWN ROAD
SINKING SPRING, PA 19608
610.670.3281

TIME WARNER CABLE
3760 INTERCHANGE DRIVE
COLUMBUS, OH 43204
614.255.6349

CONSOLIDATED ELECTRIC
COOPERATIVE, INC.
5255 STATE ROUTE 95
P.O.BOX 111
MT. GILEAD, OH 43338-0111

OHIO EDISON COMPANY
420 SOUTH YORK STREET
SPRINGFIELD, OH 45505
937.327.1283

THE DAYTON POWER
AND LIGHT COMPANY
1900 DRYDEN ROAD
DAYTON, OH 45439
937.331.4497

LEVEL 3 COMMUNICATIONS
226 NORTH FIFTH - SUITE 100
COLUMBUS, OH 43215 614.469.9657

CENTURYLINK
127 NORTH MAIN STREET
BELLEFONTAINE, OH 43311
19.947.3055

DRAINAGE AT INTERSECTING STREETS:
AT INTERSECTING STREETS WHERE THE DRAINAGE IS TOWARD OR INTO THE PROJECT, SPECIAL CARE SHALL BE TAKEN BY THE CONTRACTOR TO MAINTAIN PROPER GRADE ALONG THE EDGE OF PAVEMENT SO THAT WATER WILL NOT POND. AT INTERSECTING STREETS, WHERE THE EDGE OF PAVEMENT CONTINUES ACROSS THE STREET, CARE SHALL BE TAKEN TO FEATHER DOWN AND FORM A NEAT SEAM WITH THE PROPER GRADE.

REVIEW OF DRAINAGE FACILITIES:
BEFORE ANY WORK IS STARTED ON THE PROJECT AND AGAIN BEFORE FINAL ACCEPTANCE OF THE PROJECT BY THE STATE, REPRESENTATIVES OF THE STATE AND THE CONTRACTOR, SHALL INSPECT ALL EXISTING SEWERS WHICH ARE TO REMAIN IN SERVICE AND WHICH MAY BE AFFECTED BY THE WORK. THE CONDITION OF THE EXISTING CONDUITS AND THEIR APPURTENANCE SHALL BE DETERMINED FROM FIELD OBSERVATIONS. RECORDS OF THE INSPECTION SHALL BE KEPT IN WRITING BY THE STATE.

ALL NEW CONDUITS, INLETS, CATCH BASINS, AND MANHOLES CONSTRUCTED, AS A PART OF THE PROJECT SHALL BE FREE OF ALL FOREIGN MATTER AND IN A CLEAN CONDITION BEFORE THE PROJECT WILL BE ACCEPTED BY THE STATE.

ALL EXISTING SEWERS INSPECTED INITIALLY BY THE ABOVE MENTIONED PARTIES SHALL BE MAINTAINED AND LEFT IN A CONDITION REASONABLY COMPARABLE TO THAT DETERMINED BY THE ORIGINAL INSPECTION. THE CONTRACTOR TO THE SATISFACTION OF THE ENGINEER SHALL CORRECT ANY CHANGE IN THE CONDITION RESULTING FROM THE CONTRACTOR'S OPERATIONS.

A.D.A. RAMPS:
A.D.A. RAMPS ARE BEING CONSTRUCTED AS PART OF THIS PLAN. THE CONTRACTOR SHALL EXERCISE CAUTION WHEN WORKING OR OPERATING AROUND EXISTING A.D.A. COMPLIANT RAMPS. IF THE CONTRACTOR DAMAGES ANY EXISTING A.D.A. CURB RAMPS OR RENDERS AN EXISTING A.D.A. COMPLIANT RAMP TO BE NON-COMPLIANT AS A RESULT OF NEGLIGENCE OR INADEQUATE CONSTRUCTION PRACTICE, THEN THE CONTRACTOR SHALL BE RESPONSIBLE FOR THE CORRECTION OF THE DEFICIENCY AT THE CONTRACTORS EXPENSE. THIS MAY INCLUDE, BUT IS NOT LIMITED TO, FULL REMOVAL AND REPLACEMENT OF THE RAMP, MILLING AND RESURFACING, ETC. NO EXCEPTIONS WILL BE GRANTED.
DRAIN PIPES:

AT ALL DRAIN PIPES LOCATED IN EXISTING CURB AND THAT DRAIN INTO THE GUTTER, SPECIAL CARE SHALL BE TAKEN BY THE CONTRACTOR SO THAT THESE DRAINS WILL NOT BE CLOSED OR OTHERWISE RENDERED INOPERATIVE. ANY DAMAGE DONE TO THE DRAIN PIPE WILL BE REPLACED AT THE CONTRACTOR'S EXPENSE.

MANHOLES AND OTHER CASTINGS:
THE CASTING TOPS OF MANHOLES, VALVE BOXES, AND OTHER STRUCTURES OWNED BY PUBLIC SERVICE CORPORATIONS OTHER THAN THE VILLAGE OF MILFORD CENTER WILL BE ADJUSTED TO GRADE BY THEIR RESPECTIVE OWNERS. THE WORK MAY BE DONE PRIOR TO THE CONSTRUCTION OF THE SURFACE COURSE. THE CONTRACTOR SHALL NOTIFY SUCH PUBLIC SERVICE CORPORATIONS AT LEAST ONE WEEK IN ADVANCE OF WORK OPERATIONS SO THAT WORK MAY BE PROPERLY SCHEDULED.

WATER VALVES ON PLANED STREETS:
BEFORE ANY MILLING BEGINS ON A STREET, THE PROJECT ENGINEER WILL IDENTIFY ALL THE WATER VALVE CASTINGS BY MARKING THE CASTINGS OR CREATING A LIST OF THE CASTINGS THAT WILL NEED TO BE ADJUSTED TO GRADE AFTER THE RESURFACING IS COMPLETED, ANY CASTINGS THAT NEED TO BE ADJUSTED TO GRADE THAT WERE NOT IDENTIFIED TO BE RAISED PRIOR TO THE RESURFACING SHALL BE ADJUSTED TO GRADE BY THE CONTRACTOR AT THE CONTRACTOR'S EXPENSE. THIS DOES NOT APPLY TO BURIED WATER VALVES.

CALCULATED DKR CHECKED

GENERAL NOTES

UNI-36-0.00
UNI-4-0.00

I:\Projects\uni\036.0000.016\91053\production\ROADWAY\sheets\GENERAL NOTES.dgn 10-APR-2015 8:44PM drankin SHEET_GN001

\\d06fs002\cadd$\Projects\uni\036\0000.016\91053\production\ROADWAY\SHEETS\GENERAL NOTES.dgn 14-MAY-2015 9:04AM k.fiant SHEET_GN002

GENERAL NOTES

CALCULATED DKR CHECKED

ITEM 202 - PAVEMENT REMOVED, AS PER PLAN (CONCRETE):
THIS ITEM SHALL BE USED TO REMOVE EXISTING CONCRETE DRIVEWAY APPROACHES IN ORDER TO INSTALL THE PROPOSED CURB LINE. LIMITS OF THIS REMOVAL HAVE BEEN IDENTIFIED IN THE PLANS. THE REMOVAL SHALL ALSO INCLUDE THE DEPTH OF EXISTING SUB-BASE MATERIAL AS IDENTIFIED IN THE CURB DETAILS IN THIS PLAN. PAYMENT FOR ALL REQUIRED SAWCUTS FOR REMOVAL IS TO BE INCLUDED WITH THIS ITEM.

ITEM 202 - PAVEMENT REMOVED, ASPHALT, AS PER PLAN:
THIS ITEM SHALL BE USED TO REMOVE EXISTING ASPHALT DRIVEWAY APPROACHES IN ORDER TO INSTALL THE PROPOSED CURB LINE. LIMITS OF THIS REMOVAL HAVE BEEN IDENTIFIED IN THE PLANS. THE REMOVAL SHALL ALSO INCLUDE THE DEPTH OF EXISTING SUB-BASE MATERIAL AS IDENTIFIED IN THE CURB DETAILS IN THIS PLAN. PAYMENT FOR ALL REQUIRED SAWCUTS FOR REMOVAL IS TO BE INCLUDED WITH THIS ITEM.

ITEM 202 - WALK REMOVED, AS PER PLAN:
THIS ITEM SHALL BE USED TO REMOVE EXISTING SIDEWALK IN ORDER TO INSTALL THE PROPOSED CURB LINE AND CONSTRUCT PROPOSED ADA COMPLIANT CURB RAMPS. LIMITS OF THIS REMOVAL HAVE BEEN IDENTIFIED IN THE PLANS. THE REMOVAL SHALL ALSO INCLUDE THE DEPTH OF EXISTING SUB-BASE MATERIAL AS IDENTIFIED IN THE CURB DETAILS IN THIS PLAN. ALL SAWCUTS AND BACKFILL IN ACCORDANCE WITH CMS 202 IS TO BE INCLUDED WITH THIS ITEM.

ITEM 202 - CURB REMOVED, AS PER PLAN:
THIS ITEM SHALL BE USED TO REMOVE EXISTING SANDSTONE CURB IN ORDER TO INSTALL THE PROPOSED CURB LINE, CONSTRUCT PROPOSED ADA COMPLIANT CURB RAMPS, AND INSTALL PROPOSED CATCH BASINS. LIMITS OF THIS REMOVAL HAVE BEEN IDENTIFIED IN THE PLANS. IT WILL BE NECESSARY TI REMOVE THE EXISTING CURB FROM THE BACKSIDE AS TO NOT DISTURB THE ASPHALT ROADWAY. DETAILS AND QUANTITIES HAVE BEEN PROVIDED TO ACCOMPLISH THIS WORK. THE REMOVAL SHALL INCLUDE THE DEPTH OF EXISTING SUB-BASE MATERIAL AS IDENTIFIED IN THE CURB DETAILS IN THIS PLAN IN ORDER TO CONSTUCT THE PROPOSED TYPE CURB. ALL SAWCUTS AND BACKFILL IN ACCORDANCE WITH CMS 202 IS TO BE INCLUDED WITH THIS ITEM.

ITEM 608 - 4" CONCRETE WALK:
QUANTITIES HAVE BEEN PROVIDED TO ENSURE ADEQUATE TRANSITIONS BETWEEN THE EXISTING SIDEWALK AND THE PROPOSED CURB RAMP AS DETAILED IN THE PLANS. THIS ITEM SHALL INCLUDE THE COST OF FURNISHING ALL MATERIALS, GRADING, FORMING AND FINISHING OF THE SIDEWALK AT VARIOUS LOCATIONS AS SPECIFIED IN THE PLANS.

ITEM 623 – MONUMENT BOX ADJUSTED TO GRADE:
THIS ITEM OF WORK WILL PROVIDE ALL MATERIAL, LABOR, EQUIPMENT, AND HARDWARE NECESSARY TO ADJUST TO GRADE THE EXITSTING MONUMENT BOX TO 1/4 INCH BELOW THE PROPOSED ASPHALT ELEVATION AT THE FOLLOWING LOCATIONS.

UNION SR-4 AT CHAMPAIGN COUNTY LINE ROAD = 1 EACH

ITEM 605 – AGGREGATE DRAINS, AS PER PLAN:
AGGREGATE DRAINS, AS PER PLAN SHALL BE PERFORMED ON US-36 BETWEEN SLM 0.00 - SLM 8.74 AND SLM 13.86 - SLM 18.89. AGGREGATE DRAINS, AS PER PLAN SHALL ALSO BE PERFORMED ON SR-4 BETWEEN SLM 0.00 AND SLM 2.57. SPACING SHALL BE AS DETAILED ON SHEET 9/50. ONE AGGREGATE DRAIN, AS PER PLAN SHALL BE PERFORMED IN THE CENTER OF ANY PARTIAL DEPTH PAVEMENT REPAIR PERFORMED ON US-36 AND SR-4, AS DIRECTED BY THE ENGINEER.

THE CONTRACTOR SHALL MARK THE LOCATIONS OF THE PROPOSED AGGREGATE DRAINS AS DETAILED ON SHEET 9/50 PRIOR TO ANY EXCAVATION WORK, INCLUDING PAVEMENT REPAIRS. THE PROPOSED LOCATION SHALL THEN BE VERIFIED BY THE ENGINEER.

AGGREGATE DRAINS SHALL BE PERFORMED PRIOR TO THE PLACEMENT OF THE PROPOSED SURFACE TREATMENT. IN THE EVENT THAT AN AGGREGATE DRAIN LOCATION FALLS WITHIN A LOCATION FOR (PARTIAL DEPTH) PAVEMENT REPAIR, THE CONTRACTOR MAY PERFORM BOTH THESE ITEMS CONCURRENTLY. IN THE EVENT THAT A PROPOSED AGGREGATE DRAIN FALLS IN AN AREA THAT DOES NOT LEAD TO AN OPEN DITCH (SUCH AS RESIDENTIAL PROPERTY, MAILBOX POST, OR DRIVEWAY) THE CONTRACTOR SHALL ADJUST THE LOCATION TO AVOID THE OBSTACLE. IF THE CONTRACTOR CANNOT AVOID THE OBSTACLE BY MOVING THE DRAIN LESS THAN 10 FEET IN EITHER DIRECTION, THE AGGREGATE DRAIN SHALL BE OMITTED.

ITEM 605 INCLUDES SAW-CUTTING OF ROADWAY, EXCAVATION AND REMOVAL OF AT LEAST 12" THROUGH EXISTING PAVEMENT AND THE PLACEMENT OF A 6" OF ITEM 301, ASPHALT CONCRETE BASE, PG 64-22 AS DETAILED ON SHEET 9/50. ITEM 605 ALSO INCLUDES TACK COAT THAT SHALL BE APPLIED TO ALL VERTICAL SURFACES WITHIN THE ROADWAY AT A RATE OF 0.075 PER SQ YD PRIOR TO THE PLACING ITEM 301 - ASPHALT CONCRETE BASE.

ITEM 611 - 12" CONDUIT, TYPE B, AS PER PLAN:
THIS ITEM HAS BEEN PROVIDED AS DETAILED IN THE MILFORD CENTER PLAN TO CONNECT THE EXISTING CATCH BASIN AT STA 245+00 TO THE PROPOSED CATCH BASIN AT 253+46. THIS ITEM WILL INCLUDE ALL MATERIAL, LABOR, EQUIPMENT, AND HARDWARE NECESSARY TO PROVIDE AND INSTALL THE CONDUIT AS SHOWN IN THE PLANS INCLUDING PROVIDING THE INVERT TO THE EXISTING CATCH BASIN.

THE FOLLOWING QUANTITY HAS BEEN PROVIDED FOR THIS DRAINAGE STRUCTURE INSTALLATION:

ITEM 301 - ASPHALT CONCRETE BASE, PG64-22 =30 CU YD

ITEM 611 - CATCH BASIN, NO. 3A, AS PER PLAN:
THE CONTRACTOR SHALL PROVIDE ALL MATERIAL, LABOR, EQUIPMENT, AND HARDWARE NECESSARY TO REMOVE THE EXISTING CATCH BASIN AND INSTALL A NEW CATCH BASIN, NO. 3A AT THE LOCATIONS GIVEN IN THE PLAN PER STANDARD DRAWING CB-2.2. THIS ITEM SHALL INCLUDE ALL INCIDENTALS INCLUDING BUT NOT LIMITED TO (5' ESTIMATED LENGTH) CONDUIT AND CONCRETE COLLARS NECESSARY TO CONNECT TO THE EXISTING CONDUIT AND INSTALL A PROPERLY FUNCTIONING CATCH BASIN. GRATES SHALL BE EITHER "V" TYPE OR DIAGONAL. THE PROPOSED CATCH BASIN DEPTHS AND INVERTS SHALL BE THE SAME AS EXISTING. THESE CATCH BASIN DEPTHS, INVERT ELEVATIONS, AND CONDUIT SIZES SHALL BE VERIFIED BY THE CONTRACTOR BEFORE ORDERING ANY MATERIALS.

ITEM 251 - PARTIAL DEPTH PAVEMENT REPAIR, AS PER PLAN:
ALL REPAIR AREAS WILL BE IDENTIFIED AND MARKED OUT BY THE PROJECT ENGINEER. THE REPAIR AREAS SHALL BE OF VARYING LENGTH AND THE AVERAGE WIDTH SHALL NOT BE LESS THAN 4 FEET. THE AVERAGE DEPTH OF EACH REPAIR SHALL BE 5 INCHES. ALL AREAS SHALL BE REFILLED WITH AN EQUAL AMOUNT OF ITEM 301 - ASPHALT CONCRETE BASE. FOR MORE INFORMATION SEE DETAIL ON SHEET 8/50. NO MORE PARTIAL PAVEMENT REPAIR, AS PER PLAN SHALL BE STARTED AND PERFORMED THAN CAN BE COMPLETED IN THE SAME WORKING DAY.

ITEM 253 – PAVEMENT REPAIR, AS PER PLAN:
THIS ITEM SHALL BE USED AS DIRECTED BY THE CITY ENGINEER/ODOT PROJECT ENGINEER. THESE PAVEMENT REPAIRS SHALL CONSIST OF REMOVING THE EXISTING PAVEMENT TO A DEPTH OF 18". THE PERIMETER OF THE REPAIR AREA SHALL BE SAWED FULL DEPTH. THE FULL DEPTH PAVEMENT REPAIR AREA SHALL BE FILLED WITH ITEM 304 - AGGREGATE BASE AND 301 - ASPHALT CONCRETE BASE. FOR MORE INFORMATION SEE DETAIL ON SHEET 8/50. TACK COAT SHALL BE APPLIED TO ALL VERTICAL SURFACES AT A RATE OF 0.075 PER SQ YD PRIOR TO THE PLACING ITEM 301 - ASPHALT CONCRETE BASE. ALL PAVEMENT REPAIRS SHALL BE PERFORMED PRIOR TO MILLING. NO MORE PAVEMENT REPAIR SHALL BE STARTED THAN CAN BE COMPLETED IN THE SAME WORKING DAY.

THE SPECIFIC LOCATIONS OF THE FOLLOWING REPAIRS CAN BE FOUND ON SHEET 24/50.

ITEM 254 - PAVEMENT PLANING, ASPHALT CONCRETE:
THE CONTRACTOR SHALL BE TOTALLY RESPONSIBLE FOR ANY AND ALL DAMAGE TO THE CONTRACTORS EQUIPMENT THAT MAY RESULT FROM THE PLANING OPERATION, INCLUDING DAMAGE CAUSED BY CASTINGS AND LOOP DETECTORS. THE DEPTH OF PLANING CLOSE TO THE CASTINGS SHALL BE AS DIRECTED IN ODER TO ACHIEVE A SMOOTH RIDING FINISHED PAVEMENT. GREAT CARE SHALL BE TAKEN TO PREVENT THE REMOVAL OF THE EXISTING PAVEMENT CROSS-SLOPE (CROWN), INTERSECTION CROSS-SLOPES (CROWN) AS WELL AS ALL LONGITUDINAL SLOPES WITHIN THE EXISTING CROSSWALKS DURING THE PLANING OPERATIONS. THE CONTRACTOR MAY ENCOUNTER CONCRETE PAVEMENT IN AREAS OVER RECENT CULVERT REPLACEMENTS.

THE CONTRACTOR SHALL LIMIT THE PLANING OPERATION (EXCEPT IN MILFORD CENTER) TO ONE LANE AT A TIME AS TO ENSURE THAT THE PROPOSED SURFACE COURSE IS BUTTING UP TO EITHER PROPOSED OR EXISTING ASPHALT.

THE CONTRACTOR SHALL USE CARE WHEN PLANING AROUND EXISTING MANHOLES WITH CONCRETE COLLAR SO AS TO NOT DAMAGE THE EXISTING CONCRETE COLLAR. SHOULD THE CONCRETE COLLAR BE DAMAGED BY THE PLANING OPERATION THE CONTRACTOR SHALL REPLACE THE CONCRETE COLLAR AT HIS EXPENSE.

ALL THE GRINDINGS REMOVED WITHIN THE MILFORD CENTER PORTION OF THIS PROJECT SHALL BE HAULED TO A LOCATION WITHIN THE VILLAGE. THE EXACT PLACEMENT OF THE GRINDINGS SHALL BE AS DIRECTED BY THE MILF CENTER VILLAGE ADMINISTRATOR (SEE BELOW FOR CONTACT INFORMATION). WHEN OTHERWISE INSTRUCTED, GRINDINGS SHALL BECOME PROPERTY OF THE CONTRACTOR AND SHALL BE DISPOSED OF. PAYMENT FOR THE ABOVE SHALL BE INCLUDED IN THE UNIT PRICE BID FOR PAVEMENT PLANING, ASPHALT CONCRETE.

MAYOR CHRIS WINKLE
12 RAILRAOD STREET, PO BOX 395
MILFORD CENTER, OH 43045
PHONE: (937)349-2701
FAX: (937)349-4582
EMAIL: VILLAGEOFMILFORDCENTER@YAHOO.COM

NO PLANED PAVEMENT SHALL BE LEFT EXPOSED TO TRAFFIC FOR MORE THAN FIVE CONSECUTIVE DAYS PRIOR TO THE PLACEMENT OF THE PROPOSED SURFACE TREATMENT. FAILURE TO COMPLY SHALL SUBJECT THE CONTRACTOR TO LIQUIDATED DAMAGES AS PER SECTION 108.07 OF CMS.

ITEM 609 - CURB, TYPE 4-C, AS PER PLAN:
THIS ITEM SHALL BE USED TO CONSTRUCT THE PROPOSED 4" CURB LINE AS DETAILED IN THE MILFORD CENTER PLAN. IT WILL BE NECESSARY TO INSTALL THE PROPOSED CURB FROM THE BACKSIDE AS TO MINIMIZE DISTURBANCE OF THE ASPHALT ROADWAY. DETAILS AND QUANTITIES HAVE BEEN PROVIDED TO ACCOMPLISH THIS WORK.

ITEM 609 - CURB, TYPE 6, AS PER PLAN:
THIS ITEM SHALL BE USED TO CONSTRUCT THE PROPOSED 6" CURB LINE AS DETAILED IN THE MILFORD CENTER PLAN. IT WILL BE NECESSARY TO INSTALL THE PROPOSED CURB FROM THE BACKSIDE AS TO MINIMIZE DISTURBANCE OF THE ASPHALT ROADWAY. DETAILS AND QUANTITIES HAVE BEEN PROVIDED TO ACCOMPLISH THIS WORK.

ITEM 617 – WATER:
THE FOLLOWING QUANTITY HAS BEEN PROVIDED AND THE TOTAL HAS BEEN CARRIED TO THE GENERAL SUMMARY.
ITEM 617 – WATER = 4 MGAL

UNI-36-0.00
UNI-4-0.00

ITEM 638 - VALVE BOX ADJUSTED TO GRADE:
THIS ITEM IS A CONTINGENCY QUANTITY TO BE USED AS DIRECTED BY THE PROJECT ENGINEER AT VARIOUS LOCATIONS AND PROVIDE ALL MATERIAL, LABOR, EQUIPMENT, AND HARDWARE NECESSARY TO ADJUST TO GRADE THE EXISTING CATCH BASIN TO THE PROPOSED ASPHALT ELEVATION. THE FOLLOWING QUANTITY HAS BEEN PROVIDED AND THE TOTAL CARRIED TO THE GENERAL SUMMARY.

THE FOLLOWING QUANTITY HAS BEEN PROVIDED AND THE TOTAL HAS BEEN CARRIED TO THE GENERAL SUMMARY.
ITEM 638 - VALVE BOX ADJUSTED TO GRADE = 20 EACH

ITEM 644 - CENTER LINE:
THE PROPER PLACEMENT OF ALL PASSING AND NO PASSING ZONES AS SHOWN ON PLAN SHEETS 33/50 THROUGH 42/50 SHALL BE CONFIRMED BY THE CONTRACTOR AND PLACED BY USING THE CONTROL POINTS SHOWN ON THE PLAN SHEETS LISTED ABOVE. THIS COULD BE DIFFERENT THAN THE SLM'S SHOWN ON THE PAVING PLAN. ALL START AND STOP SLM LOCATIONS SHALL BE WITHIN 0.005 MILES OF THE LOCATIONS SHOWN ON THE PLAN SHEETS LISTED ABOVE. A LETTER OF VERIFICATION OF ALL PASSING AND NO PASSING ZONES SHALL BE SUBMITTED TO THE PROJECT ENGINEER FOR PLACEMENT IN THE PROJECT RECORDS. ANY IMPROPERLY PLACED PASSING OR NO PASSING ZONES SHALL BE IMMEDIATELY CORRECTED.

644 - THERMOPLASTIC PAVEMENT MARKING:
646 - EPOXY PAVEMENT MARKING:
THE LOCATIONS, SIZES AND SHAPES OF PROPOSED AUXILIARY PAVEMENT MARKINGS WILL BE THE SAME AS EXISTING ON THE MAJORITY OF THIS PROJECT. IT IS THE CONTRACTOR'S RESPONSIBILITY TO VERIFY THE LOCATION, SIZE AND SHAPE OF THESE EXISTING PAVEMENT MARKINGS BEFORE THE PAVEMENT PLANING AND RESURFACING OBLITERATES THEM. ANY PAVEMENT MARKING WHICH IS PLACED AT THE WRONG LOCATION SHALL BE REMOVED AND REPLACED AT THE CONTRACTORS EXPENSE.

ITEM 644 - SPECIAL - AIR SPEED ZONE MARKING:
AIR SPEED ZONE MARKINGS SHALL BE PLACED AT THEIR ORGINAL LOCATIONS ON US 36. EACH MARKING SHALL BE INSTALLED AS SHOWN ON SHEET 12/50. THE MARKINGS SHALL BE INSTALLED AT THE FOLLOWING LOCATIONS:

UNI 36 - SLM 3.00
UNI 36 - SLM 3.25
UNI 36 - SLM 3.50
UNI 36 - SLM 3.75
UNI 36 - SLM 4.00

IT IS THE CONCTRACTOR'S RESPONSIBILITY TO HAVE THE MARKINGS LAID OUT BY A REGISETERED SURVEYOR. A RECORD IS TO BE KEPT AND ONE ORGINIAL SIGNED AND SEALED DOUCMENT IS TO BE SENT TO THE DISTRICT TRAFFIC ENGINEER AND ONE COPY IS TO BE SENT TO THE DISTRICT CONSTRUCTION ENGINEER.

PAYMENT SHALL BE ACCORDING TO THE PAVEMENT MARKING MATERIAL USED AND SHALL INCLUDE THE SURVEYING WORK. THE FIVE MARKINGS PLACED IN EACH 1 MILE OF ROADWAY SHALL EQUAL ONE ZONE. ONE ZONE SHALL BE MEASURED AS 1 EACH FOR AIR SPEED ZONE MARKING.

ITEM 623 - CONSTRUCTION LAYOUT STAKES, AS PER PLAN:
THE ITEM SHALL CONSIST OF STATION USING 3 FT LATH STAKES OR PAINT MARKINGS. THE STAKES OR PAINT MARKINGS SHALL BE SPACED AT 100' INTERNVALS WITHIN MILFORD CENTER AND EVERY 200' FOR THE ENTIRE LENGTH. PLACEMENT OF THE STAKES OR PAINT MARKINGS SHALL BE AS DIRECTED BY THE ENGINEER. THE CONTRACTOR IS RESPONSIBLE FOR REPLACING ANY DAMAGED, MISSING STAKES, OR PAINT MARKINGS. PAINT MARKINGS SHALL BE PLACED ON CURBS AND USED IN AREAS WERE THE PLACEMENT OF STAKES IS NOT POSSIBLE AND APPROVED BY THE PROJECT ENGINEER.

CONSTRUCTION LAYOUT STAKES WILL BE PAID FOR AT THE CONTRACT LUMP SUM BID, WHICH PRICE SHALL BE FULL COMPENSATION FOR ALL SERVICES, MATERIALS, LABOR, EQUIPMENT, TOOLS, AND INCIDENTALS, INCLUDING THE REMOVAL, NECESSARY TO COMPLETE THIS ITEM.

NOTIFICATION OF WORK HOURS RESTRICTIONS IN MILFORD CENTER, OHIO:
ANY AND ALL CONSTRUCTION TAKING PLACE IN MILFORD CENTER, OHIC SHALL ONLY TAKE PLACE BETWEEN 7AM AND 5PM MONDAY THROUGH SATURDAY.

WATER QUALITY PROTECTION:
NO TOXIC OR HAZARDOUS MATERIALS SUCH AS SEALANTS, PAINT, SOLVENTS, CLEANING AGENTS, EARTHEN MATERIALS, WASTE-WATER FUELS OR DEBRIS OF ANY KIND SHALL BE DISCHARGED TO ANY STREAMS, DRAINAGE COURSES OR BODIES OF WATER. ALL ASPHALT OR CONCRETE GRINDINGS, EXCESS ASPHALT OR CONCRETE MATERIALS OR ANY OTHER DEBRIS GENERATED DURING RESURFACING OR OTHER SIMILAR ACTIVITIES SHALL BE REMOVED IMMEDIATELY FROM WINTHIN 1,000 FEET OF THE BIG DERBY CREEK AND NOT BE DISPOSED OF WITHIN A FLOODPLAIN BELOW THE 100-YEAR FLOOD ELEVATION. THE CONTRACTOR SHALL TAKE ALL PRECAUTIONS NECESSARY TO PREVENT LIQUIDS USED TO REPAIR, CLEAN, SEAL, OR TREAT ANY BRIDGE STRUCTURE (E.G. PAINT, SEALER, SOLVENT) FROM ENTERING STREAMS, WETLANDS OR OTHER "WATERS OF THE UNITED STATES" AND TAKE THE APPROPRIATE ACTIONS IN THE EVENT OF A RELEASE.

WATERSHED PROTECTION:
THE PROJECT IS LOCATED WITHIN VARIOUS SOURCE WATER PROTECTION AREAS. IT IS ESSENTIAL THAT ALL ACTIVITIES ASSOCIATED WITH THIS WORK BE PERFORMED IN A MANNER CONSISTENT WITH BEST WATERSHED MANAGEMENT PRACTICES INCLUDING, BUT NOT LIMITED TO: AREAS OF DISTURBED GROUND SHALL HAVE APPROPRIATE EROSION AND SEDIMENT CONTROLS. IF HAZARDOUS/TOXIC MATERIALS INCLUDING BUT NOT LIMITED TO FUELS, OILS, BITUMENS PAINTS, SEALANTS, OR OTHER CHEMICALS, ARE STORED ON SITE, THEY SHALL BE STORED IN A DOUBLE-CONTAINMENT MANNER. ALL EQUIPMENT REPAIRS, MAINTENANCE, AND MECHANICAL WORK THAT COULD RESULT IN THE RELEASE OF HAZARDOUS/TOXIC MATERIALS SHALL BE PERFORMED IN AN APPROPRIATELY CONTAINED AREA, PREFERABLY OFF SITE OR AN APPROPRIATE OFF-SITE FACILITY. IN THE EVENT THAT ANY HAZARDOUS/TOXIC MATERIALS INCLUDING, BUT NOT LIMITED TO FUELS, OILS, BITUMEN'S PAINTS, SEALANTS, OR OTHER CHEMICALS ARE SPILLED, THE CONTRACTOR SHALL IMMEDIATELY NOTIFY EMERGENCY SERVICES BY CALLING 911 AND THE OHIO EPA @ (800) 282-9378. THE CONTRACTOR SHOULD BE PREPARED TO PROVIDE DETAILED INFORMATION RELATIVE TO THE TYPE AND QUANTITY OF MATERIAL THAT HAS BEEN SPILLED AS WELL AS THE EXACT LOCATION AND THE EXACT TIME AT WHICH THE SPILL OCCURRED. THE CONTRACTOR SHALL BE SOLELY RESPONSIBLE FOR INFORMING ALL SUBCONTRACTORS AND OTHER AGENTS OF THESE RESPONSIBILITIES, PRECAUTIONS, AND PROHIBITIONS.

NOISE PROTECTION:
IN AN EFFORT TO MINIMIZE NOISE DURING CONSTRUCTION, ALL CONSTRUCTION EQUIPMENT OPERATION MUST CONFORM TO ANY AND ALL PERTINENT LOCAL NOISE ORDINANCES. IT IS THE RESPONSIBILITY OF THE CONTRACTOR TO DETERMINE IF THERE ARE ANY PERTINENT LOCAL NOISE ORDINANCES, AND, IF THERE ARE ANY, TO ENSURE THAT THEY ARE COMPLIED WITH THROUGHOUT THE CONSTRUCTION OF THIS PROJECT.

THE FOLLOWING QUANTITIES HAVE BEEN PROVIDED TO RE-ESTABLISH AREAS DISTURBED AS A RESULT OF THE PROPOSED WORK IN MILFORD CENTER:

ITEM 659 - COMMERCIAL FERTILIZER:
THE APPLICATION RATE FOR THIS ITEM IS 30 POUNDS PER 1000 SQ FT OF SEEDING.

642 SQ YD OF SEEDING AND MULCHING (FROM TABLE)
642 X 9 SQ FT / SQ YD = 5,778 SQ FT

5778 / 1,000 = 5.8

5.8 X 30 POUNDS = 174 POUNDS = 0.09 TONS

TOTAL CARRIED TO GENERAL SUMMARY:
ITEM 659 - COMMERCIAL FERTILIZER = 0.09 TON

ITEM 659 - LIME:
THE APPLICATION RATE FOR THIS ITEM IS BASED ON THE AREA OF SEEDING.

642 SQ YD OF SEEDING AND MULCHING (FROM TABLE)
642 X 9 SQ FT / SQ YD = 5,778 SQ FT

5778 / 43,560 SQ FT / ACRE = 0.13 ACRE

TOTAL CARRIED TO GENERAL SUMMARY:
ITEM 659 - LIME = 0.13 ACRE

ITEM 659 - REPAIR SEEDING AND MULCHING:
THE APPLICATION RATE FOR THIS ITEM IS 5% OF THE SEEDING AREA.

642 SQ YD OF SEEDING AND MULCHING (FROM TABLE)
642 SQ YD X 0.05 = 32 SQ YDS

TOTAL CARRIED TO GENERAL SUMMARY:
ITEM 659 - REPAIR SEEDING AND MULCHING = 32 SQ YD

ITEM 659 - INTER-SEEDING:
THE APPLICATION RATE FOR THIS ITEM IS 5% OF THE SEEDING AREA.

642 SQ YD OF SEEDING AND MULCHING (FROM TABLE)
642 SQ YD X 0.05 = 32 SQ YDS

TOTAL CARRIED TO GENERAL SUMMARY:
ITEM 659 - INTER-SEEDING = 32 SQ YD

ITEM 659 - WATER:
THE APPLICATION RATE FOR THIS ITEM IS 2 APPLICATIONS OF 300 GALLONS PER 1000 SQ FT OF SEEDING

642 SQ YD OF SEEDING AND MULCHING (FROM TABLE)
642 X 9 SQ FT / SQ YD = 5,778 SQ FT

5778 / 1,000 = 5.8

5.8 X 300 GAL. X 2 = 3,480 GALLONS = 3 M GAL

TOTAL CARRIED TO GENERAL SUMMARY:
ITEM 659 - WATER = 3 M GAL

CALCULATED DKR CHECKED

GENERAL NOTES

UNI-36-0.00
UNI-4-0.00

16
50

I:\Projects\uni\036\0000.016\91053\production\ROADWAY\SHEETS\GENERAL NOTES.dgn 13-APR-2015 12:45PM vpatel SHEET_GN003

GENERAL:
ALL TRAFFIC CONTROL DEVICES SHALL BE FURNISHED, ERECTED, MAINTAINED, AND REMOVED BY THE CONTRACTOR IN ACCORDANCE WITH THE OHIO MANUAL OF UNIFORM TRAFFIC CONTROL DEVICES (CURRENT EDITION). COPIES ARE AVAILABLE FROM:

THE OHIO DEPARTMENT OF TRANSPORTATION
BUREAU OF TRAFFIC,
1980 WEST BROAD STREET
COLUMBUS, OHIO 43223.

MAINTENANCE OF TRAFFIC (HOLIDAYS AND SPECIAL EVENTS):
NO WORK SHALL BE PERFORMED AND ALL LANES (EACH DIRECTION) SHALL BE OPEN TO TRAFFIC DURING THE FOLLOWING HOLIDAYS:

CHRISTMAS	FOURTH OF JULY
NEW YEARS	LABOR DAY
MEMORIAL DAY	THANKSGIVING

THE PERIOD OF TIME THAT THE LANES ARE TO BE OPEN DEPENDS ON THE DAY OF THE WEEK ON WHICH THE HOLIDAY FALLS. THE FOLLOWING SCHEDULE SHALL BE USED TO DETERMINE THE PERIOD:

DAY OF HOLIDAY OR EVENT	TIME ALL LANES MUST BE OPEN TO TRAFFIC
SUNDAY	12:00N FRIDAY THROUGH 6:00 AM MONDAY
MONDAY	12:00N FRIDAY THROUGH 6:00 AM TUESDAY
TUESDAY	12:00N MONDAY THROUGH 6:00 AM WEDNESDAY
WEDNESDAY	12:00N TUESDAY THROUGH 6:00 AM THURSDAY
THURSDAY	12:00N WEDNESDAY THROUGH 6:00 AM FRIDAY
THURSDAY (THANKSGIVING ONLY)	12:00N TUESDAY THROUGH 6:00 AM MONDAY
FRIDAY	12:00N THURSDAY THROUGH 6:00 AM MONDAY
SATURDAY	12:00N FRIDAY THROUGH 6:00 AM MONDAY

LENGTH AND DURATION OF LANE CLOSURES AND RESTRICTIONS SHALL BE AT THE APPROVAL OF THE ENGINEER. IT IS THE INTENT TO MINIMIZE THE IMPACT TO THE TRAVELING PUBLIC. LANE CLOSURES OR RESTRICTIONS OVER SEGMENTS OF THE PROJECT IN WHICH NO WORK IS ANTICIPATED WITHIN A REASONABLE TIME FRAME, AS DETERMINED BY THE ENGINEER, SHALL NOT BE PERMITTED. THE LEVEL OF UTILIZATION OF MAINTENANCE OF TRAFFIC DEVICES SHALL BE COMMENSURATE WITH THE WORK IN PROGRESS.

ALL WORK AND TRAFFIC CONTROL DEVICES SHALL BE IN ACCORDANCE WITH CMS 614 AND OTHER APPLICABLE PORTIONS OF THE SPECIFICATIONS, AS WELL AS THE OHIO MANUAL OF UNIFORM TRAFFIC CONTROL DEVICES.

PAYMENT FOR ALL LABOR, EQUIPMENT AND MATERIALS SHALL BE INCLUDED IN THE LUMP SUM CONTRACT PRICE FOR ITEM 614, MAINTAINING TRAFFIC, UNLESS SEPARATELY ITEMIZED IN THE PLAN.

NOTIFICATION OF TRAFFIC RESTRICTIONS:
THROUGHOUT THE DURATION OF THE PROJECT, THE CONTRACTOR SHALL NOTIFY THE PROJECT ENGINEER IN WRITING OF ALL TRAFFIC RESTRICTIONS AND UPCOMING MAINTENANCE OF TRAFFIC CHANGES. THE CONTRACTOR SHALL ENSURE THE WRITTEN NOTIFICATION IS SUBMITTED IN A TIMELY MANNER TO ALLOW THE PROJECT ENGINEER TO MEET THE REQUIRED TIME FRAMES SET FORTH IN THE TABLE BELOW. THIS NOTIFICATION SHALL BE RECEIVED BY THE PROJECT ENGINEER PRIOR TO THE PHYSICAL SETUP OF ANY APPLICABLE SIGNS OR MESSAGE BOARDS.

INFORMATION SHOULD INCLUDE BUT IS NOT LIMITED TO ALL CONSTRUCTION ACTIVITIES THAT IMPACT OR INTERFERE WITH TRAFFIC AND SHOULD LIST THE SPECIFIC LOCATION, TYPE OF WORK, ROAD STATUS, DATE AND TIME OF RESTRICTION, DURATION OF RESTRICTION, NUMBER OF LANES MAINTAINED, DETOUR ROUTES IF APPLICABLE, AND ANY OTHER INFORMATION REQUESTED BY THE PROJECT ENGINEER.

ITEM	DURATION OF CLOSURE	NOTIFICATION DUE TO DISTRICT 6 COMMUNICATIONS OFFICE
RAMP AND ROAD CLOSURES	>= 2 WEEKS	14 BUSINESS DAYS PRIOR TO CLOSURE
	> 12 HOURS AND < 2 WEEKS	7 BUSINESS DAYS PRIOR TO CLOSURE
	< 12 HOURS	2 BUSINESS DAYS PRIOR TO CLOSURE
LANE CLOSURES/ RESTRICTIONS	>= 2 WEEKS	7 BUSINESS DAYS PRIOR TO CLOSURE
	< 2 WEEKS	2 BUSINESS DAYS PRIOR TO CLOSURE

ANY UNFORESEEN CONDITIONS NOT SPECIFIED IN THE PLANS REQUIRING TRAFFIC RESTRICTIONS SHALL ALSO BE REPORTED TO THE PROJECT ENGINEER USING THE NOTIFICATION TIME FRAME TABLE.

NOTIFICATION OF CONSTRUCTION INITIATION:
AT LEAST FOURTEEN DAYS PRIOR TO ANY CONSTRUCTION ACTIVITIES, THE CONTRACTOR SHALL ADVISE THE DISTRICT OFFICE OF COMMUNICATIONS VIA EMAIL AT d06.pio@dot.state.oh.us AND THE DISTRICT WORK ZONE TRAFFIC MANAGER VIA EMAIL AT d06.mot@dot.state.oh.us OF THE ANTICIPATED START DATE OF ANY CONSTRUCTION ACTIVITIES, INCLUDING BUT NOT LIMITED TO THE PLACING OF WORK ZONE SIGNS. THE NOTIFICATION SHALL ALSO INCLUDE THE PROJECT NUMBER, PID, NAME AND PHONE NUMBER OF THE CONTRACTOR, A POINT OF CONTACT AND THE ANTICIPATED IMPACT ON TRAFFIC. THE CONTRACTOR WILL IMMEDIATELY INFORM THE DISTRICT OFFICE OF COMMUNICATIONS AND THE DISTRICT WORK ZONE TRAFFIC MANAGER OF ANY AND ALL DELAYS AND/OR CHANGES REGARDING THE CONSTRUCTION INITIATION DATE.

PUBLIC OUTREACH AND NOTIFICATION (RESURFACING PROJECTS & MILFORD CENTER CURB INSTALLATION)
THE CONTRACTOR SHALL BE RESPONSIBLE FOR CONTACTING THE DISTRICT 6 PUBLIC INFORMATION OFFICE VIA EMAIL AT d06.pio@dot.state.oh.us TO COORDINATE EFFORTS TO NOTIFY ADJACENT RESIDENTS AND BUSINESSES OF THE UPCOMING RESURFACING PROJECT AND MILFORD CENTER CURB INSTALLTION. ADVANCE NOTIFICATION SHALL OCCUR NO LATER THAN FOURTEEN (14) DAYS PRIOR TO THE FIRST DAY OF WORK. ALL NOTIFICATIONS SHALL BE MADE UTILIZING THE TEMPLATE PROVIDED BY THE DISTRICT 6 PUBLIC INFORMATION OFFICE.

USE OF STANDARD DRAWINGS
FOR THE PURPOSE OF THIS PROJECT, "MOVING OPERATION" SHALL BE LIMITED TO PAVEMENT MARKING STRIPING.

IT MAY BE NECESSARY TO EXTEND THE ADVANCE WARNING AND BUFFER ZONES BEYOND THE MINIMUM DISTANCES SHOWN ON THE STANDARD DRAWINGS. THIS MAY BE DUE TO HORIZONTAL ALIGNMENT, VERTICAL ALIGNMENT, RAMP LOCATIONS, OR OTHER SIGHT OBSTRUCTIONS. LOCATIONS OF THE TAPER ZONES MAY BE ADJUSTED AS DIRECTED BY THE ENGINEER, BUT TAPER LENGTHS MUST MEET THE MINIMUM STANDARDS. TAPERS SHOULD BE PLACED IN TANGENT SECTIONS WHENEVER POSSIBLE. ADDITIONAL YIELD SIGNS MAY BE REQUIRED FOR RAMPS WITHIN 1,000 FEET OF A WORK ZONE. PAYMENT SHALL BE INCLUDED IN THE LUMP SUM CONTRACT PRICE FOR ITEM 614 - MAINTAINING TRAFFIC.

USE OF WEIGHTED CHANNELIZERS
THE WEIGHTED CHANNELIZERS MAY BE USED IN ACCORDANCE WITH THIS SECTION. THE WEIGHTED CHANNELIZERS SHALL BE PREDOMINANTLY ORANGE IN COLOR AND SHALL BE MADE OF LIGHTWEIGHT, FLEXIBLE, AND DEFORMABLE MATERIAL. THEY SHALL BE AT LEAST 42 INCHES IN HEIGHT WITH A WEIGHTED BASE. THEY MAY HAVE A HANDLE OR LIFTING DEVICE, WHICH EXTENDS ABOVE THE 42" MINIMUM HEIGHT.

THE MARKINGS ON THE WEIGHTED CHANNELIZERS SHALL BE HORIZONTAL, CIRCUMFERENTIAL, ALTERNATING ORANGE AND WHITE RETRO REFLECTIVE STRIPES 6 INCHES WIDE. EACH WEIGHTED CHANNELIZERS SHALL HAVE A MINIMUM OF TWO ORANGE AND TWO WHITE STRIPES. ANY NON-RETRO REFLECTIVE SPACES BETWEEN THE HORIZONTAL ORANGE AND WHITE STRIPES SHALL NOT EXCEED 2 INCHES WIDE. THE WEIGHTED CHANNELIZERS SHALL HAVE A 4-INCH MINIMUM WIDTH, REGARDLESS OF ORIENTATION.

USE OF WEIGHTED CHANNELIZERS ON FREEWAYS AND MULTILANE HIGHWAYS SHALL BE LIMITED TO SHORT-TERM OPERATION FOR EITHER DAY OR NIGHT. UPON COMPLETION OF WORK, THE WEIGHTED CHANNELIZERS SHALL BE REMOVED. THE WEIGHTED CHANNELIZERS MAY AGAIN BE PLACED ON THE HIGHWAY WHEN THE WORK IS TO RESUME ON THE FOLLOWING DAY OR NIGHT. ANY LANE CLOSURE USING CHANNELIZATION DEVICES, EXPECTED TO REMAIN FOR MORE THAN TWELVE HOURS, SHALL REQUIRE THE USE OF DRUMS OR BARRIERS. WORK IS TO RESUME ON THE FOLLOWING DAY OR NIGHT.

WHEN USED AT NIGHT, WEIGHTED CHANNELIZERS SHALL ONLY BE PLACED IN THE TANGENT AREA. THE TANGENT AREA IS DEFINED AS THE AREA AFTER THE TRANSITION TAPER WHERE THE WORK TAKES PLACE. DRUMS SHALL BE USED IN THE TRANSITION TAPERS FOR NIGHT OPERATIONS. MAXIMUM SPACING OF THE WEIGHTED CHANNELIZERS SHALL BE 40 FEET.

STEPS SHOULD BE TAKEN TO ENSURE THAT THE WEIGHTED CHANNELIZERS WILL NOT BE BLOWN OVER OR DISPLACED BY WIND OR MOVING TRAFFIC. BALLASTS SHOULD NOT PRESENT A HAZARD IF THE WEIGHTED CHANNELIZERS ARE INADVERTENTLY STRUCK, NOR SHOULD THEY AFFECT THE VISIBILITY OF THE WEIGHTED CHANNELIZERS. ALL BALLASTS USED SHOULD BE IN ACCORDANCE WITH THE MANUFACTURER'S SPECIFICATIONS.

PARKING RESTRICTIONS:
CONTRACTORS SHALL INSTALL "NO PARKING" SIGNS, R8-3 OR R8-3a, PRIOR TO CONSTRUCTION OF CURBS AND SIDEWALK IN MILFORD CENTER. ONCE CONSTRUCTION HAS FINISHED ALL "NO PARKING" SIGNS SHALL BE TAKEN DOWN.

CALCULATED DKR CHECKED

MAINTENANCE OF TRAFFIC NOTES

UNI-36-0.00
UNI-4-0.00

I:\Projects\uni\036\0000.016\91053\production\ROADWAY\sheets\MOT.dgn 10-APR-2015 8:19PM drankin SHEET_MT001

ITEM 614 - LAW ENFORCEMENT OFFICER WITH PATROL CAR FOR ASSISTANCE DURING CONSTRUCTION OPERATIONS:
USE OF LEOS BY CONTRACTORS OTHER THAN THE USES SPECIFIED BELOW WILL NOT BE PERMITTED AT PROJECT COST UNLESS PRIOR APPROVAL HAS BEEN OBTAINED FROM THE PROJECT ENGINEER. LAW ENFORCEMENT OFFICERS (LEOS) SHOULD NOT BE USED WHERE THE OMUTCD INTENDS THAT FLAGGERS BE USED. IN ADDITION TO THE REQUIREMENTS OF CMS 614 AND THE OHIO MANUAL OF UNIFORM TRAFFIC CONTROL DEVICES (OMUTCD), A UNIFORMED LAW ENFORCEMENT OFFICER WITH AN OFFICIAL PATROL CAR (CAR WITH TOP-MOUNTED EMERGENCY FLASHING LIGHTS AND COMPLETE MARKINGS OF THE APPROPRIATE LAW ENFORCEMENT AGENCY) SHOULD BE PROVIDED FOR THE FOLLOWING TRAFFIC CONTROL TASKS:

- *THE USE OF A LAW ENFORCEMENT OFFICER WITH PATROL CAR IS REQUIRED IF THE CONTRACTOR TURNS THE INTERSECTION SIGNALS OFF OR PUTS THE INTERSECTION IN FLASHING OPERATION, AND WHEN THE LEO DIRECTS TRAFFIC THROUGH THE INTERSECTION CONTRARY TO THE SIGNAL DISPLAY.*

LAW ENFORCEMENT OFFICERS SHOULD NOT FORSAKE THEIR TRAFFIC CONTROL RESPONSIBILITIES TO CHASE MOTORISTS FOR ROUTINE TRAFFIC VIOLATIONS. HOWEVER, IF THE MOTORISTS ACTIONS ARE CONSIDERED TO BE RECKLESS, THEN PURSUIT OF THE MOTORIST MAY BE ACCEPTABLE.

THE LEOS WORK AT THE DIRECTION OF THE CONTRACTOR. THE CONTRACTOR IS RESPONSIBLE FOR SECURING THE SERVICES OF THE LEO'S AND COMMUNICATING THE INTENTIONS OF THE PLANS WITH RESPECT TO DUTIES OF THE LEO. THE ENGINEER SHALL HAVE FINAL CONTROL OVER THEIR RESPECTIVE DUTIES, PLACEMENT AND WILL RESOLVE ANY ISSUES BETWEEN THE TWO PARTIES THAT MAY ARISE. THE CONTRACTOR SHALL MAKE ARRANGEMENTS FOR THE SERVICES WITH:

THE OHIO HIGHWAY PATROL 1-614-466-2660

THE LEO SHOULD REPORT IN TO THE CONTRACTOR PRIOR TO THE START OF THE SHIFT, IN ORDER TO RECEIVE INSTRUCTIONS REGARDING SPECIFIC WORK ASSIGNMENTS DURING THE SHIFT. THE CONTRACTOR SHALL PROVIDE THE LEO WITH A TWO-WAY COMMUNICATION DEVICE WHICH SHALL BE RETURNED TO THE CONTRACTOR AT THE END OF THE SHIFT.

LAW ENFORCEMENT OFFICERS (WITH PATROL CAR) REQUIRED BY THE TRAFFIC MAINTENANCE TASKS ABOVE SHALL BE PAID FOR ON A UNIT PRICE (HOURLY) BASIS UNDER ITEM 614, LAW ENFORCEMENT OFFICER WITH PATROL CAR. THE FOLLOWING ESTIMATED QUANTITIES HAVE BEEN CARRIED TO THE GENERAL SUMMARY.

ANY ADDITIONAL COSTS (ADMINISTRATIVE OR OTHERWISE) INCURRED BY THE CONTRACTOR TO OBTAIN THE SERVICES OF A L.E.O. ARE INCLUDED WITHIN THE BID UNIT PRICE FOR ITEM-614 LAW ENFORCEMENT OFFICER WITH PATROL CAR. THE HOURS PAID SHALL INCLUDE ANY MINIMUM SHOW-UP TIME REQUIRED BY THE LAW ENFORCEMENT AGENCY INVOLVED.
THE FOLLOWING ESTIMATED QUANTITIES HAVE BEEN PROVIDED:

ITEM 614 - LAW ENFORCEMENT OFFICER WITH PATROL CAR FOR ASSISTANCE = 40 HOUR

ITEM 614 - WORK ZONE MARKING SIGN:
THE FOLLOWING ESTIMATED QUANTITIES HAVE BEEN CARRIED TO THE GENERAL SUMMARY FOR USE AT LOCATIONS IDENTIFIED BY THE ENGINEER FOR WORK ZONE MARKING SIGNS PER THE REQUIREMENTS OF MT-101.90, 614.04 AND 614.11.

LOC	BEGIN SLM	END SLM	SIDE	W8-H12a NO EDGE LINES EACH
US - 36	0.00	8.74	RT & LT	24
US - 36	13.86	18.89	RT & LT	16
SR - 4	0.00	2.57	RT & LT	6
			TOTAL	46

R4-1-18 "NO EDGE LINES" = 46 EACH

LOC	BEGIN SLM	END SLM	R4-1 DO NOT PASS EACH	R4-2 PASS WITH CARE EACH
US - 36	0.00	8.74	29	29
US - 36	13.86	18.89	14	15
SR - 4	0.00	2.57	6	5
		TOTAL	49	49

R4-1 "DO NOT PASS" = 49 EACH
R4-2 "PASS WITH CARE" = 49 EACH

THE FOLLOWING QUANTITY HAS BEEN PROVIDED AND THE TOTAL HAS BEEN CARRIED TO THE GENERAL SUMMARY.

ITEM 614 - WORK ZONE MARKING SIGN = 144

ITEM 614 - WORK ZONE STOP LINE, CLASS III, 642 PAINT:
WORK ZONE STOP LINE SHALL BE PLACED TO REFLECT THE EXISTING STOP LINE AS DETERMINED FROM THE EXISTING MARKINGS WITHIN THE PROJECT LIMITS. IT SHALL BE THE CONTRACTOR'S RESPONSIBILITY TO VERIFY THE LOCATION, SIZE, AND TYPE OF WORK ZONE MARKINGS NEEDED MEETING THE REQUIREMENTS OF ITEM 614 BEFORE THE REMOVAL OR RESURFACING OBLITERATES THE EXISTING.

US-36 @ 0.00 = 24 FT
SR-4 @ 0.00 = 24 FT
US-36 @ 8.74= 24 FT
US-36 @ 13.86 = 24 FT
US-36 @ 18.89 = 24 FT
US-36 @ 1.731 = 24 FT
US-36 @ 4.700 = 60 FT

*= 204 FT * 2 = 408 FT*

THE FOLLOWING QUANTITY HAS BEEN PROVIDED AND THE TOTAL HAS BEEN CARRIED TO THE GENERAL SUMMARY.
ITEM 614 - WORK ZONE STOP LINE, CLASS III, 642 PAINT = 408 FT

ITEM 614 - WORK ZONE CENTER LINE, CLASS III, 642 PAINT:
WORK ZONE CENTER LINES SHALL BE PLACED TO REFLECT THE EXISTTING CENTER LINE AS DETERMINED FROM THE EXISTING MARKINGS WITHIN THE PROJECT LIMITS. WORK ZONE CENTER LINES SHALL BE PLACED TWICE BEFORE THE FINAL ITEM 644 - CENTER LINE IS PLACED DOWN; ONCE AFTER MILLING HAS TAKEN PLACE ON THE ROUTE AND ONCE AFTER THE NEW ASPHALT HAD BEEN LAYED DOWN.

*US-36 0.00 TO 8.74 & 13.86 TO 18.89 = 13.76 MILES * 2 = 27.52 MILES*
*SR-4 0.00 TO 2.57 = 2.57 MILES * 2 = 5.14 MILES*
TOTAL = 27.52 MILES + 5.14 MILES = 32.66 MILES

THE FOLLOWING QUANTITY HAS BEEN PROVIDED AND THE TOTAL HAS BEEN CARRIED TO THE GENERAL SUMMARY.
ITEM 614 - WORK ZONE CENTER LINE, CLASS III, 642 PAINT = 32.66 MILES

ITEM 614 - WORK ZONE CHANNELIZING LINE, CLASS III, 642 PAINT:
WORK ZONE CHANNILIZING LINES SHALL BE PLACED TO REFLECT THE EXISTTING CHANNELIZING LINE AS DETERMINED FROM THE EXISTING MARKINGS WITHIN THE PROJECT LIMITS. WORK ZONE CHANNELIZING LINES SHALL BE PLACED TWICE BEFORE THE FINAL ITEM 644 - CHANNILIZING LINE IS PLACED DOWN; ONCE AFTER MILLING HAS TAKEN PLACE ON THE ROUTE AND ONCE AFTER THE NEW ASPHALT HAD BEEN LAYED DOWN.

*US-36 7.12 TO 7.17 = 0.05 MILES * 5280 FT = 264 FT*
*US-36 7.27 TO 7.33 = 0.06 MILES * 5280 FT = 317 FT*
*TOTAL = 264 FT + 317 FT = 581 FT * 2 = 1162 FT*

THE FOLLOWING QUANTITY HAS BEEN PROVIDED AND THE TOTAL HAS BEEN CARRIED TO THE GENERAL SUMMARY.
ITEM 614 - WORK ZONE CHANNELIZING LINE, CLASS III, 642 PAINT = 1162 FT

ITEM 614 - WORK ZONE CROSSWALK LINE, CLASS III, 642 PAINT:
WORK ZONE CROSSWALK LINES SHALL BE PLACED TO REFLECT THE EXISTTING CHANNELIZING LINE AS DETERMINED FROM THE EXISTING MARKINGS WITHIN THE PROJECT LIMITS. WORK ZONE CROSSWALK LINES SHALL BE PLACED TWICE BEFORE THE FINAL ITEM 644 - CROSSWALK LINE IS PLACED DOWN; ONCE AFTER MILLING HAS TAKEN PLACE ON THE ROUTE AND ONCE AFTER THE NEW ASPHALT HAD BEEN LAYED DOWN.

US-36 4.61 TO 4.62: 210 FT, CROSSWALK LINES
US-36 4.70 TO 4.71: 425 FT, CROSSWALK LINES
US-36 4.86 TO 4.89: 56 FT, CROSSWALK LINES

*TOTAL = 210 FT + 425 FT +56 FT = 691 FT * 2 = 1382*

THE FOLLOWING QUANTITY HAS BEEN PROVIDED AND THE TOTAL HAS BEEN CARRIED TO THE GENERAL SUMMARY.
ITEM 614 - WORK ZONE CROSSWALK LINE, CLASS III, 642 PAINT = 1382 FT

INTERIM COMPLETION DATE:
FINAL COMPLETION DATE:
(CAL 2015)
THE CONTRACTOR SHALL HAVE AN INTERIM COMPLETION DATE OF 10/15/2015 FOR ALL WORK IDENTIFIED BELOW:

- *ALL PAVEMENT REPAIR (PARTIAL & FULL) TO BE COMPLETED WITHIN ENTIRE PROJECT LIMITS*
- *ALL WORK ON US-36 FOR 2.79 MI. FROM SLM 1.74(SR-4 JCT) TO SLM 4.53(BEGIN MILFORD CENTER SECTION). INCLUDING BUT NOT LIMITED TO:*
  - *PAVEMENT REPAIR*
  - *AGGREGATE DRAINS (AS PER PLAN)*
  - *1.5" MILL & FILL*
  - *1.5" MILL & FILL ON STRUCTURE UNI-36-0282 INCLUDING SAWING AND SEALING JOINTS.*
  - *FINAL PAVEMENT MARKINGS*

(CAL 2016)
THIS PROJECT HAS A FINAL COMPLETION DATE OF 8/31/2016 FOR ALL WORK IDENTIFIED IN THE PLAN EXCEPT AS NOTED ABOVE (CAL 2015).

IF THE CONTRACTOR FAILS TO COMPLETE BY THIS INTERIM COMPLETION DATES, HE WILL BE ASSESSED DISINCENTIVES IN THE AMOUNT OF $1500 PER DAY FOR EVERY DAY PAST THE INTERIM COMPLETION DATE.

CALCULATED
CHECKED DKR

MAINTENANCE OF TRAFFIC NOTES

UNI-36-0.00
UNI-4-0.00

13-MAY-2015 3:21PM drankin
I:\Projects\uni\036\0000.016\91053\production\ROADWAY\SHEETS\MOT.dgn SHEET_MT002

SHEET NUMBER										PARTICIPATION					ITEM	ITEM EXT	GRAND TOTAL	UNIT	DESCRIPTION	SEE SHEET NO.
14 - 16	17 - 18	21	22	23	24	25	26	31	32	01/STR/PV	02/S<2/PV	03/NHS/PV	04/NHS/PV/Mary	05/NHS/PV/MILF						
																			ROADWAY	
		43												43	202	23001	43	SY	PAVEMENT REMOVED, AS PER PLAN(CONCRETE)	15
		1755	140									140		1755	202	30001	1895	SF	WALK REMOVED, AS PER PLAN	15
		825	60									60		825	202	32001	885	FT	CURB REMOVED, AS PER PLAN	15
		303												303	204	10000	303	SY	SUBGRADE COMPACTION	
						2.56	13.77			6.65	0.13	9.14	0.41		209	60500	16.33	MILE	LINEAR GRADING	
		1730	160									160		1730	608	10000	1890	SF	4" CONCRETE WALK	
			216									216			608	52010	216	SF	CURB RAMP, TYPE A1	
			216									216			608	52020	216	SF	CURB RAMP, TYPE A2	
			252									252			608	52040	252	SF	CURB RAMP, TYPE B2	
			36									36			608	52044	36	SF	CURB RAMP, TYPE B3	
1												1			623	39500	1	EACH	MONUMENT BOX ADJUSTED TO GRADE	
																			EROSION CONTROL	
		25												25	659	00300	25	CY	TOPSOIL	
		224												224	659	10000	224	SY	SEEDING AND MULCHING	
32														32	659	14000	32	SY	REPAIR SEEDING AND MULCHING	
32														32	659	15000	32	SY	INTER-SEEDING	
0.09														0.09	659	20000	0.09	TON	COMMERCIAL FERTILIZER	
0.13														0.13	659	31000	0.13	ACRE	LIME	
3														3	659	35000	3	MGAL	WATER	
										400	10	300	40	250	832	30000	1000	EACH	EROSION CONTROL	
																			DRAINAGE	
					850					420		430			605	31100	850	FT	AGGREGATE DRAINS	
						1410	7101			3530	70	4681	230		605	31101	8511	FT	AGGREGATE DRAINS, AS PER PLAN	15
			54									54			611	04401	54	FT	12" CONDUIT, TYPE B, AS PER PLAN	15
			7									1		6	611	98181	7	EACH	CATCH BASIN, NO. 3A, AS PER PLAN	15
																			PAVEMENT	
				5000						2830	214	1956			251	01001	5000	SY	PARTIAL DEPTH PAVEMENT REPAIR, AS PER PLAN	15
					3200					1690		1510			253	02001	3200	CY	PAVEMENT REPAIR, AS PER PLAN	8
						41213	218970			99983	2058	148795	9347		254	01000	260183	SY	PAVEMENT PLANING, ASPHALT CONCRETE	
30												30			301	46000	30	CY	ASPHALT CONCRETE BASE, PG64-22	
		94												94	304	20000	94	CY	AGGREGATE BASE	
						3108	16423			7549	154	11127	701		407	10000	19531	GAL	TACK COAT	
						1715	9126			4196	86	6170	389		441	10000	10841	CY	ASPHALT CONCRETE SURFACE COURSE, TYPE 1, (446), PG64-22	
		43												43	452	10010	43	SY	6" NON-REINFORCED CONCRETE PAVEMENT, CLASS QC1	
		75	60									60		75	609	24511	135	FT	CURB, TYPE 4-C, AS PER PLAN	15
		750	176									176		750	609	26001	926	FT	CURB, TYPE 6, AS PER PLAN	15
						333	1728			865	17	1126	53		617	10100	2061	CY	COMPACTED AGGREGATE	
4										1.6	0.04	2.2	0.16		617	25000	4	MGAL	WATER	
																			WATER WORK	
20												20			638	10800	20	EACH	VALVE BOX ADJUSTED TO GRADE	

CALCULATED DKR CHECKED

GENERAL SUMMARY

UNI-36-0.00
UNI-4-0.00

I:\Projects\uni\036\0000.016\91053\production\ROADWAY\SHEETS\SUMMARY SHEETS.dgn 13-MAY-2015 5:22PM drankin
SHEET_GG001

SHEET NUMBER										PARTICIPATION					ITEM	ITEM EXT	GRAND TOTAL	UNIT	DESCRIPTION	SEE SHEET NO.
14 - 16	17 - 18	21	22	23	24	25	26	31	32	01/STR/PV	02/S<2/PV	03/NHS/PV	04/NHS/PV/Mary	05/NHS/PV/MILF						
																			TRAFFIC CONTROL	
									1172	478		634	60		621	00100	1172	EACH	RPM	
									1172	478		634	60		621	54000	1172	EACH	RAISED PAVEMENT MARKER REMOVED	
								32.5		13.24	0.26	17.56	1.44		644	00100	32.5	MILE	EDGE LINE, 4"	
								16.25		6.62	0.13	8.78	0.72		644	00300	16.25	MILE	CENTER LINE	
								580.8					580.8		644	00400	580.8	FT	CHANNELIZING LINE, 8"	
								84		24		60			644	00500	84	FT	STOP LINE	
								691				691			644	00600	691	FT	CROSSWALK LINE	
								1425.6					1425.6		644	00700	1425.6	FT	TRANSVERSE/DIAGONAL LINE	
								2					2		644	01110	2	EACH	SCHOOL SYMBOL MARKING, 96"	
								4					4		644	01300	4	EACH	LANE ARROW	
								1				1			SPECIAL	64440000	1	EACH	AIR SPEED ZONE MARKING	16
								0.18		0.04		0.1	0.04		646	10000	0.18	MILE	EDGE LINE, 4"	
								0.09		0.02		0.05	0.02		646	10200	0.09	MILE	CENTER LINE	
			49									49			630	02100	49	FT	GROUND MOUNTED SUPPORT, NO. 2 POST	
			70									70			630	03100	70	FT	GROUND MOUNTED SUPPORT, NO. 3 POST	
			29.75									29.75			630	80100	29.75	SF	SIGN, FLAT SHEET	
																			STRUCTURE 20 FOOT SPAN AND OVER	
																			SEE STRUCTURE SUMMARY	43
																			MAINTENANCE OF TRAFFIC	
	40											40			614	11110	40	HOUR	LAW ENFORCEMENT OFFICER WITH PATROL CAR FOR ASSISTANCE	
	144									58	1	79	6		614	12460	144	EACH	WORK ZONE MARKING SIGN	
	32.66									13.06	0.33	17.96	1.31		614	21550	32.66	MILE	WORK ZONE CENTER LINE, CLASS III, 642 PAINT	
	1162												1162		614	23680	1162	FT	WORK ZONE CHANNELIZING LINE, CLASS III, 642 PAINT	
	1382											1382			614	27620	1382	FT	WORK ZONE CROSSWALK LINE, CLASS III, 642 PAINT	
	408									192		216			614	26610	408	FT	WORK ZONE STOP LINE, CLASS III, 642 PAINT	
																			ITEMS OF WORK (ADDITIVE ALTERNATE GROUP A)	
		18												18	202	23001	18	SY	PAVEMENT REMOVED, AS PER PLAN	15
		55												55	202	23011	55	SY	PAVEMENT REMOVED, ASPHALT, AS PER PLAN	15
		145												145	202	30001	145	SF	WALK REMOVED, AS PER PLAN	15
		885												885	202	32001	885	FT	CURB REMOVED, AS PER PLAN	15
		166												166	204	10000	166	SY	SUBGRADE COMPACTION	
		49												49	659	00300	49	CY	TOPSOIL	
		419												419	659	10000	419	SY	SEEDING AND MULCHING	
		46												46	304	20000	46	CY	AGGREGATE BASE	
		9												9	441	10000	9	CY	ASPHALT CONCRETE SURFACE COURSE, TYPE 1, (446), PG64-22	
		18												18	452	10010	18	SY	6" NON-REINFORCED CONCRETE PAVEMENT, CLASS QC1	
		885												885	609	24511	885	FT	CURB, TYPE 4-C, AS PER PLAN	15
																			INCIDENTALS	
	LS									LS	LS	LS	LS	LS	614	11000	LS		MAINTAINING TRAFFIC	
LS										LS	LS	LS	LS	LS	623	10001	LS		CONSTRUCTION LAYOUT STAKES AND SURVEYING, AS PER PLAN	15
										LS	LS	LS	LS	LS	624	10000	LS		MOBILIZATION	

CALCULATED DKR CHECKED

GENERAL SUMMARY

UNI-36-0.00
UNI-4-0.00

20
50

13-MAY-2015 5:23PM drankin

I:\Projects\uni\036\0000.016\91053\production\ROADWAY\SHEETS\SUMMARY SHEETS.dgn SHEET_GG002

LOCATION									ROADWAY										EROSION		DRAINAGE		PAVEMENT					TRAFFIC CONTROL		
CATEGORY	REFERENCE	COUNTY	ROUTE	STATION	STATION	SIDE	ACTUAL LENGTH OF CURB SECTION	SEE CURB DETAIL NO.	202 PAVEMENT REMOVED, AS PER PLAN (CONCRETE)	202 PAVEMENT REMOVED, ASPHALT, AS PER PLAN	202 WALK REMOVED, AS PER PLAN	202 CURB REMOVED, AS PER PLAN			204 SUBGRADE COMPACTION	608 4" CONCRETE WALK	608 CURB RAMP, TYPE A1	608 CURB RAMP, TYPE A2	608 CURB RAMP, TYPE B2	608 CURB RAMP, TYPE B3	659 TOPSOIL	659 SEEDING AND MULCHING	611 12" CONDUIT, TYPE B	611 CATCH BASIN, NO. 3A, AS PER PLAN			304 AGGREGATE BASE	441 ASPHALT CONCRETE SURFACE COURSE, TYPE 1, PG64-22 (446)	452 6" NON-REINFORCED CONCRETE PAVEMENT, CLASS QC1	609 CURB, TYPE 4-C, AS PER PLAN	609 CURB, TYPE 6, AS PER PLAN	630 GROUND MOUNTED SUPPORT NO. 2 POST	630 GROUND MOUNTED SUPPORT NO. 3 POST	630 SIGN, FLAT SHEET
									SQ YD	SQ YD	SQ FT	FT			SQ YD	SQ FT	SQ FT	SQ FT	SQ FT	SQ FT	CU YD	SQ YD	FT	EACH			CU YD	CU YD	SQ YD	FT	FT	FT	FT	SQ FT
ADD. ALT. GROUP A	C-1	UNI	36	239+04.59	240+00.69	RT	36	1				36			4						2	20					1			36				
	C-1	UNI	36	240+00.69	240+11.51	RT	11	2		6		11			7												2	1		11				
	C-1	UNI	36	240+11.51	241+06.02	RT	95	1				95			11						6	53					2			95				
	C-1	UNI	36	241+06.02	241+26.95	RT	21	2		12		21			13												4	2		21				
	C-1	UNI	36	241+26.95	241+91.81	RT	65	1				65			7						4	36					1			65				
	C-1	UNI	36	241+91.81	242+07.27	RT	16	2		9		16			10												3	1		16				
	C-1	UNI	36	242+07.27	242+42.08	RT	35	1				35			4						2	19					1			35				
	C-1	UNI	36	242+42.08	242+47.89	RT	6	4			30	6			1						1	3					1			6				
	C-1	UNI	36	242+47.89	243+28.41	RT	81	1				81			9						5	45					2			81				
	C-1	UNI	36	243+28.41	243+38.58	RT	11	2		6		11			7												2	1		11				
	C-1	UNI	36	243+38.58	243+74.42	RT	36	1				36			4						2	20					1			36				
	C-1	UNI	36	243+74.42	243+79.82	RT	6	4			30	6			1						1	3					1			6				
	C-1	UNI	36	243+79.82	244+55.96	RT	76	1				76			8						5	42					1			76				
BASE BID	C-1	UNI	36	244+55.96	244+68.23	RT	40	1				40			4						2	22					1			40				
	C-2	UNI	36	244+94.03	244+94.03	RT	71	5				71			8						4	39					1				71			
	C-1	UNI	36	245+46.50	245+51.22	RT	5	4			25	5			1						1	3					1			5				
	C-2	UNI	36	245+51.22	246+80.84	RT	130	5				130			14						8	72					2				130			
	C-2	UNI	36	246+80.84	247+16.94	RT	37	6	21			37			23												5		21		37			
	C-2	UNI	36	247+16.94	247+62.62	RT	46	5				46			5						3	26					1				46			
	C-2	UNI	36	247+62.62	248+00.76	RT	39	6	22			39			24												5		22		39			
	C-2	UNI	36	248+00.76	248+81.36	RT	81	5				81			9						5	45					2				81			
	C-3	UNI	36	248+81.36	248+97.62	RT	31	8			155	31			19	155											7				31			
	C-3	UNI	36	249+52.36	249+71.27	RT	30	8			150	30			18	150											6				30			
ADD. ALT. GROUP A	C-4	UNI	36	240+77.92	241+41.99	LT	68	1				68			8						4	38					1			68				
	C-4	UNI	36	241+41.99	241+61.37	LT	20	2		11		20			12												4	2		20				
	C-4	UNI	36	241+61.37	241+80.99	LT	20	1				20			2						1	11					1			20				
	C-4	UNI	36	241+80.99	241+85.68	LT	5	4			25	5			1						1	3					1			5				
	C-4	UNI	36	241+85.68	242+11.94	LT	27	1				27			3						2	15					1			27				
	C-4	UNI	36	242+11.94	242+31.72	LT	20	2		11		20			12												4	2		20				
	C-4	UNI	36	242+31.72	242+53.64	LT	22	1				22			2						1	12					1			22				
	C-4	UNI	36	242+53.64	242+58.64	LT	5	4			25	5			1						1	3					1			5				
	C-4	UNI	36	242+58.64	242+92.56	LT	34	1				34			4						2	19					1			34				
	C-4	UNI	36	242+92.56	243+07.81	LT	16	3	9			16			10												2		9	16				
	C-4	UNI	36	243+07.81	243+88.34	LT	81	1				81			9						5	45					2			81				
	C-4	UNI	36	243+88.34	244+03.58	LT	16	3	9			16			10												2		9	16				
	C-4	UNI	36	244+03.58	244+21.72	LT	19	1				19			2						1	11					1			19				
	C-4	UNI	36	244+21.72	244+28.33	LT	7	4			35	7			1						1	4					1			7				
	C-4	UNI	36	244+28.33	244+55.96	LT	30	1				30			3						2	17					1			30				
BASE BID	C-4	UNI	36	244+55.96	244+66.83	LT	30	1				30			3						2	17					1			30				
	C-5	UNI	36	244+95.96	245+03.64	LT	27	8			135	27			17	135											6				27			
	C-5	UNI	36	245+03.64	245+57.09	LT	57	8			285	57			35	285											12				57			
	C-6	UNI	36	245+95.05	247+36.59	LT	146	8			730	146			89	730											32				146			
	C-7	UNI	36	248+78.82	248+94.41	LT	28	8			140	28			17	140											6				28			
	C-8	UNI	36	249+48.87	249+71.47	LT	27	8			135	27			17	135											6				27			
BASE BID TOTALS CARRIED TO THE GENERAL SUMMARY									43		1755	825			303	1730					25	224					94		43	75	750			
ADD. ALT. GROUP A TOTALS CARRIED TO THE GENERAL SUMMARY									18	55	145	885			166						49	419					46	9	18	885				

CALCULATED VHP
CHECKED DKR

PLAN SUBSUMMARY (MILFORD CENTER)

UNI-36-0.00
UNI-4-0.00

I:\Projects\uni\036\0000.016\91053\production\ROADWAY\SHEETS\SUMMARY SHEETS.dgn 13-MAY-2015 4:45PM drankin SHEET_MILF1

LOCATION									ROADWAY										EROSION		DRAINAGE		PAVEMENT					TRAFFIC CONTROL		
SHEET #	REFERENCE	COUNTY	ROUTE	STATION	STATION	SIDE	ACTUAL LENGTH OF CURB SECTION	SEE CURB DETAIL NO.	202 PAVEMENT REMOVED, AS PER PLAN (CONCRETE) SQ YD	202 PAVEMENT REMOVED, ASPHALT, AS PER PLAN SQ YD	202 WALK REMOVED, AS PER PLAN SQ FT	202 CURB REMOVED, AS PER PLAN FT			204 SUBGRADE COMPACTION SQ YD	608 4" CONCRETE WALK SQ FT	608 CURB RAMP, TYPE A1 SQ FT	608 CURB RAMP, TYPE A2 SQ FT	608 CURB RAMP, TYPE B2 SQ FT	608 CURB RAMP, TYPE B3 SQ FT	659 TOPSOIL CU YD	659 SEEDING AND MULCHING SQ YD	611 12" CONDUIT, TYPE B FT	611 CATCH BASIN, NO. 3A, AS PER PLAN EACH			304 AGGREGATE BASE CU YD	441 ASPHALT CONCRETE SURFACE COURSE, TYPE I, PG64-22 (446) CU YD	452 6" NON-REINFORCED CONCRETE PAVEMENT, CLASS QC1 SQ YD	609 CURB, TYPE 4-6, AS PER PLAN FT	609 CURB, TYPE 6, AS PER PLAN FT	630 GROUND MOUNTED SUPPORT NO. 2 POST FT	630 GROUND MOUNTED SUPPORT NO. 3 POST FT	630 SIGN, FLAT SHEET SQ FT
	P-1	UNI	36	239+37.93		RT					10					10		36										6			
	P-4	UNI	36	244+68.23		RT										10		36										6			
	P-6	UNI	36	244+94.03		RT					10					10		36											6		
	P-8	UNI	36	245+05.67		RT					10					10		36											6		
	P-11	UNI	36	248+81.36		RT					10					10			36										6		
	P-12	UNI	36	248+97.62		RT					10					10			36										6		
	P-15	UNI	36	249+53.71		RT													36										6		
	P-16	UNI	36	249+61.86		RT													36										6		
	P-18	UNI	36	257+66.37		RT					10					10			36										20		
	P-20	UNI	36	258+06.91		RT					10					10				36									20		
	P-2	UNI	36	239+40.58		LT										10		36										6		
	P-3	UNI	36	244+66.83		LT					10					10		36										6		
	P-5	UNI	36	244+95.96		LT					10					10	36											6		
	P-7	UNI	36	245+09.00		LT					10					10	36											6		
	P-9	UNI	36	248+84.27		LT					10					10	36											6		
	P-10	UNI	36	248+94.41		LT					10					10	36											6		
	P-13	UNI	36	249+48.87		LT											36											6		
	P-14	UNI	36	248+60.62		LT											36											6		
	P-17	UNI	36	257+65.87		LT					10					10			36										20		
	P-19	UNI	36	257+95.26		LT					10					10			36										20		
	D-1	UNI	36	239+75.84		RT																1								
	D-5	UNI	36	245+18.90		RT																1								
	D-2	UNI	36	244+59.83		LT																1								
	D-3	UNI	36	245+01.46		LT																1								
	D-4	UNI	36	245+18.90		LT																1								
	D-6	UNI	36	248+91.41		LT																1								
	D-7	UNI	36	253+45.93		LT						60									54	1						60			
	S-1	UNI	36	242+94.89		RT																							7	10	4.25
	S-2	UNI	36	245+00.25		RT																							14	20	8.50
	S-3	UNI	36	253+41.95		RT																							7	10	4.25
	S-4	UNI	36	257+46.95		RT																							14	20	8.50
	S-5	UNI	36	259+56.57		LT																							7	10	4.25
TOTALS CARRIED TO THE GENERAL SUMMARY											140	60				160	216	216	252	36			54	7				60	176	49	70	29.75

PLAN SUBSUMMARY (MILFORD CENTER)

CALCULATED VHP
CHECKED DKR

UNI-36-0.00
UNI-4-0.00

22
50

drankin 13-MAY-2015 4:48PM SHEET_MILF2 I:\Projects\uni\036\0000.016\91053\production\ROADWAY\SHEETS\SUMMARY SHEETS.dgn

Route	Length of Repair	Width of Repair	Pavement Repair	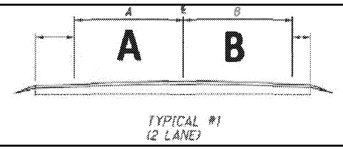 TYPICAL #1 (2 LANE)					SLM	ITEM 251 - PARITAL DEPTH PAVEMENT REPAIR, AS PER PLAN	Comments
	FT	FT	SQ FT	UNI - 36						SQ YD	Location
					A	C/L	B				
US-36	55	4	220				X		3.04	25	Center of Lane
US-36	110	4	440				X		3.09	49	Just Off Center Line
US-36	12	4	48				X		3.12	6	Just Off Center Line
US-36	725	4	2900		X				3.2	323	Both Sides of Center Line
US-36	47	4	188				X		3.31	21	Just Off Center Line
US-36	160	4	640				X		3.52	72	Just Off Center Line
US-36	4	4	16				X		4.44	2	Just Off Center Line
US-36	42	4	168				X		4.46	19	Just Off Center Line
US-36	20	10	200		X				4.46	23	Just Off Center Line
US-36	20	4	80		X				4.52	9	Whole Lane
US-36	15	4	60		X				4.54	7	Center Line
US-36	20	4	80				X		4.55	9	Center Line
US-36	15	4	60		X				4.9	7	Shoulder
US-36	15	4	60		X				4.93	7	Just Off Center Line
US-36	15	4	60		X				5.06	7	Shoulder
US-36	70	4	280		X				5.13	32	Shoulder
US-36	90	4	360		X				5.25	40	Shoulder
US-36	65	4	260		X				5.37	29	Shoulder
US-36	10	4	40		X				5.48	5	Shoulder
US-36	20	4	80				X		5.65	9	Shoulder Seperation
US-36	428	4	1712				X		5.85	191	Rotten Shoulder
US-36	35	4	140		X				6.42	16	Shoulder
US-36	30	4	120				X		6.59	14	Shoulder Seperation
US-36	50	6	300				X		6.89	34	Shoulder Seperation
US-36	480	4	1920		X				13.86	214	Shoulder
US-36	90	4	360			X			14.10	40	
US-36	200	4	800		X				14.12	89	Shoulder
US-36	50	4	200		X				14.17	23	Shoulder
US-36	25	7	175		X				14.42	20	Wheel Track
US-36	30	4	120			X			14.50	14	
US-36	100	4	400		X				14.62	45	Shoulder
US-36	25	5	125		X				14.64	14	Shoulder
US-36	240	4	960				X		14.69	107	Shoulder
US-36	150	4	600				X		15.10	67	Shoulder
US-36	150	4	600				X		15.19	67	Shoulder
US-36	100	4	400			X			15.43	45	
US-36	50	4	200				X		15.46	23	Shoulder
US-36	100	4	400		X				15.61	45	Shoulder
US-36	30	4	120			X			15.80	14	
US-36	115	4	460		X				16.13	52	Shoulder
US-36	60	4	240		X				16.18	27	Shoulder
US-36	50	4	200			X			16.20	23	
US-36	150	4	600		X				16.30	67	Shoulder
US-36	100	4	400			X			16.50	45	
US-36	220	4	880			X			16.60	98	
US-36	110	5	550		X				16.98	62	Shoulder
US-36	275	4	1100			X			17.30	123	
US-36	200	7	1400		X				17.33	156	Shoulder
US-36	50	4	200			X			17.40	23	
US-36	7	8	56		X				17.75	7	Over Pipe
US-36	30	4	120			X			17.80	14	
US-36	30	4	120			X			17.90	14	
US-36	225	7	1575		X				18.40	175	Shoulder
US-36	30	7	210		X				18.70	24	Shoulder
Contingency Quantity										2307	Various
TOTAL										5000	

CALCULATED | CHECKED

PARTIAL DEPTH PAVEMENT REPAIR

UNI-36-0.00
UNI-4-0.00

I:\Projects\uni\036\0000.016\91053\production\ROADWAY\sheets\TYPICAL SECTIONS.dgn 10-APR-2015 8:20PM drankin
SHEET_GY113

Route	Length of Repair	Width of Repair	Pavement Repair	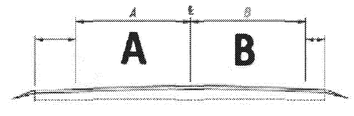					SLM	ITEM 253 - PAVEMENT REPAIR, AS PER PLAN	ITEM 605 - AGGREGATE DRAINS	Comments
				TYPICAL #1 (2 LANE)								
	FT	FT	SQ FT	UNI - 36						CU YD	FT	Location
					A	C/L	B					
US-36	20	4	80				X		2.15	5	10	Shoulder
US-36	20	4	80		X				2.34	5	10	Shoulder
US-36	500	4	2000				X		2.51	112	50	Shoulder
US-36	130	4	520				X		2.6	29	20	Shoulder
US-36	200	4	800				X		2.67	45	20	Shoulder
US-36	110	4	440				X		3.07	25	20	Shoulder
US-36	440	4	1760				X		3.36	98	50	Shoulder
US-36	30	4	120				X		4.2	7	10	Shoulder
US-36	30	4	120				X		14.08	7	10	
US-36	50	4	200				X		14.19	12	10	
US-36	50	8	400				X		14.40	23	10	
US-36	200	5	1000				X		14.42	56	20	Shoulder
US-36	30	7	210				X		14.59	12	10	Shoulder
US-36	200	4	800				X		15.71	45	20	Shoulder
US-36	115	4	460				X		16.15	26	20	Shoulder
US-36	220	4	880				X		16.40	49	30	Shoulder
US-36	250	5	1250				X		16.56	70	30	Shoulder
US-36	65	4	260				X		16.85	15	10	Shoulder
US-36	80	7	560				X		16.92	32	10	Shoulder
US-36	215	4	860				X		17.26	48	30	Shoulder
US-36	180	4	720				X		17.66	40	20	Shoulder
US-36	510	4	2040				X		17.86	114	60	Shoulder
US-36	300	4	1200				X		17.98	67	30	Shoulder
SR-4	165	4	660				X		1.42	37	20	Shoulder
SR-4	75	4	300				X		1.39	17	10	Shoulder
SR-4	145	4	580				X		1.34	33	20	Shoulder
SR-4	15	4	60				X		1.25	4	10	Shoulder
SR-4	20	4	80				X		1.16	5	10	Shoulder
SR-4	170	4	680				X		0.54	38	20	Shoulder
SR-4	20	4	80				X		0.18	5	10	Shoulder
SR-4	10	4	40		X				1.77	3	10	Shoulder
SR-4	20	4	80		X				2.21	5	10	Shoulder
SR-4	165	4	660		X				2.34	37	20	Shoulder
Contingency Quantity										2074	200	Various
TOTAL										3200	850	

CALCULATED | CHECKED

FULL DEPTH PAVEMENT REPAIR

UNI-36-0.00
UNI-4-0.00

I:\Projects\uni\036\0000.016\91053\production\ROADWAY\SHEETS\TYPICAL SECTIONS.dgn 10-APR-2015 8:31PM drankin SHEET_GY114



STRAIGHT LINE DIAGRAM
SR-4

CALCULATED KLB
CHECKED

PAVEMENT SUBSUMMARY

UNI-36-0.00
UNI-4-0.00

LOCATION							DESIGN								QUANTITIES								REMARKS
								AVG. PAVEMENT WIDTH							209	254		407	441		605	617	
LOCATION	COUNTY	ROUTE	BEG SLM	END SLM	LENGTH	LENGTH	TYPICAL	A	B	C	D	E	F	PAVEMENT AREA	LINEAR GRADING	PAVEMENT PLANING, ASPHALT CONCRETE AVG DEPTH	PAVEMENT PLANING, ASPHALT CONCRETE	TACK COAT	ASPHALT CONCRETE SURFACE COURSE, TYPE 1, (446), PG64-22 AVG DEPTH	ASPHALT CONCRETE SURFACE COURSE, TYPE 1, (446), PG64-22	AGGREGATE DRAINS, AS PER PLAN	COMPACTED AGGREGATE	
					MI	FT		FT	FT	FT	FT	FT	FT	SQ YD	MILE	IN	SQ YD	GAL	IN	CU YD	FT	CU YD	
1	UNI	4	0.00	0.06	0.06	317	1	2.0	11.0	11.0	2.0			916	0.06	1.50	916	69	1.50	38	40	8	
1	UNI	4	0.06	0.08	0.02	106	1	2.0	20.0	20.0	2.0			518	0.02	1.50	518	39	1.50	22	20	3	MILL AND FILL
1	UNI	4	0.08	0.52	0.44	2,323	1	1.0	11.0	11.0	1.0			6,195	0.44	1.50	6,195	467	1.50	258	240	57	
1	UNI	4	0.52	0.53	0.01	53	1	1.0	15.0	15.0	1.0			188	0.01	1.50	188	14	1.50	8	10	1	
1	UNI	4	0.53	0.60	0.07	370	1	1.0	11.0	11.0	1.0			987	0.07	1.50	987	74	1.50	41	40	9	
1	UNI	4	0.60	0.66	0.06	317	1	3.0	11.0	11.0	1.0			916	0.06	1.50	916	69	1.50	38	40	8	
1	UNI	4	0.66	0.70	0.04	211	1	3.0	11.0	11.0	3.0			656	0.04	1.50	656	49	1.50	27	30	5	
1	UNI	4	0.70	1.00	0.30	1,584	1	3.0	11.0	11.0	3.0			4,928	0.30	1.50	4,928	372	1.50	205	160	39	
1	UNI	4	1.00	2.00	1.00	5,280	1	3.0	11.0	11.0	3.0			16,427	1.00	1.50	16,427	1,239	1.50	684	530	130	
1	UNI	4	2.00	2.57	0.57	3,010	1	3.0	11.0	11.0	3.0			9,364	0.57	1.50	9,364	706	1.50	390	310	74	
EXTRA																							
1	UNI	4	MAILBOXS											50		1.50	50	4	1.50	2			
1	UNI	4	DRIVEWAYS											100		1.50	100	8	1.50	4			
1	UNI	4	INTERSECTIONS											156		1.50	156	12	1.50	6			
DEDUCTIONS																							
1	UNI	4	0.52	0.53	0.01	53		1.0	15.0	15.0	1.0			188	-0.01	1.50	-188	-14	1.50	-8	-10	-1	PATCH EXISTING CONCRETE DECK (100 SF)
TOTALS CARRIED TO GENERAL SUMMARY															2.56		41,213	3108		1,715	1,410	333	

I:\Projects\uni\036\0000.016\91053\production\ROADWAY\SHEETS\SUMMARY SHEETS.dgn 13-APR-2015 12:55PM rmcneill SHEET_GA001

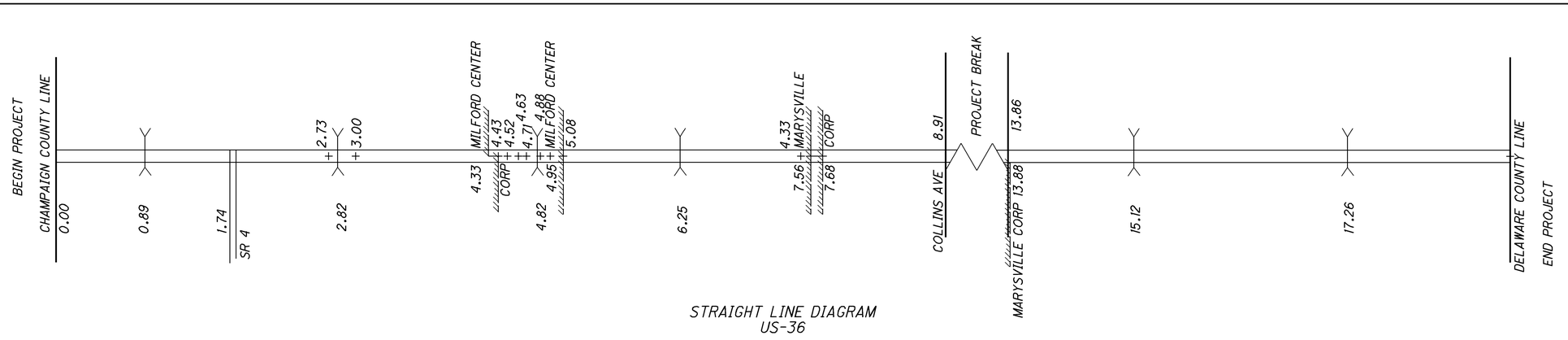

STRAIGHT LINE DIAGRAM
US-36

CALCULATED KLB CHECKED

PAVEMENT SUBSUMMARY

LOCATION							DESIGN								QUANTITIES									REMARKS
								AVG. PAVEMENT WIDTH							209	254		407	441		605	617		
LOCATION	COUNTY	ROUTE	BEG SLM	END SLM	LENGTH	LENGTH	TYPICAL	A	B	C	D	E	F	PAVEMENT AREA	LINEAR GRADING	PAVEMENT PLANING, ASPHALT CONCRETE AVG DEPTH		TACK COAT	ASPHALT CONCRETE SURFACE COURSE, TYPE 1, (446), PG64-22 AVG DEPTH		AGGREGATE DRAINS, AS PER PLAN	COMPACTED AGGREGATE	
					MI	FT		FT	FT	FT	FT	FT	FT	SQ YD	MILE	IN	SQ YD	GAL	IN	CU YD	FT	CU YD	
2	UNI	36	0.00	0.07	0.07	370	2	2.5	11.0	11.0	2.5			1,110	0.07	1.50	1,110	83	1.50	46	40	9	
2	UNI	36	0.07	1.65	1.58	8,342	2-3	1.0	10.0	10.0	1.0			20,392	1.58	1.50	20,392	1,529	1.50	850	840	206	
2	UNI	36	1.65	1.70	0.05	264	3	1.0	10.0	10.0	1.0			645	0.05	1.50	645	48	1.50	27	30	7	
2	UNI	36	1.70	1.75	0.05	248	3	1.0	26.0	26.0	1.0			1,488	0.05	1.50	1,488	112	1.50	62	30	6	
2	UNI	36	1.75	1.77	0.02	121	4	1.0	26.0	26.0	1.0			726	0.02	1.50	726	54	1.50	30	20	3	
2	UNI	36	1.77	2.30	0.53	2,798	4	2.0	12.0	12.0	3.0			9,016	0.53	1.50	9,016	676	1.50	376	280	69	
2	UNI	36	2.30	2.82	0.52	2,746	4	3.0	11.0	11.0	3.0			8,543	0.52	1.50	8,543	641	1.50	356	280	68	
2	UNI	36	2.82	2.84	0.02	106	4	3.0	11.0	11.0	3.0			330	0.02	1.50	330	25	1.50	14	20	3	MILL AND FILL BRIDGE ASPHALT 1.5"
2	UNI	36	2.84	4.00	1.16	6,125	4	3.0	11.5	11.5	3.0			19,736	1.16	1.50	19,736	1,480	1.50	822	620	151	
2	UNI	36	4.00	4.50	0.50	2,640	4	3.0	11.5	11.5	3.0			8,507	0.50	1.50	8,507	638	1.50	354	270	65	
2	UNI	36	4.50	4.53	0.03	143	4	2.0	12.0	12.0	2.0			445	0.03	1.50	445	33	1.50	19	20	4	
2	UNI	36	4.53	4.56	0.03	174	5	7.0	11.0	11.0	7.0			775	0.03	3.00	775	58	1.50	32	1		PLANNING TAPER 1.5" TO 3.0"
2	UNI	36	4.56	4.63	0.07	385	5	6.0	11.0	11.0	6.0			1,454	0.07	3.00	1,454	109	1.50	61			
2	UNI	36	4.63	4.64	0.01	32	5	35.0	11.0	11.0	35.0			290	0.01	3.00	290	22	1.50	12			US 36 & W. CENTER ST. INTERSECTION
2	UNI	36	4.64	4.64	0.00	25	5	13.0	11.0	11.0	13.0			95	0.00	3.00	95	7	1.50	4			
2	UNI	36	4.64	4.65	0.01	53	5	13.0	11.0	11.0	13.0			283	0.01	3.00	283	21	1.50	12			PLANNING TAPER 3.0" TO 1.5"
2	UNI	36	4.65	4.71	0.06	325	5	13.0	11.0	11.0	13.0			1,770	0.06	1.50	1,770	133	1.50	74			
2	UNI	36	4.71	4.73	0.01	55	5	32.0	11.0	11.0	32.0			526	0.01	1.50	526	39	1.50	22			US 36 & E. STATE ST. INTERSECTION
2	UNI	36	4.73	4.76	0.04	185	5	10.0	11.0	11.0	10.0			1,060	0.04	1.50	1,060	80	1.50	44			
2	UNI	36	4.76	4.88	0.12	634	5	4.0	11.0	11.0	2.0			1,972	0.12	1.50	1,972	148	1.50	82			
2	UNI	36	4.88	4.88	0.00	30	5	8.0	11.0	11.0	2.0			134	0.00	1.50	134	10	1.50	6			
2	UNI	36	4.88	4.89	0.01	25	5	41.0	11.0	11.0	2.0			182	0.01	1.50	182	14	1.50	8			US 36 & REED ST. INTERSECTION
2	UNI	36	4.89	4.90	0.01	25	5	8.0	11.0	11.0	2.0			95	0.01	1.50	95	7	1.50	4			
2	UNI	36	4.90	7.00	2.10	11,088	6-7	1.0	11.0	11.0	1.0			29,568	2.10	1.50	29,568	2,218	1.50	1,232	1,110	274	
2	UNI	36	7.00	7.14	0.14	739	7	2.0	11.5	11.5	2.0			2,217	0.14	1.50	2,217	166	1.50	92	80	18	
2	UNI	36	7.14	7.30	0.16	845	7	4.0	18.0	18.0	5.0			4,225	0.16	1.50	4,225	317	1.50	176	90	21	
2	UNI	36	7.30	7.41	0.11	581	7	4.0	18.0	18.0	5.0			2,905	0.11	1.50	2,905	218	1.50	121	60	14	
2	UNI	36	7.41	8.34	0.93	4,910	7-8	3.0	11.0	11.0	3.0			15,276	0.93	1.50	15,276	1,146	1.50	637	500	121	
2	UNI	36	8.34	8.74	0.40	2,112	8	3.0	11.5	11.5	2.5			6,688	0.40	1.50	6,688	502	1.50	279	220	52	
3	UNI	36	13.86	13.99	0.13	686	9-10	2.5	11.0	11.0	2.5			2,058	0.13	1.50	2,058	154	1.50	86	70	17	
3	UNI	36	13.99	16.20	2.21	11,669	9-10	2.5	11.0	11.0	2.5			35,007	2.21	1.50	35,007	2,626	1.50	1,459	1,170	288	
3	UNI	36	16.20	18.89	2.69	14,203	9	1.5	11.5	11.5	1.5			41,031	2.69	1.50	41,031	3,077	1.50	1,710	1,430	351	
EXTRA																							
1	UNI	36	MAILBOXS											220		1.50	220	17	1.50	9			
1	UNI	36	DRIVEWAYS											570		1.50	570	43	1.50	24			
1	UNI	36	INTERSECTIONS											1,711		1.50	1,711	128	1.50	71			
DEDUCTIONS																							
2	UNI	36	0089			-78		1.0	10.0	10.0	1.0			-191		1.50	-191	-14	1.50	-8	-10	-2	DEDUCT FOR STRUCTURE UNI-36-0089
2	UNI	36	0482			-200		2.0	12.0	12.0	2.0			-622		1.50	-622	-47	1.50	-26	-20	-5	DEDUCT FOR STRUCTURE UNI-36-0482
2	UNI	36	0625			-475		1.0	11.0	11.0	1.0			-1,267		1.50	-1,267	-95	1.50	-53	-50	-12	DEDUCT FOR STRUCTURE UNI-36-0625
TOTALS CARRIED TO GENERAL SUMMARY															13.77		218,970	16,423		9,126	7,101	1,728	

UNI-36-0.00
UNI-4-0.00

rmcneill
13-APR-2015 12:57PM
SHEET_GA101
I:\Projects\uni\036\0000.016\91053\production\ROADWAY\SHEETS\SUMMARY SHEETS.dgn

FOR RESURFACING QUANTITIES, SEE PAVEMENT SUBSUMMARY ON SHEET 26/50 .

FOR ALL OTHER QUANTITIES, SEE PLAN SUBSUMMARIES ON SHEETS 21-22 .

STA 239+04.59
BEGIN ADDITIVE ALTERNATIVE GROUP A
(CURB WORK IN MILFORD CENTER [05/NHS/PV/MILF])

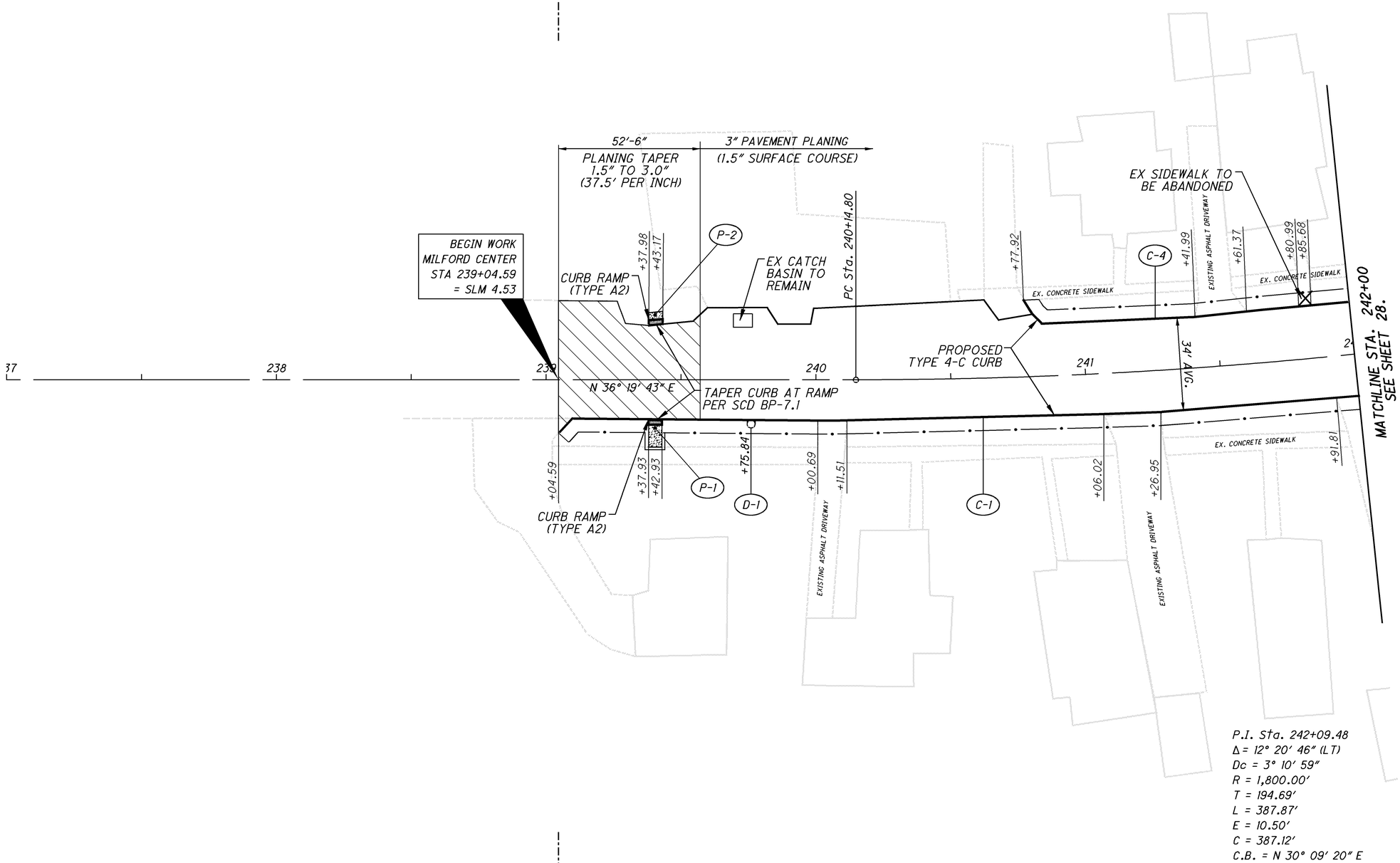

P.I. Sta. 242+09.48
Δ = 12° 20' 46" (LT)
Dc = 3° 10' 59"
R = 1,800.00'
T = 194.69'
L = 387.87'
E = 10.50'
C = 387.12'
C.B. = N 30° 09' 20" E

STA 239+04.59
BEGIN ADDITIVE ALTERNATIVE GROUP A
(CURB WORK IN MILFORD CENTER [05/NHS/PV/MILF])

HORIZONTAL SCALE IN FEET
0 10 20 40

CALCULATED DKR
CHECKED

US-36 MILFORD CENTER PLAN
STA 239+04.59 TO STA 242+00

UNI-36-0.00
UNI-4-0.00

27
50

I:\Projects\uni\036\0000.016\91053\production\ROADWAY\SHEETS\MILFORD CENTER PLAN.dgn SHEET_DR101 13-MAY-2015 3:47PM drankin

FOR RESURFACING QUANTITIES, SEE PAVEMENT SUBSUMMARY ON SHEET 26/50 .

FOR ALL OTHER QUANTITIES, SEE PLAN SUBSUMMARIES ON SHEETS 21-22 .

STA 244+55.96
END ADDITIVE ALTERNATIVE GROUP A
(CURB WORK IN MILFORD CENTER [05/NHS/PV/MILF])

STA 244+55.96
BEGIN BASE BID
(CURB WORK IN MILFORD CENTER [05/NHS/PV/MILF])

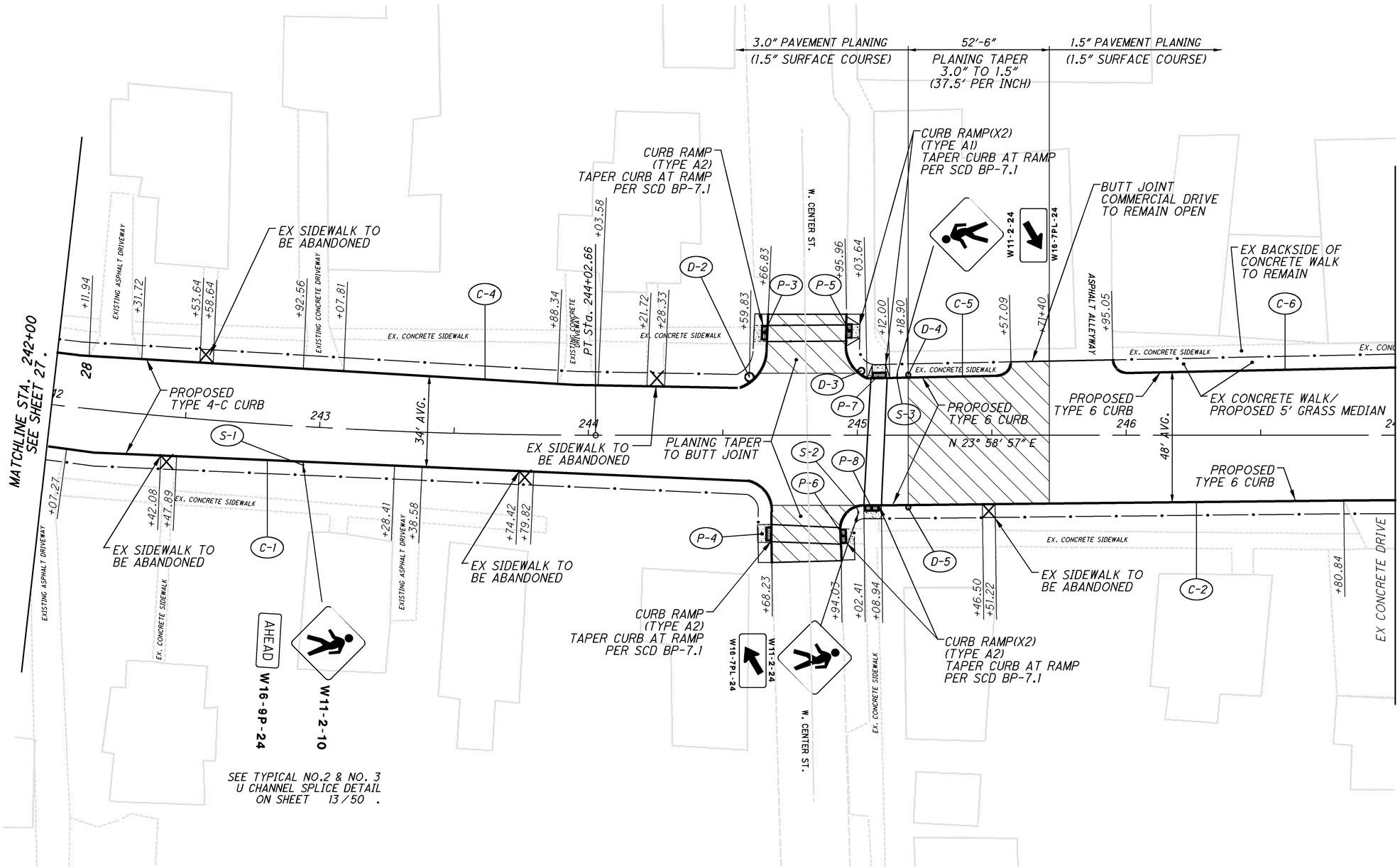

STA 244+55.96
END ADDITIVE ALTERNATIVE GROUP A
(CURB WORK IN MILFORD CENTER [05/NHS/PV/MILF])

STA 244+55.96
BEGIN BASE BID
(CURB WORK IN MILFORD CENTER [05/NHS/PV/MILF])

HORIZONTAL SCALE IN FEET
0 10 20 40

CALCULATED DKR
CHECKED

US-36 MILFORD CENTER PLAN
STA 242+00 TO STA 247+00

UNI-36-0.00
UNI-4-0.00

28
50

I:\Projects\uni\036\0000.016\91053\production\ROADWAY\SHEETS\MILFORD CENTER PLAN.dgn SHEET_DR102 13-MAY-2015 3:48PM drankin

FOR RESURFACING QUANTITIES, SEE PAVEMENT SUBSUMMARY ON SHEET 26/50 .

FOR ALL OTHER QUANTITIES, SEE PLAN SUBSUMMARIES ON SHEETS 21-22 .

STA 249+71.47
END BASE BID
(CURB WORK IN MILFORD CENTER [05/NHS/PV/MILF])

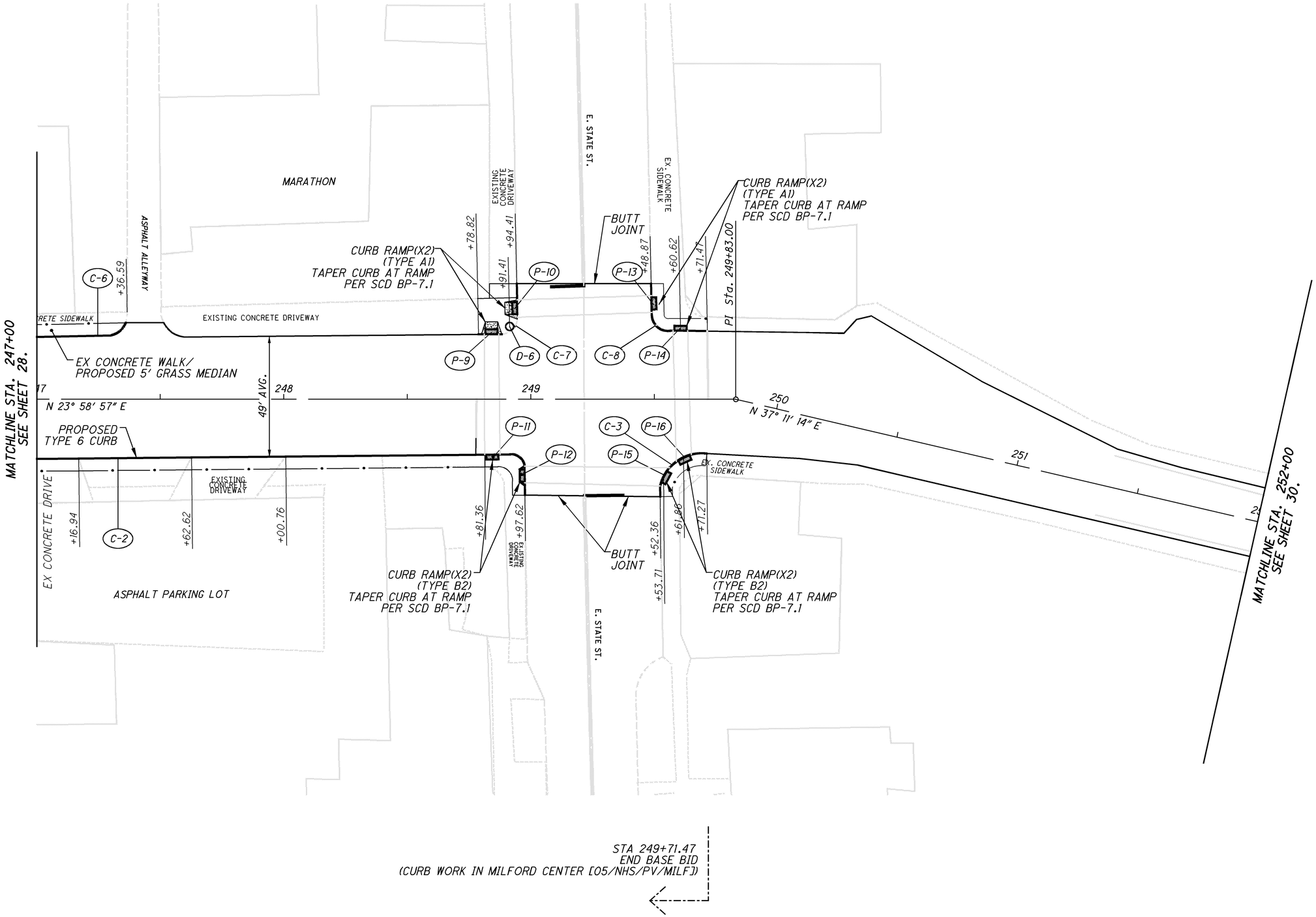

STA 249+71.47
END BASE BID
(CURB WORK IN MILFORD CENTER [05/NHS/PV/MILF])

HORIZONTAL SCALE IN FEET
0 10 20 40

CALCULATED DKR
CHECKED

US-36 MILFORD CENTER PLAN
STA 247+00 TO STA 252+00

UNI-36-0.00
UNI-4-0.00

I:\Projects\uni\036\0000.016\91053\production\ROADWAY\SHEETS\MILFORD CENTER PLAN.dgn 13-MAY-2015 3:48PM drankin SHEET_DR103

D-7 CATCH BASIN PLAN

D-7 CATCH BASIN DETAIL

FOR RESURFACING QUANTITIES, SEE PAVEMENT SUBSUMMARY ON SHEET 26/50 .

FOR ALL OTHER QUANTITIES, SEE PLAN SUBSUMMARIES ON SHEETS 21-22 .

HORIZONTAL SCALE IN FEET
0 10 20 40

CALCULATED DKR
CHECKED

US-36 MILFORD CENTER PLAN
STA 254+00 TO STA 258+46.09

UNI-36-0.00
UNI-4-0.00

30
50

SHEET_DR104 10-APR-2015 8:20PM drankin

I:\Projects\uni\036\0000.016\91053\production\ROADWAY\sheets\MILFORD CENTER PLAN.dgn

LOCATION							644															646																		COMMENTS
SHEET #	LOCATION	COUNTY	ROUTE	BEG SLM	END SLM	LENGTH	EDGE LINE		CENTER LINE	CHANNELIZING LINE	STOP LINE	CROSSWALK LINE	TRANSVERSE/ DIAGONAL LINE		SCHOOL SYMBOL MARKING, 96"	LANE ARROW					BIKE LANE SYMBOL MARKING	AIR SPEED ZONE MARKING	EDGE LINE		LANE LINE	CENTER LINE	CENTER LINE, AS PER PLAN	CHANNELIZING LINE	STOP LINE	CROSSWALK LINE	TRANSVERSE/ DIAGONAL LINE		RAILROAD SYMBOL MARKING	RAILROAD SYMBOL MARKING, APP	SCHOOL SYMBOL MARKING, 96"	DOTTED LINE	
							W	Y					W	Y		LT	LT THRU	THRU	RT THRU	RT			W	Y							W	Y					
						MILE	MILE	MILE	MILE	FT	FT	FT	FT	FT	EACH	EACH	EACH	EACH	EACH	EACH	EACH	EACH	MILE	MILE	MILE	MILE	MILE	FT	FT	FT	FT	FT	EACH	EACH	EACH	FT	
	2	UNI	36	0.00	1.74	1.74	3.48		1.74																													
				1.74	6.94	5.20	10.40		5.20																													
				6.94	7.68	0.74	1.48		0.74																													
				7.68	8.74	1.06	2.12		1.06																													
	3	UNI	36	13.86	13.99	0.13	0.26		0.13																													
	3	UNI	36	13.99	18.89	4.90	9.80		4.90																													
	2	UNI	36	4.61	4.62	0.01						210																											
	2	UNI	36	4.70	4.71	0.01					60	425																											
	2	UNI	36	4.86	4.89	0.01						56																											
	2	UNI	36	7.01	7.11	0.10								528																									
	2	UNI	36	7.12	7.17	0.05				264																													
	2	UNI	36	7.17	7.26	0.09								475																									
	2	UNI	36	7.27	7.33	0.06				317																													
	2	UNI	36	7.33	7.41	0.08								422																									
	2	UNI	36	7.13												1																							LEFT TURN ARROW ON US-36 AT BUNSOLD MIDDLE SCHOOL
	2	UNI	36	7.17												1																							LEFT TURN ARROW ON US-36 AT BUNSOLD MIDDLE SCHOOL
	2	UNI	36	7.28												1																							LEFT TURN ARROW ON US-36 AT BUNSOLD MIDDLE SCHOOL
	2	UNI	36	7.31												1																							LEFT TURN ARROW ON US-36 AT BUNSOLD MIDDLE SCHOOL
	2	UNI	36	7.00											1																							NORTHBOUND
	2	UNI	36	7.41											1																							SOUTHBOUND
	2	UNI	36	1.73							24																												NB STOP LINE ON US-36 AT SR-4
	2	UNI	36	3.00																		1																
	1	UNI	4	0.00	2.57	2.57	5.14		2.57																													
	2	UNI	36	0.89	0.91	0.02	-0.04		-0.02														0.04			0.02											
	2	UNI	36	4.82	4.86	0.04	-0.08		-0.04														0.08			0.04											
	2	UNI	36	6.25	6.27	0.02	-0.04		-0.02														0.04			0.02											
	1	UNI	4	0.52	0.53	0.01	-0.02		-0.01														0.02			0.01											
TOTALS CARRIED TO GENERAL SUMMARY							32.50		16.25	581	84	691	1,426		2	4						1	0.18			0.09											

CALCULATED KLB
CHECKED

TRAFFIC CONTROL SUBSUMMARY

UNI-36-0.00
UNI-4-0.00

I:\Projects\uni\036\0000.016\91053\production\ROADWAY\sheets\SUMMARY SHEETS.dgn 10-APR-2015 8:20PM drankin
SHEET_TS101

DETAIL	STANDARD DRAWING TC-65.10
1	EDGE LINE
2	CHANNELIZING LINE
3	LANE LINE
4	CENTER LINE

DETAIL	STANDARD DRAWING TC-65.11
5	ENTRANCE RAMP
6	EXIT RAMP
7	4 LANE DIVIDED TO 2 LANE TRANSITION
8	4 LANE UNDIVIDED TO 2 LANE TRANSITION
9	MULTILANE DIVIDED HIGHWAY

DETAIL	STANDARD DRAWING TC-65.11
10	APPROACH W/ LEFT TURN LANE
11	STOP APPROACH
12	TWO WAY LEFT TURN LANE
13	ONE LANE BRIDGE
14	HORIZONTAL CURVE

LOCATION							REFLECTOR TYPE											621		REMARKS
							ONE WAY				TWO WAY									
							WHITE			YELLOW	WHITE RED				YELLOW RED	YELLOW YELLOW			RAISED PAVEMENT MARKER REMOVED	RPM	
							RIGHT EDGE LINE		LANE LINE	LEFT EDGE LINE	RIGHT EDGE LINE		CHANNELIZING LINE		LANE LINE	LEFT EDGE LINE	CENTER LINE					
LOCATION	COUNTY	ROUTE	BEG SLM	END SLM	LENGTH FT	DETAIL	40'	80'	120'	80'	40'	80'	40'	80'	80'	80'	20'	40'	80'	EACH	EACH	
1	UNI	4	0.00	0.39	2054	4													27	27	27	
1	UNI	4	0.39	0.48	480	4												12		12	12	CURVE APPROACH
1	UNI	4	0.48	0.52	211	14											12			12	12	HORIZONTAL CURVE - 12 DEGREE
1	UNI	4	0.52	0.62	528	4												14		14	14	
1	UNI	4	0.62	0.67	264	14											14			14	14	HORIZONTAL CURVE - 19 DEGREE
1	UNI	4	0.67	0.76	480	4												12		12	12	CURVE APPROACH
1	UNI	4	0.76	1.97	6384	4													81	81	81	
1	UNI	4	1.97	2.01	211	14												6		6	6	HORIZONTAL CURVE - 5 DEGREE
1	UNI	4	2.01	2.35	1795	4													23	23	23	
1	UNI	4	2.35	2.38	158	14												5		5	5	HORIZONTAL CURVE - 6 DEGREE
1	UNI	4	2.01	2.57	2957	4													38	38	38	
2	UNI	36	0.00	0.46	2429	4													31	31	31	
2	UNI	36	0.46	0.49	158	14												5		5	5	HORIZONTAL CURVE - 8 DEGREE
2	UNI	36	0.49	1.47	5174	4													66	66	66	
2	UNI	36	1.47	1.52	264	14												8		8	8	HORIZONTAL CURVE - 9 DEGREE
2	UNI	36	1.52	1.58	322	4													5	5	5	
2	UNI	36	1.58	1.74	840	11	11	5											12	28	28	STOP APPROACH - STATE ROUTE 4
2	UNI	36	1.74	4.38	13939	4													175	175	175	
2	UNI	36	5.09	6.98	9958	4													125	125	125	
2	UNI	36	6.98	7.39	2186	4							16						44	60	60	SCHOOL ZONE WITH CHANNELIZING LINES
2	UNI	36	7.39	8.74	7128	4													90	90	90	
3	UNI	36	13.99	15.95	10349	4													130	130	130	
3	UNI	36	15.95	15.99	211	14												6		6	6	HORIZONTAL CURVE - 8 DEGREE
3	UNI	36	15.99	16.18	1003	4													14	14	14	
3	UNI	36	16.18	16.24	317	14												9		9	9	HORIZONTAL CURVE - 6 DEGREE
3	UNI	36	16.24	18.89	13992	4													176	176	176	

ODOT District 6
No Passing Zone Log (UNI)

Route: 0004R (SUNISR00004**C)
Length: 26.234 Direction: North

From: 0.000 *LEAVE CHP CO*
To: 26.234 *ENTER DEL CO*

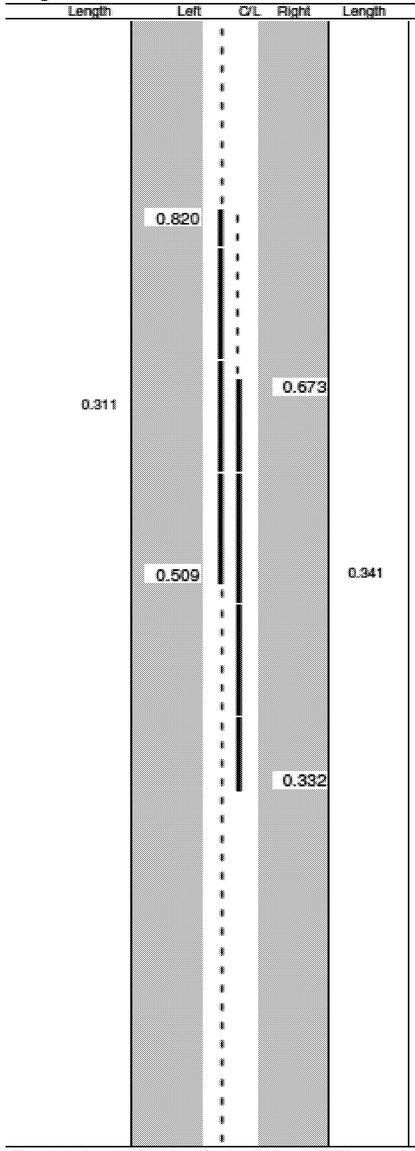

Length	Control Points	Scale: 1.00 mile/page
	0.974	Mile Post = 001
	0.673	S0161R RT
	0.635	SPUR TO SR 161 RT
	0.514	Bridge
	0.436	ENTER IRWIN
	0.115	T0077 CHAMPAIGN COUNTY LINE LT
	0.061	Bridge
	0.000	LEAVE CHP CO

Sheet total equivalent length of solid line: 0.861 Accum. total: 0.861

© 2009 - MasterMind Systems, Inc. - Traffic Safety Suite

ODOT District 6
No Passing Zone Log (UNI)

Page: 1 of 17

Route: 0004R (SUNISR00004**C)
Length: 26.234 Direction: North

From: 0.000 *LEAVE CHP CO*
To: 26.234 *ENTER DEL CO*

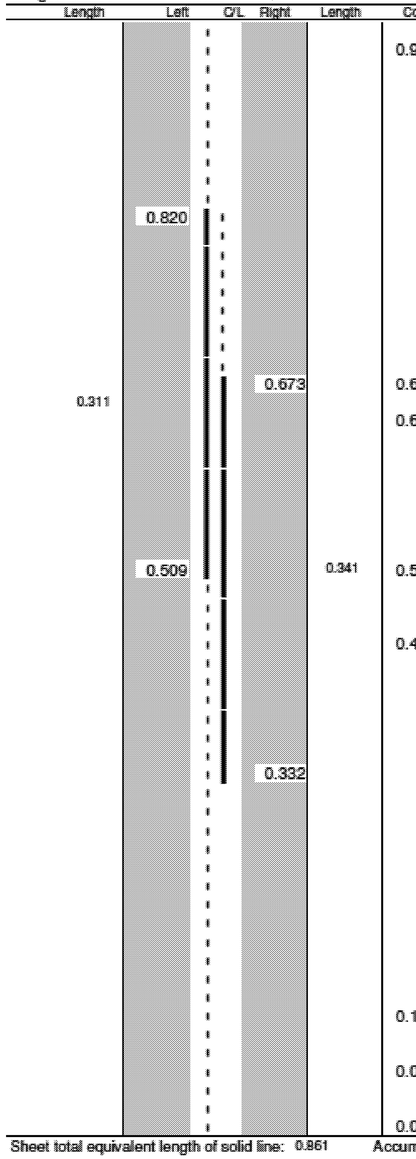

Length	Control Points	Scale: 1.00 mile/page
	0.974	Mile Post = 001
	0.673	S0161R RT
	0.635	SPUR TO SR 161 RT
	0.514	Bridge
	0.436	ENTER IRWIN
	0.115	T0077 CHAMPAIGN COUNTY LINE LT
	0.061	Bridge
	0.000	LEAVE CHP CO

Sheet total equivalent length of solid line: 0.861 Accum. total: 0.861

© 2009 - MasterMind Systems, Inc. - Traffic Safety Suite

CALCULATED | CHECKED

PASSING / NO PASSING ZONE LOG

UNI-36-0.00
UNI-4-0.00

I:\Projects\uni\036\0000.016\91053\production\ROADWAY\sheets\GENERAL NOTES.dgn 10-APR-2015 8:20PM drankin SHEET_MM001

ODOT District 6
No Passing Zone Log (UNI)

Route: **0004R (SUNISR00004**C)** From: **0.000** *LEAVE CHP CO*
Length: **26.234** Direction: **North** To: **26.234** *ENTER DEL CO*

Scale: **1.00 mile/page**

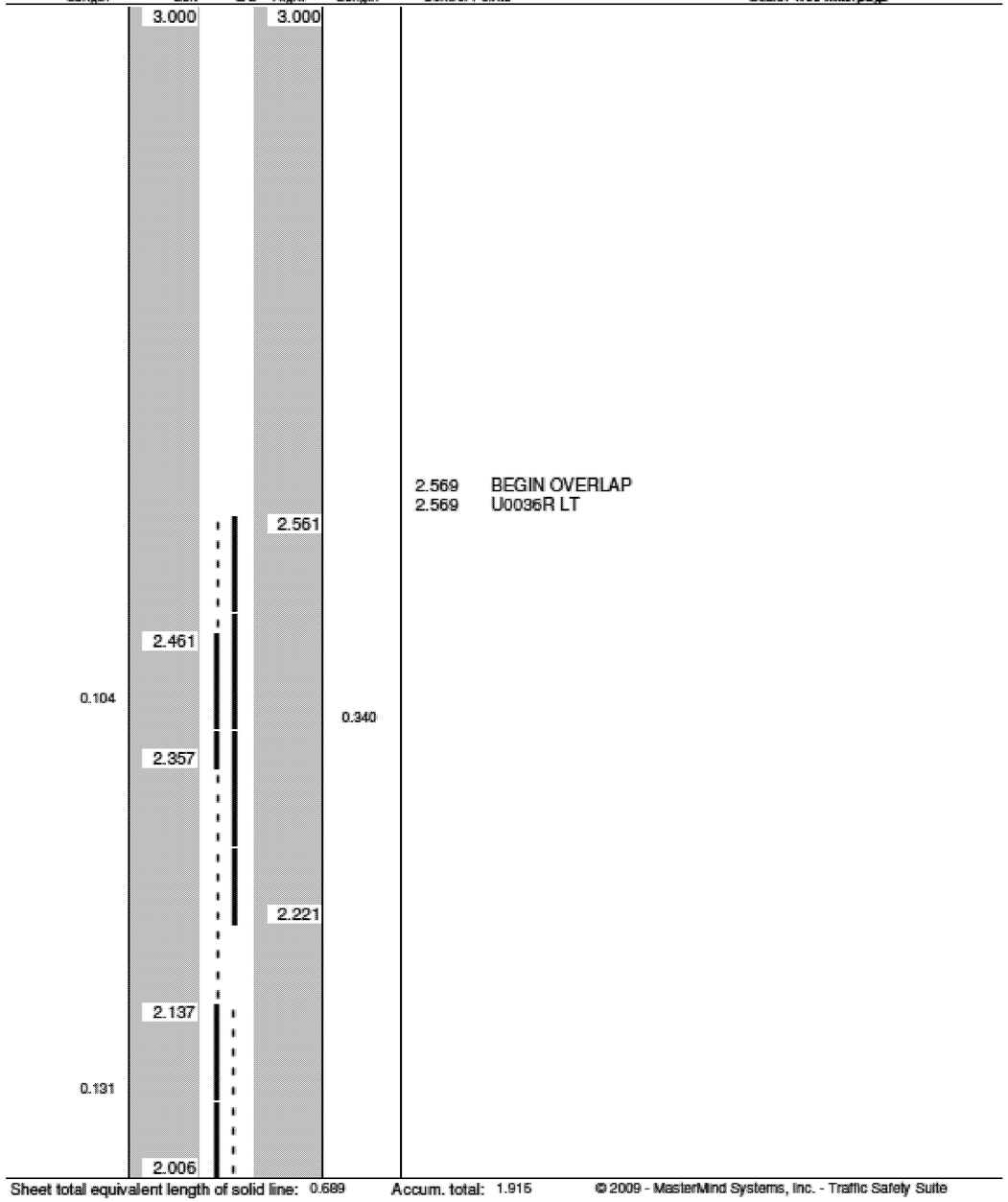

Length	Left	G/L	Right	Length	Control Points
	3.000		3.000		
					2.569 BEGIN OVERLAP
					2.569 U0036R LT
			2.561		
	2.461				
0.104				0.340	
	2.357				
			2.221		
	2.137				
0.131					
	2.006				

Sheet total equivalent length of solid line: 0.689 Accum. total: 1.915

© 2009 - MasterMind Systems, Inc. - Traffic Safety Suite

I:\Projects\uni\036\0000.016\91053\production\ROADWAY\sheets\GENERAL NOTES.dgn 10-APR-2015 8:20PM drankin SHEET_MM002

CALCULATED | CHECKED

PASSING / NO PASSING ZONE LOG

UNI-36-0.00
UNI-4-0.00

ODOT District 6
No Passing Zone Log (UNI)

Route: 0036R (SUNIUS00036**C)
Length: 18.878 Direction: East

From: 0.000 *LEAVE CHP CO*
To: 18.878 *ENTER DEL CO*

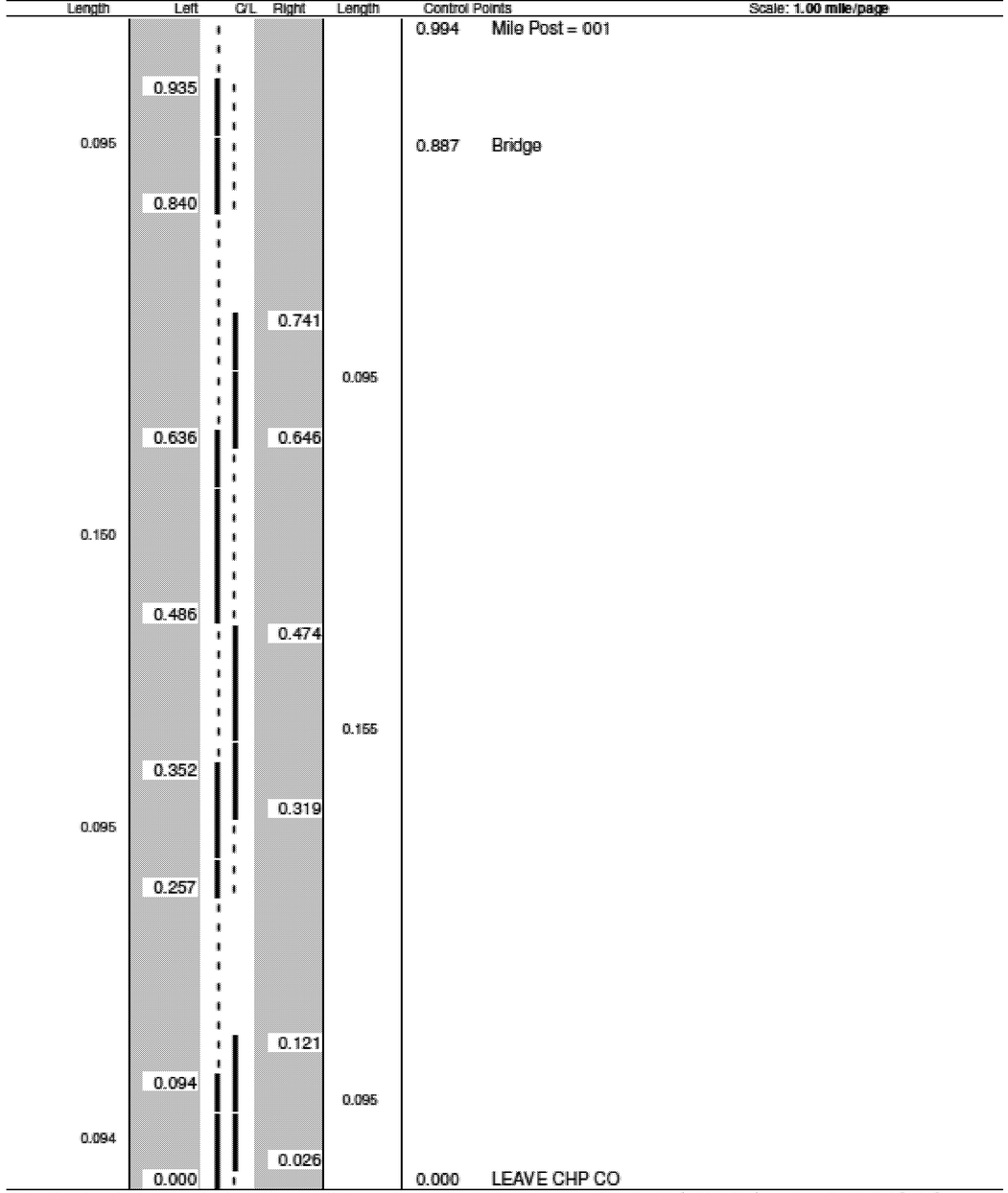

Sheet total equivalent length of solid line: 1.004 Accum. total: 1.004

© 2009 - MasterMind Systems, Inc. - Traffic Safety Suite

ODOT District 6
No Passing Zone Log (UNI)

Route: 0036R (SUNIUS00036**C)
Length: 18.878 Direction: East

From: 0.000 *LEAVE CHP CO*
To: 18.878 *ENTER DEL CO*

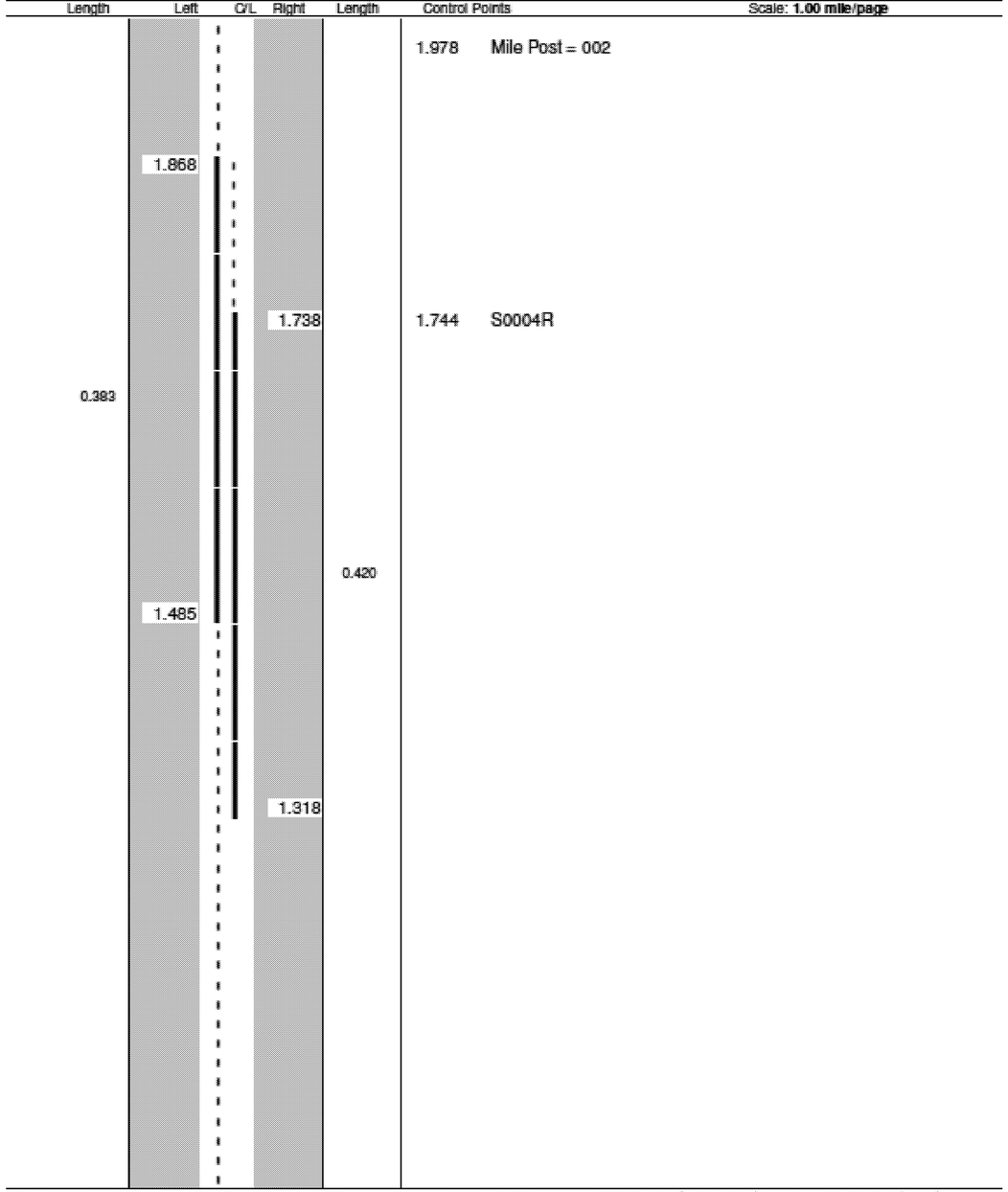

Sheet total equivalent length of solid line: 0.990 Accum. total: 1.994

© 2009 - MasterMind Systems, Inc. - Traffic Safety Suite

CALCULATED | CHECKED

PASSING / NO PASSING ZONE LOG

UNI-36-0.00
UNI-4-0.00

I:\Projects\uni\036\0000.016\91053\production\ROADWAY\sheets\GENERAL NOTES.dgn 10-APR-2015 8:20PM drankin SHEET_MM101

ODOT District 6
No Passing Zone Log (UNI)

Route: 0036R (SUNIUS00036**C)
Length: 18.878 Direction: East
From: 0.000 *LEAVE CHP CO*
To: 18.878 *ENTER DEL CO*

Scale: 1.00 mile/page

Length	Left	C/L	Right	Length	Control Points
					2.975 Mile Post = 003
					2.947 C0081 CONNOR LT
					2.812 Bridge
	2.317				
0.104					
	2.213				
			2.140		
				0.106	2.073 C0086 HOMER RT
			2.034		

Sheet total equivalent length of solid line: 0.460 Accum. total: 2.454

© 2009 - MasterMind Systems, Inc. - Traffic Safety Suite

ODOT District 6
No Passing Zone Log (UNI)

Route: 0036R (SUNIUS00036**C)
Length: 18.878 Direction: East
From: 0.000 *LEAVE CHP CO*
To: 18.878 *ENTER DEL CO*

Scale: 1.00 mile/page

Length	Left	C/L	Right	Length	Control Points
					3.956 Mile Post = 004
					3.138 C0065 SABINE BIGELOW RT

Sheet total equivalent length of solid line: 0.250 Accum. total: 2.704

© 2009 - MasterMind Systems, Inc. - Traffic Safety Suite

CALCULATED | CHECKED

PASSING / NO PASSING ZONE LOG

UNI-36-0.00
UNI-4-0.00

I:\Projects\uni\036\0000.016\91053\production\ROADWAY\sheets\GENERAL NOTES.dgn 10-APR-2015 8:20PM drankin SHEET_MM102

ODOT District 6
No Passing Zone Log (UNI)

Route: 0036R (SUNIUS00036**C)
Length: 18.878 Direction: East

From: 0.000 *LEAVE CHP CO*
To: 18.878 *ENTER DEL CO*

Scale: 1.00 mile/page

Length	Left	C/L	Right	Length	Control Points		
	5.000		5.000		4.952	Mile Post = 005	
0.400					4.811	Bridge	
					4.794		↑ 35mph
				0.512			
					4.711	NO NAME	
	4.600						
			4.488		4.515		↑ 25mph
					4.390	ENTER MILFORD CENTER	
					4.376		↑ 35mph

Sheet total equivalent length of solid line: 1.062 Accum. total: 3.766

© 2009 - MasterMind Systems, Inc. - Traffic Safety Suite

ODOT District 6
No Passing Zone Log (UNI)

Route: 0036R (SUNIUS00036**C)
Length: 18.878 Direction: East

From: 0.000 *LEAVE CHP CO*
To: 18.878 *ENTER DEL CO*

Scale: 1.00 mile/page

Length	Left	C/L	Right	Length	Control Points		
	6.000				5.959	Mile Post = 006	
0.126							
	5.874						
			5.812				
				0.102			
			5.710				
	5.681						
0.105							
	5.576						
			5.480				
				0.098			
			5.382				
	5.296						
0.296							
			5.124				
				0.124	5.081	LEAVE MILFORD CENTER	
					5.063		↑ 55mph
	5.000		5.000				

Sheet total equivalent length of solid line: 1.070 Accum. total: 4.836

© 2009 - MasterMind Systems, Inc. - Traffic Safety Suite

CALCULATED | CHECKED

PASSING/NO PASSING ZONE LOG

UNI-36-0.00
UNI-4-0.00

I:\Projects\uni\036\0000.016\91053\production\ROADWAY\sheets\GENERAL NOTES.dgn 10-APR-2015 8:21PM drankin SHEET_MM103

ODOT District 6
No Passing Zone Log (UNI)

Route: 0036R (SUNIUS00036**C)
Length: 18.878 Direction: East

From: 0.000 *LEAVE CHP CO*
To: 18.878 *ENTER DEL CO*

Scale: 1.00 mile/page

Length	Left	C/L	Right	Length	Control Points	
			7.000	0.020		
			6.980		6.982	Mile Post = 007
					6.939	T0074 PHILIP HERRE LT
	6.672					
0.095						
	6.577				6.585	T0070 BOERGER RT
			6.497	0.095		
			6.402			
	6.305					
0.095					6.243	Bridge
	6.210					
			6.105	0.095		
0.001	6.001		6.010			

Sheet total equivalent length of solid line: 0.651 Accum. total: 5.487

© 2009 - MasterMind Systems, Inc. - Traffic Safety Suite

ODOT District 6
No Passing Zone Log (UNI)

Route: 0036R (SUNIUS00036**C)
Length: 18.878 Direction: East

From: 0.000 *LEAVE CHP CO*
To: 18.878 *ENTER DEL CO*

Scale: 1.00 mile/page

Length	Left	C/L	Right	Length	Control Points	
					7.947	Mile Post = 008
	7.860					
0.277						
			7.668		7.668	T0071 PAYNE LT
					7.668	C0088 MILFORD RT
	7.583					
				0.258	7.537	C0088 MILFORD RT
			7.410			
	7.392					
0.232						
			7.212			
	7.160			0.212		
			7.000			

Sheet total equivalent length of solid line: 1.195 Accum. total: 6.682

© 2009 - MasterMind Systems, Inc. - Traffic Safety Suit

CALCULATED | CHECKED

PASSING / NO PASSING ZONE LOG

UNI-36-0.00
UNI-4-0.00

I:\Projects\uni\036\0000.016\91053\production\ROADWAY\sheets\GENERAL NOTES.dgn 10-APR-2015 8:21PM drankin SHEET_MM104

ODOT District 6
No Passing Zone Log (UNI)

Route: 0036R (SUNIUS00036**C) From: 0.000 *LEAVE CHP CO*
Length: 18.878 Direction: East To: 18.878 *ENTER DEL CO*

Length	Left	C/L	Right	Length	Control Points	Scale: 1.00 mile/page
					8.955	Mile Post = 009
					8.881	C0078 COLLINS

Sheet total equivalent length of solid line: 0.250 Accum. total: 6.932

© 2009 - MasterMind Systems, Inc. - Traffic Safety Suite

ODOT District 6
No Passing Zone Log (UNI)

Route: 0036R (SUNIUS00036**C) From: 0.000 *LEAVE CHP CO*
Length: 18.878 Direction: East To: 18.878 *ENTER DEL CO*

Length	Left	C/L	Right	Length	Control Points	Scale: 1.00 mile/page
					13.980	Mile Post = 014
					13.839	LEAVE MARYSVILLE
					13.768	MILL CREEK DR LT
	13.763		13.763			
0.039	13.724		13.724	0.039	13.725	END DIVIDED HIGHWAY
			13.658			
				0.049		
			13.609			
					13.596	SQUARE DR LT
	13.585				13.596	WATKINS RD RT
0.097						
	13.488					
					13.458	RAMPS FOR US 33
	13.441					
0.049						
	13.392					
					13.020	EXIT RAMP US 36

Sheet total equivalent length of solid line: 0.605 Accum. total: 7.793

© 2009 - MasterMind Systems, Inc. - Traffic Safety Suite

CALCULATED | CHECKED

PASSING/NO PASSING ZONE LOG

UNI-36-0.00
UNI-4-0.00

I:\Projects\uni\036\0000.016\91053\production\ROADWAY\sheets\GENERAL NOTES.dgn SHEET_MM105 10-APR-2015 8:21PM drankin

ODOT District 6
No Passing Zone Log (UNI)

Route: 0036R (SUNIUS00036**C)
Length: 18.878 Direction: East

From: 0.000 *LEAVE CHP CO*
To: 18.878 *ENTER DEL CO*

Scale: 1.00 mile/page

Length	Left	C/L	Right	Length	Control Points
					14.987 Mile Post = 015
	14.315				
0.095					
	14.220				
			14.120		
				0.095	
			14.025		

Sheet total equivalent length of solid line: 0.440 Accum. total: 8.233

© 2009 - MasterMind Systems, Inc. - Traffic Safety Suite

ODOT District 6
No Passing Zone Log (UNI)

Route: 0036R (SUNIUS00036**C)
Length: 18.878 Direction: East

From: 0.000 *LEAVE CHP CO*
To: 18.878 *ENTER DEL CO*

Scale: 1.00 mile/page

Length	Left	C/L	Right	Length	Control Points
	16.000		16.000		15.985 Mile Post = 016
				0.163	
0.181					
			15.837		15.855 CHURCH LT
	15.819				15.813 SCHOOL LT
					15.555 ENTER NEW DOVER
					15.536 ↑ 45mph
					15.507 C0119 MACKAN LT
	15.369				
0.122					
	15.247		15.227		
				0.163	
					15.106 Bridge
			15.064		

Sheet total equivalent length of solid line: 0.838 Accum. total: 9.071

© 2009 - MasterMind Systems, Inc. - Traffic Safety Suite

CALCULATED | CHECKED

PASSING / NO PASSING ZONE LOG

UNI-36-0.00
UNI-4-0.00

I:\Projects\uni\036\0000.016\91053\production\ROADWAY\sheets\GENERAL NOTES.dgn 10-APR-2015 8:21PM drankin SHEET_MM106

ODOT District 6
No Passing Zone Log (UNI)

Route: 0036R (SUNIUS00036**C)
Length: 18.878 Direction: East

From: 0.000 *LEAVE CHP CO*
To: 18.878 *ENTER DEL CO*

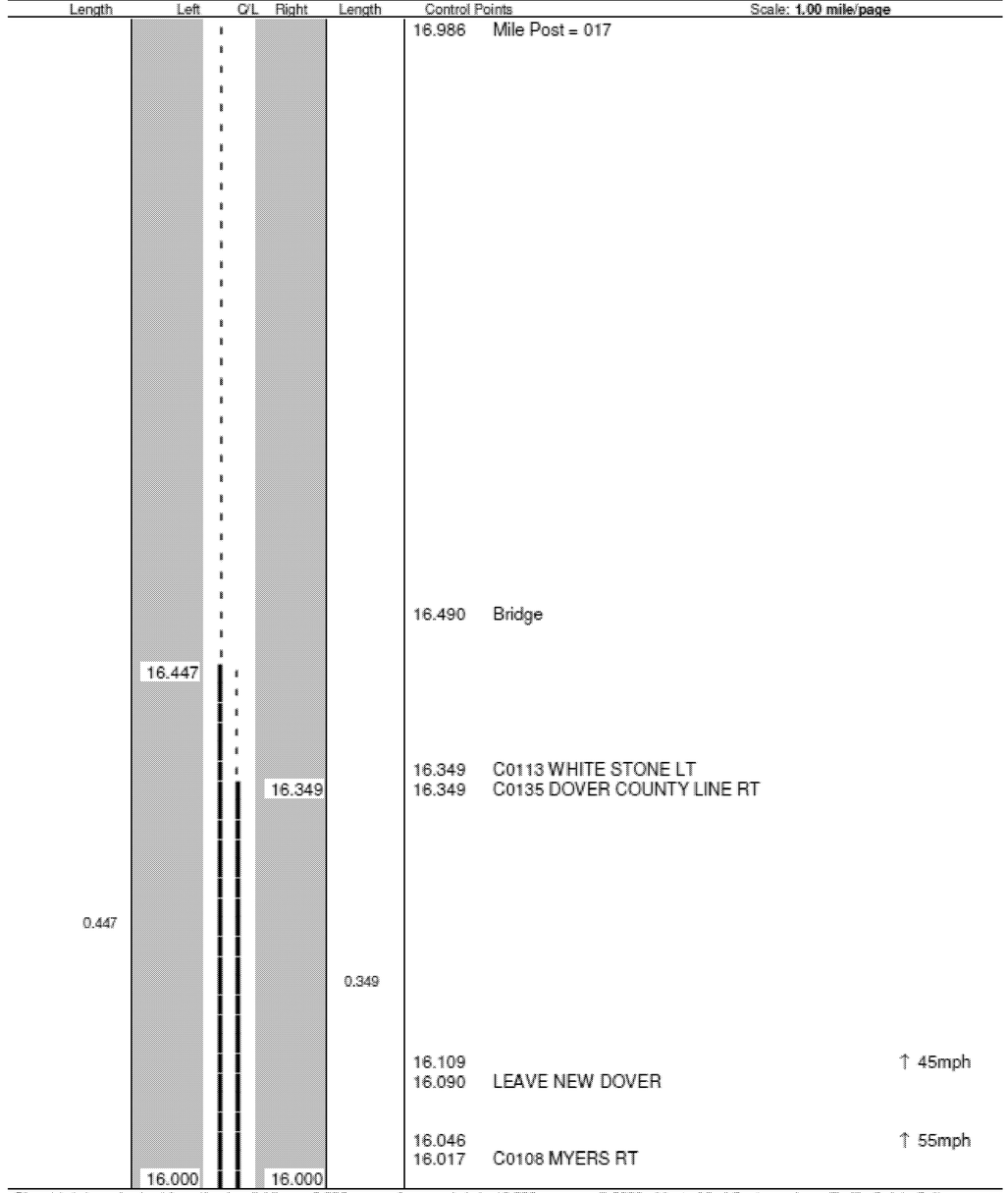

Sheet total equivalent length of solid line: 0.959 Accum. total: 10.030

© 2009 - MasterMind Systems, Inc. - Traffic Safety Suite

ODOT District 6
No Passing Zone Log (UNI)

Route: 0036R (SUNIUS00036**C)
Length: 18.878 Direction: East

From: 0.000 *LEAVE CHP CO*
To: 18.878 *ENTER DEL CO*

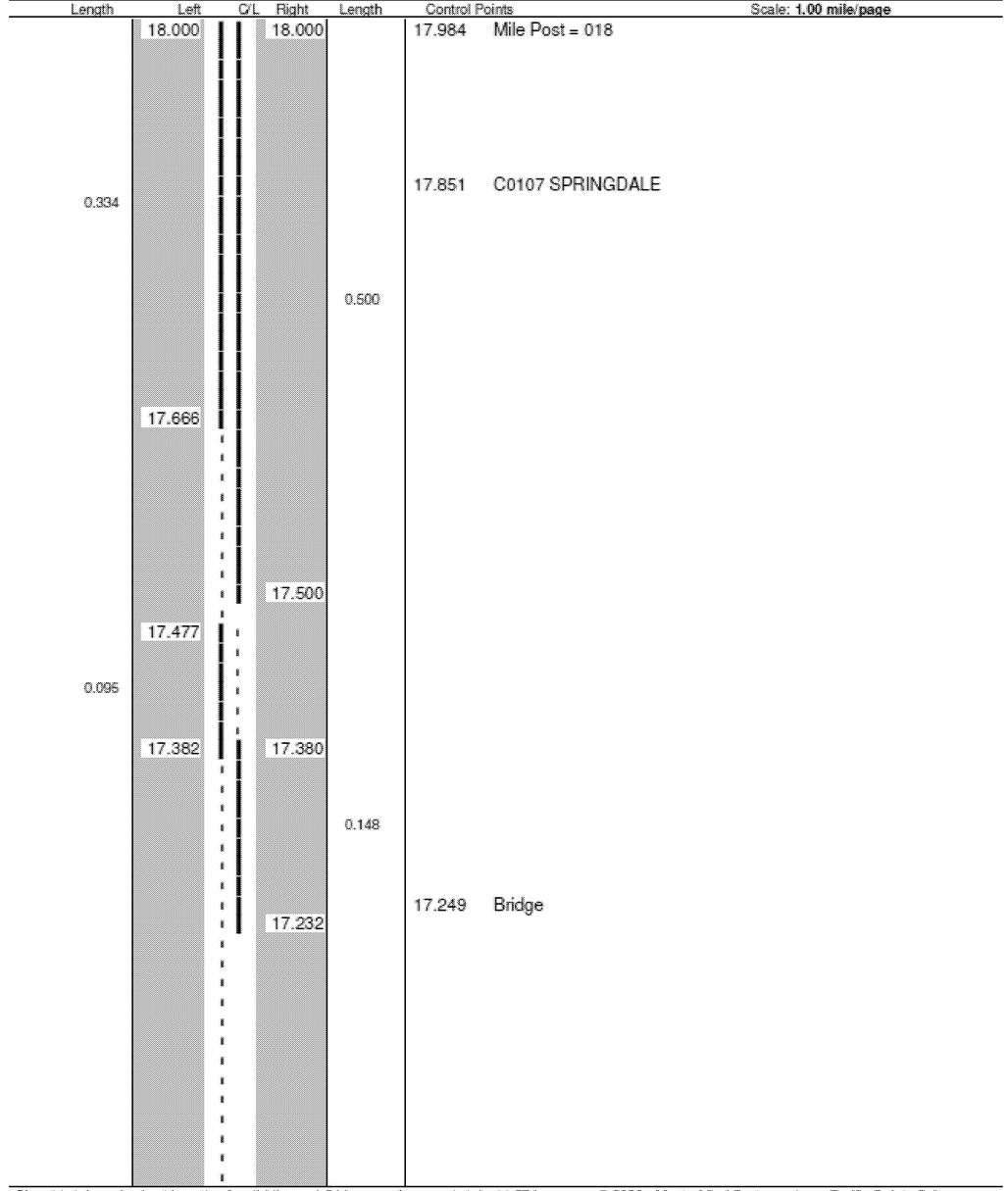

Sheet total equivalent length of solid line: 1.244 Accum. total: 11.274

© 2009 - MasterMind Systems, Inc. - Traffic Safety Suite

CALCULATED | CHECKED

PASSING / NO PASSING ZONE LOG

UNI-36-0.00
UNI-4-0.00

I:\Projects\uni\036\0000.016\91053\production\ROADWAY\sheets\GENERAL NOTES.dgn 10-APR-2015 8:22PM drankin SHEET_MM107

ODOT District 6
No Passing Zone Log (UNI)

Route: 0036R (SUNIUS00036**C)
Length: 18.878 Direction: East
From: 0.000 *LEAVE CHP CO*
To: 18.878 *ENTER DEL CO*

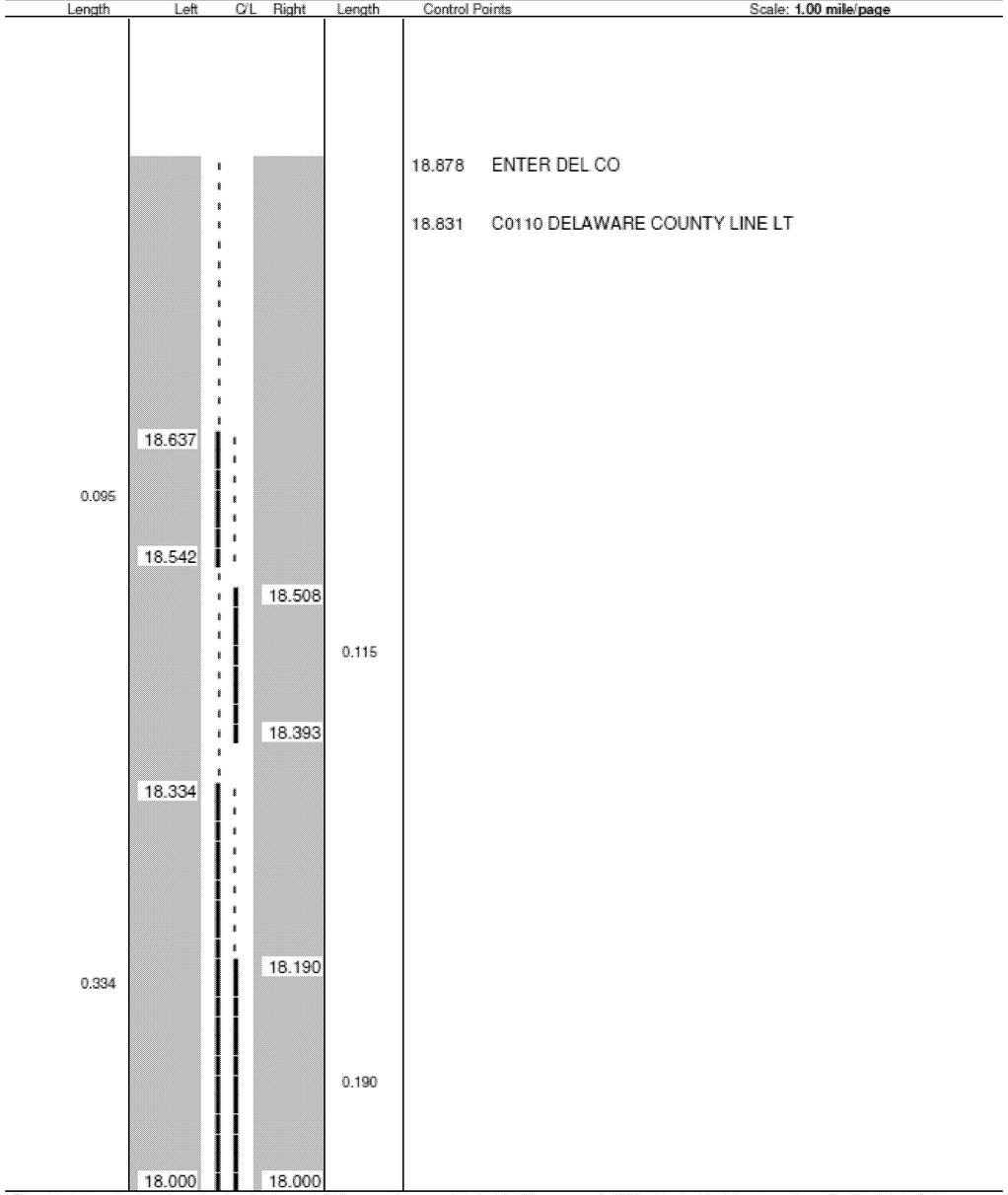

Sheet total equivalent length of solid line: 0.906 Accum. total: 12.180

© 2009 - MasterMind Systems, Inc. - Traffic Safety Suite

I:\Projects\uni\036\0000.016\91053\production\ROADWAY\sheets\GENERAL NOTES.dgn 10-APR-2015 8:22PM drankin SHEET_MM108

CALCULATED | CHECKED

PASSING/NO PASSING ZONE LOG

UNI-36-0.00
UNI-4-0.00

STRUCTURE ESTIMATED QUANTITIES

SHEET NUMBER								PARTICIPATION				ITEM	ITEM EXT.	GRAND TOTAL	UNIT	DESCRIPTION
		45	46	47	48	49	50	06/STR/BR	07/NHS/BR							
																STRUCTURES OVER 20'
																STRUCTURE UNI-4-00.06 SFN: 8000026
		104							104			SPECIAL	51631200	104	FT	SAWING AND SEALING BITUMINOUS CONCRETE JOINTS
																STRUCTURE UNI-4-00.52 SFN: 8000077
			408						408			512	10400	408	SQ YD	TREATING OF CONCRETE BRIDGE DECK WITH SRS
			100						100			519	11100	100	SQ FT	PATCHING CONCRETE STRUCTURE
																STRUCTURE UNI-36-00.89 SFN: 8001634
				517				517				512	10400	517	SQ YD	TREATING OF CONCRETE BRIDGE DECK WITH SRS
																STRUCTURE UNI-36-02.82 SFN: 8001650
					103				103			SPECIAL	51631200	103	FT	SAWING AND SEALING BITUMINOUS CONCRETE JOINTS
																STRUCTURE UNI-36-04.82 SFN: 8001685
						714			714			512	10400	714	SQ YD	TREATING OF CONCRETE BRIDGE DECK WITH SRS
																STRUCTURE UNI-36-06.25 SFN: 8001723
							724		724			512	10400	724	SQ YD	TREATING OF CONCRETE BRIDGE DECK WITH SRS

DESIGN AGENCY
DIST. #6
IN-HOUSE DESIGN

DATE 04/07/2015
REVIEWED VHP
SFN:

STRUCTURE ESTIMATED QUANTITIES

UNI-36-0.00
UNI-4-0.00
PID# 91053

1 / 8

43
50

rmcneill
30-APR-2015 2:13PM
SHEET_EQ001
I:\Projects\uni\036\0000.016\91053\production\ROADWAY\SHEETS\STRUCTURE SHEETS.dgn

ITEM SPECIAL-SAWING AND SEALING BITUMINOUS CONCRETE JOINTS

1) DESCRIPTION:

THIS WORK SHALL CONSIST OF CUTTING AND SEALING TRANSVERSE JOINTS IN THE NEW BITUMINOUS CONCRETE OVERLAY OF BRIDGES. BITUMINOUS CONCRETE JOINTS SHALL BE CONSTRUCTED DIRECTLY OVER, AND IN LINE WITH, THE EXISTING UNDERLYING TRANSVERSE ABUTMENT AND APPROACH SLAB JOINTS.

2) MATERIALS:

THE JOINT SEALANT SHALL MEET THE REQUIREMENTS OF ITEM 705.04, JOINT SEALANTS, HOT-POURED, FOR CONCRETE AND ASPHALT PAVEMENTS. ACCEPTABLE ALTERNATE MATERIALS ARE:

A SILICONE SEALANT MEETING FEDERAL SPECIFICATIONS TT-S-001543A CLASS A (ONE-PART SILICONE SEALANTS) AND TT-S-00230C CLASS A (ONE-COMPONENT SEALANTS), SUCH AS THOSE MANUFACTURED BY GENERAL ELECTRIC, SILICONE PRODUCTS DIVISION, 4015 EXECUTIVE PARK DRIVE, CINCINNATI, OHIO 45242 (513-243-1953)OR DOW CORNING, 400 TECHNE CENTER, SUITE 103, MILFORD, OHIO 45150 (513-831-3586); OR SOF-SEAL, A COLD-APPLIED, LOW-MODULUS, TWO-COMPONENT POLY-MERIC COMPOUND HORIZONTAL SEALANT AS MANUFACTURED BY W.R.MEADOWS, INC., P.O. BOX 543,ELGIN,ILLINOIS 60121 (800-342-5976).

3) CONSTRUCTION DETAILS:

A) GENERAL: THE CONTRACTOR SHALL CONDUCT HIS OPERATION SO THAT THE CUTTING, CLEANING AND SEALING OF TRANSVERSE JOINTS IS A CONTINUOUS OPERATION THAT WILL BE PERFORMED AS SOON AS PRACTICAL AFTER THE PAVING, BUT NO LATER THAN FOUR (4) DAYS AFTER PLACEMENT OF THE ASPHALT CONCRETE SURFACE COURSE. TRAFFIC SHALL NOT BE ALLOWED TO KNEAD TOGETHER OR DAMAGE JOINT CUT PRIOR TO SEALING.

B) CUTTING OF TRANSVERSE JOINTS: THE CONTRACTOR SHALL SAW OR ROUT TRANSVERSE JOINTS TO THE DIMENSIONS SHOWN IN THE DETAILS ON THIS SHEET. THE CUT JOINTS SHALL LIE DIRECTLY ABOVE EACH TRANSVERSE JOINT.

THE BLADE OR BLADES SHALL BE OF SUCH SIZE THAT THE FULL WIDTH AND DEPTH OF THE CUT CAN BE MADE WITH ONE PASS. DRY OR WET CUTTING WILL BE ALLOWED. JOINTS SHALL EXTEND THE FULL WIDTH OF THE BRIDGE.

C) CLEANING JOINTS: DRY SAWED JOINTS SHALL BE THOROUGHLY CLEANED WITH A SUFFICIENT AMOUNT OF COMPRESSED AIR TO REMOVE ANY DIRT, DUST, OR DELETERIOUS MATTER. WET SAWED JOINTS SHALL BE WASHED CLEAN OF ALL CUTTINGS BY FLUSHING WITH A JET OF WATER AND WITH OTHER TOOLS AS NECESSARY. AFTER FLUSHING, THE JOINT SHALL BE BLOWN OUT WITH COMPRESSED AIR. WHEN THE SURFACES ARE THOROUGHLY CLEAN AND DRY, AND JUST PRIOR TO PLACING THE JOINT SEALER, COMPRESSED AIR HAVING A PRESSURE OF AT LEAST 90 PSI SHALL BE USED TO BLOW OUT THE JOINT AND REMOVE ALL TRACES OF DUST.

IN THE EVENT FRESHLY CUT JOINTS BECOME CONTAMINATED BEFORE THEY ARE SEALED, THEY SHALL BE RE-CLEANED OF ALL FOREIGN MATERIAL BY HIGH PRESSURE WATER JET.

D) SEALING JOINTS: THE JOINT SHALL BE THOROUGHLY DRY WHEN THE SEALANT IS PLACED. AFTER CLEANING AND DRYING, A BOND-BREAKER MATERIAL SHALL BE APPLIED TO THE BOTTOM OF THE GROOVE.

HOT-POURED JOINT SEALANT MATERIAL SHALL BE HEATED IN A KETTLE OR MELTER CONSTRUCTED AS A DOUBLE BOILER, WITH THE SPACE BETWEEN THE INNER AND OUTER SHELLS FILLED WITH OIL OR OTHER HEAT TRANSFER MEDIUM. POSITIVE TEMPERATURE CONTROL AND MECHANICAL AGITATION SHALL BE PROVIDED. HEATING MUST BE IN STRICT ACCORDANCE WITH THE MANUFACTURER'S RECOMMENDATION. JOINT SEALER MATERIAL SHALL NEVER BE KEPT HEATED AT THE POURING TEMPERATURE FOR MORE THAN FOUR (4) HOURS AND SHALL NEVER BE REHEATED. SEALER LEFT IN THE APPLICATOR AT THE END OF A DAY'S WORK SHALL NOT BE USED.

HOT-POURED SEALANT SHALL BE APPLIED IMMEDIATELY THROUGH A NOZZLE, WHICH MUST PROJECT INTO THE SAWED JOINT, FILLING FROM THE BOTTOM UP. THE SEALANT SHALL COMPLETELY FILL THE JOINT IN SUCH A MANNER THAT, AFTER COOLING, THE LEVEL OF THE SEALANT WILL NOT BE HIGHER THAN 1/8" BELOW THE PAVEMENT SURFACE. ANY DEPRESSION IN THE COOLED SEAL GREATER THAN 1/4" SHALL BE BROUGHT UP TO THE SPECIFIED LIMIT BY FURTHER ADDITION OF HOT-POURED SEALANT. CARE SHALL BE TAKEN IN THE SEALING OF THE JOINTS SO THAT THE FINAL APPEARANCE WILL PRESENT A NEAT FINE LINE.

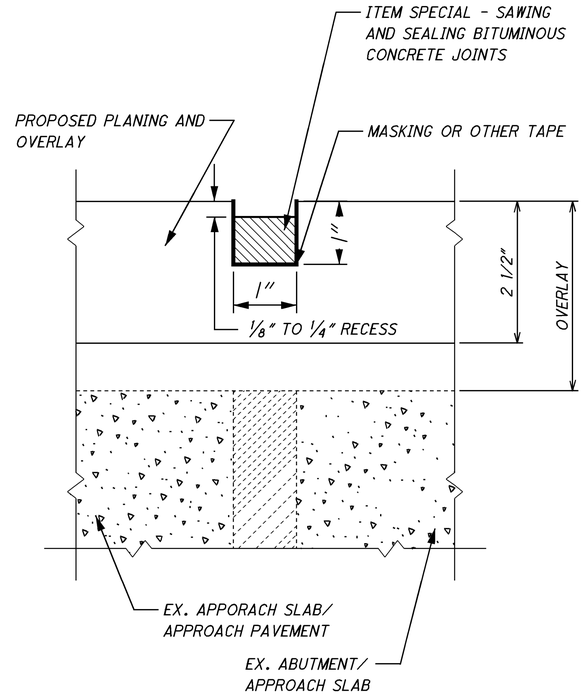

THE COLD APPLIED SEALANT MATERIALS (POLYURETHANE, SILICONE, AND POLYMERIC COMPOUNDS) SHALL BE INSTALLED AS PER MANUFACTURERS' RECOMMENDATIONS, EXCEPT AS MODIFIED BY THIS DRAWING. THE SEALANT SHALL BE INSTALLED WHEN THE AMBIENT TEMPERATURE IS 40 DEGREES F OR HIGHER. TRAFFIC SHALL NOT BE ALLOWED ON THE JOINT FOR ONE HOUR AFTER APPLICATION OF THE SEALANT.

4) METHOD OF MEASUREMENT:

THE QUANTITY TO BE PAID FOR UNDER THIS ITEM WILL BE THE NUMBER OF LINEAR FEET OF JOINTS SAWED AND SEALED AS PER THE ABOVE REQUIREMENTS.

5) BASIS OF PAYMENT:

THE UNIT PRICE PER LINEAR FOOT FOR ITEM SPECIAL - "SAWING AND SEALING BITUMINOUS CONCRETE JOINTS" SHALL INCLUDE THE COST OF ALL LABOR, MATERIALS, AND EQUIPMENT NECESSARY TO COMPLETE THE WORK, INCLUDING THE FURNISHING AND PLACING OF THE JOINT SEALER MATERIAL.

CALCULATED | CHECKED

STRUCTURE NOTES
SAWING AND SEALING BITUMINOUS CONCRETE JOINTS

UNI-36-0.00
UNI-4-0.00

I:\Projects\uni\036\0000.016\91053\production\ROADWAY\sheets\STRUCTURE SHEETS.DGN SHEET_SN001
10-APR-2015 8:22PM drankin

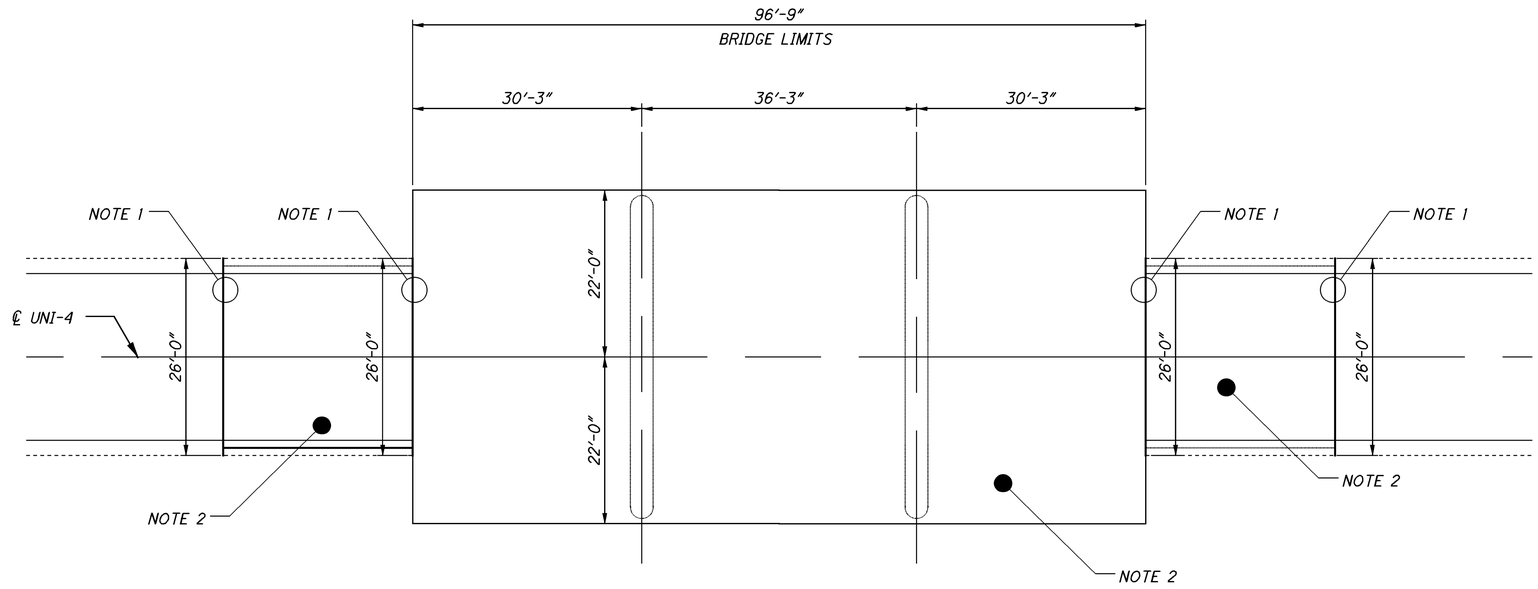

NOTES:

NOTE 1:
SAW AND SEAL JOINTS. FOR DETAILS AND INFORMATION REGARDING THIS WORK SEE STRUCTURE NOTES ON SHEET 44/50.

NOTE 2:
1.5" MILL & FILL ON DECK AND APPROACHES. SEE PAVEMENT SUBSUMMARIES FOR QUANTITIES.

BRIDGE PLAN

UNI-4-0006 (8200026)
3 SPAN CONCRETE SLAB OVER TREACLE CREEK

LOCATION				QUANTITIES			REMARKS
COUNTY	ROUTE	NUMBER	AREA		516		
			SQ FT		SPECIAL - SAWING AND SEALING BITUMINOUS CONCRETE JOINTS		
					FT.		
UNI	4	0006			104		APPROACH SLABS
TOTALS CARRIED TO STRUCTURE SUMMARY					104		

DESIGN AGENCY
DIST. #6
IN-HOUSE DESIGN

REVIEWED VHP
DATE 04/06/2015
SFN: 8200026

STRUCTURE SUBSUMMARY AND DETAILS

BRIDGE NO. UNI-4-0006 (BRIDGE OVER TREACLE CREEK)

UNI-36-0.00
UNI-4-0.00
PID# 91053

3 / 8

45
50

I:\Projects\uni\036\0000.016\91053\production\ROADWAY\sheets\STRUCTURE SHEETS.DGN SHEET_SM_001 10-APR-2015 8:22PM drankin

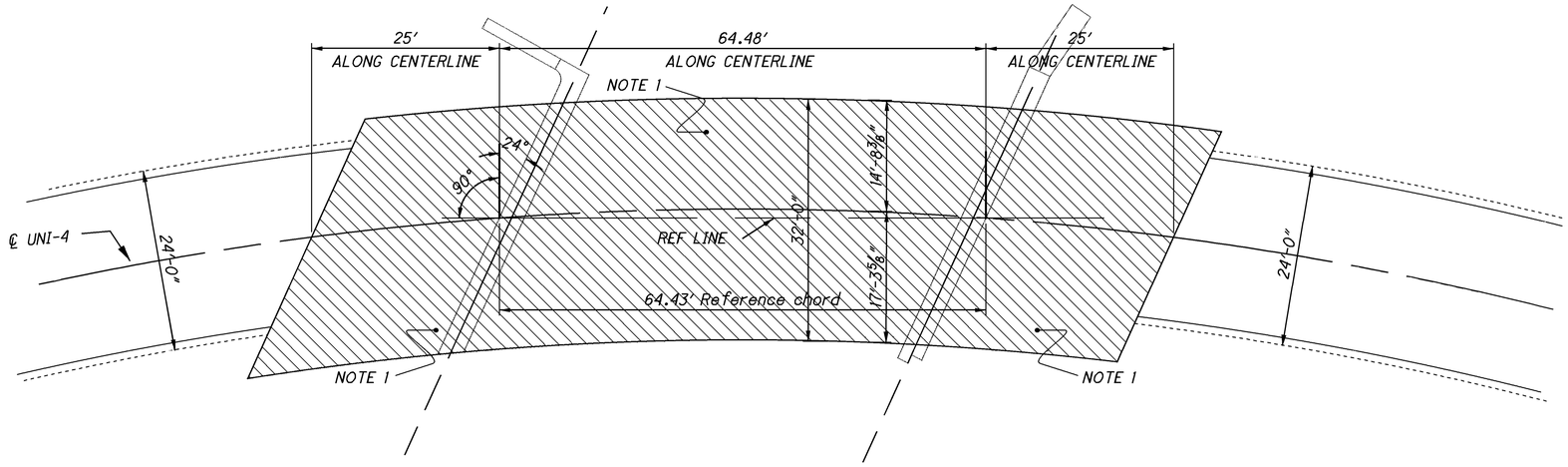

NOTES:

NOTE 1:
DO NOT PAVE BRIDGE DECK. PROPOSED DECK PATCHING AND TREATING OF CONCRETE BRIDGE DECK AND APPROACH SLABS WITH SRS.

BRIDGE PLAN

UNI-4-0052 (8000077)
1 SPAN STEEL BEAM OVER TREACLE CREEK

LEGEND:

PROPOSED BRIDGE TREATMENT

LOCATION				QUANTITIES			REMARKS
COUNTY	ROUTE	NUMBER	AREA	512 TREATING OF CONCRETE BRIDGE DECK WITH SRS		519 PATCHING CONCRETE STRUCTURE	
			SQ FT	SQ. YD.		SQ. FT.	
UNI	4	0052	1965	218		100	DECK AREA
			1712	190			APPROACH SLABS
TOTALS CARRIED TO STRUCTURE SUMMARY				408		100	

DESIGN AGENCY
DIST. #6
IN-HOUSE DESIGN

REVIEWED VHP
DATE 04/06/2015
SFN: 8000077

STRUCTURE SUBSUMMARY AND DETAILS

BRIDGE NO. UNI-4-0052 (BRIDGE OVER TREACLE CREEK)

UNI-36-0.00
UNI-4-0.00
PID# 91053

4 / 8

46
50

I:\Projects\uni\036\0000.016\91053\production\ROADWAY\sheets\STRUCTURE SHEETS.DGN 10-APR-2015 8:22PM drankin

SHEET_SM_002

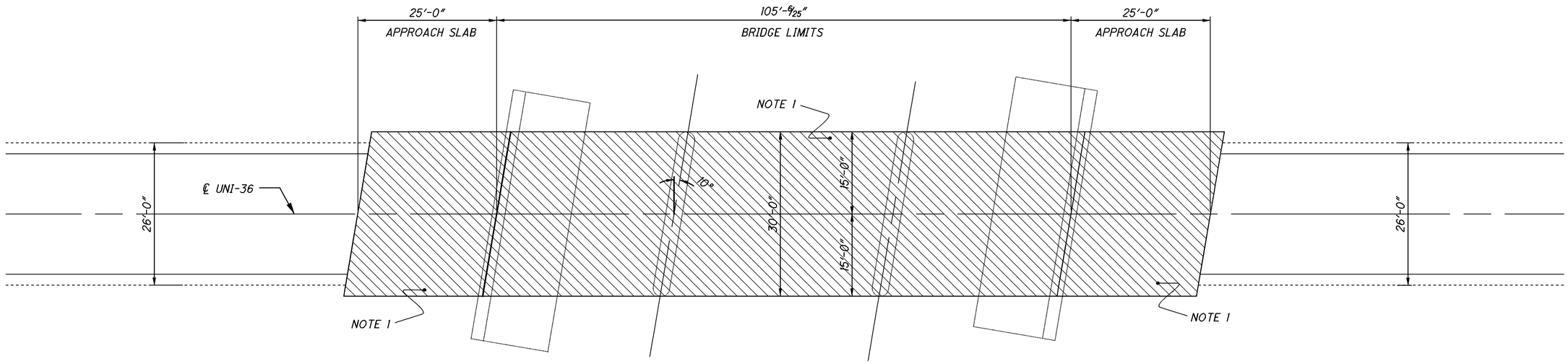

NOTES:

NOTE 1:
DO NOT PAVE BRIDGE DECK. PROPOSED TREATING OF CONCRETE BRIDGE DECK AND APPROACH SLABS WITH SRS.

BRIDGE PLAN

UNI-36-0089 (8001634)
3-SPAN CONTINUOUS CONCRETE SLAB BRIGDE WITH CAPPED PILE ABUTMENTS AND PIERS OVER TREACLE CREEK

LEGEND:

PROPOSED BRIDGE TREATMENT

LOCATION				QUANTITIES			REMARKS
COUNTY	ROUTE	NUMBER	AREA	512 TREATING OF CONCRETE BRIDGE DECK WITH SRS			
			SQ FT	SQ. YD.			
UNI	36	0089	3151	350			DECK AREA
			1500	167			APPROACH SLABS
TOTALS CARRIED TO STRUCTURE SUMMARY				517			

DESIGN AGENCY
DIST. #6
IN-HOUSE DESIGN

REVIEWED VHP
DATE 04/06/2015
SFN: 8001634

STRUCTURE SUBSUMMARY AND DETAILS
BRIDGE NO. UNI-36-0089 (BRIDGE OVER TREACLE CREEK)

UNI-36-0.00
UNI-4-0.00
PID# 91053

5 / 8

47
50

I:\Projects\uni\036\0000.016\91053\production\ROADWAY\sheets\STRUCTURE SHEETS.DGN 10-APR-2015 8:22PM drankin SHEET_SM_101

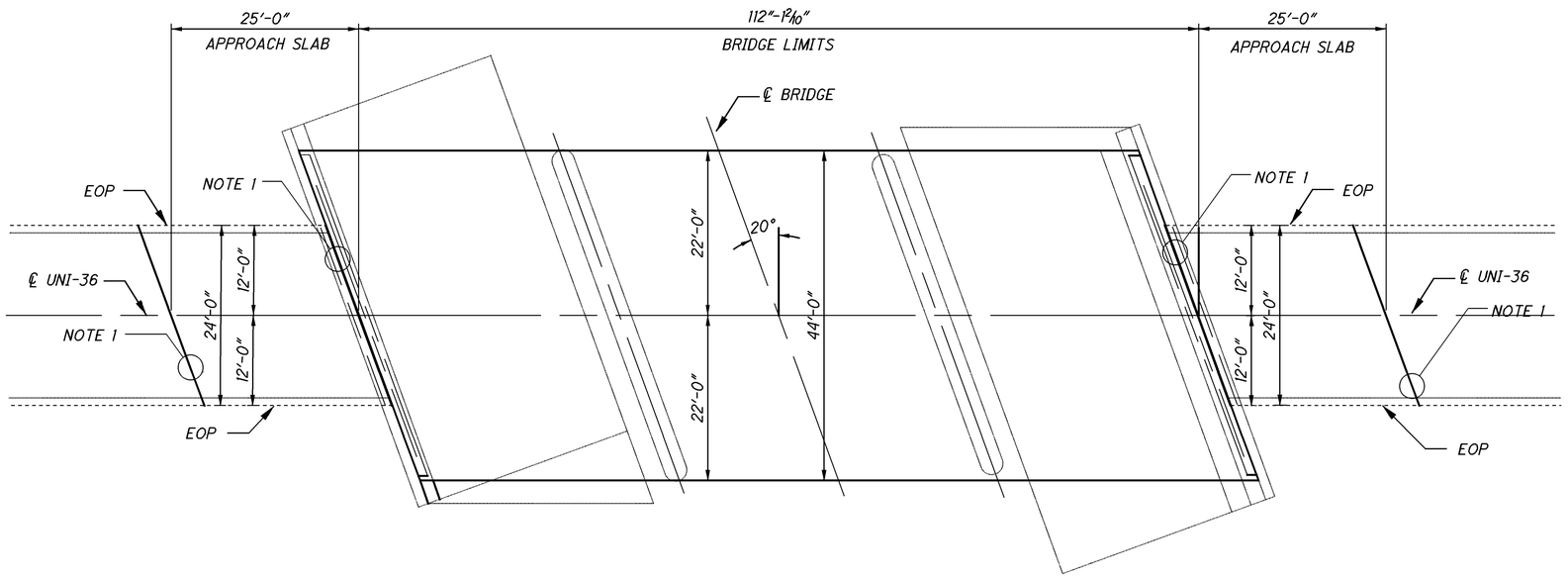

NOTES:

NOTE 1:
SAW AND SEAL JOINTS. FOR DETAILS AND INFORMATION REGARDING THIS WORK SEE STRUCTURE NOTES ON SHEET 44/50.

NOTE 2:
1.5" MILL & FILL ON DECK AND APPROACHES. SEE PAVEMENT SUBSUMMARIES FOR QUANTITIES.

BRIDGE PLAN

UNI-36-0282 (8001650)
3 SPAN CONCRETE SLAB OVER TREACLE CREEK

LOCATION				QUANTITIES			REMARKS
COUNTY	ROUTE	NUMBER	AREA		516		
			SQ FT		SPECIAL - SAWING AND SEALING BITUMINOUS CONCRETE JOINTS FT.		
UNI	36	0282			103		APPROACH SLABS
TOTALS CARRIED TO STRUCTURE SUMMARY					103		

DESIGN AGENCY
DIST. #6
IN-HOUSE DESIGN

REVIEWED VHP
DATE 04/06/2015
SFN: 8001650

STRUCTURE SUBSUMMARY AND DETAILS

BRIDGE NO. UNI-36-0282(BRIDGE OVER TREACLE CREEK)

UNI-36-0.00
UNI-4-0.00
PID# 91053

6 / 8

48
50

I:\Projects\uni\036\0000.016\91053\production\ROADWAY\sheets\STRUCTURE SHEETS.DGN 10-APR-2015 8:22PM drankin SHEET_SM_102

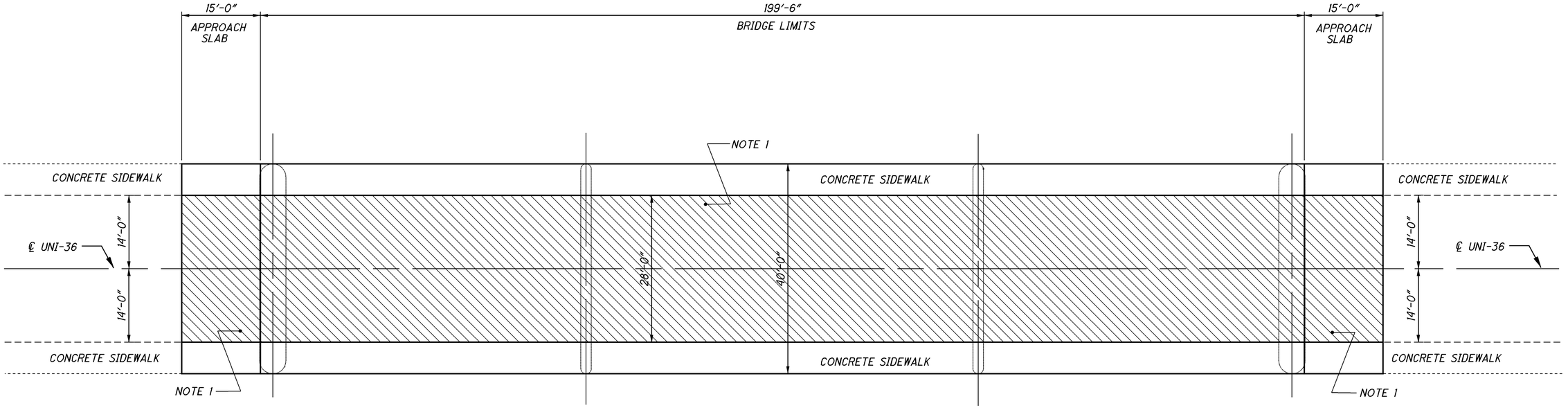

NOTES:

NOTE 1:
DO NOT PAVE BRIDGE DECK. PROPOSED TREATING OF CONCRETE BRIDGE DECK AND APPROACH SLABS WITH SRS.

BRIDGE PLAN

UNI-36-04.82 (8001685)
1 SPAN STEEL BEAM OVER BIG DARBY CREEK

LEGEND:

PROPOSED BRIDGE TREATMENT

LOCATION				QUANTITIES			REMARKS
COUNTY	ROUTE	NUMBER	AREA	512			
				TREATING OF CONCRETE BRIDGE DECK WITH SRS			
			SQ FT	SQ. YD.			
UNI	36	0482	5586	621			DECK AREA
			840	93			APPROACH SLABS
TOTALS CARRIED TO STRUCTURE SUMMARY				714			

DESIGN AGENCY
DIST. #6
IN-HOUSE DESIGN

REVIEWED VHP
DATE 04/06/2015
SFN: 8001685

STRUCTURE SUBSUMMARY AND DETAILS

BRIDGE NO. UNI-36-0482(BRIDGE OVER BIG DARBY CREEK)

UNI-36-0.00
UNI-4-0.00
PID# 91053

7 / 8

49
50

I:\Projects\uni\036\0000.016\91053\production\ROADWAY\sheets\STRUCTURE SHEETS.DGN 10-APR-2015 8:22PM drankin SHEET_SM_103

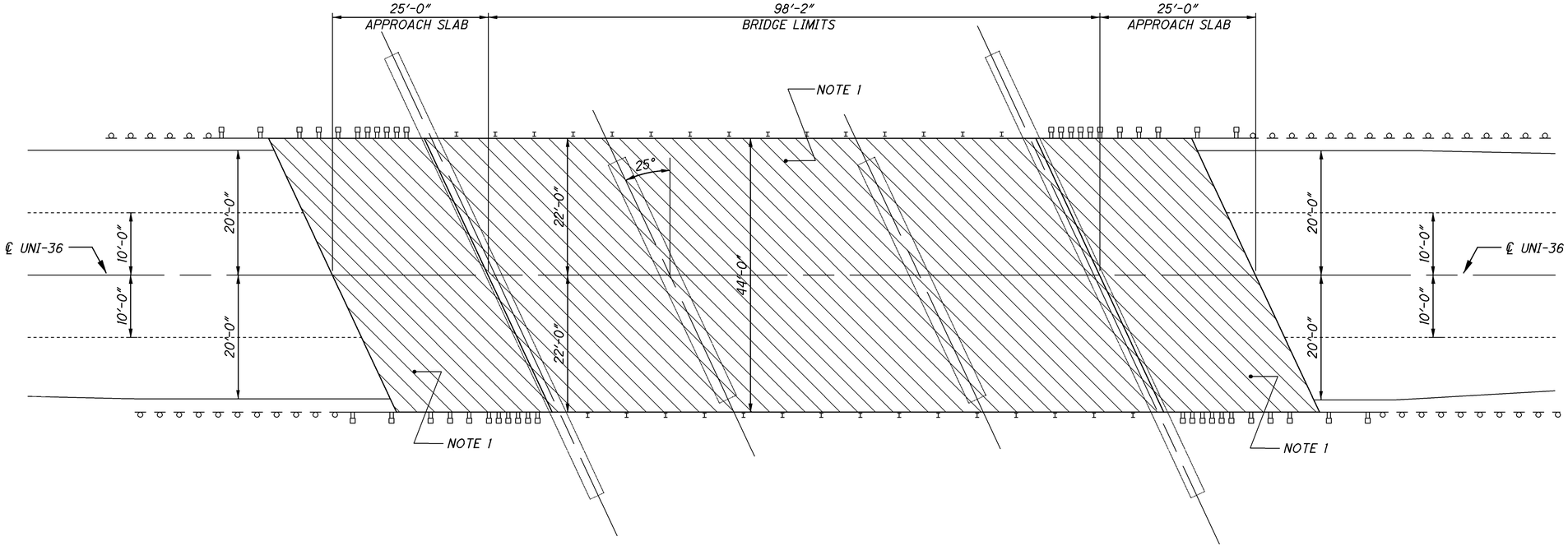

NOTES:

NOTE 1:
DO NOT PAVE BRIDGE DECK. PROPOSED TREATING OF CONCRETE BRIDGE DECK AND APPROACH SLABS WITH SRS.

BRIDGE PLAN

UNI-36-0625 (8001723)
SINGLE SPAN COMPOSITE STEEL BEAM BRIDGE
OVER BUCK RUN

LEGEND:

PROPOSED BRIDGE TREATMENT

LOCATION				QUANTITIES			REMARKS
COUNTY	ROUTE	NUMBER	AREA	512 TREATING OF CONCRETE BRIDGE DECK WITH SRS			
			SQ FT	SQ. YD.			
UNI	36	0625	4320	480			DECK AREA
			2200	244			APPROACH SLABS
TOTALS CARRIED TO STRUCTURE SUMMARY				724			

DESIGN AGENCY
DIST. #6
IN-HOUSE DESIGN

REVIEWED VHP
DATE 04/06/2015
SFN: 8001723

STRUCTURE SUBSUMMARY AND DETAILS
BRIDGE NO. UNI-36-0625(BRIDGE OVER BUCK RUN)

UNI-36-0.00
UNI-4-0.00
PID # 91053

8 / 8

50
50

I:\Projects\uni\036\0000.016\91053\production\ROADWAY\sheets\STRUCTURE SHEETS.DGN SHEET_SM_104 10-APR-2015 8:22PM drankin

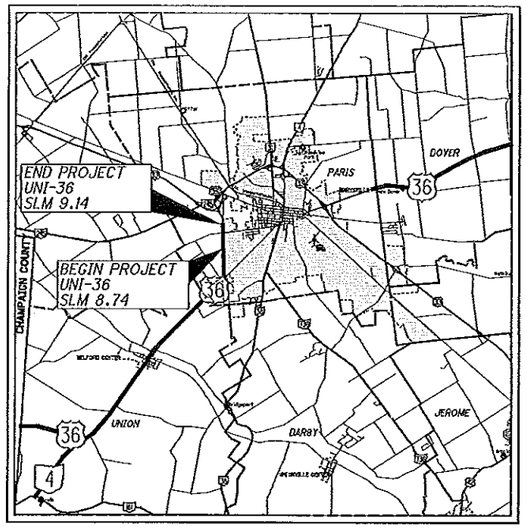

LOCATION MAP

LATITUDE: 40° 13' 42" LONGITUDE: 83° 23' 52"

SCALE IN MILES

0 1 2 3 4

N

PORTION TO BE IMPROVED

INTERSTATE & DIVIDED HIGHWAYS

UNDIVIDED STATE & FEDERAL ROUTES

OTHER ROADS

DESIGN DESIGNATION	UNI-36
CURRENT ADT (2016)	5,000
DESIGN YEAR ADT (2028)	6,400
DESIGN HOURLY VOLUME (2028)	580
DIRECTIONAL DISTRIBUTION	53%
TRUCKS (24 HOUR B&C)	8%
DESIGN SPEED	60
LEGAL SPEED	55

DESIGN FUNCTIONAL CLASSIFICATION:
URBAN PRINCIPAL ARTERIAL

UNDERGROUND UTILITIES

CONTACT BOTH SERVICES
CALL TWO WORKING DAYS
BEFORE YOU DIG

CALL
1-800-362-2764
(TOLL FREE)
OHIO UTILITIES PROTECTION SERVICE
NON-MEMBERS
MUST BE CALLED DIRECTLY

OIL & GAS PRODUCERS PROTECTIVE
SERVICE CALL: 1-800-925-0988

PLAN PREPARED BY:

Ohio Department of Transportation
odot district 6

STATE OF OHIO

DEPARTMENT OF TRANSPORTATION

UNI-36-8.74
PART 2

UNION TOWNSHIP
UNION COUNTY

FOR PART 1, SEE UNI-36-0.00

INDEX OF SHEETS:

TITLE	1
SCHEMATIC PLANS	2
TYPICAL SECTIONS	3
GENERAL NOTES	4 - 5
MAINTENANCE OF TRAFFIC NOTES	6 - 7
MAINTENANCE OF TRAFFIC PLANS	8 - 9
GENERAL SUMMARY	10 - 11
PLAN SUBSUMMARIES	12 - 13
PROJECT SITE PLAN	14
PLAN (AND PROFILE) SHEETS	15 - 19
CROSS SECTIONS (US-36)	20 - 40
CROSS SECTIONS (COLLINS RD)	41
TRAFFIC CONTROL	42 - 44
TRAFFIC SIGNALS	45 - 49

PROJECT DESCRIPTION

ADDITION OF A LEFT TURN LANE AT COLLINS ROAD ON US-36.

EARTH DISTURBED AREA:

PROJECT EARTH DISTURBED AREA	3.72 ACRES
EST. CONTRACTOR EARTH DISTURBED AREA	0.25 ACRES
NOTICE OF INTENT EARTH DISTURBED AREA	4.9 ACRES

2013 SPECIFICATIONS

THE STANDARD SPECIFICATIONS OF THE STATE OF OHIO, DEPARTMENT OF TRANSPORTATION, INCLUDING CHANGES AND SUPPLEMENTAL SPECIFICATIONS LISTED IN THE PROPOSAL SHALL GOVERN THIS IMPROVEMENT.

ENGINEERS SEAL:	STANDARD CONSTRUCTION DRAWINGS				SUPPLEMENTAL SPECIFICATIONS
STATE OF OHIO KEVIN R. FIANT E-64877 REGISTERED PROFESSIONAL ENGINEER					
SIGNED: Kevin R. Fiant	SEE PART 1				
DATE: 4/3/15					

I HEREBY APROVE THESE PLANS AND DECLARE THAT THE MAKING OF THIS IMPROVEMENT WILL NOT REQUIRE THE CLOSING TO TRAFFIC OF THE HIGHWAY AND THAT PROVISIONS FOR THE MAINTENANCE AND SAFETY OF TRAFFIC WILL BE SET FORTH ON THE PLANS AND ESTIMATES.

PLANS CERTIFIED BY:
NAME: David H. Rankin DATE: 04/03/15
DISTRICT 6
OHIO DEPT. OF TRANSPORTATION

APPROVED _____
DISTRICT DEPUTY DIRECTOR
DATE 4-3-15

APPROVED _____
DIRECTOR, DEPARTMENT OF TRANSPORTATION
DATE 4-28-15

FEDERAL PROJECT NO. E130611
PID NO. 91053
CONSTRUCTION PROJECT NO.
RAILROAD INVOLVEMENT NONE
UNI-36-8.74
1 / 49

I:\Projects\uni\036\0000.016\91053\production\ROADWAY\SHEETS\Part 2\TITLE SHEETS.dgn 11-APR-2015 10:13AM drankin
SHEET_GT001

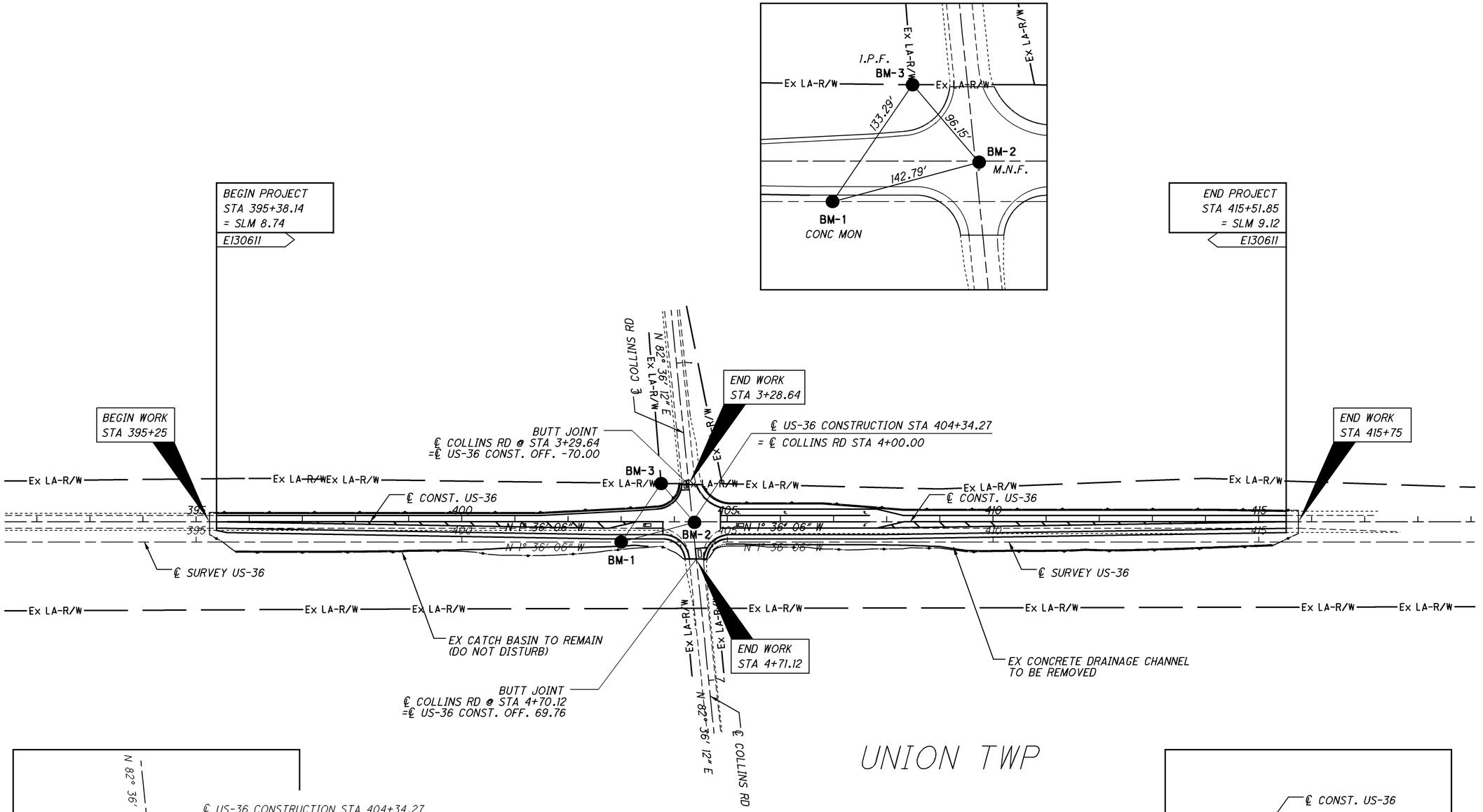

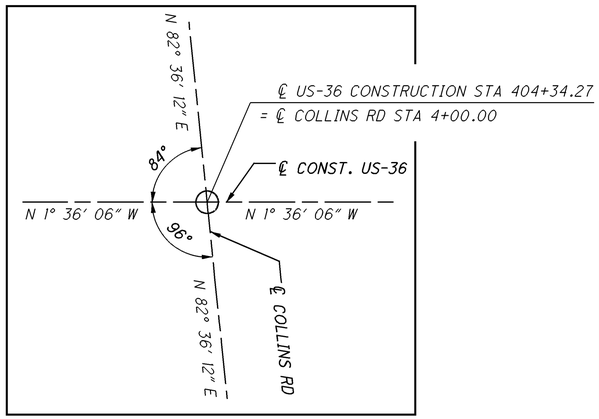

BENCHMARKS				
NUMBER	TYPE	STATION	OFFSET	ELEVATION
BM1	CONC MON	402+99.96	38.00' RT	1058.41
BM2	MAG NAIL SET	404+37.86	00.97' RT	1062.55
BM3	IRON PIN	403+75.25	71.99' LT	1065.66

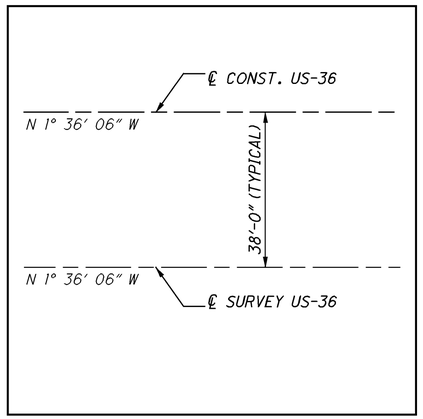

N

0 50 100 200 HORIZONTAL SCALE IN FEET

CALCULATED DKR | CHECKED

US-36 SCHEMATIC PLAN

UNI-36-8.74

2
49

I:\Projects\uni\036\0000.016\91053\production\ROADWAY\SHEETS\Part 2\SCHEMATIC PLANS.dgn 11-APR-2015 10:13AM drankin SHEET_GB001

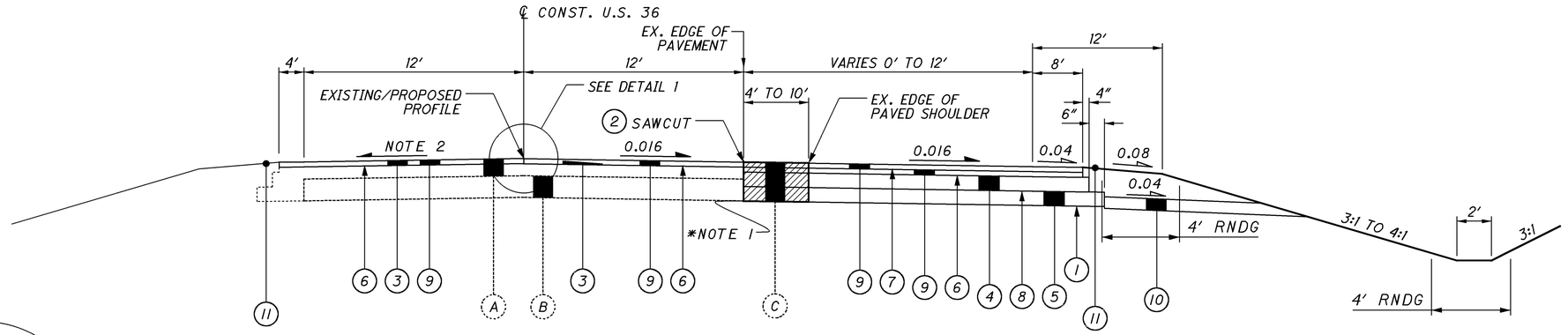

TYPICAL SECTION #1 - U.S. 36

SECTION APPLIES TO THE FOLLOWING STATIONS:

UNI 36 STA. 395+38.14 TO STA. 415+51.85 = 2013.71 FT

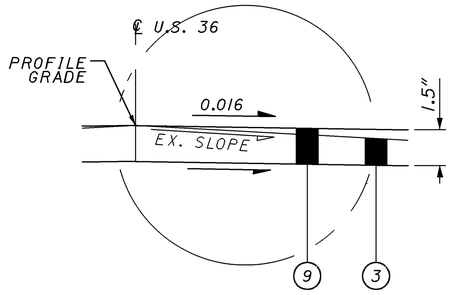

DETAIL 1

VARIABLE DEPTH PAVEMENT PLANING TO CORRECT CROWN

NOTES:

NOTE 1: ITEM 304 - AGGREGATE BASE TO EXTEND TO A DEPTH EQUAL TO THE BOTTOM OF THE EXISTING ADJACENT CONCRETE SUB-BASE WITH A MINIMUM DEPTH OF 6″.

NOTE 2:
PROPOSED PAVEMENT CROSS SLOPES TO REMAIN AS EXISTING LEFT OF PROFILE GRADE LINE (℄ US-36 CONSTRUCTION). CROSS SLOPES RIGHT OF PROFILE GRADE LINE (℄ US-36 CONSTRUCTION) SHALL BE PLANED (VARIABLE DEPTH) TO SLOPE AS SHOWN.

LEGEND:

- (A) EXISTING ASPHALT (VAR 6″- 8″)
- (B) EXISTING CONCRETE (9″)
- (C) EXISTING FULL DEPTH ASPHALT
- ITEM 202 - (16″ AVG) PAVEMENT REMOVED, ASPHALT
- (1) ITEM 204 - SUBGRADE COMPACTION
- (2) ITEM 252 - (16″ AVG) FULL DEPTH PAVEMENT SAWING
- (3) ITEM 254 - (VAR 0″-1.5″) PAVEMENT PLANING, ASPHALT CONCRETE
- (4) ITEM 301 - 6″ ASPHALT CONCRETE BASE, PG64-22
- (5) ITEM 304 - 6″ AGGREGATE BASE
- (6) ITEM 407 - TACK COAT (0.075 GAL/SY)
- (7) ITEM 407 - TACK COAT FOR INTERMEDIATE COURSE (0.05 GAL/SY)
- (8) ITEM 408 - PRIME COAT (0.04 GAL/SY)
- (9) ITEM 441 - 1.5″ ASPHALT CONCRETE SURFACE COURSE, TYPE 1, PG64-22 (446)
- (10) ITEM 605 - AGGREGATE DRAINS
- (11) ITEM 617 - (2″ AVG) COMPACTED AGGREGATE

CALCULATED DKR CHECKED

US-36 TYPICAL SECTIONS

UNI-36-8.74

I:\Projects\uni\036\0000.016\91053\production\ROADWAY\SHEETS\Part 2\TYPICAL SECTIONS.dgn SHEET_GY101 11-APR-2015 10:13AM drankin

GENERAL:
THE CONTRACTOR SHALL SUBMIT IN WRITING A SCHEDULE OF OPERATIONS TO THE ENGINEER (SEE 108.02) AND RECEIVE APPROVAL IN WRITING BEFORE WORK IS STARTED ON THIS PROJECT. ALL TRAFFIC CONTROL DEVICES SHALL BE FURNISHED, ERECTED, MAINTAINED, AND REMOVED BY THE CONTRACTOR IN ACCORDANCE WITH THE OHIO MANUAL OF UNIFORM TRAFFIC CONTROL DEVICES.

ALIGNMENT AND PROFILE:
THE WORK INVOLVED IN THIS PROJECT IS TO PLANE PAVEMENT VARIABLE DEPTH TO A PROPOSED CROSS-SLOPE (CROWN). REPLACE PAVEMENT IN FULL DEPTH AND FILL AREAS TO PROPOSED PROFILE AND SLOPE. THE ALIGNMENT OF THE EXISTING PAVEMENT (CENTER LINE) WILL NOT BE CHANGED.

CONTRACTORS EQUIPMENT - OPERATION AND STORAGE:
THE CONTRACTOR'S EQUIPMENT SHALL BE OPERATED IN THE DIRECTION OF TRAFFIC WHERE PRACTICAL. EQUIPMENT SHALL HAVE AT LEAST ONE AMBER FLASHING LIGHT. WHEN PARKED ALONG THE HIGHWAY, THE EQUIPMENT SHALL BE LOCATED EITHER A MINIMUM OF THIRTY FEET FROM THE EDGE OF PAVEMENT OR SIX FEET BEHIND GUARDRAIL WITH A MINIMUM OF 125 FEET OF GUARDRAIL PRECEDING THE EQUIPMENT. ALL OTHER EQUIPMENT, INCLUDING PRIVATE VEHICLES, SHALL BE STORED AT AN APPROVED CONTRACTOR'S STORAGE AREA.

CONTINGENCY QUANTITIES:
THE CONTRACTOR SHALL NOT ORDER MATERIALS OR PERFORM WORK FOR ITEMS DESIGNATED BY PLAN NOTE TO BE USED "AS DIRECTED BY THE ENGINEER" UNLESS AUTHORIZED BY THE ENGINEER. THE ACTUAL WORK LOCATIONS AND QUANTITIES USED FOR SUCH ITEMS SHALL BE INCORPORATED INTO THE FINAL CHANGE ORDER GOVERNING COMPLETION OF THIS PROJECT.

PART-WIDTH CONSTRUCTION:
BECAUSE OF THE NECESSITY TO BUILD THIS PROJECT UNDER TRAFFIC AND TO CONSTRUCT THE FULL PAVEMENT WIDTH IN STAGES, EXTREME CARE SHALL BE TAKEN TO PREVENT THE CONSTRUCTION OF A BUTT JOINT IN THE BASE COURSES. LONGITUDINAL JOINTS SHALL BE LAPPED AS SHOWN ON STANDARD CONSTRUCTION DRAWING BP-3.1.

WORK LIMITS:
THE WORK LIMITS SHOWN ON THESE PLANS ARE FOR PHYSICAL CONSTRUCTION ONLY. THE INSTALLATION AND OPERATION OF ALL TEMPORARY TRAFFIC CONTROL AND TEMPORARY TRAFFIC CONTROL DEVICES REQUIRED BY THESE PLANS SHALL BE PROVIDED BY THE CONTRACTOR WHETHER INSIDE OR OUTSIDE THESE WORK LIMITS.

CLEARING AND GRUBBING:
ALTHOUGH THERE ARE NO TREES OR STUMPS SPECIFICALLY MARKED FOR REMOVAL WITHIN THE LIMITS OF THE PROJECT. A LUMP SUM QUANTITY IS INCLUDED IN THE GENERAL SUMMARY FOR ITEM 201, CLEARING AND GRUBBING. ALL PROVISIONS AS SET FORTH IN THE SPECIFICATIONS UNDER THIS ITEM ARE INCLUDED IN THE LUMP SUM PRICE BID FOR ITEM 201, CLEARING AND GRUBBING.

UNDERGROUND UTILITIES:
THE IDENTITY AND THE LOCATION OF SOME OF THE EXISTING UNDERGROUND FACILITIES KNOWN TO BE LOCATED IN THE CONSTRUCTION AREA HAVE BEEN IDENTIFIED. THE CONTRACTOR SHALL GIVE NOTICE OF INTENT TO CONSTRUCT TO THE OHIO UTILITIES PROTECTION SERVICE, PRODUCERS UNDERGROUND PROTECTION SERVICE, AND OWNERS OF UNDERGROUND FACILITIES THAT ARE NOT MEMBERS OF A REGISTERED PROTECTION SERVICE IN ACCORDANCE WITH SECTION 153.64 OF THE OHIO REVISED CODE. THE ABOVE, MENTIONED NOTICE SHALL BE GIVEN AT LEAST TWO WORKING DAYS PRIOR TO THE START OF CONSTRUCTION THE FOLLOWING UTILITIES ARE LOCATED WITHIN THE WORK LIMITS OF THE PROJECT AND THE OWNERS SUBSCRIBE TO REGISTERED UNDERGROUND PROTECTION SERVICE.

OHIO UTILITY PROTECTION SERVICE 1-800-362-2764
PRODUCERS UNDERGROUND PROTECTION SERVICE 1-614-587-0486
NON-MEMBERS MUST BE CALLED DIRECTLY.

UTILITIES OWNERSHIP:
LISTED BELOW ARE THE KNOWN UTILITIES LOCATED WITHIN THE PROJECT CONSTRUCTION LIMITS TOGETHER WITH THEIR RESPECTIVE OWNERS.

COLUMBIA GAS OF OHIO
1600 DUBLIN ROAD
COLUMBUS, OH
614.481.1057

ODOT - DISTRICT 6
400 EAST WILLIAM STREET
DELAWARE, OH 43015
740.833.8332

SUNOCO PIPELINE LP
525 FRITZTOWN ROAD
SINKING SPRING, PA 19608
610.670.3281

TIME WARNER CABLE
3760 INTERCHANGE DRIVE
COLUMBUS, OH 43204
614.255.6349

CONSOLIDATED ELECTRIC
COOPERATIVE, INC.
5255 STATE ROUTE 95
P.O.BOX 111
MT. GILEAD, OH 43338-0111

OHIO EDISON COMPANY
420 SOUTH YORK STREET
SPRINGFIELD, OH 45505
937.327.1283

THE DAYTON POWER
AND LIGHT COMPANY
1900 DRYDEN ROAD
DAYTON, OH 45439
937.331.4497

LEVEL 3 COMMUNICATIONS
226 NORTH FIFTH - SUITE 100
COLUMBUS, OH 43215 614.469.9657

CENTURYLINK
127 NORTH MAIN STREET
BELLEFONTAINE, OH 43311
937.599.9378
419.947.3055

ITEM 202 - REMOVAL MISC.: CONCRETE DRAINAGE CHANNEL:
THIS ITEM HAS BEEN PROVIDED TO REMOVE THE EXISTING CONCRETE DRAINAGE CHANNEL AS IDENTIFIED IN THE PLAN SHEETS. THE CONTRACTOR SHALL PROVIDE ALL MATERIAL, LABOR, AND EQUIPMENT NECESSARY TO REMOVE THE EXISTING CONCRETE DRAINAGE CHANNEL TO A MINIMUM OF ONE FOOT BELOW THE PROPOSED DITCH GRADE.

FARM DRAINS
ALL FARM DRAINS, WHICH ARE ENCOUNTERED DURING CONSTRUCTION, SHALL BE PROVIDED WITH UNOBSTRUCTED OUTLETS. EXISTING COLLECTORS WHICH ARE LOCATED BELOW THE ROADWAY DITCH ELEVATIONS, AND WHICH CROSS THE ROADWAY, SHALL BE REPLACED WITHIN THE (RIGHT OF WAY)(CONSTRUCTION) LIMITS BY ITEM 611 CONDUIT, TYPE B, ONE COMMERCIAL SIZE LARGER THAN THE EXISTING CONDUIT. EXISTING COLLECTORS AND ISOLATED FARM DRAINS, WHICH ARE ENCOUNTERED ABOVE THE ELEVATION OF ROADWAY DITCHES, SHALL BE OUTLETTED INTO THE ROADWAY DITCH BY 611 TYPE F CONDUIT. THE OPTIMUM OUTLET ELEVATION SHALL BE ONE FOOT ABOVE THE FLOWLINE ELEVATION OF THE DITCH. LATERAL FIELD TILES WHICH CROSS THE ROADWAY SHALL BE INTERCEPTED BY 611, TYPE E CONDUIT, AND CARRIED IN A LONGITUDINAL DIRECTION TO AN ADEQUATE OUTLET OR ROADWAY CROSSING. THE LOCATION, TYPE, SIZE AND GRADE OF REPLACEMENTS SHALL BE DETERMINED BY THE ENGINEER AND PAYMENT SHALL BE MADE ON FINAL MEASUREMENTS.
EROSION CONTROL PADS AND ANIMAL GUARDS SHALL BE PROVIDED AT THE OUTLET END OF ALL FARM DRAINS AS PER STANDARD CONSTRUCTION DRAWING DM-1.1, EXCEPT WHEN THEY OUTLET INTO A DRAINAGE STRUCTURE. PAYMENT FOR THE EROSION CONTROL PADS AND ANIMAL GUARDS AND ANY NECESSARY BENDS OR BRANCHES SHALL BE INCLUDED FOR PAYMENT IN THE PERTINENT CONDUIT ITEMS.
THE FOLLOWING ESTIMATED QUANTITIES HAVE BEEN INCLUDED IN THE GENERAL SUMMARY FOR THE WORK NOTED ABOVE:

611 6" CONDUIT, TYPE B	= 20 FT
611 6" CONDUIT, TYPE E	= 20 FT
611 6" CONDUIT, TYPE F	= 20 FT

UNRECORDED UNTREATED NON-STORMWATER DRAINAGE
FURNISH NO CONTINUANCE FOR ANY UNRECORDED UNTREATED NON-STORMWATER DRAINAGE SUCH AS UNTREATED SEPTIC, UNTREATED WASTEWATER, UNTREATED CURTAIN/GRADIENT DRAINS, AND UNTREATED FOUNDATION FLOOR DRAINS DISTURBED BY THE WORK. PLUG ANY UNRECORDED UNTREATED NON-STORMWATER DRAINAGE WITH CONCRETE AT THE RIGHT OF WAY LINE. PAYMENT FOR PLUGGING SHALL BE INCLUDED IN THE CONTRACT PRICE FOR THE PERTINENT 202 OR 203 ITEM.

EXISTING SUBSURFACE DRAINAGE
PROVIDE UNOBSTRUCTED OUTLETS FOR ALL EXISTING UNDERDRAINS OR AGGREGATE DRAINS ENCOUNTERED DURING CONSTRUCTION. PROVIDE AN OUTLET PER STANDARD CONSTRUCTION DRAWING DM-1.1 FOR ALL UNDERDRAINS THAT OUTLET TO A SLOPE. UNDERDRAINS THAT CAN BE CONNECTED TO THE NEW OR EXISTING UNDERDRAINS AT THE END OF THE PROJECT LIMITS AS WELL AS ALL NECESSARY BENDS OR BRANCHES REQUIRED FOR CONNECTION ARE INCLUDED IN THE BASIS OF PAYMENT FOR UNCLASSIFIED PIPE UNDERDRAINS.
THE FOLLOWING ESTIMATED QUANTITIES HAVE BEEN INCLUDED IN THE GENERAL
SUMMARY FOR THE WORK NOTED ABOVE:

601, TIED CONCRETE BLOCK MAT, TYPE 1	= 100 SQ YD
605, AGGREGATE DRAINS	= 60 FT.
611 6" CONDUIT, TYPE F	= 20 FT.
611, PRECAST REINFORCED CONCRETE OUTLET	= 2 EACH
605 4" UNCLASSIFIED PIPE UNDERDRAINS	= 20 FT.

SEEDING AND MULCHING
SEEDING AND MULCHING SHALL BE APPLIED TO ALL AREAS OF EXPOSED SOIL BETWEEN THE RIGHT-OF-WAY LINES, AND WITHIN THE CONSTRUCTION LIMITS FOR AREAS OUTSIDE THE RIGHT-OF-WAY LINES COVERED BY WORK AGREEMENT OR SLOPE EASEMENT. QUANTITY CALCULATIONS FOR SEEDING AND MULCHING HAVE BEEN CALCULATED ON SHEET 12/49.

POST CONSTRUCTION STORM WATER TREATMENT
THIS PLAN UTILIZES STRUCTURAL BEST MANAGEMENT PRACTICES (BMP'S) FOR POST CONSTRUCTION STORM WATER TREATMENT.

CALCULATED | CHECKED

GENERAL NOTES

UNI-36-8.74

SHEET_GN001 11-APR-2015 10:21AM drankin
I:\Projects\uni\036\0000.016\91053\production\ROADWAY\SHEETS\Part 2\GENERAL NOTES.dgn

ITEM 254 - PAVEMENT PLANING, ASPHALT CONCRETE:
THE CONTRACTOR SHALL BE TOTALLY RESPONSIBLE FOR ANY AND ALL DAMAGE THAT MAY RESULT FROM THE PLANING OPERATION. PLANED PAVEMENT SHALL NOT BE EXPOSED TO TRAFFIC FOR MORE THAN THREE CALENDAR DAYS. GREAT CARE SHALL BE TAKEN TO MAINTAIN THE EXISTING PAVEMENT CROWN DURING THE PLANING OPERATION. PLANED PAVEMENT SHALL NOT BE EXPOSED TO TRAFFIC FOR MORE THAN 14 CONSECUTIVE DAYS.

ITEM 617 - WATER:
THE FOLLOWING QUANTITY HAS BEEN PROVIDED AND THE TOTAL HAS BEEN CARRIED TO THE GENERAL SUMMARY.
ITEM 617 - WATER: = 1 MGAL

WATER QUALITY PROTECTION:
NO TOXIC OR HAZARDOUS MATERIALS SUCH AS SEALANTS, PAINT, SOLVENTS, CLEANING AGENTS, EARTHEN MATERIALS, WASTE-WATER FUELS OR DEBRIS OF ANY KIND SHALL BE DISCHARGED TO ANY STREAMS, DRAINAGE COURSES OR BODIES OF WATER. ALL ASPHALT OR CONCRETE GRINDINGS, EXCESS ASPHALT OR CONCRETE MATERIALS OR ANY OTHER DEBRIS GENERATED DURING RESURFACING OR OTHER SIMILAR ACTIVITIES SHALL NOT BE DISPOSED OF WITHIN A FLOODPLAIN BELOW THE 100-YEAR FLOOD ELEVATION. THE CONTRACTOR SHALL TAKE ALL PRECAUTIONS NECESSARY TO PREVENT LIQUIDS USED TO REPAIR, CLEAN, SEAL, OR TREAT ANY BRIDGE STRUCTURE (E.G. PAINT, SEALER, SOLVENT) FROM ENTERING STREAMS, WETLANDS OR OTHER "WATERS OF THE UNITED STATES" AND TAKE THE APPROPRIATE ACTIONS IN THE EVENT OF A RELEASE.

WATERSHED PROTECTION:
THE PROJECT IS LOCATED WITHIN VARIOUS SOURCE WATER PROTECTION AREAS. IT IS ESSENTIAL THAT ALL ACTIVITIES ASSOCIATED WITH THIS WORK BE PERFORMED IN A MANNER CONSISTENT WITH BEST WATERSHED MANAGEMENT PRACTICES INCLUDING, BUT NOT LIMITED TO: AREAS OF DISTURBED GROUND SHALL HAVE APPROPRIATE EROSION AND SEDIMENT CONTROLS. IF HAZARDOUS/TOXIC MATERIALS INCLUDING BUT NOT LIMITED TO FUELS, OILS, BITUMENS PAINTS, SEALANTS, OR OTHER CHEMICALS, ARE STORED ON SITE, THEY SHALL BE STORED IN A DOUBLE-CONTAINMENT MANNER. ALL EQUIPMENT REPAIRS, MAINTENANCE, AND MECHANICAL WORK THAT COULD RESULT IN THE RELEASE OF HAZARDOUS/TOXIC MATERIALS SHALL BE PERFORMED IN AN APPROPRIATELY CONTAINED AREA, PREFERABLY OFF SITE OR AN APPROPRIATE OFF-SITE FACILITY. IN THE EVENT THAT ANY HAZARDOUS/TOXIC MATERIALS INCLUDING, BUT NOT LIMITED TO FUELS, OILS, BITUMENS PAINTS, SEALANTS, OR OTHER CHEMICALS ARE SPILLED, THE CONTRACTOR SHALL IMMEDIATELY NOTIFY EMERGENCY SERVICES BY CALLING 911 AND THE OHIO EPA @ (800) 282-9378. THE CONTRACTOR SHOULD BE PREPARED TO PROVIDE DETAILED INFORMATION RELATIVE TO THE TYPE AND QUANTITY OF MATERIAL THAT HAS BEEN SPILLED AS WELL AS THE EXACT LOCATION AND THE EXACT TIME AT WHICH THE SPILL OCCURRED. THE CONTRACTOR SHALL BE SOLELY RESPONSIBLE FOR INFORMING ALL SUBCONTRACTORS AND OTHER AGENTS OF THESE RESPONSIBILITIES, PRECAUTIONS, AND PROHIBITIONS.

NOISE PROTECTION:
IN AN EFFORT TO MINIMIZE NOISE DURING CONSTRUCTION, ALL CONSTRUCTION EQUIPMENT OPERATION MUST CONFORM TO ANY AND ALL PERTINENT LOCAL NOISE ORDINANCES. IT IS THE RESPONSIBILITY OF THE CONTRACTOR TO DETERMINE IF THERE ARE ANY PERTINENT LOCAL NOISE ORDINANCES, AND, IF THERE ARE ANY, TO ENSURE THAT THEY ARE COMPLIED WITH THROUGHOUT THE CONSTRUCTION OF THIS PROJECT.

GENERAL NOTES

I:\Projects\uni\036\0000.016\91053\production\ROADWAY\SHEETS\Part 2\GENERAL NOTES.dgn 11-APR-2015 10:13AM drankin SHEET_GN002

I:\Projects\uni\036\0000.016\91053\production\ROADWAY\SHEETS\Part 2\MAINTENANCE OF TRAFFIC NOTES.dgn SHEET_MT001 11-APR-2015 10:13AM drankin

GENERAL:
ALL TRAFFIC CONTROL DEVICES SHALL BE FURNISHED, ERECTED, MAINTAINED, AND REMOVED BY THE CONTRACTOR IN ACCORDANCE WITH THE OHIO MANUAL OF UNIFORM TRAFFIC CONTROL DEVICES (CURRENT EDITION). COPIES ARE AVAILABLE FROM:

THE OHIO DEPARTMENT OF TRANSPORTATION
BUREAU OF TRAFFIC,
1980 WEST BROAD STREET
COLUMBUS, OHIO 43223.

MAINTENANCE OF TRAFFIC (HOLIDAYS AND SPECIAL EVENTS):
NO WORK SHALL BE PERFORMED AND ALL LANES (EACH DIRECTION) SHALL BE OPEN TO TRAFFIC DURING THE FOLLOWING HOLIDAYS:

CHRISTMAS	*FOURTH OF JULY*
NEW YEARS	*LABOR DAY*
MEMORIAL DAY	*THANKSGIVING*

THE PERIOD OF TIME THAT THE LANES ARE TO BE OPEN DEPENDS ON THE DAY OF THE WEEK ON WHICH THE HOLIDAY FALLS. THE FOLLOWING SCHEDULE SHALL BE USED TO DETERMINE THE PERIOD:

DAY OF HOLIDAY OR EVENT	*TIME ALL LANES MUST BE OPEN TO TRAFFIC*
SUNDAY	*12:00N FRIDAY THROUGH 6:00 AM MONDAY*
MONDAY	*12:00N FRIDAY THROUGH 6:00 AM TUESDAY*
TUESDAY	*12:00N MONDAY THROUGH 6:00 AM WEDNESDAY*
WEDNESDAY	*12:00N TUESDAY THROUGH 6:00 AM THURSDAY*
THURSDAY	*12:00N WEDNESDAY THROUGH 6:00 AM FRIDAY*
THURSDAY (THANKSGIVING ONLY)	*12:00N TUESDAY THROUGH 6:00 AM MONDAY*
FRIDAY	*12:00N THURSDAY THROUGH 6:00 AM MONDAY*
SATURDAY	*12:00N FRIDAY THROUGH 6:00 AM MONDAY*

LENGTH AND DURATION OF LANE CLOSURES AND RESTRICTIONS SHALL BE AT THE APPROVAL OF THE ENGINEER. IT IS THE INTENT TO MINIMIZE THE IMPACT TO THE TRAVELING PUBLIC. LANE CLOSURES OR RESTRICTIONS OVER SEGMENTS OF THE PROJECT IN WHICH NO WORK IS ANTICIPATED WITHIN A REASONABLE TIME FRAME, AS DETERMINED BY THE ENGINEER, SHALL NOT BE PERMITTED. THE LEVEL OF UTILIZATION OF MAINTENANCE OF TRAFFIC DEVICES SHALL BE COMMENSURATE WITH THE WORK IN PROGRESS.

ALL WORK AND TRAFFIC CONTROL DEVICES SHALL BE IN ACCORDANCE WITH CMS 614 AND OTHER APPLICABLE PORTIONS OF THE SPECIFICATIONS, AS WELL AS THE OHIO MANUAL OF UNIFORM TRAFFIC CONTROL DEVICES.

PAYMENT FOR ALL LABOR, EQUIPMENT AND MATERIALS SHALL BE INCLUDED IN THE LUMP SUM CONTRACT PRICE FOR ITEM 614, MAINTAINING TRAFFIC, UNLESS SEPARATELY ITEMIZED IN THE PLAN.

NOTIFICATION OF CONSTRUCTION INITIATION:
AT LEAST FOURTEEN DAYS PRIOR TO ANY CONSTRUCTION ACTIVITIES, THE CONTRACTOR SHALL ADVISE THE DISTRICT OFFICE OF COMMUNICATIONS VIA EMAIL AT d06.pio@dot.state.oh.us AND THE DISTRICT WORK ZONE TRAFFIC MANAGER VIA EMAIL AT d06.mot@dot.state.oh.us OF THE ANTICIPATED START DATE OF ANY CONSTRUCTION ACTIVITIES, INCLUDING BUT NOT LIMITED TO THE PLACING OF WORK ZONE SIGNS. THE NOTIFICATION SHALL ALSO INCLUDE THE PROJECT NUMBER, PID, NAME AND PHONE NUMBER OF THE CONTRACTOR, A POINT OF CONTACT AND THE ANTICIPATED IMPACT ON TRAFFIC. THE CONTRACTOR WILL IMMEDIATELY INFORM THE DISTRICT OFFICE OF COMMUNICATIONS AND THE DISTRICT WORK ZONE TRAFFIC MANAGER OF ANY AND ALL DELAYS AND/OR CHANGES REGARDING THE CONSTRUCTION INITIATION DATE.

NOTIFICATION OF TRAFFIC RESTRICTIONS:
THROUGHOUT THE DURATION OF THE PROJECT, THE CONTRACTOR SHALL NOTIFY THE PROJECT ENGINEER IN WRITING OF ALL TRAFFIC RESTRICTIONS AND UPCOMING MAINTENANCE OF TRAFFIC CHANGES. THE CONTRACTOR SHALL ENSURE THE WRITTEN NOTIFICATION IS SUBMITTED IN A TIMELY MANNER TO ALLOW THE PROJECT ENGINEER TO MEET THE REQUIRED TIME FRAMES SET FORTH IN THE TABLE BELOW. THIS NOTIFICATION SHALL BE RECEIVED BY THE PROJECT ENGINEER PRIOR TO THE PHYSICAL SETUP OF ANY APPLICABLE SIGNS OR MESSAGE BOARDS.

INFORMATION SHOULD INCLUDE BUT IS NOT LIMITED TO ALL CONSTRUCTION ACTIVITIES THAT IMPACT OR INTERFERE WITH TRAFFIC AND SHOULD LIST THE SPECIFIC LOCATION, TYPE OF WORK, ROAD STATUS, DATE AND TIME OF RESTRICTION, DURATION OF RESTRICTION, NUMBER OF LANES MAINTAINED, DETOUR ROUTES IF APPLICABLE, AND ANY OTHER INFORMATION REQUESTED BY THE PROJECT ENGINEER.

ITEM	*DURATION OF CLOSURE*	*NOTIFICATION DUE TO DISTRICT 6 COMMUNICATIONS OFFICE*
RAMP AND ROAD CLOSURES	*>= 2 WEEKS*	*14 BUSINESS DAYS PRIOR TO CLOSURE*
	> 12 HOURS AND < 2 WEEKS	*7 BUSINESS DAYS PRIOR TO CLOSURE*
	< 12 HOURS	*2 BUSINESS DAYS PRIOR TO CLOSURE*
LANE CLOSURES/ RESTRICTIONS	*>= 2 WEEKS*	*7 BUSINESS DAYS PRIOR TO CLOSURE*
	< 2 WEEKS	*2 BUSINESS DAYS PRIOR TO CLOSURE*

ANY UNFORESEEN CONDITIONS NOT SPECIFIED IN THE PLANS REQUIRING TRAFFIC RESTRICTIONS SHALL ALSO BE REPORTED TO THE PROJECT ENGINEER USING THE NOTIFICATION TIME FRAME TABLE.

PUBLIC OUTREACH AND NOTIFICATION:
THE CONTRACTOR SHALL BE RESPONSIBLE FOR CONTACTING THE DISTRICT 6 PUBLIC INFORMATION OFFICE VIA EMAIL AT d06.pio@dot.state.oh.us TO COORDINATE EFFORTS TO NOTIFY ADJACENT RESIDENTS AND BUSINESSES OF THE UPCOMING RESURFACING PROJECT. ADVANCE NOTIFICATION SHALL OCCUR NO LATER THAN FOURTEEN (14) DAYS PRIOR TO THE FIRST DAY OF WORK. ALL NOTIFICATIONS SHALL BE MADE UTILIZING THE TEMPLATE PROVIDED BY THE DISTRICT 6 PUBLIC INFORMATION OFFICE.

USE OF STANDARD DRAWINGS:
FOR THE PURPOSE OF THIS PROJECT, "MOVING OPERATION" SHALL BE LIMITED TO PAVEMENT MARKING STRIPING.

IT MAY BE NECESSARY TO EXTEND THE ADVANCE WARNING AND BUFFER ZONES BEYOND THE MINIMUM DISTANCES SHOWN ON THE STANDARD DRAWINGS. THIS MAY BE DUE TO HORIZONTAL ALIGNMENT, VERTICAL ALIGNMENT, RAMP LOCATIONS, OR OTHER SIGHT OBSTRUCTIONS. LOCATIONS OF THE TAPER ZONES MAY BE ADJUSTED AS DIRECTED BY THE ENGINEER, BUT TAPER LENGTHS MUST MEET THE MINIMUM STANDARDS. TAPERS SHOULD BE PLACED IN TANGENT SECTIONS WHENEVER POSSIBLE. ADDITIONAL YIELD SIGNS MAY BE REQUIRED FOR RAMPS WITHIN 1,000 FEET OF A WORK ZONE. PAYMENT SHALL BE INCLUDED IN THE LUMP SUM CONTRACT PRICE FOR ITEM 614 - MAINTAINING TRAFFIC.

ITEM 614 - WORK ZONE IMPACT ATTENUATOR FOR 24" WIDE HAZARDS (UNIDIRECTIONAL):
THIS ITEM SHALL CONSIST OF FURNISHING AND INSTALLING ONE OF THE FOLLOWING IMPACT ATTENUATORS:

1. THE QUADGUARD CZ, (24 INCHES (610 MILLIMETERS) WIDE SIX-BAY) WORK ZONE IMPACT ATTENUATOR MANUFACTURED BY ENERGY ABSORPTION SYSTEMS, INC., 35 EAST WACKER DRIVE, CHICAGO, IL 60601 (TELEPHONE: 312-467-6750).

THE LENGTH OF THE SIX-BAY QUADGUARD CZ IS 20'-9" (6.33 METERS). INSTALLATION SHALL BE AT THE LOCATIONS SPECIFIED IN THE PLANS, IN ACCORDANCE WITH THE MANUFACTURER'S SPECIFICATIONS AS DETAILED ON THE FOLLOWING PRE-APPROVED SHOP DRAWINGS:

DRAWING NUMBER	*DRAWING NAME*	*DRAWING/ REVISION DATE*	*ODOT APPROVAL DATE*
QSCZCVR-T4	*QUADGUARD CZ SYSTEM FOR CONSTRUCTION ZONES*	*5/13/99 REV. J*	*8/27/99*
35-40-10	*QUADGUARD SYSTEM CONCRETE PAD, CZ, QG*	*11/19/97 REV. D*	*8/27/99*
35-4-16	*QUADGUARD SYSTEM BACKUP ASSEMBLY, CZ, QG*	*7/30/99 REV. F*	*8/27/99*
354051Z	*QUADGUARD CZ SYSTEM NOSE ASSEMBLY, CZ, QG, 24, 30, 36*	*5/17/99*	*8/27/99*
35-40-18	*TRANSITION ASSEMBLY, 4 OFFSET, QG*	*6/25/99 REV. F*	*8/27/99*
35400260	*QUADGUARD SYSTEM PCMB ANCHOR ASSEMBLY*	*11/19/97 REV. C*	*8/27/99*

2. THE TRACC (TRINITY ATTENUATING CRASH CUSHION) MANUFACTURED BY TRINITY INDUSTRY, 1170 N. STATE STREET, GIRARD, OHIO 44420 (TELEPHONE: 330-545-4373).

THE TRACC IS 21'-0" (6.4 METERS) LONG AND 2'-7" (0.8 METER) WIDE. INSTALLATION SHALL BE AT THE LOCATIONS SPECIFIED IN THE PLANS, IN ACCORDANCE WITH THE MANUFACTURER'S SPECIFICATIONS AS DETAILED ON THE FOLLOWING PRE-APPROVED SHOP DRAWINGS:

DRAWING NUMBER	*DRAWING NAME*	*DRAWING/ REVISION DATE*	*ODOT APPROVAL DATE*
SS450	*CRASH-CUSHION ATTENUATING TERMINAL PLAN, ELEVATION & SECTIONS*	*3/12/99 REV. 1*	*8/27/99*
SS455	*TRACC TRANSITION TO W-BEAM MEDIAN BARRIER PLAN, ELEVATION & SECTIONS*	*2/18/1999*	*8/27/99*
SS461	*TRACC TRANSITION TO CONCRETE SAFETY SHAPE BARRIER PLAN, ELEVATION & SECTIONS*	*6/30/99 REV. 1*	*8/27/99*
SS462	*TRACC TRANSITION TO CONCRETE BARRIER SINGLE SLOPE PLAN, ELEVATION & SECTIONS*	*6/30/1999*	*8/27/99*

CALCULATED | CHECKED

MAINTENANCE OF TRAFFIC NOTES

UNI-36-8.74

3. THE BARRIER SYSTEMS, INC. TAU-II IMPACT ATTENUATOR, DISTRIBUTED BY ROAD SYSTEMS, INC., SALES SUPPORT, 2183 ELM TRACE, AUSTINTOWN, OH 44515, (TELEPHONE 330-799-9291). INSTALLATION SHALL BE AT THE LOCATIONS SPECIFIED IN THE PLANS, IN ACCORDANCE WITH THE MANUFACTURER'S SPECIFICATIONS AS DETAILED ON THE FOLLOWING PRE-APPROVED SHOP DRAWINGS:

DRAWING NUMBER	DRAWING NAME	DRAWING/ REVISION DATE	ODOT APPROVAL DATE
A040416	UNIVERSAL TAU-II PARTS LIST	4/22/04	10/16/04
A040420	UNIVERSAL TAU-II FOUNDATION, FLUSH MOUNT BACKSTOP	4/28/04	10/16/04
A040105	UNIVERSAL TAU-II FOUNDATION, PCB BACKSTOP (REFERENCED ON A04020)	1/7/04	10/16/04
B040239	APPLICATION, FLUSH THE TAU-II FOR THIS NOTE IS A PARALLEL 8-BAY UNIT 24' LONG AND 35" WIDE). MOUNT BACKSTOP (TYPICAL FOR PARALLEL 60 MPH UNIT)	4/21/04	10/16/04

THE CONTRACTOR SHALL REPAIR OR REPLACE A DAMAGED UNIT WITHIN 24 HOURS OF A DAMAGING IMPACT.

WHEN BIDIRECTIONAL DESIGNS ARE SPECIFIED, THE CONTRACTOR SHALL SUPPLY APPROPRIATE TRANSITIONS. PAYMENT FOR THE ABOVE WORK SHALL BE MADE AT THE UNIT PRICE BID AND SHALL INCLUDE ALL LABOR, TOOLS, EQUIPMENT AND MATERIALS NECESSARY TO CONSTRUCT AND MAINTAIN A COMPLETE AND FUNCTIONAL IMPACT ATTENUATOR SYSTEM, INCLUDING ALL RELATED BACKUPS, TRANSITIONS, LEVELING PADS, HARDWARE AND GRADING, NOT SEPARATELY SPECIFIED, AS REQUIRED BY THE MANUFACTURER.

ITEM 614 - BARRIER REFLECTORS/OBJECT MARKERS:
BARRIER REFLECTORS AND OBJECT MARKERS SHALL BE INSTALLED ON ALL PORTABLE CONCRETE BARRIER WITHIN THE RIGHT-OF-WAY IN ACCORDANCE WITH THE STANDARD BARRIER DELINEATION METHOD (SINGLE STACKED) SHOWN ON STANDARD CONSTRUCTION DRAWING MT-101.70. BARRIER REFLECTOR AND OBJECT MARKER MATERIAL AND INSTALLATION SHALL CONFORM TO CMS 626.02 AND 626.04.

ITEM 614 - WORK ZONE PAVEMENT MARKING, CLASS I, 642 PAINT:
THIS ITEM IS TO BE USED ON THE PLANED AREAS OF ASPHALT AND FINAL SURFACE COURSE NOT COVERED IN THE MAINTENANCE OF TRAFFIC PHASING PLAN. WORK ZONE CENTER LINE SHALL BE PLACED TO REFLECT THE PROPOSED CENTER LINE AS DETERMINED FROM THE PROPOSED MARKINGS WITHIN THE PROJECT LIMITS ON THE FINAL SURFACE COURSE. IT SHALL BE THE CONTRACTOR'S RESPONSIBILITY TO VERIFY THE LOCATION, SIZE, AND TYPE OF WORK ZONE MARKINGS NEEDED MEETING THE REQUIREMENTS OF ITEM 614 BEFORE THE REMOVAL OR RESURFACING OBLITERATES THE EXISTING.

THE FOLLOWING QUANTITIES HAS BEEN PROVIDED AND THE TOTAL HAS BEEN CARRIED TO THE GENERAL SUMMARY.
ITEM 614 - WORK ZONE EDGE LINE, CLASS I, 642 PAINT
(0.82 X 2) = 1.64 MI.
ITEM 614 - WORK ZONE CENTER LINE, CLASS I, 642 PAINT
(0.75 X 2) = 1.5 MI.
ITEM 614 - WORK ZONE CHANNELIZING LINE, CLASS I, 642 PAINT
(610 X 2) = 1220 FT.
ITEM 614 - WORK ZONE STOP LINE, CLASS I, 642 PAINT
(103 X 2) = 206 FT.
ITEM 614 - WORK ZONE ARROW, CLASS I, 642 PAINT
(7 X 2) = 14 EA.

ITEM 614 - LAW ENFORCEMENT OFFICER WITH PATROL CAR FOR ASSISTANCE DURING CONSTRUCTION OPERATIONS:
USE OF LEOS BY CONTRACTORS OTHER THAN THE USES SPECIFIED BELOW WILL NOT BE PERMITTED AT PROJECT COST UNLESS PRIOR APPROVAL HAS BEEN OBTAINED FROM THE PROJECT ENGINEER. LAW ENFORCEMENT OFFICERS (LEOS) SHOULD NOT BE USED WHERE THE OMUTCD INTENDS THAT FLAGGERS BE USED. IN ADDITION TO THE REQUIREMENTS OF CMS 614 AND THE OHIO MANUAL OF UNIFORM TRAFFIC CONTROL DEVICES (OMUTCD), A UNIFORMED LAW ENFORCEMENT OFFICER WITH AN OFFICIAL PATROL CAR (CAR WITH TOP-MOUNTED EMERGENCY FLASHING LIGHTS AND COMPLETE MARKINGS OF THE APPROPRIATE LAW ENFORCEMENT AGENCY) SHOULD BE PROVIDED FOR THE FOLLOWING TRAFFIC CONTROL TASKS:

- THE USE OF A LAW ENFORCEMENT OFFICER WITH PATROL CAR IS REQUIRED IF THE CONTRACTOR TURNS THE INTERSECTION SIGNALS OFF OR PUTS THE INTERSECTION IN FLASHING OPERATION, AND WHEN THE LEO DIRECTS TRAFFIC THROUGH THE INTERSECTION CONTRARY TO THE SIGNAL DISPLAY.

LAW ENFORCEMENT OFFICERS SHOULD NOT FORSAKE THEIR TRAFFIC CONTROL RESPONSIBILITIES TO CHASE MOTORISTS FOR ROUTINE TRAFFIC VIOLATIONS. HOWEVER, IF THE MOTORISTS ACTIONS ARE CONSIDERED TO BE RECKLESS, THEN PURSUIT OF THE MOTORIST MAY BE ACCEPTABLE.

THE LEOS WORK AT THE DIRECTION OF THE CONTRACTOR. THE CONTRACTOR IS RESPONSIBLE FOR SECURING THE SERVICES OF THE LEO'S AND COMMUNICATING THE INTENTIONS OF THE PLANS WITH RESPECT TO DUTIES OF THE LEO. THE ENGINEER SHALL HAVE FINAL CONTROL OVER THEIR RESPECTIVE DUTIES, PLACEMENT AND WILL RESOLVE ANY ISSUES BETWEEN THE TWO PARTIES THAT MAY ARISE. THE CONTRACTOR SHALL MAKE ARRANGEMENTS FOR THE SERVICES WITH:

THE OHIO HIGHWAY PATROL 1-614-466-2660

THE LEO SHOULD REPORT IN TO THE CONTRACTOR PRIOR TO THE START OF THE SHIFT, IN ORDER TO RECEIVE INSTRUCTIONS REGARDING SPECIFIC WORK ASSIGNMENTS DURING THE SHIFT. THE CONTRACTOR SHALL PROVIDE THE LEO WITH A TWO-WAY COMMUNICATION DEVICE WHICH SHALL BE RETURNED TO THE CONTRACTOR AT THE END OF THE SHIFT.

LAW ENFORCEMENT OFFICERS (WITH PATROL CAR) REQUIRED BY THE TRAFFIC MAINTENANCE TASKS ABOVE SHALL BE PAID FOR ON A UNIT PRICE (HOURLY) BASIS UNDER ITEM 614, LAW ENFORCEMENT OFFICER WITH PATROL CAR. THE FOLLOWING ESTIMATED QUANTITIES HAVE BEEN CARRIED TO THE GENERAL SUMMARY.

ANY ADDITIONAL COSTS (ADMINISTRATIVE OR OTHERWISE) INCURRED BY THE CONTRACTOR TO OBTAIN THE SERVICES OF A L.E.O. ARE INCLUDED WITHIN THE BID UNIT PRICE FOR ITEM-614 LAW ENFORCEMENT OFFICER WITH PATROL CAR. THE HOURS PAID SHALL INCLUDE ANY MINIMUM SHOW-UP TIME REQUIRED BY THE LAW ENFORCEMENT AGENCY INVOLVED.
THE FOLLOWING ESTIMATED QUANTITIES HAVE BEEN PROVIDED:

ITEM 614 - LAW ENFORCEMENT OFFICER WITH PATROL CAR FOR ASSISTANCE = 120 HOUR

ITEM 614 - MAINTENANCE OF TRAFFIC (PHASES):
CONSTRUCTION OPERATIONS SHALL NOT BEGIN UNTIL ALL TRAFFIC CONTROL IS IN PLACE AND APPROVED BY ODOT PERSONNEL. ALL TEMPORARY TRAFFIC CONTROL DEVICES SHALL BE APPROVED FOR CONDITION AND LOCATION BY THE CONSTRUCTION INSPECTOR BEFORE THE CONTRACTOR WILL BE ALLOWED TO BEGIN WORK. BOTH LANES OF TRAFFIC IN EACH DIRECTION SHALL BE MAINTAINED AT ALL TIMES ON US-36 AND COLLINS RD DURING ALL PHASES. ALL WORK AND TRAFFIC CONTROL DEVICES SHALL BE IN ACCORDANCE WITH 614 AND OTHER APPLICABLE PORTIONS OF THE SPECIFICATIONS, AS WELL AS THE OHIO MANUAL OF UNIFORM TRAFFIC CONTROL DEVICES. PAYMENT FOR ALL LABOR, EQUIPMENT AND MATERIALS SHALL BE INCLUDED IN THE LUMP SUM CONTRACT PRICE FOR 614, DETOUR SIGNING, UNLESS SEPARATELY ITEMIZED IN THE PLAN.

PHASE 1:
PHASE 1 INVOLVES ALL MAINTENANCE OF TRAFFIC REQUIRED IN THE WIDENING OF US-36 AT THE INTERSECTION OF COLLINS RD AS DETAILED IN THE MAINTENANCE OF TRAFFIC PLAN. THIS WORK WILL REQUIRE THE CONTRACTOR TO PROTECT THE SITE BY USE OF DRUMS AND FLAGGERS. NO "DROP-OFF" SHALL BE LEFT UNPROTECTED DURING THIS PHASE. NO WORK SHALL BE STARTED THAT CANNOT BE COMPLETED WITHIN THE SAME DAY. THIS PHASE IS PERMITTED FOR A PERIOD NOT TO EXCEED TEN(10) CALENDAR DAYS.

THE USE OF A L.E.O. WILL BE REQUIRED DURING THIS PHASE TO DIRECT TRAFFIC THROUGH THE SIGNALIZED INTERSECTION. 100 HOURS OF ITEM 614- LAW ENFORCEMENT OFFICER WITH PATROL CAR FOR ASSISTANCE DURING CONSTRUCTION OPERATIONS HAS BEEN PROVIDED FOR USE DURING THIS PHASE. SHOULD THE CONTRACTOR NOT COMPLETE THIS PHASE WITHIN THE TEN(10) ALLOWABLE CALENDAR DAYS, THE COST OF THE REQUIRED L.E.O. SHALL BE AT THE CONTRACTOR'S EXPENSE.

PHASE 2:
PHASE 2 INVOLVES ALL MAINTENANCE OF TRAFFIC REQUIRED IN THE WIDENING OF US-36 NOT MENTIONED IN PHASE 1 AS DETAILED IN THE MAINTENANCE OF TRAFFIC PLAN.

ITEM 622 – PORTABLE BARRIER, 32":
THIS WORK SHALL CONSIST OF FURNISHING, INSTALLING, MAINTAINING, AND SUBSEQUENTLY REMOVING A 32 INCH PORTABLE BARRIER AT THE LOCATIONS SHOWN ON THE MAINTENANCE OF TRAFFIC PLAN. FOR DETAILS, SEE SCD RM-4.2. PAYMENT SHALL INCLUDE ALL LABOR, MATERIAL, AND EQUIPMENT NECESSARY TO PERFORM THE WORK AND SHALL BE PAID FOR AT THE CONTRACT PRICE.

ITEM 623 - CONSTRUCTION LAYOUT STAKES AND SURVEYING, AS PER PLAN:
THIS ITEM SHALL CONSIST OF STATIONING USING 3 FT LATH STAKES. THE STAKES SHALL BE SPACED AT 100 FT INTERVALS AND SHALL EXTEND THROUGHOUT THE LENGTH OF THE PROJECT AND THROUGHOUT THE LENGTH OF ALL RAMPS. PLACEMENT OF THE STAKES SHALL BE AS DIRECTED BY THE ENGINEER. THE CONTRACTOR IS RESPONSIBLE FOR REPLACING ANY DAMAGED OR MISSING STAKES.

CONSTRUCTION LAYOUT STAKES, AS PER PLAN WILL BE PAID FOR AT THE CONTRACT LUMP SUM BID, WHICH SHALL BE FULL COMPENSATION FOR ALL SERVICES, MATERIALS, LABOR, EQUIPMENT, TOOLS, AND INCIDENTALS, INCLUDING THE REMOVAL, NECESSARY TO COMPLETE THIS ITEM.

ITEM 614, MAINTAINING TRAFFIC (WINTER TIME LIMITATIONS)
ALL EXISTING LANES SHALL BE OPEN TO TRAFFIC BETWEEN OCTOBER 15 AND APRIL 15. OCTOBER 15 SHALL BE CONSIDERED TO CONSTITUTE AN INTERIM COMPLETION DATE AND LIQUIDATED DAMAGES SHALL BE ASSESSED IN ACCORDANCE WITH C&MS 108.07 FOR EACH CALENDAR DAY THAT ALL LANES ARE NOT OPEN AND AVAILABLE TO TRAFFIC.

CALCULATED | CHECKED

MAINTENANCE OF TRAFFIC NOTES

UNI-36-8.74

I:\Projects\uni\036\0000.016\91053\production\ROADWAY\SHEETS\Part 2\MAINTENANCE OF TRAFFIC NOTES.dgn 13-APR-2015 3:51PM drankin SHEET_MT002

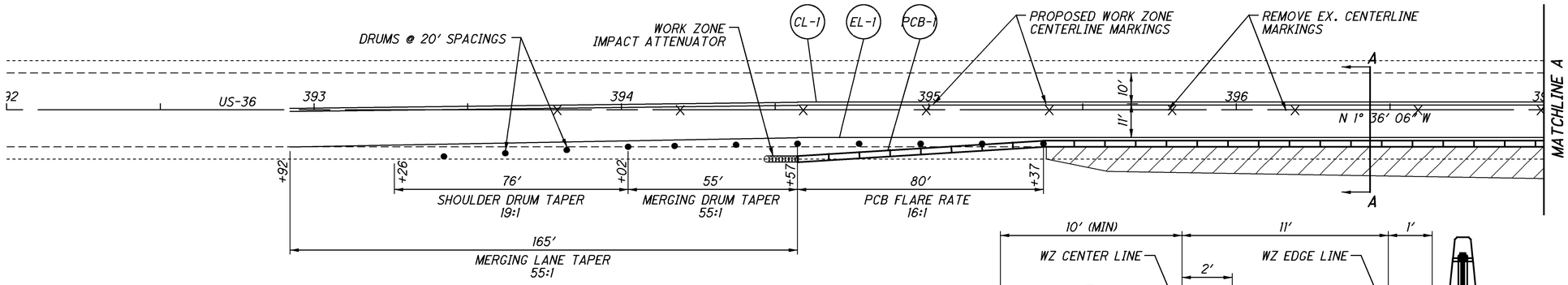

ADVANCED SHOULDER CLOSURE WARNINGS AS PER APPLICABLE STANDARD CONSTRUCTION DRAWING

ALL WORK ZONE SIGNS SHALL BE INCLUDED IN THE LUMP SUM BID ITEM 614 - MAINTAINING TRAFFIC.

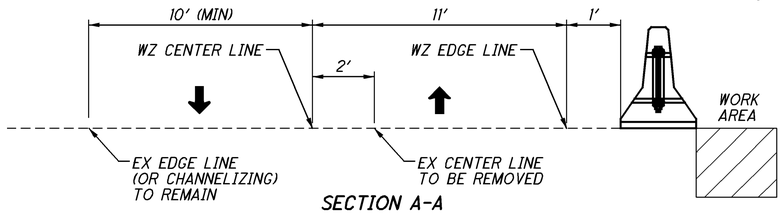

SECTION A-A

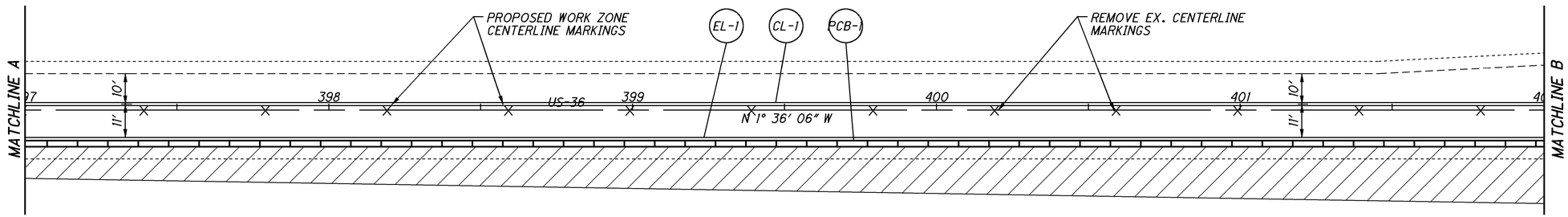

PHASE 1 - PROTECTED BY DAY SHOULDER CLOSURES WITH FLAGGERS AND DRUMS. NO WIDENING SHALL BE STARTED THAT CANNOT BE COMPLETED THAT DAY.

PHASE 2 - LONG TERM SHOULDER CLOSURES. SEE MAINTENANCE OF TRAFFIC NOTES FOR ALLOWABLE DURATIONS.

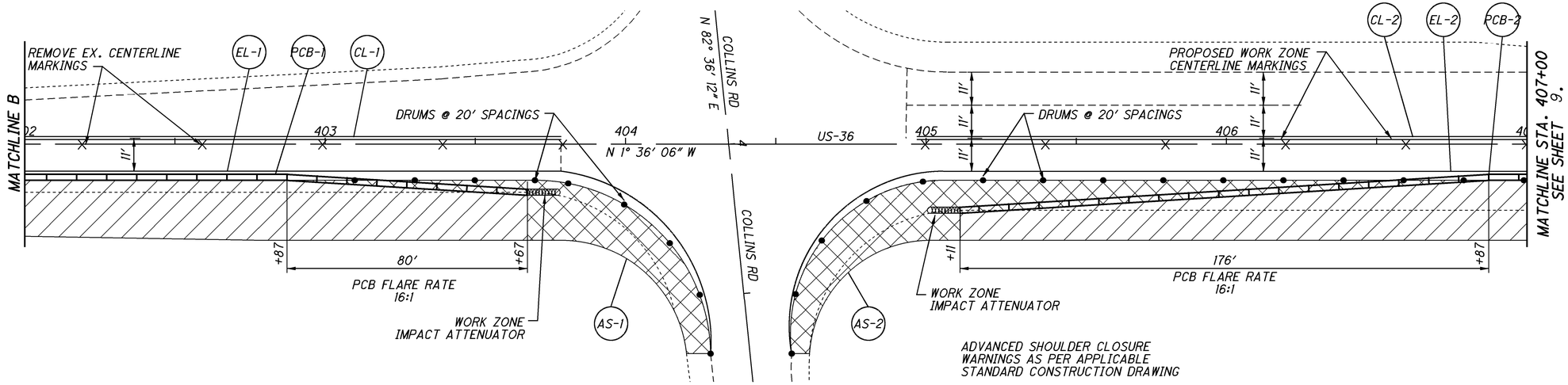

ADVANCED SHOULDER CLOSURE WARNINGS AS PER APPLICABLE STANDARD CONSTRUCTION DRAWING

MAINTENANCE OF TRAFFIC PLAN

US-36 MAINTENANCE STA 395+38.14 TO STA 407+00

HORIZONTAL SCALE IN FEET
0 10 20 40

CALCULATED DKR
CHECKED

UNI-36-8.74

8
49

I:\Projects\uni\036\0000.016\91053\production\ROADWAY\SHEETS\Part 2\MAINTENANCE OF TRAFFIC PLAN.dgn 11-APR-2015 10:14 AM drankin SHEET_MP001

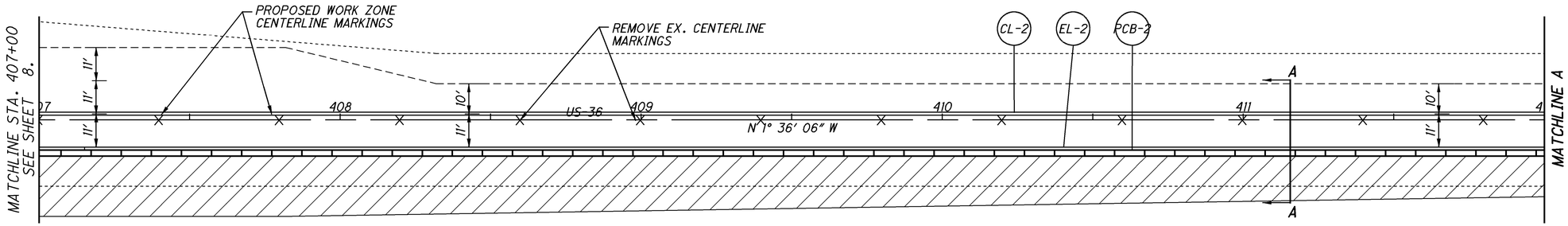

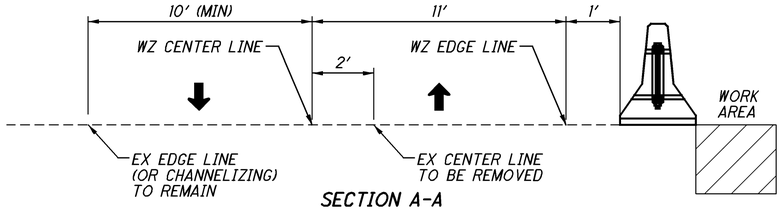

SECTION A-A

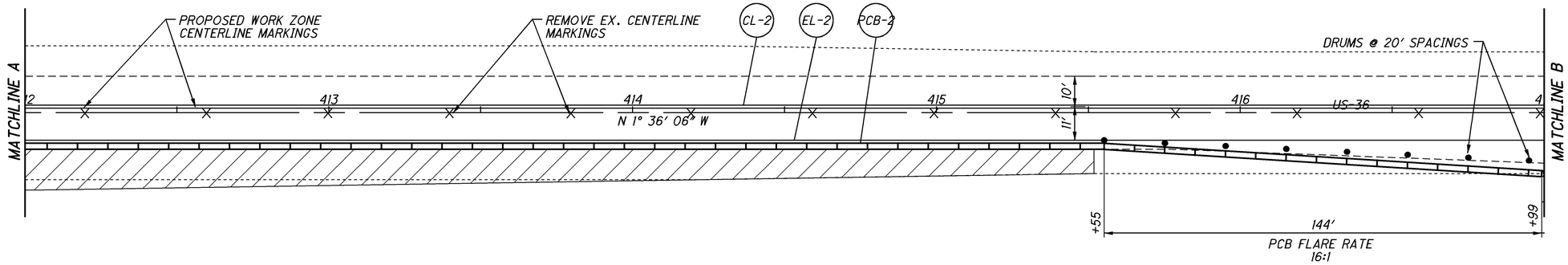

PHASE 1 - PROTECTED BY DAY SHOULDER CLOSURES WITH FLAGGERS AND DRUMS. NO WIDENING SHALL BE STARTED THAT CANNOT BE COMPLETED THAT DAY.

PHASE 2 - LONG TERM SHOULDER CLOSURES. SEE MAINTENANCE OF TRAFFIC NOTES FOR ALLOWABLE DURATIONS.

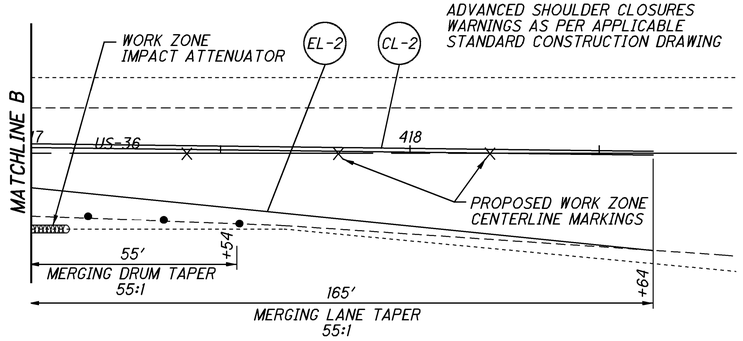

ALL WORK ZONE SIGNS SHALL BE INCLUDED IN THE LUMP SUM BID ITEM 614 - MAINTAINING TRAFFIC.

REF NO.	STATION		LENGTH	614	614	614	614	614	615	622
				WORK ZONE IMPACT ATTENUATOR (UNIDIRECTIONAL)	BARRIER REFLECTOR, TYPE B2	OBJECT MARKER, TWO WAY	WORK ZONE EDGE LINE, CLASS 1, 740.06, TYPE 1	WORK ZONE CENTER LINE, CLASS 1, 740.06, TYPE 1	PAVEMENT FOR MAINTAINING TRAFFIC, CLASS B	PORTABLE BARRIER, 32"
	FROM	TO	FT	EACH	EACH	EACH	MILE	MILE	SQ YD	FT
EL-1	392+92	404+28	1,010				0.19			
EL-2	404+55	418+64	1,285				0.24			
CL-1	392+92	403+78	925					0.18		
CL-2	404+97	418+64	1,205					0.23		
PCB-1	394+57	403+67	910	2	20	20				910
PCB-2	405+11	416+99	1,190	2	26	26				1,190
AS-1	402+87	404+28	141						150	
AS-2	404+55	406+87	232						240	
TOTALS CARRIED TO GENERAL SUMMARY				4	46	46	0.43	0.41	390	2,100

HORIZONTAL SCALE IN FEET
0 10 20 40

CALCULATED DKR
CHECKED

MAINTENANCE OF TRAFFIC PLAN
US-36 STA 407+00 TO STA 418+64
UNI-36-8.74

9
49

I:\Projects\uni\036\0000.016\91053\production\ROADWAY\SHEETS\Part 2\MAINTENANCE OF TRAFFIC PLAN.dgn SHEET_MP002 11-APR-2015 10:14 AM drankin

SHEET NUMBER										PARTICIPATION					ITEM	ITEM EXT	GRAND TOTAL	UNIT	DESCRIPTION	SEE SHEET NO.
4 - 5	6 - 7	9	12	13	43	47				08/NHS/PV										
																			ROADWAY	
LS										LS					201	11000	LS		CLEARING AND GRUBBING	
				1673						1673					202	23010	1673	SY	PAVEMENT REMOVED, ASPHALT	
				150						150					202	98400	150	SF	REMOVAL MISC.:CONCRETE DRAINAGE CHANNEL (6" THICK)	4
			400							400					203	10000	400	CY	EXCAVATION	
			1856							1856					203	20000	1856	CY	EMBANKMENT	
				3388						3388					204	10000	3388	SY	SUBGRADE COMPACTION	
										LS					878	25000	LS		INSPECTION AND COMPACTION TESTING OF UNBOUND MATERIALS	
																			EROSION CONTROL	
100										100					601	21050	100	SY	TIED CONCRETE BLOCK MAT, TYPE 1	
			611	258						869					659	00300	869	CY	TOPSOIL	
			5536							5536					659	10000	5536	SY	SEEDING AND MULCHING	
				1612						1612					659	11000	1612	SY	SEEDING AND MULCHING FOR VEGETATED FILTER STRIP	
			277							277					659	14000	277	SY	REPAIR SEEDING AND MULCHING	
			277							277					659	15000	277	SY	INTER-SEEDING	
			0.75							0.75					659	20000	0.75	TON	COMMERCIAL FERTILIZER	
			1.14							1.14					659	31000	1.14	ACRE	LIME	
			30							30					659	35000	30	MGAL	WATER	
				1612						1612					670	00500	1612	SY	SLOPE EROSION PROTECTION	
										LS					832	15000	LS		STORM WATER POLLUTION PREVENTION PLAN	
										26900					832	30000	26900	EACH	EROSION CONTROL	
																			DRAINAGE	
20										20					605	05200	20	FT	4" UNCLASSIFIED PIPE UNDERDRAINS	
60				380						440					605	31100	440	FT	AGGREGATE DRAINS	
20										20					611	00900	20	FT	6" CONDUIT, TYPE B	
40										40					611	01400	40	FT	6" CONDUIT, TYPE E	
20										20					611	01500	20	FT	6" CONDUIT, TYPE F	
2										2					611	99710	2	EACH	PRECAST REINFORCED CONCRETE OUTLET	
																			PAVEMENT	
				2082						2082					252	01500	2082	FT	FULL DEPTH PAVEMENT SAWING	
				8263						8263					254	01000	8263	SY	PAVEMENT PLANING, ASPHALT CONCRETE	
				564						564					301	46000	564	CY	ASPHALT CONCRETE BASE, PG64-22	
				659						659					304	20000	659	CY	AGGREGATE BASE	
				874						874					407	10000	874	GAL	TACK COAT	
				169						169					407	14000	169	GAL	TACK COAT FOR INTERMEDIATE COURSE	
				1355						1355					408	10000	1355	GAL	PRIME COAT	
				626						626					441	10000	626	CY	ASPHALT CONCRETE SURFACE COURSE, TYPE I, (446), PG64-22	
				50						50					617	10100	50	CY	COMPACTED AGGREGATE	
1										1					617	25000	1	MGAL	WATER	
																			TRAFFIC CONTROL	
					105					105					621	00100	105	EACH	RPM	
					100					100					621	54000	100	EACH	RAISED PAVEMENT MARKER REMOVED	
					21					21					630	02100	21	FT	GROUND MOUNTED SUPPORT, NO. 2 POST	
					30					30					630	03100	30	FT	GROUND MOUNTED SUPPORT, NO. 3 POST	
					22					22					630	80100	22	SF	SIGN, FLAT SHEET	
					1					1					630	85100	1	EACH	REMOVAL OF GROUND MOUNTED SIGN AND REERECTION	
					0.82					0.82					644	00100	0.82	MILE	EDGE LINE, 4"	
					0.75					0.75					644	00300	0.75	MILE	CENTER LINE	
					610					610					644	00400	610	FT	CHANNELIZING LINE, 8"	
					103					103					644	00500	103	FT	STOP LINE	
					270					270					644	00700	270	FT	TRANSVERSE/DIAGONAL LINE	
					7					7					644	01300	7	EACH	LANE ARROW	

CALCULATED DKR CHECKED

GENERAL SUMMARY

UNI-36-8.74

drankin
13-APR-2015 3:32PM
SHEET_GG101
I:\Projects\uni\036\0000.016\91053\production\ROADWAY\SHEETS\Part 2\SUMMARY SHEETS.dgn

SHEET NUMBER										PARTICIPATION					ITEM	ITEM EXT	GRAND TOTAL	UNIT	DESCRIPTION	SEE SHEET NO.
4 - 5	6 - 7	9	12	13	43	47				08/NHS/PV										
																			TRAFFIC SIGNALS	
						2				2					632	00500	2	EACH	VEHICULAR SIGNAL HEAD, 5 SECTION, 12" LENS, 1-WAY	
						4				4					632	27005	4	EACH	LOOP DETECTOR UNIT, AS PER PLAN	45-46
						50				50					632	40700	50	FT	SIGNAL CABLE, 7 CONDUCTOR, NO. 14 AWG	
						2				2					632	90201	2	EACH	REUSE OF VEHICULAR SIGNAL HEAD, AS PER PLAN	45-46
						4				4					633	69101	4	EACH	STOP BAR DETECTION RADAR, AS PER PLAN	45-46
																			MAINTENANCE OF TRAFFIC	
	120									120					614	11110	120	HOUR	LAW ENFORCEMENT OFFICER WITH PATROL CAR FOR ASSISTANCE	
		4								4					614	12336	4	EACH	WORK ZONE IMPACT ATTENUATOR (UNIDIRECTIONAL)	
		46								46					614	13302	46	EACH	BARRIER REFLECTOR, TYPE B2	
		46								46					614	13360	46	EACH	OBJECT MARKER, TWO WAY	
	1.5									1.5					614	21100	1.5	MILE	WORK ZONE CENTER LINE, CLASS I, 642 PAINT	
		0.41								0.41					614	21200	0.41	MILE	WORK ZONE CENTER LINE, CLASS I, 740.06, TYPE I	
	1.64									1.64					614	22100	1.64	MILE	WORK ZONE EDGE LINE, CLASS I, 642 PAINT	
		0.43								0.43					614	22200	0.43	MILE	WORK ZONE EDGE LINE, CLASS I, 740.06, TYPE I	
	1220									1220					614	23200	1220	FT	WORK ZONE CHANNELIZING LINE, CLASS I, 642 PAINT	
	206									206					614	26200	206	FT	WORK ZONE STOP LINE, CLASS I, 642 PAINT	
	14									14					614	30200	14	EACH	WORK ZONE ARROW, CLASS I, 642 PAINT	
		390								390					615	25000	390	SY	PAVEMENT FOR MAINTAINING TRAFFIC, CLASS B	
		2100								2100					622	41000	2100	FT	PORTABLE BARRIER, 32"	
																			INCIDENTALS	
	LS									LS					614	11000	LS		MAINTAINING TRAFFIC	
LS										LS					623	10001	LS		CONSTRUCTION LAYOUT STAKES AND SURVEYING, AS PER PLAN	7
										LS					624	10000	LS		MOBILIZATION	

CALCULATED DKR CHECKED

GENERAL SUMMARY

UNI-36-8.74

drankin
13-APR-2015 3:33PM
SHEET_GG102
I:\Projects\uni\036\0000.016\91053\production\ROADWAY\SHEETS\Part 2\SUMMARY SHEETS.dgn

EARTHWORK SUBSUMMARIES

CROSS SECTION SHEET NUMBER	ROUTE	STATIONS	203 EXCAVATION CU YD	203 EMBANKMENT CU YD		659 SEEDING AND MULCHING SQ YD
20	US-36	STA 395+25 TO STA 396+00	11	35		305
21	US-36	STA 396+25 TO STA 397+00	20	86		393
22	US-36	STA 397+25 TO STA 398+00	20	110		373
23	US-36	STA 398+25 TO STA 399+00	19	124		344
24	US-36	STA 399+25 TO STA 400+00	18	147		311
25	US-36	STA 400+25 TO STA 401+00	30	162		367
26	US-36	STA 401+25 TO STA 402+00	68	129		350
27	US-36	STA 402+25 TO STA 403+00	57	131		249
28	US-36	STA 403+25 TO STA 404+00	32	50		147
29	US-36	STA 404+25 TO STA 405+00	3	18		82
30	US-36	STA 405+25 TO STA 406+00	14	53		147
31	US-36	STA 406+25 TO STA 407+00	22	57		191
32	US-36	STA 407+25 TO STA 408+00	33	57		209
33	US-36	STA 408+25 TO STA 409+00	18	85		205
34	US-36	STA 409+25 TO STA 410+00	5	145		293
35	US-36	STA 410+24 TO STA 411+00	8	134		307
36	US-36	STA 411+25 TO STA 412+00	8	108		313
37	US-36	STA 412+25 TO STA 413+00	8	88		324
38	US-36	STA 413+25 TO STA 414+00	4	72		304
39	US-36	STA 414+25 TO STA 415+00	2	49		276
40	US-36	STA 415+25 TO STA 416+00	0	10		46
41	COLLINS RD	STA 4+40 TO STA 4+70	0	6		0
TOTALS CARRIED TO GENERAL SUMMARY			400	1,856		5,536

ITEM 659 - TOPSOIL:
THE APPLICATION RATE FOR THIS ITEM IS
111 CU YDS PER 1000 SQ YDS OF SEEDING

5536 SQ YD / 1000 = 5.5

5.5 X 111 CU YDS = 611 CU YDS

TOTAL CARRIED TO GENERAL SUMMARY:
ITEM 659 - TOPSOIL = 611 CU YD

ITEM 659 - COMMERCIAL FERTILIZER:
THE APPLICATION RATE FOR THIS ITEM IS
30 POUNDS PER 1000 SQ FT OF SEEDING.

5,536 SQ YD OF SEEDING AND MULCHING (FROM TABLE)
5536 X 9 SQ FT / SQ YD = 49,824 SQ FT

49824 / 1,000 = 49.8

49.8 X 30 POUNDS = 1,494 POUNDS = 0.75 TONS

TOTAL CARRIED TO GENERAL SUMMARY:
ITEM 659 - COMMERCIAL FERTILIZER = 0.75 TON

ITEM 659 - LIME:
THE APPLICATION RATE FOR THIS ITEM IS
BASED ON THE AREA OF SEEDING.

5,536 SQ YD OF SEEDING AND MULCHING (FROM TABLE)
5536 X 9 SQ FT / SQ YD = 49,824 SQ FT

49824 / 43,560 SQ FT / ACRE = 1.14 ACRE

TOTAL CARRIED TO GENERAL SUMMARY:
ITEM 659 - LIME = 1.14 ACRE

ITEM 659 - REPAIR SEEDING AND MULCHING:
THE APPLICATION RATE FOR THIS ITEM IS
5% OF THE SEEDING AREA.

5,536 SQ YD OF SEEDING AND MULCHING (FROM TABLE)
5536 SQ YD X 0.05 = 277 SQ YDS

TOTAL CARRIED TO GENERAL SUMMARY:
ITEM 659 - REPAIR SEEDING AND MULCHING = 277 SQ YD

ITEM 659 - INTER-SEEDING:
THE APPLICATION RATE FOR THIS ITEM IS
5% OF THE SEEDING AREA.

5,536 SQ YD OF SEEDING AND MULCHING (FROM TABLE)
5536 SQ YD X 0.05 = 277 SQ YDS

TOTAL CARRIED TO GENERAL SUMMARY:
ITEM 659 - INTER-SEEDING = 277 SQ YD

ITEM 659 - WATER:
THE APPLICATION RATE FOR THIS ITEM IS
2 APPLICATIONS OF 300 GALLONS PER 1000
SQ FT OF SEEDING

5,536 SQ YD OF SEEDING AND MULCHING (FROM TABLE)
5536 X 9 SQ FT / SQ YD = 49,824 SQ FT

49824 / 1,000 = 49.8

49.8 X 300 GAL. X 2 = 29,880 GALLONS = 30 M GAL

TOTAL CARRIED TO GENERAL SUMMARY:
ITEM 659 - WATER = 30 M GAL

CALCULATED DKR CHECKED

EARTHWORK SUBSUMMARY

UNI-36-8.74

I:\Projects\uni\036\0000.016\91053\production\ROADWAY\SHEETS\Part 2\SUMMARY SHEETS.dgn 11-APR-2015 10:14 AM drankin
SHEET_GS101

PAVEMENT CALCULATIONS

STATION		TYPICAL	LENGTH	202	204	252	254	301	304	407	407	408	441	441	617
				PAVEMENT REMOVED, ASPHALT	SUBGRADE COMPACTION	FULL DEPTH PAVEMENT SAWING	PAVEMENT PLANING, ASPHALT CONCRETE	ASPHALT CONCRETE BASE, PG64-22	AGGREGATE BASE	TACK COAT	TACK COAT FOR INTERMEDIATE COURSE	PRIME COAT	ASPHALT CONCRETE SURFACE COURSE, TYPE 1, PG64-22 (446)	ASPHALT CONCRETE SURFACE COURSE, TYPE 1, PG64-22 (446)	COMPACTED AGGREGATE
				(16" AVG)		(16" AVG)	(VAR AVG 1.5")	(6" MAX)	(6" MIN)	(0.075 GAL/SY)	(0.05 GAL/SY)	(0.40 GAL/SY)	FOR SURF (1.5" THICK)	FOR INT (1.5" THICK)	(2" AVG)
FROM	TO		FT	SY	SY	FT	SY	CY	CY	GAL	GAL	GAL	CY	CY	CY
395+38.14	404+34.27	1	896.13	437	1460	935	3298	243	284	357	73	584	198	61	22
404+34.27	415+51.85	1	1117.58	1236	1928	1147	4965	321	375	517	96	771	287	80	28
TOTALS CARRIED TO GENERAL SUMMARY				1673	3388	2082	8263	564	659	874	169	1355	626		50

PLAN SUBSUMMARY

SEE SHEET	REF NO.	STATION		SIDE		202		605		VEGETATIVE FILTER STRIP 659	659	670			
						REMOVAL MISC.: CONCRETE DRAINAGE CHANNEL		AGGREGATE DRAINS		TOPSOIL (6")	SEEDING AND MULCHING FOR VEGETATED FILTER STRIP	SLOPE EROSION PROTECTION			
		FROM	TO			SF		FT		CY	SY	SY			
15	D-1	395+38.14	397+00.00	RT				30							
	SP-1	396+50.00	399+40.00	RT						129	806	806			
16	D-1	397+00.00	402+00.00	RT				100							
17	D-1	402+00.00	407+00.00	RT				80							
18	D-1	407+00.00	412+00.00	RT				100							
	R-1	408+94.00	409+39.00	RT		150									
	SP-2	410+68.00	413+58.00	RT						129	806	806			
19	D-1	412+00.00	415+51.85	RT				70							
TOTALS CARRIED TO GENERAL SUMMARY						150		380		258	1612	1612			

CALCULATED DKR CHECKED

PLAN SUBSUMMARY

UNI-36-8.74

13
49

I:\Projects\uni\036\0000.016\91053\production\ROADWAY\SHEETS\Part 2\SUMMARY SHEETS.dgn 11-APR-2015 10:14AM drankin SHEET_GS102

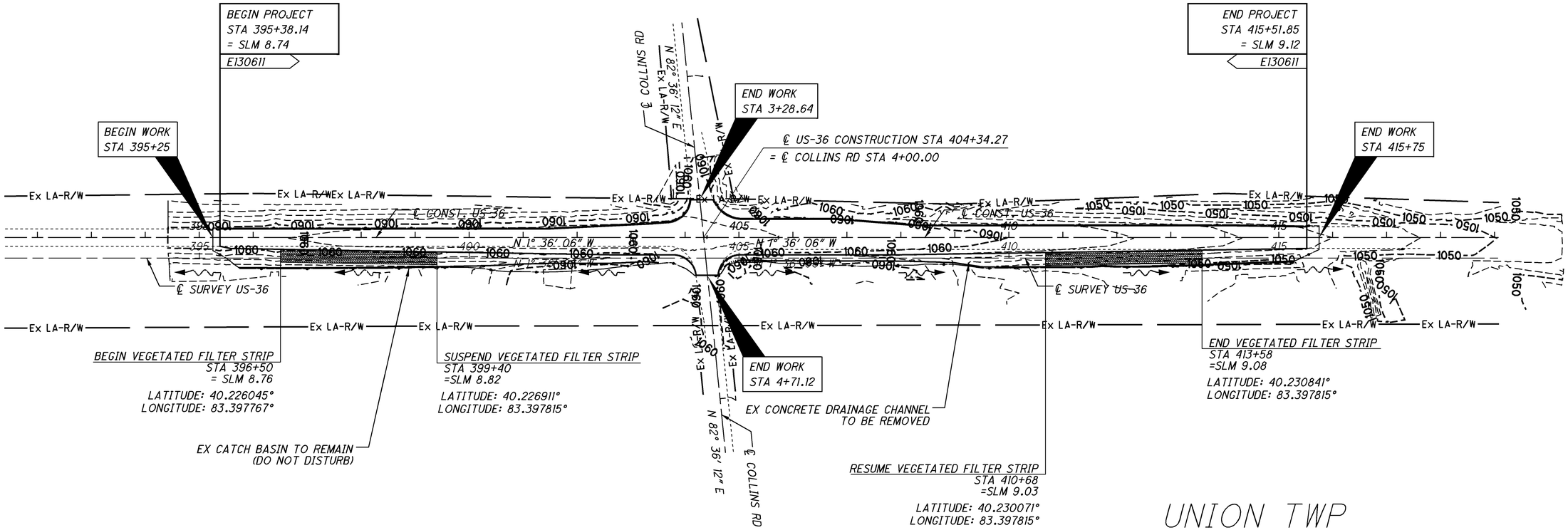

DESCRIPTION: WIDENING PAVEMENT FOR ADDITIONAL TURN LANES

TOTAL AREA OF PROJECT:
3.72 ACRES

PROJECT EARTH DISTURBED AREA:
1.54 ACRES

ESTIMATED CONTRACTOR EARTH DISTURBED AREA:
0.25 ACRES

NOTICE OF INTENT EARTH DISTURBED AREA:
4.9 ACRES

RATIONAL METHOD RUNOFF COEFFICIENT:
PRE-CONSTRUCTION: 0.63
POST CONSTRUCTION: 0.72

IMPERVIOUS (PAVED) AREA:
PRE-CONSTRUCTION: 1.71 ACRES
POST CONSTRUCTION: 2.41 ACRES

SOIL AND WATER CONSERVATION MAPS:
SOIL SURVEY OF UNION COUNTY, OHIO
USDA
DeA, Mf, Sc, Ud

SURFACE WATER RUNOFF FLOWS AWAY FROM INTERSECTION VIA OPEN DITCHES AND CULVERTS.

LATITUDE: 40° 13′ 42″
LONGITUDE: 83° 23′ 52″

USGS 7.5 MINUTE QUADRANGLE MAP
NAME: UNION, OHIO

BMP TYPE	LOCATION	Station	LATITUDE	LONGITUDE
VEGETATED BIOFILTER	BEGIN	396+50	40.226045	83.397767
	END	399+40	40.226911	83.397815
VEGETATED BIOFILTER	BEGIN	410+68	40.230071	83.397815
	END	413+58	40.230841	83.397815
RECEIVING WATERS: MILL CREEK				

HORIZONTAL SCALE IN FEET
0 50 100 200

CALCULATED DKR CHECKED

US-36
PROJECT SITE PLAN

UNI-36-8.74

14
49

I:\Projects\uni\036\0000.016\91053\production\ROADWAY\SHEETS\Part 2\SCHEMATIC PLANS.dgn 11-APR-2015 10:14 AM drankin SHEET_DB001

LEGEND:
PAVEMENT REMOVED, ASPHALT
VARIABLE DEPTH PAVEMENT PLANING
VEGETATED FILTER STRIP

FOR QUANTITIES SEE SHEET 13 / 49.

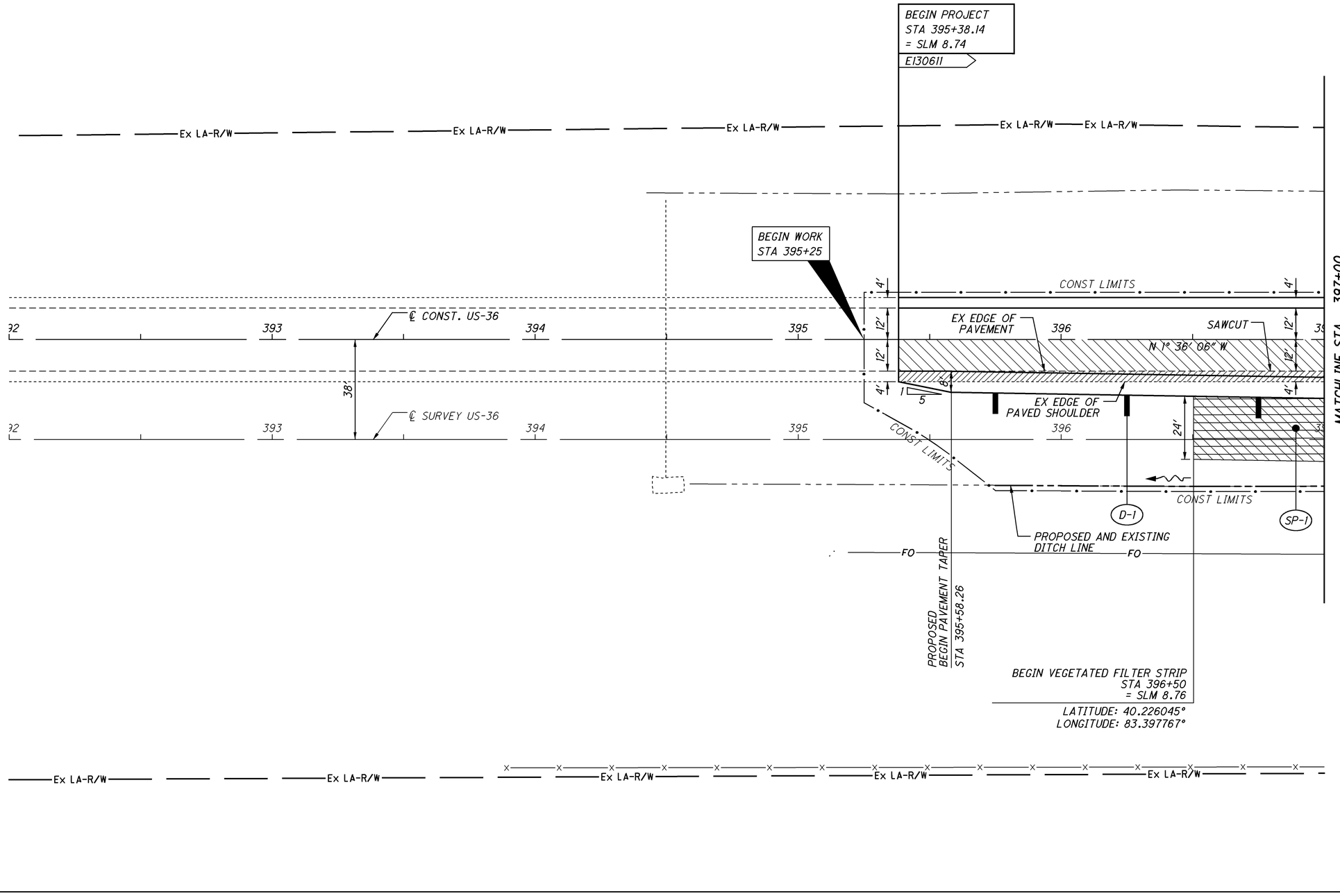

HORIZONTAL SCALE IN FEET
0 10 20 40

CALCULATED DKR
CHECKED

US-36 PLAN
STA 395+38.14 TO STA 397+00

UNI-36-8.74

15
49

SHEET_GP101 11-APR-2015 10:14 AM drankin

I:\Projects\uni\036\0000.016\91053\production\ROADWAY\SHEETS\Part 2\PLAN AND PROFILE SHEETS.dgn

LEGEND:
PAVEMENT REMOVED, ASPHALT
VARIABLE DEPTH PAVEMENT PLANING
VEGETATED FILTER STRIP

FOR QUANTITIES SEE SHEET 13 / 49.

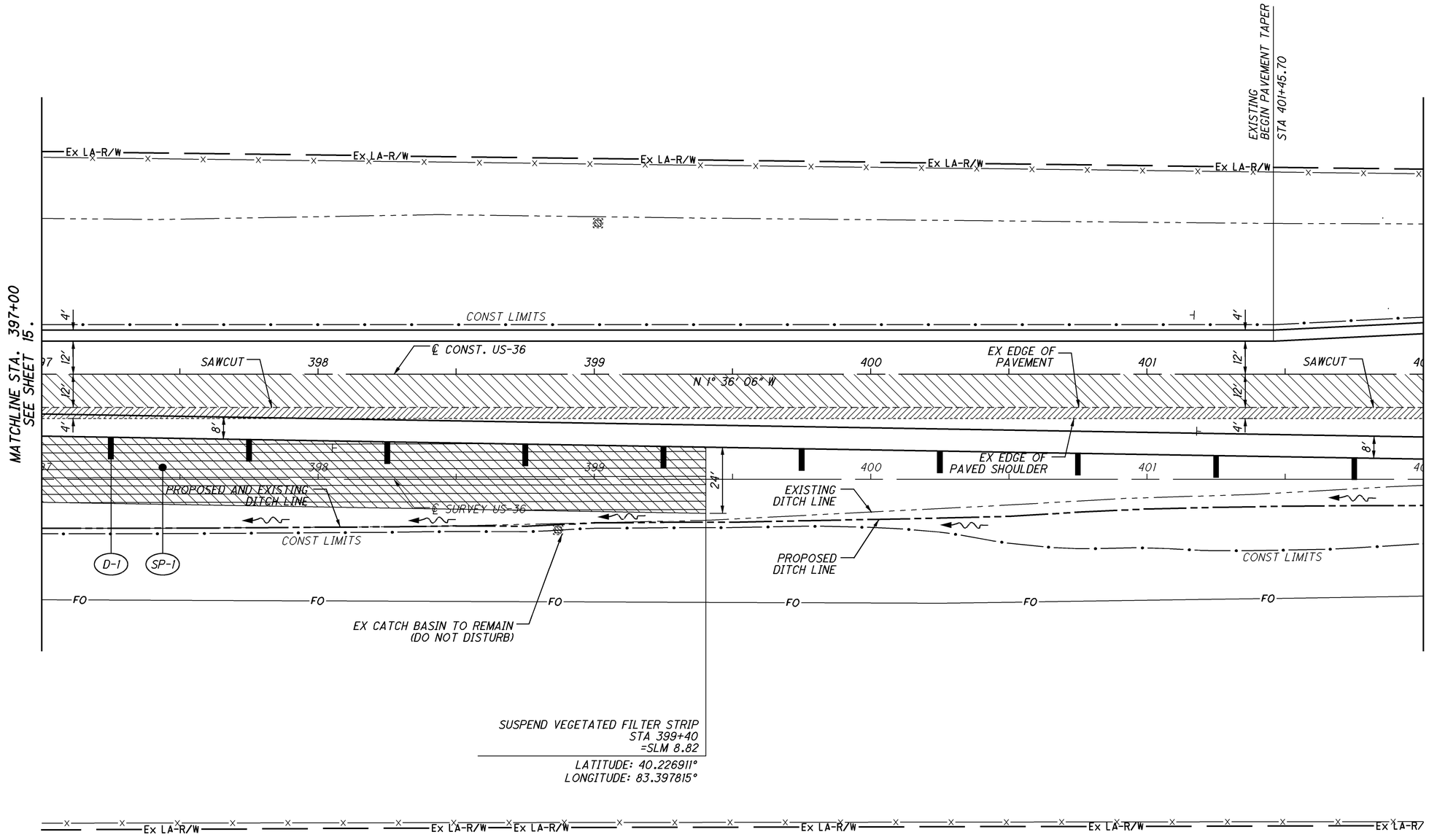

HORIZONTAL SCALE IN FEET
0 10 20 40

CALCULATED DKR
CHECKED

US-36 PLAN
STA 397+00 TO STA 402+00

UNI-36-8.74

16
49

SHEET_GP102 11-APR-2015 10:14 AM drankin

I:\Projects\uni\036\0000.016\91053\production\ROADWAY\SHEETS\Part 2\PLAN AND PROFILE SHEETS.dgn

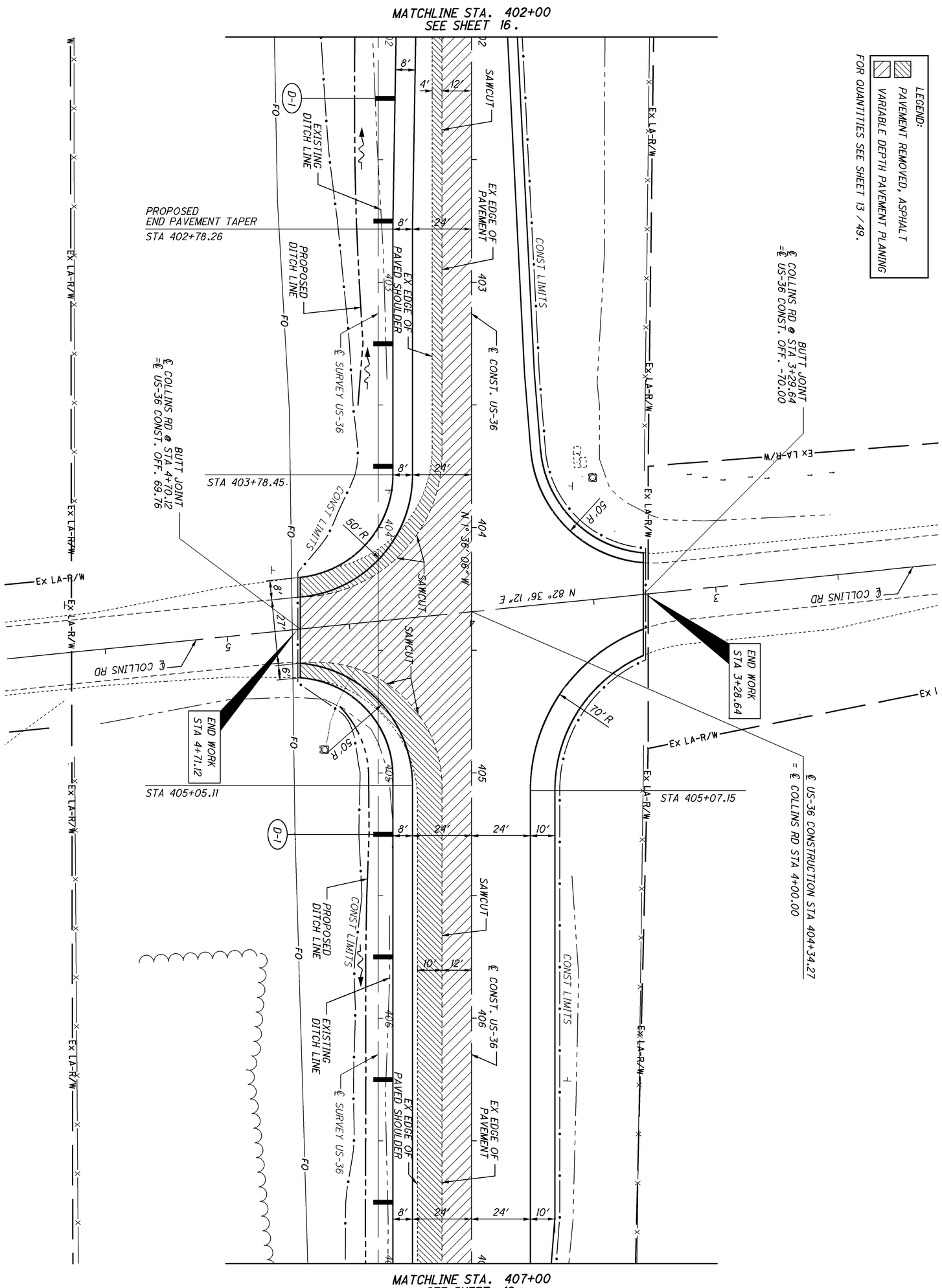

17 / 49	UNI-36-8.74	US-36 PLAN STA 402+00 TO STA 407+00	CALCULATED DKR CHECKED	0 10 20 40 HORIZONTAL SCALE IN FEET

LEGEND:
PAVEMENT REMOVED, ASPHALT
VARIABLE DEPTH PAVEMENT PLANING
VEGETATED FILTER STRIP

FOR QUANTITIES SEE SHEET 13 / 49

MATCHLINE STA. 407+00
SEE SHEET 17.

EXISTING BEGIN PAVEMENT TAPER STA 407+81.85

EXISTING BEGIN PAVEMENT TAPER STA 408+31.85

Ex LA-R/W

CONST LIMITS

24'
10'
12'
EX EDGE OF PAVEMENT
℄ CONST. US-36
SAWCUT
N 1° 36' 06" W
8'
EX EDGE OF PAVED SHOULDER
℄ SURVEY US-36
PROPOSED AND EXISTING DITCH LINE
FO
PROPOSED DITCH LINE
EXISTING DITCH LINE
EX CONCRETE DRAINAGE CHANNEL TO BE REMOVED
D-1
R-1
SP-2

407 408 409 410 411

PROPOSED BEGIN PAVEMENT TAPER STA 407+81.95

RESUME VEGETATED FILTER STRIP
STA 410+68
=SLM 9.03
LATITUDE: 40.230071°
LONGITUDE: 83.397815°

MATCHLINE STA. 412+00
SEE SHEET 19.

N

HORIZONTAL SCALE IN FEET
0 10 20 40

CALCULATED DKR
CHECKED

US-36 PLAN
STA 407+00 TO STA 412+00

UNI-36-8.74

18
49

I:\Projects\uni\036\0000.016\91053\production\ROADWAY\SHEETS\Part 2\PLAN AND PROFILE SHEETS.dgn
11-APR-2015 10:14 AM drankin
SHEET_GP104

LEGEND:
PAVEMENT REMOVED, ASPHALT
VARIABLE DEPTH PAVEMENT PLANING
VEGETATED FILTER STRIP

FOR QUANTITIES SEE SHEET 13 / 49.

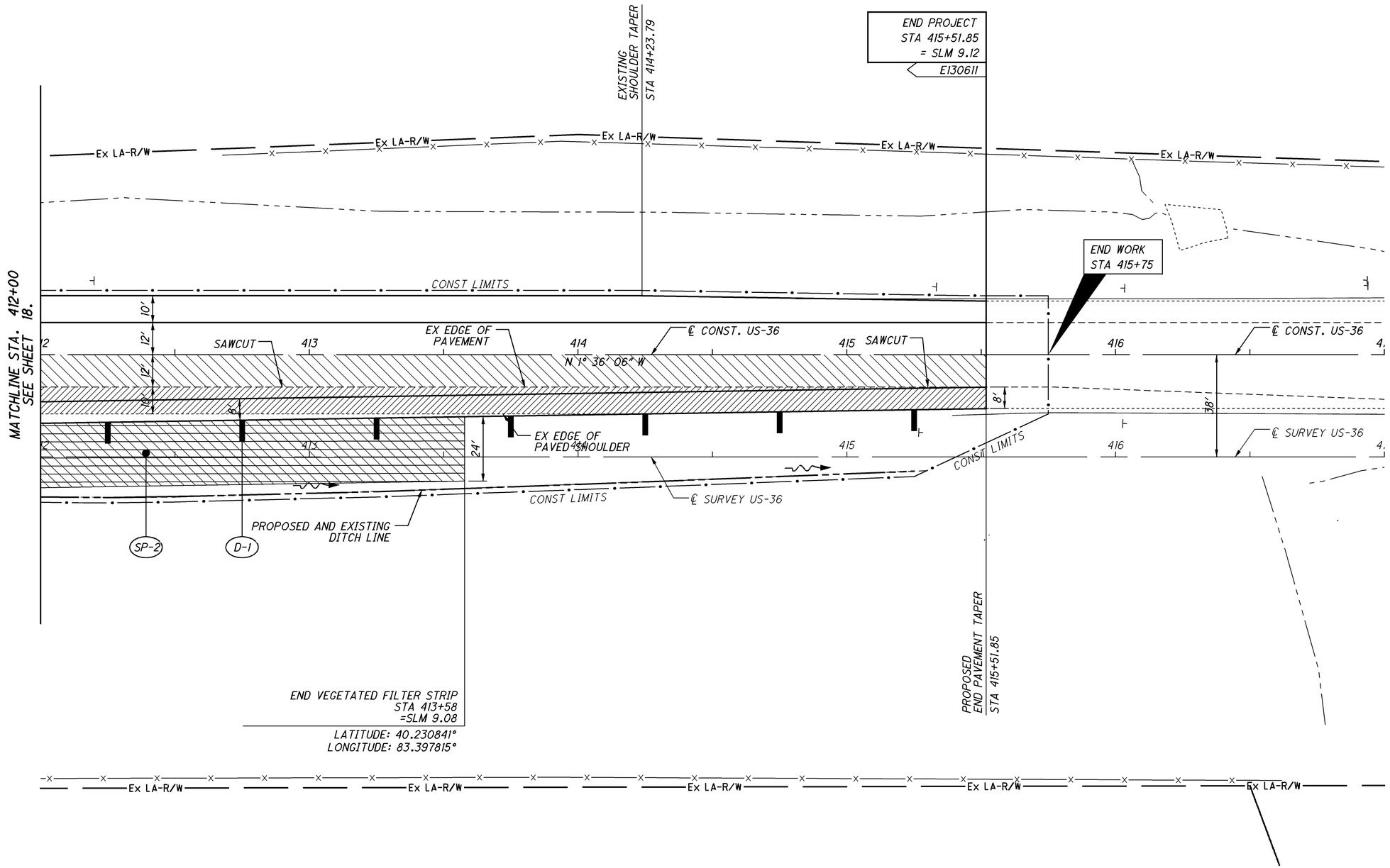

HORIZONTAL SCALE IN FEET
0 10 20 40

CALCULATED DKR
CHECKED

US-36 PLAN
STA 412+00 TO STA 415+51.85

UNI-36-8.74

19
49

SHEET_GP105 11-APR-2015 10:14 AM drankin

I:\Projects\uni\036\0000.016\91053\production\ROADWAY\SHEETS\Part 2\PLAN AND PROFILE SHEETS.dgn

SEEDING END WIDTH	SEEDING SQ. YDS.
	100
36	
	101
37	
	78
19	
	26
0	
	305

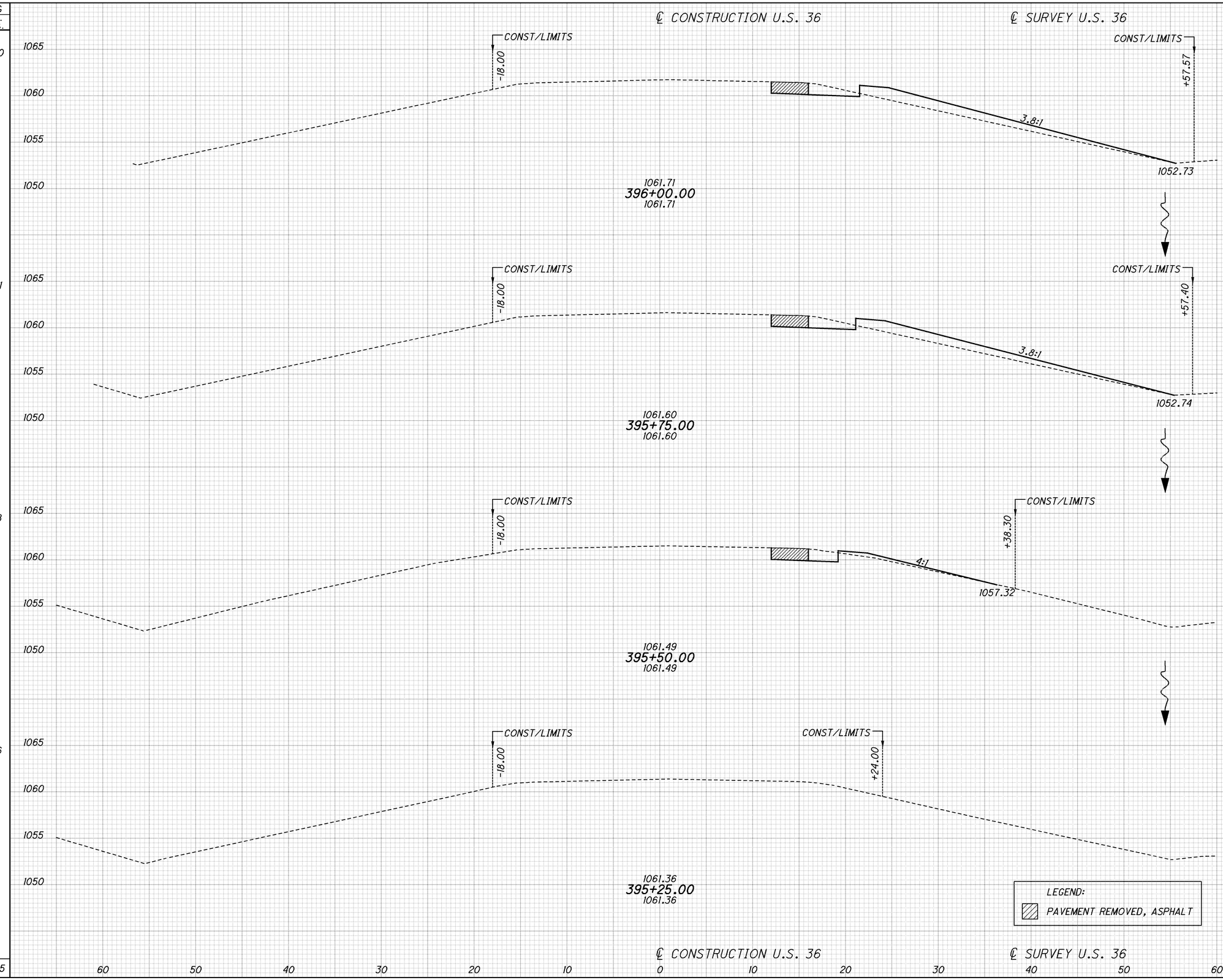

END AREA CUT	END AREA FILL	VOLUME CUT	VOLUME FILL
5	24		
		5	21
5	22		
		4	12
4	4		
		2	2
0	0		
		11	35

CALCULATED DKR
CHECKED

US-36 CROSS SECTIONS
STA 395+25 TO STA 396+00

UNI-36-8.74

20
49

I:\Projects\uni\036\0000.016\91053\production\ROADWAY\SHEETS\Part 2\CROSS SECTION SHEETS.dgn 11-APR-2015 10:14AM drankin SHEET_XS101

SEEDING END WIDTH	SEEDING SQ. YDS.
	97
35	
	97
35	
	99
36	
	100
36	
	393

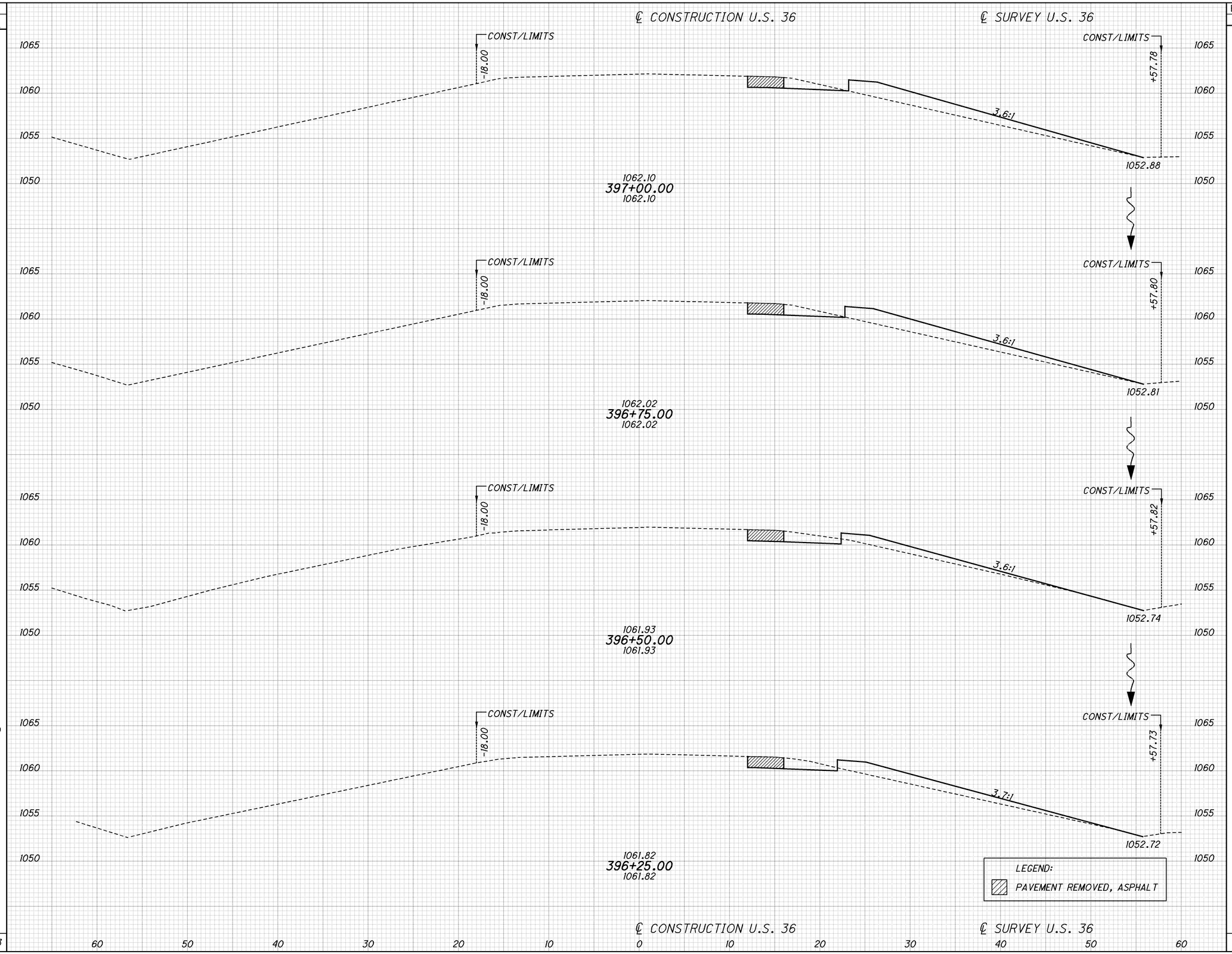

END AREA CUT	END AREA FILL	VOLUME CUT	VOLUME FILL
5	30		
		5	27
5	29		
		5	20
6	14		
		5	17
5	23		
		5	22
		20	86

CALCULATED DKR
CHECKED

US-36 CROSS SECTIONS
STA 396+25 TO STA 397+00

UNI-36-8.74

21
49

I:\Projects\uni\036\0000.016\91053\production\ROADWAY\SHEETS\Part 2\CROSS SECTION SHEETS.dgn 11-APR-2015 10:14 AM drankin SHEET_XS102

SEEDING END WIDTH	SEEDING SQ. YDS.
	90
33	
	93
34	
	94
34	
	96
35	
	373

END AREA CUT	END AREA FILL	VOLUME CUT	VOLUME FILL
5	34		
		5	31
5	33		
		5	27
6	26		
		5	25
5	29		
		5	27
		20	110

CALCULATED DKR
CHECKED

US-36 CROSS SECTIONS
STA 397+25 TO STA 398+00

UNI-36-8.74

22
49

℄ CONSTRUCTION U.S. 36 — ℄ SURVEY U.S. 36

398+00.000
1062.38 (℄ CONSTRUCTION U.S. 36) — 1062.38 (℄ SURVEY U.S. 36)
CONST/LIMITS 18.00 — 3.3:1 — +57.36 — 1053.28

397+75.000
1062.32 (℄ CONSTRUCTION U.S. 36) — 1062.32 (℄ SURVEY U.S. 36)
CONST/LIMITS 18.00 — 3.4:1 — +57.52 — 1053.16

397+50.000
1062.27 (℄ CONSTRUCTION U.S. 36) — 1062.27 (℄ SURVEY U.S. 36)
CONST/LIMITS 18.00 — 3.4:1 — +57.69 — 1053.03

397+25.000
1062.19 (℄ CONSTRUCTION U.S. 36) — 1062.19 (℄ SURVEY U.S. 36)
CONST/LIMITS 18.00 — 3.5:1 — +57.76 — 1052.95

LEGEND:
PAVEMENT REMOVED, ASPHALT

60 50 40 30 20 10 0 10 20 30 40 50 60

I:\Projects\uni\036\0000.016\91053\production\ROADWAY\SHEETS\Part 2\CROSS SECTION SHEETS.dgn 11-APR-2015 10:14 AM drankin SHEET_XS103

SEEDING END WIDTH	SEEDING SQ. YDS.
30	82
	85
31	
	88
32	
	89
32	
	344

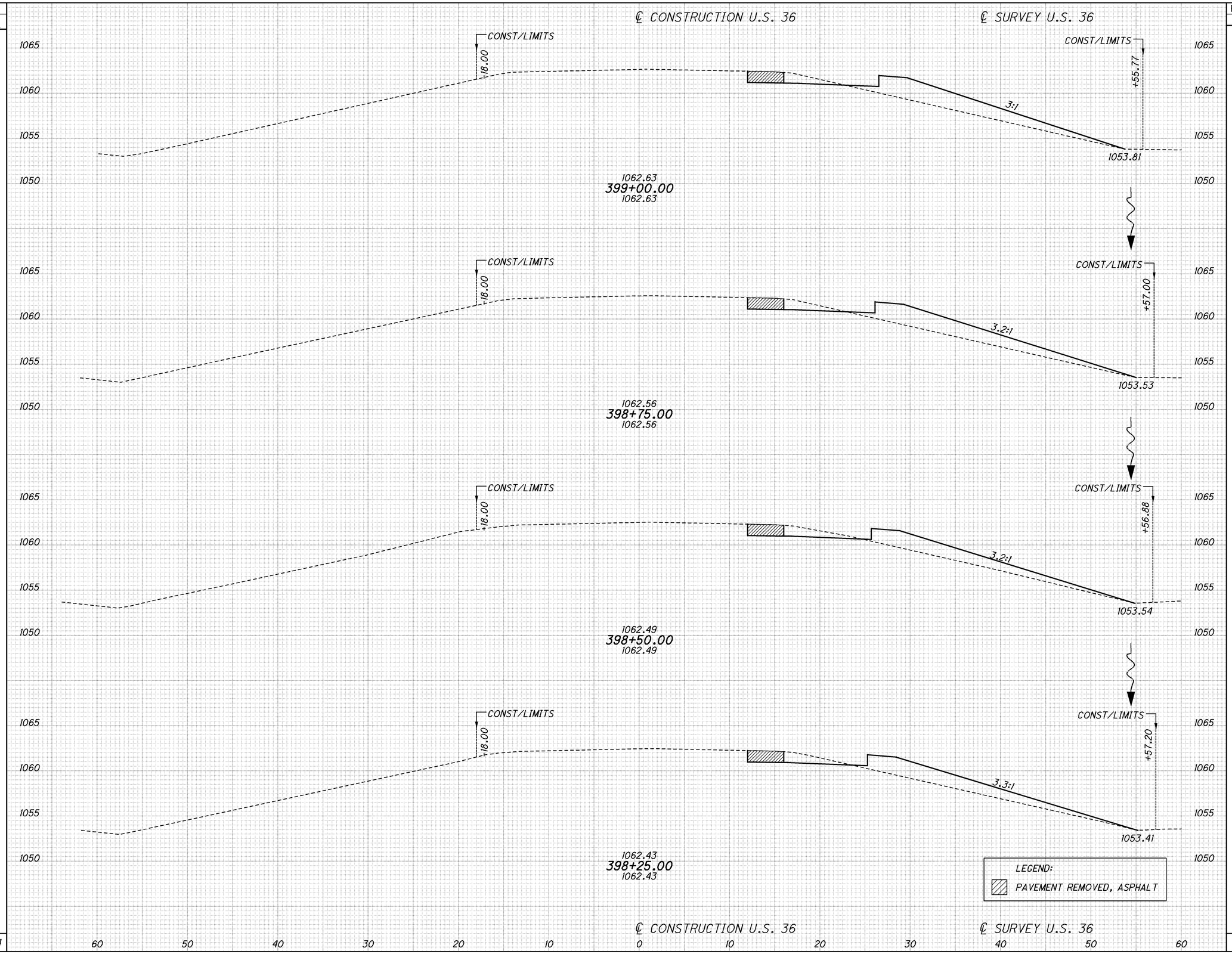

END AREA CUT	END AREA FILL	VOLUME CUT	VOLUME FILL
4	37		
		4	34
5	37		
		5	31
6	29		
		5	28
5	32		
		5	31
		19	124

CALCULATED DKR
CHECKED

US-36 CROSS SECTIONS STA 398+25 TO STA 399+00

UNI-36-8.74

23
49

I:\Projects\uni\036\0000.016\91053\production\ROADWAY\SHEETS\Part 2\CROSS SECTION SHEETS.dgn 11-APR-2015 10:14 AM drankin SHEET_XS104

SEEDING END WIDTH	SEEDING SQ. YDS.	END AREA CUT	END AREA FILL	VOLUME CUT	VOLUME FILL
	78				
27		4	47		
				4	43
	76				
		4	45		
28					
				5	36
	78				
		6	32		
28					
				5	33
	79				
		5	39		
29					
				4	35
	311			18	147

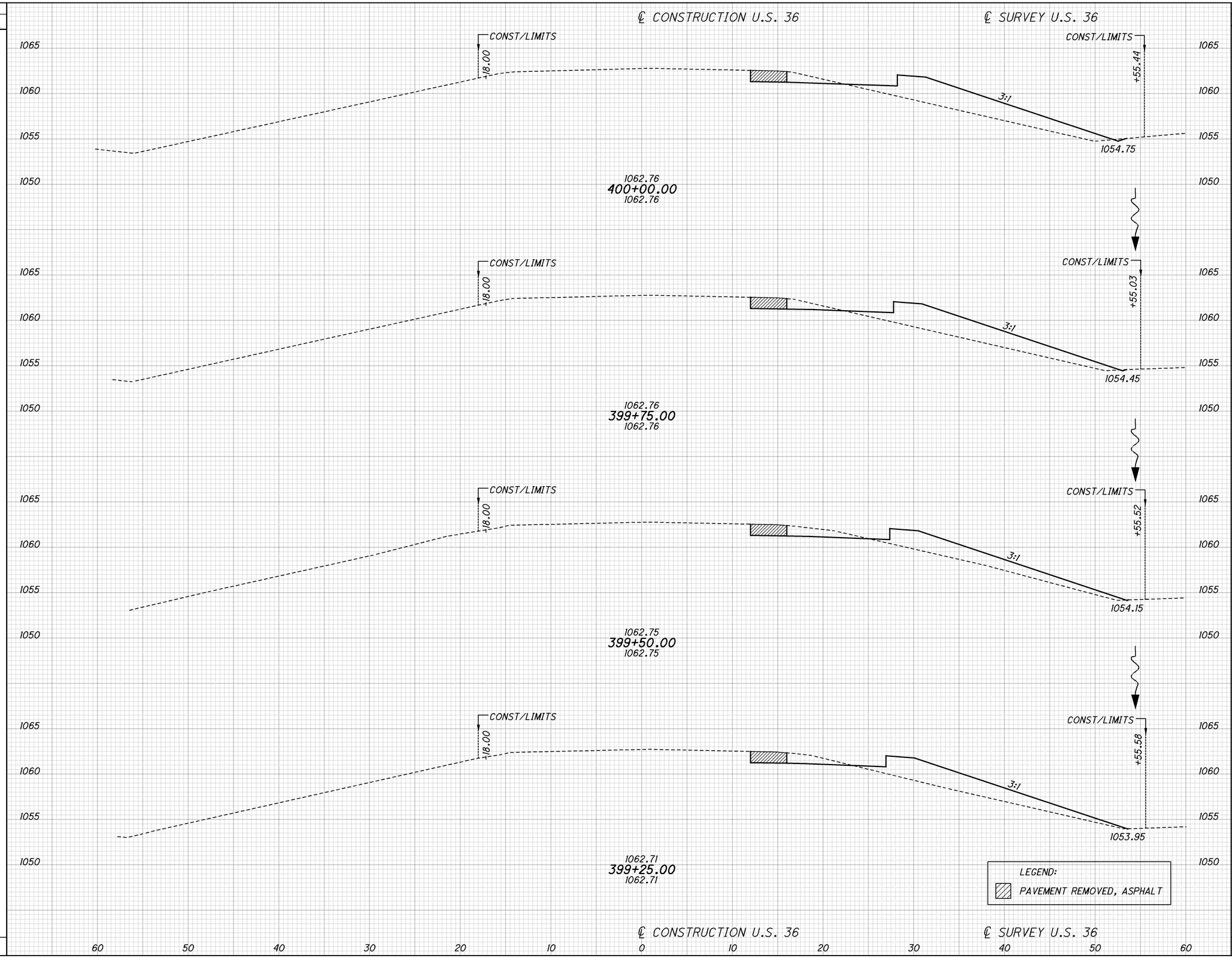

CALCULATED DKR CHECKED

US-36 CROSS SECTIONS STA 399+25 TO STA 400+00

UNI-36-8.74

24
49

I:\Projects\uni\036\0000.016\91053\production\ROADWAY\SHEETS\Part 2\CROSS SECTION SHEETS.dgn 11-APR-2015 10:14AM drankin SHEET_XS105

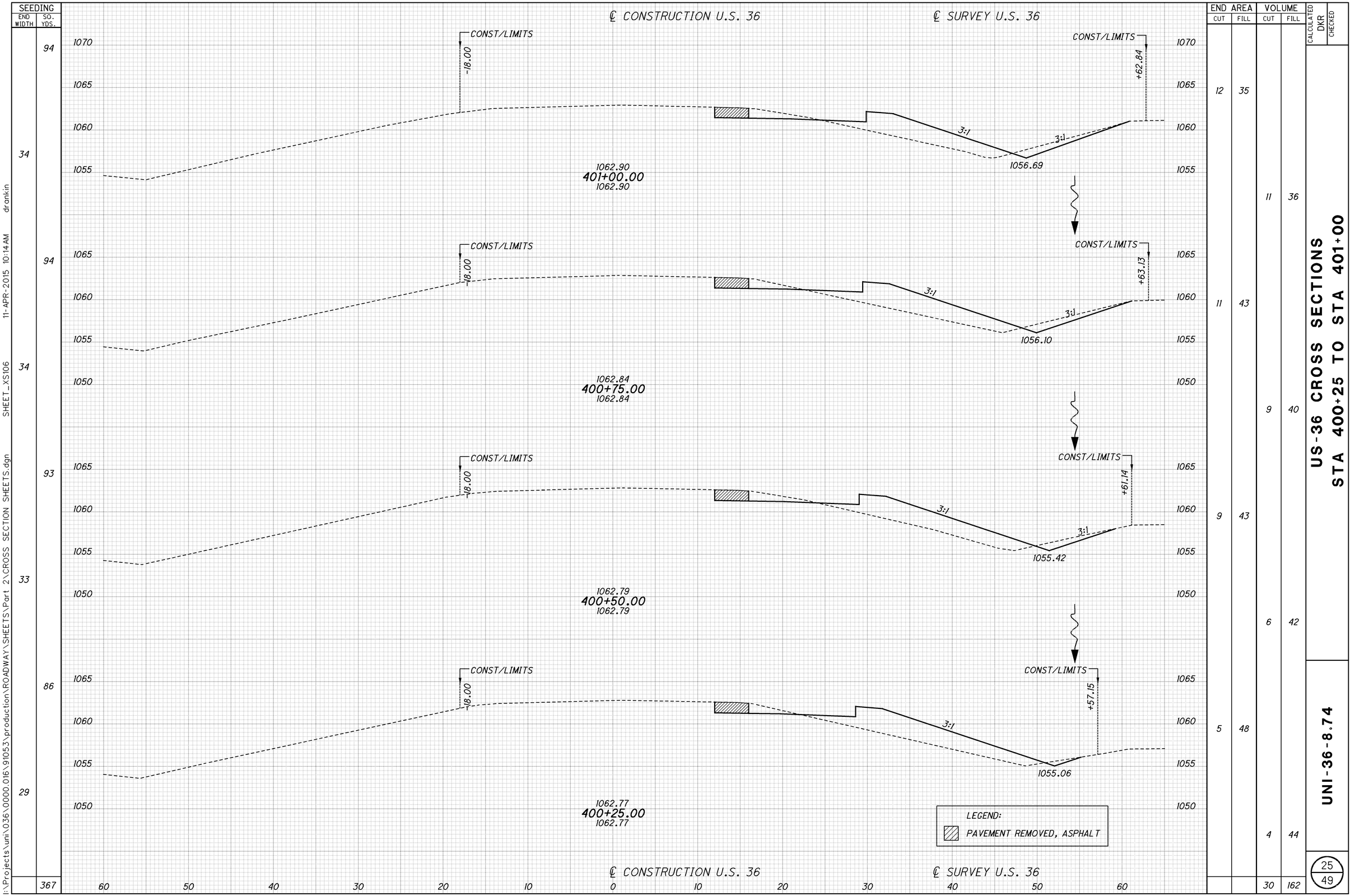

SEEDING END WIDTH	SEEDING SQ. YDS.
	94
34	
	94
34	
	93
33	
	86
29	
	367

END AREA CUT	END AREA FILL	VOLUME CUT	VOLUME FILL
12	35		
		11	36
11	43		
		9	40
9	43		
		6	42
5	48		
		4	44
		30	162

CALCULATED DKR
CHECKED

US-36 CROSS SECTIONS
STA 400+25 TO STA 401+00

UNI-36-8.74

25
49

I:\Projects\uni\036\0000.016\91053\production\ROADWAY\SHEETS\Part 2\CROSS SECTION SHEETS.dgn 11-APR-2015 10:14 AM drankin SHEET_XS106

SEEDING END WIDTH	SEEDING SQ. YDS.	END AREA CUT	END AREA FILL	VOLUME CUT	VOLUME FILL
	81				
30		21	36		
	86			19	33
32		21	35		
	90			19	32
33		20	34		
	93			17	32
34		17	35		
				13	32
350				68	129

CALCULATED DKR

CHECKED

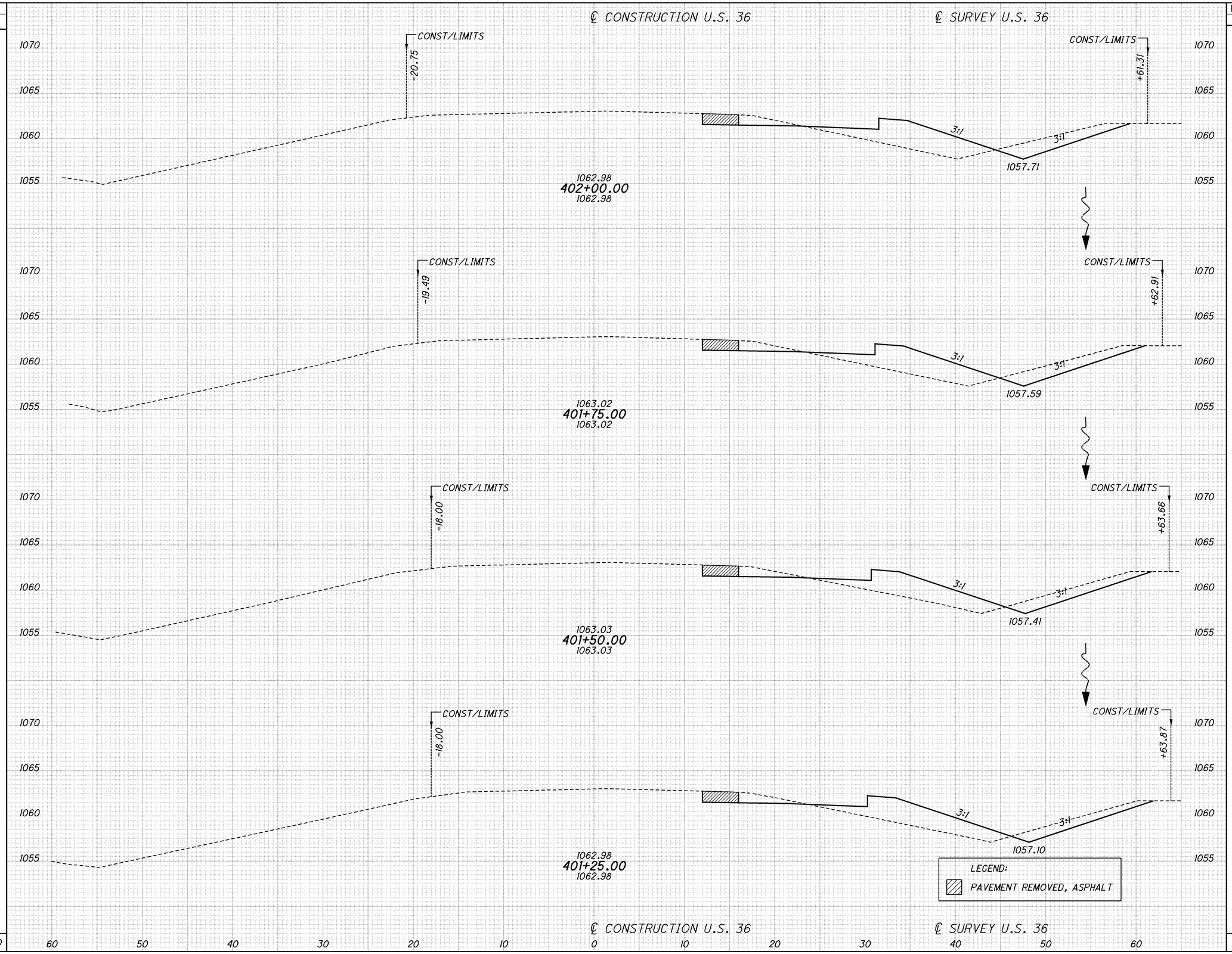

US-36 CROSS SECTIONS STA 401+25 TO STA 402+00

UNI-36-8.74

I:\Projects\uni\036\0000.016\91053\production\ROADWAY\SHEETS\Part 2\CROSS SECTION SHEETS.dgn 11-APR-2015 10:14 AM drankin SHEET_XS107

SEEDING END WIDTH	SEEDING SQ. YDS.	END AREA CUT	END AREA FILL	VOLUME CUT	VOLUME FILL
	50				
19		9	30		
				10	30
	57				
22		12	35		
				13	33
	67				
26		16	37		
				16	34
	75				
28		18	37		
				18	34
	249			57	131

CALCULATED DKR | CHECKED

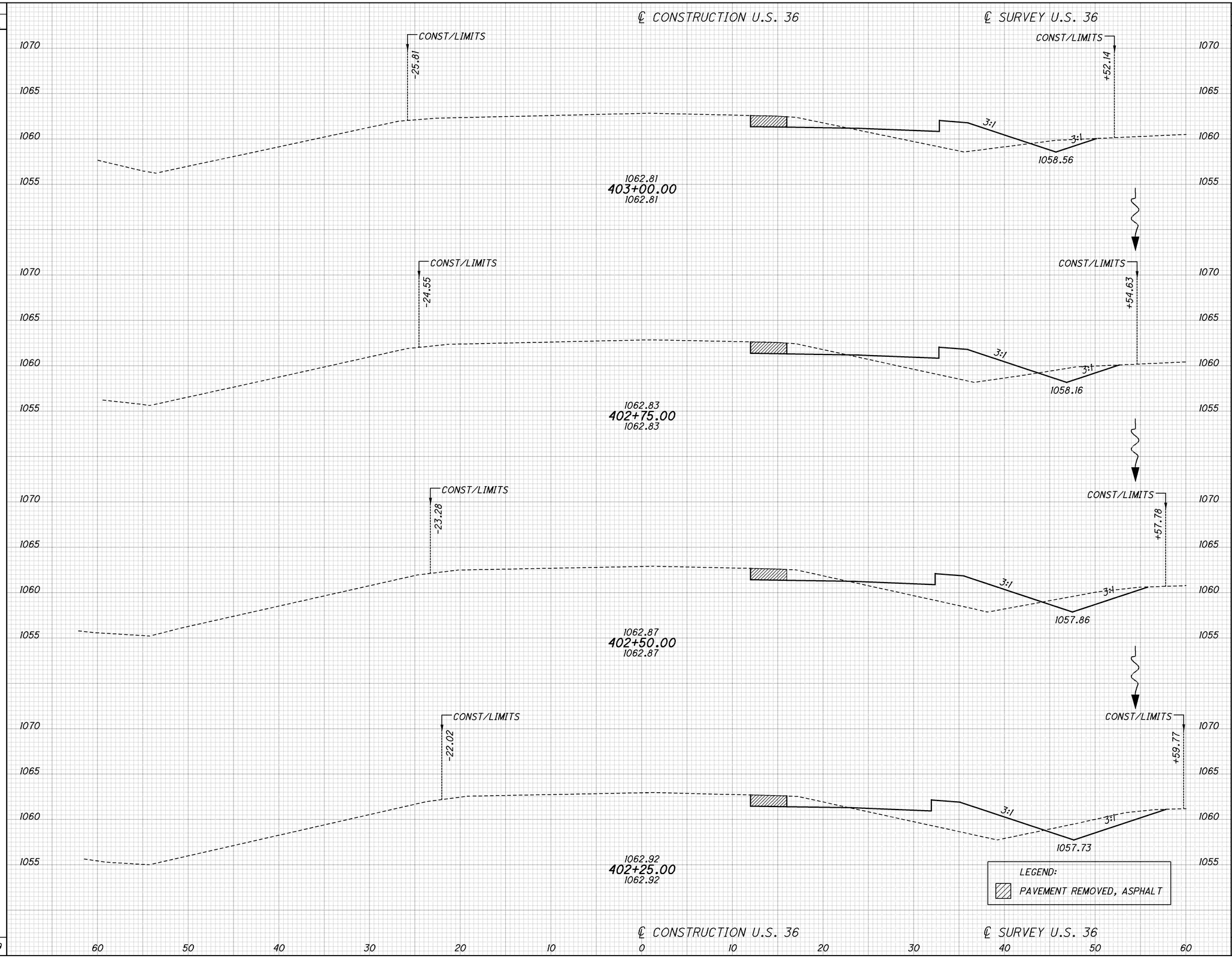

US-36 CROSS SECTIONS STA 402+25 TO STA 403+00

UNI-36-8.74

I:\Projects\uni\036\0000.016\91053\production\ROADWAY\SHEETS\Part 2\CROSS SECTION SHEETS.dgn 11-APR-2015 10:15AM drankin SHEET_XS108

SEEDING END WIDTH	SEEDING SQ. YDS.
	24
17	
	42
13	
	38
14	
	43
17	
	147

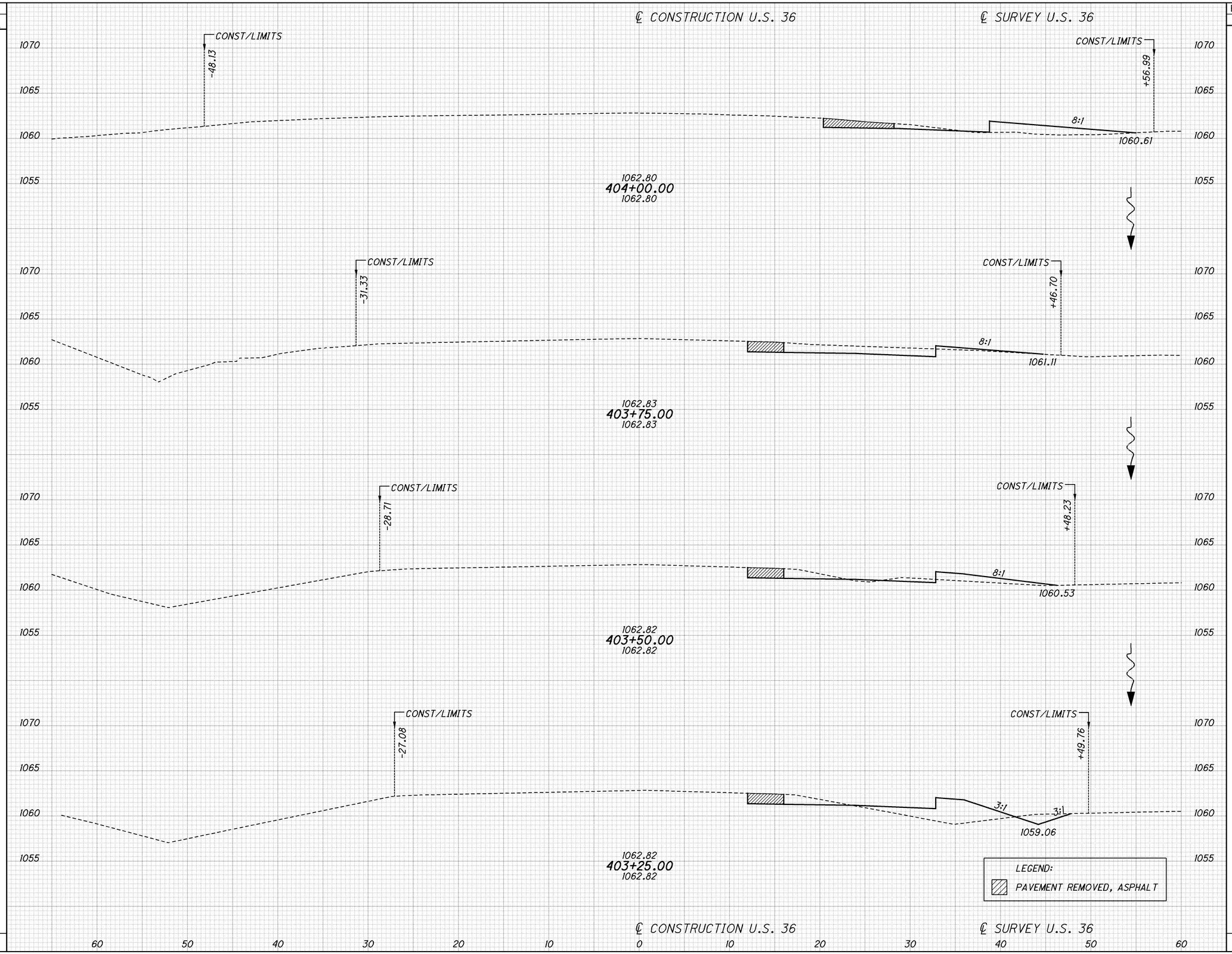

END AREA CUT	END AREA FILL	VOLUME CUT	VOLUME FILL
3	12		
		8	6
15	2		
		10	5
6	8		
		6	14
8	23		
		8	25
		32	50

CALCULATED DKR
CHECKED

US-36 CROSS SECTIONS
STA 403+25 TO STA 404+00

UNI-36-8.74

28
49

I:\Projects\uni\036\0000.016\91053\production\ROADWAY\SHEETS\Part 2\CROSS SECTION SHEETS.dgn 11-APR-2015 10:15AM drankin SHEET_XS109

SEEDING END WIDTH	SEEDING SQ. YDS.
	35
12	
	32
11	
	15
0	
	0
0	
	82

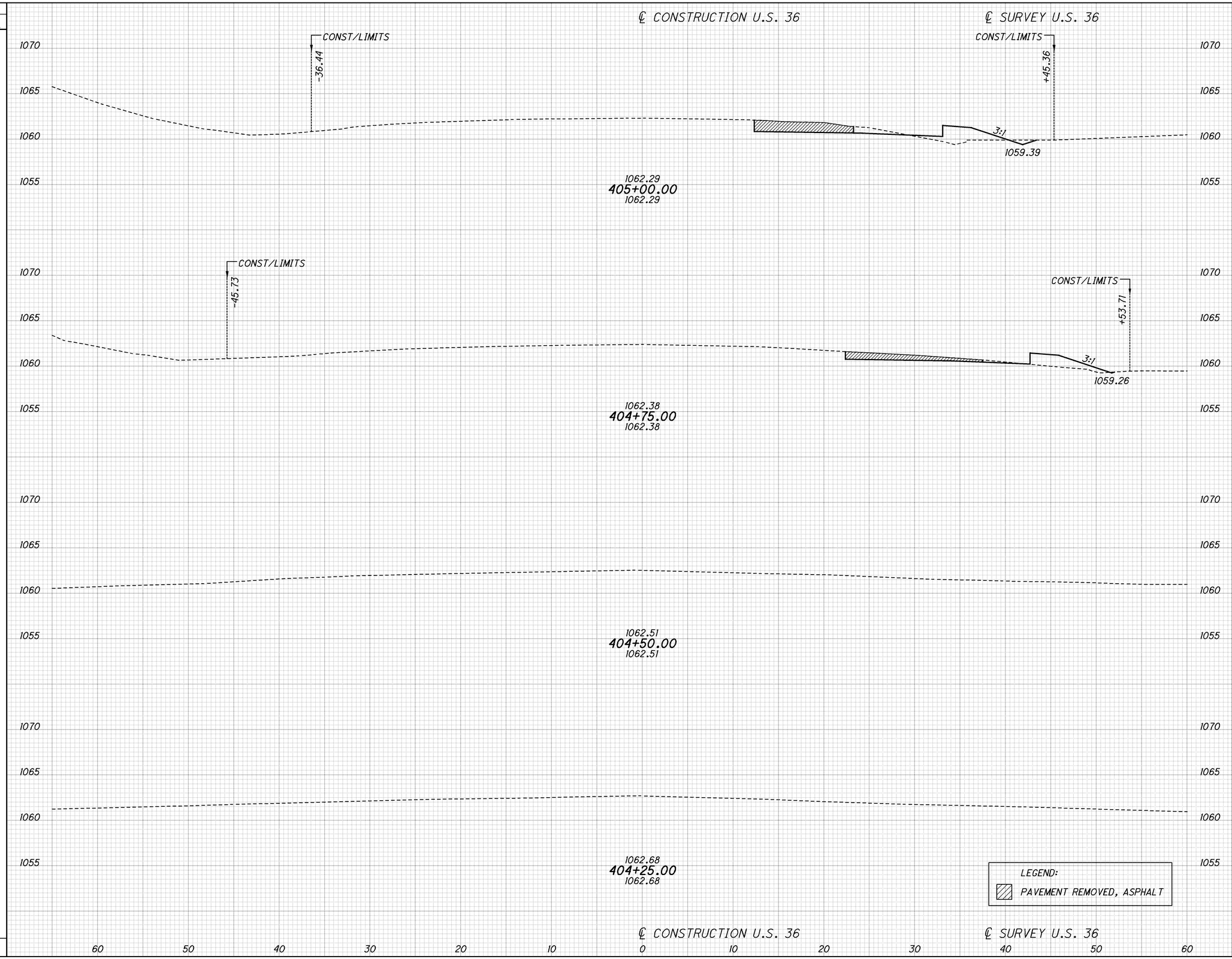

END AREA CUT	END AREA FILL	VOLUME CUT	VOLUME FILL
4	10		
		2	8
1	8		
		0	4
0	0		
		0	0
0	0		
		1	6
		3	18

CALCULATED DKR
CHECKED

US-36 CROSS SECTIONS
STA 404+25 TO STA 405+00

UNI-36-8.74

29
49

I:\Projects\uni\036\0000.016\91053\production\ROADWAY\SHEETS\Part 2\CROSS SECTION SHEETS.dgn 11-APR-2015 10:15AM drankin SHEET_XS110

SEEDING END WIDTH	SEEDING SQ. YDS.
	40
14	
	39
14	
	35
11	
	33
13	
	147

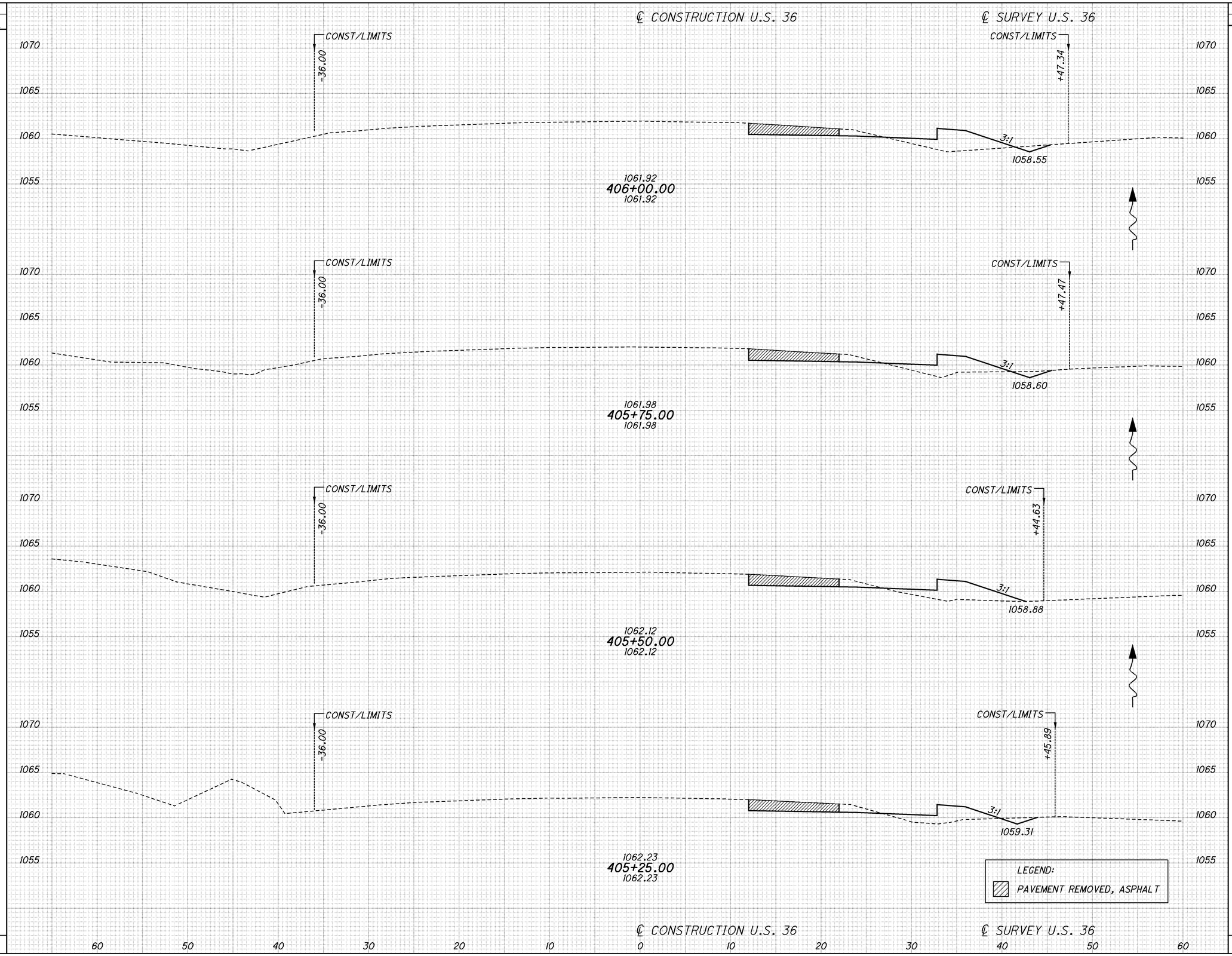

END AREA CUT	END AREA FILL	VOLUME CUT	VOLUME FILL
4	17		
		4	15
4	15		
		3	15
3	17		
		3	13
4	12		
		4	10
		14	53

CALCULATED DKR
CHECKED

US-36 CROSS SECTIONS STA 405+25 TO STA 406+00

UNI-36-8.74

30
49

I:\Projects\uni\036\0000.016\91053\production\ROADWAY\SHEETS\Part 2\CROSS SECTION SHEETS.dgn 11-APR-2015 10:15AM drankin

SHEET_XS111

SEEDING END WIDTH	SEEDING SQ. YDS.
	53
18	
	50
18	
	46
15	
	42
15	
	191

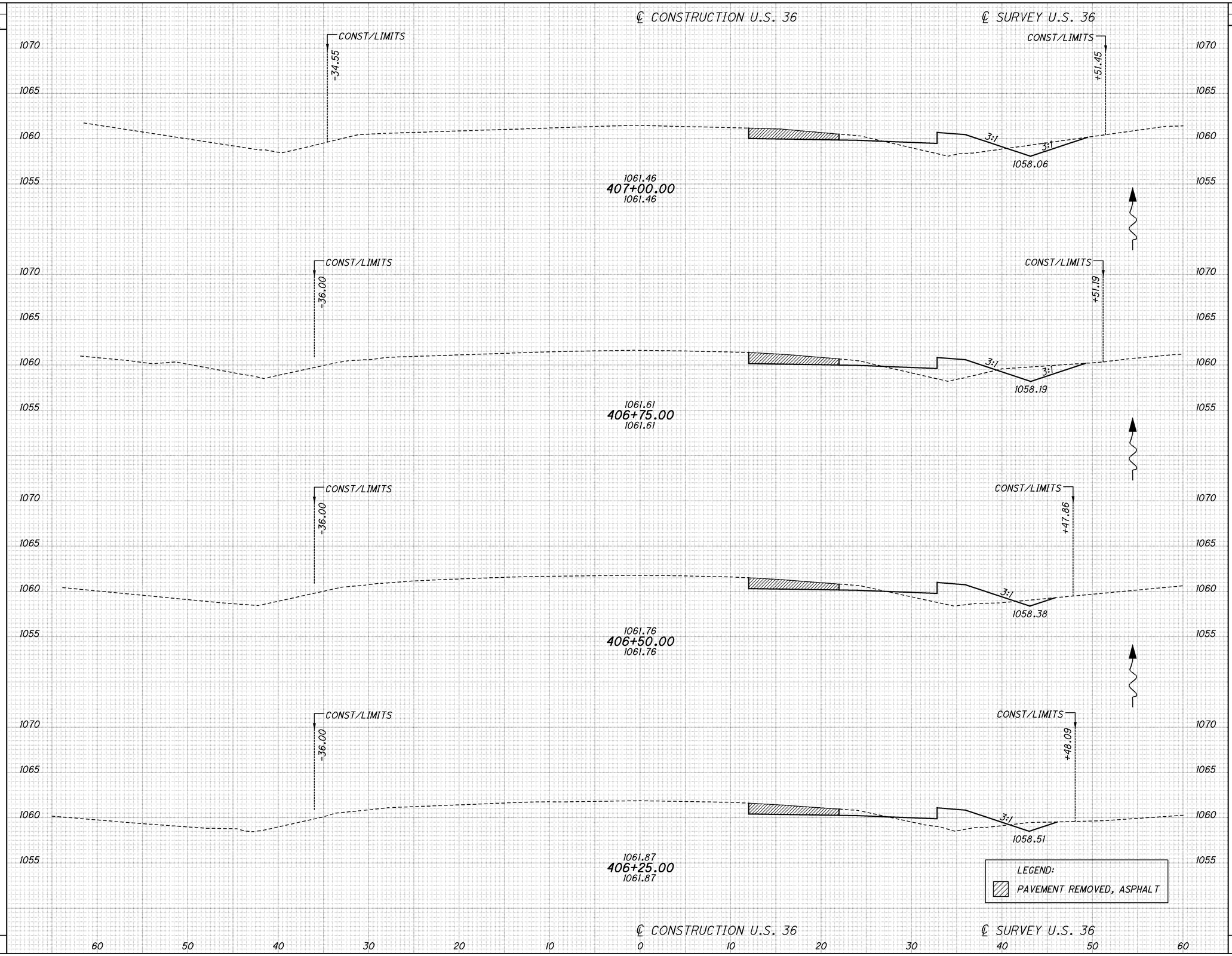

END AREA CUT	END AREA FILL	VOLUME CUT	VOLUME FILL
8	16	8	14
10	15	6	14
4	16	4	14
5	15	4	15
		22	57

CALCULATED DKR
CHECKED

US-36 CROSS SECTIONS
STA 406+25 TO STA 407+00

UNI-36-8.74

31
49

I:\Projects\uni\036\0000.016\91053\production\ROADWAY\SHEETS\Part 2\CROSS SECTION SHEETS.dgn 11-APR-2015 10:15AM drankin SHEET_XS112

SEEDING END WIDTH	SEEDING SQ. YDS.	END AREA CUT	END AREA FILL	VOLUME CUT	VOLUME FILL
	53				
19		7	18		
				7	16
	51				
18		9	16		
				8	14
	51				
19		9	15		
				9	13
	54				
20		11	14		
				9	14
	209			33	57

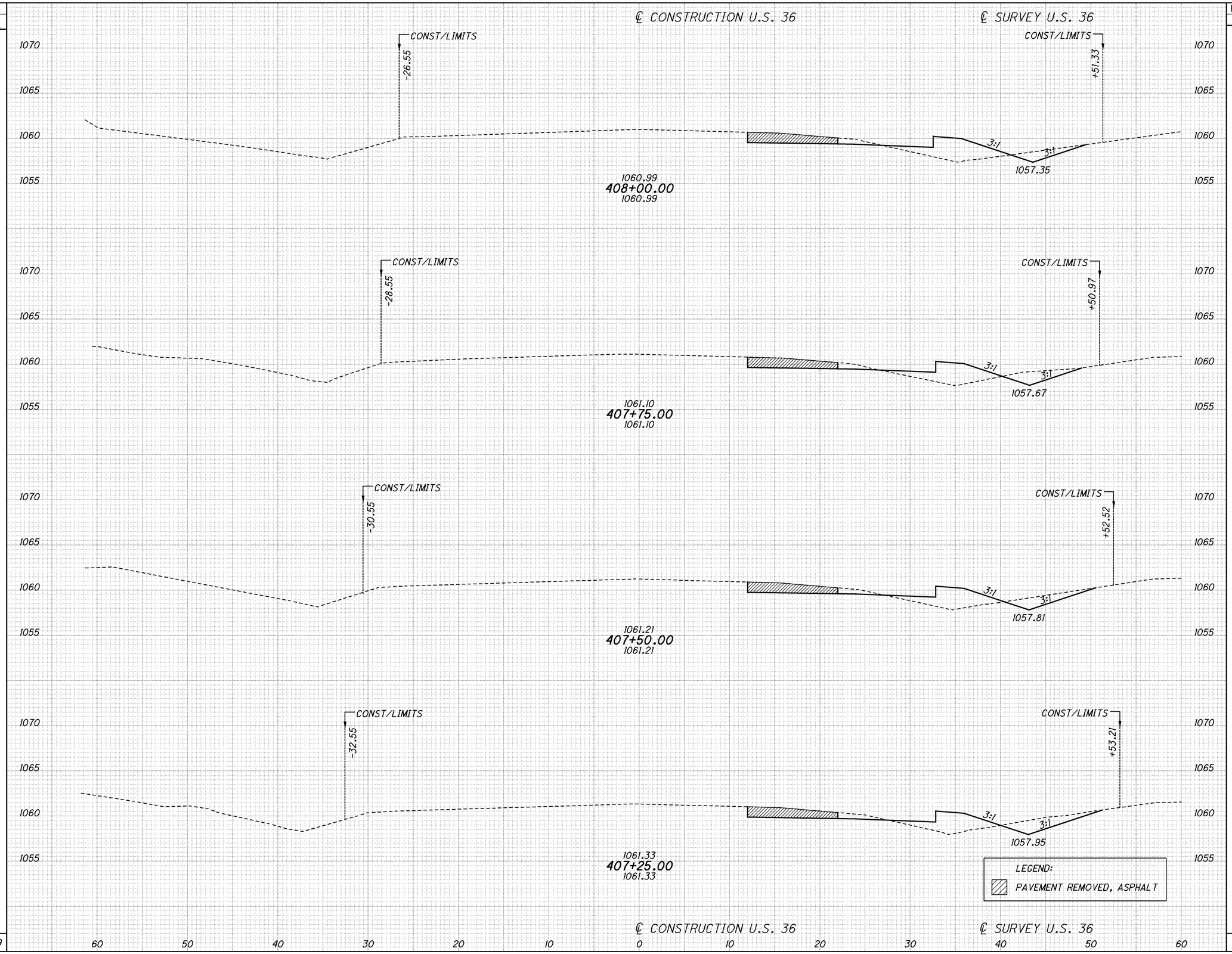

CALCULATED DKR
CHECKED

US-36 CROSS SECTIONS
STA 407+25 TO STA 408+00

UNI-36-8.74

32
49

I:\Projects\uni\036\0000.016\91053\production\ROADWAY\SHEETS\Part 2\CROSS SECTION SHEETS.dgn 11-APR-2015 10:15AM drankin SHEET_XS113

SEEDING END WIDTH	SEEDING SQ. YDS.
	56
18	
	50
18	
	49
17	
	50
19	
	205

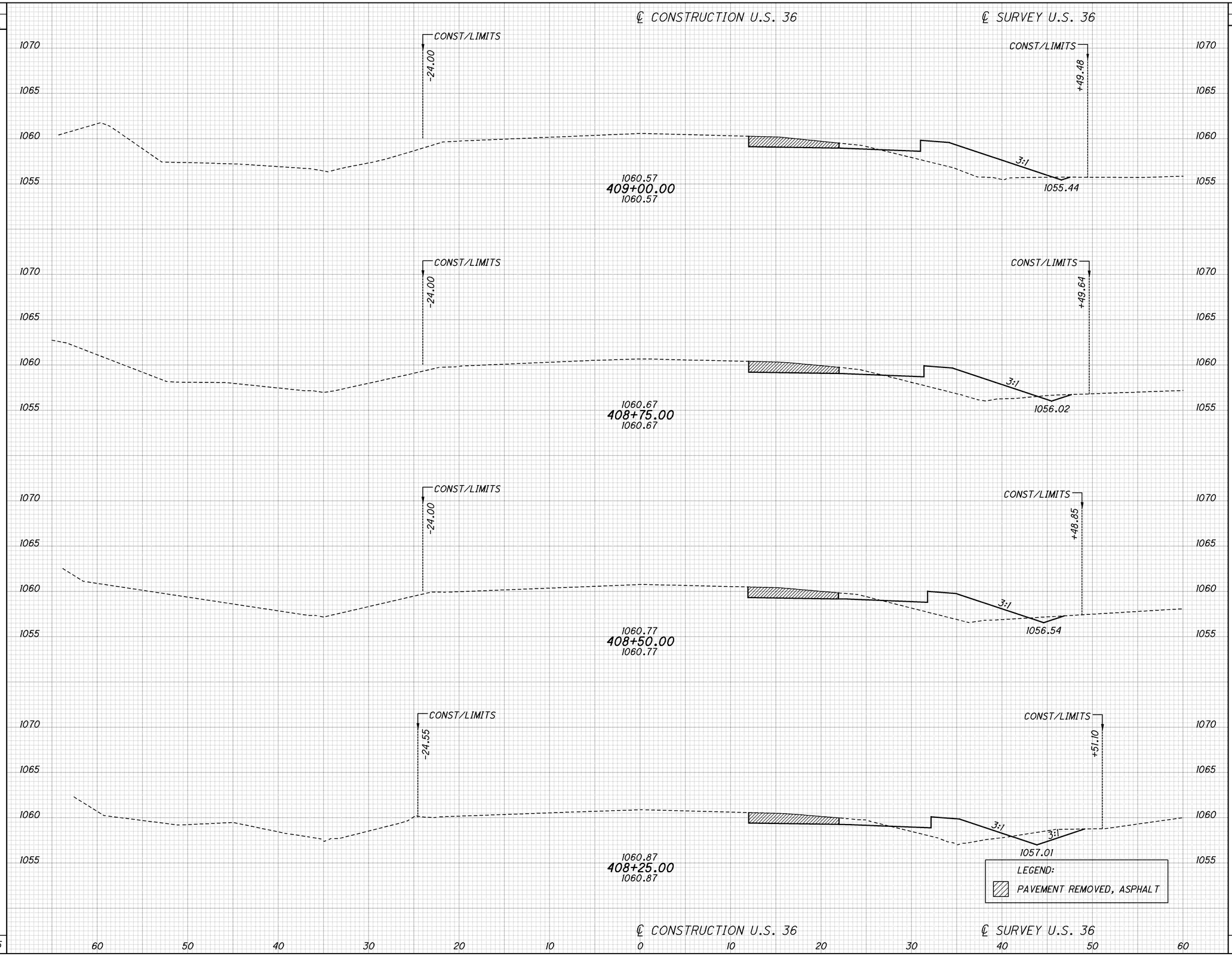

END AREA CUT	END AREA FILL	VOLUME CUT	VOLUME FILL
2	30		
		2	26
3	26		
		3	23
4	24		
		6	19
9	18		
		7	17
		18	85

CALCULATED DKR
CHECKED

US-36 CROSS SECTIONS
STA 408+25 TO STA 409+00

UNI-36-8.74

33
49

I:\Projects\uni\036\0000.016\91053\production\ROADWAY\SHEETS\Part 2\CROSS SECTION SHEETS.dgn 11-APR-2015 10:15AM drankin SHEET_XS114

SEEDING END WIDTH	SEEDING SQ. YDS.
	76
28	
	76
27	
	74
26	
	67
22	
	293

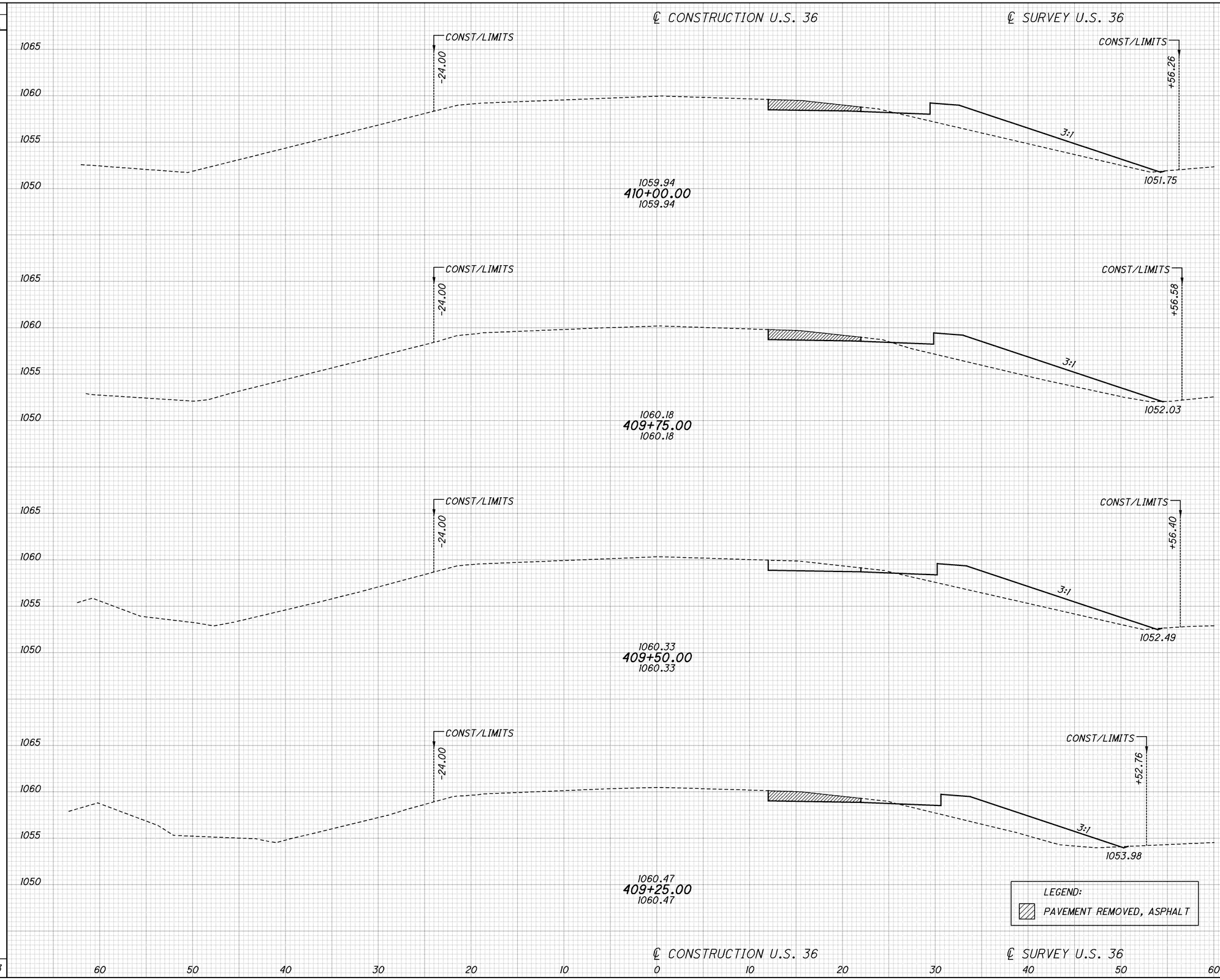

END AREA CUT	END AREA FILL	VOLUME CUT	VOLUME FILL
2	37		
		1	38
1	45		
		1	39
1	39		
		1	36
2	39		
		2	32
		5	145

CALCULATED DKR
CHECKED

US-36 CROSS SECTIONS
STA 409+25 TO STA 410+00

UNI-36-8.74

34
49

I:\Projects\uni\036\0000.016\91053\production\ROADWAY\SHEETS\Part 2\CROSS SECTION SHEETS.dgn 11-APR-2015 10:15AM drankin SHEET_XS115

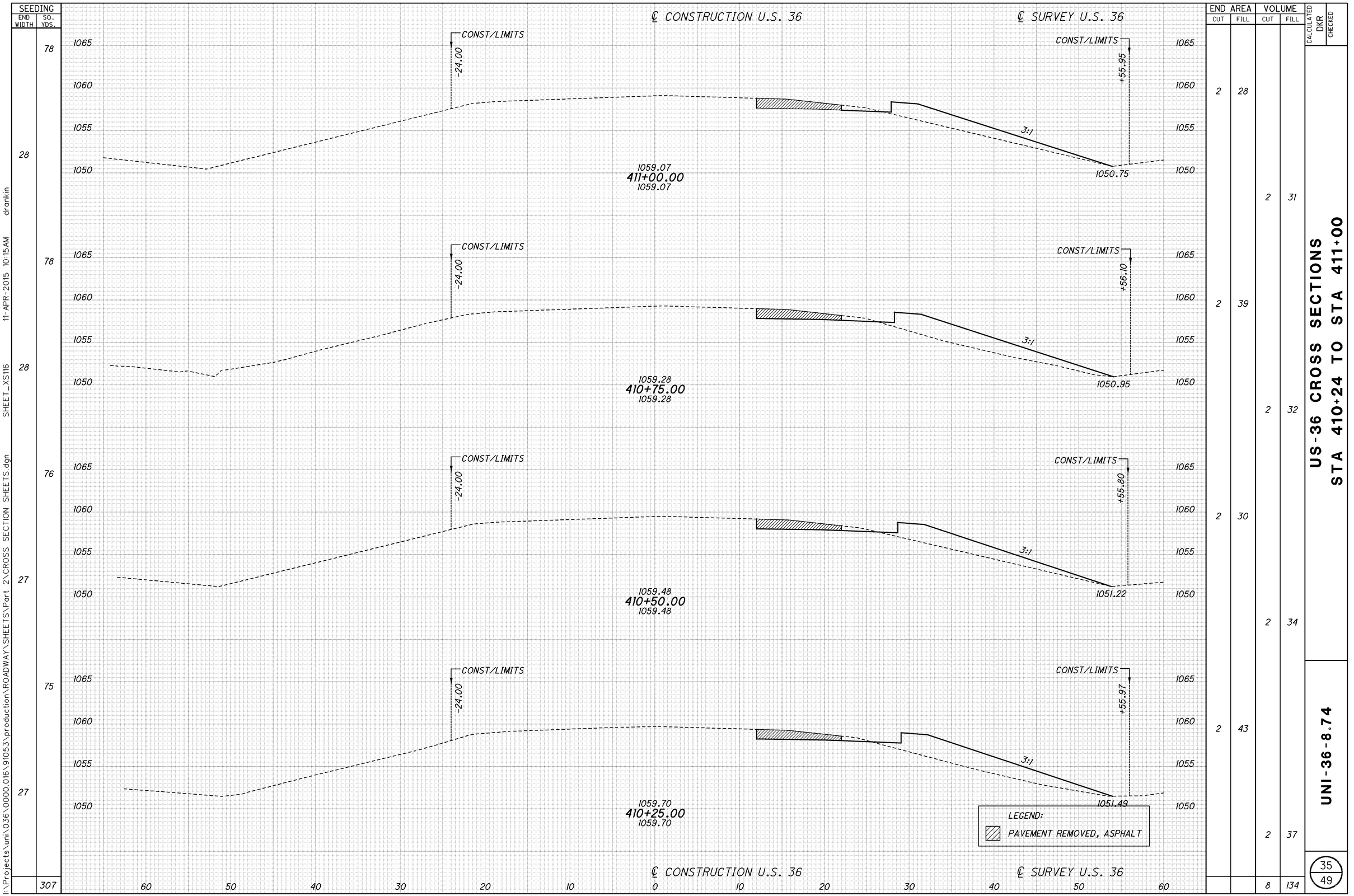

SEEDING END WIDTH	SEEDING SQ. YDS.	END AREA CUT	END AREA FILL	VOLUME CUT	VOLUME FILL
	78				
28		2	28		
	78				
28		2	39		
				2	31
	76				
				2	32
		2	30		
27					
				2	34
	75				
		2	43		
27					
				2	37
	307			8	134

CALCULATED DKR
CHECKED

US-36 CROSS SECTIONS STA 410+24 TO STA 411+00

UNI-36-8.74

35
49

I:\Projects\uni\036\0000.016\91053\production\ROADWAY\SHEETS\Part 2\CROSS SECTION SHEETS.dgn 11-APR-2015 10:15AM drankin SHEET_XS116

SEEDING END WIDTH	SEEDING SQ. YDS.
	81
29	
	78
27	
	76
28	
	78
28	
	313

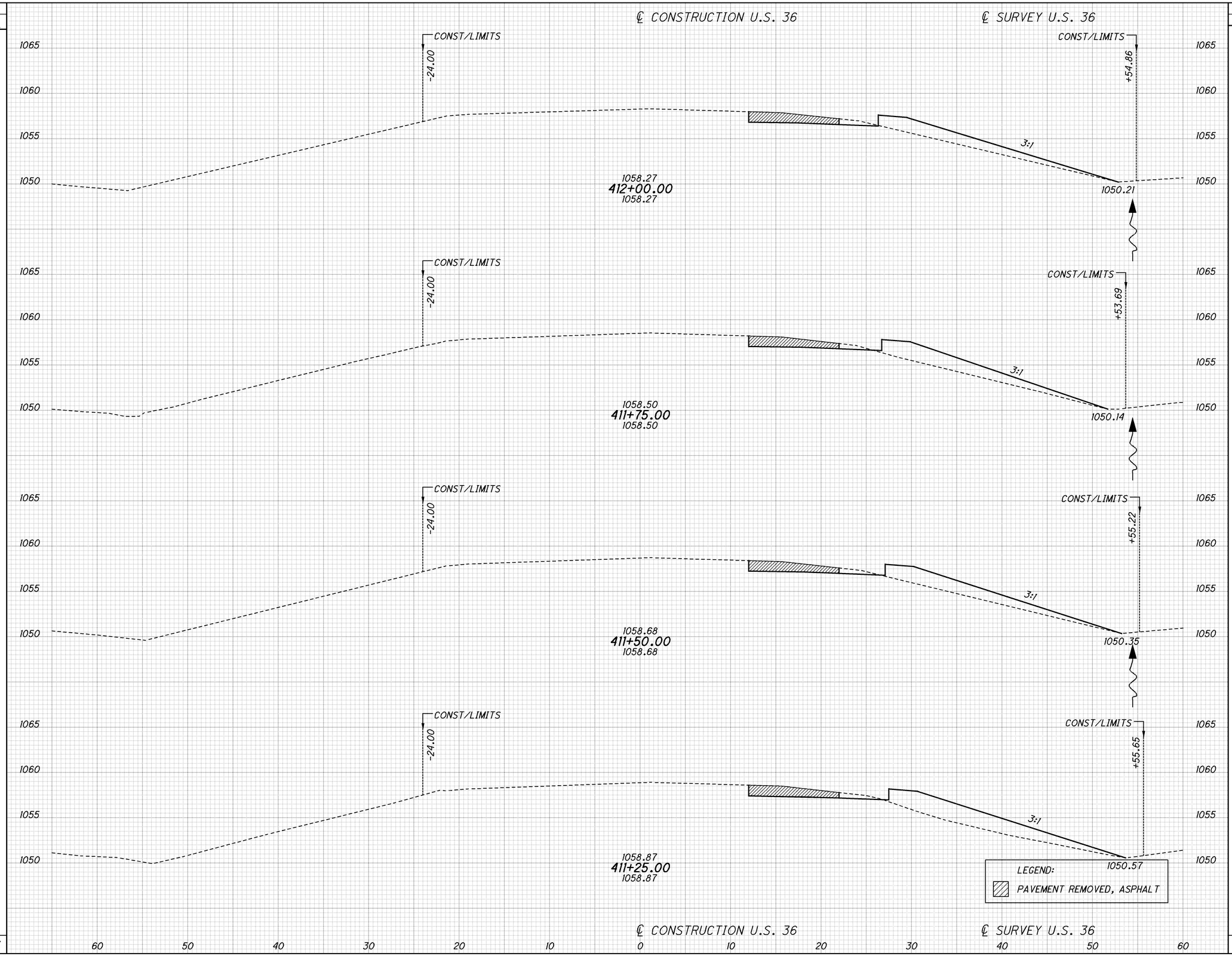

END AREA CUT	END AREA FILL	VOLUME CUT	VOLUME FILL
2	24		
		2	24
2	27		
		2	25
2	26		
		2	29
2	37		
		2	30
		8	108

CALCULATED DKR
CHECKED

US-36 CROSS SECTIONS STA 411+25 TO STA 412+00

UNI-36-8.74

36
49

I:\Projects\uni\036\0000.016\91053\production\ROADWAY\SHEETS\Part 2\CROSS SECTION SHEETS.dgn 11-APR-2015 10:15AM drankin SHEET_XS117

SEEDING END WIDTH	SEEDING SQ. YDS.	END AREA CUT	END AREA FILL	VOLUME CUT	VOLUME FILL
29	81	2	20	2	18
29	81	2	19	2	18
29	81	2	19	2	25
29	81	2	35	2	27
	324			8	88

CALCULATED DKR | CHECKED

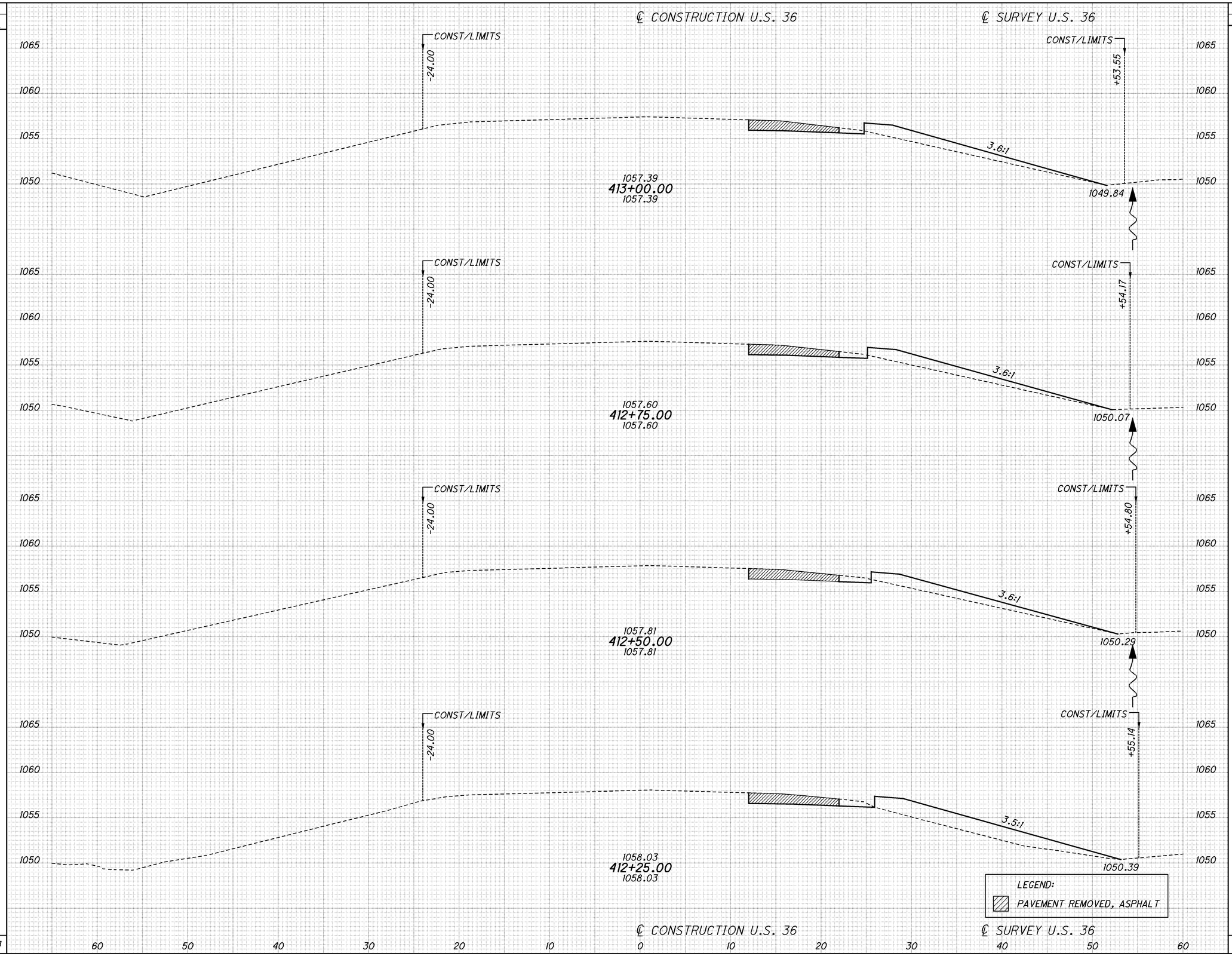

US-36 CROSS SECTIONS STA 412+25 TO STA 413+00

UNI-36-8.74

37
49

I:\Projects\uni\036\0000.016\91053\production\ROADWAY\SHEETS\Part 2\CROSS SECTION SHEETS.dgn 11-APR-2015 10:15AM drankin SHEET_XS118

SEEDING END WIDTH	SEEDING SQ. YDS.
	74
27	
	75
27	
	76
28	
	79
29	
	304

END AREA CUT	END AREA FILL	VOLUME CUT	VOLUME FILL
1	17		
		1	16
1	18		
		1	17
1	19		
		1	19
1	23		
		1	20
		4	72

CALCULATED DKR

CHECKED

US-36 CROSS SECTIONS STA 413+25 TO STA 414+00

UNI-36-8.74

I:\Projects\uni\036\0000.016\91053\production\ROADWAY\SHEETS\Part 2\CROSS SECTION SHEETS.dgn 11-APR-2015 10:15AM drankin SHEET_XS119

SEEDING END WIDTH	SEEDING SQ. YDS.
	65
24	
	68
	25
	71
26	
	72
26	
	276

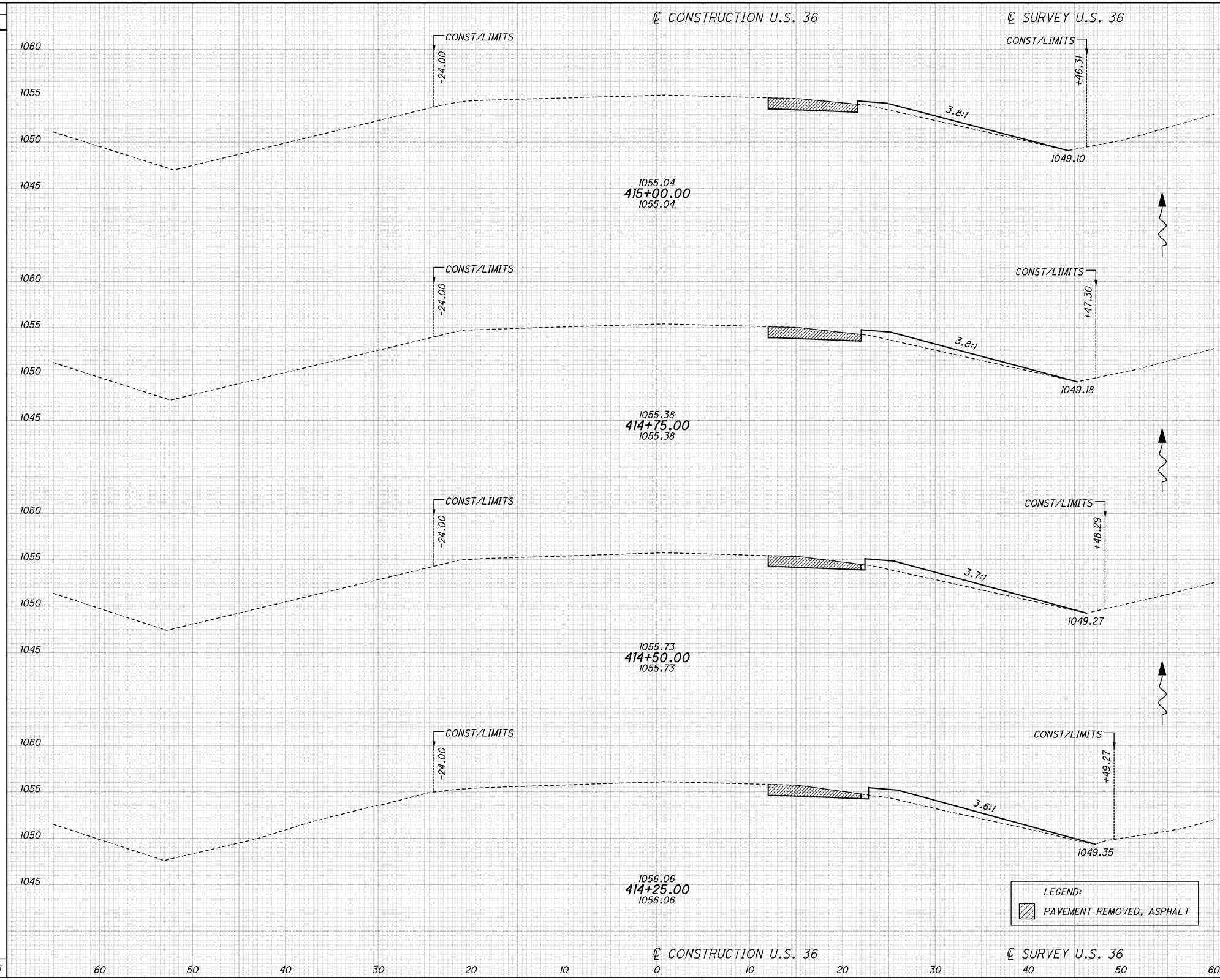

END AREA CUT	END AREA FILL	VOLUME CUT	VOLUME FILL
0	9	0	9
0	11	0	12
1	14	1	13
1	15	1	15
		2	49

CALCULATED DKR
CHECKED

US-36 CROSS SECTIONS
STA 414+25 TO STA 415+00

UNI-36-8.74

39
49

I:\Projects\uni\036\0000.016\91053\production\ROADWAY\SHEETS\Part 2\CROSS SECTION SHEETS.dgn 11-APR-2015 10:15AM drankin SHEET_XS120

SEEDING END WIDTH	SEEDING SQ. YDS.
	0
0	
	0
0	
	7
5	
	39
23	
	46

END AREA CUT	END AREA FILL	VOLUME CUT	VOLUME FILL
0	0	0	0
0	0	0	0
0	1	0	3
0	6	0	7
		0	10

CALCULATED DKR
CHECKED

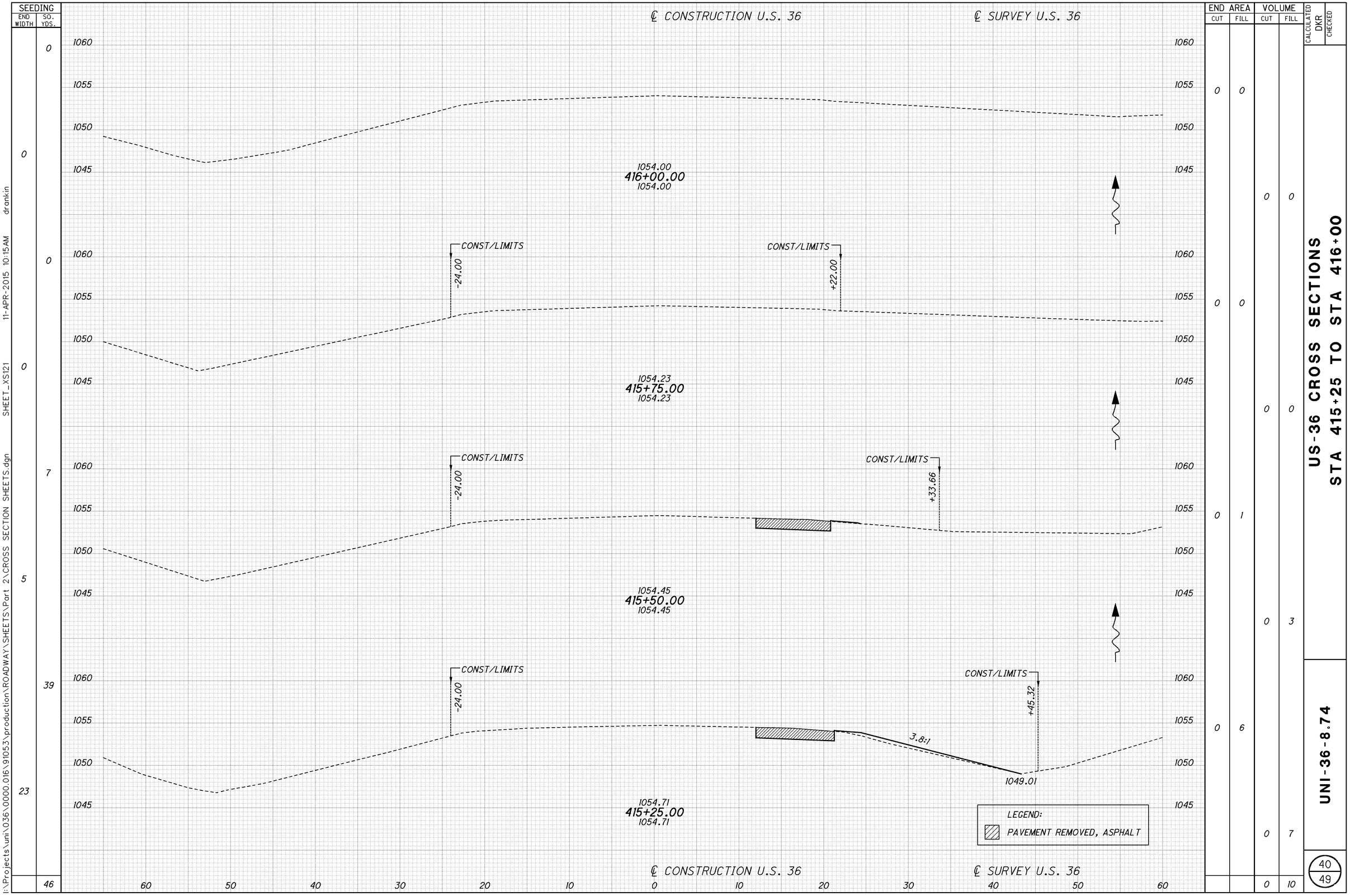

US-36 CROSS SECTIONS
STA 415+25 TO STA 416+00

UNI-36-8.74

40
49

I:\Projects\uni\036\0000.016\91053\production\ROADWAY\SHEETS\Part 2\CROSS SECTION SHEETS.dgn 11-APR-2015 10:15AM drankin SHEET_XS121

SEEDING END WIDTH	SEEDING SQ. YDS.
	0
0	
	0
0	
	0
0	
	0
0	
	0

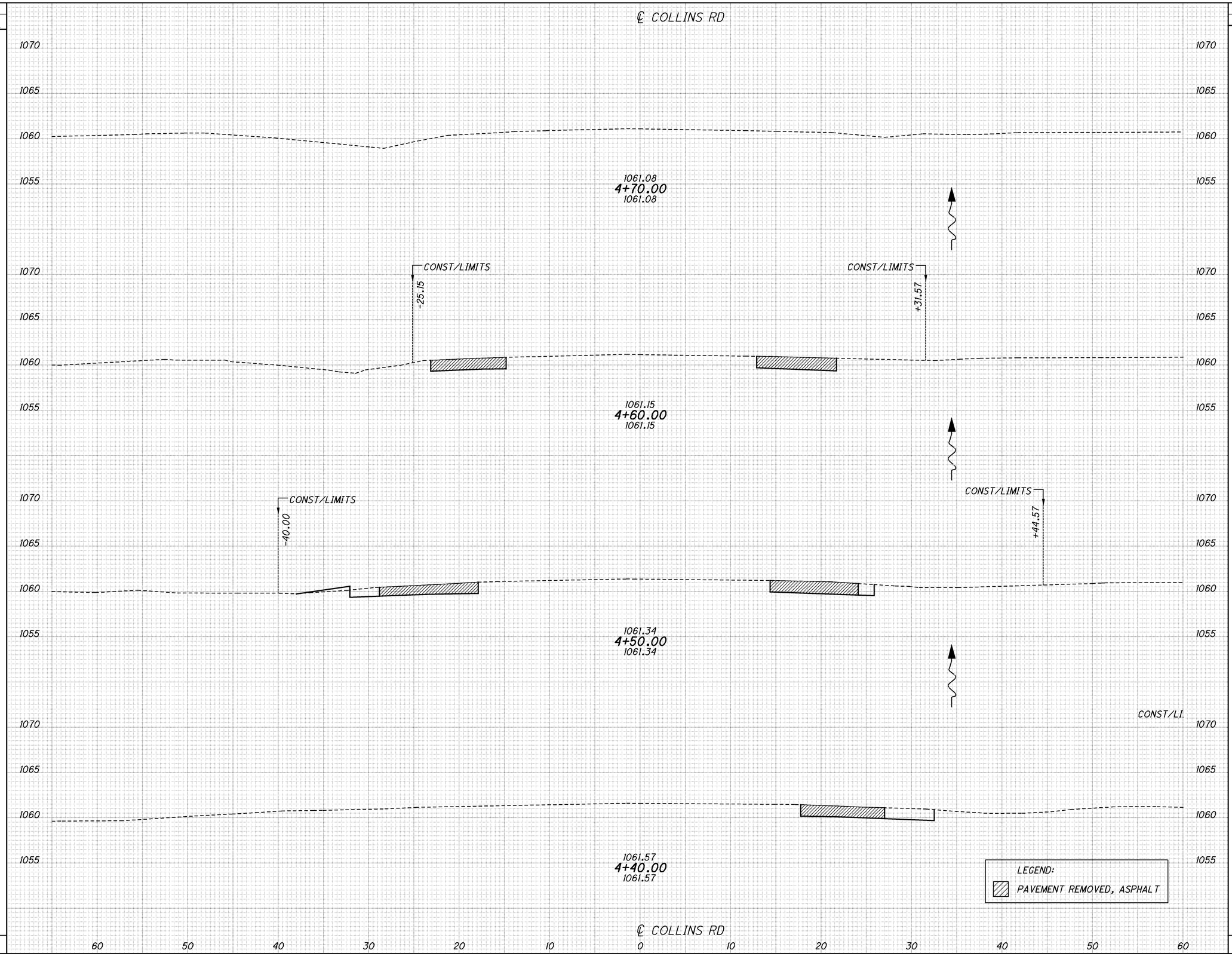

END AREA CUT	END AREA FILL	VOLUME CUT	VOLUME FILL
0	0		
		0	0
0	0		
		0	1
0	3		
		0	5
0	7		
		0	6

CALCULATED DKR
CHECKED

COLLINS RD CROSS SECTIONS STA 4+40 TO STA 4+70

UNI-36-8.74

41
49

I:\Projects\uni\036\0000.016\91053\production\ROADWAY\SHEETS\Part 2\CROSS SECTION SHEETS.dgn 11-APR-2015 10:15AM drankin SHEET_XS201

LEGEND:

CL - CENTER LINE (DOUBLE SOLID)
ELW - EDGE LINE, WHITE
CHW - CHANNELIZING LINE, WHITE
SL - STOP LINE
TRY - TRANSVERSE LINE, YELLOW

SN - SIGN

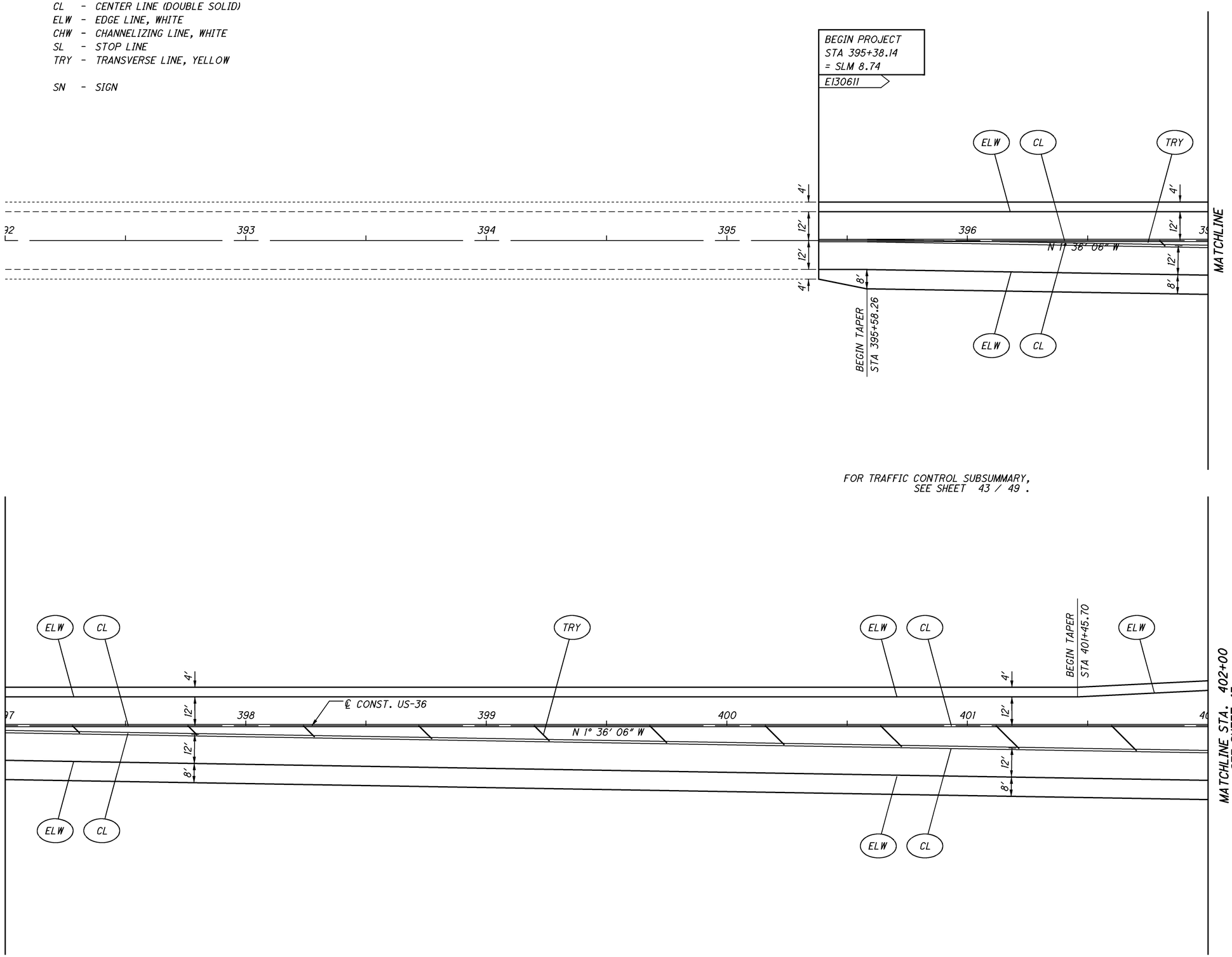

FOR TRAFFIC CONTROL SUBSUMMARY,
SEE SHEET 43 / 49 .

HORIZONTAL SCALE IN FEET
0 10 20 40

CALCULATED DKR
CHECKED

US-36 TRAFFIC CONTROL PLAN
STA 395+38.14 TO STA 402+00

UNI-36-8.74

I:\Projects\uni\036\0000.016\91053\production\ROADWAY\SHEETS\Part 2\TRAFFIC CONTROL PLAN.dgn 11-APR-2015 10:15AM drankin
SHEET_TP001

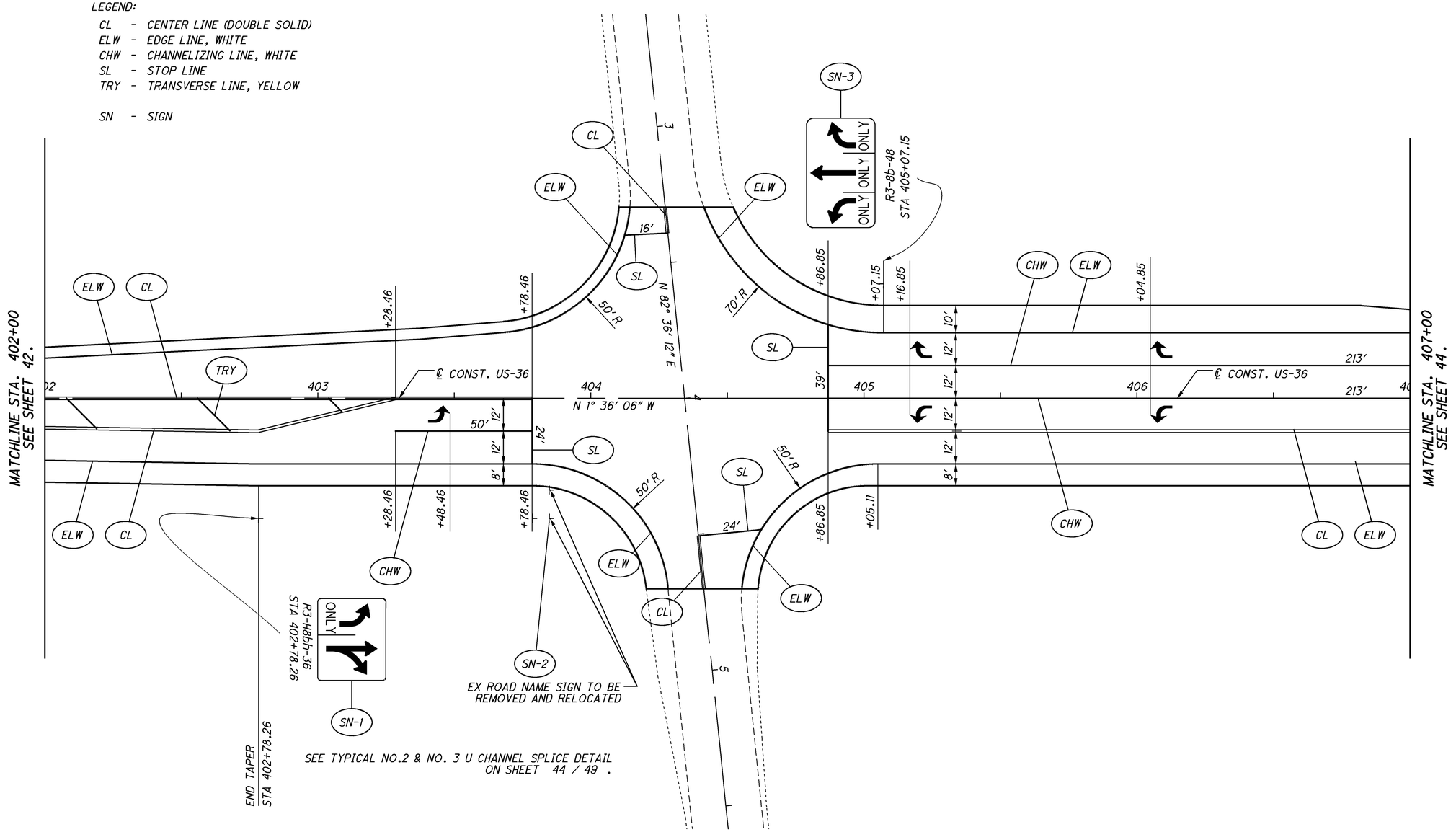

LOCATION							630	630	630	630	644		644		644	644	644		644		REFLECTOR TYPE											621	621
													CENTERLINE									ONE WAY	TWO WAY										
SHEET NUMBER	ROUTE	BEGIN STATION	END STATION	SIDE	LENGTH		GROUND MOUNTED SUPPORT, NO. 2 POST	GROUND MOUNTED SUPPORT, NO. 3 POST	SIGN, FLAT SHEET	REMOVAL OF GROUND MOUNTED SIGN AND REERECTION	EDGE LINE		DOUBLE SOLID	PASSING/ NO PASSING	CHANNELIZING LINE	STOP LINE	TRANSVERSE/ DIAGONAL LINE		LANE ARROW		RPM DETAILS	WHITE	WHITE RED		YELLOW RED		YELLOW YELLOW					RAISED PAVEMENT MARKER REMOVED	RPM
											W	Y					W	Y	LT	RT		RIGHT EDGE LINE	CHANNELIZING LINE		LANE LINE	LEFT EDGE LINE		CENTER LINE					
					FT	MI	FT	FT	SF	EACH	MILE	MILE	MILE	MILE	FT	FT	FT	FT	EACH	EACH		40'	40'	80'	80'	40'	80'	20'	40'	80'			EACH	EACH
42	US-36	395+38.14	402+00.00		661.86	0.13					0.26		0.26					95			10									18		18
43	US-36	402+00.00	407+00.00		500.00	0.09	14	20	14		0.18		0.14		476	63		40	3	2	10,11	22	10	14						14		60
	COLLINS	3+29.64	4+70.12		140.48	0.03				1	0.06		0.03			40																
44	US-36	407+00.00	415+51.85		851.85	0.16	7	10	8		0.32		0.32		134			135	1	1	10			5						22		27
TOTALS CARRIED TO GENERAL SUMMARY							21	30	22	1	0.82		0.75		610	103	270		7		TOTALS CARRIED TO GENERAL SUMMARY									100	105

HORIZONTAL SCALE IN FEET
0 10 20 40

CALCULATED DKR
CHECKED

US-36 TRAFFIC CONTROL PLAN
STA 402+00 TO STA 407+00

UNI-36-8.74

43
49

I:\Projects\uni\036\0000.016\91053\production\ROADWAY\SHEETS\Part 2\TRAFFIC CONTROL PLAN.dgn SHEET_TP002 11-APR-2015 10:15AM drankin

SEE TYPICAL NO.2 & NO. 3 U CHANNEL SPLICE DETAIL

LEGEND:
CL - CENTER LINE (DOUBLE SOLID)
ELW - EDGE LINE, WHITE
CHW - CHANNELIZING LINE, WHITE
SL - STOP LINE
TRY - TRANSVERSE LINE, YELLOW

SN - SIGN

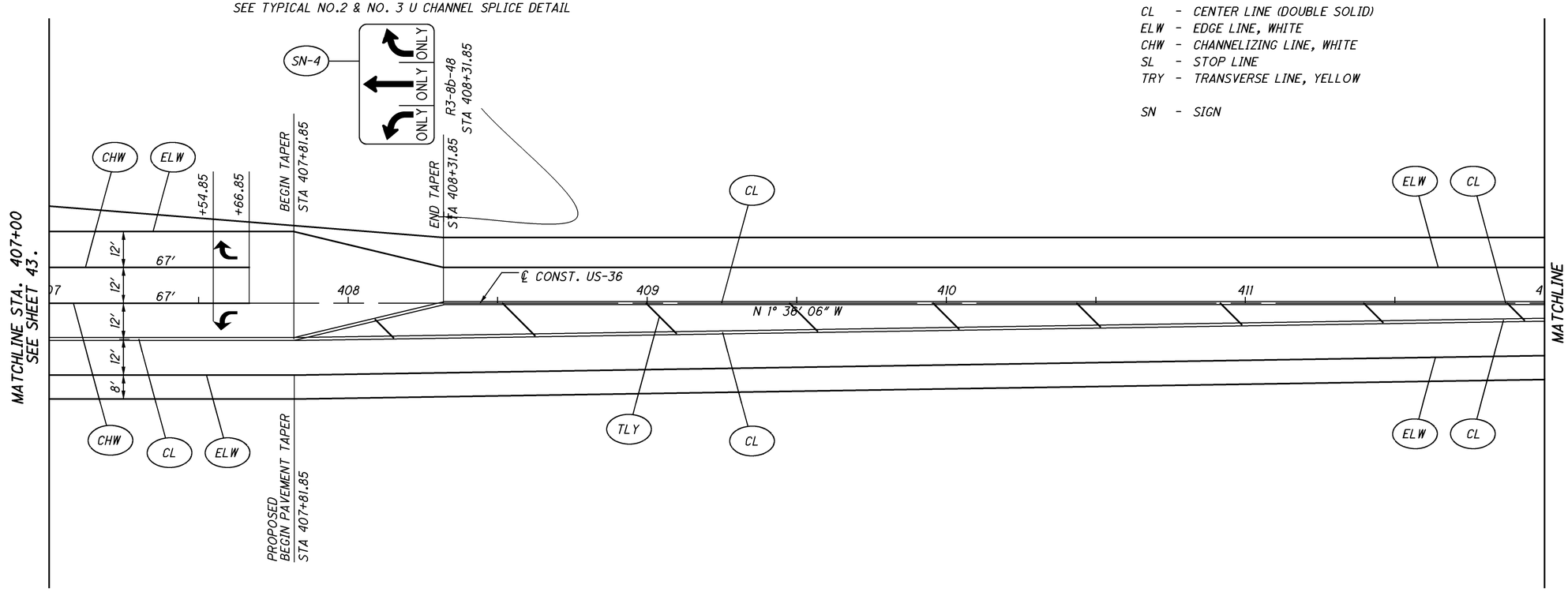

FOR TRAFFIC CONTROL SUBSUMMARY,
SEE SHEET 43 / 49 .

END PROJECT
STA 415+51.85
= SLM 9.12
E130611

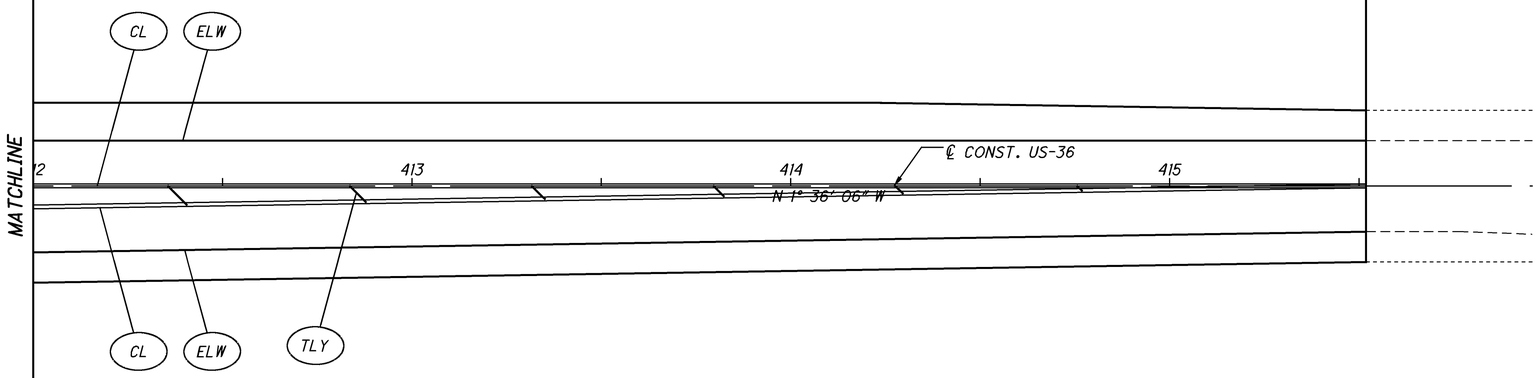

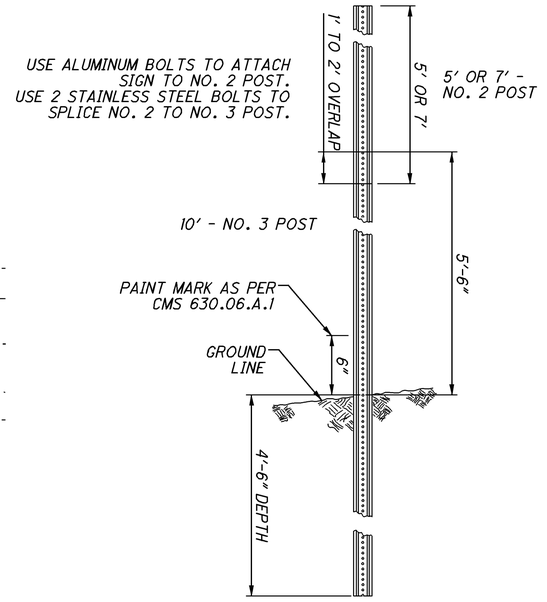

TYPICAL NO.2 & NO. 3 U CHANNEL SPLICE DETAIL
WITH 10' DRIVEN SECTION INSTALLATION

HORIZONTAL SCALE IN FEET
0 10 20 40

CALCULATED DKR
CHECKED

US-36 TRAFFIC CONTROL PLAN
STA 407+00 TO STA 415+51.85

UNI-36-8.74

44
49

I:\Projects\uni\036\0000.016\91053\production\ROADWAY\SHEETS\Part 2\TRAFFIC CONTROL PLAN.dgn
SHEET_TP003 11-APR-2015 10:15AM drankin

NEW TRAFFIC SIGNAL INSTALLATION:
THIS WORK CONSISTS OF FURNISHING AND INSTALLING TRAFFIC SIGNAL EQUIPMENT, COMPLETE AND READY FOR SERVICE. THIS WORK ALSO INCLUDES NECESSARY EXCAVATION AND BACKFILL, DISPOSAL OF DISCARDED MATERIALS, RESTORATION OF DISTURBED FACILITIES AND SURFACES TO A CONDITION EQUAL TO THAT EXISTING BEFORE THE WORK STARTED, AND ELECTRICAL TESTING AS SPECIFIED.

PULL BOXES, CONDUITS, GROUND RODS, AND CABLE SPLICING KITS REQUIRED FOR TRAFFIC SIGNAL EQUIPMENT INSTALLATIONS ARE SPECIFIED IN ITEM 625.

BEFORE ANY WORK IS STARTED ON THE TRAFFIC SIGNAL, THE DISTRICT SIX TRAFFIC ENGINEER (740-833-8198) AND THE CONTRACTORS REPRESENTATIVE SHALL REVIEW AND RESOLVE ANY POTENTIAL PROBLEMS AT THE LOCATION WHERE THE NEW SIGNAL WILL BE CONSTRUCTED.

ALL OF THE REQUIRED PERMANENT SIGNS SHALL BE ERECTED AND THE REQUIRED PERMANENT PAVEMENT MARKINGS SHALL BE IN PLACE PRIOR TO THE FINAL ACCEPTANCE OF THE TRAFFIC SIGNAL.

PRIOR TO THE FINAL ACCEPTANCE OF THE COMPLETED TRAFFIC SIGNAL, THE DISTRICT SIX ROADWAY SERVICES REPRESENTATIVE AND THE CONTRACTORS REPRESENTATIVE, SHALL INSPECT AND RESOLVE ANY EXISTING PROBLEMS PRIOR TO THE ACCEPTANCE OF EACH NEW SIGNAL BY THE OHIO DEPARTMENT OF TRANSPORTATION.

ITEM 633 - ADVANCE/DILEMMA ZONE DETECTION SYSTEM:
THIS ITEM OF WORK SHALL CONSIST OF FURNISHING AND INSTALLING A ADVANCE/DILEMMA ZONE DETECTION UNIT CAPABLE OF INTERSECTION ADVANCE DETECTION CONTROL UTILIZING ABOVE GROUND DIGITAL WAVE RADAR TECHNIQUES. THE UNIT SHALL BE NON-INTRUSIVE AND SHALL DETECT VEHICLES FROM 50 FT. (15.2 M) UP TO 500 FT. (152.4 M) FROM THE UNIT. THE UNIT SHALL PROVIDE UP TO 8 DETECTION ZONES SIMULTANEOUSLY FOR INTERSECTION CONTROL. ONE UNIT SHALL BE PROVIDED PER APPROACH, WHERE SPECIFIED IN THE PLANS, COVERING MULTIPLE LANES WHERE ADVANCE DETECTION IS REQUIRED. THE DETECTION UNIT SHALL INCLUDE THE FOLLOWING LIST OF FEATURES AND CAPABILITIES:

- *THE UNIT SHALL PROVIDE ACCURATE PRESENCE-DETECTION OF BOTH STOPPED AND MOVING VEHICLES. THE UNIT SHALL BE MOUNTED IN A FORWARD-FIRE, LOOKING AT EITHER APPROACHING OR DEPARTING TRAFFIC AND SHALL ONLY DETECT VEHICLES IN ONE DIRECTION OF TRAVEL.*
- *THE UNIT SHALL BE TESTED TO MEET NEMA TS2 ENVIRONMENTAL STANDARDS AND MAINTAIN ACCURATE PERFORMANCE IN THE FOLLOWING OPERATING CONDITIONS:*
  - *RAIN UP TO 4 IN. (10.2 CM) PER HOUR*
  - *FREEZING RAIN*
  - *SNOW*
  - *WIND*
  - *DUST*
  - *FOG*
  - *CHANGING TEMPERATURE*
  - *CHANGING LIGHTING*
- *THE RADAR DESIGN FOR EACH UNIT SHALL CONFORM TO THE FOLLOWING:*
  - *OPERATING FREQUENCY: 10.5-10.55 GHZ (X-BAND)*
  - *MATRIX OF A MINIMUM OF 16 RADARS*
  - *NO MANUAL TUNING TO CIRCUITRY*
  - *TRANSMITS MODULATED SIGNALS GENERATED DIGITALLY*
  - *NO TEMPERATURE-BASED COMPENSATION NECESSARY*
  - *BANDWIDTH STABLE WITHIN 1%*
  - *PRINTED CIRCUIT BOARD ANTENNAS*
  - *ANTENNA VERTICAL 6 DB BEAM WIDTH (TWO-WAY PATTERN): 80 DEGREES*
  - *ANTENNA HORIZONTAL 6 DB BEAM WIDTH (TWO-WAY PATTERN): 10.5 DEGREES*
  - *ANTENNA TWO-WAY SIDELOBES: -40 DB*
  - *TRANSMIT BANDWIDTH: 45 MHZ*
  - *UN-WINDOWED RESOLUTION: 11 FT. (3.4 M)*
  - *RF CHANNELS: 4*
- *THE UNIT SHALL INCLUDE A SIMPLE SETUP ROUTINE THAT SHALL AUTOMATICALLY CONFIGURE AND CALIBRATE THE UNIT FOR PROPER OPERATION DURING INSTALLATION. THE UNIT SHALL ALSO BE CAPABLE OF BEING PROGRAMMED AND UPDATED FROM A LAPTOP COMPUTER OR OTHER PORTABLE PROGRAMMING DEVICE, SUCH AS A POCKET PC, VIA A LOCAL OR REMOTE ETHERNET CONNECTION USING VENDOR SUPPLIED SOFTWARE. THE SOFTWARE SHALL SUPPORT TCP/IP CONNECTIVITY, UNIT CONFIGURATION BACK-UP AND RESTORE, AND VIRTUAL SENSOR CONNECTIONS. THE GRAPHICAL USER INTERFACE SHALL OPERATE ON A WINDOWS PLATFORM.*
- *THE UNIT SHALL HAVE ONE FULL-DUPLEX RS2-232 AND ONE HALF-DUPLEX RS-485 COMMUNICATION PORTS AND SHALL HAVE THE ABILITY TO UPGRADE FIRMWARE OVER ANY COMMUNICATION PORT.*
- *THE UNIT SHALL BE MOUNTED DIRECTLY TO A POLE OR MOST ARM, AS RECOMMENDED BY THE MANUFACTURER. CABLE(S) SHALL BE PROVIDED AS REQUIRED AND RECOMMENDED BY THE MANUFACTURER.*
- *SURGE PROTECTION DEVICES, AS RECOMMENDED BY THE MANUFACTURER, SHALL BE INCLUDED BOTH AT THE POLE WHERE THE UNIT IS LOCATED TO PROTECT THE UNIT AND IN THE TRAFFIC CABINET TO PROTECT THE CABINET ELECTRONICS.*
- *POWER SHALL BE PROVIDED FROM THE TRAFFIC CABINET. THE UNIT SHALL CONSUME LESS THAN 10 WATTS AND OPERATE FROM A DC INPUT BETWEEN 9 VDC AND 28 VDC. COMPLETE AND AUTOMATIC RECOVERY FROM A POWER FAILURE SHALL BE WITHIN 15 SECONDS AFTER RESUMPTION OF NORMAL POWER.*
- *ALL REQUIRED INPUTS CARDS SHALL BE INCLUDED IN THE TRAFFIC CABINET AND SHALL BE COMPATIBLE WITH CALTRANS, NEMA TS1 AND NEMA TS2 DETECTOR RACKS. THE CARDS SHALL PROVIDE TRUE PRESENCE DETECTOR CALLS OR CONTACT CLOSURE TO THE TRAFFIC CONTROLLER.*
- *THE MANUFACTURER'S REPRESENTATIVE SHALL BE ON SITE DURING INSTALLATION AND TESTING AND SHALL PROVIDE ONSITE TRAINING ON THE SETUP, OPERATION, AND MAINTENANCE OF THE UNIT.*
- *THE UNIT SHALL COME WITH A 2-YEAR MANUFACTURER SUPPLIED WARRANTY.*
- *PRIOR TO PROGRAMMING, THE CONTRACTOR SHALL CONTACT THE ODOT DISTRICT 6 DISTRICT TRAFFIC ENGINEER AT 740-833-8198. A DISTRICT 6 TRAFFIC DEPARTMENT REPRESENTATIVE SHALL BE PRESENT DURING THE PROGRAMMING OF THE SYSTEM.*

PAYMENT FOR ITEM 633 ADVANCE/DILEMMA ZONE DETECTION SYSTEM SHALL BE MADE AT THE CONTRACT UNIT PRICE FOR EACH UNIT, COMPLETE AND IN PLACE INCLUDING ALL REQUIRED CABINET HARDWARE, MOUNTING BRACKETS, CABLES, CONDUIT, CONNECTIONS TESTED AND ACCEPTED, AND ANY OTHER NECESSARY HARDWARE TO ESTABLISH A FULLY FUNCTIONAL DETECTION SYSTEM. INCIDENTAL WORK TO THIS ITEM INCLUDES REMOVING AND DISPOSING OF ALL EXISTING LOOP LEAD-IN CABLE BETWEEN THE LOOP SPLICE AND THE CONTROLLER CABINET WHICH INCLUDES ALL UNDERGROUND AND OVERHEAD RUNS. ANY CONDUITS LEFT EMPTY AFTER THE REMOVAL OF THE LEAD-IN CABLE SHALL HAVE A PULL WIRE INSTALLED. INCIDENTAL WORK ALSO INCLUDES UNLASHING/RELASHING OF THE MESSENGER WIRE. THE CONTRACTOR SHALL REMOVE EXISTING MESSENGER WIRE LASHING RODS AND REINSTALL THEM AS NECESSARY FOR THE INSTALLATION OF ANY NEW CABLES ON THE EXISTING INTERSECTION SIGNAL SPANS. IF NECESSARY, NEW LASHING RODS SHALL BE INSTALLED. THE CABLES SHALL ENTER THE EXISTING STRAIN POLE THROUGH THE POLE CABLE ENTRANCE FITTING AND USE THE EXISTING CONDUIT SYSTEM TO GET TO THE CONTROLLER CABINET. THE NEW CABLES SHALL BE SUPPORTED BY A NEW CABLE SUPPORT ASSEMBLY AT THE TOP OF THE STRAIN POLE.

ITEM 633 - STOP BAR DETECTION RADAR:
THIS ITEM OF WORK SHALL CONSIST OF FURNISHING AND INSTALLING STOP BAR DETECTION UNIT CAPABLE OF INTERSECTION DETECTION CONTROL UTILIZING ABOVE GROUND DIGITAL WAVE RADAR TECHNIQUES. THE UNIT SHALL BE NON-INTRUSIVE AND SHALL DETECT VEHICLES FROM 6 FT. (1.8 M) UP TO 140 FT. (42.7 M) FOR A 90 DEGREE FIELD OF VIEW FROM THE UNIT. THE UNIT SHALL PROVIDE REAL-TIME PRESENCE DATA FOR AT LEAST 10 LANES. THE UNIT SHALL PROVIDE AT LEAST SIXTEEN DETECTION ZONES SIMULTANEOUSLY FOR INTERSECTION CONTROL. ONE UNIT SHALL BE PROVIDED PER APPROACH, WHERE SPECIFIED IN THE PLANS, COVERING MULTIPLE LANES WHERE STOP BAR DETECTION IS REQUIRED. THE DETECTION UNIT SHALL INCLUDE THE FOLLOWING LIST OF FEATURES AND CAPABILITIES:

- *THE UNIT SHALL PROVIDE ACCURATE PRESENCE-DETECTION OF BOTH MOVING AND STOPPED VEHICLES. THE UNIT SHALL BE MOUNTED IN A FORWARD-FIRE OR SIDE-FIRE POSITION, LOOKING AT EITHER APPROACHING OR DEPARTING TRAFFIC AND SHALL ONLY DETECT VEHICLES IN ONE DIRECTION OF TRAVEL.*
- *THE UNIT SHALL BE TESTED TO MEET NEMA TS2 ENVIRONMENTAL STANDARDS AND MAINTAIN ACCURATE PERFORMANCE IN THE FOLLOWING OPERATING CONDITIONS:*
  - *RAIN UP TO 1 IN. (2.5 CM) PER HOUR*
  - *FREEZING RAIN*
  - *SNOW*
  - *WIND*
  - *DUST*
  - *FOG*
  - *CHANGING TEMPERATURE*
  - *CHANGING LIGHTING*

CALCULATED | CHECKED

TRAFFIC SIGNAL NOTES

UNI-36-8.74

I:\Projects\uni\036\0000.016\91053\production\ROADWAY\SHEETS\Part 2\TRAFFIC SIGNAL NOTES.dgn 11-APR-2015 10:15AM drankin SHEET_CN001

- *THE RADAR DESIGN FOR EACH UNIT SHALL CONFORM TO THE FOLLOWING:*
    - *OPERATING FREQUENCY: 24.0-24.25 GHZ (K-BAND)*
    - *MATRIX OF 16 RADARS*
    - *NO MANUAL TUNING TO CIRCUITRY*
    - *TRANSMITS MODULATED SIGNALS GENERATED DIGITALLY*
    - *NO TEMPERATURE-BASED COMPENSATION NECESSARY*
    - *BANDWIDTH STABLE WITHIN 1%*
    - *PRINTED CIRCUIT BOARD ANTENNAS*
    - *ANTENNA VERTICAL 6 DB BEAM WIDTH (TWO-WAY PATTERN): 65 DEGREES*
    - *HORIZONTAL FIELD OF VIEW: 90 DEGREES*
    - *ANTENNA TWO-WAY SIDELOBES: -40 DB*
    - *TRANSMIT BANDWIDTH: 245 MHZ*
    - *UN-WINDOWED RESOLUTION: 2 FT. (0.6 M)*
    - *RF CHANNELS: 8*
    - *SELF-TEST FOR VERIFYING HARDWARE FUNCTIONALITY*
    - *DIAGNOSTICS MODE FOR VERIFYING SYSTEM FUNCTIONALITY*

- *THE UNIT SHALL INCLUDE A SIMPLE SETUP ROUTINE THAT SHALL AUTOMATICALLY CONFIGURE AND CALIBRATE THE UNIT FOR PROPER OPERATION DURING INSTALLATION. THE UNIT SHALL ALSO BE CAPABLE OF BEING PROGRAMMED AND UPDATED FROM A LAPTOP COMPUTER OR OTHER PORTABLE PROGRAMMING DEVICE, SUCH AS A POCKET PC, VIA A LOCAL OR REMOTE ETHERNET CONNECTION USING VENDOR SUPPLIED SOFTWARE. THE SOFTWARE SHALL SUPPORT TCP/IP CONNECTIVITY, UNIT CONFIGURATION BACK-UP AND RESTORE, AND REAL-TIME TRAFFIC VISUALIZATION FOR PERFORMANCE VERIFICATION AND TRAFFIC DISPLAY. THE GRAPHICAL USER INTERFACE SHALL OPERATE ON A WINDOWS PLATFORM.*

- *THE UNIT SHALL HAVE TWO HALF-DUPLEX RS-485 COMMUNICATION PORTS AND SHALL HAVE THE ABILITY TO UPGRADE FIRMWARE OVER ANY COMMUNICATION PORT.*

- *THE UNIT SHALL BE MOUNTED DIRECTLY TO A POLE OR MAST ARM, AS RECOMMENDED BY THE MANUFACTURER. CABLE(S) SHALL BE PROVIDED AS REQUIRED AND RECOMMENDED BY THE MANUFACTURER.*

- *SURGE PROTECTION DEVICES, AS RECOMMENDED BY THE MANUFACTURER, SHALL BE INCLUDED BOTH AT THE POLE WHERE THE UNIT IS LOCATED TO PROTECT THE UNIT AND IN THE TRAFFIC CABINET TO PROTECT THE CABINET ELECTRONICS.*

- *POWER SHALL BE PROVIDED FROM THE TRAFFIC CABINET. THE UNIT SHALL CONSUME LESS THAN 10 WATTS AND OPERATE FROM A DC INPUT BETWEEN 9 VDC AND 28 VDC. COMPLETE AND AUTOMATIC RECOVERY FROM A POWER FAILURE SHALL BE WITHIN 15 SECONDS AFTER RESUMPTION OF NORMAL POWER.*

- *ALL REQUIRED INPUTS CARDS SHALL BE INCLUDED IN THE TRAFFIC CABINET AND SHALL BE COMPATIBLE WITH CALTRANS, NEMA TS1 AND NEMA TS2 DETECTOR RACKS. THE CARDS SHALL PROVIDE TRUE PRESENCE DETECTOR CALLS OR CONTACT CLOSURE TO THE TRAFFIC CONTROLLER.*

- *THE MANUFACTURER'S REPRESENTATIVE SHALL BE ON SITE DURING INSTALLATION AND TESTING AND SHALL PROVIDE ONSITE TRAINING ON THE SETUP, OPERATION, AND MAINTENANCE OF THE UNIT.*

- *THE UNIT SHALL COME WITH A 2-YEAR MANUFACTURER SUPPLIED WARRANTY.*

- *PRIOR TO PROGRAMMING, THE CONTRACTOR SHALL CONTACT THE ODOT DISTRICT 6 DISTRICT TRAFFIC ENGINEER AT 740-833-8198. A DISTRICT 6 TRAFFIC DEPARTMENT REPRESENTATIVE SHALL BE PRESENT DURING THE PROGRAMMING OF THE SYSTEM.*

PAYMENT FOR ITEM 633 STOP BAR DETECTION RADAR SHALL BE MADE AT THE CONTRACT UNIT PRICE FOR EACH UNIT, COMPLETE AND IN PLACE INCLUDING ALL REQUIRED CABINET HARDWARE, MOUNTING BRACKETS, CABLES, CONDUIT, AND CONNECTIONS TESTED AND ACCEPTED. INCIDENTAL WORK TO THIS ITEM INCLUDES REMOVING AND DISPOSING OF ALL EXISTING LOOP LEAD-IN CABLE BETWEEN THE LOOP SPLICE AND THE CONTROLLER CABINET WHICH INCLUDES ALL UNDERGROUND AND OVERHEAD RUNS. ANY CONDUITS LEFT EMPTY AFTER THE REMOVAL OF THE LEAD-IN CABLE SHALL HAVE A PULL WIRE INSTALLED. INCIDENTAL WORK ALSO INCLUDES UNLASHING/RELASHING OF THE MESSENGER WIRE. THE CONTRACTOR SHALL REMOVE EXISTING MESSENGER WIRE LASHING RODS AND REINSTALL THEM AS NECESSARY FOR THE INSTALLATION OF ANY NEW CABLES ON THE EXISTING INTERSECTION SIGNAL SPANS. IF NECESSARY, NEW LASHING RODS SHALL BE INSTALLED. THE CABLES SHALL ENTER THE EXISTING STRAIN POLE THROUGH THE POLE CABLE ENTRANCE FITTING AND USE THE EXISTING CONDUIT SYSTEM TO GET TO THE CONTROLLER CABINET. THE NEW CABLES SHALL BE SUPPORTED BY A NEW CABLE SUPPORT ASSEMBLY AT THE TOP OF THE STRAIN POLE.

CALCULATED | CHECKED

TRAFFIC SIGNAL NOTES

UNI-36-8.74

I:\Projects\uni\036\0000.016\91053\production\ROADWAY\SHEETS\Part 2\TRAFFIC SIGNAL NOTES.dgn 11-APR-2015 10:15AM drankin
SHEET_CN002

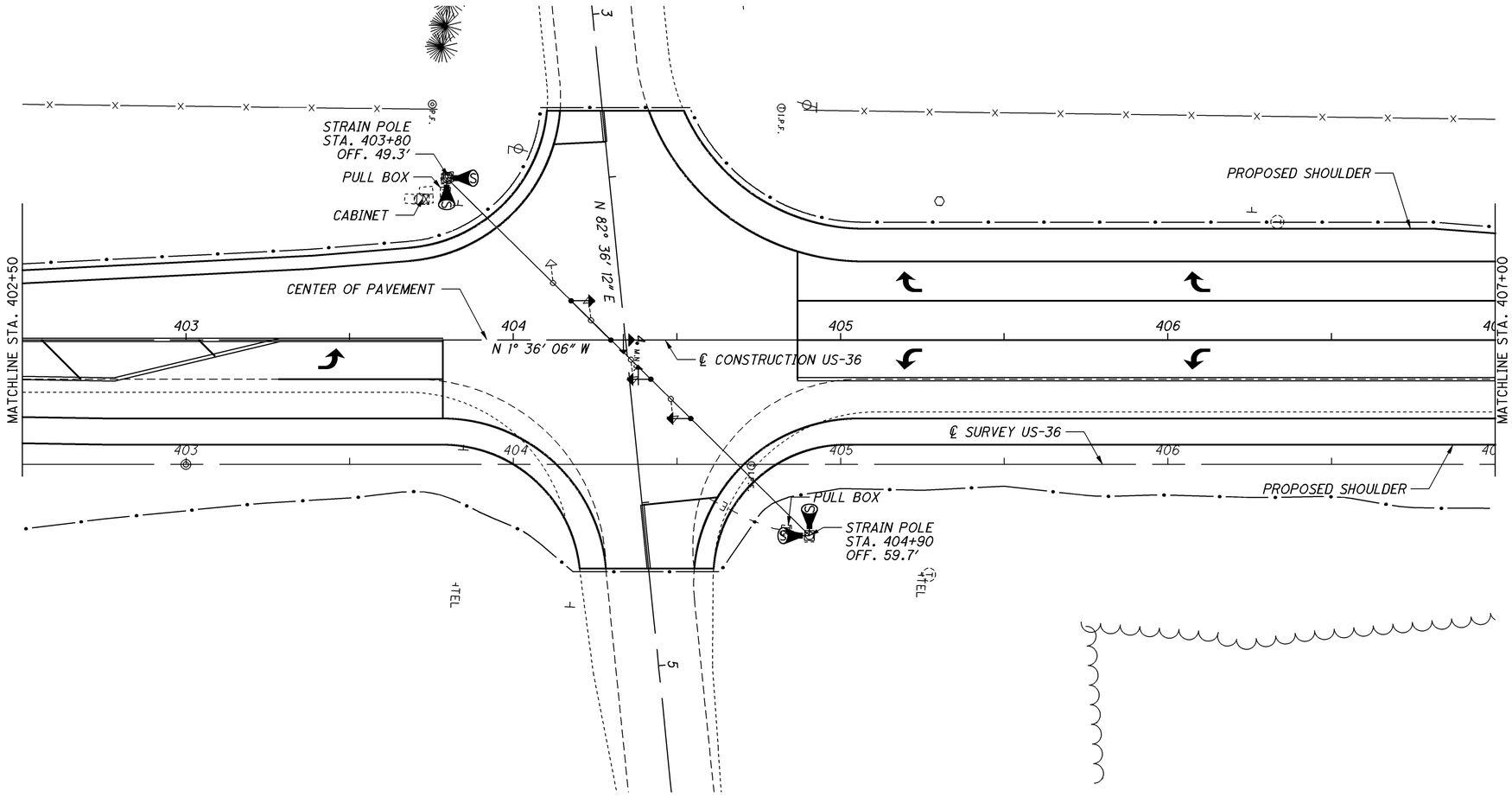

LEGEND

	PROP	EXIST
TRAFFIC SIGNAL, 3 UNIT HEAD, 12"		
TRAFFIC SIGNAL, 3 UNIT HEAT, 12" WITH ARROWS		
TRAFFIC SIGNAL, 4 OR 5 UNIT HEAD, 12"		
SIGNAL SUPPORT POLE		
PEDESTRIAN SIGNAL		
PEDESTRIAN PUSH BUTTON		
PEDESTAL SUPPORT		
LUMINAIRE, CONVENTIONAL		
CONTROLLER CABINET AND WORK PAD (332)		
CONTROLLER CABINET AND WORK PAD (TS-2)		
TRAFFIC PULL BOX		
VIDEO DETECTION CAMERA		
DILEMMA ZONE RADAR DETECTION UNIT		
STOP BAR RADAR DETECTION UNIT		
PTZ CAMERA		
ETHERNET RADIO		
DETECTOR LOOP		
DETECTION ZONE		
DETECTOR COUNT		

HORIZONTAL SCALE IN FEET
0 10 20 40

CALCULATED KLB | CHECKED

TRAFFIC SIGNAL PLAN
US-36 STA. 402+50 TO 407+00

UNI-36-8.74

47
49

TRAFFIC CONTROL SUB SUMMARY

SHEET NO.	LOCATION	632 VEHICULAR SIGNAL HEAD, 5 SECTION, 12" LENS, 1-WAY EACH	632 LOOP DETECTOR UNIT, AS PER PLAN EACH	632 SIGNAL CABLE, 7 CONDUCTOR, NO. 14 AWG FT	632 REUSE OF VEHICULAR SIGNAL HEAD, AS PER PLAN EACH		633 STOP BAR DETECTION RADAR, AS PER PLAN EACH		REMARKS
	US36/US4 - COLLINS ROAD	2.0	4.0	50.0	2.0		4.0		
	SUBTOTAL	2	4	50	2		4		
TOTALS CARRIED TO GENERAL SUMMARY		2	4	50	2		4		

I:\Projects\uni\036\0000.016\91053\production\ROADWAY\SHEETS\Part 2\TRAFFIC SIGNAL PLAN.dgn 11-APR-2015 10:16AM drankin SHEET_CP001

SIGNAL TIMING CHART (TEM FORM 496-3)

INTERSECTION: UNI-US36/SR4 & Collins. Rd.									
MAINTAINING AGENCY: ODOT District 6									
START UP		DUAL ENTRY: YES		PHASES:		2 & 6, 4 & 8			
		REST IN RED: NO		RING 1	NO			RING 2	NO
START IN: YELLOW/RED FLASH		OVERLAP			A	B	C	D	
TIME FOR FLASH OR ALL RED: 5									
FIRST PHASE(S): 2 & 6		PHASES			-	-	-	-	
COLOR DISPLAYED: GREEN									
INTERVAL OR FEATURE		CONTROLLER MOVEMENT NO.							
INTERSECTION MOVEMENT (PHASE)		1	2	3	4	5	6	7	8
DIRECTION		SB LT	NB	-	EB	NB LT	SB	-	WB
MINIMUM GREEN (INITIAL)	(SEC.)	7	20	-	10	7	20	-	10
ADDED INITIAL	*(SEC./ACTUATION)	-	-	-	-	-	-	-	-
MAXIMUM INITIAL	(SEC.)	-	-	-	-	-	-	-	-
PASSAGE TIME (PRESET GAP)	(SEC.)	-	-	-	-	-	-	-	-
TIME BEFORE REDUCTION	*(SEC.)	-	-	-	-	-	-	-	-
MINIMUM GAP	*(SEC.)	-	-	-	-	-	-	-	-
TIME TO REDUCE	*(SEC.)	-	-	-	-	-	-	-	-
MAXIMUM GREEN I	(SEC.)	15	50	-	40	15	50	-	40
MAXIMUM GREEN II	(SEC.)	15	50	-	40	15	50	-	40
YELLOW CHANGE	(SEC.)	5	5	-	5	5	5	-	5
ALL RED CLEARANCE	(SEC.)	1	1.5	-	1.5	1	1.5	-	1.5
WALK	(SEC.)	-	-	-	-	-	-	-	-
PEDESTRIAN CLEARANCE	(SEC.)	-	-	-	-	-	-	-	-
RECALL — MAXIMUM	(ON/OFF)	OFF	OFF	OFF	OFF	OFF	OFF	OFF	OFF
RECALL — MINIMUM	(ON/OFF)	-	ON	-	-	-	ON	-	-
RECALL — PEDESTRIAN	(ON/OFF)	OFF	OFF	OFF	OFF	OFF	OFF	OFF	OFF
MEMORY	(ON/OFF)	OFF	ON	OFF	OFF	OFF	ON	OFF	OFF

*VOLUME DENSITY CONTROLS

NOTES:

- ALL MOVEMENTS SHALL BE ACTUATED. THE PRIMARY THRU MOVEMENT SHOULD HAVE MIN RECALL ACTIVE TO REST IN GREEN.
- FOR PROTECTED/PERMISSIVE PHASES, IMPLEMENT CALL OMITS TO AVOID YELLOW BALL TRAP.
- ENABLE ϕ3 & ϕ7 DETECTOR SWITCHING TO ALLOW ϕ3 & ϕ7 TO EXTEND ϕ4 & ϕ8 WHEN ALLOCATED GREEN TIME FOR LEFT TURN PHASES ARE EXHAUSTED.
- RADAR DETECTION UNITS FOR DILEMMA ZONE DETECTION SHALL PLACE A CONSTANT CALL TO THE CONTROLLER WHEN VEHICLES TRAVEL TIMES TO THE STOP BAR ARE BETWEEN 2.5 AND 6 SECONDS. SPEED TRIGGER SHALL BE SET FOR VEHICLES TRAVELING 35 MPH AND GREATER.
- RADAR SHALL HAVE QUEUE DETECTION CONFIGURED AND A ZONE PLACED AT 100-200 FEET FROM STOP BAR FOR SLOW MOVING VEHICLE EXTENSIONS. SPEED TRIGGER SHALL BE SET AT 1-35 MPH.
- ALL DETECTOR DELAYS SHALL BE PLACED IN THE CONTROLLER.

PHASING DIAGRAM (TYPICAL)

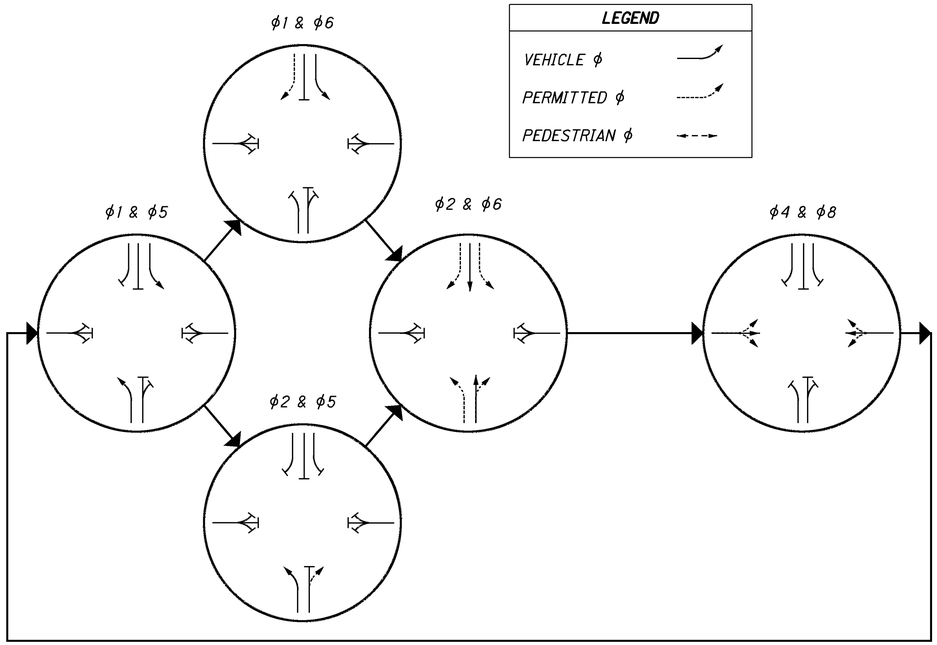

CALCULATED | CHECKED

TRAFFIC SIGNAL PLAN DETAILS
US36/SR4 & COLLINS ROAD

UNI-36-8.74

48
49

I:\Projects\uni\036\0000.016\91053\production\ROADWAY\SHEETS\Part 2\TRAFFIC SIGNAL PLAN DETAILS.dgn 11-APR-2015 10:16AM drankin SHEET_CD001

WIRING DIAGRAM (TYPICAL)

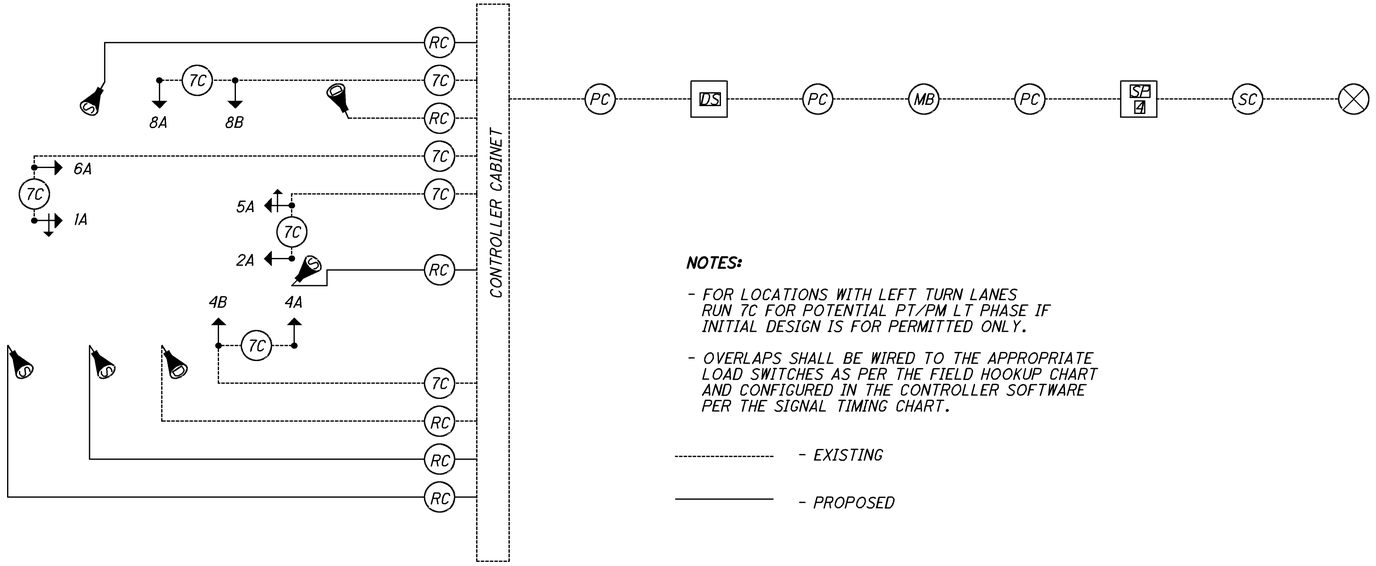

NOTES:

- FOR LOCATIONS WITH LEFT TURN LANES RUN 7C FOR POTENTIAL PT/PM LT PHASE IF INITIAL DESIGN IS FOR PERMITTED ONLY.
- OVERLAPS SHALL BE WIRED TO THE APPROPRIATE LOAD SWITCHES AS PER THE FIELD HOOKUP CHART AND CONFIGURED IN THE CONTROLLER SOFTWARE PER THE SIGNAL TIMING CHART.

---------- - EXISTING

———— - PROPOSED

FIELD WIRING HOOK-UP CHART (TEM FORM 496-16)

SIGNAL HEAD	INDICATION	FIELD TERMINAL	FLASH	SIGNAL HEAD	INDICATION	FIELD TERMINAL	FLASH
1A (SB LT)	R	6 R	Y	-	-	-	-
	Y	6 Y			-	-	
	G	6 G			-	-	
	<--Y---	1 Y		-	-	-	
	<--G---	1 G			-	-	
5A (NB LT)	R	2 R	Y	-	-	-	-
	Y	2 Y			-	-	
	G	2 G		-	-	-	
	<--Y---	5 Y		-	-	-	-
	<--G---	5 G			-	-	
-	-	-	-		-	-	
	-	-			-	-	
	-	-		-	-	-	
	-	-			-	-	
	-	-		PEDESTRIAN MOVEMENTS			
-	-	-	-	-	-	-	-
	-	-		-	-	-	
-	-	-		-	-	-	-
	-	-		-	-	-	
-	-	-	-	-	-	-	-
	-	-		-	-	-	
	-	-		-	-	-	-
-	-	-		-	-	-	
	-	-		OVERLAPS			
	-	-		-	-	-	-
-	-	-	-		-	-	
	-	-		-	-	-	-
-	-	-			-	-	
LS = LOAD SWITCH							

* SEE TEM FORM 496-20 FOR COMPLETED SAMPLE OF THIS CHART.

LEGEND

2/C NO. XX AWG (LEAD-IN CABLE)		PTZ CAMERA	
L	VEHICLE LOOP DETECTOR	INT	INTERCONNECT CABLE
SC	SIGNAL CABLE, 5 CONDUCTOR, NO. XX AWG		ETHERNET RADIO
TC	SIGNAL CABLE, 7 CONDUCTOR, NO. XX AWG	PE	PHOTOELECTRIC CELL
	5 SECTION VEHICULAR SIGNAL HEAD, 1-WAY		LUMINAIRE, CONVENTIONAL, 150 WATT, HPS, 120 VOLT, AS PER PLAN
	3 SECTION VEHICULAR SIGNAL HEAD, 1-WAY		POWER SOURCE
	3 SECTION VEHICULAR SIGNAL HEAD, TURN ARROWS 1-WAY	SC	SERVICE CABLE, 3 CONDUCTOR, NO. X AWG
	PEDESTRIAN SIGNAL HEAD	PC	POWER CABLE, 2 CONDUCTOR, NO. X AWG
	PEDESTRIAN PUSH BUTTON	SP	SIGNAL SUPPORT POLE NO. __
D	DILEMMA ZONE RADAR DETECTION UNIT	MB	METER BASE
S	STOP BAR RADAR DETECTION UNIT	NX	NO. X AWG DISTRIBUTION CABLE
RC	RADAR DETECTION CABLE	NXX	NO. XX AWG POLE & BRACKET CABLE
VC	VIDEO CAMERA CABLE	DS	DUAL LIGHTING/SIGNAL DISCONNECT SWITCH
	VIDEO DETECTION CAMERA	FC	FLASHER CABINET

RADAR DETECTION CHART (TEM FORM 496-4)

RADAR DETECTION NO.	MOVEMENT	PULSE OR PRESENCE	DELAY (SEC) CONTROLLER	ASSOCIATED CONTROLLER PHASE
SB1	NBLT	PRES	4	5
SB2	EB	PRES	10	4
SB3	SBLT	PRES	4	1
SB4	WB	PRES	10	8
-	-	-	-	-
-	-	-	-	-
-	-	-	-	-
-	-	-	-	-

CALCULATED | CHECKED

TRAFFIC SIGNAL PLAN DETAILS
US36/SR4 & COLLINS ROAD

UNI-36-8.74

49
49

I:\Projects\uni\036\0000.016\91053\production\ROADWAY\SHEETS\Part 2\TRAFFIC SIGNAL WIRING PLAN DETAILS.dgn 11-APR-2015 10:16AM drankin SHEET_CM001