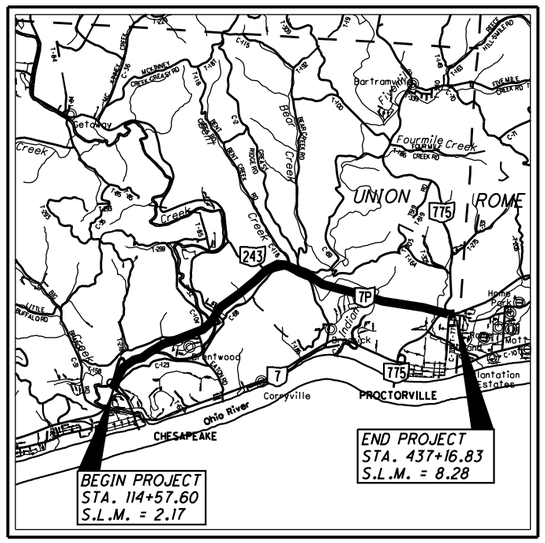

LOCATION MAP

LATITUDE: N 38°27'16" LONGITUDE: W 82°25'19"

SCALE IN MILES

0 1 2 3 4

PORTION TO BE IMPROVED

INTERSTATE HIGHWAY

FEDERAL ROUTES

STATE ROUTES

COUNTY & TOWNSHIP ROADS

OTHER ROADS

FOR DESIGN DESIGNATIONS AND DESIGN EXCEPTIONS, SEE SHEET 2.

UNDERGROUND UTILITIES

Contact Two Working Days Before You Dig

OHIO811.org Before You Dig

OHIO811, 8-1-1, or 1-800-362-2764

(Non-members must be called directly)

PLAN PREPARED BY:

Stantec

1500 Lake Shore Drive, Suite 100

Columbus, Ohio 43204

(614) 486-4383

OHIO DEPARTMENT OF TRANSPORTATION, DISTRICT NINE

650 EASTERN AVENUE, P.O. BOX 467

CHILLICOTHE, OHIO 45601

STATE OF OHIO

DEPARTMENT OF TRANSPORTATION

LAW-7-2.17

VILLAGE OF CHESAPEAKE
VILLAGE OF PROCTORVILLE
UNION TOWNSHIP
ROME TOWNSHIP
LAWRENCE COUNTY

INDEX OF SHEETS:

TITLE SHEET	1	PLAN AND PROFILE - S.R. 243	490-491
SIGNITURE SHEET / STANDARD CONSTRUCTION DRAWINGS	1A	CROSS SECTIONS - S.R. 243	492-501
DESIGN DESIGNATIONS/EXCEPTIONS	2	PLAN AND PROFILE - C.R. 69	502-507
SCHEMATIC PLAN	3-11	CROSS SECTIONS - C.R. 69	508-546
GEOMETRIC LAYOUT	12	PLAN AND PROFILE - C.R. 118	547
UTILITY SCHEMATIC PLAN	13-14	CROSS SECTIONS - C.R. 118	548-552
ENVIRONMENTAL COMMITMENTS	15-22	PLAN AND PROFILE - C.R. 2	553
TYPICAL SECTIONS	23-33	CROSS SECTIONS - C.R. 2	554-558
GENERAL NOTES	34-41	PLAN AND PROFILE - S.R. 775	559-560
MAINTENANCE OF TRAFFIC	42-66	CROSS SECTIONS - S.R. 775	561-579
GENERAL SUMMARY	67-70	SUPERELEVATION TABLES	580-604
SUBSUMMARIES	71-81	PAVEMENT DETAILS	605-615
PAVEMENT CALCULATIONS	82-84	INTERCHANGE DETAILS	616-621
PROJECT SITE PLAN	85-92	INTERSECTION DETAILS	622-628
PLAN AND PROFILE - S.R. 7	93-155	DRIVEWAY AND TURNAROUND DETAILS	629-638
REFERENCE LINE PROFILES	156-158	STORM SEWER PROFILES	639-648
CROSS SECTIONS - S.R. 7	159-418	CULVERT DETAILS	649-664
PLAN AND PROFILE - RAMP C	419	DRAINAGE DETAILS	665-673
CROSS SECTIONS - RAMP C	420-424	UNDERDRAIN TABLE	674-678
PLAN AND PROFILE - RAMP D	425-426	NOISE WALL	679-705
CROSS SECTIONS - RAMP D	427-430	RETAINING WALL	706-712
PLAN AND PROFILE - RAMP I	431	TRAFFIC CONTROL PLAN	
CROSS SECTIONS - RAMP I	432-436	SIGNING AND PAVEMENT MARKING	713-763
PLAN AND PROFILE - RAMP J	437	SIGNALS	764-773A
CROSS SECTIONS - RAMP J	438-441	LANDSCAPING	774-775
PLAN AND PROFILE- RAMP K	442-444	LIGHTING	776-791
CROSS SECTIONS - RAMP K	445-456	STRUCTURE (OVER 20 FOOT SPAN)	
PLAN AND PROFILE - RAMP L	457	LAW-7-0251	792-816
CROSS SECTIONS - RAMP L	458-464	LAW-7-0370	817-844
BRENTWOOD EMERGENCY ACCESS		LAW-7-0376	845-869
PLAN AND PROFILE	465	LAW-7-0387	870-897
CROSS SECTIONS	466-472	LAW-7-0510	898-906
HENSON HOLLOW EMERGENCY ACCESS		LAW-7-0563	907-930
PLAN AND PROFILE	473	LAW-7-0711	931-960
CROSS SECTIONS	474-475	LAW-7-0713L	961-988
CROSS SECTIONS - C.R. 104	476-478	LAW-7-0713R	989-1014
CROSS SECTIONS - C.R. 32	479-481	LAW-775-0105	1015-1038
PLAN AND PROFILE - LYNN LANE	482	FENCE PLAN	1039-1041
CROSS SECTIONS - LYNN LANE	483-485	GEOTECHNICAL PROFILE - ROADWAY	1042-1247 TR21, V1.64
PLAN AND PROFILE - DOGWOOD LANE EXTENSION	486	RIGHT-OF-WAY	
CROSS SECTIONS - DOGWOOD LANE EXTENSION	487-489		

PROJECT DESCRIPTION

THIS PROJECT IS THE THIRD PHASE OF THE LAW-7-2.17 STATE ROUTE 7 RELOCATION PROJECT. THIS PROJECT WILL CONSTRUCT 6.11 MILES OF THE EASTBOUND LANES OF STATE ROUTE 7 BETWEEN STATE ROUTE 527 AND STATE ROUTE 775. THIS PROJECT ALSO INCLUDES A PARTIAL GRADE SEPARATED INTERCHANGE AT STATE ROUTE 527 AND A FULL INTERCHANGE AT STATE ROUTE 775. ALSO INCLUDED WITH THIS PROJECT IS THE CONSTRUCTION OF A ROUNDABOUT AT THE INTERSECTION OF STATE ROUTE 7 AND STATE ROUTE 243. THIS IMPROVEMENT INCLUDES THE RELOCATION OF 1.98 MILES OF STATE ROUTES, COUNTY AND TOWNSHIP ROADS AS WELL AS THE ADDITION OF 1.28 MILES OF RAMP AND ELEVEN (11) CUL-DE-SACS AND DRIVES. A TOTAL OF TEN (10) STRUCTURES WILL BE DEVELOPED WHICH INCLUDE TRAFFIC OVERPASS AND STREAM CROSSING BRIDGES. WORK WILL INCLUDE NEW STORM SEWERS, CULVERTS, NOISE AND RETAINING WALLS, TRAFFIC CONTROL, PAVEMENT MARKING AND LIGHTING.

EARTH DISTURBED AREAS

PROJECT EARTH DISTURBED AREA:	281 ACRES
ESTIMATED CONTRACTOR EARTH DISTURBED AREA:	77 ACRES
NOTICE OF INTENT EARTH DISTURBED AREA:	358 ACRES

LIMITED ACCESS

THIS IMPROVEMENT IS ESPECIALLY DESIGNED FOR THROUGH TRAFFIC AND HAS BEEN DECLARED A LIMITED ACCESS HIGHWAY OR FREEWAY BY ACTION OF THE DIRECTOR IN ACCORDANCE WITH THE PROVISIONS OF SECTION 5511.02 OF THE OHIO REVISED CODE.

2023 SPECIFICATIONS

THE STANDARD SPECIFICATIONS OF THE STATE OF OHIO, DEPARTMENT OF TRANSPORTATION, INCLUDING CHANGES AND SUPPLEMENTAL SPECIFICATIONS LISTED IN THE PROPOSAL SHALL GOVERN THIS IMPROVEMENT.

I HEREBY APPROVE THESE PLANS AND DECLARE THAT THE MAKING OF THIS IMPROVEMENT WILL REQUIRE THE CLOSING TO TRAFFIC OF THE HIGHWAY AND THAT DETOURS WILL BE PROVIDED AS INDICATED ON SHEETS 63-66.

APPROVED _____

DATE _____ DISTRICT DEPUTY DIRECTOR

APPROVED _____

DATE 09/23/2024 DIRECTOR, DEPARTMENT OF TRANSPORTATION

DRAFT Stage 3 - Not for Construction

FEDERAL PROJECT NO. E035(921) E060(482)

PID NO. 75923

CONSTRUCTION PROJECT NO.

RAILROAD INVOLVEMENT NONE

LAW-7-2.17

1 / 1247

U:\173608714\LAW\75923\roadway\sheets\75923GT001-2B.dgn 5/22/2024 9:39:18 AM SLParker

ENGINEERS SEAL:	ENGINEERS SEAL:	ENGINEERS SEAL:
ROADWAY & LANDSCAPING PLAN SIGNED:_____ DATE:_____	ROADWAY & LANDSCAPING PLAN SIGNED:_____ DATE:_____	TRAFFIC CONTROL SIGNED:_____ DATE:_____
ENGINEERS SEAL:	ENGINEERS SEAL:	
STRUCTURES SIGNED:_____ DATE:_____	STRUCTURES SIGNED:_____ DATE:_____	
ENGINEERS SEAL:	ENGINEERS SEAL:	
GEOTECHNICAL SIGNED:_____ DATE:_____	GEOTECHNICAL SIGNED:_____ DATE:_____	

STANDARD CONSTRUCTION DRAWINGS								SUPPLEMENTAL SPECIFICATIONS		SPECIAL PROVISIONS
BP-2.1	1/21/22	F-1.1	7/19/13	AS-1-15	1/20/23	MT-95.30	7/19/19	TC-52.20	1/15/21	800-2023	7/19/24	
BP-2.2	1/15/21	F-2.1	7/20/18	AS-2-15	7/21/23	MT-95.45	7/21/23	TC-61.10	4/21/23	813	7/21/23	
BP-2.3	7/18/14	F-3.1	7/19/13	EXJ-6-17	1/19/24	MT-95.61	4/19/19	TC-61.30	7/19/19	815	4/16/21	
BP-3.1	1/19/24	F-3.3	7/19/13	GSD-1-19	1/15/21	MT-97.10	4/19/19	TC-64.10	7/21/23	821	4/20/12	
BP-4.1	7/19/13	F-3.4	7/19/13	HW-2.1	7/15/22	MT-97.12	1/20/17	TC-65.10	1/17/14	825	4/21/23	
BP-5.1	7/15/22			HW-2.2	7/20/18	MT-99.20	4/19/19	TC-65.11	1/19/24	832	7/21/23	
BP-9.1	1/18/19	LA-1.2	1/16/09	PSID-1-13	1/20/23	MT-99.60	1/19/24	TC-71.10	4/21/23	836	1/19/24	
				SBR-1-20	7-21-23	MT-101.60	4/21/23	TC-72.20	7/21/23	840	7/21/23	
CB-2-2A,2B,2C	1/20/23	MGS-1.1	7/16/21	SICD-2-14	1/15/21	MT-101.70	4/21/23	TC-73.20	7/21/23	863	7/21/23	
CB-2-3,2-4	1/20/23	MGS-2.1	1/19/18			MT-101.75	7/21/23	TC-81.11	1/19/24	867	4/15/22	
CB-3A	7/16/21	MGS-2.3	1/20/23	HL-10.11	7/21/23	MT-101.90	7/17/20	TC-83.10	1/17/20	869	10/17/14	
CB-4	7/16/21	MGS-3.1	1/19/18	HL-10.12	7/21/23	MT-105.10	1/17/20	TC-83.20	1/19/24	906	10/15/10	
CB-4A 5A, 8A,	7/16/21	MGS-3.2	1/18/13	HL-10.13	1/20/23	MT-120.00	1/19/24	TC-84.20	1/19/24	913	4/16/21	
CB-5	7/16/21	MGS-4.2	7/19/13	HL-10.31	7/15/22			TC-85.10	1/19/24	921	4/20/12	
CB-8	7/16/21	MGS-4.3	1/18/13	HL-20.11	7/21/23	TC-15.116	1/19/24	TC-85.21	1/19/24			
		MGS-5.3	7/15/16	HL-30.11	7/21/23	TC-17.11	1/19/24	TC-85.22	4/21/23			
DM-1.1	7/17/20	MGS-6.1	1/19/18	HL-30.21	4/17/20	TC-21.11	7/16/21					
DM-1.2	7/16/21	MGS-6.2	7/19/19	HL-30.22	1/15/21	TC-21.21	1/20/23					
DM-4.1	7/17/20			HL-30.31	1/19/24	TC-22.10	4/21/23					
DM-4.2	7/20/12	RM-1.1	1/20/23	HL-30.41	1/21/22	TC-22.20	1/17/14					
DM-4.3	1/15/16	RM-3.1	7/20/18	HL-40.10	7/21/23	TC-41.10	7/19/13					
DM-4.4	1/15/16	RM-4.2	4/17/20	HL-40.20	1/19/24	TC-41.20	10/18/13					
		RM-4.4	7/21/23	HL-50.21	7/15/22	TC-41.30	4/21/23					
I-2.3	7/15/22	RM-4.5	7/21/17	HL-60.11	7/21/17	TC-41.40	10/18/13					
I-3D	7/15/22	RM-4.6	7/19/13	HL-60.31	7/21/23	TC-41.41	7/19/19					
		RM-7.1	7/18/14			TC-41.50	10/18/13					
MH-3	1/19/24	RM-7.2	7/15/07			TC-42.10	10/18/13					
						TC-42.20	10/18/13					
WO-1.1	7/21/23					TC-51.11	1/15/16					
WO-1.2	1/15/16					TC-52.10	10/18/13					

DRAFT Stage 3 - Not for Construction 09/23/2024

SIGNATURE SHEET / STANDARD CONSTRUCTION DRAWINGS

LAW-7-2.17

1A
1247

U:\173608714\LAW\75923\roadway\sheets\75923GT002-2B.dgn 5/22/2024 10:56:55 AM SLParker

DESIGN DESIGNATION (LAW-7-2.17)

OPENING DAY A.D.T. (2028)	13,400
DESIGN YEAR A.D.T. (2048)	17,500
D.H.V. (2048)	1,575
DIRECTIONAL DISTRIBUTION	53%
TRUCKS (24 HOURS B&C)	11%
Td	8%
DESIGN SPEED	60 M.P.H.
LEGAL SPEED	55 M.P.H.
DESIGN FUNCTIONAL CLASSIFICATION	02 FREEWAY (RURAL)

DESIGN EXCEPTIONS

DESIGN FEATURES:	APPROVAL DATE:	SHEET NO.:
NONE		

DESIGN DESIGNATION (S.R. 775)

OPENING DAY A.D.T. (2028)	19,400
DESIGN YEAR A.D.T. (2048)	29,100
D.H.V. (2048)	2,910
DIRECTIONAL DISTRIBUTION	57%
TRUCKS (24 HOURS B&C)	4%
Td	4%
DESIGN SPEED	55 M.P.H.
LEGAL SPEED	55 M.P.H.
DESIGN FUNCTIONAL CLASSIFICATION	05 MAJOR COLLECTOR (URBAN)

DESIGN EXCEPTIONS

DESIGN FEATURES:	APPROVAL DATE:	SHEET NO.:
NONE		

DESIGN DESIGNATION (S.R. 243)

OPENING DAY A.D.T. (2028)	5,200
DESIGN YEAR A.D.T. (2048)	6,800
D.H.V. (2048)	816
DIRECTIONAL DISTRIBUTION	58%
TRUCKS (24 HOURS B&C)	4%
Td	4%
DESIGN SPEED	55 M.P.H.
LEGAL SPEED	55 M.P.H.
DESIGN FUNCTIONAL CLASSIFICATION	05 MAJOR COLLECTOR (RURAL)

DESIGN EXCEPTIONS

DESIGN FEATURES	APPROVAL DATE	SHEET NO.
NONE		

DESIGN DESIGNATION (C.R. 2)

OPENING DAY A.D.T. (2028)	1,800
DESIGN YEAR A.D.T. (2048)	2,100
D.H.V. (2048)	273
DIRECTIONAL DISTRIBUTION	58%
TRUCKS (24 HOURS B&C)	2%
Td	2%
DESIGN SPEED	55 M.P.H.
LEGAL SPEED	55 M.P.H.
DESIGN FUNCTIONAL CLASSIFICATION	07 LOCAL (RURAL)

DESIGN EXCEPTIONS

DESIGN FEATURES:	APPROVAL DATE:	SHEET NO.:
GRADED SHOULDER WIDTH	5-18-23	31
HORIZONTAL ALIGNMENT:		
DEGREE OF CURVE	5-18-23	553
SUPERELEVATION:		
MAX. RATE	5-18-23	553

DESIGN DESIGNATION (C.R. 32)

OPENING DAY A.D.T. (2028)	754
DESIGN YEAR A.D.T. (2048)	1120
D.H.V. (2048)	112
DIRECTIONAL DISTRIBUTION	50%
TRUCKS (24 HOURS B&C)	LOWEST
Td	LOWEST
DESIGN SPEED	55
LEGAL SPEED	55
DESIGN FUNCTIONAL CLASSIFICATION	07 LOCAL (RURAL)

DESIGN EXCEPTIONS

DESIGN FEATURES:	APPROVAL DATE:	SHEET NO.:
NONE		

DESIGN DESIGNATION (C.R. 118)

OPENING DAY A.D.T. (2028)	400
DESIGN YEAR A.D.T. (2048)	500
D.H.V. (2048)	60
DIRECTIONAL DISTRIBUTION	60%
TRUCKS (24 HOURS B&C)	2%
Td	2%
DESIGN SPEED	55 M.P.H.
LEGAL SPEED	55 M.P.H.
DESIGN FUNCTIONAL CLASSIFICATION	07 LOCAL (RURAL)

DESIGN EXCEPTIONS

DESIGN FEATURES:	APPROVAL DATE:	SHEET NO.:
GRADED SHOULDER WIDTH	5-18-23	31
HORIZONTAL ALIGNMENT:		
DEGREE OF CURVE	5-18-23	547
SUPERELEVATION:		
MAX. RATE	5-18-23	547

DESIGN DESIGNATION (C.R. 69)

OPENING DAY A.D.T. (2028)	400
DESIGN YEAR A.D.T. (2048)	500
D.H.V. (2048)	75
DIRECTIONAL DISTRIBUTION	67%
TRUCKS (24 HOURS B&C)	6%
Td	12%
DESIGN SPEED	55 M.P.H.
LEGAL SPEED	55 M.P.H.
DESIGN FUNCTIONAL CLASSIFICATION	07 LOCAL (RURAL)

DESIGN EXCEPTIONS

DESIGN FEATURES:	APPROVAL DATE:	SHEET NO.:
HORIZONTAL ALIGNMENT:		
DEGREE OF CURVE	5-19-23	502-507
VERTICAL ALIGNMENT:		
STOPPING SIGHT DISTANCE	5-19-23	502-507
SUPERELEVATION:		
MAX. RATE	5-19-23	502-507

DESIGN DESIGNATION (C.R. 104)

OPENING DAY A.D.T. (2028)	376
DESIGN YEAR A.D.T. (2048)	555
D.H.V. (2048)	56
DIRECTIONAL DISTRIBUTION	50%
TRUCKS (24 HOURS B&C)	LOWEST
Td	LOWEST
DESIGN SPEED	55
LEGAL SPEED	55
DESIGN FUNCTIONAL CLASSIFICATION	07 LOCAL (URBAN)

DESIGN EXCEPTIONS

DESIGN FEATURES	APPROVAL DATE	SHEET NO.
NONE		

DESIGN DESIGNATION (LYNN LANE)

OPENING DAY A.D.T. (2028)	LOWEST
DESIGN YEAR A.D.T. (2048)	LOWEST
D.H.V. (2048)	LOWEST
DIRECTIONAL DISTRIBUTION	50%
TRUCKS (24 HOURS B&C)	LOWEST
Td	LOWEST
DESIGN SPEED	55 M.P.H.
LEGAL SPEED	55 M.P.H.
DESIGN FUNCTIONAL CLASSIFICATION	07 LOCAL (RURAL)

DESIGN EXCEPTIONS

DESIGN FEATURES	APPROVAL DATE	SHEET NO.
HORIZONTAL ALIGNMENT:		
DEGREE OF CURVE	5/18/23	482
SUPERELEVATION:		
MAX. RATE	5/18/23	482

DRAFT Stage 3 - Not for Construction 09/23/2024

CALCULATED SLP CHECKED ALB

DESIGN DESIGNATIONS / EXCEPTIONS

LAW-7-2.17

U:\173608714\LAW\75923\roadway\sheets\75923GN100-2B.dgn 5/21/2024 4:47:56 PM SLParker

CURVE DATA
S.R. 7
CURVE NO. 1

P.I. STA. 138+60.99
Δ = 53° 33′ 53″ (RT)
Dc = 1° 27′ 15″
R = 3,940.00′
T = 1,880.13′
L = 3,508.44′
E = 425.60′
TS STA. 117+84.61
SC STA. 119+59.61

θs = 1° 16′ 21″
Ls = 175.00′
Ts = 2,076.38′
LT = 116.67′
ST = 58.34′
e_{max} = 4.00%
CS STA. 154+68.05
ST STA. 156+43.05

CURVE DATA
S.R. 7
CURVE NO. 2

P.I. STA. 182+06.44
Δ = 24° 16′ 14″ (LT)
Dc = 2° 10′ 43″
R = 2,630.00′
T = 423.13′
L = 839.08′
E = 33.82′
TS STA. 175+03.18
SC STA. 177+78.18

θs = 2° 59′ 44″
Ls = 275.00′
Ts = 703.26′
LT = 183.36′
ST = 91.69′
e_{max} = 5.51%
CS STA. 186+17.26
ST STA. 188+92.26

CURVE DATA
S.R. 7
CURVE NO. 3

P.I. STA. 205+33.31
Δ = 27° 30′ 45″ (RT)
Dc = 1° 45′ 00″
R = 3,274.04′
T = 683.24′
L = 1,347.14′
E = 70.53′
TS STA. 196+19.13
SC STA. 198+44.13

θs = 1° 58′ 07″
Ls = 225.00′
Ts = 914.18′
LT = 150.01′
ST = 75.01′
e_{max} = 4.60%
CS STA. 211+91.27
ST STA. 214+16.27

CURVE DATA
S.R. 7
CURVE NO. 4

P.I. STA. 232+01.52
Δ = 34° 12′ 59″ (LT)
Dc = 4° 45′ 00″
R = 1,206.23′
T = 161.12′
L = 320.35′
E = 10.71′
TS STA. 226+28.73
SC STA. 230+28.73

θs = 9° 30′ 00″
Ls = 400.00′
Ts = 572.79′
LT = 267.05′
ST = 133.68′
e_{max} = 8.00%
CS STA. 233+49.08
ST STA. 237+49.08

CURVE DATA
S.R. 7
CURVE NO. 5

P.I. STA. 261+89.75
Δ = 58° 46′ 06″ (RT)
Dc = 3° 15′ 00″
R = 1,762.95′
T = 773.76′
L = 1,458.26′
E = 162.33′
TS STA. 250+20.45
SC STA. 253+70.45

θs = 5° 41′ 15″
Ls = 350.00′
Ts = 1,169.30′
LT = 233.45′
ST = 116.78′
e_{max} = 7.10%
CS STA. 268+28.71
ST STA. 271+78.71

CURVE DATA
S.R. 7
CURVE NO. 6

P.I. STA. 280+92.68
Δ = 5° 51′ 21″ (LT)
Dc = 1° 00′ 00″
R = 5,729.58′
T = 230.42′
L = 460.59′
E = 4.63′
TS STA. 277+37.12
SC STA. 278+62.12

θs = 0° 37′ 30″
Ls = 125.00′
Ts = 355.56′
LT = 83.33′
ST = 41.67′
e_{max} = 2.90%
CS STA. 283+22.71
ST STA. 284+47.71

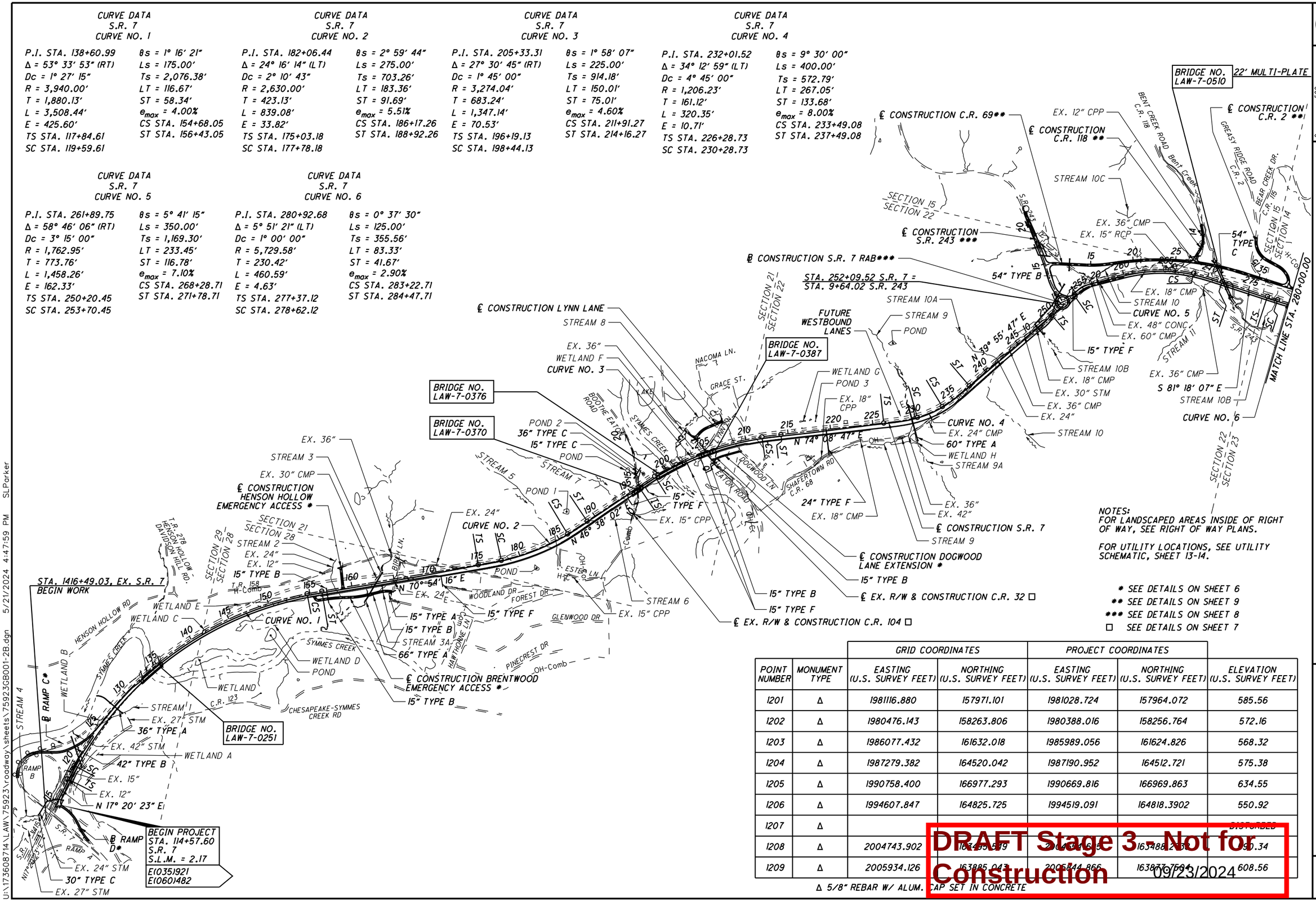

NOTES:
FOR LANDSCAPED AREAS INSIDE OF RIGHT OF WAY, SEE RIGHT OF WAY PLANS.

FOR UTILITY LOCATIONS, SEE UTILITY SCHEMATIC, SHEET 13-14.

* SEE DETAILS ON SHEET 6
** SEE DETAILS ON SHEET 9
*** SEE DETAILS ON SHEET 8
□ SEE DETAILS ON SHEET 7

		GRID COORDINATES		PROJECT COORDINATES		
POINT NUMBER	MONUMENT TYPE	EASTING (U.S. SURVEY FEET)	NORTHING (U.S. SURVEY FEET)	EASTING (U.S. SURVEY FEET)	NORTHING (U.S. SURVEY FEET)	ELEVATION (U.S. SURVEY FEET)
1201	Δ	1981116.880	157971.101	1981028.724	157964.072	585.56
1202	Δ	1980476.143	158263.806	1980388.016	158256.764	572.16
1203	Δ	1986077.432	161632.018	1985989.056	161624.826	568.32
1204	Δ	1987279.382	164520.042	1987190.952	164512.721	575.38
1205	Δ	1990758.400	166977.293	1990669.816	166969.863	634.55
1206	Δ	1994607.847	164825.725	1994519.091	164818.3902	550.92
1207	Δ					DISTURBED
1208	Δ	2004743.902	163955.589	2004656.565	163488.230	590.34
1209	Δ	2005934.126	163885.043	2005844.866	163877.7594	608.56

Δ 5/8" REBAR W/ ALUM. CAP SET IN CONCRETE

DRAFT Stage 3 - Not for Construction
09/23/2024

HORIZONTAL SCALE IN FEET
0 250 500 1000

SCHEMATIC PLAN

LAW-7-2.17

U:\173608714\LAW\75923\roadway\sheets\75923GB001-2B.dgn 5/21/2024 4:47:59 PM SLParker

CURVE DATA
S.R. 7
CURVE NO. 6

P.I. STA. 280+92.68
Δ = 5° 51′ 21″ (LT)
Dc = 1° 00′ 00″
R = 5,729.58′
T = 230.42′
L = 460.59′
E = 4.63′
TS STA. 277+37.12
SC STA. 278+62.12
θs = 0° 37′ 30″
Ls = 125.00′
Ts = 355.56′
LT = 83.33′
ST = 41.67′
e_{max} = 2.90%
CS STA. 283+22.71
ST STA. 284+47.71

CURVE DATA
S.R. 7
CURVE NO. 7

P.I. STA. 326+36.08
Δ = 31° 21′ 41″ (RT)
Dc = 2° 00′ 00″
R = 2,864.79′
T = 670.91′
L = 1,318.07′
E = 77.51′
TS STA. 317+06.62
SC STA. 319+56.62
θs = 2° 30′ 00″
Ls = 250.00′
Ts = 929.46′
LT = 166.68′
ST = 83.35′
e_{max} = 5.10%
CS STA. 332+74.69
ST STA. 335+24.69

CURVE DATA
S.R. 7
CURVE NO. 8

P.I. STA. 355+16.90
Δ = 9° 56′ 13″ (LT)
Dc = 0° 52′ 24″
R = 6,560.00′
T = 507.37′
L = 1,012.73′
E = 19.59′
TS STA. 348+84.10
SC STA. 350+09.10
θs = 0° 32′ 45″
Ls = 125.00′
Ts = 632.80′
LT = 83.33′
ST = 41.67′
e_{max} = 2.60%
CS STA. 360+21.83
ST STA. 361+46.83

CURVE DATA
S.R. 7
CURVE NO. 9

P.I. STA. 387+47.15
Δ = 46° 04′ 34″ (LT)
Dc = 2° 29′ 28″
R = 2,300.00′
T = 805.51′
L = 1,549.62′
E = 136.98′
TS STA. 376+18.38
SC STA. 379+18.38
θs = 3° 44′ 12″
Ls = 300.00′
Ts = 1,128.77′
LT = 200.04′
ST = 100.04′
e_{max} = 6.20%
CS STA. 394+68.00
ST STA. 397+68.00

CURVE DATA
S.R. 7
CURVE NO. 10

P.I. STA. 403+74.19
Δ = 1° 29′ 03″ (RT)
Dc = 0° 16′ 56″
R = 20,306.35′
T = 263.02′
L = 526.00′
E = 1.70′
e_{max} = NC
PC STA. 401+11.17
PT STA. 406+37.18

CURVE DATA
S.R. 7
CURVE NO. 11

P.I. STA. 416+63.54
Δ = 18° 47′ 30″ (LT)
Dc = 1° 38′ 13″
R = 3,500.00′
T = 451.44′
L = 897.92′
E = 28.99′
TS STA. = 409+59.26
SC STA. = 412+09.26
θs = 2° 02′ 47″
Ls = 250.00′
Ts = 704.28′
LT = 166.68′
ST = 83.34′
e_{max} = 4.47%
CS STA. 421+07.18
ST STA. 423+57.18

CURVE DATA
S.R. 7
CURVE NO. 12

P.I. STA. 428+11.24
Δ = 3° 17′ 53″ (RT)
Dc = 1° 19′ 10″
R = 4,342.09′
T = 125.00′
L = 249.93′
E = 1.80′
e_{max} = 3.77%
PC STA. = 426+86.24
PT STA. = 429+36.17

CURVE DATA
S.R. 7 WESTBOUND LANES
℄ CURVE NO. 1

P.I. STA. 399+82.71
Δ = 4° 17′ 32″ (LT)
Dc = 1° 00′ 00″
R = 5,729.58′
T = 214.71′
L = 429.22′
E = 4.02′
e_{max} = 2.90%
PC STA. = 397+68.00
PT STA. = 401+97.22

CURVE DATA
S.R. 7 WESTBOUND LANES
℄ CURVE NO. 2

P.I. STA. 405+66.18
Δ = 4° 27′ 49″ (RT)
Dc = 0° 50′ 00″
R = 6,875.49′
T = 267.96′
L = 535.64′
E = 5.22′
e_{max} = 2.48%
PC STA. = 402+98.22
PT STA. = 408+33.87

CURVE DATA
S.R. 7 WESTBOUND LANES
℄ CURVE NO. 3

P.I. STA. 418+95.85
Δ = 17° 28′ 44″ (LT)
Dc = 1° 30′ 00″
R = 3,820.00′
T = 587.24′
L = 1,165.35′
E = 44.87′
e_{max} = 4.10%
PC STA. = 413+08.61
PT STA. = 424+73.96

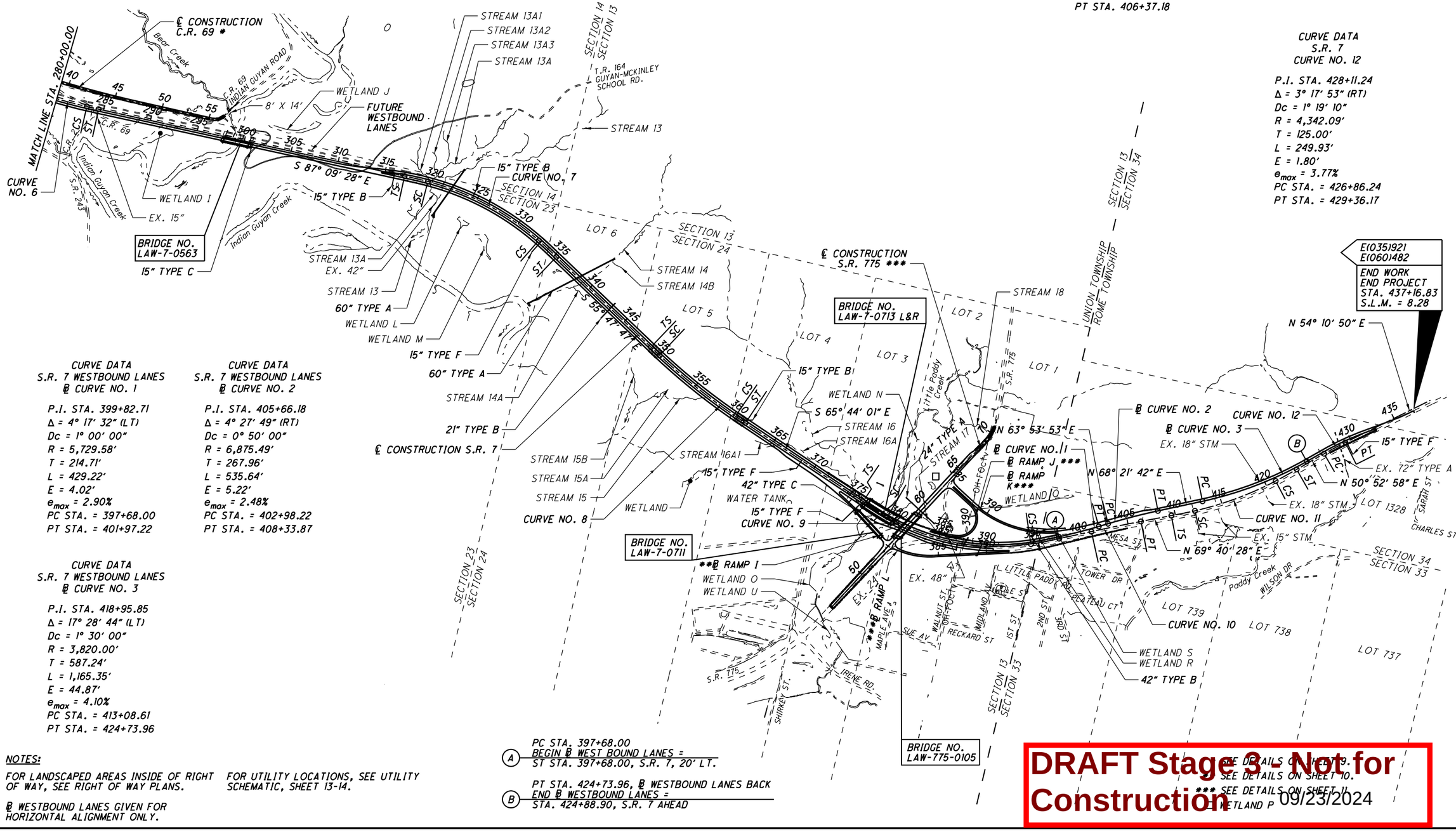

NOTES:

FOR LANDSCAPED AREAS INSIDE OF RIGHT OF WAY, SEE RIGHT OF WAY PLANS.

℄ WESTBOUND LANES GIVEN FOR HORIZONTAL ALIGNMENT ONLY.

FOR UTILITY LOCATIONS, SEE UTILITY SCHEMATIC, SHEET 13-14.

* SEE DETAILS ON SHEET 9.
** SEE DETAILS ON SHEET 10.
*** SEE DETAILS ON SHEET 11

DRAFT Stage 3 - Not for Construction - 09/23/2024

HORIZONTAL SCALE IN FEET
0 250 500 1000

SCHEMATIC PLAN

LAW-7-2.17

4
1247

U:\173608714\LAW\75923\roadway\sheets\75923GB002-2B.dgn 5/21/2024 4:48:01 PM SLParker

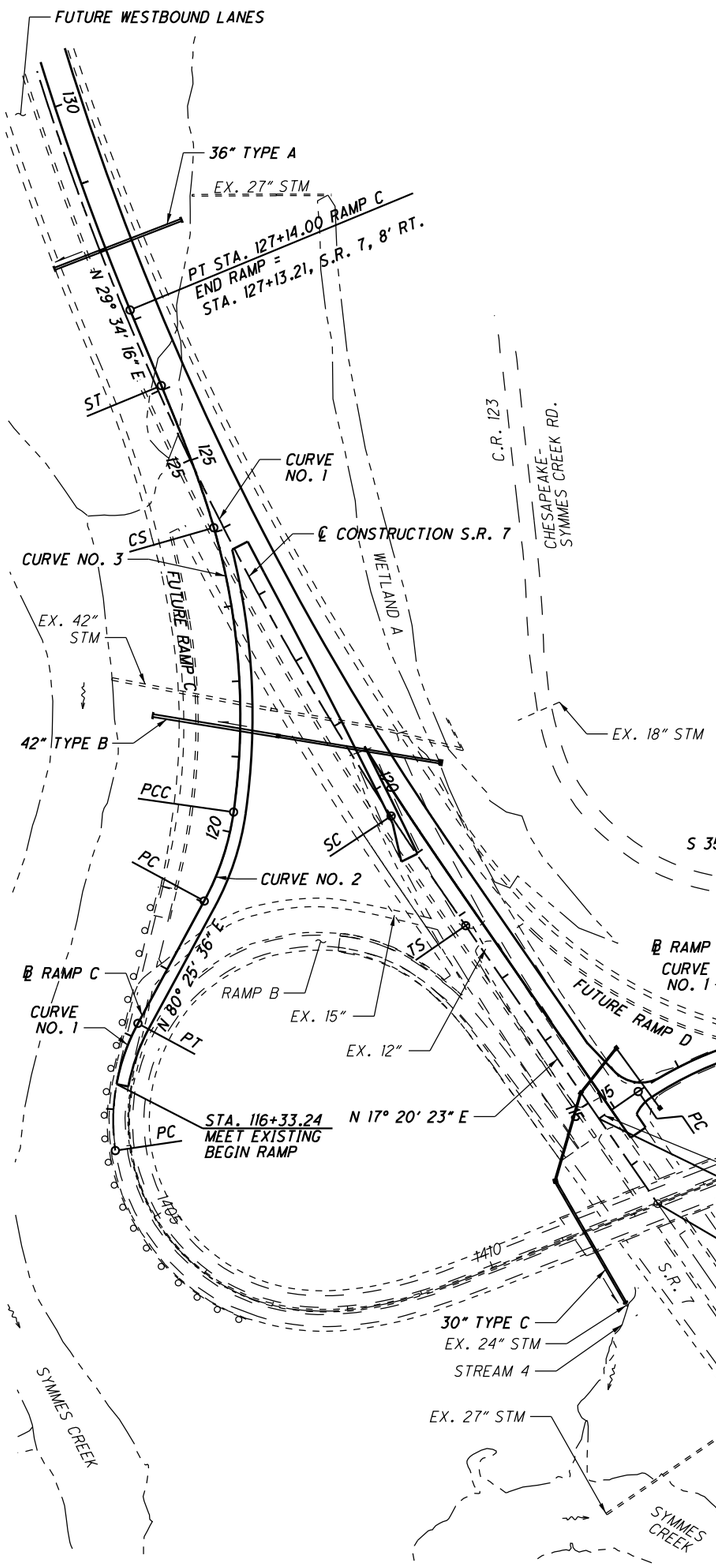

RAMP C
RAMP D

CURVE DATA
S.R. 7
CURVE NO. 1

P.I. STA. 138+60.99
Δ = 53° 33' 53" (RT)
Dc = 1° 27' 15"
R = 3,940.00'
T = 1,880.13'
L = 3,508.44'
E = 425.60'
TS STA. 117+84.61
SC STA. 119+59.61

θs = 1° 16' 21"
Ls = 175.00'
Ts = 2,076.38'
LT = 116.67'
ST = 58.34'
e_{max} = 4.00%
CS STA. 154+68.05
ST STA. 156+43.05

CURVE DATA
RAMP D
CURVE NO. 1

P.I. STA. 116+98.94
Δ = 37° 15' 49" (RT)
Dc = 12° 00' 00"
R = 477.46'
T = 160.98'
L = 310.53'
E = 26.41'
e_{max} = 7.30%
PC STA. 115+37.96
PT STA. 118+48.49

CURVE DATA
RAMP D
CURVE NO. 2

P.I. STA. 119+97.82
Δ = 17° 04' 16" (LT)
Dc = 10° 00' 00"
R = 572.96'
T = 85.99'
L = 170.71'
E = 6.42'
e_{max} (N.D.C.) = 6.70%
e_{max} = 1.60%
PC STA. 119+11.83
PT STA. 120+82.54

CURVE DATA
RAMP C
CURVE NO. 1

P.I.Sta. 116+35.14
Δ = 36° 41' 41" (RT)
Dc = 21° 08' 32"
R = 271.00'
T = 89.87'
L = 173.56'
E = 14.51'
e_{max} = 6.57%
PC Sta. 115+45.27
PT Sta. 117+18.83

CURVE DATA
RAMP C
CURVE NO. 2

P.I.Sta. 119+65.29
Δ = 20° 20' 49" (LT)
Dc = 16° 22' 13"
R = 350.00'
T = 62.81'
L = 124.29'
E = 5.59'
e_{max} = 7.08%
PC Sta. 119+02.48
PCC Sta. 120+26.77

CURVE DATA
RAMP C
CURVE NO. 3

P.I. STA. 122+69.78
Δ = 30° 30' 36" (LT)
Dc = 6° 21' 58"
R = 900.00'
T = 192.47'
L = 379.23'
E = 20.35'
CS STA. 124+06.00
ST STA. 126+06.00

θ_{back} = 6° 21' 58"
L_{back} = 200.00'
T_{back} = 342.26'
LT = 133.42'
ST = 66.75'
e_{max} = 6.25%
LT = 133.42'
ST = 66.75'

HORIZONTAL SCALE IN FEET
0 50 100 200

SCHEMATIC PLAN

LAW-7-2.17

5
1247

DRAFT Stage 3 - Not for Construction

09/23/2024

NOTES:
FOR LANDSCAPED AREAS INSIDE OF RIGHT OF WAY, SEE RIGHT OF WAY PLANS.
FOR UTILITY LOCATIONS, SEE UTILITY SCHEMATIC, SHEET 13-14.

U:\173608714\LAW\75923\roadway\sheets\75923GB003-2B.dgn 5/21/2024 4:48:01 PM SLParker

CURVE DATA
BRENTWOOD
EMERGENCY ACCESS
CURVE NO. 1
P.I. Sta. 13+95.14
Δ = 89° 37' 42" (LT)
Dc = 143° 14' 22"
R = 40.00'
T = 39.74'
L = 62.57'
E = 16.39'
e_{max} = N/C
PC STA. 13+55.39
PT STA. 14+17.97

CURVE DATA
BRENTWOOD
EMERGENCY ACCESS
CURVE NO. 2
P.I. Sta. 15+84.63
Δ = 7° 47' 00" (RT)
Dc = 3° 10' 59"
R = 1,800.00'
T = 122.45'
L = 244.52'
E = 4.16'
e_{max} = N/C
PC STA. 14+62.19
PT STA. 17+06.71

CURVE DATA
BRENTWOOD
EMERGENCY ACCESS
CURVE NO. 3
P.I. Sta. 18+80.83
Δ = 11° 25' 47" (LT)
Dc = 5° 43' 46"
R = 1,000.00'
T = 100.08'
L = 199.49'
E = 5.00'
e_{max} = N/C
PC STA. 17+80.75
PT STA. 19+80.24

CURVE DATA
BRENTWOOD
EMERGENCY ACCESS
CURVE NO. 4
P.I. Sta. 22+17.69
Δ = 25° 16' 53" (RT)
Dc = 19° 05' 55"
R = 300.00'
T = 67.28'
L = 132.37'
E = 7.45'
e_{max} = N/C
PC STA. 21+50.41
PT STA. 22+82.78

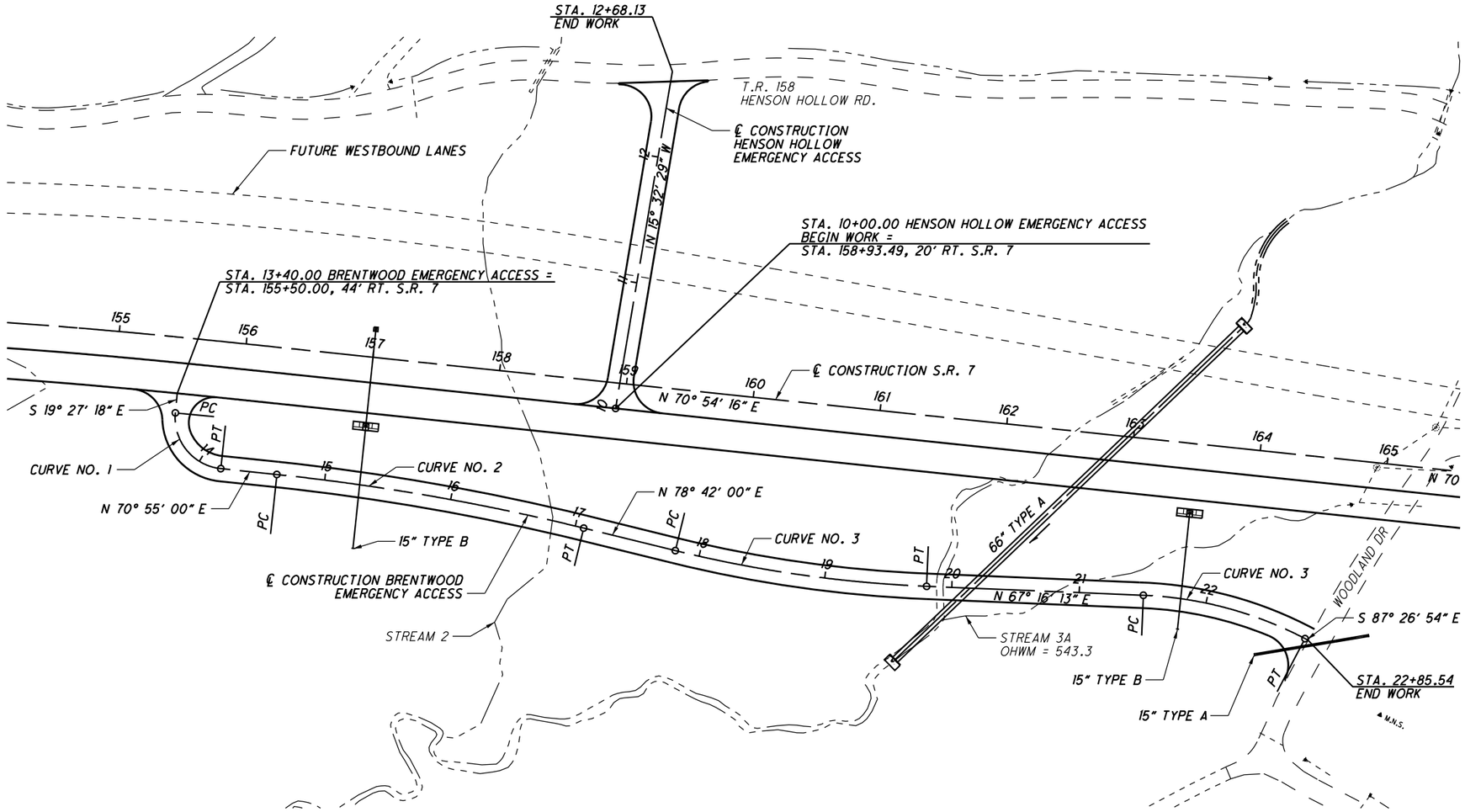

BRENTWOOD EMERGENCY ACCESS & HENSON HOLLOW EMERGENCY ACCESS

CURVE DATA
DOGWOOD LANE EXTENSION
CURVE NO. 1
P.I. Sta. 10+81.45
Δ = 15° 58' 40" (RT)
Dc = 11° 27' 33"
R = 500.00'
T = 70.17'
L = 139.43'
E = 4.90'
e_{max} = N/C
PC Sta. 10+11.28
PT Sta. 11+50.72

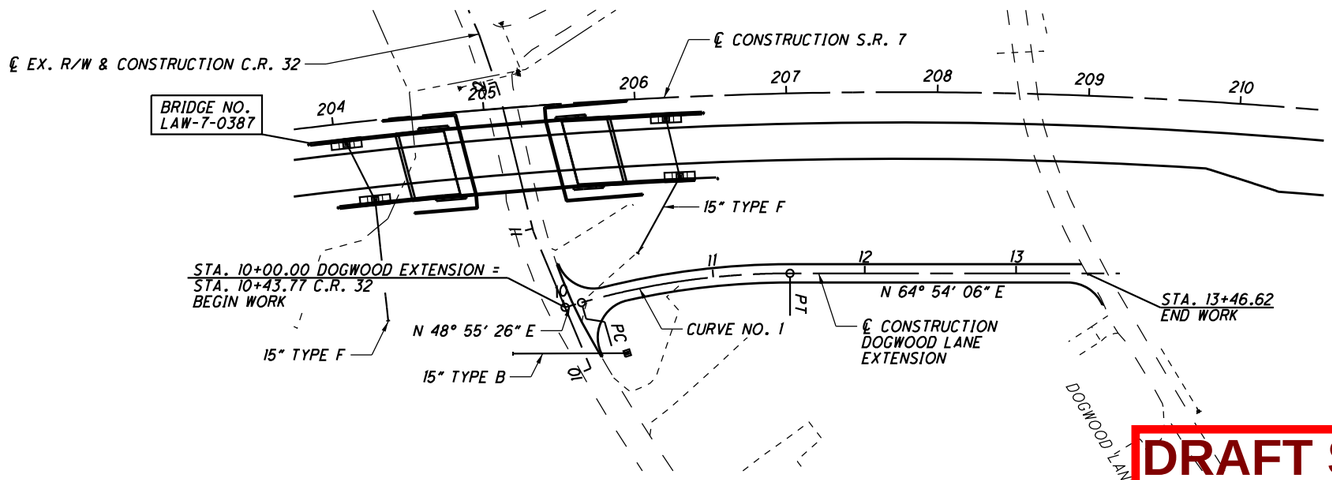

DOGWOOD LANE EXTENSION

DRAFT Stage 3 - Not for Construction 09/23/2024

HORIZONTAL SCALE IN FEET
0 25 50 100

SCHEMATIC PLAN

LAW-7-2.17

6
1247

U:\173608714\LAW\75923\roadway\sheets\75923GB013.dgn 5/21/2024 4:48:04 PM SLParker

EX. C.R. 104

P.I. STA. 11+53.11
Δ = 2° 41' 45" (LT)
NO CURVE

P.I. STA. 14+07.46
Δ = 2° 39' 07" (LT)
NO CURVE

P.I. STA. 16+72.90
Δ = 4° 02' 33" (LT)
NO CURVE

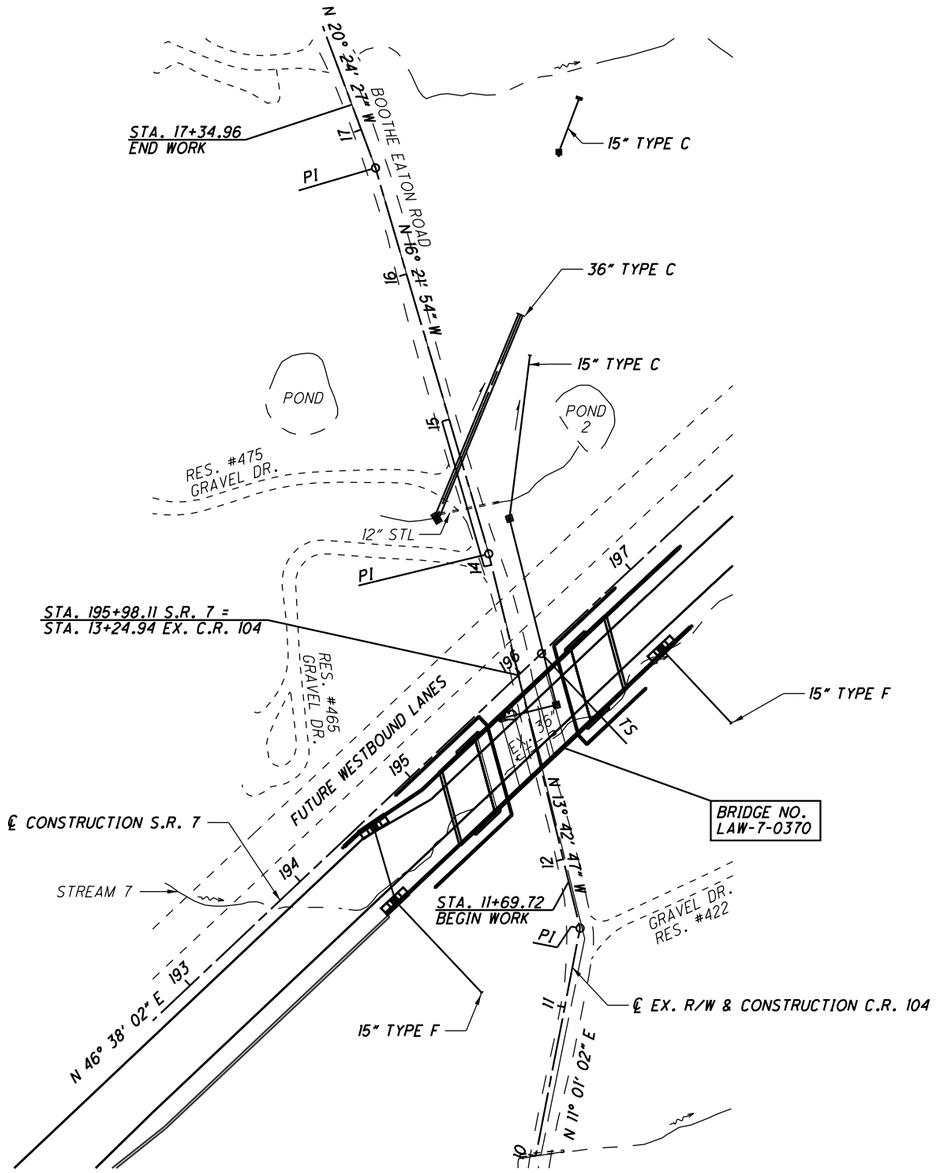

C.R. 104

CURVE DATA
LYNN LANE
P.I. STA. 11+44.17
Δ = 25° 37' 23" (RT)
Dc = 22° 55' 06"
R = 250.00'
T = 56.85'
L = 111.80'
E = 6.38'
e_{max} (N.D.C.) = 8.00%
e_{max} = NC
PC STA. 10+87.32
PT STA. 11+99.12

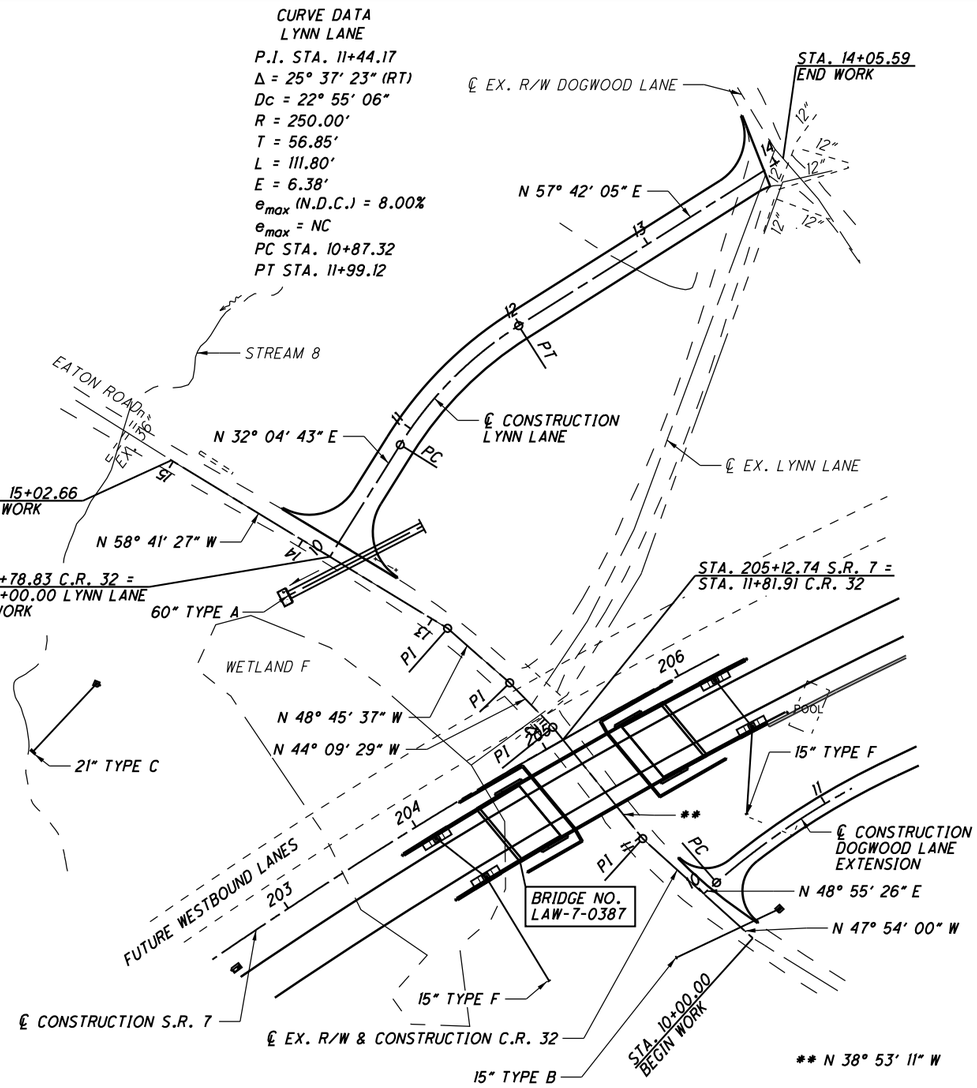

LYNN LANE & C.R. 32

EX. C.R. 32

P.I. STA. 10+98.09
Δ = 9° 00' 49" (RT)
NO CURVE

P.I. STA. 11+92.44
Δ = 5° 16' 19" (LT)
NO CURVE

P.I. STA. 12+33.35
Δ = 4° 36' 07" (LT)
NO CURVE

P.I. STA. 12+87.96
Δ = 9° 55' 50" (LT)
NO CURVE

NOTES:

FOR LANDSCAPED AREAS INSIDE OF RIGHT OF WAY, SEE RIGHT OF WAY PLANS.

FOR UTILITY LOCATIONS, SEE UTILITY SCHEMATIC, SHEETS 13-14.

DRAFT Stage 3 - Not for Construction 09/23/2024

HORIZONTAL SCALE IN FEET
0 25 50 100

SCHEMATIC PLAN

LAW-7-2.17

7
1247

U:\173608714\LAW\75923\roadway\sheets\75923GB006-2B.dgn 5/21/2024 4:48:05 PM SLParker

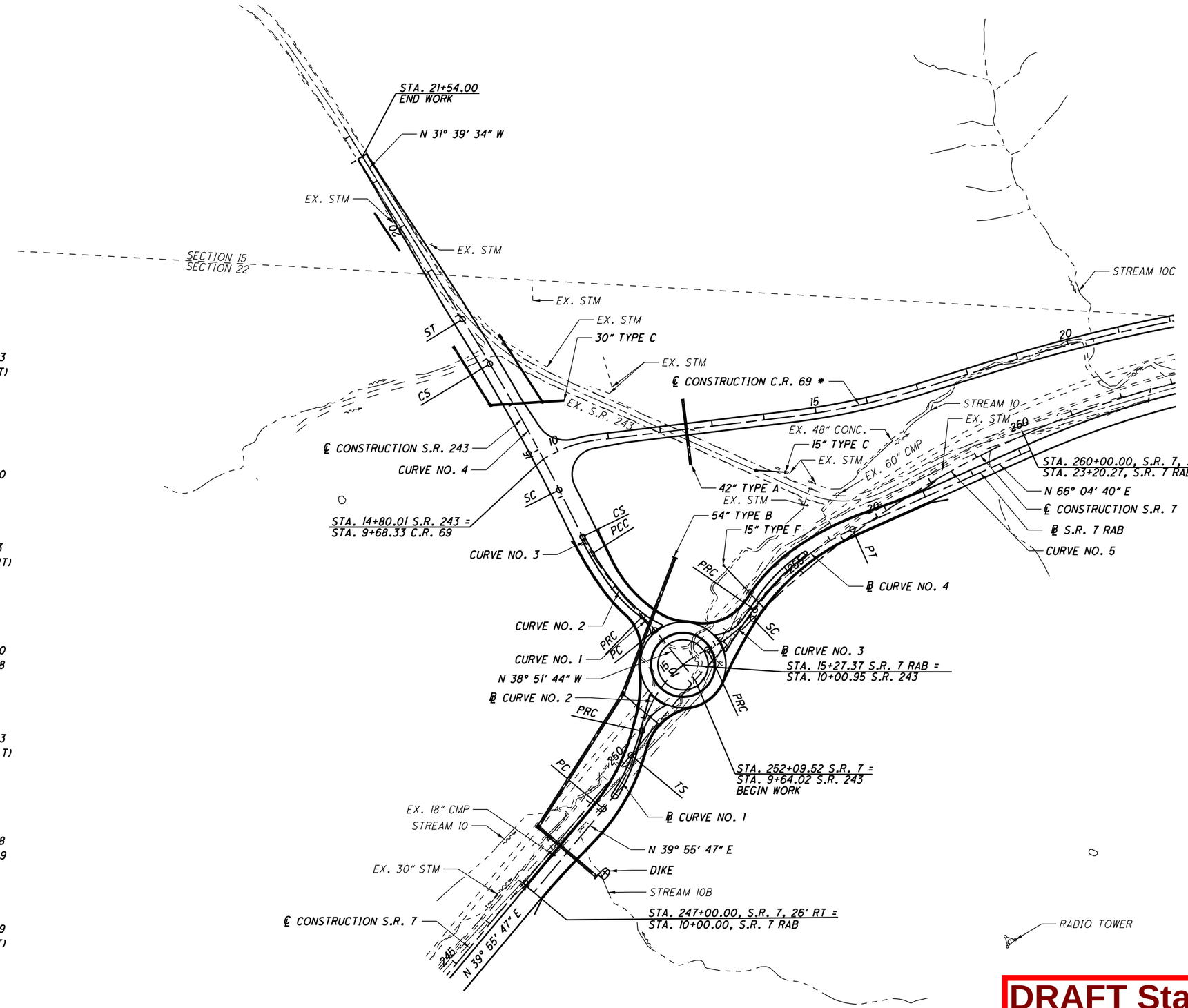

CURVE DATA
S.R. 7 RAB
℄ CURVE NO. 1

P.I. Sta. 12+93.43
Δ = 27° 26' 21" (LT)
Dc = 16° 22' 13"
R = 350.00'
T = 85.45'
L = 167.62'
E = 10.28'
PC Sta. 12+07.99
PRC Sta. 13+75.60

CURVE DATA
S.R. 7 RAB
℄ CURVE NO. 2

P.I. Sta. 14+87.13
Δ = 52° 43' 55" (RT)
Dc = 25° 27' 53"
R = 225.00'
T = 111.52'
L = 207.08'
E = 26.12'
PRC Sta. 13+75.60
PRC Sta. 15+82.68

CURVE DATA
S.R. 7 RAB
℄ CURVE NO. 3

P.I. Sta. 16+43.83
Δ = 30° 24' 24" (LT)
Dc = 25° 27' 53"
R = 225.00'
T = 61.15'
L = 119.41'
E = 8.16'
PRC Sta. 15+82.68
PRC Sta. 17+02.09

CURVE DATA
S.R. 7 RAB
℄ CURVE NO. 4

P.I. Sta. 18+27.99
Δ = 31° 15' 43" (RT)
Dc = 12° 43' 57"
R = 450.00'
T = 125.90'
L = 245.53'
E = 17.28'
PRC Sta. 17+02.09
PT Sta. 19+47.62

CURVE DATA
S.R. 243
CURVE NO. 1

P.I. Sta. 11+03.86
Δ = 6° 51' 57" (LT)
Dc = 19° 05' 55"
R = 300.00'
T = 18.00'
L = 35.95'
E = 0.54'
e_{max} = 1.60%
PC Sta. 10+85.87
PRC Sta. 11+21.82

CURVE DATA
S.R. 243
CURVE NO. 2

P.I. Sta. 11+99.38
Δ = 13° 36' 35" (RT)
Dc = 8° 48' 53"
R = 650.00'
T = 77.56'
L = 154.40'
E = 4.61'
e_{max} = 1.60%
PRC Sta. 11+21.82
PCC Sta. 12+76.21

CURVE DATA
S.R. 243
CURVE NO. 3

P.I. Sta. 12+94.82
Δ = 6° 05' 09" (RT)
Dc = 16° 22' 13"
R = 350.00'
T = 18.61'
L = 37.18'
E = 0.49'
e_{max} = 1.60%
PCC Sta. 12+76.21
CS Sta. 13+13.39

CURVE DATA
S.R. 243
CURVE NO. 4

P.I. Sta. 15+51.11
Δ = 5° 37' 36" (LT)
Dc = 1° 30' 00"
R = 3,819.72'
T = 137.62'
L = 275.13'
E = 2.48'
TS STA. 13+13.39
SC STA. 14+13.39
θs = 00° 45' 00"
Ls = 100.00'
Ts = 237.72'
LT = 66.67'
ST = 33.33'
e_{max} = 3.50%
CS Sta. 16+88.52
ST Sta. 17+88.52

CURVE DATA
S.R. 7
CURVE NO. 5

P.I. STA. 261+89.75
Δ = 58° 46' 06" (RT)
Dc = 3° 15' 00"
R = 1,762.95'
T = 773.76'
L = 1,458.26'
E = 162.33'
TS STA. 250+20.45
SC STA. 253+70.45
θs = 5° 41' 15"
Ls = 350.00'
Ts = 1,169.30'
LT = 233.45'
ST = 116.78'
e_{max} = 7.10%
CS STA. 268+28.71
ST STA. 271+78.71

NOTES:
FOR LANDSCAPED AREAS INSIDE OF RIGHT OF WAY, SEE RIGHT OF WAY PLANS.
FOR UTILITY LOCATIONS, SEE UTILITY SCHEMATIC, SHEET 13-14.
SEE DETAILS ON SHEET 9

HORIZONTAL SCALE IN FEET
0 50 100 200

SCHEMATIC PLAN

LAW-7-2.17

8
1247

DRAFT Stage 3 - Not for Construction
09/23/2024

U:\1736087\14\LAW\75923\roadway\sheets\75923GB011-2B.dgn 5/21/2024 4:48:05 PM SLParker

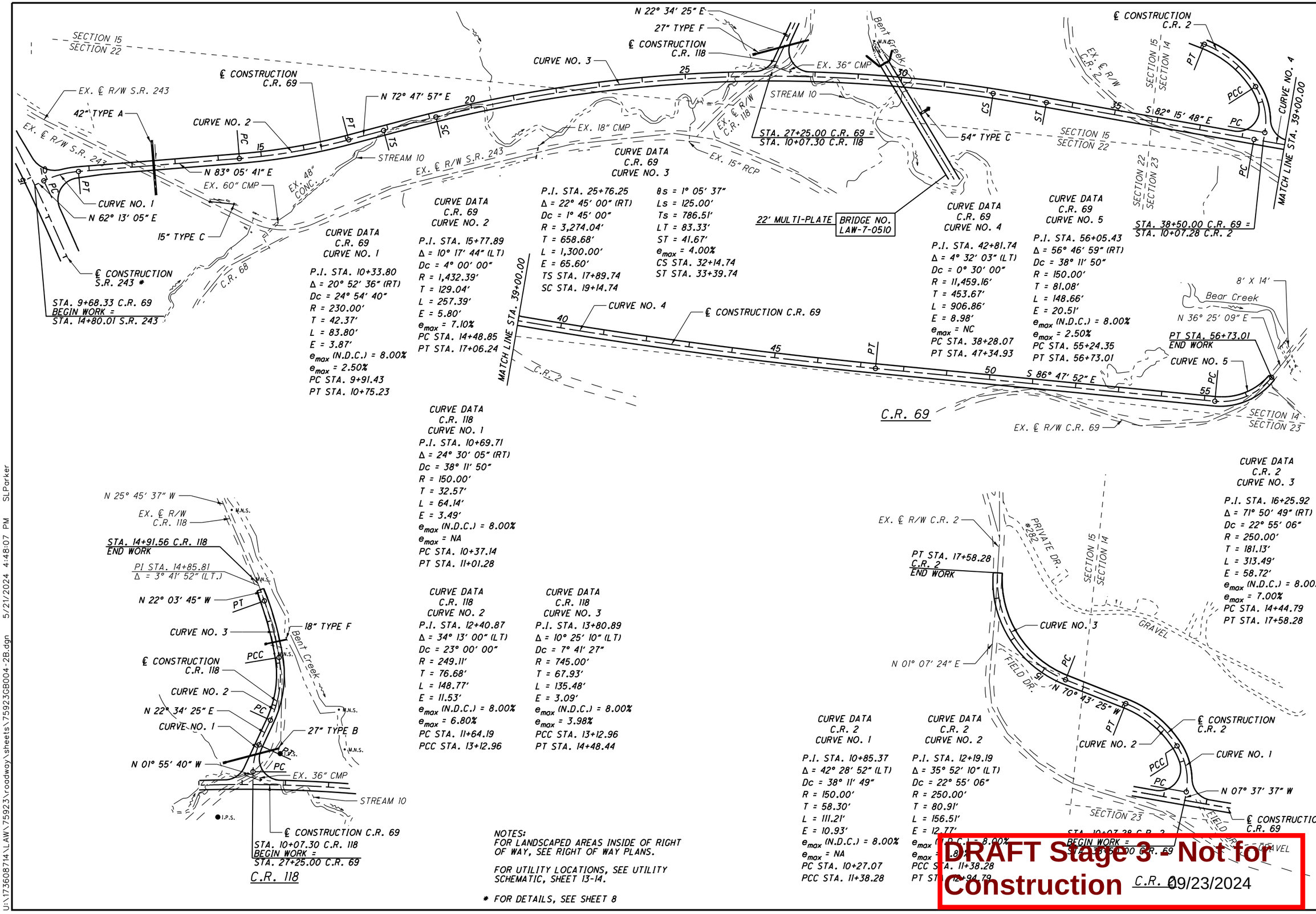
SECTION 15
SECTION 22
EX. ℄ R/W S.R. 243
42" TYPE A
℄ CONSTRUCTION
C.R. 69
CURVE NO. 2
PC
PT
TS
SC
N 72° 47' 57" E
20
CURVE NO. 3
25
N 22° 34' 25" E
27" TYPE F
℄ CONSTRUCTION
C.R. 118
EX. 36" CMP
Bent Creek
N.N.S.
EX. ℄ R/W
C.R. 118
EX. 18" CMP
STREAM 10
EX. ℄ R/W S.R. 243
EX. 48"
CONC.
EX. 60" CMP
N 83° 05' 41" E
CURVE NO. 1
N 62° 13' 05" E
15" TYPE C
℄ CONSTRUCTION
S.R. 243 *
STA. 9+68.33 C.R. 69
BEGIN WORK =
STA. 14+80.01 S.R. 243
C.R. 68
EX. ℄ R/W
C.R. 118
STA. 27+25.00 C.R. 69 =
STA. 10+07.30 C.R. 118
EX. 15" RCP
22' MULTI-PLATE
BRIDGE NO.
LAW-7-0510
54" TYPE C
CS
ST
SECTION 15
SECTION 22
SECTION 22
SECTION 23
℄ CONSTRUCTION
C.R. 2
PT
PCC
PC
CURVE NO. 4
S 82° 15' 48" E
STA. 38+50.00 C.R. 69 =
STA. 10+07.28 C.R. 2
MATCH LINE STA. 39+00.00
CURVE DATA
C.R. 69
CURVE NO. 1
P.I. STA. 10+33.80
Δ = 20° 52' 36" (RT)
Dc = 24° 54' 40"
R = 230.00'
T = 42.37'
L = 83.80'
E = 3.87'
e_max (N.D.C.) = 8.00%
e_max = 2.50%
PC STA. 9+91.43
PT STA. 10+75.23
CURVE DATA
C.R. 69
CURVE NO. 2
P.I. STA. 15+77.89
Δ = 10° 17' 44" (LT)
Dc = 4° 00' 00"
R = 1,432.39'
T = 129.04'
L = 257.39'
E = 5.80'
e_max = 7.10%
PC STA. 14+48.85
PT STA. 17+06.24
CURVE DATA
C.R. 69
CURVE NO. 3
P.I. STA. 25+76.25
Δ = 22° 45' 00" (RT)
Dc = 1° 45' 00"
R = 3,274.04'
T = 658.68'
L = 1,300.00'
E = 65.60'
TS STA. 17+89.74
SC STA. 19+14.74
θs = 1° 05' 37"
Ls = 125.00'
Ts = 786.51'
LT = 83.33'
ST = 41.67'
e_max = 4.00%
CS STA. 32+14.74
ST STA. 33+39.74
CURVE DATA
C.R. 69
CURVE NO. 4
P.I. STA. 42+81.74
Δ = 4° 32' 03" (LT)
Dc = 0° 30' 00"
R = 11,459.16'
T = 453.67'
L = 906.86'
E = 8.98'
e_max = NC
PC STA. 38+28.07
PT STA. 47+34.93
CURVE DATA
C.R. 69
CURVE NO. 5
P.I. STA. 56+05.43
Δ = 56° 46' 59" (RT)
Dc = 38° 11' 50"
R = 150.00'
T = 81.08'
L = 148.66'
E = 20.51'
e_max (N.D.C.) = 8.00%
e_max = 2.50%
PC STA. 55+24.35
PT STA. 56+73.01
MATCH LINE STA. 39+00.00
CURVE NO. 4
℄ CONSTRUCTION C.R. 69
40
45
50
PT
C.R. 2
C.R. 69
EX. ℄ R/W C.R. 69
8' X 14'
Bear Creek
N 36° 25' 09" E
PT STA. 56+73.01
END WORK
CURVE NO. 5
PC
55
SECTION 14
SECTION 23
CURVE DATA
C.R. 118
CURVE NO. 1
P.I. STA. 10+69.71
Δ = 24° 30' 05" (RT)
Dc = 38° 11' 50"
R = 150.00'
T = 32.57'
L = 64.14'
E = 3.49'
e_max (N.D.C.) = 8.00%
e_max = NA
PC STA. 10+37.14
PT STA. 11+01.28
CURVE DATA
C.R. 118
CURVE NO. 2
P.I. STA. 12+40.87
Δ = 34° 13' 00" (LT)
Dc = 23° 00' 00"
R = 249.11'
T = 76.68'
L = 148.77'
E = 11.53'
e_max (N.D.C.) = 8.00%
e_max = 6.80%
PC STA. 11+64.19
PCC STA. 13+12.96
CURVE DATA
C.R. 118
CURVE NO. 3
P.I. STA. 13+80.89
Δ = 10° 25' 10" (LT)
Dc = 7° 41' 27"
R = 745.00'
T = 67.93'
L = 135.48'
E = 3.09'
e_max (N.D.C.) = 8.00%
e_max = 3.98%
PCC STA. 13+12.96
PT STA. 14+48.44
N 25° 45' 37" W
EX. ℄ R/W
C.R. 118
N.N.S.
STA. 14+91.56 C.R. 118
END WORK
PI STA. 14+85.81
Δ = 3° 41' 52" (LT.)
N 22° 03' 45" W
PT
CURVE NO. 3
18" TYPE F
Bent Creek
PCC
℄ CONSTRUCTION
C.R. 118
CURVE NO. 2
N 22° 34' 25" E
PC
CURVE NO. 1
27" TYPE B
I.P.S.
N 01° 55' 40" W
EX. 36" CMP
STREAM 10
℄ CONSTRUCTION C.R. 69
STA. 10+07.30 C.R. 118
BEGIN WORK =
STA. 27+25.00 C.R. 69
C.R. 118
CURVE DATA
C.R. 2
CURVE NO. 3
P.I. STA. 16+25.92
Δ = 71° 50' 49" (RT)
Dc = 22° 55' 06"
R = 250.00'
T = 181.13'
L = 313.49'
E = 58.72'
e_max (N.D.C.) = 8.00%
e_max = 7.00%
PC STA. 14+44.79
PT STA. 17+58.28
EX. ℄ R/W C.R. 2
PRIVATE DR.
#282
SECTION 15
SECTION 14
PT STA. 17+58.28
C.R. 2
END WORK
CURVE NO. 3
GRAVEL
N 01° 07' 24" E
FIELD DR.
PC
N 70° 43' 25" W
PT
CURVE NO. 2
℄ CONSTRUCTION
C.R. 2
CURVE NO. 1
PCC
PC
N 07° 37' 37" W
SECTION 23
FIELD DR.
℄ CONSTRUCTION
C.R. 69
BEGIN WORK =
STA. 10+07.28 C.R. 2
STA. 38+50.00 C.R. 69
GRAVEL
CURVE DATA
C.R. 2
CURVE NO. 1
P.I. STA. 10+85.37
Δ = 42° 28' 52" (LT)
Dc = 38° 11' 49"
R = 150.00'
T = 58.30'
L = 111.21'
E = 10.93'
e_max (N.D.C.) = 8.00%
e_max = NA
PC STA. 10+27.07
PCC STA. 11+38.28
CURVE DATA
C.R. 2
CURVE NO. 2
P.I. STA. 12+19.19
Δ = 35° 52' 10" (LT)
Dc = 22° 55' 06"
R = 250.00'
T = 80.91'
L = 156.51'
E = 12.77'
e_max (N.D.C.) = 8.00%
e_max = 7.00%
PCC STA. 11+38.28
PT STA. 14+94.79
NOTES:
FOR LANDSCAPED AREAS INSIDE OF RIGHT OF WAY, SEE RIGHT OF WAY PLANS.
FOR UTILITY LOCATIONS, SEE UTILITY SCHEMATIC, SHEET 13-14.
* FOR DETAILS, SEE SHEET 8
HORIZONTAL SCALE IN FEET
0
50
100
200
SCHEMATIC PLAN
LAW-7-2.17
9
1247
DRAFT Stage 3 - Not for Construction
C.R. 09/23/2024
U:\173608714\LAW\75923\roadway\sheets\75923GB004-2B.dgn 5/21/2024 4:48:07 PM SLParker

CURVE DATA
S.R. 7
CURVE NO. 9

P.I. STA. 387+47.15
Δ = 46° 04' 34" (LT)
Dc = 2° 29' 28"
R = 2,300.00'
T = 805.51'
L = 1,549.62'
E = 136.98'
TS STA. 376+18.38
SC STA. 379+18.38

θs = 3° 44' 12"
Ls = 300.00'
Ts = 1,128.77'
LT = 200.04'
ST = 100.04'
e_{max} = 6.20%
CS STA. 394+68.00
ST STA. 397+68.00

CURVE DATA
RAMP I
CURVE NO. 1

P.I. Sta. 373+25.29
Δ = 13° 38' 08" (RT)
Dc = 1° 50' 00"
R = 3,125.22'
T = 373.64'
L = 743.76'
E = 22.26'
e_{max} = 3.53%
PC Sta. 369+51.65
PT Sta. 376+95.41

BRIDGE NO.
LAW-775-0105

STA. 56+77.91 S.R. 775 =
STA. 381+38.36 S.R. 7

BRIDGE NO.
LAW-7-0713 L&R

STREAM 16

STREAM 16A

STREAM 17

WETLAND N

Ex LA-R/W

TS

SC

CURVE NO. 9

℄ CONSTRUCTION S.R. 7

S 65° 44' 01" E

PC STA. 369+51.65 RAMP I
BEGIN RAMP =
STA. 369+51.65, S.R. 7, 56' RT.

CURVE NO. 1

℄ RAMP I

PT

42" TYPE C

N 33° 21' 37" E

S.R. 7

PC

℄ RAMP L*

S 76° 38' 23" E

S 52° 05' 53" E

15" TYPE F

BRIDGE NO.
LAW-7-0711

WETLAND N

LA-R/W

FIELD DRIVE

WATER TANK

STA. 54+00.89 S.R. 775 =
STA. 381+11.69 RAMP I
END RAMP =
STA. 379+57.36 RAMP L
BEGIN RAMP

℄ CONSTRUCTION S.R. 775 *

Little Paddy Creek

RAMP I

NOTES:
FOR LANDSCAPED AREAS INSIDE OF RIGHT OF WAY, SEE RIGHT OF WAY PLANS.
FOR UTILITY LOCATIONS, SEE UTILITY SCHEMATIC, SHEET 15 OF 15.
* SEE DETAILS ON SHEET 11.

DRAFT Stage 3 - Not for Construction 09/23/2024

HORIZONTAL SCALE IN FEET
0 25 50 100

SCHEMATIC PLAN

LAW-7-2.17

10
1247

U:\173608714\LAW\75923\roadway\sheets\75923GB007-2B.dgn 5/21/2024 4:48:08 PM SLParker

WETLAND O
Little Paddy Creek
BRIDGE NO. LAW-7-0711
BRIDGE NO. LAW-7-0713 L&R
WETLAND N
STA. 56+77.91 S.R. 775 = STA. 381+38.36 S.R. 7
24" TYPE A
42" TYPE D
**℄ RAMP I
SC
S 52° 05' 53" E
STA. 54+00.89 S.R. 775 = STA. 381+11.69 RAMP I
END RAMP = STA. 379+57.36 RAMP L
BEGIN RAMP
WETLAND P
STA. 63+36.00 S.R. 775 = STA. 384+75.56 RAMP K
BEGIN RAMP
STREAM 18
DRIVE (TYP.)
PI Sta. 66+62.11
PT
S.R. 775
PC
EX. ℄ R/W S.R. 607
℄ CONSTRUCTION S.R. 775
N 33° 21' 37" E
STA. 45+30.85 S.R. 775
BEGIN WORK
S 76° 38' 23" E
EX. ℄ R/W S.R. 775
STREAM 17
N 34° 05' 09" E
N 1° 40' 02" E
STA. 70+75.00 S.R. 775
END WORK
S 56° 38' 23" E
EX. 24" STM
BRIDGE NO. LAW-775-0105
CURVE NO. 9
CURVE NO. 3
℄ RAMP J
CURVE NO. 1
CURVE NO. 2
PCC
SC
PT
℄ RAMP L
EX. 48"
CURVE NO. 1
℄ RAMP K
WALNUT ST.
COLE ST.
N 77° 36' 10" E
℄ CONSTRUCTION S.R. 7
MIDLAND AV.
42" TYPE B
CSJ
WETLAND R
WETLAND S
FIELD DR.
SECT. 13 SECT. 34
UNION TWP. ROME TWP.
SECT. 34 SECT. 33
SECT. 13 SECT. 33
LITTLE PADDY RD.
℄ WESTBOUND LANES
N 68° 11' 25" E
400 CURVE NO. 2
℄ CURVE NO. 1
℄ CURVE NO. 2
PT STA. 403+59.10 RAMP K END RAMP = STA. 403+54.87, S.R. 7, 85.31 LT.
S.R. 7
CURVE NO. 1
HILLVIEW DR.
MESA ST.
LOT 2
LOT 1

HORIZONTAL SCALE IN FEET
0 50 100 200

CURVE DATA
S.R. 7 WESTBOUND LANES
℄ CURVE NO. 1

P.I. STA. 399+82.71
Δ = 4° 17' 32" (LT)
Dc = 1° 00' 00"
R = 5,729.58'
T = 214.71'
L = 429.22'
E = 4.02'
e_{max} = 2.90%
PC STA. = 397+68.00
PT STA. = 401+97.22

CURVE DATA
S.R. 7 WESTBOUND LANES
℄ CURVE NO. 2

P.I. STA. 405+66.18
Δ = 4° 27' 49" (RT)
Dc = 0° 50' 00"
R = 6,875.49'
T = 267.96'
L = 535.64'
E = 5.22'
e_{max} = 2.48%
PC STA. = 402+98.22
PT STA. = 408+33.87

NOTE: ℄ WESTBOUND LANES GIVEN FOR HORIZONTAL ALIGNMENT ONLY.

CURVE DATA
S.R. 7
CURVE NO. 9

P.I. STA. 387+47.15
Δ = 46° 04' 34" (LT)
Dc = 2° 29' 28"
R = 2,300.00'
T = 805.51'
L = 1,549.62'
E = 136.98'
TS STA. 376+18.38
SC STA. 379+18.38
θs = 3° 44' 12"
Ls = 300.00'
Ts = 1,128.77'
LT = 200.04'
ST = 100.04'
e_{max} = 6.20%
CS STA. 394+68.00
ST STA. 397+68.00

CURVE DATA
S.R. 7
CURVE NO. 10

P.I. STA. 403+74.19
Δ = 1° 29' 03" (RT)
Dc = 0° 16' 56"
R = 20,306.35'
T = 263.02'
L = 526.00'
E = 1.70'
e_{max} = NC
PC STA. 401+11.17
PT STA. 406+37.18

S.R. 775
P.I. STA. 66+62.11
Δ = 0° 43' 32" (RT)
NO CURVE

CURVE DATA
S.R. 775

P.I. STA. 70+19.99
Δ = 32° 25' 06" (LT)
Dc = 11° 50' 00"
R = 484.19'
T = 140.75'
L = 273.96'
E = 20.04'
e_{max} (N.D.C.) = 4.00%
e_{max} = 1.60%
PC STA. = 68+79.23
PT STA. = 71+53.19

CURVE DATA
RAMP J
CURVE NO. 1

P.I. STA. 385+74.87
Δ = 13° 53' 07" (LT)
Dc = 7° 30' 00"
R = 763.94'
T = 42.61'
L = 85.14'
E = 1.19'
TS STA. 383+90.72
SC STA. 385+90.72
$θ_{back}$ = 7° 30' 00"
L_{back} = 200.00'
T_{back} = 184.15'
LT = 133.45'
ST = 66.78'
e_{max} (N.D.C.) = 8.00%
e_{max} = 6.20%
PCC STA. 386+75.86

CURVE DATA
RAMP J
CURVE NO. 2

P.I. Sta. 388+50.86
Δ = 88° 23' 15" (LT)
Dc = 31° 49' 52"
R = 180.00'
T = 175.00'
L = 277.68'
E = 71.05'
e_{max} = 7.66%
PCC Sta. 386+75.86
PCC Sta. 389+53.54

CURVE DATA
RAMP J
CURVE NO. 3

P.I. Sta. 390+41.04
Δ = 53° 07' 48" (LT)
Dc = 32° 44' 26"
R = 175.00'
T = 87.50'
L = 162.28'
E = 20.66'
e_{max} = 7.73%
PCC Sta. 389+53.54
PT Sta. 391+15.81

CURVE DATA
RAMP K
CURVE NO. 1

P.I. STA. 393+97.26
Δ = 54° 19' 17" (LT)
Dc = 5° 00' 00"
R = 1145.92'
T = 587.93'
L = 1086.43'
E = 142.02'
e_{max} = 6.30%
PC STA. 388+09.33
PCC STA. 398+95.76

CURVE DATA
RAMP K
CURVE NO. 2

P.I. STA. 401+27.55
Δ = 4° 38' 00" (LT)
Dc = 1° 00' 00"
R = 5729.58'
T = 231.80'
L = 463.34'
E = 4.69'
e_{max} = 6.00%
PCC STA. 398+95.76
PT STA. 403+59.10

CURVE DATA
RAMP L

P.I. STA. 382+67.06
Δ = 25° 45' 21" (LT)
Dc = 6° 44' 26"
R = 850.00'
T = 194.33'
L = 382.09'
E = 21.93'
e_{max} = 4.60%
PC STA. 380+72.73
PT STA. 384+54.82

STA. 392+40.09 RAMP L
END RAMP =
STA. 392+40.09, 69' RT., S.R. 7

ST STA. 383+90.72 RAMP J
BEGIN RAMP =
RAMP NOSE
(A) STA. 383+90.72, S.R. 7, 69' LT.

PT STA. 391+15.81 RAMP J
END RAMP =
(B) STA. 388+20.53, RAMP K, 44.06' RT.

RAMP J, K, L

NOTES:
FOR LANDSCAPED AREAS INSIDE OF RIGHT OF WAY, SEE RIGHT OF WAY PLANS.

FOR UTILITY LOCATIONS, SEE UTILITY SCHEMATIC, SHEET 13-14.

** SEE DETAILS ON SHEET 10.

DRAFT Stage 3- Not for Construction
09/23/2024

SCHEMATIC PLAN

LAW-7-2.17

11
1247

U:\173608714\LAW\75923\roadway\sheets\75923GB005-2B.dgn 5/21/2024 4:48:09 PM SLParker

WEST LEG

REF. LINE	P.I. STATION	Dc	Δ	T (FT)	L (FT)	R (FT)	BEGIN CURVE	END CURVE	TANGENT BEARING	TANGENT DISTANCE
WN									N39°55'47"E	196.52
	122+83.03	14°46'01"	25°08'16" (LT)	86.51	170.23	388.00	121+96.52	123+66.75		
									N14°47'32"E	26.49
	124+38.56	22°55'06"	20°32'59" (LT)	45.32	89.67	250.00	123+93.24	124+82.91		
	124+94.19	69°52'22"	15°39'48" (RT)	11.28	22.42	82.00	124+82.91	125+05.32		
	125+55.55	63°39'43"	58°19'40" (LT)	50.23	91.62	90.00	125+05.32	125+96.94		
	126+23.26	20°50'05"	10°55'49" (RT)	26.31	52.46	275.00	125+96.94	126+49.41		
	127+09.61	09°32'57"	11°27'33" (RT)	60.20	120.00	600.00	126+49.41	127+69.41		
WL									N39°55'47"E	196.52
	32+85.71	14°19'26"	25°08'16" (LT)	89.18	175.49	400.00	31+96.52	33+72.02		
									N14°47'32"E	55.29
	34+38.80	28°56'14"	06°38'27" (LT)	11.49	22.95	198.00	34+27.31	34+50.26		
WR									N39°55'47"E	6.93
	40+46.95	04°46'29"	03°49'11" (RT)	40.01	80.00	1,200.00	40+06.93	40+86.93		
									N43°44'58"E	65.02
	42+47.96	14°41'28"	27°39'31" (LT)	96.00	188.27	390.00	41+51.95	43+40.22		
									N16°05'28"E	39.00
	44+18.34	76°23'40"	55°05'37" (RT)	39.12	72.12	75.00	43+79.22	44+51.34		
SW									N39°55'47"E	6.93
	100+46.55	04°49'22"	03°49'11" (RT)	39.61	79.20	1,188.00	100+06.93	100+86.13		
									N43°44'58"E	65.02
	102+50.11	14°15'10"	27°39'31" (LT)	98.96	194.06	402.00	101+51.15	103+45.21		
									N16°05'28"E	10.86
	104+23.91	52°05'13"	63°19'19" (RT)	67.83	121.57	110.00	103+56.08	104+77.65		

NORTH LEG

REF. LINE	P.I. STATION	Dc	Δ	T (FT)	L (FT)	R (FT)	BEGIN CURVE	END CURVE	TANGENT BEARING	TANGENT DISTANCE
NL	80+23.34	114°35'30"	50°02'32" (LT)	23.34	43.67	50.00	80+00.00	80+43.67		
	80+81.31	21°47'08"	16°17'24" (RT)	37.64	74.77	263.00	80+43.67	81+18.44		
	81+77.44	09°44'39"	11°27'33" (RT)	59.00	117.60	588.00	81+18.44	82+36.04		
NR	90+41.38	28°56'14"	23°36'28" (RT)	41.38	81.58	198.00	90+00.00	90+81.58		
	91+59.52	11°27'33"	17°43'08" (RT)	77.94	154.63	500.00	90+81.58	92+36.21		

EAST LEG

REF. LINE	P.I. STATION	Dc	Δ	T (FT)	L (FT)	R (FT)	BEGIN CURVE	END CURVE	TANGENT BEARING	TANGENT DISTANCE
NE									S26°01'58"E	64.84
	171+37.60	22°55'06"	32°27'12" (LT)	72.76	141.60	250.00	170+64.84	172+06.44		
	172+31.90	57°17'45"	28°34'10" (LT)	25.46	49.86	100.00	172+06.44	172+56.31		
	172+62.70	69°52'22"	08°55'11" (RT)	6.40	12.77	82.00	172+56.31	172+69.07		
	173+35.87	57°17'45"	67°28'59" (LT)	66.80	117.78	100.00	172+69.07	173+86.85		
									N34°22'52"E	17.90
	174+67.62	17°00'16"	21°08'04" (RT)	62.87	124.31	337.00	174+04.75	175+29.06		
	175+98.09	10°28'28"	14°23'12" (RT)	69.04	137.35	547.00	175+29.06	176+66.40		
									N69°54'09"E	65.30
	177+71.32	04°49'22"	03°49'11" (LT)	39.61	79.20	1,188.00	177+31.70	178+10.90		
EL	60+35.54	84°15'31"	55°11'26" (LT)	35.54	65.50	68.00	60+00.00	60+65.50		
									N34°22'52"E	49.25
	61+75.38	17°37'46"	21°08'04" (RT)	60.63	119.88	325.00	61+14.75	62+34.63		
	63+02.15	10°42'34"	14°23'12" (RT)	67.52	134.34	535.00	62+34.63	63+68.97		
									N69°54'09"E	65.30
	64+74.28	04°46'29"	03°49'11" (LT)	40.01	80.00	1,200.00	64+34.26	65+14.26		
ER	70+61.34	05°43'47"	07°01'11" (RT)	61.34	122.52	1,000.00	70+00.00	71+22.52		
	72+38.78	12°43'57"	28°58'21" (RT)	116.26	227.55	450.00	71+22.52	73+50.07		
									N66°04'40"E	166.72
SE	50+62.91	05°47'57"	07°17'11" (RT)	62.91	125.65	988.00	50+00.00	51+25.65		
	52+61.72	13°04'52"	34°31'02" (RT)	136.08	263.87	438.00	51+25.65	53+89.52		
									N66°04'40"E	168.95

	STA. ℄ CONSTR. S.R. 7	OFFSET		STA. ℄ CONSTR. S.R. 7	OFFSET		STA. ℄ CONSTR. S.R. 7	OFFSET
1	247+00.00	8.00' RT	5	257+92.06	31.97' RT	9	252+89.17	332.70' LT
2	247+00.00	20.00' RT	6	257+93.48	20.06' RT	10	252+69.53	341.27' LT
3	247+00.00	32.00' RT	7	257+93.48	20.06' RT	11	252+59.69	345.63' LT
4	247+00.00	44.00' RT	8	257+94.89	8.14' LT	12	252+49.83	350.02' LT

CENTER OF ROUNDABOUT		NORTHING = 1991207.234	
STA. 15+27.37, 0.00' RT.		EASTING = 165912.814	
RADII = 82.00'			
	STA. ℄ S.R. 7 RAB	OFFSET	
A	14+71.28	53.39' LT	
B	14+49.40	16.36' LT	
C	14+45.21	31.22' RT	
D	14+71.35	67.36' RT	
E	15+81.22	68.70' RT	
F	16+05.43	25.75' RT	
G	16+06.56	22.33' LT	
H	15+78.07	59.09' LT	
I	15+69.84	66.30' LT	
J	15+43.97	79.69' LT	
K	15+16.34	80.99' LT	
L	14+85.44	66.72' LT	

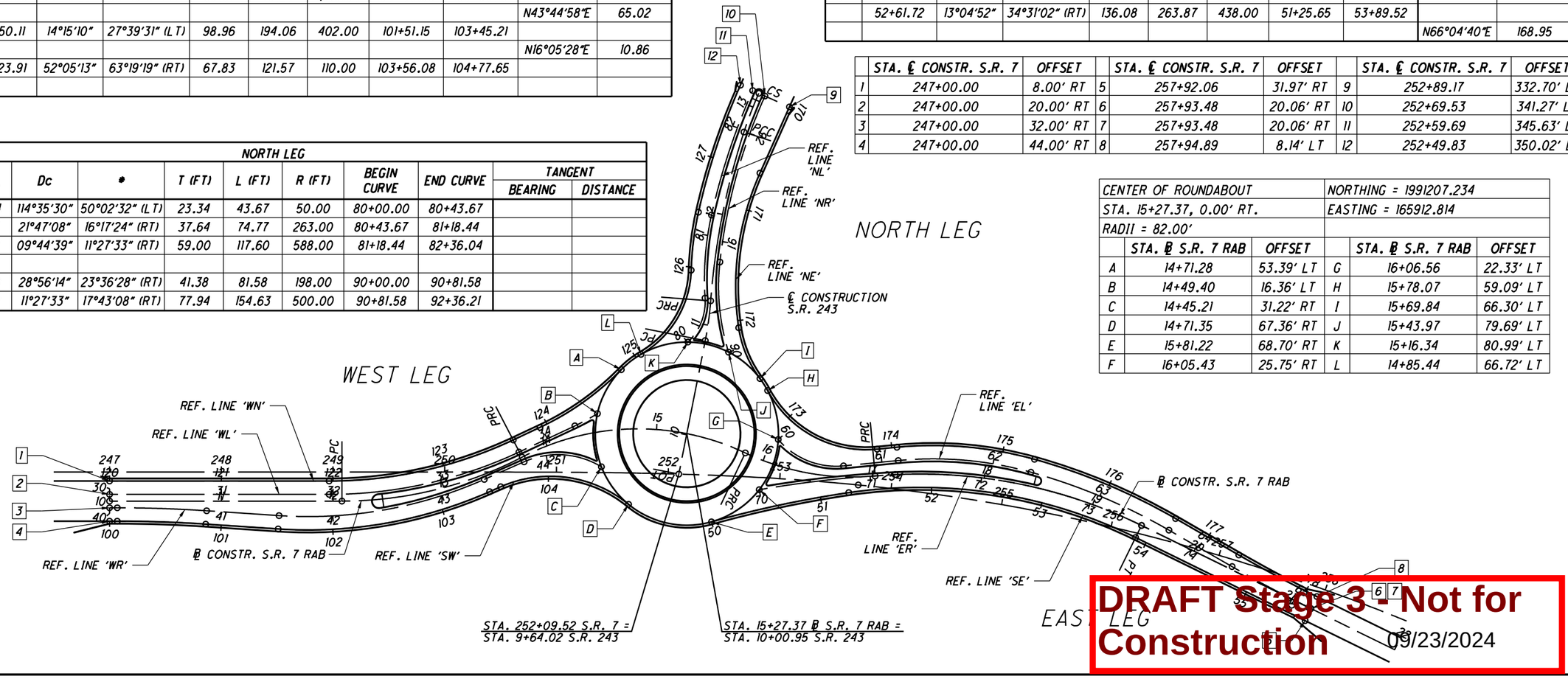

DRAFT Stage 3 - Not for Construction

09/23/2024

HORIZONTAL SCALE IN FEET
0 25 50 100

GEOMETRIC LAYOUT

ROUNDABOUT

LAW-7-2.17

12
1247

U:\173608714\LAW\75923\roadway\sheets\75923GB012-2B.dgn 5/21/2024 4:48:10 PM SLParker

(T) FRONTIER COMMUNICATIONS
1315 ALBERT STREET
PORTSMOUTH, OHIO 45662
PHONE: (740) 354-0521
MS. DENA MARTIN

(E) AMERICAN ELECTRIC POWER (DISTRIBUTION)
38831 STATE ROUTE 7
REEDSVILLE, OHIO 45772
PHONE: (740) 985-3054
MR. CLARKE SAUNDERS

(Et) AMERICAN ELECTRIC POWER (TRANSMISSION)
8600 SMITHS HILL ROAD
NEW ALBANY, OHIO 43054
PHONE: (380) 205-5072
MR. MICHAEL CARR

(Eb) BUCKEYE RURAL ELECTRIC CO-OP, INC.
P.O. BOX 200
RIO GRANDE, OHIO 45674
PHONE: (740) 379-9659
MR. WESTON CLARY

(Wh) HECLA WATER ASSOCIATION, INC.
3190 SR 141
IRONTON, OHIO 45638
PHONE: (740) 533-0526, EXT. 5
MR. TIM DALTON

(Wo) AQUA OHIO (FORMERLY OHIO-AMERICAN WATER COMPANY)
5481 BUENOS ARIES BLVD.
WESTERVILLE, OHIO 43081
PHONE: (614) 882-6586
MR. JAKE LOGAN

(G) COLUMBIA GAS OF OHIO
843 PIATT AVENUE
CHILLICOTHE, OHIO 45601
PHONE: (740) 656-7401
MR. JOSEPH DiBENEDETTO

(C) ARMSTRONG CABLE SERVICES
9651 COUNTY ROAD 1
SOUTH POINT, OHIO 45680
PHONE: (740) 451-1833
MR. NATHAN ITTIG

(Ca) AERIAL CABLE LINES
(Cu) UNDERGROUND CABLE LINES
(Cf) FIBER OPTIC CABLE LINES

(C) CHARTER COMMUNICATIONS
(AKA SPECTRUM FKA TIME WARNER CABLE)
1617 FOXHAVEN DRIVE
RICHMOND, KENTUCKY 40475
PHONE: (859) 626-4899
MR. MARK HARLOW

(Ca) AERIAL CABLE LINES
(Cu) UNDERGROUND CABLE LINES
(Cf) FIBER OPTIC CABLE LINES

(Gm) MYERS DRILLING COMPANY
P.O. BOX 290
BARBOURSVILLE, WV. 25504
PHONE: (304) 736-7431
MR. JOHN DIAL

(S) UNION-ROME TOWNSHIPS
SUBSEWER DISTRICT
P.O. BOX 430
CHESAPEAKE, OHIO 45619
PHONE: (740) 867-8700
MR. ADAM STEWART

℄ CONSTRUCTION C.R. 69
℄ CONSTRUCTION C.R. 2
℄ CONSTRUCTION C.R. 118
℄ CONSTRUCTION S.R. 243
℄ CONSTRUCTION LYNN LANE
℄ CONSTRUCTION S.R. 7
FUTURE WESTBOUND LANES
℄ CONSTRUCTION HENSON HOLLOW EMERGENCY ACCESS
℄ CONSTRUCTION BRENTWOOD EMERGENCY ACCESS
℄ CONSTRUCTION DOGWOOD LANE EXTENSION
℄ EX. R/W & CONSTRUCTION C.R. 32
℄ EX. R/W & CONSTRUCTION C.R. 104
℄ RAMP C
℄ RAMP D
EX. RADIO TOWER
MATCH LINE STA. 280+00.00
BEGIN PROJECT
STA. 114+57.60
S.R. 7
S.L.M. = 2.17
E(035)921
E(060)482
STA. 1416+45.92, EX. S.R. 7
BEGIN WORK
BENT CREEK ROAD
GREASY RIDGE ROAD C.R. 2
BEAR CREEK DR. C.R. 115
Bent Creek C.R. 118
C.R. 68
SHAFERTOWN RD. C.R. 68
C.R. 32 EATON ROAD
C.R. 104 BOOTHE EATON ROAD
C.R. 123
T.R. 278 HENSON HOLLOW DAVIDSON HILL RD.
T.R. 158
HENSON HOLLOW RD
SYMMES CREEK
CHESAPEAKE-SYMMES CREEK RD
NACOMA LN.
GRACE ST.
LAKE ST.
TWIN LN.
DOGWOOD LN.
BIRCH LN.
WOODLAND DR
HAWTHORN LN.
FOREST DR
GLENWOOD DR
PINECREST DR
ESTEP LN.
GAS WELL
B.R.F.C.
138 kV O.P.C.
O.H.-E.
CTV
Com
4"-G
8"

NOTE: UNDERGROUND UTILITIES
THE LOCATION OF THE UNDERGROUND UTILITIES SHOWN ON THE PLANS ARE AS OBTAINED FROM THE OWNERS OF THE UTILITY AS REQUIRED BY SECTION 155.64 O.R.C.

DRAFT Stage 3 - Not for Construction 09/23/2024

N

HORIZONTAL SCALE IN FEET
0 250 500 1000

UTILITY SCHEMATIC PLAN

LAW-7-2.17

13
1247

U:\173608714\LAW\75923\utilities\sheets\75923UB001-2B.dgn 5/21/2024 4:48:12 PM SLParker

NOTE: UNDERGROUND UTILITIES
THE LOCATION OF THE UNDERGROUND UTILITIES SHOWN ON THE PLANS ARE AS OBTAINED FROM THE OWNERS OF THE UTILITY AS REQUIRED BY SECTION 155.64 O.R.C.

(T) FRONTIER COMMUNICATIONS
1315 ALBERT STREET
PORTSMOUTH, OHIO 45662
PHONE: (740) 354-0521
MS. DENA MARTIN

(E) AMERICAN ELECTRIC POWER (DISTRIBUTION)
38831 STATE ROUTE 7
REEDSVILLE, OHIO 45772
PHONE: (740) 985-3054
MR. CLARKE SAUNDERS

(Et) AMERICAN ELECTRIC POWER (TRANSMISSION)
8600 SMITHS HILL ROAD
NEW ALBANY, OHIO 43054
PHONE: (380) 205-5072
MR. MICHAEL CARR

(Eb) BUCKEYE RURAL ELECTRIC CO-OP, INC.
P.O. BOX 200
RIO GRANDE, OHIO 45674
PHONE: (740) 379-9659
MR. WESTON CLARY

(Wh) HECLA WATER ASSOCIATION, INC.
3190 SR 141
IRONTON, OHIO 45638
PHONE: (740) 533-0526, EXT. 5
MR. TIM DALTON

(G) COLUMBIA GAS OF OHIO
843 PIATT AVENUE
CHILLICOTHE, OHIO 45601
PHONE: (740) 656-7401
MR. JOSEPH DiBENEDETTO

(C) ARMSTRONG CABLE SERVICES
9651 COUNTY ROAD 1
SOUTH POINT, OHIO 45680
PHONE: (740) 451-1833
MR. NATHAN ITTIG

(Ca) AERIAL CABLE LINES
(Cu) UNDERGROUND CABLE LINES
(Cf) FIBER OPTIC CABLE LINES

(C) CHARTER COMMUNICATIONS
(AKA SPECTRUM FKA TIME WARNER CABLE)
1617 FOXHAVEN DRIVE
RICHMOND, KENTUCKY 40475
PHONE: (859) 626-4899
MR. MARK HARLOW

(Ca) AERIAL CABLE LINES
(Cu) UNDERGROUND CABLE LINES
(Cf) FIBER OPTIC CABLE LINES

E(035)921
E(060)482
END WORK
END PROJECT
STA. 437+16.83
S.L.M. = 8.28

HORIZONTAL SCALE IN FEET
0 250 500 1000

UTILITY SCHEMATIC PLAN

LAW-7-2.17

14
1247

DRAFT Stage 3 - Not for Construction 09/23/2024

U:\173608714\LAW\75923\utilities\sheets\75923UB002-2B.dgn 5/21/2024 4:48:14 PM SLParker

ENVIRONMENTAL COMMITMENTS

THE PROJECT IS LOCATED IN A SURFACE WATER SOURCE PROTECTION AREA FOR THE OHIO RIVER/CITY OF IRONTON AND IS LOCATED ADJACENT TO A GROUND WATER SOURCE PROTECTION AREA FOR THE VILLAGE OF PROCTORVILLE. USE PROPER CONTAINMENT AND DIKING IN REFUELING AREAS. DO NOT STORE FUELS, TOXIC/HAZARDOUS MATERIALS, AND CHEMICALS WITHIN 50 FEET OF DRAINAGE WAYS, DITCHES, OR STREAMS. MAINTAIN A SPILL KIT ON-SITE THROUGHOUT CONSTRUCTION ACTIVITIES. IMMEDIATELY MITIGATE ANY EVENT, SUCH AS A SPILL OF FUELS, OILS, OR CHEMICALS, THAT COULD THREATEN TO CONTAMINATE THE DRINKING WATER SUPPLY. IF THE SPILL IS A REPORTABLE AMOUNT (PER OHIO EPA'S RELEASE REPORTING REQUIREMENTS), CONTACT THE CITY OF IRONTON FIRE DEPARTMENT (740-532-6463), THE CHESAPEAKE-UNION TOWNSHIP VOLUNTEER FIRE DEPARTMENT (740-867-5988), THE PROCTORVILLE COMMUNITY VOLUNTEER FIRE AND RESCUE (740-886-8579), AND/OR THE ROME VOLUNTEER FIRE DEPARTMENT (740-886-6770), AND/OR THE OHIO EPA'S SPILLS HOTLINE (1-800-282-9378) FOR CLEANUP OF THE SPILL.

THE CONTRACTOR SHALL NOT PERFORM ANY WORK WITHIN THE JURISDICTIONAL BOUNDARIES OF ANY WATERWAY, INCLUDING WETLANDS, UNTIL ODOT OBTAINS THE NECESSARY WATERWAY PERMITS. WORK INCLUDES THE PLACEMENT OF ANY TEMPORARY OR PERMANENT FILLS.

TO HELP PROTECT UNDISTURBED WETLANDS AND STREAMS, THE CONTRACTOR SHALL DEMARCATE AVOIDED AREAS IN THE FIELD PRIOR TO CONSTRUCTION.

TO MINIMIZE IMPACTS TO STATE AND FEDERALLY LISTED BATS, DO NOT REMOVE TREES FROM APRIL 1 THROUGH SEPTEMBER 30. PERFORM ALL NECESSARY TREE REMOVAL FROM OCTOBER 1 THROUGH MARCH 31. DEMARCATE CLEARING LIMITS IN THE FIELD TO AVOID ANY UNAUTHORIZED TREE CLEARING. FOR THE PURPOSES OF THIS NOTE, A TREE IS DEFINED AS A LIVE, DYING, OR DEAD WOODY PLANT, WITH A TRUNK THREE INCHES OR GREATER IN DIAMETER AT A HEIGHT OF 4.5 FEET ABOVE THE GROUND SURFACE, AND WITH A MINIMUM HEIGHT OF 13 FEET.

ANY NECESSARY BLASTING AND/OR EXCAVATION WORK WITHIN AREAS IDENTIFIED AS POTENTIAL NON-TRADITIONAL HIBERNACULA ON THE CONSTRUCTION PLANS BETWEEN STA 307+00 AND 348+00 MUST OCCUR BETWEEN MAY 15 AND SEPTEMBER 30. BLASTING CAN ONLY BE COMPLETED AFTER ALL TREE CLEARING HAS OCCURRED NEAR THE POTENTIAL HIBERNACULA FOLLOWING THE TIME OF YEAR RESTRICTIONS IN THE TREE CLEARING NOTE. AFTER THE FEATURES IN AREAS IDENTIFIED AS POTENTIAL NON-TRADITIONAL HIBERNACULA ARE NO LONGER PRESENT FOLLOWING DISTURBANCE, CONSTRAINTS ON THE TIMING OF DISRUPTION OF THESE AREAS WILL NO LONGER APPLY.

THE USFWS WILDLIFE BIOLOGIST, DR. KAREN HALLBERG (614-528-9697; KAREN_HALLBERG@FWS.GOV), MUST BE INVITED TO A PRE-CONSTRUCTION MEETING WITH THE CONTRACTOR PRESENT AND BE NOTIFIED OF THE PROJECT START DATE A MINIMUM OF ONE WEEK PRIOR TO THE COMMENCEMENT OF WORK.

IF ANY HUMAN REMAINS OR NATIVE AMERICAN CULTURAL ITEMS FALLING UNDER THE NATIVE AMERICAN GRAVES PROTECTION AND REPATRIATION ACT (NAGPRA) OR ARCHAEOLOGICAL EVIDENCE IS DISCOVERED DURING ANY PHASE OF THIS PROJECT, THE CONTRACTOR SHALL STOP WORK WITHIN 100 METERS (±330 FEET) OF THE SITE OF DISCOVERY AND AVOID FURTHER DISTURBANCE. CONSTRUCTION PERSONNEL SHALL IMMEDIATELY CONTACT BRANDON BECK, ODOT DISTRICT 9 ENVIRONMENTAL COORDINATOR (740-774-8976) TO INITIATE CONSULTATION. THE DISCOVERING PARTY MUST MAKE A REASONABLE EFFORT TO PROTECT AND SECURE THE REMAINS AND ITEMS. CONSTRUCTION SHALL NOT RESUME WITHIN 100 METERS (±330 FEET) AROUND THE DISCOVERY UNTIL A COURSE OF ACTION IS DETERMINED THROUGH CONSULTATION.

DRAFT Stage 3 - Not for Construction 09/23/2024

CALCULATED ALB | CHECKED TCM

ENVIRONMENTAL COMMITMENT PLAN
GENERAL NOTES

LAW-7-2.17

15
1247

U:\173608714\LAW\75923\ecological\sheets\75923ENO01-2B.dgn 5/21/2024 4:48:15 PM SLParker

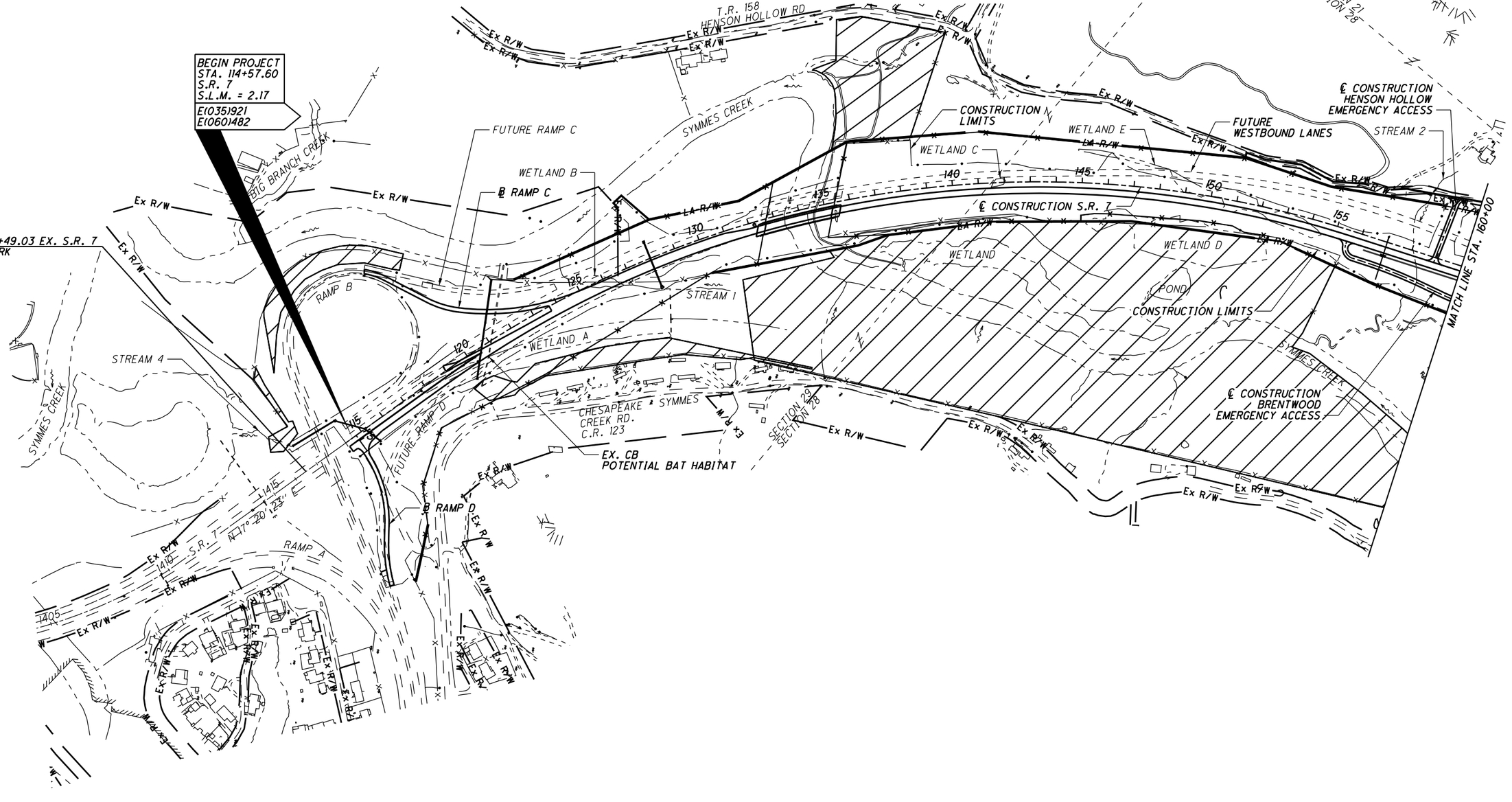

LEGEND

RO-## - POTENTIAL BAT HABITAT

DRAFT Stage 3 - Not for Construction

09/23/2024

HORIZONTAL SCALE IN FEET
0 100 200 400

CALCULATED ALB
CHECKED TCM

ENVIRONMENTAL COMMITMENT PLAN
STA. 114+57.60 TO STA. 160+00

LAW-7-2.17

16
1247

U:\173608714\LAW\75923\ecological\sheets\75923EP001.dgn 5/21/2024 4:48:17 PM SLParker

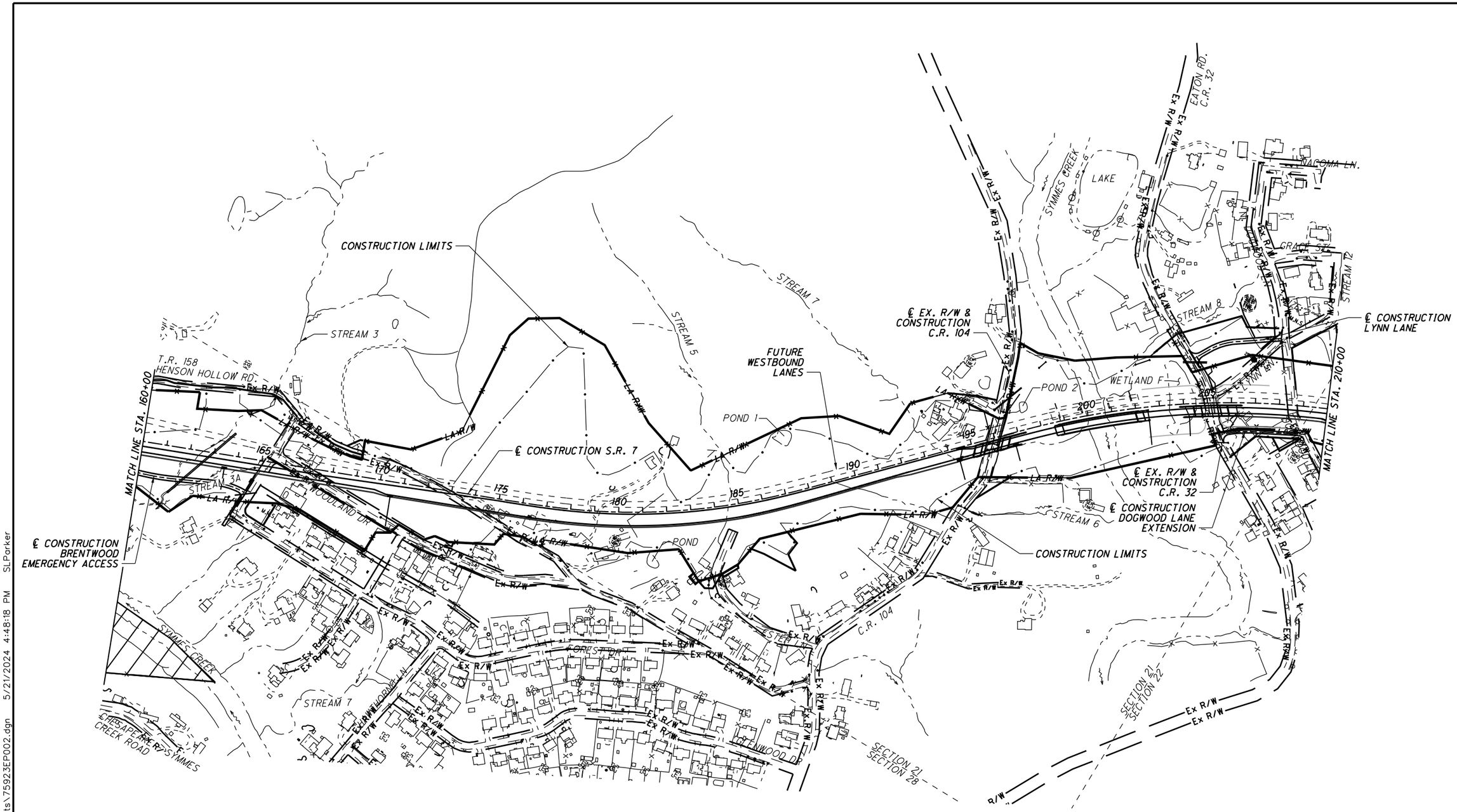

LEGEND

RO-## - POTENTIAL BAT HABITAT

DRAFT Stage 3 Not for Construction

09/23/2024

HORIZONTAL SCALE IN FEET
0 100 200 400

CALCULATED ALB
CHECKED TCM

ENVIRONMENTAL COMMITMENT PLAN
STA. 160+00 TO STA. 210+00

LAW-7-2.17

17
1247

U:\173608714\LAW\75923\ecological\sheets\75923EP002.dgn 5/21/2024 4:48:18 PM SLParker

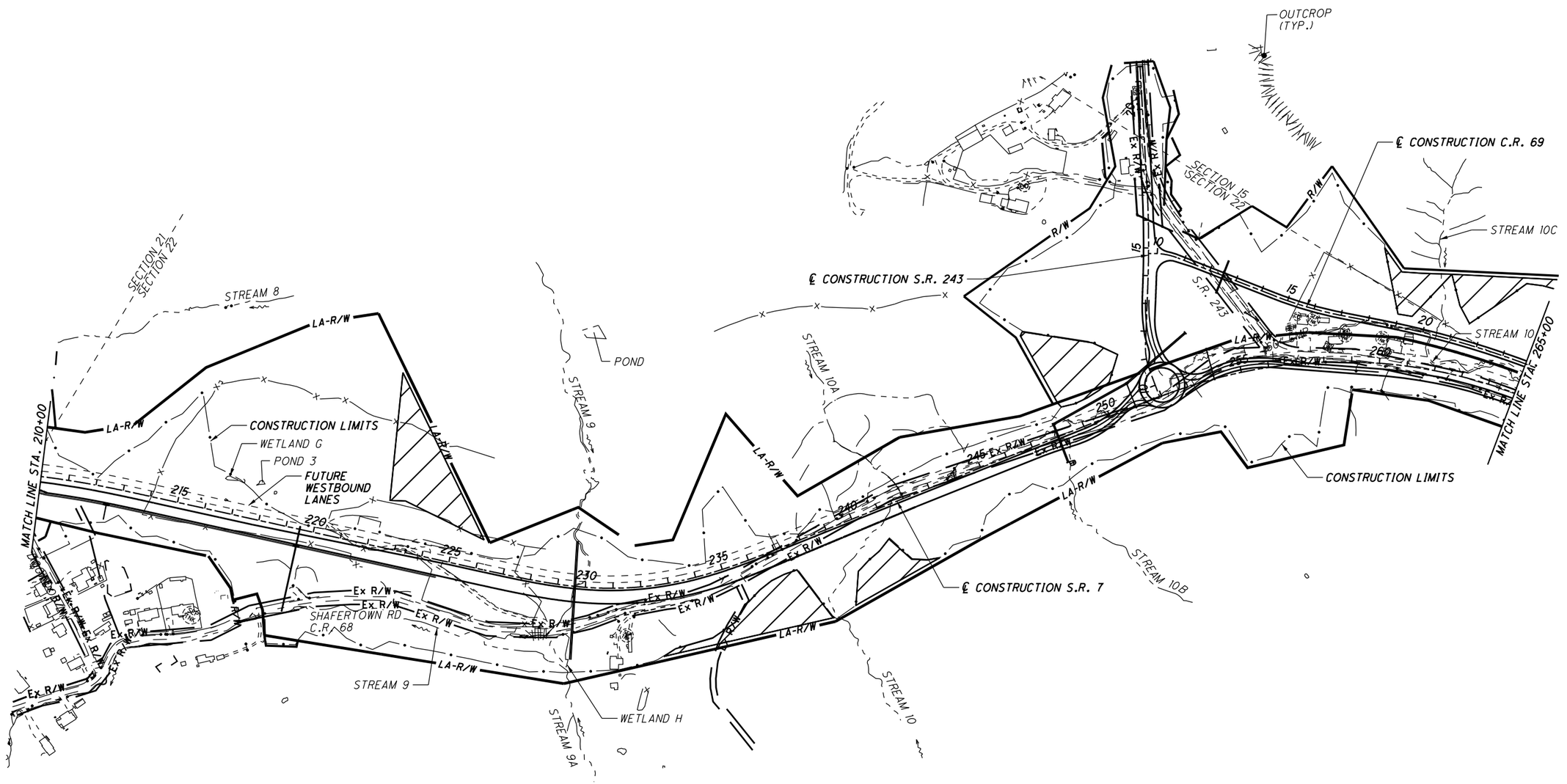

HORIZONTAL SCALE IN FEET
0 100 200 400

CALCULATED ALB
CHECKED TCM

ENVIRONMENTAL COMMITMENT PLAN
STA. 210+00 TO STA. 265+00

LAW-7-2.17

18
1247

LEGEND

LOD - LIMIT OF DISTURBANCE

RO-## - POTENTIAL BAT HABITAT

DRAFT Stage 3 Not for Construction

09/23/2024

U:\1736087\14\LAW\75923\ecological\sheets\75923EP003.dgn 5/21/2024 4:48:19 PM SLParker

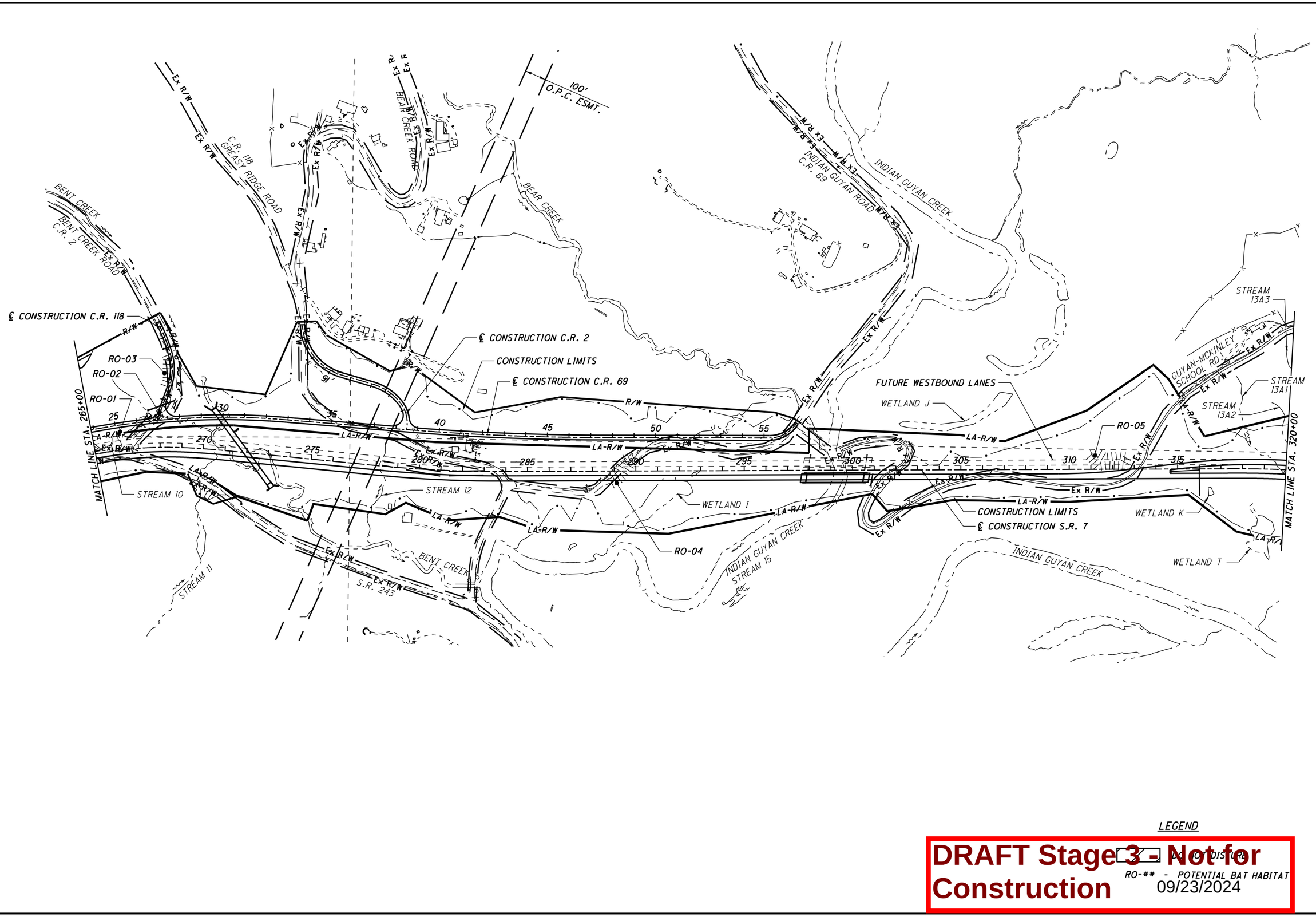

LEGEND

RO-## - POTENTIAL BAT HABITAT

DRAFT Stage 3 - Not for Construction

09/23/2024

ENVIRONMENTAL COMMITMENT PLAN
STA. 265+00 TO STA. 320+00

HORIZONTAL SCALE IN FEET
0 100 200 400

CALCULATED ALB
CHECKED TCM

LAW-7-2.17

19
1247

U:\173608714\LAW\75923\ecological\sheets\75923EP004.dgn 5/21/2024 4:48:20 PM SLParker

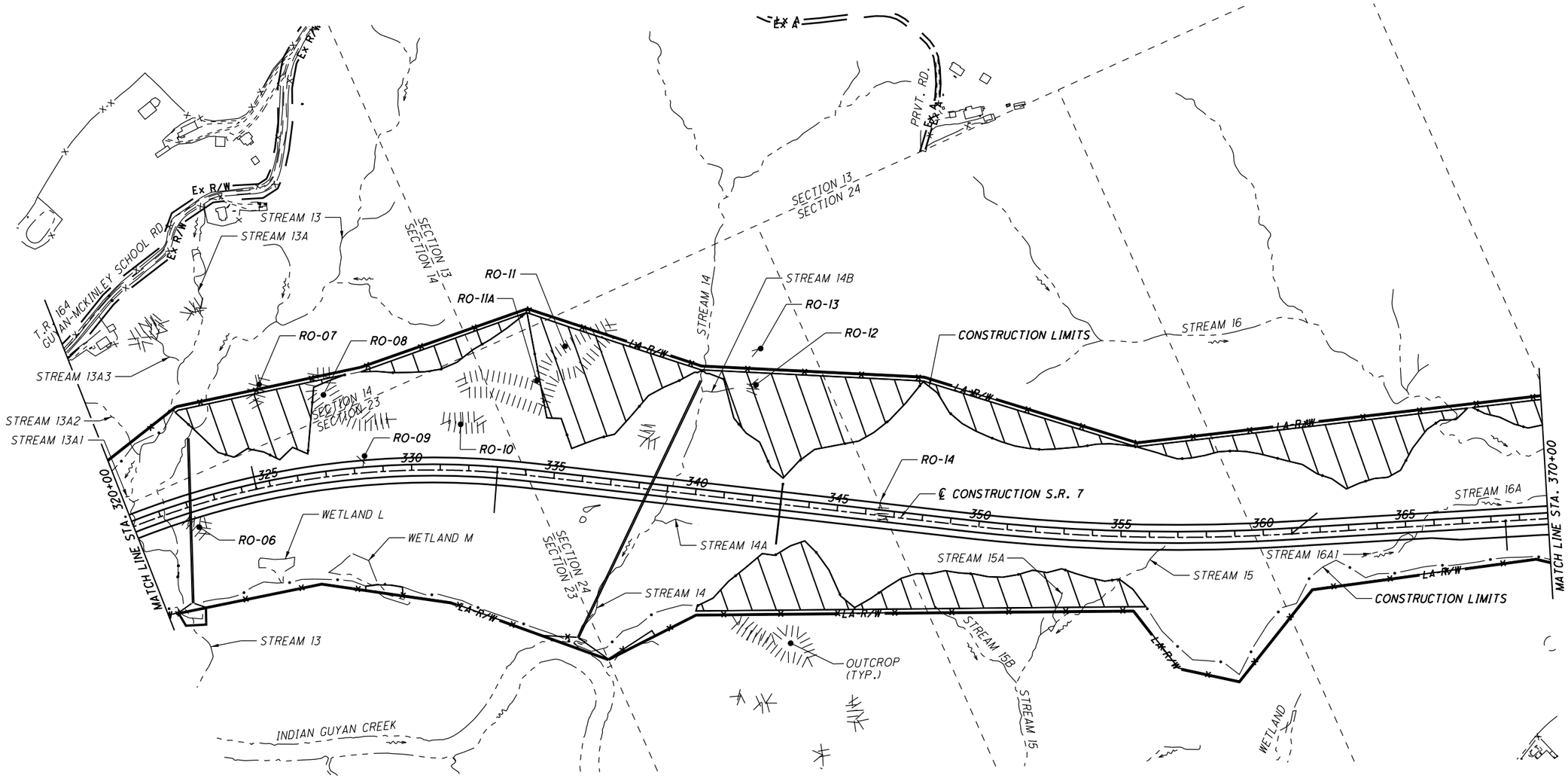

LEGEND

RO-## - POTENTIAL BAT HABITAT

DRAFT Stage 3 - Not for Construction

09/23/2024

U:\173608714\LAW\75923\ecological\sheets\75923EP005.dgn 5/21/2024 4:48:21 PM SLParker

HORIZONTAL SCALE IN FEET
0 100 200 400

CALCULATED ALB
CHECKED TCM

ENVIRONMENTAL COMMITMENT PLAN
STA. 320+00 TO STA. 370+00

LAW-7-2.17

20
1247

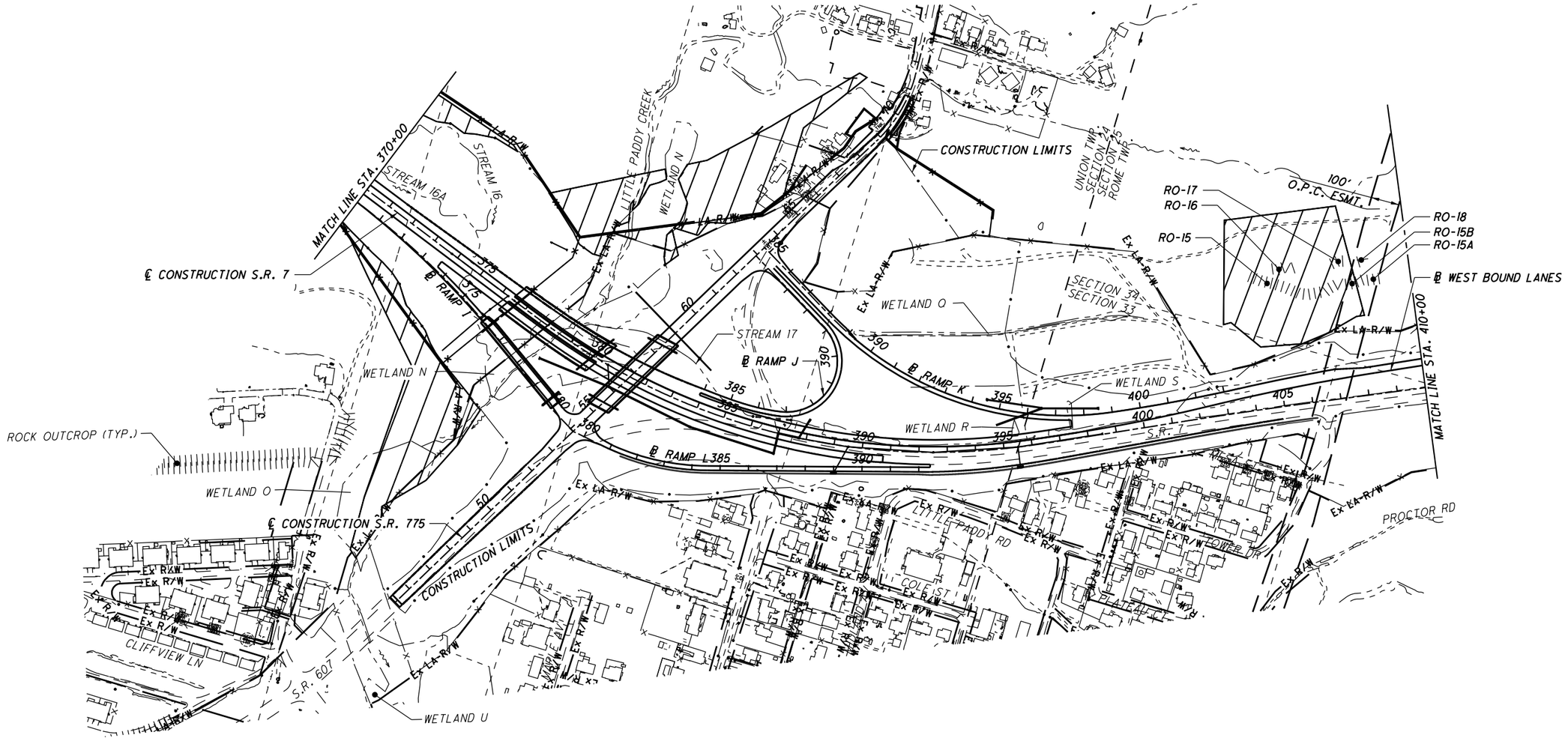

LEGEND

RO-## - POTENTIAL BAT HABITAT

DRAFT Stage 3 - Not for Construction

09/23/2024

HORIZONTAL SCALE IN FEET
0 100 200 400

CALCULATED ALB
CHECKED TCM

ENVIRONMENTAL COMMITMENT PLAN
STA. 370+00 TO STA. 410+00

LAW-7-2.17

21
1247

U:\173608714\LAW\75923\ecological\sheets\75923EP006.dgn 5/21/2024 4:48:23 PM SLParker

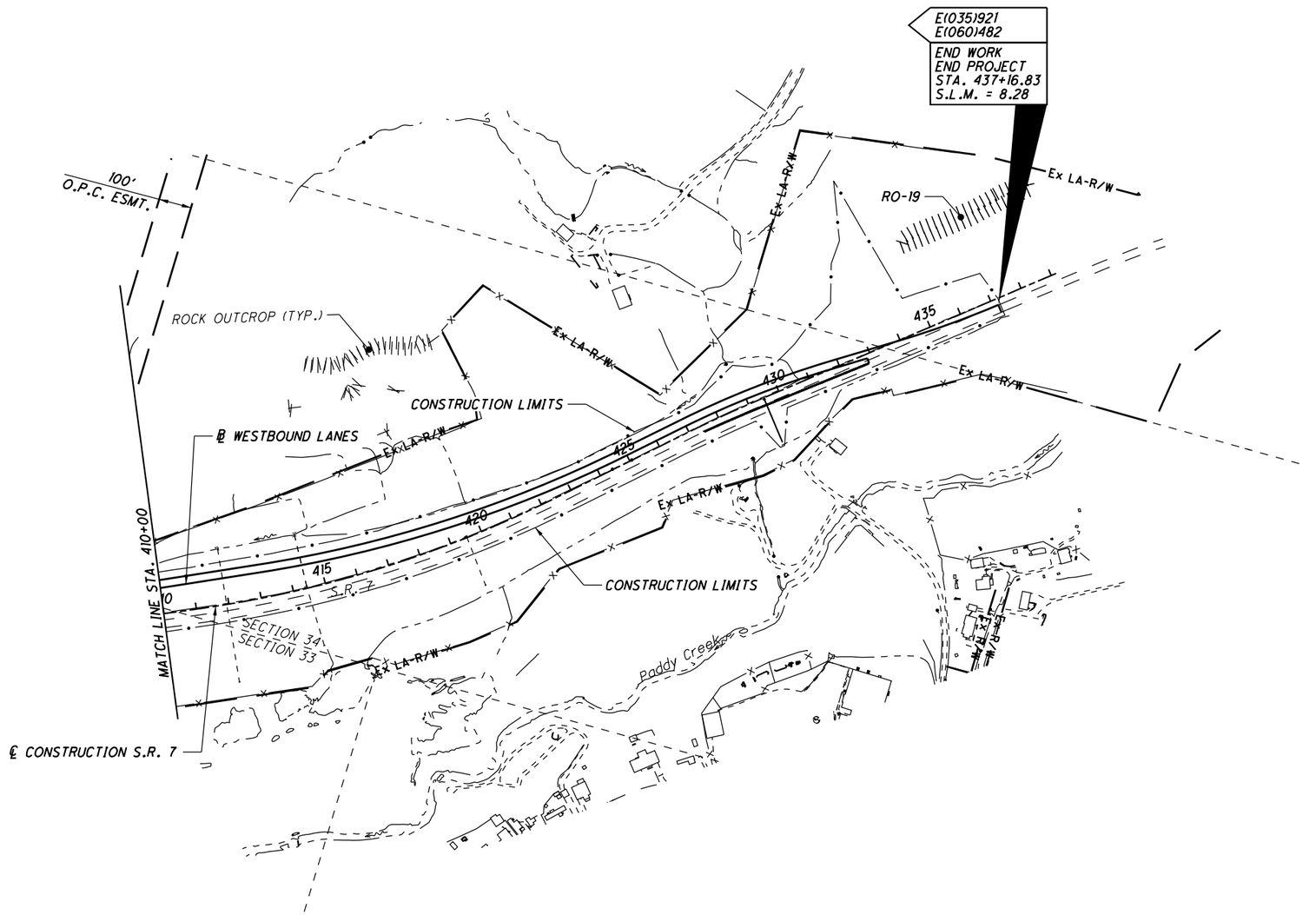

LEGEND

RO-## - POTENTIAL BAT HABITAT

DRAFT Stage 3 - Not for Construction

09/23/2024

HORIZONTAL SCALE IN FEET
0 100 200 400

CALCULATED ALB
CHECKED TCM

ENVIRONMENTAL COMMITMENT PLAN
STA. 410+00 TO STA. 437+16.83

LAW-7-2.17

22
1247

U:\173608714\LAW\75923\ecological\sheets\75923EP007.dgn 5/21/2024 4:48:24 PM SLParker

LEGEND

1. ITEM 442 - 1 1/2" ASPHALT CONCRETE SURFACE COURSE, 12.5MM, TYPE A (446)
2. ITEM 442 - 1 3/4" ASPHALT CONCRETE INTERMEDIATE COURSE, 19MM, TYPE A (446)
3. ITEM 302 - 7" ASPHALT CONCRETE BASE, PG64-22, (449)
4. ITEM 304 - 6" AGGREGATE BASE
5. ITEM 407 - TACK COAT
6. ITEM 609 - CURB, TYPE 6
7. ITEM 609 - COMBINATION CURB AND GUTTER, TYPE 2
8. ITEM 605 - AGGREGATE DRAIN (SLOPE @ 0.04 MIN., 0.08 DESIRABLE)
9. ITEM 441 - 2" ASPHALT CONCRETE INTERMEDIATE COURSE, TYPE 1, (449), (UNDER GUARDRAIL), AS PER PLAN
10. NOT USED
11. ITEM 605 - 6" SHALLOW PIPE UNDERDRAIN
12. ITEM 605 - 6" BASE PIPE UNDERDRAIN
13. ITEM 441 - 1 1/4" ASPHALT CONCRETE SURFACE COURSE, TYPE 1, (449), PG64-22
14. ITEM 441 - 1 3/4" ASPHALT CONCRETE INTERMEDIATE COURSE, TYPE 2, (449)
15. ITEM 301 - 3" ASPHALT CONCRETE BASE, PG64-22, (449)
16. ITEM 659 - SEEDING AND MULCHING, CLASS 3C
17. ITEM 204 - SUBGRADE COMPACTION
18. ITEM 204 - PROOF ROLLING
19. ITEM 606 - GUARDRAIL, TYPE MGS
20. ITEM 606 - GUARDRAIL, TYPE MGS WITH LONG POSTS
21. ITEM 609 - CONCRETE MEDIAN
22. ITEM 609 - COMBINATION CURB AND GUTTER, TYPE 9

(A) EX. 12"± ASPHALT CONCRETE
(B) EX. 6"± SUBBASE
(C) 2" ASPHALT CONCRETE
(D) ASPHALT CONCRETE BERM
(E) UNDERDRAIN
(F) GUARDRAIL, TYPE 5

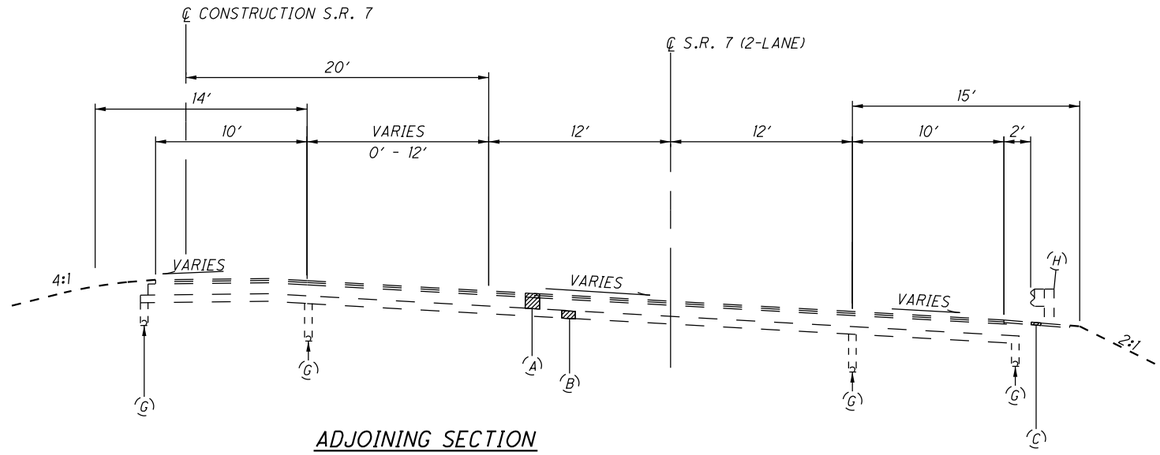

ADJOINING SECTION

MAINLINE S.R. 7 EASTERN TERMINUS

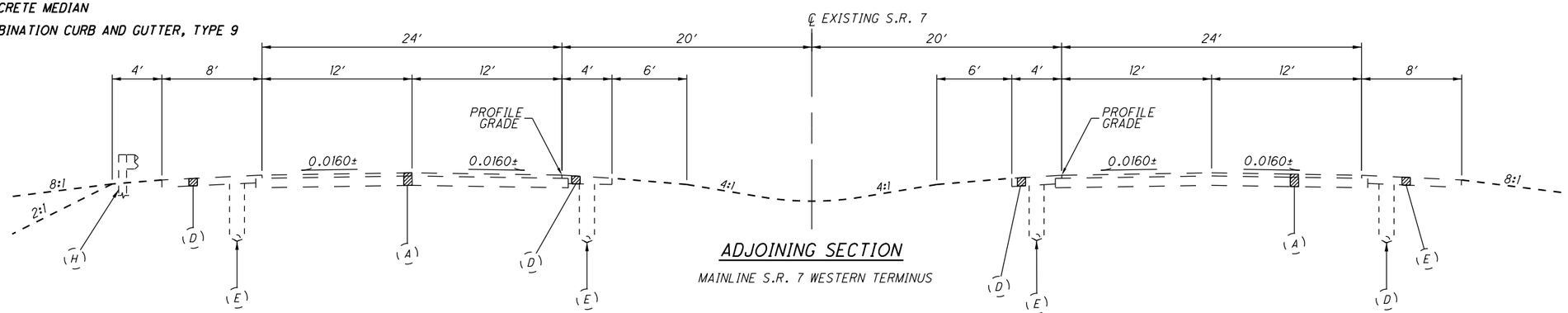

ADJOINING SECTION

MAINLINE S.R. 7 WESTERN TERMINUS

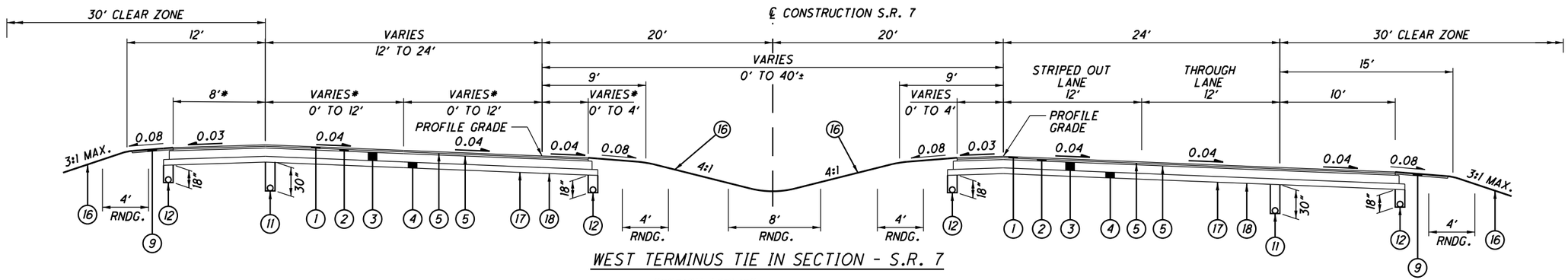

WEST TERMINUS TIE IN SECTION - S.R. 7

SECTION APPLIES:

STA. 114+30.42 TO STA. 120+56.37

* MILL/FILL EXISTING SECTION FROM STA. 114+30.42 TO STA. 118+99.14

NOTES:

FOR DITCH DETAILS, SEE SHEET 32

FOR EDGE COURSE DETAILS, SEE SHEET 33

FOR EXIT RAMP TOUCH OUT DRAINS, SEE UNDERDRAIN TABLE SHEETS 674-678

DRAFT Stage 3 - Not for Construction

09/23/2024

TYPICAL SECTIONS - S.R. 7

LAW-7-2.17

U:\173608714\LAW\75923\roadway\sheets\75923GY001-2B.dgn 5/21/2024 4:48:24 PM SLParker

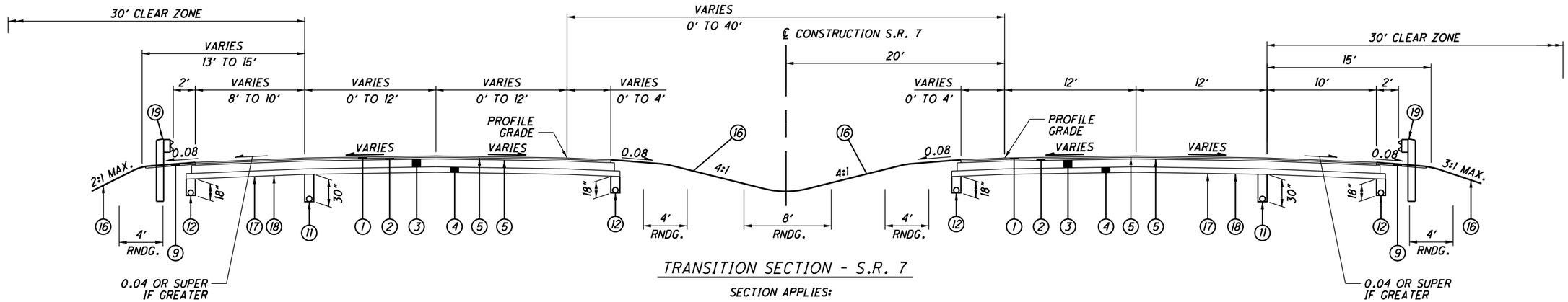

TRANSITION SECTION - S.R. 7

SECTION APPLIES:
STA. 309+49.89 TO STA. 319+56.62

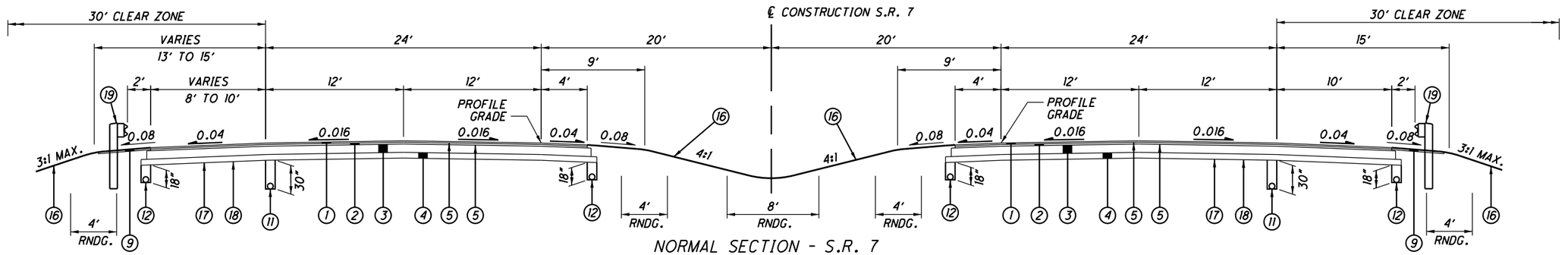

NORMAL SECTION - S.R. 7

SECTION APPLIES:
STA. 335+67.69 TO STA. 348+41.10
STA. 361+89.83 TO STA. 375+75.38

NOTES:

SUPERELEVATION TO BE OPPOSITE HAND TO TYPICAL SHOWN

FOR GUARDRAIL, SEE SHEET 33

FOR BARRIER DETAILS, SEE SHEET 32

FOR EDGE COURSE DETAILS, SEE SHEET 33

FOR SUPERELEVATION TRANSITION DETAILS, SEE DETAIL A, SHEET 33

FOR EXACT LOCATION OF UNDERDRAINS, SEE UNDERDRAIN TABLE SHEETS 674-678

DRAFT Stage 3 - Not for Construction 09/23/2024

TYPICAL SECTION - S.R. 7

LAW-7-2.17

24
1247

U:\173608714\LAW\75923\roadway\sheets\75923GY009-2B.dgn 5/21/2024 4:48:25 PM SLParker

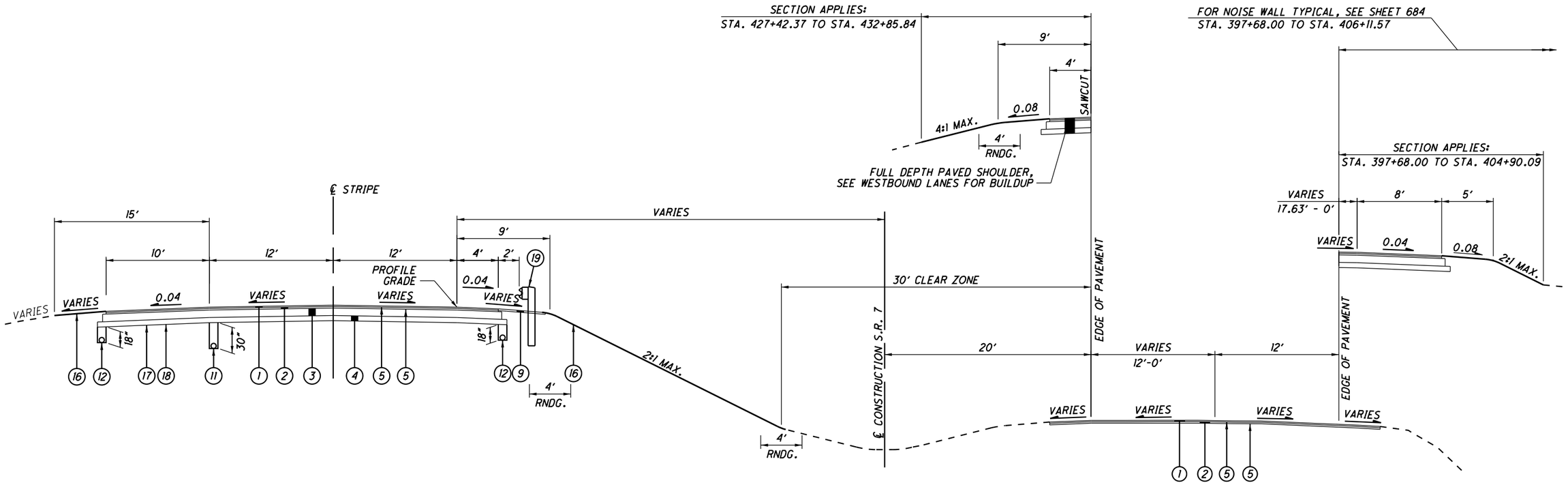

BIFURCATED MEDIAN SECTION - S.R. 7

SECTION APPLIES:
STA. 397+68.00 TO STA. 432+85.84

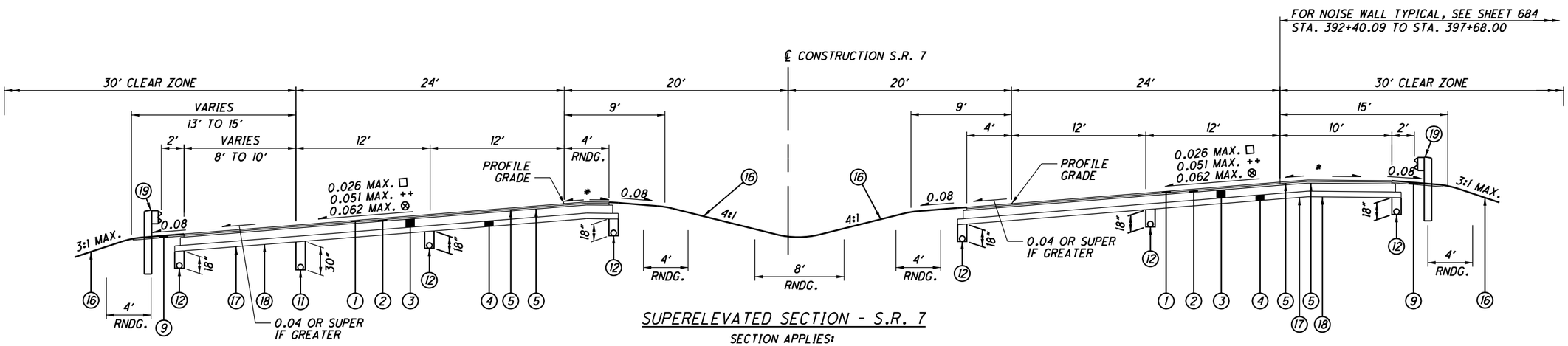

SUPERELEVATED SECTION - S.R. 7

SECTION APPLIES:
++ STA. 319+56.52 TO STA. 335+67.69 +
□ STA. 348+41.10 TO STA. 361+89.83
⊗ STA. 375+75.38 TO STA. 397+68.00

NOTES:

- SUPERELEVATION TO BE OPPOSITE HAND TO TYPICAL SHOWN
- FOR EQUAL, SEE SHEET 33
- FOR DITCH DETAILS, SEE SHEET 32
- FOR EDGE COURSE DETAILS, SEE SHEET 33
- * FOR SUPERELEVATED SHOULDER DETAILS, SEE DETAIL 2, SHEET 33
- FOR EXACT LOCATION OF UNDERDRAINS, SEE UNDERDRAIN TABLE SHEETS 674-678

DRAFT Stage 3 - Not for Construction
09/23/2024

TYPICAL SECTION - S.R. 7

LAW-7-2.17

U:\173608714\LAW\75923\roadway\sheets\75923GY010-2B.dgn 5/21/2024 4:48:26 PM SLParker

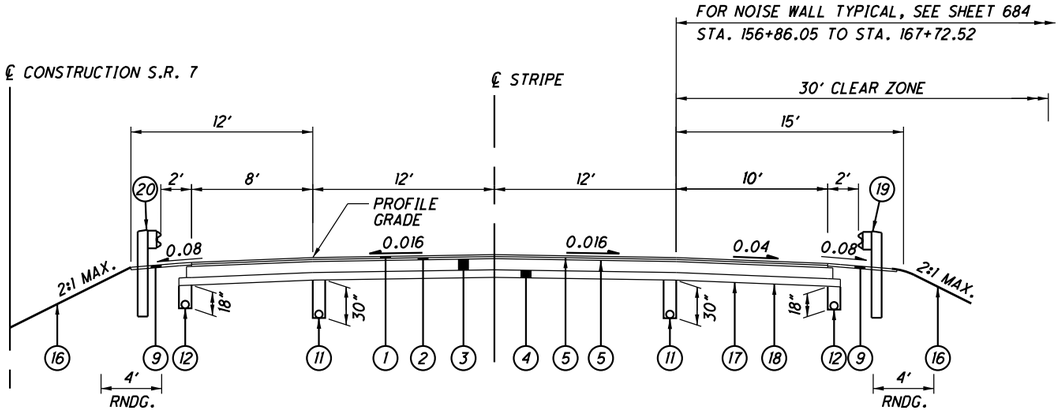

NORMAL SECTION - S.R. 7

SECTION APPLIES:

STA. 156+86.05 TO STA. 167+72.52
STA. 195+00.00 TO STA. 195+76.13
STA. 272+21.71 TO STA. 276+94.12
STA. 284+90.71 TO STA. 309+49.89

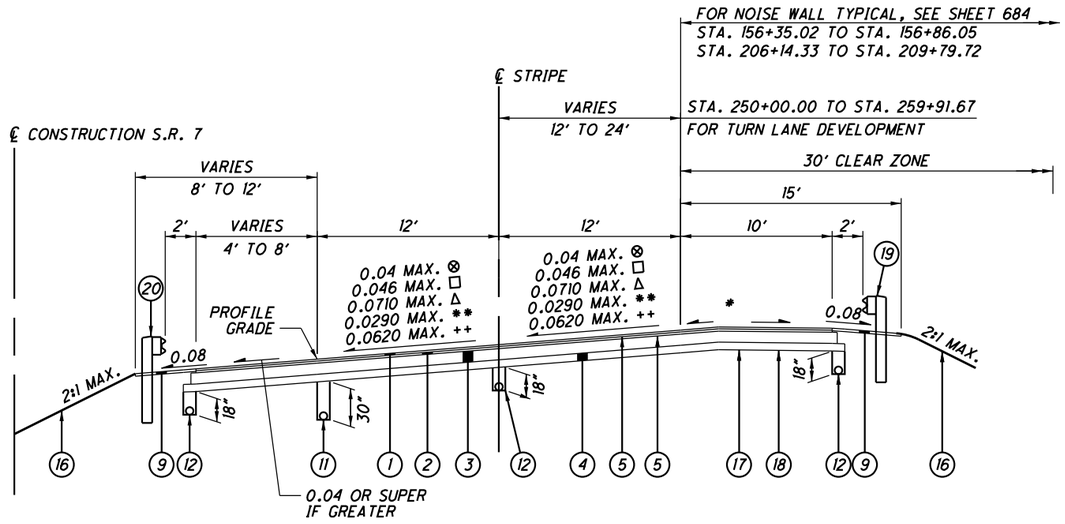

SUPERELEVATED SECTION - S.R. 7

SECTION APPLIES:

⊗ STA. 120+56.37 TO STA. 156+86.05 +
□ STA. 195+76.13 TO STA. 209+79.72 +
Δ STA. 257+84.54 TO STA. 272+21.71 +
** STA. 276+94.12 TO STA. 284+90.71
++ STA. 376+00.00 TO STA. 390+75.00

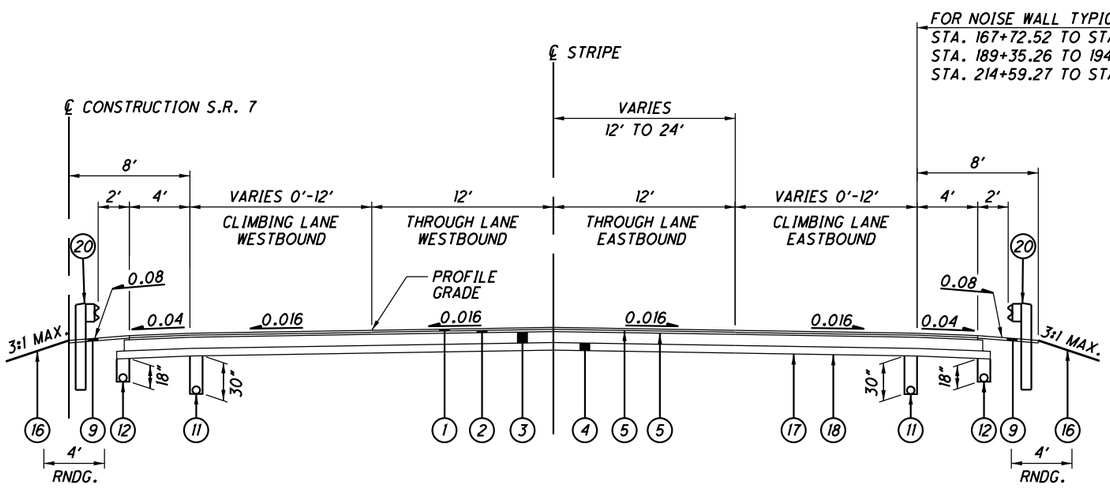

NORMAL SECTION - S.R. 7 WITH CLIMBING LANES

SECTION APPLIES:

STA. 167+72.52 TO STA. 174+60.18
STA. 189+35.26 TO STA. 195+00.00
STA. 214+59.27 TO STA. 225+85.73
STA. 237+92.08 TO STA. 247+00.00

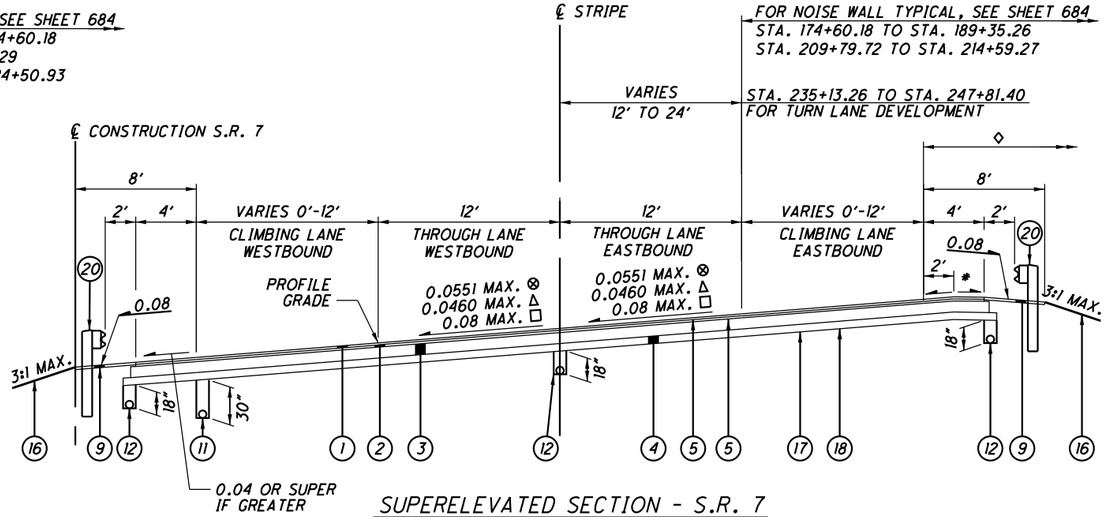

SUPERELEVATED SECTION - S.R. 7 WITH CLIMBING LANES

SECTION APPLIES:

⊗ STA. 174+60.18 TO STA. 189+35.26
Δ STA. 209+79.72 TO STA. 214+59.27 +
□ STA. 225+85.73 TO STA. 237+92.08

NOTES:

+ SUPERELEVATION TO BE OPPOSITE HAND TO TYPICAL SHOWN
FOR LEGEND, SEE SHEET 23
FOR DITCH DETAILS, SEE SHEET 32
FOR EDGE COURSE DETAILS, SEE SHEET 33
* FOR SUPERELEVATED SHOULDER DETAILS, SEE DETAIL A, SHEET 33
FOR EXACT LOCATION OF UNDERDRAINS, SEE UNDERDRAIN TABLE SHEETS 674-678

◇ - FOR NOISE WALL TYPICAL, SEE SHEET 684
STA. 174+60.18 TO STA. 189+35.26
STA. 209+79.72 TO STA. 214+59.27

DRAFT Stage 3 - Not for Construction 09/23/2024

TYPICAL SECTION - S.R. 7

LAW-7-2.17

U:\173608714\LAW\75923\roadway\sheets\75923GY002-2B.dgn 5/21/2024 4:48:27 PM SLParker

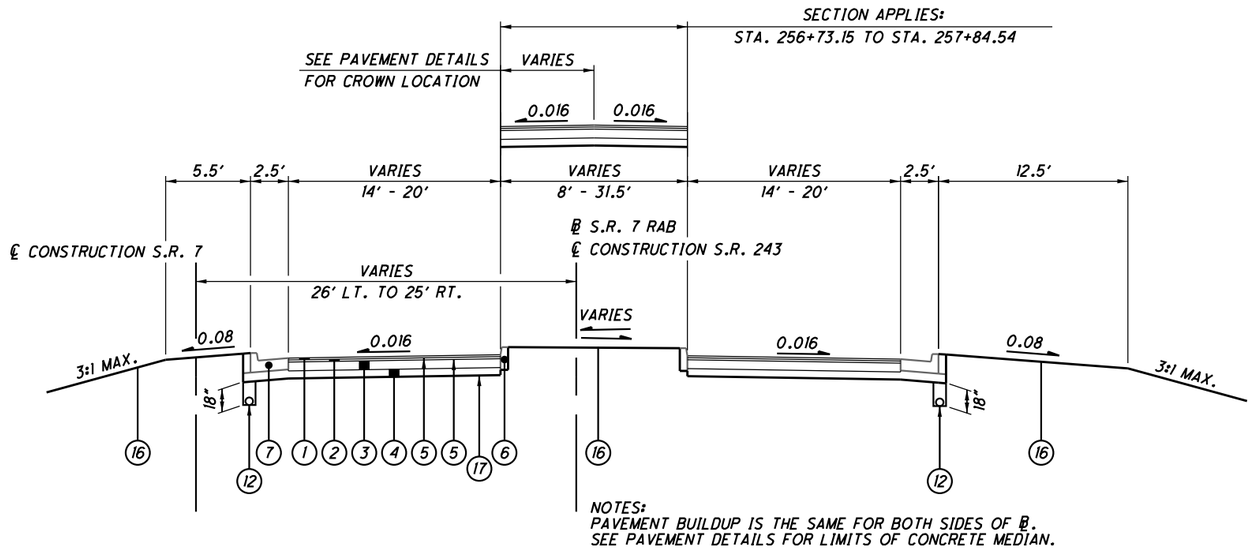

NORMAL SECTION - S.R. 7 RAB & S.R. 243

SECTION APPLIES:
S.R. 7 STA. 247+00.00 TO STA. 251+00.00
S.R. 7 STA. 253+00.00 TO STA. 257+84.54
S.R. 243 STA. 11+00.00 TO STA. 13+07.05

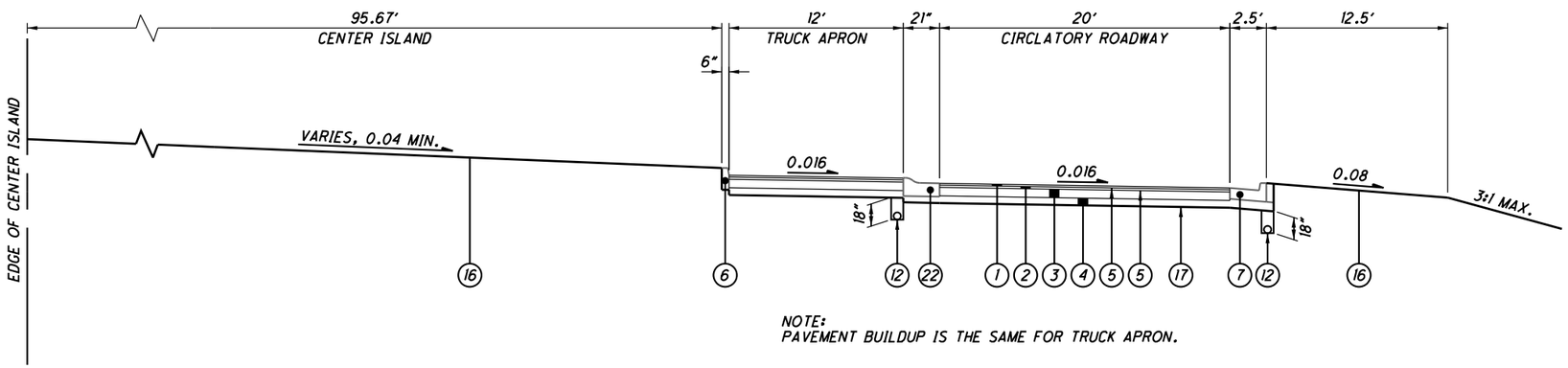

ROUNDABOUT SECTION

NOTES:
FOR DITCH DETAILS, SEE SHEET 32
FOR EDGE OF PAVEMENT DETAILS, SEE SHEET 33
FOR EXACT LOCATION OF UNDERDRAINS, SEE UNDERDRAIN TABLE SHEETS 674-678

DRAFT Stage 3 - Not for Construction 09/23/2024

TYPICAL SECTION - S.R. 7

LAW-7-2.17

U:\173608714\LAW\75923\roadway\sheets\75923GY011-2B.dgn 5/21/2024 4:48:28 PM SLParker

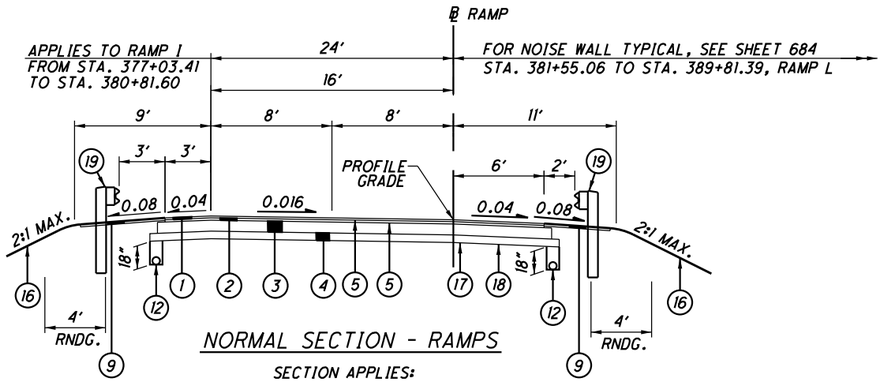

NORMAL SECTION - RAMPS

SECTION APPLIES:

RAMP D: STA. 119+84.99 TO STA. 120+82.54
RAMP I: STA. 377+03.41 TO STA. 380+81.60
RAMP L: STA. 384+90.86 TO STA. 389+81.39

◇ - 0.073 MAX. □
0.0353 MAX. ⊗⊗
0.046 MAX. **

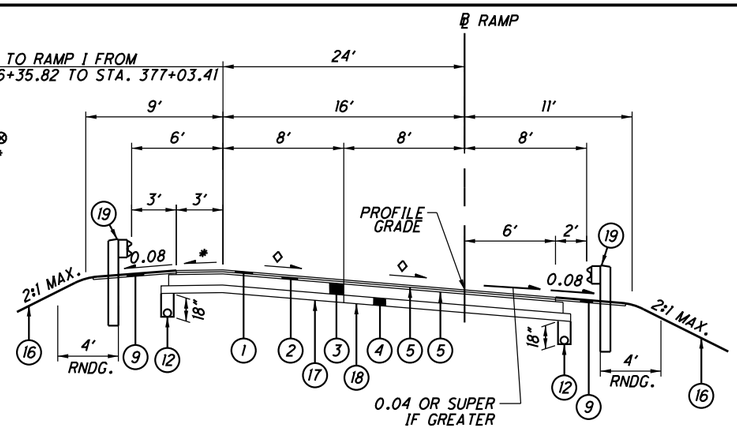

SUPERELEVATED SECTION - RAMPS

SECTION APPLIES:

□ RAMP D: STA. 115+19.00 TO STA. 119+84.99 +
⊗⊗ RAMP I: STA. 377+63.81 TO STA. 377+03.41
** RAMP L: STA. 379+89.28 TO STA. 384+90.86 +

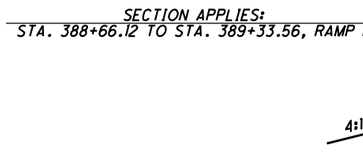

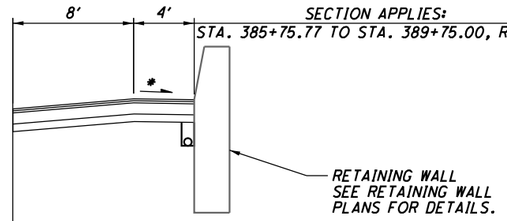

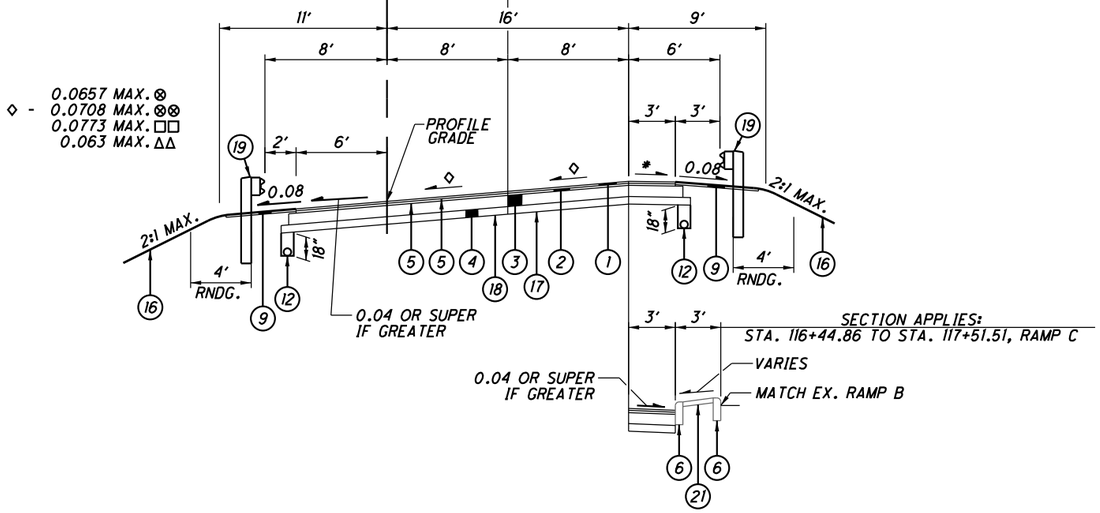

SUPERELEVATED SECTION - RAMPS

SECTION APPLIES:

⊗ RAMP C: STA. 116+33.24 TO STA. 118+16.48 +
⊗⊗ RAMP C: STA. 118+16.48 TO STA. 123+68.17
□□ RAMP J: STA. 387+15.12 TO STA. 391+15.81
ΔΔ RAMP K: STA. 388+66.12 TO STA. 397+51.56

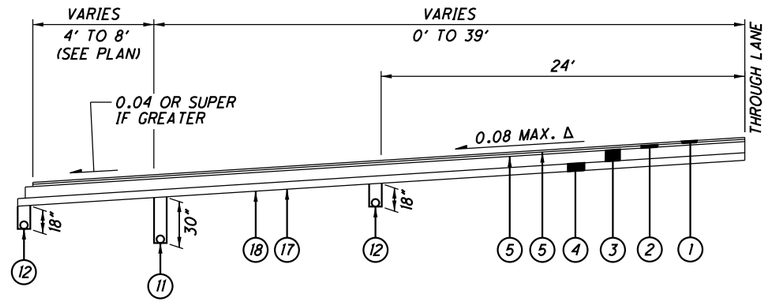

SPEED LANE CHANGE

SECTION APPLIES:

STA. 126+47.37 TO STA. 132+00.00

NOTES:

PROFILE GRADE ON RIGHT SIDE OF DIRECTION OF TRAVEL
+ SUPERELEVATION TO BE OPPOSITE HAND TO TYPICAL SHOWN
FOR LEGEND, SEE SHEET 23
FOR DITCH DETAILS, SEE SHEET 33
FOR EDGE COURSE DETAILS, SEE SHEET 33
* FOR SUPERELEVATED SHOULDER DETAILS, SEE DETAIL A, SHEET 33
FOR EXACT LOCATION OF UNDERDRAINS SEE UNDERDRAIN TABLE SHEET 678
Δ DENOTES MAXIMUM FOR ENTIRE PROJECT, FOR SPECIFIC CURVE SUPERELEVATION, SEE PLANS

DRAFT Stage 3 - Not for Construction 09/30/2024

TYPICAL SECTIONS - RAMPS

LAW-7-2.17

28
1247

U:\1736087\4\LAW\75923\roadway\sheets\75923GY003-2B.dgn 5/21/2024 4:48:29 PM SLParker

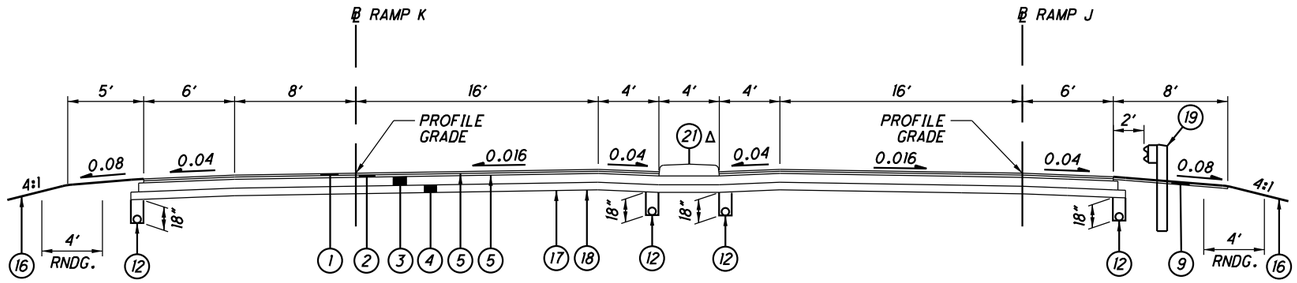

NORMAL SECTION - RAMPS J & K CONCRETE MEDIAN

SECTION APPLIES:

STA. 384+99.45 TO STA. 385+66.77
Δ STA. 385+48.00 TO STA. 385+66.77

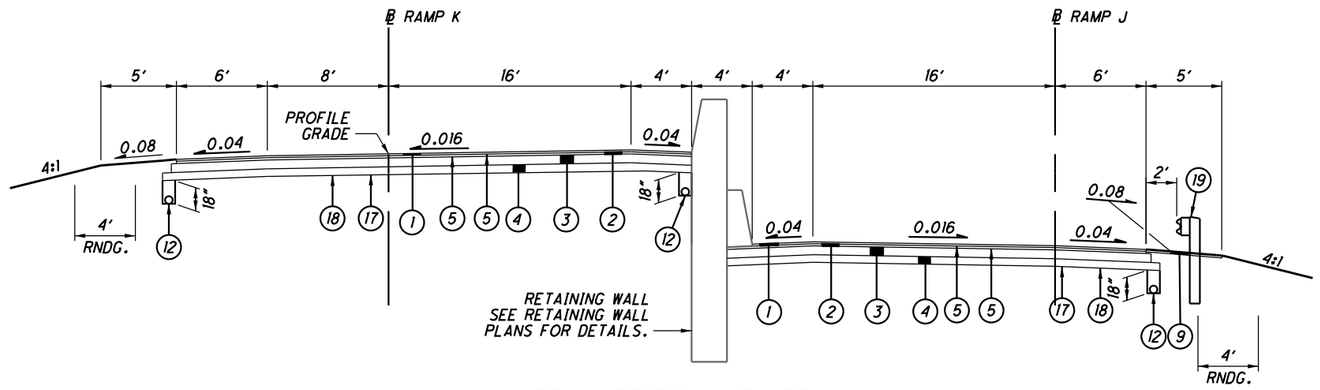

NORMAL SECTION - RAMPS

SECTION APPLIES:

STA. 385+66.77 TO STA. 387+63.83

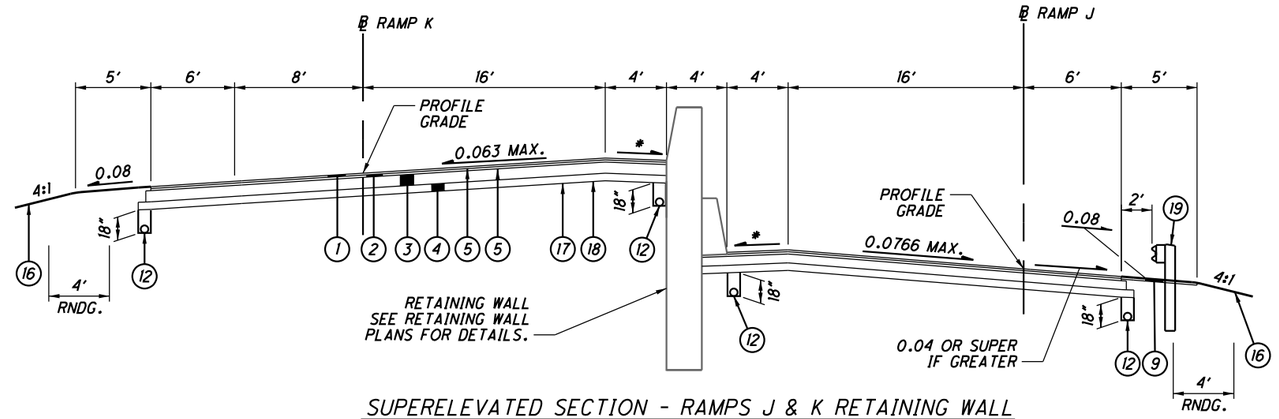

SUPERELEVATED SECTION - RAMPS J & K RETAINING WALL

SECTION APPLIES:

STA. 387+63.83 TO STA. 388+65.84

NOTES:

+ SUPERELEVATION TO BE OPPOSITE HAND TO TYPICAL SHOWN
FOR LOCATIONS, SEE SHEET 32
FOR DITCH DETAILS, SEE SHEET 32
FOR EDGE COURSE DETAILS, SEE SHEET 33
* FOR UNDERDRAIN LOCATIONS, SEE DETAIL A, SHEET 33
FOR EXACT LOCATION OF UNDERDRAINS, SEE UNDERDRAIN TABLE SHEETS 674-613

DRAFT Stage 3 - Not for Construction 09/23/2024

TYPICAL SECTIONS - RAMPS

LAW-7-2.17

U:\173608714\LAW\75923\roadway\sheets\75923GY008-2B.dgn 5/21/2024 4:48:29 PM SLParker

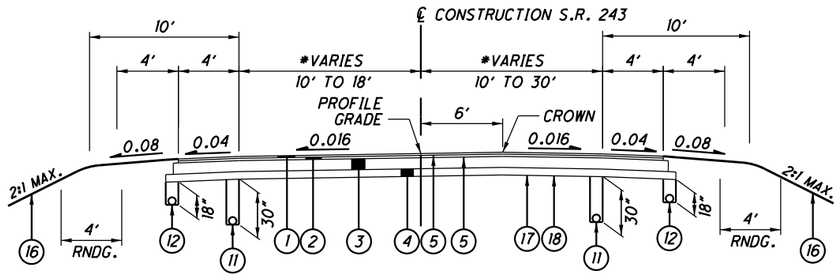

NORMAL SECTION - S.R. 243

SECTION APPLIES:
STA. 18+34.52 TO STA. 21+54.00

* OVERLAY EXISTING SECTION FROM STA. 19+05.08 TO STA. 21+54.00

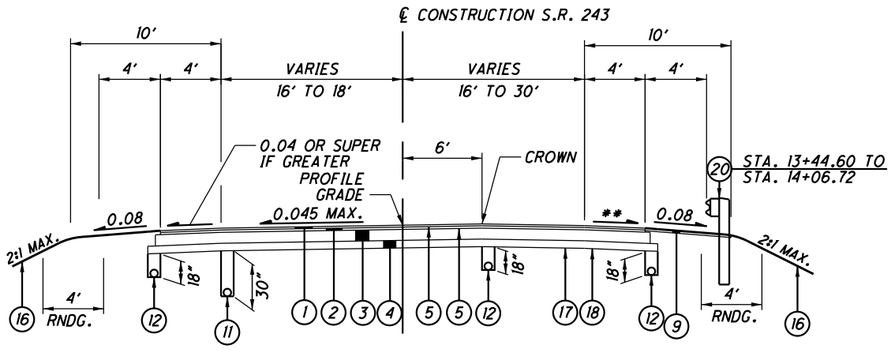

SUPERELEVATED SECTION - S.R. 243

SECTION APPLIES:
STA. 13+07.05 TO STA. 18+34.52

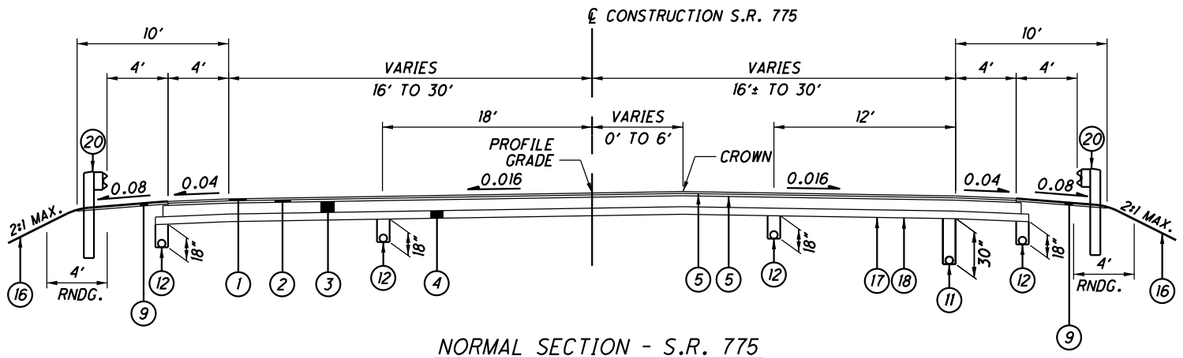

NORMAL SECTION - S.R. 775

SECTION APPLIES:
STA. 45+42.93 TO STA. 68+10.76

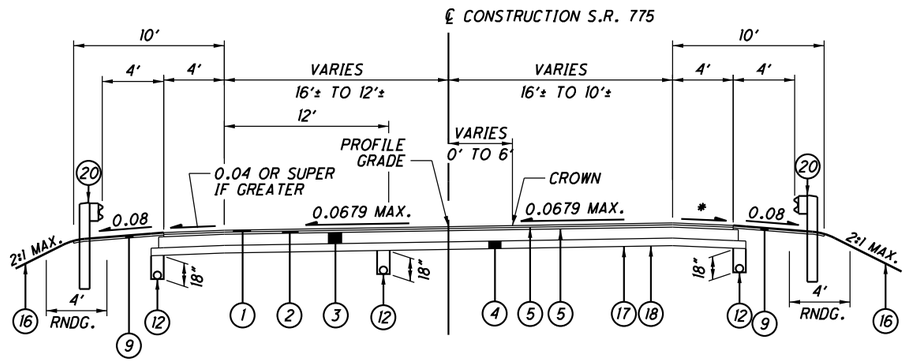

SUPERELEVATED SECTION - S.R. 775

SECTION APPLIES:
STA. 68+10.76 TO STA. 70+75.00

NOTES:

+ SUPERELEVATION TO BE OPPOSITE HAND TO TYPICAL SHOWN
  FOR LEGEND, SEE SHEET 23
  FOR DITCH DETAILS, SEE SHEET 32
  FOR EDGE COURSE DETAILS, SEE SHEET 33
* FOR SUPERELEVATED SHOULDER DETAILS, SEE DETAIL A, SHEET 33
  FOR EXACT LOCATION OF UNDERDRAINS, SEE UNDERDRAIN TABLE SHEETS 674-678

DRAFT Stage 3 - Not for Construction 09/23/2024

TYPICAL SECTIONS - S.R. 243 & S.R. 775

LAW-7-2.17

U:\173608714\LAW\75923\roadway\sheets\75923GY004-2B.dgn 5/21/2024 4:48:30 PM SLParker

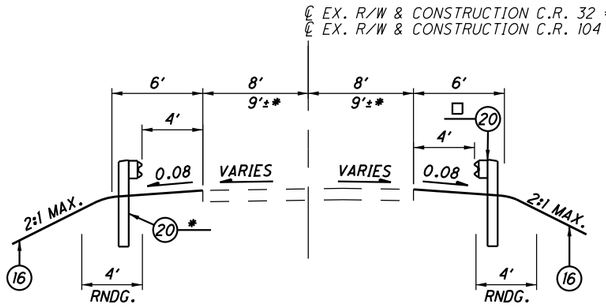

NORMAL SECTION - SIDE ROADS

SECTION APPLIES

C.R. 104

STA. 12+00.00 TO STA. 17+03.97
□ STA. 14+66.51 TO STA. 17+15.59

C.R. 32

STA. 10+00.00 TO STA. 15+00.00

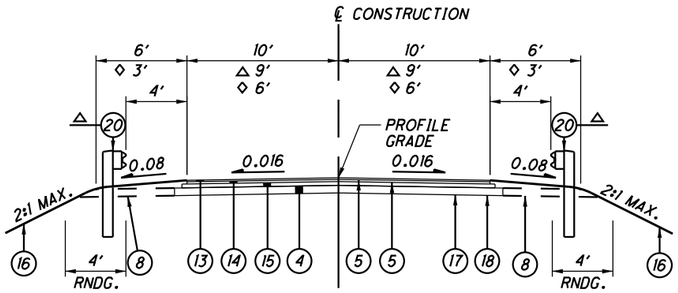

NORMAL SECTION - SIDE ROADS

SECTION APPLIES

HENSON HOLLOW EMERGENCY ACCESS

STA. 10+00.00 TO STA. 12+60.04

◇ **DOGWOOD LANE EXTENSION**

STA. 10+05.78 TO STA. 13+46.62

LYNN LANE

STA. 10+10.00 TO STA. 13+90.68

△ **C.R. 118**

STA. 10+18.30 TO STA. 10+99.19

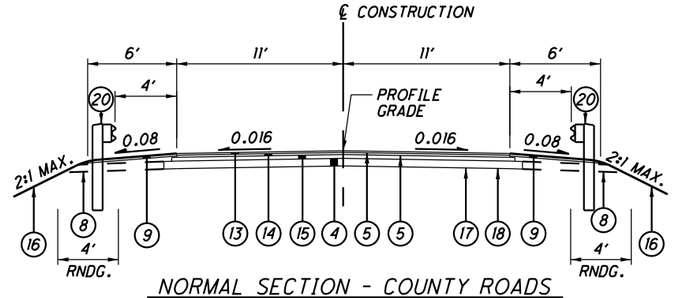

NORMAL SECTION - COUNTY ROADS

SECTION APPLIES:

C.R. 69

STA. 9+90.51 TO STA. 13+27.35
STA. 33+77.74 TO STA. 54+56.85

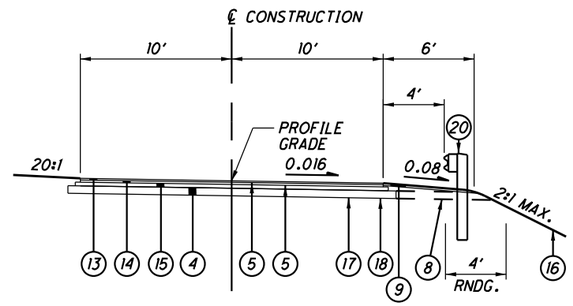

NORMAL SECTION - SIDE ROADS

SECTION APPLIES

BRENTWOOD EMERGENCY ACCESS

STA. 13+40.00 TO STA. 22+85.54

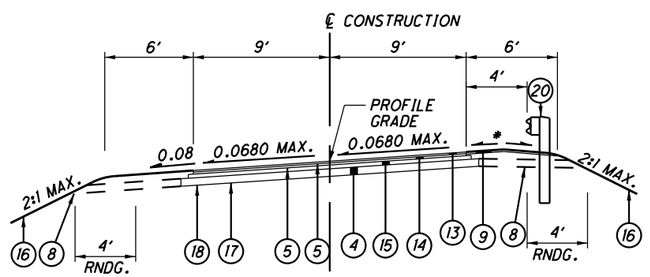

SUPERELEVATED SECTION - SIDE ROADS

SECTION APPLIES

C.R. 118

STA. 10+99.19 TO STA. 14+76.01

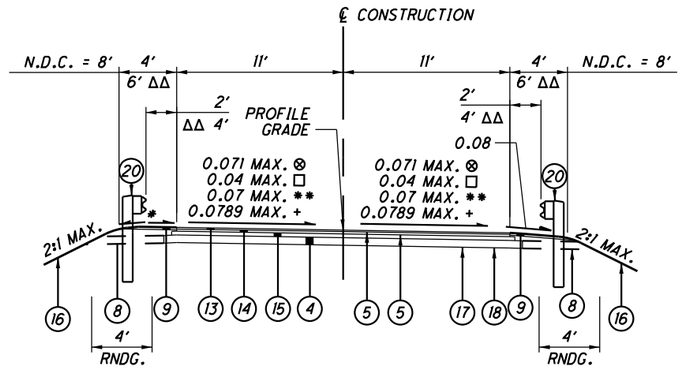

SUPERELEVATED SECTION - COUNTY ROADS

SECTION APPLIES:

△△ **C.R. 69**

⊗ STA. 13+27.35 TO STA. 33+77.74
□ STA. 54+56.85 TO STA. 56+73.01

C.R. 2

STA. 10+28.28 TO STA. 12+40.34 +
** STA. 12+40.34 TO STA. 17+58.28

NOTES:

+ SUPERELEVATION TO BE OPPOSITE HAND TO TYPICAL SHOWN
FOR LEGEND, SEE SHEET 23
FOR DITCH DETAILS, SEE SHEET 32
FOR EDGE COURSE DETAILS, SEE SHEET 33
* FOR SUPERELEVATED SHOULDER DETAILS, SEE DETAIL A, SHEET 33
FOR EXACT LOCATION OF UNDERDRAINS, SEE UNDERDRAIN TABLE SHEETS 674-678

DRAFT Stage 3 - Not for Construction 09/23/2024

TYPICAL SECTIONS - COUNTY ROADS AND SIDE ROADS

LAW-7-2.17

U:\173608714\LAW\75923\roadway\sheets\75923GY005-2B.dgn 5/21/2024 4:48:31 PM SLParker

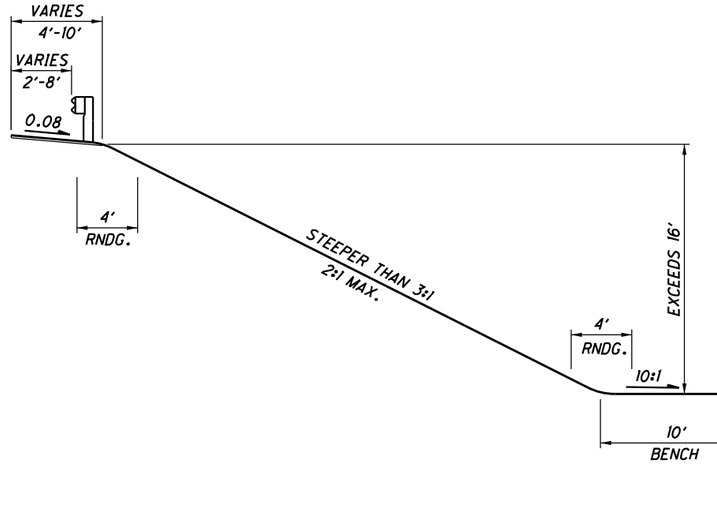

SIDE ROAD BARRIER GRADING

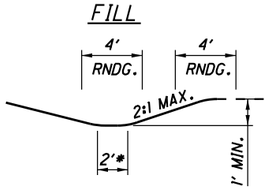

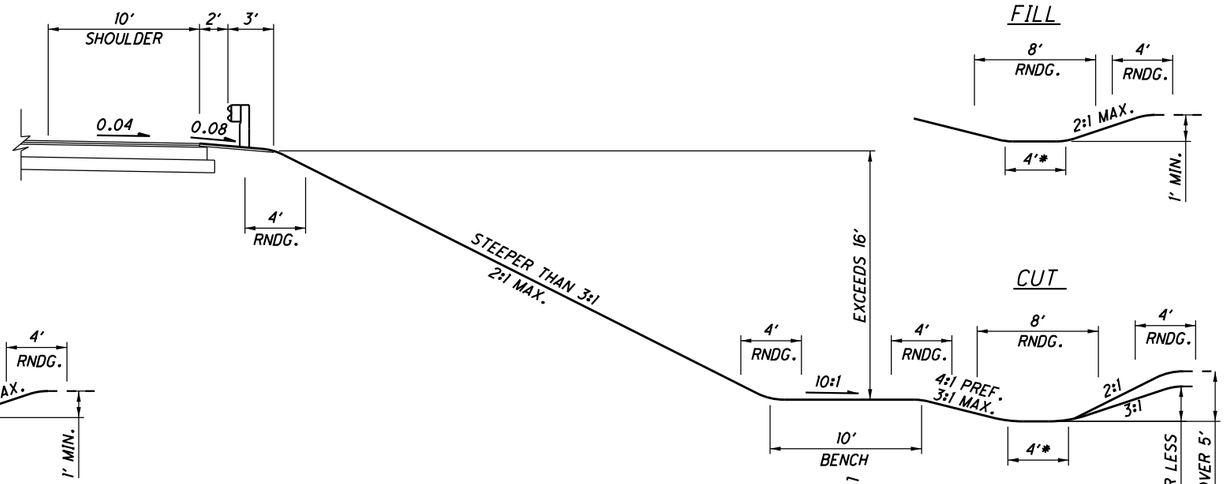

S.R. 7 BARRIER GRADING

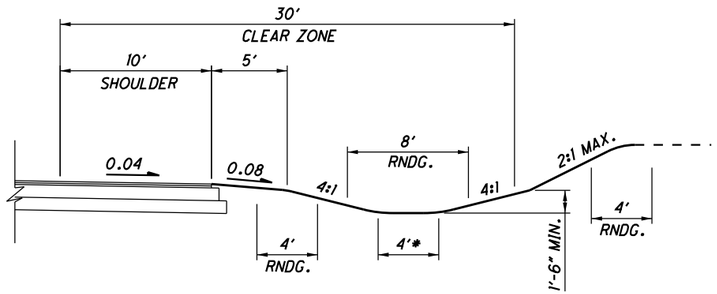

CUT SECTION

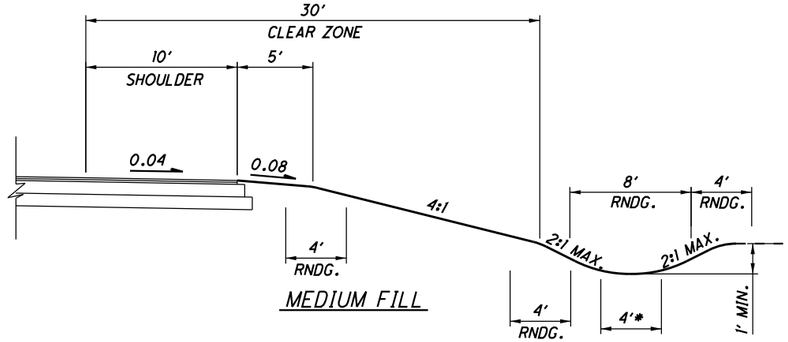

MEDIUM FILL

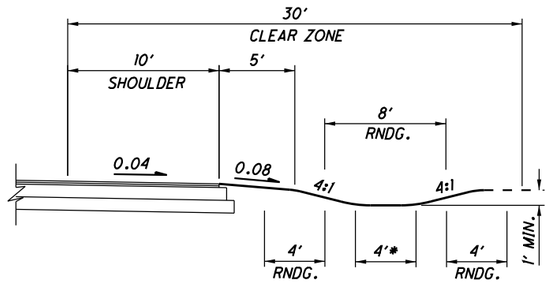

LOW FILL

NOTES:
SEE CROSS SECTIONS FOR POST CONSTRUCTION ENHANCED BANKFULL WIDTHS
ROUNDING SHALL BE 1' WIDER THAN DITCH WIDTH SHOWN

DRAFT Stage 3 - Not for Construction

09/23/2024

TYPICAL SECTIONS - DITCH DETAILS

LAW-7-2.17

32
1247

U:\173608714\LAW\75923\roadway\sheets\75923GY006-2B.dgn 5/21/2024 4:48:32 PM SLParker

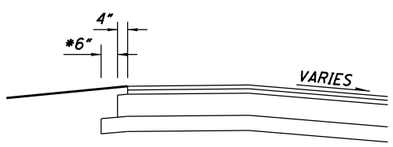

EDGE COURSE DETAIL
FOR ALL TYPICALS

* 6" OR THE THICKNESS OF OVERLYING LIFT, WHICHEVER IS GREATER.

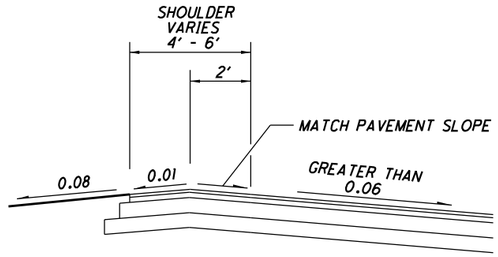

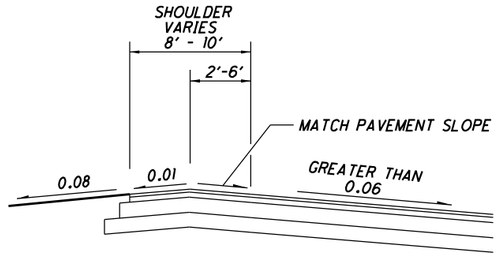

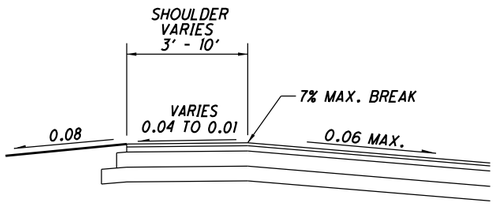

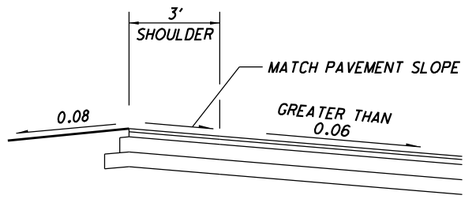

DETAIL A
PAVED SHOULDERS

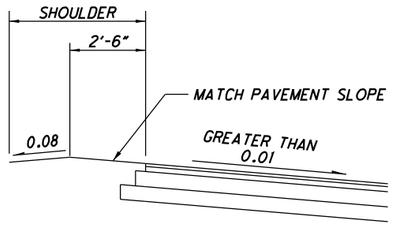

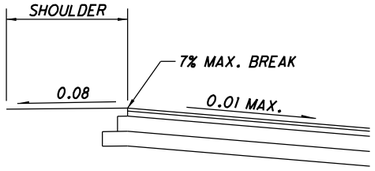

DETAIL B
TURF SHOULDERS

NOTES:
APPLY SAME SHOULDER BREAKS IN AREAS WHERE SUPERELEVATION IS OPPOSITE HAND TO TYPICAL SHOWN ABOVE.

DRAFT Stage 3 - Not for Construction
09/23/2024

TYPICAL SECTIONS - MISCELLANEOUS DETAILS

LAW-7-2.17

U:\173608714\LAW\75923\roadway\sheets\75923GY007-2B.dgn 5/21/2024 4:48:33 PM SLParker

ROUNDING

THE ROUNDING AT SLOPE BREAKPOINTS SHOWN ON THE TYPICAL SECTIONS APPLIES TO ALL CROSS-SECTIONS EVEN THOUGH OTHERWISE SHOWN.

UTILITIES

LISTED BELOW ARE ALL UTILITIES LOCATED WITHIN OR ADJACENT TO THE PROJECT CONSTRUCTION LIMITS TOGETHER WITH THEIR RESPECTIVE OWNERS:

FRONTIER COMMUNICATIONS
1315 ALBERT STREET
PORTSMOUTH, OHIO 45662
PHONE: (740) 354-0521
MS. DENA MARTIN

AMERICAN ELECTRIC POWER (DISTRIBUTION)
38831 STATE ROUTE 7
REEDSVILLE, OHIO 45772
PHONE: (740) 985-3054
MR. CLARKE SAUNDERS

AMERICAN ELECTRIC POWER (TRANSMISSION)
8600 SMITHS HILL ROAD
NEW ALBANY, OHIO 43054
PHONE: (380) 205-5072
MR. MICHAEL CARR

BUCKEYE RURAL ELECTRIC CO-OP, INC.
P.O. BOX 200
RIO GRANDE, OHIO 45674
PHONE: (740) 379-9659
MR. WESTON CLARY

HECLA WATER ASSOCIATION, INC.
3190 SR 141
IRONTON, OHIO 45638
PHONE: (740) 533-0526, EXT. 5
MR. TIM DALTON

AQUA OHIO (FORMERLY OHIO-AMERICAN WATER COMPANY)
5481 BUENOS ARIES BLVD.
WESTERVILLE, OHIO 43081
PHONE: (614) 882-6586
MR. JAKE LOGAN

COLUMBIA GAS OF OHIO
843 PIATT AVENUE
CHILLICOTHE, OHIO 45601
PHONE: (740) 656-7401
MR. JOSEPH DiBENEDETTO

MYERS DRILLING COMPANY
P.O. BOX 290
BARBOURSVILLE, WV. 25504
PHONE: (304) 736-7431
MR. JOHN DIAL

ARMSTRONG CABLE SERVICES
9651 COUNTY ROAD 1
SOUTH POINT, OHIO 45680
PHONE: (740) 451-1833
MR. NATHAN ITTIG

UNION-ROME TOWNSHIPS
SUBSEWER DISTRICT
P.O. BOX 430
CHESAPEAKE, OHIO 45619
PHONE: (740) 867-8700
MR. ADAM STEWART

CHARTER COMMUNICATIONS
(AKA SPECTRUM FKA TIME WARNER CABLE)
1617 FOXHAVEN DRIVE
RICHMOND, KENTUCKY 40475
PHONE: (859) 626-4899
MR. MARK HARLOW

THE LOCATION OF THE UNDERGROUND UTILITIES SHOWN ON THE PLANS ARE AS OBTAINED FROM THE OWNERS AS REQUIRED BY SECTION 153.64 O.R.C.

BENCHING OF FOUNDATION SLOPES

ALTHOUGH CROSS-SECTIONS INDICATE SPECIFIC DIMENSIONS FOR PROPOSED BENCHING OF THE EMBANKMENT FOUNDATIONS IN CERTAIN AREAS, NO WAIVER OF THE SPECIFICATIONS IS INTENDED. BENCH ALL OTHER SLOPED EMBANKMENT AREAS AS SET FORTH IN SECTION 203.05 OF THE CONSTRUCTION AND MATERIAL SPECIFICATIONS (C&MS). NO ADDITIONAL PAYMENT WILL BE MADE FOR BENCHING REQUIRED UNDER THE PROVISIONS OF SECTION 203.05.

SURVEYING PARAMETERS

PRIMARY PROJECT CONTROL MONUMENTS GOVERN ALL POSITIONING ON ODOT PROJECTS. SEE SHEET 3 OF THE PLANS FOR A TABLE CONTAINING PROJECT CONTROL INFORMATION.

USE THE FOLLOWING PROJECT CONTROL, VERTICAL POSITIONING, AND HORIZONTAL POSITIONING PARAMETERS FOR ALL SURVEYING:

PROJECT CONTROL

POSITIONING METHOD: STATIC GPS (2011)
MONUMENT TYPE: TYPE A

VERTICAL POSITIONING

ORTHOMETRIC HEIGHT DATUM:	NAVD88
GEOID:	GEOID09

HORIZONTAL POSITIONING

REFERENCE FRAME:	NAD83 (CORS 96)
ELLIPSOID:	GRS80
MAP PROJECTION:	LAMBERT CONFORMAL CONIC
COORDINATE SYSTEM:	OHIO STATE PLANE, SOUTH ZONE
COMBINED SCALE FACTOR:	1.000044500000 (FROM GROUND TO SPC)
ORIGIN OF COORDINATE SYSTEM:	0,0

USE THE POSITIONING METHODS AND MONUMENT TYPE USED IN THE ORIGINAL SURVEY TO RESTORE ALL MONUMENTS RELATED TO PRIMARY PROJECT CONTROL THAT ARE DAMAGED OR DESTROYED BY CONSTRUCTION ACTIVITIES. RESTORE THE DAMAGED OR DESTROYED MONUMENTS IN ACCORDANCE WITH CMS 623.

UNITS ARE IN U.S. SURVEY FEET.

CONSTRUCTION NOISE

ACTIVITIES AND LAND USE ADJACENT TO THIS PROJECT MAY BE AFFECTED BY CONSTRUCTION NOISE. IN ORDER TO MINIMIZE ANY ADVERSE CONSTRUCTION NOISE IMPACTS, DO NOT OPERATE AT ANY TIME ANY DEVICE IN SUCH A MANNER THAT THE NOISE CREATED SUBSTANTIALLY EXCEEDS THE NOISE CUSTOMARILY AND NECESSARILY ATTENDANT TO THE REASONABLE AND EFFICIENT PERFORMANCE OF SUCH EQUIPMENT.

WHERE CONTRUCTION ACTIVITIES ARE WITHIN 500 FEET OF RESIDENTIAL AREAS, CONSTRUCTION ACTIVITIES WILL BE LIMITED TO DAYTIME HOURS ONLY. THE FOLLOWING AREAS GIVE LOCATIONS WHERE WORK SHALL BE LIMITED TO DAYTIME HOURS ONLY:

AREA 1: SR 7 STATION 165+00 TO STATION 220+00
AREA 2: SR 7 STATION 381+00 TO STATION 409+00
AREA 3: SR 775 STATION 45+30 TO STATION 70+75

WORK LIMITS

THE WORK LIMITS SHOWN ON THESE PLANS ARE FOR PHYSICAL CONSTRUCTION ONLY. PROVIDE THE INSTALLATION AND OPERATION OF ALL WORK ZONE TRAFFIC CONTROL AND WORK ZONE TRAFFIC CONTROL DEVICES REQUIRED BY THESE PLANS WHETHER INSIDE OR OUTSIDE THESE WORK LIMITS.

NO WORK SHALL OCCUR IN THE DO NOT DISTURB AREAS AS SHOWN IN THE PLANS.

AIRWAY/HIGHWAY CLEARANCE FOR AIRPORTS AND HELIPORTS

THIS PROJECT HAS BEEN IDENTIFIED AS BEING WITHIN THE INFLUENCE AREA OF A PUBLIC USE AIRPORT OR HELIPORT. NO TEMPORARY STRUCTURES OR CONSTRUCTION EQUIPMENT AT MAXIMUM OPERATING HEIGHT SHALL EXCEED A HEIGHT OF 1144.23 FT. IF ANY TEMPORARY STRUCTURES OR CONSTRUCTION EQUIPMENT WILL EXCEED THIS HEIGHT, FURTHER COORDINATION WITH THE FEDERAL AVIATION ADMINISTRATION (FAA), AND ODOT OFFICE OF AVIATION, WILL BE NECESSARY PRIOR TO ERECTING SUCH TEMPORARY STRUCTURES OR OPERATING SUCH EQUIPMENT ON THE PROJECT. THE CONTRACTOR WILL BE REQUIRED TO SUBMIT FORM 7460-1 TO THE FAA. NOTIFY THE ODOT OFFICE OF AVIATION WHEN SUBMITTING FAA FORM 7460-1.

NO TEMPORARY STRUCTURES OR CONSTRUCTION EQUIPMENT SHALL EXCEED THE PERMISSIBLE HEIGHT, UNTIL A COPY OF THE FAA APPROVAL AND THE ODOT OFFICE OF AVIATION PERMIT HAS BEEN FURNISHED TO THE PROJECT ENGINEER.

FEDERAL AVIATION ADMINISTRATION SOUTHWEST REGIONAL OFFICE OBSTRUCTION EVALUATION GROUP 10101 HILLWOOD PARKWAY FORT WORTH, TX 76177 FAX: (817) 222-5920
HTTP://CEAAA.FAA.GOV

OHIO DEPARTMENT OF TRANSPORTATION OFFICE OF AVIATION 2829 WEST DUBLIN-GRANVILLE ROAD COLUMBUS, OHIO 43235
OHIO.AIRPORT.PROTECTION@DOT.OHIO.GOV

RIGHT-OF-WAY FENCE CONSTRUCTION

ALTHOUGH NOT SHOWN IN THE PLANS, THE CONTRACTOR HAS A 15' WORK AREA CENTERED ON THE FENCE TO CONSTRUCT THE PROPOSED FENCE.

CLEARING AND GRUBBING

THE DEPARTMENT HAS NOT MARKED INDIVIDUAL TREES AND STUMPS FOR REMOVAL. UNLESS SPECIFICALLY DESIGNATED AS "DO NOT DISTURB" IN THE PLANS, REMOVE ALL TREES AND STUMPS WITHIN THE CONSTRUCTION LIMITS UNDER THE LUMP SUM BID FOR ITEM 201 CLEARING AND GRUBBING.

PROTECTION OF RIGHT-OF-WAY LANDSCAPING

PRIOR TO BEGINNING WORK, THE CONTRACTOR, THE PROJECT ENGINEER, AND A REPRESENTATIVE OF THE MAINTAINING AGENCY WILL REVIEW AND RECORD ALL LANDSCAPING ITEMS WITHIN THE RIGHT-OF-WAY (BOTH WITHIN AND OUTSIDE THE CONSTRUCTION LIMITS). A RECORD OF THIS REVIEW WILL BE KEPT IN THE PROJECT ENGINEER'S FILES. PRIOR TO FINAL ACCEPTANCE, A FINAL REVIEW OF LANDSCAPING ITEMS WILL BE MADE.

CONSTRICT ALL ACTIVITIES, EQUIPMENT STORAGE, AND STAGING TO WITHIN THE CONSTRUCTION LIMITS. UNLESS OTHERWISE IDENTIFIED IN THE PLANS OR PROPOSAL, THE CONSTRUCTION LIMITS ARE IDENTIFIED AS 30 FEET FROM THE EDGE OF PAVEMENT.

SUBMIT A WRITTEN REQUEST TO THE PROJECT ENGINEER TO USE ANY AREA OUTSIDE THESE LIMITS. THE DOCUMENT SUBMITTED MUST CLEARLY IDENTIFY THE AREA AND EXPLAIN THE PROPOSED USE AND RESTORATION OF THE AREA. EXCEPT AS INDICATED ON SHEETS 15-22, USE OF THESE AREAS FOR DISPOSAL OF WASTE MATERIAL AND CONSTRUCTION DEBRIS, EXCAVATION OF BORROW MATERIAL AND PLACEMENT OF PORTABLE PLANTS IS PROHIBITED. THE REQUEST MUST BE APPROVED, IN WRITING, BEFORE THE CONTRACTOR HAS PERMISSION TO USE THE AREA.

ANY ITEMS DAMAGED BEYOND THE CONSTRUCTION LIMITS AS DEFINED ABOVE, WILL BE REPLACED IN KIND OR AS APPROVED BY THE PROJECT ENGINEER.

ITEM 623 - MONUMENT, MISC.: RIGHT-OF-WAY MONUMENT RESET

EXISTING RIGHT-OF-WAY MONUMENTS THAT HAVE BEEN SET PRIOR TO CONSTRUCTION THAT ARE DISTURBED AS A RESULT OF CONSTRUCTION ACTIVITY SHALL BE RESET ACCORDING TO ITEM 623 IN THE CMS. RIGHT-OF-WAY MONUMENTS EXPECTED TO BE DISTURBED ARE LISTED ON THE CENTERLINE PLAT ATTACHED TO THESE PLANS.

ALL LABOR, EQUIPMENT AND MATERIALS NECESSARY TO COMPLETE THE WORK SHALL BE PAID FOR IN THE PRICE BID FOR ITEM 623 - MONUMENT, MISC.: RIGHT-OF-WAY MONUMENT RESET.

MONUMENT ASSEMBLIES

CONSTRUCT MONUMENT ASSEMBLIES IN ACCORDANCE WITH THE DETAILS SHOWN ON THE STANDARD CONSTRUCTION DRAWINGS AND AT THE LOCATIONS SHOWN IN THE RIGHT-OF-WAY PLANS.

ITEM 204 - PROOF ROLLING

THE FOLLOWING QUANTITY IS PROVIDED IN THE GENERAL SUMMARY TO ADDRESS LOCATIONS REQUIRING PROOF ROLLING.

ITEM 204 - PROOF ROLLING _ _ _ _ _ _ _ _ _ _ _ 110 HOUR

BUILDING DEMOLISHED, AS PER PLAN

BUILDINGS AND APPURTENANCES SUCH AS, BUT NOT LIMITED TO FENCES, SEPTIC TANKS, CISTERNS, WELLS, BASEMENTS, POOLS, DRIVEWAYS, PLANTERS, DECORATIVE WALLS ON EACH RIGHT-OF-WAY PARCEL SHALL BE DEMOLISHED IN THEIR ENTIRETY IN ACCORDANCE WITH 202 AND DEBRIS/MATERIAL FROM THE DEMOLITION SHALL BE DISPOSED OF IN ACCORDANCE WITH 105.17 AND ALL AREAS DISTURBED SHALL BE RESTORED IN ACCORDANCE WITH 104.04 TO THE SATISFACTION OF THE ENGINEER.

ANY UNKNOWN REGULATED UNDERGROUND STORAGE TANKS FOUND ON A RIGHT-OF-WAY PARCEL ARE TO BE REMOVED IN ACCORDANCE WITH 202.08 AS EXTRA WORK IN ACCORDANCE WITH 109.04 AND 109.05.

BURNING IS NOT A PERMISSIBLE METHOD OF REMOVAL UNLESS DIRECTED BY THE ENGINEER.

THE CONTRACTOR SHALL NOTIFY OWNERS OF WATER, ELECTRIC, OR GAS METERS WHEN THE METERS ARE READY FOR REMOVAL AND SHALL BE RESPONSIBLE FOR DISCONNECTION/REMOVAL OF SERVICE LINES FROM PUBLIC AND/OR PRIVATE UTILITY LINES IN COMPLIANCE WITH LOCAL REQUIREMENTS.

ITEM 601 - DUMPED ROCK FILL, TYPE C, AS PER PLAN

IN THE AREA BETWEEN STATIONS 13+42.91 (C.R. 118) AND 14+01.46 (C.R. 118), DUMPED ROCK FILL, TYPE C AS SHOWN ON THE CROSS-SECTIONS AND ON PLAN SHEET 547, MAY BE PLACED BY THE METHOD OF END DUMPING IF SURFACE WATER IS PRESENT AT THE TIME OF CONSTRUCTION. END DUMPING METHODS MAY BE USED UP TO AN ELEVATION 2 FEET ABOVE THE WATER LEVEL. ABOVE THIS ELEVATION, EMBANKMENT CONSTRUCTION METHODS WILL BE IN ACCORDANCE WITH SECTIONS 203.05 TO 203.07 OF THE CONSTRUCTION AND MATERIAL SPECIFICATIONS (C&MS), INCLUSIVELY. DURING NORMAL CLEARING AND GRUBBING, WHERE END DUMPING IS PERMITTED, THE REQUIREMENTS OF C&MS 201.04 FOR SCALPING SHALL BE WAIVED.

DRAFT Stage 3 - Not for Construction 09/23/2024

CALCULATED SLP CHECKED ALB

GENERAL NOTES

LAW-7-2.17

U:\173608714\LAW\75923\roadway\sheets\75923GN001-2B.dgn 5/21/2024 4:48:34 PM SLParker

FENCE LENGTHS

THE LENGTHS OF FENCE SHOWN IN THE PLANS ARE HORIZONTAL DIMENSIONS. MEASUREMENTS OF THE FINAL QUANTITIES WILL BE IN ACCORDANCE WITH ITEM 607.

PAVEMENT RESTORATION FOR PIPE INSTALLATIONS AND/OR REMOVALS

THE FOLLOWING QUANTITY HAS BEEN PROVIDED FOR PAVEMENT RESTORATION FOLLOWING INSTALLATION AND/OR REMOVAL OF PIPES.

STORM AT STATION 114+85, LEFT

ITEM 202 - PAVEMENT REMOVED _ _ _ _ _ _ _ _ _ _ 55 SY
ITEM 302 - 7" ASPHALT CONCRETE BASE, PG64-22, (449) _ _ _ _ _ _ _ _ _ _ _ _ _ 11 CY
ITEM 304 - 6" AGGREGATE BASE _ _ _ _ _ _ _ _ _ _ 10 CY
ITEM 407 - TACK COAT _ _ _ _ _ _ _ _ _ _ _ _ _ _ 6 GAL
ITEM 442 - 1½" ASPHALT CONCRETE SURFACE COURSE, 12MM, TYPE A (446) _ _ _ _ _ _ _ _ _ _ 3 CY
ITEM 442 - 1¾" ASPHALT CONCRETE INTERMEDIATE COURSE, 19MM, TYPE A (446) _ _ _ _ _ _ 3 CY

STORM AT STATION 14+72.59, C.R. 104

ITEM 202 - PAVEMENT REMOVED _ _ _ _ _ _ _ _ _ _ 21 SY
ITEM 301 - 3" ASPHALT CONCRETE BASE, PG64-22, (449) _ _ _ _ _ _ _ _ _ _ _ _ _ 2 CY
ITEM 304 - 6" AGGREGATE BASE _ _ _ _ _ _ _ _ _ _ 4 CY
ITEM 407 - TACK COAT _ _ _ _ _ _ _ _ _ _ _ _ _ _ 3 GAL
ITEM 442 - 1¼" ASPHALT CONCRETE SURFACE COURSE, TYPE I (449), PG64-22 _ _ _ _ _ _ _ _ _ 1 CY
ITEM 442 - 1¾" ASPHALT CONCRETE INTERMEDIATE COURSE, TYPE I (446) _ _ _ _ _ _ _ _ _ 1 CY

STORM AT STATION 13+66.99, C.R. 32

ITEM 202 - PAVEMENT REMOVED _ _ _ _ _ _ _ _ _ _ 25 SY
ITEM 301 - 3" ASPHALT CONCRETE BASE, PG64-22, (449) _ _ _ _ _ _ _ _ _ _ _ _ _ 3 CY
ITEM 304 - 6" AGGREGATE BASE _ _ _ _ _ _ _ _ _ _ 5 CY
ITEM 407 - TACK COAT _ _ _ _ _ _ _ _ _ _ _ _ _ _ 3 GAL
ITEM 442 - 1¼" ASPHALT CONCRETE SURFACE COURSE, TYPE I (449), PG64-22 _ _ _ _ _ _ _ _ _ 1 CY
ITEM 442 - 1¾" ASPHALT CONCRETE INTERMEDIATE COURSE, TYPE I (446) _ _ _ _ _ _ _ _ _ 2 CY

STORM AT STATION 395+50, RIGHT

ITEM 202 - PAVEMENT REMOVED _ _ _ _ _ _ _ _ _ _ 16 SY
ITEM 302 - 7" ASPHALT CONCRETE BASE, PG64-22, (449) _ _ _ _ _ _ _ _ _ _ _ _ _ 4 CY
ITEM 304 - 6" AGGREGATE BASE _ _ _ _ _ _ _ _ _ _ 3 CY
ITEM 407 - TACK COAT _ _ _ _ _ _ _ _ _ _ _ _ _ _ 2 GAL
ITEM 442 - 1½" ASPHALT CONCRETE SURFACE COURSE, 12MM, TYPE A (446) _ _ _ _ _ _ _ _ _ _ 1 CY
ITEM 442 - 1¾" ASPHALT CONCRETE INTERMEDIATE COURSE, 19MM, TYPE A (446) _ _ _ _ _ _ 1 CY

STORM AT STATION 429+50, RIGHT

ITEM 202 - PAVEMENT REMOVED _ _ _ _ _ _ _ _ _ _ 24 SY
ITEM 302 - 7" ASPHALT CONCRETE BASE, PG64-22, (449) _ _ _ _ _ _ _ _ _ _ _ _ _ 5 CY
ITEM 304 - 6" AGGREGATE BASE _ _ _ _ _ _ _ _ _ _ 4 CY
ITEM 407 - TACK COAT _ _ _ _ _ _ _ _ _ _ _ _ _ _ 3 GAL
ITEM 442 - 1½" ASPHALT CONCRETE SURFACE COURSE, 12MM, TYPE A (446) _ _ _ _ _ _ _ _ _ _ 1 CY
ITEM 442 - 1¾" ASPHALT CONCRETE INTERMEDIATE COURSE, 19MM, TYPE A (446) _ _ _ _ _ _ 2 CY

THE ABOVE QUANTITIES ARE BASED ON THICKNESS SHOWN AND A PAVEMENT RESTORATION WIDTH THAT INCLUDES THE TRENCH WIDTH PLUS TWO FEET ON EACH SIDE OF THE TRENCH.

PROVIDE ANY MATERIALS USED OUTSIDE THE LIMITS STATED ABOVE AT NO ADDITIONAL COST.

CONNECTION BETWEEN EXISTING AND PROPOSED GUARDRAIL

WHEN IT IS NECESSARY TO SPLICE PROPOSED GUARDRAIL TO EXISTING GUARDRAIL, ONLY THE EXISTING GUARDRAIL SHALL BE CUT, DRILLED, OR PUNCHED. THE CONNECTION SHALL BE MADE USING A W-BEAM, BEAM SPLICE AS SHOWN IN AASHTO M 180-12, EXCEPT THE BEAM WASHERS ARE NOT TO BE USED. PAYMENT SHALL BE INCLUDED IN THE CONTRACT PRICE FOR THE RESPECTIVE GUARDRAIL ITEMS.

ITEM 204 - SUBGRADE COMPACTION AND PROOF ROLLING

CONSTRUCT THE SUBGRADE AS FOLLOWS AND IN THE FOLLOWING SEQUENCE:

1. SHAPE THE SUBGRADE TO WITHIN 0.2 FEET OF THE PLAN SUBGRADE ELEVATION.

2. EXCAVATE AND REPLACE UNSUITABLE SUBGRADE BEFORE PROOF ROLLING. THE EXCAVATION LIMITS ARE SHOWN AND LABELED ON THE CROSS SECTIONS AS UNSUITABLE SUBGRADE. UNSUITABLE SUBGRADE INCLUDES UNSUITABLE SOIL (A-4B, A-2-5, A-5, A-7-5, AND SOIL WITH A LIQUID LIMIT GREATER THAN 65) AND ANY COAL, SHALE, OR ROCK WHICH NEEDS TO BE REMOVED ACCORDING TO SECTION 204.05 OF THE CONSTRUCTION AND MATERIAL SPECIFICATIONS (C&MS).

   IF THERE IS UNSUITABLE SUBGRADE IN A SHALLOW FILL LOCATION, EXCAVATE AND REPLACE THE UNSUITABLE SUBGRADE BEFORE CONSTRUCTING THE SHALLOW FILL AND SHAPING THE SUBGRADE.

3. COMPACT THE SUBGRADE ACCORDING TO C&MS 204.03.

4. APPROXIMATE LIMITS FOR EXCAVATION OF UNSTABLE SUBGRADE ARE SHOWN AND LABELED ON THE CROSS SECTIONS AS UNSTABLE SUBGRADE. THE ENGINEER WILL IDENTIFY THE ACTUAL LIMITS OF EXCAVATION FOR UNSTABLE SUBGRADE BASED ON THE PROOF ROLLING RESULTS AND VISUAL OBSERVATIONS.

   PROOF ROLL THE COMPACTED SUBGRADE ACCORDING TO C&MS 204.06.

5. EXCAVATE UNSTABLE SUBGRADE AS DIRECTED BY THE ENGINEER AND STABILIZE BY REPLACING WITH THE SPECIFIED MATERIALS ACCORDING TO C&MS 204.07. EXCAVATIONS WILL EXTEND 18 INCHES BEYOND THE EDGE OF THE SURFACE OF THE PAVEMENT, PAVED SHOULDERS, OR PAVED MEDIANS.

6. PROOF ROLL THE STABILIZED AREAS ACCORDING TO C&MS 204.06 TO VERIFY STABILITY.

7. FINE GRADE THE SUBGRADE TO THE SPECIFIED GRADE.

THE QUANTITIES FOR EXCAVATING THE UNSUITABLE SUBGRADE AND UNSTABLE SUBGRADE ARE BOTH PAID UNDER ITEM 204, EXCAVATION OF SUBGRADE.

ITEM 606 - ANCHOR ASSEMBLY, MGS TYPE E

THIS ITEM SHALL CONSIST OF FURNISHING AND INSTALLING ANY OF THE GUARDRAIL END TERMINALS FOR TYPE MGS GUARDRAIL AS LISTED ON ROADWAY ENGINEERING'S WEB PAGE UNDER ROADSIDE SAFETY DEVICES FOR APPROVED GUARDRAIL END TREATMENTS. INSTALLATION SHALL BE AT THE LOCATIONS SPECIFIED IN THE PLANS, IN ACCORDANCE WITH THE MANUFACTURER'S SPECIFICATIONS.

THE FACE OF THE TYPE E IMPACT HEAD SHALL BE COVERED WITH A SHEET OF TYPE G REFLECTIVE SHEETING, PER CMS 730.19.

REFER TO THE MANUFACTURER'S INSTRUCTIONS REGARDING THE INSTALLATION OF, AND THE GRADING AROUND THE FOUNDATION TUBES AND GROUND STRUT. THE TOP OF ANY FOUNDATION TUBE SHOULD BE LESS THAN 4 INCHES ABOVE THE GROUND. THE PLACEMENT OF THE FOUNDATION TUBES SHOULD BE AN APPROPRIATE DEPTH BELOW THE LEVEL LINE IN ORDER TO MAINTAIN THE FINISHED GUARDRAIL HEIGHT OF 31 INCHES FROM THE EDGE OF THE SHOULDER.

ON-SITE GRADING IS REQUIRED IF THE TOP OF THE FOUNDATION TUBES OR TOP OF THE GROUND STRUT DOES PROJECT MORE THAN 4 INCHES ABOVE THE GROUND LINE.

PAYMENT FOR THE ABOVE WORK SHALL BE MADE AT THE UNIT PRICE BID FOR ITEM 606, ANCHOR ASSEMBLY, MGS TYPE E, EACH, AND SHALL INCLUDE ALL LABOR, TOOLS, EQUIPMENT AND MATERIALS NECESSARY TO CONSTRUCT A COMPLETE AND FUNCTIONAL ANCHOR ASSEMBLY SYSTEM, INCLUDING ALL RELATED TRANSITIONS, REFLECTIVE SHEETING, HARDWARE, GRADING, EMBANKMENT AND EXCAVATION NOT SEPARATELY SPECIFIED, AS REQUIRED BY THE MANUFACTURER.

ITEM 606 - IMPACT ATTENUATOR, TYPE I (UNIDIRECTIONAL OR BIDIRECTIONAL)

THIS ITEM SHALL CONSIST OF FURNISHING AND INSTALLING ANY ONE OF THE TYPE I IMPACT ATTENUATORS AS LISTED ON THE OFFICE OF ROADWAY ENGINEERING'S WEB PAGE. INSTALLATION SHALL BE AT THE LOCATIONS SPECIFIED IN THE PLANS, IN ACCORDANCE WITH THE MANUFACTURER'S SPECIFICATIONS.

PAYMENT FOR THE ABOVE WORK SHALL BE MADE AT THE UNIT PRICE BID FOR ITEM 606, IMPACT ATTENUATOR, TYPE I (UNIDIRECTIONAL OR BIDIRECTIONAL), EACH, AND SHALL INCLUDE ALL LABOR, TOOLS, EQUIPMENT AND MATERIALS NECESSARY TO CONSTRUCT A COMPLETE AND FUNCTIONAL IMPACT ATTENUATOR SYSTEM, INCLUDING ALL RELATED TRANSITIONS, HARDWARE, REFLECTIVE SHEETING AND GRADING, NOT SEPARATELY SPECIFIED, AS REQUIRED BY THE MANUFACTURER.

ITEM 202 - REMOVAL MISC.: GAS WELL REMOVED

THE CONTRACTOR SHALL REMOVE AND DISPOSE OF THE EXISTING GAS WELL LOCATED AT APPROXIMATE STATION 162+50, 91' RT ACCORDING TO ITEM 202 IN THE CMS.

ALL LABOR, EQUIPMENT AND MATERIALS NEEDED TO COMPLETE THE WORK INCLUDING DISPOSAL SHALL BE INCLUDED IN THE LUMP SUM BID FOR ITEM 202 - REMOVAL MISC.: GAS WELL REMOVED.

ITEM SPECIAL - FILL AND PLUG EXISTING CONDUIT

THIS ITEM CONSISTS OF THE CONSTRUCTION OF BULKHEADS IN AN EXISTING 21 & 36 INCH DIAMETER CONDUIT AND FILLING THE AREA SEALED OFF WITH ITEM 613 - SAND OR OTHER MATERIAL APPROVED BY THE ENGINEER.

LOCATE THE BULKHEADS AT THE LIMITS OF THE AREA TO BE FILLED, AS INDICATED ON THE PLANS. THE BULKHEADS CONSIST OF BRICK OR CONCRETE MASONRY WITH A MINIMUM THICKNESS OF 12 INCHES.

PUMP THE FILL MATERIAL INTO PLACE OR BY OTHER MEANS APPROVED BY THE ENGINEER, SO THAT AFTER SETTLEMENT, AT LEAST 90 PERCENT OF THE CROSS-SECTIONAL AREA OF THE CONDUIT, FOR ITS ENTIRE LENGTH IS FILLED. THE LENGTH OF FILLED AND PLUGGED CONDUIT TO BE PAID FOR IS THE ACTUAL NUMBER OF FEET (MEASURED ALONG THE CENTERLINE OF EACH CONDUIT FROM OUTER FACE TO OUTER FACE OF BULKHEADS) FILLED AND PLUGGED AS DESCRIBED ABOVE.

IN LIEU OF FILLING AND PLUGGING THE EXISTING CONDUIT, THE PIPE MAY BE CRUSHED AND BACKFILLED PER 203, OR IT MAY BE REMOVED. THE LENGTH, MEASURED AS PROVIDED ABOVE, WILL BE PAID FOR AT THE CONTRACT PRICE PER FOOT FOR, ITEM SPECIAL, FILL AND PLUG EXISTING CONDUIT.

THE CONTRACTOR SHALL FILL AND PLUG THE EXISTING 21" AND 36" STORM AT STATION 120+01.20, 109.89' RT. AND SHALL PERFORM THE WORK IN SUCH A MANNER AS TO NOT ENTER THE DND AREA.

THE FOLLOWING QUANTITY HAS BEEN CARRIED TO THE GENERAL SUMMARY TO COMPLETE THE WORK.

ITEM SPECIAL - FILL AND PLUG EXISTING CONDUIT _ _ _ .69 FT.

CALCULATED SLP CHECKED ALB

GENERAL NOTES

LAW-7-2.17

DRAFT Stage 3 - Not for Construction 09/23/2024

U:\173608714\LAW\75923\roadway\sheets\75923GN002-2B.dgn 5/21/2024 4:48:35 PM SLParker

PAVING UNDER GUARDRAIL

THIS OPERATION SHALL INCLUDE PREPARATION OF THE GRADED SHOULDER USING ITEM 209, LINEAR GRADING, AS PER PLAN AND PAVING UNDER THE GUARDRAIL USING 441 ASPHALT CONCRETE INTERMEDIATE COURSE, TYPE I, (449), (UNDER GUARDRAIL), AS PER PLAN.

ITEM 209, LINEAR GRADING, AS PER PLAN SHALL CONSIST OF EXCAVATING TOPSOIL, AND PLACING GRANULAR MATERIAL.

ALL COLLECTED DEBRIS AND TOPSOIL, INCLUDING RHIZOMES, ROOTS AND OTHER VEGETATIVE PLANT MATERIAL SHALL BE REMOVED AND DISPOSED OF AS SPECIFIED IN 105.17.

THE REMOVED MATERIAL SHALL BE REPLACED WITH COMPACTABLE GRANULAR MATERIAL CONFORMING TO 703.16 PLACED TO GRADE AS DETAILED ON THE TYPICAL SECTION OR AS APPROVED BY THE ENGINEER.

ALL EQUIPMENT, MATERIALS AND LABOR REQUIRED TO PERFORM THE WORK OUTLINED ABOVE SHALL BE INCLUDED FOR PAYMENT UNDER ITEM 209 - LINEAR GRADING, AS PER PLAN.

PAVING UNDER GUARDRAIL SHALL CONSIST OF PLACING ITEM 441 TO THE DEPTH SPECIFIED USING ONE OF THE FOLLOWING METHODS:

METHOD A:
1. SET GUARDRAIL POSTS
2. PLACE ITEM 441

METHOD B:
1. PLACE ITEM 441
2. BORE ASPHALT AT POST LOCATIONS (MAY BE OMITTED IF STEEL POSTS ARE USED)
3. SET GUARDRAIL POSTS
4. PATCH AROUND POSTS. THE MATERIALS USED FOR PATCHING SHALL BE AN ASPHALT CONCRETE APPROVED BY THE ENGINEER. PATCHED AREAS SHALL BE COMPACTED USING EITHER HAND OR MECHANICAL METHODS. FINISHED SURFACES SHALL BE SMOOTH AND SLOPED TO DRAIN AWAY FROM THE POSTS.

ALL EQUIPMENT, MATERIALS AND LABOR REQUIRED TO PERFORM THE WORK OUTLINED ABOVE, WITH THE EXCEPTION OF SETTING GUARDRAIL POSTS, SHALL BE INCLUDED FOR PAYMENT UNDER ITEM 441 - ASPHALT CONCRETE INTERMEDIATE COURSE, TYPE I, (449), (UNDER GUARDRAIL), AS PER PLAN.

THE FOLLOWING ESTIMATED QUANTITIES HAVE BEEN CARRIED TO THE GENERAL SUMMARY FOR THE WORK NOTED ABOVE:

ITEM 441 - ASPHALT CONCRETE INTERMEDIATE COURSE, TYPE I, (449), (UNDER GUARDRAIL), AS PER PLAN

S.R. 7: 20745 FT X 5 FT X 2" /12 /27 = 640.28 CY
RAMPS: 1674.3 FT X 3 FT X 2" /12 /27 = 31.01 CY
S.R. 243 & S.R. 775: 3364.5 FT X 6 FT X 2" /12 /27 = 124.61 CY

TOTAL CARRIED TO THE GENERAL SUMMARY = 796 CY

ITEM 209 - LINEAR GRADING, AS PER PLAN

S.R. 7: 20745 FT / 100 = 207.45 STA.
RAMPS: 1674.3 FT / 100 = 16.74 STA.
S.R. 243 & S.R. 775: 3364.5 FT / 100 = 33.65 STA.

TOTAL CARRIED TO THE GENERAL SUMMARY = 258 STA.

ITEM 606 - IMPACT ATTENUATOR, TYPE 1 (UNIDIRECTIONAL OR BIDIRECTIONAL)

THIS ITEM SHALL CONSIST OF FURNISHING AND INSTALLING ANY ONE OF THE TYPE 1 IMPACT ATTENUATORS AS LISTED ON THE OFFICE OF ROADWAY ENGINEERING'S WEB PAGE. INSTALLATION SHALL BE AT THE LOCATIONS SPECIFIED IN THE PLANS, IN ACCORDANCE WITH THE MANUFACTURER'S SPECIFICATIONS.

PAYMENT FOR THE ABOVE WORK SHALL BE MADE AT THE UNIT PRICE BID FOR ITEM 606, IMPACT ATTENUATOR, TYPE 1 (UNIDIRECTIONAL OR BIDIRECTIONAL), EACH, AND SHALL INCLUDE ALL LABOR, TOOLS, EQUIPMENT AND MATERIALS NECESSARY TO CONSTRUCT A COMPLETE AND FUNCTIONAL IMPACT ATTENUATOR SYSTEM, INCLUDING ALL RELATED TRANSITIONS, HARDWARE, REFLECTIVE SHEETING AND GRADING, NOT SEPARATELY SPECIFIED, AS REQUIRED BY THE MANUFACTURER.

ITEM 606 - IMPACT ATTENUATOR, TYPE 2 (UNIDIRECTIONAL)

THIS ITEM SHALL CONSIST OF FURNISHING AND INSTALLING ANY OF THE TYPE 2 IMPACT ATTENUATORS AS LISTED ON THE OFFICE OF ROADWAY ENGINEERING'S WEB PAGE (REFER TO THE POSTED SHOP DRAWINGS FOR THE MOST CURRENT APPROVED PRODUCT MODELS). WHEN BI-DIRECTIONAL DESIGNS ARE SPECIFIED, THE CONTRACTOR SHALL SUPPLY APPROPRIATE TRANSITIONS.

PAYMENT FOR THE ABOVE WORK SHALL BE MADE AT THE UNIT PRICE BID FOR ITEM 606, IMPACT ATTENUATOR, TYPE 2 [(SPEED (55 MPH), HAZARD WIDTH (69 INCHES)), (UNIDIRECTIONAL)], EACH, AND SHALL INCLUDE ALL LABOR, TOOLS, EQUIPMENT AND MATERIALS NECESSARY TO CONSTRUCT A COMPLETE AND FUNCTIONAL IMPACT ATTENUATOR SYSTEM, INCLUDING ALL RELATED BACKUPS/BACKSTOPS, TRANSITIONS, HARDWARE AND GRADING, NOT SEPARATELY SPECIFIED, AS REQUIRED BY THE MANUFACTURER. INSTALLATION SHALL BE AT THE LOCATIONS SPECIFIED IN THE PLANS, IN ACCORDANCE WITH THE MANUFACTURER'S SPECIFICATIONS.

SPRING DRAINS

THE FOLLOWING ESTIMATED QUANTITIES HAVE BEEN CARRIED TO THE GENERAL SUMMARY FOR USE AS DIRECTED BY THE ENGINEER FOR DRAINING ANY SPRINGS SHOWN IN THE PLAN OR ENCOUNTERED DURING CONSTRUCTION. THE FOLLOWING PIPE MATERIALS ARE PERMITTED: 707.33, 707.41, 707.42 or 707.45 PERFORATED PER 707.31.

CONSTRUCT SPRING DRAINS PER STANDARD CONSTRUCTION DRAWING DM-1.1 AND PAID FOR AT THE CONTRACT PRICE FOR:

ITEM 605 - 6" UNCLASSIFIED PIPE UNDERDRAINS
FOR SPRINGS _ _ _ _ _ _ _ _ _ _ _ _ _ _ _ 750 FT
ITEM 605 - AGGREGATE DRAINS FOR SPRINGS _ _ _ _ _ 1500 FT
ITEM 611 - PRECAST REINFORCED CONCRETE OUTLET _ _ _ 2 EACH

CROSSINGS AND CONNECTIONS TO EXISTING PIPES AND UTILITIES

WHERE PLANS PROVIDE FOR A PROPOSED CONDUIT TO BE CONNECTED TO, OR CROSS OVER OR UNDER AN EXISTING SEWER OR UNDERGROUND UTILITY, LOCATE THE EXISTING PIPES OR UTILITIES BOTH AS TO LINE AND GRADE BEFORE STARTING TO LAY THE PROPOSED CONDUIT.

IF IT IS DETERMINED THAT THE ELEVATION OF THE EXISTING CONDUIT, OR EXISTING APPURTENANCE TO BE CONNECTED, DIFFERS FROM THE PLAN ELEVATION OR RESULTS IN A CHANGE IN THE PLAN CONDUIT SLOPE, NOTIFY THE ENGINEER BEFORE STARTING CONSTRUCTION OF ANY PORTION OF THE PROPOSED CONDUIT WHICH WILL BE AFFECTED BY THE VARIANCE IN THE EXISTING ELEVATIONS.

IF IT IS DETERMINED THAT THE PROPOSED CONDUIT WILL INTERSECT AN EXISTING SEWER OR UNDERGROUND UTILITY IF CONSTRUCTED AS SHOWN ON THE PLAN, NOTIFY THE ENGINEER BEFORE STARTING CONSTRUCTION OF ANY PORTION OF THE PROPOSED CONDUIT WHICH WOULD BE AFFECTED BY THE INTERFERENCE WITH AN EXISTING FACILITY.

PAYMENT FOR ALL THE OPERATIONS DESCRIBED ABOVE IS INCLUDED IN THE CONTRACT PRICE FOR THE PERTINENT 611 CONDUIT ITEM.

FARM DRAINS

PROVIDE UNOBSTRUCTED OUTLETS TO ALL FARM DRAINS ENCOUNTERED DURING CONSTRUCTION. REPLACE EXISTING COLLECTORS WHICH ARE LOCATED BELOW THE ROADWAY DITCH ELEVATIONS, AND WHICH CROSS THE ROADWAY WITHIN THE (RIGHT OF WAY)(CONSTRUCTION) LIMITS WITH ITEM 611, CONDUIT, TYPE B, ONE COMMERCIAL SIZE LARGER THAN THE EXISTING CONDUIT.

OUTLET EXISTING COLLECTORS AND ISOLATED FARM DRAINS, WHICH ARE ENCOUNTERED ABOVE THE ELEVATION OF ROADWAY DITCHES INTO THE ROADWAY.

DITCH USING ITEM 611, TYPE F CONDUIT. THE OPTIMUM OUTLET ELEVATION IS ONE FOOT ABOVE THE FLOWLINE ELEVATION OF THE DITCH. INTERCEPT LATERAL FIELD TILES WHICH CROSS THE ROADWAY WITH ITEM 611, TYPE E CONDUIT, AND CARRY IN A LONGITUDINAL DIRECTION TO AN ADEQUATE OUTLET OR ROADWAY CROSSING.

THE LOCATION, TYPE, SIZE AND GRADE OF REPLACEMENTS IS DETERMINED BY THE ENGINEER AND PAYMENT MADE ON FINAL MEASUREMENTS.

PROVIDE EROSION CONTROL PADS AT THE OUTLET END OF ALL FARM DRAINS PER STANDARD CONSTRUCTION DRAWING DM-1.1, EXCEPT WHEN THEY OUTLET INTO A DRAINAGE STRUCTURE.

PAYMENT FOR THE EROSION CONTROL PADS AND ANY NECESSARY BENDS OR BRANCHES IS INCLUDED FOR PAYMENT IN THE PERTINENT CONDUIT ITEMS.

THE FOLLOWING ESTIMATED QUANTITIES HAVE BEEN INCLUDED IN THE GENERAL SUMMARY FOR THE WORK NOTED ABOVE:

ITEM 611 - 6" CONDUIT, TYPE B _ _ _ _ _ _ _ _ _ _ 150 FT
ITEM 611 - 6" CONDUIT, TYPE E _ _ _ _ _ _ _ _ _ _ 150 FT
ITEM 611 - 6" CONDUIT, TYPE F _ _ _ _ _ _ _ _ _ _ 150 FT
ITEM 601 - ROCK CHANNEL PROTECTION TYPE C
WITH FILTER _ _ _ _ _ _ _ _ _ _ _ _ _ 10 CY

REVIEW OF DRAINAGE FACILITIES

PRIOR TO THE START OF WORK AND AGAIN BEFORE FINAL ACCEPTANCE, PERFORM AN INSPECTION WITH REPRESENTATIVES OF THE DEPARTMENT, CONTRACTOR AND LOCALS OF ALL EXISTING DRAINAGE FACILITIES THAT ARE TO REMAIN IN SERVICE WHICH MAY BE AFFECTED BY THE WORK. THE CONDITION OF THE EXISTING CONDUITS AND THEIR APPURTENANCES IS DETERMINED FROM FIELD OBSERVATIONS. RECORDS OF THE INSPECTION ARE MAINTAINED BY THE DEPARTMENT.

CONFIRM ALL EXISTING SEWERS INSPECTED INITIALLY BY THE ABOVE-MENTIONED PARTIES ARE MAINTAINED AND LEFT IN A CONDITION COMPARABLE TO THAT DETERMINED BY THE ORIGINAL INSPECTION. THE CONTRACTOR IS RESPONSIBLE TO CORRECT ANY CHANGE IN THE CONDITION RESULTING FROM THEIR OPERATIONS AS DIRECTED AND APPROVED BY THE ENGINEER.

PAYMENT FOR ALL OPERATIONS DESCRIBED ABOVE IS INCLUDED IN THE CONTRACT PRICE FOR THE PERTINENT 611 CONDUIT ITEMS.

EXISTING SUBSURFACE DRAINAGE

PROVIDE UNOBSTRUCTED OUTLETS FOR ALL EXISTING UNDERDRAINS OR AGGREGATE DRAINS ENCOUNTERED DURING CONSTRUCTION.

PROVIDE AN OUTLET PER STANDARD CONSTRUCTION DRAWING DM-1.1 FOR ALL UNDERDRAINS THAT OUTLET TO A SLOPE. UNDERDRAINS THAT CAN BE CONNECTED TO THE NEW OR EXISTING UNDERDRAINS AT THE END OF THE PROJECT LIMITS AS WELL AS ALL NECESSARY BENDS OR BRANCHES REQUIRED FOR CONNECTION ARE INCLUDED IN THE BASIS OF PAYMENT FOR UNCLASSIFIED PIPE UNDERDRAINS.

THE FOLLOWING ESTIMATED QUANTITIES HAVE BEEN INCLUDED IN THE GENERAL SUMMARY FOR THE WORK NOTED ABOVE:

ITEM 601 - TIED CONCRETE BLOCK MAT, WITH TYPE I UNDERLAYMENT _ _ _ _ _ 4 SY
ITEM 605 - AGGREGATE DRAINS _ _ _ _ _ _ _ _ _ _ _ 150 FT
ITEM 611 - 6" CONDUIT, TYPE F _ _ _ _ _ _ _ _ _ _ _ 100 FT
ITEM 611 - PRECAST REINFORCED CONCRETE OUTLET_ _ _ 2 EACH
ITEM 605 - 6" UNCLASSIFIED PIPE UNDERDRAINS_ _ _ _ 1500 FT

DRAFT Stage 3 - Not for Construction 09/23/2024

CALCULATED SLP CHECKED ALB

GENERAL NOTES

LAW-7-2.17

36
1247

U:\173608714\LAW\75923\roadway\sheets\75923GN003-2B.dgn 5/21/2024 4:48:35 PM SLParker

SEEDING AND MULCHING

THE FOLLOWING QUANTITIES ARE PROVIDED TO PROMOTE GROWTH AND CARE OF PERMANENT SEEDED AREAS:

ITEM 659 - SOIL ANALYSIS TEST _ _ _ _ _ _ _ _ . 14 EACH
ITEM 659 - TOPSOIL _ _ _ _ _ _ _ _ _ _ _ _ _ _ 131277 CY
ITEM 659 - REPAIR SEEDING AND MULCHING _ _ _ _ 59225 SY
ITEM 659 - INTER-SEEDING _ _ _ _ _ _ _ _ _ _ . 59225 SY
ITEM 659 - COMMERCIAL FERTILIZER _ _ _ _ _ _ . 165 TON
ITEM 659 - LIME _ _ _ _ _ _ _ _ _ _ _ _ _ _ . 244.73 AC
ITEM 659 - WATER _ _ _ _ _ _ _ _ _ _ _ _ _ _ 6556 M GAL
ITEM 659 - MOWING _ _ _ _ _ _ _ _ _ _ _ _ _ _ 2665 M SF

SEEDING AND MULCHING SHALL BE APPLIED TO ALL AREAS OF EXPOSED SOIL BETWEEN THE RIGHT-OF-WAY LINES, AND WITHIN THE CONSTRUCTION LIMITS FOR AREAS OUTSIDE THE RIGHT- OF-WAY LINES COVERED BY WORK AGREEMENT OR SLOPE EASEMENT. QUANTITY CALCULATIONS FOR SEEDING AND MULCHING ARE BASED ON THESE LIMITS.

POST CONSTRUCTION STORM WATER TREATMENT

THIS PLAN UTILIZES STRUCTURAL BEST MANAGEMENT PRACTICES (BMP'S) FOR POST CONSTRUCTION STORM WATER TREATMENT.

VEGETATED FILTER STRIP

THIS PLAN UTILIZES VEGETATED FILTER STRIP(S) FOR POST CONSTRUCTION STORM WATER TREATMENT. PLACE EITHER ITEM 660 SODDING OR ITEM 659 SEEDING AND MULCHING WITH A 4-INCH LIFT OF TOPSOIL AND ITEM 670, SLOPE EROSION PROTECTION TO ALL DISTURBED AREAS DESIGNATED AS VEGETATED FILTER STRIPS, THE EDGE OF SHOULDER, AND THE FORESLOPE AS SPECIFIED IN THE PLANS.

THE FOLLOWING QUANTITIES HAVE BEEN CARRIED TO THE GENERAL SUMMARY FOR PROVIDING THE VEGETATED FILTER STRIPS AS SHOWN ON SHEET 87.

ITEM 659 - TOPSOIL _ _ _ _ _ _ _ _ _ _ _ _ _ _ _ 468 CY
ITEM 670 - SLOPE EROSION PROTECTION _ _ _ _ _ 4207 SY

VEGETATED BIOFILTER

THIS PLAN UTILIZES VEGETATED BIOFILTER(S) FOR POST CONSTRUCTION STORM WATER TREATMENT. PLACE EITHER ITEM 660 SODDING OR ITEM 659 SEEDING AND MULCHING WITH A 4-INCH LIFT OF TOPSOIL AS SHOWN IN THE PLANS TO ANY DISTURBED AREA ON THE SHOULDER AND FORESLOPE DRAINING TO A VEGETATED BIOFILTER. THE DITCH FOR EACH VEGETATED BIOFILTER SHALL BE TRAPEZOIDAL, AS SHOWN IN THE PLAN CROSS SECTIONS. PROVIDE ITEM 670 AS SPECIFIED IN THE PLANS.

EXTENDED DETENTION BASIN

THIS PLAN UTILIZES EXTENDED DETENTION BASIN(S) FOR POST CONSTRUCTION STORM WATER TREATMENT. DETENTION BASINS MAY BE USED AS SEDIMENT CONTROL DEVICES DURING CONSTRUCTION. FOLLOWING STABILIZATION OF THE TRIBUTARY AREA, FINAL GRADING OF THE DETENTION BASIN MUST MATCH THE PLANS. THE DETENTION BASIN OUTLET STRUCTURE FOR CONSTRUCTION SEDIMENT CONTROL MUST BE REMOVED AND THE OUTLET STRUCTURE MUST BE MADE TO MATCH THE DESIGN SHOWN IN THE PLANS.

ITEM 659 - TOPSOIL, AS PER PLAN

THE CONTRACTOR SHALL EXCAVATE FOR AND PLACE 12" OF TOPSOIL IN THE AREAS OF THE VEGETATED BIOFILTERS THAT HAVE BEEN IDENTIFIED IN THE PLANS.

ALL LABOR, EQUIPMENT AND MATERIALS NEEDED TO COMPLETE THE WORK, INCLUDING EXCAVATION AND DISPOSAL, SHALL BE INCLUDED IN THE PRICE BID FOR ITEM 659 - TOPSOIL, AS PER PLAN.

THE FOLLOWING TABLE HAS IDENTIFIED THE LOCATIONS AND QUANTITIES WHERE THE WORK ABOVE APPLIES.

STATION	TO	STATION	SIDE	ITEM 659 - TOPSOIL, AS PER PLAN (CY)
175+00.00	-	180+30.00	LT.	197
223+50.00	-	226+50.00	LT.	78
307+00.00	-	315+00.00	LT.	297
327+00.00	-	334+50.00	LT.	278
343+00.00	-	351+00.00	LT.	297
351+00.00	-	360+00.00	RT.	300
64+74.00	-	391+50.00	LT.	294
TOTAL CARRIED TO GENERAL SUMMARY				1741

MATCH LINES ON CROSS SECTIONS

THE INTENT OF THE MATCH LINE IS TO SHOW THE RELATIONSHIP OF THE PROPOSED GRADING BETWEEN TWO PROPOSED ROADS. ADJUSTMENTS IN THE FIELD MAY BE NECESSARY.

ITEM 605 - AGGREGATE DRAINS

AGGREGATE DRAINS SHALL BE PLACED AT 50 FOOT INTERVALS ON EACH SIDE OF NORMAL CROWNED SECTIONS, STAGGERED SO THAT EACH DRAIN IS 25 FEET FROM THE ADJACENT DRAIN ON THE OPPOSITE SIDE, AND AT 25 FOOT INTERVALS ON THE LOW SIDE ONLY OF SUPERELEVATED SECTIONS. AN AGGREGATE DRAIN SHALL BE PLACED AT THE LOW POINT OF EACH SAG VERTICAL CURVE.

ROAD NAME	NUMBER OF AGG. DRAINS	AVG. LENGTH (FT.)	TOTAL (FT.)
BRENTWOOD EMERGENCY ACCESS	37	8	296
HENSON HOLLOW EMERGENCY ACCESS	10	11	110
LYNN LANE	16	10	160
DOGWOOD LANE EXTENSION	14	8	112
C.R. 69	184	11	2024
C.R. 118	19	11	209
C.R. 2	30	16	480
TOTAL CARRIED TO THE GENERAL SUMMARY			3391

ITEM 611 - CATCH BASIN, NO. 5A, AS PER PLAN
ITEM 611 - CATCH BASIN, NO. 8A, AS PER PLAN

THE CONTRACTOR IS TO PROVIDE CATCH BASINS IN ACCORDANCE WITH ITEM 611 IN THE CONSTRUCTION AND MATERIALS SPECIFICATIONS EXCEPT THE CATCH BASIN SHALL BE PROVIDED WITH THE BASE WIDTH AS INDICATED IN THE PLANS. THE CONTRACTOR SHALL FURNISH ALL LABOR, EQUIPMENT AND MATERIALS NECESSARY AND SHALL BE INCLUDED IN THE UNIT PRICE BID PER ITEM 611 - CATCH BASIN, NO. 5A, AS PER PLAN OR ITEM 611 - CATCH BASIN NO. 8A, AS PER PLAN.

ITEM 601- SLOPE PROTECTION, MISC.: SEEDING AND EROSION CONTROL WITH TURF REINFORCING MAT, TYPE 3 AND PERCUSSION DRIVEN EARTH ANCHORS

THE SLOPE PROTECTION SHALL CONSIST OF SEEDING AND EROSION CONTROL WITH TURF REINFORCING MAT, TYPE 3 WITH THE FOLLOWING ADDITIONAL REQUIREMENTS, FURNISHED AND INSTALLED ACCORDING TO ITEM 836.

- TENSILE STRENGTH (MARV) OF 4,000 X 3,000 LB/FT PER ASTM D 6818
- UV RESISTANCE % STRENGTH RETAINED OF 90% AT 6000 HR PER ASTM D 4355
- LIGHT PENETRATION MAX 10% PER ASTM D 6567

PERCUSSION DRIVEN EARTH ANCHORS AND SECURING PINS SHALL BE FURNISHED AND INSTALLED OVER TOP OF THE REINFORCING MAT. THE PERCUSSION DRIVEN EARTH ANCHORS AND SECURING PINS SHOULD HAVE THE FOLLOWING MINIMUM PROPERTIES AND REQUIREMENTS:

- TYPICAL ANCHOR WORKING LOAD UP TO 2,000 LBS.
- LOAD BEARING PLATE/HPTRM PULL-THROUGH STRENGTH OF 2,800 LB.
- PERCUSSION DRIVEN EARTH ANCHORS: VERTICAL ANCHOR SPACING OF 4 FEET (ALONG THE SLOPE FACE) AND 4 FEET HORIZONTAL (ACROSS THE SLOPE FACE).
- ANCHOR EMBEDMENT DEPTH 9 FT.
- SECURING PIN SHOULD BE A MINIMUM OF 0.2 INCH DIAMETER STEEL WITH A 1.5 INCH STEEL WASHER AT THE HEAD OF THE PIN.
- SECURING PINS: VERTICAL PIN SPACING OF 2 FEET (ALONG THE SLOPE FACE) AND 2 FEET HORIZONTAL (ACROSS THE SLOPE FACE).
- SECURING PIN LENGTH OF 18 INCHES.

PAYMENT SHALL BE MADE AT THE CONTRACT UNIT PRICE PER SQUARE YARD FOR ITEM 601 - SLOPE PROTECTION, MISC.: SEEDING AND EROSION CONTROL WITH TURF REINFORCING MAT, TYPE 3 AND PERCUSSION DRIVEN EARTH ANCHORS AND SHALL INCLUDE ALL LABOR, MATERIAL, EQUIPMENT AND INCIDENTALS NECESSARY TO PERFORM THE WORK.

ITEM 607 - FENCE, MISC.: GATE, AS PER PLAN

THE GATE AND ALL APPURTENANCES INCLUDING EXCAVATION AND CONCRETE SHALL BE CONSTRUCTED WHERE SPECIFIED IN THE PLANS, PER MISCELLANEOUS DETAIL BELOW AND AS DIRECTED BY THE ENGINEER. KEYS SHALL BE PROVIDED TO THE ODOT, DISTRICT 9 OFFICE. PAYMENT FOR ALL WORK SHALL BE INCLUDED IN THE PRICE BID PER ITEM 607 - FENCE, MISC.: GATE, AS PER PLAN.

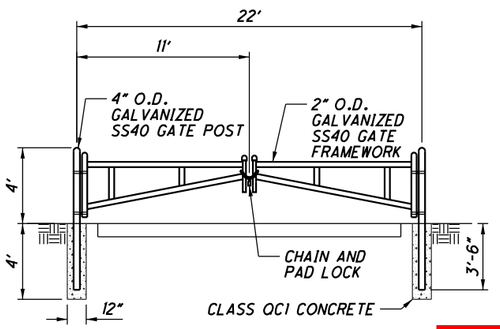

BARRICADE GATE DETIAL
N.T.S.

STA. 13+80.0 AND STA. 22+50.00, BRENTWOOD EMRGENCY ACCESS DRIVE

ITEM SPECIAL - MAILBOX SUPPORT

THIS WORK SHALL CONSIST OF FURNISHING AND ERECTING MAILBOX SUPPORTS AND ANY ASSOCIATED MOUNTING HARDWARE IN ACCORDANCE WITH PLAN DETAILS, AND ATTACHING AN OWNER-SUPPLIED MAILBOX AT LOCATIONS SPECIFIED IN THE PLAN, OR OTHERWISE ESTABLISHED BY THE ENGINEER.

WOOD POSTS SHALL BE NOMINAL 4 INCHES BY 4 INCHES SQUARE OR 4.5 INCHES DIAMETER ROUND, AND CONFORM TO 710.14.

STEEL POSTS SHALL BE NOMINAL PIPE SIZE 2 INCHES I.D., AND CONFORM TO AASHTO M 181.

ALL HARDWARE INCLUDING BUT NOT LIMITED TO PLATES, SCREWS, BOLTS, AND ETC. SHALL BE COMMERCIAL-GRADE GALVANIZED STEEL.

POSTS SHALL BE SET PER THE FIRST PARAGRAPH OF 606.03, AND SHALL IN NO INSTANCE BE ENCASED IN CONCRETE.

SUPPORT HARDWARE SHALL ACCOMMODATE EITHER A SINGLE OR A DOUBLE MAILBOX INSTALLATION, AND NO MORE THAN TWO BOXES MAY BE MOUNTED ON A SINGLE POST.

THE MAILBOX SHALL BE SECURELY AND NEATLY ATTACHED BY THE CONTRACTOR TO THE NEW SUPPORT. THE CONTRACTOR SHALL FURNISH ALL NECESSARY ATTACHMENT HARDWARE (NUTS, BOLTS, PLATES, SPACERS, AND WASHERS) AS NECESSARY TO ACCOMMODATE THE COMPLETE INSTALLATION.

IN THE ABSENCE OF A NEW BOX SUPPLIED BY THE OWNER, THE CONTRACTOR SHALL SALVAGE THE EXISTING BOX AND PLACE IT ON THE NEW SUPPORT. DUE CARE SHALL BE EXERCISED IN SUCH AN OPERATION, AND THE CONTRACTOR SHALL BE RESPONSIBLE FOR REPAIRING OR REPLACING ANY BOX DAMAGED BY IMPROPER HANDLING ON HIS PART, AS JUDGED AND DIRECTED BY THE ENGINEER.

THE CONTRACTOR SHALL BE RESPONSIBLE FOR COORDINATING WITH THE LOCAL POST MASTER REGARDING THE TIMING OF THE MOVEMENT OF ANY MAILBOX TO A NEW LOCATION.

PAYMENT UNDER THIS ITEM SHALL BE LIMITED TO FINAL PERMANENT INSTALLATIONS. TEMPORARY INSTALLATIONS SHALL BE IN ACCORDANCE WITH 107.10. HOWEVER, THE SAME MATERIAL AND SIZE LIMITATIONS AS FOR PERMANENT INSTALLATIONS SHALL APPLY.

MAILBOX SUPPORTS, COMPLETE IN PLACE, WILL BE PAID FOR AT THE CONTRACT UNIT PRICE PER EACH, FOR ITEM SPECIAL MAILBOX SUPPORT SYSTEM, (SINGLE) (DOUBLE).

DRAFT Stage 3 - Not for Construction 09/23/2024

CALCULATED SLP CHECKED ALB

GENERAL NOTES

LAW-7-2.17

U:\173608714\LAW\75923\roadway\sheets\75923GN004-2B.dgn 5/21/2024 4:48:36 PM SLParker

EMBANKMENTS - PERMISSIBLE RATES OF CONSTRUCTION

EMBANKMENTS AT THE FOLLOWING LOCATIONS SHALL BE CONSTRUCTED USING NORMAL RATES OF CONSTRUCTION UP THE TO ELEVATIONS LISTED IN THE TABLE BELOW. ABOVE THESE MAXIMUM ELEVATIONS, THE SPECIFIED RATES OF CONSTRUCTION ARE REQUIRED TO INCREASE SHORT TERM SLOPE STABILITY FACTORS OF SAFETY TO ACCEPTABLE LEVELS:

STATION ANALYZED	MAX EMBANKMENT ELEVATION USING NORMAL CONSTRUCTION RATES (FEET)	PERMISSIBLE CONSTRUCTION RATE (FEET/WEEK)	APPROX. STATION INTERVAL FOR RATE CONSTRUCTION
136+00	548	13	136+25 to 146+00
160+00	578	10.7	148+00 to 162+00
219+00	605	3.2	215+00 to 228+50
293+00	545	5	289+00 to 295+00
322+00	609	3.6	316+00 to 324+00
329+00	590	1.3	324+50 to 332+50
340+00	623	11.2	338+50 to 342+00
371+00	593	4.6	342+00 to 374+00
REINFORCED SLOPES			
198+00	565	6.1	196+75 to 199+87
297+68	549	16.4	296+75 to 298+58
300+81	549	16.3	300+06 to 301+00
377+50	573	8.2	376+60 to 378+34, Ramp 1 376+35 to 377+94

ITEM 203 - EMBANKMENT, AS PER PLAN (TYPE C)

THIS ITEM SHALL CONSIST OF PROVIDING AND PLACEMENT OF THE DRAINAGE LAYER AS SHOWN IN THE CROSS-SECTIONS. THE DRAINAGE LAYER MUST BE CONSTRUCTED TO PREVENT INTERNAL EROSION OR PIPING OF THE EMBANKMENT DURING OR AFTER A FLOOD EVENT. ODOT ITEM 703 MAY MEET THESE CRITERIA FOR AN EMBANKMENT CONSTRUCTED USING PREDOMINATELY COHESIVE MATERIALS. THE DRAINAGE LAYER SHOULD CONSIST OF A CRUSHED ODOT ITEM 703 (NO. 2 STONE) AND BE COMPACTED AS PER ITEM 203. SANDSTONE OR SILT STONE MAY BE USED IF THE MATERIAL HAS A SLAKE DURABILITY INDEX GREATER THAN 90 PERCENT ACCORDING TO ASTM D 4644-87. A 6 INCH LAYER OF ITEM 304 AND ITEM 712.09 TYPE A GEOTEXTILE FABRIC WITH AN AOS LESS THAN OR EQUAL TO 0.3 MM SHOULD BE PLACED ABOVE AND BELOW THE DRAINAGE LAYER TO ASSIST SEPARATION OF THE EMBANKMENT SOIL FROM THE DRAINAGE MATERIAL. THE DRAINAGE LAYER SHALL BE CONSTRUCTED TO A TOP ELEVATION OF 557.

PAYMENT FOR THE ABOVE WORK INCLUDING ALL LABOR, EQUIPMENT AND MATERIALS SHALL BE PAID FOR AT THE CONTRACT PRICE PER CUBIC YARD OF ITEM 203 - EMBANKMENT, AS PER PLAN (TYPE C).

CONSTRUCTED DEER PATH

THE CONTRACTOR IS TO CONSTRUCT A PROPOSED DEER PATH AT THE LOCATIONS LISTED IN THE TABLE BELOW AND ACCORDING TO THE DETAIL BELOW. THE PATH HAS NOT BEEN SHOWN IN IT'S ENTIRETY IN THE PLANS, BUT QUANTITIES HAVE BEEN INCLUDED TO PROVIDE A DEER PATH THAT EXTENDS TO THE LIMITS OF THE ROCK CHANNEL PROTECTION AT THE BRIDGE ABUTMENTS AND TRANSITIONED DOWN TO NATURAL GROUND.

THE FOLLOWING QUANTITIES HAVE BEEN CARRIED TO THE GENERAL SUMMARY TO COMPLETE THIS WORK.

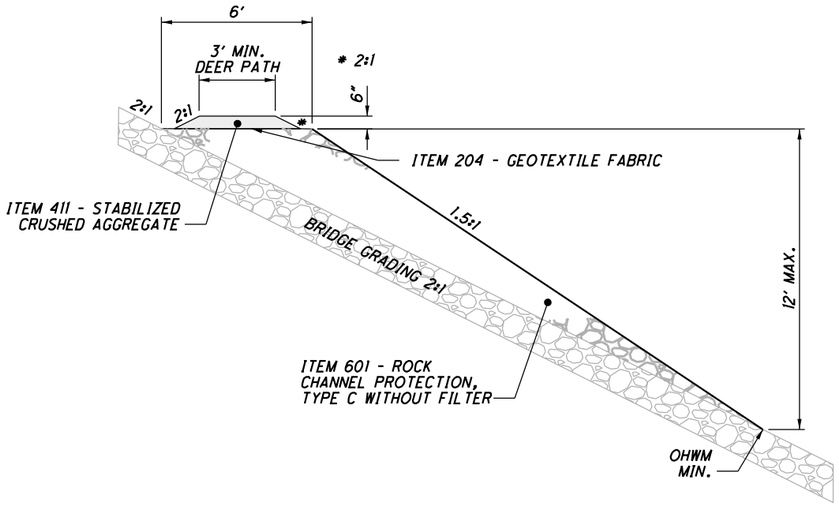

DEER PASSAGE THROUGH RCP

LOCATION	LENGTH	TOP OF ROCK CHANNEL PROTECTION ELEVATION	204 GEOTEXTILE FABRIC (SY)	411 STABILIZED CRUSHED AGGREGATE (CY)	601 ROCK CHANNEL PROTECTION, TYPE C WITHOUT FILTER (CY)
S.R. 7 - BRIDGE LAW-7-0711P REAR ABUTMENT	200	561	111.11	14.81	266.67
S.R. 7 - BRIDGE LAW-7-0711P FORWARD ABUTMENT	157	561	87.22	11.63	209.33
S.R. 7 - BRIDGE LAW-7-0713L/R REAR ABUTMENT	248	561	137.78	18.37	330.67
S.R. 7 - BRIDGE LAW-7-0713L/R FORWARD ABUTMENT	330	561	183.33	24.44	440.00
TOTALS			519.44	69.26	1246.67

EMBANKMENTS - REINFORCED SOIL SLOPES

CONSTRUCT REINFORCED SOIL SLOPE ACCORDING TO SUPPLEMENTAL SPECIFICATION 863.

PRIMARY REINFORCEMENT TO BE ITEM 863 UNIAXIAL OR BIAXIAL GEOGRID TYPE P1 AND P3.

SECONDARY REINFORCEMENT TO BE ITEM 863 BIAXIAL GEOGRID TYPE S1.

SECONDARY REINFORCEMENT SPACING OF 1 FOOT AND WIDTH OF 6 FEET.

REINFORCEMENT NOT WRAPPED AT SLOPE FACE.

ESTIMATED GEOGRID QUANTITIES WERE BASED ON THE MAXIMUM FILL SECTION. GEOGRID LAYERS CAN BE DISCONTINUED WHEN EXITING GROUND IS HIGHER THAN THE GEOGRID LAYER ELEVATION. ACTUAL GEOGRID QUANTITIES WILL DEPEND ON THE AMOUNT OF UNDERCUTTING, BENCHING, AND SURFACE PREPARATION PERFORMED.

EMBANKMENTS AT THE FOLLOWING LOCATIONS SHALL BE REINFORCED WITH GEOGRID AS INDICATED IN THE FOLLOWING TABLES.

STA. 134+56 TO STA. 136+25				
ELEVATION	GEOGRID TYPE	EMBEDMENT LENGTH	863 GEOGRID, TYPE P1	863 GEOGRID, TYPE S1
		FT	SY	SY
525	P1	90	5280	
526	P1	90	5280	
527	P1	90	5280	
528	P1	85	4987	
529	P1	85	4987	
530	S1	6		352
531	S1	6		352
532	P1	50	2933	
533	S1	6		352
534	S1	6		352
535	P1	50	2933	
536	S1	6		352
537	S1	6		352
538	P1	50	2933	
539	S1	6		352
540	S1	6		352
541	P1	50	2933	
542	S1	6		352
543	S1	6		352
544	S1	6		352
545	S1	6		352
546	S1	6		352
547	P1	40	2347	
548	S1	6		352
549	S1	6		352
550	S1	6		352
551	S1	6		352
552	S1	6		352
553	P1	40	2347	
554	S1	6		352
555	S1	6		352
556	S1	6		352
557	S1	6		352
558	S1	6		352
559	P1	40	2347	
560	S1	6		352
561	S1	6		352
562	S1	6		352
563	S1	6		352
TOTALS CARRIED TO SHEET 41			44587	9504

DRAFT Stage 3 - Not for Construction
09/23/2024

CALCULATED SLP CHECKED ALB

GENERAL NOTES

LAW-7-2.17

U:\173608714\LAW\75923\roadway\sheets\75923GN005-2B.dgn 5/21/2024 4:48:37 PM SLParker

STA. 196+75 TO STA. 199+87				
ELEVATION	GEOGRID TYPE	EMBEDMENT LENGTH	863 GEOGRID, TYPE P1	863 GEOGRID, TYPE S1
		FT	SY	SY
541	P1	60	5627	
542	P1	60	5627	
543	P1	55	5158	
544	P1	55	5158	
545	P1	55	5158	
546	S1	6		563
547	S1	6		563
548	P1	45	4220	
549	S1	6		563
550	S1	6		563
551	P1	45	4220	
552	S1	6		563
553	S1	6		563
554	P1	45	4220	
555	S1	6		563
556	S1	6		563
557	P1	45	4220	
558	S1	6		563
559	S1	6		563
560	S1	6		563
561	S1	6		563
562	S1	6		563
563	P1	45	4220	
564	S1	6		563
565	S1	6		563
566	S1	6		563
567	S1	6		563
568	S1	6		563
569	P1	30	2813	
570	S1	6		563
571	S1	6		563
572	S1	6		563
573	S1	6		563
574	S1	6		563
575	P1	30	2813	
576	S1	6		563
577	S1	6		563
578	S1	6		563
579	S1	6		563
580	S1	6		563
581	P1	30	2813	
582	S1	6		563
583	S1	6		563
584	S1	6		563
585	S1	6		563
586	S1	6		563
587	P1	30	2813	
TOTALS CARRIED TO SHEET 41			59080	18568

STA. 201+04 TO STA. 204+38.53				
ELEVATION	GEOGRID TYPE	EMBEDMENT LENGTH	863 GEOGRID, TYPE P1	863 GEOGRID, TYPE S1
		FT	SY	SY
536	P1	90	9190	
537	P1	90	9190	
538	P1	85	8679	
539	P1	85	8679	
540	P1	85	8679	
541	S1	6		613
542	S1	6		613
543	P1	60	6127	
544	S1	6		613
545	S1	6		613
546	P1	60	6127	
547	S1	6		613
548	S1	6		613
549	P1	60	6127	
550	S1	6		613
551	S1	6		613
552	P1	60	6127	
553	S1	6		613
554	S1	6		613
555	S1	6		613
556	S1	6		613
557	S1	6		613
558	P1	60	6127	
559	S1	6		613
560	S1	6		613
561	S1	6		613
562	S1	6		613
563	S1	6		613
564	P1	30	3063	
565	S1	6		613
566	S1	6		613
567	S1	6		613
568	S1	6		613
569	S1	6		613
570	P1	30	3063	
571	S1	6		613
572	S1	6		613
573	S1	6		613
574	S1	6		613
575	S1	6		613
576	P1	30	3063	
577	S1	6		613
578	S1	6		613
579	S1	6		613
580	S1	6		613
581	S1	6		613
582	P1	30	3063	
583	S1	6		613
TOTALS CARRIED TO SHEET 41			87305	20831

STA. 206+25 TO STA. 209+25				
ELEVATION	GEOGRID TYPE	EMBEDMENT LENGTH	863 GEOGRID, TYPE P1	863 GEOGRID, TYPE S1
		FT	SY	SY
571	P1	30	1000	
572	P1	30	1000	
573	P1	25	833	
574	P1	25	833	
575	P1	25	833	
576	S1	6		200
577	S1	6		200
578	P1	15	500	
579	S1	6		200
580	S1	6		200
581	P1	15	500	
582	S1	6		200
583	S1	6		200
584	P1	15	500	
585	S1	6		200
586	S1	6		200
587	P1	15	500	
588	S1	6		200
589	S1	6		200
590	S1	6		200
591	S1	6		200
592	S1	6		200
TOTALS CARRIED TO SHEET 41			6500	2600

STA. 296+75 TO STA. 298+58				
ELEVATION	GEOGRID TYPE	EMBEDMENT LENGTH	863 GEOGRID, TYPE P3	863 GEOGRID, TYPE S1
		FT	SY	SY
533	P3	90	5600	
534	P3	90	5600	
535	P3	85	5289	
536	P3	85	5289	
537	P3	85	5289	
538	S1	6		373
539	S1	6		373
540	P3	50	3111	
541	S1	6		373
542	S1	6		373
543	P3	50	3111	
544	S1	6		373
545	S1	6		373
546	P3	40	2489	
547	S1	6		373
548	S1	6		373
549	P3	40	2489	
550	S1	6		373
551	S1	6		373
552	S1	6		373
553	S1	6		373
554	S1	6		373
555	P3	40	2489	
556	S1	6		373
557	S1	6		373
558	S1	6		373
559	S1	6		373
560	S1	6		373
561	P3	40	2489	
562	S1	6		373
563	S1	6		373
564	S1	6		373
565	S1	6		373
566	S1	6		373
567	P3	40	2489	
568	S1	6		373
TOTALS CARRIED TO SHEET 41			45733	8960

STA. 300+06 TO STA. 301+00				
ELEVATION	GEOGRID TYPE	EMBEDMENT LENGTH	863 GEOGRID, TYPE P1	863 GEOGRID, TYPE S1
		FT	SY	SY
536	P1	80	2862	
537	P1	80	2862	
538	P1	75	2683	
539	P1	75	2683	
540	P1	75	2683	
541	S1	6		215
542	S1	6		215
543	P1	30	1073	
544	S1	6		215
545	S1	6		215
546	P1	30	1073	
547	S1	6		215
548	S1	6		215
549	P1	30	1073	
550	S1	6		215
551	S1	6		215
552	P1	30	1073	
553	S1	6		215
554	S1	6		215
555	S1	6		215
556	S1	6		215
557	S1	6		215
558	P1	30	1073	
559	S1	6		215
560	S1	6		215
561	S1	6		215
562	S1	6		215
563	S1	6		215
TOTALS CARRIED TO SHEET 41			19141	3864

DRAFT Stage 3 - Not for Construction 09/23/2024

CALCULATED SLP CHECKED ALB

GENERAL NOTES

LAW-7-2.17

U:\17360871 4\LAW\75923\roadway\sheets\75923GN006-2B.dgn 5/21/2024 4:48:38 PM SLParker

SR 7 STA. 376+60 TO STA. 378+34, RAMP I STA. 376+35 TO STA. 377+94				
ELEVATION	GEOGRID TYPE	EMBEDMENT LENGTH	863 GEOGRID, TYPE P3	863 GEOGRID, TYPE SI
		FT	SY	SY
544	P3	60	5573	
545	P3	60	5573	
546	P3	60	5573	
547	P3	60	5573	
548	P3	60	5573	
549	SI	6		557
550	SI	6		557
551	P3	60	5573	
552	SI	6		557
553	SI	6		557
554	P3	60	5573	
555	SI	6		557
556	SI	6		557
557	P3	60	5573	
558	SI	6		557
559	SI	6		557
560	P3	60	5573	
561	SI	6		557
562	SI	6		557
563	P3	60	5573	
564	SI	6		557
565	SI	6		557
566	SI	6		557
567	SI	6		557
568	P3	60	5573	
569	SI	6		557
570	SI	6		557
571	SI	6		557
572	SI	6		557
573	P3	60	5573	
574	SI	6		557
575	SI	6		557
576	SI	6		557
577	SI	6		557
578	P3	70	6502	
579	SI	6		557
580	SI	6		557
581	SI	6		557
582	SI	6		557
583	P3	70	6502	
584	SI	6		557
585	SI	6		557
586	SI	6		557
587	SI	6		557
588	P3	70	6502	
589	SI	6		557
590	SI	6		557
591	SI	6		557
592	SI	6		557
593	P3	70	6502	
594	SI	6		557
595	SI	6		557
596	SI	6		557
597	SI	6		557
598	P3	70	6502	
599	SI	6		557
600	SI	6		557
601	SI	6		557
602	SI	6		557
603	P3	70	6502	
604	SI	6		557
605	SI	6		557
606	SI	6		557
607	SI	6		557
608	P3	70	6502	
609	SI	6		557
610	SI	6		557
611	SI	6		557
612	SI	6		557
613	P3	70	6502	
614	SI	6		557
615	SI	6		557
616	SI	6		557
617	SI	6		557
618	P3	70	6502	
619	SI	6		557
620	SI	6		557
621	SI	6		557
622	SI	6		557
TOTALS CARRIED TO SHEET 41			125400	32325

S.R. 7 STA. 378+64 TO STA. 379+90, RAMP I STA. 378+30 TO STA. 379+75				
ELEVATION	GEOGRID TYPE	EMBEDMENT LENGTH	863 GEOGRID, TYPE PI	863 GEOGRID, TYPE SI
		FT	SY	SY
545	PI	65	3640	
546	PI	65	3640	
547	PI	60	3360	
548	PI	60	3360	
549	PI	60	3360	
550	SI	6		336
551	SI	6		336
552	PI	50	2800	
553	SI	6		336
554	PI	50	2800	
555	SI	6		336
556	SI	6		336
557	SI	6		336
558	PI	50	2800	
559	SI	6		336
560	SI	6		336
561	PI	50	2800	
562	SI	6		336
563	SI	6		336
564	SI	6		336
565	SI	6		336
566	SI	6		336
567	PI	30	1680	
568	SI	6		336
569	SI	6		336
570	SI	6		336
571	SI	6		336
572	SI	6		336
573	PI	30	1680	
574	SI	6		336
575	SI	6		336
576	SI	6		336
577	SI	6		336
578	SI	6		336
579	PI	30	1680	
580	SI	6		336
581	SI	6		336
582	SI	6		336
583	SI	6		336
584	SI	6		336
585	PI	30	1680	
586	SI	6		336
587	SI	6		336
588	SI	6		336
589	SI	6		336
590	SI	6		336
591	PI	30	1680	
592	SI	6		336
593	SI	6		336
594	SI	6		336
595	SI	6		336
596	SI	6		336
597	PI	30	1680	
598	SI	6		336
599	SI	6		336
600	SI	6		336
601	SI	6		336
602	SI	6		336
TOTALS CARRIED TO SHEET 41			38640	14448

SR 775 STA. 54+61.56 TO STA. 55+97				
ELEVATION	GEOGRID TYPE	EMBEDMENT LENGTH	863 GEOGRID, TYPE PI	863 GEOGRID, TYPE SI
		FT	SY	SY
545	PI	65	1957	
546	PI	65	1957	
547	PI	65	1957	
548	PI	65	1957	
549	PI	65	1957	
550	SI	6		181
551	SI	6		181
552	PI	60	1807	
553	SI	6		181
554	SI	6		181
555	PI	60	1807	
556	SI	6		181
557	SI	6		181
558	PI	60	1807	
559	SI	6		181
560	SI	6		181
561	PI	60	1807	
562	SI	6		181
563	SI	6		181
564	SI	6		181
565	SI	6		181
566	SI	6		181
567	PI	60	1807	
568	SI	6		181
569	SI	6		181
570	SI	6		181
571	SI	6		181
572	SI	6		181
573	PI	60	1807	
574	SI	6		181
575	SI	6		181
576	SI	6		181
577	SI	6		181
578	SI	6		181
579	PI	60	1807	
580	SI	6		181
581	SI	6		181
582	SI	6		181
583	SI	6		181
584	SI	6		181
585	PI	60	1807	
586	SI	6		181
587	SI	6		181
588	SI	6		181
589	SI	6		181
590	SI	6		181
591	PI	50	1506	
592	SI	6		181
593	SI	6		181
594	SI	6		181
595	SI	6		181
596	SI	6		181
597	PI	50	1506	
598	SI	6		181
599	SI	6		181
600	SI	6		181
601	SI	6		181
602	SI	6		181
603	PI	50	1506	
604	SI	6		181
605	SI	6		181
606	SI	6		181
607	SI	6		181
608	SI	6		181
609	PI	50	1506	
610	SI	6		181
611	SI	6		181
612	SI	6		181
613	SI	6		181
614	SI	6		181
615	PI	30	903	
616	SI	6		181
617	SI	6		181
618	SI	6		181
619	SI	6		181
620	SI	641		181

SR 775 STA. 54+61.56 TO STA. 55+97				
ELEVATION	GEOGRID TYPE	EMBEDMENT LENGTH	863 GEOGRID, TYPE PI	863 GEOGRID, TYPE SI
		FT	SY	SY
621	PI	30	903	
622	SI	6		181
623	SI	6		181
624	SI	6		181
TOTALS CARRIED TO SHEET 41			32068	11021

CALCULATED SLP CHECKED ALB

GENERAL NOTES

LAW-7-2.17

40
1247

DRAFT Stage 3 - Not for Construction 09/23/2024

U:\173608714\LAW\75923\roadway\sheets\75923GN007-2B.dgn 5/21/2024 4:48:39 PM SLParker

Ramp L STA. 380+25 TO STA. 389+25				
ELEVATION	GEOGRID TYPE	EMBEDMENT LENGTH	863 GEOGRID, TYPE PI	863 GEOGRID, TYPE SI
		FT	SY	SY
561	PI	35	3500	
562	PI	35	3500	
563	PI	30	3000	
564	PI	30	3000	
565	PI	30	3000	
566	SI	6		600
567	SI	6		600
568	PI	15	1500	
569	SI	6		600
570	SI	6		600
571	PI	15	1500	
572	SI	6		600
573	SI	6		600
574	PI	15	1500	
575	SI	6		600
576	SI	6		600
577	PI	15	1500	
578	SI	6		600
579	SI	6		600
580	SI	6		600
581	SI	6		600
582	SI	6		600
583	PI	15	1500	
584	SI	6		600
585	SI	6		600
586	SI	6		600
587	SI	6		600
588	SI	6		600
589	PI	15	1500	
590	SI	6		600
591	SI	6		600
592	SI	6		600
593	SI	6		600
594	SI	6		600
595	PI	15	1500	
596	SI	6		600
597	SI	6		600
598	SI	6		600
599	SI	6		600
600	SI	6		600
601	PI	15	1500	
602	SI	6		600
603	SI	6		600
604	SI	6		600
605	SI	6		600
606	SI	6		600
607	PI	15	1500	
608	SI	6		600
609	SI	6		600
610	SI	6		600
611	SI	6		600
612	SI	6		600
613	SI	6		600
614	SI	6		600
TOTALS CARRIED TO THIS SHEET			29500	24000

SR 775 STA. 57+75 TO STA. 61+25				
ELEVATION	GEOGRID TYPE	EMBEDMENT LENGTH	863 GEOGRID, TYPE PI	863 GEOGRID, TYPE SI
		FT	SY	SY
545	PI	150	11667	
546	PI	150	11667	
547	PI	150	11667	
548	PI	150	11667	
549	PI	150	11667	
550	PI	150	11667	
551	SI	6		467
552	PI	120	9333	
553	SI	6		467
554	PI	120	9333	
555	SI	6		467
556	PI	120	9333	
557	SI	6		467
558	PI	120	9333	
559	SI	6		467
560	PI	120	9333	
561	SI	6		467
562	PI	120	9333	
563	SI	6		467
564	PI	120	9333	
565	SI	6		467
566	SI	6		467
567	SI	6		467
568	SI	6		467
569	PI	120	9333	
570	SI	6		467
571	SI	6		467
572	SI	6		467
573	SI	6		467
574	PI	100	7778	
575	SI	6		467
576	SI	6		467
577	SI	6		467
578	SI	6		467
579	PI	100	7778	
580	SI	6		467
581	SI	6		467
582	SI	6		467
583	SI	6		467
584	PI	100	7778	
585	SI	6		467
586	SI	6		467
587	SI	6		467
588	SI	6		467
589	PI	100	7778	
590	SI	6		467
591	SI	6		467
592	SI	6		467
593	SI	6		467
594	PI	100	7778	
595	SI	6		467
596	SI	6		467
597	SI	6		467
598	SI	6		467
599	PI	100	7778	
600	SI	6		467
601	SI	6		467
602	SI	6		467
603	SI	6		467
604	PI	20	1556	
605	SI	6		467
606	SI	6		467
607	SI	6		467
608	SI	6		467
609	PI	20	1556	
610	SI	6		467
611	SI	6		467
612	SI	6		467
613	SI	6		467
614	PI	20	1556	
615	SI	6		467
616	SI	6		467
617	SI	6		467
618	SI	6		467
619	PI	20	1556	
620	SI	6		467
621	SI	6		467
622	SI	6		467
623	SI	6		467
624	SI	6		467
625	SI	6		467
626	SI	6		467
TOTALS CARRIED TO THIS SHEET			197556	27067

LOCATION	863 GEOGRID, TYPE PI	863 GEOGRID, TYPE P3	863 GEOGRID, TYPE SI
	SY	SY	SY
S.R. 7			
STA. 134+56 TO STA. 136+25	44587		9504
STA. 196+75 TO STA. 199+87	59080		18568
STA. 201+04 TO STA. 204+38.53	87305		20831
STA. 206+25 TO STA. 209+25	6500		2600
STA. 296+75 TO STA. 298+58		45733	8960
STA. 300+06 TO STA. 301+00	19141		3864
STA. 376+60 TO STA. 378+34 - S.R. 7 STA. 376+35 TO STA. 377+94 - RAMP I		125400	32325
STA. 378+64 TO STA. 379+90 - S.R. 7 STA. 378+30 TO STA. 379+75 - RAMP I	38640		14448
RAMP L			
STA. 380+25 TO STA. 389+25	29500		24000
S.R. 775			
STA. 57+75 TO STA. 61+25	197556		27067
TOTALS CARRIED TO GENERAL SUMMARY	482309	171133	162167

CALCULATED SLP CHECKED ALB

GENERAL NOTES

LAW-7-2.17

41
1247

DRAFT Stage 3 - Not for Construction 09/23/2024

U:\173608714\LAW\75923\roadway\sheets\75923GN008-2B.dgn 5/21/2024 4:48:40 PM SLParker

ITEM 614, MAINTAINING TRAFFIC

ACCESS TO ADJACENT PROPERTIES SHALL BE MAINTAINED AT ALL TIMES. THE CONTRACTOR SHALL COORDINATE WITH INDIVIDUAL PROPERTY OWNERS TO MAINTAIN ACCESS, IF THE PROPERTY IS NOT DIRECTLY ACCESSIBLE FOR ANY REASON DURING CONSTRUCTION.

UNLESS OTHERWISE SPECIFIED IN THE PLAN, A MINIMUM OF 1 LANE OF TRAFFIC IN EACH DIRECTION ON SR 7 SHALL BE MAINTAINED AT ALL TIMES BY USE OF EXISTING SR 7, THE COMPLETED SR 7 BYPASS, AND TEMPORARY SURFACES USING ITEMS 410 AND 614.

LENGTH AND DURATION OF LANE CLOSURES AND RESTRICTIONS SHALL BE AT THE APPROVAL OF THE ENGINEER. IT IS THE INTENT TO MINIMIZE THE IMPACT TO THE TRAVELING PUBLIC. LANE CLOSURES OR RESTRICTIONS OVER SEGMENTS OF THE PROJECT IN WHICH NO WORK IS ANTICIPATED WITHIN A REASONABLE TIME FRAME, AS DETERMINED BY THE ENGINEER, SHALL NOT BE PERMITTED. THE LEVEL OF UTILIZATION OF MAINTENANCE OF TRAFFIC DEVICES SHALL BE COMMENSURATE WITH THE WORK IN PROGRESS.

SEQUENCE OF CONSTRUCTION:
PHASE 1, WEST END: PERMANENTLY CLOSE MELODY LANE. CONSTRUCT SR 7 FROM THE WEST TERMINUS, AND WORK EAST.

PHASE 1, CENTER SECTION: CONSTRUCT SR 7 AND DEMOLISH PAVEMENT AS SHOWN IN THE PLAN. PRIOR TO CLOSING SR 243, THE CONTRACTOR SHOULD CONSTRUCT AS MUCH OFF-ROAD GRADING AND ROADWAY WORK ON TR 164 AS POSSIBLE, TO MINIMIZE THE AMOUNT OF TIME THAT TR 164 WILL NEED TO BE CLOSED. CLOSE SR 243 AND DETOUR TRAFFIC AS SHOWN ON SHEET 63. REOPEN CR 118, CR 2, AND TR 164 WITHIN 365 DAYS AFTER CLOSING SR 243, IN ACCORDANCE WITH PN 129.

PHASE 1, EAST END: CONSTRUCT BYPASS PAVEMENT, WHILE LEAVING THE EXISTING INTERSECTION OF SR 7 AT SR 775 OPEN AT ALL TIMES. CONSTRUCT TEMPORARY PAVEMENT TO TIE-IN EB BYPASS PAVEMENT WITH EXISTING SR 7, AS SHOWN IN THE PLAN. DO NOT INSTALL SURFACE ASPHALT COURSE FROM STA 309+50 TO END PROJECT.

PHASE 2, EAST END: OPEN THE BYPASS TO TRAFFIC. CLOSE SR 775 AND DETOUR TRAFFIC AS SHOWN ON SHEET 65. MAINTAIN 2-WAY TRAFFIC USING THE PROPOSED EASTBOUND BYPASS LANES CONSTRUCTED IN PHASE 1. COMPLETE CONSTRUCTION OF THE WB LANES ON THE BYPASS.

PHASE 3, EAST END: MAINTAIN 2-WAY TRAFFIC USING THE PROPOSED WESTBOUND BYPASS PAVEMENT. COMPLETE CONSTRUCTION OF SR 775 INTERCHANGE.

FINAL - COMPLETE FINAL SURFACING AND TRAFFIC CONTROL WORK.

THE CONTRACTOR SHALL PROVIDE, ERECT, AND MAINTAIN STANDARD 48 X 30 INCH ROAD CLOSED SIGNS, SIGN SUPPORTS, BARRICADES AND LIGHTS, AS DETAILED IN SCD MT-101.60 DURING PERIODS IN WHICH THE AFFECTED ROADS ARE CLOSED TO TRAFFIC.

ALL WORK AND TRAFFIC CONTROL DEVICES SHALL BE IN ACCORDANCE WITH C&MS 614 AND OTHER APPLICABLE PORTIONS OF THE SPECIFICATIONS, AS WELL AS THE OHIO MANUAL OF UNIFORM TRAFFIC CONTROL DEVICES.

OTHER WORK RESTRICTIONS

OUTSIDE OF THE WORK WINDOW PERMIITED FOR THE ROAD CLOSURE WITH DETOUR, NO WORK SHALL BE PERFORMED AND ALL EXISTING LANES SHALL BE OPEN TO TRAFFIC DURING THE FOLLOWING DESIGNATED HOLIDAYS OR EVENTS:

CHRISTMAS FOURTH OF JULY
NEW YEAR'S LABOR DAY
MEMORIAL DAY THANKSGIVING

THE PERIOD OF TIME THAT THE LANES ARE TO BE OPEN DEPENDS ON THE DAY OF THE WEEK ON WHICH THE HOLIDAY FALLS. THE FOLLOWING SCHEDULE SHALL BE USED TO DETERMINE THIS PERIOD.

HOLIDAY/EVENT CLOSURE SCHEDULE

DAY OF HOLIDAY OR EVENT	TIME ALL LANES MUST BE OPENED TO TRAFFIC
SUNDAY	12:00N ON FRIDAY THROUGH 6:00 AM MONDAY
MONDAY	12:00N ON FRIDAY THROUGH 6:00 AM TUESDAY
TUESDAY	12:00N ON MONDAY THROUGH 6:00 AM WEDNESDAY
WEDNESDAY	12:00N ON TUESDAY THROUGH 6:00 AM THURSDAY
THURSDAY	12:00N ON WEDNESDAY THROUGH 6:00 AM FRIDAY
THURSDAY (THANKSGIVING ONLY)	6:00AM ON WEDNESDAY THROUGH 6:00 AM MONDAY
FRIDAY	12:00N ON THURSDAY THROUGH 6:00 AM MONDAY
SATURDAY	12:00N ON FRIDAY THROUGH 6:00 AM MONDAY

DURING THE SAME PERIODS, MAINTAIN PEDESTRIAN ACCESS IF PEDESTRIAN ACCESS WAS PRESENT PRIOR TO CONSTRUCTION. NEWLY CONSTRUCTED LANE ADDITIONS, ONCE COMPLETED AND INITIALLY OPENED TO TRAFFIC, SHALL BE OPEN TO TRAFFIC DURING ALL SUBSEQUENT DESIGNATED HOLIDAYS AND SPECIAL EVENTS, AND RELATED PERIODS OF TIME, SPECIFIED ABOVE.

SHOULD THE CONTRACTOR FAIL TO MEET ANY OF THESE REQUIREMENTS, THE CONTRACTOR SHALL BE ASSESSED A DISINCENTIVE PER THE LANE VALUE CONTRACT (PN 127).

NOTICE OF CLOSURE SIGN

NOTICE OF CLOSURE SIGNS W20-H13 SHALL BE ERECTED BY THE CONTRACTOR PRIOR TO THE SCHEDULED ROAD OR RAMP CLOSURE IN ACCORDANCE WITH THE NOTICE OF CLOSURE TIME TABLE BELOW.

ITEM	DURATION OF CLOSURE	SIGN DISPLAYED TO THE PUBLIC
RAMP & ROAD CLOSURES	>= 2 WEEKS	14 CALENDAR DAYS PRIOR TO CLOSURE
	>12 HOURS & < 2 WEEKS	7 CALENDAR DAYS PRIOR TO CLOSURE
	<= 12 HOURS	2 BUSINESS DAYS PRIOR TO CLOSURE

THE SIGNS SHALL BE ERECTED ON THE RIGHT-HAND SIDE OF THE ROAD/RAMP FACING TRAFFIC. THEY SHALL BE PLACED SO AS NOT TO INTERFERE WITH THE VISIBILITY OF ANY OTHER TRAFFIC CONTROL SIGNS. ON ROADWAYS, THEY SHOULD BE ERECTED AT OR NEAR THE POINT OF CLOSURE. THE SIGNS MAY BE ERECTED ANYWHERE ON RAMPS AS LONG AS THEY ARE VISIBLE TO THE MOTORISTS USING THE RAMP. ON ENTRANCE RAMPS, THE SIGN SHALL BE ERECTED WELL IN ADVANCE OF THE MERGE AREA TO AVOID DISTRACTING MOTORISTS.

THE SIGN SHALL DISPLAY THE DATE OF THE CLOSURE IN MMM-DD FORMAT AND THE NUMBER OF DAYS OF THE CLOSURE, IF APPLICABLE. THE LAST LINE OF THE W20-H13 SIGN LISTS A PHONE NUMBER WHICH A MOTORIST MAY CALL FOR ADDITIONAL INFORMATION. THIS IS TO BE A SPECIFIC OFFICE WITHIN THE DISTRICT RATHER THAN THE GENERAL SWITCHBOARD NUMBER.

NOTIFICATION OF TRAFFIC RESTRICTIONS

THROUGHOUT THE DURATION OF THE PROJECT, THE CONTRACTOR SHALL NOTIFY THE PROJECT ENGINEER IN WRITING OF ALL TRAFFIC RESTRICTIONS AND UPCOMING MAINTENANCE OF TRAFFIC CHANGES. THE CONTRACTOR SHALL ENSURE THE WRITTEN NOTIFICATION IS SUBMITTED IN A TIMELY MANNER TO ALLOW THE PROJECT ENGINEER TO MEET THE REQUIRED TIME FRAMES SET FORTH IN THE TABLE BELOW TO INFORM THE SPECIAL HAULING PERMITS SECTION (HAULING.PERMITS@DOT.OHIO.GOV) AND THE DISTRICT PUBLIC INFORMATION OFFICE (PIO). THIS NOTIFICATION SHALL BE RECEIVED BY THE PROJECT ENGINEER PRIOR TO THE PHYSICAL SETUP OF ANY APPLICABLE SIGNS OR MESSAGE BOARDS.

INFORMATION SHOULD INCLUDE, BUT IS NOT LIMITED TO, ALL CONSTRUCTION ACTIVITIES THAT IMPACT OR INTERFERE WITH TRAFFIC AND SHALL LIST THE SPECIFIC LOCATION, TYPE OF WORK, ROAD STATUS, DATE AND TIME OF RESTRICTION, DURATION OF RESTRICTION, NUMBER OF LANES MAINTAINED, NUMBER OF LANES CLOSED, MINIMUM VERTICAL CLEARANCE, MINIMUM WIDTH OF DRIVABLE PAVEMENT, DETOUR ROUTES, IF APPLICABLE, AND ANY OTHER INFORMATION REQUESTED BY THE PROJECT ENGINEER.

ITEM	DURATION OF CLOSURE	NOTICE DUE TO THE OFFICE OF COMMUNICATIONS
RAMP & ROAD CLOSURES	>= 2 WEEKS	21 CALENDAR DAYS PRIOR TO CLOSURE
	>12 HOURS & < 2 WEEKS	14 CALENDAR DAYS PRIOR TO CLOSURE
	<= 12 HOURS	4 BUSINESS DAYS PRIOR TO CLOSURE
LANE CLOSURES AND RESTRICTIONS	>= 2 WEEKS	14 CALENDAR DAYS PRIOR TO CLOSURE
	< 2 WEEKS	2 BUSINESS DAYS PRIOR TO CLOSURE
START OF CONSTRUCTION AND TRAVEL PATTERN CHANGES		14 CALENDAR DAYS PRIOR TO IMPLEMENTATION

ANY UNFORESEEN CONDITIONS NOT SPECIFIED IN THE PLANS REQUIRING TRAFFIC RESTRICTIONS SHALL ALSO BE REPORTED TO THE PROJECT ENGINEER USING THE NOTICE TO OFFICE OF COMMUNICATIONS TIME TABLE.

ITEM 614 - WORKZONE RAISED PAVEMENT MARKER, AS PER PLAN

WORK ZONE RAISED PAVEMENT MARKERS, AS PER PLAN, AND THEIR INSTALLATION SHALL CONFORM TO C&MS 614 OR C&MS 621 AS SPECIFIED HEREIN.

* RAISED PAVEMENT MARKERS IN USE DURING THE SNOW-PLOWING SEASON SHALL CONFORM TO 621.

* RAISED PAVEMENT MARKERS IN USE DURING THE NON-SNOW-PLOW SEASON SHALL CONFORM TO EITHER 614 OR TO 621.

THE SNOW-PLOWING SEASON SHALL RUN FROM OCTOBER 15 THROUGH APRIL 1. IF PROJECT DELAYS, NOT THE FAULT OF ODOT, CAUSE THE WORK TO EXTEND INTO THE SNOW-PLOWING SEASON, THE CONTRACTOR SHALL BE RESPONSIBLE FOR REPLACING WORK ZONE RAISED PAVEMENT MARKERS (WZRPMS) CONFORMING TO C&MS 614, WITH RAISED PAVEMENT MARKERS CONFORMING TO 621, AS DETERMINED BY THE ENGINEER, AT THE CONTRACTOR'S EXPENSE.

THIS ITEM SHALL INCLUDE PURCHASE, INSTALLATION AND REMOVAL OF ITEM 614 WORK ZONE RAISED PAVEMENT MARKER, AS PER PLAN, INCLUDING FILLING OF ANY DEPRESSIONS CREATED IN THE PAVEMENT AS PER C&MS 621.08.

DRAFT Stage 3 - Not for Construction 09/23/2024

CALCULATED MJH CHECKED KAE

MAINTENANCE OF TRAFFIC GENERAL NOTES

LAW-7-2.17

4.2
12.4.7

C:\EEC\Projects\LAW-7(Stantec)\CADD\Phase 2B\MOT\Sheets\42-75923_MN001.dgn Sheet 5/15/2024 3:17:07 PM mhunt

LANE VALUE CONTRACT (PN 127)

THE CONTRACTOR SHALL BE ASSESSED DISINCENTIVES AS DESIGNATED IN THE LANE VALUE CONTRACT TABLE FOR EACH UNIT OF TIME THE DESCRIBED CRITICAL LANE/RAMP IS RESTRICTED FROM FULL USE BY THE TRAVELING PUBLIC WITHIN THE RESTRICTED TIME PERIOD. THE LANE VALUE CONTRACT TABLE IS PROVIDED BELOW. THE DISINCENTIVES WILL BE ASSESSED FOR ALL RESTRICTIONS OF THE CRITICAL WORK.

CRITICAL WORK IS SHOWN IN THE LANE VALUE CONTRACT TABLE. CRITICAL WORK IS DEFINED AS HAVING THE DESIGNATED SECTIONS OPEN TO UNRESTRICTED TRAFFIC AS SHOWN IN THE TABLE, OR THE ENTIRE PROJECT IF NOT OTHERWISE LISTED. UNRESTRICTED TRAFFIC IS DEFINED AS ALL TRAFFIC LANES BEING AVAILABLE FOR USE WITH SPECIFIED STRIPING AND SAFETY FEATURES IN PLACE.

LANE VALUE CONTRACT TABLE - LANE CLOSURES

SHEET NUMBER	ROUTE	MOVEMENT	RESTRICTED HOURS	DAYS	DISENCENTIVE (PER MINUTE)
57	SR 7	EB LT TURN LANE	2PM-6PM	WEEKDAYS	$70
			ALL HOURS	HOLIDAYS	
48	SR 7	2-WAY, 1-LANE	6AM-11AM	WEEKDAYS	$90
			ALL HOURS	HOLIDAYS	

LANE VALUE CONTRACT TABLE - DETOURS

SHEET NUMBER	ROUTE	ROUTE	DURATION (DAYS)	DISENCENTIVE AMOUNT PER DAY
63	SR 243	SR 7 TO SR 775 TO SR 217 TO SR 378	730	$4000
65	SR 775	SR 7 TO BYPASS TO SR 243 TO SR 378 TO SR 217	365	$5000

DUST CONTROL

THE CONTRACTOR SHALL FURNISH AND APPLY WATER FOR DUST CONTROL AS DIRECTED BY THE ENGINEER. THE FOLLOWING ESTIMATED QUANTITIES HAVE BEEN INCLUDED FOR DUST CONTROL PURPOSES:

ITEM 616 WATER 160,000 M. GAL.

ITEM 614 - DETOUR SIGNING

THE CONTRACTOR SHALL FURNISH, ERECT, MAINTAIN AND REMOVE DETOUR SIGNING SHOWN ON SHEETS 63 THRU 66. DETOUR SIGNS SHALL BE ERECTED AND/OR UNCOVERED PRIOR TO THE ROAD OR RAMP BEING CLOSED TO TRAFFIC BUT NO EARLIER THAN FOUR HOURS PRIOR TO THE CLOSURE. DETOUR SIGNS SHALL BE COVERED AND/OR REMOVED NO LATER THAN FOUR HOURS FOLLOWING THE ROAD OR RAMP RE-OPENING TO TRAFFIC.

PAYMENT FOR ALL MATERIAL, LABOR AND EQUIPMENT TO IMPLEMENT THE DETOUR SHALL BE INCLUDED IN THE LUMP SUM BID FOR ITEM 614, DETOUR SIGNING.

FLEXIBLE START WINDOW CONTRACT (PN 129)

THE CONTRACTOR HAS THE NUMBER OF CALENDAR DAYS DESIGNATED IN THE WINDOW CONTRACT TABLE IN WHICH TO COMPLETE ALL ITEMS OF CRITICAL WORK. THE WINDOW CONTRACT TABLE IS LOCATED IN THE PLAN BELOW. THE CONTRACTOR MAY BEGIN ANY TIME AS IDENTIFIED IN THE WINDOW CONTRACT TABLE AND MUST COMPLETE THE CRITICAL WORK WITHIN THE CALENDAR DAYS DESIGNATED IN THE WINDOW CONTRACT TABLE OR BY THE COMPLETION DATE LISTED IN THE PROPOSAL, WHICHEVER COMES FIRST. CRITICAL WORK IS SHOWN IN THE WINDOW CONTRACT TABLE. COMPLETION OF CRITICAL WORK IS DEFINED AS HAVING THE DESIGNATED SECTION OF WORK OPEN TO UNRESTRICTED TRAFFIC AS SHOWN IN THE TABLE, OR THE ENTIRE PROJECT IF NOT OTHERWISE LISTED. UNRESTRICTED TRAFFIC IS DEFINED AS ALL TRAFFIC LANES BEING AVAILABLE FOR USE AT THEIR FINAL DESIGN WIDTH WITH ALL MARKINGS, RPM'S, AND SAFETY FEATURES INSTALLED, ALONG WITH NO RESTRICTIONS WITHIN 2 FEET OF THE EDGE LINE ON THE SHOULDERS.

IF THE WORK IS NOT COMPLETED WITHIN THE CALENDAR DAYS DESIGNATED IN THE WINDOW CONTRACT TABLE, THE CONTRACTOR WILL BE SUBJECT TO DISINCENTIVES AS IDENTIFIED IN THE CONTRACT CRITICAL WORK TABLE.

108.06.C SHALL BE MODIFIED TO THE FOLLOWING AND SHALL BE APPLICABLE ONLY TO THE CRITICAL WORK (AS DEFINED IN THE WINDOW CONTRACT TABLE):

108.06.C EXTENSION TO THE COMPLETION DATE FOR WEATHER OR SEASONAL CONDITIONS. A WEATHER DAY FOR CRITICAL WORK IS DEFINED AS A WORKDAY THAT WEATHER REDUCED PRODUCTION BY MORE THAN 50 PERCENT ON ITEMS OF WORK ON THE CRITICAL PATH. SUBMIT A REQUEST FOR AN EXTENSION OF TIME FOR A LOST DAY DUE TO WEATHER WITHIN 2 DAYS OF OCCURRENCE. THE ENGINEER WILL EXTEND THE CALENDAR DAYS TO COMPLETE BY 1 CALENDAR DAY FOR EACH LOST DAY CAUSED DUE TO WEATHER.

FLEXIBLE START WINDOW CONTRACT

PROJECT WORK LOCATION	CALENDAR DAYS TO COMPLETE	DISINCENTIVE PER DAY	WORK WINDOW	
			START	END
SR 243 @ TR 164*	365 DAYS	$2,000	5/26/25	6/1/26

* ACCESS SHALL BE PROVIDED PROVIDED FROM SR 243 TO CR 69 (WITH FULL ACCESS TO CR2, AND CR 118) AT ALL TIMES, EXCEPT FOR THE TIME SHOWN IN THIS WINDOW CONTRACT.

DELINEATION OF PORTABLE BARRIER

BARRIER REFLECTORS AND OBJECT MARKERS SHALL BE INSTALLED ON ALL PORTABLE BARRIER (PB) USED FOR TRAFFIC CONTROL AND ON PERMANENT CONCRETE BARRIER (INCLUDING BRIDGE PARAPETS) LOCATED WITHIN 5 FEET OF THE EDGE OF THE ADJACENT TRAVEL LANE.

BARRIER REFLECTORS SHALL CONFORM TO C&MS 626, EXCEPT THAT THE SPACING SHALL BE AS PER TRAFFIC SCD MT-101.70. OBJECT MARKERS AND THEIR INSTALLATION SHALL CONFORM TO C&MS 614.03 AND SCD MT-101.70. WHEN THE PB CONTAINS GLARE SCREEN, ONE SET OF THREE VERTICAL STRIPES OF SHEETING SHALL BE CONSIDERED EQUIVALENT TO AN OBJECT MARKER, ONE-WAY.

INCREASED BARRIER DELINEATION, AS SPECIFIED HEREIN, SHALL BE INSTALLED ON ALL PB AND CONCRETE PERMANENT BARRIER LOCATED WITHIN 5 FEET OF THE EDGE OF THE TRAVELED LANE ALONG TAPERS AND TRANSITION AREAS AND ALONG CURVES (OUTSIDE ONLY) WITH DEGREE OF CURVATURE GREATER THAN OR EQUAL TO 3 DEGREES.

THE INCREASED BARRIER DELINEATION SHALL CONSIST OF EITHER DELINEATION PANELS OR THE TRIPLE STACKING OF WORK ZONE BARRIER REFLECTORS.

DELINEATION PANELS SHALL CONSIST OF PANELS OF DELINEATION, APPROXIMATELY 34 INCHES LONG AND 6 INCHES WIDE AND SHALL BE "CRIMPED". PANELS SHALL BE INSTALLED AND SPACED PER TRAFFIC SCD MT-101.70.

TRIPLE-STACKED BARRIER REFLECTORS SHALL CONSIST OF ALIGNING THREE BARRIER REFLECTORS VERTICALLY, AT LOCATIONS WHERE A SINGLE BARRIER REFLECTOR WOULD BE OTHERWISE ATTACHED. THERE SHALL BE NO OPEN SPACE BETWEEN THE ADJACENT BARRIER REFLECTORS. THE TRIPLE-STACKED BARRIER REFLECTORS SHALL CONFORM TO C&MS 626, EXCEPT THAT THEY SHALL BE SPACED AND ALIGNED PER TRAFFIC SCD MT-101.70.

PAYMENT SHALL BE FULL COMPENSATION FOR ALL MATERIAL, LABOR, INCIDENTALS AND EQUIPMENT NECESSARY FOR FURNISHING, INSTALLING, MAINTAINING AND REMOVING EACH OF THE ABOVE ITEMS. ALONG RUNS OF INCREASED BARRIER DELINEATION WHERE THIS ITEM IS PROVIDED, THE QUANTITY SHALL BE MEASURED AS THE ENTIRE LENGTH OF THE RUN OF INCREASED BARRIER DELINEATION, INCLUDING THE SPACES BETWEEN THE INDIVIDUAL DELINEATION PANELS OR STACKS OF BARRIER REFLECTORS.

DRAFT Stage 3 - Not for Construction 09/23/2024

CALCULATED MJH CHECKED KAE

MAINTENANCE OF TRAFFIC GENERAL NOTES

LAW-7-2.17

C:\EEC\Projects\LAW-7(Stantec)\CADD\Phase_2B\MOT\Sheets\43-75923_MN002.dgn Sheet 5/13/2024 12:41:00 PM mhunt

ITEM 614 - LAW ENFORCEMENT OFFICER (WITH PATROL CAR) FOR ASSISTANCE DURING CONSTRUCTION OPERATIONS

USE OF LAW ENFORCEMENT OFFICERS (LEOS) BY CONTRACTORS OTHER THAN THE USES SPECIFIED BELOW WILL NOT BE PERMITTED AT PROJECT COST. LEOS SHOULD NOT BE USED WHERE THE OMUTCD INTENDS THAT FLAGGERS BE USED.

IN ADDITION TO THE REQUIREMENTS OF C&MS 614 AND THE OMUTCD, A UNIFORMED LEO WITH AN OFFICIAL PATROL CAR (CAR WITH TOP-MOUNTED EMERGENCY FLASHING LIGHTS AND COMPLETE MARKINGS OF THE APPROPRIATE LAW ENFORCEMENT AGENCY) SHALL BE PROVIDED FOR THE FOLLOWING TRAFFIC CONTROL TASKS:

* DURING THE ENTIRE ADVANCE PREPARATION AND CLOSURE SEQUENCE FOR CLOSING A STATE ROUTE, WHERE COMPLETE BLOCKAGE OF TRAFFIC IS REQUIRED.

* FOR THE TRANSITION FROM PHASE 2 TO PHASE 3 AT THE EASTERN PROJECT TERMINUS.

IN GENERAL, LEOS SHOULD BE POSITIONED IN ADVANCE OF AND ON THE SAME SIDE AS THE LANE RESTRICTION (OR AT THE POINT OF ROAD CLOSURE), AND TO MANUALLY CONTROL TRAFFIC MOVEMENTS THROUGH SIGNALIZED INTERSECTIONS IN WORK ZONES.

LEOS SHOULD NOT FORGO THEIR TRAFFIC CONTROL RESPONSIBILITIES TO APPREHEND MOTORISTS FOR ROUTINE TRAFFIC VIOLATIONS. HOWEVER, IF A MOTORIST'S ACTIONS ARE CONSIDERED TO BE RECKLESS, THEN PURSUIT OF THE MOTORIST IS APPROPRIATE.

THE LEOS WORK AT THE DIRECTION OF THE CONTRACTOR. THE CONTRACTOR IS RESPONSIBLE FOR SECURING THE SERVICES OF THE LEOS WITH THE APPROPRIATE AGENCIES AND COMMUNICATING THE INTENTIONS OF THE PLANS WITH RESPECT TO DUTIES OF THE LEOS. THE ENGINEER SHALL HAVE FINAL CONTROL OVER THE LEOS' DUTIES AND PLACEMENT, AND WILL RESOLVE ANY ISSUES THAT MAY ARISE BETWEEN THE TWO PARTIES.

ENSURE PROVIDED LEOS HAVE BEEN TRAINED APPROPRIATE TO THE JOB DECISIONS THEY ARE REQUIRED TO MAKE WHILE ON THE PROJECT, IN ACCORDANCE WITH C&MS 614.03.

THE LEO SHALL REPORT IN TO THE CONTRACTOR PRIOR TO THE START OF THE SHIFT, IN ORDER TO RECEIVE INSTRUCTIONS REGARDING SPECIFIC WORK ASSIGNMENTS DURING HIS/HER SHIFT. THE LEO IS EXPECTED TO STAY AT THE PROJECT SITE FOR THE ENTIRE DURATION OF HIS/HER SHIFT. THE LEO SHALL REPORT TO THE CONTRACTOR AT THE END OF HIS/HER SHIFT. SHOULD IT BE NECESSARY TO LEAVE THE PROJECT SITE, THE LEO SHALL NOTIFY THE ENGINEER. THE CONTRACTOR SHALL PROVIDE THE LEO WITH A TWO-WAY COMMUNICATION DEVICE THAT SHALL BE RETURNED TO THE CONTRACTOR AT THE END OF HIS/HER SHIFT.

LEOS (WITH PATROL CAR) REQUIRED BY THE TRAFFIC MAINTENANCE TASKS ABOVE SHALL BE PAID FOR ON A UNIT PRICE (HOURLY) BASIS UNDER ITEM 614, LAW ENFORCEMENT OFFICER (WITH PATROL CAR) FOR ASSISTANCE. THE FOLLOWING ESTIMATED QUANTITIES HAVE BEEN CARRIED TO THE SUBSUMMARY.

ITEM 614, LAW ENFORCEMENT OFFICER WITH PATROL CAR FOR ASSISTANCE
40 HOURS

THE HOURS PAID SHALL INCLUDE ANY MINIMUM SHOW-UP TIME REQUIRED BY THE LAW ENFORCEMENT AGENCY INVOLVED.

ANY ADDITIONAL COSTS (ADMINISTRATIVE OR OTHERWISE) INCURRED BY THE CONTRACTOR TO OBTAIN THE SERVICES OF A LEO ARE INCLUDED WITH THE BID UNIT PRICE FOR ITEM 614, LAW ENFORCEMENT OFFICER WITH PATROL CAR FOR ASSISTANCE.

ITEM 614 - PORTABLE CHANGEABLE MESSAGE SIGNS, AS PER PLAN

THE CONTRACTOR SHALL FURNISH, INSTALL, MAINTAIN AND REMOVE, WHEN NO LONGER NEEDED, A CHANGEABLE MESSAGE SIGN. THE SIGN SHALL BE OF A TYPE SHOWN ON A LIST OF APPROVED PCMS UNITS AVAILABLE ON THE OFFICE OF MATERIALS MANAGEMENT WEB PAGE. THE LIST CONTAINS CLASS A AND B UNITS WITH MINIMUM LEGIBILITY DISTANCES OF 800 FEET AND 650 FEET, RESPECTIVELY.

EACH SIGN SHALL BE TRAILER-MOUNTED AND EQUIPPED WITH A FUNCTIONAL DIMMING MECHANISM, TO DIM THE SIGN DURING DARKNESS, AND A TAMPER AND VANDAL PROOF ENCLOSURE. EACH SIGN SHALL BE PROVIDED WITH APPROPRIATE TRAINING AND OPERATION INSTRUCTIONS TO ENABLE ON-SITE PERSONNEL TO OPERATE AND TROUBLE-SHOOT THE UNIT. THE SIGN SHALL ALSO BE CAPABLE OF BEING POWERED BY AN ELECTRICAL SERVICE DROP FROM A LOCAL UTILITY COMPANY. THE PCMS SHALL BE DELINEATED IN ACCORDANCE WITH C&MS 614.03.

THE PROBABLE PCMS LOCATIONS AND WORK LIMITS FOR THOSE LOCATIONS SHALL BE AS DIRECTED BY THE ENGINEER. PLACEMENT, OPERATION, MAINTENANCE AND ALL ACTIVATION OF THE SIGNS BY THE CONTRACTOR SHALL BE AS DIRECTED BY THE ENGINEER. THE PCMS SHALL BE LOCATED IN A HIGHLY VISIBLE POSITION YET PROTECTED FROM TRAFFIC. THE CONTRACTOR SHALL, AT THE DIRECTION OF THE ENGINEER, RELOCATE THE PCMS TO IMPROVE VISIBILITY OR ACCOMMODATE CHANGED CONDITIONS. WHEN NOT IN USE, THE PCMS SHALL BE TURNED OFF. ADDITIONALLY, WHEN NOT IN USE FOR EXTENDED PERIODS OF TIME, THE PCMS SHALL BE TURNED AWAY FROM ALL TRAFFIC.

THE ENGINEER SHALL BE PROVIDED ACCESS TO EACH SIGN UNIT AND SHALL BE PROVIDED WITH APPROPRIATE TRAINING AND OPERATION INSTRUCTIONS TO ENABLE ODOT PERSONNEL TO OPERATE AND TROUBLESHOOT THE UNIT, AND TO REVISE SIGN MESSAGES, IF NECESSARY.

THE CONTRACTOR SHALL IMPLEMENT A SYSTEM WHEREBY CHANGEABLE MESSAGES WILL BE IMPLEMENTED WITHIN 2 HOURS FOLLOWING TELEPHONE NOTIFICATION FROM THE PROJECT ENGINEER TO A DESIGNATED PHONE.

ALL MESSAGES TO BE DISPLAYED ON THE SIGN WILL BE PROVIDED BY THE ENGINEER. A LIST OF ALL REQUIRED PRE-PROGRAMMED MESSAGES WILL BE GIVEN TO THE CONTRACTOR AT THE PROJECT PRECONSTRUCTION CONFERENCE. THE SIGN SHALL HAVE THE CAPABILITY TO STORE UP TO 99 MESSAGES. MESSAGE MEMORY OR PRE-PROGRAMMED DISPLAYS SHALL NOT BE LOST AS A RESULT OF POWER FAILURES TO THE ON-BOARD COMPUTER. THE SIGN LEGEND SHALL BE CAPABLE OF BEING CHANGED IN THE FIELD. THREE-LINE PRESENTATION FORMATS WITH UP TO SIX MESSAGE PHASES SHALL BE SUPPORTED. PCMS FORMAT SHALL PERMIT THE COMPLETE MESSAGE FOR EACH PHASE TO BE READ AT LEAST TWICE.

THE PCMS SHALL CONTAIN AN ACCURATE CLOCK AND PROGRAMMING LOGIC WHICH WILL ALLOW THE SIGN TO BE ACTIVATED, DEACTIVATED OR MESSAGES CHANGED AUTOMATICALLY AT DIFFERENT TIMES OF THE DAY FOR DIFFERENT DAYS OF THE WEEK.

PAYMENT FOR THE ABOVE DESCRIBED ITEM SHALL BE AT THE CONTRACT UNIT PRICE. PAYMENT SHALL INCLUDE ALL LABOR, MATERIALS, EQUIPMENT, FUELS, LUBRICATING OILS, SOFTWARE, HARDWARE AND INCIDENTALS TO PERFORM THE ABOVE DESCRIBED WORK.

ITEM 614, WORK ZONE IMPACT ATTENUATOR FOR 24" WIDE HAZARDS (UNIDIRECTIONAL)

THIS ITEM SHALL CONSIST OF FURNISHING AND INSTALLING A NON-GATING IMPACT ATTENUATOR. FURNISH AN IMPACT ATTENUATOR FROM THE OFFICE OF ROADWAY ENGINEERING'S APPROVED LIST FOR WORK ZONE IMPACT ATTENUATORS, FROM THE ROADWAY STANDARDS WEB PAGE.

INSTALLATION SHALL BE AT THE LOCATIONS SPECIFIED IN THE PLANS IN ACCORDANCE WITH THE MANUFACTURER'S SPECIFICATIONS.

THE CONTRACTOR SHALL REPAIR OR REPLACE A DAMAGED UNIT WITHIN 24 HOURS OF A DAMAGING IMPACT.

WHEN BIDIRECTIONAL DESIGNS ARE SPECIFIED, THE CONTRACTOR SHALL SUPPLY APPROPRIATE TRANSITIONS.

WHEN GATING IMPACT ATTENUATORS ARE DESIRED, THE CONTRACTOR SHALL SUBMIT DOCUMENTATION TO THE ENGINEER FOR ACCEPTANCE.

THE COST FOR THE ADDITIONAL BARRIER REQUIRED FOR A GATING IMPACT ATTENUATOR SHALL BE INCLUDED IN THE COST OF THE GATING IMPACT ATTENUATOR.

PAYMENT FOR THE ABOVE WORK SHALL BE MADE AT THE UNIT PRICE BID AND SHALL INCLUDE ALL LABOR, TOOLS, EQUIPMENT AND MATERIALS NECESSARY TO CONSTRUCT AND MAINTAIN A COMPLETE AND FUNCTIONAL IMPACT ATTENUATOR SYSTEM, INCLUDING ALL RELATED BACKUPS, TRANSITIONS, LEVELING PADS, HARDWARE AND GRADING, NOT SEPARATELY SPECIFIED, AS REQUIRED BY THE MANUFACTURER.

LEGEND

- WZEW - EDGE LINE, WHITE, 6"
- WZEY - EDGE LINE, YELLOW, 6"
- WZDY - DOUBLE SOLID YELLOW CENTERLINE, CLASS I, 642 PAINT
- LA - LANE ARROW, 642 PAINT
- DIRECTION OF TRAVEL
- TRAFFIC ATTENUATOR
- PORTABLE BARRIER
- PROPOSED PAVEMENT TO BE CONSTRUCTED
- PAVEMENT TO BE REMOVED
- PAVEMENT TO MAINTAIN TRAFFIC, CLASS B

DRAFT Stage 3 - Not for Construction 09/23/2024

CALCULATED MJH CHECKED KAE

GENERAL NOTES OF TRAFFIC MAINTENANCE

LAW-7-2.17

C:\EEC\Projects\LAW-7(Shantec)\CADD\Phase_2B\MOT\Sheets\44-75923_MN003.dgn Sheet 5/21/2024 7:59:29 AM mhunt

SHEET NUMBER	PARTICIPATION	ITEM	ITEM EXT.	GRAND TOTAL	UNIT	DESCRIPTION	SEE SHEET NO.
43 46	01/NHS/01						
						MAINTENANCE OF TRAFFIC	
40	40	614	11110	40	HOUR	LAW ENFORCEMENT OFFFICER WITH PATROL CAR FOR ASSISTANCE	
432	432	614	11630	432	FT	INCREASED BARRIER DELINEATION	43
2	2	614	12380	2	EACH	WORK ZONE IMPACT ATTENUATOR, 24" WIDE HAZARDS, (UNIDIRECTIONAL)	44
LUMP	LUMP	614	12420	LUMP		DETOUR SIGNING	43
258	258	614	12801	258	EACH	WORK ZONE RAISED PAVEMENT MARKER, AS PER PLAN	42
24	24	614	18601	24	SNMT	PORTABLE CHANGEABLE MESSAGE SIGN, AS PER PLAN	44
3.90	3.90	614	21000	3.90	MILE	WORK ZONE CENTER LINE, CLASS I	
7.92	7.92	614	22010	7.92	MILE	WORK ZONE EDGE LINE, CLASS I, 6"	
LUMP	LUMP	615	10000	LUMP		ROADS FOR MAINTAINING TRAFFIC	
437	437	615	25000	437	SQ YD	PAVEMENT FOR MAINTAINING TRAFFIC, CLASS B	
160,000	160,000	616	10000	160,000	MGAL	WATER	
432	432	622	41100	432	FT	PORTABLE BARRIER, UNANCHORED	

CALCULATED EAE CHECKED MJH

MAINTENANCE OF TRAFFIC PLAN - GENERAL SUMMARY

LAW-7-2.17

DRAFT Stage 3 - Not for Construction 09/23/2024

SHEET NO.	PHASE	REF. NO.	STATION FROM	STATION TO	614 LAW ENFORCEMENT OFFICER WITH PATROL CAR FOR ASSISTANCE	614 INCREASED BARRIER DELINEATION	614 WORK ZONE IMPACT ATTENUATOR, 24" WIDE HAZARDS, (UNIDIRECTIONAL)	614 DETOUR SIGNING	614 WORK ZONE RAISED PAVEMENT MARKER, AS PER PLAN	614 PORTABLE CHANGEABLE MESSAGE SIGN, AS PER PLAN	614 WORK ZONE CENTER LINE, CLASS 1	614 WORK ZONE EDGE LINE, CLASS 1, 6"	614	615 ROADS FOR MAINTAINING TRAFFIC	615 PAVEMENT FOR MAINTAINING TRAFFIC, CLASS B	622	622 PORTABLE BARRIER, UNANCHORED	622	622				
					HOUR	FT	EACH	LUMP	EACH	SNMT	FT	FT		LS	SY		FT							
44	GEN NOTES				40																			
55	PHASE 1													LS	437									
57,58	PHASE 2	WZDY-1	309+50	387+54					98		7804													
↓	↓	WZEW-1	309+50	387+54								7804												
↓	↓	WZEW-2	309+50	394+50								8500												
57	↓	PB-1	381+92	384+20		228	1										228							
59-62	PHASE 3	WZDY-2	309+50	437+17					160		12767													
↓	↓	WZEW-3	309+50	437+17								12767												
↓	↓	WZEW-4	309+50	437+17								12767												
↓	↓	PCMS								6														
60	↓	PB-2	374+46	376+50		204	1										204							
63-66	DETOUR PLANS							LS																
63	SR 243 DETOUR PLAN									6														
65	SR 775 DETOUR PLAN									12														
				SUBTOTALS							20,571 FT	41,838 FT												
TOTALS CARRIED TO GENERAL SUMMARY					40	432	2	LS	258	24	3.90 MI	7.92 MI		LS	437		432							

CALCULATED MJH CHECKED KAE

MAINTENANCE OF TRAFFIC SUBSUMMARY

LAW-7-2.17

DRAFT Stage 3 - Not for Construction 09/23/2024

C:\EEC\Projects\LAW-7(Stantec)\CADD\Phase_2B\MOT\Sheets\46-75923_MS001.dgn Sheet 5/13/2024 12:18:04 PM mhunt

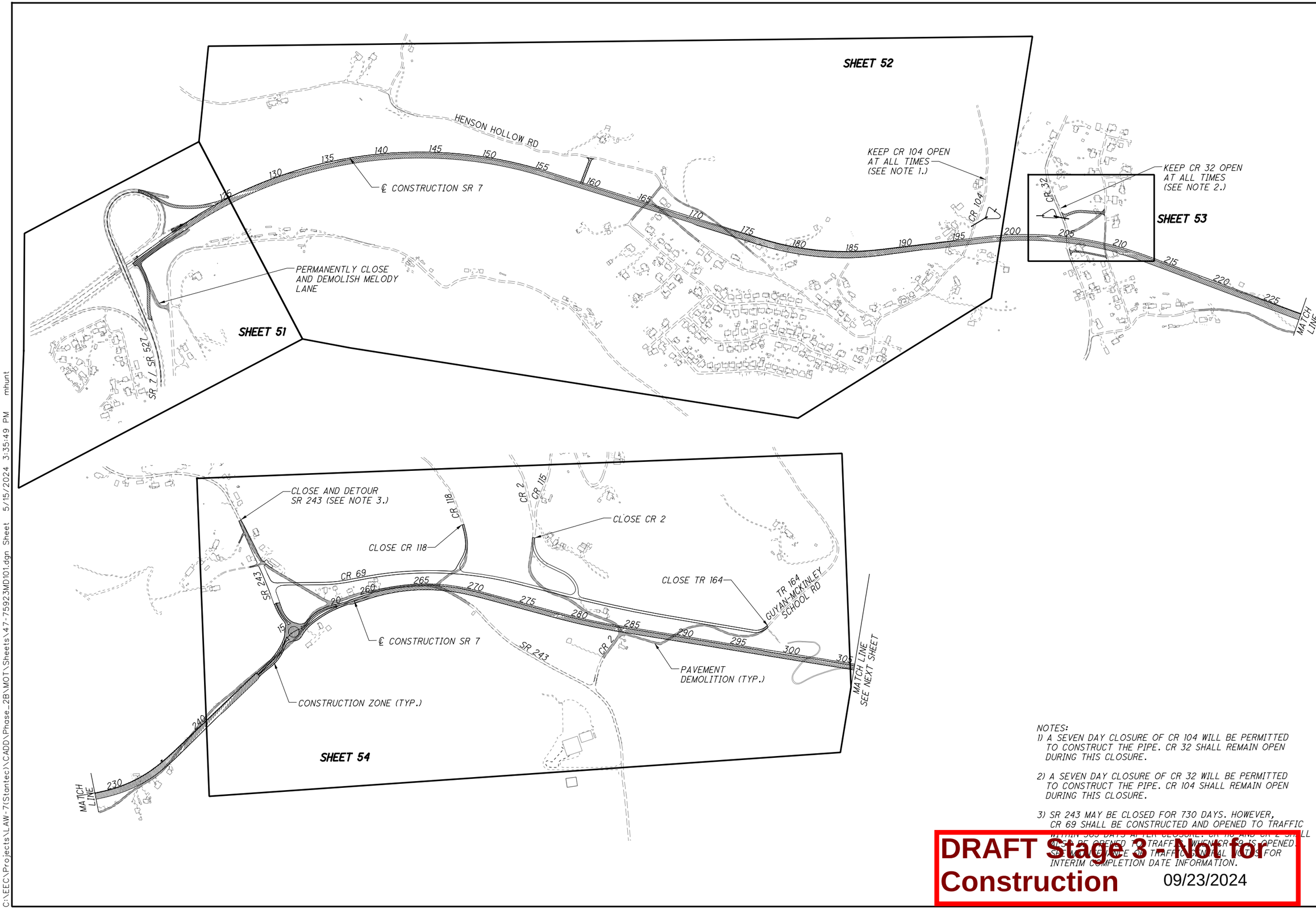

NOTES:

1) A SEVEN DAY CLOSURE OF CR 104 WILL BE PERMITTED TO CONSTRUCT THE PIPE. CR 32 SHALL REMAIN OPEN DURING THIS CLOSURE.

2) A SEVEN DAY CLOSURE OF CR 32 WILL BE PERMITTED TO CONSTRUCT THE PIPE. CR 104 SHALL REMAIN OPEN DURING THIS CLOSURE.

3) SR 243 MAY BE CLOSED FOR 730 DAYS. HOWEVER, CR 69 SHALL BE CONSTRUCTED AND OPENED TO TRAFFIC WITHIN 300 DAYS AFTER CLOSURE. CR 118 AND CR 2 SHALL NOT BE OPENED TO TRAFFIC WHEN CR 69 IS OPENED. SEE TRAFFIC CONTROL NOTES FOR INTERIM COMPLETION DATE INFORMATION.

DRAFT Stage 3 - Not for Construction 09/23/2024

HORIZONTAL SCALE IN FEET
0 200 400 800

CALCULATED MJH
CHECKED KAE

MAINTENANCE OF TRAFFIC PLAN
PHASE 1 - WEST END

LAW-7-2.17

47
1247

C:\EEC\Projects\LAW-7(Stantec)\CADD\Phase_2B\MOT\Sheets\47-75923MD101.dgn Sheet 5/15/2024 3:35:49 PM mhunt

NOTES:
1) THE CONTRACTOR SHALL MAINTAIN 2-WAY TRAFFIC ON SR 7 AT ALL TIMES. THE CONTRACTOR MAY MAINTAIN TWO-WAY/ONE-LANE TRAFFIC PER SCD MT-97.10 TO CONSTRUCT THE PAVEMENT TIE-IN. THIS LANE CLOSURE WILL NOT BE PERMITTED FROM 6AM TO 11AM, WEEKDAYS.

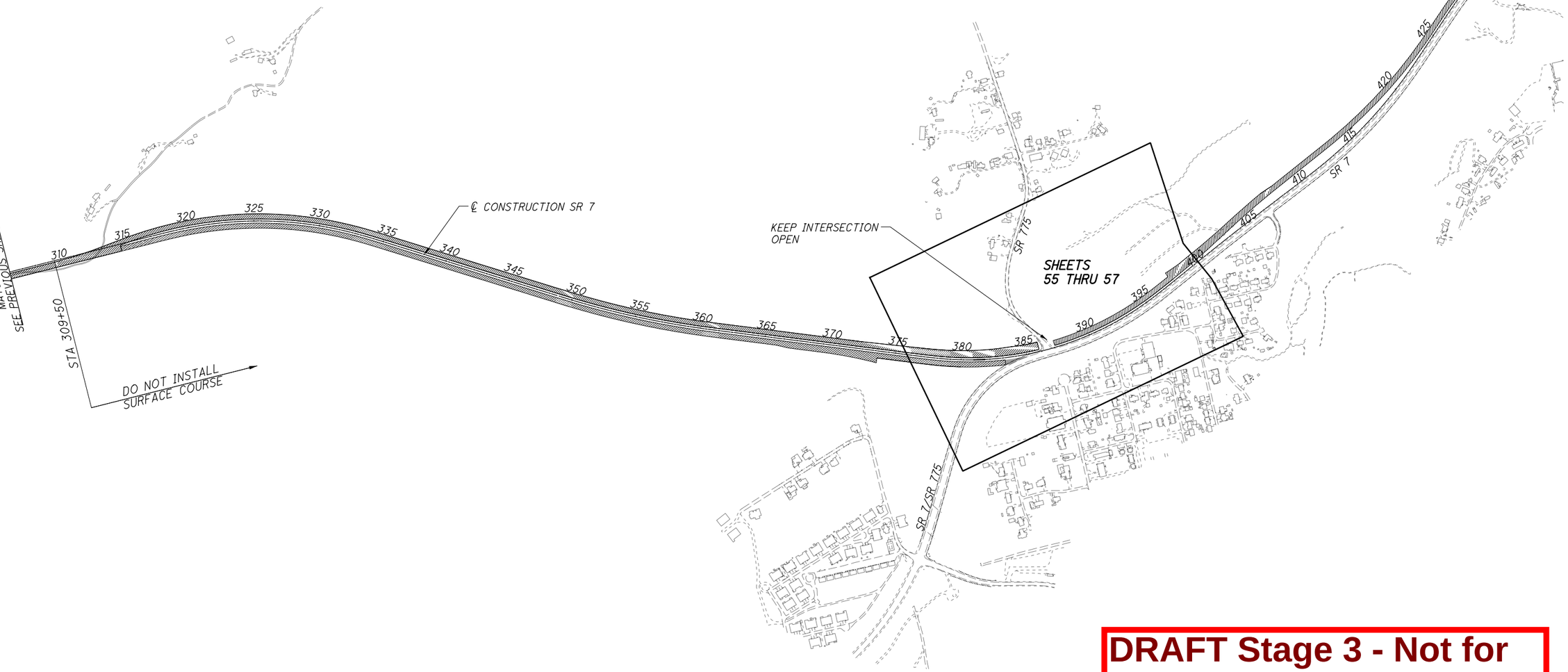

DRAFT Stage 3 - Not for Construction 09/23/2024

HORIZONTAL SCALE IN FEET
0 200 400 800

CALCULATED MJH
CHECKED KAE

MAINTENANCE OF TRAFFIC PLAN
PHASE 1 - EAST END

LAW-7-2.17

48
1247

C:\EEC\Projects\LAW-7(Stantec)\CADD\Phase_2B\MOT\Sheets\48-75923MD102.dgn Sheet 5/13/2024 12:22:02 PM mhunt

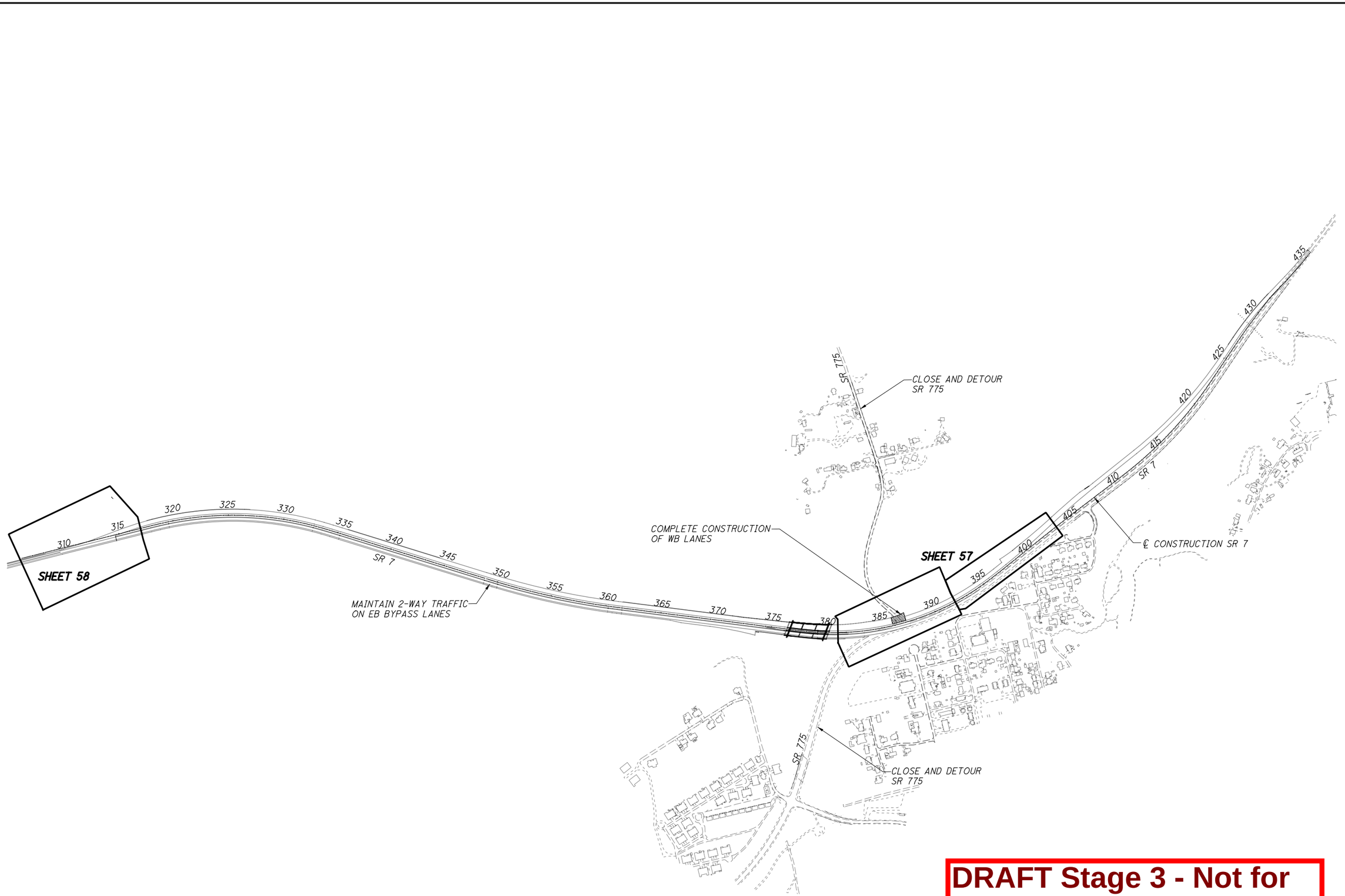

DRAFT Stage 3 - Not for Construction 09/23/2024

HORIZONTAL SCALE IN FEET
0 200 400 800

CALCULATED MJH
CHECKED KAE

MAINTENANCE OF TRAFFIC PLAN
PHASE 2 - EAST END

LAW-7-2.17

49
1247

C:\EEC\Projects\LAW-7(Stantec)\CADD\Phase_2B\MOT\Sheets\49-75923MD201.dgn Sheet 5/13/2024 12:23:12 PM mhunt

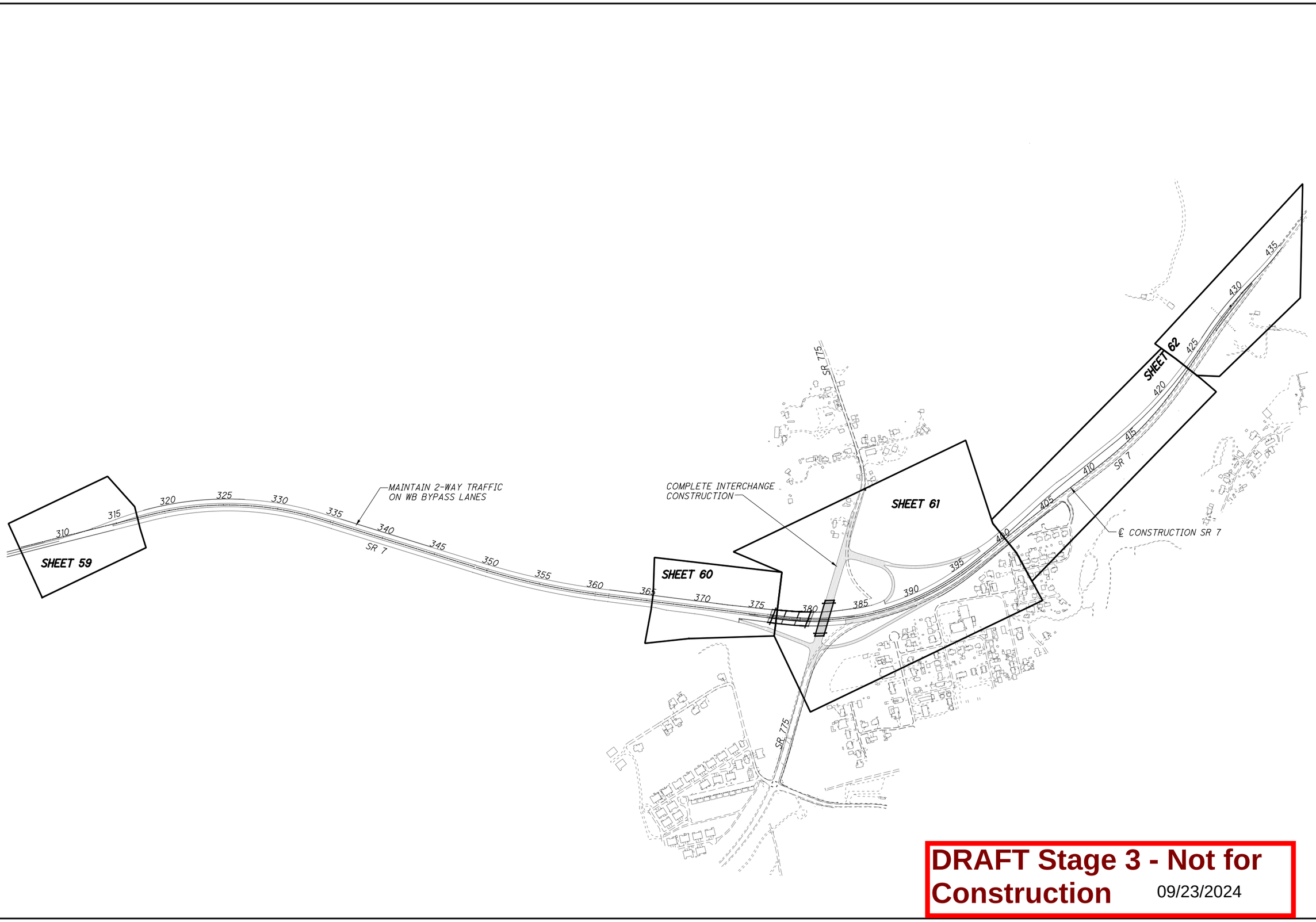

DRAFT Stage 3 - Not for Construction 09/23/2024

CALCULATED MJH
CHECKED KAE

0 200 400 800
HORIZONTAL SCALE IN FEET

MAINTENANCE OF TRAFFIC PLAN
PHASE 3 - EAST END

LAW-7-2.17

50
1247

C:\EEC\Projects\LAW-7(Stantec)\CADD\Phase_2B\MOT\Sheets\50-75923MD301.dgn Sheet 5/13/2024 12:24:35 PM mhunt

NOTES:
1) PLACE BARRICADES PER STANDARD DRAWING MT-101.60. ADVANCE WARNING SIGNING MAY BE OMITTED, EXCEPT AS NOTED.

2) PLACE A SIGN ON BOTH SIDES OF THE ROAD, 500' IN ADVANCE OF FIRST DRUM.

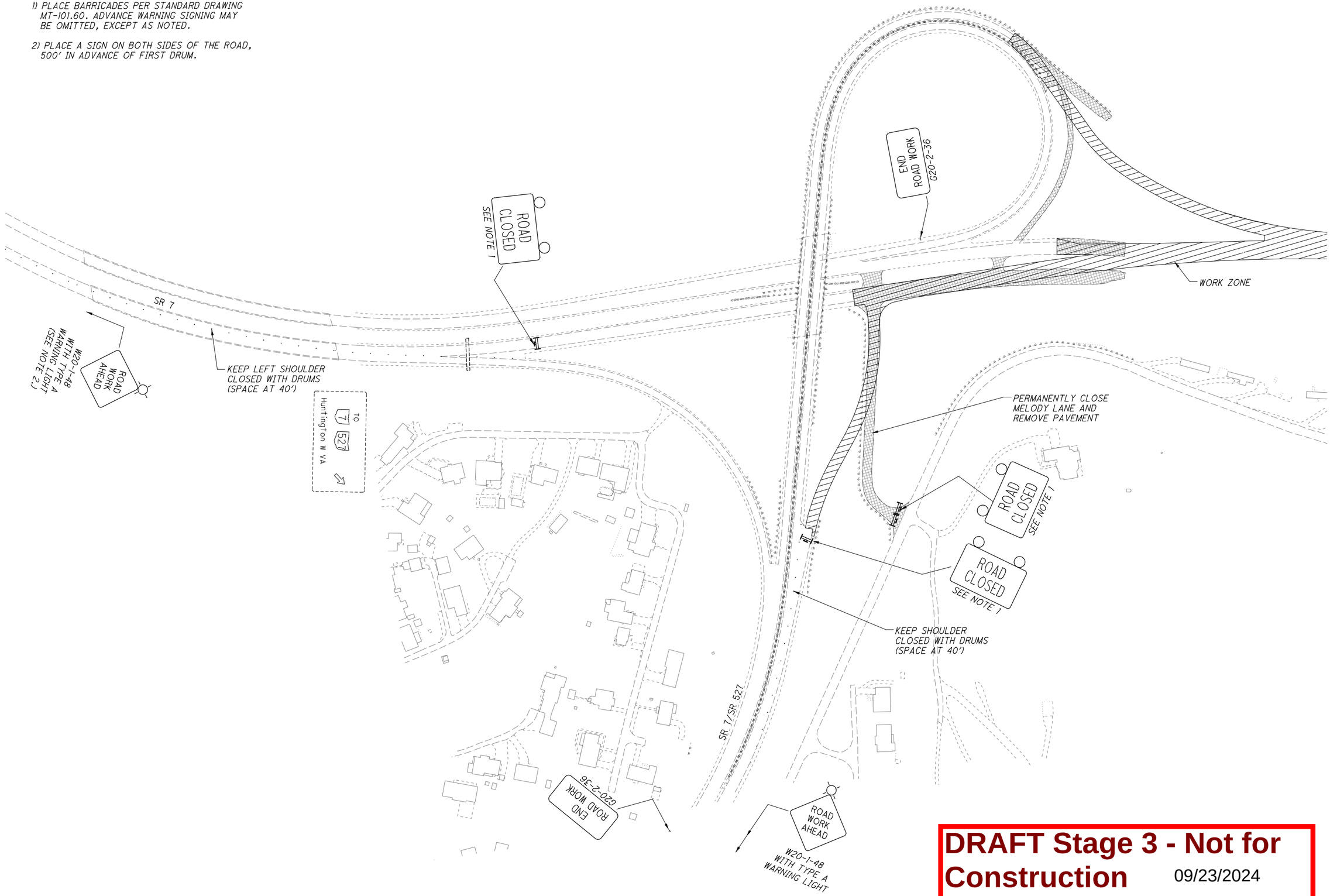

DRAFT Stage 3 - Not for Construction 09/23/2024

HORIZONTAL SCALE IN FEET
0 50 100 200

CALCULATED MJH
CHECKED KAE

MAINTENANCE OF TRAFFIC PLAN
PHASE 1 - SR 7 / SR 527 INTERCHANGE

LAW-7-2.17

51
1247

C:\EEC\Projects\LAW-7(Stantec)\CADD\Phase_2B\MOT\Sheets\51-75923MP011.dgn Sheet 5/13/2024 12:02:13 PM mhunt

NOTES:
1) INSTALL BARRICADES AT ROAD CLOSURE POINTS AND ADVANCED SIGNING IN CONFORMANCE WITH STANDARD DRAWING MT-101.60.

2) MAINTAIN ACCESS TO ADJACENT PROPERTIES USING A FLAGGER DURING DEMOLITION OF THE FOREST DRIVE INTERSECTION.

3) CONSTRUCT INTERSECTION USING FLAGGERS.

4) A SEVEN DAY CLOSURE OF CR 104 WILL BE PERMITTED TO CONSTRUCT THE PIPE. CR 32 SHALL REMAIN OPEN DURING THIS CLOSURE.

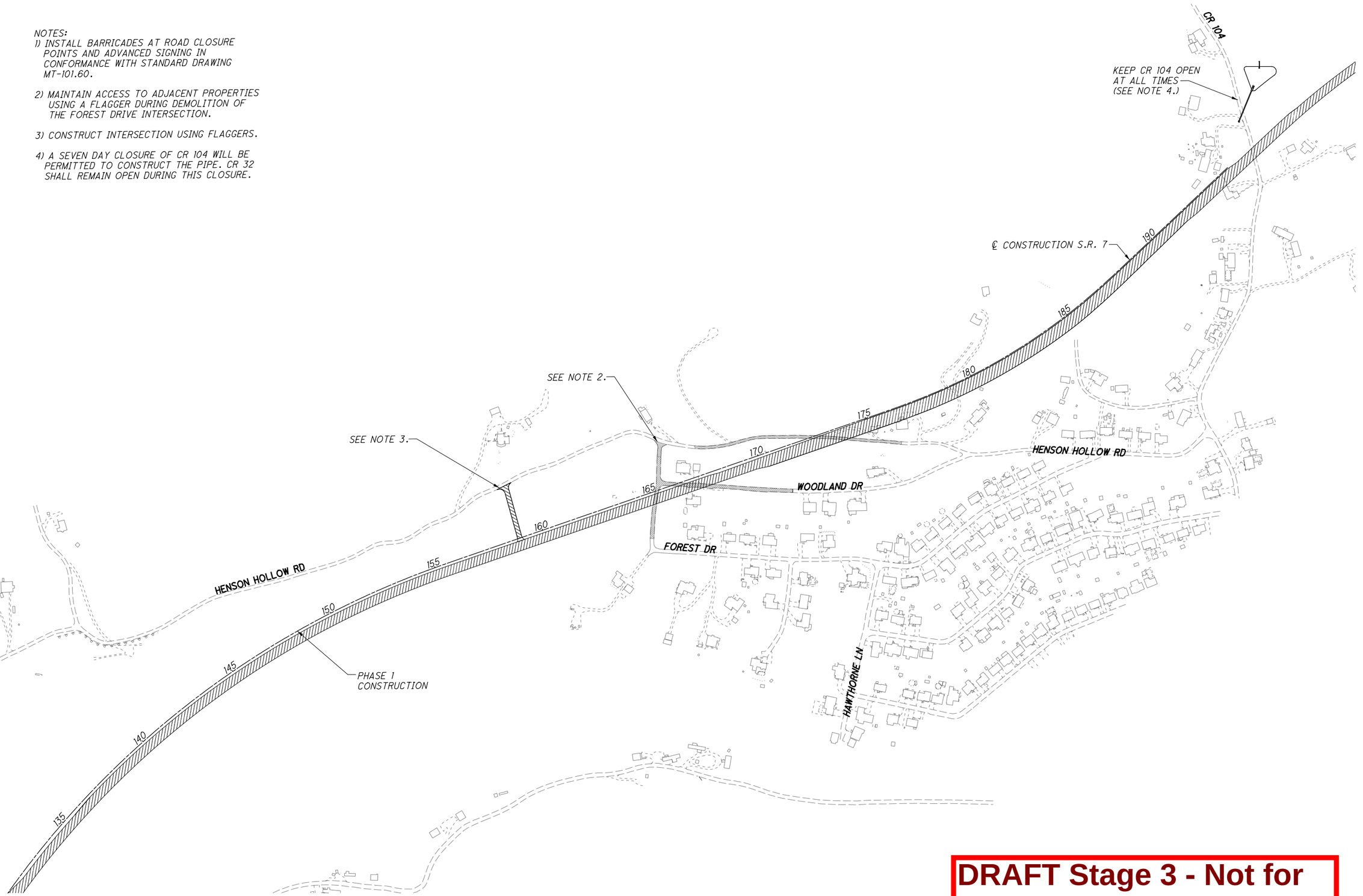

HORIZONTAL SCALE IN FEET
0 100 200 400

CALCULATED M.JH
CHECKED KAE

MAINTENANCE OF TRAFFIC PLAN
PHASE 1 - STA. 132+00 TO STA. 200+00

LAW-7-2.17

52
1247

DRAFT Stage 3 - Not for Construction 09/23/2024

C:\EEC\Projects\LAW-7(Stantec)\CADD\Phase_2B\MOT\Sheets\52-75923MP101.dgn Sheet 5/13/2024 12:02:29 PM mhunt

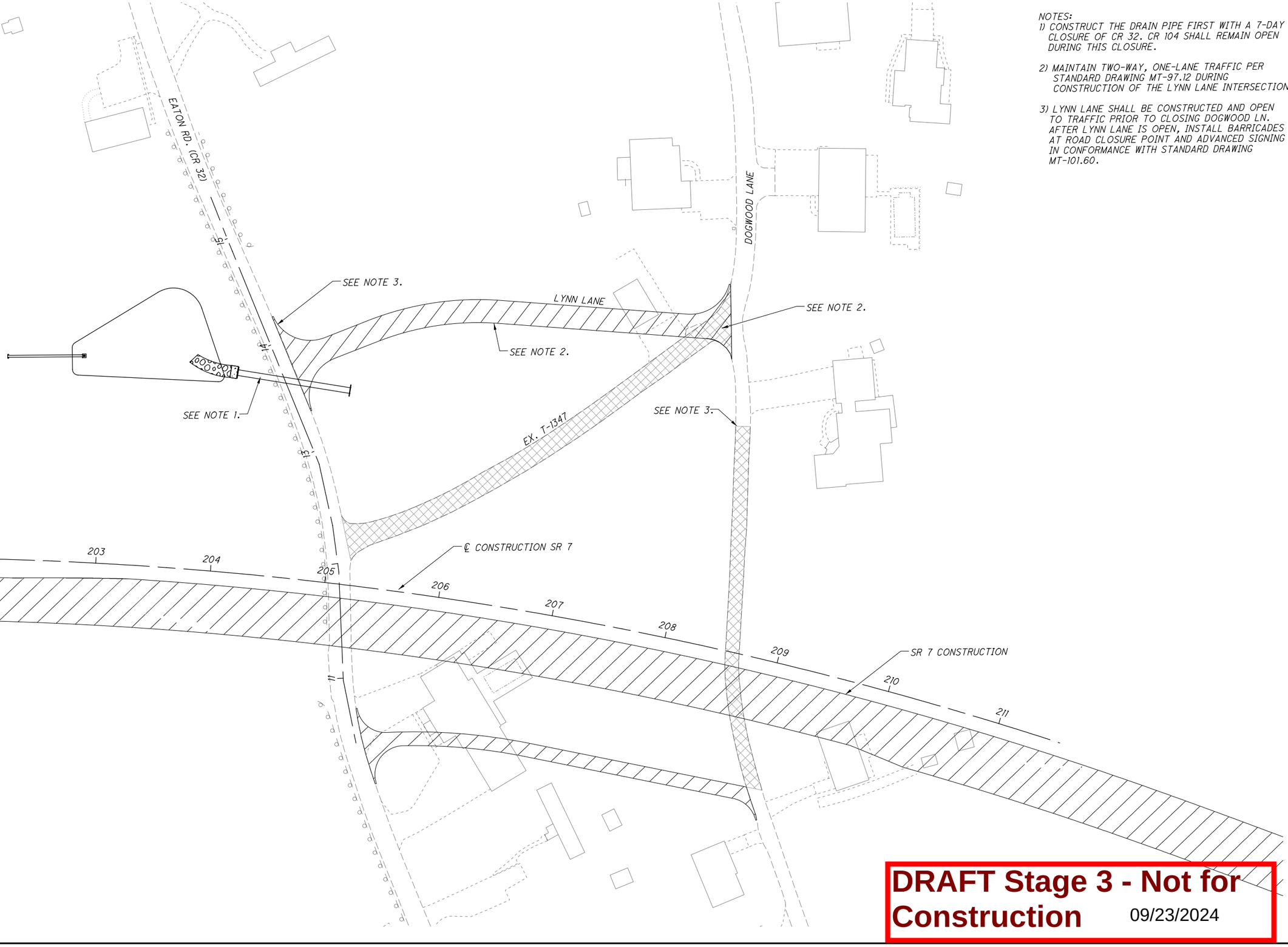

NOTES:
1) CONSTRUCT THE DRAIN PIPE FIRST WITH A 7-DAY CLOSURE OF CR 32. CR 104 SHALL REMAIN OPEN DURING THIS CLOSURE.

2) MAINTAIN TWO-WAY, ONE-LANE TRAFFIC PER STANDARD DRAWING MT-97.12 DURING CONSTRUCTION OF THE LYNN LANE INTERSECTION.

3) LYNN LANE SHALL BE CONSTRUCTED AND OPEN TO TRAFFIC PRIOR TO CLOSING DOGWOOD LN. AFTER LYNN LANE IS OPEN, INSTALL BARRICADES AT ROAD CLOSURE POINT AND ADVANCED SIGNING IN CONFORMANCE WITH STANDARD DRAWING MT-101.60.

HORIZONTAL SCALE IN FEET
0 40 80

CALCULATED MJH
CHECKED KAE

MAINTENANCE OF TRAFFIC PLAN
PHASE 1 - DETAIL AT LYNN LANE

LAW-7-2.17

53
1247

DRAFT Stage 3 - Not for Construction 09/23/2024

C:\EEC\Projects\LAW-7(Stantec)\CADD\Phase_2B\MOT\Sheets\53-75923MP102.dgn Sheet 5/13/2024 12:02:46 PM mhunt

NOTES:
1) INSTALL BARRICADES AT ROAD CLOSURE POINTS AND ADVANCED SIGNING IN CONFORMANCE WITH STANDARD DRAWING MT-101.60.

2) SR 243 MAY BE CLOSED FOR 730 DAYS. HOWEVER, CR 69 SHALL BE CONSTRUCTED AND OPENED TO TRAFFIC WITHIN 365 DAYS AFTER CLOSURE. CR 118 AND CR 2 SHALL ALSO BE OPENED TO TRAFFIC, WHEN CR 69 IS OPENED. SEE MAINTENANCE OF TRAFFIC GENERAL NOTES FOR INTERIM COMPLETION DATE INFORMATION.

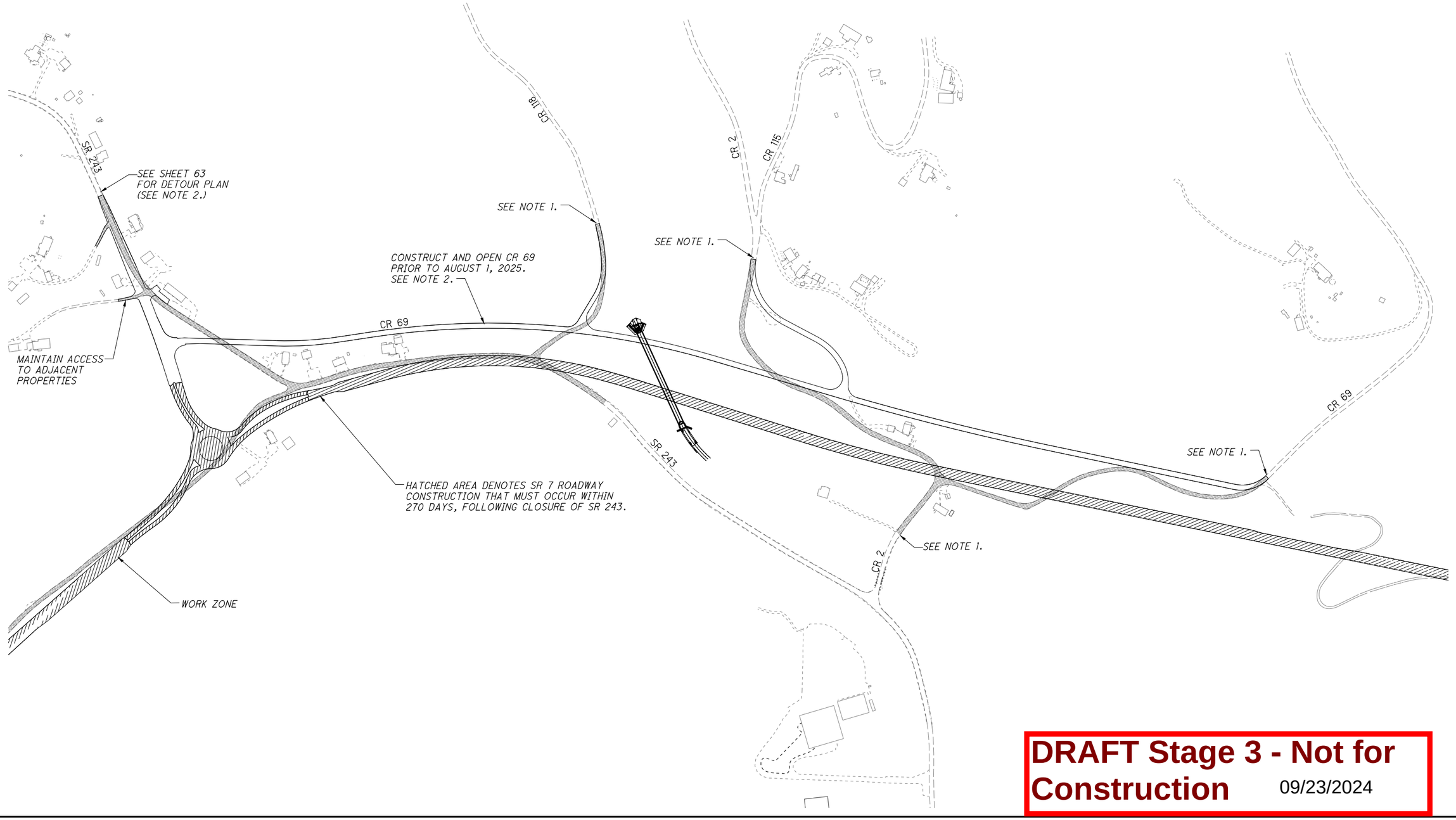

DRAFT Stage 3 - Not for Construction 09/23/2024

HORIZONTAL SCALE IN FEET
0 100 200 400

CALCULATED MJH
CHECKED KAE

MAINTENANCE OF TRAFFIC PLAN
PHASE 1 - SR 7 / SR 243 INTERSECTION

LAW-7-2.17

54
1247

C:\EEC\Projects\LAW-7(Stantec)\CADD\Phase_2B\MOT\Sheets\54-75923MP012.dgn Sheet 5/15/2024 3:35:21 PM mhunt

NOTES:
1) KEEP INTERSECTION OPEN AT ALL TIMES. CONTRACTOR SHALL USE FLAGGERS AND/OR LEO TO CONTROL TRAFFIC WHEN CONSTRUCTION OPERATIONS RESTRICT SAFE SIGHT DISTANCE VIEWS, AS DIRECTED BY THE ENGINEER.

2) THE CONTRACTOR SHALL FOLLOW MT-101.90 FOR WORK ZONE DROP OFF CRITERIA.

3) THE CONTRACTOR SHALL MAINTAIN 2-WAY TRAFFIC ON SR 7 AT ALL TIMES. THE CONTRACTOR MAY CLOSE THE WB THRU LANE, SIMILAR TO SCD MT-95.61 (SEE NEXT SHEET) DURING NON-RESTRICTED HOURS.

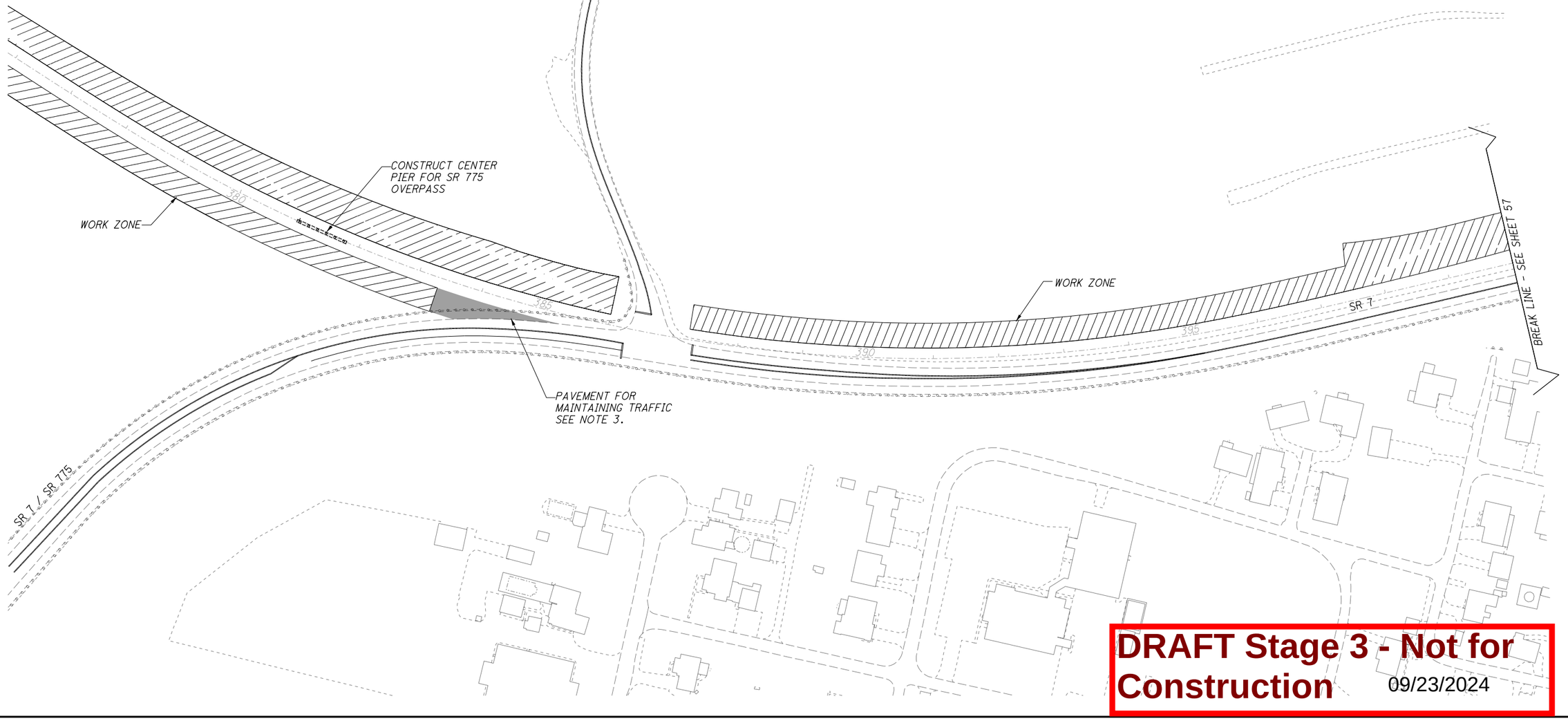

HORIZONTAL SCALE IN FEET
0 40 80 160

CALCULATED MJH
CHECKED KAE

MAINTENANCE OF TRAFFIC PLAN
PHASE 1 - SR 7 / SR 775 INTERSECTION

LAW-7-2.17

55
1247

DRAFT Stage 3 - Not for Construction 09/23/2024

C:\EEC\Projects\LAW-7(Stantec)\CADD\Phase_2B\MOT\Sheets\55-75923MP013.dgn Sheet 5/13/2024 12:57:50 PM mhunt

NOTES:
1) SEE SCD MT-95.61 FOR ADDITIONAL DETAILS AND INFORMATION.

2) THIS CLOSURE WILL NOT BE PERMITTED FROM 2PM TO 6PM, WEEKDAYS.

3) WARP WORK ZONE PAVEMENT AS NECESSARY TO TRANSITION FROM PROPOSED PAVEMENT TO MEET EXISTING PAVEMENT.

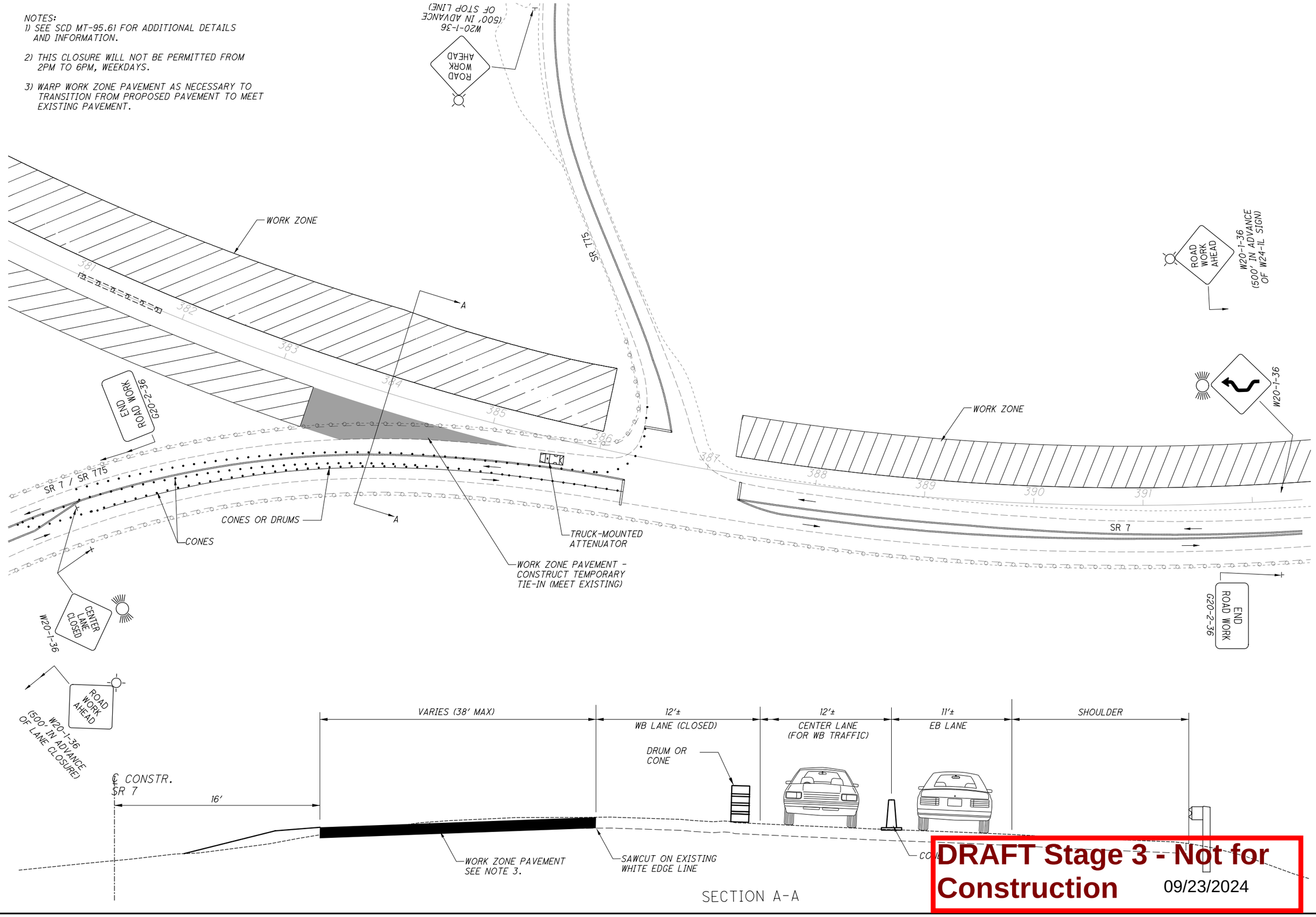

SECTION A-A

DRAFT Stage 3 - Not for Construction 09/23/2024

MAINTENANCE OF TRAFFIC PLAN
PHASE 1 - SR 7 / SR 775 DETAIL

HORIZONTAL SCALE IN FEET
0 40 80 160

CALCULATED MJH
CHECKED KAE

LAW-7-2.17

56
1247

C:\EEC\Projects\LAW-7(Stantec)\CADD\Phase_2B\MOT\Sheets\56-75923MP014.dgn Sheet 5/13/2024 12:04:56 PM mhunt

MAINTENANCE OF TRAFFIC PLAN
PHASE 2 - SR 7 / SR 775 INTERSECTION

CALCULATED MJH
CHECKED KAE

HORIZONTAL SCALE IN FEET
0 20 40 80

LAW-7-2.17

57
1247

BREAK LINE (SEE NEXT SHEET)

WZEW-2

TO 775 SOUTH 7
M3-3-24
M1-5-24
M4-8-24
M1-5-24
M6-3-21
STA 382+00

SR 775 (CLOSED)

SR 775 IS CLOSED, THIS PHASE
SEE SHEET 65 FOR DETOUR PLAN

SR 7

+92

382

383

384

385

386

387

388

389

390

391

PB-1

BEGIN PB TAPER
STA 382+16, 17' RT
SEE NOTE 1.

END PB TAPER
STA 384+08, 11' RT

+20

IA-1

R=2275'

WORK ZONE

ROAD CLOSED
DETOUR
R11-2-48
M4-10L-48
ON TYPE III BARRICADE

TO 775 SOUTH 7
M4-5-15
M1-5-24
M3-3-21
M1-5-24
M6-3-21
STA 390+00

SOUTH 7
JCT NORTH 775 SOUTH
Scottown

SR 775 (CLOSED)

WZEW-1

WZDY-1

+54

ROAD CLOSED
DETOUR
R11-2-48
M4-10R-48
ON TYPE III BARRICADE

MATCH LINE (SEE NEXT BELOW)

MESSAGE 2
FOLLOW DETOUR

MESSAGE 1
SR 775 CLOSED AHEAD

PORTABLE CHANGEABLE MESSAGE SIGN

MATCH LINE (SEE ABOVE)

WZEW-2

393

394

+50

395

396

397

398

399

400

401

402

403

SR 7

ROAD WORK AHEAD
W20-1-36
STA 402+00

DRAFT Stage 3 - Not for Construction 09/23/2024

C:\EEC\Projects\LAW-7(Stantec)\CADD\Phase_2B\MOT\Sheets\57-75923MP021.dgn Sheet 5/13/2024 1:00:57 PM mhunt

C:\EEC\Projects\LAW-7(Stantec)\CADD\Phase_2B\MOT\Sheets\58-75923MP023.dgn Sheet 5/13/2024 12:05:24 PM mhunt

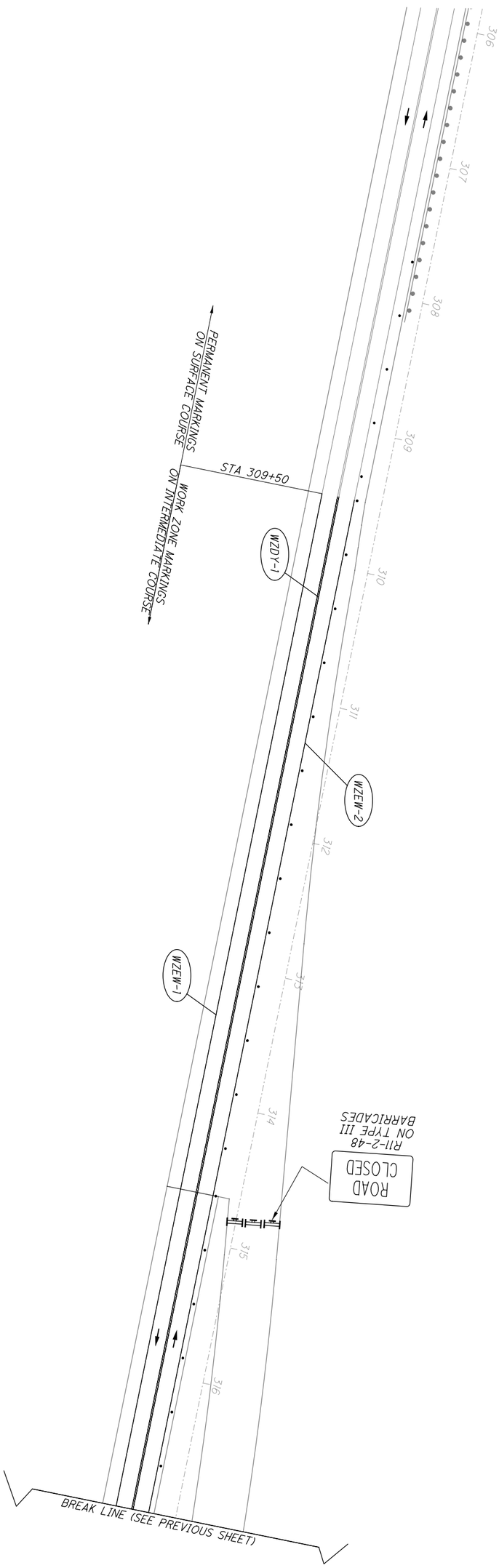

DRAFT Stage 3 - Not for Construction

09/23/2024

58 / 1247	LAW-7-2.17	MAINTENANCE OF TRAFFIC PLAN PHASE 2 - STA 306+00 TO STA 317+00	CALCULATED MJH CHECKED KAE	0 40 20 80 HORIZONTAL SCALE IN FEET

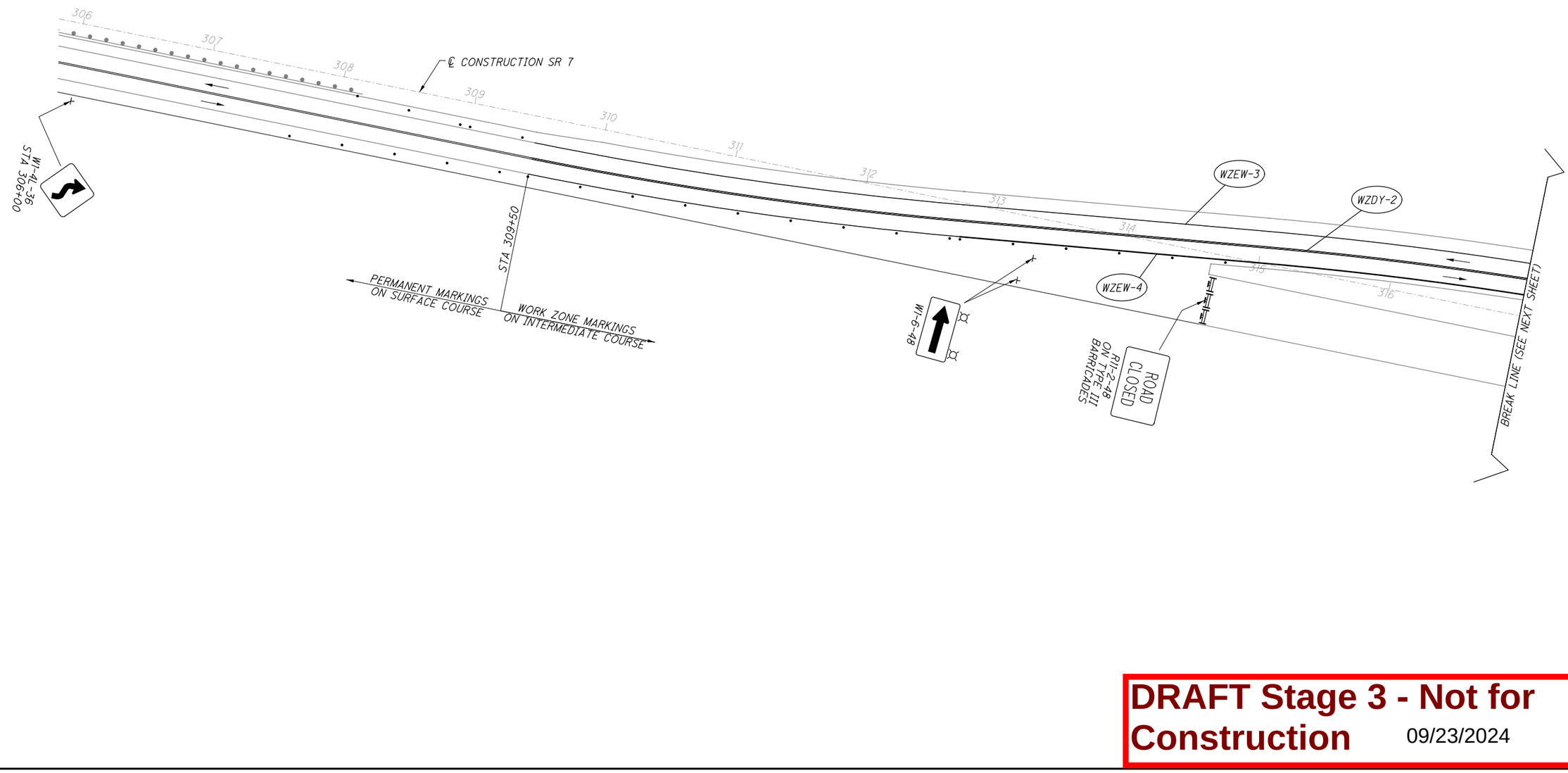

DRAFT Stage 3 - Not for Construction 09/23/2024

HORIZONTAL SCALE IN FEET
0 20 40 80

CALCULATED MJH
CHECKED KAE

MAINTENANCE OF TRAFFIC PLAN
PHASE 3 - STA 306+00 TO STA 317+00

LAW-7-2.17

59
1247

C:\EEC\Projects\LAW-7(Stantec)\CADD\Phase_2B\MOT\Sheets\59-75923MP031.dgn Sheet 5/13/2024 12:05:41 PM mhunt

NOTES:
1) PROVIDE APPROPRIATE GRADING FOR PORTABLE BARRIER.

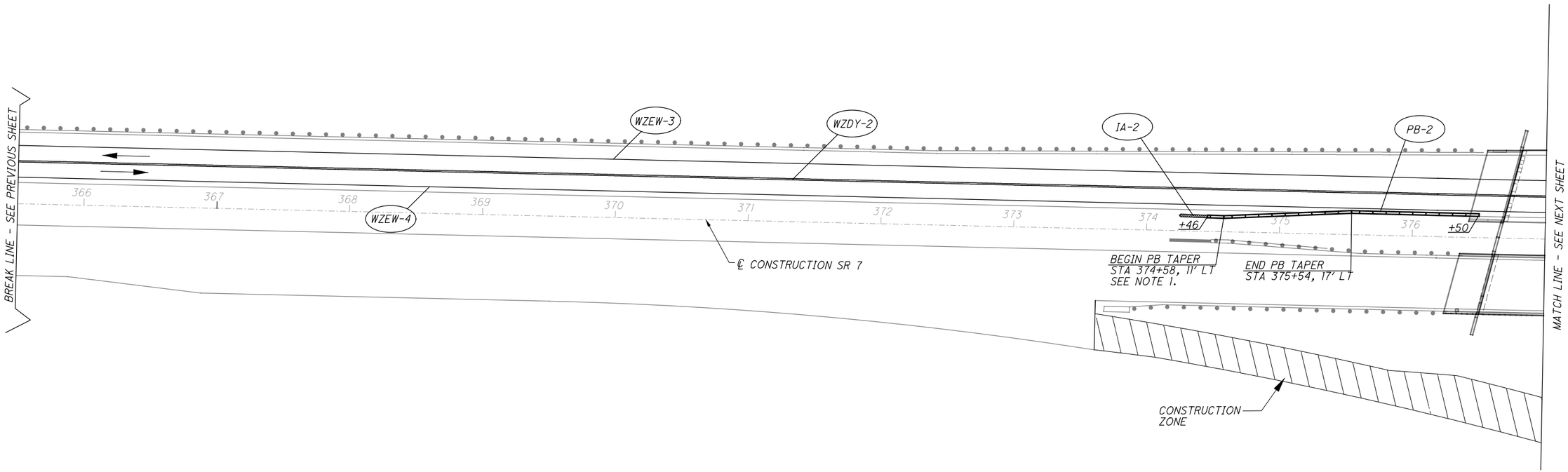

DRAFT Stage 3 - Not for Construction 09/23/2024

HORIZONTAL SCALE IN FEET
0 20 40 80

CALCULATED MJH
CHECKED KAE

MAINTENANCE OF TRAFFIC PLAN
PHASE 3 - STA 366+50 TO STA 377+00

LAW-7-2.17

60
1247

C:\EEC\Projects\LAW-7(Stantec)\CADD\Phase_2B\MOT\Sheets\60-75923MP032.dgn Sheet 5/13/2024 12:05:55 PM mhunt

NOTES:
1) FIFTEEN MINUTE CLOSURES (ONE CLOSURE PER HOUR) WILL BE PERMITTED ON SR 7 FOR TWO NIGHTS, TO COMPLETE OVERHEAD BRIDGE WORK. CLOSURES SHALL OCCUR ONLY BETWEEN THE HOURS OF 9PM AND 6AM.

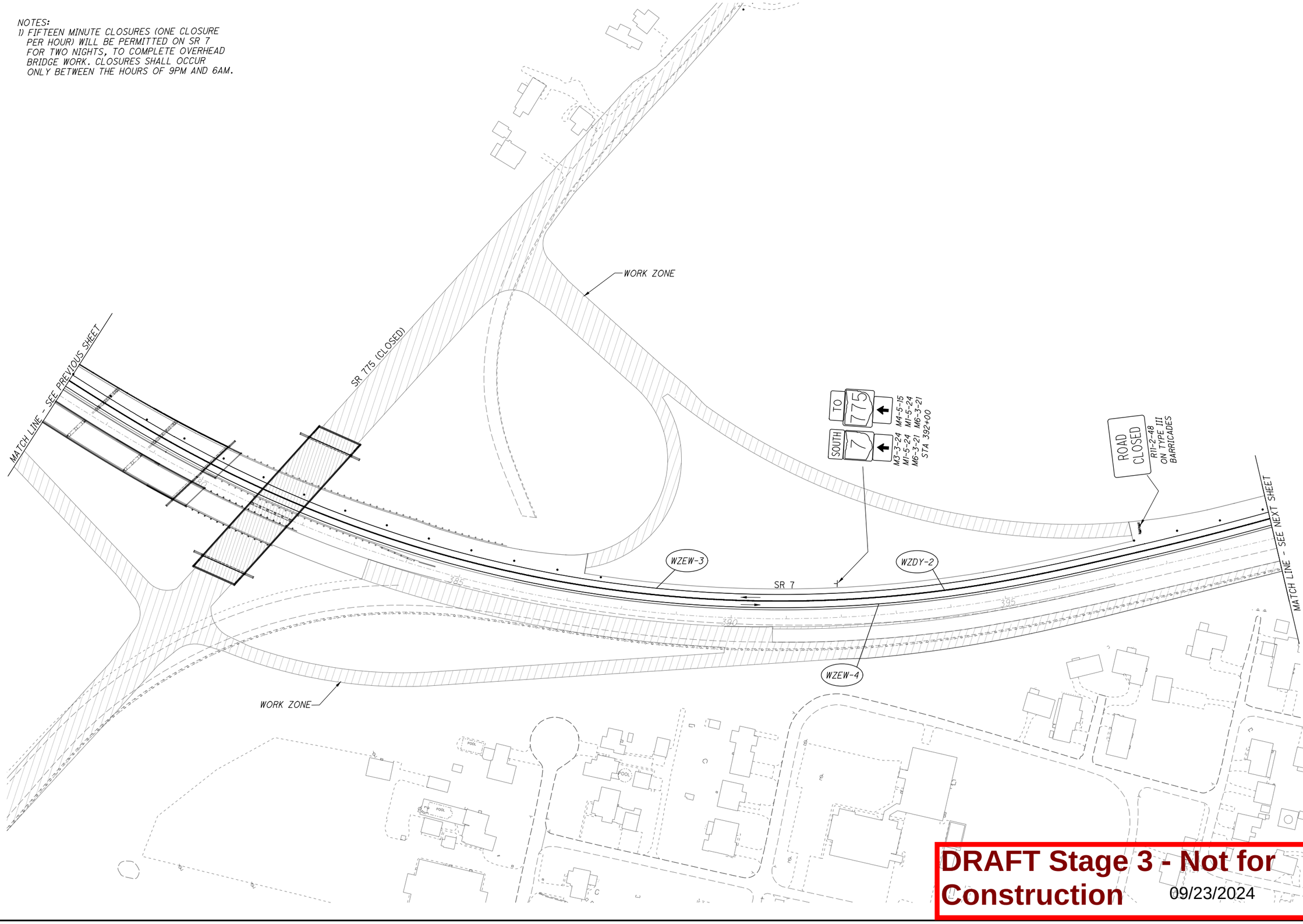

DRAFT Stage 3 - Not for Construction 09/23/2024

MAINTENANCE OF TRAFFIC PLAN
PHASE 3 - SR 7 / SR 775 INTERSECTION

CALCULATED MJH
CHECKED KAE

HORIZONTAL SCALE IN FEET
0 40 80 160

LAW-7-2.17

61
1247

C:\EEC\Projects\LAW-7(Stantec)\CADD\Phase_2B\MOT\Sheets\61-75923MP033.dgn Sheet 5/13/2024 12:06:09 PM mhunt

C:\EEC\Projects\LAW-7(Stantec)\CADD\Phase_2B\MOT\Sheets\62-75923MP034.dgn Sheet 5/13/2024 12:06:23 PM mhunt

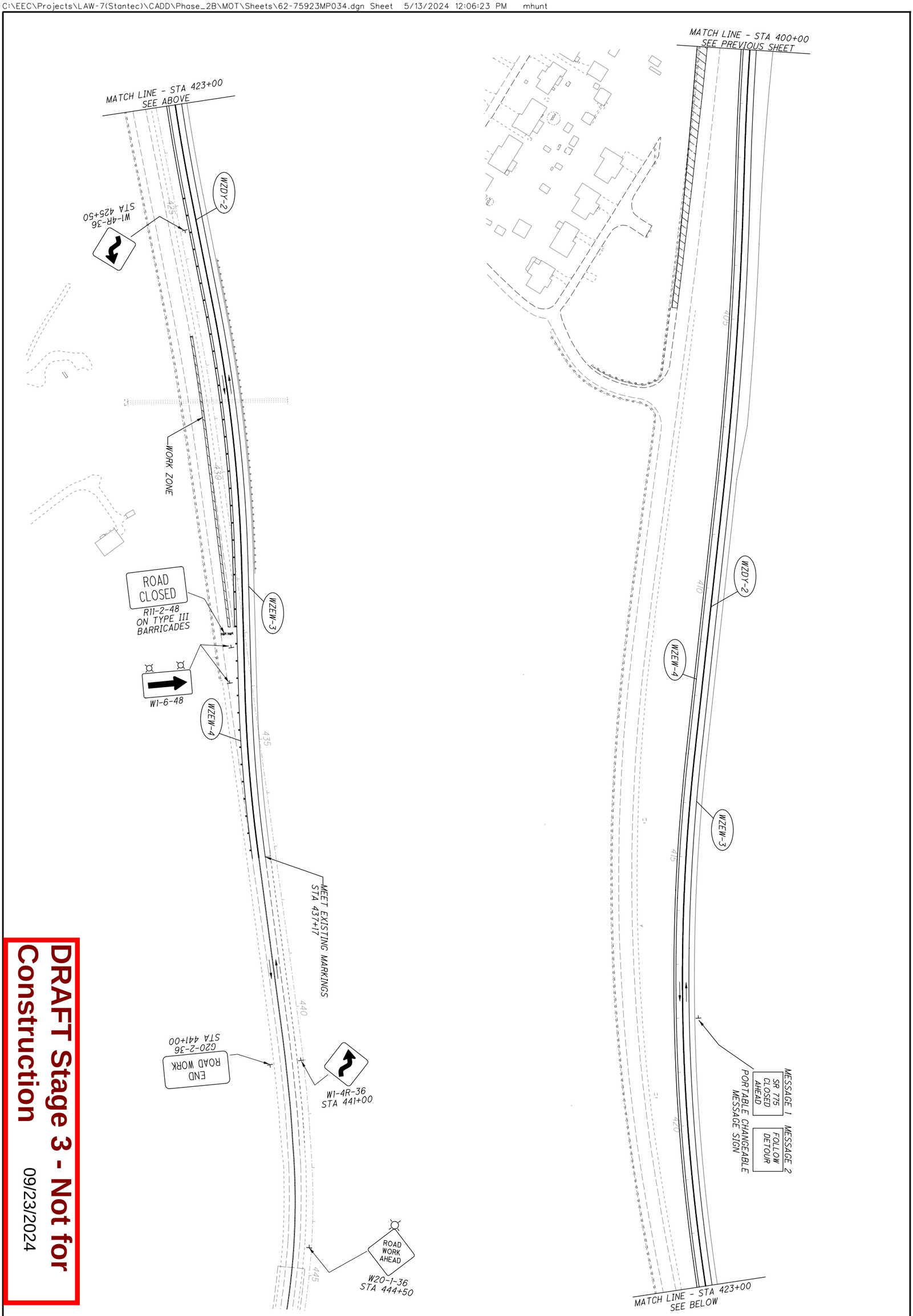

DRAFT Stage 3 - Not for Construction

09/23/2024

62 / 1247	LAW-7-2.17	MAINTENANCE OF TRAFFIC PLAN PHASE 3 - SR 7 EASTERN TERMINUS	CALCULATED MJH CHECKED KAE	0 40 80 160 HORIZONTAL SCALE IN FEET

MAINTENANCE OF TRAFFIC PLAN
DETOUR PLAN - SR 243

LAW-7-2.17

63
1247

HORIZONTAL SCALE IN FEET
0 1500 3000 6000

CALCULATED MJH
CHECKED KAE

SEE DETAIL "A" NEXT SHEET

SEE DETAIL "B" NEXT SHEET

WORK ZONE

PROPOSED BYPASS CORRIDOR

OHIO RIVER

LEGEND

- PROPOSED SIGN
- TYPE III BARRICADE
- (19) SIGN NUMBER
- WORK AREA
- DETOUR ROUTE
- TYPE "A" FLASHING WARNING LIGHT

DRAFT Stage 3 - Not for Construction 09/23/2024

C:\EEC\Projects\LAW-7(Stantec)\CADD\Phase_2B\MOT\Sheets\63-75923_MD001.dgn Sheet - 1 5/13/2024 12:06:38 PM mhunt

DETAIL "A"

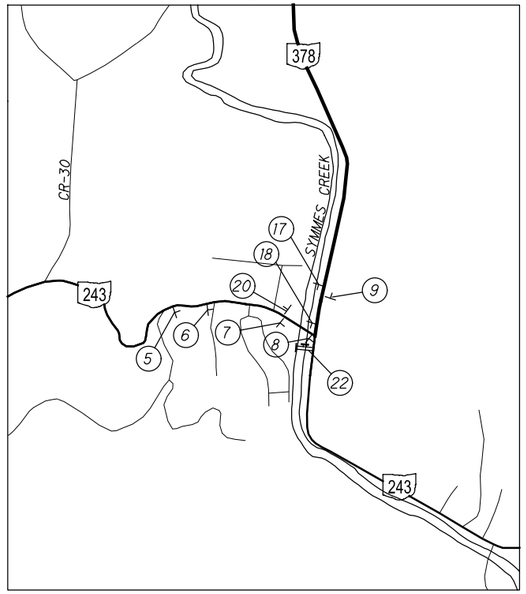

1 — ROAD WORK AHEAD
W20-1-36 WITH TYPE A WARNING LIGHT

2 — ROAD CLOSED 1000 FT
W20-3-36 WITH TYPE A WARNING LIGHT

3 — ROAD CLOSED 500 FT
W20-3-36 WITH TYPE A WARNING LIGHT

4 — ROAD CLOSED
R11-2-48
2 SIGNS PER DIRECTION ON TYPE III BARRICADES W/ 2 TYPE-B FLASHING WARNING LIGHT (PER SIGN)

5 — ROAD CLOSED AHEAD / EAST / 243
W20-3-36
M3-2-24
M1-5-24

6 — DETOUR 1500 FT
W20-2-36

7 — DETOUR / EAST / 243
M4-8-24
M3-2-24
M1-5-24
M5-1L-21

8 — DETOUR / EAST / 243
M4-8-24
M3-2-24
M1-5-24
M6-1L-21

9 — DETOUR / EAST / 243 / TO / 7
M4-8-24
M3-2-24
M1-5-24
M4-5-24
M1-5-24

10 — DETOUR / EAST / 243
M4-8-24
M3-2-24
M1-5-24
M6-3-21

11 — DETOUR / EAST / 243
M4-8-24
M3-2-24
M1-5-24
M5-1R-21

12 — DETOUR / EAST / 243
M4-8-24
M3-2-24
M1-5-24
M6-1R-21

13 — END DETOUR / EAST / 243
M4-8a-24
M3-2-24
M1-5-24

14 — DETOUR / WEST / 243
M4-8-24
M3-4-24
M1-5-24
M6-3-21

15 — DETOUR / WEST / 243
M4-8-24
M3-4-24
M1-5-24
M5-1L-21

16 — DETOUR / WEST / 243
M4-8-24
M3-4-24
M1-5-24
M6-1L-21

17 — DETOUR / WEST / 243
M4-8-24
M3-4-24
M1-5-24
M5-1R-21

18 — DETOUR / WEST / 243
M4-8-24
M3-4-24
M1-5-24
M6-1R-21

19 — DETOUR / WEST / 243
M4-8-24
M3-4-24
M1-5-24

20 — END DETOUR / WEST / 243
M4-8a-24
M3-4-24
M1-5-24

21 — EB SR 243 CLOSED AHEAD / NO ACCESS TO PROCTORVILLE
SPECIAL SIGN ON TYPE III BARRICADE (SEE REVIEWER NOTE)

22 — ROAD CLOSED 4.0 MILES AHEAD / LOCAL TRAFFIC ONLY
R11-3a-60
ON TYPE III BARRICADE

23 — ROAD CLOSED 1.0 MILE AHEAD / LOCAL TRAFFIC ONLY / DETOUR
R11-3A-60
M4-10R-48
ON TYPE III BARRICADE

24 — MESSAGE 1: SR 243 WEST CLOSED; MESSAGE 2: FOLLOW DETOUR
PORTABLE CHANGEABLE MESSAGE SIGN (OPERATE SIGN FOR THE FIRST 7 DAYS OF THE CLOSURE)

21 SIGN DETAIL

DETAIL "B"

LEGEND

- PROPOSED SIGN
- TYPE III BARRICADE
- (19) SIGN NUMBER
- WORK AREA
- DETOUR ROUTE
- TYPE "A" FLASHING WARNING LIGHT

DRAFT Stage 3 - Not for Construction 09/23/2024

C:\EEC\Projects\LAW-7(Stantec)\CADD\Phase_2B\MOT\Sheets\64-75923_MD002.dgn Sheet +1 5/13/2024 12:06:52 PM mhunt

N

HORIZONTAL SCALE IN FEET
0 500 1000 2000

CALCULATED MJH
CHECKED KAE

MAINTENANCE OF TRAFFIC PLAN
DETOUR PLAN - SR 243

LAW-7-2.17

64
1247

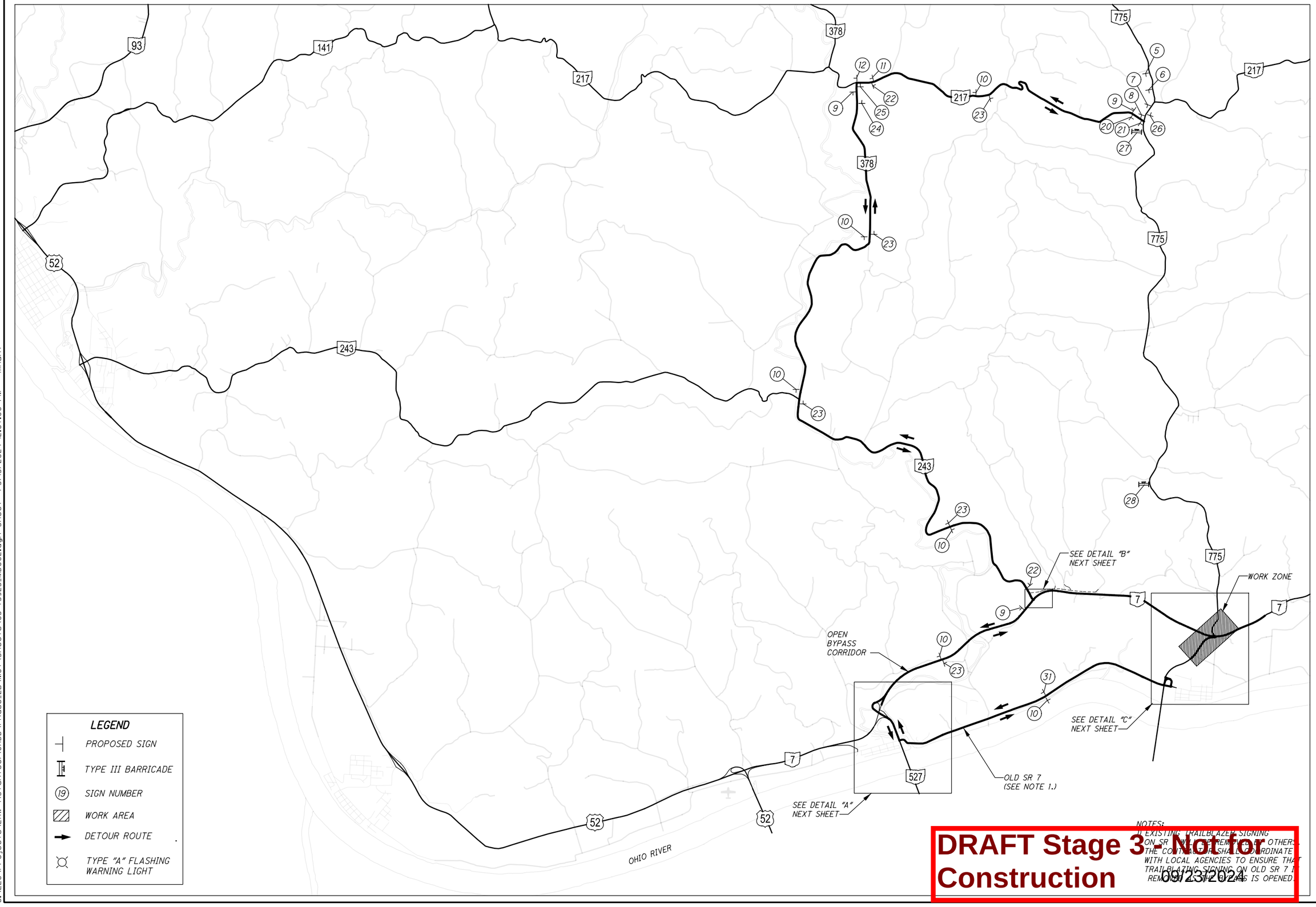

DRAFT Stage 3 - Not for Construction 09/23/2024

MAINTENANCE OF TRAFFIC PLAN
DETOUR PLAN - SR 775

HORIZONTAL SCALE IN FEET
0 1500 3000 6000

CALCULATED MJH
CHECKED KAE

LAW-7-2.17

65
1247

C:\EEC\Projects\LAW-7(Stantec)\CADD\Phase 2B\MOT\Sheets\65-75923_MD002.dgn Sheet - 1 5/13/2024 12:07:06 PM mhunt

1 — ROAD WORK AHEAD
W20-1-36 WITH TYPE A WARNING LIGHT

2 — ROAD CLOSED 1000 FT
W20-3-36 WITH TYPE A WARNING LIGHT

3 — ROAD CLOSED 500 FT
W20-3-36 WITH TYPE A WARNING LIGHT

4 — ROAD CLOSED
R11-2-48
2 SIGNS PER DIRECTION ON TYPE III BARRICADES W/ 2 TYPE-B FLASHING WARNING LIGHT (PER SIGN)

5 — ROAD CLOSED AHEAD / SOUTH / 775
W20-3-36 M3-3-24 M1-5-24

6 — DETOUR 1500 FT
W20-2-36

7 — DETOUR / SOUTH / 775
M4-8-24 M3-3-24 M1-5-24 M5-1R-21

8 — DETOUR / SOUTH / 775
M4-8-24 M3-3-24 M1-5-24 M6-1R-21

9 — DETOUR / SOUTH / 775
M4-8-24 M3-3-24 M1-5-24

10 — DETOUR / SOUTH / 775
M4-8-24 M3-3-24 M1-5-24 M6-3-21

11 — DETOUR / SOUTH / 775
M4-8-24 M3-3-24 M1-5-24 M5-1L-21

12 — DETOUR / SOUTH / 775
M4-8-24 M3-3-24 M1-5-24 M6-1L-21

13 — DETOUR / SOUTH / 775
M4-8-24 M3-3-24 M1-5-30 M5-2-21

14 — DETOUR / SOUTH / 775
M4-8-24 M3-3-24 M1-5-30 M6-2-21

15 — END DETOUR / SOUTH / 775
M4-8a-24 M3-3-24 M1-5-24

16 — ROAD CLOSED 0.5 MILES AHEAD LOCAL TRAFFIC ONLY
R11-3a-60 ON TYPE III BARRICADES

17 — ROAD CLOSED AHEAD / NORTH / 775
W20-3-36 M3-1-24 M1-5-24

18 — DETOUR / NORTH / 775
M4-8-24 M3-1-24 M1-5-30 M5-2-21

19 — DETOUR / NORTH / 775
M4-8-24 M3-1-24 M1-5-30 M6-2-21

20 — DETOUR / NORTH / 775
M4-8-24 M3-1-24 M1-5-24 M5-1L-21

21 — DETOUR / NORTH / 775
M4-8-24 M3-1-24 M1-5-24 M6-1L-21

22 — DETOUR / NORTH / 775
M4-8-24 M3-1-24 M1-5-24

23 — DETOUR / NORTH / 775
M4-8-24 M3-1-24 M1-5-24 M6-3-21

24 — DETOUR / NORTH / 775
M4-8-24 M3-1-24 M1-5-24 M5-1R-21

25 — DETOUR / NORTH / 775
M4-8-24 M3-1-24 M1-5-24 M6-1R-21

26 — END DETOUR / NORTH / 775
M4-8a-24 M3-1-24 M1-5-24

27 — ROAD CLOSED 7.0 MILES AHEAD LOCAL TRAFFIC ONLY
R11-3a-60 ON TYPE III BARRICADES

28 — ROAD CLOSED 2.0 MILES AHEAD LOCAL TRAFFIC ONLY
R11-3a-60 ON TYPE III BARRICADES

29 — DETOUR / NORTH / 775
M4-8-24 M3-1-24 M1-5-24 M5-3-21

30 — PORTABLE CHANGEABLE MESSAGE SIGN
MESSAGE 1: ACCESS TO SR 7 NORTH
MESSAGE 2: FOLLOW SR 775 DETOUR

31 — DETOUR / NORTH / 775 / TO / NORTH / 7
M4-8-24 M3-1-24 M1-5-24 M4-5-24 M3-1-24 M1-5-24 M6-3-21

32 — DETOUR / NORTH / 775 / TO / NORTH / 7
M4-8-24 M3-1-24 M1-5-24 M4-5-24 M3-1-24 M1-5-24 M5-2-21

LEGEND
- PROPOSED SIGN
- TYPE III BARRICADE
- (19) SIGN NUMBER
- WORK AREA
- DETOUR ROUTE
- TYPE "A" FLASHING WARNING LIGHT

DETAIL "A"

DETAIL "B"

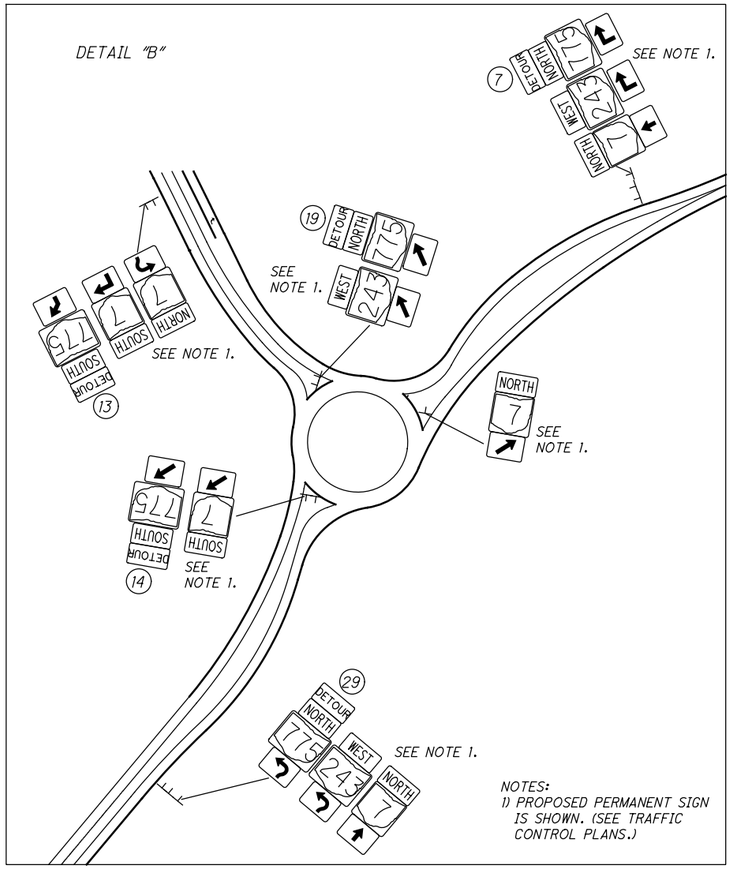

DETAIL "C"

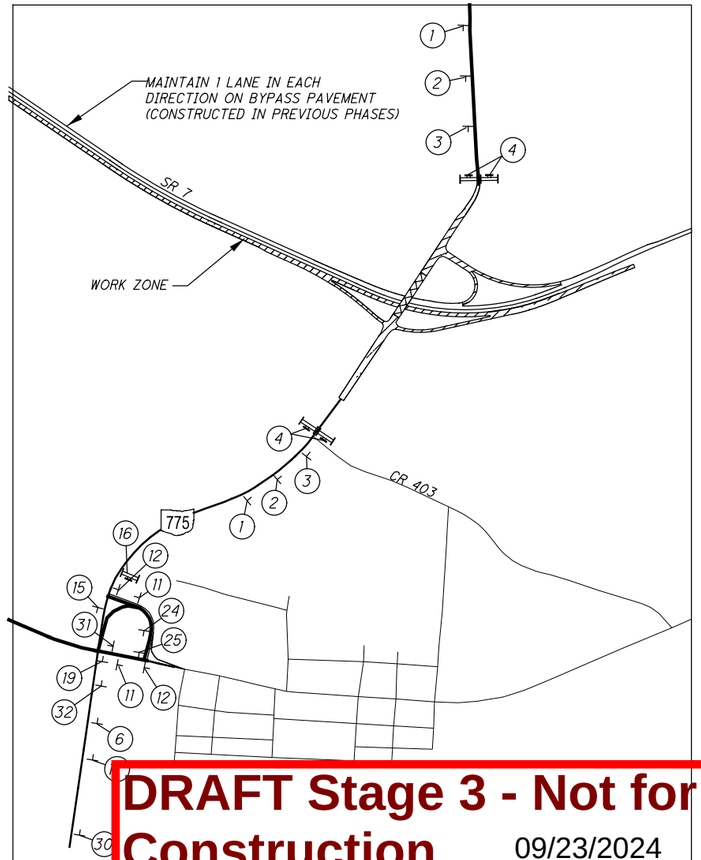

DRAFT Stage 3 - Not for Construction 09/23/2024

HORIZONTAL SCALE IN FEET: 0, 375, 750, 1500

CALCULATED MJH CHECKED KAE

MAINTENANCE OF TRAFFIC PLAN
DETOUR PLAN

LAW-7-2.17

66 / 1247

C:\EEC\Projects\LAW-7(Stantec)\CADD\Phase_2B\MOT\Sheets\66-75923_MD004.dgn Sheet - 5/13/2024 12:07:25 PM mhunt

SHEET NUM.															PART.	ITEM	ITEM EXT	GRAND TOTAL	UNIT	DESCRIPTION	SEE SHEET NO.
34	35	36	38	41	72	73	74	78	79	82	83	84	629	1041	01/NHS/01						
																				ROADWAY	
LS															LS	201	11000	LS		CLEARING AND GRUBBING	
					1										1	202	20010	1	EACH	HEADWALL REMOVED	
	141				1,229	871				28,196	14,972	5,369	248		51,026	202	23000	51,026	SY	PAVEMENT REMOVED	
					1,955	307							301		2,563	202	35100	2,563	FT	PIPE REMOVED, 24" AND UNDER	
					855	130							48		1,033	202	35200	1,033	FT	PIPE REMOVED, OVER 24"	
					3,881	2,619									6,500	202	38000	6,500	FT	GUARDRAIL REMOVED	
					2										2	202	58000	2	EACH	MANHOLE REMOVED	
					6										6	202	58100	6	EACH	CATCH BASIN REMOVED	
	69														69	SPECIAL	20270000	69	FT	FILL AND PLUG EXISTING CONDUIT, 21" AND 36"	35
					4,965	1,679									6,644	202	75000	6,644	FT	FENCE REMOVED	
													1		1	202	75250	1	EACH	GATE REMOVED	
					LS										LS	202	98000	LS		REMOVAL MISC.: GAS WELL REMOVED	35
					381	291	5,039,677	267	1,101				3,153		5,044,870	203	10000	5,044,870	CY	EXCAVATION	
					342	291	4,523,577	1,932	195				1,071		4,527,408	203	20000	4,527,408	CY	EMBANKMENT	
							582,155								582,155	203	20001	582,155	CY	EMBANKMENT, AS PER PLAN (TYPE C)	38
							7,459								7,459	203	22000	7,459	CY	EMBANKMENT, USING NATURAL SOILS, 703.16.A	
							68,291			202,373	34,615	21,411	1,729		328,419	204	10000	328,419	SY	SUBGRADE COMPACTION	
							16,878								16,878	204	13000	16,878	CY	EXCAVATION OF SUBGRADE	
							16,878								16,878	204	30010	16,878	CY	GRANULAR MATERIAL, TYPE B	
110															110	204	45000	110	HOUR	PROOF ROLLING	
			520				68,055								68,575	204	50000	68,575	SY	GEOTEXTILE FABRIC	
		258													258	209	60201	258	STA	LINEAR GRADING, AS PER PLAN	36
					18,840.9	1,420.3									20,261.2	606	15050	20,261.2	FT	GUARDRAIL, TYPE MGS	
					1,112.5	5,150									6,262.5	606	15100	6,262.5	FT	GUARDRAIL, TYPE MGS WITH LONG POSTS	
					137.5	237.5									375	606	15550	375	FT	GUARDRAIL, BARRIER DESIGN, TYPE MGS	
					25										25	606	17350	25	FT	GUARDRAIL, TYPE MGS, 25' LONG-SPAN	
					24	12									36	606	26150	36	EACH	ANCHOR ASSEMBLY, MGS TYPE E, (MASH 2016)	
					15	6									21	606	26550	21	EACH	ANCHOR ASSEMBLY, MGS TYPE T	
					24	7									31	606	35002	31	EACH	MGS BRIDGE TERMINAL ASSEMBLY, TYPE 1	
					3	2									5	606	35102	5	EACH	MGS BRIDGE TERMINAL ASSEMBLY, TYPE 2	
					2										2	606	60012	2	EACH	IMPACT ATTENUATOR, TYPE 1 (BIDIRECTIONAL)	
					1										1	606	60022	1	EACH	IMPACT ATTENUATOR, TYPE 2 (UNIDIRECTIONAL), (55 MPH, 69" HAZARD WIDTH)	
														43,773	43,773	607	15000	43,773	FT	FENCE, TYPE 47	
														15,189	15,189	607	23000	15,189	FT	FENCE, TYPE CLT	
						2									2	607	98100	2	EACH	FENCE, MISC.: GATE, AS PER PLAN	37
					6,989	1,087									8,076	622	10160	8,076	FT	CONCRETE BARRIER, SINGLE SLOPE, TYPE D	
					3	1									4	622	25050	4	EACH	CONCRETE BARRIER, END ANCHORAGE, REINFORCED, TYPE D	
															3	623	38500	3	EACH	MONUMENT ASSEMBLY, TYPE C	
															106	623	40500	106	EACH	REFERENCE MONUMENT, TYPE A	
															30	623	40900	30	EACH	MONUMENT, MISC.: RIGHT-OF-WAY MONUMENT RESET	34
															LS	623	50000	LS		PRECONSTRUCTION SURVEY MONUMENT VERIFICATION AND REPORT	
															LS	623	51000	LS		POST CONSTRUCTION SURVEY MONUMENT VERIFICATION AND REPORT	
														4	4	625	32000	4	EACH	GROUND ROD	
						1							3		4	SPECIAL	69050350	4	EACH	MAILBOX REMOVED AND RESET	37
				482,309											482,309	863	00100	482,309	SY	GEOGRID, TYPE P1	
				171,133											171,133	863	00300	171,133	SY	GEOGRID, TYPE P3	
				162,167											162,167	863	00600	162,167	SY	GEOGRID, TYPE S1	
							524,387								524,387	863	00800	524,387	CY	REINFORCED EMBANKMENT	

CALCULATED SLP CHECKED ALB

GENERAL SUMMARY

LAW-7-2.17

DRAFT Stage 3 - Not for Construction 09/23/2024

U:\173608714\LAW\75923\roadway\sheets\75923GG001.dgn 5/21/2024 4:48:40 PM SLParker

SHEET NUM.														PART.	ITEM	ITEM EXT	GRAND TOTAL	UNIT	DESCRIPTION	SEE SHEET NO.
37	38	72	73	74	78	79	80	81	629	774				01/NHS/01						
																			EROSION CONTROL	
						117								117	601	11000	117	SY	RIPRAP, TYPE D	
					133					38				175	601	21050	175	SY	TIED CONCRETE BLOCK MAT WITH TYPE I UNDERLAYMENT	
					9,811									9,811	601	21100	9,811	SY	SLOPE PROTECTION, MISC.: SEEDING AND EROSION CONTROL WITH TURF REINFORCING MAT,	37
																			TYPE 3 AND PERCUSSION DRIVEN EARTH ANCHORS	
					2,641									2,641	601	23000	2,641	SY	ARTICULATING CONCRETE BLOCK REVETMENT SYSTEM, TYPE I	
					14	180								194	601	27001	194	CY	DUMPED ROCK FILL, TYPE C, AS PER PLAN	34
						550								550	601	32000	550	CY	ROCK CHANNEL PROTECTION, TYPE A WITH FILTER	
				1,147	1,938	78								3,163	601	32100	3,163	CY	ROCK CHANNEL PROTECTION, TYPE B WITH FILTER	
				157	3,083	160								3,410	601	32200	3,410	CY	ROCK CHANNEL PROTECTION, TYPE C WITH FILTER	
					78									78	601	32300	78	CY	ROCK CHANNEL PROTECTION, TYPE D WITH FILTER	
	1,247													1,247	601	34200	1,247	CY	ROCK CHANNEL PROTECTION, TYPE C WITHOUT FILTER	
14														14	659	00100	14	EACH	SOIL ANALYSIS TEST	
131,277														131,277	659	00300	131,277	CY	TOPSOIL	
1,741														1,741	659	00301	1,741	CY	TOPSOIL, AS PER PLAN	37
		1,631	1,141	1,165,946	1,342		1,900	7,681	4,854					1,184,495	659	00540	1,184,495	SY	SEEDING AND MULCHING, CLASS 3C	
59,225														59,225	659	14000	59,225	SY	REPAIR SEEDING AND MULCHING	
59,225														59,225	659	15000	59,225	SY	INTER-SEEDING	
165														165	659	20000	165	TON	COMMERCIAL FERTILIZER	
244.73														244.73	659	31000	244.73	ACRE	LIME	
6,556														6,556	659	35000	6,556	MGAL	WATER	
2,665														2,665	659	40000	2,665	MSF	MOWING	
4,207				5,482										9,689	670	00500	9,689	SY	SLOPE EROSION PROTECTION	
					10,580									10,580	670	00700	10,580	SY	DITCH EROSION PROTECTION	
					13,171									13,171	670	00720	13,171	SY	DITCH EROSION PROTECTION MAT, TYPE B	
														LS	832	15000	LS		STORM WATER POLLUTION PREVENTION PLAN	
														LS	832	15002	LS		STORM WATER POLLUTION PREVENTION INSPECTIONS	
														LS	832	15010	LS		STORM WATER POLLUTION PREVENTION INSPECTION SOFTWARE	
														3,068,219	832	30000	3,068,219	EACH	EROSION CONTROL	
					18,348									18,348	836	10000	18,348	SY	SEEDING AND EROSION CONTROL WITH TURF REINFORCING MAT, TYPE 1	
					9,192									9,192	836	10020	9,192	SY	SEEDING AND EROSION CONTROL WITH TURF REINFORCING MAT, TYPE 2	
					6,406									6,406	836	10030	6,406	SY	SEEDING AND EROSION CONTROL WITH TURF REINFORCING MAT, TYPE 3	
																			DRAINAGE	
				3		37								40	602	20000	40	CY	CONCRETE MASONRY	
										32,781				32,781	605	11100	32,781	FT	6" SHALLOW PIPE UNDERDRAINS	
										2,370				3,870	605	13300	3,870	FT	6" UNCLASSIFIED PIPE UNDERDRAINS	
														750	605	13402	750	FT	6" UNCLASSIFIED PIPE UNDERDRAINS FOR SPRINGS	
										19,922				19,922	605	13500	19,922	FT	6" ROCK CUT UNDERDRAINS	
										99,751				99,751	605	14000	99,751	FT	6" BASE PIPE UNDERDRAINS	
3,391														5,041	605	31100	5,041	FT	AGGREGATE DRAINS	
										2,970				2,970	611	00510	2,970	FT	6" CONDUIT, TYPE F FOR UNDERDRAIN OUTLETS	
										2,171				2,321	611	00900	2,321	FT	6" CONDUIT, TYPE B	
														150	611	01400	150	FT	6" CONDUIT, TYPE E	
														250	611	01500	250	FT	6" CONDUIT, TYPE F	
							92							92	611	05700	92	FT	15" CONDUIT, TYPE A, 706.02, 707.33	
						1,644								1,644	611	05900	1,644	FT	15" CONDUIT, TYPE B	
				219		528								747	611	06100	747	FT	15" CONDUIT, TYPE C	
						294								294	611	06700	294	FT	15" CONDUIT, TYPE F	
						856								856	611	06700	856	FT	15" CONDUIT, TYPE F, 707.21	
						50								50	611	07400	50	FT	18" CONDUIT, TYPE B	
						777								777	611	07600	777	FT	18" CONDUIT, TYPE C	
						477								477	611	08900	477	FT	21" CONDUIT, TYPE B	
						88								88	611	09400	88	FT	21" CONDUIT, TYPE D	
						20								20	611	09700	20	FT	21" CONDUIT, TYPE F	
						65								65	611	09700	65	FT	21" CONDUIT, TYPE F, 707.21	
							384							384	611	10200	384	FT	24" CONDUIT, TYPE A, 707.01, 707.02, 707.33	

CALCULATED SLP CHECKED ALB

GENERAL SUMMARY

LAW-7-2.17

DRAFT Stage 3 - Not for Construction 09/23/2024

U:\173608714\LAW\75923\roadway\sheets\75923GG002.dgn 5/21/2024 4:48:41 PM SLParker

SHEET NUM.														PART.	ITEM	ITEM EXT	GRAND TOTAL	UNIT	DESCRIPTION	SEE SHEET NO.
35	36	38	72	73	74	79	80	82	83	84	629	774		01/NHS/01						
																			DRAINAGE (CONT.)	
						69								69	611	10400	69	FT	24" CONDUIT, TYPE B	
						10								10	611	10600	10	FT	24" CONDUIT, TYPE C	
						20								20	611	11200	20	FT	24" CONDUIT, TYPE F	
						224								224	611	11200	224	FT	24" CONDUIT, TYPE F, 707.21	
						91								91	611	11900	91	FT	27" CONDUIT, TYPE B	
						196								196	611	12100	196	FT	27" CONDUIT, TYPE C	
						18								18	611	12700	18	FT	27" CONDUIT, TYPE F	
						24								24	611	12700	24	FT	27" CONDUIT, TYPE F, 707.21	
						229								229	611	13400	229	FT	30" CONDUIT, TYPE B	
						426								426	611	13600	426	FT	30" CONDUIT, TYPE C	
							181							181	611	16200	181	FT	36" CONDUIT, TYPE A, 706.01, 706.02, 707.33 OR 48" 707.01, 707.02	
						270								270	611	16400	270	FT	36" CONDUIT, TYPE B	
						12								12	611	16600	12	FT	36" CONDUIT, TYPE C	
						83								83	611	17200	83	FT	36" CONDUIT, TYPE F	
							128							128	611	19200	128	FT	42" CONDUIT, TYPE A, 707.01, 707.02, 707.33	
						441								441	611	19400	441	FT	42" CONDUIT, TYPE B	
							967							967	611	19600	967	FT	42" CONDUIT, TYPE C	
							47							47	611	19904	47	FT	42" CONDUIT, TYPE F	
							426							426	611	22400	426	FT	54" CONDUIT, TYPE B	
							325							325	611	22600	325	FT	54" CONDUIT, TYPE C	
							1,582							1,582	611	23600	1,582	FT	60" CONDUIT, TYPE A, 707.02, 707.04	
							100							100	611	23600	100	FT	60" CONDUIT, TYPE A, 707.02, 707.33	
							377							377	611	25000	377	FT	66" CONDUIT, TYPE A, 707.02, 707.04	
							8							8	611	98180	8	EACH	CATCH BASIN, NO. 3A	
							6							6	611	98230	6	EACH	CATCH BASIN, NO. 4	
							3							3	611	98260	3	EACH	CATCH BASIN, NO. 4 WITHOUT APRON	
							3							3	611	98270	3	EACH	CATCH BASIN, NO. 4A	
							9							9	611	98300	9	EACH	CATCH BASIN, NO. 5	
							3							3	611	98341	3	EACH	CATCH BASIN, NO. 5A	
							4							4	611	98350	4	EACH	CATCH BASIN, NO. 5A, AS PER PLAN	37
							17							17	611	98410	17	EACH	CATCH BASIN, NO. 8	
							1							1	611	98434	1	EACH	CATCH BASIN, NO. 8A	
							1							1	611	98435	1	EACH	CATCH BASIN, NO. 8A, AS PER PLAN	37
							1							1	611	98470	1	EACH	CATCH BASIN, NO. 2-2B	
					4									4	611	98471	4	EACH	CATCH BASIN, NO. 2-2B, AS PER PLAN	670
							14							14	611	99114	14	EACH	INLET, NO. 3 FOR SINGLE SLOPE BARRIER, TYPE D	
							1							1	611	99574	1	EACH	MANHOLE, NO. 3	
	4											23		27	611	99710	27	EACH	PRECAST REINFORCED CONCRETE OUTLET	
																			PAVEMENT	
			184	103				3,404	883	104	92			4,770	252	01500	4,770	FT	FULL DEPTH PAVEMENT SAWING	
								21,202	545					21,747	254	01000	21,747	SY	PAVEMENT PLANING, ASPHALT CONCRETE, 3.25"	
5										1,617	66			1,688	301	56000	1,688	CY	ASPHALT CONCRETE BASE, PG64-22, (449)	
20								37,648	6,383		30			44,081	302	56000	44,081	CY	ASPHALT CONCRETE BASE, PG64-22, (449)	
26					53			33,171	5,620	3,377	278			42,525	304	20000	42,525	CY	AGGREGATE BASE	
17								24,045	3,623	2,071	101			29,857	407	10000	29,857	GAL	TACK COAT	
		70												70	411	10000	70	CY	STABILIZED CRUSHED AGGREGATE	
2										654	27			683	441	70000	683	CY	ASPHALT CONCRETE SURFACE COURSE, TYPE 1, (449), PG64-22	
3										916	38			957	441	70300	957	CY	ASPHALT CONCRETE INTERMEDIATE COURSE, TYPE 2, (449)	
											20			20	441	70500	20	CY	ASPHALT CONCRETE SURFACE COURSE, TYPE 1, (449), (DRIVEWAYS)	
	796													796	441	70801	796	CY	ASPHALT CONCRETE INTERMEDIATE COURSE, TYPE 1, (449), (UNDER GUARDRAIL), AS PER PLAN	36
5								8,755	1,366		6			10,132	442	10000	10,132	CY	ASPHALT CONCRETE SURFACE COURSE, 12.5 MM, TYPE A (446)	
6								10,345	1,597		7			11,955	442	10100	11,955	CY	ASPHALT CONCRETE INTERMEDIATE COURSE, 19 MM, TYPE A (446)	
								2,656						2,656	609	12000	2,656	FT	COMBINATION CURB AND GUTTER, TYPE 2	
								1,922	204					2,126	609	26000	2,126	FT	CURB, TYPE 6	
								382						382	609	31000	382	FT	COMBINATION CURB AND GUTTER, TYPE 9	
								736	42					778	609	72000	778	SY	CONCRETE MEDIAN	

CALCULATED SLP
CHECKED ALB

GENERAL SUMMARY

LAW-7-2.17

DRAFT Stage 3 - Not for Construction 09/23/2024

U:\173608714\LAW\75923\roadway\sheets\75923GG003.dgn 5/21/2024 4:48:42 PM SLParker

SHEET NUM.											PART.	ITEM	ITEM EXT	GRAND TOTAL	UNIT	DESCRIPTION	SEE SHEET NO.
72	73	81	774								01/NHS/01						
																LIGHTING	777
																TRAFFIC CONTROL	713
115	65										180	626	00102	180	EACH	BARRIER REFLECTOR, TYPE 1, BIDIRECTIONAL	
126	32										158	626	00102	158	EACH	BARRIER REFLECTOR, TYPE 1, UNIDIRECTIONAL	
																TRAFFIC SIGNALS	766
																LANDSCAPING	
			7								7	661	20080	7	EACH	DECIDUOUS SHRUB, 4' HEIGHT, RHUS AROMATICA	
			796								796	661	99930	796	SY	PLANTING, MISC.:, 10" GRAY WASHED RIVER STONE MULCH	774
			49								49	662	31000	49	GAL	LANDSCAPE WATERING	
																RETAINING WALLS (001)	707
																NOISE BARRIERS	684
																BUILDING DEMOLITION	
		LS									LS	202	56001	LS		BUILDING DEMOLISHED, AS PER PLAN, 1.5 - STORY FRAME HOUSE, GARAGE	34
		LS									LS	202	56001	LS		BUILDING DEMOLISHED, AS PER PLAN, 1.5 - STORY FRAME HOUSE, POOL	34
		LS									LS	202	56001	LS		BUILDING DEMOLISHED, AS PER PLAN, (2) 1 - STORY FRAME HOUSES, 2 SHEDS	34
		LS									LS	202	56001	LS		BUILDING DEMOLISHED, AS PER PLAN, ABANDONED 1 - STORY FRAME HOUSE, 2 SHEDS, PROPANE TANK	34
		LS									LS	202	56001	LS		BUILDING DEMOLISHED, AS PER PLAN, 1 - STORY FRAME HOUSE, POOL, DECK	34
		LS									LS	202	56001	LS		BUILDING DEMOLISHED, AS PER PLAN, WOOD SHED, BARN	34
		LS									LS	202	56001	LS		BUILDING DEMOLISHED, AS PER PLAN, 1 - STORY FRAME HOUSE, 2 - STORY BARN, GARAGE, 2 SHEDS, TRAILER PORT, DOG HOUSE	34
		LS									LS	202	56001	LS		BUILDING DEMOLISHED, AS PER PLAN, SEPTIC TANK, WELL, LEACH FIELD	34
		LS									LS	202	56001	LS		BUILDING DEMOLISHED, AS PER PLAN, 1.5 - STORY FRAME HOUSE, POOL	34
		LS									LS	202	56001	LS		BUILDING DEMOLISHED, AS PER PLAN, 2 - STORY METAL BUILDING	34
		LS									LS	202	56001	LS		BUILDING DEMOLISHED, AS PER PLAN, 1.5 - STORY FRAME HOUSE, MOBILE HOME, WOOD BUILDING, WELL HOUSE, PROPANE TANK	34
		LS									LS	202	56001	LS		BUILDING DEMOLISHED, AS PER PLAN, 2 - STORY BRICK FRAME HOUSE, 1 - STORY DUPLEX, SHED	34
		LS									LS	202	56001	LS		BUILDING DEMOLISHED, AS PER PLAN, 2 - STORY BRICK FRAME HOUSE, GARAGE, PROPANE TANK	34
		LS									LS	202	56001	LS		BUILDING DEMOLISHED, AS PER PLAN, 1.5 - STORY FRAME HOUSE, (2) METAL OUT BUILDINGS, PROPANE TANK	34
		LS									LS	202	56001	LS		BUILDING DEMOLISHED, AS PER PLAN, GARAGE, CAR PORT	34
		LS									LS	202	56001	LS		BUILDING DEMOLISHED, AS PER PLAN, (2) 1 - STORY FRAME HOUSE, WELL, 1-STORY BLOCK GARAGE	34
		LS									LS	202	56001	LS		BUILDING DEMOLISHED, AS PER PLAN, 1-STORY FRAME HOUSE, GARAGE	34
																STRUCTURE OVER 20 FOOT SPAN (LAW-7-0251)	796
																STRUCTURE OVER 20 FOOT SPAN (LAW-7-0370)	820, 844
																STRUCTURE OVER 20 FOOT SPAN (LAW-7-0376)	849
																STRUCTURE OVER 20 FOOT SPAN (LAW-7-0387)	873, 897
																STRUCTURE OVER 20 FOOT SPAN (LAW-7-0510)	899
																STRUCTURE OVER 20 FOOT SPAN (LAW-7-0563)	910
																STRUCTURE OVER 20 FOOT SPAN (LAW-7-0711)	935
																STRUCTURE OVER 20 FOOT SPAN (LAW-7-0713L)	964
																STRUCTURE OVER 20 FOOT SPAN (LAW-7-0713R)	993
																STRUCTURE OVER 20 FOOT SPAN (LAW-775-0105)	1018
																MAINTENANCE OF TRAFFIC	45
																INCIDENTALS	
											LS	614	11000	LS		MAINTAINING TRAFFIC	
											42	619	16000	42	MNTH	FIELD OFFICE, TYPE A	
											LS	623	10000	LS		CONSTRUCTION LAYOUT STAKES AND SURVEYIN	
											LS	624	10000	LS		MOBILIZATION	

CALCULATED SLP
CHECKED ALB

GENERAL SUMMARY

LAW-7-2.17

DRAFT Stage 3 - Not for Construction 09/23/2024

U:\173608714\LAW\75923\roadway\sheets\75923GG004.dgn 5/21/2024 4:48:43 PM SLParker

SUBSUMMARY

CALCULATED SLP | CHECKED ALB

REF NO.	SHEET NO.	STATION FROM	STATION TO	SIDE	202 PAVEMENT REMOVED	202 PIPE REMOVED, 24" AND UNDER	202 PIPE REMOVED, OVER 24"	202 CATCH BASIN REMOVED	202 MANHOLE REMOVED	202 FENCE REMOVED	202 REMOVEL MISC.: GAS WELL REMOVED	202 HEADWALL REMOVED	202 GUARDRAIL REMOVED	203 EXCAVATION	203 EMBANKMENT	252 FULL DEPTH PAVEMENT SAWING	606 GUARDRAIL, TYPE MGS	606 GUARDRAIL, BARRIER DESIGN, TYPE MGS	606 ANCHOR ASSEMBLY, MGS TYPE E, (MASH 2016)	606 ANCHOR ASSEMBLY, MGS TYPE T	606 MGS BRIDGE TERMINAL ASSEMBLY, TYPE 1	606 MGS BRIDGE TERMINAL ASSEMBLY, TYPE 2	606 GUARDRAIL, TYPE MGS WITH LONG POSTS	606 GUARDRAIL, TYPE MGS, 25' LONG SPAN	606 IMPACT ATTENUATOR, TYPE 1 (BIDIRECTIONAL)	606 IMPACT ATTENUATOR, TYPE 2 (UNIDIRECTIONAL)	622 CONCRETE BARRIER, SINGLE SLOPE, TYPE D	622 CONCRETE BARRIER, END ANCHORAGE, REINFORCED, TYPE D	626 BARRIER REFLECTOR, TYPE 1, BIDIRECTIONAL	BARRIER REFLECTOR, TYPE 1, UNIDIRECTIONAL	659 SEEDING AND MULCHING, CLASS 3C
					SY	FT	FT	EACH	EACH	FT	LS	EACH	FT	CY	CY	FT	FT		EACH	EACH	EACH	EACH	FT	FT	EACH	EACH	FT	EACH	EACH	EACH	
		S.R. 7																													
1-R	95	1416+61.49	115+38.66	RT/LT		388		3																							
2-R	95	114+52.43	115+04.85	RT/LT	157.73											53.63															
3-R	95	117+44.37	118+64.03	RT/LT	69.33	63								46.22		42.67															191.51
4-R	95	118+17.00	119+61.00	LT	320.21									106.74	106.74																547.12
5-R	95	120+01.20	122+94.78	RT/LT			447	2																							
1-GR	97	126+85.91	132+33.08	RT													462.50		1		1								6		
1-R	97	122+23.33	129+92.93	RT/LT						859																					
1-GR	99	135+30.10	141+66.03	RT													550.00		1		1								7		
2-GR	99	135+47.99	138+88.23	LT													262.5		1		1								4		
1-R	99	134+60.34	144+43.02	RT						952																					
2-R	99	136+28.58	138+61.39	LT						254																					
1-GR	101	155+69.84	156+23.50	RT													25.0			1	1								1		
1-R	101	153+92.03	155+35.48	RT						192																					
2-R	101	155+96.90	156+12.13	RT/LT						126																					
3-R	101	156+21.00	159+00.00	RT																								264.98	1		
1-GR	103	163+31.78	171+00.00	LT													718.4		1										8		
1-R	103	162+81.08	163+34.44	LT			68																								
2-R	103	162+49.64		RT							1																				
3-R	103	164+30.94	164+82.77	RT						138																					
4-R	103	164+60.90	164+84.62	RT		27																									
5-R	103	165+73.10	166+16.10	LT	227.03									75.68	75.68	62.35															339.71
6-R	103	165+30.48	167+32.84	LT/RT		453		1	2																						
7-R	103	166+57.66	169+56.49	RT		323																									
8-R	103	169+13.78	170+51.87	LT	177.65									59.22	59.22																322.60
9-R	103	170+08.23	170+26.02	LT		28																									
10-R	105	159+00.00	171+00.00	RT																								1200.36			
1-GR	105	171+00.00	176+06.55	LT													356.6		1										4		
2-GR	105	182+31.87	183+00.00	LT													55.7			1									1		
1-R	105	171+00.00	183+00.00	RT																								1215.56			
2-R	105	175+12.48	176+12.86	RT	145.65									48.55	48.55	12.15															
3-R	105	177+71.58	180+74.34	LT/RT						517																					
4-R	105	180+81.67	181+91.41	LT/RT						285																					
1-GR	107	183+00.00	183+56.62	LT													206.8		1										3		
2-GR	107	191+24.60	194+38.97	LT													275.0			1	1								4		
1-R	107	NOT USED																													
2-R	107	183+00.00	194+26.72	RT																								1137.52			
1-GR	109	197+31.07	198+72.09	RT													87.1				2								2		
2-GR	109	197+00.54	198+76.03	RT													119.6				2								2		
3-GR	109	202+09.88	203+85.71	RT													121.5				2								2		
4-GR	109	202+18.48	204+00.49	RT													125.2				2								2		
5-GR	109	206+41.50	207+00.00	RT													31.4				1								1		
6-GR	109	14+66.51 (C.R. 104)	17+15.59 (C.R. 104)	RT															2				150						3		
7-GR	109	10+50.77 (C.R. 32)	15+02.66 (C.R. 32)	LT																			450						5		
1-R	109	14+42.25 (C.R. 104)	14+38.27 (C.R. 104)	RT/LT		43						1																			
2-R	109	10+50.77 (C.R. 32)	10+84.73 (C.R. 32)	LT									36.5																		
3-R	109	11+40.00 (C.R. 32)	15+02.66 (C.R. 32)	LT									359.2																		
4-R	109	206+37.53	207+00.00	RT																								61.46			
1-GR	111	207+00.00	214+95.40	LT													743.6		1										8		
1-R	111	208+28.41	208+43.82	LT	131.35									43.78	43.78	13.00															213.87
2-R	111	207+00.00	219+00.00	RT																											
3-R	111	208+39.13	208+68.99	LT		31																						1189.49			
1-GR	114	224+62.43	231+00.00	RT													624.6				1								7		
2-GR	114	227+33.61	231+00.00	RT													354.3			1									4		
1-R	114	219+00.00	224+64.93	RT																								550.93	1		
1-R	115	223+33.51	223+35.89	RT		41																									
2-R	115	227+79.70	229+73.56	RT		128	71																								
TOTALS CARRIED TO SHEET 72					1228.95	1525	586	6	2	3323	1	1	395.7	380.19	333.97	183.80	5119.82	0	9	4	15	0	600.0	0	0	0	5620.30	2	74	0	1114.81

DRAFT Stage 3 - Not for Construction 09/23/2024

LAW-7-2.17

U:\1736087\4\LAW\75923\roadway\sheets\75923GS001.dgn 5/21/2024 4:48:43 PM SLParker

SUBSUMMARY

CALCULATED SLP
CHECKED ALB

REF NO.	SHEET NO.	STATION FROM	STATION TO	SIDE	202 PAVEMENT REMOVED	202 PIPE REMOVED, 24" AND UNDER	202 PIPE REMOVED, OVER 24"	202 CATCH BASIN REMOVED	202 MANHOLE REMOVED	202 FENCE REMOVED	202 REMOVEL MISC.: GAS WELL REMOVED	202 HEADWALL REMOVED	202 GUARDRAIL REMOVED	203 EXCAVATION	203 EMBANKMENT	252 FULL DEPTH PAVEMENT SAWING	606 GUARDRAIL, TYPE MGS	606 GUARDRAIL, BARRIER DESIGN, TYPE MGS	606 ANCHOR ASSEMBLY, MGS TYPE E, (MASH 2016)	606 ANCHOR ASSEMBLY, MGS TYPE T	606 MGS BRIDGE TERMINAL ASSEMBLY, TYPE 1	606 MGS BRIDGE TERMINAL ASSEMBLY, TYPE 2	606 GUARDRAIL, TYPE MGS WITH LONG POSTS	606 GUARDRAIL, TYPE MGS, 25' LONG SPAN	606 IMPACT ATTENUATOR, TYPE 1 (BIDIRECTIONAL)	606 IMPACT ATTENUATOR, TYPE 2 (UNIDIRECTIONAL)	622 CONCRETE BARRIER, SINGLE SLOPE, TYPE D	622 CONCRETE BARRIER, END ANCHORAGE, REINFORCED, TYPE D	626 BARRIER REFLECTOR, TYPE 1, BIDIRECTIONAL	626 BARRIER REFLECTOR, TYPE 1, UNIDIRECTIONAL	659 SEEDING AND MULCHING, CLASS 3C
					SY	FT	FT	EACH	EACH	FT	LS	EACH	FT	CY	CY	FT	FT	FT	EACH	EACH	EACH	EACH	FT	FT	EACH	EACH	FT	EACH	EACH	EACH	SY
		S.R. 7																													
1-GR	117	231+00.00	232+19.25	RT													112.9			1									2		
2-GR	117	231+00.00	234+07.67	RT													258.2		1										3		
1-R	117	241+95.67	241+99.64	LT		31																									
1-R	119	243+75.50	244+14.09	LT			46																								
2-R	119	246+21.17	247+97.69	LT/RT		73																									
3-R	119	252+16.36	253+16.81	LT/RT		66																									
1-R	122	255+98.85	256+45.05	LT		49	47																								
2-R	122	258+11.16	258+31.33	LT		21																									
3-R	122	262+46.96	262+59.82	LT/RT		31																									
4-R	122	266+09.87	266+12.79	LT/RT		33																									
1-R	123	261+62.29	262+59.82	LT/RT		93																									
1-GR	125	269+50.06	279+00.00	RT													898.6		1										10		
1-GR	127	279+00.00	288+96.71	RT													951.4		1										10		
1-R	127	284+44.50	284+52.98	RT		33																									
2-R	127	286+68.39	288+15.62	RT						152																					
1-GR	129	293+96.71	297+61.10	RT													287.5		1		1								4		
2-GR	129	296+02.12	297+78.80	RT													100		1		1								2		
3-GR	129	300+58.85	301+85.75	RT													50		1		1								2		
4-GR	129	300+66.85	303+00.00	RT													206.4				1								3		
1-R	129	299+42.94	303+00.00	LT/RT						988																					
1-GR	131	303+00.00	308+18.64	RT													468.6		1										5		
2-GR	131	314+04.56	315+00.00	RT													45.4		1											1	
1-R	131	303+00.00	307+80.07	RT						502																					
1-GR	133	315+00.00	322+62.99	RT													742.1			1									8		
2-GR	133	317+84.09	326+92.50	LT													862.5		1	1									10		
1-R	133	315+21.31	315+26.49	LT						8																					16
2-R	133	320+87.42	321+04.49	RT			41																								
1-GR	135, 136	328+52.06	339+00.00	RT													987.2		1										11		
2-GR	135, 136	338+30.00	339+00.00	LT													57.5			1									1		
1-GR	138	339+00.00	342+55.00	LT													305		1										4		
2-GR	138	339+00.00	344+62.77	RT													550.3			1									6		
1-GR	140	360+47.16	363+00.00	RT													203.2		1										3		
2-GR	140	361+69.71	363+00.00	LT													117.8			1									2		
1-GR	142	363+00.00	375+00.00	LT													1175.1						512.5	25					12		
2-GR	142	363+00.00	375+00.00	RT													1203.1												12		
3-GR	142	373+65.62	376+27.70	RT													86.7									1			1		
4-GR	142	374+17.32	375+00.00	RT														38.7							1				2		
1-GR	144	375+00.00	376+57.16	LT													157.1					1							2		
2-GR	144	375+00.00	376+38.06	RT													75.0	36.3			1								3		
3-GR	144	375+00.00	376+27.70	RT													100.8				1								2		
4-GR	144	380+39.68	385+71.47	LT													437.5		1		1								5		
5-GR	144	380+17.76	384+53.39	LT													300.0	62.5			1				1				4		
6-GR	144	380+08.36	381+94.72	RT													175.0			1		1							2		
7-GR	144	379+93.59	381+64.43	RT													162.5			1		1							2		
8-GR	144	375+00.00	376+37.71 (RAMP J)	RT													106.2				1								2		
1-R	144	380+48.03	387+00.00	LT/RT									1504																		
2-R	144	385+96.65	387+32.41	LT			135																								
1-R	146	387+00.00	399+00.00	RT									1222																		
2-R	146	392+40.07	399+00.00	RT																								672.37			
1-GR	148	401+87.56	411+00.00	LT													901.5			1									10		
2-GR	148	406+11.58	406+40.49	RT													37.5			1									4		
1-R	148	399+00.00	406+11.58	RT																								695.54	1		
2-R	148	399+00.00	406+40.49	RT									759																		
1-GR	150	411+00.00	422+63.69	RT													1098.5		1										11		
1-GR	152	426+35.50	431+94.02	LT													500.0		1	1									6		
TOTALS THIS SHEET					0	430	269	0	0	1642	0	0	3485.00	0	8	0	13721.05	137.5	15	11	9	3	512.5	25	3	1	1367.91	1	126	16
TOTALS FROM SHEET 71					1228.95	1525	586	6	2	3323	1	1	395.70	380.19	333.97	183.80	5119.82	0	9	4	15	0	600	0	0	0	5620.30	2	74	0	114.81
TOTALS CARRIED TO GENERAL SUMMARY					1229	1955	855	6	2	4965	1	1	3881	381	342	184	18840.9	137.5	24	15	24	3	1112.5	25	3	1	6988	3	115	126	1631

DRAFT Stage 3 - Not for Construction
09/23/2024

LAW-7-2.17

U:\173608714\LAW\75923\roadway\sheets\75923GS002.dgn 5/21/2024 4:48:44 PM SLParker

SUBSUMMARY

CALCULATED SLP | CHECKED ALB

REF NO.	SHEET NO.	STATION FROM	STATION TO	SIDE	202 PAVEMENT REMOVED SY	202 PIPE REMOVED, 24" AND UNDER FT	202 PIPE REMOVED, OVER 24" FT	202 FENCE REMOVED FT	202 GUARDRAIL REMOVED FT	203 EXCAVATION CY	203 EMBANKMENT CY	252 FULL DEPTH PAVEMENT SAWING FT	606 GUARDRAIL, TYPE MGS FT	606 GUARDRAIL, BARRIER DESIGN, TYPE MGS	606 ANCHOR ASSEMBLY, MGS TYPE E, (MASH 2016) EACH	606 ANCHOR ASSEMBLY, MGS TYPE T EACH	606 MGS BRIDGE TERMINAL ASSEMBLY, TYPE 1 EACH	606 MGS BRIDGE TERMINAL ASSEMBLY, TYPE 2 EACH	606 GUARDRAIL, TYPE MGS WITH LONG POSTS FT	607 FENCE, MISC.: GATE, AS PER PLAN EACH	622 CONCRETE BARRIER, SINGLE SLOPE, TYPE D FT	622 CONCRETE BARRIER, END ANCHORAGE, REINFORCED, TYPE D EACH	626 BARRIER REFLECTOR, TYPE 1, BIDIRECTIONAL EACH	626 BARRIER REFLECTOR, TYPE 1, UNIDIRECTIONAL EACH	659 SEEDING AND MULCHING, CLASS 3C SY	690 SPECIAL - MAILBOX REMOVED AND RESET EACH
		RAMP C																									
1-GR	419	116+33.24	119+18.34	LT									237.5		1										6		
2-GR	419	116+44.86	118+54.66	RT										200		1									8		
1-R	419	116+44.86	117+44.09	RT					95																		
2-R	419	116+33.24	118+90.55	LT					268																		
		RAMP D																									
1-GR	425	120+31.65	120+82.54	LT										37.5		1											
1-R	425	115+32.16	120+53.07	LT/RT					575																		
2-R	425	118+99.37	120+44.70	LT	269.64					90	90	103.00														388.41	
3-R	425	120+37.66	120+82.54	LT					45																		
		RAMP I																									
1-GR	431	374+13.80	376+38.42	LT									200				1								3		
2-GR	431	379+71.95	380+67.98	LT									120.3					1							2		
3-GR	431	379+71.95	380+68.61	RT									112.5					1							2		
		RAMP K																									
1-GR	442	385+17.88	389+72.34 (RAMP J)	RT									450			1									7		
2-GR	442	389+99.04	389+63.15	RT									37.5		1		1										
1-R	442	385+36.47	391+87.78	LT				1025																			
		RAMP L																									
1-GR	457	379+91.22	381+45.06	RT									137.5				1								2		
2-GR	457	380+26.72	381+25.36	LT									125			1									2		
1-R	457	381+42.58	392+40.09 (S.R. 7)	RT																		1086.47	1				
		BRENTWOOD EMERGENCY ACCESS																									
1-GR	465	13+68.33	20+40.17	RT												2				662.5				14			
1-R	465	13+80.00	13+80.00	LT/RT																	1						
2-R	465	22+50.00	22+50.00	LT/RT																	1						
		LYNN LANE																									
1-GR	482	12+73.76 (C.R. 32)	11+00.09	RT											2					62.5				2			
1-R	482	12+02.84 (C.R. 32)	12+34.08 (C.R. 32)	RT		33																					
2-R	482	10+14.78	10+15.76	RT		16																					
3-R	482	12+00.99	13+38.18	RT	329.24					109.75	109.75															480.30	
4-R	482	13+66.31	14+05.59	RT		64																					
		S.R. 243																									
1-R	490	16+28.71	17+79.21	RT		154																					
		C.R. 69																									
1-GR	502	13+44.60 (S.R. 243)	15+40.63	RT											2					512.5				6			
1-R	502	10+78.02	10+84.62	RT			90																				
1-GR	504	25+62.55	26+62.10	LT											1					50				1			
2-GR	504	27+88.11	32+48.52	LT											1					412.5				5			
1-GR	506	48+87.50	50+62.50	LT											1					75				2			
1-R	506	49+63.80	49+84.53	LT				124																			
		C.R. 118																									
1-GR	547	10+21.73	10+90.52	LT											1					50				1			
2-GR	547	10+21.69	14+76.01	RT											1					450				5			
1-R	547	10+18.85	10+32.01	LT/RT			40																				
2-R	547	13+29.48	13+44.97	LT/RT		40																					
		C.R. 2																									
1-R	553	15+66.70	16+65.73	LT	271.79					90.60	90.60															271.79	
		S.R. 775																									
1-GR	559	45+40.14	53+77.08	RT																712.5				8			
2-GR	559	45+47.80	53+59.80	LT																687.5				7			
3-GR	559	54+74.58	55+13.98	LT													1			12.5				1			
4-GR	559	54+99.28	55+38.67	RT													1			12.5				1			
1-R	559	45+40.14	53+68.24	RT					834																		
2-R	559	45+47.80	53+45.58	LT/RT					802																		
1-GR	560	58+48.15	70+43.05	LT											1		1			1112.5				12			
2-GR	560	58+72.85	62+37.03	RT													1			337.5							
1-R	560	61+13.26	65+36.85	LT				530																			
2-R	560	70+54.96	70+55.51	LT																							
TOTALS					870.67	307	130	1679	2619	290.35	290.35	103	1420.3	237.50	12	6	7	2	5150.0	2	1086.47	1	66	32	1140.50	1
TOTALS CARRIED TO GENERAL SUMMARY					871	307	130	1679	2619	291	291	103	1420.3	237.5	12	6	7	2	5150.0	2	1087	1	66	32	1141	1	

DRAFT Stage 3 - Not for Construction 09/23/2024

LAW-7-2.17

U:\1736087\14\LAW\75923\roadway\sheets\75923GS003.dgn 5/21/2024 4:48:45 PM SLParker

SUBSUMMARY

SHEET NO.	STATION FROM	STATION TO	SIDE	203 EXCAVATION CY	203 EMBANKMENT CY	203 EMBANKMENT, AS PER PLAN (TYPE C) CY	203 EMBANKMENT, USING NATURAL SOILS, 703.16A CY	204 EXCAVATION OF SUBGRADE CY	204 GRANULAR MATERIAL, TYPE B CY	204 GEOTEXTILE FABRIC SY	204 SUBGRADE COMPACTION SY	304 AGGREGATE BASE SY	601 ROCK CHANNEL PROTECTION, TYPE B WITH FILTER CY	601 ROCK CHANNEL PROTECTION, TYPE C WITH FILTER CY	602 CONCRETE MASONRY CY	611 CATCH BASIN, NO. 2-2B, AS PER PLAN EACH	611 15" CONDUIT, TYPE C FT	659 SEEDING AND MULCHING, CLASS 3C SY	670 SLOPE EROSION PROTECTION SY	863 REINFORCED EMBANKMENT CY
	S.R. 7																			
418	114+30.42	437+16.83	LT/RT	3620043	4199122	541262		12910	12910	53279	53279							844640		237999
	RAMP C																			
424	116+33.24	123+68.17	LT/RT	1696	4746													6325		
	RAMP D																			
430	115+19.00	120+82.54	LT/RT	14984	52			1206	1206	1188	1188							6501		
	RAMP I																			
436	373+63.81	380+81.60	LT/RT		94784													6040		50807
	RAMP J																			
441	387+15.12	391+15.81	LT/RT	82404	198			187	187	1087	1087							11456		
	RAMP K																			
456	384+99.45	397+51.56	LT/RT	600221	2027			789	789	4549	4549							59627		
	RAMP L																			
464	379+89.28	390+00.00	LT/RT	139	5052													16975		102171
	S.R. 243																			
501	11+00.00	21+54.00	LT/RT	242716	2913			513	513	2799	2799							31648		
	S.R. 775																			
579	45+42.93	70+75.00	LT/RT	97045	81378			435	435	1544	1544							42055		133410
	BRENTWOOD EMERGENCY ACCESS																			
472	13+40.00	22+85.54	LT/RT	748	9222	10209												5396		
	HENSON HOLLOW EMERGENCY ACCESS																			
475	10+00.00	12+60.01	LT/RT	143	2425													1834		
	C.R. 104																			
478	12+00.00	17+03.97	LT/RT	2123	3986													3792		
	C.R. 32																			
481	10+00.00	15+00.00	LT/RT	2164	1951													2511		
	LYNN LANE																			
485	10+10.00	13+90.68	LT/RT	2259	838			308	308	909	909							3046		
	DOGWOOD LANE EXTENSION																			
489	10+05.78	13+46.62	LT/RT	690	233													1369		
	C.R. 69																			
546	9+90.51	56+73.01	LT/RT	269898	113092	23726		422	422	2465	2465							91495		
	C.R. 118																			
552	10+18.30	14+76.01	LT/RT	51044	913	6958		108	108	235	235							13375		
	C.R. 2																			
558	10+18.28	17+58.28	LT/RT	26942	645													12099		
670	DETENTION BASIN #1		LT/RT	364.98			762.87				57.32	12.74	260.12	12.78	0.75	1	39	1258.80	967.82	
671	DETENTION BASIN #2		LT/RT	1106.54			9.75				110.79	24.62	204.01	4.44	0.75	1	62	245.67	787.98	
672	DETENTION BASIN #3		LT/RT	2864.02			5781.23				67.53	15.01	254.89	25.0[illegible]	0.75	1	56	2917.[illegible]	820.4[illegible]	
673	DETENTION BASIN #4		LT/RT	20081.62			904.64						427.87	114.6[illegible]	0.75	1	62	1340.25	2905.23	
TOTALS				5039676.16	4523577	582155	7458.49	16878	16878	68055	68290.64	52.37	1146.89	156.8[illegible]	3.00	4	219	1165945.86	5481.50	524[illegible]7
TOTALS CARRIED TO GENERAL SUMMARY				5039677	4523577	582155	7459	16878	16878	68055	68291	53	1147	157	3.0	4	219	1165946	5482	524[illegible]7

CALCULATED SLP
CHECKED ALB

LAW-7-2.17

DRAFT Stage 3 - Not for Construction 09/23/2024

U:\173608714\LAW\75923\roadway\sheets\75923GS011.dgn 5/21/2024 4:48:46 PM SLParker

CALCULATED SLP CHECKED ALB

SUBSUMMARY

REF NO.	SHEET NO.	STATION FROM	STATION TO	SIDE	203 EXCAVATION CY	203 EMBANKMENT CY	601 ARTICULATING CONCRETE BLOCK REVETMENT SYSTEM, TYPE I SY	601 ROCK CHANNEL PROTECTION, TYPE B WITH FILTER CY	601 ROCK CHANNEL PROTECTION, TYPE C WITH FILTER CY	601 ROCK CHANNEL PROTECTION, TYPE D WITH FILTER CY	601 DUMPED ROCK FILL, TYPE C CY	601 TIED CONCRETE BLOCK MAT WITH TYPE I UNDERLAYMENT SY	601 SLOPE PROTECTION, MISC.: SEEDING AND EROSION CONTROL WITH TURF REINFORCING MAT, TYPE 3 AND PERCUSSION DRIVEN EARTH ANCHORS SY	659 SEEDING AND MULCHING, CLASS 3C SY	DITCH EROSION PROTECTION SY	DITCH EROSION PROTECTION MAT, TYPE B SY	836 SEEDING AND EROSION CONTROL WITH TURF REINFORCING MAT, TYPE I SY	836 SEEDING AND EROSION CONTROL WITH TURF REINFORCING MAT, TYPE 2 SY	836 SEEDING AND EROSION CONTROL WITH TURF REINFORCING MAT, TYPE 3 SY
		S.R. 7																	
1-EC	95	115+38.66	116+88.68	RT												125			
2-EC	95	118+38.22	121+33.45	RT												250			
3-EC	95	119+92.07	121+26.76	LT												125			
4-EC	95	121+50.00	123+00.00	RT											183.33				
1-EC	97	123+00.00	125+00.00	RT											244.44				
2-EC	97	126+50.00	127+50.00	RT												83.33			
3-EC	97	128+05.82	129+00.00	RT					43.75										
1-EC	99	146+00.00	147+00.00	LT												201.39			
1-EC	101	147+00.00	149+00.00	LT												325.44			
2-EC	101	151+00.00	151+50.00	LT												61.11			
3-EC	101	156+00.00	157+00.00	LT												83.33			
4-EC	101	157+00.00	158+00.00	LT												241.67			
1-EC	103	159+30.11	159+50.00	LT													16.67		
2-EC	103	161+28.53	161+74.00	RT			38.89												
3-EC	103	161+50.00	163+50.00	LT												256.67			
4-EC	103	161+74.00	163+22.00	RT					77.78										
5-EC	103	163+50.00	163+77.00	LT					18.94										
6-EC	103	163+88.00	164+50.00	LT			105.78												
7-EC	103	165+50.00	166+50.00	LT													200		
8-EC	103	166+00.00	167+50.00	RT												183.33			
9-EC	103	166+50.00	168+00.00	LT					118.22										
10-EC	103	168+00.00	170+00.00	LT														322.22	
11-EC	103	170+00.00	171+00.00	LT					75										
12-EC	103	163+22.00	163+68.00	RT													61.11		
1-EC	105	171+00.00	172+50.00	LT					108.33										
2-EC	105	172+50.00	175+00.00	LT													402.78		
3-EC	105	175+00.00	180+30.00	LT											937.67				
4-EC	105	182+50.00	183+00.00	LT					28										
1-EC	107	183+00.00	184+50.00	LT					101.5										
2-EC	107	185+50.00	186+50.00	RT					41.61										
3-EC	107	189+00.00	191+00.00	RT					80.89										
4-EC	107	189+50.00	191+50.00	LT														322.22	
5-EC	107	191+50.00	193+00.00	LT				180.56											
6-EC	107	191+00.00	192+00.00	RT					43.33										
7-EC	107	192+00.00	192+50.00	RT												44.17			
8-EC	107	194+50.00	195+00.00	LT														100	
1-EC	109	195+00.00	196+00.00	LT														200	
2-EC	109	196+00.00	196+30.13	LT			30												
3-EC	109	11+69.77 (C.R. 104)	14+39.83 (C.R. 104)	RT/LT												423.33			
4-EC	109	197+50.00	198+67.39	RT					59										
5-EC	111	205+09.43	207+00.00	LT														410.83	
1-EC	111	207+00.00	208+00.00	LT													200		
2-EC	111	208+00.00	210+00.00	LT														330.28	
3-EC	111	210+00.00	212+75.00	LT					217.5										
4-EC	111	212+75.00	218+00.00	LT													845.83		
5-EC	111	218+00.00	219+00.00	LT												122.22			
1-EC	114	219+00.00	219+50.00	LT														61.11	
2-EC	114	219+50.00	221+50.00	LT															322.22
3-EC	114	223+50.00	226+50.00	LT													483.33		
4-EC	114	227+00.00	227+50.00	LT														44.17	
5-EC	114	227+50.00	229+34.07	LT								100.11							
6-EC	114	229+65.83	230+50.00	LT															119.22
7-EC	114	230+50.00	231+00.00	LT								32.39							
TOTALS CARRIED TO SHEET 78					0	0	174.67	180.56	1013.85	0	0	132.5	0	0	1365.44	2525.99	2209.72	790.83	441.44

DRAFT Stage 3 - Not for Construction 09/23/2024

LAW-7-2.17

U:\173608714\LAW\75923\roadway\sheets\75923GS004.dgn 5/21/2024 4:48:47 PM SLParker

REF NO.	SHEET NO.	STATION FROM	STATION TO	SIDE	203 EXCAVATION CY	203 EMBANKMENT CY	601 ARTICULATING CONCRETE BLOCK REVETMENT SYSTEM, TYPE I SY	601 ROCK CHANNEL PROTECTION, TYPE B WITH FILTER CY	601 ROCK CHANNEL PROTECTION, TYPE C WITH FILTER CY	601 ROCK CHANNEL PROTECTION, TYPE D WITH FILTER CY	601 DUMPED ROCK FILL, TYPE C CY	601 TIED CONCRETE BLOCK MAT WITH TYPE I UNDERLAYMENT SY	601 SLOPE PROTECTION, MISC.: SEEDING AND EROSION CONTROL WITH TURF REINFORCING MAT, TYPE 3 AND PERCUSSION DRIVEN EARTH ANCHORS SY	659 SEEDING AND MULCHING, CLASS 3C SY	670 DITCH EROSION PROTECTION SY	670 DITCH EROSION PROTECTION MAT, TYPE B SY	836 SEEDING AND EROSION CONTROL WITH TURF REINFORCING MAT, TYPE 1 SY	836 SEEDING AND EROSION CONTROL WITH TURF REINFORCING MAT, TYPE 2 SY	836 SEEDING AND EROSION CONTROL WITH TURF REINFORCING MAT, TYPE 3 SY
		S.R. 7																	
1-EC	115	219+50.00	220+00.00	RT			111.11												
2-EC	115	220+00.00	221+50.00	RT															360.72
3-EC	115	221+50.00	223+50.00	RT													555.56		
4-EC	115	223+50.00	229+32.30	RT															1450.06
5-EC	115	230+01.65	231+00.00	RT					78.17										
1-EC	117	231+00.00	233+00.00	RT					141.75										
2-EC	117	233+00.00	233+50.00	RT												69.67			
3-EC	117	231+00.00	231+50.00	LT					34.83										
4-EC	117	231+50.00	233+50.00	LT													239.56		
5-EC	117	233+50.00	234+00.00	LT					17.67										
6-EC	117	236+50.00	238+00.00	RT												187			
7-EC	117	238+00.00	239+50.00	RT					101.33										
8-EC	117	238+22.33	239+41.15	RT	5	1932			203					1100					
9-EC	117	238+50.00	242+00.00	LT														571.94	
1-EC	119	243+00.00	243+50.00	LT					38.28										
2-EC	119	243+50.00	246+50.00	LT												600			
3-EC	119	246+50.00	250+00.00	LT														836.11	
4-EC	119	250+00.00	251+00.00	LT												238.89			
5-EC	119	243+00.00	248+00.00	RT															1000
6-EC	119	248+00.00	250+00.00	RT															477.78
7-EC	119	252+00.00	255+00.00	RT													464		
1-EC	122	255+93.25	260+00.00	LT													1380.56		
2-EC	122	260+00.00	267+00.00	LT															1944.44
1-EC	123	255+00.00	259+00.00	RT													615.44		
2-EC	123	259+00.00	267+00.00	RT														1600	
1-EC	125	267+00.00	268+50.00	LT															416.67
2-EC	125	268+50.00	271+50.00	LT												1166.67			
3-EC	125	271+50.00	277+50.00	LT													973.11		
4-EC	125	278+50.00	279+00.00	LT												80.56			
5-EC	125	267+00.00	269+00.00	RT														800	
6-EC	125	269+00.00	271+00.00	RT													358.33		
7-EC	125	269+60.00	270+01.20	RT	262									242		111.22			
8-EC	125	271+00.00	273+30.24	RT				519.17											
1-EC	127	279+00.00	280+50.00	LT												241.67			
2-EC	127	287+50.00	291+00.00	LT												552.44			
1-EC	129	291+00.00	292+00.00	LT												122.22			
2-EC	129	292+00.00	296+50.00	LT													726.61		
3-EC	129	296+50.00	298+34.67	LT					123										
4-EC	129	299+53.69	300+08.52	RT													91.83		
5-EC	129	300+08.52	301+00.00	RT					62										
1-EC	131	304+50.00	306+00.00	LT					104.17										
2-EC	131	306+00.00	307+00.00	LT												161.11			
3-EC	131	307+00.00	315+00.00	LT											1288.89				
4-EC	131	306+50.00	307+00.00	RT												61.11			
5-EC	131	307+00.00	315+00.00	RT											977.78				
1-EC	133	315+00.00	316+00.00	LT											80.56				
2-EC	133	314+68.00	316+00.00	RT/LT												108.3.3			
3-EC	133	316+00.00	324+50.00	RT/LT													708.33		
4-EC	133	324+50.00	327+00.00	RT/LT													208.33		
5-EC	133	317+50.00	318+00.00	LT					30.56										
6-EC	133	319+00.00	320+00.00	LT													200		
7-EC	133	320+00.00	321+00.00	LT					80.56										
8-EC	133	322+82.71	323+50.00	LT			171.89												
9-EC	133	323+50.00	325+00.00	LT					119.44										
10-EC	133	326+00.00	327+00.00	LT													167.56		
1-EC	152	428+00.00	429+50.00	RT/LT													125		
2-EC	152	429+50.00	431+00.00	RT												125			
3-EC	152	430+50.00	431+00.00	LT													47.5		
TOTALS CARRIED TO SHEET 78					267	1932	283	519.17	1134.76	0	0	0	0	1342	2347.23	3717.56	6814.22	7855.55	5649.67

CALCULATED SLP
CHECKED ALB

SUBSUMMARY

LAW-7-2.17

DRAFT Stage 3 - Not for Construction

09/23/2024

U:\173608714\LAW\75923\roadway\sheets\75923GS005.dgn 5/21/2024 4:48:47 PM SLParker

REF NO.	SHEET NO.	STATION FROM	STATION TO	SIDE	203 EXCAVATION CY	203 EMBANKMENT CY	601 ARTICULATING CONCRETE BLOCK REVETMENT SYSTEM, TYPE I SY	601 ROCK CHANNEL PROTECTION, TYPE B WITH FILTER CY	601 ROCK CHANNEL PROTECTION, TYPE C WITH FILTER CY	601 ROCK CHANNEL PROTECTION, TYPE D WITH FILTER CY	601 DUMPED ROCK FILL, TYPE C CY	601 TIED CONCRETE BLOCK MAT WITH TYPE I UNDERLAYMENT SY	601 SLOPE PROTECTION, MISC.: SEEDING AND EROSION CONTROL WITH TURF REINFORCING MAT, TYPE 3 AND PERCUSSION DRIVEN EARTH ANCHORS SY	659 SEEDING AND MULCHING, CLASS 3C SY	670 DITCH EROSION PROTECTION SY	670 DITCH EROSION PROTECTION MAT, TYPE B SY	836 SEEDING AND EROSION CONTROL WITH TURF REINFORCING MAT, TYPE I SY	836 SEEDING AND EROSION CONTROL WITH TURF REINFORCING MAT, TYPE 2 SY	836 SEEDING AND EROSION CONTROL WITH TURF REINFORCING MAT, TYPE 3 SY
		S.R. 7																	
1-EC	135	327+00.00	333+00.00	RT/LT													500		
2-EC	135	333+00.00	339+00.00	RT/LT													500		
3-EC	135	327+00.00	334+50.00	LT											1235.72				
4-EC	135	335+50.00	337+00.00	LT												202.89			
5-EC	135	337+00.00	338+50.00	LT			268.89												
6-EC	135	337+00.00	339+00.00	LT					42.67										
1-EC	138	339+00.00	343+00.00	RT/LT													333.33		
2-EC	138	343+00.00	348+00.00	RT/LT													805.56		
3-EC	138	339+00.00	339+50.00	LT					39.33										
4-EC	138	340+00.00	340+50.00	LT					38.67										
5-EC	138	343+00.00	351+00.00	RT/LT											1288.89				
6-EC	138	340+50.00	342+50.00	RT			413.11												
7-EC	138	342+50.00	343+00.00	RT					39										
8-EC	138	343+00.00	344+50.00	RT					96.25										
9-EC	138	344+50.00	346+50.00	RT												244.44			
1-EC	140	354+00.00	361+00.00	RT/LT													583.33		
2-EC	140	361+00.00	363+00.00	RT/LT													166.67		
3-EC	140	355+50.00	358+50.00	LT												483.33			
4-EC	140	358+50.00	363+00.00	LT												725			
5-EC	140	351+00.00	360+00.00	RT											1450				
6-EC	140	360+00.00	362+50.00	RT													402.78		
7-EC	140	362+50.00	363+00.00	RT					40.28										
1-EC	142	363+00.00	368+50.00	RT/LT													458.33		
2-EC	142	368+50.00	373+75.00	RT/LT													437.5		
3-EC	142	373+75.00	375+00.00	RT/LT													104.17		
4-EC	142	363+00.00	366+50.00	LT			637.5												
5-EC	142	369+00.00	369+50.00	LT														119.44	
6-EC	142	369+50.00	372+50.00	LT			754.89												
7-EC	142	363+00.00	364+00.00	RT					76.39										
8-EC	142	364+00.00	369+50.00	RT													1106		
9-EC	142	374+00.00	375+00.00	RT													83.33		
1-EC	144	375+00.00	376+22.79	RT/LT													102.5		
2-EC	144	380+20.52	387+00.00	RT/LT												567.5			
3-EC	144	375+00.00	376+00.00	RT													84.17		
4-EC	144	379+91.26	384+00.00	RT											514.56				
5-EC	144	383+00.00	384+00.00	LT					44.58										
6-EC	144	384+00.00	387+00.00	RT											366.67				
1-EC	146	387+00.00	397+00.00	RT/LT												833.33			
2-EC	146	398+50.00	399+00.00	RT/LT												41.67			
3-EC	146	389+00.00	394+62.74	LT														1304.33	
4-EC	146	398+50.00	399+00.00	LT														80.56	
1-EC	148	399+00.00	402+00.00	RT/LT												250			
2-EC	148	399+00.00	409+00.00	LT														1288.89	
		RAMP C																	
1-EC	419	119+00.00	121+28.94	RT												210			
2-EC	419	123+50.00	121+97.56	RT												192.5			
		RAMP D																	
1-EC	425	115+45.65	120+82.54	LT												478.33			
2-EC	425	155+50.00	117+00.00	RT												125			
		RAMP I																	
1-EC	431	369+51.65	373+13.48	RT				527.59											
2-EC	431	373+13.48	373+84.03	RT			108.44												
3-EC	431	373+84.03	378+41.21	RT				710											
		RAMP J																	
1-EC	437	388+00.00	390+00.00	LT												217.56			
TOTALS CARRIED TO SHEET 78					0	0	2182.83	1237.59	417.17	0	0	0	0	0	4855.84	4571.55	5667.67	1673.78	119.44

SLParker
5/21/2024 4:48:48 PM
U:\173608714\LAW\75923\roadway\sheets\75923GS006.dgn

CALCULATED SLP
CHECKED ALB

SUBSUMMARY

LAW-7-2.17

DRAFT Stage 3 - Not for Construction 09/23/2024

REF NO.	SHEET NO.	STATION FROM	STATION TO	SIDE	203 EXCAVATION CY	203 EMBANKMENT CY	601 ARTICULATING CONCRETE BLOCK REVETMENT SYSTEM, TYPE I SY	601 ROCK CHANNEL PROTECTION, TYPE B WITH FILTER CY	601 ROCK CHANNEL PROTECTION, TYPE C WITH FILTER CY	601 ROCK CHANNEL PROTECTION, TYPE D WITH FILTER CY	601 DUMPED ROCK FILL, TYPE C CY	601 TIED CONCRETE BLOCK MAT WITH TYPE I UNDERLAYMENT SY	601 SLOPE PROTECTION, MISC.: SEEDING AND EROSION CONTROL WITH TURF REINFORCING MAT, TYPE 3 AND PERCUSSION DRIVEN EARTH ANCHORS SY	659 SEEDING AND MULCHING, CLASS 3C SY	670 DITCH EROSION PROTECTION SY	670 DITCH EROSION PROTECTION MAT, TYPE B SY	836 SEEDING AND EROSION CONTROL WITH TURF REINFORCING MAT, TYPE I SY	836 SEEDING AND EROSION CONTROL WITH TURF REINFORCING MAT, TYPE 2 SY	836 SEEDING AND EROSION CONTROL WITH TURF REINFORCING MAT, TYPE 3 SY
		RAMP K																	
1-EC	442	386+00.00	390+00.00	RT						77.78									
2-EC	442	65+50.00 (S.R. 775)	391+50.00	LT											1277.61				
3-EC	442	391+50.00	396+00.00	LT												725			
1-EC	444	396+00.00	396+50.00	LT												80.56			
2-EC	444	396+50.00	398+50.00	LT													322.22		
		LYNN LANE																	
1-EC	482	10+53.33	11+00.00	RT					38.39										
2-EC	482	11+00.00	13+50.00	RT													386.67		
3-EC	482	12+50.00	13+00.00	LT					15.28										
		DOGWOOD LANE EXTENSION																	
1-EC	486	10+14.56	13+00.00	LT													270.83		
2-EC	486	10+47.73	11+00.00	RT												105			
		S.R. 243																	
1-EC	490	12+55.74	16+80.44	LT												694.39			
2-EC	490	17+50.00	19+62.61	LT													343.17		
3-EC	490	20+50.00	21+54.00	LT														130.78	
4-EC	490	17+23.45	21+50.00	RT														526.78	
		C.R. 69																	
1-EC	502	10+46.28	12+50.00	LT														344.78	
2-EC	502	10+27.58	12+70.61	RT					73.67										
3-EC	502	12+50.00	13+00.00	LT												66			
4-EC	502	13+50.00	19+50.00	LT											733.33				
5-EC	502	19+50.00	20+50.00	LT													167.56		
6-EC	502	22+00.00	22+50.00	LT													80.56		
7-EC	502	23+50.00	24+00.00	LT													80.56		
8-EC	502	22+50.00	24+00.00	LT									1278.42						
1-EC	504	24+00.00	25+00.00	LT									914.64						
2-EC	504	24+00.00	26+00.00	LT													325.44		
3-EC	504	26+00.00	26+60.57	LT					56.83										
4-EC	504	29+34.29	31+50.00	LT					134.75										
5-EC	504	31+50.00	37+00.00	LT													673.44		
6-EC	504	31+50.00	35+00.00	LT									1904.12						
1-EC	506	45+00.00	49+00.00	LT													644.44		
2-EC	506	49+00.00	50+00.00	LT					75										
1-EC	507	54+50.00	56+73.01	LT													165.83		
		C.R. 118																	
1-EC	547	10+54.46	11+00.00	LT												61.67			
2-EC	547	12+00.00	13+50.00	LT												125			
3-EC	547	13+50.00	14+76.00	LT												154			
4-EC	547	13+42.91	14+01.46	RT							13.83								
		C.R. 2																	
1-EC	553	10+50.00	15+00.00	RT												343.44			
2-EC	553	15+00.00	17+58.28	RT													195		
		S.R. 775																	
1-EC	559	48+90.78	53+33.17	RT									3860.58						
2-EC	559	50+80.65	53+00.00	LT									1852.49						
1-EC	560	62+50.00	64+00.00	LT					57.75										
2-EC	560	69+50.00	69+77.95	LT					6.67										
3-EC	560	59+00.00	60+00.00	LT					58.5										
4-EC	560	68+50.00	69+25.00	RT														64.17	
TOTALS THIS SHEET					0	0	0	0	516.84	77.78	13.83	0	9810.25	0	2010.94	2355.06	3655.72	[illegible]	[illegible]
TOTALS FROM SHEET 75					0	0	174.67	180.56	1013.85	0	0	132.5	0	0	1365.44	2525.99	2209.72	1790.83	441.44
TOTALS FROM SHEET 76					267	1932	283	519.17	1134.76	0	0	0	0	1342	2347.23	3717.56	6814.22	[illegible]	[illegible]
TOTALS FROM SHEET 77					0	0	2182.83	1237.59	417.17	0	0	0	0	0	4855.84	4571.55	5667.67	[illegible]	[illegible]
TOTALS CARRIED TO GENERAL SUMMARY					267	1932	2641	1938	3083	78	14	133	9811	1342	10580	13171	18348	8192	6406

CALCULATED SLP
CHECKED ALB

SUBSUMMARY

LAW-7-2.17

DRAFT Stage 3 - Not for Construction
09/23/2024

U:\173608714\LAW\75923\roadway\sheets\75923GS007.dgn 5/21/2024 4:48:49 PM SLParker

REF NO.	SHEET NO.	STATION FROM	STATION TO	SIDE	203 EXCAVATION CY	203 EMBANKMENT CY	601 ROCK CHANNEL PROTECTION, TYPE A WITH FILTER CY	601 ROCK CHANNEL PROTECTION, TYPE B WITH FILTER CY	601 ROCK CHANNEL PROTECTION, TYPE C WITH FILTER CY	601 ARTICULATING CONCRETE BLOCK REVETMENT SYSTEM, TYPE 1 SY	601 RIPRAP, TYPE D SY	602 CONCRETE MASONRY CY	611 15" CONDUIT, TYPE B FT	611 15" CONDUIT, TYPE C FT	611 15" CONDUIT, TYPE F, 707.21 FT	611 15" CONDUIT, TYPE F FT	611 18" CONDUIT, TYPE B FT	611 18" CONDUIT, TYPE C FT	611 21" CONDUIT, TYPE B FT	611 21" CONDUIT, TYPE F, 707.21 FT	611 21" CONDUIT, TYPE D FT	611 21" CONDUIT, TYPE F FT	611 24" CONDUIT, TYPE B FT	611 24" CONDUIT, TYPE C FT	611 24" CONDUIT, TYPE F, 707.21 FT	611 24" CONDUIT, TYPE F FT	611 27" CONDUIT, TYPE B FT	611 27" CONDUIT, TYPE C FT	611 27" CONDUIT, TYPE F, 707.21 FT	611 27" CONDUIT, TYPE F FT	611 30" CONDUIT, TYPE B FT	611 30" CONDUIT, TYPE C FT	611 36" CONDUIT, TYPE B FT	611 36" CONDUIT, TYPE C FT	611 36" CONDUIT, TYPE F FT	611 42" CONDUIT, TYPE B FT
		S.R. 7																																		
1-D	95	115+50.00 (RAMP D)	1416+66.14	RT/LT			2.5		2.5			0.27	98						196																		
2-D	95	119+83.21	121+54.74 (RAMP C)	RT/LT			4.67		4.67			0.92																						217			121
1-D	97, 649	128+00.00	128+00.00	RT/LT	182		55.78		32.33		13.16	1.52																									
1-D	101, 187	157+00.00	157+00.00	RT/LT					1.78			0.27	174																								
1-D	103, 652	161+32.00	163+75.36	RT/LT	674	70	26.26		58.58		15.02	4.12																									
2-D	103	163+50.00	163+50.00	RT								0.27	20		47	27																				
3-D	103	170+50.00	170+50.00	RT					1.33			0.27			107	25																				
1-D	107, 640	194+36.72	194+60.29	RT/LT								0.27	52	12	54	21																				
1-D	109, 640	13+00.00 (C.R. 104)	15+25.93 (C.R. 104)	RT/LT					10.51			0.27	38																								
2-D	109, 640	196+30.13	197+60.77	LT					8.21			0.76																						53	12	83	
3-D	109, 641	196+78.92	196+78.92	RT								0.27			44	28																				
4-D	109	202+49.53	202+52.20	RT					1.33			0.27	42		86	17																				
5-D	109	204+07.45	204+22.35	RT								0.27	42	7	59	21																				
6-D	109	205+96.17	206+19.92	RT					1.33			0.27	42		50	10																				
1-D	112	212+50.00	212+50.00	RT					1.33			0.27			37	21																				
1-D	114	219+50.00	219+50.00	RT/LT					1.56			0.46											69	10	224	20										
2-D	114, 658	229+54.36	229+70.45	RT/LT				47.37		179.1	18.15	3.56																								
1-D	119	248+00.00	253+48.22	RT/LT			71.94				11.82	2.66																								
2-D	119	251+00.00	251+00.00	RT/LT									55	36																						
3-D	119	254+00.00	254+00.00	RT/LT					8.27			0.27	40	16	43	18																				
1-D	125	271+33.15	271+50.00	LT																																
1-D	129	300+85.74	300+93.74	RT/LT								0.27	42	27																						
1-D	131, 133	314+70.00	316+00.00	RT					1.33			0.27	73	130	29	19																				
2-D	133, 659	321+07.00	322+69.14	RT/LT	44	73	136.7				13.42	3.56																								
3-D	133	324+50.00	324+50.00	RT/LT					1.28			0.27	82																							
1-D	135, 136	333+00.00	333+00.00	RT/LT					1.33			0.27	56		72	18																				
2-D	135,136,661	336+48.23	339+73.20	RT/LT	201	52	101.5				13.42	3.56																								
1-D	138	343+00.00	343+00.00	RT/LT					1.56										131	65		20														
1-D	140	361+00.00	361+93.05	RT/LT					5.84			0.27	115																							
1-D	142	368+50.00	368+50.00	RT/LT					1.11			0.27	71		16	19																				
2-D	144	373+75.00	375+53.10	RT/LT					1.11			0.27	144		137	29																				
1-D	146	378+38.24	388+00.00	RT/LT			97.34				4.47	0.92	79																							148
1-D	146	387+73.25	398+50.00	RT/LT									249	300				777																	
2-D	146	394+50 (RAMP K)	394+80.53	RT/LT					4.67		4.47	0.92																		196			198			172
1-D	152	429+50.00	429+50.00	RT					2.05			0.27	54		75	21																				
		BRENTWOOD EMERGENCY ACCESS																																		
1-D	465	22+50.00	165+00.00 (S.R. 7)	RT					1.33			0.54																								
		LYNN LANE																																		
1-D	482	204+08.37 (S.R. 7)	205+03.01 (S.R. 7)	LT			52.4				6.71	3.56																								
		DOGWOOD LANE EXTENSION																																		
1-D	486	10+00.00 (C.R. 32)	10+29.07 (C.R. 32)	RT/LT					1.33			0.27	76																								
		S.R. 243																																		
1-D	490	15+58.36	17+50.00	RT/LT				5.09				0.6							150														229	42		
2-D	490	19+62.61	20+50.00	LT																	88															
		C.R. 69																																		
1-D	502, 663	12+50.00	12+50.00	RT/LT				20.72			9.1	1.84																								
		C.R. 118																																		
1-D	547	10+51.46	11+13.66	RT/LT					2.25			0.53																	91		24	18				
2-D	547	13+50.00	13+50.00	RT/LT					0.39			0.33					50																			
		S.R. 775																																		
1-D	560, 664	59+00.00	59+00.00	RT/LT				4.81			7.01	0.92																								
TOTALS					1101	195	549.1	77.99	159.3	179.1	116.8	36.95	1644	528	856	294	50	777	477	65	88	20	69	0	224	20	91	196	24	18	229	426	270	12	83	441
TOTALS CARRIED TO GENERAL SUMMARY					1101	195	550	78	160	180	117	37.0	1644	528	856	294	50	777	477	65	88	20	69	0	224	20	91	196	24	18	229	426	270	12	83	441

CALCULATED SLP
CHECKED ALB

SUBSUMMARY

LAW-7-2.17

DRAFT Stage 3 - Not for Construction
09/23/2024

U:\1736087\14\LAW\75923\roadway\sheets\75923GS008.dgn 5/21/2024 4:48:50 PM SLParker

SUBSUMMARY

CALCULATED SLP | CHECKED ALB

REF NO.	SHEET NO.	STATION FROM	STATION TO	SIDE	611																							659
					15" CONDUIT, TYPE A, 706.02 OR 707.33	24" CONDUIT, TYPE A, 707.01 (0.218) GALVANIZED OR 707.02 (0.064) ALUMINIZED OR 707.33	36" CONDUIT, TYPE A, 706.01 OR 706.02 OR 707.33 OR 48" CONDUIT, TYPE A, 707.01 OR 707.02 (GALVANIZED OR ALUMINIZED)	42" CONDUIT, TYPE A, 707.01 (0.218) GALVANIZED OR 707.02 (0.064) ALUMINIZED OR 707.33	42" CONDUIT, TYPE C	42" CONDUIT, TYPE F	54" CONDUIT, TYPE B	54" CONDUIT, TYPE C	60" CONDUIT, TYPE A, 707.02 (0.218) GALVANIZED OR 707.02 (0.064) ALUMINIZED OR 707.33	60" CONDUIT, TYPE A, 707.02 (0.218) GALVANIZED WITH CFP OR 707.02 (0.064) ALUMINIZED WITH CFP OR 707.04 (0.064) WITH CFP	66" CONDUIT, TYPE A, 707.02 (0.218) GALVANIZED WITH CFP OR 707.02 (0.064) ALUMINIZED WITH CFP OR 707.04 (0.064) WITH CFP	CATCH BASIN, NO. 3A	CATCH BASIN, NO. 4	CATCH BASIN, NO. 4, WITHOUT APRON	CATCH BASIN, NO. 4A	CATCH BASIN, NO. 5	CATCH BASIN, NO. 5A	CATCH BASIN, NO. 5A, AS PER PLAN	CATCH BASIN, NO. 8	CATCH BASIN, NO. 8A	CATCH BASIN, NO. 8A, AS PER PLAN	CATCH BASIN, NO. 2-2B	INLET, NO. 3 FOR SINGLE SLOPE BARRIER, TYPE D	MANHOLE, NO. 3	SEEDING AND MULCHING, CLASS 3C
					FT	FT	FT	FT	FT	FT	FT	FT	FT	FT	FT	EACH	EACH	EACH	EACH	EACH	EACH	EACH	EACH	EACH	EACH	EACH	EACH	SY
		S.R. 7																										
1-D	95	115+50.00 (RAMP D)	1416+66.14	RT/LT																2	1	1	1					
2-D	95	119+83.21	121+54.74 (RAMP C)	RT/LT						47							1						1					
1-D	97, 649	128+00.00	128+00.00	RT/LT			181																					572
1-D	101, 187	157+00.00	157+00.00	RT/LT																			1					
1-D	103, 652	161+32.00	163+75.36	RT/LT												377												703
2-D	103	163+50.00	163+50.00	RT																							1	
3-D	103	170+50.00	170+50.00	RT																							1	
1-D	107, 640	194+36.72	194+60.29	RT/LT																							2	
1-D	109, 640	13+00.00 (C.R. 104)	15+25.93 (C.R. 104)	RT/LT																3								
2-D	109, 640	196+30.13	197+60.77	LT													1											
3-D	109, 641	196+78.92	196+78.92	RT																							1	
4-D	109	202+49.53	202+52.20	RT												2												
5-D	109	204+07.45	204+22.35	RT																							2	
6-D	109	205+96.17	206+19.92	RT																							2	
1-D	112	212+50.00	212+50.00	RT																							1	
1-D	114	219+50.00	219+50.00	RT/LT													1										1	
1-D	119	248+00.00	253+48.22	RT/LT							426	302							2									
2-D	119	251+00.00	251+00.00	RT/LT												2												
3-D	119	254+00.00	254+00.00	RT/LT												2												
1-D	125	271+33.15	271+50.00	LT								23							1									
1-D	129	300+85.74	300+93.74	RT/LT												2												
1-D	131, 133	314+70.00	316+00.00	RT																							2	
2-D	133, 659	321+07.00	322+69.14	RT/LT										580														193
3-D	133	324+50.00	324+50.00	RT/LT																							1	
1-D	135, 136	333+00.00	333+00.00	RT/LT																							1	
2-D	135,136,661	336+48.23	339+73.20	RT/LT										1002														432
1-D	138	343+00.00	343+00.00	RT/LT																1							1	
1-D	140	361+00.00	361+93.05	RT/LT																							1	
1-D	142	368+50.00	368+50.00	RT/LT																							1	
2-D	142, 144	373+75.00	375+53.10	RT/LT																1						1	1	
1-D	144, 146	378+38.24	388+00.00	RT/LT					967												2	2	1	1	1			
1-D	146	387+73.25	398+50.00	RT/LT																			4			2		
2-D	146	394+50 (RAMP K)	394+80.53	RT/LT													2					1						
1-D	152	429+50.00	429+50.00	RT																			1					
		BRENTWOOD EMERGENCY ACCESS																										
1-D	465	22+50.00	165+00.00 (S.R. 7)	RT	92																							
		LYNN LANE																										
1-D	482	204+08.37 (S.R. 7)	205+03.01 (S.R. 7)	LT									100															
		DOGWOOD LANE EXTENSION																										
1-D	486	10+00.00 (C.R. 32)	10+29.07 (C.R. 32)	RT/LT																1								
		S.R. 243																										
1-D	490	15+58.36	17+50.00	RT/LT														3									1	
		C.R. 69																										
1-D	502, 663	12+50.00	12+50.00	RT/LT				128																				
		C.R. 118																										
1-D	547	10+51.46	11+13.66	RT/LT													1											
2-D	547	13+50.00	13+50.00	RT/LT																1								
		S.R. 775																										
1-D	560, 664	59+00.00	59+00.00	RT/LT		384																						
TOTALS					92	384	181	128	967	47	426	325	100	1582	377	8	6	3	3	9	3	4	17	1	1	14	1	1000
TOTALS CARRIED TO GENERAL SUMMARY					92	384	181	128	967	47	426	325	100	1582	377	8	6	3	3	9	3	4	17	1	1	14	1	1000

DRAFT Stage 3 - Not for Construction 09/23/2024

LAW-7-2.17

U:\173608714\LAW\75923\roadway\sheets\75923GS009.dgn 5/21/2024 4:48:51 PM SLParker

REF NO.	SHEET NO.	STATION (APPROX.) FROM	TO	SIDE	AUDITOR'S PARCEL NO.	PHYSICAL ADDRESS	659 SEEDING AND MULCHING, CLASS 3C (SY)	202 BUILDING DEMOLISHED, AS PER PLAN (LUMP)	STRUCTURE DESCRIPTION
		S.R. 7							
11-R	103	165+46	167+33	LT	21-112-0744.060	19 TWP RD 1389	174	LUMP	1.5-STORY FRAME HOUSE, GARAGE
12-R	103	165+95	167+32	RT	23-112-0744.012	32 TWP RD 1389	81	LUMP	1.5-STORY FRAME HOUSE, POOL
5-R	105	174+75	177+64	LT/RT	23-078-1200.000	1485 TWP RD 158		LUMP	(2) 1-STORY FRAME HOUSES, 2 SHEDS
6-R	105, 107	173+07	183+16	LT/RT	23-079-0100.001	1485 TWP RD 158	1268	LUMP	ABANDONED 1-STORY FRAME HOUSE, 2 SHEDS, PROPANE TANK
7-R	105	178+22	180+84	RT	23-078-1300.001	1529 TWP RD 158	1086	LUMP	1-STORY FRAME HOUSE, POOL, DECK
3-R	105, 107	179+07	184+83	LT/RT	23-078-1300.002	1599 TWP RD 158	160	LUMP	WOOD SHED, BARN
4-R	107, 109	191+82	196+39	LT/RT	23-079-1500.005	465 CO RD 104	434	LUMP	1-STORY FRAME HOUSE, 2-STORY BARN, GARAGE, 2 SHEDS, TRAILER PORT, DOG HOUSE
5-R	109	194+58	196+50	LT	23-079-1500.003	475 CO RD 104		LUMP	SEPTIC TANK, WELL, LEACH FIELD
6-R	109, 111	205+34	208+45	LT/RT	23-079-0200.002	1322 CO RD 32	374	LUMP	1.5-STORY FRAME HOUSE, POOL
2-R	114	221+60	223+20	LT	23-083-1200.000	277 CO RD 68	330	LUMP	2-STORY METAL BUILDING
2-R	115, 117	229+22	232+12	RT	23-082-1100.000	460 CO RD 68	1967	LUMP	1.5-STORY FRAME HOUSE, MOBILE HOME, WOOD BUILDING, WELL HOUSE, PROPANE TANK
5-R	122	256+29	259+23	LT	23-081-1200.002	17001 ST RT 243		LUMP	2-STORY BRICK FRAME HOUSE, 1-STORY DUPLEX, SHED
6-R	122	259+88	261+97	LT/RT	23-081-1200.001	17039 ST RT 243		LUMP	2-STORY BRICK FRAME HOUSE, GARAGE, PROPANE TANK
3-R	127	281+09	282+79	LT	23-085-0500.000	44 CO RD 2		LUMP	1.5-STORY FRAME HOUSE, (2) METAL BUILDINGS, PROPANE TANK
		LYNN LANE							
5-R	482	12+51	13+88	LT	23-079-0200.013	229 TWP RD 1347	93	LUMP	GARAGE, CAR PORT
		S.R. 775							
4-R	560	65+56	66+93	LT	25-062-0200.000 25-062-0600.000	911 SR RT 775 929 ST RT 775	1092	LUMP	(2) 1-STORY FRAME HOUSE, WELL, 1-STORY BLOCK GARAGE, (SEE NOTE BELOW)
5-R	560	64+35	65+27	LT	25-062-0500.000	909 ST RT 775	622	LUMP	1-STORY FRAME HOUSE, GARAGE, (SEE NOTE BELOW)
TOTALS CARRIED TO GENERAL SUMMARY							7681		

NOTE:
SEEDING AND MULCHING AREA SHOWN WAS GENERATED IN CADD OF THE AREA NOT OTHERWISE INCLUDED IN THE CROSS SECTION QUANTITY.

ALTHOUGH A PORTION OF THESE PARCELS ARE IN THE DO NOT DISTURB AREA SHOWN IN THE PLANS, THE CONTRACTOR IS TO REMOVE THE EXISTING STRUCTURE ONLY. NO TREES SHALL BE DISTURBED OR CUT DURING DEMOLITION.

CALCULATED SLP
CHECKED ALB

SUBSUMMARY

LAW-7-2.17

DRAFT Stage 3 - Not for Construction 09/23/2024

U:\173608714\LAW\75923\roadway\sheets\75923GS010.dgn 5/21/2024 4:48:51 PM SLParker

STATION FROM	STATION TO	LENGTH	SIDE	202	204			252	254	302			304			407		442				609			
				PAVEMENT REMOVED	CADD AREA	WIDTH	SUBGRADE COMPACTION (AREA / 9)	FULL DEPTH PAVEMENT SAWING	PAVEMENT PLANING, ASPHALT CONCRETE	CADD AREA	WIDTH	7" ASPHALT CONCRETE BASE, PG64-22, (449) (AREA X (7"/12) / 27)	CADD AREA	WIDTH	6" AGGREGATE BASE (AREA X (6"/12) / 27)	TACK COAT (AREA /9 X 0.055) x 2	TACK COAT (AREA /9 X 0.085) + (AREA /9 X 0.055)	CADD AREA	WIDTH	1.5" ASPHALT CONCRETE SURFACE COURSE, 12.5 mm, TYPE A (446) (AREA X (1.5"/12) / 27)	1.75" ASPHALT CONCRETE INTERMEDIATE COURSE, 12.5MM, TYPE A (446) (AREA X (1.75"/12) / 27)	CURB, TYPE 6	COMBINATION CURB AND GUTTER, TYPE 2	COMBINATION CURB AND GUTTER, TYPE 9	CONCRETE MEDIAN
				SY	SF	FT	SY	FT	SY	SF	FT	SY	SF	FT	SY	GAL	GAL	SF	FT	SY	SY	FT	FT	FT	SY
S.R. 7																									
114+30.42	120+47.80	617.38	LT/RT	2833.33				127.61																	
114+30.42	119+03.51	473.09	LT						2664.47								373.03	23980.26		111.02	129.52				
114+30.42	114+57.60	27.18	RT						66.21								9.27	595.86		2.76	3.22				
114+30.42	132+35.54	1805.12	LT/RT		92179.92		10242.21			88012.86		1901.51	90101.72		1668.55	1061.06		86814.38		401.92	468.90				
135+48.67	136+59.43	110.76	RT		4385.13		487.24			4146.83		89.59	4265.99		79.00	49.85		4078.75		18.88	22.03				
136+59.43	167+72.52	3113.09	RT			45.00	15565.45				42.67	2869.68		43.83	2526.98	1598.05			42.00	605.32	706.21				
164+58.02	175+17.86	1059.84	LT/RT	2141.73				37.33																	
167+72.52	174+92.49	719.97	RT		36838.55		4093.17			35157.94		759.59	35998.24		666.63	423.84		34677.76		160.55	187.30				
174+92.49	185+03.46	1010.97	RT			59.00	6627.47				56.67	1237.71		57.83	1082.74	691.95			56.00	262.10	305.79				
185+03.46	195+21.92	1018.46	RT		53163.42		5907.05			50991.12		1101.66	52077.28		964.39	615.64		50370.48		233.20	272.06				
196+44.72	198+58.05	213.33	RT		8883.18		987.02			8563.22		185.01	8723.23		161.54	103.54		8471.60		39.22	45.76				
202+27.86	204+38.53	210.67	RT		9258.76		1028.75			8891.66		192.10	9075.21		168.06	107.39		8786.78		40.68	47.46				
205+82.98	206+44.01	61.03	RT		2528.37		280.93			2520.90		54.46	2524.62		46.75	30.79		2518.77		11.66	13.60				
205+10.23	206+37.14	126.91	LT	277.55				36.36																	
208+37.62	209+11.29	73.67	LT/RT	286.40				13.96																	
206+44.01	209+79.72	335.71	RT			45.00	1678.55				42.67	309.46		43.83	272.51	172.33			42.00	65.28	76.16				
209+79.72	210+29.72	50.00	RT		2375.29		263.92			2259.43		48.81	2317.36		42.91	27.21		2226.27		10.31	12.02				
210+29.72	217+80.41	750.69	RT			51.00	4253.91				48.67	789.31		49.83	692.77	440.40			48.00	166.82	194.62				
217+80.41	225+00.38	719.97	RT		38238.77		4248.75			36558.58		789.85	37398.67		692.57	440.96		36078.52		167.03	194.87				
219+07.27	269+99.24	5091.97	LT/RT	9915.24				34.40																	
225+00.38	235+13.25	1012.87	RT			59.00	6639.93				56.67	1240.04		57.83	1084.77	693.25			56.00	262.60	306.36				
235+13.25	246+68.00	1154.75	RT		61486.11		6831.79			58016.70		1253.45	60136.90		1113.65	709.09		58016.70		268.60	313.36				
ROUNDABOUT																									
246+68.00	251+42.48	474.48	WEST LEG		17875.39		1986.15			17847.39		385.59	17861.39		384.40	218.04		17839.39		82.59	96.35	508.21	957.58		236.33
251+42.48	252+88.58	146.10	CENTER		13138.14		1459.79			13138.14		283.85	13138.14		264.63	160.58		13138.14		60.82	70.96	303.16	113.39	381.70	
252+88.58	260+00.00	711.42	EAST LEG		25293.49		2810.39			24859.29		537.08	25076.39		524.67	302.32		24735.23		114.51	133.60	589.75	1076.81		269.26
10+82.95 (S.R. 243)	13+17.39 (S.R. 243)	234.44	NORTH LEG		8743.84		971.54			8738.24		188.79	8741.04		190.35	106.78		8736.64		40.45	47.19	520.27	507.83		229.76
260+00.00	297+25.66	3725.66	RT			45.00	18628.30				42.67	3434.35		43.83	3024.22	1912.51			42.00	724.43	845.17				
280+23.72	290+25.35	1001.63	LT/RT	2592.37				19.48																	
297+25.66	297+65.66	40.00	RT		1582.92		175.88			1497.18		32.35	1540.05		28.52	18.00		1472.53		6.82	7.95				
300+72.00	301+78.70	106.70	RT		4437.40		493.04			4196.16		90.66	4316.78		79.94	50.44		4127.27		19.11	22.29				
301+78.70	309+49.89	771.19	RT			45.00	3855.95				42.67	710.89		43.83	626.00	395.88			42.00	149.95	174.95				
309+49.89	319+56.62	1006.73	RT		72109.81		8012.20			68609.39		1482.30	70359.59		1302.96	826.34		67609.26		313.01	365.17				
319+56.62	371+40.72	5184.10	LT			41.00	23616.46				38.67	4330.75		39.83	3824.07	2407.73			38.00	912.02	1064.02				
319+56.62	365+89.03	4632.41	RT			41.00	21103.20				38.67	3869.87		39.83	3417.12	2151.50			38.00	814.96	950.79				
371+40.72	376+54.69	513.97	LT		22503.12		2500.35			21317.22		460.56	21910.17		405.74	256.40		20978.39		97.12	113.31				
365+89.03	373+62.62	773.59	RT		42676.40		4741.82			40869.39		882.98	41772.89		773.57	493.20		40353.10		186.82	217.96				
373+62.62	376+00.00	237.38	RT			41.00	1081.40				38.67	198.31		39.83	175.10	110.25			38.00	41.76	48.72				
376+00.00	376+35.07	35.07	RT		1245.75		138.42			1174.85		25.38	1210.30		22.41	14.11		1154.60		5.35	6.24				
380+22.49	387+24.05	701.56	LT		41949.59		4661.07			40371.91		872.23	41160.80		762.24	487.92		39921.00		184.82	215.62				
379+96.23	380+50.00	53.77	RT		1961.59		217.95			1849.96		39.97	1905.78		35.29	22.22		1818.07		8.42	9.82				
380+50.00	389+89.91	939.91	RT			41.00	4281.81				38.67	785.19		39.83	693.33	436.54			38.00	165.35	192.91				
382+60.03	404+90.09	2230.06	LT/RT	10149.17				2127.99																	
387+24.05	397+49.13	1025.08	LT			41.00	4669.81				38.67	856.34		39.83	756.15	476.09			38.00	180.34	210.39				
389+89.91	404+90.09	1500.18	RT				4961.63					908.53			802.84	504.88				191.24	223.12				
397+49.13	407+90.33	1041.20	LT		58107.27		6456.36			55672.53		1202.80	56889.91		1053.52	671.94		54976.87		254.52	296.94				
407+90.33	426+91.87	1901.54	LT				8557.35					1569.24			1385.64	914.52				346.41	404.15				
426+91.87	437+16.83	1024.96	LT/RT		42296.11		4699.57			39762.72		859.07	41029.41		759.80	477.14		39039.00		180.74	210.86				
390+75.00	437+16.83	4641.83	LT/RT					1006.01	18470.41								2585.86	166233.72		769.60	897.87				
NOISE WALL PAVEMENT																									
156+21.00	194+26.72	3805.72	RT		13320.02		1480.00			17760.03		383.70	15540.02		287.78	232.57		19028.60		35.24	102.78				
206+37.53	224+64.93	1827.40	RT		6395.90		710.66			8527.87		184.24	7461.88		138.18	111.67		9137.00		16.92	49.35				
381+42.58 (RAMP L)	406+11.57	2483.16	RT		8691.06		965.67			11588.08		250.36	10139.57		187.77	151.75		12415.80		22.99	67.06				
TOTALS				28195.79			202372.92	3403.14	21201.09			37647.62			33170.08	21076.69	2968.15			8754.25	10344.80	1921.39	2655.61	381.70	1736.34
TOTALS CARRIED TO GENERAL SUMMARY				28196			202373	3404	21202			37648			33171	24045				8755	10345	1922	2656	382	1736

NOTE: CADD AREA CALCULATED BY COMPUTER CENTERLINE AREA

DRAFT Stage 3 - Not for Construction 09/23/2024

CALCULATED SLP CHECKED ALB

PAVEMENT CALCULATIONS

LAW-7-2.17

82 1247

U:\1736087\14\LAW\75923\roadway\sheets\75923GC001.dgn 5/21/2024 4:48:52 PM SLParker

STATION FROM	STATION TO	LENGTH	SIDE	202	204			252	254	302			304			407		442				609	
				PAVEMENT REMOVED	CADD AREA	WIDTH	SUBGRADE COMPACTION (AREA / 9)	FULL DEPTH PAVEMENT SAWING	PAVEMENT PLANING, ASPHALT CONCRETE	CADD AREA	WIDTH	7" ASPHALT CONCRETE BASE, PG64-22, (449) (AREA X (7"/12) / 27)	CADD AREA	WIDTH	6" AGGREGATE BASE (AREA X (6"/12) / 27)	TACK COAT (AREA /9 X 0.055) x 2	TACK COAT (AREA /9 X 0.085) + (AREA /9 X 0.055)	CADD AREA	WIDTH	1.5" ASPHALT CONCRETE SURFACE COURSE, 12.5 mm, TYPE A (446) (AREA X (1.5"/12) / 27)	1.75" ASPHALT CONCRETE INTERMEDIATE COURSE, 12.5MM, TYPE A (446) (AREA X (1.75"/12) / 27)	CURB TYPE 6	CONCRETE MEDIAN
				SY	SF	FT	SY	FT	SY	SF	FT	SY	SF	FT	SY	GAL	GAL	SF	FT	SY	SY	FT	SY
RAMP C																							
116+33.24	119+11.99	278.75	LT/RT	816.60				171.23															
116+33.24	117+82.65	149.41	LT/RT		4095.45		455.05			3918.58		84.66	4006.96		74.20	47.28		3868.13		17.91	20.89	203.84	33.57
117+82.65	122+72.02	489.37	LT/RT			28.00	1522.48				25.67	271.37		26.83	243.17	149.53			25.00	56.64	66.08		
122+72.02	123+68.17	96.15	LT/RT		2843.96		316.00			2614.91		56.49	2729.43	0.00	50.55	31.16		2549.46		11.80	13.77		
RAMP D																							
115+27.92	120+82.54	554.62	LT/RT	1276.70				89.69															
115+19.00	115+72.76	53.76	LT/RT		3266.42		362.94			3066.92		66.26	3167.23		58.65	36.78		3009.12		13.93	16.25		
115+72.76	120+20.45	447.69	LT/RT			28.00	1392.81				25.67	248.26		26.83	222.46	136.79			25.00	51.82	60.45		
120+20.45	120+82.54	62.09	LT/RT		2531.32		281.26			2458.70		53.12	2494.99		46.20	29.78		2436.95		11.28	13.16		
RAMP I																							
373+63.81	376+08.86	245.05	LT/RT		6993.75		777.08			6418.24		138.67	6705.98		124.18	76.44		6253.80		28.95	33.78		
380+00.46	380+77.59	77.13	LT/RT		4554.94		506.10			4259.89		92.03	4407.89		81.63	51.03		4174.90		19.33	22.55		
RAMP J																							
387+09.53	390+76.46	366.93	LT/RT			28.00	1141.56				25.67	203.47		26.83	182.33	112.12			25.00	42.47	49.55		
RAMP K																							
384+99.44	389+80.00	480.56	LT/RT		30896.44		3432.94			29750.86		642.77	30323.74		561.55	351.33		28745.27		133.08	158.52		8.15
389+80.00	389+93.76	13.76	LT/RT		400.56		44.51			378.41		8.18	389.42		7.21	4.37		357.39		1.65	2.01		
389+93.76	397+53.79	760.03	LT/RT			28.00	2364.54				25.67	421.46		26.83	377.67	232.23			25.00	87.97	102.63		
RAMP L																							
379+89.28	381+06.41	117.13	LT/RT		5025.23		558.36			4699.37		101.53	4862.50		90.05	56.30		4605.98		21.32	24.88		
381+06.41	389+83.47	877.06	LT			28.00	2728.63				25.67	486.35		26.83	435.82	267.99			25.00	101.51	118.43		
S.R. 243																							
13+17.39	14+06.72	89.33	LT/RT			59.00	585.61				56.67	109.36		57.83	95.67	61.14			56.00	23.16	27.02		
14+06.72	16+00.75	194.03	LT/RT		10115.02		1123.89			9817.72		212.11	9966.39		184.56	118.96		9732.75		45.06	52.57		
16+00.75	18+24.00	223.25	LT/RT			47.00	1165.86				44.67	215.44		45.83	189.49	120.06			44.00	45.48	53.06		
18+24.00	21+54.00	330.00	LT/RT		8248.87		916.54			7478.36		161.57	7863.61		145.62	88.71		7258.21		33.60	39.20		
15+28.23	21+54.00	625.77	LT/RT	1229.53																			
19+05.00	21+54.00	249.00	LT/RT					518.87	479.65								67.15	4316.89		19.99	23.32		
S.R. 775																							
45+30.85	45+42.93	12.08	LT/RT						64.72								9.06	582.45		2.70	3.15		
45+42.93	56+32.79	1089.86	LT/RT	8556.94				75.96															
45+42.93	55+33.61	990.68	LT/RT		65261.86		7251.32			63356.21		1368.81	64309.45		1190.92	767.68		62810.04		290.79	339.25		
58+53.22	64+73.78	620.56	LT/RT		40153.34		4461.48			39054.20		843.76	39603.77		733.40	473.49		38740.16		179.35	209.24		
60+59.87	70+75.00	1015.13	LT/RT	3092.03				26.80															
64+73.78	66+95.47	221.69	LT/RT			59.00	1453.30				56.67	271.41		57.83	237.43	151.73			56.00	57.48	67.05		
66+95.47	70+75.00	379.53	LT/RT		15953.23		1772.58			15066.01		325.50	15509.62		287.22	181.04		14812.33		68.58	80.00		
TOTALS				14971.80			34614.84	882.55	544.37			6382.58			5619.99	3545.93	76.21			1365.84	1596.82	203.84	41.72
TOTALS CARRIED TO GENERAL SUMMARY				14972			34615	883	545			6383			5620	3623				1366	1597	204	42

NOTE: CADD AREA WAS NOT SCOMPUTER GENERATED AREA.

DRAFT Stage 3 - Not for Construction 09/23/2024

CALCULATED SLP CHECKED ALB

PAVEMENT CALCULATIONS

LAW-7-2.17

83
1247

U:\173608714\LAW\75923\roadway\sheets\75923GC002.dgn 5/21/2024 4:48:53 PM SLParker

STATION FROM	STATION TO	LENGTH	SIDE	202 PAVEMENT REMOVED	204 CADD AREA	204 WIDTH	204 SUBGRADE COMPACTION (AREA / 9)	252 FULL DEPTH PAVEMENT SAWING	301 CADD AREA	301 WIDTH	301 3" ASPHALT CONCRETE BASE, PG64-22, (449) (AREA X (3"/12) / 27)	304 CADD AREA	304 WIDTH	304 6" AGGREGATE BASE (AREA X (6"/12) / 27)	407 TACK COAT (AREA /9 X 0.055) x 2	441 CADD AREA	441 WIDTH	441 1.25" ASPHALT CONCRETE SURFACE COURSE, TYPE 1, (449), PG64-22 (AREA X (1.25"/12) / 27)	441 1.75" ASPHALT CONCRETE INTERMEDIATE COURSE, TYPE 2, (449) (AREA X (1.75"/12) / 27)			
FROM	TO			SY	SF	FT	SY	FT	SF	FT	SY	SF	FT	SY	GAL	SF	FT	SY	SY			
HENSON HOLLOW EA																						
10+08.02	10+27.22	19.20	LT/RT		465.54		51.73		459.38		4.25	459.72		8.51	5.58	456.80		1.76	2.47			
10+27.22	12+26.49	199.27	LT/RT			23.00	509.25			20.67	38.13		21.67	79.95	48.71		20.00	15.38	21.53			
12+26.49	12+60.04	33.55	LT/RT		1147.64		127.52		1044.14		9.67	1089.01		20.17	12.39	1013.79		3.91	5.48			
BRENTWOOD EMERGENCY ACCESS																						
13+50.00	13+74.80	24.80	LT/RT		566.14		62.90		543.27		5.03	551.20		10.21	6.55	535.90		2.07	2.89			
13+74.80	22+55.44	880.64	LT/RT			23.00	2250.52			20.67	168.52		21.67	353.34	215.27		20.00	67.95	95.13			
22+55.44	22+85.54	30.10	LT/RT		893.14		99.24		809.73		7.50	845.74		15.66	9.60	785.52		3.03	4.24			
LYNN LANE																						
10+10.00	10+47.38	37.38	LT/RT		1490.86		165.65		1365.76		12.65	1419.89		26.29	16.25	1329.25		5.13	7.18			
10+47.38	13+62.58	315.20	LT/RT			23.00	805.51			20.67	60.32		21.67	126.47	77.05		20.00	24.32	34.05			
13+62.58	13+90.68	28.10	LT/RT		871.28		96.81		785.78		7.28	822.68		15.23	9.30	760.95		2.94	4.11			
13+23.74	13+90.68	66.94	LT/RT	137.81				50.55														
DOGWOOD EXTENSION																						
10+05.78	10+41.18	35.40	LT/RT		972.77		108.09		862.84		7.99	910.50		16.86	10.15	830.60		3.20	4.49			
10+41.18	13+34.07	292.89	LT/RT			15.00	488.15			12.67	34.35		13.67	74.13	42.96		12.00	13.56	18.98			
13+34.07	13+46.62	12.55	LT/RT		260.43		28.94		217.80		2.02	236.33		4.38	2.51	205.21		0.79	1.11			
C.R. 69																						
9+97.68	11+30.77	133.09	LT/RT		5486.95		609.66		5123.35		47.44	5279.61		97.77	61.34	5018.88		19.36	27.11			
10+52.93	14+67.51	414.58	LT/RT	1070.09																		
11+30.77	55+24.35	4393.58	LT/RT			25.00	12204.39			22.67	922.11		23.67	1925.58	1181.38		22.00	372.91	522.08			
33+44.76	39+49.76	605.00	LT/RT	1647.47																		
49+27.57	56+73.01	745.44	LT/RT	1331.23				16.11														
55+24.35	56+73.01	148.66	LT/RT		3329.87		369.99		2982.38		27.61	3131.30		57.99	35.24	2883.20		11.12	15.57			
C.R. 118																						
10+07.30	14+76.01	468.71	LT/RT	936.77				16.17														
10+18.30	11+01.28	82.98	LT/RT		3296.86		366.32		3187.65		29.52	3234.98		59.91	38.57	3155.66		12.17	17.04			
11+01.28	14+50.98	349.70	LT/RT			21.00	815.97			18.67	60.44		19.67	127.36	76.93		18.00	24.28	34.00			
14+50.98	14+76.01	25.03	LT/RT		502.78		55.86		444.33		4.11	469.38		8.69	5.23	427.64		1.65	2.31			
C.R. 2																						
10+18.28	10+99.50	81.22	LT/RT		3306.87		367.43		3206.09		29.69	3249.80		60.18	38.82	3176.50		12.26	17.16			
10+99.50	16+99.28	599.78	LT/RT			25.00	1666.06			22.67	125.88		23.67	262.87	161.27		22.00	50.91	71.27			
16+99.28	17+58.28	59.00	LT/RT		1442.30		160.26		1304.77		12.08	1363.71		25.25	15.47	1265.32		4.88	6.83			
16+44.09	17+58.28	114.19	LT/RT	244.85				20.94														
TOTALS				5368.23			21410.22	103.76			1616.57			3376.81	2070.57			653.59	915.03			
TOTALS CARRIED TO GENERAL SUMMARY				5369			21411	104			1617			3377	2071			654	916			

* "CADD AREA" DENOTES GRAPHIC GENERATED AREA.

DRAFT Stage 3 - Not for Construction

09/23/2024

CALCULATED SLP CHECKED ALB

PAVEMENT CALCULATIONS

LAW-7-2.17

U:\173608714\LAW\75923\roadway\sheets\75923GC003.dgn 5/21/2024 4:48:54 PM SLParker

LOCATION / DESCRIPTION		SIDE	LOCATION OF BMP		BMP WIDTH (FT) *	ONSITE TREATED AREA (AC)
			FROM	TO		
	S.R. 7					
VBF #1		RT	121+50.00	125+00.00	7	1.01
	LATITUDE		38.436133	38.437000		
	LONGITUDE		82.456497	82.456025		
VBF #2		RT	307+00.00	315+00.00	7	1.70
	LATITUDE		38.456187	38.456095		
	LONGITUDE		82.401616	82.398825		
VBF #3		RT	351+00.00	360+00.00	9	4.56
	LATITUDE		38.452100	38.450890		
	LONGITUDE		82.387754	82.384978		
VBF #4		RT	380+93.00	384+00.00	7	1.72
	LATITUDE		38.448583	38.448378		
	LONGITUDE		82.378252	82.377176		
VBF #5		RT	384+00.00	387+00.00	6	0.99
	LATITUDE		38.448378	38.448306		
	LONGITUDE		82.377176	82.376100		
VBF #6		LT	175+00.00	180+30.00	10	5.90
	LATITUDE		38.444259	38.444797		
	LONGITUDE		82.442017	82.440309		
VBF #7		LT	223+50.00	226+50.00	7	2.05
	LATITUDE		38.450737	38.450972		
	LONGITUDE		82.427538	82.426533		
VBF #8		LT	307+00.00	315+00.00	10	5.40
	LATITUDE		38.456410	38.456485		
	LONGITUDE		82.401602	82.398803		
VBF #9		LT	327+00.00	334+50.00	10	6.40
	LATITUDE		38.455947	38.454983		
	LONGITUDE		82.394611	82.392236		
VBF #10		LT	343+00.00	351+00.00	10	5.13
	LATITUDE		38.453655	38.452427		
	LONGITUDE		82.389797	82.387484		
	C.R. 69					
VBF #11		LT	13+50.00	19+50.00	9	4.04
	LATITUDE		38.456986	38.457245		
	LONGITUDE		82.419803	82.418287		
	S.R. 775/RAMP K					
VBF #12		LT	65+50.00	391+50.00	10	4.61
	LATITUDE		38.450668	38.449393		
	LONGITUDE		82.376252	82.374696		

	S.R. 7					
VFS#1		LT	118+49.54	120+67.39	15 **	0.53
	LATITUDE		38.435479	38.436062		
	LONGITUDE		82.457677	82.457451		
	RAMP C					
VFS#2		LT	119+00.00	122+50.00	15 **	0.59
	LATITUDE		38.436107	38.436572		
	LONGITUDE		82.458132	82.457144		
	S.R. 7					
EDB#1		LT		198+97.10	NA	13.13
	LATITUDE			38.448615		
	LONGITUDE			-82.435919		
EDB#2		LT		202+12.83	NA	16.81
	LATITUDE			38.448983		
	LONGITUDE			-82.434899		
EDB#3		LT		255+93.25	NA	31.87
	LATITUDE			38.449670		
	LONGITUDE			-82.378801		
EDB#4		LT		378+18.16	NA	23.72
	LATITUDE			38.456657		
	LONGITUDE			-82.419464		
					TOTAL EDA CREDIT	130.16
					TREATMENT REQUIRED ***	129.95

*MAX WIDTH OF VBF PROVIDED. SEE CROSS SECTIONS FOR ACTUAL BMP/DITCH WIDTHS.
**WIDTH OF FILTER STRIP VARIES, 15' MIN.
***CALCULATED PER L&D VOL. 2, SEC. 1111.7

CALCULATED SLP CHECKED ALB

PROJECT SITE PLAN

LAW-7-2.17

85
1247

DRAFT Stage 3 - Not for Construction 09/23/2024

U:\173608714\LAW\75923\drainage\sheets\75923DE001-2B.dgn 5/21/2024 4:48:55 PM SLParker

LOCATION / DESCRIPTION		SIDE	LOCATION OF BMP		ONSITE TREATED AREA (AC)
			INLET	OUTLET	
	S.R. 7				
STREAM GRADE CONTROL		RT/LT	128+00.00	128+00.00	8.58
	LATITUDE		38.437897	38.437642	
	LONGITUDE		-82.455931	-82.455390	
STREAM GRADE CONTROL		RT/LT	163+75.36	161+32.00	12.58
	LATITUDE		38.443460	38.442497	
	LONGITUDE		-82.445824	-82.446300	
STREAM GRADE CONTROL		RT/LT	229+54.36	229+70.45	7.20
	LATITUDE		38.451555	38.450488	
	LONGITUDE		-82.425709	-82.425086	
STREAM GRADE CONTROL		RT/LT	322+69.14	321+07.00	15.57
	LATITUDE		38.456709	38.455282	
	LONGITUDE		-82.395983	-82.396869	
STREAM GRADE CONTROL		RT/LT	339+73.20	336+48.23	17.63
	LATITUDE		38.454903	38.453263	
	LONGITUDE		-82.390096	-82.392890	
				TOTAL EDA CREDIT *	61.56
				TREATMENT REQUIRED ***	129.95

* TOTAL WATER QUANTITY CREDIT INCLUDES 61.56 ACRES PLUS 85.53 ACRES FROM THE DETENTION BASINS TO MEET THE TREATMENT REQUIRED.

***CALCULATED PER L&D VOL. 2, SEC. 1111.7

CALCULATED SLP
CHECKED ALB

PROJECT SITE PLAN

LAW-7-2.17

DRAFT Stage 3 - Not for Construction 09/23/2024

U:\173608714\LAW\75923\drainage\sheets\75923DE002-2B.dgn 5/21/2024 4:48:55 PM SLParker

LEGEND

XXX - VEGETATED BIOFILTER (VBF)

- VEGETATED FILTER STRIP (VFS)

NOTES:
THE QUANTITY FOR ITEM 659 - TOPSOIL INCLUDES THE TOPSOIL TO BE PLACED IN THE AREAS OF THE VEGETATED BIOFILTERS, EXCEPT AS SHOWN IN THE PLANS.

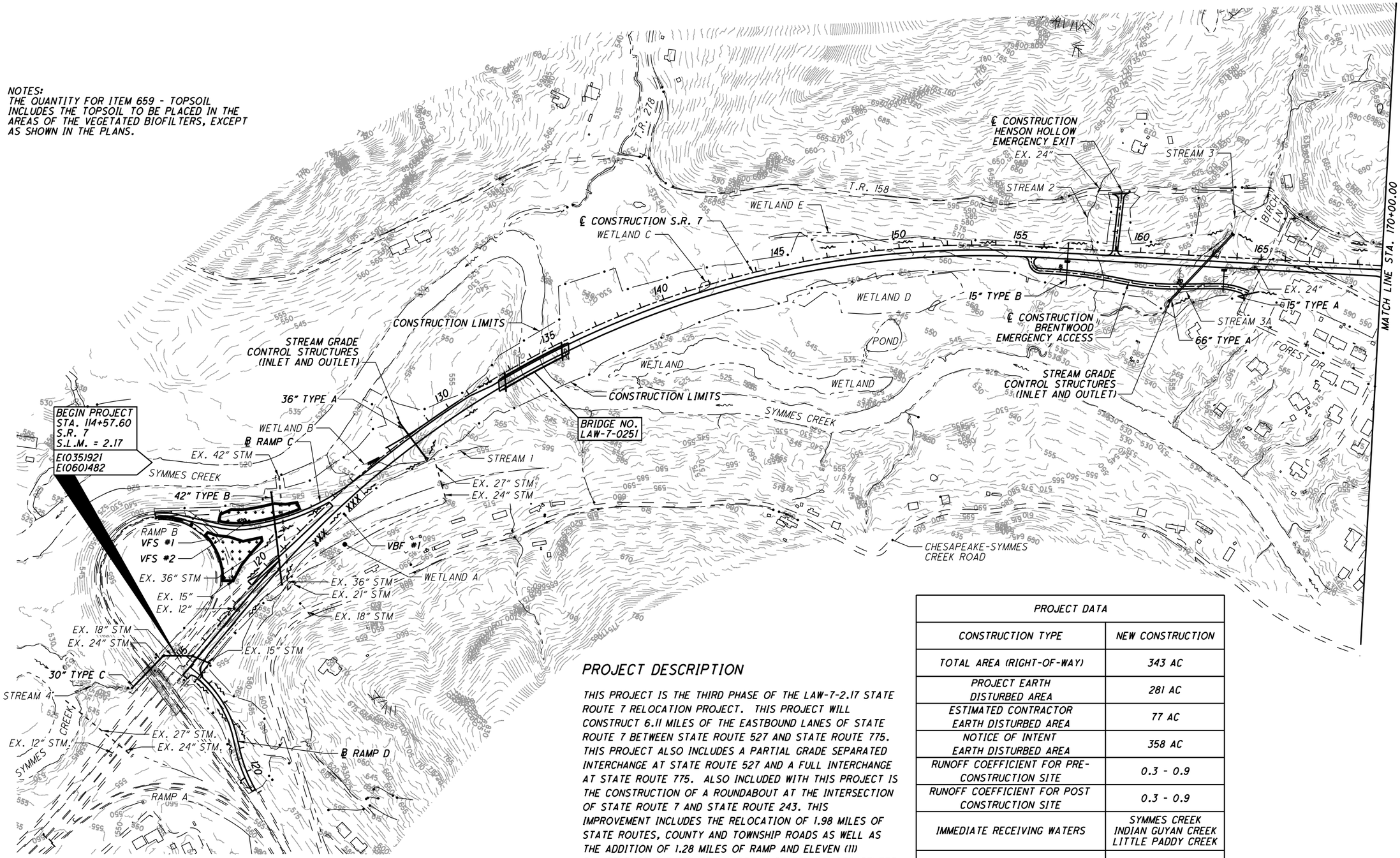

USGS MAP: HUNTINGTON QUADRANGLE
WEST VIRGINIA - OHIO

LATITUDE: 38°27'16" *
LONGITUDE: 82°25'19" *

* LATITUDE AND LONGITUDE TO APPROX. CENTER OF PROJECT

PROJECT DESCRIPTION

THIS PROJECT IS THE THIRD PHASE OF THE LAW-7-2.17 STATE ROUTE 7 RELOCATION PROJECT. THIS PROJECT WILL CONSTRUCT 6.11 MILES OF THE EASTBOUND LANES OF STATE ROUTE 7 BETWEEN STATE ROUTE 527 AND STATE ROUTE 775. THIS PROJECT ALSO INCLUDES A PARTIAL GRADE SEPARATED INTERCHANGE AT STATE ROUTE 527 AND A FULL INTERCHANGE AT STATE ROUTE 775. ALSO INCLUDED WITH THIS PROJECT IS THE CONSTRUCTION OF A ROUNDABOUT AT THE INTERSECTION OF STATE ROUTE 7 AND STATE ROUTE 243. THIS IMPROVEMENT INCLUDES THE RELOCATION OF 1.98 MILES OF STATE ROUTES, COUNTY AND TOWNSHIP ROADS AS WELL AS THE ADDITION OF 1.28 MILES OF RAMP AND ELEVEN (11) CUL-DE-SACS AND DRIVES. A TOTAL OF TEN (10) STRUCTURES WILL BE DEVELOPED WHICH INCLUDE TRAFFIC OVERPASS AND STREAM CROSSING BRIDGES. WORK WILL INCLUDE NEW STORM SEWERS, CULVERTS, NOISE AND RETAINING WALLS, TRAFFIC CONTROL, PAVEMENT MARKING AND LIGHTING.

PROJECT DATA	
CONSTRUCTION TYPE	NEW CONSTRUCTION
TOTAL AREA (RIGHT-OF-WAY)	343 AC
PROJECT EARTH DISTURBED AREA	281 AC
ESTIMATED CONTRACTOR EARTH DISTURBED AREA	77 AC
NOTICE OF INTENT EARTH DISTURBED AREA	358 AC
RUNOFF COEFFICIENT FOR PRE-CONSTRUCTION SITE	0.3 - 0.9
RUNOFF COEFFICIENT FOR POST CONSTRUCTION SITE	0.3 - 0.9
IMMEDIATE RECEIVING WATERS	SYMMES CREEK INDIAN GUYAN CREEK LITTLE PADDY CREEK
SUBSEQUENT RECEIVING WATERS	OHIO RIVER
IMPERVIOUS AREA FOR PRE-CONSTRUCTION SITE	69 AC
IMPERVIOUS AREA FOR POST CONSTRUCTION SITE	77 AC

DRAFT Stage 3 - Not for Construction
09/23/2024

HORIZONTAL SCALE IN FEET
0 100 200 400

PROJECT SITE PLAN

LAW-7-2.17

U:\173608714\LAW\75923\drainage\sheets\75923DE003-2B.dgn 5/21/2024 4:49:12 PM SLParker

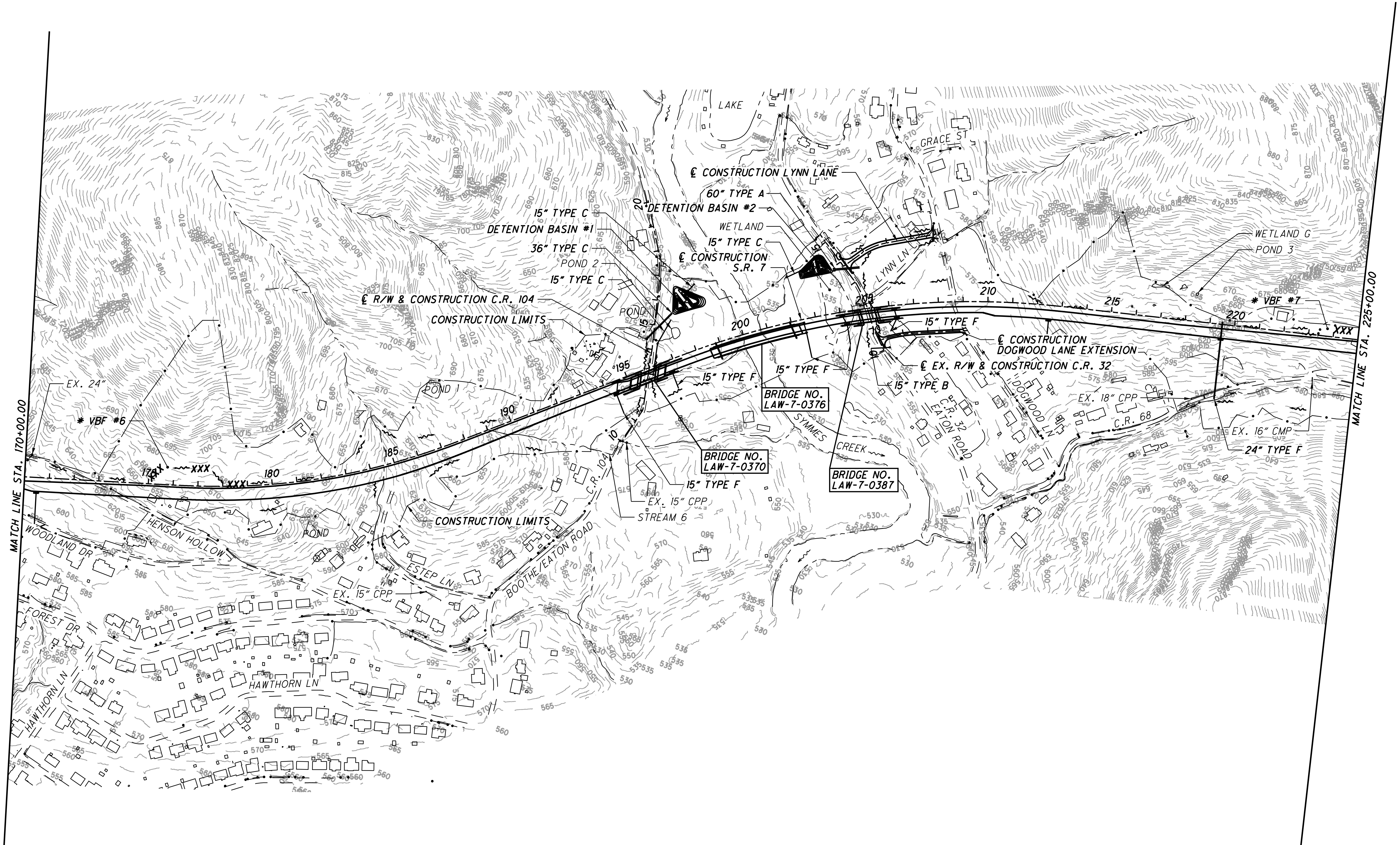

LEGEND

XXX - VEGETATED BIOFILTER (VBF)

- EXTENDED DETENTION BASIN

* - ITEM 659 - TOPSOIL, AS PER PLAN

NOTES:
THE QUANTITY FOR ITEM 659 - TOPSOIL INCLUDES THE TOPSOIL TO BE PLACED IN THE AREAS OF THE VEGETATED BIOFILTERS, EXCEPT AS SHOWN IN THE PLANS.

DRAFT Stage 3 - Not for Construction 09/23/2024

HORIZONTAL SCALE IN FEET 0 100 200 400

PROJECT SITE PLAN

LAW-7-2.17

U:\173608714\LAW\75923\drainage\sheets\75923DE004-2B.dgn 5/21/2024 4:49:14 PM SLParker

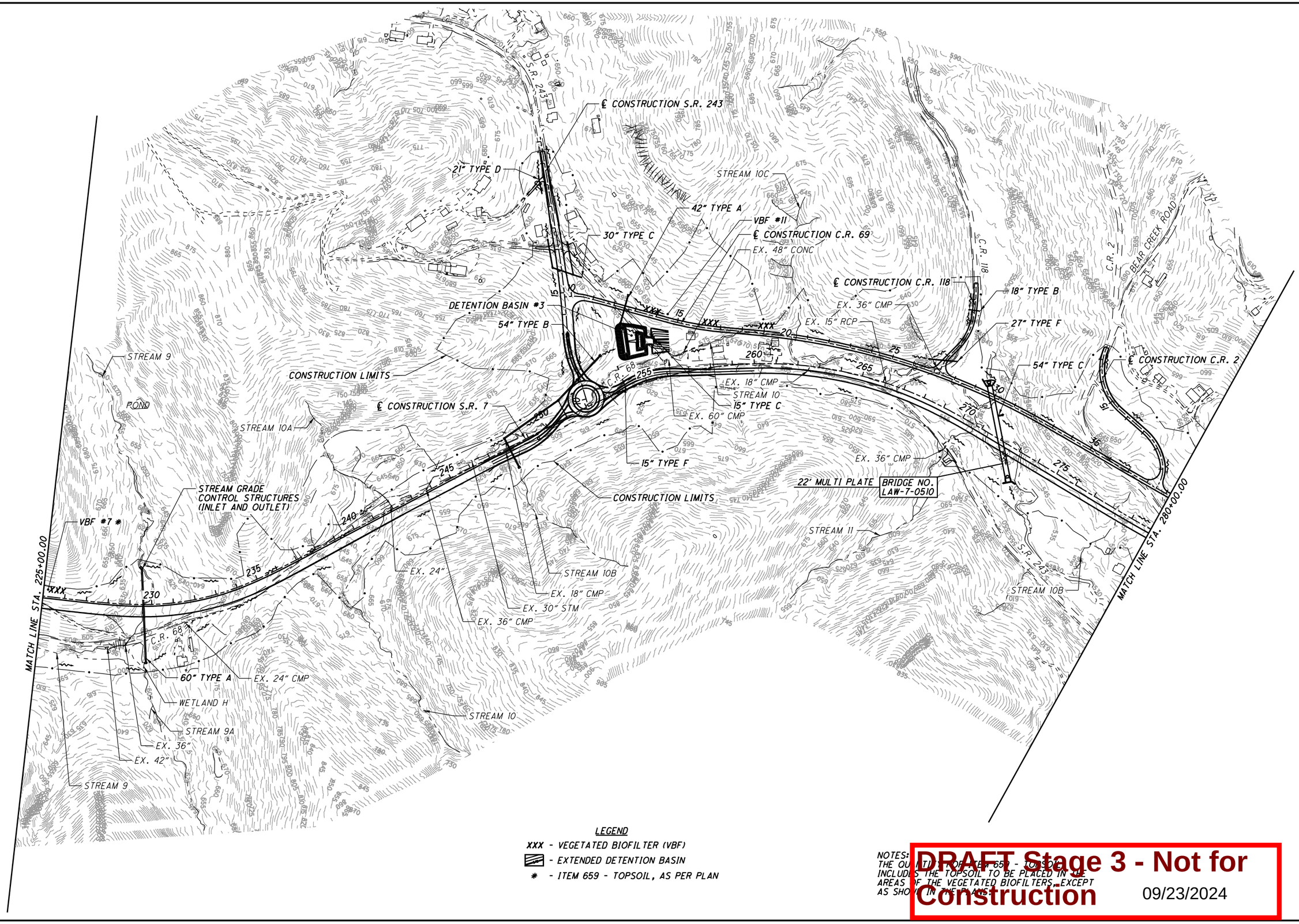

LEGEND

XXX - VEGETATED BIOFILTER (VBF)

- EXTENDED DETENTION BASIN

* - ITEM 659 - TOPSOIL, AS PER PLAN

NOTES:
THE QUANTITY FOR ITEM 659 - TOPSOIL INCLUDES THE TOPSOIL TO BE PLACED IN THE AREAS OF THE VEGETATED BIOFILTERS, EXCEPT AS SHOWN IN THE PLANS.

DRAFT Stage 3 - Not for Construction 09/23/2024

HORIZONTAL SCALE IN FEET
0 100 200 400

PROJECT SITE PLAN

LAW-7-2.17

89
1247

U:\173608714\LAW\75923\drainage\sheets\75923DE005-2B.dgn 5/21/2024 4:49:24 PM SLParker

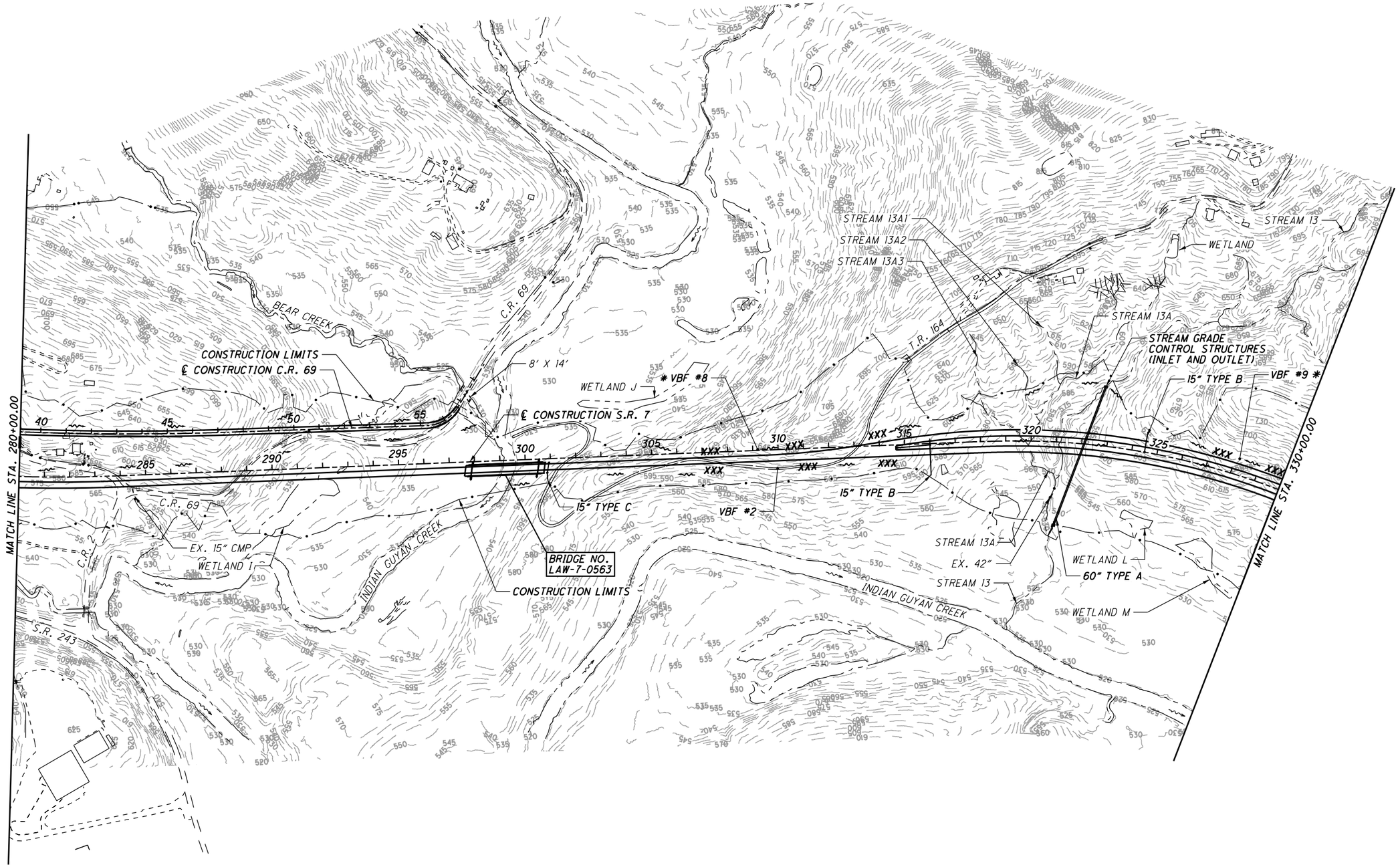

LEGEND

XXX - VEGETATED BIOFILTER (VBF)

* - ITEM 659 - TOPSOIL, AS PER PLAN

NOTES:
THE QUANTITY FOR ITEM 659 - TOPSOIL, INCLUDES THE TOPSOIL TO BE PLACED IN THE AREAS OF THE VEGETATED BIOFILTERS, EXCEPT AS SHOWN IN THE PLANS.

DRAFT Stage 3 - Not for Construction

09/23/2024

HORIZONTAL SCALE IN FEET
0 100 200 400

PROJECT SITE PLAN

LAW-7-2.17

90
1247

U:\173608714\LAW\75923\drainage\sheets\75923DE006-2B.dgn 5/21/2024 4:49:27 PM SLParker

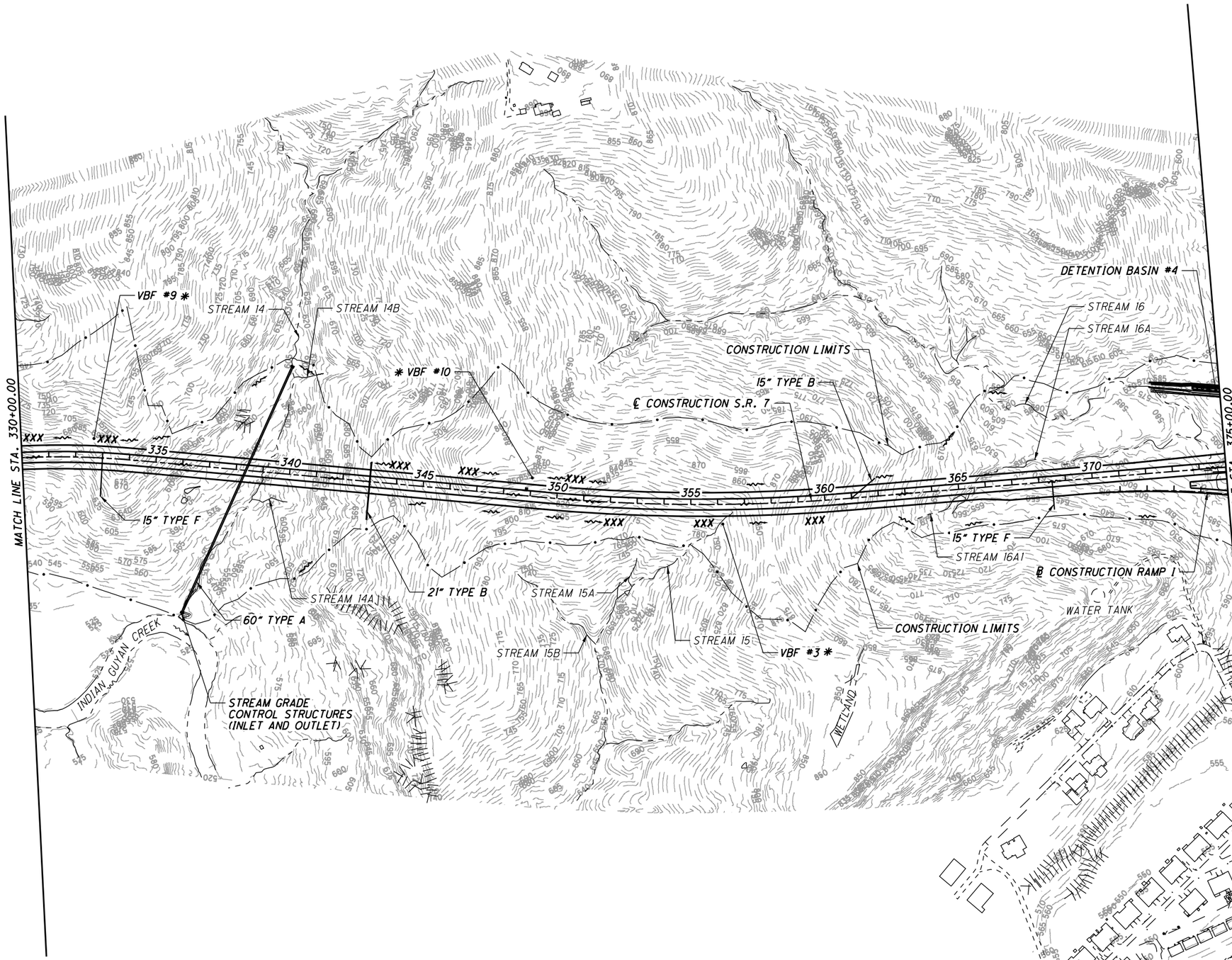

LEGEND

XXX - VEGETATED BIOFILTER (VBF)

* - ITEM 659 - TOPSOIL, AS PER PLAN

NOTES:
THE QUANTITY FOR ITEM 659 - TOPSOIL INCLUDES THE TOPSOIL TO BE PLACED IN THE AREAS OF THE VEGETATED BIOFILTERS, EXCEPT AS SHOWN IN THE PLANS.

DRAFT Stage 3 - Not for Construction 09/23/2024

N

0 100 200 400
HORIZONTAL SCALE IN FEET

PROJECT SITE PLAN

LAW-7-2.17

91
1247

U:\173608714\LAW\75923\drainage\sheets\75923DE007-2B.dgn 5/21/2024 4:49:30 PM SLParker

PROJECT SITE PLAN

LAW-7-2.17

HORIZONTAL SCALE IN FEET
0 100 200 400

N

E(035)921
E(060)482
END WORK
END PROJECT
STA. 437+16.83
S.L.M. = 8.28

S.R. 7
EX. 72" TYPE A
EX. 15" STM
EX. 18" STM
EX. 15" STM
Paddy Creek
MESA ST
TOWER DR
PLATEAU CT
LITTLE PADDY RD
COLE ST
1ST ST
2ND ST
3RD ST
MIDLAND AVE
WALNUT ST
RECKARD ST
MAPLE VIEW
SUE AVE
WETLAND O
WETLAND R
WETLAND S
WETLAND N
Little Paddy Creek
STREAM 18
STREAM 17
EX. 48" TYPE A
EX. 24"

℄ CONSTRUCTION S.R. 775
CONSTRUCTION LIMITS
℄ CONSTRUCTION RAMP K
42" TYPE B
VBF #12
℄ CONSTRUCTION RAMP J
15" TYPE C
24" TYPE A
DETENTION BASIN #4
BRIDGE NO. LAW-7-0713 L&R
MATCH LINE STA. 375+00.00
BRIDGE NO. LAW-7-0711
15" TYPE F
42" TYPE C
VBF #5
VBF #4
℄ CONSTRUCTION RAMP L
℄ CONSTRUCTION RAMP I
BRIDGE NO. LAW-775-0105
℄ CONSTRUCTION S.R. 775
℄ CONSTRUCTION S.R. 7
CONSTRUCTION LIMITS

LEGEND

XXX - VEGETATED BIOFILTER (VBF)

* - ITEM 659 - TOPSOIL, AS PER PLAN

NOTES:
THE QUANTITY FOR ITEM 659 - TOPSOIL INCLUDES THE TOPSOIL TO BE PLACED IN THE AREAS OF THE VEGETATED BIOFILTERS, EXCEPT AS SHOWN IN THE PLANS.

DRAFT Stage 3 - Not for Construction
09/23/2024

92
1247

U:\173608714\LAW\75923\drainage\sheets\75923DE008-2B.dgn 5/21/2024 4:49:34 PM SLParker

CURVE DATA
EX. S.R. 7
EX. CURVE NO. 1

P.I. Sta. 1402+27.98
Δ = 49° 22′ 38″ (LT)
Dc = 3° 00′ 00″
R = 1,909.86′
T = 877.98′
L = 1,645.91′
E = 192.14′
PC Sta. 1393+50.00
PT Sta. 1409+95.91

SECTION 28
SECTION 33

UNION TOWNSHIP
CHESAPEAKE

Ex R/W

PC

PAVED GUTTER

℄ R/W & CONSTRUCTION S.R. 7

EX. CURVE NO. 1

1394
1395
1396
1397
1398
1399
1400

BIG BRANCH ROAD / T.R. 31

MATCH LINE STA. 1401+00.00

TAPER EX. S.R. 7 FROM TWO LANES TO ONE
FOR DETAILS, SEE SHEETS 713-773A

FOR TRAFFIC CONTROL PLAN, SEE SHEETS 713-773A

DRAFT Stage 3 - Not for Construction

09/23/2024

HORIZONTAL SCALE IN FEET
0 25 50 100

CALCULATED SLP
CHECKED ALB

PLAN - S.R. 7
STA. 1393+50.00 TO STA. 1401+00.00

LAW-7-2.17

93
1247

U:\173608714\LAW\75923\roadway\sheets\75923GP030-2B.dgn 5/21/2024 4:49:37 PM SLParker

CURVE DATA
EX. S.R. 7
EX. CURVE NO. 1

P.I. Sta. 1402+27.98
Δ = 49° 22' 38" (LT)
Dc = 3° 00' 00"
R = 1,909.86'
T = 877.98'
L = 1,645.91'
E = 192.14'
PC Sta. 1393+50.00
PT Sta. 1409+95.91

EX. S.R. 7

P.I. STA. 1412+88.89
Δ = 0° 13' 13" (LT)
NO CURVE

MATCH LINE STA. 1401+00.00

MATCH LINE STA. 1414+00.00

SYMMES CREEK

SYMMES CREEK

Ex R/W

1402 1403 1404 1405 1406 1407 1408 1409 1410 1411 1412 1413

EX. CB-8

N 17° 33' 10" E

N 17° 20' 23" E

EX. PAVED GUTTER

℄ R/W & CONSTRUCTION

EX. CURVE NO. 1

EX. OVERHEAD SIGN TRUSS

EX. CB

EX. CB

SYMMES CREEK ROAD / T.R. 123

POOL

POOL

POOL

SECTION 28
SECTION 33

UNION TOWNSHIP
CHESAPEAKE

DRAFT Stage 3 - Not for Construction

09/23/2024

ALL TRAFFIC CONTROL PLAN SHEETS 713-737A

U:\173608714\LAW\75923\roadway\sheets\75923GP031-2B.dgn 5/21/2024 4:49:38 PM SLParker

HORIZONTAL SCALE IN FEET
0 25 50 100

CALCULATED SLP
CHECKED ALB

PLAN - S.R. 7
STA. 1401+00.00 TO STA. 1414+00.00

LAW-7-2.17

94
1247

CURVE DATA
S.R. 7
CURVE NO. 1

P.I. STA. 138+60.99
Δ = 53° 33' 53" (RT)
Dc = 1° 27' 15"
R = 3,940.00'
T = 1,880.13'
L = 3,508.44'
E = 425.60'
TS STA. 117+84.61
SC STA. 119+59.61

θs = 1° 16' 21"
Ls = 175.00'
Ts = 2,076.38'
LT = 116.67'
ST = 58.34'
e_{max} = 4.00%
CS STA. 154+68.05
ST STA. 156+43.05

(1/EC) DITCH EROSION PROTECTION
MAT, TYPE B
(150' x 7.5' / 9) = 125 SY

(2/EC) DITCH EROSION PROTECTION
MAT, TYPE B
(2 x (150' x 7.5' / 9) = 250 SY)

(3/EC) DITCH EROSION PROTECTION
MAT, TYPE B
(150' x 7.5' / 9) = 125 SY

(4/EC) DITCH EROSION PROTECTION (VBF)
(150' x 11' / 9 = 183.33 SY)

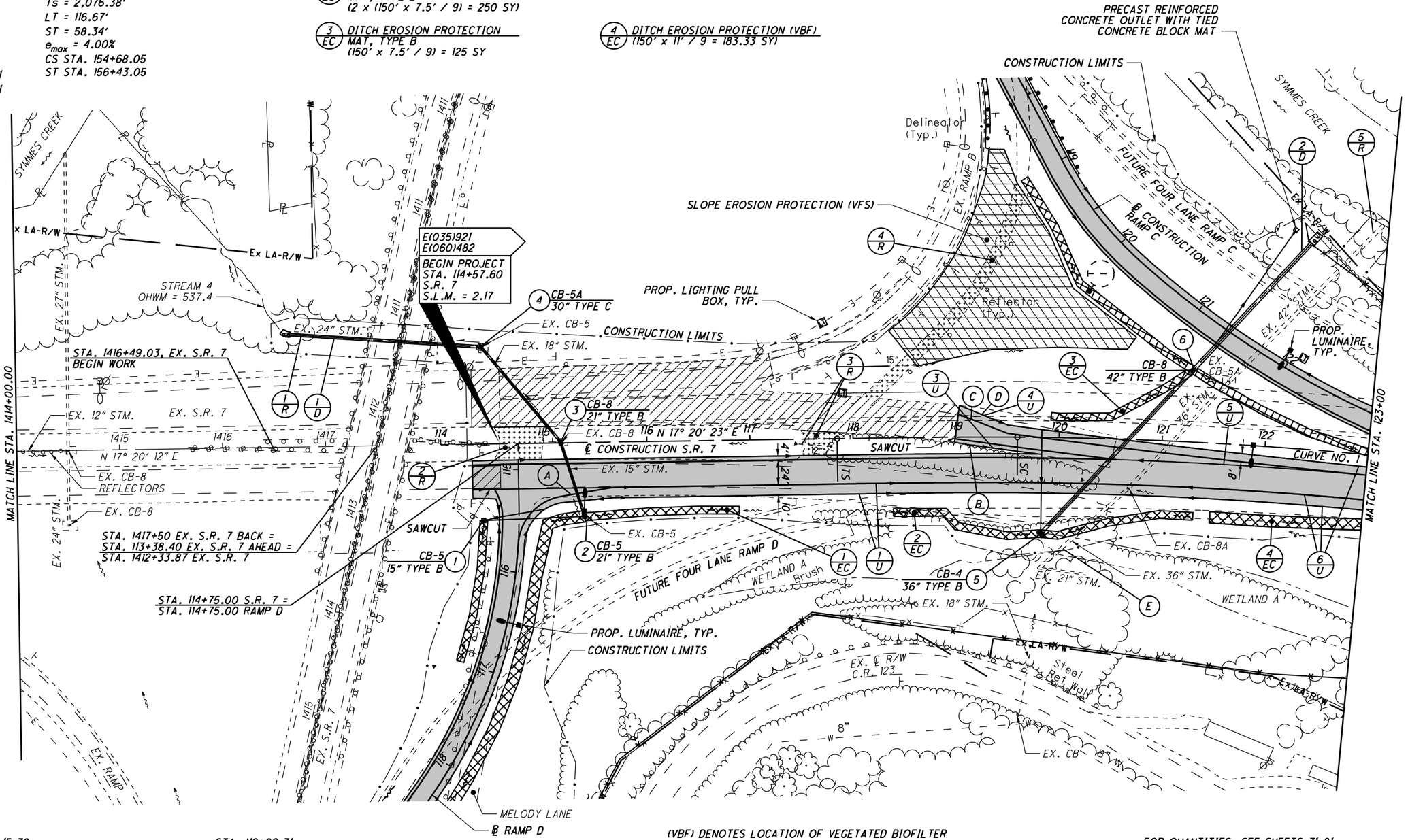

(A) - STA. 115+15.70 BEGIN PAVEMENT TAPER, 52' RT.
STA. 115+65.70 END PAVEMENT TAPER, 44' RT.

(B) - STA. 118+98.44 BEGIN SHOULDER TAPER, 4.95' RT.
STA. 119+11.42 END SHOULDER TAPER, 7.31' RT.

(C) - STA. 119+02.31 BEGIN PAVEMENT TAPER, 22.25' LT.
STA. 119+50.10 END PAVEMENT TAPER, 3.66' LT.

(D) - STA. 119+03.51 BEGIN SHOULDER TAPER, 30.74' LT.
STA. 119+50.10 END SHOULDER TAPER, 11.73' LT.

(E) - STA. 120+01.20, 109.89' RT. THE CONTRACTOR IS TO REMOVE EXISTING STORM TO THE SPECIFIED LOCATION AND FILL AND PLUG THE REMAINDER.

(VBF) DENOTES LOCATION OF VEGETATED BIOFILTER
(VFS) DENOTES LOCATION OF VEGETATED FILTER STRIP

- PROPOSED PAVEMENT
- 3-1/4" MILL/FILL
- PAVEMENT REMOVED
QUANTITIES ARE INCLUDED IN REFERENCE NUMBERS 2-R, 3-R AND 4-R FOR THE REMOVAL OF EXISTING PAVEMENT, REGRADING TO ENSURE A DRAINABLE SURFACE AND SEEDING AND MULCHING OF THE AREA SHOWN.

FOR QUANTITIES, SEE SHEETS 71-81
FOR PROFILE, SEE SHEET 96
FOR RAMP C PLAN & PROFILE, SEE SHEET 419
FOR RAMP D PLAN & PROFILE, SEE SHEET 425
FOR PAVEMENT DETAILS, SEE SHEET 605
FOR INTERCHANGE DETAILS, SEE SHEETS 610-618
FOR INTERSECTION DETAILS, SEE SHEET 622
FOR STORM SEWER PROFILES, SEE SHEET 639
FOR UNDERDRAIN TABLES, SEE SHEETS 674-678
FOR TRAFFIC CONTROL PLAN, SEE SHEETS 713-733
FOR ITEMIZED TABLES, SEE SHEETS 1039-1041

DRAFT Stage 1 Not for Construction

HORIZONTAL SCALE IN FEET
0 25 50 100
CALCULATED SLP
CHECKED ALB

PLAN - S.R. 7
STA. 114+57.60 TO STA. 123+00

LAW-7-2.17

95
1247

U:\173608714\LAW\75923\roadway\sheets\75923GP001-2A.dgn 5/21/2024 4:49:39 PM SLParker

PROFILE - S.R. 7
STA. 114+57.60 TO STA. 123+00

CALCULATED SLP
CHECKED ALB

STA. 114+57.60
BEGIN PROFILE
ELEV. 555.11

℄ RAMP D

EX. GROUND

PROPOSED PROFILE

+0.14 %

+0.05 % +0.39 %

STA. 115+16.28 ℄
EX. CB-8
T/C = 552.20
℄ EX. 18" = 545.40
℄ EX. 15" = 545.65

STA. 115+16.53
CB-8
T/C = 551.89
℄ 21" TYPE B = 547.16

P.V.C. STA. 116+14.00
ELEV. 555.19

P.V.T. STA. 117+14.00
ELEV. 555.42

100.00' VC
P.V.I. STA. 116+64.00
ELEV. = 555.22'

STA. 120+67.31
℄ 36" TYPE B
= 544.99

STA. 121+10
℄ EX. 36" STM
= 544.21

640 630 620 610 600 590 580 570 560 550 540 530 520 510 500 490 480 470 460

555.12 555.13 555.15 555.16 555.17 555.19 555.20 555.23 555.29 555.37 555.46 555.56 555.66 555.76 555.86 555.95 556.05 556.15 556.25 556.35 556.45 556.55 556.64 556.74 556.84 556.94 557.04 557.14 557.24 557.34 557.43 557.53 557.63 557.73

555.08 552.40 552.77 553.12 553.50 554.17 554.36 555.51 556.12 556.64 557.36 558.00 556.71 556.16 554.60 553.50 552.37

115+00 116+00 117+00 118+00 119+00 120+00 121+00 122+00 123+00

DRAFT Stage 3 - Not for Construction
09/23/2024

LAW-7-2.17

96
1247

U:\173608714\LAW\75923\roadway\sheets\75923GF001-2B.dgn 5/21/2024 4:49:40 PM SLParker

CURVE DATA
S.R. 7
CURVE NO. 1

P.I. STA. 138+60.99
Δ = 53° 33' 53" (RT)
Dc = 1° 27' 15"
R = 3,940.00'
T = 1,880.13'
L = 3,508.44'
E = 425.60'
TS STA. 117+84.61
SC STA. 119+59.61

θs = 1° 16' 21"
Ls = 175.00'
Ts = 2,076.38'
LT = 116.67'
ST = 58.34'
e_{max} = 4.00%
CS STA. 154+68.05
ST STA. 156+43.05

HORIZONTAL SCALE IN FEET
0 25 50 100

CALCULATED SLP
CHECKED ALB

PLAN - S.R. 7
STA. 123+00 TO STA. 135+00

LAW-7-2.17

97
1247

Ex R/W
SYMMES CREEK 1
DO NOT DISTURB CREEK
Wooded Area
PRECAST REINFORCED CONCRETE OUTLET WITH TIED CONCRETE BLOCK MAT (TYP.)
OHWM = 517.3
STA. 123+69.22 S.R. 7, 3' LT. =
STA. 123+72.02 RAMP C, 16' RT.
RAMP NOSE
LA-R/W
PROP. LUMINAIRE, TYP.
EROSION CONTROL FLUME
FUTURE WESTBOUND LANES
℄ CONSTRUCTION S.R. 7
CONSTRUCTION LIMITS
36" TYPE A
N 29° 34' 16" E
CURVE NO. 1
WETLAND B
MATCH LINE STA. 123+00
MATCH LINE STA. 135+00
Brush
℄ RAMP C
TYPE E PON
+98.59
BTA, TYPE 1
+33.08
BTA, TYPE 1
+54.10
BRIDGE NO.
LAW-7-0251
SYMMES CREEK 2
STA. 127+13.21 S.R. 7, 8' RT. =
PT STA. 127+14.00 RAMP C
END RAMP
WETLAND A
OHWM = 546.5
EX. 24" STM.
EX. 27" STM.
CB
STREAM 1
OHWM = 520.1
3 EC ROCK CHANNEL PROTECTION
TYPE C WITH FILTER
(105' x 7.5' x 1.5' / 27 = 43.75 CY)

A - STA. 131+00.00
BEGIN PAVEMENT TAPER, 8' RT.
BEGIN SHOULDER TAPER, 0' RT./LT.

STA. 132+00.00
END PAVEMENT TAPER, 20' RT.
END SHOULDER TAPER, 16' RT.

(VBF) DENOTES LOCATION OF VEGETATED BIOFILTER

1 EC DITCH EROSION PROTECTION (VBF)
(200' x 11' / 9) = 244.44 SY)

2 EC DITCH EROSION PROTECTION MAT, TYPE B
(100' x 7.5' / 9 = 83.33 SY)

- PROPOSED PAVEMENT

FOR QUANTITIES, SEE SHEETS 71-81
FOR PROFILE, SEE SHEET 98
FOR RAMP C PLAN & PROFILE, SEE SHEET 419
FOR PAVEMENT DETAILS, SEE SHEETS 605-606
FOR INTERCHANGE DETAILS, SEE SHEETS 616-616
FOR CONCRETE BARRIER, SEE SHEETS 670-671
FOR UNDERDRAIN TABLES, SEE SHEETS 674-678
FOR TRAFFIC CONTROL PLAN, SEE SHEETS 713-733A
FOR STRUCTURES OVER AND UNDER, SEE SHEETS 801-816
FOR FENCE TABLES, SEE SHEETS 1039-1041

DRAFT Stage 3 - Not for Construction
09/25/2024

U:\17360871\4\LAW\75923\roadway\sheets\75923GP002-2A.dgn 5/21/2024 4:49:43 PM SLParker

PROPOSED PROFILE

+0.39 %

EX. GROUND

STA. 128+00
℄ 361 TYPE A
= 540.99

557.73 557.83 557.93 558.03 558.12 558.22 558.32 558.42 558.52 558.62 558.72 558.81 558.91 559.01 559.11 559.21 559.31 559.41 559.51 559.60 559.70 559.80 559.90 560.00 560.10 560.20 560.29 560.39 560.49 560.59 560.69 560.79 560.89 560.99 561.08 561.18 561.28 561.38 561.48 561.58 561.68 561.77 561.87 561.97 562.07 562.17 562.27 562.37 562.47

640 630 620 610 600 590 580 570 560 550 540 530 520 510 500 490 480

552.36 556.00 557.01 548.18 535.65 531.28 531.58 532.33 534.07 538.32 541.65 544.77 548.56 552.71 555.78 558.42 563.08 575.19 578.78 572.7 541.08 520.1 520.1 524.58 524.72

123+00 124+00 125+00 126+00 127+00 128+00 129+00 130+00 131+00 132+00 133+00 134+00 135+00

DRAFT Stage 3 - Not for Construction

09/23/2024

U:\17360714\LAW\75923\roadway\sheets\75923GF002-2B.dgn 5/21/2024 4:49:45 PM SLParker

CALCULATED SLP
CHECKED ALB

PROFILE - S.R. 7
STA. 123+00 TO STA. 135+00

LAW-7-2.17

98
1247

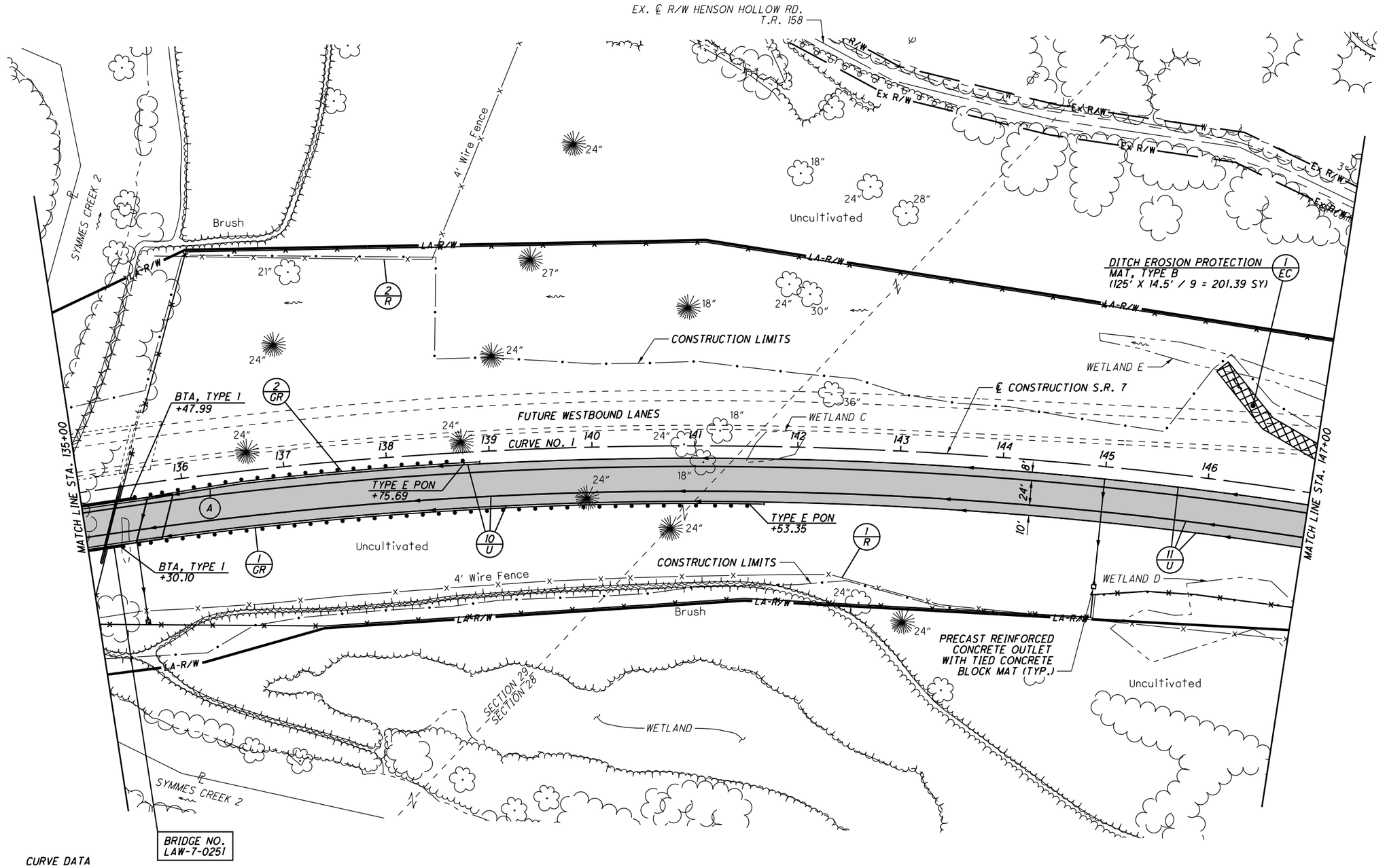

CURVE DATA
S.R. 7
CURVE NO. 1

P.I. STA. 138+60.99	θs = 1° 16' 21"
Δ = 53° 33' 53" (RT)	Ls = 175.00'
Dc = 1° 27' 15"	Ts = 2,076.38'
R = 3,940.00'	LT = 116.67'
T = 1,880.13'	ST = 58.34'
L = 3,508.44'	e_{max} = 4.00%
E = 425.60'	CS STA. 154+68.05
TS STA. 117+84.61	ST STA. 156+43.05
SC STA. 119+59.61	

(A) - STA. 135+59.43
BEGIN SHOULDER TAPER, 16' RT.

STA. 136+59.43
END SHOULDER TAPER, 12' RT.

- PROPOSED PAVEMENT

FOR QUANTITIES, SEE SHEETS 71-81
FOR PROFILE, SEE SHEET 120
FOR UNDERDRAIN TABLES, SEE SHEETS 674-678
FOR TRAFFIC CONTROL PLAN, SEE SHEETS 713-733A
FOR STRUCTURES 20' AND OVER, SEE SHEETS 816
FOR FENCE TABLES, SEE SHEETS 1039-1041

DRAFT Stage 3 - Not for Construction 09/30/2024

HORIZONTAL SCALE IN FEET
0 25 50 100

CALCULATED SLP
CHECKED ALB

PLAN - S.R. 7
STA. 135+00 TO STA. 147+00

LAW-7-2.17

99
1247

U:\1736O714\LAW\75923\roadway\sheets\75923GP003-2A.dgn 5/21/2024 4:49:47 PM SLParker

PROFILE - S.R. 7

STA. 135+00 TO STA. 147+00

CALCULATED SLP

CHECKED ALB

LAW-7-2.17

PROPOSED PROFILE

+0.39 %

EX. GROUND

562.47 562.56 562.66 562.76 562.86 562.96 563.06 563.16 563.25 563.35 563.45 563.55 563.65 563.75 563.85 563.95 564.04 564.14 564.24 564.34 564.44 564.54 564.64 564.73 564.83 564.93 565.03 565.13 565.23 565.33 565.42 565.52 565.62 565.72 565.82 565.92 566.02 566.12 566.21 566.31 566.41 566.51 566.61 566.71 566.81 566.90 567.00 567.10 567.20

630 620 610 600 590 580 570 560 550 540 530 520 510 500 490 480 470 460

524.75 525.34 528.51 531.77 531.29 530.90 531.54 531.66 533.28 533.27 535.38 537.24 537.43 538.03 537.83 542.21 545.60 547.57 549.24 550.69 552.00 553.43 553.80 554.62

135+00 136+00 137+00 138+00 139+00 140+00 141+00 142+00 143+00 144+00 145+00 146+00 147+00

DRAFT Stage 3 - Not for Construction

09/23/2024

100
1247

U:\173608714\LAW\75923\roadway\sheets\75923GF003-2B.dgn 5/21/2024 4:49:48 PM SLParker

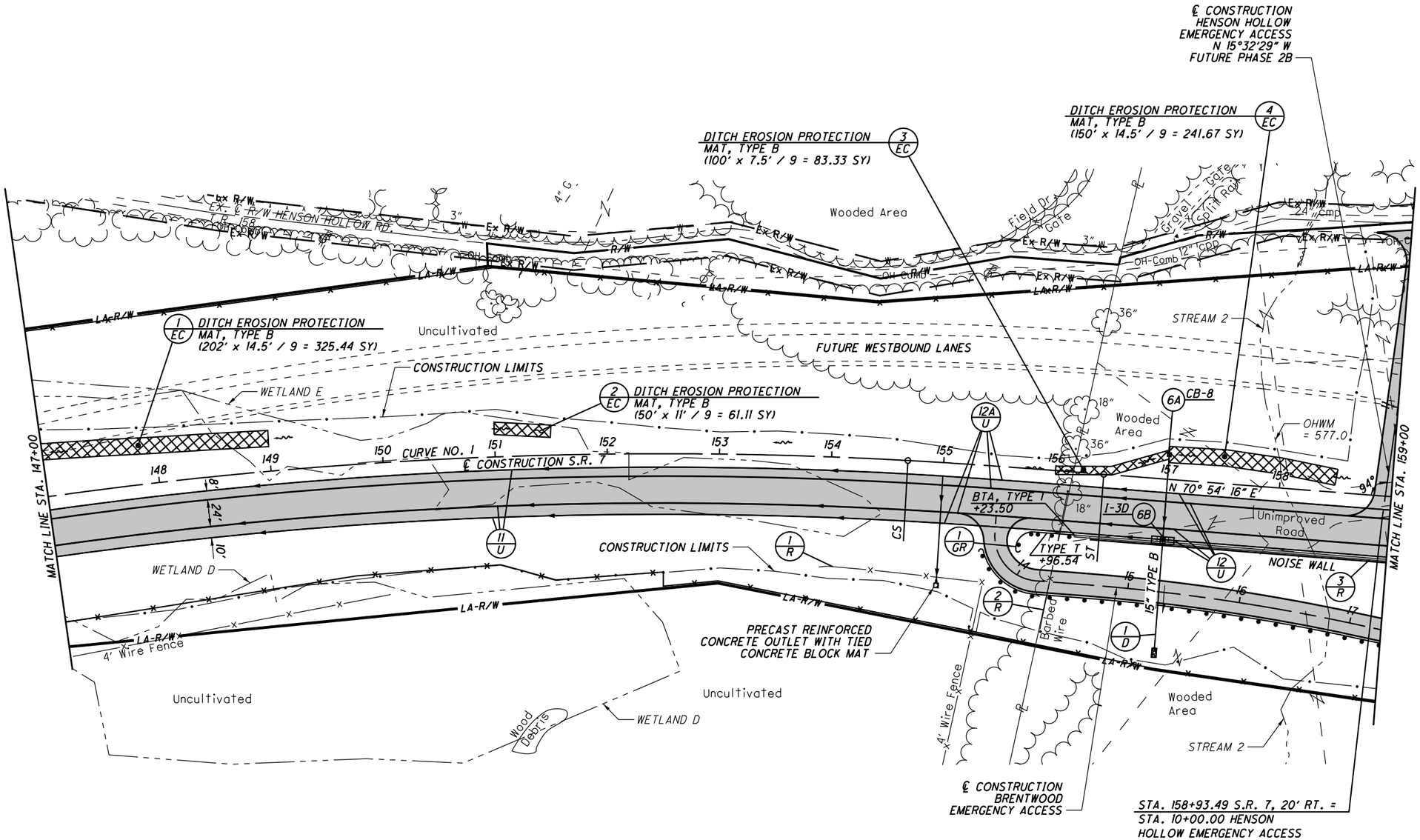

CURVE DATA
S.R. 7
CURVE NO. 1

P.I. STA. 138+60.99	θs = 1° 16' 21"
Δ = 53° 33' 53" (RT)	Ls = 175.00'
Dc = 1° 27' 15"	Ts = 2,076.38'
R = 3,940.00'	LT = 116.67'
T = 1,880.13'	ST = 58.34'
L = 3,508.44'	e_{max} = 4.00%
E = 425.60'	CS STA. 154+68.05
TS STA. 117+84.61	ST STA. 156+43.05
SC STA. 119+59.61	

- PROPOSED PAVEMENT

1/GR - INCLUDES 25' OF 15' RADIUS SHOP CURVED GUARDRAIL

FOR QUANTITIES, SEE SHEETS 71-81
FOR PROFILE, SEE SHEET 102
FOR STORM SEWER PROFILE SEE SHEET 187
FOR DETACTED ED ERGENCY ACCESS, SEE SHEET 465
FOR INTERSECTION DETAILS, SEE SHEETS 623
FOR UNDERDRAIN TABLES, SEE SHEETS 674-678
FOR EROSION CONTROL PLANS, SEE SHEETS 713-733A
FOR FENCE TABLES, SEE SHEETS 1039-1041

DRAFT Stage 3 - Not for Construction 09/23/2024

HORIZONTAL SCALE IN FEET
0 25 50 100

CALCULATED SLP
CHECKED ALB

PLAN
STA. 147+00 TO STA. 159+00

LAW-7-2.17

U:\173608714\LAW\75923\roadway\sheets\75923GP004-2A.dgn 5/21/2024 4:49:50 PM SLParker

U:\173608714\LAW\75923\roadway\sheets\75923GF004-2B.dgn 5/21/2024 4:49:51 PM SLParker

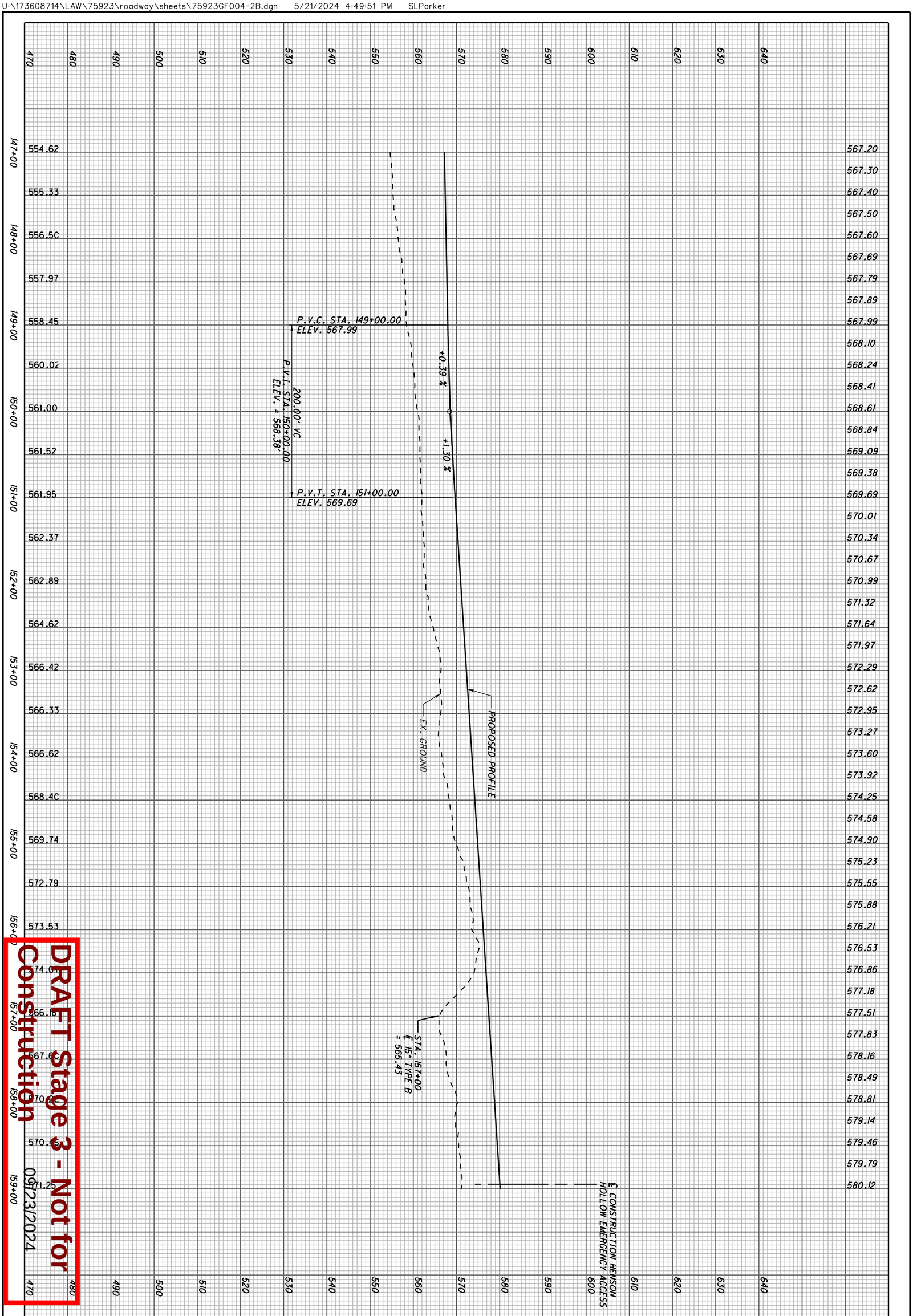

DRAFT Stage 3 - Not for Construction 09/23/2024

102 / 1247	LAW-7-2.17	PROFILE - S.R. 7 STA. 147+00 TO STA. 159+00	CALCULATED SLP CHECKED ALB

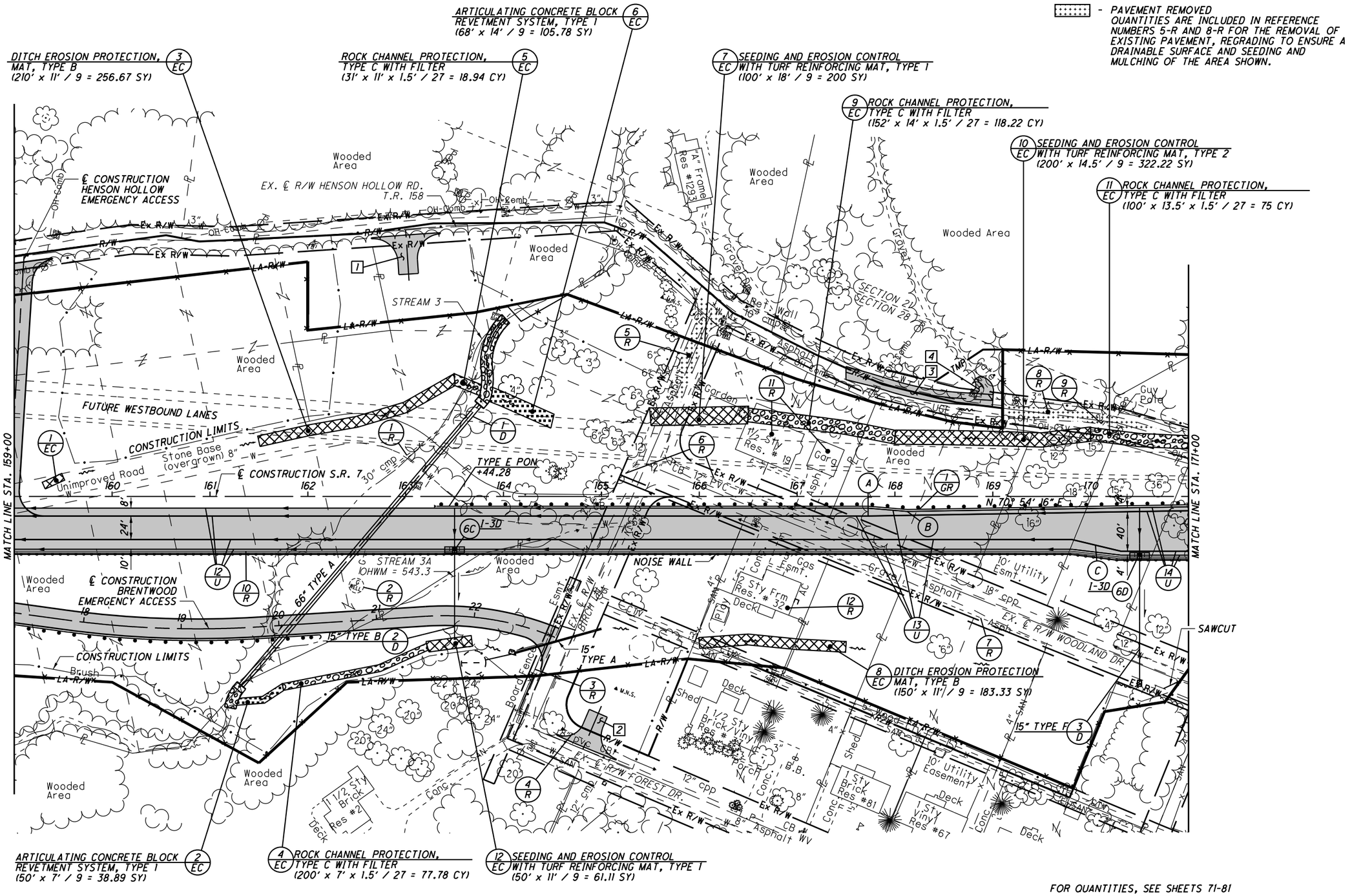
ARTICULATING CONCRETE BLOCK REVETMENT SYSTEM, TYPE I (68' x 14' / 9 = 105.78 SY)
DITCH EROSION PROTECTION, MAT, TYPE B (210' x 11' / 9 = 256.67 SY)
ROCK CHANNEL PROTECTION, TYPE C WITH FILTER (31' x 11' x 1.5' / 27 = 18.94 CY)
SEEDING AND EROSION CONTROL WITH TURF REINFORCING MAT, TYPE I (100' x 18' / 9 = 200 SY)
ROCK CHANNEL PROTECTION, TYPE C WITH FILTER (152' x 14' x 1.5' / 27 = 118.22 CY)
SEEDING AND EROSION CONTROL WITH TURF REINFORCING MAT, TYPE 2 (200' x 14.5' / 9 = 322.22 SY)
ROCK CHANNEL PROTECTION, TYPE C WITH FILTER (100' x 13.5' x 1.5' / 27 = 75 CY)
- PAVEMENT REMOVED
QUANTITIES ARE INCLUDED IN REFERENCE NUMBERS 5-R AND 8-R FOR THE REMOVAL OF EXISTING PAVEMENT, REGRADING TO ENSURE A DRAINABLE SURFACE AND SEEDING AND MULCHING OF THE AREA SHOWN.
℄ CONSTRUCTION HENSON HOLLOW EMERGENCY ACCESS
EX. ℄ R/W HENSON HOLLOW RD. T.R. 158
Wooded Area
STREAM 3
FUTURE WESTBOUND LANES
CONSTRUCTION LIMITS
Stone Base (overgrown) 8"
Unimproved Road
℄ CONSTRUCTION S.R. 7
TYPE E PON +44.28
MATCH LINE STA. 159+00
MATCH LINE STA. 171+00
STREAM 3A (OHWM = 543.3)
66" TYPE A
℄ CONSTRUCTION BRENTWOOD EMERGENCY ACCESS
15" TYPE B
15" TYPE A
NOISE WALL
SAWCUT
EX. ℄ R/W WOODLAND DR.
EX. ℄ R/W FOREST DR.
"A" Frame Res #1293
1 1/2 Sty Res. #19
1 1/2 Sty Brick Res #2
1 1/2 Sty Brick Vinyl Res #81
1 Sty Vinyl Res #67
2 Sty Frm Res. # 32
N 70° 54' 16" E
ARTICULATING CONCRETE BLOCK REVETMENT SYSTEM, TYPE I (50' x 7' / 9 = 38.89 SY)
ROCK CHANNEL PROTECTION, TYPE C WITH FILTER (200' x 7' x 1.5' / 27 = 77.78 CY)
SEEDING AND EROSION CONTROL WITH TURF REINFORCING MAT, TYPE I (50' x 11' / 9 = 61.11 SY)
DITCH EROSION PROTECTION MAT, TYPE B (150' x 11'/ 9 = 183.33 SY)
SEEDING AND EROSION CONTROL WITH TURF REINFORCING MAT, TYPE I (20' x 7.5' / 9 = 16.67 SY)
A - STA. 167+72.52 BEGIN PAVEMENT TAPER, 20' RT. BEGIN SHOULDER TAPER, 12' RT.
B - STA. 168+12.52 END SHOULDER TAPER, 15.33' RT.
C - STA. 169+80.98 BEGIN PAVEMENT TAPER, 44' RT. BEGIN SHOULDER TAPER, 54' RT.
STA. 170+30.98 END PAVEMENT TAPER, 56' RT. END SHOULDER TAPER, 60' RT.
- PROPOSED PAVEMENT
FOR QUANTITIES, SEE SHEETS 71-81
FOR PROFILE, SEE SHEET 104
FOR BRENTWOOD EMERGENCY ACCESS, SEE SHEET 465
FOR DRIVE DETAILS, SEE SHEETS 630-638
FOR GUIDESHEETS, SEE SHEETS 652-663
FOR UNDERDRAIN TABLES, SEE SHEETS 674-678
FOR TRAFFIC CONTROL PLAN, SEE SHEETS 713-733A
FOR GUIDE TABLES, SEE SHEETS 1039-1041
DRAFT Stage 3 - Not for Construction 09/25/2024
HORIZONTAL SCALE IN FEET
CALCULATED SLP
CHECKED ALB
PLAN - S.R. 7
STA. 159+00 TO STA. 171+00
LAW-7-2.17
103
1247
U:\1736087.14\LAW\75923\roadway\sheets\75923GP005-2A.dgn 5/21/2024 4:49:53 PM SLParker

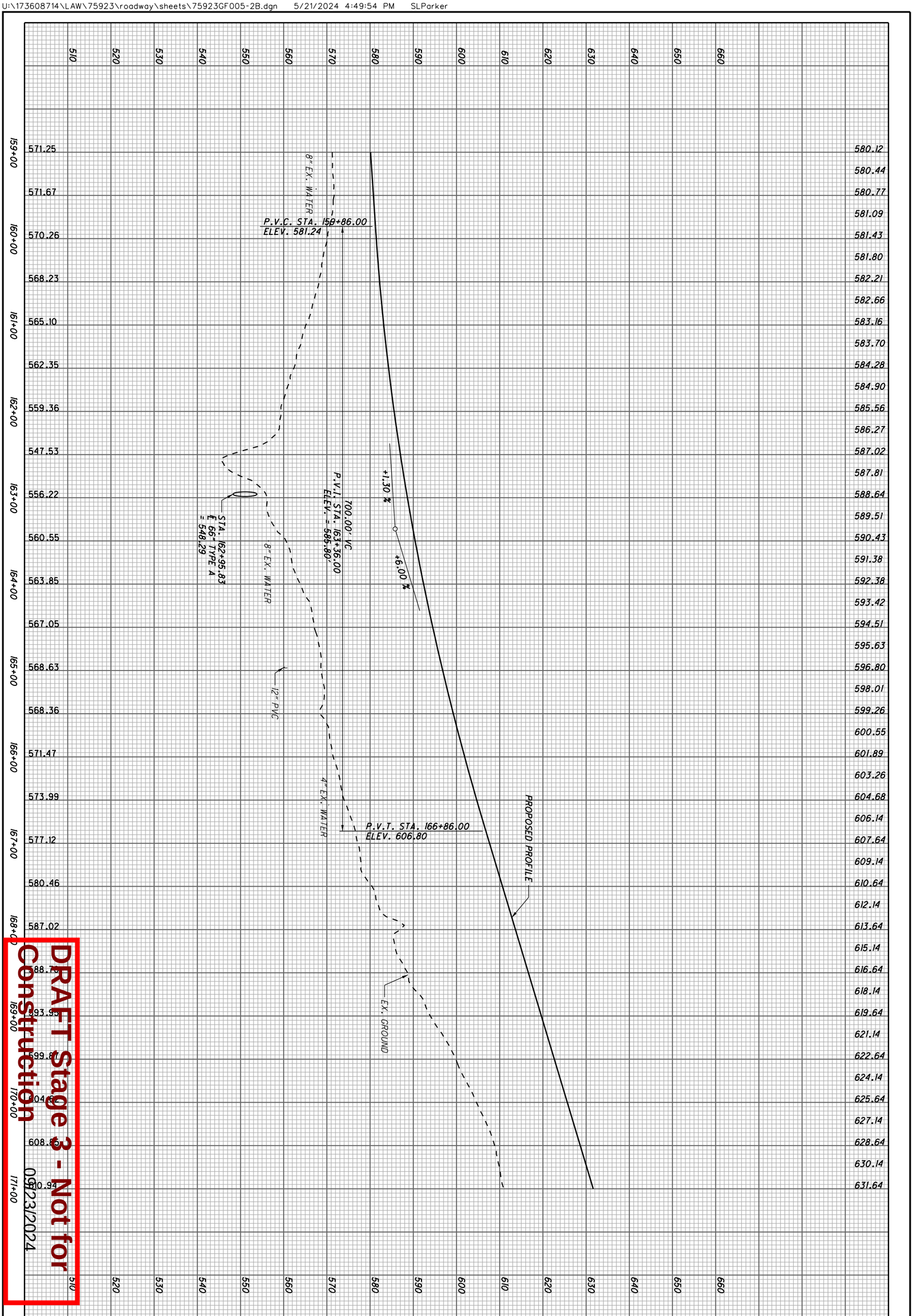

DRAFT Stage 3 - Not for Construction

09/23/2024

104 / 1247	LAW-7-2.17	PROFILE - S.R. 7 STA. 159+00 TO STA. 171+00	CALCULATED SLP CHECKED ALB

CURVE DATA
S.R. 7
CURVE NO. 2

P.I. STA. 182+06.44
Δ = 24° 16' 14" (LT)
Dc = 2° 10' 43"
R = 2,630.00'
T = 423.13'
L = 839.08'
E = 33.82'
TS STA. 175+03.18
SC STA. 177+78.18

θs = 2° 59' 44"
Ls = 275.00'
Ts = 703.26'
LT = 183.36'
ST = 91.69'
e_{max} = 5.51%
CS STA. 186+17.26
ST STA. 188+92.26

FOR QUANTITIES, SEE SHEETS 71-81
FOR PROFILE, SEE SHEET 106
FOR DRIVE DETAILS, SEE SHEETS 630-638
FOR UNDERDRAIN TABLES, SEE SHEETS 674-678
FOR TRAFFIC CONTROL PLAN, SEE SHEETS 713-733A
FOR FENCE TABLES, SEE SHEETS 1039-1041

(A) - STA. 174+92.52
END PAVEMENT TAPER, 8' RT.

(VBF) DENOTES LOCATION OF VEGETATED BIOFILTER

- PAVEMENT REMOVED
QUANTITIES ARE INCLUDED IN REFERENCE NUMBER 2-R FOR THE REMOVAL OF EXISTING PAVEMENT, REGRADING TO ENSURE A DRAINABLE SURFACE AND SEEDING AND MULCHING OF THE AREA SHOWN.

- PROPOSED PAVEMENT

ROCK CHANNEL PROTECTION, TYPE C WITH FILTER (1/EC)
(156' x 12.5' x 1.5' / 27 = 108.33 CY)

(2/EC) SEEDING AND EROSION CONTROL WITH TURF REINFORCING MAT, TYPE I
(250' x 14.5' / 9 = 402.78 SY)

DITCH EROSION PROTECTION (VBF) (582' x 14.5' / 9 = 937.67 SY) (3/EC)

(4/EC) ROCK CHANNEL PROTECTION, TYPE C WITH FILTER
(56' x 9' x 1.5' / 27 = 28 CY)

N 70° 54' 16" E
℄ CONSTRUCTION S.R. 7

MATCH LINE STA. 171+00

MATCH LINE STA. 183+00

TYPE E PON +94.05

TYPE T +44.36

FUTURE WESTBOUND LANES

CURVE NO. 2

CONSTRUCTION LIMITS

NOISE WALL

SAWCUT

(LF) DESIGNATES LEACH FIELD

Wooded Area

Abandonded Pole

Light Pole

Shed

Trash

Gravel & dirt

Wire Fence

Brush

Rock

Asphalt

Gravel

Pool

Deck

Porch

1 Sty Frame Res. #1485

1 Sty Frame Res. #1529

1 Sty Vinyl Res. # 128

1 Sty Vinyl Res. #185

EX. E R/W WOODLAND DR.

DRAFT Stage 3 - Not for Construction 09/27/2024

HORIZONTAL SCALE IN FEET
0 25 50 100

CALCULATED SLP
CHECKED ALB

PLAN - S.R. 7
STA. 171+00 TO STA. 183+00

LAW-7-2.17

105
1247

U:\17360871 4\LAW\75923\roadway\sheets\75923GP006-2A.dgn 5/21/2024 4:49:55 PM SLParker

631.64 633.14 634.60 636.03 637.41 638.76 640.06 641.32 642.54 643.72 644.86 645.96 647.01 648.03 649.00 649.94 650.83 651.68 652.49 653.26 653.98 654.67 655.32 655.92 656.48 657.01 657.49 657.93 658.32 658.68 659.00 659.27 659.51 659.70 659.85 659.96 660.03 660.06 660.05 660.00 659.90 659.77 659.59 659.37 659.11 658.81 658.47 658.09 657.67

730 720 710 700 690 680 670 660 650 640 630 620 610 600 590 580 570 560 550

1,825.00' VC
P.V.I. STA. 180+30.00
ELEV. = 687.44'

+6.00 %

-6.00 %

EX. GROUND

℄ EX. R/W HENSON HOLLOW RD.

P.V.C. STA. 171+17.50
ELEV. 632.69

PROPOSED PROFILE

3" EX. WATER

610.94 617.14 624.13 630.64 632.16 635.08 646.30 653.15 664.11 666.60 669.66 669.63 671.26 674.03 680.91 679.49 673.75 668.72 668.22 665.83 662.79 661.24 658.46 655.46 654.59

171+00 172+00 173+00 174+00 175+00 176+00 177+00 178+00 179+00 180+00 181+00 182+00 183+00

DRAFT Stage 3 - Not for Construction

09/23/2024

CALCULATED SLP
CHECKED ALB

PROFILE - S.R. 7
STA. 171+00 STA. 183+00

LAW-7-2.17

106
1247

U:\1736087\14\LAW\75923\roadway\sheets\75923GF006-2B.dgn 5/21/2024 4:49:56 PM SLParker

CURVE DATA
S.R. 7
CURVE NO. 2

P.I. STA. 182+06.44
Δ = 24° 16' 14" (LT)
Dc = 2° 10' 43"
R = 2,630.00'
T = 423.13'
L = 839.08'
E = 33.82'
TS STA. 175+03.18
SC STA. 177+78.18

θs = 2° 59' 44"
Ls = 275.00'
Ts = 703.26'
LT = 183.36'
ST = 91.69'
e_{max} = 5.51%
CS STA. 186+17.26
ST STA. 188+92.26

HORIZONTAL SCALE IN FEET
0 25 50 100

CALCULATED SLP
CHECKED ALB

PLAN - S.R. 7
STA. 183+00 TO STA. 195+00

LAW-7-2.17

107
1247

ROCK CHANNEL PROTECTION, TYPE C WITH FILTER (203' x 9' x 1.5' / 27 = 101.5 CY) — 1 EC

ROCK CHANNEL PROTECTION, TYPE B WITH FILTER (150' x 13' x 2.5' / 27 = 180.56 CY) — 5 EC

SEEDING AND EROSION CONTROL WITH TURF REINFORCING MAT, TYPE 2 (200' X 14.5' / 9 = 322.22 SY) — 4 EC

SEEDING AND EROSION CONTROL WITH TURF REINFORCING MAT, TYPE 2 (50' X 18' / 9 = 100 SY) — 8 EC

MATCH LINE STA. 183+00

MATCH LINE STA. 195+00

CURVE NO. 2

℄ CONSTRUCTION S.R. 7

FUTURE WESTBOUND LANES

N 46° 38' 02" E

CONSTRUCTION LIMITS

CONSTRUCTION LIMITS

LA-R/W

Ex. ℄ R/W

Ex R/W

Ex. ℄ R/W & Est. R/W Ln.

℄ EX. R/W & CONSTRUCTION C.R. 104

Wooded Area

Wooded Area

Wooded Area

Brush

Gas Well

Abandonded Pole

Wood Shed

Barn

Sty Frame Res. # 52

Dog Ch Hse

Gravel

Trail

POND 1

STREAM 5
OHWM = 585.7

STREAM 6
OHWM = 600.0

STREAM 7
OHWM = 578.2

1½" Private Gasline Exact Location Unknown

2 Prv Gas Lines Exact Location Unknown

Shed

Shed

Garage

Privy

Bird rd

Sty Frame Res. #351

Mtl Shed

Trailer Port

Well

Steel Bridge

Wood Pile

TYPE E PON +44.13

TYPE T +37.10

BTA, TYPE I +38.97

I-3D 15" TYPE B

I-3D 15" TYPE F

NOISE WALL

PRECAST REINFORCED CONCRETE OUTLET WITH TIED CONCRETE BLOCK MAT

ROCK CHANNEL PROTECTION, TYPE C WITH FILTER (224' x 6.5' x 1.5' / 27 = 80.89 CY) — 3 EC

ROCK CHANNEL PROTECTION, TYPE C WITH FILTER (104' x 7.5' x 1.5' / 27 = 43.33 CY) — 6 EC

2 EC ROCK CHANNEL PROTECTION, TYPE C WITH FILTER (107' x 7' x 1.5' / 27 = 41.61 CY)

7 EC DITCH EROSION PROTECTION MAT, TYPE B (53' x 7.5' / 9 = 44.17 SY)

SAWCUT CONCRETE AT LA-R/W. DO NOT DISTURB CONCRETE OUTSIDE OF THE LA-R/W.

TAPERS PROVIDED FOR INFORMATION ONLY

(A) - STA. 185+03.46 BEGIN PAVEMENT TAPER, 56' RT.

(B) - STA. 191+63.46 BEGIN SHOULDER TAPER, 49' RT.

(C) - STA. 192+23.46 END PAVEMENT TAPER, 44' RT. END SHOULDER TAPER, 54' RT.

- PROPOSED PAVEMENT

FOR QUANTITIES, SEE SHEETS 71-81
FOR PROFILE, SEE SHEET 101
FOR EXCAVATION TABLES, SEE SHEETS 301-639
FOR STORM SEWER PROFILE, SEE SHEET 640
FOR UNDERDRAIN TABLES, SEE SHEETS 674-678
FOR EROSION CONTROL PLAN, SEE SHEETS 713-733A
FOR FENCE TABLES, SEE SHEETS 1039-1041

DRAFT Stage 3 Not for Construction 09/23/2024

U:\1736087\4_LAW\75923\roadway\sheets\75923GP007-2A.dgn 5/22/2024 9:41:20 AM SLParker

PROFILE - S.R. 7
STA. 183+00 TO STA. 195+00

CALCULATED SLP
CHECKED ALB

LAW-7-2.17

1,825.00' VC
P.V.I. STA. 180+30.00
ELEV. = 687.44'

EX. GAS
EX. GROUND
PROPOSED PROFILE
2" EX. WATER
EX. 1 1/2" GAS

P.V.I. STA. 189+42.50
ELEV. 632.69

-6.00 %

P.V.C. STA. 192+75.00
ELEV. 612.74

1,900.00' VC
P.V.I. STA 202+25.00
ELEV. = 555.74'

700 690 680 670 660 650 640 630 620 610 600 590 580 570 560 550 540

657.67 657.20 656.70 656.15 655.56 654.93 654.26 653.55 652.80 652.01 651.17 650.30 649.38 648.42 647.43 646.39 645.31 644.18 643.02 641.82 640.57 639.28 637.96 636.59 635.18 633.73 632.24 630.74 629.24 627.74 626.24 624.74 623.24 621.74 620.24 618.74 617.24 615.74 614.24 612.74 611.26 609.82 608.41 607.05 605.72 604.43 603.18 601.97 600.79

644.59 632.55 619.87 609.26 614.81 632.43 642.56 655.44 663.72 670.26 668.86 660.41 648.82 638.10 639.75 633.26 624.00 617.23 601.87 591.91 583.03 571.46 575.40 572.74 564.90

183+00 184+00 185+00 186+00 187+00 188+00 189+00 190+00 191+00 192+00 193+00 194+00 195+00

DRAFT Stage 3 - Not for Construction
09/23/2024

U:\173608714\LAW\75923\roadway\sheets\75923GF007-2B.dgn 5/21/2024 4:49:59 PM SLParker

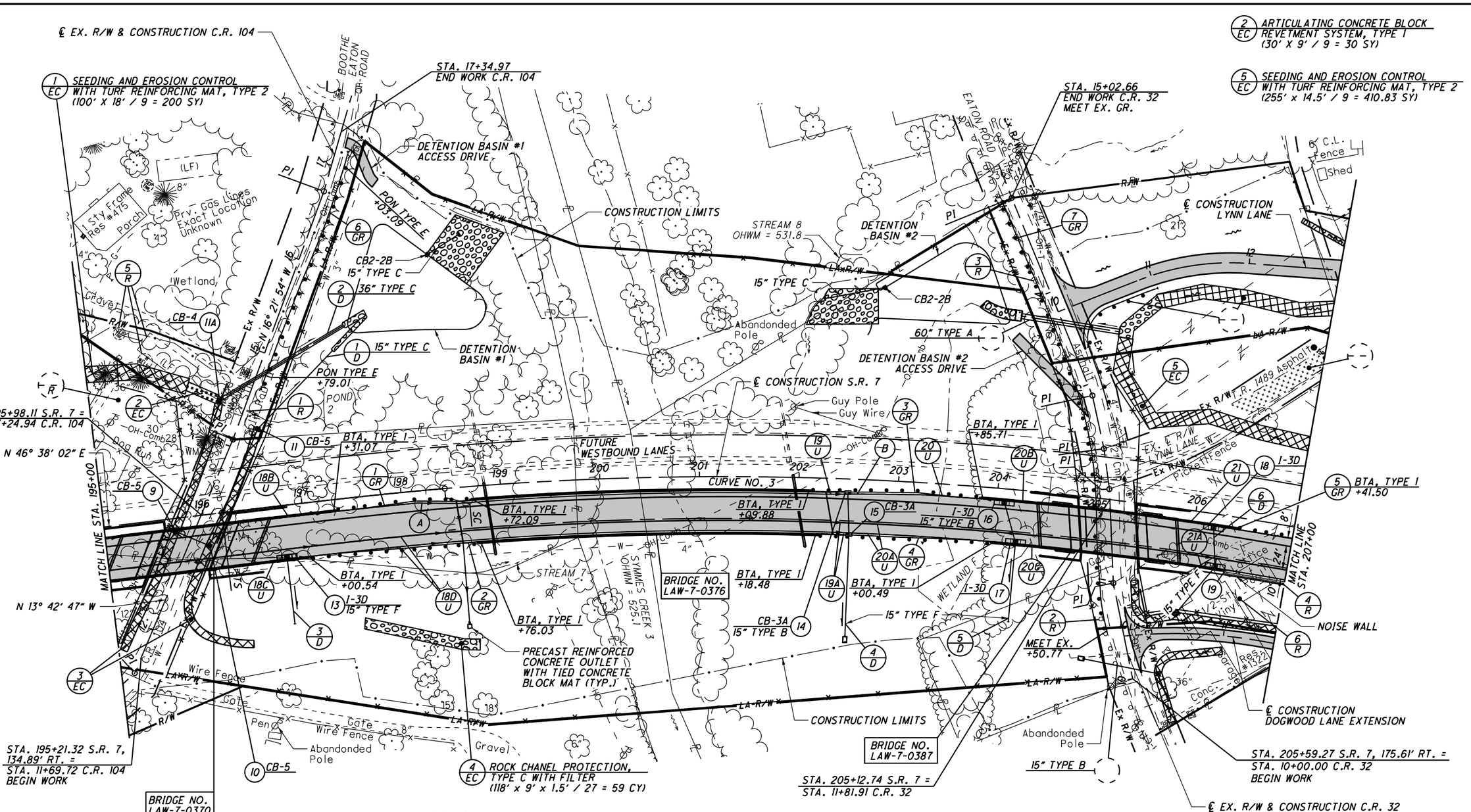

CURVE DATA
S.R. 7
CURVE NO. 3

P.I. STA. 205+33.31	θs = 1° 58' 07"
Δ = 27° 30' 45" (RT)	Ls = 225.00'
Dc = 1° 45' 00"	Ts = 914.18'
R = 3,274.04'	LT = 150.01'
T = 683.24'	ST = 75.01'
L = 1,347.14'	e_{max} = 4.60%
E = 70.53'	CS STA. 211+91.27
TS STA. 196+19.13	ST STA. 214+16.27
SC STA. 198+44.13	

C.R. 104

P.I. STA. 11+53.11	P.I. STA. 12+33.35
Δ = 2° 41' 45"	Δ = 4° 36' 08"
NO CURVE	NO CURVE
P.I. STA. 14+07.46	P.I. STA. 12+87.96
Δ = 2° 39' 07"	Δ = 9° 55' 50"
NO CURVE	NO CURVE
P.I. STA. 16+72.90	P.I. STA. 15+02.34
Δ = 4° 02' 33"	Δ = 0° 49' 53"
NO CURVE	NO CURVE

C.R. 32

P.I. STA. 10+98.09	P.I. STA. 11+92.44
Δ = 9° 00' 49"	Δ = 5° 16' 18"
NO CURVE	NO CURVE

FOR QUANTITIES, SEE SHEETS 71-81
FOR PROFILE, SEE SHEET 110
FOR LYNN LANE PLAN AND PROFILE, SEE SHEET 482
FOR DOGWOOD EXTENSION PLAN AND PROFILE, SEE SHEET 486
FOR INTERSECTION DETAILS, SEE SHEETS 624-625
FOR SOLVENT DETAIL, SEE SHEET 651
FOR STORM SEWER PROFILES, SEE SHEETS 640-641
FOR DETENTION BASIN DETAILS, SEE SHEETS 671-673
FOR TRAFFIC CONTROL PLAN, SEE SHEETS 713-733A
FOR STRUCTURES 20' AND OVER, SEE SHEETS 817-897
FOR SIGNAL DETAILS, SEE SHEETS 1039-1041

DRAFT - Stage 3 - Not for Construction
09/23/2024

HORIZONTAL SCALE IN FEET
0 25 50 100
CALCULATED SLP
CHECKED ALB

PLAN - S.R. 7
STA. 195+00 TO STA. 207+00

LAW-7-2.17

U:\173608714\LAW\75923\roadway\sheets\75923GP008-2A.dgn 5/21/2024 4:50:04 PM SLParker

600.79 599.66 598.56 597.50 596.48 595.50 594.56 593.66 592.79 591.96 591.17 590.42 589.71 589.03 588.40 587.80 587.24 586.72 586.24 585.80 585.39 585.02 584.70 584.41 584.15 583.94 583.77 583.63 583.53 583.47 583.45 583.47 583.52 583.62 583.75 583.92 584.13 584.38 584.66 584.99 585.35 585.75 586.19 586.67 587.19 587.74 588.34 588.97 589.64

680 670 660 650 640 630 620 610 600 590 580 570 560 550 540 530 520

℄ EX. R/W & CONSTRUCTION C.R. 104

℄ EX. R/W & CONSTRUCTION C.R. 32

PROPOSED PROFILE

29.60' ACTUAL
16.5' REQ'D

EX. WATERLINE
STA. 196+20.54
℄ 15" TYPE C
= 555.80

-6.00 %

+5.68 %

1,900.00' VC
P.V.I. STA 202+25.00
ELEV. = 555.74'

17.5' ACTUAL
16.5' MIN.

4" EX. WATER

564.90 564.33 562.35 558.55 552.44 546.25 543.61 542.06 540.49 533.35 524.77 524.77 532.11 531.01 532.94 534.49 535.20 534.68 534.77 537.42 538.04 563.60 564.62 564.92 565.67

195+00 196+00 197+00 198+00 199+00 200+00 201+00 202+00 203+00 204+00 205+00 206+00 207+00

DRAFT Stage 3 - Not for Construction

09/23/2024

CALCULATED SLP | CHECKED ALB

PROFILE - S.R. 7
STA. 195+00 STA. 207+00

LAW-7-2.17

110
1247

U:\173608714\LAW\75923\roadway\sheets\75923GF008-2B.dgn 5/21/2024 4:50:05 PM SLParker

CURVE DATA
S.R. 7
CURVE NO. 3

P.I. STA. 205+33.31
Δ = 27° 30' 45" (RT)
Dc = 1° 45' 00"
R = 3,274.04'
T = 683.24'
L = 1,347.14'
E = 70.53'
TS STA. 196+19.13
SC STA. 198+44.13

θs = 1° 58' 07"
Ls = 225.00'
Ts = 914.18'
LT = 150.01'
ST = 75.01'
e_{max} = 4.60%
CS STA. 211+91.27
ST STA. 214+16.27

℄ CONSTRUCTION LYNN LANE

STA. 209+79.72
BEGIN PAVEMENT TAPER, 44' RT.
BEGIN SHOULDER TAPER, 54' RT.

A

STA. 210+29.72
END PAVEMENT TAPER, 56' RT.
END SHOULDER TAPER, 60' RT.

1 EC SEEDING AND EROSION CONTROL WITH TURF REINFORCING MAT, TYPE I (100' x 18' / 9 = 200 SY)

2 EC SEEDING AND EROSION CONTROL WITH TURF REINFORCING MAT, TYPE 2 (205' x 14.5' / 9 = 330.28 SY)

3 EC ROCK CHANNEL PROTECTION TYPE C WITH FILTER (290' x 13.5' x 1.5' / 27 = 217.5 CY)

4 EC SEEDING AND EROSION CONTROL WITH TURF REINFORCING MAT, TYPE I (525' x 14.5' / 9 = 845.83 SY)

5 EC DITCH EROSION PROTECTION MAT, TYPE B (100' x 11' / 9 = 122.22 SY)

- PROPOSED PAVEMENT

- PAVEMENT REMOVED
QUANTITIES ARE INCLUDED IN REFERENCE NUMBER 1-R FOR THE REMOVAL OF EXISTING PAVEMENT, REGRADING TO ENSURE A DRAINABLE SURFACE AND SEEDING AND MULCHING OF THE AREA SHOWN.

FOR QUANTITIES, SEE SHEETS 71-81
FOR PROFILE, SEE SHEET 113
FOR STORM SEWER PROFILE, SEE SHEET 225
FOR LYNN LANE PLAN AND PROFILE, SEE SHEET 486
FOR DOGWOOD EXTENSION PLAN AND PROFILE, SEE SHEET 486
FOR INLET DETAILS, SEE SHEETS 674-675
FOR UNDERDRAIN TABLES, SEE SHEETS 674-678
FOR TRAFFIC CONTROL PLAN, SEE SHEETS 713-733A
FOR UTILITY DETAILS, SEE SHEETS 1039-1041

DRAFT Stage 3 - Not for Construction

01/31/2024

PLAN - S.R. 7
STA. 207+00 TO STA. 219+00 (NORTH)

HORIZONTAL SCALE IN FEET
0 25 50 100

CALCULATED SLP
CHECKED ALB

LAW-7-2.17

U:\1736087\14\LAW\75923\roadway\sheets\75923GP009-2A.dgn 5/21/2024 4:50:07 PM SLParker

CURVE DATA
S.R. 7
CURVE NO. 3

P.I. STA. 205+33.31
Δ = 27° 30' 45" (RT)
Dc = 1° 45' 00"
R = 3,274.04'
T = 683.24'
L = 1,347.14'
E = 70.53'
TS STA. 196+19.13
SC STA. 198+44.13

θs = 1° 58' 07"
Ls = 225.00'
Ts = 914.18'
LT = 150.01'
ST = 75.01'
e_{max} = 4.60%
CS STA. 211+91.27
ST STA. 214+16.27

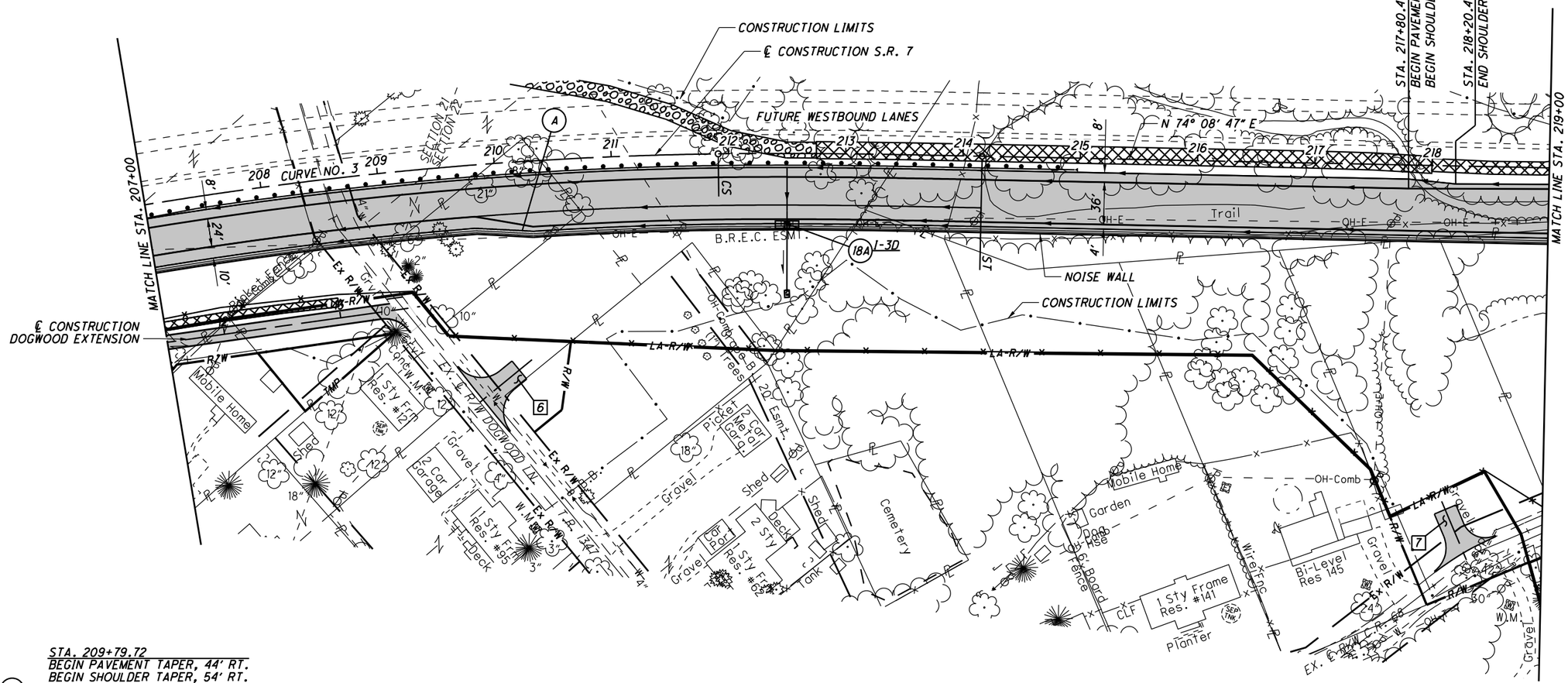

A - STA. 209+79.72
BEGIN PAVEMENT TAPER, 44' RT.
BEGIN SHOULDER TAPER, 54' RT.

STA. 210+29.72
END PAVEMENT TAPER, 56' RT.
END SHOULDER TAPER, 60' RT.

- PROPOSED PAVEMENT

FOR QUANTITIES, SEE SHEETS 71-81
FOR PROFILE, SEE SHEET 113
FOR STORM SEWER PROFILE, SEE SHEET 225
FOR LYNN LANE PLAN AND PROFILE, SEE SHEET 482
FOR DOGWOOD EXTENSION PLAN AND PROFILE, SEE SHEET 486
FOR INVERTED FLOW DETAILS, SEE SHEETS 624-625
FOR UNDERDRAIN TABLES, SEE SHEETS 674-678
FOR TRAFFIC CONTROL PLAN, SEE SHEETS 733A
FOR FENCE TABLES, SEE SHEETS 1039-1041

DRAFT Stage 3 - Not for Construction 09/28/2024

HORIZONTAL SCALE IN FEET
0 25 50 100
CALCULATED SLP
CHECKED ALB

PLAN - S.R. 7
STA. 207+00 TO STA. 219+00 (SOUTH)

LAW-7-2.17

112
1247

U:\173608714\LAW\75923\roadway\sheets\75923GP009A-2A.dgn 5/21/2024 4:50:08 PM SLParker

PROFILE - S.R. 7
STA. 207+00 TO STA. 219+00

CALCULATED SLP
CHECKED ALB

LAW-7-2.17

113
1247

3,000.00' VC
P.V.I. STA 227+50.00
ELEV. = 699.08'

P.V.C. STA. 212+50.00
ELEV. 613.93

EX. GROUND

℄ EX. R/W DOGWOOD LANE

PROPOSED PROFILE

+5.68%

P.V.T. STA. 211+75.00
ELEV. 609.67

4" EX. WATER

1,900.00' VC
P.V.I. STA 202+25.00
ELEV. = 555.74'

589.64 590.35 591.09 591.88 592.70 593.56 594.47 595.40 596.38 597.40 598.45 599.54 600.68 601.85 603.05 604.30 605.58 606.91 608.27 609.67 611.09 612.51 613.93 615.34 616.73 618.10 619.46 620.79 622.11 623.41 624.69 625.95 627.19 628.41 629.62 630.81 631.97 633.12 634.25 635.37 636.46 637.54 638.59 639.63 640.65 641.65 642.63 643.60 644.54

565.67 566.47 567.78 569.46 571.00 573.24 574.67 577.31 581.90 591.64 603.51 616.08 628.76 641.51 649.09 651.49 648.87 648.31 646.51 645.11 644.37 641.21 643.62 642.14

710 700 690 680 670 660 650 640 630 620 610 600 590 580 570 560 550

207+00 208+00 209+00 210+00 211+00 212+00 213+00 214+00 215+00 216+00 217+00 218+00 219+00

DRAFT Stage 3 - Not for Construction

09/23/2024

U:\173608714\LAW\75923\roadway\sheets\75923GF009-2B.dgn 5/21/2024 4:50:09 PM SLParker

FOR QUANTITIES, SEE SHEETS 71-81
FOR PROFILE, SEE SHEET 116
FOR STORM SEWER PROFILE, SEE SHEET 231
FOR CULVERT DETAILS, SEE SHEETS 658
FOR UNDERDRAIN TABLES, SEE SHEETS 674-678
FOR TRAFFIC CONTROL PLAN, SEE SHEETS 713-733A
FOR FENCE TABLES, SEE SHEETS 1039-1041

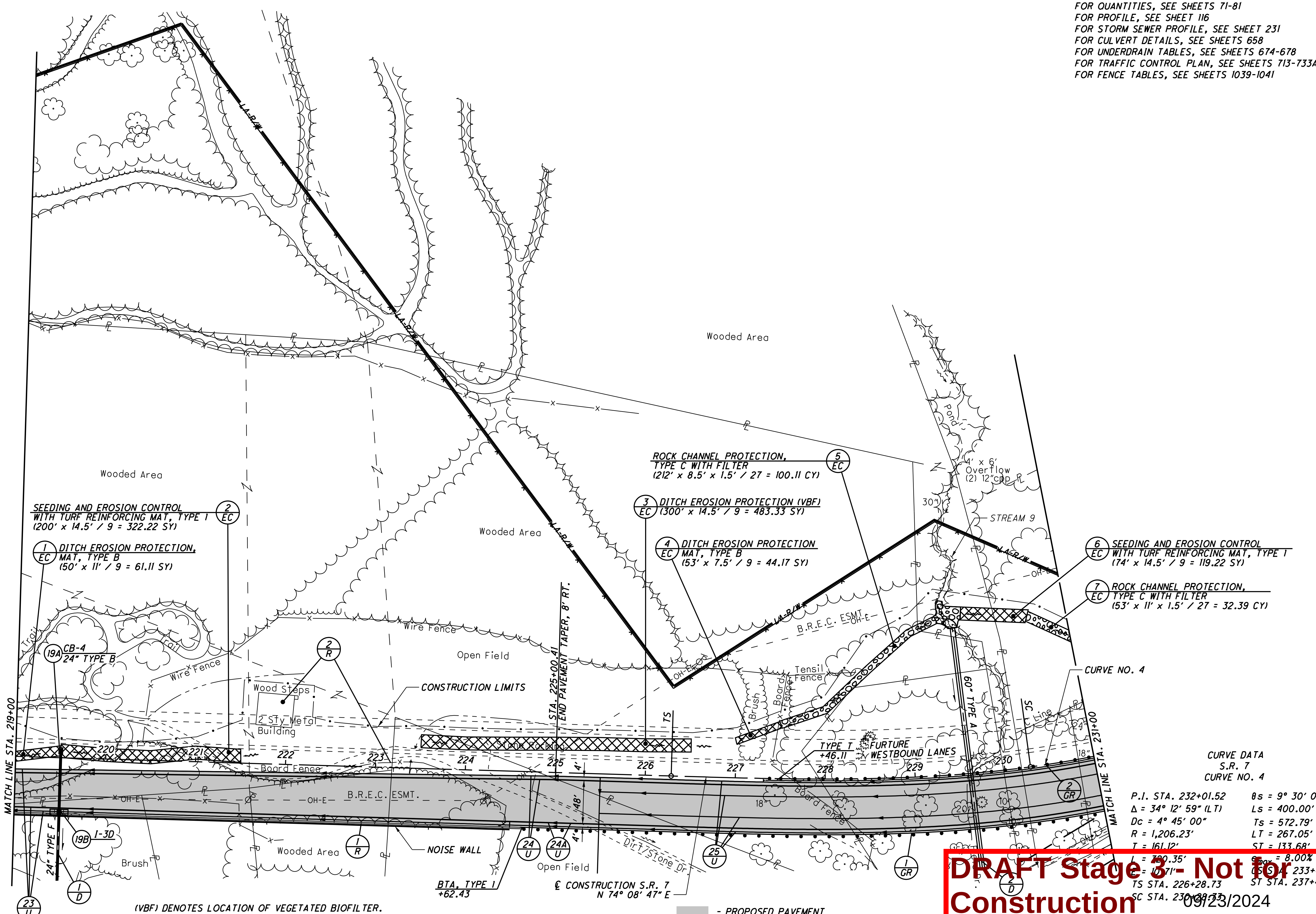

(VBF) DENOTES LOCATION OF VEGETATED BIOFILTER.

- PROPOSED PAVEMENT

CURVE DATA
S.R. 7
CURVE NO. 4

P.I. STA. 232+01.52	θs = 9° 30' 00"
Δ = 34° 12' 59" (LT)	Ls = 400.00'
Dc = 4° 45' 00"	Ts = 572.79'
R = 1,206.23'	LT = 267.05'
T = 161.12'	ST = 133.68'
L = 320.35'	e_{max} = 8.00%
E = 10.71'	CS STA. 233+4?.08
TS STA. 226+28.73	ST STA. 237+4?.08
SC STA. 230+28.73	

DRAFT Stage 3 - Not for Construction 09/23/2024

HORIZONTAL SCALE IN FEET 0 25 50 100

CALCULATED SLP CHECKED ALB

PLAN - S.R. 7
STA. 219+00 TO STA. 231+00 (NORTH)

LAW-7-2.17

U:\173608714\LAW\75923\roadway\sheets\75923GP010-2A.dgn 5/21/2024 4:50:11 PM SLParker

CURVE DATA
S.R. 7
CURVE NO. 4

P.I. STA. 232+01.52
Δ = 34° 12′ 59″ (LT)
Dc = 4° 45′ 00″
R = 1,206.23′
T = 161.12′
L = 320.35′
E = 10.71′
TS STA. 226+28.73
SC STA. 230+28.73

θs = 9° 30′ 00″
Ls = 400.00′
Ts = 572.79′
LT = 267.05′
ST = 133.68′
e_{max} = 8.00%
CS STA. 233+49.08
ST STA. 237+49.08

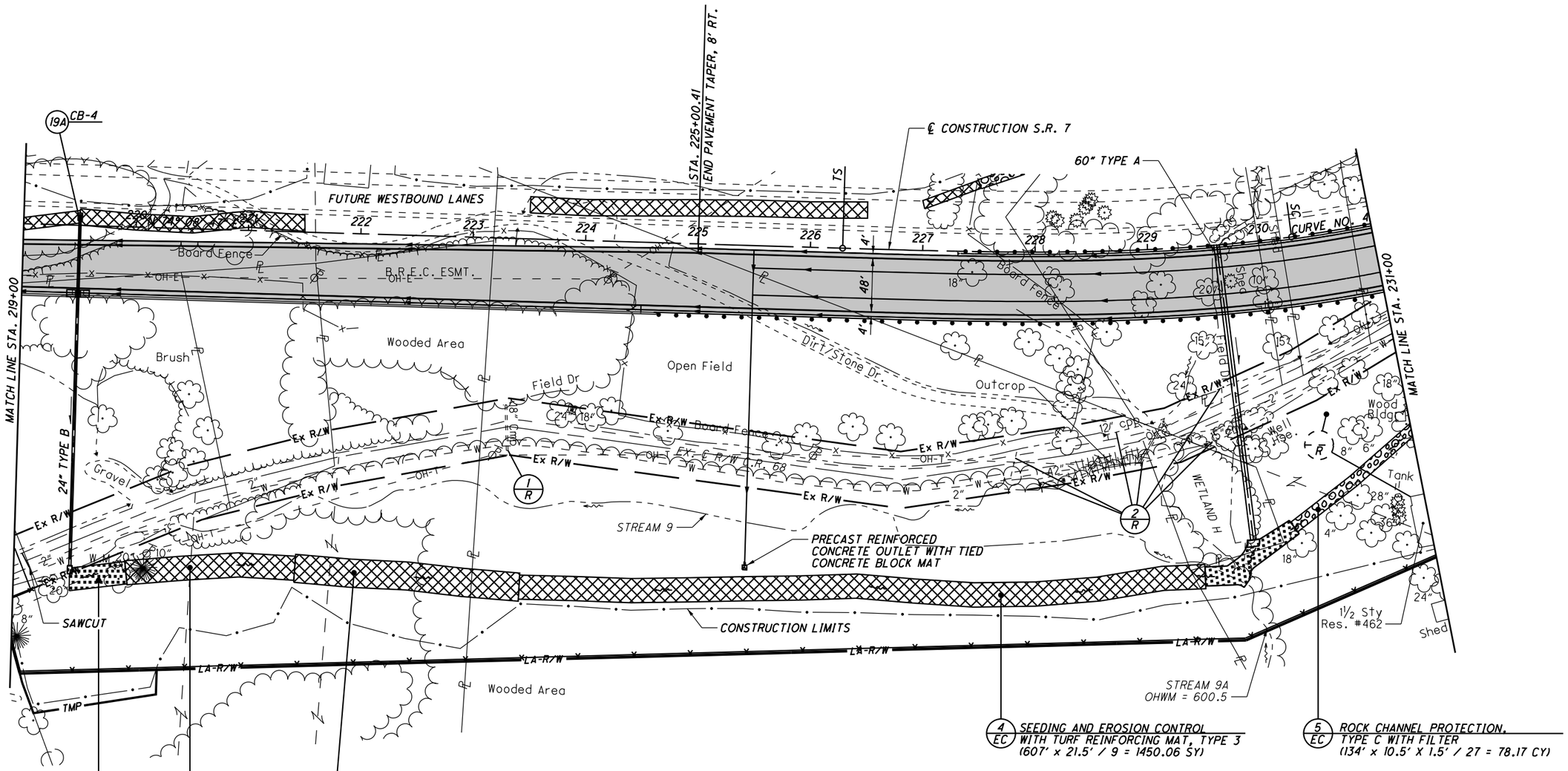

ARTICULATING CONCRETE BLOCK REVETMENT SYSTEM, TYPE 1 (1 EC)
(50′ x 20′ / 9 = 111.11 SY)

SEEDING AND EROSION CONTROL WITH TURF REINFORCING MAT, TYPE 3 (2 EC)
(151′ x 21.5′ / 9 = 360.72 SY)

3 EC SEEDING AND EROSION CONTROL WITH TURF REINFORCING MAT, TYPE 1
(200′ x 25′ / 9 = 555.56 SY)

4 EC SEEDING AND EROSION CONTROL WITH TURF REINFORCING MAT, TYPE 3
(607′ x 21.5′ / 9 = 1450.06 SY)

5 EC ROCK CHANNEL PROTECTION, TYPE C WITH FILTER
(134′ x 10.5′ x 1.5′ / 27 = 78.17 CY)

- PROPOSED PAVEMENT

FOR QUANTITIES, SEE SHEETS 71-81
FOR PROFILE, SEE SHEET 116
FOR STORM SEWER PROFILE, SEE SHEET 231
FOR CULVERT DETAILS, SEE SHEETS 658
FOR UNDERDRAIN TABLES, SEE SHEETS 674-678
FOR TRAFFIC CONTROL PLAN, SEE SHEETS 713-733A
FOR FENCE TABLES, SEE SHEETS 1039-1041

DRAFT Stage 3 - Not for Construction 09/23/2024

N

HORIZONTAL SCALE IN FEET
0 25 50 100

CALCULATED SLP
CHECKED ALB

PLAN - S.R. 7
STA. 219+00 TO STA. 231+00 (SOUTH)

LAW-7-2.17

115
1247

U:\173608714\LAW\75923\roadway\sheets\75923GP010A-2A.dgn 5/21/2024 4:50:12 PM SLParker

644.54 645.47 646.38 647.26 648.14 648.99 649.82 650.64 651.43 652.21 652.97 653.71 654.43 655.13 655.82 656.48 657.13 657.76 658.37 658.96 659.54 660.09 660.63 661.14 661.64 662.12 662.58 663.03 663.45 663.86 664.24 664.61 664.96 665.29 665.61 665.90 666.17 666.43 666.67 666.89 667.09 667.27 667.44 667.58 667.71 667.82 667.91 667.98 668.03

750 740 730 720 710 700 690 680 670 660 650 640 630 620 610 600 590

3,000.00' VC
P.V.I. STA 227+50.00
ELEV. = 699.08'

+5.68 %

-3.25 %

PROPOSED PROFILE

EX. GROUND

STA. 219+50.00
℄ 24" TYPE B
= 639.02

STA. 229+61.63
℄ 60" TYPE A
= 606.24

642.14 637.04 641.68 644.58 645.82 647.16 650.09 649.04 649.87 649.67 652.34 652.65 653.34 653.98 654.42 653.57 648.30 643.47 635.61 625.82 619.14 601.64 603.43 609.43 606.67

219+00 220+00 221+00 222+00 223+00 224+00 225+00 226+00 227+00 228+00 229+00 230+00 231+00

DRAFT Stage 3 - Not for Construction 09/23/2024

PROFILE - S.R. 7
STA. 219+00 TO STA. 231+00

CALCULATED SLP
CHECKED ALB

LAW-7-2.17

116
1247

U:\173608714\LAW\75923\roadway\sheets\75923GF010-2B.dgn 5/21/2024 4:50:13 PM SLParker

CURVE DATA
S.R. 7
CURVE NO. 4

P.I. STA. 232+01.52
Δ = 34° 12' 59" (LT)
Dc = 4° 45' 00"
R = 1,206.23'
T = 161.12'
L = 320.35'
E = 10.71'
TS STA. 226+28.73
SC STA. 230+28.73

θs = 9° 30' 00"
Ls = 400.00'
Ts = 572.79'
LT = 267.05'
ST = 133.68'
e_{max} = 8.00%
CS STA. 233+49.08
ST STA. 237+49.08

FOR QUANTITIES, SEE SHEETS 71-81
FOR PROFILE, SEE SHEET 118
FOR UNDERDRAIN TABLES, SEE SHEETS 674-678
FOR TRAFFIC CONTROL PLAN, SEE SHEETS 713-733A
FOR FENCE TABLES, SEE SHEETS 1039-1041

5 EC — ROCK CHANNEL PROTECTION, TYPE C WITH FILTER (53' x 6' x 1.5' / 27 = 17.67 CY)

4 EC — SEEDING AND EROSION CONTROL WITH TURF REINFORCING MAT, TYPE 1 (196' x 11' / 9 = 239.56 SY)

3 EC — ROCK CHANNEL PROTECTION TYPE C WITH FILTER (57' x 11' x 1.5' / 27 = 34.83 CY)

9 EC — SEEDING AND EROSION CONTROL WITH TURF REINFORCING MAT, TYPE 2 (355' x 14.5' / 9 = 571.94 SY)

CURVE NO. 4

MATCH LINE STA. 231+00

MATCH LINE STA. 243+00

CONSTRUCTION LIMITS

FUTURE WESTBOUND LANES

℄ CONSTRUCTION S.R. 7

N 39° 55' 47" E

TYPE T +05.94

TYPE E PON +95.19

STREAM 10A OHWM = 636.7

STREAM 10 OHWM = 637.4

Wooded Area

Brush

Trail

Abond. Road

Mobile Home

Septic Dr.

B.R.E.C. ESMT.

Ex R/W

LA-R/W

1 EC — ROCK CHANNEL PROTECTION, TYPE C WITH FILTER (243' x 10.5' x 1.5' /27 = 141.75 CY)

2 EC — DITCH EROSION PROTECTION MAT, TYPE B (57' x 11' / 9 = 69.67 SY)

6 EC — DITCH EROSION PROTECTION MAT, TYPE B (153' x 11' / 9 = 187 SY)

7 EC — ROCK CHANNEL PROTECTION, TYPE C WITH FILTER (152' x 12' x 1.5' / 27 = 101.33 CY)

8 EC — CONSTRUCTION LIMITS

SEE DITCH TYPICAL SECTION THIS SHEET

EX. ℄ = 646.00

(A) - STA. 235+13.20 — BEGIN PAVEMENT TAPER, 56' RT.

(B) - STA. 241+73.20 — BEGIN SHOULDER TAPER, 49' RT.

(C) - STA. 242+33.20 — END PAVEMENT TAPER, 44' RT. END SHOULDER TAPER, 54' RT.

(D) - PRECAST REINFORCED OUTLET WITH TIED CONCRETE BLOCK MAT

(LF) DESIGNATES LEACH FIELD

- PROPOSED PAVEMENT

DITCH TYPICAL SECTION

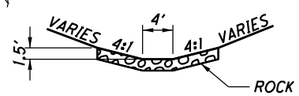

ROCK CHANNEL PROTECTION, TYPE C WITH FILTER

CONTRACTOR TO FILL AND REGRADE THE EXISTING CHANNEL TO TIE INTO THE PROPOSED ROADSIDE DITCH USING THE TYPICAL SECTION ABOVE. THE FOLLOWING QUANTITIES ARE INCLUDED IN REFERENCE NUMBER 8 EC TO COMPLETE THIS WORK:

ITEM 203 - EXCAVATION _____ CY
ITEM 203 - EMBANKMENT _____ 193 CY
ITEM 601 - ROCK CHANNEL PROTECTION, TYPE C WITH FILTER _____ 203 CY
ITEM 659 - SEEDING AND MULCHING _____ 1100 SY

DRAFT Stage 3 - Not for Construction
06/23/2024

HORIZONTAL SCALE IN FEET
0 25 50 100

CALCULATED SLP
CHECKED ALB

PLAN - S.R. 7
STA. 231+00 TO STA. 243+00

LAW-7-2.17

117
1247

U:\1736087\4\LAW\75923\roadway\sheets\75923GP011-2A.dgn 5/21/2024 4:50:15 PM SLParker

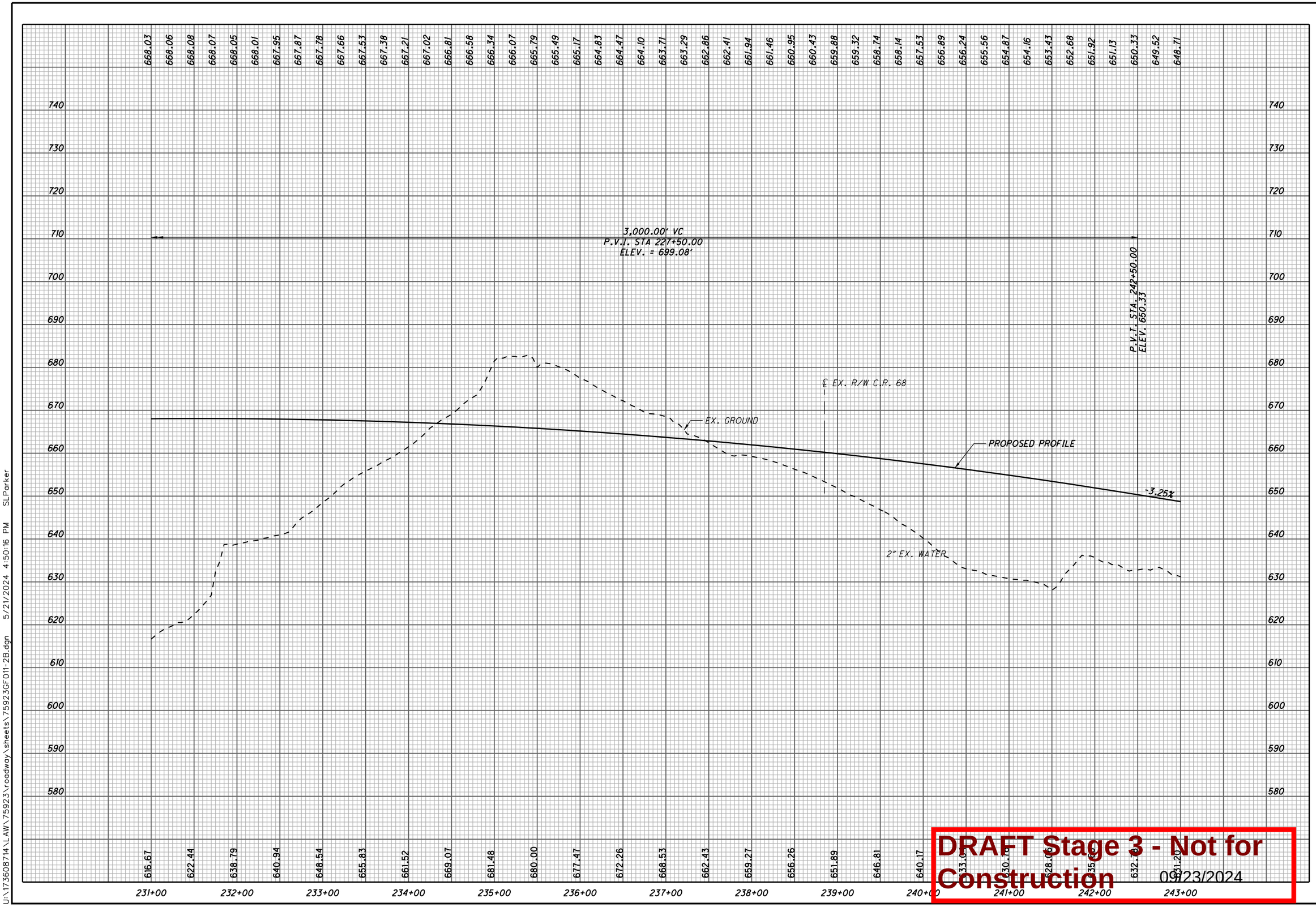

DRAFT Stage 3 - Not for Construction
09/23/2024

PROFILE - S.R. 7
STA. 231+00 TO STA. 243+00

CALCULATED SLP
CHECKED ALB

LAW-7-2.17

U:\1736087\14\LAW\75923\roadway\sheets\75923GF011-2B.dgn 5/21/2024 4:50:16 PM SLParker

CURVE DATA
S.R. 7
CURVE NO. 5

P.I. STA. 261+89.75
Δ = 58° 46' 06" (RT)
Dc = 3° 15' 00"
R = 1,762.95'
T = 773.76'
L = 1,458.26'
E = 162.33'
TS STA. 250+20.45
SC STA. 253+70.45

θs = 5° 41' 15"
Ls = 350.00'
Ts = 1,169.30'
LT = 233.45'
ST = 116.78'
e_{max} = 7.10%
CS STA. 268+28.71
ST STA. 271+78.71

CURVE DATA
S.R. 7 RAB
℄ CURVE NO. 1

P.I. Sta. 12+93.43
Δ = 27° 26' 21" (LT)
Dc = 16° 22' 13"
R = 350.00'
T = 85.45'
L = 167.62'
E = 10.28'
PC Sta. 12+07.99
PRC Sta. 13+75.60

CURVE DATA
S.R. 7 RAB
℄ CURVE NO. 2

P.I. Sta. 14+87.13
Δ = 52° 43' 55" (RT)
Dc = 25° 27' 53"
R = 225.00'
T = 111.52'
L = 207.08'
E = 26.12'
PRC Sta. 13+75.60
PRC Sta. 15+82.68

CURVE DATA
S.R. 7 RAB
℄ CURVE NO. 3

P.I. Sta. 16+43.83
Δ = 30° 24' 24" (LT)
Dc = 25° 27' 53"
R = 225.00'
T = 61.15'
L = 119.41'
E = 8.16'
PRC Sta. 15+82.68
PRC Sta. 17+02.09

CURVE DATA
S.R. 7 RAB
℄ CURVE NO. 4

P.I. Sta. 18+27.99
Δ = 31° 15' 43" (RT)
Dc = 12° 43' 57"
R = 450.00'
T = 125.90'
L = 245.53'
E = 17.28'
PRC Sta. 17+02.09
PT Sta. 19+47.62

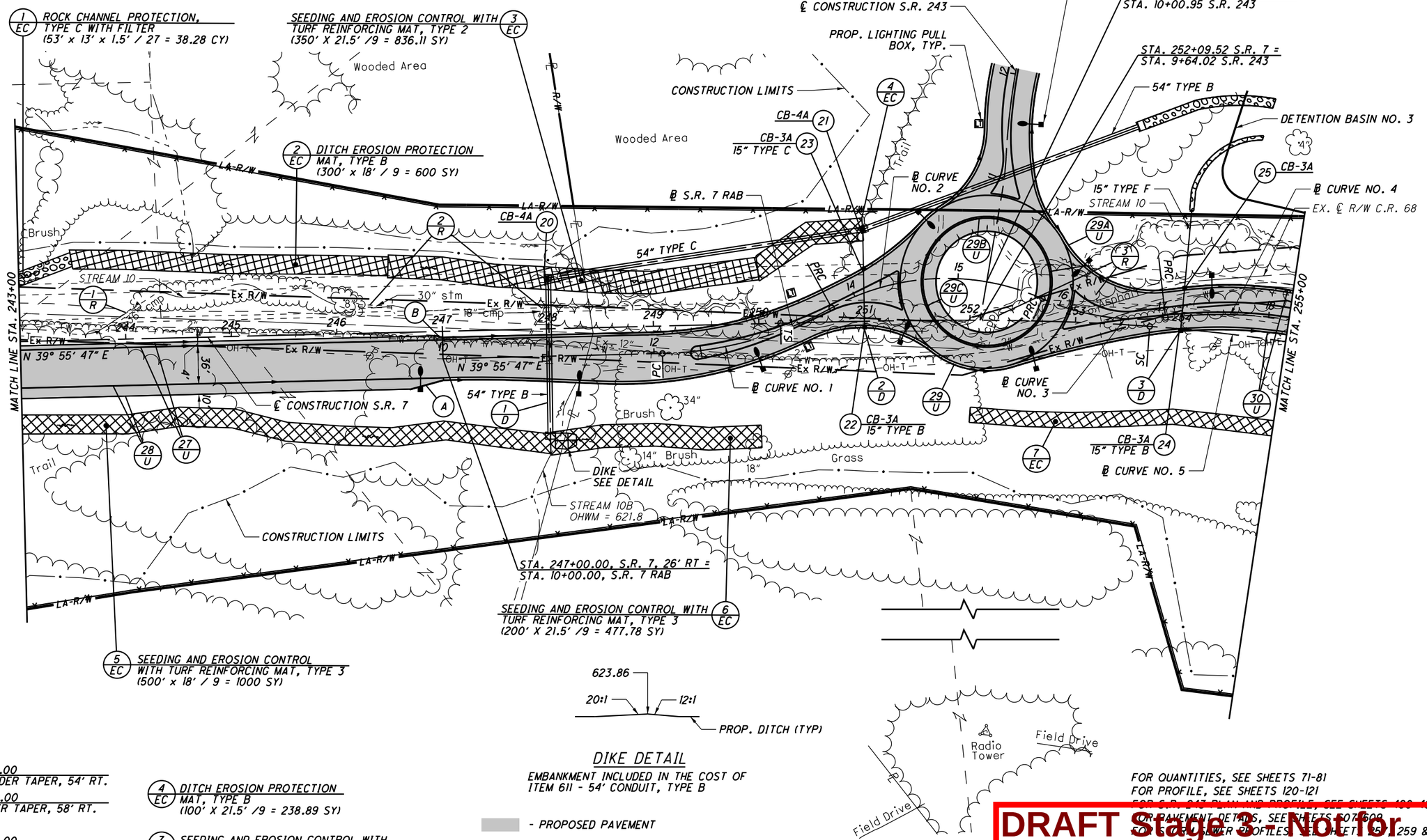

623.86
20:1
12:1
PROP. DITCH (TYP)

DIKE DETAIL

EMBANKMENT INCLUDED IN THE COST OF ITEM 611 - 54' CONDUIT, TYPE B

- PROPOSED PAVEMENT

* USE TYPE 6 CURB TO TAPER SHOULDER. TAPER CURB HEIGHT FROM 0" TO 6" IN 10'.

(A) - STA. 246+68.00 BEGIN SHOULDER TAPER, 54' RT.
STA. 247+00.00 END SHOULDER TAPER, 58' RT.

(B) - STA. 246+92.00 BEGIN SHOULDER TAPER, 4' LT.
STA. 247+00.00 END SHOULDER TAPER, 6' LT.

4/EC DITCH EROSION PROTECTION MAT, TYPE B (100' X 21.5' /9 = 238.89 SY)

7/EC SEEDING AND EROSION CONTROL WITH TURF REINFORCING MAT, TYPE 1 (288' x 14.5' / 9 = 464 SY)

FOR QUANTITIES, SEE SHEETS 71-81
FOR PROFILE, SEE SHEETS 120-121
FOR S.R. 247 PLAN AND PROFILE, SEE SHEETS 122-124
FOR PAVEMENT DETAILS, SEE SHEETS 607-608
FOR SEWER PROFILES, SEE SHEETS 1258, 1259 & 1242
FOR UNDERDRAIN TABLES, SEE SHEETS 674-678
FOR TRAFFIC CONTROL PLAN, SEE SHEETS 713-733A
FOR SEWER TABLES, SEE SHEETS 1039-1041

DRAFT Stage 3 - Not for Construction
09/23/2024

PLAN - S.R. 7
STA. 243+00 TO STA. 255+00 (NORTH)

LAW-7-2.17

119
1247

HORIZONTAL SCALE IN FEET
0 25 50 100

CALCULATED SLP
CHECKED ALB

U:\1736087\4\LAW\75923\roadway\sheets\75923GP012-2A.dgn 5/21/2024 4:50:20 PM SLParker

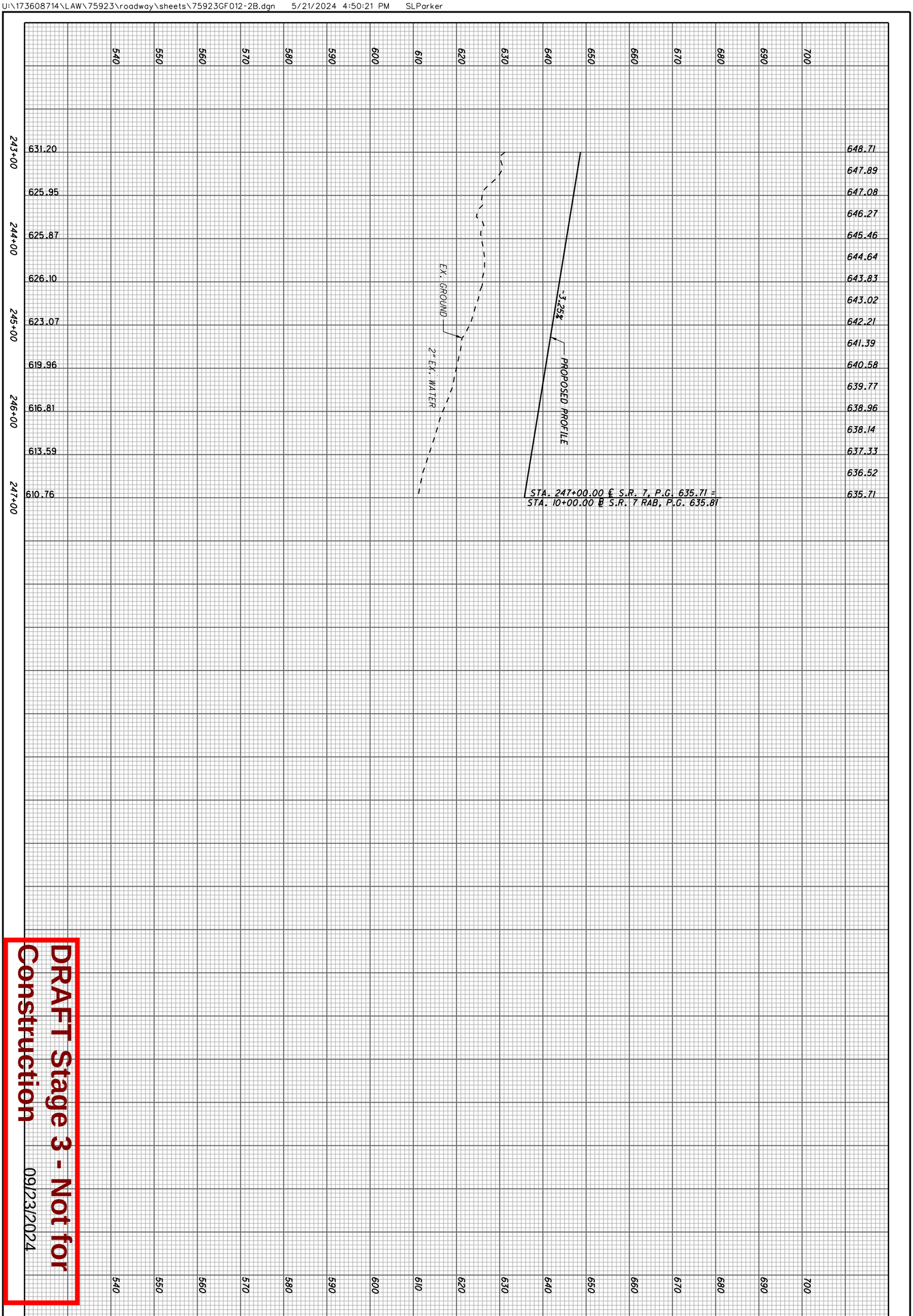

DRAFT Stage 3 - Not for Construction

09/23/2024

120 / 1247	LAW-7-2.17	PROFILE - S.R. 7 STA. 243+00.00 TO STA. 247+00.00	CALCULATED SLP CHECKED ALB

U:\173608714\LAW\75923\roadway\sheets\75923GF030-2B.dgn 5/21/2024 4:50:22 PM SLParker

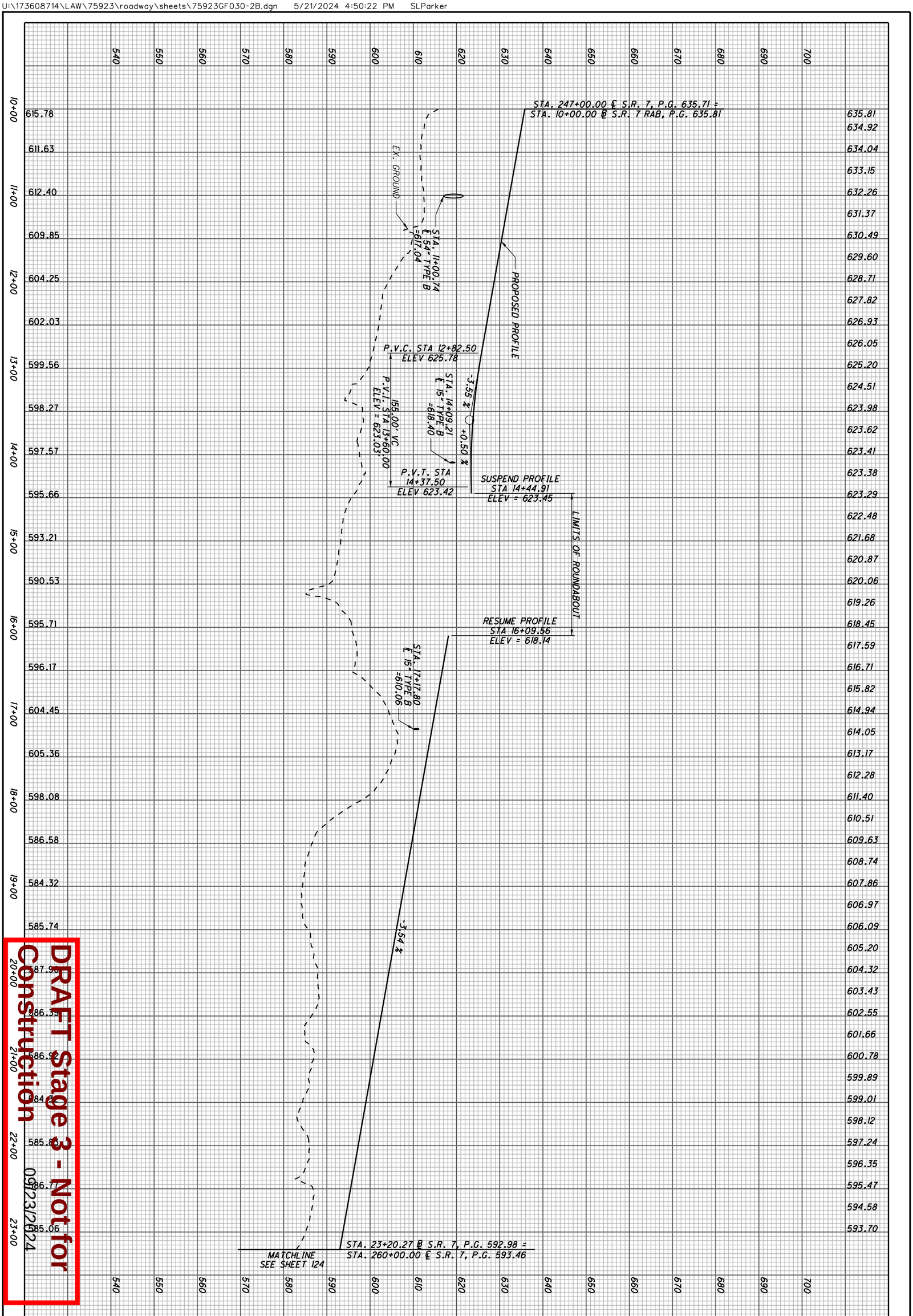

DRAFT Stage 3 - Not for Construction 09/23/2024

(121) (1247)	LAW-7-2.17	PROFILE - S.R. 7 RAB STA. 10+00 TO STA. 23+20.27

CALCULATED SLP
CHECKED ALB

CURVE DATA
S.R. 7
CURVE NO. 5

P.I. STA. 261+89.75
Δ = 58° 46' 06" (RT)
Dc = 3° 15' 00"
R = 1,762.95'
T = 773.76'
L = 1,458.26'
E = 162.33'
TS STA. 250+20.45
SC STA. 253+70.45

θs = 5° 41' 15"
Ls = 350.00'
Ts = 1,169.30'
LT = 233.45'
ST = 116.78'
e_{max} = 7.10%
CS STA. 268+28.71
ST STA. 271+78.71

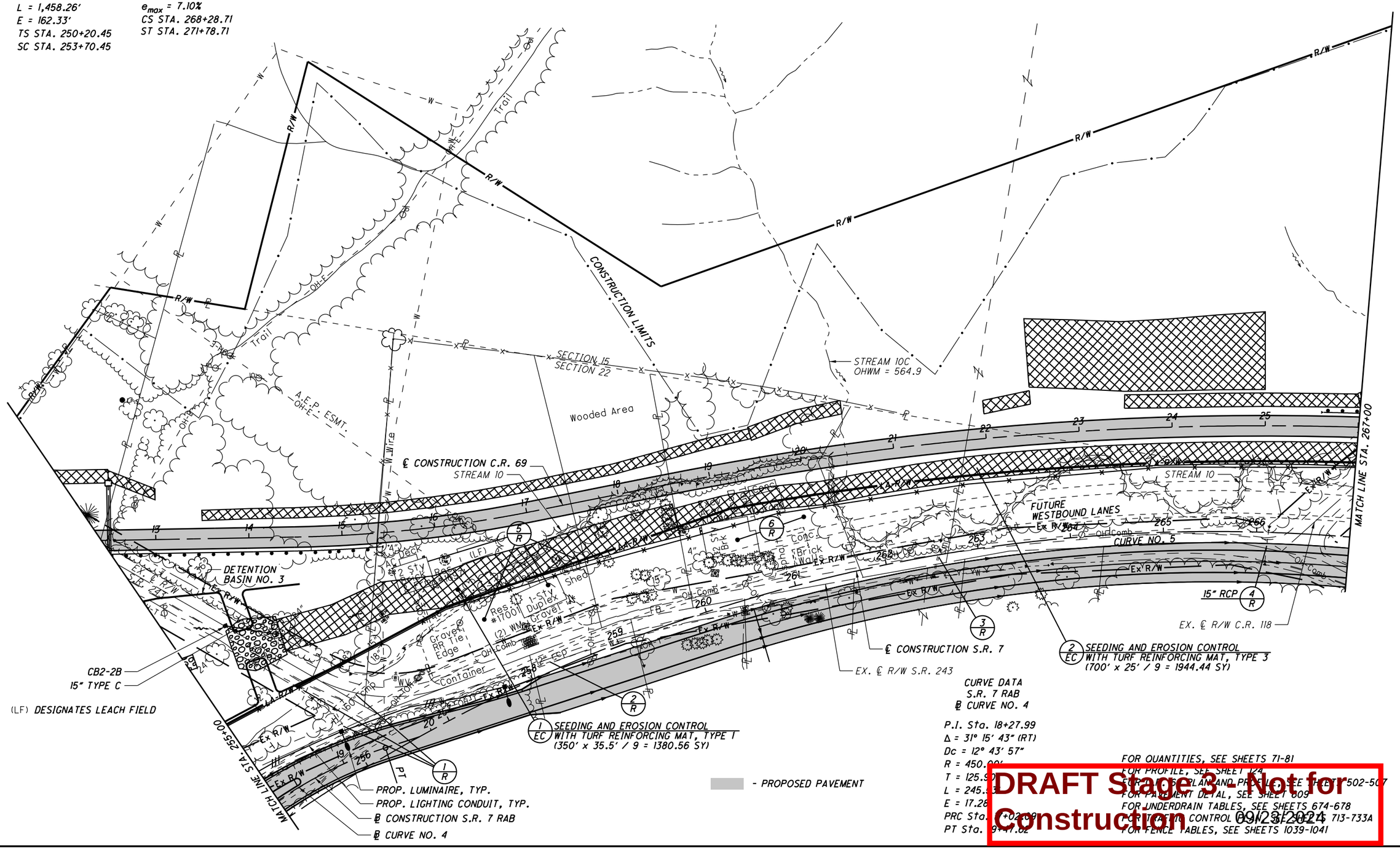

1 EC SEEDING AND EROSION CONTROL WITH TURF REINFORCING MAT, TYPE T (350' x 35.5' / 9 = 1380.56 SY)

2 EC SEEDING AND EROSION CONTROL WITH TURF REINFORCING MAT, TYPE 3 (700' x 25' / 9 = 1944.44 SY)

CURVE DATA
S.R. 7 RAB
℄ CURVE NO. 4

P.I. Sta. 18+27.99
Δ = 31° 15' 43" (RT)
Dc = 12° 43' 57"
R = 450.00'
T = 125.92'
L = 245.33'
E = 17.28'
PRC Sta. 16+02.06
PT Sta. 18+47.82

FOR QUANTITIES, SEE SHEETS 71-81
FOR PROFILE, SEE SHEET 124
FOR STORM PLAN AND PROFILE, SEE SHEETS 502-507
FOR PAVEMENT DETAIL, SEE SHEET 609
FOR UNDERDRAIN TABLES, SEE SHEETS 674-678
FOR EROSION CONTROL DETAILS, SEE SHEETS 713-733A
FOR FENCE TABLES, SEE SHEETS 1039-1041

DRAFT Stage 3 - Not for Construction 09/23/2024

CALCULATED SLP
CHECKED ALB

HORIZONTAL SCALE IN FEET
0 25 50 100

PLAN - S.R. 7
STA. 255+00 TO STA. 267+00 (NORTH)

LAW-7-2.17

122
1247

U:\173608714\LAW\75923\roadway\sheets\75923GP013-2A.dgn 5/21/2024 4:50:24 PM SLParker

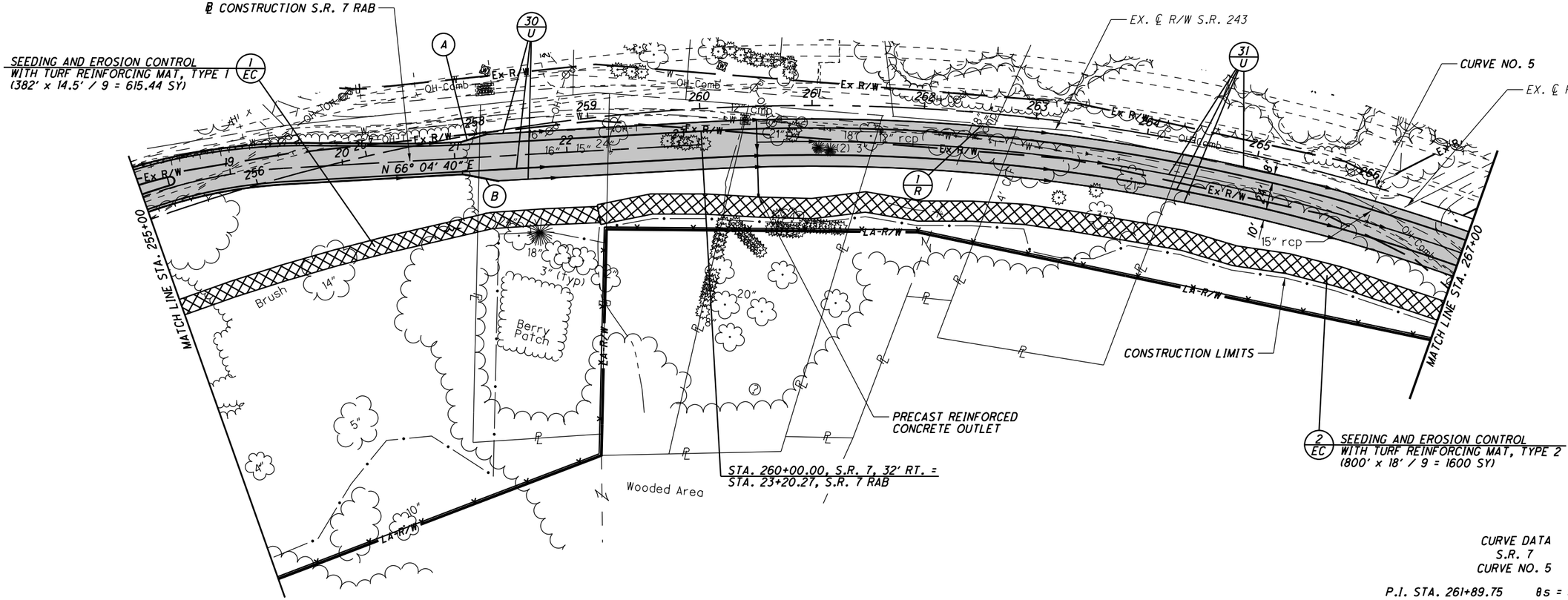

CURVE DATA
S.R. 7
CURVE NO. 5

P.I. STA. 261+89.75	θs = 5° 41' 15"
Δ = 58° 46' 06" (RT)	Ls = 350.00'
Dc = 3° 15' 00"	Ts = 1,169.30'
R = 1,762.95'	LT = 233.45'
T = 773.76'	ST = 116.78'
L = 1,458.26'	e_{max} = 7.10%
E = 162.33'	CS STA. 268+28.71
TS STA. 250+20.45	ST STA. 271+78.71
SC STA. 253+70.45	

* (A) - STA. 257+84.79 BEGIN SHOULDER TAPER, 4.87' RT.
STA. 258+09.36 END SHOULDER TAPER, 1.71' RT.

* (B) - STA. 257+81.31 BEGIN SHOULDER TAPER, 32.70' RT.
STA. 258+12.87 END SHOULDER TAPER, 44.33' RT.

* USE TYPE 6 CURB TO TAPER SHOULDER. TAPER CURB HEIGHT FROM 0" TO 6" IN 10'.

- PROPOSED PAVEMENT

FOR QUANTITIES, SEE SHEETS 71-81
FOR PROFILE, SEE SHEET 121
FOR EQUIPMENT DETAILS, SEE SHEETS 600
FOR UNDERDRAIN TABLES, SEE SHEETS 674-678
FOR TRAFFIC CONTROL PLAN, SEE SHEETS 713-733A
FOR EDGE TABLES, SEE SHEETS 1035-1041

DRAFT Stage 2 - Not for Construction

PLAN - S.R. 7
STA. 255+00 TO STA. 267+00 (SOUTH)

HORIZONTAL SCALE IN FEET
0 25 50 100

CALCULATED SLP
CHECKED ALB

LAW-7-2.17

123
1247

U:\17360714\LAW\75923\roadway\sheets\75923GP013A-2A.dgn 5/21/2024 4:50:25 PM SLParker

PROFILE - S.R. 7
STA. 260+00 TO 267+00

CALCULATED SLP
CHECKED ALB

LAW-7-2.17

DRAFT Stage 3 - Not for Construction
09/23/2024

U:\173608714\LAW\75923\roadway\sheets\75923GF013-2B.dgn 5/21/2024 4:50:26 PM SLParker

CURVE DATA
S.R. 7
CURVE NO. 5

P.I. STA. 261+89.75
Δ = 58° 46' 06" (RT)
Dc = 3° 15' 00"
R = 1,762.95'
T = 773.76'
L = 1,458.26'
E = 162.33'
TS STA. 250+20.45
SC STA. 253+70.45

θs = 5° 41' 15"
Ls = 350.00'
Ts = 1,169.30'
LT = 233.45'
ST = 116.78'
e_{max} = 7.10%
CS STA. 268+28.71
ST STA. 271+78.71

CURVE DATA
S.R. 7
CURVE NO. 6

P.I. STA. 280+92.68
Δ = 5° 51' 21" (LT)
Dc = 1° 00' 00"
R = 5,729.58'
T = 230.42'
L = 460.59'
E = 4.63'
TS STA. 277+37.12
SC STA. 278+62.12

θs = 0° 37' 30"
Ls = 125.00'
Ts = 355.56'
LT = 83.33'
ST = 41.67'
e_{max} = 2.90%
CS STA. 283+22.71
ST STA. 284+47.71

(2 EC) DITCH EROSION PROTECTION
MAT, TYPE B
(300' X 35' / 9 = 1166.67 SY)

(4 EC) DITCH EROSION PROTECTION
MAT, TYPE B
(150' x 14.5' / 9 = 80.56 SY)

℄ CONSTRUCTION C.R. 118
℄ CONSTRUCTION C.R. 2
EX. ℄ R/W C.R. 118
EX. ℄ R/W C.R. 2
OHWM = 539.1
R/W
BENT CREEK
STREAM 10
CONSTRUCTION LIMITS
Wooded Area
Asphalt
Brush
SECTION 14
SECTION 15
SECTION 22
FUTURE PHASE 2B
℄ CONSTRUCTION C.R. 69
Ex R/W
LA-R/W
56" cmp
16" W
3" W
OH-E
OH-T
I.P.S.
T.P.S.

SEEDING AND EROSION CONTROL
WITH TURF REINFORCING MAT, TYPE 3 (1 EC)
(150' x 25' / 9 = 416.67 SY)

(26) CB-4A
54" TYPE C

(2 EC) (1 D)

MATCH LINE STA. 267+00
MATCH LINE STA. 279+00
S 81° 18' 07" E
℄ CONSTRUCTION S.R. 7
STREAM 11
OHWM = 544.1
(1 GR)
(31 U) (32 U) (33 U)
CURVE NO. 5
CURVE NO. 6
TS
SC
24'
10'
138 kV
O.P.C.
100' ESMT.

(3 EC) SEEDING AND EROSION CONTROL
WITH TURF REINFORCING MAT, TYPE 1
(604' x 14.5' / 9 = 973.11 SY)

(LF) DESIGNATES LEACH FIELD

SEEDING AND EROSION CONTROL
WITH TURF REINFORCING MAT, TYPE 2 (5 EC)
(400' x 18' / 9 = 800 SY)

TYPE E PON
+62.82

Gravel
Asphalt
Shed
LE
8

SEEDING AND EROSION CONTROL
WITH TURF REINFORCING MAT, TYPE 1 (6 EC)
(150' x 21.5' / 9 = 358.33 SY)

DITCH EROSION PROTECTION
MAT, TYPE B (7 EC)
(91' x 11' / 9 = 111.22 SY)

EX. ℄ R/W C.R. 243
100' ESMT.
BENT CREEK
OHWM = 529.9
STREAM 12
OHWM = 538.7
PRECAST REINFORCE
CONCRETE OUTLET WITH
TURF REINFORCING MAT (TYP.)

BRIDGE NO.
LAW-7-0510
22' MULTI-PLATE

ROCK CHANNEL PROTECTION, (8 EC)
TYPE B WITH FILTER
(267' x 2.5' / 27 = 519.17 CY)

2:1 4' 2:1

DITCH TYPICAL SECTION

CONTRACTOR TO FILL AND REGRADE THE EXISTING CHANNEL TO TIE INTO THE PROPOSED ROADSIDE DITCH USING THE TYPICAL SECTION ABOVE. THE FOLLOWING QUANTITIES ARE INCLUDED IN REFERENCE NUMBER 7-EC TO COMPLETE THIS WORK.

ITEM 203 - EXCAVATION _____ 262 CY
ITEM 659 - SEEDING AND MULCHING, CLASS 3C _____ 242 SY

- PROPOSED PAVEMENT

FOR QUANTITIES, SEE SHEETS 71-81
FOR PROFILE, SEE SHEET 126
FOR C.R. 69 PLAN AND PROFILE, SEE SHEETS 502-507
FOR C.R. 118 PLAN AND PROFILE, SEE SHEET 547
FOR C.R. 2 PLAN AND PROFILE, SEE SHEET 553
FOR DRIVE DETAILS, SEE SHEETS 650-656
FOR ENTRANCE PROFILES, SEE SHEET 673
FOR UNDERRUN TABLES, SEE SHEETS 674-696
FOR TRAFFIC CONTROL PLAN, SEE SHEETS 713-733A
FOR STRUCTURE 20' AND OVER, SEE SHEETS 898-906
FOR FENCE TABLES, SEE SHEETS 1039-1041

DRAFT Stage 2 - Not for Construction
05/28/2024

N

HORIZONTAL SCALE IN FEET
0 25 50 100

CALCULATED SLP
CHECKED ALB

PLAN - S.R. 7
STA. 267+00 TO STA. 279+00

LAW-7-2.17

125
1247

U:\173608714\LAW\75923\roadway\sheets\75923GP014-2A.dgn 5/21/2024 4:50:34 PM SLParker

U:\173608714\LAW\75923\roadway\sheets\75923GF014-2B.dgn 5/21/2024 4:50:35 PM SLParker

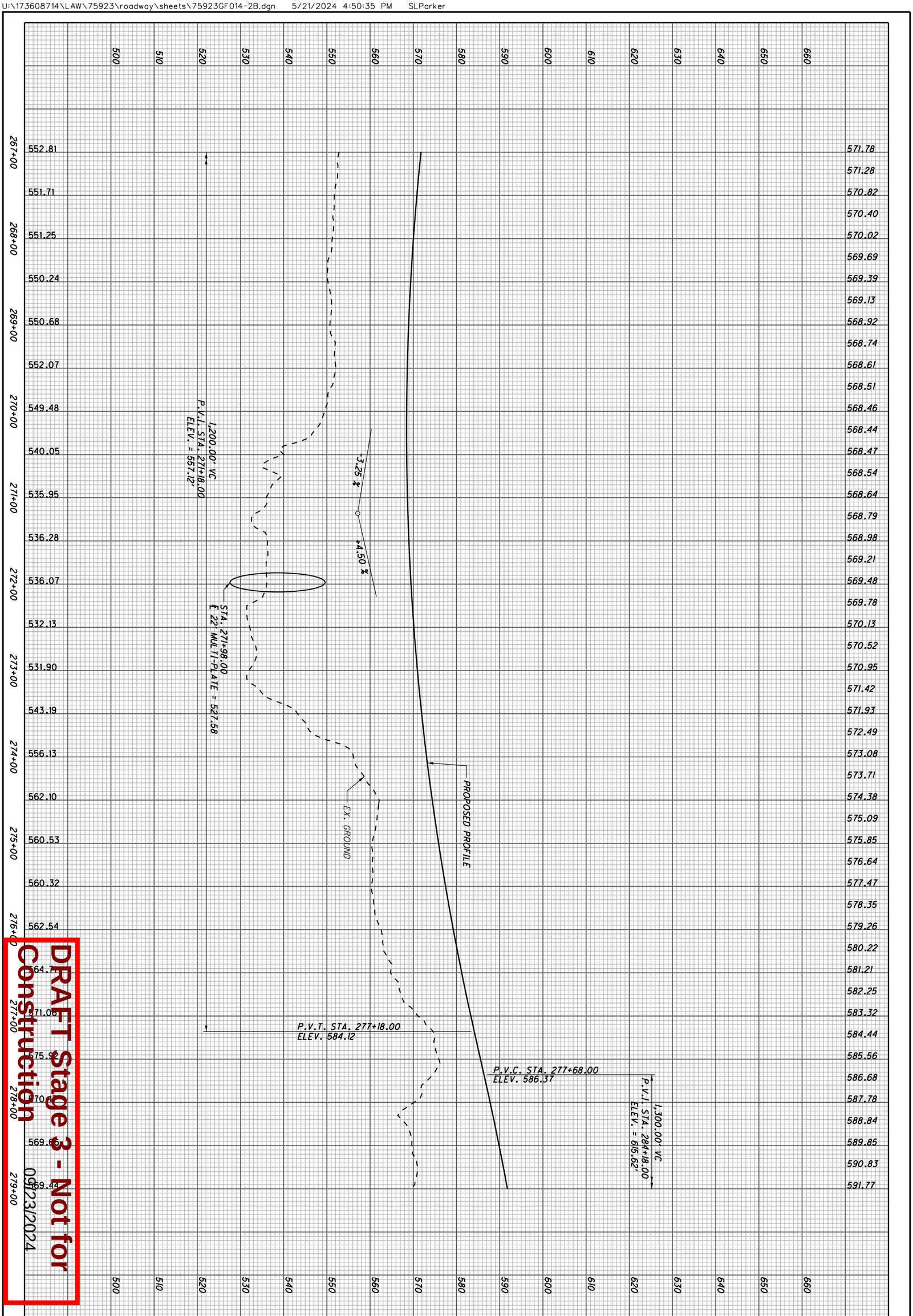

DRAFT Stage 3 - Not for Construction 09/23/2024

126
1247

LAW-7-2.17

PROFILE - S.R. 7
STA. 267+00 TO STA. 279+00

CALCULATED SLP
CHECKED ALB

(LF) *DESIGNATES LEACH FIELD*

CURVE DATA
S.R. 7
CURVE NO. 6

P.I. STA. 280+92.68
Δ = 5° 51′ 21″ (LT)
Dc = 1° 00′ 00″
R = 5,729.58′
T = 230.42′
L = 460.59′
E = 4.63′
TS STA. 277+37.12
SC STA. 278+62.12
θs = 0° 37′ 30″
Ls = 125.00′
Ts = 355.56′
LT = 83.33′
ST = 41.67′
e_{max} = 2.90%
CS STA. 283+22.71
ST STA. 284+47.71

HORIZONTAL SCALE IN FEET
0 25 50 100

CALCULATED SLP
CHECKED ALB

PLAN - S.R. 7
STA. 279+00 TO STA. 291+00

LAW-7-2.17

127
1247

MATCH LINE STA. 279+00

MATCH LINE STA. 291+00

Field Dr.

OH-Comb

R/W

Mowed Area

Bldg. Foundation

(LF)

Wooded Area

℄ CONSTRUCTION C.R. 2

CONSTRUCTION LIMITS

SECTION 14

SECTION 23

℄ CONSTRUCTION C.R. 69

Tree Hse

Shop

Play Center

Deck

Bldg

Gravel Mtl Cargl

Walk

Anhar

Tank

Gravel

Container

Trail

Brush

LA-R/W

Ex R/W

DITCH EROSION PROTECTION
MAT, TYPE B
(452′ x 11′ / 9 = 552.44 SY)

2 EC

FUTURE WESTBOUND LANES

CURVE NO. 6

S 87° 09′ 28″ E

℄ CONSTRUCTION S.R. 7

1 EC
DITCH EROSION PROTECTION
MAT, TYPE B
(150′ x 14.5′ / 9 = 241.67 SY)

1 GR

33 U

33A U

34 U

1 R

2 R

Ex. ℄ R/W C.R. 69

Wire Fence

Asphalt

TYPE E PON
+84.21

Lattice

Gravel

1 Sty Add
2 Sty Frm
Res. #15

SAWCUT

WETLAND 1

- PROPOSED PAVEMENT

FOR QUANTITIES, SEE SHEETS 71-81
FOR PROFILE, SEE SHEET 126
FOR CROSS PLAN AND PROFILE, SEE SHEETS 502-567
FOR C.R. 2 PLAN AND PROFILE, SEE SHEET 553
FOR UNDERDRAIN TABLES, SEE SHEETS 674-678
FOR EROSION CONTROL, SEE SHEETS 713-733A
FOR FENCE TABLES, SEE SHEETS 1039-1041

DRAFT Stage 3 Not for Construction 09/23/2024

U:\1736087\4\LAW\75923\roadway\sheets\75923GP015-2A.dgn 5/21/2024 4:50:37 PM SLParker

PROFILE - S.R. 7
STA. 279+00 TO STA. 291+00

CALCULATED SLP
CHECKED ALB

1,300.00' VC
P.V.I. STA. 284+18.00
ELEV. = 615.62'

+4.50 %
-3.50 %

℄ EX. R/W C.R. 2
℄ EX. R/W C.R. 69

PROPOSED PROFILE
EX. GROUND
16" EX. WATER
4" EX. WATER

P.V.T. STA. 290+68.00
ELEV. 592.87

591.77 592.68 593.54 594.37 595.15 595.90 596.61 597.29 597.92 598.51 599.07 599.59 600.07 600.51 600.91 601.28 601.60 601.89 602.14 602.35 602.52 602.65 602.75 602.81 602.82 602.80 602.74 602.65 602.51 602.34 602.12 601.87 601.58 601.26 600.89 600.48 600.04 599.56 599.04 598.48 597.88 597.25 596.57 595.86 595.11 594.32 593.49 592.63 591.75

670 660 650 640 630 620 610 600 590 580 570 560 550 540 530 520 510

569.44 573.05 578.25 580.58 582.24 582.70 580.65 578.08 579.71 577.79 578.29 583.27 585.68 591.29 598.87 602.44 606.98 613.59 618.38 602.9[illegible] 575.0[illegible] 564.4[illegible] 557.6[illegible] 542.1[illegible] 536.77

279+00 280+00 281+00 282+00 283+00 284+00 285+00 286+00 287+00 288+00 289+00 290+00 291+00

DRAFT Stage 3 - Not for Construction
09/23/2024

LAW-7-2.17

128
1247

U:\173608714\LAW\75923\roadway\sheets\75923GF015-2B.dgn 5/21/2024 4:50:38 PM SLParker

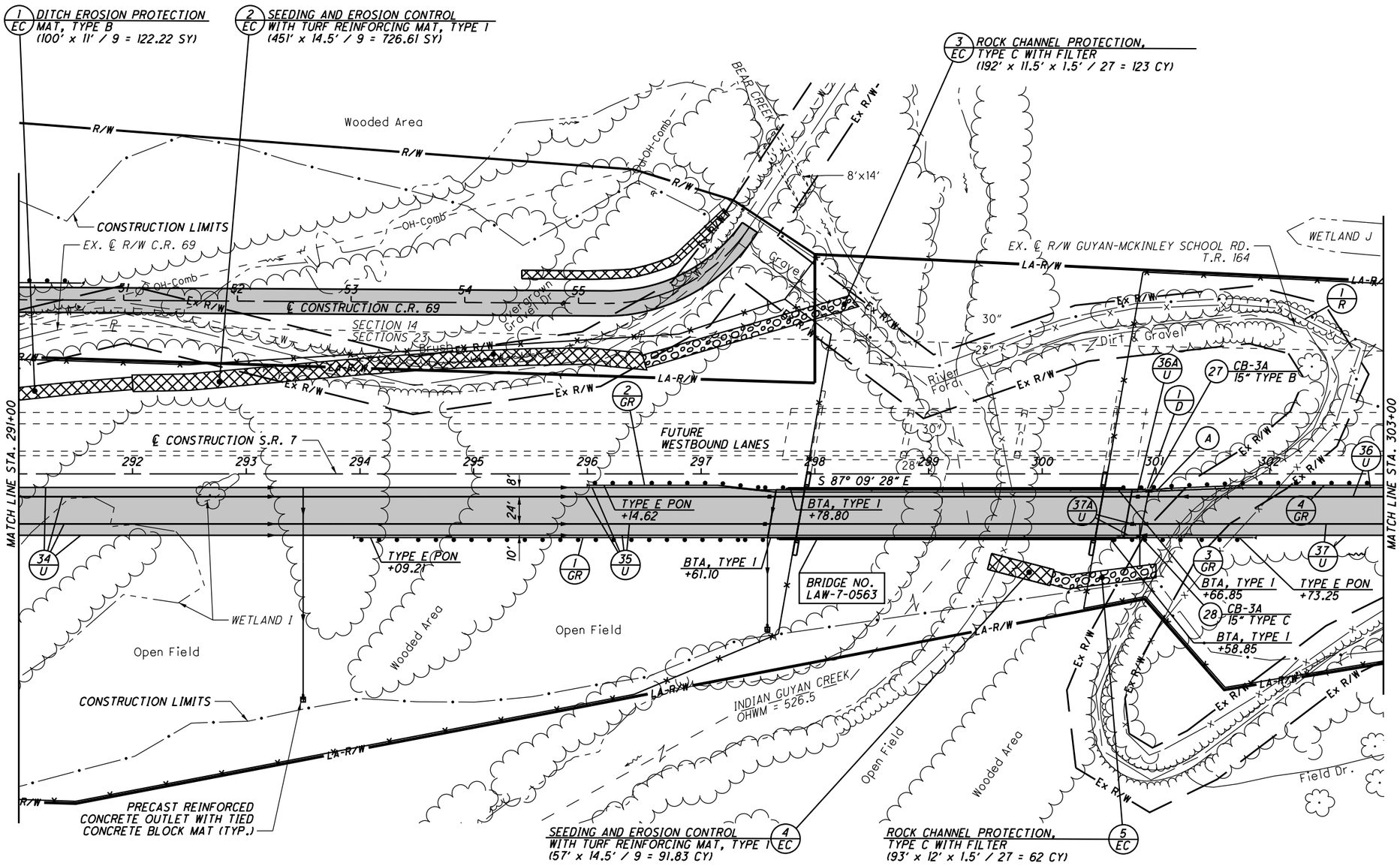

A - STA. 300+78.70 BEGIN SHOULDER TAPER, 16' RT.
STA. 301+78.70 END SHOULDER TAPER, 12' RT.

- PROPOSED PAVEMENT

FOR QUANTITIES, SEE SHEETS 71-81
FOR PROFILE, SEE SHEET 130
FOR C.R. 69 PLAN AND PROFILE, SEE SHEETS 902-907
FOR SOUTHBOUND PROFILE, SEE SHEET 908
FOR UNDERDRAIN TABLES, SEE SHEETS 674-678
FOR TRAFFIC CONTROL PLAN, SEE SHEETS 713-733A
FOR STRUCTURES 20' AND OVER, SEE SHEETS 907-930
FOR FENCE TABLES, SEE SHEETS 1039-1041

DRAFT Stage 3 Not for Construction
DO NOT USE

HORIZONTAL SCALE IN FEET
0 25 50 100
CALCULATED SLP
CHECKED ALB

PLAN - S.R. 7
STA. 291+00 TO 303+00

LAW-7-2.17

U:\173608714\LAW\75923\roadway\sheets\75923GP016-2A.dgn 5/21/2024 4:50:40 PM SLPorker

PROFILE - S.R. 7

STA. 291+00 TO STA. 303+00

CALCULATED SLP
CHECKED ALB

LAW-7-2.17

PROPOSED PROFILE

℄ EX. R/W GUYAN-MCKINLEY SCHOOL ROAD

P.V.C. STA. 297+05.00
ELEV. 570.58

EX. GROUND

-3.50 %

+3.91 %

1,010.00' VC
P.V.I. STA. 302+10.00
ELEV. = 552.90'

591.75 590.88 590.00 589.13 588.25 587.38 586.50 585.63 584.75 583.88 583.00 582.13 581.25 580.38 579.50 578.63 577.75 576.88 576.00 575.13 574.25 573.38 572.50 571.63 570.75 569.89 569.08 568.31 567.58 566.90 566.27 565.69 565.15 564.65 564.20 563.80 563.44 563.13 562.87 562.65 562.47 562.35 562.26 562.23 562.24 562.29 562.40 562.54 562.74

650 640 630 620 610 600 590 580 570 560 550 540 530 520 510 500 490

536.72 533.75 533.27 532.82 532.87 536.24 552.21 553.79 553.49 539.96 533.52 531.94 531.43 531.48 532.31 531.68 531.91 522.97 533.80 537.0 540.39 543.80 543.69 551.7 558.67

291+00 292+00 293+00 294+00 295+00 296+00 297+00 298+00 299+00 300+00 301+00 302+00 303+00

DRAFT Stage 3 - Not for Construction

09/23/2024

130
1247

U:\173608714\LAW\75923\roadway\sheets\75923GF016-2B.dgn 5/21/2024 4:50:41 PM SLParker

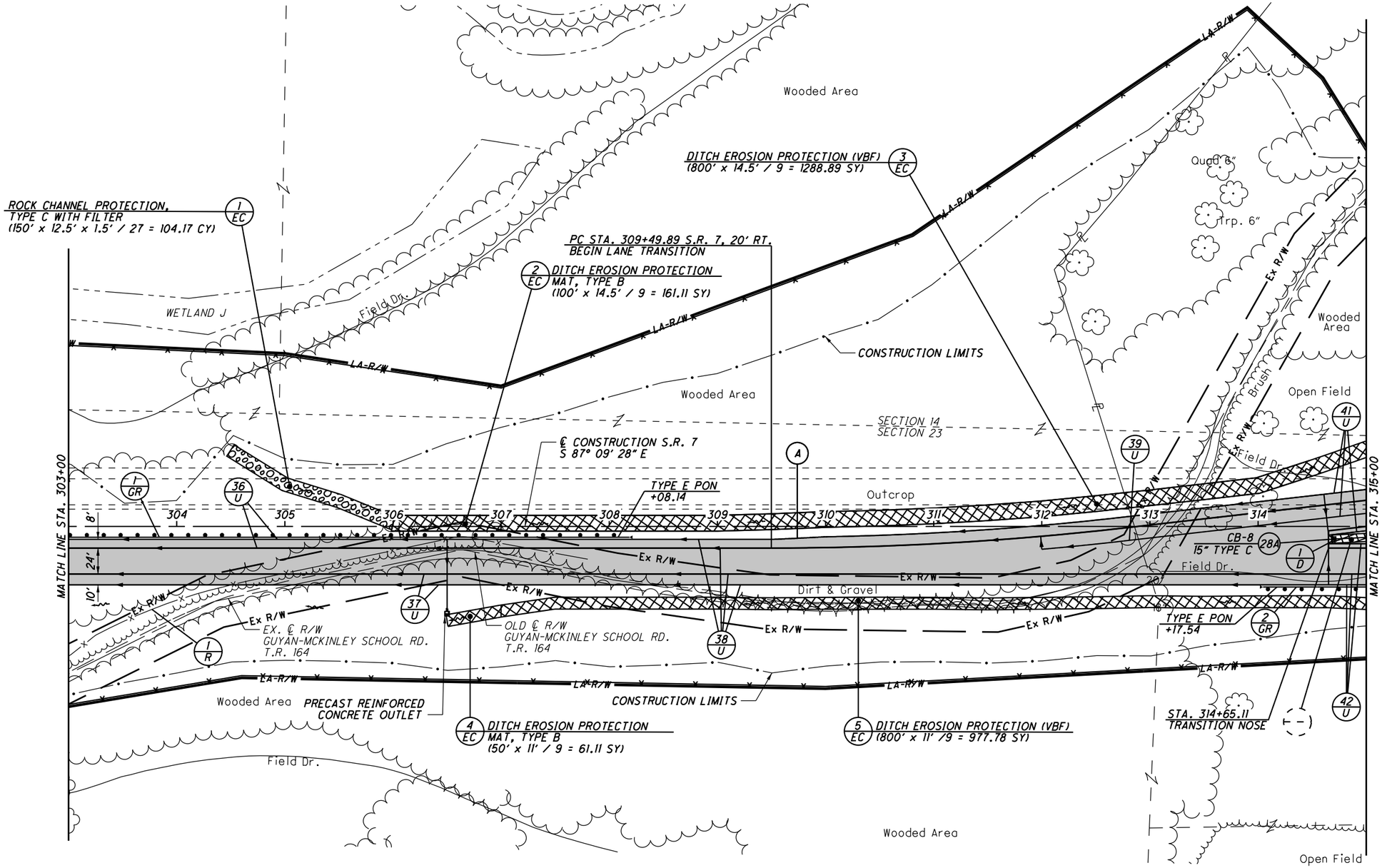

CURVE DATA
S.R. 7 LANE TRANSITION
TRANSITION CURVE NO. 1
(FOR HORIZONTAL LAYOUT ONLY)

P.I. Sta. 311+12.46, S.R. 7, 20' RT.
Δ = 6° 29' 46" (LT)
Dc = 2° 00' 00"
R = 2,864.79'
T = 162.58'
L = 324.81'
E = 4.61'
e_{max} = NC
PC STA. = 309+49.89, S.R. 7, 20' RT.
PT STA. = 312+74.00, S.R. 7, 1.61' RT.

(A) - STA. 309+49.89 BEGIN SHOULDER TAPER, 12' RT.
STA. 309+99.71 END SHOULDER TAPER, 9.57' RT.

- PROPOSED PAVEMENT

(VBF) DENOTES LOCATION OF VEGETATED BIOFILTER.

FOR QUANTITIES, SEE SHEETS 71-81
FOR PROFILE, SEE SHEET 132
FOR PAVEMENT DETAILS, SEE SHEET 610
FOR UNDERDRAIN TABLES, SEE SHEETS 674-678
FOR TRAFFIC CONTROL PLAN, SEE SHEETS 713-737A
FOR LINE TABLES, SEE SHEETS 1039-1041

DRAFT Stage 3-Not for Construction 09/23/2024

N

HORIZONTAL SCALE IN FEET
0 25 50 100

CALCULATED SLP
CHECKED ALB

PLAN - S.R. 7
STA. 303+00 TO STA. 315+00

LAW-7-2.17

131
1247

U:\1736087\14\LAW\75923\roadway\sheets\75923GP017-2A.dgn 5/21/2024 4:50:43 PM SLParker

PROFILE - S.R. 7
STA. 303+00 TO STA. 315+00

CALCULATED SLP
CHECKED ALB

EX. GROUND

℄ EX. R/W GUYAN-MCKINLEY SCHOOL ROAD

PROPOSED PROFILE
+3.91 %

P.V.T. STA. 307+15.00
ELEV. 572.64

1,010.00' VC
P.V.I. STA. 302+10.00
ELEV. = 552.90'

562.74 562.98 563.26 563.59 563.97 564.39 564.86 565.37 565.93 566.54 567.19 567.89 568.63 569.42 570.26 571.14 572.06 573.03 574.01 574.99 575.96 576.94 577.92 578.90 579.87 580.85 581.83 582.81 583.78 584.76 585.74 586.71 587.69 588.67 589.65 590.62 591.60 592.58 593.56 594.53 595.51 596.49 597.46 598.44 599.42 600.40 601.37 602.35 603.33

660 650 640 630 620 610 600 590 580 570 560 550 540 530 520 510 500

558.67 564.23 570.83 577.24 588.21 594.57 598.60 605.01 614.83 626.07 628.36 634.44 637.48 641.73 643.68 651.65 641.18 636.92 638.16 638.82 633.67 632.24 625.40 623.57 618.82

303+00 304+00 305+00 306+00 307+00 308+00 309+00 310+00 311+00 312+00 313+00 314+00 315+00

DRAFT Stage 3 - Not for Construction
09/23/2024

LAW-7-2.17

132
1247

U:\173608714\LAW\75923\roadway\sheets\75923GF017-2B.dgn 5/21/2024 4:50:43 PM SLParker

ROCK CHANNEL PROTECTION, TYPE C WITH FILTER (100' x 14.5' x 1.5' / 27 = 80.56 CY) — 7 EC

SEEDING AND EROSION CONTROL WITH TURF REINFORCING MAT, TYPE I (100' x 18' / 9 = 200 SY) — 6 EC

ARTICULATING CONCRETE BLOCK REVETMENT SYSTEM, TYPE I (119' x 13' / 9' = 171.89 SY) — 8 EC

SEEDING AND EROSION CONTROL WITH TURF REINFORCING MAT, TYPE I (104' x 14.5' / 9 = 167.56 SY) — 10 EC

ROCK CHANNEL PROTECTION, TYPE C WITH FILTER (172' x 12.5' x 1.5' / 27 = 119.44 CY) — 9 EC

ROCK CHANNEL PROTECTION, TYPE C WITH FILTER (50' x 11' x 1.5' / 27 = 30.56 CY) — 5 EC

1 R MOUND SEE MOUND DETAIL

EX. ℄ R/W GUYAN-MCKINLEY SCHOOL RD. T.R. 164

Mowed, Brush, Ex R/W, Wooded Area, Open Field, Trail, Field Dr.

STREAM 13A, STREAM 1343, STREAM 1342, STREAM 13

OHWM = 613.8, OHWM = 584.8, OHWM = 567.7, OHWM = 543.3

LA-R/W, CONSTRUCTION LIMITS, TRANSITION CURVE NO. 2

SECTION 14, SECTION 23

TYPE E PON +80.24

15" TYPE B, 15" TYPE C, 60" TYPE A

TYPE T +96.51, TYPE T +50.24

S 87° 09' 28" E

CURVE NO. 2, CURVE NO. 7, ℄ CONSTRUCTION S.R. 7

MATCH LINE STA. 315+00, MATCH LINE STA. 327+00

CB-8

WETLAND K, WETLAND T, WETLAND L, WETLAND M

SEEDING AND EROSION CONTROL WITH TURF REINFORCING MAT, TYPE I (850' x 7.5' / 9 = 708.33 SY) — 3 EC

SEEDING AND EROSION CONTROL WITH TURF REINFORCING MAT, TYPE I (250' x 7.5' / 9 = 208.33 SY) — 4 EC

1 EC DITCH EROSION PROTECTION (VBF) (150' x 14.5' / 9 = 80.56 SY)

2 EC DITCH EROSION PROTECTION MAT, TYPE B. (130' x 7.5' / 9 = 108.33 SY)

CURVE DATA
S.R. 7
CURVE NO. 7

P.I. STA. 326+36.08
Δ = 31° 21' 41" (RT)
Dc = 2° 00' 00"
R = 2,864.79'
T = 670.91'
L = 1,318.07'
E = 77.51'
TS STA. 317+06.62
SC STA. 319+56.62
θs = 2° 30' 00"
Ls = 250.00'
Ts = 929.46'
LT = 166.68'
ST = 83.35'
e_{max} = 5.10%
CS STA. 332+74.69
ST STA. 335+24.69

CURVE DATA
S.R. 7 LANE TRANSITION
TRANSITION CURVE NO. 2
(FOR HORIZONTAL LAYOUT ONLY)

P.I. Sta. 323+90.75, S.R. 7, 188.18' LT.
Δ = 35° 21' 27" (RT)
Dc = 1° 58' 11"
R = 2,908.79'
T = 927.12'
L = 1,795.03'
E = 144.18'
e_{max} = 5.10%
PC STA. = 315+02.52, S.R. 7, 24.41' LT.
PT STA. = 332+74.69, S.R. 7, 44' LT.

- PROPOSED PAVEMENT

1 R - QUANTITIES ARE INCLUDED IN REFERENCE NUMBER 1-R FOR THE CONSTRUCTION OF A 3' TALL EARTHEN MOUND AT THE LOCATION WHERE THE EXISTING ROAD IS TO BE REMOVED

(VBF) DENOTES LOCATION OF VEGETATED BIOFILTER.

MOUND DETAIL

FOR QUANTITIES, SEE SHEETS 71-81
FOR PROFILE, SEE SHEET 134
FOR PAVEMENT DETAILS, SEE SHEET 610
FOR STORM SEWER PROFILES, SEE SHEETS 640, 641 & 644
FOR CULVERT DETAILS, SEE SHEETS 659-660
FOR UNDERDRAIN TABLES, SEE SHEETS 674-678
FOR EROSION CONTROL PLAN, SEE SHEETS 713-733A
FOR FENCE TABLES, SEE SHEETS 1039-1041

DRAFT Stage 3 - Not for Construction 09/23/2024

N

HORIZONTAL SCALE IN FEET: 0, 25, 50, 100

CALCULATED SLP CHECKED ALB

PLAN - S.R. 7
STA. 315+00 TO STA. 327+00

LAW-7-2.17

133
1247

U:\173608714\LAW\75923\roadway\sheets\75923GP018-2A.dgn 5/21/2024 4:50:46 PM SLParker

603.33 604.31 605.28 606.26 607.24 608.21 609.19 610.17 611.15 612.12 613.10 614.08 615.06 616.03 617.01 617.99 618.96 619.94 620.92 621.90 622.87 623.85 624.83 625.81 626.78 627.76 628.74 629.71 630.69 631.67 632.65 633.62 634.60 635.58 636.56 637.53 638.51 639.49 640.46 641.44 642.42 643.40 644.37 645.35 646.33 647.31 648.28 649.26 650.24

700 690 680 670 660 650 640 630 620 610 600 590 580 570 560 550 540

PROPOSED PROFILE

+3.91 %

STA. 324+50.00
CB-8
T/C = 637.18
℄ 15" TYPE B
= 634.18

STA. 316+00
CB-8
T/C = 605.21
℄ 15" TYPE B
= 594.66

EX. GROUND

STA. 322+09.92
℄ 60" TYPE A
= 557.91

618.82 608.30 598.39 594.15 584.92 579.85 573.74 565.66 563.26 557.75 546.14 568.51 551.82 570.80 586.37 596.41 606.01 609.56 608.87 610.92 617.31 617.13 612.42 621.31 626.93

315+00 316+00 317+00 318+00 319+00 320+00 321+00 322+00 323+00 324+00 325+00 326+00 327+00

DRAFT Stage 3 - Not for Construction

09/23/2024

CALCULATED SLP | CHECKED ALB

PROFILE - S.R. 7
STA. 315+00 TO STA. 327+00

LAW-7-2.17

134
1247

U:\173608714\LAW\75923\roadway\sheets\75923GF018-2B.dgn 5/21/2024 4:50:47 PM SLParker

CURVE DATA
S.R. 7
CURVE NO. 7

P.I. STA. 326+36.08
Δ = 31° 21' 41" (RT)
Dc = 2° 00' 00"
R = 2,864.79'
T = 670.91'
L = 1,318.07'
E = 77.51'
TS STA. 317+06.62
SC STA. 319+56.62

θs = 2° 30' 00"
Ls = 250.00'
Ts = 929.46'
LT = 166.68'
ST = 83.35'
e_{max} = 5.10%
CS STA. 332+74.69
ST STA. 335+24.69

CURVE DATA
S.R. 7 LANE TRANSITION
TRANSITION CURVE NO. 2
(FOR HORIZONTAL LAYOUT ONLY)

P.I. STA. 323+90.75, S.R. 7, 188.18' LT.
Δ = 35° 21' 27" (RT)
Dc = 1° 58' 11"
R = 2,908.79'
T = 927.12'
L = 1,795.03'
E = 144.18'
e_{max} = 5.10%
PC STA. = 315+02.52, S.R. 7, 24.41' LT.
PT STA. = 332+74.69, S.R. 7, 44' LT.

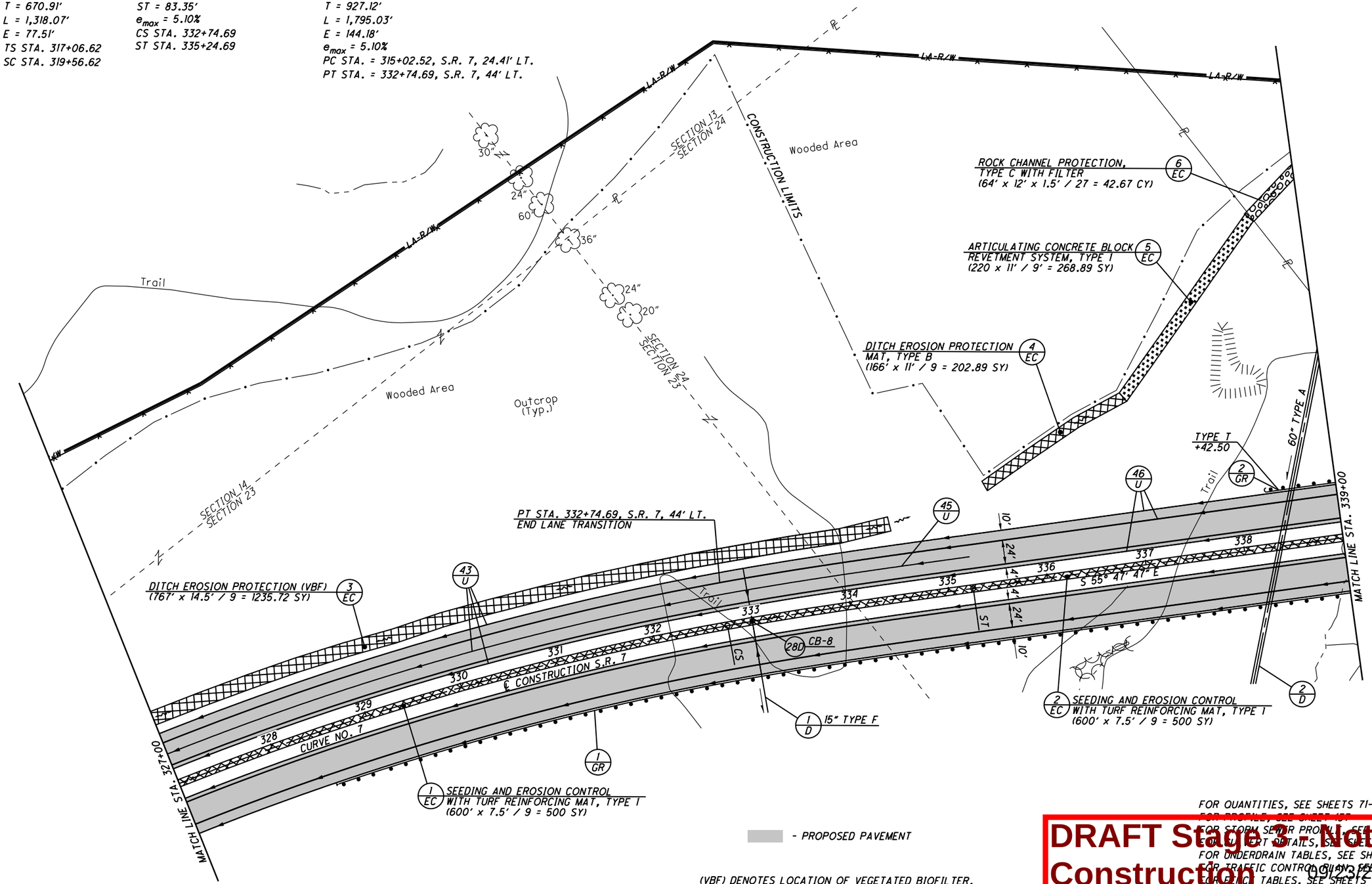

(VBF) DENOTES LOCATION OF VEGETATED BIOFILTER.

FOR QUANTITIES, SEE SHEETS 71-81
FOR PROFILE, SEE SHEET 157
FOR STORM SEWER PROFILE, SEE SHEET 330
FOR CULVERT DETAILS, SEE SHEETS 601-612
FOR UNDERDRAIN TABLES, SEE SHEETS 674-678
FOR TRAFFIC CONTROL PLANS, SEE SHEETS 713-733
FOR ITEM TABLES, SEE SHEETS 1039-1041

DRAFT Stage 2 - Not for Construction 09/3/2024

HORIZONTAL SCALE IN FEET
0 25 50 100

CALCULATED SLP
CHECKED ALB

PLAN - S.R. 7
STA. 327+00 TO STA. 339+00 (NORTH)

LAW-7-2.17

135
1247

U:\17360871\4\LAW\75923\roadway\sheets\75923GP019-2A.dgn 5/21/2024 4:50:48 PM SLParker

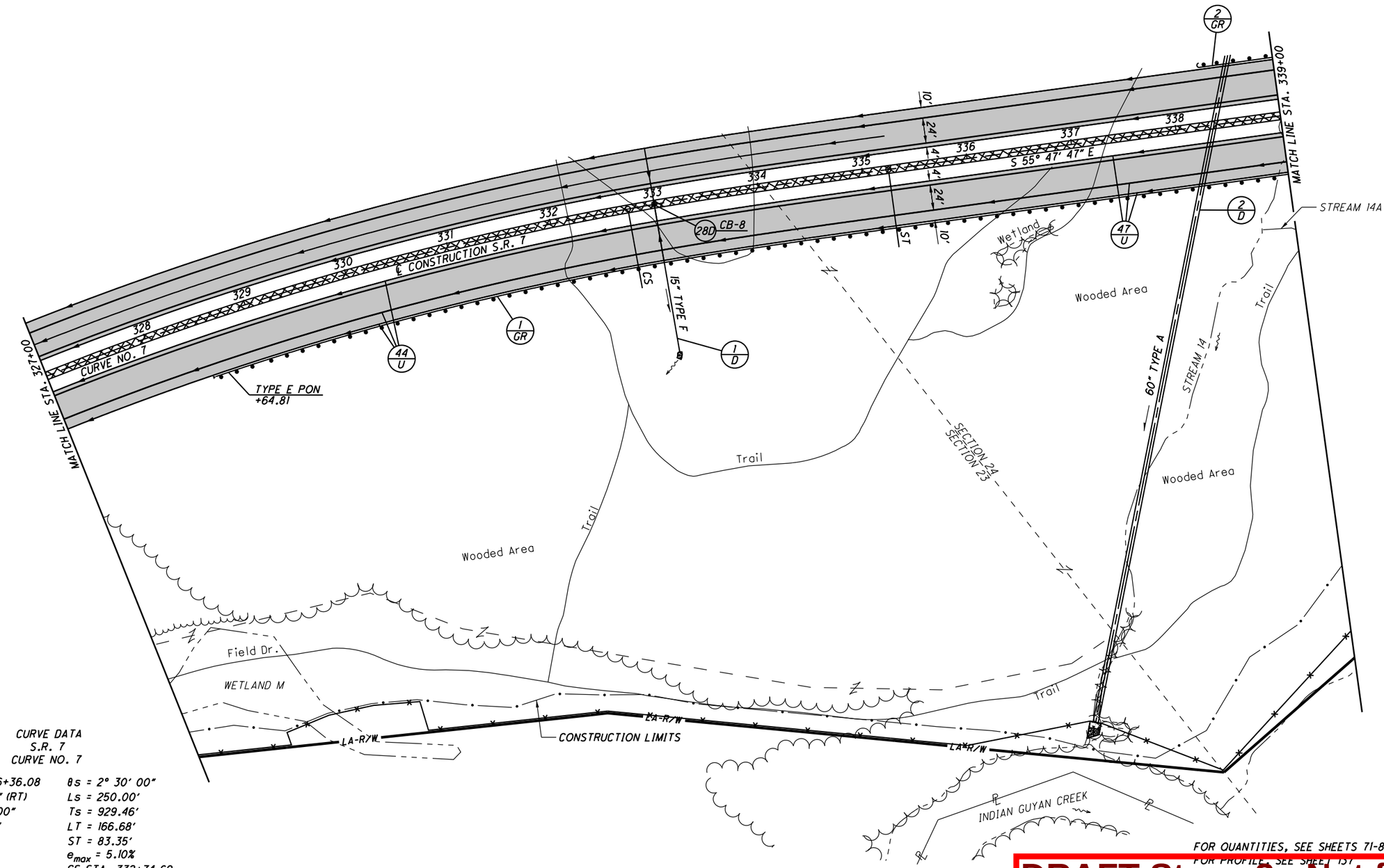

CURVE DATA
S.R. 7
CURVE NO. 7

P.I. STA. 326+36.08	θs = 2° 30' 00"
Δ = 31° 21' 41" (RT)	Ls = 250.00'
Dc = 2° 00' 00"	Ts = 929.46'
R = 2,864.79'	LT = 166.68'
T = 670.91'	ST = 83.35'
L = 1,318.07'	e_{max} = 5.10%
E = 77.51'	CS STA. 332+74.69
TS STA. 317+06.62	ST STA. 335+24.69
SC STA. 319+56.62	

FOR QUANTITIES, SEE SHEETS 71-81
FOR PROFILE, SEE SHEET 137
FOR STORM SEWER PROFILES, SEE SHEETS 330
FOR CULVERT DETAILS, SEE SHEETS 661-662
FOR UNDERDRAIN TABLES, SEE SHEETS 674-678
FOR TRAFFIC CONTROL, SEE SHEETS 713-733A
FOR FENCE TABLES, SEE SHEETS 1039-1041

DRAFT Stage 3 - Not for Construction
09/23/2024

HORIZONTAL SCALE IN FEET
0 25 50 100

CALCULATED SLP
CHECKED ALB

PLAN - S.R. 7
STA. 327+00 TO STA. 339+00 (SOUTH)

LAW-7-2.17

136
1247

U:\173608714\LAW\75923\roadway\sheets\75923GP019A-2A.dgn 5/21/2024 4:50:49 PM SLParker

PROFILE - S.R. 7
STA. 327+00 TO STA. 339+00

CALCULATED SLP
CHECKED ALB

PROPOSED PROFILE
+3.91 %
+5.93 %
STA. 333+00.00
CB-8
T/C = 672.21
E 15" TYPE B
= 669.21
EX. GROUND
P.V.C. STA. 328+78.00
ELEV. 657.20
1,000.00' VC
P.V.I. STA. 333+78.00
ELEV. = 676.74'
P.V.T. STA. 338+78.00
ELEV. 706.41
STA. 338+36.39
E 60" TYPE A
= 664.99

650.24 651.21 652.19 653.17 654.15 655.12 656.10 657.08 658.06 659.06 660.06 661.08 662.12 663.16 664.22 665.29 666.37 667.47 668.58 669.70 670.83 671.98 673.14 674.31 675.49 676.69 677.90 679.12 680.36 681.61 682.87 684.14 685.43 686.73 688.04 689.36 690.70 692.05 693.41 694.78 696.17 697.57 698.98 700.41 701.84 703.29 704.76 706.23 707.72

730 720 710 700 690 680 670 660 650 640 630 620 610 600 590 580 570 560 550

626.93 641.18 645.40 632.36 626.76 624.54 633.76 642.57 644.96 643.26 644.47 663.16 674.29 695.14 697.82 682.52 667.96 648.75 628.27 611.85 600.36 603.68 592.00 578.60 561.53

327+00 328+00 329+00 330+00 331+00 332+00 333+00 334+00 335+00 336+00 337+00 338+00 339+00

DRAFT Stage 3 - Not for Construction
09/23/2024

LAW-7-2.17

137
1247

U:\173608714\LAW\75923\roadway\sheets\75923GF019-2B.dgn 5/21/2024 4:50:50 PM SLParker

3 EC ROCK CHANNEL PROTECTION, TYPE C WITH FILTER (59' x 12' x 1.5' / 27 = 39.33 CY)

4 EC ROCK CHANNEL PROTECTION, TYPE C WITH FILTER (58' x 12' x 1.5' / 27 = 38.67 CY)

LA-R/W

STREAM 14B OHWM = 595.0

STREAM 14

60" TYPE A

Wooded Area

CONSTRUCTION LIMITS

DITCH EROSION PROTECTION (VBF) 5 EC (800' x 14.5' / 9 = 1288.89 SY)

SEEDING AND EROSION CONTROL WITH TURF REINFORCING MAT, TYPE 1 1 EC (400' x 7.5' / 9 = 333.33 SY)

2 EC SEEDING AND EROSION CONTROL WITH TURF REINFORCING MAT, TYPE 1 (500' x 14.5' / 9 = 805.56 SY)

TYPE E PON +42.50

Field Dr.

1 GR

46 U

28E CB-5 21" TYPE B

50 U

MATCH LINE STA. 339+00

MATCH LINE STA. 351+00

10'

24'

4'

340 341 342 343 344 345 346 347 348 349 350

TS SC

S 55° 47' 47" E

℄ CONSTRUCTION S.R. 7

CURVE NO. 8

47 U

2 GR

28F CB-8

21" TYPE F

1 D

TYPE T +50.27

48 U

49 U

Trail

STREAM 14A OHWM = 572.0

ROCK CHANNEL PROTECTION, TYPE C WITH FILTER 7 EC (52' x 13.5' x 1.5' / 27 = 39 CY)

9 EC DITCH EROSION PROTECTION MAT, TYPE B (200' x 11' / 9 = 244.44 SY)

ARTICULATING CONCRETE BLOCK REVETMENT SYSTEM, TYPE 1 6 EC (286' x 13' / 9 = 413.11 SY)

ROCK CHANNEL PROTECTION, TYPE C WITH FILTER 8 EC (165' x 10.5' x 1.5' / 27 = 96.25 CY)

Wooded Area

Wooded Area

Wooded Area

STREAM 15B OHWM = 736.8

LA-R/W

CURVE DATA
S.R. 7
CURVE NO. 8

P.I. STA. 355+16.90
Δ = 9° 56' 13" (LT)
Dc = 0° 52' 24"
R = 6,560.00'
T = 507.37'
L = 1,012.73'
E = 19.59'
TS STA. 348+84.10
SC STA. 350+09.10

θs = 0° 32' 45"
Ls = 125.00'
Ts = 632.80'
Lt = 87.33'
[illegible]
[illegible]
CS STA. 360+21.83
ST STA. 361+46.83

- PROPOSED PAVEMENT

Outcrop Typ.

(VBF) DENOTES LOCATION OF VEGETATED BIOFILTER.

FOR QUANTITIES, SEE SHEETS 11-81
FOR PROFILE, SEE SHEETS 1039-1041
FOR STORM SEWER PROFILE, SEE SHEET 344
FOR UNDERDRAIN TABLES, SEE SHEETS 674-678
FOR TRAFFIC CONTROL PLAN, SEE SHEETS 713-733A
FOR FENCE TABLES, SEE SHEETS 1039-1041

DRAFT Stage 3 - Not for Construction

N

HORIZONTAL SCALE IN FEET
0 25 50 100

CALCULATED SLP
CHECKED ALB

PLAN - S.R. 7
STA. 339+00 TO STA. 351+00

LAW-7-2.17

U:\173608714\LAW\75923\roadway\sheets\75923GP020-2A.dgn 5/21/2024 4:50:52 PM SLParker

PROFILE - S.R. 7
STA. 339+00 STA. 351+00

CALCULATED SLP
CHECKED ALB

1,825.00' VC
P.V.I. STA. 351+07.00
ELEV. = 779.34'

+5.93 %

P.V.C. STA. 341+94.50
ELEV. = 725.19

PROPOSED PROFILE

STA. 343+00.00
CB-8
T/C = 727.78
℄ 21" TYPE B
= 723.94

EX. GROUND

707.12 709.20 710.68 712.17 713.65 715.13 716.62 718.10 719.58 721.07 722.55 724.03 725.52 726.97 728.38 729.76 731.09 732.38 733.63 734.84 736.01 737.13 738.22 739.26 740.27 741.23 742.15 743.04 743.88 744.68 745.44 746.16 746.83 747.47 748.07 748.62 749.13 749.61 750.04 750.43 750.78 751.09 751.36 751.59 751.78 751.92 752.03 752.09 752.12

800 790 780 770 760 750 740 730 720 710 700 690 680 670 660 650 640

561.53 577.09 597.44 603.68 630.26 659.33 681.47 704.93 716.99 730.09 747.87 770.64 781.12 800.27 829.41 849.62 851.63 842.79 837.26 832.08 829.33 822.86 825.63 824.8 808.63

339+00 340+00 341+00 342+00 343+00 344+00 345+00 346+00 347+00 348+00 349+00 350+00 351+00

DRAFT Stage 3 - Not for Construction
09/23/2024

LAW-7-2.17

U:\173608714\LAW\75923\roadway\sheets\75923GF020-2B.dgn 5/21/2024 4:50:53 PM SLParker

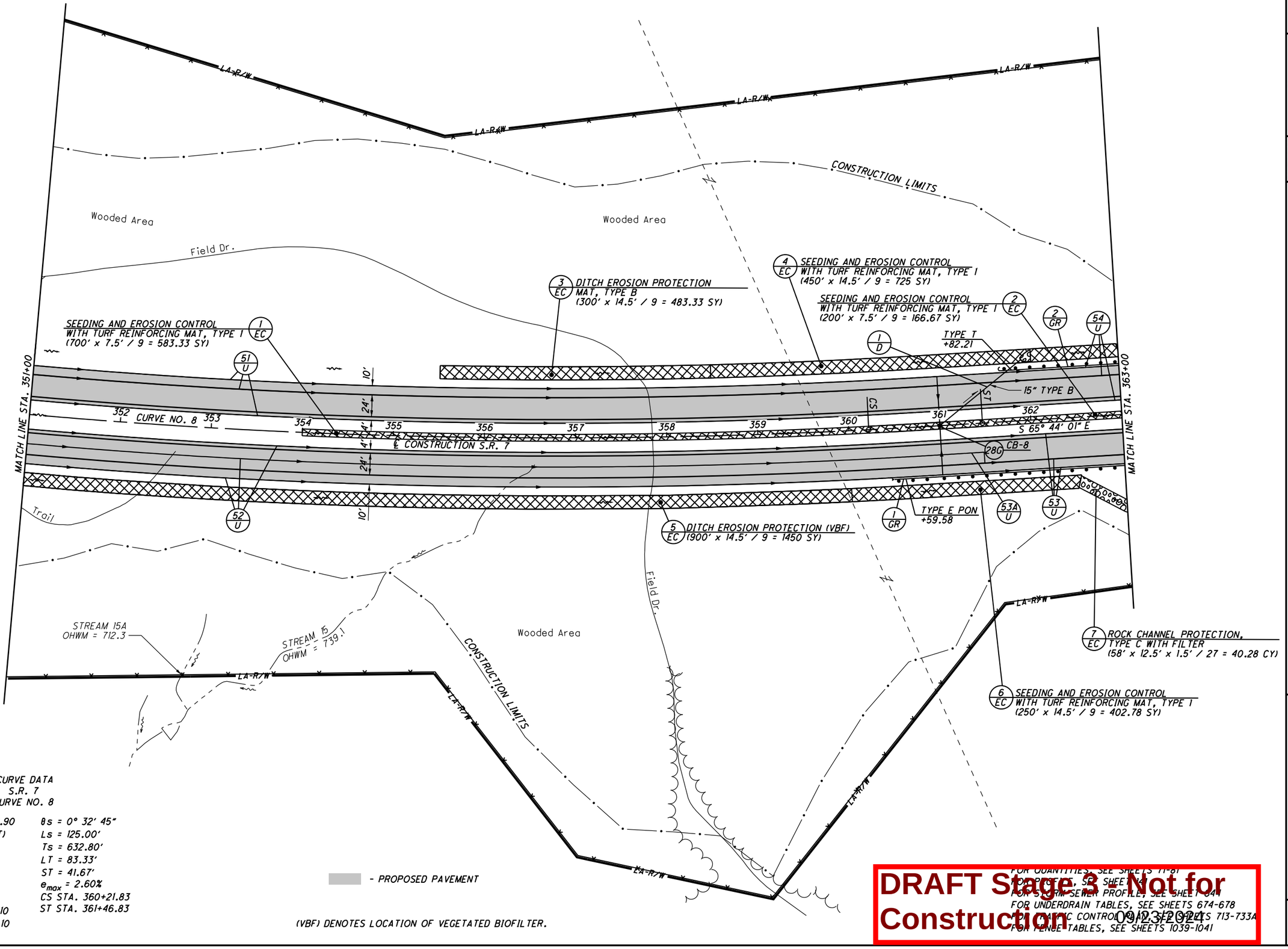

CURVE DATA
S.R. 7
CURVE NO. 8

P.I. STA. 355+16.90	θs = 0° 32' 45"
Δ = 9° 56' 13" (LT)	Ls = 125.00'
Dc = 0° 52' 24"	Ts = 632.80'
R = 6,560.00'	LT = 83.33'
T = 507.37'	ST = 41.67'
L = 1,012.73'	e_{max} = 2.60%
E = 19.59'	CS STA. 360+21.83
TS STA. 348+84.10	ST STA. 361+46.83
SC STA. 350+09.10	

FOR QUANTITIES, SEE SHEETS 71-81
FOR NOTES, SEE SHEET 1
FOR STORM SEWER PROFILE, SEE SHEET 644
FOR UNDERDRAIN TABLES, SEE SHEETS 674-678
FOR TRAFFIC CONTROL PLAN, SEE SHEETS 713-733A
FOR FENCE TABLES, SEE SHEETS 1039-1041

DRAFT Stage 3 Not for Construction 09/23/2024

PLAN - S.R. 7
STA. 351+00 TO STA. 363+00

LAW-7-2.17

140
1247

HORIZONTAL SCALE IN FEET
0 25 50 100

CALCULATED SLP
CHECKED ALB

U:\173608714\LAW\75923\roadway\sheets\75923GP021-2A.dgn 5/21/2024 4:50:55 PM SLParker

PROFILE - S.R. 7
STA. 351+00 TO STA. 363+00

CALCULATED SLP
CHECKED ALB

LAW-7-2.17

752.12 752.10 752.04 751.94 751.80 751.62 751.40 751.14 750.83 750.49 750.10 749.68 749.21 748.70 748.15 747.57 746.94 746.26 745.55 744.80 744.01 743.17 742.30 741.38 740.42 739.42 738.38 737.30 736.18 735.02 733.82 732.58 731.29 729.97 728.60 727.19 725.75 724.26 722.76 721.26 719.76 718.26 716.76 715.26 713.76 712.26 710.76 709.26 707.76

870 860 850 840 830 820 810 800 790 780 770 760 750 740 730 720 710 700 690 680

EX. GROUND

1,825.00' VC
P.V.I. STA. 351+07.00
ELEV. = 779.34'

-6.00 %

PROPOSED PROFILE

P.V.T. STA. 360+19.50
ELEV. 724.59

STA. 361+00.00
CB-8
T/C = 716.45
FI 15" TYPE B
= 712.47

818.69 810.14 802.37 798.68 793.88 801.30 806.38 810.23 814.81 819.92 824.29 828.57 838.02 856.35 864.29 843.67 829.71 817.98 800.13 782.99 775.51 765.94 758.18 719.70 704.55

351+00 352+00 353+00 354+00 355+00 356+00 357+00 358+00 359+00 360+00 361+00 362+00 363+00

DRAFT Stage 3 - Not for Construction
09/23/2024

U:\173608714\LAW\75923\roadway\sheets\75923GF021-2B.dgn 5/21/2024 4:50:56 PM SLParker

STA. 365+89.03
BEGIN PAVEMENT TAPER, 44' RT.
BEGIN SHOULDER TAPER, 54' RT.

(A) -

STA. 366+89.03
END PAVEMENT TAPER, 56' RT.
END SHOULDER TAPER, 64' RT.

5 EC SEEDING AND EROSION CONTROL
WITH TURF REINFORCING MAT, TYPE 3
(50' X 21.5' / 9 = 119.44 SY)

6 EC ARTICULATING CONCRETE BLOCK
REVETMENT SYSTEM, TYPE 1
(316' X 21.5' / 9 = 754.89 SY)

LA-R/W

CONSTRUCTION LIMITS

Wooded Area

ARTICULATING CONCRETE BLOCK 4 EC
REVETMENT SYSTEM, TYPE 1
(459' x 12.5' / 9' = 637.5 SY)

Wooded Area

DETENTION BASIN NO. 4

STREAM 16
OHWM = 564.7

2 EC SEEDING AND EROSION CONTROL
WITH TURF REINFORCING MAT, TYPE 1
(525' x 7.5' / 9 = 437.5 SY)

SEEDING AND EROSION CONTROL 3 EC
WITH TURF REINFORCING MAT, TYPE 1
(125' x 7.5' / 9 = 104.17 SY)

DETENTION BASIN NO. 4 ACCESS DRIVE

1 EC SEEDING AND EROSION CONTROL
WITH TURF REINFORCING MAT, TYPE 1
(550' x 7.5' / 9 = 458.33 SY)

STA. 371+40.72
BEGIN PAVEMENT TAPER, 44' LT.
BEGIN SHOULDER TAPER, 54' LT.

Abandonded Well (A)

STREAM 16A
OHWM = 586.6

LONG SPAN GUARDRAIL

℄ CONSTRUCTION S.R. 7

1 GR 54 U 55 U

IMPACT ATTENUATOR, TYPE 1
+48.82

2 D 4 GR BARRIER DESIGN

STA. 372+90.72
END SHOULDER TAPER, 54' LT.

MATCH LINE STA. 363+00

MATCH LINE STA. 375+00

10'
24'
4'
4'
24'
10'

CB-8 28H

CB-8 29 15" TYPE C

364 365 366 367 368 369 370 371 372 373 374

S 65° 44' 01" E

IMPACT ATTENUATOR TYPE 2 WITH
CONCRETE LEVELING PAD
+65.62

58 U

53 U

STREAM 16A1
OHWM = 659.7

A

PROP. LUMINAIRE, TYP.

15" TYPE F 1 D

2 GR

℄ RAMP 1

56 U

B

57 U

3 GR 9 EC

PROP. PULL BOX

LA-R/W

CONSTRUCTION LIMITS

Wooded Area

ROCK CHANNEL PROTECTION, 7 EC
TYPE C WITH FILTER
(110' X 12.5' X 1.5' / 27 = 76.39 CY)

STA. 369+51.65 S.R. 7, 56' RT. =
PC STA. 369+51.65 RAMP 1
BEGIN RAMP

℄ R

Stone Dr.

SEEDING AND EROSION CONTROL 8 EC
WITH TURF REINFORCING MAT, TYPE 1
(553' X 18' / 9 = 1106 SY)

9 EC SEEDING AND EROSION CONTROL
WITH TURF REINFORCING MAT, TYPE 1
(100' X 7.5' / 9 = 83.33 SY)

- PROPOSED PAVEMENT

FOR QUANTITIES, SEE SHEETS 71-81
FOR PROFILE, SEE SHEET 143
FOR STORM SEWER PROFILE, SEE SHEETS 368 & 643
FOR RAMP 1 PLAN AND PROFILE, SEE SHEET 431
FOR PAVEMENT DETAILS, SEE SHEET 611
FOR PAVEMENT CHANGE DETAILS, SEE SHEETS 619-621
FOR DETENTION BASIN DETAILS, SEE SHEETS 665-673
FOR UNDERDRAIN TABLES, SEE SHEETS 674-678
FOR TRAFFIC CONTROL PLANS, SEE SHEETS 713-731A
FOR FENCE TABLES, SEE SHEETS 1039-1041

DRAFT Stage 5 - Not for Construction 09/23/2024

N

HORIZONTAL SCALE IN FEET
0 25 50 100

CALCULATED SLP
CHECKED ALB

PLAN - S.R. 7
STA. 363+00 TO STA. 375+00

LAW-7-2.17

142
1247

U:\173608714\LAW\75923\roadway\sheets\75923GP022-2A.dgn 5/21/2024 4:50:59 PM SLParker

PROFILE - S.R. 7
STA. 363+00 TO STA. 375+00

CALCULATED SLP
CHECKED ALB

LAW-7-2.17

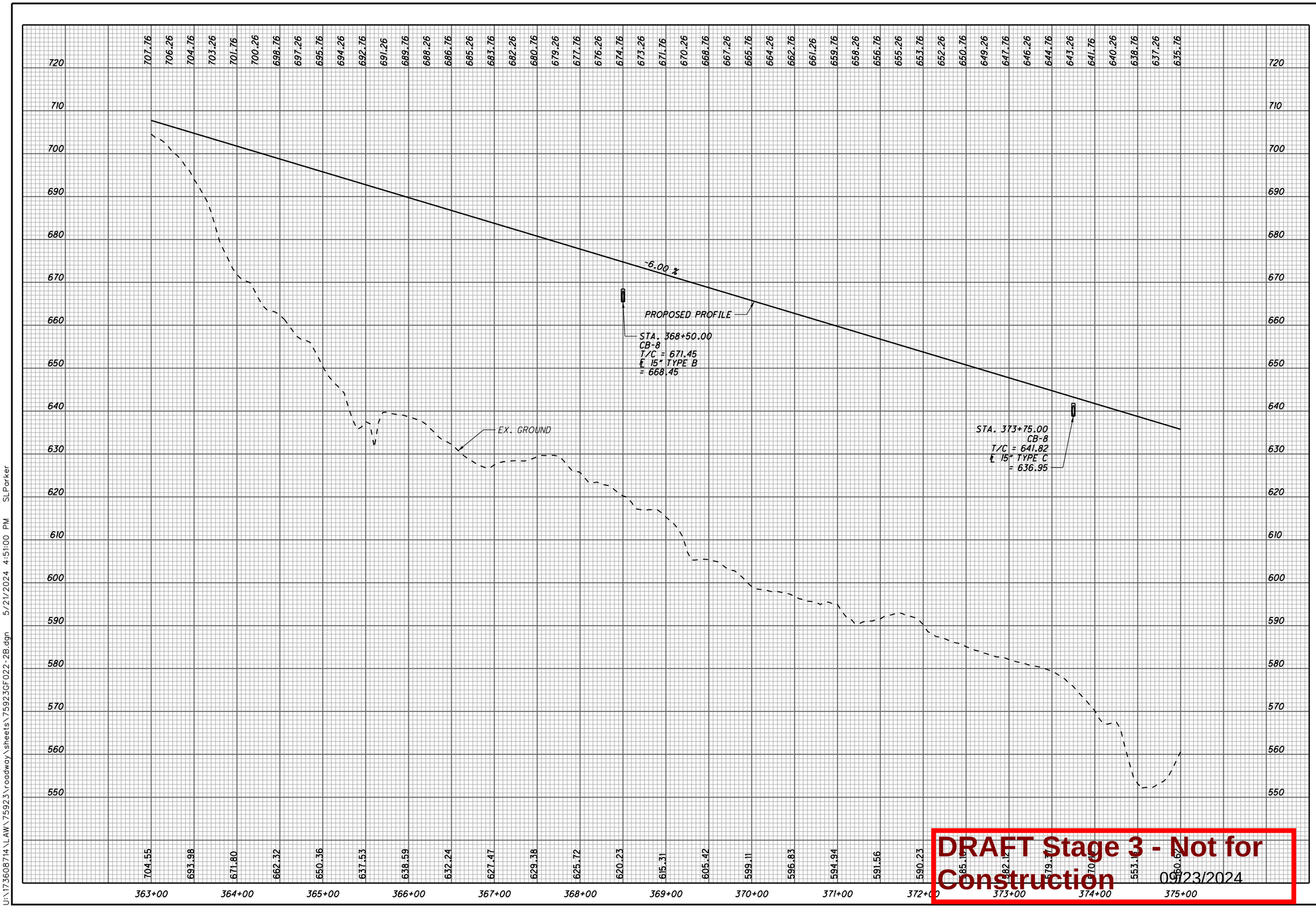

DRAFT Stage 3 - Not for Construction
09/23/2024

U:\173608714\LAW\75923\roadway\sheets\75923GF022-2B.dgn 5/21/2024 4:51:00 PM SLParker

CURVE DATA
S.R. 7
CURVE NO. 9

P.I. STA. 387+47.15
Δ = 46° 04' 34" (LT)
Dc = 2° 29' 28"
R = 2,300.00'
T = 805.51'
L = 1,549.62'
E = 136.98'
TS STA. 376+18.38
SC STA. 379+18.38

θs = 3° 44' 12"
Ls = 300.00'
Ts = 1,128.77'
LT = 200.04'
ST = 100.04'
e_{max} = 6.20%
CS STA. 394+68.00
ST STA. 397+68.00

HORIZONTAL SCALE IN FEET
0 25 50 100

CALCULATED SLP
CHECKED ALB

PLAN - S.R. 7
STA. 375+00 TO STA. 387+00

LAW-7-2.17

144
1247

U:\173608714\LAW\75923\roadway\sheets\75923GP023-2A.dgn 5/21/2024 4:51:04 PM SLParker

LITTLE PADDY CREEK
CONSTRUCTION LIMITS
WETLAND N
Wooded Area
Ex LA-R/W
LA-R/W
DETENTION BASIN #4
CB2-2B
15" TYPE C
SEEDING AND EROSION CONTROL WITH TURF REINFORCING MAT, TYPE 1 (123' x 7.5' / 9 = 102.5 SY)
1 EC
CB2-2B 15" TYPE B 30
BRIDGE NO. LAW-7-0713 L&R
PROP. LUMINAIRE, TYP.
55 U
55A U
1 GR
PROP. PULL BOX
MATCH LINE STA. 375+00
2 GR
S 65° 44' 01" E 376
TS
BTA, TYPE 2 +57.19
BTA, TYPE 1 +38.06
BTA, TYPE 1 +21.70
31 CB-5
58 U
3 GR
57 U
3 EC
8 GR
STREAM 16
℄ RAMP I
Wooded Area
W 6"
LA-R/W
CONSTRUCTION LIMITS
LITTLE PADDY CREEK
SCL
PT
6" CURB
S 52° 05' 53" E 379
WETLAND N
Rock Channel
55
℄ RAMP I
Brush
SIGNAL STRAIN POLE WITH LUMINAIRE (TYP.)
STA. 381+38.36 S.R. 7 = STA. 56+77.91 S.R. 775
BTA, TYPE 1 +39.68
BTA, TYPE 1 +17.76
32 CB-8
6 GR
BTA, TYPE 2 +08.36
BTA, TYPE 2 +93.59
15" TYPE B
OHWM = 542.2
BTA, TYPE 2 +04.40
7 GR
℄ CONSTRUCTION S.R. 775
SIGNAL STRAIN POLE (TYP.)
Brush
STREAM 17 OHWM = 568.3
24" TYPE A
WATERLINE ABANDONDED
℄ RAMP J
TYPE E PCN +58.55
59A U
Rock Channel
STREAM 17
4 GR
59 U
5 EC
A
℄ CONSTRUCTION S.R. 7
CURVE NO. 9
TYPE T +82.30
TYPE T +52.22
33 CB-5A
5 GR
34 CB-5A
4 EC DITCH EROSION PROTECTION (VBF) (421' x 11' / 9 = 514.56 SY)
BRIDGE NO. LAW-775-0105
1 R
Ex. S.R. 7
Brush
℄ RAMP L
NOISE WALL
Wooded Area
Gravel
Asphalt
Ex. S.R. 775
Brush
2 R
61 U
MATCH LINE STA. 387+00
IMPACT ATTENUATOR, TYPE I +21.79
BARRIER DESIGN
60 U
2 EC
6 EC
1 D
CONSTRUCTION LIMITS
Ex LA-R/W
WALNUT ST.
Pool
1 Sty Brick #6 Res.
Conc
Shed
Pl Comb

A - STA. 383+90.72 S.R. 7, 69' LT.
END PAVEMENT TAPER =
ST STA. 383+90.72 RAMP J
BEGIN RAMP
RAMP NOSE

2 EC DITCH EROSION PROTECTION MAT, TYPE B (681'x 7.5' / 9 = 567.5 SY)

3 EC SEEDING AND EROSION CONTROL WITH TURF REINFORCING MAT, TYPE I (101' x 7.5' / 9 = 84.17 SY)

5 EC ROCK CHANNEL PROTECTION, TYPE C WITH FILTER (107' x 7.5' x 1.5' / 27 = 44.58 CY)

6 EC DITCH EROSION PROTECTION (VBF) (300' x 11' / 9 = 366.67 SY)

- PROPOSED PAVEMENT

(VBF) DENOTES LOCATION OF VEGETATED BIOFILTER

FOR QUANTITIES, SEE SHEETS 71-81
FOR PROFILE, SEE SHEET 145
FOR RAMP I PLAN AND PROFILE, SEE SHEET 431
FOR RAMP J PLAN AND PROFILE, SEE SHEET 457
FOR RAMP L PLAN AND PROFILE, SEE SHEET 457
FOR S.R. 775 PLAN AND PROFILE, SEE SHEETS 559-560
FOR INTERCHANGE DETAILS, SEE SHEETS 603-626
FOR INTERSECTION DETAILS, SEE SHEETS 627-628

FOR STORM SEWER PROFILES, SEE SHEETS 643 & 645
FOR CULVERT DETAILS, SEE SHEET 664
FOR DETENTION BASIN DETAILS, SEE SHEETS 665-673
FOR EROSION TABLES, SEE SHEETS 674-678
FOR TRAFFIC CONTROL PLAN, SEE SHEETS 713-733A
FOR STRUCTURE DETAILS, SEE SHEETS 931-1038
FOR DETOUR TABLES, SEE SHEETS 1039-1044

DRAFT Stage 2 - Not for Construction

PROFILE - S.R. 7
STA. 375+00 TO STA. 387+00

CALCULATED SLP
CHECKED ALB

LAW-7-2.17

DRAFT Stage 3 - Not for Construction
09/23/2024

STA. 376+22.79
CB2-2B
T/C = 626.75
℄ 15" TYPE B
= 622.02

℄ CONSTRUCTION S.R. 775

PROPOSED PROFILE

68'-1/2"

73'-5"

P.V.C. STA. 379+91.15
ELEV. 606.29

EX. GROUND

6" EX. WATER

-6.00 %

+1.67 %

4" EX. GAS
4" EX. SAN FM
4" EX. WATER

STA. 387+00
CB-8A
T/C = 579.81
℄ 42" TYPE B = 571.97

1,000.00' VC
P.V.I. STA. 384+91.15
ELEV. = 576.29'

635.76 634.26 632.76 631.26 629.76 628.26 626.76 625.26 623.76 622.26 620.76 619.26 617.76 616.26 614.76 613.26 611.76 610.26 608.76 607.26 605.76 604.30 602.89 601.53 600.21 598.95 597.73 596.56 595.43 594.36 593.33 592.35 591.42 590.53 589.70 588.91 588.17 587.48 586.84 586.24 585.69 585.19 584.74 584.33 583.98 583.67 583.41 583.20 583.03

680 670 660 650 640 630 620 610 600 590 580 570 560 550 540 530 520

560.62 568.31 567.48 573.18 573.79 551.68 543.30 541.61 544.81 544.35 545.89 542.57 544.47 552.19 558.97 564.65 569.67 581.03 586.84 586.7 585.3 584.9 584.6 583.8 582.9

375+00 376+00 377+00 378+00 379+00 380+00 381+00 382+00 383+00 384+00 385+00 386+00 387+00

U:\173608714\LAW\75923\roadway\sheets\75923GF023-2B.dgn 5/21/2024 4:51:05 PM SLParker

CURVE DATA
S.R. 7
CURVE NO. 9

P.I. STA. 387+47.15
Δ = 46° 04' 34" (LT)
Dc = 2° 29' 28"
R = 2,300.00'
T = 805.51'
L = 1,549.62'
E = 136.98'
TS STA. 376+18.38
SC STA. 379+18.38

θs = 3° 44' 12"
Ls = 300.00'
Ts = 1,128.77'
LT = 200.04'
ST = 100.04'
e_{max} = 6.20%
CS STA. 394+68.00
ST STA. 397+68.00

CURVE DATA
S.R. 7 WESTBOUND LANES
℄ CURVE NO. 1

P.I. STA. 399+82.71
Δ = 4° 17' 32" (LT)
Dc = 1° 00' 00"
R = 5,729.58'
T = 214.71'
L = 429.22'
E = 4.02'
e_{max} = 2.90%
PC STA. = 397+68.00
PT STA. = 401+97.22

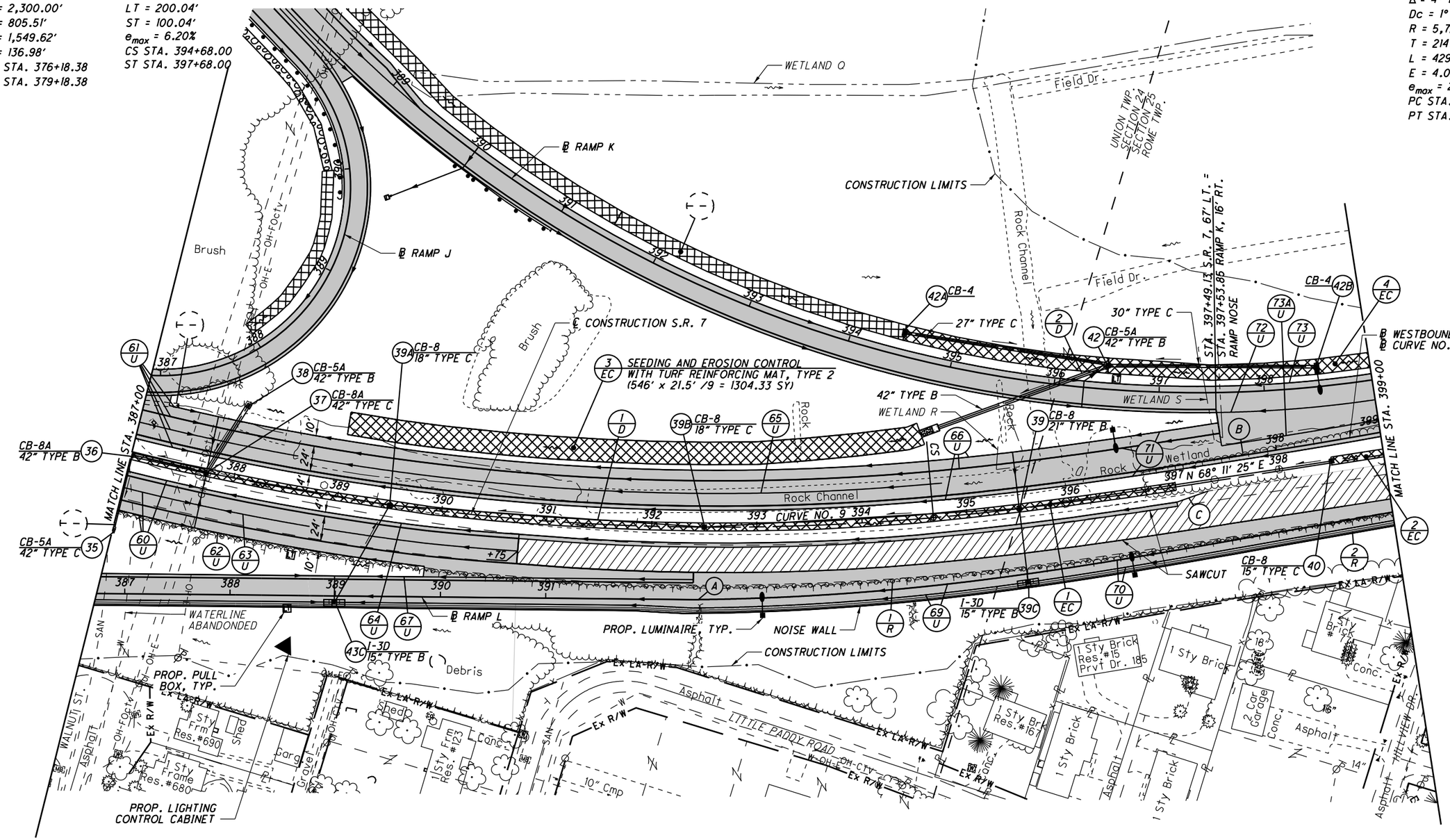

(A) - STA. 392+40.09 S.R. 7
BEGIN PAVEMENT TAPER, 69' RT. =
STA. 392+40.09 RAMP L
RAMP NOSE
END RAMP

(B) - P.C. STA. 397+68.00
BEGIN ℄ WESTBOUND LANES =
S.T. STA. 397+68.00, S.R. 7, 20' LT.

(C) - 5:1 SAWCUT TAPER TO MEET EXISTING SHOULDER WIDTH.

1 EC DITCH EROSION PROTECTION MAT, TYPE B (1000' x 7.5' / 9 = 833.33 SY)

2 EC DITCH EROSION PROTECTION MAT, TYPE B (50' x 7.5' / 9 = 41.67 SY)

4 EC SEEDING AND EROSION CONTROL WITH TURF REINFORCING MAT, TYPE 2 (50' x 14.5' /9 = 80.56 SY)

- PROPOSED PAVEMENT
- 3-1/4" MILL/FILL

NOTE: ℄ WESTBOUND LANES SHOWN FOR HORIZONTAL ALIGNMENT ONLY

FOR QUANTITIES, SEE SHEETS 71-81
FOR PROFILE, SEE SHEET 147
FOR RAMP J PLAN & PROFILE, SEE SHEETS 437
FOR RAMP K PLAN & PROFILE, SEE SHEETS 442-444
FOR RAMP L PLAN & PROFILE, SEE SHEET 457
FOR PAVEMENT DETAILS, SEE SHEETS 613-614
FOR DISCHARGE DETAILS, SEE SHEETS 619-621
FOR STORM SEWER PROFILE, SEE SHEETS 645-64
FOR UNDERDRAIN TABLES, SEE SHEETS 674-678
FOR TRAFFIC CONTROL PLAN, SEE SHEETS 713-733A
FOR FENCE TABLES, SEE SHEETS 1039-1041

DRAFT Stage 2 - Not for Construction
09/23/2024

HORIZONTAL SCALE IN FEET
0 25 50 100

CALCULATED SLP
CHECKED ALB

PLAN - S.R. 7
STA. 387+00 STA. 399+00

LAW-7-2.17

146
1247

U:\17360871\4\LAW\75923\roadway\sheets\75923GP024-2A.dgn 5/21/2024 4:51:07 PM SLParker

PROFILE - S.R. 7
STA. 387+00 TO STA. 399+00

CALCULATED SLP
CHECKED ALB

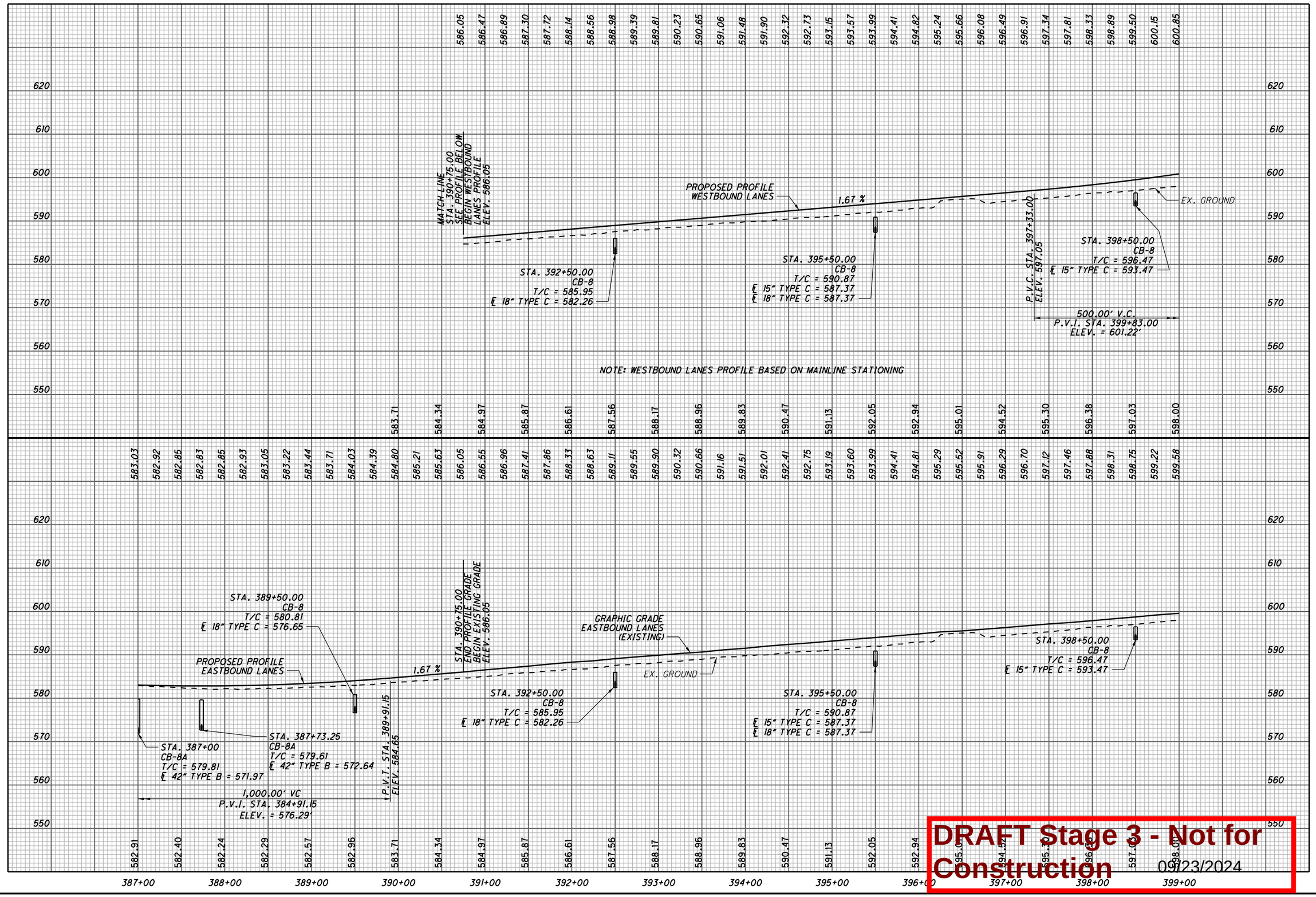

DRAFT Stage 3 - Not for Construction

09/23/2024

LAW-7-2.17

147
1247

U:\173608714\LAW\75923\roadway\sheets\75923GF024-2B.dgn 5/21/2024 4:51:08 PM SLParker

CURVE DATA
S.R. 7
CURVE NO. 10

P.I. STA. 403+74.19
Δ = 1° 29' 03" (RT)
Dc = 0° 16' 56"
R = 20,306.35'
T = 263.02'
L = 526.00'
E = 1.70'
e_{max} = NC
PC STA. 401+11.17
PT STA. 406+37.18

CURVE DATA
S.R. 7
CURVE NO. 11

P.I. STA. 416+63.54
Δ = 18° 47' 30" (LT)
Dc = 1° 38' 13"
R = 3,500.00'
T = 451.44'
L = 897.92'
E = 28.99'
TS STA. = 409+59.26
SC STA. = 412+09.26

θs = 2° 02' 47"
Ls = 250.00'
Ts = 704.28'
LT = 166.68'
ST = 83.34'
e_{max} = 4.47%
CS STA. 421+07.18
ST STA. 423+57.18

CURVE DATA
S.R. 7 WESTBOUND LANES
℄ CURVE NO. 1

P.I. STA. 399+82.71
Δ = 4° 17' 32" (LT)
Dc = 1° 00' 00"
R = 5,729.58'
T = 214.71'
L = 429.22'
E = 4.02'
e_{max} = 2.90%
PC STA. = 397+68.00
PT STA. = 401+97.22

CURVE DATA
S.R. 7 WESTBOUND LANES
℄ CURVE NO. 2

P.I. STA. 405+66.18
Δ = 4° 27' 49" (RT)
Dc = 0° 50' 00"
R = 6,875.49'
T = 267.96'
L = 535.64'
E = 5.22'
e_{max} = 2.48%
PC STA. = 402+98.22
PT STA. = 408+33.87

(A) - STA. 403+90.09
BEGIN SHOULDER TAPER, 52.91' RT.

(B) - STA. 404+90.09
END SHOULDER TAPER, 52.82' RT.
END PAVEMENT TAPER, 42.82' RT.

(C) - STA. 406+89.52, S.R. 7
BEGIN PAVEMENT TAPER, 106.08' LT.
BEGIN SHOULDER TAPER, 114.08' LT.

(D) - STA. 407+90.33, S.R. 7
END PAVEMENT TAPER, 97.70' LT.
END SHOULDER TAPER, 107.70' LT.

(2/GR) - INCLUDES 37.5' OF 31' RADIUS SHOP CURVED GUARDRAIL

(2/EC) SEEDING AND EROSION CONTROL WITH TURF REINFORCING MAT, TYPE 2 (800' x 14.5' /9 = 1288.89 SY)

(1/EC) DITCH EROSION PROTECTION MAT, TYPE B (300' x 7.5' / 9 = 250 SY)

- PROPOSED PAVEMENT
- 3-1/4" MILL/FILL

NOTE: ℄ WESTBOUND LANES GIVEN FOR HORIZONTAL ALIGNMENT ONLY.

FOR QUANTITIES, SEE SHEETS 71-81
FOR PROFILE, SEE SHEET 149
FOR RAMP K PLAN & PROFILE, SEE SHEET 443-444
FOR RAMP L PLAN & PROFILE, SEE SHEET 457
FOR PAVEMENT DETAILS, SEE SHEETS 613-614
FOR INTERCHANGE DETAILS, SEE SHEETS 619-62
FOR UNDERDRAIN TABLES, SEE SHEETS 674-678
FOR TRAFFIC CONTROL PLAN, SEE SHEETS 713-733A
FOR FENCE TABLES, SEE SHEETS 1039-1041

DRAFT Stage 3 - Not for Construction 09/23/2024

HORIZONTAL SCALE IN FEET
0 25 50 100

CALCULATED SLP
CHECKED ALB

PLAN - S.R. 7
STA. 399+00 TO STA. 411+00

LAW-7-2.17

148
1247

U:\173608714\LAW\75923\roadway\sheets\75923GP025-2A.dgn 5/21/2024 4:51:10 PM SLParker

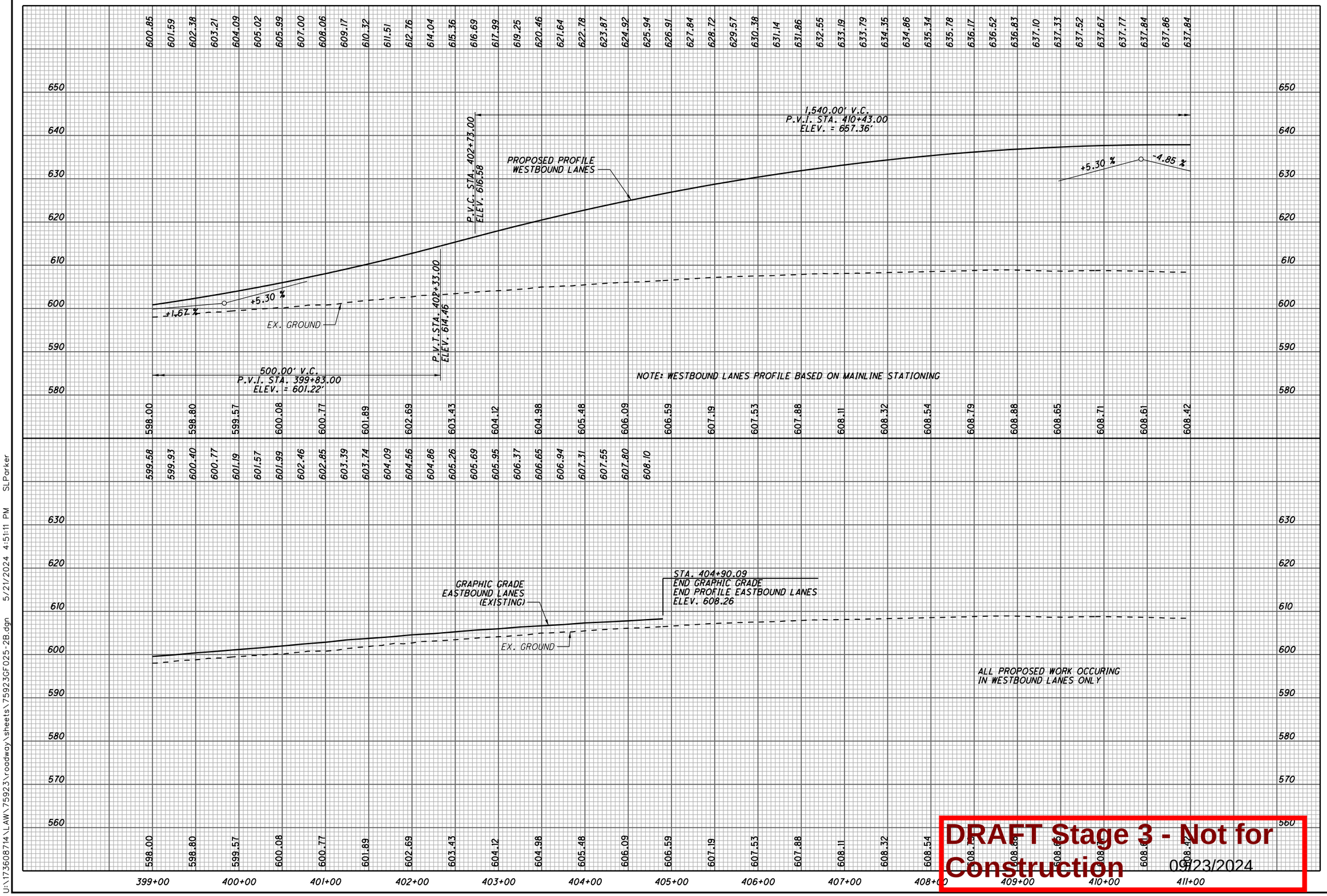

DRAFT Stage 3 - Not for Construction

09/23/2024

CALCULATED SLP
CHECKED ALB

PROFILE - S.R. 7
STA. 399+00 TO 411+00

LAW-7-2.17

149
1247

U:\173608714\LAW\75923\roadway\sheets\75923GF025-2B.dgn 5/21/2024 4:51:11 PM SLParker

CURVE DATA
S.R. 7
CURVE NO. 11

P.I. STA. 416+63.54
Δ = 18° 47' 30" (LT)
Dc = 1° 38' 13"
R = 3,500.00'
T = 451.44'
L = 897.92'
E = 28.99'
TS STA. = 409+59.26
SC STA. = 412+09.26

θs = 2° 02' 47"
Ls = 250.00'
Ts = 704.28'
LT = 166.68'
ST = 83.34'
e_{max} = 4.47%
CS STA. 421+07.18
ST STA. 423+57.18

CURVE DATA
S.R. 7 WESTBOUND LANES
℄ CURVE NO. 3

P.I. STA. 418+95.85
Δ = 17° 28' 44" (LT)
Dc = 1° 30' 00"
R = 3,820.00'
T = 587.24'
L = 1,165.35'
E = 44.87'
e_{max} = 4.10%
PC STA. = 413+08.61
PT STA. = 424+73.96

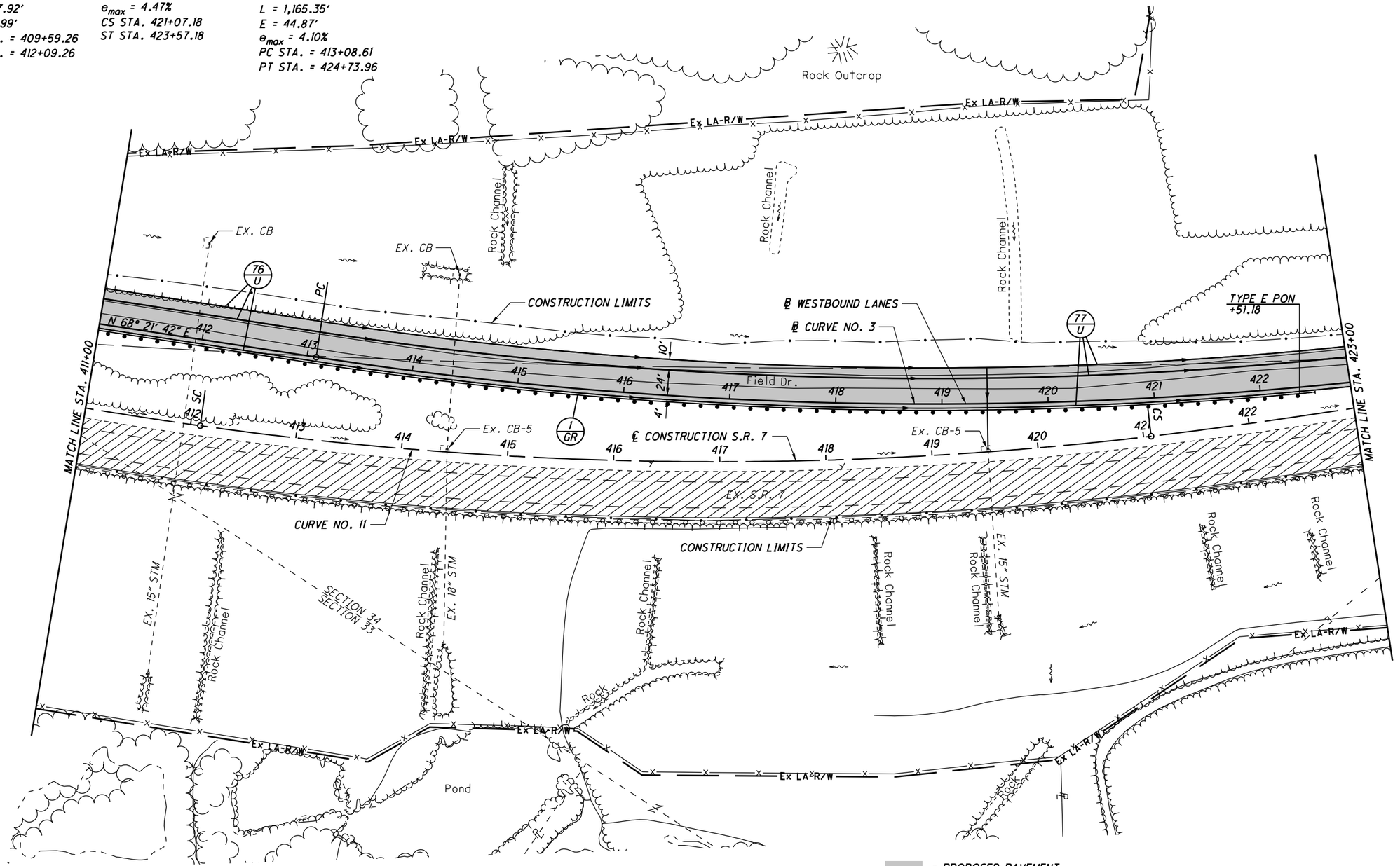

- PROPOSED PAVEMENT
- 3-1/4" MILL/FILL

NOTE: ℄ WESTBOUND LANES GIVEN FOR HORIZONTAL ALIGNMENT ONLY.

DRAFT Stage 3 - Not for Construction 09/23/2024

- FOR CONTINUES, SEE SHEET 151
- FOR PROFILE, SEE SHEET 151
- FOR UNDERDRAIN TABLES, SEE SHEETS 674-678
- FOR TRAFFIC CONTROL PLAN, SEE SHEETS 713-733A
- FOR FENCE TABLES, SEE SHEETS 1039-1041

HORIZONTAL SCALE IN FEET
0 25 50 100

CALCULATED SLP
CHECKED ALB

PLAN - S.R. 7
STA. 411+00 TO STA. 423+00

LAW-7-2.17

150
1247

U:\1736087\14\LAW\75923\roadway\sheets\75923GP026-2A.dgn 5/21/2024 4:51:13 PM SLParker

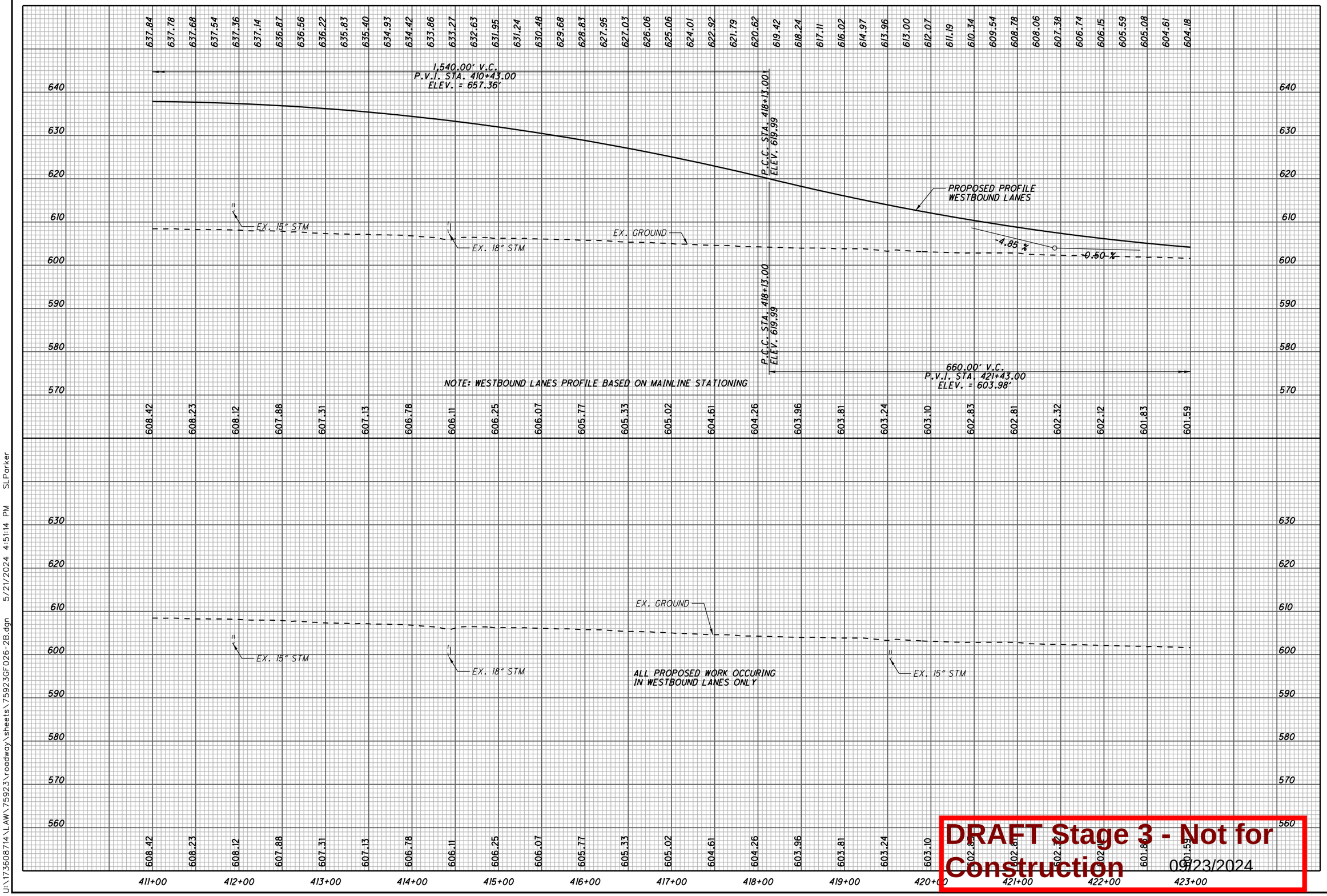

DRAFT Stage 3 - Not for Construction

09/23/2024

CALCULATED SLP
CHECKED ALB

PROFILE - S.R. 7
STA. 411+00 TO STA. 423+00

LAW-7-2.17

151
1247

U:\173608714\LAW\75923\roadway\sheets\75923GF026-2B.dgn 5/21/2024 4:51:14 PM SLParker

CURVE DATA
S.R. 7
CURVE NO. 11

P.I. STA. 416+63.54
Δ = 18° 47′ 30″ (LT)
Dc = 1° 38′ 13″
R = 3,500.00′
T = 451.44′
L = 897.92′
E = 28.99′
TS STA. = 409+59.26
SC STA. = 412+09.26

θs = 2° 02′ 47″
Ls = 250.00′
Ts = 704.28′
LT = 166.68′
ST = 83.34′
e_{max} = 4.47%
CS STA. 421+07.18
ST STA. 423+57.18

CURVE DATA
S.R. 7
CURVE NO. 12

P.I. STA. 428+11.24
Δ = 3° 17′ 53″ (RT)
Dc = 1° 19′ 10″
R = 4,342.09′
T = 125.00′
L = 249.93′
E = 1.80′
e_{max} = 3.77%
PC STA. = 426+86.24
PT STA. = 429+36.17

CURVE DATA
S.R. 7
WESTBOUND LANES
℄ CURVE NO. 3

P.I. STA. 418+95.85
Δ = 17° 28′ 44″ (LT)
Dc = 1° 30′ 00″
R = 3,820.00′
T = 587.24′
L = 1,165.35′
E = 44.87′
e_{max} = 4.10%
PC STA. 413+08.61
PT STA. 424+73.96

CURVE DATA
S.R. 7 LANE TRANSITION
TRANSITION CURVE NO. 1
(FOR HORIZONTAL LAYOUT ONLY)

P.I. STA. 429+32.01, S.R. 7, 51.04′ LT.
Δ = 9° 41′ 31″ (RT)
Dc = 2° 00′ 00″
R = 2,864.79′
T = 242.88′
L = 484.59′
E = 10.28′
e_{max} = 5.10%
PC STA. 426+91.84, S.R. 7, 44′ LT.
PT STA. 431+73.33, S.R. 7, 23.99′ LT.

CURVE DATA
S.R. 7 LANE TRANSITION
TRANSITION CURVE NO. 2
(FOR HORIZONTAL LAYOUT ONLY)

P.I. STA. 435+58.87, S.R. 7, 19.22′ RT.
Δ = 6° 18′ 42″ (LT)
Dc = 2° 00′ 00″
R = 2,864.79′
T = 157.95′
L = 315.59′
E = 4.35′
e_{max} = NC
PC STA. 434+01.90, S.R. 7, 1.63′ RT.
PT STA. 437+16.83, S.R. 7, 19.44′ RT.

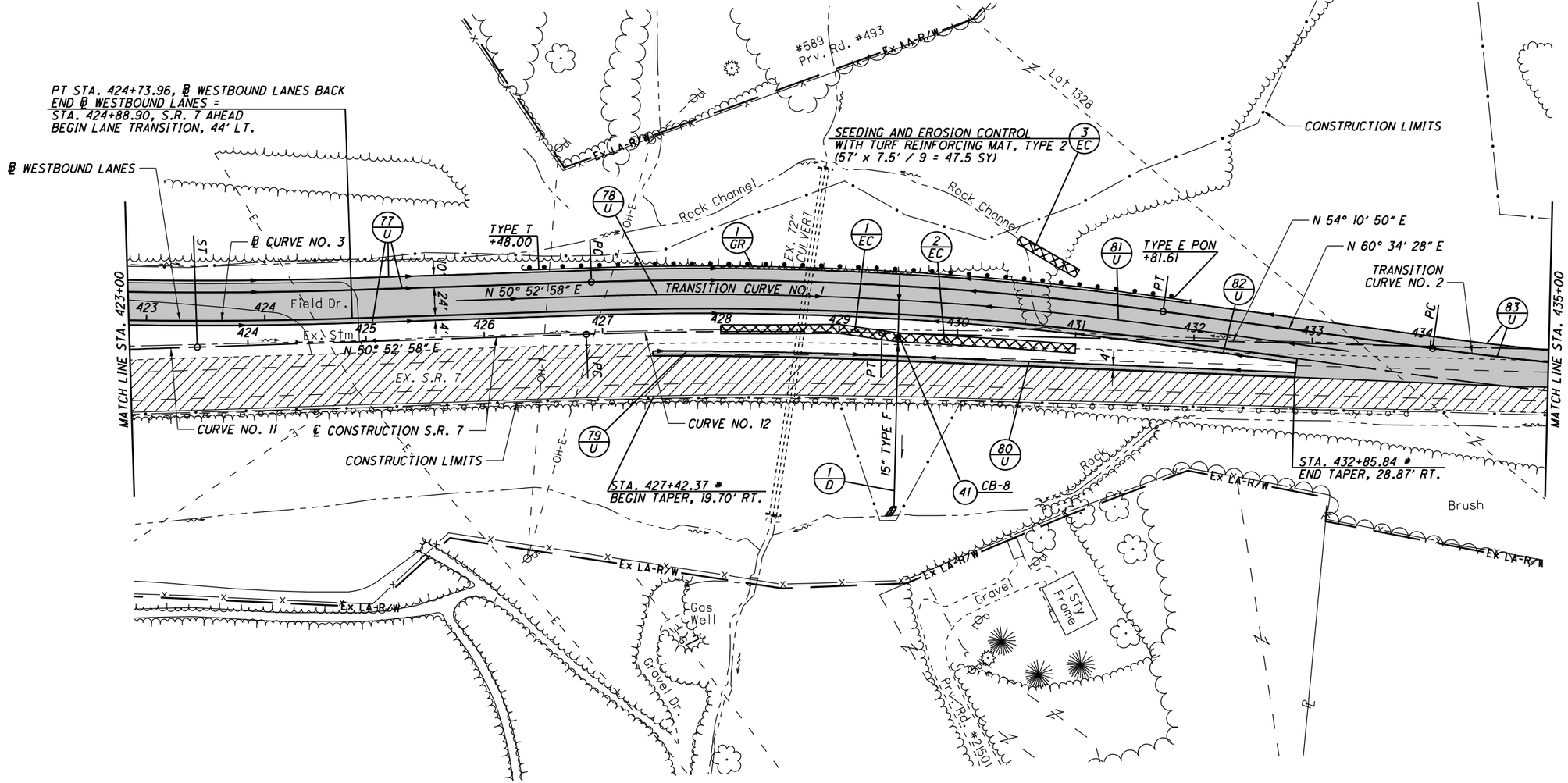

1 EC SEEDING AND EROSION CONTROL
WITH TURF REINFORCING MAT, TYPE 1
(150′ x 7.5′ / 9 = 125 SY)

2 EC DITCH EROSION PROTECTION
MAT, TYPE B
(150′ x 7.5′ / 9 = 125 SY)

* - SEE TRAFFIC CONTROL PLAN SHEETS 713-773A FOR FULL TAPER LENGTH.

- PROPOSED PAVEMENT
- 3-1/4" MILL/FILL

NOTE: ℄ WESTBOUND LANES GIVEN FOR HORIZONTAL ALIGNMENT ONLY.

FOR QUANTITIES, SEE SHEETS 71-81
FOR PROFILE, SEE SHEET 153
FOR STORM SEWER PROFILES, SEE SHEET 412
FOR PAVEMENT DETAILS, SEE SHEET 615
FOR UNDERDRAIN TABLES, SEE SHEETS 674-678
FOR TRAFFIC CONTROL PLAN, SEE SHEETS 713-733A
FOR FENCE TABLES, SEE SHEETS 1039-1041

DRAFT Stage 3 - Not for Construction
09/23/2024

HORIZONTAL SCALE IN FEET
0 25 50 100

CALCULATED SLP
CHECKED ALB

PLAN - S.R. 7
STA. 423+00 TO STA. 435+00

LAW-7-2.17

152
1247

U:\173608714\LAW\75923\roadway\sheets\75923GP027-2A.dgn 5/21/2024 4:51:16 PM SLParker

STA. 424+73.96 ℄ WESTBOUND LANES BACK =
STA. 424+88.90 S.R. 7 AHEAD
END PROFILE
ELEV. 602.24

PROPOSED PROFILE
WESTBOUND LANES

EX. GROUND

P.V.T. STA. 424+73.00
ELEV. 602.32

660.00' V.C.
P.V.I. STA. 421+43.00
ELEV. = 603.98'

NOTE: WESTBOUND LANES PROFILE BASED ON MAINLINE STATIONING

STA. 424+88.90
END PROFILE GRADE
BEGIN GRAPHIC GRADE
ELEV. 602.24

GRAPHIC GRADE
EASTBOUND LANES
(EXISTING)

EX. GROUND

STA. 429+50
CB-8
T/C = 596.59
℄ 15" TYPE B = 593.59

DRAFT Stage 3 - Not for Construction
09/23/2024

CALCULATED SLP
CHECKED ALB

PROFILE - S.R. 7
STA. 423+00 TO 435+00

LAW-7-2.17

153
1247

U:\1736O8714\LAW\75923\roadway\sheets\75923GF027-2B.dgn 5/21/2024 4:51:16 PM SLPorker

- PROPOSED PAVEMENT
- 3-1/4" MILL/FILL

FOR QUANTITIES, SEE SHEETS 47 OF
FOR PROFILE, SEE SHEETS 105
FOR PAVEMENT DETAILS, SEE SHEET 1001
FOR UNDERDRAIN TABLES, SEE SHEETS 674-678
FOR TRAFFIC CONTROL PLAN, SEE SHEETS 713-731A
FOR SIGNAGE TABLES, SEE SHEETS 1039-1041

DRAFT Stage 3: Not for Construction

05/15/2024

PLAN
STA. 435+00 TO STA. 437+16.83

LAW-7-2.17

154
1247

CALCULATED SLP
CHECKED ALB

0 25 50 100
HORIZONTAL SCALE IN FEET

U:\173608714\LAW\75923\roadway\sheets\75923GP028-2A.dgn 5/21/2024 4:51:18 PM SLParker

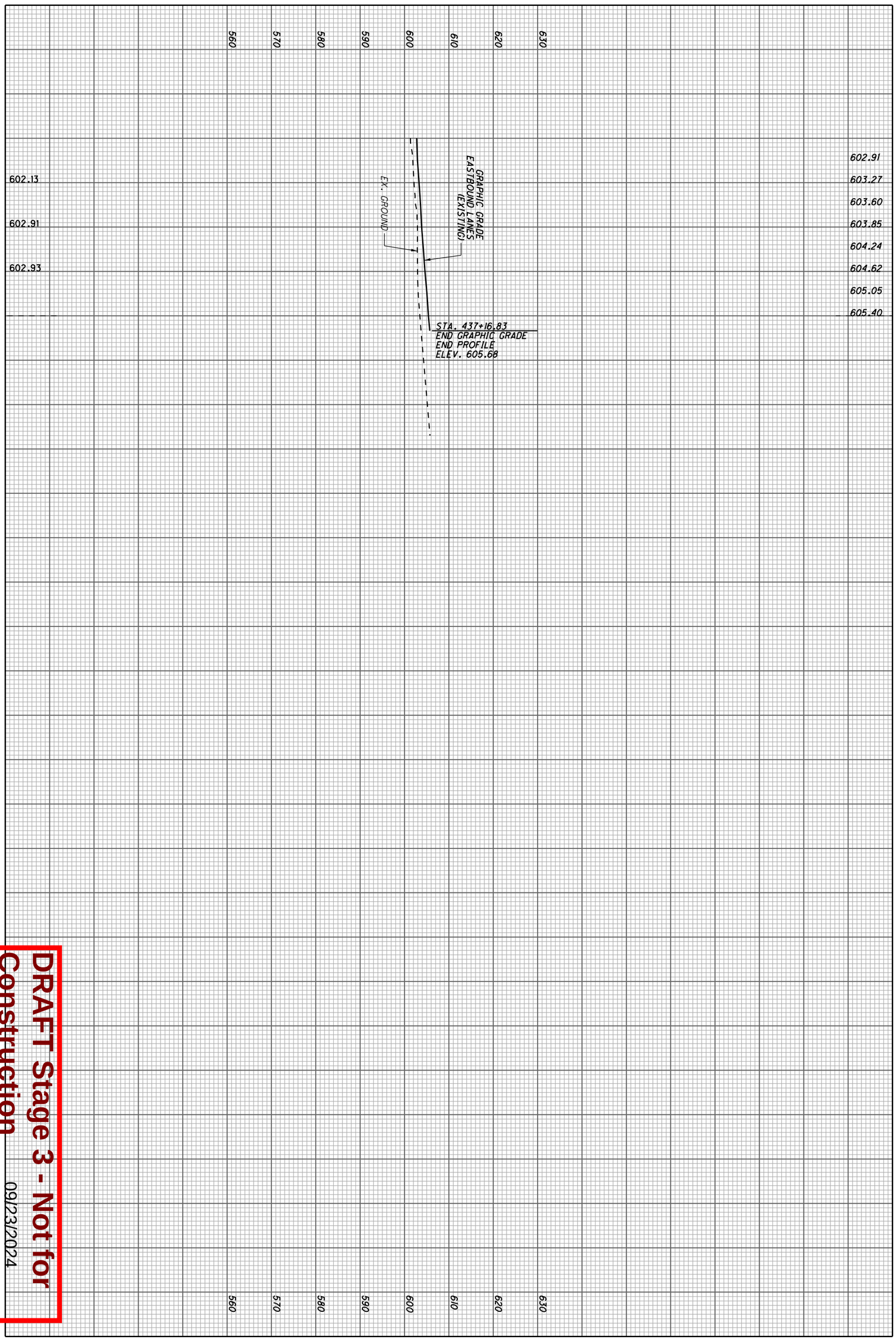

DRAFT Stage 3 - Not for Construction
09/23/2024

155 / 1247	LAW-7-2.17	PROFILE - S.R. 7 STA. 435+00 TO 437+16.83	CALCULATED SLP CHECKED ALB

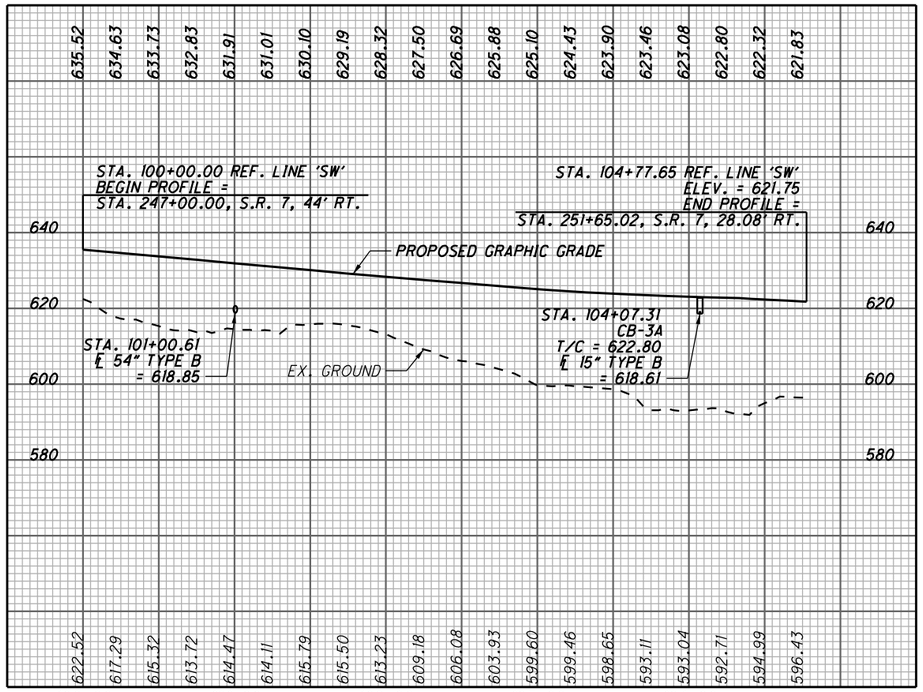

PROFILE REFERENCE LINE "RLSW"

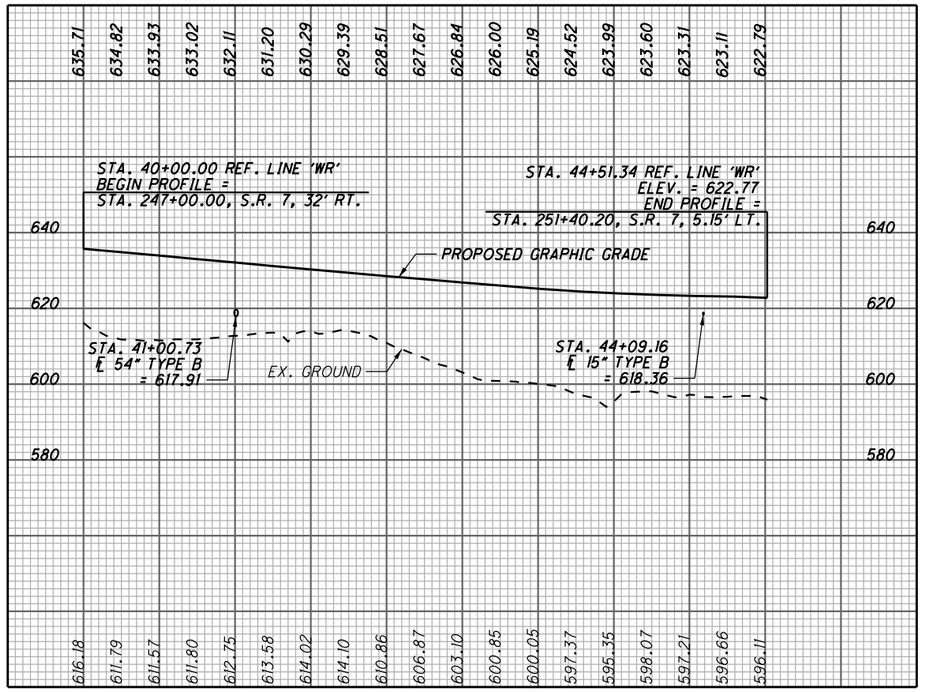

PROFILE REFERENCE LINE "RLWR"

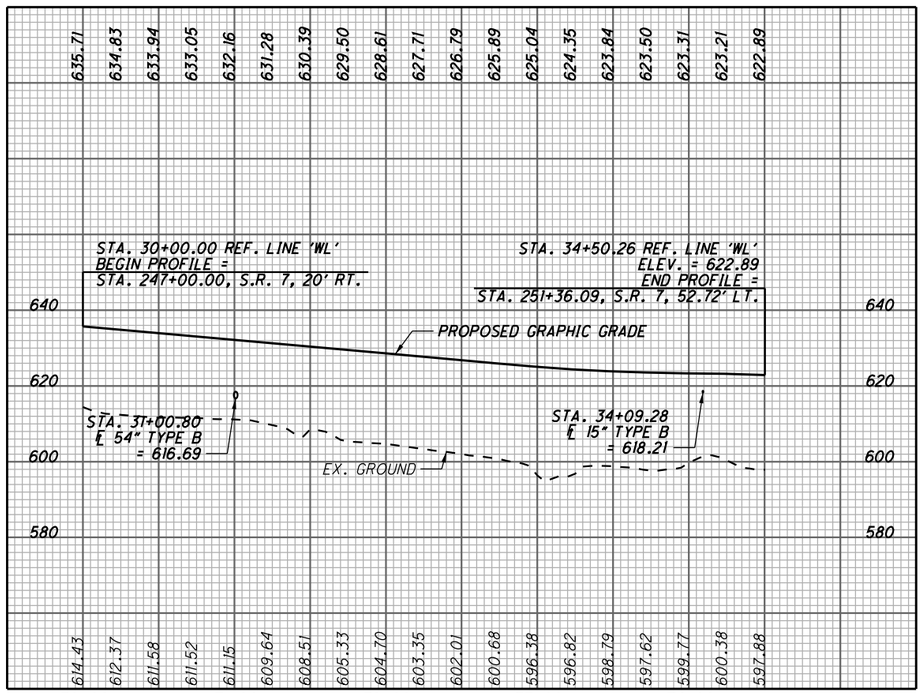

PROFILE REFERENCE LINE "RLWL"

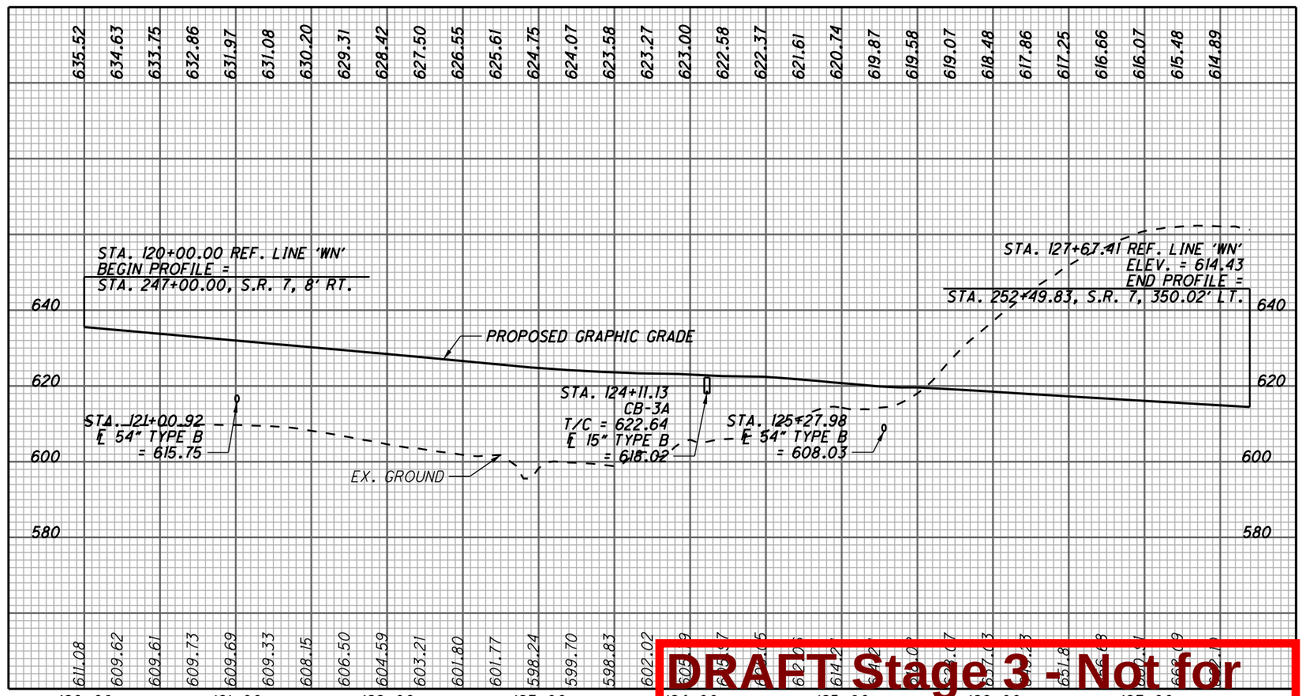

PROFILE REFERENCE LINE "RLWN"

DRAFT Stage 3 - Not for Construction
09/23/2024

CALCULATED SLP
CHECKED ALB

REFERENCE PROFILES

LAW-7-2.17

U:\173608714\LAW\75923\roadway\sheets\75923GF040.dgn 5/21/2024 4:51:20 PM SLParker

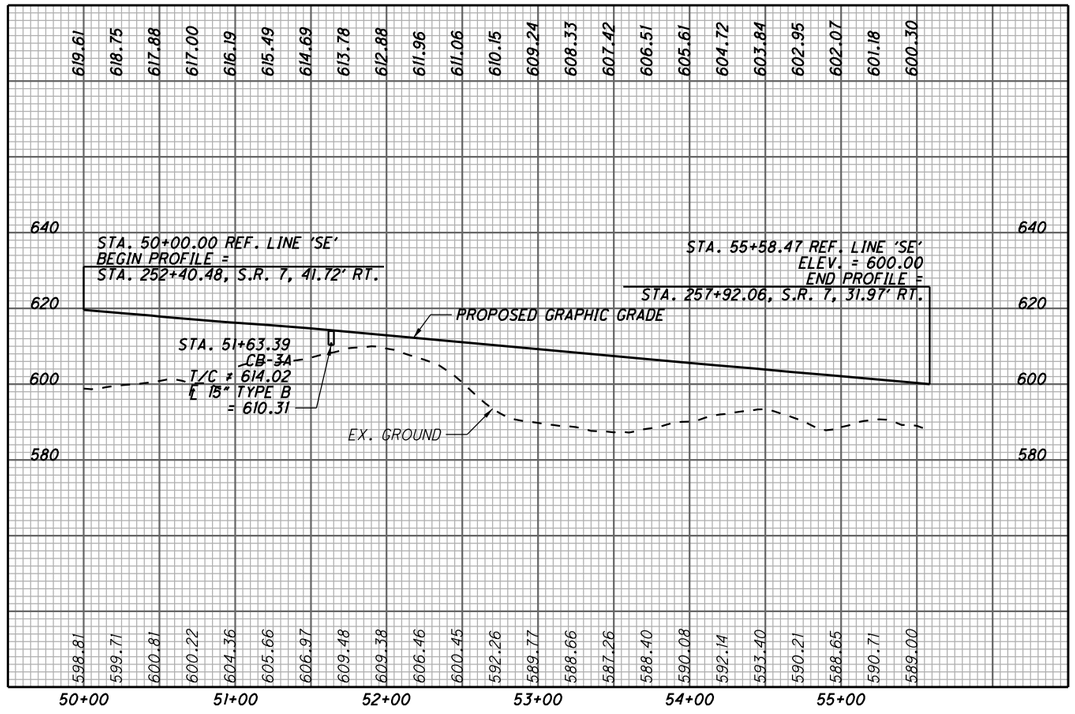

PROFILE REFERENCE LINE "RLSE"

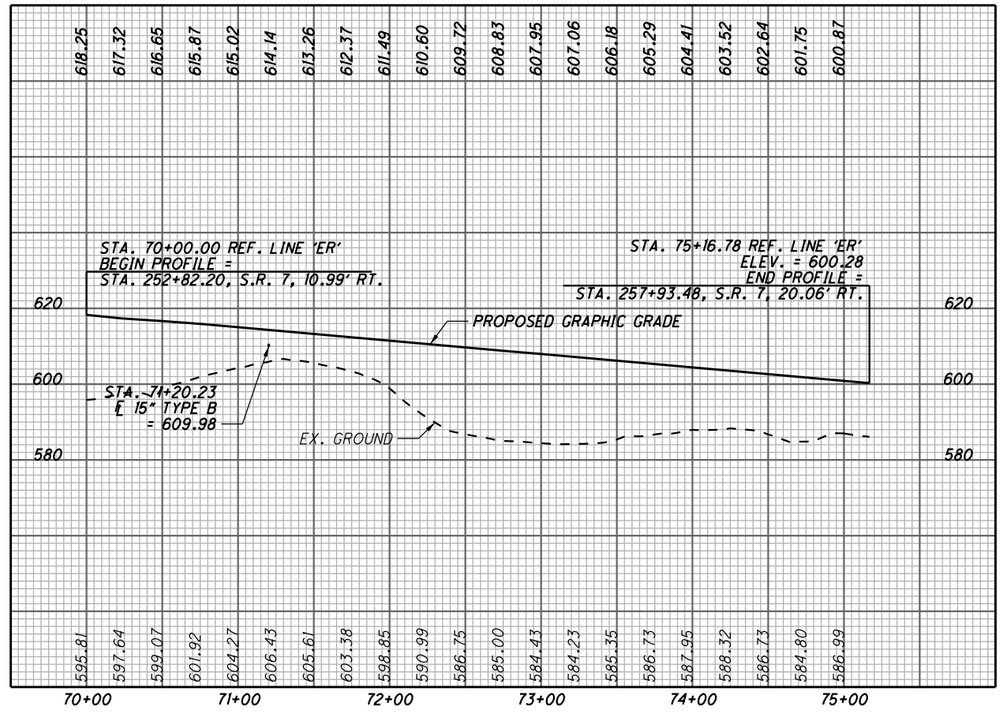

PROFILE REFERENCE LINE "RLER"

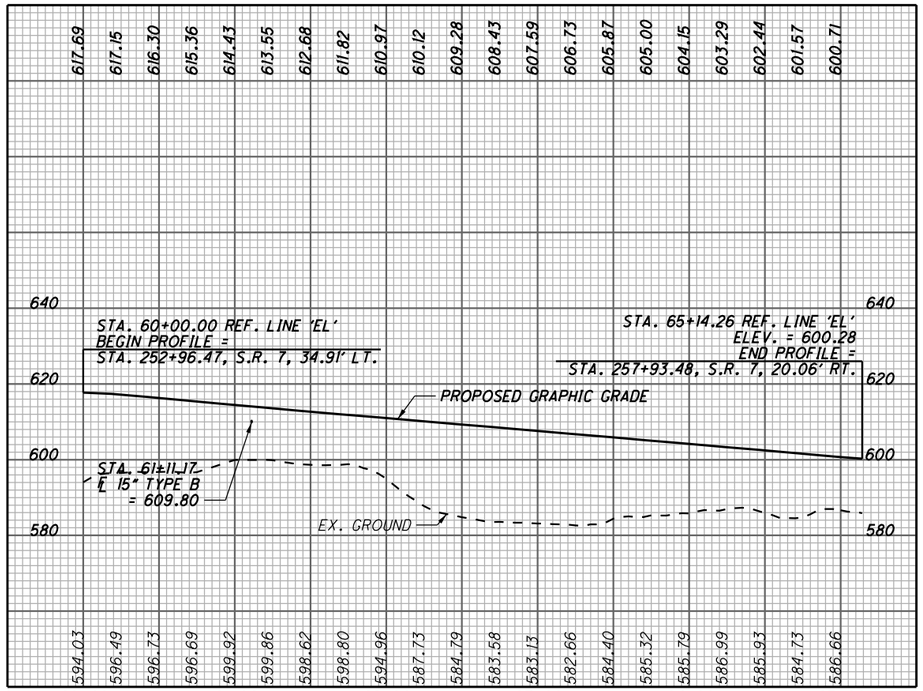

PROFILE REFERENCE LINE "RLEL"

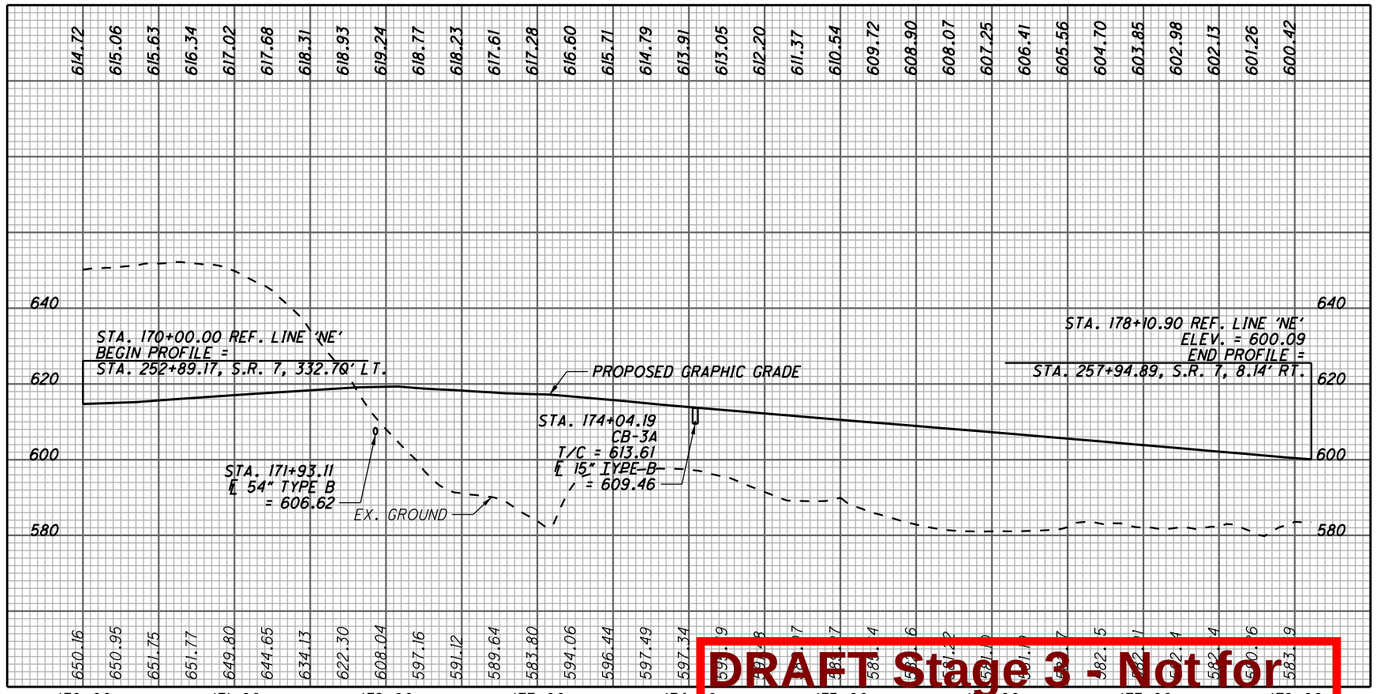

PROFILE REFERENCE LINE "RLNE"

DRAFT Stage 3 - Not for Construction
09/23/2024

CALCULATED SLP
CHECKED ALB

REFERENCE PROFILES

LAW-7-2.17

U:\173608714\LAW\75923\roadway\sheets\75923GF041.dgn 5/21/2024 4:51:20 PM SLParker

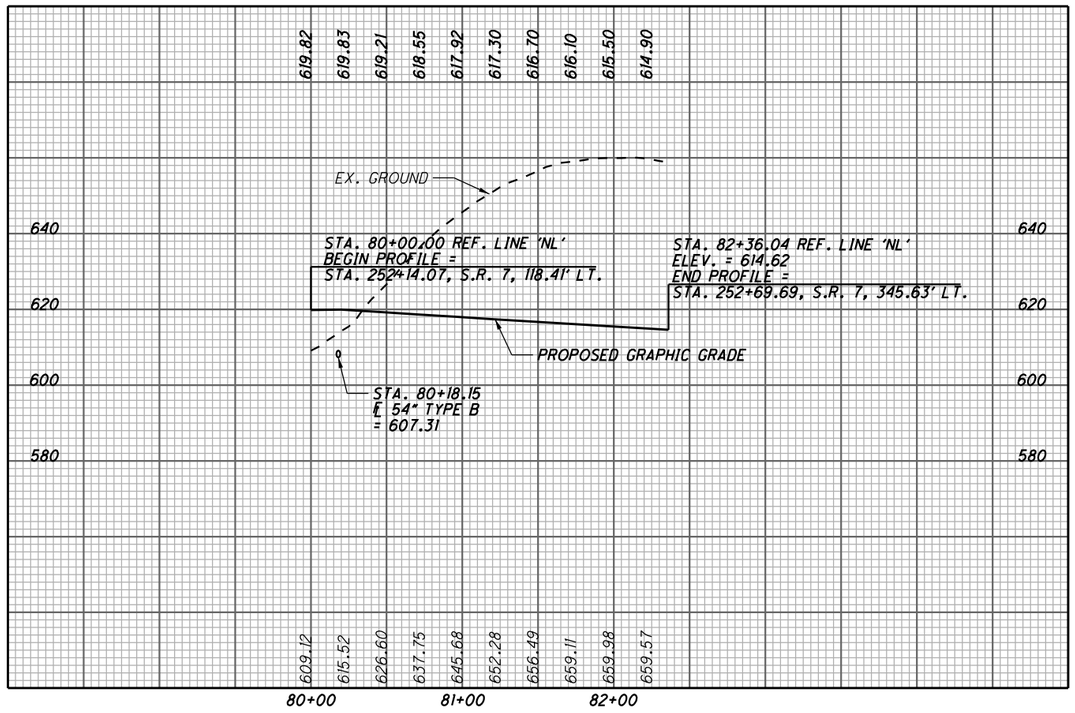

PROFILE REFERENCE LINE "RLNL"

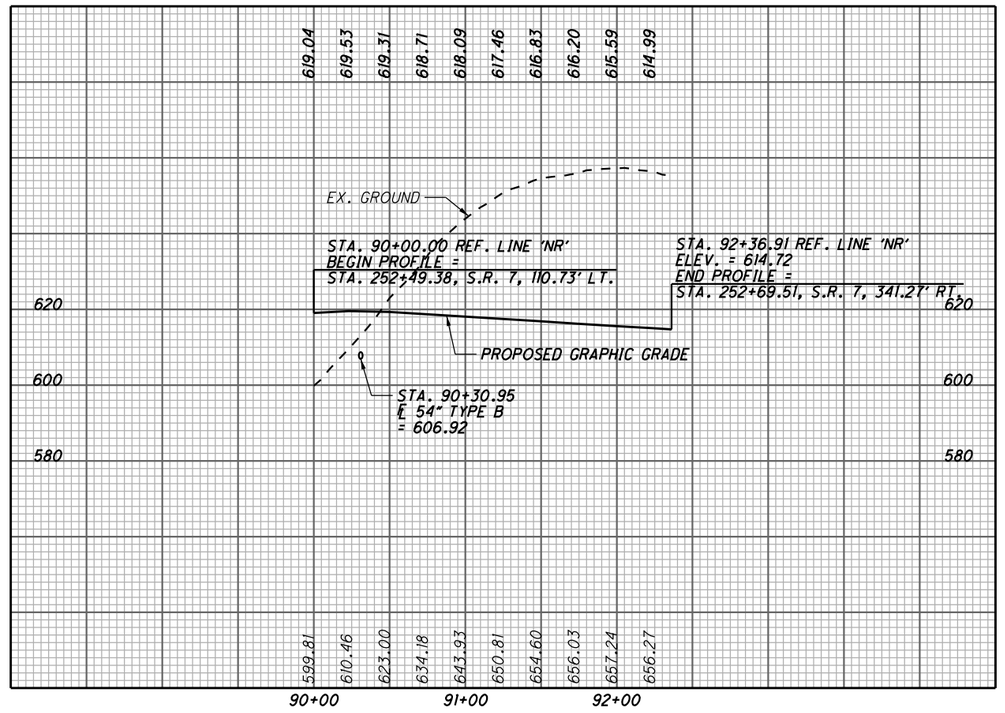

PROFILE REFERENCE LINE "RLNR"

REFERENCE PROFILES

CALCULATED SLP
CHECKED ALB

LAW-7-2.17

158
1247

DRAFT Stage 3 - Not for Construction 09/23/2024

U:\17360714\LAW\75923\roadway\sheets\75923GF042.dgn 5/21/2024 4:51:21 PM SLParker

SEEDING		END AREA		VOLUME		CALCULATED	CHECKED
END WIDTH	SQ. YDS.	CUT	FILL	CUT	FILL	SLP	ALB
40	24	17	0	5	0		
28	70	25	0	17	0		
49		35	0				
10	94	7	0	22	0		

600 580 560 540 520 620 600 580 560 540 520 600 580 560 540 520

AHEAD

BACK

AHEAD BACK

12.5:1 4:1 4:1 4:1 6.5:1

552.84

555.11

114+57.60

555.11

MATCH LINE RAMP D

℄ 21" TYPE B = 546.24

EX. 18" STM (TO BE REMOVED)

℄ 15" TYPE B = 549.53

PROP. LIGHTING CIRCUIT OR CONDUIT

552.86

554.92

114+51.53

555.11

℄ 21" TYPE B = 546.15

EX. 18" STM (TO BE REMOVED)

℄ 15" TYPE B = 549.62

MATCH LINE RAMP D

STA. 114+40.86
PROP. CB-5

554.81

114+30.42

554.81

BEGIN WORK

℄ 30" TYPE C = 545.15

EX. 24" STM (TO BE REMOVED)

260 240 220 200 180 160 140 120 100 80 60 40 20 0 20 40 60 80 100 120 140 160 180 200 220 240

DRAFT Stage 3 - Not for Construction 09/23/2024

CROSS SECTIONS S.R. 7 STA. 114+30.42 TO STA. 114+57.60

LAW-7-2.17

159
1247

U:\173608714\LAW\75923\roadway\sheets\75923XS1000-2B.dgn 5/21/2024 4:51:24 PM SLParker

SEEDING		END AREA		VOLUME		CALCULATED	CHECKED
END WIDTH	SQ. YDS.	CUT	FILL	CUT	FILL	SLP	ALB
25	92	10	8	17	9		
23 AHEAD 10 BACK	45	AHEAD 16 BACK 8	6 0	15	0		
41	191	43	0	47	0		
	328			79	9		

600 580 560 540 520

12.5:1 3.8:1
EX. 552.34
555.16
115+50.00
555.20
EX. 551.99

STA. 115+16.53.
PROP. CB-8

STA. 115+38.66
PROP. CB-5

BACK AHEAD
12.5:1 4:1
EX. 552.18
℄ 21" TYPE B
= 547.16
EX. 15" STM
TO BE REMOVED
555.14
115+15.70
555.19
EX. 553.28
℄ 15" TYPE B
= 548.70
PROP. LIGHTING
CIRCUIT OR CONDUIT

12.5:1 4:1 4:1
552.72
℄ 21" TYPE B
= 546.91
EX. 18" STM
(TO BE REMOVED)
555.13
115+00.00
555.18
MATCH LINE RAMP D
PROP. LIGHTING
CIRCUIT OR CONDUIT
℄ 15" TYPE B
= 548.92

260 240 220 200 180 160 140 120 100 80 60 40 20 0 20 40 60 80 100 120 140 160 180 200 220 240

DRAFT Stage 3 - Not for Construction 09/23/2024

CROSS SECTIONS S.R. 7
STA. 115+00.00 TO STA. 115+50.00

LAW-7-2.17

160
1247

U:\1736087\14\LAW\75923\roadway\sheets\75923XS1001-2B.dgn 5/21/2024 4:51:25 PM SLParker

SEEDING END WIDTH	SEEDING SQ. YDS.	END AREA CUT	END AREA FILL	VOLUME CUT	VOLUME FILL
28	143	13	9	26	15
23	131	15	7	23	14
24	135	9	8	19	14
	409			68	43

CALCULATED SLP
CHECKED ALB

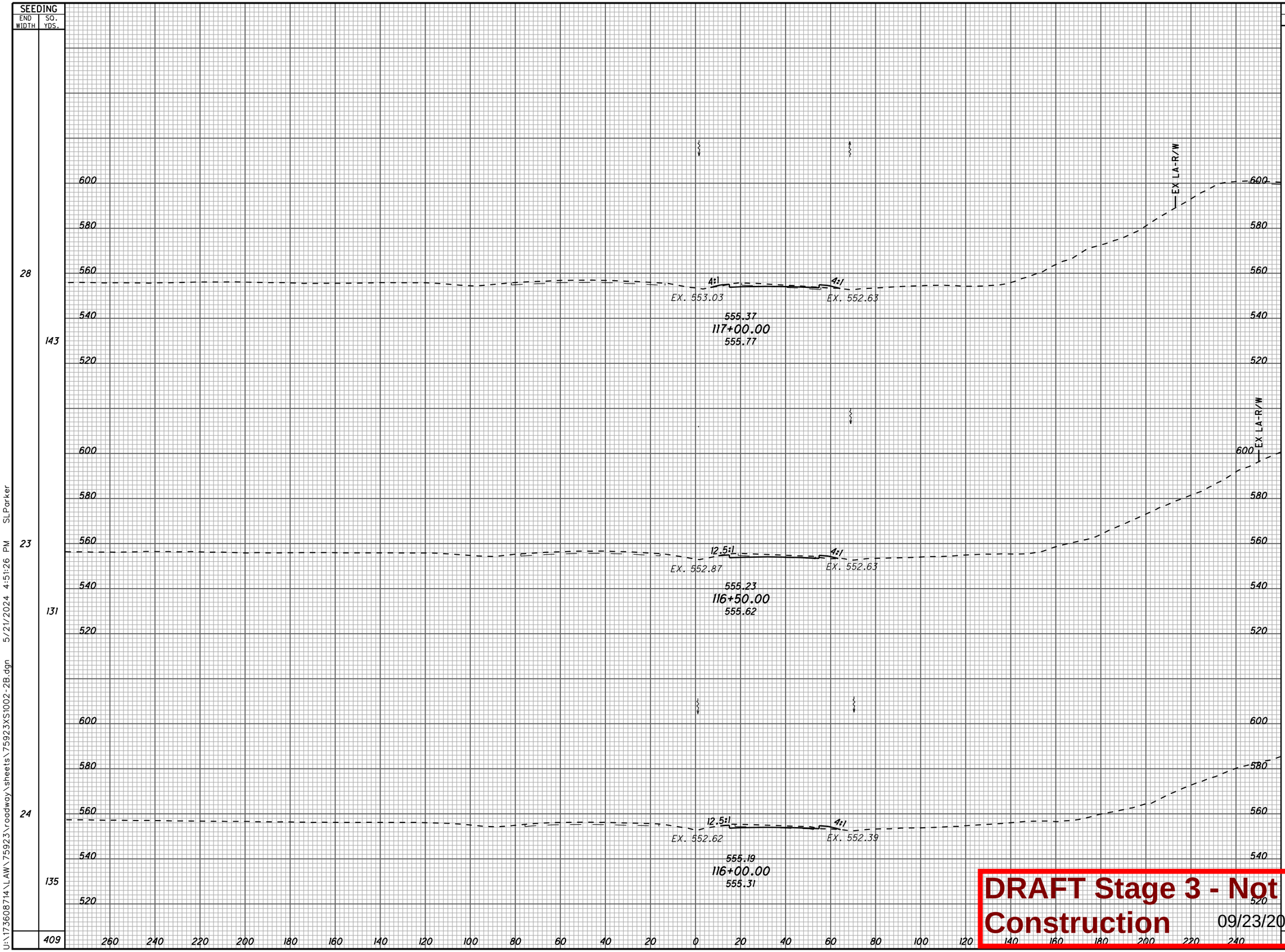

CROSS SECTIONS S.R. 7
STA. 116+00.00 TO STA. 117+00.00

LAW-7-2.17

161
1247

DRAFT Stage 3 - Not for Construction 09/23/2024

U:\173608714\LAW\75923\roadway\sheets\75923XS1002-2B.dgn 5/21/2024 4:51:26 PM SLParker

SEEDING		END AREA		VOLUME		CALCULATED	CHECKED
END WIDTH	SQ. YDS.	CUT	FILL	CUT	FILL	SLP	ALB
46	252	28	14	48	29		
44	226	23	17	37	23		
37	180	17	8	28	16		
	658			113	68		

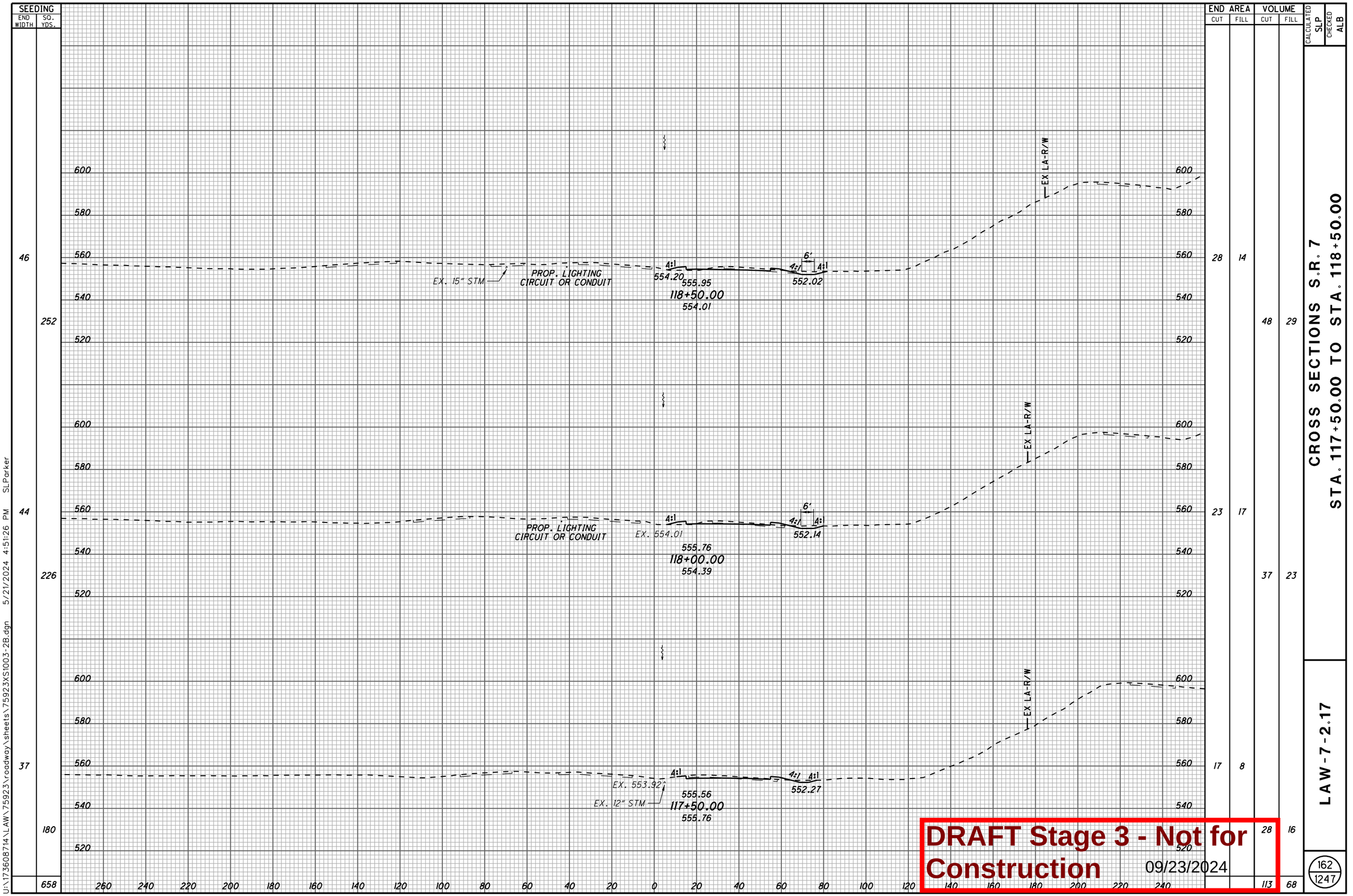

CROSS SECTIONS S.R. 7
STA. 117+50.00 TO STA. 118+50.00

LAW-7-2.17

162
1247

DRAFT Stage 3 - Not for Construction 09/23/2024

U:\173608714\LAW\75923\roadway\sheets\75923XS1003-2B.dgn 5/21/2024 4:51:26 PM SLParker

SEEDING	
END WIDTH	SQ. YDS.
95	442
64	6
49	
40	236
	684

END AREA	
CUT	FILL
120	12
51	17
47	17
32	17

VOLUME	
CUT	FILL
159	27
2	1
55	28
216	56

CALCULATED SLP
CHECKED ALB

STA. 119+83.21
PROP. CB-4

EX LA-R/W

5'
4:1
4:1
554.89
PROP. LIGHTING
CIRCUIT OR CONDUIT
556.06
556.35
119+50.00
554.28
12.5:1
9'
4:1
4:1
551.12

EX LA-R/W

MATCH LINE
STA. 118+99.14
PROP. LIGHTING
CIRCUIT OR CONDUIT
555.46
556.15
119+00.00
554.01
12.5:1
7'
4:1
4:1
551.89

AHEAD BACK
PROP. LIGHTING
CIRCUIT OR CONDUIT
555.44
556.14
118+99.14
554.01
SKEW ANGLE = 8° LHF
6'
4:1
4:1
551.92

600 580 560 540 520

260 240 220 200 180 160 140 120 100 80 60 40 20 0 20 40 60 80 100 120 140 160 180 200 220 240

CROSS SECTIONS S.R. 7
STA. 118+99.14 TO STA. 119+50.00

LAW-7-2.17

163
1247

DRAFT Stage 3 - Not for Construction 09/23/2024

U:\173608714\LAW\75923\roadway\sheets\75923XS1004-2B.dgn 5/21/2024 4:51:27 PM SLParker

SEEDING	
END WIDTH	SQ. YDS.
73	450
89	510
	960

END AREA		VOLUME	
CUT	FILL	CUT	FILL
166	0		
		268	8
		123	8
		225	19
		493	27

CALCULATED SLP
CHECKED ALB

CROSS SECTIONS S.R. 7
STA. 120+00.00 TO STA. 120+50.00

LAW-7-2.17

DRAFT Stage 3 - Not for Construction 09/23/2024

U:\173608714\LAW\75923\roadway\sheets\75923XS1005-2B.dgn 5/21/2024 4:51:28 PM SLPorker

SEEDING	
END WIDTH	SQ. YDS.
56	292
49	418
102	486
	1196

END AREA	
CUT	FILL
36	12
55	18
109	23
491	89

VOLUME	
CUT	FILL
84	28
152	39
255	22

CALCULATED SLP
CHECKED ALB

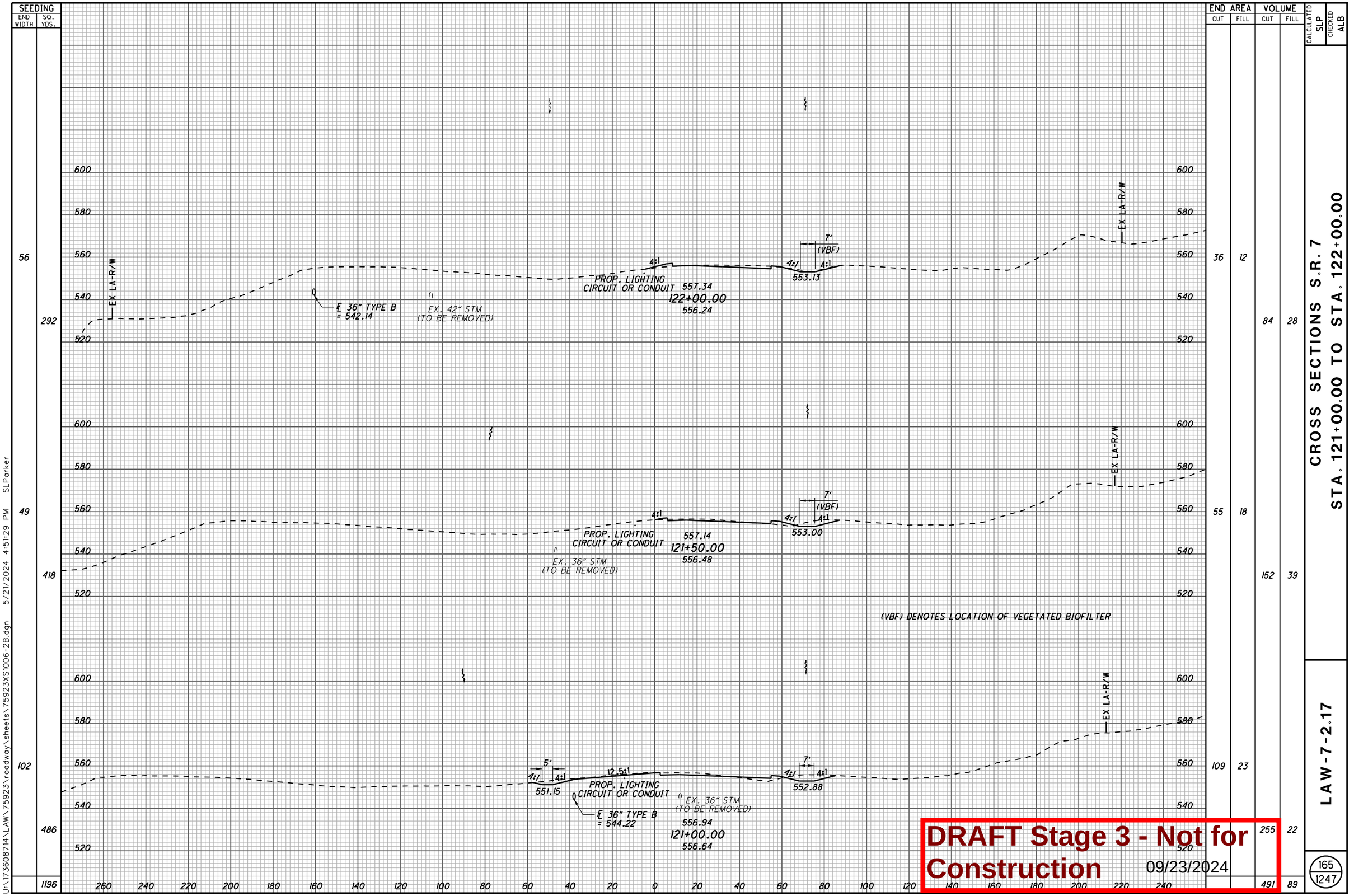

CROSS SECTIONS S.R. 7
STA. 121+00.00 TO STA. 122+00.00

LAW-7-2.17

DRAFT Stage 3 - Not for Construction 09/23/2024

U:\173608714\LAW\75923\roadway\sheets\75923XS1006-2B.dgn 5/21/2024 4:51:29 PM SLParker

SEEDING END WIDTH	SEEDING SQ. YDS.	END AREA CUT	END AREA FILL	VOLUME CUT	VOLUME FILL
43	249	76	65	156	116
47	286	92	60	155	87
56	312	75	33	103	42
	847			414	245

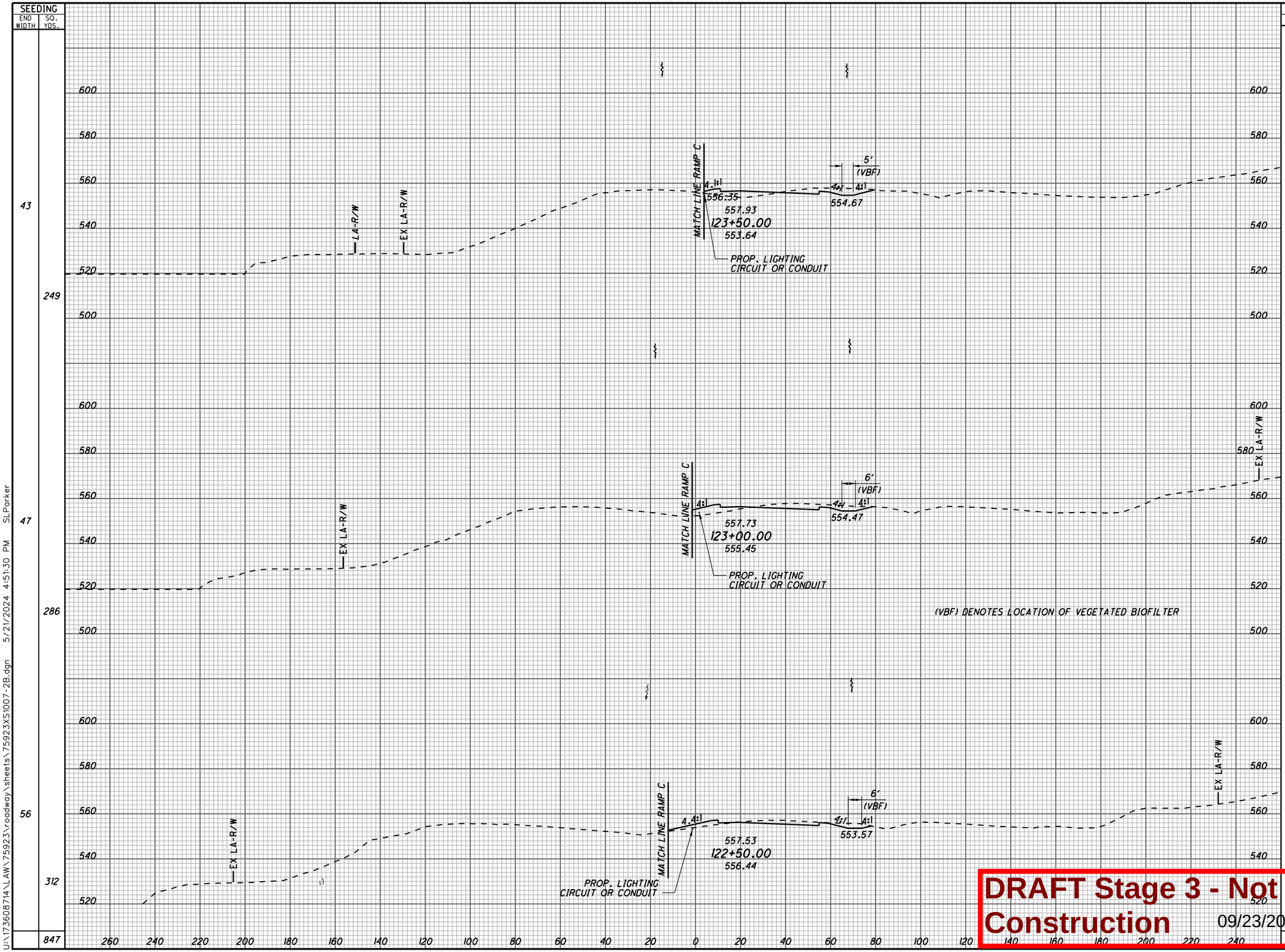

(VBF) DENOTES LOCATION OF VEGETATED BIOFILTER

DRAFT Stage 3 - Not for Construction 09/23/2024

CALCULATED SLP | CHECKED ALB

CROSS SECTIONS S.R. 7
STA. 122+50.00 TO STA. 123+50.00

LAW-7-2.17

166
1247

U:\173608714\LAW\75923\roadway\sheets\75923XS1007-2B.dgn 5/21/2024 4:51:30 PM SLParker

SEEDING		END AREA		VOLUME	
END WIDTH	SQ. YDS.	CUT	FILL	CUT	FILL
136	747	530	5	996	6
133	451	546	1	627	1
131 AHEAD 31 BACK	79	553 AHEAD 65 BACK	0 0	51	24
	1277			1647	31

CALCULATED SLP
CHECKED ALB

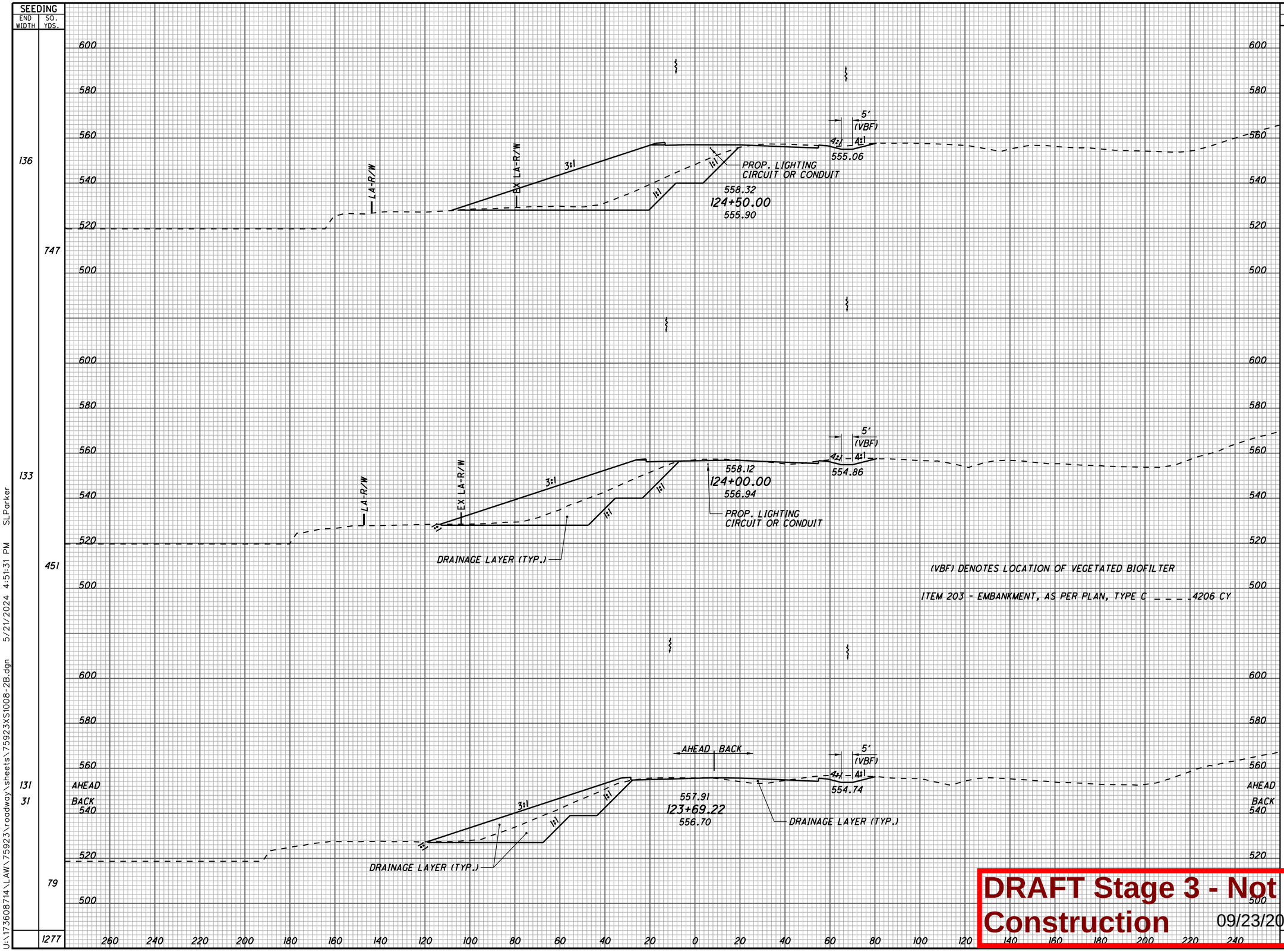

CROSS SECTIONS S.R. 7
STA. 123+69.22 TO STA. 124+50.00

LAW-7-2.17

DRAFT Stage 3 - Not for Construction 09/23/2024

U:\173608714\LAW\75923\roadway\sheets\75923XS1008-2B.dgn 5/21/2024 4:51:31 PM SLParker

SEEDING		END AREA		VOLUME		CALCULATED	CHECKED
END WIDTH	SQ. YDS.	CUT	FILL	CUT	FILL	SLP	ALB
131	728	600	37	1216	64		
131	734	713	31	1242	48		
134	750	629	20	1073	23		
	2212			3531	135		

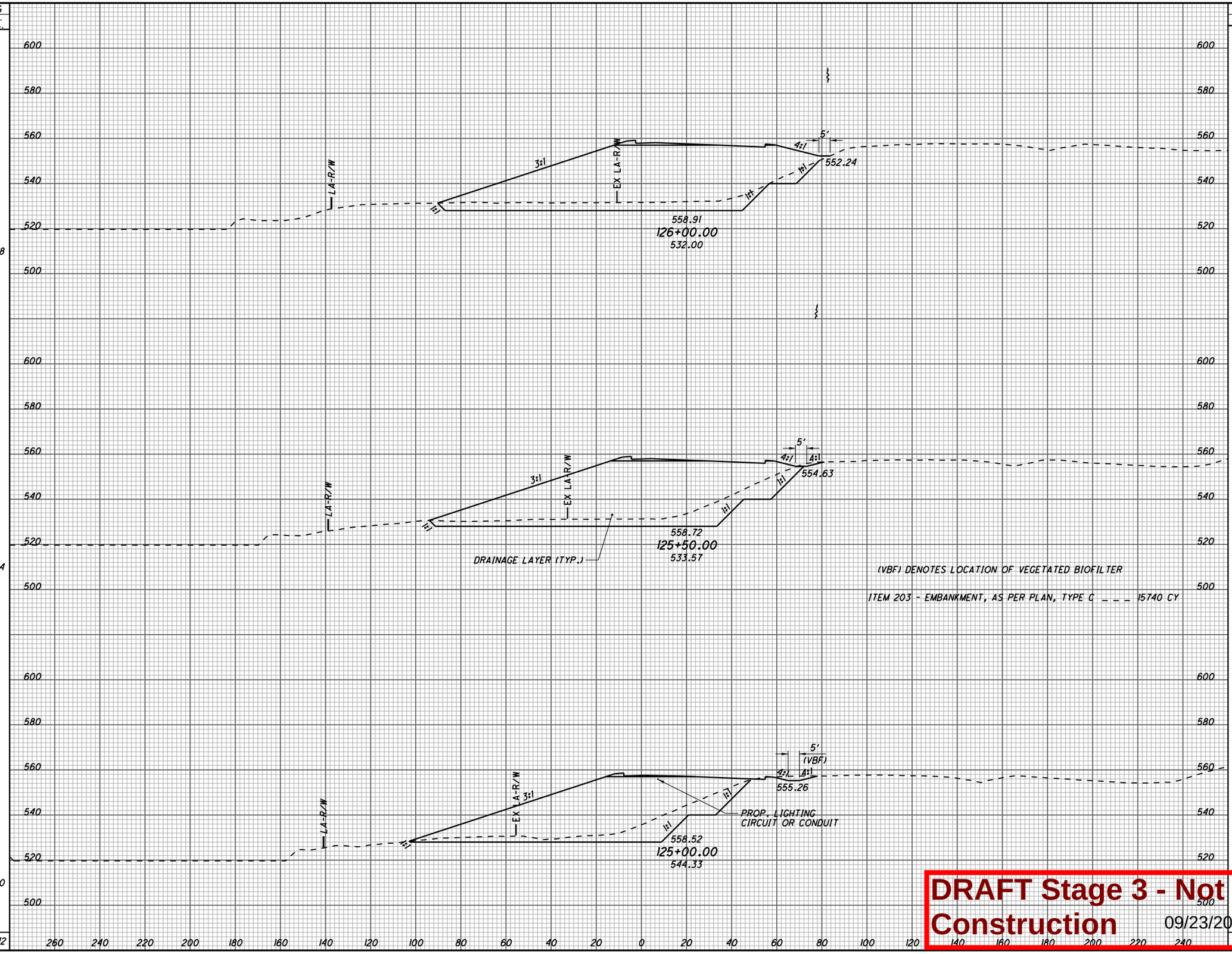

CROSS SECTIONS S.R. 7
STA. 125+00.00 TO STA. 126+00.00

LAW-7-2.17

168
1247

DRAFT Stage 3 - Not for Construction 09/23/2024

U:\173608714\LAW\75923\roadway\sheets\75923XS1009-2B.dgn 5/21/2024 4:51:32 PM SLParker

SEEDING END WIDTH	SEEDING SQ. YDS.	END AREA CUT	END AREA FILL	VOLUME CUT	VOLUME FILL
164	942	0	70	0	118
174	872	0	57	186	97
140	753	200	47	741	78
	2567			927	293

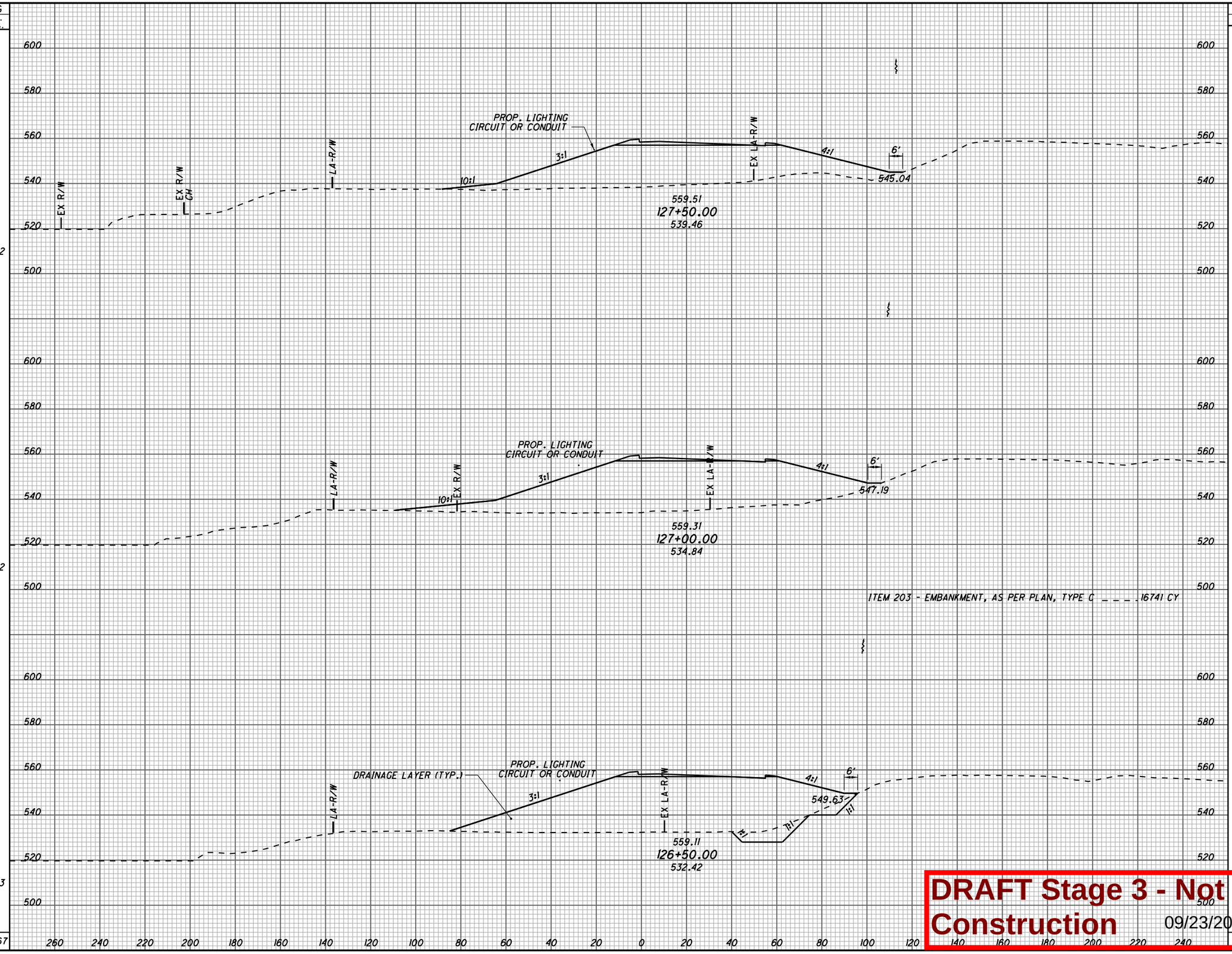

CALCULATED SLP
CHECKED ALB

CROSS SECTIONS S.R. 7
STA. 126+50.00 TO STA. 127+50.00

LAW-7-2.17

169
1247

DRAFT Stage 3 - Not for Construction 09/23/2024

U:\173608714\LAW\75923\roadway\sheets\75923XS1010-2B.dgn 5/21/2024 4:51:33 PM SLParker

SEEDING	
END WIDTH	SQ. YDS.
89	616
132	790
152	879
	2285

END AREA	
CUT	FILL
218	90
819	88
406	84

VOLUME	
CUT	FILL
961	166
1135	160
376	143
2472	469

CALCULATED SLP
CHECKED ALB

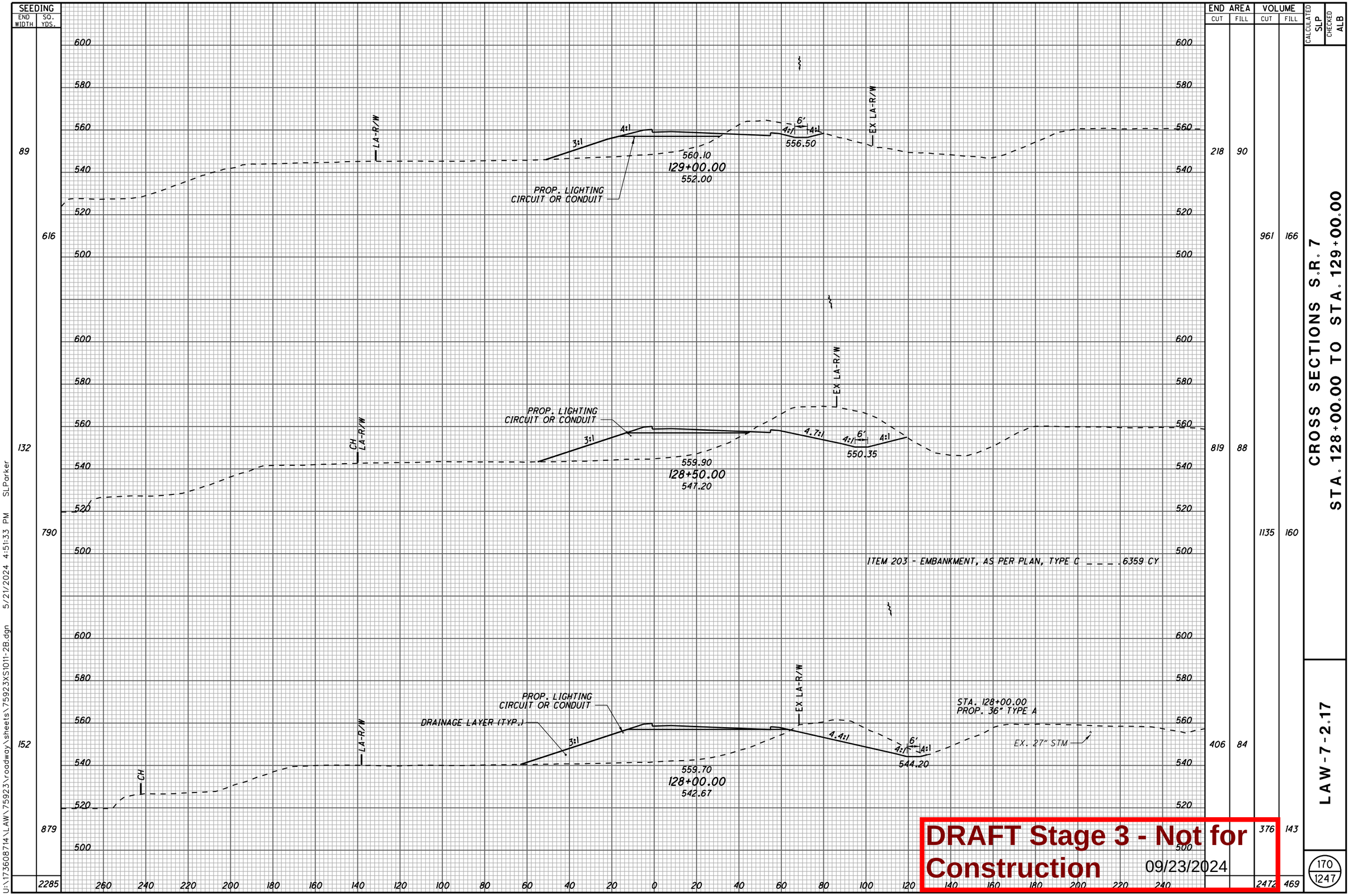

CROSS SECTIONS S.R. 7

STA. 128+00.00 TO STA. 129+00.00

LAW-7-2.17

DRAFT Stage 3 - Not for Construction 09/23/2024

U:\173608714\LAW\75923\roadway\sheets\75923XS1011-2B.dgn 5/21/2024 4:51:33 PM SLParker

SEEDING END WIDTH	SEEDING SQ. YDS.	END AREA CUT	END AREA FILL	VOLUME CUT	VOLUME FILL
94	502	974	33	1497	100
87	527	642	75	1011	152
103	534	449	89	618	167
	1563			3126	419

CALCULATED SLP
CHECKED ALB

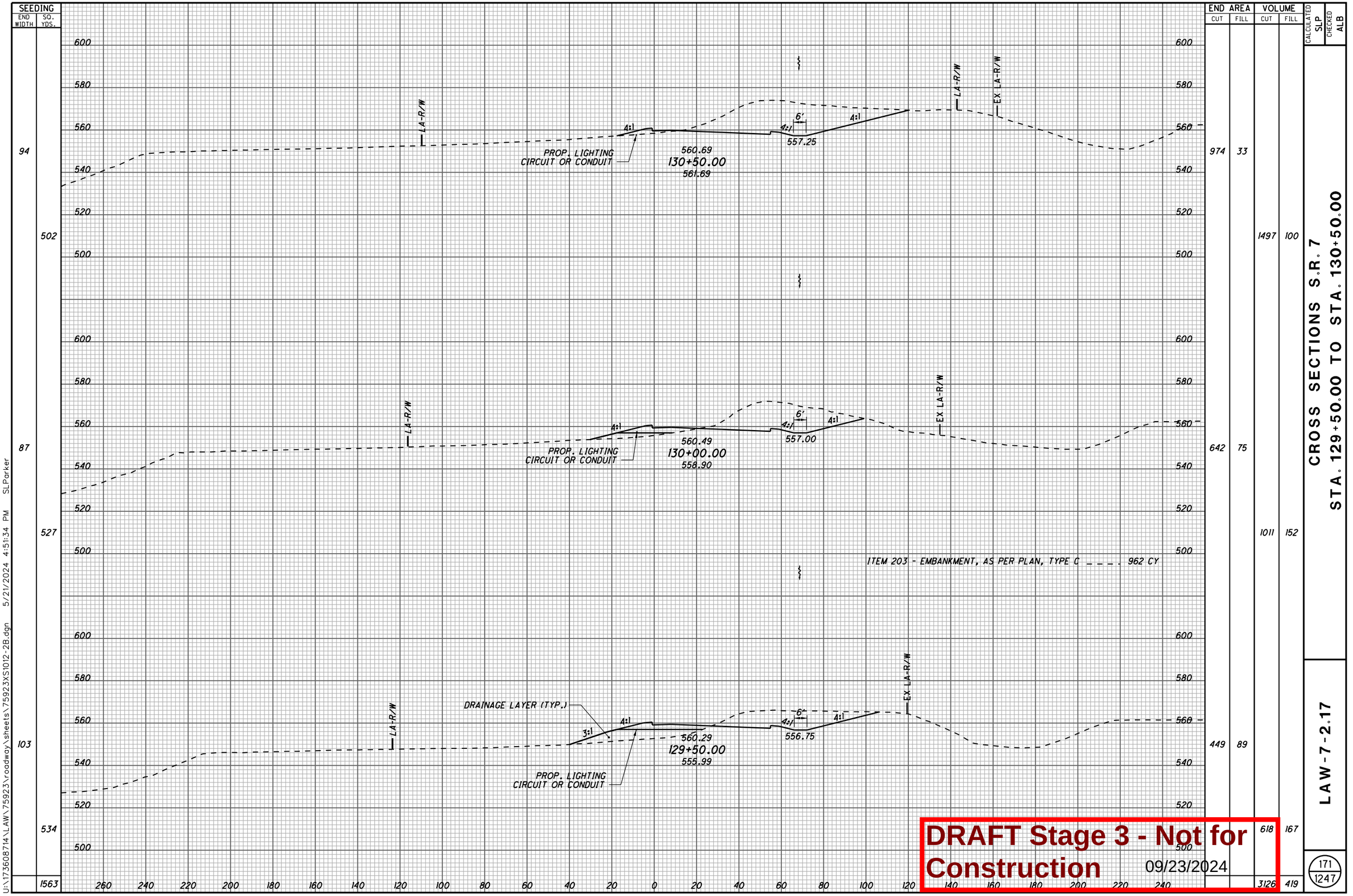

DRAFT Stage 3 - Not for Construction 09/23/2024

CROSS SECTIONS S.R. 7
STA. 129+50.00 TO STA. 130+50.00

LAW-7-2.17

171
1247

U:\1736087\14\LAW\75923\roadway\sheets\75923XS1012-2B.dgn 5/21/2024 4:51:34 PM SLParker

SEEDING		END AREA		VOLUME		CALCULATED	CHECKED
END WIDTH	SQ. YDS.	CUT	FILL	CUT	FILL	SLP	ALB
129	639	2143	0	3637	0		
101	534	1784	0	3049	0		
92	516	1508	0	2298	31		
	1689			8984	31		

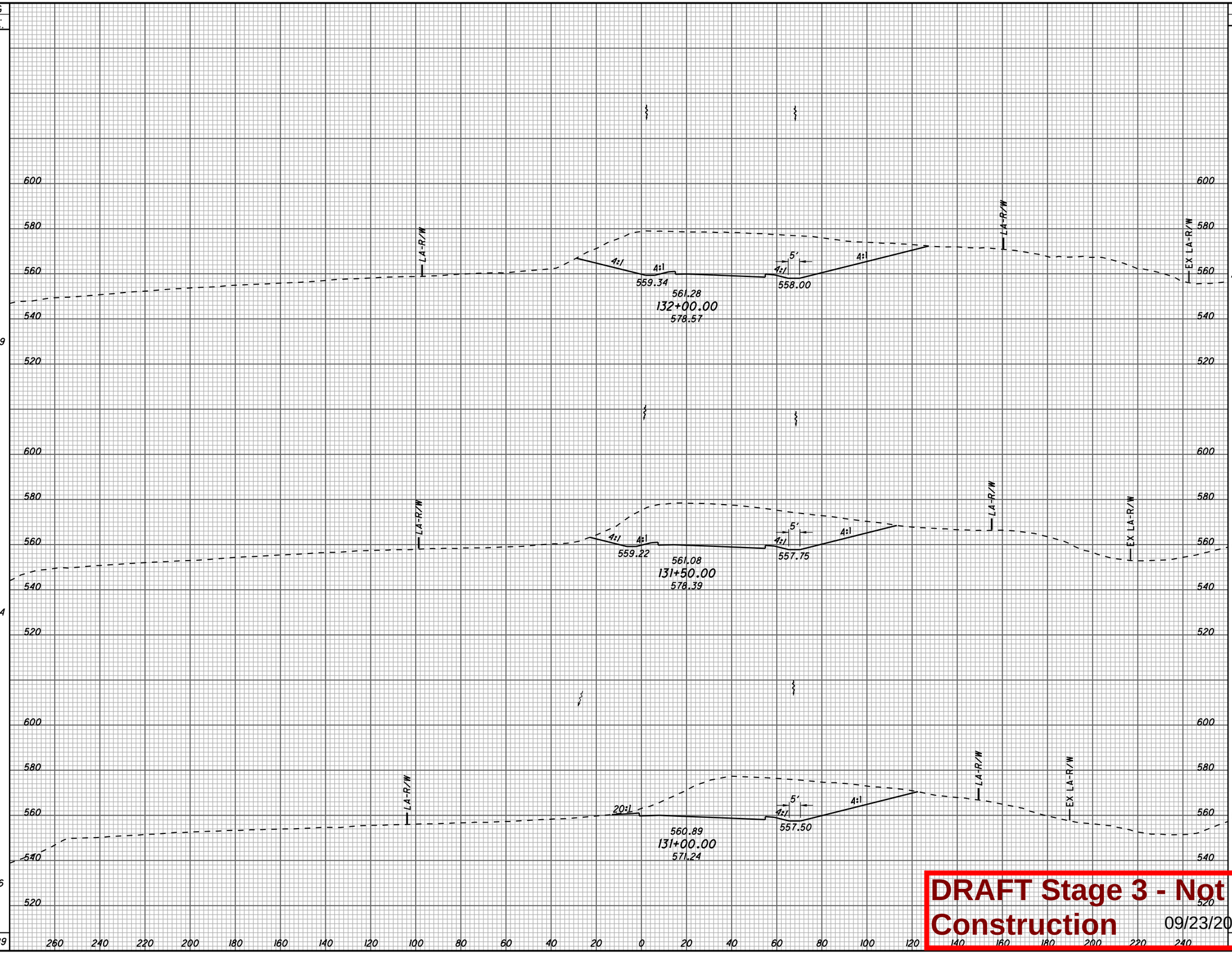

CROSS SECTIONS S.R. 7
STA. 131+00.00 TO STA. 132+00.00

LAW-7-2.17

172
1247

DRAFT Stage 3 - Not for Construction 09/23/2024

U:\173608714\LAW\75923\roadway\sheets\75923XS1013-2B.dgn 5/21/2024 4:51:35 PM SLParker

SEEDING END WIDTH	SEEDING SQ. YDS.	END AREA CUT	END AREA FILL	VOLUME CUT	VOLUME FILL
168	560	838	0	671	0
173		387	0		
149		2406	0		
	672	3664	0		
	1232	4335	0		

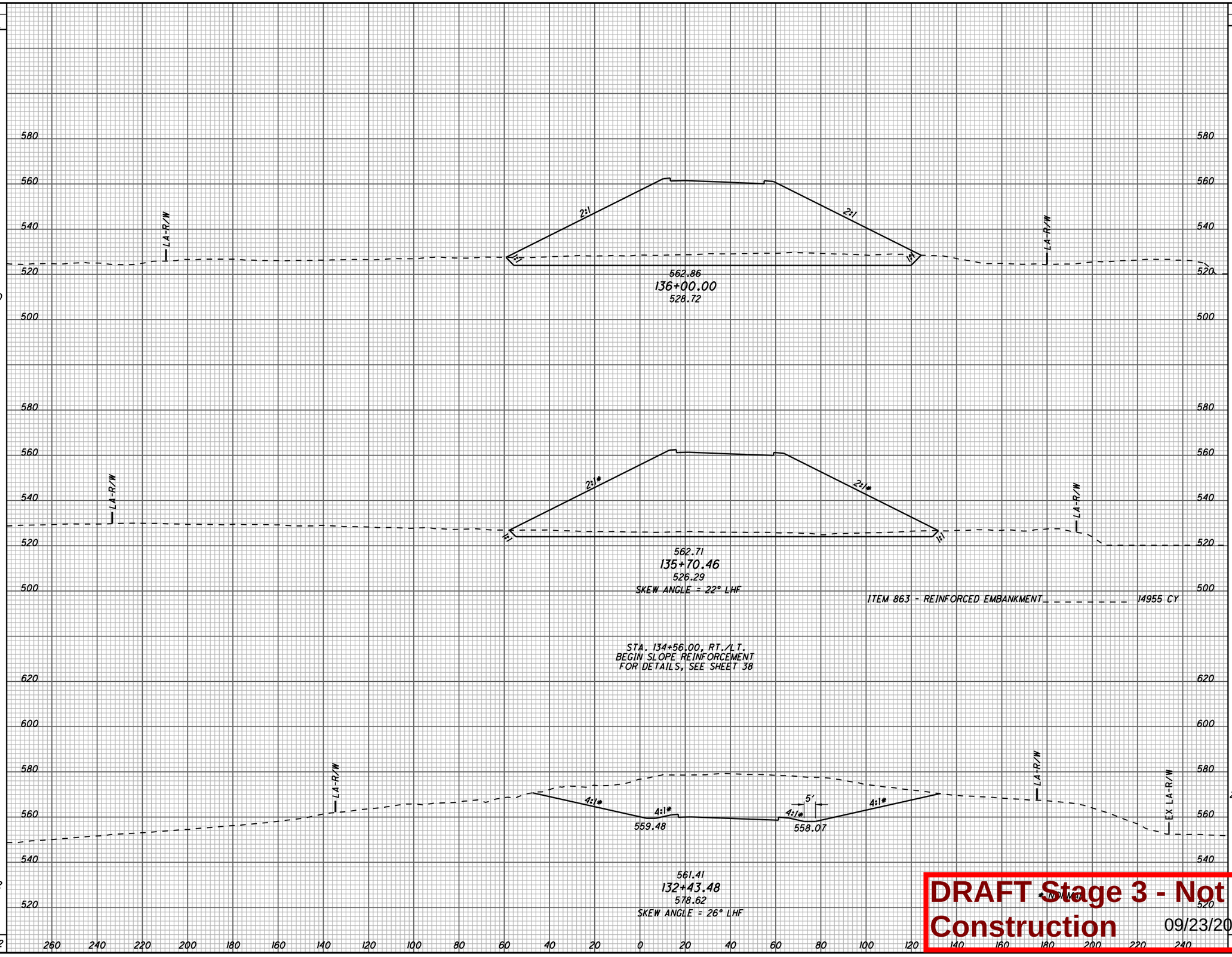

ITEM 863 - REINFORCED EMBANKMENT _____ 14955 CY

STA. 134+56.00, RT./LT.
BEGIN SLOPE REINFORCEMENT
FOR DETAILS, SEE SHEET 38

DRAFT Stage 3 - Not for Construction 09/23/2024

CALCULATED SLP CHECKED ALB

CROSS SECTIONS S.R. 7
STA. 132+43.48 TO 136+00.00

LAW-7-2.17

U:\173608714\LAW\75923\roadway\sheets\75923XS1014-2B.dgn 5/21/2024 4:51:36 PM SLParker

SEEDING		END AREA		VOLUME		
END WIDTH	SQ. YDS.	CUT	FILL	CUT	FILL	
211	1170	0	321	0	581	563.45 137+50.00 531.38
210	1165	0	305	0	549	563.25 137+00.00 547.64
209	1048	0	288	776	267	563.06 136+50.00 531.83
	3383			776	1397	

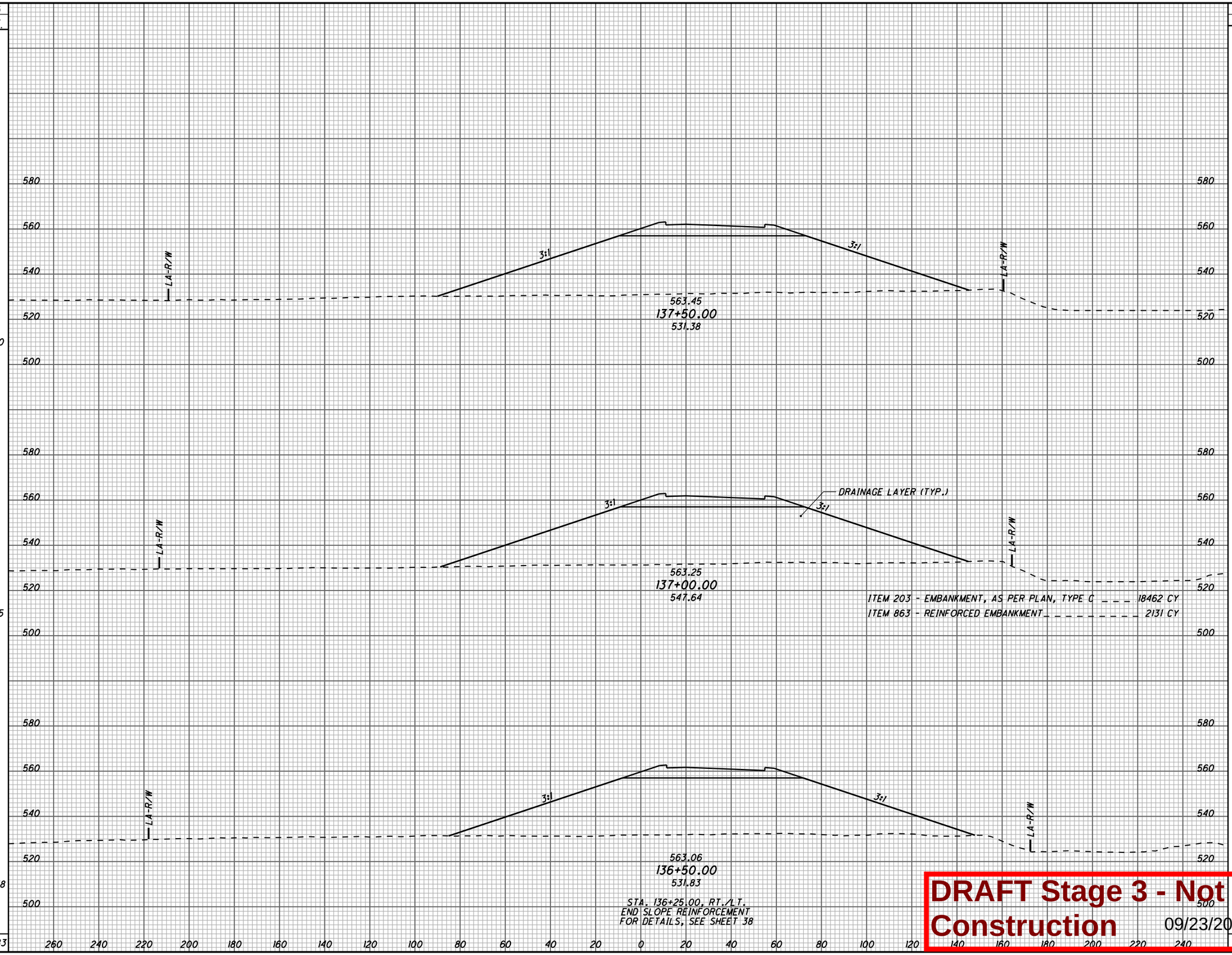

ITEM 203 - EMBANKMENT, AS PER PLAN, TYPE C _ _ _ 18462 CY
ITEM 863 - REINFORCED EMBANKMENT_ _ _ _ _ _ _ _ 2131 CY

STA. 136+25.00, RT./LT.
END SLOPE REINFORCEMENT
FOR DETAILS, SEE SHEET 38

DRAFT Stage 3 - Not for Construction 09/23/2024

CALCULATED SLP
CHECKED ALB

CROSS SECTIONS S.R. 7
STA. 136+50.00 TO STA. 137+50.00

LAW-7-2.17

U:\173608714\LAW\75923\roadway\sheets\75923XS1015-2B.dgn 5/21/2024 4:51:37 PM SLParker

SEEDING END WIDTH	SEEDING SQ. YDS.	END AREA CUT	END AREA FILL	VOLUME CUT	VOLUME FILL
204	1148	0	371	0	673
209	1165	0	354	0	641
210	1171	0	338	0	611
	3484			0	1925

CALCULATED SLP
CHECKED ALB

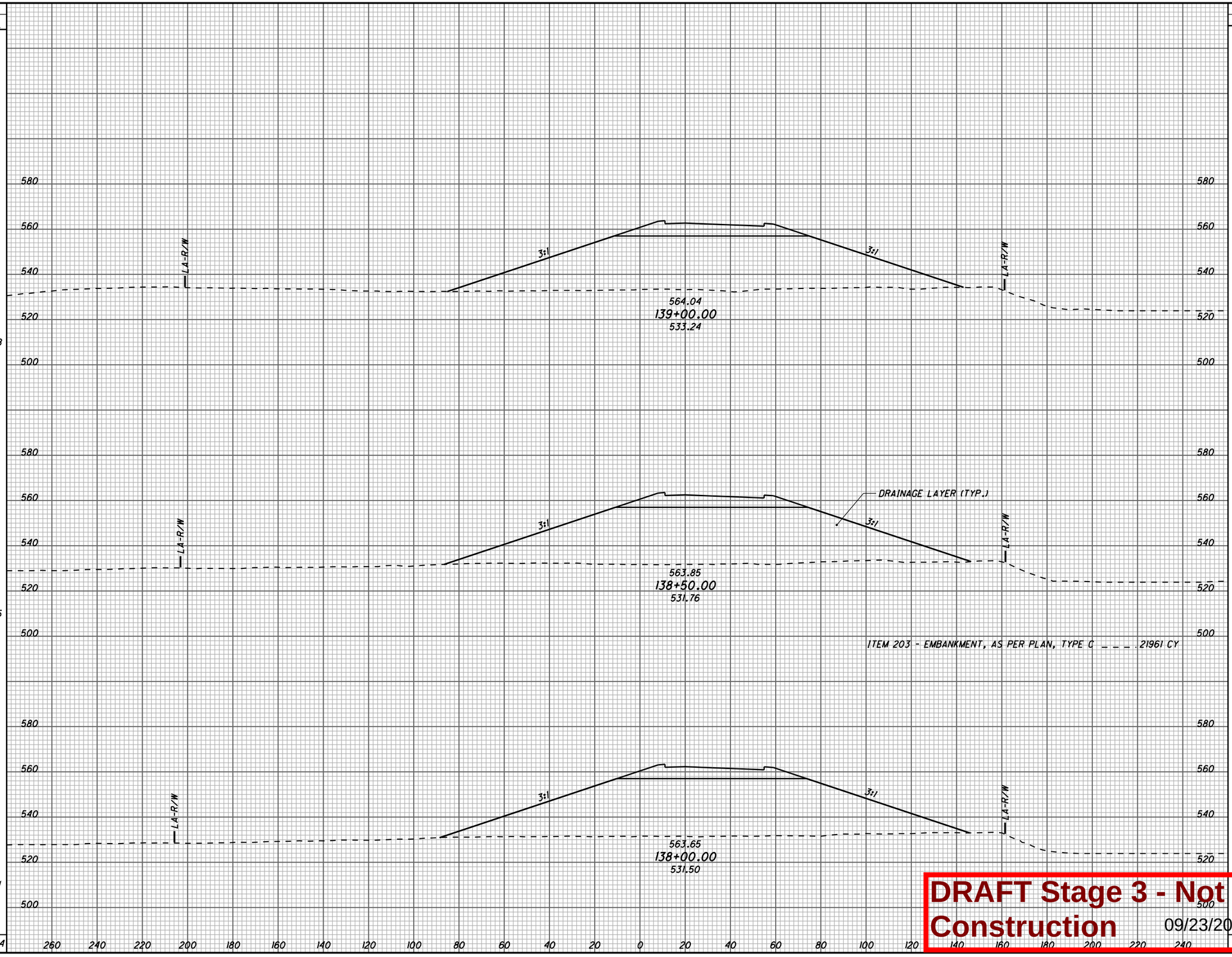

CROSS SECTIONS S.R. 7
STA. 138+00.00 TO STA. 139+00.00

LAW-7-2.17

175
1247

DRAFT Stage 3 - Not for Construction 09/23/2024

U:\173608714\LAW\75923\roadway\sheets\75923XS1016-2B.dgn 5/21/2024 4:51:38 PM SLParker

SEEDING		END AREA		VOLUME		CALCULATED	CHECKED
END WIDTH	SQ. YDS.	CUT	FILL	CUT	FILL	SLP	ALB
191	1067	0	423	0	768		
193	1088	0	406	0	736		
198	1119	0	389	0	704		
	3274			0	2208		

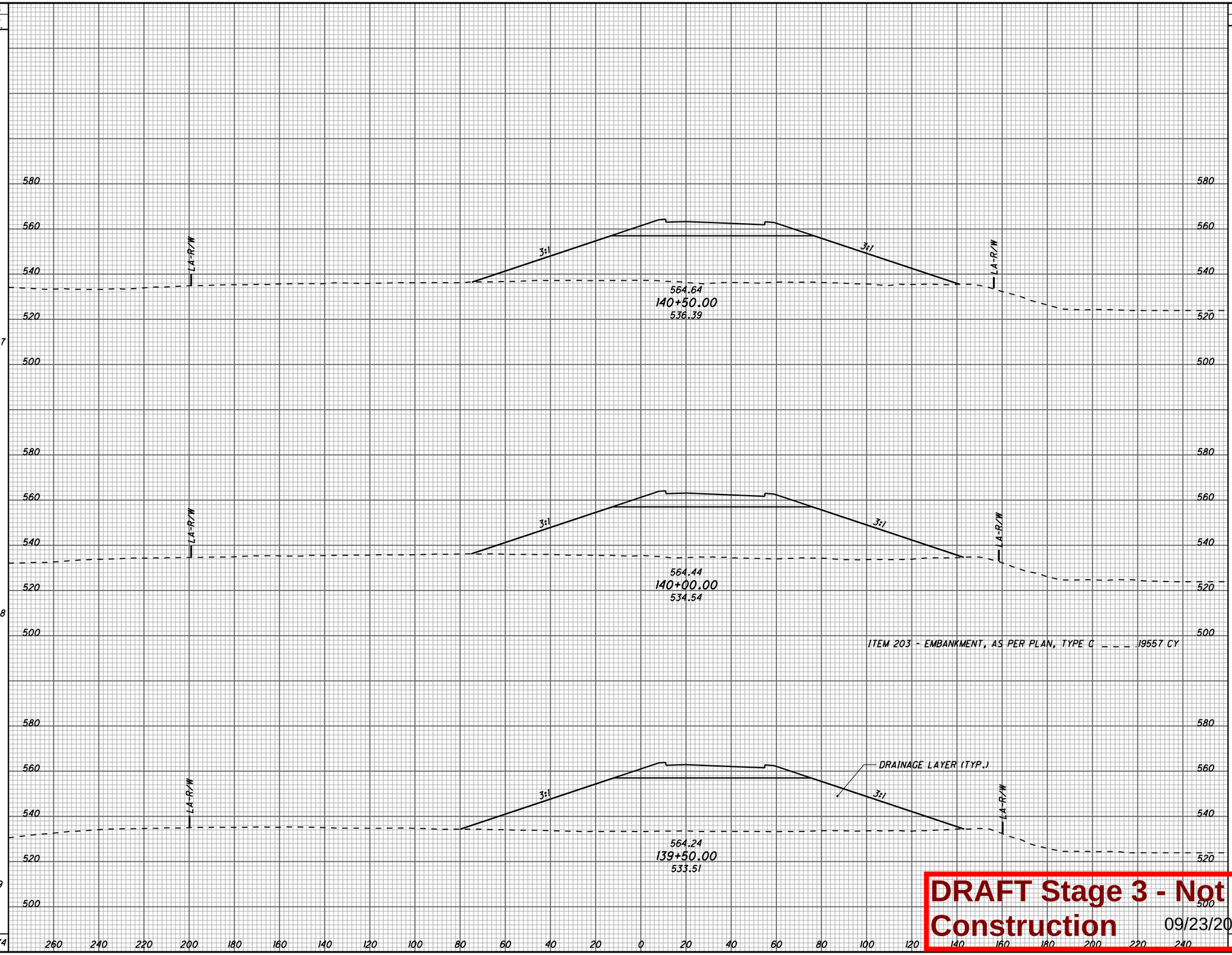

CROSS SECTIONS S.R. 7
STA. 139+50.00 TO STA. 140+50.00

LAW-7-2.17

176
1247

DRAFT Stage 3 - Not for Construction 09/23/2024

U:\173608714\LAW\75923\roadway\sheets\75923XS1017-2B.dgn 5/21/2024 4:51:39 PM SLParker

SEEDING END WIDTH	SEEDING SQ. YDS.	END AREA CUT	END AREA FILL	VOLUME CUT	VOLUME FILL
171	969	0	478	0	868
178	1010	0	459	0	835
185	1046	0	441	0	801
	3025			0	2504

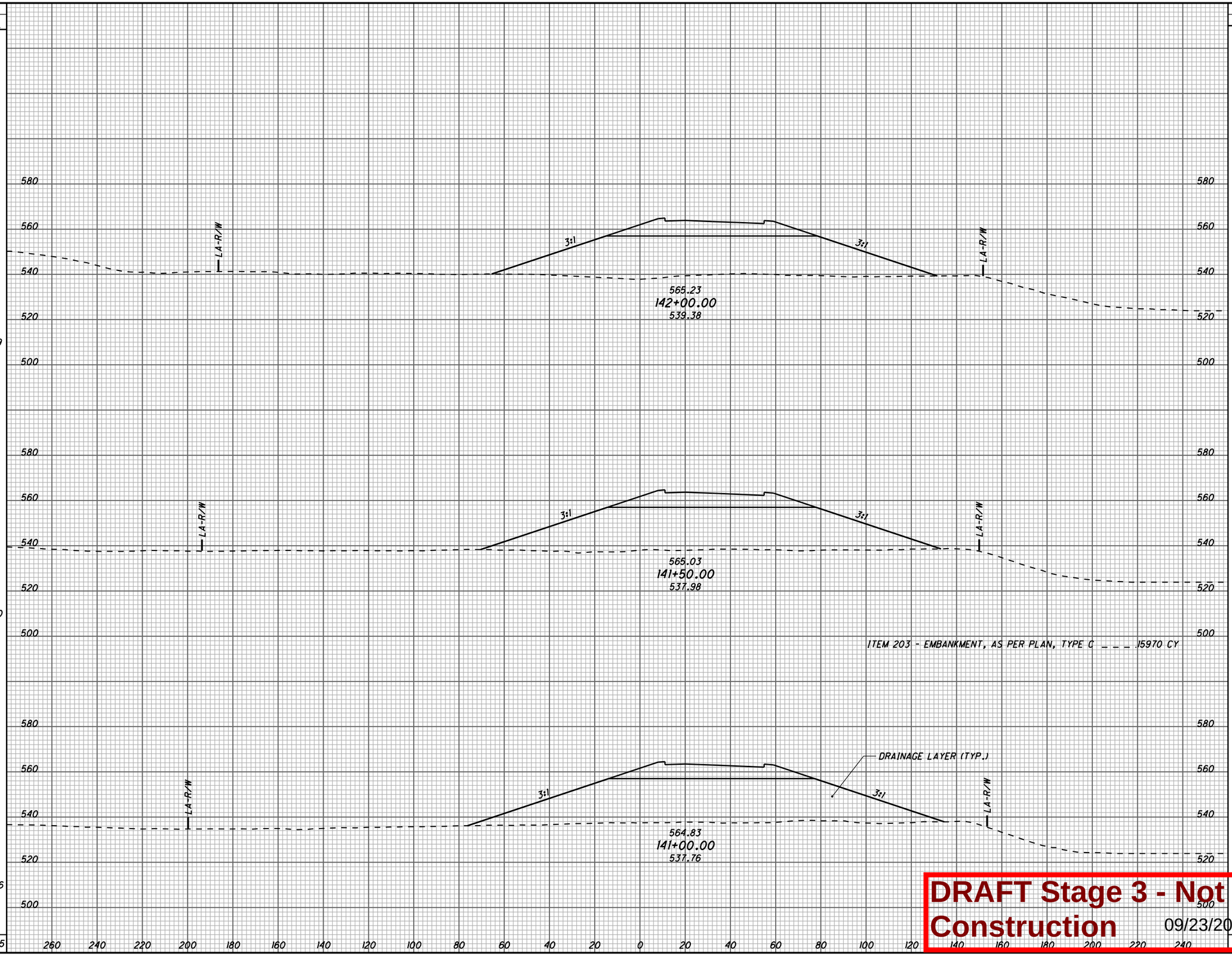

CALCULATED SLP
CHECKED ALB

CROSS SECTIONS S.R. 7
STA. 141+00.00 TO STA. 142+00.00

LAW-7-2.17

177
1247

DRAFT Stage 3 - Not for Construction 09/23/2024

U:\173608714\LAW\75923\roadway\sheets\75923XS1018-2B.dgn 5/21/2024 4:51:39 PM SLParker

SEEDING END WIDTH	SEEDING SQ. YDS.
137	784
145	853
162	925
	2562

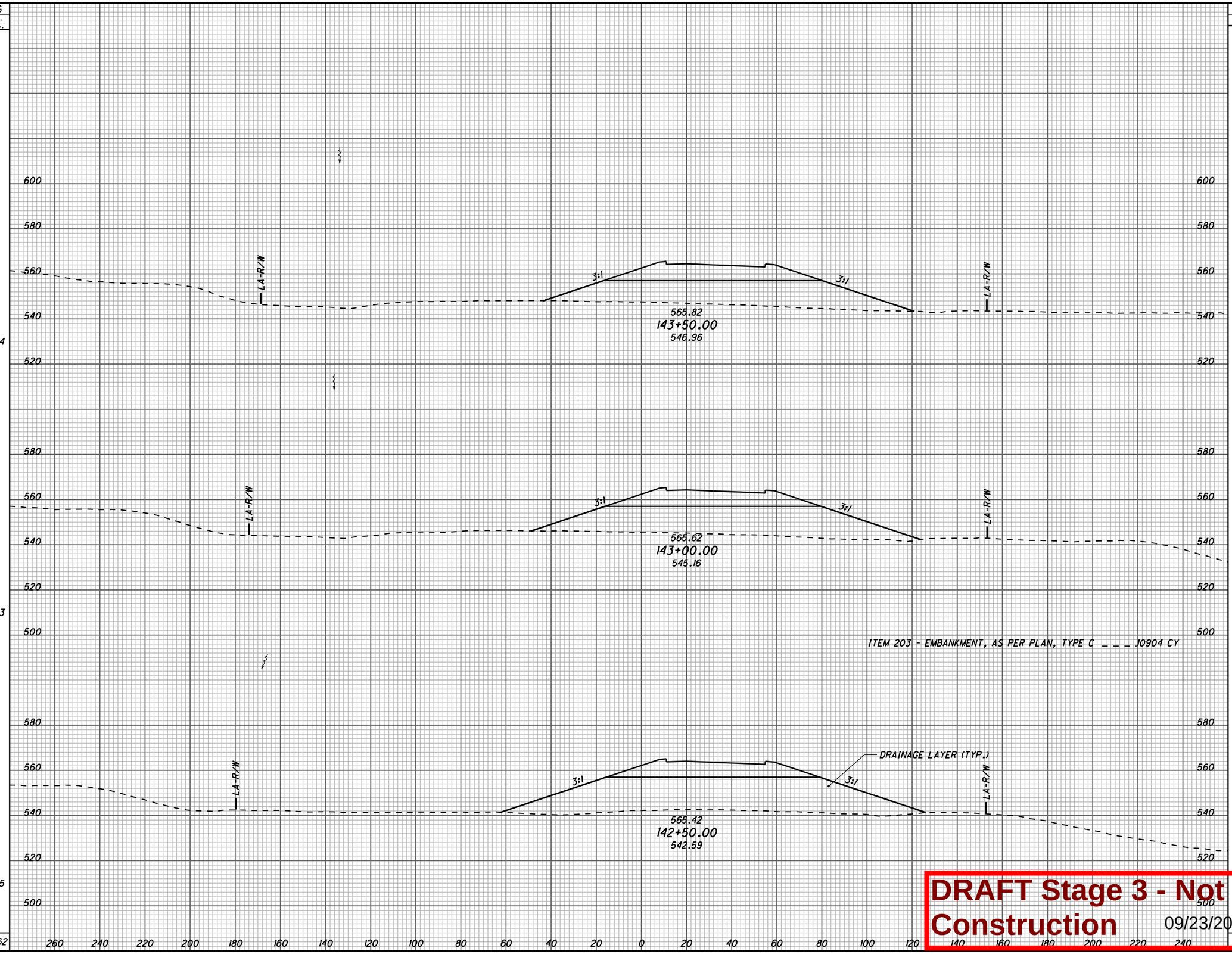

END AREA CUT	END AREA FILL	VOLUME CUT	VOLUME FILL
0	534	0	972
0	515	0	937
0	496	0	902
0	2811		

CALCULATED SLP
CHECKED ALB

CROSS SECTIONS S.R. 7
STA. 142+50.00 TO STA. 143+50.00

LAW-7-2.17

178
1247

DRAFT Stage 3 - Not for Construction 09/23/2024

U:\173608714\LAW\75923\roadway\sheets\75923XS1019-2B.dgn 5/21/2024 4:51:40 PM SLParker

SEEDING		END AREA		VOLUME		CALCULATED	CHECKED
END WIDTH	SQ. YDS.	CUT	FILL	CUT	FILL	SLP	ALB
122	683	0	643	0	1154		
124	716	0	602	0	1096		
134	752	0	581	0	1033		
	2151			0	3283		

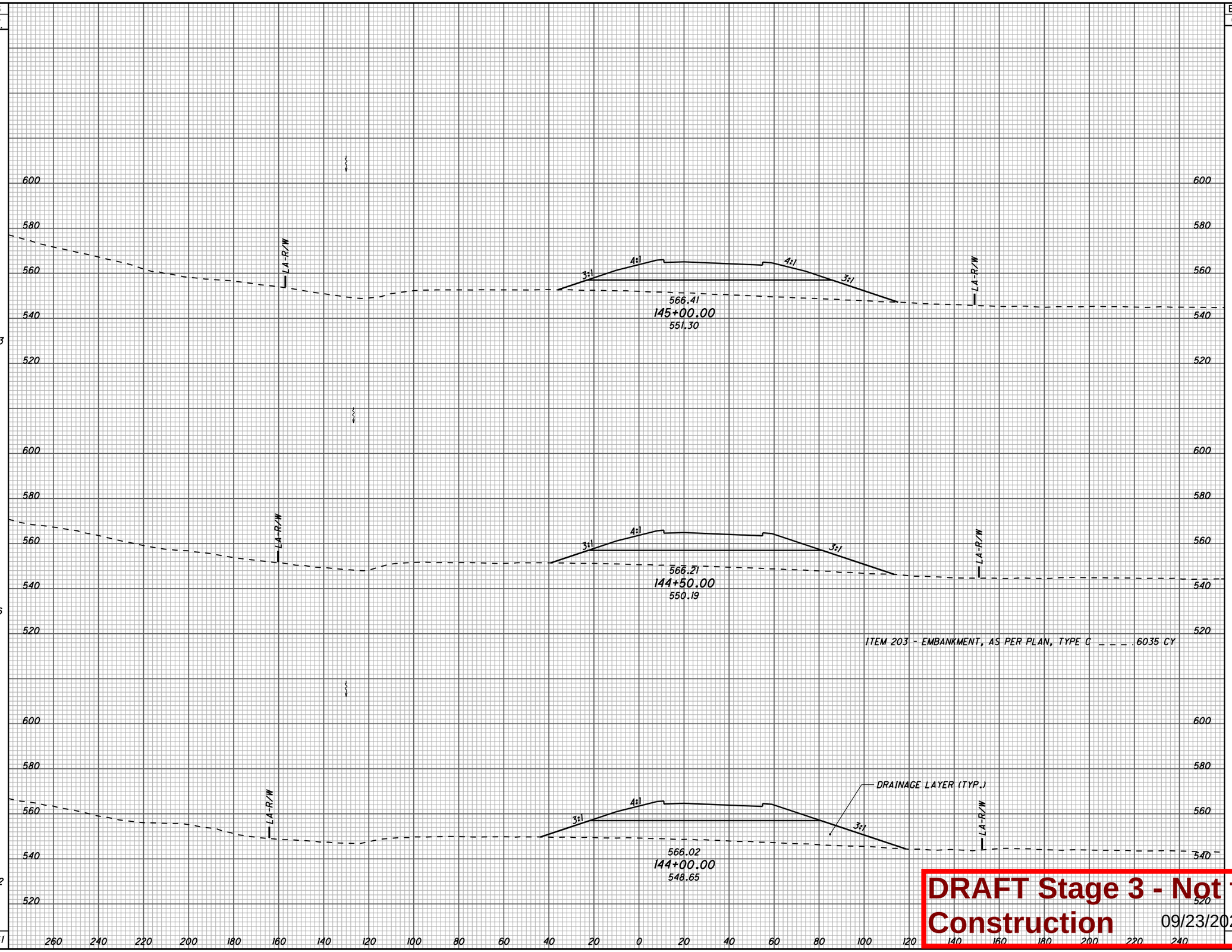

CROSS SECTIONS S.R. 7
STA. 144+00.00 TO STA. 145+00.00

LAW-7-2.17

179
1247

DRAFT Stage 3 - Not for Construction 09/23/2024

U:\173608714\LAW\75923\roadway\sheets\75923XS1020-2B.dgn 5/21/2024 4:51:41 PM SLParker

SEEDING	
END WIDTH	SQ. YDS.
157	760
116	654
119	670
	2084

END AREA	
CUT	FILL
38	709
0	687
0	665

VOLUME	
CUT	FILL
36	1294
0	1253
0	1212
36	3759

CALCULATED SLP
CHECKED ALB

CROSS SECTIONS S.R. 7
STA. 145+50.00 TO STA. 146+50.00

LAW-7-2.17

180
1247

600
580
560
540
520

LA-R/W
10'
4:1
10:1
3:1
552.82
567.00
146+50.00
553.26
EX. 551.46
566.81
146+00.00
552.51
566.61
145+50.00
551.96
DRAINAGE LAYER (TYP.)

ITEM 203 - EMBANKMENT, AS PER PLAN, TYPE C . . . . 3967 CY

260 240 220 200 180 160 140 120 100 80 60 40 20 0 20 40 60 80 100 120 140 160 180 200 220 240

DRAFT Stage 3 - Not for Construction 09/23/2024

U:\173608714\LAW\75923\roadway\sheets\75923XS1021-2B.dgn 5/21/2024 4:51:42 PM SLParker

SEEDING END WIDTH	SEEDING SQ. YDS.
126	702
127	726
135	812
	2240

END AREA CUT	END AREA FILL	VOLUME CUT	VOLUME FILL
10	775	25	1416
17	754	43	1376
30	731	63	1334
		131	4126

CALCULATED SLP
CHECKED ALB

CROSS SECTIONS S.R. 7
STA. 147+00.00 TO STA. 148+00.00

LAW-7-2.17

181
1247

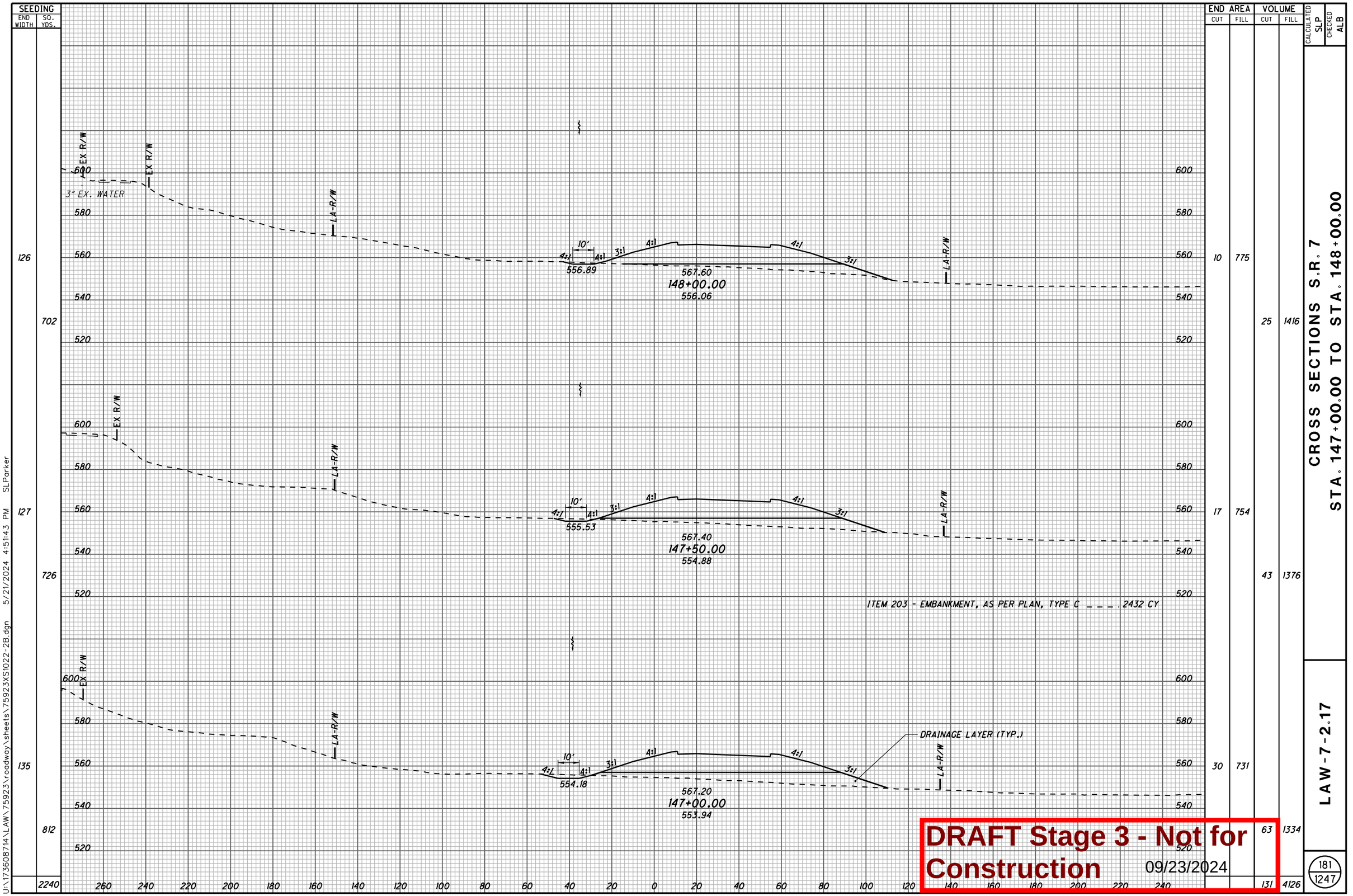

DRAFT Stage 3 - Not for Construction 09/23/2024

U:\173608714\LAW\75923\roadway\sheets\75923XS1022-2B.dgn 5/21/2024 4:51:43 PM SLParker

SEEDING END WIDTH	SEEDING SQ. YDS.	END AREA CUT	END AREA FILL	VOLUME CUT	VOLUME FILL
106	601	11	666	19	1302
110	636	10	740	19	1390
119	680	11	760	19	1422
	1917			57	4114

CALCULATED SLP
CHECKED ALB

CROSS SECTIONS S.R. 7
STA. 148+50.00 TO STA. 149+50.00

LAW-7-2.17

182
1247

620
600
580
560
540
520

EX R/W
3" EX. WATER
LA-R/W
9'
4:1
3:1
560.04
568.24
149+50.00
559.39
559.25
567.99
149+00.00
558.01
EX 557.69
567.79
148+50.00
557.09
DRAINAGE LAYER (TYP.)

ITEM 203 - EMBANKMENT, AS PER PLAN, TYPE C _ _ _ _ 671 CY

260 240 220 200 180 160 140 120 100 80 60 40 20 0 20 40 60 80 100 120 140 160 180 200 220 240

DRAFT Stage 3 - Not for Construction 09/23/2024

U:\173608714\LAW\75923\roadway\sheets\75923XS1023-2B.dgn 5/21/2024 4:51:44 PM SLParker

SEEDING END WIDTH	SEEDING SQ. YDS.	END AREA CUT	END AREA FILL	VOLUME CUT	VOLUME FILL
100	555	8	629	16	1177
100	561	8	642	18	1173
102	579	10	624	20	1195
	1695			54	3545

CALCULATED SLP
CHECKED ALB

CROSS SECTIONS S.R. 7
STA. 150+00.00 TO STA. 151+00.00

LAW-7-2.17

183
1247

620
600
580
560
540
520

EX R/W
R/W
EX R/W
LA-R/W
3" EX. WATER
8'
4:1
4:1
4:1
3:1
561.77
569.69
151+00.00
561.36
LA-R/W

EX R/W
EX R/W
LA-R/W
3" EX. WATER
8'
4:1
4:1
4:1
3:1
561.16
569.09
150+50.00
560.76
DRAINAGE LAYER
LA-R/W

ITEM 203 - EMBANKMENT, AS PER PLAN, TYPE C _ _ _ _ 104 CY

EX R/W
EX R/W
LA-R/W
3" EX. WATER
9'
4:1
4:1
4:1
3:1
561.04
568.61
150+00.00
560.28
DRAINAGE LAYER
LA-R/W

260 240 220 200 180 160 140 120 100 80 60 40 20 0 20 40 60 80 100 120 140 160 180 200 220 240

DRAFT Stage 3 - Not for Construction 09/23/2024

U:\173608714\LAW\75923\roadway\sheets\75923XS1024-2B.dgn 5/21/2024 4:51:44 PM SLParker

SEEDING END WIDTH	SEEDING SQ. YDS.	END AREA CUT	END AREA FILL	VOLUME CUT	VOLUME FILL
86	510	0	634	0	1215
98	562	0	678	0	1231
105	569	0	652	0	1186
	1641			8	3632

CALCULATED SLP
CHECKED ALB

CROSS SECTIONS S.R. 7
STA. 151+50.00 TO STA. 152+50.00

LAW-7-2.17

184
1247

620 600 580 560 540 520

EX R/W — R/W — EX R/W — LA-R/W

3" EX. WATER

4" EX. GAS

7' 4:1 4:1 3:1

566.72
571.64
152+50.00
563.38

8' 4:1 4:1 3:1

564.97
570.99
152+00.00
562.46

8' 4:1 4:1 3:1

563.45
570.34
151+50.00
562.07

ITEM 203 - EMBANKMENT, AS PER PLAN, TYPE C ..... 12 CY

260 240 220 200 180 160 140 120 100 80 60 40 20 0 20 40 60 80 100 120 140 160 180 200 220 240

DRAFT Stage 3 - Not for Construction 09/23/2024

U:\173608714\LAW\75923\roadway\sheets\75923XS1025-2B.dgn 5/21/2024 4:51:45 PM SLParker

SEEDING END WIDTH	SEEDING SQ. YDS.	END AREA CUT	END AREA FILL	VOLUME CUT	VOLUME FILL
89	486	0	781	0	1355
85	464	0	681	0	1219
81	466	0	635	0	1175
	1416			0	3749

CALCULATED SLP
CHECKED ALB

CROSS SECTIONS S.R. 7
STA. 153+00.00 TO STA. 154+00.00

LAW-7-2.17

185
1247

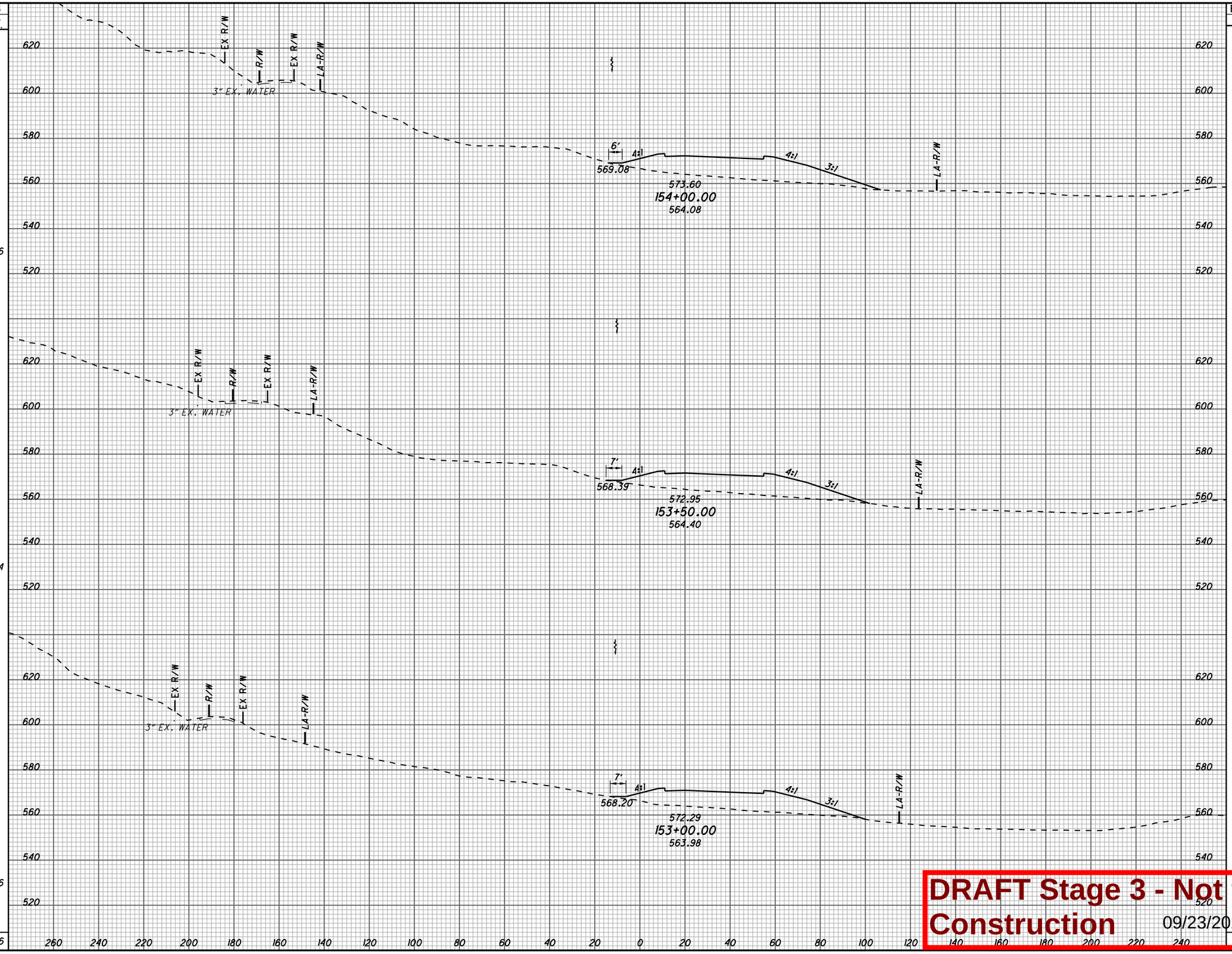

DRAFT Stage 3 - Not for Construction 09/23/2024

U:\173608714\LAW\75923\roadway\sheets\75923XS1026-2B.dgn 5/21/2024 4:51:46 PM SLParker

SEEDING	
END WIDTH	SQ. YDS.
19	287
84	476
88	492
	1255

END AREA	
CUT	FILL
0	248
	656
	747
	1415
	3552

VOLUME	
CUT	FILL
0	838
0	1299
0	

CALCULATED SLP
CHECKED ALB

CROSS SECTIONS S.R. 7
STA. 154+50.00 TO STA. 155+50.00

LAW-7-2.17

186
1247

EX R/W
R/W
EX R/W
LA-R/W
3" EX. WATER
5'
4:1
573.35
575.55
155+50.00
569.83
MATCH LINE
ACCESS DRIVE
571.69
574.90
155+00.00
567.64
4:1
3:1
570.12
574.25
154+50.00
565.86
6'

620 600 580 560 540 520

260 240 220 200 180 160 140 120 100 80 60 40 20 0 20 40 60 80 100 120 140 160 180 200 220 240

DRAFT Stage 3 - Not for Construction 09/23/2024

U:\173608714\LAW\75923\roadway\sheets\75923XS1027-2B.dgn 5/21/2024 4:51:47 PM SLParker

SEEDING	
END WIDTH	SQ. YDS.
145	547
52	228
30	137
	912

END AREA		VOLUME	
CUT	FILL	CUT	FILL
0	1275		
		7	1725
		7	588
		7	784
		0	258
		0	469
		14	2978

CALCULATED SLP
CHECKED ALB

CROSS SECTIONS S.R. 7
STA. 156+00.00 TO STA. 157+00.00

LAW-7-2.17

187
1247

U:\173608714\LAW\75923\roadway\sheets\75923XS1028-2B.dgn 5/21/2024 4:51:48 PM SLParker

680 660 640 620 600 580 560 540 620 600 580 560 540 620 600 580 560 540

260 240 220 200 180 160 140 120 100 80 60 40 20 0 20 40 60 80 100 120 140 160 180 200 220 240

EX R/W
R/W
EX R/W
LA-R/W
3" EX. WATER

6A
CATCH BASIN NO. 8
STA. 157+00.00, 22.08' LT., S.R. 7
T/C = 570.47
E = 567.47

6B
INLET NO. 3D
STA. 157+00.000, 55.61' RT., S.R. 7
T/C = 576.88
E = 560.20

NOISE WALL
9'
4:1
3:1
570.47
78' - 15" CONDUIT, TYPE B @ 9.32%
577.51
157+00.00
562.75
CFN: 1995089
MATCH LINE ACCESS DRIVE
96' - 15" CONDUIT, TYPE B @ 9.73%
HW-2.1 OR 2.2
STA. 157+00.000, 151.13' RT., S.R. 7
E = 550.86
LA-R/W
18" ROCK CHANNEL PROTECTION TYPE C WITH FILTER (8'X4')

NOISE WALL
5'
4:1
573.90
576.86
156+50.00
570.24
MATCH LINE ACCESS DRIVE

4:1
574.02
576.21
156+00.00
571.43
MATCH LINE ACCESS DRIVE

DRAFT Stage 3 - Not for Construction
09/23/2024

SEEDING	
END WIDTH	SQ. YDS.
80	452
82	447
79	621
	1520

END AREA	
CUT	FILL
0	1159
249	1165
0	1234
0	2324
462	6698

VOLUME	
CUT	FILL
231	2152
231	2222

CALCULATED SLP
CHECKED ALB

CROSS SECTIONS S.R. 7
STA. 157+50.00 TO STA. 158+50.00

LAW-7-2.17

188
1247

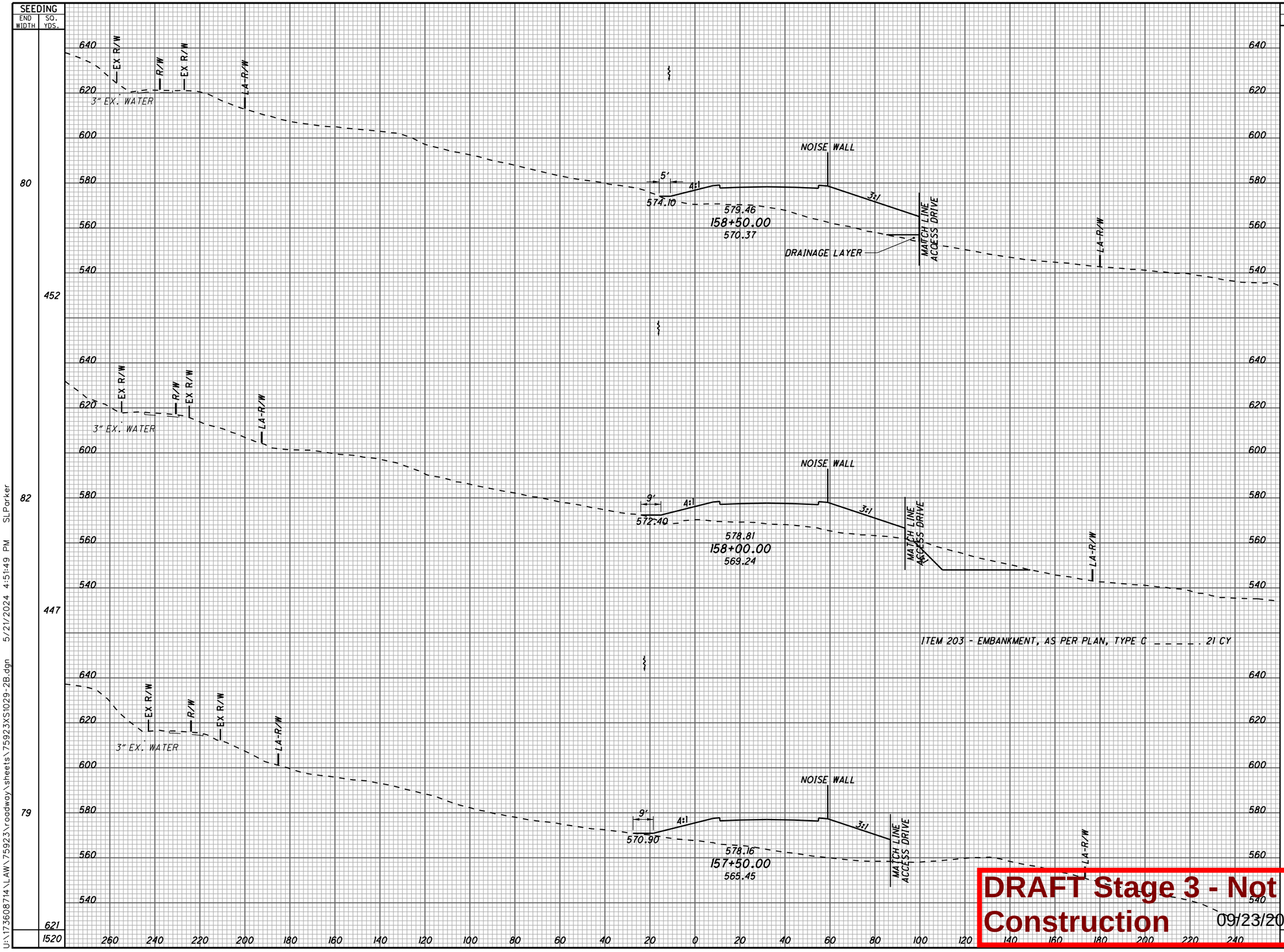

DRAFT Stage 3 - Not for Construction
09/23/2024

U:\173608714\LAW\75923\roadway\sheets\75923XS1029-2B.dgn 5/21/2024 4:51:49 PM SLParker

SEEDING END WIDTH	SEEDING SQ. YDS.		END AREA CUT	END AREA FILL	VOLUME CUT	VOLUME FILL
120		AHEAD	0	1699		
58		BACK	0	1358		
	188				0	1462
54			0	1263		
	232				0	1707
50		AHEAD	0	1038		
83		BACK	0	1242		
	91				0	444
	511				0	3613

CALCULATED SLP
CHECKED ALB

EX R/W
R/W
EX R/W
LA-R/W
3" EX. WATER
8" EX. WATER
NOISE WALL
AHEAD BACK
10:1
4:1
4:1
3:1
575.61
580.51
159+30.11
568.12
MATCH LINE ACCESS DRIVE
MATCH LINE HENSON HOLLOW EMERGENCY ACCESS
580.12
159+00.00
569.63
DRAINAGE LAYER (TYP.)
ITEM 203 - EMBANKMENT, AS PER PLAN, TYPE C _ _ _ _ 250 CY
BACK AHEAD
5'
4:1
574.21
579.59
158+59.97
570.40

CROSS SECTIONS S.R. 7
STA. 158+59.97 TO STA. 159+30.11

LAW-7-2.17

189
1247

DRAFT Stage 3 - Not for Construction
09/23/2024

U:\173608714\LAW\75923\roadway\sheets\75923XS1030-2B.dgn 5/21/2024 4:51:50 PM SLParker

SEEDING	
END WIDTH	SQ. YDS.
129	673
113	617
109	253
	1543

END AREA	
CUT	FILL
12	2014
1	1820
1	3249
0	1688
0	1248
12	8048

VOLUME	
CUT	FILL
11	3551

CALCULATED SLP
CHECKED ALB

CROSS SECTIONS S.R. 7
STA. 159+50.00 TO STA. 160+50.00

LAW-7-2.17

190
1247

640
620
600
580
560
540

EX R/W
R/W
EX R/W
LA-R/W
3" EX. WATER
NOISE WALL
6'
4:1
3:1
4:1
4:1
3:1
569.90
8" EX. WATER
582.27
160+50.00
565.03
MATCH LINE ACCESS DRIVE
LA-R/W

EX R/W
R/W
EX R/W
LA-R/W
3" EX. WATER
NOISE WALL
4:1
3:1
4:1
3:1
571.75
8" EX. WATER
581.43
160+00.00
565.78
DRAINAGE LAYER (TYP.)
MATCH LINE ACCESS DRIVE
LA-R/W

ITEM 203 - EMBANKMENT, AS PER PLAN, TYPE C _ _ _ _ 523 CY

EX R/W
R/W
EX R/W
LA-R/W
3" EX. WATER
NOISE WALL
6.4:1
4:1
3:1
573.62
8" EX. WATER
580.77
159+50.00
566.99
MATCH LINE ACCESS DRIVE
LA-R/W

260 240 220 200 180 160 140 120 100 80 60 40 20 0 20 40 60 80 100 120 140 160 180 200 220 240

DRAFT Stage 3 - Not for Construction 09/23/2024

U:\173608714\LAW\75923\roadway\sheets\75923XS1031-2B.dgn 5/21/2024 4:51:51 PM SLParker

SEEDING END WIDTH	SEEDING SQ. YDS.	END AREA CUT	END AREA FILL	VOLUME CUT	VOLUME FILL
163	887	22	3217	50	5575
156	832	31	2803	54	4853
144	758	27	2438	36	4123
	2477			140	14551

CALCULATED SLP
CHECKED ALB

CROSS SECTIONS S.R. 7
STA. 161+00.00 TO STA. 162+00.00

LAW-7-2.17

191
1247

U:\173608714\LAW\75923\roadway\sheets\75923XS1032-2B.dgn 5/21/2024 4:51:52 PM SLParker

640 620 600 580 560 540 520

3" EX. WATER
EX R/W
R/W
LA-R/W
NOISE WALL
3:1
4:1
10:1
8'
7'
563.96
8" EX. WATER
585.36
162+00.00
551.12
MATCH LINE ACCESS DRIVE
℄ 66" TYPE A = 540.95
566.20
584.28
161+50.00
559.32
DRAINAGE LAYER (TYP.)
℄ 66" TYPE A = 537.11
ITEM 203 - EMBANKMENT, AS PER PLAN, TYPE C _ _ _ _ 2841 CY
STA. 161+32
PROP. 66" TYPE A
568.05
583.16
161+00.00
562.03

260 240 220 200 180 160 140 120 100 80 60 40 20 0 20 40 60 80 100 120 140 160 180 200 220 240

DRAFT Stage 3 - Not for Construction
09/23/2024

SEEDING	
END WIDTH	SQ. YDS.
	212
	184
	165
	1100
	971
	913
	2984

END AREA		VOLUME	
CUT	FILL	CUT	FILL
8	4294	17	7734
10	4058	10	7172
0	3687	21	6393
		48	21299

CALCULATED SLP
CHECKED ALB

STA. 163+75.36
PROP. 66" TYPE A

BRENTWOOD EMERGENCY ACCESS
GRADING. FOR SECTIONS SEE
SHEETS 466-472

* MASONARY COLLARS AS PER
SCD DM-1.1 (INCLUDE WITH COST OF CONDUIT)

(6C) INLET NO. 3D
STA. 163+50.00, 55.67' RT., S.R. 7
T/C = 589.79
℄ = 584.00

NOISE WALL

12' - 15" CONDUIT,
TYPE F @ 0.83%

℄ = 583.90

47' - 15" CONDUIT,
TYPE F, 707.21 @ 31.62%

℄ = 569.04

MATCH LINE
ACCESS DRIVE

HW-2.1 OR 2.2
STA. 163+50.00, 146.54' RT., S.R. 7
℄ = 568.89

20' - 15" CONDUIT,
TYPE B @ 0.43%

15' - 15" CONDUIT,
TYPE F @ 0.43%

R/W
EX R/W
LA-R/W
9'
4:1
4:1
10:1
3:1
3:1
558.61
℄ 66" TYPE A =
552.45
EX. GAS
8" EX. WATER
590.43
163+50.00
558.98

NOISE WALL
R/W
EX R/W
LA-R/W
9'
4:1
4:1
10:1
3:1
3:1
559.31
8" EX. WATER
EX. 30" CMP
(TO BE REMOVED)
EX. GAS
588.64
163+00.00
555.40
℄ 66" TYPE A =
548.62
MATCH LINE
ACCESS DRIVE
LA-R/W

ITEM 203 - EMBANKMENT, AS PER PLAN, TYPE C ____ 3354 CY

NOISE WALL
R/W
EX R/W
LA-R/W
8'
4:1
10:1
3:1
3:1
562.47
8" EX. WATER
DRAINAGE LAYER (TYP.)
MATCH LINE
ACCESS DRIVE
587.02
162+50.00
547.65
EX. GAS
℄ 66" TYPE A =
544.78
LA-R/W

DRAFT Stage 3 - Not for Construction
09/23/2024

CROSS SECTIONS S.R. 7
STA. 162+50.00 TO STA. 163+50.00

LAW-7-2.17

192
1247

U:\173608714\LAW\75923\roadway\sheets\75923XS1033-2B.dgn 5/21/2024 4:51:52 PM SLParker

SEEDING END WIDTH	SEEDING SQ. YDS.
220	1182
205	1101
191	1119
	3402

END AREA CUT	END AREA FILL	VOLUME CUT	VOLUME FILL
154	3003	333	5530
205	2969	529	5911
367	3415	347	7138
		1209	18579

CALCULATED SLP
CHECKED ALB

CROSS SECTIONS S.R. 7
STA. 164+00.00 TO STA. 165+00.00

LAW-7-2.17

NOISE WALL
R/W
EX R/W
LA-R/W
580
640
620
600
560
540
10'
4:1
10:1
3:1
573.18
EX. STM
(TO BE REMOVED)
8" EX. WATER
596.80
165+00.00
567.35
571.75
EX GEN

NOISE WALL
MATCH LINE
CHANNEL GRADING
9.2:1
6:1
573.06
594.51
164+50.00
564.39
MATCH LINE
ACCESS DRIVE
EX GEN
8" EX. WATER

NOISE WALL
EX. GAS
560.56
592.38
164+00.00
562.54
DRAINAGE LAYER
4" EX. SAN

ITEM 203 - EMBANKMENT, AS PER PLAN, TYPE C _ _ _ _ 216 CY

DRAFT Stage 3 - Not for Construction 09/23/2024

U:\173608714\LAW\75923\roadway\sheets\75923XS1034-2B.dgn 5/21/2024 4:51:53 PM SLParker

SEEDING END WIDTH	SEEDING SQ. YDS.	END AREA CUT	END AREA FILL	VOLUME CUT	VOLUME FILL
224	1259	57	3288	106	6234
229	1261	58	3444	109	6189
225	1237	60	3240	199	5781
	3757			414	18204

CALCULATED SLP

CHECKED ALB

CROSS SECTIONS S.R. 7
STA. 165+50.00 TO STA. 166+50.00

LAW-7-2.17

194
1247

U:\173608714\LAW\75923\roadway\sheets\75923XS1035-2B.dgn 5/21/2024 4:51:54 PM SLParker

640 620 600 580 560 540 620 600 580 560 620 600 580 560 540 620 600 580 560

EX R/W, R/W, EX R/W, LA-R/W, 3" EX. WATER, EX. STM, 10', 4:1, 10:1, 3:1, NOISE WALL, EX R/W, EX R/W, EX GEN, 4" EX. SAN, 578.13, EX. STM (TO BE REMOVED), 4" EX. WATER, 604.68, 166+50.00, 574.68, 4:1, 4:1, 576.00, EX-GEN, LA-R/W, EX GEN, 8" EX. SAN, EX. CTV, EX. TELE, EX. ELEC.

EX R/W, R/W, EX R/W, LA-R/W, 3" EX. WATER, 4" EX. WATER, EX R/W, 10', 4:1, 10:1, 3:1, EX R/W, EX R/W, EX GEN, 575.72, EX. STM (TO BE REMOVED), 4" EX. WATER, 601.89, 166+00.00, 572.09, 3:1, EX GEN, EX GEN, LA-R/W, 4" EX. SAN, 4:1, 4:1, EX. CTV, EX. TELE, EX. ELEC., 8" EX. SAN, 572.00

R/W, EX R/W, LA-R/W, 3" EX. WATER, EX R/W, 10', 4:1, 10:1, 3:1, EX GEN, EX GEN, EX R/W, 573.31, EX. STM (TO BE REMOVED), EX. STM (TO BE REMOVED), 599.26, 165+50.00, 570.26, 3:1, EX GEN, EX GEN, LA-R/W, 8" EX. SAN, 4:1, 4:1, 571.88

NOISE WALL

260 240 220 200 180 160 140 120 100 80 60 40 20 0 20 40 60 80 100 120 140 160 180 200 220 240

DRAFT Stage 3 - Not for Construction 09/23/2024

SEEDING END WIDTH	SEEDING SQ. YDS.
215	1184
211	1182
214	1218
	3584

END AREA CUT	END AREA FILL	VOLUME CUT	VOLUME FILL
36	3871	54	7287
22	3999	31	7163
12	3736	64	6505
		149	20955

CALCULATED SLP

CHECKED ALB

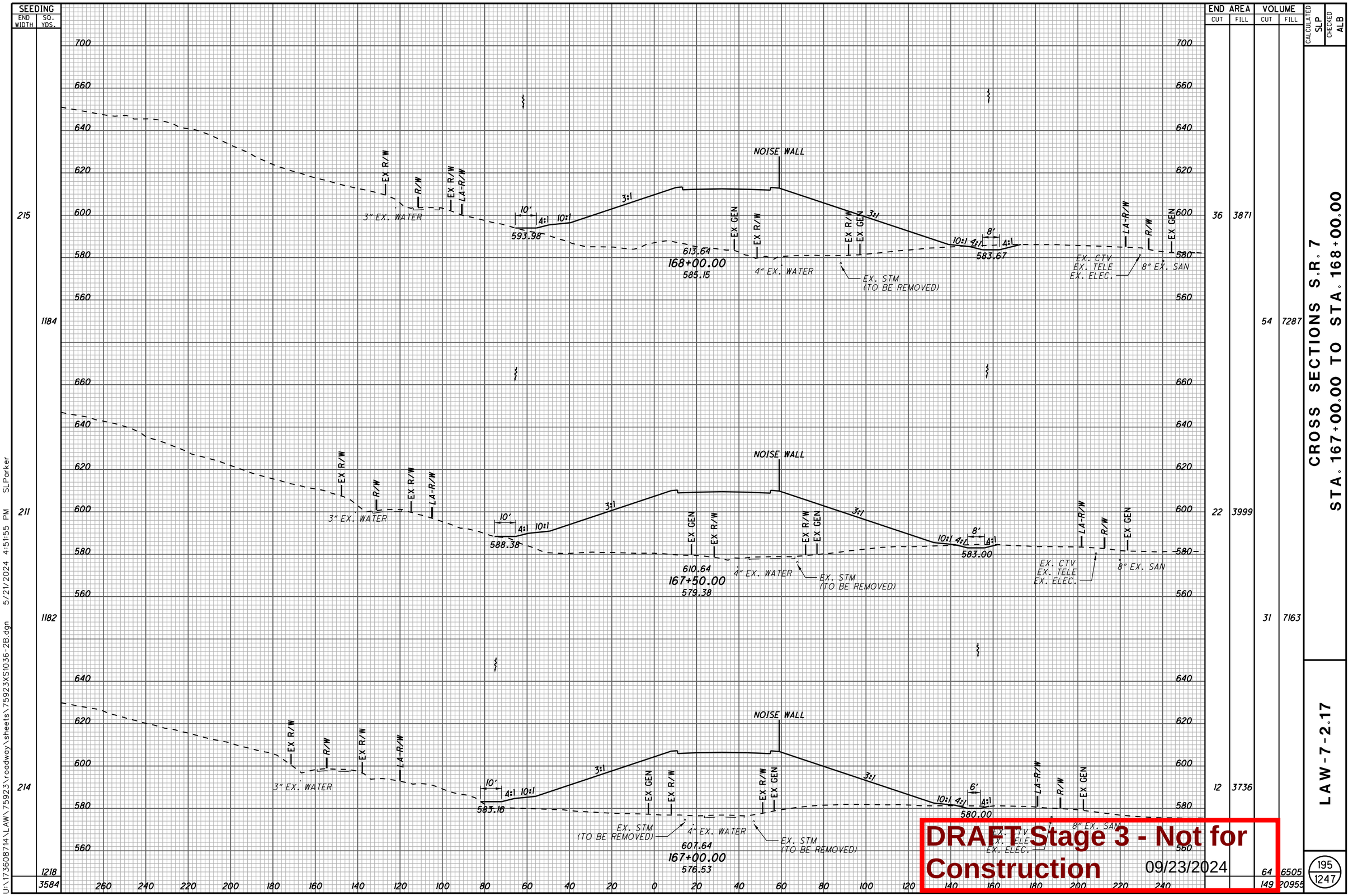

CROSS SECTIONS S.R. 7
STA. 167+00.00 TO STA. 168+00.00

LAW-7-2.17

195
1247

DRAFT Stage 3 - Not for Construction 09/23/2024

U:\173608714\LAW\75923\roadway\sheets\75923XS1036-2B.dgn 5/21/2024 4:51:55 PM SLParker

SEEDING END WIDTH	SEEDING SQ. YDS.	END AREA CUT	END AREA FILL	VOLUME CUT	VOLUME FILL
	223				
	1269	11	3342	77	6428
	1277	72	3601	119	6872
	1224	56	3821	86	7122
	3770			282	20422

CALCULATED SLP
CHECKED ALB

CROSS SECTIONS S.R. 7
STA. 168+50.00 TO STA. 169+50.00

LAW-7-2.17

196
1247

U:\173608714\LAW\75923\roadway\sheets\75923XS1037-2B.dgn 5/21/2024 4:51:56 PM SLParker

680 660 640 620 600 580

LA-R/W EX R/W 3" EX. WATER EX R/W 10' 4:1 10:1 3:1 NOISE WALL 60+4.36 622.64 169+50.00 598.81 EX GEN 3:1 EX R/W 4" EX. WATER EX R/W EX GEN 10:1 4:1 7' 4:1 586.75 4" EX. SAN EX. STM (TO BE REMOVED)

680 660 640 620 600 580

TMP EX R/W R/W EX R/W LA-R/W 3" EX. WATER 10' 4:1 10:1 3:1 NOISE WALL 600.58 619.64 169+00.00 593.08 EX GEN EX R/W 3:1 4" EX. WATER EX R/W EX GEN 10:1 4:1 8' 4:1 585.00 EX. STM (TO BE REMOVED)

680 660 640 620 600 580 560

TMP EX R/W R/W EX R/W LA-R/W 3" EX. WATER 10' 4:1 10:1 3:1 NOISE WALL 597.00 616.64 168+50.00 588.01 EX GEN EX R/W 3:1 4" EX. WATER EX R/W EX GEN 10:1 4:1 8' 4:1 584.33 LA-R/W R/W EX. CTV EX. ELEC

260 240 220 200 180 160 140 120 100 80 60 40 20 0 20 40 60 80 100 120 140 160 180 200 220 240

DRAFT Stage 3 - Not for Construction 09/23/2024

SEEDING	
END WIDTH	SQ. YDS.
219	1289
245	1333
234	1270
	3892

END AREA	
CUT	FILL
28	3636
102	3432
21	3284
30	6135
265	18899

VOLUME	
CUT	FILL
121	6545
114	6219

CALCULATED SLP
CHECKED ALB

CROSS SECTIONS S.R. 7
STA. 170+00.00 TO STA. 171+00.00

LAW-7-2.17

197
1247

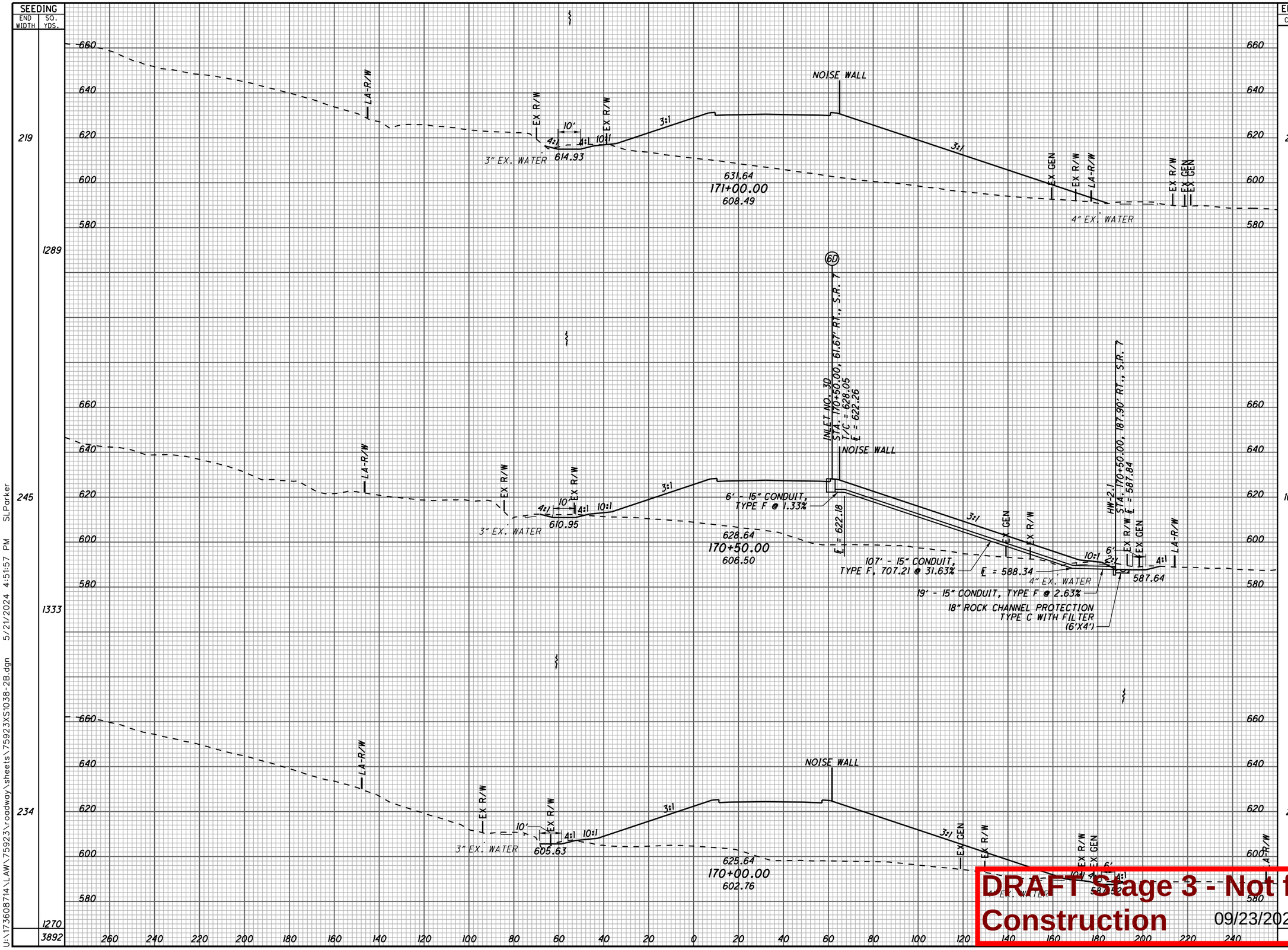

DRAFT Stage 3 - Not for Construction 09/23/2024

U:\173608714\LAW 75923\roadway\sheets\75923XS1038-2B.dgn 5/21/2024 4:51:57 PM SLParker

SEEDING	
END WIDTH	SQ. YDS.
157	945
183	1064
200	1163
	3172

END AREA		VOLUME	
CUT	FILL	CUT	FILL
0	2681	0	5638
0	3408	8	6527
0	3641	34	6738
		42	18903

CALCULATED SLP
CHECKED ALB

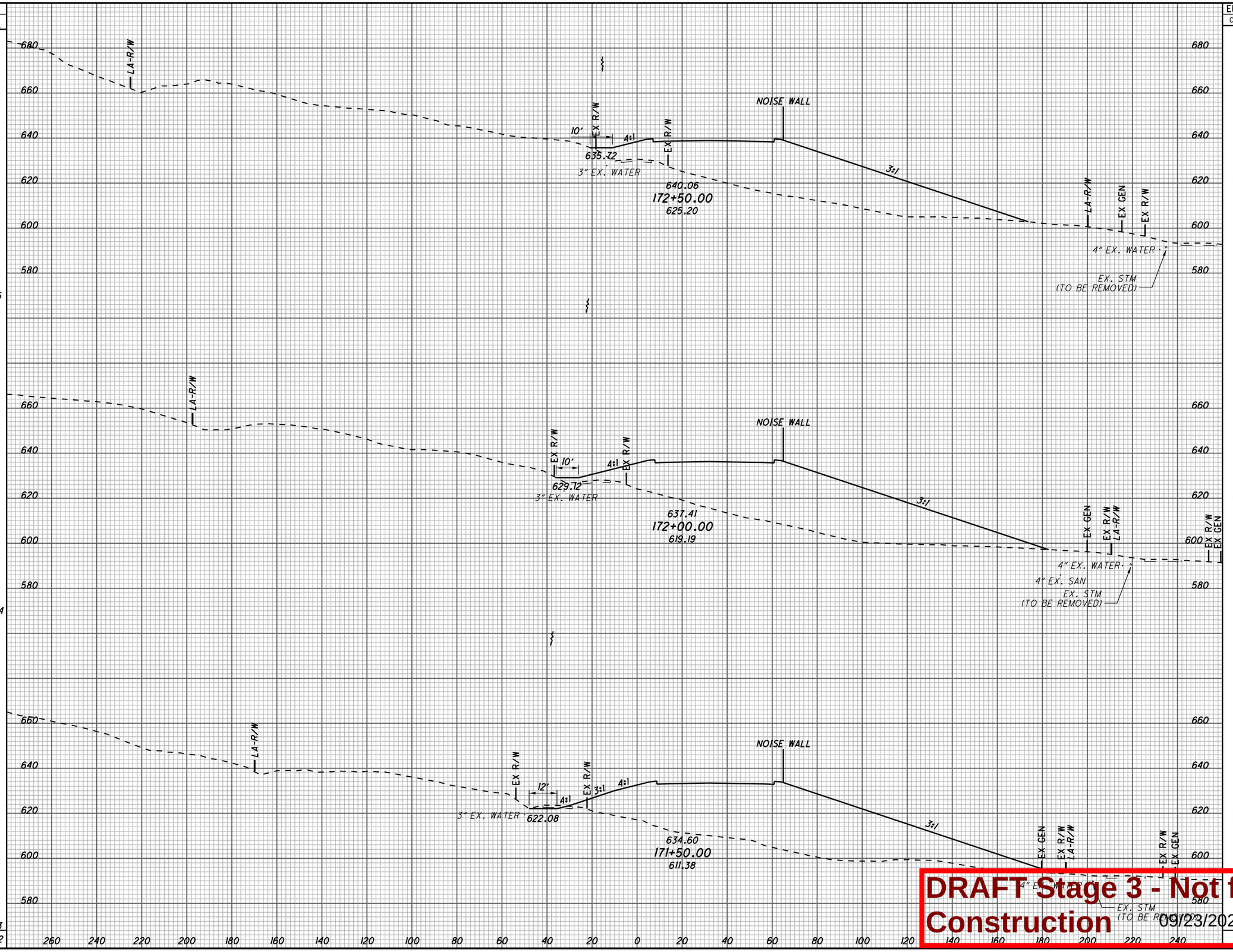

CROSS SECTIONS S.R. 7
STA. 171+50.00 TO STA. 172+50.00

LAW-7-2.17

198
1247

DRAFT Stage 3 - Not for Construction
09/23/2024

U:\173608714\LAW\75923\roadway\sheets\75923XS1039-2B.dgn 5/21/2024 4:51:58 PM SLParker

SEEDING	
END WIDTH	SQ. YDS.
227	1151
187	974
163	891
	3016

END AREA	
CUT	FILL
836	2024
641	2823
0	2375

VOLUME	
CUT	FILL
1368	4489
594	4813
0	4682
1962	13984

CALCULATED SLP
CHECKED ALB

CROSS SECTIONS S.R. 7
STA. 173+00.00 TO STA. 174+00.00

LAW-7-2.17

199
1247

680
660
640
620
600
580

260 240 220 200 180 160 140 120 100 80 60 40 20 0 20 40 60 80 100 120 140 160 180 200 220 240

NOISE WALL
10'
4:1
1:1
2.86:1
3:1
EX R/W
LA-R/W
EX GEN
644.87
647.01
174+00.00
641.61
3" EX. WATER
640.96
644.86
173+50.00
632.17
638.19
642.54
173+00.00
630.87
(2) 4" EX. SAN

DRAFT Stage 3 - Not for Construction
09/23/2024

U:\173608714\LAW\75923\roadway\sheets\75923XS1040-2B.dgn 5/21/2024 4:51:58 PM SLParker

SEEDING	
END WIDTH	SQ. YDS.
525	2047
211	1455
312	1499
	5001

END AREA		VOLUME	
CUT	FILL	CUT	FILL
9165	92	10718	408
2411	349	4060	1655
1973	1438	2601	3207
		17379	5270

CALCULATED SLP
CHECKED ALB

CROSS SECTIONS S.R. 7
STA. 174+50.00 TO STA. 175+50.00

LAW-7-2.17

200
1247

MATCH LINE
460 440 420 400
380 360 340 320 300 280 260
3:1
10:1
1.5:1
800 780 760 740 720 700 680 660 640 620

1.5:1
10:1
3:1
10'
4:1 (VBF) 4:1
649.61
113.5:1
NOISE WALL
4:1
652.49
175+50.00
659.73
EX R/W
3" EX. WATER
EX R/W
LA-R/W

4:1
10'
(VBF) 4:1
648.66
650.83
175+00.00
655.49
NOISE WALL
EX R/W
3:1
EX R/W
3" EX. WATER
LA-R/W

4:1
10'
4:1
646.84
649.00
174+50.00
647.97
NOISE WALL
EX R/W
EX R/W
3" EX. WATER
LA-R/W

(VBF) DENOTES LOCATION OF VEGETATED BIOFILTER

260 240 220 200 180 160 140 120 100 80 60 40 20 0 20 40 60 80 100 120 140 160 180 200 220 240

DRAFT Stage 3 - Not for Construction
09/23/2024

U:\17360871 4\LAW\75923\roadway\sheets\75923XS1041-2B.dgn 5/21/2024 4:51:59 PM SLParker

SEEDING	
END WIDTH	SQ. YDS.
737	3500
523	2911
	6411

END AREA	
CUT	FILL
12615	0
11272	18

VOLUME	
CUT	FILL
22117	17
18927	102
41040	119

CALCULATED SLP

CHECKED ALB

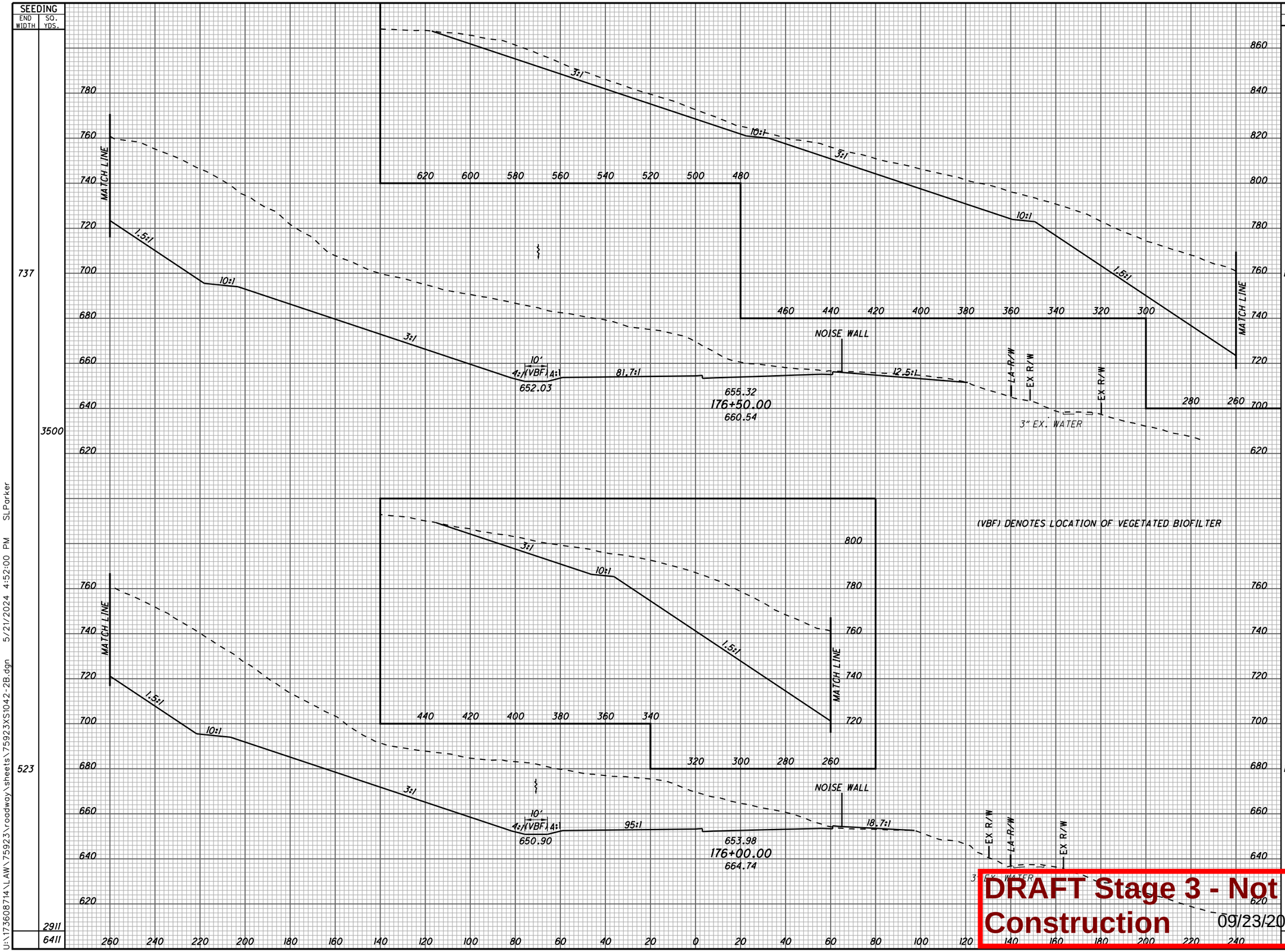

CROSS SECTIONS S.R. 7
STA. 176+00.00 TO STA. 176+50.00

LAW-7-2.17

201
1247

DRAFT Stage 3 - Not for Construction
09/23/2024

U:\173608714\LAW\75923\roadway\sheets\75923XS1042-2B.dgn 5/21/2024 4:52:00 PM SLParker

SEEDING	
END WIDTH	SQ. YDS.
751	4187
756	4148
	8335

END AREA	
CUT	FILL
11841	0
14010	24
2465.	23

VOLUME	
CUT	FILL
23937	23
	46

CALCULATED SLP

CHECKED ALB

LA-R/W

MATCH LINE

NOISE WALL

EX R/W

3" EX. WATER

(VBF) DENOTES LOCATION OF VEGETATED BIOFILTER

653.55
657.49
177+50.00
669.22

652.98
656.48
177+00.00
666.64

DRAFT Stage 3 - Not for Construction

09/23/2024

CROSS SECTIONS S.R. 7
STA. 177+00.00 TO STA. 177+50.00

LAW-7-2.17

202 1247

U:\173608714\LAW\75923\roadway\sheets\75923XS1043-2B.dgn 5/21/2024 4:52:01 PM SLParker

SEEDING	
END WIDTH	SQ. YDS.
248	1174
174	2571
	3745

END AREA		VOLUME	
CUT	FILL	CUT	FILL
3388	0		
		5910	0
2995	0		
		13736	0
		19646	0

CALCULATED SLP
CHECKED ALB

CROSS SECTIONS S.R. 7
STA. 178+00.00 TO STA. 178+50.00

780 760 740 720 700 680 660 640 620

3.8:1
8'
(VBF)
4:1
4:1
656.30
659.00
178+50.00
675.34
NOISE WALL
12.5:1
LA-R/W
EX. 651.36

(VBF) DENOTES LOCATION OF VEGETATED BIOFILTER

3:1
9'
(VBF)
4:1
4:1
655.62
658.32
178+00.00
674.45
NOISE WALL
8:1
LA-R/W
EX R/W
EX. WATER

260 240 220 200 180 160 140 120 100 80 60 40 20 0 20 40 60 80 100 120 140 160 180 200 220 240

DRAFT Stage 3 - Not for Construction

09/23/2024

LAW-7-2.17

203
1247

U:\173608714\LAW\75923\roadway\sheets\75923XS1044-2B.dgn 5/21/2024 4:52:02 PM SLParker

SEEDING END WIDTH	SEEDING SQ. YDS.
229	1297
238	1350
	2647

END AREA CUT	END AREA FILL	VOLUME CUT	VOLUME FILL
1901	11	4126	10
2555	0	5504	0
		9630	10

CALCULATED SLP
CHECKED ALB

CROSS SECTIONS S.R. 7
STA. 179+00.00 TO STA. 179+50.00

LAW-7-2.17

204
1247

760
740
720
700
680
660
640
620

3.8:1
6'
(VBF)
4:1
4:1
657.15
659.85
179+50.00
665.36
NOISE WALL
4:1
4:1
652.28
LA-R/W
TMP

(VBF) DENOTES LOCATION OF VEGETATED BIOFILTER

3.8:1
7'
(VBF)
4:1
4:1
656.81
659.51
179+00.00
670.77
NOISE WALL
4:1
4:1
652.15
LA-R/W
TMP

260 240 220 200 180 160 140 120 100 80 60 40 20 0 20 40 60 80 100 120 140 160 180 200 220 240

DRAFT Stage 3 - Not for Construction 09/23/2024

U:\173608714\LAW\75923\roadway\sheets\75923XS1045-2B.dgn 5/21/2024 4:52:03 PM SLParker

SEEDING END WIDTH	SEEDING SQ. YDS.	END AREA CUT	END AREA FILL	VOLUME CUT	VOLUME FILL
240	1299	1542	1542	3014	1736
	1268			3346	318
227	1268	1712	332		
	2567			6360	2054

CALCULATED SLP

CHECKED SLP

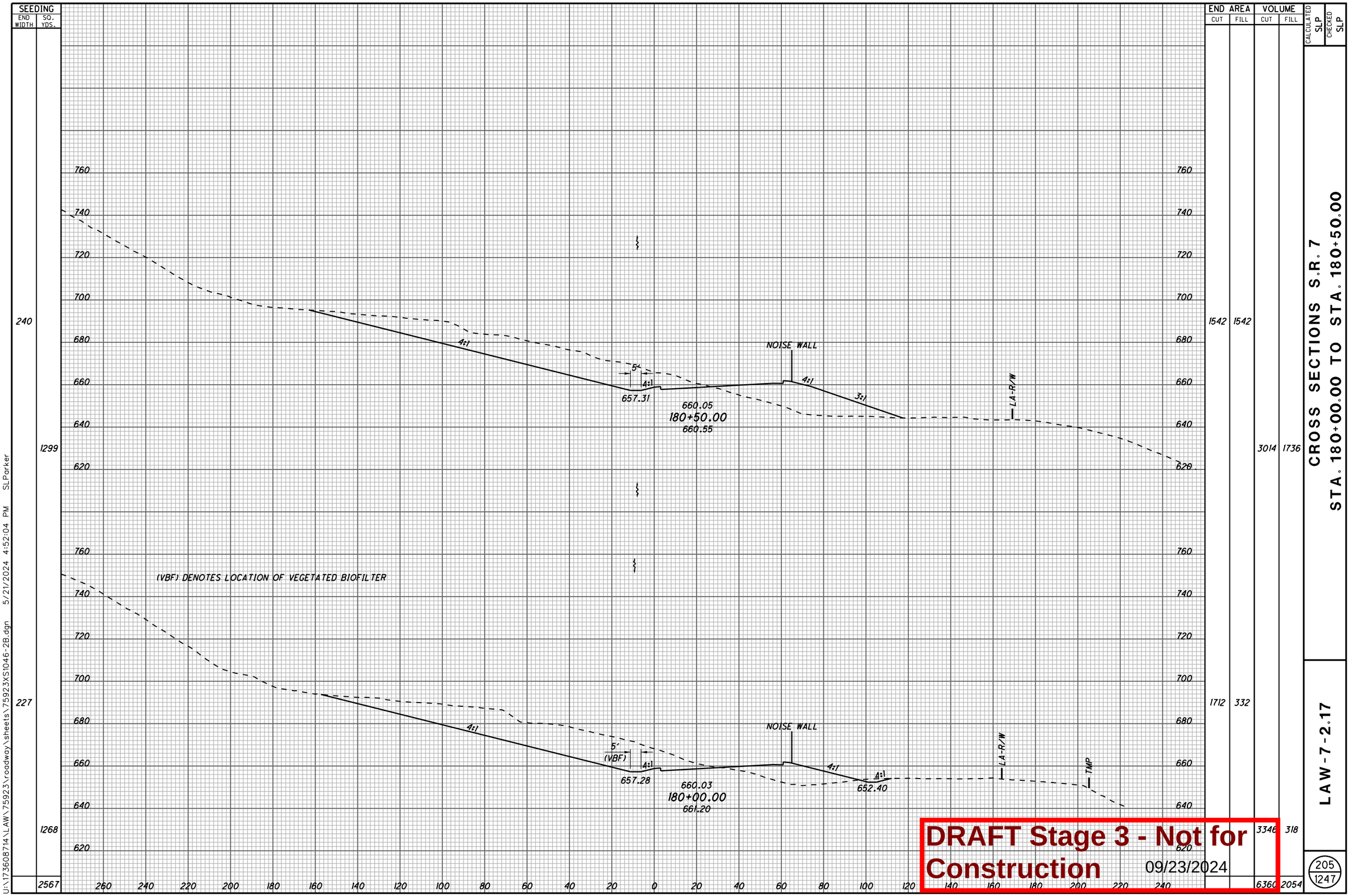

CROSS SECTIONS S.R. 7
STA. 180+00.00 TO STA. 180+50.00

LAW-7-2.17

205
1247

DRAFT Stage 3 - Not for Construction 09/23/2024

U:\173608714\LAW\75923\roadway\sheets\75923XS1046-2B.dgn 5/21/2024 4:52:04 PM SLParker

SEEDING END WIDTH	SEEDING SQ. YDS.	END AREA CUT	END AREA FILL	VOLUME CUT	VOLUME FILL
176	1197	905	796	2150	1494
254	1454	1416	818	2985	1601
269	1414	1808	911	3102	2271
	4065			8237	5366

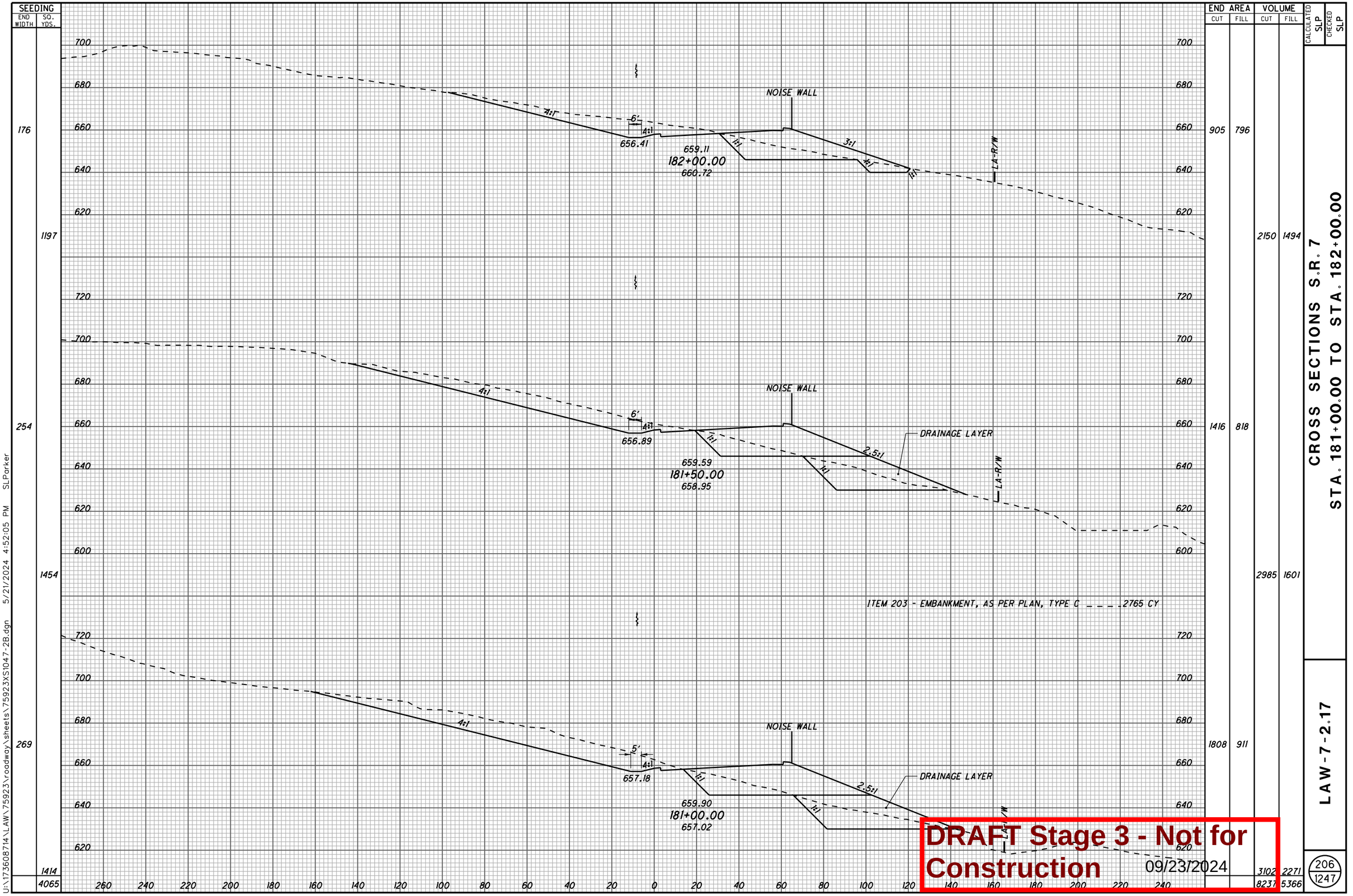

ITEM 203 - EMBANKMENT, AS PER PLAN, TYPE C _ _ _ _ 2765 CY

CALCULATED SLP
CHECKED SLP

CROSS SECTIONS S.R. 7
STA. 181+00.00 TO STA. 182+00.00

LAW-7-2.17

DRAFT Stage 3 - Not for Construction
09/23/2024

SLParker
5/21/2024 4:52:05 PM
U:\1736087\14\LAW\75923\roadway\sheets\75923XS1047-2B.dgn

SEEDING		END AREA		VOLUME		CALCULATED	CHECKED
END WIDTH	SQ. YDS.	CUT	FILL	CUT	FILL	SLP	SLP
321	1617	9	7506	895	11717		
261	1105	958	5148	1783	6658		
137	870	967	2043	1734	2629		
	3592			4412	21004		

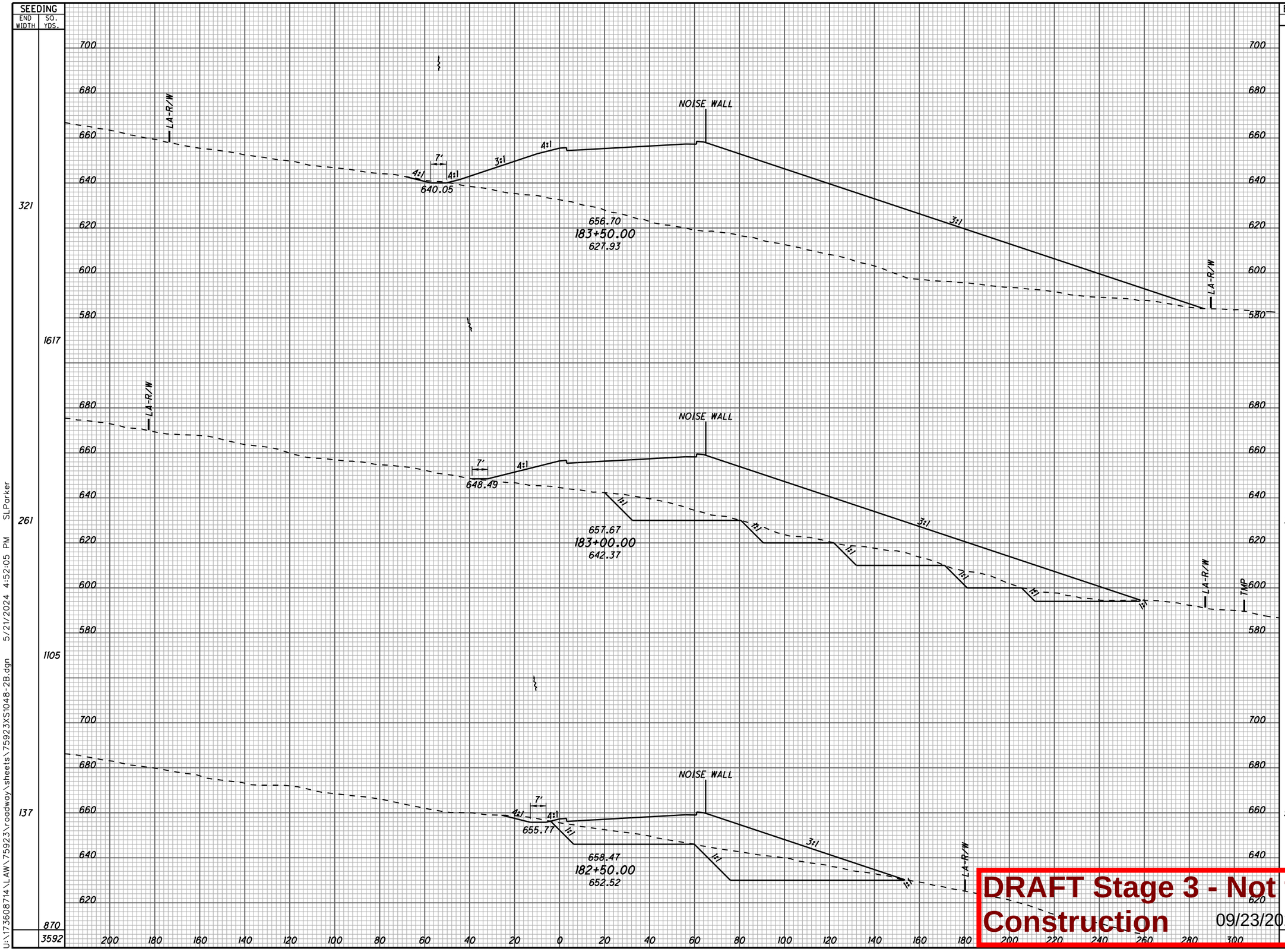

CROSS SECTIONS S.R. 7
STA. 182+50.00 TO STA. 183+50.00

LAW-7-2.17

207
1247

DRAFT Stage 3 - Not for Construction 09/23/2024

U:\173608714\LAW\75923\roadway\sheets\75923XS1048-2B.dgn 5/21/2024 4:52:05 PM SLParker

SEEDING END WIDTH	SEEDING SQ. YDS.
270	1900
414	2200
378	1943
	6043

END AREA CUT	END AREA FILL	VOLUME CUT	VOLUME FILL
0	7218		
		5	16828
4	10955		
		142	19466
		149	10067
		146	16272
		293	52566

CALCULATED SLP
CHECKED ALB

CROSS SECTIONS S.R. 7
STA. 184+00.00 TO STA. 185+00.00

LAW-7-2.17

208
1247

NOISE WALL
LA-R/W
5:1
4:1 10:1
627.42
652.80
185+00.00
615.19
2" EX. WATER
3:1
LA-R/W
680
660
640
620
600
580

NOISE WALL
LA-R/W
6.3:1
200:1
4:1 4:1 10:1
627.55
654.26
184+50.00
601.80
EX R/W
2" EX. WATER
3:1
EX R/W
LA-R/W
TMP

NOISE WALL
LA-R/W
3:1
6'
4:1 4:1 10:1
633.80
5:1
655.56
184+00.00
616.13
EX R/W
3:1
EX R/W
LA-R/W
TMP
EX R/W
2" WATER
EX. 2" WATER
(TO BE REMOVED)

200 180 160 140 120 100 80 60 40 20 0 20 40 60 80 100 120 140 160 180 200 220 240 260 280 300

DRAFT Stage 3 - Not for Construction

09/23/2024

U:\1736087\14\LAW\75923\roadway\sheets\75923XS1049-2B.dgn 5/21/2024 4:52:06 PM SLParker

SEEDING END WIDTH	SEEDING SQ. YDS.	END AREA CUT	END AREA FILL	VOLUME CUT	VOLUME FILL
258	1402	4356	0	5628	749
246	1331	1721	809	1867	3181
233	1396	294	2626	273	9115
	4129			7768	13045

CALCULATED SLP
CHECKED ALB

720 700 680 660 640 620 600

LA-R/W

EX. GAS
¾" EX. WATER

3:1 4:1 4:1 10:1

627.05

647.43
186+50.00
654.62

NOISE WALL

4:1 4:1 3:1

643.98

LA-R/W

EX. GAS ¾" EX. WATER

627.18

2" EX. WATER 649.38
186+00.00
639.61

6' 4:1

641.16

LA-R/W TMP

EX. GAS ¾" EX. WATER

627.30

2" EX. WATER
651.17
185+50.00
630.80

NOISE WALL

3:1 10:1

LA-R/W TMP

260 240 220 200 180 160 140 120 100 80 60 40 20 0 20 40 60 80 100 120 140 160 180 200 220 240

CROSS SECTIONS S.R. 7
STA. 185+50.00 TO STA. 186+50.00

LAW-7-2.17

209
1247

DRAFT Stage 3 - Not for Construction 09/23/2024

U:\173608714\LAW\75923\roadway\sheets\75923XS1050-2B.dgn 5/21/2024 4:52:07 PM SLParker

SEEDING END WIDTH	SEEDING SQ. YDS.
349	2011
374	1970
335	1648
	5629

END AREA CUT	END AREA FILL	VOLUME CUT	VOLUME FILL
9033	0		
		16932	40
9253	42		
		15051	40
7001	0		
		10516	0
		4249	80

CALCULATED SLP
CHECKED ALB

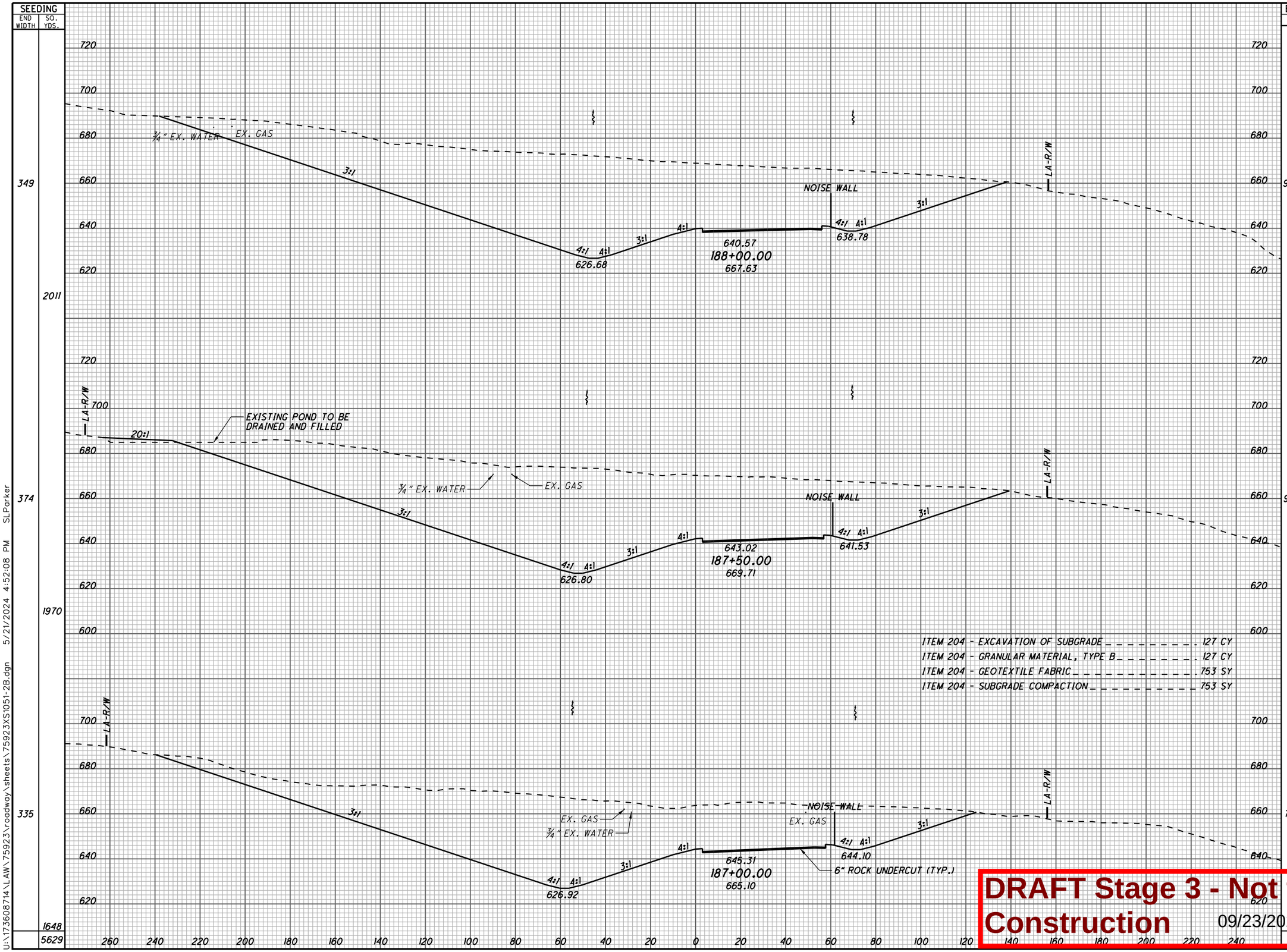

ITEM 204 - EXCAVATION OF SUBGRADE . . . . . 127 CY
ITEM 204 - GRANULAR MATERIAL, TYPE B . . . . . 127 CY
ITEM 204 - GEOTEXTILE FABRIC . . . . . 753 SY
ITEM 204 - SUBGRADE COMPACTION . . . . . 753 SY

DRAFT Stage 3 - Not for Construction 09/23/2024

CROSS SECTIONS S.R. 7
STA. 187+00.00 TO STA. 188+00.00

LAW-7-2.17

U:\173608714\LAW\75923\roadway\sheets\75923XS1051-2B.dgn 5/21/2024 4:52:08 PM SLParker

SEEDING	
END WIDTH	SQ. YDS.
234	1407
272	1620
311	1835
	4862

END AREA		VOLUME	
CUT	FILL	CUT	FILL
2897	0		
		6824	0
4472	0		
		10173	0
6514	0		
		14396	0
		3139	0

CALCULATED SLP
CHECKED ALB

720
700
680
660
640
620
600

LA-R/W
EX. GAS
3:1
4:1
4:1
626.30
632.24
189+50.00
638.03
NOISE WALL
6'
4:1
4:1
3:1
626.92
LA-R/W

LA-R/W
EX. GAS
3:1
4:1
4:1
626.42
635.18
189+00.00
649.60
NOISE WALL
5'
4:1
4:1
3:1
632.99
6" ROCK UNDERCUT
LA-R/W

3:1
4:1
4:1
3:1
626.55
637.96
188+50.00
660.39
NOISE WALL
5'
4:1
3:1
636.04
6" ROCK UNDERCUT
LA-R/W

ITEM 204 - EXCAVATION OF SUBGRADE . . . . . 123 CY
ITEM 204 - GRANULAR MATERIAL, TYPE B . . . . . 123 CY
ITEM 204 - GEOTEXTILE FABRIC . . . . . 724 SY
ITEM 204 - SUBGRADE COMPACTION . . . . . 724 SY

260 240 220 200 180 160 140 120 100 80 60 40 20 0 20 40 60 80 100 120 140 160 180 200 220 240

DRAFT Stage 3 - Not for Construction 09/23/2024

CROSS SECTIONS S.R. 7
STA. 188+50.00 TO STA. 189+50.00

LAW-7-2.17

211
1247

U:\173608714\LAW\75923\roadway\sheets\75923XS1052-2B.dgn 5/21/2024 4:52:09 PM SLParker

SEEDING END WIDTH	SEEDING SQ. YDS.
185	1082
205	1214
232	1297
	3593

END AREA CUT	END AREA FILL	VOLUME CUT	VOLUME FILL
895	1219		
1046	339		
		1798	1443
		2332	367
1473	57		
		4046	53
		8176	1863

CALCULATED SLP
CHECKED ALB

CROSS SECTIONS S.R. 7
STA. 190+00.00 TO STA. 191+00.00

LAW-7-2.17

212
1247

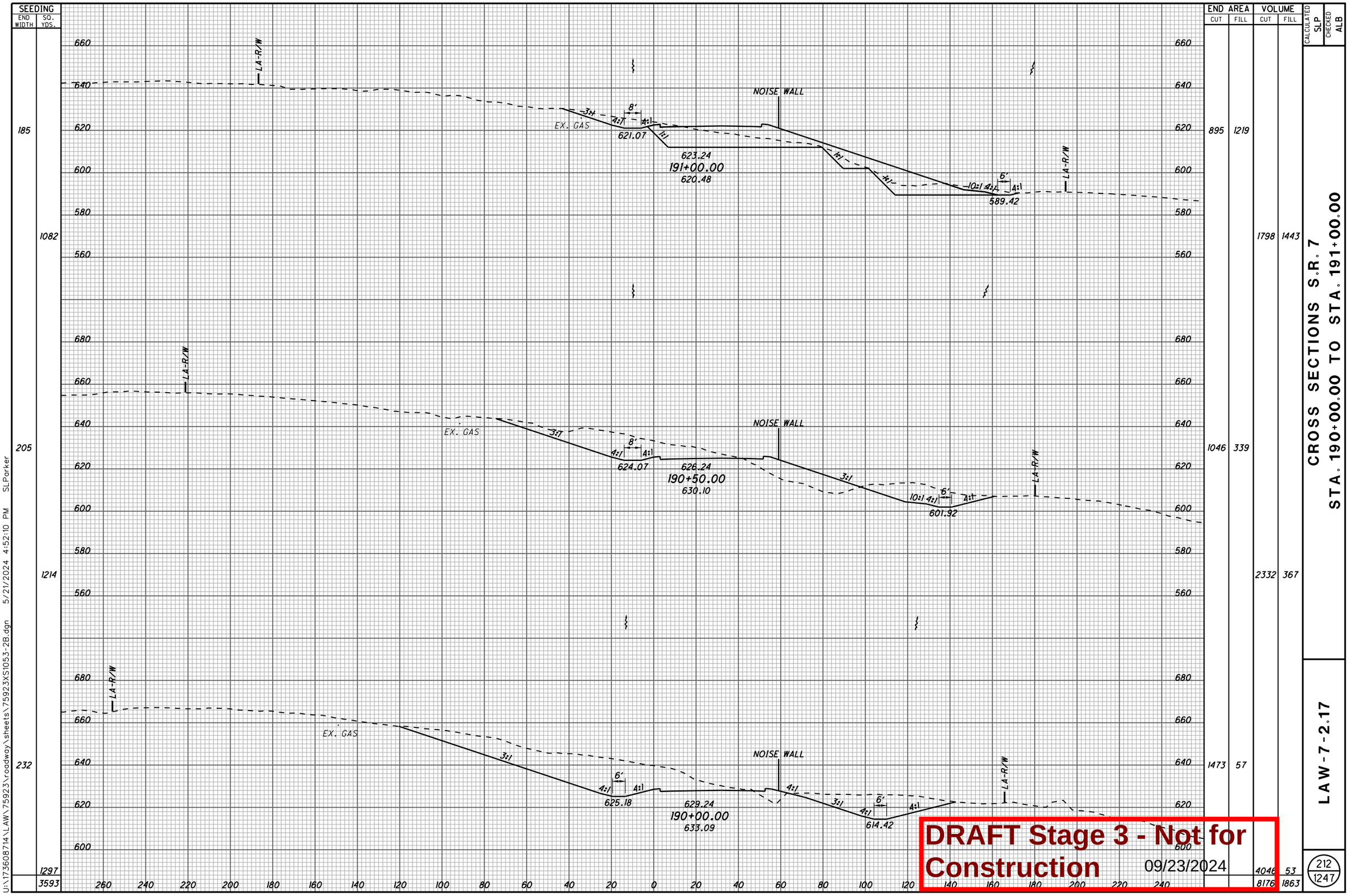

DRAFT Stage 3 - Not for Construction
09/23/2024

U:\173608714\LAW\75923\roadway\sheets\75923XS1053-2B.dgn 5/21/2024 4:52:10 PM SLParker

SEEDING	
END WIDTH	SQ. YDS.
230	1302
239	1164
180	1013
	3479

END AREA	
CUT	FILL
3	3794
95	2633
948	2126
1707	3097
2765	13455

VOLUME	
CUT	FILL
91	5951
967	4407

CALCULATED SLP
CHECKED ALB

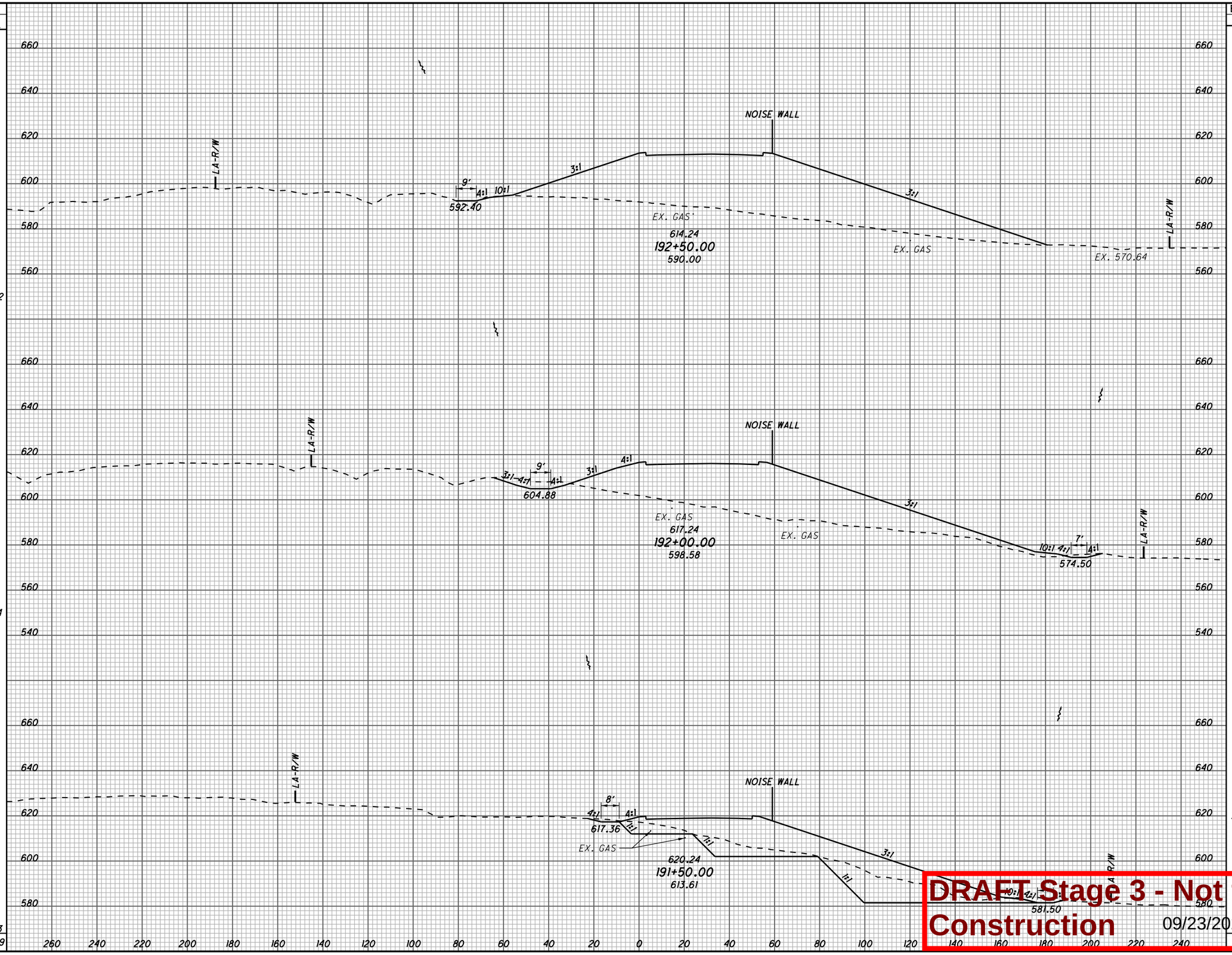

CROSS SECTIONS S.R. 7
STA. 191+50.00 TO STA. 192+50.00

LAW-7-2.17

213
1247

DRAFT Stage 3 - Not for Construction 09/23/2024

U:\173608714\LAW\75923\roadway\sheets\75923XS1054-2B.dgn 5/21/2024 4:52:11 PM SLParker

SEEDING END WIDTH	SEEDING SQ. YDS.	END AREA CUT	END AREA FILL	VOLUME CUT	VOLUME FILL
292	1683	406	4327	757	8950
314	1640	411	5339	381	9550
276	1405	0	4974	3	8119
	4728			1141	26619

CALCULATED SLP
CHECKED ALB

CROSS SECTIONS S.R. 7
STA. 193+00.00 TO STA. 194+00.00

LAW-7-2.17

214
1247

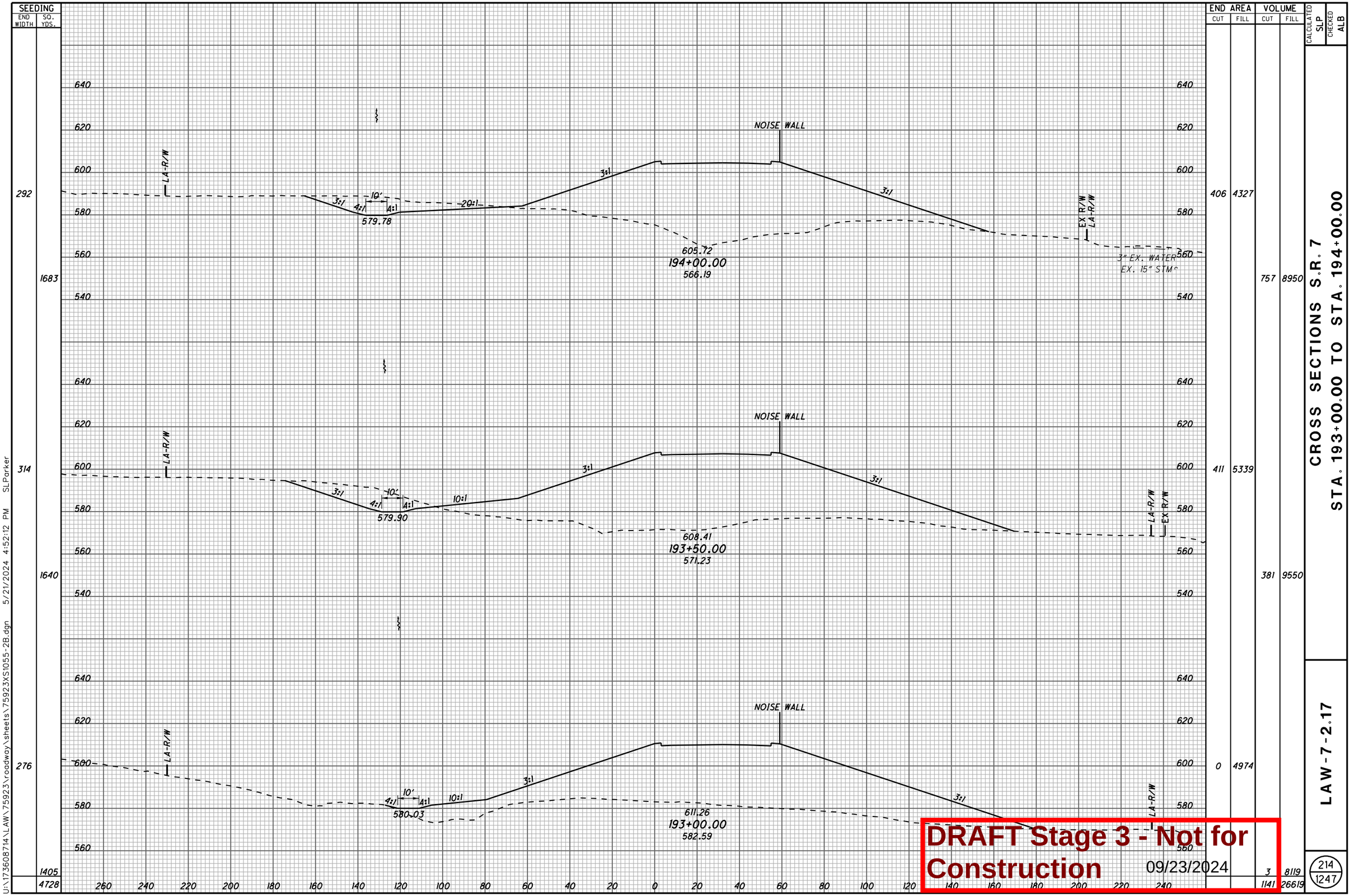

DRAFT Stage 3 - Not for Construction 09/23/2024

U:\173608714\LAW\75923\roadway\sheets\75923XS1055-2B.dgn 5/21/2024 4:52:12 PM SLParker

SEEDING	
END WIDTH	SQ. YDS.
59	185
92	999
267	1552
	2736

STA. 196+30.13
PROP. CB-4

R/W
LA-R/W
10'
4:1
4:1
567.41

NOISE WALL
* 3:1 NORMAL
600.28
195+21.92
560.77
SKEW ANGLE = 28° LHF

EX R/W
LA-R/W

3:1
3:1
MSE WALL (TYP.)
572.84
600.79
195+00.00
561.39

3" EX. WATER

NOISE WALL
3:1
20:1
3:1
579.66
603.18
194+50.00
566.72

EX. GAS

END AREA		VOLUME	
CUT	FILL	CUT	FILL
42	2655		
270	2356		
		127	2035
		419	6232
182	4374		
		545	8057
		1091	16324

CALCULATED SLP
CHECKED ALB

CROSS SECTIONS S.R. 7
STA. 194+50.00 TO STA. 195+21.18

LAW-7-2.17

215
1247

DRAFT Stage 3 - Not for Construction 09/23/2024

U:\173608714\LAW 75923\roadway\sheets\75923XS1056-2B.dgn 5/21/2024 4:52:13 PM SLParker

SEEDING END WIDTH	SEEDING SQ. YDS.
182	369
68	
	369

END AREA CUT	END AREA FILL	VOLUME CUT	VOLUME FILL
754	0	410	1365
78	2768		
		410	1365

CALCULATED SLP
CHECKED ALB

EX R/W
R/W
EX R/W
LA-R/W
MATCH LINE
G.R. 104
2.5:1
2:1
10:1 4:1 4:1
564.16
LA-R/W
3" EX. WATER
EX. 36" TYPE C
PROP. 15" TYPE C
℄ = 547.99
1:1
1:1
592.79
197+00.00
550.90
4" EX. WATER

STA. 196+75.00, LT./RT.
BEGIN SLOPE REINFORCEMENT
FOR DETAILS, SEE SHEETS 38-39

NOISE WALL
* 3:1 NORMAL
MSE WALL
MATCH LINE
MSE WALL GRADING
10:1* 4:1* 4:1*
564.40
LA-R/W
R/W
594.09
196+73.39
553.91
SKEW ANGLE = 28° LHF
4" EX. WATER

ITEM 863 - REINFORCED EMBANKMENT _ _ _ _ _ _ _ _ 2559 CY

600 580 560 540

260 240 220 200 180 160 140 120 100 80 60 40 20 0 20 40 60 80 100 120 140 160 180 200 220 240

CROSS SECTIONS S.R. 7
STA. 196+73.39 TO STA. 197+00.00

LAW-7-2.17

DRAFT Stage 3 - Not for Construction 09/23/2024

U:\173608714\LAW\75923\roadway\sheets\75923XS1057-2B.dgn 5/21/2024 4:52:13 PM SLParker

SEEDING	
END WIDTH	SQ. YDS.
301	1630
285	1455
238	1166
	4251

END AREA	
CUT	FILL
451	0
89	0
235	0
916	0
1716	0

VOLUME	
CUT	FILL
500	0
300	0

CALCULATED SLP
CHECKED ALB

CROSS SECTIONS S.R. 7
STA. 197+50.00 TO STA. 198+50.00

LAW-7-2.17

217
1247

620
600
580
560
540
520
500

DETENTION BASIN #1
FOR DETAILS, SEE SHEETS 665 & 670

541.00
4:1*
4:1*
534.00
4:1
56.8:1
20:1
1:1
2:1
2:1
6'
10:1 4:1
544.44
1:1
588.40
198+50.00
542.27
4" EX. WATER
LA-R/W

100:1
1:1
589.71
198+00.00
544.03
553.24

EX R/W
LA-R/W
3" EX. WATER
MATCH LINE
C.R. 104
591.17
197+50.00
546.58
562.67

ITEM 863 - REINFORCED EMBANKMENT ... 34548 CY

DRAFT Stage 3 - Not for Construction

09/23/2024

U:\173608714\LAW\75923\roadway\sheets\75923XS1058-2B.dgn 5/21/2024 4:52:14 PM SLParker

SEEDING END WIDTH	SEEDING SQ. YDS.
253	704
246	211
100	804

END AREA CUT	END AREA FILL	VOLUME CUT	VOLUME FILL
417	0	335	0
297	0	287	0
		48	0
		383	0

620 600 580 560 540 520 500 600 580 560 540 520 500 600 580 560 540 520

LA-R/W

10'
4:1 4:1
531.60

2:1 2:1

4" EX. WATER
583.45
202+50.00
534.33

LA-R/W

2:1 2:1

EX. 528.08

4" EX. WATER
583.47
202+24.66
533.43
SKEW ANGLE = 11° RHF

LA-R/W

STA. 201+04.00, LT./RT.
BEGIN SLOPE REINFORCEMENT
FOR DETAILS, SEE SHEETS 38-39

STA. 199+87.00, LT./RT.
END SLOPE REINFORCEMENT
FOR DETAILS, SEE SHEETS 38-39

* NORMAL

MATCH LINE STA. 198+50

2:1* 2:1*

4:1*
10:1*
7'
1:1
543.31

4" EX. WATER

588.27
198+53.49
542.10
SKEW ANGLE = 5° RHF

LA-R/W

ITEM 863 - REINFORCED EMBANKMENT ... 40707 CY

260 240 220 200 180 160 140 120 100 80 60 40 20 0 20 40 60 80 100 120 140 160 180 200 220 240

DRAFT Stage 3 - Not for Construction

09/23/2024

CALCULATED SLP
CHECKED ALB

CROSS SECTIONS S.R. 7
STA. 198+53.49 TO STA. 202+50.00

LAW-7-2.17

218
1247

U:\173608714\LAW\75923\roadway\sheets\75923XS1059-2B.dgn 5/21/2024 4:52:15 PM SLParker

SEEDING	
END WIDTH	SQ. YDS.
317	1710
299	1670
302	1543
	4923

END AREA	
CUT	FILL
1495	0
844	0
868	0
1191	0
4944	0

VOLUME	
CUT	FILL
2167	0
1586	0

CALCULATED SLP
CHECKED ALB

STA. 204+08.37
PROP. 60" TYPE A

DETENTION BASIN #2
FOR DETAILS, SEE SHEETS 666 & 671

EX R/W
LA-R/W
TMP
4" EX. WATER
584.13
204+00.00
534.57

538.59
583.75
203+50.00
534.59

529
583.52
203+00.00
534.96

ITEM 863 - REINFORCED EMBANKMENT - - - 43107 CY

DRAFT Stage 3 - Not for Construction

09/23/2024

CROSS SECTIONS S.R. 7
STA. 203+00.00 TO STA. 204+00.00

LAW-7-2.17

219
1247

U:\173608714\LAW\75923\roadway\sheets\75923XS1060-2B.dgn 5/21/2024 4:52:16 PM SLParker

SEEDING		END AREA		VOLUME		CALCULATED	CHECKED
END WIDTH	SQ. YDS.	CUT	FILL	CUT	FILL	SLP	ALB
96		276	1299				
30		0	0				
	743			1067	0		
	743			1067	0		

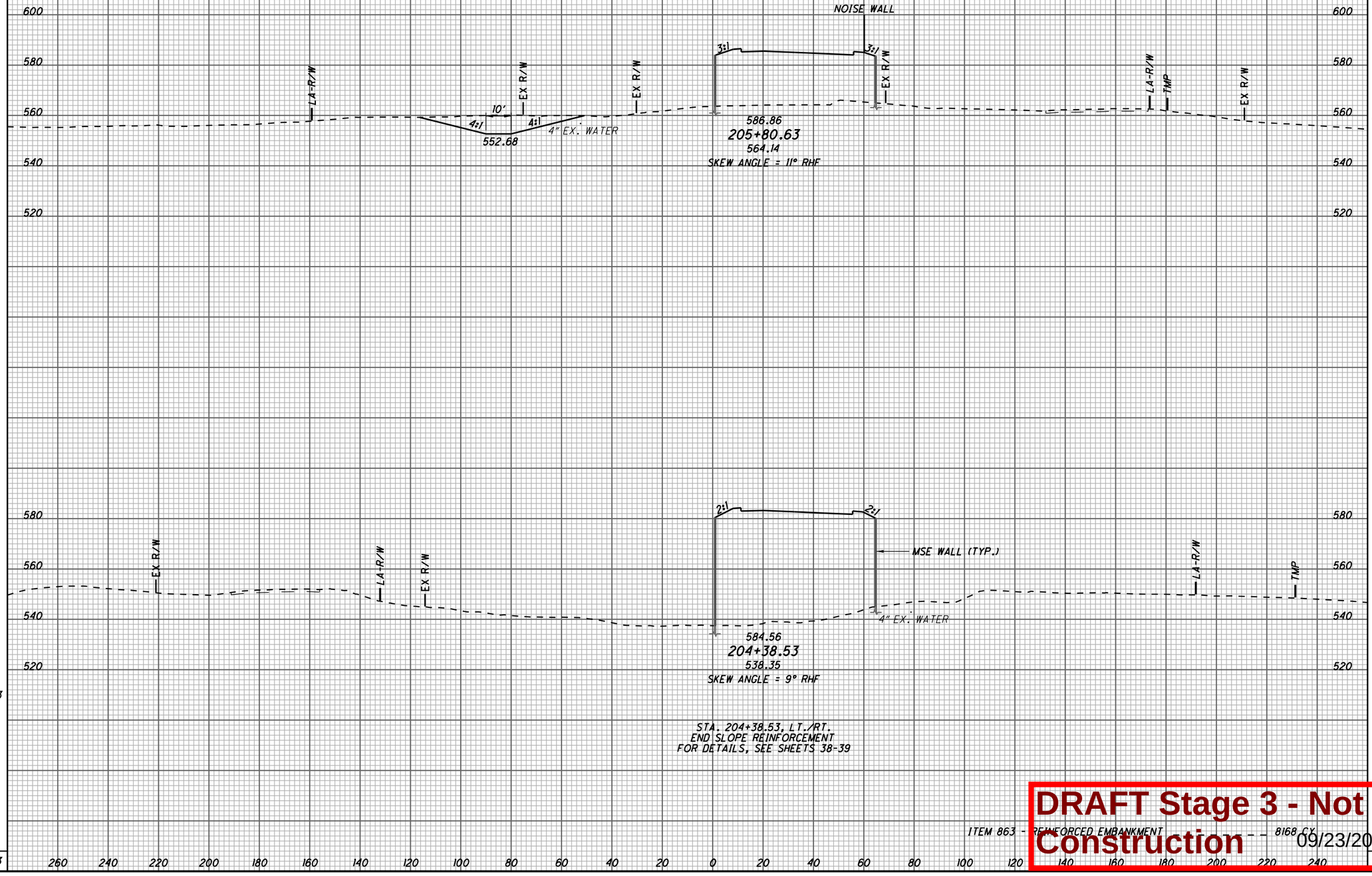

STA. 204+38.52 TO STA. 205+80.63

CROSS SECTIONS S.R. 7

STA. 204+38.53, LT./RT.
END SLOPE REINFORCEMENT
FOR DETAILS, SEE SHEETS 38-39

ITEM 863 - REINFORCED EMBANKMENT - - - 8168 CY

DRAFT Stage 3 - Not for Construction

09/23/2024

LAW-7-2.17

220
1247

U:\173608714\LAW\75923\roadway\sheets\75923XS1061-2B.dgn 5/21/2024 4:52:17 PM SLParker

SEEDING		END AREA		VOLUME		CALCULATED	CHECKED
END WIDTH	SQ. YDS.	CUT	FILL	CUT	FILL	SLP	ALB
174	967	30	0	67	0		
174	906	43	0	148	1752		
152		117	1891				
268	2141	141	1145	356	2897		

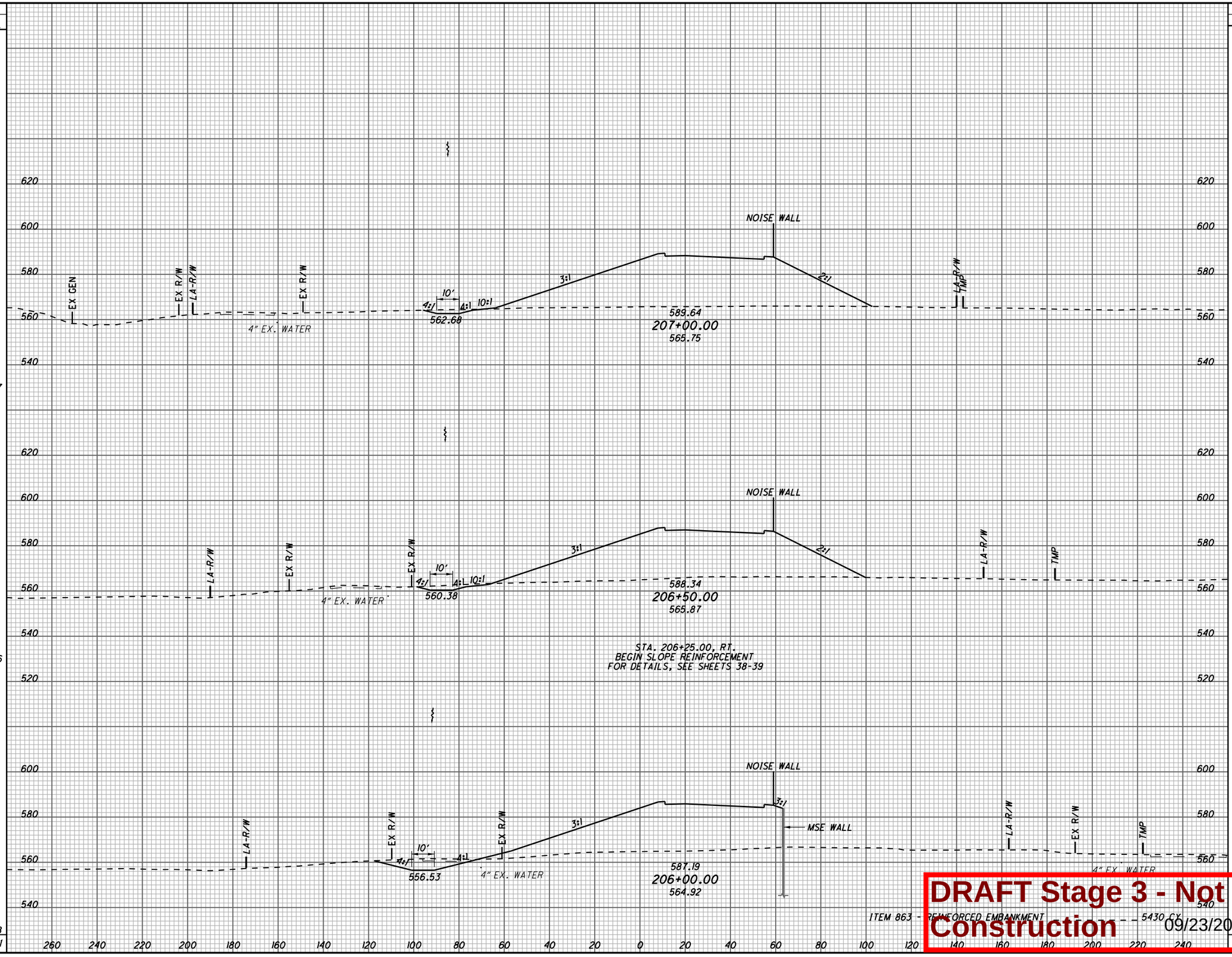

ITEM 863 - REINFORCED EMBANKMENT - - - 5430 CY

DRAFT Stage 3 - Not for Construction

09/23/2024

CROSS SECTIONS S.R. 7
STA. 206+00.00 TO STA. 207+00.00

LAW-7-2.17

U:\173608714\LAW\75923\roadway\sheets\75923XS1062-2B.dgn 5/21/2024 4:52:18 PM SLParker

SEEDING	
END WIDTH	SQ. YDS.
168	948
173	963
174	967
	2878

END AREA	
CUT	FILL
6	0
23	0
24	0

VOLUME	
CUT	FILL
27	0
44	0
50	0
121	0

CALCULATED SLP
CHECKED ALB

CROSS SECTIONS S.R. 7
STA. 207+50.00 TO STA. 208+50.00

LAW-7-2.17

222
1247

620
600
580
560
540
520

TMP
EX R/W
LA-R/W
EX R/W
4" EX. WATER
10'
4:1
4:1
10:1
3:1
NOISE WALL
EX R/W
2:1
LA-R/W
EX GEN
TMP
567.84
594.47
208+50.00
571.00

EX R/W
LA-R/W
EX. STM
4" EX. WATER
565.32
592.70
208+00.00
568.68

EX GEN
EX R/W
EX R/W
LA-R/W
4" EX. WATER
563.94
591.09
207+50.00
566.71

260 240 220 200 180 160 140 120 100 80 60 40 20 0 20 40 60 80 100 120 140 160 180 200 220 240

ITEM 863 - REINFORCED EMBANKMENT - - - 13579 CY

DRAFT Stage 3 - Not for Construction

09/23/2024

U:\173608714\LAW\75923\roadway\sheets\75923XS1063-2B.dgn 5/21/2024 4:52:18 PM SLParker

SEEDING END WIDTH	SEEDING SQ. YDS.
180	1019
186	1045
189	986
165	927
	3977

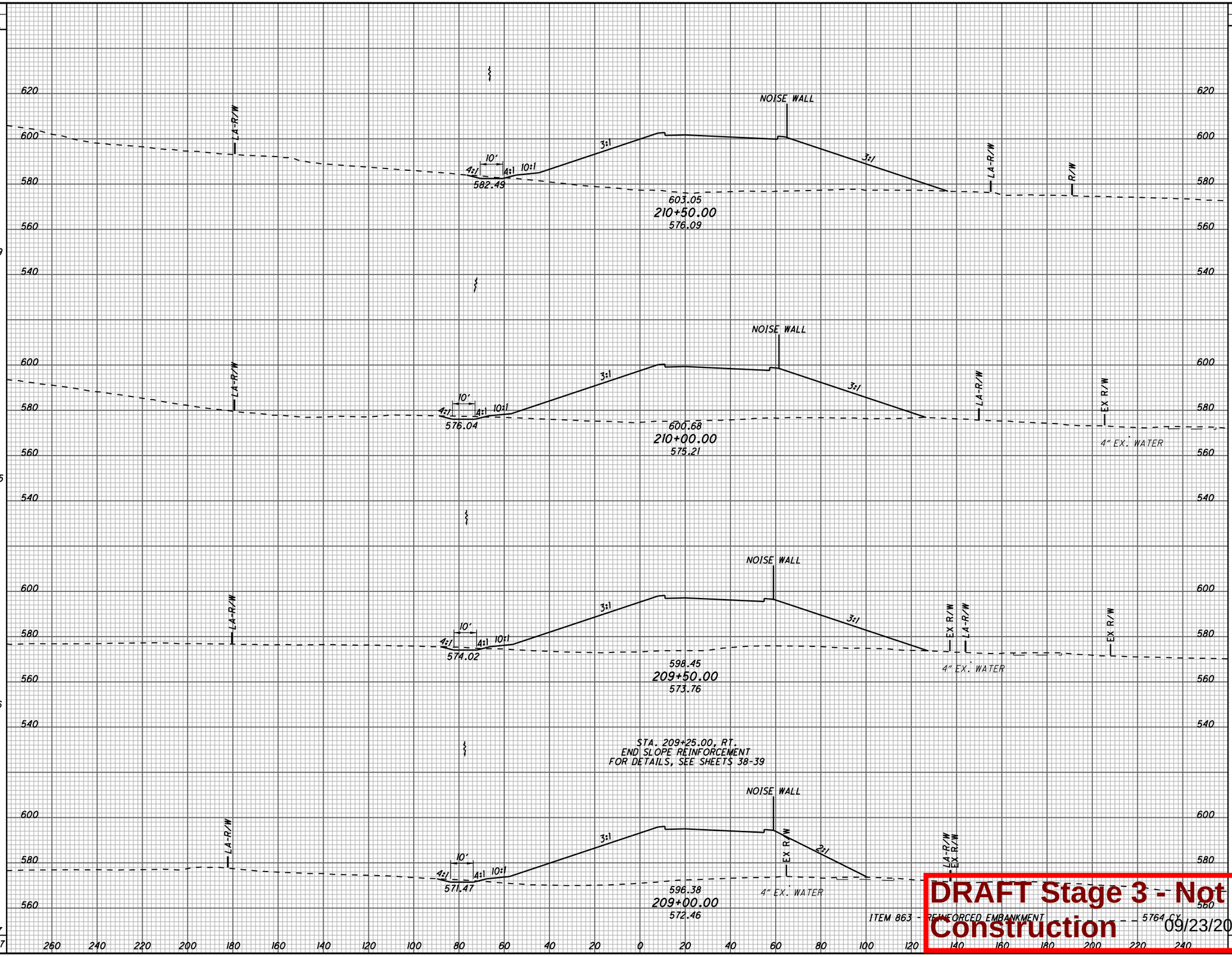

END AREA CUT	END AREA FILL	VOLUME CUT	VOLUME FILL
10	3014		
		28	5439
20	2859		
		34	5168
16	2721		
		28	2520
14	0		
		18	0
		108	13127

ITEM 863 - REINFORCED EMBANKMENT ..... 5764 CY

CALCULATED SLP CHECKED ALB

CROSS SECTIONS S.R. 7
STA. 209+00.00 TO STA. 210+50.00

LAW-7-2.17

223
1247

DRAFT Stage 3 - Not for Construction

09/23/2024

U:\173608714\LAW\75923\roadway\sheets\75923XS1064-2B.dgn 5/21/2024 4:52:19 PM SLParker

SEEDING	
END WIDTH	SQ. YDS.
119	766
157	919
174	983
	2668

END AREA	
CUT	FILL
0	1254
0	2193
0	2926

VOLUME	
CUT	FILL
0	3192
0	4740
10	5501
10	13433

CALCULATED SLP
CHECKED ALB

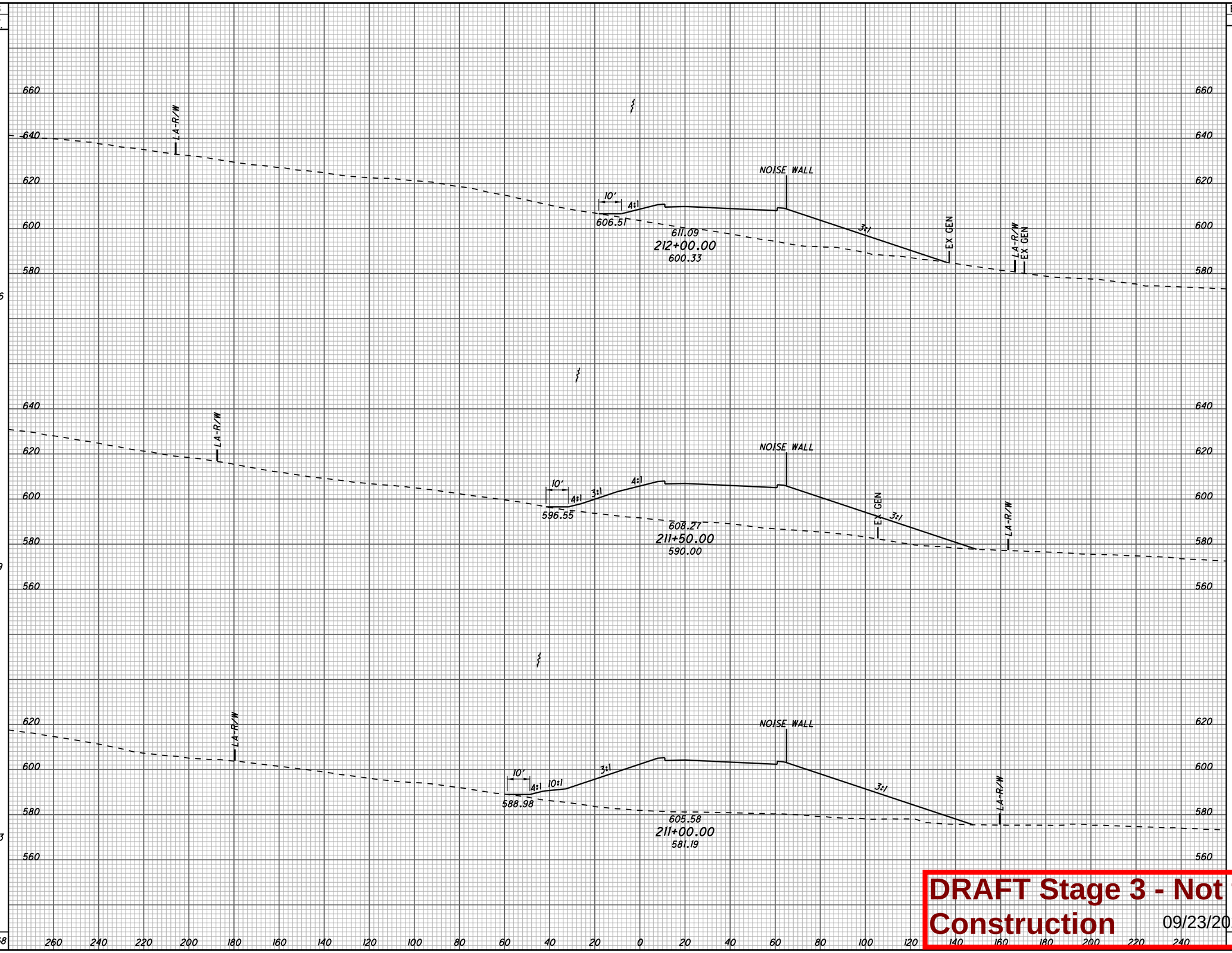

CROSS SECTIONS S.R. 7
STA. 211+00.00 TO STA. 212+00.00

LAW-7-2.17

224
1247

DRAFT Stage 3 - Not for Construction 09/23/2024

U:\173608714\LAW\75923\roadway\sheets\75923XS1065-2B.dgn 5/21/2024 4:52:20 PM SLParker

SEEDING END WIDTH	SEEDING SQ. YDS.
275	1309
196	1031
175	816
	3156

END AREA CUT	END AREA FILL	VOLUME CUT	VOLUME FILL
4389	0		
		5918	0
2002	0		
		2151	380
		322	410
		298	1542
		8367	1922

CALCULATED SLP
CHECKED ALB

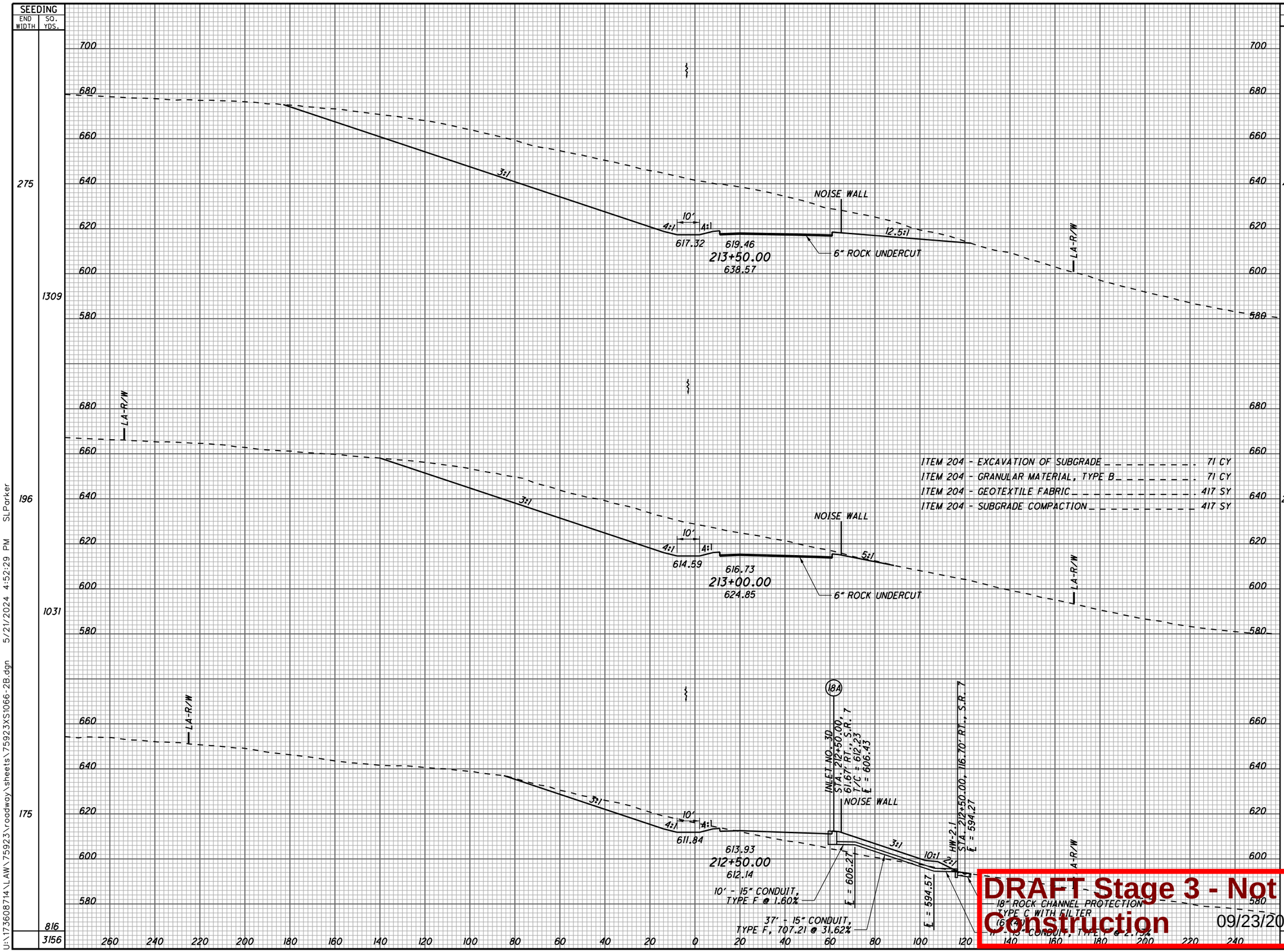

DRAFT Stage 3 - Not for Construction

09/23/2024

CROSS SECTIONS S.R. 7
STA. 212+50.00 TO STA. 213+50.00

LAW-7-2.17

225
1247

U:\173608714\LAW\75923\roadway\sheets\75923XS1066-2B.dgn 5/21/2024 4:52:29 PM SLParker

SEEDING END WIDTH	SEEDING SQ. YDS.
419	2231
384	1830
	4061

END AREA CUT	END AREA FILL	VOLUME CUT	VOLUME FILL
8888	0	15132	0
		7454	0
		1096	0
		2609	0

CALCULATED SLP
CHECKED ALB

CROSS SECTIONS S.R. 7
STA. 214+00.00 TO STA. 214+50.00

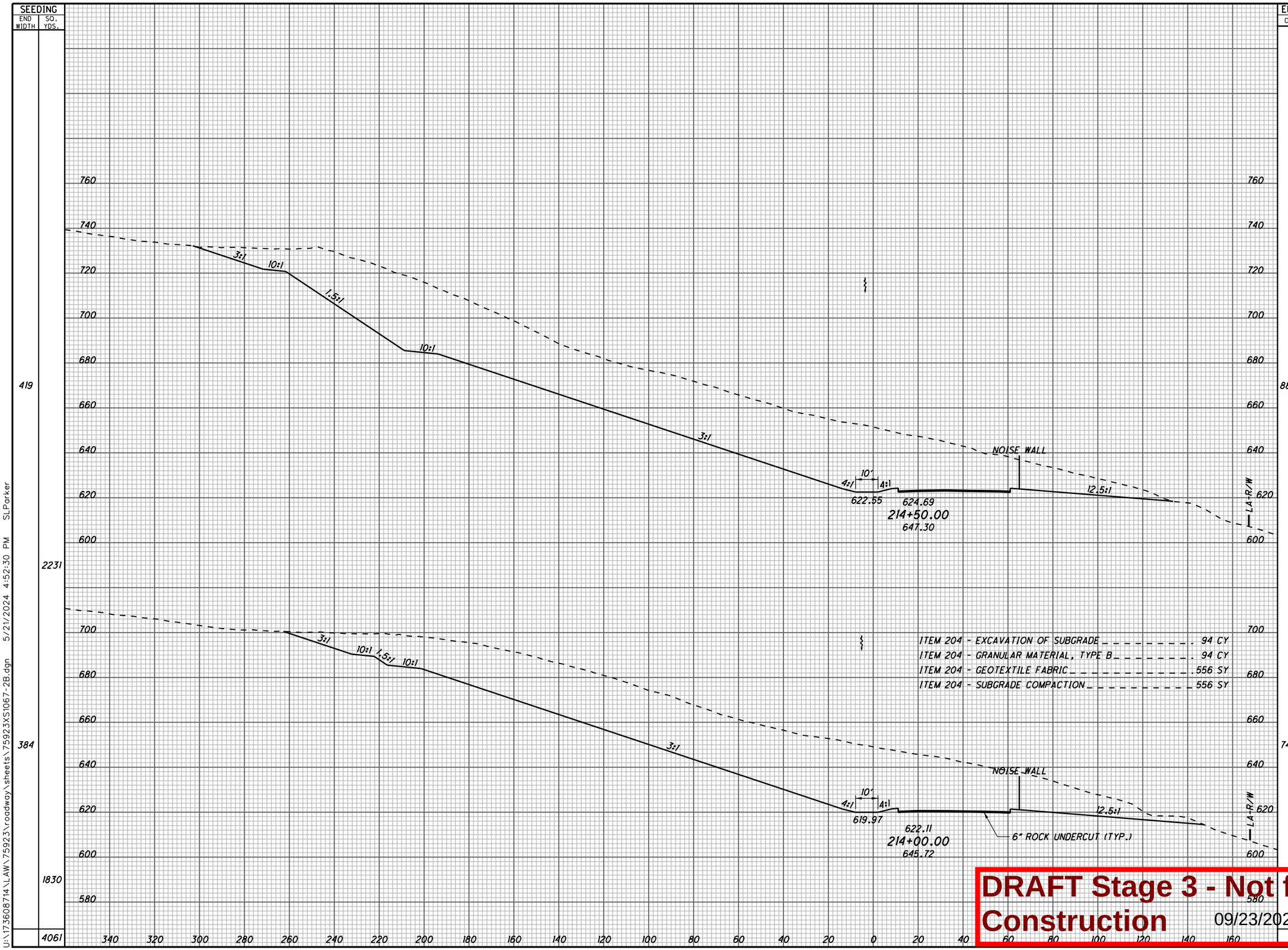

ITEM 204 - EXCAVATION OF SUBGRADE	94 CY
ITEM 204 - GRANULAR MATERIAL, TYPE B	94 CY
ITEM 204 - GEOTEXTILE FABRIC	556 SY
ITEM 204 - SUBGRADE COMPACTION	556 SY

DRAFT Stage 3 - Not for Construction 09/23/2024

LAW-7-2.17

226
1247

U:\173608714\LAW\75923\roadway\sheets\75923XS1067-2B.dgn 5/21/2024 4:52:30 PM SLParker

SEEDING	
END WIDTH	SQ. YDS.
197	1879
479	2497
	4376

END AREA	
CUT	FILL
2457	0
6964	0
14676	0
2340	0

VOLUME	
CUT	FILL
8724	0

CALCULATED SLP
CHECKED ALB

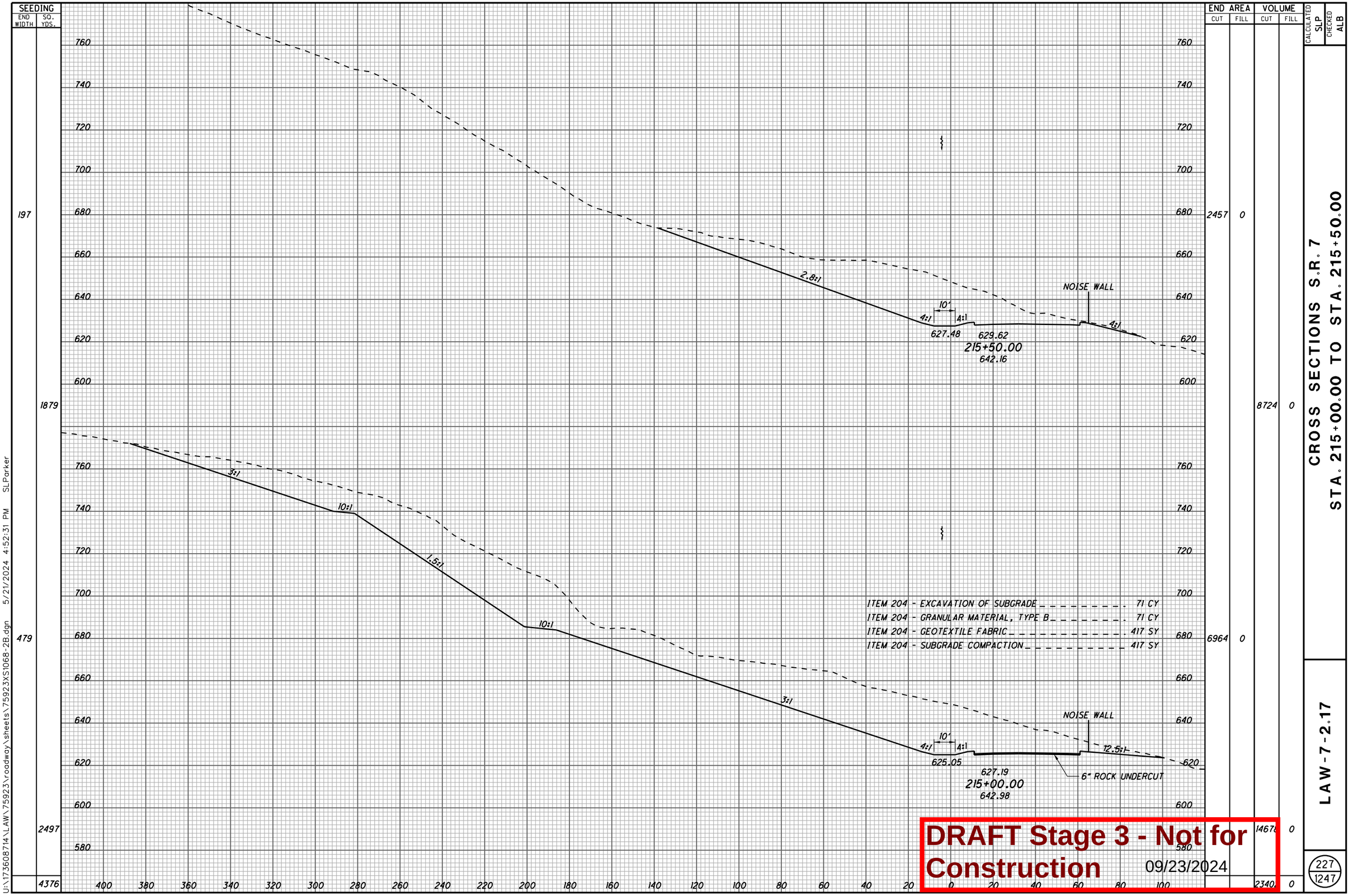

ITEM 204 - EXCAVATION OF SUBGRADE . . . . . 71 CY
ITEM 204 - GRANULAR MATERIAL, TYPE B . . . . . 71 CY
ITEM 204 - GEOTEXTILE FABRIC . . . . . 417 SY
ITEM 204 - SUBGRADE COMPACTION . . . . . 417 SY

DRAFT Stage 3 - Not for Construction 09/23/2024

CROSS SECTIONS S.R. 7
STA. 215+00.00 TO STA. 215+50.00

LAW-7-2.17

227
1247

U:\173608714\LAW\75923\roadway\sheets\75923XS1068-2B.dgn 5/21/2024 4:52:31 PM SLParker

SEEDING END WIDTH	SEEDING SQ. YDS.
246	1420
265	1284
	2704

END AREA CUT	END AREA FILL	VOLUME CUT	VOLUME FILL
1908	528		
		3961	1208
2369	776		
		4469	719
		8430	1927

CALCULATED SLP

CHECKED ALB

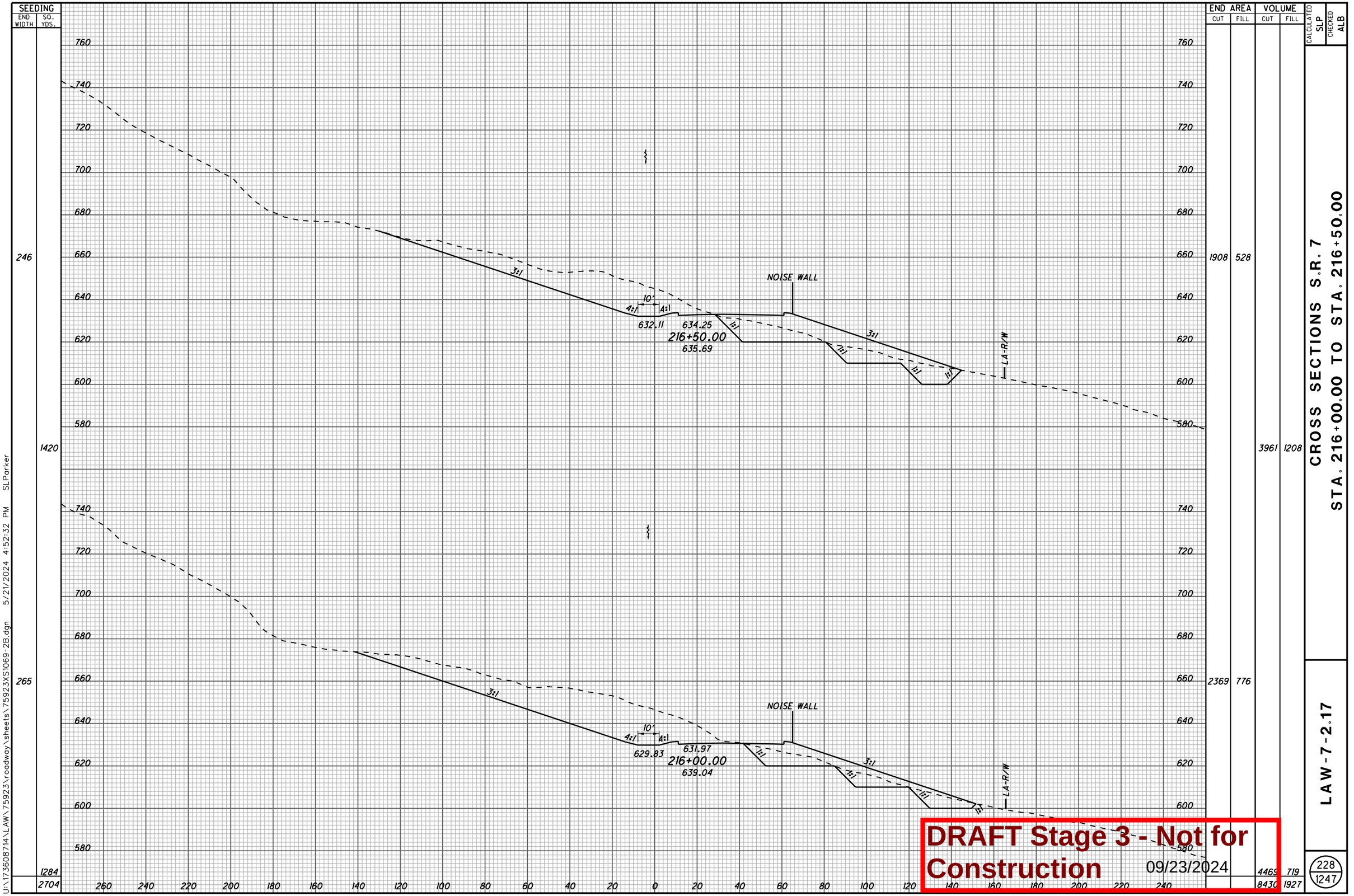

CROSS SECTIONS S.R. 7
STA. 216+00.00 TO STA. 216+50.00

LAW-7-2.17

228
1247

DRAFT Stage 3 - Not for Construction 09/23/2024

U:\173608714\LAW\75923\roadway\sheets\75923XS1069-2B.dgn 5/21/2024 4:52:32 PM SLParker

SEEDING	
END WIDTH	SQ. YDS.
299	1607
279	1459
	3066

END AREA	
CUT	FILL
1327	2754
1498	1770
3154	2129
5770	6318

VOLUME	
CUT	FILL
2616	4189

CALCULATED SLP
CHECKED ALB

740 720 700 680 660 640 620 600 580 560

NOISE WALL
3:1
9'
4:1
636.45
638.59
217+50.00
634.36
1:1
LA-R/W

NOISE WALL
10'
634.32
636.46
217+00.00
635.72

260 240 220 200 180 160 140 120 100 80 60 40 20 0 20 40 60 80 100 120 140 160 180 200 220 240

CROSS SECTIONS S.R. 7
STA. 217+00.00 TO STA. 217+50.00

LAW-7-2.17

DRAFT Stage 3 - Not for Construction 09/23/2024

229
1247

U:\173608714\LAW\75923\roadway\sheets\75923XS1070-2B.dgn 5/21/2024 4:52:32 PM SLParker

SEEDING	
END WIDTH	SQ. YDS.
296	1663
302	1670
	3333

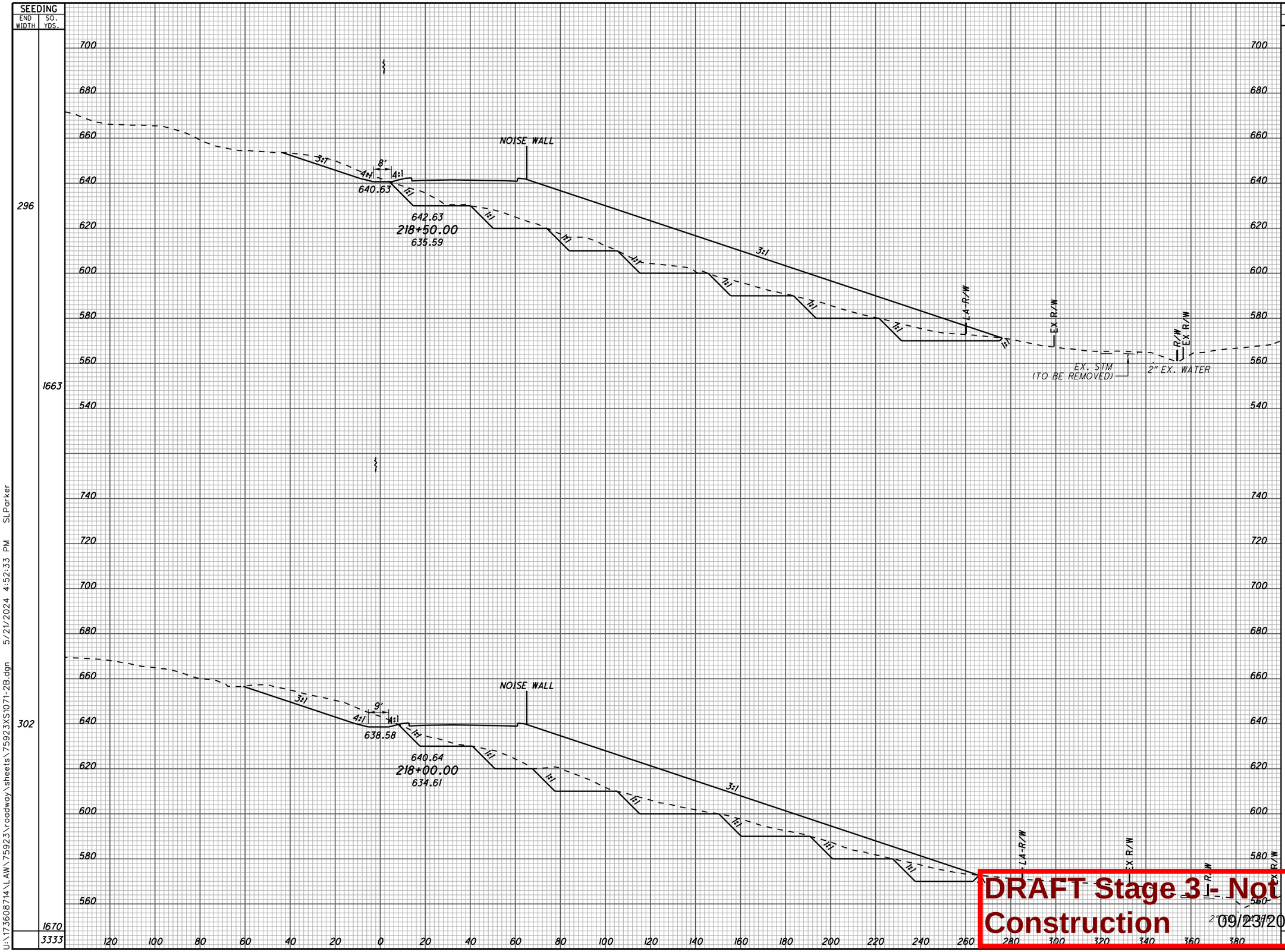

END AREA		VOLUME	
CUT	FILL	CUT	FILL
1077	4232		
		2250	7185
1353	3527		
		2482	5816
		4732	13001

CALCULATED	CHECKED
SLP	ALB

CROSS SECTIONS S.R. 7
STA. 218+00.00 TO STA. 218+50.00

LAW-7-2.17

230
1247

DRAFT Stage 3 - Not for Construction

09/23/2024

U:\173608714\LAW\75923\roadway\sheets\75923XS1071-2B.dgn 5/21/2024 4:52:33 PM SLParker

SEEDING	
END WIDTH	SQ. YDS.
	361
	1792
	284
	1613
	3405

END AREA		VOLUME	
CUT	FILL	CUT	FILL
1284	6623		
		2205	10667
1097	4897		
		2013	8453
		4218	19120

CALCULATED SLP
CHECKED ALB

(19A) CATCH BASIN NO. 4
STA. 219+50.00, 7.62' LT., S.R. 7
T/C = 642.88
E = 639.13

(19B) INLET NO. 3D
STA. 219+50.00, 62' RT., S.R. 7
T/C = 645.78
E = 637.72

CFN: 1995095

NOISE WALL

* MASONRY COLLARS AS PER SCD DM-1.1
(INCLUDE WITH THE COST OF CONDUIT)

69' - 24" CONDUIT, TYPE B @ 2.04%

E = 637.56

646.38
219+50.00
629.02

10' - 24" CONDUIT, TYPE F @ 1.60%

224' - 24" CONDUIT, TYPE F, 707.21 @ 31.54%

10' - 24" CONDUIT, TYPE F @ 1.54%

MW-2.1 OR 2.2
STA. 219+50.00, 302.95' RT., S.R. 7
E = 566.61

EX R/W

LA-R/W

566.52

E = 566.92

18" ROCK CHANNEL PROTECTION, TYPE C WITH FILTER (7'x4')

2" EX. WATER

10' - 24" CONDUIT, TYPE C @ 1.54%

642.53

644.54
219+00.00
635.21

EX. 562.27

DRAFT Stage 3 - Not for Construction
09/23/2024

CROSS SECTIONS S.R. 7
STA. 219+00.00 TO STA. 219+50.00

LAW-7-2.17

231
1247

U:\173608714\LAW\75923\roadway\sheets\75923XS1072-2B.dgn 5/21/2024 4:52:34 PM SLParker

SEEDING	
END WIDTH	SQ. YDS.
301	1730
322	1896
	3626

END AREA	
CUT	FILL
879	6608
1003	6665

VOLUME	
CUT	FILL
1743	12290
2118	12304
3861	24594

CALCULATED SLP
CHECKED ALB

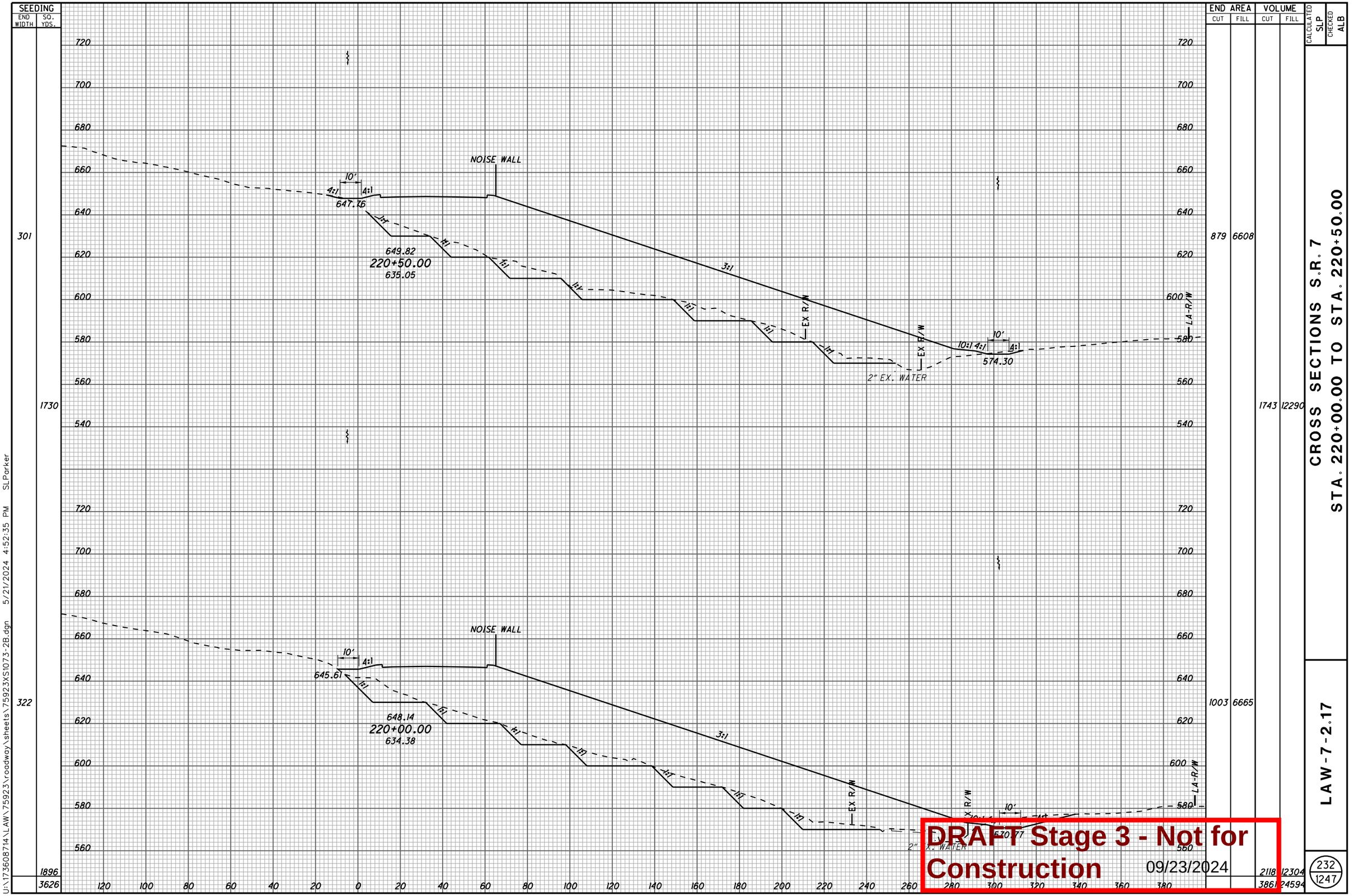

CROSS SECTIONS S.R. 7
STA. 220+00.00 TO STA. 220+50.00

LAW-7-2.17

232
1247

DRAFT Stage 3 - Not for Construction 09/23/2024

U:\173608714\LAW\75923\roadway\sheets\75923XS1073-2B.dgn 5/21/2024 4:52:35 PM SLParker

SEEDING	
END WIDTH	SQ. YDS.
326	
	1738
300	
	1669
	3407

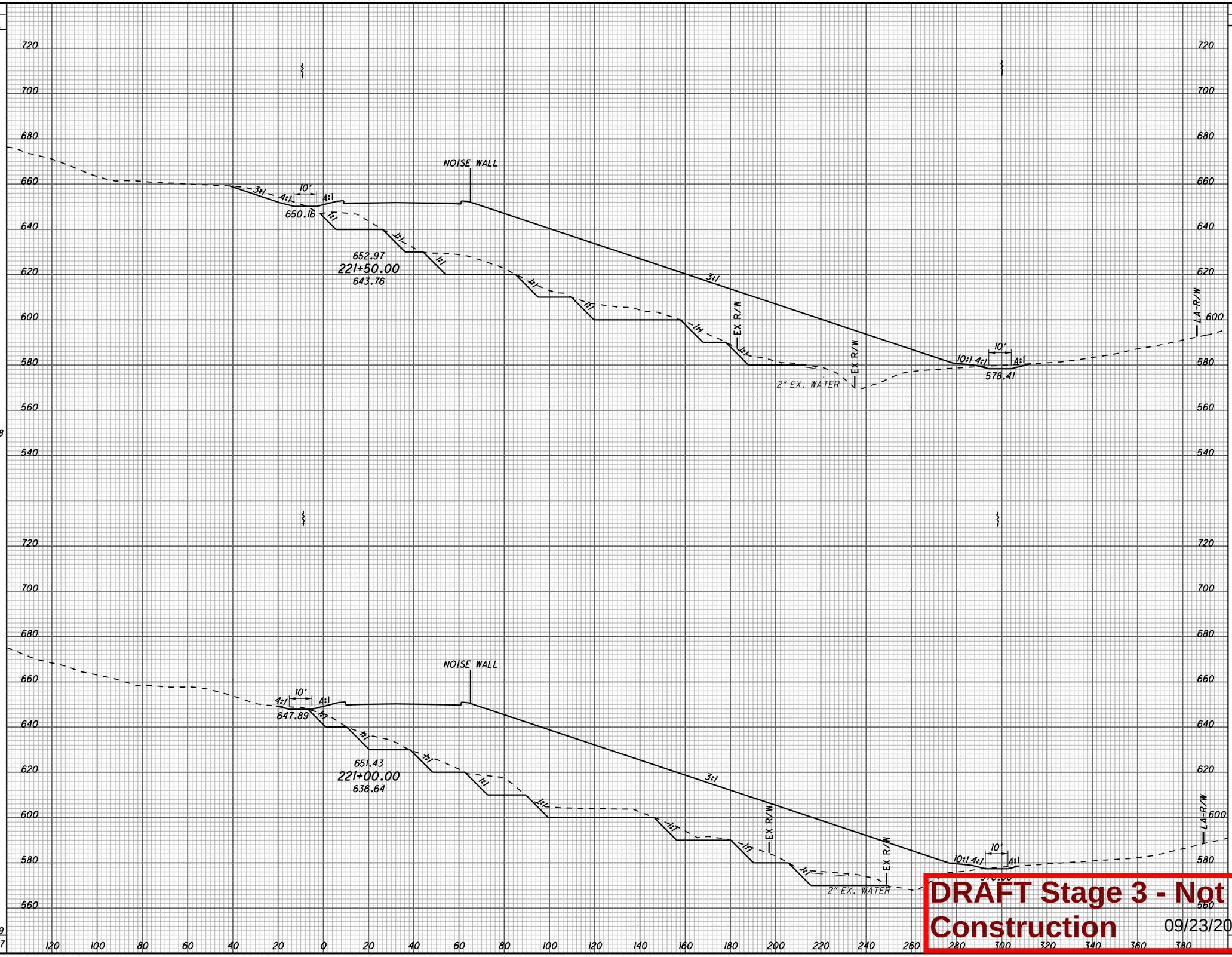

END AREA		VOLUME	
CUT	FILL	CUT	FILL
853	6429		
		1639	12569
917	7145		
1663	12735		
3302	25304		

CALCULATED SLP

CHECKED ALB

CROSS SECTIONS S.R. 7
STA. 221+00.00 TO STA. 221+50.00

LAW-7-2.17

233
1247

DRAFT Stage 3 - Not for Construction 09/23/2024

U:\1736087\14\LAW\75923\roadway\sheets\75923XS1074-2B.dgn 5/21/2024 4:52:36 PM SLParker

SEEDING	
END WIDTH	SQ. YDS.
367	2040
367	1924 / 3964

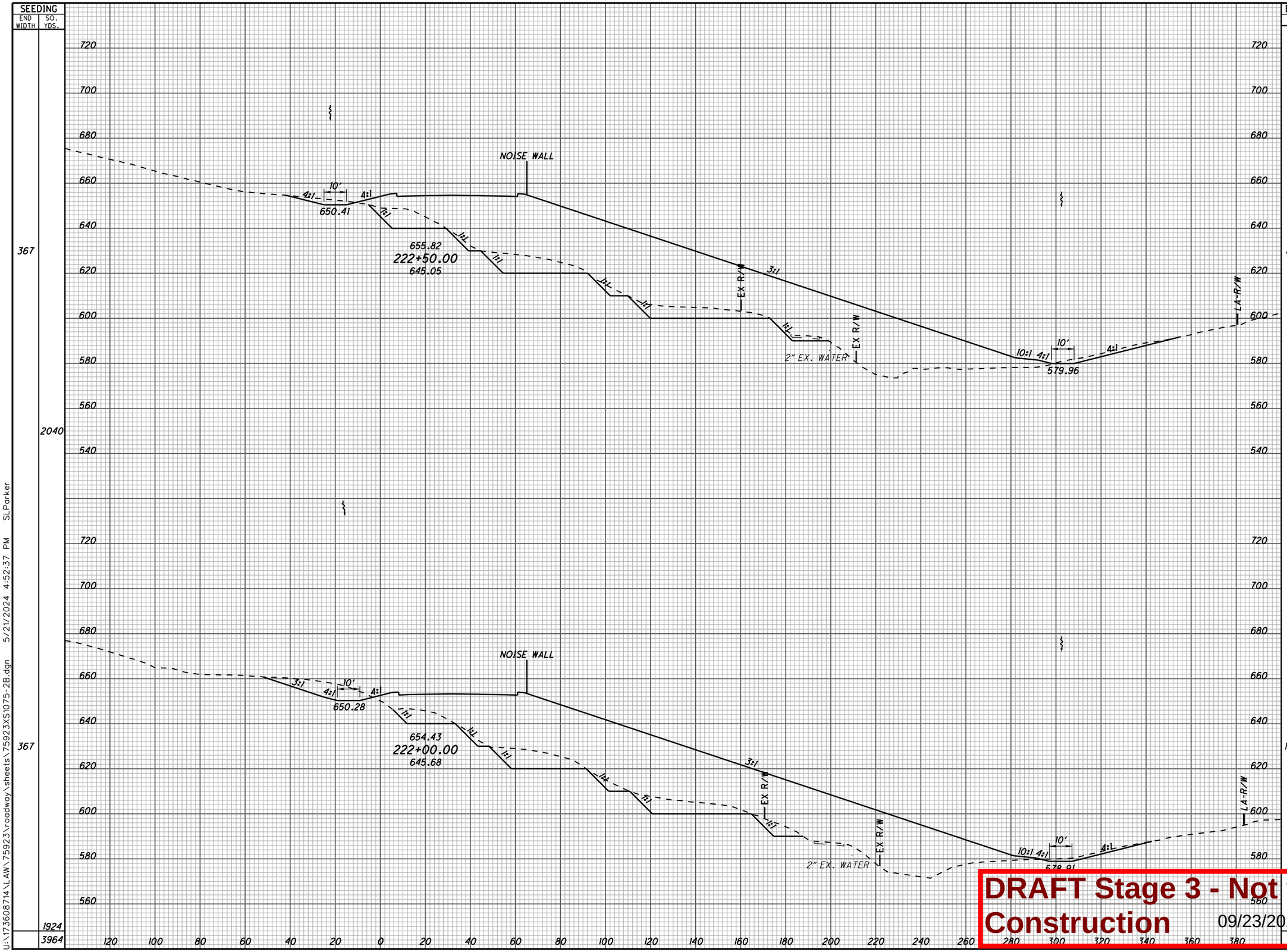

END AREA	
CUT	FILL
890	6722
1003	6276
1720	11764
3473	23799

VOLUME	
CUT	FILL
1753	12035

CALCULATED	CHECKED
ALB	TCM

CROSS SECTIONS S.R. 7
STA. 222+00.00 TO STA. 222+50.00

LAW-7-2.17

234
1247

DRAFT Stage 3 - Not for Construction 09/23/2024

U:\173608714\LAW\75923\roadway\sheets\75923XS1075-2B.dgn 5/21/2024 4:52:37 PM SLParker

SEEDING END WIDTH	SEEDING SQ. YDS.
328	1941
371	2050
	3991

END AREA CUT	END AREA FILL	VOLUME CUT	VOLUME FILL
654	7472	1382	13524
839	7134	1601	12829
		2983	26353

CALCULATED SLP
CHECKED ALB

CROSS SECTIONS S.R. 7
STA. 223+00.00 TO STA. 223+50.00

LAW-7-2.17

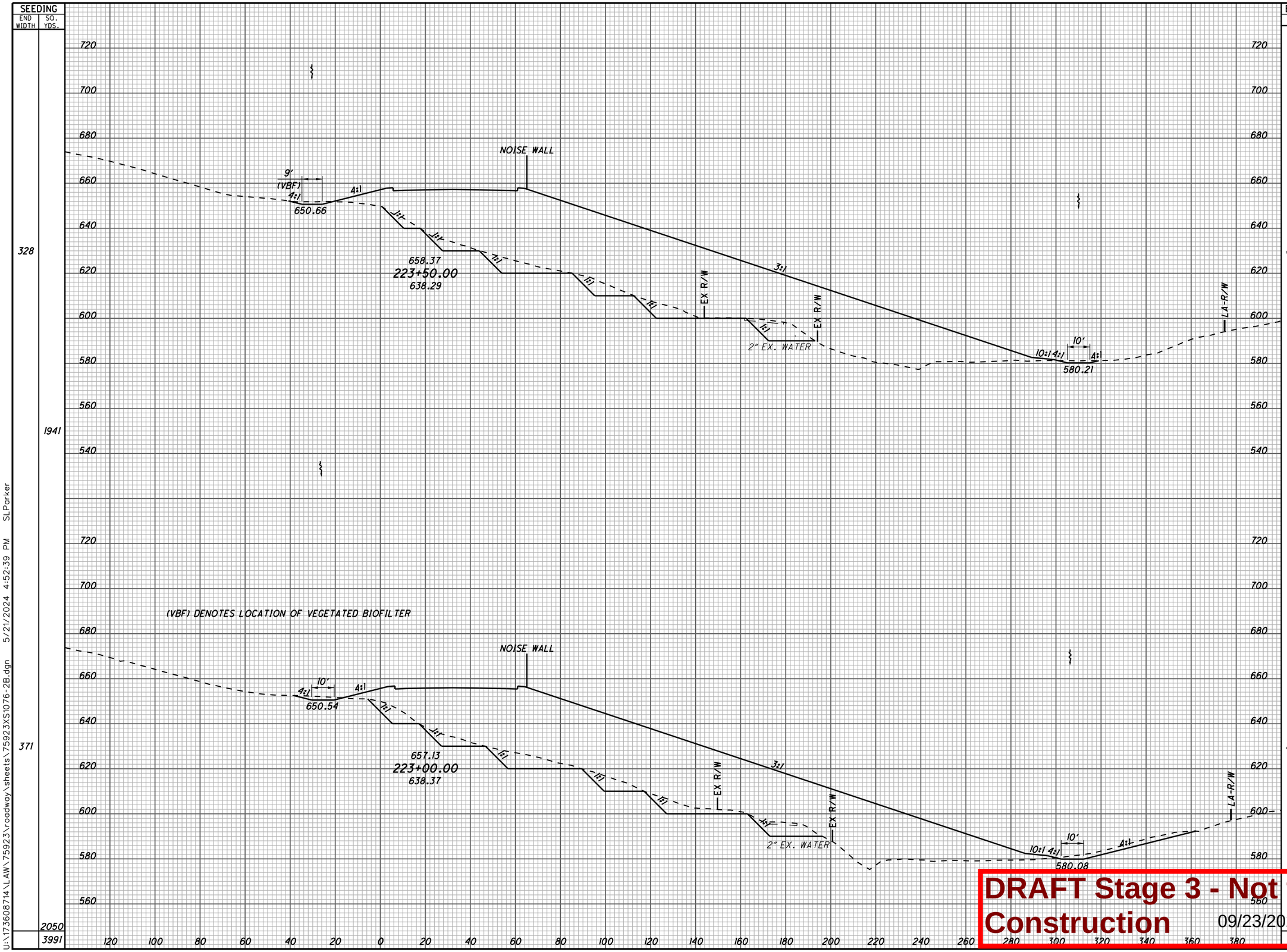

DRAFT Stage 3 - Not for Construction 09/23/2024

U:\173608714\LAW\75923\roadway\sheets\75923XS1076-2B.dgn 5/21/2024 4:52:39 PM SLParker

SEEDING	
END WIDTH	SQ. YDS.
330	1832
329	1825
	3657

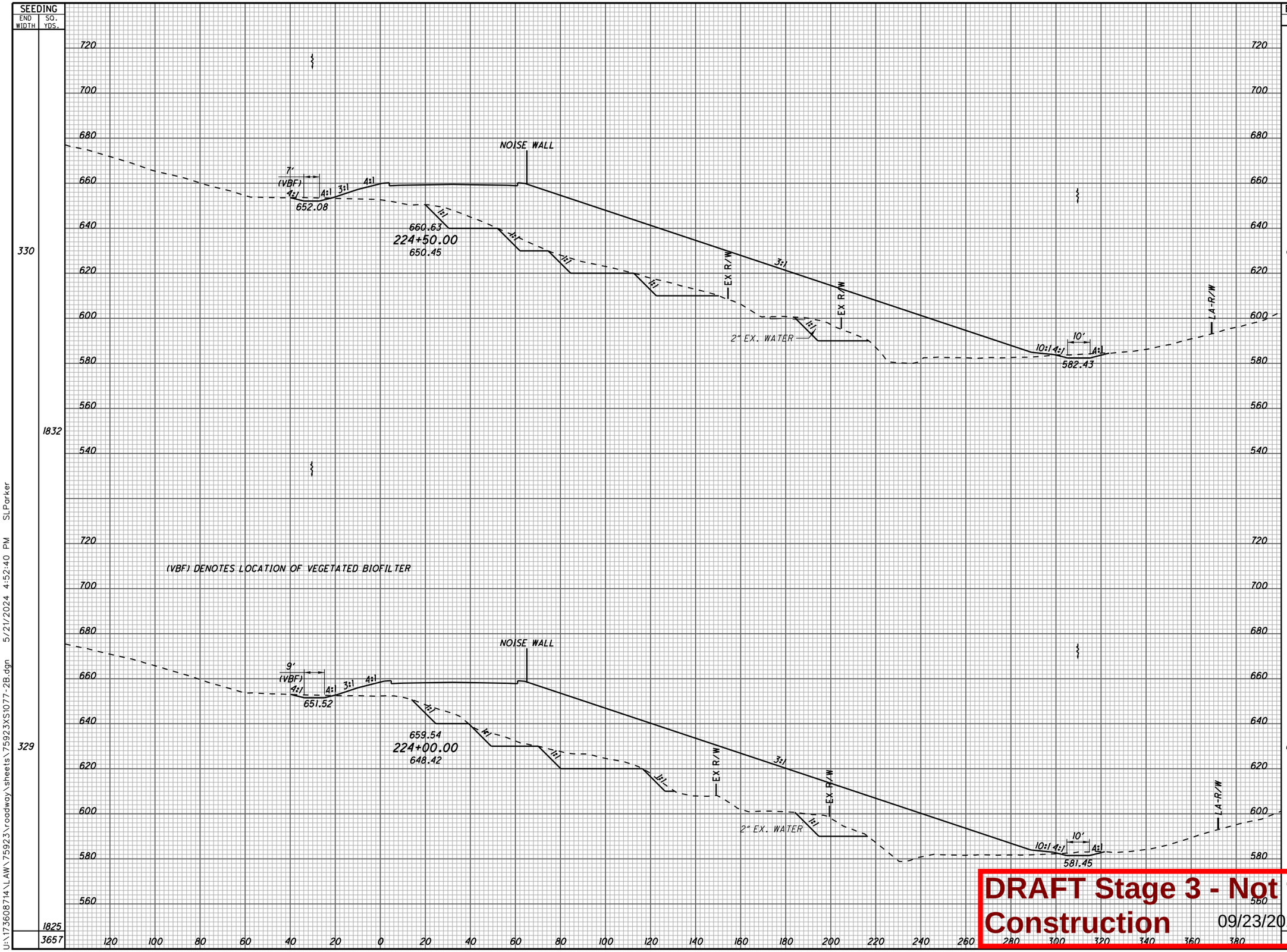

END AREA		VOLUME	
CUT	FILL	CUT	FILL
679	6054		
		1192	11182
608	6023		
		1169	12496
		2361	23678

CALCULATED SLP
CHECKED ALB

CROSS SECTIONS S.R. 7
STA. 224+00.00 TO STA. 224+50.00

LAW-7-2.17

DRAFT Stage 3 - Not for Construction
09/23/2024

U:\173608714\LAW\75923\roadway\sheets\75923XS1077-2B.dgn 5/21/2024 4:52:40 PM SLParker

SEEDING	
END WIDTH	SQ. YDS.
327	1820
328	1830
	3650

END AREA	
CUT	FILL
637	5767
763	6086
1336	11240
2633	22215

VOLUME	
CUT	FILL
1297	10975

CALCULATED SLP
CHECKED ALB

720 700 680 660 640 620 600 580 560 540

6' (VBF) 4:1 4:1 4:1 3:1 4:1
653.18
662.58
225+50.00
652.39
1:1 1:1 1:1 1:1 1:1 1:1
3:1
EX R/W
EX R/W
2" EX. WATER
10' 10:1 4:1 4:1
585.93
LA-R/W

(VBF) DENOTES LOCATION OF VEGETATED BIOFILTER

7' (VBF) 4:1 4:1 4:1 3:1 4:1
652.77
661.64
225+00.00
649.72
1:1 1:1 1:1 1:1 1:1 1:1
3:1
EX R/W
EX R/W
2" EX. WATER
10' 10:1 4:1 4:1
584.18
LA-R/W

120 100 80 60 40 20 0 20 40 60 80 100 120 140 160 180 200 220 240 260 280 300 320 340 360 380

CROSS SECTIONS S.R. 7
STA. 225+00.00 TO STA. 225+50.00

LAW-7-2.17

237
1247

DRAFT Stage 3 - Not for Construction 09/23/2024

U:\173608714\LAW\75923\roadway\sheets\75923XS1078-2B.dgn 5/21/2024 4:52:41 PM SLParker

SEEDING	
END WIDTH	SQ. YDS.
329	1827
	3649

END AREA	
CUT	FILL
858	6263
851	802

VOLUME	
CUT	FILL
1583	6542
2961	12625
1378	6083

CALCULATED SLP
CHECKED ALB

CROSS SECTIONS S.R. 7
STA. 226+00.00 TO STA. 226+50.00

LAW-7-2.17

238
1247

720 700 680 660 640 620 600 580 560

LA-R/W
5' (VBF)
4:1 4:1 3:1 4:1
654.22
664.24
226+50.00
650.09
1:1
EX R/W
3:1
2" EX. WATER
10' 10:1 4:1 4:1
589.95

(VBF) DENOTES LOCATION OF VEGETATED BIOFILTER

6' (VBF)
654.02
663.45
226+00.00
653.24
587.68

120 100 80 60 40 20 0 20 40 60 80 100 120 140 160 180 200 220 240 260 280 300 320 340 360 380

DRAFT Stage 3 - Not for Construction 09/23/2024

U:\173608714\LAW\75923\roadway\sheets\75923XS1079-2B.dgn 5/21/2024 4:52:42 PM SLParker

SEEDING	
END WIDTH	SQ. YDS.
355	1920
336	1846
	3766

END AREA	
CUT	FILL
886	8401
994	7249
1716	12512
3457	27004

VOLUME	
CUT	FILL
1741	14492

CALCULATED	CHECKED
SLP	ALB

CROSS SECTIONS S.R. 7
STA. 227+00.00 TO STA. 227+50.00

LAW-7-2.17

239
1247

700 680 660 640 620 600 580 560

120 100 80 60 40 20 0 20 40 60 80 100 120 140 160 180 200 220 240 260 280 300 320 340 360 380

6' 4:1 4:1 10:1 3:1 1:1 1:1 1:1 1:1 1:1 EX R/W EX R/W 2" EX. WATER 10:1 4:1 10' 4:1 LA-R/W

648.59
665.61
227+50.00
641.02
590.20

5' 4:1 4:1 3:1 4:1 1:1 1:1 1:1 1:1 1:1 EX R/W EX R/W 2" EX. WATER 10' LA-R/W

652.80
664.96
227+00.00
645.83

DRAFT Stage 3 - Not for Construction 09/23/2024

U:\1736087\14\LAW\75923\roadway\sheets\75923XS1080-2B.dgn 5/21/2024 4:52:43 PM SLParker

SEEDING	
END WIDTH	SQ. YDS.
448	2282
374	2026
	4308

END AREA	
CUT	FILL
762	12113
980	10842
1614	21256
1728	17819
3342	39075

VOLUME	
CUT	FILL
1614	21256
1728	17819
3342	39075

CALCULATED SLP
CHECKED ALB

CROSS SECTIONS S.R. 7
STA. 228+00.00 TO STA. 228+50.00

LAW-7-2.17

240
1247

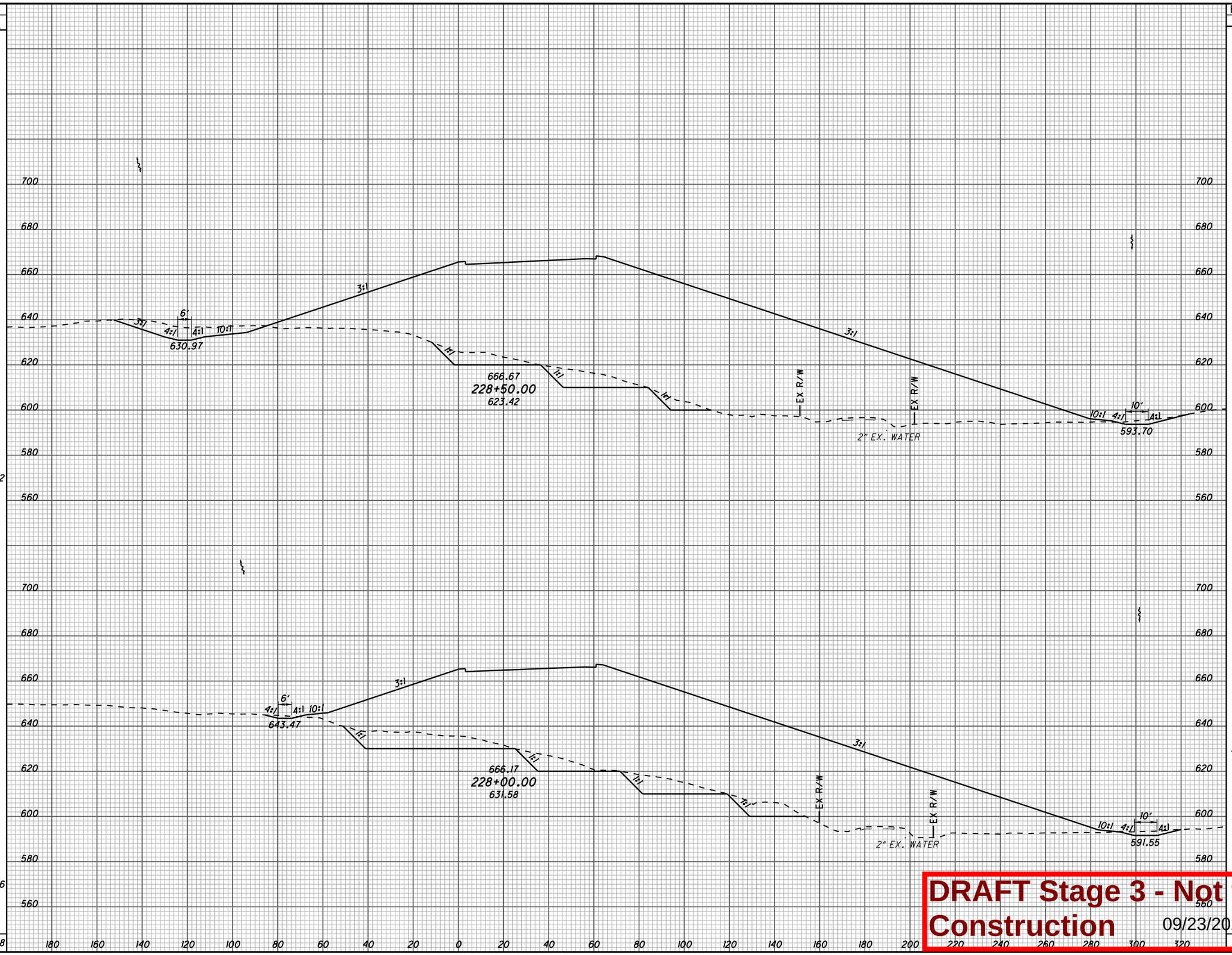

DRAFT Stage 3 - Not for Construction 09/23/2024

U:\173608714\LAW\75923\roadway\sheets\75923XS1081-2B.dgn 5/21/2024 4:52:44 PM SLParker

SEEDING	
END WIDTH	SQ. YDS.
470	2583
	2520
459	
	5103

END AREA	
CUT	FILL
36	16554
270	14028
1241	52524

VOLUME	
CUT	FILL
284	28318
957	24206

CALCULATED SLP
CHECKED ALB

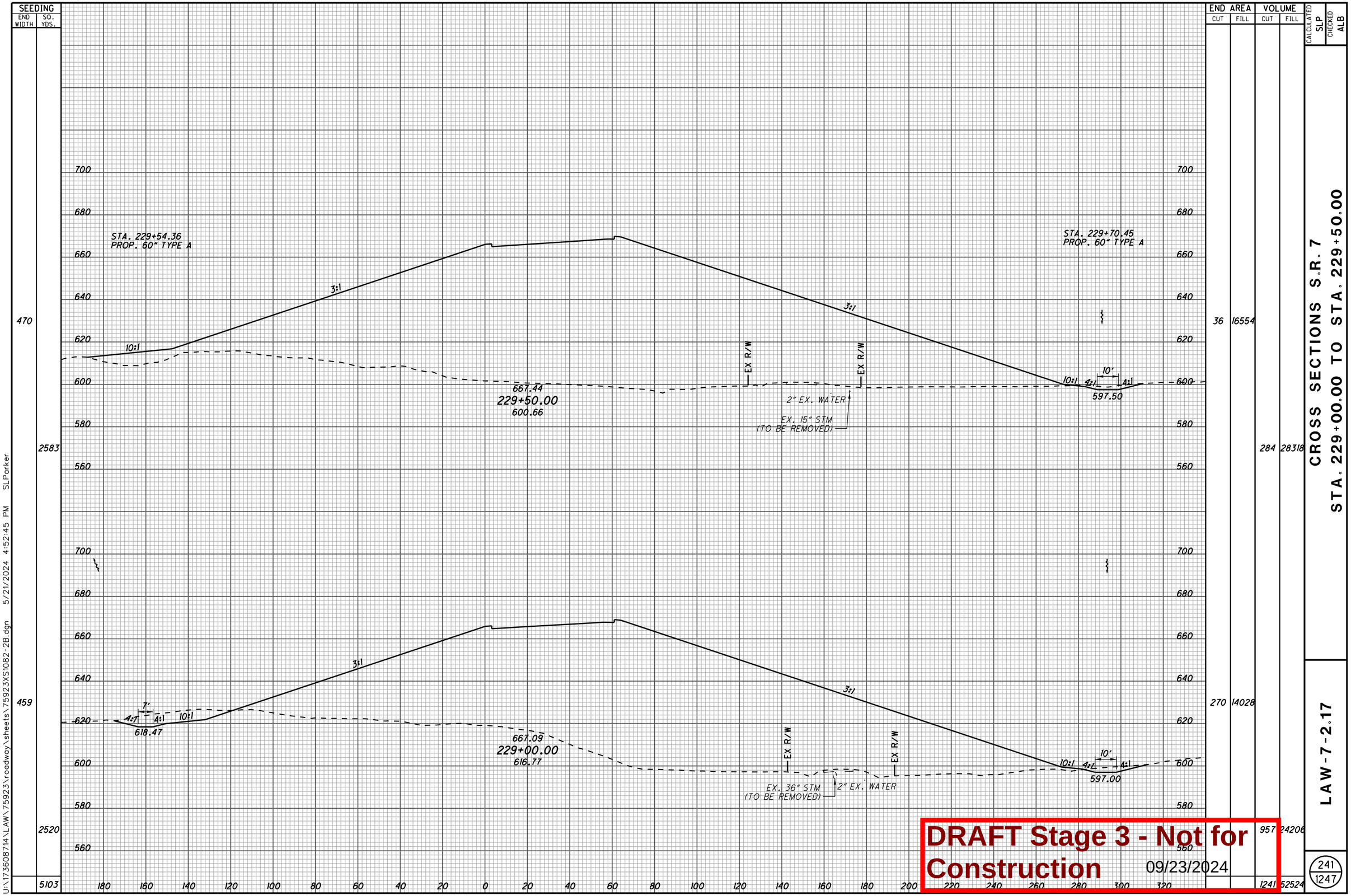

CROSS SECTIONS S.R. 7
STA. 229+00.00 TO STA. 229+50.00

LAW-7-2.17

241
1247

DRAFT Stage 3 - Not for Construction 09/23/2024

U:\173608714\LAW\75923\roadway\sheets\75923XS1082-2B.dgn 5/21/2024 4:52:45 PM SLParker

SEEDING	
END WIDTH	SQ. YDS.
386	2225
415	2460
	4685

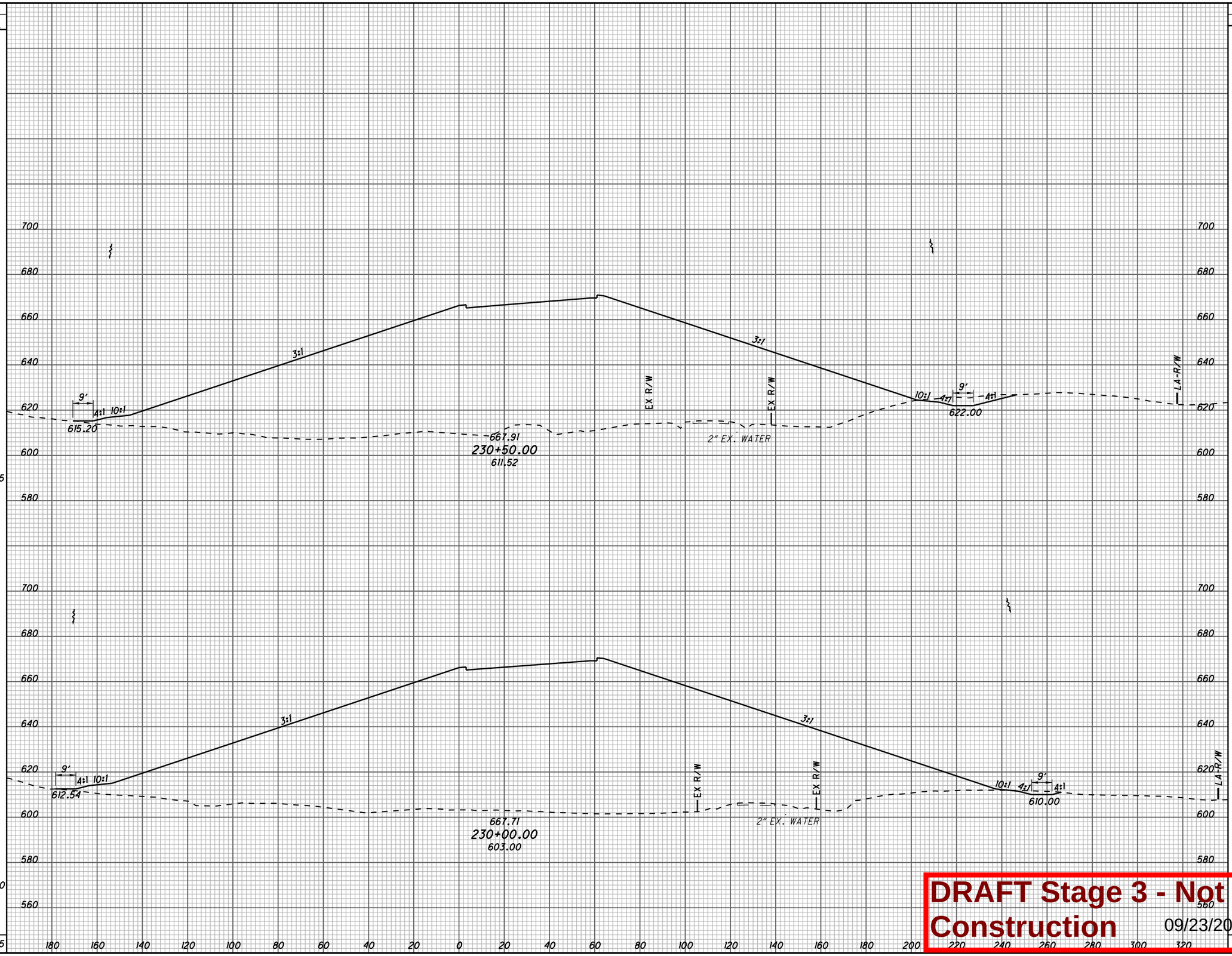

END AREA		VOLUME	
CUT	FILL	CUT	FILL
98	12941		
		113	26555
23	15738		
		55	29901
		168	56456

CALCULATED SLP
CHECKED ALB

CROSS SECTIONS S.R. 7
STA. 230+00.00 TO STA. 230+50.00

LAW-7-2.17

242
1247

DRAFT Stage 3 - Not for Construction 09/23/2024

U:\173608714\LAW\75923\roadway\sheets\75923XS1083-2B.dgn 5/21/2024 4:52:46 PM SLParker

SEEDING	
END WIDTH	SQ. YDS.
222	1260
232	1521
316	1949
	4730

END AREA		VOLUME	
CUT	FILL	CUT	FILL
62	3883		
		64	9620
7	6505		
		58	14465
		55	9116
		142	20423
		264	44508

CALCULATED SLP
CHECKED ALB

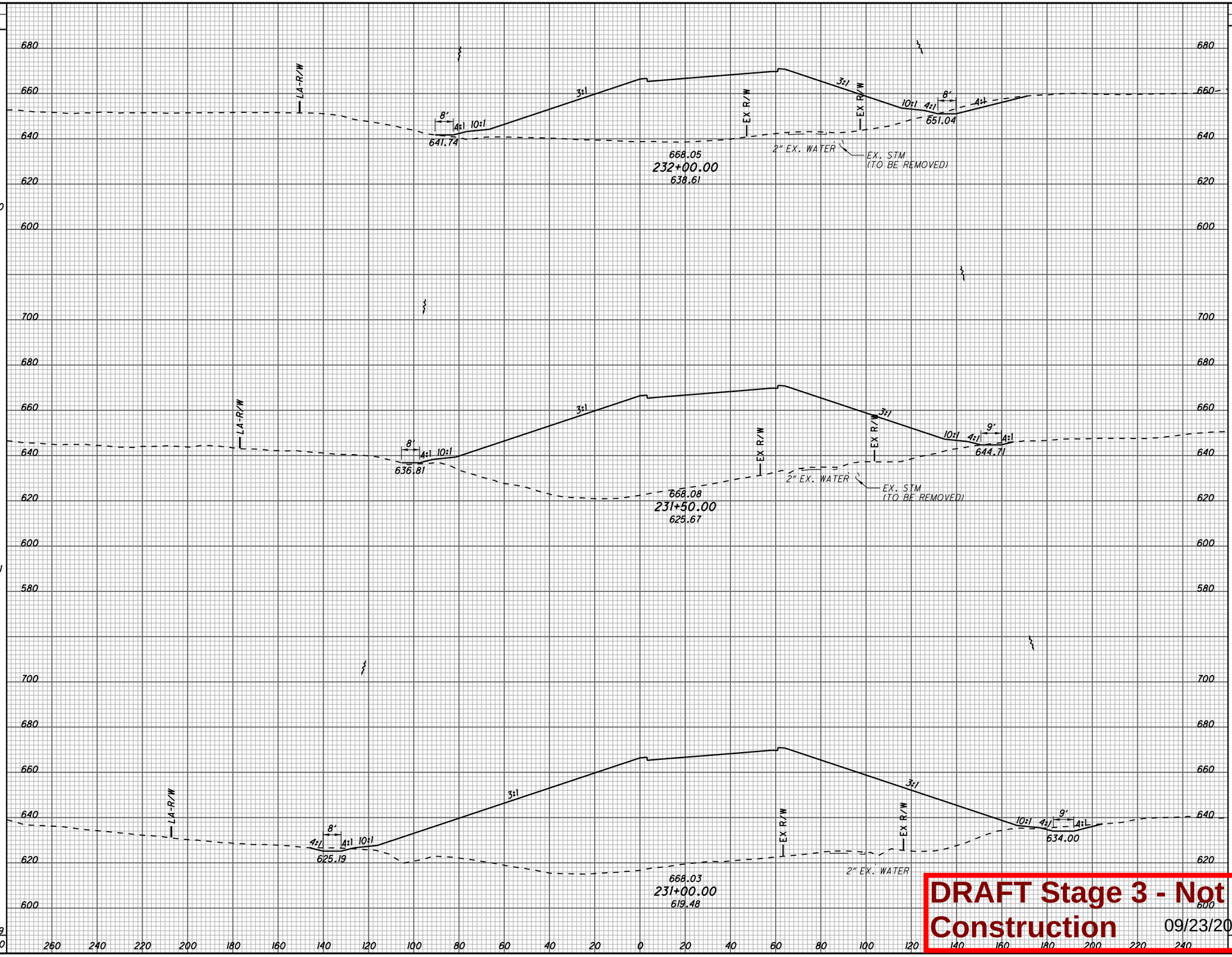

CROSS SECTIONS S.R. 7
STA. 231+00.00 TO STA. 232+00.00

LAW-7-2.17

243
1247

DRAFT Stage 3 - Not for Construction 09/23/2024

U:\173608714\LAW\75923\roadway\sheets\75923XS1084-2B.dgn 5/21/2024 4:52:47 PM SLParker

SEEDING	
END WIDTH	SQ. YDS.
117	781
164	934
172	1095
	2810

END AREA	
CUT	FILL
43	734
50	1687
16	2963
73	6339
221	12886

VOLUME	
CUT	FILL
86	2242
62	4305

CALCULATED SLP
CHECKED ALB

CROSS SECTIONS S.R. 7
STA. 232+50.00 TO STA. 233+50.00

LAW-7-2.17

244
1247

720
700
680
660
640
620
700
680
660
640
620
700
680
660
640
620

LA-R/W
EX R/W
6'
4:1
3:1
4:1
652.82
667.53
233+50.00
658.86
EX. STM
(TO BE REMOVED)
2" EX. WATER
666.12

LA-R/W
EX R/W
7'
4:1
10:1
3:1
4:1
EX R/W
7'
4:1
4:1
648.58
667.78
233+00.00
650.73
2" EX. WATER
EX. STM
(TO BE REMOVED)
661.95

LA-R/W
EX R/W
7'
4:1
10:1
3:1
4:1
EX R/W
3:1
7'
4:1
4:1
644.30
667.95
232+50.00
642.82
2" EX. WATER
EX. STM
(TO BE REMOVED)
656.34

260 240 220 200 180 160 140 120 100 80 60 40 20 0 20 40 60 80 100 120 140 160 180 200 220 240

DRAFT Stage 3 - Not for Construction 09/23/2024

U:\173608714\LAW\75923\roadway\sheets\75923XS1085-2B.dgn 5/21/2024 4:52:48 PM SLPorker

SEEDING	
END WIDTH	SQ. YDS.
342	1315
131	641
100	603
	2559

END AREA		VOLUME	
CUT	FILL	CUT	FILL
2498	0	3127	0
879	0	886	87
77	93	111	766
		4124	853

CALCULATED SLP
CHECKED ALB

760 740 720 700 680 660 640 720 700 680 660 640 720 700 680 660 640

3:1 10:1 3:1 EX R/W EX R/W EX R/W EX R/W 2" EX. WATER 6' 4:1 4:1 7' 4:1 4:1 3:1
663.67 666.34 235+00.00 676.56 665.54

740 720 700 680 660 640 720 700 680 660 640 720 700 680 660 640

LA-R/W EX R/W EX R/W 3:1 4:1 4:1 664.00 666.81 234+50.00 670.73 EX R/W EX R/W 6' 4:1 4:1 3:1 2" EX. WATER 666.47

LA-R/W EX R/W EX R/W 4:1 4:1 659.72 667.21 234+00.00 665.11 6' 4:1 4:1 667.11 2" EX. WATER

300 280 260 240 220 200 180 160 140 120 100 80 60 40 20 0 20 40 60 80 100 120 140 160 180 200 220 240

CROSS SECTIONS S.R. 7
STA. 234+00.00 TO STA. 235+00.00

LAW-7-2.17

245
1247

DRAFT Stage 3 - Not for Construction 09/23/2024

U:\173608714\LAW\75923\roadway\sheets\75923XS1086-2B.dgn 5/21/2024 4:52:49 PM SLParker

SEEDING END WIDTH	SEEDING SQ. YDS.
352	1965
355	1937
	3902

END AREA CUT	END AREA FILL	VOLUME CUT	VOLUME FILL
2777	0		
		6188	0
		3906	0
		5930	0
		12118	0

CALCULATED SLP
CHECKED ALB

CROSS SECTIONS S.R. 7
STA. 235+50.00 TO STA. 236+00.00

LAW-7-2.17

246
1247

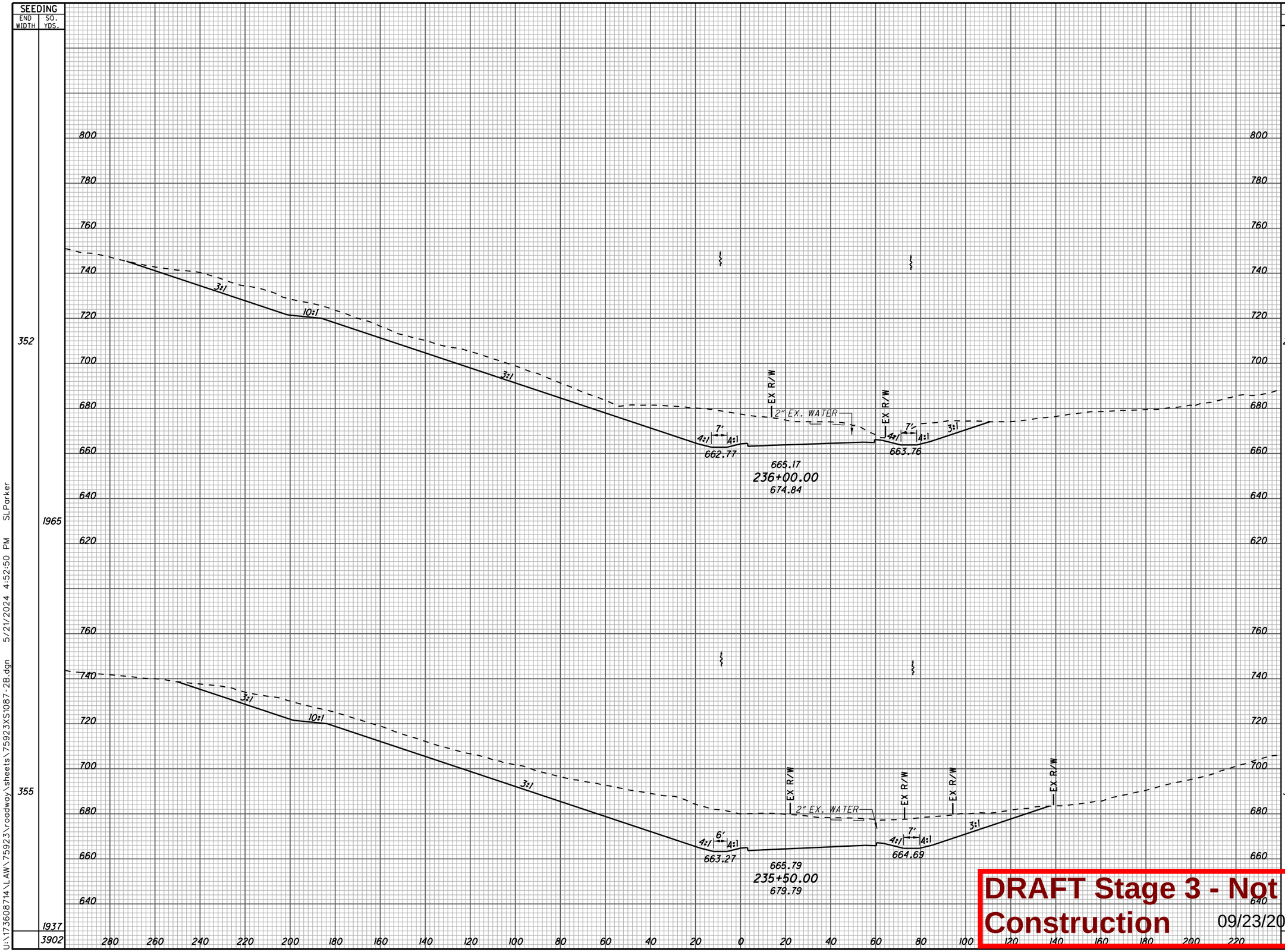

DRAFT Stage 3 - Not for Construction 09/23/2024

U:\173608714\LAW\75923\roadway\sheets\75923XS1087-2B.dgn 5/21/2024 4:52:50 PM SLParker

SEEDING		END AREA		VOLUME		CALCULATED	CHECKED
END WIDTH	SQ. YDS.	CUT	FILL	CUT	FILL	SLP	ALB
83	484	92	222	452	263		
91	595	396	61	1252	61		
123	1320	956	5	3457	5		
	2399			5161	329		

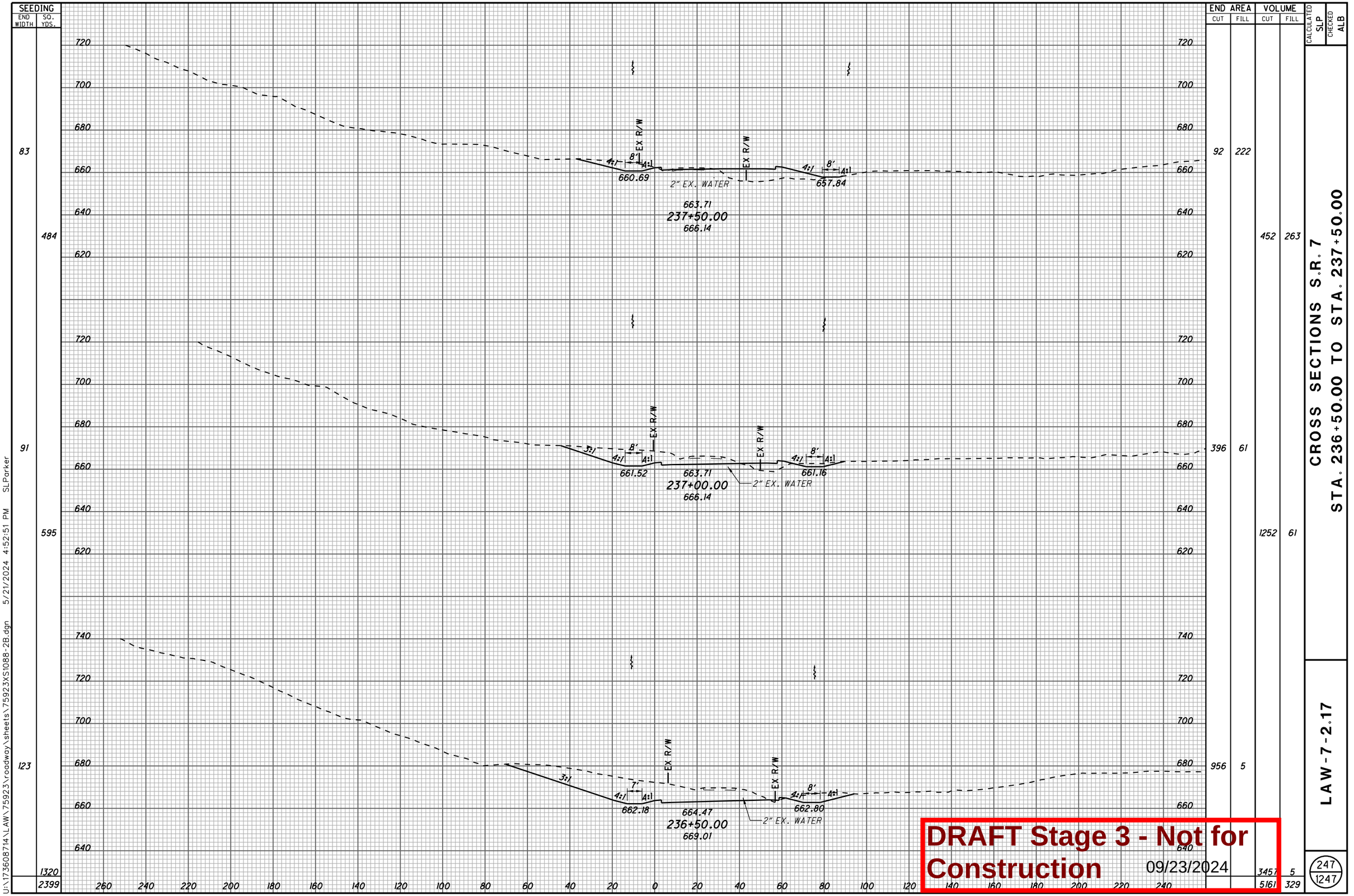

CROSS SECTIONS S.R. 7
STA. 236+50.00 TO STA. 237+50.00

LAW-7-2.17

247
1247

DRAFT Stage 3 - Not for Construction 09/23/2024

U:\173608714\LAW\75923\roadway\sheets\75923XS1088-2B.dgn 5/21/2024 4:52:51 PM SLParker

SEEDING		END AREA		VOLUME		CALCULATED	CHECKED
END WIDTH	SQ. YDS.	CUT	FILL	CUT	FILL	SLP	ALB
317	1209	163	2484	214	3029		
118	546	67	786	84	1155		
79	450	23	460	107	632		
	2205			405	4816		

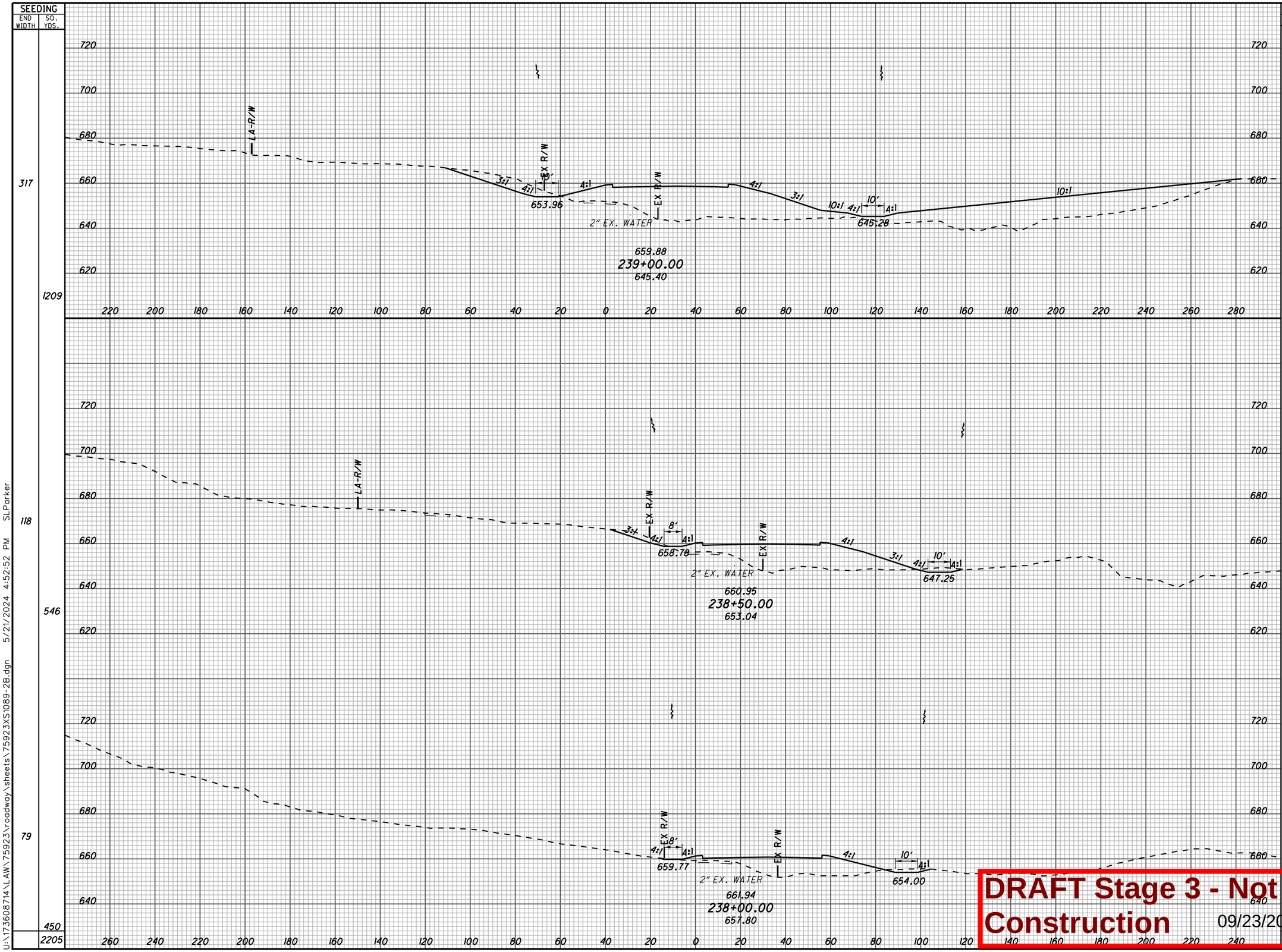

CROSS SECTIONS S.R. 7
STA. 238+00.00 TO STA. 239+00.00

LAW-7-2.17

DRAFT Stage 3 - Not for Construction 09/23/2024

U:\173608714\LAW\75923\roadway\sheets\75923XS1089-2B.dgn 5/21/2024 4:52:52 PM SLParker

SEEDING END WIDTH	SEEDING SQ. YDS.	END AREA CUT	END AREA FILL	VOLUME CUT	VOLUME FILL
154	886	0	2462	0	4358
165	969	0	2243	0	3940
184	1393	0	2011	0	4163
	3248			152	12461

CALCULATED SLP
CHECKED ALB

CROSS SECTIONS S.R. 7
STA. 239+50.00 TO STA. 240+50.00

LAW-7-2.17

249
1247

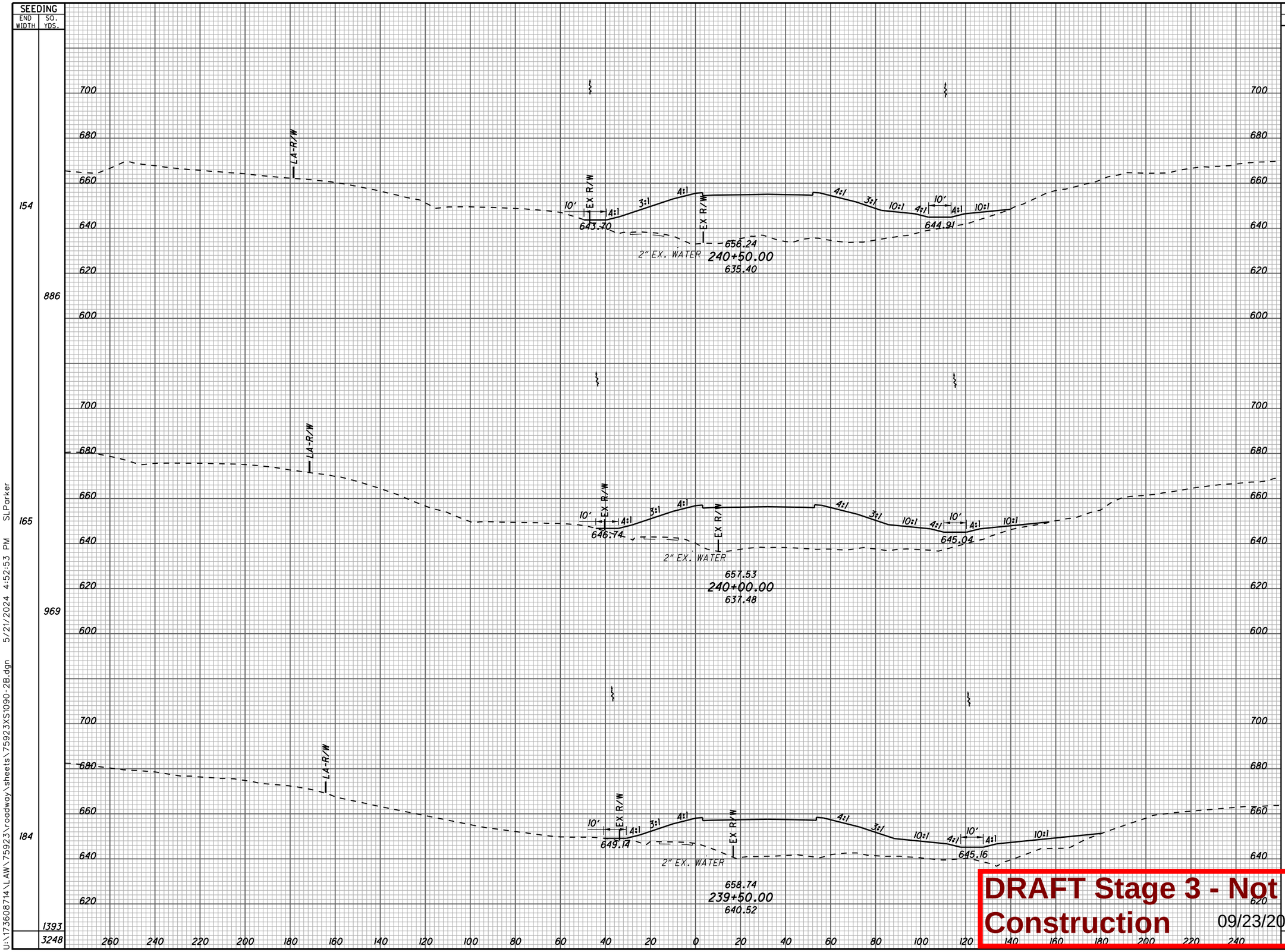

DRAFT Stage 3 - Not for Construction 09/23/2024

U:\173608714\LAW\75923\roadway\sheets\75923XS1090-2B.dgn 5/21/2024 4:52:53 PM SLParker

SEEDING	
END WIDTH	SQ. YDS.
262	1383
235	4073
1231	3847
	9303

END AREA	
CUT	FILL
2118	1488
1438	1916
0	2304
0	4413
4626	11472

VOLUME	
CUT	FILL
3294	3152
1332	3907

CALCULATED SLP
CHECKED ALB

CROSS SECTIONS S.R. 7
STA. 241+00.00 TO STA. 242+00.00

LAW-7-2.17

250
1247

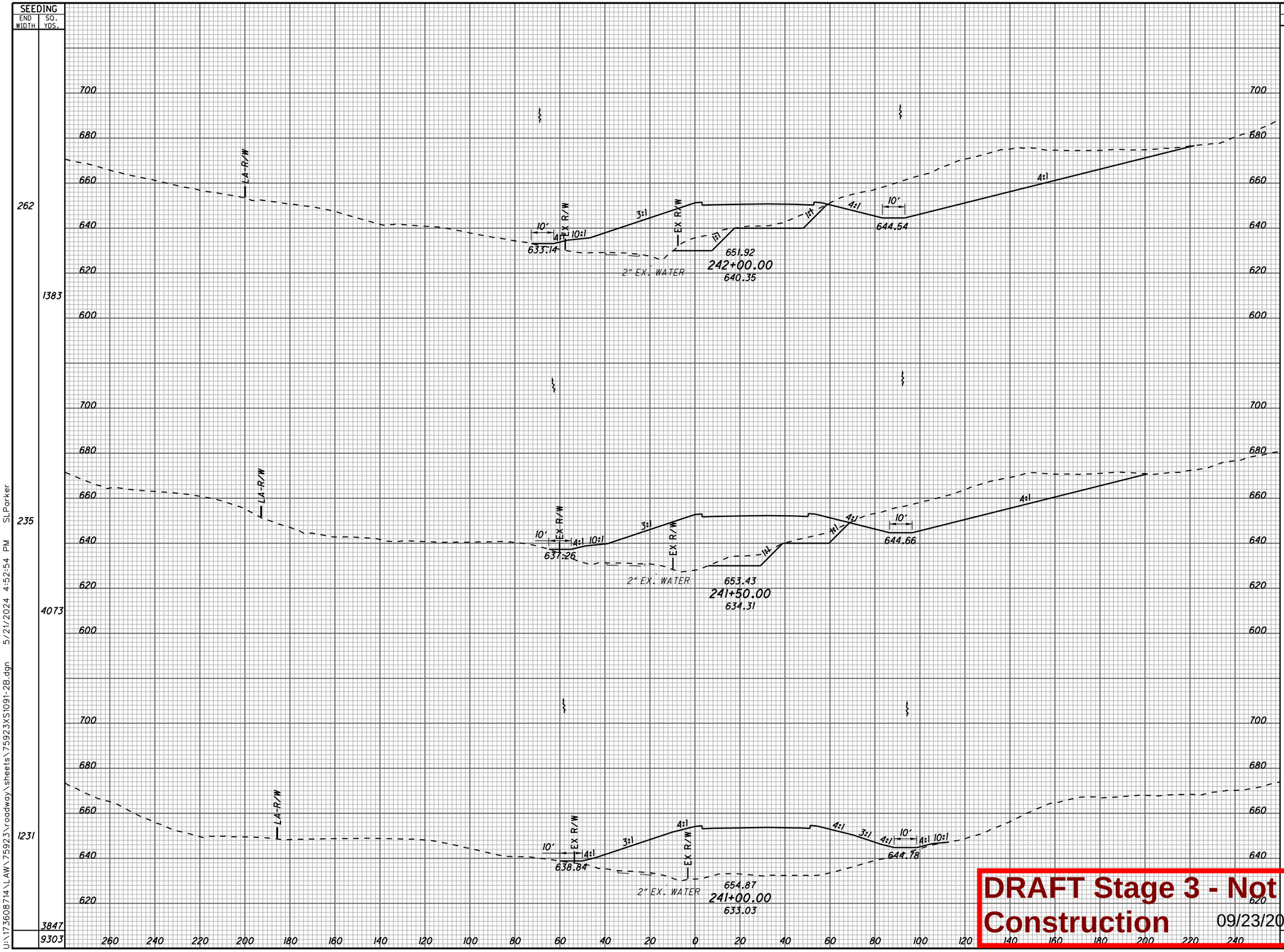

DRAFT Stage 3 - Not for Construction 09/23/2024

U:\173608714\LAW 75923\roadway\sheets\75923XS1091-2B.dgn 5/21/2024 4:52:54 PM SLPorker

SEEDING	
END WIDTH	SQ. YDS.
263	1428
251	1460
275	1493
	4381

END AREA	
CUT	FILL
1471	1339
1976	1280
2317	1244
4107	2531
11275	7294

VOLUME	
CUT	FILL
3193	2425
3975	2338

CALCULATED SLP
CHECKED ALB

720 700 680 660 640 620 600 700 680

LA-R/W

10' 4:1 4:1 10:1 3:1 EX R/W 1:1 1:1 4:1 10' 4:1

625.38 647.08 642.31

243+50.00

635.94

2" EX. WATER

632.89 648.71 644.28

243+00.00

636.90

633.02 650.33 644.41

242+50.00

639.99

260 240 220 200 180 160 140 120 100 80 60 40 20 0 20 40 60 80 100 120 140 160 180 200 220 240

CROSS SECTIONS S.R. 7
STA. 242+50.00 TO STA. 243+50.00

LAW-7-2.17

251
1247

DRAFT Stage 3 - Not for Construction 09/23/2024

U:\173608714\LAW\75923\roadway\sheets\75923XS1092-2B.dgn 5/21/2024 4:52:55 PM SLParker

SEEDING	
END WIDTH	SQ. YDS.
136	891
185	1257
268	1476
	3624

END AREA	
CUT	FILL
39	1438
289	1376
882	1265
2180	2411
3569	7464

VOLUME	
CUT	FILL
304	2607
1085	2446

CALCULATED SLP
CHECKED ALB

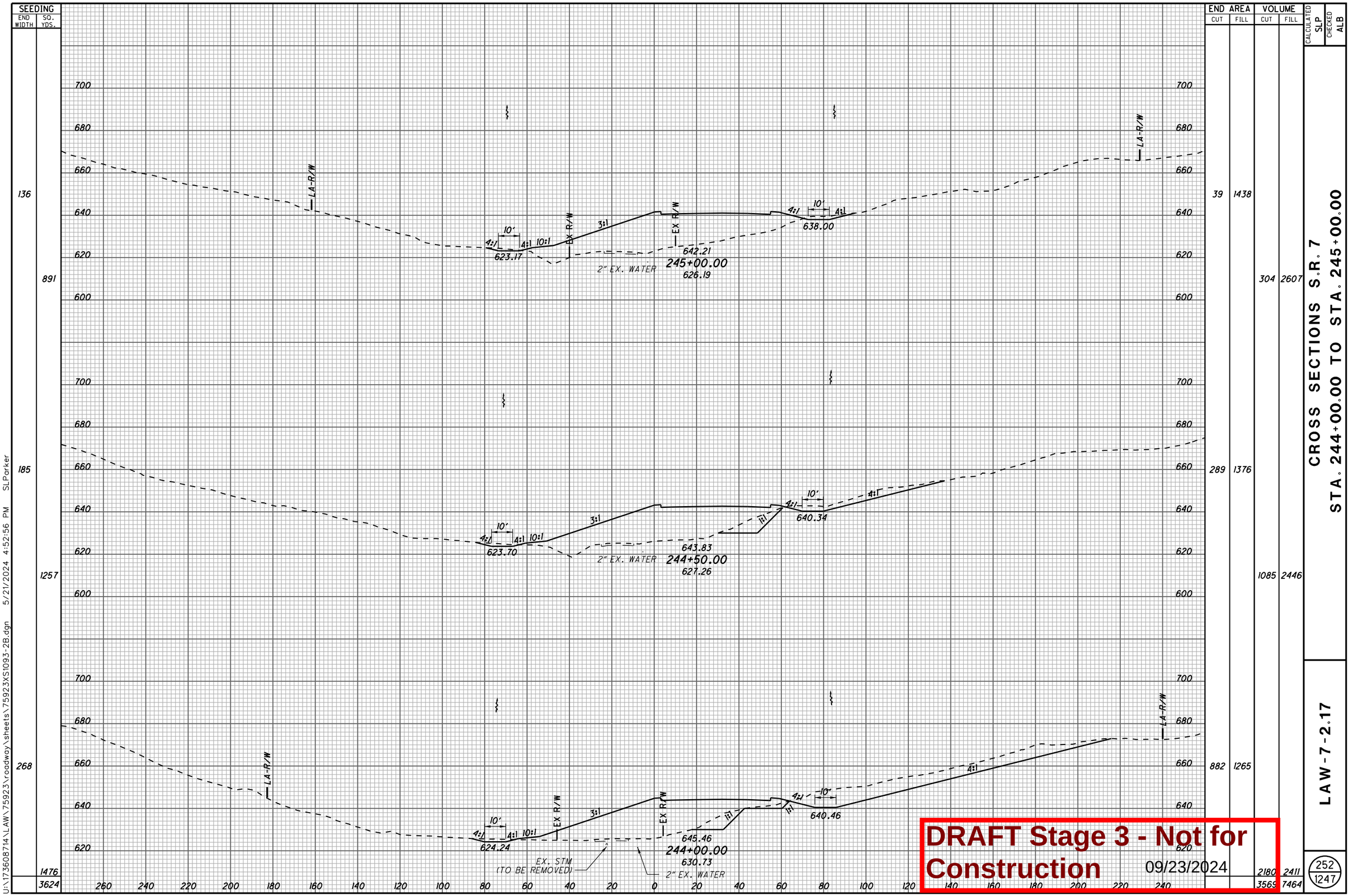

CROSS SECTIONS S.R. 7
STA. 244+00.00 TO STA. 245+00.00

LAW-7-2.17

252
1247

DRAFT Stage 3 - Not for Construction 09/23/2024

U:\173608714\LAW\75923\roadway\sheets\75923XS1093-2B.dgn 5/21/2024 4:52:56 PM SLParker

SEEDING END WIDTH	SEEDING SQ. YDS.	END AREA CUT	END AREA FILL	VOLUME CUT	VOLUME FILL
149	893	14	1833	86	3481
172	930	78	1926	118	3303
162	830	48	1641	82	2851
	2653			286	9635

CALCULATED SLP
CHECKED ALB

CROSS SECTIONS S.R. 7
STA. 245+50.00 TO STA. 246+50.00

LAW-7-2.17

253
1247

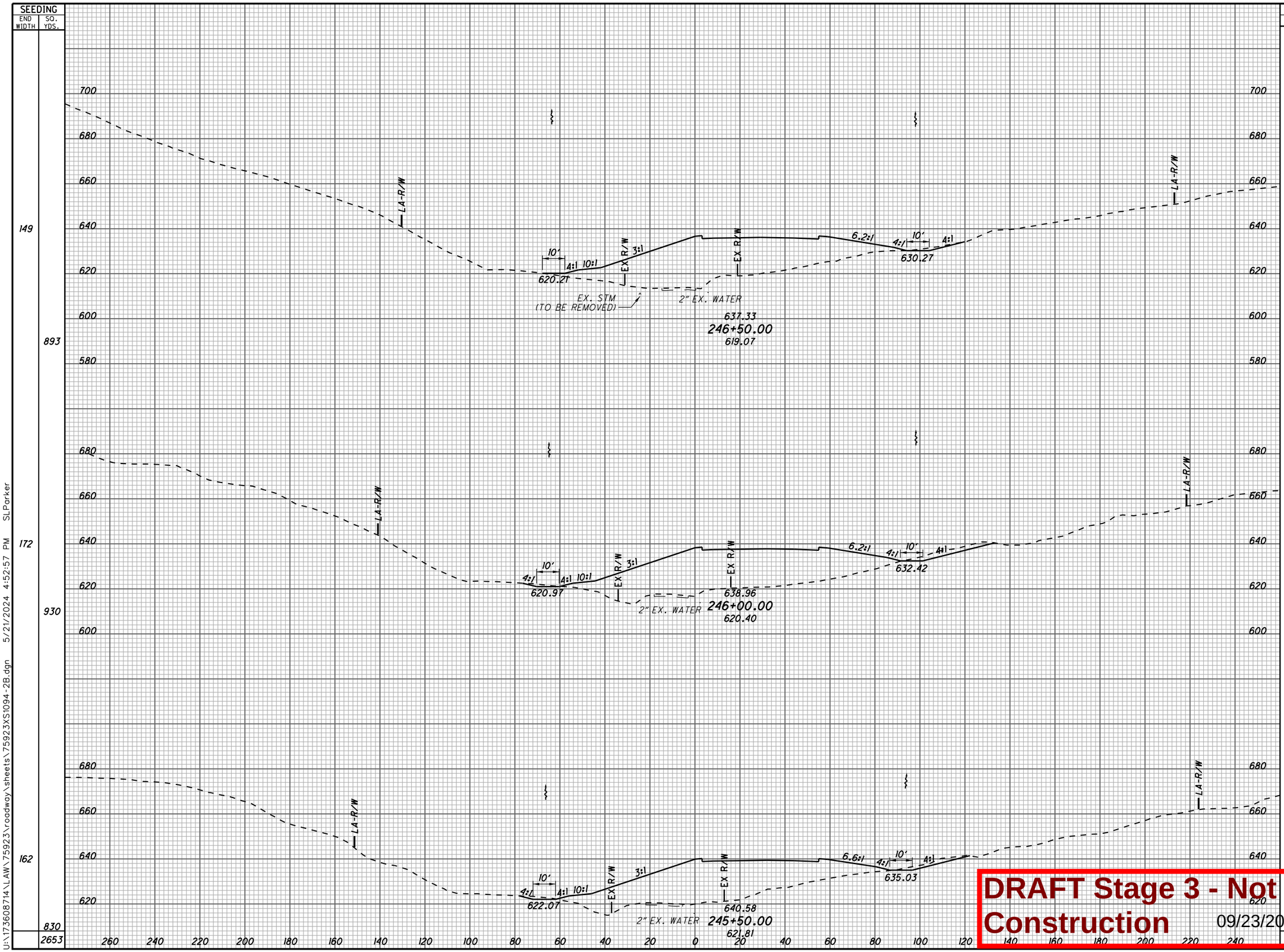

DRAFT Stage 3 - Not for Construction
09/23/2024

U:\173608714\LAW\75923\roadway\sheets\75923XS1094-2B.dgn 5/21/2024 4:52:57 PM SLParker

SEEDING END WIDTH	SEEDING SQ. YDS.
231	1176
193	1085
198	965
	3226

END AREA CUT	END AREA FILL	VOLUME CUT	VOLUME FILL
8	2088	620	3722
662	1931	833	3513
238	1862	233	3421
		1686	10656

CALCULATED SLP
CHECKED ALB

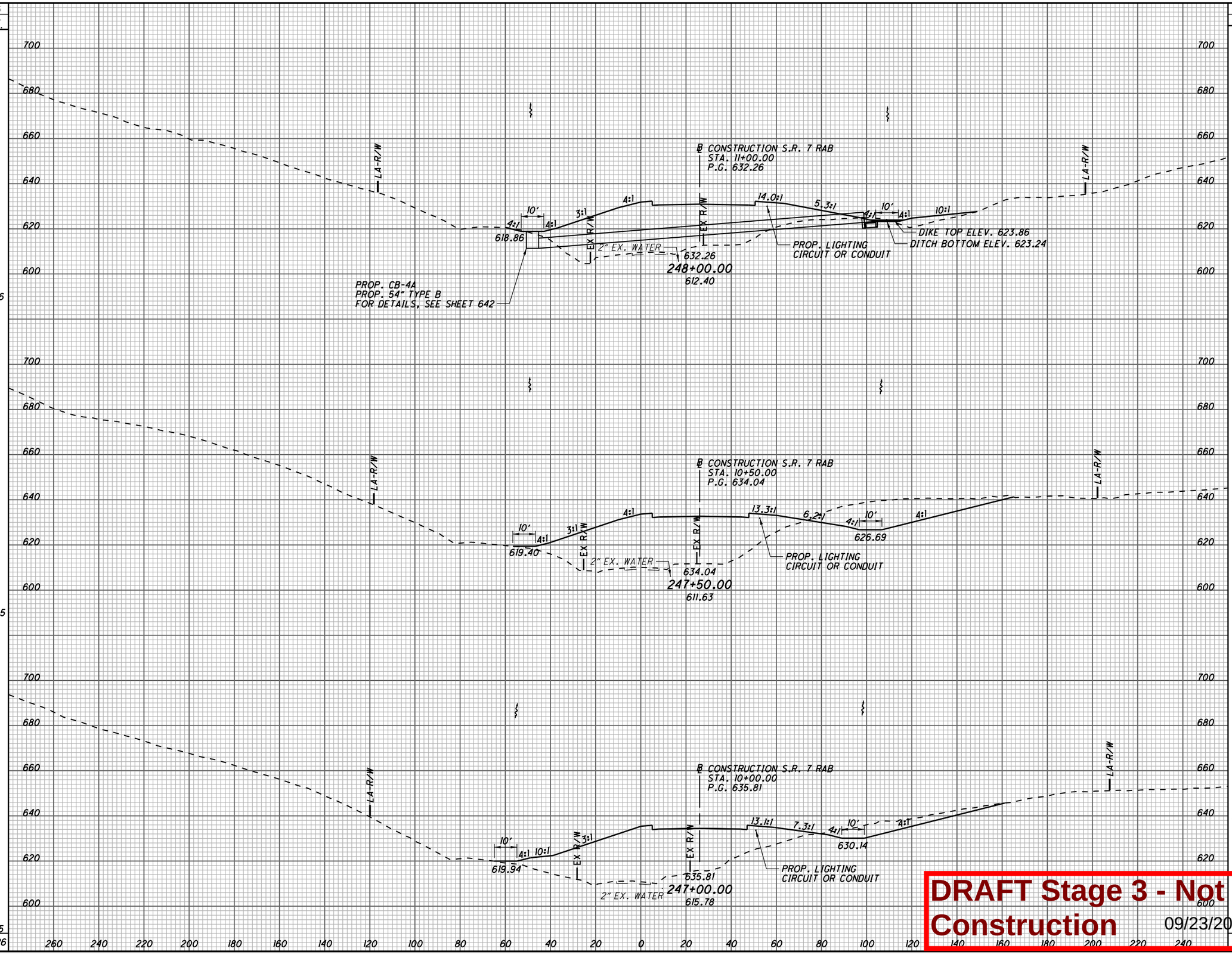

CROSS SECTIONS S.R. 7
STA. 247+00.00 TO STA. 248+00.00

LAW-7-2.17

254
1247

DRAFT Stage 3 - Not for Construction 09/23/2024

U:\173608714\LAW\75923\roadway\sheets\75923XS1095-2B.dgn 5/21/2024 4:52:58 PM SLParker

SEEDING END WIDTH	SEEDING SQ. YDS.
210	1073
176	1020
191	1172
	3265

END AREA CUT	END AREA FILL	VOLUME CUT	VOLUME FILL
67	2896		
39	2465		
73	2485		
105	4584		
99	4965		
76	4234		
280	13783		

CALCULATED SLP
CHECKED ALB

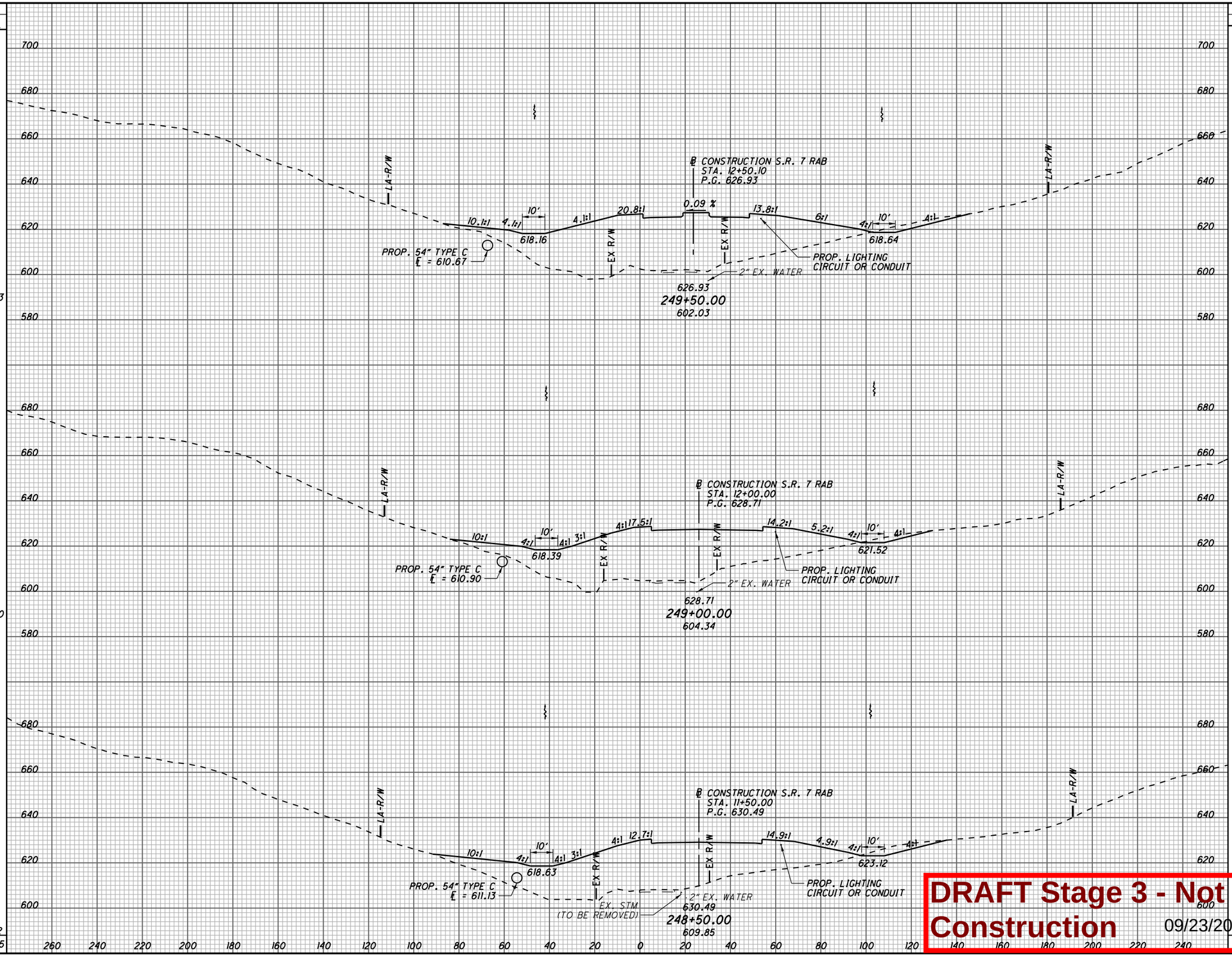

CROSS SECTIONS S.R. 7
STA. 248+50.00 TO STA. 249+50.00

LAW-7-2.17

DRAFT Stage 3 - Not for Construction
09/23/2024

U:\173608714\LAW\75923\roadway\sheets\75923XS1096-2B.dgn 5/21/2024 4:52:59 PM SLParker

SEEDING	
END WIDTH	SQ. YDS.
200	1154
	1182
	2336

END AREA	
CUT	FILL
104	2854
169	5388
78	2964
134	5427
303	10815

VOLUME	
CUT	FILL

CALCULATED SLP
CHECKED ALB

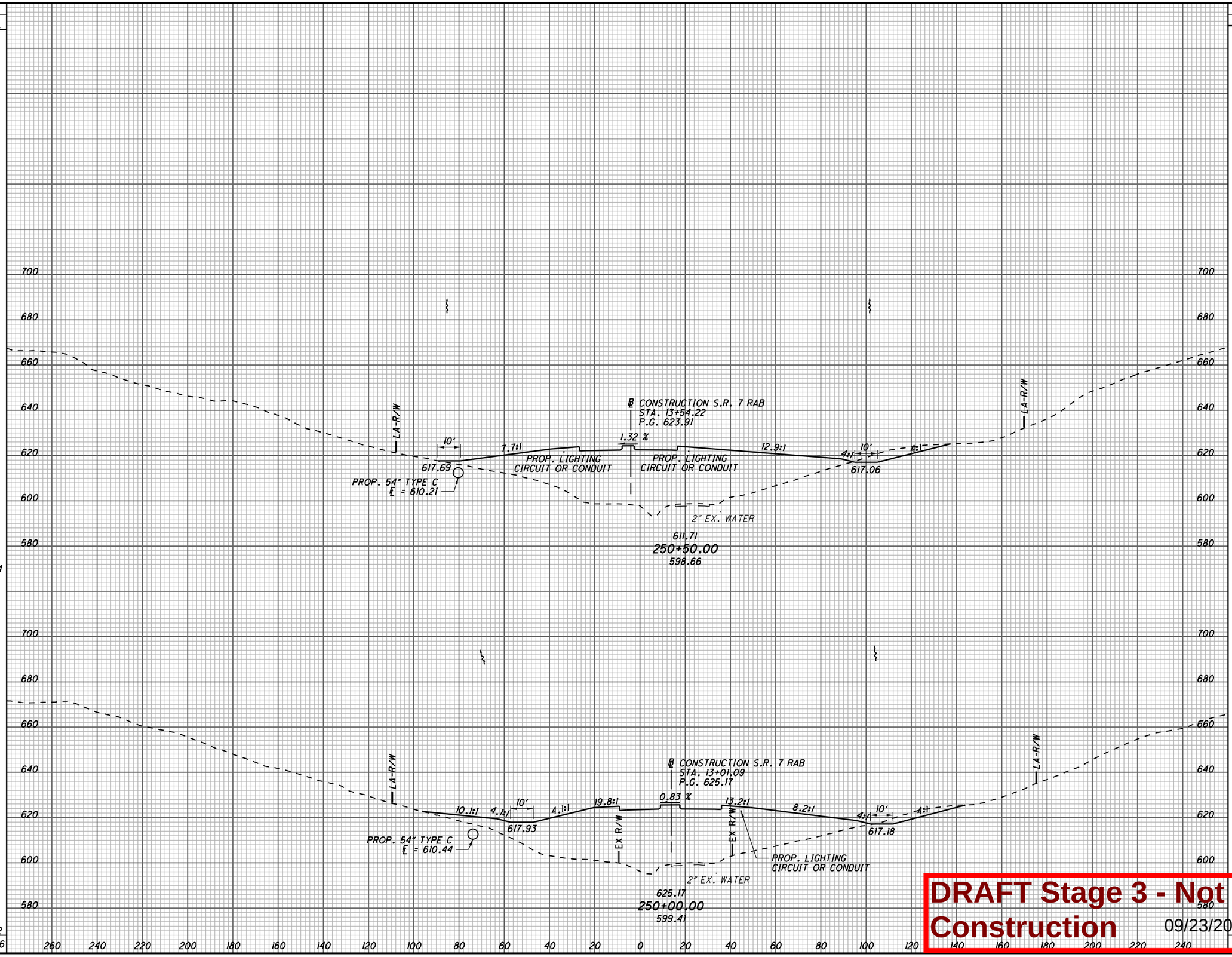

DRAFT Stage 3 - Not for Construction 09/23/2024

CROSS SECTIONS S.R. 7
STA. 250+00.00 TO STA. 250+50.00

LAW-7-2.17

U:\173608714\LAW\75923\roadway\sheets\75923XS1097-2B.dgn 5/21/2024 4:53:00 PM SLParker

SEEDING	
END WIDTH	SQ. YDS.
198	1105
	1105

END AREA		VOLUME	
CUT	FILL	CUT	FILL
145	3136		
231	5546		
231	5546		

CALCULATED SLP
CHECKED ALB

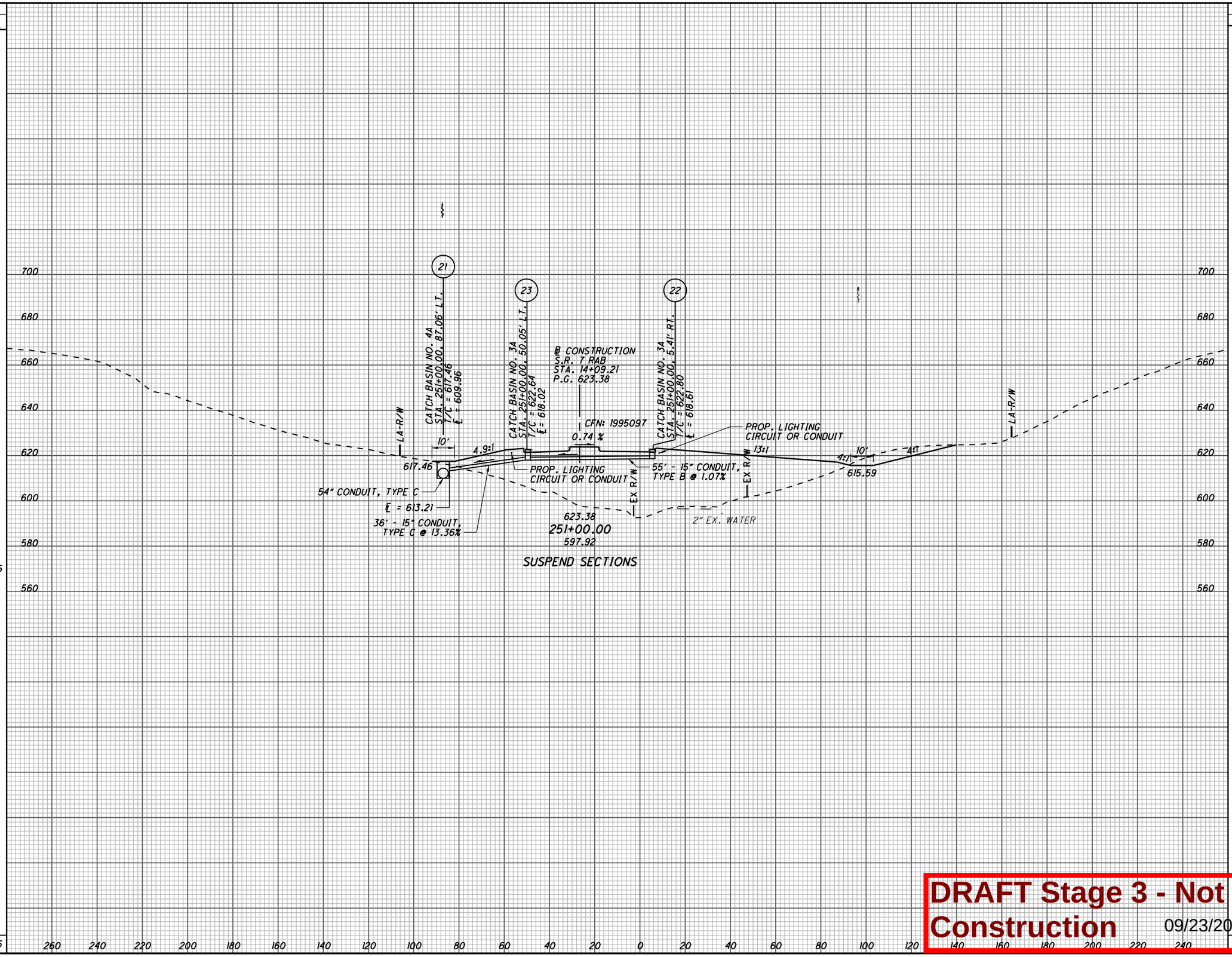

CROSS SECTIONS S.R. 7
STA. 251+00.00

LAW-7-2.17

257
1247

DRAFT Stage 3 - Not for Construction 09/23/2024

U:\173608714\LAW\75923\roadway\sheets\75923XS1098-2B.dgn 5/21/2024 4:53:01 PM SLParker

SEEDING	
END WIDTH	SQ. YDS.
245	
	4405
	4405

END AREA	
CUT	FILL
568	4098

VOLUME	
CUT	FILL
3602	35934
3602	35934

CALCULATED SLP

CHECKED ALB

660
640
620
600
580
560

℄ CONSTRUCTION S.R. 7 RAB
STA. 16+16.45
P.C. 617.90

0.08 %

12.1:1

PROP. LIGHTING CIRCUIT OR CONDUIT

MATCH LINE S.R. 243

LA-R/W

EX R/W

EX R/W

6.5:1

4:1

10'

4:1

608.78

PROP. 54" TYPE C
℄ = 605.61

2" EX. WATER

617.90
253+00.00
596.69
RESUME SECTIONS

ADD FOR ROUNDABOUT

ADD FOR ROUNDABOUT

260 240 220 200 180 160 140 120 100 80 60 40 20 0 20 40 60 80 100 120 140 160 180 200 220 240

CROSS SECTIONS S.R. 7
STA. 253+00.00

LAW-7-2.17

258
1247

DRAFT Stage 3 - Not for Construction 09/23/2024

U:\1736087\14\LAW\75923\roadway\sheets\75923XS1100-2B.dgn 5/21/2024 4:53:01 PM SLParker

SEEDING	
END WIDTH	SQ. YDS.
	277
	1445
	243
	1355
	2800

END AREA		VOLUME	
CUT	FILL	CUT	FILL
1100	2037		
		1249	4554
248	2881		
		756	6462
		2005	11016

CALCULATED SLP
CHECKED ALB

CROSS SECTIONS S.R. 7
STA. 253+50.00 TO STA. 254+00.00

LAW-7-2.17

259
1247

660
640
620
600
580

DETENTION BASIN #3
FOR DETAILS, SEE SHEETS 667 & 672

MATCH LINE C.R. 69

LA-R/W

7.9:1

2:1
10:1
3:1

HW-2.1
STA. 254+00, 112.93' LT.
℄ = 595.73

PROP. LIGHTING CIRCUIT OR CONDUIT

16' - 15" CONDUIT, TYPE C @ 0.96%

10' - 15" CONDUIT, TYPE F @ 0.96%

CATCH BASIN NO. 3A
STA. 254+00.00, 39.17' LT.
T/C = 613.61
℄ = 609.46

℄ CONSTRUCTION
S.R. 7 RAB
STA. 17+17.80
P.G. 614.31

EX R/W

3.34%

CFN: 1995073

CATCH BASIN NO. 3A
STA. 254+00.00, 1.81' RT.
T/C = 614.02
℄ = 610.31

14.6:1
4:1
10'
4:1
607.05

2" EX. WATER

℄ = 609.21
614.31
254+00.00
605.90

40' - 15" CONDUIT, TYPE B @ 2.12%

43' - 15" CONDTUIT, TYPE F, T07.21 @ 31.16%

℄ = 595.81

8' - 15" CONDUIT, TYPE F @ 1.00%

18" ROCK CHANNEL PROTECTION, TYPE C WITH FILTER
(148.82 SF X 1.5' / 27 = 8.27 CY)

* MASONARY COLLARS AS PER SCD DM-1.1 (INCLUDE WITH COST OF CONDUIT)

260 240 220 200 180 160 140 120 100 80 60 40 20 0 20 40 60 80 100 120 140 160 180 200 220 240

℄ CONSTRUCTION S.R. 7 RAB
STA. 16+67.03
P.G. 616.11

PROP. LIGHTING CIRCUIT OR CONDUIT

MATCH LINE S.R. 243

LA-R/W

6:1

EX R/W

1.73 %

EX R/W

8.5:1

4:1
10'
4:1
607.55

2" EX. WATER

616.11
253+50.00
599.97

DRAFT Stage 3 - Not for Construction 09/23/2024

SEEDING	
END WIDTH	SQ. YDS.
426	1955
	1955

END AREA	
CUT	FILL
2276	1915
3127	3660

VOLUME	
CUT	FILL
3127	3660

CALCULATED SLP

CHECKED ALB

CROSS SECTIONS S.R. 7

STA. 254+50.00

LAW-7-2.17

260
1247

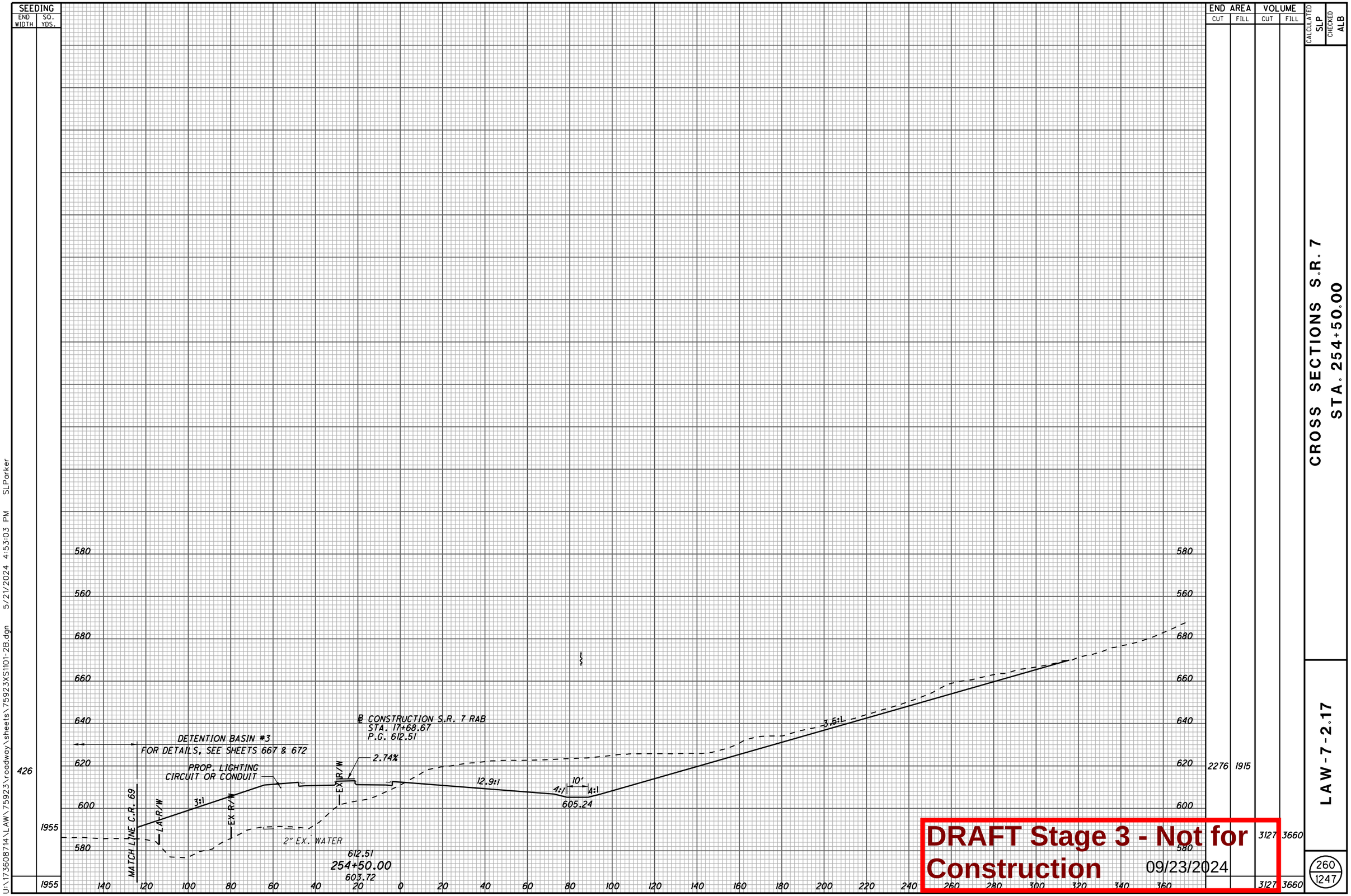

DRAFT Stage 3 - Not for Construction 09/23/2024

U:\173608714\LAW\75923\roadway\sheets\75923XS1101-2B.dgn 5/21/2024 4:53:03 PM SLParker

SEEDING	
END WIDTH	SQ. YDS.
417	2343

END AREA		VOLUME	
CUT	FILL	CUT	FILL
2909	2511	4802	4098

CALCULATED SLP
CHECKED ALB

CROSS SECTIONS S.R. 7
STA. 255+00.00

DRAFT Stage 3 - Not for Construction 09/23/2024

LAW-7-2.17

261
1247

U:\173608714\LAW\75923\roadway\sheets\75923XS1101A-2B.dgn 5/21/2024 4:53:04 PM SLPorker

SEEDING	
END WIDTH	SQ. YDS.
397	
2261	
2261	

END AREA		VOLUME	
CUT	FILL	CUT	FILL
		2948	3201
		5424	5289
		5424	5289

CALCULATED SLP
CHECKED ALB

CROSS SECTIONS S.R. 7
STA. 255+50.00

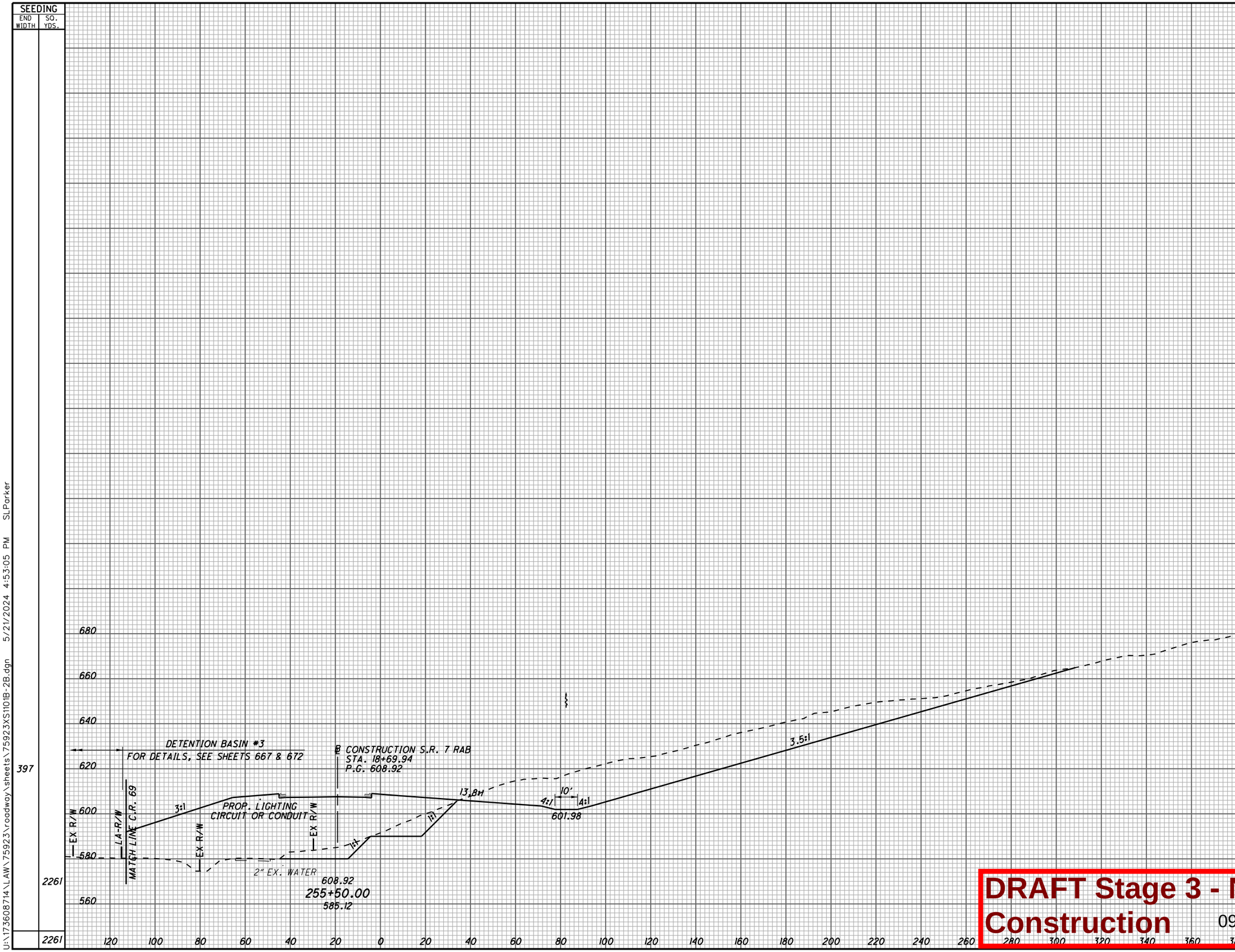

DRAFT Stage 3 - Not for Construction 09/23/2024

LAW-7-2.17

262
1247

U:\173608714\LAW\75923\roadway\sheets\75923XS1101B-2B.dgn 5/21/2024 4:53:05 PM SLParker

SEEDING	
END WIDTH	SQ. YDS.
361	2106

END AREA		VOLUME	
CUT	FILL	CUT	FILL
2416	3125	4967	5858

CALCULATED SLP
CHECKED ALB

CROSS SECTIONS S.R. 7
STA. 256+00.00

LAW-7-2.17

263
1247

DETENTION BASIN #3
FOR DETAILS, SEE SHEETS 667 & 672

℄ CONSTRUCTION S.R. 7 RAB
STA. 19+21.00
P.G. 607.11

LA-R/W
MATCHLINE S.R. 69

3:1

PROP. LIGHTING
CIRCUIT OR CONDUIT

EX R/W

2" EX. WATER

607.11
256+00.00
584.11

12.9:1

10'

4:1

4:1

600.35

3.5:1

680
660
640
620
600
580

120 100 80 60 40 20 0 20 40 60 80 100 120 140 160 180 200 220 240 260 280 300 320 340 360 380

DRAFT Stage 3 - Not for Construction 09/23/2024

U:\173608714\LAW\75923\roadway\sheets\75923XS1102-2B.dgn 5/21/2024 4:53:05 PM SLParker

SEEDING	
END WIDTH	SQ. YDS.

END AREA		VOLUME	
CUT	FILL	CUT	FILL

CALCULATED SLP
CHECKED ALB

CROSS SECTIONS S.R. 7
STA. 256+50.00

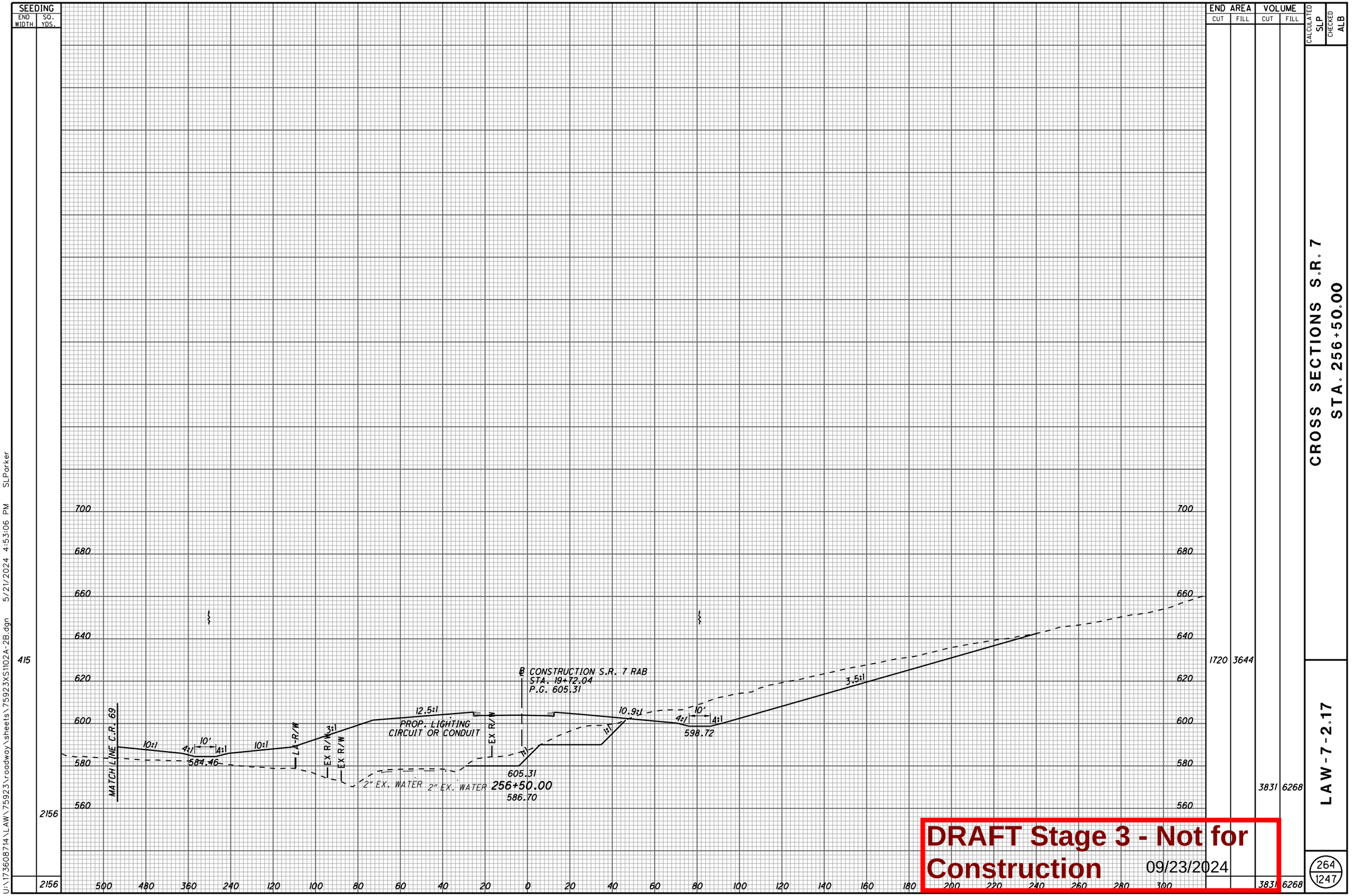

DRAFT Stage 3 - Not for Construction 09/23/2024

LAW-7-2.17

264
1247

U:\173608714\LAW\75923\roadway\sheets\75923XS1102A-2B.dgn 5/21/2024 4:53:06 PM SLParker

SEEDING	
END WIDTH	SQ. YDS.
430	2298
397	2256
	4554

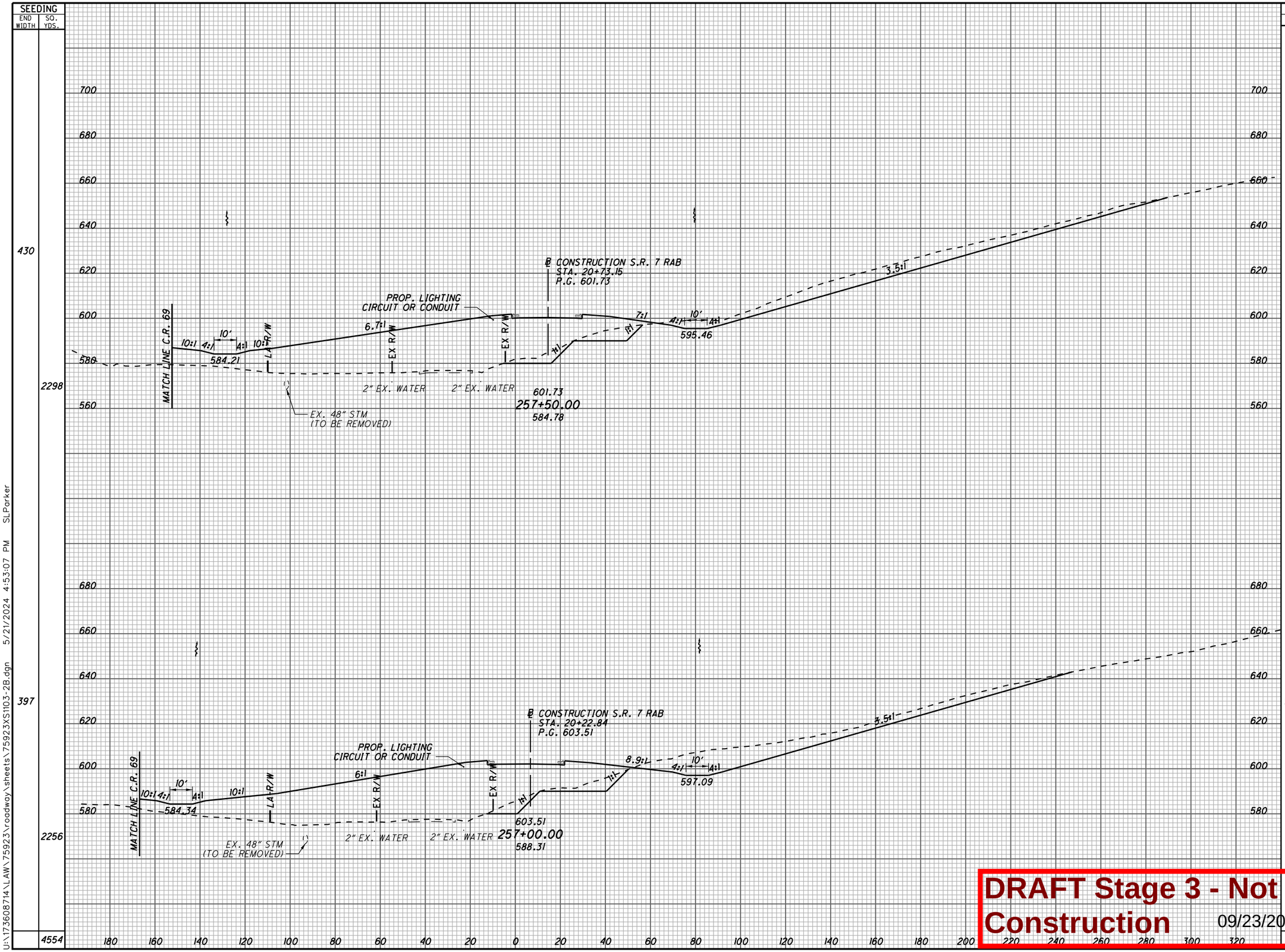

END AREA		VOLUME	
CUT	FILL	CUT	FILL
967	3103		
		1830	5882
1009	3248		
		2528	6382
		4358	12264

CALCULATED	CHECKED
SLP	ALB

CROSS SECTIONS S.R. 7
STA. 257+00.00 TO STA. 257+50.00

LAW-7-2.17

265
1247

DRAFT Stage 3 - Not for Construction 09/23/2024

U:\173608714\LAW\75923\roadway\sheets\75923XS1103-2B.dgn 5/21/2024 4:53:07 PM SLParker

SEEDING END WIDTH	SEEDING SQ. YDS.	END AREA CUT	END AREA FILL	VOLUME CUT	VOLUME FILL
201	1080	18	2752	18	5309
188	1055	0	2981	1	5660
192	1728	0	3131	896	5774
	3863			915	16743

CALCULATED SLP
CHECKED ALB

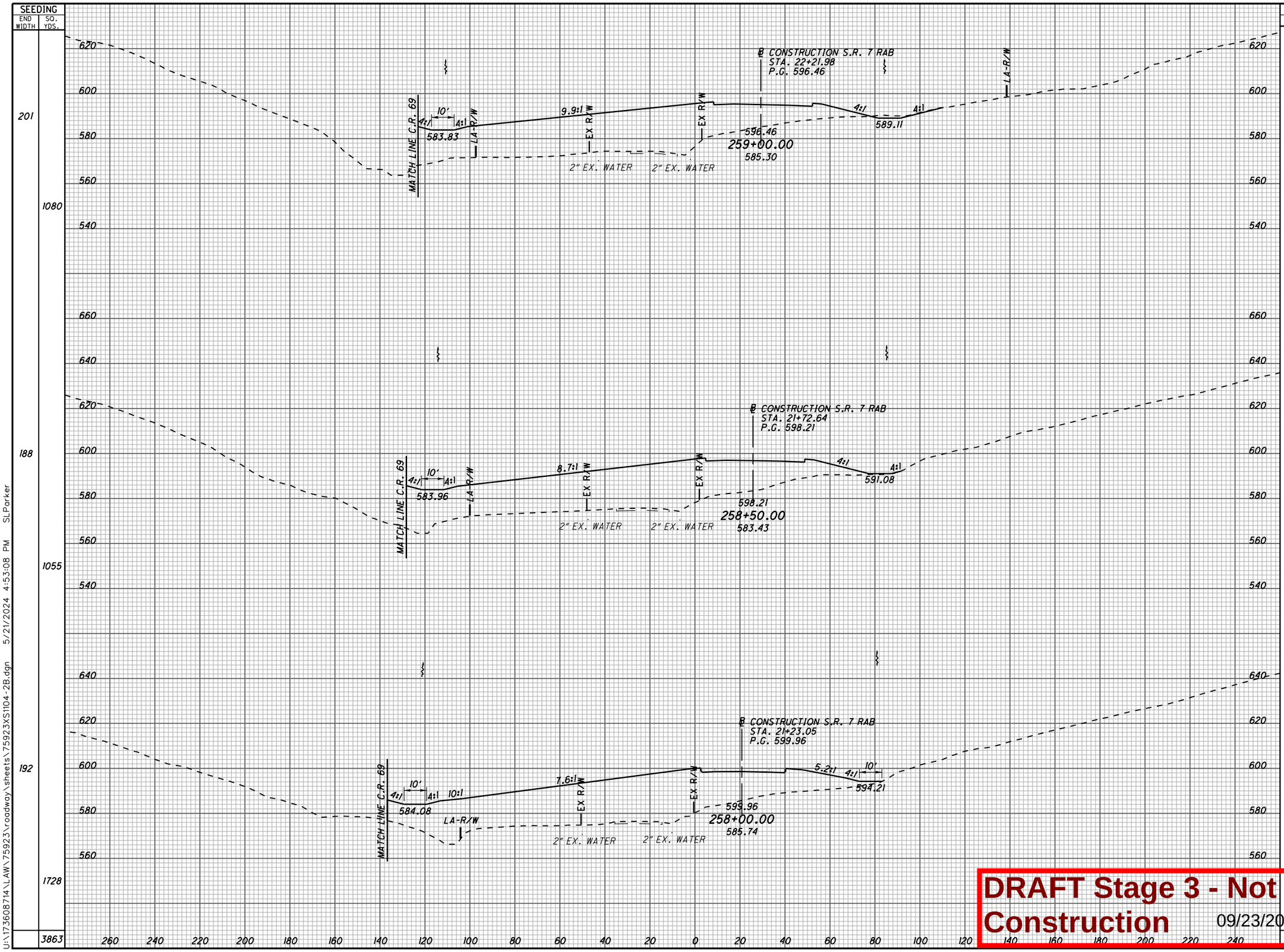

CROSS SECTIONS S.R. 7
STA. 258+00.00 TO STA. 259+00.00

LAW-7-2.17

266
1247

DRAFT Stage 3 - Not for Construction 09/23/2024

U:\173608714\LAW\75923\roadway\sheets\75923XS1104-2B.dgn 5/21/2024 4:53:08 PM SLParker

SEEDING END WIDTH	SEEDING SQ. YDS.	END AREA CUT	END AREA FILL	VOLUME CUT	VOLUME FILL
182	994	0	3384	43	5839
175	986	46	2921	151	5245
180	1057	116	2743	125	5088
	3037			319	16172

CALCULATED SLP
CHECKED ALB

CROSS SECTIONS S.R. 7
STA. 259+50.00 TO STA. 260+50.00

LAW-7-2.17

267
1247

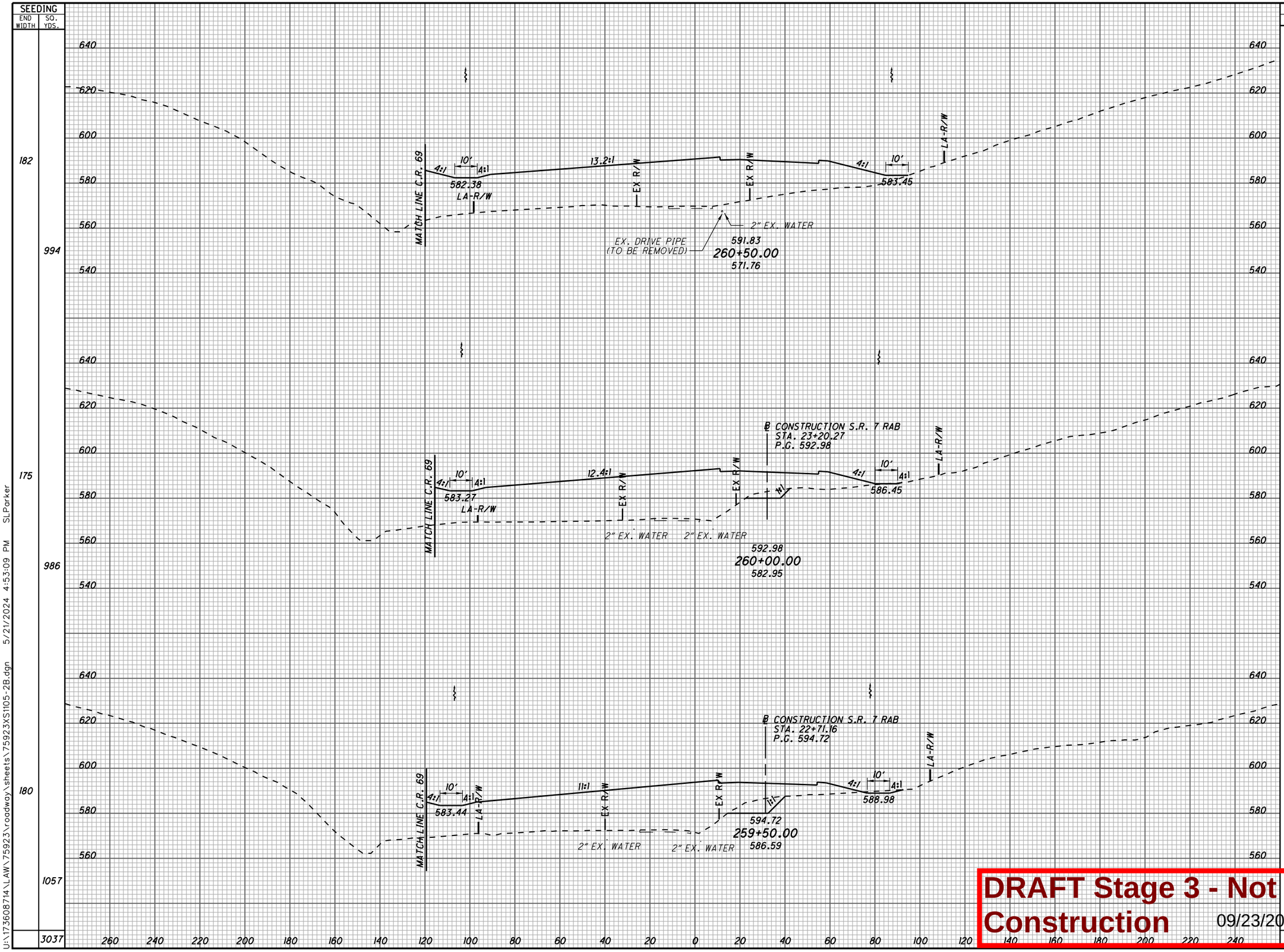

DRAFT Stage 3 - Not for Construction 09/23/2024

U:\173608714\LAW\75923\roadway\sheets\75923XS1105-2B.dgn 5/21/2024 4:53:09 PM SLParker

SEEDING END WIDTH	SEEDING SQ. YDS.
170	940
168	966
179	1006
	2912

END AREA CUT	END AREA FILL	VOLUME CUT	VOLUME FILL
0	3579	0	6402
0	3334	0	6073
0	3224	0	6119
		0	18594

CALCULATED SLP
CHECKED ALB

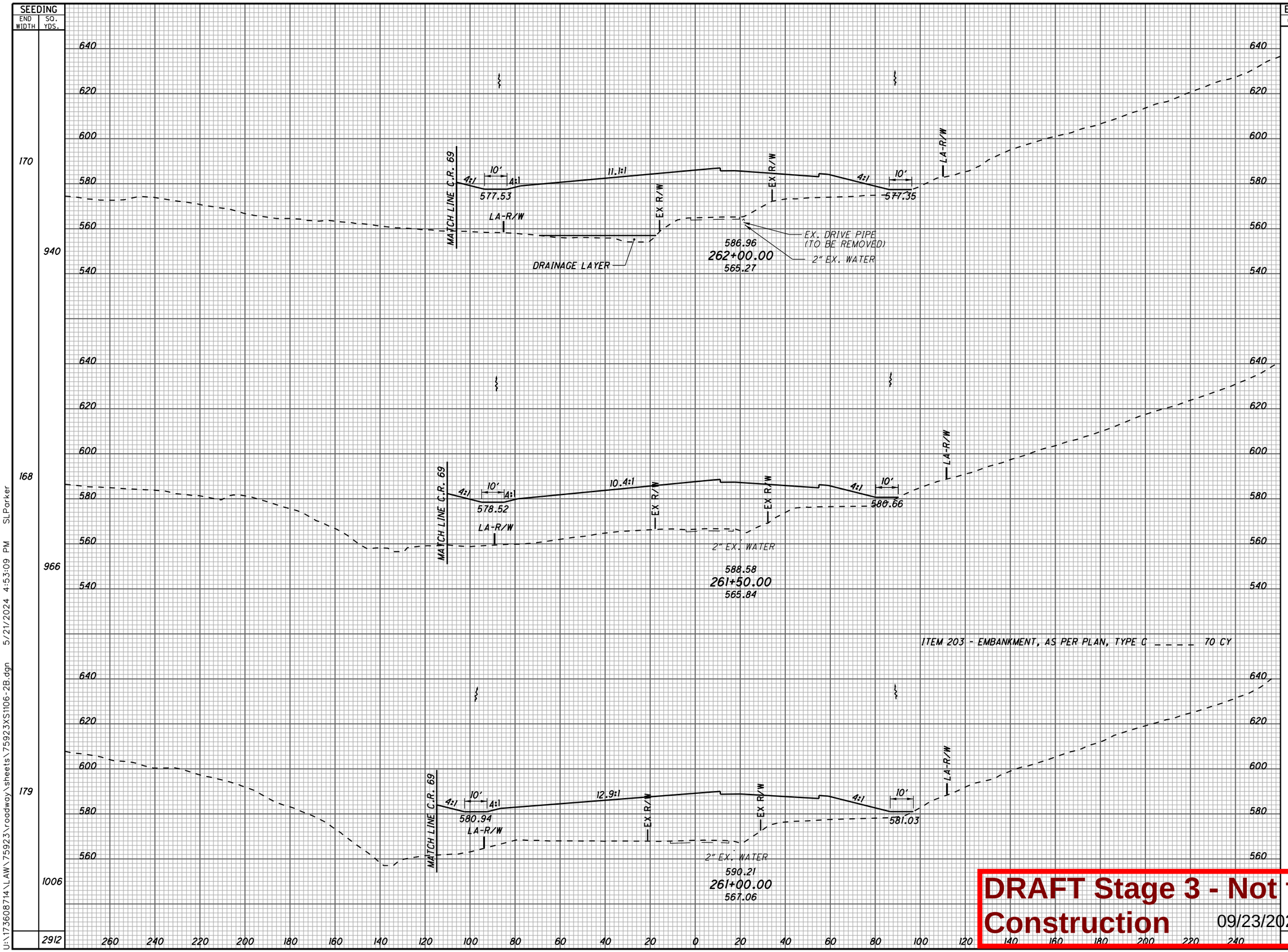

DRAFT Stage 3 - Not for Construction 09/23/2024

CROSS SECTIONS S.R. 7
STA. 261+00.00 TO STA. 262+00.00

LAW-7-2.17

268
1247

U:\173608714\LAW\75923\roadway\sheets\75923XS1106-2B.dgn 5/21/2024 4:53:09 PM SLParker

SEEDING END WIDTH	SEEDING SQ. YDS.
163	894
159	895
163	926
	2715

END AREA CUT	END AREA FILL	VOLUME CUT	VOLUME FILL
17	2960	16	5700
0	3196	0	6055
0	3342	0	6409
		16	18164

CALCULATED SLP

CHECKED ALB

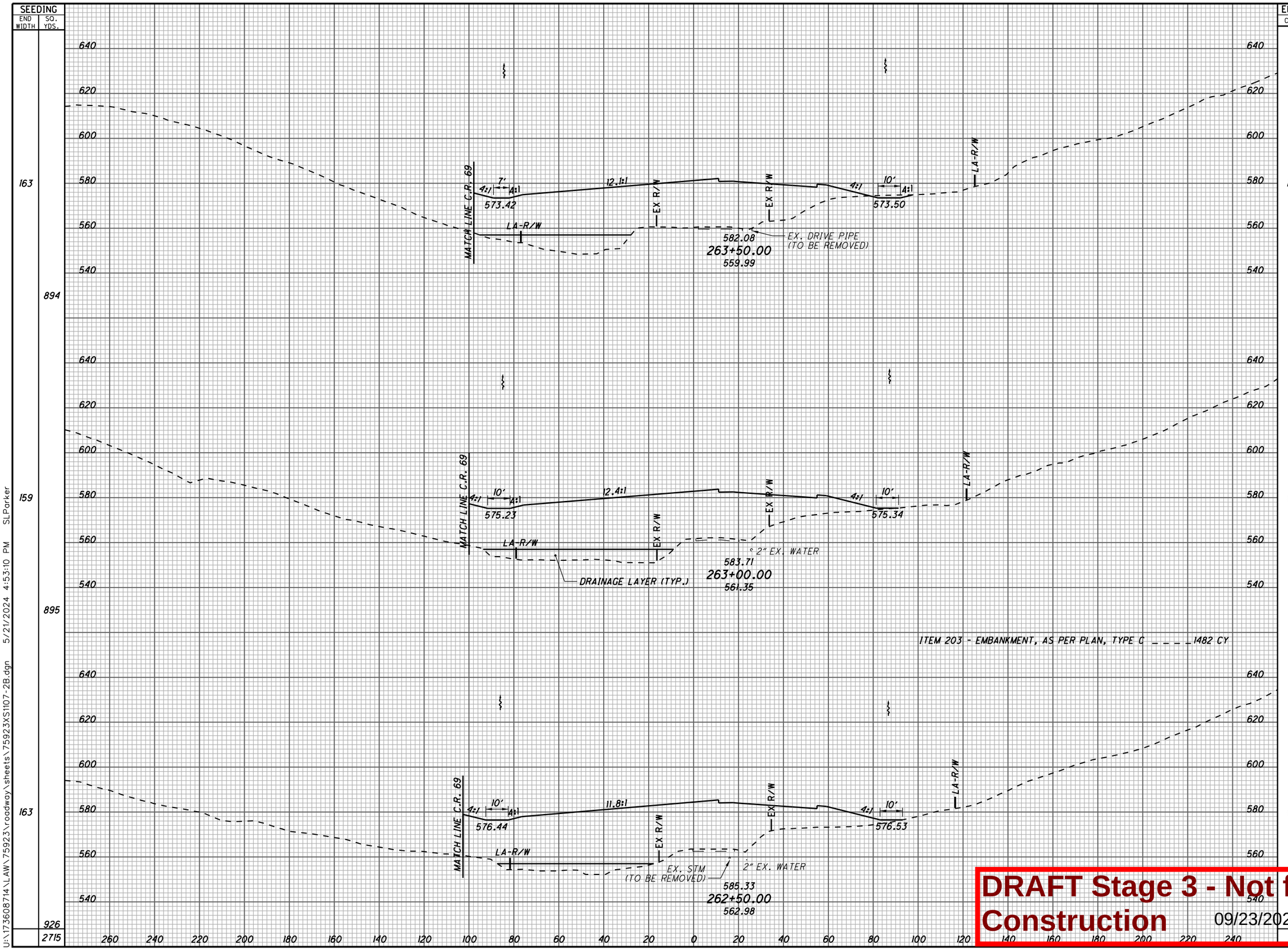

ITEM 203 - EMBANKMENT, AS PER PLAN, TYPE C _ _ _ _ 1482 CY

CROSS SECTIONS S.R. 7
STA. 262+50.00 TO STA. 263+50.00

LAW-7-2.17

269
1247

DRAFT Stage 3 - Not for Construction 09/23/2024

U:\173608714\LAW\75923\roadway\sheets\75923XS1107-2B.dgn 5/21/2024 4:53:10 PM SLParker

SEEDING	
END WIDTH	SQ. YDS.
159	874
155	867
157	888
	2629

END AREA	
CUT	FILL
0	2592
0	2687
0	2880
0	5155
0	4889
16	5407
16	15451

VOLUME	
CUT	FILL

CALCULATED SLP

CHECKED ALB

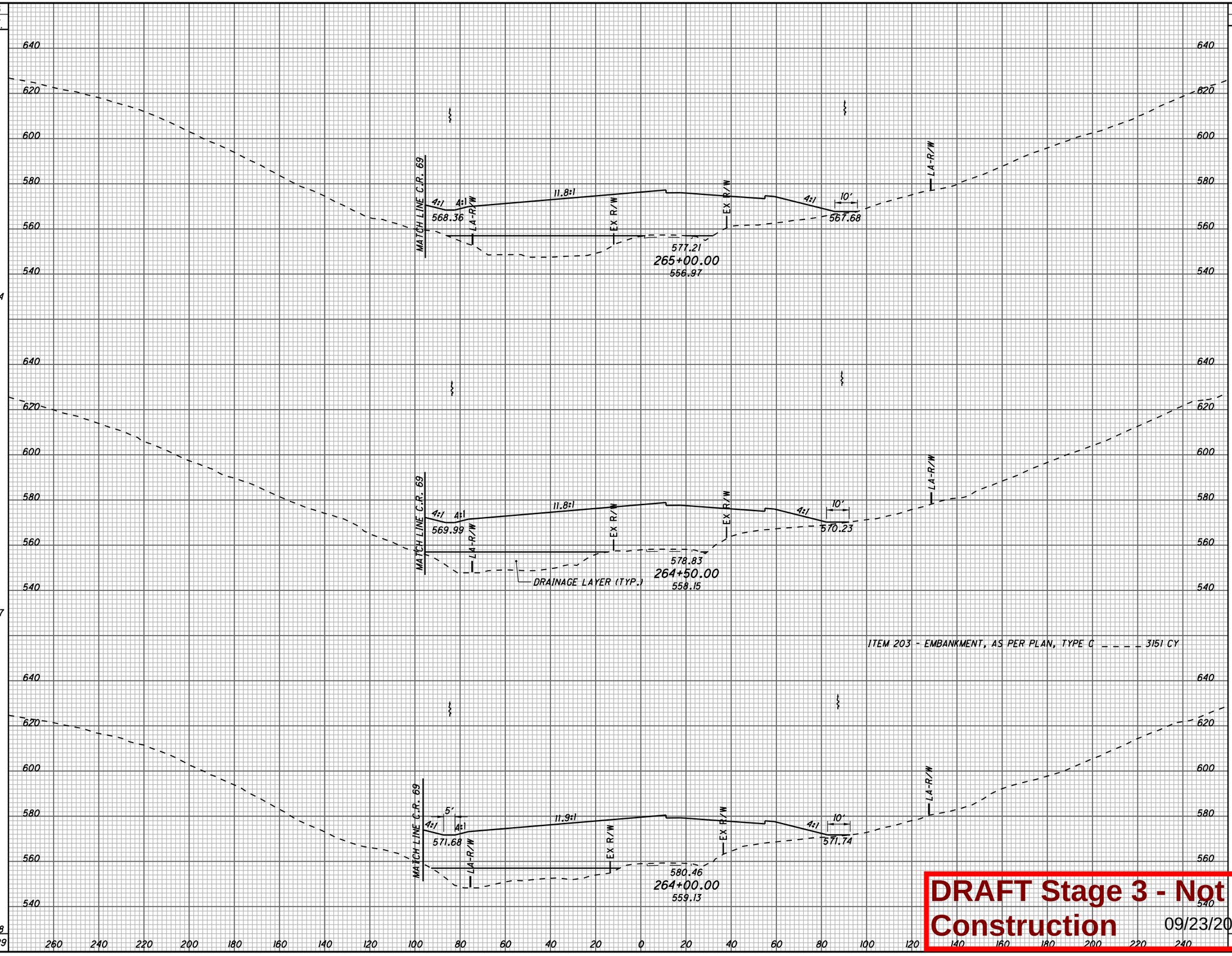

CROSS SECTIONS S.R. 7
STA. 264+00.00 TO STA. 265+00.00

LAW-7-2.17

270
1247

DRAFT Stage 3 - Not for Construction 09/23/2024

U:\173608714\LAW\75923\roadway\sheets\75923XS1108-2B.dgn 5/21/2024 4:53:11 PM SLParker

SEEDING	
END WIDTH	SQ. YDS.
158	869
155	861
155	872
	2602

END AREA		VOLUME	
CUT	FILL	CUT	FILL
0	2054	0	3967
0	2231	0	4288
0	2400	0	4623
		0	12878

CALCULATED SLP
CHECKED ALB

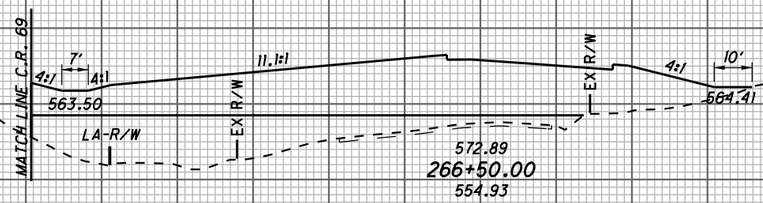

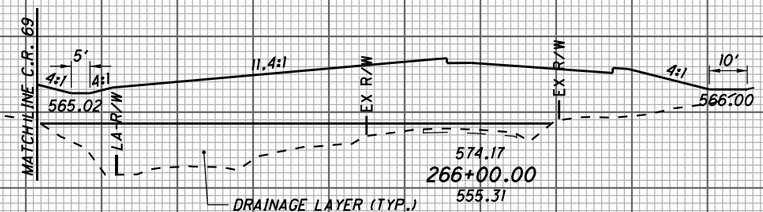

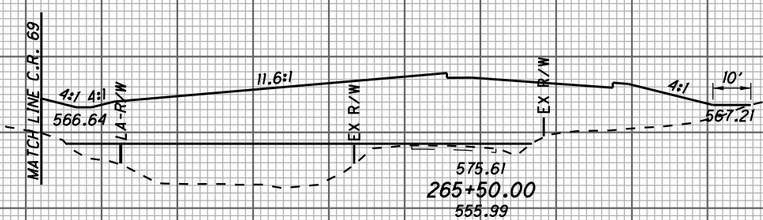

ITEM 203 - EMBANKMENT, AS PER PLAN, TYPE C _ _ _ _ 5172 CY

DRAFT Stage 3 - Not for Construction 09/23/2024

CROSS SECTIONS S.R. 7
STA. 265+50.00 TO STA. 266+50.00

LAW-7-2.17

271
1247

U:\173608714\LAW\75923\roadway\sheets\75923XS1109-2B.dgn 5/21/2024 4:53:12 PM SLParker

SEEDING	
END WIDTH	SQ. YDS.
171	954
172	924
160	884
	2762

END AREA	
CUT	FILL
0	1498
0	1701
0	1839

VOLUME	
CUT	FILL
0	2962
0	3278
0	3604
0	9844

CALCULATED SLP
CHECKED ALB

CROSS SECTIONS S.R. 7
STA. 267+00.00 TO STA. 268+00.00

LAW-7-2.17

272
1247

640 620 600 580 560 540 520

EX R/W
EX. STM
MATCH LINE C.R. 69
10'
4:1
4:1
9.1:1
558.48
LA-R/W
EX R/W
570.02
268+00.00
550.87
EX. R/W
4:1
3:1
10'
EX R/W
LA-R/W
558.25

EX R/W
MATCH LINE C.R. 69
10'
4:1
4:1
9.9:1
EX R/W
560.19
LA-R/W
EX R/W
570.82
267+50.00
552.61
DRAINAGE LAYER (TYP.)
4:1
EX R/W
10'
LA-R/W
560.31

ITEM 203 - EMBANKMENT, AS PER PLAN, TYPE C _ _ _ _6597 CY

MATCH LINE C.R. 69
8'
4:1
4:1
10.5:1
561.79
EX R/W
EX R/W
LA-R/W
571.78
267+00.00
553.26
EX R/W
4:1
10'
LA-R/W
563.34

260 240 220 200 180 160 140 120 100 80 60 40 20 0 20 40 60 80 100 120 140 160 180 200 220 240

DRAFT Stage 3 - Not for Construction 09/23/2024

U:\173608714\LAW\75923\roadway\sheets\75923XS1110-2B.dgn 5/21/2024 4:53:13 PM SLParker

SEEDING	
END WIDTH	SQ. YDS.
229	
	1202
204	
	1091
189	
	1001
	3294

END AREA	
CUT	FILL
0	1279
0	1301
0	1371
0	2657
0	7521

VOLUME	
CUT	FILL
0	2390
0	2474

CALCULATED SLP

CHECKED ALB

CROSS SECTIONS S.R. 7

STA. 268+50.00 TO STA. 269+50.00

LAW-7-2.17

273
1247

MATCH LINE C.R. 69

10'

4:1

10.1:1

556.78

LA-R/W

EX. WATER SERVICE

568.61

269+50.00

553.84

4:1

3:1

EX R/W

555.76

10'

LA-R/W

R/W EX R/W

9.5:1

556.90

568.92

269+00.00

551.29

DRAINAGE LAYER (TYP.)

556.84

8.6:1

557.03

569.39

268+50.00

550.87

558.00

ITEM 203 - EMBANKMENT, AS PER PLAN, TYPE C ____7760 CY

640 620 600 580 560 540 520

260 240 220 200 180 160 140 120 100 80 60 40 20 0 20 40 60 80 100 120 140 160 180 200 220 240

U:\173608714\LAW\75923\roadway\sheets\75923XS1111-2B.dgn 5/21/2024 4:53:14 PM SLParker

DRAFT Stage 3 - Not for Construction 09/23/2024

SEEDING END WIDTH	SEEDING SQ. YDS.
208	1188
219	1152
195	1179
	3519

END AREA CUT	END AREA FILL	VOLUME CUT	VOLUME FILL
34	1313	139	2404
115	1282	107	2375
0	1282	0	2372
		246	7151

CALCULATED SLP

CHECKED ALB

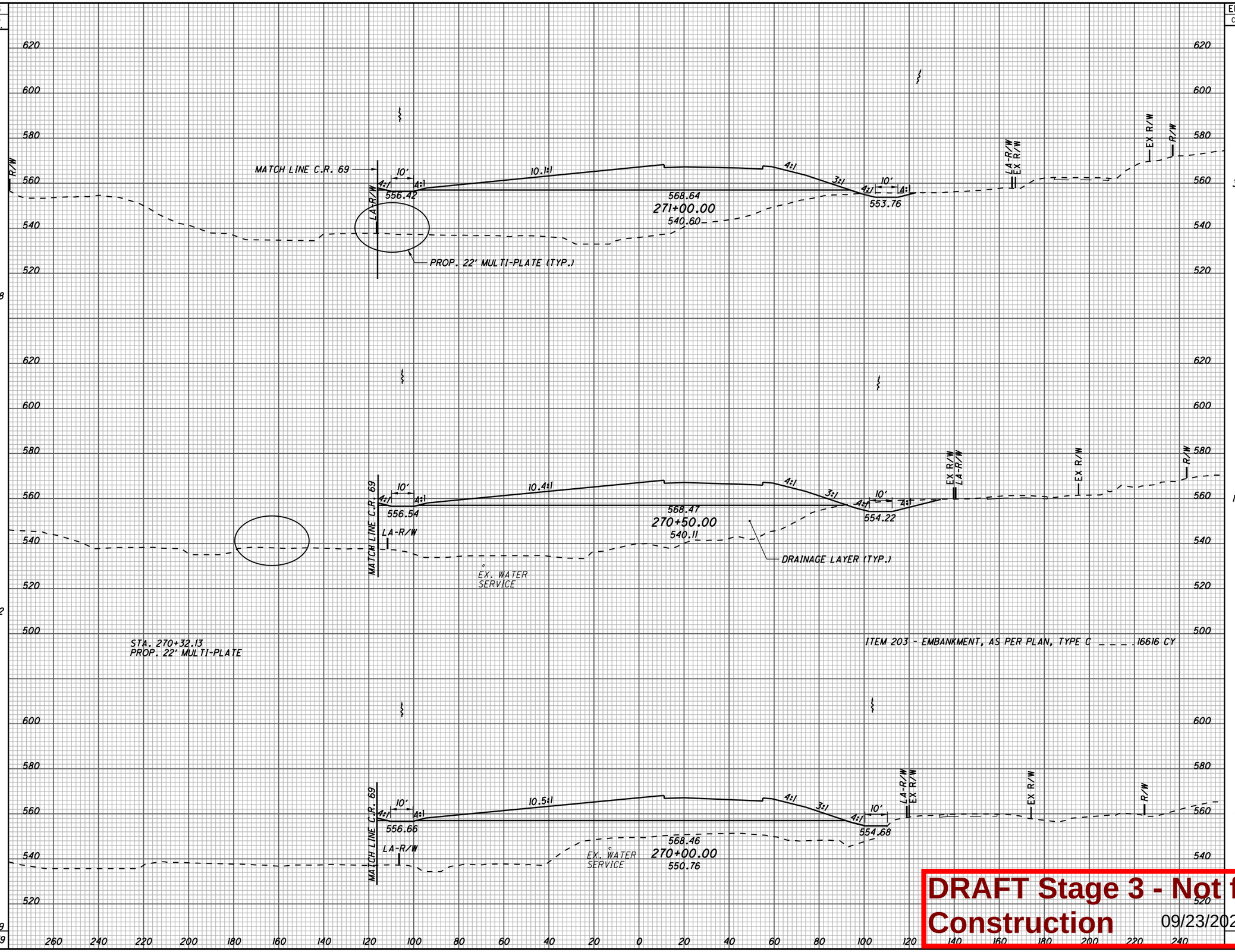

CROSS SECTIONS S.R. 7
STA. 270+00.00 TO STA. 271+00.00

LAW-7-2.17

274
1247

DRAFT Stage 3 - Not for Construction 09/23/2024

U:\173608714\LAW\75923\roadway\sheets\75923XS1112-2B.dgn 5/21/2024 4:53:14 PM SLParker

SEEDING END WIDTH	SEEDING SQ. YDS.
265	1514
280	1391
221	1192
	4097

END AREA CUT	END AREA FILL	VOLUME CUT	VOLUME FILL
0	1622	0	3299
0	1940	0	3035
0	1337	0	2455
		32	8789

CALCULATED SLP
CHECKED ALB

620 600 580 560 540 520

R/W — LA-R/W — MATCH LINE C.R. 69 — 10:1 4:1 — 8' — 4:1 — 7.2:1 — 15:1 — 3.7:1 — 10:1 4:1 — 10' — LA-R/W

556.75 — 570.13 — 272+50.00 — 531.46 — 542.31

OUTLET TO BENT CREEK

R/W — LA-R/W — MATCH LINE C.R. 69 — 10:1 4:1 — 7' — 4:1 — 8.4:1 — 93.0:1 — 3:1 — 10:1 4:1 — 10' — 4:1 — LA-R/W — EX R/W

556.52 — 569.48 — 272+00.00 — 535.24 — 547.64

DRAINAGE LAYER (TYP.)

ITEM 203 - EMBANKMENT, AS PER PLAN, TYPE C _ _ _ 26061 CY

R/W — LA-R/W — MATCH LINE C.R. 69 — 4:1 — 6' — 4:1 — 9.8:1 — 3:1 — 10:1 4:1 — 10' — LA-R/W — EX R/W — R/W — EX R/W

556.29 — 568.98 — 271+50.00 — 535.64 — 547.76

PROP. CB-4
PROP. 54" TYPE C
FOR DETAILS, SEE SHEET 642

PROP. 22' MULTI-PLATE (TYP.)

260 240 220 200 180 160 140 120 100 80 60 40 20 0 20 40 60 80 100 120 140 160 180 200 220 240

CROSS SECTIONS S.R. 7
STA. 271+50.00 TO STA. 272+50.00

LAW-7-2.17

275
1247

DRAFT Stage 3 - Not for Construction 09/23/2024

U:\173608714\LAW\75923\roadway\sheets\75923XS1113-2B.dgn 5/21/2024 4:53:15 PM SLParker

SEEDING END WIDTH	SEEDING SQ. YDS.	END AREA CUT	END AREA FILL	VOLUME CUT	VOLUME FILL
164	928	655	1368	639	2434
170	1205	34	1260	322	2326
263		313	1251		
	1469			290	2662
	3602			1251	7422

CALCULATED SLP
CHECKED ALB

CROSS SECTIONS S.R. 7
STA. 273+00.00 TO STA. 274+00.00

LAW-7-2.17

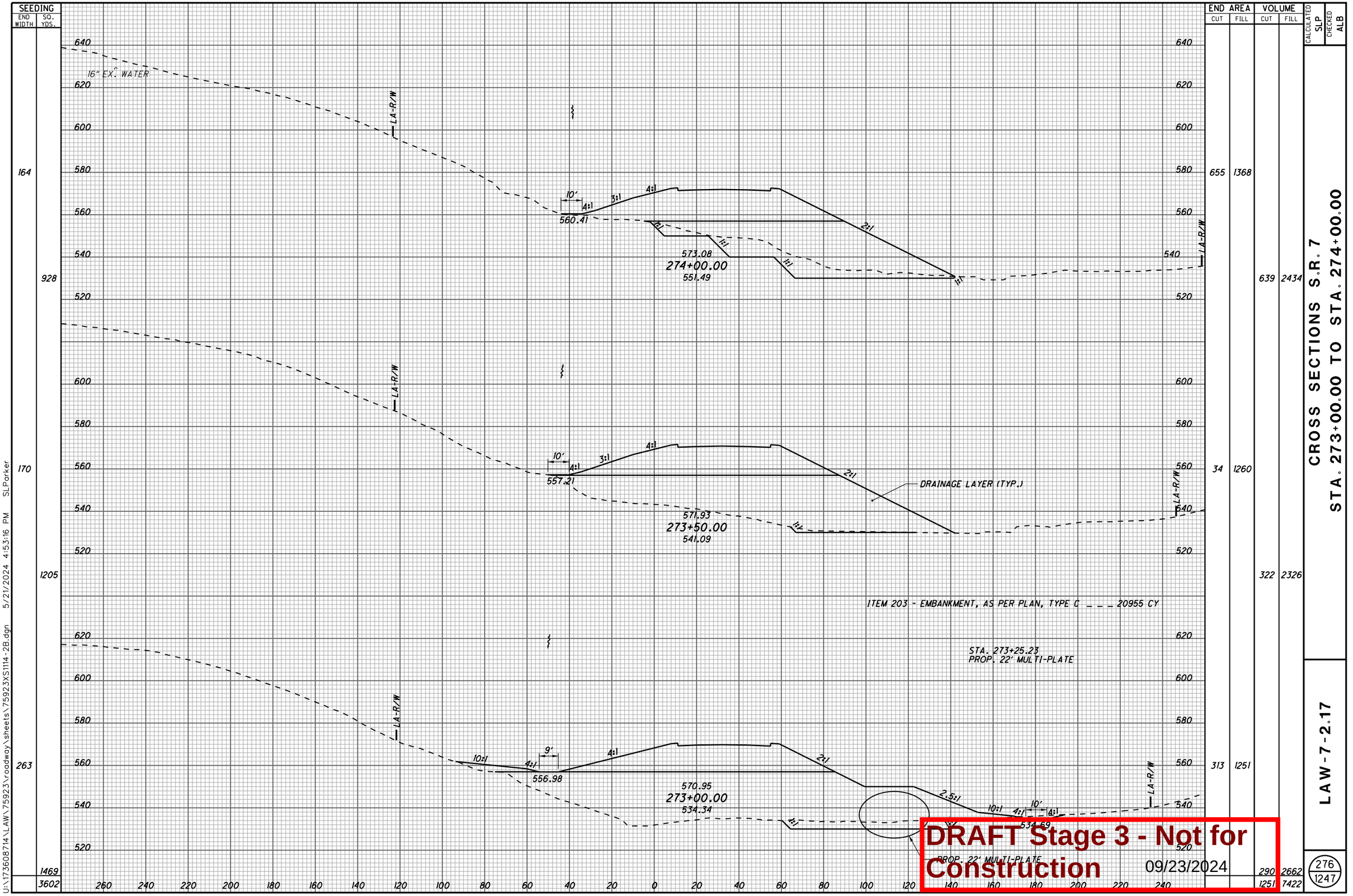

DRAFT Stage 3 - Not for Construction
09/23/2024

U:\173608714\LAW 7\5923\roadway\sheets\75923XS1114-2B.dgn 5/21/2024 4:53:16 PM SLParker

SEEDING		END AREA		VOLUME		CALCULATED	CHECKED
END WIDTH	SQ. YDS.	CUT	FILL	CUT	FILL	SLP	ALB
197	1071	833	2006	1266	3410		
189	953	534	1676	1543	2762		
154	884	1132	1307	1655	2477		
	2908			4464	8649		

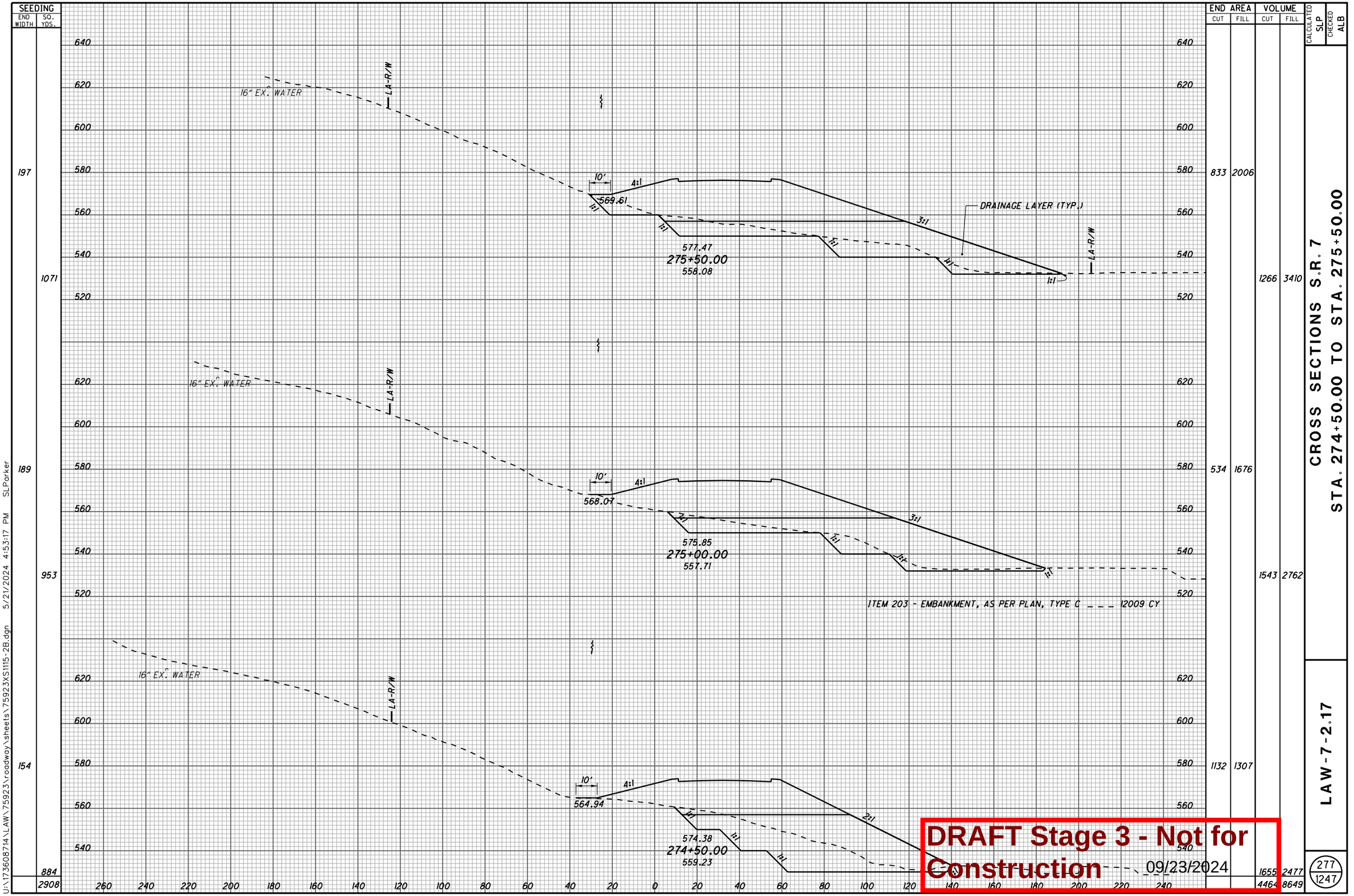

CROSS SECTIONS S.R. 7
STA. 274+50.00 TO STA. 275+50.00

LAW-7-2.17

277
1247

DRAFT Stage 3 - Not for Construction 09/23/2024

U:\173608714\LAW\75923\roadway\sheets\75923XS1115-2B.dgn 5/21/2024 4:53:17 PM SLParker

SEEDING	
END WIDTH	SQ. YDS.
167	928
167	945
173	1028
	2901

END AREA	
CUT	FILL
469	2406
344	2364
795	2180
1508	3876
3316	12502

VOLUME	
CUT	FILL
753	4418
1055	4208

CALCULATED SLP
CHECKED ALB

660 640 620 600 580 560 540

EX R/W
EX R/W
LA-R/W
16" EX. WATER
EX OHE ESMT
10'
4:1
578.68
583.32
277+00.00
564.41
3:1
1:1
LA-R/W

575.05
581.21
276+50.00
559.20
DRAINAGE LAYER (TYP.)

572.10
579.26
276+00.00
557.27

EX R/W
EX R/W
LA-R
16" EX. WATER

ITEM 203 - EMBANKMENT, AS PER PLAN, TYPE C ____ 8561 CY

260 240 220 200 180 160 140 120 100 80 60 40 20 0 20 40 60 80 100 120 140 160 180 200 220 240

CROSS SECTIONS S.R. 7
STA. 276+00.00 TO STA. 277+00.00

LAW-7-2.17

278
1247

DRAFT Stage 3 - Not for Construction 09/23/2024

U:\173608714\LAW\75923\roadway\sheets\75923XS1116-2B.dgn 5/21/2024 4:53:18 PM SLParker

SEEDING END WIDTH	SEEDING SQ. YDS.	END AREA CUT	END AREA FILL	VOLUME CUT	VOLUME FILL
213	1225	185	3699	851	6495
228	1116	733	3315	1256	5321
174	948	623	2431	1011	4479
	3289			3118	16295

CALCULATED SLP
CHECKED ALB

CROSS SECTIONS S.R. 7
STA. 277+50.00 TO STA. 278+50.00

LAW-7-2.17

279
1247

640 620 600 580 560 540 520

EX R/W
EX OHE ESMT
LA-R/W
EX R/W
16" EX. WATER
MATCH LINE C.R. 69
10:1
4:1
9'
4:1
EX ACCESS
581.93
1:1
EX ACCESS
1:1
589.85
278+50.00
563.14
3:1
LA-R/W

EX R/W
EX R/W
LA-R/W
16" EX. WATER
10:1
4:1
10'
4:1
EX OHE ESMT
581.62
1:1
1:1
587.78
278+00.00
567.13
3:1
DRAINAGE LAYER (TYP.)
1:1
1:1
LA-R/W

ITEM 203 - EMBANKMENT, AS PER PLAN, TYPE C ____ 4970 CY

EX R/W
EX OHE ESMT
EX R/W
LA-R/W
16" EX. WATER
10'
4:1
581.32
1:1
1:1
585.56
277+50.00
570.33
3:1
OHE ESMT
LA-R/W
1:1
1:1

260 240 220 200 180 160 140 120 100 80 60 40 20 0 20 40 60 80 100 120 140 160 180 200 220 240

DRAFT Stage 3 - Not for Construction
09/23/2024

U:\173608714\LAW\75923\roadway\sheets\75923XS1117-2B.dgn 5/21/2024 4:53:19 PM SLParker

CROSS SECTIONS S.R. 7
STA. 279+00.00 TO STA. 280+00.00

CALCULATED SLP | CHECKED ALB

SEEDING END WIDTH	SEEDING SQ. YDS.	END AREA CUT	END AREA FILL	VOLUME CUT	VOLUME FILL
169	817	0	2380	0	4291
125	808	0	2254	0	5400
166	1053	0	3578	172	6739
	2678			172	16430

660 640 620 600 580 560

3" EX. WATER
LA-R/W
EX R/W
EX R/W
16" EX. WATER
9'
587.94
EX ACCESS
4:1
EX ACCESS
595.15
280+00.00
576.32
3:1
LA-R/W

640 620 600 580 560

3" EX. WATER
EX R/W
LA-R/W
EX R/W
16" EX. WATER
9'
585.70
EX ACCESS
4:1
EX ACCESS
593.54
279+50.00
571.00
3:1
LA-R/W

ITEM 203 - EMBANKMENT, AS PER PLAN, TYPE C _ _ _ _ 527 CY

640 620 600 580 560 540

3" EX. WATER
EX R/W
LA-R/W
EX R/W
16" EX. WATER
MATCH LINE C.R. 69
10:1
9'
4:1
4:1
583.82
EX ACCESS
EX ACCESS
591.77
279+00.00
563.29
3:1
LA-R/W

260 240 220 200 180 160 140 120 100 80 60 40 20 0 20 40 60 80 100 120 140 160 180 200 220 240

DRAFT Stage 3 - Not for Construction 09/23/2024

LAW-7-2.17

280 / 1247

U:\173608714\LAW\75923\roadway\sheets\75923XS1118-2B.dgn 5/21/2024 4:53:20 PM SLParker

SEEDING END WIDTH	SEEDING SQ. YDS.	END AREA CUT	END AREA FILL	VOLUME CUT	VOLUME FILL
239	1346	113	3363	279	6244
246	1313	188	3380	354	5550
227	1100	194	2614	180	4624
	3759			813	16418

CALCULATED SLP
CHECKED ALB

CROSS SECTIONS S.R. 7
STA. 280+50.00 TO STA. 281+50.00

LAW-7-2.17

281
1247

660 640 620 600 580 560 540 640 620 600 580 560 540 640 620 600 580 560

LA-R/W
EX R/W
3" EX. WATER
16" EX. WATER
3:1
4:1
8'
589.63
EX ACCESS
599.07
281+50.00
577.73
589.50
597.92
281+00.00
576.25
589.38
596.61
280+50.00
576.80
DRAINAGE LAYER (TYP.)
ITEM 203 - EMBANKMENT, AS PER PLAN, TYPE C ____ 285 CY

260 240 220 200 180 160 140 120 100 80 60 40 20 0 20 40 60 80 100 120 140 160 180 200 220 240

DRAFT Stage 3 - Not for Construction 09/23/2024

U:\173608714\LAW\75923\roadway\sheets\75923XS1119-2B.dgn 5/21/2024 4:53:20 PM SLParker

SEEDING END WIDTH	SEEDING SQ. YDS.	END AREA CUT	END AREA FILL	VOLUME CUT	VOLUME FILL
232	1204	0	4812	0	7959
201	1165	0	3784	16	6525
218	1270	17	3262	121	6135
	3639			137	20619

CALCULATED SLP
CHECKED ALB

CROSS SECTIONS S.R. 7
STA. 282+00.00 TO STA. 283+00.00

LAW-7-2.17

282
1247

640
620
600
580
560
540

LA-R/W
EX R/W
4:1
7'
3:1
10:1
590.00
3" EX. WATER
16" EX. WATER
589.88
589.76
EX ACCESS
601.60
283+00.00
574.56
600.91
282+50.00
574.47
600.07
282+00.00
576.57
DRAINAGE LAYER (TYP.)

ITEM 203 - EMBANKMENT, AS PER PLAN, TYPE C ---- 163 CY

260 240 220 200 180 160 140 120 100 80 60 40 20 0 20 40 60 80 100 120 140 160 180 200 220 240

DRAFT Stage 3 - Not for Construction 09/23/2024

U:\1736087\14\LAW\75923\roadway\sheets\75923XS1120-2B.dgn 5/21/2024 4:53:21 PM SLParker

SEEDING	
END WIDTH	SQ. YDS.
267	1280
193	1111
207	1219
	3610

END AREA	
CUT	FILL
615	4158
0	4054
0	3817
0	67
0	4518
570	15939

VOLUME	
CUT	FILL
570	7604

CALCULATED SLP
CHECKED ALB

660 640 620 600 580 560 540

MATCH LINE C.R. 69
LA-R/W
3:1
10:1
4:1
5'
590.99
EX R/W
602.75
284+50.00
577.44
16" EX. WATER
EX. 15" STM
(TO BE REMOVED)

6'
590.77
3" EX. WATER
16" EX. WATER
602.52
284+00.00
574.01

590.13
602.14
283+50.00
575.03

ITEM 203 - EMBANKMENT, AS PER PLAN, TYPE C ..... 42 CY

260 240 220 200 180 160 140 120 100 80 60 40 20 0 20 40 60 80 100 120 140 160 180 200 220 240

CROSS SECTIONS S.R. 7
STA. 283+50.00 TO STA. 284+50.00

LAW-7-2.17

283
1247

DRAFT Stage 3 - Not for Construction 09/23/2024

U:\173608714\LAW\75923\roadway\sheets\75923XS1121-2B.dgn 5/21/2024 4:53:22 PM SLParker

SEEDING END WIDTH	SEEDING SQ. YDS.
205	1364
286	1408
220	1355
	4127

END AREA CUT	END AREA FILL	VOLUME CUT	VOLUME FILL
1283	2908	2190	6213
1082	3802	1352	7497
378	4294	919	7826
		4461	21536

CALCULATED SLP
CHECKED ALB

660 640 620 600 580 560 540

MATCH LINE C.R. 69

10:1 4:1 4:1 3:1 4:1 1:1

590.88

602.51
286+00.00
592.74

LA-R/W
EX R/W
16" EX. WATER

591.38

602.74
285+50.00
586.01

DRAINAGE LAYER

ITEM 203 - EMBANKMENT, AS PER PLAN, TYPE C _ _ _ _ 2156 CY

591.26

602.82
285+00.00
579.71

240 220 200 180 160 140 120 100 80 60 40 20 0 20 40 60 80 100 120 140 160 180 200 220 240 260

CROSS SECTIONS S.R. 7
STA. 285+00.00 TO STA. 286+00.00

LAW-7-2.17

284
1247

DRAFT Stage 3 - Not for Construction 09/23/2024

U:\173608714\LAW\75923\roadway\sheets\75923XS1122-2B.dgn 5/21/2024 4:53:23 PM SLParker

SEEDING END WIDTH	SEEDING SQ. YDS.	END AREA CUT	END AREA FILL	VOLUME CUT	VOLUME FILL
146	1113	2114	412	3815	1921
255	1193	2006	1662	3214	3324
174	1054	1465	1928	2544	4478
	3360			9573	9723

CALCULATED SLP
CHECKED ALB

CROSS SECTIONS S.R. 7
STA. 286+50.00 TO STA. 287+50.00

LAW-7-2.17

285
1247

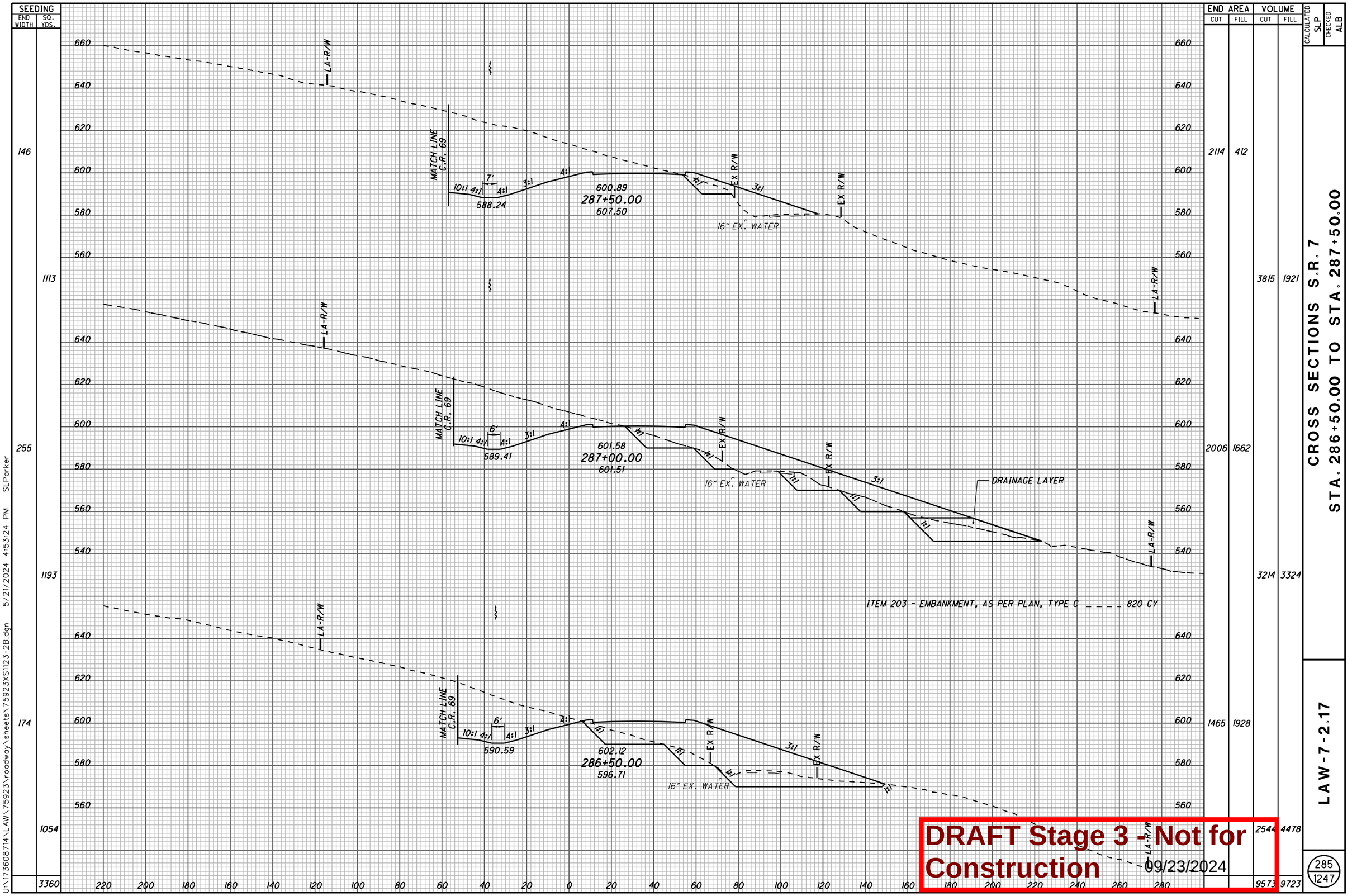

DRAFT Stage 3 - Not for Construction
09/23/2024

U:\173608714\LAW\75923\roadway\sheets\75923XS1123-2B.dgn 5/21/2024 4:53:24 PM SLParker

SEEDING END WIDTH	SEEDING SQ. YDS.
288	1776
	3156

END AREA CUT	END AREA FILL	VOLUME CUT	VOLUME FILL
2297	2438	4692	2558
		9215	3240

CALCULATED SLP

CHECKED ALB

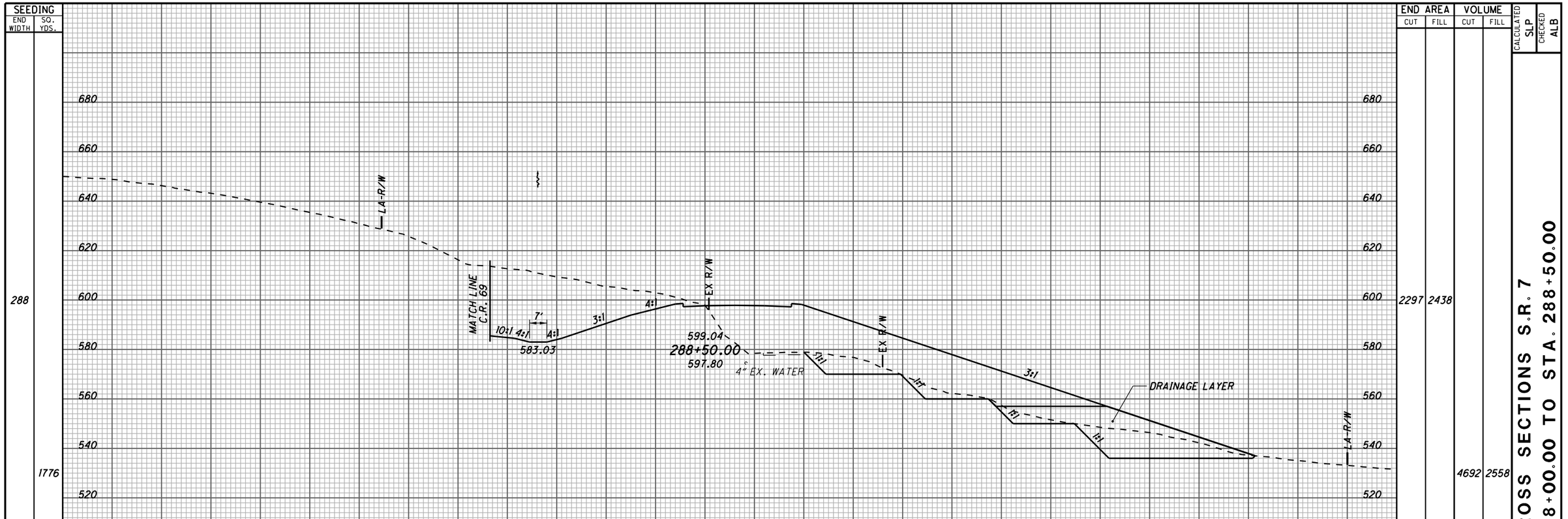

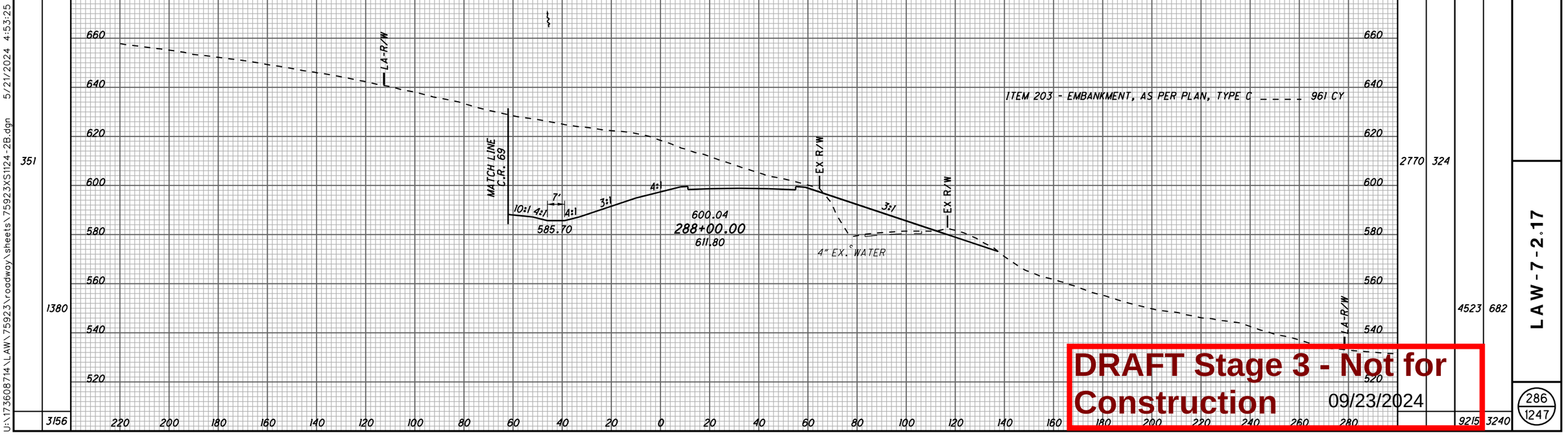

CROSS SECTIONS S.R. 7
STA. 288+00.00 TO STA. 288+50.00

LAW-7-2.17

286
1247

DRAFT Stage 3 - Not for Construction 09/23/2024

U:\173608714\LAW\75923\roadway\sheets\75923XS1124-2B.dgn 5/21/2024 4:53:25 PM SLParker

SEEDING END WIDTH	SEEDING SQ. YDS.
326	1753
305	1683
300	1636
	5072

END AREA CUT	END AREA FILL	VOLUME CUT	VOLUME FILL
0	5572	0	9911
0	5131	628	8491
678	4038	2755	5997
		3383	24399

CALCULATED SLP
CHECKED ALB

CROSS SECTIONS S.R. 7
STA. 289+00.00 TO STA. 290+00.00

LAW-7-2.17

287
1247

640 620 600 580 560 540 520

LA-R/W
EX R/W
MATCH LINE C.R. 69
10:1 4:1 8' 4:1 10:1
3:1
575.06
EX. 4" WATER
595.11
290+00.00
554.21
10:1
LA-R/W

7'
577.82
4" EX. WATER
596.57
289+50.00
562.42
DRAINAGE LAYER (TYP.)

580.67
597.88
289+00.00
574.38

ITEM 203 - EMBANKMENT, AS PER PLAN, TYPE C _ _ _ 10443 CY

180 160 140 120 100 80 60 40 20 0 20 40 60 80 100 120 140 160 180 200 220 240 260 280 300 320

DRAFT Stage 3 - Not for Construction - - - - 09/23/2024

U:\173608714\LAW\75923\roadway\sheets\75923XS1125-2B.dgn 5/21/2024 4:53:25 PM SLPorker

SEEDING	
END WIDTH	SQ. YDS.
342	1842
321	1796
	3638

END AREA	
CUT	FILL
0	5394
0	5700

VOLUME	
CUT	FILL
0	10273
0	10438
0	20711

CALCULATED ALB
CHECKED TCM

660
640
620
600
580
560
540
520

EX R/W
4" EX. WATER
LA-R/W
MATCH LINE C.R. 69
10:1 4:1 8' 4:1 10:1
569.14
3:1
3:1
DRAINAGE LAYER (TYP.)
10:1
LA-R/W
591.75
291+00.00
535.32

ITEM 203 - EMBANKMENT, AS PER PLAN, TYPE C _ _ _ 17696 CY

EX R/W
LA-R/W
4" EX. WATER
MATCH LINE C.R. 69
10:1 4:1 8' 4:1 10:1
572.06
EX R/W
3:1
3:1
10:1
LA-R/W
593.49
290+50.00
539.49

180 160 140 120 100 80 60 40 20 0 20 40 60 80 100 120 140 160 180 200 220 240 260 280 300 320

DRAFT Stage 3 - Not for Construction 09/23/2024

CROSS SECTIONS S.R. 7
STA. 290+50.00 TO STA. 291+00.00

LAW-7-2.17

288
1247

U:\173608714\LAW\75923\roadway\sheets\75923XS1126-2B.dgn 5/21/2024 4:53:26 PM SLParker

SEEDING	
END WIDTH	SQ. YDS.
316	1777
324	1851
	3628

END AREA		VOLUME	
CUT	FILL	CUT	FILL
0	4430		
		0	8590
0	4846		
		0	9482
		0	18072

CALCULATED SLP
CHECKED ALB

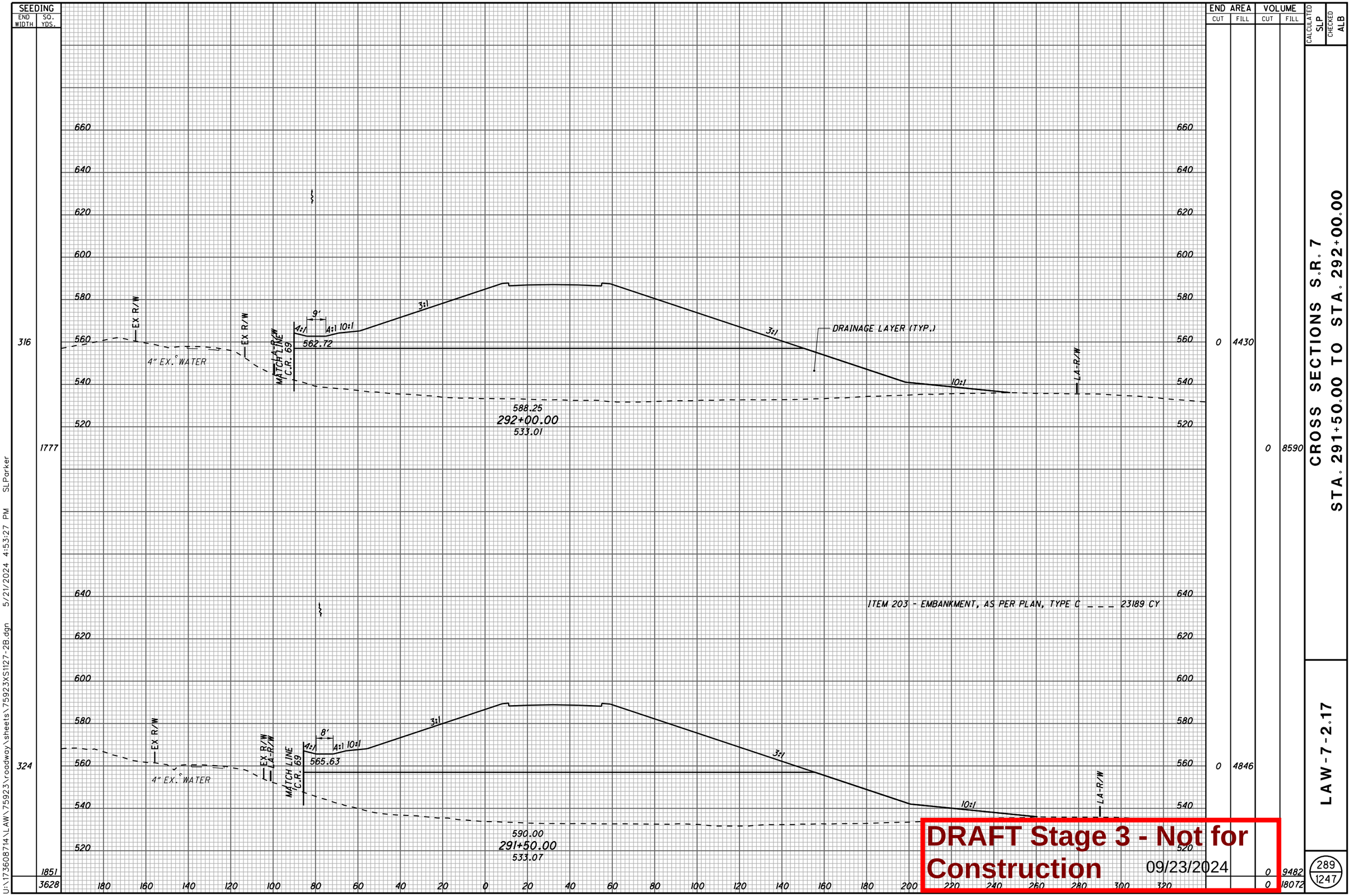

CROSS SECTIONS S.R. 7
STA. 291+50.00 TO STA. 292+00.00

LAW-7-2.17

289
1247

DRAFT Stage 3 - Not for Construction 09/23/2024

U:\173608714\LAW\75923\roadway\sheets\75923XS1127-2B.dgn 5/21/2024 4:53:27 PM SLParker

SEEDING	
END WIDTH	SQ. YDS.
275	1571
290	1606
288	1676
	4853

END AREA	
CUT	FILL
18	3178
17	6248
0	3570
0	7018
0	4009
0	7815
17	21081

VOLUME	
CUT	FILL

CALCULATED SLP
CHECKED ALB

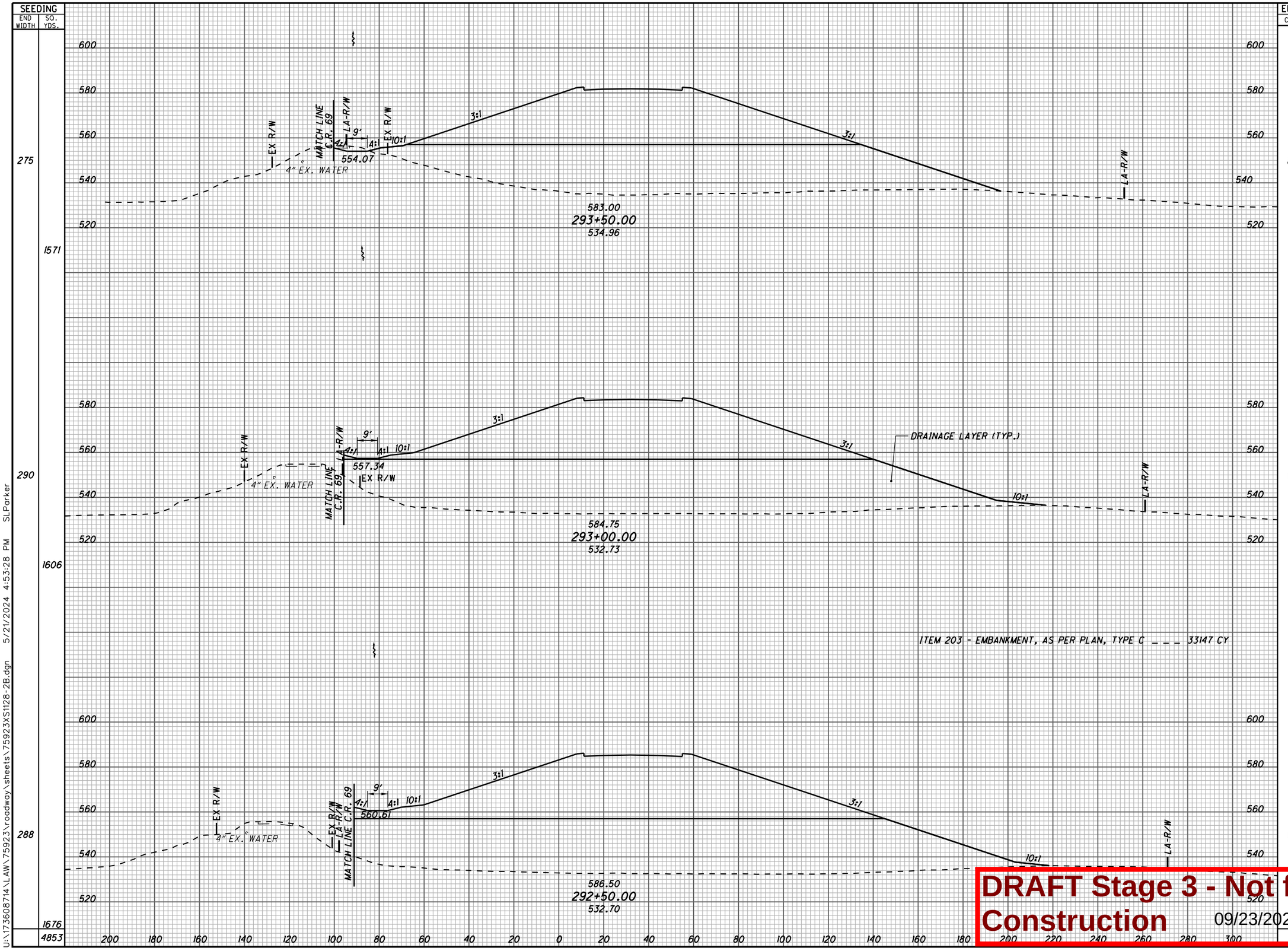

DRAFT Stage 3 - Not for Construction 09/23/2024

CROSS SECTIONS S.R. 7
STA. 292+50.00 TO STA. 293+50.00

LAW-7-2.17

290
1247

U:\173608714\LAW\75923\roadway\sheets\75923XS1128-2B.dgn 5/21/2024 4:53:28 PM SLParker

SEEDING END WIDTH	SEEDING SQ. YDS.	END AREA CUT	END AREA FILL	VOLUME CUT	VOLUME FILL
291	1604	497	2195	819	4351
287	1574	387	2504	556	4937
280	1542	212	2828	214	5562
	4720			1589	14850

CALCULATED SLP
CHECKED ALB

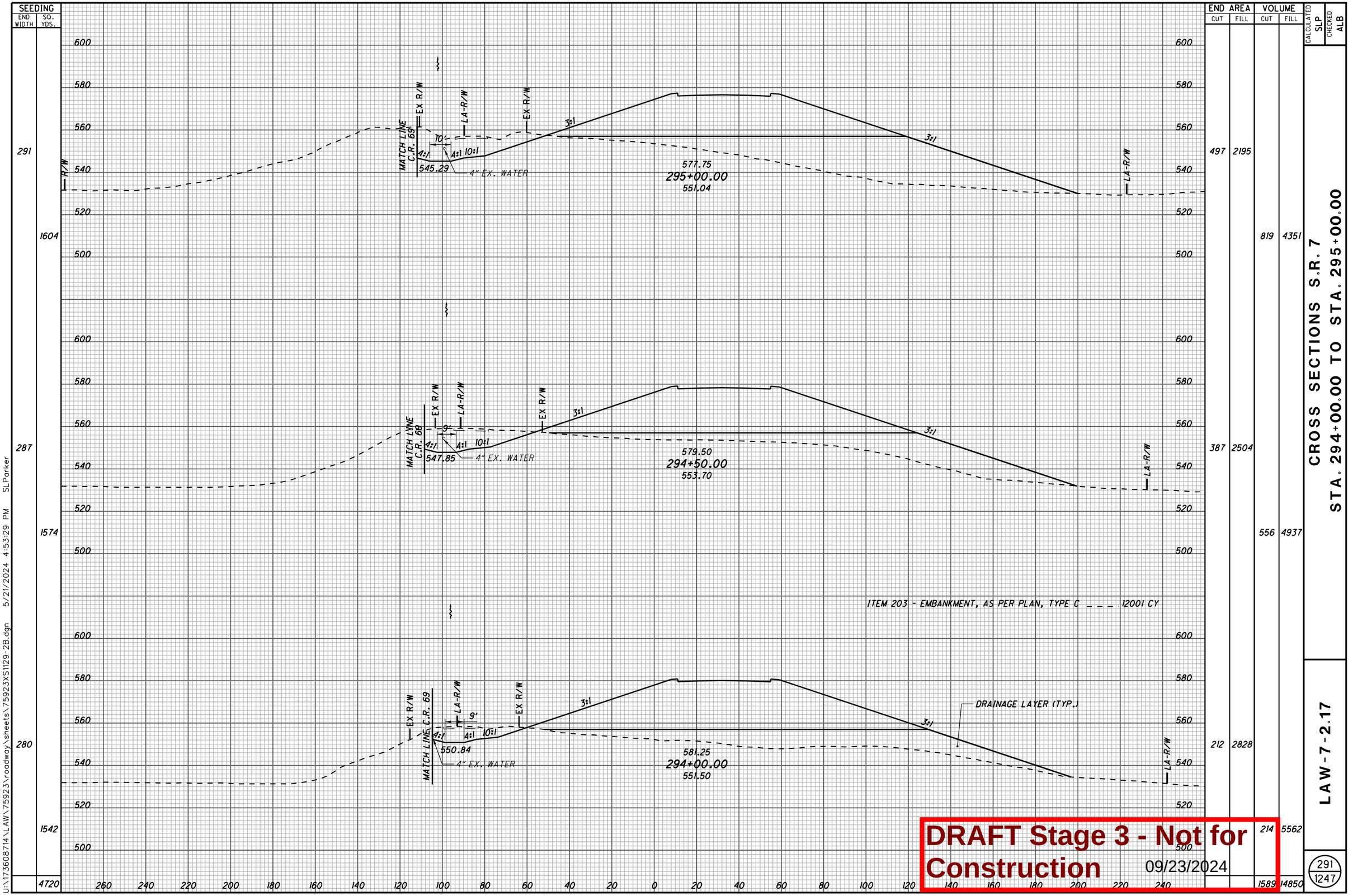

CROSS SECTIONS S.R. 7
STA. 294+00.00 TO STA. 295+00.00

LAW-7-2.17

291
1247

DRAFT Stage 3 - Not for Construction 09/23/2024

U:\173608714\LAW\75923\roadway\sheets\75923XS1129-2B.dgn 5/21/2024 4:53:29 PM SLParker

SEEDING END WIDTH	SEEDING SQ. YDS.	END AREA CUT	END AREA FILL	VOLUME CUT	VOLUME FILL
259	1494	0	1381	146	2792
279	1574	157	1634	520	3279
288	1607	404	1906	835	3798
	4675			1501	9869

CALCULATED SLP
CHECKED ALB

CROSS SECTIONS S.R. 7
STA. 295+50.00 TO STA. 296+50.00

LAW-7-2.17

292
1247

600 580 560 540 520 500

R/W — EX R/W — 10' — 4:1 — 10:1 — LA-R/W — 3:1 — 3:1

4" EX. WATER

540.72

572.50
296+50.00
531.85

MATCH LINE C.R. 69

540.91

574.25
296+00.00
532.58

DRAINAGE LAYER (TYP.)

542.90

576.00
295+50.00
575.61

ITEM 203 - EMBANKMENT, AS PER PLAN, TYPE C _ _ _ 24990 CY

260 240 220 200 180 160 140 120 100 80 60 40 20 0 20 40 60 80 100 120 140 160 180 200 220 240

DRAFT Stage 3 - Not for Construction 09/23/2024

U:\173608714\LAW\75923\roadway\sheets\75923XS1130-2B.dgn 5/21/2024 4:53:30 PM SLPorker

SEEDING END WIDTH	SEEDING SQ. YDS.
214	485
259	1372
235	1374
	3231

STA. 298+58.00, LT./RT.
END SLOPE REINFORCEMENT
FOR DETAILS, SEE SHEETS 38-39

* NORMAL

568.61
297+68.48
531.94
SKEW ANGLE = 10° LHF

569.08
297+50.00
531.71

570.75
297+00.00
530.91

4" EX. WATER

STA. 296+75.00, LT./RT.
BEGIN SLOPE REINFORCEMENT
FOR DETAILS, SEE SHEETS 38-39

ITEM 203 - EMBANKMENT, AS PER PLAN, TYPE C _ _ _ _ 5014 CY
ITEM 863 - REINFORCED EMBANKMENT _ _ _ _ _ _ _ _ _ 15231 CY

END AREA CUT	END AREA FILL	VOLUME CUT	VOLUME FILL
56	0		
		29	0
28	0		
		27	0
0	0		
		0	1279
		56	1279

CALCULATED SLP
CHECKED ALB

CROSS SECTIONS S.R. 7
STA. 297+00.00 TO STA. 297+68.48

LAW-7-2.17

293
1247

DRAFT Stage 3 - Not for Construction 09/23/2024

U:\173608714\LAW\75923\roadway\sheets\75923XS1131-2B.dgn 5/21/2024 4:53:30 PM SLParker

SEEDING	
END WIDTH	SQ. YDS.
202	941
137	260
116	1201

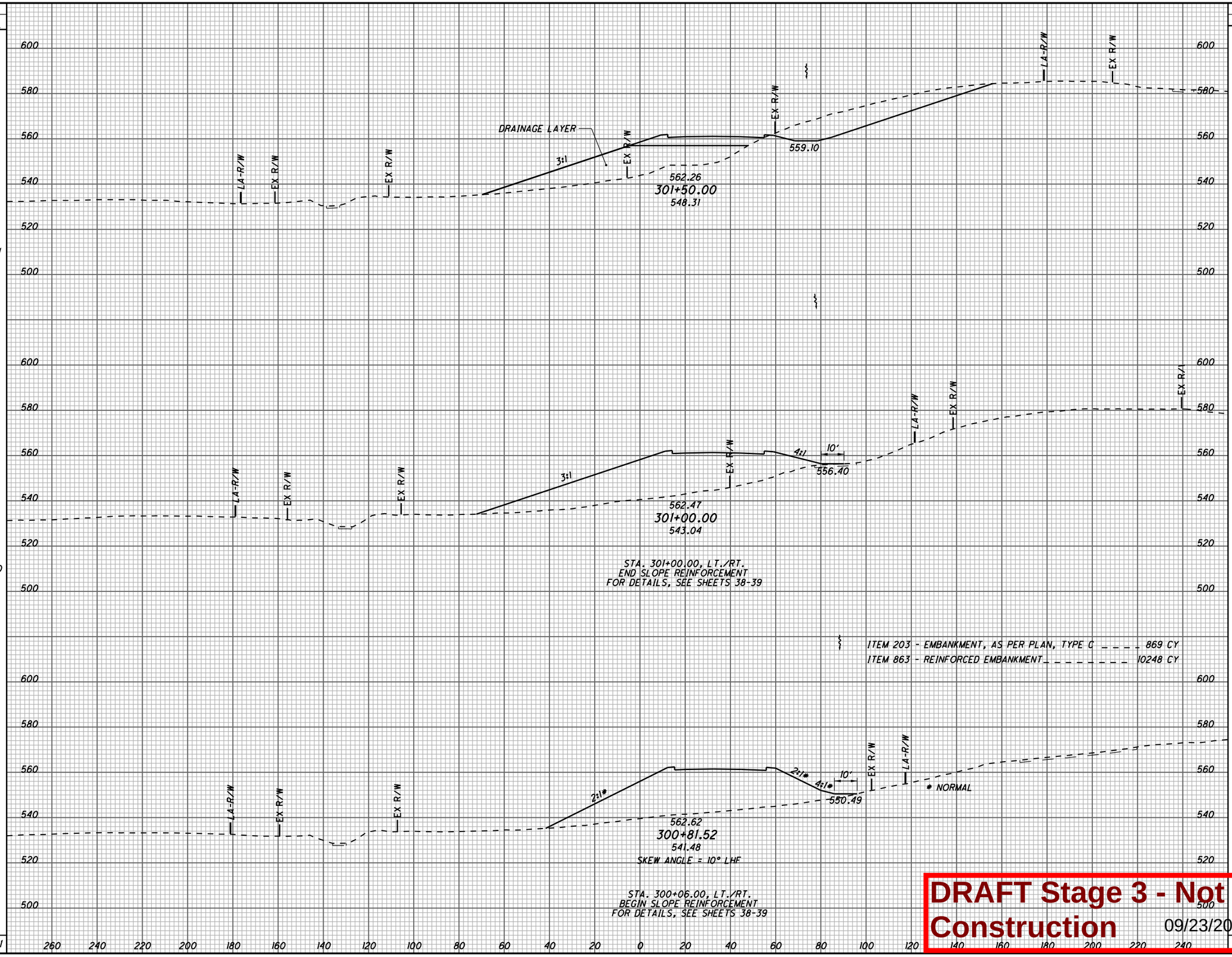

END AREA		VOLUME	
CUT	FILL	CUT	FILL
634	200	588	1821
0	1767		
0	605		
0	0		
588	2426		

CALCULATED SLP
CHECKED ALB

CROSS SECTIONS S.R. 7
STA. 300+81.52 TO STA. 301+50.00

LAW-7-2.17

DRAFT Stage 3 - Not for Construction 09/23/2024

U:\173608714\LAW\75923\roadway\sheets\75923XS1132-2B.dgn 5/21/2024 4:53:31 PM SLParker

SEEDING END WIDTH	SEEDING SQ. YDS.	END AREA CUT	END AREA FILL	VOLUME CUT	VOLUME FILL
179	1050	3913	607	6230	624
199	1188	2815	66	4483	161
228	1195	2026	107	2464	285
	3433			13177	1070

CALCULATED ALB
CHECKED TCM

620 600 580 560 540 520

LA-R/W
EX R/W
3:1
1:1
4:1
10'
559.97
6" ROCK UNDERCUT
562.74
303+00.00
569.52

620 600 580 560 540 520

LA-R/W
EX R/W
3:1
1:1
4:1
10'
559.63
6" ROCK UNDERCUT
562.40
302+50.00
562.50

ITEM 203 - EMBANKMENT, AS PER PLAN, TYPE C ..... 3425 CY
ITEM 204 - EXCAVATION OF SUBGRADE ..... 53 CY
ITEM 204 - GRANULAR MATERIAL, TYPE B ..... 53 CY
ITEM 204 - GEOTEXTILE FABRIC ..... 316 SY
ITEM 204 - SUBGRADE COMPACTION ..... 316 SY

620 600 580 560 540 520

LA-R/W
EX R/W
3:1
1:1
4:1
10'
559.30
DRAINAGE LAYER (TYP.)
553.12
553.12
302+00.00
556.68

260 240 220 200 180 160 140 120 100 80 60 40 20 0 20 40 60 80 100 120 140 160 180 200 220 240

CROSS SECTIONS S.R. 7
STA. 302+00.00 TO STA. 303+00.00

LAW-7-2.17

295
1247

DRAFT Stage 3 - Not for Construction 09/23/2024

U:\173608714\LAW\75923\roadway\sheets\75923XS1133-2B.dgn 5/21/2024 4:53:32 PM SLParker

SEEDING	
END WIDTH	SQ. YDS.
121	672
121	692
128	853
	2217

END AREA	
CUT	FILL
3495	0
3622	0
3652	0
7005	563
2033	563

VOLUME	
CUT	FILL
6591	0
6736	0

CALCULATED SLP
CHECKED ALB

620 600 580 560 540 520

EX R/W
LA-R/W
12.5:1
4:1
9'
4:1
3:1
564.86
304+50.00
589.45
562.09

563.97
304+00.00
586.36
561.20

563.26
303+50.00
577.88
560.50
6" ROCK UNDERCUT (TYP.)

ITEM 204 - EXCAVATION OF SUBGRADE . . . . . 122 CY
ITEM 204 - GRANULAR MATERIAL, TYPE B . . . . . 122 CY
ITEM 204 - GEOTEXTILE FABRIC . . . . . 717 SY
ITEM 204 - SUBGRADE COMPACTION . . . . . 717 SY

260 240 220 200 180 160 140 120 100 80 60 40 20 0 20 40 60 80 100 120 140 160 180 200 220 240

CROSS SECTIONS S.R. 7
STA. 303+50.00 TO STA. 304+50.00

LAW-7-2.17

296
1247

DRAFT Stage 3 - Not for Construction 09/23/2024

U:\173608714\LAW\75923\roadway\sheets\75923XS1134-2B.dgn 5/21/2024 4:53:33 PM SLParker

SEEDING END WIDTH	SEEDING SQ. YDS.
147	809
144	815
149	750
	2374

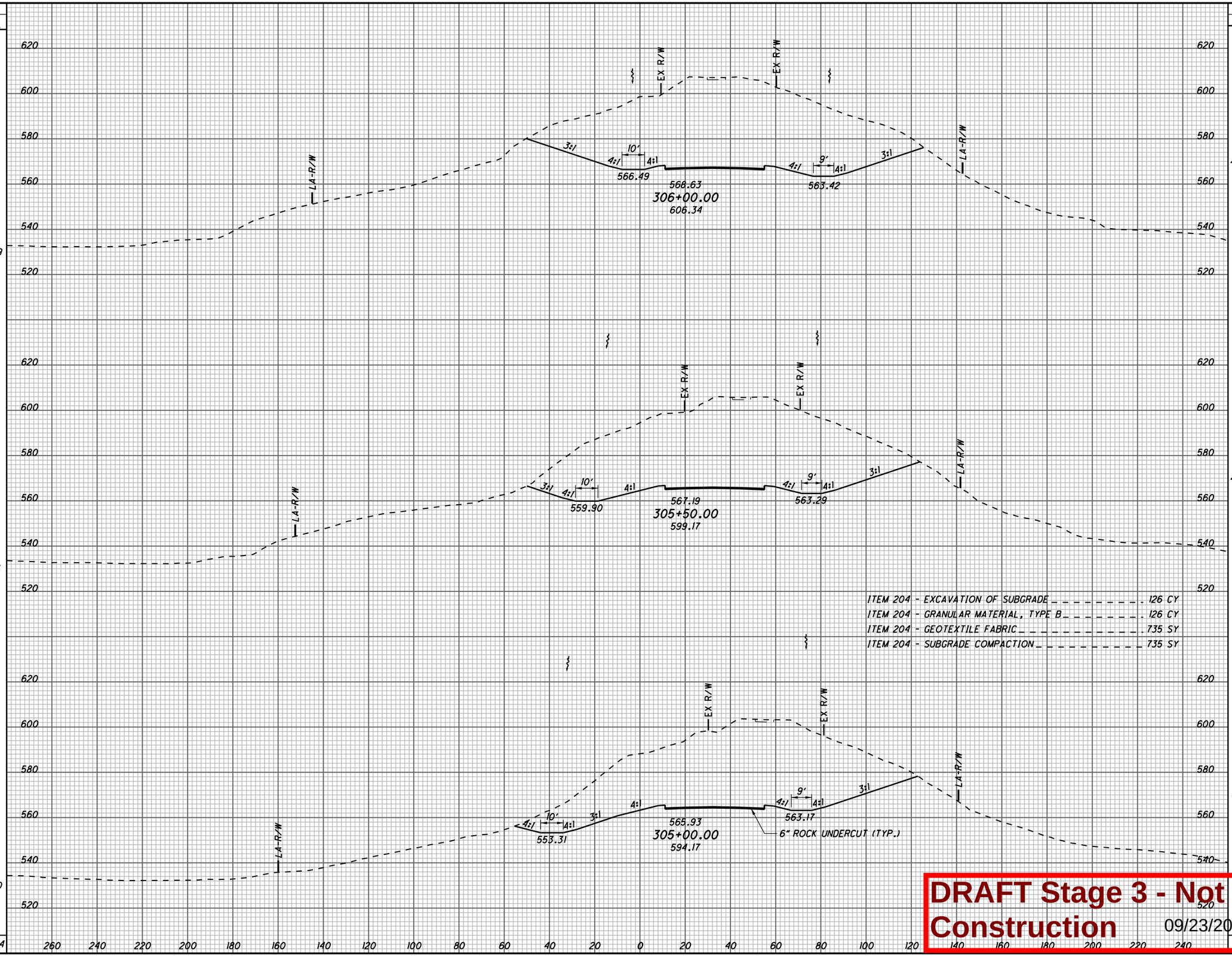

ITEM 204 -	
EXCAVATION OF SUBGRADE	126 CY
GRANULAR MATERIAL, TYPE B	126 CY
GEOTEXTILE FABRIC	735 SY
SUBGRADE COMPACTION	735 SY

END AREA CUT	END AREA FILL	VOLUME CUT	VOLUME FILL
4623	0	8640	0
4708	0	8296	0
4251	0	7173	0
		2410	0

CALCULATED SLP
CHECKED ALB

CROSS SECTIONS S.R. 7
STA. 305+00.00 TO STA. 306+00.00

LAW-7-2.17

297
1247

DRAFT Stage 3 - Not for Construction 09/23/2024

U:\173608714\LAW\75923\roadway\sheets\75923XS1135-2B.dgn 5/21/2024 4:53:34 PM SLParker

SEEDING END WIDTH	SEEDING SQ. YDS.	END AREA CUT	END AREA FILL	VOLUME CUT	VOLUME FILL
194	1056	7154	0	12285	0
187	1002	6113	0	10515	0
174	891	5242	0	9135	0
	2949			31934	0

CALCULATED SLP
CHECKED ALB

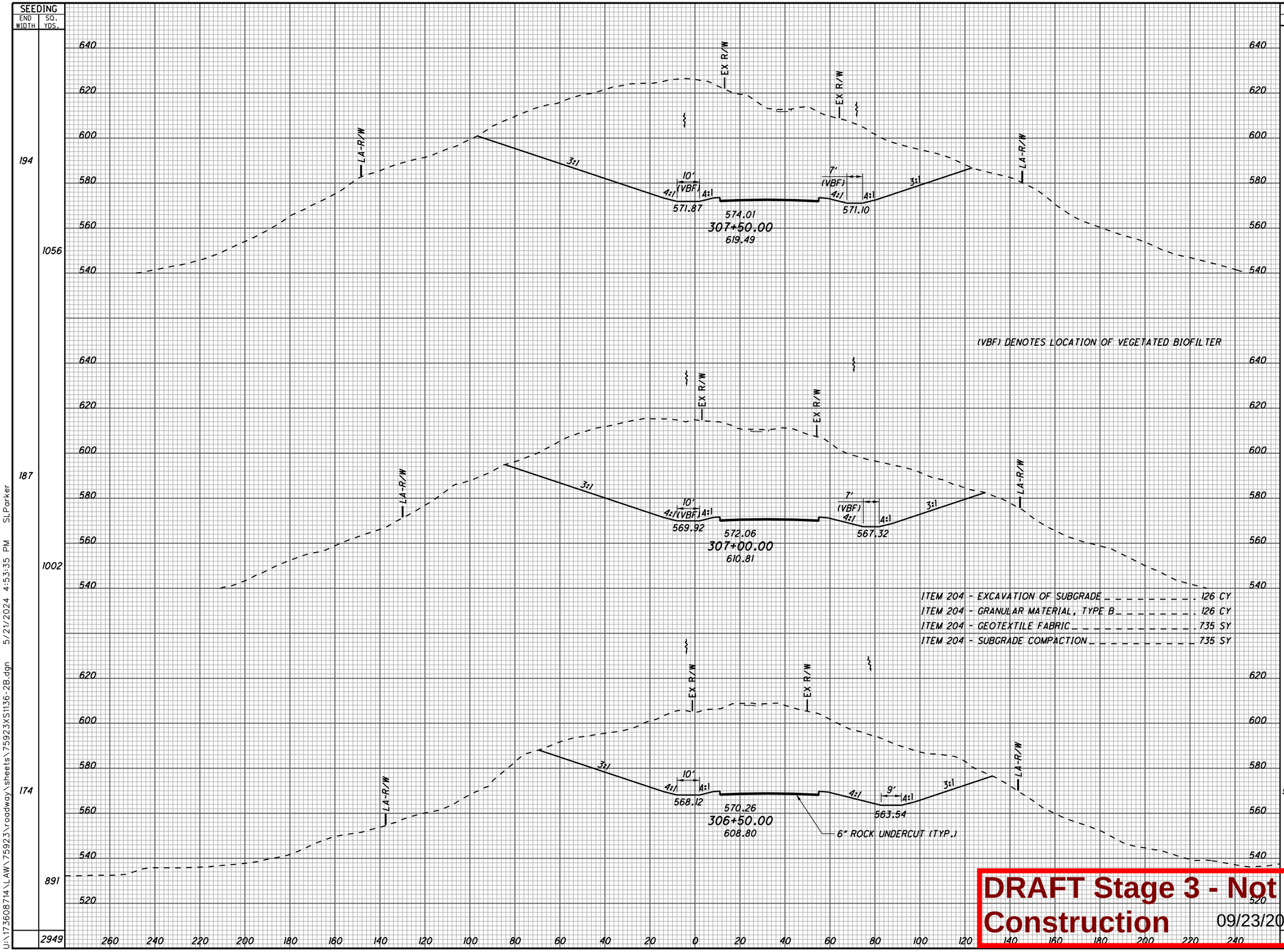

(VBF) DENOTES LOCATION OF VEGETATED BIOFILTER

ITEM 204 - EXCAVATION OF SUBGRADE	126 CY
ITEM 204 - GRANULAR MATERIAL, TYPE B	126 CY
ITEM 204 - GEOTEXTILE FABRIC	735 SY
ITEM 204 - SUBGRADE COMPACTION	735 SY

DRAFT Stage 3 - Not for Construction 09/23/2024

CROSS SECTIONS S.R. 7
STA. 306+50.00 TO STA. 307+50.00

LAW-7-2.17

298
1247

U:\173608714\LAW\75923\roadway\sheets\75923XS1136-2B.dgn 5/21/2024 4:53:35 PM SLParker

SEEDING	
END WIDTH	SQ. YDS.
229	1238
216	1139
	2377

END AREA		VOLUME	
CUT	FILL	CUT	FILL
9024	0		
		15900	0
8147	0		
		14169	0
		3006	0

CALCULATED ALB
CHECKED TCM

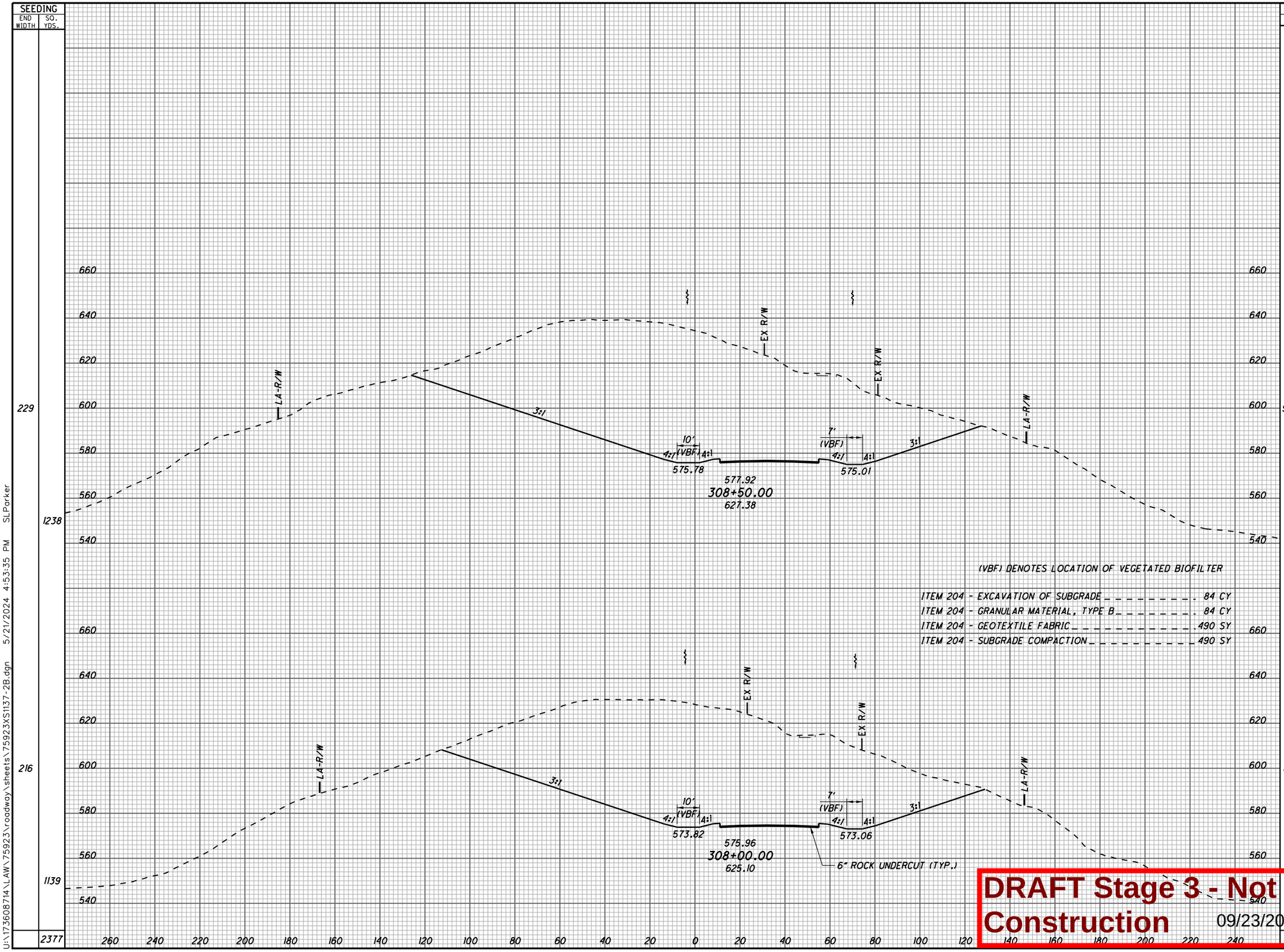

DRAFT Stage 3 - Not for Construction 09/23/2024

CROSS SECTIONS S.R. 7
STA. 308+00.00 TO STA. 308+50.00

LAW-7-2.17

U:\173608714\LAW\75923\roadway\sheets\75923XS1137-2B.dgn 5/21/2024 4:53:35 PM SLParker

SEEDING END WIDTH	SEEDING SQ. YDS.
263	
	1384
235	
	1288
	2672

END AREA CUT	END AREA FILL	VOLUME CUT	VOLUME FILL
11121	0		
		19344	0
9769	0		
		17402	0
		3674(	0

CALCULATED SLP
CHECKED ALB

CROSS SECTIONS S.R. 7
STA. 309+00.00 TO STA. 309+50.00

LAW-7-2.17

300
1247

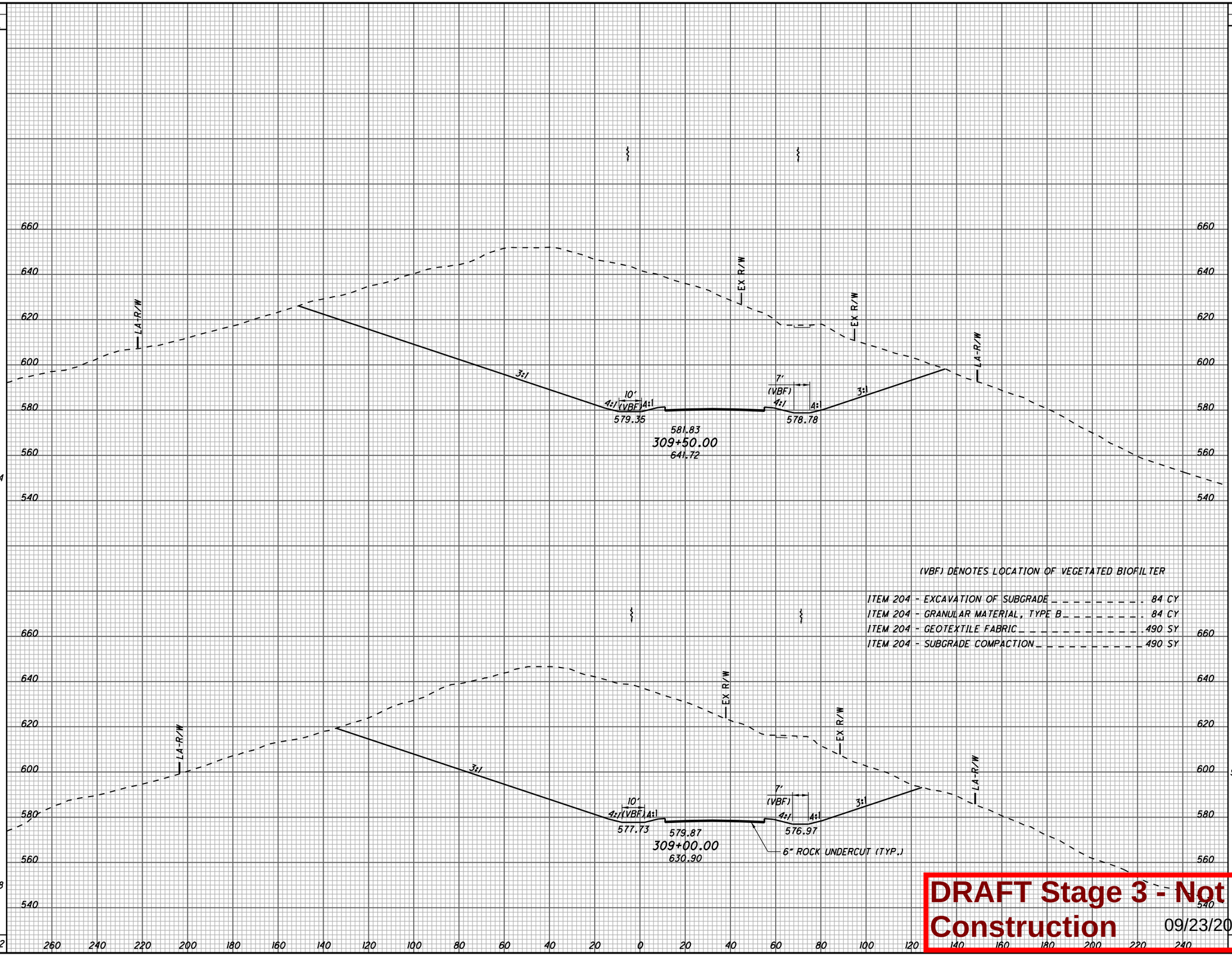

DRAFT Stage 3 - Not for Construction 09/23/2024

U:\173608714\LAW\75923\roadway\sheets\75923XS1138-2B.dgn 5/21/2024 4:53:36 PM SLParker

SEEDING END WIDTH	SEEDING SQ. YDS.	END AREA CUT	END AREA FILL	VOLUME CUT	VOLUME FILL
284	1546	14936	0	25567	0
273	1489	12676	0	22037	0
	3035			4760	0

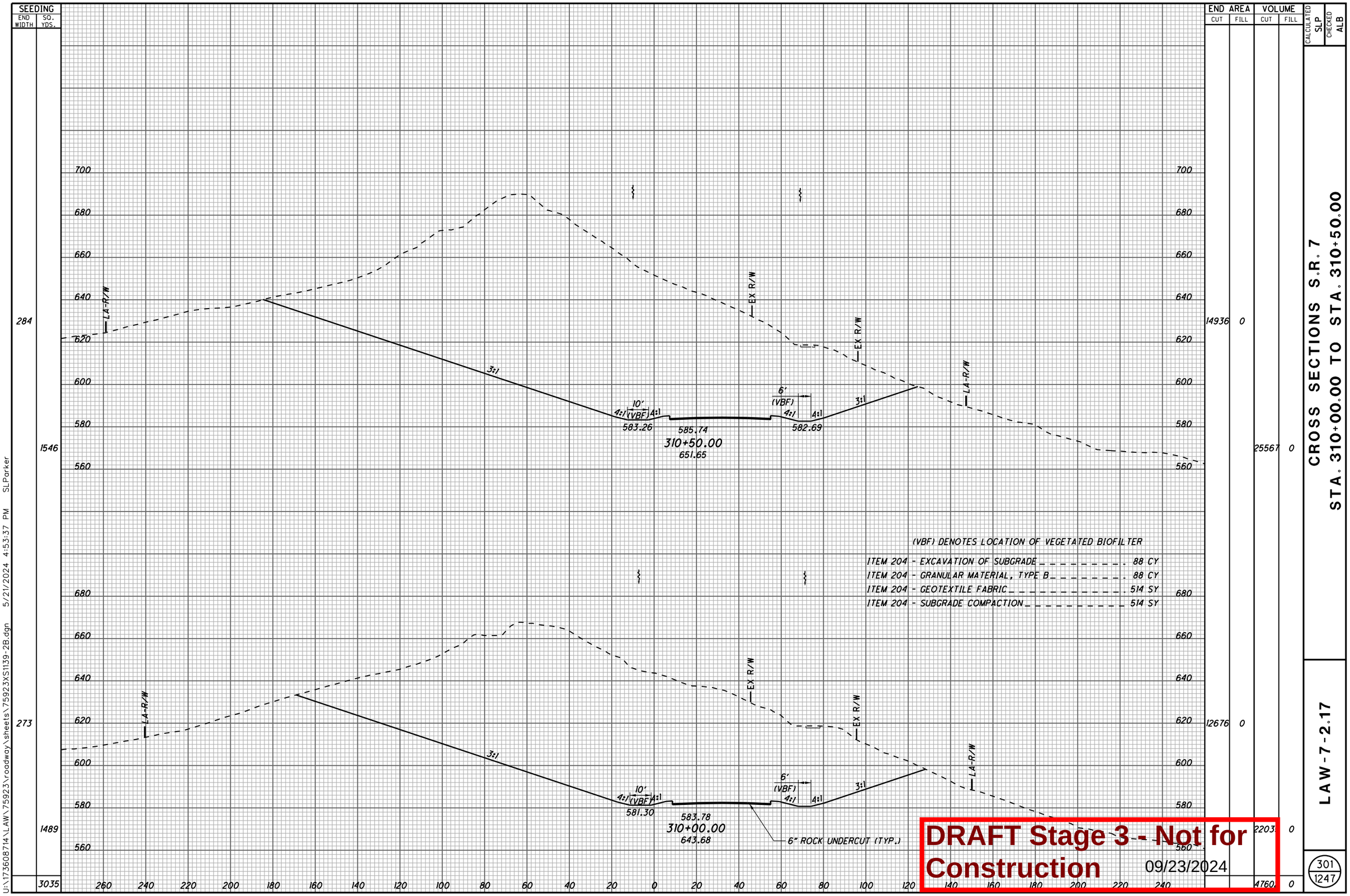

(VBF) DENOTES LOCATION OF VEGETATED BIOFILTER

ITEM 204 - EXCAVATION OF SUBGRADE	88 CY
ITEM 204 - GRANULAR MATERIAL, TYPE B	88 CY
ITEM 204 - GEOTEXTILE FABRIC	514 SY
ITEM 204 - SUBGRADE COMPACTION	514 SY

DRAFT Stage 3 - Not for Construction 09/23/2024

CALCULATED SLP CHECKED ALB

CROSS SECTIONS S.R. 7
STA. 310+00.00 TO STA. 310+50.00

LAW-7-2.17

301
1247

U:\1736087\14\LAW\75923\roadway\sheets\75923XS1139-2B.dgn 5/21/2024 4:53:37 PM SLParker

SEEDING END WIDTH	SEEDING SQ. YDS.
355	1861
314	1662
	3523

END AREA CUT	END AREA FILL	VOLUME CUT	VOLUME FILL
18407	0	32295	0
16471	0	29081	0
		61376	0

CALCULATED SLP
CHECKED ALB

CROSS SECTIONS S.R. 7
STA. 311+00.00 TO STA. 311+50.00

LAW-7-2.17

302
1247

700 680 660 640 620 600 580 560

LA-R/W
3:1
10:1
3:1
EX R/W
EX R/W
LA-R/W
10'
4:1 (VBF) 4:1
587.17
589.65
311+50.00
636.92
6'
(VBF)
4:1 4:1
3:1
586.45

320 300 280 260 240 220 200 180 160 140 120 100 80 60 40 20 0 20 40 60 80 100 120 140 160 180

(VBF) DENOTES LOCATION OF VEGETATED BIOFILTER

ITEM 204 - EXCAVATION OF SUBGRADE	95 CY
ITEM 204 - GRANULAR MATERIAL, TYPE B	95 CY
ITEM 204 - GEOTEXTILE FABRIC	559 SY
ITEM 204 - SUBGRADE COMPACTION	559 SY

700 680 660 640 620 600 580 560

LA-R/W
3:1
10:1
3:1
EX R/W
EX R/W
LA-R/W
10'
4:1 (VBF) 4:1
587.69
311+00.00
641.18
6'
(VBF)
4:1 4:1
3:1
584.64
6" ROCK UNDERCUT (TYP.)

320 300 280 260 240 220 200 180 160 140 120 100 80 60 40 20 0 20 40 60 80 100 120 140 160 180

DRAFT Stage 3 - Not for Construction
09/23/2024

U:\173608714\LAW\75923\roadway\sheets\75923XS1140-2B.dgn 5/21/2024 4:53:38 PM SLParker

SEEDING	
END WIDTH	SQ. YDS.
416	2240
391	2074
	4314

END AREA	
CUT	FILL
20579	0
20644	0

VOLUME	
CUT	FILL
38169	0
74324	0

CALCULATED SLP

CHECKED ALB

720 700 680 660 640 620 600 580 560

LA-R/W

3:1 10:1 3:1

EX R/W

10' (VBF) 4:1 4:1

591.08

593.56

312+50.00

638.82

5' (VBF) 4:1 4:1 3:1

590.36

(VBF) DENOTES LOCATION OF VEGETATED BIOFILTER

ITEM 204 - EXCAVATION OF SUBGRADE . . . . . 108 CY
ITEM 204 - GRANULAR MATERIAL, TYPE B . . . . . 108 CY
ITEM 204 - GEOTEXTILE FABRIC . . . . . 637 SY
ITEM 204 - SUBGRADE COMPACTION . . . . . 637 SY

589.12

591.60

312+00.00

638.16

588.41

6" ROCK UNDERCUT (TYP.)

380 360 340 320 300 280 260 240 220 200 180 160 140 120 100 80 60 40 20 0 20 40 60 80 100 120

DRAFT Stage 3 - Not for Construction 09/23/2024

CROSS SECTIONS S.R. 7
STA. 312+00.00 TO STA. 312+50.00

LAW-7-2.17

303
1247

U:\173608714\LAW\75923\roadway\sheets\75923XS1141-2B.dgn 5/21/2024 4:53:39 PM SLParker

SEEDING END WIDTH	SEEDING SQ. YDS.
445	2462
441	2379
	4841

END AREA CUT	END AREA FILL	VOLUME CUT	VOLUME FILL
13733	0	29679	0
18321	0	36019	0
		6569	0

CALCULATED SLP
CHECKED ALB

720 700 680 660 640 620 600 580 560

EX R/W

3:1 10:1 3:1

8' (VBF) 4:1 4:1

594.84

597.46
313+50.00
632.21

5' (VBF) 4:1 4:1 3:1

594.13

LA-R/W

(VBF) DENOTES LOCATION OF VEGETATED BIOFILTER

ITEM 204 - EXCAVATION OF SUBGRADE . . . . . 127 CY
ITEM 204 - GRANULAR MATERIAL, TYPE B . . . . . 127 CY
ITEM 204 - GEOTEXTILE FABRIC . . . . . 751 SY
ITEM 204 - SUBGRADE COMPACTION . . . . . 751 SY

3:1 10:1 3:1

8' (VBF) 4:1 4:1

592.89

595.51
313+00.00
535.87

5' (VBF) 4:1 4:1 3:1

592.32

6" ROCK UNDERCUT (TYP.)

380 360 340 320 300 280 260 240 220 200 180 160 140 120 100 80 60 40 20 0 20 40 60 80 100 120

DRAFT Stage 3 - Not for Construction 09/23/2024

CROSS SECTIONS S.R. 7
STA. 313+00.00 TO STA. 313+50.00

LAW-7-2.17

304
1247

U:\173608714\LAW\75923\roadway\sheets\75923XS1142-2B.dgn 5/21/2024 4:53:40 PM SLParker

SEEDING	
END WIDTH	SQ. YDS.
365	2220
434	2442
	4662

END AREA	
CUT	FILL
6976	0
9442	0
21456	0
36660	0

VOLUME	
CUT	FILL
15202	0

CALCULATED SLP
CHECKED ALB

EX R/W
EX R/W
3:1
10:1
3:1
7'
(VBF)
4:1
4:1
45:1
598.61
601.37
314+50.00
623.57
4'
(VBF)
4:1
4:1
3:1
598.04
LA-R/W
720
700
680
660
640
620
600
580
560

(VBF) DENOTES LOCATION OF VEGETATED BIOFILTER

EX R/W
EX R/W
3:1
10:1
3:1
7'
(VBF)
4:1
4:1
596.66
599.42
314+00.00
625.73
4'
(VBF)
4:1
4:1
3:1
596.08
LA-R/W
6" ROCK UNDERCUT (TYP.)
720
700
680
660
640
620
600
580
560
380 360 340 320 300 280 260 240 220 200 180 160 140 120 100 80 60 40 20 0 20 40 60 80 100 120

ITEM 204 - EXCAVATION OF SUBGRADE . . . . . 149 CY
ITEM 204 - GRANULAR MATERIAL, TYPE B . . . . . 149 CY
ITEM 204 - GEOTEXTILE FABRIC . . . . . 877 SY
ITEM 204 - SUBGRADE COMPACTION . . . . . 877 SY

DRAFT Stage 3 - Not for Construction 09/23/2024

CROSS SECTIONS S.R. 7
STA. 314+00.00 TO STA. 314+50.00

LAW-7-2.17

305
1247

U:\173608714\LAW\75923\roadway\sheets\75923XS1143-2B.dgn 5/21/2024 4:53:40 PM SLParker

SEEDING	
END WIDTH	SQ. YDS.
339	1355
360	609
	1964

END AREA	
CUT	FILL
4337	0
6376	0
3737	0
10666	0

VOLUME	
CUT	FILL
6923	0

CALCULATED SLP
CHECKED ALB

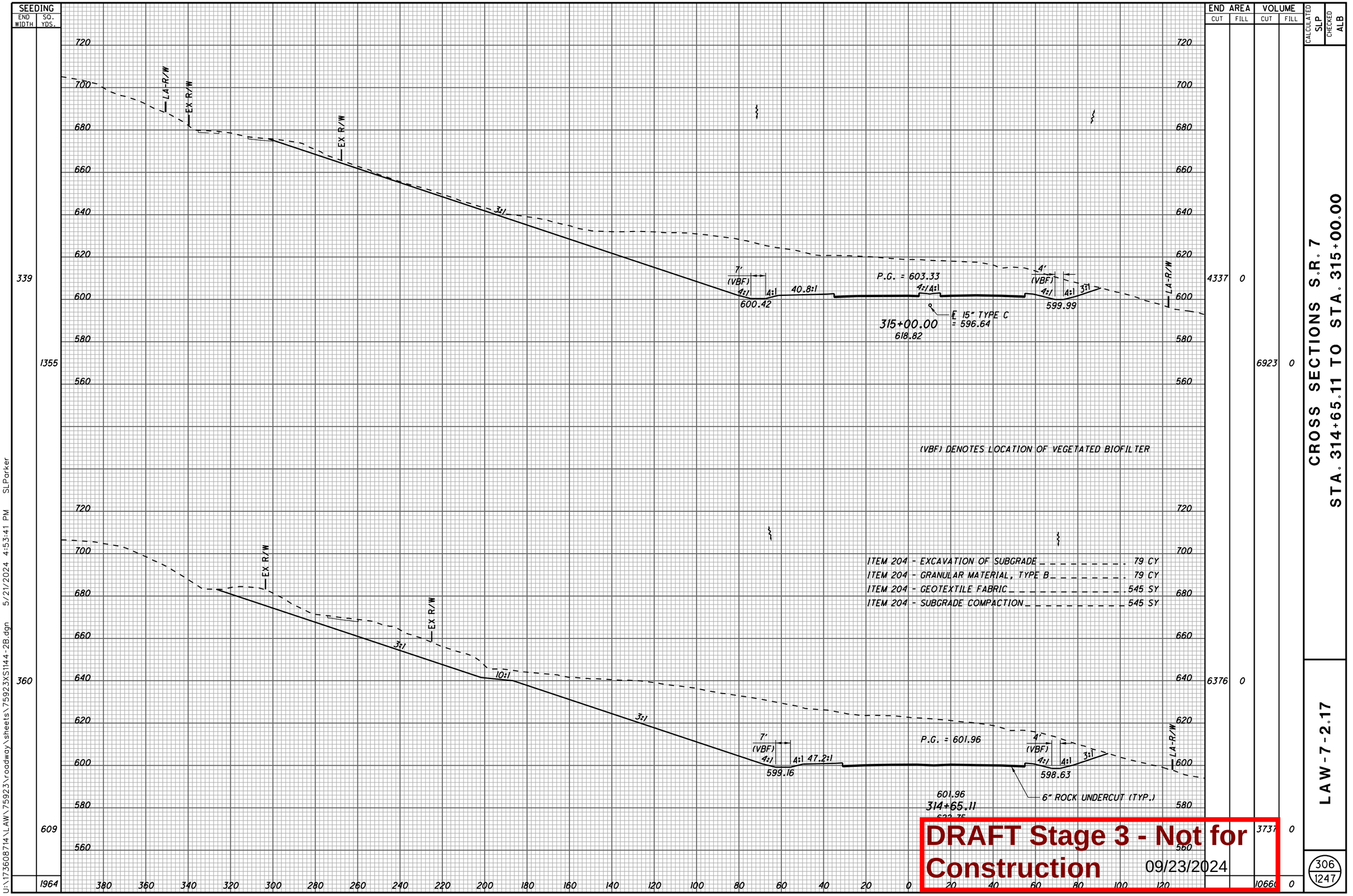

CROSS SECTIONS S.R. 7
STA. 314+65.11 TO STA. 315+00.00

LAW-7-2.17

306
1247

DRAFT Stage 3 - Not for Construction 09/23/2024

U:\173608714\LAW\75923\roadway\sheets\75923XS1144-2B.dgn 5/21/2024 4:53:41 PM SLParker

SEEDING END WIDTH	SEEDING SQ. YDS.
193	954
151	929
184	1452
	3335

END AREA CUT	END AREA FILL	VOLUME CUT	VOLUME FILL
8	3220	28	4212
22	1328	988	1250
1045	20	4984	19
		6000	5481

CALCULATED ALB
CHECKED TCM

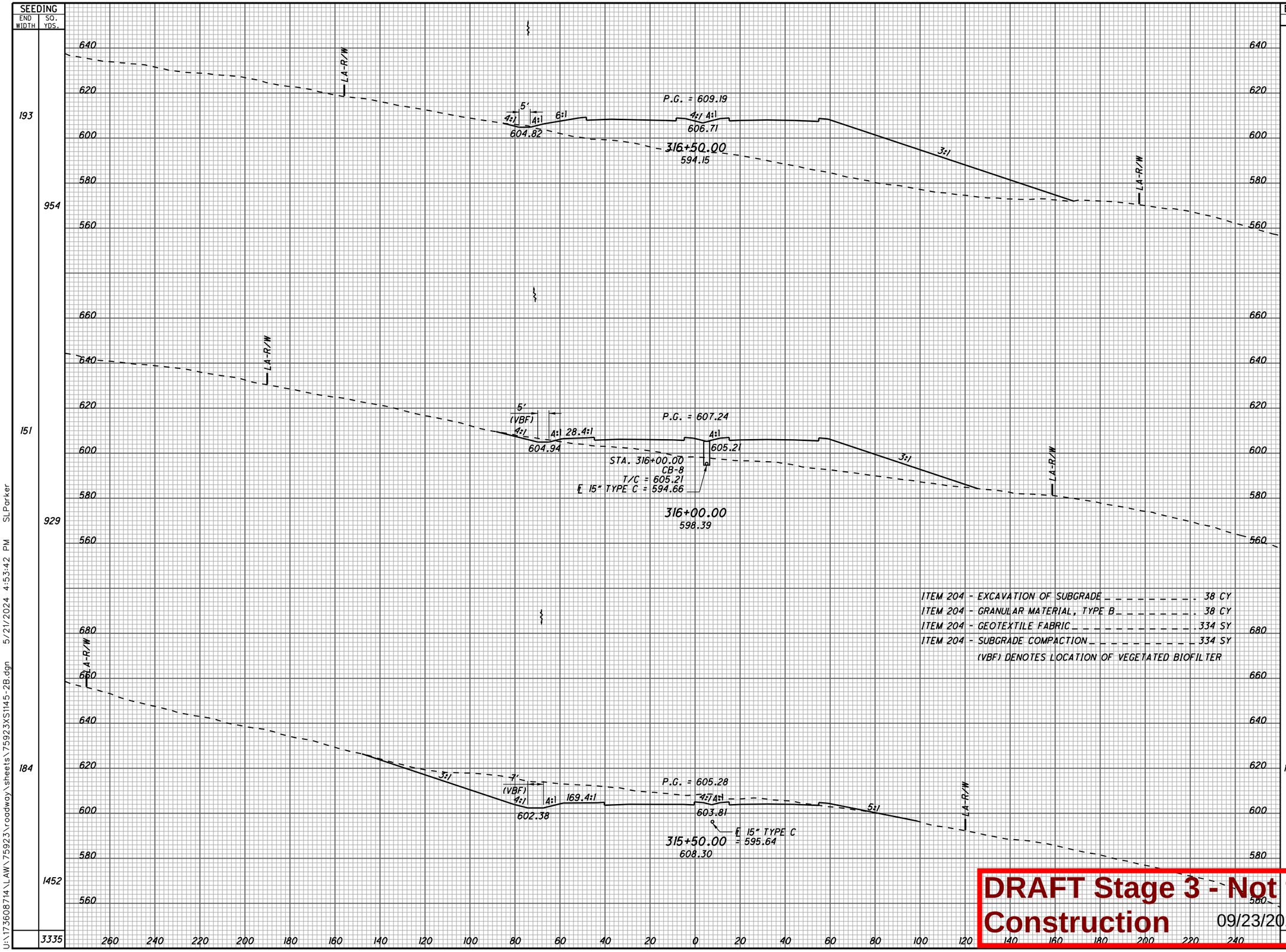

ITEM 204 - EXCAVATION OF SUBGRADE . . . . . 38 CY
ITEM 204 - GRANULAR MATERIAL, TYPE B . . . . . 38 CY
ITEM 204 - GEOTEXTILE FABRIC . . . . . 334 SY
ITEM 204 - SUBGRADE COMPACTION . . . . . 334 SY
(VBF) DENOTES LOCATION OF VEGETATED BIOFILTER

CROSS SECTIONS S.R. 7
STA. 315+50.00 TO STA. 316+50.00

LAW-7-2.17

307
1247

DRAFT Stage 3 - Not for Construction 09/23/2024

U:\1736087\14\LAW\75923\roadway\sheets\75923XS1145-2B.dgn 5/21/2024 4:53:42 PM SLParker

SEEDING END WIDTH	SEEDING SQ. YDS.	END AREA CUT	END AREA FILL	VOLUME CUT	VOLUME FILL
402	1980	0	10730	0	17147
310	1560	0	7788	0	12097
251	1234	0	5276	0	7867
	4774			8	37111

CALCULATED SLP
CHECKED ALB

CROSS SECTIONS S.R. 7
STA. 317+00.00 TO STA. 318+00.00

LAW-7-2.17

308
1247

640
620
600
580
560
540

LA-R/W
10:1
4:1
10'
4:1
10:1
588.44
3:1
P.G. = 615.06
4:1 4:1
611.84
318+00.00
573.74
3:1
DRAINAGE LAYER (TYP.)
LA-R/W

LA-R/W
10'
4:1
3:1
4:1
598.02
P.G. = 613.10
4:1 4:1
610.05
317+50.00
3:1
LA-R/W

ITEM 203 - EMBANKMENT, AS PER PLAN, TYPE C ---- 1088 CY

LA-R/W
5'
4:1
3.6:1
4:1
601.25
P.G. = 611.15
4:1 4:1
608.33
317+00.00
584.92
3:1
LA-R/W

200 180 160 140 120 100 80 60 40 20 0 20 40 60 80 100 120 140 160 180 200 220 240 260 280 300

DRAFT Stage 3 - Not for Construction 09/23/2024

U:\17360871 4\LAW\75923\roadway\sheets\75923XS1146-2B.dgn 5/21/2024 4:53:43 PM SLParker

SEEDING	
END WIDTH	SQ. YDS.
439	2352
407	4602

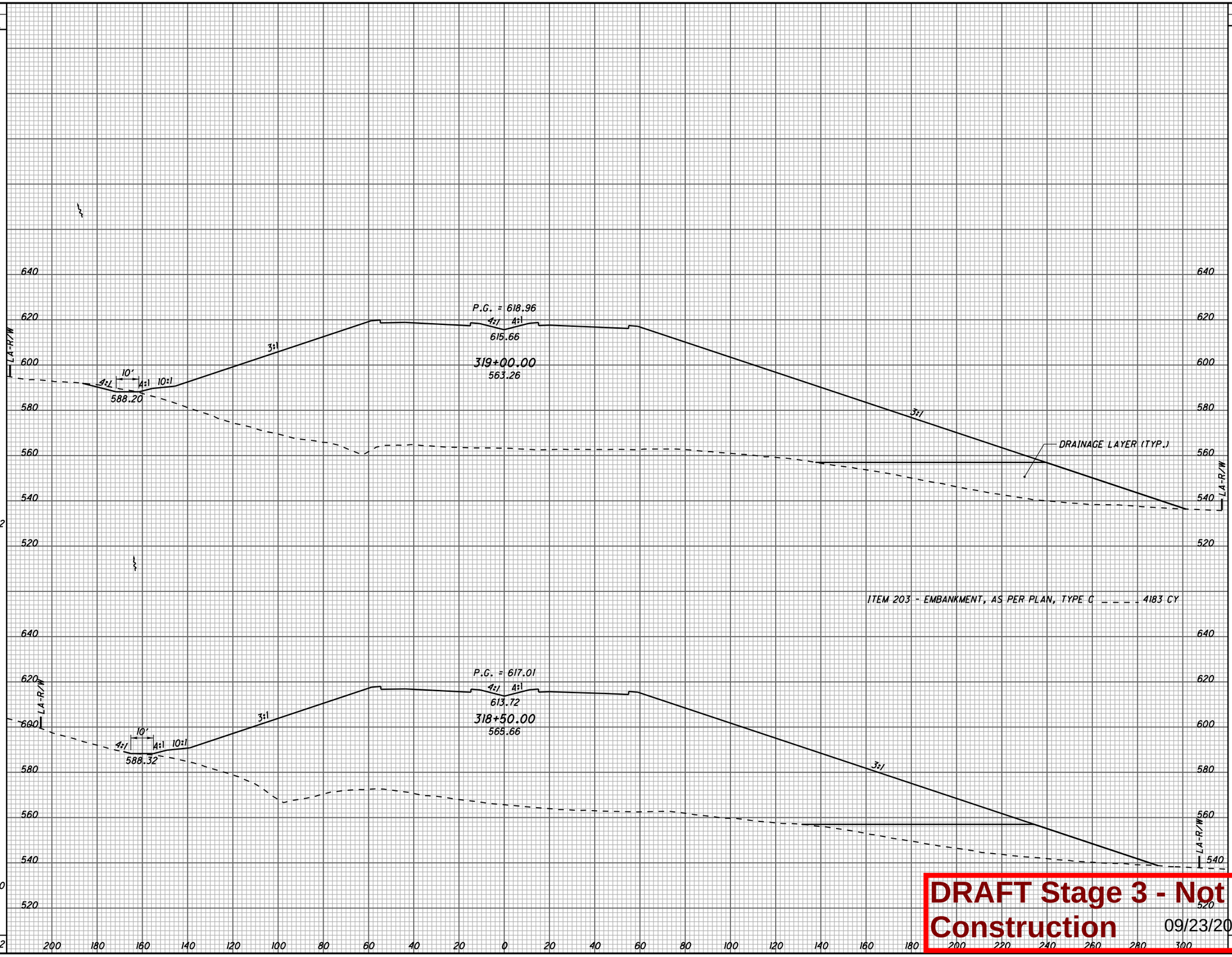

END AREA		VOLUME	
CUT	FILL	CUT	FILL
23	14576		
		21	25712
0	13193		
		0	22152
		21	47864

CALCULATED SLP
CHECKED ALB

CROSS SECTIONS S.R. 7
STA. 318+50.00 TO STA. 319+00.00

LAW-7-2.17

309
1247

DRAFT Stage 3 - Not for Construction 09/23/2024

SLParker
5/21/2024 4:53:44 PM
U:\1736087\14\LAW\75923\roadway\sheets\75923XS1147-2B.dgn

SEEDING	
END WIDTH	SQ. YDS.
460	2528
450	2471
	4999

END AREA		VOLUME	
CUT	FILL	CUT	FILL
0	18410		
		0	31717
0	15843		
		21	28166
		21	59883

CALCULATED SLP | CHECKED ALB

CROSS SECTIONS S.R. 7
STA. 319+50.00 TO STA. 320+00.00

LAW-7-2.17

310
1247

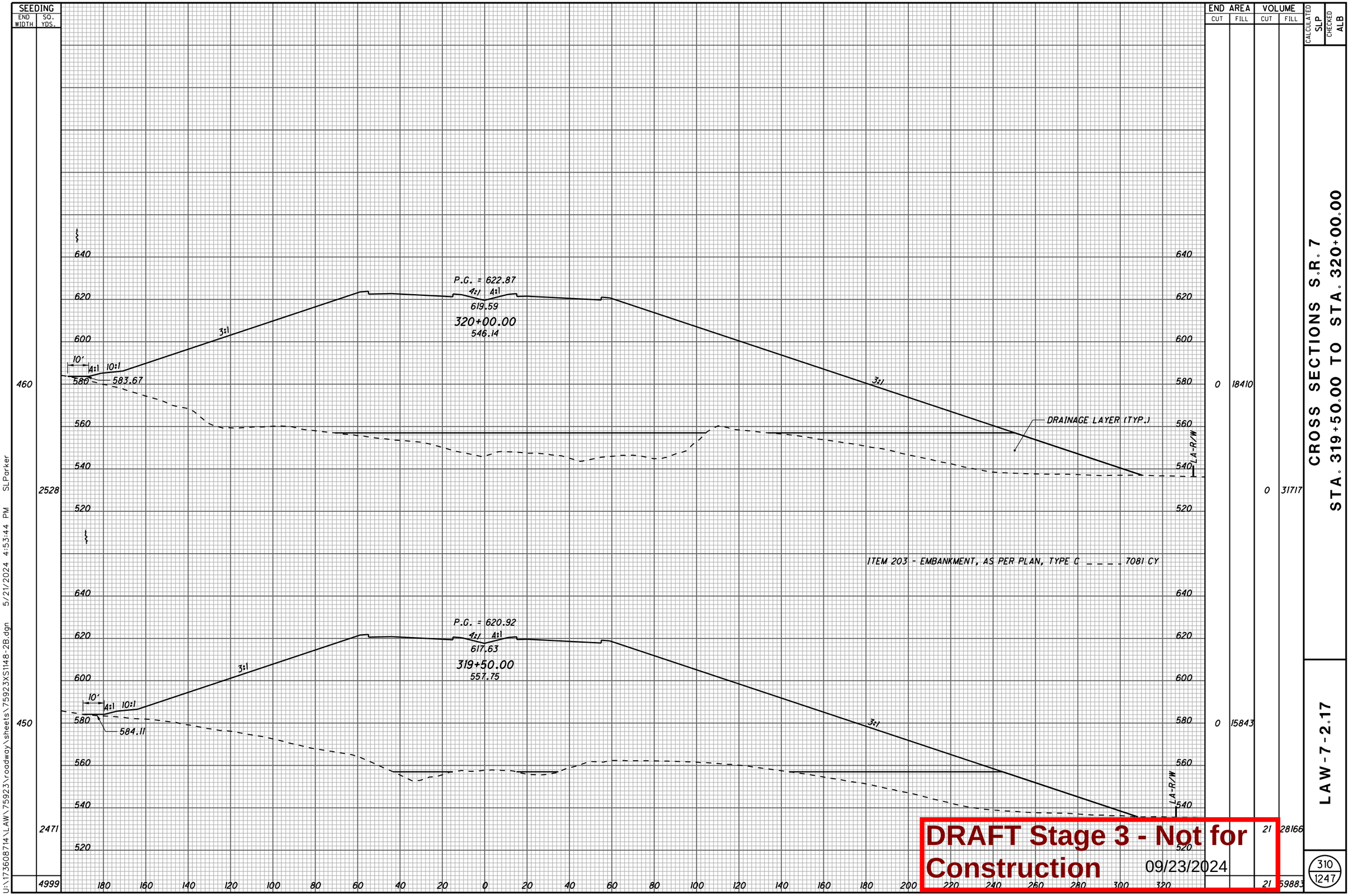

DRAFT Stage 3 - Not for Construction 09/23/2024

U:\17360871 4\LAW\75923\roadway\sheets\75923XS1148-2B.dgn 5/21/2024 4:53:44 PM SLParker

SEEDING	
END WIDTH	SQ. YDS.
540	
	2882
497	
	2659
	5541

END AREA		VOLUME	
CUT	FILL	CUT	FILL
0	18761		
0	26791		
0	10173		
0	26466		
0	53251		

CALCULATED SLP
CHECKED ALB

STA, 321+07.00
EX. 60" TYPE A

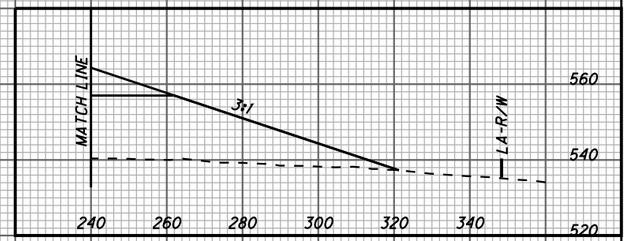

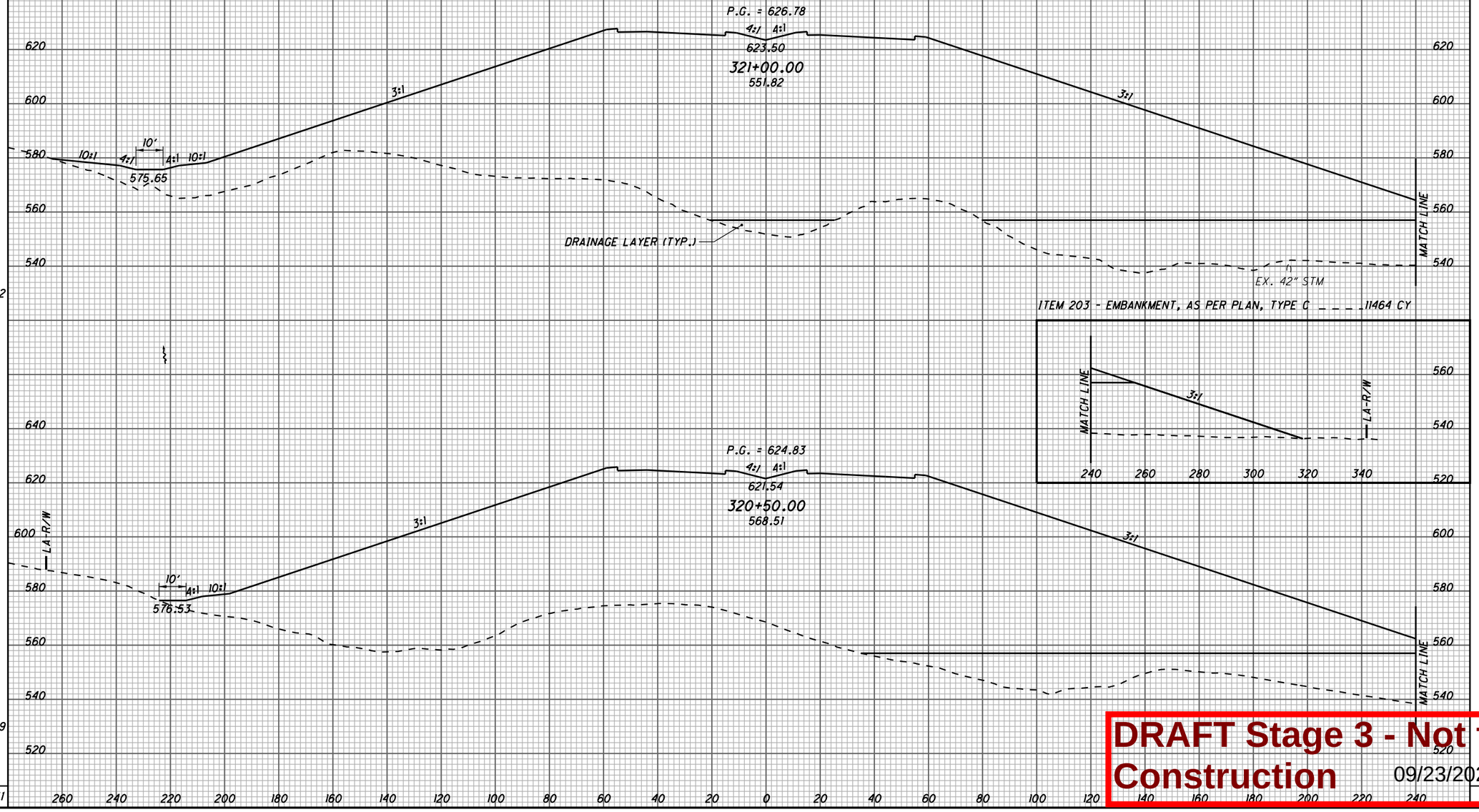

DRAFT Stage 3 - Not for Construction 09/23/2024

CROSS SECTIONS S.R. 7
STA. 320+50.00 TO STA. 321+00.00

LAW-7-2.17

311
1247

U:\173608714\LAW\75923\roadway\sheets\75923XS1149-2B.dgn 5/21/2024 4:53:45 PM SLPorker

SEEDING	
END WIDTH	SQ. YDS.
568	3121
555	3044
	6165

END AREA	
CUT	FILL
995	16176
233	19536
216	35461
1353	68529

VOLUME	
CUT	FILL
1137	33068

CALCULATED SLP
CHECKED ALB

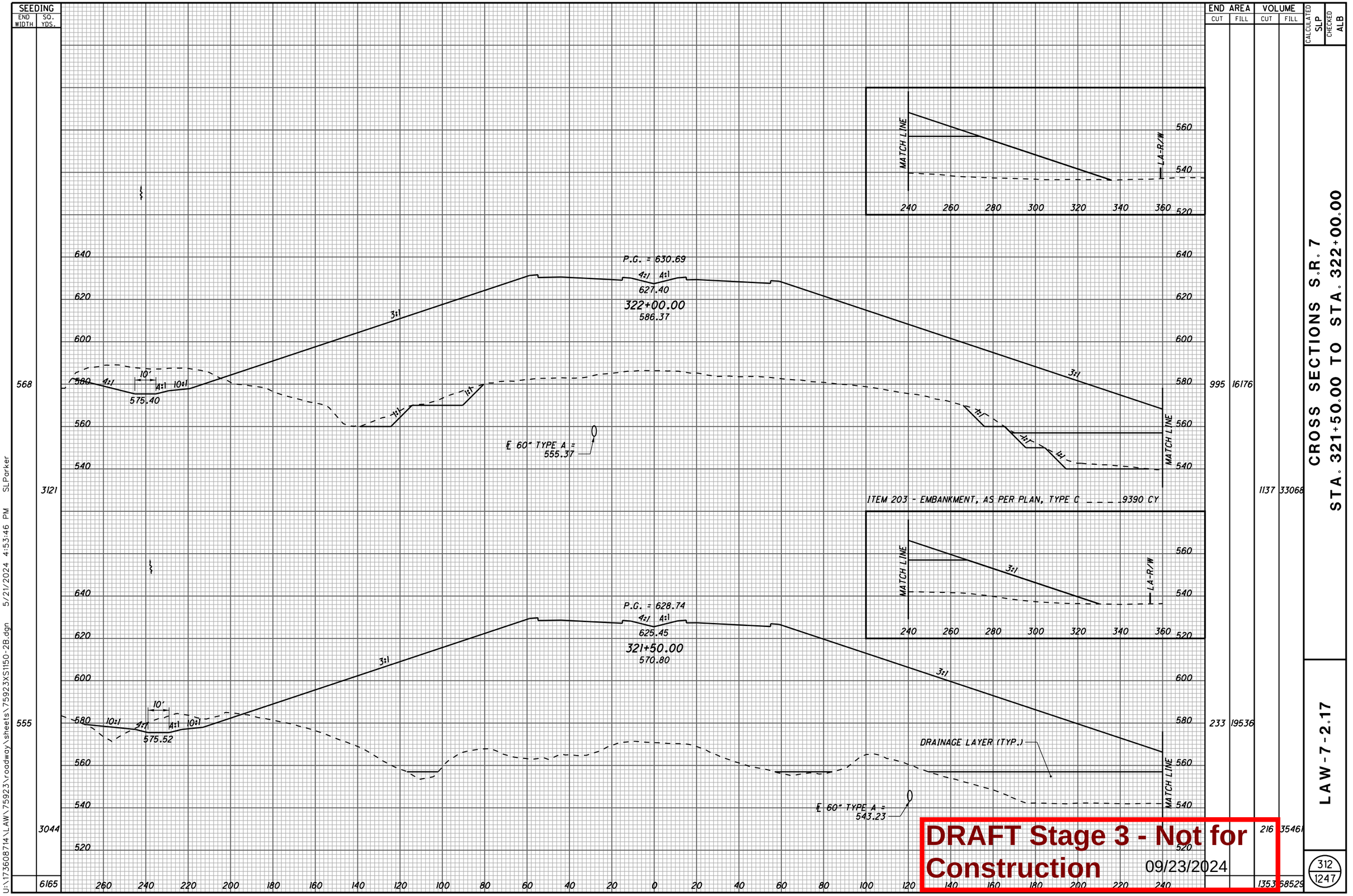

CROSS SECTIONS S.R. 7
STA. 321+50.00 TO STA. 322+00.00

LAW-7-2.17

DRAFT Stage 3 - Not for Construction
09/23/2024

U:\173608714\LAW\75923\roadway\sheets\75923XS1150-28.dgn 5/21/2024 4:53:46 PM SLParker

SEEDING	
END WIDTH	SQ. YDS.
527	3228
635	3343
	6571

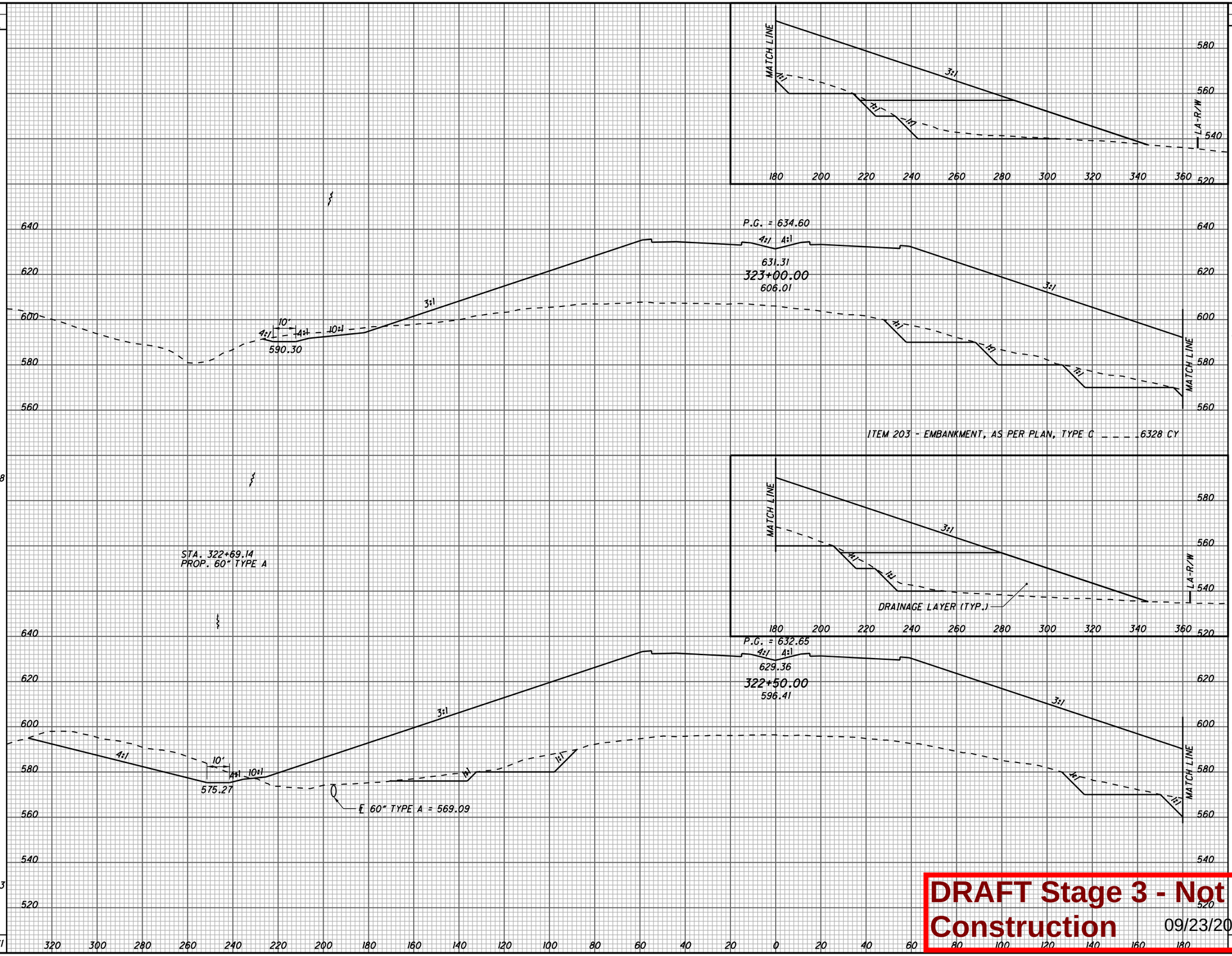

END AREA		VOLUME	
CUT	FILL	CUT	FILL
1005	10694		
		2187	22694
1356	13815		
		2177	27770
		4364	50464

CALCULATED ALB
CHECKED TCM

CROSS SECTIONS S.R. 7
STA. 322+50.00 TO STA. 323+00.00

LAW-7-2.17

313
1247

DRAFT Stage 3 - Not for Construction 09/23/2024

U:\173608714\LAW\75923\roadway\sheets\75923XS1151-2B.dgn 5/21/2024 4:53:47 PM SLParker

SEEDING	
END WIDTH	SQ. YDS.
393	2300
	435
	2670
	4970

END AREA	
CUT	FILL
1300	11158
	1525
	10279
	4960
	39269

VOLUME	
CUT	FILL
2616	19849
2344	19420

CALCULATED SLP
CHECKED ALB

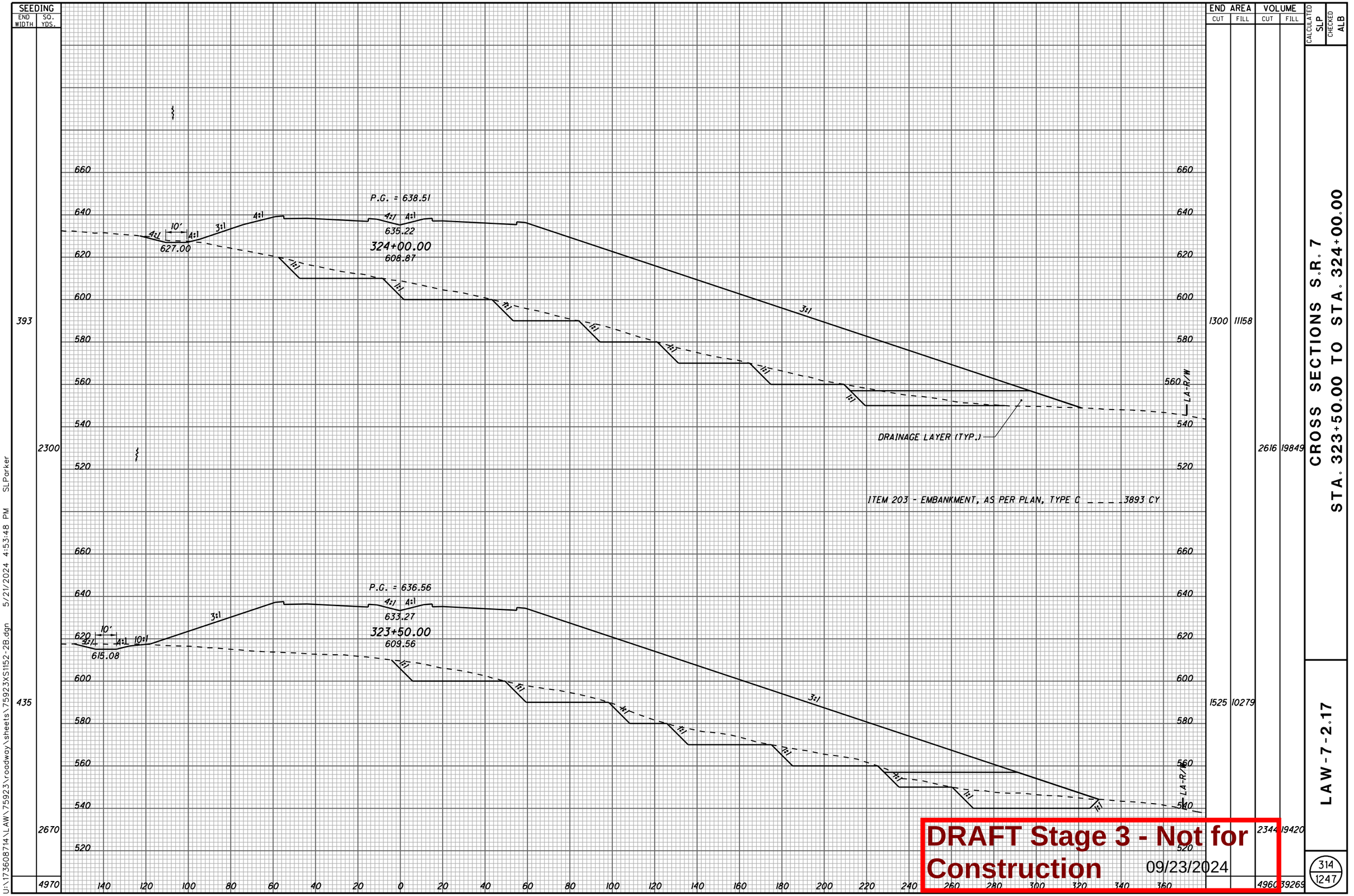

CROSS SECTIONS S.R. 7
STA. 323+50.00 TO STA. 324+00.00

LAW-7-2.17

314
1247

DRAFT Stage 3 - Not for Construction 09/23/2024

U:\173608714\LAW\75923\roadway\sheets\75923XS1152-2B.dgn 5/21/2024 4:53:48 PM SLParker

SEEDING	
END WIDTH	SQ. YDS.
428	2283

END AREA		VOLUME	
CUT	FILL	CUT	FILL
1504	11024	25962	20540

CALCULATED SLP
CHECKED ALB

CROSS SECTIONS S.R. 7
STA. 324+50.00

LAW-7-2.17

315
1247

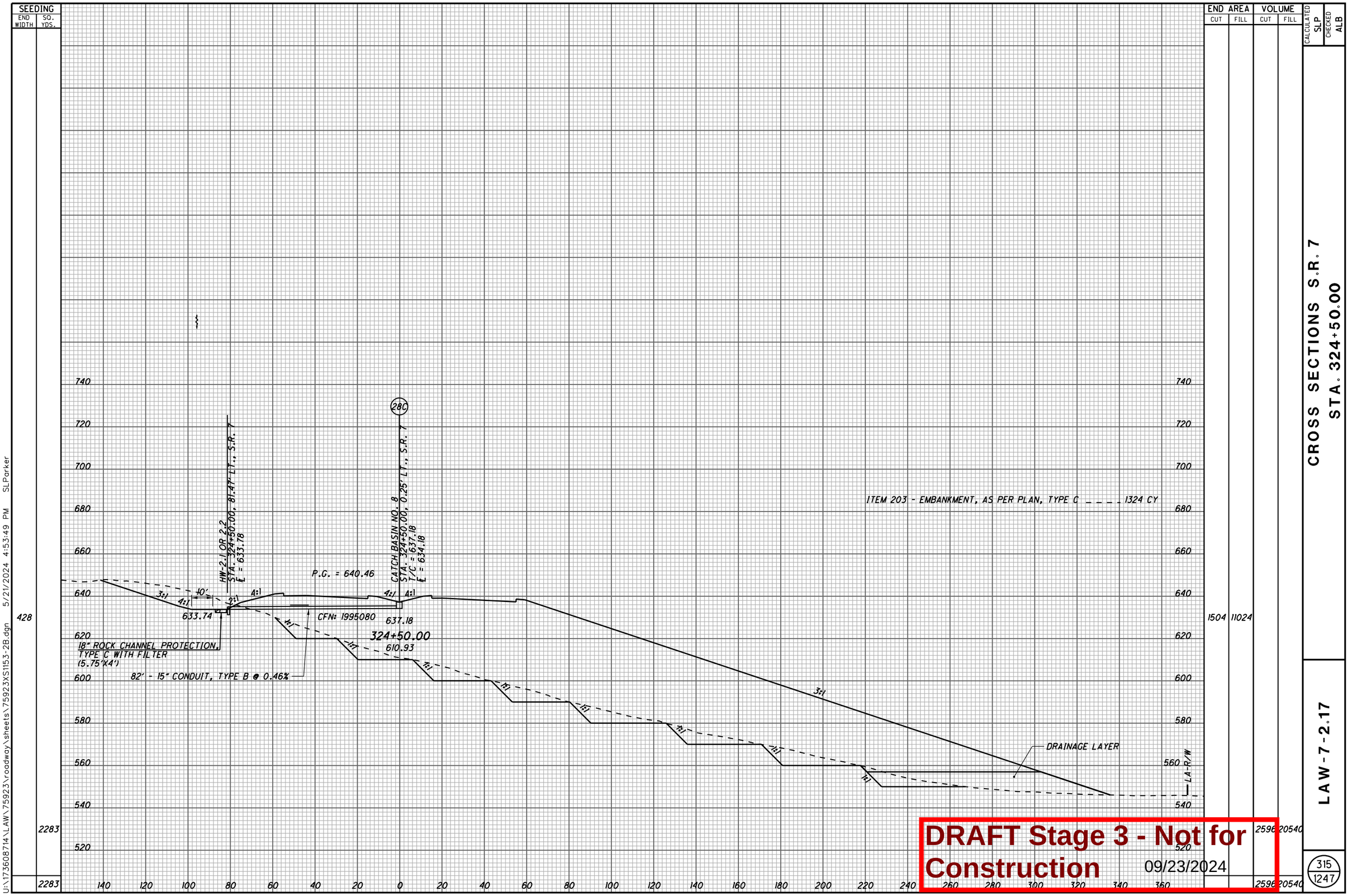

DRAFT Stage 3 - Not for Construction 09/23/2024

U:\1736087\14\LAW\75923\roadway\sheets\75923XS1153-2B.dgn 5/21/2024 4:53:49 PM SLParker

SEEDING END WIDTH	SEEDING SQ. YDS.
370	2175
413	2337
	4512

END AREA CUT	END AREA FILL	VOLUME CUT	VOLUME FILL
1395	12045	2513	21303
1319	10961	2614	20358
		5127	41661

CALCULATED SLP
CHECKED ALB

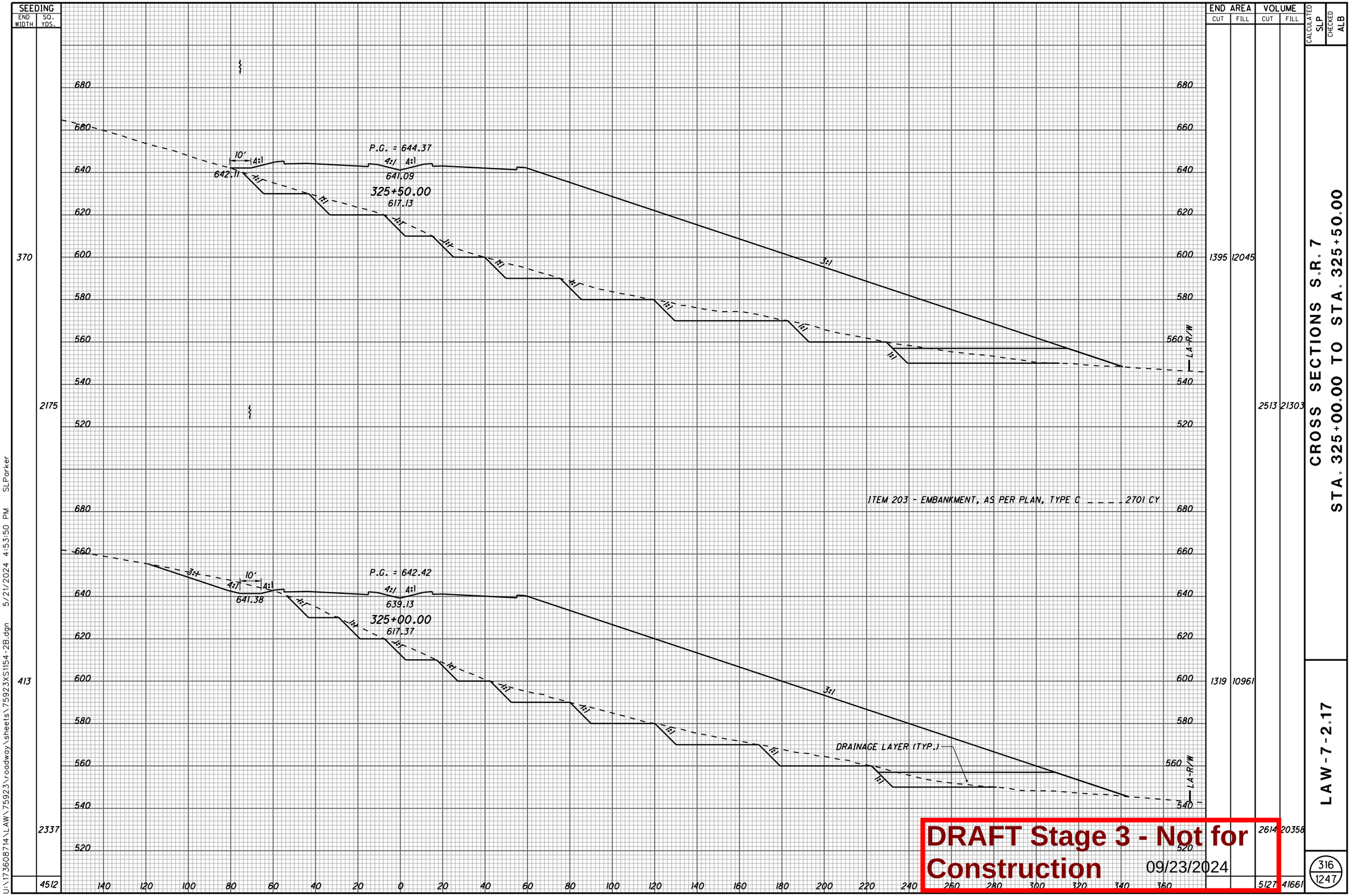

CROSS SECTIONS S.R. 7
STA. 325+00.00 TO STA. 325+50.00

LAW-7-2.17

316
1247

DRAFT Stage 3 - Not for Construction 09/23/2024

U:\173608714\LAW\75923\roadway\sheets\75923XS1154-2B.dgn 5/21/2024 4:53:50 PM SLParker

SEEDING END WIDTH	SEEDING SQ. YDS.
387	2222
412	2173
	4395

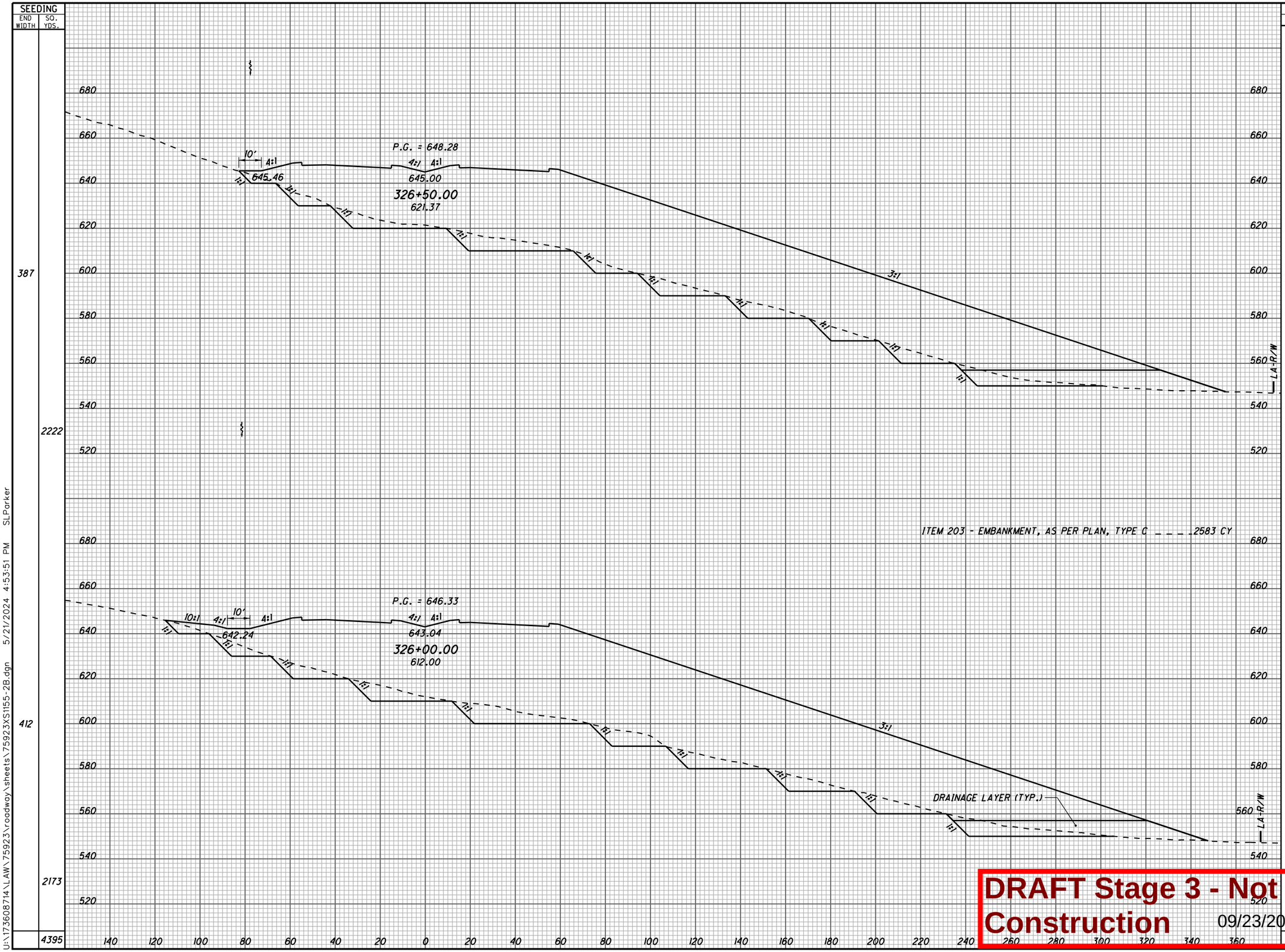

END AREA CUT	END AREA FILL	VOLUME CUT	VOLUME FILL
1253	11013		
		2628	21917
1584	12657		
		2759	22873
		5387	44790

CALCULATED SLP
CHECKED ALB

CROSS SECTIONS S.R. 7
STA. 326+00.00 TO STA. 326+50.00

LAW-7-2.17

317
1247

DRAFT Stage 3 - Not for Construction 09/23/2024

U:\173608714\LAW\75923\roadway\sheets\75923XS1155-2B.dgn 5/21/2024 4:53:51 PM SLParker

SEEDING	
END WIDTH	SQ. YDS.
	639
	2850
	2850

END AREA		VOLUME	
CUT	FILL	CUT	FILL
		4559	10463
		5382	19886
		5382	19886

CALCULATED SLP
CHECKED ALB

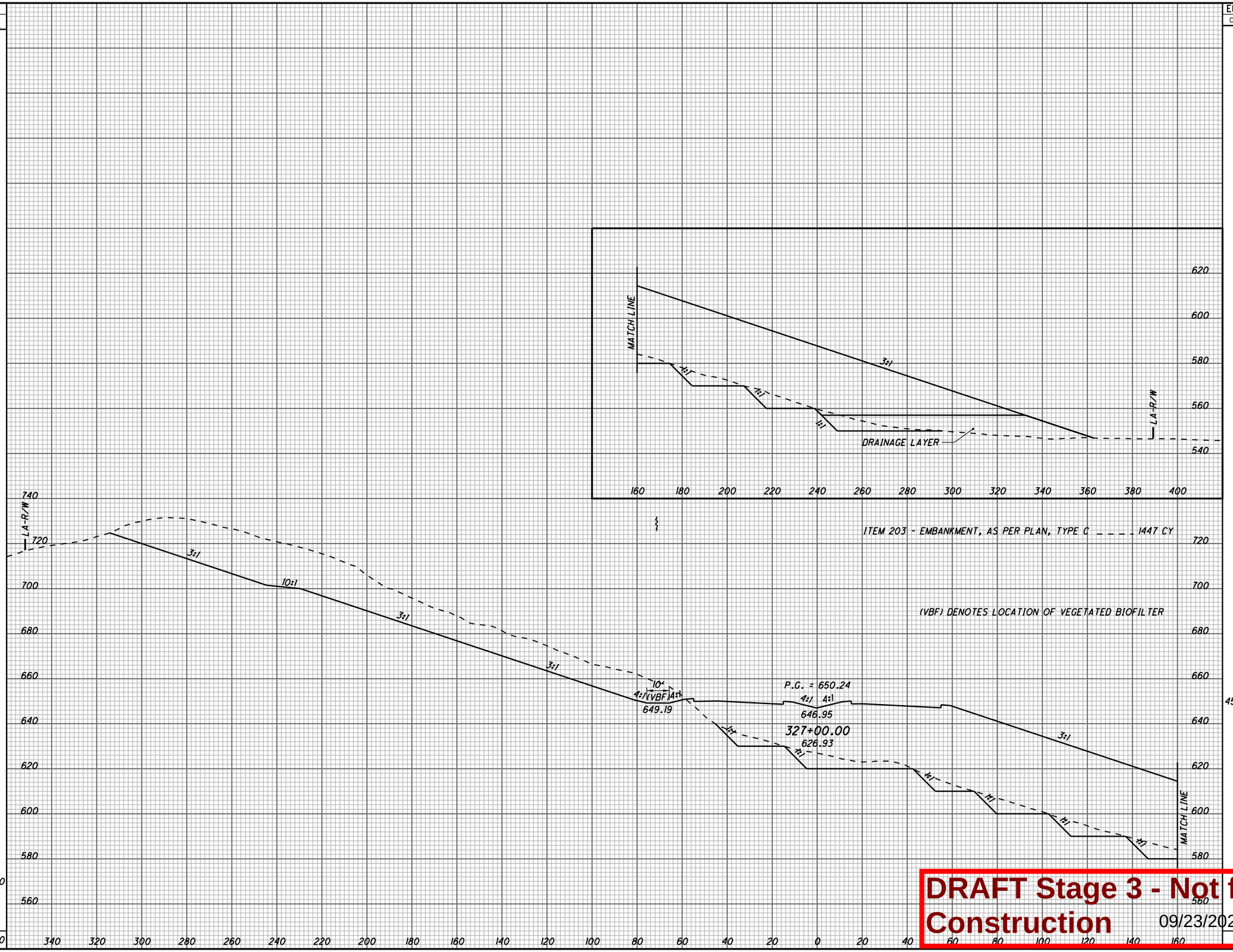

CROSS SECTIONS S.R. 7
STA. 327+00.00

LAW-7-2.17

DRAFT Stage 3 - Not for Construction 09/23/2024

U:\173608714\LAW\75923\roadway\sheets\75923XS1156-2B.dgn 5/21/2024 4:53:52 PM SLParker

SEEDING	
END WIDTH	SQ. YDS.
666	3625
	3625

END AREA		VOLUME	
CUT	FILL	CUT	FILL
6366	9657		
10116	18631		
10116	18631		

CALCULATED SLP
CHECKED ALB

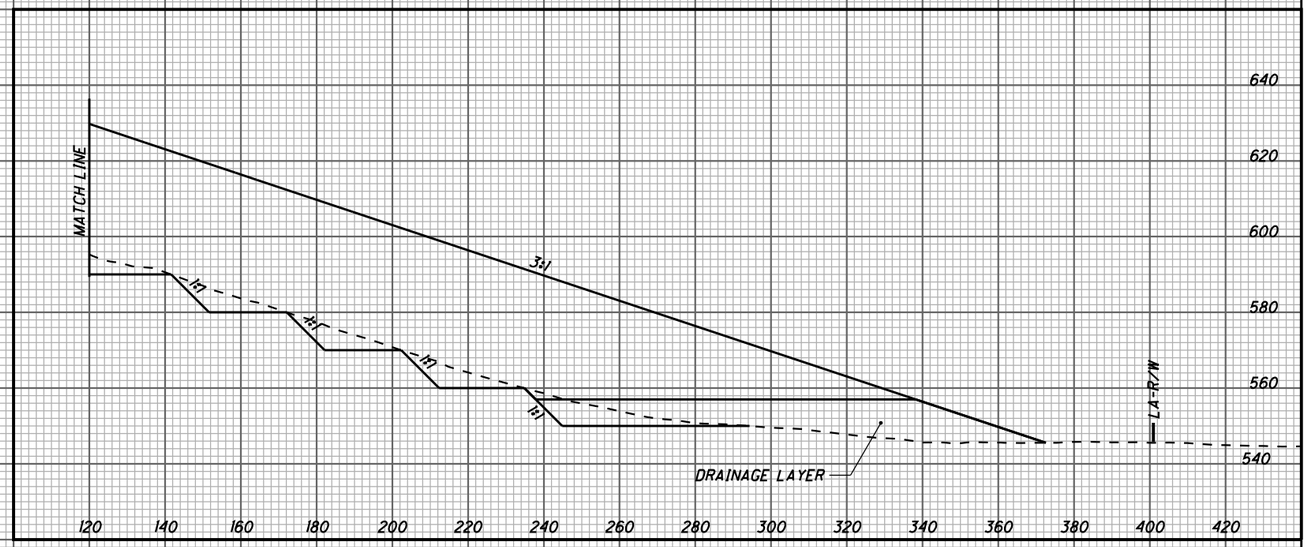

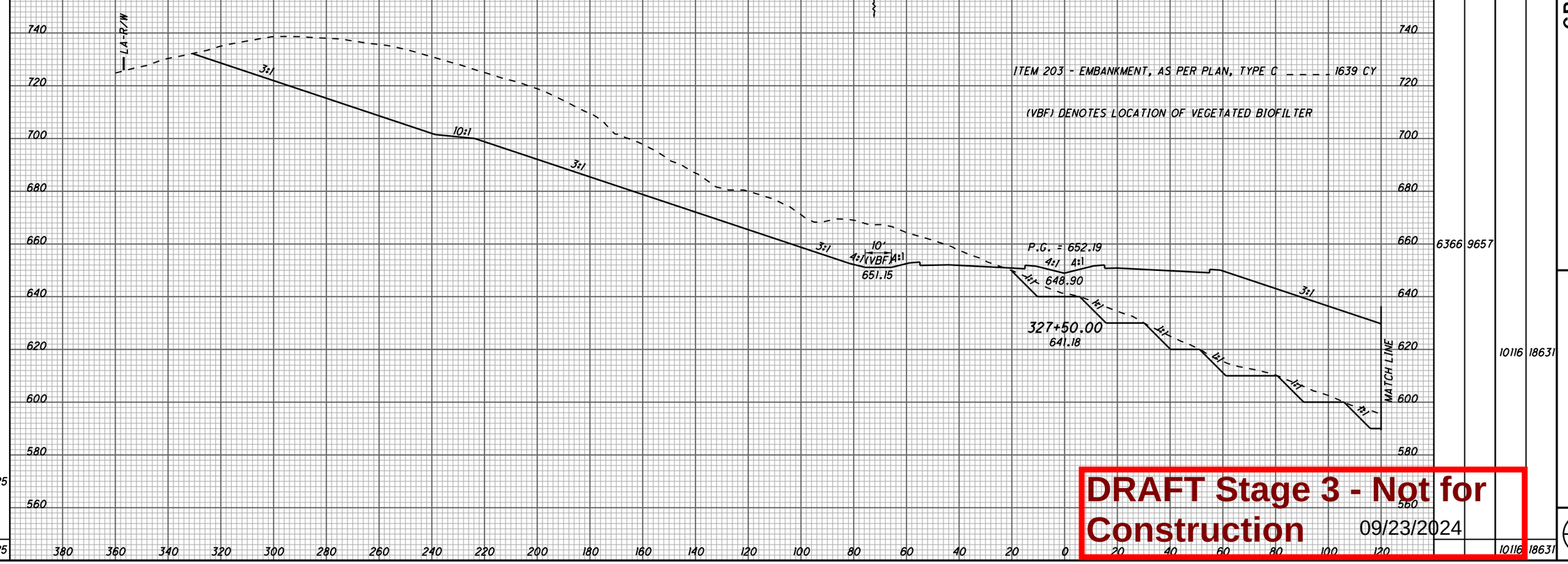

ITEM 203 - EMBANKMENT, AS PER PLAN, TYPE C _ _ _ _ 1639 CY

(VBF) DENOTES LOCATION OF VEGETATED BIOFILTER

DRAFT Stage 3 - Not for Construction 09/23/2024

CROSS SECTIONS S.R. 7
STA. 327+50.00

LAW-7-2.17

319
1247

U:\173608714\LAW\75923\roadway\sheets\75923XS1157-2B.dgn 5/21/2024 4:53:53 PM SLParker

SEEDING	
END WIDTH	SQ. YDS.
703	3804
	3804

END AREA	
CUT	FILL
7385	9784
12733	18002
12733	18002

VOLUME	
CUT	FILL

CALCULATED SLP

CHECKED ALB

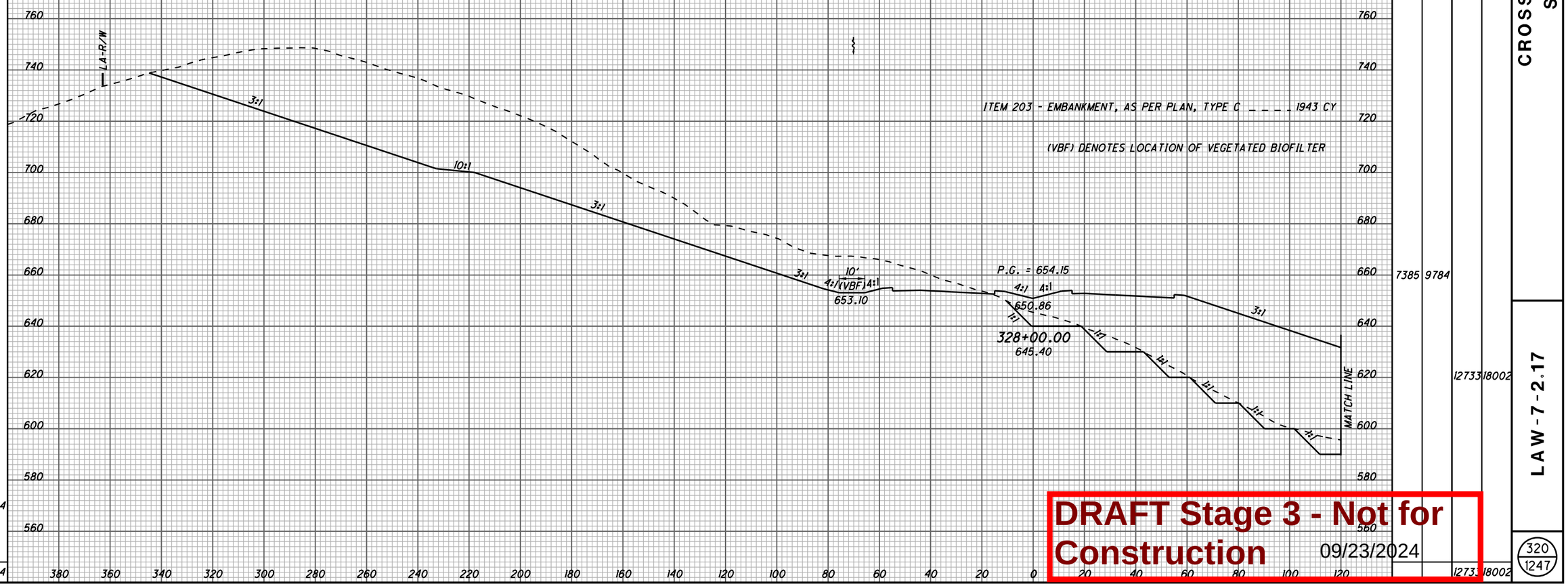

CROSS SECTIONS S.R. 7
STA. 328+00.00

LAW-7-2.17

320
1247

DRAFT Stage 3 - Not for Construction 09/23/2024

U:\173608714\LAW\75923\roadway\sheets\75923XS1158-2B.dgn 5/21/2024 4:53:53 PM SLParker

SEEDING	
END WIDTH	SQ. YDS.
707	3917
	3917

END AREA	
CUT	FILL
6244	12164
	12620

VOLUME	
CUT	FILL
	20323
	20323

CALCULATED SLP
CHECKED ALB

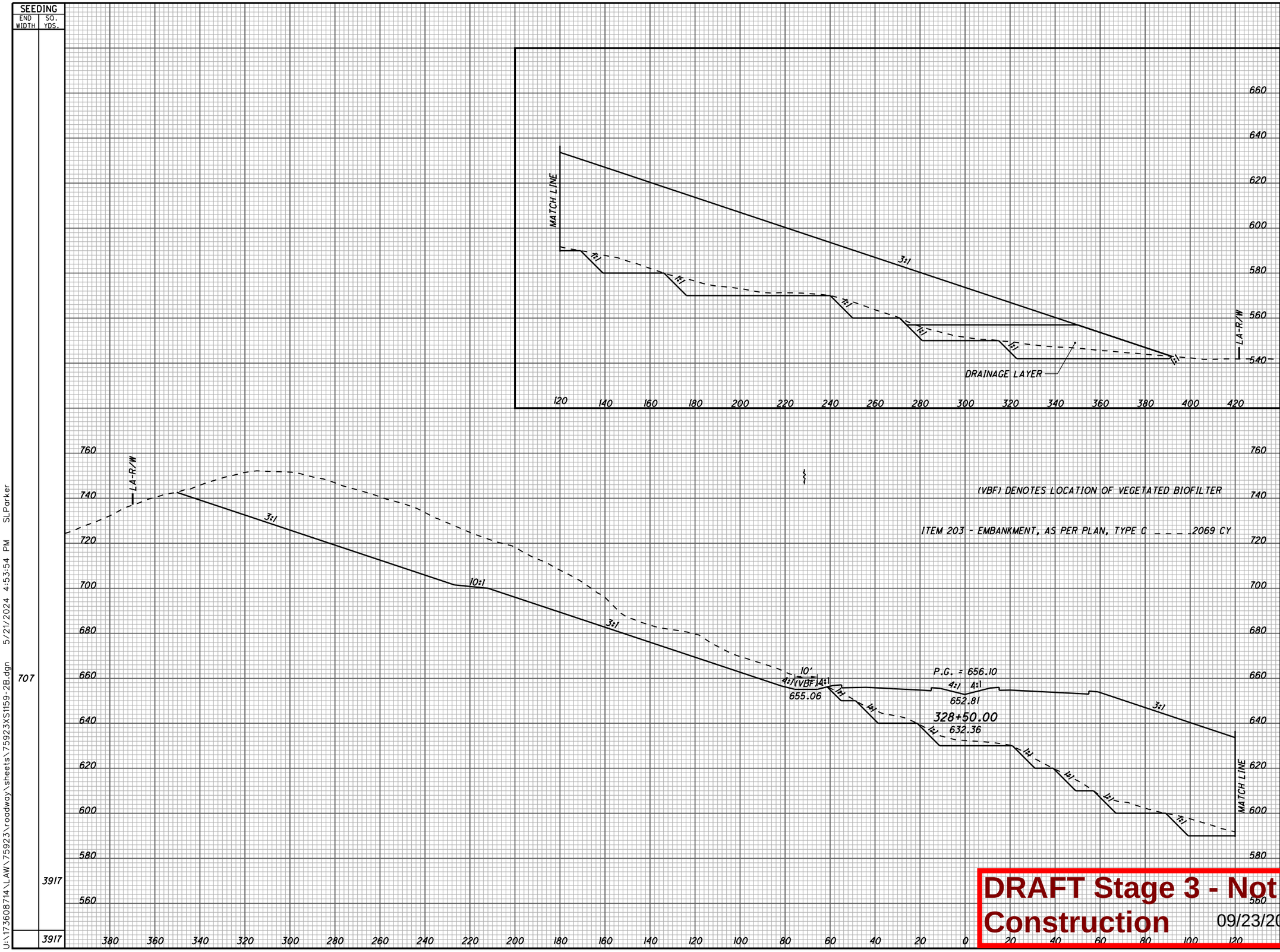

DRAFT Stage 3 - Not for Construction 09/23/2024

CROSS SECTIONS S.R. 7
STA. 328+50.00

LAW-7-2.17

321
1247

U:\173608714\LAW\75923\roadway\sheets\75923XS1159-2B.dgn 5/21/2024 4:53:54 PM SLPorker

SEEDING	
END WIDTH	SQ. YDS.
709	3934
	3934

END AREA		VOLUME	
CUT	FILL	CUT	FILL
		6204	14099
		11527	24318
		11527	24318

CALCULATED SLP
CHECKED ALB

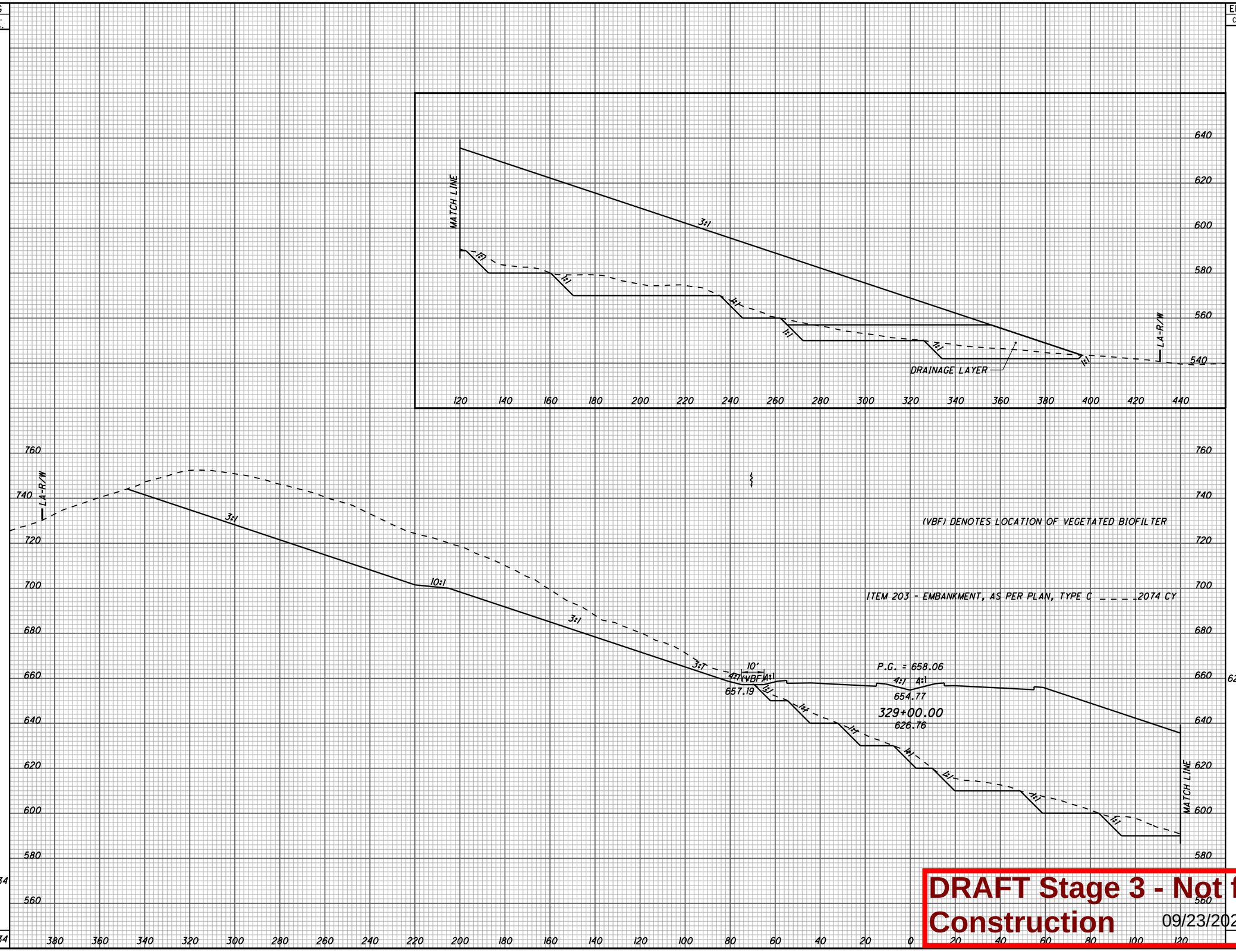

CROSS SECTIONS S.R. 7
STA. 329+00.00

LAW-7-2.17

322
1247

DRAFT Stage 3 - Not for Construction 09/23/2024

U:\173608714\LAW\75923\roadway\sheets\75923XS1160-2B.dgn 5/21/2024 4:53:55 PM SLParker

SEEDING	
END WIDTH	SQ. YDS.
711	3946
	3946

END AREA	
CUT	FILL
4960	15047

VOLUME	
CUT	FILL
10336	26987
10336	26987

CALCULATED SLP

CHECKED ALB

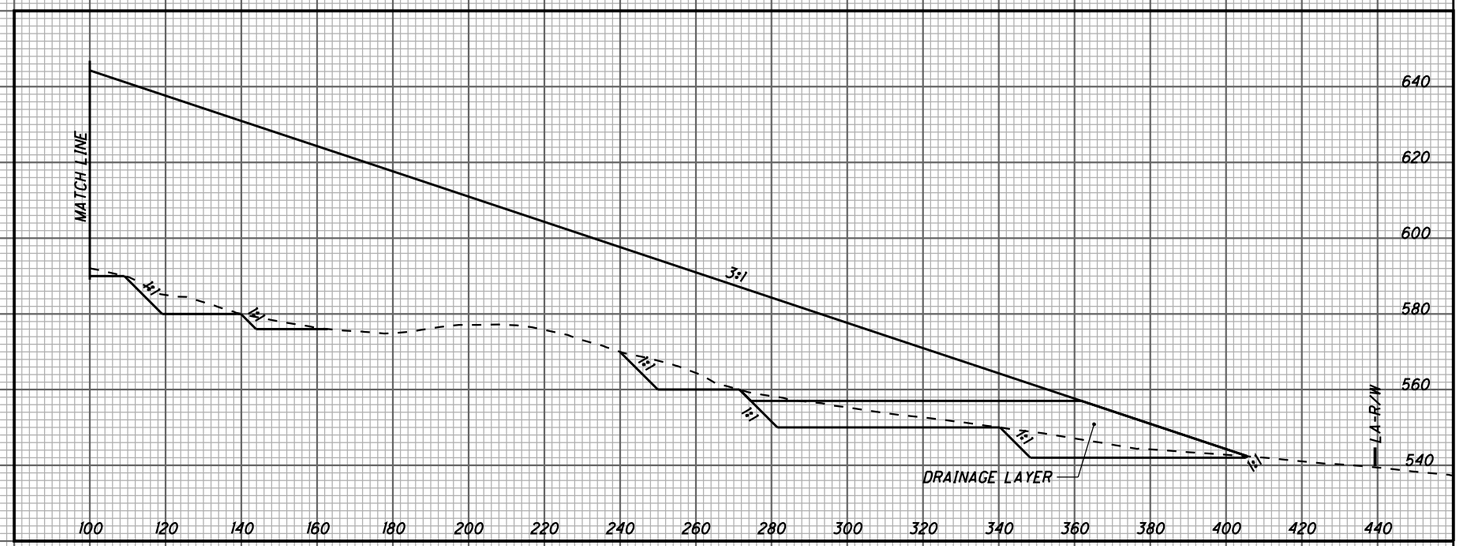

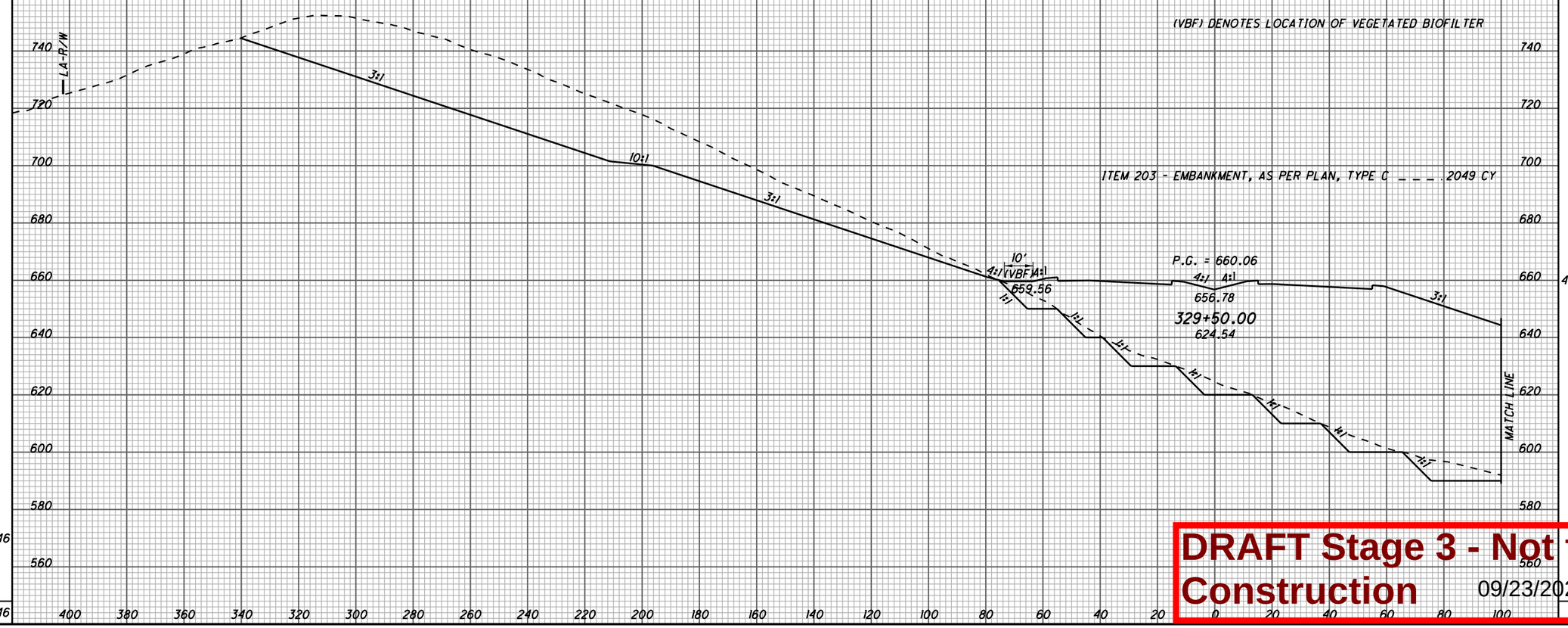

DRAFT Stage 3 - Not for Construction 09/23/2024

CROSS SECTIONS S.R. 7
STA. 329+50.00

LAW-7-2.17

323
1247

U:\173608714\LAW\75923\roadway\sheets\75923XS1161-2B.dgn 5/21/2024 4:53:56 PM SLParker

SEEDING	
END WIDTH	SQ. YDS.
	4000
	4000

END AREA		VOLUME	
CUT	FILL	CUT	FILL
5820	14835		
		998327669	
		998327669	

CALCULATED SLP
CHECKED ALB

MATCH LINE
3:1
1H:1V
DRAINAGE LAYER
LA-R/W
640 620 600 580 560 540
80 100 120 140 160 180 200 220 240 260 280 300 320 340 360 380 400 420 440 460

760 740 720 700 680 660 640 620 600 580 560
420 400 380 360 340 320 300 280 260 240 220 200 180 160 140 120 100 80 60 40 20 0 20 40 60 80

(VBF) DENOTES LOCATION OF VEGETATED BIOFILTER
LA-R/W
3:1
10:1
3:1
ITEM 203 - EMBANKMENT, AS PER PLAN, TYPE C _ _ _ _ 1993 CY
10'
4:1 (VBF) 4:1
661.07
P.G. = 662.12
4:1 4:1
658.83
330+00.00
633.76
1H:1V
3:1
MATCH LINE

DRAFT Stage 3 - Not for Construction 09/23/2024

CROSS SECTIONS S.R. 7
STA. 330+00.00

LAW-7-2.17

324
1247

U:\173608714\LAW\75923\roadway\sheets\75923XS1162-2B.dgn 5/21/2024 4:53:57 PM SLParker

SEEDING	
END WIDTH	SQ. YDS.
745	4095
	4095

END AREA	
CUT	FILL
7571	12734

VOLUME	
CUT	FILL
12399	25527
12399	25527

CALCULATED SLP

CHECKED ALB

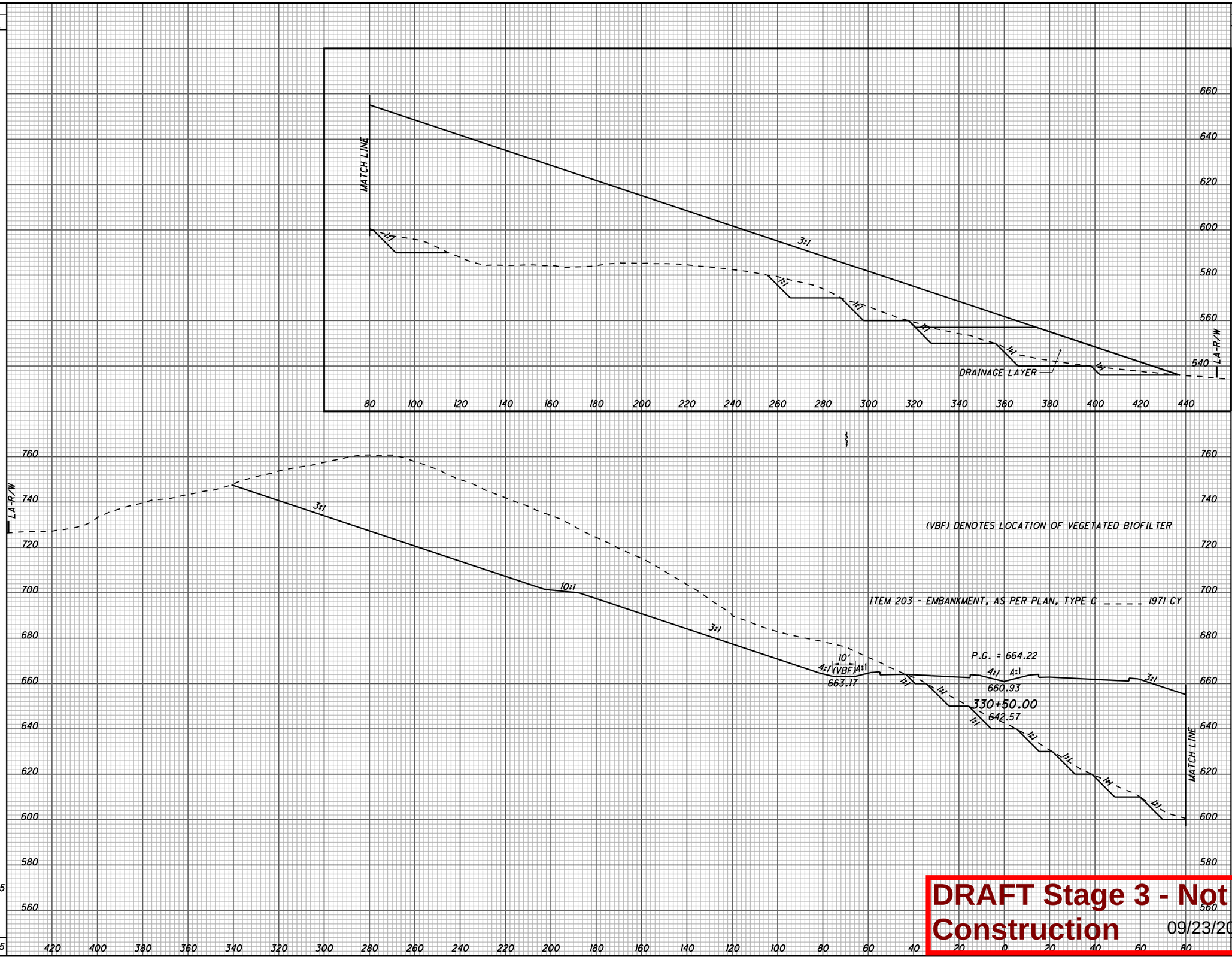

CROSS SECTIONS S.R. 7
STA. 330+50.00

LAW-7-2.17

DRAFT Stage 3 - Not for Construction 09/23/2024

U:\173608714\LAW\75923\roadway\sheets\75923XS1163-2B.dgn 5/21/2024 4:54:05 PM SLParker

SEEDING	
END WIDTH	SQ. YDS.
752	4159
	4159

END AREA	
CUT	FILL
8338	12637
1473	23492

VOLUME	
CUT	FILL
1473	23492

CALCULATED SLP

CHECKED ALB

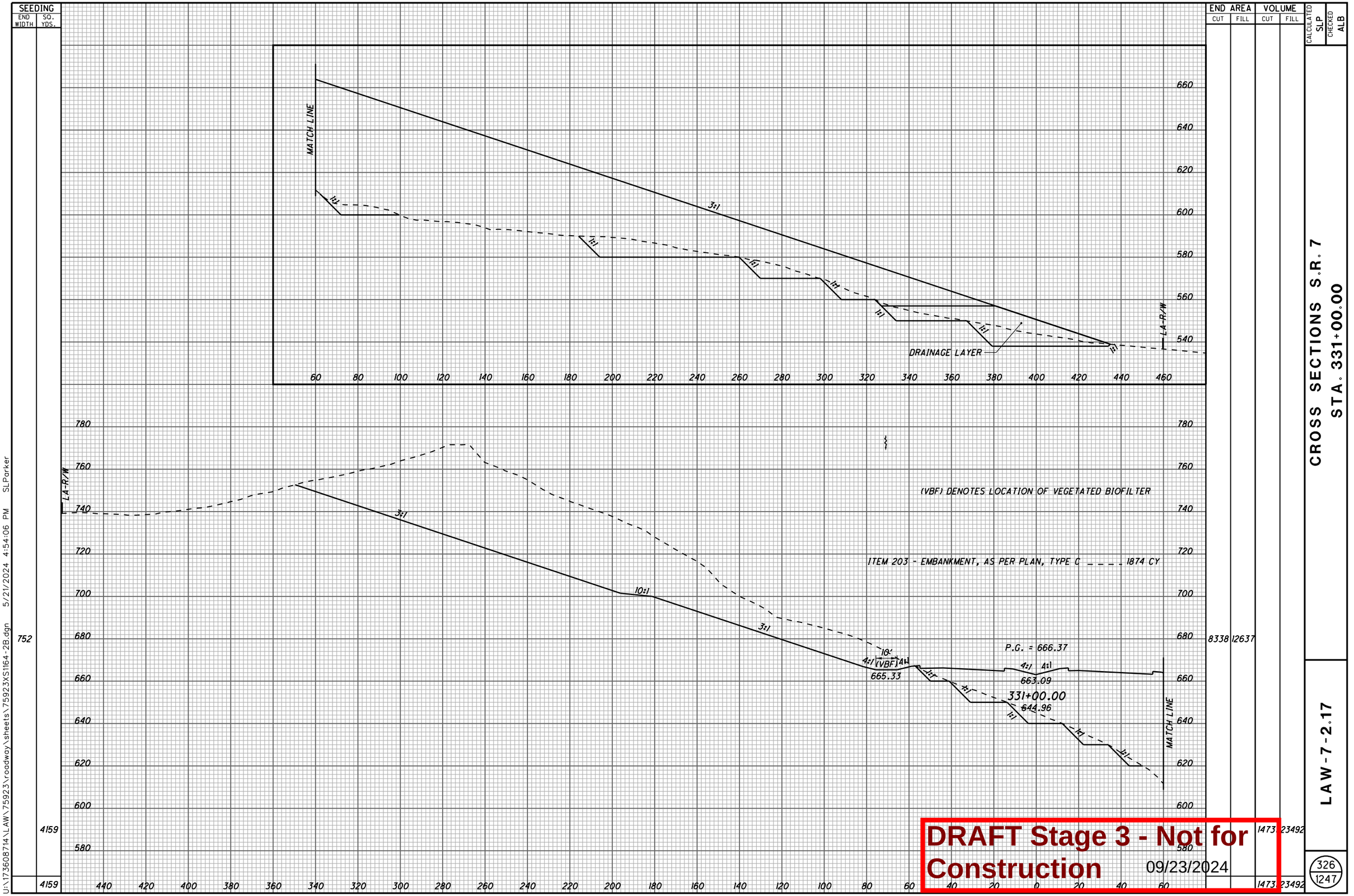

DRAFT Stage 3 - Not for Construction 09/23/2024

CROSS SECTIONS S.R. 7
STA. 331+00.00

LAW-7-2.17

U:\173608714\LAW\75923\roadway\sheets\75923XS1164-2B.dgn 5/21/2024 4:54:06 PM SLParker

SEEDING	
END WIDTH	SQ. YDS.
790	
	4282
	4282

END AREA	
CUT	FILL
8514	14132
	15604 24787

VOLUME	
CUT	FILL
	15604 24787

CALCULATED SLP

CHECKED ALB

MATCH LINE

DRAINAGE LAYER

LA-R/W

(VBF) DENOTES LOCATION OF VEGETATED BIOFILTER

ITEM 203 - EMBANKMENT, AS PER PLAN, TYPE C _ _ _ _ 1941 CY

P.G. = 668.58

667.39

665.29

331+50.00

643.26

MATCH LINE

DRAFT Stage 3 - Not for Construction 09/23/2024

CROSS SECTIONS S.R. 7
STA. 331+50.00

LAW-7-2.17

327
1247

U:\173608714\LAW\75923\roadway\sheets\75923XS1165-2B.dgn 5/21/2024 4:54:07 PM SLParker

SEEDING	
END WIDTH	SQ. YDS.
849	
	4552
	4552

END AREA		VOLUME	
CUT	FILL	CUT	FILL
		9192	12809
		16395	24946
		16395	24946

CALCULATED SLP
CHECKED ALB

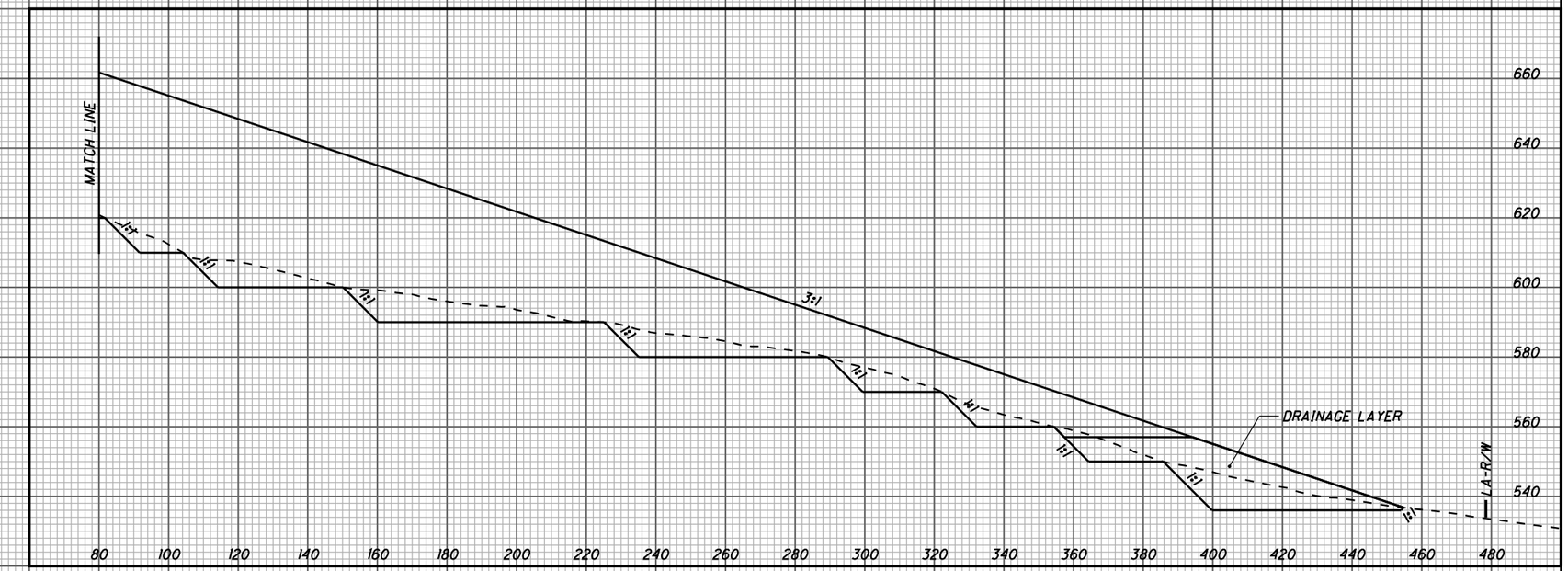

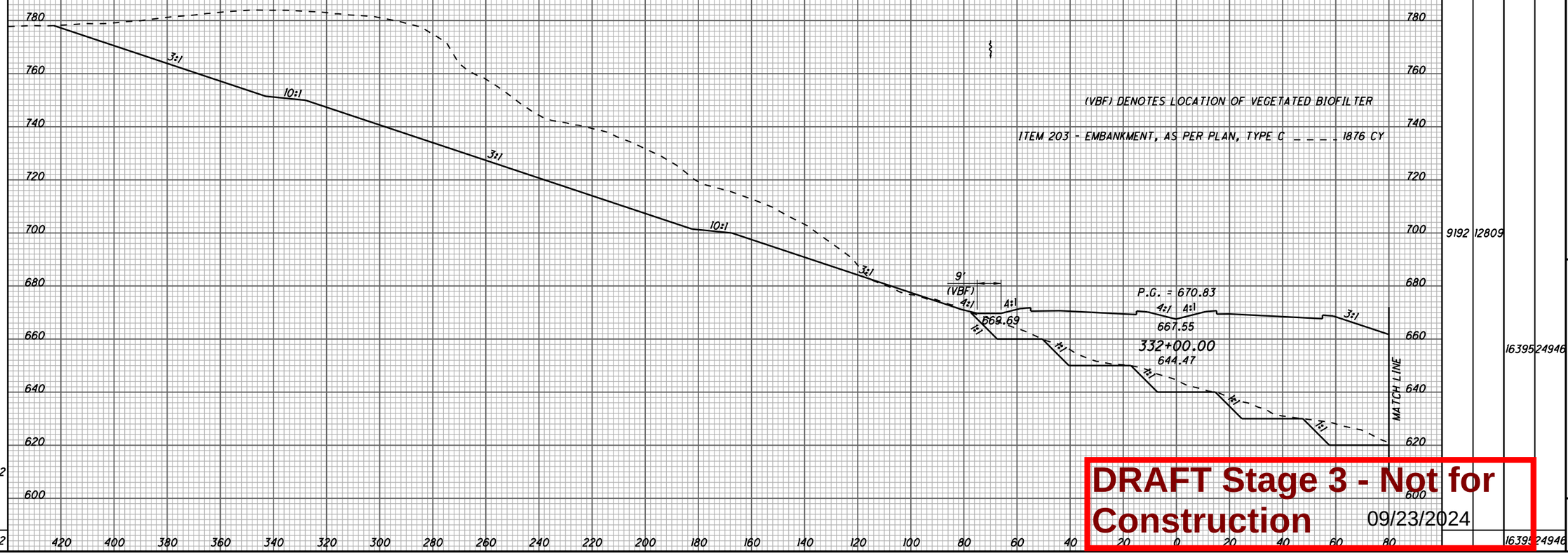

DRAFT Stage 3 - Not for Construction 09/23/2024

CROSS SECTIONS S.R. 7
STA. 332+00.00

LAW-7-2.17

328
1247

U:\173608714\LAW\75923\roadway\sheets\75923XS1166-2B.dgn 5/21/2024 4:54:08 PM SLParker

SEEDING	
END WIDTH	SQ. YDS.
907	4877
	4877

END AREA		VOLUME	
CUT	FILL	CUT	FILL
11422	7935		
		19088	19208
		19088	19208

CALCULATED SLP
CHECKED ALB

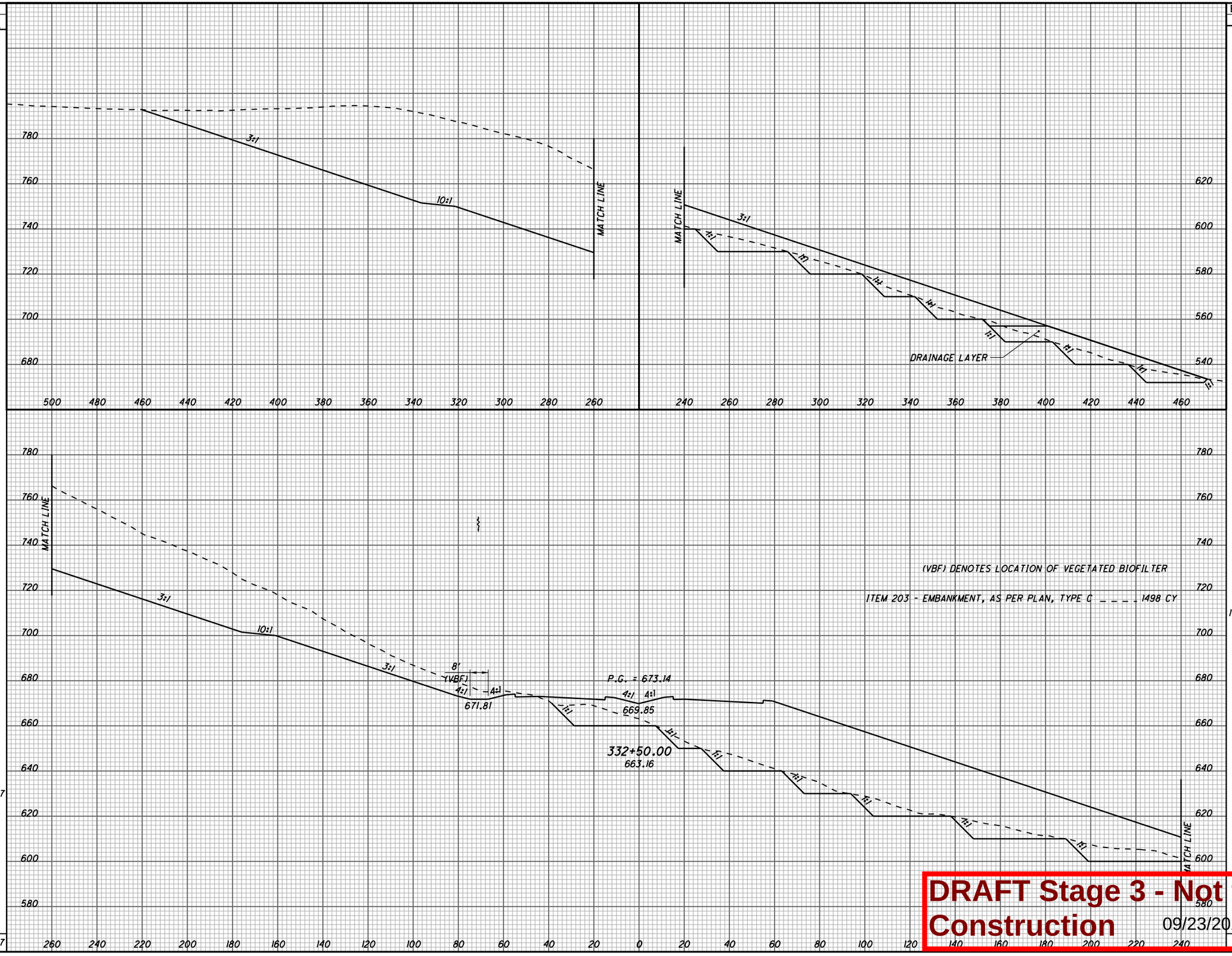

(VBF) DENOTES LOCATION OF VEGETATED BIOFILTER

ITEM 203 - EMBANKMENT, AS PER PLAN, TYPE C _ _ _ _ 1498 CY

CROSS SECTIONS S.R. 7
STA. 332+50.00

LAW-7-2.17

329
1247

DRAFT Stage 3 - Not for Construction 09/23/2024

U:\173608714\LAW\75923\roadway\sheets\75923XS1167-2B.dgn 5/21/2024 4:54:09 PM SLParker

SEEDING	
END WIDTH	SQ. YDS.
601	4189
	4189

END AREA		VOLUME	
CUT	FILL	CUT	FILL
13875	502	2342	7813
		2342	7813

CALCULATED SLP
CHECKED ALB

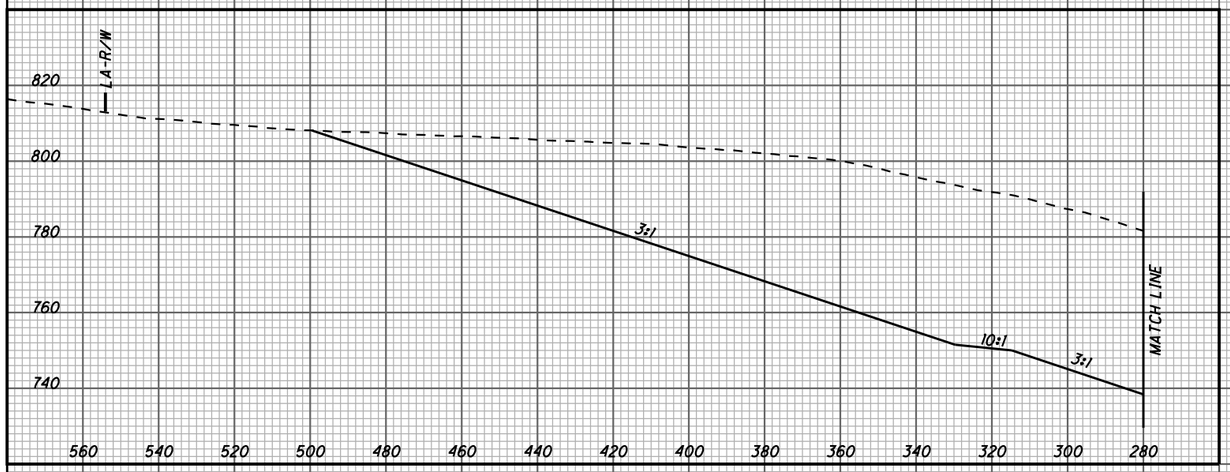

(VBF) DENOTES LOCATION OF VEGETATED BIOFILTER

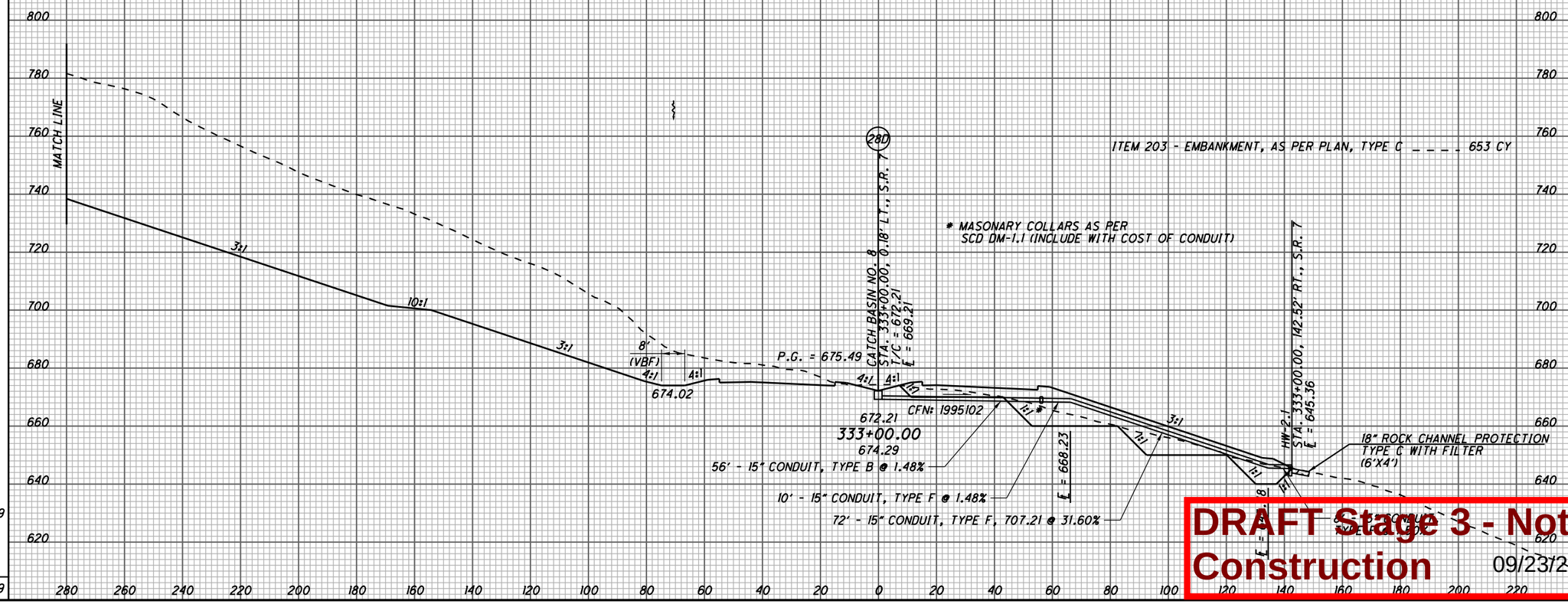

DRAFT Stage 3 - Not for Construction 09/23/2024

CROSS SECTIONS S.R. 7
STA. 333+00.00

LAW-7-2.17

330
1247

U:\1736087\4\LAW\75923\roadway\sheets\75923XS1168-2B.dgn 5/21/2024 4:54:09 PM SLParker

SEEDING	
END WIDTH	SQ. YDS.
332	2658
	3407
	6065

END AREA	
CUT	FILL
7768	0
16558	27
28180	491
5070	517

VOLUME	
CUT	FILL
22525	26

CALCULATED SLP

CHECKED ALB

CROSS SECTIONS S.R. 7
STA. 333+50.00 TO STA. 334+00.00

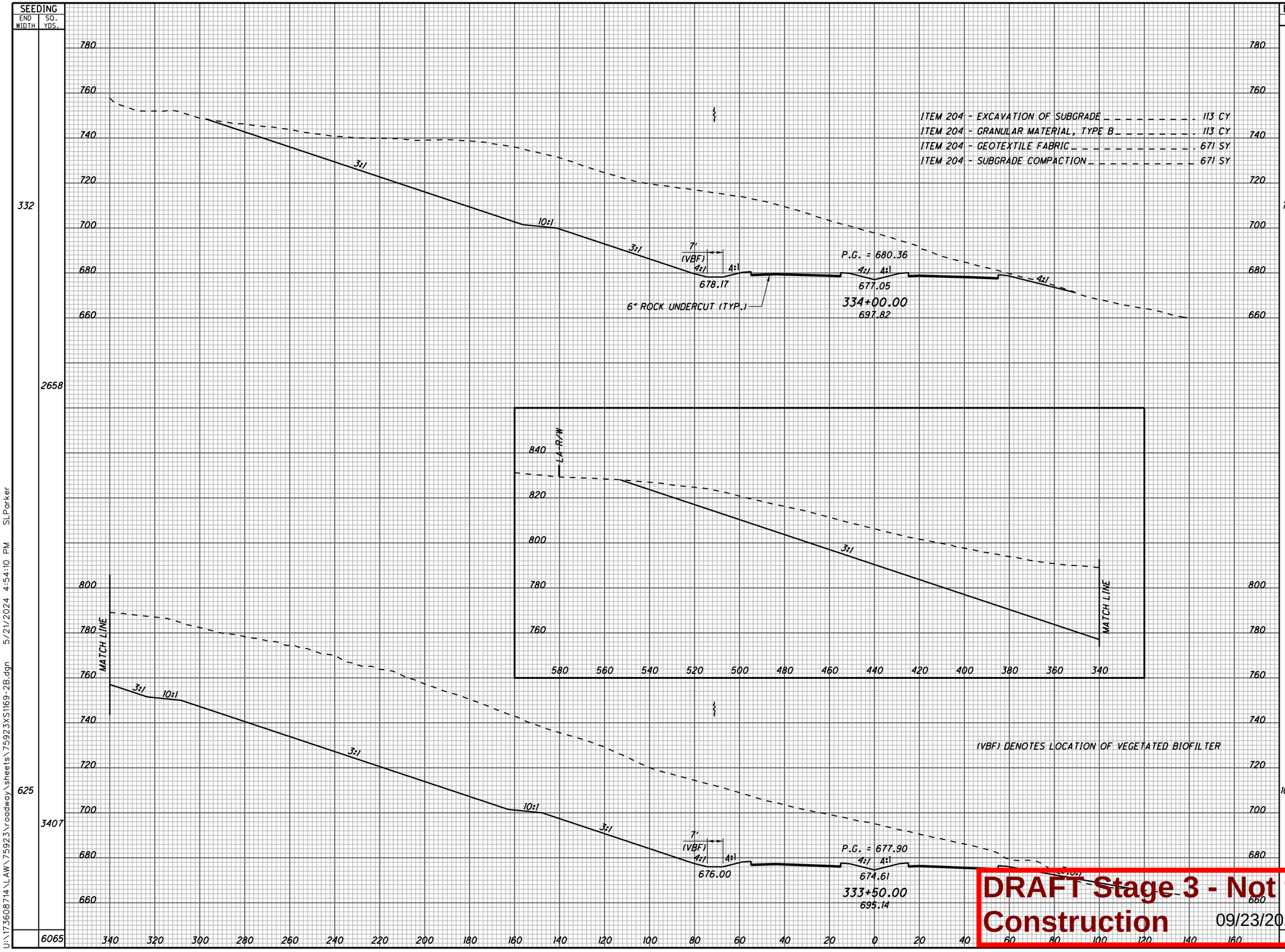

DRAFT Stage 3 - Not for Construction 09/23/2024

LAW-7-2.17

331
1247

U:\173608714\LAW\75923\roadway\sheets\75923XS1169-2B.dgn 5/21/2024 4:54:10 PM SLParker

SEEDING	
END WIDTH	SQ. YDS.
692	3825
685	2825
	6650

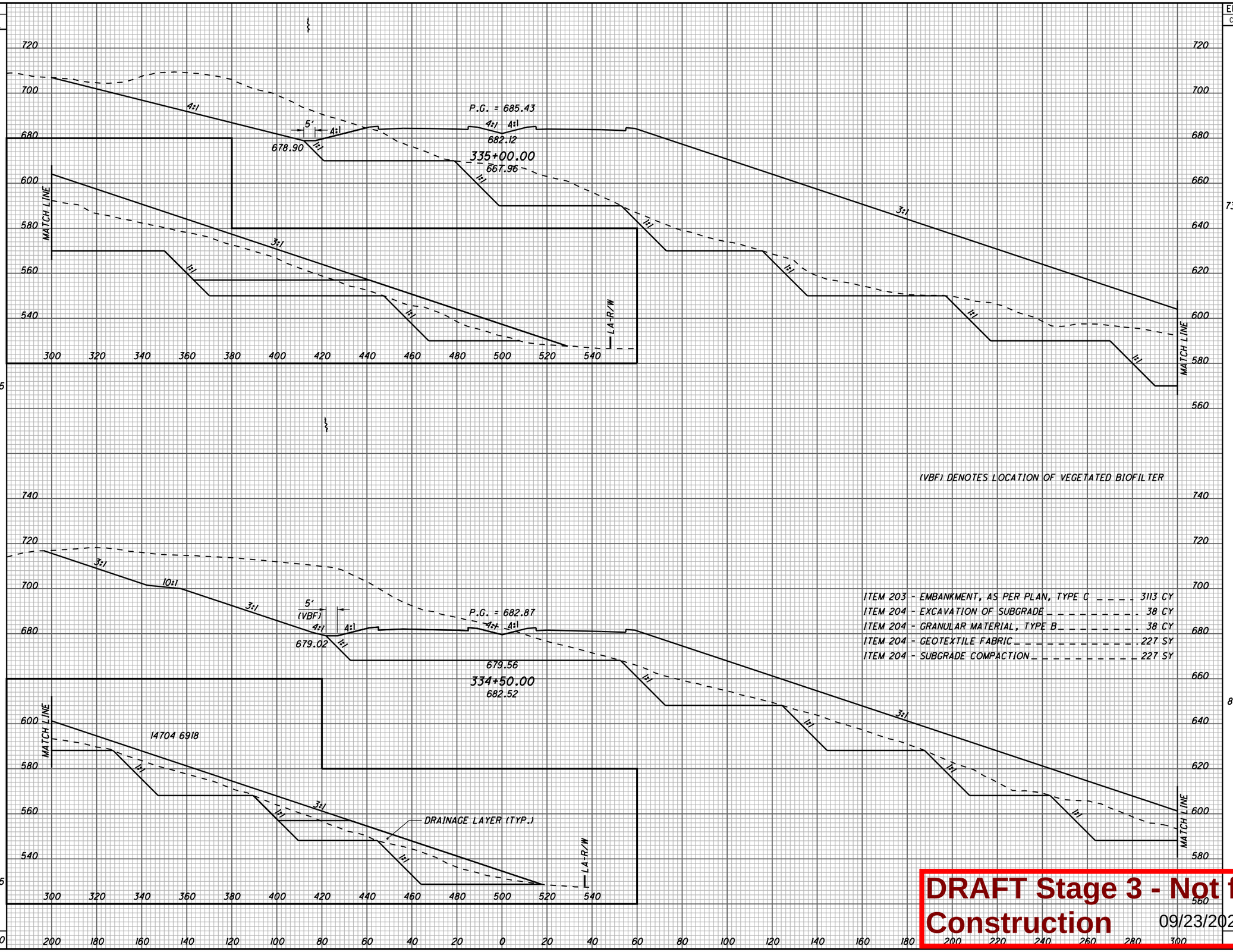

ITEM	
ITEM 203 - EMBANKMENT, AS PER PLAN, TYPE C	3113 CY
ITEM 204 - EXCAVATION OF SUBGRADE	38 CY
ITEM 204 - GRANULAR MATERIAL, TYPE B	38 CY
ITEM 204 - GEOTEXTILE FABRIC	227 SY
ITEM 204 - SUBGRADE COMPACTION	227 SY

END AREA	
CUT	FILL
7362	15015
8112	7471
14704	6918
2903	27739

VOLUME	
CUT	FILL
14328	20821
14704	6918

CALCULATED SLP
CHECKED ALB

CROSS SECTIONS S.R. 7
STA. 334+50.00 TO STA. 335+00.00

LAW-7-2.17

DRAFT Stage 3 - Not for Construction 09/23/2024

332
1247

U:\173608714\LAW\75923\roadway\sheets\75923XS1170-2B.dgn 5/21/2024 4:54:11 PM SLParker

SEEDING	
END WIDTH	SQ. YDS.
645	3468
603	3598
	7066

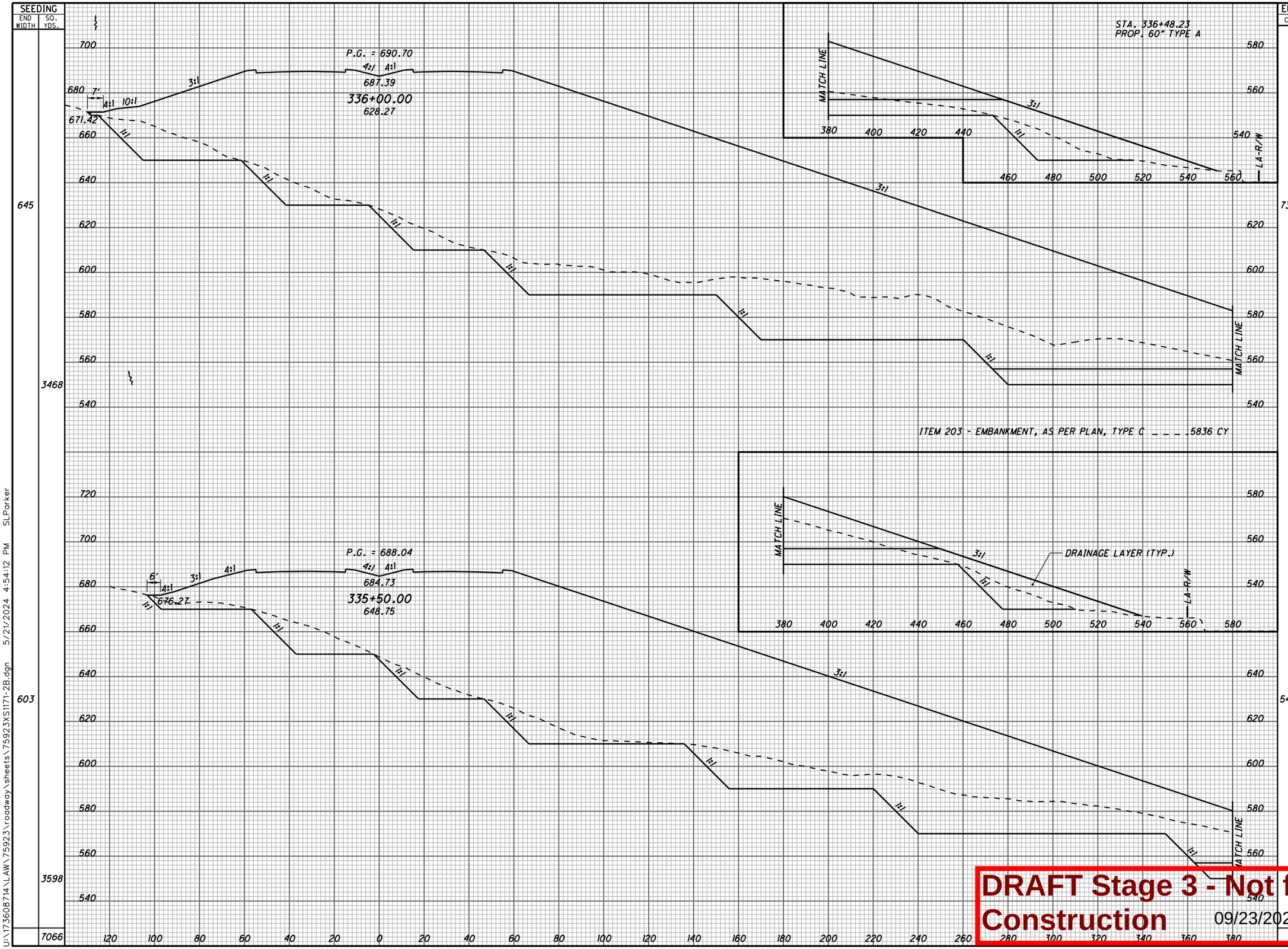

END AREA		VOLUME	
CUT	FILL	CUT	FILL
7326	31494		
		11832	49561
5452	22031		
		11865	34303
		23697	83864

CALCULATED SLP
CHECKED ALB

CROSS SECTIONS S.R. 7
STA. 335+50.00 TO STA. 336+00.00

LAW-7-2.17

333
1247

DRAFT Stage 3 - Not for Construction 09/23/2024

U:\173608714\LAW\75923\roadway\sheets\75923XS1171-2B.dgn 5/21/2024 4:54:12 PM SLParker

SEEDING	
END WIDTH	SQ. YDS.
691	3713
	3713

END AREA	
CUT	FILL

VOLUME	
CUT	FILL
6143	38080
12472	64421
12472	64421

CALCULATED SLP
CHECKED ALB

MATCH LINE
3:1
1:1
10:1
LA-R/W
600
580
560
540
520
340 360 380 400 420 440 460 480 500 520 540 560 580

720 700 680 660 640 620 600 580 560 540
160 140 120 100 80 60 40 20 0 20 40 60 80 100 120 140 160 180 200 220 240 260 280 300 320 340

P.G. = 693.41
4:1 4:1
690.10
336+50.00
611.88
7'
4:1 10:1
665.85
1:1
ITEM 203 - EMBANKMENT, AS PER PLAN, TYPE C _ _ _ _ 6581 CY
MATCH LINE
DRAINAGE LAYER (TYP.)

DRAFT Stage 3 - Not for Construction 09/23/2024

CROSS SECTIONS S.R. 7
STA. 336+50.00

LAW-7-2.17

334
1247

U:\173608714\LAW\75923\roadway\sheets\75923XS1172-2B.dgn 5/21/2024 4:54:13 PM SLParker

SEEDING	
END WIDTH	SQ. YDS.
726	3936
	3936

END AREA		VOLUME	
CUT	FILL	CUT	FILL
		5972	44245
		11218	76227
		11218	76227

CALCULATED SLP
CHECKED ALB

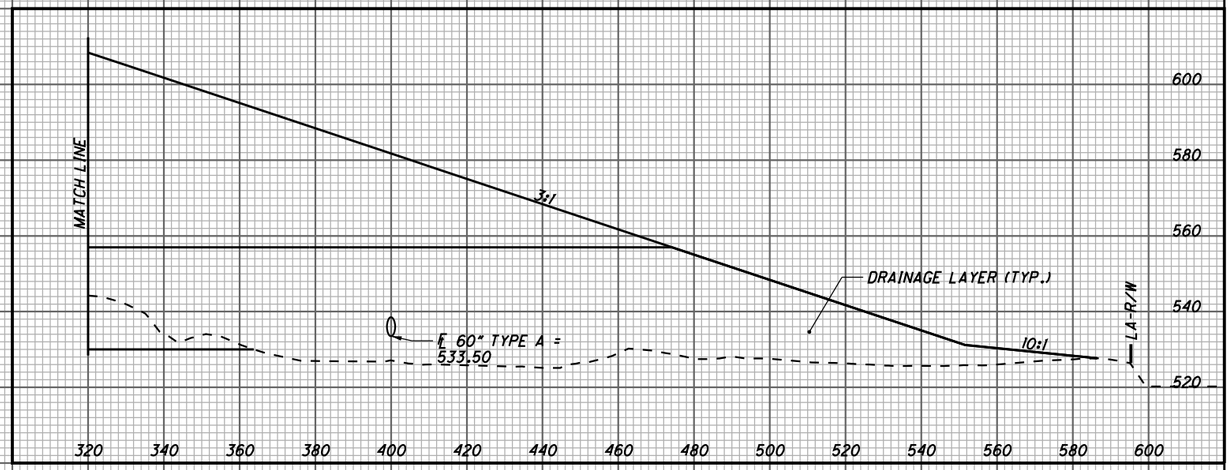

ITEM 203 - EMBANKMENT, AS PER PLAN, TYPE C _ _ _ _ 11724 CY

DRAFT Stage 3 - Not for Construction 09/23/2024

CROSS SECTIONS S.R. 7
STA. 337+00.00

LAW-7-2.17

335
1247

U:\173608714\LAW\75923\roadway\sheets\75923XS1173-2B.dgn 5/21/2024 4:54:14 PM SLParker

SEEDING	
END WIDTH	SQ. YDS.
786	4199
	4199

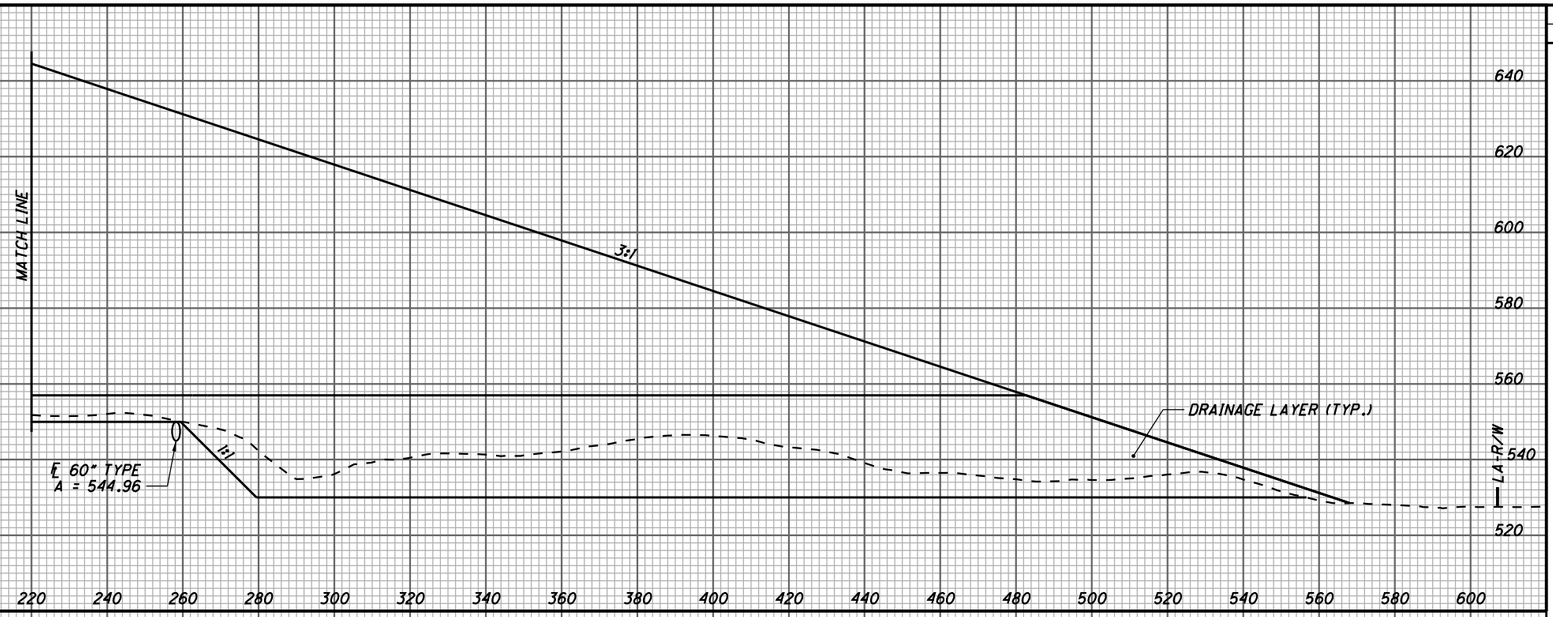

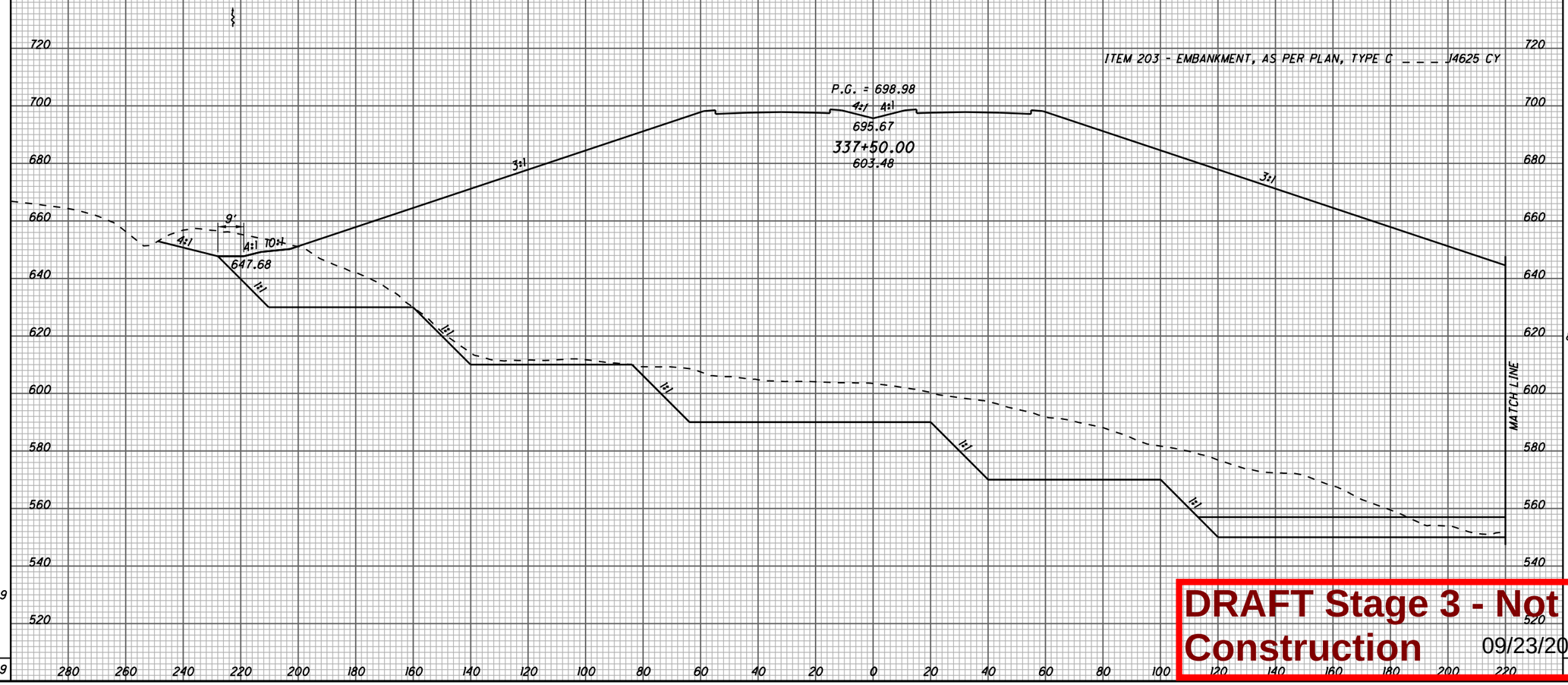

END AREA		VOLUME	
CUT	FILL	CUT	FILL

CALCULATED SLP
CHECKED ALB

CROSS SECTIONS S.R. 7
STA. 337+50.00

LAW-7-2.17

336
1247

DRAFT Stage 3 - Not for Construction 09/23/2024

U:\173608714\LAW\75923\roadway\sheets\75923XS1174-2B.dgn 5/21/2024 4:54:15 PM SLParker

SEEDING	
END WIDTH	SQ. YDS.
796	4395
	4395

END AREA		VOLUME	
CUT	FILL	CUT	FILL

CALCULATED SLP
CHECKED ALB

MATCH LINE

3:1

DRAINAGE LAYER (TYP.)

LT-R/W

ITEM 203 - EMBANKMENT, AS PER PLAN, TYPE C . . . . 9579 CY

P.G. = 701.84
4:1 4:1
698.54
338+00.00
592.75

10:1 4:1 10' 4:1 10:1
632.68
1:1 1:1 1:1 1:1

℄ 60" TYPE A =
556.41

MATCH LINE

720 700 680 660 640 620 600 580 560 540 520

160 180 200 220 240 260 280 300 320 340 360 380 400 420 440 460 480 500 520 540 560 580 600

340 320 300 280 260 240 220 200 180 160 140 120 100 80 60 40 20 0 20 40 60 80 100 120 140 160

7148 103260

7148 103260

DRAFT Stage 3 - Not for Construction 09/23/2024

CROSS SECTIONS S.R. 7
STA. 338+00.00

LAW-7-2.17

337
1247

U:\173608714\LAW\75923\roadway\sheets\75923XS1175-2B.dgn 5/21/2024 4:54:15 PM SLParker

SEEDING	
END WIDTH	SQ. YDS.
808	4457
	4457

END AREA		VOLUME	
CUT	FILL	CUT	FILL
		0	59578
		63757	110875
		6375	110875

CALCULATED SLP
CHECKED ALB

MATCH LINE

3:1

DRAINAGE LAYER

LA-R/W

100 120 140 160 180 200 220 240 260 280 300 320 340 360 380 400 420 440 460 480 500 520 540

ITEM 203 - EMBANKMENT, AS PER PLAN, TYPE C _ _ _ _ 2287 CY

P.G. = 704.76

4:1 4:1

701.45

338+50.00

578.60

3:1

MATCH LINE

10:1 4:1 10' 4:1 10:1

617.68

℄ 60" TYPE A = 567.87

720 700 680 660 640 620 600 580 560 540

400 380 360 340 320 300 280 260 240 220 200 180 160 140 120 100 80 60 40 20 0 20 40 60 80 100

DRAFT Stage 3 - Not for Construction 09/23/2024

CROSS SECTIONS S.R. 7
STA. 338+50.00

LAW-7-2.17

338
1247

U:\173608714\LAW\75923\roadway\sheets\75923XS1176-2B.dgn 5/21/2024 4:54:16 PM SLParker

SEEDING	
END WIDTH	SQ. YDS.
784	
4425	
4425	

END AREA		VOLUME	
CUT	FILL	CUT	FILL
		0	62924
		0	113428
		0	113428

CALCULATED SLP
CHECKED ALB

MATCH LINE
3:1
LA-R/W
100 120 140 160 180 200 220 240 260 280 300 320 340 360 380 400 420 440 460 480 500 520 540
700 680 660 640 620 600 580 560

ITEM 203 - EMBANKMENT, AS PER PLAN, TYPE C _ _ _ _ 50 CY

P.G. = 707.72
4:1 4:1
704.41
339+00.00
561.53
3:1
3:1
MATCH LINE
10'
4:1 4:1 10:1
610.54
℄ 60" TYPE A = 579.32
400 380 360 340 320 300 280 260 240 220 200 180 160 140 120 100 80 60 40 20 0 20 40 60 80 100
720 700 680 660 640 620 600 580 560

DRAFT Stage 3 - Not for Construction
09/23/2024

CROSS SECTIONS S.R. 7
STA. 339+00.00

LAW-7-2.17

339
1247

U:\1736087\14\LAW\75923\roadway\sheets\75923XS1177-2B.dgn 5/21/2024 4:54:17 PM SLParker

SEEDING	
END WIDTH	SQ. YDS.
799	4399
	4399

END AREA		VOLUME	
CUT	FILL	CUT	FILL
		63	61810
		59	115495
		59	115495

CALCULATED SLP
CHECKED ALB

MATCH LINE
3:1
L/A-R/W
700
680
660
640
620
600
580
80 100 120 140 160 180 200 220 240 260 280 300 320 340 360 380 400 420 440 460 480 500 520

STA. 339+73.20
PROP. 60" TYPE A
740
720
700
680
660
640
620
600
580
560
4:1 10' A:1 10:1
603.06
℄ 60" TYPE A = 590.78
3:1
P.G. = 710.68
4:1 A:1 3:1
707.38
339+50.00
577.09
MATCH LINE
420 400 380 360 340 320 300 280 260 240 220 200 180 160 140 120 100 80 60 40 20 0 20 40 60 80

DRAFT Stage 3 - Not for Construction 09/23/2024

CROSS SECTIONS S.R. 7
STA. 339+50.00

LAW-7-2.17

340
1247

U:\173608714\LAW\75923\roadway\sheets\75923XS1180-2B.dgn 5/21/2024 4:54:18 PM SLParker

SEEDING	
END WIDTH	SQ. YDS.
780	4388
	4388

END AREA	
CUT	FILL
60	55478
115	108600
115	108600

VOLUME	
CUT	FILL

CALCULATED SLP
CHECKED ALB

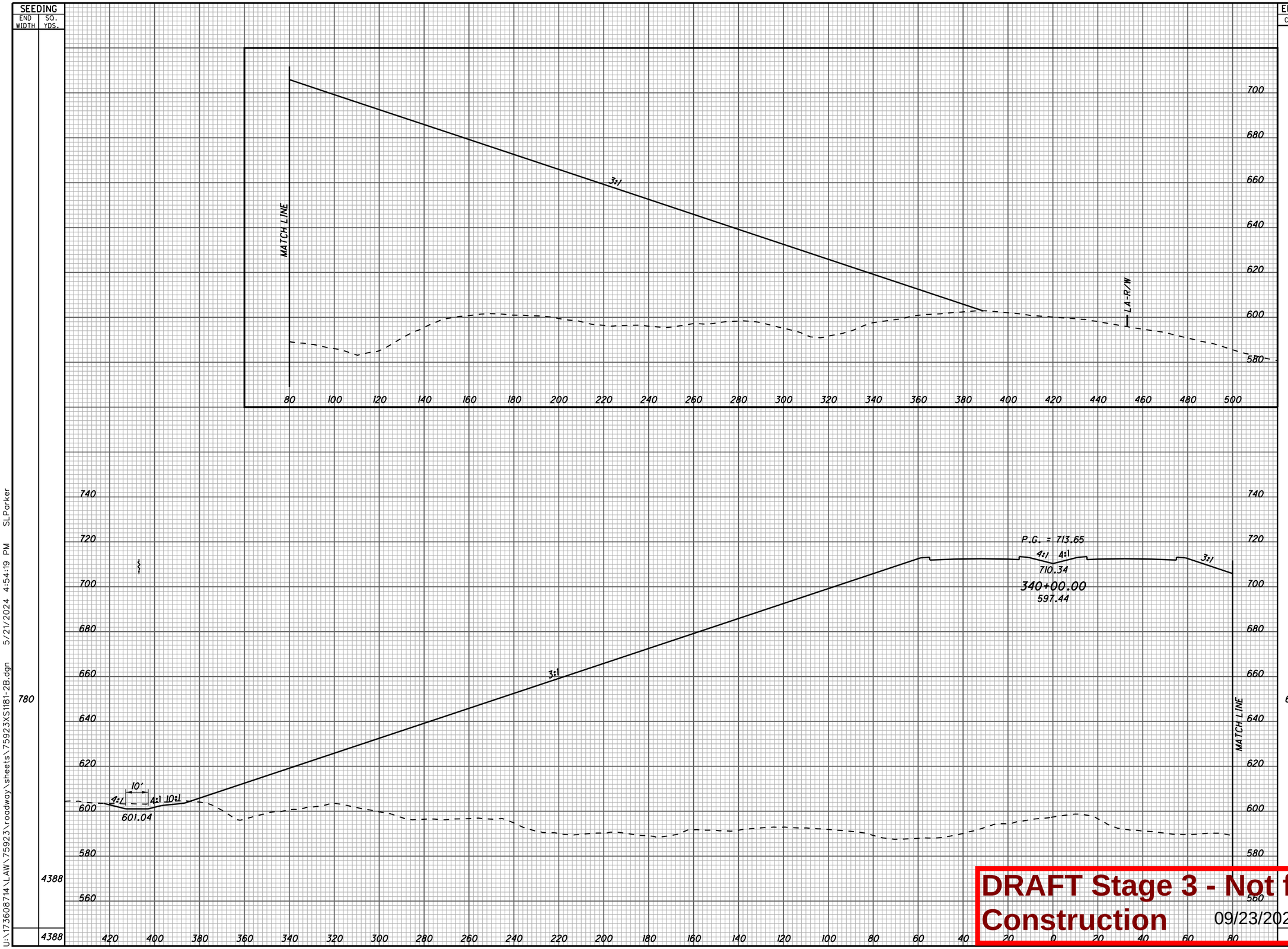

CROSS SECTIONS S.R. 7
STA. 340+00.00

LAW-7-2.17

341
1247

DRAFT Stage 3 - Not for Construction 09/23/2024

U:\173608714\LAW\75923\roadway\sheets\75923XS1181-2B.dgn 5/21/2024 4:54:19 PM SLParker

SEEDING	
END WIDTH	SQ. YDS.
759	4275
	4275

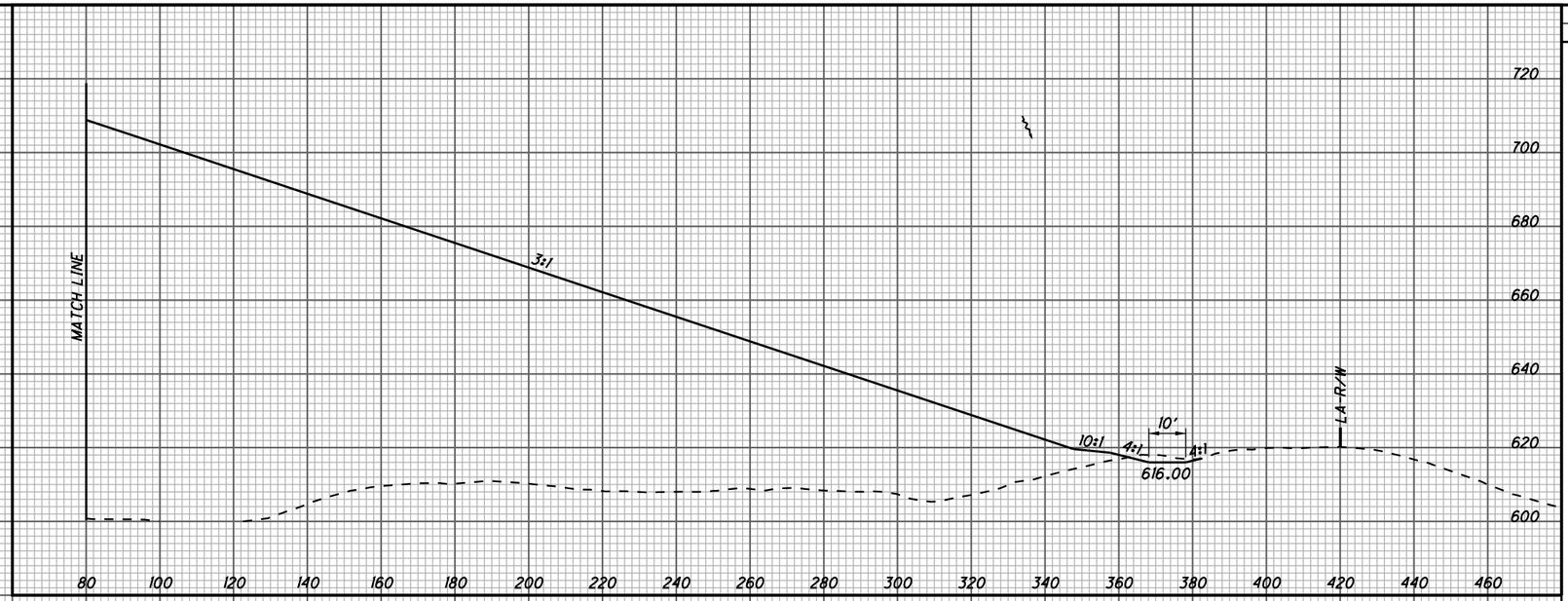

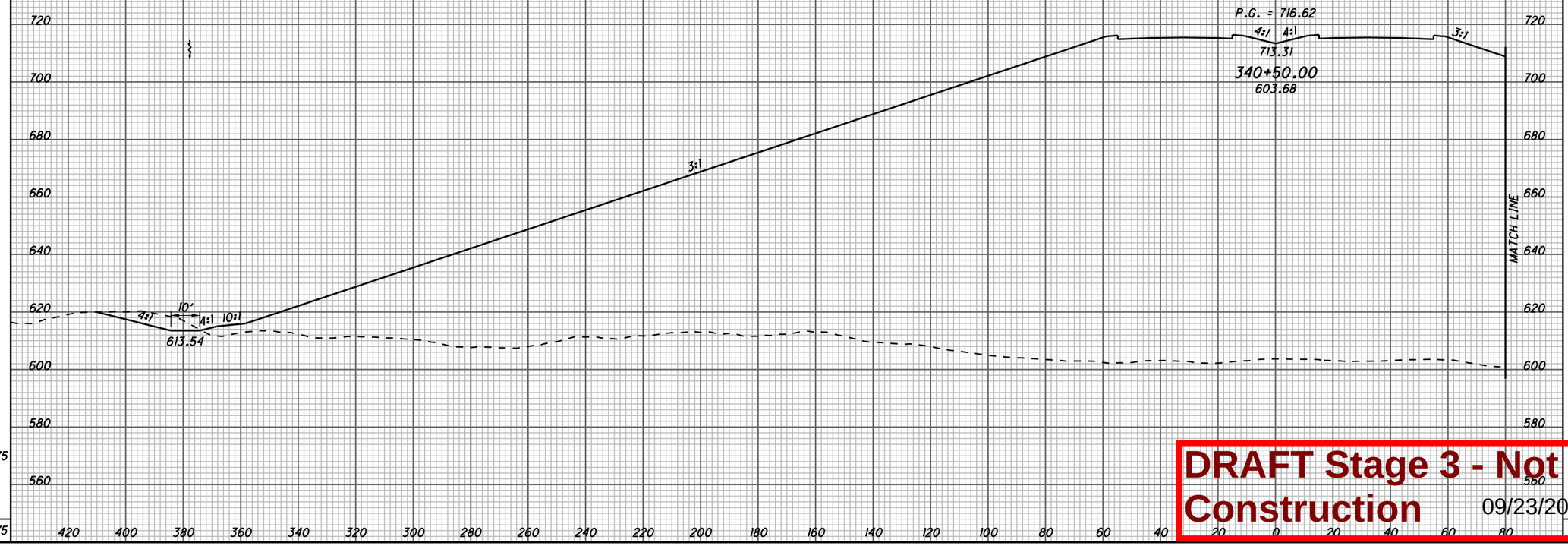

END AREA		VOLUME	
CUT	FILL	CUT	FILL
		132	47836
		178	95662
		178	95662

CALCULATED SLP
CHECKED ALB

CROSS SECTIONS S.R. 7
STA. 340+50.00

LAW-7-2.17

342
1247

DRAFT Stage 3 - Not for Construction 09/23/2024

U:\173608714\LAW\75923\roadway\sheets\75923XS1182-2B.dgn 5/21/2024 4:54:19 PM SLParker

SEEDING	
END WIDTH	SQ. YDS.
466	2932
589	3744
	6676

END AREA	
CUT	FILL
25	19089
9	30836
163	119072

VOLUME	
CUT	FILL
32	46227
131	72845

CALCULATED SLP
CHECKED ALB

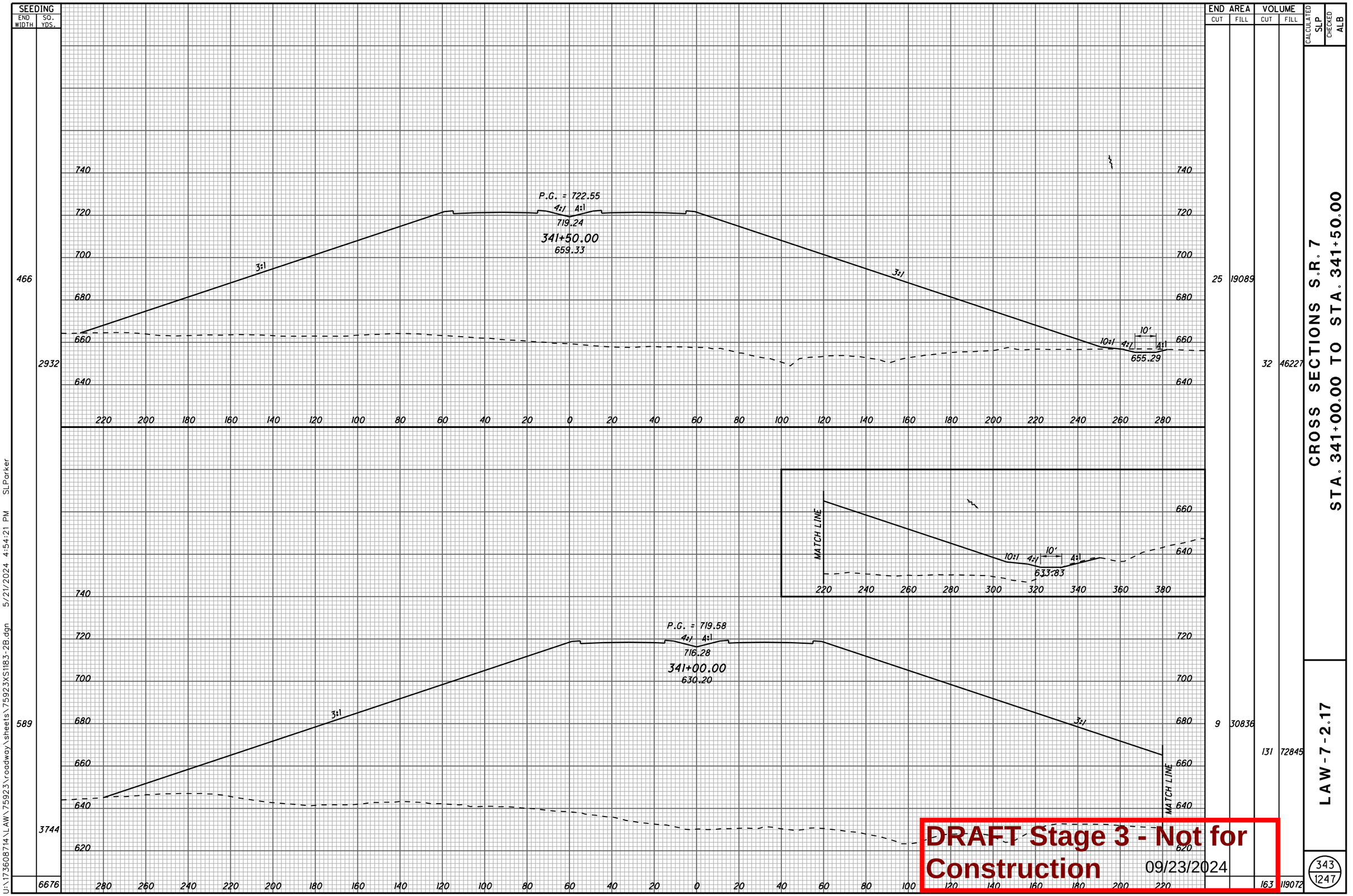

U:\173608714\LAW\75923\roadway\sheets\75923XS1183-2B.dgn 5/21/2024 4:54:21 PM SLParker

CROSS SECTIONS S.R. 7
STA. 341+00.00 TO STA. 341+50.00

LAW-7-2.17

343
1247

DRAFT Stage 3 - Not for Construction 09/23/2024

SEEDING	
END WIDTH	SQ. YDS.
	201
	1215
	236
	1730
	386
	2369
	5314

(VBF) DENOTES LOCATION OF VEGETATED BIOFILTER

28E

CATCH BASIN NO. 5
STA. 343+00.00, 70' LT., S.R. 7
T/C = 728.79
E = 725.29

28F

CATCH BASIN NO. 8
STA. 343+00.00, 0' RT./LT., S.R. 7
T/C = 727.78
E = 723.94

* MASONARY COLLARS AS PER SCD DM-1.1 (INCLUDE WITH COST OF CONDUIT)

P.G. = 731.09
10' (VBF)
4:1 4:1 4:1
CFN: 1995103
727.78
343+00.00
716.99
70' - 21" CONDUIT, TYPE B @ 1.93%
61' - 21" CONDUIT, TYPE B @ 1.96%
10' - 21" CONDUIT, TYPE F @ 1.96%
E = 722.55
65' - 21" CONDUIT TYPE F, 707.21 @ 31.76%
E = 701.89
10' - 21" CONDUIT, TYPE F @ 2.00%
3:1
10:1 2:1
HW 2.1
STA. 343+00.00, 143.11' RT., S.R. 7
E = 701.69
10'
4:1
701.60
18" ROCK CHANNEL PROTECTION TYPE C WITH FILTER (7'X4')

P.G. = 728.38
4:1 4:1
725.08
342+50.00
704.93
3:1
3:1
10:1 4:1
10'
695.24

P.G. = 725.52
4:1 4:1
722.21
342+00.00
681.47
3:1
3:1
10:1
10:1 4:1
10'
4:1

END AREA		VOLUME	
CUT	FILL	CUT	FILL
122	2491		
		113	7087
0	5163		
		46	16178
49	12308		
		69	29072
228	52337		

CALCULATED SLP
CHECKED ALB

CROSS SECTIONS S.R. 7
STA. 342+00.00 TO STA. 343+00.00

LAW-7-2.17

344
1247

DRAFT Stage 3 - Not for Construction 09/23/2024

U:\173608714\LAW\75923\roadway\sheets\75923XS1184-2B.dgn 5/21/2024 4:54:21 PM SLParker

SEEDING	
END WIDTH	SQ. YDS.
307	1567
256	1356
231	1202
	4125

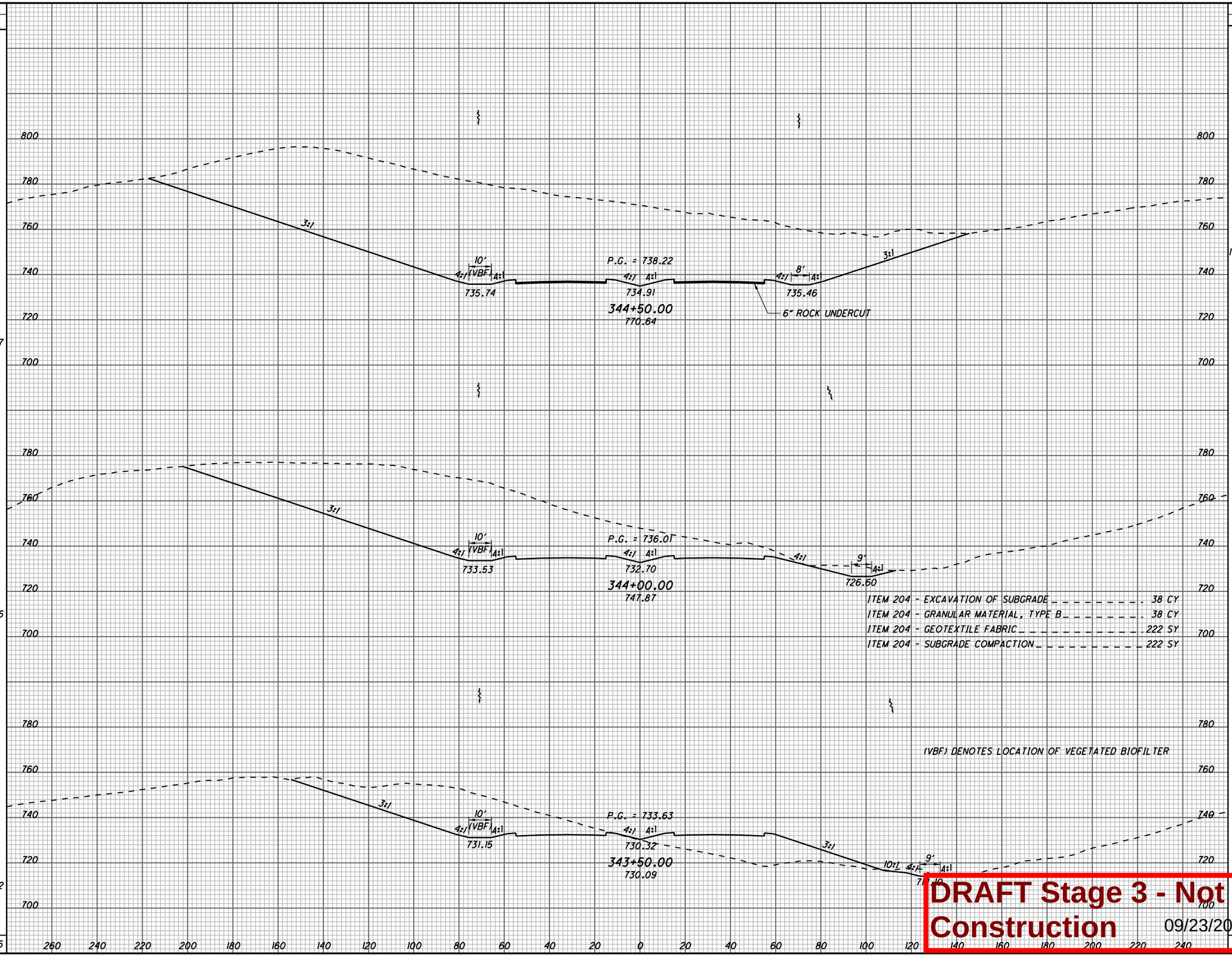

ITEM 204 - EXCAVATION OF SUBGRADE . . . . . 38 CY
ITEM 204 - GRANULAR MATERIAL, TYPE B . . . . . 38 CY
ITEM 204 - GEOTEXTILE FABRIC . . . . . 222 SY
ITEM 204 - SUBGRADE COMPACTION . . . . . 222 SY

(VBF) DENOTES LOCATION OF VEGETATED BIOFILTER

END AREA		VOLUME	
CUT	FILL	CUT	FILL
10345	0		
5111	0		
		6162	693
1544	748		
		1543	2999
		2201	3692

CALCULATED SLP
CHECKED ALB

CROSS SECTIONS S.R. 7
STA. 343+50.00 TO STA. 344+50.00

LAW-7-2.17

345
1247

DRAFT Stage 3 - Not for Construction 09/23/2024

U:\173608714\LAW\75923\roadway\sheets\75923XS1185-2B.dgn 5/21/2024 4:54:22 PM SLParker

SEEDING	
END WIDTH	SQ. YDS.
	494
	2432
	381
	1913
	4345

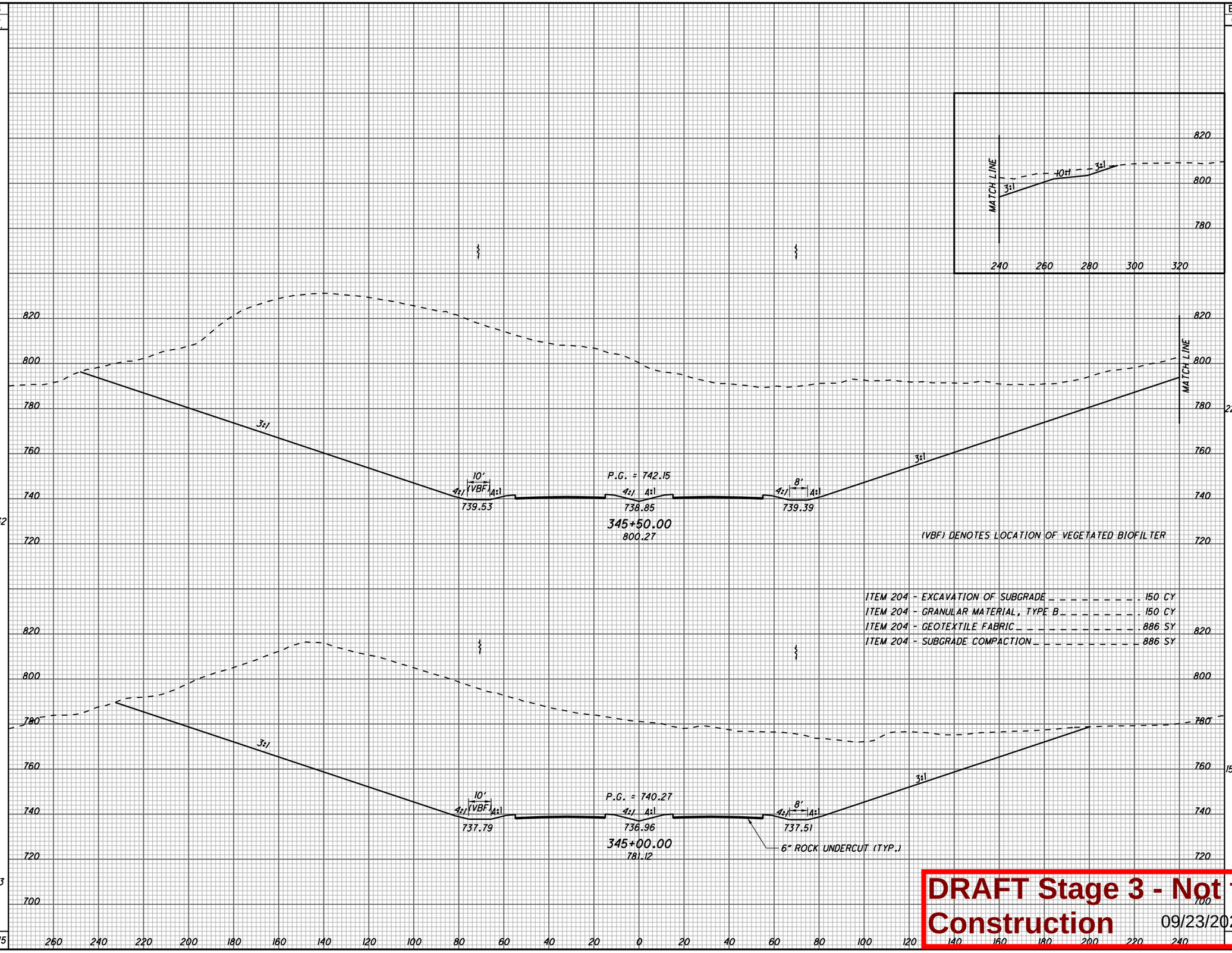

END AREA		VOLUME	
CUT	FILL	CUT	FILL
22538	0		
		35078	0
15345	0		
		2378	0
		5886	0

CALCULATED SLP
CHECKED ALB

CROSS SECTIONS S.R. 7
STA. 345+00.00 TO STA. 345+50.00

LAW-7-2.17

346
1247

DRAFT Stage 3 - Not for Construction 09/23/2024

U:\1736087\14\LAW\75923\roadway\sheets\75923XS1186-2B.dgn 5/21/2024 4:54:23 PM SLParker

SEEDING	
END WIDTH	SQ. YDS.
580	3185
566	2946
	6131

END AREA	
CUT	FILL
42368	0

VOLUME	
CUT	FILL
71383	0
34726	0
5302	0
12440	0

CALCULATED SLP

CHECKED ALB

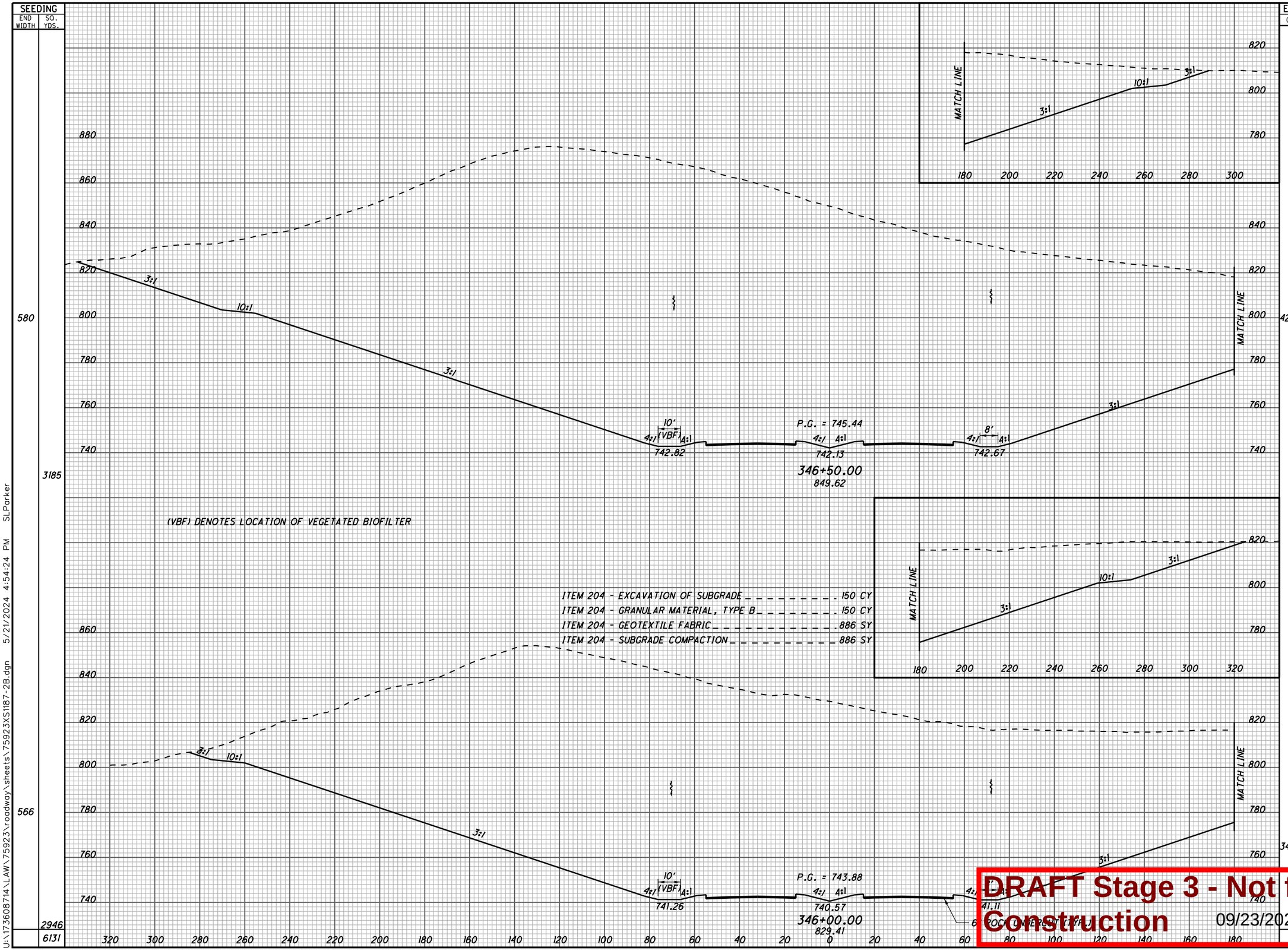

CROSS SECTIONS S.R. 7
STA. 346+00.00 TO STA. 346+50.00

LAW-7-2.17

347
1247

DRAFT Stage 3 - Not for Construction

09/23/2024

U:\1736087\14\LAW\75923\roadway\sheets\75923XS1187-2B.dgn 5/21/2024 4:54:24 PM SLParker

SEEDING	
END WIDTH	SQ. YDS.
645	3471
604	3291
	6762

END AREA		VOLUME	
CUT	FILL	CUT	FILL
46581	0		
44827	0		
		84638	0
		80731	0
		165375	0

CALCULATED SLP
CHECKED ALB

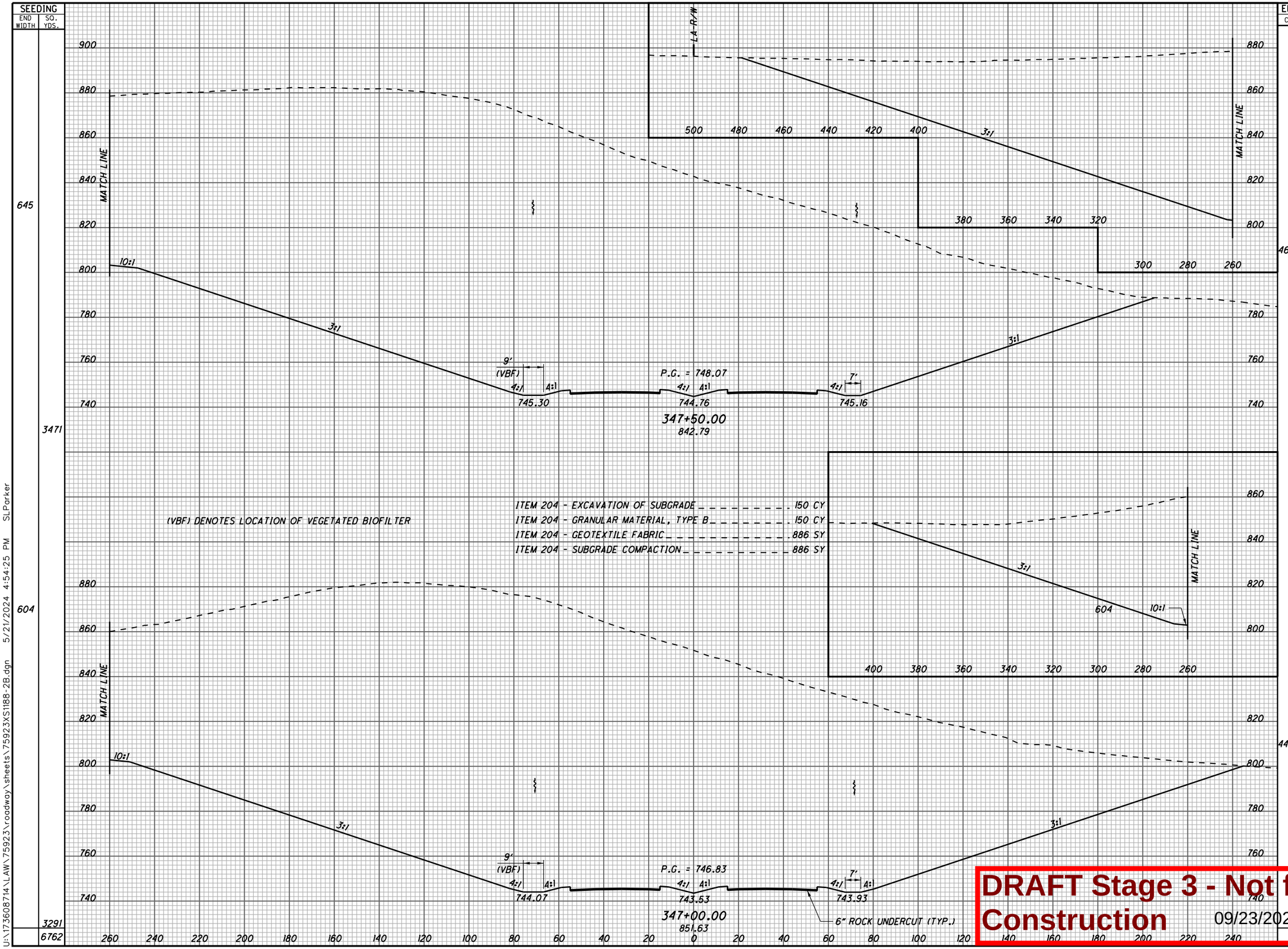

DRAFT Stage 3 - Not for Construction 09/23/2024

CROSS SECTIONS S.R. 7
STA. 347+00.00 TO STA. 347+50.00

LAW-7-2.17

348
1247

U:\173608714\LAW\75923\roadway\sheets\75923XS1188-2B.dgn 5/21/2024 4:54:25 PM SLParker

SEEDING END WIDTH	SEEDING SQ. YDS.	END AREA CUT	END AREA FILL	VOLUME CUT	VOLUME FILL
516		36879	0		
	3073			74165	0
590		43219	0		
	3431			83149	0
	6504			157311	0

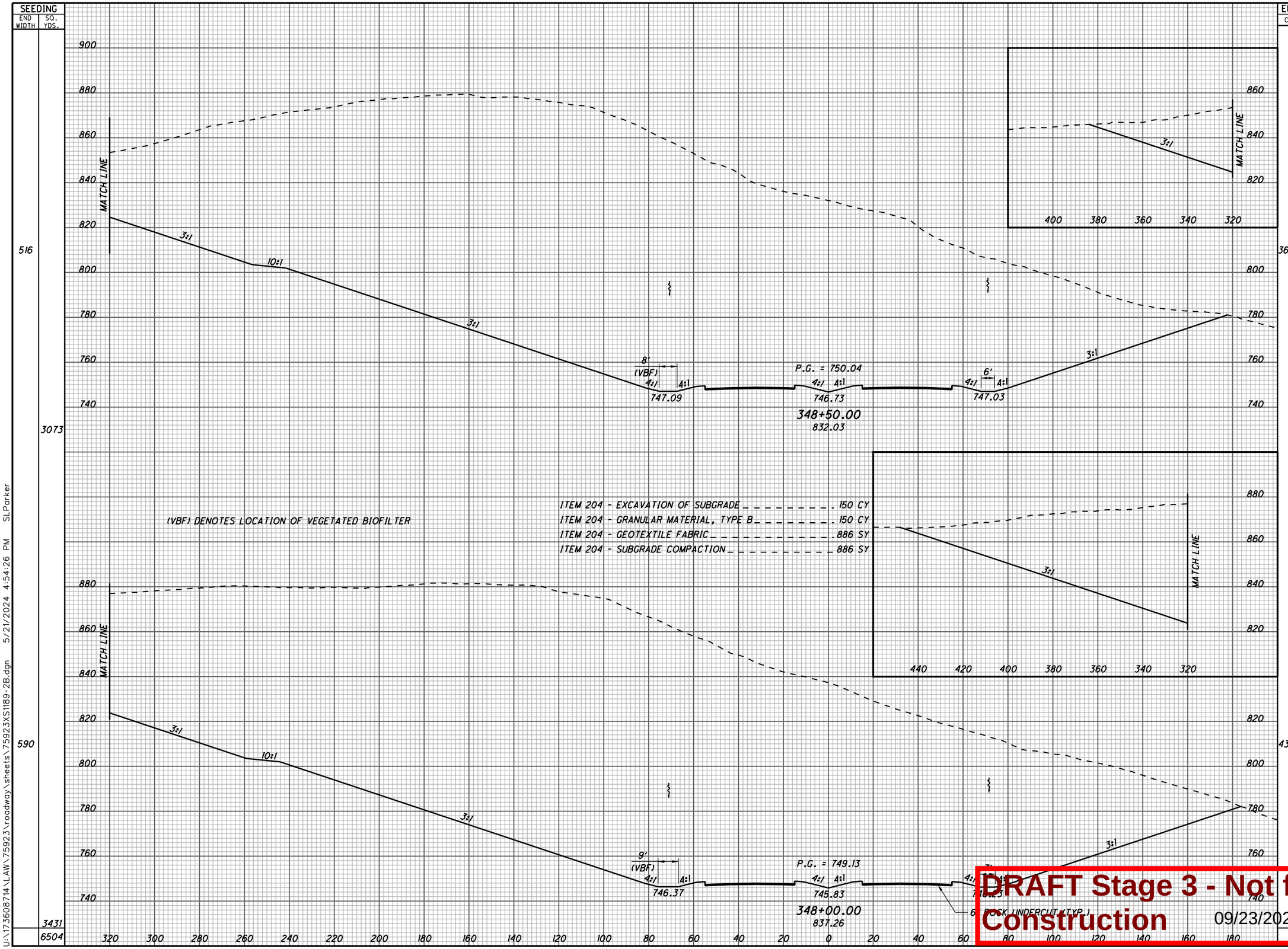

CALCULATED SLP
CHECKED ALB

CROSS SECTIONS S.R. 7
STA. 348+00.00 TO STA. 348+50.00

LAW-7-2.17

349
1247

DRAFT Stage 3 - Not for Construction
09/23/2024

U:\173608714\LAW\75923\roadway\sheets\75923XS1189-2B.dgn 5/21/2024 4:54:26 PM SLParker

SEEDING END WIDTH	SEEDING SQ. YDS.	END AREA CUT	END AREA FILL	VOLUME CUT	VOLUME FILL
444	2523	30022	0	58224	0
464	2723	32860	0	64573	0
	5246			122973	0

CALCULATED SLP
CHECKED ALB

CROSS SECTIONS S.R. 7
STA. 349+00.00 TO STA. 349+50.00

LAW-7-2.17

350
1247

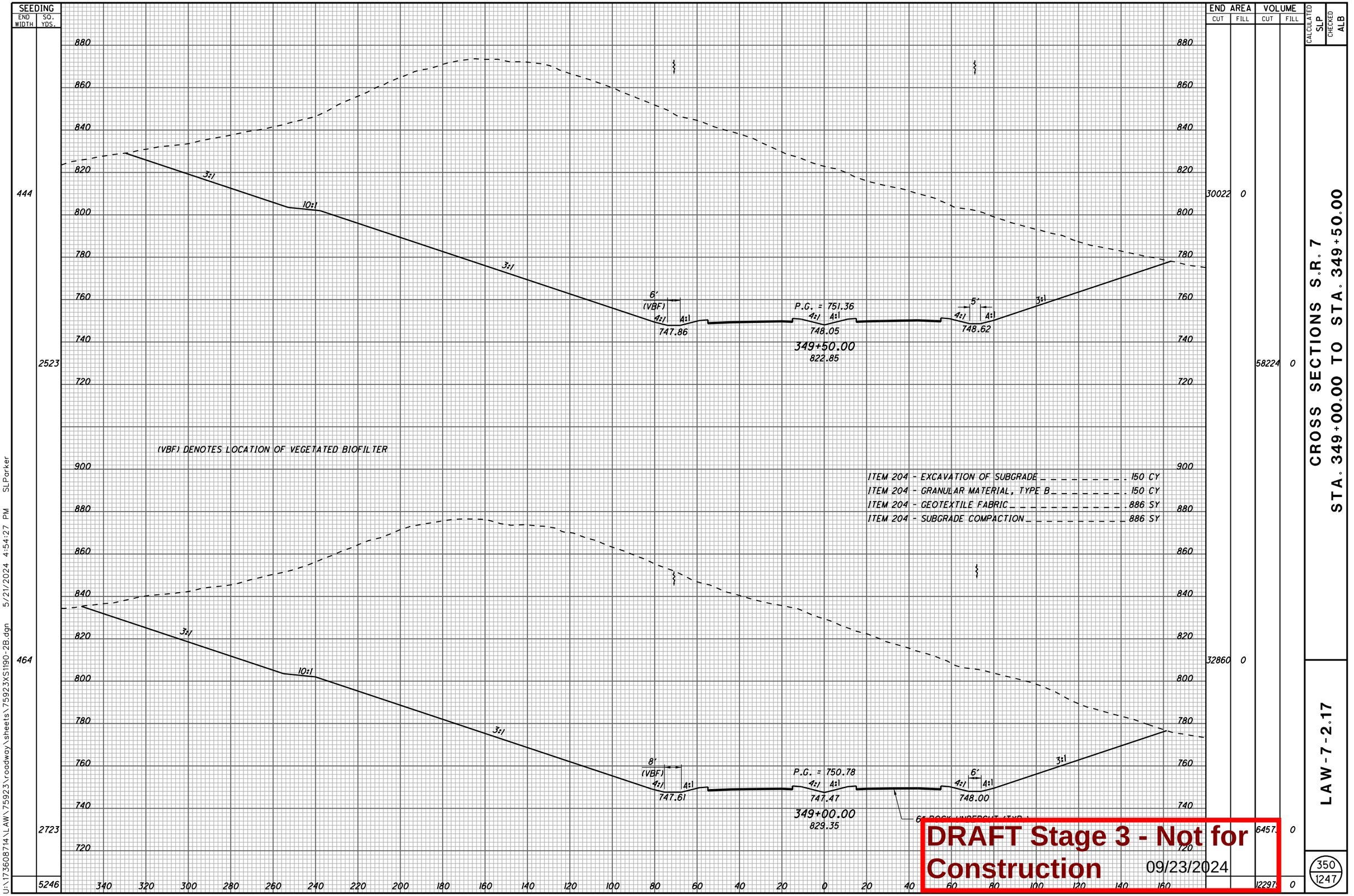

DRAFT Stage 3 - Not for Construction 09/23/2024

U:\173608714\LAW\75923\roadway\sheets\75923XS1190-2B.dgn 5/21/2024 4:54:27 PM SLParker

SEEDING END WIDTH	SEEDING SQ. YDS.
417	2342
426	2417
	4759

END AREA CUT	END AREA FILL	VOLUME CUT	VOLUME FILL
28472	0		
		53913	0
29755	0		
		55345	0
		10926	0

CALCULATED SLP
CHECKED ALB

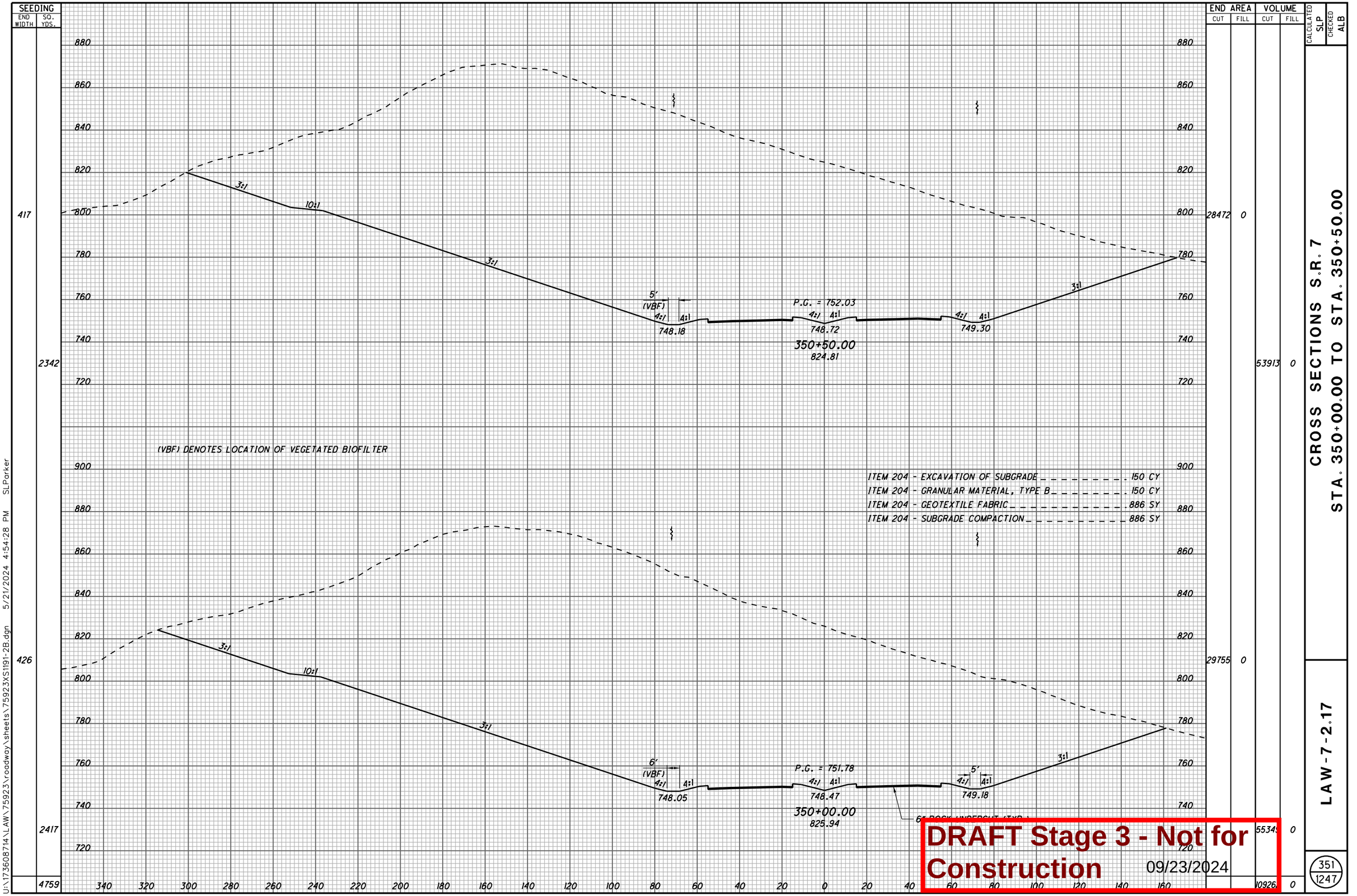

CROSS SECTIONS S.R. 7
STA. 350+00.00 TO STA. 350+50.00

LAW-7-2.17

351
1247

DRAFT Stage 3 - Not for Construction 09/23/2024

U:\173608714\LAW\75923\roadway\sheets\75923XS1191-2B.dgn 5/21/2024 4:54:28 PM SLParker

SEEDING END WIDTH	SEEDING SQ. YDS.
385	2189
403	2279
	4468

END AREA CUT	END AREA FILL	VOLUME CUT	VOLUME FILL
22918	0		
25683	0		
		45001	0
		50144	0
		95145	0

CALCULATED SLP

CHECKED ALB

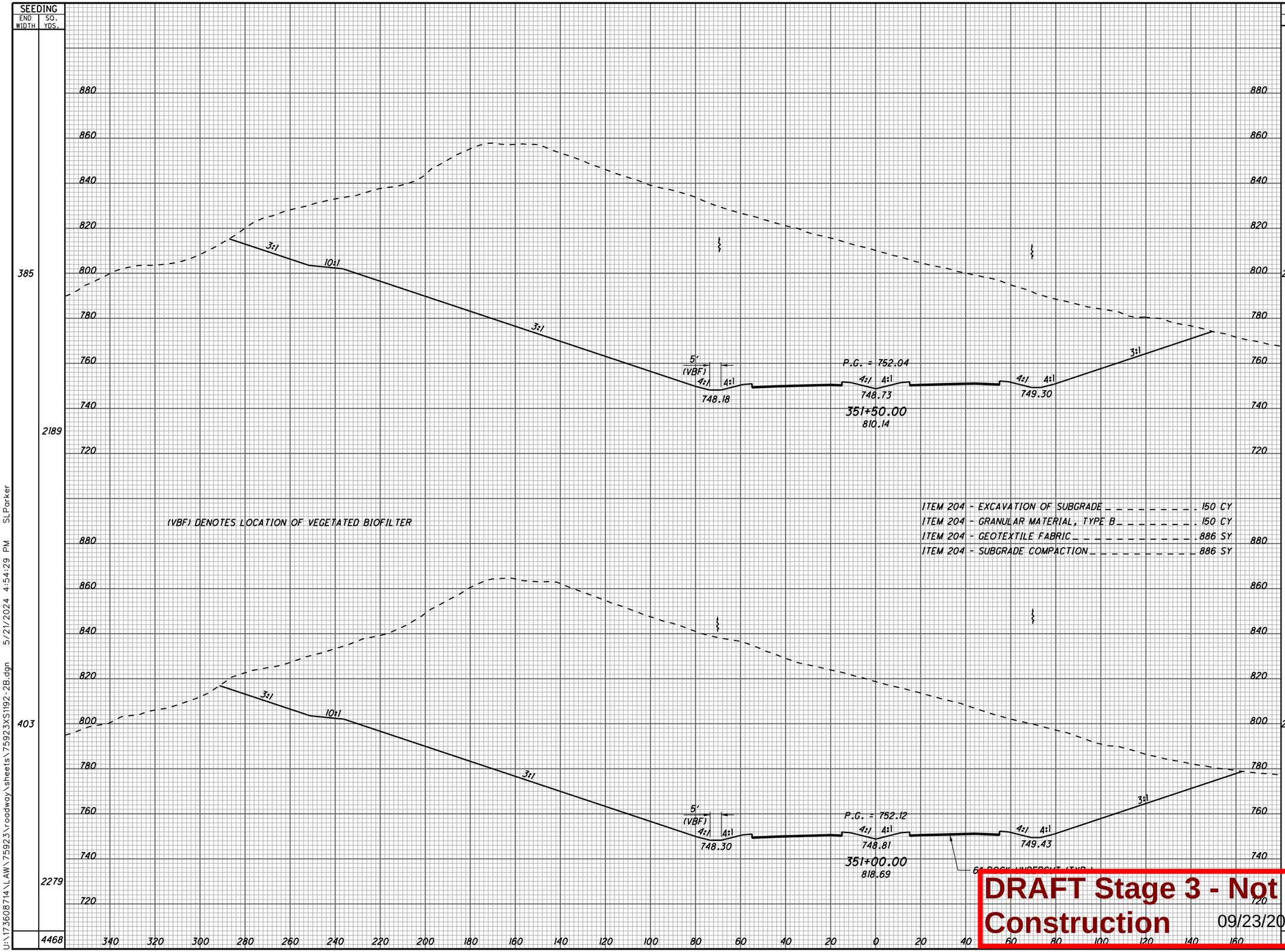

CROSS SECTIONS S.R. 7
STA. 351+00.00 TO STA. 351+50.00

LAW-7-2.17

352
1247

DRAFT Stage 3 - Not for Construction 09/23/2024

U:\173608714\LAW\75923\roadway\sheets\75923XS1192-2B.dgn 5/21/2024 4:54:29 PM SLParker

SEEDING END WIDTH	SEEDING SQ. YDS.	END AREA CUT	END AREA FILL	VOLUME CUT	VOLUME FILL
374	2045	19864	0	37593	0
363	2076	20736	0	4042	0
	4121			7801	0

CALCULATED SLP
CHECKED ALB

CROSS SECTIONS S.R. 7
STA. 352+00.00 TO STA. 352+50.00

LAW-7-2.17

353
1247

880
860
840
820
800
780
760
740
720

340 320 300 280 260 240 220 200 180 160 140 120 100 80 60 40 20 0 20 40 60 80 100 120 140 160

3:1
3:1
7'
(VBF)
4:1
4:1
747.87
P.G. = 751.40
4:1
4:1
748.09
352+50.00
798.68
5'
4:1
4:1
748.83
3:1

(VBF) DENOTES LOCATION OF VEGETATED BIOFILTER

ITEM 204 - EXCAVATION OF SUBGRADE . . . . . 150 CY
ITEM 204 - GRANULAR MATERIAL, TYPE B . . . . . 150 CY
ITEM 204 - GEOTEXTILE FABRIC . . . . . 886 SY
ITEM 204 - SUBGRADE COMPACTION . . . . . 886 SY

3:1
10:1
3:1
6'
(VBF)
4:1
4:1
748.05
P.G. = 751.80
4:1
4:1
748.49
352+00.00
802.37
5'
4:1
4:1
749.18
3:1

6" ROCK UNDERCUT (TYP.)

DRAFT Stage 3 - Not for Construction 09/23/2024

U:\173608714\LAW\75923\roadway\sheets\75923XS1193-2B.dgn 5/21/2024 4:54:29 PM SLParker

SEEDING	
END WIDTH	SQ. YDS.
386	2082
363	2047
	4129

END AREA	
CUT	FILL
22032	0
19560	0
38512	0
36504	0
75016	0

VOLUME	
CUT	FILL

CALCULATED SLP

CHECKED ALB

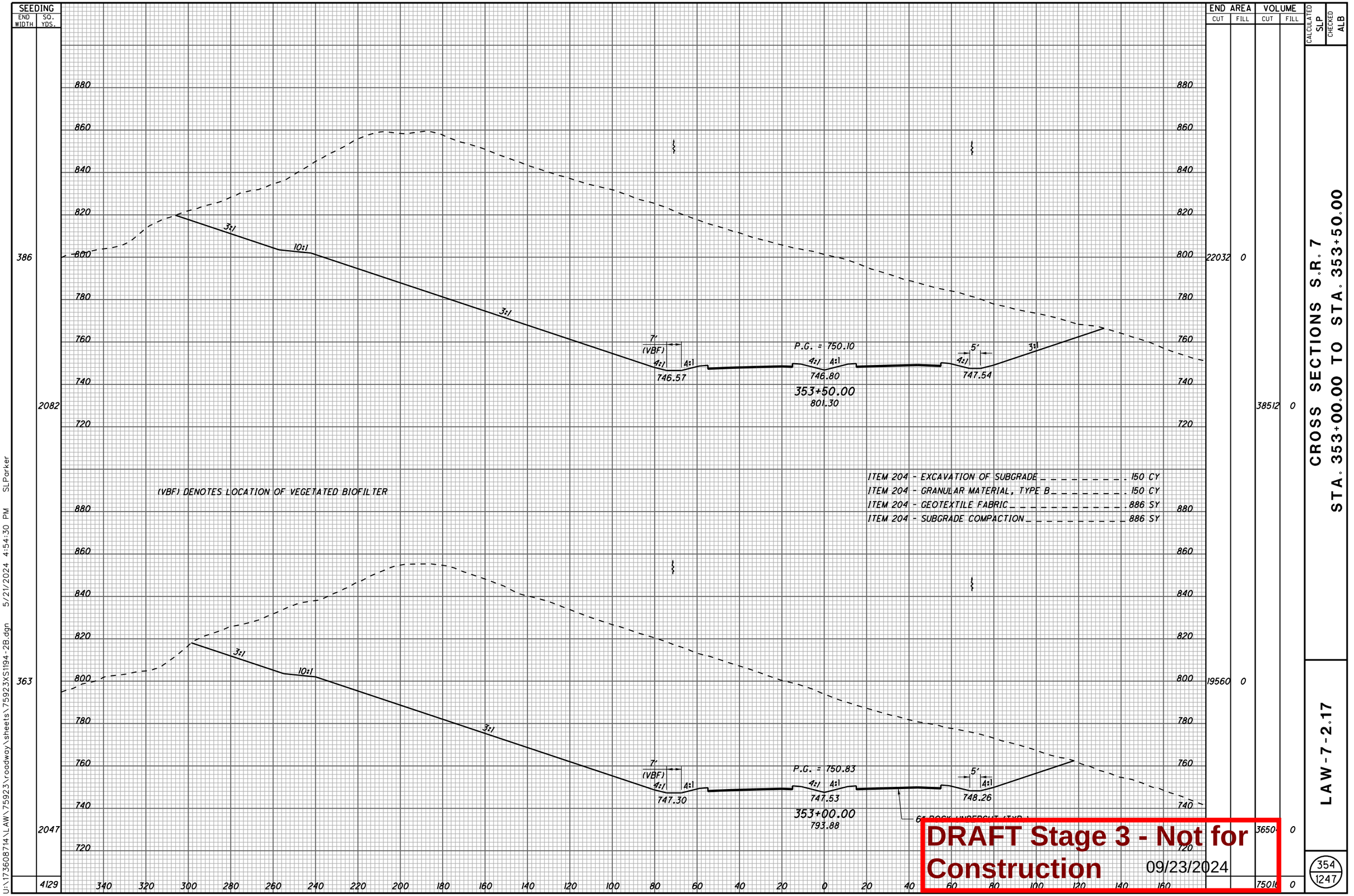

(VBF) DENOTES LOCATION OF VEGETATED BIOFILTER

ITEM 204 - EXCAVATION OF SUBGRADE . . . . . 150 CY
ITEM 204 - GRANULAR MATERIAL, TYPE B . . . . . 150 CY
ITEM 204 - GEOTEXTILE FABRIC . . . . . 886 SY
ITEM 204 - SUBGRADE COMPACTION . . . . . 886 SY

DRAFT Stage 3 - Not for Construction 09/23/2024

CROSS SECTIONS S.R. 7
STA. 353+00.00 TO STA. 353+50.00

LAW-7-2.17

U:\173608714\LAW\75923\roadway\sheets\75923XS1194-2B.dgn 5/21/2024 4:54:30 PM SLParker

SEEDING	
END WIDTH	SQ. YDS.
424	2320
411	2214
	4534

END AREA	
CUT	FILL
27660	0
25307	0

VOLUME	
CUT	FILL
49044	0
43837	0
92877	0

CALCULATED SLP
CHECKED ALB

LA-R/W

3:1
10:1
3:1

8' (VBF) 4:1 4:1
744.77

P.G. = 748.15
4:1 4:1
744.85

354+50.00
810.23

6' 4:1 4:1
745.73
3:1

(VBF) DENOTES LOCATION OF VEGETATED BIOFILTER

ITEM 204 - EXCAVATION OF SUBGRADE . . . . . 150 CY
ITEM 204 - GRANULAR MATERIAL, TYPE B . . . . . 150 CY
ITEM 204 - GEOTEXTILE FABRIC . . . . . 886 SY
ITEM 204 - SUBGRADE COMPACTION . . . . . 886 SY

3:1
10:1
3:1

8' (VBF) 4:1 4:1
745.82

P.G. = 749.21
4:1 4:1
745.90

354+00.00
806.38

6' 4:1 4:1
746.78
3:1

6" BOOK UNDERCUT (TYP.)

880 860 840 820 800 780 760 740 720

340 320 300 280 260 240 220 200 180 160 140 120 100 80 60 40 20 0 20 40 60 80 100 120 140 160

DRAFT Stage 3 - Not for Construction 09/23/2024

CROSS SECTIONS S.R. 7
STA. 354+00.00 TO STA. 354+50.00

LAW-7-2.17

355
1247

U:\173608714\LAW\75923\roadway\sheets\75923XS1195-2B.dgn 5/21/2024 4:54:31 PM SLParker

SEEDING END WIDTH	SEEDING SQ. YDS.
443	2374
411	2321
	4695

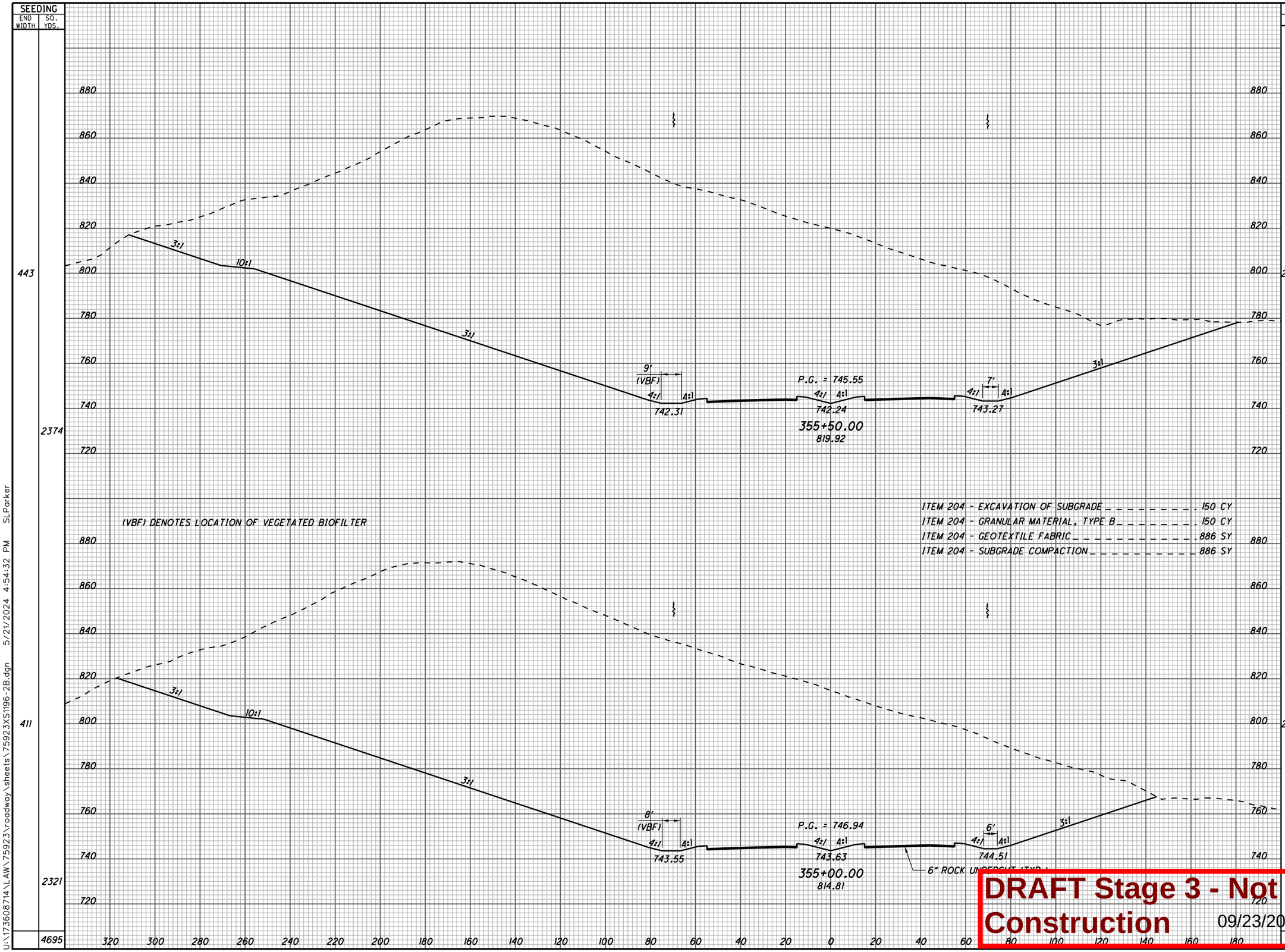

END AREA CUT	END AREA FILL	VOLUME CUT	VOLUME FILL
29568	0		
		53984	0
28734	0		
		52217	0
		10620	0

CALCULATED SLP
CHECKED ALB

CROSS SECTIONS S.R. 7
STA. 355+00.00 TO STA. 355+50.00

LAW-7-2.17

356
1247

DRAFT Stage 3 - Not for Construction 09/23/2024

U:\173608714\LAW\75923\roadway\sheets\75923XS1196-2B.dgn 5/21/2024 4:54:32 PM SLParker

SEEDING	
END WIDTH	SQ. YDS.
571	2959
	2605
	5564

END AREA	
CUT	FILL
35778	0
31379	0

VOLUME	
CUT	FILL
62183	0
5643	0
118610	0

CALCULATED SLP
CHECKED ALB

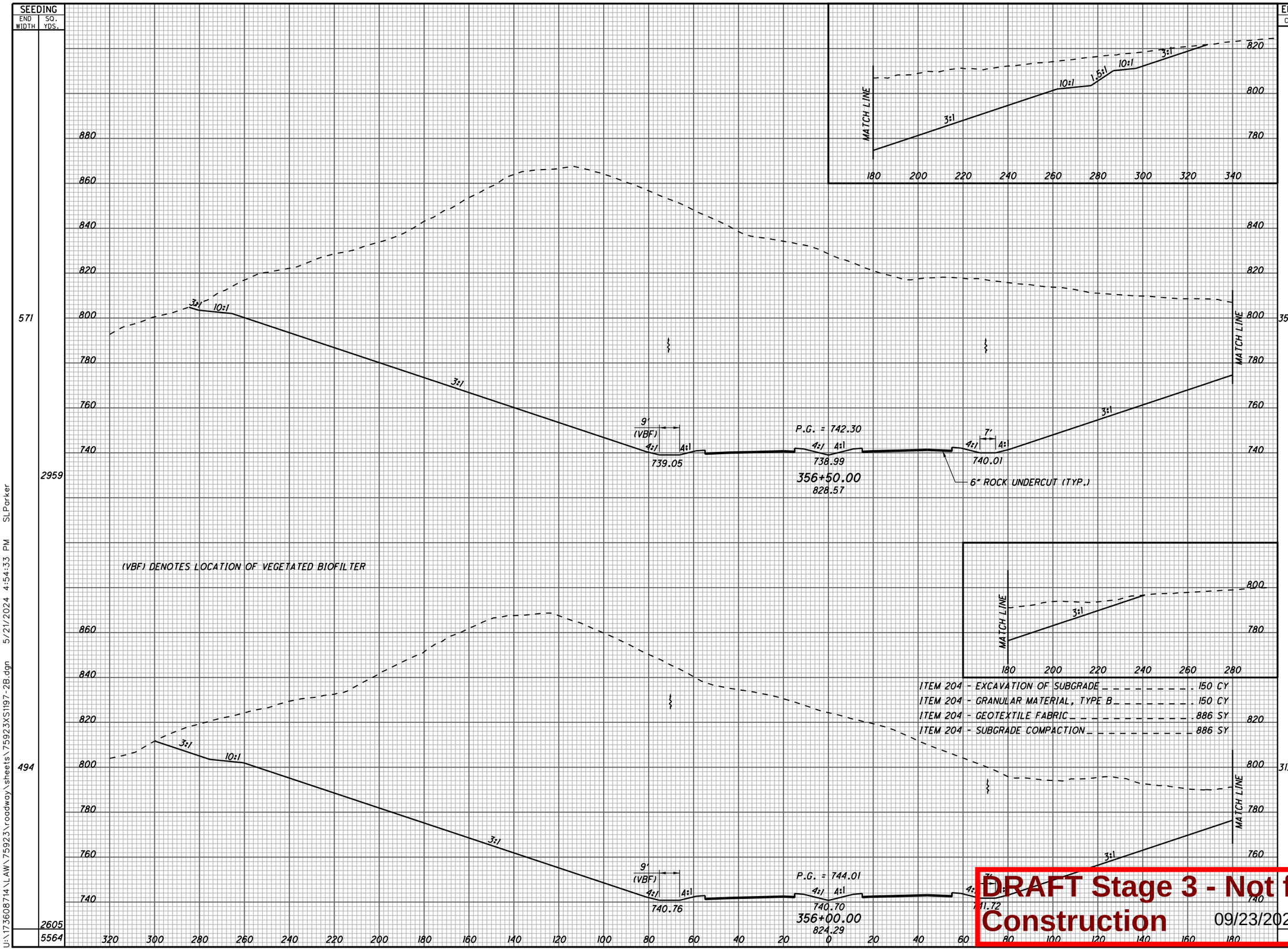

CROSS SECTIONS S.R. 7
STA. 356+00.00 TO STA. 356+50.00

LAW-7-2.17

DRAFT Stage 3 - Not for Construction
09/23/2024

U:\173608714\LAW\75923\roadway\sheets\75923XS1197-2B.dgn 5/21/2024 4:54:33 PM SLParker

SEEDING	
END WIDTH	SQ. YDS.
668	3548
	6826
609	3278

(VBF) DENOTES LOCATION OF VEGETATED BIOFILTER

ITEM 204 - EXCAVATION OF SUBGRADE _____ 150 CY
ITEM 204 - GRANULAR MATERIAL, TYPE B _____ 150 CY
ITEM 204 - GEOTEXTILE FABRIC _____ 886 SY
ITEM 204 - SUBGRADE COMPACTION _____ 886 SY

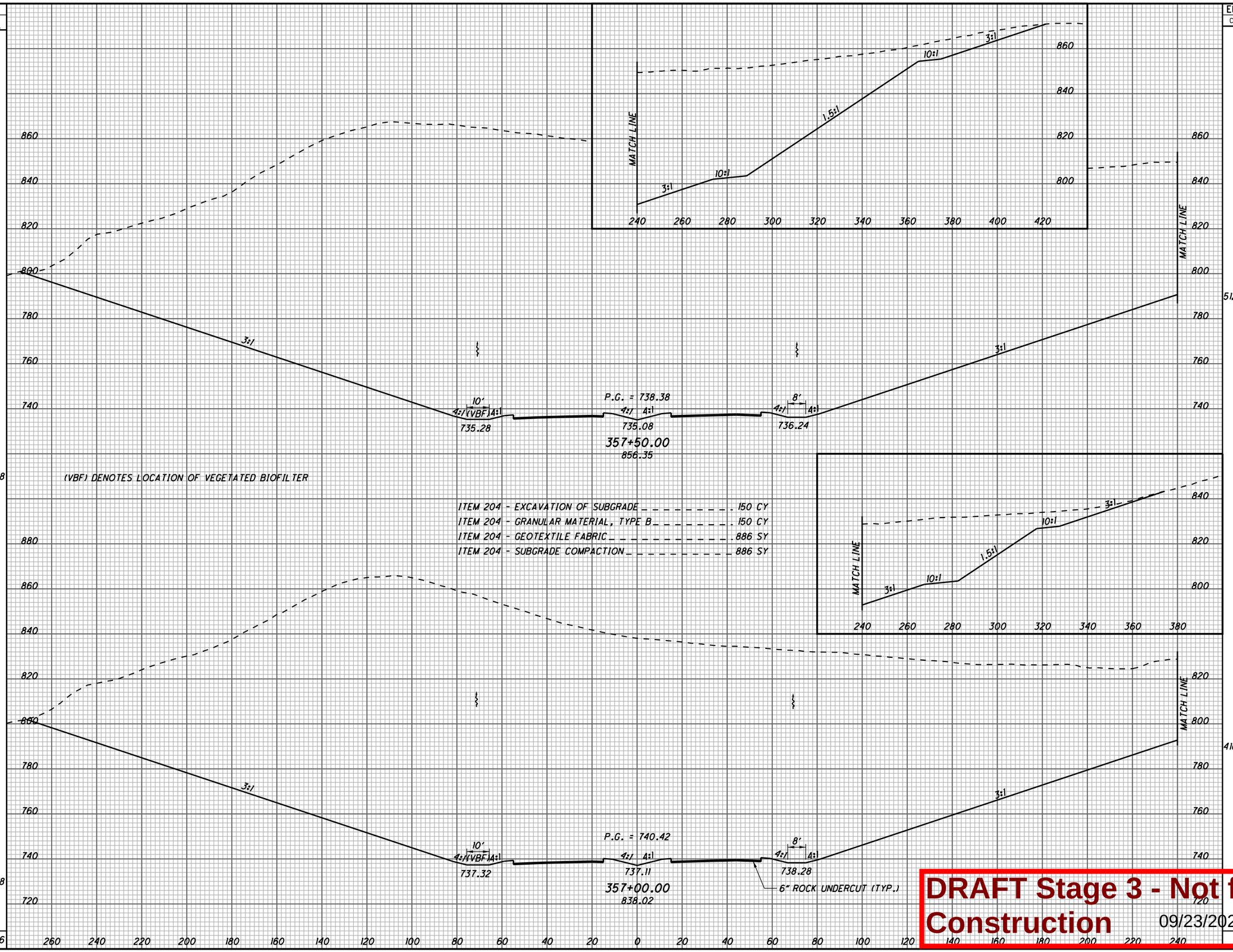

DRAFT Stage 3 - Not for Construction 09/23/2024

END AREA		VOLUME	
CUT	FILL	CUT	FILL
51269	0		
		86081	0
41698	0		
		71737	0
		15781	0

CALCULATED SLP
CHECKED ALB

CROSS SECTIONS S.R. 7
STA. 357+00.00 TO STA. 357+50.00

LAW-7-2.17

358
1247

U:\173608714\LAW\75923\roadway\sheets\75923XS1198-2B.dgn 5/21/2024 4:54:34 PM SLParker

SEEDING END WIDTH	SEEDING SQ. YDS.
702	3850
684	3757
	7607

END AREA CUT	END AREA FILL	VOLUME CUT	VOLUME FILL
52094	0		
		102294	0
58383	0		
		101530	0
		20382	0

CALCULATED SLP

CHECKED ALB

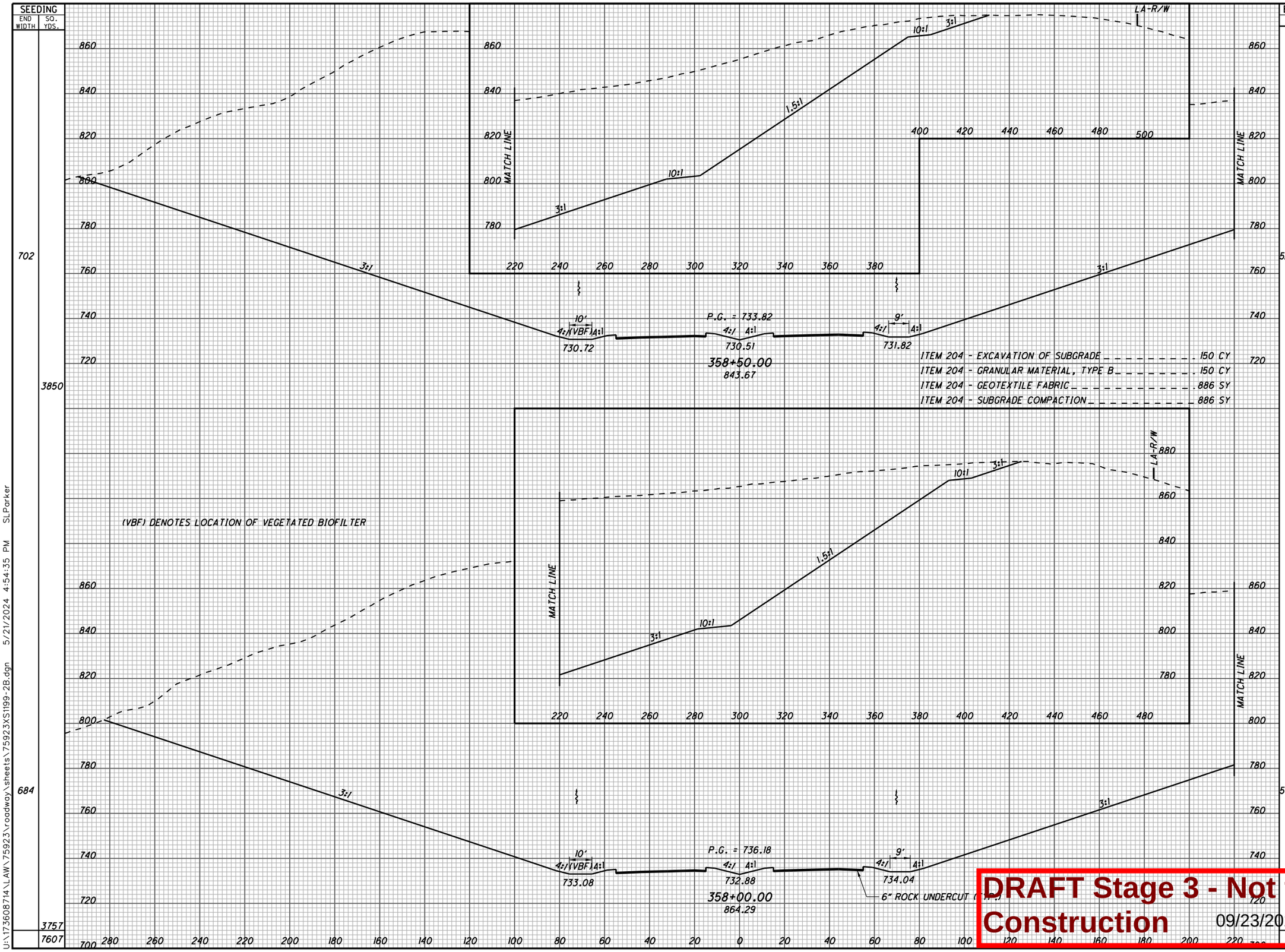

CROSS SECTIONS S.R. 7
STA. 358+00.00 TO STA. 358+50.00

LAW-7-2.17

359
1247

DRAFT Stage 3 - Not for Construction 09/23/2024

U:\173608714\LAW\75923\roadway\sheets\75923XS1199-2B.dgn 5/21/2024 4:54:35 PM SLParker

SEEDING	
END WIDTH	SQ. YDS.
634	3827
743	4014
	7841

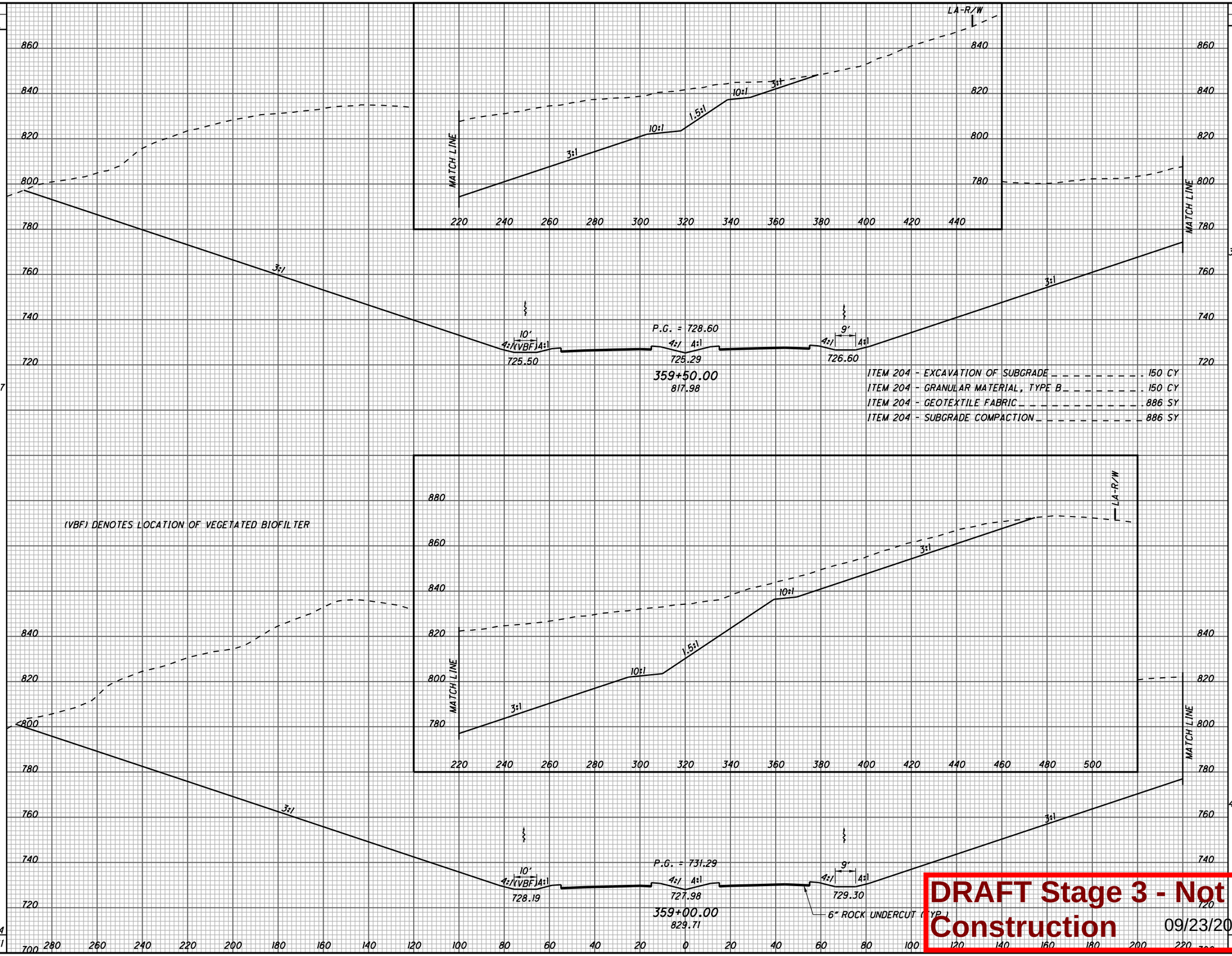

ITEM	
ITEM 204 - EXCAVATION OF SUBGRADE	150 CY
ITEM 204 - GRANULAR MATERIAL, TYPE B	150 CY
ITEM 204 - GEOTEXTILE FABRIC	886 SY
ITEM 204 - SUBGRADE COMPACTION	886 SY

END AREA		VOLUME	
CUT	FILL	CUT	FILL
37477	0		
		76823	0
45492	0		
		90354	0
		16718	0

CALCULATED SLP
CHECKED ALB

CROSS SECTIONS S.R. 7
STA. 359+00.00 TO STA. 359+50.00

LAW-7-2.17

360
1247

DRAFT Stage 3 - Not for Construction 09/23/2024

U:\173608714\LAW\75923\roadway\sheets\75923XS1200-2B.dgn 5/21/2024 4:54:35 PM SLParker

SEEDING	
END WIDTH	SQ. YDS.
470	2810
542	3267
	6077

END AREA	
CUT	FILL
22919	0
29419	0

VOLUME	
CUT	FILL
48462	0
6194	0
11040	0

CALCULATED SLP
CHECKED ALB

(VBF) DENOTES LOCATION OF VEGETATED BIOFILTER

P.G. = 722.76
719.74
719.45
720.82
360+50.00
782.92

P.G. = 725.75
722.64
722.44
723.89
360+00.00
800.13

LA-R/W 820

MATCH LINE

6" ROCK UNDERCUT (TYP.)

ITEM 204 - EXCAVATION OF SUBGRADE	150 CY
ITEM 204 - GRANULAR MATERIAL, TYPE B	150 CY
ITEM 204 - GEOTEXTILE FABRIC	886 SY
ITEM 204 - SUBGRADE COMPACTION	886 SY

DRAFT Stage 3 - Not for Construction 09/23/2024

CROSS SECTIONS S.R. 7
STA. 360+00.00 TO STA. 360+50.00

LAW-7-2.17

361
1247

U:\173608714\LAW\75923\roadway\sheets\75923XS1201-2B.dgn 5/21/2024 4:54:36 PM SLParker

SEEDING END WIDTH	SEEDING SQ. YDS.
265	1665
334	2152
440	2528
	6345

END AREA CUT	END AREA FILL	VOLUME CUT	VOLUME FILL
8334	0	20212	0
13494	0	29128	0
17964	0	37850	0
		87196	0

CALCULATED SLP
CHECKED ALB

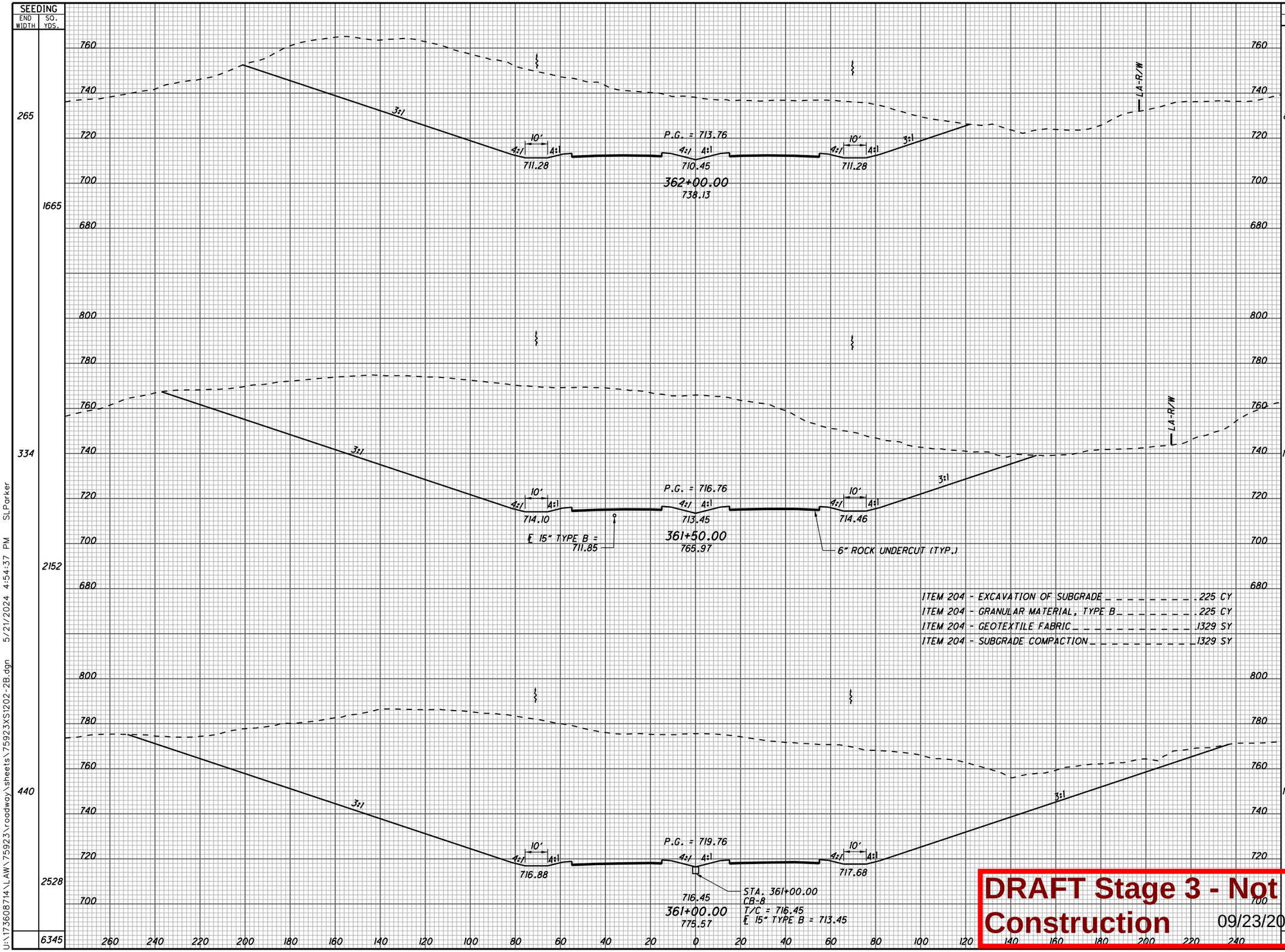

ITEM 204 - EXCAVATION OF SUBGRADE . . . . . 225 CY
ITEM 204 - GRANULAR MATERIAL, TYPE B . . . . . 225 CY
ITEM 204 - GEOTEXTILE FABRIC . . . . . 1329 SY
ITEM 204 - SUBGRADE COMPACTION . . . . . 1329 SY

DRAFT Stage 3 - Not for Construction 09/23/2024

CROSS SECTIONS S.R. 7
STA. 361+00.00 TO STA. 362+00.00

LAW-7-2.17

362
1247

U:\173608714\LAW\75923\roadway\sheets\75923XS1202-2B.dgn 5/21/2024 4:54:37 PM SLPorker

SEEDING	
END WIDTH	SQ. YDS.
267	1326
210	1199
222	1352
	3877

END AREA	
CUT	FILL
475	2027
816	250
3587	0

VOLUME	
CUT	FILL
1196	2108
4078	232
11039	0
16313	2340

CALCULATED SLP
CHECKED ALB

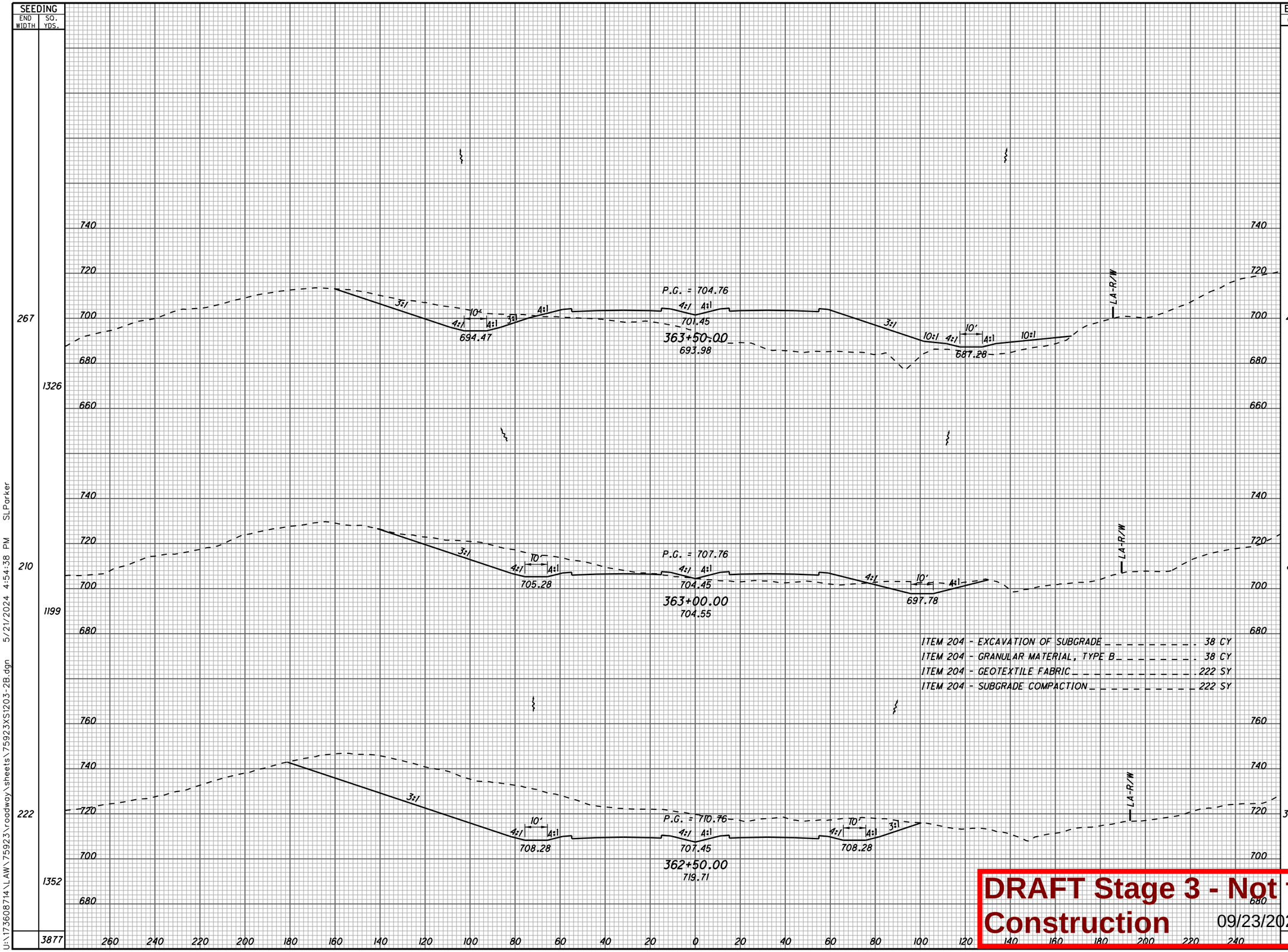

ITEM 204 - EXCAVATION OF SUBGRADE . . . . . 38 CY
ITEM 204 - GRANULAR MATERIAL, TYPE B . . . . . 38 CY
ITEM 204 - GEOTEXTILE FABRIC . . . . . 222 SY
ITEM 204 - SUBGRADE COMPACTION . . . . . 222 SY

DRAFT Stage 3 - Not for Construction 09/23/2024

CROSS SECTIONS S.R. 7
STA. 362+50.00 TO STA. 363+50.00

LAW-7-2.17

363
1247

U:\173608714\LAW\75923\roadway\sheets\75923XS1203-2B.dgn 5/21/2024 4:54:38 PM SLParker

SEEDING END WIDTH	SEEDING SQ. YDS.	END AREA CUT	END AREA FILL	VOLUME CUT	VOLUME FILL
285	1533	24	8879	48	14904
267	1477	27	7218	392	11192
265	1478	395	4869	806	6386
	4488			1246	32482

CALCULATED SLP
CHECKED ALB

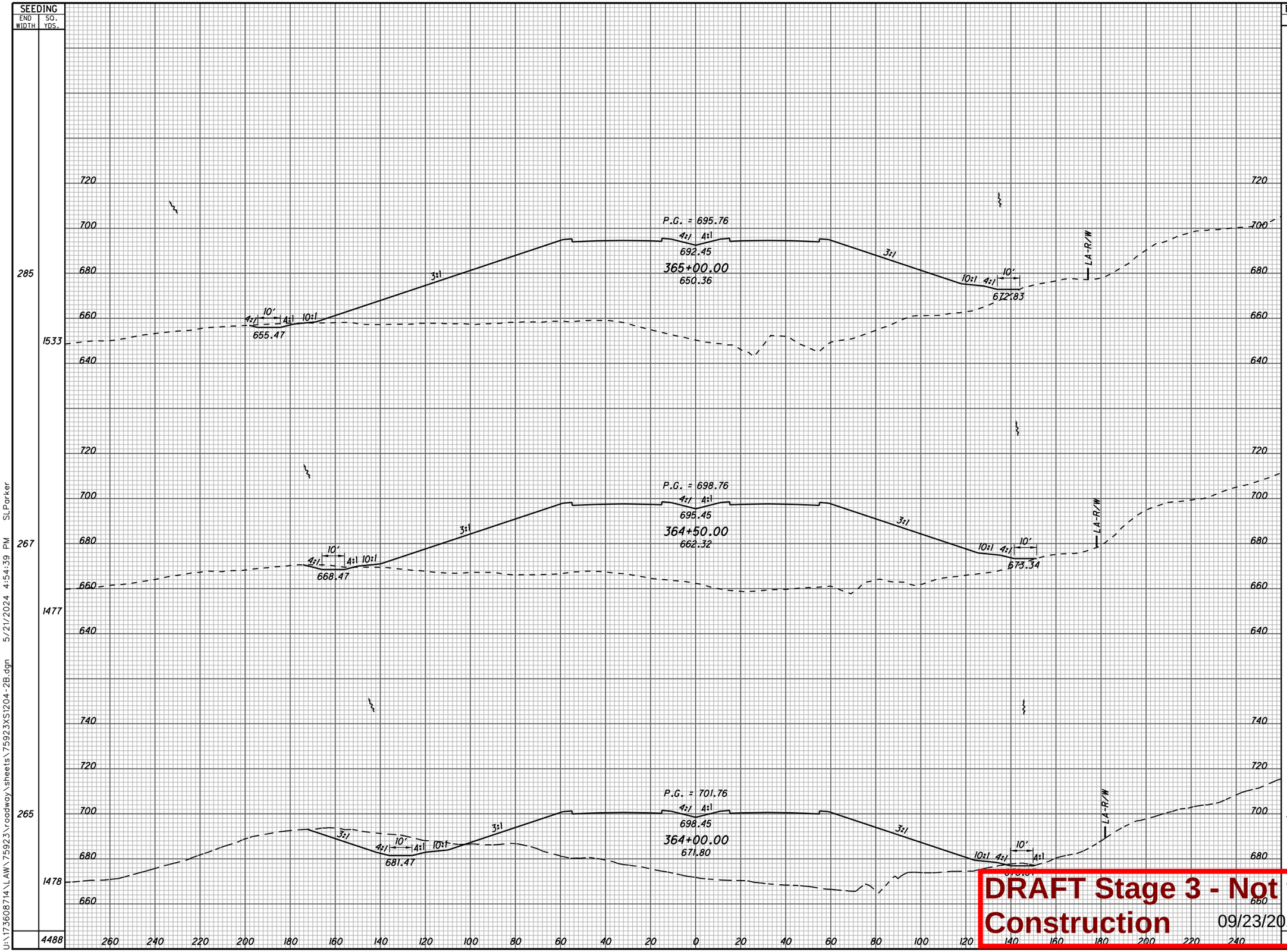

CROSS SECTIONS S.R. 7
STA. 364+00.00 TO STA. 365+00.00

LAW-7-2.17

364
1247

DRAFT Stage 3 - Not for Construction 09/23/2024

U:\173608714\LAW\75923\roadway\sheets\75923XS1204-2B.dgn 5/21/2024 4:54:39 PM SLParker

SEEDING END WIDTH	SEEDING SQ. YDS.
414	2152
361	1793
	3945

END AREA CUT	END AREA FILL	VOLUME CUT	VOLUME FILL
30	12706	60	22094
34	11155	54	18550
		114	10644

CALCULATED SLP
CHECKED ALB

CROSS SECTIONS S.R. 7
STA. 365+50.00 TO STA. 366+00.00

LAW-7-2.17

365
1247

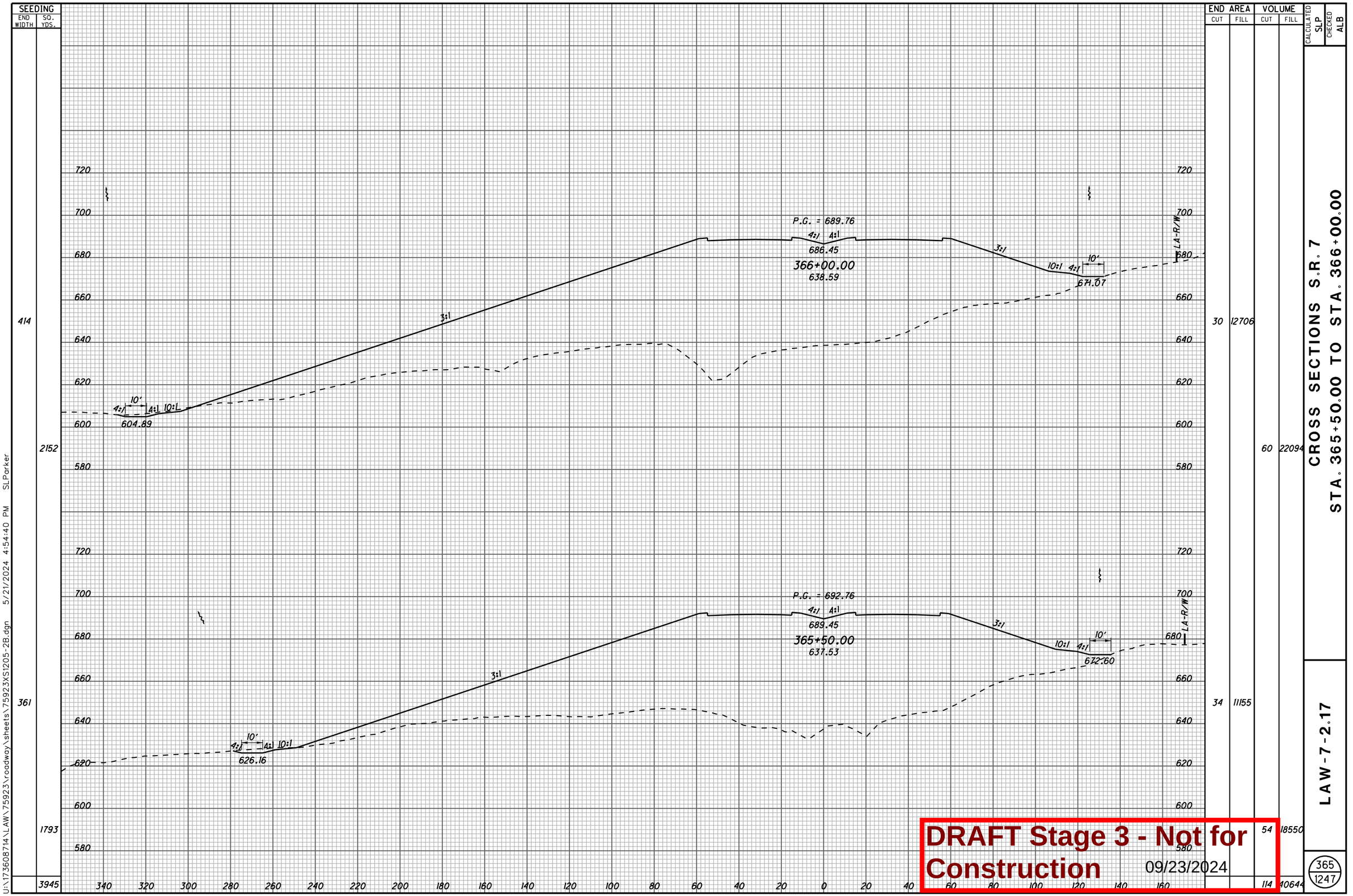

DRAFT Stage 3 - Not for Construction 09/23/2024

U:\173608714\LAW\75923\roadway\sheets\75923XS1205-2B.dgn 5/21/2024 4:54:40 PM SLParker

SEEDING END WIDTH	SEEDING SQ. YDS.
435	2420
436	2362
	4782

END AREA CUT	END AREA FILL	VOLUME CUT	VOLUME FILL
680	15534	940	28439
335	15180	338	25821
		1278	54260

CALCULATED SLP
CHECKED ALB

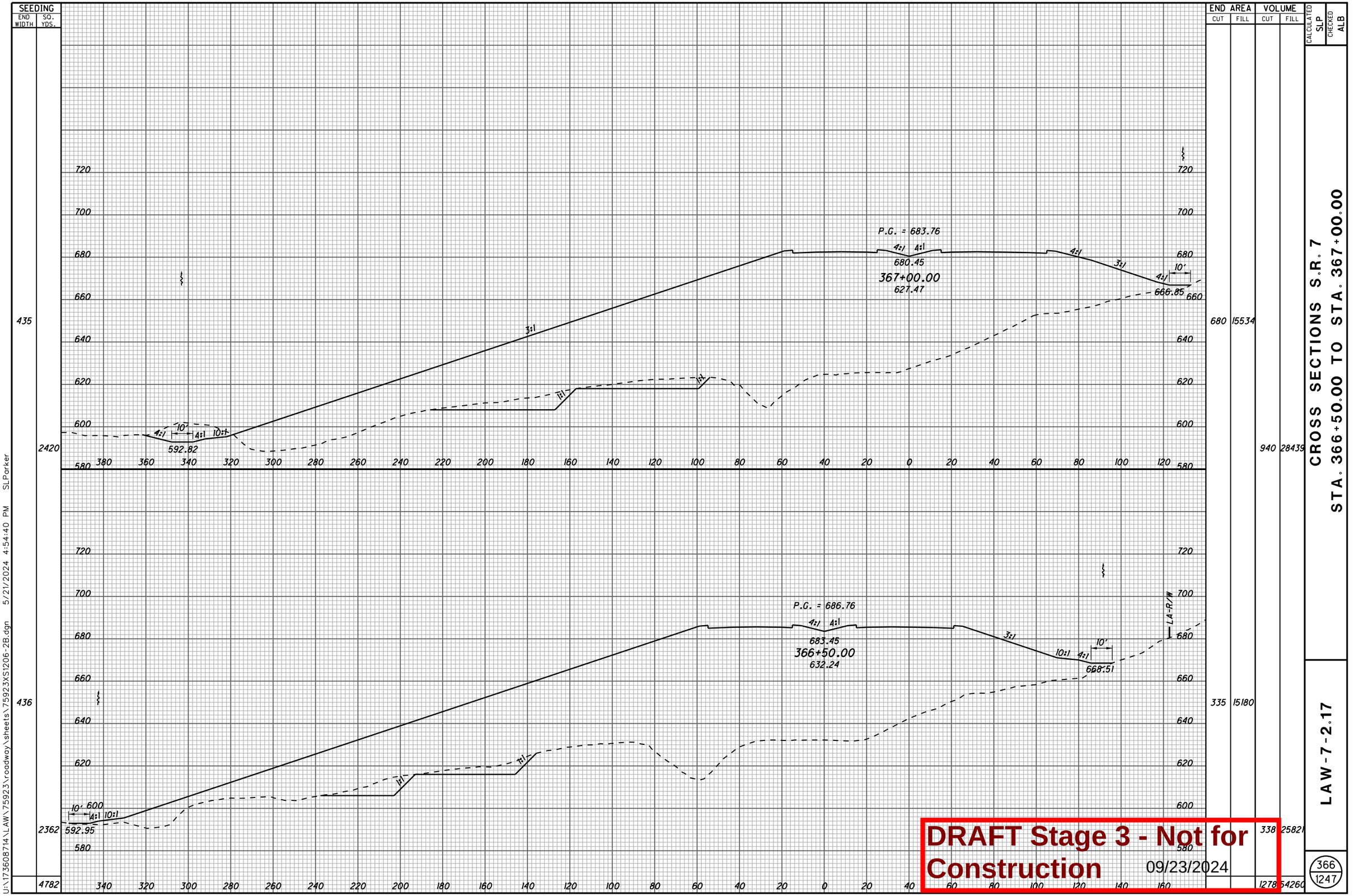

DRAFT Stage 3 - Not for Construction
09/23/2024

CROSS SECTIONS S.R. 7
STA. 366+50.00 TO STA. 367+00.00

LAW-7-2.17

366
1247

U:\1736087\4\LAW\75923\roadway\sheets\75923XS1206-2B.dgn 5/21/2024 4:54:40 PM SLParker

SEEDING	
END WIDTH	SQ. YDS.
439	2542
476	2529
	5071

END AREA		VOLUME	
CUT	FILL	CUT	FILL
1560	17000		
2230	30364		
848	15793		
1415	29007		
3645	59371		

CALCULATED SLP
CHECKED ALB

P.G. = 677.76
674.45
368+00.00
625.72
592.58
P.G. = 680.76
677.45
367+50.00
629.38
592.70
MATCH LINE
MATCH LINE
420 400 380
3:1
4:1
10:1
10'
13'
1:1
700 680 660 640 620 600 580
380 360 340 320 300 280 260 240 220 200 180 160 140 120 100 80 60 40 20 0 20 40 60 80 100 120

CROSS SECTIONS S.R. 7
STA. 367+50.00 TO STA. 368+00.00

LAW-7-2.17

367
1247

DRAFT Stage 3 - Not for Construction 09/23/2024

U:\173608714\LAW\75923\roadway\sheets\75923XS1207-2B.dgn 5/21/2024 4:54:41 PM SLParker

SEEDING	
END WIDTH	SQ. YDS.
394	2267
422	2392
	4659

END AREA	
CUT	FILL
942	17543
1205	17511
2560	31954
4549	64411

VOLUME	
CUT	FILL
1989	32457

CALCULATED SLP
CHECKED ALB

P.G. = 671.76
668.45
369+00.00
615.47
592.32
658.33
PROP. LIGHTING CIRCUIT OR CONDUIT
LA-R/W
P.G. = 674.76
671.45
368+50.00
620.23
592.45
661.94
CATCH BASIN NO. 8
STA. 368+50.00, 0' RT./LT., S.R. 7
T/C = 671.45
E = 668.45
HW-2.1
STA. 368+50.00, 104.53' RT., S.R. 7
E = 662.02
71' - 15" CONDUIT, TYPE B @ 1.47%
10' - 15" CONDUIT, TYPE F @ 1.47%
CFN: 1995104
E = 667.26
E = 662.14
16' - 15" CONDUIT, TYPE F, 707.21 @ 32.00%
9' - 15" CONDUIT, TYPE F @ 1.33%
* MASONARY COLLARS AS PER SCD DM-1.1 (INCLUDE WITH COST OF CONDUIT)
18" ROCK CHANNEL PROTECTION, TYPE C WITH FILTER (5.0 CY/LF)

DRAFT Stage 3 - Not for Construction 09/23/2024

CROSS SECTIONS S.R. 7
STA. 368+50.00 TO STA. 369+00.00

LAW-7-2.17

368
1247

U:\1736087\14\LAW\75923\roadway\sheets\75923XS1208-2B.dgn 5/21/2024 4:54:42 PM SLPorker

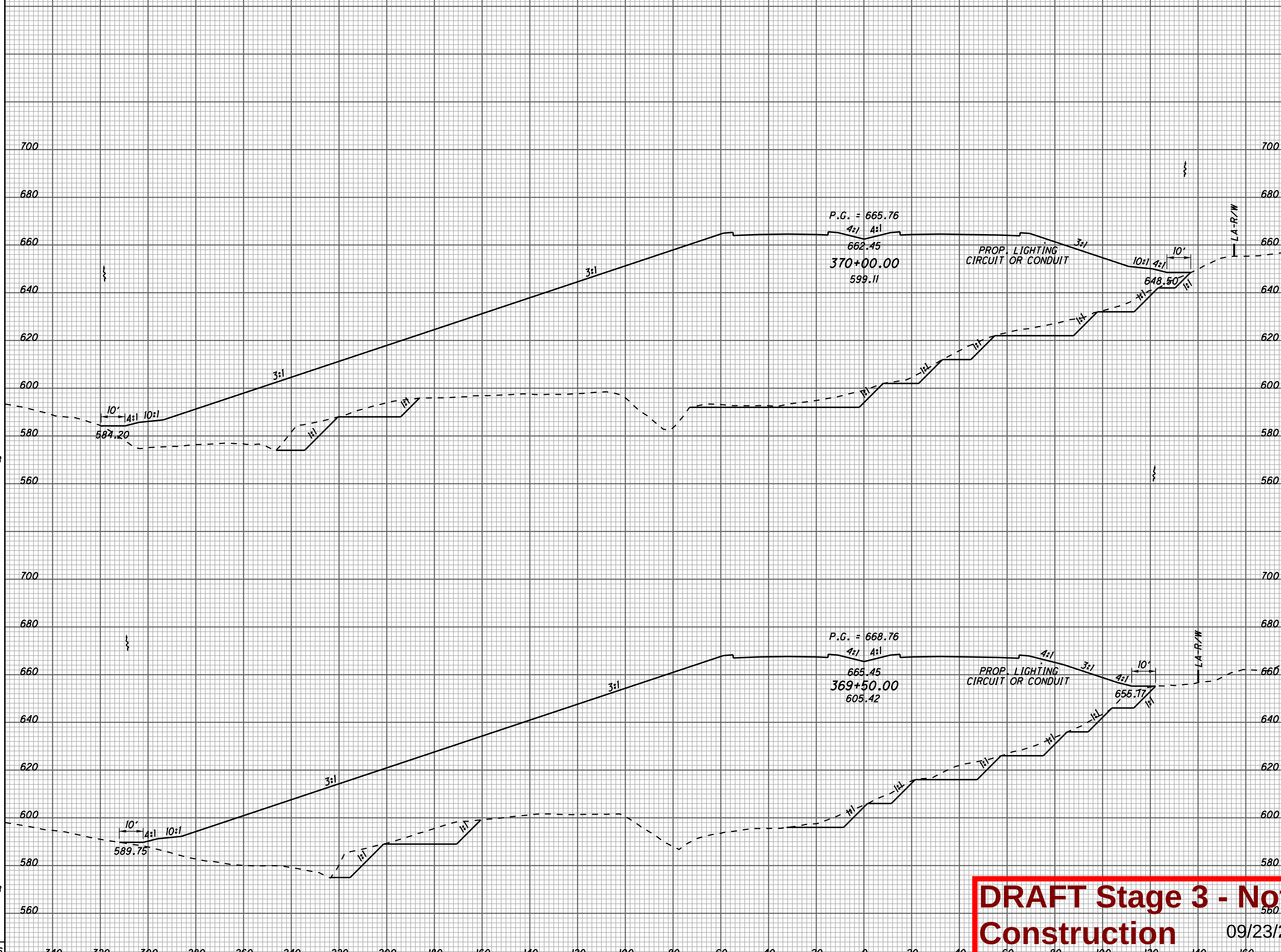

SEEDING END WIDTH	SEEDING SQ. YDS.	END AREA CUT	END AREA FILL	VOLUME CUT	VOLUME FILL
394		802	18599		
	2128			1444	34032
371		757	18155		
	2128			1574	33054
	4256			3018	67086

CALCULATED SLP
CHECKED ALB

CROSS SECTIONS S.R. 7
STA. 369+50.00 TO STA. 370+00.00

LAW-7-2.17

369
1247

U:\173608714\LAW\75923\roadway\sheets\75923XS1209-2B.dgn 5/21/2024 4:54:43 PM SLParker

DRAFT Stage 3 - Not for Construction 09/23/2024

SEEDING	
END WIDTH	SQ. YDS.
385	2215
412	2242
	4457

END AREA	
CUT	FILL
615	17984
533	18086

VOLUME	
CUT	FILL
1063	33399
1237	33968
2300	67367

CALCULATED SLP
CHECKED ALB

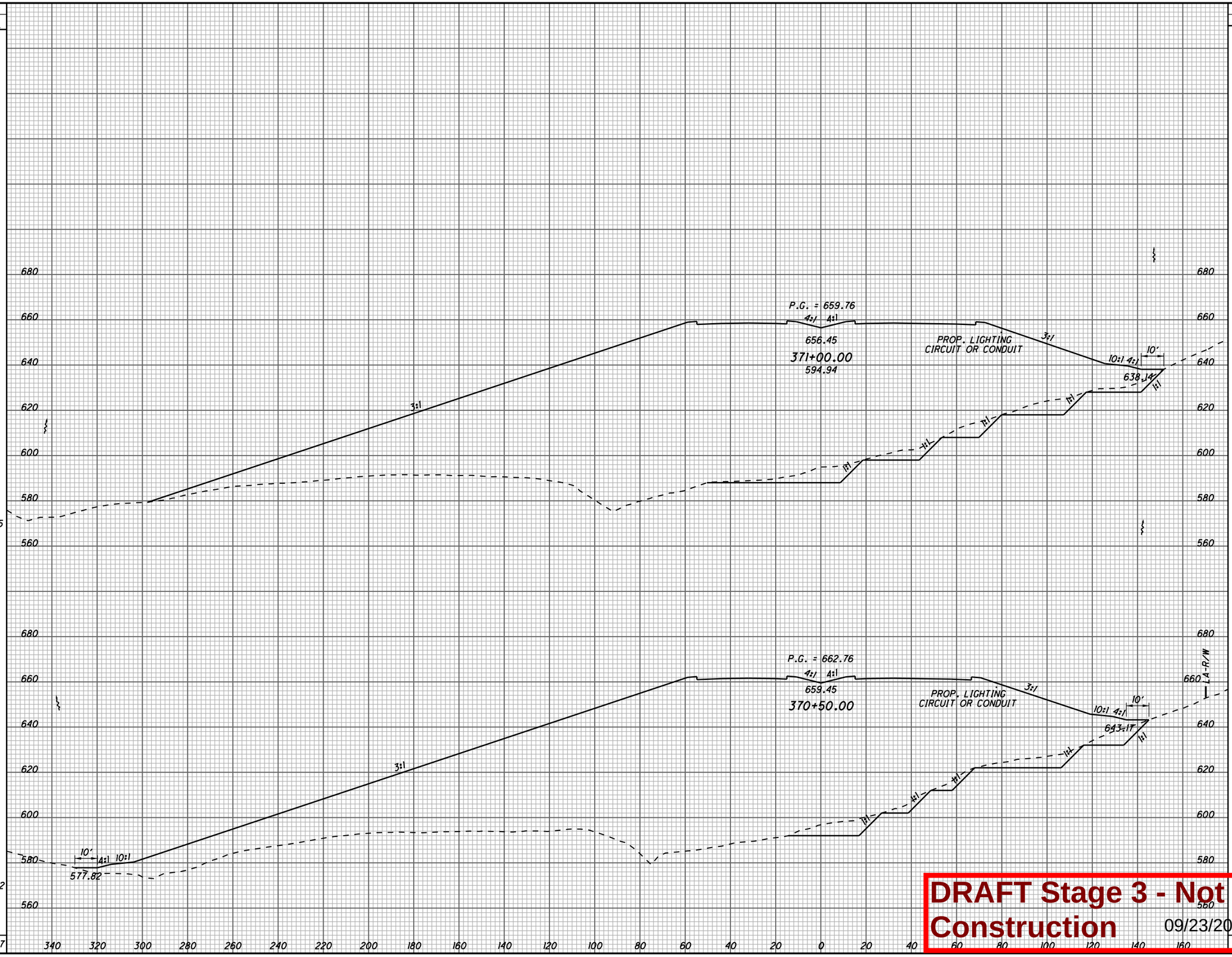

CROSS SECTIONS S.R. 7
STA. 370+50.00 TO STA. 371+00.00

LAW-7-2.17

370
1247

DRAFT Stage 3 - Not for Construction 09/23/2024

U:\17360871 4\LAW\75923\roadway\sheets\75923XS1210-2B.dgn 5/21/2024 4:54:44 PM SLParker

SEEDING	
END WIDTH	SQ. YDS.
406	2214
391	2156
	4370

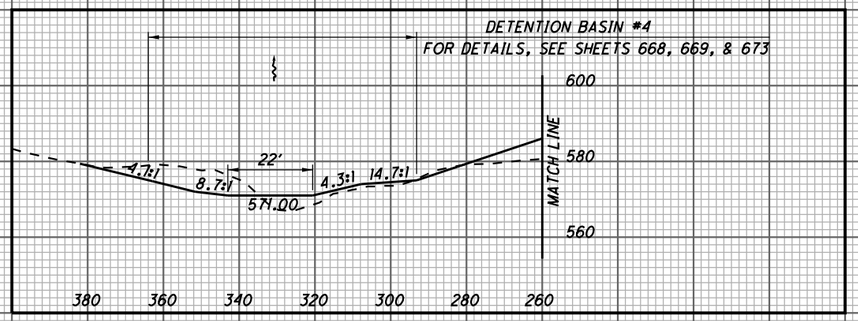

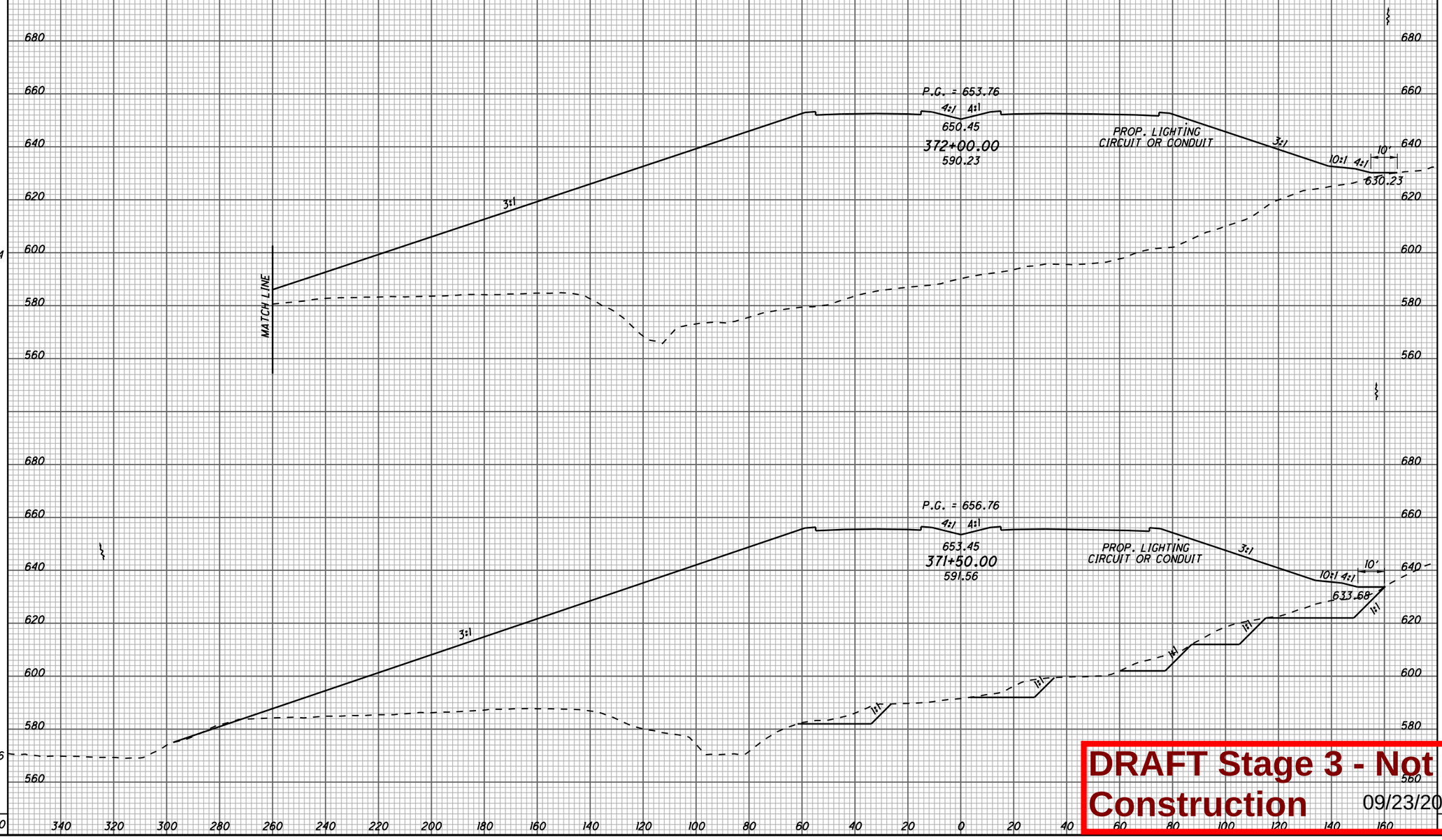

END AREA		VOLUME	
CUT	FILL	CUT	FILL
33	18272	559	33986
571	18433	1099	33720
		1658	67706

CALCULATED SLP
CHECKED ALB

CROSS SECTIONS S.R. 7
STA. 371+50.00 TO STA. 372+00.00

LAW-7-2.17

371
1247

DRAFT Stage 3 - Not for Construction 09/23/2024

U:\173608714\LAW\75923\roadway\sheets\75923XS1211-2B.dgn 5/21/2024 4:54:45 PM SLParker

SEEDING	
END WIDTH	SQ. YDS.
442	2363
409	2262
	4625

DETENTION BASIN #4
FOR DETAILS, SEE SHEETS 668, 669, & 673

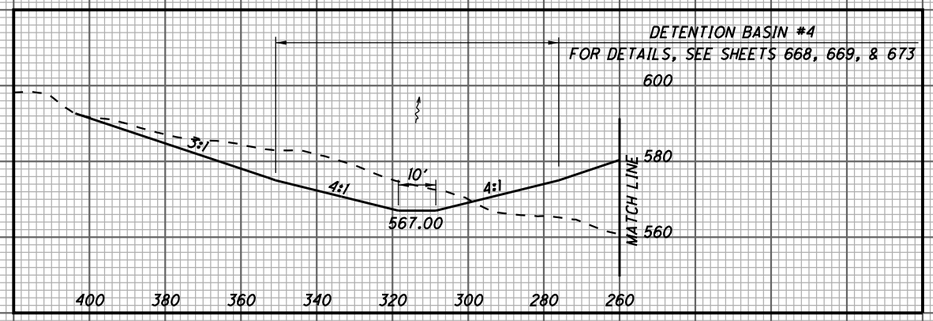

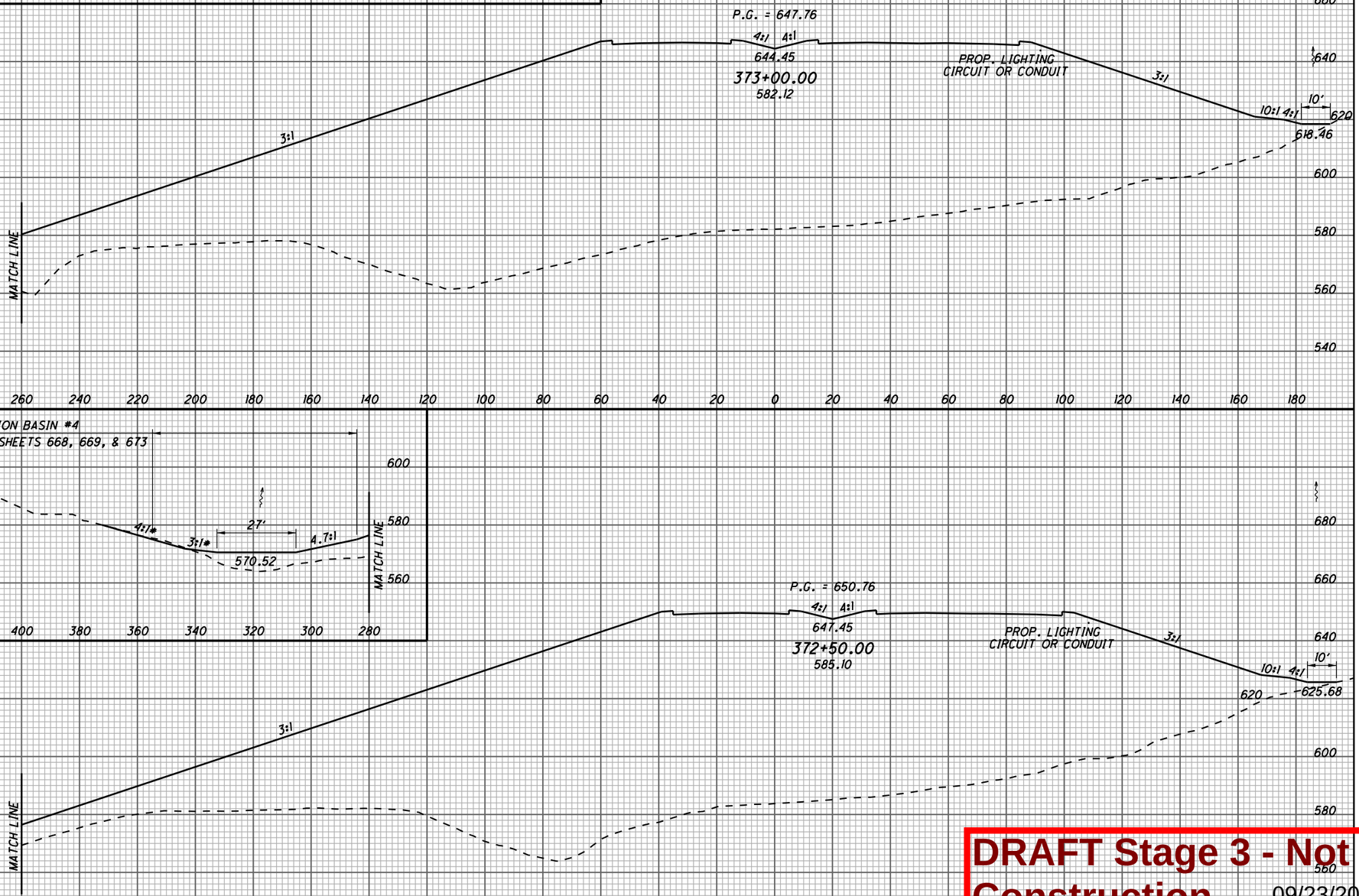

DETENTION BASIN #4
FOR DETAILS, SEE SHEETS 668, 669, & 673

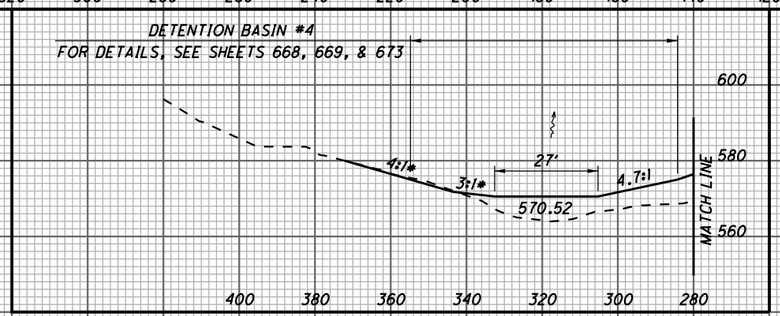

END AREA		VOLUME	
CUT	FILL	CUT	FILL
184	21067		
		173	37291
3	19207		
		34	34703
		207	71994

CALCULATED SLP
CHECKED ALB

CROSS SECTIONS S.R. 7
STA. 372+50.00 TO STA. 373+00.00

LAW-7-2.17

372
1247

DRAFT Stage 3 - Not for Construction 09/23/2024

U:\173608714\LAW\75923\roadway\sheets\75923XS1212-2B.dgn 5/21/2024 4:54:45 PM SLParker

SEEDING	
END WIDTH	SQ. YDS.
365	
515	
	701
	2572
	3273

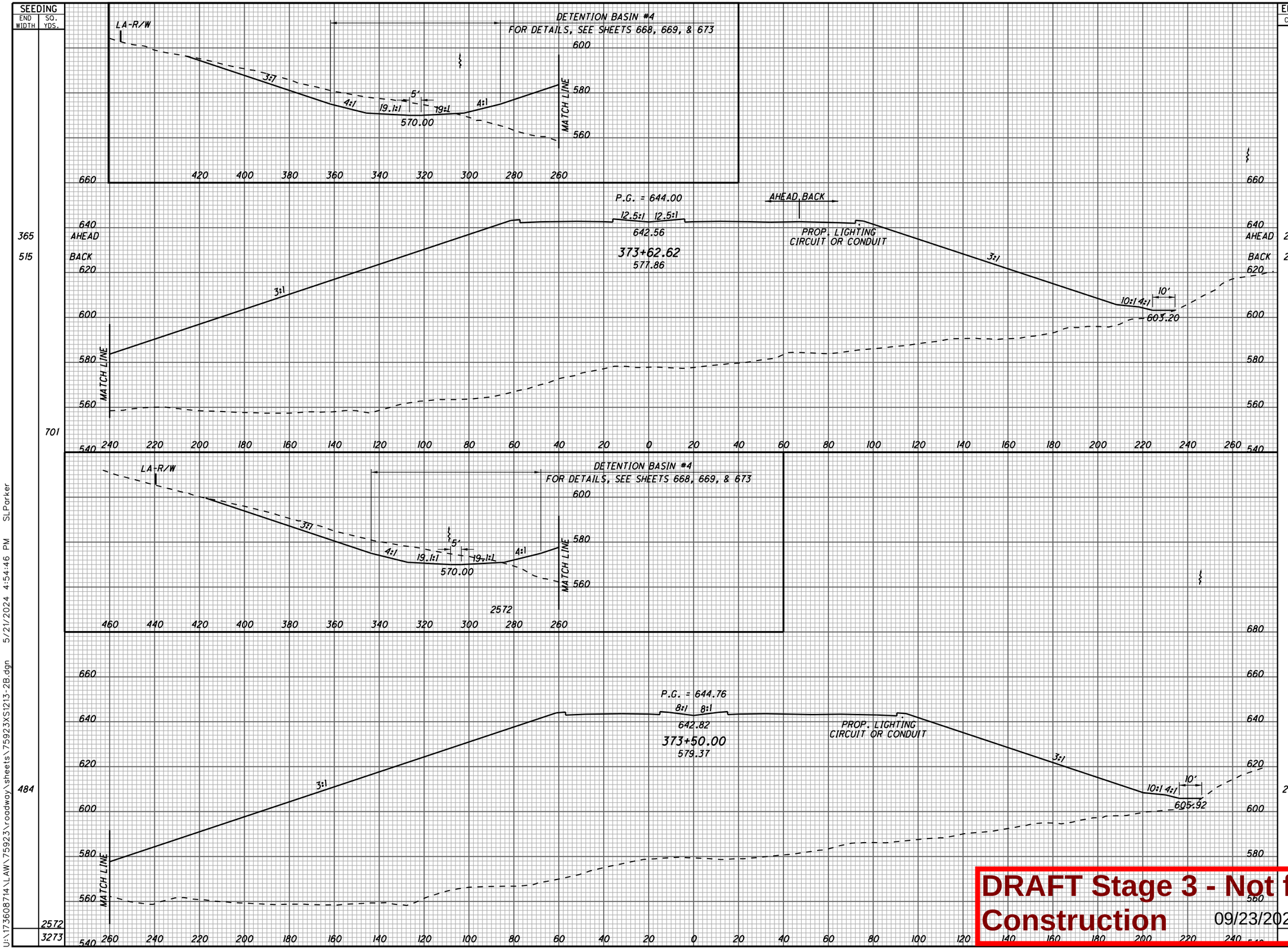

END AREA		VOLUME	
CUT	FILL	CUT	FILL
215	18471		
215	23992		
		108	11080
		246	23415
		398	41187
		506	52267

CALCULATED SLP
CHECKED ALB

CROSS SECTIONS S.R. 7
STA. 373+50.00 TO STA. 373+62.62

LAW-7-2.17

373
1247

DRAFT Stage 3 - Not for Construction 09/23/2024

U:\173608714\LAW 75923\roadway\sheets\75923XS1213-2B.dgn 5/21/2024 4:54:46 PM SLParker

SEEDING	
END WIDTH	SQ. YDS.
300	1678
304	1389
	3067

END AREA	
CUT	FILL
354	17298
187	18313
278	25463

VOLUME	
CUT	FILL
501	32974
779	58437

CALCULATED SLP
CHECKED ALB

CROSS SECTIONS S.R. 7
STA. 374+00.00 TO STA. 374+50.00

LAW-7-2.17

374
1247

U:\173608714\LAW\75923\roadway\sheets\75923XS1214-2B.dgn 5/21/2024 4:54:47 PM SLParker

660 640 620 600 580 560 540 680

LA-R/W

3:1 4:1 21.2:1 8' 18.4:1 4:1 3:1

569.25

DETENTION BASIN #4
FOR DETAILS, SEE SHEETS 668, 669, & 673

P.G. = 638.76
12.5:1 12.5:1 4:1
637.32 636.97
374+50.00
553.15

MATCH LINE RAMP 1

DRAINAGE LAYER (TYP.)

ITEM 203 - EMBANKMENT, AS PER PLAN, TYPE C _ _ _ _ 739 CY

P.G. = 641.76
12.5:1 12.5:1 4:1
602.65 640.70
374+00.00
570.18

3:1 4:1 22.3:1 6' 18.1:1 4:1 3:1

570.00

420 400 380 360 340 320 300 280 260 240 220 200 180 160 140 120 100 80 60 40 20 0 20 40 60 80

DRAFT Stage 3 - Not for Construction 09/23/2024

SEEDING END WIDTH	SEEDING SQ. YDS.
273	1567
291	1643
	3210

END AREA CUT	END AREA FILL	VOLUME CUT	VOLUME FILL
900	11864		
		1582	24369
808	14453		
		1077	29400
		2659	53769

CALCULATED SLP
CHECKED ALB

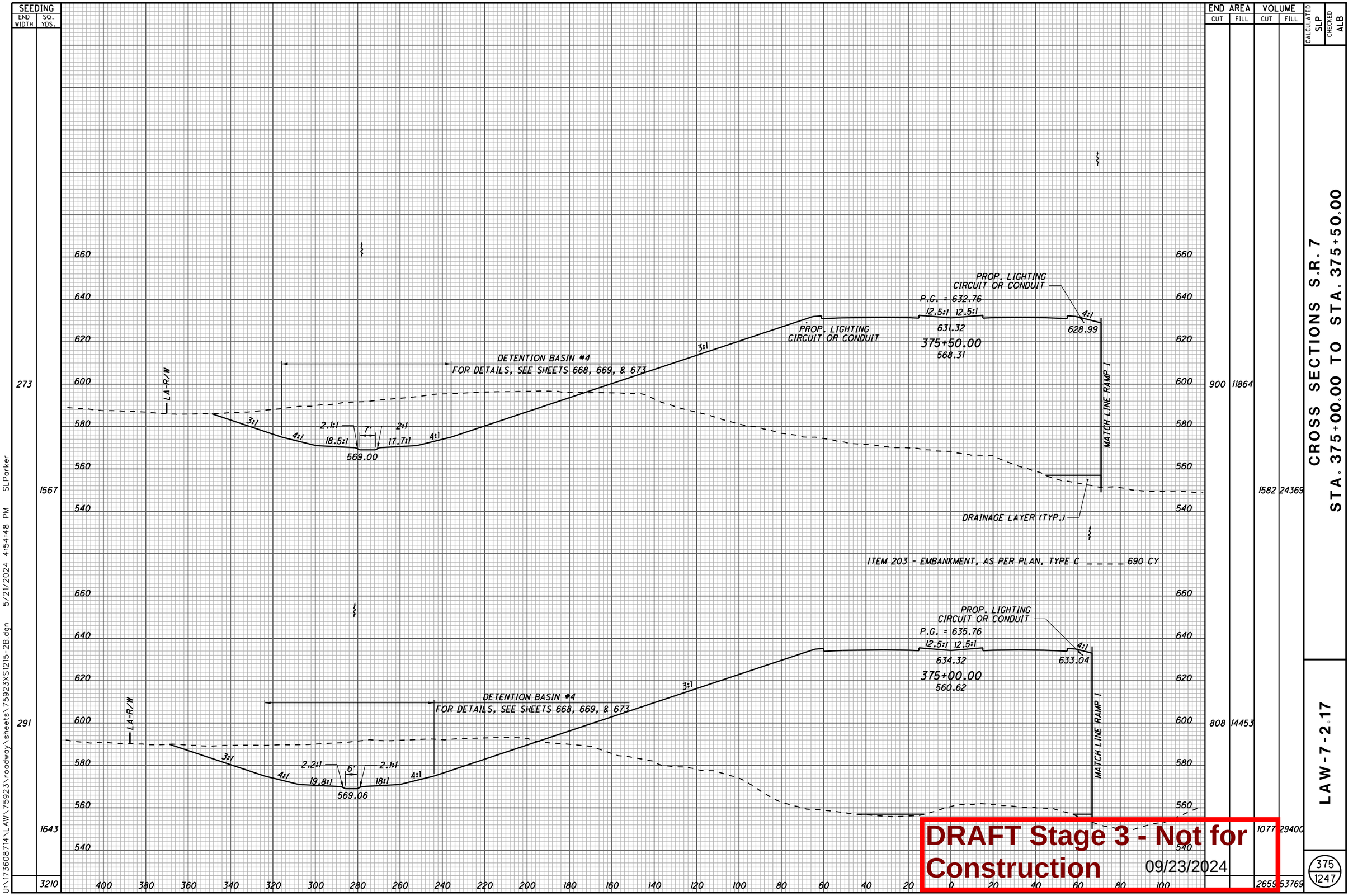

DRAFT Stage 3 - Not for Construction 09/23/2024

CROSS SECTIONS S.R. 7 STA. 375+00.00 TO STA. 375+50.00

LAW-7-2.17

375
1247

U:\1736087\14\LAW\75923\roadway\sheets\75923XS1215-2B.dgn 5/21/2024 4:54:48 PM SLParker

SEEDING	
END WIDTH	SQ. YDS.
237	1081
261	1484
	2565

END AREA	
CUT	FILL
395	11212
1025	10960
1026	16018
1782	21134
2808	37152

VOLUME	
CUT	FILL
1026	16018
1782	21134
2808	37152

CALCULATED SLP
CHECKED ALB

STA. 379+90.00, LT./RT.
END SLOPE REINFORCEMENT
FOR DETAILS, SEE SHEETS 38 & 39

STA. 378+64.00, LT./RT.
BEGIN SLOPE REINFORCEMENT
FOR DETAILS, SEE SHEETS 38 & 39

STA. 378+34.00, LT./RT.
END SLOPE REINFORCEMENT
FOR DETAILS, SEE SHEETS 38 & 39

STA. 376+60.00, LT./RT.
BEGIN SLOPE REINFORCEMENT
FOR DETAILS, SEE SHEETS 38 & 39

660 640 620 600 580 560 540

P.G. = 627.12 P.G. = 627.71
20:1 20:1 42.2:1
626.43
376+39.01
571.87
SKEW ANGLE = 14° LHF

PROP. LIGHTING CIRCUIT OR CONDUIT

PROP. LIGHTING CIRCUIT OR CONDUIT

DETENTION BASIN #4
FOR DETAILS, SEE SHEETS 668, 669, & 673

3:1* 3:1* 18' 4:1* 566.00

MATCH LINE RAMP I

DRAINAGE LAYER (TYP.)

ITEM 203 - EMBANKMENT, AS PER PLAN, TYPE C ..... 528 CY
ITEM 863 - REINFORCED EMBANKMENT ..... 41572 CY

P.G. = 629.76
10:1 10:1 5:1
628.10
376+00.00
567.48

PROP. LIGHTING CIRCUIT OR CONDUIT

STA. 376+00.00
CB-5
T/C = 625.61
℄ 15" TYPE B
= 620.92

DETENTION BASIN #4
FOR DETAILS, SEE SHEETS 668, 669, & 673

LA-R/W

3:1 4:1 15' 4:1 3:1 567.00

MATCH LINE RAMP I

400 380 360 340 320 300 280 260 240 220 200 180 160 140 120 100 80 60 40 20 0 20 40 60 80 100

DRAFT Stage 3 - Not for Construction 09/23/2024

CROSS SECTIONS S.R. 7
STA. 376+00.00 TO STA. 376+39.01

LAW-7-2.17

376
1247

U:\1736087\14\LAW\75923\roadway\sheets\75923XS1216-2B.dgn 5/21/2024 4:54:49 PM SLParker

SEEDING END WIDTH	SEEDING SQ. YDS.
70	645
161	599
150	1244

(VBF) DENOTES LOCATION OF VEGETATED BIOFILTER

P.G. = 600.21
25:1
8:1
16:1
4:1
4'
(VBF)
599.21 599.21
599.88
381+00.00
544.47
PROP. LIGHTING CIRCUIT OR CONDUIT
4:1
595.14
MATCH LINE S.R. 775
℄ 42" TYPE C = 559.21

P.G. = 602.89
9:1
12.5:1
4:1
601.36
602.56
380+50.00
542.57
6:1
PROP. LIGHTING CIRCUIT OR CONDUIT
MATCH LINE S.R. 775
DRAINAGE LAYER (TYP.)

P.G. = 604.43
P.G. = 605.28
157.6:1
13.3:1
13.3:1
5.1:1
603.50
380+15.41
546.11
SKEW ANGLE = 21° LHF
PROP. LIGHTING CIRCUIT OR CONDUIT
MATCH LINE STA. 380+50.00
MATCH LINE STA. 380+50.00
℄ 42" TYPE C = 552.97

ITEM 203 - EMBANKMENT, AS PER PLAN, TYPE C _ _ _ .6650 CY

END AREA CUT	END AREA FILL	VOLUME CUT	VOLUME FILL
0	6445		
		0	15045
0	9804		
0	13521		
0	11304		
0	28566		

CALCULATED SLP
CHECKED ALB

CROSS SECTIONS S.R. 7
STA. 380+15.41 TO STA. 381+00.00

LAW-7-2.17

DRAFT Stage 3 - Not for Construction 09/23/2024

377
1247

U:\173608714\LAW\75923\roadway\sheets\75923XS1217-2B.dgn 5/21/2024 4:54:50 PM SLParker

SEEDING	
END WIDTH	SQ. YDS.
84	659
153	623
70	392
	1674

END AREA	
CUT	FILL
0	3829
422	6157
486	5949
1685	31934

VOLUME	
CUT	FILL
392	9247
842	11210
451	11477

CALCULATED SLP
CHECKED ALB

CROSS SECTIONS S.R. 7
STA. 381+50.00 TO STA. 382+50.00

LAW-7-2.17

378
1247

620
600
580
560
540

MATCH LINE S.R. 775

4:1
588.07
PROP. LIGHTING CIRCUIT OR CONDUIT

P.G. = 593.33
10:1 14.7:1
591.93
382+50.00
564.65

7' (VBF)
4:1 4:1
592.05

MATCH LINE RAMP L

PROP. LIGHTING CIRCUIT OR CONDUIT
℄ 42" TYPE C = 563.72

P.G. = 595.43
25:1
8:1 16:1
594.43 594.43
382+00.00
558.97

4' (VBF)
4:1 4:1
595.10

6.1:1

MATCH LINE S.R. 775

4:1
590.24
PROP. LIGHTING CIRCUIT OR CONDUIT

PROP. LIGHTING CIRCUIT OR CONDUIT

1:1
℄ 42" TYPE C = 562.21

(VBF) DENOTES LOCATION OF VEGETATED BIOFILTER

ITEM 203 - EMBANKMENT, AS PER PLAN, TYPE C _ _ _ _ 2641 CY

P.G. = 597.73
25:1
8:1 16:1
596.72 596.72
381+50.00
552.19

4' (VBF)
4:1
597.40

PROP. LIGHTING CIRCUIT OR CONDUIT
4:1
592.59

MATCH LINE S.R. 775

MATCH LINE S.R. 775

1:1
℄ 42" TYPE C = 560.71

DRAINAGE LAYER (TYP.)

260 240 220 200 180 160 140 120 100 80 60 40 20 0 20 40 60 80 100 120 140 160 180 200 220 240

DRAFT Stage 3 - Not for Construction 09/23/2024

U:\173608714\LAW\75923\roadway\sheets\75923XS1218-2B.dgn 5/21/2024 4:54:50 PM SLParker

SEEDING	
END WIDTH	SQ. YDS.
132	797
155	888
164	690
	2375

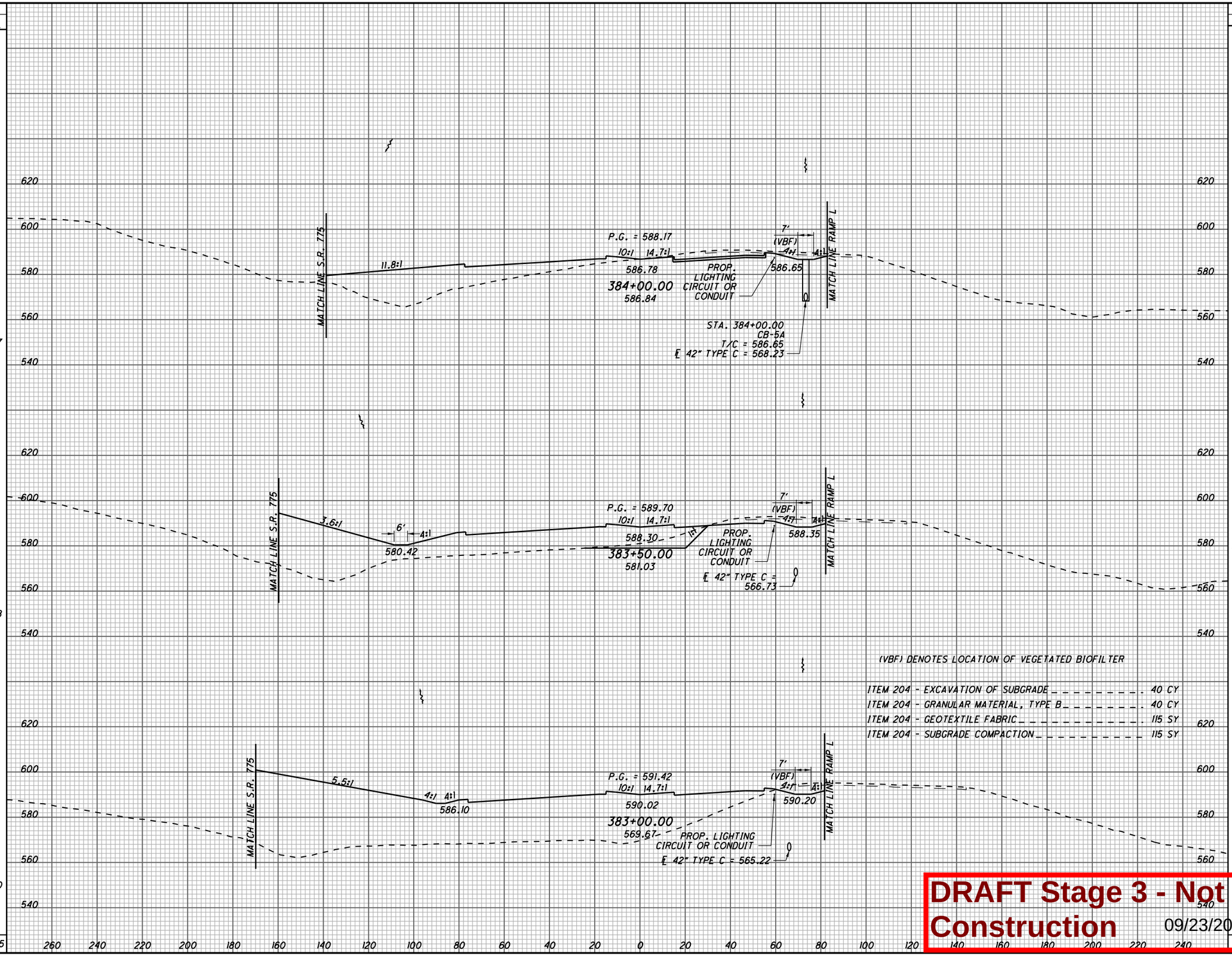

END AREA		VOLUME	
CUT	FILL	CUT	FILL
111	1051	323	3005
237	2194	279	6295
64	4604	59	7808
		661	17108

(VBF) DENOTES LOCATION OF VEGETATED BIOFILTER

ITEM 204 - EXCAVATION OF SUBGRADE	40 CY
ITEM 204 - GRANULAR MATERIAL, TYPE B	40 CY
ITEM 204 - GEOTEXTILE FABRIC	115 SY
ITEM 204 - SUBGRADE COMPACTION	115 SY

CALCULATED SLP
CHECKED ALB

CROSS SECTIONS S.R. 7
STA. 383+00.00 TO STA. 384+00.00

LAW-7-2.17

379
1247

DRAFT Stage 3 - Not for Construction 09/23/2024

U:\173608714\LAW\75923\roadway\sheets\75923XS1219-2B.dgn 5/21/2024 4:54:51 PM SLParker

SEEDING END WIDTH	SEEDING SQ. YDS.
136	720
122	341
0	367
	1428

END AREA CUT	END AREA FILL	VOLUME CUT	VOLUME FILL
194	600	336	1152
169	643	241	1359
91	825	188	1737
		765	4248

CALCULATED SLP
CHECKED ALB

CROSS SECTIONS S.R. 7
STA. 384+50.00 TO STA. 385+50.00

LAW-7-2.17

380
1247

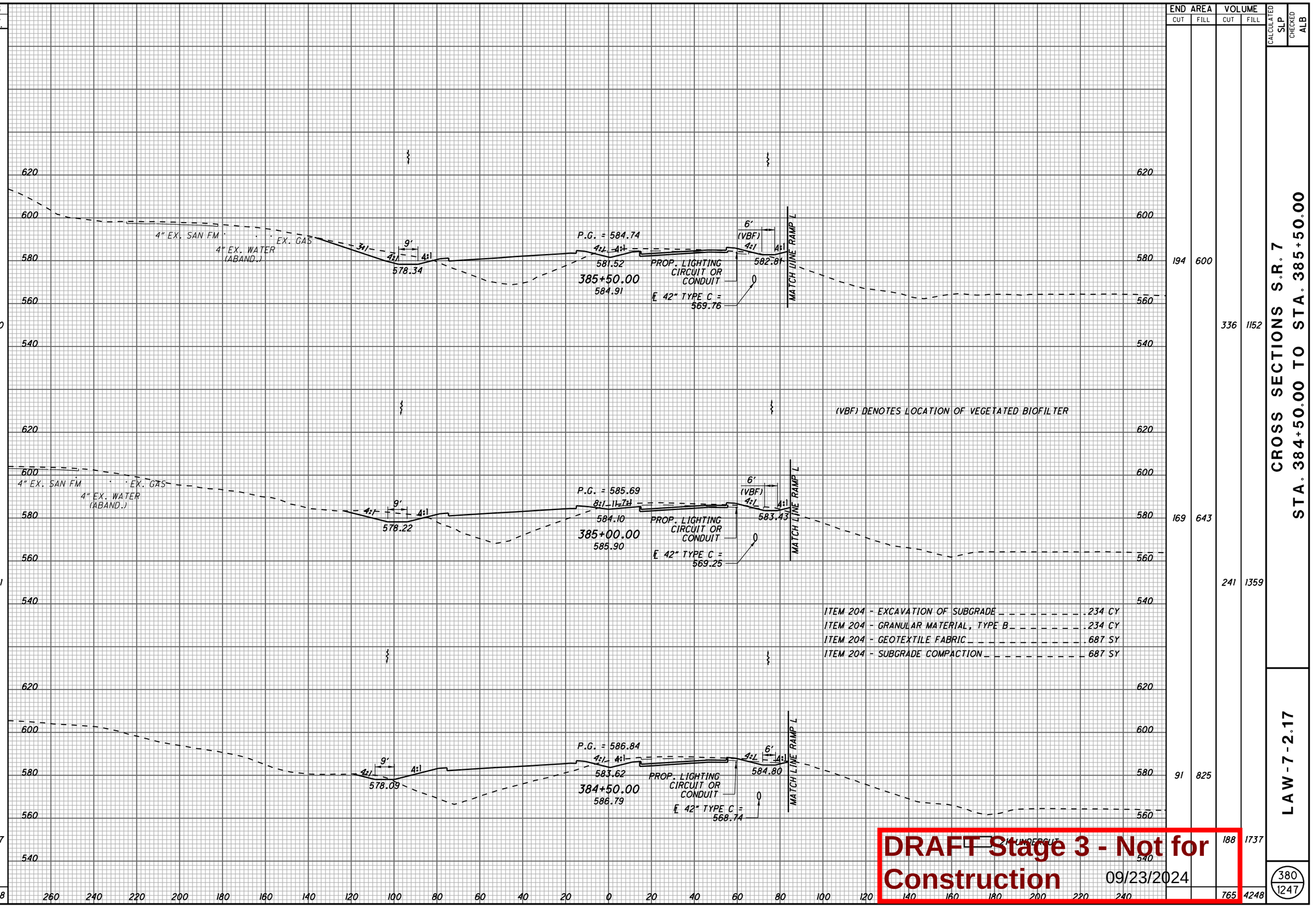

DRAFT Stage 3 - Not for Construction 09/23/2024

U:\173608714\LAW\75923\roadway\sheets\75923XS1220-2B.dgn 5/21/2024 4:54:52 PM SLPorker

SEEDING	
END WIDTH	SQ. YDS.
183	825
114	691
134	753
	2269

END AREA	
CUT	FILL
737	79
515	84
395	388
2547	1504

VOLUME	
CUT	FILL
1159	151
842	437
546	916

CALCULATED SLP
CHECKED ALB

MATCH LINE RAMP J

4:1

7'

578.85

EX. 48" STM (TO BE REMOVED)

STA. 387+00.00
CB-8A
T/C = 579.81
℄ 42" TYPE B = 571.97

P.G. = 583.03
579.81

387+00.00
582.91

EX. GAS
4" EX. WATER (ABAND.)

PROP. LIGHTING CIRCUIT OR CONDUIT

6' (VBF)

581.36

MATCH LINE RAMP L

STA. 387+00.00
CB-5A
T/C = 581.36
℄ 42" TYPE C = 571.28

4" EX. GAS
4" EX. SAN FM

EX LA-R/W

(VBF) DENOTES LOCATION OF VEGETATED BIOFILTER

3:1

8'

578.59

EX. 48" STM (TO BE REMOVED)
4" EX. SAN FM
4" EX. WATER (ABAND.)
4" EX. GAS

P.G. = 583.41
580.19

386+50.00
583.87

PROP. LIGHTING CIRCUIT OR CONDUIT

582.22

℄ 42" TYPE C = 570.77

4" EX. WATER (ABAND.)
4" EX. SAN FM

578.46

EX. GAS

EX. 48" STM (TO BE REMOVED)

P.G. = 583.98
580.76

386+00.00
584.57

582.58

℄ 42" TYPE C = 570.26

UNDERCUT

ITEM 204 - EXCAVATION OF SUBGRADE	410 CY
ITEM 204 - GRANULAR MATERIAL, TYPE B	410 CY
ITEM 204 - GEOTEXTILE FABRIC	1316 SY
ITEM 204 - SUBGRADE COMPACTION	1316 SY

620 600 580 560 540 520

260 240 220 200 180 160 140 120 100 80 60 40 20 0 20 40 60 80 100 120 140 160 180 200 220 240

DRAFT Stage 3 - Not for Construction 09/23/2024

CROSS SECTIONS S.R. 7
STA. 386+00.00 TO STA. 387+00.00

LAW-7-2.17

381
1247

U:\173608714\LAW\75923\roadway\sheets\75923XS1221-2B.dgn 5/21/2024 4:54:53 PM SLParker

SEEDING	
END WIDTH	SQ. YDS.
84	424
68	149
35	380
101	
	953

END AREA	
CUT	FILL
22	294
19	293
23	146
576	255
	644

VOLUME	
CUT	FILL
38	544
21	211
585	149
	904

CALCULATED SLP
CHECKED ALB

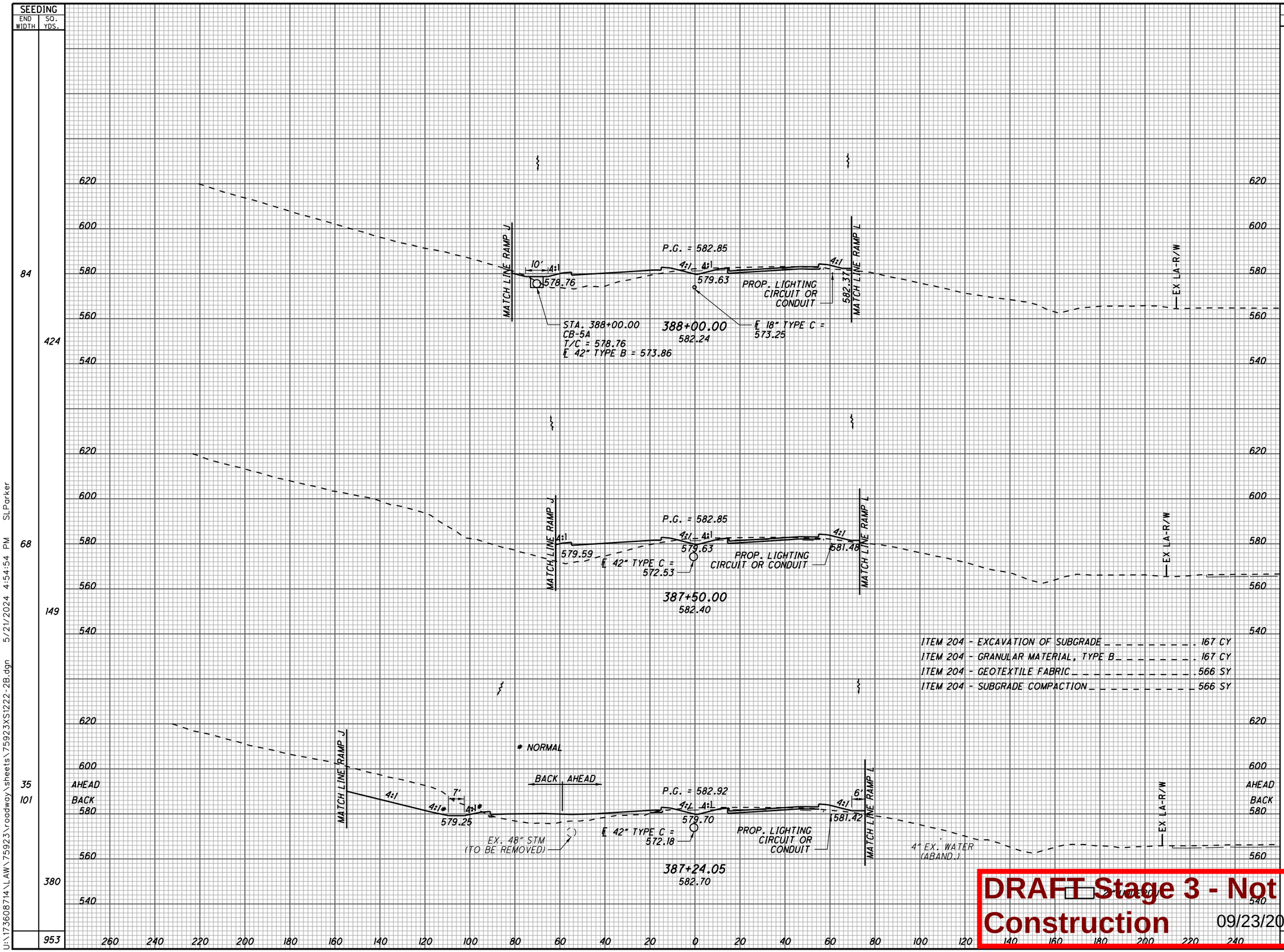

ITEM 204 - EXCAVATION OF SUBGRADE . . . . . 167 CY
ITEM 204 - GRANULAR MATERIAL, TYPE B . . . . . 167 CY
ITEM 204 - GEOTEXTILE FABRIC . . . . . 566 SY
ITEM 204 - SUBGRADE COMPACTION . . . . . 566 SY

CROSS SECTIONS S.R. 7
STA. 387+24.05 TO STA. 388+00.00

LAW-7-2.17

382
1247

DRAFT Stage 3 - Not for Construction 09/23/2024

U:\173608714\LAW\75923\roadway\sheets\75923XS1222-2B.dgn 5/21/2024 4:54:54 PM SLPorker

SEEDING END WIDTH	SEEDING SQ. YDS.
140 AHEAD	299
60 BACK	
75	420
76	439
82	461
	1619

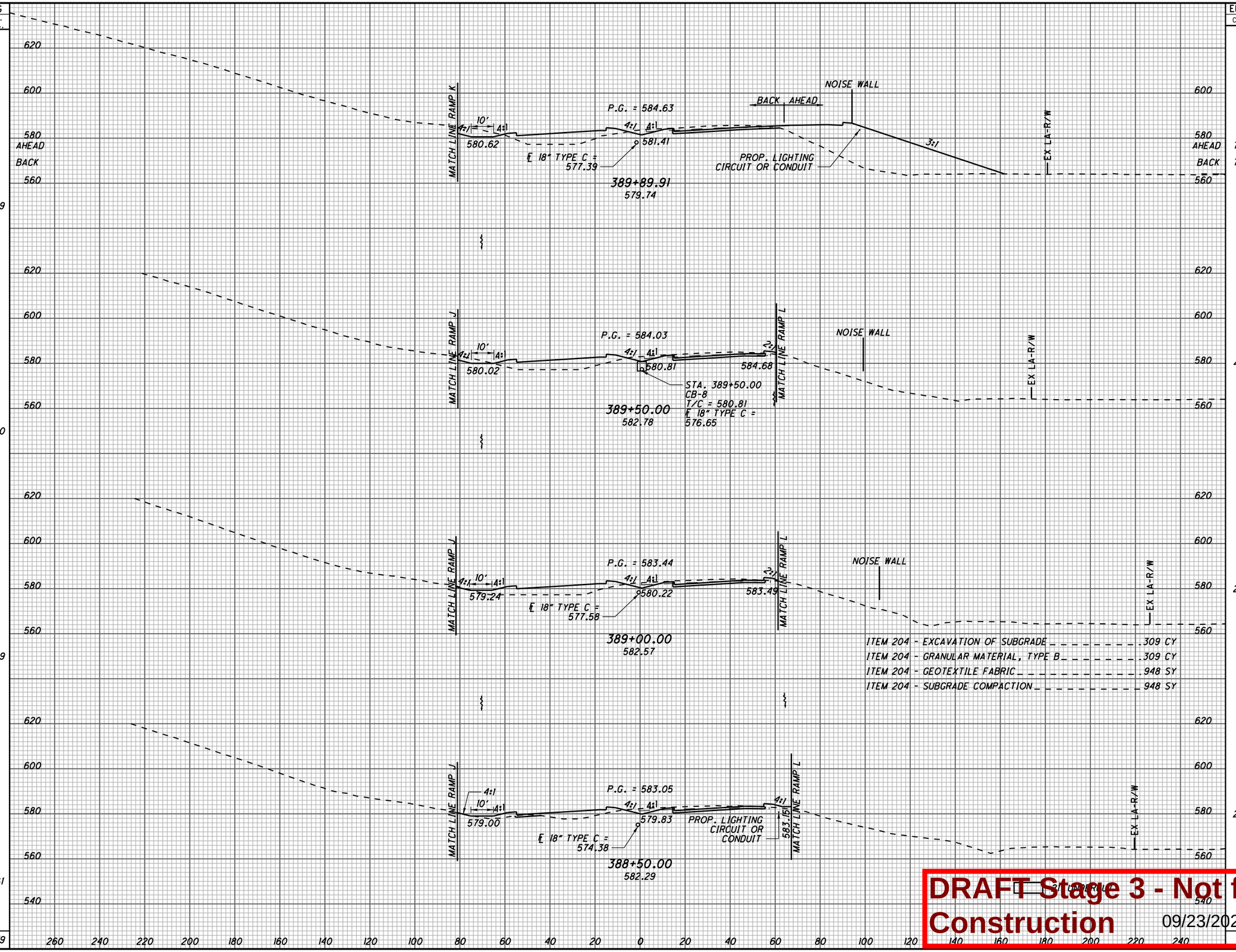

END AREA CUT	END AREA FILL	VOLUME CUT	VOLUME FILL
AHEAD 76	1215		
BACK 76	209		
		90	317
45	218		
		64	399
23	212		
		40	321
20	134		
		39	397
233	1434		

ITEM 204 - EXCAVATION OF SUBGRADE ..... 309 CY
ITEM 204 - GRANULAR MATERIAL, TYPE B ..... 309 CY
ITEM 204 - GEOTEXTILE FABRIC ..... 948 SY
ITEM 204 - SUBGRADE COMPACTION ..... 948 SY

CALCULATED SLP
CHECKED ALB

CROSS SECTIONS S.R. 7
STA. 338+50.00 TO STA. 389+89.91

LAW-7-2.17

383
1247

DRAFT Stage 3 - Not for Construction 09/23/2024

U:\173608714\LAW\75923\roadway\sheets\75923XS1223-2B.dgn 5/21/2024 4:54:54 PM SLPorker

SEEDING END WIDTH	SEEDING SQ. YDS.	END AREA CUT	END AREA FILL	VOLUME CUT	VOLUME FILL
149	412	321	1373	281	1272
148	815	284	1373	497	2564
145	160	253	1395	62	488
	1387			840	4324

CALCULATED SLP
CHECKED ALB

CROSS SECTIONS S.R. 7
STA. 390+00.00 TO STA. 390+75.00

LAW-7-2.17

384
1247

620
600
580
560
540

MATCH LINE RAMP K

10'
4:1
4:1
582.04
P.G. = 586.14
4:1
4:1
583.01
℄ 18" TYPE C = 578.99
390+75.00
584.63
END FULL DEPTH
NOISE WALL
PROP. LIGHTING CIRCUIT OR CONDUIT
1:1
3:1
EX LA-R/W

P.G. = 585.63
581.62
℄ 18" TYPE C = 578.52
390+50.00
584.29

P.G. = 584.80
580.79
℄ 18" TYPE C = 577.58
390+00.00
579.75

ITEM 204 - EXCAVATION OF SUBGRADE . . . . . 151 CY
ITEM 204 - GRANULAR MATERIAL, TYPE B . . . . . 151 CY
ITEM 204 - GEOTEXTILE FABRIC . . . . . 457 SY
ITEM 204 - SUBGRADE COMPACTION . . . . . 457 SY

260 240 220 200 180 160 140 120 100 80 60 40 20 0 20 40 60 80 100 120 140 160 180 200 220 240

DRAFT Stage 3 - Not for Construction 09/23/2024

U:\173608714\LAW\75923\roadway\sheets\75923XS1224-2B.dgn 5/21/2024 4:54:55 PM SLPorker

SEEDING END WIDTH	SEEDING SQ. YDS.	END AREA CUT	END AREA FILL	VOLUME CUT	VOLUME FILL
127	694	317	790	567	1488
123	688	295	817	526	1676
125	380	273	993	275	1096
	1762			1368	4260

CALCULATED ALB
CHECKED TCM

620
600
580
560
540

MATCH LINE RAMP K

10'
4:1
4:1
584.13
P.C. = 588.14
P.C. = 588.33
4:1
585.15
℄ 18" TYPE C = 581.32
392+00.00
586.61
NOISE WALL
1:1
1:1
2:1
PROP. LIGHTING CIRCUIT OR CONDUIT
EX LA-R/W
EX R/W
4" EX. WATER

MATCH LINE RAMP K

10'
4:1
4:1
583.30
P.C. = 587.30
P.C. = 587.41
4:1
4:1
584.28
℄ 18" TYPE C = 580.39
391+50.00
585.87
NOISE WALL
1:1
1:1
2:1
PROP. LIGHTING CIRCUIT OR CONDUIT
EX LA-R/W
EX R/W
4" EX. WATER
EX. SAN

ITEM 204 - EXCAVATION OF SUBGRADE . . . . . 161 CY
ITEM 204 - GRANULAR MATERIAL, TYPE B . . . . . 161 CY
ITEM 204 - GEOTEXTILE FABRIC . . . . . 540 SY
ITEM 204 - SUBGRADE COMPACTION . . . . . 540 SY

MATCH LINE RAMP K

10'
4:1
4:1
582.46
P.C. = 586.47
P.C. = 586.55
4:1
4:1
583.47
℄ 18" TYPE C = 579.46
391+00.00
584.97
NOISE WALL
PROP. LIGHTING CIRCUIT OR CONDUIT
1:1
1:1
2:1
EX LA-R/W
4" UNDERCUT

260 240 220 200 180 160 140 120 100 80 60 40 20 0 20 40 60 80 100 120 140 160 180 200 220 240

DRAFT Stage 3 - Not for Construction 09/23/2024

CROSS SECTIONS S.R. 7
STA. 391+00.00 TO STA. 392+00.00

LAW-7-2.17

385
1247

U:\173608714\LAW\75923\roadway\sheets\75923XS1225-2B.dgn 5/21/2024 4:54:56 PM SLParker

SEEDING END WIDTH	SEEDING SQ. YDS.
149	757
124	691
125	699
	2147

END AREA CUT	END AREA FILL	VOLUME CUT	VOLUME FILL
353	1048	615	1755
311	846	593	1600
330	881	599	1548
		1807	4903

CALCULATED SLP
CHECKED ALB

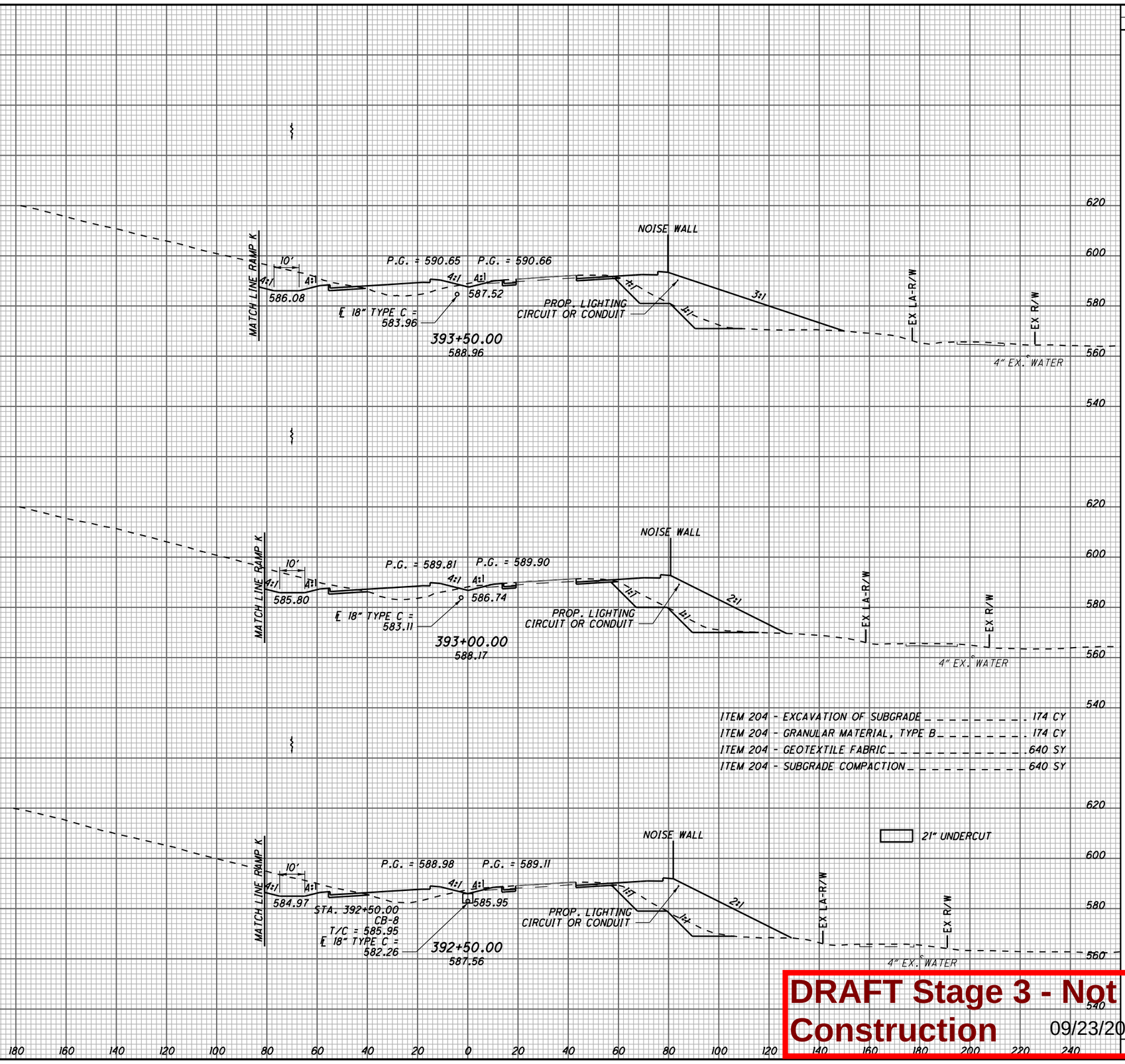

ITEM 204 - EXCAVATION OF SUBGRADE . . . . . 174 CY
ITEM 204 - GRANULAR MATERIAL, TYPE B . . . . . 174 CY
ITEM 204 - GEOTEXTILE FABRIC . . . . . 640 SY
ITEM 204 - SUBGRADE COMPACTION . . . . . 640 SY

DRAFT Stage 3 - Not for Construction 09/23/2024

CROSS SECTIONS S.R. 7
STA. 392+50.00 TO STA. 393+50.00

LAW-7-2.17

386
1247

U:\173608714\LAW\75923\roadway\sheets\75923XS1226-2B.dgn 5/21/2024 4:54:57 PM SLParker

SEEDING	
END WIDTH	SQ. YDS.
104	697
146	813
146	820
	2330

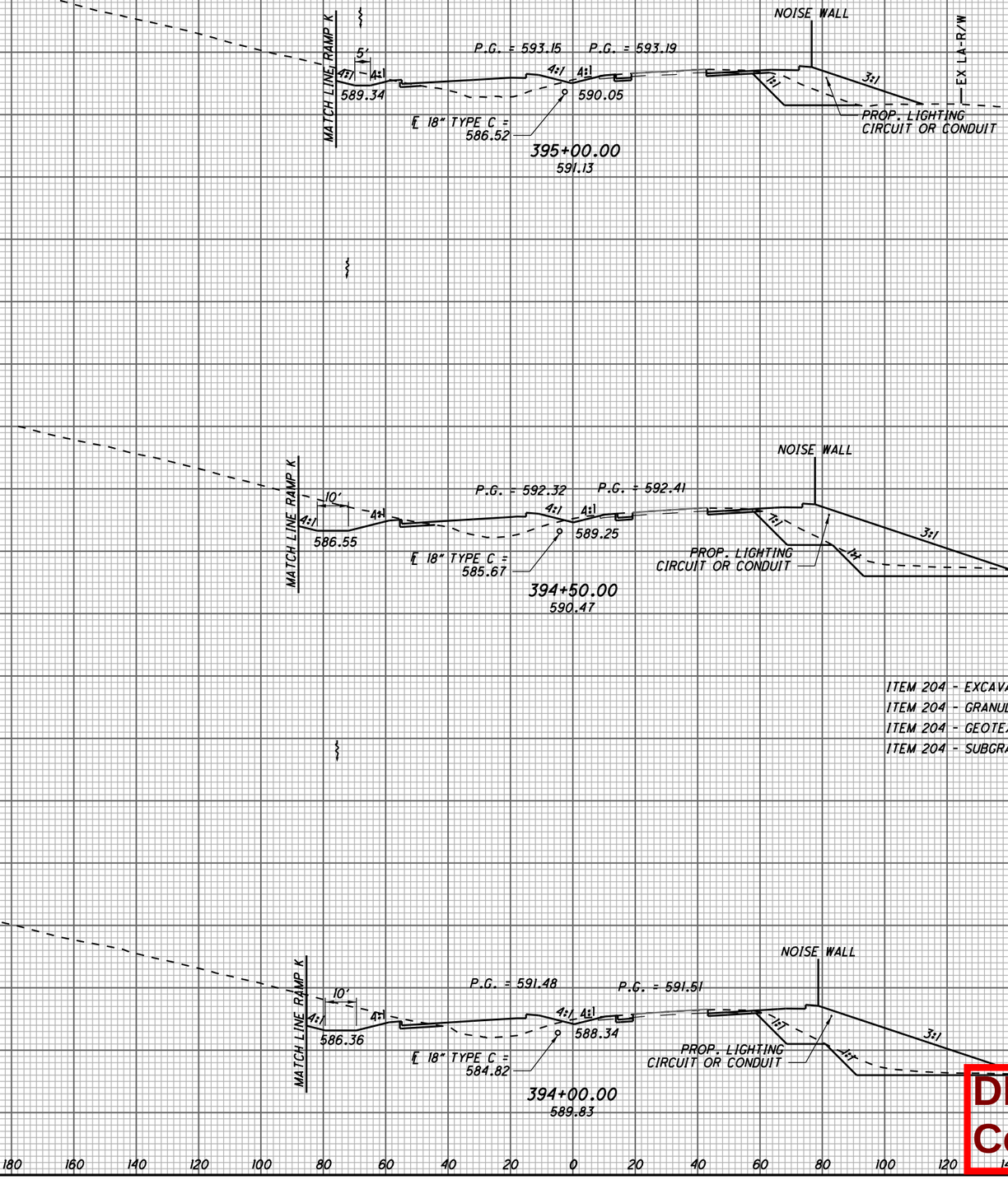

ITEM 204 - EXCAVATION OF SUBGRADE	166 CY
ITEM 204 - GRANULAR MATERIAL, TYPE B	166 CY
ITEM 204 - GEOTEXTILE FABRIC	590 SY
ITEM 204 - SUBGRADE COMPACTION	590 SY

END AREA		VOLUME	
CUT	FILL	CUT	FILL
220	580	667	1500
500	1040	830	1902
396	1013	694	1909
		2191	5311

CALCULATED SLP
CHECKED ALB

CROSS SECTIONS S.R. 7 STA. 394+00.00 TO STA. 395+00.00

LAW-7-2.17

387
1247

DRAFT Stage 3 - Not for Construction
09/23/2024

U:\173608714\LAW\75923\roadway\sheets\75923XS1227-2B.dgn 5/21/2024 4:54:58 PM SLParker

SEEDING END WIDTH	SEEDING SQ. YDS.	END AREA CUT	END AREA FILL	VOLUME CUT	VOLUME FILL
88	502	158	556	217	653
92	532	76	149	108	506
100	554	40	397	91	723
100	567	58	383	258	892
	2155			674	2774

CALCULATED SLP
CHECKED ALB

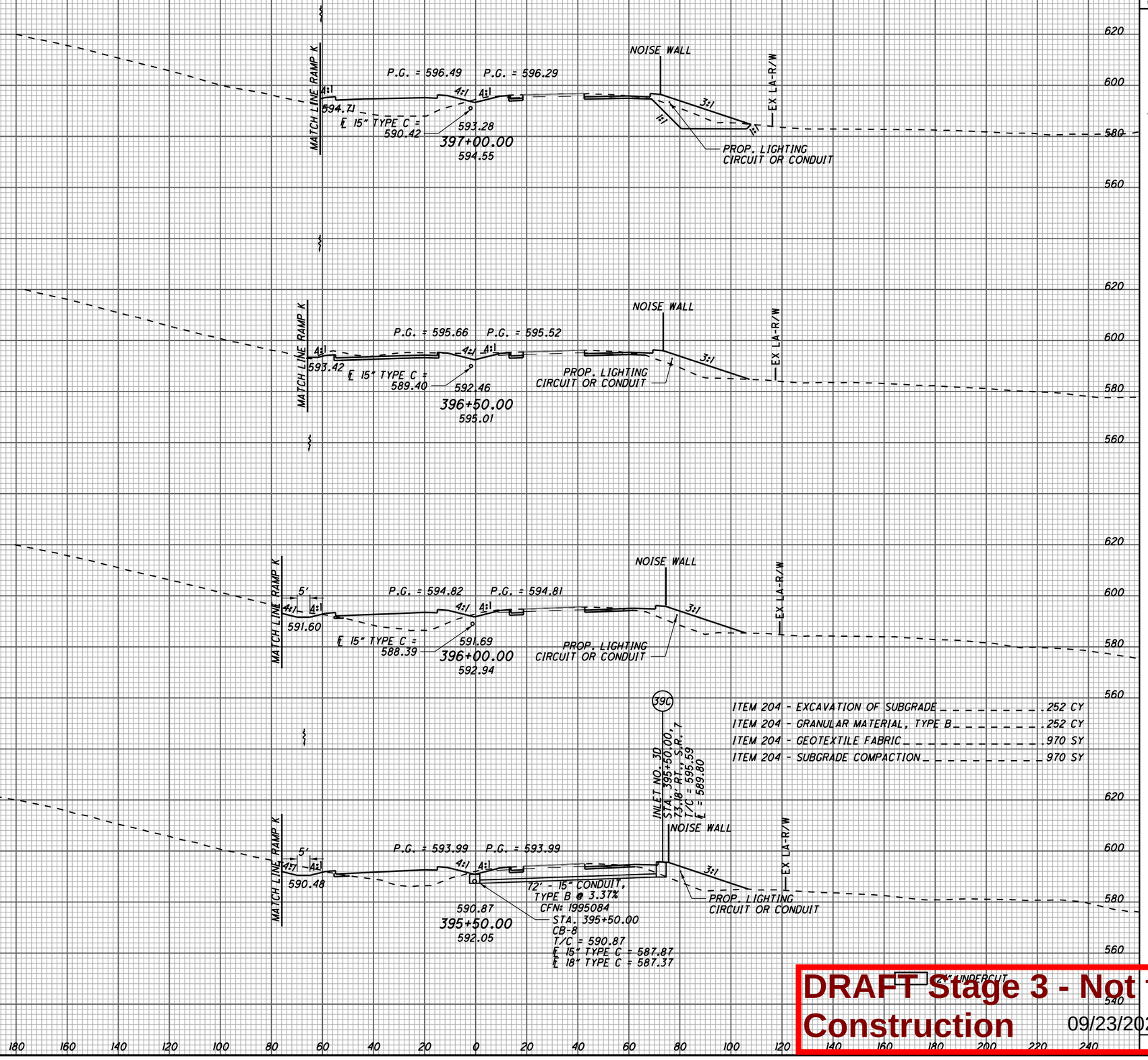

CROSS SECTIONS S.R. 7
STA. 395+50.00 TO STA. 397+00.00

LAW-7-2.17

388
1247

DRAFT Stage 3 - Not for Construction 09/23/2024

U:\173608714\LAW\75923\roadway\sheets\75923XS1228-2B.dgn 5/21/2024 4:54:59 PM SLParker

SEEDING	
END WIDTH	SQ. YDS.
147	862
163	966
178 AHEAD 66 BACK	423
	2251

END AREA	
CUT	FILL
194	491
576	665
760 AHEAD 196 BACK	629 620

VOLUME	
CUT	FILL
713	1071
1259	1219
323	1071
2295	3361

CALCULATED SLP
CHECKED ALB

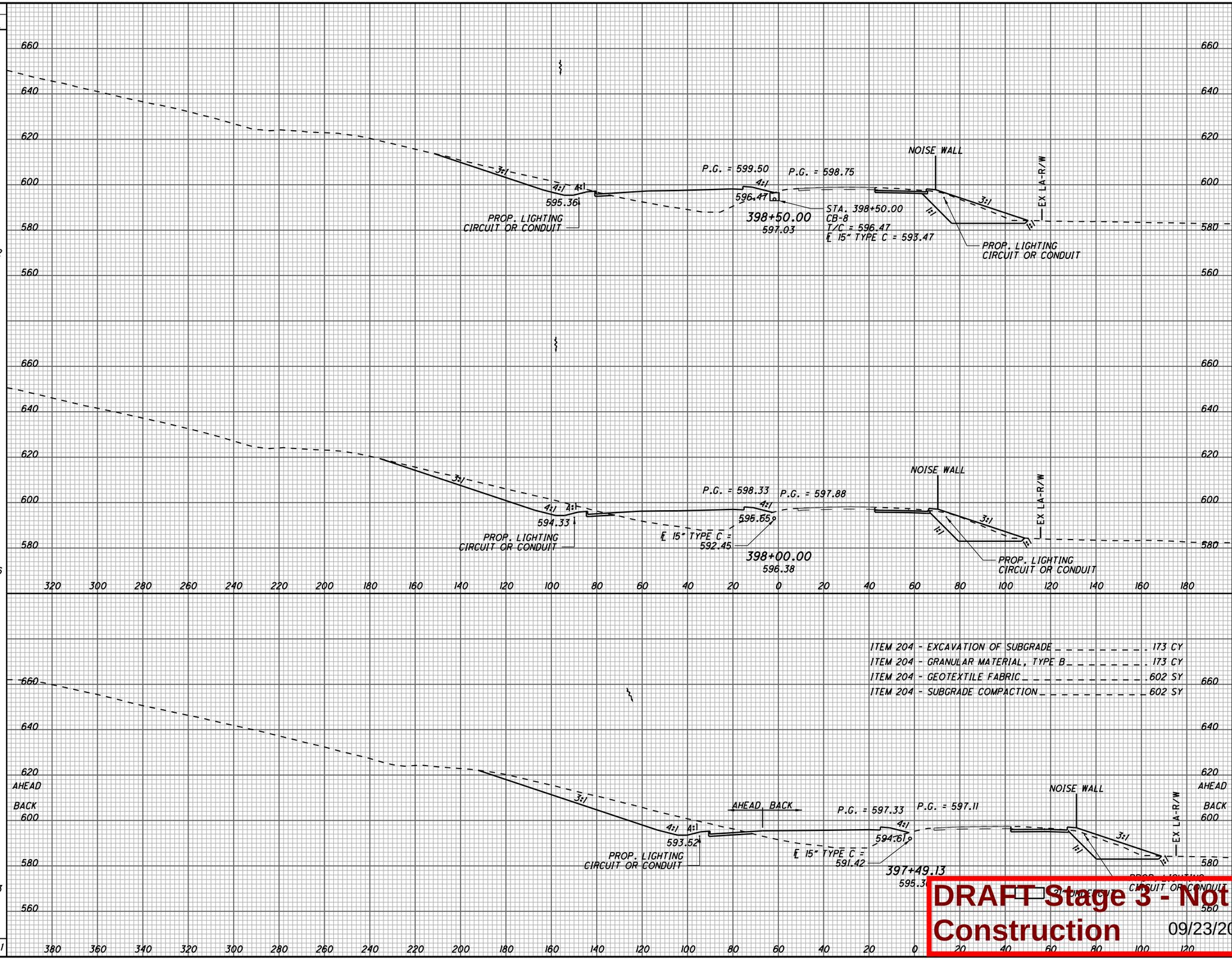

ITEM 204 - EXCAVATION OF SUBGRADE . . . . . 173 CY
ITEM 204 - GRANULAR MATERIAL, TYPE B . . . . . 173 CY
ITEM 204 - GEOTEXTILE FABRIC . . . . . 602 SY
ITEM 204 - SUBGRADE COMPACTION . . . . . 602 SY

DRAFT Stage 3 - Not for Construction 09/23/2024

CROSS SECTIONS S.R. 7 STA. 397+49.13 TO STA. 398+50.00

LAW-7-2.17

389
1247

U:\173608714\LAW\75923\roadway\sheets\75923XS1229-2B.dgn 5/21/2024 4:54:59 PM SLParker

SEEDING END WIDTH	SEEDING SQ. YDS.	END AREA CUT	END AREA FILL	VOLUME CUT	VOLUME FILL
96	571	226	979	541	1662
110	679	358	815	714	1546
135	781	413	855	563	1247
	2031			1818	4455

CALCULATED SLP
CHECKED ALB

660 640 620 600 580 560

P.G. = 604.09
P.G. = 601.19
3:1 4:1 4:1
599.87
PROP. LIGHTING CIRCUIT OR CONDUIT
4:1
599.59
400+00.00
599.60
NOISE WALL
1:1
2:1
EX LA-R/W

P.G. = 602.38
P.G. = 600.40
3:1 4:1 4:1
598.11
4:1
598.60
399+50.00
592.13
NOISE WALL
1:1
2:1
EX LA-R/W
EX R/W
PROP. LIGHTING CIRCUIT OR CONDUIT
4" EX. WATER

P.G. = 600.85
P.G. = 599.58
3:1 4:1 4:1
596.64
4:1
597.60
399+00.00
598.00
NOISE WALL
1:1
3:1
EX LA-R/W
EX R/W
PROP. LIGHTING CIRCUIT OR CONDUIT
24" UNDERCUT

ITEM 204 - EXCAVATION OF SUBGRADE . . . . . 119 CY
ITEM 204 - GRANULAR MATERIAL, TYPE B . . . . . 119 CY
ITEM 204 - GEOTEXTILE FABRIC . . . . . 411 SY
ITEM 204 - SUBGRADE COMPACTION . . . . . 411 SY

260 240 220 200 180 160 140 120 100 80 60 40 20 0 20 40 60 80 100 120 140 160 180 200 220 240

CROSS SECTIONS S.R. 7
STA. 399+00.00 TO STA. 400+00.00

LAW-7-2.17

390
1247

DRAFT Stage 3 - Not for Construction 09/23/2024

U:\173608714\LAW\75923\roadway\sheets\75923XS1230-2B.dgn 5/21/2024 4:55:00 PM SLParker

SEEDING		END AREA		VOLUME		CALCULATED	CHECKED
END WIDTH	SQ. YDS.	CUT	FILL	CUT	FILL	SLP	ALB
107	577	263	1233	475	2328		
100	542	250	1281	453	2256		
95	529	239	1155	431	1977		
	1648			1359	6561		

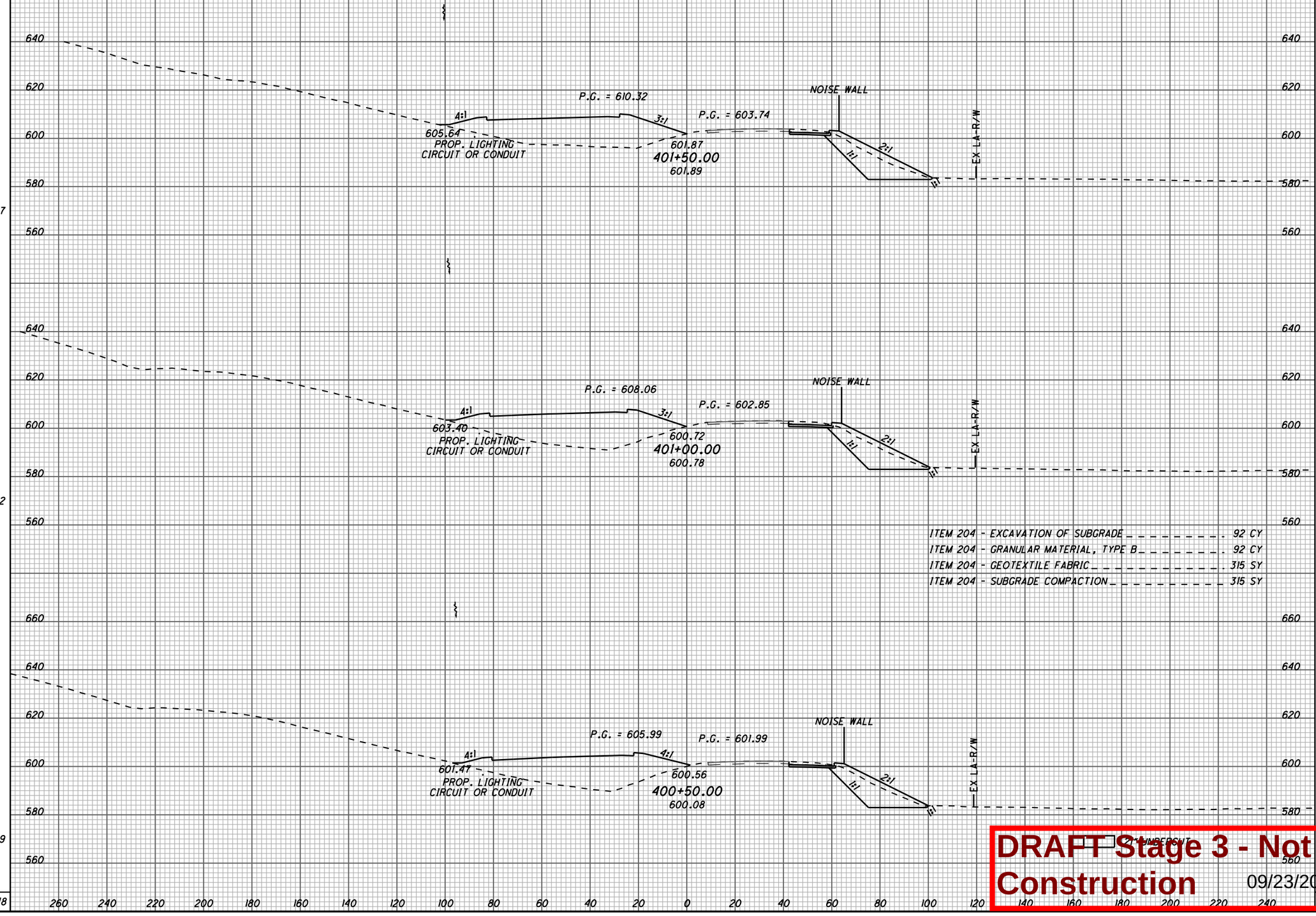

ITEM 204 - EXCAVATION OF SUBGRADE . . . . . 92 CY
ITEM 204 - GRANULAR MATERIAL, TYPE B . . . . . 92 CY
ITEM 204 - GEOTEXTILE FABRIC . . . . . 315 SY
ITEM 204 - SUBGRADE COMPACTION . . . . . 315 SY

CROSS SECTIONS S.R. 7
STA. 400+50.00 TO STA. 401+50.00

LAW-7-2.17

391
1247

DRAFT Stage 3 - Not for Construction 09/23/2024

U:\173608714\LAW\75923\roadway\sheets\75923XS1231-2B.dgn 5/21/2024 4:55:01 PM SLParker

SEEDING END WIDTH	SEEDING SQ. YDS.
87	510
97	576
110	605
	1691

END AREA CUT	END AREA FILL	VOLUME CUT	VOLUME FILL
424	427	823	760
465	393	713	819
305	490	526	1596
		2062	3175

CALCULATED SLP
CHECKED ALB

660 640 620 600 580 560

EX LA-R/W

P.G. = 617.99
4:1
12.5:1
615.81
PROP. LIGHTING CIRCUIT OR CONDUIT
P.G. = 605.95
EX. 603.67
403+00.00
604.12
NOISE WALL
2:1
1:1
EX LA-R/W
EX R/W
EX. 18" STM
4" EX. WATER

P.G. = 615.36
3:1 4:1 4:1
12.5:1
613.10
PROP. LIGHTING CIRCUIT OR CONDUIT
P.G. = 605.26
EX. 602.76
402+50.00
611.59
NOISE WALL
2:1
1:1
EX LA-R/W
EX R/W
EX. 18" STM
4" EX. WATER

ITEM 204 - EXCAVATION OF SUBGRADE . . . . . 254 CY
ITEM 204 - GRANULAR MATERIAL, TYPE B . . . . . 254 CY
ITEM 204 - GEOTEXTILE FABRIC . . . . . 856 SY
ITEM 204 - SUBGRADE COMPACTION . . . . . 856 SY

P.G. = 612.76
4:1
2.5:1
608.89
PROP. LIGHTING CIRCUIT OR CONDUIT
P.G. = 604.56
602.08
402+00.00
602.69
NOISE WALL
2:1
1:1
EX LA-R/W
EX R/W
4" EX. WATER
2" UNDERDRAIN

260 240 220 200 180 160 140 120 100 80 60 40 20 0 20 40 60 80 100 120 140 160 180 200 220 240

CROSS SECTIONS S.R. 7
STA. 402+00.00 TO STA. 403+00.00

LAW-7-2.17

392
1247

DRAFT Stage 3 - Not for Construction 09/23/2024

U:\173608714\LAW\75923\roadway\sheets\75923XS1232-2B.dgn 5/21/2024 4:55:02 PM SLParker

SEEDING	
END WIDTH	SQ. YDS.
133	
	635
	96
	508
	1143

END AREA	
CUT	FILL
490	393
	848
	742
426	408
	787
	773
1635	1515

VOLUME	
CUT	FILL

CALCULATED SLP
CHECKED ALB

CROSS SECTIONS S.R. 7
STA. 403+50.00 TO STA. 404+00.00

EX LA-R/W

2.8:1 4:1 4:1 12.5:1

P.G. = 622.78

621.45

PROP. LIGHTING CIRCUIT OR CONDUIT

P.G. = 607.31

NOISE WALL

EX. 604.86

404+00.00

605.95

2:1 1:1

EX LA-R/W

ITEM 204 - EXCAVATION OF SUBGRADE . . . . . 234 CY
ITEM 204 - GRANULAR MATERIAL, TYPE B . . . . . 234 CY
ITEM 204 - GEOTEXTILE FABRIC . . . . . 709 SY
ITEM 204 - SUBGRADE COMPACTION . . . . . 709 SY
21" UNDERCUT

EX LA-R/W

3:1 4:1 4:1 12.5:1

P.G. = 620.46

619.13

PROP. LIGHTING CIRCUIT OR CONDUIT

P.G. = 606.65

NOISE WALL

EX. 604.32

403+50.00

604.98

2:1 1:1

EX LA-R/W

720 700 680 660 640 620 600 580 560

400 380 360 340 320 300 280 260 240 220 200 180 160 140 120 100 80 60 40 20 0 20 40 60 80 100

DRAFT Stage 3 - Not for Construction 09/23/2024

LAW-7-2.17

393
1247

U:\173608714\LAW\75923\roadway\sheets\75923XS1233-2B.dgn 5/21/2024 4:55:03 PM SLParker

SEEDING	
END WIDTH	SQ. YDS.
78	367
86	608
	975

END AREA	
CUT	FILL
131	10
134	5
578	370
775	382

VOLUME	
CUT	FILL
197	12

CALCULATED SLP
CHECKED ALB

740 720 700 680 660 640 620 600 580

EX LA-R/W

3:1

4:1 – 4:1

625.20

PROP. LIGHTING CIRCUIT OR CONDUIT

P.G. = 626.53

12.5:1

NOISE WALL

2:1

P.G. = 608.26

EX. 605.89

404+90.09

606.45

END PAVEMENT WIDENING

ITEM 204 - EXCAVATION OF SUBGRADE . . . . . .209 CY
ITEM 204 - GRANULAR MATERIAL, TYPE B . . . . . .209 CY
ITEM 204 - GEOTEXTILE FABRIC . . . . . .627 SY
ITEM 204 - SUBGRADE COMPACTION . . . . . .627 SY

EX LA-R/W

3:1

4:1 – 4:1

623.59

PROP. LIGHTING CIRCUIT OR CONDUIT

P.G. = 624.92

12.5:1

NOISE WALL

2:1

EX. 606.50

404+50.00

606.00

21" UNDERCUT

420 400 380 360 340 320 300 280 260 240 220 200 180 160 140 120 100 80 60 40 20 0 20 40 60 80

DRAFT Stage 3 - Not for Construction
09/23/2024

CROSS SECTIONS S.R. 7
STA. 404+50.00 TO STA. 404+90.09

LAW-7-2.17

394
1247

U:\173608714\LAW\75923\roadway\sheets\75923XS1234-2B.dgn 5/21/2024 4:55:04 PM SLParker

SEEDING	
END WIDTH	SQ. YDS.
87	449
75	534
	85

END AREA	
CUT	FILL
168	6
131	6

VOLUME	
CUT	FILL
278	11
49	3
327	14

CALCULATED SLP
CHECKED ALB

760 740 720 700 680 660 640 620 600 580

EX LA-R/W

3:1 4:1 4:1 A:1

627.40

P.G. = 628.72

12.5:1

PROP. LIGHTING CIRCUIT OR CONDUIT

NOISE WALL

EX. 606.50

405+50.00

607.19

740 720 700 680 660 640 620 600 580

ITEM 204 - EXCAVATION OF SUBGRADE . . . . . 117 CY
ITEM 204 - GRANULAR MATERIAL, TYPE B . . . . . 117 CY
ITEM 204 - GEOTEXTILE FABRIC . . . . . 347 SY
ITEM 204 - SUBGRADE COMPACTION . . . . . 347 SY

EX LA-R/W

3:1 4:1 4:1 A:1

625.58

P.G. = 626.91

12.5:1

PROP. LIGHTING CIRCUIT OR CONDUIT

NOISE WALL

21" UNDERCUT

EX. 606.99

405+00.00

605.18

420 400 380 360 340 320 300 280 260 240 220 200 180 160 140 120 100 80 60 40 20 0 20 40 60 80

CROSS SECTIONS S.R. 7
STA. 405+00.00 TO STA. 405+50.00

LAW-7-2.17

395
1247

DRAFT Stage 3 - Not for Construction

09/23/2024

U:\173608714\LAW\75923\roadway\sheets\75923XS1235-2B.dgn 5/21/2024 4:55:04 PM SLParker

SEEDING	
END WIDTH	SQ. YDS.
105	551
93	501
	1052

END AREA	
CUT	FILL
169	6
194	6

VOLUME	
CUT	FILL
337	11
336	11
673	22

CALCULATED SLP
CHECKED ALB

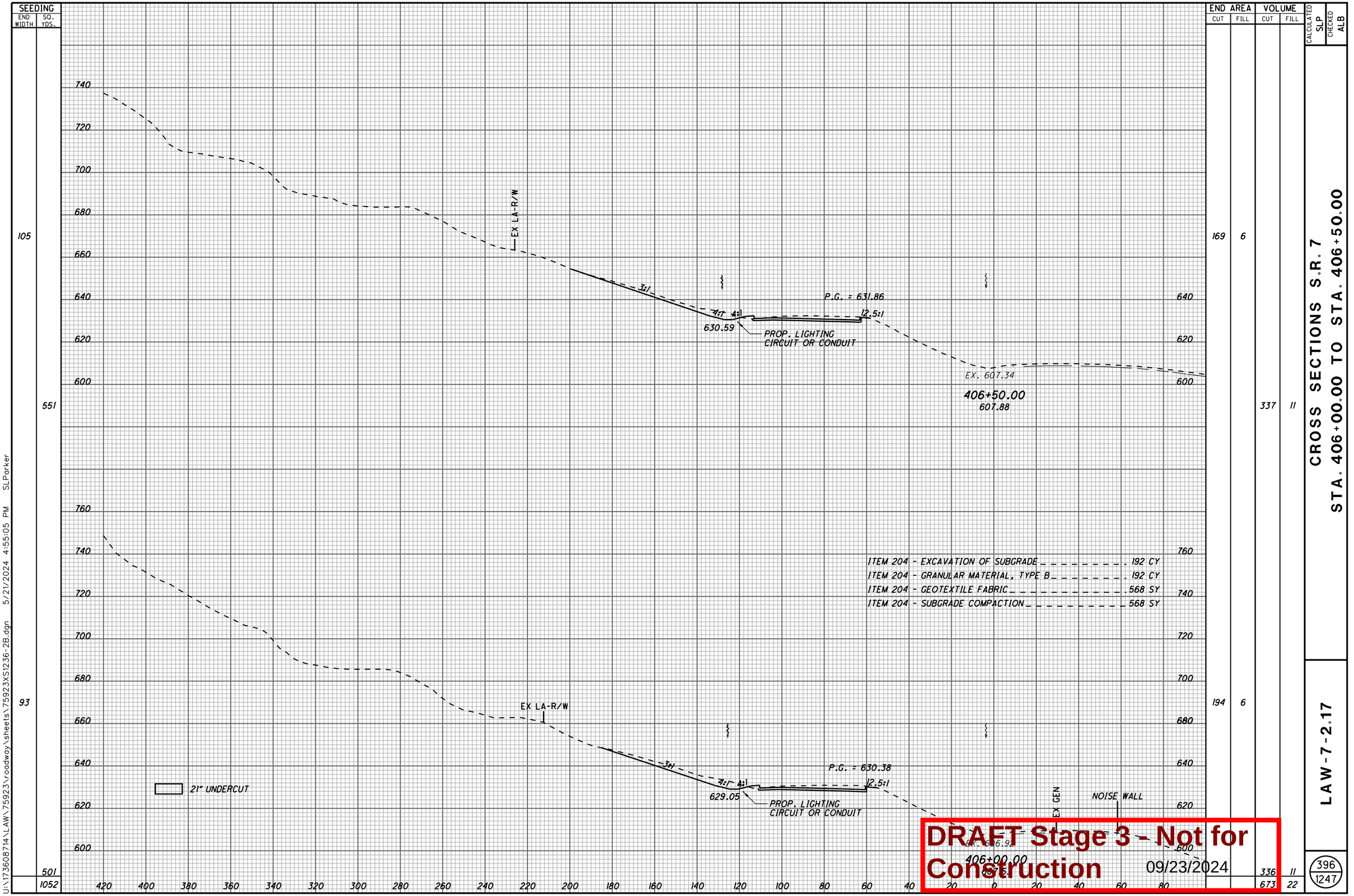

ITEM 204 - EXCAVATION OF SUBGRADE . . . . . 192 CY
ITEM 204 - GRANULAR MATERIAL, TYPE B . . . . . 192 CY
ITEM 204 - GEOTEXTILE FABRIC . . . . . 568 SY
ITEM 204 - SUBGRADE COMPACTION . . . . . 568 SY

DRAFT Stage 3 - Not for Construction
09/23/2024

CROSS SECTIONS S.R. 7
STA. 406+00.00 TO STA. 406+50.00

LAW-7-2.17

396
1247

U:\173608714\LAW\75923\roadway\sheets\75923XS1236-2B.dgn 5/21/2024 4:55:05 PM SLParker

SEEDING	
END WIDTH	SQ. YDS.
52	422
100	570
	992

END AREA	
CUT	FILL
94	3
164	5

VOLUME	
CUT	FILL
239	7
309	11
548	18

CALCULATED SLP
CHECKED ALB

EX GEN
EX LA-R/W
P.G. = 634.35
3:1 4:1 4:1
632.79
3:1
EX. 607.99
407+50.00
608.32
EX LA-R/W
EX GEN
P.G. = 633.19
3:1
4:1 4:1
631.83
3:1
EX GEN
EX. 607.74
407+00.00
608.41

740 720 700 680 660 640 620 600

760 740 720 700 680 660 640 620 600

420 400 380 360 340 320 300 280 260 240 220 200 180 160 140 120 100 80 60 40 20 0 20 40 60 80

21" UNDERCUT

ITEM 204 - EXCAVATION OF SUBGRADE . . . . . 185 CY
ITEM 204 - GRANULAR MATERIAL, TYPE B . . . . . 185 CY
ITEM 204 - GEOTEXTILE FABRIC . . . . . 545 SY
ITEM 204 - SUBGRADE COMPACTION . . . . . 545 SY

DRAFT Stage 3 - Not for Construction
09/23/2024

CROSS SECTIONS S.R. 7
STA. 407+00.00 TO STA. 407+50.00

LAW-7-2.17

397
1247

U:\1736087\4\LAW\75923\roadway\sheets\75923XS1237-2B.dgn 5/21/2024 4:55:06 PM SLParker

SEEDING		END AREA		VOLUME	
END WIDTH	SQ. YDS.	CUT	FILL	CUT	FILL
47	255	95	0	170	1
45	269	87	0	168	3
	524			338	4

CALCULATED SLP
CHECKED ALB

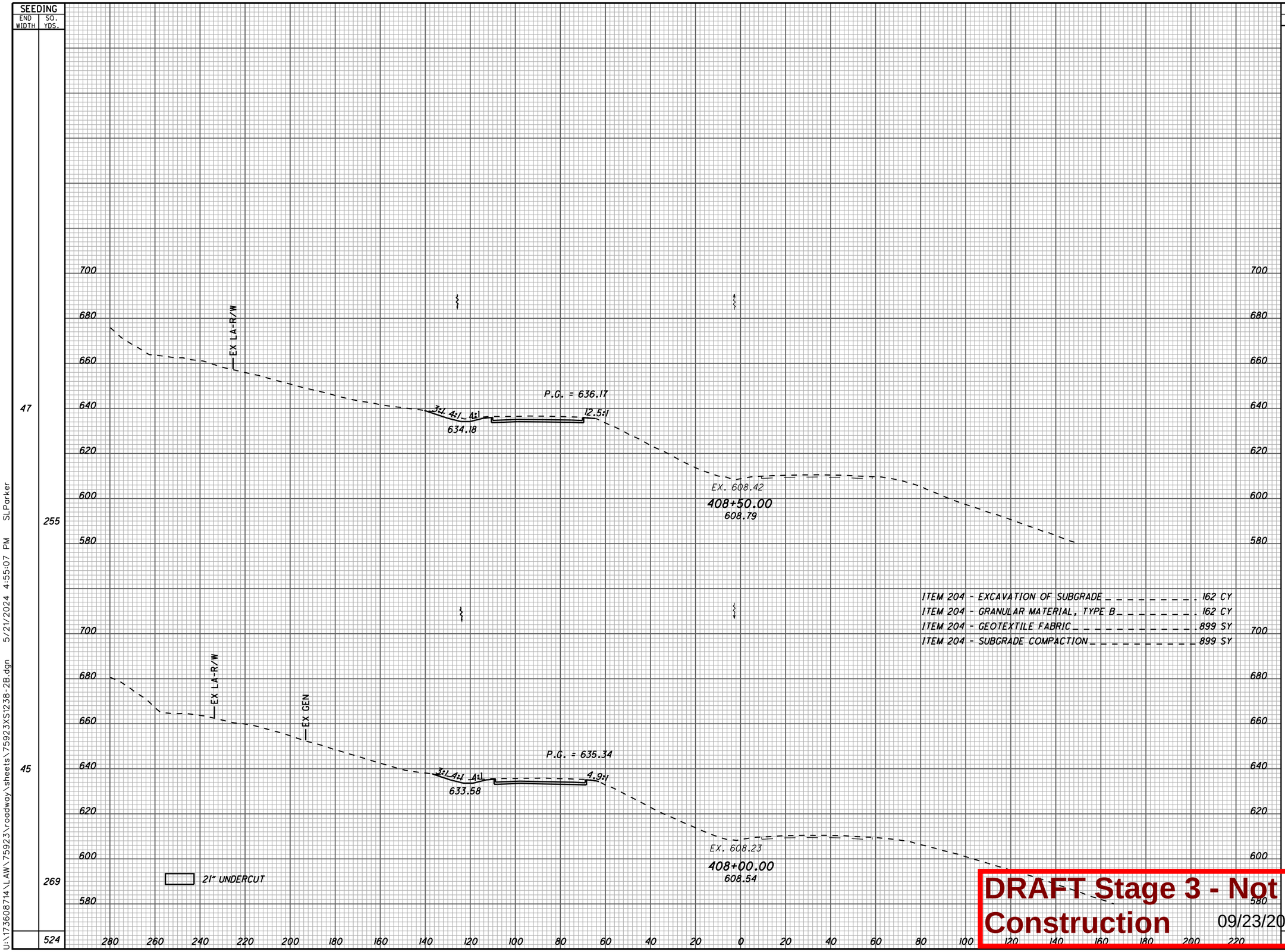

CROSS SECTIONS S.R. 7
STA. 408+00.00 TO STA. 408+50.00

LAW-7-2.17

398
1247

DRAFT Stage 3 - Not for Construction 09/23/2024

U:\173608714\LAW\75923\roadway\sheets\75923XS1238-2B.dgn 5/21/2024 4:55:07 PM SLParker

SEEDING END WIDTH	SEEDING SQ. YDS.	END AREA CUT	END AREA FILL	VOLUME CUT	VOLUME FILL
21	129	55	0	103	1
25	197	56	0	115	1
46	258	68	0	152	1
	584			370	3

CALCULATED ALB
CHECKED TCM

CROSS SECTIONS S.R. 7
STA. 409+00.00 TO STA. 410+00.00

LAW-7-2.17

399
1247

680 660 640 620 600 580

EX LA-R/W

P.G. = 637.67
12.5:1 12.5:1
EX. 629.55
EX. 608.15
410+00.00
608.71

EX LA-R/W

P.G. = 637.33
12.5:1 8:1
EX. 633.46
EX. 608.15
409+50.00
608.65

EX LA-R/W

P.G. = 636.83
3:1 4:1 4:1 4.7:1
634.62
EX. 608.34
409+00.00
608.88

21" UNDERCUT

ITEM 204 - EXCAVATION OF SUBGRADE . . . . . 237 CY
ITEM 204 - GRANULAR MATERIAL, TYPE B . . . . . 237 CY
ITEM 204 - GEOTEXTILE FABRIC . . . . . 684 SY
ITEM 204 - SUBGRADE COMPACTION . . . . . 684 SY

260 240 220 200 180 160 140 120 100 80 60 40 20 0 20 40 60 80 100 120 140 160 180 200 220 240

DRAFT Stage 3 - Not for Construction 09/23/2024

U:\1736087\14\LAW\75923\roadway\sheets\75923XS1239-2B.dgn 5/21/2024 4:55:08 PM SLParker

SEEDING END WIDTH	SEEDING SQ. YDS.
22	118
20	115
21	118
	351

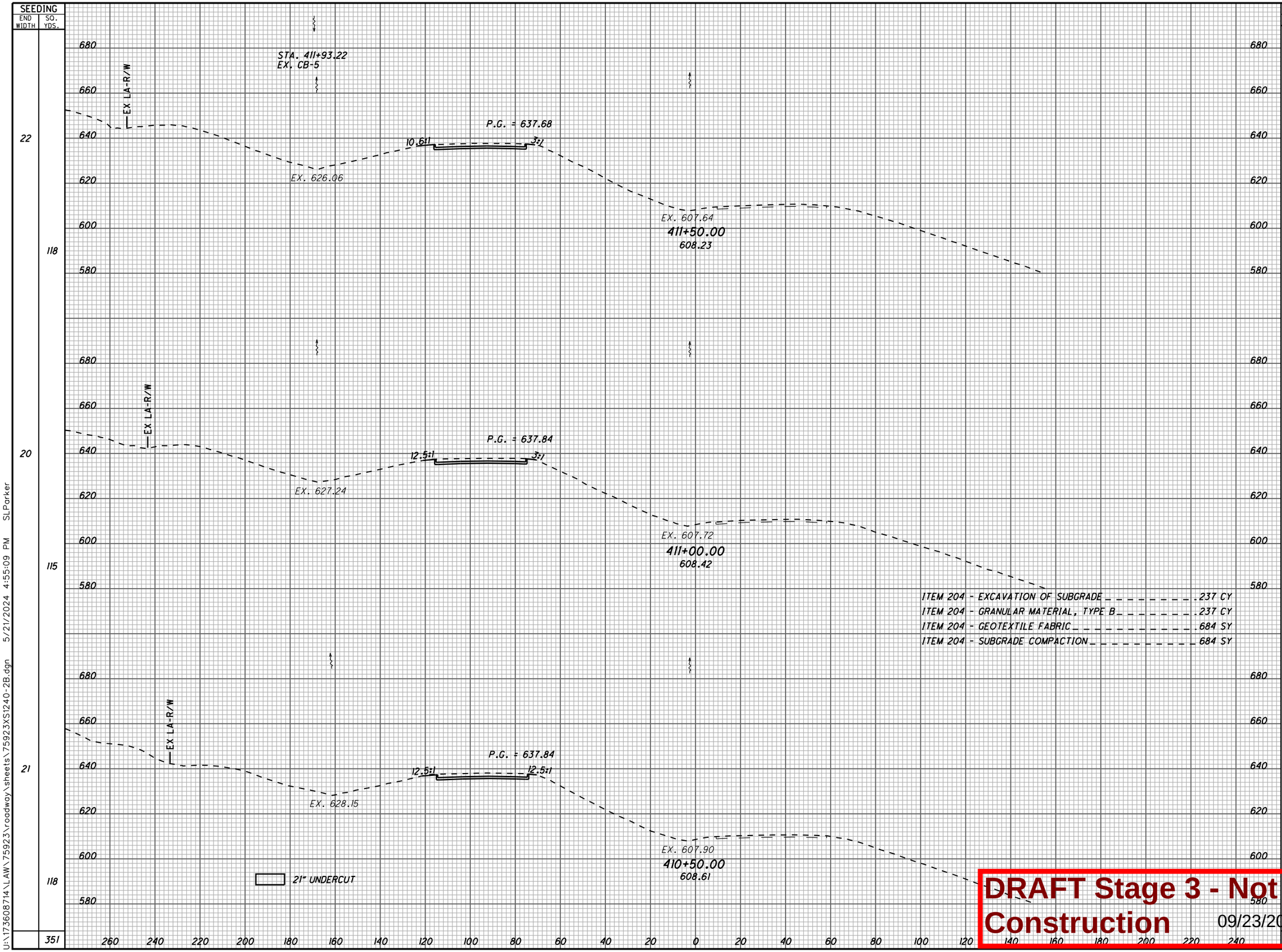

END AREA CUT	END AREA FILL	VOLUME CUT	VOLUME FILL
43	1		
		88	1
52	0		
		103	0
59	0		
		106	0
		297	1

ITEM 204 - EXCAVATION OF SUBGRADE . . . . . 237 CY
ITEM 204 - GRANULAR MATERIAL, TYPE B . . . . . 237 CY
ITEM 204 - GEOTEXTILE FABRIC . . . . . 684 SY
ITEM 204 - SUBGRADE COMPACTION . . . . . 684 SY

CALCULATED SLP
CHECKED ALB

CROSS SECTIONS S.R. 7
STA. 410+50.00 TO STA. 411+50.00

LAW-7-2.17

400
1247

DRAFT Stage 3 - Not for Construction 09/23/2024

U:\173608714\LAW\75923\roadway\sheets\75923XS1240-2B.dgn 5/21/2024 4:55:09 PM SLParker

SEEDING END WIDTH	SEEDING SQ. YDS.	END AREA CUT	END AREA FILL	VOLUME CUT	VOLUME FILL
25	147	52	0	103	1
27	148	58	0	104	0
26	133	54	0	90	1
	428			297	2

CALCULATED SLP
CHECKED ALB

EX LA-R/W

P.G. = 636.22
12.5:1
12.5:1
EX. 624.36
EX. 606.94
413+00.00
607.31

EX LA-R/W

P.G. = 636.87
12.5:1
12.5:1
EX. 625.28
EX. 607.35
412+50.00
607.88

ITEM 204 - EXCAVATION OF SUBGRADE . . . . . 237 CY
ITEM 204 - GRANULAR MATERIAL, TYPE B . . . . . 237 CY
ITEM 204 - GEOTEXTILE FABRIC . . . . . 684 SY
ITEM 204 - SUBGRADE COMPACTION . . . . . 684 SY

EX LA-R/W

P.G. = 637.36
12.5:1
12.5:1
EX. 624.67
EX. 607.52
412+00.00
608.12

21" UNDERCUT

680 660 640 620 600 580

260 240 220 200 180 160 140 120 100 80 60 40 20 0 20 40 60 80 100 120 140 160 180 200 220 240

CROSS SECTIONS S.R. 7
STA. 412+00.00 TO STA. 413+00.00

LAW-7-2.17

401
1247

DRAFT Stage 3 - Not for Construction 09/23/2024

U:\1736087\14\LAW\75923\roadway\sheets\75923XS1241-2B.dgn 5/21/2024 4:55:10 PM SLParker

SEEDING END WIDTH	SEEDING SQ. YDS.	END AREA CUT	END AREA FILL	VOLUME CUT	VOLUME FILL
28	151	72	0	129	1
26	141	67	0	118	1
24	138	59	0	104	1
	430			351	3

CALCULATED SLP
CHECKED ALB

CROSS SECTIONS S.R. 7
STA. 413+50.00 TO STA. 414+50.00

LAW-7-2.17

402
1247

680 660 640 620 600 580

P.G. = 633.27
12.5:1 12.5:1
EX. 618.63
EX. 606.87
414+50.00
606.11

STA. 414+42.91
EX. CB-5

P.G. = 634.42
12.5:1 12.5:1
EX. 621.95
EX. 606.39
414+00.00
606.78

P.G. = 635.40
12.5:1 7.6:1
EX. 623.48
EX. 606.80
413+50.00
607.13

21" UNDERCUT

260 240 220 200 180 160 140 120 100 80 60 40 20 0 20 40 60 80 100 120 140 160 180 200 220 240

ITEM 204 - EXCAVATION OF SUBGRADE . . . . . .237 CY
ITEM 204 - GRANULAR MATERIAL, TYPE B . . . . . .237 CY
ITEM 204 - GEOTEXTILE FABRIC . . . . . .687 SY
ITEM 204 - SUBGRADE COMPACTION . . . . . .687 SY

DRAFT Stage 3 - Not for Construction 09/23/2024

U:\173608714\LAW\75923\roadway\sheets\75923XS1242-2B.dgn 5/21/2024 4:55:10 PM SLParker

SEEDING END WIDTH	SEEDING SQ. YDS.	END AREA CUT	END AREA FILL	VOLUME CUT	VOLUME FILL
26	145	60	1	121	1
26	149	70	0	137	0
28	154	77	0	139	0
	448			397	1

680 660 640 620 600 580

P.G. = 628.83
12.5:1
2:1
EX. 623.65
EX. 605.32
416+00.00
605.77

660 640 620 600 580

P.G. = 630.48
12.5:1
12.5:1
EX. 622.63
EX. 605.62
415+50.00
606.07

ITEM 204 - EXCAVATION OF SUBGRADE . . . . . 245 CY
ITEM 204 - GRANULAR MATERIAL, TYPE B . . . . . 245 CY
ITEM 204 - GEOTEXTILE FABRIC . . . . . 697 SY
ITEM 204 - SUBGRADE COMPACTION . . . . . 697 SY

660 640 620 600 580

P.G. = 631.95
12.5:1
12.5:1
EX. 622.21
EX. 605.88
415+00.00
606.25

21" UNDERCUT

260 240 220 200 180 160 140 120 100 80 60 40 20 0 20 40 60 80 100 120 140 160 180 200 220 240

DRAFT Stage 3 - Not for Construction 09/23/2024

CALCULATED SLP
CHECKED ALB

CROSS SECTIONS S.R. 7
STA. 415+00.00 TO STA. 416+00.00

LAW-7-2.17

403
1247

U:\173608714\LAW\75923\roadway\sheets\75923XS1243-2B.dgn 5/21/2024 4:55:11 PM SLParker

SEEDING END WIDTH	SEEDING SQ. YDS.
34	181
31	155
24	146
28	151
	633

END AREA CUT	END AREA FILL	VOLUME CUT	VOLUME FILL
67	0	126	0
69	0	123	0
63	0	115	1
60	0	112	1
		476	2

CALCULATED ALB
CHECKED TCM

640 620 600 580 660

P.G. = 620.62
12.5:1 12.5:1
EX. 617.16
EX. 603.98
418+00.00
604.26

P.G. = 622.92
12.5:1 12.5:1
EX. 619.15
EX. 604.05
417+50.00
604.61

P.G. = 625.06
12.5:1 12.5:1
EX. 621.22
EX. 604.44
417+00.00
605.02

P.G. = 627.03
12.5:1 2:1
EX. 623.26
EX. 604.89
416+50.00
605.33

21" UNDERCUT

ITEM 204 - EXCAVATION OF SUBGRADE . . . . . 316 CY
ITEM 204 - GRANULAR MATERIAL, TYPE B . . . . . 316 CY
ITEM 204 - GEOTEXTILE FABRIC . . . . . 916 SY
ITEM 204 - SUBGRADE COMPACTION . . . . . 916 SY

260 240 220 200 180 160 140 120 100 80 60 40 20 0 20 40 60 80 100 120 140 160 180 200 220 240

CROSS SECTIONS S.R. 7
STA. 416+50.00 TO STA. 418+00.00

LAW-7-2.17

404
1247

DRAFT Stage 3 - Not for Construction 09/23/2024

U:\1736087\14\LAW\75923\roadway\sheets\75923XS1244-2B.dgn 5/21/2024 4:55:12 PM SLParker

SEEDING END WIDTH	SEEDING SQ. YDS.
54	253
37	206
37	196
34	187
	842

END AREA CUT	END AREA FILL	VOLUME CUT	VOLUME FILL
65	9	134	8
80	0	152	0
84	0	148	0
75	0	132	0
		566	8

CALCULATED SLP
CHECKED ALB

P.G. = 612.07
12.5:1
3:1
EX. 608.86
EX. 602.75
420+00.00
603.10

P.G. = 613.96
12.5:1
12.5:1
EX. 610.89
EX. 602.83
419+50.00
603.24

P.G. = 616.02
12.5:1
12.5:1
EX. 612.88
EX. 603.46
419+00.00
603.81

P.G. = 618.24
12.5:1
12.5:1
EX. 615.12
EX. 603.70
418+50.00
603.96

21" UNDERCUT

ITEM 204 - EXCAVATION OF SUBGRADE . . . . . 316 CY
ITEM 204 - GRANULAR MATERIAL, TYPE B . . . . . 316 CY
ITEM 204 - GEOTEXTILE FABRIC . . . . . 916 SY
ITEM 204 - SUBGRADE COMPACTION . . . . . 916 SY

CROSS SECTIONS S.R. 7
STA. 418+50.00 TO STA. 420+00.00

LAW-7-2.17

405
1247

DRAFT Stage 3 - Not for Construction 09/23/2024

U:\173608714\LAW\75923\roadway\sheets\75923XS1245-2B.dgn 5/21/2024 4:55:13 PM SLParker

SEEDING END WIDTH	SEEDING SQ. YDS.	END AREA CUT	END AREA FILL	VOLUME CUT	VOLUME FILL
30	205	61	7	109	27
43	259	56	21	103	48
49	287	54	30	111	36
	751			323	111

CALCULATED SLP
CHECKED ALB

P.G. = 607.38
12.5:1
3:1
EX. 603.92
EX. 602.06
421+50.00
602.32

P.G. = 608.78
12.5:1
3:1
EX. 605.28
EX. 602.42
421+00.00
602.81

P.G. = 610.34
12.5:1
3:1
EX. 607.18
EX. 602.45
420+50.00
602.83

EX LA-R/W

21" UNDERCUT

ITEM 204 - EXCAVATION OF SUBGRADE . . . . . 235 CY
ITEM 204 - GRANULAR MATERIAL, TYPE B . . . . . 235 CY
ITEM 204 - GEOTEXTILE FABRIC . . . . . 687 SY
ITEM 204 - SUBGRADE COMPACTION . . . . . 687 SY

DRAFT Stage 3 - Not for Construction 09/23/2024

CROSS SECTIONS S.R. 7
STA. 420+50.00 TO STA. 421+50.00

LAW-7-2.17

406
1247

U:\173608714\LAW\75923\roadway\sheets\75923XS1246-2B.dgn 5/21/2024 4:55:14 PM SLParker

SEEDING END WIDTH	SEEDING SQ. YDS.
22	117
20	124
24	151
	392

END AREA CUT	END AREA FILL	VOLUME CUT	VOLUME FILL
84	1	152	1
80	0	147	2
78	1	129	8
		428	11

CALCULATED SLP
CHECKED ALB

660 640 620 600 580 560

P.G. = 604.18
12.5:1 4:1
EX. 600.88 EX. 601.16
423+00.00
601.59
EX LA-R/W

P.G. = 605.08
12.5:1 4:1
EX. 601.73 EX. 601.48
422+50.00
601.83
EX LA-R/W

P.G. = 606.15
12.5:1 4:1
EX. 602.76 EX. 601.75
422+00.00
602.12
EX LA-R/W

21" UNDERCUT

260 240 220 200 180 160 140 120 100 80 60 40 20 0 20 40 60 80 100 120 140 160 180 200 220 240

ITEM 204 - EXCAVATION OF SUBGRADE . . . . . 237 CY
ITEM 204 - GRANULAR MATERIAL, TYPE B . . . . . 237 CY
ITEM 204 - GEOTEXTILE FABRIC . . . . . 687 SY
ITEM 204 - SUBGRADE COMPACTION . . . . . 687 SY

DRAFT Stage 3 - Not for Construction 09/23/2024

CROSS SECTIONS S.R. 7
STA. 422+00.00 TO STA. 423+00.00

LAW-7-2.17

407
1247

U:\1736087\14\LAW\75923\roadway\sheets\75923XS1247-2B.dgn 5/21/2024 4:55:14 PM SLParker

SEEDING END WIDTH	SEEDING SQ. YDS.	END AREA CUT	END AREA FILL	VOLUME CUT	VOLUME FILL
44	191	106	2	172	4
24	130	79	2	144	4
22	123	76	2	149	3
	444			465	11

CALCULATED SLP
CHECKED ALB

CROSS SECTIONS S.R. 7
STA. 423+50.00 TO STA. 424+50.00

LAW-7-2.17

408
1247

660 640 620 600 580 560 640 620 600 580 560 640 620 600 580 560

P.G. = 602.45
4:1
6:1 6.7:1
EX. 599.28
600.45
424+50.00
602.32
EX LA-R/W

P.G. = 602.86
4:1
4:1
EX. 599.68
EX. 600.64
424+00.00
600.97
EX LA-R/W

P.G. = 603.44
12.5:1
4:1
EX. 600.19
EX. 600.95
423+50.00
601.16
EX LA-R/W

21" UNDERCUT

ITEM 204 - EXCAVATION OF SUBGRADE . . . . . 237 CY
ITEM 204 - GRANULAR MATERIAL, TYPE B . . . . . 237 CY
ITEM 204 - GEOTEXTILE FABRIC . . . . . 686 SY
ITEM 204 - SUBGRADE COMPACTION . . . . . 686 SY

260 240 220 200 180 160 140 120 100 80 60 40 20 0 20 40 60 80 100 120 140 160 180 200 220 240

DRAFT Stage 3 - Not for Construction 09/23/2024

U:\173608714\LAW\75923\roadway\sheets\75923XS1248-2B.dgn 5/21/2024 4:55:15 PM SLParker

SEEDING END WIDTH	SEEDING SQ. YDS.
25	200
47	251
43	244
	695

END AREA CUT	END AREA FILL	VOLUME CUT	VOLUME FILL
61	2	128	6
77	5	158	6
93	1	185	3
		471	15

CALCULATED SLP
CHECKED ALB

EX LA-R/W

660 640 620 600 580 560

P.G. = 601.49
3.4:1
12.5:1
EX. 598.11
EX. 599.89
426+00.00
600.05

EX LA-R/W

660 640 620 600 580 560

P.G. = 601.86
4:1
6:1 8.7:1
EX. 598.61
600.08
425+50.00
600.43

EX LA-R/W

640 620 600 580 560

P.G. = 602.18
4:1
6:1 7.5:1
EX. 598.97
600.27
425+00.00
601.35

EX LA-R/W

640 620 600 580 560

21" UNDERCUT

ITEM 204 - EXCAVATION OF SUBGRADE . . . . . 237 CY
ITEM 204 - GRANULAR MATERIAL, TYPE B . . . . . 237 CY
ITEM 204 - GEOTEXTILE FABRIC . . . . . 684 SY
ITEM 204 - SUBGRADE COMPACTION . . . . . 684 SY

260 240 220 200 180 160 140 120 100 80 60 40 20 0 20 40 60 80 100 120 140 160 180 200 220 240

DRAFT Stage 3 - Not for Construction 09/23/2024

CROSS SECTIONS S.R. 7
STA. 425+00.00 TO STA. 426+00.00

LAW-7-2.17

409
1247

U:\173608714\LAW\75923\roadway\sheets\75923XS1249-2B.dgn 5/21/2024 4:55:16 PM SLParker

SEEDING END WIDTH	SEEDING SQ. YDS.
37	158
20	113
21	127
	398

END AREA CUT	END AREA FILL	VOLUME CUT	VOLUME FILL
46	8	92	8
53	0	96	3
51	2	104	4
		292	15

CALCULATED SLP
CHECKED ALB

CROSS SECTIONS S.R. 7
STA. 426+50.00 TO STA. 427+50.00

LAW-7-2.17

410
1247

EX GEN
EX LA-R/W
EX GEN
EX LA-R/W
P.G. = 600.70
2:1
4:1
12.5:1
EX. 598.77
427+50.00
599.02
EX. 589.02
EX LA-R/W

EX LA-R/W
P.G. = 600.86
4:1
12.5:1
EX. 599.09
427+00.00
599.37
EX. 593.51
EX LA-R/W

EX LA-R/W
P.G. = 601.24
4:1
4:1
EX. 599.36
426+50.00
599.63
EX. 596.76
EX LA-R/W

21" UNDERCUT

ITEM 204 - EXCAVATION OF SUBGRADE . . . . . .243 CY
ITEM 204 - GRANULAR MATERIAL, TYPE B . . . . . .243 CY
ITEM 204 - GEOTEXTILE FABRIC . . . . . .700 SY
ITEM 204 - SUBGRADE COMPACTION . . . . . .700 SY

640 620 600 580 560 540 640 620 600 580 560 540 620 600 580 560 640 620 600 580 560 620 600 580 560

260 240 220 200 180 160 140 120 100 80 60 40 20 0 20 40 60 80 100 120 140 160 180 200 220 240

DRAFT Stage 3 - Not for Construction 09/23/2024

U:\173608714\LAW\75923\roadway\sheets\75923XS1250-2B.dgn 5/21/2024 4:55:17 PM SLPorker

SEEDING	
END WIDTH	SQ. YDS.
114	554
86	414
64	279
	1247

END AREA	
CUT	FILL
454	529
422	443
189	179

VOLUME	
CUT	FILL
811	901
566	576
218	173
1595	1650

CALCULATED ALB
CHECKED TCM

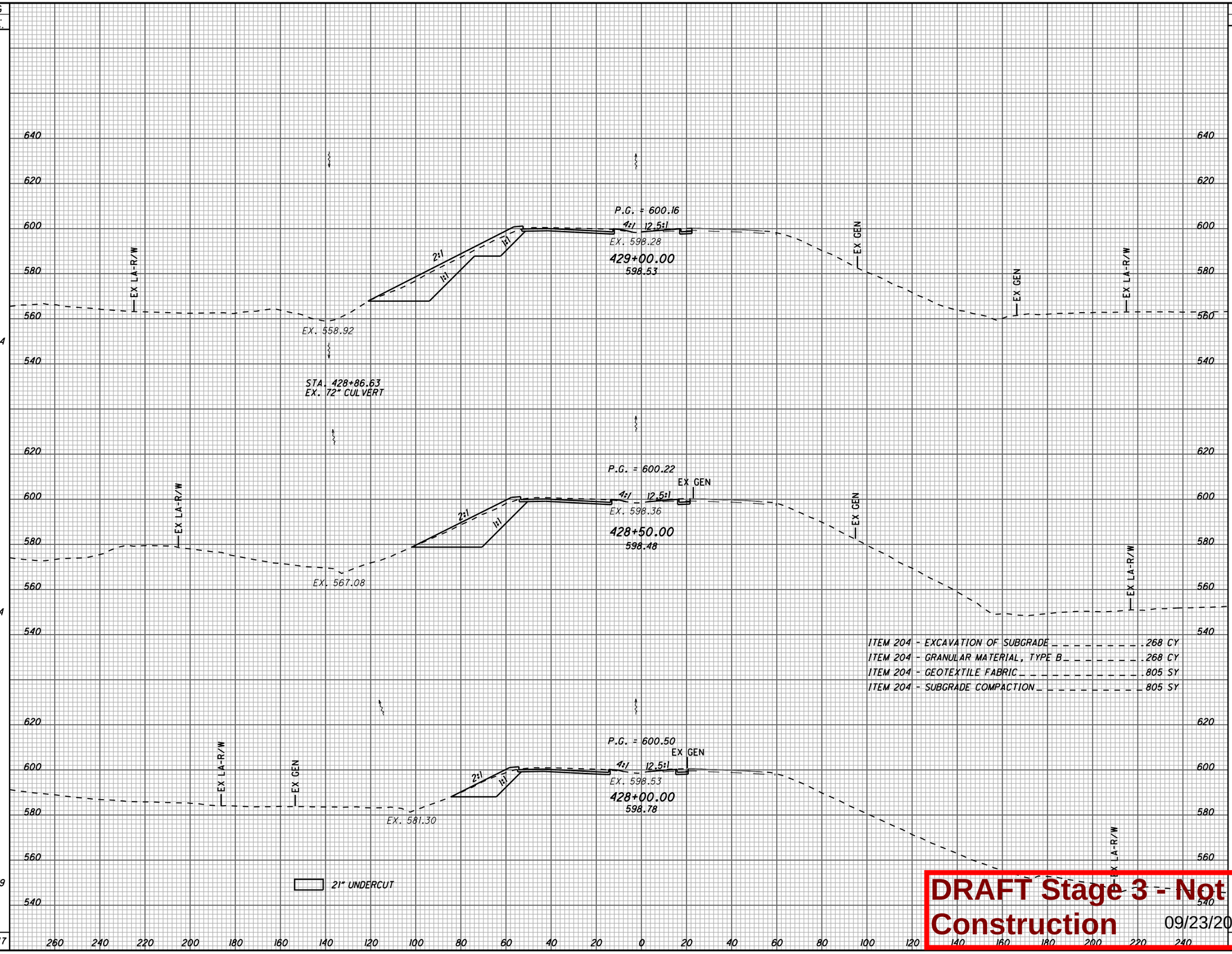

ITEM 204 - EXCAVATION OF SUBGRADE . . . . . 268 CY
ITEM 204 - GRANULAR MATERIAL, TYPE B . . . . . 268 CY
ITEM 204 - GEOTEXTILE FABRIC . . . . . 805 SY
ITEM 204 - SUBGRADE COMPACTION . . . . . 805 SY

DRAFT Stage 3 - Not for Construction 09/23/2024

CROSS SECTIONS S.R. 7
STA. 428+00.00 TO STA. 429+00.00

LAW-7-2.17

411
1247

U:\173608714\LAW\75923\roadway\sheets\75923XS1251-2B.dgn 5/21/2024 4:55:18 PM SLParker

SEEDING END WIDTH	SEEDING SQ. YDS.
57	361
73	483
101	597
300	1441

END AREA CUT	END AREA FILL	VOLUME CUT	VOLUME FILL
19	35	184	182
179	161	478	455
337	329	733	795
		1395	1432

CALCULATED ALB
CHECKED TCM

620 600 580 560 640 620 600 580 540 640 620 600 580 560 540

P.G. = 600.12
4:1 4:1
597.30
430+50.00
598.52
EX. 592.47
EX LA-R/W

P.G. = 599.83
3:1 1:1 4:1 4:1
596.73
430+00.00
598.62
EX. 580.62
EX LA-R/W
EX GEN

P.G. = 599.84
2:1 1:1 4:1 4:1
596.59
429+50.00
598.57
EX. 569.30
EX LA-R/W

(41) CATCH BASIN NO. 8
STA. 429+50.00, 3.41' RT., S.R. 7
T/C = 596.59
E = 593.59

* MASONRY COLLARS AS PER SCD DM-1.1
(INCLUDE WITH THE COST OF CONDUIT)

54' - 15" CONDUIT, TYPE B @ 1.47%
CFN: 1995085

10' - 15" CONDUIT, TYPE F @ 1.47%

E = 592.65

75' - 15" CONDUIT, TYPE F, 39.05% 707.21 @

HW 2.1
STA. 429+50.00, 146.63' RT., S.R. 7
E = 563.20

E = 566.16

111' - 15" CONDUIT, TYPE F @ 1.45%

21" UNDERCUT

ITEM 204 - EXCAVATION OF SUBGRADE . . . . . 261 CY
ITEM 204 - GRANULAR MATERIAL, TYPE B . . . . . 261 CY
ITEM 204 - GEOTEXTILE FABRIC . . . . . 777 SY
ITEM 204 - SUBGRADE COMPACTION . . . . . 777 SY

260 240 220 200 180 160 140 120 100 80 60 40 20 0 20 40 60 80 100 120 140 160 180 200 220 240

DRAFT Stage 3 - Not for Construction 09/23/2024

CROSS SECTIONS S.R. 7
STA. 429+50.00 TO STA. 430+50.00

LAW-7-2.17

412
1247

U:\173608714\LAW\75923\roadway\sheets\75923XS1252-2B.dgn 5/21/2024 4:55:19 PM SLParker

SEEDING	
END WIDTH	SQ. YDS.
154	795
132	649
101	440
	1884

END AREA	
CUT	FILL
955	11
685	12
371	17

VOLUME	
CUT	FILL
1519	21
978	28
362	49
2859	98

CALCULATED SLP
CHECKED ALB

660
640
620
600
580
560
540

4:1
10'
4:1
4:1 4:1
598.28
599.11
P.G. = 600.45
432+00.00
598.80
EX LA-R/W

598.16
598.44
P.G. = 600.36
431+50.00
598.59

598.04
597.81
P.G. = 600.23
431+00.00
598.36

21" UNDERCUT

ITEM 204 - EXCAVATION OF SUBGRADE ..... 237 CY
ITEM 204 - GRANULAR MATERIAL, TYPE B ..... 237 CY
ITEM 204 - GEOTEXTILE FABRIC ..... 757 SY
ITEM 204 - SUBGRADE COMPACTION ..... 757 SY

260 240 220 200 180 160 140 120 100 80 60 40 20 0 20 40 60 80 100 120 140 160 180 200 220 240

DRAFT Stage 3 - Not for Construction 09/23/2024

CROSS SECTIONS S.R. 7
STA. 431+00.00 TO STA. 432+00.00

LAW-7-2.17

413
1247

U:\173608714\LAW\75923\roadway\sheets\75923XS1253-2B.dgn 5/21/2024 4:55:19 PM SLParker

SEEDING	
END WIDTH	SQ. YDS.
287	1293
178	923
	2216

END AREA	
CUT	FILL
2440	0
1123	9

VOLUME	
CUT	FILL
3299	9
1924	19
5223	28

CALCULATED SLP

CHECKED ALB

700
680
660
640
620
600
580
560

4:1
10'
4:1
598.54
P.G. = 601.03
433+00.00
599.63
EX LA-R/W

4:1
10'
4:1
4:1
598.41
P.G. = 600.72
599.98
432+50.00
598.98
EX LA-R/W

21" UNDERCUT

ITEM 204 - EXCAVATION OF SUBGRADE . . . . . 174 CY
ITEM 204 - GRANULAR MATERIAL, TYPE B . . . . . 174 CY
ITEM 204 - GEOTEXTILE FABRIC . . . . . 531 SY
ITEM 204 - SUBGRADE COMPACTION . . . . . 531 SY

320 300 280 260 240 220 200 180 160 140 120 100 80 60 40 20 0 20 40 60 80 100 120 140 160 180

U:\173608714\LAW\75923\roadway\sheets\75923XS1254-2B.dgn 5/21/2024 4:55:20 PM SLParker

DRAFT Stage 3 - Not for Construction 09/23/2024

CROSS SECTIONS S.R. 7
STA. 432+50.00 TO STA. 433+00.00

LAW-7-2.17

414
1247

SEEDING END WIDTH	SEEDING SQ. YDS.
517	2405
	1766
349	4171

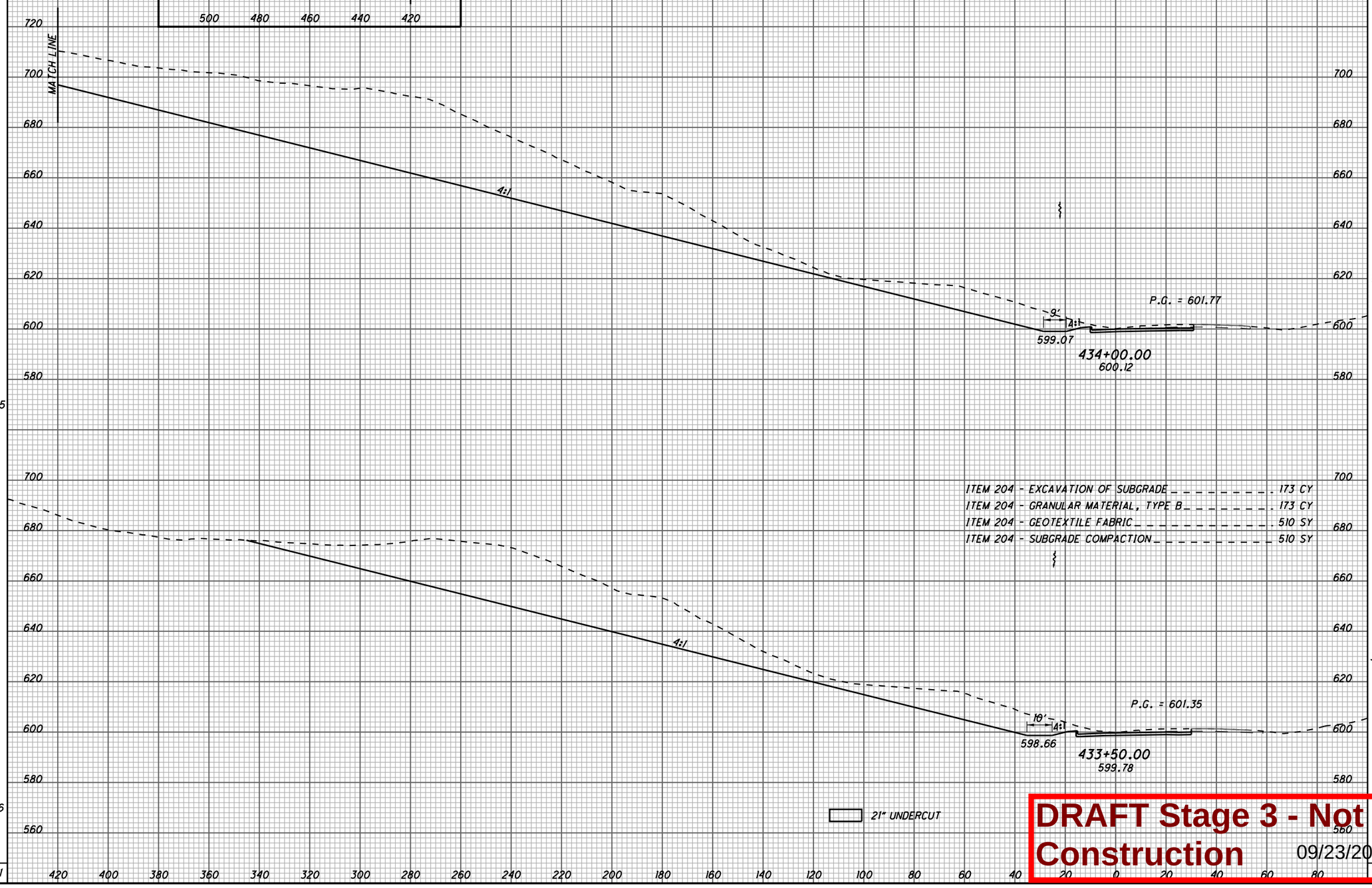

END AREA CUT	END AREA FILL	VOLUME CUT	VOLUME FILL
7283	0		
		10285	0
3824	0		
		5801	0
		16086	0

CALCULATED SLP
CHECKED ALB

CROSS SECTIONS S.R. 7
STA. 433+50.00 TO STA. 434+00.00

LAW-7-2.17

415
1247

DRAFT Stage 3 - Not for Construction 09/23/2024

U:\173608714\LAW\75923\roadway\sheets\75923XS1255-2B.dgn 5/21/2024 4:55:21 PM SLParker

SEEDING	
END WIDTH	SQ. YDS.
114	640
116	642
115	1755
	3037

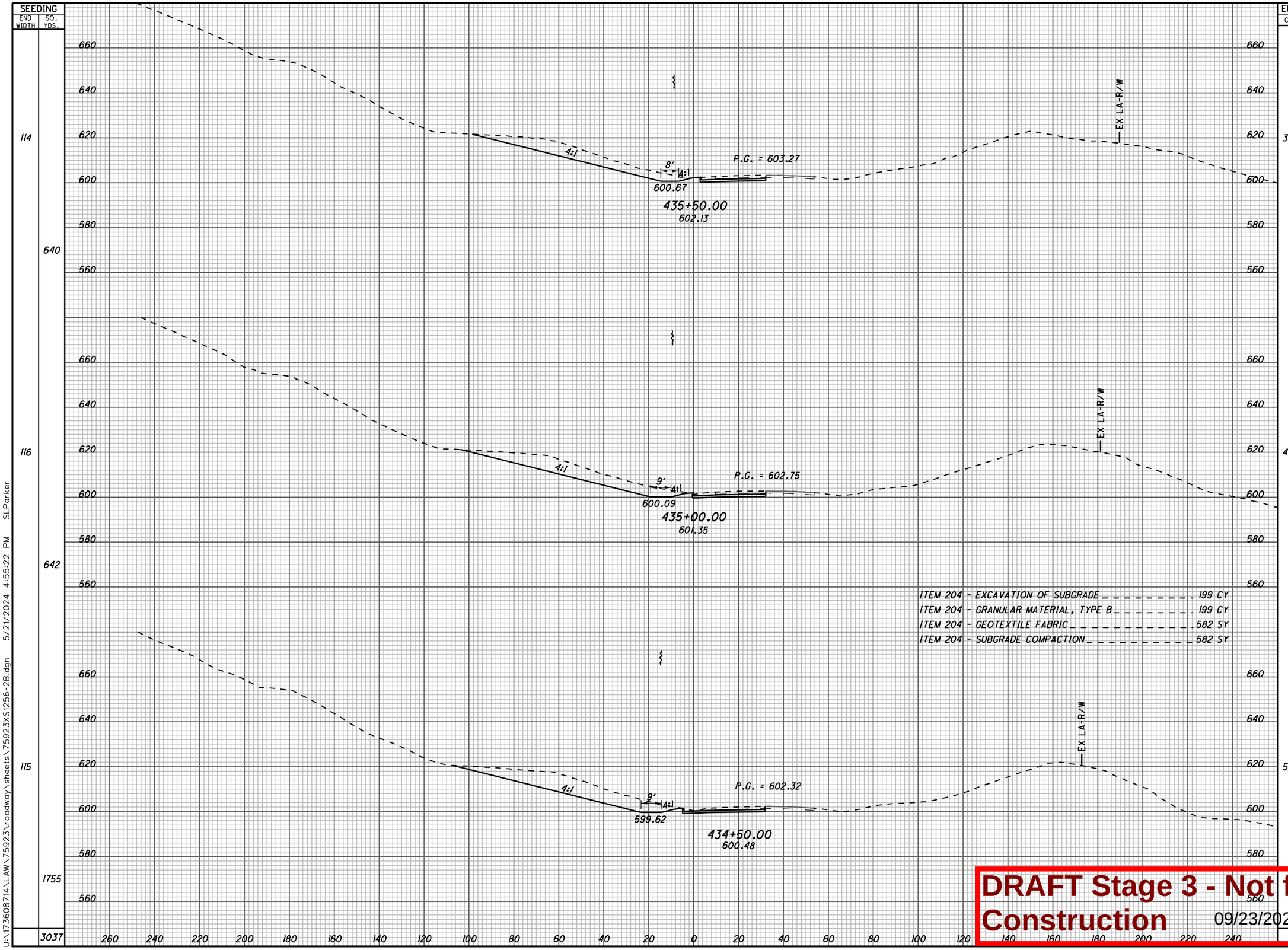

END AREA		VOLUME	
CUT	FILL	CUT	FILL
383	0		
		773	1
450	1		
		904	1
525	0		
		723	0
		890	2

CALCULATED SLP
CHECKED ALB

CROSS SECTIONS S.R. 7
STA. 434+50.00 TO STA. 435+50.00

LAW-7-2.17

416
1247

DRAFT Stage 3 - Not for Construction 09/23/2024

U:\173608714\LAW\75923\roadway\sheets\75923XS1256-2B.dgn 5/21/2024 4:55:22 PM SLParker

SEEDING	
END WIDTH	SQ. YDS.
105	594
109	616
113	629
	1839

END AREA	
CUT	FILL
141	1
212	1
276	0

VOLUME	
CUT	FILL
327	2
452	1
611	1
1390	4

CALCULATED SLP

CHECKED ALB

660 640 620 600 580 560

4:1

7'

4:1

P.G. = 605.40

603.04

437+00.00

603.46

660 640 620 600 580 560

4:1

7'

4:1

P.G. = 604.62

602.09

436+50.00

602.93

EX LA-R/W

660 640 620 600 580 560

4:1

8'

4:1

P.G. = 603.85

601.30

436+00.00

602.91

EX LA-R/W

260 240 220 200 180 160 140 120 100 80 60 40 20 0 20 40 60 80 100 120 140 160 180 200 220 240

ITEM 204 - EXCAVATION OF SUBGRADE . . . . . 150 CY

ITEM 204 - GRANULAR MATERIAL, TYPE B . . . . . 150 CY

ITEM 204 - GEOTEXTILE FABRIC . . . . . 437 SY

ITEM 204 - SUBGRADE COMPACTION . . . . . 437 SY

CROSS SECTIONS S.R. 7

STA. 436+00.00 TO STA. 437+00.00

LAW-7-2.17

417
1247

DRAFT Stage 3 - Not for Construction 09/23/2024

SLParker
5/21/2024 4:55:23 PM
U:\1736008714\LAW\75923\roadway\sheets\75923XS1257-2B.dgn

SEEDING	
END WIDTH	SQ. YDS.

END AREA		VOLUME	
CUT	FILL	CUT	FILL

CALCULATED SLP
CHECKED ALB

ITEM 203 - EXCAVATION _ _ _ _ _ _ _ _ _ _ _ _ 3,620,043 CY
ITEM 203 - EMBANKMENT _ _ _ _ _ _ _ _ _ _ _ _ 4,199,122 CY
ITEM 203 - EMBANKMENT, AS PER PLAN (TYPE C) _ _ 541,262 CY
ITEM 204 - EXCAVATION OF SUBGRADE _ _ _ _ _ _ _ 12,910 CY
ITEM 204 - GRANULAR MATERIAL, TYPE B _ _ _ _ _ _ 12,910 CY
ITEM 204 - GEOTEXTILE FABRIC _ _ _ _ _ _ _ _ _ _ 53,279 SY
ITEM 204 - SUBGRADE COMPACTION _ _ _ _ _ _ _ _ 53,279 SY
ITEM 659 - SEEDING AND MULCHING, CLASS 3C _ _ _ 844,640 CY
ITEM 863 - REINFORCED EMBANKMENT _ _ _ _ _ _ _ 237,999 CY

QUANTITIES CARRIED TO THE SUBSUMMARY, SEE SHEET 74.

ITEM 204 - EXCAVATION OF SUBGRADE _ _ _ _ _ _ _ _ 16 CY
ITEM 204 - GRANULAR MATERIAL, TYPE B _ _ _ _ _ _ _ 16 CY
ITEM 204 - GEOTEXTILE FABRIC _ _ _ _ _ _ _ _ _ _ _ 46 SY
ITEM 204 - SUBGRADE COMPACTION _ _ _ _ _ _ _ _ _ _ 46 SY

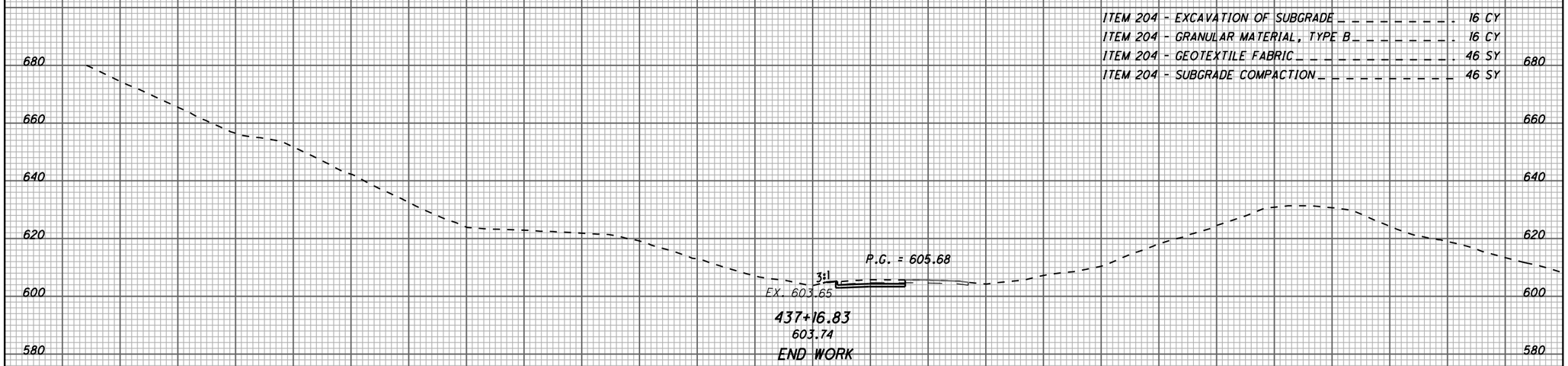

14				9	1
	III				
				47	1
	III			47	1

DRAFT Stage 3 - Not for Construction 09/23/2024

CROSS SECTIONS S.R. 7
STA. 437+16.83

LAW-7-2.17

418
1247

U:\173608714\LAW\75923\roadway\sheets\75923XS1258-2B.dgn 5/21/2024 4:55:24 PM SLParker

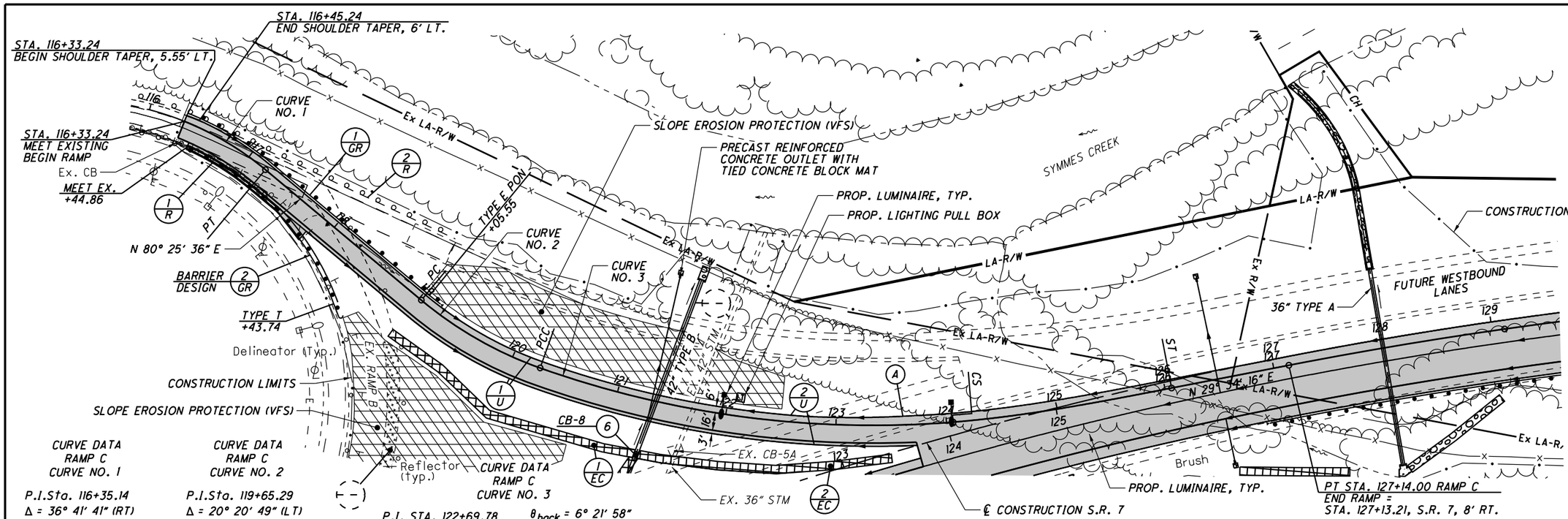

CURVE DATA RAMP C CURVE NO. 1

P.I.Sta. 116+35.14
Δ = 36° 41' 41" (RT)
Dc = 21° 08' 32"
R = 271.00'
T = 89.87'
L = 173.56'
E = 14.51'
e_{max} = 6.57%
PC Sta. 115+45.27
PT Sta. 117+18.83

CURVE DATA RAMP C CURVE NO. 2

P.I.Sta. 119+65.29
Δ = 20° 20' 49" (LT)
Dc = 16° 22' 13"
R = 350.00'
T = 62.81'
L = 124.29'
E = 5.59'
e_{max} = 7.08%
PC Sta. 119+02.48
PCC Sta. 120+26.77

CURVE DATA RAMP C CURVE NO. 3

P.I. STA. 122+69.78
Δ = 30° 30' 36" (LT)
Dc = 6° 21' 58"
R = 900.00'
T = 192.47'
L = 379.23'
E = 20.35'
CS STA. 124+06.00
ST STA. 126+06.00
θ_{back} = 6° 21' 58"
L_{back} = 200.00'
T_{back} = 342.26'
LT = 133.42'
ST = 66.75'
e_{max} = 6.25%
LT = 133.42'
ST = 66.75'

1 EC DITCH EROSION PROTECTION MAT, TYPE B (252' x 7.5' / 9) = 210 SY

2 EC DITCH EROSION PROTECTION MAT, TYPE B (231' x 7.5' / 9) = 192.5 SY

- PROPOSED PAVEMENT
- PAVEMENT REMOVED

A - STA. 122+72.02 BEGIN SHOULDER TAPER, 6' LT.
STA. 123+72.02 END SHOULDER TAPER, 8' LT.

FOR QUANTITIES, SEE SHEETS 71-81
FOR S.R. 7 PLAN AND PROFILE, SEE SHEETS 95-98
FOR PAVEMENT DETAILS, SEE SHEETS 614
FOR INTERCHANGE DETAILS, SEE SHEETS 616-618
FOR STORM SEWER PROFILES, SEE SHEET 639
FOR CULVERT DETAILS, SEE SHEET 649
FOR UNDERDRAIN TABLES, SEE SHEETS 674-678
FOR TRAFFIC CONTROL PLAN, SEE SHEETS 713-733A
FOR FENCE TABLES, SEE SHEETS 1039-1041

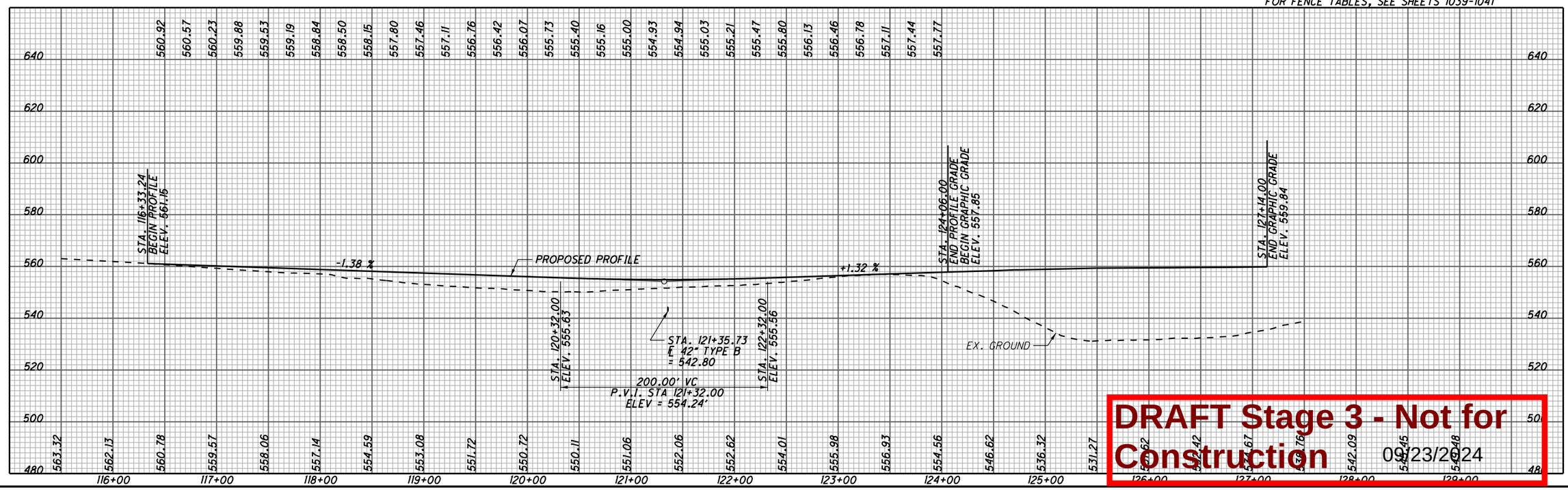

DRAFT Stage 3 - Not for Construction 09/23/2024

HORIZONTAL SCALE IN FEET 0 25 50 100

CALCULATED SLP CHECKED ALB

PLAN AND PROFILE RAMP C

LAW-7-2.17

U:\173608714\LAW\75923\roadway\sheets\75923GP100-2B.dgn 5/21/2024 4:55:26 PM SLParker

SEEDING END WIDTH	SEEDING SQ. YDS.	END AREA CUT	END AREA FILL	VOLUME CUT	VOLUME FILL
21	98	3	34	9	48
14	70	6	17	13	18
11	22	8	2	6	2
12	190	10	1	28	68

CALCULATED SLP
CHECKED ALB

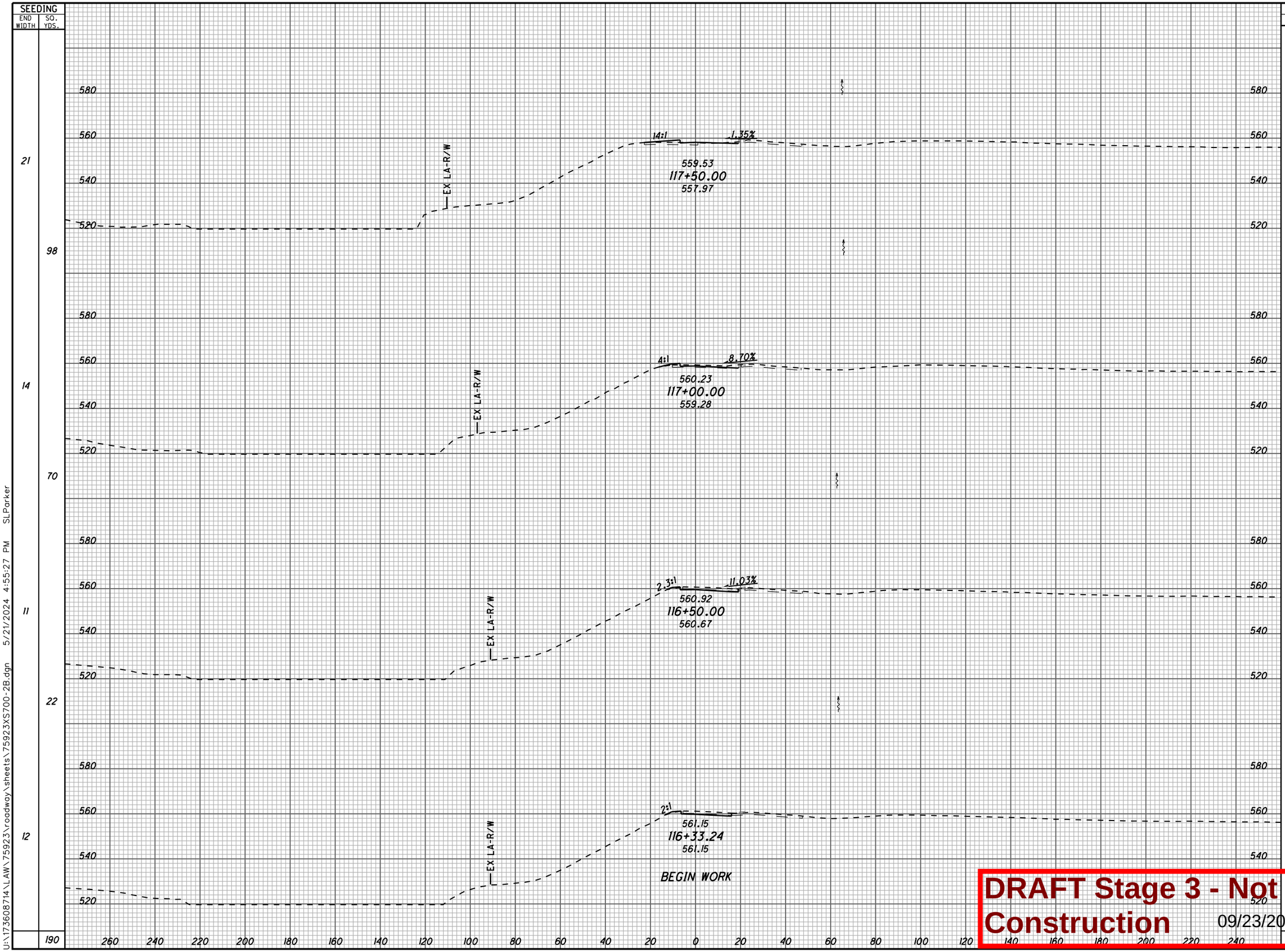

CROSS SECTIONS RAMP C
STA. 116+33.24 TO STA. 117+50.00

LAW-7-2.17

420
1247

DRAFT Stage 3 - Not for Construction 09/23/2024

U:\173608714\LAW\75923\roadway\sheets\75923XS700-2B.dgn 5/21/2024 4:55:27 PM SLParker

SEEDING END WIDTH	SEEDING SQ. YDS.	END AREA CUT	END AREA FILL	VOLUME CUT	VOLUME FILL
118	605	131	79	135	241
99	476	14	180	23	273
72	315	10	114	10	160
41	173	1	59	4	86
	1569			172	760

CALCULATED SLP
CHECKED ALB

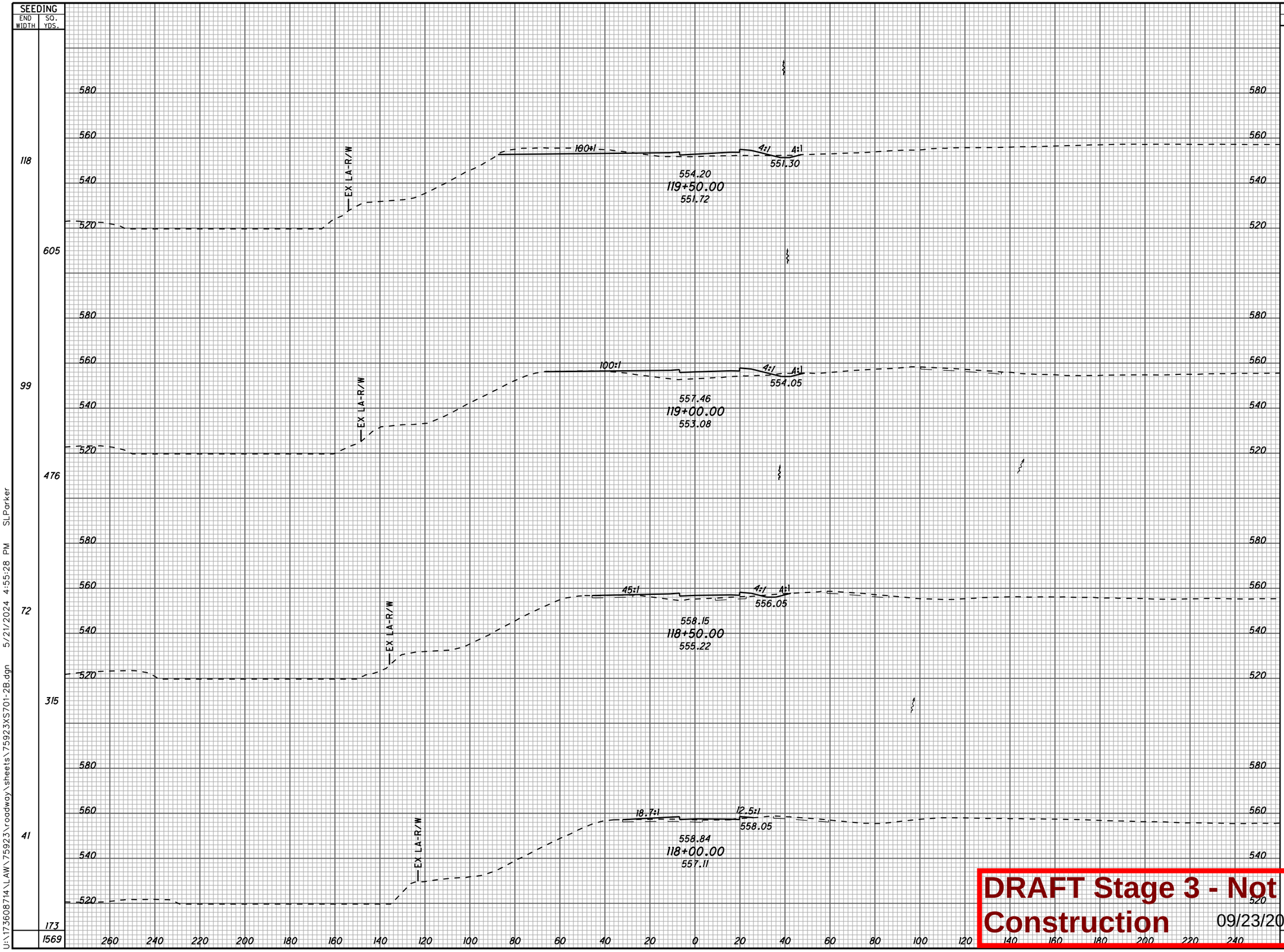

CROSS SECTIONS RAMP C
STA. 118+00.00 TO STA. 119+50.00

LAW-7-2.17

421
1247

DRAFT Stage 3 - Not for Construction 09/23/2024

U:\1736087\14\LAW\75923\roadway\sheets\75923XS701-2B.dgn 5/21/2024 4:55:28 PM SLParker

SEEDING END WIDTH	SEEDING SQ. YDS.	END AREA CUT	END AREA FILL	VOLUME CUT	VOLUME FILL
120	685	59	217	104	440
126	704	53	257	63	587
127	682	14	376	135	422
	2071			302	1449

CALCULATED SLP
CHECKED ALB

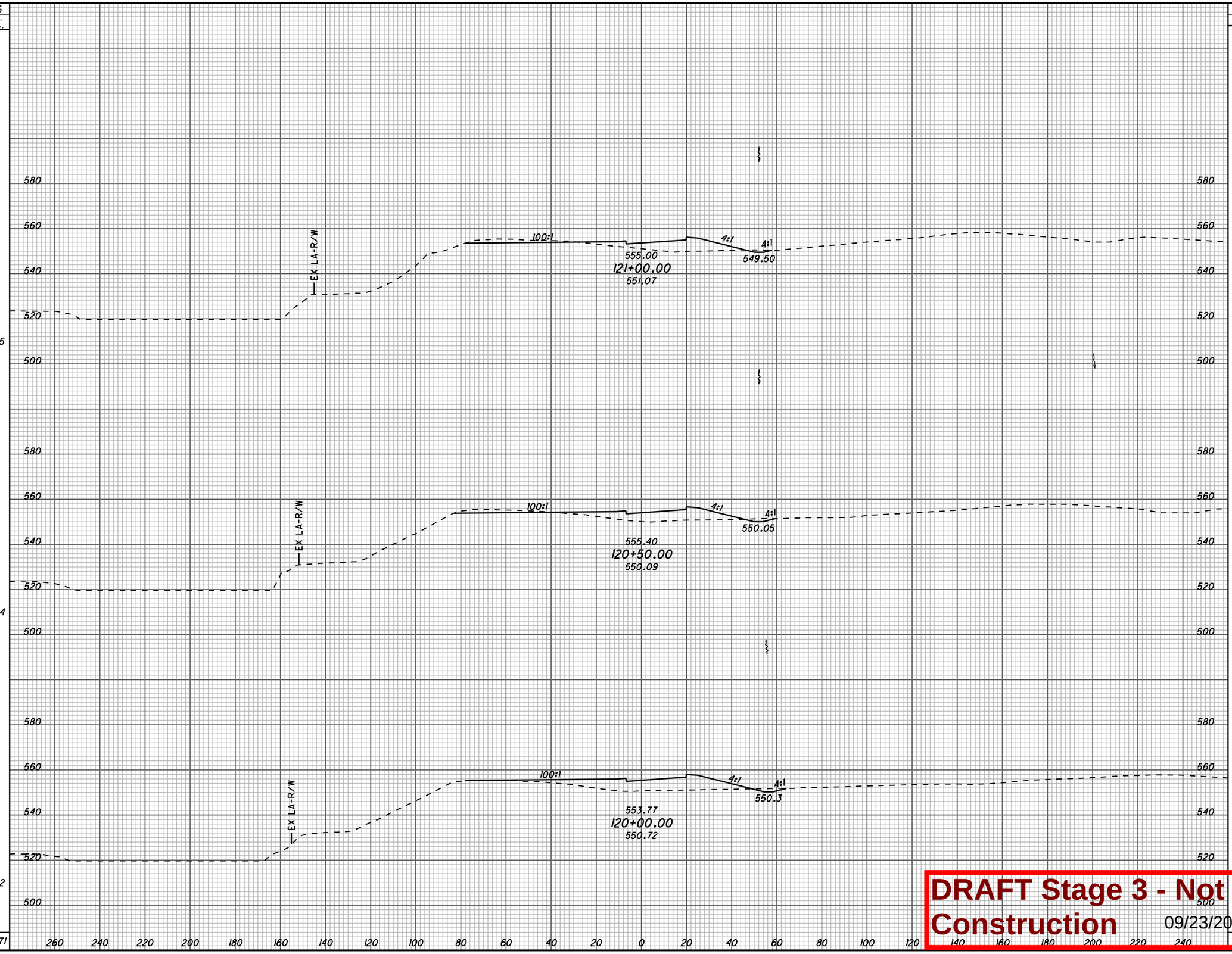

CROSS SECTIONS RAMP C
120+00.00 TO STA. 121+00.00

LAW-7-2.17

422
1247

DRAFT Stage 3 - Not for Construction 09/23/2024

U:\173608714\LAW\75923\roadway\sheets\75923XS702-2B.dgn 5/21/2024 4:55:28 PM SLParker

SEEDING END WIDTH	SEEDING SQ. YDS.	END AREA CUT	END AREA FILL	VOLUME CUT	VOLUME FILL
71	448	20	123	60	268
90	546	44	166	95	337
106	629	58	198	109	385
	1623			264	990

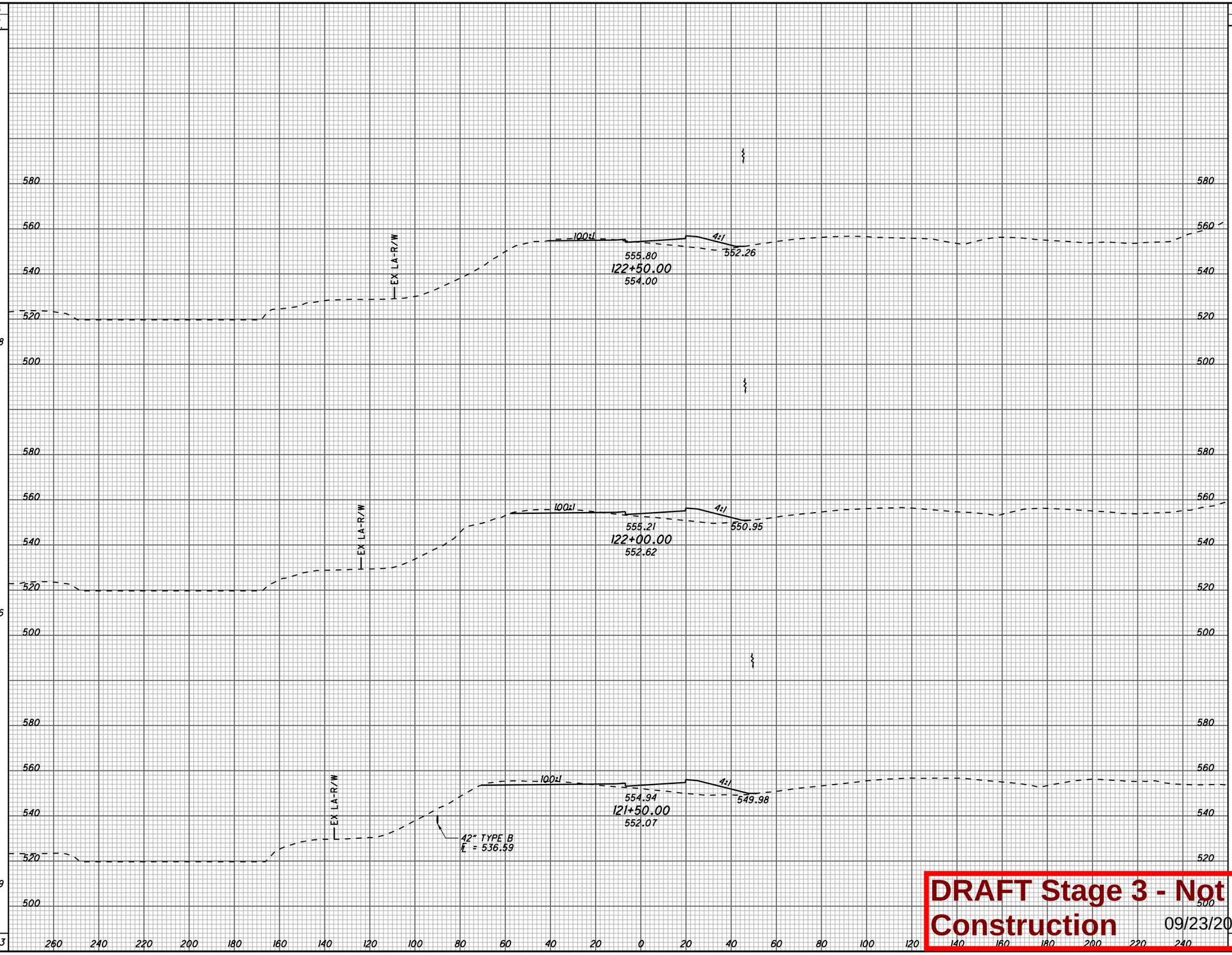

CALCULATED SLP
CHECKED ALB

CROSS SECTIONS RAMP C
STA. 121+50.00 TO STA. 122+50.00

LAW-7-2.17

423
1247

DRAFT Stage 3 - Not for Construction 09/23/2024

U:\173608714\LAW\75923\roadway\sheets\75923XS703-2B.dgn 5/21/2024 4:55:30 PM SLParker

SEEDING END WIDTH	SEEDING SQ. YDS.	END AREA CUT	END AREA FILL	VOLUME CUT	VOLUME FILL
100	180	492	872	347	539
78	356	537	729	531	751
50	336	36	81	52	189
	872			930	1479

CALCULATED SLP
CHECKED ALB

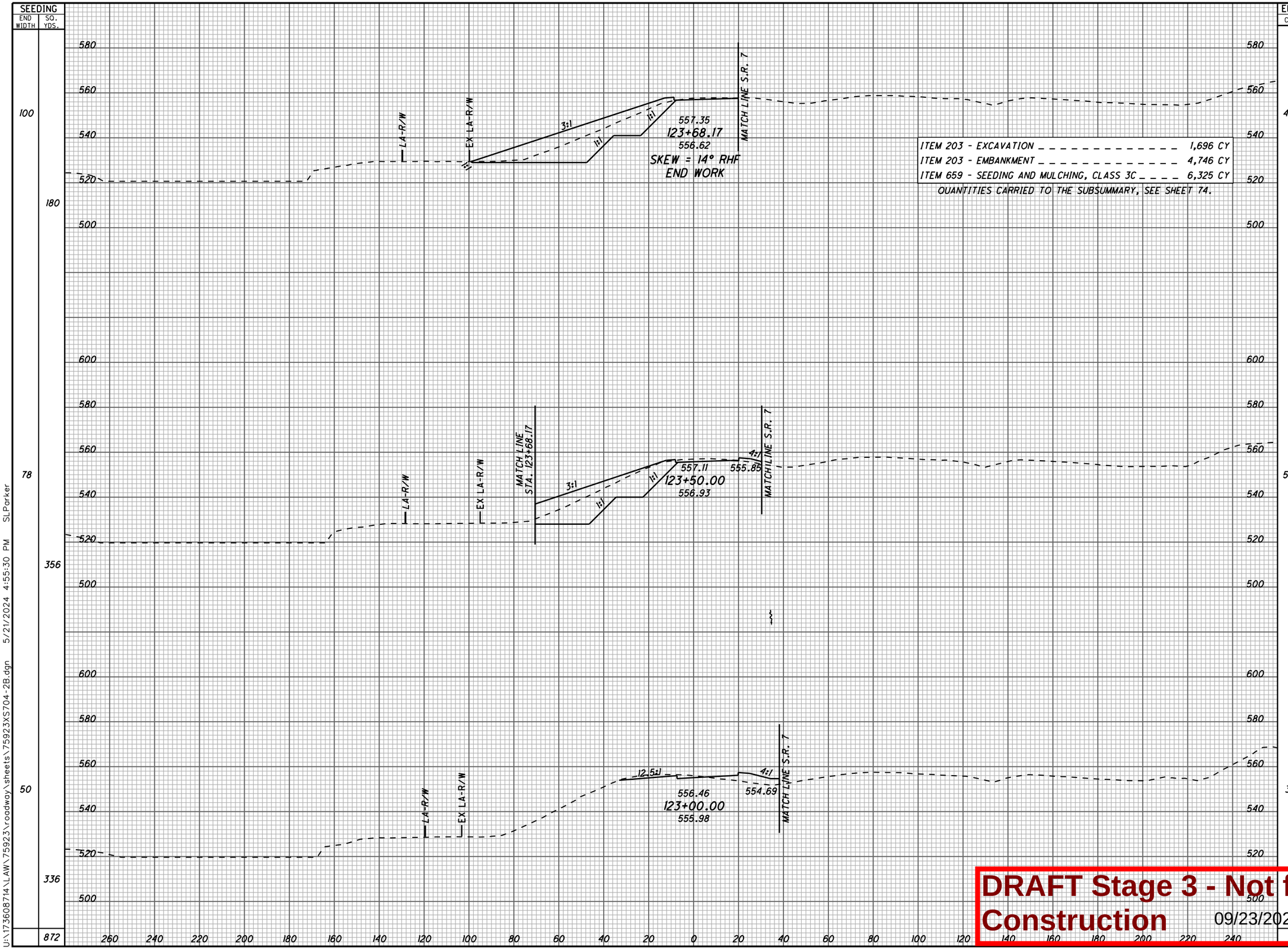

ITEM 203 - EXCAVATION _ _ _ _ _ _ _ _ _ _ _ _ _ _ 1,696 CY
ITEM 203 - EMBANKMENT _ _ _ _ _ _ _ _ _ _ _ _ _ _ 4,746 CY
ITEM 659 - SEEDING AND MULCHING, CLASS 3C _ _ _ _ 6,325 CY
QUANTITIES CARRIED TO THE SUBSUMMARY, SEE SHEET 74.

DRAFT Stage 3 - Not for Construction 09/23/2024

CROSS SECTIONS RAMP C STA. 123+00.00 TO STA. 123+68.17

LAW-7-2.17

424
1247

U:\173608714\LAW\75923\roadway\sheets\75923XS704-2B.dgn 5/21/2024 4:55:30 PM SLParker

CURVE DATA
RAMP D
CURVE NO. 1

P.I. STA. 116+98.94
Δ = 37° 15' 49" (RT)
Dc = 12° 00' 00"
R = 477.46'
T = 160.98'
L = 310.53'
E = 26.41'
e_{max} = 7.30%
PC STA. 115+37.96
PT STA. 118+48.49

CURVE DATA
RAMP D
CURVE NO. 2

P.I. STA. 119+97.82
Δ = 17° 04' 16" (LT)
Dc = 10° 00' 00"
R = 572.96'
T = 85.99'
L = 170.71'
E = 6.42'
e_{max} (N.D.C.) = 6.70%
e_{max} = 1.60%
PC STA. 119+11.83
PT STA. 120+82.54

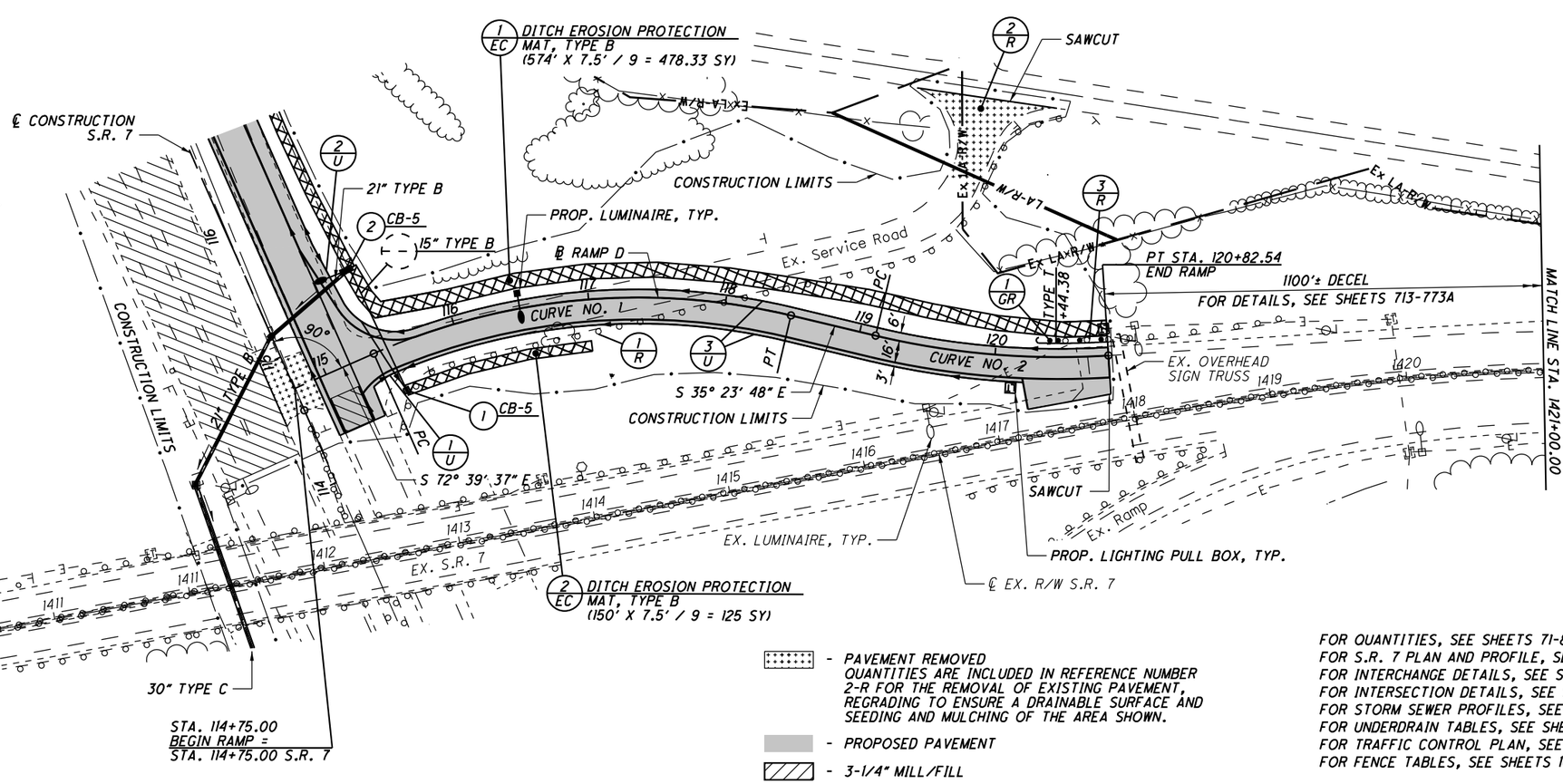

- PAVEMENT REMOVED
QUANTITIES ARE INCLUDED IN REFERENCE NUMBER 2-R FOR THE REMOVAL OF EXISTING PAVEMENT, REGRADING TO ENSURE A DRAINABLE SURFACE AND SEEDING AND MULCHING OF THE AREA SHOWN.
- PROPOSED PAVEMENT
- 3-1/4" MILL/FILL

FOR QUANTITIES, SEE SHEETS 71-81
FOR S.R. 7 PLAN AND PROFILE, SEE SHEETS 95-96
FOR INTERCHANGE DETAILS, SEE SHEETS 616-618
FOR INTERSECTION DETAILS, SEE SHEET 622
FOR STORM SEWER PROFILES, SEE SHEET 639
FOR UNDERDRAIN TABLES, SEE SHEETS 674-678
FOR TRAFFIC CONTROL PLAN, SEE SHEETS 713-733A
FOR FENCE TABLES, SEE SHEETS 1039-1041

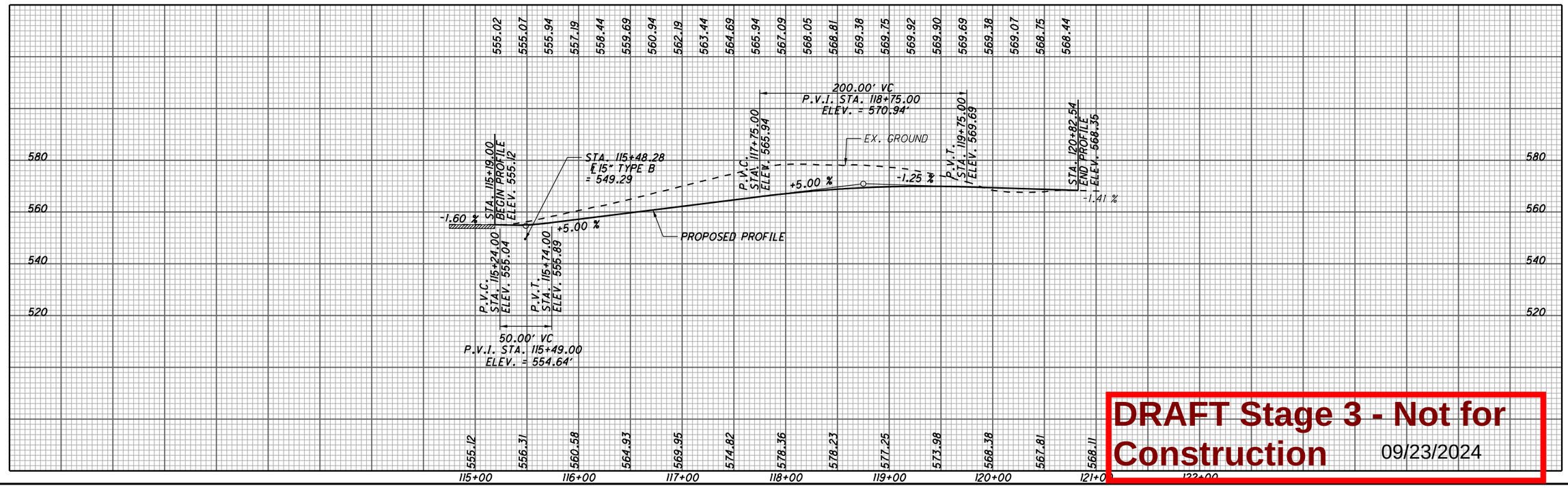

DRAFT Stage 3 - Not for Construction 09/23/2024

HORIZONTAL SCALE IN FEET
0 25 50 100
CALCULATED SLP
CHECKED ALB

PLAN AND PROFILE
RAMP D

LAW-7-2.17

425
1247

U:\1736087\14\LAW\75923\roadway\sheets\75923GP101-2B.dgn 5/21/2024 4:55:39 PM SLParker

DRAFT Stage 3 - Not for Construction 09/23/2024

FOR TRAFFIC CONTROL, SEE SHEETS 713-733.
FOR FENCE TABLES, SEE SHEETS 1039-1041

HORIZONTAL SCALE IN FEET
0 25 50 100

CALCULATED SLP
CHECKED ALB

PLAN - S.R. 7
STA. 1421+00.00 TO STA. 1433+00.00

LAW-7-2.17

426
1247

U:\173608714\LAW\75923\roadway\sheets\75923GP122.dgn 5/21/2024 4:55:40 PM SLPorker

SEEDING END WIDTH	SEEDING SQ. YDS.
84	409
63	311
49	85
0	805

END AREA CUT	END AREA FILL	VOLUME CUT	VOLUME FILL
451	13		
		674	12
277	0		
		349	0
100	0		
		68	0
18	0		
		1091	12

CALCULATED SLP
CHECKED ALB

EX LA-R/W

PROP. LIGHTING CIRCUIT OR CONDUIT
557.90
559.69
116+50.00
564.93
556.32

PROP. LIGHTING CIRCUIT OR CONDUIT
555.18
557.19
116+00.00
560.58
554.21

PROP. LIGHTING CIRCUIT OR CONDUIT
555.07
115+50.00
556.31
552.69
STA. 115+50.00
CB-5
T/C = 552.69
L 15" TYPE B = 549.76

STA. 115+45.65
PROP. CB-5

MATCH LINE S.R. 7

555.12
115+19.00
555.12
BEGIN WORK

MATCH LINE S.R. 7

DRAFT Stage 3 - Not for Construction 09/23/2024

CROSS SECTIONS RAMP D
STA. 115+19.00 TO STA. 116+50.00

LAW-7-2.17

427
1247

U:\173608714\LAW\75923\roadway\sheets\75923XS11000-2B.dgn 5/21/2024 4:55:41 PM SLParker

SEEDING END WIDTH	SEEDING SQ. YDS.
137	824
160	837
142	653
93	494
	2808

END AREA CUT	END AREA FILL	VOLUME CUT	VOLUME FILL
1275	0		
		2289	0
1197	0		
		1984	0
945	0		
		1480	8
652	8		
		1022	20
		6775	28

CALCULATED SLP
CHECKED ALB

EX LA-R/W
EX. 8" WATER
3.5:1
4:1
6'
5'
566.11
568.81
565.74
PROP. LIGHTING CIRCUIT OR CONDUIT
118+50.00
578.23

EX LA-R/W
EX. 8" WATER
3.5:1
4:1
7'
5'
565.10
567.09
563.48
PROP. LIGHTING CIRCUIT OR CONDUIT
118+00.00
578.36

EX LA-R/W
EX. 8" WATER
3.5:1
4:1
7'
6'
562.89
564.69
560.70
PROP. LIGHTING CIRCUIT OR CONDUIT
117+50.00
574.82

EX LA-R/W
EX. 8" WATER
3.5:1
4:1
7'
6'
10:1
560.40
558.82
PROP. LIGHTING CIRCUIT OR CONDUIT
562.19
117+00.00
569.95

36" UNDERCUT

ITEM 204 - EXCAVATION OF SUBGRADE . . . . . 398 CY
ITEM 204 - GRANULAR MATERIAL, TYPE B . . . . . 398 CY
ITEM 204 - GEOTEXTILE FABRIC . . . . . 390 SY
ITEM 204 - SUBGRADE COMPACTION . . . . . 390 SY

620 600 580 560 540

260 240 220 200 180 160 140 120 100 80 60 40 20 0 20 40 60 80 100 120 140 160 180 200 220 240

DRAFT Stage 3 - Not for Construction 09/23/2024

CROSS SECTIONS RAMP D
STA. 117+00.00 TO STA. 118+50.00

LAW-7-2.17

428
1247

U:\173608714\LAW\75923\roadway\sheets\75923XS11001-2B.dgn 5/21/2024 4:55:42 PM SLParker

SEEDING END WIDTH	SEEDING SQ. YDS.
77	516
109	711
147	769
129	740
	2736

END AREA CUT	END AREA FILL	VOLUME CUT	VOLUME FILL
217	3	700	5
539	1	1582	3
1168	2	2299	2
1314	0		
		2398	0
		6979	10

CALCULATED SLP
CHECKED ALB

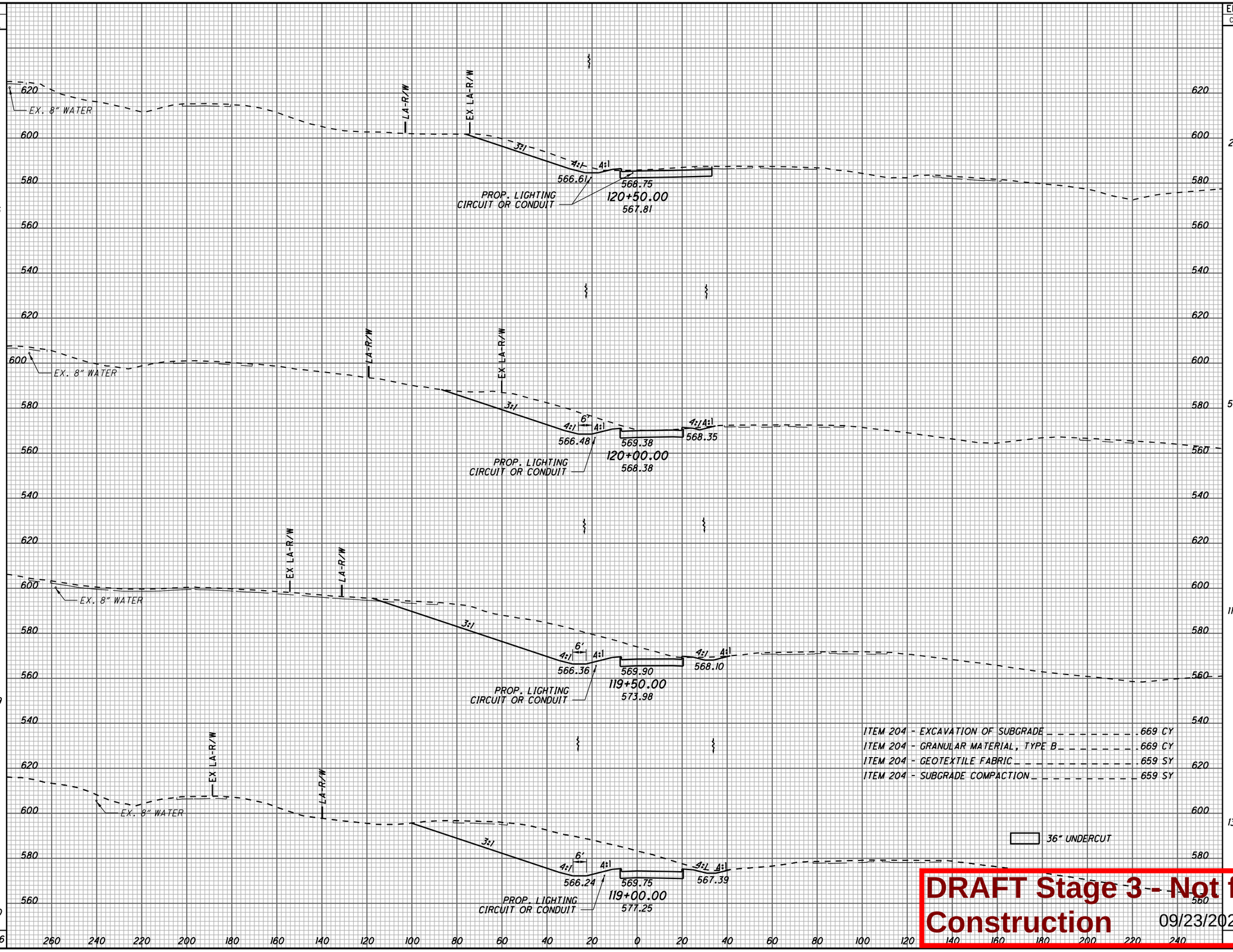

ITEM 204 - EXCAVATION OF SUBGRADE ..... 669 CY
ITEM 204 - GRANULAR MATERIAL, TYPE B ..... 669 CY
ITEM 204 - GEOTEXTILE FABRIC ..... 659 SY
ITEM 204 - SUBGRADE COMPACTION ..... 659 SY

36" UNDERCUT

DRAFT Stage 3 - Not for Construction 09/23/2024

CROSS SECTIONS RAMP D
STA. 119+00.00 TO STA. 120+50.00

LAW-7-2.17

429
1247

U:\1736087\14\LAW\75923\roadway\sheets\75923XS11002-2B.dgn 5/21/2024 4:55:43 PM SLParker

SEEDING	
END WIDTH	SQ. YDS.
7	152
	152

ITEM	
ITEM 203 - EXCAVATION	14,984 CY
ITEM 203 - EMBANKMENT	52 CY
ITEM 204 - EXCAVATION OF SUBGRADE	1,206 CY
ITEM 204 - GRANULAR MATERIAL, TYPE B	1,206 CY
ITEM 204 - GEOTEXTILE FABRIC	1,188 SY
ITEM 204 - SUBGRADE COMPACTION	1,188 SY
ITEM 659 - SEEDING AND MULCHING, CLASS 3C	6,501 CY

QUANTITIES CARRIED TO THE SUBSUMMARY, SEE SHEET 74.

ITEM	
ITEM 204 - EXCAVATION OF SUBGRADE	139 CY
ITEM 204 - GRANULAR MATERIAL, TYPE B	139 CY
ITEM 204 - GEOTEXTILE FABRIC	139 SY
ITEM 204 - SUBGRADE COMPACTION	139 SY

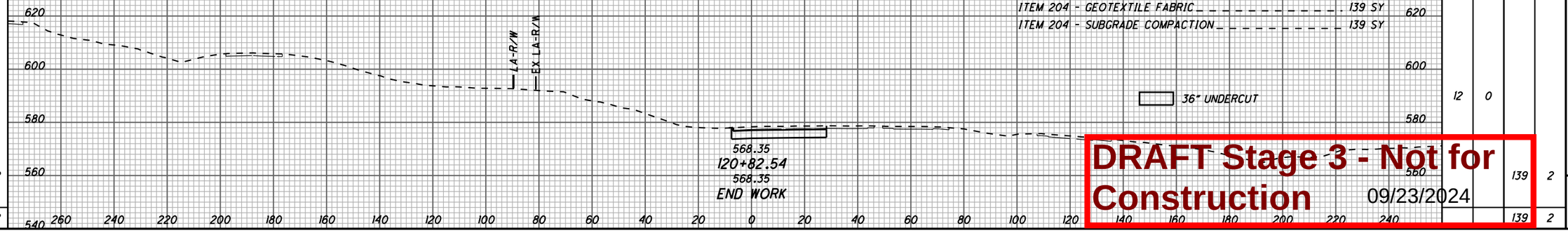

DRAFT Stage 3 - Not for Construction 09/23/2024

END AREA		VOLUME	
CUT	FILL	CUT	FILL
		12	0
		139	2
		139	2

CALCULATED SLP
CHECKED ALB

CROSS SECTIONS RAMP D
STA. 120+82.54

LAW-7-2.17

430
1247

U:\173608714\LAW\75923\roadway\sheets\75923XS11003-2B.dgn 5/21/2024 4:55:44 PM SLParker

STREAM 16A
OHWM = 586.6

STREAM 16
OHWM = 564.7

℄ CONSTRUCTION S.R. 7

CB-8
15" TYPE C (29)

CB2-2B
15" TYPE B (30)

CB-5
15" TYPE B (31)

PROP. LUMINAIRE, TYP.

PRECAST REINFORCED CONCRETE OUTLET
WITH TIED CONCRETE BLOCK MAT

℄ CONSTRUCTION S.R. 775

SIGNAL STRAIN
POLE WITH
LUMINAIRE (TYP.)

S 65° 44' 01" E

CURVE NO. 1

℄ RAMP I

℄ RAMP L

BTA, TYPE 1
+38.42

BTA, TYPE 1
+37.71

42" TYPE C

Rock Channel

N 33° 21' 37" E

S 52° 05' 53" E

BTA, TYPE 2
+71.95

SIGNAL STRAIN
POLE (TYP.)

BRIDGE NO.
LAW-7-0711

PROP. LIGHTING
PULL BOX, TYP.

STA. 373+61.70
BEGIN SHOULDER TAPER, 8' RT.
RAMP NOSE

STA. 374+11.70
END SHOULDER TAPER, 6' RT.

STA. 375+85.82
BEGIN PAVEMENT TAPER, 16' LT.

STA. 376+35.82
END PAVEMENT TAPER, 24' LT.

15" TYPE F

Ex. Fence

WETLAND N

PADDY

LITTLE

Brush

Wooded Area

LOT 3
LOT 4

CONSTRUCTION LIMITS

CURVE DATA
RAMP I
CURVE NO. 1

P.I. Sta. 373+25.29
Δ = 13° 38' 08" (RT)
Dc = 1° 50' 00"
R = 3,125.22'
T = 373.64'
L = 743.76'
E = 22.26'
e_{max} = 3.53%
PC Sta. 369+51.65
PT Sta. 376+95.41

PC STA. 369+51.65
BEGIN RAMP
STA. 369+51.65, 56' RT., S.R. 7

3 EC ROCK CHANNEL PROTECTION
TYPE B WITH FILTER
(426' X 2.5' X 15' / 27 = 710 CY)

STA. 381+11.69
END RAMP =
STA. 54+00.89 S.R. 775 =
STA. 379+57.36 RAMP L

FOR QUANTITIES, SEE SHEETS 71-81
FOR S.R. 7 PLAN & PROFILE, SEE SHEETS 142-145
FOR RAMP L PLAN AND PROFILE, SEE SHEET 457
FOR S.R. 775 PLAN AND PROFILE, SEE SHEETS 559-560
FOR INTERCHANGE DETAILS, SEE SHEETS 619-621
FOR INTERSECTION DETAILS, SEE SHEETS 627
FOR STORM SEWER PROFILES, SEE SHEETS 368 & 643
FOR UNDERDRAIN TABLES, SEE SHEETS 674-678
FOR TRAFFIC CONTROL PLAN, SEE SHEETS 713-733A
FOR FENCE TABLES, SEE SHEETS 1039-1041

- PROPOSED PAVEMENT

2 GR - INCLUDES 50' OF 38' RADIUS SHOP CURVED GUARDRAIL

3 GR - INCLUDES 62.5' OF 39' RADIUS SHOP CURVED GUARDRAIL

2 EC ARTICULATING CONCRETE BLOCK REVETMENT SYSTEM, TYPE I
(61' x 16' / 9' = 108.44 SY)

1 EC ROCK CHANNEL PROTECTION,
TYPE B WITH FILTER
(407' X 14' X 2.5' / 27 = 527.59 CY)

A
STA. 379+82.99
BEGIN PAVEMENT TAPER, 0' LT./RT.

STA. 380+32.99
END PAVEMENT TAPER, 5' RT.

HORIZONTAL SCALE IN FEET
0 25 50 100

CALCULATED SLP
CHECKED ALB

PLAN AND PROFILE
RAMP I

LAW-7-2.17

431
1247

U:\173608714\LAW\75923\roadway\sheets\75923GP102-2B.dgn 5/21/2024 4:55:46 PM SLParker

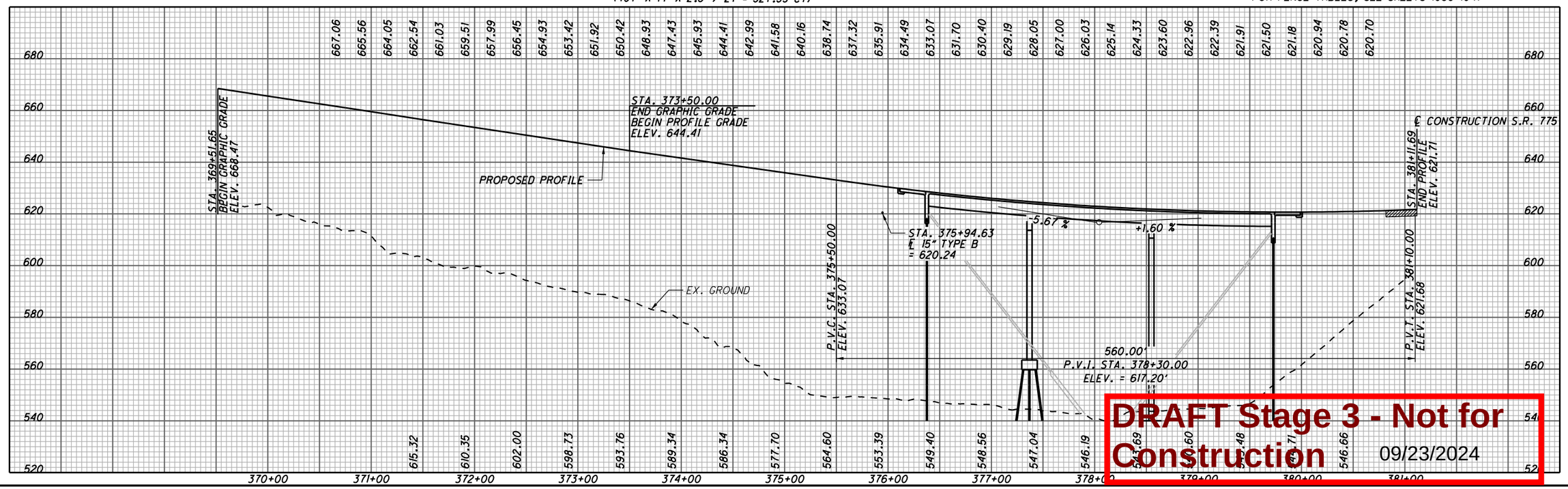

DRAFT Stage 3 - Not for Construction 09/23/2024

SEEDING	
END WIDTH	SQ. YDS.
165	641
154	641

END AREA		VOLUME	
CUT	FILL	CUT	FILL
0	6519		
0	8069		
0	5521		
0	8069		

CALCULATED SLP
CHECKED ALB

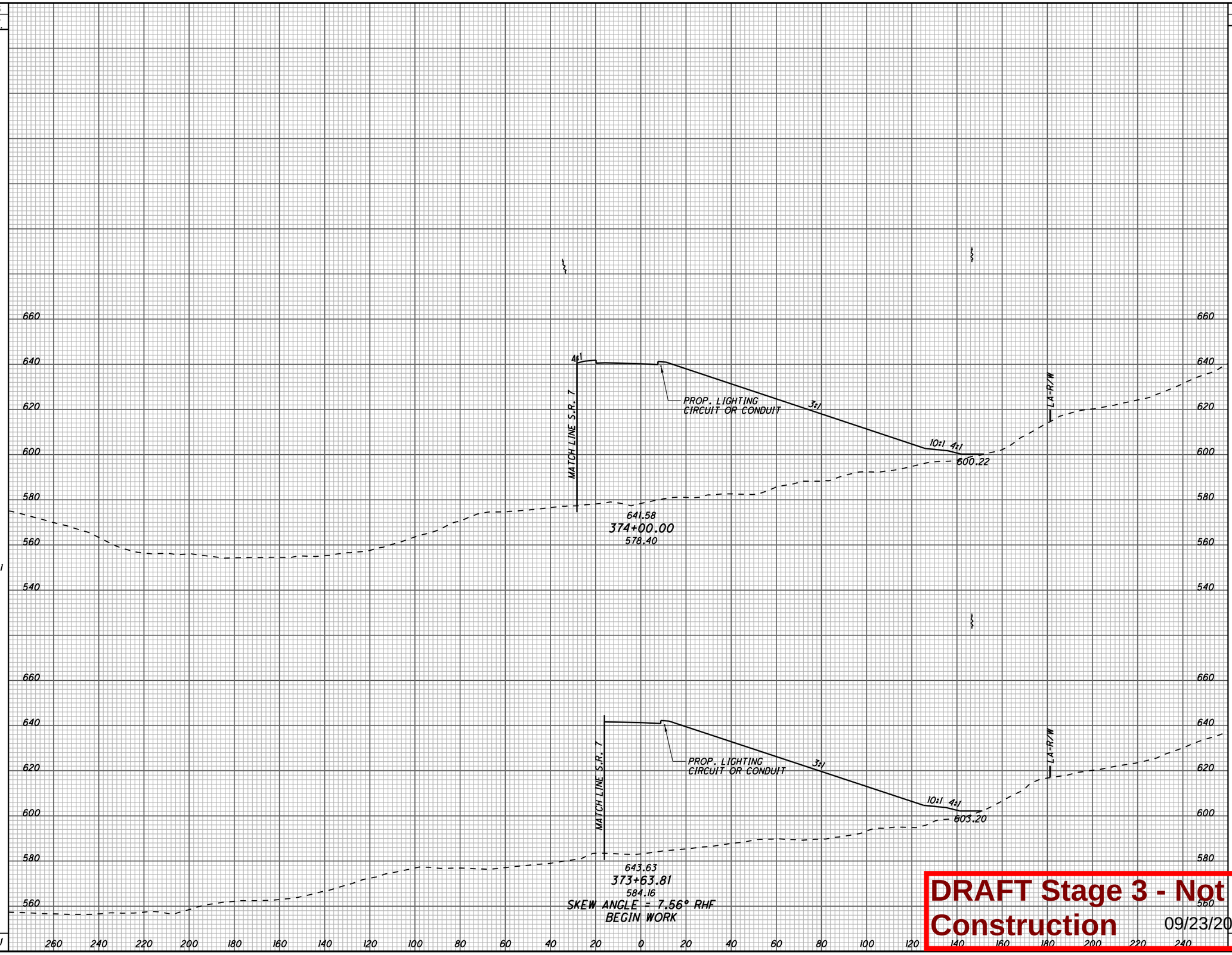

CROSS SECTIONS RAMP I
STA. 373+63.81 TO STA. 374+00.00

LAW-7-2.17

DRAFT Stage 3 - Not for Construction 09/23/2024

U:\173608714\LAW\75923\roadway\sheets\75923XS18000-2B.dgn 5/21/2024 4:55:48 PM SLParker

SEEDING	
END WIDTH	SQ. YDS.
190	1033
182	965
	1998

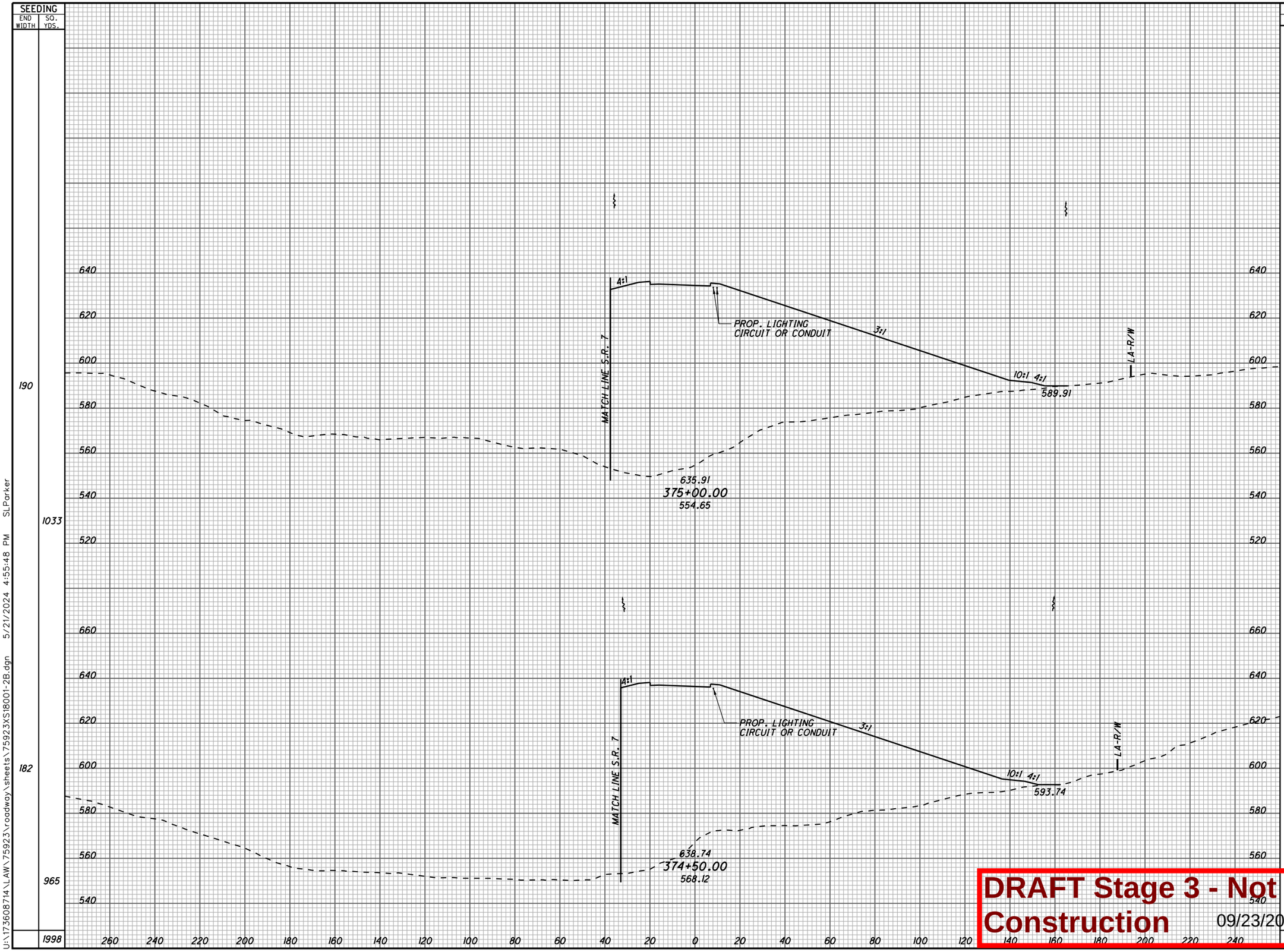

END AREA		VOLUME	
CUT	FILL	CUT	FILL
0	8761		
		0	15438
0	7911		
		0	13362
		0	28800

CALCULATED SLP
CHECKED ALB

CROSS SECTIONS RAMP I
STA. 374+50.00 TO STA. 375+00.00

LAW-7-2.17

433
1247

DRAFT Stage 3 - Not for Construction 09/23/2024

SLParker
U:\17360871 4\LAW\75923\roadway\sheets\75923XS18001-2B.dgn 5/21/2024 4:55:48 PM

SEEDING		END AREA		VOLUME		CALCULATED	CHECKED
END WIDTH	SQ. YDS.	CUT	FILL	CUT	FILL	SLP	ALB
223		0	11135				
	1221			0	19583		
216				0	10014		
	1129			0	17384		
	2350			0	36967		

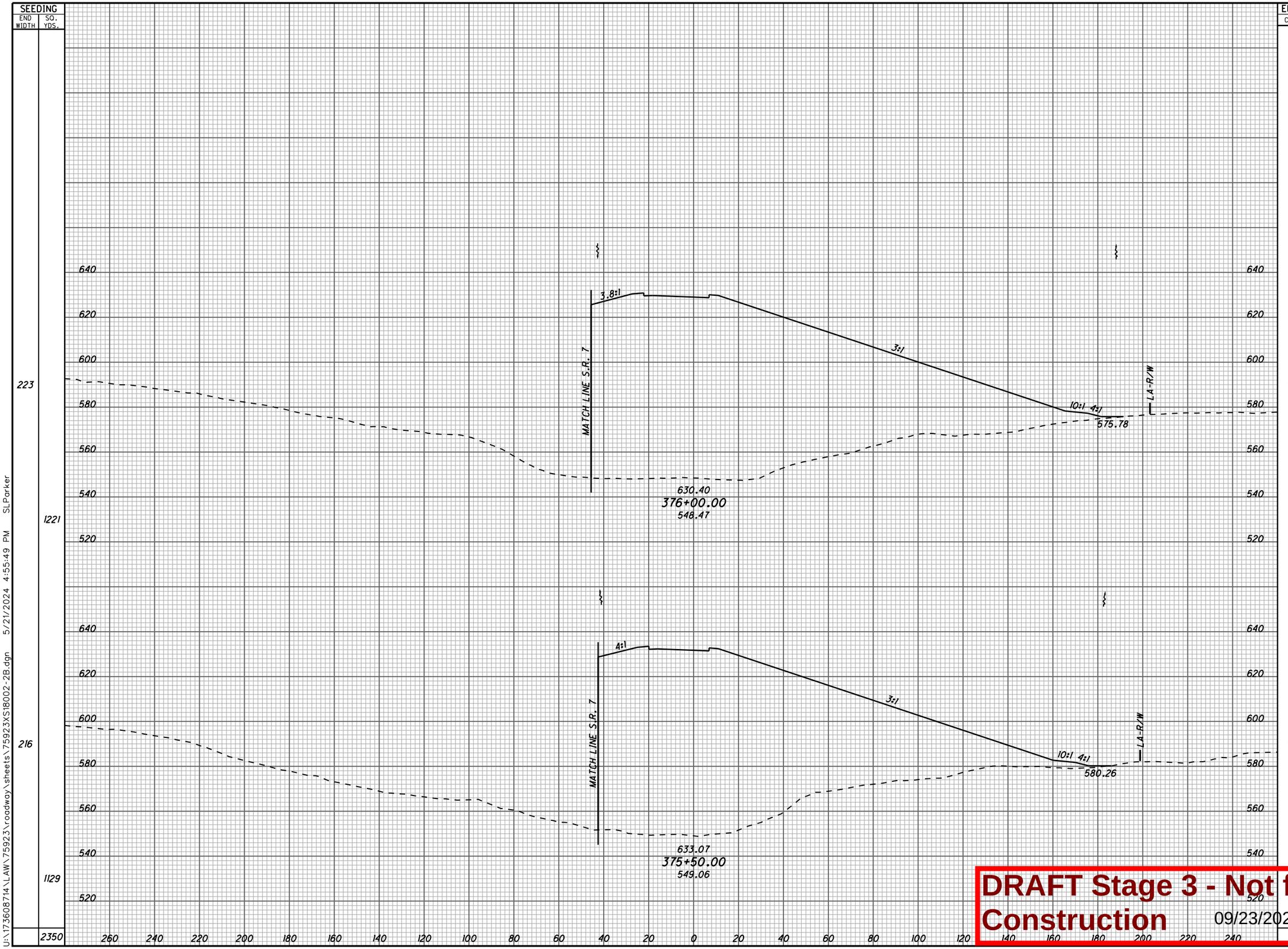

CROSS SECTIONS RAMP I
STA. 375+50.00 TO STA. 376+00.00

LAW-7-2.17

DRAFT Stage 3 - Not for Construction 09/23/2024

434
1247

U:\173608714\LAW\75923\roadway\sheets\75923XS18002-2B.dgn 5/21/2024 4:55:49 PM SLParker

SEEDING	
END WIDTH	SQ. YDS.
128	
219	
218	
218	

END AREA		VOLUME	
CUT	FILL	CUT	FILL
0	6857		
0	11001		
0	3633		
		0	3633

CALCULATED SLP
CHECKED ALB

ITEM 863 - REINFORCED EMBANKMENT _ _ _ _ _ _ _ _ 50807 CY

640
620
600
580
560
540
520

2.6:1
2.4:1
MATCH LINE S.R. 775
MATCH LINE S.R. 775
620.71
380+00.45
561.80

STA. 379+75.00, LT./RT.
END SLOPE REINFORCEMENT
FOR DETAILS, SEE SHEETS 38 & 40

STA. 378+30.00, LT./RT.
BEGIN SLOPE REINFORCEMENT
FOR DETAILS, SEE SHEETS 38 & 40

STA. 377+94.00, LT./RT.
END SLOPE REINFORCEMENT
FOR DETAILS, SEE SHEETS 38 & 40

STA. 376+35.00, LT./RT.
BEGIN SLOPE REINFORCEMENT
FOR DETAILS, SEE SHEETS 38 & 40

4.5:1
3:1
10:1 4:1
MATCH LINE S.R. 7
LA-R/W
575.30
629.96
376+08.86
548.42
SKEW ANGLE = 1.55° LHF

260 240 220 200 180 160 140 120 100 80 60 40 20 0 20 40 60 80 100 120 140 160 180 200 220 240

DRAFT Stage 3 - Not for Construction 09/23/2024

CROSS SECTIONS RAMP I
STA. 376+08.86 TO STA. 380+00.45

LAW-7-2.17

435
1247

U:\173608714\LAW\75923\roadway\sheets\75923XS18003-2B.dgn 5/21/2024 4:55:50 PM SLPorker

SEEDING	
END WIDTH	SQ. YDS.
0	
	188
	107
	645
	833

ITEM 203 - EMBANKMENT _ _ _ _ _ _ _ _ _ _ _ _ _ _ 94,784 CY
ITEM 659 - SEEDING AND MULCHING, CLASS 3C _ _ _ _ 6,040 CY
ITEM 863 - REINFORCED EMBANKMENT_ _ _ _ _ _ _ _ 50,807 CY

QUANTITIES CARRIED TO THE SUBSUMMARY, SEE SHEET 74.

660
640
620
600
580
560
540

MATCH LINE S.R. 775

621.28
380+81.60
588.74
SKEW ANGLE = 4.54° RHF
END WORK

MATCH LINE S.R. 775

660
640
620
600
580
560
540

640
620
600
580

20.6:1
6.4:1

MATCH LINE S.R. 775

MATCH LINE S.R. 775

620.95
380+50.00
578.64

640
620
600
580

260 240 220 200 180 160 140 120 100 80 60 40 20 0 20 40 60 80 100 120 140 160 180 200 220 240

END AREA		VOLUME	
CUT	FILL	CUT	FILL
0	4341		
		0	5843
		0	5644
		0	11472
		0	17315

CALCULATED SLP
CHECKED ALB

CROSS SECTIONS RAMP I
STA. 380+50.00 TO STA. 380+81.60

LAW-7-2.17

436
1247

DRAFT Stage 3 - Not for Construction 09/23/2024

U:\173608714\LAW\75923\roadway\sheets\75923XS18004-2B.dgn 5/21/2024 4:55:51 PM SLParker

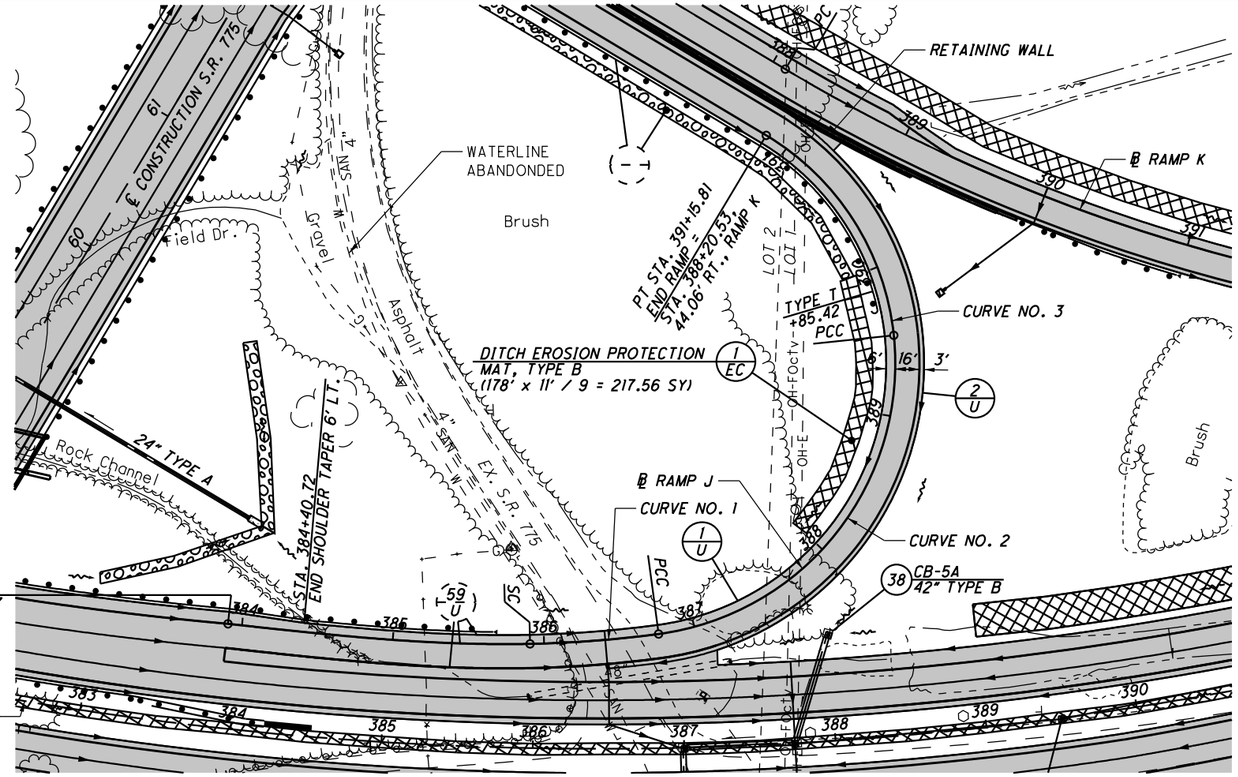

CURVE DATA
RAMP J
CURVE NO. 1

P.I. STA. 385+74.87
Δ = 13° 53' 07" (LT)
Dc = 7° 30' 00"
R = 763.94'
T = 42.61'
L = 85.14'
E = 1.19'
TS STA. 383+90.72
SC STA. 385+90.72

θ_{back} = 7° 30' 00"
L_{back} = 200.00'
T_{back} = 184.15'
LT = 133.45'
ST = 66.78'
e_{max} (N.D.C.) = 8.00%
e_{max} = 6.20%
PCC STA. 386+75.86

CURVE DATA
RAMP J
CURVE NO. 2

P.I. Sta. 388+50.86
Δ = 88° 23' 15" (LT)
Dc = 31° 49' 52"
R = 180.00'
T = 175.00'
L = 277.68'
E = 71.05'
e_{max} = 7.66%
PCC Sta. 386+75.86
PCC Sta. 389+53.54

CURVE DATA
RAMP J
CURVE NO. 3

P.I. Sta. 390+41.04
Δ = 53° 07' 48" (LT)
Dc = 32° 44' 26"
R = 175.00'
T = 87.50'
L = 162.28'
E = 20.66'
e_{max} = 7.73%
PCC Sta. 389+53.54
PT Sta. 391+15.81

FOR QUANTITIES, SEE SHEETS 71-81
FOR S.R. 7 PLAN & PROFILE, SEE SHEETS 144-147
FOR RAMP K PLAN AND PROFILE, SEE SHEETS 442-444
FOR S.R. 775 PLAN & PROFILE, SEE SHEETS 559-560
FOR INTERCHANGE DETAILS, SEE SHEETS 619-621
FOR STORM SEWER PROFILE, SEE SHEET 645
FOR CULVERT DETAILS, SEE SHEET 664
FOR UNDERDRAIN TABLES, SEE SHEETS 674-678
FOR RETAINING WALL DETAILS, SEE SHEETS 706-712
FOR TRAFFIC CONTROL PLAN, SEE SHEETS 713-733A
FOR FENCE TABLES, SEE SHEETS 1039-1041

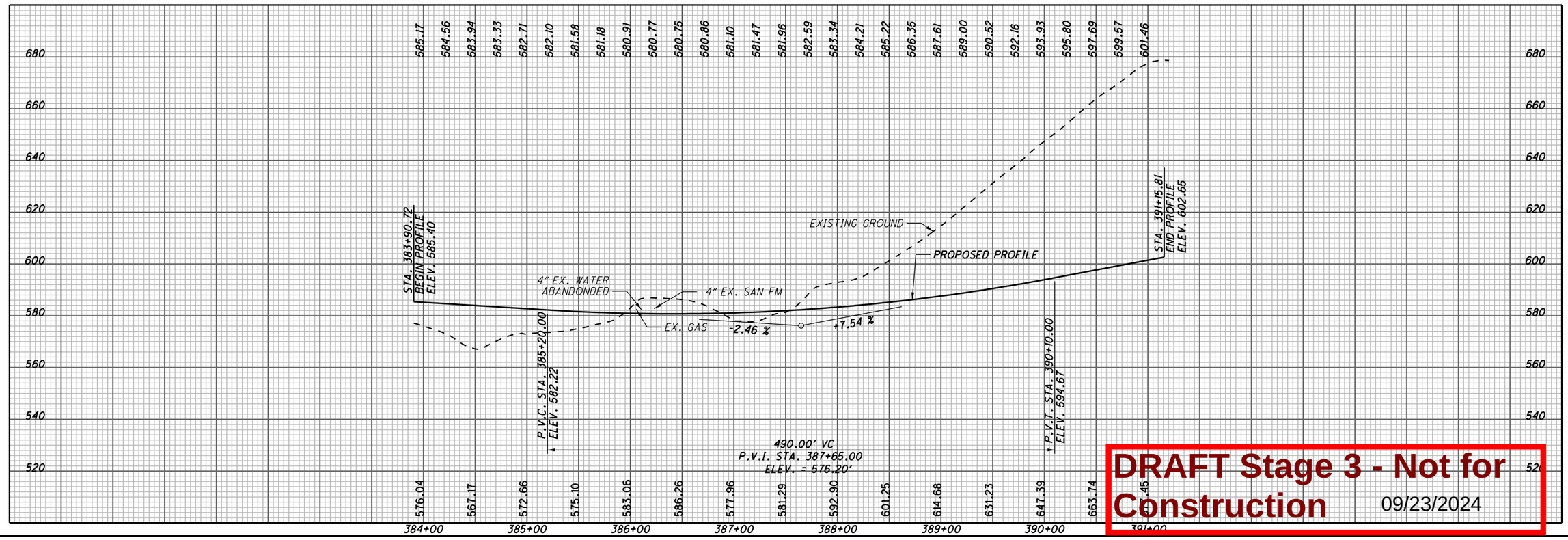

DRAFT Stage 3 - Not for Construction 09/23/2024

N

HORIZONTAL SCALE IN FEET
0 25 50 100

CALCULATED SLP
CHECKED ALB

PLAN AND PROFILE RAMP J

LAW-7-2.17

U:\173608714\LAW\75923\roadway\sheets\75923GP103-2B.dgn 5/21/2024 4:55:52 PM SLParker

SEEDING END WIDTH	SEEDING SQ. YDS.	END AREA CUT	END AREA FILL	VOLUME CUT	VOLUME FILL
237	1314	2243	0	3396	82
236	586	1424	88	1277	116
66		553	90		
1900				4673	198

CALCULATED SLP
CHECKED ALB

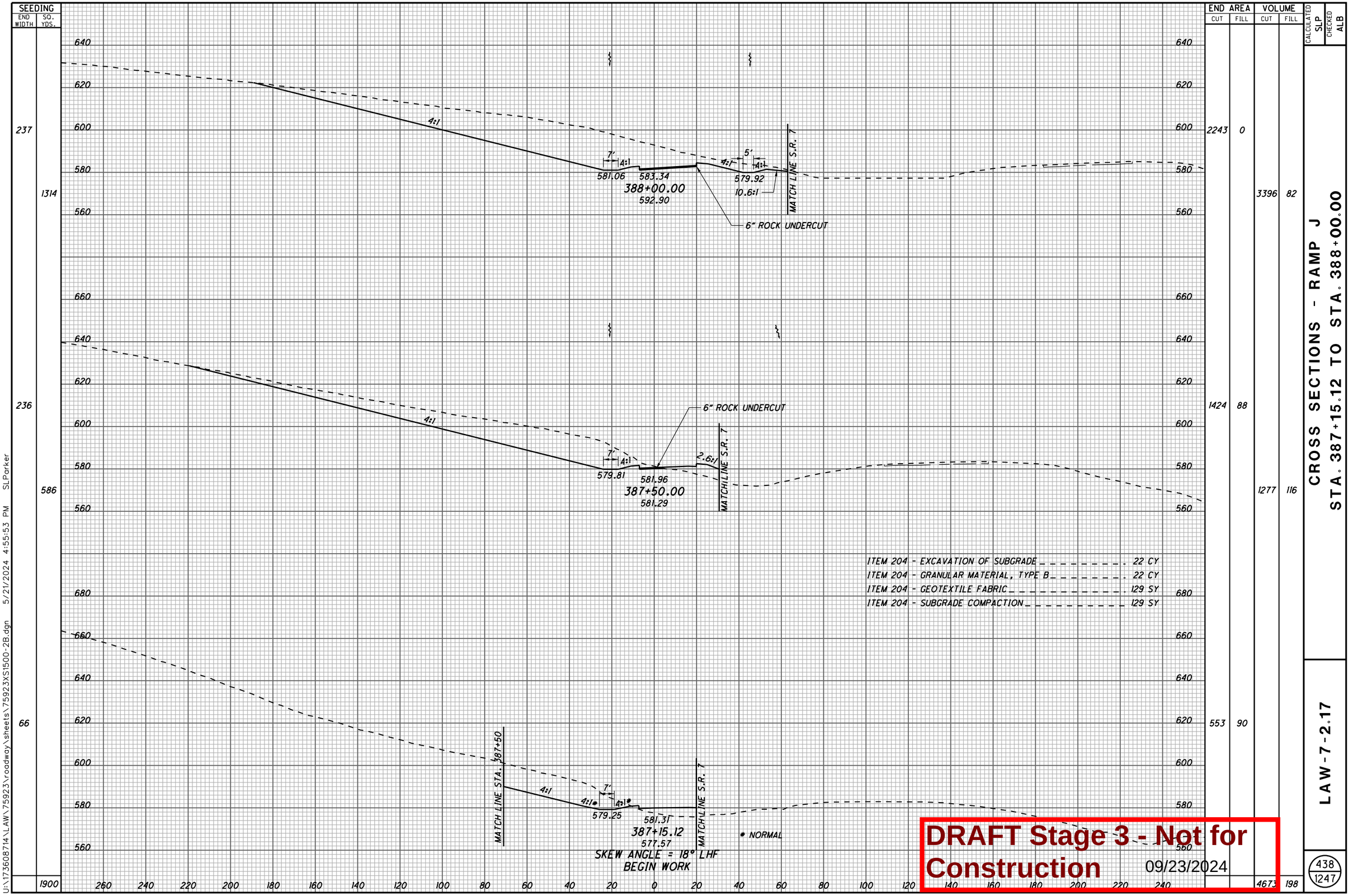

CROSS SECTIONS - RAMP J
STA. 387+15.12 TO STA. 388+00.00

LAW-7-2.17

438
1247

DRAFT Stage 3 - Not for Construction 09/23/2024

U:\173608714\LAW\75923\roadway\sheets\75923XS1500-2B.dgn 5/21/2024 4:55:53 PM SLParker

SEEDING	
END WIDTH	SQ. YDS.
211	1290
253	1570
312	1526
	4386

END AREA	
CUT	FILL
6956	0
5692	0
3411	0

VOLUME	
CUT	FILL
11712	0
8429	0
5236	0
25377	0

CALCULATED SLP
CHECKED ALB

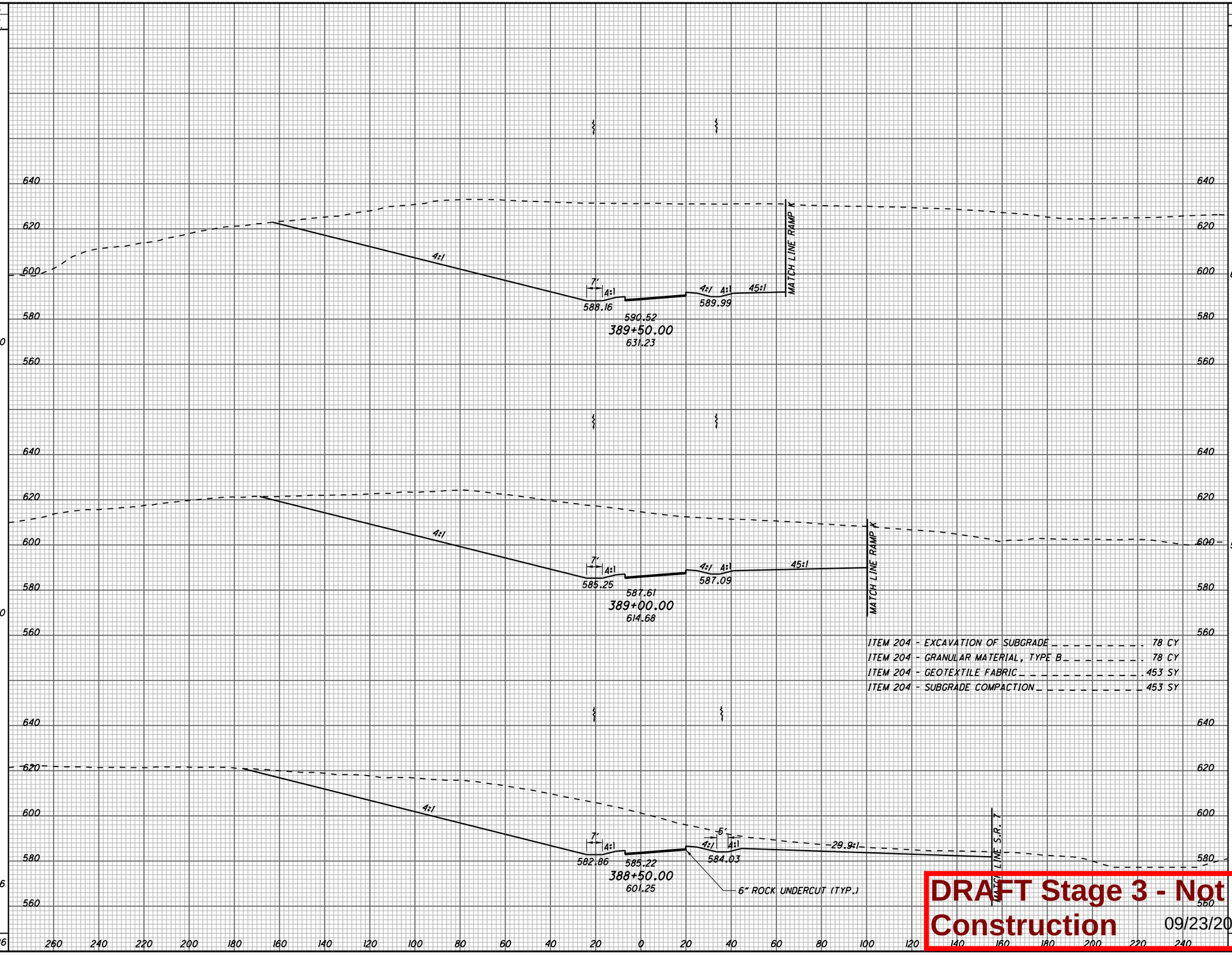

ITEM 204 - EXCAVATION OF SUBGRADE . . . . . 78 CY
ITEM 204 - GRANULAR MATERIAL, TYPE B . . . . . 78 CY
ITEM 204 - GEOTEXTILE FABRIC . . . . . 453 SY
ITEM 204 - SUBGRADE COMPACTION . . . . . 453 SY

DRAFT Stage 3 - Not for Construction 09/23/2024

CROSS SECTIONS - RAMP J
STA. 388+50.00 TO STA. 389+50.00

LAW-7-2.17

439
1247

U:\173608714\LAW\75923\roadway\sheets\75923XS1501-2B.dgn 5/21/2024 4:55:54 PM SLParker

SEEDING	
END WIDTH	SQ. YDS.
174	
	1957
531	
	2060
	4017

END AREA		VOLUME	
CUT	FILL	CUT	FILL
8607	0		
		16899	0
9643	0		
		15370	0
		32265	0

CALCULATED SLP
CHECKED ALB

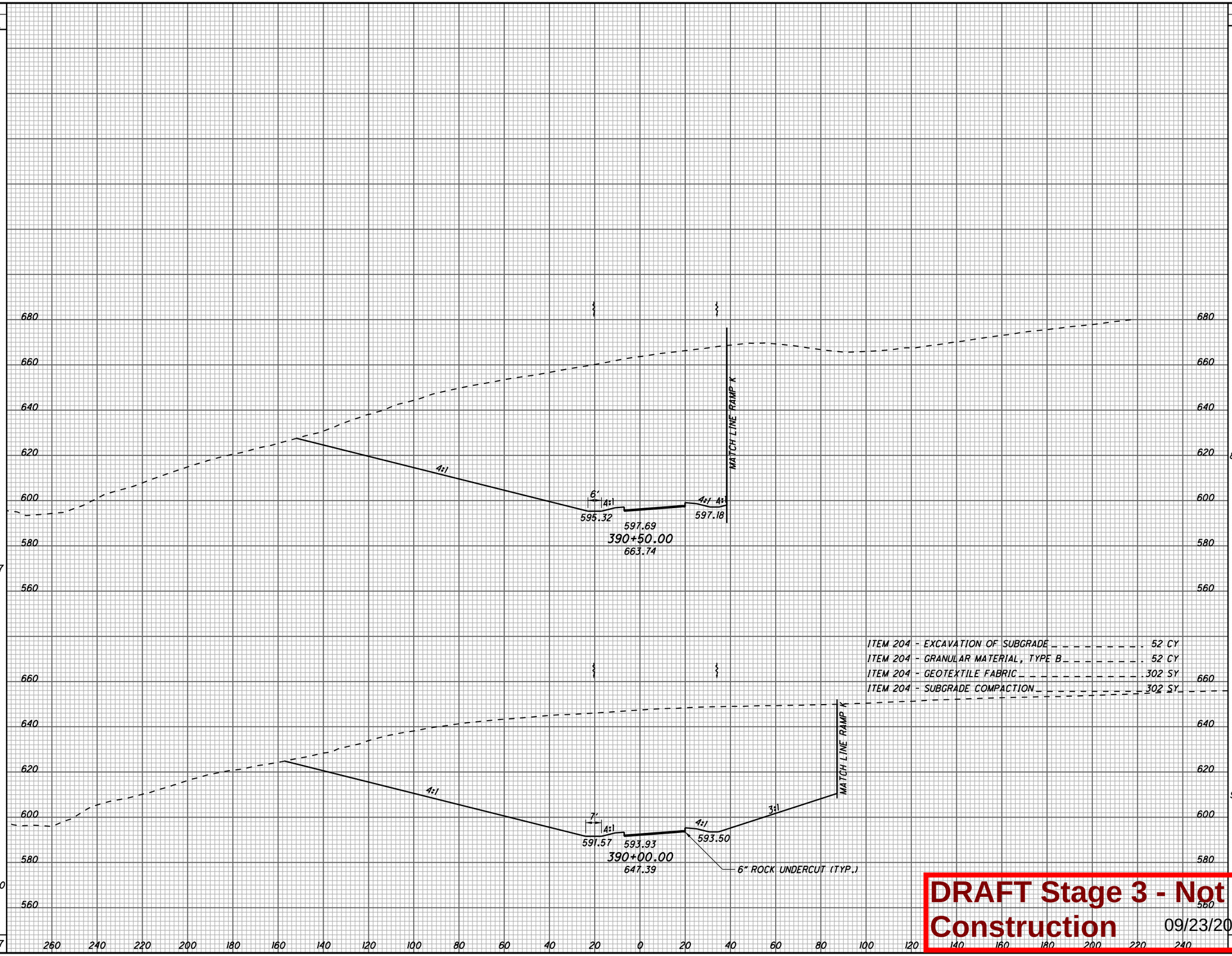

ITEM 204 - EXCAVATION OF SUBGRADE . . . . . 52 CY
ITEM 204 - GRANULAR MATERIAL, TYPE B . . . . . 52 CY
ITEM 204 - GEOTEXTILE FABRIC . . . . . 302 SY
ITEM 204 - SUBGRADE COMPACTION . . . . . 302 SY

DRAFT Stage 3 - Not for Construction 09/23/2024

CROSS SECTIONS - RAMP J
STA. 390+00.00 TO STA. 390+50.00

LAW-7-2.17

440
1247

U:\173608714\LAW\75923\roadway\sheets\75923XS1502-2B.dgn 5/21/2024 4:55:55 PM SLParker

SEEDING	
END WIDTH	SQ. YDS.
	146
	259
	148
	894
	1153

END AREA	
CUT	FILL
7909	0
8041	0
15415	0
2008	0

VOLUME	
CUT	FILL
4670	0

CALCULATED SLP
CHECKED ALB

740 720 700 680 660 640 620 600 580 560

EX LA-R/W

MATCH LINE RAMP K

4:1

6'

4:1

600.41

603.00

391+15.81

602.65

END WORK

ITEM 203 - EXCAVATION _ _ _ _ _ _ _ _ _ _ _ _ _ 82,404 CY
ITEM 203 - EMBANKMENT _ _ _ _ _ _ _ _ _ _ _ _ _ _ _ 198 CY
ITEM 204 - EXCAVATION OF SUBGRADE _ _ _ _ _ _ _ _ _ 187 CY
ITEM 204 - GRANULAR MATERIAL, TYPE B _ _ _ _ _ _ _ _ 187 CY
ITEM 204 - GEOTEXTILE FABRIC _ _ _ _ _ _ _ _ _ _ _ 1,087 SY
ITEM 204 - SUBGRADE COMPACTION _ _ _ _ _ _ _ _ _ _ 1,087 SY
ITEM 659 - SEEDING AND MULCHING, CLASS 3C _ _ _ _ 11,456 CY

QUANTITIES CARRIED TO THE SUBSUMMARY, SEE SHEET 74.

740 720 700 680 660 640 620 600 580 560

MATCH LINE RAMP K

4:1

6'

4:1

599.19

601.46

391+00.00

677.45

6" ROCK UNDERCUT (TYP.)

ITEM 204 - EXCAVATION OF SUBGRADE _ _ _ _ _ _ _ _ _ 35 CY
ITEM 204 - GRANULAR MATERIAL, TYPE B _ _ _ _ _ _ _ _ 35 CY
ITEM 204 - GEOTEXTILE FABRIC _ _ _ _ _ _ _ _ _ _ _ 203 SY
ITEM 204 - SUBGRADE COMPACTION _ _ _ _ _ _ _ _ _ _ 203 SY

260 240 220 200 180 160 140 120 100 80 60 40 20 0 20 40 60 80 100 120 140 160 180 200 220 240

DRAFT Stage 3 - Not for Construction 09/23/2024

CROSS SECTIONS - RAMP J
STA. 391+00.00 TO STA. 391+15.81

LAW-7-2.17

U:\1736087\14\LAW\75923\roadway\sheets\75923XS1503-2B.dgn 5/21/2024 4:55:56 PM SLParker

CURVE DATA
RAMP K
CURVE NO. 1

P.I. STA. 393+97.26
Δ = 54° 19' 17" (LT)
Dc = 5° 00' 00"
R = 1145.92'
T = 587.93'
L = 1086.43'
E = 142.02'
e_{max} = 6.30%
PC STA. 388+09.33
PCC STA. 398+95.76

HORIZONTAL SCALE IN FEET
0 25 50 100

CALCULATED SLP
CHECKED ALB

PLAN - RAMP K
STA. 384+75.56 TO STA. 396+00.00

LAW-7-2.17

442
1247

U:\173608714\LAW\75923\roadway\sheets\75923GP118-2B.dgn 5/21/2024 4:55:58 PM SLParker

END WATERLINE
SIGNAL STRAIN POLE (TYP.)
STA. 384+75.56
BEGIN RAMP =
STA. 63+36.00
S.R. 775
SIGNAL STRAIN POLE WITH LUMINAIRE (TYP.)
Ex R/W
Ex LA-R/W
LA-R/W
Trail
Wooded Area
Brush
WATERLINE ABANDONED
℄ CONSTRUCTION S.R. 775
N 33° 21' 37" E
EX. S.R. 775
S 56° 38' 23" E
℄ RAMP K
℄ RAMP J
RAMP J
CURVE NO. 1
TYPE E PON
+86.39
CONSTRUCTION LIMITS
2 EC DITCH EROSION PROTECTION (VBF)
(793' X 14.5' / 9 = 1277.61 SY)
ROCK CHANNEL PROTECTION, TYPE D WITH FILTER
(280' X 7.5' X 1' / 27 = 77.78 CY)
STA. 388+20.53, 44.06' RT., PT STA. 391+15.81, RAMP J END RAMP
STA. 388+83.56 BEGIN PAVEMENT TAPER, 8' LT. BEGIN SHOULDER TAPER, 14' LT.
STA. 389+33.56 END PAVEMENT TAPER, 0' LT./RT. END SHOULDER TAPER, 6' LT.
PRECAST REINFORCED CONCRETE OUTLET WITH TIED CONCRETE BLOCK MAT
RETAINING WALL
3 EC DITCH EROSION PROTECTION MAT, TYPE B
(450' X 14.5' / 9 = 725 SY)
CB-4
27" TYPE C
42A
42" TYPE B
Rock Channel
MATCH LINE STA. 398+00
℄ CONSTRUCTION S.R. 7

A STA. 389+88.76
BEGIN SHOULDER TAPER, 20' RT.
STA. 389+93.76
END SHOULDER TAPER, 19' RT.

B - BTA, TYPE 1
+86.30

C STA. 385+63.29
BEGIN PAVEMENT TAPER, 48' RT.
STA. 386+03.29
END PAVEMENT TAPER, 44' RT.

D STA. 3[illegible]
BEGIN [illegible]
STA. 3[illegible]
END PAVEMENT TAPER, 8' LT.

(VBF) DENOTES LOCATION OF VEGETATED BIOFILTER.

I/GR - INCLUDES 62.5' OF 46' RADIUS SHOP CURVED GUARDRAIL

- PROPOSED PAVEMENT
- 3-1/4" MILL/FILL

FOR QUANTITIES, SEE SHEETS 71-81
FOR S.R. 7 PLAN & PROFILE, SEE SHEETS 146-147
FOR PROFILE, SEE SHEET 443
FOR S.R. 775 PLAN & PROFILE, SEE SHEETS 559-560
FOR INTERCHANGE DETAILS, SEE SHEETS 628
FOR STORM SEWER PROFILES, SEE SHEET 648
FOR RETAINING WALL DETAILS, SEE SHEETS 706-712
FOR UNDERDRAIN TABLES, SEE SHEETS 674-678
FOR TRAFFIC CONTROL PLAN, SEE SHEETS 713-713A
FOR FENCE TABLES, SEE SHEETS 1039-1041

DRAFT Stage 3 - Not for Construction

10/23/2024

U:\173608714\LAW\75923\roadway\sheets\75923GF118.dgn 5/21/2024 4:55:58 PM SLParker

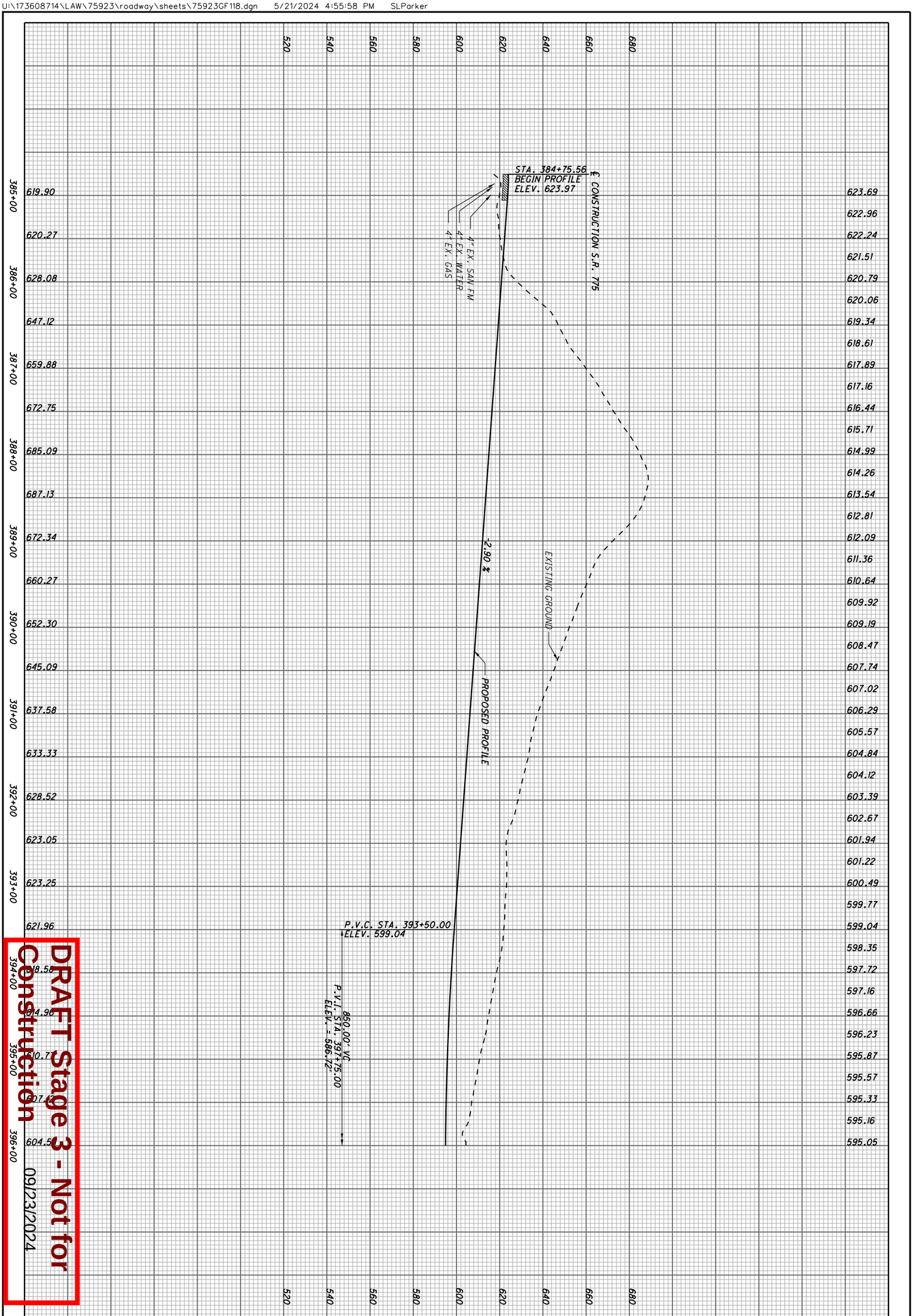

DRAFT Stage 3 - Not for Construction

09/23/2024

443
1247

LAW-7-2.17

PROFILE - RAMP K
STA. 384+75.56 TO STA. 396+00.00

CALCULATED SLP
CHECKED ALB

0 50
25 100
HORIZONTAL SCALE IN FEET

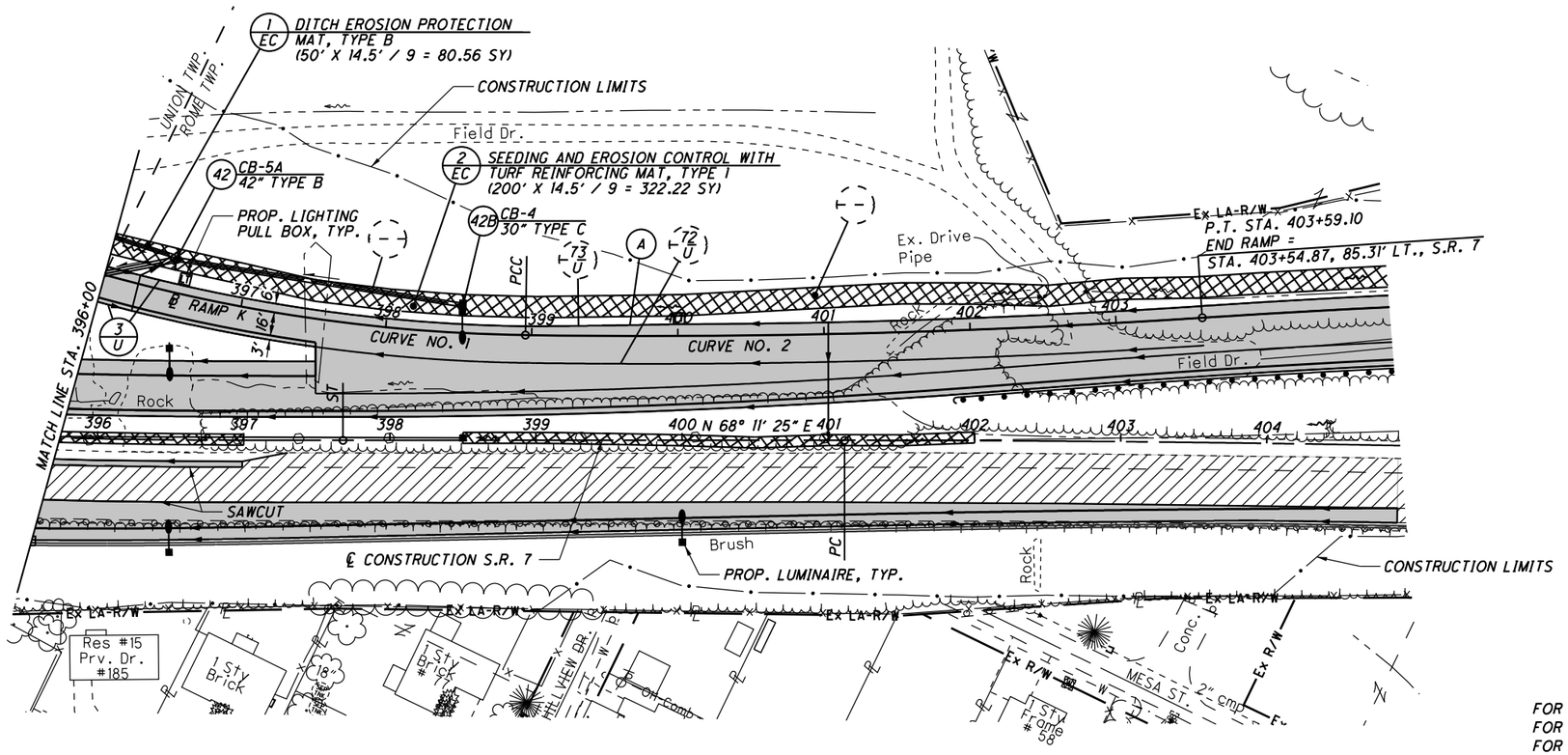

CURVE DATA
RAMP K
CURVE NO. 1

P.I. STA. 393+97.26
Δ = 54° 19' 17" (LT)
Dc = 5° 00' 00"
R = 1145.92'
T = 587.93'
L = 1086.43'
E = 142.02'
e_{max} = 6.30%
PC STA. 388+09.33
PCC STA. 398+95.76

CURVE DATA
RAMP K
CURVE NO. 2

P.I. STA. 401+27.55
Δ = 4° 38' 00" (LT)
Dc = 1° 00' 00"
R = 5729.58'
T = 231.80'
L = 463.34'
E = 4.69'
e_{max} = 2.10%
PCC STA. 398+95.76
PT STA. 403+59.10

FOR QUANTITIES, SEE SHEETS 71-81
FOR S.R. 7 PLAN & PROFILE, SEE SHEETS 146-149
FOR PAVEMENT DETAILS, SEE SHEET 613
FOR INTERCHANGE DETAILS, SEE SHEETS 619-621
FOR STORM SEWER PROFILE, SEE SHEET 648
FOR UNDERDRAIN TABLES, SEE SHEETS 674-678
FOR TRAFFIC CONTROL PLAN, SEE SHEETS 713-733A
FOR FENCE TABLES, SEE SHEETS 1039-1041

PCC STA. 398+95.76
BEGIN SHOULDER TAPER, 6' LT.

A -

STA. 399+95.76
END SHOULDER TAPER, 8' LT.

- PROPOSED PAVEMENT
- 3-1/4" MILL/FILL

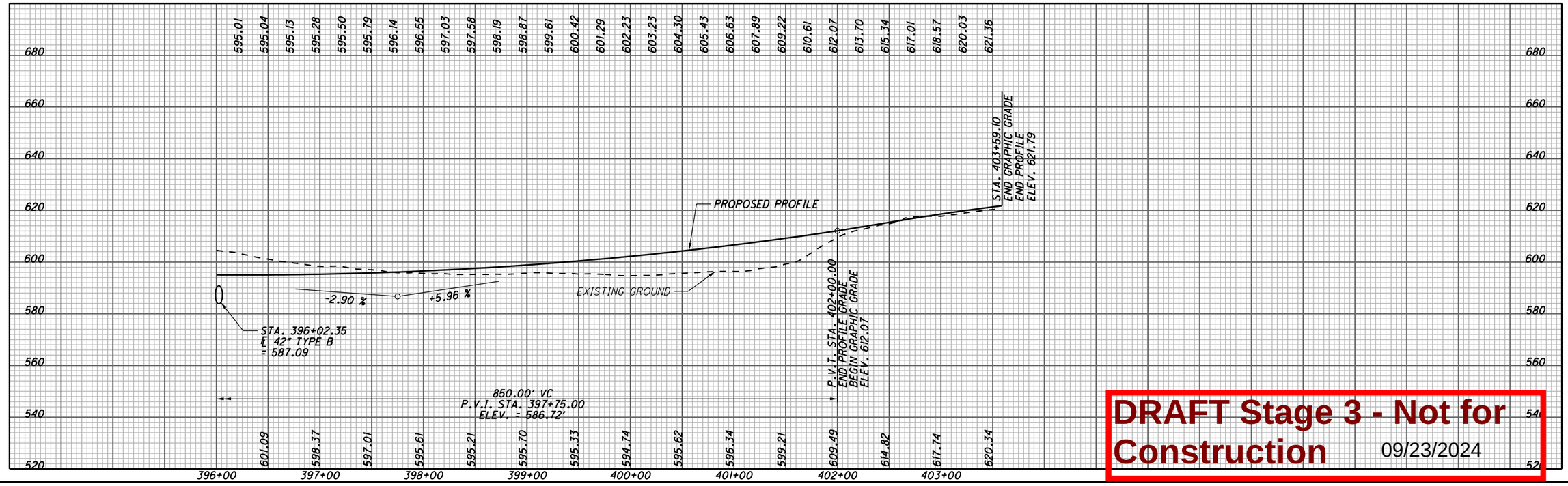

DRAFT Stage 3 - Not for Construction 09/23/2024

PLAN AND PROFILE - RAMP K
STA. 396+00.00 TO STA. 403+59.10

HORIZONTAL SCALE IN FEET
0 25 50 100

CALCULATED SLP
CHECKED ALB

LAW-7-2.17

444
1247

U:\173608714\LAW\75923\roadway\sheets\75923GP119-2B.dgn 5/21/2024 4:56:00 PM SLParker

SEEDING	
END WIDTH	SQ. YDS.
172	1052
207	581
0	1633

END AREA	
CUT	FILL
2854	0
916	324
0	1426
	4349

VOLUME	
CUT	FILL
3491	300
858	1638
	1938

CALCULATED SLP
CHECKED ALB

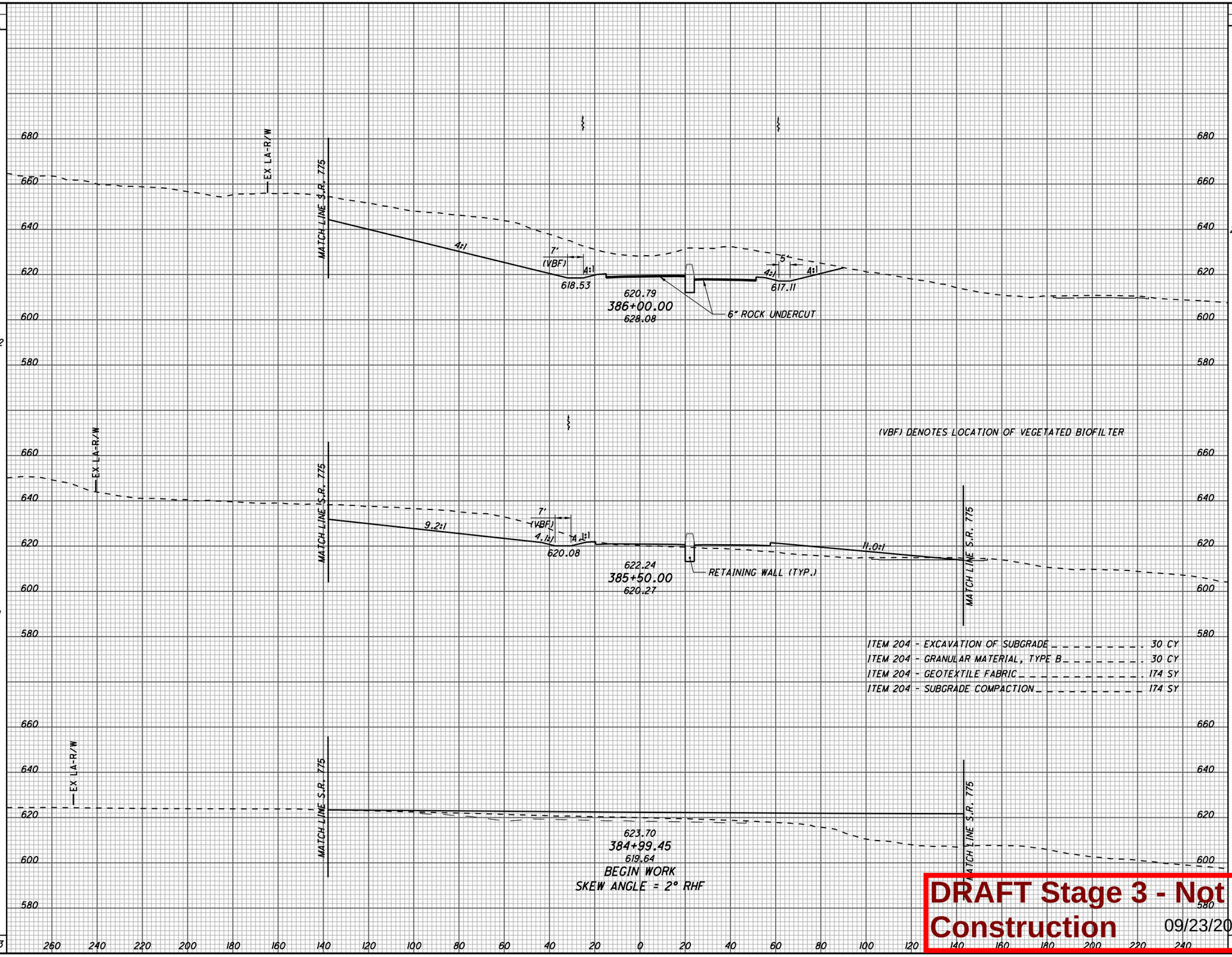

ITEM 204 - EXCAVATION OF SUBGRADE . . . . . 30 CY
ITEM 204 - GRANULAR MATERIAL, TYPE B . . . . . 30 CY
ITEM 204 - GEOTEXTILE FABRIC . . . . . 174 SY
ITEM 204 - SUBGRADE COMPACTION . . . . . 174 SY

DRAFT Stage 3 - Not for Construction 09/23/2024

CROSS SECTIONS RAMP K
STA. 384+99.45 TO STA. 386+00.00

LAW-7-2.17

445
1247

U:\173608714\LAW\75923\roadway\sheets\75923XS5000-2B.dgn 5/21/2024 4:56:02 PM SLParker

SEEDING END WIDTH	SEEDING SQ. YDS.
437	2251
373	1796
273	1237
	5284

END AREA CUT	END AREA FILL	VOLUME CUT	VOLUME FILL
22516	0	34154	0
14371	0	19850	0
7067	0	9186	0
		63190	0

MATCH LINE S.R. 775

EX LA-R/W

4:1

7' (VBF)

4:1

614.17

616.44

387+50.00

672.75

5'

4:1

4:1

605.86

MATCH LINE S.R. 775

EX LA-R/W

4:1

7' (VBF)

4:1

615.62

617.89

387+00.00

659.88

5'

4:1

4:1

609.63

6" ROCK UNDERCUT (TYP.)

(VBF) DENOTES LOCATION OF VEGETATED BIOFILTER

ITEM 204 - EXCAVATION OF SUBGRADE . . . . . 174 CY
ITEM 204 - GRANULAR MATERIAL, TYPE B . . . . . 174 CY
ITEM 204 - GEOTEXTILE FABRIC . . . . . 1036 SY
ITEM 204 - SUBGRADE COMPACTION . . . . . 1036 SY

MATCH LINE S.R. 775

EX LA-R/W

4:1

7' (VBF)

4:1

617.06

619.34

386+50.00

647.12

5'

4:1

4:1

613.40

RETAINING WALL (TYP.)

680 660 640 620 600 580

300 280 260 240 220 200 180 160 140 120 100 80 60 40 20 0 20 40 60 80 100 120 140 160 180 200

DRAFT Stage 3 - Not for Construction 09/23/2024

CALCULATED SLP
CHECKED ALB

CROSS SECTIONS RAMP K
STA. 386+50.00 TO STA. 387+50.00

LAW-7-2.17

446
1247

U:\173608714\LAW\75923\roadway\sheets\75923XS5001-2B.dgn 5/21/2024 4:56:02 PM SLParker

SEEDING	
END WIDTH	SQ. YDS.
369	
512	
	1145
491	
	2579
	3724

ITEM 204 - EXCAVATION OF SUBGRADE . . . . . 82 CY
ITEM 204 - GRANULAR MATERIAL, TYPE B . . . . . 82 CY
ITEM 204 - GEOTEXTILE FABRIC . . . . . 487 SY
ITEM 204 - SUBGRADE COMPACTION . . . . . 487 SY

END AREA		VOLUME	
CUT	FILL	CUT	FILL
AHEAD 25735	0		
BACK 33942	0		
		24785	0
31249	0		
		4978	0
		7456	0

CALCULATED SLP
CHECKED ALB

EX LA-R/W
MATCH LINE
MATCH LINE S.R. 775
740
720
700
680
660
640
620
600
580
4:1
AHEAD BACK
8' (VBF)
612.10
614.50
388+20.53
688.13
6' (VBF)
600.41
6" ROCK UNDERCUT (TYP.)
(VBF) DENOTES LOCATION OF VEGETATED BIOFILTER
7' (VBF)
612.62
614.99
388+00.00
685.09
5' (VBF)
602.19
RETAINING WALL (TYP.)
360 340 320
320 300 280 260 240 220 200 180 160 140 120 100 80 60 40 20 0 20 40 60 80 100 120 140 160 180

DRAFT Stage 3 - Not for Construction
09/23/2024

CROSS SECTIONS RAMP K
STA. 388+00.00 TO STA. 388+16.96

LAW-7-2.17

447
1247

U:\173608714\LAW\75923\roadway\sheets\75923XS5002-2B.dgn 5/21/2024 4:56:03 PM SLParker

SEEDING	
END WIDTH	SQ. YDS.
423	2249
387	1238
	3487

END AREA	
CUT	FILL
24826	0
26439	0

VOLUME	
CUT	FILL
47468	0
2847	0
7594	0

CALCULATED SLP
CHECKED ALB

CROSS SECTIONS RAMP K
STA. 388+50.00 TO STA. 389+00.00

LAW-7-2.17

448
1247

MATCH LINE S.R. 175
EX LA-R/W
4:1
10'
(VBF)
4:1
609.48
612.09
389+00.00
672.34
MATCH LINE RAMP J
EX LA-R/W
EX LA-R/W
MATCH LINE S.R. 175
(VBF) DENOTES LOCATION OF VEGETATED BIOFILTER

ITEM 204 - EXCAVATION OF SUBGRADE . . . . . 59 CY
ITEM 204 - GRANULAR MATERIAL, TYPE B . . . . . 59 CY
ITEM 204 - GEOTEXTILE FABRIC . . . . . 303 SY
ITEM 204 - SUBGRADE COMPACTION . . . . . 303 SY

8'
(VBF)
6" ROCK UNDERCUT
388+50.00
687.13
MATCH LINE RAMP J

DRAFT Stage 3 - Not for Construction
09/23/2024

SLParker
U:\1736087\14\LAW\75923\roadway\sheets\75923XS5002A-2B.dgn 5/21/2024 4:56:04 PM

SEEDING	
END WIDTH	SQ. YDS.
561	2818
453	2433
	5251

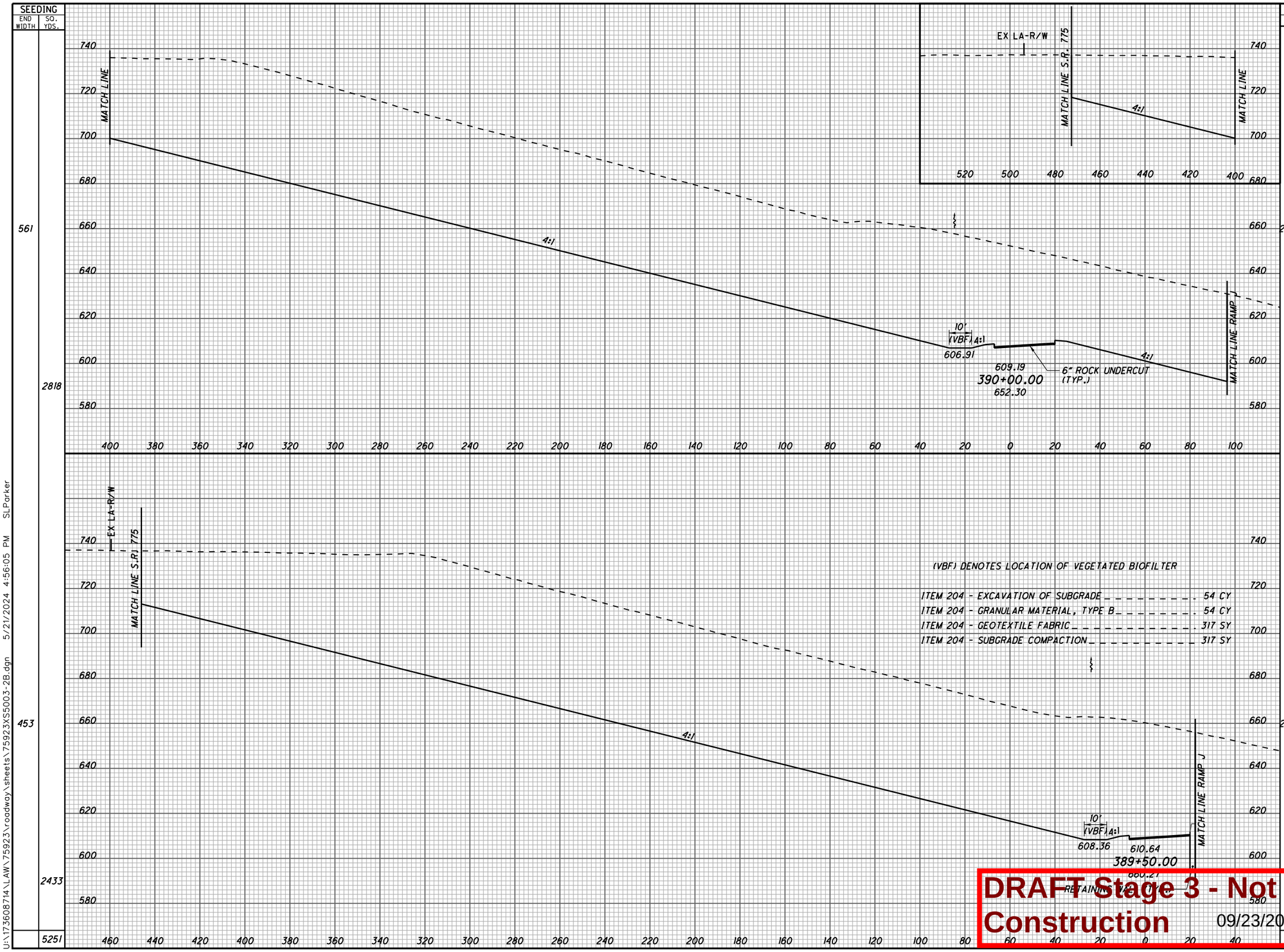

END AREA		VOLUME	
CUT	FILL	CUT	FILL
23920	0		
22488	0	42971	0
		43805	0
		86780	0

CALCULATED SLP
CHECKED ALB

CROSS SECTIONS RAMP K
STA. 389+50.00 TO STA. 390+00.00

LAW-7-2.17

449
1247

DRAFT Stage 3 - Not for Construction 09/23/2024

U:\173608714\LAW\75923\roadway\sheets\75923XS5003-2B.dgn 5/21/2024 4:56:05 PM SLParker

SEEDING END WIDTH	SEEDING SQ. YDS.
193	4001
647	3356
	7357

END AREA CUT	END AREA FILL	VOLUME CUT	VOLUME FILL
20894	0		
		40767	0
23133	0		
		43569	0
		84330	0

CALCULATED SLP
CHECKED ALB

EX LA-R/W
MATCH LINE
4:1
8.5:1
7:1
10' (VBF) 4:1
604.01
606.29
391+00.00
637.58
605.46
607.74
390+50.00
645.09
MATCH LINE S.R. 7
MATCH LINE S.R. 775
MATCH LINE RAMP J
6" ROCK UNDERCUT (TYP.)

(VBF) DENOTES LOCATION OF VEGETATED BIOFILTER

ITEM 204 - EXCAVATION OF SUBGRADE . . . . . 52 CY
ITEM 204 - GRANULAR MATERIAL, TYPE B . . . . . 52 CY
ITEM 204 - GEOTEXTILE FABRIC . . . . . 302 SY
ITEM 204 - SUBGRADE COMPACTION . . . . . 302 SY

CROSS SECTIONS RAMP K
STA. 390+50.00 TO STA. 391+00.00

LAW-7-2.17

450
1247

DRAFT Stage 3 - Not for Construction 09/23/2024

U:\173608714\LAW\75923\roadway\sheets\75923XS5004-2B.dgn 5/21/2024 4:56:06 PM SLParker

SEEDING	
END WIDTH	SQ. YDS.
751	4230
772	4349
	8579

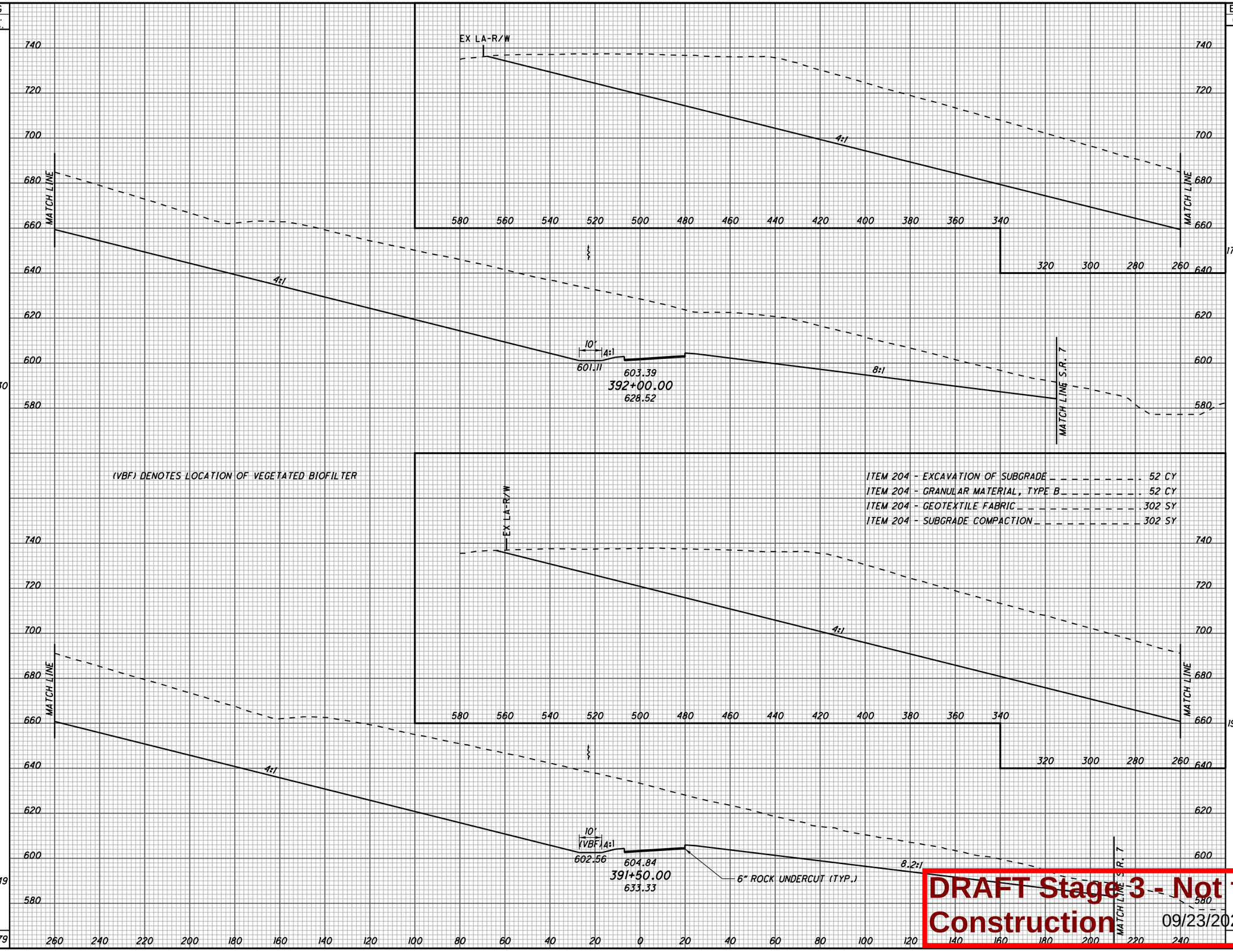

END AREA		VOLUME	
CUT	FILL	CUT	FILL
17646	0		
		34059	0
19137	0		
		37060	0
		71125	0

CALCULATED SLP
CHECKED ALB

CROSS SECTIONS RAMP K
STA. 391+50.00 TO STA. 392+00.00

LAW-7-2.17

451
1247

DRAFT Stage 3 - Not for Construction 09/23/2024

U:\173608714\LAW\75923\roadway\sheets\75923XS5004A-2B.dgn 5/21/2024 4:56:06 PM SLParker

SEEDING END WIDTH	SEEDING SQ. YDS.
712	4005
730	4114
	8119

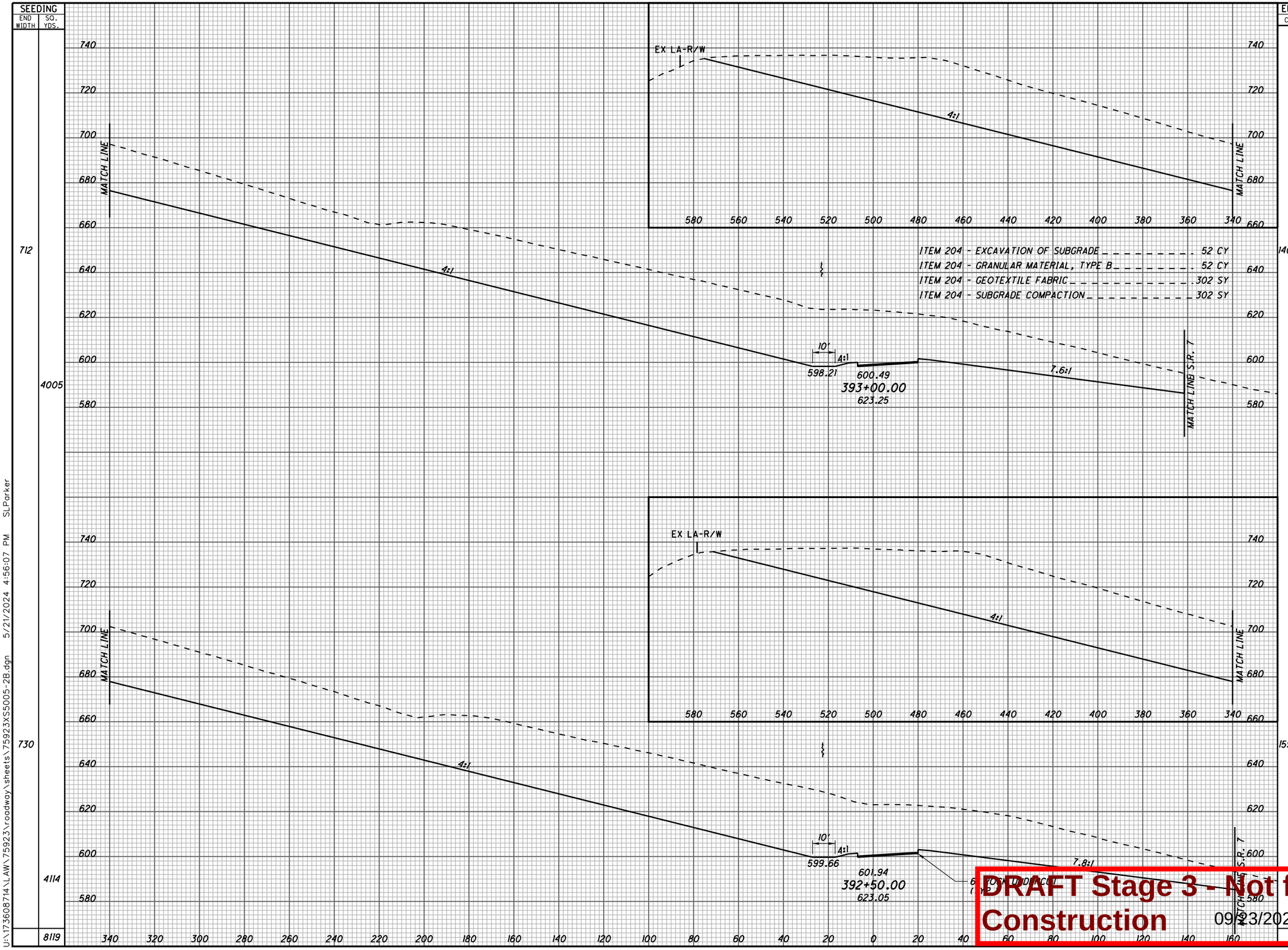

END AREA CUT	END AREA FILL	VOLUME CUT	VOLUME FILL
14090	0		
		27796	0
15929	0		
		31086	0
		5888	0

CALCULATED SLP
CHECKED ALB

CROSS SECTIONS RAMP K
STA. 392+50.00 TO STA. 393+00.00

LAW-7-2.17

452
1247

DRAFT Stage 3 - Not for Construction 09/23/2024

U:\173608714\LAW\75923\roadway\sheets\75923XS5005-2B.dgn 5/21/2024 4:56:07 PM SLParker

SEEDING	
END WIDTH	SQ. YDS.
672	3794
694	3904
	7698

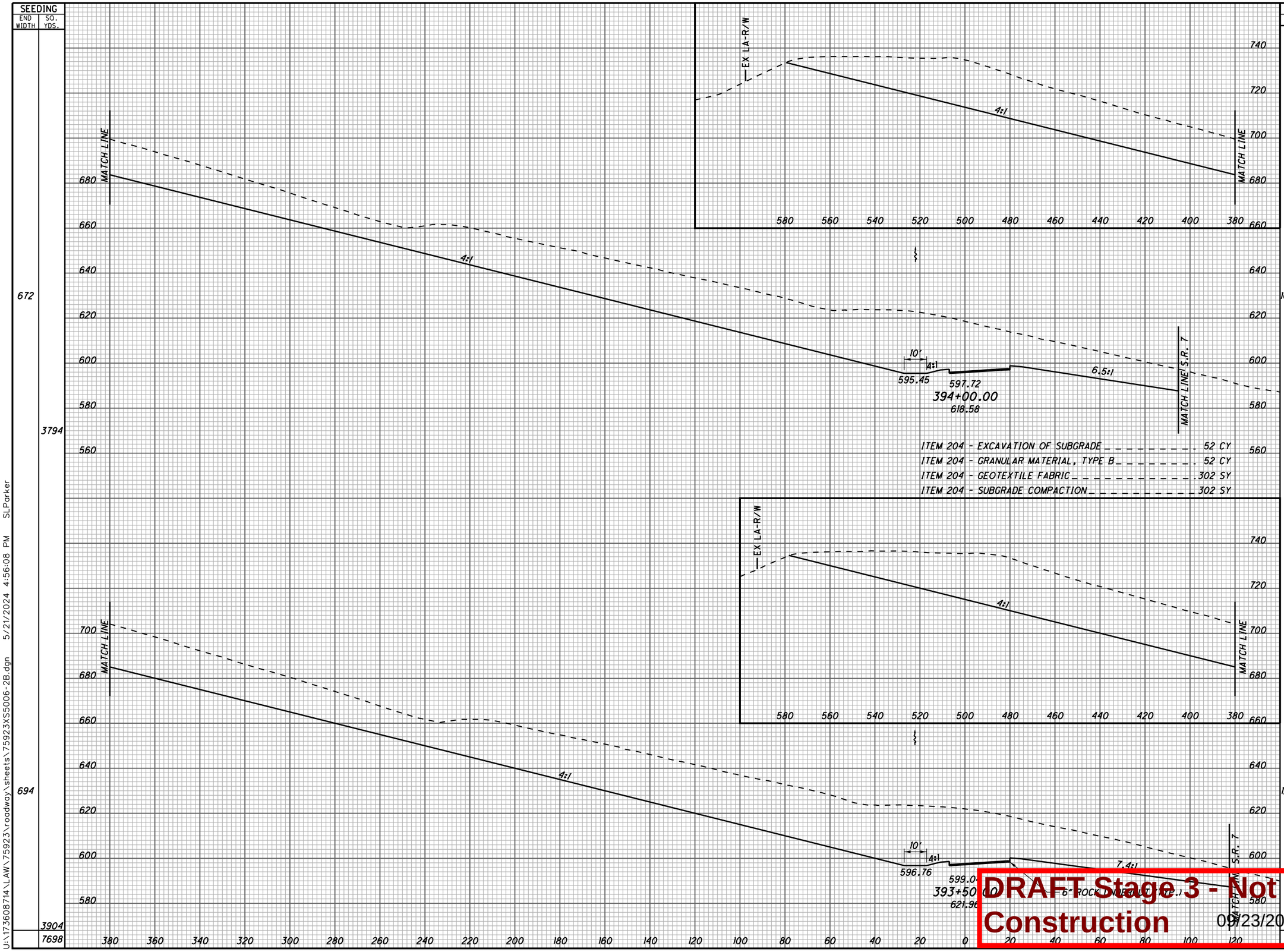

END AREA		VOLUME	
CUT	FILL	CUT	FILL
10900	0		
		21635	0
12465	0		
		24589	0
		46224	0

CALCULATED SLP
CHECKED ALB

CROSS SECTIONS RAMP K
STA. 393+50.00 TO STA. 394+00.00

LAW-7-2.17

453
1247

DRAFT Stage 3 - Not for Construction 09/23/2024

U:\173608714\LAW\75923\roadway\sheets\75923XS5006-2B.dgn 5/21/2024 4:56:08 PM SLParker

SEEDING	
END WIDTH	SQ. YDS.
234	1551
324	2768
	4319

END AREA	
CUT	FILL
2763	0
4497	0

VOLUME	
CUT	FILL
6722	0
14256	0
20978	0

CALCULATED SLP
CHECKED ALB

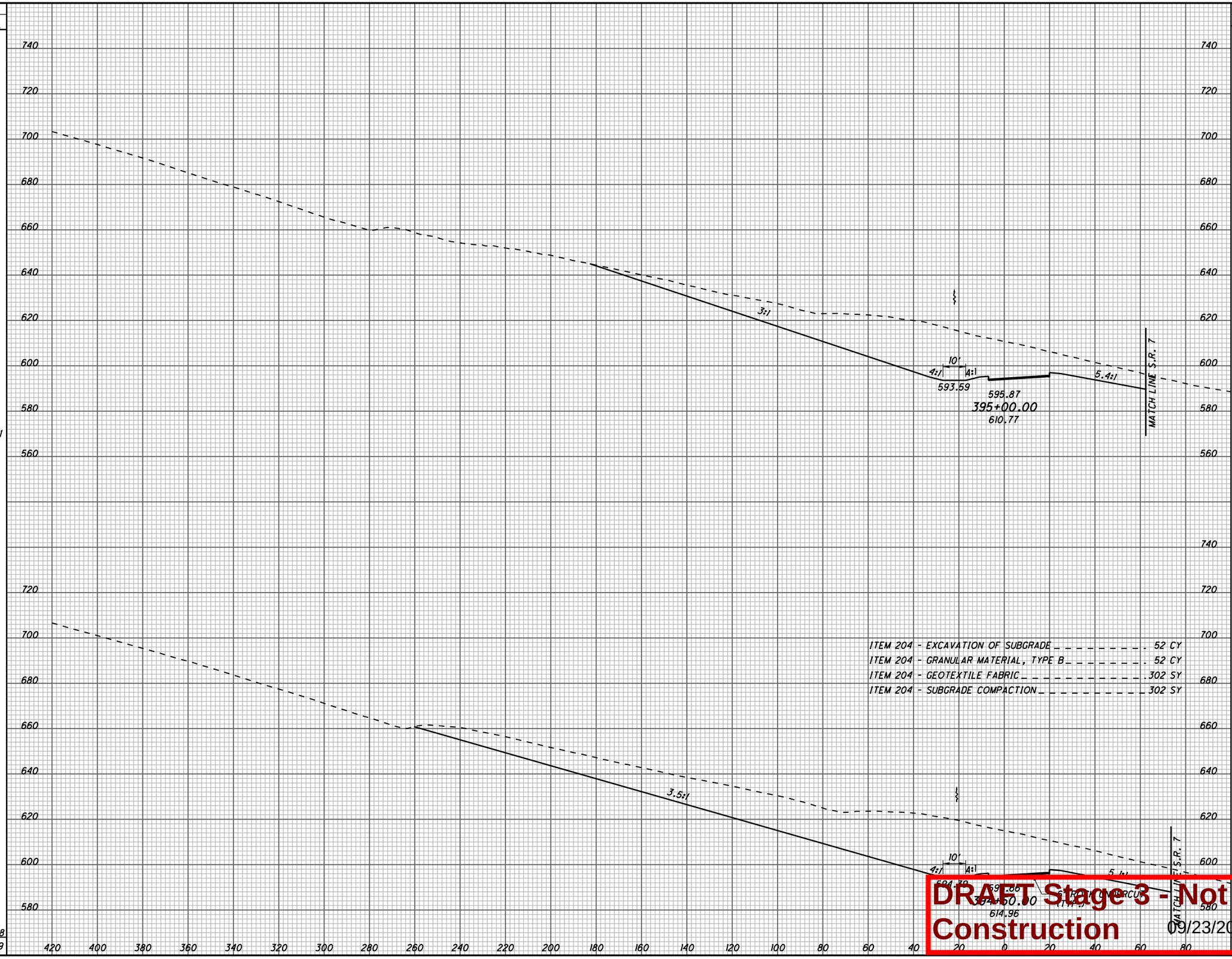

CROSS SECTIONS RAMP K
STA. 394+50.00 TO STA. 395+00.00

LAW-7-2.17

454
1247

DRAFT Stage 3 - Not for Construction 09/23/2024

U:\173608714\LAW\75923\roadway\sheets\75923XS5007-2B.dgn 5/21/2024 4:56:09 PM SLParker

SEEDING END WIDTH	SEEDING SQ. YDS.	END AREA CUT	END AREA FILL	VOLUME CUT	VOLUME FILL
140	833	1363	0	2816	0
160	977	1678	0	3442	0
192	1184	2039	0	4447	0
	2994			10705	0

CALCULATED SLP
CHECKED ALB

3:1
10'
4:1
592.64
595.04
396+50.00
601.09
STA. 396+50.00
CB-5A
T/C = 592.64
℄ 42" TYPE B = 587.50
MATCH LINE S.R. 7
4:1

3:1
10'
4:1
4.6:1
592.77
595.05
396+00.00
604.54
MATCH LINE S.R. 7

3:1
10'
4:1
6.1:1
593.05
595.33
395+50.00
607.12
MATCH LINE S.R. 7
6" ROCK UNDERCUT (TYP.)

ITEM 204 - EXCAVATION OF SUBGRADE . . . . . 78 CY
ITEM 204 - GRANULAR MATERIAL, TYPE B . . . . . 78 CY
ITEM 204 - GEOTEXTILE FABRIC . . . . . 453 SY
ITEM 204 - SUBGRADE COMPACTION . . . . . 453 SY

380 360 340 320 300 280 260 240 220 200 180 160 140 120 100 80 60 40 20 0 20 40 60 80 100 120

DRAFT Stage 3 - Not for Construction 09/23/2024

CROSS SECTIONS RAMP K
STA. 395+50.00 TO STA. 396+50.00

LAW-7-2.17

455
1247

U:\173608714\LAW\75923\roadway\sheets\75923XS5008-2B.dgn 5/21/2024 4:56:10 PM SLParker

SEEDING END WIDTH	SEEDING SQ. YDS.	END AREA CUT	END AREA FILL	VOLUME CUT	VOLUME FILL
112	11	568	9	18	2
9	403	52	33	954	59
136	768	978	30	2168	28
	1182			3140	89

ITEM 203 - EXCAVATION _ _ _ _ _ _ _ _ _ _ _ _ _ _ 600,221 CY
ITEM 203 - EMBANKMENT _ _ _ _ _ _ _ _ _ _ _ _ _ _ 2,027 CY
ITEM 204 - EXCAVATION OF SUBGRADE _ _ _ _ _ _ _ _ _ 789 CY
ITEM 204 - GRANULAR MATERIAL, TYPE B _ _ _ _ _ _ _ _ 789 CY
ITEM 204 - GEOTEXTILE FABRIC _ _ _ _ _ _ _ _ _ _ _ 4,549 SY
ITEM 204 - SUBGRADE COMPACTION _ _ _ _ _ _ _ _ _ _ 4,549 SY
ITEM 659 - SEEDING AND MULCHING, CLASS 3C _ _ _ _ 59,627 CY
QUANTITIES CARRIED TO THE SUBSUMMARY, SEE SHEET 74.

3:1
4:1
4:1
593.52
595.81
397+51.56
598.95
END WORK
SKEW ANGLE = 8° RHF
MATCH LINE S.R. 7
EX. L.A. R/W

6" ROCK UNDERCUT
MATCH LINE STA. 397+51.56
595.79
397+50.00
597.01
MATCH LINE S.R. 7

ITEM 204 - EXCAVATION OF SUBGRADE _ _ _ _ _ _ _ _ 52 CY
ITEM 204 - GRANULAR MATERIAL, TYPE B _ _ _ _ _ _ _ 52 CY
ITEM 204 - GEOTEXTILE FABRIC _ _ _ _ _ _ _ _ _ _ 269 SY
ITEM 204 - SUBGRADE COMPACTION _ _ _ _ _ _ _ _ _ 269 SY

3:1
10'
4:1
4:1
3.9:1
593.00
595.28
397+00.00
598.37
PROP. LIGHTING CIRCUIT OR CONDUIT
MATCH LINE S.R. 7
6" ROCK UNDERCUT

660 640 620 600 580 560

320 300 280 260 240 220 200 180 160 140 120 100 80 60 40 20 0 20 40 60 80 100 120 140 160 180

CALCULATED SLP
CHECKED ALB

CROSS SECTIONS RAMP K
STA. 397+00.00 TO STA. 397+51.56

LAW-7-2.17

456
1247

DRAFT Stage 3 - Not for Construction 09/23/2024

U:\17360871\4\LAW 75923\roadway\sheets\75923XS5009-2B.dgn 5/21/2024 4:56:11 PM SLParker

SIGNAL STRAIN POLE (TYP.)

℄ CONSTRUCTION S.R. 775
N 33° 21' 37" E

SIGNAL STRAIN POLE WITH LUMINAIRE (TYP.)

EX. S.R. 7

42" TYPE C

42" TYPE B

℄ CONSTRUCTION S.R. 7

CB-5A (34)

CB-5A (35)

Brush

WATERLINE ABANDONDED

BTA. TYPE 1 +45.06

S 76° 38' 23" E

℄ RAMP L

NOISE WALL

PROP. LIGHTING PULL BOX, TYP.

PROP. LIGHTING CONTROL CENTER

I-3D 15" TYPE B

PROP. LUMINAIRE, TYP.

CONSTRUCTION LIMITS

Asphalt Parking

Ex LA R/W

Ex R/W

WALNUT ST.

MIDLAND AVE.

LITTLE PADDY CREEK

Asphalt

Debris

Pool

Garage

Shed

Conc

1 Sty Brk. Res. #675

1 Sty Frm Res. #690

1 Sty Frame Res. #680

1 Sty Frm Res. #123

10" Cmp SAN

4" SAN

W

OH-E

OH-Fo

CURVE DATA
RAMP L

P.I. STA. 382+67.06
Δ = 25° 45' 21" (LT)
Dc = 6° 44' 26"
R = 850.00'
T = 194.33'
L = 382.09'
E = 21.93'
e_{max} = 4.60%
PC STA. 380+72.73
PT STA. 384+54.82

STA. 379+57.36
BEGIN RAMP =
STA. 54+00.89 S.R. 775 =
STA. 381+12.92 RAMP 1

(A) STA. 380+27.92
BEGIN PAVEMENT TAPER, 4' RT.

STA. 380+67.92
END PAVEMENT TAPER, 0' LT./RT.

(B) STA. 380+65.49
BEGIN PAVEMENT TAPER, 19.07' LT.

STA. 381+06.26
END PAVEMENT TAPER, 16' LT.

STA 391+90.09
BEGIN SHOULDER TAPER, 6' RT.

STA. 392+40.09
END SHOULDER TAPER, 8' RT.
END RAMP
RAMP NOSE =
STA. 392+40.09, 69' RT. S.R. 7

(1/GR) - INCLUDES 50' OF 50' RADIUS SHOP CURVED GUARDRAIL

(2/GR) - INCLUDES 75' OF 41' RADIUS SHOP CURVED GUARDRAIL

- PROPOSED PAVEMENT

- 3-1/4" MILL/FILL

FOR QUANTITIES, SEE SHEETS 71-81
FOR S.R. 7 PLAN & PROFILE, SEE SHEETS 144-147
FOR S.R. 775 PLAN & PROFILE, SEE SHEET 559-560
FOR INTERCHANGE DETAILS, SEE SHEETS 619-621
FOR INTERSECTION DETAILS, SEE SHEETS 627
FOR STORM DETAILS, SEE SHEETS 645-647
FOR UNDERDRAIN TABLES, SEE SHEETS 674-678
FOR TRAFFIC CONTROL PLAN, SEE SHEETS 713-733A
FOR FENCE TABLES, SEE SHEETS 1039-1041

HORIZONTAL SCALE IN FEET
0 25 50 100

CALCULATED SLP
CHECKED ALB

PLAN AND PROFILE
RAMP L

LAW-7-2.17

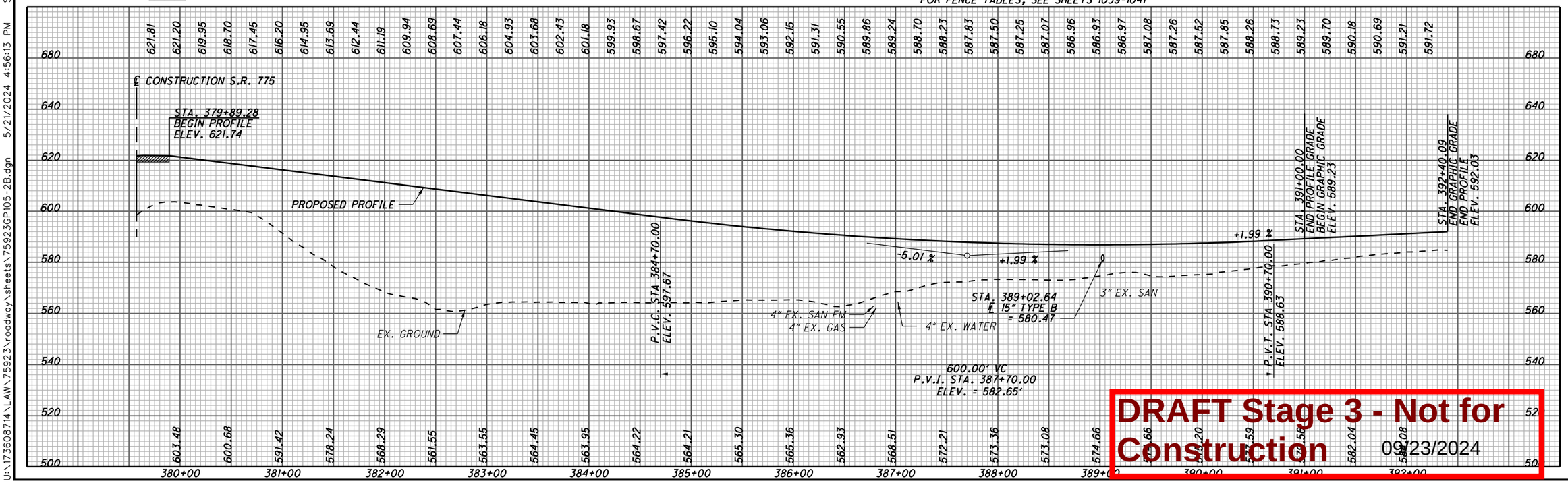

DRAFT Stage 3 - Not for Construction
09/23/2024

U:\1736087\4\LAW\75923\roadway\sheets\75923GP105-2B.dgn 5/21/2024 4:56:13 PM SLParker

SEEDING	
END WIDTH	SQ. YDS.
99	466
68	41
0	507

END AREA	
CUT	FILL
0	0
0	1628
0	822
0	2508
0	2330

VOLUME	
CUT	FILL
0	1508
0	1628
0	822
0	2508
0	2330

CALCULATED SLP
CHECKED ALB

640 620 600 580 560 540

MATCH LINE S.R. 775
3:1
2:1
618.70
380+50.00
600.68

STA. 380+25.00, RT.
BEGIN SLOPE REINFORCEMENT
FOR DETAILS, SEE SHEETS 38 & 41

MATCH LINE STA. 379+89
3:1
MATCH LINE S.R. 775
621.20
380+00.00
603.48

ITEM 863 - REINFORCED EMBANKMENT ..... 687 CY

MATCH LINE S.R. 775
MATCH LINE S.R. 775
621.74
379+89.28
603.62
BEGIN WORK
SKEW ANGLE = 20° LHF

260 240 220 200 180 160 140 120 100 80 60 40 20 0 20 40 60 80 100 120 140 160 180 200 220 240

CROSS SECTIONS - RAMP L
STA. 379+89.28 TO STA. 380+50.00

LAW-7-2.17

458
1247

DRAFT Stage 3 - Not for Construction 09/23/2024

U:\173608714\LAW\75923\roadway\sheets\75923XS1600-2B.dgn 5/21/2024 4:56:14 PM SLParker

SEEDING END WIDTH	SEEDING SQ. YDS.	END AREA CUT	END AREA FILL	VOLUME CUT	VOLUME FILL
270	1550	33	0	31	0
288	1234	0	0	0	0
156	709	0	0	0	0
	3493			31	0

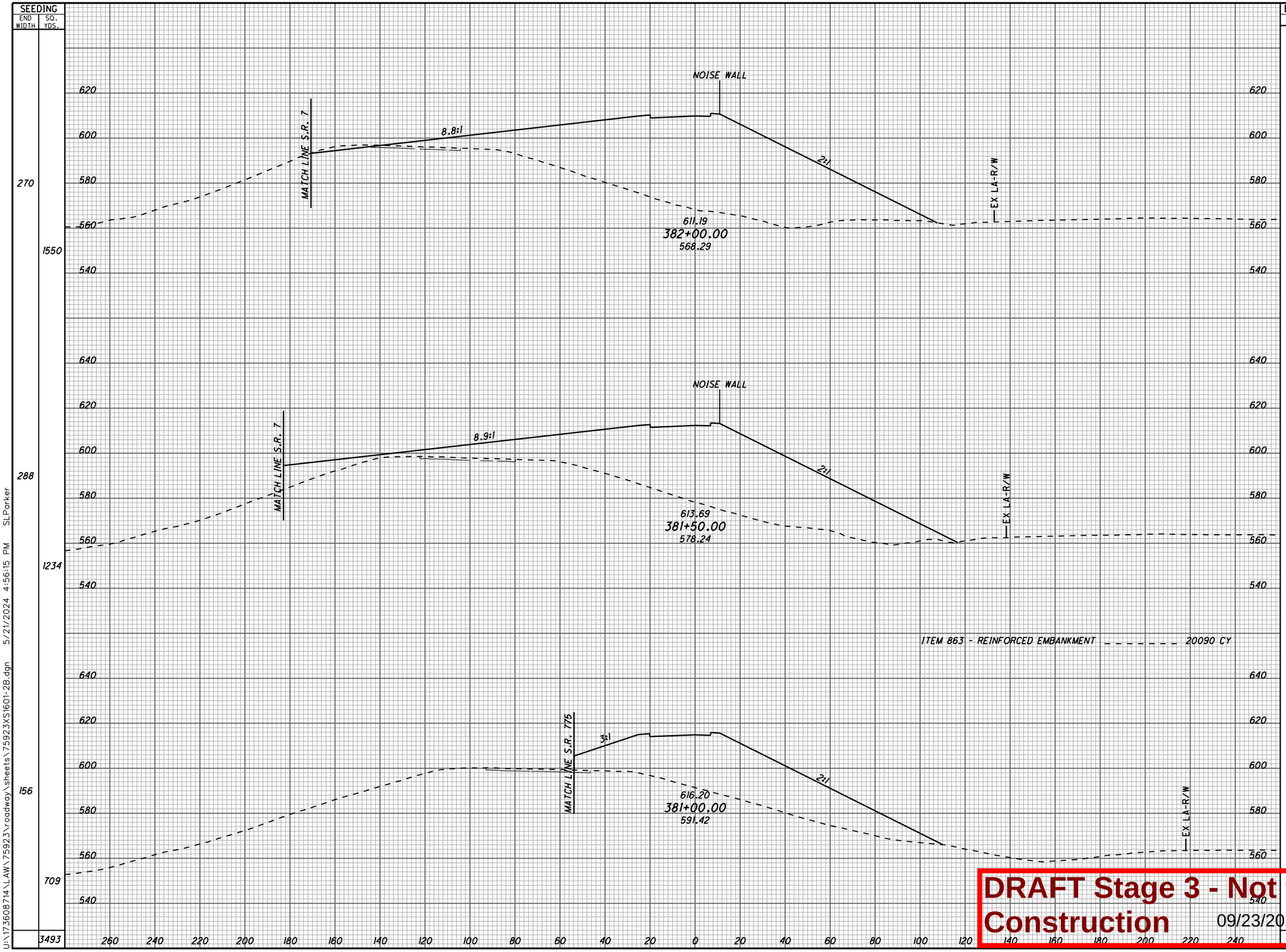

CALCULATED SLP
CHECKED ALB

CROSS SECTIONS - RAMP L
STA. 381+00.00 TO STA. 382+00.00

LAW-7-2.17

459
1247

DRAFT Stage 3 - Not for Construction 09/23/2024

U:\173608714\LAW\75923\roadway\sheets\75923XS1601-2B.dgn 5/21/2024 4:56:15 PM SLParker

SEEDING	
END WIDTH	SQ. YDS.
225	1295
241	1369
251	1448
	4112

END AREA	
CUT	FILL
2	0
8	0
29	0

VOLUME	
CUT	FILL
10	0
35	0
58	0
103	0

CALCULATED SLP
CHECKED ALB

620
600
580
560
540

NOISE WALL
MATCH LINE S.R. 7
9:1
2:1
EX LA-R/W
603.68
383+50.00
564.45

NOISE WALL
MATCH LINE S.R. 7
9:1
2:1
EX LA-R/W
606.18
383+00.00
563.55

ITEM 863 - REINFORCED EMBANKMENT ------- 30012 CY

NOISE WALL
MATCH LINE S.R. 7
9:1
2:1
EX LA-R/W
608.69
382+50.00
561.55

260 240 220 200 180 160 140 120 100 80 60 40 20 0 20 40 60 80 100 120 140 160 180 200 220 240

DRAFT Stage 3 - Not for Construction 09/23/2024

CROSS SECTIONS - RAMP L
STA. 382+50.00 TO STA. 383+50.00

LAW-7-2.17

460
1247

U:\173608714\LAW\75923\roadway\sheets\75923XS1602-2B.dgn 5/21/2024 4:56:16 PM SLParker

SEEDING END WIDTH	SEEDING SQ. YDS.	END AREA CUT	END AREA FILL	VOLUME CUT	VOLUME FILL
164	975	0	0	0	0
187	1099	0	0	2	0
208	1204	1	0	3	0
	3278			5	0

CALCULATED SLP
CHECKED ALB

620
600
580
560
540

MATCH LINE S.R. 7
NOISE WALL
7.3:1
2:1
EX LA-R/W
596.22
385+00.00
564.21

MATCH LINE S.R. 7
NOISE WALL
8.1:1
2:1
EX LA-R/W
598.67
384+50.00
564.22

ITEM 863 - REINFORCED EMBANKMENT ---------- 25189 CY

MATCH LINE S.R. 7
NOISE WALL
8.8:1
2:1
EX LA-R/W
601.18
384+00.00
563.95

260 240 220 200 180 160 140 120 100 80 60 40 20 0 20 40 60 80 100 120 140 160 180 200 220 240

CROSS SECTIONS - RAMP L
STA. 384+00.00 TO STA. 385+00.00

LAW-7-2.17

461
1247

DRAFT Stage 3 - Not for Construction 09/23/2024

U:\173608714\LAW\75923\roadway\sheets\75923XS1603-2B.dgn 5/21/2024 4:56:16 PM SLParker

SEEDING END WIDTH	SEEDING SQ. YDS.
94	557
107	639
123	738
142	851
	2785

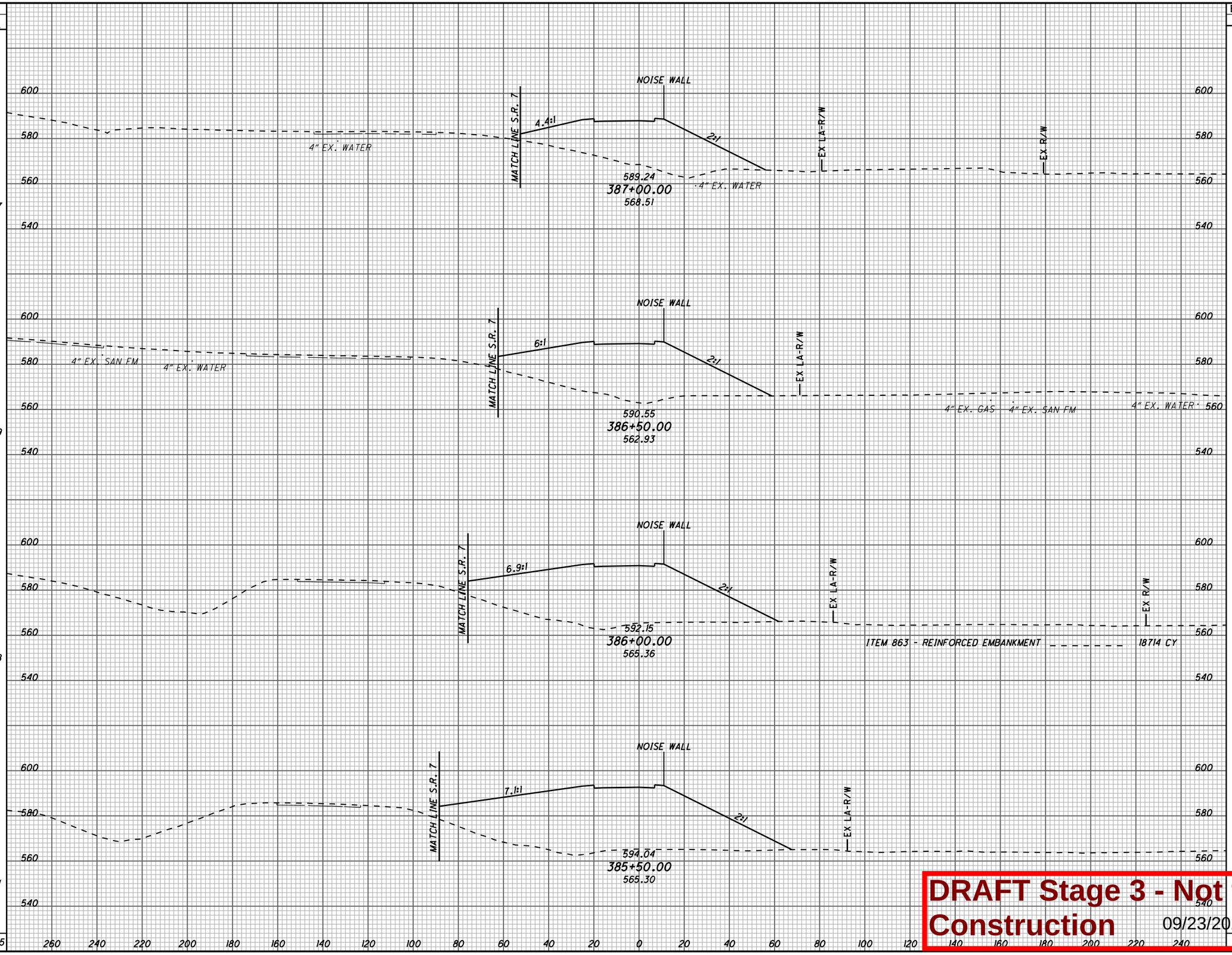

END AREA CUT	END AREA FILL	VOLUME CUT	VOLUME FILL
0	0	0	0
0	0	0	0
		0	0
		0	0
		0	0

CALCULATED SLP
CHECKED ALB

CROSS SECTIONS - RAMP L
STA. 385+50.00 TO STA. 387+00.00

LAW-7-2.17

462
1247

DRAFT Stage 3 - Not for Construction 09/23/2024

U:\1736087.14\LAW\75923\roadway\sheets\75923XS1604-2B.dgn 5/21/2024 4:56:17 PM SLParker

STA. 389+25.00, RT.
END SLOPE REINFORCEMENT
FOR DETAILS, SEE SHEETS 38 & 41

SEEDING END WIDTH	SEEDING SQ. YDS.
71	401
73	477
98	515
87	502
	1895

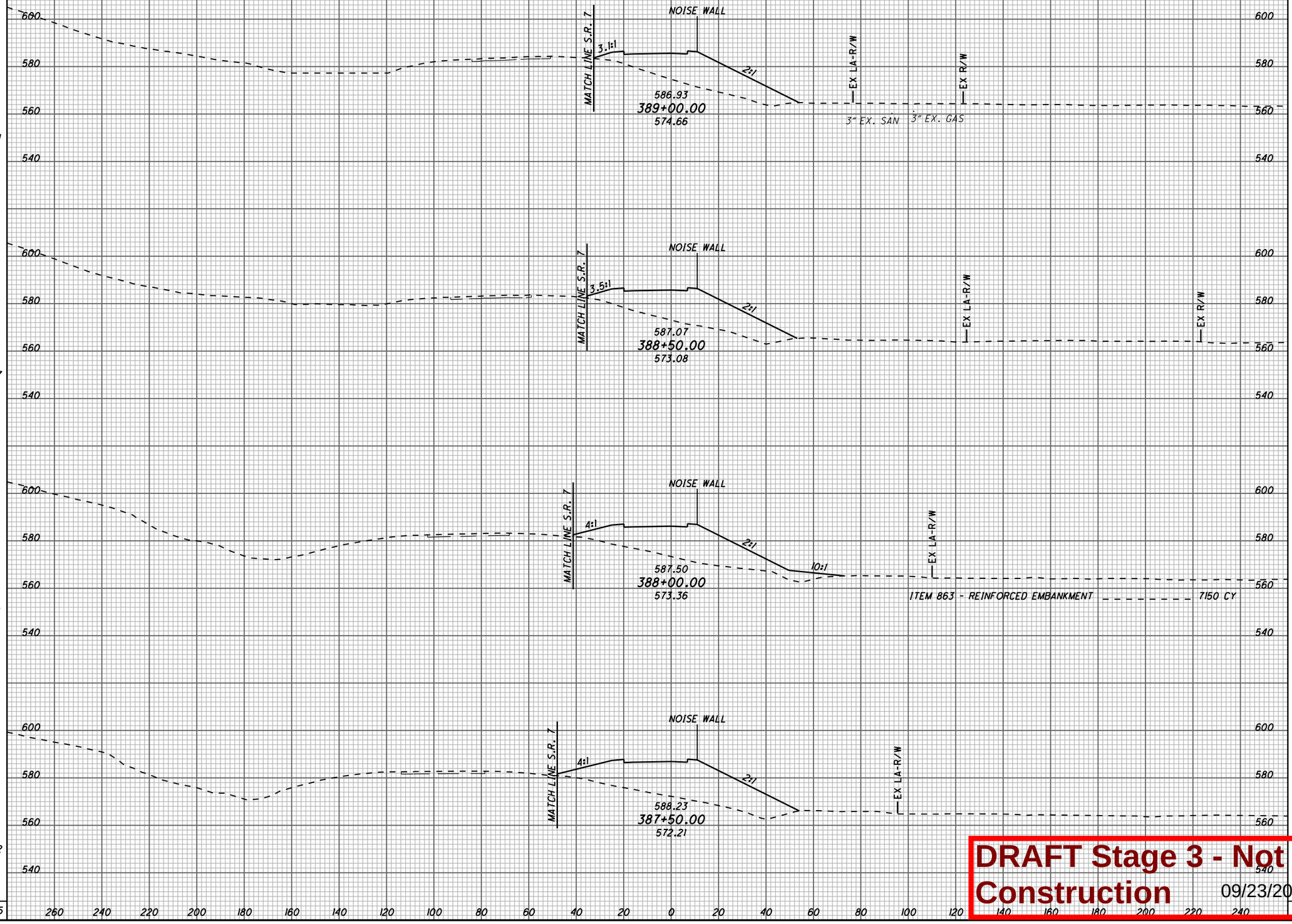

END AREA CUT	END AREA FILL	VOLUME CUT	VOLUME FILL
0	0	0	0
		0	0
0	0	0	0
		0	0
0	0	0	0
		0	0
0	0	0	0
		0	0

CALCULATED SLP
CHECKED ALB

CROSS SECTIONS - RAMP L
STA. 387+50.00 TO STA. 389+00.00

LAW-7-2.17

463
1247

DRAFT Stage 3 - Not for Construction 09/23/2024

U:\173608714\LAW\75923\roadway\sheets\75923XS1605-2B.dgn 5/21/2024 4:56:18 PM SLParker

SEEDING	
END WIDTH	SQ. YDS.
81	466
87	439
	905

ITEM	
ITEM 203 - EXCAVATION	139 CY
ITEM 203 - EMBANKMENT	5,052 CY
ITEM 659 - SEEDING AND MULCHING, CLASS 3C	16,975 CY
ITEM 863 - REINFORCED EMBANKMENT	102,171 CY

QUANTITIES CARRIED TO THE SUBSUMMARY, SEE SHEET 74.

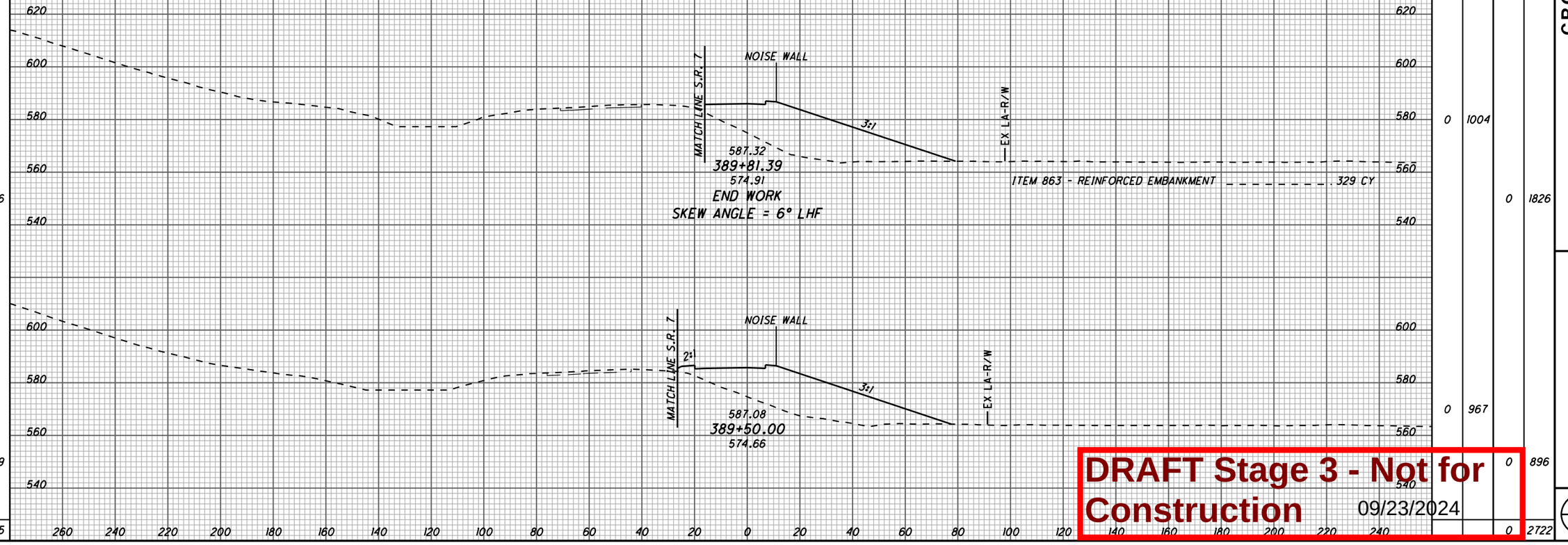

END AREA		VOLUME	
CUT	FILL	CUT	FILL
		0	1004
		0	1826
		0	967
		0	896
		0	2722

CALCULATED SLP
CHECKED ALB

CROSS SECTIONS - RAMP L
STA. 389+50.00 TO STA. 389+81.39

LAW-7-2.17

464
1247

DRAFT Stage 3 - Not for Construction 09/23/2024

U:\1736087\14\LAW\75923\roadway\sheets\75923XS1606-2B.dgn 5/21/2024 4:56:19 PM SLParker

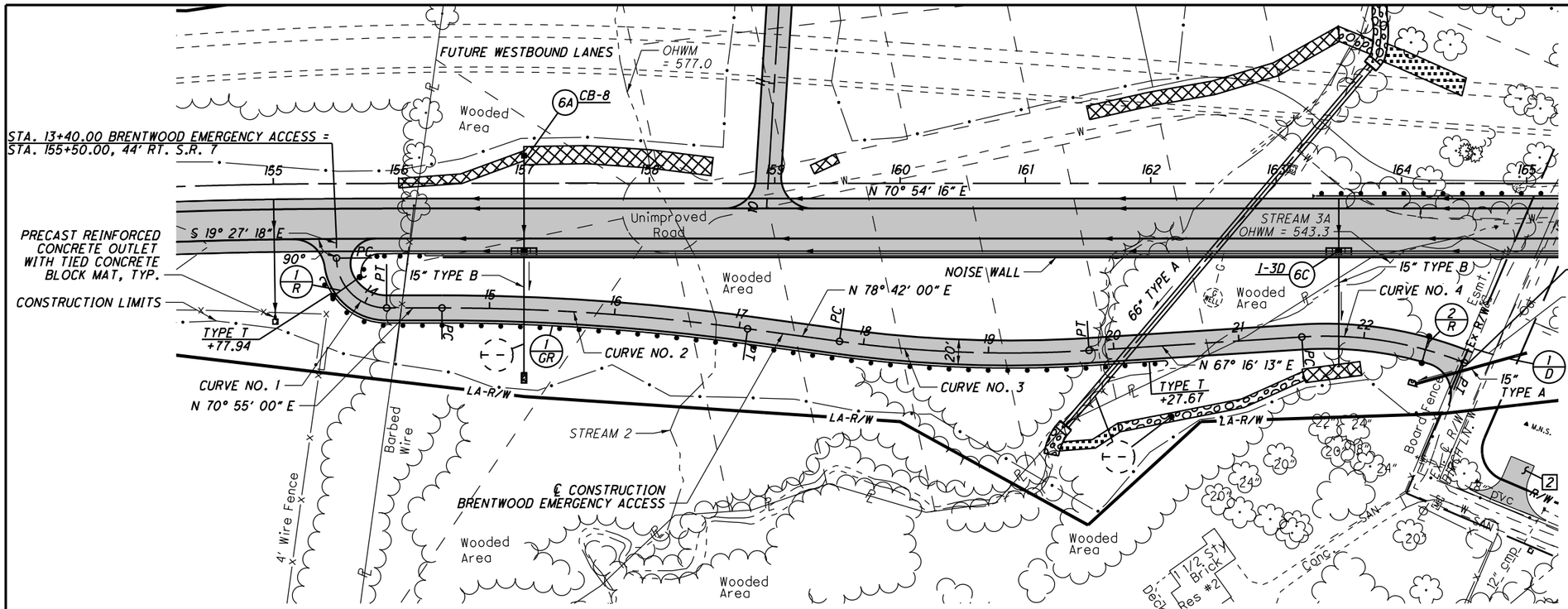

CURVE DATA
CURVE NO. 1
P.I. Sta. 13+95.14
Δ = 89° 37' 42" (LT)
Dc = 143° 14' 22"
R = 40.00'
T = 39.74'
L = 62.57'
E = 16.39'
e_{max} = N/C
PC STA. 13+55.39
PT STA. 14+17.97

CURVE DATA
CURVE NO. 2
P.I. Sta. 15+84.63
Δ = 7° 47' 00" (RT)
Dc = 3° 10' 59"
R = 1,800.00'
T = 122.45'
L = 244.52'
E = 4.16'
e_{max} = N/C
PC STA. 14+62.19
PT STA. 17+06.71

CURVE DATA
CURVE NO. 3
P.I. Sta. 18+80.83
Δ = 11° 25' 47" (LT)
Dc = 5° 43' 46"
R = 1,000.00'
T = 100.08'
L = 199.49'
E = 5.00'
e_{max} = N/C
PC STA. 17+80.75
PT STA. 19+80.24

CURVE DATA
CURVE NO. 4
P.I. Sta. 22+17.69
Δ = 25° 16' 53" (RT)
Dc = 19° 05' 55"
R = 300.00'
T = 67.28'
L = 132.37'
E = 7.45'
e_{max} = N/C
PC STA. 21+50.41
PT STA. 22+82.78

FOR QUANTITIES, SEE SHEETS 71-81
FOR S.R. 7 PLAN & PROFILE, SEE SHEETS 101-104
FOR STORM SEWER PROFILES, SEE SHEETS 187 & 192
FOR INTERSECTION DETAILS, SEE SHEET 623
FOR CULVERT DETAILS, SEE SHEETS 652-656
FOR UNDERDRAIN TABLES, SEE SHEETS 674-678
FOR TRAFFIC CONTROL PLAN, SEE SHEETS 713-733A
FOR FENCE TABLES, SEE SHEETS 1039-1041

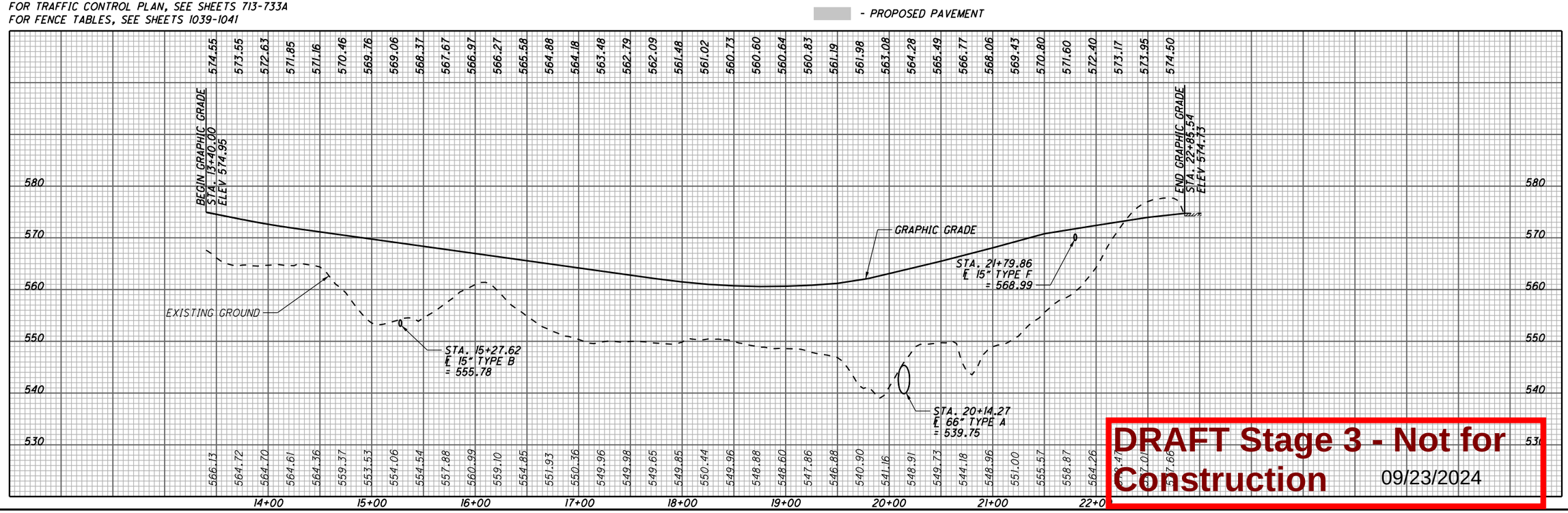

DRAFT Stage 3 - Not for Construction
09/23/2024

HORIZONTAL SCALE IN FEET
0 25 50 100

CALCULATED SLP
CHECKED ALB

PLAN AND PROFILE
BRENTWOOD EMERGENCY ACCESS

LAW-7-2.17

U:\173608714\LAW\75923\roadway\sheets\75923GP121.dgn 5/21/2024 4:56:21 PM SLParker

SEEDING END WIDTH	SEEDING SQ. YDS.	END AREA CUT	END AREA FILL	VOLUME CUT	VOLUME FILL
58	349	0	387	0	847
68	189	0	526	0	694
0	0	0	223	0	116
0	0	0	401	0	1657
	538				

MATCH LINE S.R. 7
20:1
2:1
L A-R/W
571.16
14+50.00
564.36
572.63
14+00.00
564.70
574.55
13+50.00
566.13
574.95
13+40.00
567.76
BEGIN WORK
580
570
560
550
540
120 100 80 60 40 20 0 20 40 60 80 100 120

CALCULATED SLP
CHECKED ALB

BRENTWOOD EMERGENCY ACCESS ROAD
CROSS SECTIONS BR STA. 13+40.00 TO STA. 14+50.00

LAW-7-2.17

466
1247

DRAFT Stage 3 - Not for Construction 09/23/2024

U:\173608714\LAW\75923\roadway\sheets\75923XS51001.dgn 5/21/2024 4:56:22 PM SLParker

SEEDING	
END WIDTH	SQ. YDS.
40	262
54	343
69	353
	958

END AREA	
CUT	FILL
0	235
0	484
0	604
	0

VOLUME	
CUT	FILL
0	665
0	1007
0	918
0	2590

CALCULATED SLP
CHECKED ALB

CROSS SECTIONS BRENTWOOD EMERGENCY ACCESS ROAD STA. 15+00.00 TO STA. 16+00.00

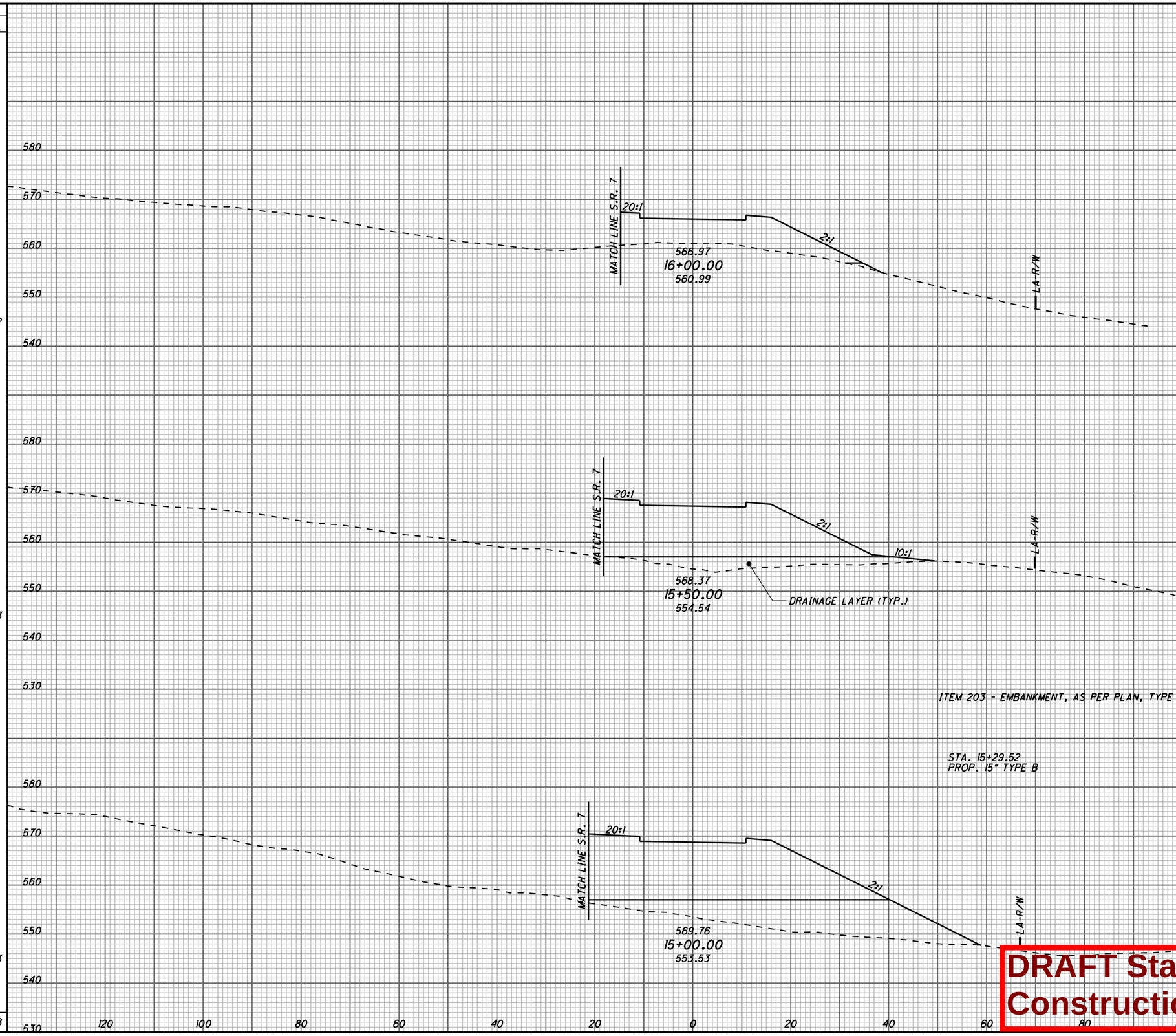

DRAFT Stage 3 - Not for Construction 09/23/2024

LAW-7-2.17

467
1247

U:\173608714\LAW\75923\roadway\sheets\75923XS51002.dgn 5/21/2024 4:56:23 PM SLParker

SEEDING	
END WIDTH	SQ. YDS.
51	296
56	326
61	282
	904

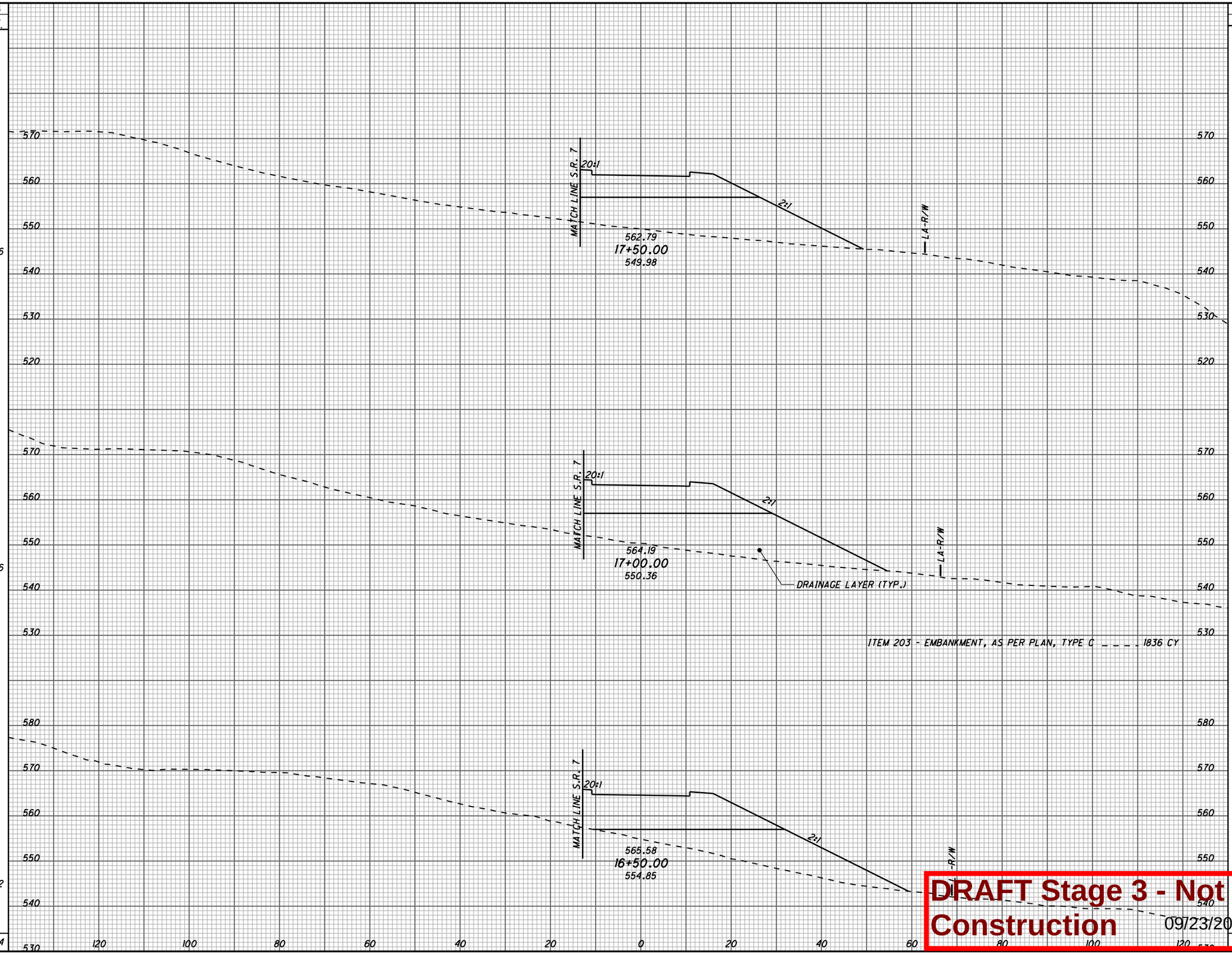

END AREA		VOLUME	
CUT	FILL	CUT	FILL
0	174	0	370
0	225	0	474
0	287	0	483
		0	1327

CALCULATED SLP
CHECKED ALB

CROSS SECTIONS BRENTWOOD EMERGENCY ACCESS ROAD STA. 16+50.00 TO STA. 17+50.00

LAW-7-2.17

DRAFT Stage 3 - Not for Construction 09/23/2024

U:\173608714\LAW\75923\roadway\sheets\75923XS51003.dgn 5/21/2024 4:56:23 PM SLParker

SEEDING		END AREA		VOLUME	
END WIDTH	SQ. YDS.	CUT	FILL	CUT	FILL
48	277	0	93	0	180
52	297	0	100	0	211
55	293	0	127	0	279
	687			0	670

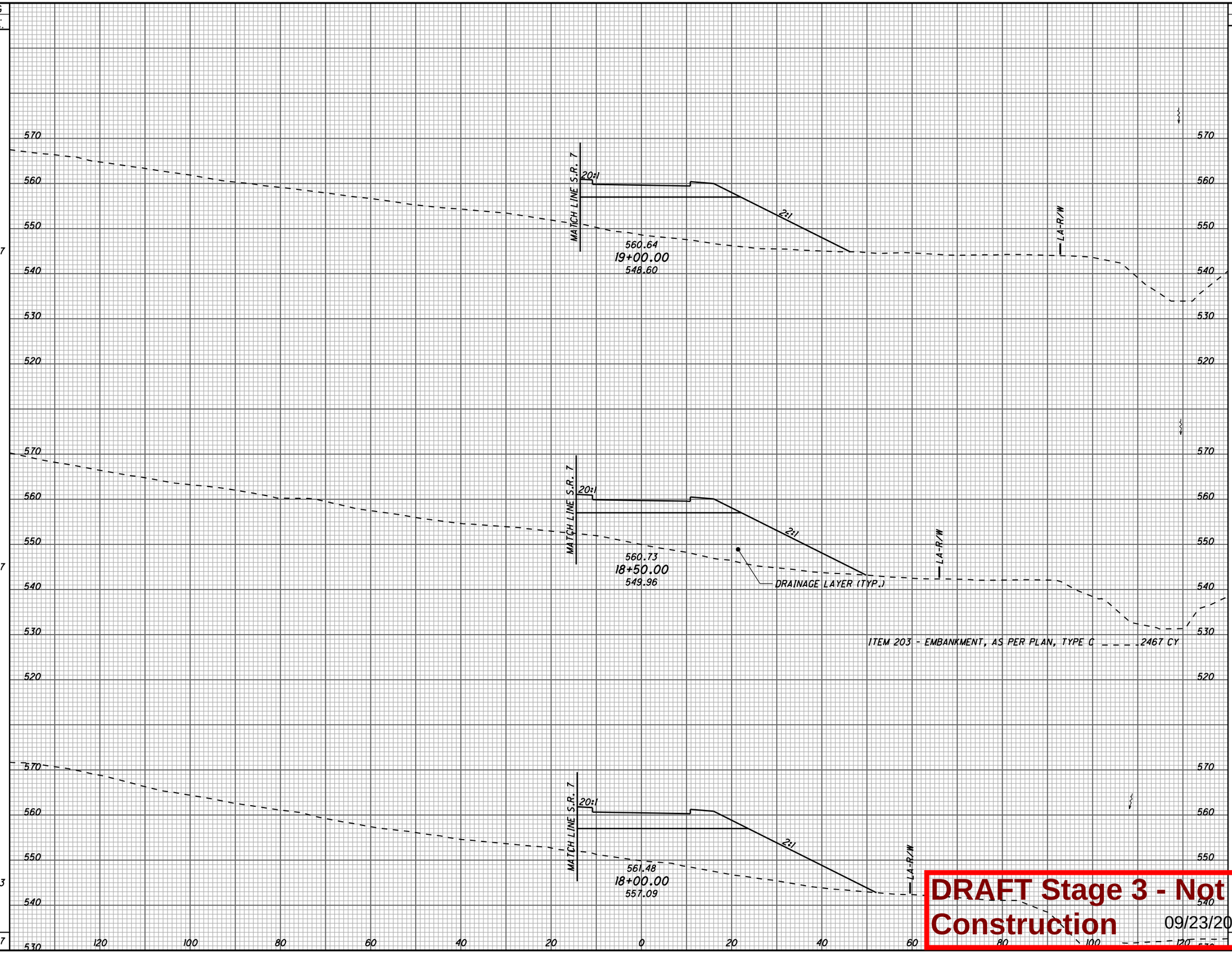

DRAFT Stage 3 - Not for Construction 09/23/2024

CALCULATED SLP
CHECKED ALB

CROSS SECTIONS BRENTWOOD EMERGENCY ACCESS ROAD
STA. 18+00.00 TO STA. 19+00.00

LAW-7-2.17

469
1247

U:\173608714\LAW\75923\roadway\sheets\75923XS51004.dgn 5/21/2024 4:56:24 PM SLPorker

SEEDING	
END WIDTH	SQ. YDS.
63	220
129	310
60	299
	829

END AREA	
CUT	FILL
0	160
294	127
0	95
0	175

VOLUME	
CUT	FILL
112	109
161	122
	273
	406

CALCULATED SLP
CHECKED ALB

BRENTWOOD EMERGENCY ACCESS ROAD
CROSS SECTIONS STA. 19+50.00 TO STA. 20+00.00

LAW-7-2.17

470
1247

MATCH LINE S.R. 7
2:1
10:1
4:1
545.30
563.08
20+00.00
541.16
LA-R/W

MATCH LINE S.R. 7
2:1
10:1
4:1
538.03
562.12
19+79.50
541.20
DRAINAGE LAYER (TYP.)
LA-R/W

ITEM 203 - EMBANKMENT, AS PER PLAN, TYPE C ..... 2378 CY

STA. 19+58.99
PROP. 66" TYPE A

MATCH LINE S.R. 7
20:1
2:1
561.19
19+50.00
546.88
EX. 535.88
LA-R/W

570
560
550
540
530
520
100 80 60 40 20 0 20 40 60 80 100 120 140

DRAFT Stage 3 - Not for Construction 09/23/2024

U:\173608714\LAW\75923\roadway\sheets\75923XS51005.dgn 5/21/2024 4:56:25 PM SLParker

SEEDING END WIDTH	SEEDING SQ. YDS.	END AREA CUT	END AREA FILL	VOLUME CUT	VOLUME FILL
28	213	0	381	0	759
48	287	0	438	0	680
55	330	0	296	0	423
	830			0	1862

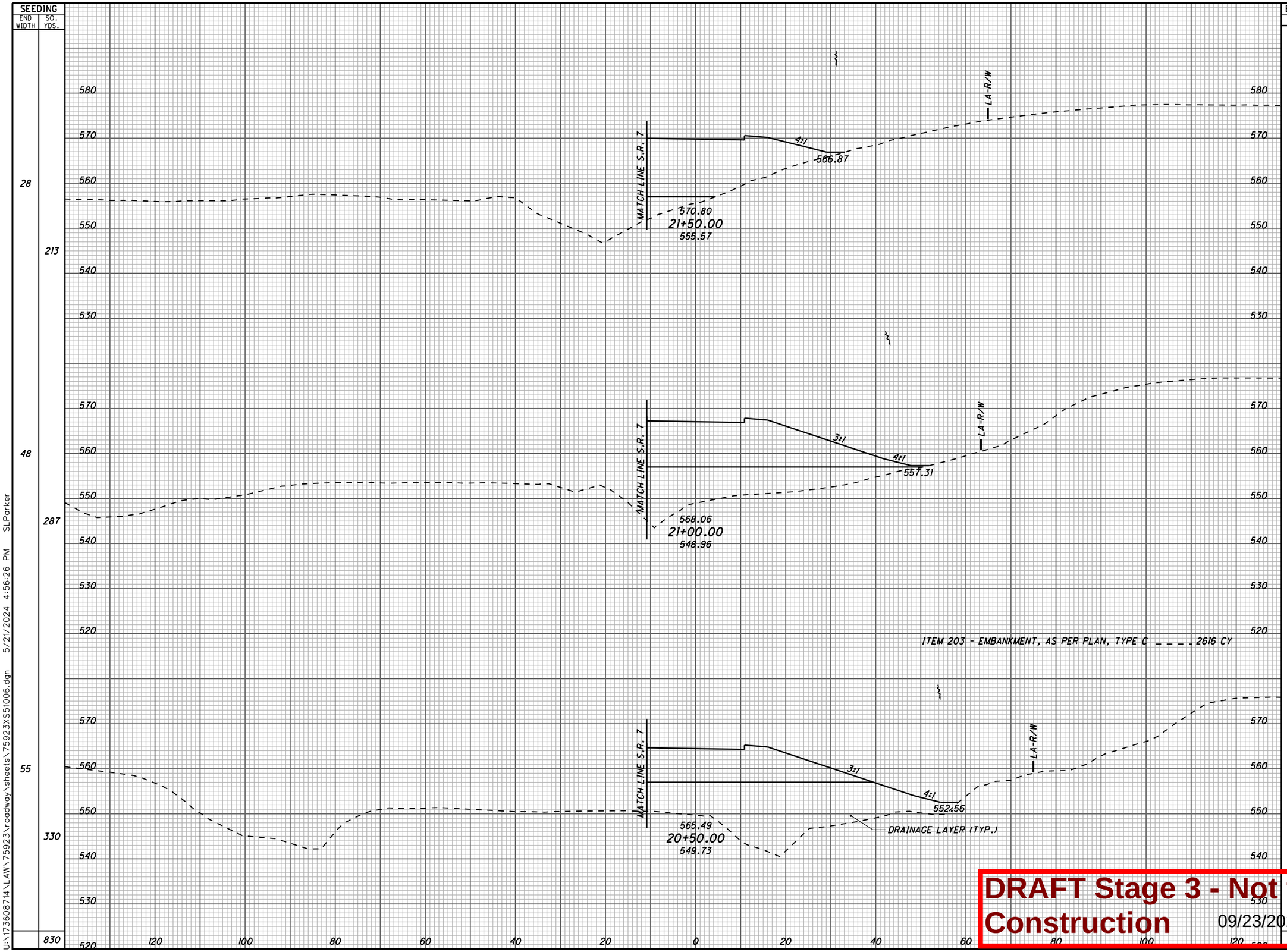

DRAFT Stage 3 - Not for Construction 09/23/2024

CALCULATED SLP CHECKED ALB

CROSS SECTIONS BRENTWOOD EMERGENCY ACCESS ROAD STA. 20+50.00 TO STA. 21+50.00

LAW-7-2.17

471 1247

U:\173608714\LAW\75923\roadway\sheets\75923XS51006.dgn 5/21/2024 4:56:26 PM SLParker

SEEDING	
END WIDTH	SQ. YDS.
0	113
57	218
21	139
	470

END AREA	
CUT	FILL
48	0
279	0
0	193
0	531
	710

VOLUME	
CUT	FILL
216	0
259	179
475	

ITEM 203 - EXCAVATION _ _ _ _ _ _ _ _ _ _ _ _ _ _ _ _ _ 748
ITEM 203 - EMBANKMENT _ _ _ _ _ _ _ _ _ _ _ _ _ _ _ _ 9,222
ITEM 203 - EMBANKMENT, AS PER PLAN (TYPE C) _ _ _ 10,209 CY
ITEM 659 - SEEDING AND MULCHING, CLASS 3C _ _ _ _ 5,396 CY
QUANTITIES CARRIED TO THE SUBSUMMARY, SEE SHEET 74.

EX GEN
MATCH LINE EXISTING WOODLAND DRIVE
574.73
22+85.54
574.73
END WORK
MATCH LINE EXISTING WOODLAND DRIVE
LA-R/W
EX R/W

STA. 22+50.00
PROP. 15" TYPE A
MATCH LINE S.R. 7
20:1
4:1
4:1
573.95
22+50.00
577.01
570.15
LA-R/W
ITEM 203 - EMBANKMENT, AS PER PLAN, TYPE C _ _ _ _ _ 35 CY

MATCH LINE S.R. 7
4:1
570.20
572.40
22+00.00
564.26
LA-R/W

580 570 560 550 590 540 120 100 80 60 40 20 0 20 40 60 80 100 120

DRAFT Stage 3 - Not for Construction 09/23/2024

CALCULATED SLP
CHECKED ALB

CROSS SECTIONS BRENTWOOD EMERGENCY ACCESS ROAD
STA. 22+00.00 TO STA. 22+85.54

LAW-7-2.17

472
1247

U:\173608714\LAW\75923\roadway\sheets\75923XS51007.dgn 5/21/2024 4:56:27 PM SLParker

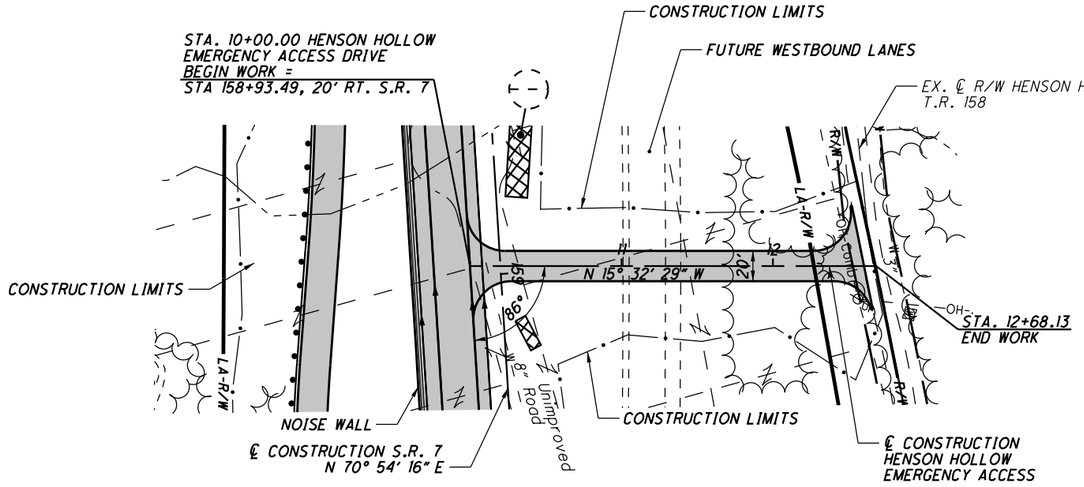

FOR QUANTITIES, SEE SHEETS 71-81
FOR S.R. 7 PLAN & PROFILE, SEE SHEETS 101-104
FOR INTERSECTION DETAILS, SEE SHEETS 623
FOR TRAFFIC CONTROL PLAN, SEE SHEETS 713-733A
FOR FENCE TABLES, SEE SHEETS 1039-1041

- PROPOSED PAVEMENT

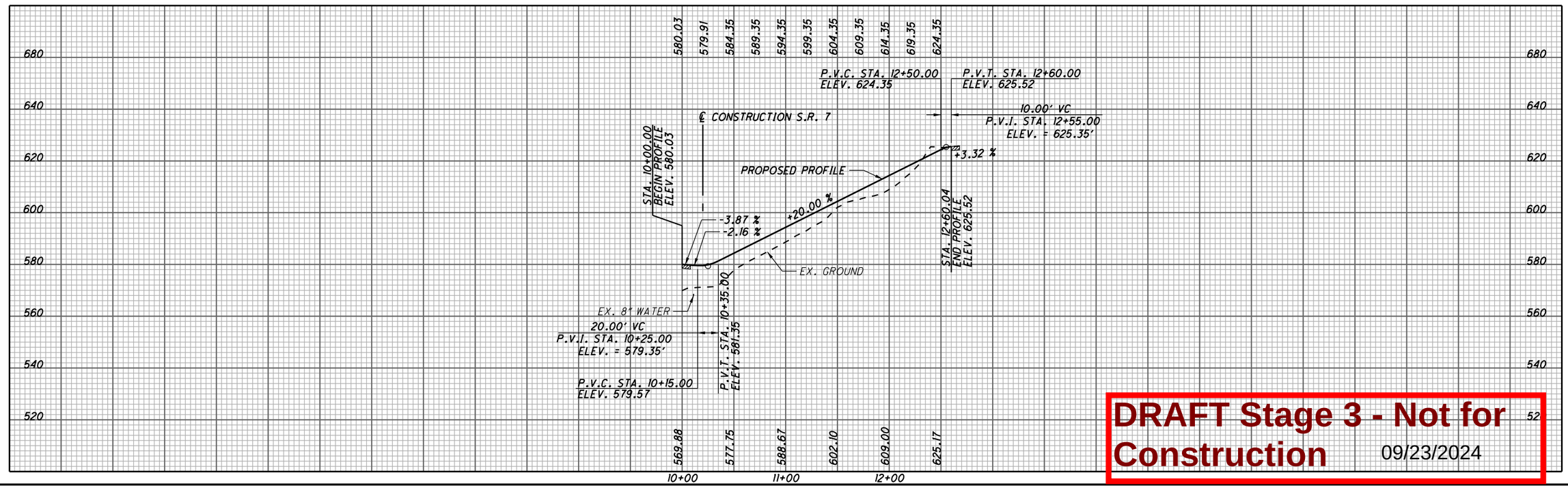

DRAFT Stage 3 - Not for Construction 09/23/2024

N

0 25 50 100 HORIZONTAL SCALE IN FEET

CALCULATED SLP CHECKED ALB

PLAN AND PROFILE
HENSON HOLLOW EMERGENCY ACCESS

LAW-7-2.17

473
1247

U:\173608714\LAW\75923\roadway\sheets\75923GP106-2B.dgn 5/21/2024 4:56:29 PM SLParker

SEEDING END WIDTH	SEEDING SQ. YDS.
65	364
66	423
86	241
0	
	1028

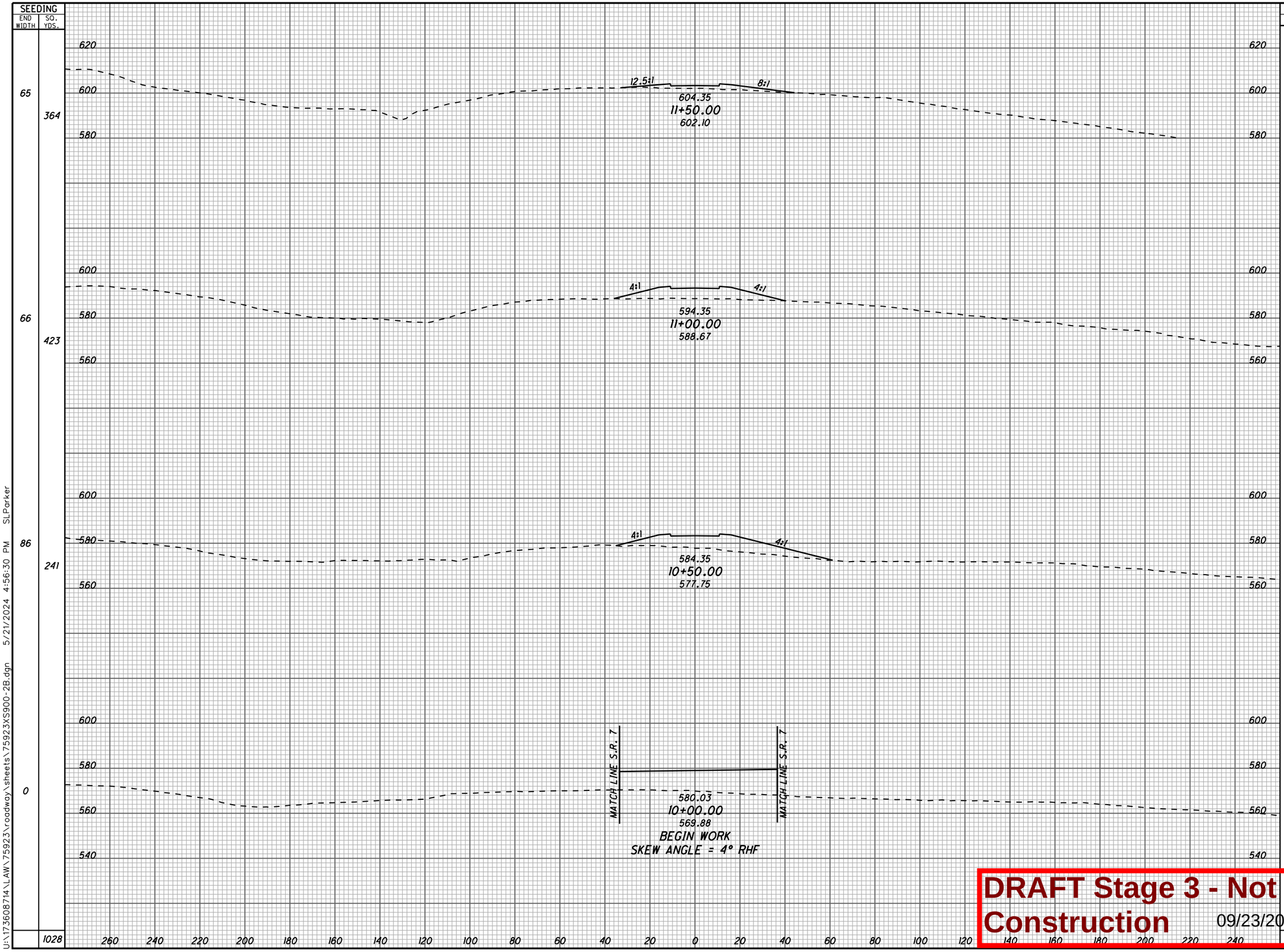

END AREA CUT	END AREA FILL	VOLUME CUT	VOLUME FILL
0	87	0	330
0	269	0	612
0	392	0	981
0	667	0	1923

CALCULATED SLP
CHECKED ALB

CROSS SECTIONS HENSON HOLLOW EMERGENCY ACCESS
STA. 10+00.00 TO STA. 11+50.00

LAW-7-2.17

474
1247

DRAFT Stage 3 - Not for Construction 09/23/2024

U:\173608714\LAW\75923\roadway\sheets\75923XS900-2B.dgn 5/21/2024 4:56:30 PM SLParker

SEEDING	
END WIDTH	SQ. YDS.
51	51
90	412
58	343
	806

ITEM 203 - EXCAVATION _ 143 CY
ITEM 203 - EMBANKMENT _ _ _ _ _ _ _ _ _ _ _ _ _ _ _ _ _ _ _ 2,425 CY
ITEM 659 - SEEDING AND MULCHING, CLASS 3C _ _ _ _ _ _ 1,834 CY
QUANTITIES CARRIED TO THE SUBSUMMARY, SEE SHEET 74.

660
640
620
600
580

MATCH LINE EXISTING HENSON HOLLOW ROAD

625.52
12+60.04
625.52
END WORK
SKEW ANGLE = 11° RHF

MATCH LINE EXISTING HENSON HOLLOW ROAD

EX R/W
R/W
11:1
12.5:1
EX R/W
13.5:1
LA-R/W
624.35
12+50.00
625.17

R/W
EX R/W
LA-R/W
4:1
4:1
614.35
12+00.00
609.00

260 240 220 200 180 160 140 120 100 80 60 40 20 0 20 40 60 80 100 120 140 160 180 200 220 240

END AREA		VOLUME	
CUT	FILL	CUT	FILL
78	0	36	1
115	2	107	211
0	225	0	290
		143	502

CALCULATED SLP
CHECKED ALB

CROSS SECTIONS HENSON HOLLOW EMERGENCY ACCESS
STA. 12+00.00 TO STA. 12+60.04

LAW-7-2.17

475
1247

DRAFT Stage 3 - Not for Construction 09/23/2024

U:\173608714\LAW\75923\roadway\sheets\75923XS901-2B.dgn 5/21/2024 4:56:30 PM SLParker

SEEDING END WIDTH	SEEDING SQ. YDS.
117	545
79	348
46	290
59	248
30	
	1431

END AREA CUT	END AREA FILL	VOLUME CUT	VOLUME FILL
135	416	320	394
209	9	208	62
14	58	68	76
58	23	99	22
49	0		
		695	554

CALCULATED SLP
CHECKED ALB

CROSS SECTIONS C.R. 104
STA. 12+00.00 TO STA. 14+00.00

LAW-7-2.17

476
1247

14+00.00
564.31
562.28
564.31
562.16
EX. 3" WATER
℄ 15" TYPE C = 555.28
MATCH LINE S.R. 7

13+50.00
563.62
561.38
563.62
561.84
MATCH LINE MSE WALL GRADING
℄ 15" TYPE C = 555.68

13+00.00
561.30
559.79
561.30
558.84
STA. 13+00.00 CB-5 T/C = 558.84 ℄ 15" TYPE C = 556.09
EX. 3" WATER
STA. 13+00.00 CB-5 T/C = 559.79 ℄ 15" TYPE B = 557.04

PROP. MSE WALL
12+50.00
563.30
561.97
563.30
561.66
EX. 4" WATER

12+00.00
570.59
568.46
570.59
EX. 4" WATER
BEGIN WORK

EX R/W

DRAFT Stage 3 - Not for Construction 09/23/2024

U:\1736087\14\LAW\75923\roadway\sheets\75923XS910-2B.dgn 5/21/2024 4:56:31 PM SLParker

SEEDING END WIDTH	SEEDING SQ. YDS.	END AREA CUT	END AREA FILL	VOLUME CUT	VOLUME FILL
109	527	146	504	323	936
81	318	203	506	218	545
34	184	32	82	70	218
104	320	124	408	125	398
	1349			736	2097

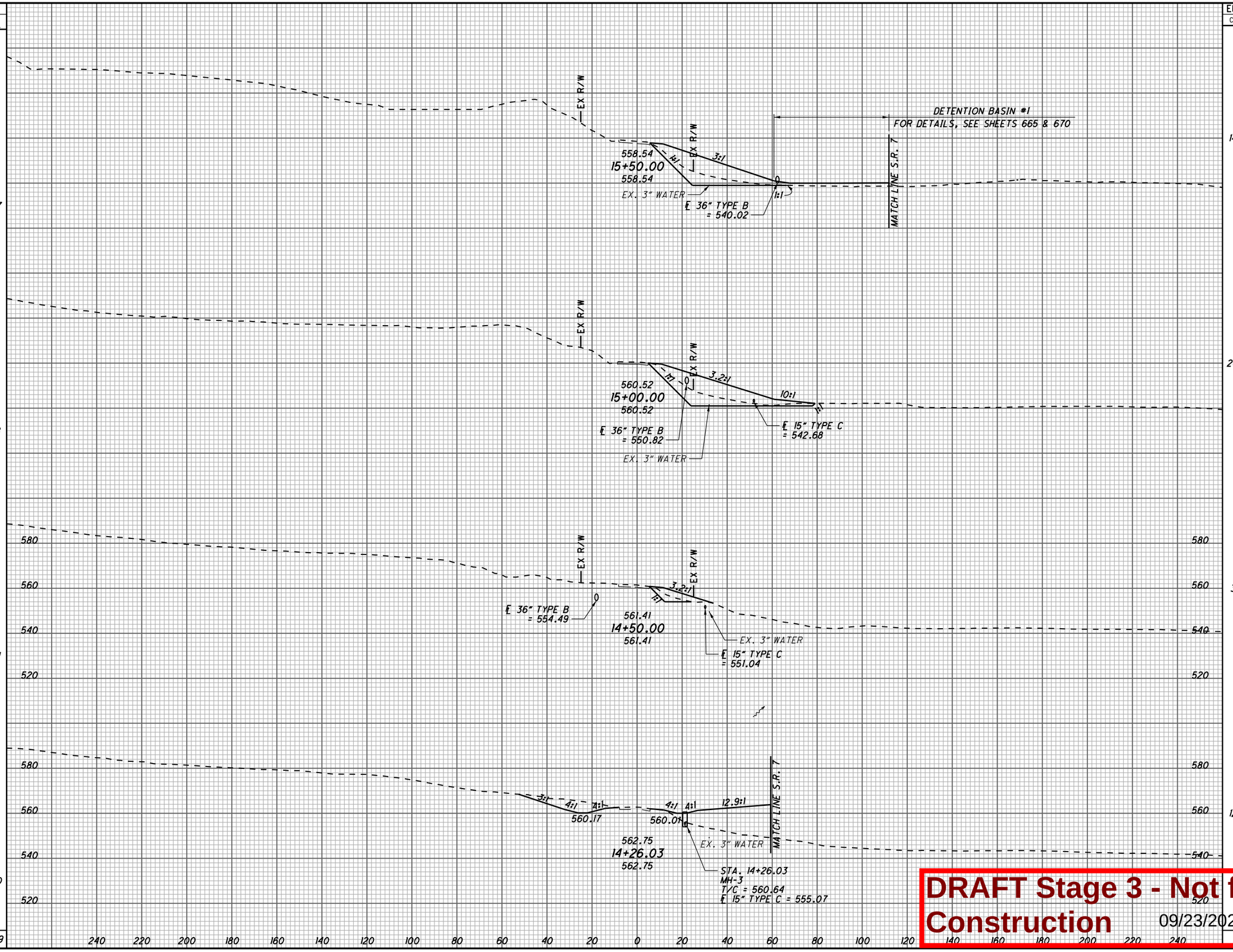

CALCULATED SLP
CHECKED ALB

CROSS SECTIONS C.R. 104
STA. 14+26.03 TO STA. 15+50.00

LAW-7-2.17

477
1247

DRAFT Stage 3 - Not for Construction 09/23/2024

U:\173608714\LAW\75923\roadway\sheets\75923XS911-2B.dgn 5/21/2024 4:56:32 PM SLParker

SEEDING END WIDTH	SEEDING SQ. YDS.	END AREA CUT	END AREA FILL	VOLUME CUT	VOLUME FILL
0	3	0	0	1	1
11	137	0	1	47	51
38	337	50	53	277	433
84	535	249	414	367	850
	1012			692	1335

ITEM 203 - EXCAVATION _ _ _ _ _ _ _ _ _ _ _ _ _ _ _ _ 2,123 CY
ITEM 203 - EMBANKMENT _ _ _ _ _ _ _ _ _ _ _ _ _ _ _ _ 3,986 CY
ITEM 659 - SEEDING AND MULCHING, CLASS 3C _ _ _ _ _ 3,792 CY
QUANTITIES CARRIED TO THE SUBSUMMARY, SEE SHEET 74.

EX R/W
555.03
17+03.97
555.03
END WORK
EX. 3" WATER

EX R/W
555.02
17+00.00
555.02
EX. 3" WATER

EX R/W
555.33
16+50.00
555.33
EX. 3" WATER
DETENTION BASIN #1
FOR DETAILS, SEE SHEETS 665 & 670
MATCH LINE S.R. 7

EX R/W
556.87
16+00.00
556.87
EX. 3" WATER
DETENTION BASIN #1
FOR DETAILS, SEE SHEETS 665 & 670
MATCH LINE S.R. 7

DRAFT Stage 3 - Not for Construction 09/23/2024

CALCULATED SLP
CHECKED ALB

CROSS SECTIONS C.R. 104
STA. 16+00.00 TO STA. 17+03.97

LAW-7-2.17

478
1247

U:\173608714\LAW\75923\roadway\sheets\75923XS912-2A.dgn 5/21/2024 4:56:33 PM SLParker

SEEDING END WIDTH	SEEDING SQ. YDS.	END AREA CUT	END AREA FILL	VOLUME CUT	VOLUME FILL
50	245	45	122	86	142
39	207	47	31	90	31
36	100	49	1	46	2
0	124	0	0	88	0
44		95	0		
	676			310	175

CALCULATED SLP
CHECKED ALB

CROSS SECTIONS C.R. 32
STA. 10+00.0 TO STA. 12+00.00

LAW-7-2.17

479
1247

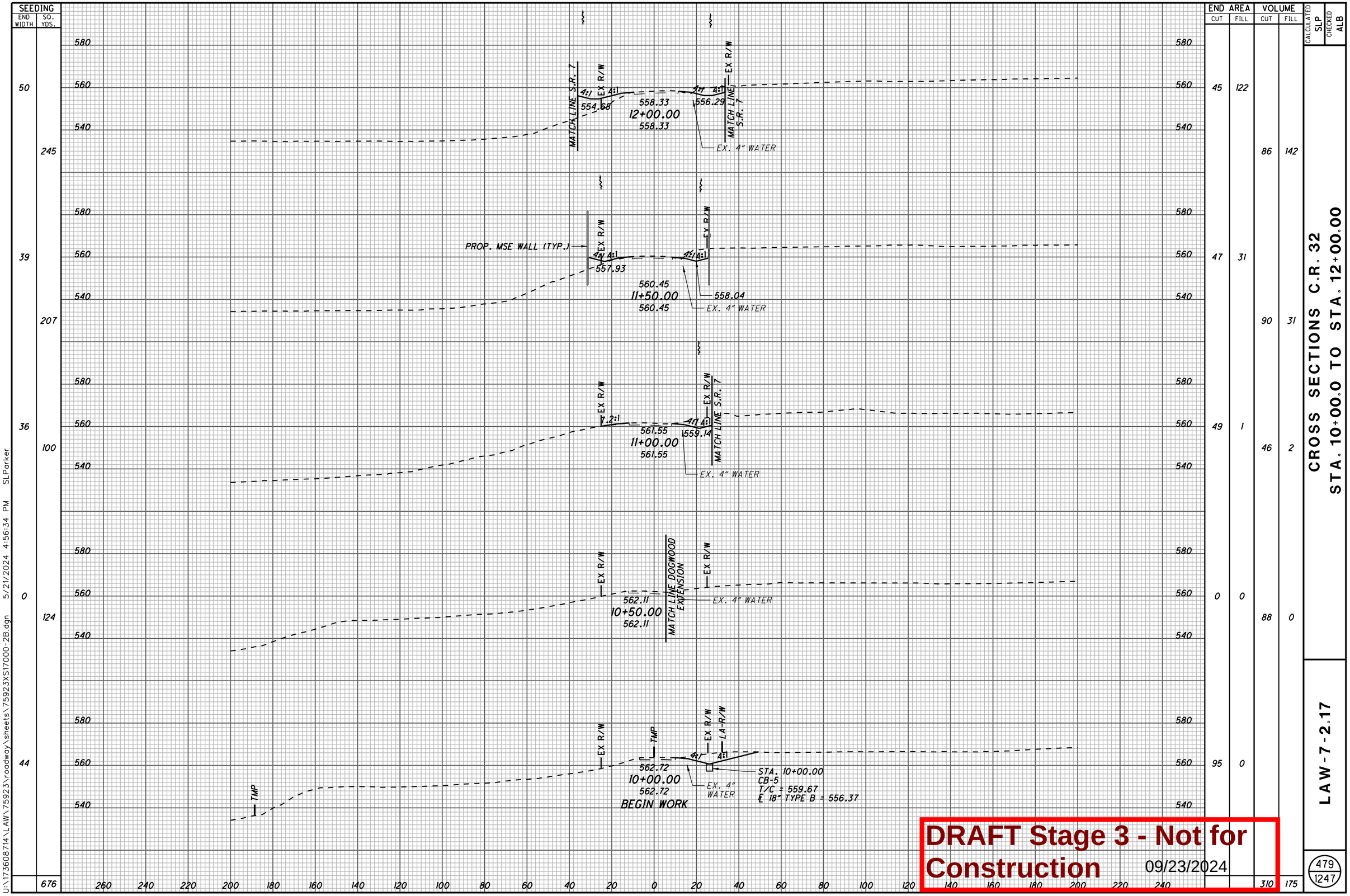

DRAFT Stage 3 - Not for Construction 09/23/2024

U:\173608714\LAW\75923\roadway\sheets\75923XS17000-2B.dgn 5/21/2024 4:56:34 PM SLParker

SEEDING	
END WIDTH	SQ. YDS.
44	82
45	297
113	546
83	369
	1294

END AREA	
CUT	FILL
140	209
161	229
439	267
251	113

VOLUME	
CUT	FILL
92	133
374	309
639	352
274	218
1379	1012

CALCULATED ALB
CHECKED TCM

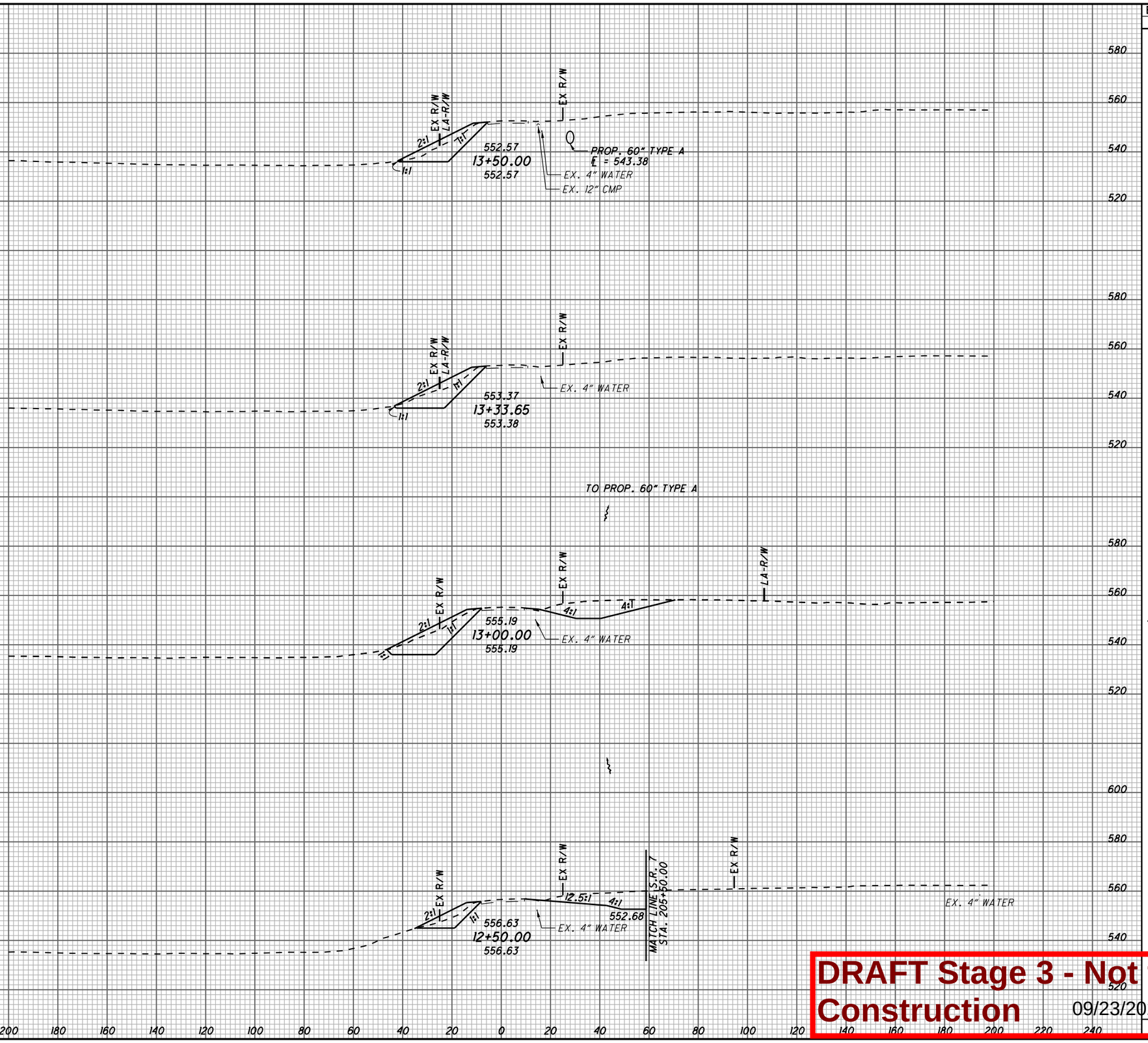

CROSS SECTIONS C.R. 32
STA. 12+50.00 TO STA. 13+50.00

LAW-7-2.17

480
1247

DRAFT Stage 3 - Not for Construction 09/23/2024

U:\173608714\LAW\75923\roadway\sheets\75923XS17001-2B.dgn 5/21/2024 4:56:35 PM SLParker

SEEDING	
END WIDTH	SQ. YDS.
0	
	98
35	
	209
40	
	234
	541

ITEM 203 - EXCAVATION _ _ _ _ _ _ _ _ _ _ _ _ _ _ _ 2,164 CY
ITEM 203 - EMBANKMENT _ _ _ _ _ _ _ _ _ _ _ _ _ _ . 1,951 CY
ITEM 659 - SEEDING AND MULCHING, CLASS 3C _ _ _ _ _ 2,511 CY
QUANTITIES CARRIED TO THE SUBSUMMARY, SEE SHEET 74.

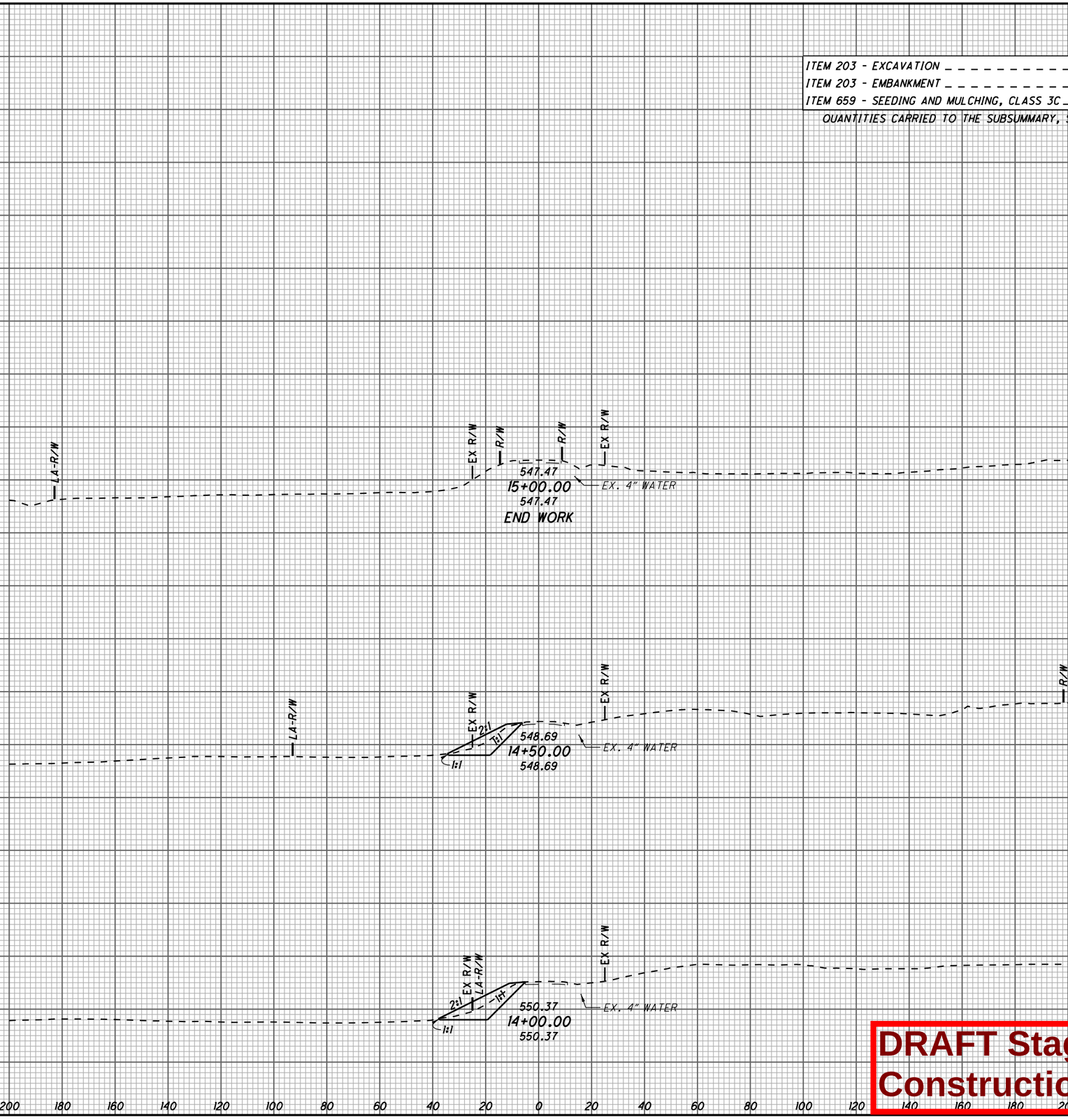

END AREA	
CUT	FILL
0	0

VOLUME	
CUT	FILL
80	125
86	134
173	285
100	173
222	354
475	764

CALCULATED SLP
CHECKED ALB

CROSS SECTIONS C.R. 32
STA. 14+00.00 TO STA. 15+00.00

LAW-7-2.17

481
1247

DRAFT Stage 3 - Not for Construction 09/23/2024

U:\173608714\LAW\75923\roadway\sheets\75923XS17002-2A.dgn 5/21/2024 4:56:35 PM SLParker

CURVE DATA
LYNN LANE
P.I. STA. 11+44.17
Δ = 25° 37' 23" (RT)
Dc = 22° 55' 06"
R = 250.00'
T = 56.85'
L = 111.80'
E = 6.38'
e_{max} (N.D.C.) = 8.00%
e_{max} = NC
PC STA. 10+87.32
PT STA. 11+99.12

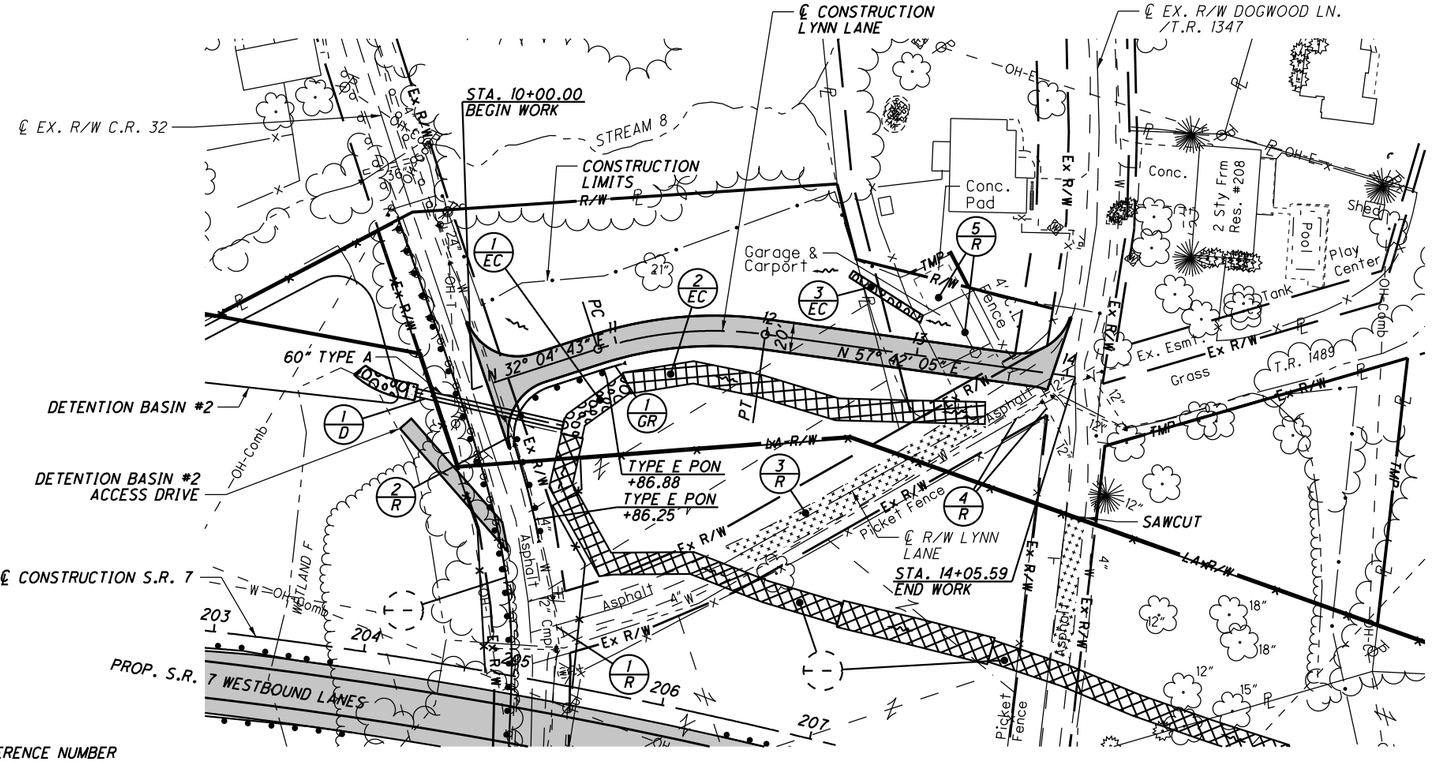

1/EC - ROCK CHANNEL PROTECTION
TYPE C WITH FILTER
(691 SF x 1.5' / 27 = 38.39 CY)

2/EC - SEEDING AND EROSION CONTROL
WITH TURF REINFORCING MAT, TYPE T
(240' x 14.5' / 9 = 386.67 SY)

3/EC - ROCK CHANNEL PROTECTION,
TYPE C WITH FILTER
(55' x 5' x 1.5' / 27 = 15.28 CY)

1/GR - INCLUDES 50' OF 34" RADIUS SHOP CURVED GUARDRAIL

- PAVEMENT REMOVED
QUANTITIES ARE INCLUDED IN REFERENCE NUMBER 3-R FOR THE REMOVAL OF EXISTING PAVEMENT, REGRADING TO ENSURE A DRAINABLE SURFACE AND SEEDING AND MULCHING OF THE AREA SHOWN.

- PROPOSED PAVEMENT

FOR QUANTITIES, SEE SHEETS 71-81
FOR S.R. 7 PLAN & PROFILE, SEE SHEETS 109-112
FOR INTERSECTION DETAILS, SEE SHEET 624
FOR CULVERT DETAILS, SEE SHEET 657
FOR DETENTION BASIN DETAILS, SEE SHEETS 666 & 671
FOR TRAFFIC CONTROL PLAN, SEE SHEETS 713-733A
FOR FENCE TABLES, SEE SHEETS 1039-1041

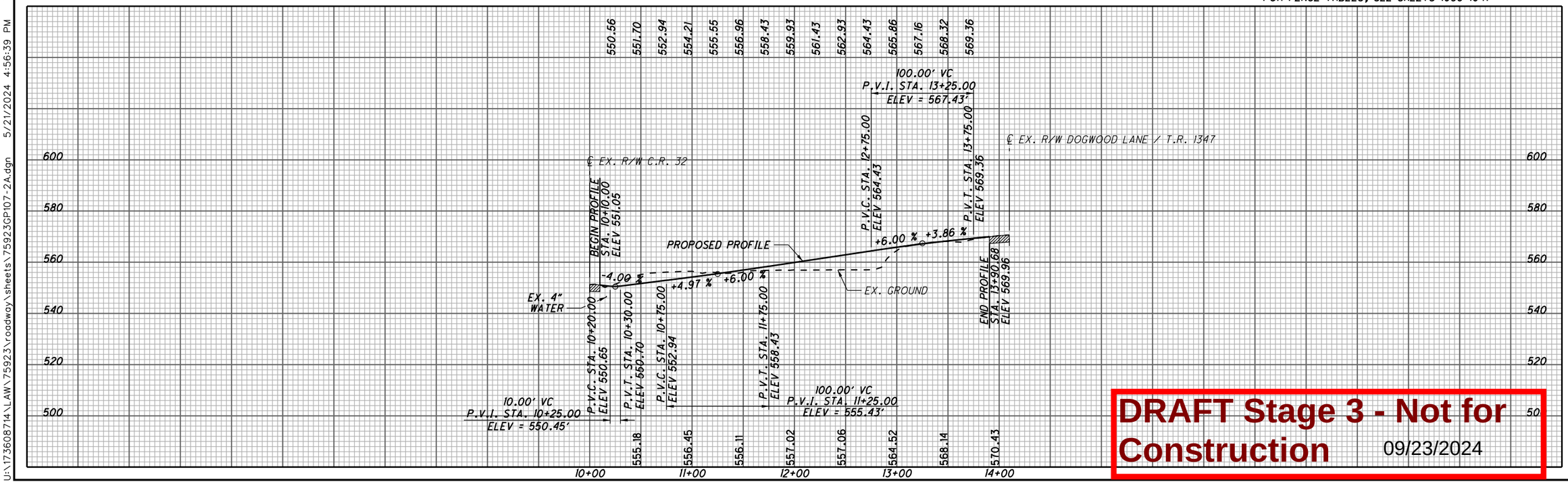

DRAFT Stage 3 - Not for Construction 09/23/2024

HORIZONTAL SCALE IN FEET
0 25 50 100
CALCULATED SLP
CHECKED ALB

PLAN AND PROFILE
LYNN LANE

LAW-7-2.17

482
1247

U:\1736087\4\LAW\75923\roadway\sheets\75923GP107-2A.dgn 5/21/2024 4:56:39 PM SLParker

SEEDING END WIDTH	SEEDING SQ. YDS.
60	387
79	543
116	277
8	
	1207

END AREA CUT	END AREA FILL	VOLUME CUT	VOLUME FILL
44	3		
		284	3
262	0		
		947	0
760	0		
		626	0
85	0		
		1857	3

CALCULATED SLP
CHECKED ALB

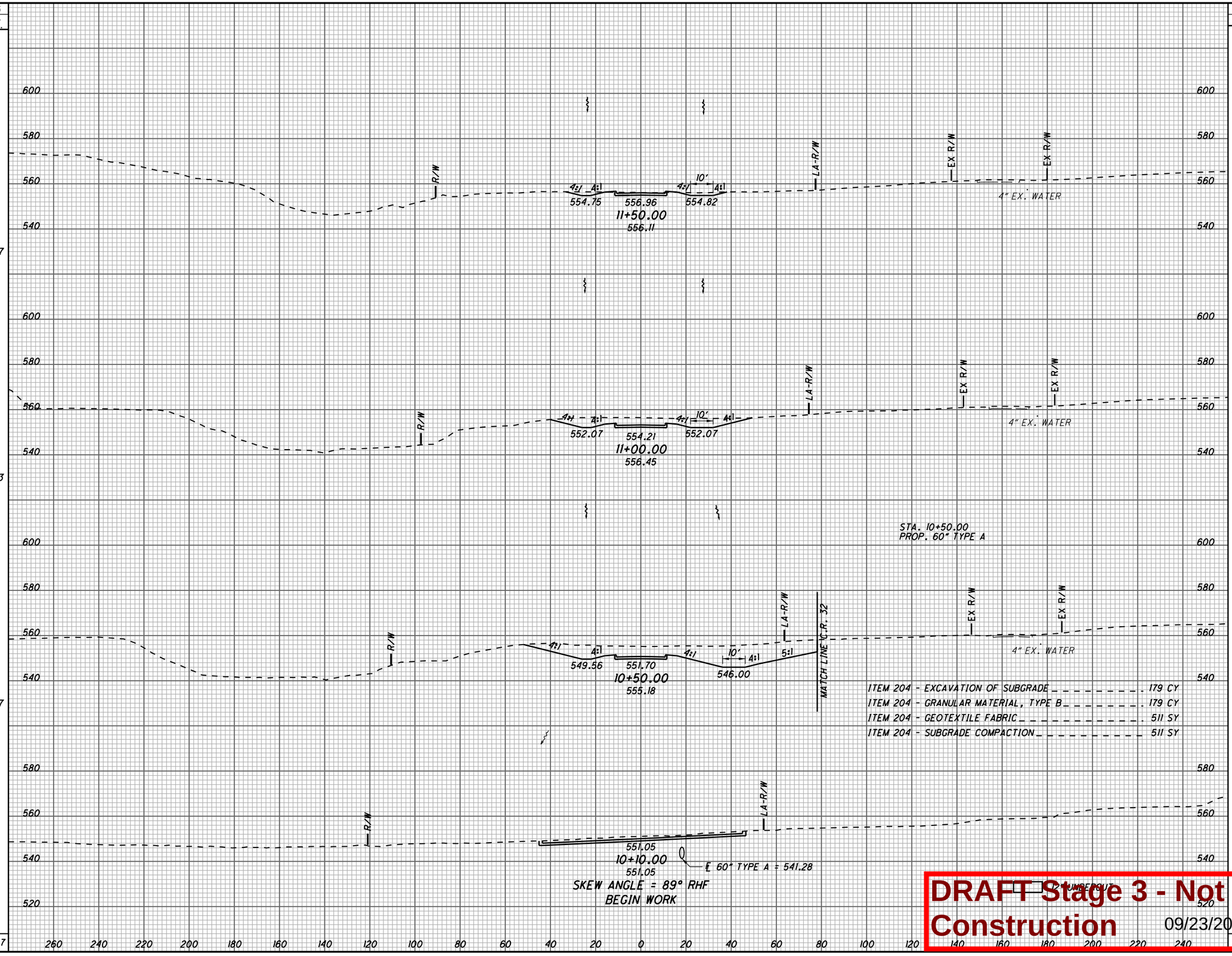

ITEM 204 - EXCAVATION OF SUBGRADE . . . . . 179 CY
ITEM 204 - GRANULAR MATERIAL, TYPE B . . . . . 179 CY
ITEM 204 - GEOTEXTILE FABRIC . . . . . 511 SY
ITEM 204 - SUBGRADE COMPACTION . . . . . 511 SY

DRAFT Stage 3 - Not for Construction 09/23/2024

CROSS SECTIONS - LYNN LANE
STA. 10+10.00 TO STA. 11+50.00

LAW-7-2.17

483
1247

U:\173608714\LAW\75923\roadway\sheets\75923XS800-2A.dgn 5/21/2024 4:56:40 PM SLParker

SEEDING	
END WIDTH	SQ. YDS.
68	368
64	437
93	476
78	385
	1666

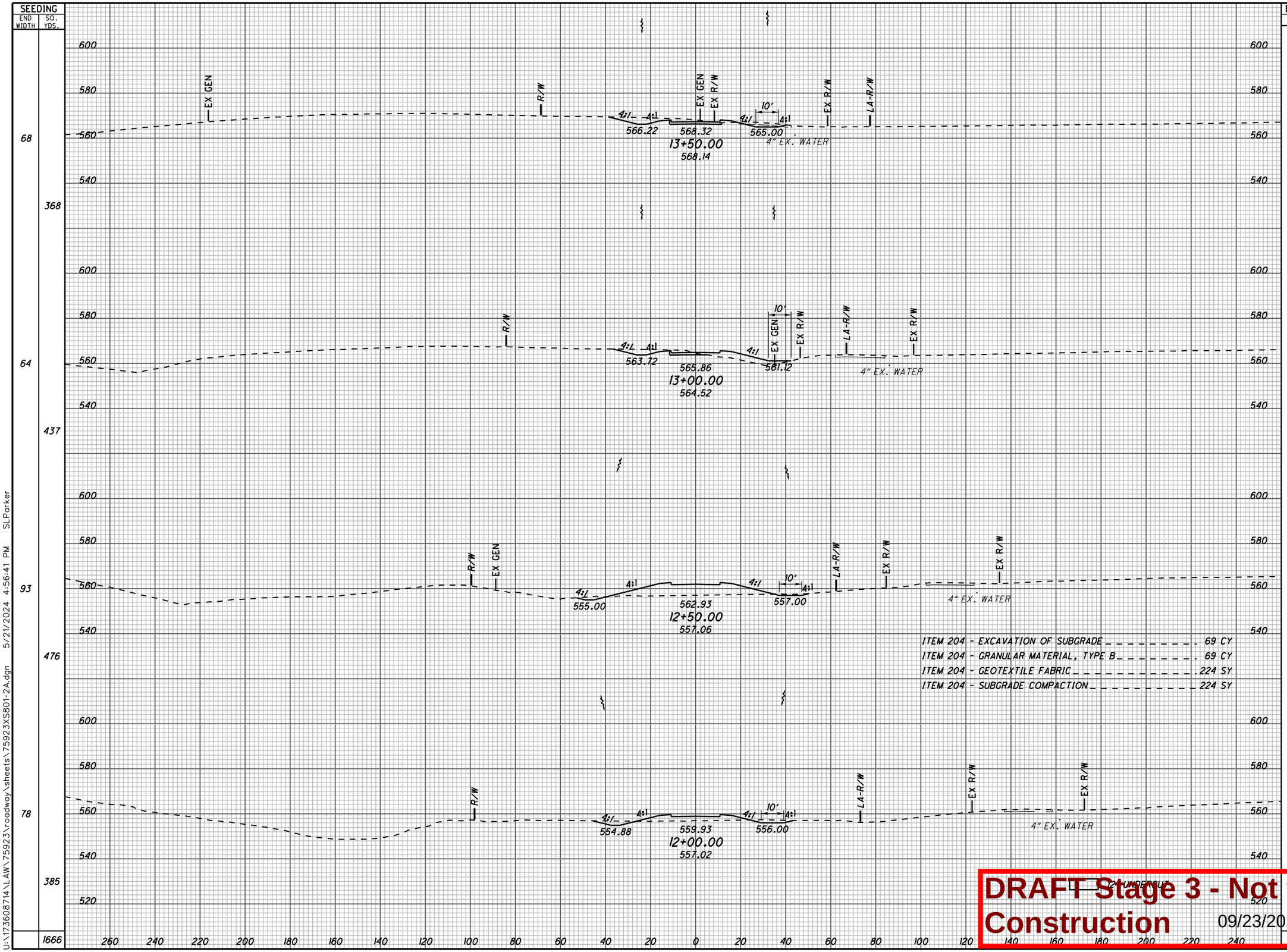

END AREA		VOLUME	
CUT	FILL	CUT	FILL
75	7		
		112	84
45	83		
		58	326
18	269		
		55	333
41	90		
		79	86
		304	829

ITEM 204 - EXCAVATION OF SUBGRADE . . . . . 69 CY
ITEM 204 - GRANULAR MATERIAL, TYPE B . . . . . 69 CY
ITEM 204 - GEOTEXTILE FABRIC . . . . . 224 SY
ITEM 204 - SUBGRADE COMPACTION . . . . . 224 SY

CALCULATED SLP
CHECKED ALB

CROSS SECTIONS - LYNN LANE
STA. 12+00.00 TO STA. 13+50.00

LAW-7-2.17

484
1247

DRAFT Stage 3 - Not for Construction 09/23/2024

U:\173608714\LAW\75923\roadway\sheets\75923XS801-2A.dgn 5/21/2024 4:56:41 PM SLParker

SEEDING	
END WIDTH	SQ. YDS.
8	173
	173

END AREA		VOLUME	
CUT	FILL	CUT	FILL
		55	0
		98	6

CALCULATED SLP
CHECKED ALB

ITEM 203 - EXCAVATION _ _ _ _ _ _ _ _ _ _ _ _ _ _ 2,259 CY
ITEM 203 - EMBANKMENT _ _ _ _ _ _ _ _ _ _ _ _ _ _ 838 CY
ITEM 204 - EXCAVATION OF SUBGRADE _ _ _ _ _ _ _ _ 308 CY
ITEM 204 - GRANULAR MATERIAL, TYPE B _ _ _ _ _ _ _ 308 CY
ITEM 204 - GEOTEXTILE FABRIC _ _ _ _ _ _ _ _ _ _ _ 909 SY
ITEM 204 - SUBGRADE COMPACTION _ _ _ _ _ _ _ _ _ _ 909 SY
ITEM 659 - SEEDING AND MULCHING, CLASS 3C _ _ _ _ 3,046 CY
QUANTITIES CARRIED TO THE SUBSUMMARY, SEE SHEET 74.

ITEM 204 - EXCAVATION OF SUBGRADE _ _ _ _ _ _ _ _ 60 CY
ITEM 204 - GRANULAR MATERIAL, TYPE B _ _ _ _ _ _ _ 60 CY
ITEM 204 - GEOTEXTILE FABRIC _ _ _ _ _ _ _ _ _ _ _ 174 SY
ITEM 204 - SUBGRADE COMPACTION _ _ _ _ _ _ _ _ _ _ 174 SY

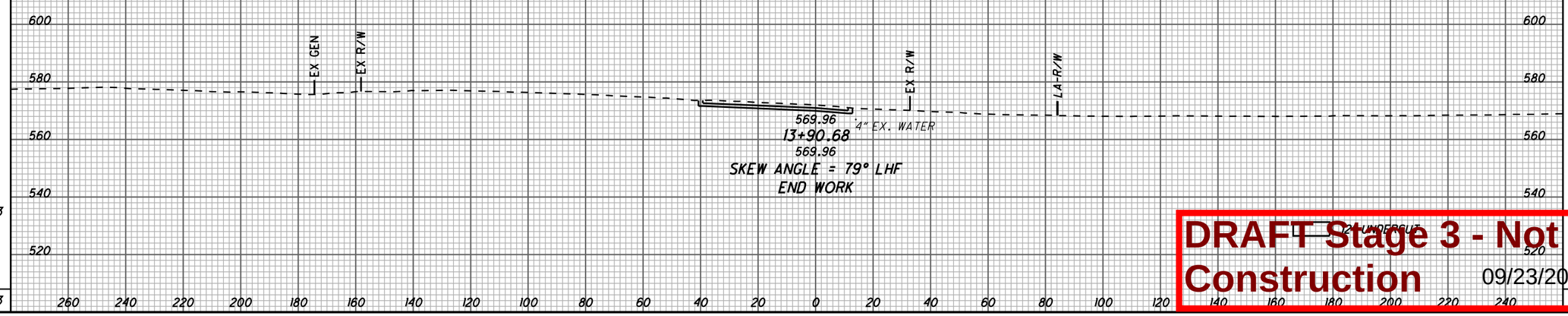

DRAFT Stage 3 - Not for Construction 09/23/2024

CROSS SECTIONS - LYNN LANE
STA. 13+90.68

LAW-7-2.17

485
1247

U:\173608714\LAW\75923\roadway\sheets\75923XS802-2A.dgn 5/21/2024 4:56:42 PM SLParker

CURVE DATA
CURVE NO. 1

P.I. Sta. 10+81.45
Δ = 15° 58' 40" (RT)
Dc = 11° 27' 33"
R = 500.00'
T = 70.17'
L = 139.43'
E = 4.90'
e_{max} = N/C
PC STA. 10+11.28
PT STA. 11+50.72

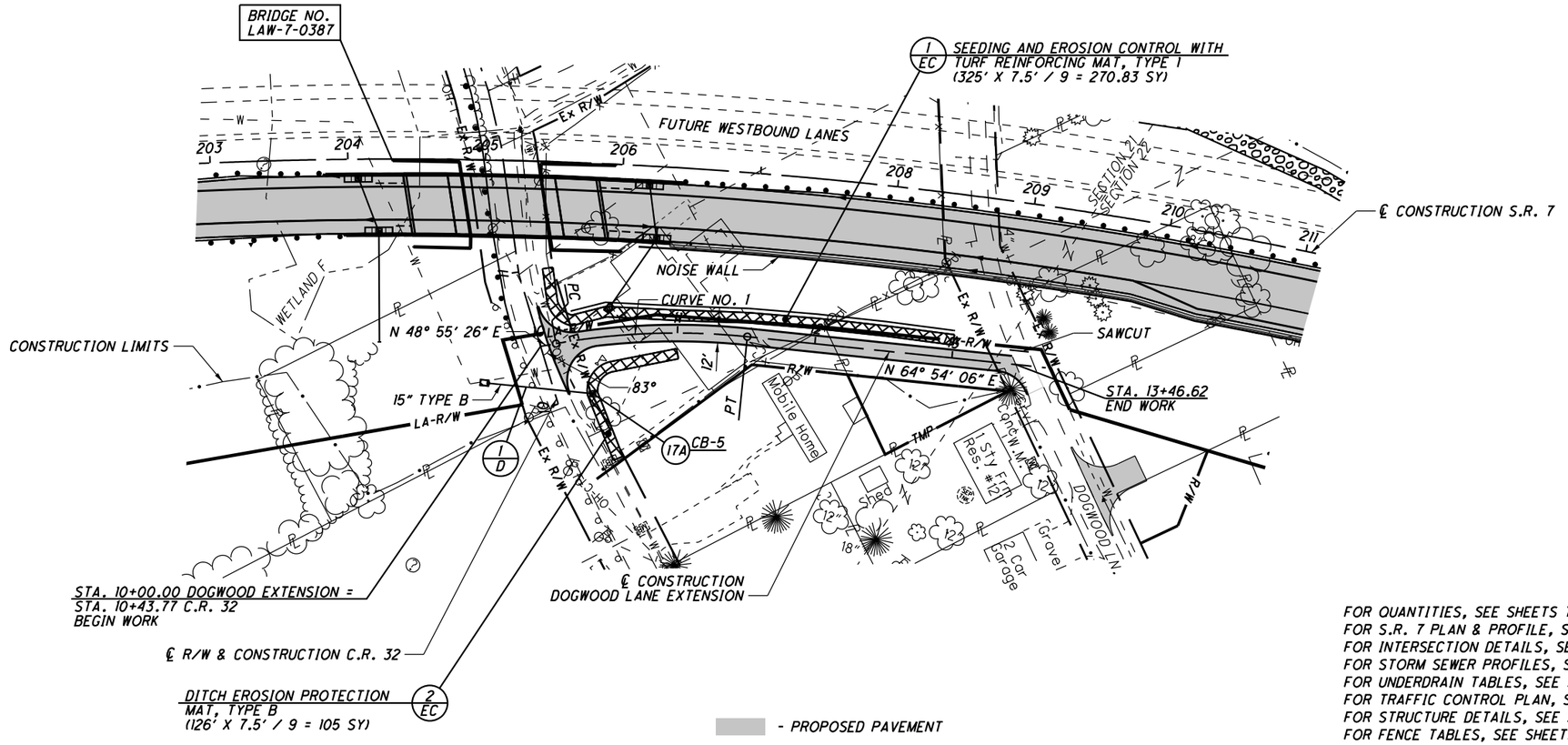

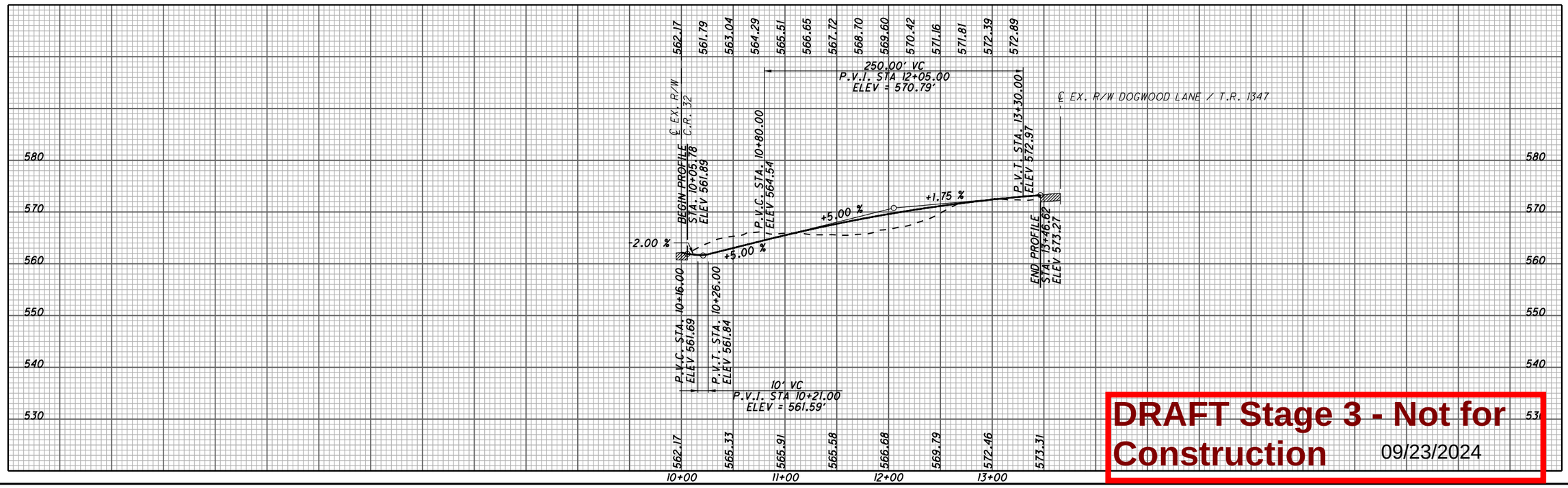

FOR QUANTITIES, SEE SHEETS 71-81
FOR S.R. 7 PLAN & PROFILE, SEE SHEETS 109-113
FOR INTERSECTION DETAILS, SEE SHEET 625
FOR STORM SEWER PROFILES, SEE SHEET 643
FOR UNDERDRAIN TABLES, SEE SHEETS 674-678
FOR TRAFFIC CONTROL PLAN, SEE SHEETS 713-733A
FOR STRUCTURE DETAILS, SEE SHEETS 870-897
FOR FENCE TABLES, SEE SHEETS 1039-1041

DRAFT Stage 3 - Not for Construction 09/23/2024

HORIZONTAL SCALE IN FEET
0 25 50 100
CALCULATED SLP
CHECKED ALB

PLAN AND PROFILE
DOGWOOD LANE EXTENSION

LAW-7-2.17

486
1247

U:\173608714\LAW\75923\roadway\sheets\75923GP120-2B.dgn 5/21/2024 4:56:44 PM SLParker

SEEDING		END AREA		VOLUME		CALCULATED	CHECKED
END WIDTH	SQ. YDS.	CUT	FILL	CUT	FILL	SLP	ALB
67	192	236	0	204	0		
70	84	204	0	100	0		
8	276	75	0	304	0		

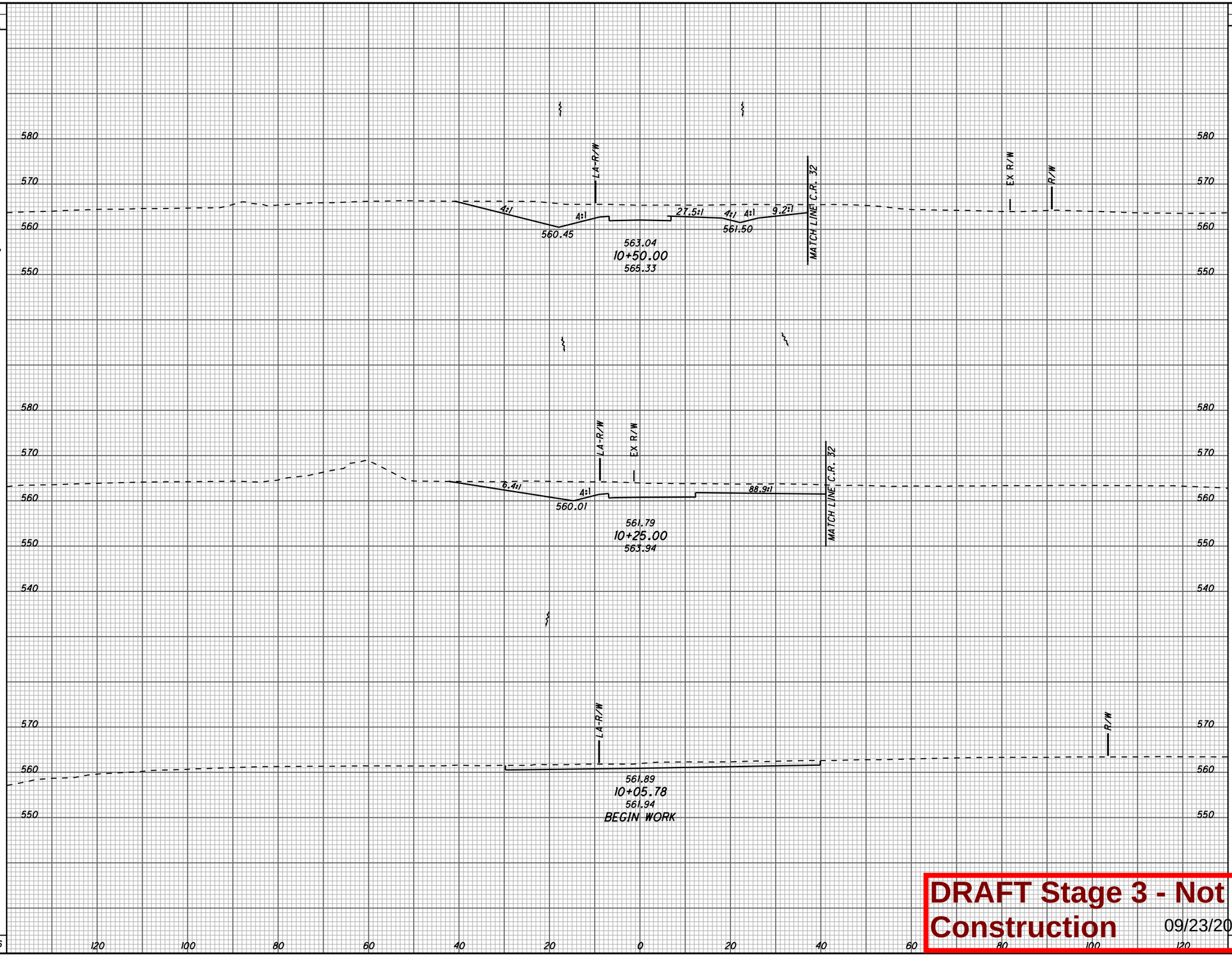

DRAFT Stage 3 - Not for Construction 09/23/2024

CROSS SECTIONS DOGWOOOD LANE EXTENSION
STA. 10+05.78 TO STA. 10+50.00

LAW-7-2.17

U:\173608714\LAW\75923\roadway\sheets\75923XS041.dgn 5/21/2024 4:56:45 PM SLParker

SEEDING		END AREA		VOLUME		CALCULATED SLP
END WIDTH	SQ. YDS.	CUT	FILL	CUT	FILL	CHECKED ALB
33	174	0	64	0	99	
29	179	0	42	43	40	
35	285	45	0	261	0	
	638			304	139	

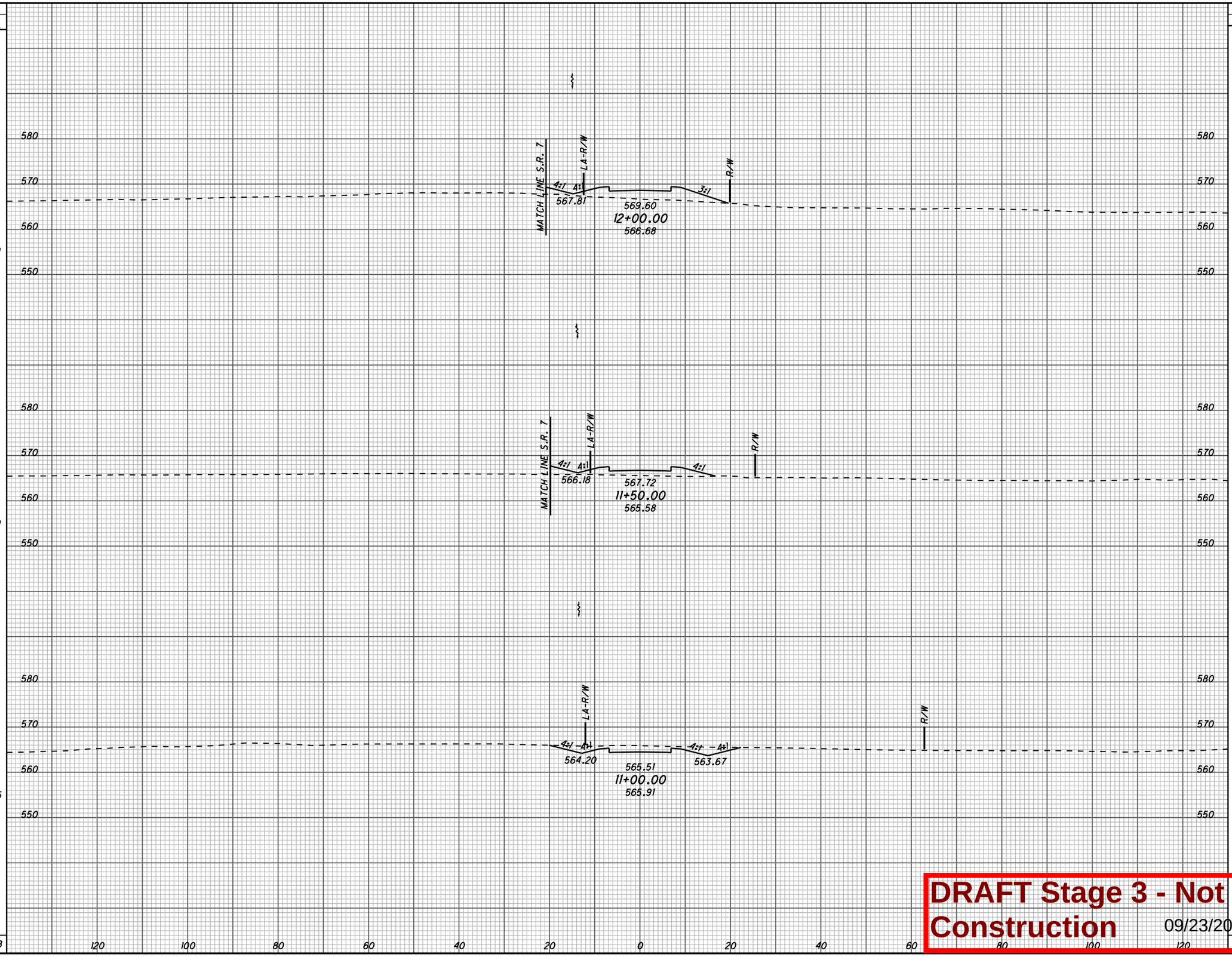

CROSS SECTIONS DOGWOOD LANE EXTENSION STA. 11+00.00 TO STA. 12+00.00

LAW-7-2.17

488
1247

DRAFT Stage 3 - Not for Construction 09/23/2024

U:\173608714\LAW\75923\roadway\sheets\75923XS042.dgn 5/21/2024 4:56:46 PM SLParker

SEEDING END WIDTH	SEEDING SQ. YDS.
8	102
31	174
31	179
	455

ITEM 203 - EXCAVATION _____ 690 CY
ITEM 203 - EMBANKMENT _____ 233 CY
ITEM 659 - SEEDING AND MULCHING, CLASS 3C _____ 1,369 CY
QUANTITIES CARRIED TO THE SUBSUMMARY, SEE SHEET 74.

590
580
570
560
550

EX R/W
LA-R/W
573.11
13+46.62
573.11
END WORK
EX R/W
LA-R/W
4:1
4:1
571.07
44.8:1
R/W
EX GEN
TMP
572.39
13+00.00
572.46
MATCH LINE S.R. 7
LA-R/W
4:1
4:1
569.44
4:1
R/W
TMP
EX GEN
EX GEN
571.16
12+50.00
569.79

120 100 80 60 40 20 0 20 40 60 80 100 120

END AREA CUT	END AREA FILL	VOLUME CUT	VOLUME FILL
31	0	51	0
27	0	28	17
3	18	3	77
		82	94

CALCULATED SLP
CHECKED ALB

CROSS SECTIONS DOGWOOOD LANE EXTENSION STA. 12+50.00 TO STA. 13+46.62

LAW-7-2.17

489
1247

DRAFT Stage 3 - Not for Construction 09/23/2024

U:\1736087\14\LAW\75923\roadway\sheets\75923XS043.dgn 5/21/2024 4:56:47 PM SLParker

CURVE DATA
S.R. 243
CURVE NO. 1

P.I. Sta. 11+03.86
Δ = 6° 51′ 57″ (LT)
Dc = 19° 05′ 55″
R = 300.00′
T = 18.00′
L = 35.95′
E = 0.54′
e_{max} = 1.60%
PC Sta. 10+85.87
PRC Sta. 11+21.82

CURVE DATA
S.R. 243
CURVE NO. 2

P.I. Sta. 11+99.38
Δ = 13° 36′ 35″ (RT)
Dc = 8° 48′ 53″
R = 650.00′
T = 77.56′
L = 154.40′
E = 4.61′
e_{max} = 1.60%
PRC Sta. 11+21.82
PCC Sta. 12+76.21

CURVE DATA
S.R. 243
CURVE NO. 3

P.I. Sta. 12+94.82
Δ = 6° 05′ 09″ (RT)
Dc = 16° 22′ 13″
R = 350.00′
T = 18.61′
L = 37.18′
E = 0.49′
e_{max} = 1.60%
PCC Sta. 12+76.21
CS Sta. 13+13.39

CURVE DATA
S.R. 243
CURVE NO. 4

P.I. Sta. 15+51.11
Δ = 5° 37′ 36″ (LT)
Dc = 1° 30′ 00″
R = 3,819.72′
T = 137.62′
L = 275.13′
E = 2.48′
TS STA. 13+13.39
SC STA. 14+13.39

θs = 00° 45′ 00″
Ls = 100.00′
Ts = 237.72′
LT = 66.67′
ST = 33.33′
e_{max} = 3.50%
CS Sta. 16+88.52
ST Sta. 17+88.52

FOR QUANTITIES, SEE SHEETS 71-81
FOR S.R. 7 PLAN & PROFILE, SEE SHEETS 119-120
FOR PROFILE, SEE SHEET 491
FOR INTERSECTION DETAILS, SEE SHEETS 625
FOR DRIVE DETAILS, SEE SHEETS 636-638
FOR STORM SEWER PROFILE, SEE SHEET 647
FOR DETENTION BASIN DETAILS, SEE SHEETS 667 & 672
FOR UNDERDRAIN TABLES, SEE SHEETS 674-678
FOR TRAFFIC CONTROL PLAN, SEE SHEETS 713-733A
FOR FENCE TABLES, SEE SHEETS 1039-1041

*(A) STA. 13+07.06 BEGIN SHOULDER TAPER, 20.02′ LT.
STA. 13+15.05 END SHOULDER TAPER, 22′ LT.

*(B) STA. 13+06.93 BEGIN SHOULDER TAPER, 31.95′ RT.
STA. 13+14.93 END SHOULDER TAPER, 34′ RT.

(C) STA. 15+38.99 BEGIN PAVEMENT TAPER, 22.63′ RT.
BEGIN SHOULDER TAPER, 26.63′ RT.
STA. 16+00.62 END PAVEMENT TAPER, 18′ RT.
END SHOULDER TAPER, 22′ RT.

(2 EC) SEEDING AND EROSION CONTROL WITH TURF REINFORCING MAT, TYPE 1 (213′ X 14.5′ / 9 = 343.17 SY)

(3 EC) SEEDING AND EROSION CONTROL WITH TURF REINFORCING MAT, TYPE 3 (107′ X 11′ / 9 = 130.78 SY)

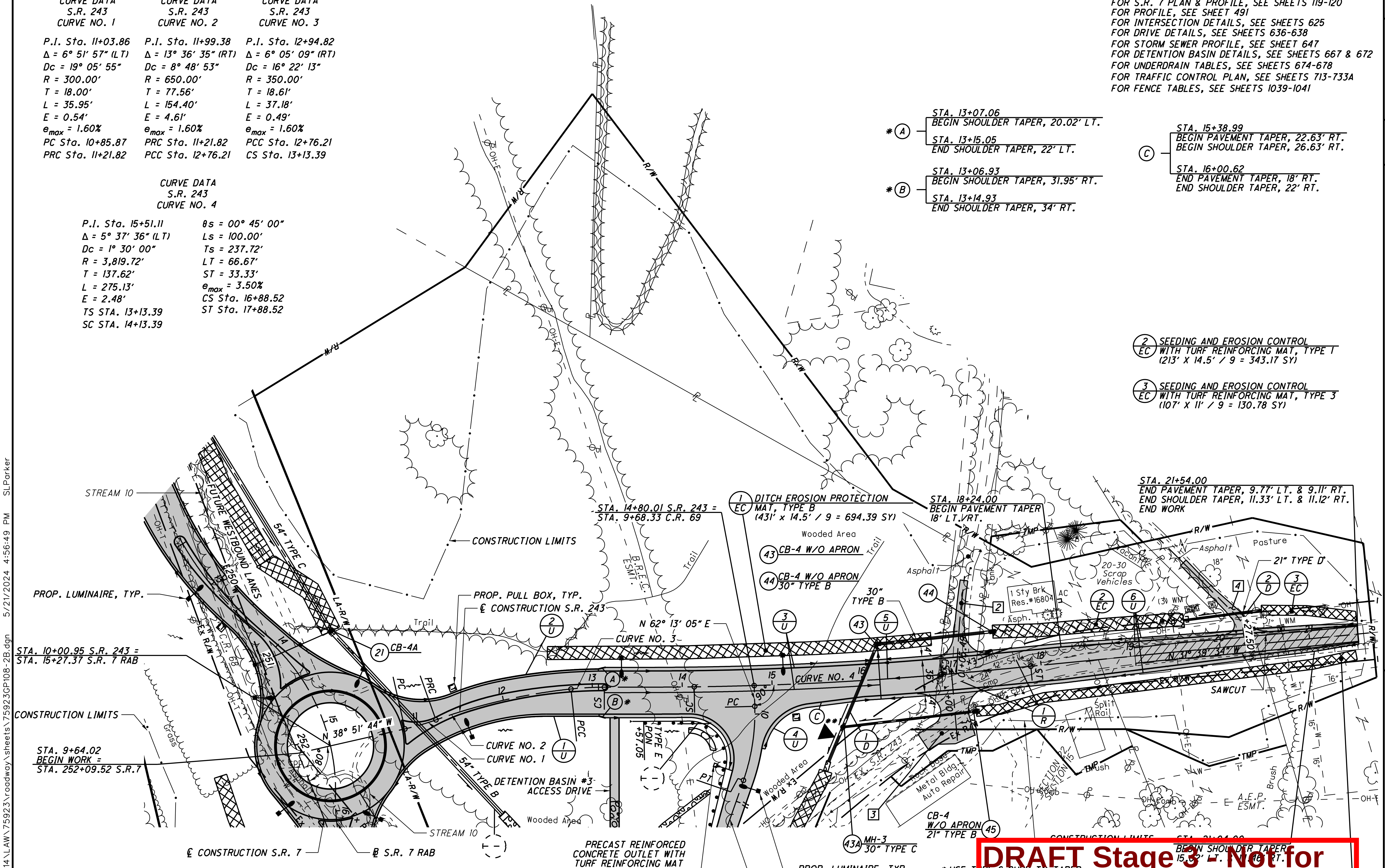

℄ CONSTRUCTION S.R. 7
℄ S.R. 7 RAB
PRECAST REINFORCED CONCRETE OUTLET WITH TURF REINFORCING MAT (TYP.)
PROP. LUMINAIRE, TYP.
℄ CONSTRUCTION C.R. 69
CONSTRUCTION LIMITS
STA. 21+04.00 BEGIN SHOULDER TAPER 15.5′ LT. ... RT.

* USE TYPE 6 CURB TO TAPER SHOULDER ... TAPER CURB HEIGHT FROM 6″ TO 0″ ...
** LIGHTING CONTROL CENTER

(4 EC) SEEDING AND EROSION CONTROL WITH TURF REINFORCING MAT, TYPE 2 (431′ x 11′ / 9 = 526.78 SY)

- PROPOSED PAVEMENT
- 3-1/4″ MILL/FILL

DRAFT Stage 3 - Not for Construction

0 25 50 100
HORIZONTAL SCALE IN FEET

CALCULATED SLP
CHECKED ALB

PLAN
S.R. 243

LAW-7-2.17

490
1247

U:\17360871\LAW\75923\roadway\sheets\75923GP108-2B.dgn 5/21/2024 4:56:49 PM SLParker

620.06 619.43 618.81 618.18 617.56 616.93 616.31 615.68 615.06 614.43 613.81 613.18 612.56 611.93 611.31 610.68 610.06 609.52 609.11 608.82 608.66 608.62 608.71 608.92 609.26 609.73 610.31 611.03 611.87 612.83 613.92 615.13 616.47 617.75 619.14 620.67 622.39 624.29 626.00 627.61 629.43 631.17 632.84

LIMITS OF ROUNDABOUT

680
660
640
620
600
580
560

STA. 10+82.95
BEGIN PROFILE
ELEV. 620.48

-2.50 %

EX. GROUND

PROPOSED PROFILE

STA. 11+02.19
℄ 54" TYPE B
= 607.18

℄ CONSTRUCTION C.R. 69

℄ CONSTRUCTION RADER AUTO DRIVE

℄ CONSTRUCTION THOMPSON DRIVE

P.V.C. STA. 14+95.00
ELEV. 610.18

-2.50 %

STA. 16+00.38
℄ 30" TYPE B
= 599.70

+5.71 %

℄ CONSTRUCTION
RADER DRIVE

P.V.I. STA. 19+05.00
END PROFILE GRADE
BEGIN GRAPHIC GRADE
ELEV. 616.75

STA. 21+64.00
END GRAPHIC GRADE
END PROFILE
ELEV. 633.07

EX. WATER
SERVICE

410.00' VC
P.V.I. STA. 17+00.00
ELEV. = 605.06'

592.29 594.02 613.39 634.78 650.77 657.05 658.14 654.91 650.81 645.00 637.60 629.60 622.27 612.78 608.07 609.20 611.10 613.51 616.58 619.13 622.36 625.43 629.43 632.87 636.08

10+00 11+00 12+00 13+00 14+00 15+00 16+00 17+00 18+00 19+00 20+00 21+00 22+00

PROFILE
S.R. 243

CALCULATED SLP
CHECKED ALB

LAW-7-2.17

491
1247

DRAFT Stage 3 - Not for Construction 09/23/2024

U:\173608714\LAW\75923\roadway\sheets\75923GF031-2B.dgn 5/21/2024 4:56:50 PM SLParker

SEEDING	
END WIDTH	SQ. YDS.
358	1733
265	1359
224	3092

END AREA		VOLUME	
CUT	FILL	CUT	FILL
8177	0		
		10366	0
3018	0		
		3628	2290
		900	2473
		1399	2290

CALCULATED SLP
CHECKED ALB

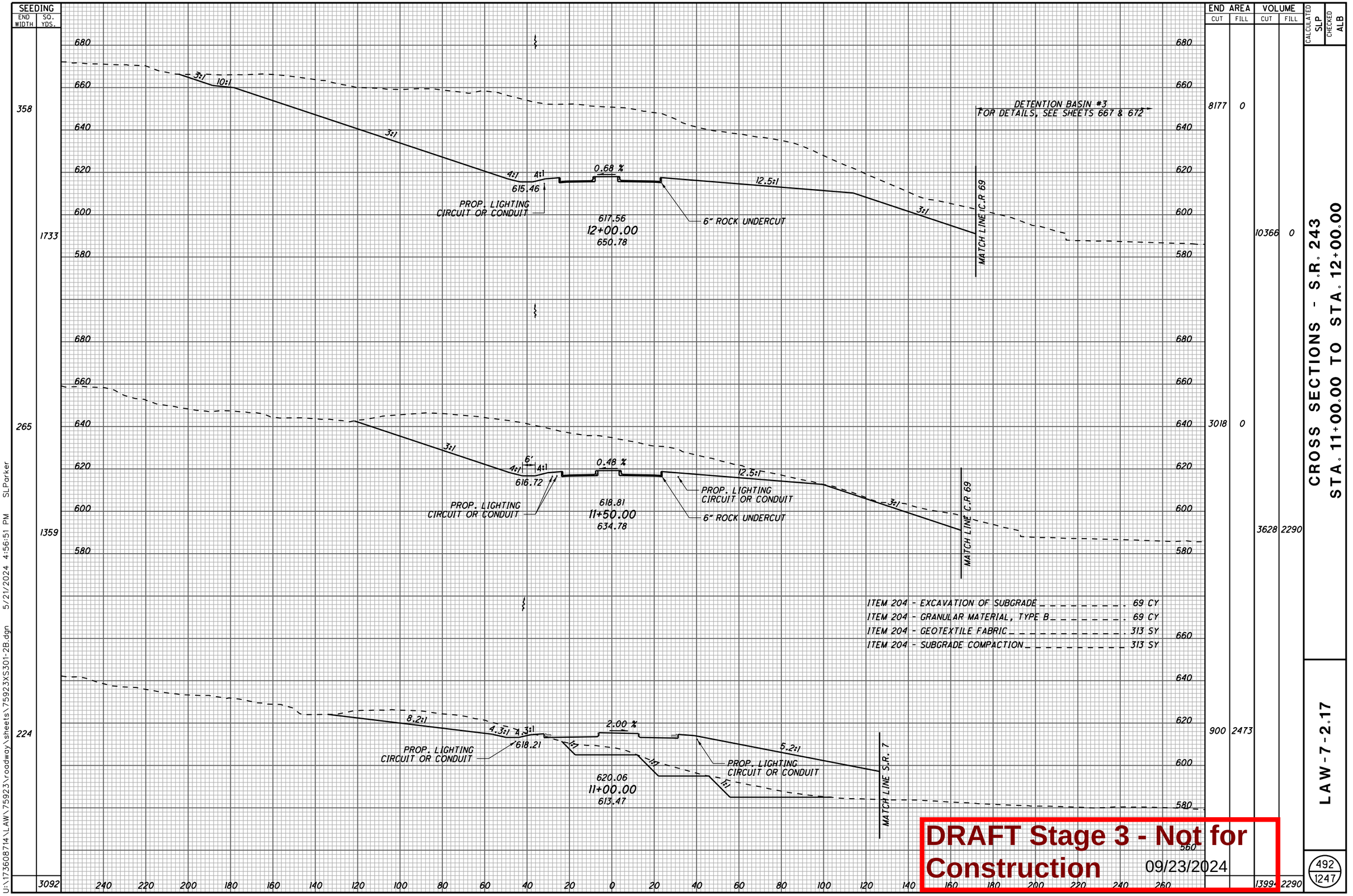

ITEM 204 - EXCAVATION OF SUBGRADE	69 CY
ITEM 204 - GRANULAR MATERIAL, TYPE B	69 CY
ITEM 204 - GEOTEXTILE FABRIC	313 SY
ITEM 204 - SUBGRADE COMPACTION	313 SY

DRAFT Stage 3 - Not for Construction 09/23/2024

CROSS SECTIONS - S.R. 243
STA. 11+00.00 TO STA. 12+00.00

LAW-7-2.17

492
1247

U:\173608714\LAW\75923\roadway\sheets\75923XS301-2B.dgn 5/21/2024 4:56:51 PM SLParker

SEEDING END WIDTH	SEEDING SQ. YDS.
763	3822
613	2698
	6520

END AREA CUT	END AREA FILL	VOLUME CUT	VOLUME FILL
25413	0		
		35178	0
12579	0		
		19219	0
		54397	0

CALCULATED SLP
CHECKED ALB

780 760 740 720 700 680 660 640 620 600

R/W

620 600 580 560 540 520 500 480

460 440 420 400 380 360 340 320 300 280

3:1 10:1 3:1

MATCH LINE MATCH LINE

10:1 3:1

DETENTION BASIN #3
FOR DETAILS, SEE SHEETS 667 & 672

8' 4:1 4:1 0.63 % 12.5:1 3:1

613.00
PROP. LIGHTING
CIRCUIT OR CONDUIT

615.06
13+00.00
658.13

MATCH LINE C.R 69

760 740 720 700 680 660 640 620 600

R/W

580 560 540 520 500 480 460 440 420 400

3:1 10:1 3:1

MATCH LINE MATCH LINE

10:1 3:1

380 360 340 320 300 280

DETENTION BASIN #3
FOR DETAILS, SEE SHEETS 667 & 672

8' 4:1 4:1 0.41 % 12.5:1 3:1

614.22
PROP. LIGHTING
CIRCUIT OR CONDUIT

616.31
12+50.00
657.02

6" ROCK UNDERCUT (TYP.)

MATCH LINE C.R 69

260 240 220 200 180 160 140 120 100 80 60 40 20 0 20 40 60 80 100 120 140 160 180 200 220 240

ITEM 204 - EXCAVATION OF SUBGRADE . . . . . 100 CY
ITEM 204 - GRANULAR MATERIAL, TYPE B . . . . . 100 CY
ITEM 204 - GEOTEXTILE FABRIC . . . . . 477 SY
ITEM 204 - SUBGRADE COMPACTION . . . . . 477 SY

DRAFT Stage 3 - Not for Construction 09/23/2024

CROSS SECTIONS - S.R. 243
STA. 12+50.00 TO STA. 13+00.00

LAW-7-2.17

493
1247

U:\173608714\LAW\75923\roadway\sheets\75923XS302-2B.dgn 5/21/2024 4:56:52 PM SLParker

SEEDING	
END WIDTH	SQ. YDS.
583	3442
656	3943
	7385

END AREA		VOLUME	
CUT	FILL	CUT	FILL
20345	0		
		42594	0
25655	0		
		47280	0
		89880	0

CALCULATED SLP
CHECKED ALB

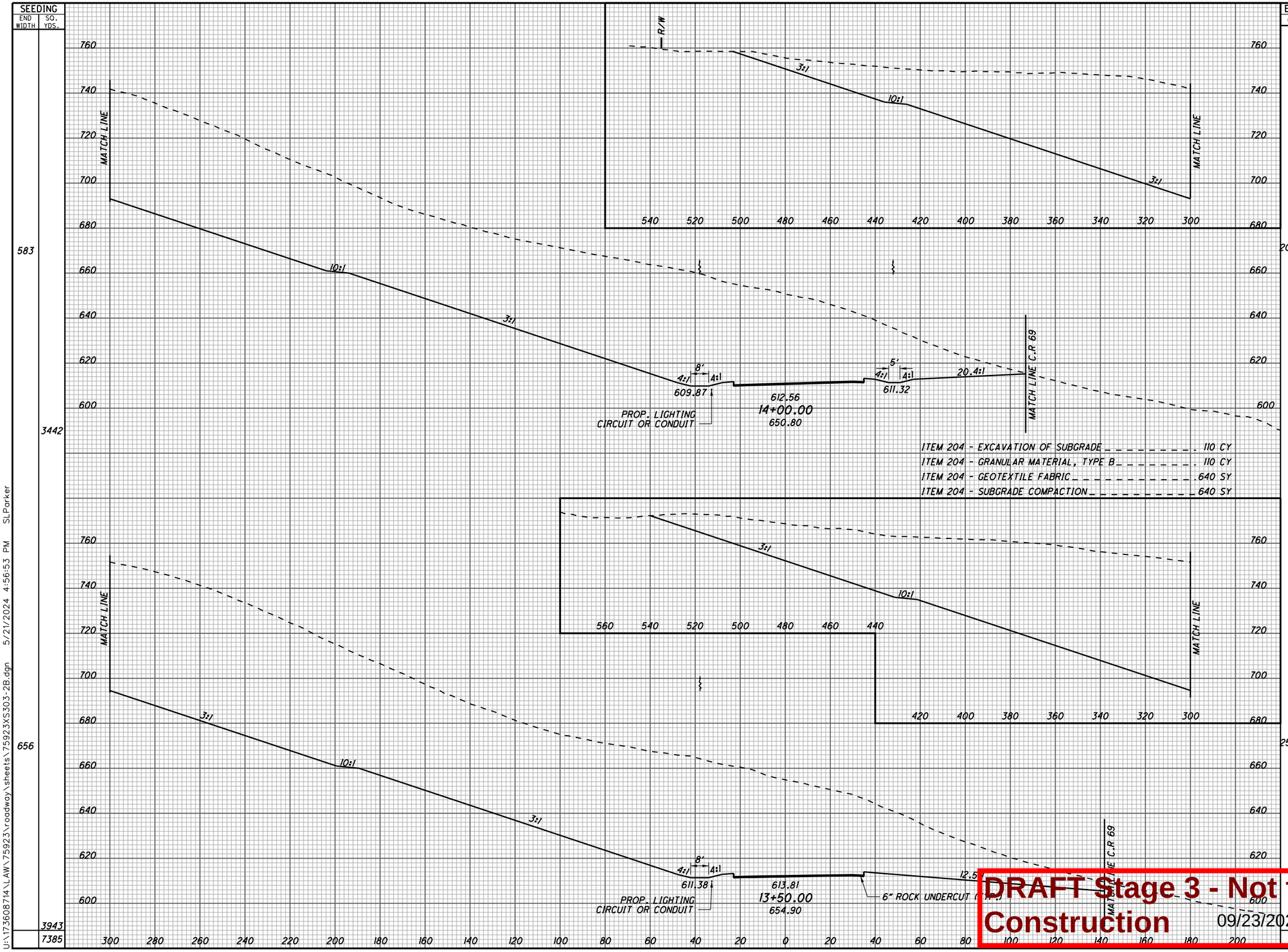

CROSS SECTIONS - S.R. 243
STA. 13+50.00 TO STA. 14+00.00

LAW-7-2.17

494
1247

DRAFT Stage 3 - Not for Construction 09/23/2024

U:\173608714\LAW\75923\roadway\sheets\75923XS303-2B.dgn 5/21/2024 4:56:53 PM SLParker

SEEDING	
END WIDTH	SQ. YDS.
408	2198
505	418
536	2616

END AREA		VOLUME	
CUT	FILL	CUT	FILL
12595	0		
		24725	0
AHEAD 18254	0		
BACK 19272	0		
		4931	0
		29650	0

CALCULATED SLP
CHECKED ALB

ITEM 204 - EXCAVATION OF SUBGRADE . . . . . 45 CY
ITEM 204 - GRANULAR MATERIAL, TYPE B . . . . . 45 CY
ITEM 204 - GEOTEXTILE FABRIC . . . . . 264 SY
ITEM 204 - SUBGRADE COMPACTION . . . . . 264 SY

760 740 720 700 680 660 640 620 600 580

3:1 10:1 3:1

9' 4:1 4:1

608.54

611.31
14+50.00
645.01

PROP. LIGHTING CIRCUIT OR CONDUIT

6" ROCK UNDERCUT (TYP.)

MATCH LINE C.R. 69

R/W

MATCH LINE

520 500 480 460 440 420

AHEAD BACK

5' 4:1

609.66

611.39
14+06.72
645.19

420 400 380 360 340 320 300 280 260 240 220 200 180 160 140 120 100 80 60 40 20 0 20 40 60 80

DRAFT Stage 3- Not for Construction

09/23/2024

CROSS SECTIONS - S.R. 243
STA. 14+06.72 TO STA. 14+50.00

LAW-7-2.17

495
1247

U:\173608714\LAW\75923\roadway\sheets\75923XS304-2B.dgn 5/21/2024 4:56:54 PM SLParker

SEEDING	
END WIDTH	SQ. YDS.
349	
272	
	1315
335	
	2066
	3381

END AREA		VOLUME	
CUT	FILL	CUT	FILL
6734	0		
6179	0		
		10548	0
8425	0		
		19464	0
		30012	0

CALCULATED SLP
CHECKED ALB

CROSS SECTIONS - S.R. 243
STA. 15+00.00 TO STA. 15+39.00

LAW-7-2.17

496
1247

700 680 660 640 620 600 580 760 740 720 700 680 660 640 620 600 580

R/W

AHEAD
BACK

3:1 10:1 3:1

10' 4:1 4:1 606.50 609.27 15+39.00 631.23 6" ROCK UNDERCUT (TYP.)

BACK AHEAD

6:1

EX R/W

MATCH LINE C.R. 69

PROP. LIGHTING CIRCUIT OR CONDUIT

3:1 10:1 3:1

10' 4:1 4:1 607.29 610.00 15+00.00 637.64

MATCH LINE C.R. 69

EX R/W

PROP. LIGHTING CIRCUIT OR CONDUIT

380 360 340 320 300 280 260 240 220 200 180 160 140 120 100 80 60 40 20 0 20 40 60 80 100 120

ITEM 204 - EXCAVATION OF SUBGRADE . . . . . 77 CY
ITEM 204 - GRANULAR MATERIAL, TYPE B . . . . . 77 CY
ITEM 204 - GEOTEXTILE FABRIC . . . . . 452 SY
ITEM 204 - SUBGRADE COMPACTION . . . . . 452 SY

DRAFT Stage 3 - Not for Construction
09/23/2024

U:\173608714\LAW\75923\roadway\sheets\75923XS305-2B.dgn 5/21/2024 4:56:55 PM SLParker

SEEDING	
END WIDTH	SQ. YDS.
	241
	1588
	331
	416
	2004

STA. 16+19.90
CB-4 WITHOUT APRON
T/C = 605.67
℄ 30" TYPE B = 601.49

R/W

3:1

10'
4:1
4:1

605.89

6" ROCK UNDERCUT (TYP.)

608.66
16+00.00
622.27

EX R/W

EX. 598.47

ITEM 204 - EXCAVATION OF SUBGRADE . . . . . 57 CY
ITEM 204 - GRANULAR MATERIAL, TYPE B . . . . . 57 CY
ITEM 204 - GEOTEXTILE FABRIC . . . . . 329 SY
ITEM 204 - SUBGRADE COMPACTION . . . . . 329 SY

3:1
10:1
3:1

10'
4:1
4:1

606.34

609.11
15+50.00
629.58

5.9:1

PROP. LIGHTING CIRCUIT OR CONDUIT

MATCH LINE L.R. 69

700 680 660 640 620 600 580 700 680 660 640 620 600

320 300 280 260 240 220 200 180 160 140 120 100 80 60 40 20 0 20 40 60 80 100 120 140 160 180

END AREA		VOLUME	
CUT	FILL	CUT	FILL
3613	0		
		9070	4
6182	4		
		2631	1
		1170	5

CALCULATED SLP
CHECKED ALB

CROSS SECTIONS - S.R. 243
STA. 15+50.00 TO STA. 16+00.00

LAW-7-2.17

497
1247

DRAFT Stage 3- Not for Construction
09/23/2024

U:\173608714\LAW\75923\roadway\sheets\75923XS306-2B.dgn 5/21/2024 4:56:55 PM SLParker

SEEDING END WIDTH	SEEDING SQ. YDS.
110	
33	
	92
0	
	0
0	
97	
	492
194	
	1208
	1792

END AREA CUT	END AREA FILL	VOLUME CUT	VOLUME FILL
582	70		
38	70		
		58	92
24	29		
		43	17
94	18		
746	18		
		1401	69
1738	103		
		4955	96
		6457	274

CALCULATED SLP

CHECKED ALB

640 620 600 660 640 620 600 660 640 620 600 660 640 620 600

R/W R/W EX R/W R/W TMP

AHEAD BACK 10' 3:1 4:1 4:1 4:1 4:1

607.00 610.31 606.33

17+50.00 609.20

CB-4 WITHOUT APRON
T/C = 607.00
℄ 30" TYPE B = 602.78

STA. 17+23.45
CB-4 WITHOUT APRON
T/C = 606.00
℄ 21" TYPE B = 600.47

MATCH LINE DRIVE EX R/W MATCH LINE DRIVE R/W EX R/W TMP

609.26 17+00.00 608.09

BACK AHEAD EX R/W R/W EX R/W TMP MATCH LINE DRIVE

605.82 608.99 16+80.44 609.87

℄ 30" TYPE B = 602.09

ITEM 204 - EXCAVATION OF SUBGRADE . . . . . 55 CY
ITEM 204 - GRANULAR MATERIAL, TYPE B . . . . . 55 CY
ITEM 204 - GEOTEXTILE FABRIC . . . . . 324 SY
ITEM 204 - SUBGRADE COMPACTION . . . . . 324 SY

EX R/W R/W EX R/W TMP

605.74 608.71 16+50.00 612.75

℄ 30" TYPE B = 601.79 6" ROCK UNDERCUT

260 240 220 200 180 160 140 120 100 80 60 40 20 0 20 40 60 80 100 120 140 160 180 200 220 240

DRAFT Stage 3 - Not for Construction 09/23/2024

CROSS SECTIONS - S.R. 243
STA. 16+50.00 TO STA. 17+50.00

LAW-7-2.17

498
1247

U:\173608714\LAW\75923\roadway\sheets\75923XS307-2B.dgn 5/21/2024 4:56:56 PM SLParker

SEEDING END WIDTH	SEEDING SQ. YDS.
131	73
131	658
106	605
111	615
	1951

END AREA CUT	END AREA FILL	VOLUME CUT	VOLUME FILL
537	15	99	3
530	16	954	46
500	33	968	80
544	53	1043	115
		3064	244

CALCULATED SLP
CHECKED ALB

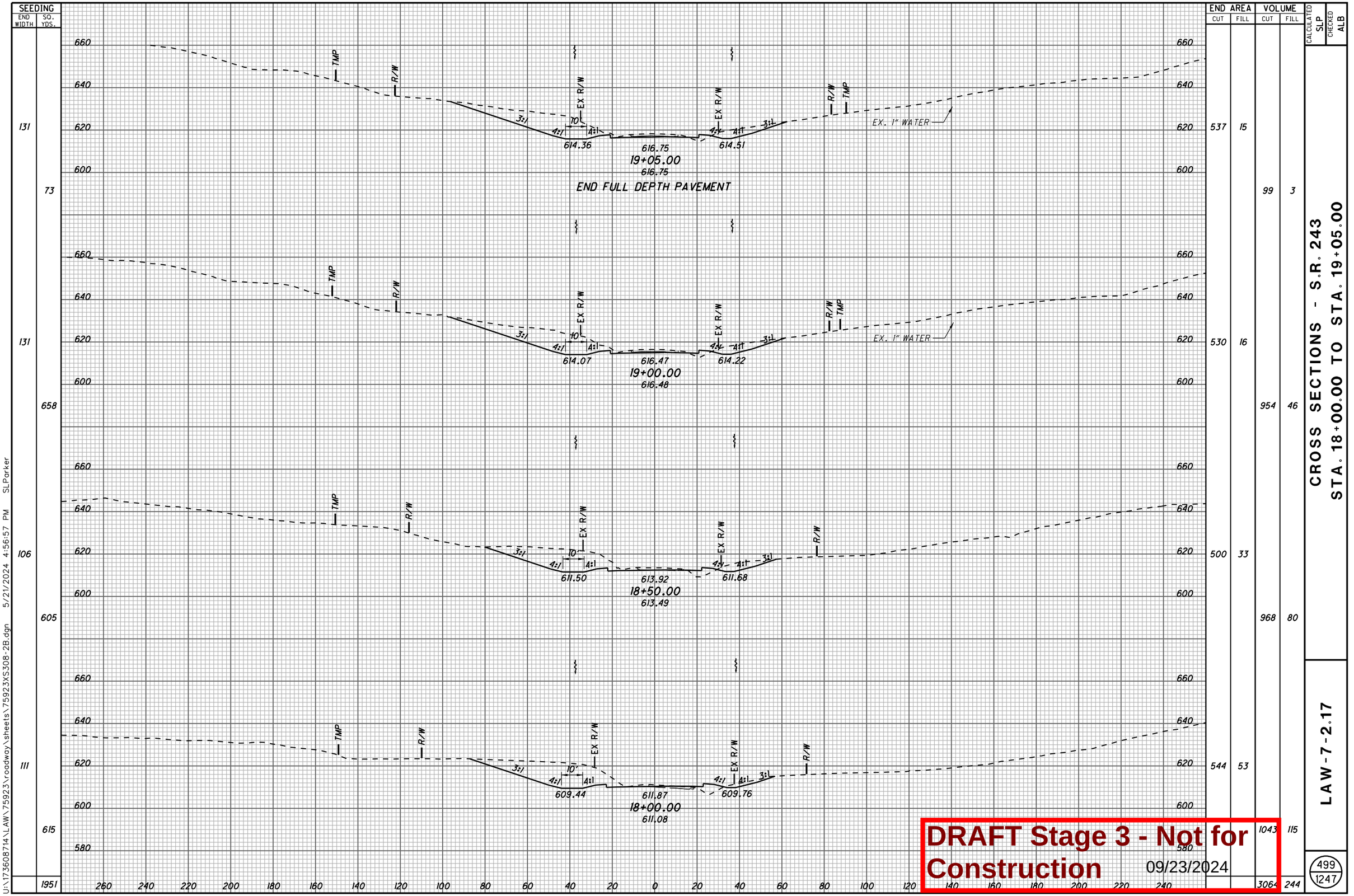

CROSS SECTIONS - S.R. 243
STA. 18+00.00 TO STA. 19+05.00

LAW-7-2.17

499
1247

DRAFT Stage 3 - Not for Construction 09/23/2024

U:\1736087\14\LAW\75923\roadway\sheets\75923XS308-2B.dgn 5/21/2024 4:56:57 PM SLParker

SEEDING		END AREA		VOLUME		CALCULATED	CHECKED
END WIDTH	SQ. YDS.	CUT	FILL	CUT	FILL	SLP	ALB
159		582	15				
0		7	9				
	197			261	13		
71		274	4				
78		279	11				
	604			757	25		
139		537	15				
	676			896	26		
	1477			1914	64		

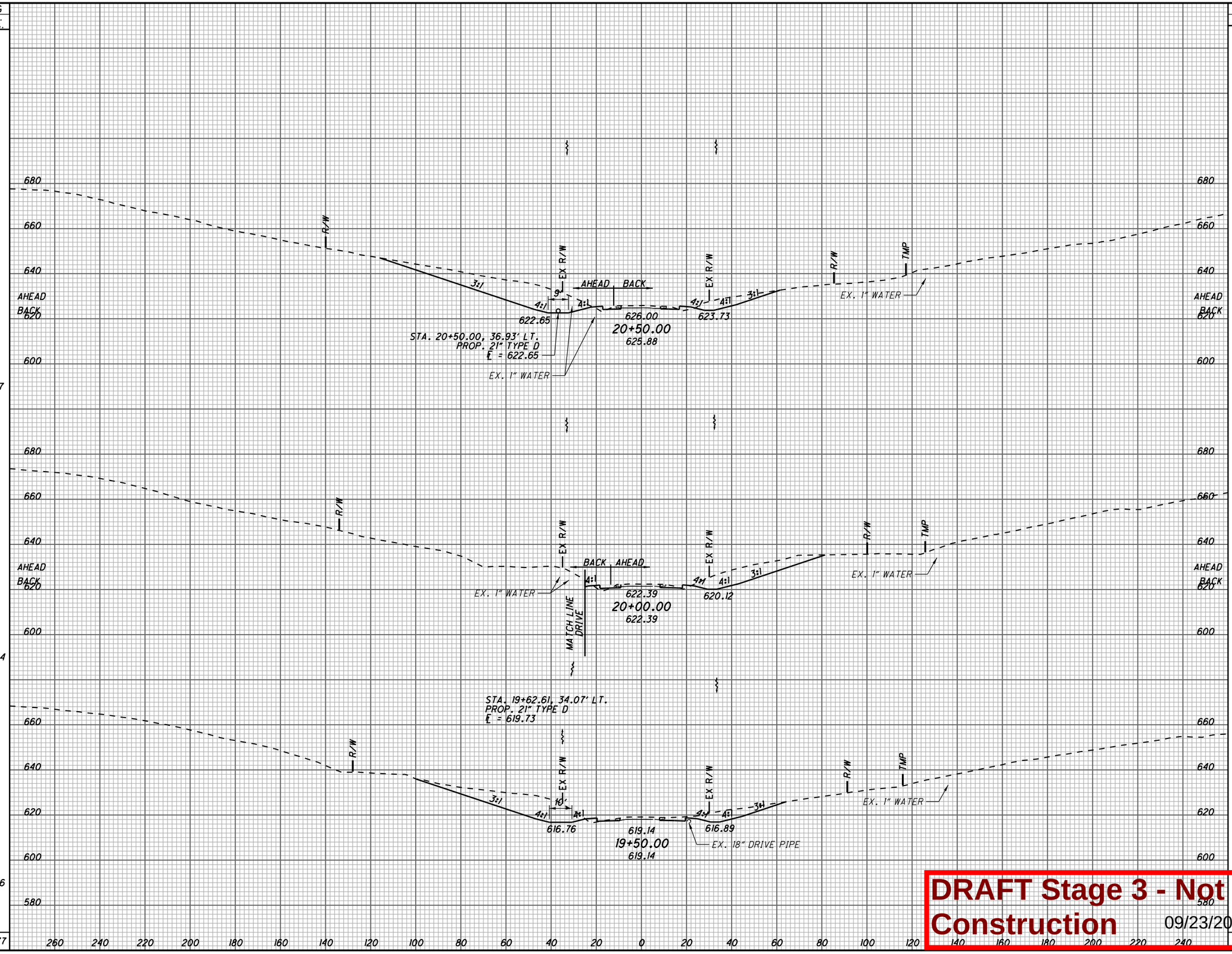

CROSS SECTIONS - S.R. 243
STA. 19+50.00 TO STA. 20+50.00

LAW-7-2.17

500
1247

DRAFT Stage 3 - Not for Construction 09/23/2024

U:\173608714\LAW\75923\roadway\sheets\75923XS309-2B.dgn 5/21/2024 4:56:58 PM SLParker

SEEDING END WIDTH	SEEDING SQ. YDS.
8	18
	71
	139
	828
	1430

ITEM	
ITEM 203 - EXCAVATION	242,716 CY
ITEM 203 - EMBANKMENT	2,913 CY
ITEM 204 - EXCAVATION OF SUBGRADE	513 CY
ITEM 204 - GRANULAR MATERIAL, TYPE B	513 CY
ITEM 204 - GEOTEXTILE FABRIC	2,799 SY
ITEM 204 - SUBGRADE COMPACTION	2,799 SY
ITEM 659 - SEEDING AND MULCHING, CLASS 3C	31,648 CY

QUANTITIES CARRIED TO THE SUBSUMMARY, SEE SHEET 74.

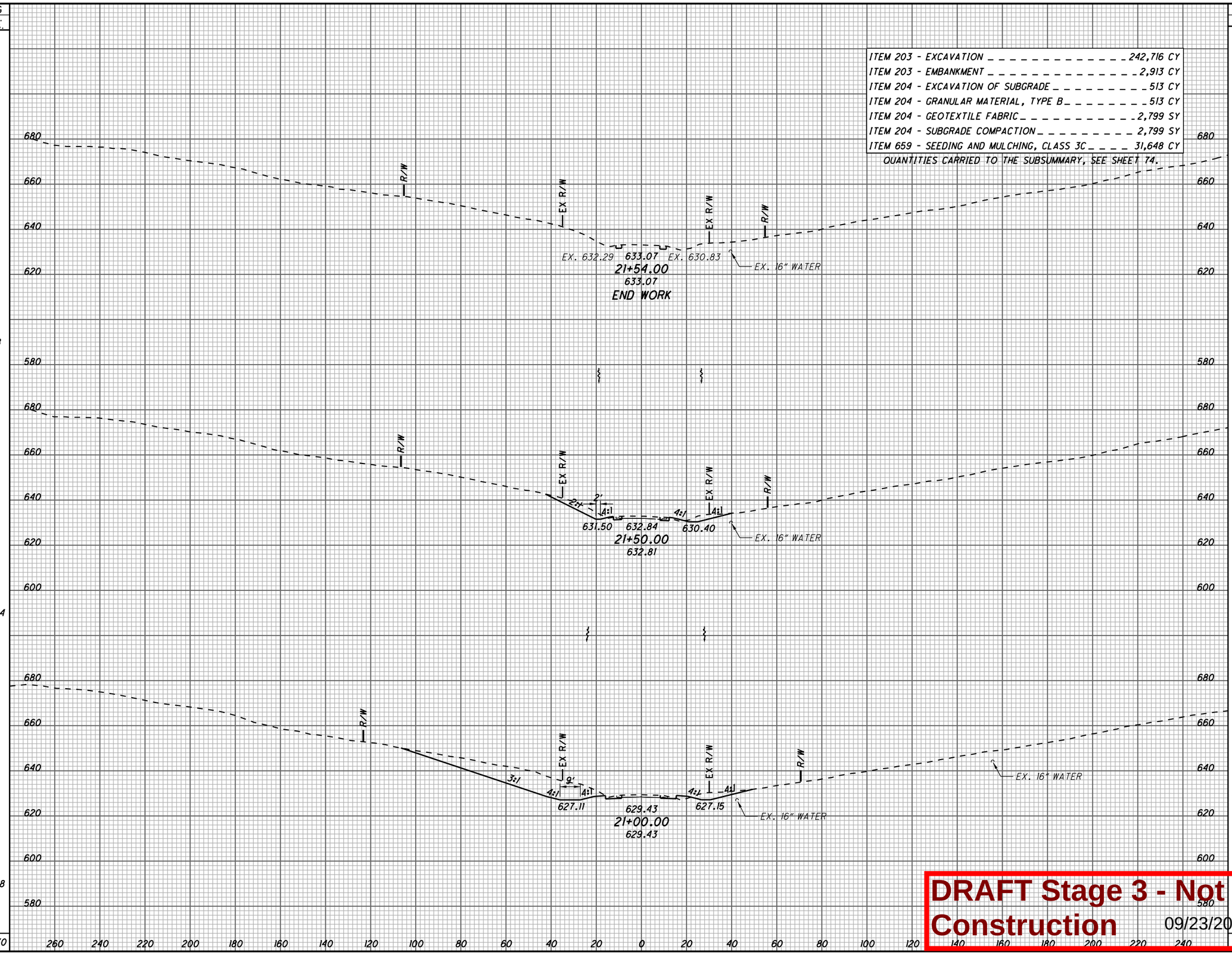

END AREA CUT	END AREA FILL	VOLUME CUT	VOLUME FILL
0	0		
		7	1
		590	13
92	5		
545	8		
		1044	22
		1641	36

CALCULATED SLP
CHECKED ALB

CROSS SECTIONS - S.R. 243
STA. 21+00.00 TO STA. 21+54.00

LAW-7-2.17

501
1247

DRAFT Stage 3 - Not for Construction 09/23/2024

U:\173608714\LAW\75923\roadway\sheets\75923XS310-2B.dgn 5/21/2024 4:56:59 PM SLParker

FOR QUANTITIES, SEE SHEETS 71-81
FOR PROFILE, SEE SHEET 503
FOR S.R. 243 PLAN & PROFILE, SEE SHEETS 490 & 491
FOR INTERSECTION DETAILS, SEE SHEET 625
FOR CULVERT DETAILS, SEE SHEET 663
FOR DETENTION BASIN DETAILS, SEE SHEETS 667 & 672
FOR UNDERDRAIN TABLES, SEE SHEETS 674-678
FOR TRAFFIC CONTROL PLAN, SEE SHEETS 713-733A
FOR FENCE TABLES, SEE SHEETS 1039-1041

CURVE DATA C.R. 69 CURVE NO. 1	CURVE DATA C.R. 69 CURVE NO. 2	CURVE DATA C.R. 69 CURVE NO. 3	
P.I. STA. 10+33.80	P.I. STA. 15+77.89	P.I. STA. 25+76.25	θs = 1° 05′ 37″
Δ = 20° 52′ 36″ (RT)	Δ = 10° 17′ 44″ (LT)	Δ = 22° 45′ 00″ (RT)	Ls = 125.00′
Dc = 24° 54′ 40″	Dc = 4° 00′ 00″	Dc = 1° 45′ 00″	Ts = 786.51′
R = 230.00′	R = 1,432.39′	R = 3,274.04′	LT = 83.33′
T = 42.37′	T = 129.04′	T = 658.68′	ST = 41.67′
L = 83.80′	L = 257.39′	L = 1,300.00′	e_{max} = 4.00%
E = 3.87′	E = 5.80′	E = 65.60′	CS STA. 32+14.74
e_{max} (N.D.C.) = 8.00%	e_{max} = 7.10%	TS STA. 17+89.74	ST STA. 33+39.74
e_{max} = 2.50%	PC STA. 14+48.85	SC STA. 19+14.74	
PC STA. 9+91.43	PT STA. 17+06.24		
PT STA. 10+75.23			

(LF) DESIGNATES LEACH FIELD

(1/GR) - INCLUDES 75′ OF 42′ RADIUS SHOP CURVED GUARDRAIL

(8/EC) SLOPE PROTECTION, MISC.: SEEDING AND EROSION CONTROL WITH TURF REINFORCING MAT, TYPE 3 AND PERCUSSION DRIVEN EARTH ANCHORS (11,505.78 SF / 9 = 1,278.42 SY)

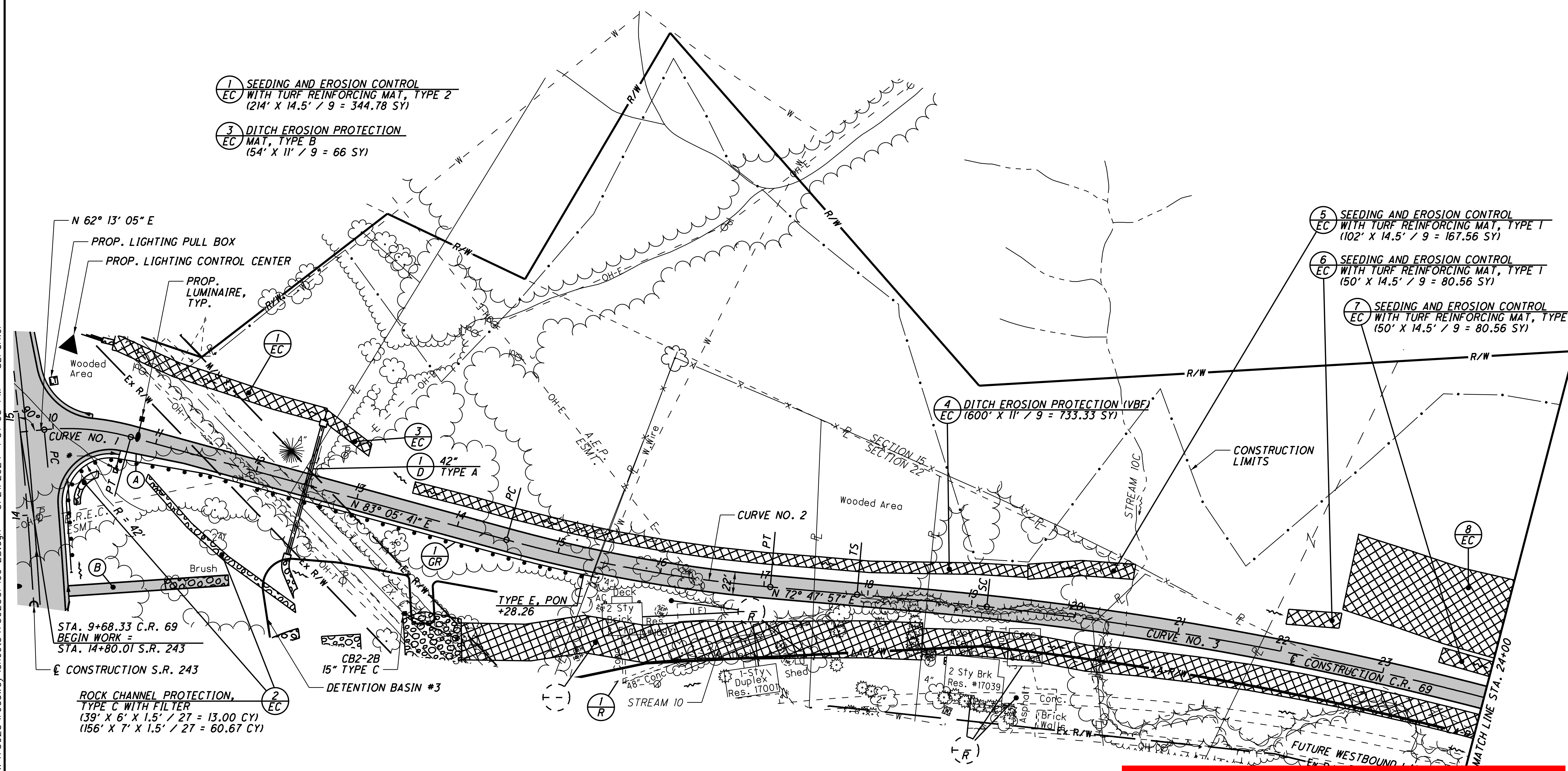

(VBF) DENOTES LOCATION OF VEGETATED BIOFILTER

* PRECAST REINFORCED CONCRETE OUTLET WITH TIED CONCRETE BLOCK MAT

- PROPOSED PAVEMENT

(A) STA. 10+68.68 BEGIN PAVEMENT TAPER, 15.02′ RT.
STA. 11+30.77 END PAVEMENT TAPER, 11′ RT.

(B) DETENTION BASIN #3 ACCESS DRIVE

DRAFT Stage 3 - Not for Construction 09/23/2024

HORIZONTAL SCALE IN FEET 0 25 50 100

CALCULATED SLP CHECKED ALB

PLAN - C.R. 69
STA. 9+68.33 TO STA. 24+00.00

LAW-7-2.17

U:\17360871\LAW\75923\roadway\sheets\75923GP109-2B.dgn 5/21/2024 4:57:03 PM SLParker

U:\173608714\LAW\75923\roadway\sheets\75923GF109-2B.dgn 5/21/2024 4:57:04 PM SLParker

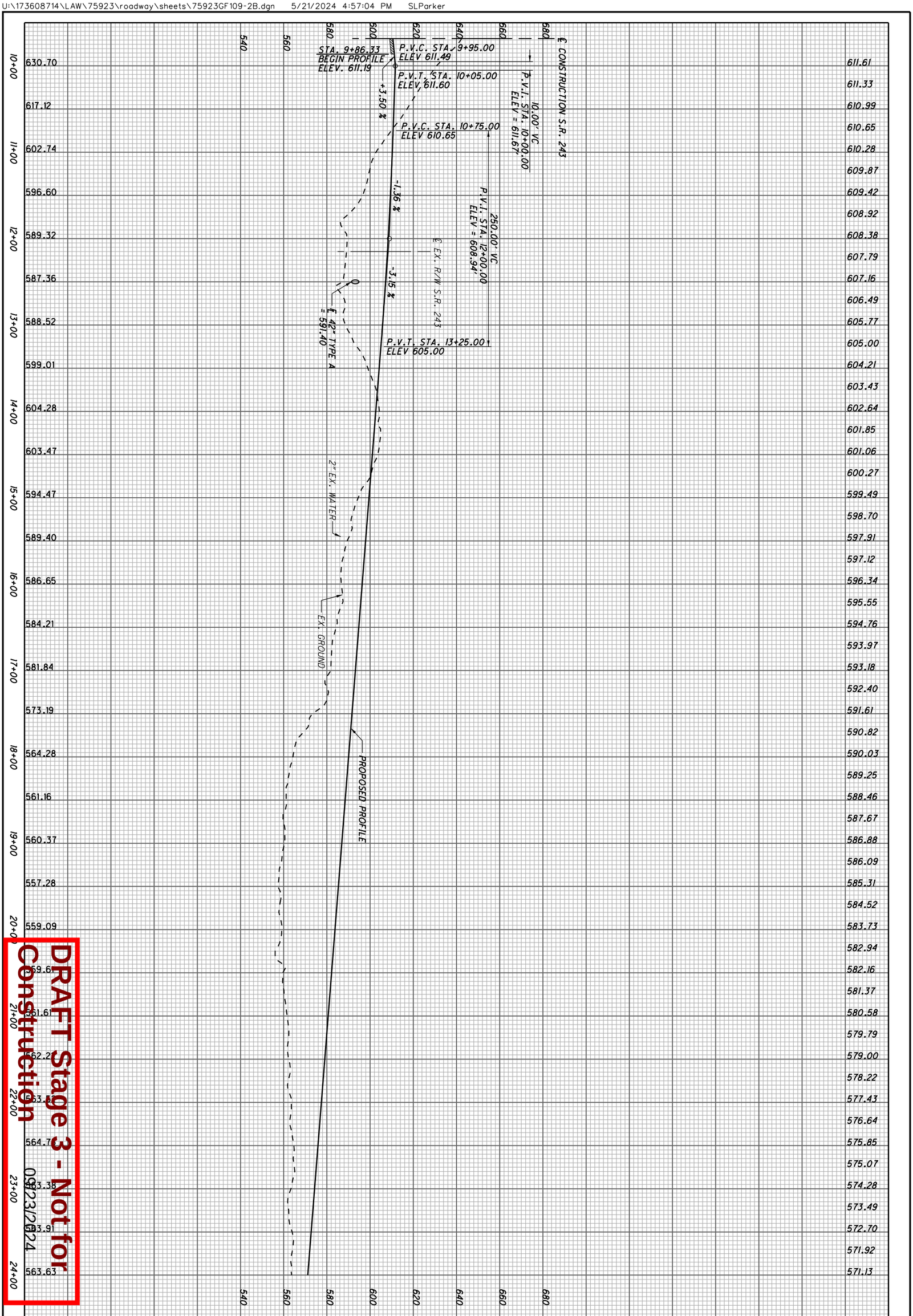

DRAFT Stage 3 - Not for Construction

09/23/2024

503 / 1247	LAW-7-2.17	PROFILE - C.R. 69 STA. 9+68.33 TO STA. 24+00.00	CALCULATED SLP CHECKED ALB

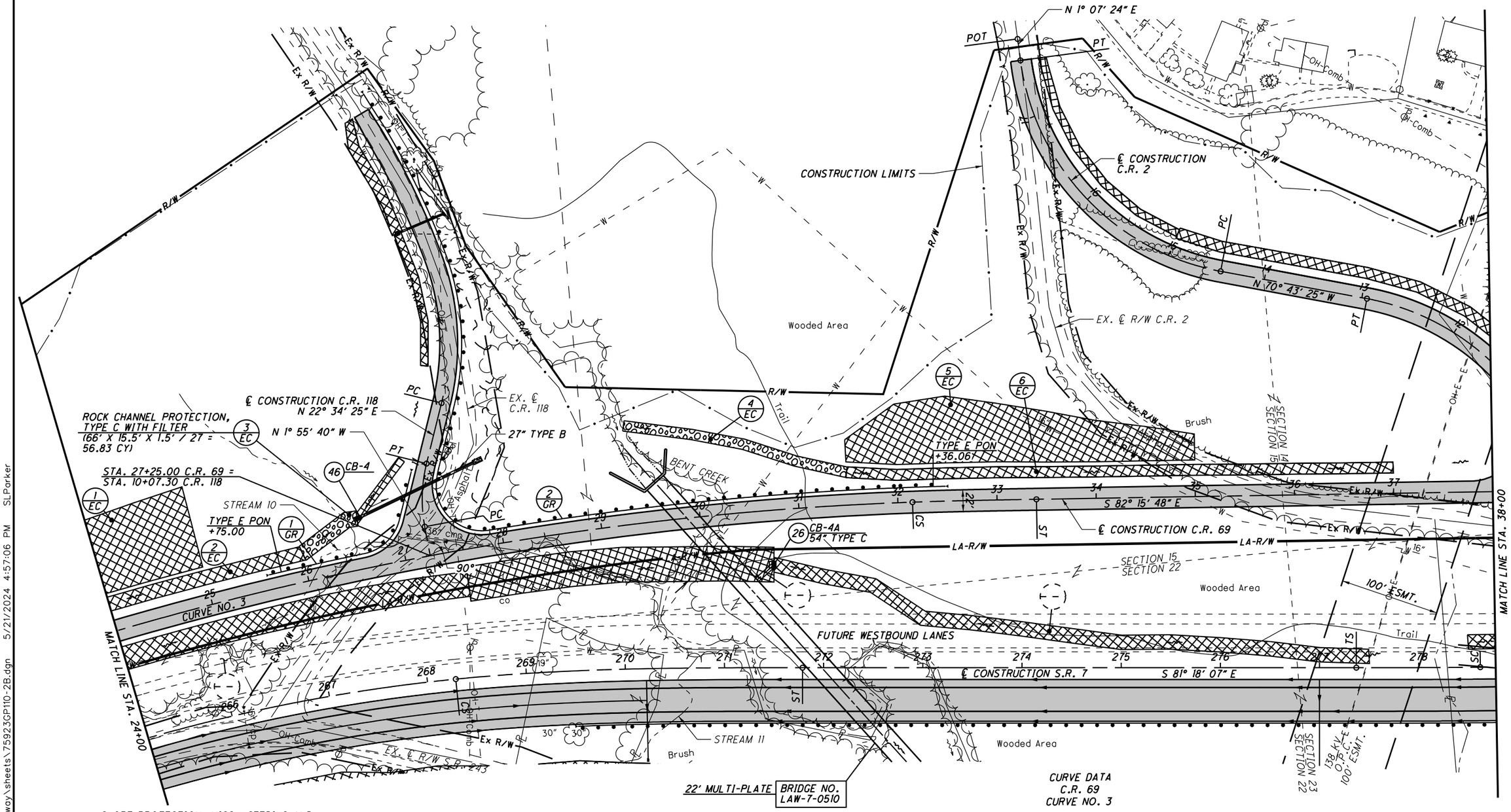

1 EC SLOPE PROTECTION, MISC.: SEEDING AND EROSION CONTROL WITH TURF REINFORCING MAT, TYPE 3 AND PERCUSSION DRIVEN EARTH ANCHORS (8,231.79 SF / 9 = 914.64 SY)

2 EC SEEDING AND EROSION CONTROL WITH TURF REINFORCING MAT, TYPE 1 (202' X 14.5' / 9 = 325.44 SY)

4 EC ROCK CHANNEL PROTECTION, TYPE C WITH FILTER (231' X 10.5' X 1.5' / 27 = 134.75 CY)

5 EC SEEDING AND EROSION CONTROL WITH TURF REINFORCING MAT, TYPE 1 (551' X 11' / 9 = 673.44 SY)

6 EC SLOPE PROTECTION, MISC.: SEEDING AND EROSION CONTROL WITH TURF REINFORCING MAT, TYPE 3 AND PERCUSSION DRIVEN EARTH ANCHORS (17,137.12 SF / 9 = 1,904.12 SY)

- PROPOSED PAVEMENT

CURVE DATA
C.R. 69
CURVE NO. 3

P.I. STA. 25+76.25
Δ = 22° 45' 00" (RT)
Dc = 1° 45' 00"
R = 3,274.04'
T = 658.68'
L = 1,300.00'
E = 65.60'
TS STA. 17+89.74
SC STA. 19+14.74

θs = 1° 05' 37"
Ls = 125.00'
Ts = 786.51'
LT = 83.33'
ST = 41.67'
Smax = 4.00%
CS STA. 21+14.74
ST STA. 33+39.74

FOR QUANTITIES, SEE SHEETS 71-81
FOR S.R. 7 PLAN & PROFILE, SEE SHEETS 122-126
FOR PROFILE, SEE SHEETS 505
FOR C.R. 2 PLAN AND PROFILE, SEE SHEET 553
FOR C.R. 118 PLAN AND PROFILE, SEE SHEET 547
FOR INTERSECTION DETAILS, SEE SHEET 626
FOR STORM SEWER PROFILES, SEE SHEETS 642 & 648
FOR TRAFFIC CONTROL PLAN, SEE SHEETS 713-713A
FOR STRUCTURE DETAILS, SEE SHEETS 898-906
FOR FENCE TABLES, SEE SHEETS 1039-1041

DRAFT Stage 2 - Not for Construction
10/23/2024

HORIZONTAL SCALE IN FEET
0 25 50 100

CALCULATED SLP
CHECKED ALB

PLAN - C.R. 69
STA. 24+00.00 TO STA. 38+00.00

LAW-7-2.17

504
1247

U:\17360871\4\LAW\75923\roadway\sheets\75923GP110-2B.dgn 5/21/2024 4:57:06 PM SLParker

PROFILE - C.R. 69

STA. 24+00.00 TO STA. 38+00.00

CALCULATED SLP
CHECKED ALB

LAW-7-2.17

505
1247

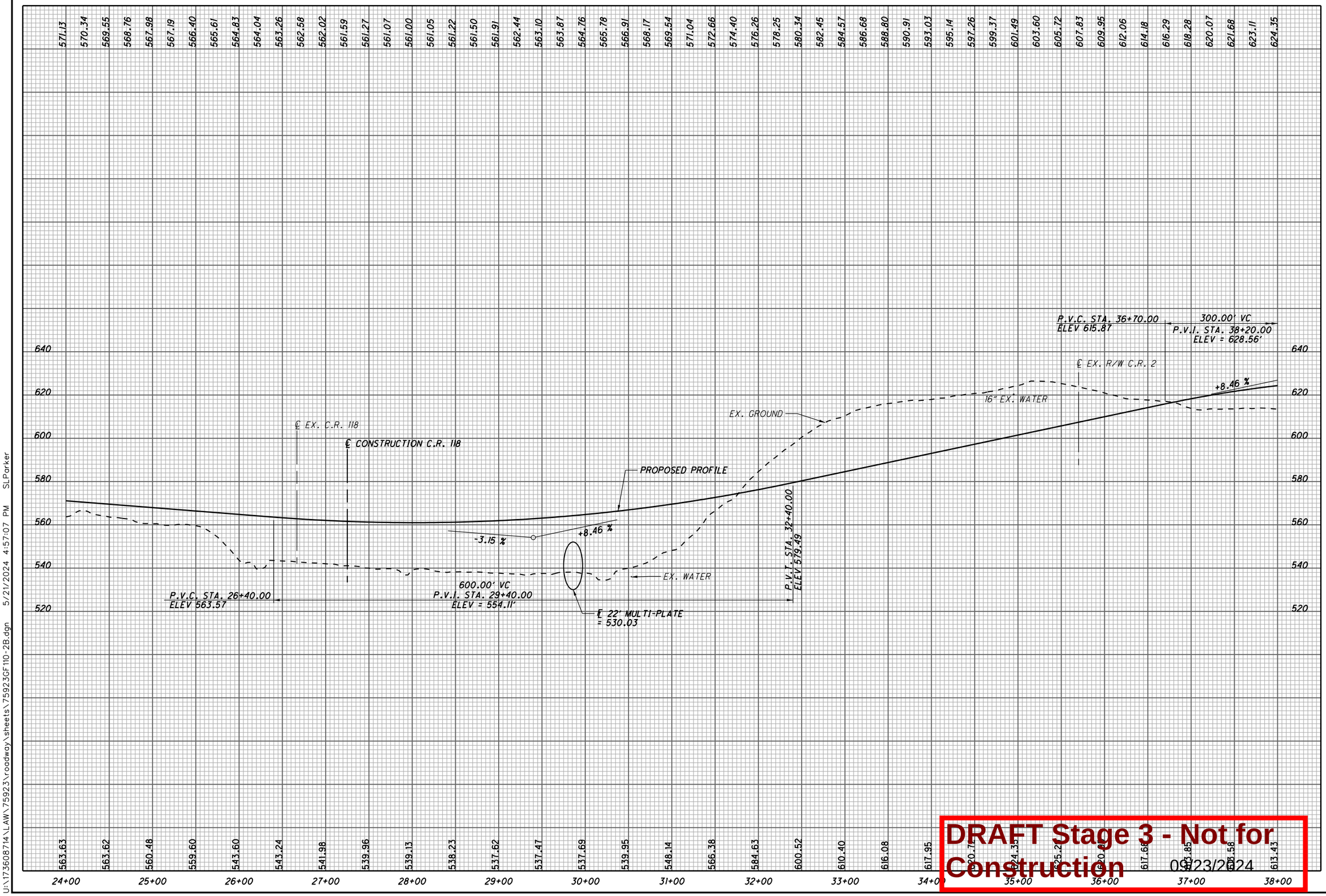

DRAFT Stage 3 - Not for Construction

09/23/2024

U:\173608714\LAW\75923\roadway\sheets\75923GF110-2B.dgn 5/21/2024 4:57:07 PM SLParker

(LF) DESIGNATES LEACH FIELD

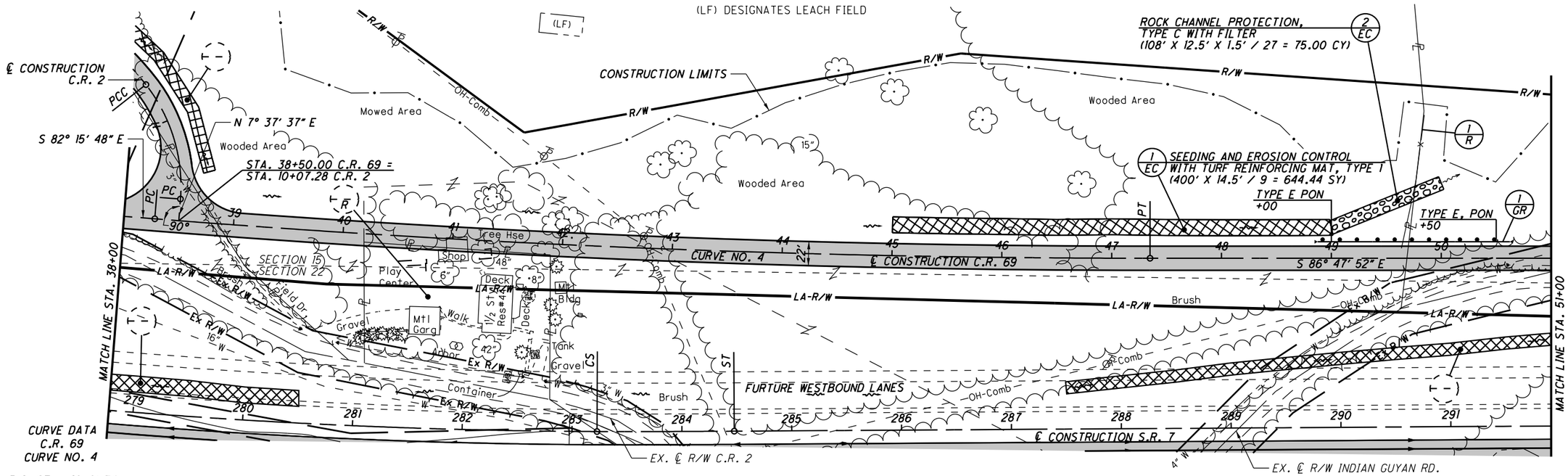

CURVE DATA
C.R. 69
CURVE NO. 4

P.I. STA. 42+81.74
Δ = 4° 32' 03" (LT)
Dc = 0° 30' 00"
R = 11,459.16'
T = 453.67'
L = 906.86'
E = 8.98'
e_{max} = 1.60%
PC STA. 38+28.07
PT STA. 47+34.93

- PROPOSED PAVEMENT

FOR QUANTITIES, SEE SHEETS 71-81
FOR S.R. 7 PLAN & PROFILE, SEE SHEETS 127-130
FOR C.R. 2 PLAN AND PROFILE, SEE SHEET 553
FOR INTERSECTION DETAILS, SEE SHEET 626
FOR TRAFFIC CONTROL PLAN, SEE SHEETS 713-733A
FOR FENCE TABLES, SEE SHEETS 1039-1041

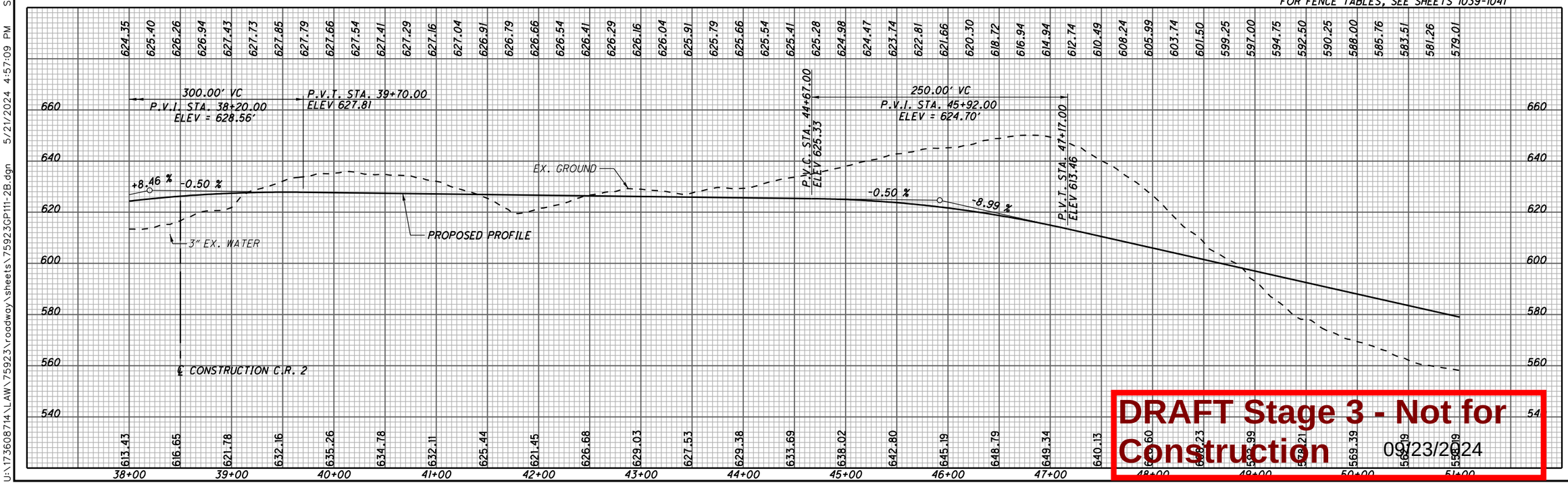

DRAFT Stage 3 - Not for Construction
09/23/2024

HORIZONTAL SCALE IN FEET
0 25 50 100

CALCULATED SLP
CHECKED ALB

PLAN AND PROFILE - C.R. 69
STA. 38+00.00 TO STA. 51+00.00

LAW-7-2.17

506
1247

U:\17360814\LAW\75923\roadway\sheets\75923GP111-2B.dgn 5/21/2024 4:57:09 PM SLParker

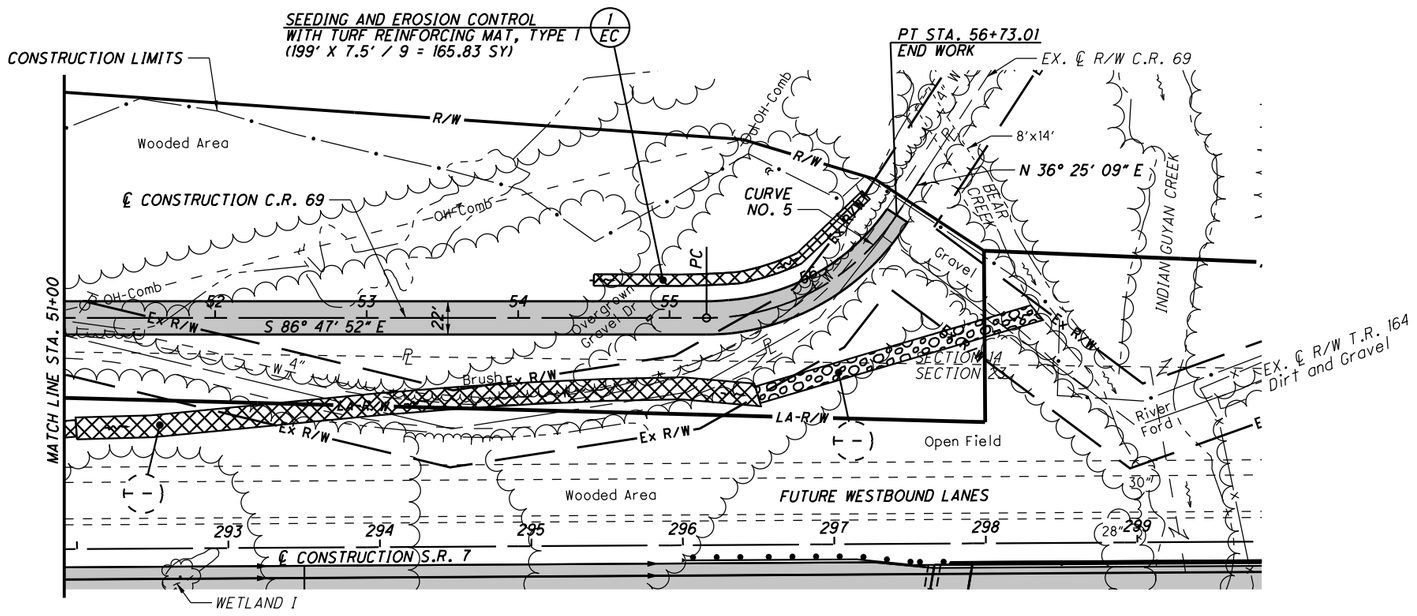

CURVE DATA
C.R. 69
CURVE NO. 5

P.I. STA. 56+05.43
Δ = 56° 46' 59" (RT)
Dc = 38° 11' 50"
R = 150.00'
T = 81.08'
L = 148.66'
E = 20.51'
e_{max} (N.D.C.) = 8.00%
e_{max} = 2.50%
PC STA. 55+24.35
PT STA. 56+73.01

- PROPOSED PAVEMENT

FOR QUANTITIES, SEE SHEETS 71-81
FOR S.R. 7 PLAN & PROFILE, SEE SHEETS 129-130
FOR TRAFFIC CONTROL PLAN, SEE SHEETS 713-733A
FOR FENCE TABLES, SEE SHEETS 1039-1041

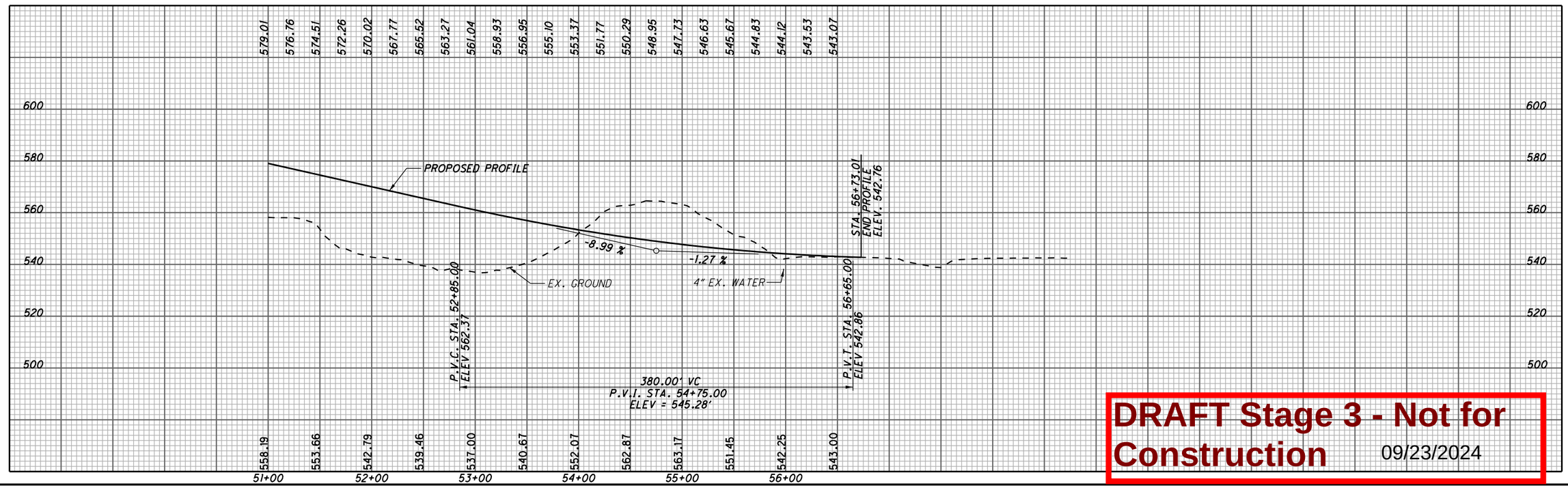

DRAFT Stage 3 - Not for Construction 09/23/2024

HORIZONTAL SCALE IN FEET
0 25 50 100

CALCULATED SLP
CHECKED ALB

PLAN AND PROFILE - C.R. 69
STA. 51+00.00 TO STA. 56+73.01

LAW-7-2.17

507
1247

U:\173608714\LAW\75923\roadway\sheets\75923GP112-2B.dgn 5/21/2024 4:57:10 PM SLParker

SEEDING	
END WIDTH	SQ. YDS.
141	453
22	12
0	
	465

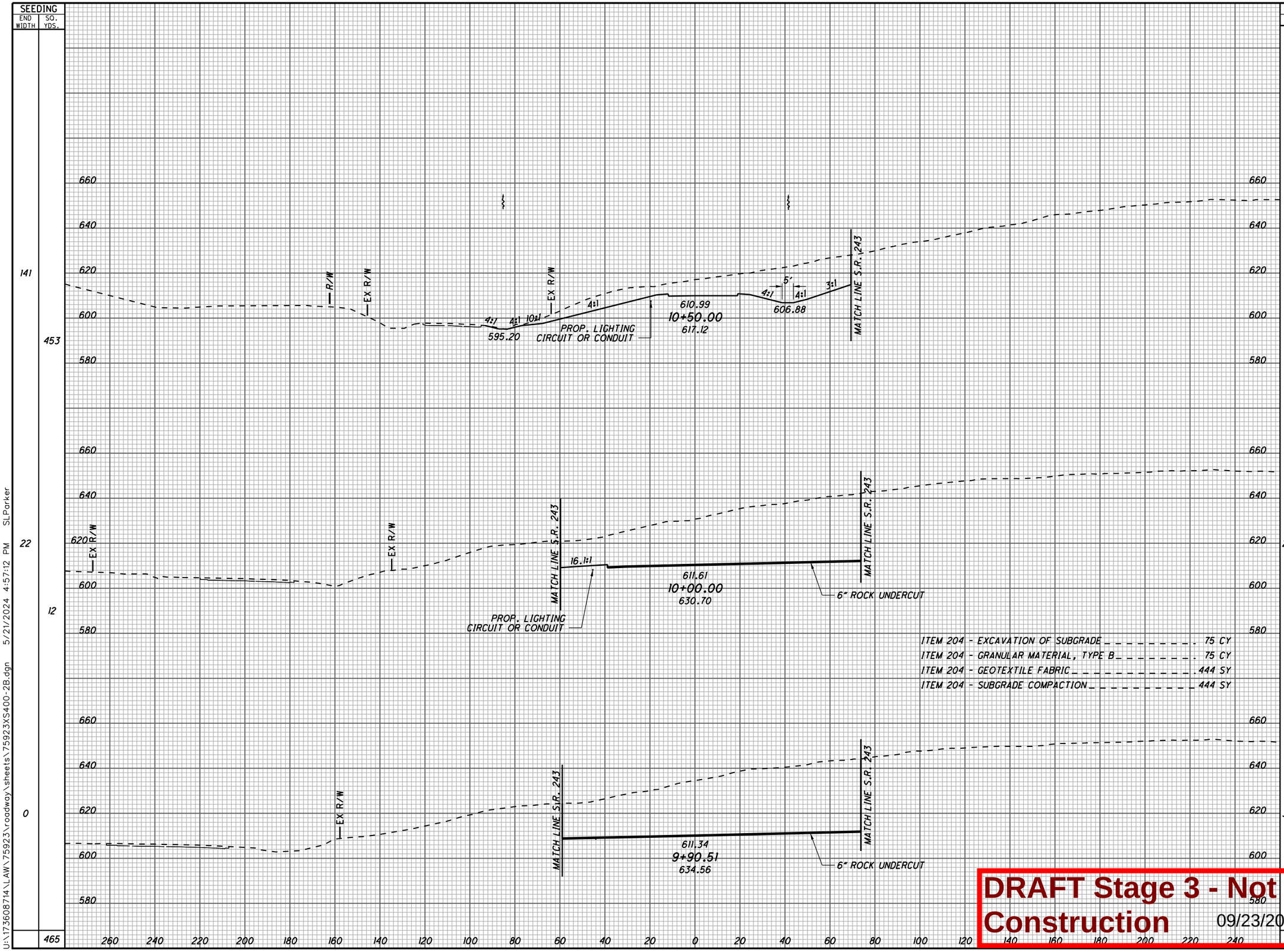

ITEM	
ITEM 204 - EXCAVATION OF SUBGRADE	75 CY
ITEM 204 - GRANULAR MATERIAL, TYPE B	75 CY
ITEM 204 - GEOTEXTILE FABRIC	444 SY
ITEM 204 - SUBGRADE COMPACTION	444 SY

END AREA		VOLUME	
CUT	FILL	CUT	FILL
1233	0		
		3761	1
2828	0		
		1069	0
3253	0		
		4830	1

CALCULATED SLP
CHECKED ALB

CROSS SECTIONS C.R. 69
STA. 9+90.51 TO STA. 10+50.00

LAW-7-2.17

508
1247

DRAFT Stage 3 - Not for Construction 09/23/2024

U:\173608714\LAW\75923\roadway\sheets\75923XS400-2B.dgn 5/21/2024 4:57:12 PM SLParker

SEEDING		END AREA		VOLUME	
END WIDTH	SQ. YDS.	CUT	FILL	CUT	FILL
139	849	56	1319	179	2305
166	814	136	1170	188	1602
126	744	66	559	1204	519
	2407			1571	4426

CALCULATED SLP
CHECKED ALB

CROSS SECTIONS C.R. 69
STA. 11+00.00 TO STA. 12+00.00

LAW-7-2.17

509
1247

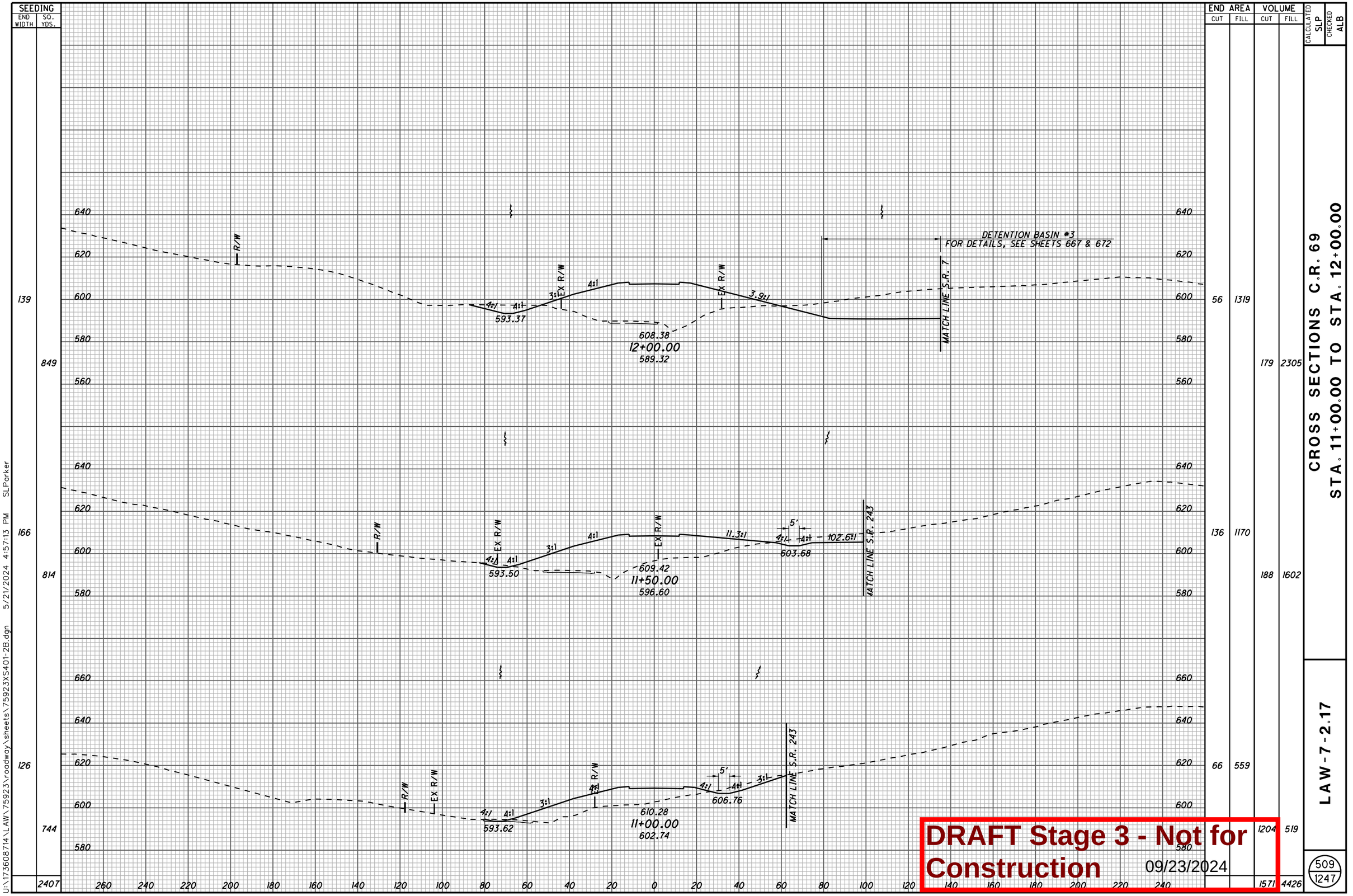

DRAFT Stage 3 - Not for Construction 09/23/2024

U:\1736087\14\LAW\75923\roadway\sheets\75923XS401-2B.dgn 5/21/2024 4:57:13 PM SLParker

SEEDING	
END WIDTH	SQ. YDS.
163	889
157	1068
227	1017
	2974

(VBF) DENOTES LOCATION OF VEGETATED BIOFILTER

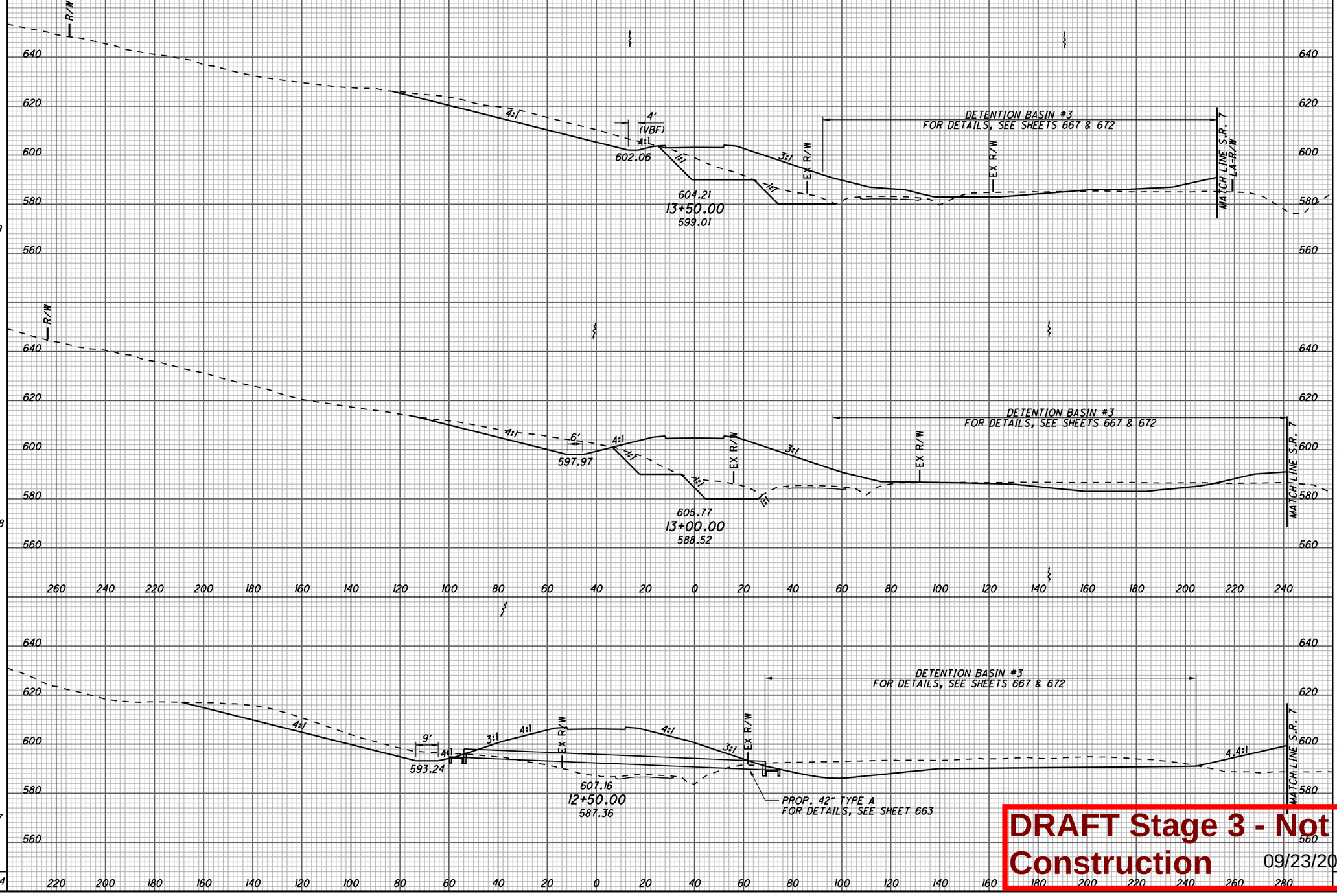

END AREA	
CUT	FILL
713	868
533	1449
463	1503
2558	7493

VOLUME	
CUT	FILL
1154	2146
923	2734
481	2613

CALCULATED SLP
CHECKED ALB

CROSS SECTIONS C.R. 69
STA. 12+50.00 TO STA. 13+50.00

LAW-7-2.17

510
1247

DRAFT Stage 3 - Not for Construction 09/23/2024

U:\173608714\LAW\75923\roadway\sheets\75923XS402-2B.dgn 5/21/2024 4:57:13 PM SLParker

SEEDING	
END WIDTH	SQ. YDS.
357	1694
	253
	1155
	2849

(VBF) DENOTES LOCATION OF VEGETATED BIOFILTER

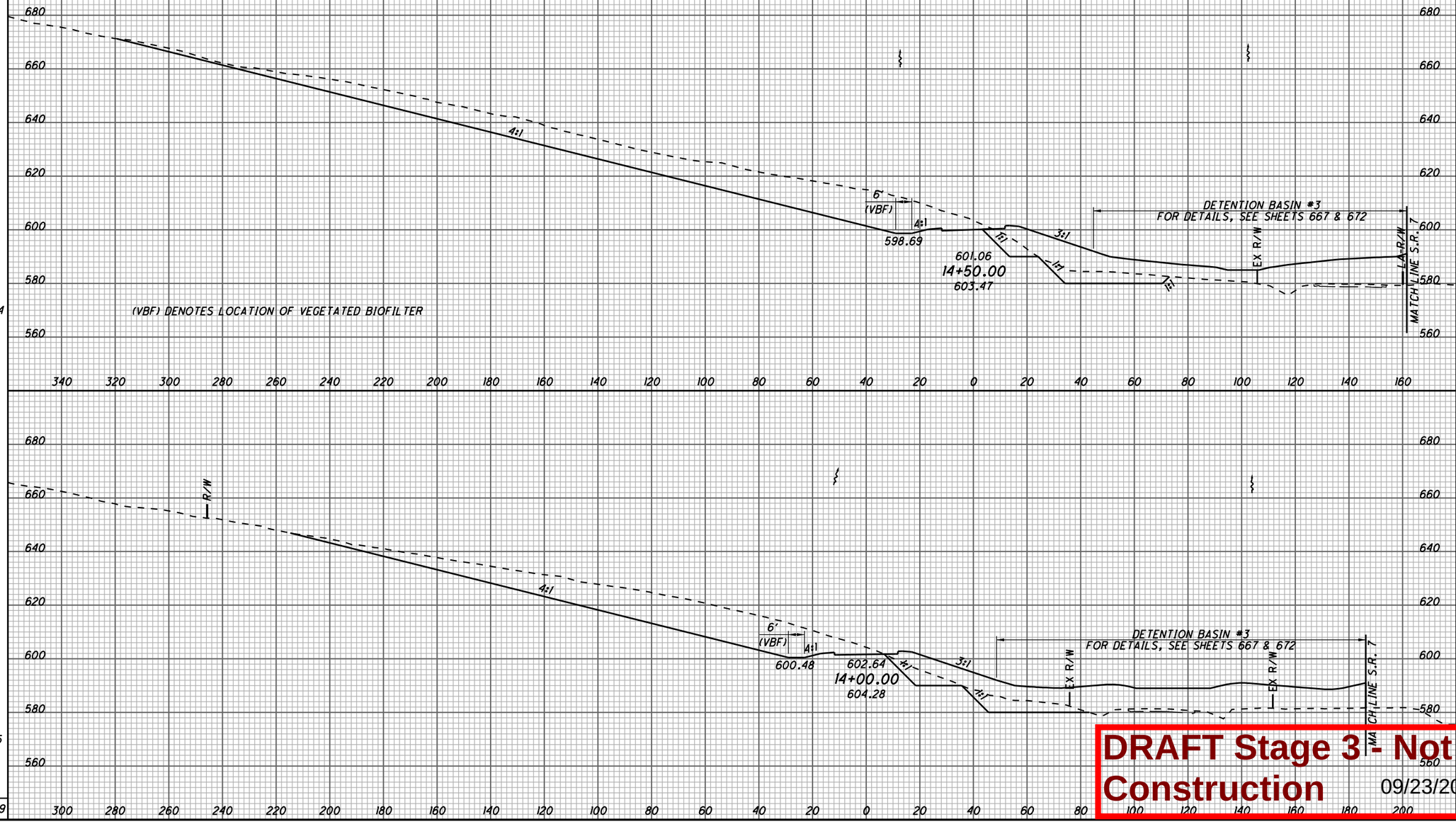

END AREA		VOLUME	
CUT	FILL	CUT	FILL
2451	563		
		4021	996
1891	512		
		2411	1278
		6432	2274

CALCULATED SLP
CHECKED ALB

CROSS SECTIONS C.R. 69
STA. 14+00.00 TO STA. 14+50.00

LAW-7-2.17

511
1247

DRAFT Stage 3 - Not for Construction 09/23/2024

U:\1736087\14\LAW\75923\roadway\sheets\75923XS403-2B.dgn 5/21/2024 4:57:14 PM SLParker

SEEDING	
END WIDTH	SQ. YDS.
	488
	2817
	526
	2453
	5270

END AREA	
CUT	FILL
2008	860
2727	740
4795	1207

VOLUME	
CUT	FILL
4385	1482
9180	2689

CALCULATED SLP
CHECKED ALB

CROSS SECTIONS C.R. 69
STA. 15+00.00 TO STA. 15+50.00

LAW-7-2.17

512
1247

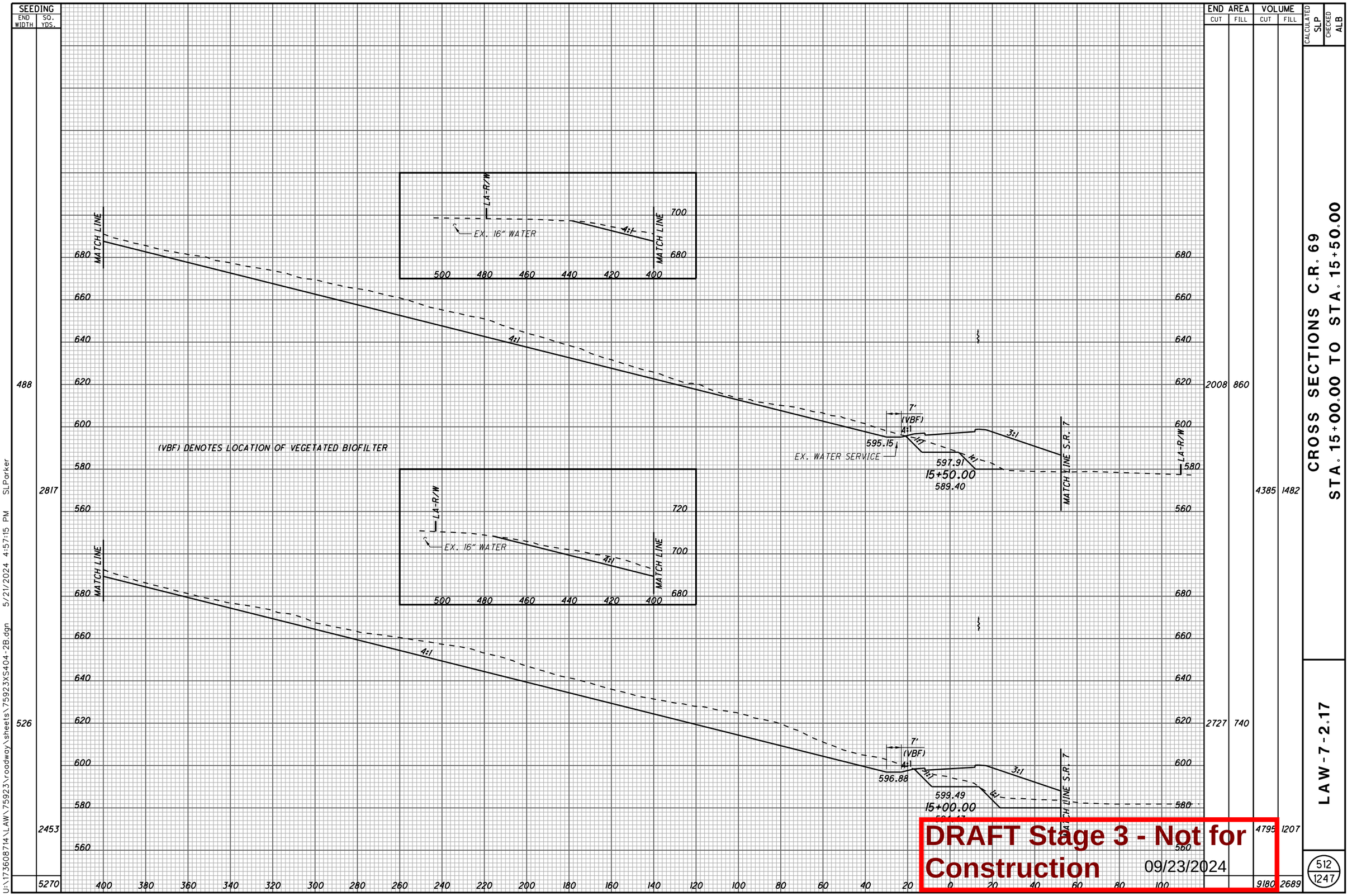

DRAFT Stage 3 - Not for Construction 09/23/2024

U:\1736087\14\LAW\75923\roadway\sheets\75923XS404-2B.dgn 5/21/2024 4:57:15 PM SLParker

SEEDING END WIDTH	SEEDING SQ. YDS.	END AREA CUT	END AREA FILL	VOLUME CUT	VOLUME FILL
409	2342	3881	987	6043	1701
434	2560	2645	850	4309	1584
	4902			10352	3285

CALCULATED SLP
CHECKED ALB

CROSS SECTIONS C.R. 69
STA. 16+00.00 TO STA. 16+50.00

LAW-7-2.17

513
1247

680
660
640
620
600
580
560

EX. WATER SERVICE
4:1
8'
(VBF)
592.13
1+1
3:1
MATCH LINE S.R. 7
LA-R/W
594.76
16+50.00
584.21

(VBF) DENOTES LOCATION OF VEGETATED BIOFILTER

EX. WATER SERVICE
593.57
(EX. 8" W/M TO BE REMOVED)

400 380 360 340 320 300 280 260 240 220 200 180 160 140 120 100 80 60 40 20 0 20 40 60 80 100

DRAFT Stage 3 - Not for Construction 09/23/2024

U:\173608714\LAW\75923\roadway\sheets\75923XS405-2B.dgn 5/21/2024 4:57:16 PM SLParker

SEEDING	
END WIDTH	SQ. YDS.
336	1972
374	2177
	4149

END AREA	
CUT	FILL
3151	1205
3796	1143
	13542

VOLUME	
CUT	FILL
6433	2175
7109	1973
	4148

CALCULATED SLP

CHECKED ALB

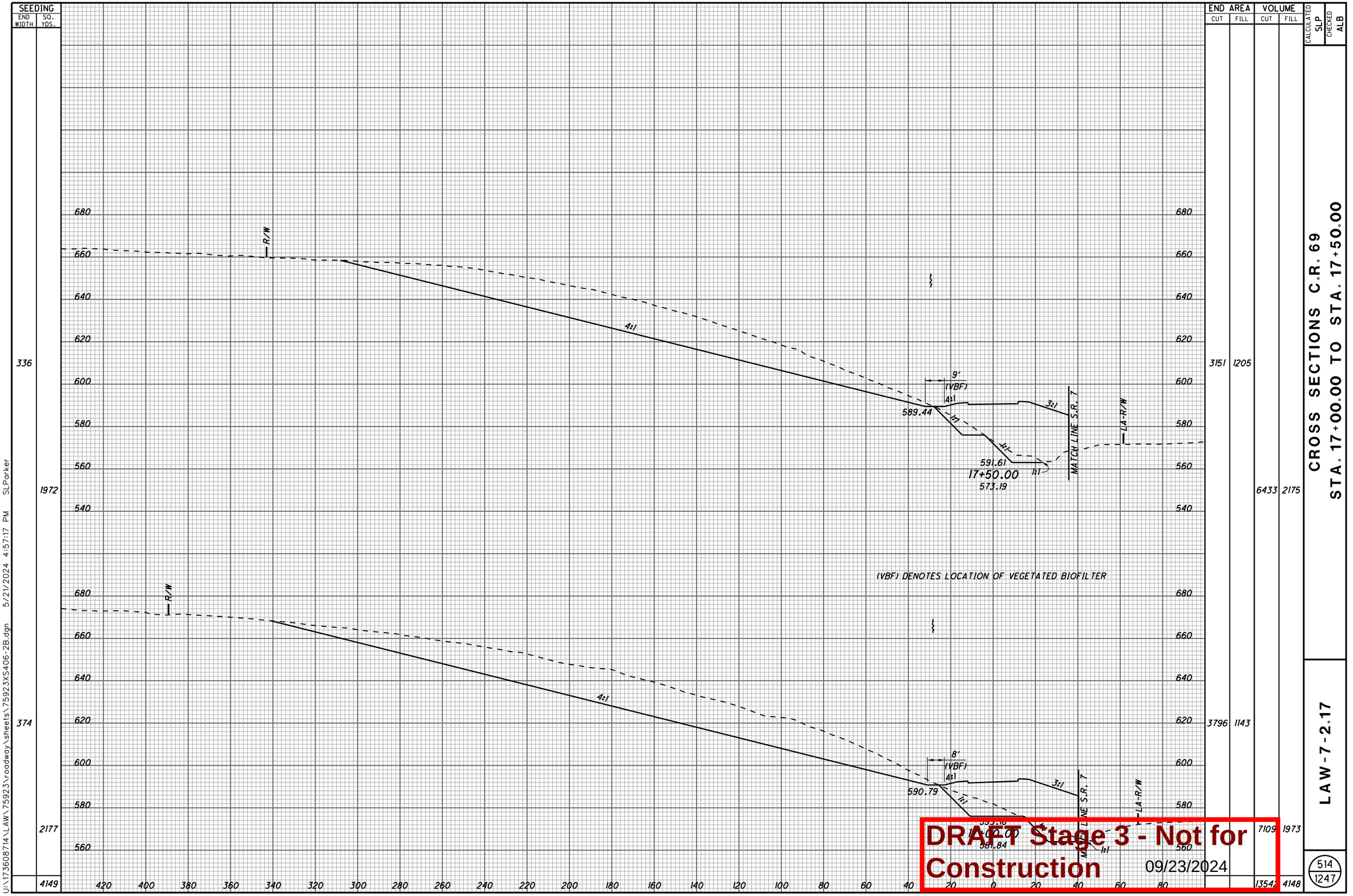

CROSS SECTIONS C.R. 69
STA. 17+00.00 TO STA. 17+50.00

LAW-7-2.17

514
1247

DRAFT Stage 3 - Not for Construction 09/23/2024

U:\1736087\14\LAW\75923\roadway\sheets\75923XS406-2B.dgn 5/21/2024 4:57:17 PM SLParker

SEEDING	
END WIDTH	SQ. YDS.
47	956
297	1758
	2714

END AREA	
CUT	FILL
0	1089
2893	1008
5597	2050
8277	3993

VOLUME	
CUT	FILL
2680	1943

CALCULATED SLP

CHECKED ALB

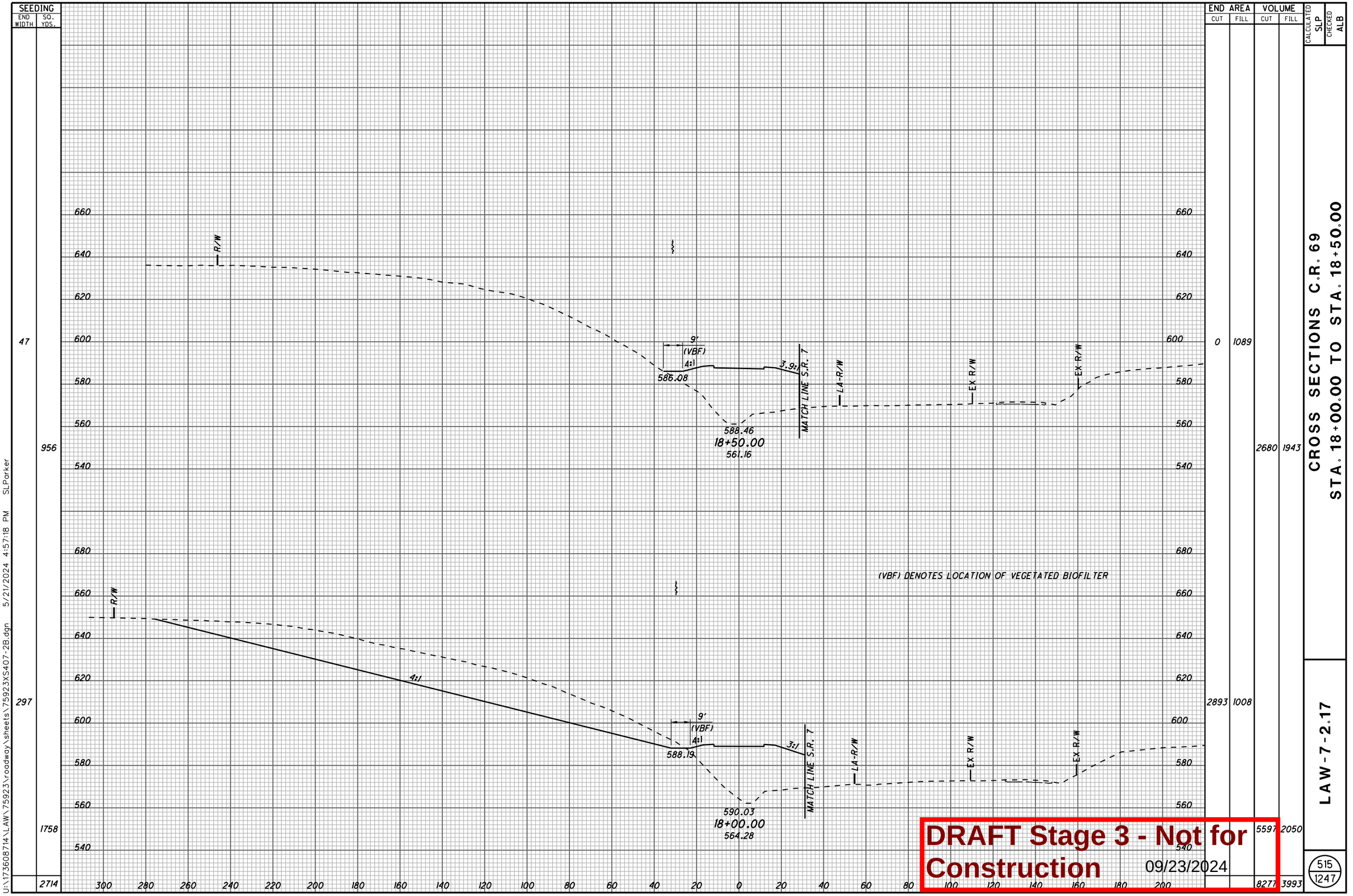

DRAFT Stage 3 - Not for Construction 09/23/2024

CROSS SECTIONS C.R. 69 STA. 18+00.00 TO STA. 18+50.00

LAW-7-2.17

515
1247

U:\1736087\14\LAW\75923\roadway\sheets\75923XS407-2B.dgn 5/21/2024 4:57:18 PM SLParker

SEEDING END WIDTH	SEEDING SQ. YDS.	END AREA CUT	END AREA FILL	VOLUME CUT	VOLUME FILL
52	262	0	1191	0	2045
42	231	0	1016	0	1835
41	245	0	964	0	1902
	738			0	5782

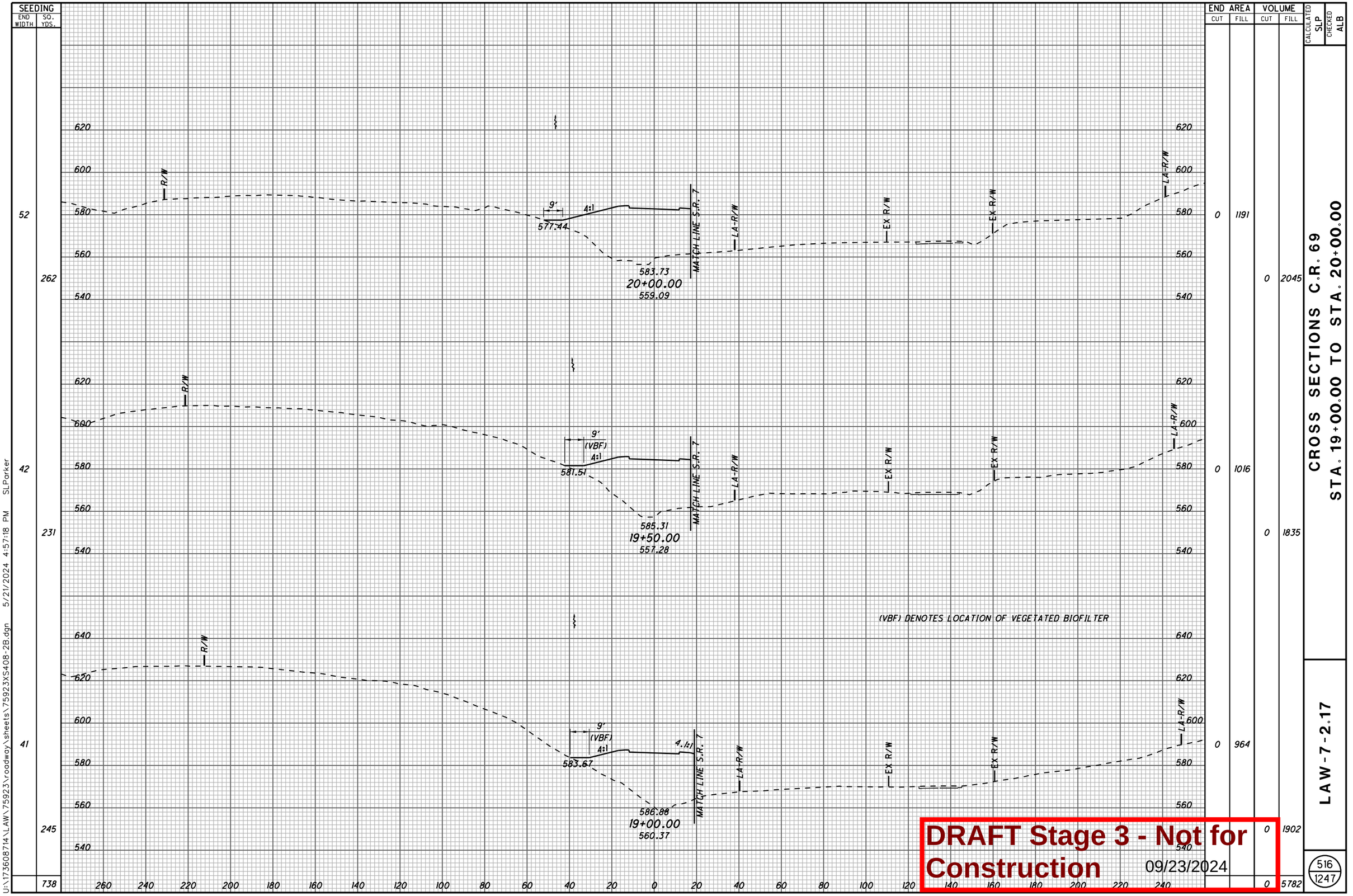

(VBF) DENOTES LOCATION OF VEGETATED BIOFILTER

CALCULATED SLP
CHECKED ALB

CROSS SECTIONS C.R. 69
STA. 19+00.00 TO STA. 20+00.00

LAW-7-2.17

516
1247

DRAFT Stage 3 - Not for Construction 09/23/2024

U:\173608714\LAW\75923\roadway\sheets\75923XS408-2B.dgn 5/21/2024 4:57:18 PM SLParker

SEEDING END WIDTH	SEEDING SQ. YDS.
71	547
126	959
220	755
	2261

END AREA CUT	END AREA FILL	VOLUME CUT	VOLUME FILL
0	877	0	1959
0	1238	0	3948
0	3025	0	3904
		0	9811

CALCULATED SLP
CHECKED ALB

CROSS SECTIONS C.R. 69
STA. 20+50.00 TO STA. 21+50.00

LAW-7-2.17

517
1247

620
600
580
560
540

R/W
10:1
4:1
10'
4:1
574.90
579.00
21+50.00
562.22
MATCH LINE S.R. 7
LA-R/W
EX R/W
EX R/W
LA-R/W

10:1
4:1
10'
4:1
575.02
580.58
21+00.00
561.61
MATCH LINE S.R. 7
LA-R/W
EX R/W
EX R/W
LA-R/W

10:1
4:1
10'
4:1
575.14
582.16
20+50.00
559.61
MATCH LINE S.R. 7
LA-R/W
EX R/W
EX R/W
LA-R/W

260 240 220 200 180 160 140 120 100 80 60 40 20 0 20 40 60 80 100 120 140 160 180 200 220 240

DRAFT Stage 3 - Not for Construction 09/23/2024

U:\173608714\LAW\75923\roadway\sheets\75923XS409-2B.dgn 5/21/2024 4:57:20 PM SLParker

SEEDING END WIDTH	SEEDING SQ. YDS.	END AREA CUT	END AREA FILL	VOLUME CUT	VOLUME FILL
276	1319	1489	348	2407	688
199	658	1110	395	1028	889
38	305	0	565	0	1336
	2282			3435	2913

CALCULATED SLP
CHECKED ALB

CROSS SECTIONS C.R. 69
STA. 22+00.00 TO STA. 23+00.00

LAW-7-2.17

518
1247

660 640 620 600 580 560 540

R/W 4:1 10:1 2:1 10' 4:1 4:1 571.36 574.28 23+00.00 563.38 MATCH LINE S.R. 7 LA-R/W EX R/W EX R/W

R/W 4:1 10:1 2:1 10' 4:1 4:1 571.61 575.85 22+50.00 564.73 MATCH LINE S.R. 7 LA-R/W EX R/W EX R/W

R/W 10' 4:1 574.77 577.43 22+00.00 563.52 MATCH LINE S.R. 7 LA-R/W EX R/W EX R/W

320 300 280 260 240 220 200 180 160 140 120 100 80 60 40 20 0 20 40 60 80 100 120 140 160 180

DRAFT Stage 3 - Not for Construction 09/23/2024

U:\173608714\LAW\75923\roadway\sheets\75923XS410-2B.dgn 5/21/2024 4:57:20 PM SLParker

SEEDING	
END WIDTH	SQ. YDS.
293	1613
288	1567
	3180

END AREA	
CUT	FILL
1828	347
2944	696
1350	405
2629	697
5573	1393

VOLUME	
CUT	FILL

CALCULATED SLP
CHECKED ALB

CROSS SECTIONS C.R. 69
STA. 23+50.00 TO STA. 24+00.00

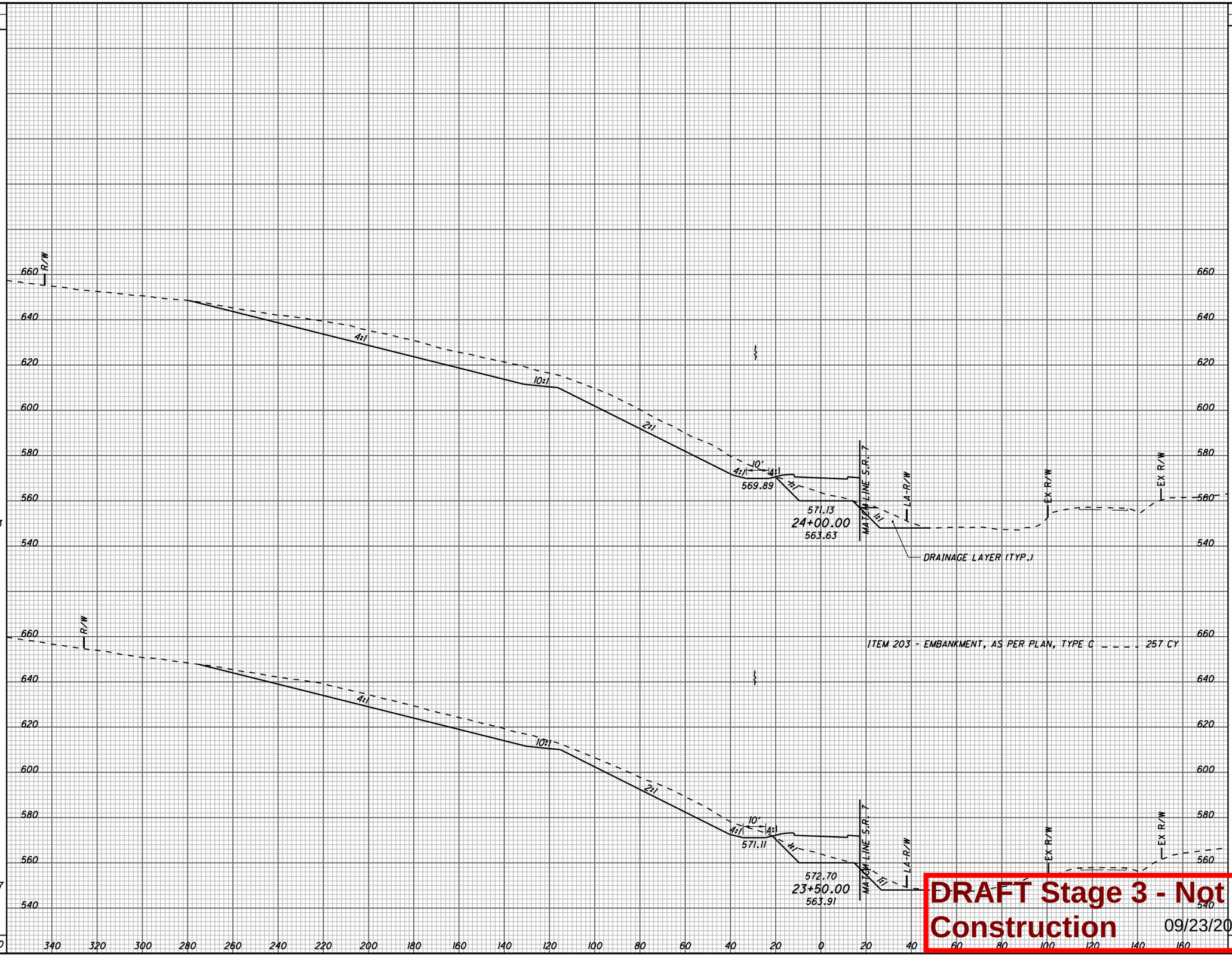

DRAFT Stage 3 - Not for Construction 09/23/2024

LAW-7-2.17

519
1247

U:\173608714\LAW\75923\roadway\sheets\75923XS411-2B.dgn 5/21/2024 4:57:21 PM SLParker

SEEDING		END AREA		VOLUME		CALCULATED	CHECKED
END WIDTH	SQ. YDS.	CUT	FILL	CUT	FILL	SLP	ALB
193	1219	1245	309	2675	575		
245	1494	1643	312	3215	610		
	2713			5890	1185		

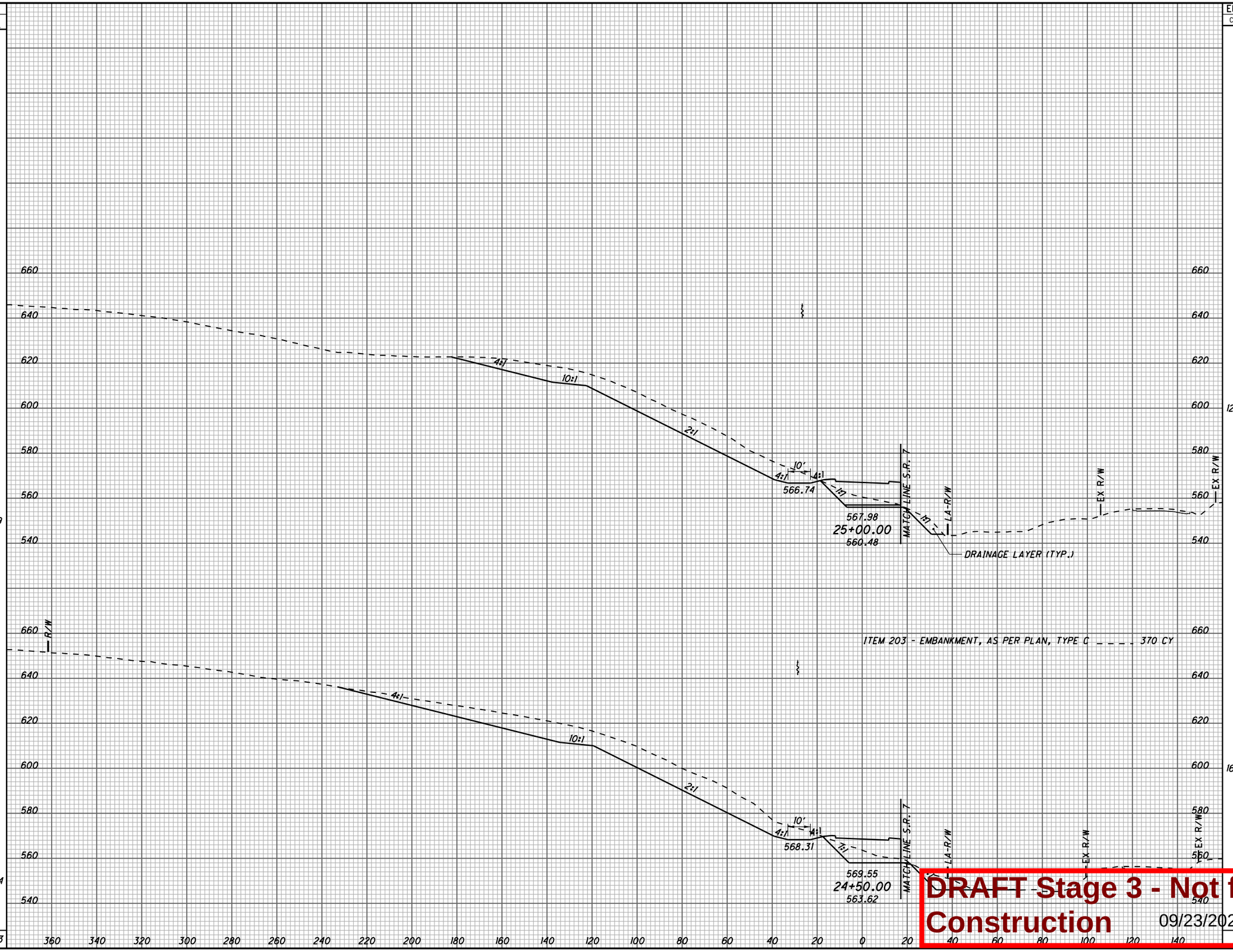

DRAFT Stage 3 - Not for Construction 09/23/2024

CROSS SECTIONS C.R. 69
STA. 24+50.00 TO STA. 25+00.00

LAW-7-2.17

520
1247

U:\173608714\LAW\75923\roadway\sheets\75923XS412-2B.dgn 5/21/2024 4:57:22 PM SLParker

SEEDING END WIDTH	SEEDING SQ. YDS.
132	
	856
176	
	927
157	
	975
	2758

END AREA CUT	END AREA FILL	VOLUME CUT	VOLUME FILL
299	273		
		1097	561
886	332		
		1971	563
1243	276		
		2304	542
		5372	1666

CALCULATED SLP
CHECKED ALB

MATCH LINE C.R. 118
3:1
4:1
10'
556.06
EX R/W
563.26
DRAINAGE LAYER (TYP.)
26+50.00
543.24
MATCH LINE S.R. 7
LA-R/W
EX R/W
EX R/W
EX R/W
MATCH LINE C.R. 118
4.2:1
10'
4:1
563.47
1:1
564.83
26+00.00
543.60
MATCH LINE S.R. 7
EX R/W
LA-R/W
EX R/W
EX R/W
EX R/W
3:1
4:1
10'
565.16
566.40
25+50.00
559.60
MATCH LINE S.R. 7
LA-R/W
EX R/W
EX R/W

ITEM 203 - EMBANKMENT, AS PER PLAN, TYPE C _ _ _ _2094 CY

600 580 560 540 520 640 620 600 580 560 540 520 640 620 600 580 560 540

300 280 260 240 220 200 180 160 140 120 100 80 60 40 20 0 20 40 60 80 100 120 140 160 180 200

CROSS SECTIONS C.R. 69
STA. 25+50.00 TO STA. 26+50.00

LAW-7-2.17

521
1247

DRAFT Stage 3 - Not for Construction 09/23/2024

U:\173608714\LAW\75923\roadway\sheets\75923XS413-2B.dgn 5/21/2024 4:57:23 PM SLParker

SEEDING		END AREA		VOLUME		CALCULATED SLP
END WIDTH	SQ. YDS.	CUT	FILL	CUT	FILL	CHECKED ALB
13	148	0	109	0	238	
40	35	0	147	0	213	
7	126	0	143	0	103	
AHEAD		0	143			
BACK		233	258			
	150			103	103	
	333			103	554	

CROSS SECTIONS C.R. 69
STA. 26+60.42 TO STA. 27+50.00

LAW-7-2.17

522
1247

DRAFT Stage 3 - Not for Construction 09/23/2024

U:\173608714\LAW\75923\roadway\sheets\75923XS414-2B.dgn 5/21/2024 4:57:24 PM SLParker

SEEDING END WIDTH	SEEDING SQ. YDS.	END AREA CUT	END AREA FILL	VOLUME CUT	VOLUME FILL
82	439	0	197	0	328
76	410	0	157	0	281
71	32	0	145	0	67
66		AHEAD	0	146	
14		BACK	0	102	
	56			0	148
	937			0	824

CALCULATED SLP
CHECKED ALB

CROSS SECTIONS C.R. 69
STA. 27+87.75 TO STA. 29+00.00

LAW-7-2.17

523
1247

R/W
4:1
2:1
MATCH LINE S.R. 7
LA-R/W
561.91
29+00.00
537.62

EX R/W
561.22
28+50.00
538.23
16" EX. WATER

561.00
28+00.00
539.13
ITEM 203 - EMBANKMENT, AS PER PLAN, TYPE C . . . . 6331 CY

AHEAD BACK
10:1
DRAINAGE LAYER (TYP.)
561.02
27+87.75
537.39

580
560
540
520
260 240 220 200 180 160 140 120 100 80 60 40 20 0 20 40 60 80 100 120 140 160 180 200 220 240

DRAFT Stage 3 - Not for Construction 09/23/2024

U:\173608714\LAW\75923\roadway\sheets\75923XS415-2B.dgn 5/21/2024 4:57:25 PM SLParker

SEEDING END WIDTH	SEEDING SQ. YDS.
87	547
110	700
142	518
44	349
	2114

END AREA CUT	END AREA FILL	VOLUME CUT	VOLUME FILL
0	783		
		10	1222
10	536		
		179	843
182	373		
		169	605
0	279		
		0	441
		358	3111

CALCULATED SLP
CHECKED ALB

CROSS SECTIONS C.R. 69
STA. 29+50.00 TO STA. 31+00.00

LAW-7-2.17

524
1247

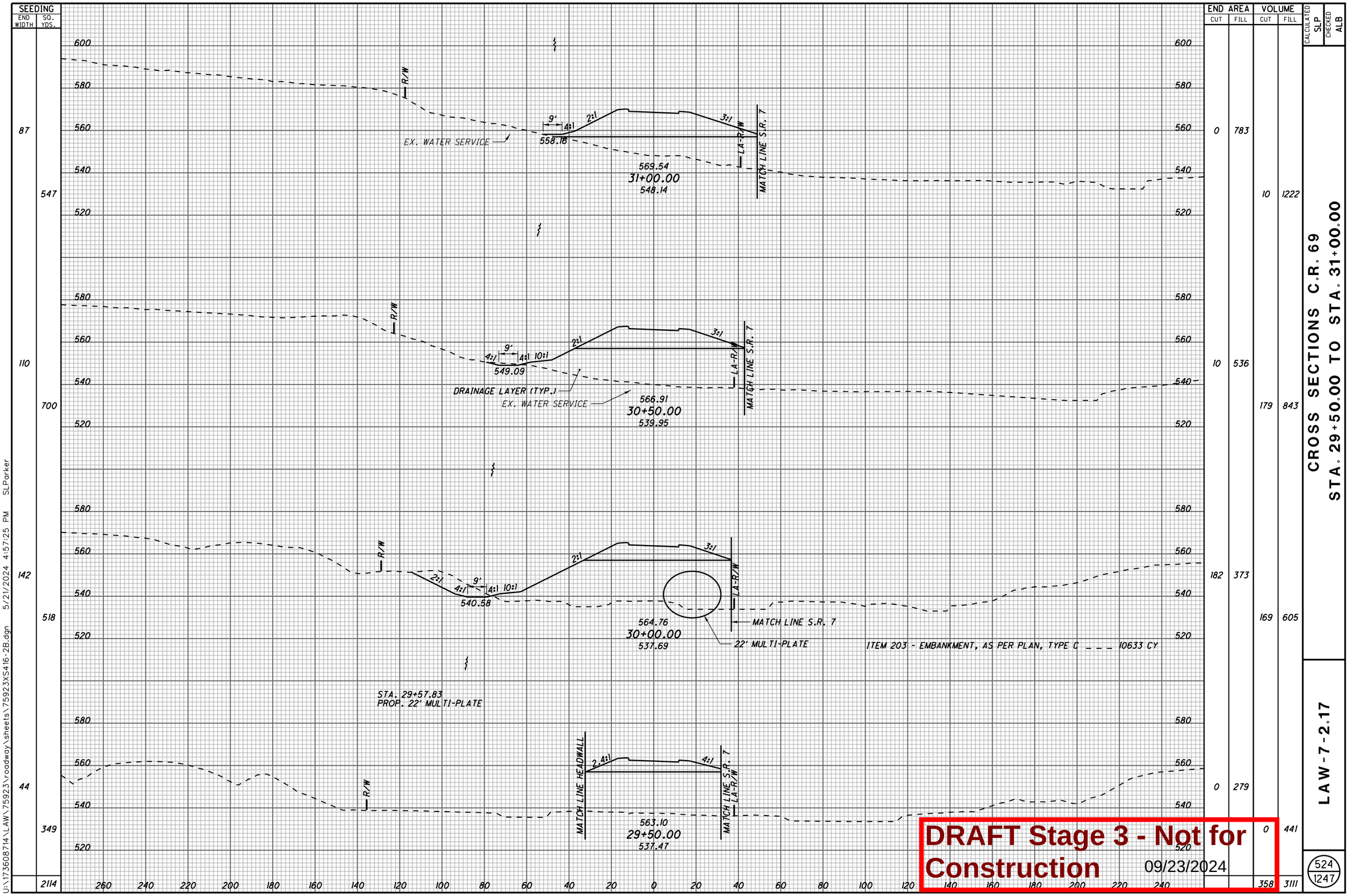

DRAFT Stage 3 - Not for Construction 09/23/2024

U:\173608714\LAW\75923\roadway\sheets\75923XS416-2B.dgn 5/21/2024 4:57:25 PM SLParker

SEEDING	
END WIDTH	SQ. YDS.
160	752
111	551
	1303

END AREA		VOLUME	
CUT	FILL	CUT	FILL
1755	274		
		2186	850
		605	644
		560	1322
		2746	2172

CALCULATED SLP
CHECKED ALB

CROSS SECTIONS C.R. 69
STA. 31+50.00 TO STA. 32+00.00

LAW-7-2.17

525
1247

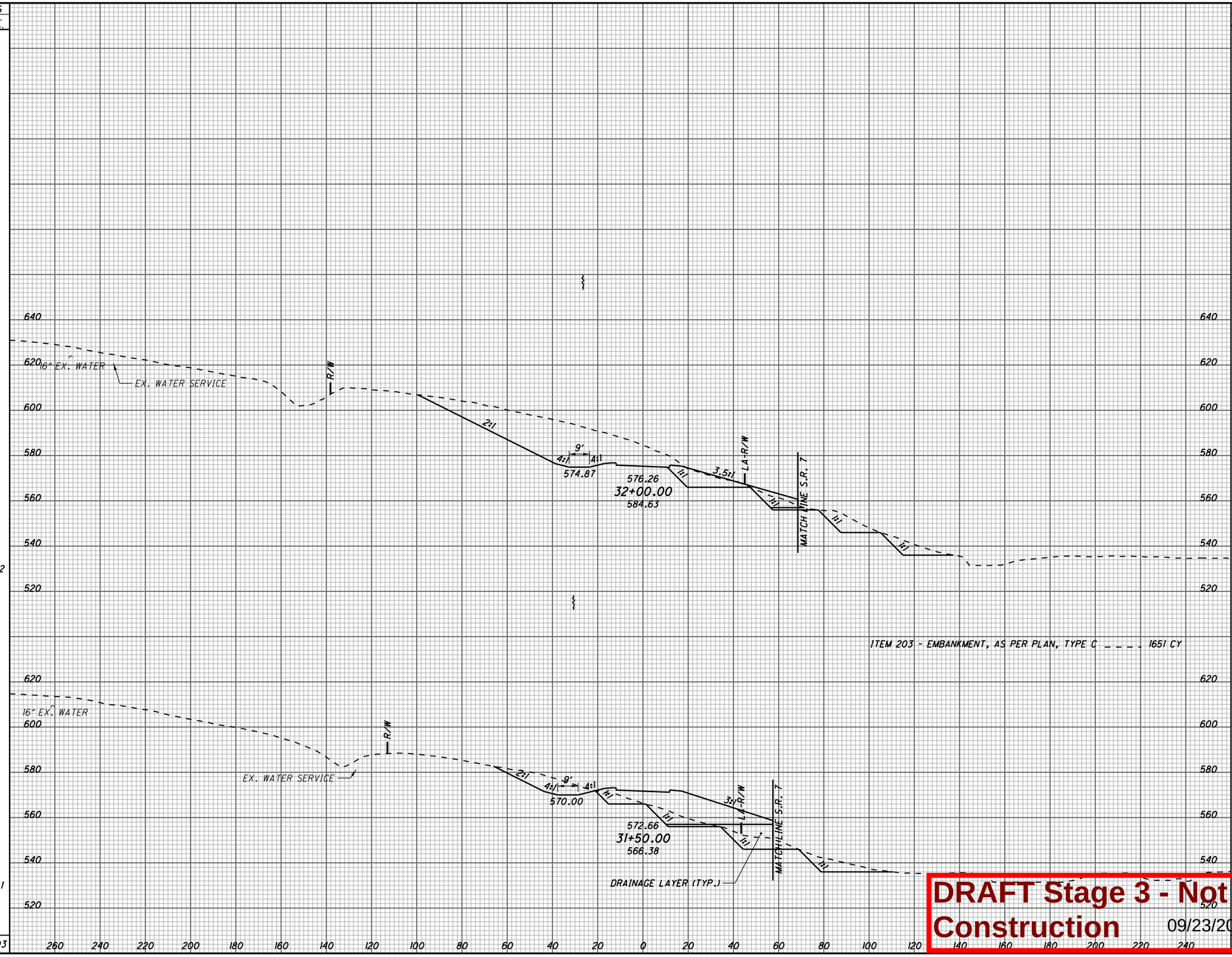

DRAFT Stage 3 - Not for Construction 09/23/2024

U:\173608714\LAW\75923\roadway\sheets\75923XS417-2B.dgn 5/21/2024 4:57:33 PM SLParker

SEEDING END WIDTH	SEEDING SQ. YDS.	END AREA CUT	END AREA FILL	VOLUME CUT	VOLUME FILL
	249	4831	0		
	1227	7448	0		
	193	3213	0		
	979	4601	254		
	2206	12049	254		

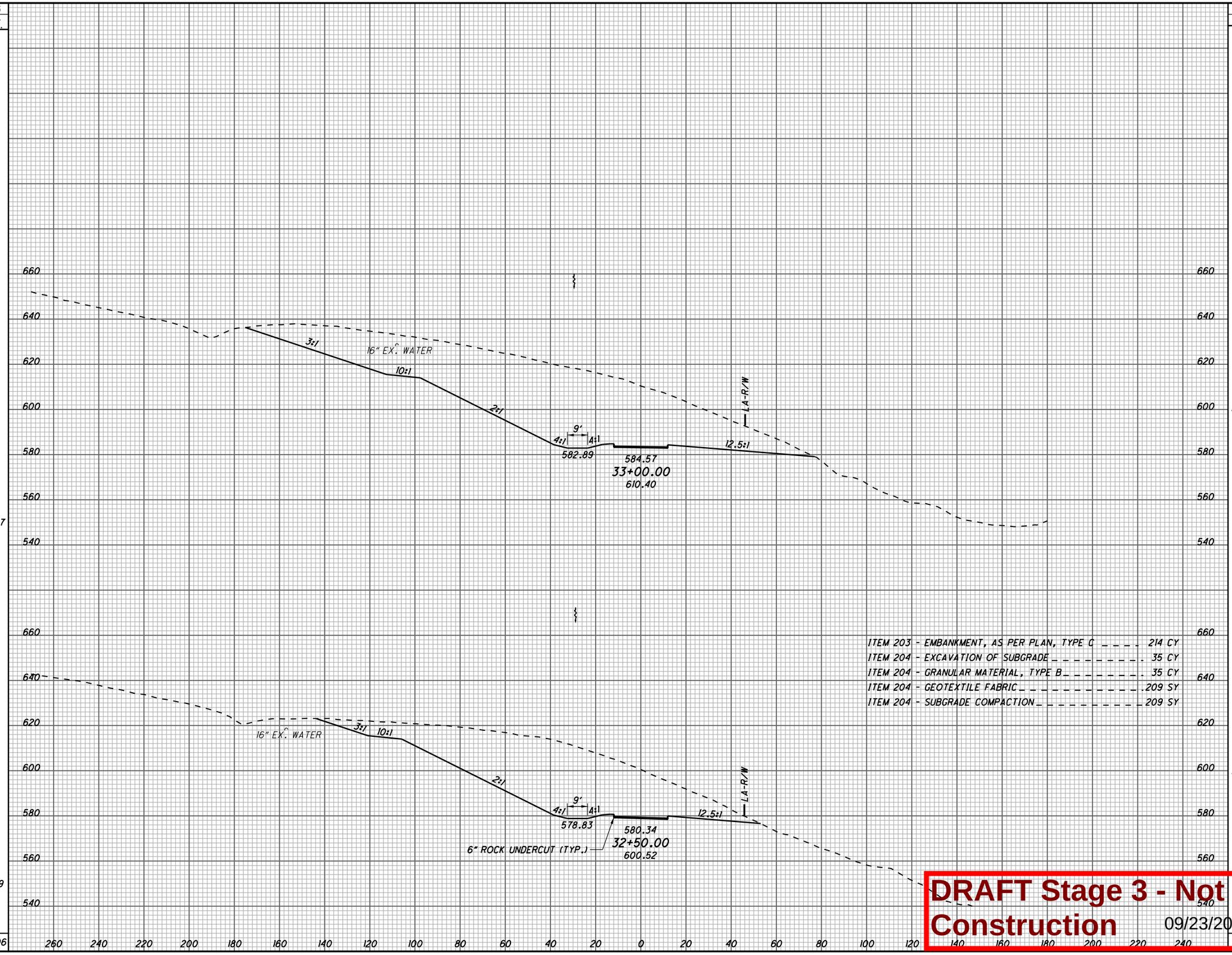

ITEM 203 - EMBANKMENT, AS PER PLAN, TYPE C _ _ _ _ 214 CY
ITEM 204 - EXCAVATION OF SUBGRADE _ _ _ _ _ _ _ _ _ 35 CY
ITEM 204 - GRANULAR MATERIAL, TYPE B _ _ _ _ _ _ _ _ 35 CY
ITEM 204 - GEOTEXTILE FABRIC _ _ _ _ _ _ _ _ _ _ _ 209 SY
ITEM 204 - SUBGRADE COMPACTION _ _ _ _ _ _ _ _ _ _ 209 SY

DRAFT Stage 3 - Not for Construction 09/23/2024

CALCULATED SLP
CHECKED ALB

CROSS SECTIONS C.R. 69
STA. 32+50.00 TO STA. 33+00.00

LAW-7-2.17

526
1247

U:\173608714\LAW\75923\roadway\sheets\75923XS418-2B.dgn 5/21/2024 4:57:34 PM SLParker

SEEDING	
END WIDTH	SQ. YDS.
288	1630
298	1520
	3150

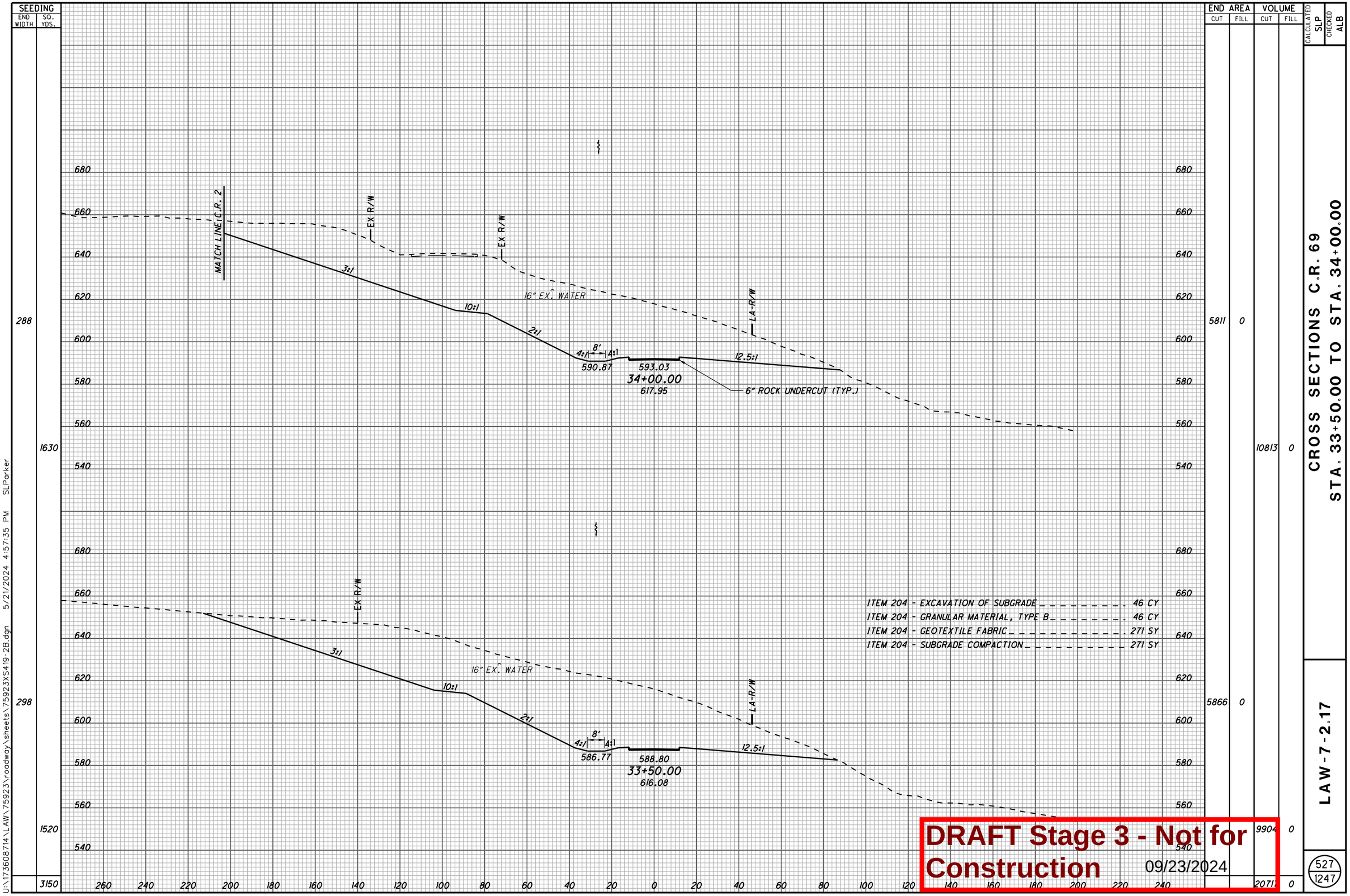

ITEM 204 - EXCAVATION OF SUBGRADE . . . . . 46 CY
ITEM 204 - GRANULAR MATERIAL, TYPE B . . . . . 46 CY
ITEM 204 - GEOTEXTILE FABRIC . . . . . 271 SY
ITEM 204 - SUBGRADE COMPACTION . . . . . 271 SY

END AREA		VOLUME	
CUT	FILL	CUT	FILL
5811	0		
		10813	0
5866	0		
		9904	0
		2071	0

CALCULATED SLP
CHECKED ALB

CROSS SECTIONS C.R. 69
STA. 33+50.00 TO STA. 34+00.00

LAW-7-2.17

527
1247

DRAFT Stage 3 - Not for Construction 09/23/2024

U:\173608714\LAW\75923\roadway\sheets\75923XS419-2B.dgn 5/21/2024 4:57:35 PM SLParker

SEEDING END WIDTH	SEEDING SQ. YDS.
254	1452
269	1548
	3000

END AREA CUT	END AREA FILL	VOLUME CUT	VOLUME FILL
5346	0	10280	0
5756	0	10711	0
		2099	0

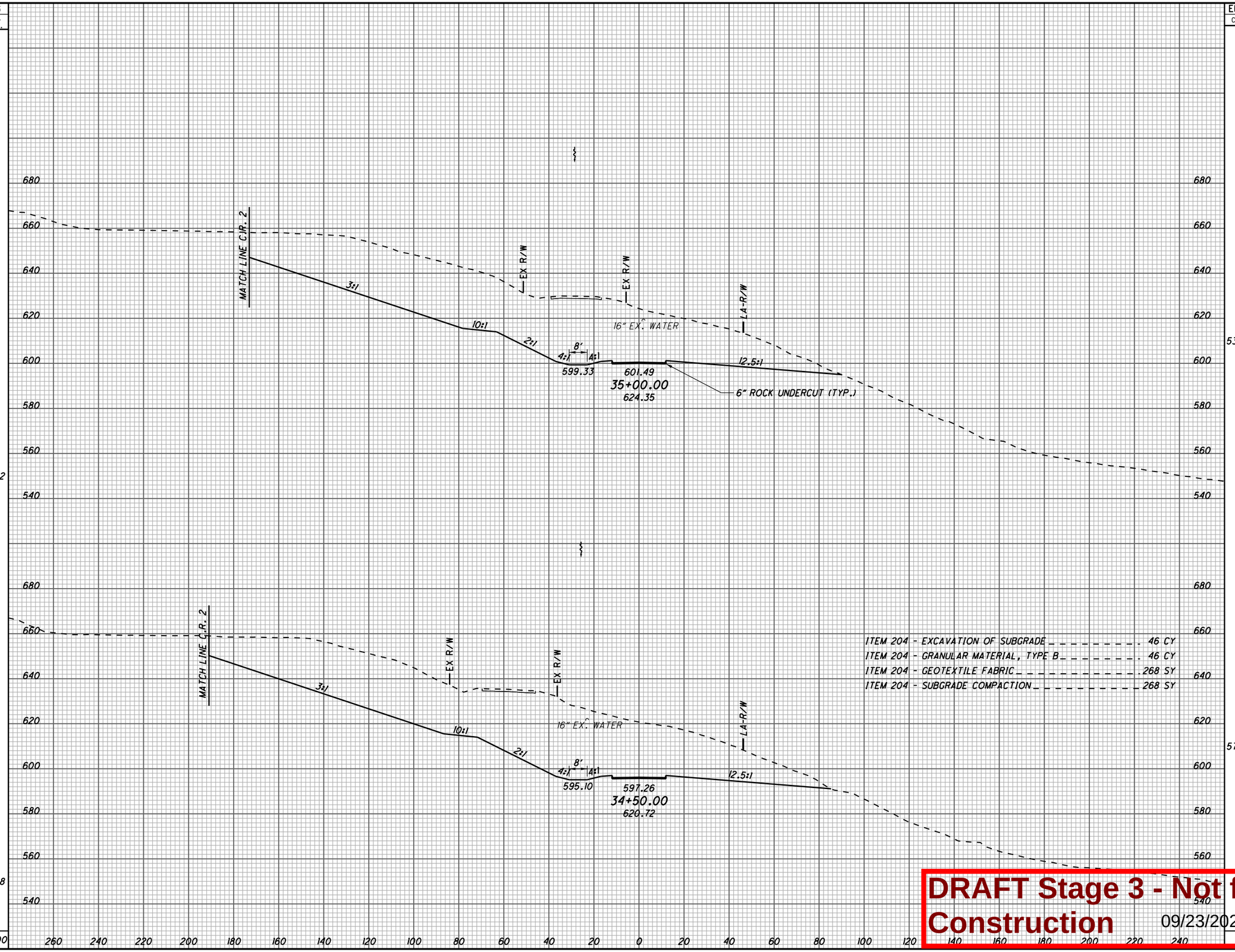

ITEM 204 - EXCAVATION OF SUBGRADE _ _ _ _ _ _ _ _ _ _ 46 CY
ITEM 204 - GRANULAR MATERIAL, TYPE B _ _ _ _ _ _ _ _ 46 CY
ITEM 204 - GEOTEXTILE FABRIC _ _ _ _ _ _ _ _ _ _ _ 268 SY
ITEM 204 - SUBGRADE COMPACTION _ _ _ _ _ _ _ _ _ _ 268 SY

DRAFT Stage 3 - Not for Construction 09/23/2024

CALCULATED SLP
CHECKED ALB

CROSS SECTIONS C.R. 69
STA. 34+50.00 TO STA. 35+00.00

LAW-7-2.17

528
1247

U:\173608714\LAW\75923\roadway\sheets\75923XS420-2B.dgn 5/21/2024 4:57:36 PM SLParker

SEEDING	
END WIDTH	SQ. YDS.
198	1194
231	1349
	2543

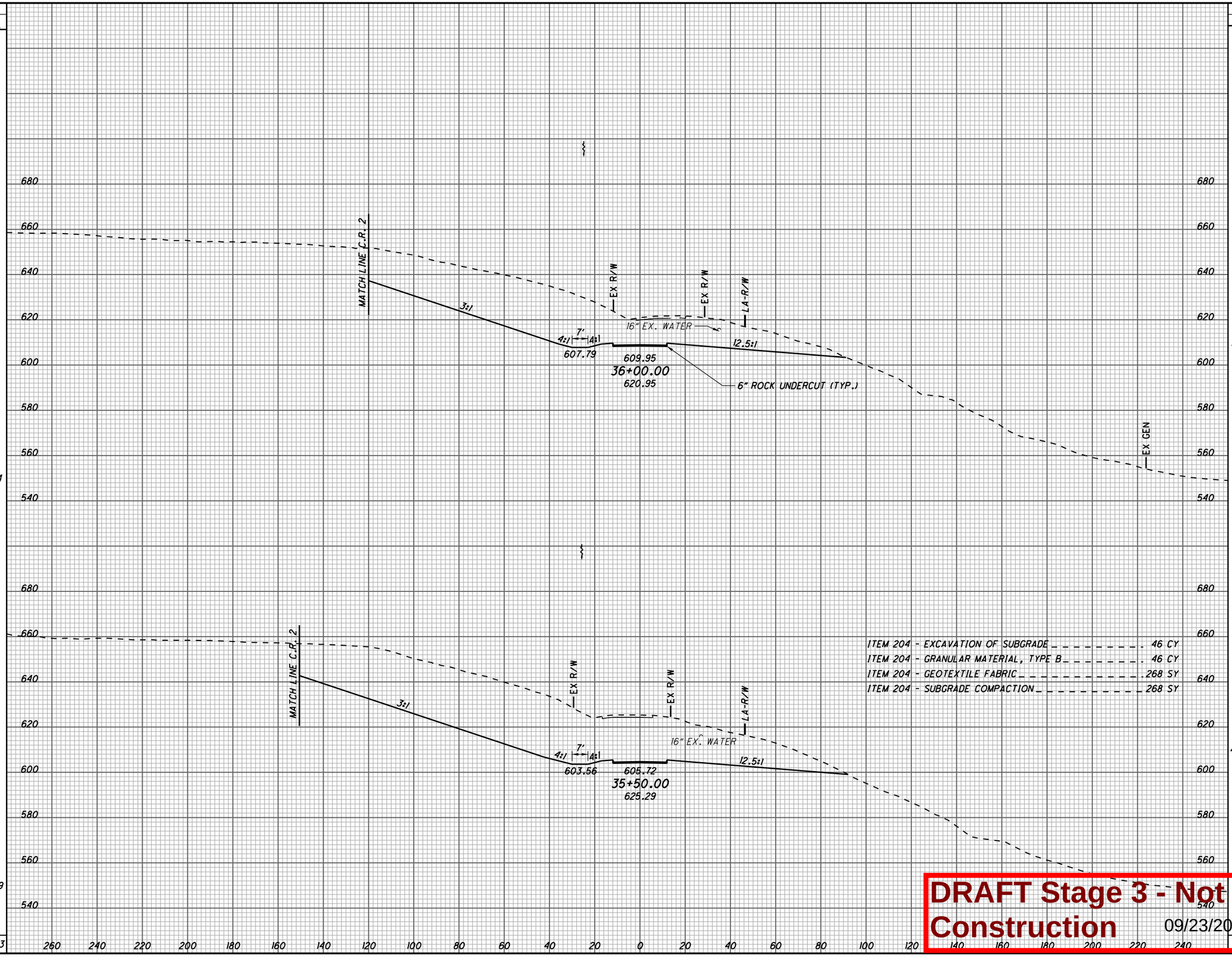

END AREA		VOLUME	
CUT	FILL	CUT	FILL
3147	0		
		7253	0
4685	0		
		9288	0
		1654	0

ITEM 204 - EXCAVATION OF SUBGRADE . . . . . 46 CY
ITEM 204 - GRANULAR MATERIAL, TYPE B . . . . . 46 CY
ITEM 204 - GEOTEXTILE FABRIC . . . . . 268 SY
ITEM 204 - SUBGRADE COMPACTION . . . . . 268 SY

DRAFT Stage 3 - Not for Construction 09/23/2024

CALCULATED SLP
CHECKED ALB

CROSS SECTIONS C.R. 69
STA. 35+50.00 TO STA. 36+00.00

LAW-7-2.17

529
1247

U:\173608714\LAW\75923\roadway\sheets\75923XS421-2B.dgn 5/21/2024 4:57:36 PM SLParker

SEEDING END WIDTH	SEEDING SQ. YDS.	END AREA CUT	END AREA FILL	VOLUME CUT	VOLUME FILL
87	662	93	128	1340	119
151	971	1353	0	4168	0
	1633			5508	119

CALCULATED SLP
CHECKED ALB

CROSS SECTIONS C.R. 69
STA. 36+50.00 TO STA. 37+00.00

LAW-7-2.17

530
1247

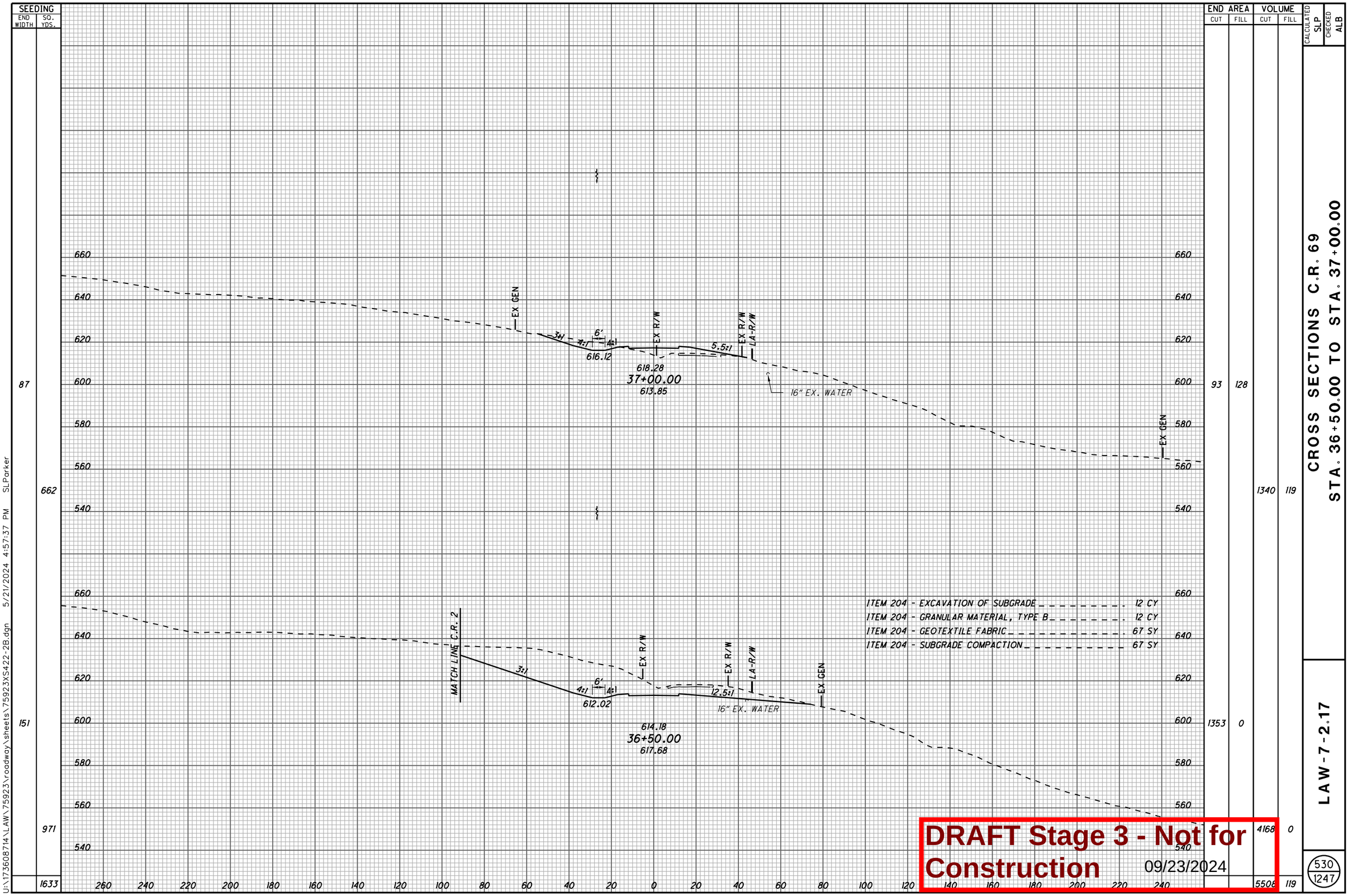

DRAFT Stage 3 - Not for Construction 09/23/2024

U:\173608714\LAW\75923\roadway\sheets\75923XS422-2B.dgn 5/21/2024 4:57:37 PM SLParker

SEEDING	
END WIDTH	SQ. YDS.
126	
161	
	501
153	
	667
	1168

END AREA		VOLUME	
CUT	FILL	CUT	FILL
255	1247		
313	1362		
		418	1547
471	1547		
		523	1551
		941	3098

CALCULATED SLP
CHECKED ALB

CROSS SECTIONS C.R. 69
STA. 37+50.00 TO STA. 37+78.71

LAW-7-2.17

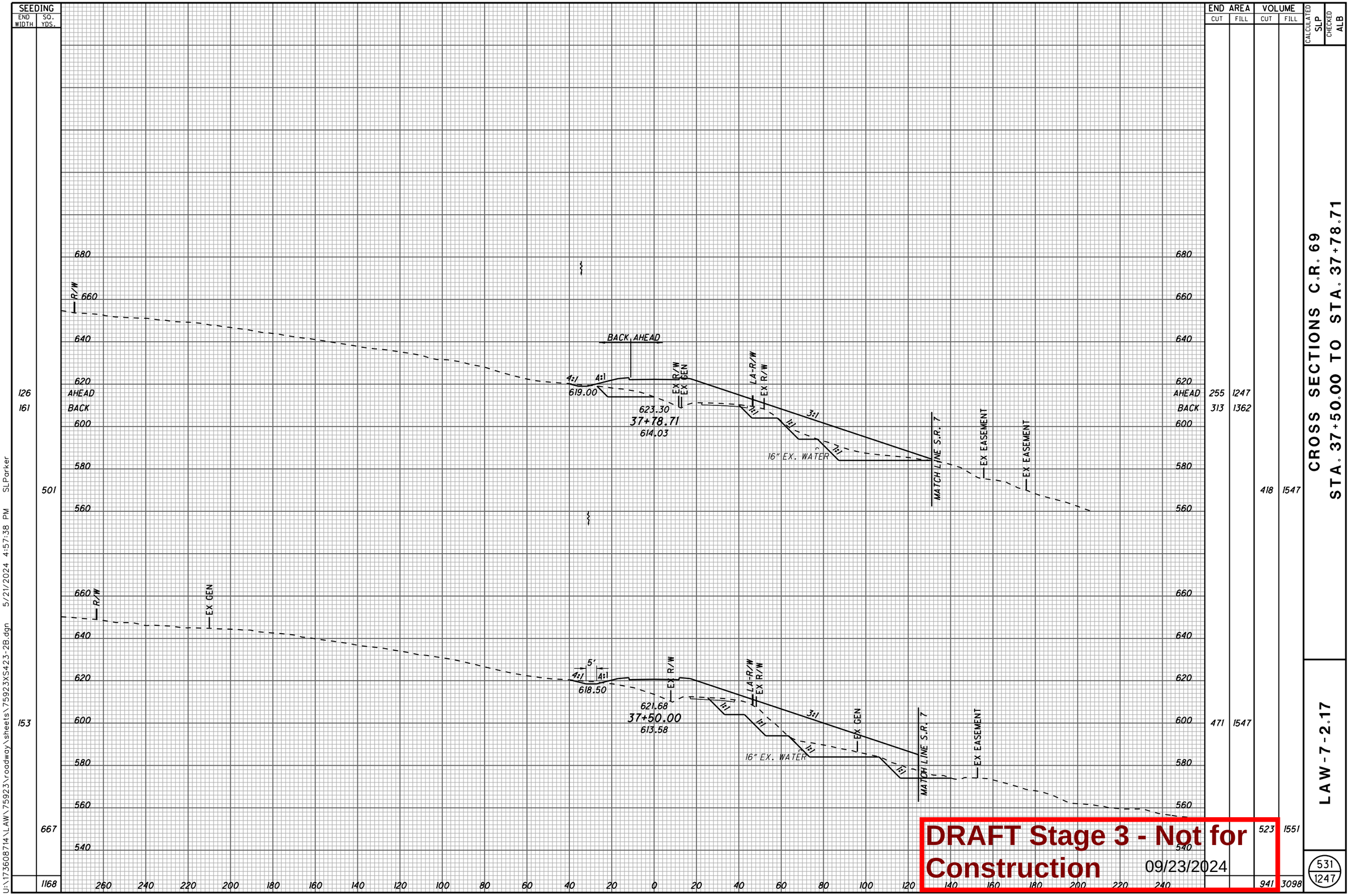

DRAFT Stage 3 - Not for Construction 09/23/2024

U:\1736087\14\LAW\75923\roadway\sheets\75923XS423-2B.dgn 5/21/2024 4:57:38 PM SLParker

SEEDING	
END WIDTH	SQ. YDS.
75	583
135	730
127	300
	1613

END AREA	
CUT	FILL
240	696
565	1510
462	1577
283	1114
1980	6016

VOLUME	
CUT	FILL
746	2043
951	2859

CALCULATED SLP
CHECKED ALB

CROSS SECTIONS C.R. 69
STA. 38+00.00 TO STA. 39+00.00

LAW-7-2.17

532
1247

R/W
EX GEN
MATCH LINE C.R. 2
627.43
39+00.00
621.78
3:1
1:1
LA-R/W
EX R/W
3" EX. WATER
16" EX. WATER
EX EASEMENT
626.26
38+50.00
616.65
10:1
MATCH LINE S.R. 7
624.35
38+00.00
613.43
660
640
620
600
580
560
260 240 220 200 180 160 140 120 100 80 60 40 20 0 20 40 60 80 100 120 140 160 180 200 220 240

DRAFT Stage 3 - Not for Construction 09/23/2024

U:\173608714\LAW\75923\roadway\sheets\75923XS424-2B.dgn 5/21/2024 4:57:39 PM SLParker

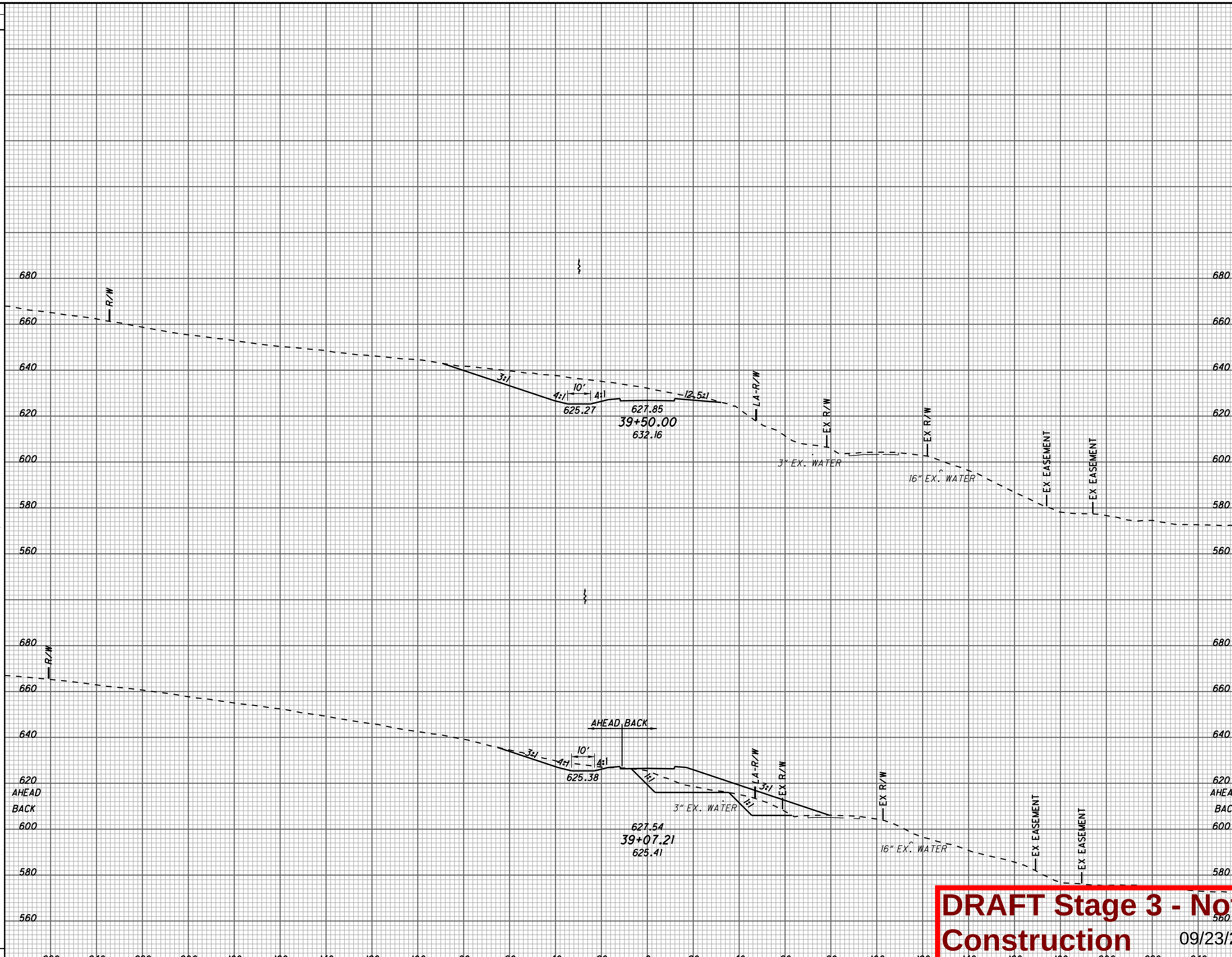

SEEDING END WIDTH	SEEDING SQ. YDS.	Station	END AREA CUT	END AREA FILL	VOLUME CUT	VOLUME FILL
111		39+50.00	698	0		
	587				834	511
136		39+07.21 AHEAD	354	644		
76		39+07.21 BACK	266	643		
	61				68	179
	648	Total			902	690

CALCULATED SLP
CHECKED ALB

CROSS SECTIONS C.R. 69
STA. 39+07.21 TO STA. 39+50.00

LAW-7-2.17

533 / 1247

U:\173608714\LAW\75923\roadway\sheets\75923XS425-2B.dgn 5/21/2024 4:57:39 PM SLParker

DRAFT Stage 3 - Not for Construction 09/23/2024

SEEDING	
END WIDTH	SQ. YDS.
157	867
155	739
	1606

END AREA		VOLUME	
CUT	FILL	CUT	FILL
1399	0	2574	0
1381	0	1926	0
		4500	0

CALCULATED SLP
CHECKED ALB

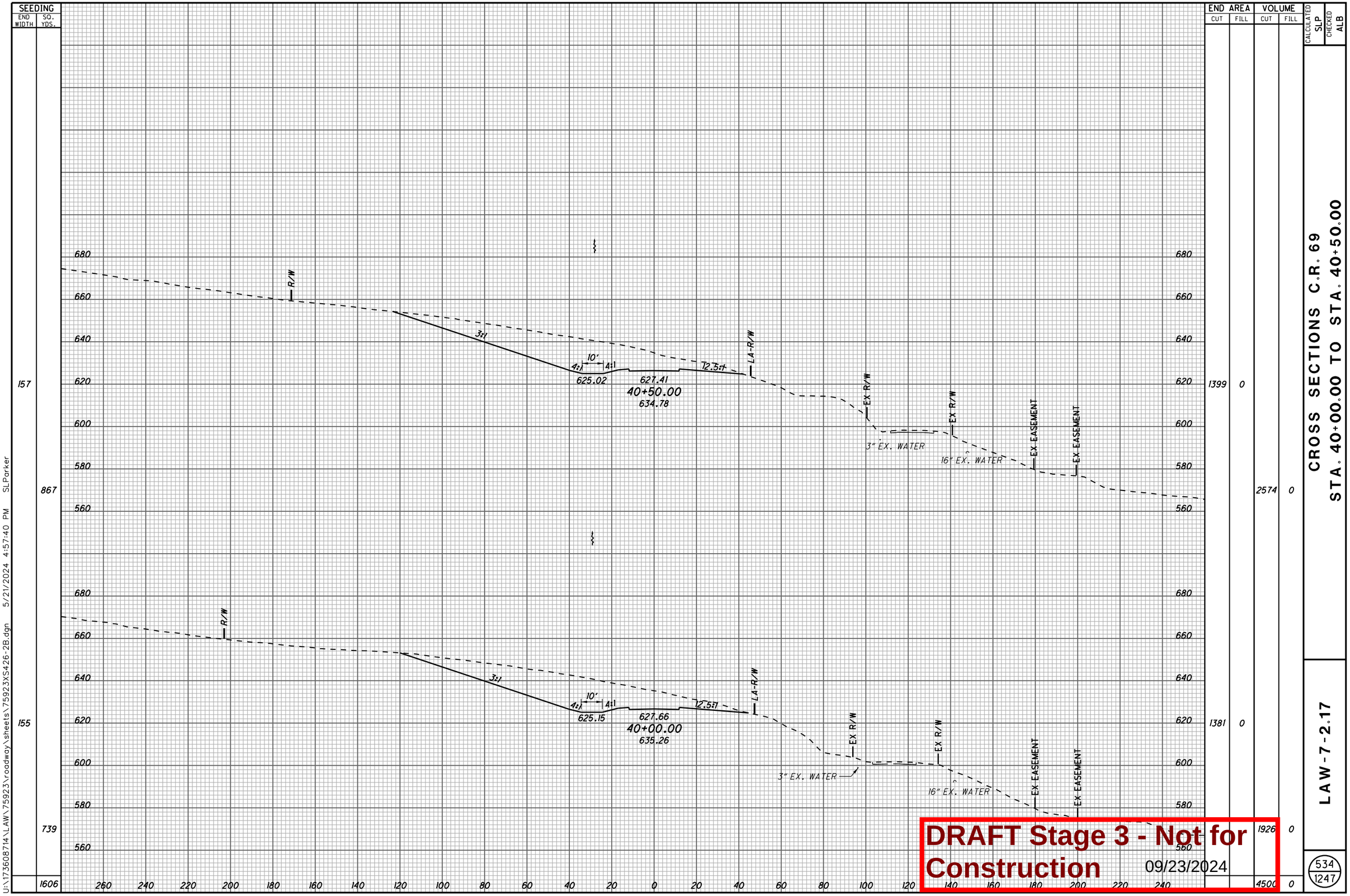

CROSS SECTIONS C.R. 69
STA. 40+00.00 TO STA. 40+50.00

LAW-7-2.17

534
1247

DRAFT Stage 3 - Not for Construction 09/23/2024

U:\173608714\LAW\75923\roadway\sheets\75923XS426-2B.dgn 5/21/2024 4:57:40 PM SLParker

SEEDING	
END WIDTH	SQ. YDS.
119	663
119	766
	1429

END AREA	
CUT	FILL
303	481
795	0
1017	446
2032	0
3049	446

VOLUME	
CUT	FILL
1017	446
795	0
2032	0
3049	446

CALCULATED SLP
CHECKED ALB

CROSS SECTIONS C.R. 69
STA. 41+00.00 TO STA. 41+50.00

LAW-7-2.17

535
1247

680 660 640 620 600 580 560

R/W
3:1
4:1
10'
4:1
624.76
626.91
41+50.00
625.44
1:1
1:1
4:1
LA-R/W
3:1
1:1
EX R/W
3" EX. WATER
EX R/W
16" EX. WATER
EX EASEMENT
EX EASEMENT

R/W
3:1
4:1
10'
4:1
624.90
627.16
41+00.00
632.11
12.5:1
LA-R/W
EX R/W
3" EX. WATER
EX R/W
16" EX. WATER
EX EASEMENT
EX EASEMENT

260 240 220 200 180 160 140 120 100 80 60 40 20 0 20 40 60 80 100 120 140 160 180 200 220 240

DRAFT Stage 3 - Not for Construction 09/23/2024

U:\17360871\4\LAW\75923\roadway\sheets\75923XS427-2B.dgn 5/21/2024 4:57:41 PM SLParker

SEEDING	
END WIDTH	SQ. YDS.
160	929
175	817
	1746

END AREA		VOLUME	
CUT	FILL	CUT	FILL
677	444		
		1327	1683
		756	1373
		981	1717
		2308	3400

CALCULATED SLP

CHECKED ALB

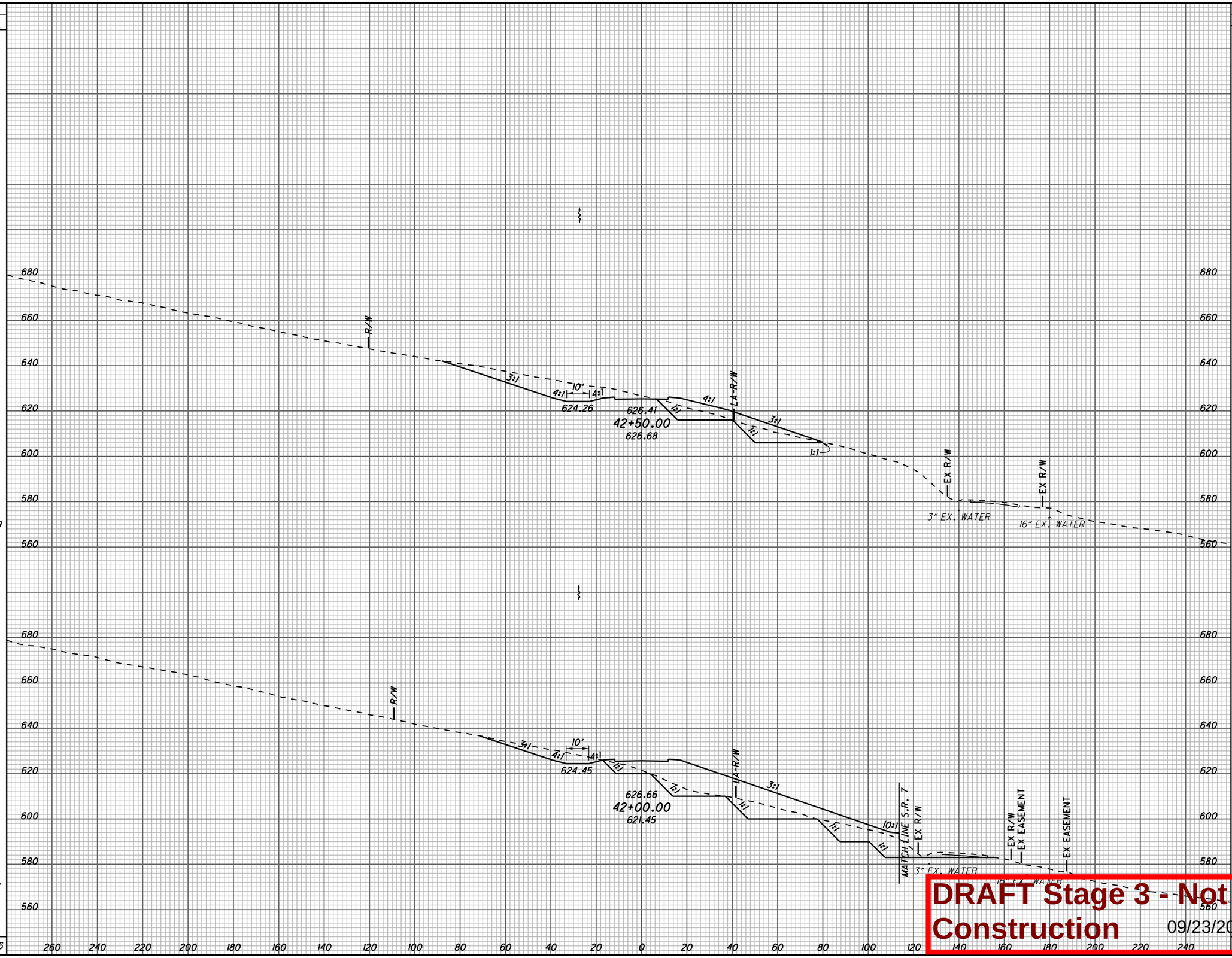

CROSS SECTIONS C.R. 69
STA. 42+00.00 TO STA. 42+50.00

LAW-7-2.17

536
1247

DRAFT Stage 3 - Not for Construction 09/23/2024

U:\173608714\LAW\75923\roadway\sheets\75923XS428-2B.dgn 5/21/2024 4:57:42 PM SLParker

SEEDING		END AREA		VOLUME		CALCULATED	CHECKED
END WIDTH	SQ. YDS.	CUT	FILL	CUT	FILL	SLP	ALB
128	748	603	14	1316	15		
141	837	817	2	1384	413		
	1585			2700	428		

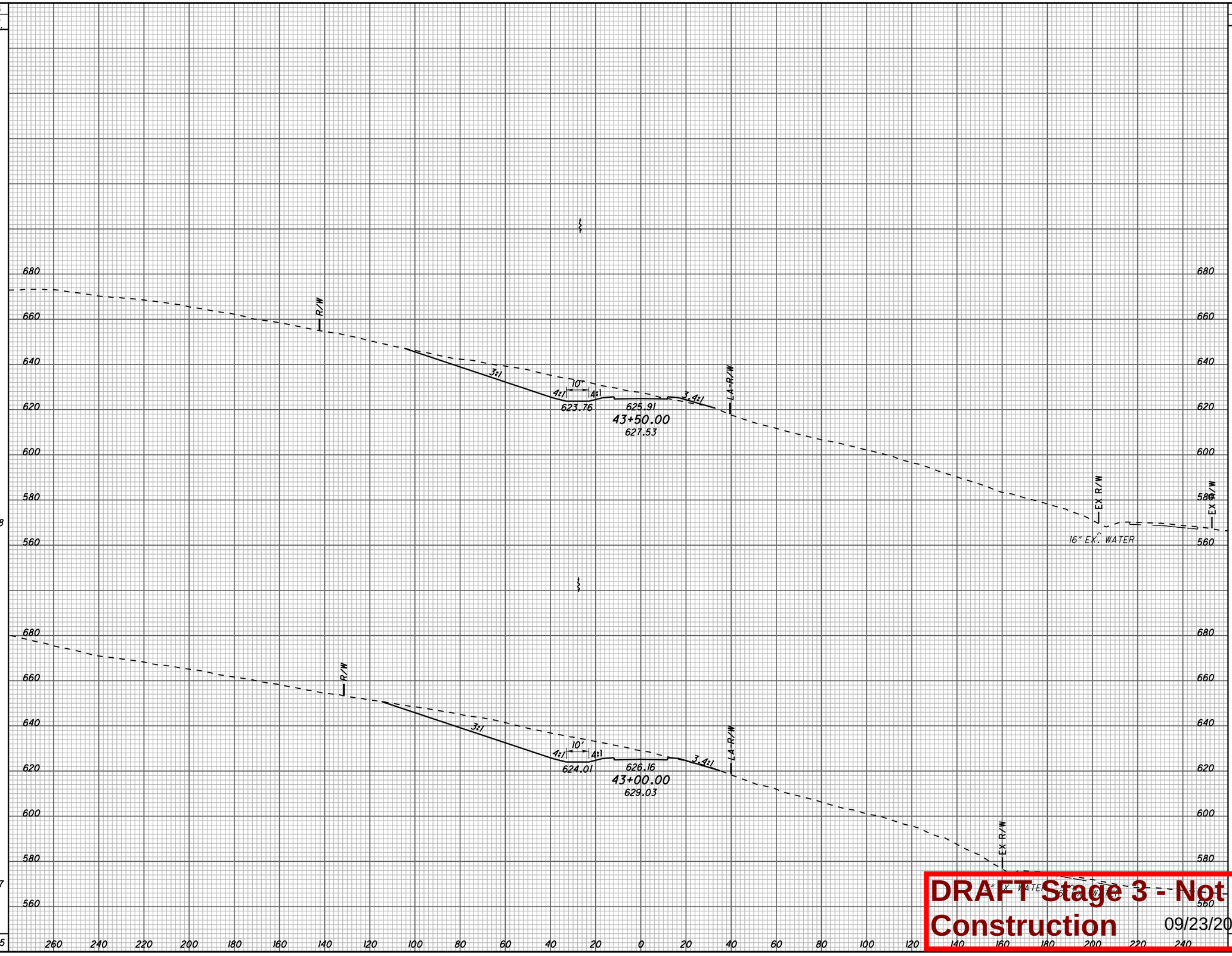

CROSS SECTIONS C.R. 69
STA. 43+00.00 TO STA. 43+50.00

LAW-7-2.17

537
1247

DRAFT Stage 3 - Not for Construction 09/23/2024

U:\173608714\LAW\75923\roadway\sheets\75923XS429-2B.dgn 5/21/2024 4:57:42 PM SLParker

SEEDING	
END WIDTH	SQ. YDS.
249	1338
232	1001
	2339

END AREA	
CUT	FILL
2460	0
1332	0

VOLUME	
CUT	FILL
3511	0
1792	14
5303	14

CALCULATED SLP
CHECKED ALB

CROSS SECTIONS C.R. 69
STA. 44+00.00 TO STA. 44+50.00

LAW-7-2.17

538
1247

680
660
640
620
600
580
560

R/W
3:1
4:1
10'
4:1
623.26
625.41
44+50.00
633.69
LA-R/W
3:1
MATCH LINE S.R. 7
EX R/W
16" EX. WATER

680
660
640
620
600
580
560

R/W
3:1
4:1
10'
4:1
623.51
625.66
44+00.00
629.38
LA-R/W
3:1
MATCH LINE S.R. 7
EX R/W
16" EX. WATER

260 240 220 200 180 160 140 120 100 80 60 40 20 0 20 40 60 80 100 120 140 160 180 200 220 240

DRAFT Stage 3 - Not for Construction 09/23/2024

U:\1736087\14\LAW\75923\roadway\sheets\75923XS430-2B.dgn 5/21/2024 4:57:43 PM SLParker

SEEDING END WIDTH	SEEDING SQ. YDS.
265	1488
270	1482
263	1423
	4393

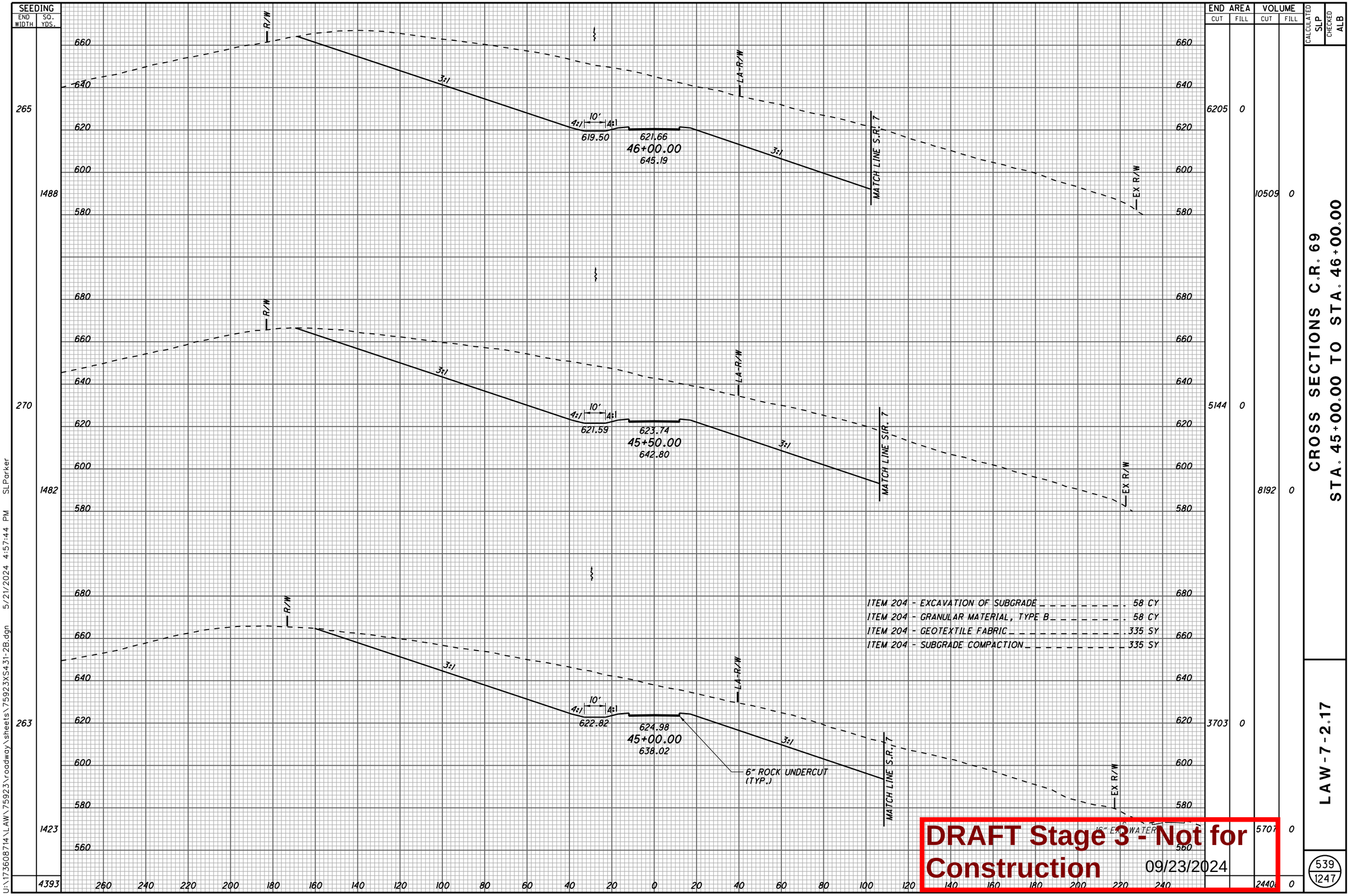

END AREA CUT	END AREA FILL	VOLUME CUT	VOLUME FILL
6205	0		
		10509	0
5144	0		
		8192	0
3703	0		
		5707	0
		2440	0

ITEM 204 - EXCAVATION OF SUBGRADE . . . . . 58 CY
ITEM 204 - GRANULAR MATERIAL, TYPE B . . . . . 58 CY
ITEM 204 - GEOTEXTILE FABRIC . . . . . 335 SY
ITEM 204 - SUBGRADE COMPACTION . . . . . 335 SY

CALCULATED SLP
CHECKED ALB

CROSS SECTIONS C.R. 69
STA. 45+00.00 TO STA. 46+00.00

LAW-7-2.17

539
1247

DRAFT Stage 3 - Not for Construction 09/23/2024

U:\1736087\14\LAW\75923\roadway\sheets\75923XS431-2B.dgn 5/21/2024 4:57:44 PM SLParker

SEEDING END WIDTH	SEEDING SQ. YDS.
	232
	1322
	244
	1392
	257
	1451
	4165

END AREA CUT	END AREA FILL	VOLUME CUT	VOLUME FILL
6342	0		
		13143	0
7852	0		
		14221	0
7506	0		
		12696	0
		4006	0

CALCULATED SLP
CHECKED ALB

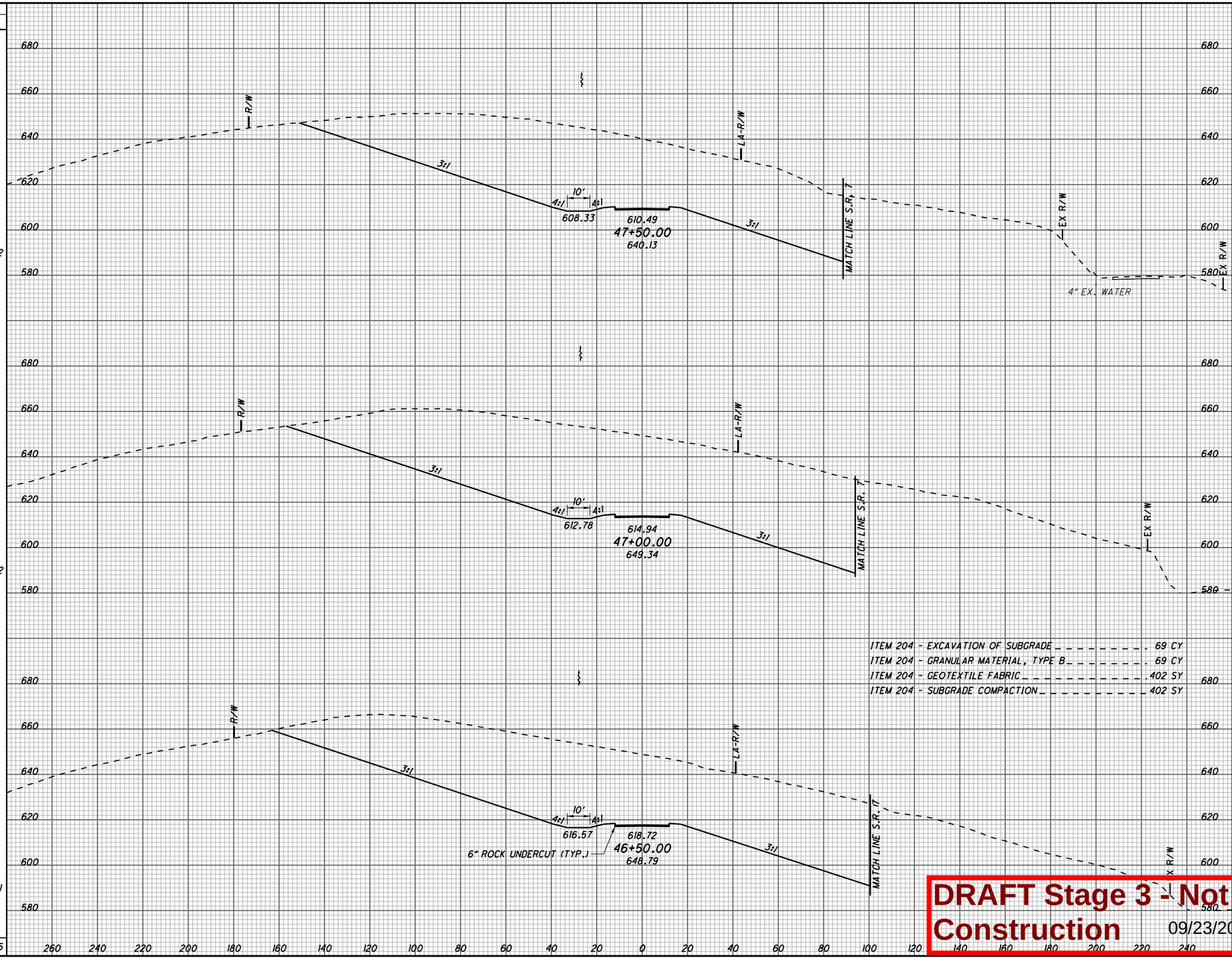

ITEM 204 - EXCAVATION OF SUBGRADE . . . . . 69 CY
ITEM 204 - GRANULAR MATERIAL, TYPE B . . . . . 69 CY
ITEM 204 - GEOTEXTILE FABRIC . . . . . 402 SY
ITEM 204 - SUBGRADE COMPACTION . . . . . 402 SY

DRAFT Stage 3 - Not for Construction 09/23/2024

CROSS SECTIONS C.R. 69
STA. 46+50.00 TO STA. 47+50.00

LAW-7-2.17

540
1247

U:\173608714\LAW\75923\roadway\sheets\75923XS432-2B.dgn 5/21/2024 4:57:45 PM SLParker

SEEDING END WIDTH	SEEDING SQ. YDS.
124	849
182	1100
214	1240
	3189

END AREA CUT	END AREA FILL	VOLUME CUT	VOLUME FILL
156	670	1614	621
1587	0	5387	0
4230	0	9790	0
		1679	621

CALCULATED SLP
CHECKED ALB

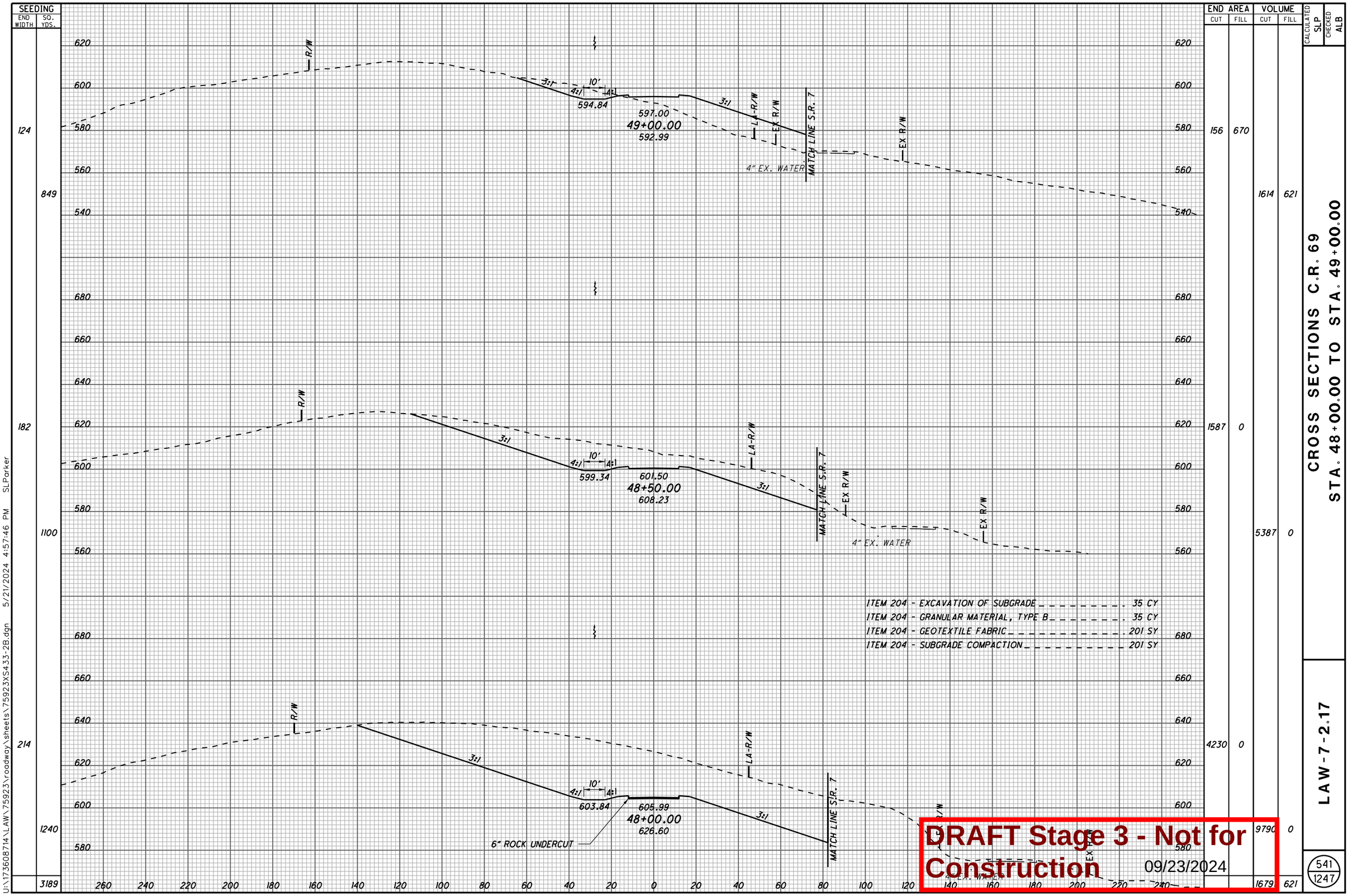

ITEM 204 - EXCAVATION OF SUBGRADE . . . . . 35 CY
ITEM 204 - GRANULAR MATERIAL, TYPE B . . . . . 35 CY
ITEM 204 - GEOTEXTILE FABRIC . . . . . 201 SY
ITEM 204 - SUBGRADE COMPACTION . . . . . 201 SY

DRAFT Stage 3 - Not for Construction 09/23/2024

CROSS SECTIONS C.R. 69
STA. 48+00.00 TO STA. 49+00.00

LAW-7-2.17

541
1247

U:\1736008714\LAW\75923\roadway\sheets\75923XS433-2B.dgn 5/21/2024 4:57:46 PM SLParker

SEEDING END WIDTH	SEEDING SQ. YDS.	END AREA CUT	END AREA FILL	VOLUME CUT	VOLUME FILL
170	796	0	2206	0	3944
116	691	0	2053	32	3533
132	746	34	1762	102	2869
136	722	76	1337	215	1859
	2955			349	12205

CALCULATED SLP
CHECKED ALB

CROSS SECTIONS C.R. 69
STA. 49+50.00 TO STA. 51+00.00

LAW-7-2.17

542
1247

U:\173608714\LAW\75923\roadway\sheets\75923XS434-2B.dgn 5/21/2024 4:57:46 PM SLPorker

DRAFT Stage 3 - Not for Construction 09/23/2024

SEEDING		END AREA		VOLUME		CALCULATED	CHECKED
END WIDTH	SQ. YDS.	CUT	FILL	CUT	FILL	SLP	ALB
159	931	0	2817	0	5745		
176	1015	0	3388	0	6393		
189	999	0	3517	0	5299		
	2945			0	17437		

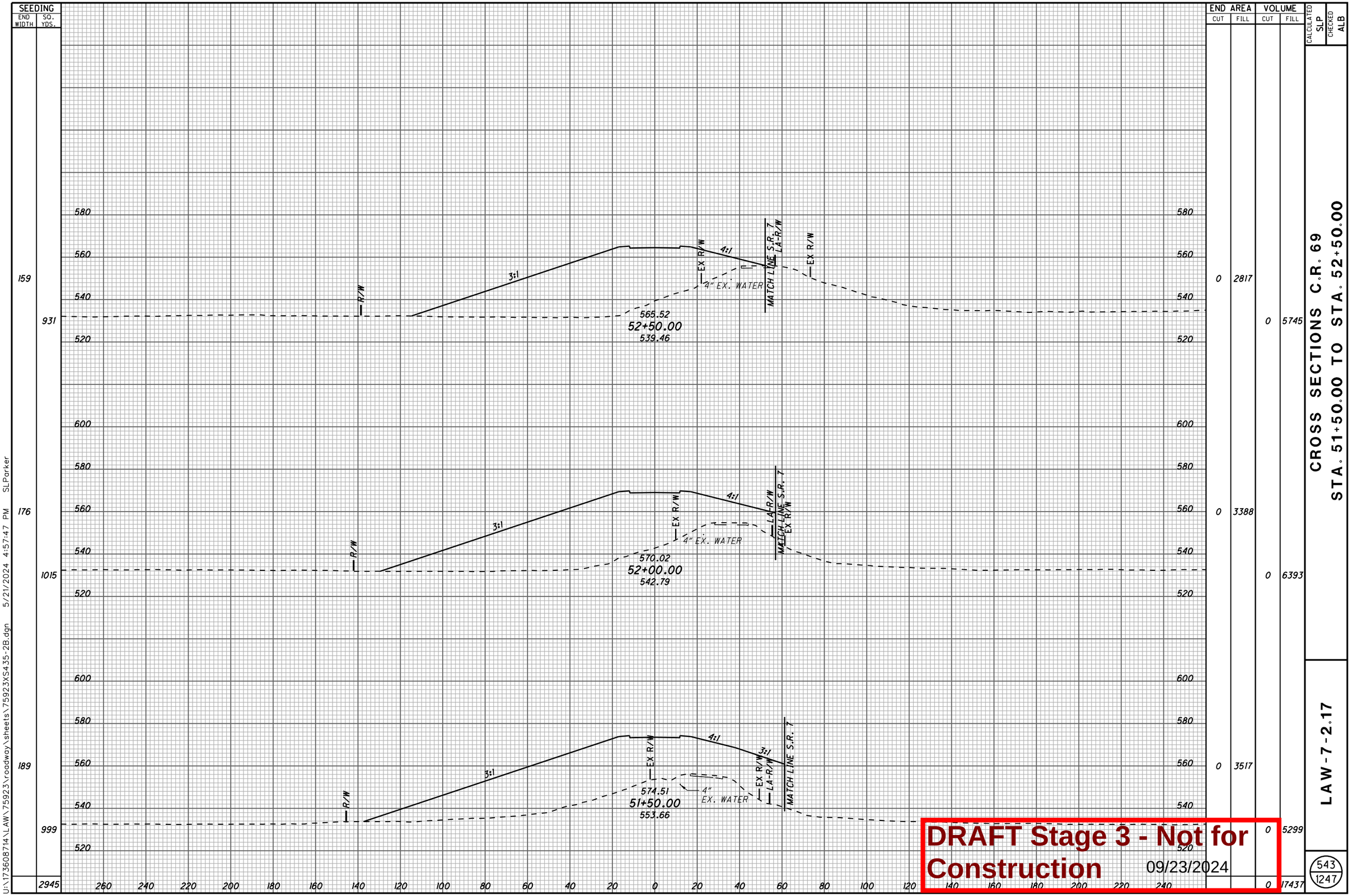

CROSS SECTIONS C.R. 69
STA. 51+50.00 TO STA. 52+50.00

LAW-7-2.17

543
1247

DRAFT Stage 3 - Not for Construction 09/23/2024

U:\173608714\LAW\75923\roadway\sheets\75923XS435-2B.dgn 5/21/2024 4:57:47 PM SLParker

SEEDING		END AREA		VOLUME	
END WIDTH	SQ. YDS.	CUT	FILL	CUT	FILL
103	623	482	556	524	1863
121	718	84	1456	92	3405
137	824	15	2221	15	4665
	2165			631	9933

CALCULATED SLP
CHECKED ALB

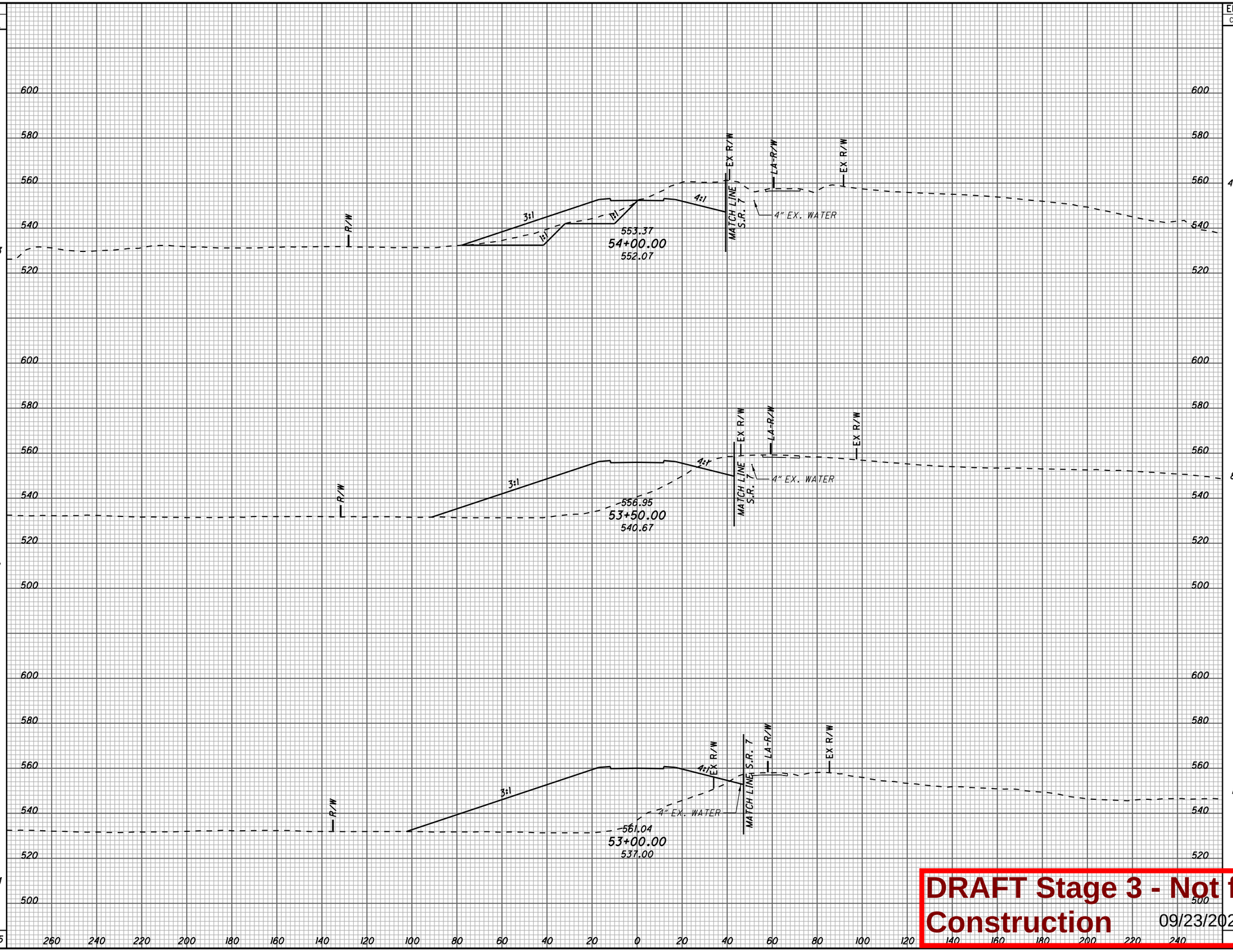

CROSS SECTIONS C.R. 69
STA. 53+00.00 TO STA. 54+00.00

LAW-7-2.17

544
1247

DRAFT Stage 3 - Not for Construction 09/23/2024

U:\173608714\LAW\75923\roadway\sheets\75923XS436-2B.dgn 5/21/2024 4:57:48 PM SLParker

SEEDING END WIDTH	SEEDING SQ. YDS.	END AREA CUT	END AREA FILL	VOLUME CUT	VOLUME FILL
116	641	1465	28	2558	64
114	568	1297	41	2484	38
90	425	1385	0	2192	0
63	462	982	0	1356	515
	2096			8590	617

CALCULATED SLP
CHECKED ALB

CROSS SECTIONS C.R. 69
STA. 54+50.00 TO STA. 56+00.00

LAW-7-2.17

545
1247

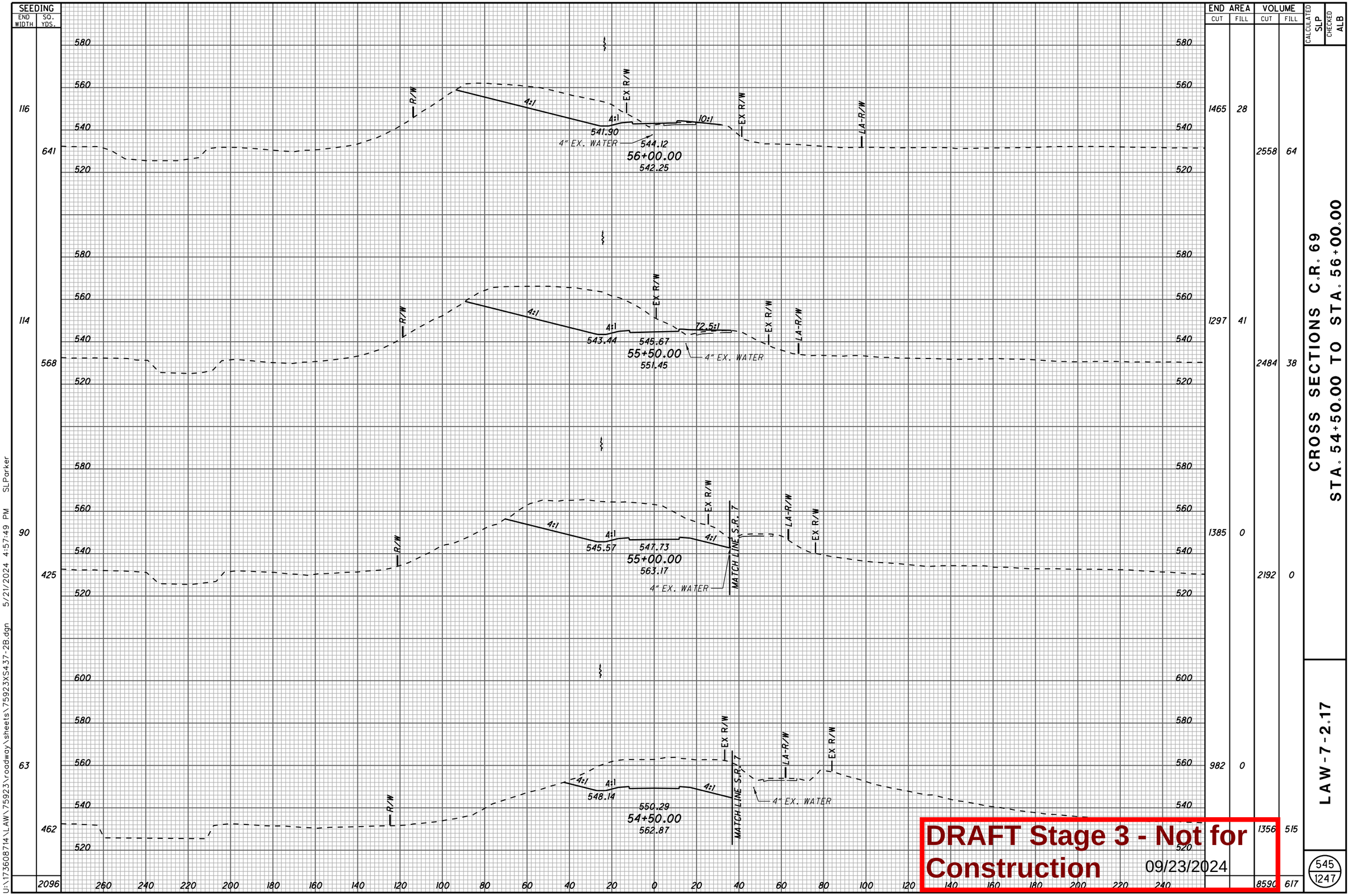

DRAFT Stage 3 - Not for Construction 09/23/2024

U:\173608714\LAW 75923\roadway\sheets\75923XS437-2B.dgn 5/21/2024 4:57:49 PM SLParker

SEEDING	
END WIDTH	SQ. YDS.
8	86
59	486
	572

ITEM 203 - EXCAVATION _ _ _ _ _ _ _ _ _ _ _ _ _ .269,898 CY
ITEM 203 - EMBANKMENT _ _ _ _ _ _ _ _ _ _ _ _ _ _ 113,092 CY
ITEM 203 - EMBANKMENT, AS PER PLAN (TYPE C) _ _ _23,726 CY
ITEM 204 - EXCAVATION OF SUBGRADE _ _ _ _ _ _ _ _ _422 CY
ITEM 204 - GRANULAR MATERIAL, TYPE B_ _ _ _ _ _ _ _422 CY
ITEM 204 - GEOTEXTILE FABRIC_ _ _ _ _ _ _ _ _ _ _2,465 SY
ITEM 204 - SUBGRADE COMPACTION_ _ _ _ _ _ _ _ _ 2,465 SY
ITEM 659 - SEEDING AND MULCHING, CLASS 3C_ _ _ _ 91,495 CY
QUANTITIES CARRIED TO THE SUBSUMMARY, SEE SHEET 74.

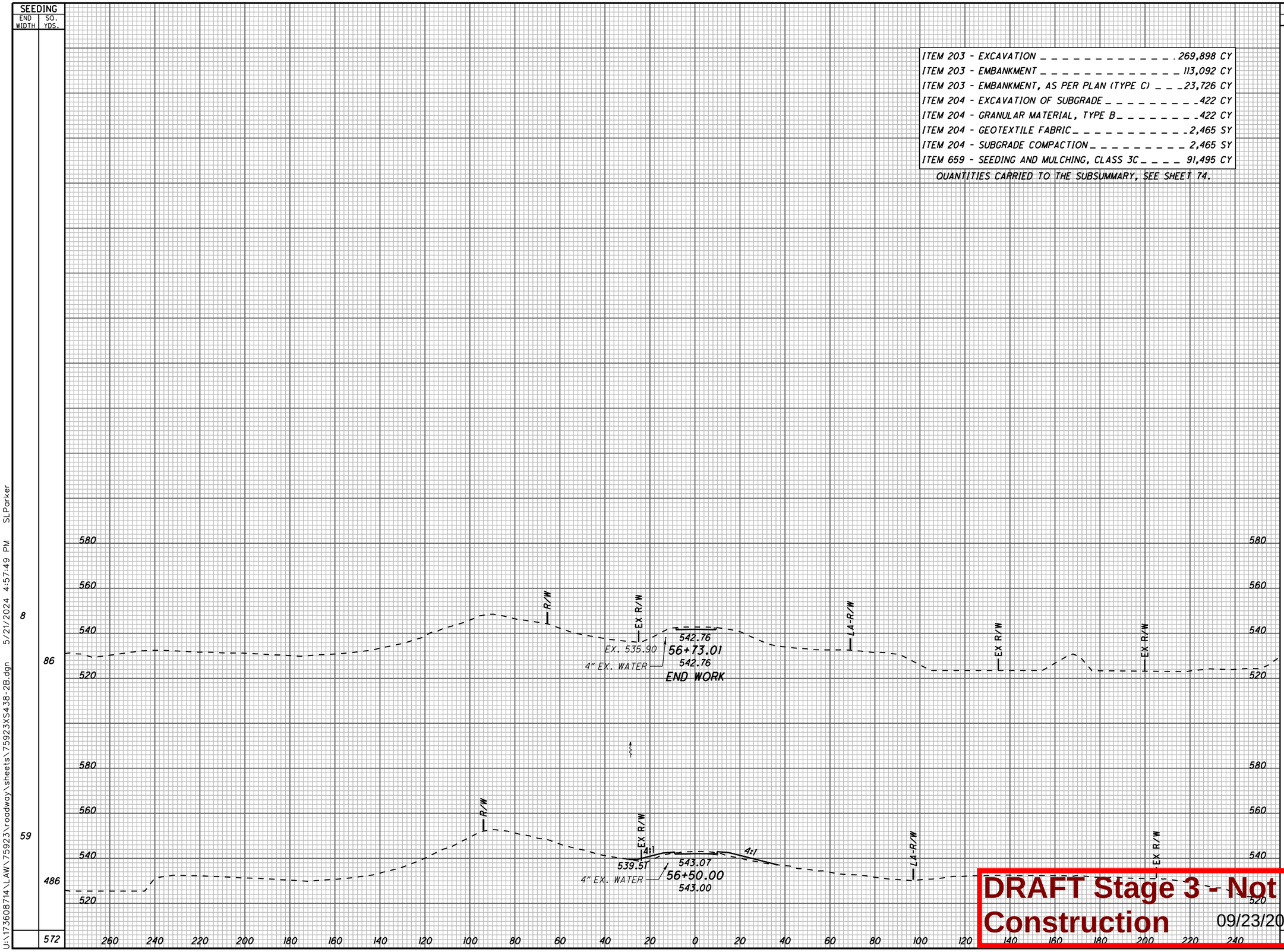

END AREA		VOLUME	
CUT	FILL	CUT	FILL
2	0		
2	22		
2	50		
1359	72		
1361	94		

CALCULATED SLP
CHECKED ALB

CROSS SECTIONS C.R. 69
STA. 56+50.00 TO STA. 56+73.01

LAW-7-2.17

546
1247

DRAFT Stage 3 - Not for Construction 09/23/2024

U:\173608714\LAW\75923\roadway\sheets\75923XS438-2B.dgn 5/21/2024 4:57:49 PM SLParker

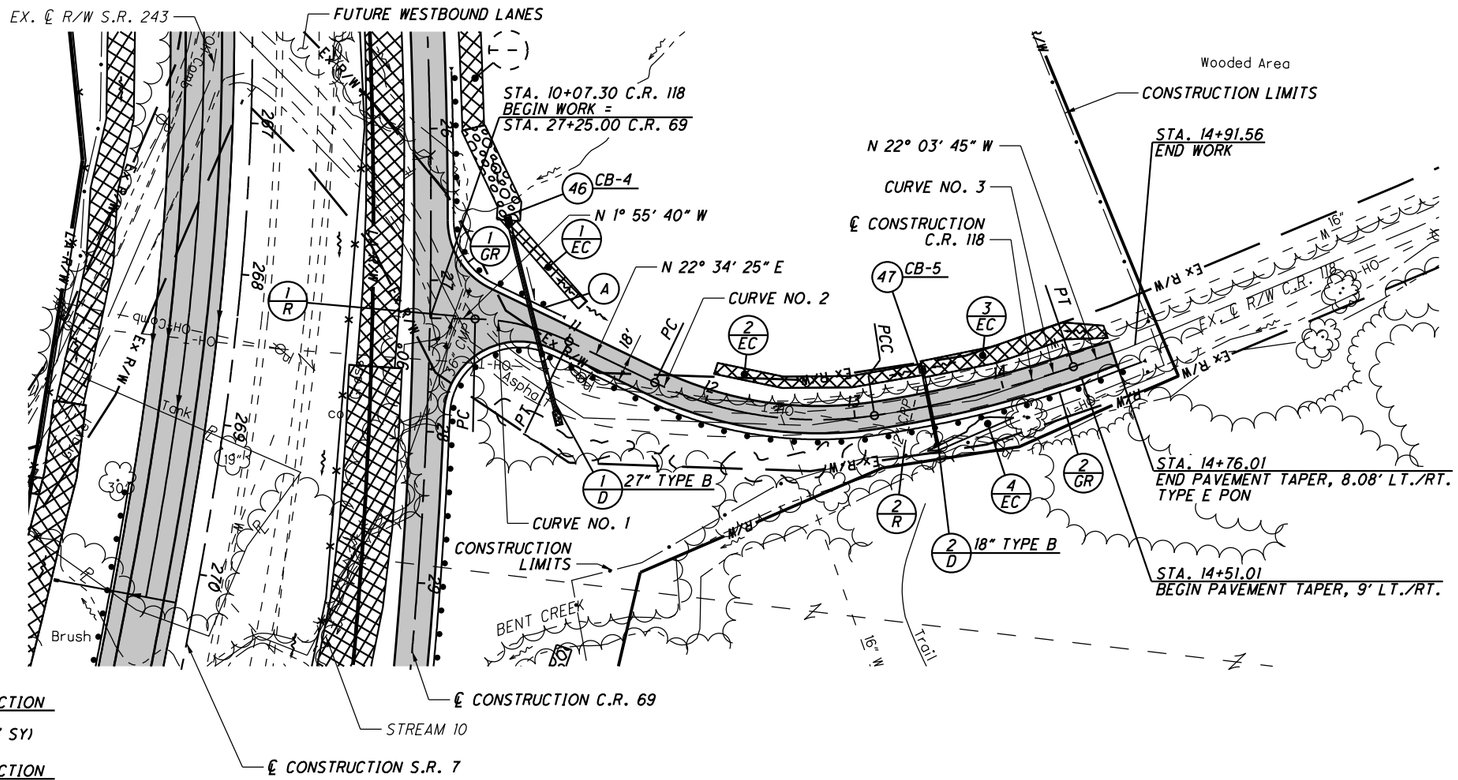

1/GR - INCLUDES 50' OF 46' RADIUS SHOP CURVED GUARDRAIL

CURVE DATA C.R. 118 CURVE NO. 1	CURVE DATA C.R. 118 CURVE NO. 2	CURVE DATA C.R. 118 CURVE NO. 3
P.I. STA. 10+69.71	P.I. STA. 12+40.87	P.I. STA. 13+80.89
Δ = 24° 30' 05" (RT)	Δ = 34° 13' 00" (LT)	Δ = 10° 25' 10" (LT)
Dc = 38° 11' 50"	Dc = 23° 00' 00"	Dc = 7° 41' 27"
R = 150.00'	R = 249.11'	R = 745.00'
T = 32.57'	T = 76.68'	T = 67.93'
L = 64.14'	L = 148.77'	L = 135.48'
E = 3.49'	E = 11.53'	E = 3.09'
e_{max} (N.D.C.) = 8.00%	e_{max} (N.D.C.) = 8.00%	e_{max} (N.D.C.) = 8.00%
e_{max} = NA	e_{max} = 6.80%	e_{max} = 3.98%
PC STA. 10+37.14	PC STA. 11+64.19	PCC STA. 13+12.96
PT STA. 11+01.28	PCC STA. 13+12.96	PT STA. 14+48.44

FOR QUANTITIES, SEE SHEETS 71-81
FOR S.R. 7 PLAN & PROFILE, SEE SHEETS 125-126
FOR C.R. 69 PLAN & PROFILE, SEE SHEETS 502-507
FOR INTERSECTION DETAILS, SEE SHEET 626
FOR STORM SEWER PROFILES, SEE SHEETS 551 & 648
FOR TRAFFIC CONTROL PLAN, SEE SHEETS 713-733A
FOR FENCE TABLES, SEE SHEETS 1039-1041

1/EC DITCH EROSION PROTECTION MAT, TYPE B (74' X 7.5' / 9 = 61.67 SY)

2/EC DITCH EROSION PROTECTION MAT, TYPE B (150' X 7.5' / 9 = 125 SY)

3/EC DITCH EROSION PROTECTION MAT, TYPE B (126' X 11' / 9 = 154 SY)

4/EC DUMPED ROCK FILL, TYPE C, AS PER PLAN (249 SF x 1.5'/ 27 = 13.83 CY)

A TYPE E PON +79.16

- PROPOSED PAVEMENT

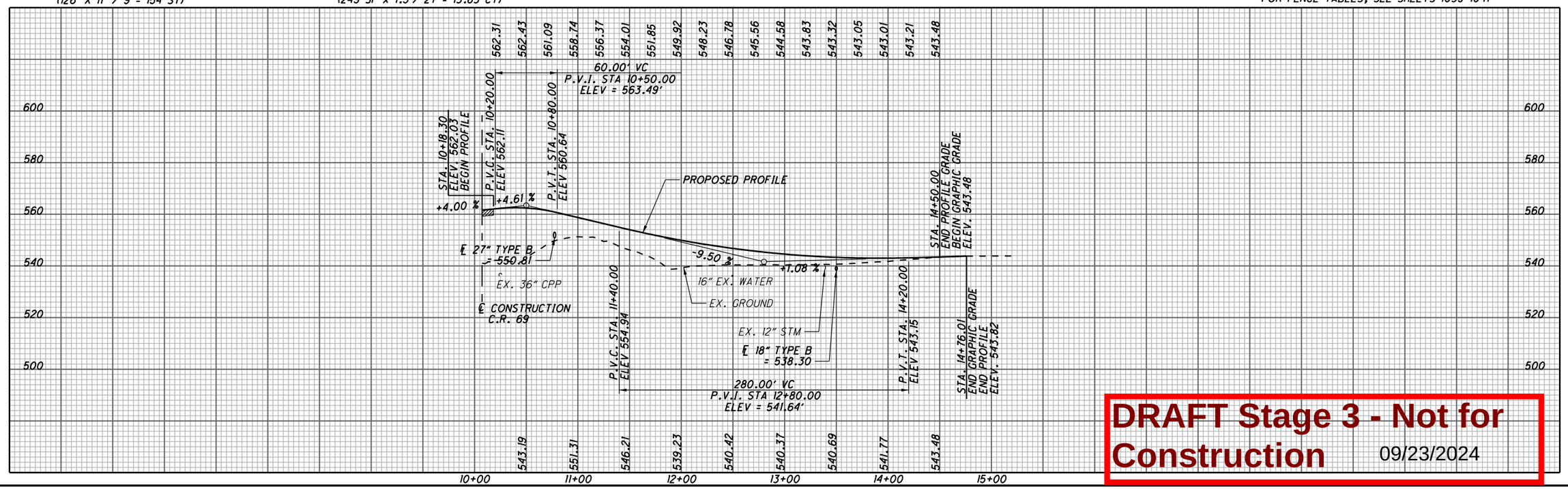

DRAFT Stage 3 - Not for Construction 09/23/2024

N

HORIZONTAL SCALE IN FEET
0 25 50 100

CALCULATED SLP
CHECKED ALB

PLAN AND PROFILE
C.R. 118

LAW-7-2.17

547
1247

U:\173608714\LAW\75923\roadway\sheets\75923GP113-2B.dgn 5/21/2024 4:57:52 PM SLParker

SEEDING	
END WIDTH	SQ. YDS.
143	661
95	168
0	829

END AREA	
CUT	FILL
31	43
30	355
0	341
0	518
0	542
30	873

VOLUME	
CUT	FILL

CALCULATED SLP
CHECKED ALB

640 620 600 580 560 540 520

MATCH LINE C.R. 69
3:1
4:1
4:1
EX R/W
556.06
558.74
11+00.00
551.31
2:1
EX R/W
27" TYPE B
℄ = 538.06

STA. 10+51.46
CB-4
T/C = 555.94
℄ 27" TYPE B
= 551.89

MATCH LINE C.R. 69
7.1:1
EX R/W
3.6:1
EX R/W
MATCH LINE C.R. 69
562.43
10+50.00
543.19

ITEM 203 - EMBANKMENT, AS PER PLAN, TYPE C _ _ _ _ 4061 CY

EX R/W
MATCH LINE C.R. 69
EX R/W
MATCH LINE C.R. 69
562.03
10+18.30
542.18
BEGIN WORK
DRAINAGE LAYER (TYP.)

260 240 220 200 180 160 140 120 100 80 60 40 20 0 20 40 60 80 100 120 140 160 180 200 220 240

CROSS SECTIONS - C.R. 118
STA. 10+18.30 TO STA. 11+00.00

LAW-7-2.17

548
1247

DRAFT Stage 3 - Not for Construction 09/23/2024

U:\173608714\LAW\75923\roadway\sheets\75923XS500-2B.dgn 5/21/2024 4:57:53 PM SLParker

SEEDING		END AREA		VOLUME		CALCULATED	CHECKED
END WIDTH	SQ. YDS.	CUT	FILL	CUT	FILL	SLP	ALB
282	1656	3126	0	5401	0		
314	1269	2707	0	2536	40		
	2925			7937	40		

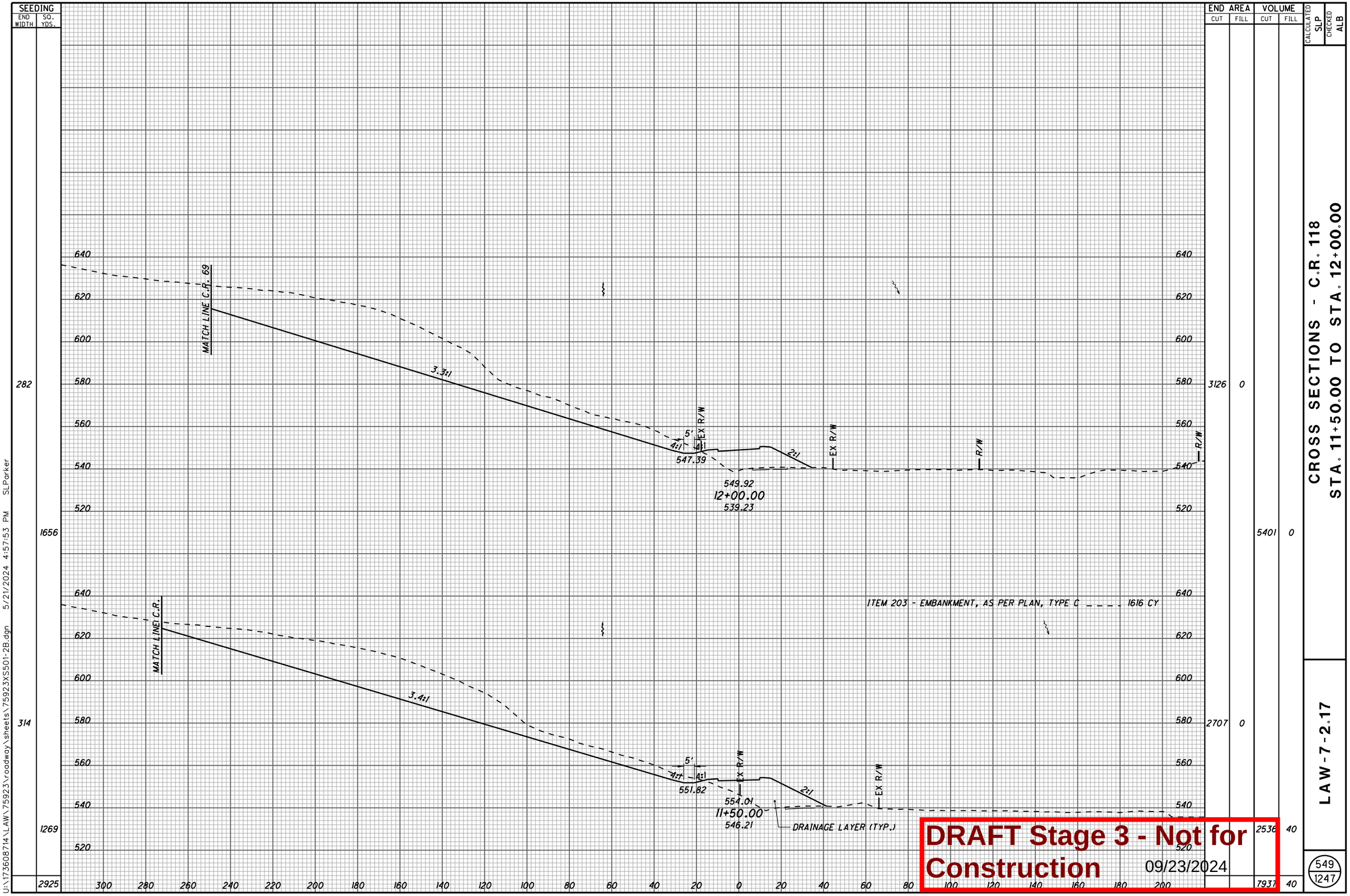

CROSS SECTIONS - C.R. 118
STA. 11+50.00 TO STA. 12+00.00

LAW-7-2.17

549
1247

DRAFT Stage 3 - Not for Construction 09/23/2024

U:\173608714\LAW\75923\roadway\sheets\75923XS501-2B.dgn 5/21/2024 4:57:53 PM SLParker

SEEDING	
END WIDTH	SQ. YDS.
312	1666
287	1582
	3248

END AREA		VOLUME	
CUT	FILL	CUT	FILL
3880	0		
		6749	0
3409	0		
		6051	0
		12800	0

CALCULATED SLP
CHECKED ALB

CROSS SECTIONS - C.R. 118
STA. 12+50.00 TO STA. 13+00.00

LAW-7-2.17

550
1247

640
620
600
580
560
540
520

3:1
EX R/W
6'
4:1
4:1
542.10
16" EX. WATER
544.58
13+00.00
540.37
4.7:1
EX R/W
R/W

MATCH LINE C.R. 69

ITEM 203 - EMBANKMENT, AS PER PLAN, TYPE C ---- 904 CY

3:1
EX R/W
6'
4:1
4:1
544.18
16" EX. WATER
546.78
12+50.00
540.42
2:1
10:1
EX R/W
R/W
DRAINAGE LAYER (TYP.)

340 320 300 280 260 240 220 200 180 160 140 120 100 80 60 40 20 0 20 40 60 80 100 120 140 160

DRAFT Stage 3 - Not for Construction 09/23/2024

U:\173608714\LAW\75923\roadway\sheets\75923XS502-2B.dgn 5/21/2024 4:57:54 PM SLParker

SEEDING END WIDTH	SEEDING SQ. YDS.	END AREA CUT	END AREA FILL	VOLUME CUT	VOLUME FILL
362	1960	5182	0		
	1821				
343		4699	0		
	3781			9149	0
				7944	0
				1709	0

CALCULATED SLP
CHECKED ALB

ITEM 204 - EXCAVATION OF SUBGRADE _____ 24 CY
ITEM 204 - GRANULAR MATERIAL, TYPE B _____ 24 CY
ITEM 204 - GEOTEXTILE FABRIC _____ 59 SY
ITEM 204 - SUBGRADE COMPACTION _____ 59 SY

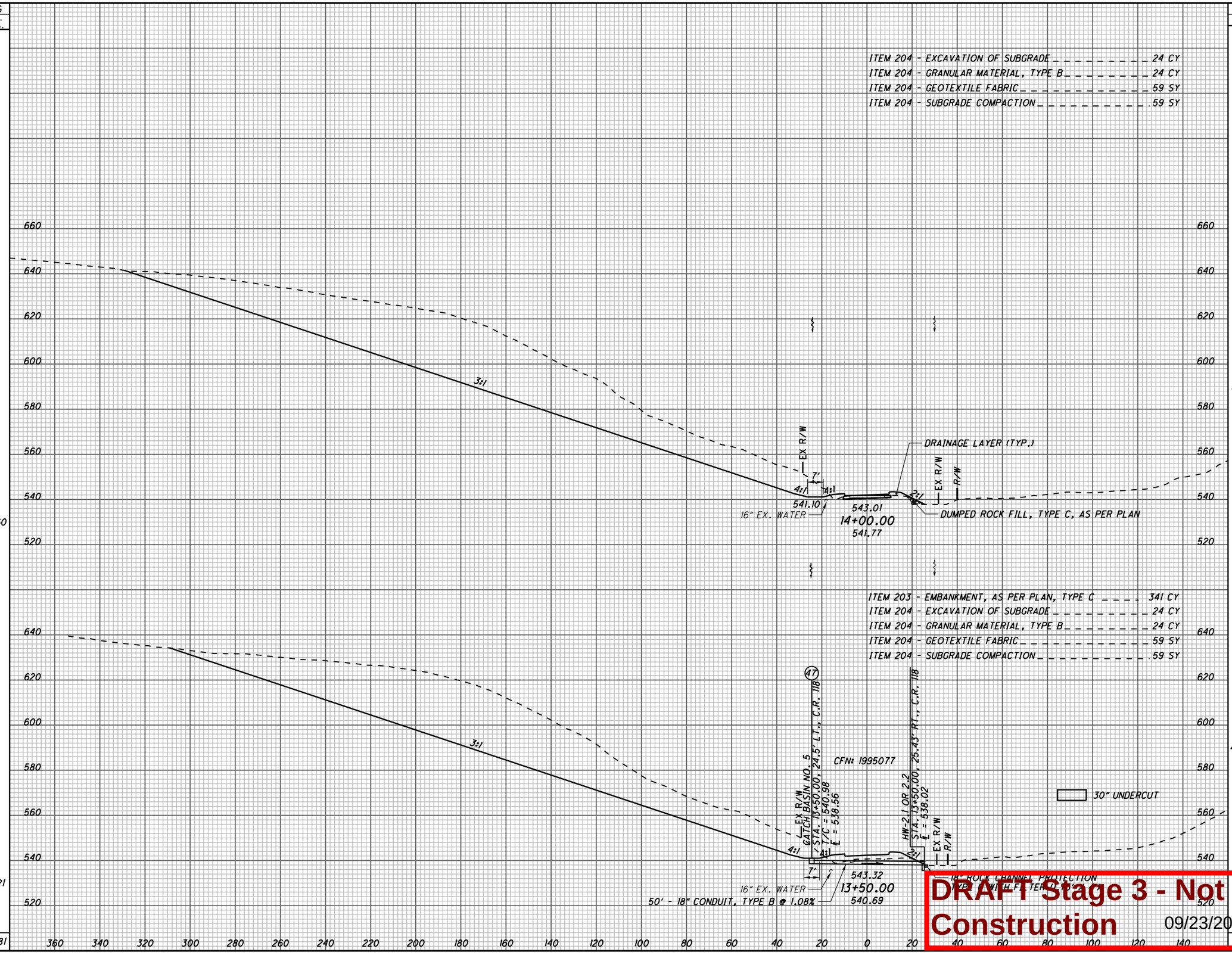

DRAFT Stage 3 - Not for Construction 09/23/2024

CROSS SECTIONS - C.R. 118
STA. 13+50.00 TO STA. 14+00.00

LAW-7-2.17

551
1247

U:\173608714\LAW\75923\roadway\sheets\75923XS503-2B.dgn 5/21/2024 4:57:55 PM SLParker

SEEDING END WIDTH	SEEDING SQ. YDS.	END AREA CUT	END AREA FILL	VOLUME CUT	VOLUME FILL
8	550	2	0	2870	0
373	2042	5956	0	10314	0
	2592			13184	0

CALCULATED SLP

CHECKED ALB

ITEM 203 - EXCAVATION _ _ _ _ _ _ _ _ _ _ _ _ _ 51,044 CY
ITEM 203 - EMBANKMENT _ _ _ _ _ _ _ _ _ _ _ _ _ _ 913 CY
ITEM 203 - EMBANKMENT, AS PER PLAN (TYPE C) _ _ _ 6,958 CY
ITEM 204 - EXCAVATION OF SUBGRADE _ _ _ _ _ _ _ _ 108 CY
ITEM 204 - GRANULAR MATERIAL, TYPE B _ _ _ _ _ _ _ 108 CY
ITEM 204 - GEOTEXTILE FABRIC _ _ _ _ _ _ _ _ _ _ 235 SY
ITEM 204 - SUBGRADE COMPACTION _ _ _ _ _ _ _ _ _ 235 SY
ITEM 659 - SEEDING AND MULCHING, CLASS 3C _ _ _ _ 13,375 CY
QUANTITIES CARRIED TO THE SUBSUMMARY, SEE SHEET 74.

660 640 620 600 580 560 540 520

EX R/W
16" EX. WATER
EX. 542.04
543.82
14+76.01
543.82
END WORK
EX R/W
R/W

3:1

ITEM 203 - EMBANKMENT, AS PER PLAN, TYPE C _ _ _ 36 CY
ITEM 204 - EXCAVATION OF SUBGRADE _ _ _ _ _ _ _ 84 CY
ITEM 204 - GRANULAR MATERIAL, TYPE B _ _ _ _ _ _ _ 84 CY
ITEM 204 - GEOTEXTILE FABRIC _ _ _ _ _ _ _ _ _ _ 176 SY
ITEM 204 - SUBGRADE COMPACTION _ _ _ _ _ _ _ _ _ 176 SY

EX R/W
7'
4:1
4:1
2:1
541.32
16" EX. WATER
543.48
14+50.00
543.48
EX R/W
R/W
DRAINAGE LAYER (TYP.)
30" UNDERCUT

360 340 320 300 280 260 240 220 200 180 160 140 120 100 80 60 40 20 0 20 40 60 80 100 120 140

DRAFT Stage 3 - Not for Construction 09/23/2024

CROSS SECTIONS - C.R. 118
STA. 14+50.00 TO STA. 14+76.01

LAW-7-2.17

552
1247

U:\1736087\14\LAW\75923\roadway\sheets\75923XS504-2B.dgn 5/21/2024 4:57:56 PM SLParker

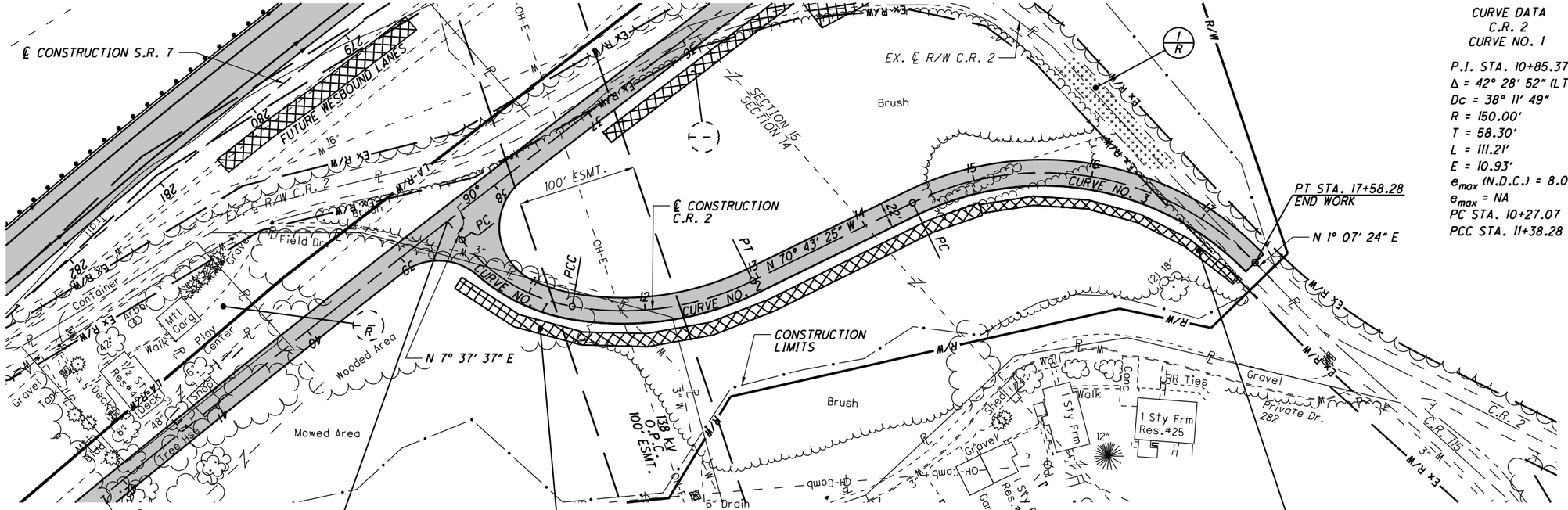

CURVE DATA
C.R. 2
CURVE NO. 1

P.I. STA. 10+85.37
Δ = 42° 28' 52" (LT)
Dc = 38° 11' 49"
R = 150.00'
T = 58.30'
L = 111.21'
E = 10.93'
e_{max} (N.D.C.) = 8.00%
e_{max} = NA
PC STA. 10+27.07
PCC STA. 11+38.28

CURVE DATA
C.R. 2
CURVE NO. 2

P.I. STA. 12+19.20
Δ = 35° 52' 10" (LT)
Dc = 22° 55' 06"
R = 250.00'
T = 80.91'
L = 156.51'
E = 12.77'
e_{max} (N.D.C.) = 8.00%
e_{max} = 7.89%
PCC STA. 11+38.28
PT STA. 12+94.79

CURVE DATA
C.R. 2
CURVE NO. 3

P.I. STA. 16+25.92
Δ = 71° 50' 49" (RT)
Dc = 22° 55' 06"
R = 250.00'
T = 181.13'
L = 313.49'
E = 58.72'
e_{max} (N.D.C.) = 8.00%
e_{max} = 7.00%
PC STA. 14+44.79
PT STA. 17+58.28

- PAVEMENT REMOVED
QUANTITIES ARE INCLUDED IN REFERENCE NUMBER 1-R FOR THE REMOVAL OF EXISTING PAVEMENT, REGRADING TO ENSURE A DRAINABLE SURFACE AND SEEDING AND MULCHING OF THE AREA SHOWN.

FOR QUANTITIES, SEE SHEETS 71-81
FOR S.R. 7 PLAN & PROFILE, SEE SHEETS 127-128
FOR C.R. 69 PLAN & PROFILE, SEE SHEETS 502-507
FOR INTERSECTION DETAILS, SEE SHEET 626
FOR TRAFFIC CONTROL PLAN, SEE SHEETS 713-733A
FOR FENCE TABLES, SEE SHEETS 1039-1041

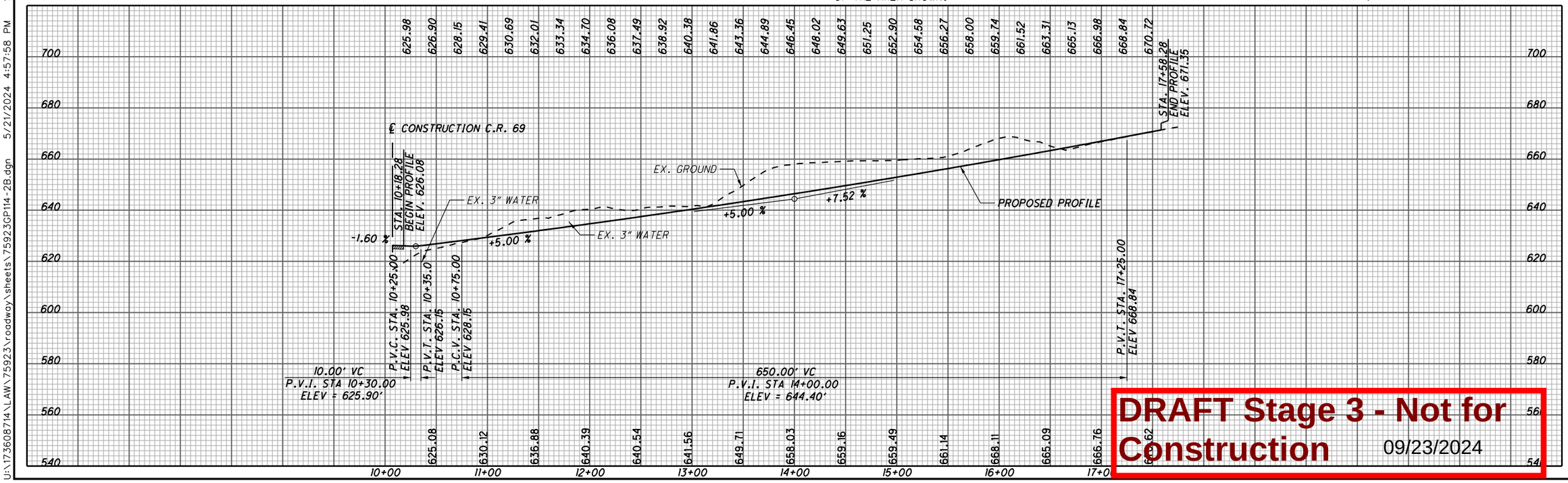

DRAFT Stage 3 - Not for Construction 09/23/2024

HORIZONTAL SCALE IN FEET
0 25 50 100

CALCULATED SLP
CHECKED ALB

PLAN AND PROFILE
C.R. 2

LAW-7-2.17

553
1247

U:\173608714\LAW\75923\roadway\sheets\75923GP114-2B.dgn 5/21/2024 4:57:58 PM SLParker

SEEDING END WIDTH	SEEDING SQ. YDS.	END AREA CUT	END AREA FILL	VOLUME CUT	VOLUME FILL
217	1000	1697	0	2373	0
143	660	865	0	930	135
94	167	138	145	81	477
0		0	667		
	1827			3384	612

CALCULATED SLP
CHECKED ALB

CROSS SECTIONS - C.R. 2
STA. 10+18.28 TO STA. 11+50.00

LAW-7-2.17

554
1247

DRAFT Stage 3 - Not for Construction 09/23/2024

U:\173608714\LAW\75923\roadway\sheets\75923XS600-2B.dgn 5/21/2024 4:57:59 PM SLParker

SEEDING	
END WIDTH	SQ. YDS.
171	959
174	1137
235	1256
	3352

END AREA	
CUT	FILL
499	0
602	0
1413	0
	5766

VOLUME	
CUT	FILL
1020	0
1866	0
2880	0
	0

CALCULATED SLP
CHECKED ALB

CROSS SECTIONS - C.R. 2
STA. 12+00.00 TO STA. 13+00.00

LAW-7-2.17

555
1247

700 680 660 640 620 600

LA-R/W
EX R/W
EX R/W
16" EX. WATER
MATCH LINE C.R. 69
12.5:1
4:1
9'
4:1
640.38
13+00.00
641.56
639.27
R/W
3" EX. WATER

637.49
12+50.00
640.54
636.73

EX GEN
634.70
12+00.00
640.39
634.05

260 240 220 200 180 160 140 120 100 80 60 40 20 0 20 40 60 80 100 120 140 160 180 200 220 240

DRAFT Stage 3 - Not for Construction 09/23/2024

U:\173608714\LAW\75923\roadway\sheets\75923XS601-2B.dgn 5/21/2024 4:58:00 PM SLParker

SEEDING	
END WIDTH	SQ. YDS.
156	889
164	858
145	874
170	947
	3568

END AREA	
CUT	FILL
1425	0
1577	0
1731	0
1485	0
1838	0
1066	0

VOLUME	
CUT	FILL
2780	0
3064	0
2979	0

CALCULATED SLP
CHECKED ALB

700 680 660 640 620 600

EX R/W
LA-R/W
16" EX. WATER
MATCH LINE C.R. 69
12.5:1
4:1
7'
8'
652.90
650.32
15+00.00
659.49
649.63
647.33
14+50.00
659.16
646.45
644.43
14+00.00
658.03
643.36
641.90
13+50.00
649.71
R/W
3" EX. WATER

260 240 220 200 180 160 140 120 100 80 60 40 20 0 20 40 60 80 100 120 140 160 180 200 220 240

CROSS SECTIONS - C.R. 2
STA. 13+50.00 TO STA. 15+00.00

LAW-7-2.17

556
1247

DRAFT Stage 3 - Not for Construction 09/23/2024

U:\173608714\LAW\75923\roadway\sheets\75923XS602-2B.dgn 5/21/2024 4:58:01 PM SLParker

SEEDING END WIDTH	SEEDING SQ. YDS.	END AREA CUT	END AREA FILL	VOLUME CUT	VOLUME FILL
121	599	394	6	914	15
95	557	593	9	1352	9
105	750	867	0	1906	0
164	890	1191	0	2423	0
	2796			6595	24

CALCULATED SLP
CHECKED ALB

CROSS SECTIONS - C.R. 2
STA. 15+50.00 TO STA. 17+00.00

LAW-7-2.17

557
1247

DRAFT Stage 3 - Not for Construction 09/23/2024

U:\173608714\LAW\75923\roadway\sheets\75923XS603-2B.dgn 5/21/2024 4:58:01 PM SLParker

SEEDING	
END WIDTH	SQ. YDS.
8	35
67	521
	556

END AREA	
CUT	FILL
3	0
25	1
157	2
511	8
536	9

VOLUME	
CUT	FILL
3	0
25	1
157	2
511	8
536	9

CALCULATED SLP

CHECKED ALB

ITEM 203 - EXCAVATION _ _ _ _ _ _ _ _ _ _ _ _ _ _ 26,942 CY
ITEM 203 - EMBANKMENT _ _ _ _ _ _ _ _ _ _ _ _ _ _ _ 645 CY
ITEM 659 - SEEDING AND MULCHING, CLASS 3C _ _ _ _ 12,099 CY
QUANTITIES CARRIED TO THE SUBSUMMARY, SEE SHEET 74.

700
680
660
640
620
600

R/W
EX R/W
EX R/W
R/W
671.35
EX. 670.34
17+58.28
671.35
END WORK
3" EX. WATER

4:1
4:1
4:1
R/W
EX R/W
EX R/W
R/W
670.72
669.04
17+50.00
670.62
3" EX. WATER

260 240 220 200 180 160 140 120 100 80 60 40 20 0 20 40 60 80 100 120 140 160 180 200 220 240

CROSS SECTIONS - C.R. 2
STA. 17+50.00 TO STA. 17+58.28

LAW-7-2.17

558
1247

DRAFT Stage 3 - Not for Construction 09/23/2024

U:\173608714\LAW\75923\roadway\sheets\75923XS604-2B.dgn 5/21/2024 4:58:02 PM SLParker

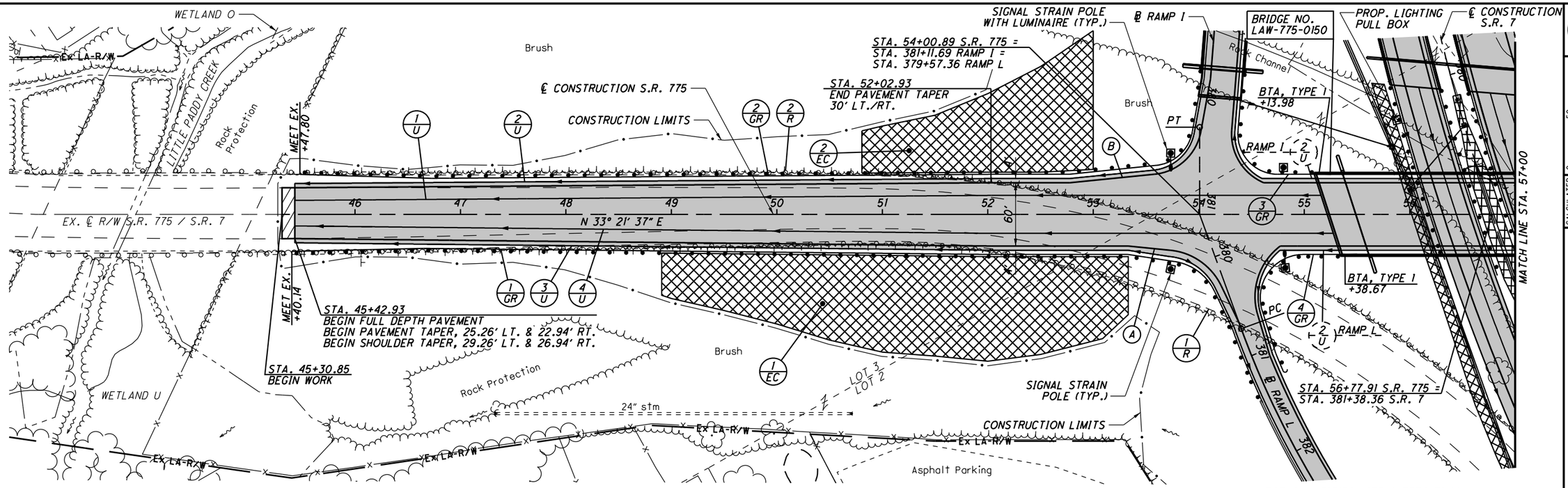

- PROPOSED PAVEMENT
- 3-1/4" MILL/FILL

(A) STA. 53+33.17
BEGIN PAVEMENT TAPER, 30' RT.
BEGIN SHOULDER TAPER, 34' RT.

STA. 53+73.17
END PAVEMENT TAPER, 34' RT.
END SHOULDER TAPER, 40' RT.

(B) STA. 52+77.91
BEGIN PAVEMENT TAPER, 30' LT.
BEGIN SHOULDER TAPER, 34' LT.

STA. 53+57.91
END PAVEMENT TAPER, 38' LT.
END SHOULDER TAPER, 42' LT.

FOR QUANTITIES, SEE SHEETS 71-81
FOR RAMP I PLAN & PROFILE, SEE SHEET 431
FOR RAMP L PLAN & PROFILE, SEE SHEET 457
FOR S.R. 7 PLAN & PROFILE, SEE SHEETS 144-145
FOR INTERCHANGE DETAILS, SEE SHEETS 619-621
FOR INTERSECTION DETAILS, SEE SHEETS 627
FOR UNDERDRAIN TABLES, SEE SHEETS 674-678
FOR TRAFFIC CONTROL PLAN, SEE SHEETS 713-733A
FOR STRUCTURE DETAILS, SEE SHEETS 931-1038
FOR FENCE TABLES, SEE SHEETS 1039-1041

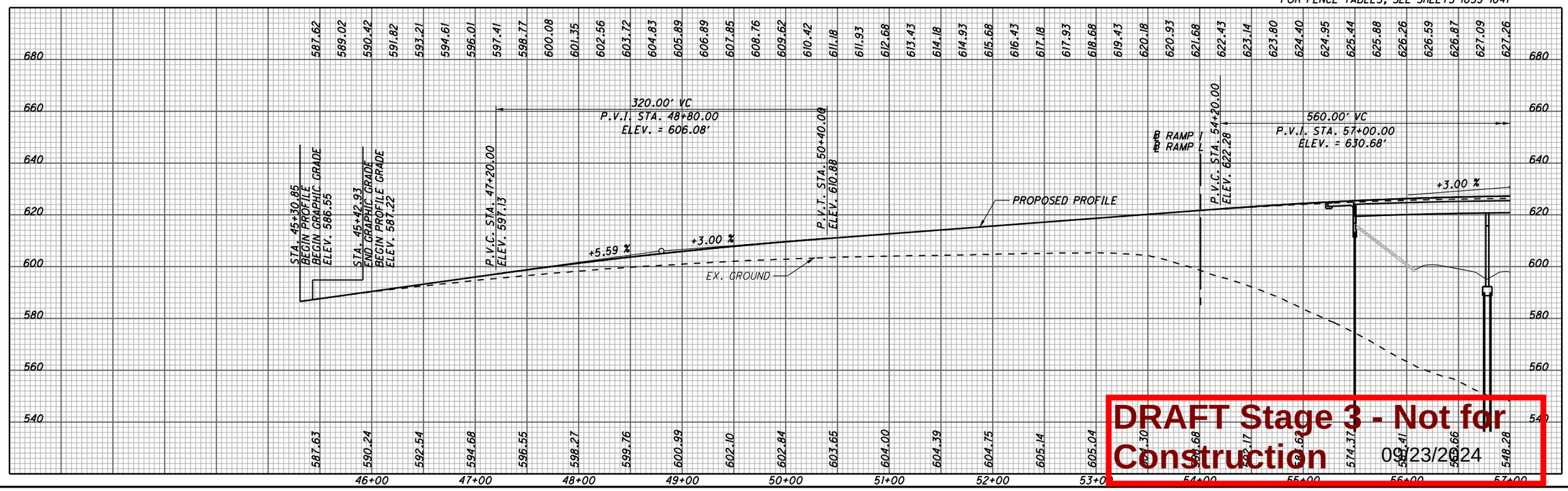

DRAFT Stage 3 - Not for Construction 09/23/2024

HORIZONTAL SCALE IN FEET
0 25 50 100
CALCULATED SLP
CHECKED ALB

PLAN AND PROFILE - S.R. 775
STA. 45+30.85 TO STA. 57+00.00

LAW-7-2.17

559
1247

U:\173608714\LAW\75923\roadway\sheets\75923GP115-2B.dgn 5/21/2024 4:58:05 PM SLParker

(2 EC) ROCK CHANNEL PROTECTION, TYPE C WITH FILTER (30' x 4' x 1.5' / 27 = 6.67 CY)

(4 EC) SEEDING AND EROSION CONTROL WITH TURF REINFORCING MAT, TYPE 3 (77' X 7.5' / 9 = 64.17 SY)

(1 EC) ROCK CHANNEL PROTECTION, TYPE C WITH FILTER (189' x 5.5' x 1.5' / 27 = 57.75 CY)

- QUANTITIES ARE INCLUDED IN REFERENCE NUMBER 3-R FOR THE REGRADING OF THE EXISTING GRAVEL PARKING IN THE AREA SHOWN.

FOR QUANTITIES, SEE SHEETS 71-81
FOR S.R. 7 PLAN & PROFILE, SEE SHEETS 144-145
FOR RAMP K PLAN & PROFILE, SEE SHEETS 442-444
FOR INTERSECTION DETAILS, SEE SHEET 628
FOR CULVERT DETAILS, SEE SHEET 664
FOR UNDERDRAIN TABLES, SEE SHEETS 674-678
FOR TRAFFIC CONTROL PLAN, SEE SHEETS 713-733A
FOR STRUCTURE DETAILS, SEE SHEETS 1015-1038
FOR FENCE TABLES, SEE SHEETS 1039-1041

STA. 66+95.00
BEGIN PAVEMENT TAPER, 30' LT.
BEGIN SHOULDER TAPER, 34' LT.

STA. 67+45.00
END PAVEMENT TAPER, 18' LT.
END SHOULDER TAPER, 22' LT.

(A) CONC. WALK AND PIPE HANDRAILS

PROP. LIGHTING PULL BOX

WETLAND N

CONSTRUCTION LIMITS

WETLAND P

STA. 63+36.00 S.R. 775 = STA. 384+75.56 RAMP K

BTA, TYPE I +48.15

BTA, TYPE I +72.85

MATCH LINE STA. 57+00

℄ CONSTRUCTION S.R. 775

SIGNAL STRAIN POLE (TYP.)

SIGNAL STRAIN POLE WITH LUMINAIRE (TYP.)

℄ RAMP K S 56° 38' 23" E

WATERLINE ABANDONED

PROP. LUMINAIRE

24" TYPE A

(3 EC) ROCK CHANNEL PROTECTION, TYPE C WITH FILTER (117' x 9' x 1.5' / 27 = 58.5 CY)

(2 R) MAIL BOX REMOVED AND RESET TO STA. 70+55.51, 19.18' LT.

BRIDGE NO. LAW-775-0150

(A) STA. 61+94.27
BEGIN PAVEMENT TAPER, 30' RT.
BEGIN SHOULDER TAPER, 34' RT.

STA. 62+34.27
END PAVEMENT TAPER, 34' RT.
END SHOULDER TAPER, 38' RT.

(B) STA. 63+93.78
BEGIN PAVEMENT TAPER, 26' RT.
BEGIN SHOULDER TAPER, 30' RT.

STA. 64+73.78
END PAVEMENT TAPER, 18' RT.
END SHOULDER TAPER, 22' RT.

(C) TYPE E PON +30.01

CURVE DATA
S.R. 775
P.I. STA. 70+19.99
Δ = 32° 25' 06" (LT)
Dc = 11° 50' 00"
R = 484.19'
T = 140.75'
L = 273.96'
E = 20.04'
e_{max} (N.D.C.) = 4.00%
e_{max} = 1.60%
PC STA. = 68+79.23
PT STA. = 71+53.19

S.R. 775
P.I. STA. 66+62.11
Δ = 0° 43' 32" (RT)
NO CURVE

STA. 67+45.00
BEGIN PAVEMENT TAPER
18' LT./RT.

CONSTRUCTION LIMITS

STA. 70+75.00
END PAVEMENT TAPER, 12' LT. & 9.71' RT.
END SHOULDER TAPER, 14.67' LT. & 12.13' RT.
END WORK

STA. 70+35.00
BEGIN SHOULDER TAPER, 16.73' LT. & 15.16' RT.

STREAM 18
OHWM = 587.8

Cemetery

N 34° 05' 09" E

N 1° 40' 02" E

- PROPOSED PAVEMENT

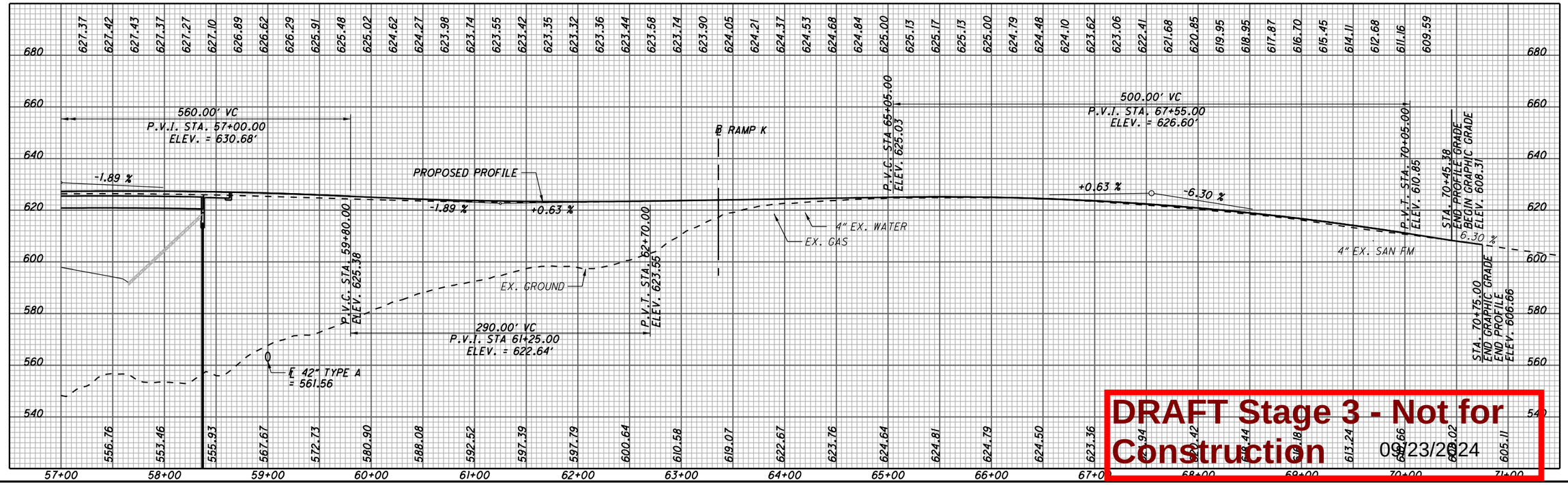

DRAFT Stage 3 - Not for Construction
09/23/2024

HORIZONTAL SCALE IN FEET
0 25 50 100

CALCULATED SLP
CHECKED ALB

PLAN AND PROFILE - S.R. 775
STA. 57+00.00 TO STA. 70+75.00

LAW-7-2.17

560
1247

U:\17360714\LAW\75923\roadway\sheets\75923GP116-2B.dgn 5/21/2024 4:58:06 PM SLParker

SEEDING END WIDTH	SEEDING SQ. YDS.	END AREA CUT	END AREA FILL	VOLUME CUT	VOLUME FILL
30	208	27	0	73	0
45	22	51	0	11	0
10		32	0		
	230			84	0

CALCULATED SLP
CHECKED ALB

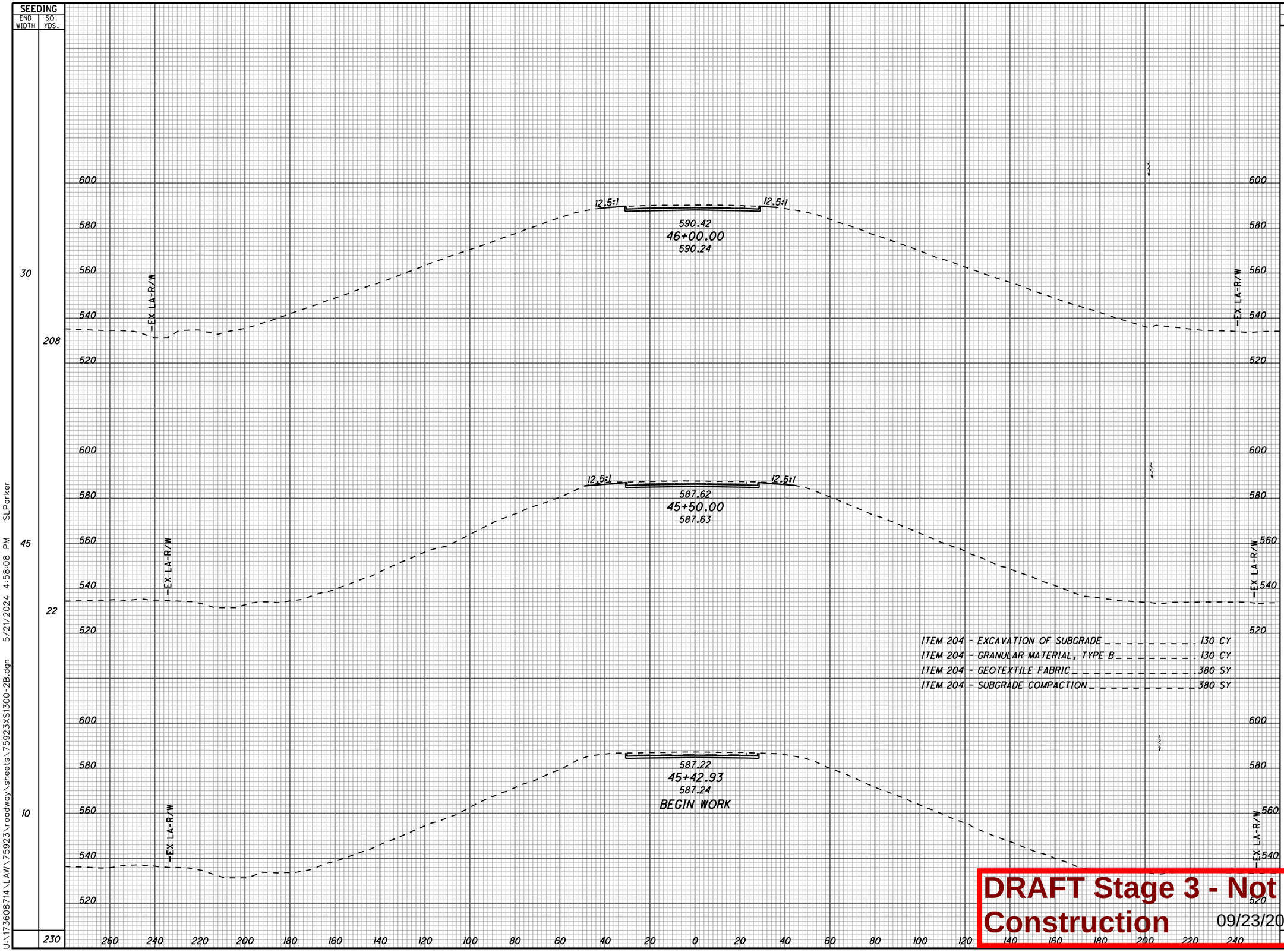

ITEM 204 - EXCAVATION OF SUBGRADE . . . . . 130 CY
ITEM 204 - GRANULAR MATERIAL, TYPE B . . . . . 130 CY
ITEM 204 - GEOTEXTILE FABRIC . . . . . 380 SY
ITEM 204 - SUBGRADE COMPACTION . . . . . 380 SY

DRAFT Stage 3 - Not for Construction 09/23/2024

CROSS SECTIONS S.R. 775
STA. 45+42.93 TO STA. 46+00.00

LAW-7-2.17

561
1247

U:\173608714\LAW\75923\roadway\sheets\75923XS1300-2B.dgn 5/21/2024 4:58:08 PM SLParker

SEEDING	
END WIDTH	SQ. YDS.
34	192
36	169
25	153
	514

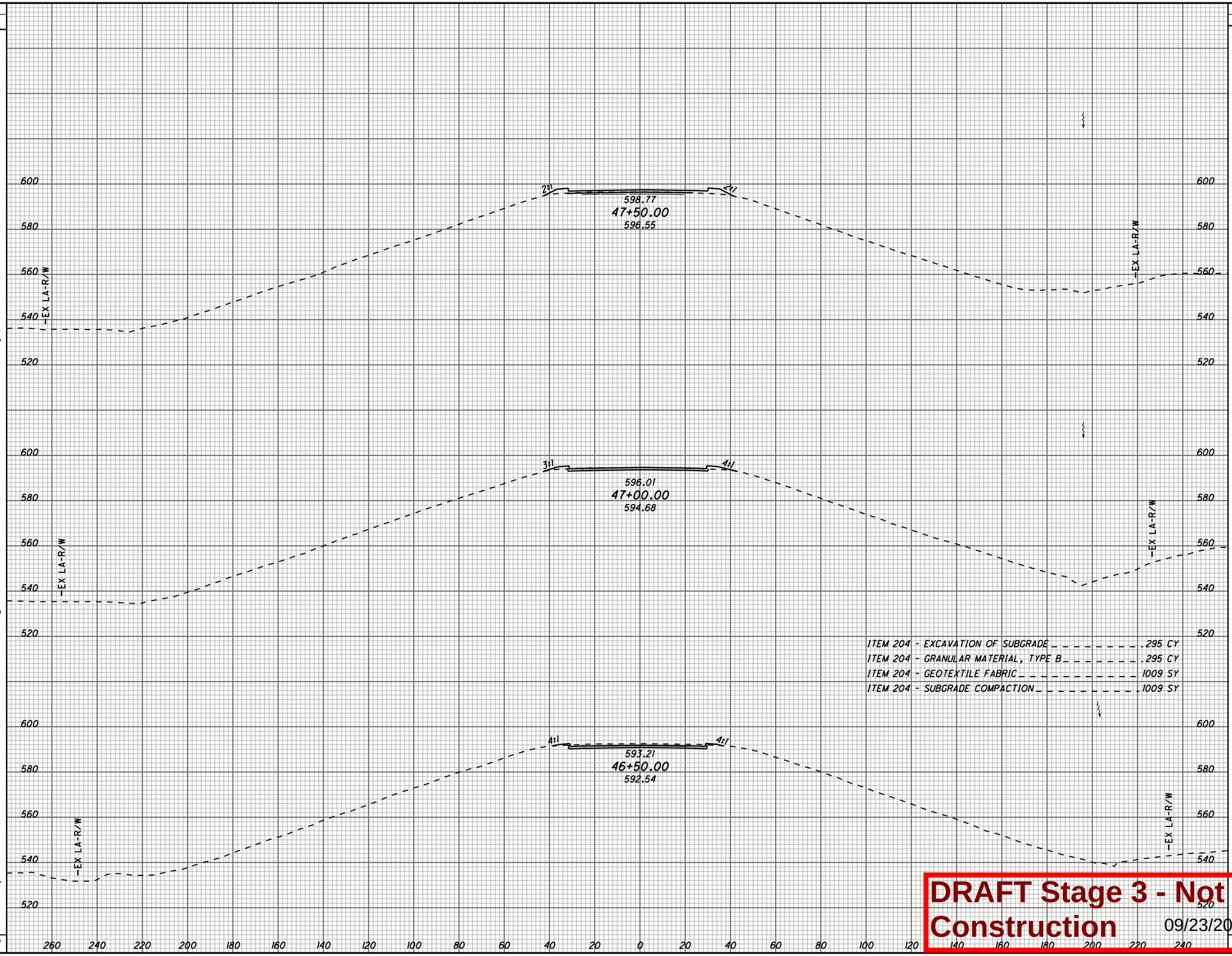

END AREA	
CUT	FILL
0	123
1	21
10	7
	153

VOLUME	
CUT	FILL
1	133
10	26
35	7
46	166

ITEM 204 - EXCAVATION OF SUBGRADE . . . . . 295 CY
ITEM 204 - GRANULAR MATERIAL, TYPE B . . . . . 295 CY
ITEM 204 - GEOTEXTILE FABRIC . . . . . 1009 SY
ITEM 204 - SUBGRADE COMPACTION . . . . . 1009 SY

CALCULATED SLP
CHECKED ALB

CROSS SECTIONS S.R. 775
STA. 46+50.00 TO STA. 47+50.00

LAW-7-2.17

562
1247

DRAFT Stage 3 - Not for Construction 09/23/2024

U:\173608714\LAW\75923\roadway\sheets\75923XS1301-2B.dgn 5/21/2024 4:58:09 PM SLParker

SEEDING		END AREA		VOLUME		CALCULATED	CHECKED
END WIDTH	SQ. YDS.	CUT	FILL	CUT	FILL	SLP	ALB
106	521	311	788	512	1254		
82	368	242	566	291	791		
51	234	72	288	67	381		
	1123			870	2426		

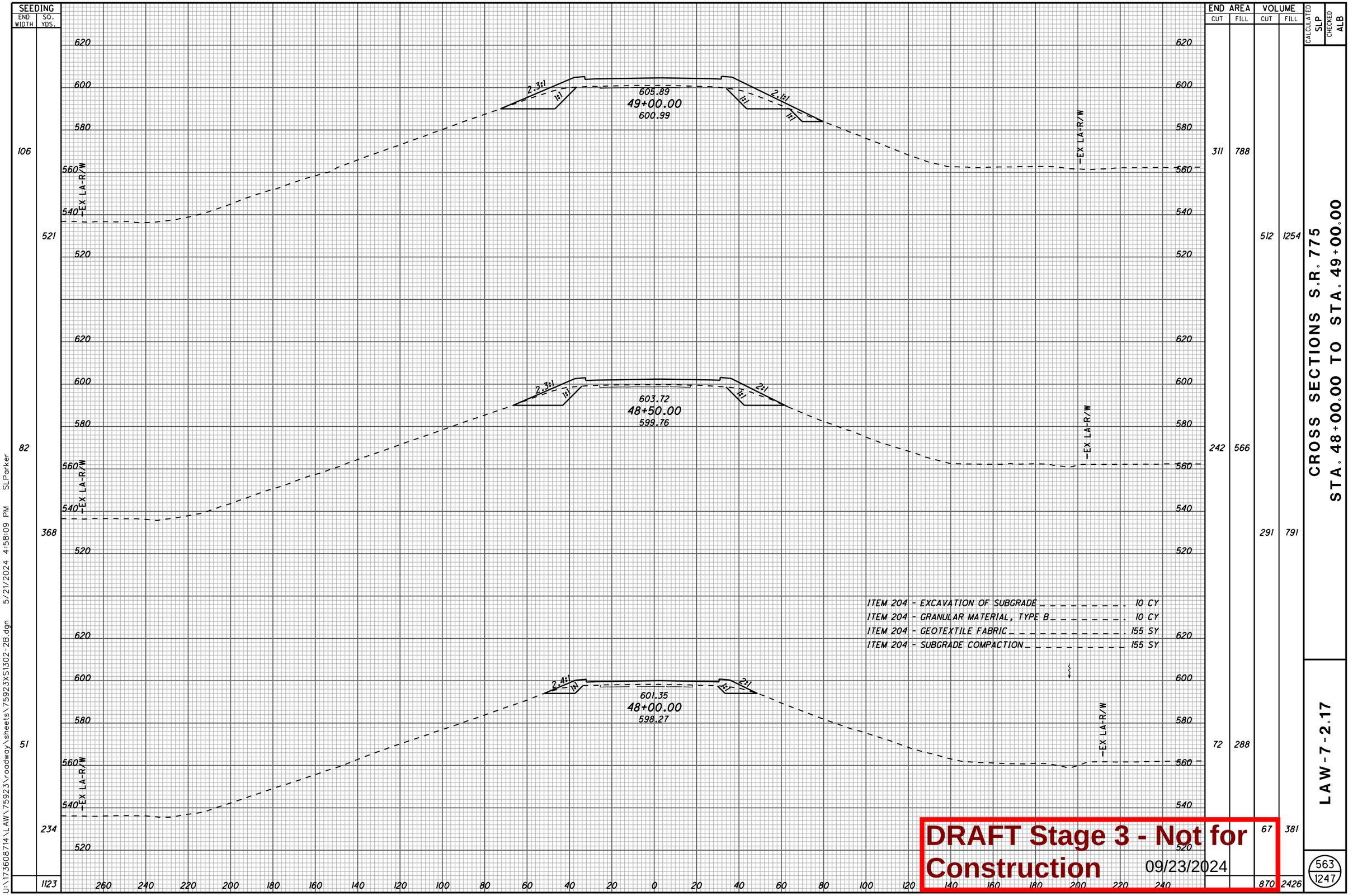

ITEM 204 - EXCAVATION OF SUBGRADE . . . . . 10 CY
ITEM 204 - GRANULAR MATERIAL, TYPE B . . . . . 10 CY
ITEM 204 - GEOTEXTILE FABRIC . . . . . 155 SY
ITEM 204 - SUBGRADE COMPACTION . . . . . 155 SY

DRAFT Stage 3 - Not for Construction 09/23/2024

CROSS SECTIONS S.R. 775
STA. 48+00.00 TO STA. 49+00.00

LAW-7-2.17

563
1247

SLParker
U:\1736087\14\LAW\75923\roadway\sheets\75923XS1302-2B.dgn 5/21/2024 4:58:09 PM

SEEDING END WIDTH	SEEDING SQ. YDS.	END AREA CUT	END AREA FILL	VOLUME CUT	VOLUME FILL
147	765	416	1380	684	2310
128	687	322	1114	578	1877
119	625	301	913	567	1576
	2077			1829	5763

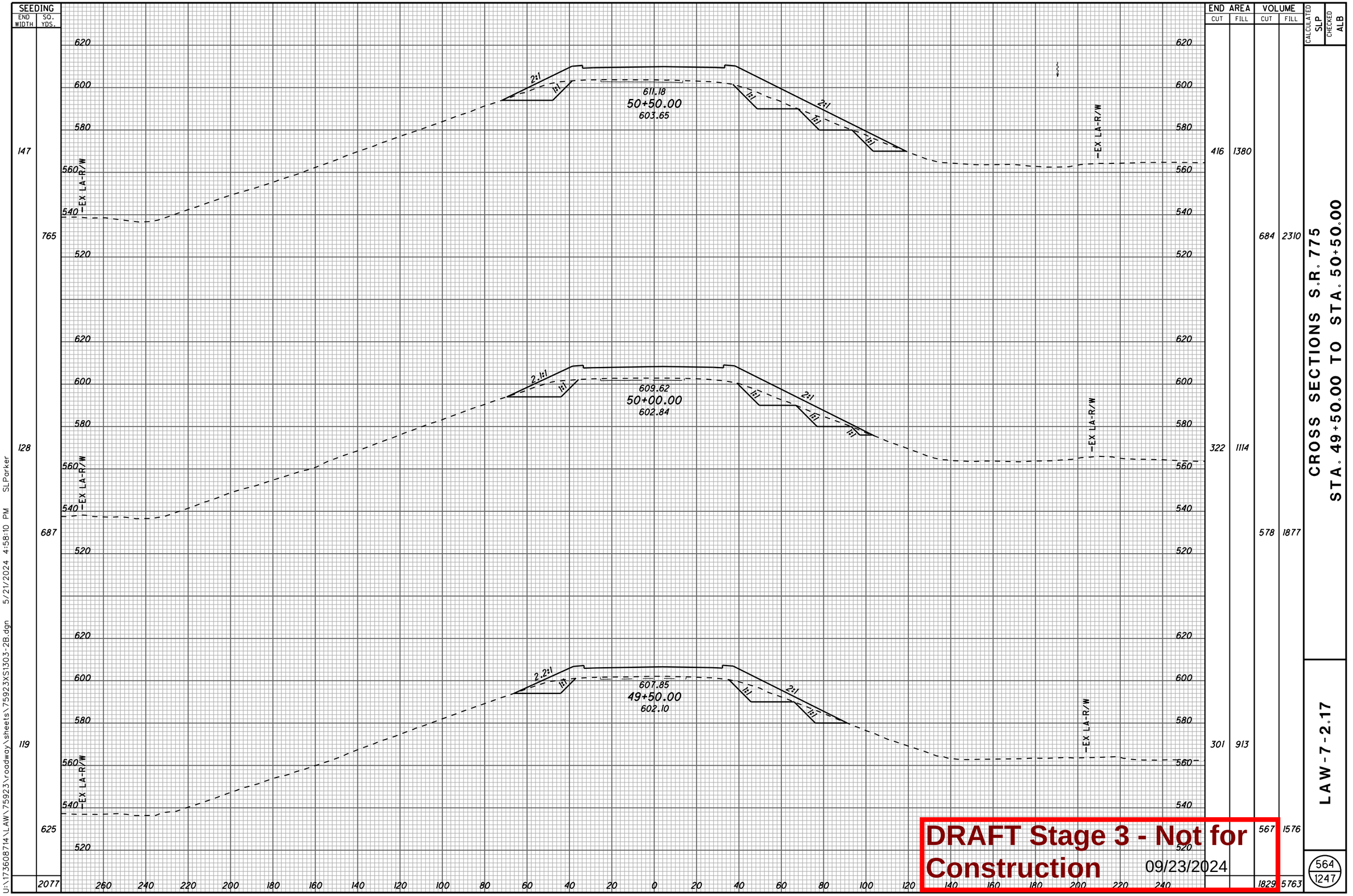

CALCULATED SLP
CHECKED ALB

CROSS SECTIONS S.R. 775
STA. 49+50.00 TO STA. 50+50.00

LAW-7-2.17

564
1247

DRAFT Stage 3 - Not for Construction 09/23/2024

U:\173608714\LAW\75923\roadway\sheets\75923XS1303-2B.dgn 5/21/2024 4:58:10 PM SLParker

SEEDING		END AREA		VOLUME		CALCULATED	CHECKED
END WIDTH	SQ. YDS.	CUT	FILL	CUT	FILL	SLP	ALB
214	1114	569	2437	1032	4181		
187	997	545	2078	914	3497		
172	887	442	1698	794	2851		
	2998			2740	10529		

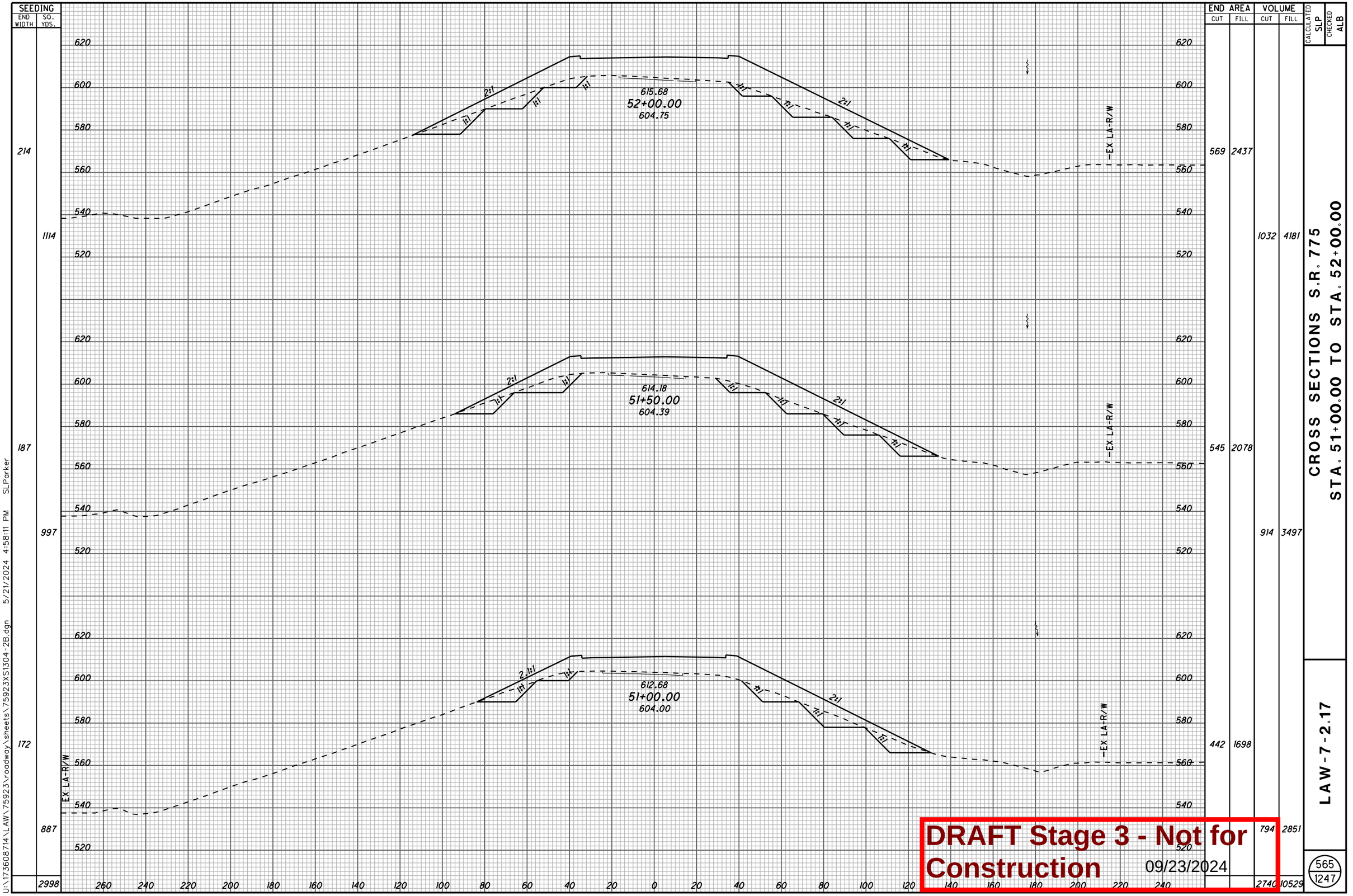

CROSS SECTIONS S.R. 775
STA. 51+00.00 TO STA. 52+00.00

LAW-7-2.17

565
1247

DRAFT Stage 3 - Not for Construction 09/23/2024

U:\1736087\14\LAW\75923\roadway\sheets\75923XS1304-2B.dgn 5/21/2024 4:58:11 PM SLParker

SEEDING		END AREA		VOLUME	
END WIDTH	SQ. YDS.	CUT	FILL	CUT	FILL
97		204	1587		
AHEAD					
288		765	4489		
BACK					
	264			239	1324
	1356			1312	6109
252		700	3640		
	1251			1190	4995
236		716	2957		
	2871			2741	12428

CALCULATED SLP
CHECKED ALB

BACK AHEAD

618.94
53+08.79
605.28

618.68
53+00.00
605.04

617.18
52+50.00
605.14

2.9:1
2:1
1H
1V
EX LA-R/W

620
600
580
560
540
520

260 240 220 200 180 160 140 120 100 80 60 40 20 0 20 40 60 80 100 120 140 160 180 200 220 240

CROSS SECTIONS S.R. 775
STA. 52+50.00 TO STA. 53+08.79

LAW-7-2.17

566
1247

DRAFT Stage 3 - Not for Construction 09/23/2024

U:\173608714\LAW\75923\roadway\sheets\75923XS1305-2B.dgn 5/21/2024 4:58:12 PM SLParker

SEEDING	
END WIDTH	SQ. YDS.
0	
0	
0	
AHEAD	
71	
BACK	
	228

END AREA		VOLUME	
CUT	FILL	CUT	FILL
161	1157		
		91	686
AHEAD	129	1043	
BACK	291	1687	
		224	1479
		315	2165

CALCULATED SLP
CHECKED ALB

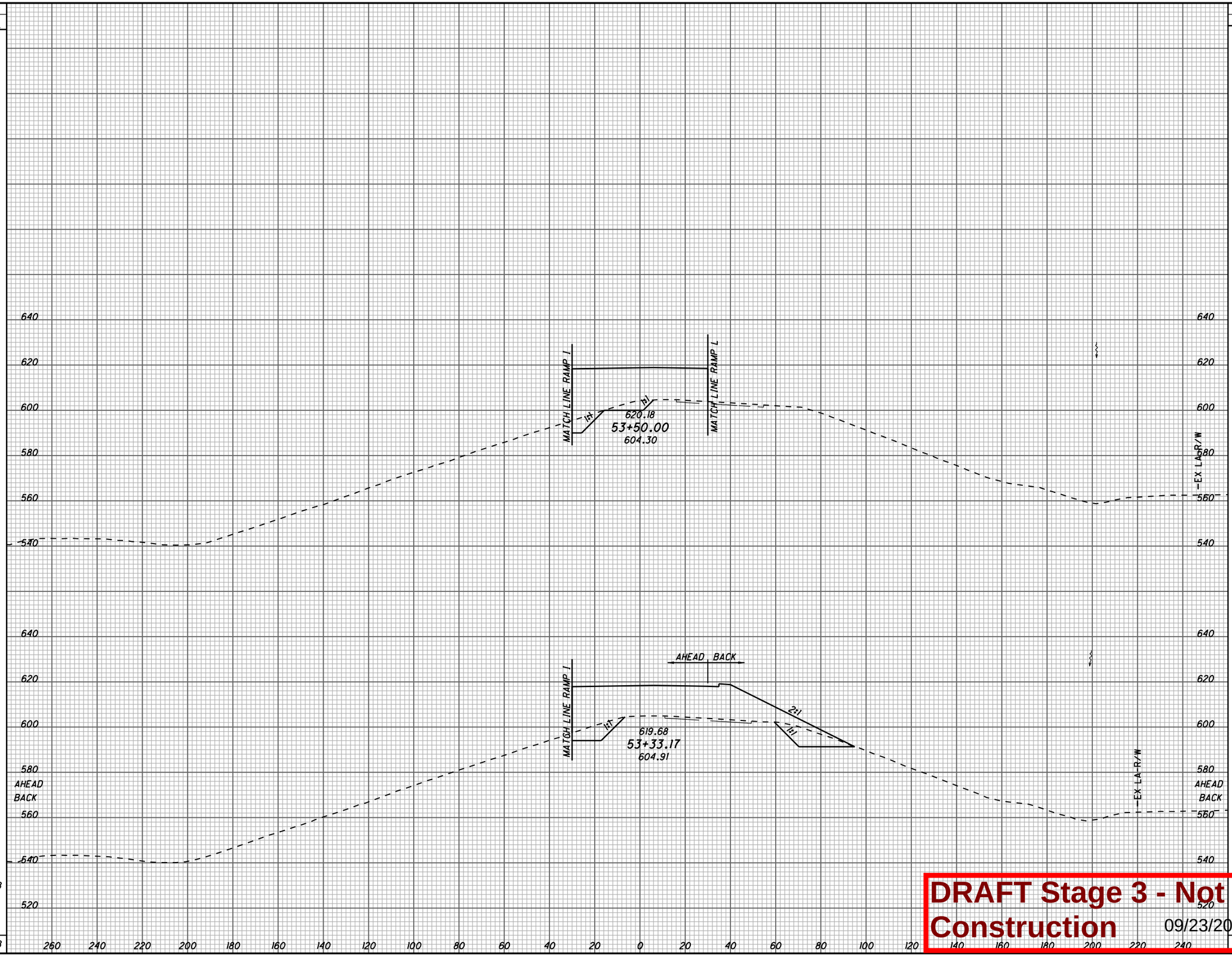

CROSS SECTIONS S.R. 775
STA. 53+33.17 TO STA. 53+50.00

LAW-7-2.17

567
1247

DRAFT Stage 3 - Not for Construction 09/23/2024

U:\173608714\LAW\75923\roadway\sheets\75923XS1306-2B.dgn 5/21/2024 4:58:12 PM SLParker

SEEDING END WIDTH	SEEDING SQ. YDS.
262	AHEAD
0	BACK
0	
0	
0	
0	

AHEAD BACK

8.3:1

2:1

1:1

MATCH LINE RAMP L

623.26
54+61.56
590.49

STA. 54+61.56, LT.
BEGIN SLOPE REINFORCEMENT
FOR DETAILS, SEE SHEETS 38 & 40

MATCH LINE RAMP L

623.14
54+50.00
592.17

MATCH LINE RAMP L

621.68
54+00.00
598.68

END AREA CUT	END AREA FILL	VOLUME CUT	VOLUME FILL
694	0		
223	0		
		101	432
245	2014		
		466	3331
257	1583		
		387	2537
		954	6300

CALCULATED SLP
CHECKED ALB

CROSS SECTIONS S.R. 775
STA. 54+00.00 TO STA. 54+61.56

LAW-7-2.17

568
1247

DRAFT Stage 3 - Not for Construction 09/23/2024

U:\173608714\LAW\75923\roadway\sheets\75923XS1307-2B.dgn 5/21/2024 4:58:13 PM SLParker

SEEDING END WIDTH	SEEDING SQ. YDS.
149	578
329	792
299	458
	1828

STA. 55+97.00, LT.
BEGIN SLOPE REINFORCEMENT
FOR DETAILS, SEE SHEETS 38 & 40

* NORMAL

7:1*

4.7:1

MATCH LINE
STA. 55+00.00

MATCH LINE
RAMP L

624.88
55+21.76
579.77

SKEW ANGLE = 18° RHF

5.3:1

4.1:1

MATCH LINE
RAMP L

2:1

1:1

624.40
55+00.00
583.62

ITEM 203 - EMBANKMENT, AS PER PLAN, TYPE C _ _ _ 38214 CY

BACK AHEAD

7.8:1

3.1:1

MATCH LINE
RAMP L

623.86
54+77.30
587.97

DRAFT Stage 3 - Not for Construction 09/23/2024

END AREA CUT	END AREA FILL	VOLUME CUT	VOLUME FILL
0	0	302	0
748	0	590	0
AHEAD 654	0	384	0
BACK 622	0		
		1276	0

CALCULATED SLP
CHECKED ALB

CROSS SECTIONS S.R. 775
STA. 54+77.30 TO STA. 55+21.76

LAW-7-2.17

569
1247

U:\1736O8714\LAW\75923\roadway\sheets\75923XS1308-2B.dgn 5/21/2024 4:58:14 PM SLParker

SEEDING END WIDTH	SEEDING SQ. YDS.	END AREA CUT	END AREA FILL	VOLUME CUT	VOLUME FILL
336	1961	300	0	402	0
370	1283	133	0	87	0
291		0	0		
	3244			489	0

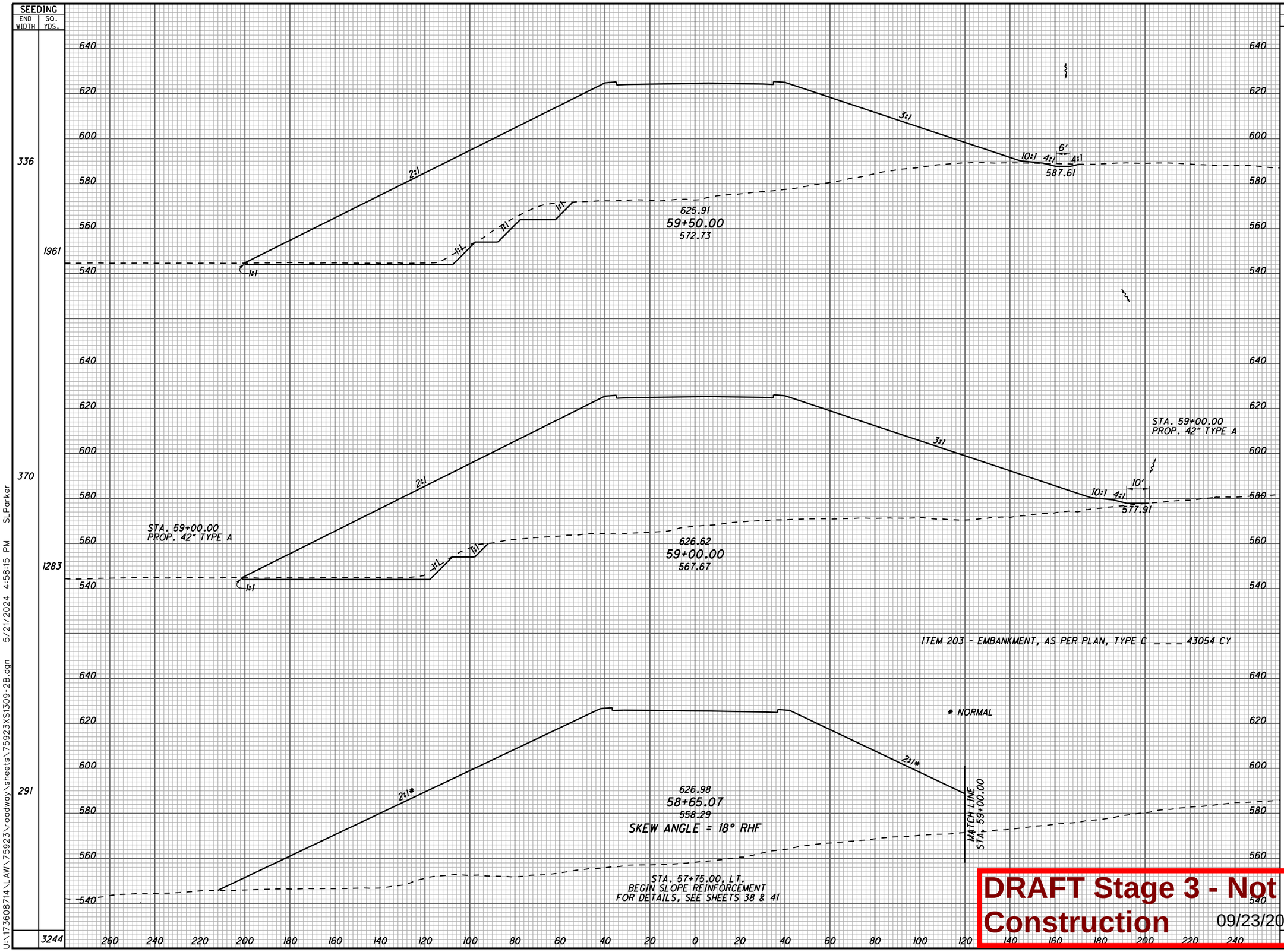

CALCULATED SLP
CHECKED ALB

CROSS SECTIONS S.R. 775
STA. 58+62.96 TO STA. 59+50.00

LAW-7-2.17

570
1247

DRAFT Stage 3 - Not for Construction 09/23/2024

U:\173608714\LAW\75923\roadway\sheets\75923XS1309-2B.dgn 5/21/2024 4:58:15 PM SLParker

SEEDING	
END WIDTH	SQ. YDS.
247	3040
267	1577
301	1769
	6386

STA. 61+25.00, LT.
END SLOPE REINFORCEMENT
FOR DETAILS, SEE SHEETS 38 & 41

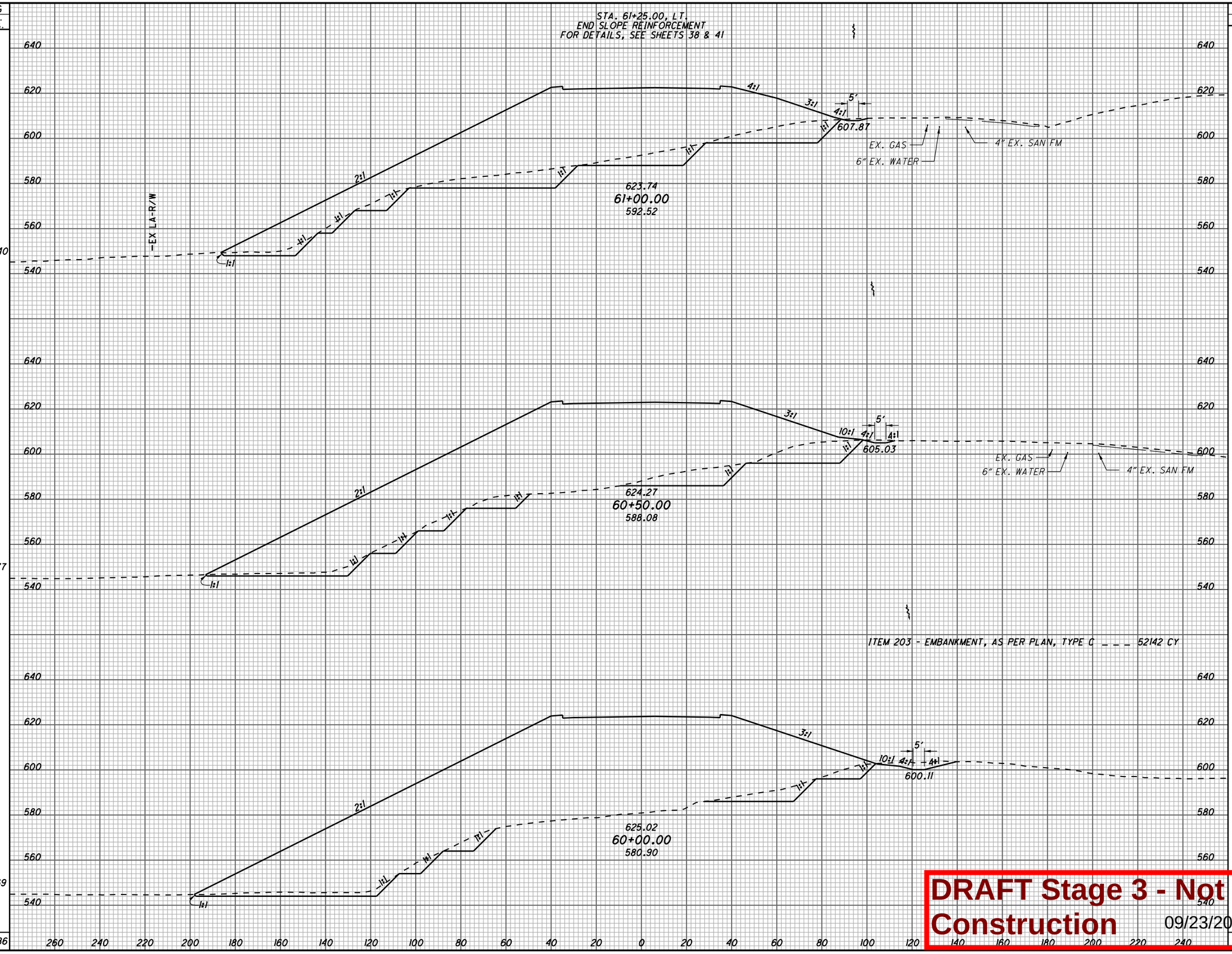

END AREA		VOLUME	
CUT	FILL	CUT	FILL
1101	0	3108	0
915	0	1382	0
577	0	813	0
		5303	0

CALCULATED SLP
CHECKED ALB

CROSS SECTIONS S.R. 775
STA. 60+00.00 TO STA. 61+00.00

LAW-7-2.17

571
1247

DRAFT Stage 3 - Not for Construction 09/23/2024

U:\173608714\LAW\75923\roadway\sheets\75923XS1310-2B.dgn 5/21/2024 4:58:15 PM SLParker

SEEDING END WIDTH	SEEDING SQ. YDS.	END AREA CUT	END AREA FILL	VOLUME CUT	VOLUME FILL
167	131	565	6315	127	1625
169	226	AHEAD 412	6197		
AHEAD	BACK	BACK 559	6630		
318	1300	1147	7934	1359	11595
442	318	532	3673	2018	16893
	1873				

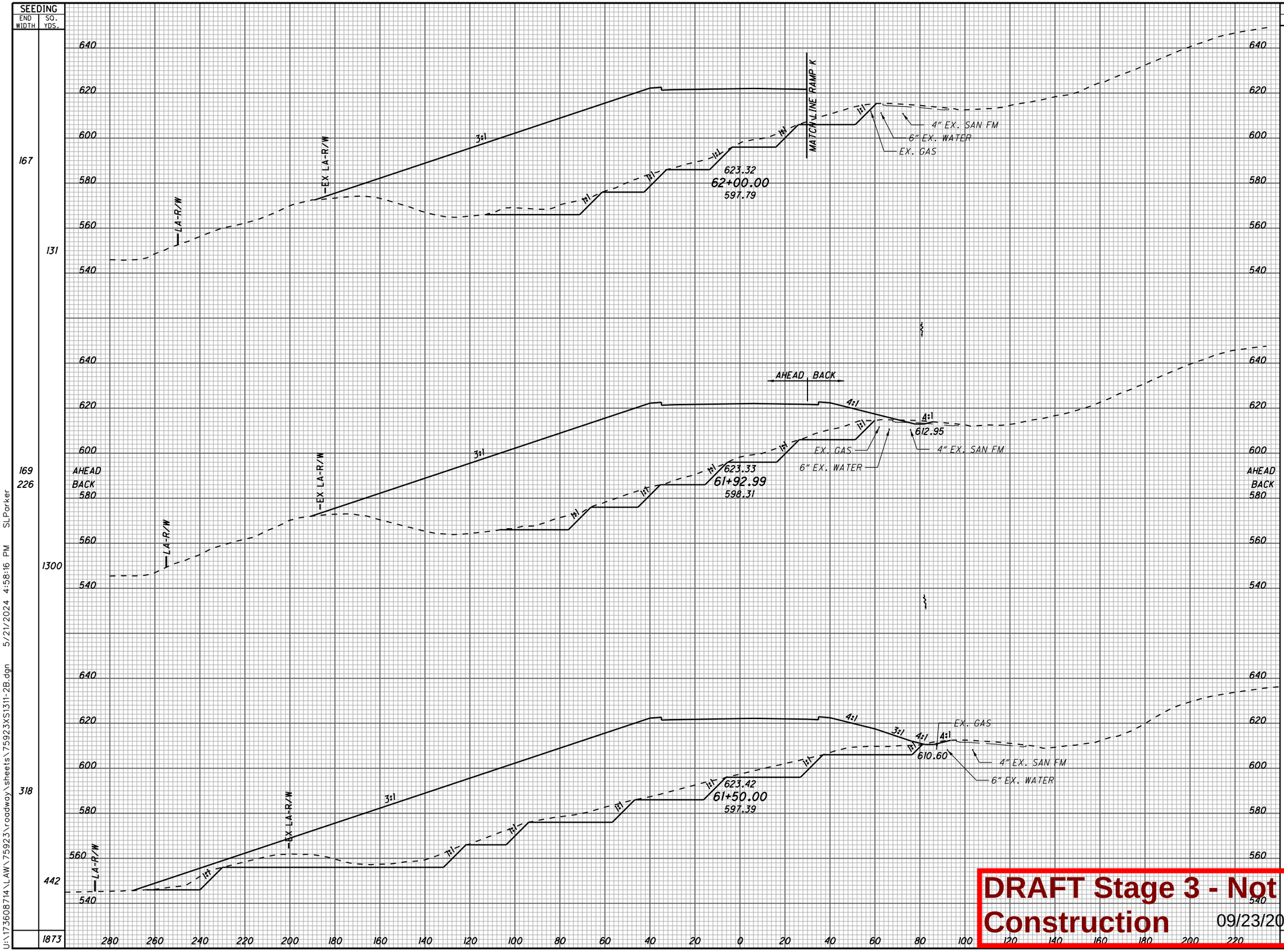

CALCULATED SLP
CHECKED ALB

CROSS SECTIONS S.R. 775
STA. 61+50.00 TO STA. 62+00.00

LAW-7-2.17

572
1247

DRAFT Stage 3 - Not for Construction 09/23/2024

U:\173608714\LAW\75923\roadway\sheets\75923XS1311-2B.dgn 5/21/2024 4:58:16 PM SLParker

SEEDING END WIDTH	SEEDING SQ. YDS.	END AREA CUT	END AREA FILL	VOLUME CUT	VOLUME FILL
89	598	294	1762	617	4129
126	810	372	2697	666	6495
166	924	347	4318	845	9846
	2332			2128	20470

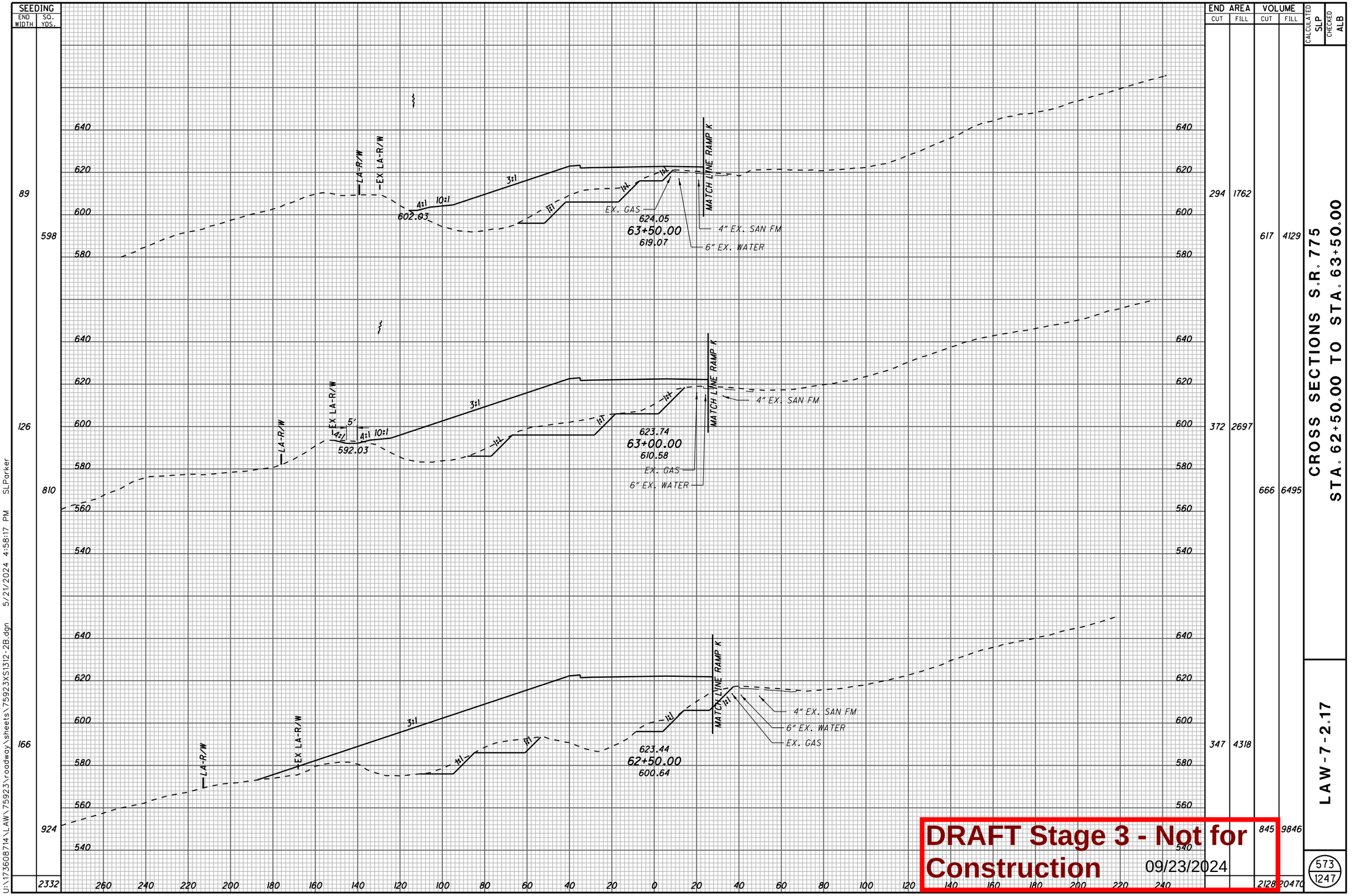

CALCULATED SLP
CHECKED ALB

CROSS SECTIONS S.R. 775
STA. 62+50.00 TO STA. 63+50.00

LAW-7-2.17

573
1247

DRAFT Stage 3 - Not for Construction 09/23/2024

U:\173608714\LAW\75923\roadway\sheets\75923XS1312-2B.dgn 5/21/2024 4:58:17 PM SLParker

SEEDING END WIDTH	SEEDING SQ. YDS.	END AREA CUT	END AREA FILL	VOLUME CUT	VOLUME FILL
57	13	201	916	14	67
58	81	196	961	81	457
66	316	182	1167	322	1982
	410			417	2506

CALCULATED SLP
CHECKED ALB

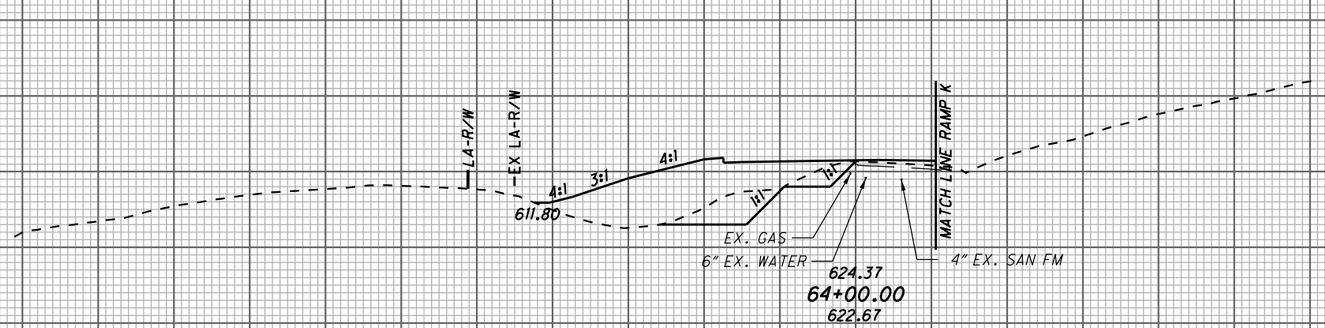

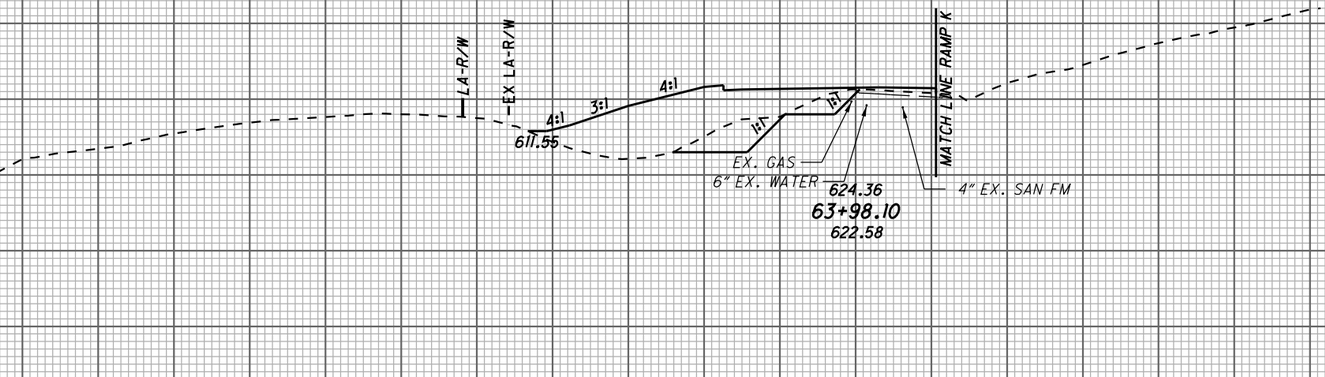

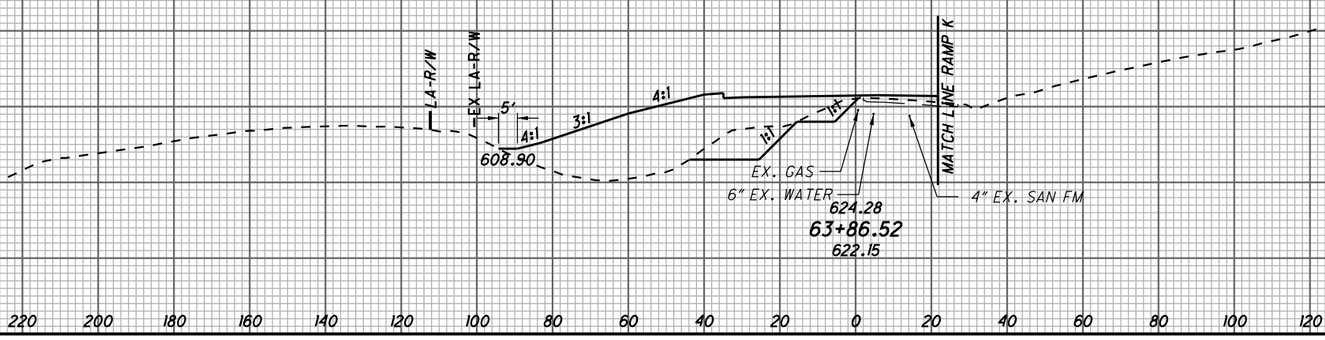

260 240 220 200 180 160 140 120 100 80 60 40 20 0 20 40 60 80 100 120 140 160 180 200 220 240

CROSS SECTIONS S.R. 775
STA. 63+86.52 TO STA. 64+00.00

LAW-7-2.17

574
1247

DRAFT Stage 3 - Not for Construction 09/23/2024

U:\173608714\LAW\75923\roadway\sheets\75923XS1313-2B.dgn 5/21/2024 4:58:18 PM SLParker

SEEDING	
END WIDTH	SQ. YDS.
173	
	472
151	
45	
	128
51	
	299
	899

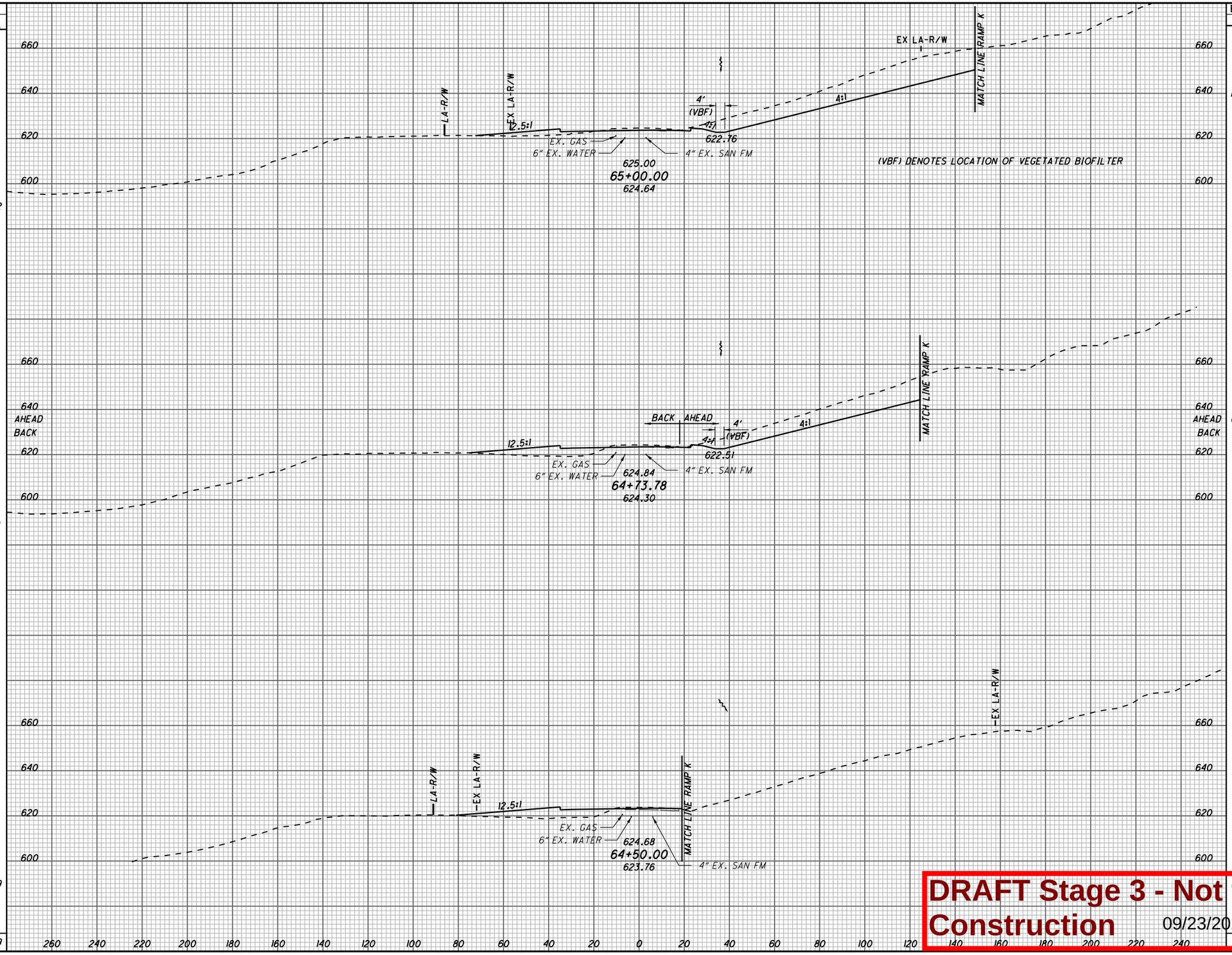

END AREA		VOLUME	
CUT	FILL	CUT	FILL
1021	73		
		807	117
640	167		
4	167		
		3	167
2	212		
		188	1045
		998	1329

CALCULATED SLP
CHECKED ALB

CROSS SECTIONS S.R. 775
STA. 64+00.00 TO STA. 65+00.00

LAW-7-2.17

575
1247

DRAFT Stage 3 - Not for Construction 09/23/2024

U:\173608714\LAW\75923\roadway\sheets\75923XS1314-2B.dgn 5/21/2024 4:58:19 PM SLParker

SEEDING END WIDTH	SEEDING SQ. YDS.	END AREA CUT	END AREA FILL	VOLUME CUT	VOLUME FILL
302	1525	5832	0	8728	6
247	1257	3594	6	4897	54
205	1050	1694	52	2514	116
	3832			16139	176

CALCULATED SLP
CHECKED ALB

CROSS SECTIONS S.R. 775
STA. 65+50.00 TO STA. 66+50.00

LAW-7-2.17

576
1247

720 700 680 660 640 620 600 580

6" EX. WATER
LA-R/W
EX R/W
4:1 4:1
621.86
EX. GAS
6" EX. WATER
624.48
66+50.00
624.50
4" EX. SAN FM
6'
4:1
622.15
4:1
MATCH LINE RAMP K

TMP
LA-R/W
EX R/W
20:1
EX. GAS
6" EX. WATER
625.00
66+00.00
624.79
4" EX. SAN FM
5'
4:1
622.67
4:1
MATCH LINE RAMP K

TMP
LA-R/W
EX LA-R/W
20:1 12.5:1
EX. GAS
6" EX. WATER
625.17
65+50.00
624.81
4" EX. SAN FM
4'
(VBF)
4:1
622.94
4:1
EX LA-R/W
MATCH LINE RAMP K

(VBF) DENOTES LOCATION OF VEGETATED BIOFILTER

200 180 160 140 120 100 80 60 40 20 0 20 40 60 80 100 120 140 160 180 200 220 240 260 280 300

DRAFT Stage 3 - Not for Construction 09/23/2024

U:\17360871 4\LAW\75923\roadway\sheets\75923XS1315-2B.dgn 5/21/2024 4:58:20 PM SLPorker

SEEDING END WIDTH	SEEDING SQ. YDS.
446	
	2324
390	
	2045
346	
	1799
	6168

END AREA CUT	END AREA FILL	VOLUME CUT	VOLUME FILL
6908	9	12866	15
6987	8	13043	7
7098	0	11973	0
		37884	22

CALCULATED SLP
CHECKED ALB

CROSS SECTIONS S.R. 775
STA. 67+00.00 TO STA. 68+00.00

LAW-7-2.17

577
1247

DRAFT Stage 3 - Not for Construction 09/23/2024

U:\173608714\LAW\75923\roadway\sheets\75923XS1316-2B.dgn 5/21/2024 4:58:20 PM SLParker

SEEDING END WIDTH	SEEDING SQ. YDS.
38	339
83	1639
506	2646
	4624

END AREA CUT	END AREA FILL	VOLUME CUT	VOLUME FILL
11	25	158	53
160	32	7164	42
7577	13	13412	21
		2073	116

CALCULATED SLP
CHECKED ALB

CROSS SECTIONS S.R. 775
STA. 68+50.00 TO STA. 69+50.00

LAW-7-2.17

578
1247

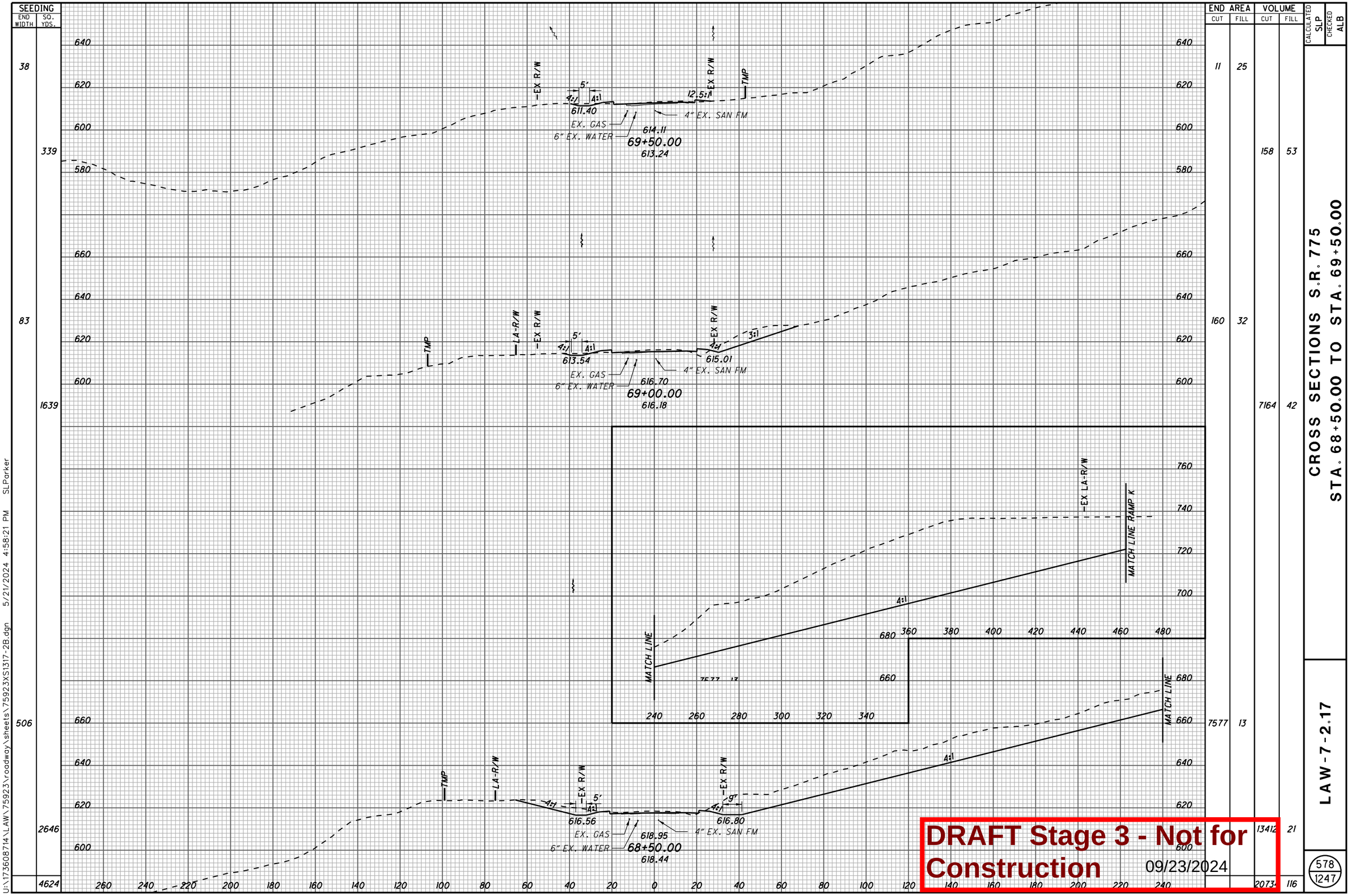

DRAFT Stage 3 - Not for Construction 09/23/2024

U:\173608714\LAW\75923\roadway\sheets\75923XS1317-2B.dgn 5/21/2024 4:58:21 PM SLParker

SEEDING	
END WIDTH	SQ. YDS.
10	54
29	169
32	195
	418

ITEM	
ITEM 203 - EXCAVATION	97,045 CY
ITEM 203 - EMBANKMENT	81,378 CY
ITEM 204 - EXCAVATION OF SUBGRADE	435 CY
ITEM 204 - GRANULAR MATERIAL, TYPE B	435 CY
ITEM 204 - GEOTEXTILE FABRIC	1,544 SY
ITEM 204 - SUBGRADE COMPACTION	1,544 SY
ITEM 659 - SEEDING AND MULCHING, CLASS 3C	42,055 CY
ITEM 863 - REINFORCED EMBANKMENT	133,410 CY

QUANTITIES CARRIED TO THE SUBSUMMARY, SEE SHEET 74.

EX R/W
EX. GAS
6" EX. WATER
4" EX. SAN FM
606.66
70+75.00
606.66
END WORK

EX R/W
EX R/W TMP
4:1
75:1
608.02
70+50.00
608.02

EX R/W
EX R/W TMP
2:1
1:1
12.5:1
EX. GAS
6" EX. WATER
4" EX. SAN FM
611.16
70+00.00
610.66

END AREA		VOLUME	
CUT	FILL	CUT	FILL
17	0		
		17	2
19	4		
		36	34
20	32		
		29	53
		82	89

CALCULATED SLP
CHECKED ALB

CROSS SECTIONS S.R. 775
STA. 70+00.00 TO STA. 70+75.00

LAW-7-2.17

579
1247

DRAFT Stage 3 - Not for Construction 09/23/2024

U:\173608714\LAW\75923\roadway\sheets\75923XS1318-2B.dgn 5/21/2024 4:58:22 PM SLParker

SUPERELEVATION TABLE - CURVE NO. 1

P.I. STA. 138+60.99 | Dc = 1° 27' 15"

CALCULATED SLP | CHECKED ALB

STATION	INSIDE EDGE 8' RT. ELEVATION	INSIDE EDGE 8' RT. ELEVATION CORRECTION	INSIDE EDGE 8' RT. CROSS SLOPE	INSIDE EDGE 8' RT. TRANSITION RATE	INSIDE EDGE 8' RT. WIDTH	INSIDE EDGE 20' RT. PROFILE GRADE	CENTERLINE 32' RT. WIDTH	CENTERLINE 32' RT. TRANSITION RATE	CENTERLINE 32' RT. CROSS SLOPE	CENTERLINE 32' RT. ELEVATION CORRECTION	CENTERLINE 32' RT. ELEVATION	OUTSIDE EDGE 44' RT. WIDTH	OUTSIDE EDGE 44' RT. TRANSITION RATE	OUTSIDE EDGE 44' RT. CROSS SLOPE	OUTSIDE EDGE 44' RT. ELEVATION CORRECTION	OUTSIDE EDGE 44' RT. ELEVATION	OUTSIDE EDGE 56' RT. WIDTH	OUTSIDE EDGE 56' RT. TRANSITION RATE	OUTSIDE EDGE 56' RT. CROSS SLOPE	OUTSIDE EDGE 56' RT. ELEVATION CORRECTION	OUTSIDE EDGE 56' RT. ELEVATION	REMARKS
117+41.61 R 1						555.53	12.00		0.0160	0.19	555.72	12.00		-0.0160	-0.19	555.53						N.C.
117+50.00 R 1						555.56	12.00		0.0129	0.15	555.71	12.00		-0.0160	-0.19	555.52						
117+75.00 R 1						555.66	12.00		0.0036	0.04	555.70	12.00		-0.0160	-0.19	555.51						
117+84.61 R 1						555.70	12.00		0.0000	0.00	555.70	12.00		-0.0160	-0.19	555.51						1/2 LEVEL / T.S.
118+00.00 R 1						555.76	12.00	226.31	-0.0057	-0.07	555.69	12.00		-0.0160	-0.19	555.50						
118+25.00 R 1						555.86	12.00		-0.0150	-0.18	555.68	12.00		-0.0160	-0.19	555.49						
118+27.61 R 1						555.87	12.00		-0.0160	-0.19	555.67	12.00		-0.0160	-0.19	555.48						R.C.
118+50.00 R 1																						
118+75.00 R 1																						
119+00.00 R 1																						
119+25.00 R 1																						
119+50.00 R 1																						
119+59.61 R 1																						F.S. / S.C.
119+75.00 R 1																						
120+00.00 R 1																						
120+25.00 R 1																						
120+50.00 R 1																						
120+75.00 R 1																						
121+00.00 R 1																						
121+25.00 R 1																						
121+50.00 R 1																						
121+75.00 R 1																						
122+00.00 R 1																						
122+25.00 R 1																						
122+50.00 R 1																						
122+75.00 R 1																						
123+00.00 R 1																						
123+25.00 R 1																						
123+50.00 R 1																						
123+75.00 R 1						558.03	12.00		-0.0400	-0.48	557.55	12.00		-0.0400	-0.48	557.07						
124+00.00 R 1						558.12	12.00		-0.0400	-0.48	557.64	12.00		-0.0400	-0.48	557.16						
124+25.00 R 1						558.22	12.00		-0.0400	-0.48	557.74	12.00		-0.0400	-0.48	557.26						
124+50.00 R 1						558.32	12.00		-0.0400	-0.48	557.84	12.00		-0.0400	-0.48	557.36						
124+75.00 R 1						558.42	12.00		-0.0400	-0.48	557.94	12.00		-0.0400	-0.48	557.46						
125+00.00 R 1						558.52	12.00		-0.0400	-0.48	558.04	12.00		-0.0400	-0.48	557.56						
125+25.00 R 1						558.62	12.00		-0.0400	-0.48	558.14	12.00		-0.0400	-0.48	557.66						
125+50.00 R 1																						
125+75.00 R 1																						
126+00.00 R 1																						
126+25.00 R 1																						
126+50.00 R 1																						
126+75.00 R 1																						
127+00.00 R 1																						
127+25.00 R 1																						
127+50.00 R 1																						
127+75.00 R 1																						
128+00.00 R 1																						
128+25.00 R 1																						
128+50.00 R 1																						
128+75.00 R 1																						
129+00.00 R 1																						
129+25.00 R 1																						
129+50.00 R 1																						
129+75.00 R 1																						
130+00.00 R 1																						
130+25.00 R 1																						
130+50.00 R 1																						
130+75.00 R 1																						
131+00.00 R 1																						
131+25.00 R 1																						
131+50.00 R 1																						

FOR STATIONS 118+50 TO 123+50,
SEE PAVEMENT DETAILS SHEET 605

FOR STATIONS 125+50 TO 132+25,
SEE PAVEMENT DETAILS SHEET 606

DRAFT Stage 3 - Not for Construction 09/23/2024

SUPERELEVATION TABLE
S.R. 7

LAW-7-2.17

580
1247

U:\173608714\LAW\75923\roadway\sheets\75923GE001-2B.dgn 5/21/2024 4:58:23 PM SLParker

SUPERELEVATION TABLE - CURVE NO. 1

P.I. STA. 138+60.99 | Dc = 1° 27′ 15″

CALCULATED SLP | CHECKED ALB

STATION	INSIDE EDGE 8' RT.					INSIDE EDGE 20' RT.	CENTERLINE 32' RT.					OUTSIDE EDGE 44' RT.					OUTSIDE EDGE 56' RT.					REMARKS
	ELEVATION	ELEVATION CORRECTION	CROSS SLOPE	TRANSITION RATE	WIDTH	PROFILE GRADE	WIDTH	TRANSITION RATE	CROSS SLOPE	ELEVATION CORRECTION	ELEVATION	WIDTH	TRANSITION RATE	CROSS SLOPE	ELEVATION CORRECTION	ELEVATION	WIDTH	TRANSITION RATE	CROSS SLOPE	ELEVATION CORRECTION	ELEVATION	
131+75.00 R 1																						
132+00.00 R 1																						
132+25.00 R 1																						
132+50.00 R 1																						
132+75.00 R 1																						
133+00.00 R 1																						
133+25.00 R 1																						
133+50.00 R 1																						
133+75.00 R 1																						
134+00.00 R 1																						
134+25.00 R 1																						
134+50.00 R 1																						
134+75.00 R 1																						
135+00.00 R 1																						
135+25.00 R 1																						
135+50.00 R 1																						
135+75.00 R 1						562.76	12.00		-0.0400	-0.48	562.28	12.00		-0.0400	-0.48	561.80						
136+00.00 R 1						562.86	12.00		-0.0400	-0.48	562.38	12.00		-0.0400	-0.48	561.90						
136+25.00 R 1						562.96	12.00		-0.0400	-0.48	562.48	12.00		-0.0400	-0.48	562.00						
136+50.00 R 1						563.06	12.00		-0.0400	-0.48	562.58	12.00		-0.0400	-0.48	562.10						
136+75.00 R 1						563.16	12.00		-0.0400	-0.48	562.68	12.00		-0.0400	-0.48	562.20						
137+00.00 R 1						563.25	12.00		-0.0400	-0.48	562.77	12.00		-0.0400	-0.48	562.29						
137+25.00 R 1						563.35	12.00		-0.0400	-0.48	562.87	12.00		-0.0400	-0.48	562.39						
137+50.00 R 1						563.45	12.00		-0.0400	-0.48	562.97	12.00		-0.0400	-0.48	562.49						
137+75.00 R 1						563.55	12.00		-0.0400	-0.48	563.07	12.00		-0.0400	-0.48	562.59						
138+00.00 R 1						563.65	12.00		-0.0400	-0.48	563.17	12.00		-0.0400	-0.48	562.69						
138+25.00 R 1						563.75	12.00		-0.0400	-0.48	563.27	12.00		-0.0400	-0.48	562.79						
138+50.00 R 1						563.85	12.00		-0.0400	-0.48	563.37	12.00		-0.0400	-0.48	562.89						
138+75.00 R 1						563.95	12.00		-0.0400	-0.48	563.47	12.00		-0.0400	-0.48	562.99						
139+00.00 R 1						564.04	12.00		-0.0400	-0.48	563.56	12.00		-0.0400	-0.48	563.08						
139+25.00 R 1						564.14	12.00		-0.0400	-0.48	563.66	12.00		-0.0400	-0.48	563.18						
139+50.00 R 1						564.24	12.00		-0.0400	-0.48	563.76	12.00		-0.0400	-0.48	563.28						
139+75.00 R 1						564.34	12.00		-0.0400	-0.48	563.86	12.00		-0.0400	-0.48	563.38						
140+00.00 R 1						564.44	12.00		-0.0400	-0.48	563.96	12.00		-0.0400	-0.48	563.48						
140+25.00 R 1						564.54	12.00		-0.0400	-0.48	564.06	12.00		-0.0400	-0.48	563.58						
140+50.00 R 1						564.64	12.00		-0.0400	-0.48	564.16	12.00		-0.0400	-0.48	563.68						
140+75.00 R 1						564.73	12.00		-0.0400	-0.48	564.25	12.00		-0.0400	-0.48	563.77						
141+00.00 R 1						564.83	12.00		-0.0400	-0.48	564.35	12.00		-0.0400	-0.48	563.87						
141+25.00 R 1						564.93	12.00		-0.0400	-0.48	564.45	12.00		-0.0400	-0.48	563.97						
141+50.00 R 1						565.03	12.00		-0.0400	-0.48	564.55	12.00		-0.0400	-0.48	564.07						
141+75.00 R 1						565.13	12.00		-0.0400	-0.48	564.65	12.00		-0.0400	-0.48	564.17						
142+00.00 R 1						565.23	12.00		-0.0400	-0.48	564.75	12.00		-0.0400	-0.48	564.27						
142+25.00 R 1						565.33	12.00		-0.0400	-0.48	564.85	12.00		-0.0400	-0.48	564.37						
142+50.00 R 1						565.42	12.00		-0.0400	-0.48	564.94	12.00		-0.0400	-0.48	564.46						
142+75.00 R 1						565.52	12.00		-0.0400	-0.48	565.04	12.00		-0.0400	-0.48	564.56						
143+00.00 R 1						565.62	12.00		-0.0400	-0.48	565.14	12.00		-0.0400	-0.48	564.66						
143+25.00 R 1						565.72	12.00		-0.0400	-0.48	565.24	12.00		-0.0400	-0.48	564.76						
143+50.00 R 1						565.82	12.00		-0.0400	-0.48	565.34	12.00		-0.0400	-0.48	564.86						
143+75.00 R 1						565.92	12.00		-0.0400	-0.48	565.44	12.00		-0.0400	-0.48	564.96						
144+00.00 R 1						566.02	12.00		-0.0400	-0.48	565.54	12.00		-0.0400	-0.48	565.06						
144+25.00 R 1						566.12	12.00		-0.0400	-0.48	565.64	12.00		-0.0400	-0.48	565.16						
144+50.00 R 1						566.21	12.00		-0.0400	-0.48	565.73	12.00		-0.0400	-0.48	565.25						
144+75.00 R 1						566.31	12.00		-0.0400	-0.48	565.83	12.00		-0.0400	-0.48	565.35						
145+00.00 R 1						566.41	12.00		-0.0400	-0.48	565.93	12.00		-0.0400	-0.48	565.45						
145+25.00 R 1						566.51	12.00		-0.0400	-0.48	566.03	12.00		-0.0400	-0.48	565.55						
145+50.00 R 1						566.61	12.00		-0.0400	-0.48	566.13	12.00		-0.0400	-0.48	565.65						
145+75.00 R 1						566.71	12.00		-0.0400	-0.48	566.23	12.00		-0.0400	-0.48	565.75						
146+00.00 R 1						566.81	12.00		-0.0400	-0.48	566.33	12.00		-0.0400	-0.48	565.85						
146+25.00 R 1						566.90	12.00		-0.0400	-0.48	566.42	12.00		-0.0400	-0.48	565.94						
146+50.00 R 1						567.00	12.00		-0.0400	-0.48	566.52	12.00		-0.0400	-0.48	566.04						
146+75.00 R 1						567.10	12.00		-0.0400	-0.48	566.62	12.00		-0.0400	-0.48	566.14						

FOR STATIONS 125+50 TO 132+25, SEE PAVEMENT DETAILS SHEET 606

FOR STATIONS 132+50 TO 135+50, SEE SCREED ELEVATION TABLE AND APPROACH SLAB DETAILS

DRAFT Stage 3 - Not for Construction 09/23/2024

SUPERELEVATION TABLE
S.R. 7

LAW-7-2.17

581
1247

U:\173608714\LAW\75923\roadway\sheets\75923GE002-2B.dgn 5/21/2024 4:58:24 PM SLParker

SUPERELEVATION TABLE - CURVE NO. 1

P.I. STA. 138+60.99 | Dc = 1° 27′ 15″

CALCULATED SLP | CHECKED ALB

STATION	INSIDE EDGE 8' RT. ELEVATION	INSIDE EDGE 8' RT. ELEVATION CORRECTION	INSIDE EDGE 8' RT. CROSS SLOPE	INSIDE EDGE 8' RT. TRANSITION RATE	INSIDE EDGE 8' RT. WIDTH	INSIDE EDGE 20' RT. PROFILE GRADE	CENTERLINE 32' RT. WIDTH	CENTERLINE 32' RT. TRANSITION RATE	CENTERLINE 32' RT. CROSS SLOPE	CENTERLINE 32' RT. ELEVATION CORRECTION	CENTERLINE 32' RT. ELEVATION	OUTSIDE EDGE 44' RT. WIDTH	OUTSIDE EDGE 44' RT. TRANSITION RATE	OUTSIDE EDGE 44' RT. CROSS SLOPE	OUTSIDE EDGE 44' RT. ELEVATION CORRECTION	OUTSIDE EDGE 44' RT. ELEVATION	OUTSIDE EDGE 56' RT. WIDTH	OUTSIDE EDGE 56' RT. TRANSITION RATE	OUTSIDE EDGE 56' RT. CROSS SLOPE	OUTSIDE EDGE 56' RT. ELEVATION CORRECTION	OUTSIDE EDGE 56' RT. ELEVATION	REMARKS
147+00.00 R 1						567.20	12.00		-0.0400	-0.48	566.72	12.00		-0.0400	-0.48	566.24							
147+25.00 R 1						567.30	12.00		-0.0400	-0.48	566.82	12.00		-0.0400	-0.48	566.34							
147+50.00 R 1						567.40	12.00		-0.0400	-0.48	566.92	12.00		-0.0400	-0.48	566.44							
147+75.00 R 1						567.50	12.00		-0.0400	-0.48	567.02	12.00		-0.0400	-0.48	566.54							
148+00.00 R 1						567.60	12.00		-0.0400	-0.48	567.12	12.00		-0.0400	-0.48	566.64							
148+25.00 R 1						567.69	12.00		-0.0400	-0.48	567.21	12.00		-0.0400	-0.48	566.73							
148+50.00 R 1						567.79	12.00		-0.0400	-0.48	567.31	12.00		-0.0400	-0.48	566.83							
148+75.00 R 1						567.89	12.00		-0.0400	-0.48	567.41	12.00		-0.0400	-0.48	566.93							
149+00.00 R 1						567.99	12.00		-0.0400	-0.48	567.51	12.00		-0.0400	-0.48	567.03							
149+25.00 R 1						568.10	12.00		-0.0400	-0.48	567.62	12.00		-0.0400	-0.48	567.14							
149+50.00 R 1						568.24	12.00		-0.0400	-0.48	567.76	12.00		-0.0400	-0.48	567.28							
149+75.00 R 1						568.41	12.00		-0.0400	-0.48	567.93	12.00		-0.0400	-0.48	567.45							
150+00.00 R 1						568.61	12.00		-0.0400	-0.48	568.13	12.00		-0.0400	-0.48	567.65							
150+25.00 R 1						568.84	12.00		-0.0400	-0.48	568.36	12.00		-0.0400	-0.48	567.88							
150+50.00 R 1						569.09	12.00		-0.0400	-0.48	568.61	12.00		-0.0400	-0.48	568.13							
150+75.00 R 1						569.38	12.00		-0.0400	-0.48	568.90	12.00		-0.0400	-0.48	568.42							
151+00.00 R 1						569.69	12.00		-0.0400	-0.48	569.21	12.00		-0.0400	-0.48	568.73							
151+25.00 R 1						570.01	12.00		-0.0400	-0.48	569.53	12.00		-0.0400	-0.48	569.05							
151+50.00 R 1						570.34	12.00		-0.0400	-0.48	569.86	12.00		-0.0400	-0.48	569.38							
151+75.00 R 1						570.67	12.00		-0.0400	-0.48	570.19	12.00		-0.0400	-0.48	569.71							
152+00.00 R 1						570.99	12.00		-0.0400	-0.48	570.51	12.00		-0.0400	-0.48	570.03							
152+25.00 R 1						571.32	12.00		-0.0400	-0.48	570.84	12.00		-0.0400	-0.48	570.36							
152+50.00 R 1						571.64	12.00		-0.0400	-0.48	571.16	12.00		-0.0400	-0.48	570.68							
152+75.00 R 1						571.97	12.00		-0.0400	-0.48	571.49	12.00		-0.0400	-0.48	571.01							
153+00.00 R 1						572.29	12.00		-0.0400	-0.48	571.81	12.00		-0.0400	-0.48	571.33							
153+25.00 R 1						572.62	12.00		-0.0400	-0.48	572.14	12.00		-0.0400	-0.48	571.66							
153+50.00 R 1						572.95	12.00		-0.0400	-0.48	572.47	12.00		-0.0400	-0.48	571.99							
153+75.00 R 1						573.27	12.00		-0.0400	-0.48	572.79	12.00		-0.0400	-0.48	572.31							
154+00.00 R 1						573.60	12.00		-0.0400	-0.48	573.12	12.00		-0.0400	-0.48	572.64							
154+25.00 R 1						573.92	12.00		-0.0400	-0.48	573.44	12.00		-0.0400	-0.48	572.96							
154+50.00 R 1						574.25	12.00		-0.0400	-0.48	573.77	12.00		-0.0400	-0.48	573.29							
154+68.05 R 1						574.49	12.00		-0.0400	-0.48	574.01	12.00		-0.0400	-0.48	573.53						F.S. / C.S.
154+75.00 R 1						574.58	12.00		-0.0387	-0.46	574.11	12.00		-0.0387	-0.46	573.65						
155+00.00 R 1						574.90	12.00		-0.0342	-0.41	574.49	12.00		-0.0342	-0.41	574.08						
155+25.00 R 1						575.23	12.00		-0.0296	-0.36	574.87	12.00	455.21'	-0.0296	-0.36	574.52						
155+50.00 R 1						575.55	12.00		-0.0251	-0.30	575.25	12.00		-0.0251	-0.30	574.95						
155+75.00 R 1						575.88	12.00		-0.0205	-0.25	575.63	12.00		-0.0205	-0.25	575.39						
156+00.00 R 1						576.21	12.00		-0.0160	-0.19	576.01	12.00		-0.0160	-0.19	575.82						
156+00.05 R 1						576.21	12.00	325.41'	-0.0160	-0.19	576.01	12.00		-0.0160	-0.19	575.82						R.C.
156+25.00 R 1						576.53	12.00		-0.0067	-0.08	576.45	12.00		-0.0160	-0.19	576.26						
156+43.05 R 1						576.77	12.00		0.0000	0.00	576.77	12.00		-0.0160	-0.19	576.57						1/2 LEVEL / S.T.
156+50.00 R 1						576.86	12.00		0.0026	0.03	576.89	12.00		-0.0160	-0.19	576.70						
156+75.00 R 1						577.18	12.00		0.0119	0.14	577.33	12.00		-0.0160	-0.19	577.13						
156+86.05 R 1						577.33	12.00		0.0160	0.19	577.52	12.00		-0.0160	-0.19	577.33						N.C.

SUPERELEVATION TABLE
S.R. 7

LAW-7-2.17

DRAFT Stage 3 - Not for Construction 09/23/2024

U:\173608714\LAW\75923\roadway\sheets\75923GE003-2B.dgn 5/21/2024 4:58:25 PM SLParker

SUPERELEVATION TABLE - CURVE NO. 2

P.I. STA. 182+06.44 | Dc = 2° 10′ 43″

CALCULATED SLP | CHECKED ALB

STATION	INSIDE EDGE 8' RT. ELEVATION	INSIDE EDGE 8' RT. ELEVATION CORRECTION	INSIDE EDGE 8' RT. CROSS SLOPE	INSIDE EDGE 8' RT. TRANSITION RATE	INSIDE EDGE 8' RT. WIDTH	INSIDE EDGE 20' RT. PROFILE GRADE	CENTERLINE 32' RT. WIDTH	CENTERLINE 32' RT. TRANSITION RATE	CENTERLINE 32' RT. CROSS SLOPE	CENTERLINE 32' RT. ELEVATION CORRECTION	CENTERLINE 32' RT. ELEVATION	OUTSIDE EDGE 44' RT. WIDTH	OUTSIDE EDGE 44' RT. TRANSITION RATE	OUTSIDE EDGE 44' RT. CROSS SLOPE	OUTSIDE EDGE 44' RT. ELEVATION CORRECTION	OUTSIDE EDGE 44' RT. ELEVATION	OUTSIDE EDGE 56' RT. WIDTH	OUTSIDE EDGE 56' RT. TRANSITION RATE	OUTSIDE EDGE 56' RT. CROSS SLOPE	OUTSIDE EDGE 56' RT. ELEVATION CORRECTION	OUTSIDE EDGE 56' RT. ELEVATION	REMARKS
174+60.18 R 1	649.21	-0.18	-0.0160		11.46	649.39	12.00		0.0160	0.19	649.58	12.00		-0.0160	-0.19	649.39	12.00		-0.0160	-0.19	649.37	N.C.
174+75.00 R 1	649.75	-0.19	-0.0160		11.71	649.94	12.00		0.0160	0.19	650.13	12.00		-0.0105	-0.13	650.00	12.00		-0.0105	-0.13	649.99	
175+00.00 R 1	650.64	-0.19	-0.0160		12.00	650.83	12.00		0.0160	0.19	651.02	12.00		-0.0012	-0.01	651.01	12.00		-0.0012	-0.01	651.01	
175+03.18 R 1	650.75	-0.19	-0.0160		12.00	650.94	12.00		0.0160	0.19	651.13	12.00		0.0000	0.00	651.13	12.00		0.0000	0.00	651.13	1/2 LEVEL / T.S.
175+25.00 R 1	651.49	-0.19	-0.0160		12.00	651.68	12.00		0.0160	0.19	651.87	12.00		0.0081	0.10	651.97	12.00		0.0081	0.10	652.07	
175+46.18 R 1	652.18	-0.19	-0.0160	↑	12.00	652.37	12.00	↑	0.0160	0.19	652.56	12.00		0.0160	0.19	652.75	12.00		0.0160	0.19	652.94	R.C.
175+50.00 R 1	652.29	-0.20	-0.0166		12.00	652.49	12.00		0.0166	0.20	652.69	12.00		0.0166	0.20	652.89	12.00		0.0166	0.20	653.09	
175+75.00 R 1	653.01	-0.25	-0.0209		12.00	653.26	12.00		0.0209	0.25	653.51	12.00	374.1↓1	0.0209	0.25	653.76	12.00	374.1↓1	0.0209	0.25	654.01	
176+00.00 R 1	653.68	-0.30	-0.0251		12.00	653.98	12.00		0.0251	0.30	654.29	12.00		0.0251	0.30	654.59	12.00		0.0251	0.30	654.89	
176+25.00 R 1	654.32	-0.35	-0.0293		12.00	654.67	12.00		0.0293	0.35	655.02	12.00		0.0293	0.35	655.37	12.00		0.0293	0.35	655.73	
176+50.00 R 1	654.91	-0.40	-0.0335	493.6↓1	12.00	655.32	12.00	493.6↓1	0.0335	0.40	655.72	12.00		0.0335	0.40	656.12	12.00		0.0335	0.40	656.52	
176+75.00 R 1	655.47	-0.45	-0.0377		12.00	655.92	12.00		0.0377	0.45	656.37	12.00		0.0377	0.45	656.83	12.00		0.0377	0.45	657.28	
177+00.00 R 1	655.98	-0.50	-0.0419		12.00	656.48	12.00		0.0419	0.50	656.99	12.00		0.0419	0.50	657.49	12.00		0.0419	0.50	657.99	
177+25.00 R 1	656.45	-0.55	-0.0461		12.00	657.01	12.00		0.0461	0.55	657.56	12.00		0.0461	0.55	658.11	12.00		0.0461	0.55	658.67	
177+50.00 R 1	656.88	-0.60	-0.0503		12.00	657.49	12.00		0.0503	0.60	658.09	12.00		0.0503	0.60	658.69	12.00		0.0503	0.60	659.30	
177+75.00 R 1	657.27	-0.65	-0.0545		12.00	657.93	12.00		0.0545	0.65	658.58	12.00		0.0545	0.65	659.23	12.00		0.0545	0.65	659.89	
177+78.18 R 1	657.32	-0.66	-0.0551	↓	12.00	657.98	12.00	↓	0.0551	0.66	658.64	12.00	↓	0.0551	0.66	659.30	12.00	↓	0.0551	0.66	659.96	F.S. / S.C.
178+00.00 R 1	657.66	-0.66	-0.0551		12.00	658.32	12.00		0.0551	0.66	658.99	12.00		0.0551	0.66	659.65	12.00		0.0551	0.66	660.31	
178+25.00 R 1	658.02	-0.66	-0.0551		12.00	658.68	12.00		0.0551	0.66	659.34	12.00		0.0551	0.66	660.00	12.00		0.0551	0.66	660.67	
178+50.00 R 1	658.34	-0.66	-0.0551		12.00	659.00	12.00		0.0551	0.66	659.66	12.00		0.0551	0.66	660.32	12.00		0.0551	0.66	660.98	
178+75.00 R 1	658.61	-0.66	-0.0551		12.00	659.27	12.00		0.0551	0.66	659.93	12.00		0.0551	0.66	660.60	12.00		0.0551	0.66	661.26	
179+00.00 R 1	658.85	-0.66	-0.0551		12.00	659.51	12.00		0.0551	0.66	660.17	12.00		0.0551	0.66	660.83	12.00		0.0551	0.66	661.49	
179+25.00 R 1	659.04	-0.66	-0.0551		12.00	659.70	12.00		0.0551	0.66	660.36	12.00		0.0551	0.66	661.02	12.00		0.0551	0.66	661.68	
179+50.00 R 1	659.19	-0.66	-0.0551		12.00	659.85	12.00		0.0551	0.66	660.51	12.00		0.0551	0.66	661.18	12.00		0.0551	0.66	661.84	
179+75.00 R 1	659.30	-0.66	-0.0551		12.00	659.96	12.00		0.0551	0.66	660.63	12.00		0.0551	0.66	661.29	12.00		0.0551	0.66	661.95	
180+00.00 R 1	659.37	-0.66	-0.0551		12.00	660.03	12.00		0.0551	0.66	660.70	12.00		0.0551	0.66	661.36	12.00		0.0551	0.66	662.02	
180+25.00 R 1	659.40	-0.66	-0.0551		12.00	660.06	12.00		0.0551	0.66	660.72	12.00		0.0551	0.66	661.39	12.00		0.0551	0.66	662.05	
180+50.00 R 1	659.39	-0.66	-0.0551		12.00	660.05	12.00		0.0551	0.66	660.71	12.00		0.0551	0.66	661.37	12.00		0.0551	0.66	662.03	
180+75.00 R 1	659.34	-0.66	-0.0551		12.00	660.00	12.00		0.0551	0.66	660.66	12.00		0.0551	0.66	661.32	12.00		0.0551	0.66	661.98	
181+00.00 R 1	659.24	-0.66	-0.0551		12.00	659.90	12.00		0.0551	0.66	660.56	12.00		0.0551	0.66	661.22	12.00		0.0551	0.66	661.89	
181+25.00 R 1	659.11	-0.66	-0.0551		12.00	659.77	12.00		0.0551	0.66	660.43	12.00		0.0551	0.66	661.09	12.00		0.0551	0.66	661.75	
181+50.00 R 1	658.93	-0.66	-0.0551		12.00	659.59	12.00		0.0551	0.66	660.25	12.00		0.0551	0.66	660.91	12.00		0.0551	0.66	661.57	
181+75.00 R 1	658.71	-0.66	-0.0551		12.00	659.37	12.00		0.0551	0.66	660.03	12.00		0.0551	0.66	660.69	12.00		0.0551	0.66	661.36	
182+00.00 R 1	658.45	-0.66	-0.0551		12.00	659.11	12.00		0.0551	0.66	659.77	12.00		0.0551	0.66	660.44	12.00		0.0551	0.66	661.10	
182+25.00 R 1	658.15	-0.66	-0.0551		12.00	658.81	12.00		0.0551	0.66	659.47	12.00		0.0551	0.66	660.14	12.00		0.0551	0.66	660.80	
182+50.00 R 1	657.81	-0.66	-0.0551		12.00	658.47	12.00		0.0551	0.66	659.13	12.00		0.0551	0.66	659.79	12.00		0.0551	0.66	660.46	
182+75.00 R 1	657.43	-0.66	-0.0551		12.00	658.09	12.00		0.0551	0.66	658.75	12.00		0.0551	0.66	659.41	12.00		0.0551	0.66	660.07	
183+00.00 R 1	657.01	-0.66	-0.0551		12.00	657.67	12.00		0.0551	0.66	658.33	12.00		0.0551	0.66	658.99	12.00		0.0551	0.66	659.65	
183+25.00 R 1	656.54	-0.66	-0.0551		12.00	657.20	12.00		0.0551	0.66	657.86	12.00		0.0551	0.66	658.52	12.00		0.0551	0.66	659.19	
183+50.00 R 1	656.04	-0.66	-0.0551		12.00	656.70	12.00		0.0551	0.66	657.36	12.00		0.0551	0.66	658.02	12.00		0.0551	0.66	658.68	
183+75.00 R 1	655.49	-0.66	-0.0551		12.00	656.15	12.00		0.0551	0.66	656.81	12.00		0.0551	0.66	657.47	12.00		0.0551	0.66	658.13	
184+00.00 R 1	654.90	-0.66	-0.0551		12.00	655.56	12.00		0.0551	0.66	656.22	12.00		0.0551	0.66	656.89	12.00		0.0551	0.66	657.55	
184+25.00 R 1	654.27	-0.66	-0.0551		12.00	654.93	12.00		0.0551	0.66	655.60	12.00		0.0551	0.66	656.26	12.00		0.0551	0.66	656.92	
184+50.00 R 1	653.60	-0.66	-0.0551		12.00	654.26	12.00		0.0551	0.66	654.93	12.00		0.0551	0.66	655.59	12.00		0.0551	0.66	656.25	
184+75.00 R 1	652.89	-0.66	-0.0551		12.00	653.55	12.00		0.0551	0.66	654.21	12.00		0.0551	0.66	654.88	12.00		0.0551	0.66	655.54	
185+00.00 R 1	652.14	-0.66	-0.0551		12.00	652.80	12.00		0.0551	0.66	653.46	12.00		0.0551	0.66	654.12	12.00		0.0551	0.66	654.78	
185+25.00 R 1	651.35	-0.66	-0.0551		12.00	652.01	12.00		0.0551	0.66	652.67	12.00		0.0551	0.66	653.33	11.64		0.0551	0.64	653.97	
185+50.00 R 1	650.51	-0.66	-0.0551		12.00	651.17	12.00		0.0551	0.66	651.83	12.00		0.0551	0.66	652.50	11.22		0.0551	0.62	653.11	
185+75.00 R 1	649.64	-0.66	-0.0551		12.00	650.30	12.00		0.0551	0.66	650.96	12.00		0.0551	0.66	651.62	10.81		0.0551	0.60	652.22	
186+00.00 R 1	648.72	-0.66	-0.0551		12.00	649.38	12.00		0.0551	0.66	650.04	12.00		0.0551	0.66	650.70	10.39		0.0551	0.57	651.28	
186+17.26 R 1	648.06	-0.66	-0.0551	↑	12.00	648.73	12.00	↑	0.0551	0.66	649.39	12.00	↑	0.0551	0.66	650.05	10.10	↑	0.0551	0.56	650.60	F.S. / C.S.
186+25.00 R 1	647.78	-0.64	-0.0538		12.00	648.42	12.00		0.0538	0.65	649.07	12.00		0.0538	0.65	649.72	9.97		0.0538	0.54	650.25	
186+50.00 R 1	646.83	-0.59	-0.0496		12.00	647.43	12.00		0.0496	0.59	648.02	12.00		0.0496	0.59	648.62	9.56		0.0496	0.47	649.09	
186+75.00 R 1	645.84	-0.54	-0.0454		12.00	646.39	12.00		0.0454	0.54	646.93	12.00		0.0454	0.54	647.47	9.14		0.0454	0.41	647.89	
187+00.00 R 1	644.81	-0.49	-0.0412	433.6↓1	12.00	645.31	12.00	433.6↓1	0.0412	0.49	645.80	12.00	374.1↓1	0.0412	0.49	646.29	8.72	374.1↓1	0.0412	0.36	646.65	
187+25.00 R 1	643.74	-0.44	-0.0369		12.00	644.18	12.00		0.0369	0.44	644.63	12.00		0.0369	0.44	645.07	8.31		0.0369	0.31	645.38	
187+50.00 R 1	642.63	-0.39	-0.0327		12.00	643.02	12.00		0.0327	0.39	643.41	12.00		0.0327	0.39	643.81	7.89		0.0327	0.26	644.15	
187+75.00 R 1	641.47	-0.34	-0.0285		12.00	641.82	12.00		0.0285	0.34	642.16	12.00		0.0285	0.34	642.50	7.47		0.0285	0.21	642.71	
188+00.00 R 1	640.28	-0.29	-0.0243		12.00	640.57	12.00		0.0243	0.29	640.86	12.00		0.0243	0.29	641.15	7.06		0.0243	0.17	641.33	
188+25.00 R 1	639.04	-0.24	-0.0201		12.00	639.28	12.00		0.0201	0.24	639.53	12.00		0.0201	0.24	639.77	6.64		0.0201	0.14	639.90	
188+49.26 R 1	637.81	-0.19	-0.0160		12.00	638.00	12.00		0.0160	0.19	638.19	12.00		0.0160	0.19	638.38	6.24		0.0160	0.10	638.48	R.C.

DRAFT Stage 3 - Not for Construction
09/23/2024

SUPERELEVATION TABLE
S.R. 7

LAW-7-2.17

583
1247

U:\173608714\LAW\75923\roadway\sheets\75923GE004-2B.dgn 5/21/2024 4:58:26 PM SLParker

SUPERELEVATION TABLE - CURVE NO. 2

P.I. STA. 182+06.44 | Dc = 2° 10′ 43″

CALCULATED SLP | CHECKED ALB

STATION	INSIDE EDGE 8' RT.					INSIDE EDGE 20' RT.	CENTERLINE 32' RT.					OUTSIDE EDGE 44' RT.					OUTSIDE EDGE 56' RT.					REMARKS
	ELEVATION	ELEVATION CORRECTION	CROSS SLOPE	TRANSITION RATE	WIDTH	PROFILE GRADE	WIDTH	TRANSITION RATE	CROSS SLOPE	ELEVATION CORRECTION	ELEVATION	WIDTH	TRANSITION RATE	CROSS SLOPE	ELEVATION CORRECTION	ELEVATION	WIDTH	TRANSITION RATE	CROSS SLOPE	ELEVATION CORRECTION	ELEVATION	
188+50.00 R 1	637.77	-0.19	-0.0160		12.00	637.96	12.00		0.0160	0.19	638.15	12.00		0.0157	0.19	638.34	6.22		0.0157	0.10	638.44	
188+75.00 R 1	636.40	-0.19	-0.0160		12.00	636.59	12.00		0.0160	0.19	636.78	12.00		0.0064	0.08	636.86	5.81		0.0064	0.04	636.90	
188+92.26 R 1	635.43	-0.19	-0.0160		12.00	635.62	12.00		0.0160	0.19	635.81	12.00		0.0000	0.00	635.81	5.52		0.0000	0.00	635.81	1/2 LEVEL / S.T.
189+00.00 R 1	634.99	-0.19	-0.0160		12.00	635.18	12.00		0.0160	0.19	635.37	12.00	374.1:1	-0.0029	-0.03	635.34	5.39	496.9:1	-0.0029	-0.02	635.32	
189+25.00 R 1	633.54	-0.19	-0.0160		12.00	633.73	12.00		0.0160	0.19	633.92	12.00		-0.0122	-0.15	633.77	4.97		-0.0122	-0.06	633.71	
189+35.26 R 1	632.93	-0.19	-0.0160		12.00	633.12	12.00		0.0160	0.19	633.31	12.00		-0.0160	-0.19	633.12	4.80		-0.0160	-0.08	633.04	N.C.

SUPERELEVATION TABLE
S.R. 7

LAW-7-2.17

DRAFT Stage 3 - Not for Construction 09/23/2024

584
1247

U:\173608714\LAW\75923\roadway\sheets\75923GE005-2B.dgn 5/21/2024 4:58:27 PM SLParker

SUPERELEVATION TABLE - CURVE NO. 3

P.I. STA. 205+33.31 | Dc = 1° 45′ 00″

CALCULATED SLP | CHECKED ALB

STATION	INSIDE EDGE 8' RT. ELEVATION	INSIDE EDGE 8' RT. ELEVATION CORRECTION	INSIDE EDGE 8' RT. CROSS SLOPE	INSIDE EDGE 8' RT. TRANSITION RATE	INSIDE EDGE 8' RT. WIDTH	INSIDE EDGE 20' RT. PROFILE GRADE	CENTERLINE 32' RT. WIDTH	CENTERLINE 32' RT. TRANSITION RATE	CENTERLINE 32' RT. CROSS SLOPE	CENTERLINE 32' RT. ELEVATION CORRECTION	CENTERLINE 32' RT. ELEVATION	OUTSIDE EDGE 44' RT. WIDTH	OUTSIDE EDGE 44' RT. TRANSITION RATE	OUTSIDE EDGE 44' RT. CROSS SLOPE	OUTSIDE EDGE 44' RT. ELEVATION CORRECTION	OUTSIDE EDGE 44' RT. ELEVATION	OUTSIDE EDGE 56' RT. WIDTH	OUTSIDE EDGE 56' RT. TRANSITION RATE	OUTSIDE EDGE 56' RT. CROSS SLOPE	OUTSIDE EDGE 56' RT. ELEVATION CORRECTION	OUTSIDE EDGE 56' RT. ELEVATION	REMARKS
195+76.13 R 1						597.46	12.00		0.0160	0.19	597.65	12.00		-0.0160	-0.19	597.46						N.C.
196+00.00 R 1						596.48	12.00		0.0071	0.09	596.57	12.00		-0.0160	-0.19	596.38						
196+19.13 R 1						595.73	12.00		0.0000	0.00	595.73	12.00		-0.0160	-0.19	595.54						1/2 LEVEL / T.S.
196+25.00 R 1						595.50	12.00		-0.0022	-0.03	595.48	12.00		-0.0160	-0.19	595.28						
196+50.00 R 1						594.56	12.00		-0.0115	-0.14	594.42	12.00		-0.0160	-0.19	594.23						
196+62.13 R 1						594.12	12.00		-0.0160	-0.19	593.92	12.00		-0.0160	-0.19	593.73						R.C.
196+75.00 R 1						593.66	12.00		-0.0181	0.22	593.44	12.00		-0.0181	-0.22	593.22						
197+00.00 R 1						592.79	12.00	362.2:1	-0.0222	-0.27	592.52	12.00		-0.0222	-0.27	592.26						
197+25.00 R 1						591.96	12.00		-0.0264	-0.32	591.64	12.00		-0.0264	-0.32	591.33						
197+50.00 R 1						591.17	12.00		-0.0305	-0.37	590.81	12.00	505.6:1	-0.0305	-0.37	590.44						
197+75.00 R 1						590.42	12.00		-0.0346	-0.42	590.01	12.00		-0.0346	-0.42	589.59						
198+00.00 R 1						589.71	12.00		-0.0387	-0.46	589.24	12.00		-0.0387	-0.46	588.78						
198+25.00 R 1						589.03	12.00		-0.0428	-0.51	588.52	12.00		-0.0428	-0.51	588.01						
198+44.13 R 1						588.54	12.00		-0.0460	-0.55	587.99	12.00		-0.0460	-0.55	587.44						F.S. / S.C.
198+50.00 R 1						588.40	12.00		-0.0460	-0.55	587.85	12.00		-0.0460	-0.55	587.29						
198+75.00 R 1																						
199+00.00 R 1																						
199+25.00 R 1																						
199+50.00 R 1																						
199+75.00 R 1																						
200+00.00 R 1						FOR STATIONS 198+75 TO 202+00, SEE SCREED ELEVATION TABLE AND APPROACH SLAB DETAILS																
200+25.00 R 1																						
200+50.00 R 1																						
200+75.00 R 1																						
201+00.00 R 1																						
201+25.00 R 1																						
201+50.00 R 1																						
201+75.00 R 1																						
202+00.00 R 1																						
202+25.00 R 1						583.47	12.00		-0.0460	-0.55	582.92	12.00		-0.0460	-0.55	582.37						
202+50.00 R 1						583.45	12.00		-0.0460	-0.55	582.90	12.00		-0.0460	-0.55	582.35						
202+75.00 R 1						583.47	12.00		-0.0460	-0.55	582.92	12.00		-0.0460	-0.55	582.36						
203+00.00 R 1						583.52	12.00		-0.0460	-0.55	582.97	12.00		-0.0460	-0.55	582.42						
203+25.00 R 1						583.62	12.00		-0.0460	-0.55	583.07	12.00		-0.0460	-0.55	582.51						
203+50.00 R 1						583.75	12.00		-0.0460	-0.55	583.20	12.00		-0.0460	-0.55	582.65						
203+75.00 R 1						583.92	12.00		-0.0460	-0.55	583.37	12.00		-0.0460	-0.55	582.82						
204+00.00 R 1						584.13	12.00		-0.0460	-0.55	583.58	12.00		-0.0460	-0.55	583.03						
204+25.00 R 1						584.38	12.00		-0.0460	-0.55	583.83	12.00		-0.0460	-0.55	583.27						
204+50.00 R 1						584.66	12.00		-0.0460	-0.55	584.11	12.00		-0.0460	-0.55	583.56						
204+75.00 R 1						584.99	12.00		-0.0460	-0.55	584.44	12.00		-0.0460	-0.55	583.88						
205+00.00 R 1						585.35	12.00		-0.0460	-0.55	584.80	12.00		-0.0460	-0.55	584.25						
205+25.00 R 1						585.75	12.00		-0.0460	-0.55	585.20	12.00		-0.0460	-0.55	584.65						
205+50.00 R 1						586.19	12.00		-0.0460	-0.55	585.64	12.00		-0.0460	-0.55	585.09						
205+75.00 R 1						586.67	12.00		-0.0460	-0.55	586.12	12.00		-0.0460	-0.55	585.57						
206+00.00 R 1						587.19	12.00		-0.0460	-0.55	586.63	12.00		-0.0460	-0.55	586.08						
206+25.00 R 1						587.74	12.00		-0.0460	-0.55	587.19	12.00		-0.0460	-0.55	586.64						
206+50.00 R 1						588.34	12.00		-0.0460	-0.55	587.78	12.00		-0.0460	-0.55	587.23						
206+75.00 R 1						588.97	12.00		-0.0460	-0.55	588.42	12.00		-0.0460	-0.55	587.86						
207+00.00 R 1						589.64	12.00		-0.0460	-0.55	589.09	12.00		-0.0460	-0.55	588.53						
207+25.00 R 1						590.35	12.00		-0.0460	-0.55	589.79	12.00		-0.0460	-0.55	589.24						
207+50.00 R 1						591.09	12.00		-0.0460	-0.55	590.54	12.00		-0.0460	-0.55	589.99						
207+75.00 R 1						591.88	12.00		-0.0460	-0.55	591.33	12.00		-0.0460	-0.55	590.77						
208+00.00 R 1						592.70	12.00		-0.0460	-0.55	592.15	12.00		-0.0460	-0.55	591.60						
208+25.00 R 1						593.56	12.00		-0.0460	-0.55	593.01	12.00		-0.0460	-0.55	592.46						
208+50.00 R 1						594.47	12.00		-0.0460	-0.55	593.91	12.00		-0.0460	-0.55	593.36						
208+75.00 R 1						595.40	12.00		-0.0460	-0.55	594.85	12.00		-0.0460	-0.55	594.30						
209+00.00 R 1						596.38	12.00		-0.0460	-0.55	595.83	12.00		-0.0460	-0.55	595.28						
209+25.00 R 1						597.40	12.00		-0.0460	-0.55	596.85	12.00		-0.0460	-0.55	596.29						
209+50.00 R 1						598.45	12.00		-0.0460	-0.55	597.90	12.00		-0.0460	-0.55	597.35						
209+75.00 R 1						599.54	12.00		-0.0460	-0.55	598.99	12.00		-0.0460	-0.55	598.44						
210+00.00 R 1						600.68	12.00		-0.0460	-0.55	600.12	12.00		-0.0460	-0.55	599.57	4.87		-0.0460	-0.22	599.35	

DRAFT Stage 3 - Not for Construction 09/23/2024

SUPERELEVATION TABLE
S.R. 7

LAW-7-2.17

585
1247

U:\1736087\4\LAW\75923\roadway\sheets\75923CE006-2B.dgn 5/21/2024 4:58:27 PM SLParker

SUPERELEVATION TABLE - CURVE NO. 3

P.I. STA. 205+33.31 | Dc = 1° 45′ 00″

CALCULATED SLP | CHECKED ALB

STATION	INSIDE EDGE 8' RT. ELEVATION	INSIDE EDGE 8' RT. ELEVATION CORRECTION	INSIDE EDGE 8' RT. CROSS SLOPE	INSIDE EDGE 8' RT. TRANSITION RATE	INSIDE EDGE 8' RT. WIDTH	INSIDE EDGE 20' RT. PROFILE GRADE	CENTERLINE 32' RT. WIDTH	CENTERLINE 32' RT. TRANSITION RATE	CENTERLINE 32' RT. CROSS SLOPE	CENTERLINE 32' RT. ELEVATION CORRECTION	CENTERLINE 32' RT. ELEVATION	OUTSIDE EDGE 44' RT. WIDTH	OUTSIDE EDGE 44' RT. TRANSITION RATE	OUTSIDE EDGE 44' RT. CROSS SLOPE	OUTSIDE EDGE 44' RT. ELEVATION CORRECTION	OUTSIDE EDGE 44' RT. ELEVATION	OUTSIDE EDGE 56' RT. WIDTH	OUTSIDE EDGE 56' RT. TRANSITION RATE	OUTSIDE EDGE 56' RT. CROSS SLOPE	OUTSIDE EDGE 56' RT. ELEVATION CORRECTION	OUTSIDE EDGE 56' RT. ELEVATION	REMARKS
210+25.00 R 1						601.85	12.00		-0.0460	-0.55	601.29	12.00		-0.0460	-0.55	600.74	10.87		-0.0460	-0.50	600.24	
210+50.00 R 1						603.05	12.00		-0.0460	-0.55	602.50	12.00		-0.0460	-0.55	601.95	12.00		-0.0460	-0.55	601.40	
210+75.00 R 1						604.30	12.00		-0.0460	-0.55	603.75	12.00		-0.0460	-0.55	603.20	12.00		-0.0460	-0.55	602.65	
211+00.00 R 1						605.58	12.00		-0.0460	-0.55	605.03	12.00		-0.0460	-0.55	604.48	12.00		-0.0460	-0.55	603.93	
211+25.00 R 1						606.91	12.00		-0.0460	-0.55	606.36	12.00		-0.0460	-0.55	605.80	12.00		-0.0460	-0.55	605.25	
211+50.00 R 1						608.27	12.00		-0.0460	-0.55	607.72	12.00		-0.0460	-0.55	607.17	12.00		-0.0460	-0.55	606.62	
211+75.00 R 1						609.67	12.00		-0.0460	-0.55	609.12	12.00		-0.0460	-0.55	608.57	12.00		-0.0460	-0.55	608.02	
211+91.27 R 1						610.59	12.00		-0.0460	-0.55	610.04	12.00		-0.0460	-0.55	609.49	12.00		-0.0460	-0.55	608.94	F.S. / C.S.
212+00.00 R 1						611.09	12.00		-0.0446	-0.53	610.55	12.00		-0.0446	-0.53	610.02	12.00		-0.0446	-0.53	609.49	
212+25.00 R 1						612.51	12.00		-0.0404	-0.49	612.02	12.00		-0.0404	-0.49	611.54	12.00		-0.0404	-0.49	611.05	
212+50.00 R 1						613.93	12.00		-0.0363	-0.44	613.49	12.00		-0.0363	-0.44	613.06	12.00		-0.0363	-0.44	612.62	
212+75.00 R 1						615.34	12.00		-0.0322	-0.39	614.95	12.00	505.6:1	-0.0322	-0.39	614.56	12.00	505.6:1	-0.0322	-0.39	614.17	
213+00.00 R 1						616.73	12.00		-0.0281	-0.34	616.39	12.00		-0.0281	-0.34	616.05	12.00		-0.0281	-0.34	615.71	
213+25.00 R 1						618.10	12.00		-0.0239	-0.29	617.81	12.00		-0.0239	-0.29	617.53	12.00		-0.0239	-0.29	617.24	
213+50.00 R 1						619.46	12.00		-0.0198	-0.24	619.22	12.00		-0.0198	-0.24	618.98	12.00		-0.0198	-0.24	618.74	
213+73.27 R 1						620.70	12.00	362.2:1	-0.0160	-0.19	620.51	12.00		-0.0160	-0.19	620.31	12.00		-0.0160	-0.19	620.12	R.C.
213+75.00 R 1						620.79	12.00		-0.0153	-0.18	620.61	12.00		-0.0160	-0.19	620.41	12.00		-0.0160	-0.19	620.22	
214+00.00 R 1						622.11	12.00		-0.0060	-0.07	622.04	12.00		-0.0160	-0.19	621.84	12.00		-0.0160	-0.19	621.65	
214+16.27 R 1						622.95	12.00		0.0000	0.00	622.95	12.00		-0.0160	-0.19	622.76	12.00		-0.0160	-0.19	622.57	1/2 LEVEL / S.T.
214+25.00 R 1						623.41	12.00		0.0032	0.04	623.45	12.00		-0.0160	-0.19	623.25	12.00		-0.0160	-0.19	623.06	
214+50.00 R 1						624.69	12.00		0.0126	0.15	624.84	12.00		-0.0160	-0.19	624.64	12.00		-0.0160	-0.19	624.45	
214+59.27 R 1						625.16	12.00		0.0160	0.19	625.35	12.00		-0.0160	-0.19	625.16	12.00		-0.0160	-0.19	624.97	N.C.

SUPERELEVATION TABLE
S.R. 7

LAW-7-2.17

586
1247

DRAFT Stage 3 - Not for Construction 09/23/2024

U:\173608714\LAW\75923\roadway\sheets\75923GE007-2B.dgn 5/21/2024 4:58:28 PM SLParker

SUPERELEVATION TABLE - CURVE NO. 4

P.I. STA. 232+01.52 | Dc = 4° 45' 00"

CALCULATED SLP | CHECKED ALB

STATION	INSIDE EDGE 8' RT. ELEVATION	INSIDE EDGE 8' RT. ELEVATION CORRECTION	INSIDE EDGE 8' RT. CROSS SLOPE	INSIDE EDGE 8' RT. TRANSITION RATE	INSIDE EDGE 8' RT. WIDTH	INSIDE EDGE 20' RT. PROFILE GRADE	CENTERLINE 32' RT. WIDTH	CENTERLINE 32' RT. TRANSITION RATE	CENTERLINE 32' RT. CROSS SLOPE	CENTERLINE 32' RT. ELEVATION CORRECTION	CENTERLINE 32' RT. ELEVATION	OUTSIDE EDGE 44' RT. WIDTH	OUTSIDE EDGE 44' RT. TRANSITION RATE	OUTSIDE EDGE 44' RT. CROSS SLOPE	OUTSIDE EDGE 44' RT. ELEVATION CORRECTION	OUTSIDE EDGE 44' RT. ELEVATION	OUTSIDE EDGE 56' RT. WIDTH	OUTSIDE EDGE 56' RT. TRANSITION RATE	OUTSIDE EDGE 56' RT. CROSS SLOPE	OUTSIDE EDGE 56' RT. ELEVATION CORRECTION	OUTSIDE EDGE 56' RT. ELEVATION	REMARKS
225+85.73 R 1	663.02	-0.19	-0.0160		12.00	663.21	12.00		0.0160	0.19	663.40	12.00		-0.0160	-0.19	663.21	12.00		-0.0160	-0.19	663.02	N.C.
226+00.00 R 1	663.26	-0.19	-0.0160		12.00	663.45	12.00		0.0160	0.19	663.64	12.00		-0.0107	-0.13	663.51	12.00		-0.0107	-0.13	663.38	
226+25.00 R 1	663.66	-0.19	-0.0160		12.00	663.86	12.00		0.0160	0.19	664.05	12.00		-0.0014	-0.02	664.03	12.00		-0.0014	-0.02	664.01	
226+28.73 R 1	663.72	-0.19	-0.0160		12.00	663.91	12.00		0.0160	0.19	664.11	12.00		0.0000	0.00	664.11	12.00		0.0000	0.00	664.11	1/2 LEVEL / T.S.
226+50.00 R 1	664.05	-0.19	-0.0160		12.00	664.24	12.00		0.0160	0.19	664.43	12.00		0.0079	0.10	664.53	12.00		0.0079	0.10	664.63	
226+71.73 R 1	664.37	-0.19	-0.0160		12.00	664.56	12.00		0.0160	0.19	664.76	12.00		0.0160	0.19	664.95	12.00		0.0160	0.19	665.14	R.C.
226+75.00 R 1	664.41	-0.20	-0.0166		12.00	664.61	12.00		0.0166	0.20	664.81	12.00		0.0166	0.20	665.01	12.00		0.0166	0.20	665.21	
227+00.00 R 1	664.71	-0.25	-0.0211		12.00	664.96	12.00		0.0211	0.25	665.21	12.00		0.0211	0.25	665.47	12.00		0.0211	0.25	665.72	
227+25.00 R 1	664.99	-0.31	-0.0256		12.00	665.29	12.00		0.0256	0.31	665.60	12.00		0.0256	0.31	665.91	12.00		0.0256	0.31	666.21	
227+50.00 R 1	665.24	-0.36	-0.0300		12.00	665.61	12.00		0.0300	0.36	665.97	12.00	385.2:1	0.0300	0.36	666.33	12.00	385.2:1	0.0300	0.36	666.69	
227+75.00 R 1	665.48	-0.41	-0.0345		12.00	665.90	12.00		0.0345	0.41	666.31	12.00		0.0345	0.41	666.73	12.00		0.0345	0.41	667.14	
228+00.00 R 1	665.71	-0.47	-0.0390		12.00	666.17	12.00		0.0390	0.47	666.64	12.00		0.0390	0.47	667.11	12.00		0.0390	0.47	667.58	
228+25.00 R 1	665.91	-0.52	-0.0435	463.6:1	12.00	666.43	12.00	463.6:1	0.0435	0.52	666.95	12.00		0.0435	0.52	667.48	12.00		0.0435	0.52	668.00	
228+50.00 R 1	666.09	-0.58	-0.0480		12.00	666.67	12.00		0.0480	0.58	667.25	12.00		0.0480	0.58	667.82	12.00		0.0480	0.58	668.40	
228+75.00 R 1	666.26	-0.63	-0.0524		12.00	666.89	12.00		0.0524	0.63	667.52	12.00		0.0524	0.63	668.15	12.00		0.0524	0.63	668.78	
229+00.00 R 1	666.41	-0.68	-0.0569		12.00	667.09	12.00		0.0569	0.68	667.77	12.00		0.0569	0.68	668.46	12.00		0.0569	0.68	669.14	
229+25.00 R 1	666.54	-0.74	-0.0614		12.00	667.27	12.00		0.0614	0.74	668.01	12.00		0.0614	0.74	668.75	12.00		0.0614	0.74	669.48	
229+50.00 R 1	666.65	-0.79	-0.0659		12.00	667.44	12.00		0.0659	0.79	668.23	12.00		0.0659	0.79	669.02	12.00		0.0659	0.79	669.81	
229+75.00 R 1	666.74	-0.84	-0.0704		12.00	667.58	12.00		0.0704	0.84	668.43	12.00		0.0704	0.84	669.27	12.00		0.0704	0.84	670.12	
230+00.00 R 1	666.81	-0.90	-0.0749		12.00	667.71	12.00		0.0749	0.90	668.61	12.00		0.0749	0.90	669.51	12.00		0.0749	0.90	670.40	
230+25.00 R 1	666.87	-0.95	-0.0793		12.00	667.82	12.00		0.0793	0.95	668.77	12.00		0.0793	0.95	669.72	12.00		0.0793	0.95	670.67	
230+28.73 R 1	666.87	-0.96	-0.0800		12.00	667.83	12.00		0.0800	0.96	668.79	12.00		0.0800	0.96	669.75	12.00		0.0800	0.96	670.71	F.S. / S.C.
230+50.00 R 1	666.95	-0.96	-0.0800		12.00	667.91	12.00		0.0800	0.96	668.87	12.00		0.0800	0.96	669.83	12.00		0.0800	0.96	670.79	
230+75.00 R 1	667.02	-0.96	-0.0800		12.00	667.98	12.00		0.0800	0.96	668.94	12.00		0.0800	0.96	669.90	12.00		0.0800	0.96	670.86	
231+00.00 R 1	667.07	-0.96	-0.0800		12.00	668.03	12.00		0.0800	0.96	668.99	12.00		0.0800	0.96	669.95	12.00		0.0800	0.96	670.91	
231+25.00 R 1	667.10	-0.96	-0.0800		12.00	668.06	12.00		0.0800	0.96	669.02	12.00		0.0800	0.96	669.98	12.00		0.0800	0.96	670.94	
231+50.00 R 1	667.12	-0.96	-0.0800		12.00	668.08	12.00		0.0800	0.96	669.04	12.00		0.0800	0.96	670.00	12.00		0.0800	0.96	670.96	
231+75.00 R 1	667.11	-0.96	-0.0800		12.00	668.07	12.00		0.0800	0.96	669.03	12.00		0.0800	0.96	669.99	12.00		0.0800	0.96	670.95	
232+00.00 R 1	667.09	-0.96	-0.0800		12.00	668.05	12.00		0.0800	0.96	669.01	12.00		0.0800	0.96	669.97	12.00		0.0800	0.96	670.93	
232+25.00 R 1	667.05	-0.96	-0.0800		12.00	668.01	12.00		0.0800	0.96	668.97	12.00		0.0800	0.96	669.93	12.00		0.0800	0.96	670.89	
232+50.00 R 1	666.99	-0.96	-0.0800		12.00	667.95	12.00		0.0800	0.96	668.91	12.00		0.0800	0.96	669.87	12.00		0.0800	0.96	670.83	
232+75.00 R 1	666.91	-0.96	-0.0800		12.00	667.87	12.00		0.0800	0.96	668.83	12.00		0.0800	0.96	669.79	12.00		0.0800	0.96	670.75	
233+00.00 R 1	666.82	-0.96	-0.0800		12.00	667.78	12.00		0.0800	0.96	668.74	12.00		0.0800	0.96	669.70	12.00		0.0800	0.96	670.66	
233+25.00 R 1	666.70	-0.96	-0.0800		12.00	667.66	12.00		0.0800	0.96	668.62	12.00		0.0800	0.96	669.58	12.00		0.0800	0.96	670.54	
233+49.08 R 1	666.57	-0.96	-0.0800		12.00	667.53	12.00		0.0800	0.96	668.49	12.00		0.0800	0.96	669.45	12.00		0.0800	0.96	670.41	F.S. / C.S.
233+50.00 R 1	666.57	-0.96	-0.0798		12.00	667.53	12.00		0.0798	0.96	668.49	12.00		0.0798	0.96	669.45	12.00		0.0798	0.96	670.40	
233+75.00 R 1	666.47	-0.90	-0.0753		12.00	667.38	12.00		0.0753	0.90	668.28	12.00		0.0753	0.90	669.19	12.00		0.0753	0.90	670.09	
234+00.00 R 1	666.36	-0.85	-0.0709		12.00	667.21	12.00		0.0709	0.85	668.06	12.00		0.0709	0.85	668.91	12.00		0.0709	0.85	669.76	
234+25.00 R 1	666.22	-0.80	-0.0664		12.00	667.02	12.00		0.0664	0.80	667.81	12.00		0.0664	0.80	668.61	12.00		0.0664	0.80	669.41	
234+50.00 R 1	666.07	-0.74	-0.0619		12.00	666.81	12.00		0.0619	0.74	667.55	12.00		0.0619	0.74	668.29	12.00		0.0619	0.74	669.04	
234+75.00 R 1	665.89	-0.69	-0.0574		12.00	666.58	12.00		0.0574	0.69	667.27	12.00		0.0574	0.69	667.96	12.00		0.0574	0.69	668.65	
235+00.00 R 1	665.70	-0.64	-0.0529		12.00	666.34	12.00		0.0529	0.64	666.97	12.00		0.0529	0.64	667.61	12.00		0.0529	0.64	668.24	
235+25.00 R 1	665.49	-0.58	-0.0485		12.00	666.07	12.00		0.0485	0.58	666.65	12.00		0.0485	0.58	667.24	11.86		0.0485	0.58	667.81	
235+50.00 R 1	665.26	-0.53	-0.0440		12.00	665.79	12.00		0.0440	0.53	666.32	12.00		0.0440	0.53	666.85	11.58		0.0440	0.51	667.36	
235+75.00 R 1	665.02	-0.47	-0.0395		12.00	665.49	12.00		0.0395	0.47	665.96	12.00		0.0395	0.47	666.44	11.29		0.0395	0.45	666.88	
236+00.00 R 1	664.75	-0.42	-0.0350		12.00	665.17	12.00		0.0350	0.42	665.59	12.00		0.0350	0.42	666.01	11.00		0.0350	0.39	666.40	
236+25.00 R 1	664.47	-0.37	-0.0305		12.00	664.83	12.00		0.0305	0.37	665.20	12.00		0.0305	0.37	665.56	10.71		0.0305	0.33	665.89	
236+50.00 R 1	664.16	-0.31	-0.0260		12.00	664.47	12.00		0.0260	0.31	664.79	12.00		0.0260	0.31	665.10	10.42		0.0260	0.27	665.37	
236+75.00 R 1	663.84	-0.26	-0.0216		12.00	664.10	12.00		0.0216	0.26	664.36	12.00		0.0216	0.26	664.62	10.13		0.0216	0.22	664.84	
237+00.00 R 1	663.50	-0.21	-0.0171		12.00	663.71	12.00		0.0171	0.21	663.91	12.00		0.0171	0.21	664.12	9.85		0.0171	0.17	664.28	
237+06.08 R 1	663.41	-0.19	-0.0160		12.00	663.61	12.00		0.0160	0.19	663.80	12.00		0.0160	0.19	663.99	9.78		0.0160	0.16	664.15	R.C.
237+25.00 R 1	663.10	-0.19	-0.0160		12.00	663.29	12.00		0.0160	0.19	663.48	12.00		0.0089	0.11	663.59	9.56		0.0089	0.09	663.68	
237+49.08 R 1	662.69	-0.19	-0.0160		12.00	662.88	12.00		0.0160	0.19	663.07	12.00		0.0000	0.00	663.07	9.28		0.0000	0.00	663.07	1/2 LEVEL / S.T.
237+50.00 R 1	662.67	-0.19	-0.0160		12.00	662.86	12.00		0.0160	0.19	663.05	12.00		-0.0003	0.00	663.05	9.27		-0.0003	0.00	663.05	
237+75.00 R 1	662.22	-0.19	-0.0160		12.00	662.41	12.00		0.0160	0.19	662.60	12.00		-0.0096	-0.12	662.49	8.98		-0.0096	-0.09	662.40	
237+92.08 R 1	661.90	-0.19	-0.0160		12.00	662.09	12.00		0.0160	0.19	662.29	12.00		-0.0160	-0.19	662.09	8.78		-0.0160	-0.14	662.23	N.C.

DRAFT Stage 3 - Not for Construction 09/23/2024

SUPERELEVATION TABLE
S.R. 7

LAW-7-2.17

U:\173608714\LAW\75923\roadway\sheets\75923GE008-2B.dgn 5/21/2024 4:58:29 PM SLParker

SUPERELEVATION TABLE - CURVE NO. 5

P.I. STA. 261+89.75 | Dc = 3° 15' 00"

CALCULATED SLP | CHECKED ALB

STATION	INSIDE EDGE 8' RT. ELEVATION	INSIDE EDGE 8' RT. ELEVATION CORRECTION	INSIDE EDGE 8' RT. CROSS SLOPE	INSIDE EDGE 8' RT. TRANSITION RATE	INSIDE EDGE 8' RT. WIDTH	INSIDE EDGE 20' RT. PROFILE GRADE	CENTERLINE 32' RT. WIDTH	CENTERLINE 32' RT. TRANSITION RATE	CENTERLINE 32' RT. CROSS SLOPE	CENTERLINE 32' RT. ELEVATION CORRECTION	CENTERLINE 32' RT. ELEVATION	OUTSIDE EDGE 44' RT. WIDTH	OUTSIDE EDGE 44' RT. TRANSITION RATE	OUTSIDE EDGE 44' RT. CROSS SLOPE	OUTSIDE EDGE 44' RT. ELEVATION CORRECTION	OUTSIDE EDGE 44' RT. ELEVATION	OUTSIDE EDGE 56' RT. WIDTH	OUTSIDE EDGE 56' RT. TRANSITION RATE	OUTSIDE EDGE 56' RT. CROSS SLOPE	OUTSIDE EDGE 56' RT. ELEVATION CORRECTION	OUTSIDE EDGE 56' RT. ELEVATION	REMARKS
249+77.45 R 1																						N.C.
250+00.00 R 1																						
250+20.45 R 1																						1/2 LEVEL / T.S.
250+25.00 R 1																						
250+50.00 R 1																						
250+63.45 R 1																						R.C.
250+75.00 R 1																						
251+00.00 R 1																						
251+25.00 R 1																						
251+50.00 R 1																						
251+75.00 R 1																						
252+00.00 R 1																						
252+25.00 R 1																						
252+50.00 R 1																						
252+75.00 R 1																						
253+00.00 R 1																						
253+25.00 R 1																						
253+50.00 R 1																						
253+70.45 R 1																						F.S. / S.C.
253+75.00 R 1																						
254+00.00 R 1																						
254+25.00 R 1																						
254+50.00 R 1																						
254+75.00 R 1																						
255+00.00 R 1																						
255+25.00 R 1																						
255+50.00 R 1																						
255+75.00 R 1																						
256+00.00 R 1																						
256+25.00 R 1																						
256+50.00 R 1																						
256+75.00 R 1																						
257+00.00 R 1																						
257+25.00 R 1																						
257+50.00 R 1																						
257+75.00 R 1																						
258+00.00 R 1																						
258+25.00 R 1																						
258+50.00 R 1																						
258+75.00 R 1																						
259+00.00 R 1																						
259+25.00 R 1																						
259+50.00 R 1																						
259+75.00 R 1																						
260+00.00 R 1																						
260+25.00 R 1																						
260+50.00 R 1																						
260+75.00 R 1																						
261+00.00 R 1																						
261+25.00 R 1																						
261+50.00 R 1																						
261+75.00 R 1																						
262+00.00 R 1						586.96	12.00		-0.0710	-0.85	586.10	12.00		-0.0710	-0.85	585.25						
262+25.00 R 1						586.14	12.00		-0.0710	-0.85	585.29	12.00		-0.0710	-0.85	584.44						
262+50.00 R 1						585.33	12.00		-0.0710	-0.85	584.48	12.00		-0.0710	-0.85	583.63						
262+75.00 R 1						584.52	12.00		-0.0710	-0.85	583.67	12.00		-0.0710	-0.85	582.81						
263+00.00 R 1						583.71	12.00		-0.0710	-0.85	582.85	12.00		-0.0710	-0.85	582.00						
263+25.00 R 1						582.89	12.00		-0.0710	-0.85	582.04	12.00		-0.0710	-0.85	581.19						
263+50.00 R 1						582.08	12.00		-0.0710	-0.85	581.23	12.00		-0.0710	-0.85	580.38						
263+75.00 R 1						581.27	12.00		-0.0710	-0.85	580.42	12.00		-0.0710	-0.85	579.56						
264+00.00 R 1						580.46	12.00		-0.0710	-0.85	579.60	12.00		-0.0710	-0.85	578.75						

FOR STATIONS 246+25 TO 261+75
SEE PAVEMENT DETAILS SHEETS 607-609

DRAFT Stage 3 - Not for Construction 09/23/2024

SUPERELEVATION TABLE
S.R. 7

LAW-7-2.17

588
1247

U:\173608714\LAW\75923\roadway\sheets\75923GE009-2B.dgn 5/21/2024 4:58:30 PM SLParker

SUPERELEVATION TABLE - CURVE NO. 5

P.I. STA. 261+89.75 | Dc = 3° 15' 00"

CALCULATED SLP | CHECKED ALB

STATION	INSIDE EDGE 8' RT. ELEVATION	INSIDE EDGE 8' RT. ELEVATION CORRECTION	INSIDE EDGE 8' RT. CROSS SLOPE	INSIDE EDGE 8' RT. TRANSITION RATE	INSIDE EDGE 8' RT. WIDTH	INSIDE EDGE 20' RT. PROFILE GRADE	CENTERLINE 32' RT. WIDTH	CENTERLINE 32' RT. TRANSITION RATE	CENTERLINE 32' RT. CROSS SLOPE	CENTERLINE 32' RT. ELEVATION CORRECTION	CENTERLINE 32' RT. ELEVATION	OUTSIDE EDGE 44' RT. WIDTH	OUTSIDE EDGE 44' RT. TRANSITION RATE	OUTSIDE EDGE 44' RT. CROSS SLOPE	OUTSIDE EDGE 44' RT. ELEVATION CORRECTION	OUTSIDE EDGE 44' RT. ELEVATION	OUTSIDE EDGE 56' RT. WIDTH	OUTSIDE EDGE 56' RT. TRANSITION RATE	OUTSIDE EDGE 56' RT. CROSS SLOPE	OUTSIDE EDGE 56' RT. ELEVATION CORRECTION	OUTSIDE EDGE 56' RT. ELEVATION	REMARKS
264+25.00 R 1						579.64	12.00		-0.0710	-0.85	578.79	12.00		-0.0710	-0.85	577.94						
264+50.00 R 1						578.83	12.00		-0.0710	-0.85	577.98	12.00		-0.0710	-0.85	577.13						
264+75.00 R 1						578.02	12.00		-0.0710	-0.85	577.17	12.00		-0.0710	-0.85	576.31						
265+00.00 R 1						577.21	12.00		-0.0710	-0.85	576.35	12.00		-0.0710	-0.85	575.50						
265+25.00 R 1						576.40	12.00		-0.0710	-0.85	575.54	12.00		-0.0710	-0.85	574.69						
265+50.00 R 1						575.61	12.00		-0.0710	-0.85	574.76	12.00		-0.0710	-0.85	573.91						
265+75.00 R 1						574.87	12.00		-0.0710	-0.85	574.02	12.00		-0.0710	-0.85	573.17						
266+00.00 R 1						574.17	12.00		-0.0710	-0.85	573.32	12.00		-0.0710	-0.85	572.47						
266+25.00 R 1						573.51	12.00		-0.0710	-0.85	572.66	12.00		-0.0710	-0.85	571.81						
266+50.00 R 1						572.89	12.00		-0.0710	-0.85	572.04	12.00		-0.0710	-0.85	571.19						
266+75.00 R 1						572.31	12.00		-0.0710	-0.85	571.46	12.00		-0.0710	-0.85	570.61						
267+00.00 R 1						571.78	12.00		-0.0710	-0.85	570.92	12.00		-0.0710	-0.85	570.07						
267+25.00 R 1						571.28	12.00		-0.0710	-0.85	570.43	12.00		-0.0710	-0.85	569.57						
267+50.00 R 1						570.82	12.00		-0.0710	-0.85	569.97	12.00		-0.0710	-0.85	569.12						
267+75.00 R 1						570.40	12.00		-0.0710	-0.85	569.55	12.00		-0.0710	-0.85	568.70						
268+00.00 R 1						570.02	12.00		-0.0710	-0.85	569.17	12.00		-0.0710	-0.85	568.32						
268+25.00 R 1						569.69	12.00		-0.0710	-0.85	568.83	12.00		-0.0710	-0.85	567.98						
268+28.71 R 1						569.64	12.00		-0.0710	-0.85	568.79	12.00		-0.0710	-0.85	567.94						F.S. / C.S.
268+50.00 R 1						569.39	12.00		-0.0672	-0.81	568.58	12.00		-0.0672	-0.81	567.78						
268+75.00 R 1						569.13	12.00		-0.0627	-0.75	568.38	12.00		-0.0627	-0.75	567.63						
269+00.00 R 1						568.92	12.00		-0.0582	-0.70	568.22	12.00		-0.0582	-0.70	567.52						
269+25.00 R 1						568.74	12.00		-0.0537	-0.64	568.10	12.00		-0.0537	-0.64	567.45						
269+50.00 R 1						568.61	12.00		-0.0493	-0.59	568.02	12.00		-0.0493	-0.59	567.43						
269+75.00 R 1						568.51	12.00		-0.0448	-0.54	567.98	12.00		-0.0448	-0.54	567.44						
270+00.00 R 1						568.46	12.00		-0.0403	-0.48	567.97	12.00		-0.0403	-0.48	567.49						
270+25.00 R 1						568.44	12.00		-0.0358	-0.43	568.01	12.00		-0.0358	-0.43	567.58						
270+50.00 R 1						568.47	12.00		-0.0313	-0.38	568.09	12.00		-0.0313	-0.38	567.72						
270+75.00 R 1						568.54	12.00		-0.0269	-0.32	568.21	12.00		-0.0269	-0.32	567.89						
271+00.00 R 1						568.64	12.00		-0.0224	-0.27	568.38	12.00		-0.0224	-0.27	568.11						
271+25.00 R 1						568.79	12.00		-0.0179	-0.21	568.58	12.00		-0.0179	-0.21	568.36						
271+35.71 R 1						568.87	12.00		-0.0160	-0.19	568.67	12.00		-0.0160	-0.19	568.48						R.C.
271+50.00 R 1						568.98	12.00		-0.0107	-0.13	568.85	12.00		-0.0160	-0.19	568.66						
271+75.00 R 1						569.21	12.00		-0.0014	-0.02	569.19	12.00		-0.0160	-0.19	569.00						
271+78.71 R 1						569.24	12.00		0.0000	0.00	569.24	12.00		-0.0160	-0.19	569.05						1/2 LEVEL / S.T.
272+00.00 R 1						569.48	12.00		0.0079	0.10	569.57	12.00		-0.0160	-0.19	569.38						
272+21.71 R 1						569.74	12.00		0.0160	0.19	569.93	12.00		-0.0160	-0.19	569.74						N.C.

377.91' (CENTERLINE 32' RT. TRANSITION RATE)

465.21' (OUTSIDE EDGE 44' RT. TRANSITION RATE)

SUPERELEVATION TABLE
S.R. 7

LAW-7-2.17

589
1247

DRAFT Stage 3 - Not for Construction 09/23/2024

U:\173608714\LAW\75923\roadway\sheets\75923GE010-2B.dgn 5/21/2024 4:58:31 PM SLParker

SUPERELEVATION TABLE - CURVE NO. 6

P.I. STA. 280+92.68 | Dc = 1° 00′ 00″

CALCULATED SLP | CHECKED ALB

STATION	INSIDE EDGE 8' RT. ELEVATION	INSIDE EDGE 8' RT. ELEVATION CORRECTION	INSIDE EDGE 8' RT. CROSS SLOPE	INSIDE EDGE 8' RT. TRANSITION RATE	INSIDE EDGE 8' RT. WIDTH	INSIDE EDGE 20' RT. PROFILE GRADE	CENTERLINE 32' RT. WIDTH	CENTERLINE 32' RT. TRANSITION RATE	CENTERLINE 32' RT. CROSS SLOPE	CENTERLINE 32' RT. ELEVATION CORRECTION	CENTERLINE 32' RT. ELEVATION	OUTSIDE EDGE 44' RT. WIDTH	OUTSIDE EDGE 44' RT. TRANSITION RATE	OUTSIDE EDGE 44' RT. CROSS SLOPE	OUTSIDE EDGE 44' RT. ELEVATION CORRECTION	OUTSIDE EDGE 44' RT. ELEVATION	OUTSIDE EDGE 56' RT. WIDTH	OUTSIDE EDGE 56' RT. TRANSITION RATE	OUTSIDE EDGE 56' RT. CROSS SLOPE	OUTSIDE EDGE 56' RT. ELEVATION CORRECTION	OUTSIDE EDGE 56' RT. ELEVATION	REMARKS
276+94.12 R 1						583.06	12.00		0.0160	0.19	583.26	12.00		-0.0160	-0.19	583.06						N.C.
277+00.00 R 1						583.32	12.00		0.0160	0.19	583.51	12.00		-0.0138	-0.17	583.35						
277+25.00 R 1						584.44	12.00		0.0160	0.19	584.63	12.00		-0.0045	-0.05	584.57						
277+37.12 R 1						584.98	12.00		0.0160	0.19	585.17	12.00		0.0000	0.00	585.17						1/2 LEVEL / T.S.
277+50.00 R 1						585.56	12.00		0.0160	0.19	585.75	12.00	311.1:1	0.0048	0.06	585.81						
277+75.00 R 1						586.68	12.00		0.0160	0.19	586.88	12.00		0.0141	0.17	587.05						
277+80.12 R 1						586.91	12.00		0.0160	0.19	587.10	12.00		0.0160	0.19	587.30						R.C.
278+00.00 R 1						587.78	12.00	512.5:1	0.0192	0.23	588.01	12.00		0.0192	0.23	588.24						
278+25.00 R 1						588.84	12.00		0.0231	0.28	589.11	12.00		0.0231	0.28	589.39						
278+50.00 R 1						589.85	12.00		0.0271	0.32	590.18	12.00		0.0271	0.32	590.50						
278+62.12 R 1						590.33	12.00		0.0290	0.35	590.68	12.00		0.0290	0.35	591.03						F.S. / S.C.
278+75.00 R 1						590.83	12.00		0.0290	0.35	591.18	12.00		0.0290	0.35	591.53						
279+00.00 R 1						591.77	12.00		0.0290	0.35	592.12	12.00		0.0290	0.35	592.47						
279+25.00 R 1						592.68	12.00		0.0290	0.35	593.03	12.00		0.0290	0.35	593.37						
279+50.00 R 1						593.54	12.00		0.0290	0.35	593.89	12.00		0.0290	0.35	594.24						
279+75.00 R 1						594.37	12.00		0.0290	0.35	594.72	12.00		0.0290	0.35	595.06						
280+00.00 R 1						595.15	12.00		0.0290	0.35	595.50	12.00		0.0290	0.35	595.85						
280+25.00 R 1						595.90	12.00		0.0290	0.35	596.25	12.00		0.0290	0.35	596.60						
280+50.00 R 1						596.61	12.00		0.0290	0.35	596.96	12.00		0.0290	0.35	597.31						
280+75.00 R 1						597.29	12.00		0.0290	0.35	597.63	12.00		0.0290	0.35	597.98						
281+00.00 R 1						597.92	12.00		0.0290	0.35	598.27	12.00		0.0290	0.35	598.62						
281+25.00 R 1						598.51	12.00		0.0290	0.35	598.86	12.00		0.0290	0.35	599.21						
281+50.00 R 1						599.07	12.00		0.0290	0.35	599.42	12.00		0.0290	0.35	599.77						
281+75.00 R 1						599.59	12.00		0.0290	0.35	599.94	12.00		0.0290	0.35	600.29						
282+00.00 R 1						600.07	12.00		0.0290	0.35	600.42	12.00		0.0290	0.35	600.76						
282+25.00 R 1						600.51	12.00		0.0290	0.35	600.86	12.00		0.0290	0.35	601.21						
282+50.00 R 1						600.91	12.00		0.0290	0.35	601.26	12.00		0.0290	0.35	601.61						
282+75.00 R 1						601.28	12.00		0.0290	0.35	601.62	12.00		0.0290	0.35	601.97						
283+00.00 R 1						601.60	12.00		0.0290	0.35	601.95	12.00		0.0290	0.35	602.30						
283+22.71 R 1						601.87	12.00		0.0290	0.35	602.21	12.00		0.0290	0.35	602.56						F.S. / C.S.
283+25.00 R 1						601.89	12.00		0.0286	0.34	602.23	12.00		0.0286	0.34	602.58						
283+50.00 R 1						602.14	12.00		0.0247	0.30	602.43	12.00		0.0247	0.30	602.73						
283+75.00 R 1						602.35	12.00		0.0207	0.25	602.60	12.00		0.0207	0.25	602.85						
284+00.00 R 1						602.52	12.00	512.5:1	0.0168	0.20	602.72	12.00		0.0168	0.20	602.92						
284+04.71 R 1						602.55	12.00		0.0160	0.19	602.74	12.00	311.1:1	0.0160	0.19	602.93						R.C.
284+25.00 R 1						602.65	12.00		0.0160	0.19	602.85	12.00		0.0085	0.10	602.95						
284+47.71 R 1						602.74	12.00		0.0160	0.19	602.93	12.00		0.0000	0.00	602.93						1/2 LEVEL / S.T.
284+50.00 R 1						602.75	12.00		0.0160	0.19	602.94	12.00		-0.0009	-0.01	602.93						
284+75.00 R 1						602.81	12.00		0.0160	0.19	603.00	12.00		-0.0102	-0.12	602.88						
284+90.71 R 1						602.82	12.00		0.0160	0.19	603.01	12.00		-0.0160	-0.19	602.82						N.C.

SUPERELEVATION TABLE
S.R. 7

LAW-7-2.17

DRAFT Stage 3 - Not for Construction 09/23/2024

U:\173608714\LAW\75923\roadway\sheets\75923GE011-2B.dgn 5/21/2024 4:58:31 PM SLParker

SUPERELEVATION TABLE - CURVE NO. 7

P.I. STA. 326+36.08 | Dc = 2° 00′ 00″

CALCULATED SLP | CHECKED ALB

REMARKS	OUTSIDE EDGE 44' LT. ELEVATION	OUTSIDE EDGE 44' LT. ELEVATION CORRECTION	OUTSIDE EDGE 44' LT. CROSS SLOPE	OUTSIDE EDGE 44' LT. TRANSITION RATE	OUTSIDE EDGE 44' LT. WIDTH	CENTERLINE OF LANES 32' LT. ELEVATION	CENTERLINE OF LANES 32' LT. ELEVATION CORRECTION	CENTERLINE OF LANES 32' LT. CROSS SLOPE	CENTERLINE OF LANES 32' LT. TRANSITION RATE	CENTERLINE OF LANES 32' LT. WIDTH	INSIDE EDGE (PROFILE GRADE) ELEVATION	INSIDE EDGE (PROFILE GRADE) OFFSET	STATION	INSIDE EDGE (PROFILE GRADE) OFFSET	INSIDE EDGE (PROFILE GRADE) ELEVATION	CENTERLINE OF LANES 32' RT. WIDTH	CENTERLINE OF LANES 32' RT. TRANSITION RATE	CENTERLINE OF LANES 32' RT. CROSS SLOPE	CENTERLINE OF LANES 32' RT. ELEVATION CORRECTION	CENTERLINE OF LANES 32' RT. ELEVATION	OUTSIDE EDGE 44' RT. WIDTH	OUTSIDE EDGE 44' RT. TRANSITION RATE	OUTSIDE EDGE 44' RT. CROSS SLOPE	OUTSIDE EDGE 44' RT. ELEVATION CORRECTION	OUTSIDE EDGE 44' RT. ELEVATION	REMARKS
													FOR STATIONS 309+50 TO 319+50, SEE PAVEMENT DETAILS SHEET 610																
F.S.	622.40	0.61	0.0510		12.00	621.79	0.61	0.0510		12.00	621.18	-20.00	319+56.62 R 1	20.00	621.18	12.00		-0.0510	-0.61	620.57	12.00		-0.0510	-0.61	619.95	F.S. / S.C.
	623.12	0.61	0.0510		12.00	622.51	0.61	0.0510		12.00	621.90	-20.00	319+75.00 R 1	20.00	621.90	12.00		-0.0510	-0.61	621.28	12.00		-0.0510	-0.61	620.67	
	624.10	0.61	0.0510		12.00	623.49	0.61	0.0510		12.00	622.87	-20.00	320+00.00 R 1	20.00	622.87	12.00		-0.0510	-0.61	622.26	12.00		-0.0510	-0.61	621.65	
	625.08	0.61	0.0510		12.00	624.46	0.61	0.0510		12.00	623.85	-20.00	320+25.00 R 1	20.00	623.85	12.00		-0.0510	-0.61	623.24	12.00		-0.0510	-0.61	622.63	
	626.05	0.61	0.0510		12.00	625.44	0.61	0.0510		12.00	624.83	-20.00	320+50.00 R 1	20.00	624.83	12.00		-0.0510	-0.61	624.22	12.00		-0.0510	-0.61	623.60	
	627.03	0.61	0.0510		12.00	626.42	0.61	0.0510		12.00	625.81	-20.00	320+75.00 R 1	20.00	625.81	12.00		-0.0510	-0.61	625.19	12.00		-0.0510	-0.61	624.58	
	628.01	0.61	0.0510		12.00	627.39	0.61	0.0510		12.00	626.78	-20.00	321+00.00 R 1	20.00	626.78	12.00		-0.0510	-0.61	626.17	12.00		-0.0510	-0.61	625.56	
	628.98	0.61	0.0510		12.00	628.37	0.61	0.0510		12.00	627.76	-20.00	321+25.00 R 1	20.00	627.76	12.00		-0.0510	-0.61	627.15	12.00		-0.0510	-0.61	626.54	
	629.96	0.61	0.0510		12.00	629.35	0.61	0.0510		12.00	628.74	-20.00	321+50.00 R 1	20.00	628.74	12.00		-0.0510	-0.61	628.13	12.00		-0.0510	-0.61	627.51	
	630.94	0.61	0.0510		12.00	630.33	0.61	0.0510		12.00	629.71	-20.00	321+75.00 R 1	20.00	629.71	12.00		-0.0510	-0.61	629.10	12.00		-0.0510	-0.61	628.49	
	631.92	0.61	0.0510		12.00	631.30	0.61	0.0510		12.00	630.69	-20.00	322+00.00 R 1	20.00	630.69	12.00		-0.0510	-0.61	630.08	12.00		-0.0510	-0.61	629.47	
	632.89	0.61	0.0510		12.00	632.28	0.61	0.0510		12.00	631.67	-20.00	322+25.00 R 1	20.00	631.67	12.00		-0.0510	-0.61	631.06	12.00		-0.0510	-0.61	630.45	
	633.87	0.61	0.0510		12.00	633.26	0.61	0.0510		12.00	632.65	-20.00	322+50.00 R 1	20.00	632.65	12.00		-0.0510	-0.61	632.03	12.00		-0.0510	-0.61	631.42	
	634.85	0.61	0.0510		12.00	634.24	0.61	0.0510		12.00	633.62	-20.00	322+75.00 R 1	20.00	633.62	12.00		-0.0510	-0.61	633.01	12.00		-0.0510	-0.61	632.40	
	635.83	0.61	0.0510		12.00	635.21	0.61	0.0510		12.00	634.60	-20.00	323+00.00 R 1	20.00	634.60	12.00		-0.0510	-0.61	633.99	12.00		-0.0510	-0.61	633.38	
	636.80	0.61	0.0510		12.00	636.19	0.61	0.0510		12.00	635.58	-20.00	323+25.00 R 1	20.00	635.58	12.00		-0.0510	-0.61	634.97	12.00		-0.0510	-0.61	634.35	
	637.78	0.61	0.0510		12.00	637.17	0.61	0.0510		12.00	636.56	-20.00	323+50.00 R 1	20.00	636.56	12.00		-0.0510	-0.61	635.94	12.00		-0.0510	-0.61	635.33	
	638.76	0.61	0.0510		12.00	638.14	0.61	0.0510		12.00	637.53	-20.00	323+75.00 R 1	20.00	637.53	12.00		-0.0510	-0.61	636.92	12.00		-0.0510	-0.61	636.31	
	639.73	0.61	0.0510		12.00	639.12	0.61	0.0510		12.00	638.51	-20.00	324+00.00 R 1	20.00	638.51	12.00		-0.0510	-0.61	637.90	12.00		-0.0510	-0.61	637.29	
	640.71	0.61	0.0510		12.00	640.10	0.61	0.0510		12.00	639.49	-20.00	324+25.00 R 1	20.00	639.49	12.00		-0.0510	-0.61	638.88	12.00		-0.0510	-0.61	638.26	
	641.69	0.61	0.0510		12.00	641.08	0.61	0.0510		12.00	640.46	-20.00	324+50.00 R 1	20.00	640.46	12.00		-0.0510	-0.61	639.85	12.00		-0.0510	-0.61	639.24	
	642.67	0.61	0.0510		12.00	642.05	0.61	0.0510		12.00	641.44	-20.00	324+75.00 R 1	20.00	641.44	12.00		-0.0510	-0.61	640.83	12.00		-0.0510	-0.61	640.22	
	643.64	0.61	0.0510		12.00	643.03	0.61	0.0510		12.00	642.42	-20.00	325+00.00 R 1	20.00	642.42	12.00		-0.0510	-0.61	641.81	12.00		-0.0510	-0.61	641.20	
	644.62	0.61	0.0510		12.00	644.01	0.61	0.0510		12.00	643.40	-20.00	325+25.00 R 1	20.00	643.40	12.00		-0.0510	-0.61	642.78	12.00		-0.0510	-0.61	642.17	
	645.60	0.61	0.0510		12.00	644.99	0.61	0.0510		12.00	644.37	-20.00	325+50.00 R 1	20.00	644.37	12.00		-0.0510	-0.61	643.76	12.00		-0.0510	-0.61	643.15	
	646.58	0.61	0.0510		12.00	645.96	0.61	0.0510		12.00	645.35	-20.00	325+75.00 R 1	20.00	645.35	12.00		-0.0510	-0.61	644.74	12.00		-0.0510	-0.61	644.13	
	647.55	0.61	0.0510		12.00	646.94	0.61	0.0510		12.00	646.33	-20.00	326+00.00 R 1	20.00	646.33	12.00		-0.0510	-0.61	645.72	12.00		-0.0510	-0.61	645.10	
	648.53	0.61	0.0510		12.00	647.92	0.61	0.0510		12.00	647.31	-20.00	326+25.00 R 1	20.00	647.31	12.00		-0.0510	-0.61	646.69	12.00		-0.0510	-0.61	646.08	
	649.51	0.61	0.0510		12.00	648.89	0.61	0.0510		12.00	648.28	-20.00	326+50.00 R 1	20.00	648.28	12.00		-0.0510	-0.61	647.67	12.00		-0.0510	-0.61	647.06	
	650.48	0.61	0.0510		12.00	649.87	0.61	0.0510		12.00	649.26	-20.00	326+75.00 R 1	20.00	649.26	12.00		-0.0510	-0.61	648.65	12.00		-0.0510	-0.61	648.04	
	651.46	0.61	0.0510		12.00	650.85	0.61	0.0510		12.00	650.24	-20.00	327+00.00 R 1	20.00	650.24	12.00		-0.0510	-0.61	649.63	12.00		-0.0510	-0.61	649.01	
	652.44	0.61	0.0510		12.00	651.83	0.61	0.0510		12.00	651.21	-20.00	327+25.00 R 1	20.00	651.21	12.00		-0.0510	-0.61	650.60	12.00		-0.0510	-0.61	649.99	
	653.42	0.61	0.0510		12.00	652.80	0.61	0.0510		12.00	652.19	-20.00	327+50.00 R 1	20.00	652.19	12.00		-0.0510	-0.61	651.58	12.00		-0.0510	-0.61	650.97	
	654.39	0.61	0.0510		12.00	653.78	0.61	0.0510		12.00	653.17	-20.00	327+75.00 R 1	20.00	653.17	12.00		-0.0510	-0.61	652.56	12.00		-0.0510	-0.61	651.95	
	655.37	0.61	0.0510		12.00	654.76	0.61	0.0510		12.00	654.15	-20.00	328+00.00 R 1	20.00	654.15	12.00		-0.0510	-0.61	653.53	12.00		-0.0510	-0.61	652.92	
	656.35	0.61	0.0510		12.00	655.74	0.61	0.0510		12.00	655.12	-20.00	328+25.00 R 1	20.00	655.12	12.00		-0.0510	-0.61	654.51	12.00		-0.0510	-0.61	653.90	
	657.33	0.61	0.0510		12.00	656.71	0.61	0.0510		12.00	656.10	-20.00	328+50.00 R 1	20.00	656.10	12.00		-0.0510	-0.61	655.49	12.00		-0.0510	-0.61	654.88	
	658.30	0.61	0.0510		12.00	657.69	0.61	0.0510		12.00	657.08	-20.00	328+75.00 R 1	20.00	657.08	12.00		-0.0510	-0.61	656.47	12.00		-0.0510	-0.61	655.85	
	659.28	0.61	0.0510		12.00	658.67	0.61	0.0510		12.00	658.06	-20.00	329+00.00 R 1	20.00	658.06	12.00		-0.0510	-0.61	657.45	12.00		-0.0510	-0.61	656.84	
	660.28	0.61	0.0510		12.00	659.67	0.61	0.0510		12.00	659.06	-20.00	329+25.00 R 1	20.00	659.06	12.00		-0.0510	-0.61	658.44	12.00		-0.0510	-0.61	657.83	
	661.29	0.61	0.0510		12.00	660.67	0.61	0.0510		12.00	660.06	-20.00	329+50.00 R 1	20.00	660.06	12.00		-0.0510	-0.61	659.45	12.00		-0.0510	-0.61	658.84	
	662.31	0.61	0.0510		12.00	661.69	0.61	0.0510		12.00	661.08	-20.00	329+75.00 R 1	20.00	661.08	12.00		-0.0510	-0.61	660.47	12.00		-0.0510	-0.61	659.86	
	663.34	0.61	0.0510		12.00	662.73	0.61	0.0510		12.00	662.12	-20.00	330+00.00 R 1	20.00	662.12	12.00		-0.0510	-0.61	661.50	12.00		-0.0510	-0.61	660.89	
	664.38	0.61	0.0510		12.00	663.77	0.61	0.0510		12.00	663.16	-20.00	330+25.00 R 1	20.00	663.16	12.00		-0.0510	-0.61	662.55	12.00		-0.0510	-0.61	661.94	
	665.44	0.61	0.0510		12.00	664.83	0.61	0.0510		12.00	664.22	-20.00	330+50.00 R 1	20.00	664.22	12.00		-0.0510	-0.61	663.61	12.00		-0.0510	-0.61	662.99	
	666.51	0.61	0.0510		12.00	665.90	0.61	0.0510		12.00	665.29	-20.00	330+75.00 R 1	20.00	665.29	12.00		-0.0510	-0.61	664.68	12.00		-0.0510	-0.61	664.07	
	667.60	0.61	0.0510		12.00	666.98	0.61	0.0510		12.00	666.37	-20.00	331+00.00 R 1	20.00	666.37	12.00		-0.0510	-0.61	665.76	12.00		-0.0510	-0.61	665.15	
	668.69	0.61	0.0510		12.00	668.08	0.61	0.0510		12.00	667.47	-20.00	331+25.00 R 1	20.00	667.47	12.00		-0.0510	-0.61	666.86	12.00		-0.0510	-0.61	666.24	
	669.80	0.61	0.0510		12.00	669.19	0.61	0.0510		12.00	668.58	-20.00	331+50.00 R 1	20.00	668.58	12.00		-0.0510	-0.61	667.97	12.00		-0.0510	-0.61	667.35	
	670.92	0.61	0.0510		12.00	670.31	0.61	0.0510		12.00	669.70	-20.00	331+75.00 R 1	20.00	669.70	12.00		-0.0510	-0.61	669.09	12.00		-0.0510	-0.61	668.47	
	672.06	0.61	0.0510		12.00	671.44	0.61	0.0510		12.00	670.83	-20.00	332+00.00 R 1	20.00	670.83	12.00		-0.0510	-0.61	670.22	12.00		-0.0510	-0.61	669.60	
	673.20	0.61	0.0510		12.00	672.59	0.61	0.0510		12.00	671.98	-20.00	332+25.00 R 1	20.00	671.98	12.00		-0.0510	-0.61	671.37	12.00		-0.0510	-0.61	670.76	
	674.36	0.61	0.0510		12.00	673.75	0.61	0.0510		12.00	673.14	-20.00	332+50.00 R 1	20.00	673.14	12.00		-0.0510	-0.61	672.53	12.00		-0.0510	-0.61	671.91	

DRAFT Stage 3 - Not for Construction 09/23/2024

SUPERELEVATION TABLE
S.R. 7

LAW-7-2.17

591
1247

U:\173608714\LAW\75923\roadway\sheets\75923GE012-2B.dgn 5/21/2024 4:58:32 PM SLParker

SUPERELEVATION TABLE - CURVE NO. 7

P.I. STA. 326+36.08 | Dc = 2° 00' 00"

CALCULATED SLP | CHECKED ALB

REMARKS	OUTSIDE EDGE 44' LT. ELEVATION	ELEVATION CORRECTION	CROSS SLOPE	TRANSITION RATE	WIDTH	CENTERLINE OF LANES 32' LT. ELEVATION	ELEVATION CORRECTION	CROSS SLOPE	TRANSITION RATE	WIDTH	INSIDE EDGE (PROFILE GRADE) ELEVATION	OFFSET	STATION	INSIDE EDGE (PROFILE GRADE) OFFSET	ELEVATION	CENTERLINE OF LANES 32' RT. WIDTH	TRANSITION RATE	CROSS SLOPE	ELEVATION CORRECTION	ELEVATION	OUTSIDE EDGE 44' RT. WIDTH	TRANSITION RATE	CROSS SLOPE	ELEVATION CORRECTION	ELEVATION	REMARKS
F.S. / C.S.	675.52	0.61	0.0510		12.00	674.91	0.61	0.0510		12.00	674.30	-20.00	332+74.69 R 1	20.00	674.30	12.00		-0.0510	-0.61	673.68	12.00		-0.0510	-0.61	673.07	F.S. / C.S.
	675.53	0.61	0.0510		12.00	674.92	0.61	0.0510		12.00	674.31	-20.00	332+75.00 R 1	20.00	674.31	12.00		-0.0510	-0.61	673.70	12.00		-0.0510	-0.61	673.09	
	676.62	0.56	0.0467		12.00	676.06	0.56	0.0467		12.00	675.49	-20.00	333+00.00 R 1	20.00	675.49	12.00		-0.0467	-0.56	674.93	12.00		-0.0467	-0.56	674.37	
	677.71	0.51	0.0425		12.00	677.20	0.51	0.0425		12.00	676.69	-20.00	333+25.00 R 1	20.00	676.69	12.00		-0.0425	-0.51	676.18	12.00		-0.0425	-0.51	675.67	
	678.82	0.46	0.0383		12.00	678.36	0.46	0.0383		12.00	677.90	-20.00	333+50.00 R 1	20.00	677.90	12.00		-0.0383	-0.46	677.44	12.00		-0.0383	-0.46	676.98	
	679.94	0.41	0.0340		12.00	679.53	0.41	0.0340	492.8:1	12.00	679.12	-20.00	333+75.00 R 1	20.00	679.12	12.00		-0.0340	-0.41	678.72	12.00	492.8:1	-0.0340	-0.41	678.31	
	681.08	0.36	0.0298		12.00	680.72	0.36	0.0298		12.00	680.36	-20.00	334+00.00 R 1	20.00	680.36	12.00		-0.0298	-0.36	680.00	12.00		-0.0298	-0.36	679.64	
	682.22	0.31	0.0256	366.2:1	12.00	681.91	0.31	0.0256		12.00	681.61	-20.00	334+25.00 R 1	20.00	681.61	12.00	366.2:1	-0.0256	-0.31	681.30	12.00		-0.0256	-0.31	680.99	
	683.38	0.26	0.0214		12.00	683.12	0.26	0.0214		12.00	682.87	-20.00	334+50.00 R 1	20.00	682.87	12.00		-0.0214	-0.26	682.61	12.00		-0.0214	-0.26	682.36	
	684.55	0.21	0.0171		12.00	684.35	0.21	0.0171		12.00	684.14	-20.00	334+75.00 R 1	20.00	684.14	12.00		-0.0171	-0.21	683.94	12.00		-0.0171	-0.21	683.73	
R.C.	684.87	0.19	0.0160		12.00	684.68	0.19	0.0160		12.00	684.48	-20.00	334+81.69 R 1	20.00	684.48	12.00		-0.0160	-0.19	684.29	12.00		-0.0160	-0.19	684.10	R.C.
	685.73	0.11	0.0092		12.00	685.62	0.19	0.0160		12.00	685.43	-20.00	335+00.00 R 1	20.00	685.43	12.00		-0.0092	-0.11	685.32	12.00		-0.0160	-0.19	685.12	
1/2 LEVEL / S.T.	686.90	-0.00	-0.0000		12.00	686.90	0.19	0.0160		12.00	686.71	-20.00	335+24.69 R 1	20.00	686.71	12.00		-0.0000	-0.00	686.71	12.00		-0.0160	-0.19	686.52	1/2 LEVEL / S.T.
	686.92	-0.00	-0.0001		12.00	686.92	0.19	0.0160		12.00	686.73	-20.00	335+25.00 R 1	20.00	686.73	12.00		0.0001	0.00	686.73	12.00		-0.0160	-0.19	686.53	
	688.12	-0.11	-0.0094		12.00	688.23	0.19	0.0160		12.00	688.04	-20.00	335+50.00 R 1	20.00	688.04	12.00		0.0094	0.11	688.15	12.00		-0.0160	-0.19	687.96	
N.C.	688.97	-0.19	-0.0160		12.00	689.16	0.19	0.0160		12.00	688.97	-20.00	335+67.69 R 1	20.00	688.97	12.00		0.0160	0.19	689.16	12.00		-0.0160	-0.19	688.97	N.C.

SUPERELEVATION TABLE
S.R. 7

LAW-7-2.17

592
1247

DRAFT Stage 3 - Not for Construction 09/23/2024

U:\173608714\LAW\7923\roadway\sheets\75923CE013-2B.dgn 5/21/2024 4:58:33 PM SLParker

SUPERELEVATION TABLE - CURVE NO. 8

P.I. STA. 355+16.90 | Dc = 0° 52′ 24″

CALCULATED SLP | CHECKED ALB

REMARKS	OUTSIDE EDGE 44' LT. ELEVATION	ELEVATION CORRECTION	CROSS SLOPE	TRANSITION RATE	WIDTH	CENTERLINE OF LANES 32' LT. ELEVATION	ELEVATION CORRECTION	CROSS SLOPE	TRANSITION RATE	WIDTH	INSIDE EDGE (PROFILE GRADE) ELEVATION	OFFSET	STATION	INSIDE EDGE (PROFILE GRADE) OFFSET	ELEVATION	CENTERLINE OF LANES 32' RT. WIDTH	TRANSITION RATE	CROSS SLOPE	ELEVATION CORRECTION	ELEVATION	OUTSIDE EDGE 44' RT. WIDTH	TRANSITION RATE	CROSS SLOPE	ELEVATION CORRECTION	ELEVATION	REMARKS
N.C.	749.89	-0.19	-0.0160		12.00	750.08	0.19	0.0160		12.00	749.89	-20.00	348+41.10 R 1	20.00	749.89	12.00		0.0160	0.19	750.08	12.00		-0.0160	-0.19	749.89	N.C.
	750.00	-0.19	-0.0160		12.00	750.19	0.15	0.0127		12.00	750.04	-20.00	348+50.00 R 1	20.00	750.04	12.00		0.0160	0.19	750.23	12.00		-0.0127	-0.15	750.08	
	750.28	-0.19	-0.0160		12.00	750.47	0.04	0.0034		12.00	750.43	-20.00	348+75.00 R 1	20.00	750.43	12.00		0.0160	0.19	750.62	12.00		-0.0034	-0.04	750.58	
1/2 LEVEL / T.S.	750.37	-0.19	-0.0160		12.00	750.56	0.00	0.0000		12.00	750.56	-20.00	348+84.10 R 1	20.00	750.56	12.00		0.0160	0.19	750.76	12.00		-0.0000	-0.00	750.76	1/2 LEVEL / T.S.
	750.52	-0.19	-0.0160		12.00	750.71	-0.07	-0.0059		12.00	750.78	-20.00	349+00.00 R 1	20.00	750.78	12.00		0.0160	0.19	750.97	12.00		0.0059	0.07	751.04	
	750.72	-0.19	-0.0160		12.00	750.91	-0.18	-0.0152	336:1	12.00	751.09	-20.00	349+25.00 R 1	20.00	751.09	12.00		0.0160	0.19	751.28	12.00	336:1	0.0152	0.18	751.47	
R.C.	750.73	-0.19	-0.0160		12.00	750.92	-0.19	-0.0160		12.00	751.12	-20.00	349+27.10 R 1	20.00	751.12	12.00		0.0160	0.19	751.31	12.00		0.0160	0.19	751.50	R.C.
	750.91	-0.23	-0.0188	683.3:1	12.00	751.14	-0.23	-0.0188		12.00	751.36	-20.00	349+50.00 R 1	20.00	751.36	12.00	683.3:1	0.0188	0.23	751.59	12.00		0.0188	0.23	751.81	
	751.06	-0.26	-0.0218		12.00	751.33	-0.26	-0.0218		12.00	751.59	-20.00	349+75.00 R 1	20.00	751.59	12.00		0.0218	0.26	751.85	12.00		0.0218	0.26	752.11	
	751.18	-0.30	-0.0249		12.00	751.48	-0.30	-0.0249		12.00	751.78	-20.00	350+00.00 R 1	20.00	751.78	12.00		0.0249	0.30	752.07	12.00		0.0249	0.30	752.37	
F.S. / S.C.	751.21	-0.31	-0.0260		12.00	751.52	-0.31	-0.0260		12.00	751.83	-20.00	350+09.10 R 1	20.00	751.83	12.00		0.0260	0.31	752.15	12.00		0.0260	0.31	752.46	F.S. / S.C.
	751.30	-0.31	-0.0260		12.00	751.61	-0.31	-0.0260		12.00	751.92	-20.00	350+25.00 R 1	20.00	751.92	12.00		0.0260	0.31	752.23	12.00		0.0260	0.31	752.55	
	751.40	-0.31	-0.0260		12.00	751.72	-0.31	-0.0260		12.00	752.03	-20.00	350+50.00 R 1	20.00	752.03	12.00		0.0260	0.31	752.34	12.00		0.0260	0.31	752.65	
	751.47	-0.31	-0.0260		12.00	751.78	-0.31	-0.0260		12.00	752.09	-20.00	350+75.00 R 1	20.00	752.09	12.00		0.0260	0.31	752.40	12.00		0.0260	0.31	752.72	
	751.49	-0.31	-0.0260		12.00	751.80	-0.31	-0.0260		12.00	752.12	-20.00	351+00.00 R 1	20.00	752.12	12.00		0.0260	0.31	752.43	12.00		0.0260	0.31	752.74	
	751.47	-0.31	-0.0260		12.00	751.79	-0.31	-0.0260		12.00	752.10	-20.00	351+25.00 R 1	20.00	752.10	12.00		0.0260	0.31	752.41	12.00		0.0260	0.31	752.72	
	751.42	-0.31	-0.0260		12.00	751.73	-0.31	-0.0260		12.00	752.04	-20.00	351+50.00 R 1	20.00	752.04	12.00		0.0260	0.31	752.35	12.00		0.0260	0.31	752.66	
	751.32	-0.31	-0.0260		12.00	751.63	-0.31	-0.0260		12.00	751.94	-20.00	351+75.00 R 1	20.00	751.94	12.00		0.0260	0.31	752.25	12.00		0.0260	0.31	752.57	
	751.18	-0.31	-0.0260		12.00	751.49	-0.31	-0.0260		12.00	751.80	-20.00	352+00.00 R 1	20.00	751.80	12.00		0.0260	0.31	752.11	12.00		0.0260	0.31	752.43	
	751.00	-0.31	-0.0260		12.00	751.31	-0.31	-0.0260		12.00	751.62	-20.00	352+25.00 R 1	20.00	751.62	12.00		0.0260	0.31	751.93	12.00		0.0260	0.31	752.24	
	750.77	-0.31	-0.0260		12.00	751.09	-0.31	-0.0260		12.00	751.40	-20.00	352+50.00 R 1	20.00	751.40	12.00		0.0260	0.31	751.71	12.00		0.0260	0.31	752.02	
	750.51	-0.31	-0.0260		12.00	750.82	-0.31	-0.0260		12.00	751.14	-20.00	352+75.00 R 1	20.00	751.14	12.00		0.0260	0.31	751.45	12.00		0.0260	0.31	751.76	
	750.21	-0.31	-0.0260		12.00	750.52	-0.31	-0.0260		12.00	750.83	-20.00	353+00.00 R 1	20.00	750.83	12.00		0.0260	0.31	751.15	12.00		0.0260	0.31	751.46	
	749.86	-0.31	-0.0260		12.00	750.18	-0.31	-0.0260		12.00	750.49	-20.00	353+25.00 R 1	20.00	750.49	12.00		0.0260	0.31	750.80	12.00		0.0260	0.31	751.11	
	749.48	-0.31	-0.0260		12.00	749.79	-0.31	-0.0260		12.00	750.10	-20.00	353+50.00 R 1	20.00	750.10	12.00		0.0260	0.31	750.42	12.00		0.0260	0.31	750.73	
	749.05	-0.31	-0.0260		12.00	749.37	-0.31	-0.0260		12.00	749.68	-20.00	353+75.00 R 1	20.00	749.68	12.00		0.0260	0.31	749.99	12.00		0.0260	0.31	750.30	
	748.59	-0.31	-0.0260		12.00	748.90	-0.31	-0.0260		12.00	749.21	-20.00	354+00.00 R 1	20.00	749.21	12.00		0.0260	0.31	749.52	12.00		0.0260	0.31	749.84	
	748.08	-0.31	-0.0260		12.00	748.39	-0.31	-0.0260		12.00	748.70	-20.00	354+25.00 R 1	20.00	748.70	12.00		0.0260	0.31	749.02	12.00		0.0260	0.31	749.33	
	747.53	-0.31	-0.0260		12.00	747.84	-0.31	-0.0260		12.00	748.15	-20.00	354+50.00 R 1	20.00	748.15	12.00		0.0260	0.31	748.47	12.00		0.0260	0.31	748.78	
	746.94	-0.31	-0.0260		12.00	747.25	-0.31	-0.0260		12.00	747.57	-20.00	354+75.00 R 1	20.00	747.57	12.00		0.0260	0.31	747.88	12.00		0.0260	0.31	748.19	
	746.31	-0.31	-0.0260		12.00	746.62	-0.31	-0.0260		12.00	746.94	-20.00	355+00.00 R 1	20.00	746.94	12.00		0.0260	0.31	747.25	12.00		0.0260	0.31	747.56	
	745.64	-0.31	-0.0260		12.00	745.95	-0.31	-0.0260		12.00	746.26	-20.00	355+25.00 R 1	20.00	746.26	12.00		0.0260	0.31	746.58	12.00		0.0260	0.31	746.89	
	744.93	-0.31	-0.0260		12.00	745.24	-0.31	-0.0260		12.00	745.55	-20.00	355+50.00 R 1	20.00	745.55	12.00		0.0260	0.31	745.86	12.00		0.0260	0.31	746.18	
	744.17	-0.31	-0.0260		12.00	744.49	-0.31	-0.0260		12.00	744.80	-20.00	355+75.00 R 1	20.00	744.80	12.00		0.0260	0.31	745.11	12.00		0.0260	0.31	745.42	
	743.38	-0.31	-0.0260		12.00	743.69	-0.31	-0.0260		12.00	744.01	-20.00	356+00.00 R 1	20.00	744.01	12.00		0.0260	0.31	744.32	12.00		0.0260	0.31	744.63	
	742.55	-0.31	-0.0260		12.00	742.86	-0.31	-0.0260		12.00	743.17	-20.00	356+25.00 R 1	20.00	743.17	12.00		0.0260	0.31	743.48	12.00		0.0260	0.31	743.79	
	741.67	-0.31	-0.0260		12.00	741.98	-0.31	-0.0260		12.00	742.30	-20.00	356+50.00 R 1	20.00	742.30	12.00		0.0260	0.31	742.61	12.00		0.0260	0.31	742.92	
	740.75	-0.31	-0.0260		12.00	741.07	-0.31	-0.0260		12.00	741.38	-20.00	356+75.00 R 1	20.00	741.38	12.00		0.0260	0.31	741.69	12.00		0.0260	0.31	742.00	
	739.80	-0.31	-0.0260		12.00	740.11	-0.31	-0.0260		12.00	740.42	-20.00	357+00.00 R 1	20.00	740.42	12.00		0.0260	0.31	740.73	12.00		0.0260	0.31	741.05	
	738.80	-0.31	-0.0260		12.00	739.11	-0.31	-0.0260		12.00	739.42	-20.00	357+25.00 R 1	20.00	739.42	12.00		0.0260	0.31	739.74	12.00		0.0260	0.31	740.05	
	737.76	-0.31	-0.0260		12.00	738.07	-0.31	-0.0260		12.00	738.38	-20.00	357+50.00 R 1	20.00	738.38	12.00		0.0260	0.31	738.70	12.00		0.0260	0.31	739.01	
	736.68	-0.31	-0.0260		12.00	736.99	-0.31	-0.0260		12.00	737.30	-20.00	357+75.00 R 1	20.00	737.30	12.00		0.0260	0.31	737.62	12.00		0.0260	0.31	737.93	
	735.56	-0.31	-0.0260		12.00	735.87	-0.31	-0.0260		12.00	736.18	-20.00	358+00.00 R 1	20.00	736.18	12.00		0.0260	0.31	736.50	12.00		0.0260	0.31	736.81	
	734.40	-0.31	-0.0260		12.00	734.71	-0.31	-0.0260		12.00	735.02	-20.00	358+25.00 R 1	20.00	735.02	12.00		0.0260	0.31	735.33	12.00		0.0260	0.31	735.65	
	733.20	-0.31	-0.0260		12.00	733.51	-0.31	-0.0260		12.00	733.82	-20.00	358+50.00 R 1	20.00	733.82	12.00		0.0260	0.31	734.13	12.00		0.0260	0.31	734.44	
	731.95	-0.31	-0.0260		12.00	732.26	-0.31	-0.0260		12.00	732.58	-20.00	358+75.00 R 1	20.00	732.58	12.00		0.0260	0.31	732.89	12.00		0.0260	0.31	733.20	
	730.67	-0.31	-0.0260		12.00	730.98	-0.31	-0.0260		12.00	731.29	-20.00	359+00.00 R 1	20.00	731.29	12.00		0.0260	0.31	731.60	12.00		0.0260	0.31	731.92	
	729.34	-0.31	-0.0260		12.00	729.66	-0.31	-0.0260		12.00	729.97	-20.00	359+25.00 R 1	20.00	729.97	12.00		0.0260	0.31	730.28	12.00		0.0260	0.31	730.59	
	727.98	-0.31	-0.0260		12.00	728.29	-0.31	-0.0260		12.00	728.60	-20.00	359+50.00 R 1	20.00	728.60	12.00		0.0260	0.31	728.91	12.00		0.0260	0.31	729.23	
	726.57	-0.31	-0.0260		12.00	726.88	-0.31	-0.0260		12.00	727.19	-20.00	359+75.00 R 1	20.00	727.19	12.00		0.0260	0.31	727.51	12.00		0.0260	0.31	727.82	

DRAFT Stage 3 - Not for Construction 09/23/2024

SUPERELEVATION TABLE
S.R. 7

LAW-7-2.17

593
1247

U:\17360714\LAW\75923\roadway\sheets\75923GE014-2B.dgn 5/21/2024 4:58:34 PM SLParker

SUPERELEVATION TABLE - CURVE NO. 8

P.I. STA. 355+16.90 | Dc = 0° 52′ 24″

REMARKS	OUTSIDE EDGE 44' LT. ELEVATION	ELEVATION CORRECTION	CROSS SLOPE	TRANSITION RATE	WIDTH	CENTERLINE OF LANES 32' LT. ELEVATION	ELEVATION CORRECTION	CROSS SLOPE	TRANSITION RATE	WIDTH	INSIDE EDGE (PROFILE GRADE) ELEVATION	OFFSET	STATION	INSIDE EDGE (PROFILE GRADE) OFFSET	ELEVATION	CENTERLINE OF LANES 32' RT. WIDTH	TRANSITION RATE	CROSS SLOPE	ELEVATION CORRECTION	ELEVATION	OUTSIDE EDGE 44' RT. WIDTH	TRANSITION RATE	CROSS SLOPE	ELEVATION CORRECTION	ELEVATION	REMARKS
	725.12	-0.31	-0.0260		12.00	725.43	-0.31	-0.0260		12.00	725.75	-20.00	360+00.00 R 1	20.00	725.75	12.00		0.0260	0.31	726.06	12.00		0.0260	0.31	726.37	
F.S. / C.S.	723.83	-0.31	-0.0260		12.00	724.14	-0.31	-0.0260		12.00	724.45	-20.00	360+21.83 R 1	20.00	724.45	12.00		0.0260	0.31	724.76	12.00		0.0260	0.31	725.07	F.S. / C.S.
	723.64	-0.31	-0.0256		12.00	723.95	-0.31	-0.0256		12.00	724.26	-20.00	360+25.00 R 1	20.00	724.26	12.00		0.0256	0.31	724.57	12.00		0.0256	0.31	724.87	
	722.22	-0.27	-0.0226		12.00	722.49	-0.27	-0.0226		12.00	722.76	-20.00	360+50.00 R 1	20.00	722.76	12.00		0.0226	0.27	723.03	12.00		0.0226	0.27	723.30	
	720.79	-0.23	-0.0195		12.00	721.02	-0.23	-0.0195		12.00	721.26	-20.00	360+75.00 R 1	20.00	721.26	12.00		0.0195	0.23	721.49	12.00		0.0195	0.23	721.73	
	719.36	-0.20	-0.0165		12.00	719.56	-0.20	-0.0165		12.00	719.76	-20.00	361+00.00 R 1	20.00	719.76	12.00		0.0165	0.20	719.96	12.00		0.0165	0.20	720.15	
R.C.	719.15	-0.19	-0.0160		12.00	719.34	-0.19	-0.0160		12.00	719.53	-20.00	361+03.83 R 1	20.00	719.53	12.00		0.0160	0.19	719.72	12.00		0.0160	0.19	719.91	R.C.
	717.97	-0.19	-0.0160		12.00	718.16	-0.10	-0.0081		12.00	718.26	-20.00	361+25.00 R 1	20.00	718.26	12.00		0.0160	0.19	718.45	12.00		0.0081	0.10	718.55	
1/2 LEVEL / S.T.	716.76	-0.19	-0.0160		12.00	716.95	-0.00	-0.0000		12.00	716.95	-20.00	361+46.83 R 1	20.00	716.95	12.00		0.0160	0.19	717.14	12.00		0.0000	0.00	717.14	1/2 LEVEL / S.T.
	716.58	-0.19	-0.0160		12.00	716.77	0.01	0.0012		12.00	716.76	-20.00	361+50.00 R 1	20.00	716.76	12.00		0.0160	0.19	716.95	12.00		-0.0012	-0.01	716.94	
	715.19	-0.19	-0.0160		12.00	715.38	0.13	0.0105		12.00	715.26	-20.00	361+75.00 R 1	20.00	715.26	12.00		0.0160	0.19	715.45	12.00		-0.0105	-0.13	715.33	
N.C.	714.37	-0.19	-0.0160		12.00	714.56	0.19	0.0160		12.00	714.37	-20.00	361+89.83 R 1	20.00	714.37	12.00		0.0160	0.19	714.56	12.00		-0.0160	-0.19	714.37	N.C.

683.3' TRANSITION RATE

336' TRANSITION RATE

CALCULATED SLP CHECKED ALB

SUPERELEVATION TABLE S.R. 7

LAW-7-2.17

DRAFT Stage 3 - Not for Construction 09/23/2024

U:\173608714\LAW\75923\roadway\sheets\75923GE015-2B.dgn 5/21/2024 4:58:35 PM SLParker

SUPERELEVATION TABLE - CURVE NO. 9

P.I. STA. 387+47.15 | Dc = 2° 29′ 28″

CALCULATED SLP | CHECKED ALB

REMARKS	OUTSIDE EDGE 44' LT. ELEVATION	OUTSIDE EDGE 44' LT. ELEVATION CORRECTION	OUTSIDE EDGE 44' LT. CROSS SLOPE	OUTSIDE EDGE 44' LT. TRANSITION RATE	OUTSIDE EDGE 44' LT. WIDTH	CENTERLINE OF LANES 32' LT. ELEVATION	CENTERLINE OF LANES 32' LT. ELEVATION CORRECTION	CENTERLINE OF LANES 32' LT. CROSS SLOPE	CENTERLINE OF LANES 32' LT. TRANSITION RATE	CENTERLINE OF LANES 32' LT. WIDTH	INSIDE EDGE (PROFILE GRADE) ELEVATION	INSIDE EDGE (PROFILE GRADE) OFFSET	STATION	INSIDE EDGE (PROFILE GRADE) OFFSET	INSIDE EDGE (PROFILE GRADE) ELEVATION	CENTERLINE OF LANES 32' RT. WIDTH	CENTERLINE OF LANES 32' RT. TRANSITION RATE	CENTERLINE OF LANES 32' RT. CROSS SLOPE	CENTERLINE OF LANES 32' RT. ELEVATION CORRECTION	CENTERLINE OF LANES 32' RT. ELEVATION	OUTSIDE EDGE 44' RT. WIDTH	OUTSIDE EDGE 44' RT. TRANSITION RATE	OUTSIDE EDGE 44' RT. CROSS SLOPE	OUTSIDE EDGE 44' RT. ELEVATION CORRECTION	OUTSIDE EDGE 44' RT. ELEVATION	REMARKS
N.C.													375+75.38 R 1	20.00	631.24	12.00		0.0160	0.19	631.43	12.00		-0.0160	-0.19	631.24	N.C.
													376+00.00 R 1	20.00	629.76	12.00		0.0160	0.19	629.95	12.00		-0.0068	-0.08	629.87	
1/2 LEVEL / T.S.													376+18.38 R 1	20.00	628.66	12.00		0.0160	0.19	628.85	12.00		0.0000	0.00	628.85	1/2 LEVEL / T.S.
													376+25.00 R 1	20.00	628.26	12.00		0.0160	0.19	628.45	12.00		0.0024	0.03	628.48	
													376+50.00 R 1													
R.C.													376+61.38 R 1													R.C.
													376+75.00 R 1													
													377+00.00 R 1													
													377+25.00 R 1													
													377+50.00 R 1													
													377+75.00 R 1													
													378+00.00 R 1													
													378+25.00 R 1													
													378+50.00 R 1													
													378+75.00 R 1													
													379+00.00 R 1													
F.S. / S.C.													379+18.38 R 1													F.S. / S.C.
													379+25.00 R 1													
													379+50.00 R 1													
													379+75.00 R 1													
													380+00.00 R 1													
													380+25.00 R 1													
													380+50.00 R 1													
													380+75.00 R 1													
													381+00.00 R 1													
													381+25.00 R 1	20.00	598.95	12.00		0.0620	0.74	599.69	12.00		0.0620	0.74	600.43	
													381+50.00 R 1	20.00	597.73	12.00		0.0620	0.74	598.47	12.00		0.0620	0.74	599.21	
													381+75.00 R 1	20.00	596.56	12.00		0.0620	0.74	597.30	12.00		0.0620	0.74	598.04	
													382+00.00 R 1	20.00	595.43	12.00		0.0620	0.74	596.18	12.00		0.0620	0.74	596.92	
													382+25.00 R 1	20.00	594.36	12.00		0.0620	0.74	595.10	12.00		0.0620	0.74	595.84	
													382+50.00 R 1	20.00	593.33	12.00		0.0620	0.74	594.07	12.00		0.0620	0.74	594.82	
													382+75.00 R 1	20.00	592.35	12.00		0.0620	0.74	593.09	12.00		0.0620	0.74	593.84	
													383+00.00 R 1	20.00	591.42	12.00		0.0620	0.74	592.16	12.00		0.0620	0.74	592.91	
													383+25.00 R 1	20.00	590.53	12.00		0.0620	0.74	591.28	12.00		0.0620	0.74	592.02	
													383+50.00 R 1	20.00	589.70	12.00		0.0620	0.74	590.44	12.00		0.0620	0.74	591.19	
													383+75.00 R 1	20.00	588.91	12.00		0.0620	0.74	589.65	12.00		0.0620	0.74	590.40	
													384+00.00 R 1	20.00	588.17	12.00		0.0620	0.74	588.91	12.00		0.0620	0.74	589.66	
													384+25.00 R 1	20.00	587.48	12.00		0.0620	0.74	588.22	12.00		0.0620	0.74	588.97	
													384+50.00 R 1	20.00	586.84	12.00		0.0620	0.74	587.58	12.00		0.0620	0.74	588.32	
													384+75.00 R 1	20.00	586.24	12.00		0.0620	0.74	586.98	12.00		0.0620	0.74	587.73	
													385+00.00 R 1	20.00	585.69	12.00		0.0620	0.74	586.44	12.00		0.0620	0.74	587.18	
													385+25.00 R 1	20.00	585.19	12.00		0.0620	0.74	585.93	12.00		0.0620	0.74	586.68	
													385+50.00 R 1	20.00	584.74	12.00		0.0620	0.74	585.48	12.00		0.0620	0.74	586.23	
													385+75.00 R 1	20.00	584.33	12.00		0.0620	0.74	585.08	12.00		0.0620	0.74	585.82	
													386+00.00 R 1	20.00	583.98	12.00		0.0620	0.74	584.72	12.00		0.0620	0.74	585.47	
													386+25.00 R 1	20.00	583.67	12.00		0.0620	0.74	584.41	12.00		0.0620	0.74	585.16	
													386+50.00 R 1	20.00	583.41	12.00		0.0620	0.74	584.15	12.00		0.0620	0.74	584.90	
													386+75.00 R 1	20.00	583.20	12.00		0.0620	0.74	583.94	12.00		0.0620	0.74	584.69	
													387+00.00 R 1	20.00	583.03	12.00		0.0620	0.74	583.78	12.00		0.0620	0.74	584.52	
													387+25.00 R 1	20.00	582.92	12.00		0.0620	0.74	583.66	12.00		0.0620	0.74	584.40	
													387+50.00 R 1	20.00	582.85	12.00		0.0620	0.74	583.59	12.00		0.0620	0.74	584.34	
	581.34	-0.74	-0.0620		12.00	582.08	-0.74	-0.0620		12.00	582.83	-20.00	387+75.00 R 1	20.00	582.83	12.00		0.0620	0.74	583.57	12.00		0.0620	0.74	584.32	
	581.37	-0.74	-0.0620		12.00	582.11	-0.74	-0.0620		12.00	582.85	-20.00	388+00.00 R 1	20.00	582.85	12.00		0.0620	0.74	583.60	12.00		0.0620	0.74	584.34	
	581.44	-0.74	-0.0620		12.00	582.19	-0.74	-0.0620		12.00	582.93	-20.00	388+25.00 R 1	20.00	582.93	12.00		0.0620	0.74	583.67	12.00		0.0620	0.74	584.42	
	581.56	-0.74	-0.0620		12.00	582.31	-0.74	-0.0620		12.00	583.05	-20.00	388+50.00 R 1	20.00	583.05	12.00		0.0620	0.74	583.80	12.00		0.0620	0.74	584.54	
	581.74	-0.74	-0.0620		12.00	582.48	-0.74	-0.0620		12.00	583.22	-20.00	388+75.00 R 1	20.00	583.22	12.00		0.0620	0.74	583.97	12.00		0.0620	0.74	584.71	
	581.96	-0.74	-0.0620		12.00	582.70	-0.74	-0.0620		12.00	583.44	-20.00	389+00.00 R 1														
	582.22	-0.74	-0.0620		12.00	582.97	-0.74	-0.0620		12.00	583.71	-20.00	389+25.00 R 1														
	582.54	-0.74	-0.0620		12.00	583.28	-0.74	-0.0620		12.00	584.03	-20.00	389+50.00 R 1														
	582.90	-0.74	-0.0620		12.00	583.64	-0.74	-0.0620		12.00	584.39	-20.00	389+75.00 R 1														
	583.31	-0.74	-0.0620		12.00	584.05	-0.74	-0.0620		12.00	584.80	-20.00	390+00.00 R 1														

FOR STATIONS 376+50 TO 381+00, SEE SCREED ELEVATION TABLE AND APPROACH SLAB DETAILS

FOR STATIONS 371+00 TO 387+50, SEE PAVEMENT DETAILS SHEET 612

FOR STATIONS 389+00 TO 404+90.09, SEE PAVEMENT DETAILS SHEET 614

DRAFT Stage 3 - Not for Construction

09/23/2024

SUPERELEVATION TABLE
S.R. 7

LAW-7-2.17

595
1247

U:\173608714\LAW\75923\roadway\sheets\75923GE016-2B.dgn 5/21/2024 4:58:35 PM SLParker

SUPERELEVATION TABLE - CURVE NO. 9

P.I. STA. 387+47.15 | Dc = 2° 29′ 28″

CALCULATED SLP | CHECKED ALB

REMARKS	OUTSIDE EDGE 44' LT. ELEVATION	ELEVATION CORRECTION	CROSS SLOPE	TRANSITION RATE	WIDTH	CENTERLINE OF LANES 32' LT. ELEVATION	ELEVATION CORRECTION	CROSS SLOPE	TRANSITION RATE	WIDTH	INSIDE EDGE (PROFILE GRADE) ELEVATION	OFFSET	STATION	INSIDE EDGE (PROFILE GRADE) OFFSET	ELEVATION	CENTERLINE OF LANES 32' RT. WIDTH	TRANSITION RATE	CROSS SLOPE	ELEVATION CORRECTION	ELEVATION	OUTSIDE EDGE 44' RT. WIDTH	TRANSITION RATE	CROSS SLOPE	ELEVATION CORRECTION	ELEVATION	REMARKS
	583.73	-0.74	-0.0620		12.00	584.47	-0.74	-0.0620		12.00	585.21	-20.00	390+25.00 R 1													
	584.14	-0.74	-0.0620		12.00	584.89	-0.74	-0.0620		12.00	585.63	-20.00	390+50.00 R 1													
	584.56	-0.74	-0.0620		12.00	585.31	-0.74	-0.0620		12.00	586.05	-20.00	390+75.00 R 1													
	584.98	-0.74	-0.0620		12.00	585.73	-0.74	-0.0620		12.00	586.47	-20.00	391+00.00 R 1													
	585.41	-0.74	-0.0620		12.00	586.15	-0.74	-0.0620		12.00	586.89	-20.00	391+25.00 R 1													
	585.81	-0.74	-0.0620		12.00	586.56	-0.74	-0.0620		12.00	587.30	-20.00	391+50.00 R 1													
	586.24	-0.74	-0.0620		12.00	586.98	-0.74	-0.0620		12.00	587.72	-20.00	391+75.00 R 1													
	586.66	-0.74	-0.0620		12.00	587.40	-0.74	-0.0620		12.00	588.14	-20.00	392+00.00 R 1													
	587.08	-0.74	-0.0620		12.00	587.82	-0.74	-0.0620		12.00	588.56	-20.00	392+25.00 R 1													
	587.50	-0.74	-0.0620		12.00	588.24	-0.74	-0.0620		12.00	588.98	-20.00	392+50.00 R 1													
	587.91	-0.74	-0.0620		12.00	588.65	-0.74	-0.0620		12.00	589.39	-20.00	392+75.00 R 1													
	588.33	-0.74	-0.0620		12.00	589.07	-0.74	-0.0620		12.00	589.81	-20.00	393+00.00 R 1													
	588.75	-0.74	-0.0620		12.00	589.49	-0.74	-0.0620		12.00	590.23	-20.00	393+25.00 R 1													
	589.17	-0.74	-0.0620		12.00	589.91	-0.74	-0.0620		12.00	590.65	-20.00	393+50.00 R 1													
	589.58	-0.74	-0.0620		12.00	590.32	-0.74	-0.0620		12.00	591.06	-20.00	393+75.00 R 1													
	590.00	-0.74	-0.0620		12.00	590.74	-0.74	-0.0620		12.00	591.48	-20.00	394+00.00 R 1													
	590.42	-0.74	-0.0620		12.00	591.16	-0.74	-0.0620		12.00	591.90	-20.00	394+25.00 R 1													
	590.84	-0.74	-0.0620		12.00	591.58	-0.74	-0.0620		12.00	592.32	-20.00	394+50.00 R 1													
F.S. / C.S.	591.14	-0.74	-0.0620		12.00	591.88	-0.74	-0.0620		12.00	592.62	-20.00	394+68.00 R 1													F.S. / C.S.
	591.27	-0.73	-0.0607		12.00	592.00	-0.73	-0.0607		12.00	592.73	-20.00	394+75.00 R 1													
	591.79	-0.68	-0.0563		12.00	592.47	-0.68	-0.0563		12.00	593.15	-20.00	395+00.00 R 1													
	592.33	-0.62	-0.0518		12.00	592.95	-0.62	-0.0518		12.00	593.57	-20.00	395+25.00 R 1													
	592.85	-0.57	-0.0473		12.00	593.42	-0.57	-0.0473		12.00	593.99	-20.00	395+50.00 R 1													
	593.39	-0.51	-0.0429	476.31	12.00	593.90	-0.51	-0.0429	476.31	12.00	594.41	-20.00	395+75.00 R 1													
	593.90	-0.46	-0.0384		12.00	594.36	-0.46	-0.0384		12.00	594.82	-20.00	396+00.00 R 1													
	594.42	-0.41	-0.0339		12.00	594.83	-0.41	-0.0339		12.00	595.24	-20.00	396+25.00 R 1													
	594.96	-0.35	-0.0294		12.00	595.31	-0.35	-0.0294		12.00	595.66	-20.00	396+50.00 R 1													
	595.48	-0.30	-0.0249		12.00	595.78	-0.30	-0.0249		12.00	596.08	-20.00	396+75.00 R 1													
	596.00	-0.25	-0.0205		12.00	596.24	-0.25	-0.0205		12.00	596.49	-20.00	397+00.00 R 1													
R.C.	596.53	-0.19	-0.0160		12.00	596.72	-0.19	-0.0160		12.00	596.91	-20.00	397+25.00 R 1													R.C.

FOR STATIONS 389+00 TO 404+90.09,
SEE PAVEMENT DETAILS SHEET 614

FOR STATIONS 397+50 TO 408+00,
SEE PAVEMENT DETAILS SHEET 613

SUPERELEVATION TABLE
S.R. 7

LAW-7-2.17

596
1247

DRAFT Stage 3 - Not for Construction 09/23/2024

U:\173608714\LAW\75923\roadway\sheets\75923GE017-2B.dgn 5/21/2024 4:58:36 PM SLParker

SUPERELEVATION TABLE - ℄ CURVE NO. 2

P.I. STA. 405+66.18 | Dc = 4° 27′ 49″

REMARKS	OUTSIDE EDGE 24' LT.					CENTERLINE OF LANES 12' LT.					INSIDE EDGE (PROFILE GRADE)		STATION
	ELEVATION	ELEVATION CORRECTION	CROSS SLOPE	TRANSITION RATE	WIDTH	ELEVATION	ELEVATION CORRECTION	CROSS SLOPE	TRANSITION RATE	WIDTH	ELEVATION	OFFSET	
						FOR STATIONS 397+50 TO 408+00, SEE PAVEMENT DETAILS SHEET 613							
	636.21	0.22	0.0180		12.00	635.99	0.22	0.0180		12.00	635.78	0.00	408+25.00 R 1
P.T.	636.32	0.20	0.0164		12.00	636.12	0.20	0.0164		12.00	635.92	0.00	408+33.87 R 1
R.C.	636.33	0.19	0.0160		12.00	636.14	0.19	0.0160		12.00	635.95	0.00	408+35.87 R 1
	636.49	0.13	0.0107		12.00	636.36	0.19	0.0160		12.00	636.17	0.00	408+50.00 R 1
	636.73	0.02	0.0014		12.00	636.71	0.19	0.0160		12.00	636.52	0.00	408+75.00 R 1
1/2 LEVEL	636.77	-0.00	-0.0000		12.00	636.77	0.19	0.0160		12.00	636.57	0.00	408+78.87 R 1
	636.94	-0.09	-0.0079		12.00	637.03	0.19	0.0160		12.00	636.83	0.00	409+00.00 R 1
N.C.	637.07	-0.19	-0.0160		12.00	637.26	0.19	0.0160		12.00	637.07	0.00	409+21.87 R 1

THIS SUPERELEVATION TRANSITION IS BASED ON THE BIFURCATED ALIGNMENT

CALCULATED SLP | CHECKED ALB

SUPERELEVATION TABLE
BIFURCATED WESTBOUND LANES
S.R. 7 -

LAW-7-2.17

597
1247

DRAFT Stage 3 - Not for Construction 09/23/2024

U:\173608714\LAW\75923\roadway\sheets\75923GE018-2B.dgn 5/21/2024 4:58:37 PM SLParker

SUPERELEVATION TABLE - ℄ CURVE NO. 3

P.I. STA. 418+95.85 | Dc = 1° 30′ 00″

CALCULATED SLP | CHECKED ALB

REMARKS	OUTSIDE EDGE 24' LT. ELEVATION	ELEVATION CORRECTION	CROSS SLOPE	TRANSITION RATE	WIDTH	CENTERLINE OF LANES 12' LT. ELEVATION	ELEVATION CORRECTION	CROSS SLOPE	TRANSITION RATE	WIDTH	INSIDE EDGE (PROFILE GRADE) ELEVATION	OFFSET	STATION
N.C.	637.53	-0.19	-0.0160		12.00	637.72	0.19	0.0160		12.00	637.53	0.00	411+77.61 R 1
	637.26	-0.19	-0.0160		12.00	637.45	0.09	0.0077		12.00	637.36	0.00	412+00.00 R 1
1/2 LEVEL	636.99	-0.19	-0.0160		12.00	637.18	0.00	0.0000		12.00	637.18	0.00	412+20.61 R 1
	636.93	-0.19	-0.0160		12.00	637.12	-0.02	-0.0016		12.00	637.14	0.00	412+25.00 R 1
	636.55	-0.19	-0.0160		12.00	636.74	-0.13	-0.0109		12.00	636.87	0.00	412+50.00 R 1
R.C.	636.33	-0.19	-0.0160		12.00	636.52	-0.19	-0.0160	322 1:1	12.00	636.71	0.00	412+63.61 R 1
	636.13	-0.22	-0.0181		12.00	636.35	-0.22	-0.0181		12.00	636.56	0.00	412+75.00 R 1
	635.67	-0.27	-0.0228	443.3:1	12.00	635.94	-0.27	-0.0228		12.00	636.22	0.00	413+00.00 R 1
P.C.	635.50	-0.29	-0.0245		12.00	635.80	-0.29	-0.0245		12.00	636.09	0.00	413+08.61 R 1
	635.17	-0.33	-0.0275		12.00	635.50	-0.33	-0.0275		12.00	635.83	0.00	413+25.00 R 1
	634.62	-0.39	-0.0322		12.00	635.01	-0.39	-0.0322		12.00	635.40	0.00	413+50.00 R 1
	634.04	-0.44	-0.0369		12.00	634.48	-0.44	-0.0369		12.00	634.93	0.00	413+75.00 R 1
F.S.	633.51	-0.49	-0.0410		12.00	634.00	-0.49	-0.0410		12.00	634.49	0.00	413+96.61 R 1
	633.43	-0.49	-0.0410		12.00	633.92	-0.49	-0.0410		12.00	634.42	0.00	414+00.00 R 1
	632.88	-0.49	-0.0410		12.00	633.37	-0.49	-0.0410		12.00	633.86	0.00	414+25.00 R 1
	632.29	-0.49	-0.0410		12.00	632.78	-0.49	-0.0410		12.00	633.27	0.00	414+50.00 R 1
	631.65	-0.49	-0.0410		12.00	632.14	-0.49	-0.0410		12.00	632.63	0.00	414+75.00 R 1
	630.97	-0.49	-0.0410		12.00	631.46	-0.49	-0.0410		12.00	631.95	0.00	415+00.00 R 1
	630.25	-0.49	-0.0410		12.00	630.74	-0.49	-0.0410		12.00	631.24	0.00	415+25.00 R 1
	629.50	-0.49	-0.0410		12.00	629.99	-0.49	-0.0410		12.00	630.48	0.00	415+50.00 R 1
	628.69	-0.49	-0.0410		12.00	629.18	-0.49	-0.0410		12.00	629.68	0.00	415+75.00 R 1
	627.85	-0.49	-0.0410		12.00	628.34	-0.49	-0.0410		12.00	628.83	0.00	416+00.00 R 1
	626.97	-0.49	-0.0410		12.00	627.46	-0.49	-0.0410		12.00	627.95	0.00	416+25.00 R 1
	626.05	-0.49	-0.0410		12.00	626.54	-0.49	-0.0410		12.00	627.03	0.00	416+50.00 R 1
	625.08	-0.49	-0.0410		12.00	625.57	-0.49	-0.0410		12.00	626.06	0.00	416+75.00 R 1
	624.07	-0.49	-0.0410		12.00	624.56	-0.49	-0.0410		12.00	625.06	0.00	417+00.00 R 1
	623.03	-0.49	-0.0410		12.00	623.52	-0.49	-0.0410		12.00	624.01	0.00	417+25.00 R 1
	621.94	-0.49	-0.0410		12.00	622.43	-0.49	-0.0410		12.00	622.92	0.00	417+50.00 R 1
	620.81	-0.49	-0.0410		12.00	621.30	-0.49	-0.0410		12.00	621.79	0.00	417+75.00 R 1
	619.64	-0.49	-0.0410		12.00	620.13	-0.49	-0.0410		12.00	620.62	0.00	418+00.00 R 1
	618.43	-0.49	-0.0410		12.00	618.92	-0.49	-0.0410		12.00	619.42	0.00	418+25.00 R 1
	617.26	-0.49	-0.0410		12.00	617.75	-0.49	-0.0410		12.00	618.24	0.00	418+50.00 R 1
	616.13	-0.49	-0.0410		12.00	616.62	-0.49	-0.0410		12.00	617.11	0.00	418+75.00 R 1
	615.04	-0.49	-0.0410		12.00	615.53	-0.49	-0.0410		12.00	616.02	0.00	419+00.00 R 1
	613.99	-0.49	-0.0410		12.00	614.48	-0.49	-0.0410		12.00	614.97	0.00	419+25.00 R 1
	612.98	-0.49	-0.0410		12.00	613.47	-0.49	-0.0410		12.00	613.96	0.00	419+50.00 R 1
	612.01	-0.49	-0.0410		12.00	612.50	-0.49	-0.0410		12.00	613.00	0.00	419+75.00 R 1
	611.09	-0.49	-0.0410		12.00	611.58	-0.49	-0.0410		12.00	612.07	0.00	420+00.00 R 1
	610.20	-0.49	-0.0410		12.00	610.69	-0.49	-0.0410		12.00	611.19	0.00	420+25.00 R 1
	609.36	-0.49	-0.0410		12.00	609.85	-0.49	-0.0410		12.00	610.34	0.00	420+50.00 R 1
	608.56	-0.49	-0.0410		12.00	609.05	-0.49	-0.0410		12.00	609.54	0.00	420+75.00 R 1
	607.80	-0.49	-0.0410		12.00	608.29	-0.49	-0.0410		12.00	608.78	0.00	421+00.00 R 1
	607.08	-0.49	-0.0410		12.00	607.57	-0.49	-0.0410		12.00	608.06	0.00	421+25.00 R 1
	606.40	-0.49	-0.0410		12.00	606.89	-0.49	-0.0410		12.00	607.38	0.00	421+50.00 R 1
	605.76	-0.49	-0.0410		12.00	606.25	-0.49	-0.0410		12.00	606.74	0.00	421+75.00 R 1
	605.17	-0.49	-0.0410		12.00	605.66	-0.49	-0.0410		12.00	606.15	0.00	422+00.00 R 1
	604.61	-0.49	-0.0410		12.00	605.10	-0.49	-0.0410		12.00	605.59	0.00	422+25.00 R 1
	604.10	-0.49	-0.0410		12.00	604.59	-0.49	-0.0410		12.00	605.08	0.00	422+50.00 R 1
	603.62	-0.49	-0.0410		12.00	604.11	-0.49	-0.0410		12.00	604.61	0.00	422+75.00 R 1
	603.19	-0.49	-0.0410		12.00	603.68	-0.49	-0.0410		12.00	604.18	0.00	423+00.00 R 1
	602.80	-0.49	-0.0410		12.00	603.29	-0.49	-0.0410		12.00	603.79	0.00	423+25.00 R 1
	602.45	-0.49	-0.0410		12.00	602.94	-0.49	-0.0410		12.00	603.44	0.00	423+50.00 R 1
	602.15	-0.49	-0.0410		12.00	602.64	-0.49	-0.0410		12.00	603.13	0.00	423+75.00 R 1
F.S.	602.02	-0.49	-0.0410		12.00	602.51	-0.49	-0.0410		12.00	603.01	0.00	423+85.96 R 1
	601.94	-0.46	-0.0384		12.00	602.40	-0.46	-0.0384		12.00	602.86	0.00	424+00.00 R 1
	601.83	-0.40	-0.0337		12.00	602.23	-0.40	-0.0337		12.00	602.64	0.00	424+25.00 R 1
	601.76	-0.35	-0.0290		12.00	602.11	-0.35	-0.0290		12.00	602.45	0.00	424+50.00 R 1
P.T.	601.74	-0.33	-0.0245		12.00	602.03	-0.33	-0.0245		12.00	602.32	0.00	424+73.96 R 1
	601.73	-0.29	-0.0243		12.00	602.02	-0.29	-0.0243		12.00	602.31	0.00	424+75.00 R 1

THIS SUPERELEVATION TRANSITION IS BASED ON THE BIFURCATED ALIGNMENT

FOR STATIONS 425+00 TO 437+63.33 SEE PAVEMENT DETAILS SHEET 615

DRAFT Stage 3 - Not for Construction 09/23/2024

SUPERELEVATION TABLE - BIFURCATED WESTBOUND LANES

S.R. 7 - B

LAW-7-2.17

598
1247

U:\173608714\LAW\75923\roadway\sheets\75923GE019-2B.dgn 5/21/2024 4:58:38 PM SLParker

SUPERELEVATION TABLE - RAMP C CURVE NO. 1, 2 & 3

P.I. STA. 116+34.14 | Dc = 21° 08′ 32″ | P.I. STA. 119+65.29 | Dc = 16° 22′ 13″ | P.I. STA. 122+69.78 | Dc = 6° 21′ 58″

LEFT SIDE					BASELINE CONTROL		RIGHT SIDE					REMARKS
EDGE ELEVATION	TRANSITION RATE	ELEVATION CORRECTION	CROSS SLOPE	WIDTH	STATION	PROFILE GRADE	WIDTH	CROSS SLOPE	ELEVATION CORRECTON	TRANSITION RATE	EDGE ELEVATION	
					116+33.24 R 1	561.15	16.00	-0.0538	-0.86		560.29	EXIST. #
					116+50.00 R 1	560.92	16.00	-0.0598	-0.96		559.96	
					116+66.48 R 1	560.69	16.00	-0.0657	-1.05		559.64	F.S.
					116+75.00 R 1	560.57	16.00	-0.0620	-0.99		559.58	
					117+00.00 R 1	560.23	16.00	-0.0510	-0.82		559.41	
					117+18.83 R 1	559.97	16.00	-0.0427	-0.68		559.29	P.T.
					117+25.00 R 1	559.88	16.00	-0.0400	-0.64		559.24	
					117+50.00 R 1	559.53	16.00	-0.0290	-0.46		559.07	
					117+75.00 R 1	559.19	16.00	-0.0180	-0.29		558.90	
					117+79.48 R 1	559.13	16.00	-0.0160	-0.26		558.87	R.C.
					118+00.00 R 1	558.84	16.00	-0.0071	-0.11		558.73	
					118+16.48 R 1	558.61	16.00	0.0000	0.00		558.61	FLAT
					118+25.00 R 1	558.50	16.00	0.0035	0.06		558.56	
					118+50.00 R 1	558.15	16.00	0.0138	0.22		558.37	
					118+55.48 R 1	558.07	16.00	0.0160	0.26		558.33	R.C.
					118+75.00 R 1	557.80	16.00	0.0240	0.38		558.18	
					119+00.00 R 1	557.46	16.00	0.0343	0.55		558.01	
					119+02.48 R 1	557.42	16.00	0.0354	0.57		557.99	P.C.
					119+25.00 R 1	557.11	16.00	0.0446	0.71		557.82	
					119+50.00 R 1	556.76	16.00	0.0549	0.88		557.64	
					119+75.00 R 1	556.42	16.00	0.0652	1.04		557.46	
					119+88.48 R 1	556.23	16.00	0.0708	1.13		557.36	F.S.
					120+00.00 R 1	556.07	16.00	0.0708	1.13		557.20	
					120+25.00 R 1	555.73	16.00	0.0708	1.13		556.86	
					120+26.77 R 1	555.70	16.00	0.0708	1.13		556.83	P.C.C.
					120+50.00 R 1	555.40	16.00	0.0708	1.13		556.53	
					120+75.00 R 1	555.16	16.00	0.0708	1.13		556.29	
					120+89.77 R 1	555.05	16.00	0.0708	1.13		556.18	F.S.
					121+00.00 R 1	555.00	16.00	0.0671	1.07		556.07	
					121+12.77 R 1	554.95	16.00	0.0625	1.00		555.95	F.S.
					121+25.00 R 1	554.93	16.00	0.0625	1.00		555.93	
					121+50.00 R 1	554.94	16.00	0.0625	1.00		555.94	
					121+75.00 R 1	555.03	16.00	0.0625	1.00		556.03	
					122+00.00 R 1	555.21	16.00	0.0625	1.00		556.21	
					122+25.00 R 1	555.47	16.00	0.0625	1.00		556.47	
					122+50.00 R 1	555.80	16.00	0.0625	1.00		556.80	

MATCH EXISTING ELEVATIONS

FOR STATIONS 122+75 TO 127+14.00,
SEE PAVEMENT DETAILS SHEET 606

SUPERELEVATION TABLE - RAMP D CURVE NO. 1 & 2

P.I. STA. 116+98.94 | Dc = 12° 00′ 00″ | P.I. STA. 119+97.82 | Dc = 10° 00′ 00″

LEFT SIDE					BASELINE CONTROL		RIGHT SIDE					REMARKS
EDGE ELEVATION	TRANSITION RATE	ELEVATION CORRECTION	CROSS SLOPE	WIDTH	STATION	PROFILE GRADE	WIDTH	CROSS SLOPE	ELEVATION CORRECTON	TRANSITION RATE	EDGE ELEVATION	
					116+32.46 R 1	558.81	16.00	-0.0730	-1.17		557.64	F.S.
					116+50.00 R 1	559.69	16.00	-0.0730	-1.17		558.52	
					116+75.00 R 1	560.94	16.00	-0.0730	-1.17		559.77	
					117+00.00 R 1	562.19	16.00	-0.0730	-1.17		561.02	
					117+25.00 R 1	563.44	16.00	-0.0730	-1.17		562.27	
					117+50.00 R 1	564.69	16.00	-0.0730	-1.17		563.52	
					117+53.99 R 1	564.89	16.00	-0.0730	-1.17		563.72	F.S.
					117+75.00 R 1	565.94	16.00	-0.0649	-1.04		564.90	
					118+00.00 R 1	567.09	16.00	-0.0552	-0.88		566.21	
					118+25.00 R 1	568.05	16.00	-0.0455	-0.73	188.5±	567.32	
					118+48.49 R 1	568.77	16.00	-0.0364	-0.58		568.19	P.T.
					118+50.00 R 1	568.81	16.00	-0.0358	-0.57		568.24	
					118+75.00 R 1	569.38	16.00	-0.0261	-0.42		568.96	
					119+00.00 R 1	569.75	16.00	-0.0164	-0.26		569.49	
					119+00.99 R 1	569.76	16.00	-0.0160	-0.26		569.50	R.C.
					119+11.83 R 1	569.61	16.00	-0.0119	-0.19		569.42	P.C.
					119+25.00 R 1	569.92	16.00	-0.0069	-0.11		569.81	
					119+50.00 R 1	569.90	16.00	0.0027	0.04		569.96	
					119+75.00 R 1	569.69	16.00	0.0122	0.20		569.89	
					119+84.99 R 1	569.58	16.00	0.0160	0.26		569.84	N.C.

FOR STATIONS 115+19 TO 116+25
AND STATIONS 120+00 TO 120+82.54,
SEE INTERSECTION DETAILS SHEET 622

CALCULATED SLP | CHECKED ALB

SUPERELEVATION TABLE
RAMP C & RAMP D

LAW-7-2.17

599
1247

DRAFT Stage 3 - Not for Construction 09/23/2024

U:\173608714\LAW\75923\roadway\sheets\75923GE100-2B.dgn 5/21/2024 4:58:39 PM SLParker

SUPERELEVATION TABLE - S.R. 775

P.I. STA. 70+19.19 | Dc = 11° 50′ 00″

LEFT SIDE					CENTERLINE CONTROL		CROWN		RIGHT SIDE					REMARKS
EDGE ELEVATION	TRANSITION RATE	ELEVATION CORRECTION	CROSS SLOPE	WIDTH	STATION	PROFILE GRADE	WIDTH	CROWN ELEVATION	WIDTH	CROSS SLOPE	ELEVATION CORRECTON	TRANSITION RATE	EDGE ELEVATION	
620.20		-0.27	-0.0160	16.81	68+10.76 R 1	620.47	4.81	620.55	12.00	-0.0160	-0.19		620.36	N.C.
619.69		-0.26	-0.0160	16.55	68+25.00 R 1	619.95	4.55	620.02	12.00	-0.0104	-0.12		619.90	
618.69		-0.26	-0.0160	16.09	68+50.00 R 1	618.95	4.09	619.02	12.00	-0.0007	-0.01		619.01	
618.62		-0.26	-0.0160	16.06	68+51.76 R 1	618.88	4.06	618.94	12.00	0.0000	0.00		618.94	1/2 LEVEL
617.62		-0.25	-0.0160	15.64	68+75.00 R 1	617.87	3.64	617.93	12.00	0.0091	0.11		618.04	
617.43		-0.25	-0.0160	15.56	68+79.23 R 1	617.68	3.56	617.74	12.00	0.0107	0.13		617.87	P.C.
616.81		-0.24	-0.0160	15.32	68+92.76 R 1	617.05	3.32	617.10	12.00	0.0160	0.19		617.29	R.C.
616.42		-0.28	-0.0184	15.18	69+00.00 R 1	616.70	3.18	616.76	12.00	0.0166	0.20		616.96	
615.06		-0.39	-0.0265	14.73	69+25.00 R 1	615.45	2.73	615.52	12.00	0.0187	0.22		615.74	
613.61		-0.50	-0.0347	14.27	69+50.00 R 1	614.11	2.27	614.19	11.97	0.0208	0.25		614.44	
612.09	268:1	-0.59	-0.0429	13.82	69+75.00 R 1	612.68	1.82	612.76	11.51	0.0229	0.26	1614.3:1	613.02	
610.48		-0.68	-0.0511	13.37	70+00.00 R 1	611.16	1.36	611.23	11.06	0.0251	0.28		611.51	
608.83		-0.76	-0.0592	12.91	70+25.00 R 1	609.59	0.91	609.64	10.61	0.0272	0.29		609.93	
607.18		-0.84	-0.0674	12.46	70+50.00 R 1	608.02	0.45	608.05	10.16	0.0293	0.30		608.35	
605.74		-0.92	-0.0756	12.11	70+75.00 R 1	606.66	0.00	606.66	9.71	0.0314	0.30		606.96	EXIST. *

* MATCH EXISTING ELEVATIONS

SUPERELEVATION TABLE - RAMP J - CURVE NO. 2 & 3

P.I. STA. 388+50.86 | Dc = 31° 49′ 52″ | P.I. STA. 390+41.04 | Dc = 32° 44′ 25″

FOR STATIONS 383+90.72 TO 387+25, SEE PAVEMENT DETAILS SHEET 612.

LEFT SIDE					BASELINE CONTROL		RIGHT SIDE					REMARKS
EDGE ELEVATION	TRANSITION RATE	ELEVATION CORRECTION	CROSS SLOPE	WIDTH	STATION	PROFILE GRADE	WIDTH	CROSS SLOPE	ELEVATION CORRECTON	TRANSITION RATE	EDGE ELEVATION	
					387+50.00 R 1	581.96	16.00	0.0418	0.67		582.63	
					387+75.00 R 1	582.59	16.00	0.0527	0.84		583.43	
					388+00.00 R 1	583.34	16.00	0.0635	1.02		584.36	
					388+25.00 R 1	584.21	16.00	0.0744	1.19		585.40	
					388+30.00 R 1	584.41	16.00	0.0766	1.23		585.64	F.S.
					388+50.00 R 1	585.22	16.00	0.0766	1.23		586.45	
					388+65.54 R 1	585.91	16.00	0.0766	1.23		587.14	F.S.
					388+75.00 R 1	586.35	16.00	0.0766	1.23		587.58	
					389+00.00 R 1	587.61	16.00	0.0768	1.23		588.84	
					389+25.00 R 1	589.00	16.00	0.0769	1.23		590.23	
					389+50.00 R 1	590.52	16.00	0.0770	1.23		591.75	
					389+53.54 R 1	590.74	16.00	0.0770	1.23		591.97	P.C.C.
					389+75.00 R 1	592.16	16.00	0.0771	1.23		593.39	
					390+00.00 R 1	593.93	16.00	0.0773	1.24		595.17	
					390+06.64 R 1	591.42	16.00	0.0773	1.24		592.66	F.S.
					390+25.00 R 1	595.80	16.00	0.0773	1.24		597.04	

FOR STATIONS 390+50 TO 391+15.81, SEE INTERSECTION DETAILS SHEET 628.

SUPERELEVATION TABLE - RAMP K - CURVE NO. 1

P.I. STA. 393+97.26 | Dc = 5° 00′ 00″

FOR STATIONS 385+25 TO 389+00, SEE INTERSECTION DETAIL SHEET 628

LEFT SIDE					BASELINE CONTROL		RIGHT SIDE					REMARKS
EDGE ELEVATION	TRANSITION RATE	ELEVATION CORRECTION	CROSS SLOPE	WIDTH	STATION	PROFILE GRADE	WIDTH	CROSS SLOPE	ELEVATION CORRECTON	TRANSITION RATE	EDGE ELEVATION	
					389+25.00 R 1	611.36	16.00	0.0630	1.01		612.37	
					389+50.00 R 1	610.64	16.00	0.0630	1.01		611.65	
					389+75.00 R 1	609.92	16.00	0.0630	1.01		610.93	
					390+00.00 R 1	609.19	16.00	0.0630	1.01		610.20	
					390+25.00 R 1	608.47	16.00	0.0630	1.01		609.48	
					390+50.00 R 1	607.74	16.00	0.0630	1.01		608.75	
					390+75.00 R 1	607.02	16.00	0.0630	1.01		608.03	
					391+00.00 R 1	606.29	16.00	0.0630	1.01		607.30	
					391+25.00 R 1	605.57	16.00	0.0630	1.01		606.58	
					391+50.00 R 1	604.84	16.00	0.0630	1.01		605.85	
					391+75.00 R 1	604.12	16.00	0.0630	1.01		605.13	
					392+00.00 R 1	603.39	16.00	0.0630	1.01		604.40	
					392+25.00 R 1	602.67	16.00	0.0630	1.01		603.68	
					392+50.00 R 1	601.94	16.00	0.0630	1.01		602.95	
					392+75.00 R 1	601.22	16.00	0.0630	1.01		602.23	
					393+00.00 R 1	600.49	16.00	0.0630	1.01		601.50	
					393+25.00 R 1	599.77	16.00	0.0630	1.01		600.78	
					393+50.00 R 1	599.04	16.00	0.0630	1.01		600.05	
					393+75.00 R 1	598.35	16.00	0.0630	1.01		599.36	
					394+00.00 R 1	597.72	16.00	0.0630	1.01		598.73	
					394+25.00 R 1	597.16	16.00	0.0630	1.01		598.17	
					394+50.00 R 1	596.66	16.00	0.0630	1.01		597.67	
					394+75.00 R 1	596.23	16.00	0.0630	1.01		597.24	
					395+00.00 R 1	595.87	16.00	0.0630	1.01		596.88	
					395+25.00 R 1	595.57	16.00	0.0630	1.01		596.58	
					395+50.00 R 1	595.33	16.00	0.0630	1.01		596.34	
					395+75.00 R 1	595.16	16.00	0.0630	1.01		596.17	
					396+00.00 R 1	595.05	16.00	0.0630	1.01		596.06	
					396+25.00 R 1	595.01	16.00	0.0630	1.01		596.02	
					396+50.00 R 1	595.04	16.00	0.0630	1.01		596.05	
					396+75.00 R 1	595.13	16.00	0.0630	1.01		596.14	

FOR STATIONS 397+00 TO 402+52.12, SEE PAVEMENT DETAILS SHEET 613

DRAFT Stage 3 - Not for Construction 09/23/2024

CALCULATED SLP | CHECKED ALB

SUPERELEVATION TABLE S.R. 775 / RAMP J / RAMP K

LAW-7-2.17

U:\173608714\LAW\75923\roadway\sheets\75923GE101-2B.dgn 5/21/2024 4:58:39 PM SLParker

SUPERELEVATION TABLE - RAMP L

P.I. STA. 382+67.06 | Dc = 6° 44′ 26″

LEFT SIDE					BASELINE CONTROL		REMARKS
EDGE ELEVATION	TRANSITION RATE	ELEVATION CORRECTION	CROSS SLOPE	WIDTH	STATION	PROFILE GRADE	
FOR STATIONS 380+00 TO 381+25, SEE INTERSECTION DETAIL SHEET 627.							
612.95		-0.74	-0.0460	16.00	381+50.00 R 1	613.69	
611.70		-0.74	-0.0460	16.00	381+75.00 R 1	612.44	
610.45		-0.74	-0.0460	16.00	382+00.00 R 1	611.19	
609.20		-0.74	-0.0460	16.00	382+25.00 R 1	609.94	
607.95		-0.74	-0.0460	16.00	382+50.00 R 1	608.69	
606.70		-0.74	-0.0460	16.00	382+75.00 R 1	607.44	
605.44		-0.74	-0.0460	16.00	383+00.00 R 1	606.18	
604.19		-0.74	-0.0460	16.00	383+25.00 R 1	604.93	
602.94		-0.74	-0.0460	16.00	383+50.00 R 1	603.68	
601.69		-0.74	-0.0460	16.00	383+75.00 R 1	602.43	
600.44		-0.74	-0.0460	16.00	384+00.00 R 1	601.18	
599.54		-0.74	-0.0460	16.00	384+17.86 R 1	600.28	F.S.
599.24	152:1	-0.69	-0.0431	16.00	384+25.00 R 1	599.93	
598.15		-0.52	-0.0328	16.00	384+50.00 R 1	598.67	
597.94		-0.49	-0.0308	16.00	384+54.82 R 1	598.43	P.T.
597.06		-0.36	-0.0225	16.00	384+75.00 R 1	597.42	
596.39		-0.26	-0.0160	16.00	384+90.86 R 1	596.65	R.C.
595.96		-0.26	-0.0160	16.00	385+00.00 R 1	596.22	
594.84		-0.26	-0.0160	16.00	385+25.00 R 1	595.10	
594.63		-0.26	-0.0160	16.00	385+29.86 R 1	594.89	1/2 LEVEL
593.78		-0.26	-0.0160	16.00	385+50.00 R 1	594.04	
593.03		-0.26	-0.0160	16.00	385+68.86 R 1	593.29	N.C.

SUPERELEVATION TABLE - S.R. 243 CURVE NO. 4

P.I. STA. 15+51.11 | Dc = 1°30′00″

LEFT SIDE					CENTERLINE CONTROL		CROWN		RIGHT SIDE					REMARKS
EDGE ELEVATION	TRANSITION RATE	ELEVATION CORRECTION	CROSS SLOPE	WIDTH	STATION	PROFILE GRADE	WIDTH	CROWN ELEVATION	WIDTH	CROSS SLOPE	ELEVATION CORRECTON	TRANSITION RATE	EDGE ELEVATION	
FOR STATIONS 11+00 TO 13+25 SEE PAVEMENT DETAIL SHEET 608.														
FOR STATIONS 13+50 TO 16+00, SEE INTERSECTION DETAIL SHEET 625.														
607.99		-0.63	-0.0350	18.00	16+25.00 R 1	608.62	6.00	608.83	12.00	0.0350	0.42		609.25	
608.08		-0.63	-0.0350	18.00	16+50.00 R 1	608.71	6.00	608.92	12.00	0.0350	0.42		609.34	
608.29		-0.63	-0.0350	18.00	16+75.00 R 1	608.92	6.00	609.13	12.00	0.0350	0.42		609.55	
608.46		-0.63	-0.0350	18.00	16+88.52 R 1	609.09	6.00	609.30	12.00	0.0350	0.42		609.72	F.S. / C.S.
608.70	158.8:1	-0.56	-0.0309	18.00	17+00.00 R 1	609.26	6.00	609.45	12.00	0.0309	0.37		609.82	
609.33		-0.40	-0.0221	18.00	17+25.00 R 1	609.73	6.00	609.86	12.00	0.0221	0.27		610.13	
609.83		-0.29	-0.0160	18.00	17+42.52 R 1	610.12	6.00	610.22	12.00	0.0160	0.19		610.41	R.C.
610.02		-0.29	-0.0160	18.00	17+50.00 R 1	610.31	6.00	610.41	12.00	0.0134	0.16	239.31	610.57	
610.74		-0.29	-0.0160	18.00	17+75.00 R 1	611.03	6.00	611.13	12.00	0.0047	0.06		611.19	
611.18		-0.29	-0.0160	18.00	17+88.52 R 1	611.47	6.00	611.57	12.00	0.000	0.00		611.57	1/2 LEVEL / S.T.
611.58		-0.29	-0.0160	18.00	18+00.00 R 1	611.87	6.00	611.97	12.00	-0.0040	-0.05		611.92	
612.54		-0.29	-0.0160	17.98	18+25.00 R 1	612.83	5.98	612.93	11.99	-0.0127	-0.15		612.78	
612.95		-0.28	-0.0160	17.74	18+34.52 R 1	613.23	5.81	613.32	11.91	-0.0160	-0.19		613.13	N.C.

CALCULATED SLP | CHECKED ALB

SUPERELEVATION TABLE
RAMP L & S.R. 243

LAW-7-2.17

601
1247

DRAFT Stage 3 - Not for Construction 09/23/2024

U:\173608714\LAW\75923\roadway\sheets\75923GE102-2B.dgn 5/21/2024 4:58:40 PM SLParker

SUPERELEVATION TABLE - C.R. 118 - CURVE NO. 2 & 3

P.I. STA. 12+40.87 | Dc = 23° 00′ 00″ | P.I. STA. 13+80.89 | Dc = 7° 41′ 27″

LEFT SIDE					CENTERLINE CONTROL		RIGHT SIDE					
EDGE ELEVATION	TRANSITION RATE	ELEVATION CORRECTION	CROSS SLOPE	WIDTH	STATION	PROFILE GRADE	WIDTH	CROSS SLOPE	ELEVATION CORRECTION	TRANSITION RATE	EDGE ELEVATION	REMARKS
			FOR STATIONS 10+25 TO 11+00, SEE INTERSECTION DETAIL SHEET 626									
556.68		-0.14	-0.0160	9.00	11+20.19 R 1	556.82	9.00	0.0000	0.00		556.82	1/2 LEVEL
556.22		-0.14	-0.0160	9.00	11+25.00 R 1	556.37	9.00	0.0037	0.03		556.40	
554.68	↑	-0.14	-0.0160	9.00	11+41.19 R 1	554.83	9.00	0.0160	0.14	↑	554.97	R.C.
553.80		-0.21	-0.0228	9.00	11+50.00 R 1	554.01	9.00	0.0228	0.21		554.22	
552.44	142.6:1	-0.31	-0.0339	9.00	11+64.19 R 1	552.75	9.00	0.0339	0.31	142.6:1	553.06	P.C.
551.47		-0.38	-0.0422	9.00	11+75.00 R 1	551.85	9.00	0.0422	0.38		552.23	
549.37		-0.55	-0.0616	9.00	12+00.00 R 1	549.92	9.00	0.0616	0.55		550.48	
548.73	↓	-0.61	-0.0680	9.00	12+08.19 R 1	549.34	9.00	0.0680	0.61	↓	549.95	F.S.
547.62		-0.61	-0.0680	9.00	12+25.00 R 1	548.23	9.00	0.0680	0.61		548.84	
546.17		-0.61	-0.0680	9.00	12+50.00 R 1	546.78	9.00	0.0680	0.61		547.39	
545.22	↑	-0.61	-0.0680	9.00	12+68.96 R 1	545.83	9.00	0.0680	0.61	↑	546.44	F.S.
544.97		-0.59	-0.0656	9.00	12+75.00 R 1	545.56	9.00	0.0656	0.59		546.15	
544.08	280:1	-0.50	-0.0555	9.00	13+00.00 R 1	544.58	9.00	0.0555	0.50	280:1	545.08	
543.71		-0.45	-0.0503	9.00	13+12.96 R 1	544.16	9.00	0.0503	0.45		544.61	P.C.C.
543.42		-0.41	-0.0454	9.00	13+25.00 R 1	543.83	9.00	0.0454	0.41		544.24	
543.16	↓	-0.36	-0.0398	9.00	13+38.96 R 1	543.52	9.00	0.0398	0.36	↓	543.88	F.S.
542.96		-0.36	-0.0398	9.00	13+50.00 R 1	543.32	9.00	0.0398	0.36		543.68	
542.69		-0.36	-0.0398	9.00	13+75.00 R 1	543.05	9.00	0.0398	0.36		543.41	
542.64	↑	-0.36	-0.0398	9.00	13+94.01 R 1	543.00	9.00	0.0398	0.36	↑	543.36	F.S.
542.67		-0.34	-0.0376	9.00	14+00.00 R 1	543.01	9.00	0.0352	0.32		543.33	
542.95	292.9:1	-0.26	-0.0286	9.00	14+25.00 R 1	543.21	9.00	0.0159	0.14	149.1:1	543.35	
543.23		-0.23	-0.0254	9.00	14+48.44 R 1	543.46	9.00	0.0091	0.08		543.54	P.T.
543.30		-0.18	-0.0195	9.00	14+50.00 R 1	543.48	9.00	-0.0034	-0.03		543.45	
543.72		-0.09	-0.0105	8.12	14+75.00 R 1	543.81	8.12	-0.0227	-0.18		543.63	
543.74	↓	-0.08	-0.0101	8.08	14+76.01 R 1	543.82	8.08	-0.0235	-0.19	↓	543.63	EXIST. *
								* MATCH EXISTING ELEVATIONS				

SUPERELEVATION TABLE - C.R. 2 - CURVE NO. 2 & 3

P.I. STA. 12+19.20 | Dc = 22° 55′ 06″ | P.I. STA. 16+25.92 | Dc = 22° 55′ 06″

LEFT SIDE					CENTERLINE CONTROL		RIGHT SIDE					
EDGE ELEVATION	TRANSITION RATE	ELEVATION CORRECTION	CROSS SLOPE	WIDTH	STATION	PROFILE GRADE	WIDTH	CROSS SLOPE	ELEVATION CORRECTION	TRANSITION RATE	EDGE ELEVATION	REMARKS
			FOR STATIONS 10+25 TO 11+25, SEE INTERSECTION DETAIL SHEET 626.									
630.26		-0.43	-0.0392	11.00	11+25.00 R 1	630.69	11.00	0.0338	0.37		631.06	
630.89		-0.44	-0.0400	11.00	11+37.21 R 1	631.33	11.00	0.0400	0.44		631.77	
630.94		-0.45	-0.0405	11.00	11+38.28 R 1	631.39	11.00	0.0405	0.45		631.84	P.C.C.
631.50		-0.51	-0.0465	11.00	11+50.00 R 1	632.01	11.00	0.0465	0.51		632.52	
632.69		-0.65	-0.0593	11.00	11+75.00 R 1	633.34	11.00	0.0593	0.65		633.99	
633.91		-0.79	-0.0721	11.00	12+00.00 R 1	634.70	11.00	0.0721	0.79		635.49	
634.56		-0.87	-0.0789	11.00	12+13.28 R 1	635.43	11.00	0.0789	0.87		636.30	F.S.
634.92	↑	-0.87	-0.0789	11.00	12+19.79 R 1	635.79	11.00	0.0789	0.87	↑	636.66	F.S.
635.24		-0.84	-0.0762	11.00	12+25.00 R 1	636.08	11.00	0.0762	0.84		636.92	
636.79		-0.70	-0.0635	11.00	12+50.00 R 1	637.49	11.00	0.0635	0.70		638.19	
638.36	172.4:1	-0.56	-0.0507	11.00	12+75.00 R 1	638.92	11.00	0.0507	0.56	172.4:1	639.48	
638.36		-0.56	-0.0405	11.00	12+94.79 R 1	640.07	11.00	0.0405	0.56		639.48	P.T.
639.96		-0.42	-0.0379	11.00	13+00.00 R 1	640.38	11.00	0.0379	0.42		640.80	
641.58		-0.28	-0.0251	11.00	13+25.00 R 1	641.86	11.00	0.0251	0.28		642.14	
642.75		-0.18	-0.0160	11.00	13+42.79 R 1	642.93	11.00	0.0160	0.18		643.11	R.C.
643.23		-0.13	-0.0117	11.00	13+50.00 R 1	643.36	11.00	0.0117	0.13		643.49	
644.57	↓	0.00	0.0000	11.00	13+69.79 R 1	644.57	11.00	0.0000	0.00	↓	644.57	FLAT
644.92	↑	0.03	0.0031	11.00	13+75.00 R 1	644.89	11.00	-0.0031	-0.03		644.86	
646.43		0.18	0.0160	11.00	13+96.79 R 1	646.25	11.00	-0.0160	-0.18	↑	646.07	R.C.
646.64		0.19	0.0176	11.00	14+00.00 R 1	646.45	11.00	-0.0176	-0.19		646.26	
648.35	172.2:1	0.33	0.0304	11.00	14+25.00 R 1	648.02	11.00	-0.0304	-0.33	172.2:1	647.69	
649.70		0.41	0.0371	11.00	14+44.79 R 1	649.29	11.00	-0.0371	-0.41		648.88	P.C.
650.11		0.48	0.0432	11.00	14+50.00 R 1	649.63	11.00	-0.0432	-0.48		649.15	
651.87		0.62	0.0560	11.00	14+75.00 R 1	651.25	11.00	-0.0560	-0.62		650.63	
653.66		0.76	0.0688	11.00	15+00.00 R 1	652.90	11.00	-0.0688	-0.76		652.14	
653.83	↓	0.77	0.0700	11.00	15+02.39 R 1	653.06	11.00	-0.0700	-0.77	↓	652.29	F.S.
655.20	↑	0.62	0.0566	11.00	15+25.00 R 1	654.58	11.00	-0.0630	-0.69	↑	653.89	
656.73		0.46	0.0419	11.00	15+50.00 R 1	656.27	11.00	-0.0553	-0.61		655.66	
658.30		0.30	0.0271	11.00	15+75.00 R 1	658.00	11.00	-0.0476	-0.52		657.48	
659.88		0.14	0.0124	11.00	16+00.00 R 1	659.74	11.00	-0.0399	-0.44		659.30	
661.49		-0.03	-0.0024	11.00	16+25.00 R 1	661.52	11.00	-0.0322	-0.35	294.1:1	661.17	
663.12	162:1	-0.19	-0.0172	11.00	16+50.00 R 1	663.31	11.00	-0.0245	-0.27		663.04	
664.78		-0.35	-0.0319	11.00	16+75.00 R 1	665.13	11.00	-0.0168	-0.19		664.94	
666.47		-0.51	-0.0467	10.99	17+00.00 R 1	666.98	11.00	-0.0091	-0.10		666.88	
668.19		-0.65	-0.0614	10.54	17+25.00 R 1	668.84	11.00	-0.0015	-0.02		668.82	
669.95		-0.77	-0.0762	10.09	17+50.00 R 1	670.72	11.00	0.0062	0.07		670.79	
670.54	↓	-0.81	-0.0811	9.94	17+58.28 R 1	671.35	11.00	0.0088	0.10	↓	671.45	PT *
								* MATCH EXISTING ELEVATIONS				

CALCULATED SLP | CHECKED ALB

SUPERELEVATION TABLE
C.R. 118 / C.R. 2

LAW-7-2.17

DRAFT Stage 3 - Not for Construction 09/23/2024

U:\173608714\LAW\75923\roadway\sheets\75923GE103-2B.dgn 5/21/2024 4:58:41 PM SLParker

SUPERELEVATION TABLE - CURVE NO. 2

P.I. STA. 15+77.89 | Dc = 4° 00' 00"

LEFT SIDE					CENTERLINE CONTROL		RIGHT SIDE					REMARKS
EDGE ELEVATION	TRANSITION RATE	ELEVATION CORRECTION	CROSS SLOPE	WIDTH	STATION	PROFILE GRADE	WIDTH	CROSS SLOPE	ELEVATION CORRECTION	TRANSITION RATE	EDGE ELEVATION	
604.75		-0.18	-0.0160	11.00	13+27.35 R 1	604.93	11.00	-0.0160	-0.18		604.75	N.C.
604.04		-0.18	-0.0160	11.00	13+50.00 R 1	604.21	11.00	-0.0065	-0.07		604.14	
603.55		-0.18	-0.0160	11.00	13+65.35 R 1	603.73	11.00	0.0000	0.00		603.73	1/2 LEVEL
603.25		-0.18	-0.0160	11.00	13+75.00 R 1	603.43	11.00	0.0041	0.04		603.47	
602.46		-0.18	-0.0160	11.00	14+00.00 R 1	602.64	11.00	0.0146	0.16		602.80	
602.36	↑	-0.18	-0.0160	11.00	14+03.35 R 1	602.53	11.00	0.0160	0.18	↑	602.71	R.C.
601.57		-0.28	-0.0252	11.00	14+25.00 R 1	601.85	11.00	0.0252	0.28		602.13	
600.71		-0.39	-0.0354	11.00	14+48.85 R 1	601.10	11.00	0.0354	0.39		601.49	P.C.
600.67		-0.39	-0.0359	11.00	14+50.00 R 1	601.06	11.00	0.0359	0.39		601.46	
599.76	2%:1	-0.51	-0.0465	11.00	14+75.00 R 1	600.27	11.00	0.0465	0.51	2%:1	600.79	
598.86		-0.63	-0.0572	11.00	15+00.00 R 1	599.49	11.00	0.0572	0.63		600.12	
597.95		-0.75	-0.0679	11.00	15+25.00 R 1	598.70	11.00	0.0679	0.75		599.45	
597.69	↓	-0.78	-0.0710	11.00	15+32.35 R 1	598.47	11.00	0.0710	0.78	↓	599.25	F.S.
597.13		-0.78	-0.0710	11.00	15+50.00 R 1	597.91	11.00	0.0710	0.78		598.69	
596.34		-0.78	-0.0710	11.00	15+75.00 R 1	597.12	11.00	0.0710	0.78		597.90	
595.55		-0.78	-0.0710	11.00	16+00.00 R 1	596.34	11.00	0.0710	0.78		597.12	
594.84	↑	-0.78	-0.0710	11.00	16+22.74 R 1	595.62	11.00	0.0710	0.78	↑	596.40	F.S.
594.78		-0.77	-0.0700	11.00	16+25.00 R 1	595.55	11.00	0.0700	0.77		596.32	
594.11		-0.65	-0.0594	11.00	16+50.00 R 1	594.76	11.00	0.0594	0.65		595.41	
593.43		-0.54	-0.0487	11.00	16+75.00 R 1	593.97	11.00	0.0487	0.54		594.51	
592.77		-0.42	-0.0381	11.00	17+00.00 R 1	593.18	11.00	0.0381	0.42		593.60	
592.60	2%:1	-0.39	-0.0354	11.00	17+06.24 R 1	592.99	11.00	0.0354	0.39	2%:1	593.38	P.T.
592.10		-0.30	-0.0274	11.00	17+25.00 R 1	592.40	11.00	0.0274	0.30		592.70	
591.43		-0.18	-0.0167	11.00	17+50.00 R 1	591.61	11.00	0.0167	0.18		591.79	
591.38		-0.18	-0.0160	11.00	17+51.74 R 1	591.55	11.00	0.0160	0.18		591.73	R.C.
590.75		-0.07	-0.0062	11.00	17+75.00 R 1	590.82	11.00	0.0062	0.07		590.89	
590.36	↓	0.00	0.0000	11.00	17+89.74 R 1	590.36	11.00	-0.0000	-0.00	↓	590.36	T.S.
590.08	↑	0.05	0.0043	11.00	18+00.00 R 1	590.03	11.00	-0.0043	-0.05	↑	589.98	
589.41		0.16	0.0148	11.00	18+25.00 R 1	589.25	11.00	-0.0148	-0.16		589.08	
589.34	2%:1	0.18	0.0160	11.00	18+27.74 R 1	589.16	11.00	-0.0160	-0.18	2%:1	588.98	R.C.
588.70		0.24	0.0221	11.00	18+50.00 R 1	588.46	11.00	-0.0221	-0.24		588.21	
587.99		0.32	0.0290	11.00	18+75.00 R 1	587.67	11.00	-0.0290	-0.32		587.35	
587.28		0.40	0.0360	11.00	19+00.00 R 1	586.88	11.00	-0.0360	-0.40		586.48	
586.86	↓	0.44	0.0400	11.00	19+14.74 R 1	586.42	11.00	-0.0400	-0.44	↓	585.98	S.C.
586.53		0.44	0.0400	11.00	19+25.00 R 1	586.09	11.00	-0.0400	-0.44		585.65	
585.75		0.44	0.0400	11.00	19+50.00 R 1	585.31	11.00	-0.0400	-0.44		584.87	
584.96		0.44	0.0400	11.00	19+75.00 R 1	584.52	11.00	-0.0400	-0.44		584.08	
584.17		0.44	0.0400	11.00	20+00.00 R 1	583.73	11.00	-0.0400	-0.44		583.29	
583.38		0.44	0.0400	11.00	20+25.00 R 1	582.94	11.00	-0.0400	-0.44		582.50	
582.60		0.44	0.0400	11.00	20+50.00 R 1	582.16	11.00	-0.0400	-0.44		581.72	
581.81		0.44	0.0400	11.00	20+75.00 R 1	581.37	11.00	-0.0400	-0.44		580.93	
581.02		0.44	0.0400	11.00	21+00.00 R 1	580.58	11.00	-0.0400	-0.44		580.14	
580.23		0.44	0.0400	11.00	21+25.00 R 1	579.79	11.00	-0.0400	-0.44		579.35	
579.44		0.44	0.0400	11.00	21+50.00 R 1	579.00	11.00	-0.0400	-0.44		578.56	
578.66		0.44	0.0400	11.00	21+75.00 R 1	578.22	11.00	-0.0400	-0.44		577.78	
577.87		0.44	0.0400	11.00	22+00.00 R 1	577.43	11.00	-0.0400	-0.44		576.99	
577.08		0.44	0.0400	11.00	22+25.00 R 1	576.64	11.00	-0.0400	-0.44		576.20	
576.29		0.44	0.0400	11.00	22+50.00 R 1	575.85	11.00	-0.0400	-0.44		575.41	
575.51		0.44	0.0400	11.00	22+75.00 R 1	575.07	11.00	-0.0400	-0.44		574.63	
574.72		0.44	0.0400	11.00	23+00.00 R 1	574.28	11.00	-0.0400	-0.44		573.84	
573.93		0.44	0.0400	11.00	23+25.00 R 1	573.49	11.00	-0.0400	-0.44		573.05	
573.14		0.44	0.0400	11.00	23+50.00 R 1	572.70	11.00	-0.0400	-0.44		572.26	
572.36		0.44	0.0400	11.00	23+75.00 R 1	571.92	11.00	-0.0400	-0.44		571.48	
571.57		0.44	0.0400	11.00	24+00.00 R 1	571.13	11.00	-0.0400	-0.44		570.69	
570.78		0.44	0.0400	11.00	24+25.00 R 1	570.34	11.00	-0.0400	-0.44		569.90	
569.99		0.44	0.0400	11.00	24+50.00 R 1	569.55	11.00	-0.0400	-0.44		569.11	
569.20		0.44	0.0400	11.00	24+75.00 R 1	568.76	11.00	-0.0400	-0.44		568.32	
568.42		0.44	0.0400	11.00	25+00.00 R 1	567.98	11.00	-0.0400	-0.44		567.54	
567.63		0.44	0.0400	11.00	25+25.00 R 1	567.19	11.00	-0.0400	-0.44		566.75	
566.84		0.44	0.0400	11.00	25+50.00 R 1	566.40	11.00	-0.0400	-0.44		565.96	
566.05		0.44	0.0400	11.00	25+75.00 R 1	565.61	11.00	-0.0400	-0.44		565.17	
565.27		0.44	0.0400	11.00	26+00.00 R 1	564.83	11.00	-0.0400	-0.44		564.39	

SUPERELEVATION TABLE - CURVE NO. 3

P.I. STA. 25+76.25 | Dc = 1° 45' 00"

LEFT SIDE					CENTERLINE CONTROL		RIGHT SIDE					REMARKS
EDGE ELEVATION	TRANSITION RATE	ELEVATION CORRECTION	CROSS SLOPE	WIDTH	STATION	PROFILE GRADE	WIDTH	CROSS SLOPE	ELEVATION CORRECTION	TRANSITION RATE	EDGE ELEVATION	
564.48		0.44	0.0400	11.00	26+25.00 R 1	564.04	11.00	-0.0400	-0.44		563.60	
563.70		0.44	0.0400	11.00	26+50.00 R 1	563.26	11.00	-0.0400	-0.44		562.82	
563.02		0.44	0.0400	11.00	26+75.00 R 1	562.58	11.00	-0.0400	-0.44		562.14	
562.46		0.44	0.0400	11.00	27+00.00 R 1	562.02	11.00	-0.0400	-0.44		561.58	
562.03		0.44	0.0400	11.00	27+25.00 R 1	561.59	11.00	-0.0400	-0.44		561.15	
561.71		0.44	0.0400	11.00	27+50.00 R 1	561.27	11.00	-0.0400	-0.44		560.83	
561.51		0.44	0.0400	11.00	27+75.00 R 1	561.07	11.00	-0.0400	-0.44		560.63	
561.44		0.44	0.0400	11.00	28+00.00 R 1	561.00	11.00	-0.0400	-0.44		560.56	
561.49		0.44	0.0400	11.00	28+25.00 R 1	561.05	11.00	-0.0400	-0.44		560.61	
561.66		0.44	0.0400	11.00	28+50.00 R 1	561.22	11.00	-0.0400	-0.44		560.78	
561.94		0.44	0.0400	11.00	28+75.00 R 1	561.50	11.00	-0.0400	-0.44		561.06	
562.35		0.44	0.0400	11.00	29+00.00 R 1	561.91	11.00	-0.0400	-0.44		561.47	
562.88		0.44	0.0400	11.00	29+25.00 R 1	562.44	11.00	-0.0400	-0.44		562.00	
563.54		0.44	0.0400	11.00	29+50.00 R 1	563.10	11.00	-0.0400	-0.44		562.66	
564.31		0.44	0.0400	11.00	29+75.00 R 1	563.87	11.00	-0.0400	-0.44		563.43	
565.20		0.44	0.0400	11.00	30+00.00 R 1	564.76	11.00	-0.0400	-0.44		564.32	
566.22		0.44	0.0400	11.00	30+25.00 R 1	565.78	11.00	-0.0400	-0.44		565.34	
567.35		0.44	0.0400	11.00	30+50.00 R 1	566.91	11.00	-0.0400	-0.44		566.47	
568.61		0.44	0.0400	11.00	30+75.00 R 1	568.17	11.00	-0.0400	-0.44		567.73	
569.98		0.44	0.0400	11.00	31+00.00 R 1	569.54	11.00	-0.0400	-0.44		569.10	
571.48		0.44	0.0400	11.00	31+25.00 R 1	571.04	11.00	-0.0400	-0.44		570.60	
573.10		0.44	0.0400	11.00	31+50.00 R 1	572.66	11.00	-0.0400	-0.44		572.22	
574.84		0.44	0.0400	11.00	31+75.00 R 1	574.40	11.00	-0.0400	-0.44		573.96	
576.70		0.44	0.0400	11.00	32+00.00 R 1	576.26	11.00	-0.0400	-0.44		575.82	
577.86	↑	0.44	0.0400	11.00	32+14.74 R 1	577.42	11.00	-0.0400	-0.44	↑	576.98	C.S.
578.65	↑	0.41	0.0372	11.00	32+25.00 R 1	578.25	11.00	-0.0372	-0.41	↑	577.84	
580.67	↑	0.33	0.0303	11.00	32+50.00 R 1	580.34	11.00	-0.0303	-0.33	334.6:1	580.01	
582.71	↑	0.26	0.0233	11.00	32+75.00 R 1	582.45	11.00	-0.0233	-0.26	↑	582.19	
584.75	↑	0.18	0.0165	11.00	33+00.00 R 1	584.57	11.00	-0.0165	-0.18	↑	584.39	
584.89	262.9:1	0.18	0.0160	11.00	33+01.74 R 1	584.72	11.00	-0.0160	-0.18	↑	584.54	R.C.
586.75	↓	0.07	0.0061	11.00	33+25.00 R 1	586.68	11.00	-0.0160	-0.18		586.50	
587.93	↓	-0.00	-0.0000	11.00	33+39.74 R 1	587.93	11.00	-0.0160	-0.18		587.75	S.T.
588.75	↓	-0.05	-0.0043	11.00	33+50.00 R 1	588.80	11.00	-0.0160	-0.18		588.62	
590.75	↓	-0.16	-0.0148	11.00	33+75.00 R 1	590.91	11.00	-0.0160	-0.18		590.74	
590.97	↓	-0.18	-0.0160	11.00	33+77.74 R 1	591.15	11.00	-0.0160	-0.18		590.97	N.C.

CALCULATED SLP | CHECKED ALB

SUPERELEVATION TABLE
C.R. 69

LAW-7-2.17

603
1247

DRAFT Stage 3 - Not for Construction 09/23/2024

U:\17360871\4\LAW\75923\roadway\sheets\75923GE104-2B.dgn 5/21/2024 4:58:42 PM SLParker

SUPERELEVATION TABLE - CURVE NO. 5

P.I. STA. 56+05.43 | Dc = 38° 11' 50"

LEFT SIDE					CENTERLINE CONTROL		RIGHT SIDE					REMARKS
EDGE ELEVATION	TRANSITION RATE	ELEVATION CORRECTION	CROSS SLOPE	WIDTH	STATION	PROFILE GRADE	WIDTH	CROSS SLOPE	ELEVATION CORRECTON	TRANSITION RATE	EDGE ELEVATION	
549.73		-0.18	-0.0160	11.00	54+56.85 R 1	549.91	11.00	-0.0160	-0.18		549.73	N.C.
548.77		-0.18	-0.0160	11.00	54+75.00 R 1	548.95	11.00	-0.0084	-0.09		548.86	
547.79		-0.18	-0.0160	11.00	54+94.85 R 1	547.97	11.00	-0.0000	-0.00		547.97	1/2 LEVEL
547.55		-0.18	-0.0160	11.00	55+00.00 R 1	547.73	11.00	0.0022	0.02		547.75	
546.48		-0.18	-0.0160	11.00	55+24.35 R 1	546.66	11.00	0.0124	0.14	215.6:1	546.80	P.C.
546.46		-0.18	-0.0160	11.00	55+25.00 R 1	546.63	11.00	0.0127	0.14		546.77	
546.14	233.3:1	-0.18	-0.0160	11.00	55+32.85 R 1	546.32	11.00	0.0160	0.18		546.49	R.C.
545.42		-0.25	-0.0234	10.74	55+50.00 R 1	545.67	10.82	0.0233	0.25		545.92	
545.27		-0.27	-0.0250	10.64	55+53.85 R 1	545.53	10.75	0.0250	0.27		545.80	F.S.
544.58		-0.25	-0.0250	10.09	55+75.00 R 1	544.83	10.36	0.0250	0.26		545.09	
544.31		-0.25	-0.0250	9.85	55+84.01 R 1	544.56	10.20	0.0250	0.26		544.81	F.S.
543.88	1483.3:1	-0.24	-0.0250	9.43	56+00.00 R 1	544.12	9.91	0.0176	0.17	222.5:1	544.29	
543.31		-0.22	-0.0251	8.78	56+25.00 R 1	543.53	9.46	0.0060	0.06		543.59	
542.87		-0.20	-0.0251	8.13	56+50.00 R 1	543.07	9.00	-0.0056	-0.05		543.02	
542.57		-0.19	-0.0252	7.53	56+73.01 R 1	542.76	8.59	-0.0163	-0.14		542.62	P.T.*

* MATCH EXISTING ELEVATIONS

DRAFT Stage 3 - Not for Construction 09/23/2024

CALCULATED SLP | CHECKED ALB

SUPERELEVATION TABLE
C.R. 69

LAW-7-2.17

604
1247

U:\173608714\LAW\75923\roadway\sheets\75923GE105-2B.dgn 5/21/2024 4:58:43 PM SLParker

CURVE DATA
S.R. 7
CURVE NO. 1

P.I. STA. 138+60.99
Δ = 53° 33' 53" (RT)
Dc = 1° 27' 15"
R = 3,940.00'
T = 1,880.13'
L = 3,508.44'
E = 425.60'
TS STA. 117+84.61
SC STA. 119+59.61

θs = 1° 16' 21"
Ls = 175.00'
Ts = 2,076.38'
LT = 116.67'
ST = 58.34'
e_{max} = 4.00%
CS STA. 154+68.05
ST STA. 156+43.05

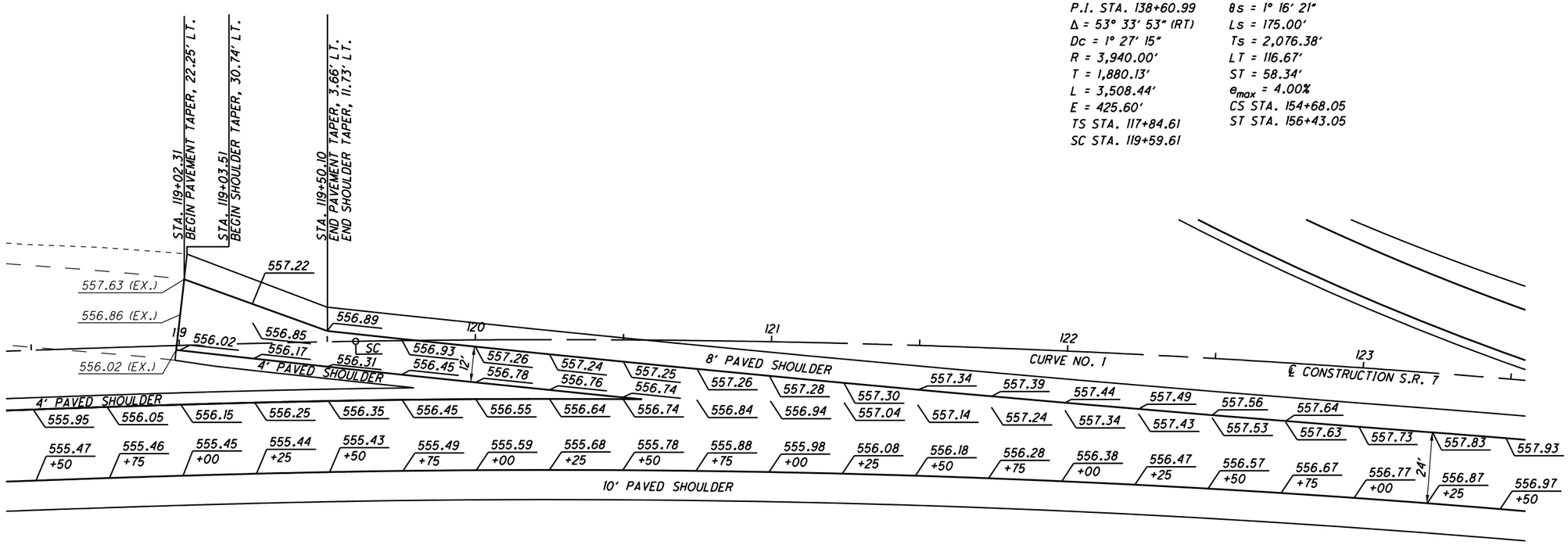

DRAFT Stage 3 - Not for Construction 09/23/2024

HORIZONTAL SCALE IN FEET
0 20 50 40

CALCULATED SLP
CHECKED ALB

PAVEMENT DETAILS
WEST END TRANSITION

LAW-7-2.17

605
1247

U:\1736087\4\LAW\75923\roadway\sheets\75923GA002-2B.dgn 5/21/2024 4:58:44 PM SLParker

(A) - STA. 122+72.02
BEGIN SHOULDER TAPER, 6' LT.
STA. 123+72.02
END SHOULDER TAPER, 8' LT.

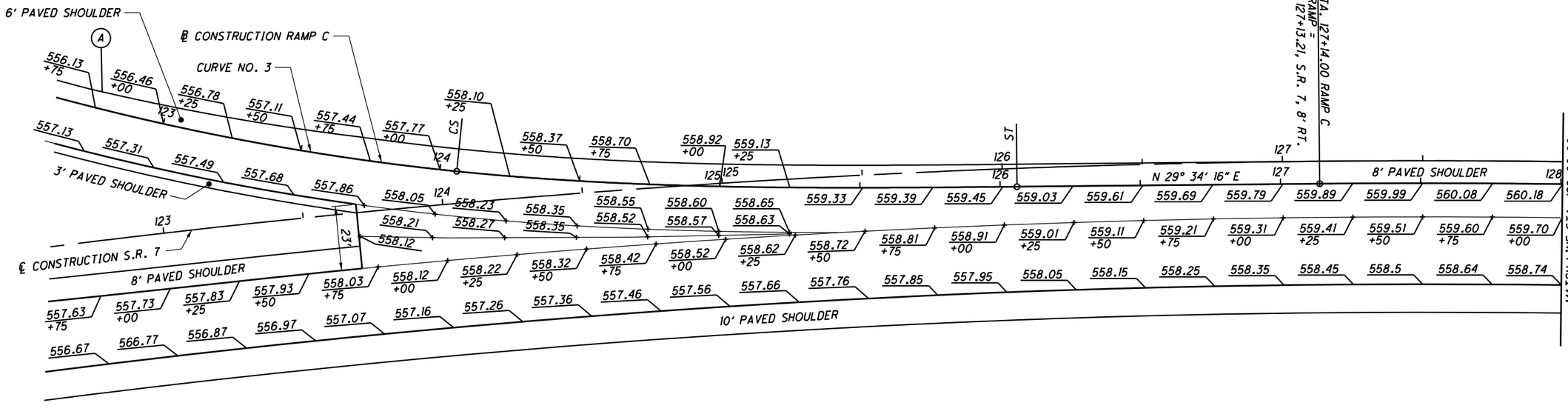

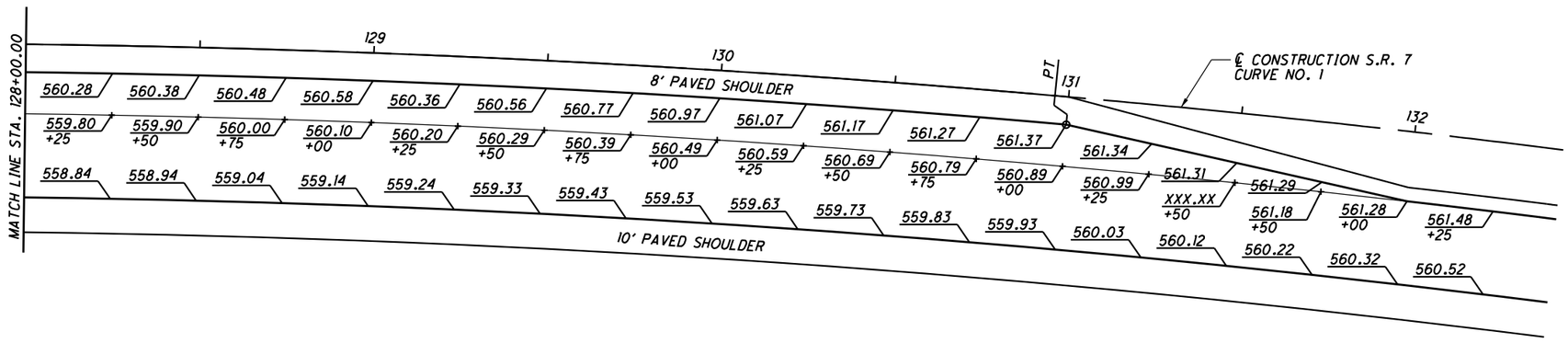

CURVE DATA
S.R. 7
CURVE NO. 1

P.I. STA. 138+60.99
Δ = 53° 33' 53" (RT)
Dc = 1° 27' 15"
R = 3,940.00'
T = 1,880.13'
L = 3,508.44'
E = 425.60'
TS STA. 117+84.61
SC STA. 119+59.61
θs = 1° 16' 21"
Ls = 175.00'
Ts = 2,076.38'
LT = 116.67'
ST = 58.34'
e_{max} = 4.00%
CS STA. 154+68.05
ST STA. 156+43.05

CURVE DATA
RAMP C
CURVE NO. 3

P.I. STA. 122+69.78
Δ = 30° 30' 36" (LT)
Dc = 6° 21' 58"
R = 900.00'
T = 192.47'
L = 379.23'
E = 20.35'
CS STA. 124+06.00
ST STA. 126+06.00
θ_{back} = 6° 21' 58"
L_{back} = 200.00'
T_{back} = 342.26'
LT = 133.42'
ST = 66.75'
e_{max} = 6.25%
LT = 133.42'
ST = 66.75'

DRAFT Stage 3 - Not for Construction 09/23/2024

HORIZONTAL SCALE IN FEET
0 20 50 40

CALCULATED SLP
CHECKED ALB

PAVEMENT DETAILS
RAMP C - S.R. 7

LAW-7-2.17

606
1247

U:\173608714\LAW\75923\roadway\sheets\75923GA001-2B.dgn 5/21/2024 4:58:45 PM SLPorker

CURVE DATA @ S.R. 7 RAB CURVE NO. 1	CURVE DATA @ S.R. 7 RAB CURVE NO. 2	CURVE DATA S.R. 7 CURVE NO. 5	
P.I. Sta. 12+93.43	P.I. Sta. 14+87.13	P.I. STA. 261+89.75	θs = 5° 41' 15"
Δ = 27° 26' 21" (LT)	Δ = 52° 43' 55" (RT)	Δ = 58° 46' 06" (RT)	Ls = 350.00'
Dc = 16° 22' 13"	Dc = 25° 27' 53"	Dc = 3° 15' 00"	Ts = 1,169.30'
R = 350.00'	R = 225.00'	R = 1,762.95'	LT = 233.45'
T = 85.45'	T = 111.52'	T = 773.76'	ST = 116.78'
L = 167.62'	L = 207.08'	L = 1,458.26'	e_{max} = 7.10%
E = 10.28'	E = 26.12'	E = 162.33'	CS STA. 268+28.71
PC Sta. 12+07.99	PRC Sta. 13+75.60	TS STA. 250+20.45	ST STA. 271+78.71
PRC Sta. 13+75.60	PRC Sta. 15+82.68	SC STA. 253+70.45	

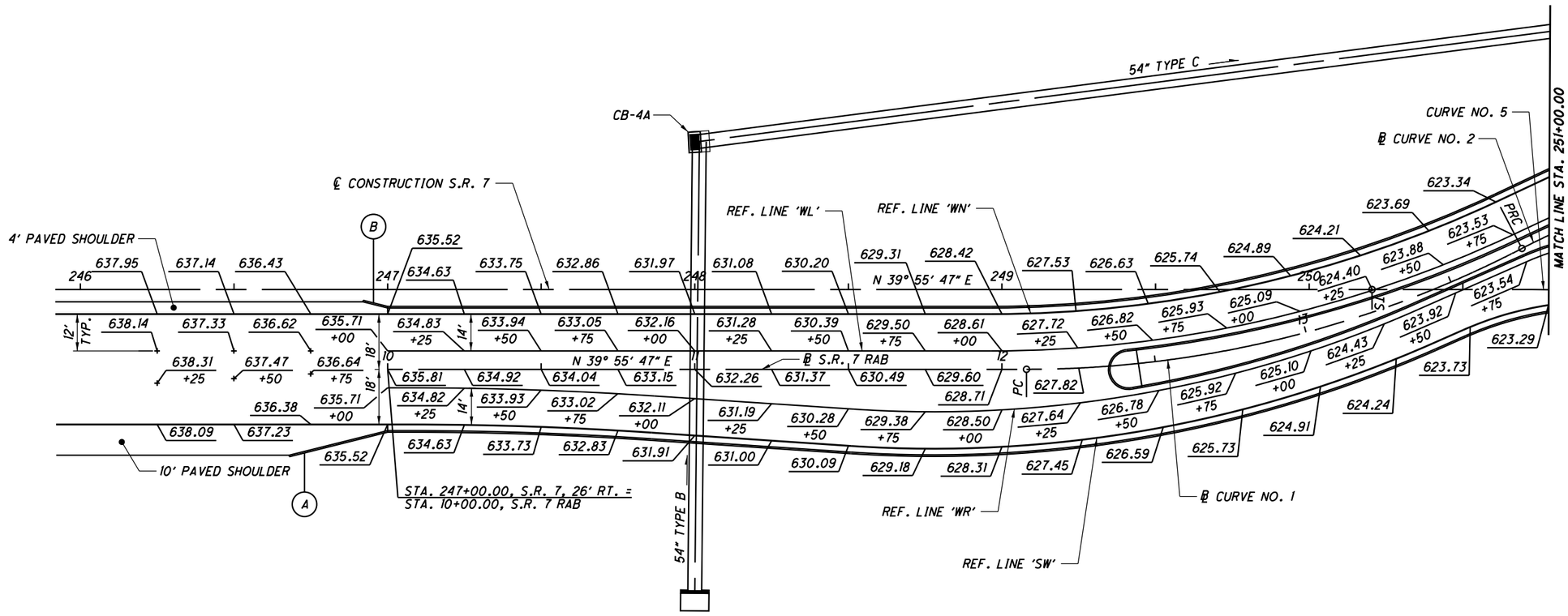

* (A) - STA. 246+68.00 BEGIN SHOULDER TAPER, 54' RT. / STA. 247+00.00 END SHOULDER TAPER, 58' RT.

* (B) - STA. 246+92.00 BEGIN SHOULDER TAPER, 4' LT. / STA. 247+00.00 END SHOULDER TAPER, 6' LT.

* USE TYPE 6 CURB TO TAPER SHOULDER. TAPER CURB HEIGHT FROM 0" TO 6" IN 10'

DRAFT Stage 3 - Not for Construction 09/23/2024

HORIZONTAL SCALE IN FEET (0, 10, 20, 40)

CALCULATED SLP | CHECKED ALB

PAVEMENT DETAILS S.R. 7 & S.R. 7 RAB

LAW-7-2.17

607 / 1247

U:\17360871 4\LAW\75923\roadway\sheets\75923GA010-2B.dgn 5/21/2024 4:58:46 PM SLParker

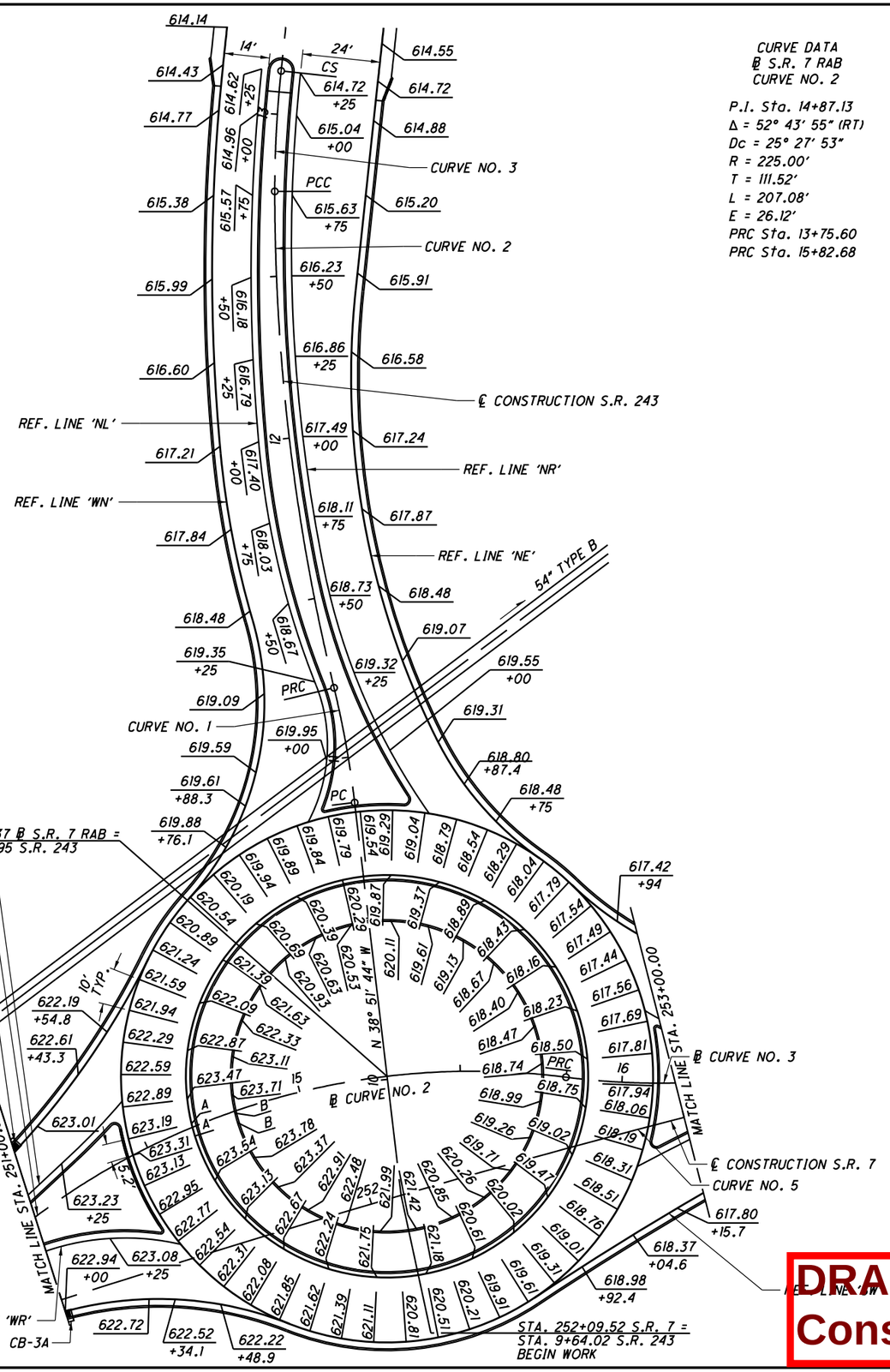

CURVE DATA
℄ S.R. 7 RAB
CURVE NO. 2

P.I. Sta. 14+87.13
Δ = 52° 43' 55" (RT)
Dc = 25° 27' 53"
R = 225.00'
T = 111.52'
L = 207.08'
E = 26.12'
PRC Sta. 13+75.60
PRC Sta. 15+82.68

CURVE DATA
℄ S.R. 7 RAB
CURVE NO. 3

P.I. Sta. 16+43.83
Δ = 30° 24' 24" (LT)
Dc = 25° 27' 53"
R = 225.00'
T = 61.15'
L = 119.41'
E = 8.16'
PRC Sta. 15+82.68
PRC Sta. 17+02.09

CURVE DATA
S.R. 7
CURVE NO. 5

P.I. STA. 261+89.75
Δ = 58° 46' 06" (RT)
Dc = 3° 15' 00"
R = 1,762.95'
T = 773.76'
L = 1,458.26'
E = 162.33'
TS STA. 250+20.45
SC STA. 253+70.45

θs = 5° 41' 15"
Ls = 350.00'
Ts = 1,169.30'
LT = 233.45'
ST = 116.78'
e_{max} = 7.10%
CS STA. 268+28.71
ST STA. 271+78.71

CURVE DATA
S.R. 243
CURVE NO. 1

P.I. Sta. 11+03.86
Δ = 6° 51' 57" (LT)
Dc = 19° 05' 55"
R = 300.00'
T = 18.00'
L = 35.95'
E = 0.54'
e_{max} = 1.60%
PC Sta. 10+85.87
PRC Sta. 11+21.82

CURVE DATA
S.R. 243
CURVE NO. 2

P.I. Sta. 11+99.38
Δ = 13° 36' 35" (RT)
Dc = 8° 48' 53"
R = 650.00'
T = 77.56'
L = 154.40'
E = 4.61'
e_{max} = 1.60%
PRC Sta. 11+21.82
PCC Sta. 12+76.21

CURVE DATA
S.R. 243
CURVE NO. 3

P.I. Sta. 12+94.82
Δ = 6° 05' 09" (RT)
Dc = 16° 22' 13"
R = 350.00'
T = 18.61'
L = 37.18'
E = 0.49'
e_{max} = 1.60%
PCC Sta. 12+76.21
CS Sta. 13+13.39

HORIZONTAL SCALE IN FEET
0 20 40

CALCULATED SLP
CHECKED ALB

PAVEMENT DETAILS
S.R. 7, S.R. 7 RAB & S.R. 243

LAW-7-2.17

608
1247

DRAFT Stage 3 - Not for Construction 09/23/2024

U:\173608714\LAW\75923\roadway\sheets\75923GA011-2B.dgn 5/21/2024 4:58:47 PM SLParker

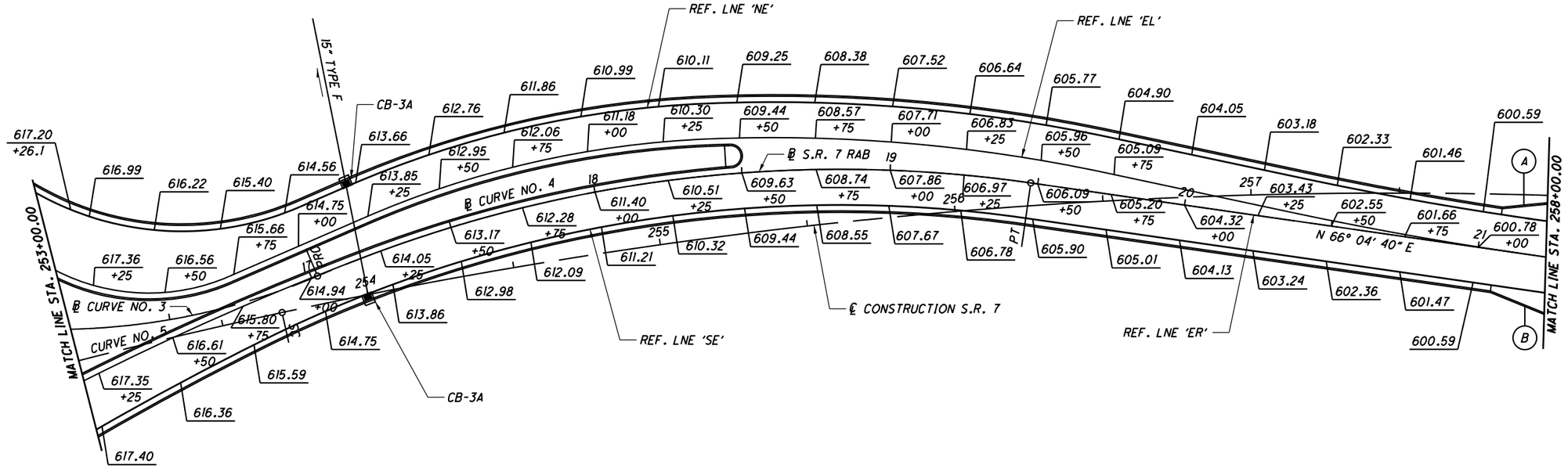

* (A) - STA. 257+84.79
BEGIN SHOULDER TAPER, 4.87' RT.
STA. 258+09.36
END SHOULDER TAPER, 1.71' RT.

* (B) - STA. 257+81.31
BEGIN SHOULDER TAPER, 32.70' RT.
STA. 258+12.87
END SHOULDER TAPER, 44.33' RT.

* USE TYPE 6 CURB TO TAPER SHOULDER. TAPER CURB HEIGHT FROM 0" TO 6" IN 10'.

CURVE DATA ℄ S.R. 7 RAB CURVE NO. 3	CURVE DATA ℄ S.R. 7 RAB CURVE NO. 4
P.I. Sta. 16+43.83	P.I. Sta. 18+27.99
Δ = 30° 24' 24" (LT)	Δ = 31° 15' 43" (RT)
Dc = 25° 27' 53"	Dc = 12° 43' 57"
R = 225.00'	R = 450.00'
T = 61.15'	T = 125.90'
L = 119.41'	L = 245.53'
E = 8.16'	E = 17.28'
PRC Sta. 15+82.68	PRC Sta. 17+02.09
PRC Sta. 17+02.09	PT Sta. 19+47.62

CURVE DATA S.R. 7 CURVE NO. 5	
P.I. STA. 261+89.75	θs = 5° 41' 15"
Δ = 58° 46' 06" (RT)	Ls = 350.00'
Dc = 3° 15' 00"	Ts = 1,169.30'
R = 1,762.95'	LT = 233.45'
T = 773.76'	ST = 116.78'
L = 1,458.26'	e_{max} = 7.10%
E = 162.33'	CS STA. 268+28.71
TS STA. 250+20.45	ST STA. 271+78.71
SC STA. 253+70.45	

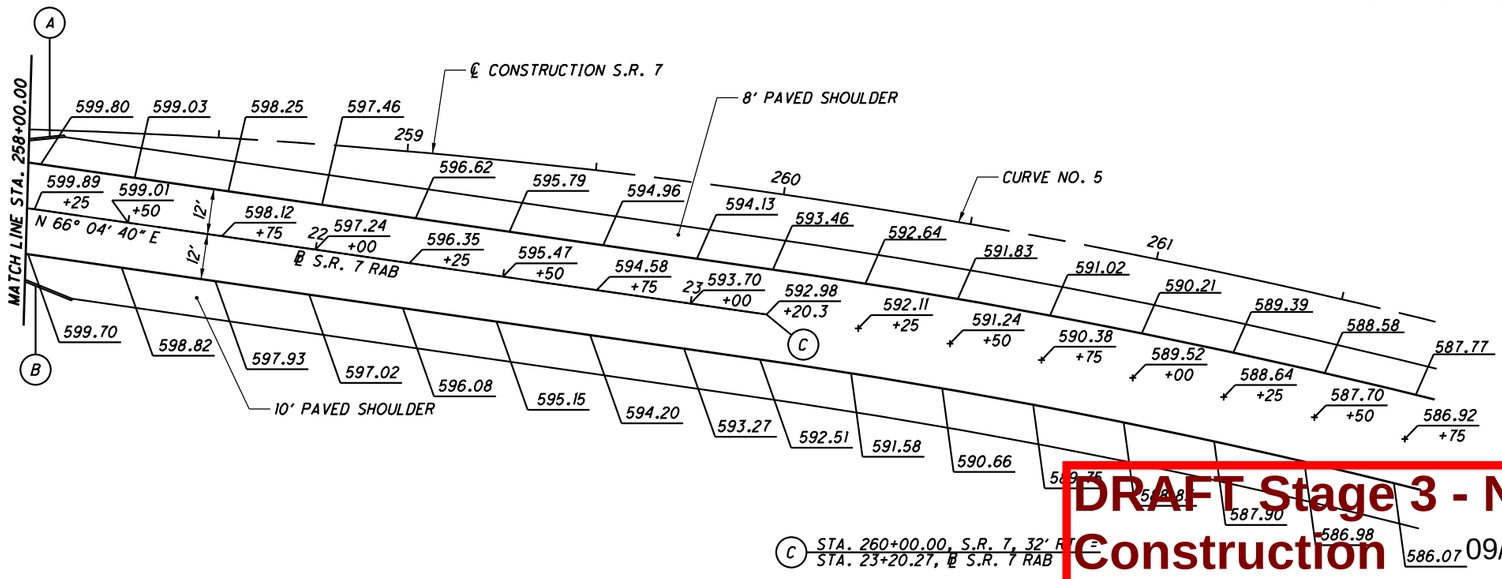

(C) STA. 260+00.00, S.R. 7, 32' RT.
STA. 23+20.27, ℄ S.R. 7 RAB

DRAFT Stage 3 - Not for Construction 09/23/2024

PAVEMENT DETAILS
S.R. 7 & S.R. 7 RAB

LAW-7-2.17

609
1247

HORIZONTAL SCALE IN FEET
0 10 20 40

CALCULATED SLP CHECKED ALB

U:\1736087\14\LAW\75923\roadway\sheets\75923GA012-2B.dgn 5/21/2024 4:58:48 PM SLParker

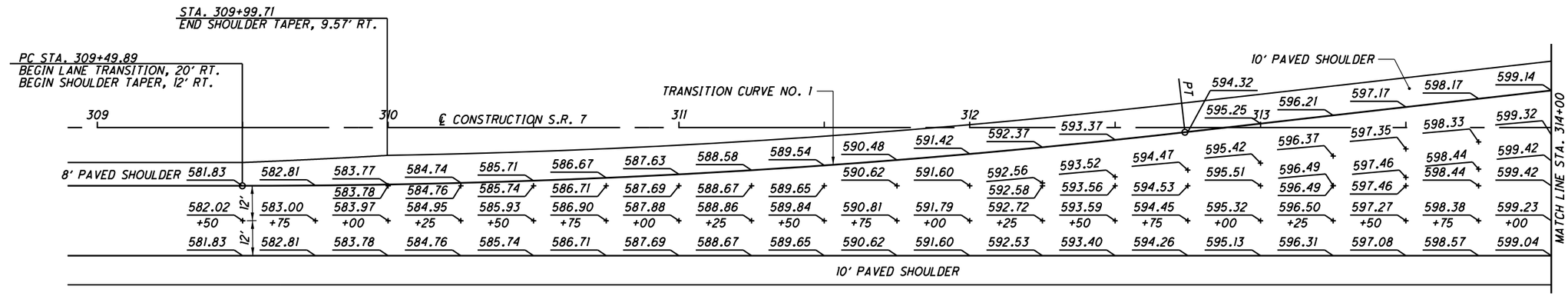

CURVE DATA
S.R. 7 LANE TRANSITION
TRANSITION CURVE NO. 1
(FOR HORIZONTAL LAYOUT ONLY)

P.I. Sta. 311+12.46, S.R. 7, 20' RT.
Δ = 6° 29' 46" (LT)
Dc = 2° 00' 00"
R = 2,864.79'
T = 162.58'
L = 324.81'
E = 4.61'
e_{max} = NC
PC STA. = 309+49.89, S.R. 7, 20' RT.
PT STA. = 312+74.00, S.R. 7, 1.61' RT.

CURVE DATA
S.R. 7 LANE TRANSITION
TRANSITION CURVE NO. 2
(FOR HORIZONTAL LAYOUT ONLY)

P.I. Sta. 323+90.75, S.R. 7, 188.18' LT.
Δ = 35° 21' 27" (RT)
Dc = 1° 58' 11"
R = 2,908.79'
T = 927.12'
L = 1,795.03'
E = 144.18'
e_{max} = 5.10%
PC STA. = 315+02.52, S.R. 7, 24.41' LT.
PT STA. = 332+74.69, S.R. 7, 44' LT.

CURVE DATA
S.R. 7
CURVE NO. 7

P.I. STA. 326+36.08
Δ = 31° 21' 41" (RT)
Dc = 2° 00' 00"
R = 2,864.79'
T = 670.91'
L = 1,318.07'
E = 77.51'
TS STA. 317+06.62
SC STA. 319+56.62
θs = 2° 30' 00"
Ls = 250.00'
Ts = 929.46'
LT = 166.68'
ST = 83.35'
e_{max} = 5.10%
CS STA. 332+74.69
ST STA. 335+24.69

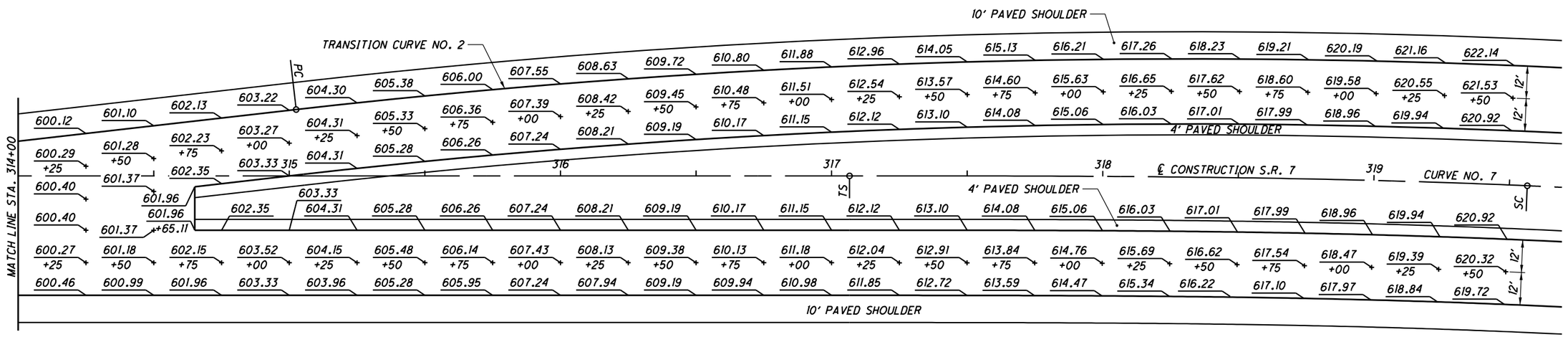

DRAFT Stage 3 - Not for Construction 09/23/2024

PAVEMENT DETAILS
2 LANE TO 4 LANE TRANSITION
LAW-7-2.17

HORIZONTAL SCALE IN FEET
0 20 50 40

CALCULATED SLP
CHECKED ALB

610
1247

U:\173608714\LAW\75923\roadway\sheets\75923GA009-2B.dgn 5/21/2024 4:58:48 PM SLParker

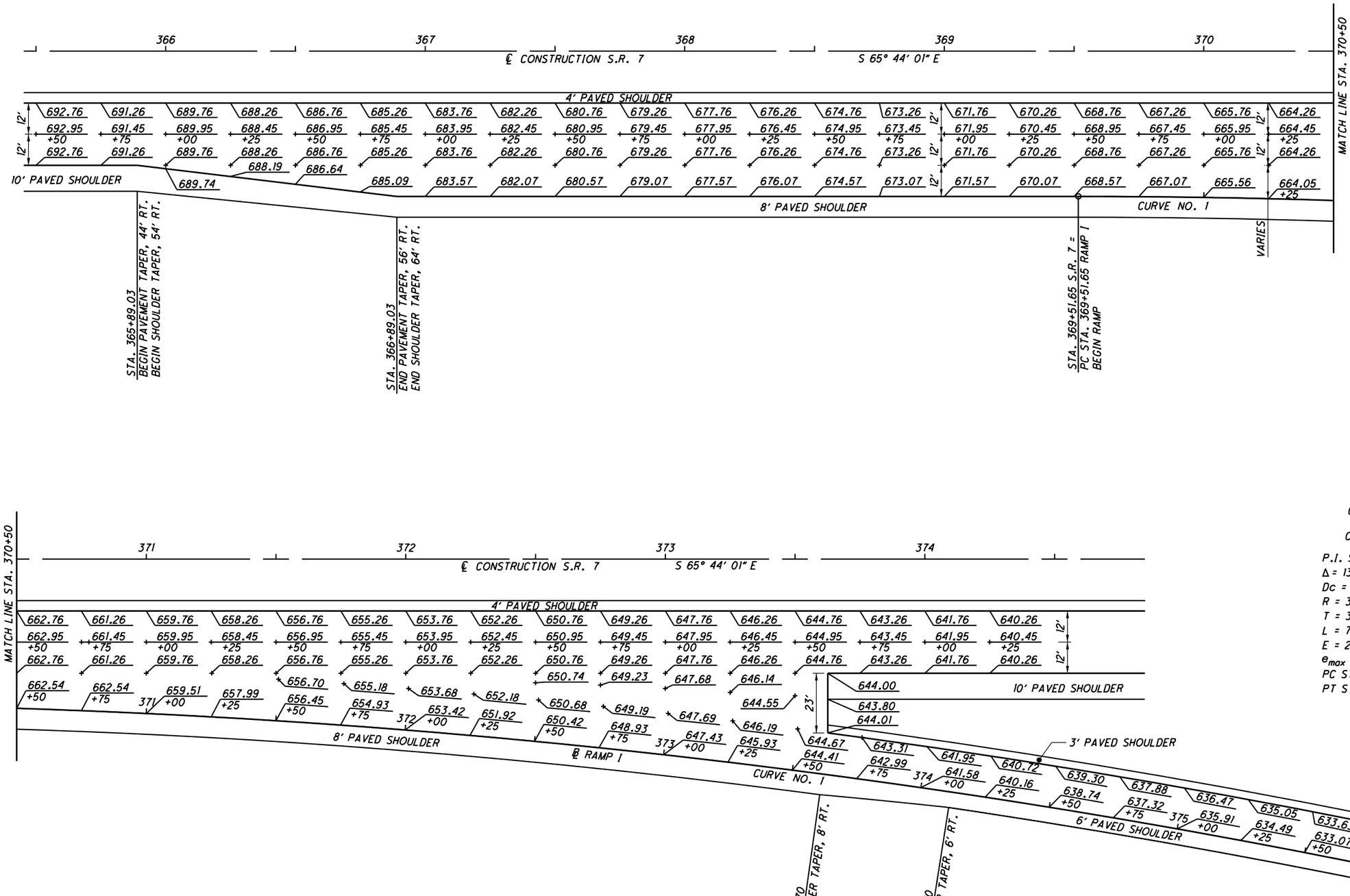

DRAFT Stage 3 - Not for Construction 09/23/2024

HORIZONTAL SCALE IN FEET
0 20 50 40

CALCULATED SLP
CHECKED ALB

PAVEMENT DETAILS
RAMP 1 - S.R. 7

LAW-7-2.17

611
1247

U:\1736087\4\LAW\75923\roadway\sheets\75923GA007-2B.dgn 5/21/2024 4:58:49 PM SLParker

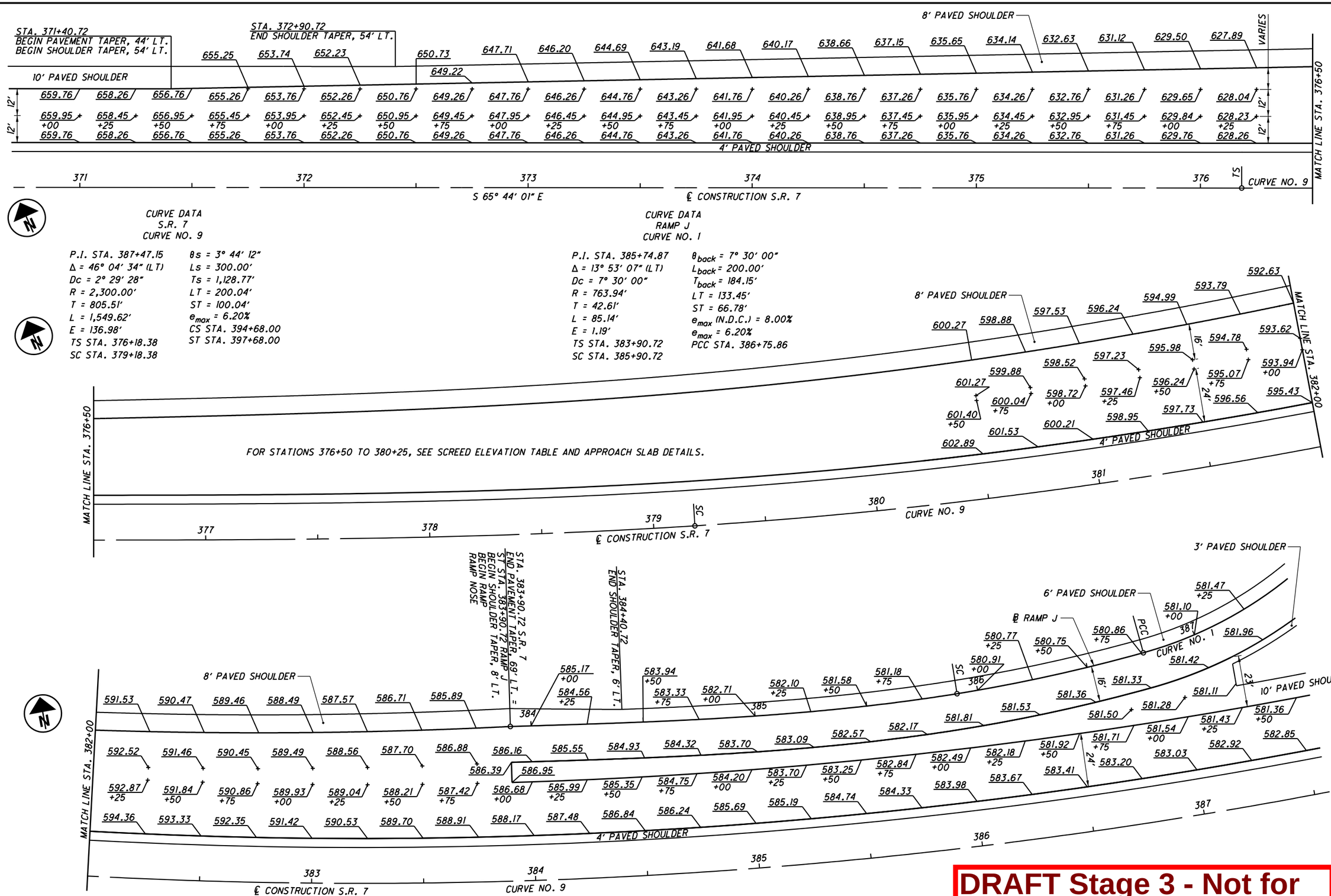

DRAFT Stage 3 - Not for Construction 09/23/2024

PAVEMENT DETAILS
RAMP J - S.R. 7

HORIZONTAL SCALE IN FEET
0 20 40 50

CALCULATED SLP
CHECKED ALB

LAW-7-2.17

612
1247

U:\173608714\LAW\75923\roadway\sheets\75923GA005-2B.dgn 5/21/2024 4:58:50 PM SLParker

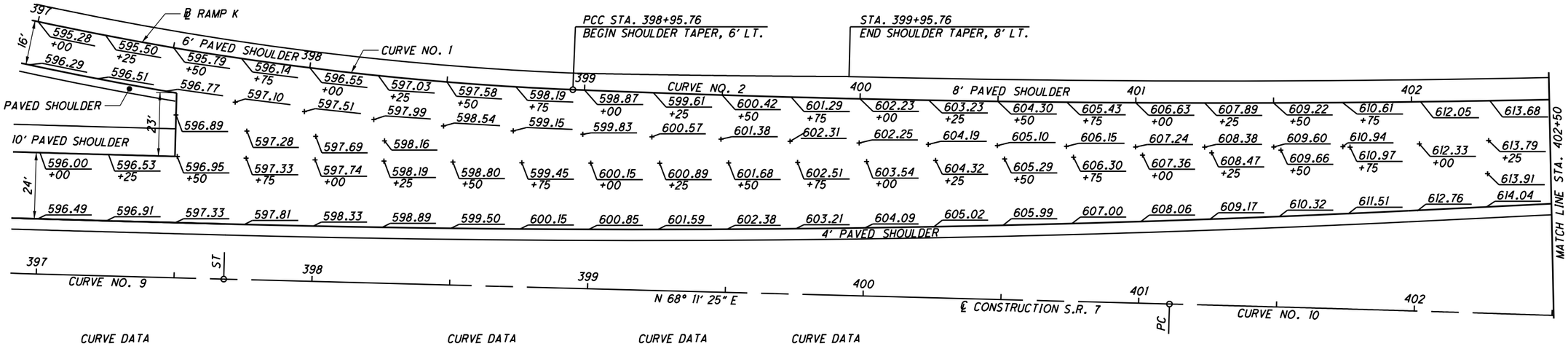

CURVE DATA
S.R. 7
CURVE NO. 9

P.I. STA. 387+47.15
Δ = 46° 04' 34" (LT)
Dc = 2° 29' 28"
R = 2,300.00'
T = 805.51'
L = 1,549.62'
E = 136.98'
TS STA. 376+18.38
SC STA. 379+18.38

θs = 3° 44' 12"
Ls = 300.00'
Ts = 1,128.77'
LT = 200.04'
ST = 100.04'
e_{max} = 6.20%
CS STA. 394+68.00
ST STA. 397+68.00

STA. 403+54.87, 85.31' LT., S.R. 7 = PT STA. 403+59.10 RAMP K
END RAMP

CURVE DATA
S.R. 7
CURVE NO. 10

P.I. STA. 403+74.19
Δ = 1° 29' 03" (RT)
Dc = 0° 16' 56"
R = 20,306.35'
T = 263.02'
L = 526.00'
E = 1.70'
e_{max} = NC
PC STA. 401+11.17
PT STA. 406+37.18

CURVE DATA
RAMP K
CURVE NO. 1

P.I. STA. 393+97.26
Δ = 54° 19' 17" (LT)
Dc = 05° 00' 00"
R = 1145.92'
T = 587.93'
L = 1086.43'
E = 142.02'
e_{max} = 6.30%
PC STA. 388+09.33
PCC STA. 398+95.76

CURVE DATA
RAMP K
CURVE NO. 2

P.I. STA. 401+27.55
Δ = 04° 38' 00" (LT)
Dc = 01° 00' 00"
R = 5729.58'
T = 231.80'
L = 463.34'
E = 4.69'
e_{max} = 2.10%
PCC STA. 398+95.76
PT STA. 403+59.10

STA. 406+89.52
BEGIN PAVEMENT TAPER, 106.08' LT., S.R. 7
BEGIN SHOULDER TAPER, 114.08' LT., S.R. 7

STA. 407+90.33
END PAVEMENT TAPER, 97.70' LT., S.R. 7
END SHOULDER TAPER, 107.70' LT., S.R. 7

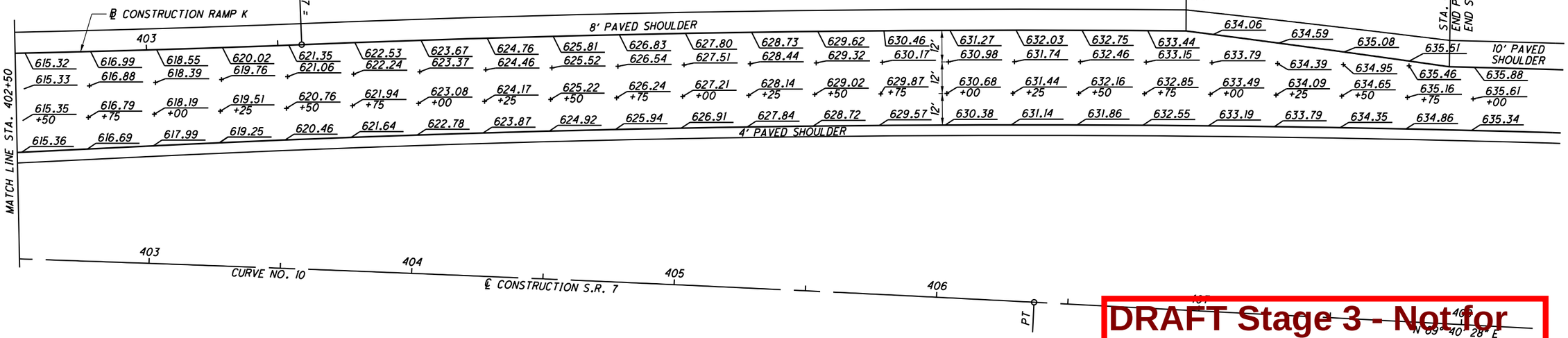

DRAFT Stage 3 - Not for Construction 09/23/2024

HORIZONTAL SCALE IN FEET
0 20 40 50

CALCULATED SLP
CHECKED ALB

PAVEMENT DETAILS
RAMP K - S.R. 7

LAW-7-2.17

613
1247

U:\173608714\LAW\75923\roadway\sheets\75923GA008-2B.dgn 5/21/2024 4:58:52 PM SLParker

CURVE DATA
S.R. 7
CURVE NO. 9

P.I. STA. 387+47.15
Δ = 46° 04' 34" (LT)
Dc = 2° 29' 28"
R = 2,300.00'
T = 805.51'
L = 1,549.62'
E = 136.98'
TS STA. 376+18.38
SC STA. 379+18.38

θs = 3° 44' 12"
Ls = 300.00'
Ts = 1,128.77'
LT = 200.04'
ST = 100.04'
e_{max} = 6.20%
CS STA. 394+68.00
ST STA. 397+68.00

389 390 391 392 CURVE NO. 9 393 ℄ CONSTRUCTION S.R. 7 394

583.44 583.71 584.18 +00 584.03 584.45 +25 584.39 584.93 584.77 +50 584.80 585.13 +75 585.20 585.21 585.52 585.54 +00 585.63 585.88 585.95 +25 586.05 586.29 586.37 +50 586.55 586.70 586.79 +75 586.96 587.12 587.32 +00 587.41 587.54 587.82 +25 587.86 588.06 588.21 +50 588.33 588.56 588.60 +75 588.63 588.95 589.09 +00 589.11 589.35 589.41 +25 589.55 589.82 589.85 +50 589.90 590.15 590.29 +75 590.32 590.42 590.60 590.66 591.04 +00 591.13 +25 591.16 591.42 591.51 +50 591.51 591.61 591.87 591.92 +75 591.96 592.01 592.25 592.37 592.40 +00 592.41 592.60 592.66 592.72 592.77 +25 592.95 593.09 593.14 593.20 +50 593.36 593.51 593.54 593.71 593.88 593.94 594.08 594.29 594.53 594.87 595.28

12' 12' 23' 16' 16'

10' PAVED SHOULDER
4' PAVED SHOULDER
6' PAVED SHOULDER
8' PAVED SHOULDER
℄ RAMP L
N 77° 36' 16" E
MATCH LINE STA. 394+50

STA. 391+90.09
BEGIN SHOULDER TAPER, 6' RT.

STA. 392+40.09 S.R. 7
BEGIN PAVEMENT TAPER, 69' RT. =
STA. 392+40.09 RAMP L
END SHOULDER TAPER, 8' RT.
END RAMP
RAMP NOSE

(C) - 5:1 SAWCUT TAPER TO MEET EXISTING SHOULDER WIDTH

CS 395 396 CURVE NO. 9 397 ST 398 ℄ CONSTRUCTION S.R. 7 399 N 68° 11' 25" E

MATCH LINE STA. 394+50
MATCH LINE STA. 400+00

592.75 593.19 593.60 593.99 594.41 594.81 595.29 595.52 595.91 596.29 596.70 597.12 597.46 597.88 598.31 598.75 599.22 599.58 599.93 600.40 600.77 601.19
593.54 +75 593.86 +00 594.22 +25 594.56 +50 594.92 +75 595.27 +00 595.70 +25 595.88 +50 596.26 +75 596.57 +00 596.93 +25 597.31 +50 597.73 +75 598.14 +00 598.50 +25 598.94 +50 599.41 +75 599.77 +00 600.20 +25 600.59 +50 600.96 +75 601.39 +00
594.27 594.54 594.84 595.13 595.44 595.73 596.10 596.23 596.56 596.82 597.18 597.40 597.76 598.00 598.41 598.78 599.22 599.68 600.01 600.41 600.82 601.28
594.59 594.81 595.07 595.31 595.58 595.84 596.18 596.28 596.59 596.84 597.19 597.51 597.72 597.82 598.18 598.56 599.01 599.48 599.81 600.22 600.64 601.11
595.56 595.71 595.90 596.07 596.27 596.45 596.72 596.76 596.99 597.17 597.44

12' 12' 12' 16'

4' PAVED SHOULDER
10' PAVED SHOULDER (EXISTING)
8' PAVED SHOULDER

CURVE DATA
S.R. 7
CURVE NO. 10

P.I. STA. 403+74.19
Δ = 1° 29' 03" (RT)
Dc = 0° 16' 56"
R = 20,306.35'
T = 263.02'
L = 526.00'
E = 1.70'
e_{max} = NC
PC STA. 401+11.17
PT STA. 406+37.18

NOTE: FROM STATION 400+00.00 TO STATION 408+12.36, THE WESTBOUND INSIDE EDGE OF PAVEMENT ELEVATIONS ARE LOCATED BASED ON MAINLINE STATIONING.

N 68° 11' 25" E 401 PC 402 CURVE NO. 10 403 ℄ CONSTRUCTION S.R. 7 404 405

MATCH LINE STA. 400+00

601.57 601.99 602.46 602.85 603.39 603.74 604.09 604.56 604.86 605.26 605.69 605.95 606.37 606.65 606.94 607.31 607.55 607.80 608.10 608.30 (EX.)
601.80 +25 602.24 +50 602.69 +75 603.08 +00 603.58 +25 603.99 +50 604.37 +75 604.75 +00 605.16 +25 605.47 +50 605.88 +75 606.22 +00 606.56 +25 606.84 +50 607.26 +75 607.60 +00 607.74 +25 608.03 +50 608.33 +75 608.34 (EX.)
601.71 602.07 602.50 602.94 603.42 603.85 604.26 604.62 604.97 605.32 605.69 606.12 606.42 606.72 607.07 607.44 607.70 607.85
601.54 601.91 602.35 602.80 603.29 603.73 604.15 604.52 604.88 605.24 605.61 606.06 606.37 606.67 607.03 607.41

12' 12' 12' VARIES

8' PAVED SHOULDER
10' PAVED SHOULDER

STA. 403+90.09
BEGIN SHOULDER TAPER, 52.9[illegible] RT.

STA. 404+90.09
END SHOULDER TAPER, 42.82' RT.
END SHOULDER TAPER, 52.82' RT.
MEET EXISTING SHOULDER

DRAFT Stage 3 - Not for Construction

N

HORIZONTAL SCALE IN FEET
0 20 40 50

CALCULATED SLP CHECKED ALB

PAVEMENT DETAILS
RAMP L - S.R. 7

LAW-7-2.17

614
1247

U:\17360871\4\LAW\75923\roadway\sheets\75923GA004-2B.dgn 5/21/2024 4:58:53 PM SLParker

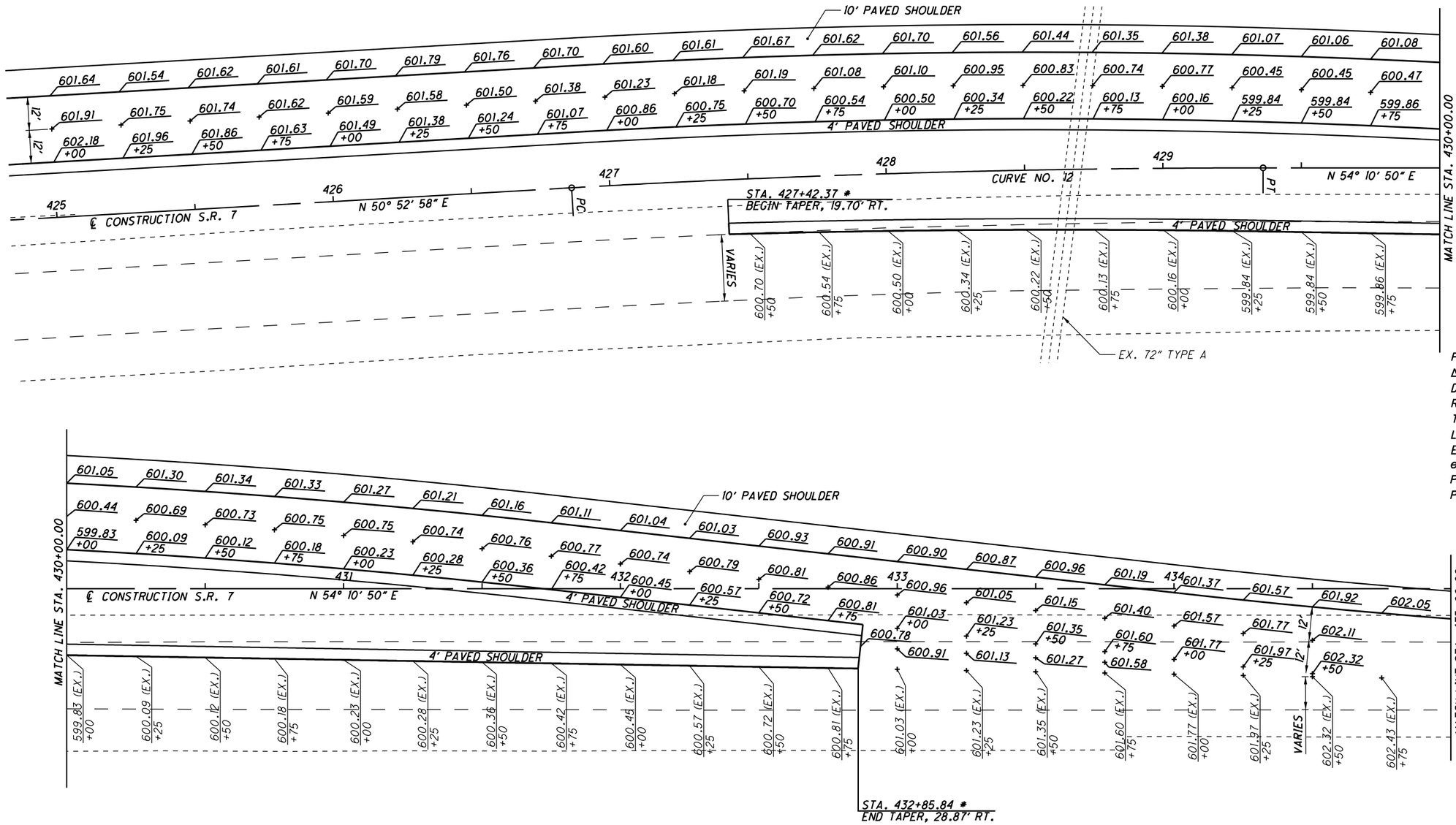

* SEE TRAFFIC CONTROL PLAN SHEET 748 FOR FULL TAPER LENGTH.

DRAFT Stage 3 - Not for Construction 09/23/2024

HORIZONTAL SCALE IN FEET
0 20 40 50

CALCULATED SLP
CHECKED ALB

PAVEMENT DETAILS
STA. 425+00 TO 437+16.83

LAW-7-2.17

615
1247

U:\1736087\14\LAW\75923\roadway\sheets\75923GA006-2B.dgn 5/21/2024 4:58:54 PM SLParker

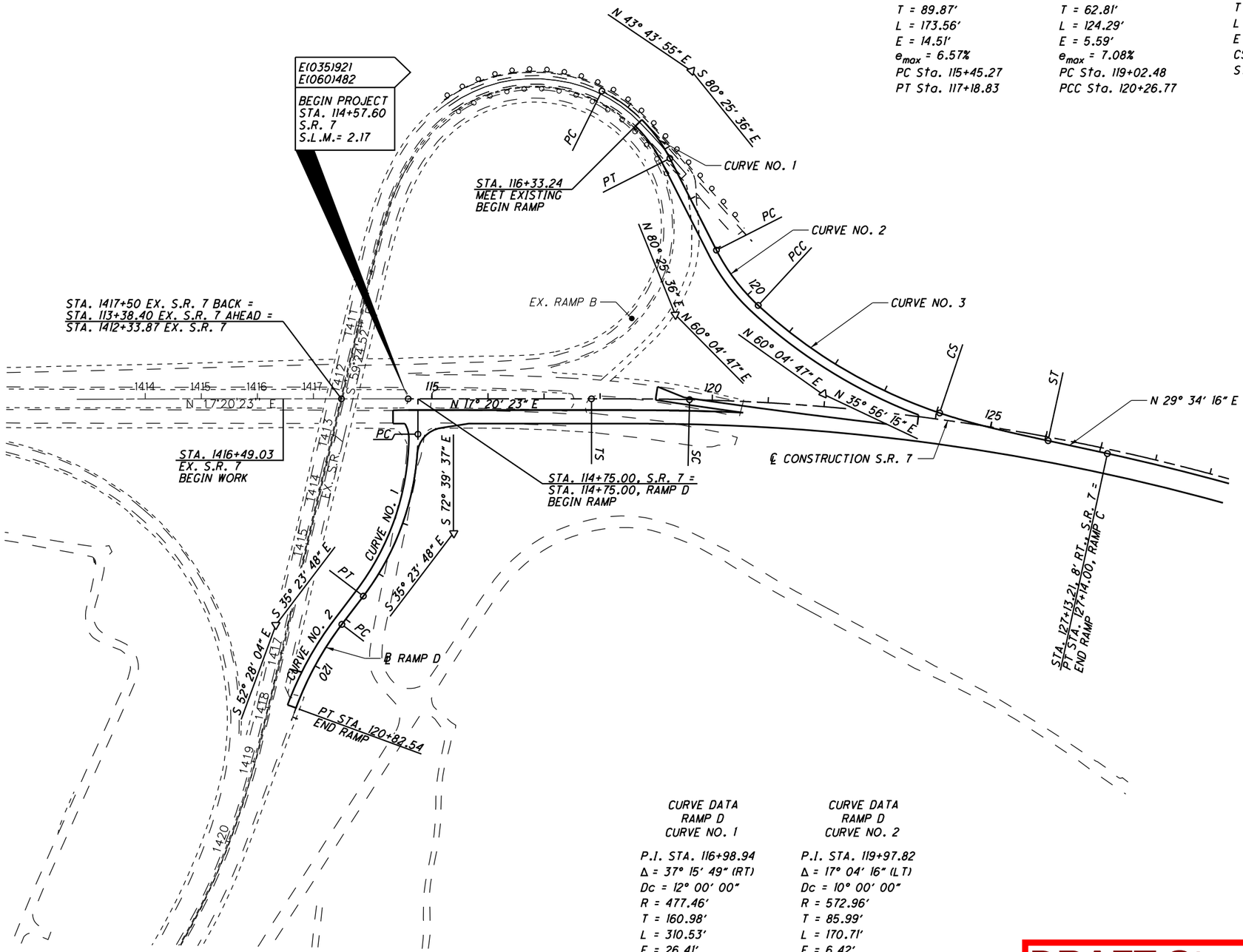

CURVE DATA
RAMP C
CURVE NO. 1

P.I.Sta. 116+35.14
Δ = 36° 41' 41" (RT)
Dc = 21° 08' 32"
R = 271.00'
T = 89.87'
L = 173.56'
E = 14.51'
e_{max} = 6.57%
PC Sta. 115+45.27
PT Sta. 117+18.83

CURVE DATA
RAMP C
CURVE NO. 2

P.I.Sta. 119+65.29
Δ = 20° 20' 49" (LT)
Dc = 16° 22' 13"
R = 350.00'
T = 62.81'
L = 124.29'
E = 5.59'
e_{max} = 7.08%
PC Sta. 119+02.48
PCC Sta. 120+26.77

CURVE DATA
RAMP C
CURVE NO. 3

P.I. STA. 122+69.78
Δ = 30° 30' 36" (LT)
Dc = 6° 21' 58"
R = 900.0'
T = 192.47'
L = 379.23'
E = 20.35'
CS STA. 124+06.00
ST STA. 126+06.00

θ_{back} = 6° 21' 58"
L_{back} = 200.00'
T_{back} = 342.26'
LT = 133.42'
ST = 66.75'
e_{max} (N.D.C.) = 6.30%
e_{max} = 6.30%
LT = 133.42'
ST = 66.75'

CURVE DATA
RAMP D
CURVE NO. 1

P.I. STA. 116+98.94
Δ = 37° 15' 49" (RT)
Dc = 12° 00' 00"
R = 477.46'
T = 160.98'
L = 310.53'
E = 26.41'
e_{max} = 7.30%
PC STA. 115+37.96
PT STA. 118+48.49

CURVE DATA
RAMP D
CURVE NO. 2

P.I. STA. 119+97.82
Δ = 17° 04' 16" (LT)
Dc = 10° 00' 00"
R = 572.96'
T = 85.99'
L = 170.71'
E = 6.42'
e_{max} (N.D.C.) = 6.70%
e_{max} = 1.60%
PC STA. 119+11.83
PT STA. 120+82.54

DRAFT Stage 3 - Not for Construction 09/23/2024

HORIZONTAL SCALE IN FEET
0 50 100 200

CALCULATED SLP
CHECKED ALB

INTERCHANGE DETAILS
GEOMETRIC LAYOUT - S.R. 7

LAW-7-2.17

616
1247

U:\1736087\14\LAW\75923\roadway\sheets\75923GI100-2B.dgn 5/21/2024 4:58:55 PM SLParker

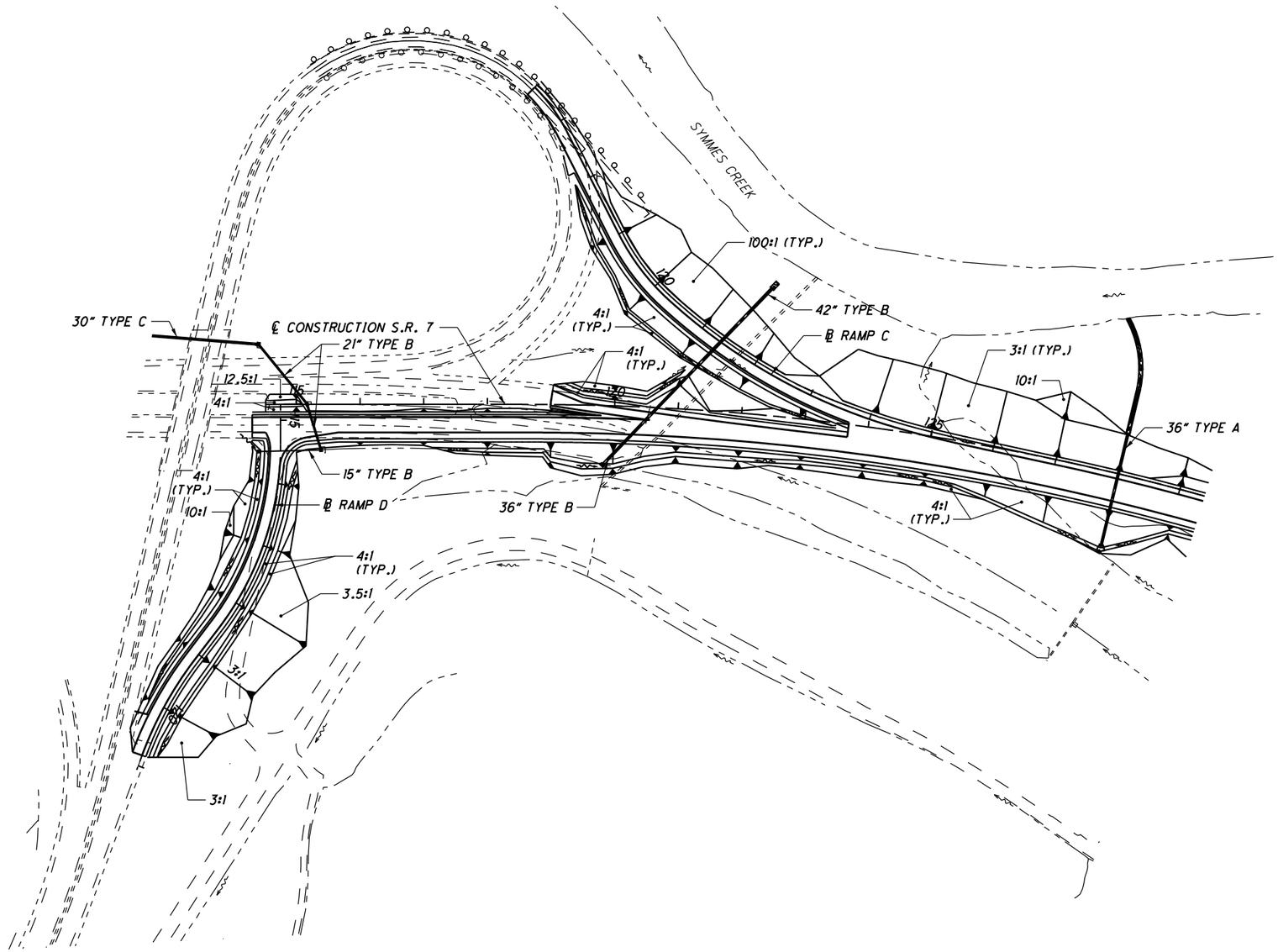

DRAFT Stage 3 - Not for Construction 09/23/2024

INTERCHANGE DETAILS
GRADING PLAN - S.R. 527

CALCULATED SLP
CHECKED ALB

HORIZONTAL SCALE IN FEET
0 50 100 200

LAW-7-2.17

617
1247

U:\173608714\LAW\75923\roadway\sheets\75923GI101-2B.dgn 5/21/2024 4:58:56 PM SLParker

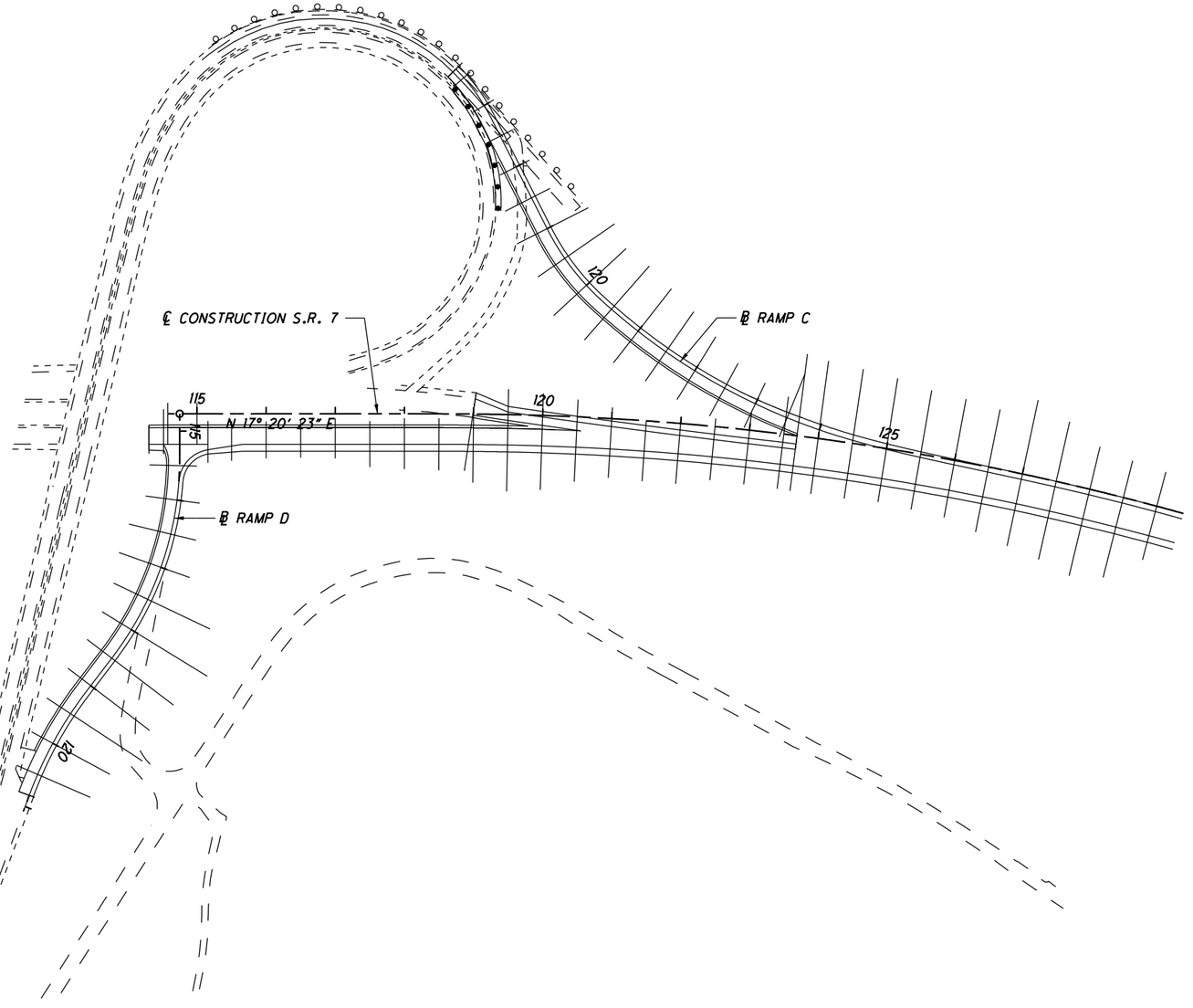

DRAFT Stage 3 - Not for Construction 09/23/2024

INTERCHANGE DETAILS
CROSS SECTION LAYOUT - S.R. 7

CALCULATED SLP
CHECKED ALB

0 50 100 200
HORIZONTAL SCALE IN FEET

LAW-7-2.17

618
1247

U:\1736087\14\LAW\75923\roadway\sheets\75923GI102-2B.dgn 5/21/2024 4:58:57 PM SLParker

CURVE DATA
RAMP I
CURVE NO. 1

P.I. STA. 374+16.34
Δ = 16° 54′ 53″ (RT)
Dc = 2° 02′ 47″
R = 2800.00′
T = 416.33′
L = 826.61′
E = 30.78′
e_{max} = 3.89%
PC STA. 370+00.01
PT STA. 378+26.62

CURVE DATA
RAMP I
CURVE NO. 2

P.I. STA. 379+75.71
Δ = 7° 49′ 16″ (LT)
Dc = 7° 09′ 43″
R = 800.00′
T = 54.69′
L = 109.20′
E = 1.87′
e_{max} (N.D.C.) = 4.77%
e_{max} = 1.60%
PC STA. 379+21.02
PT STA. 380+30.23

CURVE DATA
RAMP J
CURVE NO. 1

P.I. STA. 385+74.87
Δ = 13° 53′ 07″ (LT)
Dc = 7° 30′ 00″
R = 763.94′
T = 42.61′
L = 85.14′
E = 1.19′
TS STA. 383+90.72
SC STA. 385+90.72

θ_{back} = 7° 30′ 00″
L_{back} = 200.00′
T_{back} = 184.15′
LT = 133.45′
ST = 66.78′
e_{max} (N.D.C.) = 8.00%
e_{max} = 6.20%
PCC STA. 386+75.86

CURVE DATA
RAMP J
CURVE NO. 2

P.I. STA. 391+91.55
Δ = 141° 31′ 04″ (LT)
Dc = 31° 49′ 52″
R = 180.00′
T = 515.70′
L = 444.59′
E = 366.21′
e_{max} = 7.66%
PCC STA. 386+75.86
PT STA. 391+20.45

CURVE DATA
RAMP K
CURVE NO. 1

P.I. STA. 393+97.26
Δ = 54° 19′ 17″ (LT)
Dc = 5° 00′ 00″
R = 1145.92′
T = 587.93′
L = 1086.43′
E = 142.02′
e_{max} = 6.30%
PC STA. 388+09.33
PCC STA. 398+95.76

CURVE DATA
RAMP K
CURVE NO. 2

P.I. STA. 401+27.55
Δ = 4° 38′ 00″ (LT)
Dc = 1° 00′ 00″
R = 5729.58′
T = 231.80′
L = 463.34′
E = 4.69′
e_{max} = 6.00%
PCC STA. 398+95.76
PT STA. 403+59.10

CURVE DATA
RAMP L

P.I. STA. 382+67.06
Δ = 25° 45′ 21″ (LT)
Dc = 6° 44′ 26″
R = 850.00′
T = 194.33′
L = 382.09′
E = 21.93′
e_{max} = 4.60%
PC STA. 380+72.73
PT STA. 384+54.82

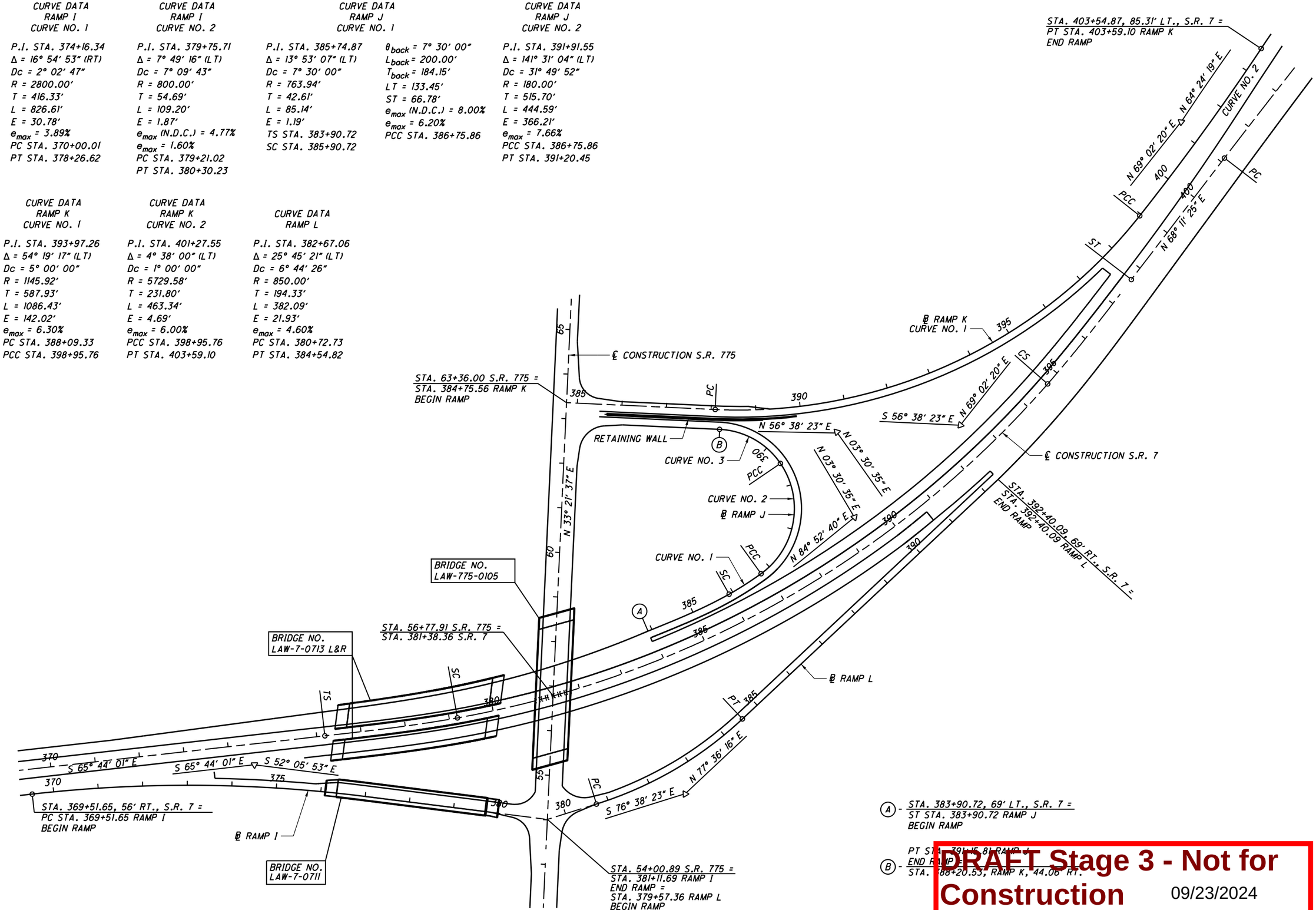

DRAFT Stage 3 - Not for Construction 09/23/2024

HORIZONTAL SCALE IN FEET
0 50 100 200
CALCULATED SLP
CHECKED ALB

INTERCHANGE DETAILS
GEOMETRIC LAYOUT - S.R. 775

LAW-7-2.17

U:\173608714\LAW\75923\roadway\sheets\75923GI103-2B.dgn 5/21/2024 4:58:58 PM SLParker

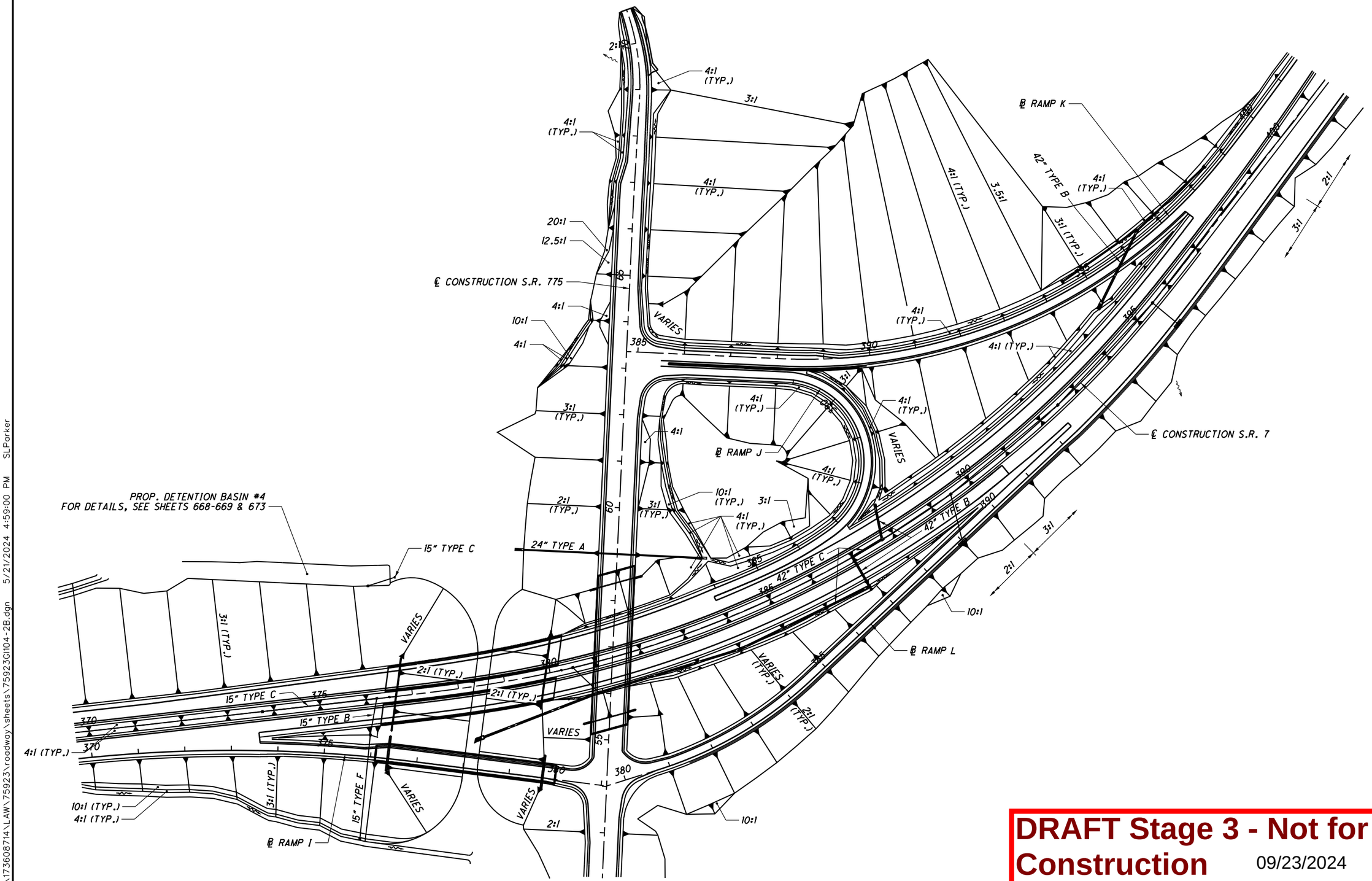

DRAFT Stage 3 - Not for Construction 09/23/2024

0 50 100 200
HORIZONTAL SCALE IN FEET

CALCULATED SLP
CHECKED ALB

INTERCHANGE DETAILS
GRADING PLAN - S.R. 775

LAW-7-2.17

620
1247

U:\1736087\4\LAW\75923\roadway\sheets\75923GI104-2B.dgn 5/21/2024 4:59:00 PM SLParker

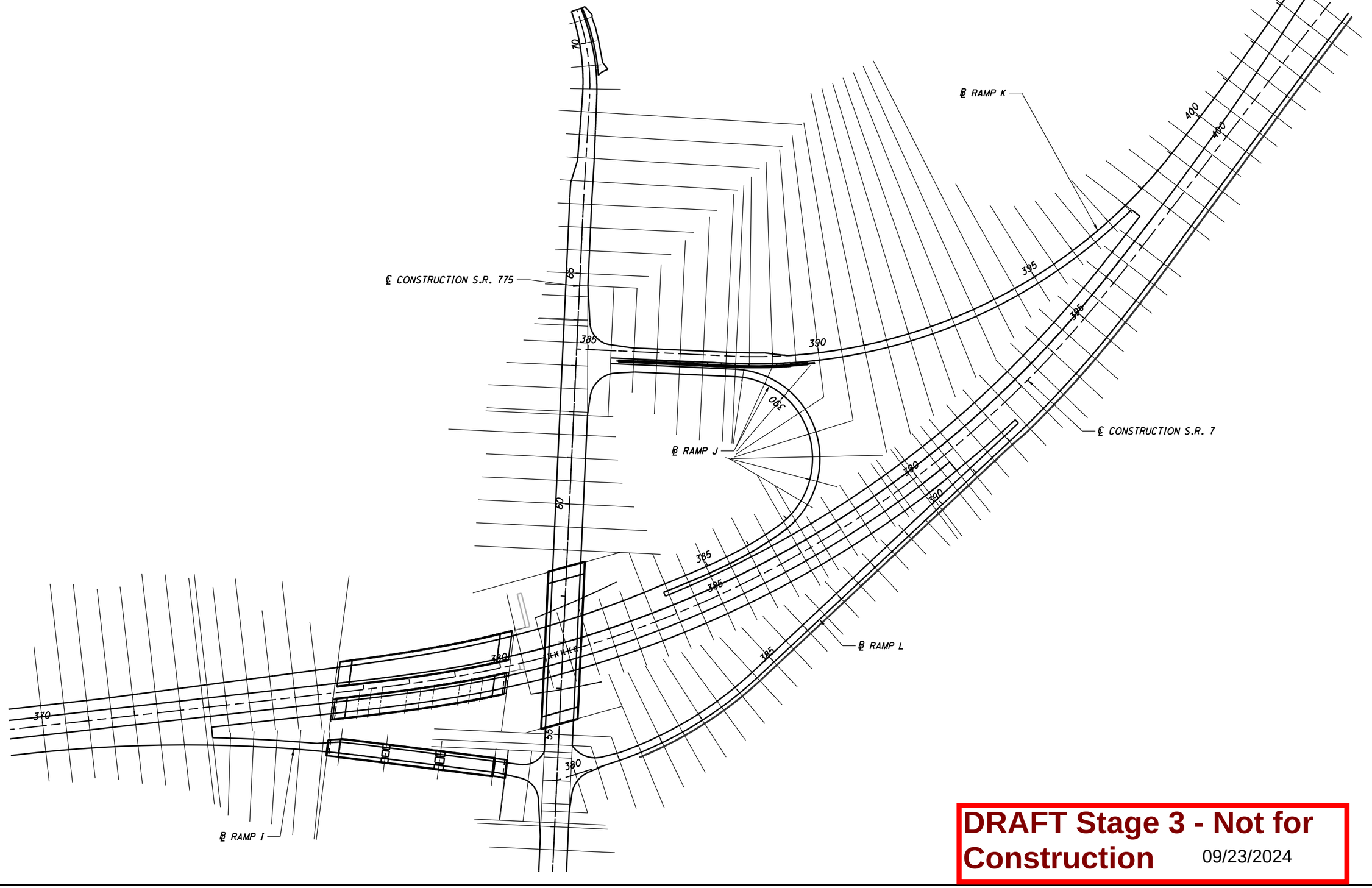

DRAFT Stage 3 - Not for Construction 09/23/2024

N

0 50 100 200 HORIZONTAL SCALE IN FEET

CALCULATED SLP
CHECKED ALB

INTERCHANGE DETAILS
CROSS SECTION LAYOUT - S.R. 775

LAW-7-2.17

621
1247

U:\173608714\LAW\75923\roadway\sheets\75923GI105-2B.dgn 5/21/2024 4:59:01 PM SLParker

LEFT E/P RETURN DATA
Δ = 76° 43′ 59″
R = 50.00′
L = 66.96′
T = 39.58′
R.P. STA. 115+72.76, 50′ LT., RAMP D
P.C. STA. 115+72.76, 0′ LT./RT., RAMP D
P.T. STA. 115+15.70, 52′ RT., S.R. 7

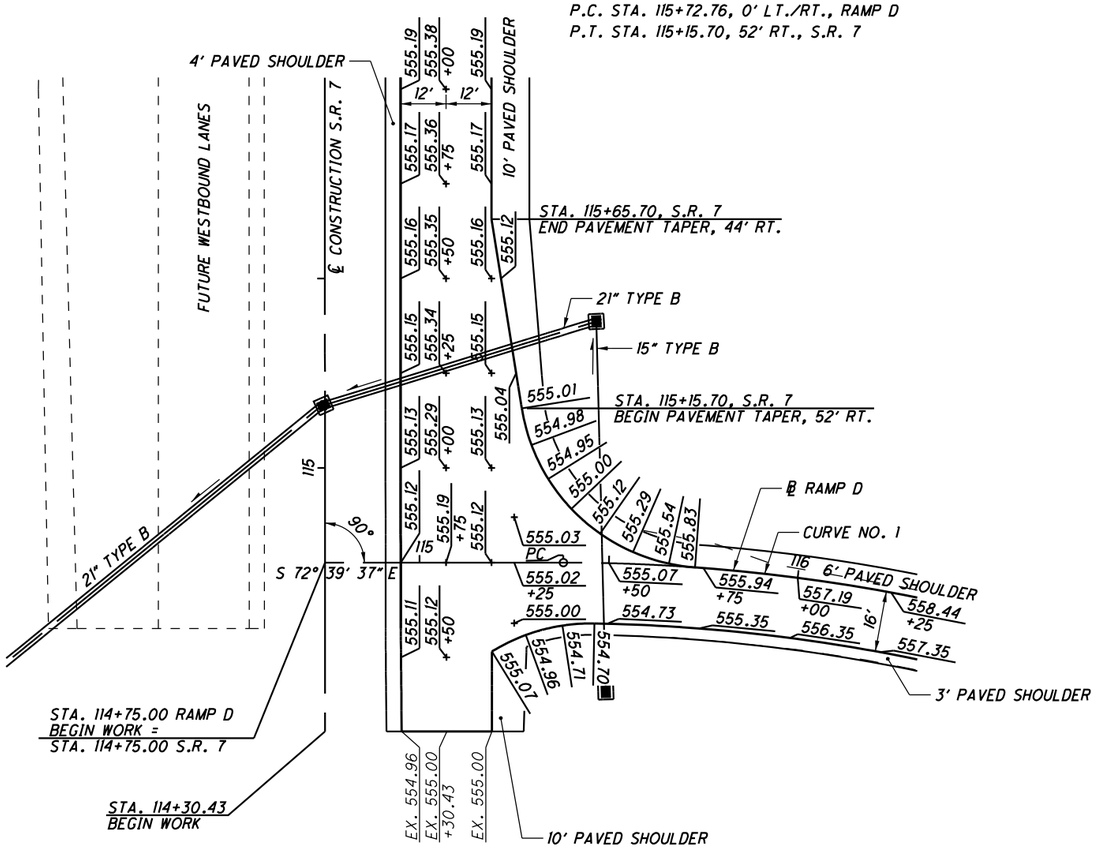

RIGHT E/P RETURN DATA
Δ = 32° 35′ 25″
R = 50.00′
L = 28.44′
T = 14.62′
R.P. STA. 115+46.41, 66′ RT., RAMP D
P.C. STA. 115+46.41, 16′ RT., RAMP D
P.T. STA. 114+51.53. 44.06′ RT., S.R. 7

CURVE DATA
RAMP D
CURVE NO. 1

P.I. STA. 116+98.94
Δ = 37° 15′ 49″ (RT)
Dc = 12° 00′ 00″
R = 477.46′
T = 160.98′
L = 310.53′
E = 26.41′
e_{max} = 7.30%
PC STA. 115+37.96
PT STA. 118+48.49

CURVE DATA
RAMP D
CURVE NO. 2

P.I. STA. 119+97.82
Δ = 17° 04′ 16″ (LT)
Dc = 10° 00′ 00″
R = 572.96′
T = 85.99′
L = 170.71′
E = 6.42′
e_{max} (N.D.C.) = 6.70%
e_{max} = 1.60%
PC STA. 119+11.83
PT STA. 120+82.54

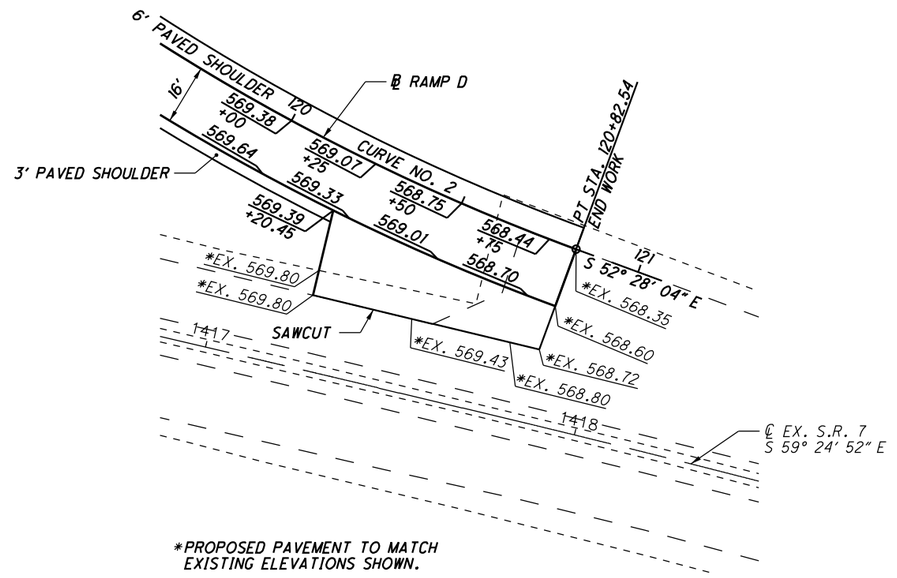

*PROPOSED PAVEMENT TO MATCH EXISTING ELEVATIONS SHOWN.

RAMP D TIE IN DETAIL

DRAFT Stage 3 - Not for Construction 09/23/2024

HORIZONTAL SCALE IN FEET
0 10 20 40

CALCULATED SLP
CHECKED ALB

INTERSECTION DETAILS
RAMP D

LAW-7-2.17

622
1247

U:\173608714\LAW\75923\roadway\sheets\75923GI305-2B.dgn 5/21/2024 4:59:02 PM SLParker

LEFT E/P RETURN DATA
Δ = 100° 56' 04"
R = 25.00'
L = 44.04'
T = 30.29'
R.P. STA. 12+26.49, 35' LT.
P.C. STA. 12+51.03, 39.74' LT.
P.T. STA. 12+26.49, 10' LT.

RIGHT E/P RETURN DATA
Δ = 76° 37' 39"
R = 25.00'
L = 33.44'
T = 19.75'
R.P. STA. 12+40.57, 35' RT.
P.C. STA. 12+40.57, 10' RT.
P.T. STA. 12+64.89, 29.22' RT.

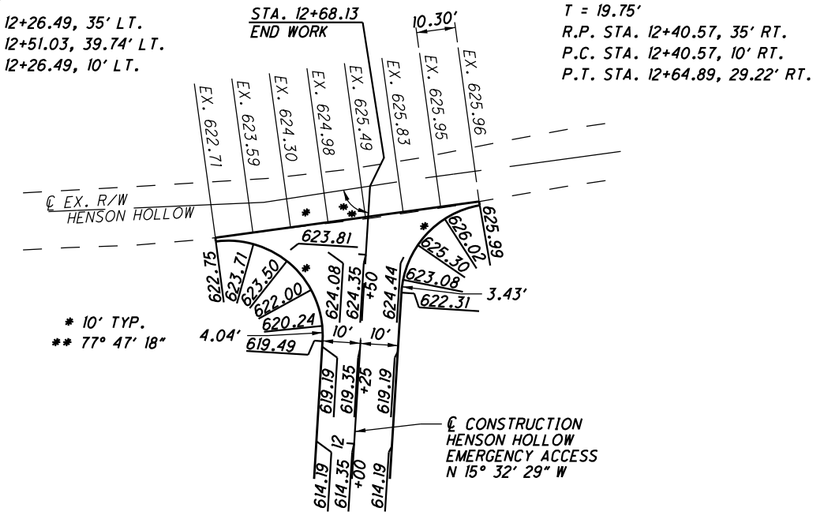

RIGHT E/P RETURN DATA
Δ = 68° 45' 18"
R = 25.00'
L = 30.00'
T = 17.10'
R.P. STA. 115+15.25, 69' RT., S.R. 7
P.C. STA. 115+15.25, 44' RT., S.R. 7
P.T. STA. 115+40.33, 65.85' RT., S.R. 7

LEFT E/P RETURN DATA
Δ = 118° 00' 04"
R = 20.00'
L = 41.19'
T = 33.29'
R.P. STA. 155+81.38, 64' RT., S.R. 7
P.C. STA. 155+63.59, 73.37' RT., S.R. 7
P.T. STA. 155+81.38, 44' RT., S.R. 7

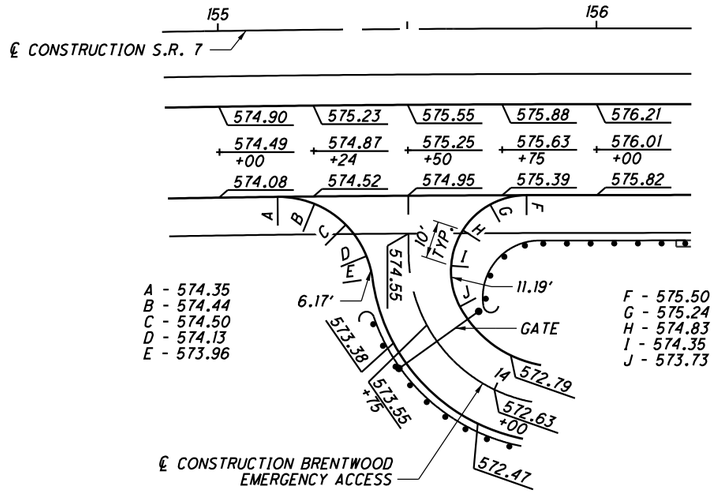

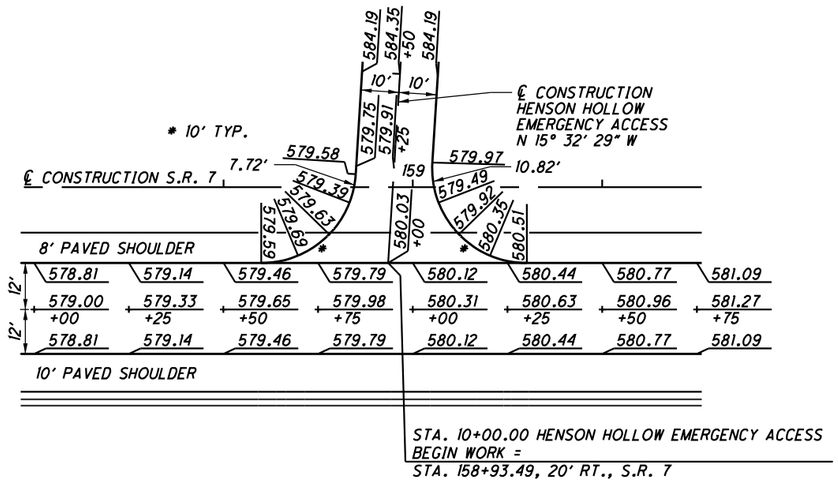

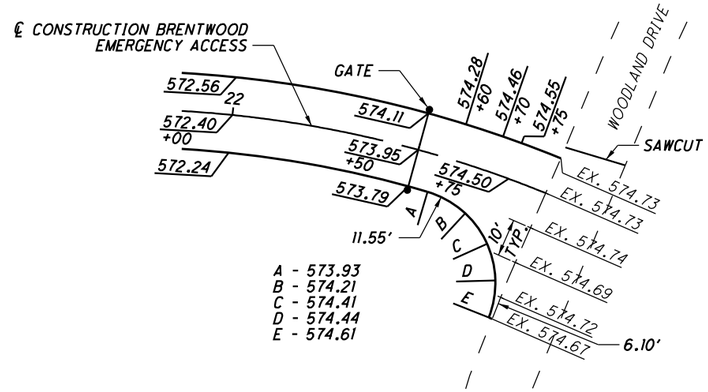

LEFT E/P RETURN DATA
Δ = 86° 26' 46"
R = 25.00'
L = 37.72'
T = 23.50'
R.P. STA. 10+22.87, 35' LT., HENSON HOLLOW EMERGENCEY ACCESS
P.C. STA. 10+22.87, 10' LT., HENSON HOLLOW EMERGENCY ACCESS
P.T. STA. 158+59.97, 20' RT., S.R. 7

RIGHT E/P RETURN DATA
Δ = 93° 33' 14"
R = 25.00'
L = 40.82'
T = 26.60'
R.P. STA. 159+30.11, 5' LT., S.R. 7
P.C. STA. 159+30.11, 20' RT., S.R. 7
P.T. STA. 10+27.22, 10' RT., HENSON HOLLOW EMERGENCEY ACCESS

RIGHT E/P RETURN DATA
Δ = 95° 13' 14"
R = 25.00'
L = 41.55'
T = 27.39'
R.P. STA. 28+55.44, 35' RT., BRENTWOOD EMERGENCY ACCESS
P.C. STA. 22+83.67, 10' RT., BRENTWOOD EMERGENCY ACCESS
P.T. STA. 22+83.67, 36.10' RT., BRENTWOOD EMERGENCY ACCESS

NOTE: ELEVETIONS ARE SHOWN AT TOP OF PAVEMENT

DRAFT Stage 3 - Not for Construction 09/23/2024

INTERSECTION DETAILS - HENSON HOLLOW & BRENTWOOD EMERGENCY ACCESS

HORIZONTAL SCALE IN FEET
0 10 20 40

CALCULATED SLP
CHECKED ALB

LAW-7-2.17

623
1247

U:\173608714\LAW\75923\roadway\sheets\75923GI301-2B.dgn 5/21/2024 4:59:03 PM SLParker

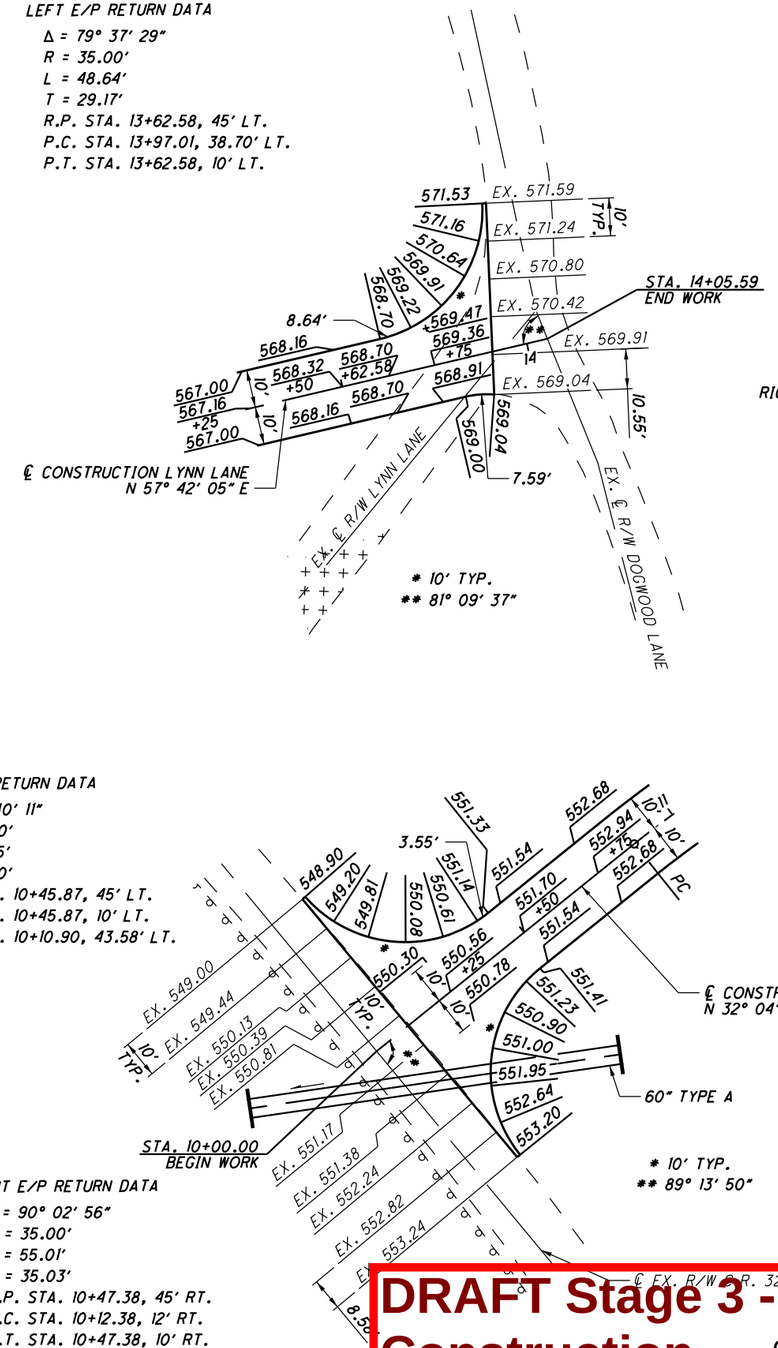

NOTE: ELEVETIONS ARE SHOWN AT TOP OF PAVEMENT

DRAFT Stage 3 - Not for Construction 09/23/2024

HORIZONTAL SCALE IN FEET
0 10 20 40

CALCULATED SLP
CHECKED ALB

INTERSECTION DETAILS
LYNN LANE

LAW-7-2.17

624
1247

U:\173608714\LAW\75923\roadway\sheets\75923GI301-2A.dgn 5/21/2024 4:59:04 PM SLParker

LEFT E/P RETURN DATA

Δ = 83° 47' 56"
R = 25.00'
L = 36.56'
T = 22.43'
R.P. STA. 10+27.50, 31' LT., DOGWOOD LANE EXTENSION
P.C. STA. 10+27.50, 6' LT., DOGWOOD LANE EXTENSION
P.T. STA. 10+03.57, 28.83' LT., DOGWOOD LANE EXTENSION

RIGHT E/P RETURN DATA

Δ = 107° 22' 05"
R = 25.00'
L = 46.85'
T = 34.01'
R.P. STA. 10+41.18, 31' RT., DOGWOOD LANE EXTENSION
P.C. STA. 10+15.35, 37.85' RT., DOGWOOD LANE EXTENSION
P.T. STA. 10+41.18, 6' RT., DOGWOOD LANE EXTENSION

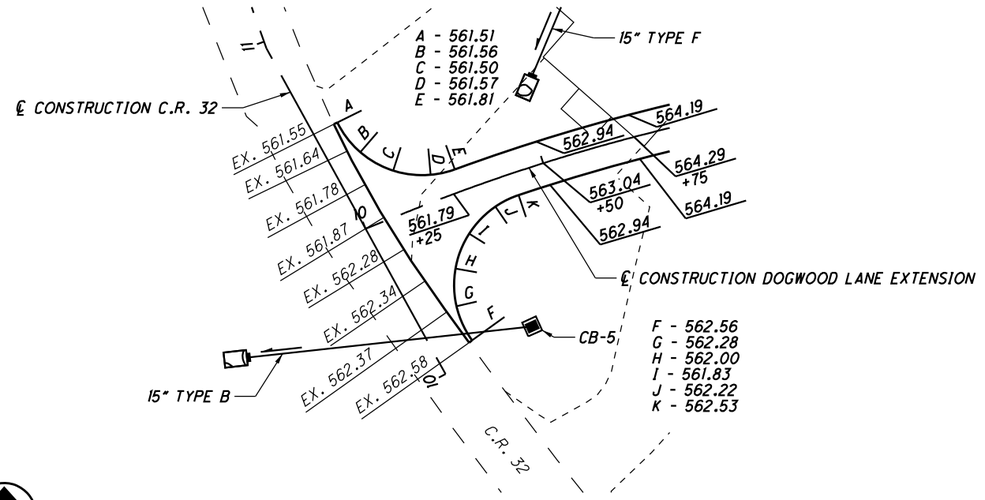

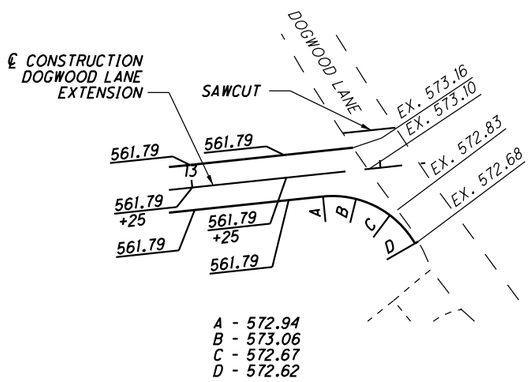

RIGHT E/P RETURN DATA

Δ = 66° 02' 32"
R = 25.00'
L = 28.82'
T = 16.25'
R.P. STA. 13+34.07, 31' RT., DOGWOOD LANE EXTENSION
P.C. STA. 13+34.07, 6' RT., DOGWOOD LANE EXTENSION
P.T. STA. 13+56.92, 20.85' RT., DOGWOOD LANE EXTENSION

NOTE: ELEVATIONS ARE SHOWN AT TOP OF PAVEMENT

CURVE DATA
S.R. 243
CURVE NO. 4

P.I. STA. 15+51.11
Δ = 5° 37' 36" (LT)
Dc = 1° 30' 00"
R = 3,819.72'
T = 137.62'
L = 275.13'
E = 2.48'
TS STA. 13+13.39
SC STA. 14+13.39
θs = 00° 45' 00"
Ls = 100.00'
Ts = 237.72'
LT = 66.67'
ST = 33.33'
e_{max} = 3.50%
CS Sta. 16+88.52
ST Sta. 17+88.52

CURVE DATA
C.R. 69
CURVE NO. 1

P.I. STA. 10+33.80
Δ = 20° 52' 36" (RT)
Dc = 24° 54' 40"
R = 230.00'
T = 42.37'
L = 83.80'
E = 3.87'
e_{max} (N.D.C.) = 8.00%
e_{max} = 2.50%
PC STA. 9+91.43
PT STA. 10+75.23

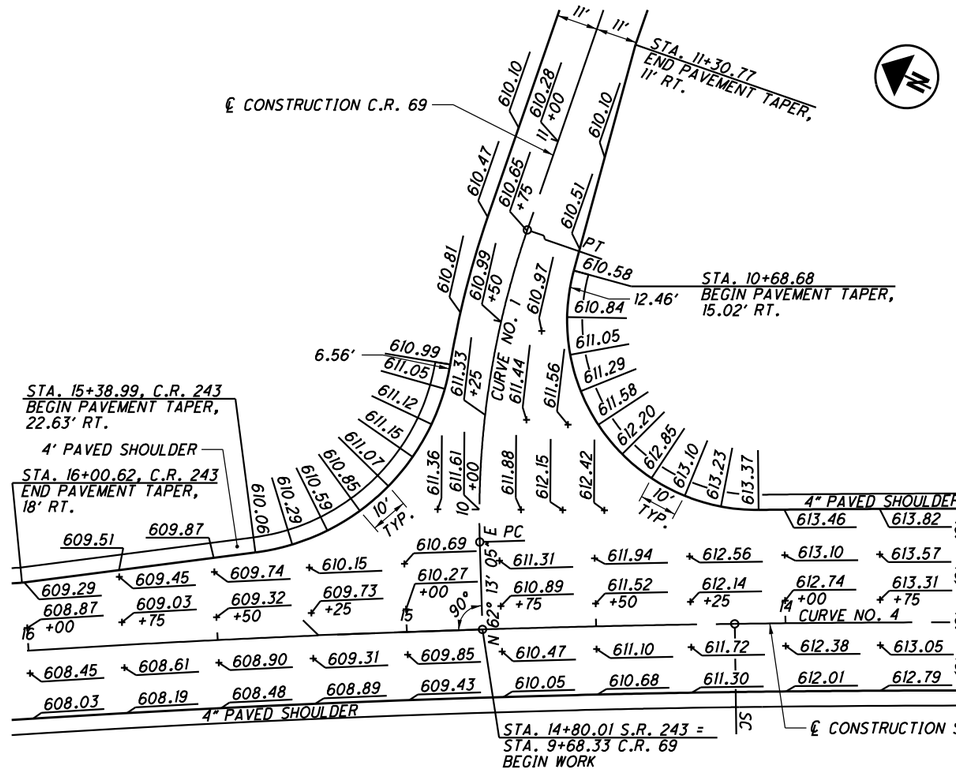

LEFT E/P RETURN DATA

Δ = 73° 06' 50"
R = 60.00'
L = 76.56'
T = 44.49'
R.P. STA. 10+36.64, 71' LT., C.R. 69
P.C. STA. 10+36.64, 11' LT., C.R. 69
P.T. STA. 15+39.00, 22.63' RT., S.R. 243

RIGHT E/P RETURN DATA

Δ = 105° 57' 05"
R = 50.00'
L = 92.46'
T = 66.29'
R.P. STA. 14+06.72, 80' RT., S.R. 243
P.C. STA. 14+06.72, 30' RT., S.R. 243
P.T. STA. 10+68.68, 15.02' RT., C.R. 69

DRAFT Stage 3 - Not for Construction 09/23/2024

HORIZONTAL SCALE IN FEET
0 10 20 40

CALCULATED SLP
CHECKED ALB

INTERSECTION DETAILS
DOGWOOD LANE EXTENSION & C.R. 69

LAW-7-2.17

625
1247

U:\1736087\4\LAW\75923\roadway\sheets\75923GI200-2B.dgn 5/21/2024 4:59:12 PM SLParker

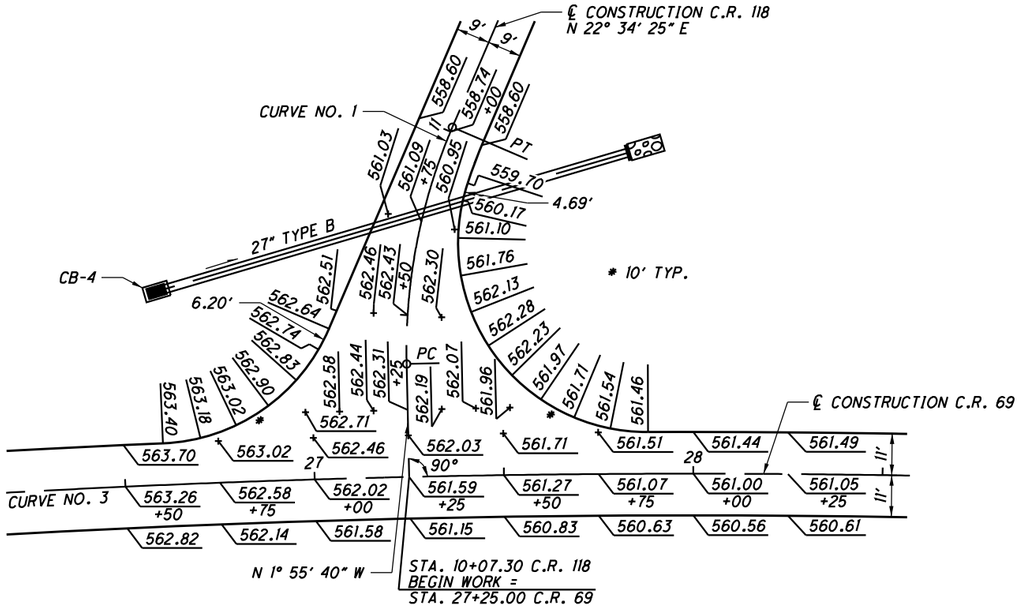

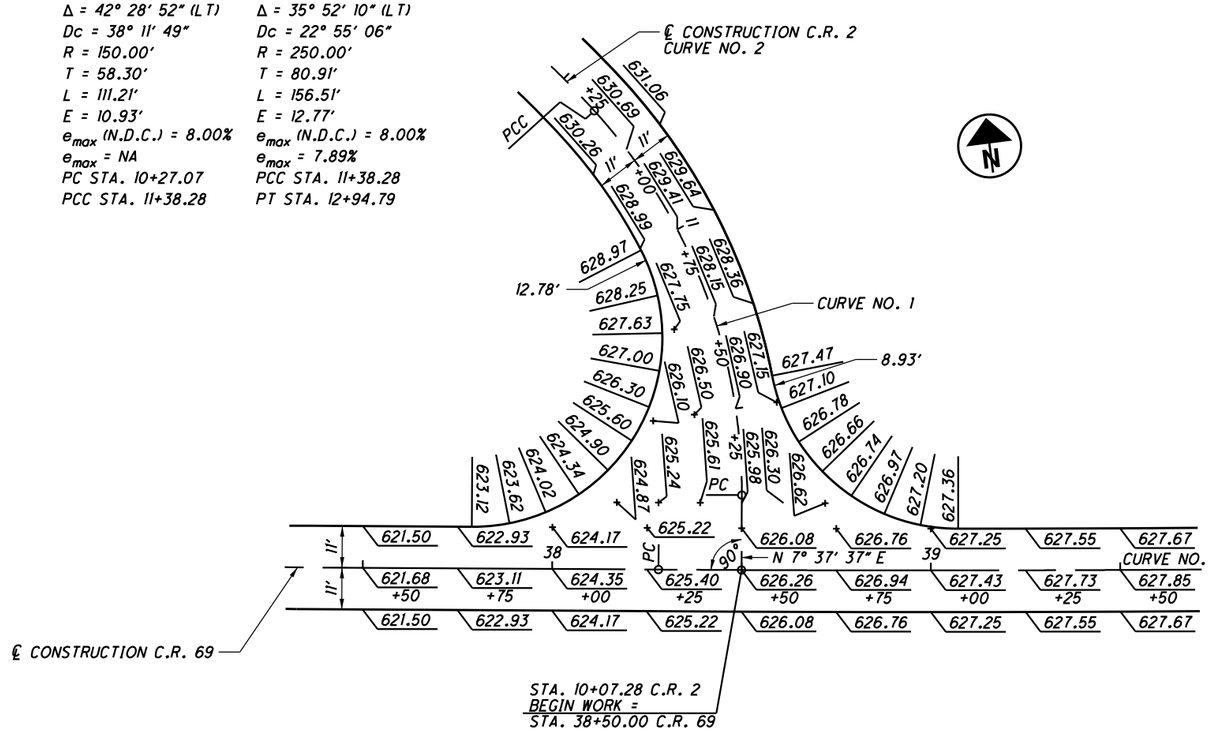

CURVE DATA
C.R. 2
CURVE NO. 1

P.I. STA. 10+85.37
Δ = 42° 28' 52" (LT)
Dc = 38° 11' 49"
R = 150.00'
T = 58.30'
L = 111.21'
E = 10.93'
e_{max} (N.D.C.) = 8.00%
e_{max} = NA
PC STA. 10+27.07
PCC STA. 11+38.28

CURVE DATA
C.R. 2
CURVE NO. 2

P.I. STA. 12+19.19
Δ = 35° 52' 10" (LT)
Dc = 22° 55' 06"
R = 250.00'
T = 80.91'
L = 156.51'
E = 12.77'
e_{max} (N.D.C.) = 8.00%
e_{max} = 7.89%
PCC STA. 11+38.28
PT STA. 12+94.79

LEFT E/P RETURN DATA

Δ = 64° 22' 07"
R = 50.00'
L = 56.17'
T = 31.47'
R.P. STA. 26+60.43, 51' LT., C.R. 69
P.C. STA. 10+45.75, 20.56' LT., C.R. 118
P.T. STA. 26+60.43, 11' LT., C.R. 69

RIGHT E/P RETURN DATA

Δ = 108° 30' 36"
R = 50.00'
L = 94.69'
T = 69.47'
R.P. STA. 10+88.49, 59' RT., C.R. 118
P.C. STA. 27+88.11, 11' LT., C.R. 69
P.T. STA. 10+88.49, 9' RT., C.R. 118

CURVE DATA
C.R. 69
CURVE NO. 3

P.I. STA. 25+76.25
Δ = 22° 45' 00" (RT)
Dc = 1° 45' 00"
R = 3,274.04'
T = 658.68'
L = 1,300.00'
E = 65.60'
TS STA. 17+89.74
SC STA. 19+14.74

θs = 1° 05' 37"
Ls = 125.00'
Ts = 786.51'
LT = 83.33'
ST = 41.67'
e_{max} = 4.00%
CS STA. 32+14.74
ST STA. 33+39.74

CURVE DATA
C.R. 118
CURVE NO. 1

P.I. STA. 10+69.71
Δ = 24° 30' 05" (RT)
Dc = 38° 11' 50"
R = 150.00'
T = 32.57'
L = 64.14'
E = 3.49'
e_{max} (N.D.C.) = 8.00%
e_{max} = NA
PC STA. 10+37.14
PT STA. 11+01.28

LEFT E/P RETURN DATA

Δ = 117° 46' 42"
R = 50.00'
L = 102.78'
T = 82.85'
R.P. STA. 10+99.50, 61' LT., C.R. 2
P.C. STA. 10+99.50, 11' LT., C.R. 2
P.T. STA. 37+78.71, 11' LT., C.R. 69

RIGHT E/P RETURN DATA

Δ = 78° 59' 01"
R = 50.00'
L = 68.93'
T = 41.20'
R.P. STA. 39+07.21, 61' LT., C.R. 69
P.C. STA. 39+07.21, 11' LT., C.R. 69
P.T. STA. 10+56.66, 11' RT., C.R. 2

CURVE DATA
C.R. 69
CURVE NO. 4

P.I. STA. 42+81.74
Δ = 4° 32' 03" (LT)
Dc = 0° 30' 00"
R = 11,459.16'
T = 453.67'
L = 906.86'
E = 8.98'
e_{max} = NC
PC STA. 38+28.07

NOTE: ELEVETIONS ARE SHOWN AT TOP OF PAVEMENT

DRAFT Stage 3 - Not for Construction 09/23/2024

HORIZONTAL SCALE IN FEET
0 10 20 40

CALCULATED SLP
CHECKED ALB

INTERSECTION DETAILS
C.R. 118 / C.R. 2

LAW-7-2.17

626
1247

U:\1736087\4\LAW\75923\roadway\sheets\75923GI300-2B.dgn 5/21/2024 4:59:13 PM SLParker

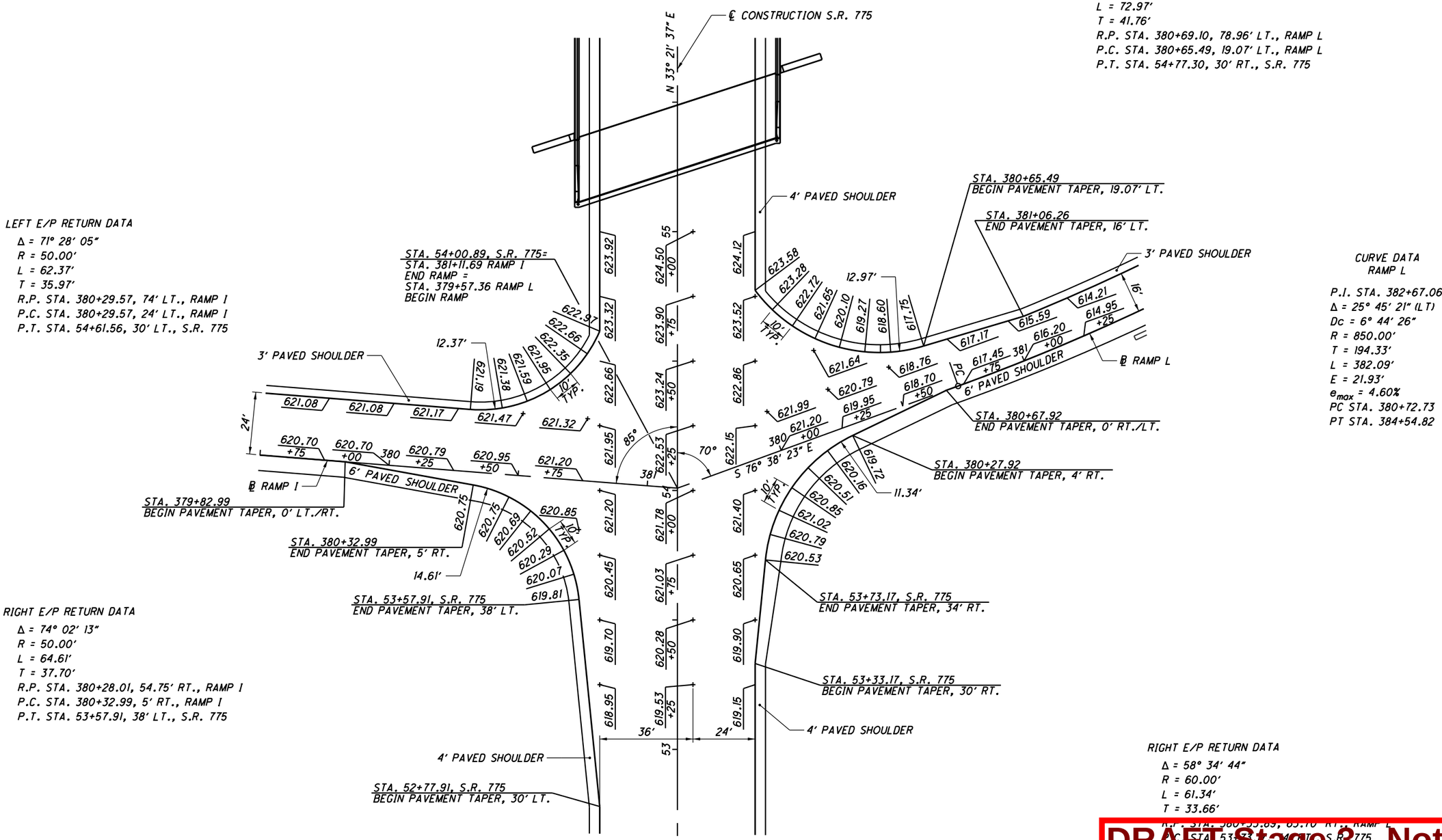

LEFT E/P RETURN DATA
Δ = 69° 40' 46"
R = 60.00'
L = 72.97'
T = 41.76'
R.P. STA. 380+69.10, 78.96' LT., RAMP L
P.C. STA. 380+65.49, 19.07' LT., RAMP L
P.T. STA. 54+77.30, 30' RT., S.R. 775

LEFT E/P RETURN DATA
Δ = 71° 28' 05"
R = 50.00'
L = 62.37'
T = 35.97'
R.P. STA. 380+29.57, 74' LT., RAMP I
P.C. STA. 380+29.57, 24' LT., RAMP I
P.T. STA. 54+61.56, 30' LT., S.R. 775

CURVE DATA
RAMP L
P.I. STA. 382+67.06
Δ = 25° 45' 21" (LT)
Dc = 6° 44' 26"
R = 850.00'
T = 194.33'
L = 382.09'
E = 21.93'
e_{max} = 4.60%
PC STA. 380+72.73
PT STA. 384+54.82

RIGHT E/P RETURN DATA
Δ = 74° 02' 13"
R = 50.00'
L = 64.61'
T = 37.70'
R.P. STA. 380+28.01, 54.75' RT., RAMP I
P.C. STA. 380+32.99, 5' RT., RAMP I
P.T. STA. 53+57.91, 38' LT., S.R. 775

RIGHT E/P RETURN DATA
Δ = 58° 34' 44"
R = 60.00'
L = 61.34'
T = 33.66'
R.P. STA. 380+33.83, 83.70' RT., RAMP L
P.C. STA. 53+33.17, 40' RT., S.R. 775
P.T. STA. 380+27.92, 4' RT., RAMP L

NOTE: ELEVETIONS ARE SHOWN AT TOP OF PAVEMENT

DRAFT Stage 3- Not for Construction 09/23/2024

HORIZONTAL SCALE IN FEET
0 10 20 40
CALCULATED SLP
CHECKED ALB

INTERSECTION DETAILS
S.R. 775 CONNECTOR / RAMP L / RAMP I

LAW-7-2.17

627
1247

U:\173608714\LAW\75923\roadway\sheets\75923GI303-2B.dgn 5/21/2024 4:59:14 PM SLParker

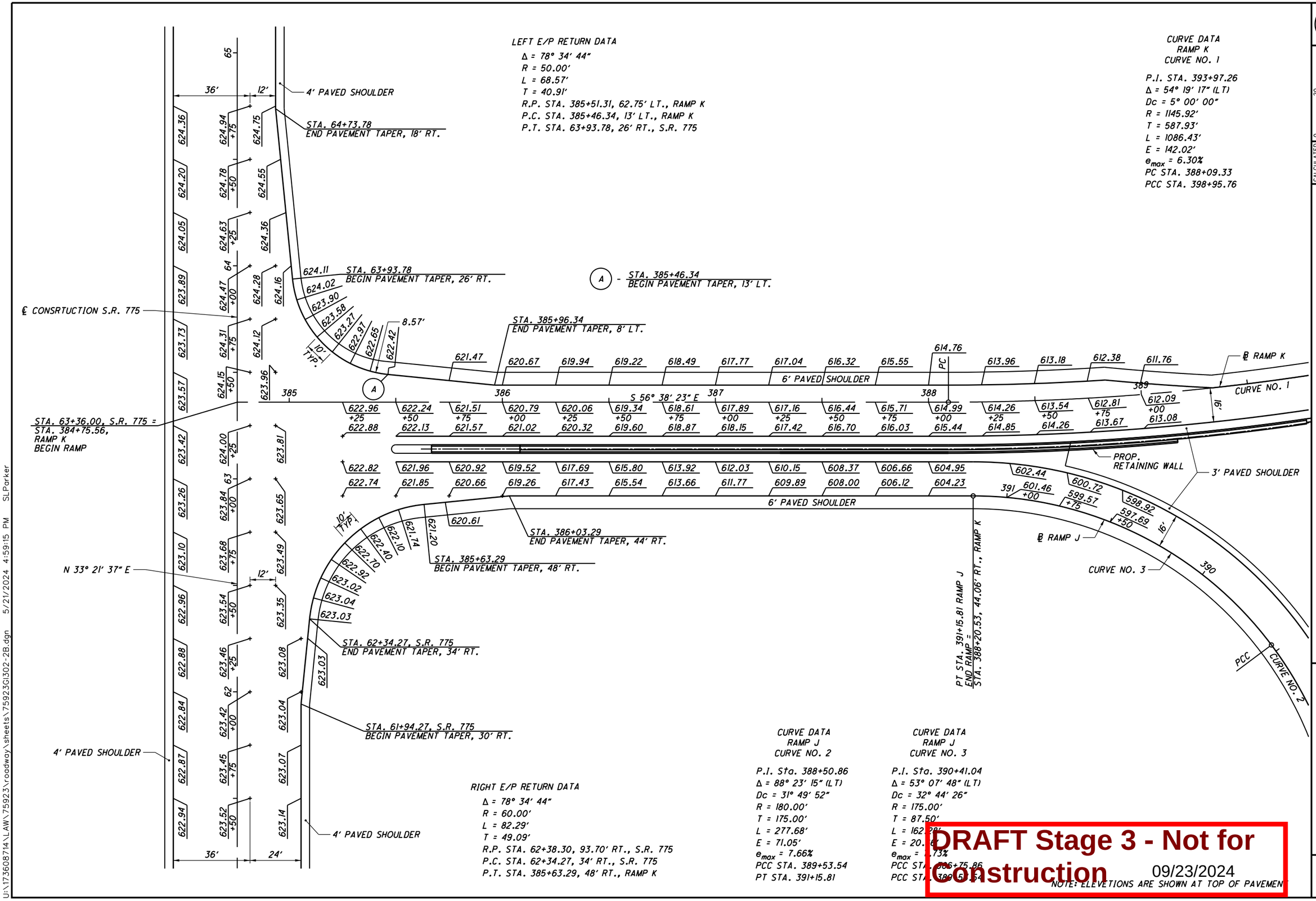
LEFT E/P RETURN DATA
Δ = 78° 34' 44"
R = 50.00'
L = 68.57'
T = 40.91'
R.P. STA. 385+51.31, 62.75' LT., RAMP K
P.C. STA. 385+46.34, 13' LT., RAMP K
P.T. STA. 63+93.78, 26' RT., S.R. 775
CURVE DATA
RAMP K
CURVE NO. 1
P.I. STA. 393+97.26
Δ = 54° 19' 17" (LT)
Dc = 5° 00' 00"
R = 1145.92'
T = 587.93'
L = 1086.43'
E = 142.02'
e_max = 6.30%
PC STA. 388+09.33
PCC STA. 398+95.76
36'
12'
4' PAVED SHOULDER
STA. 64+73.78
END PAVEMENT TAPER, 18' RT.
STA. 63+93.78
BEGIN PAVEMENT TAPER, 26' RT.
A - STA. 385+46.34
BEGIN PAVEMENT TAPER, 13' LT.
℄ CONSRTUCTION S.R. 775
STA. 385+96.34
END PAVEMENT TAPER, 8' LT.
8.57'
10' TYP.
6' PAVED SHOULDER
PC
℄ RAMP K
CURVE NO. 1
S 56° 38' 23" E
STA. 63+36.00, S.R. 775 =
STA. 384+75.56,
RAMP K
BEGIN RAMP
PROP. RETAINING WALL
3' PAVED SHOULDER
STA. 386+03.29
END PAVEMENT TAPER, 44' RT.
STA. 385+63.29
BEGIN PAVEMENT TAPER, 48' RT.
℄ RAMP J
CURVE NO. 3
N 33° 21' 37" E
STA. 62+34.27, S.R. 775
END PAVEMENT TAPER, 34' RT.
PT STA. 391+15.81 RAMP J
END RAMP =
STA. 388+20.53, 44.06' RT., RAMP K
PCC
CURVE NO. 2
STA. 61+94.27, S.R. 775
BEGIN PAVEMENT TAPER, 30' RT.
4' PAVED SHOULDER
36'
24'
RIGHT E/P RETURN DATA
Δ = 78° 34' 44"
R = 60.00'
L = 82.29'
T = 49.09'
R.P. STA. 62+38.30, 93.70' RT., S.R. 775
P.C. STA. 62+34.27, 34' RT., S.R. 775
P.T. STA. 385+63.29, 48' RT., RAMP K
CURVE DATA
RAMP J
CURVE NO. 2
P.I. Sta. 388+50.86
Δ = 88° 23' 15" (LT)
Dc = 31° 49' 52"
R = 180.00'
T = 175.00'
L = 277.68'
E = 71.05'
e_max = 7.66%
PCC STA. 389+53.54
PT STA. 391+15.81
CURVE DATA
RAMP J
CURVE NO. 3
P.I. Sta. 390+41.04
Δ = 53° 07' 48" (LT)
Dc = 32° 44' 26"
R = 175.00'
T = 87.50'
L = 162.28'
E = 20.64'
e_max = 7.73%
PCC STA. 386+75.86
PCC STA. 389+53.54
DRAFT Stage 3 - Not for Construction
09/23/2024
NOTE: ELEVATIONS ARE SHOWN AT TOP OF PAVEMEN
HORIZONTAL SCALE IN FEET
CALCULATED SLP
CHECKED ALB
INTERSECTION DETAILS
S.R. 775 / RAMP J / RAMP K
LAW-7-2.17
628
1247
U:\17360814\LAW\75923\roadway\sheets\75923GI302-2B.dgn 5/21/2024 4:59:15 PM SLParker

DRIVE & TURNAROUND SUBSUMMARY

CALCULATED SLP | CHECKED ALB

REF NO.	SHEET NO.	STATION FROM	STATION TO	SIDE	DRIVE TYPE	APRON LENGTH "L1" (ALONG CENTERLINE)	DRIVEWAY LENGTH "L2" (ALONG CENTERLINE)	WIDTH "W"	202 PAVEMENT REMOVED	202 PIPE REMOVED, 24" AND UNDER	202 PIPE REMOVED, OVER 24"	202 GATE REMOVED	203 EXCAVATION	203 EMBANKMENT	204 SUBGRADE COMPACTION	252 FULL DEPTH PAVEMENT SAWING	301 3" ASPHALT CONCRETE BASE, PG64-22, (449)	302 7" ASPHALT CONCRETE BASE, PG64-22, (449)	304 6" AGGREGATE BASE	304 8" AGGREGATE BASE	407 TACK COAT	441 2" ASPHALT CONCRETE SURFACE COURSE, TYPE I, (449), (DRIVEWAYS)	441 1-1/4" ASPHALT CONCRETE SURFACE COURSE, TYPE I, (449), PG64-22	441 1-3/4" ASPHALT CONCRETE INTERMEDIATE COURSE, TYPE 2, (449)	442 1-1/2" ASPHALT CONCRETE SURFACE COURSE, 12.5MM, TYPE A (446)	442 1-3/4" ASPHALT CONCRETE INTERMEDIATE COURSE, 19MM, TYPE A (446)	659 SEEDING AND MULCHING, CLASS 3C	690 SPECIAL - MAILBOX REMOVED AND RESET
						FT	FT	FT	SY	FT	FT	EACH	CY	CY	SY	FT	CY	CY	CY	CY	GAL	CY	CY	CY	CY	CY	SY	EACH
DRIVE - 1																												
1-DR	631	163+05.70	163+00.00	LT	TAR	40		20					31	520	142.58		10.76		22.49		13.77		4.35	6.09			409	
1-R	631	9+86.00	9+90.00	RT/LT										1.48														
DRIVE - 2																												
2-DR	631	164+81.13	165+09.12	RT	TAR	37.60		20					263		130.14		9.81		20.52		12.55		3.96	5.55			363	
1-R	631	10+09.56	10+11.30	LT						27																		
DRIVE - 3																												
3-DR	632	167+50.00	168+99.78	LT	RES	153.46		12					13	310	252.73				36.07			11.45					1650	
1-R	632	10+00.00	11+53.46	RT/LT					226.46							14												
3-R	632	169+23.22	9+94.33	LT																								1
DRIVE - 4																												
4-DR	632	168+99.78	168+99.78	LT	RES		20	7					24	17	39.47					7.14							42	
2-R	632	168+77.87	168+90.36	LT								1																
DRIVE - 5																												
5-DR	633	172+76.45	172+99.76	RT	TAR	40		20					799	0	142.63		10.75		22.49		13.76		4.34	6.08			391	
1-R	633	10+05.23	10+07.70	RT/LT						155																		
DRIVE - 6																												
6-DR	633	209+71.50	210+17.35	RT	TAR	40							46	2	142.90		10.79		22.55		13.81		4.36	6.10			99	
1-R	633	10+06.26	10+06.30	RT/LT						48																		
DRIVE - 7																												
7-DR	634	218+36.12	218+09.41	RT	TAR	40.00		20					222		129.88		9.74		20.42		12.44		3.93	5.50			246	
DRIVE - 8																												
8-DR	635	270+21.93	270+42.89	RT	TAR	40.00		24					79	2	182.84		14.07		29.15		18.13		5.72	8.01			134	
1-R	635	10+37.83	10+47.28	RT/LT					20.89							78												
2-R	635	10+45.71		LT										6.22													50.19	
3-R	635	10+36.25		LT							48																	
DRIVE - 9																												
9-DR	636	17+05.49 (S.R. 243)	17+23.48 (S.R. 243)	LT	RES	31.36	54.20	12					698	7	133.88			11.18	19.74		6.23	3.08			2.36	2.75	493	
DRIVE - 10																												
10-DR	637	17+00.00 (S.R. 243)	17+00.00 (S.R. 243)	RT	COMM	17.26	41.74	24					0	193	285.26			11.79	9.87	46.60	5.78				2.19	2.55	164	
1-R	637	10+28.44		LT																								1
2-R	637	15+29.63 (S.R. 243)	15+58.70 (S.R. 243)	RT						41			107														146	
DRIVE - 11																												
11-DR	638	19+68.47 (S.R. 243)	20+27.50 (S.R. 243)	LT	RES	19.38	82.05						871	12	146.02			6.49	20.66		3.61	4.64			1.37	1.59	666	
1-R	638	10+90.05	10+90.26	RT/LT						30																		
2-R	638	20+34.97 (S.R. 243)																										1
TOTALS									247.35	301	48	1	3153	1070.70	1728.33	92	65.92	29.46	223.96	53.74	100.50	19.17	27.65	37.33	5.92	6.99	4853.19	3
TOTALS CARRIED TO GENERAL SUMMARY									248	301	48	1	3153	1071	1729	92	66	30		78	101	20	27	38	6	7	4854	3

NOTES:

TAR DENOTES TURNAROUND, RES DENOTES RESIDENTIAL, COMM DENOTES COMMERCIAL

DRAFT Stage 3 - Not for Construction 09/23/2024

LAW-7-2.17

629
1247

SLParker
5/21/2024 4:59:16 PM
U:\173608714\LAW\75923\roadway\sheets\75923GS100-2B.dgn

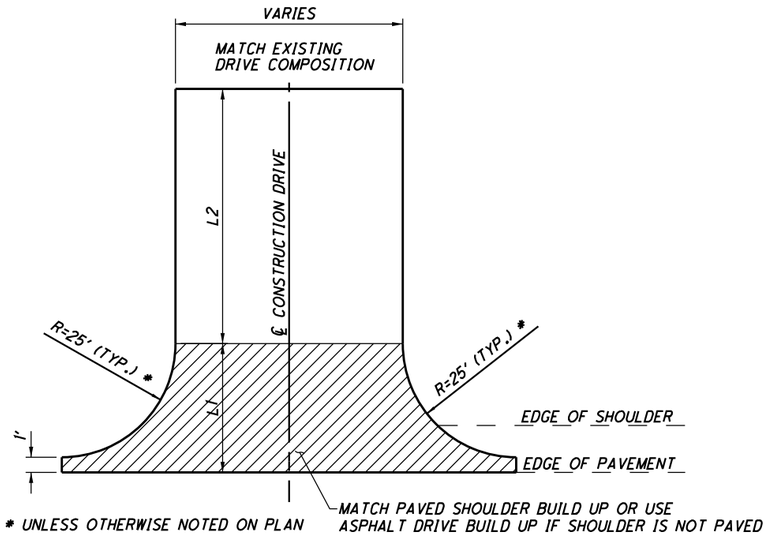

* UNLESS OTHERWISE NOTED ON PLAN

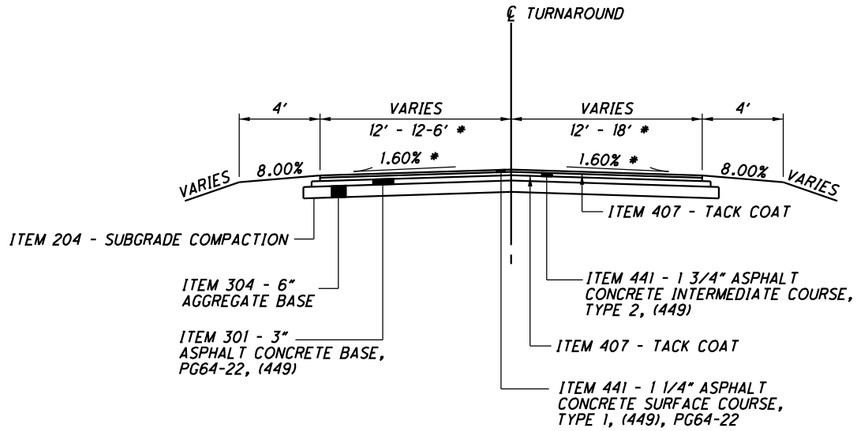

NORMAL TURNAROUND SECTION

SECTION APPLIES

* SEE PLANS FOR DETAILS

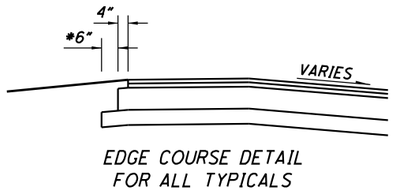

EDGE COURSE DETAIL
FOR ALL TYPICALS

* 6" OR THE THICKNESS OF
OVERLYING LIFT, WHICHEVER
IS GREATER.

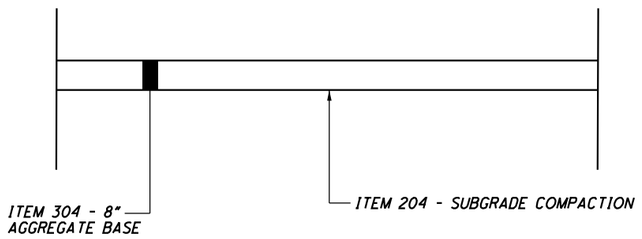

PAVEMENT BUILDUP - GRAVEL DRIVEWAY

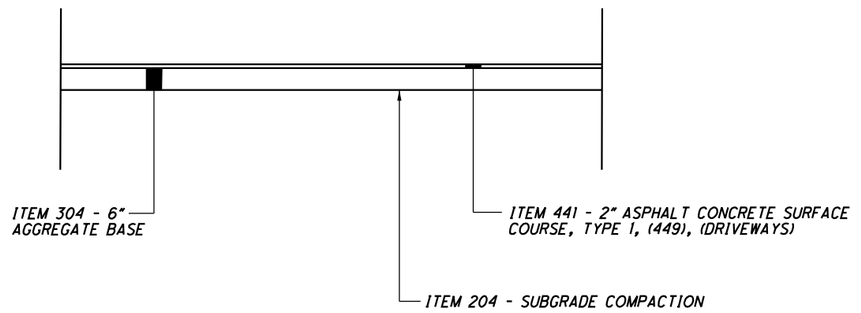

PAVEMENT BUILDUP - ASPHALT DRIVEWAY

DRAFT Stage 3 - Not for Construction 09/23/2024

CALCULATED SLP CHECKED ALB

DRIVE & TURNAROUND DETAILS

LAW-7-2.17

630
1247

U:\173608714\LAW\75923\roadway\sheets\75923GD001-2B.dgn 5/21/2024 4:59:17 PM SLParker

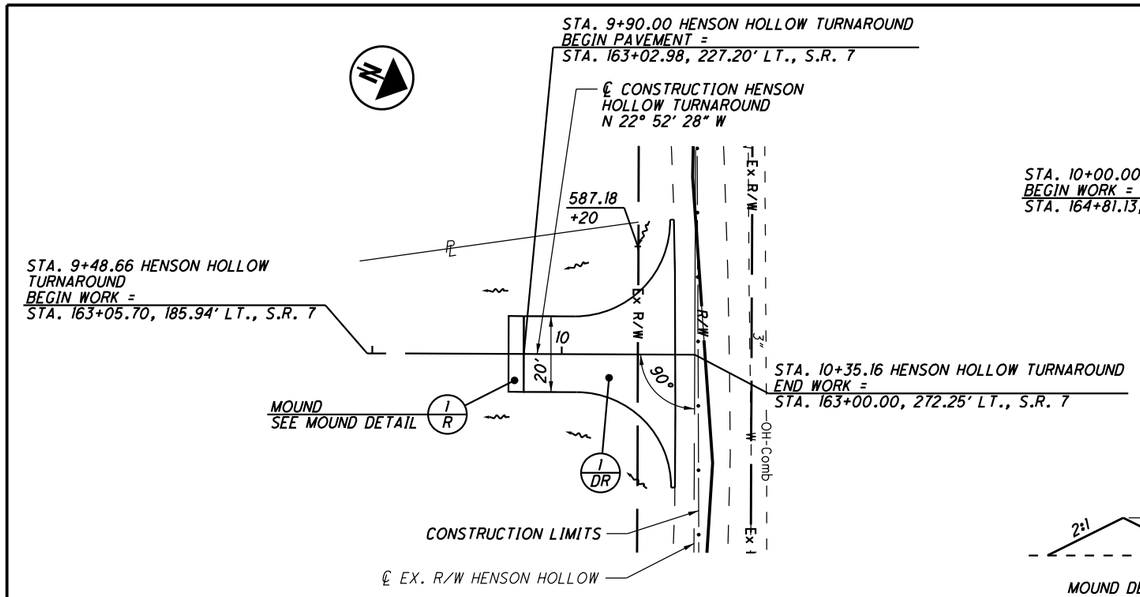

MOUND DETAIL

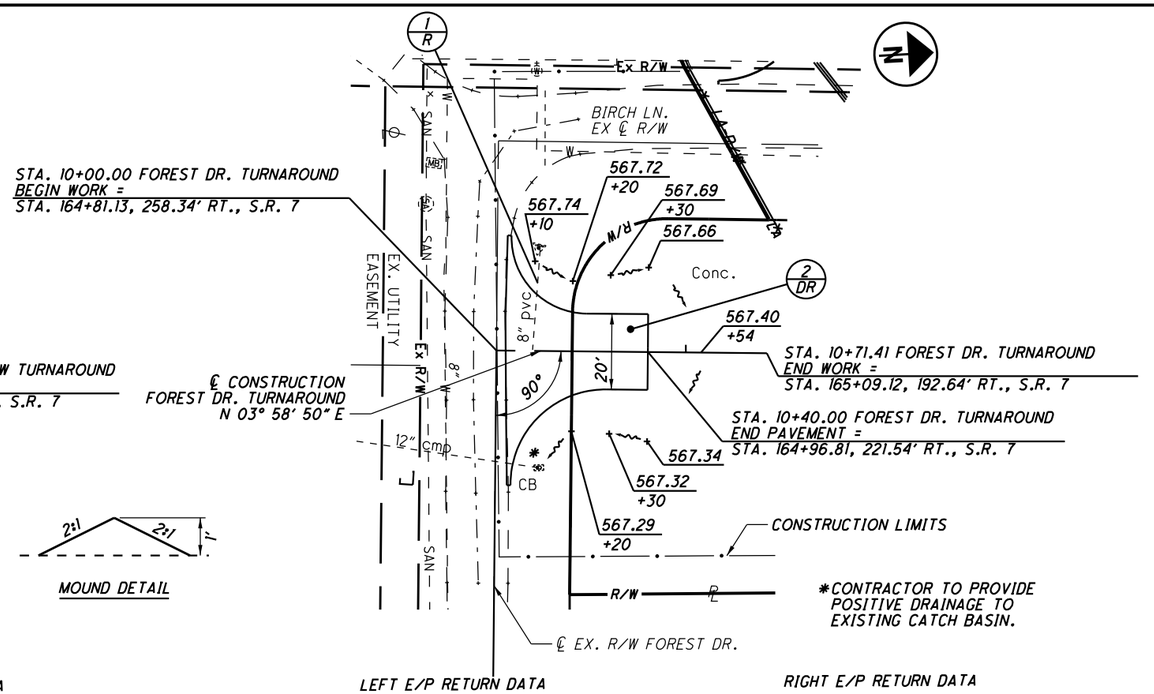

LEFT E/P RETURN DATA
- Δ = 91° 24' 26"
- R = 25.00'
- T = 25.62'
- L = 39.88'
- R.P. STA. 10+03.49, 35' LT.
- P.C. STA. 10+28.48, 35.61' LT.
- P.T. STA. 10+03.49, 10' LT.

RIGHT E/P RETURN DATA
- Δ = 90° 11' 58"
- R = 25.00'
- T = 25.09'
- L = 39.36'
- R.P. STA. 10+04.069, 35' RT.
- P.C. STA. 10+04.06, 10' RT.
- P.T. STA. 10+29.06, 35.09' RT.

HENSON HOLLOW TURNAROUND - 1

LEFT E/P RETURN DATA
- Δ = 91° 11' 00"
- R = 20.00'
- T = 20.42'
- L = 31.83'
- R.P. STA. 10+23.71, 30' LT.
- P.C. STA. 10+23.71, 10' LT.
- P.T. STA. 10+03.71, 30.41' LT.

RIGHT E/P RETURN DATA
- Δ = 91° 07' 29"
- R = 25.00'
- T = 25.50'
- L = 39.76'
- R.P. STA. 10+29.08, 35' RT.
- P.C. STA. 10+04.09, 35.49' RT.
- P.T. STA. 10+29.08, 10' RT.

FOREST DRIVE TURNAROUND - 2

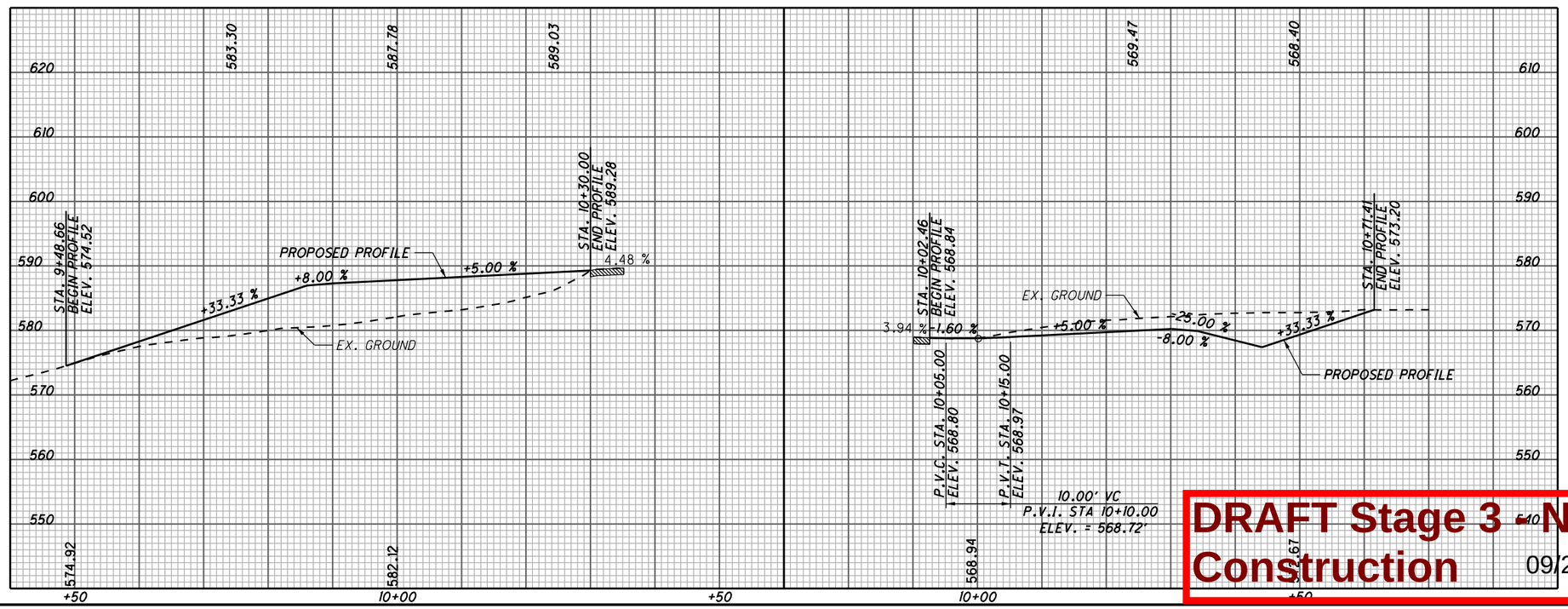

DRAFT Stage 3 - Not for Construction

09/23/2024

HENSON HOLLOW TURNAROUND
FOREST DRIVE TURNAROUND

HORIZONTAL SCALE IN FEET
0 10 20 40

CALCULATED SLP
CHECKED ALB

LAW-7-2.17

631
1247

U:\173608714\LAW\75923\roadway\sheets\75923GD004-2A.dgn 5/21/2024 4:59:18 PM SLParker

3/R MAIL BOX REMOVED AND RESET TO STA. 9+94.33, 11.30' LT.

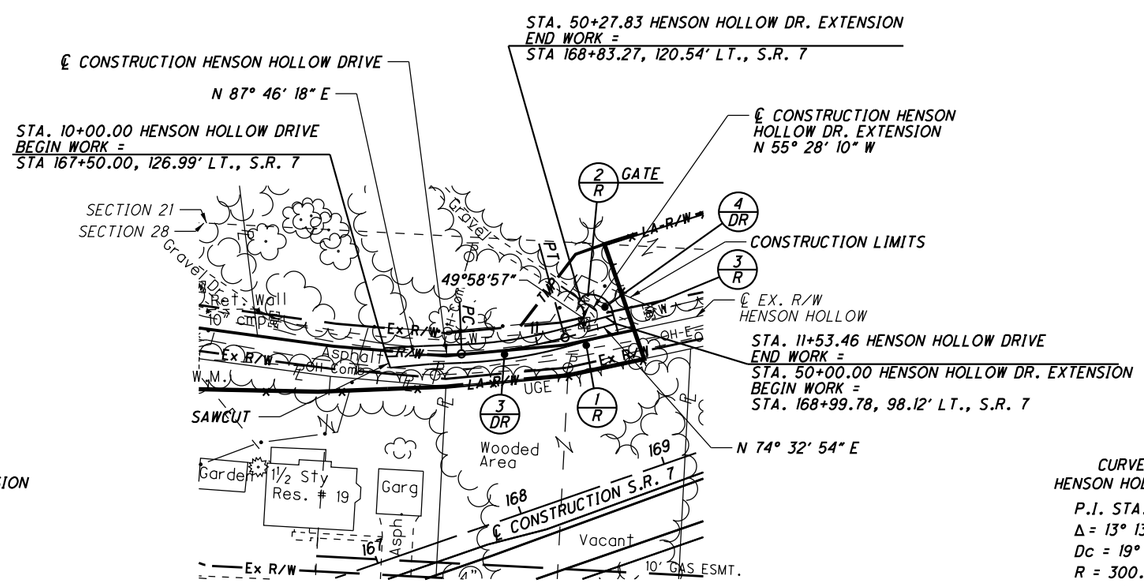

HENSON HOLLOW DRIVE EXTENSION
LEFT E/P RETURN DATA
Δ = 130° 42' 18"
R = 8.00'
T = 17.44'
L = 18.25'
R.P. STA. 11+27.27, 14' LT., HENSON HOLLOW DR.
P.C. STA. 11+27.27, 6' LT., HENSON HOLLOW DR.
P.T. STA. 10+19.68, 2.89' LT., HENSON HOLLOW DR. EXTENSION

HENSON HOLLOW DRIVE EXTENSION
RIGHT E/P RETURN DATA
Δ = 102° 28' 43"
R = 15.00'
T = 18.68'
L = 26.83'
R.P. STA. 11+38.66, 8.47' LT., HENSON HOLLOW DR.
P.C. STA. 11+53.46, 6' LT., HENSON HOLLOW DR.
P.T. STA. 10+20.00, 3.32' RT., HENSON HOLLOW DR. EXTENSION

CURVE DATA
HENSON HOLLOW DRIVE
P.I. STA. 10+84.31
Δ = 13° 13' 25" (LT)
Dc = 19° 05' 55"
R = 300.00'
T = 34.77'
L = 69.24'
E = 2.01'
PC STA. 10+49.54
PT STA. 11+18.78

HENSON HOLLOW DRIVE - 3
HENSON HOLLOW DRIVE EXTENSION - 4

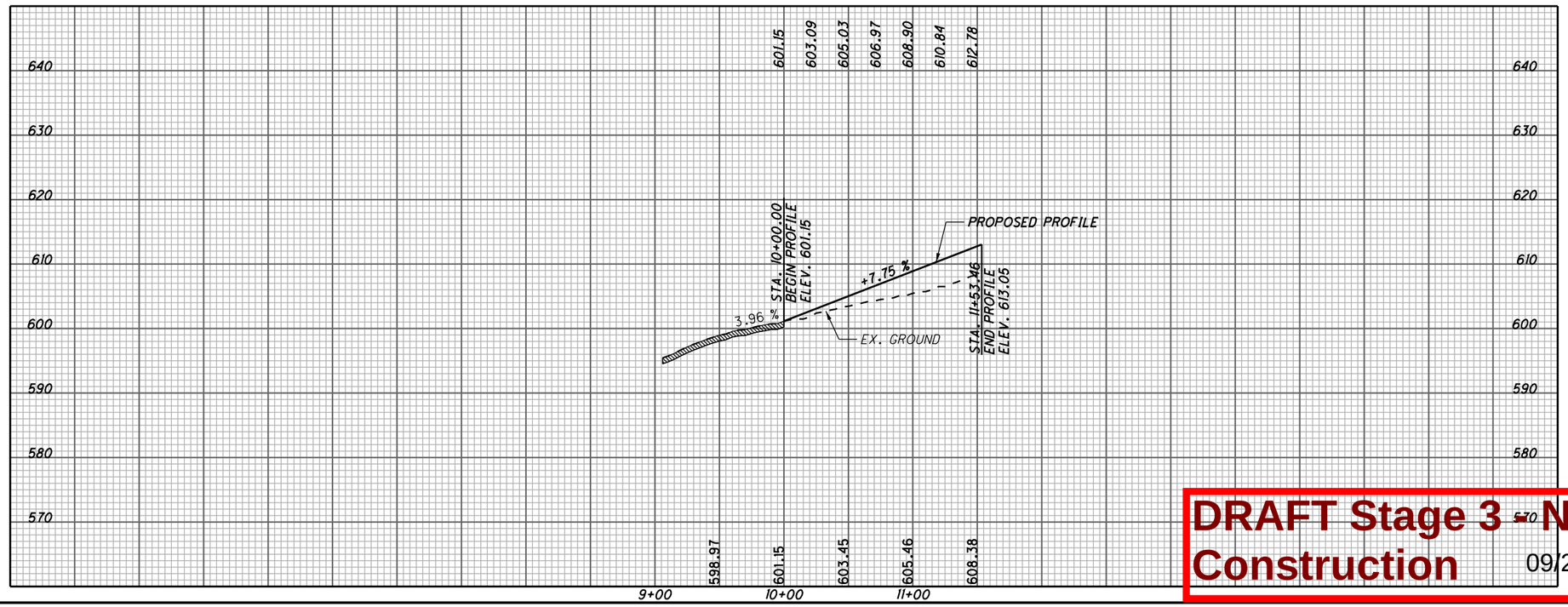

DRAFT Stage 3 - Not for Construction 09/23/2024

N

HORIZONTAL SCALE IN FEET
0 25 50 100

CALCULATED SLP
CHECKED ALB

PLAN AND PROFILE
HENSON HOLLOW DRIVE

LAW-7-2.17

632
1247

U:\173608714\LAW\75923\roadway\sheets\75923GD002-2A.dgn 5/21/2024 4:59:19 PM SLParker

*CONTRACTOR TO PROVIDE POSITIVE DRAINAGE.

LEFT E/P RETURN DATA
Δ = 90° 43' 43"
R = 25.00'
T = 25.32'
L = 39.59'
R.P. STA. 10+26.30, 35' LT.
P.C. STA. 10+26.30, 10' LT.
P.T. STA. 10+01.30, 35.32' LT.

RIGHT E/P RETURN DATA
Δ = 93° 0' 39"
R = 25.00'
T = 26.35'
L = 40.58'
R.P. STA. 10+26.22, 35' RT.
P.C. STA. 10+01.25, 36.31' RT.
P.T. STA. 10+26.22, 10' RT.

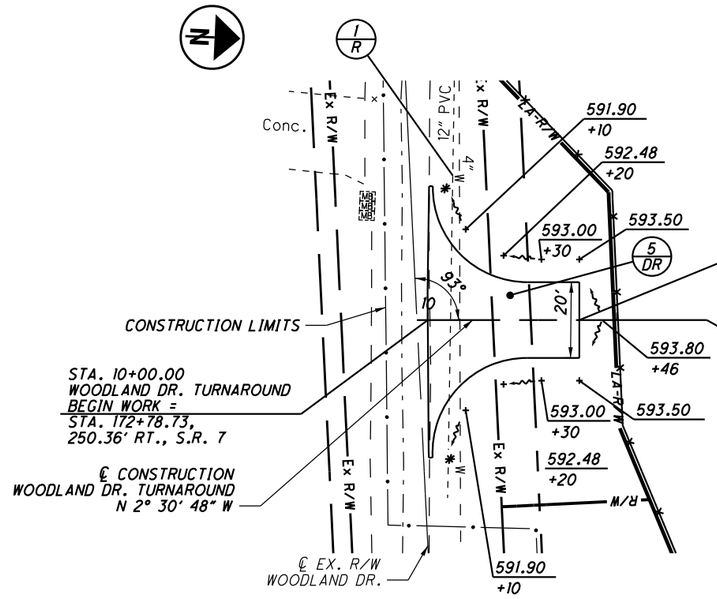

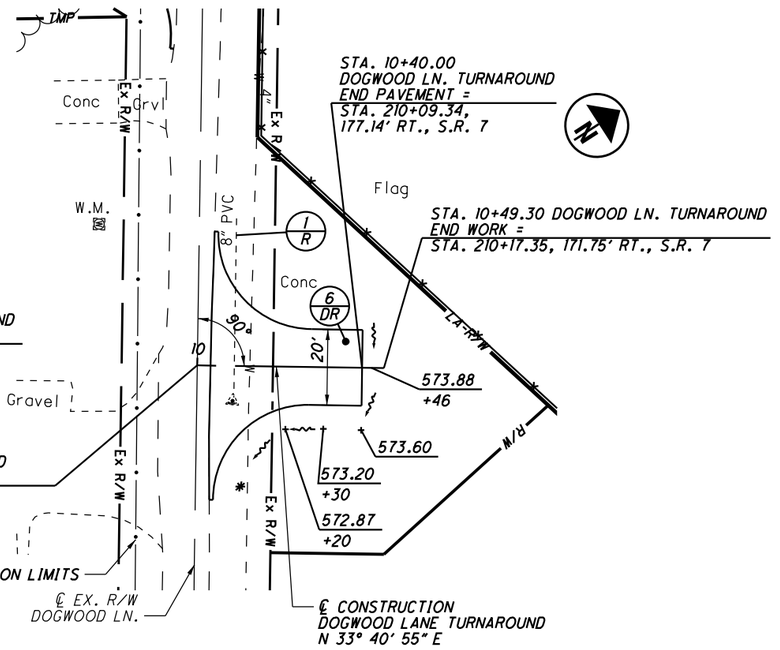

LEFT E/P RETURN DATA
Δ = 90° 54' 46"
R = 25.00'
T = 25.40'
L = 39.67'
R.P. STA. 10+26.54, 35' LT.
P.C. STA. 10+26.54, 10' LT.
P.T. STA. 10+01.54, 35.40' LT.

RIGHT E/P RETURN DATA
Δ = 90° 59' 04"
R = 25.00'
T = 25.43'
L = 39.70'
R.P. STA. 10+26.15, 35' RT.
P.C. STA. 10+01.16, 35.43' RT.
P.T. STA. 10+26.15, 10' RT.

WOODLAND DRIVE TURNAROUND - 5

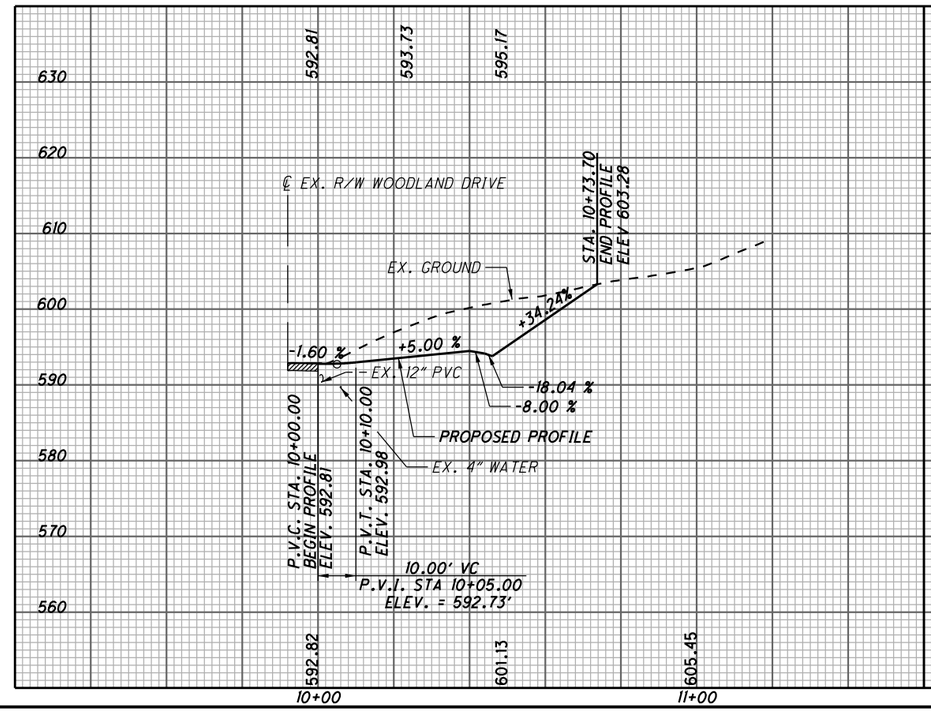

DOGWOOD LANE TURNAROUND - 6

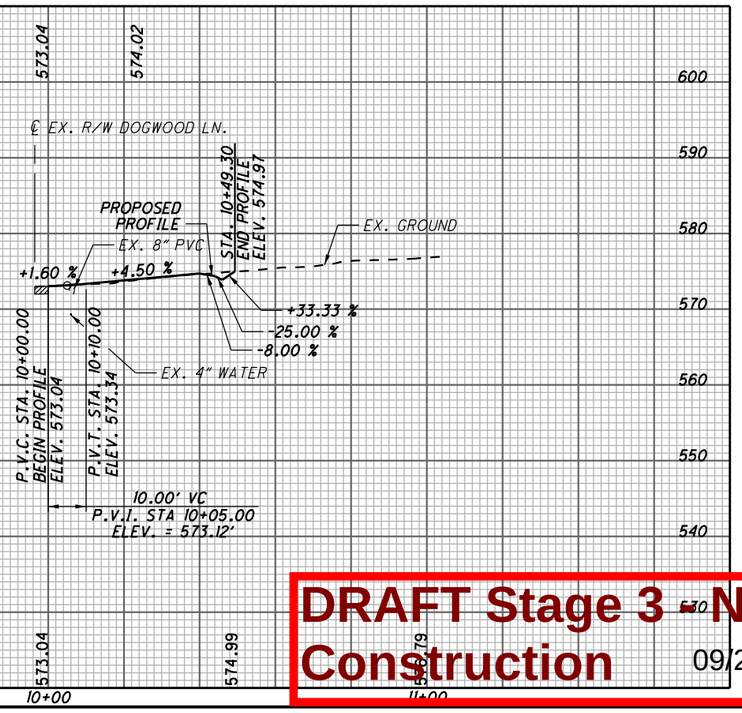

DRAFT Stage 3 - Not for Construction
09/23/2024

HORIZONTAL SCALE IN FEET
0 10 20 40
CALCULATED ALB
CHECKED TCM

WOODLAND DRIVE TURNAROUND
DOGWOOD LANE TURNAROUND

LAW-7-2.17

633
1247

U:\173608714\LAW\75923\roadway\sheets\75923GD005-2A.dgn 5/21/2024 4:59:20 PM SLPorker

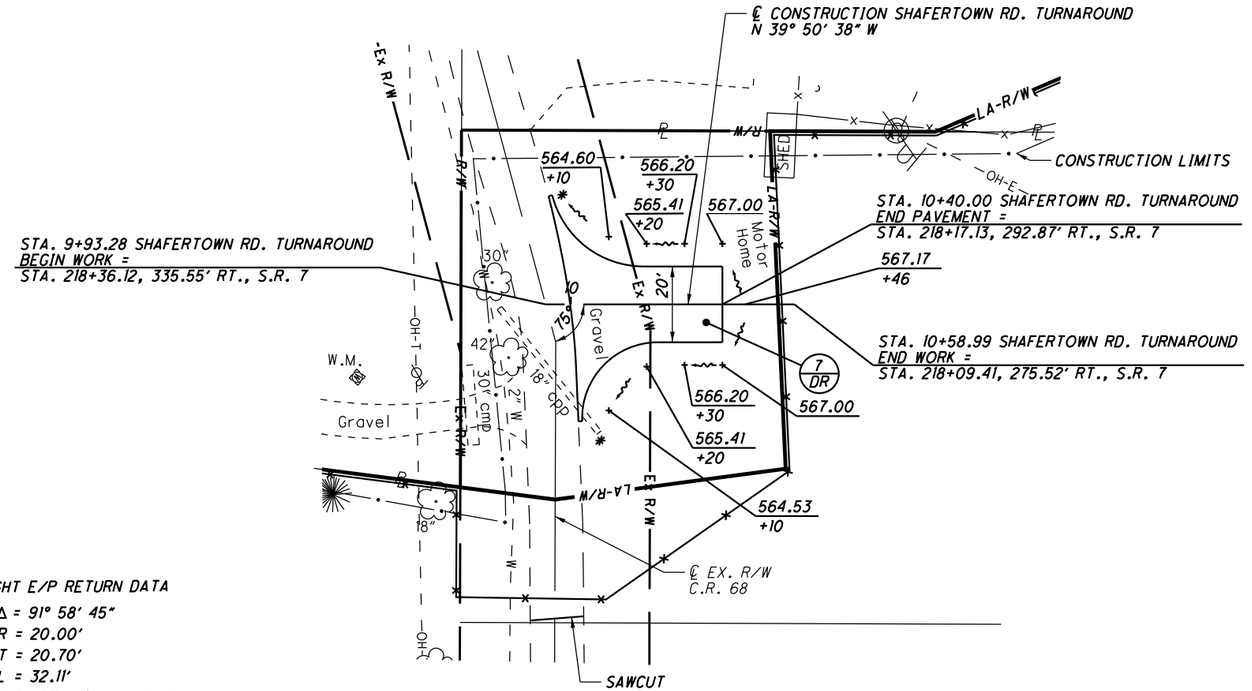

LEFT E/P RETURN DATA

Δ = 74° 19' 58"
R = 25.00'
T = 18.95'
L = 32.43'
R.P. STA. 10+18.45, 35' LT.
P.C. STA. 10+18.45, 10' LT.
P.T. STA. 9+94.38, 28.25' LT.

RIGHT E/P RETURN DATA

Δ = 91° 58' 45"
R = 20.00'
T = 20.70'
L = 32.11'
R.P. STA. 10+23.52, 30' RT.
P.C. STA. 10+03.53, 30.69' RT.
P.T. STA. 10+23.52, 10' RT.

*CONTRACTOR TO PROVIDE POSITIVE DRAINAGE

SHAFERTOWN ROAD TURNAROUND - 7

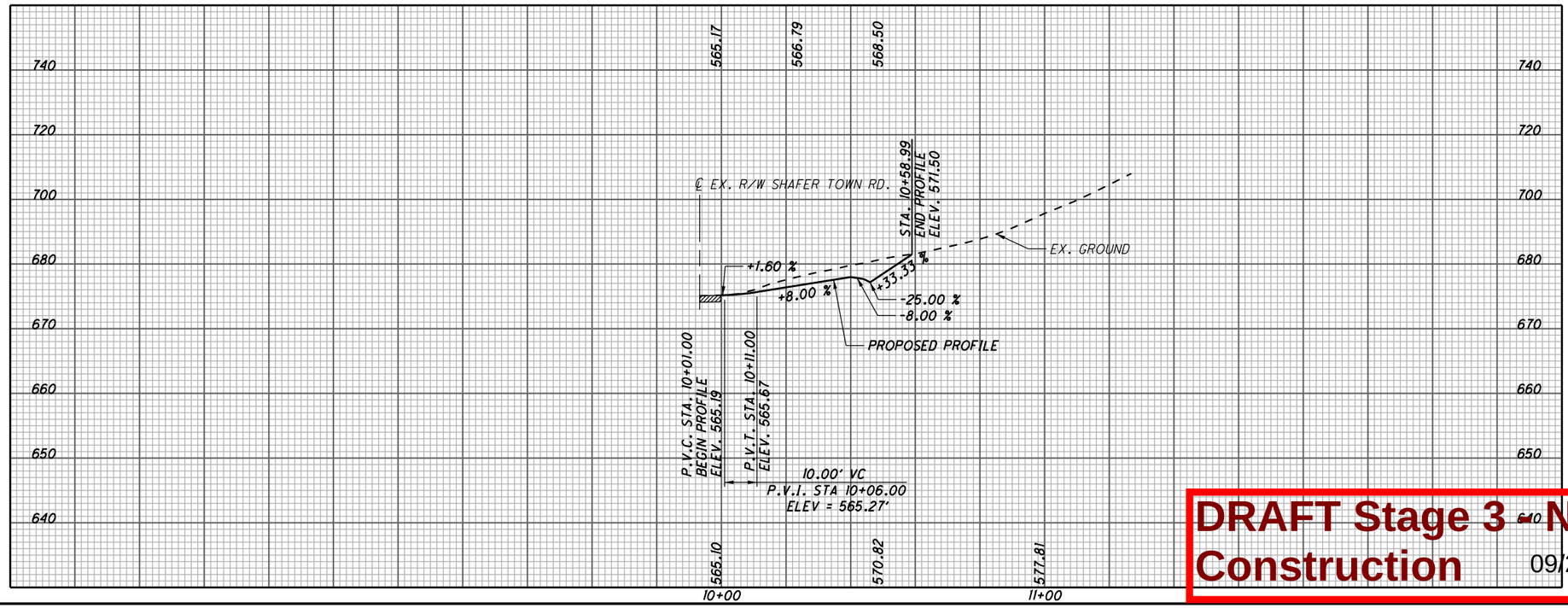

DRAFT Stage 3 - Not for Construction 09/23/2024

HORIZONTAL SCALE IN FEET
0 10 20 40

CALCULATED SLP
CHECKED ALB

SHAFERTOWN ROAD TURNAROUND

LAW-7-2.17

634
1247

U:\173608714\LAW\7923\roadway\sheets\75923GD006-2A.dgn 5/21/2024 4:59:21 PM SLParker

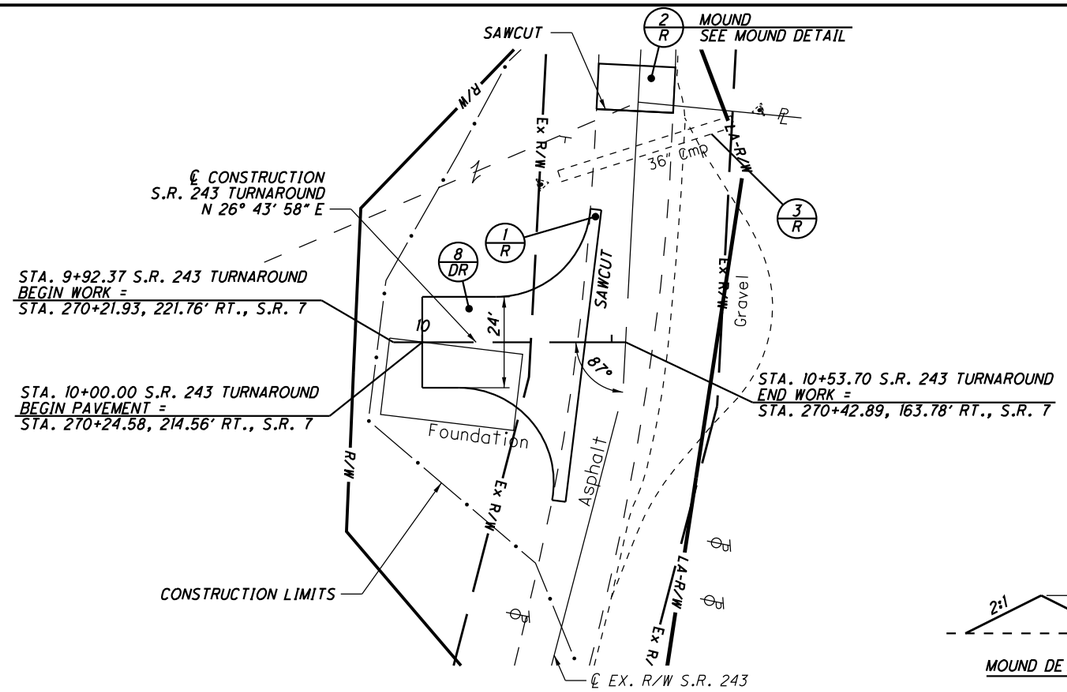

S.R. 243 TURNAROUND - 8

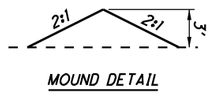

MOUND DETAIL

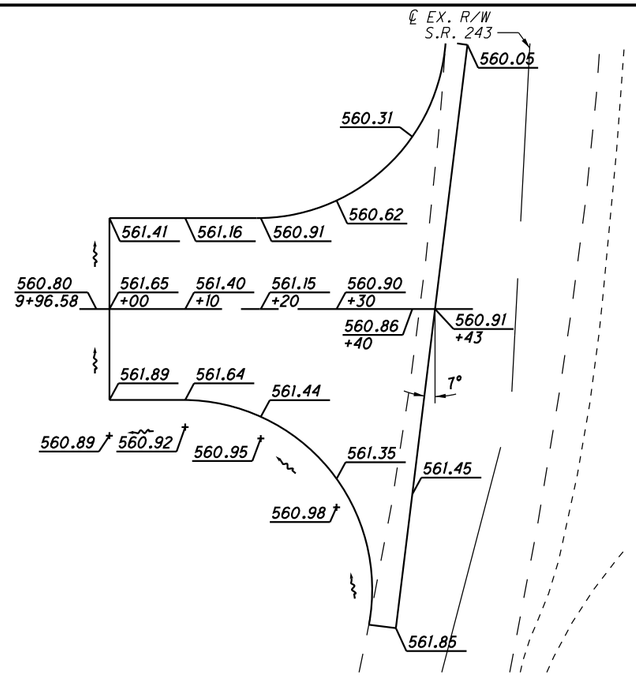

S.R. 243 TURNAROUND GRADING DETAIL
SCALE: 1" = 10'

LEFT E/P RETURN DATA
- Δ = 85° 58' 29"
- R = 25.00'
- T = 23.30'
- L = 37.51'
- R.P. STA. 10+19.46, 37' LT.
- P.C. STA. 10+44.39, 35.24' LT.
- P.T. STA. 10+19.46, 12' LT.

RIGHT E/P RETURN DATA
- Δ = 100° 45' 45"
- R = 25.00'
- T = 30.20'
- L = 43.97'
- R.P. STA. 10+09.70, 37' RT.
- P.C. STA. 10+34.26, 41.67' RT.
- P.T. STA. 10+09.70, 12' RT.

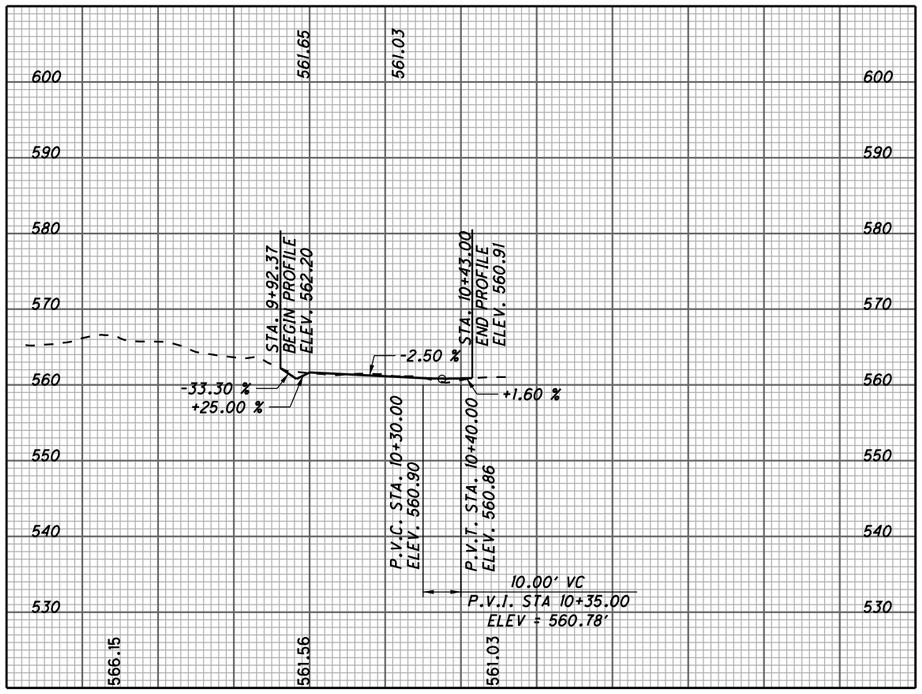

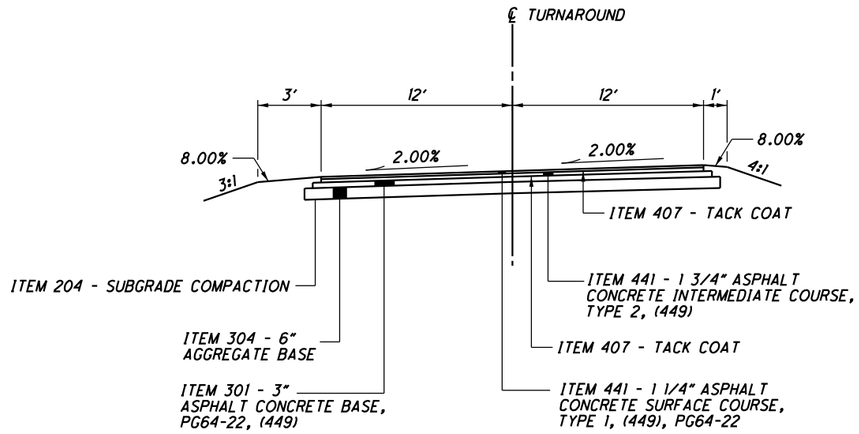

S.R. 243 TURNAROUND TYPICAL SECTION

DRAFT Stage 3 - Not for Construction 09/23/2024

HORIZONTAL SCALE IN FEET
0 10 20 40

CALCULATED SLP
CHECKED ALB

S.R. 243 TURNAROUND

LAW-7-2.17

635
1247

U:\173608714\LAW\75923\roadway\sheets\75923GD007-2B.dgn 5/21/2024 4:59:22 PM SLParker

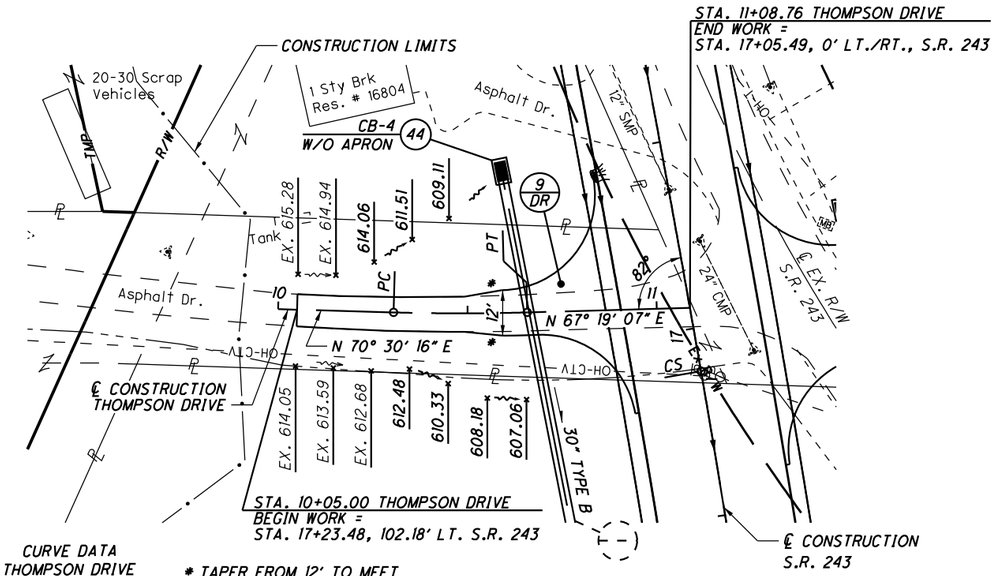

THOMPSON DRIVE - 9

CURVE DATA
THOMPSON DRIVE
P.I. STA. 10+48.13
Δ = 3° 11' 08" (LT)
Dc = 9° 01' 23"
R = 635.00'
T = 17.66'
L = 35.31'
E = 0.25'
e_{max} = NA
PC STA. 10+30.48
PT STA. 10+65.78

* TAPER FROM 12' TO MEET EXISTING DRIVE WIDTH IN 10'.

LEFT E/P RETURN DATA
Δ = 99° 25' 18"
R = 25.00'
T = 29.49'
L = 43.38'
R.P. STA. 17+43.71, 41' LT., S.R. 243
P.C. STA. 17+43.71, 19' LT., S.R. 243
P.T. STA. 10+59.20, 6' LT., THOMPSON DRIVE

RIGHT E/P RETURN DATA
Δ = 81° 53' 36"
R = 25.00'
T = 21.69'
L = 35.73'
R.P. STA. 10+68.81, 31' RT., THOMPSON DRIVE
P.C. STA. 10+68.81, 6' RT., THOMPSON DRIVE
P.T. STA. 16+80.43, 19' LT., S.R. 243

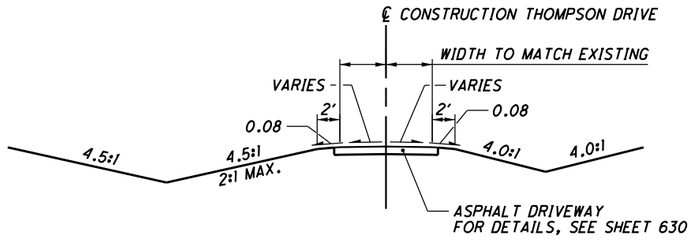

TYPICAL SECTION - THOMPSON DRIVE
NOT TO SCALE

FOR STORM SEWER PROFILE, SEE SHEET 646

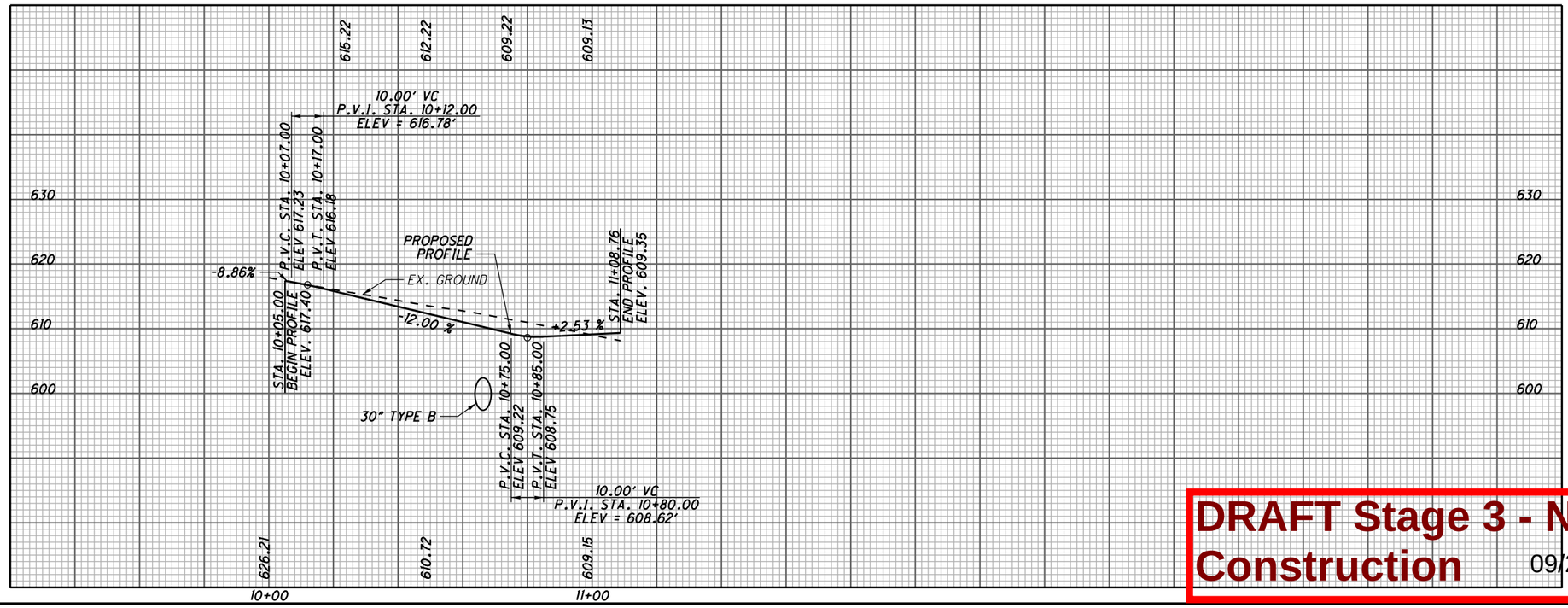

DRAFT Stage 3 - Not for Construction 09/23/2024

PLAN AND PROFILE
THOMPSON DRIVE

LAW-7-2.17

636
1247

HORIZONTAL SCALE IN FEET
0 10 20 40

CALCULATED SLP
CHECKED ALB

U:\173608714\LAW\75923\roadway\sheets\75923GD008-2B.dgn 5/21/2024 4:59:23 PM SLParker

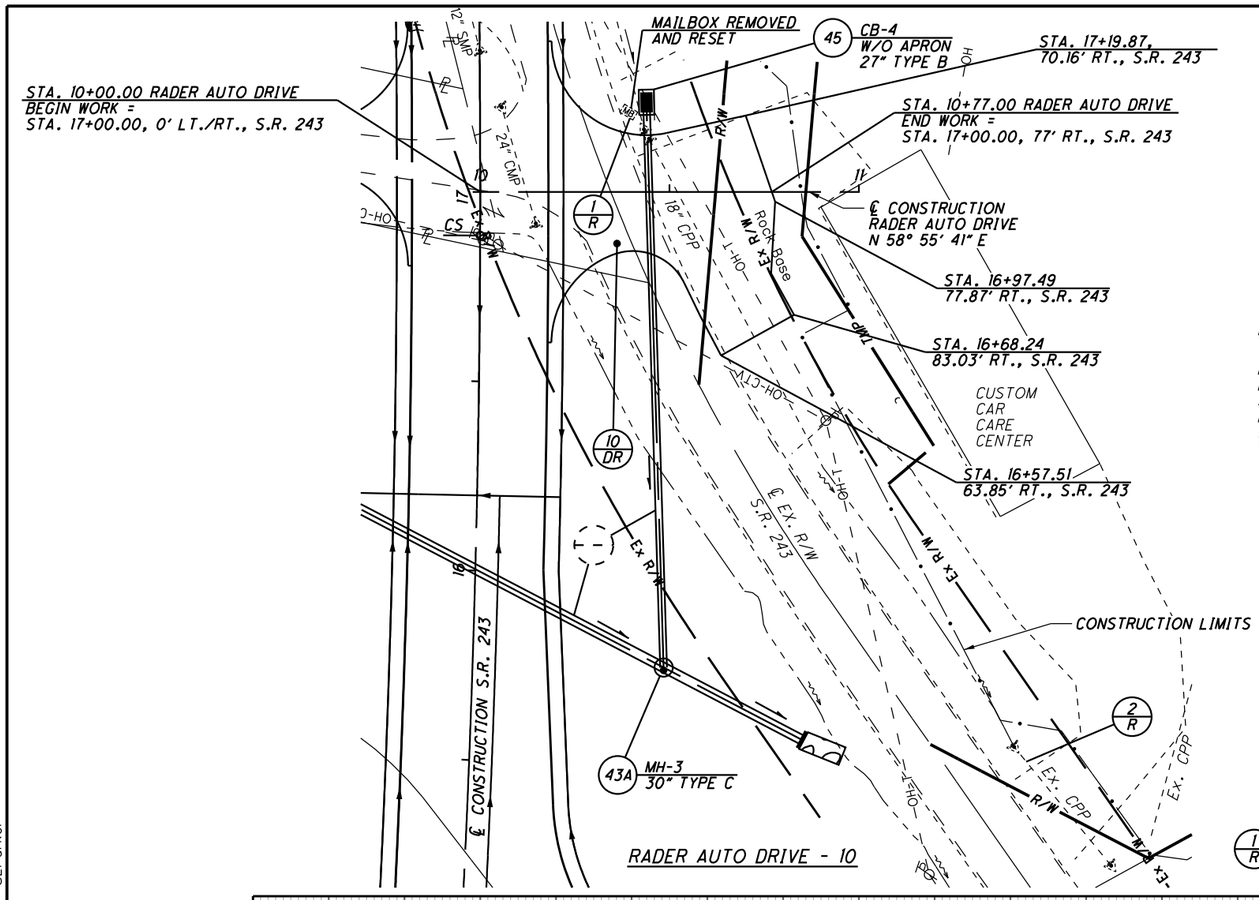

LEFT E/P RETURN DATA
- Δ = 101° 56' 10"
- R = 25.00'
- T = 30.84'
- L = 44.48'
- R.P. STA. 17+39.68, 44' RT., S.R. 243
- P.C. STA. 17+39.68, 19' RT., S.R. 243
- P.T. STA. 10+49.19, 15.58' LT., THOMPSON DRIVE

RIGHT E/P RETURN DATA (CURVE NO. 1)
- Δ 69° 27' 03"
- R = 25.00'
- T = 17.33'
- L = 30.30'
- R.P. STA. 16+60.44, 44' RT., S.R. 243
- P.C. STA. 16+60.44, 19' RT., S.R. 243
- P.C.C. STA. 10+35.26, 16.50' RT., THOMPSON DRIVE

RIGHT E/P RETURN DATA (CURVE NO. 1)
- Δ = 83° 54' 43"
- R = 15.00'
- T = 13.49'
- L = 21.97'
- R.P. STA. 10+40.38, 30.60' RT., THOMPSON DRIVE
- P.C.C. STA. 10+35.26, 16.50' RT., THOMPSON DRIVE
- P.T. STA. 10+53.86, 24.01' RT., THOMPSON DRIVE

NOTE:
THE CONTRACTOR SHALL REMOVE THE EXISTING DRIVE AND DRIVE PIPE AND REGRADE DITCH TO TIE INTO THE PROPOSED DITCH ALONG C.R. 69 TO PROVIDE POSITIVE DRAINAGE. QUANTITIES HAVE BEEN INCLUDED IN REFERENCE NUMBER 2-R TO COMPLETE THIS WORK.

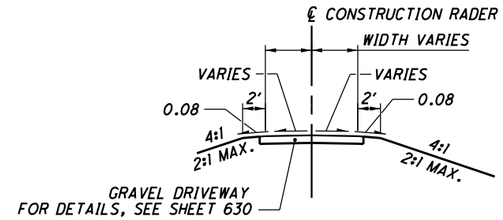

TYPICAL SECTION - RADER AUTO DRIVE
NOT TO SCALE

1/R MAIL BOX REMOVED AND RESET TO STA. 10+28.44, 22.92' LT.

FOR STORM SEWER PROFILES, SEE SHEETS 647-648

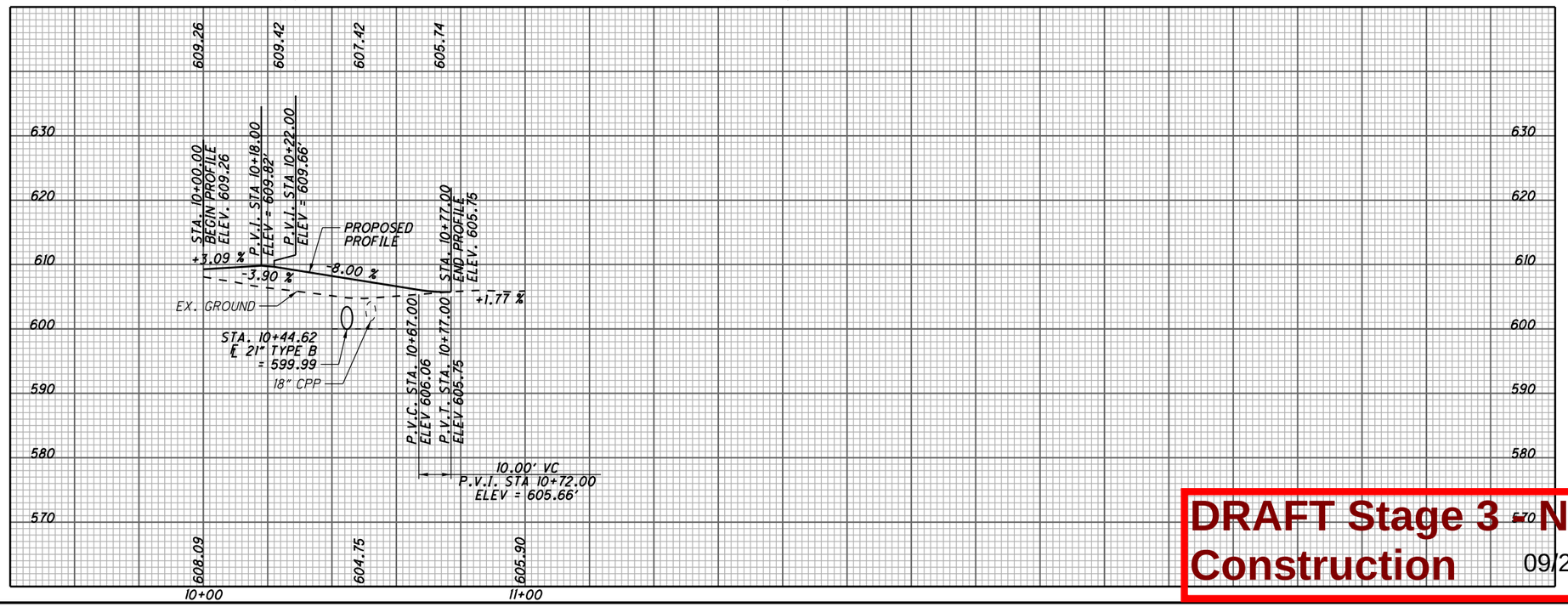

DRAFT Stage 3 - Not for Construction 09/23/2024

HORIZONTAL SCALE IN FEET
0 10 20 40

CALCULATED SLP
CHECKED ALB

PLAN AND PROFILE
RADER AUTO DRIVE

LAW-7-2.17

637
1247

U:\173608714\LAW\75923\roadway\sheets\75923GD010-2B.dgn 5/21/2024 4:59:24 PM SLParker

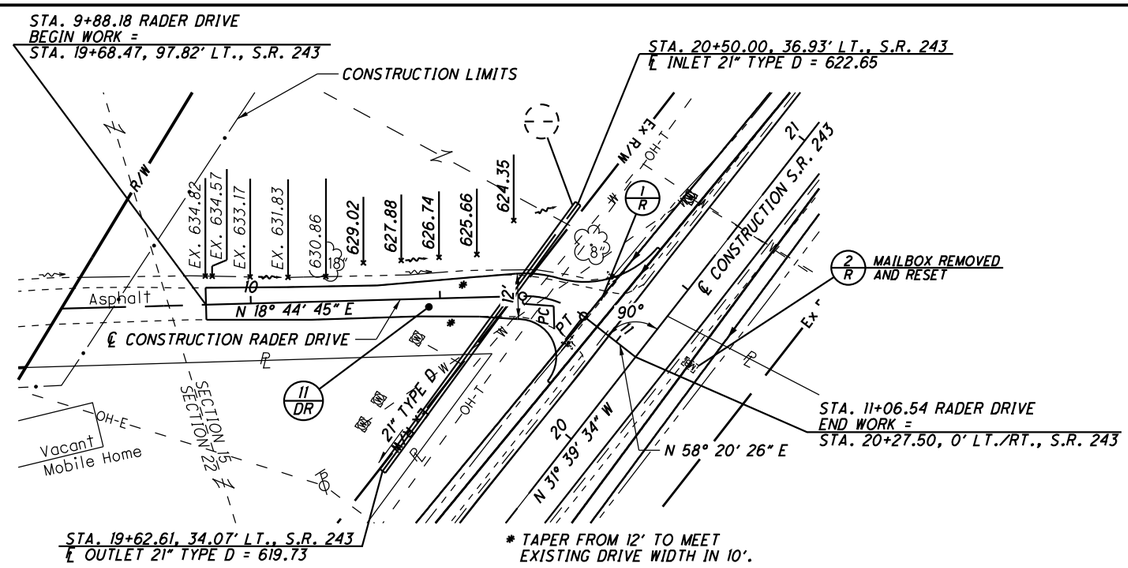

2/R MAIL BOX REMOVED AND RESET TO
STA. 20+34.97, S.R. 243, 22.32' RT.

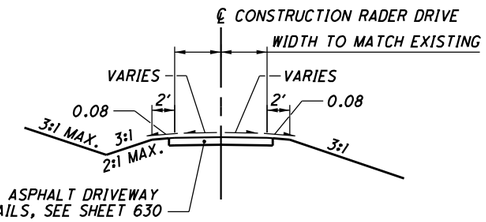

TYPICAL SECTION - RADER DRIVE
NOT TO SCALE

RADER DRIVE - 11

CURVE DATA
RADER DRIVE

P.I. STA. 10+80.82
Δ = 39° 35' 40" (RT)
Dc = 229° 10' 59"
R = 25.00'
T = 9.00'
L = 17.28'
E = 1.57'
e_{max} = NA
PC STA. 10+71.82
PT STA. 10+89.09

LEFT E/P RETURN DATA

Δ = 66° 44' 56"
R = 25.00'
T = 16.47'
L = 29.12'
R.P. STA. 10+79.57, 31' LT., RADER DRIVE
P.C. STA. 20+53.87, 13.27' LT., S.R. 243
P.T. STA. 10+79.57, 6' LT., RADER DRIVE

RIGHT E/P RETURN DATA

Δ = 131° 01' 25"
R = 10.00'
T = 21.95'
L = 22.87'
R.P. STA. 10+70.23, 16' RT., RADER DRIVE
P.C. STA. 10+70.23, 6' RT., RADER DRIVE
P.T. STA. 20+08.18, 14.41' LT., S.R. 243

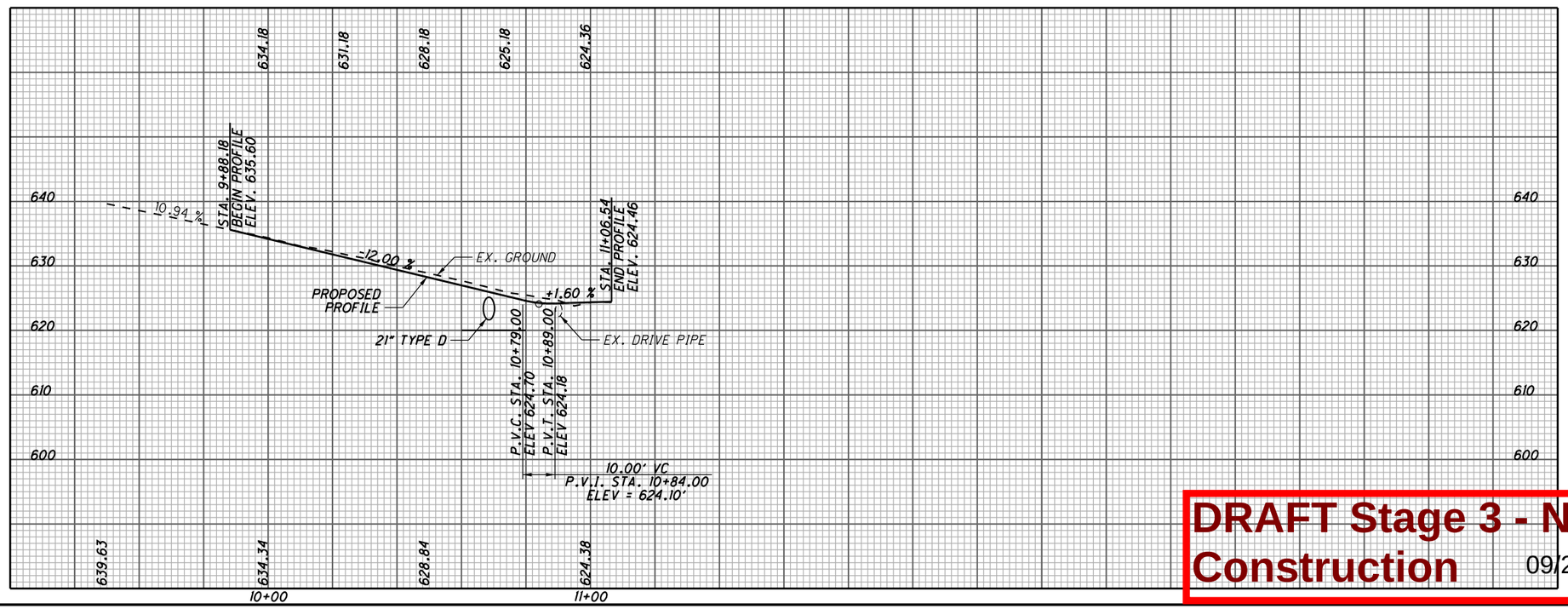

DRAFT Stage 3 - Not for Construction 09/23/2024

HORIZONTAL SCALE IN FEET
0 10 20 40
CALCULATED SLP
CHECKED ALB

PLAN AND PROFILE
RADER DRIVE

LAW-7-2.17

638
1247

U:\173608714\LAW\75923\roadway\sheets\75923GD009-2B.dgn 5/21/2024 4:59:25 PM SLParker

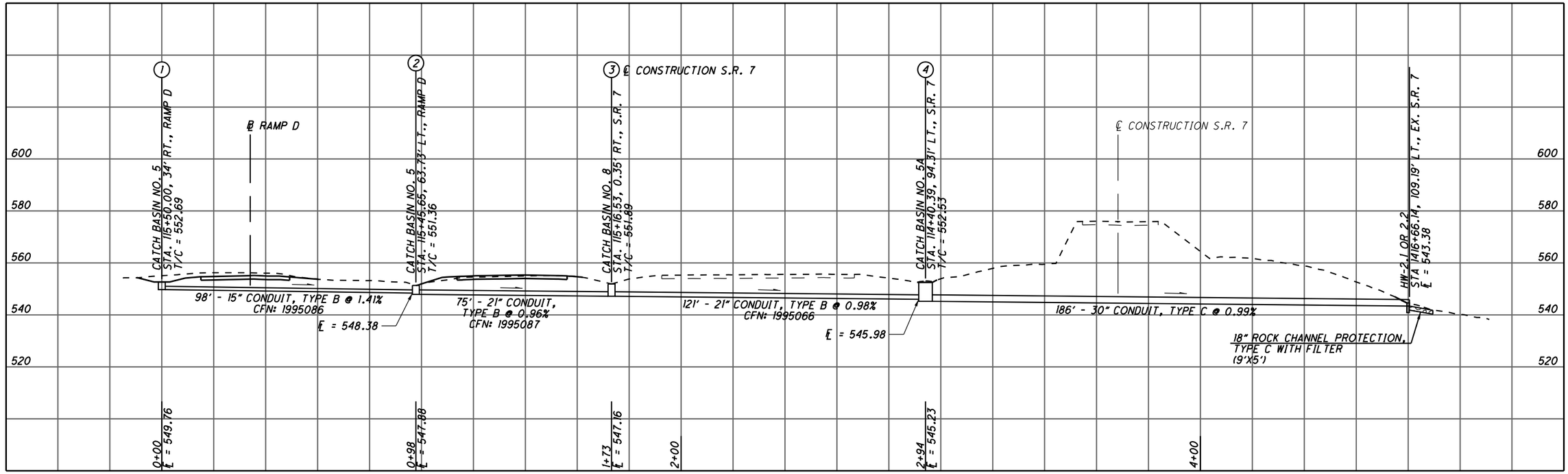

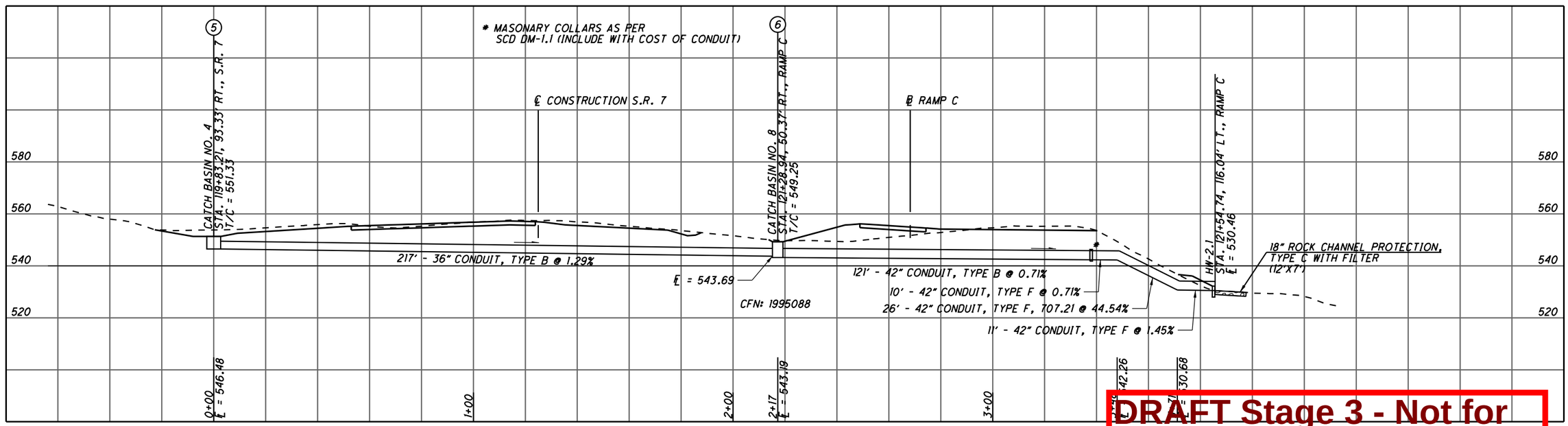

DRAFT Stage 3 - Not for Construction 09/23/2024

0 20 40 SCALE IN FEET

CALCULATED ALB
CHECKED TCM

STORM SEWER PROFILES

LAW-7-2.17

639
1247

U:\173608714\LAW\75923\drainage\sheets\75923DF001-2B.dgn 5/21/2024 4:59:26 PM SLParker

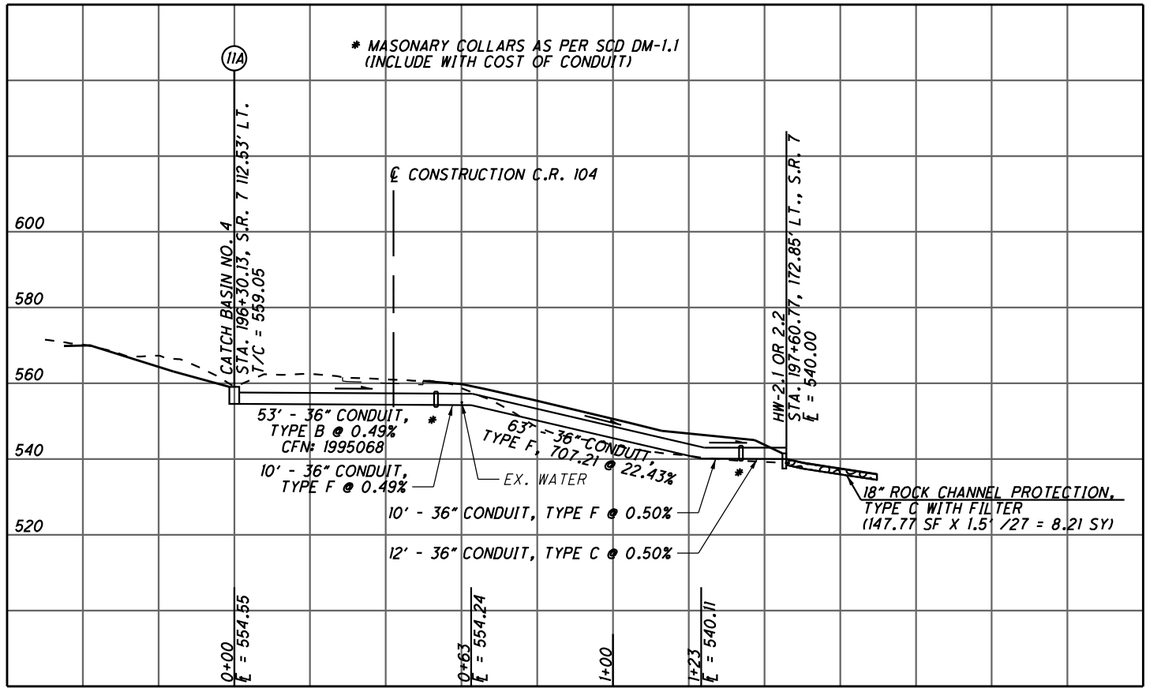

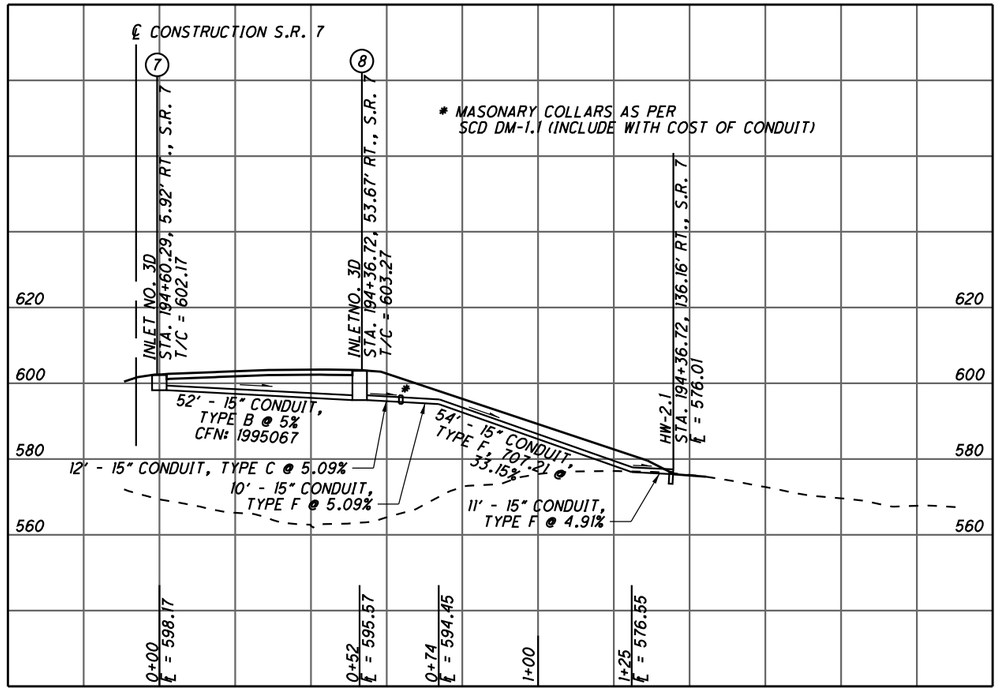

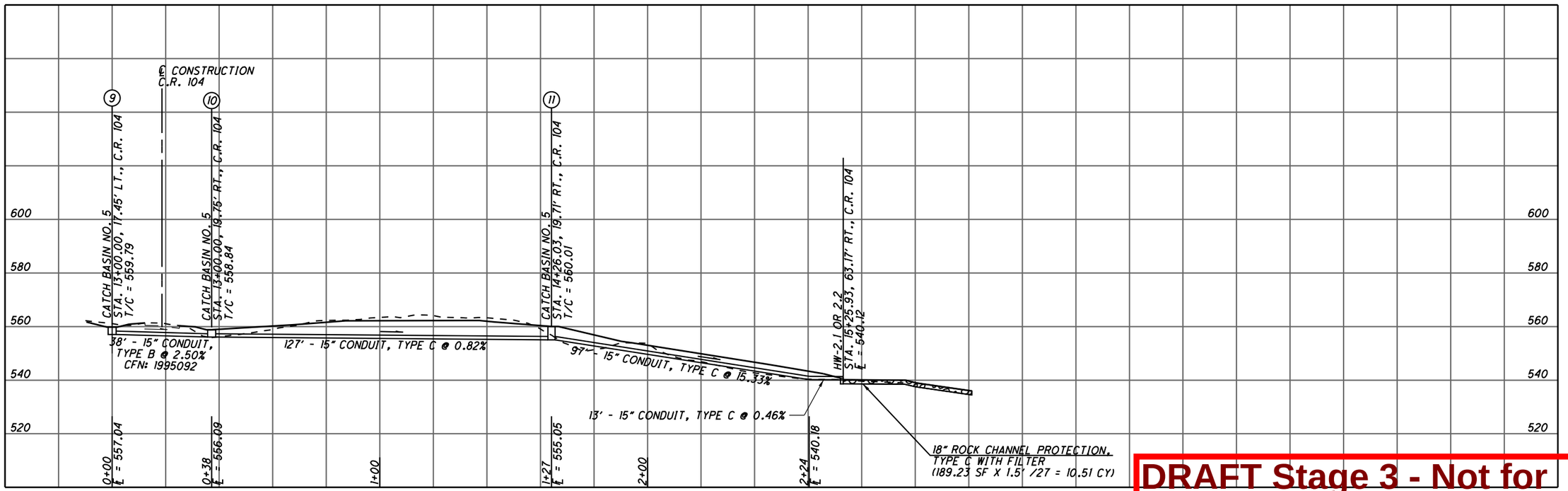

DRAFT Stage 3 - Not for Construction 09/23/2024

SCALE IN FEET 0 20 40

CALCULATED ALB
CHECKED TCM

STORM SEWER PROFILES

LAW-7-2.17

640
1247

U:\1736087\14\LAW\75923\drainage\sheets\75923DF002-2B.dgn 5/21/2024 4:59:27 PM SLParker

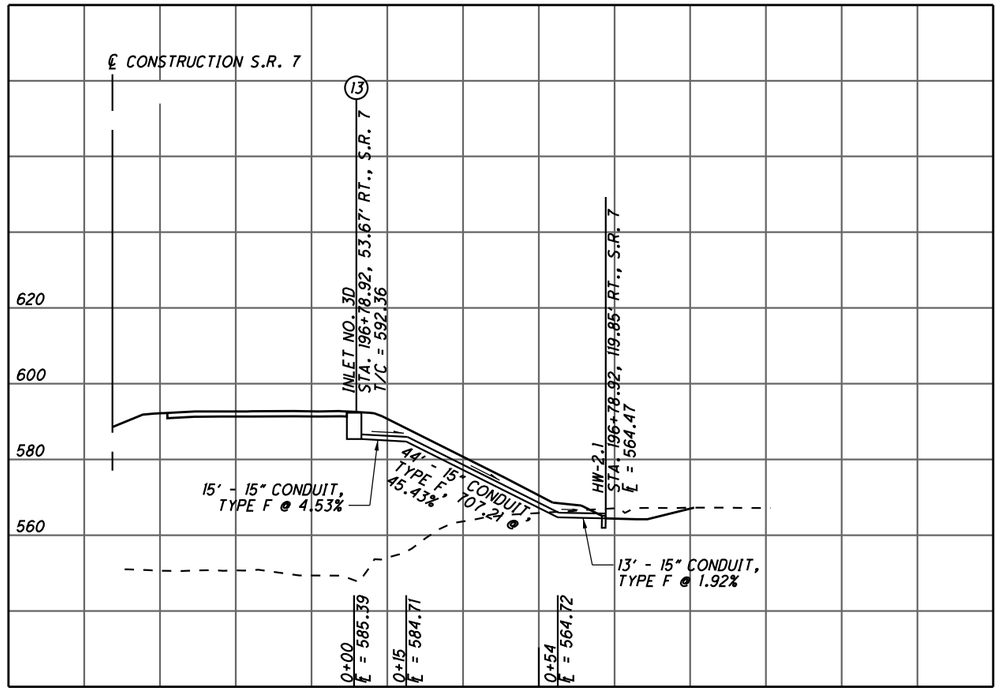

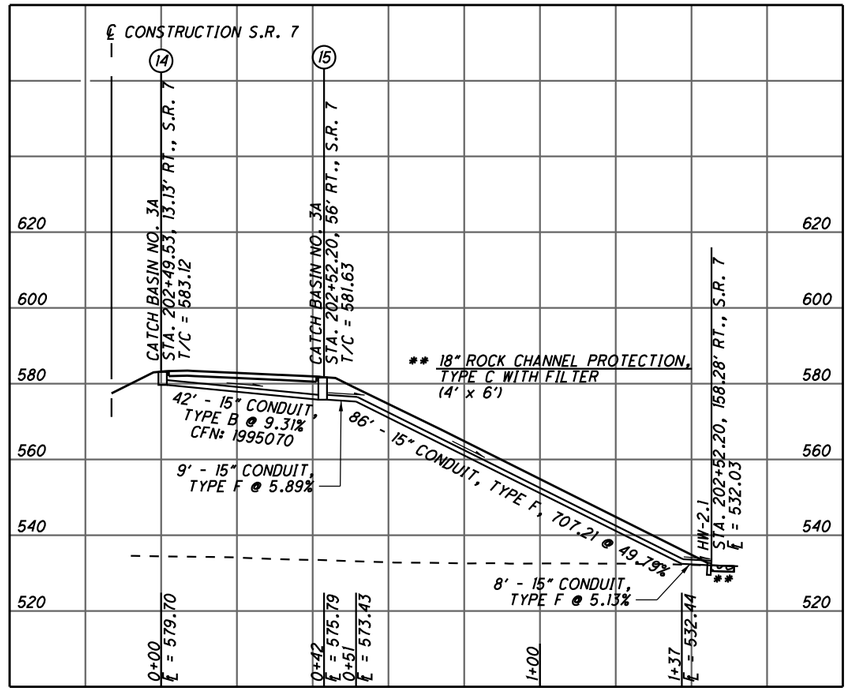

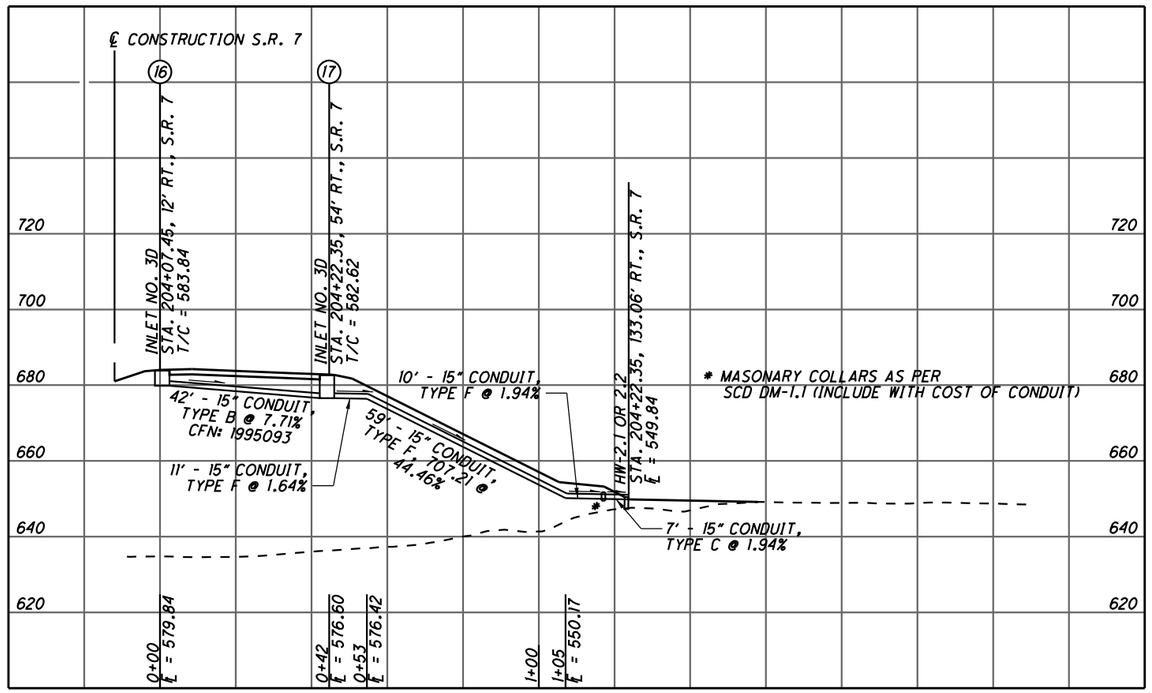

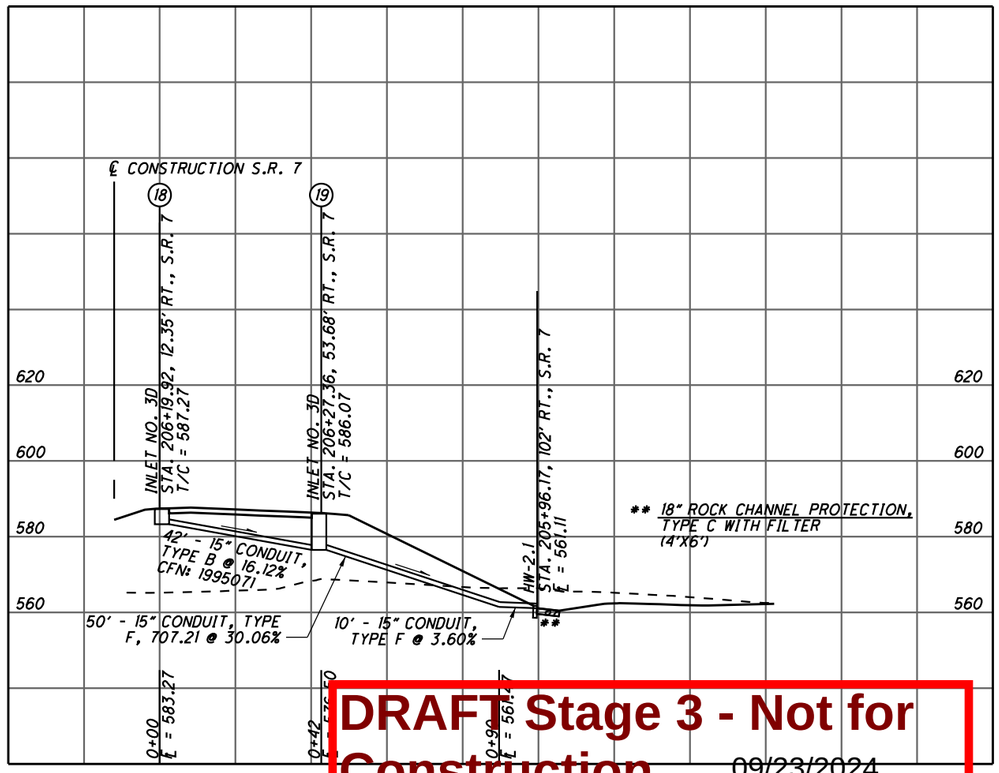

DRAFT Stage 3 - Not for Construction
09/23/2024

SCALE IN FEET
0 20 40

CALCULATED ALB
CHECKED TCM

STORM SEWER PROFILES

LAW-7-2.17

U:\173608714\LAW\75923\drainage\sheets\75923DF003-2B.dgn 5/21/2024 4:59:28 PM SLParker

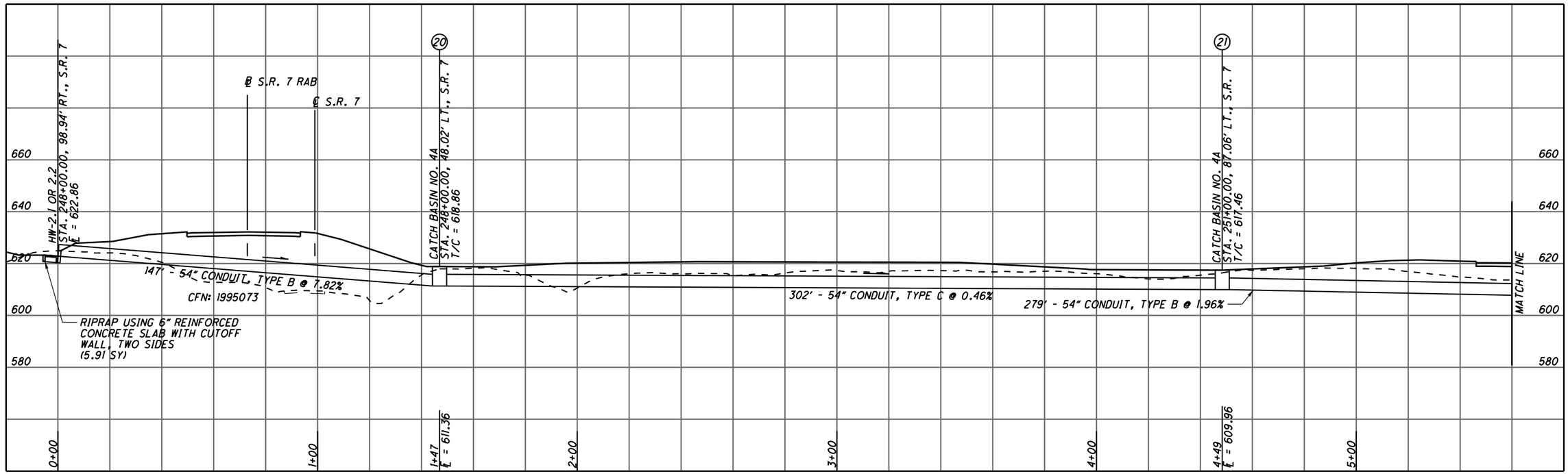

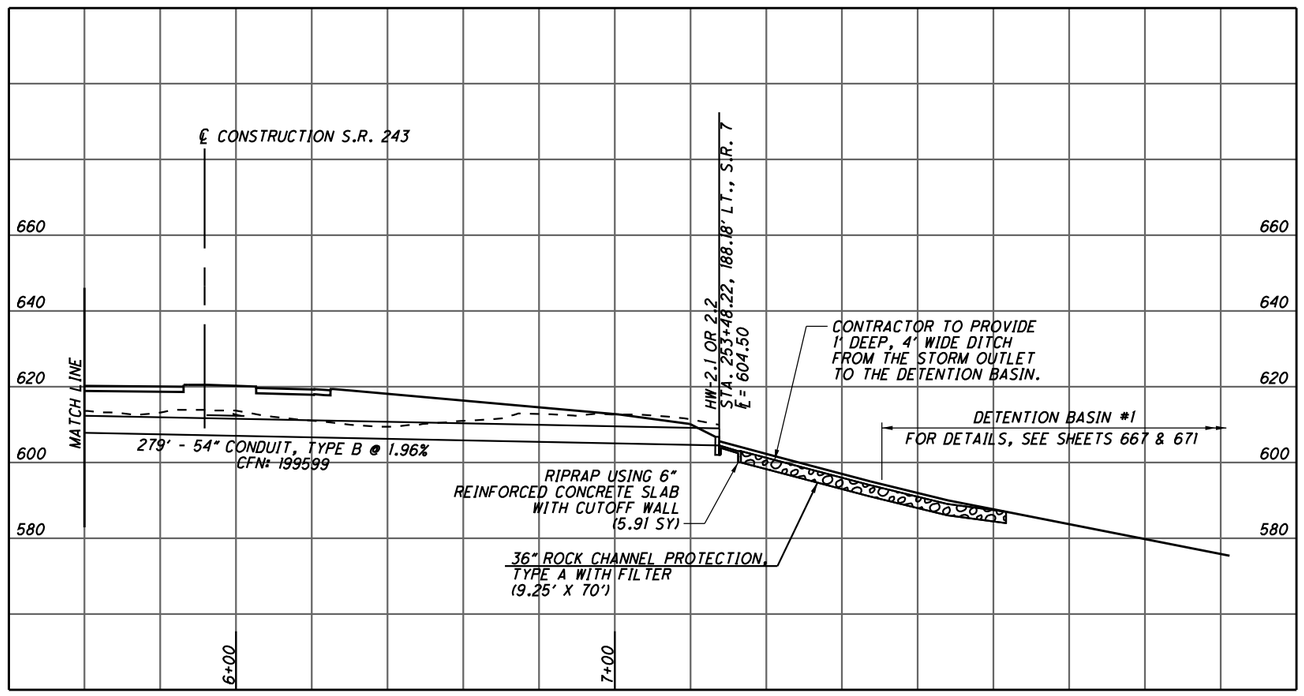

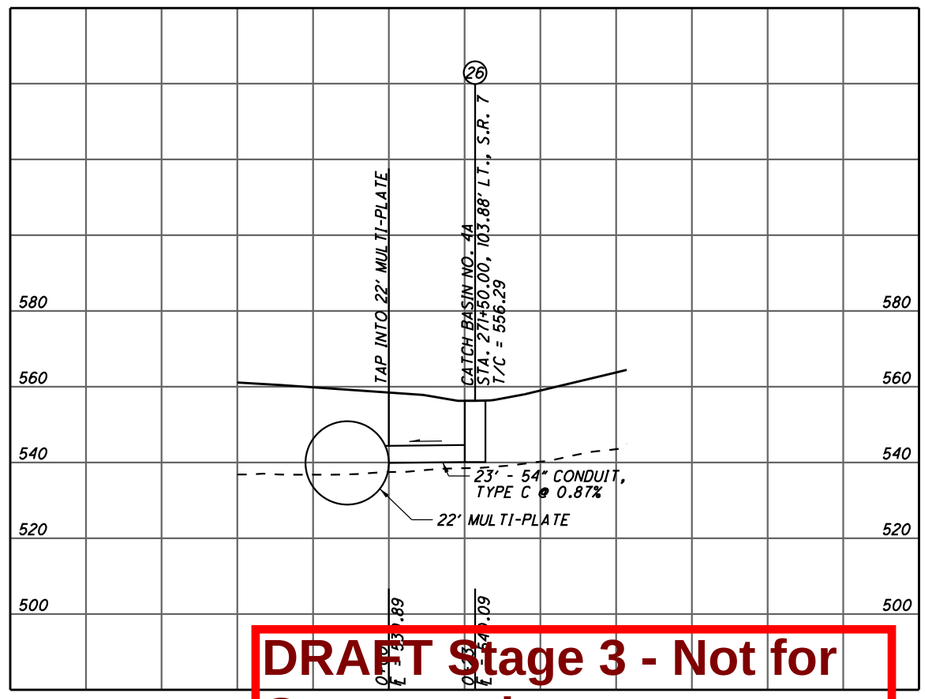

DRAFT Stage 3 - Not for Construction 09/23/2024

0 20 40 SCALE IN FEET

CALCULATED ALB
CHECKED TCM

STORM SEWER PROFILES

LAW-7-2.17

642
1247

U:\173608714\LAW\75923\drainage\sheets\75923DF004-2B.dgn 5/21/2024 4:59:29 PM SLParker

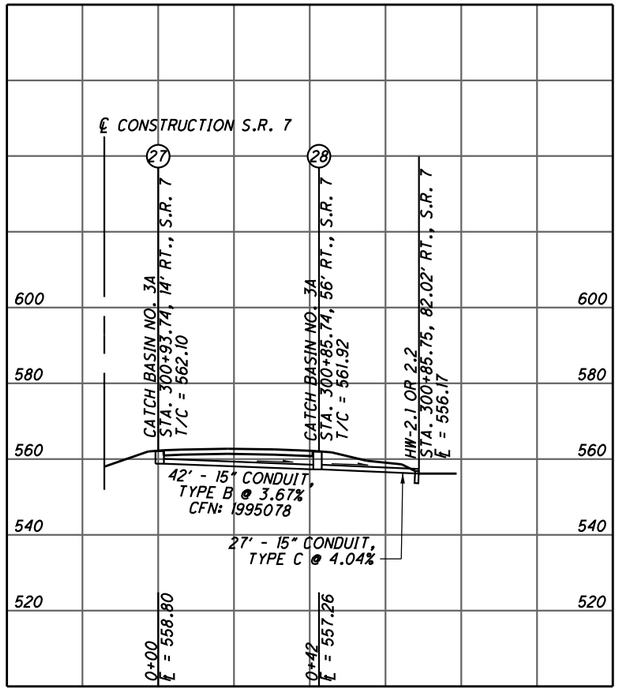

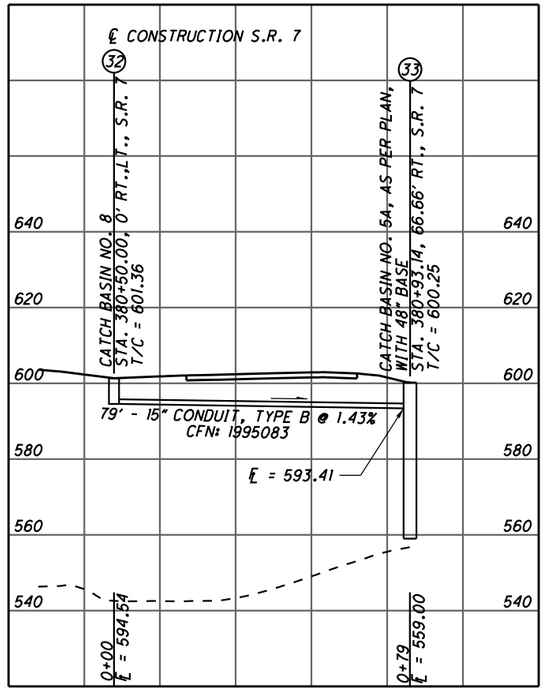

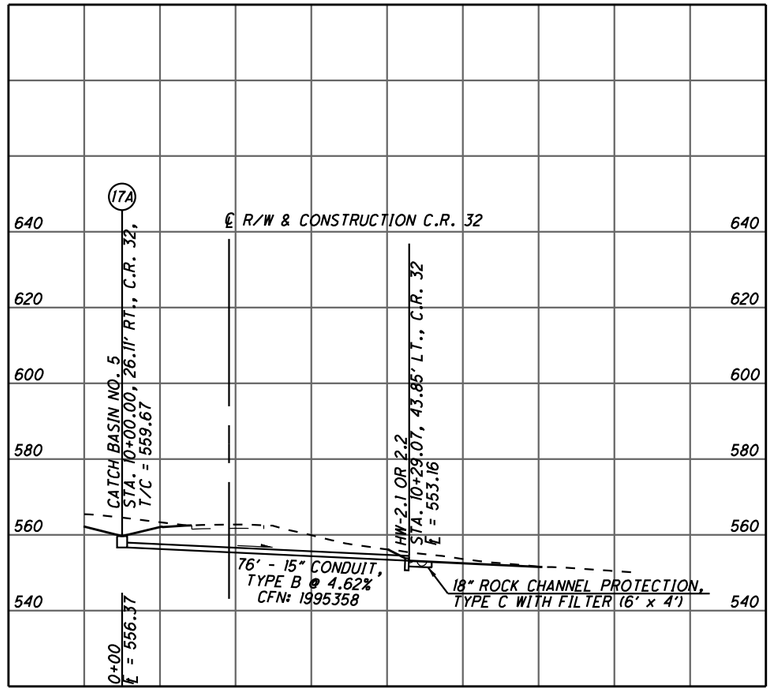

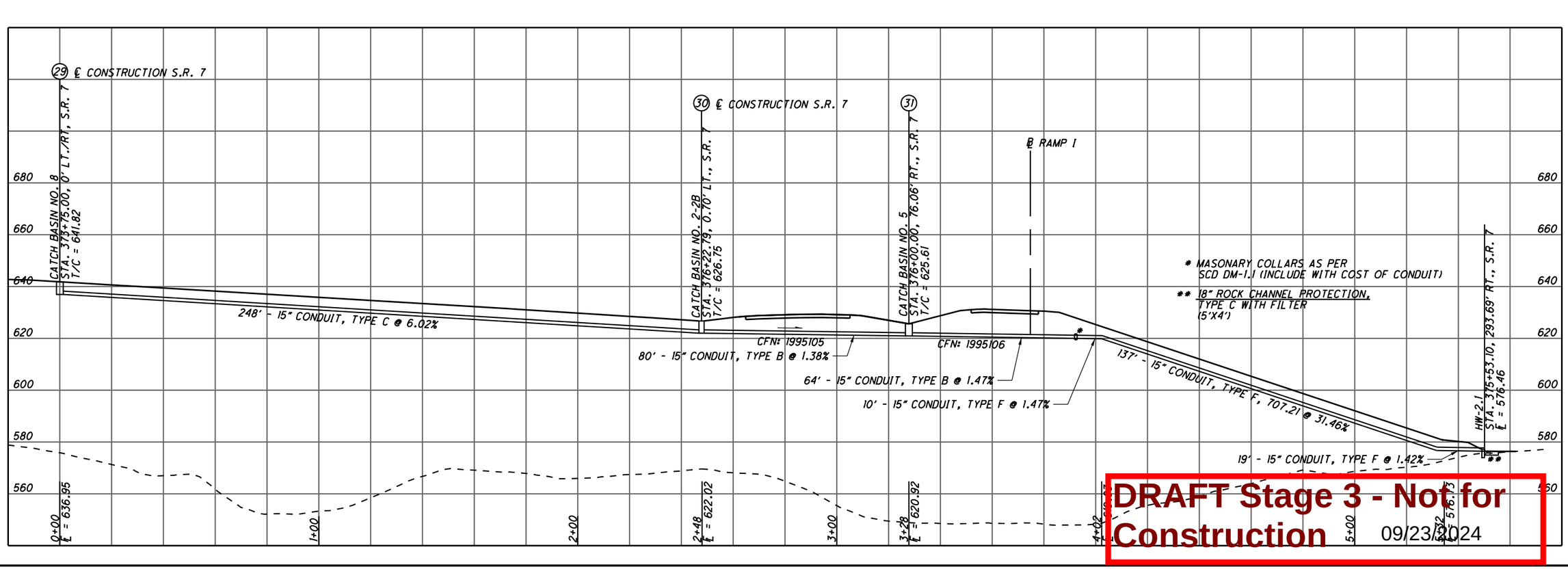

DRAFT Stage 3 - Not for Construction
09/23/2024

SCALE IN FEET
0 20 40

CALCULATED ALB
CHECKED TCM

STORM SEWER PROFILES

LAW-7-2.17

643
1247

U:\173608714\LAW\75923\drainage\sheets\75923DF005-2B.dgn 5/21/2024 4:59:30 PM SLParker

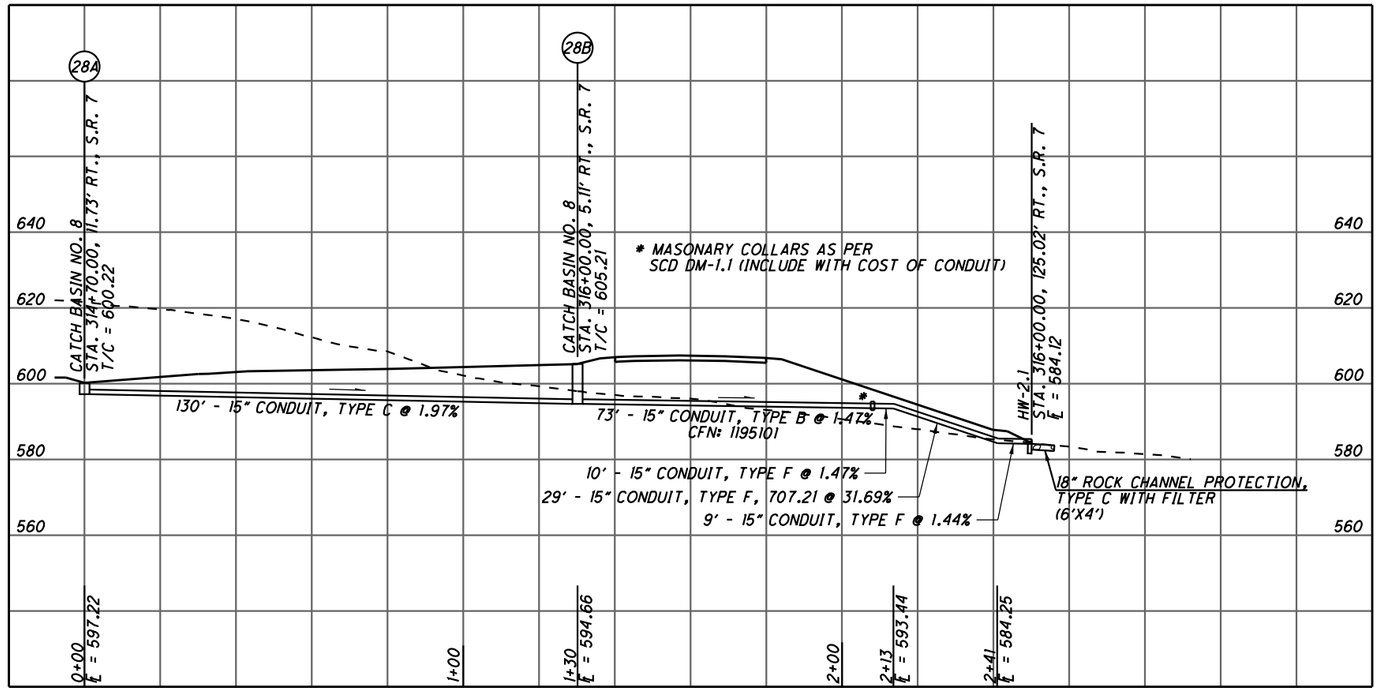

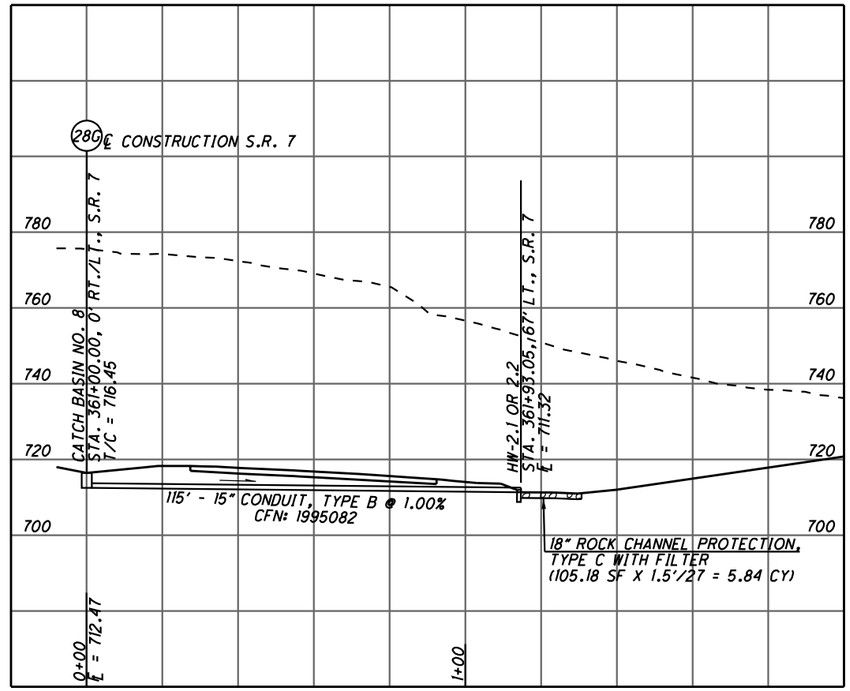

SCALE IN FEET
0 20 40

CALCULATED SLP
CHECKED ALB

STORM SEWER PROFILES

LAW-7-2.17

644
1247

DRAFT Stage 3 - Not for Construction 09/23/2024

U:\1736087\4\LAW\75923\drainage\sheets\75923DF003-2A.dgn 5/21/2024 4:59:31 PM SLParker

STORM SEWER PROFILES

LAW-7-2.17

SCALE IN FEET (0, 20, 40)

CALCULATED ALB
CHECKED TCM

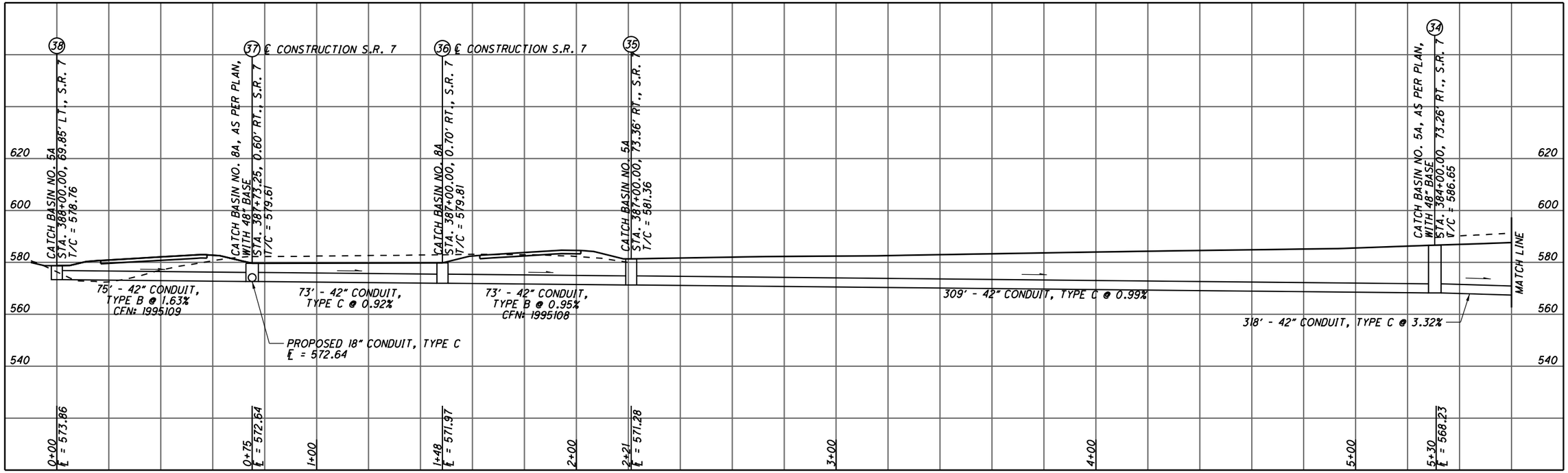

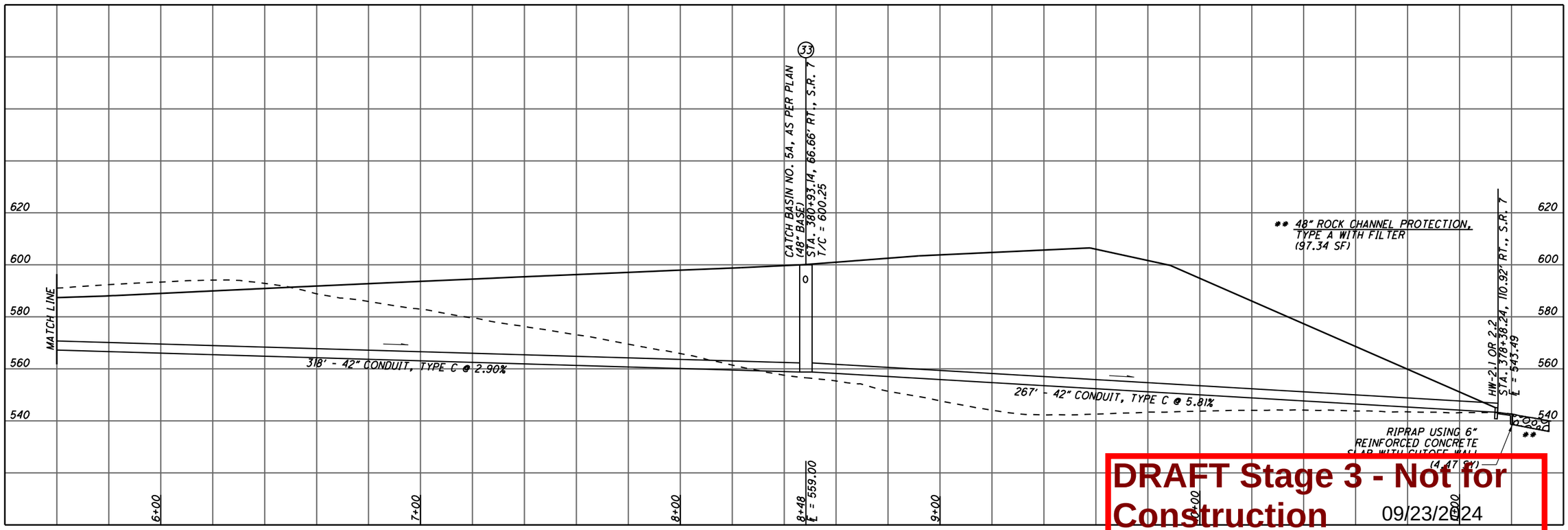

DRAFT Stage 3 - Not for Construction
09/23/2024

U:\1736087\14\LAW\75923\drainage\sheets\75923DF006-2B.dgn 5/21/2024 4:59:32 PM SLParker

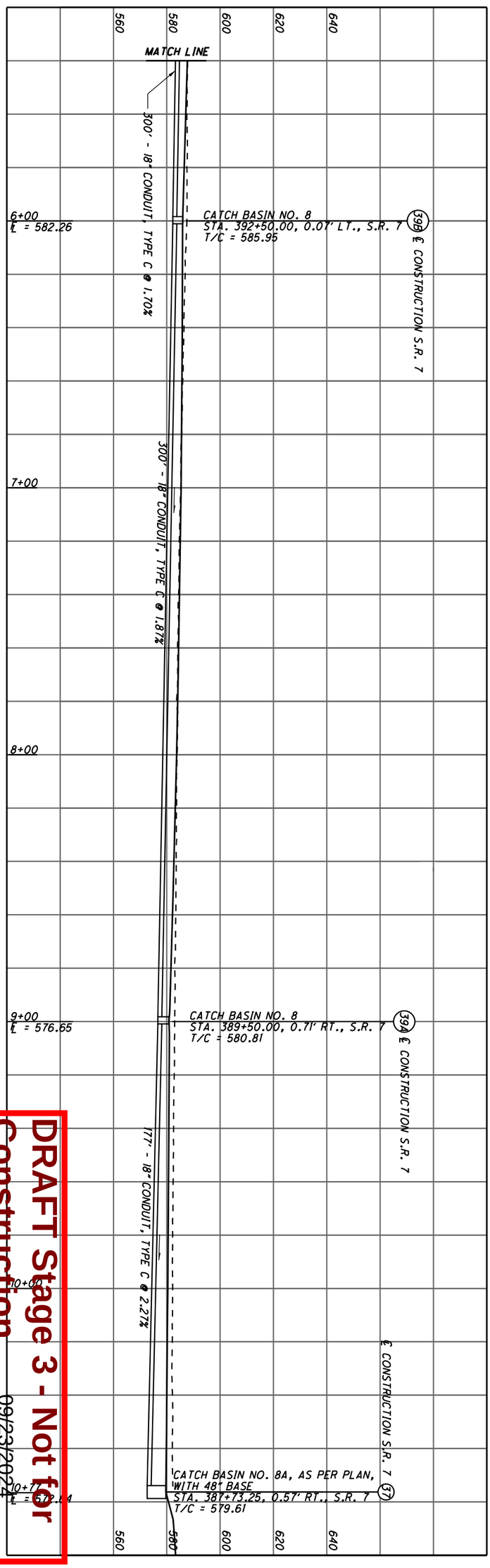

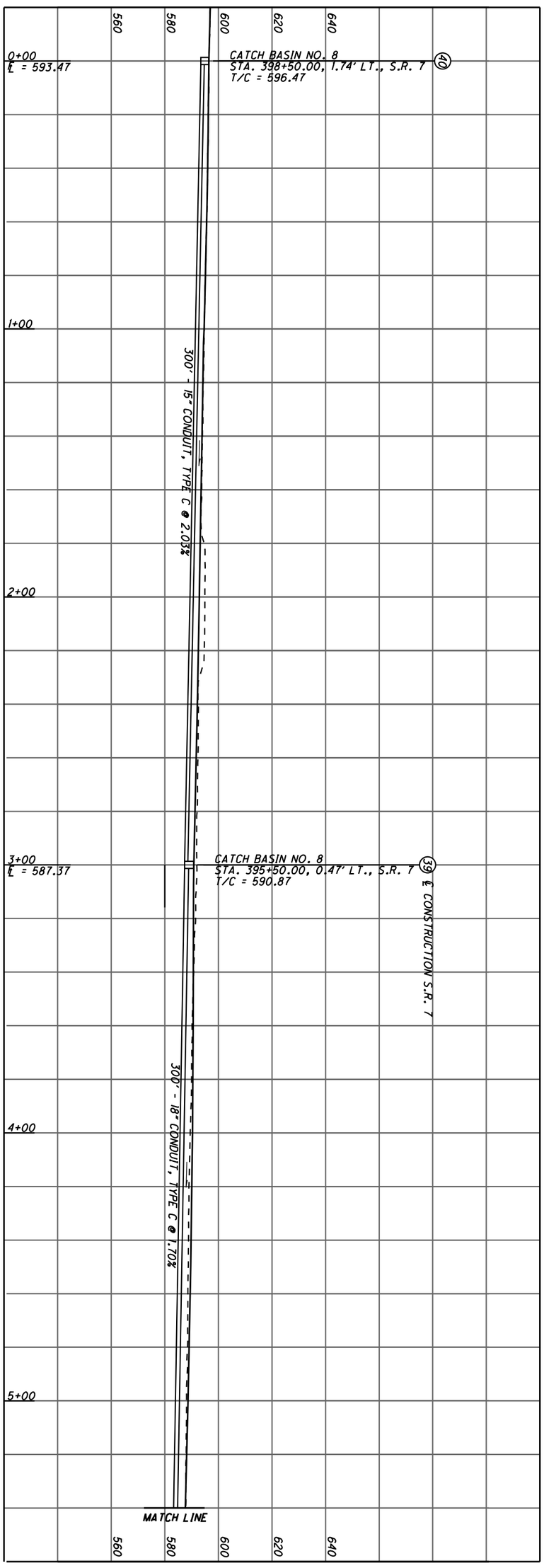

DRAFT Stage 3 - Not for Construction
09/23/2024

646 / 1247	LAW-7-2.17	STORM SEWER PROFILES	CALCULATED SLP / CHECKED ALB	0 20 40 SCALE IN FEET

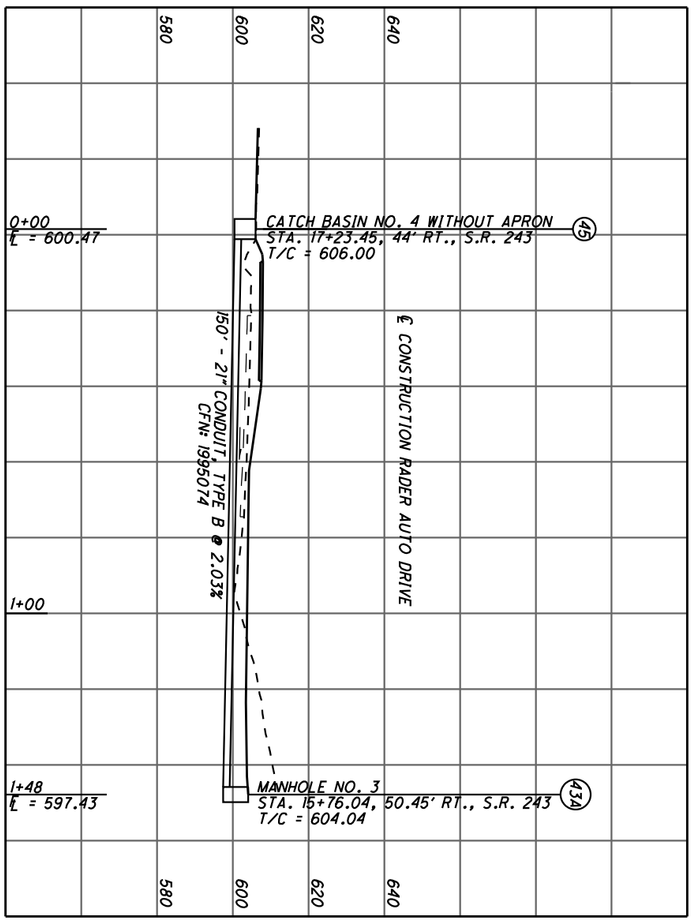

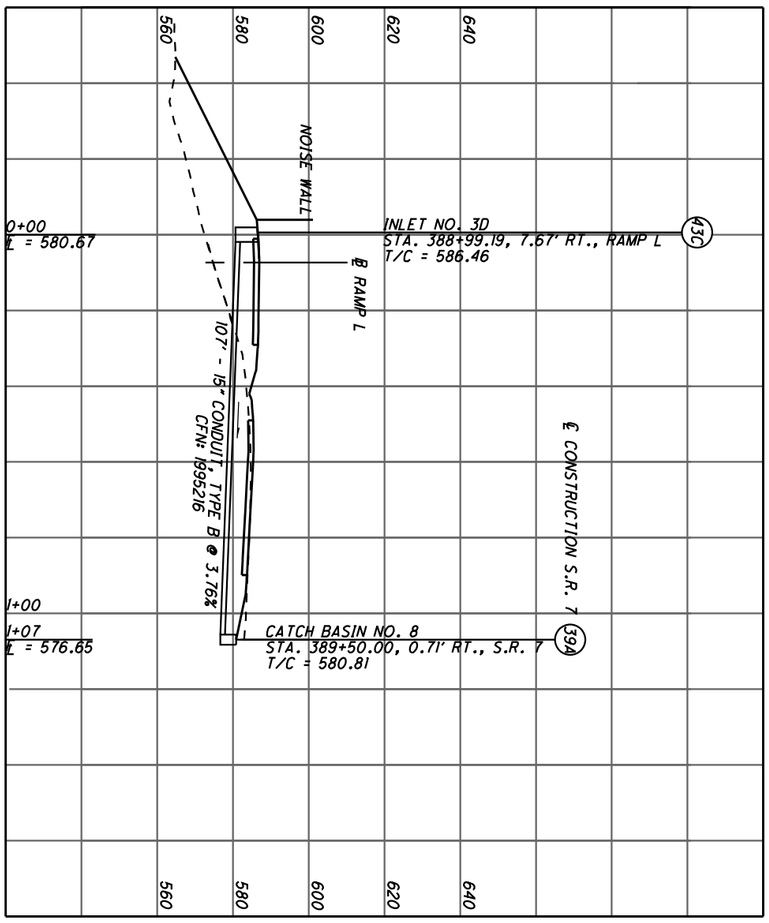

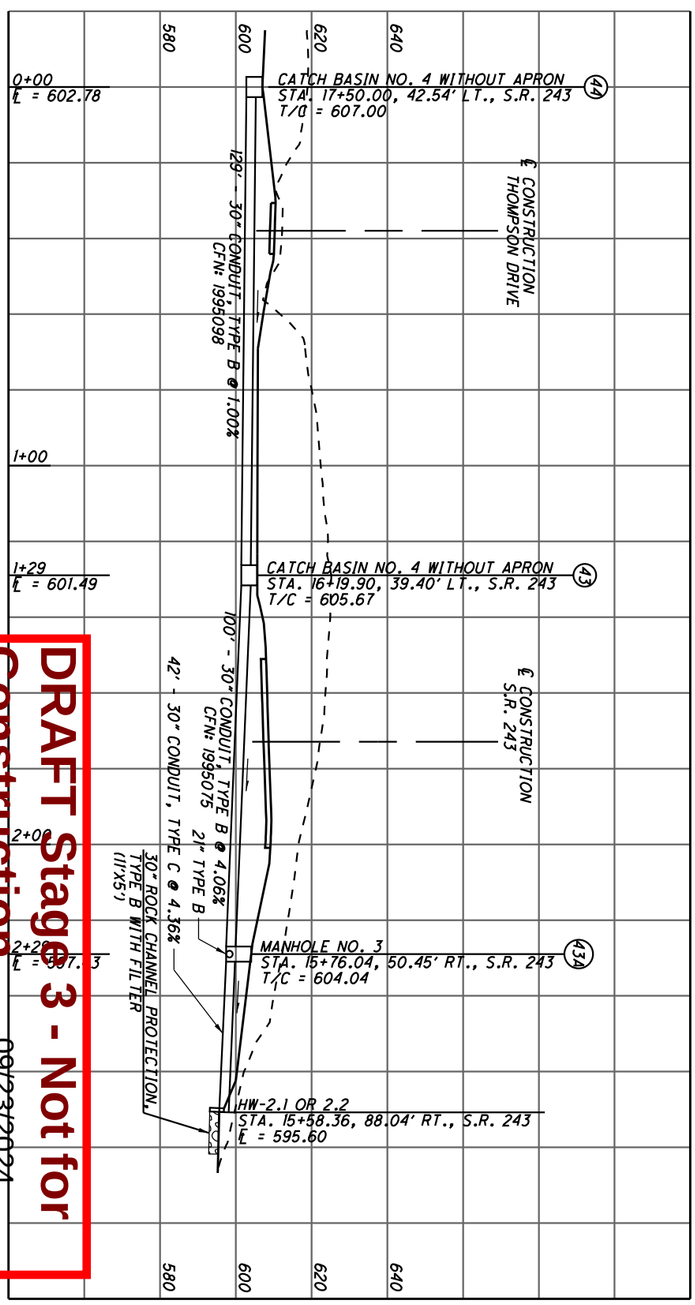

DRAFT Stage 3 - Not for Construction
09/23/2024

647 / 1247	LAW-7-2.17	STORM SEWER PROFILES	CALCULATED SLP / CHECKED ALB	0 20 40 SCALE IN FEET

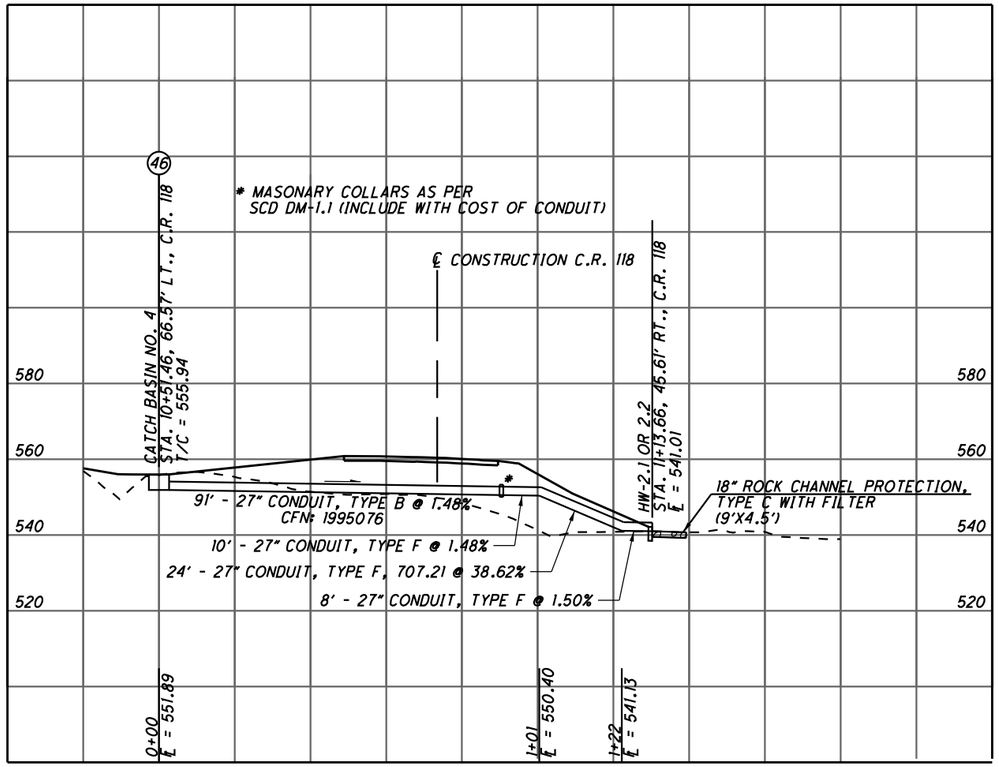

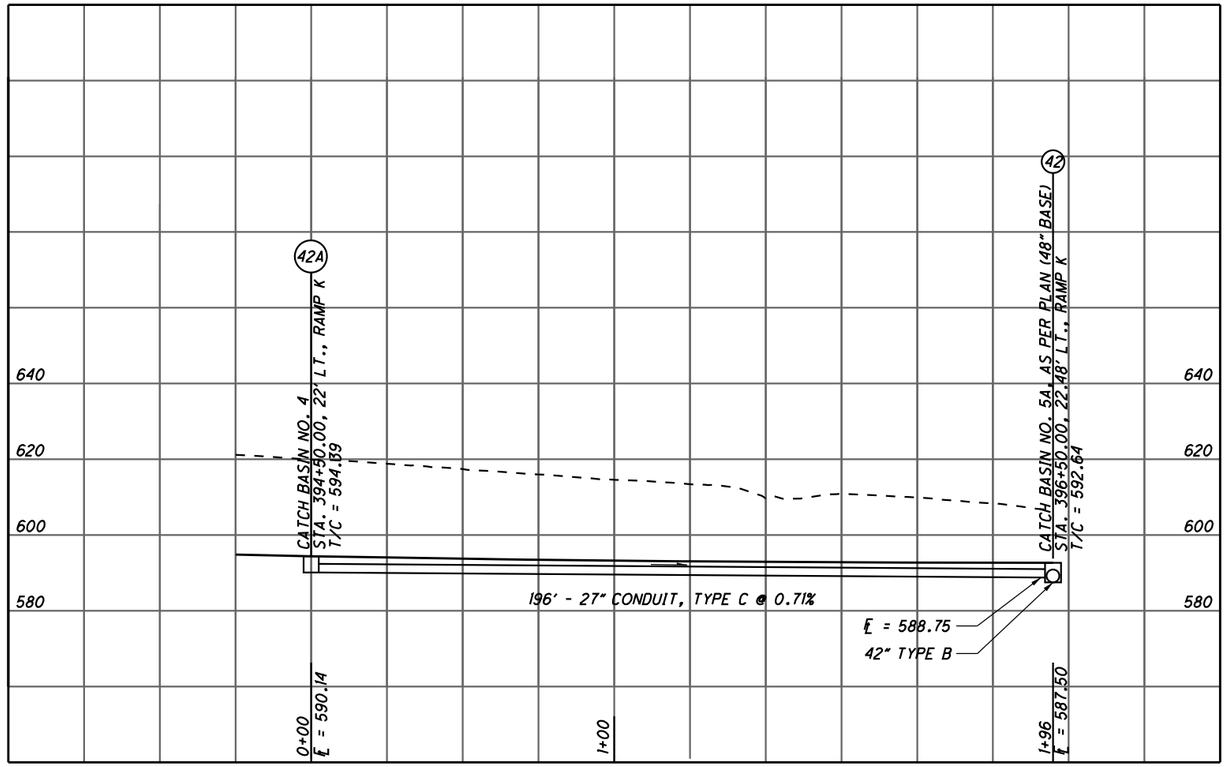

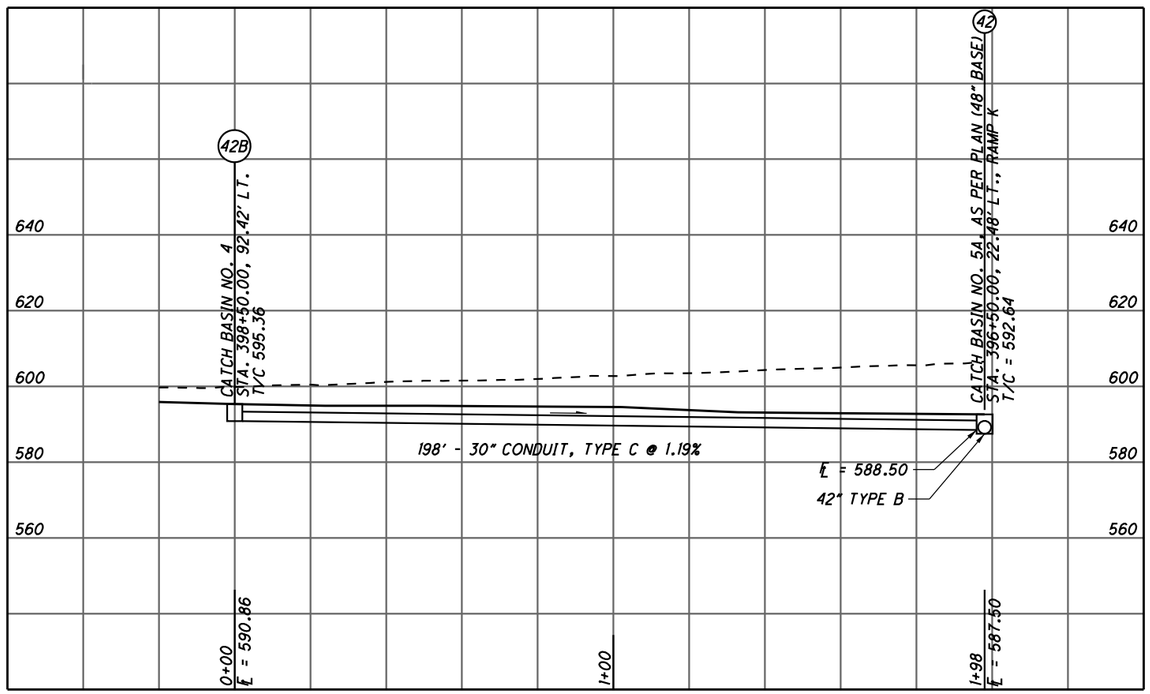

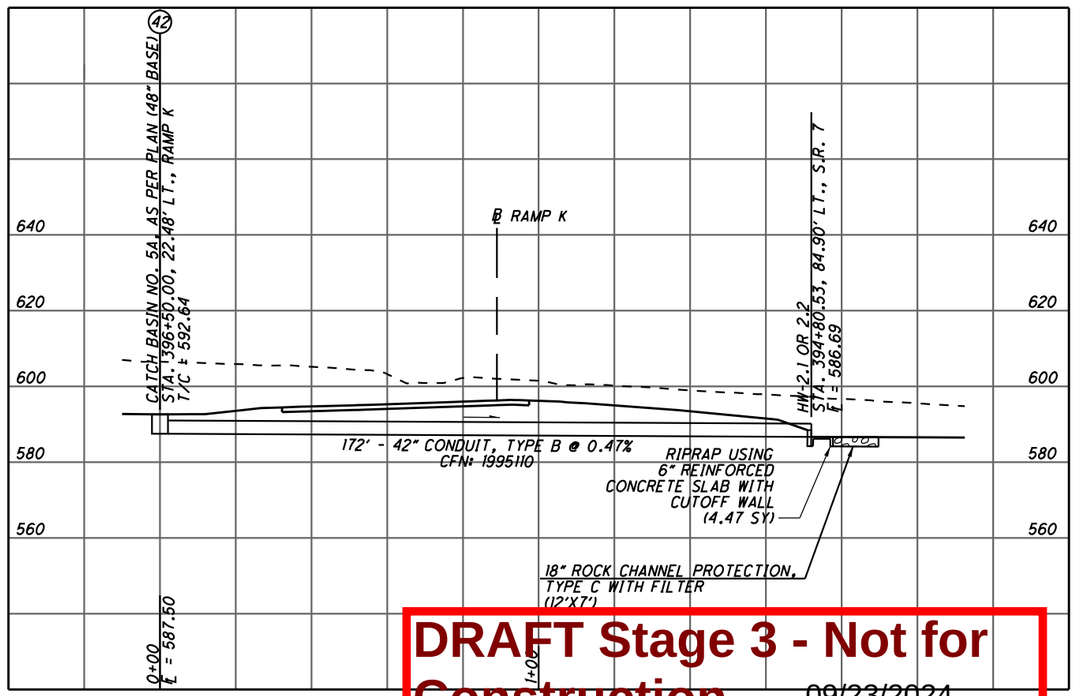

DRAFT Stage 3 - Not for Construction

09/23/2024

SCALE IN FEET
0 20 40

CALCULATED SLP
CHECKED ALB

STORM SEWER PROFILES

LAW-7-2.17

U:\1736087\14\LAW\75923\drainage\sheets\75923DF008-2B.dgn 5/21/2024 4:59:35 PM SLParker

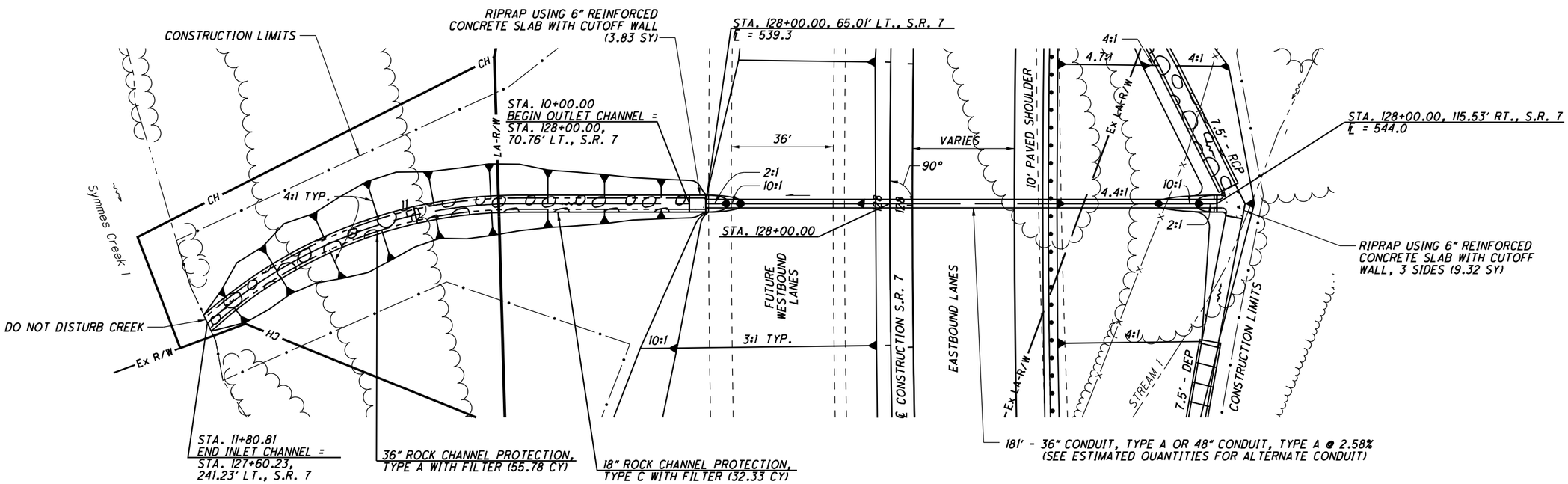

ESTIMATE QUANTITIES			
ITEM	TOTAL	UNIT	DESCRIPTION
203	182	CY	EXCAVATION
601	13.16	SY	RIPRAP, TYPE D
601	55.78	CY	ROCK CHANNEL PROTECTION, TYPE A WITH FILTER
601	32.33	CY	ROCK CHANNEL PROTECTION, TYPE C WITH FILTER
602	1.52	CY	CONCRETE MASONRY
611	181	FT	36" CONDUIT, TYPE A, 706.01 OR 706.02 OR 707.33 OR
			48" CONDUIT, TYPE A, 707.01 OR 707.02 (GALVANIZED OR ALUMINIZED)
659	572	SY	SEEDING AND MULCHING, CLASS 3C

QUANTITIES CARRIED TO SUBSUMMARY SHEETS 79-80

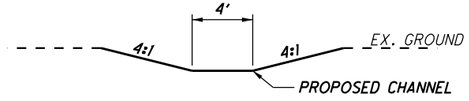

CHANNEL TYPICAL SECTION

NOTE:
CULVERT SIZE SHOWN HAS BEEN INCREASED FOR FUTURE REHABILITATION

HYDRAULIC DATA	
DRAINAGE AREA	= 15 AC.
Q50	= 44 CFS
Q100	= 48 CFS
50V	= 6.22 FPS
100V	= 6.79 FPS
50 HW	= 547.8
100 HW	= 548.1
OHWMi	= 546.5
OHWMo	= 517.3
pH	= 7.2
DESIGN SERVICE LIFE	= 75 YEARS
ABRASION LEVEL	= 4
CFN	= 1995062

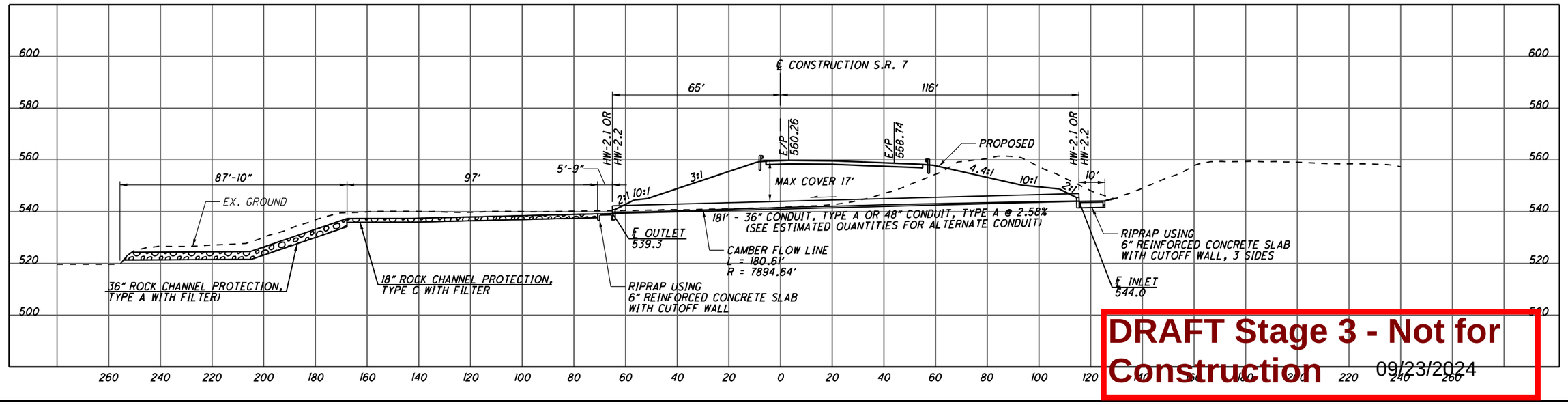

DRAFT Stage 3 - Not for Construction 09/23/2024

HORIZONTAL SCALE IN FEET
0 10 20 40

CALCULATED SLP
CHECKED ALB

CULVERT DETAIL
S.R. 7 STA. 128+00.00

LAW-7-2.17

649
1247

U:\173608714\LAW\75923\drainage\sheets\75923DC001-2B.dgn 5/21/2024 4:59:36 PM SLParker

SEEDING		END AREA		VOLUME	
END WIDTH	SQ. YDS.	CUT	FILL	CUT	FILL

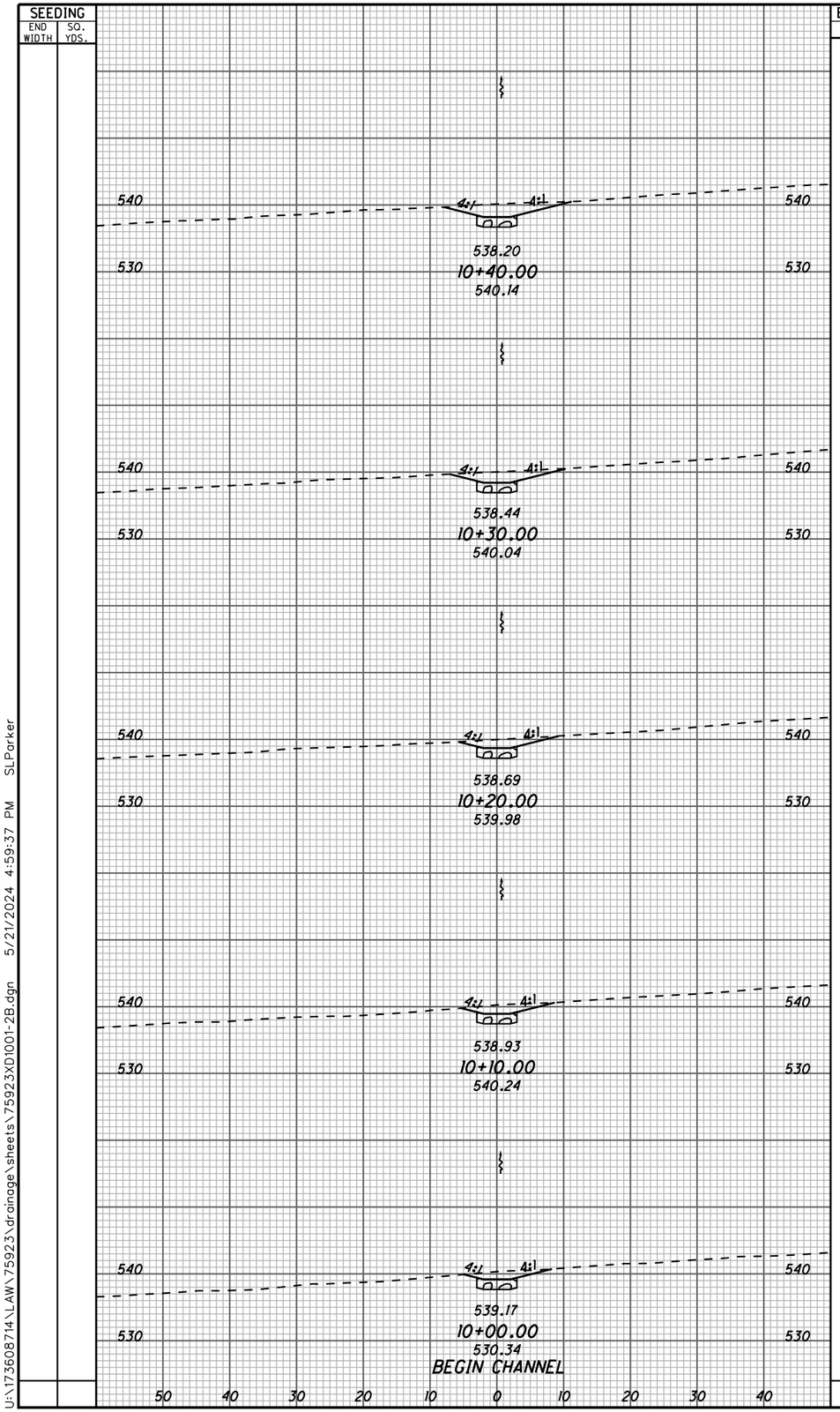

SEEDING		END AREA		VOLUME	
END WIDTH	SQ. YDS.	CUT	FILL	CUT	FILL

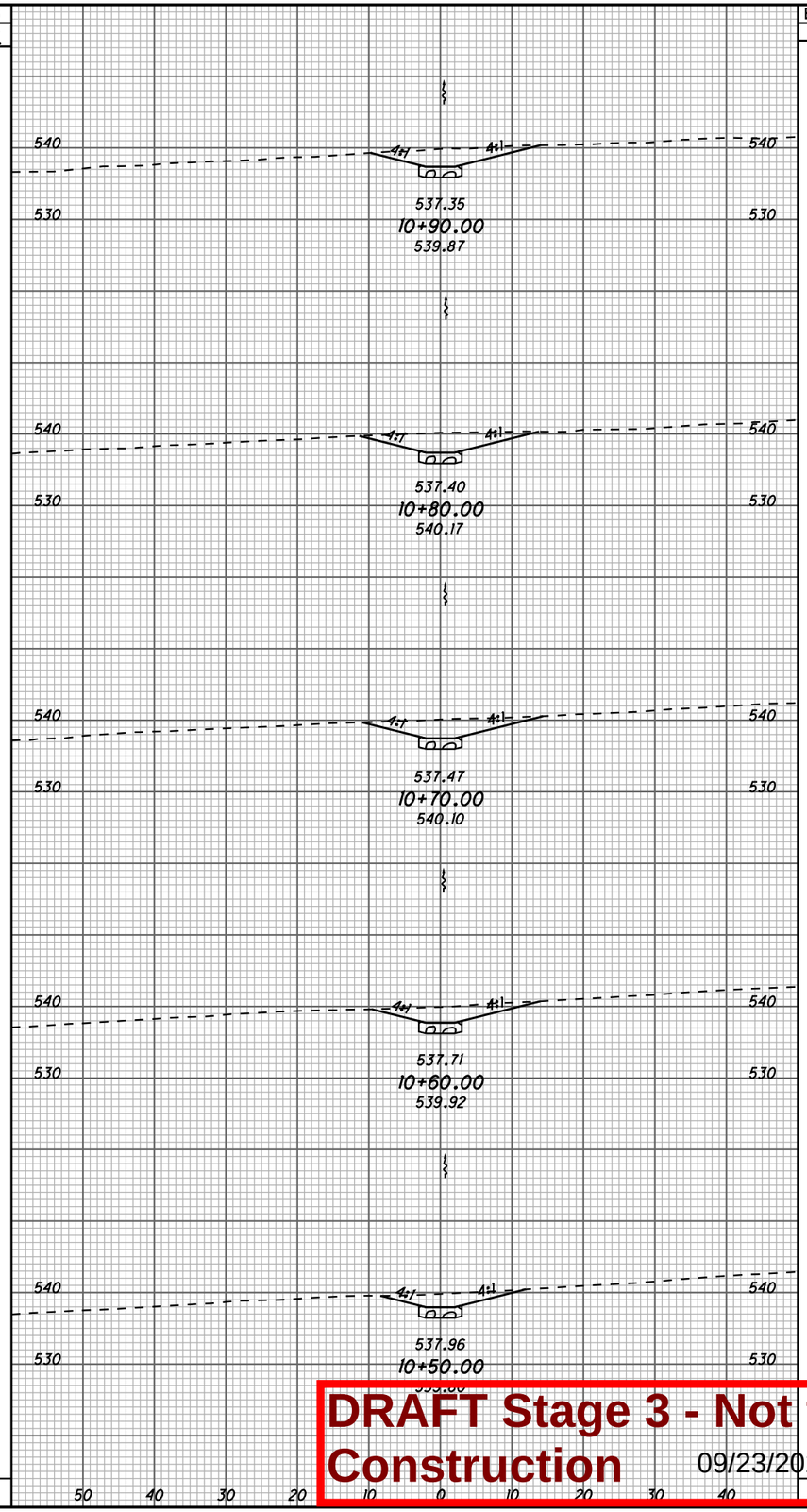

CALCULATED SLP
CHECKED ALB

CROSS SECTIONS CULVERT STA. 128+00.00 CHANNEL STA. 10+00.00 TO STA. 10+90.00

LAW-7-2.17

650
1247

DRAFT Stage 3 - Not for Construction 09/23/2024

U:\17360871 4\LAW\75923\drainage\sheets\75923XD1001-2B.dgn 5/21/2024 4:59:37 PM SLParker

SEEDING		END AREA		VOLUME	
END WIDTH	SQ. YDS.	CUT	FILL	CUT	FILL

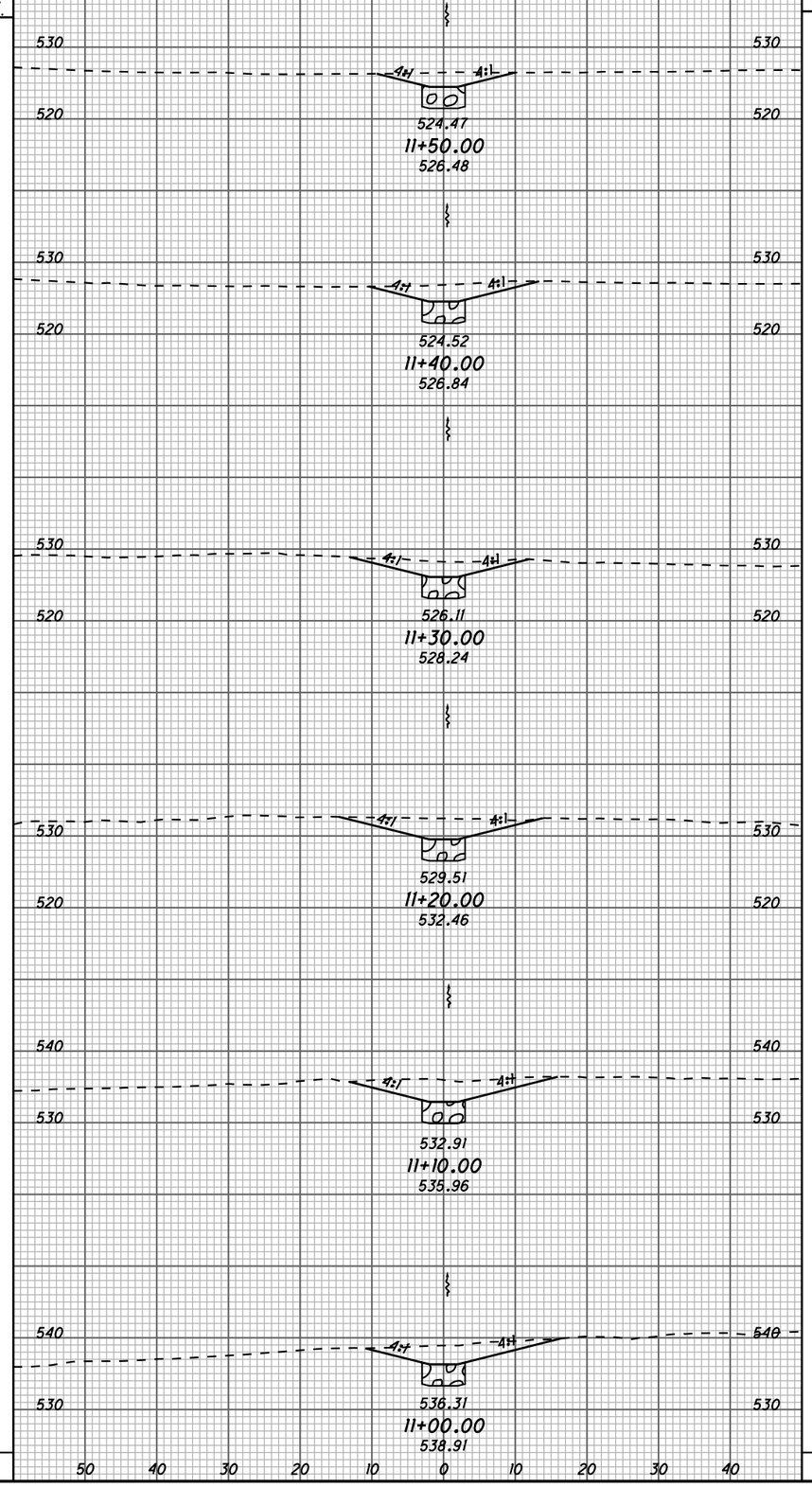

SEEDING		END AREA		VOLUME	
END WIDTH	SQ. YDS.	CUT	FILL	CUT	FILL

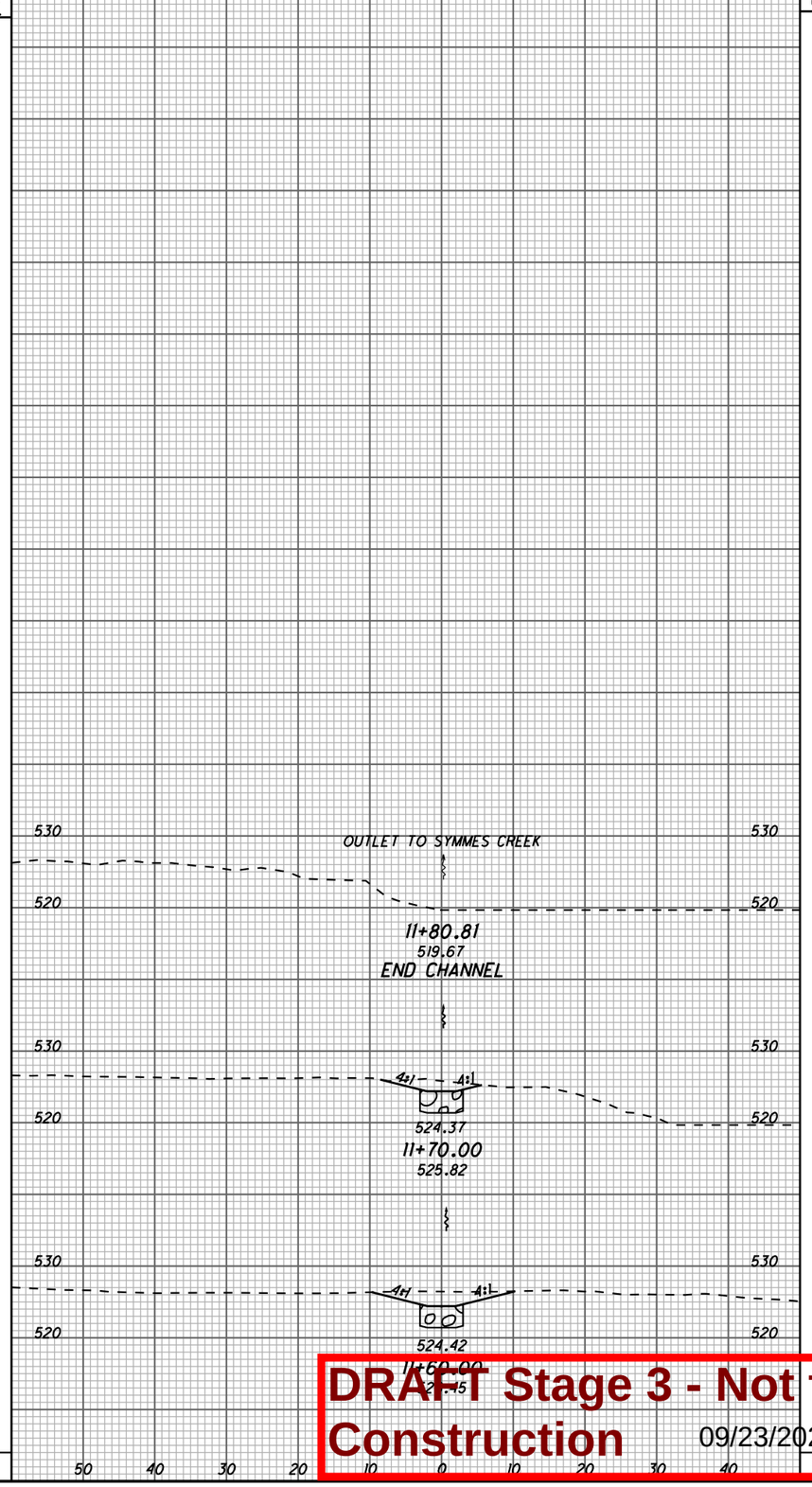

CALCULATED SLP
CHECKED ALB

CROSS SECTIONS CULVERT STA. 128+00.00 CHANNEL STA. 11+00.00 TO STA. 11+80.81

LAW-7-2.17

651
1247

DRAFT Stage 3 - Not for Construction 09/23/2024

U:\173608714\LAW\75923\drainage sheets\75923XD1002-2B.dgn 5/21/2024 4:59:38 PM SLParker

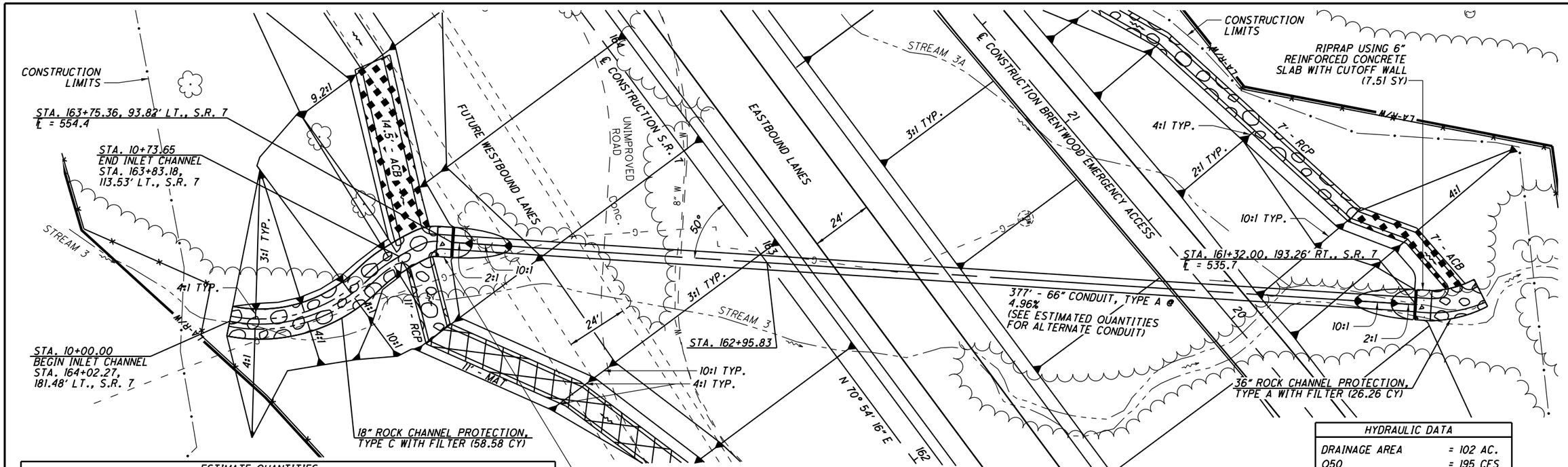

ESTIMATE QUANTITIES			
ITEM	TOTAL	UNIT	DESCRIPTION
203	674	CY	EXCAVATION
203	70	CY	EMBANKMENT
601	15.02	SY	RIPRAP, TYPE D
601	32.33	CY	ROCK CHANNEL PROTECTION, TYPE A WITH FILTER
601	55.78	CY	ROCK CHANNEL PROTECTION, TYPE C WITH FILTER
602	1.52	CY	CONCRETE MASONRY
611	377	FT	66" CONDUIT, TYPE A, 707.02 (0.218) GALVANIZED WITH CFP OR
			707.02 (0.064) ALUMINIZED WITH CFP OR 707.04 (0.064) WITH CFP
659	703	SY	SEEDING AND MULCHING, CLASS 3C

QUANTITIES CARRIED TO SUBSUMMARY SHEETS 79-80

NOTE:
CULVERT SIZE SHOWN HAS BEEN INCREASED FOR FUTURE REHABILITATION.

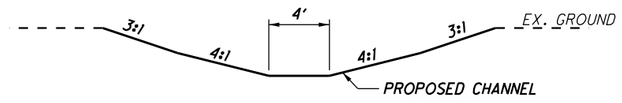

CHANNEL TYPICAL SECTION

SOME SLOPES MAY VARY
SEE CROSS SECTIONS FOR DETAILS

HYDRAULIC DATA	
DRAINAGE AREA	= 102 AC.
Q50	= 195 CFS
Q100	= 232 CFS
50V	= 15.3 FPS
100V	= 15.9 FPS
50 HW	= 562.4
100 HW	= 564.5
OHWMi	= 555.4
OHWMo	= 537.2
pH	= 6.9
DESIGN SERVICE LIFE	= 75 YEARS
ABRASION LEVEL	= 4
CFN	= 1995090

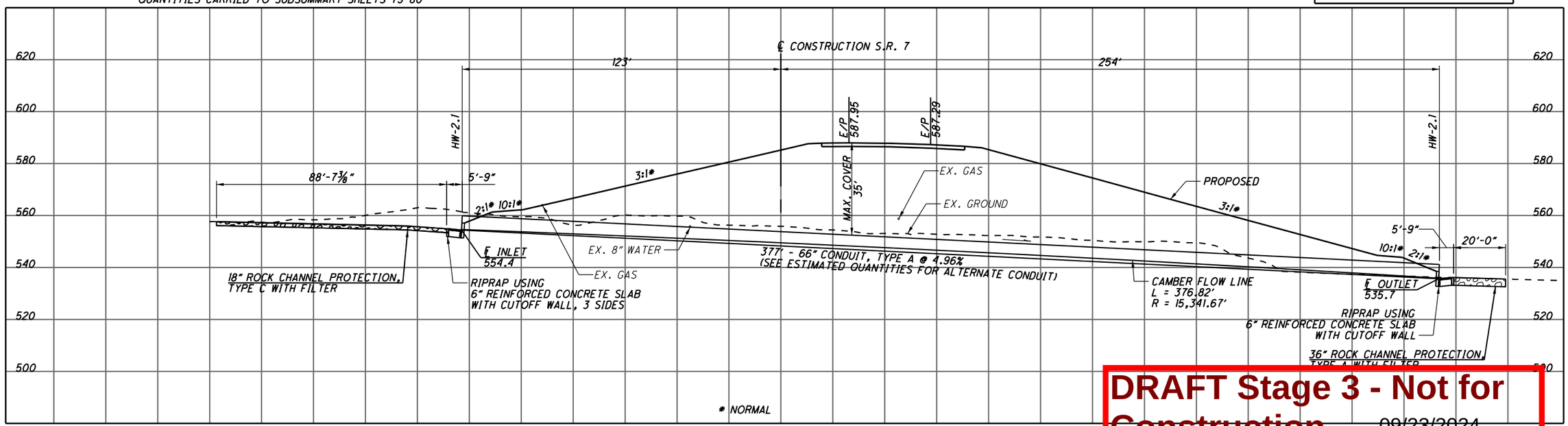

DRAFT Stage 3 - Not for Construction 09/23/2024

CALCULATED SLP CHECKED ALB

HORIZONTAL SCALE IN FEET 0 10 20 40

CULVERT DETAIL
S.R. 7 STA. 162+95.83

LAW-7-2.17

652
1247

U:\173608714\LAW\75923\drainage\sheets\75923DC002-2A.dgn 5/21/2024 4:59:40 PM SLParker

SEEDING	
END WIDTH	SQ. YDS.

END AREA	
CUT	FILL

VOLUME	
CUT	FILL

CALCULATED SLP

CHECKED ALB

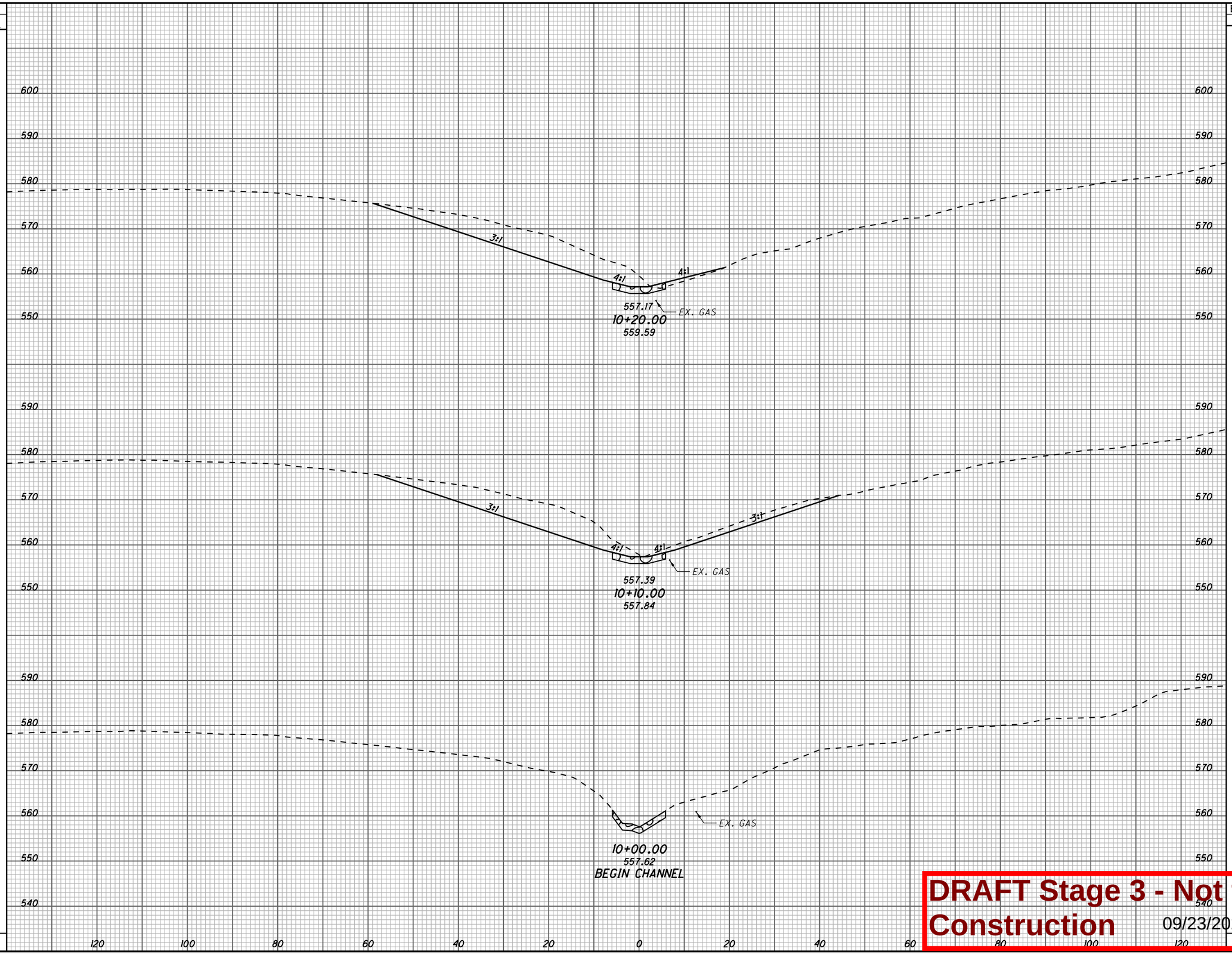

CROSS SECTIONS CULVERT STA. 162+95.83 INLET CHANNEL STA. 10+00.00 TO STA. 10+20.00

LWA-7-2.17

653
1247

DRAFT Stage 3 - Not for Construction 09/23/2024

U:\173608714\LAW\75923\drainage\sheets\75923XD1040-2A.dgn 5/21/2024 4:59:40 PM SLParker

SEEDING	
END WIDTH	SQ. YDS.

END AREA		VOLUME	
CUT	FILL	CUT	FILL

CALCULATED SLP

CHECKED ALB

CROSS SECTIONS CULVERT STA. 162+95.83 INLET CHANNEL STA. 10+30.00 TO STA. 10+50.00

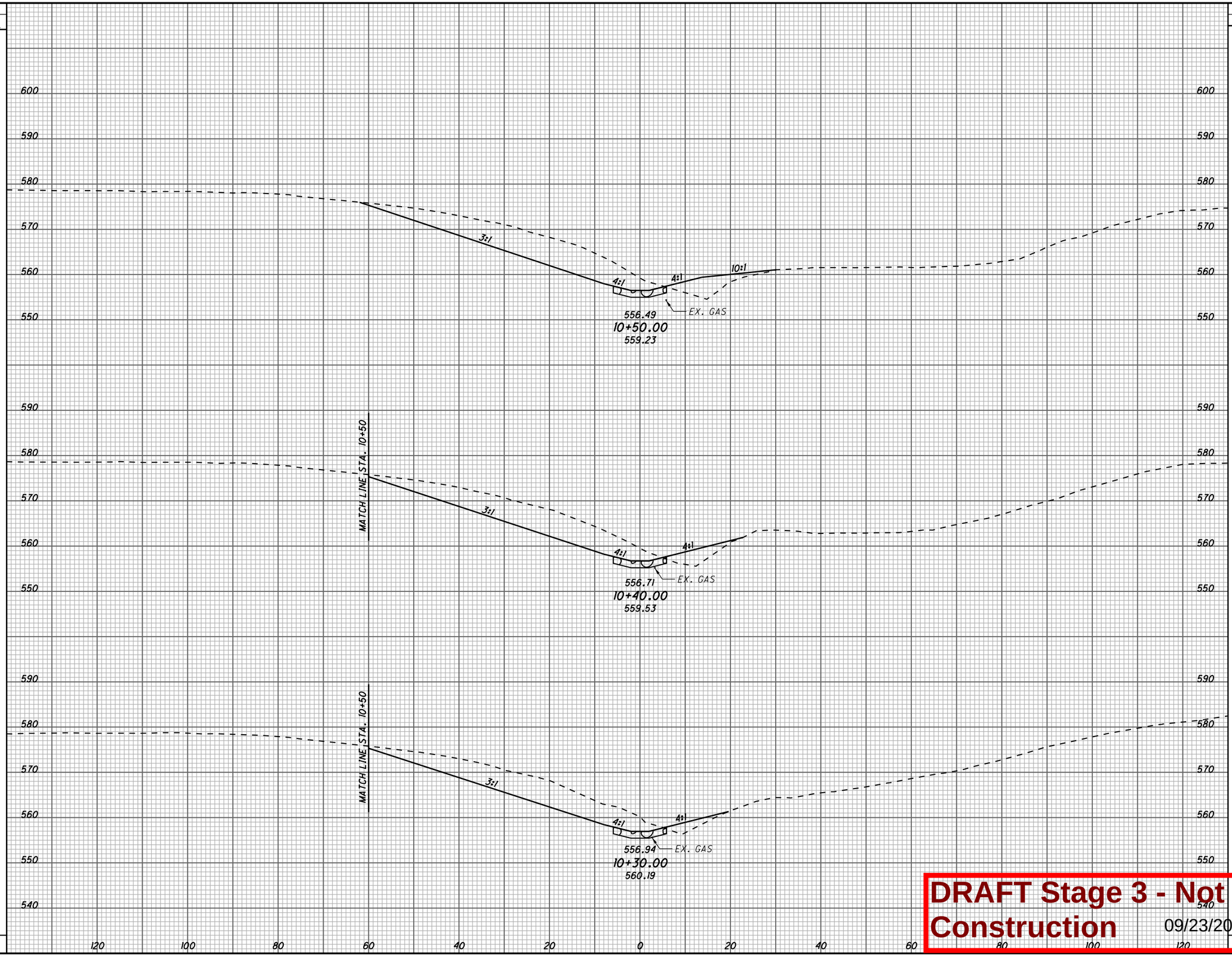

DRAFT Stage 3 - Not for Construction 09/23/2024

LWA-7-2.17

654
1247

U:\173608714\LAW\75923\drainage\sheets\75923XD1041-2A.dgn 5/21/2024 4:59:41 PM SLParker

SEEDING	
END WIDTH	SQ. YDS.

END AREA		VOLUME	
CUT	FILL	CUT	FILL

CALCULATED SLP | CHECKED ALB

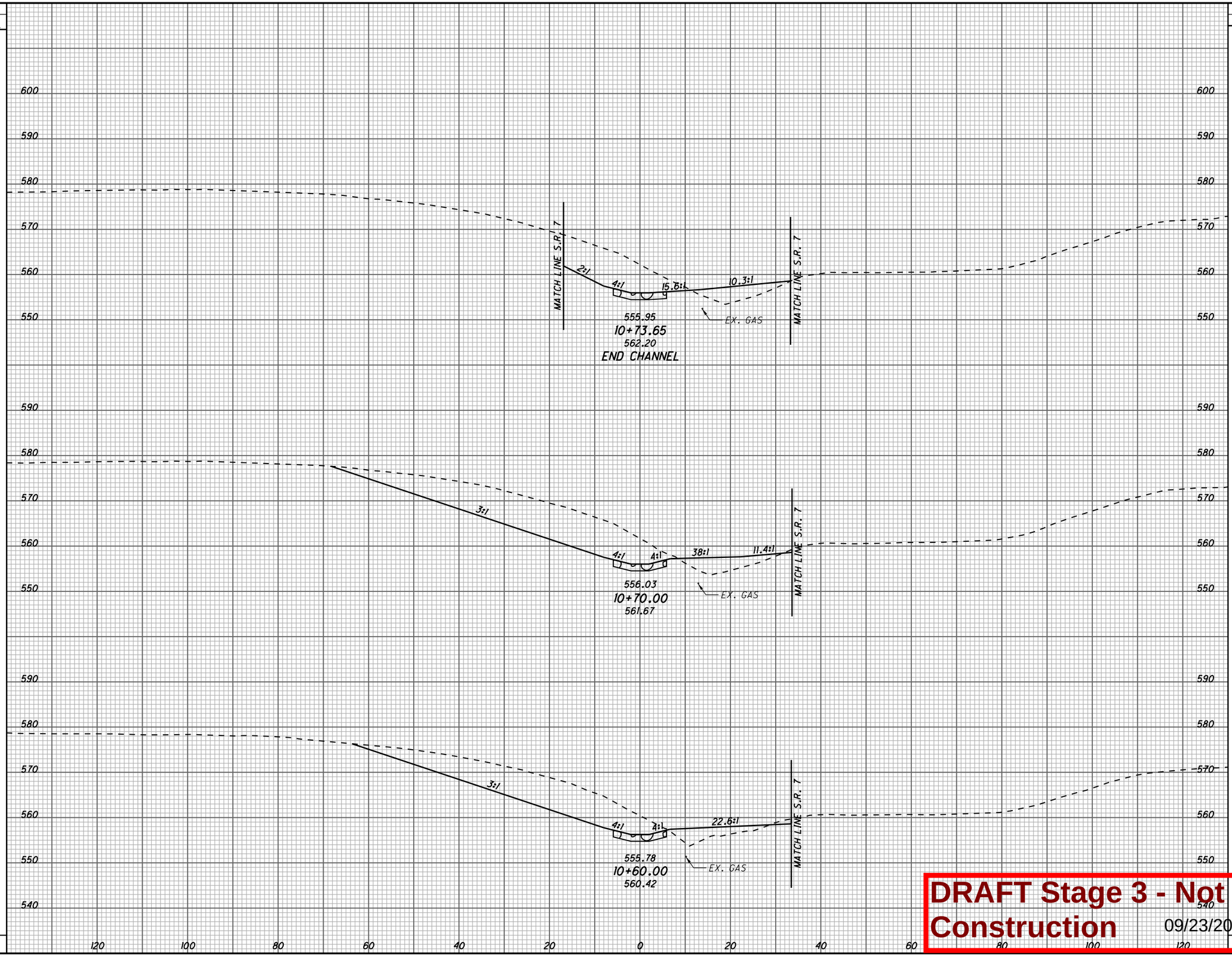

CROSS SECTIONS CULVERT STA. 162+95.83 INLET CHANNEL STA. 10+60.00 TO STA. 10+73.65

LWA-7-2.17

655
1247

DRAFT Stage 3 - Not for Construction 09/23/2024

U:\173608714\LAW\75923\drainage\sheets\75923XD1042-2A.dgn 5/21/2024 4:59:42 PM SLParker

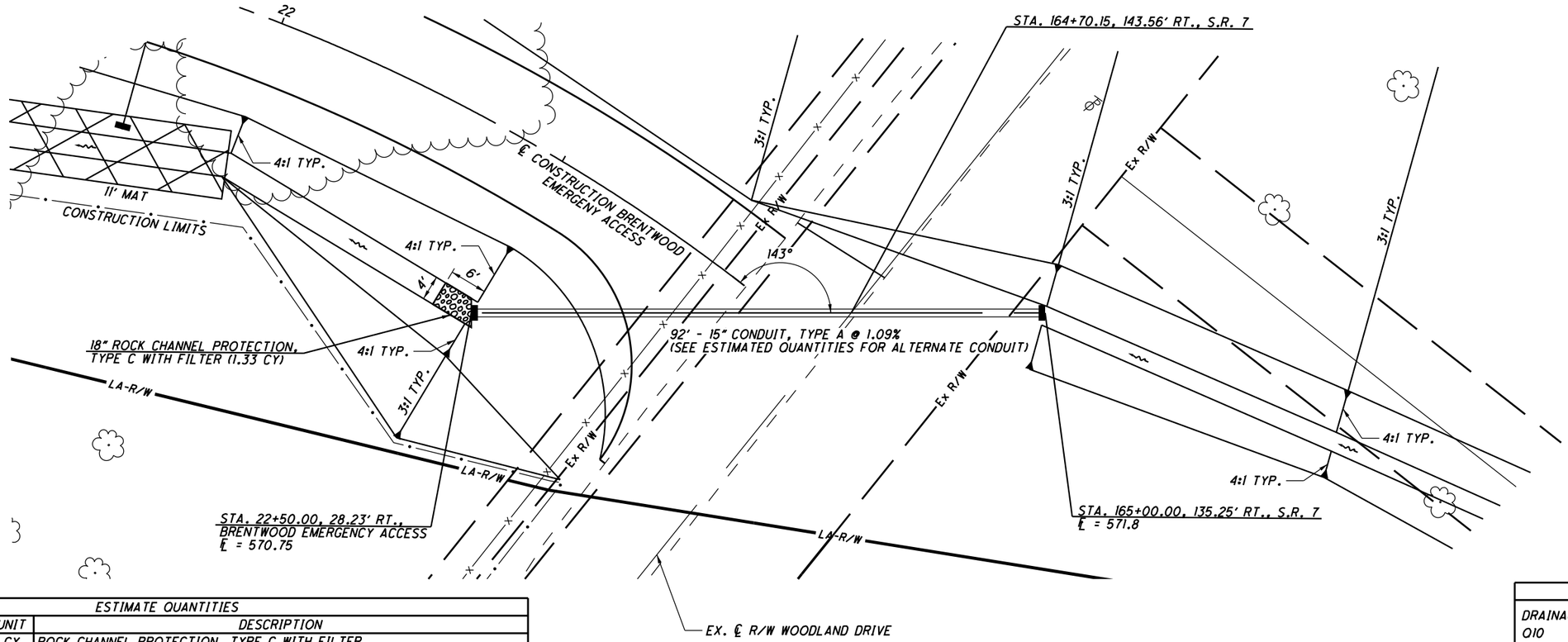

ESTIMATE QUANTITIES			
ITEM	TOTAL	UNIT	DESCRIPTION
601	1.33	CY	ROCK CHANNEL PROTECTION, TYPE C WITH FILTER
602	0.54	CY	CONCRETE MASONRY
611	92	FT	15" CONDUIT, TYPE A, 706.02 OR 707.33

QUANTITIES CARRIED TO SUBSUMMARY SHEETS 79-80

HYDRAULIC DATA	
DRAINAGE AREA	= 2 AC.
Q10	= 5 CFS
Q100	= 7 CFS
10V	= 6.4 FPS
100V	= 6.8 FPS
10 HW	= 573.1
100 HW	= 573.6
pH	= 7.6
DESIGN SERVICE LIFE	= 75 YEARS
ABRASION LEVEL	= 4
CFN	= 1995091

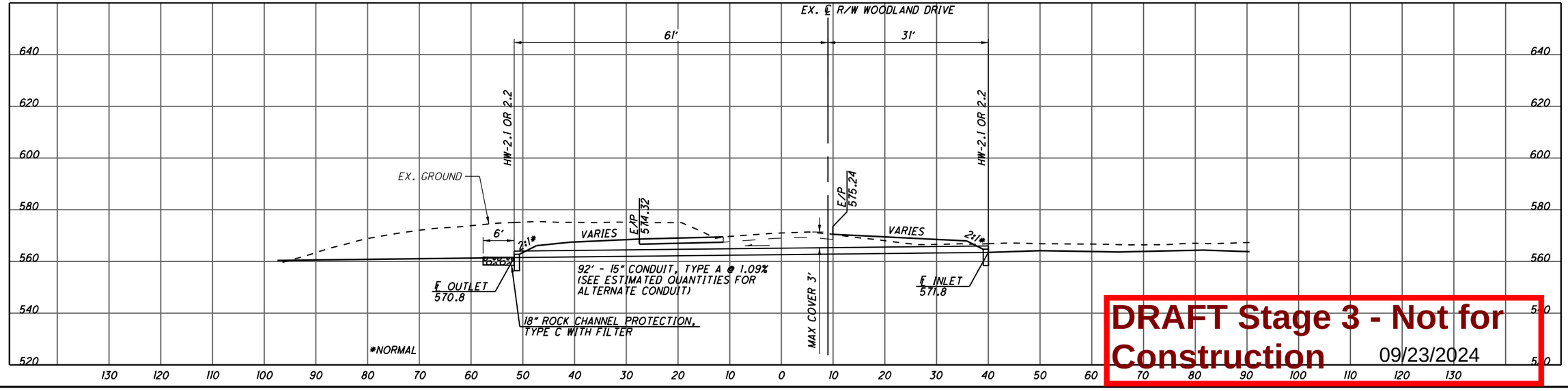

DRAFT Stage 3 - Not for Construction 09/23/2024

HORIZONTAL SCALE IN FEET
0 10 20 40

CALCULATED SLP
CHECKED ALB

CULVERT DETAIL
S.R. 7 STA. 164+70.15

LAW-7-2.17

656
1247

U:\173608714\LAW\75923\drainage\sheets\75923DC016.dgn 5/21/2024 4:59:44 PM SLParker

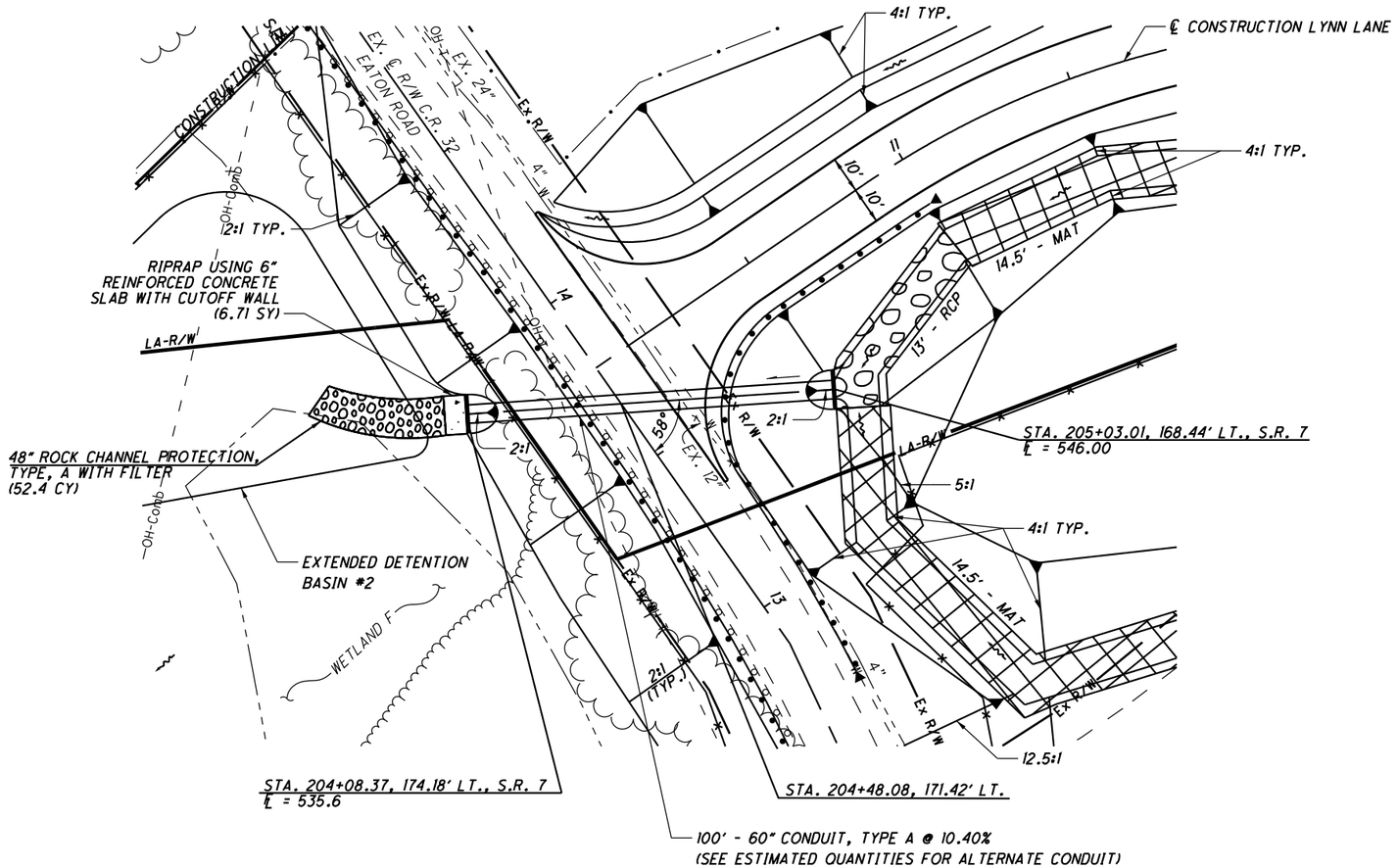

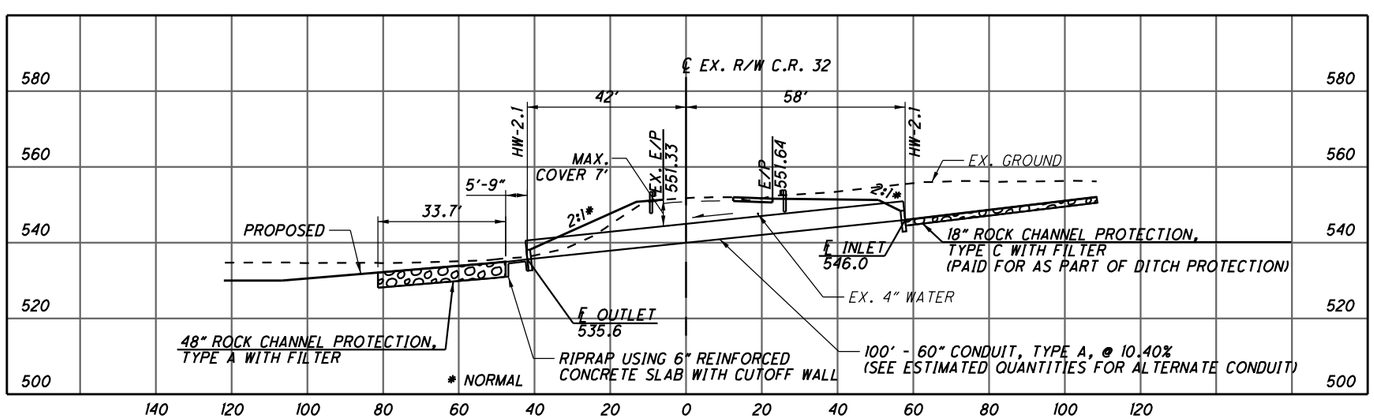

HYDRAULIC DATA	
DRAINAGE AREA	= 29 AC.
Q25	= 92 CFS
Q100	= 125 CFS
25V	= 16.6 FPS
100V	= 18.1 FPS
25 HW	= 550.1
100 HW	= 551.1
OHWMi	= 547.9
OHWMo	= 536.2
pH	= 7.6
DESIGN SERVICE LIFE	= 75 YEARS
ABRASION LEVEL	= 1
CFN	= 1995094

ESTIMATE QUANTITIES

ITEM	TOTAL	UNIT	DESCRIPTION
601	6.71	SY	RIPRAP, TYPE D
601	52.4	CY	ROCK CHANNEL PROTECTION, TYPE A WITH FILTER
602	3.56	CY	CONCRETE MASONRY
611	100	FT	60" CONDUIT, TYPE A 707.02 (0.218) GALVANIZED OR 707.02 (0.064) ALUMINIZED OR 707.33

QUANTITIES CARRIED TO SUBSUMMARY SHEETS 79-80

DRAFT Stage 3 - Not for Construction 09/23/2024

HORIZONTAL SCALE IN FEET
0 10 20 40

CALCULATED SLP
CHECKED ALB

CULVERT DETAIL
S.R. 7 STA. 204+48.08

LAW-7-2.17

657
1247

U:\173608714\LAW\75923\drainage\sheets\75923DC010-2A.dgn 5/21/2024 4:59:47 PM SLParker

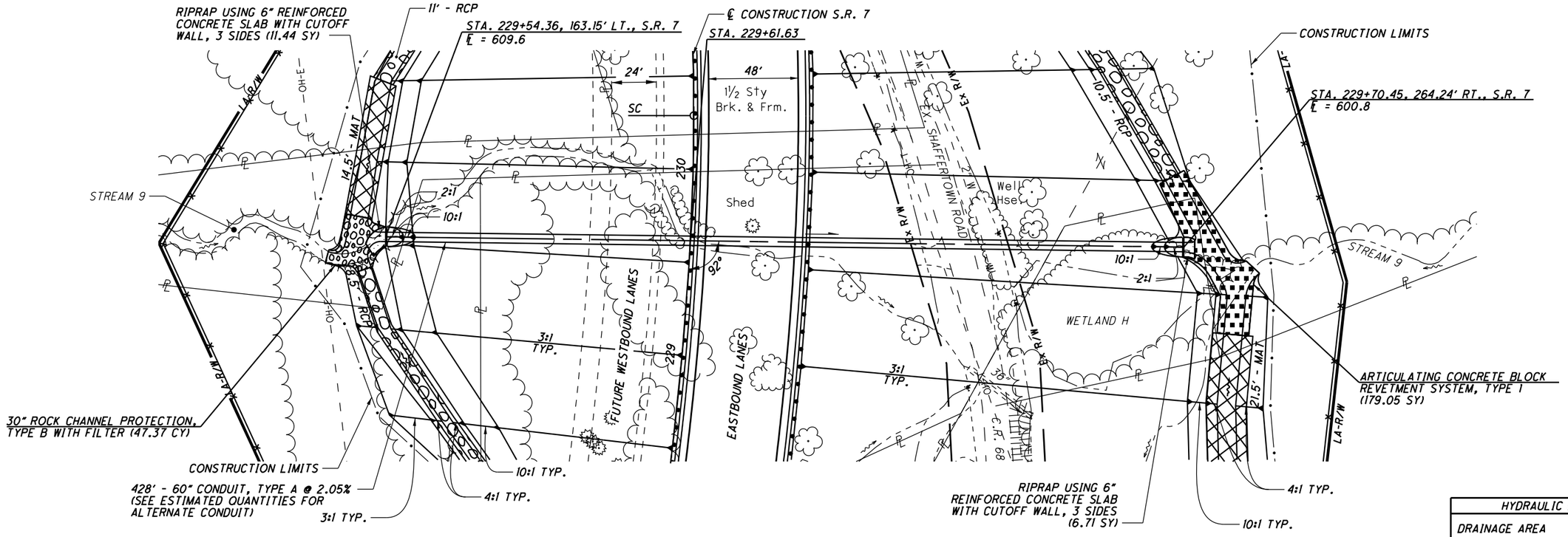

ESTIMATE QUANTITIES			
ITEM	TOTAL	UNIT	DESCRIPTION
601	18.15	SY	RIPRAP, TYPE D
601	179.05	SY	ARTICULATING CONCRETE BLOCK REVETMENT SYSTEM, TYPE 1
601	47.37	CY	ROCK CHANNEL PROTECTION, TYPE B WITH FILTER
602	3.56	CY	CONCRETE MASONRY
611	428	FT	60" CONDUIT, TYPE A, 707.02 (0.218) GALVANIZED WITH CFP OR
			707.02 (0.064) ALUMINIZED WITH CFP OR 707.04 (0.064) WITH CFP

QUANTITIES CARRIED TO SUBSUMMARY SHEETS 79-80

NOTE:
CULVERT SIZE SHOWN HAS BEEN INCREASED FOR FUTURE REHABILITATION.

HYDRAULIC DATA	
DRAINAGE AREA	= 80 AC.
Q50	= 147 CFS
Q100	= 175 CFS
50V	= 9.8 FPS
100V	= 11.7 FPS
50 HW	= 617.9
100 HW	= 623.4
OHWMi	= 610.5
OHWMo	= 601.1
pH	= 7.1
DESIGN SERVICE LIFE	= 75 YEARS
ABRASION LEVEL	= 4
CFN	= 1995072

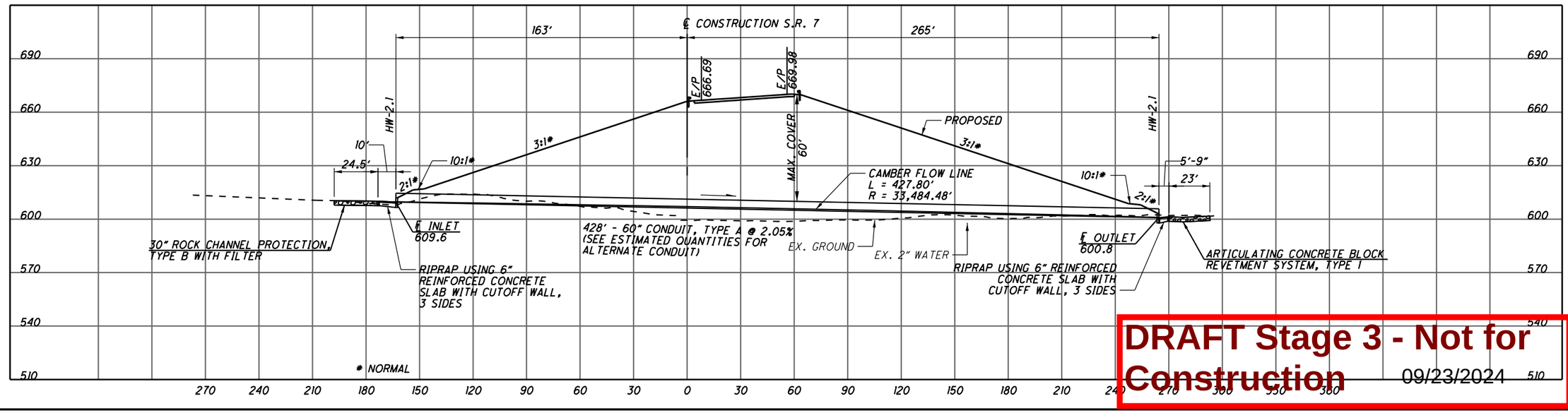

DRAFT Stage 3 - Not for Construction 09/23/2024

CULVERT DETAIL
S.R. 7 STA. 229+61.63

LAW-7-2.17

CALCULATED SLP
CHECKED ALB

HORIZONTAL SCALE IN FEET
0 15 30 60

658
1247

U:\173608714\LAW\75923\drainage\sheets\75923DC004-2A.dgn 5/21/2024 4:59:48 PM SLParker

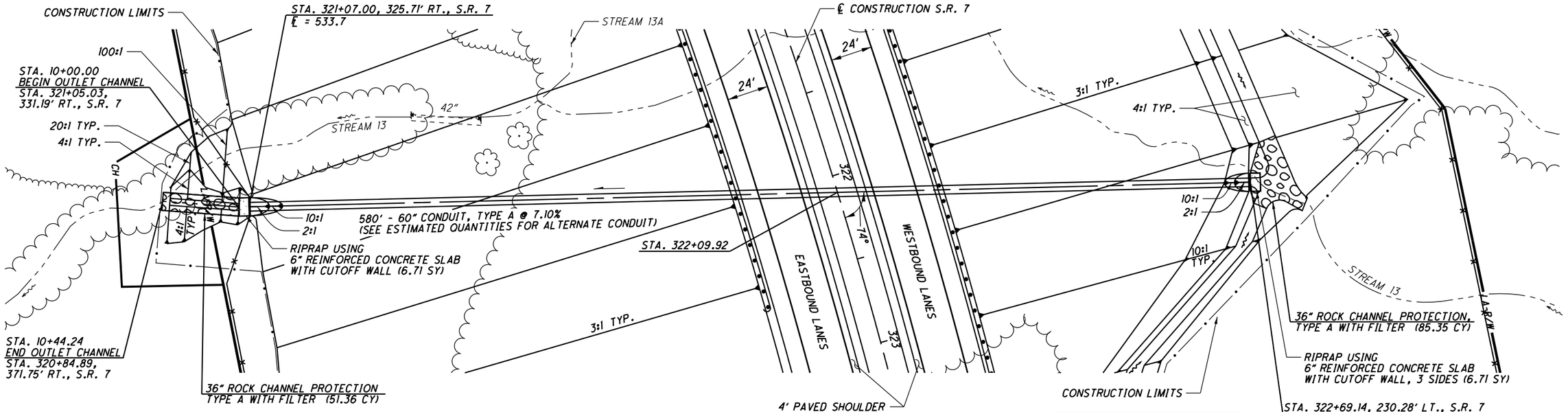

ESTIMATE QUANTITIES			
ITEM	TOTAL	UNIT	DESCRIPTION
203	44	CY	EXCAVATION
203	73	CY	EMBANKMENT
601	13.42	SY	RIPRAP, TYPE D
601	136.71	CY	ROCK CHANNEL PROTECTION, TYPE A WITH FILTER
602	3.56	CY	CONCRETE MASONRY
611	580	FT	60" CONDUIT, TYPE A, 707.02 (0.218) GALVANIZED WITH CFP OR
			707.02 (0.064) ALUMINIZED WITH CFP OR 707.04 (0.064) WITH CFP
659	193	SY	SEEDING AND MULCHING, CLASS 3C

QUANTITIES CARRIED TO SUBSUMMARY SHEETS 79-80

NOTE:
CULVERT SIZE SHOWN HAS BEEN INCREASED FOR FUTURE REHABILITATION.

HYDRAULIC DATA	
DRAINAGE AREA	= 81 AC.
Q50	= 166 CFS.
Q100	= 198 CFS
50V	= 16.8 FPS
100V	= 17.4 FPS
50 HW	= 583.2
100 HW	= 585.5
OHWMi	= 575.4
OHWMo	= 534.3
pH	= 6.8
DESIGN SERVICE LIFE	= 75 YEARS
ABRASION LEVEL	= 4
CFN	= 1995079

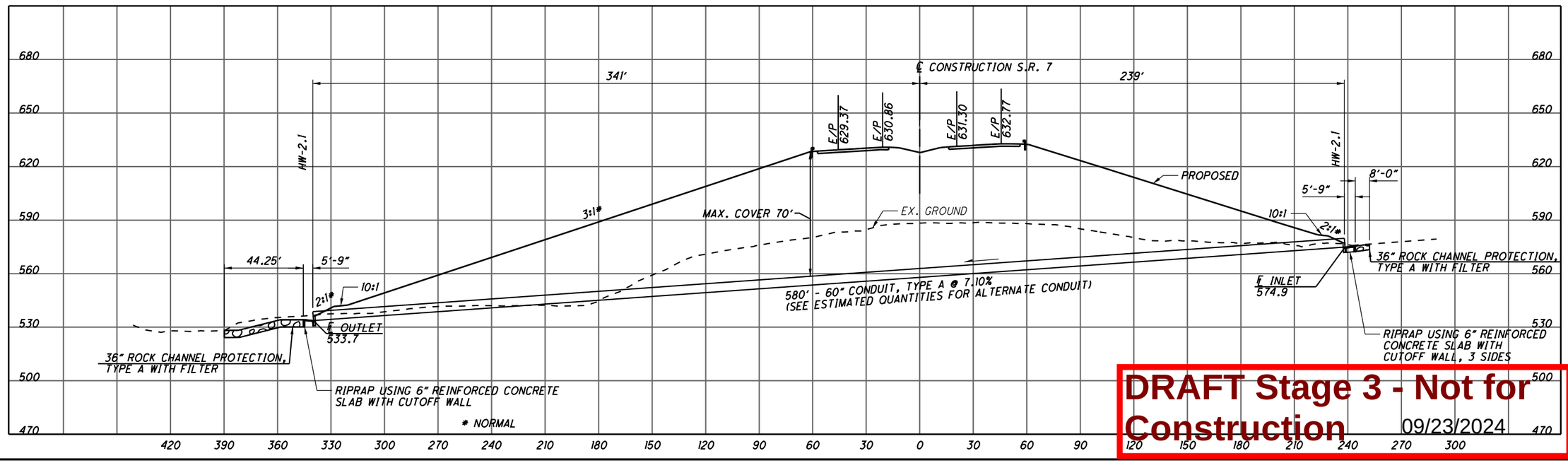

DRAFT Stage 3 - Not for Construction 09/23/2024

HORIZONTAL SCALE IN FEET
0 15 30 60

CALCULATED SLP
CHECKED ALB

CULVERT DETAIL
S.R. 7 STA. 322+09.92

LAW-7-2.17

659
1247

U:\173608714\LAW\75923\drainage\sheets\75923DC006-2A.dgn 5/21/2024 4:59:49 PM SLParker

SEEDING	
END WIDTH	SQ. YDS.

END AREA		VOLUME	
CUT	FILL	CUT	FILL

CALCULATED SLP
CHECKED ALB

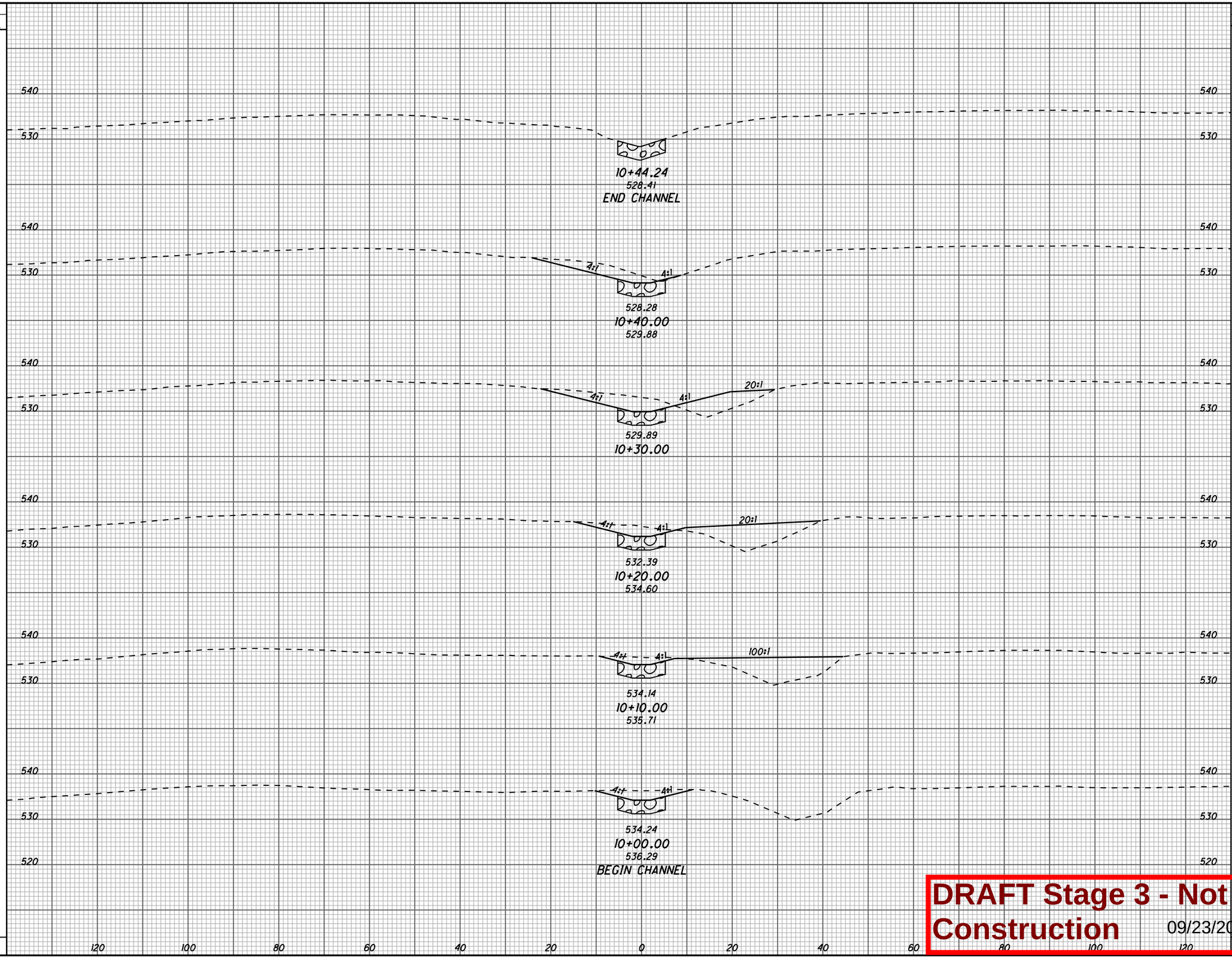

CROSS SECTIONS CULVERT STA. 322+09.92 OUTLET CHANNEL STA. 10+00.00 TO STA. 10+44.24

LAW-7-2.17

660
1247

DRAFT Stage 3 - Not for Construction 09/23/2024

U:\173608714\LAW\75923\drainage sheets\75923XD103-2A.dgn 5/21/2024 4:59:50 PM SLParker

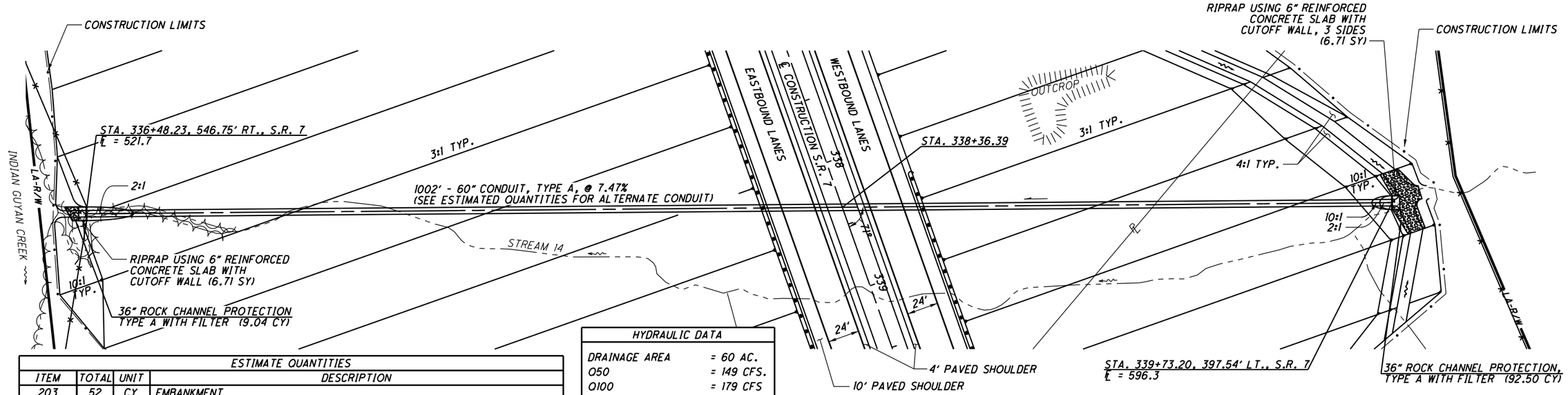

ESTIMATE QUANTITIES			
ITEM	TOTAL	UNIT	DESCRIPTION
203	52	CY	EMBANKMENT
203	201	CY	EXCAVATION
601	13.42	SY	RIPRAP, TYPE D
601	101.54	CY	ROCK CHANNEL PROTECTION, TYPE A WITH FILTER
602	3.56	CY	CONCRETE MASONRY
611	1002	FT	60" CONDUIT, TYPE A, 707.02 (0.218) GALVANIZED WITH CFP OR
			707.02 (0.064) ALUMINIZED WITH CFP OR 707.04 (0.064) WITH CFP
659	432	SY	SEEDING AND MULCHING, CLASS 3C

QUANTITIES CARRIED TO SUBSUMMARY SHEETS 79-80

HYDRAULIC DATA	
DRAINAGE AREA	= 60 AC.
Q50	= 149 CFS.
Q100	= 179 CFS
50V	= 16.7 FPS
100V	= 17.4 FPS
50 HW	= 603.5
100 HW	= 605.5
OHWMi	= 597.3
OHWMo	= 522.8
pH	= 6.9
DESIGN SERVICE LIFE	= 75 YEARS
ABRASION LEVEL	= 4
CFN	= 1995081

NOTE:
CULVERT SIZE SHOWN HAS BEEN INCREASED FOR FUTURE REHABILITATION.

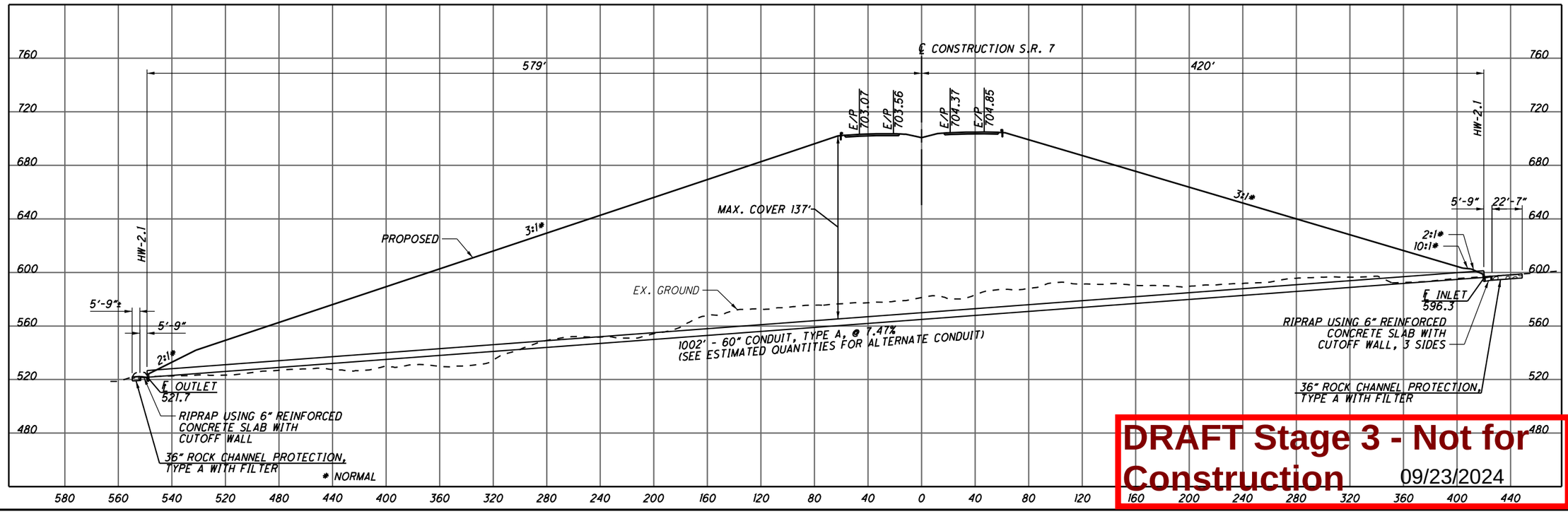

DRAFT Stage 3 - Not for Construction 09/23/2024

HORIZONTAL SCALE IN FEET
0 20 40 80

CALCULATED ALB
CHECKED TCM

CULVERT DETAIL
S.R. 7 STA. 338+36.39

LAW-7-2.17

661
1247

U:\17360871 4\LAW\75923\drainage\sheets\75923DC007-2A.dgn 5/21/2024 4:59:52 PM SLParker

SEEDING		END AREA		VOLUME	
END WIDTH	SQ. YDS.	CUT	FILL	CUT	FILL

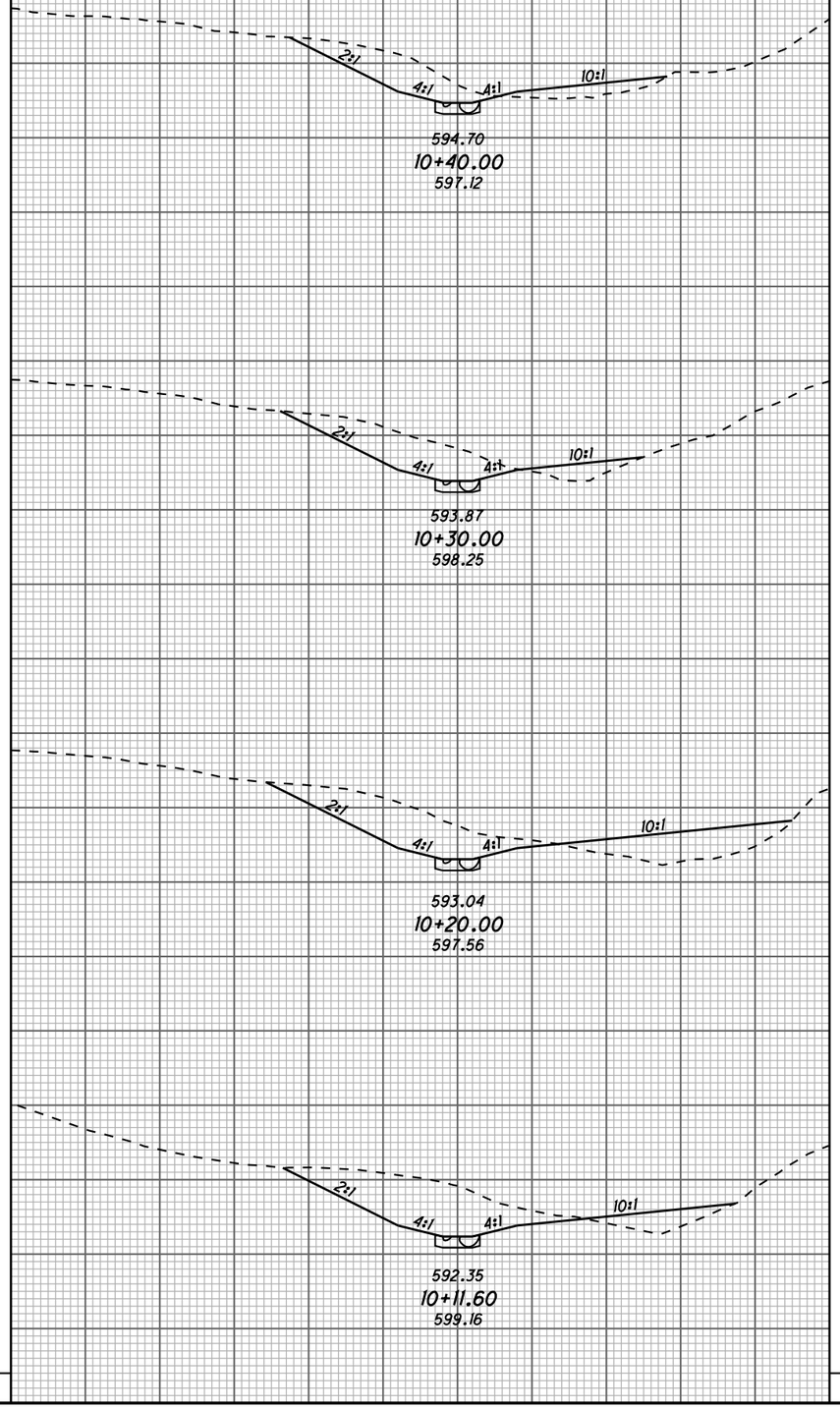

SEEDING		END AREA		VOLUME	
END WIDTH	SQ. YDS.	CUT	FILL	CUT	FILL

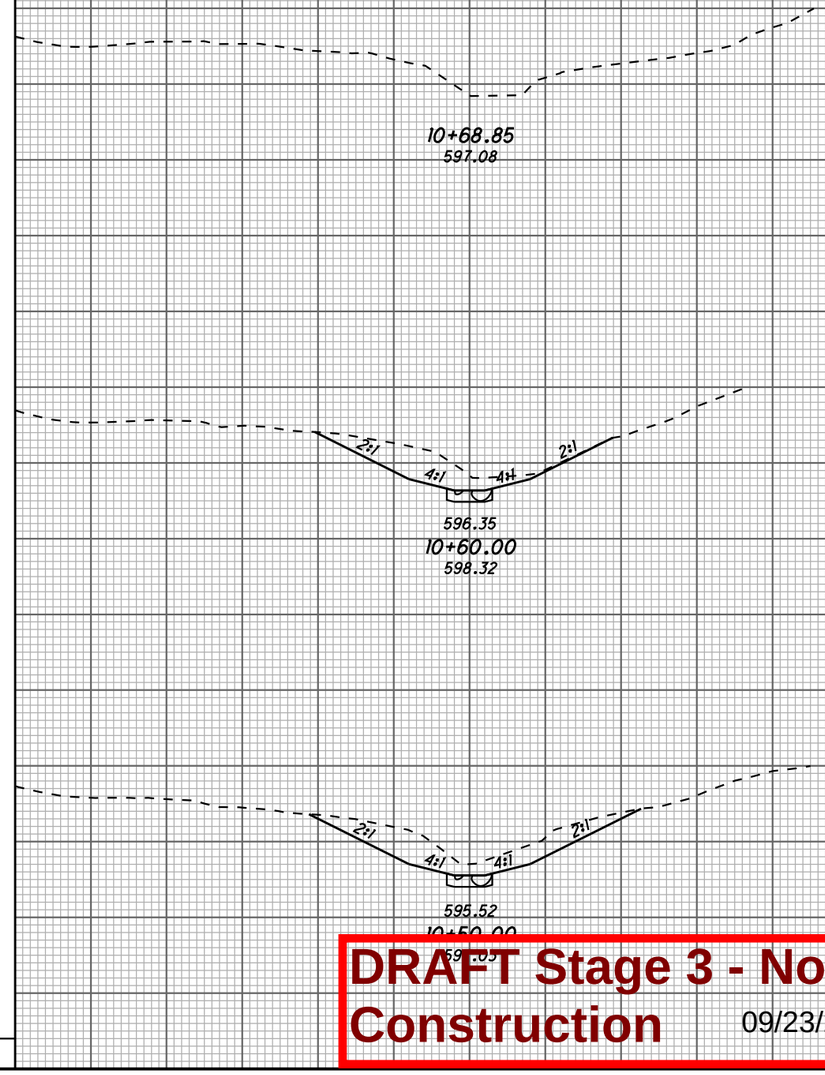

CALCULATED ALB
CHECKED TCM

CROSS SECTIONS CULVERT STA. 338+36.39 INLET CHANEL STA. 10+11.60 TO STA. 10+68.85

LAW-7-2.17

662
1247

DRAFT Stage 3 - Not for Construction 09/23/2024

U:\1736087\14\LAW\75923\drainage\sheets\75923XD106-2A.dgn 5/21/2024 4:59:53 PM SLParker

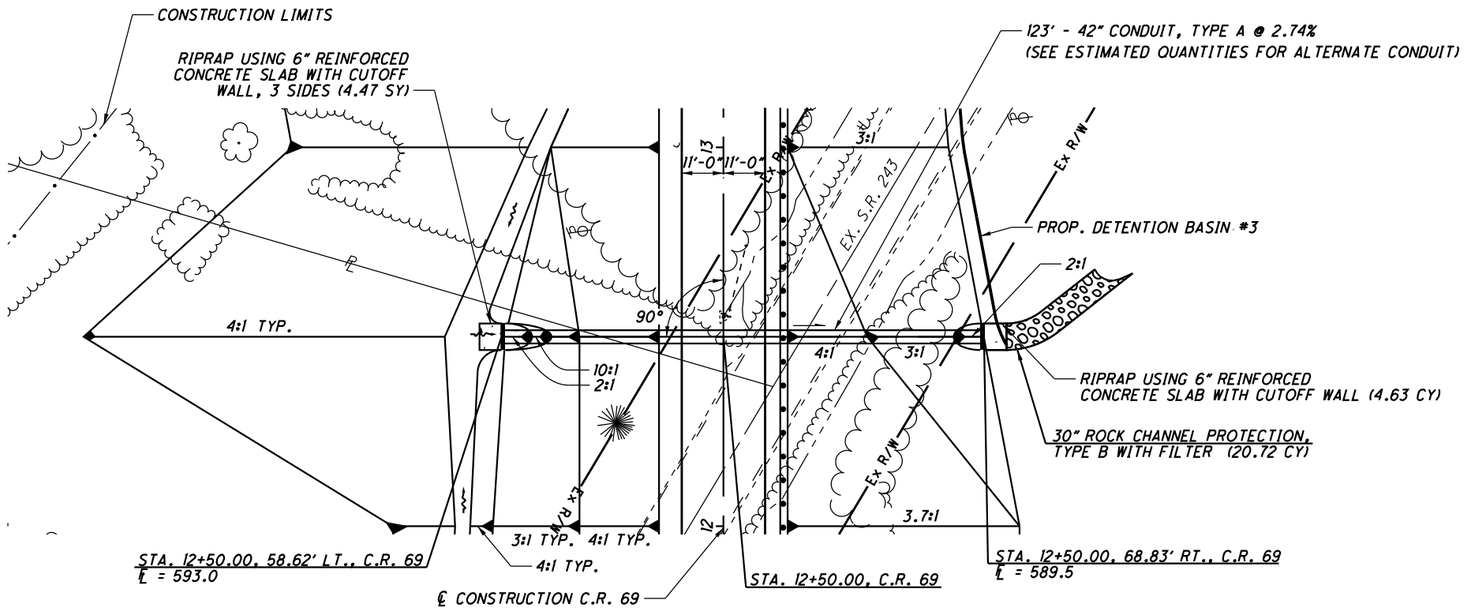

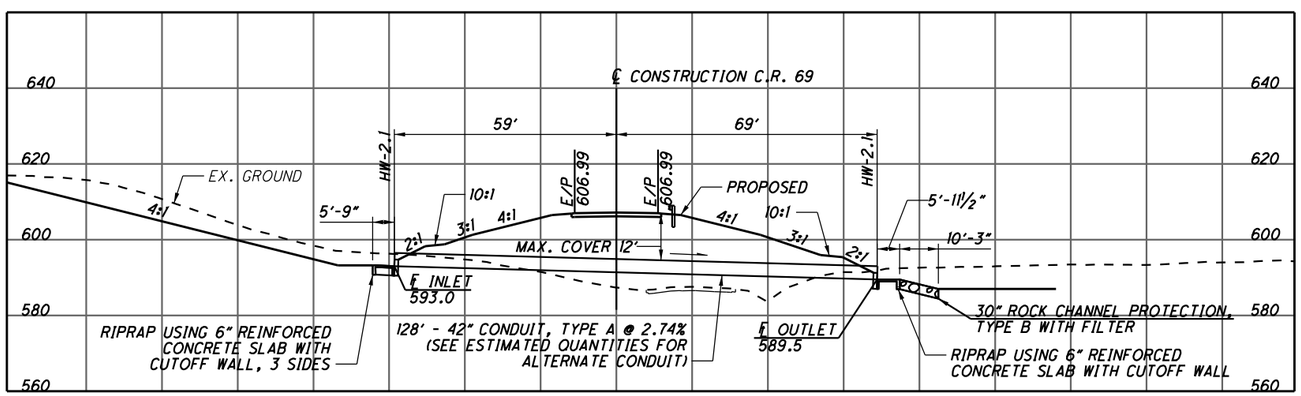

HYDRAULIC DATA	
DRAINAGE AREA	= 42 AC.
Q25	= 75 CFS
Q100	= 100 CFS
25V	= 10.6 FPS
100V	= 10.4 FPS
25 HW	= 598.2
100 HW	= 600.6
pH	= 7.6
DESIGN SERVICE LIFE	= 75 YEARS
ABRASION LEVEL	= 1
CFN	= 1995100

ESTIMATE QUANTITIES

ITEM	TOTAL	UNIT	DESCRIPTION
601	9.10	SY	RIPRAP, TYPE D
601	20.72	CY	ROCK CHANNEL PROTECTION, TYPE B WITH FILTER
602	1.84	CY	CONCRETE MASONRY
611	128	FT	42" CONDUIT, TYPE A, 707.01 (0.218) GALVANIZED OR 707.02 (0.064) ALUMINIZED OR 707.33

QUANTITIES CARRIED TO SUBSUMMARY SHEETS 79-80

DRAFT Stage 3 - Not for Construction 09/23/2024

N

HORIZONTAL SCALE IN FEET
0 10 20 40

CALCULATED SLP
CHECKED ALB

CULVERT DETAIL
C.R. 69 STA. 12+50.00

LAW-7-2.17

663
1247

U:\173608714\LAW\75923\drainage\sheets\75923DC012-2B.dgn 5/21/2024 4:59:56 PM SLParker

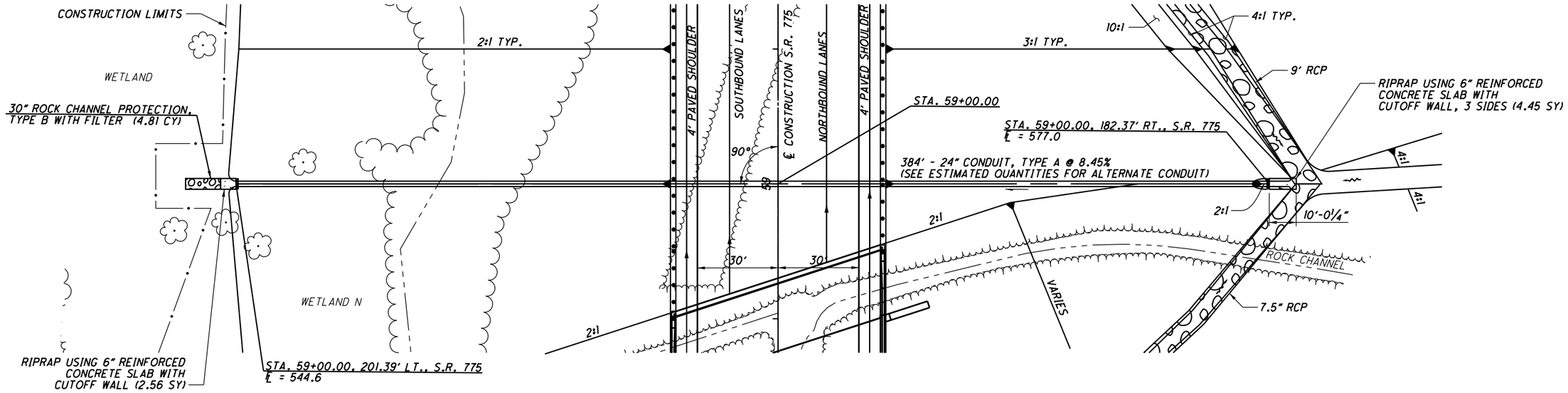

ESTIMATE QUANTITIES			
ITEM	TOTAL	UNIT	DESCRIPTION
601	7.01	SY	RIPRAP, TYPE D
601	4.81	CY	ROCK CHANNEL PROTECTION, TYPE B WITH FILTER
602	0.92	CY	CONCRETE MASONRY
611	384	FT	24" CONDUIT, TYPE A, 707.01 (0.218) GALVANIZED OR 707.02 (0.064)
			ALUMINIZED OR 707.04 (0.064)

QUANTITIES CARRIED TO SUBSUMMARY SHEETS 79-80

NOTE:
CULVERT SIZE SHOWN HAS BEEN INCREASED FOR FUTURE REHABILITATION

HYDRAULIC DATA	
DRAINAGE AREA	= 6 AC.
Q50	= 19 CFS
Q100	= 22 CFS
50V	= 11.3 FPS
100V	= 11.7 FPS
50 HW	= 580.1
100 HW	= 580.7
pH	= 7.6
DESIGN SERVICE LIFE	= 75 YEARS
ABRASION LEVEL	=
CFN	= 1995107

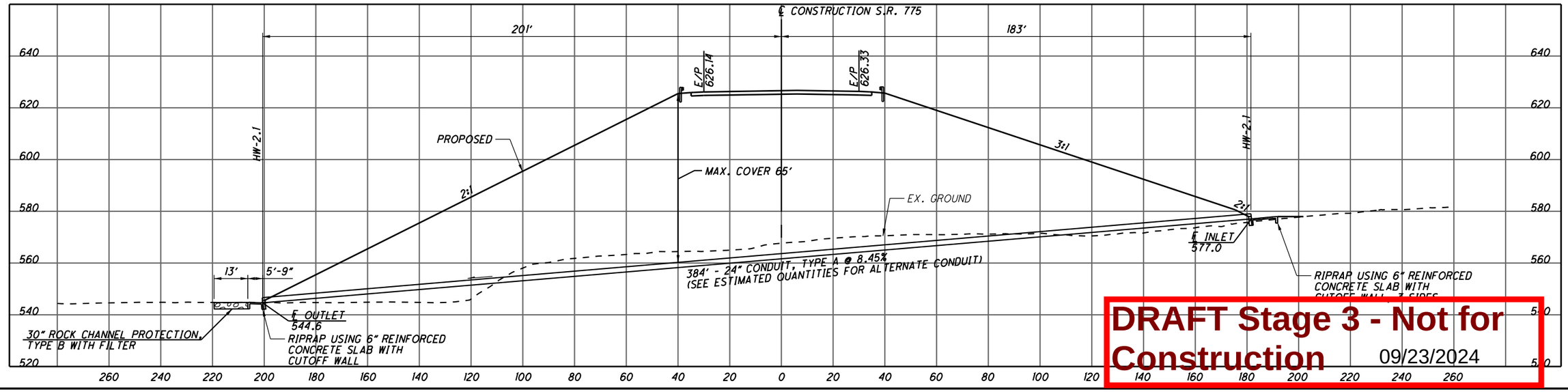

DRAFT Stage 3 - Not for Construction 09/23/2024

HORIZONTAL SCALE IN FEET
0 10 20 40

CALCULATED SLP
CHECKED ALB

CULVERT DETAIL
S.R. 775 STA. 59+00.00

LAW-7-2.17

U:\173608714\LAW\75923\drainage\sheets\75923DC015-2B.dgn 5/21/2024 4:59:57 PM SLParker

DETENTION BASIN AREA #1	
PONDED WATER SURFACE ELEVATION:	539.25
OUTLFLOW PIPE TAILWATER (OHWM):	525.1

BOOTHE EATON ROAD

100 YEAR FLOOD LIMITS

DETENTION BASIN ACCESS DRIVE WITH GRAVEL MAX. GRADE = 29%

CB2-2B
T/C = 540.00'
15" INV = 534.50'

8" RISER, 4 - 1" HOLES DRILLED AROUND CIRCUMFERENCE AT 537.00

℄ EX. R/W & CONSTRUCTION C.R. 104

ROCK CHANNEL PROTECTION, TYPE B (30" THICK)

15" TYPE C

HW-2.1
℄ = 534.25

TOP OF WEIR ELEVATION = 539.25'

TOP OF BERM ELEVATION = 541.25'
2' WIDE AT TOP

Wetland

36" TYPE C

ROCK CHANNEL PROTECTION, TYPE C
(10'x23'x1.5')

LOW FLOW CHANNEL

ITEM 670 - SLOPE EROSION PROTECTION

VARIES (TYP.)

POND 2

CONSTRUCTION LIMITS

FUTURE WESTBOUND LANES

SYMMES CREEK 3

Gravel

DRAFT Stage 3 - Not for Construction 09/23/2024

HORIZONTAL SCALE IN FEET
0 10 20 40

CALCULATED EDA
CHECKED ALB

DRAINAGE DETAILS DETENTION BASIN #1

LAW-7-2.17

665
1247

U:\173608714\LAW\75923\drainage\sheets\75923DM001-2A.dgn 5/21/2024 4:59:59 PM SLParker

DETENTION BASIN AREA #2	
PONDED WATER SURFACE ELEVATION:	535
OUTLFLOW PIPE TAILWATER (OHWM):	525.1

TOP OF BERM ELEVATION = 535.00 1' WIDE AT TOP

8" RISER, 3 - 1" HOLES DRILLED AROUND CIRCUMFERENCE AT 531.00

CB2-2B T/C = 534.50' 15" INV = 529.33'

STREAM 8

ROCK CHANNEL PROTECTION, TYPE B (30" THICK)

15" TYPE C

HW-2.1 ℄ = 529.00

TOP OF WEIR ELEVATION = 533.90'

CONSTRUCTION LIMITS

72'

35'

ROCK CHANNEL PROTECTION, TYPE C (10'x8'x1.5')

ITEM 670 - SLOPE EROSION PROTECTION

LOW FLOW CHANNEL

DETENTION BASIN ACCESS DRIVE, WITH GRAVEL MAX. GRADE = 26%

EATON ROAD

℄ EX. R/W & CONSTRUCTION C.R. 32

100 YEAR FLOOD LIMITS

℄ CONSTRUCTION LYNN LANE

60" TYPE A

Abandonded Pole

Guy Pole

Guy Wire

WETLAND F

FURTURE WESTBOUND LANES

℄ CONSTRUCTION S.R. 7

EX. ℄ R/W LYNN LANE

Picket Fence

T.R. x 489

100 YEAR FLOOD LIMITS

DRAFT Stage 3 - Not for Construction 09/23/2024

HORIZONTAL SCALE IN FEET

CALCULATED EDA CHECKED ALB

DRAINAGE DETAILS DETENTION BASIN #2

LAW-7-2.17

666 1247

U:\1736087\14\LAW\75923\drainage\sheets\75923DM002-2A.dgn 5/21/2024 5:00:00 PM SLParker

DETENTION BASIN AREA #3	
PONDED WATER SURFACE ELEVATION:	590
OUTFLOW PIPE TAILWATER:	586.8

DETENTION BASIN #3
ACCESS DRIVE WITH GRAVEL
MAX. GRADE = 33%

ROCK CHANNEL
PROTECTION, TYPE C
(30'x15'x1.5')

LOW FLOW CHANNEL

6 - 1" DIA. HOLES DRILLED AROUND
CIRCUMFERENCE AT 586.00
6 - 1" DIA. HOLES DRILLED AROUND
CIRCUMFERENCE AT 587.67

8" RISER,
CB-2-2B
T/C = 589.90'
15" INV = 585.60'

15" TYPE C

HW-2.1
℄ = 584.30'

TOP OF WEIR
ELEVATION = 588.90

ROCK CHANNEL
PROTECTION, TYPE B
(30" THICK)

ITEM 670 - SLOPE
EROSION PROTECTION

TOP OF BERM BETWEEN
THE FOREBAY AND
MICROPOOL IS AT
ELEVATION 586.6'

TOP OF BERM
ELEVATION = 592.00
6' WIDE AT TOP

℄ CONSTRUCTION S.R. 243

℄ CONSTRUCTION C.R. 69

42" TYPE A

54" TYPE B

15" TYPE F

Ex R/W

LA-R/W

OH-E

HORIZONTAL SCALE IN FEET
0 25 50 100

CALCULATED EDA
CHECKED ALB

DRAINAGE DETAILS
DETENTION BASIN #3

LAW-7-2.17

667
1247

DRAFT Stage 3 - Not for Construction 09/23/2024

U:\173608714\LAW\75923\drainage\sheets\75923DM003-2B.dgn 5/21/2024 5:00:02 PM SLParker

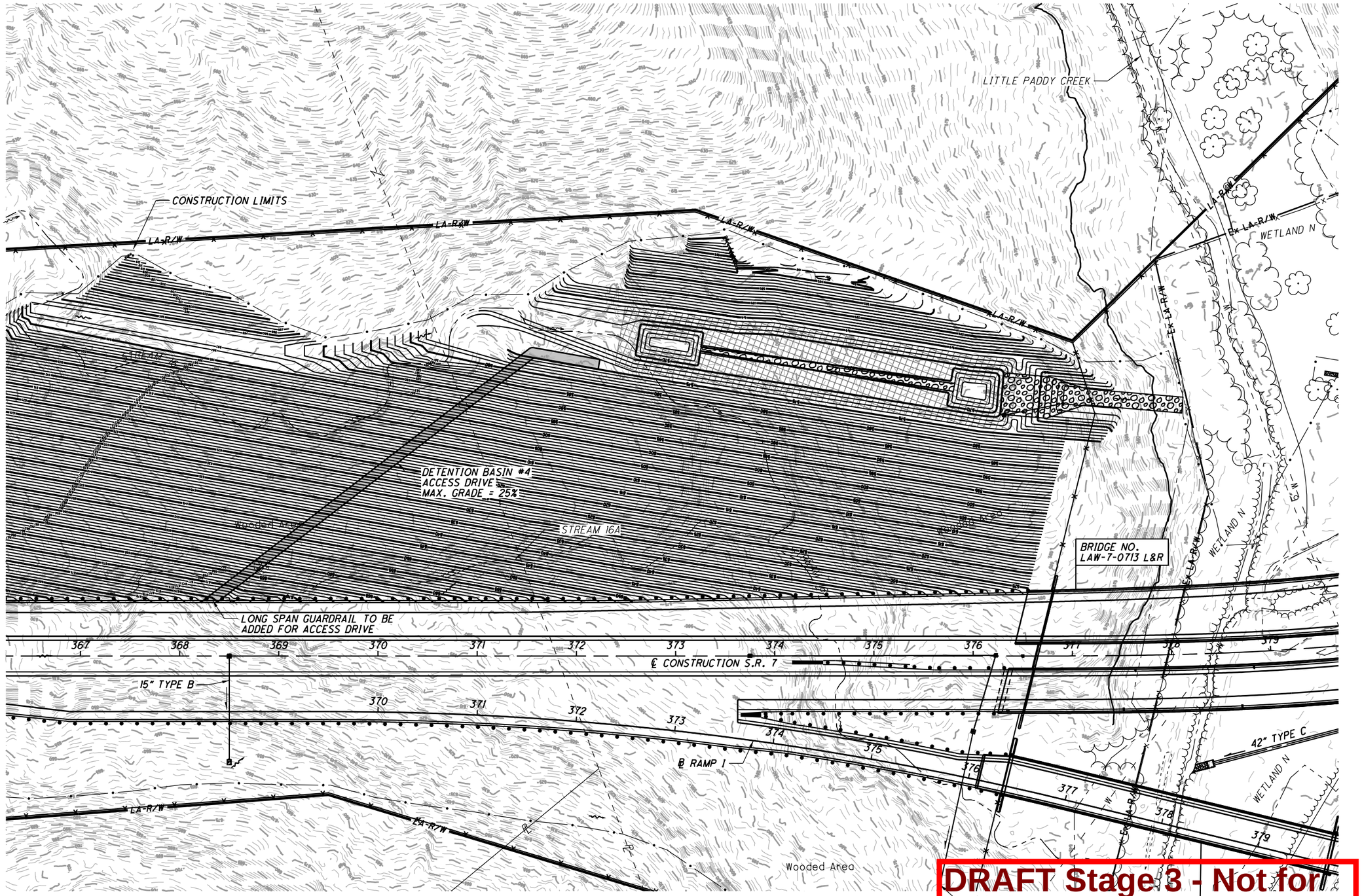

DRAFT Stage 3 - Not for Construction

06/23/2024

N

0 25 50 100
HORIZONTAL SCALE IN FEET

CALCULATED EDA
CHECKED ALB

DRAINAGE DETAILS
DETENTION BASIN #4

LAW-7-2.17

668
1247

U:\173608714\LAW\75923\drainage\sheets\75923DM004-2B.dgn 5/21/2024 5:00:04 PM SLParker

DETENTION BASIN AREA #3	
PONDED WATER SURFACE ELEVATION:	590
OUTFLOW PIPE TAILWATER:	586.8

CONSTRUCTION LIMITS

LA-R/W

100 YEAR FLOOD LIMITS

TOP OF BERM
ELEVATION = 574.50
2' WIDE AT TOP

TOP OF WEIR
ELEVATION = 571.50

HW-2.1
℄ = 566.00

ROCK CHANNEL
PROTECTION, TYPE B
(30" THICK)

LOW FLOW CHANNEL

DETENTION BASIN #4
ACCESS DRIVE
MAX. GRADE = 25%

ROCK CHANNEL
PROTECTION, TYPE C
(258'x8'x1.5')

ITEM 670 - SLOPE
EROSION PROTECTION

8" RISER,
6 - 1" HOLES DRILLED
AROUND CIRCUMFERENCE
AT 570.00

CB-2-2B
T/C = 572.50'
15" INV = 567.50'

15" TYPE C

47'

38'

98'

EX LA-R/W

16'

BRIDGE NO.
LAW-7-0713 L&R

100 YEAR FLOOD LIMITS

DRAFT Stage 3 - Not for Construction 09/23/2024

HORIZONTAL SCALE IN FEET
0 25 50 100

CALCULATED EDA
CHECKED ALB

DRAINAGE DETAILS
DETENTION BASIN #4

LAW-7-2.17

669
1247

U:\173608714\LAW\75923\drainage\sheets\75923DM005-2B.dgn 5/21/2024 5:00:06 PM SLPorter

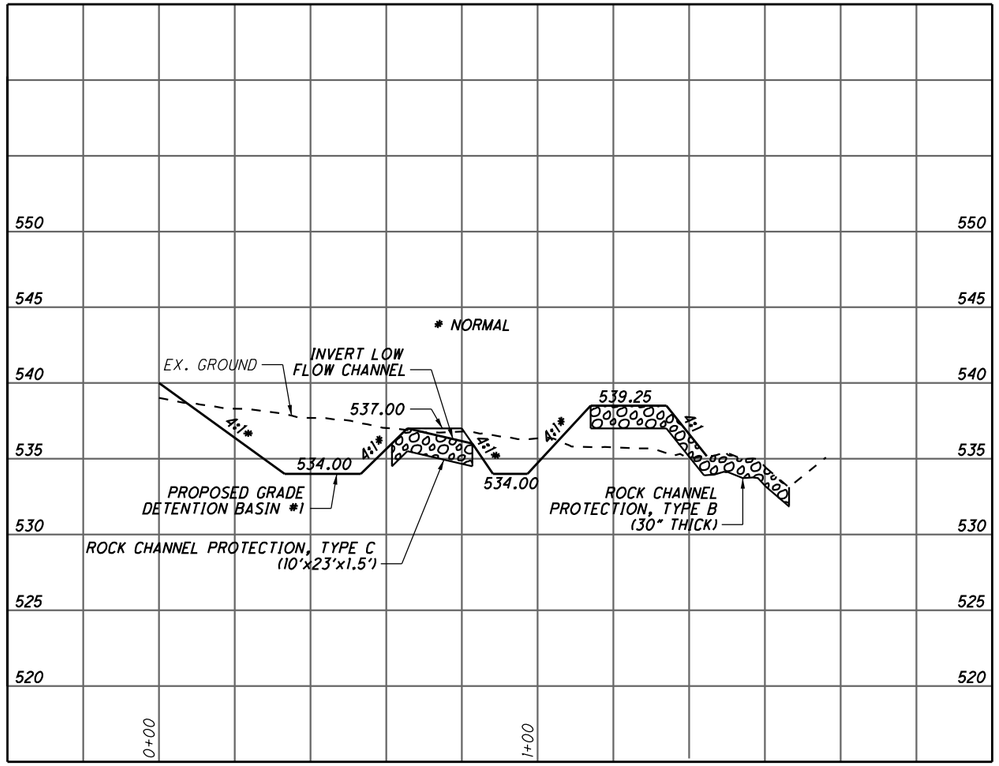

DETENTION BASIN #1 PROFILE

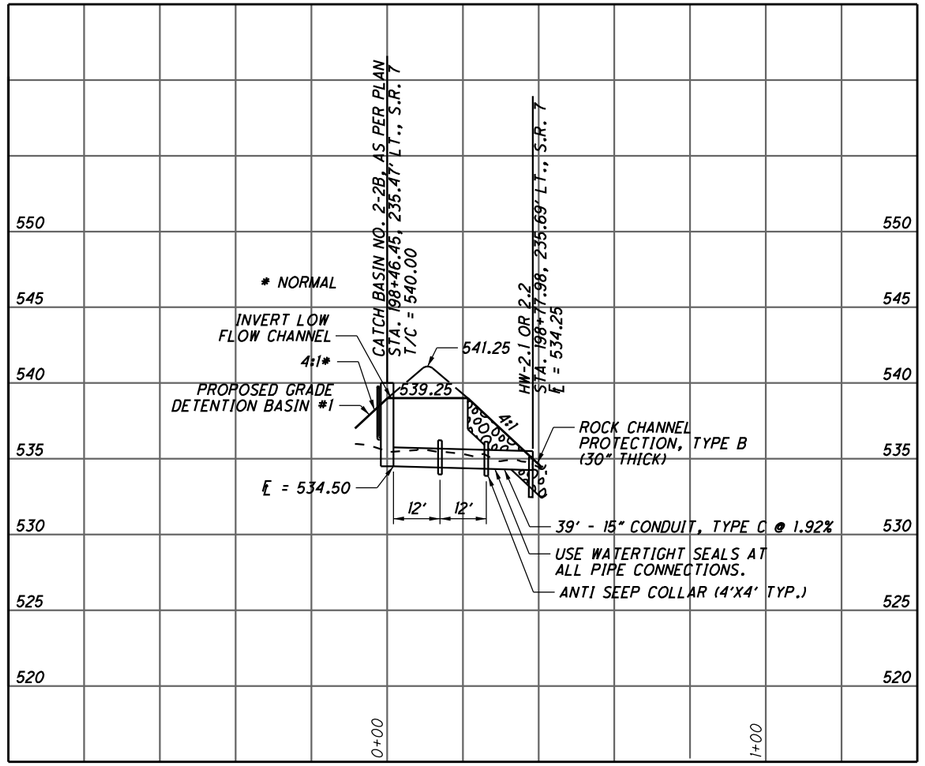

DETENTION BASIN #1 STORM SEWER PROFILE

NOTES TO APPLY TO ALL DETENTION BASINS:

CATCH BASIN NO. 2-2B, AS PER PLAN SHALL BE CONSTRUCTED PER SCD WO-1.1 AND SHALL INCLUDE THE COST OF THE ASSOCIATED RISER PIPE AND THE LABOR, EQUIPMENT AND MATERIALS NECESSSARY TO COMPLETE THIS WORK.

ANTI-SEEP COLLAR TO BE CONSTRUCTED PER SCD WO-1.2

ITEM	TOTAL	UNIT	DESCRIPTION
203	364.98	CY	EXCAVATION
203	762.87	CY	EMBANKMENT, USING NATURAL SOILS, 703.16A
204	57.32	SY	SUBGRADE COMPACTION
304	12.74	CY	AGGREGATE BASE
601	260.12	CY	ROCK CHANNEL PROTECTION, TYPE B WITH FILTER
601	12.78	CY	ROCK CHANNEL PROTECTION, TYPE C WITH FILTER
602	0.75	CY	CONCRETE MASONRY
611	1	EACH	CATCH BASIN, NO. 2-2B, AS PER PLAN
611	39	FT	15" CONDUIT, TYPE C
659	1258.80	SY	SEEDING AND MULCHING, CLASS 3C
670	381.82	SY	SLOPE EROSION PROTECTION

QUANTITIES CARRIED TO TOTAL SUMMARY, SEE SHEET 4

DRAFT Stage 3 - Not for Construction 09/23/2024

DRAINAGE DETAILS
DETENTION BASIN PROFILES

CALCULATED EDA
CHECKED ALB

0 20 40
SCALE IN FEET

LAW-7-2.17

670
1247

U:\173608714\LAW\75923\drainage\sheets\75923DF500-2A.dgn 5/21/2024 5:00:07 PM SLParker

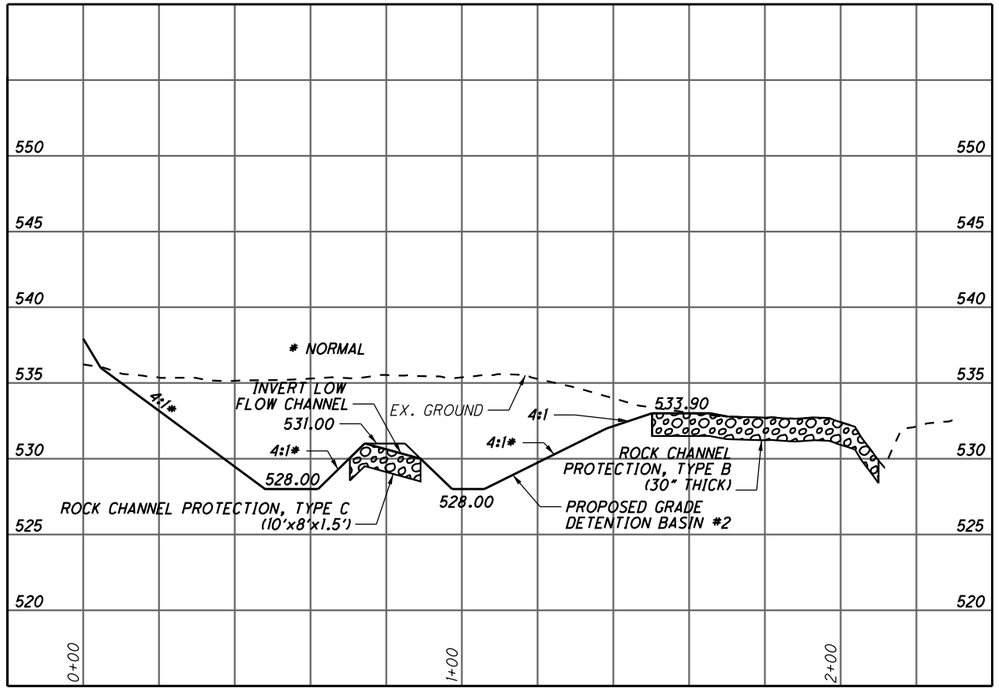

DETENTION BASIN #2 PROFILE

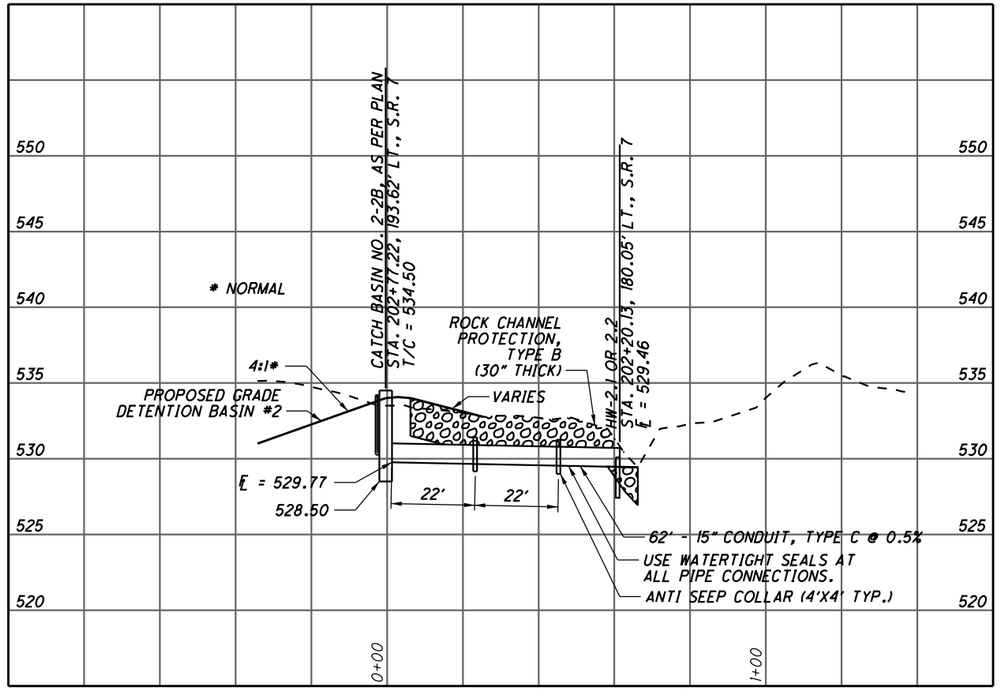

DETENTION BASIN #2 STORM SEWER PROFILE

ITEM	TOTAL	UNIT	DESCRIPTION
203	1106.54	CY	EXCAVATION
203	9.75	CY	EMBANKMENT, USING NATURAL SOILS, 703.16A
204	110.79	SY	SUBGRADE COMPACTION
304	24.62	CY	AGGREGATE BASE
601	204.01	CY	ROCK CHANNEL PROTECTION, TYPE B WITH FILTER
601	4.44	CY	ROCK CHANNEL PROTECTION, TYPE C WITH FILTER
602	0.75	CY	CONCRETE MASONRY
611	1	EACH	CATCH BASIN, NO. 2-2B, AS PER PLAN
611	62	FT	15" CONDUIT, TYPE C
659	245.67	SY	SEEDING AND MULCHING, CLASS 3C
670	181.38	SY	SLOPE EROSION PROTECTION

QUANTITIES CARRIED TO TOTAL SUMMARY, SEE SHEET 4

DRAFT Stage 3 - Not for Construction 09/23/2024

0 20 40 SCALE IN FEET

CALCULATED EDA
CHECKED ALB

DRAINAGE DETAILS
DETENTION BASIN PROFILES

LAW-7-2.17

671
1247

U:\173608714\LAW\75923\drainage\sheets\75923DF501-2B.dgn 5/21/2024 5:00:08 PM SLParker

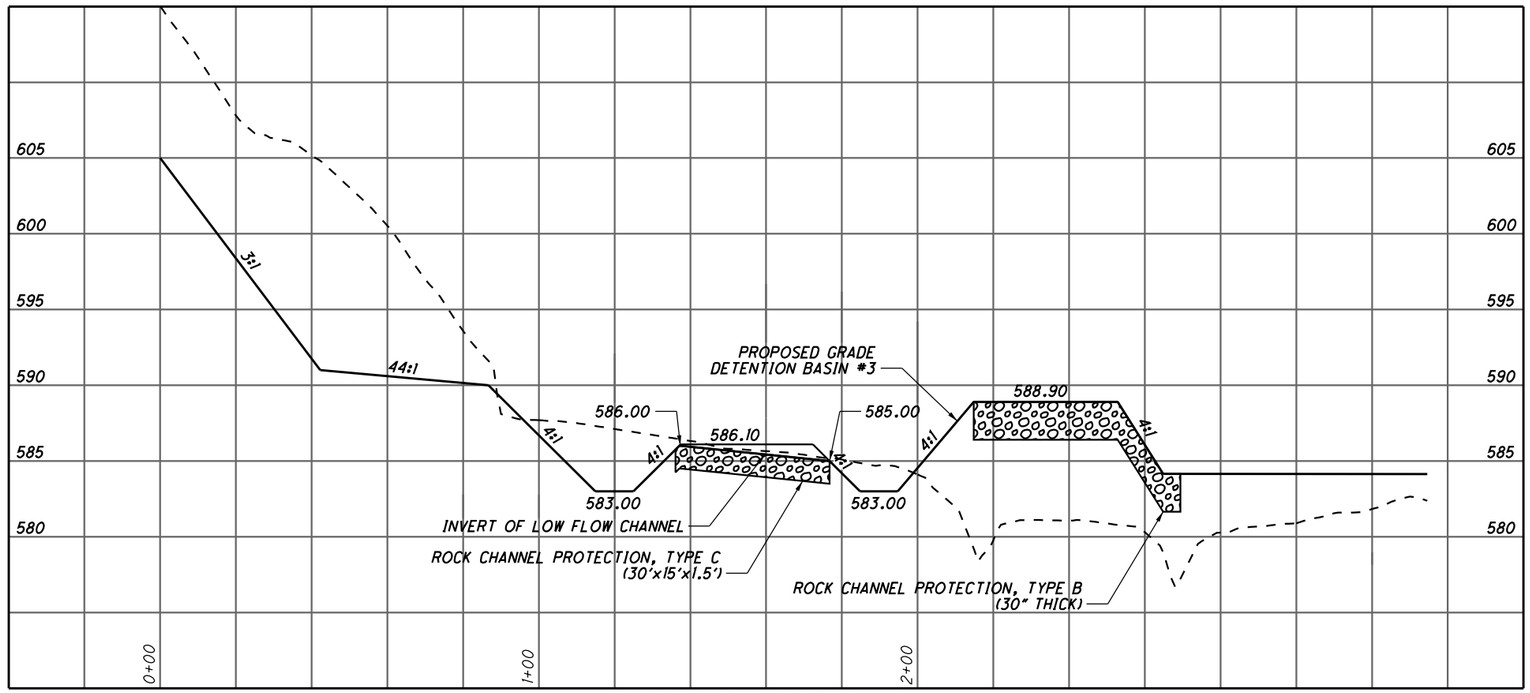

DETENTION BASIN #3

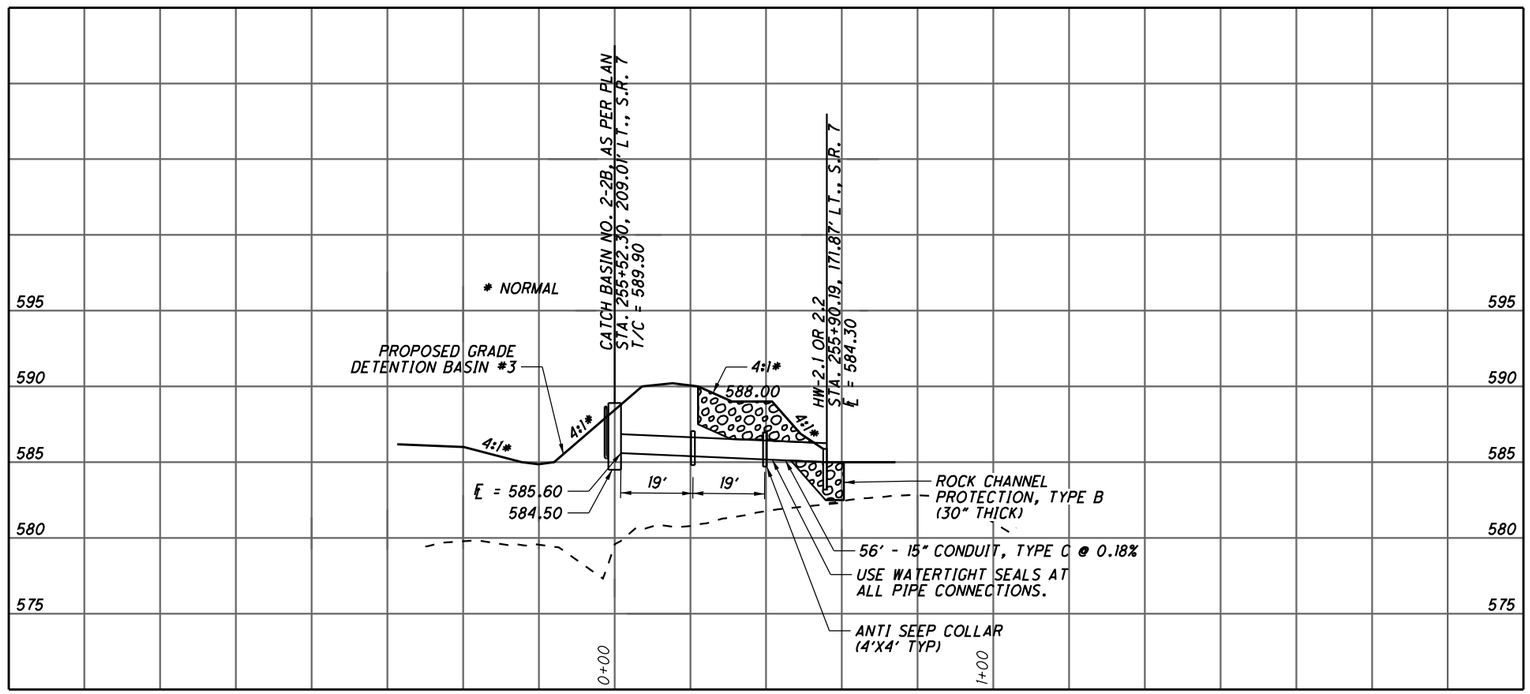

DETENTION BASIN #3 STORM SEWER PROFILE

ITEM	TOTAL	UNIT	DESCRIPTION
203	2864.02	CY	EXCAVATION
203	5781.23	CY	EMBANKMENT, USING NATURAL SOILS, 703.16A
204	67.53	SY	SUBGRADE COMPACTION
304	15.01	CY	AGGREGATE BASE
601	254.89	CY	ROCK CHANNEL PROTECTION, TYPE B WITH FILTER
601	25	CY	ROCK CHANNEL PROTECTION, TYPE C WITH FILTER
602	0.75	CY	CONCRETE MASONRY
611	1	EACH	CATCH BASIN, NO. 2-2B, AS PER PLAN
611	56	FT	15" CONDUIT, TYPE C
659	2917.14	SY	SEEDING AND MULCHING, CLASS 3C
670	820.47	SY	SLOPE EROSION PROTECTION

QUANTITIES CARRIED TO TOTAL SUMMARY, SEE SHEET 74

DRAFT Stage 3 - Not for Construction 09/23/2024

SCALE IN FEET
0 20 40

CALCULATED EDA
CHECKED ALB

DETENTION BASIN PROFILES

LAW-7-2.17

672
1247

U:\173608714\LAW\75923\drainage\sheets\75923DF502-2B.dgn 5/21/2024 5:00:09 PM SLParker

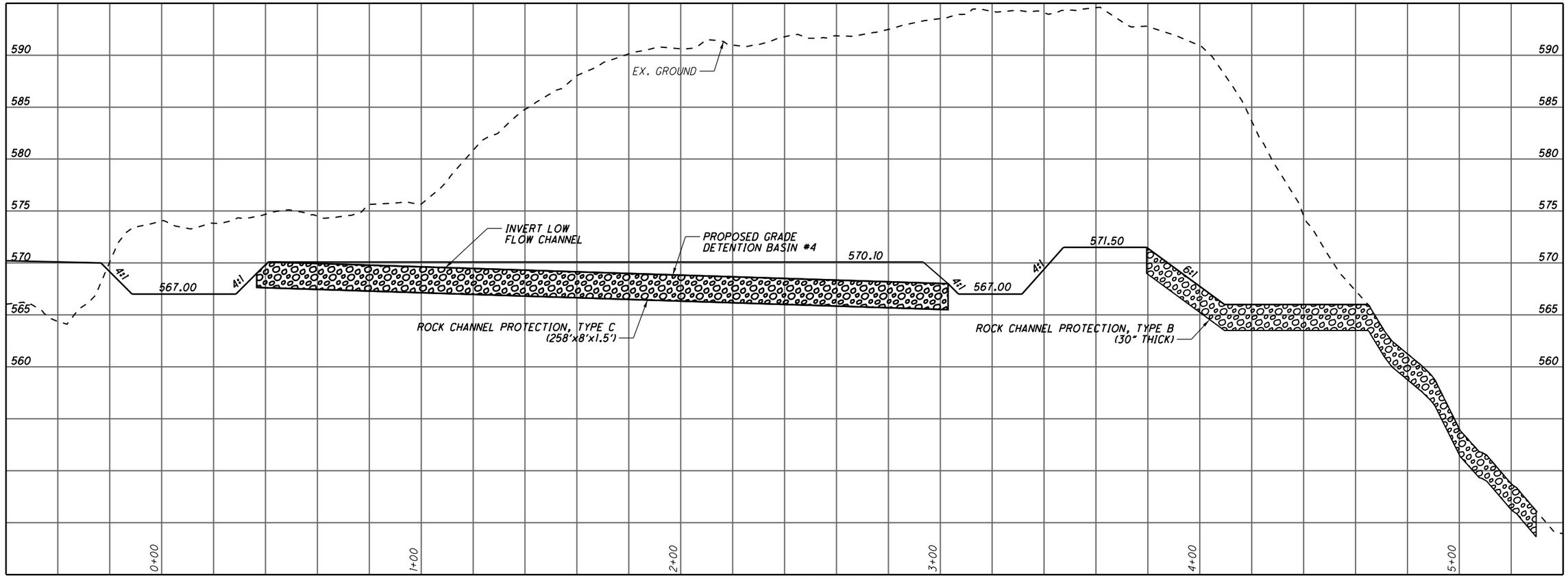

DETENTION BASIN #4

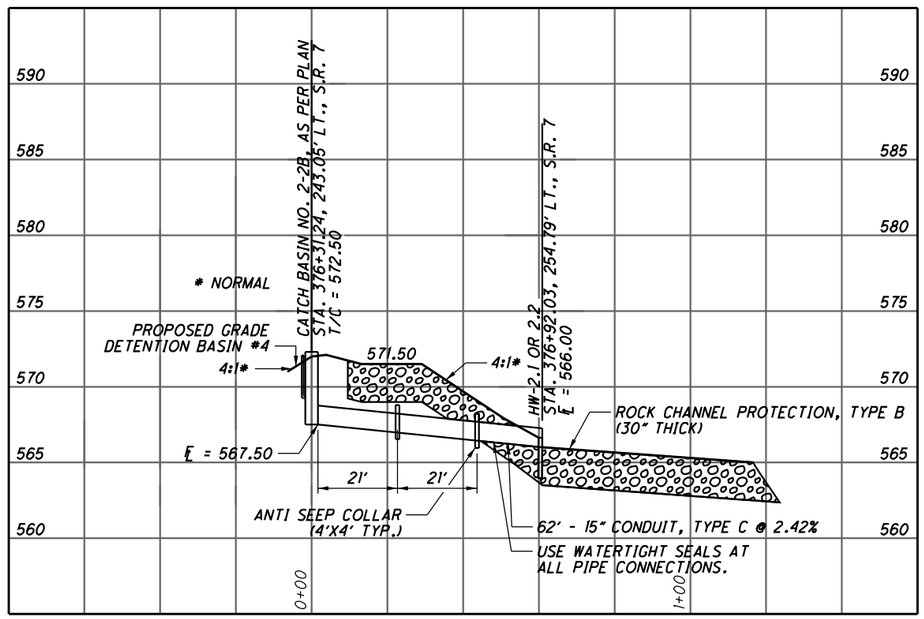

DETENTION BASIN #4 STORM SEWER PROFILE

ITEM	TOTAL	UNIT	DESCRIPTION
203	20081.62	CY	EXCAVATION
203	904.64	CY	EMBANKMENT, USING NATURAL SOILS, 703.16A
601	427.87	CY	ROCK CHANNEL PROTECTION, TYPE B WITH FILTER
601	114.67	CY	ROCK CHANNEL PROTECTION, TYPE C WITH FILTER
602	0.75	CY	CONCRETE MASONRY
611	1	EACH	CATCH BASIN, NO. 2-2B, AS PER PLAN
611	62	FT	15" CONDUIT, TYPE C
659	1340.25	SY	SEEDING AND MULCHING, CLASS 3C
670	2905.23	SY	SLOPE EROSION PROTECTION

QUANTITIES CARRIED TO THE SUBSUMMARY, SEE SHEET 74

DRAFT Stage 3 - Not for Construction 09/23/2024

SCALE IN FEET 0 20 40

CALCULATED EDA
CHECKED ALB

DETENTION BASIN PROFILES

LAW-7-2.17

673
1247

U:\173608714\LAW\75923\drainage\sheets\75923DF503-2B.dgn 5/21/2024 5:00:10 PM SLParker

REFERENCE NO.	SHEET NO.	STATION FROM	STATION TO	SIDE	LEFT OUTLET TO	RIGHT OUTLET TO	OUTLET ELEV.	OUTLET STATION	OUTLET OFFSET	REMARKS	601 TIED CONCRETE BLOCK MAT WITH TYPE I UNDERLAYMENT	605 6" SHALLOW PIPE UNDERDRAINS	605 6" UNCLASSIFIED PIPE UNDERDRAINS	605 6" ROCK CUT UNDERDRAINS	605 6" BASE PIPE UNDERDRAINS	611 6" CONDUIT, TYPE F FOR UNDERDRAIN OUTLETS	611 6" CONDUIT, TYPE B	611 PRECAST REINFORCED CONCRETE OUTLET	BENDS AND BRANCHES FOR INFORMATION ONLY			
		S.R. 7									SY	FT	FT	FT	FT	FT	FT	EACH	EACH			
1-U	95	114+30.42	119+83.21	RT		CB	550.00	119+83.21	93.33	6" UNCLASSIFIED UNDERDRAIN FROM STA. 114+30.42, FL = 551.01 TO STA. 119+83.21, FL = 550.85 6" UNCLASSIFIED UNDERDRAIN FROM STA. 115+65.70, FL = 551.92 TO STA. 119+83.21, FL = 551.80			968			50			4			
2-U	95	114+30.42	119+83.21	RT		CB	550.00	119+83.21	93.33	6" UNCLASSIFIED UNDERDRAIN FROM STA. 114+30.42, FL = 551.92 TO STA. 119+83.21, FL = 551.80			553				28		1			
3-U	95	118+98.44	119+83.21	RT		CB	550.00	119+83.21	93.33	6" UNCLASSIFIED UNDERDRAIN FROM STA. 118+98.44, FL = 552.91 TO STA. 119+79.04, FL = 551.85 TEE INTO UNDERDRAIN SYSTEM 2-U AT STA. 119+79.04			82									
4-U	95	119+03.51	119+83.21	LT		CB	550.00	119+83.21	93.33	6" UNCLASSIFIED UNDERDRAIN FROM STA. 119+03.51, FL = 553.85 TO STA. 119+83.21, FL = 553.85			84				24		1			
5-U	95, 97	119+83.21	123+69.22	RT		CB	550.00	119+83.21	93.33						387				1			
6-U	95, 97	119+83.21	126+47.37	RT		CB	550.00	119+83.21	93.33			657			1317							
7-U	97	126+47.37	132+35.54	RT/LT	SLOPE		532.79	126+47.37	85.27		1.78				590	88		1	1			
8-U	97	126+47.37	132+33.54	RT		SLOPE	532.79	126+47.37	85.27						584		21		1			
9-U	97	126+47.37	132+21.46	RT		SLOPE	550.77	126+47.37	85.28		1.78	568			562	42		1	4			
10-U	99	135+48.67	145+00.00	RT		SLOPE	567.67	135+48.68	132.00		1.78	937			1873	93	31	1	5			
11-U	99, 101	145+00.00	155+00.00	RT		SLOPE	547.20	145+00.00	115.08		1.78	989			1984	70	32	1	5			
12A-U	101	155+00.00	157+00.00	RT		SLOPE	558.36	155+00.00	107.52		1.78	400			400	65	32	1	6			
12-U	101, 103	157+00.00	165+00.00	RT		CB	573.00	157+00.00	55.67			1300			1300		42		4			
13-U	103	163+50.00	170+50.00	RT		CB	585.00	163+50.00	55.67			1402			1401		42		4			
14-U	103, 105	170+50.00	180+30.00	RT		CB	623.26	170+50.00	61.67	DUAL SYSTEM ON OUTSIDE LANE RUNS FROM STA. 170+50.00 TO STA. 175+03.18		1435			1970		49		4			
15-U	105	175+03.18	180+30.00	RT		WYE				TEE INTO UNDERDRAIN SYSTEM 14-U AT STA. 175+03.18					532		24		2			
16-U	105, 107	180+30.00	188+92.26	RT		WYE				TEE INTO UNDERDRAIN SYSTEM 17-U AT STA. 188+92.26				194	678		24		2			
17-U	105, 107	180+30.00	190+00.00	RT		SLOPE	615.92	190+00.00	98.07		1.78	772		904	1557	53	48	1	5			
17A-U	107, 109	190+00.00	194+60.35	RT		CB	599.17	194+60.35	5.59			400		100	401	20			2			
18-U	107	194+60.35	195+15.54	RT		CB	596.57	194+36.74	54.00	TEE INTO UNDERDRAIN SYSTEM 18A-U AT STA. 194+98.52		44			46	20	37		2			
18A-U	107, 109	190+00.00	194+98.52	RT		CB	596.57	194+36.74	54.00	6" UNCLASSIFIED UNDERDRAIN FROM STA. 195+11.28, FL = 596.43 TO STA. 194+59.33, FL = 596.43 6" UNCLASSIFIED UNDERDRAIN FROM STA. 195+15.54, FL = 596.91 TO STA. 194+60.35, FL = 596.91 DUAL SYSTEM ON OUTSIDE LANE RUNS FROM STA. 192+23.46 TO STA. 194+98.52		204	98	50	377	40						
18B-U	109	196+67.04	198+54.83	RT		SLOPE	546.96	198+58.05	137.96						188		28		1			
18C-U	109	196+44.72	196+78.92	RT		CB	586.39	196+78.92	54.00						25	10						
18D-U	109	196+50.04	198+58.05	RT		SLOPE	546.96	198+58.05	137.96		1.78	206			168	113		1	4			
TOTALS CARRIED TO SHEET 678											12.46	9314	1785	1248	16340	664	462	7				

CALCULATED SLP CHECKED ALB

UNDERDRAIN TABLE

LAW-7-2.17

DRAFT Stage 3 - Not for Construction 09/23/2024

U:\1736087\14\LAW\75923\drainage\sheets\75923D0001-2B.dgn 5/21/2024 5:00:11 PM SLParker

UNDERDRAIN TABLE

CALCULATED SLP CHECKED ALB

REFERENCE NO.	SHEET NO.	STATION FROM	STATION TO	SIDE	LEFT OUTLET TO	RIGHT OUTLET TO	OUTLET ELEV.	OUTLET STATION	OUTLET OFFSET	REMARKS	601 TIED CONCRETE BLOCK MAT WITH TYPE I UNDERLAYMENT	605 6" SHALLOW PIPE UNDERDRAINS	605 6" UNCLASSIFIED PIPE UNDERDRAINS	605 6" ROCK CUT UNDERDRAINS	605 6" BASE PIPE UNDERDRAINS	611 6" CONDUIT, TYPE F FOR UNDERDRAIN OUTLETS	611 6" CONDUIT, TYPE B	PRECAST REINFORCED CONCRETE OUTLET	BENDS AND BRANCHES FOR INFORMATION ONLY			
											SY	FT	FT	FT	FT	FT	FT	EACH	EACH			
		S.R. 7																				
19-U	109	202+27.86	202+49.53	RT		CB	580.75	202+49.53	13.13						12	10						
19A-U	109	202+33.54	202+52.20	RT		CB	576.79	202+52.20	56.00			8			7	32			1			
20-U	109	204+07.45	202+49.53	RT		CB	580.75	202+49.53	13.13						148	10						
20A-U	109	204+45.40	202+52.20	RT		CB	576.79	202+52.20	56.00			182			158	20			1			
20B-U	109	204+40.38	204+07.45	RT		CB	580.84	204+07.45	12.00						23	10						
20C-U	109	204+46.99	204+22.35	RT		CB	577.60	204+22.35	54.00						15	10						
21-U	109	205+83.02	206+19.92	RT		CB	577.50	206+27.36	54.00	TEE INTO UNDERDRAIN SYSTEM 21A-U AT STA. 205+89.49		27				10	33					
21A-U	109	205+89.49	206+27.36	RT		CB	577.50	206+27.36	54.00	6" UNCLASSIFIED UNDERDRAIN FROM STA. 205+89.49, FL = 583.11 TO STA. 206+27.36, FL = 583.11 6" UNCLASSIFIED UNDERDRAIN FROM STA. 205+91.54, FL = 583.69 TO STA. 206+27.36, FL = 583.11			54			29			1			
21B-U	111	206+19.92	212+50.00	RT		CB	584.27	206+19.92	12.00						618	10			1			
21C-U	111	206+27.36	212+50.00	RT		CB	577.50	206+27.36	54.00			605			603	20			1			
22-U	111	212+50.00	214+16.27	RT		CB	607.43	212+50.00	61.67					116	50				1			
23-U	111, 114	212+50.00	219+50.00	RT		CB	607.43	212+50.00	61.67	DUAL SYSTEM ON INSIDE LANE RUNS FROM STA. 212+50.00 TO STA. 217+80.41		820		800	916		48	1	4			
24-U	114	219+50.00	225+50.00	RT	CB		640.13	219+50.00	7.62			600			600	32			2			
24A-U	114, 117	219+50.00	225+50.00	RT		CB	638.72	219+50.00	62.00			600			600	14			2			
25-U	114, 117	225+50.00	231+57.80	RT		SLOPE	588.43	225+50.00	284.44		1.78				2467	237	56	1	4			
25A-U	117	231+57.80	237+49.08	RT		WYE				TEE INTO UNDERDRAIN SYSTEM 26-U AT STA. 237+49.08					606		24					
26-U	117	231+57.80	241+50.00	RT	SLOPE		639.76	241+50.00	39.01		1.78				3005	45	46	1	3			
27-U	117, 119	241+50.00	251+00.00	LT	CB		619.02	251+00.00	50.05	DUAL SYSTEM RUNS FROM STA. 241+50.00 TO STA. 246+92.00		542			951	10	5		2			
28-U	117, 119	241+50.00	251+00.00	RT		CB	619.69	251+00.00	4.12	DUAL SYSTEM RUNS FROM STA. 242+33.20 TO STA. 246+99.63		467			948	10	3		2			
29-U	119	251+00.00	254+00.00	RT		CB	611.31	254+00.00	1.81						303	10						
29A-U	119	11+00.70 (S.R. 243)	254+00.00	LT	CB		610.46	654+00.00	39.17						183	10						
29B-U	119	251+56.32	252+73.57	LT	WYE					TEE INTO UNDERDRAIN SYSTEM 29A-U AT STA. 253+08.63					179		37		2			
29C-U	119	251+56.32	252+73.57	RT	WYE					TEE INTO UNDERDRAIN SYSTEM 29A-U AT STA. 253+08.63					198							
30-U	119	254+00.00	260+50.00	RT	SLOPE		584.45	260+50.00	80.75	DUAL SYSTEM ON OUTSIDE LANE RUNS FROM STA. 258+04.74 TO STA. 260+50.00	1.78	241			663	37	32	1	4			
31-U	123, 125	260+50.00	270+21.23	RT	SLOPE		556.71	270+21.23	93.46		1.78	949			2847	53	32	1	5			
32-U	125	270+21.23	277+00.00	RT	SLOPE		556.71	270+21.23	93.46			1357			1357							
33-U	125, 127	277+00.00	284+99.25	RT		SLOPE	543.45	277+00.00	176.29	DUAL SYSTEM ON OUTSIDE LANE RUNS FROM STA. 277+00.00 TO STA. 277+37.12	1.78	839			1606	139	32	1	4			
33A-U	127	2844+73.71	284+99.25	RT		WYE				TEE INTO UNDERDRAIN SYSTEM 33-U AT STA. 284+47.71		52					10		1			
34-U	127, 129	284+99.25	293+50.00	RT		SLOPE	536.32	293+50.00	196.65		1.78	1702			1702	160	32	1	4			
35-U	129	293+50.00	297+65.66	RT		SLOPE	531.38	297+58.31	135.00		1.78	826			825	98	29	1	4			
36A-U	129	300+78.70	300+93.74	RT		CB	559.80	300+93.74	14.00						5	10						
TOTALS CARRIED TO SHEET 678											12.46	9817	54	916	21595	1026	419	8				

DRAFT Stage 3 - Not for Construction 09/23/2024

LAW-7-2.17

675
1247

U:\1736087\4\LAW\75923\drainage\sheets\75923D0002-2B.dgn 5/21/2024 5:00:12 PM SLParker

UNDERDRAIN TABLE

CALCULATED SLP | CHECKED ALB

REFERENCE NO.	SHEET NO.	STATION FROM	STATION TO	SIDE	LEFT OUTLET TO	RIGHT OUTLET TO	OUTLET ELEV.	OUTLET STATION	OUTLET OFFSET	REMARKS	601 TIED CONCRETE BLOCK MAT WITH TYPE I UNDERLAYMENT	605 6" SHALLOW PIPE UNDERDRAINS	605 6" UNCLASSIFIED PIPE UNDERDRAINS	605 6" ROCK CUT UNDERDRAINS	605 6" BASE PIPE UNDERDRAINS	611 6" CONDUIT, TYPE F FOR UNDERDRAIN OUTLETS	611 6" CONDUIT, TYPE B	PRECAST REINFORCED CONCRETE OUTLET	BENDS AND BRANCHES FOR INFORMATION ONLY			
											SY	FT	FT	FT	FT	FT	FT	EACH	EACH			
		S.R. 7																				
36-U	129, 131	300+93.74	306+50.00	RT		CB	558.38	300+93.74	14.00	6" UNCLASSIFIED UNDERDRAIN FROM STA. 301+82.12, FL = 558.38 TO STA. 300+93.74, FL = 558.38 6" UNCLASSIFIED UNDERDRAIN FROM STA. 301+82.12, FL = 559.06 TO STA. 300+93.74, FL = 559.06		68	157	800	68	20	5		1			
37A-U	129	300+72.00	300+85.75	RT		CB	558.26	300+85.75	56.00			12			4	10						
37-U	129, 131	300+85.75	306+50.00	RT		CB	558.26	300+85.75	56.00	6" UNCLASSIFIED UNDERDRAIN FROM STA. 301+82.12, FL = 558.38 TO STA. 300+93.74, FL = 558.38 6" UNCLASSIFIED UNDERDRAIN FROM STA. 301+82.12, FL = 559.06 TO STA. 300+93.74, FL = 559.06		68	174	800	68	20	10		1			
38-U	131	306+50.00	314+65.11	RT		SLOPE	565.54	306+50.00	78.66		1.78			3257		35	32	1	4			
39-U	131	312+00.00	314+65.11	RT		SLOPE	565.54	306+50.00	WYE	TEE INTO UNDERDRAIN SYSTEM 38-U AT STA. 312+00.00				265			12		2			
40-U										NOT USED												
41-U	131, 133	314+65.11	324+50.00	LT		CB	598.22	314+70.00	11.73					112	2875	7	38		4			
42-U	131, 133	314+65.11	324+50.00	RT		CB	598.22	314+70.00	11.73			941		105	1886	7	38		3			
43-U	133, 135	324+50.00	333+00.00	LT	CB		635.18	324+50.00	0.25						2551	46	38		5			
44-U	133, 136	324+50.00	333+00.00	RT	CB		635.18	324+50.00	0.25			837			1680	16	38		3			
45-U	135	335+24.69	333+00.00	LT	CB		670.21	333+00.00	0.18					50	176				1			
46-U	135, 138	333+00.00	343+00.00	LT	CB		670.21	333+00.00	0.18			952		150	1904	18	38		3			
47-U	136, 138	333+00.00	343+00.00	RT	CB		670.21	333+00.00	0.18			939		150	1878	48	38		3			
48-U	138	343+00.00	351+01.95	RT		CB	724.94	343+00.00	0.00	DUAL SYSTEM ON OUTSIDE LANE RUNS FROM STA. 343+00.00 TO STA. 348+84.10		140		1741	280	30						
49-U	138	348+84.10	351+01.95	RT		WYE				TEE INTO UNDERDRAIN SYSTEM 48-U AT STA. 348+84.10				219			16		2			
50-U	138	343+00.00	351+01.95	LT	CB		724.94	343+00.00	0.00			140		1954	280	46	38		3			
51-U	140	351+01.95	361+00.00	LT	CB		713.47	361+00.00	0.00					2979		16	39		3			
52-U	140	351+01.95	361+00.00	RT		CB	713.47	361+00.00	0.00					3011		18	38		4			
53-U	140, 142	361+00.00	368+50.00	RT		CB	669.45	368+50.00	0.00			641		300	1281	46	48		3			
53A-U	140	361+00.00	361+46.83	RT		WYE				TEE INTO UNDERDRAIN SYSTEM 53-U AT STA. 361+46.83				47			12		1			
54-U	140, 142	361+00.00	368+50.00	LT	CB		669.45	368+50.00	0.00	ADJUST UNDERDRAIN DEPTH TO AVOID CONFLICT WITH 15" TYPE B		650		120	1300	46	38		3			
55-U	142, 144	368+50.00	376+54.69	LT	CB		623.02	376+22.79	0.70			803			1599	26	48		3			
56-U	142	369+51.65	372+62.62	RT		WYE				TEE INTO UNDERDRAIN SYSTEM 58-U AT STA. 372+62.62					411		2		2			
57-U	142,144,431	368+50.00	376+08.69 (RAMP I)	RT		CB	621.92	376+00.00	76.06			759			708	29	29		3			
58-U	142, 144	368+50.00	376+25.70	RT	CB		623.02	376+22.79	0.70			266			1050	21	40		3			
59-U	144	380+32.17	386+40.48 (RAMP J)	LT		CB	572.97	387+00.00	0.70			593			1191		34		3			
59A-U	144	380+21.01	386+50.43	LT		CB	572.97	387+00.00	0.70						1242	53	28		3			
60-U	144, 146	379+96.23	387+73.25	RT		CB	573.64	387+73.25	0.57						2315	40	38		3			
61-U	144, 146	386+50.43	387+73.25	LT		CB	573.64	387+73.25	0.57	DUAL SYSTEM ON OUTSIDE LANE RUNS FROM STA. 387+24.05 TO STA. 387+73.25					2345							
															411	17	37		4			
TOTALS CARRIED TO SHEET 678											1.78	7809	331	16060	27503	615	772	1				

DRAFT Stage 3 - Not for Construction 09/23/2024

LAW-7-2.17

U:\1736087\14\LAW\75923\drainage\sheets\75923D0003-2B.dgn 5/21/2024 5:00:13 PM SLParker

REFERENCE NO.	SHEET NO.	STATION FROM	STATION TO	SIDE	LEFT OUTLET TO	RIGHT OUTLET TO	OUTLET ELEV.	OUTLET STATION	OUTLET OFFSET	REMARKS	601	605				611						
											TIED CONCRETE BLOCK MAT WITH TYPE I UNDERLAYMENT	6" SHALLOW PIPE UNDERDRAINS	6" UNCLASSIFIED PIPE UNDERDRAINS	6" ROCK CUT UNDERDRAINS	6" BASE PIPE UNDERDRAINS	6" CONDUIT, TYPE F FOR UNDERDRAIN OUTLETS	6" CONDUIT, TYPE B	PRECAST REINFORCED CONCRETE OUTLET	BENDS AND BRANCHES FOR INFORMATION ONLY			
											SY	FT	FT	FT	FT	FT	FT	EACH	EACH			
		S.R. 7																				
62-U	146	387+73.25	389+88.66	RT		CB	573.64	387+73.25	0.57						222							
63-U	146	387+73.25	390+75.00	RT		CB	573.64	387+73.25	0.57						307							
64-U	146	387+73.25	396+99.09	RT		CB	573.64	387+73.25	0.57						922	10						
65-U	146	387+73.25	394+79.17	LT		CB	573.64	387+73.25	0.57						687	10						
66-U	146	387+73.25	395+50.00	LT		CB	573.64	387+73.25	0.57						2263	30						
67-U	146, 457	388+99.19 (RAMP L)	392+40.09	RT		CB	581.67	388+99.19	7.67						341		19		1			
68-U		NOT USED																				
69-U	146, 457	388+99.19 (RAMP L)	395+50.00	RT		CB	581.67	388+99.19	7.67			650			661	10	25	1	4			
70-U	146, 148	395+50.00	404+90.09	RT		CB	590.80	295+50.00	73.18			937			942	13			2			
71-U	146, 148	395+50.00	401+00.00	LT	CB		589.60	395+50.00	0.47	DUAL SYSTEM ON OUTSIDE LANE RUNS FROM STA. 395+50.00 TO STA. 397+49.13		198			747	18	38		3			
72-U	146, 148	396+28.03 (RAMP K)	401+00.00	LT	CB		591.50	396+50.00 (RAMP K)	22.48						480							
73-U	146, 148	396+28.03 (RAMP K)	401+00.00	LT	CB		591.50	396+50.00 (RAMP K)	22.48						474							
73A-U	146, 148	397+49.13	401+00.00	LT	WYE					TEE INTO UNDERDRAIN SYSTEM 71-U AT STA. 397+49.13					352		12		2			
74-U	148	401+00.00	408+75.61	LT	SLOPE		601.72	401+00.00	3.26						779				1			
74A-U	148	401+00.00	403+56.32	LT	SLOPE		601.72	401+00.00	3.26						258				1			
75-U	148	401+00.00	410+76.60	LT	SLOPE		601.72	401+00.00	3.26		1.78	980			1959	23	55	1	4			
76-U	148, 150	410+76.60	419+57.73	LT	EX CB		601.50	419+53.08	2.70			860			1723	41	38		4			
77-U	150, 152	419+57.73	429+50.00	LT		CB	594.60	429+50.00	3.41			992			1985	39	38		4			
78-U	152	425+76.89	429+50.00	LT		CB	594.60	429+50.00	3.41						375				1			
79-U	152	42742.3.7	429+50.00	RT		CB	594.60	429+50.00	3.41						207	16			1			
80-U	152	429+50.00	432+86.29	RT		CB	594.60	429+50.00	3.41						337							
81-U	152	429+50.00	433+31.18	LT		CB	594.60	429+50.00	3.41	6" UNCLASSIFIED UNDERDRAIN FROM STA. 429+50.00, FL = 597.59 TO STA. 430+00.00, FL = 597.59			50		333							
82-U	152	429+50.00	432+87.18	RT/LT		CB	594.60	429+50.00	3.41	6" UNCLASSIFIED UNDERDRAIN FROM STA. 429+50.00, FL = 596.78 TO STA. 430+00.00, FL = 596.78			50		289							
83-U	152, 154	429+50.00	437+16.83	RT/LT		CB	594.60	429+50.00	3.41	6" UNCLASSIFIED UNDERDRAIN FROM STA. 429+50.00, FL = 598.02 TO STA. 430+00.00, FL = 598.02 6" UNCLASSIFIED UNDERDRAIN FROM STA. 429+50.00, FL = 597.20 TO STA. 430+00.00, FL = 597.20		720	100		720							
		RAMP C																				
1-U	419	116+33.24	121+32.00	RT/LT	SLOPE		532.00	121+32.00	116.12		1.78				989	122	25	1	2			
2-U	419	121+32.00	126+47.37 (S.R. 7)	RT/LT	SLOPE		532.00	121+32.00	116.12						759							
		RAMP D																				
1-U	425	114+30.42 (S.R. 7)	115+43.41	RT		CB	550.76	115+50.00	34.00						41	16			1			
2-U	425	115+65.70 (S.R. 7)	115+39.01	LT		CB	550.76	115+50.00	34.00						67		45		1			
3-U	425	115+50.00	120+82.54	RT/LT		CB	550.76	115+50.00	34.00						1020							
		RAMP I																				
1-U	431	373+61.31	376+09.49	LT	CB		621.92	376+00.00	76.06						250							
2-U	431, 559	380+00.45	55+10.71 (S.R. 775)	LT	SLOPE		603.56	380+50.00 (S.R. 7)	73.00		1.78				136	130		1	2			
3-U	431	380+00.45	380+45.23	RT	SLOPE		603.56	380+50.00 (S.R. 7)	73.00						46		35		1			
TOTALS CARRIED TO SHEET 678											5.34	5337	200	0	20671	478	330	4				

DRAFT Stage 3 - Not for Construction
09/23/2024

CALCULATED SLP
CHECKED ALB

UNDERDRAIN TABLE

LAW-7-2.17

U:\1736087\4\LAW\75923\drainage\sheets\75923D0004-2B.dgn 5/21/2024 5:00:4 PM SLParker

REFERENCE NO.	SHEET NO.	STATION FROM	STATION TO	SIDE	LEFT OUTLET TO	RIGHT OUTLET TO	OUTLET ELEV.	OUTLET STATION	OUTLET OFFSET	REMARKS	601	605				611						
											TIED CONCRETE BLOCK MAT WITH TYPE I UNDERLAYMENT	6" SHALLOW PIPE UNDERDRAINS	6" UNCLASSIFIED PIPE UNDERDRAINS	6" ROCK CUT UNDERDRAINS	6" BASE PIPE UNDERDRAINS	6" CONDUIT, TYPE F FOR UNDERDRAIN OUTLETS	6" CONDUIT, TYPE B	PRECAST REINFORCED CONCRETE OUTLET	BENDS AND BRANCHES FOR INFORMATION ONLY			
											SY	FT	FT	FT	FT	FT	FT	EACH	EACH			
		RAMP J																				
1-U	437, 442	61+97.66 (S.R. 775)	386+40.48	LT		CB	572.97	387+00.00	0.70						830							
2-U	437, 442	385+50.00 (RAMP K)	386+40.48	RT		CB	572.97	387+00.00	0.70						795				1			
		RAMP K																				
1-U	442	64+73.98 (S.R. 775)	390+00.00	LT		SLOPE	592.54	389+74.90 (RAMP J)	36.71		1.78				595	80	25	1	3			
2-U	442	385+50.00	390+00.00	RT/LT		SLOPE	592.54	389+74.90 (RAMP J)	36.71						904							
3-U	442, 444	390+00.00	396+28.03	RT/LT	CB		591.50	396+50.00	22.48						1264	33	19		4			
		RAMP L																				
1-U	457	55+34.95 (S.R. 775)	388+99.19	LT		CB	581.67	388+99.19	7.67						950							
2-U	457, 559	55+32.81 (S.R. 775)	388+99.19	RT		CB	581.67	388+99.19	7.67						909							
		S.R. 243																				
1-U	490	11+00.70	10+68.68 (C.R.69)	RT		SLOPE	607.83	10+68.68	32.59		1.78			335	50	12		1	1			
2-U	490	251+00.00 (S.R. 7)	16+19.90	LT	CB		602.50	16+19.90	39.40					476	187	22			3			
3-U	490	13+13.39	16+19.90	RT/LT	CB		602.50	16+19.90	39.40					613			24		1			
4-U	490	10+36.64 (C.R. 69)	16+19.90	RT	CB		602.50	16+19.90	39.40					153			16		1			
5-U	490	16+19.90	17+88.51	RT/LT	CB		602.50	16+19.90	39.40					31	139				1			
6-U	490	16+19.90	21+54.00	RT/LT	CB		602.50	16+19.90	39.40			504		90	1009							
		S.R. 775																				
1-U	559	45+42.93	55+15.91	LT	EX SLOPE					TIE UNDERDRAIN INTO EXISTING UNDERDRAIN SYSTEM					973		19		1			
2-U	559	45+42.93	53+57.51	LT	EX SLOPE					TIE UNDERDRAIN INTO EXISTING UNDERDRAIN SYSTEM					815				3			
3-U	559	45+42.93	53+72.57	RT		EX SLOPE				TIE UNDERDRAIN INTO EXISTING UNDERDRAIN SYSTEM					849				1			
4-U	559	45+42.93	55+27.61	RT		EX SLOPE				TIE UNDERDRAIN INTO EXISTING UNDERDRAIN SYSTEM					985		16		1			
5-U	560	58+70.92	61+97.66	RT		SLOPE	613.95	61+92.99	73.80		1.78				648	40	17	1	2			
6-U	560	58+54.02	61+97.66	LT		SLOPE	613.95	61+92.99	73.80						683		52		2			
7-U	560	61+97.66	65+50.37	RT/LT		SLOPE	613.95	61+92.99	73.80						1057				1			
TOTALS FROM SHEET 674											12.46	9314	1785	124								
TOTALS FROM SHEET 675											12.46	9817	54	91	21095	1025	19	6				
TOTALS FROM SHEET 676											1.78	7809	331	160.0	27305	619	142	1				
TOTALS FROM SHEET 677											5.34	5337	200	0	20671	478	330	4				
TOTALS THIS SHEET											5.34	504	0	169.1	13512	187	108	1				
TOTALS CARRIED TO GENERAL SUMMARY											38	32781	2370	199.2	99751	2970	2171	23				

CALCULATED SLP
CHECKED ALB

UNDERDRAIN TABLE

LAW-7-2.17

DRAFT Stage 3 - Not for Construction
09/23/2024

U:\7360871\4\LAW\75923\drainage\sheets\75923D0005-2B.dgn 5/21/2024 5:00:14 PM SLParker

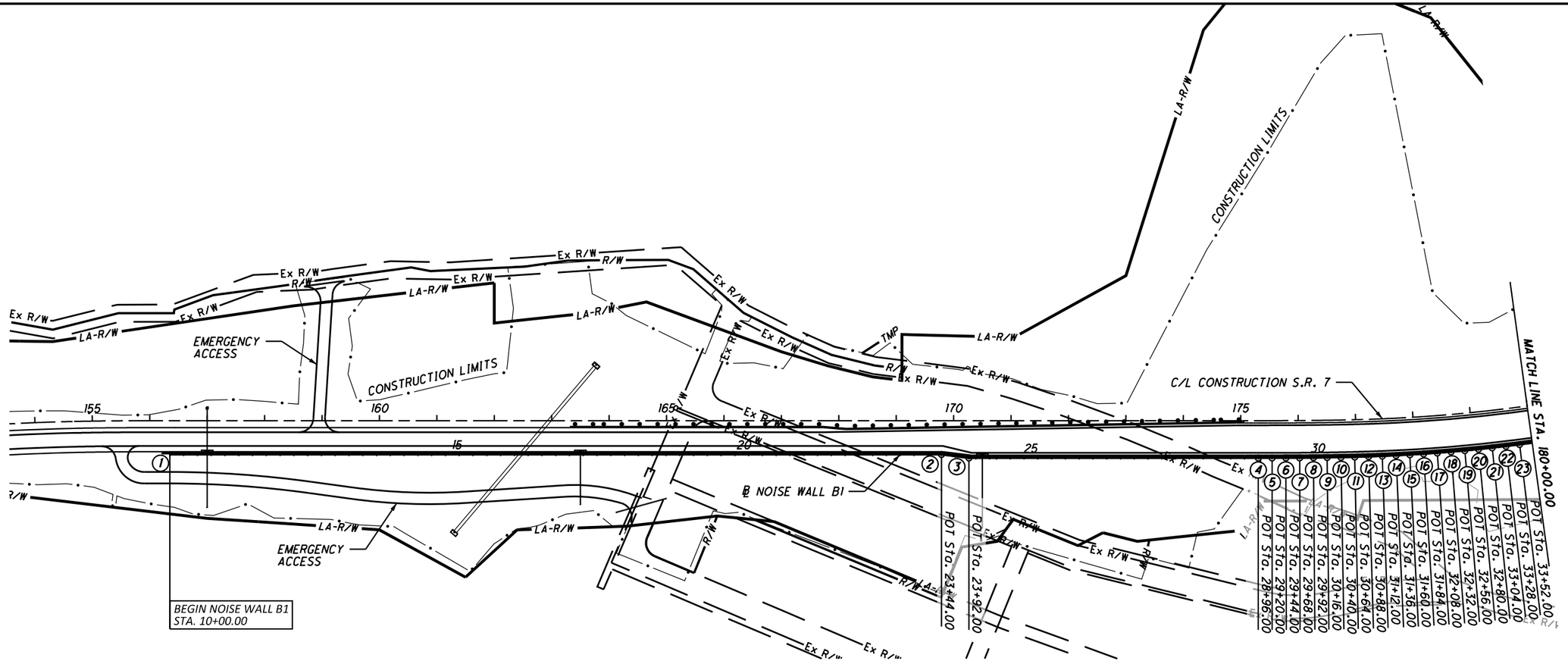

NOISE WALL BASELINE GEOMETRY						
P.I. NO.	NOISE BARRIER STATION	SR-7 STATION	SR-7 OFFSET	NORTHING	EASTING	BEARING
	WALL B1					
1	10+00.00	156+35.02	59.00' RT	161130.69	1983280.20	N70°54'16"E
2	23+44.00	169+79.02	59.00' RT	161570.36	1984550.25	N78°05'07"E
3	23+92.00	170+26.64	65.00' RT	161580.27	1984597.21	N70°54'08"E
4	28+96.00	175+30.61	64.98' RT	161745.17	1985073.47	N70°52'25"E
5	29+20.00	175+54.52	65.00' RT	161753.04	1985096.15	N70°44'49"E
6	29+44.00	175+78.39	65.00' RT	161760.95	1985118.81	N70°36'09"E
7	29+68.00	176+02.20	65.00' RT	161768.92	1985141.44	N70°24'56"E
8	29+92.00	176+25.97	65+00' RT	161776.97	1985164.06	N70°11'06"E
9	30+16.00	176+49.68	65.00' RT	161785.10	1985186.64	N69°54'35"E
10	30+40.00	176+73.34	65.00' RT	161793.35	1985209.18	N69°35'28"E
11	30+64.00	176+96.96	65.00' RT	161801.71	1985231.67	N69°13'45"E
12	30+88.00	177+20.52	65.00' RT	161810.23	1985254.11	N68°49'26"E
13	31+12.00	177+44.04	65.00' RT	161818.90	1985276.49	N68°22'32"E
14	31+36.00	177+67.50	65.00' RT	161827.74	1985298.80	N67°53'09"E
15	31+60.00	177+90.93	65.00' RT	161836.78	1985321.03	N67°22'35"E
16	31+84.00	178+14.35	65.00' RT	161846.01	1985343.19	N66°51'58"E
17	32+08.00	178+37.77	65.00' RT	161855.44	1985365.26	N66°21'21"E
18	32+32.00	178+61.19	65.00' RT	161865.06	1985387.24	N65°50'44"E
19	32+56.00	178+84.62	65.00' RT	161874.88	1985409.14	N65°20'07"E
20	32+80.00	179+08.04	65.00' RT	161884.90	1985430.95	N64°49'30"E
21	33+04.00	179+31.46	65.00' RT	161895.11	1985452.67	N64°18'53"E
22	33+28.00	179+54.88	65.00' RT	161905.51	1985474.30	N63°48'16"E
23	33+52.00	179+78.30	65.00' RT	161914.10	1985495.83	N63°17'40"E

REFERENCE POINTS FOR ℄ SR-7					
DESCRIPTION	STATION	OFFSET	NORTHING	EASTING	ELEVATION
CS #1	154+68.05	-	161130.59	1983103.55	-
ST #1	156+43.05	-	161189.06	1983268.48	-
TS #1	175+03.18	-	161797.60	1985026.27	-
SC #1	177+78.18	-	161892.06	1985284.50	-

DRAFT Stage 3 - Not for Construction 09/23/2024

HORIZONTAL SCALE IN FEET
0 50 100 200

CALCULATED TLH
CHECKED BSM

NOISE BARRIER SCHEMATIC PLAN

LAW-7-2.17

679
1247

U:\1736087\4\LAW\75923\noise wall\sheets\75923_WB001.dgn 5/22/2024 8:54:35 AM JSnair

REFERENCE POINTS FOR ℄ SR-7					
DESCRIPTION	STATION	OFFSET	NORTHING	EASTING	ELEVATION
CS #2	186+17.26	-	162325.27	1985998.94	-
ST #2	188+92.26	-	162510.57	1986202.10	-
TS #2	196+19.13	-	163009.68	1986730.52	-
SC #2	198+44.13	-	163162.28	1986895.84	-

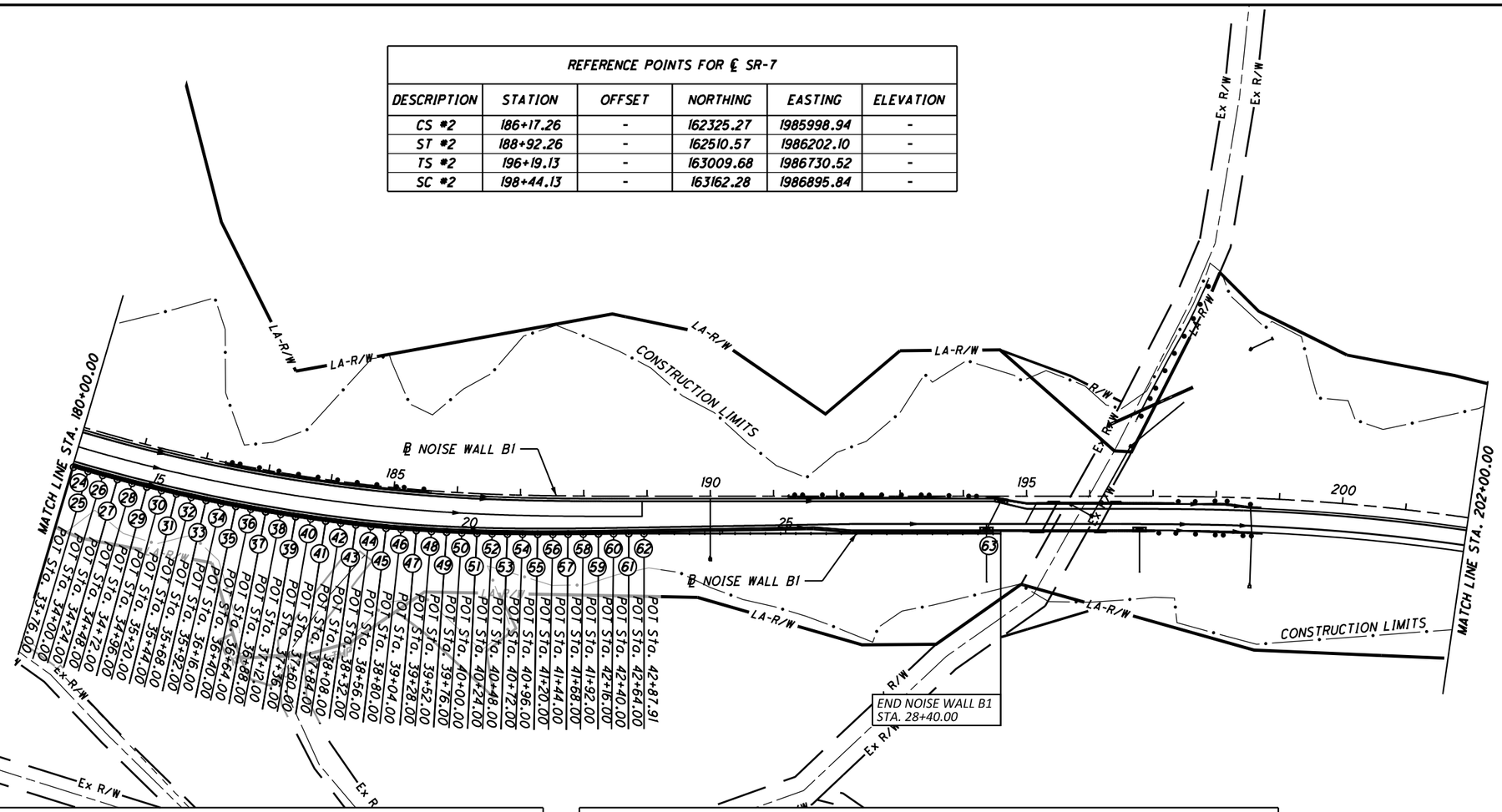

NOISE WALL BASELINE GEOMETRY						
P.I. NO.	NOISE BARRIER STATION	SR-7 STATION	SR-7 OFFSET	NORTHING	EASTING	BEARING
	WALL B1					
24	33+76.00	180+01.72	65.00' RT	161926.89	1985517.28	N62°47'03"E
25	34+00.00	180+25.14	65.00' RT	161937.87	1985538.62	N62°16'26"E
26	34+24.00	180+48.56	65.00' RT	161949.03	1985559.86	N61°45'49"E
27	34+48.00	180+71.99	65.00' RT	161960.39	1985581.01	N61°15'12"E
28	34+72.00	180+95.41	65.00' RT	161971.93	1985602.05	N60°44'35"E
29	34+96.00	181+18.83	65.00' RT	161983.66	1985622.99	N60°13'58"E
30	35+20.00	181+42.25	65.00' RT	161995.57	1985643.82	N59°43'21"E
31	35+44.00	181+65.67	65.00' RT	162007.67	1985664.55	N59°12'45"E
32	35+68.00	181+89.09	65.00' RT	162019.96	1985685.16	N58°42'08"E
33	35+92.00	182+12.51	65.00 RT	162032.43	1985705.67	N58°11'31"E
34	36+16.00	182+35.93	65.00' RT	162045.08	1985726.07	N57°40'54"E
35	36+40.00	182+59.36	65.00' RT	162057.91	1985746.35	N57°10'17"E
36	36+64.00	182+82.78	65.00' RT	162070.92	1985766.52	N56°39'40"E
37	36+88.00	183+06.20	65.00' RT	162084.11	1985786.57	N56°09'03"E
38	37+12.00	183+29.62	65.00' RT	162097.48	1985806.50	N55°38'27"E
39	37+36.00	183+53.04	65.00' RT	162111.02	1985826.311	N55°07'50"E
40	37+60.00	183+76.46	65.00' RT	162124.74	1985846.00	N54°37'13"E
41	37+84.00	183+99.88	65.00' RT	162138.64	1985865.57	N54°06'36"E
42	38+08.00	184+23.30	65.00' RT	162152.71	1985885.01	N53°35'59"E
43	38+32.00	184+46.72	65.00' RT	162166.95	1985904.33	N53°05'22"E

NOISE WALL BASELINE GEOMETRY						
P.I. NO.	NOISE BARRIER STATION	SR-7 STATION	SR-7 OFFSET	NORTHING	EASTING	BEARING
	WALL B1					
44	38+56.00	184+70.15	65.00' RT	162181.36	1985823.52	N52°34'45"E
45	38+80.00	184+93.57	65.00' RT	162195.95	1985942.58	N51°31'34"E
46	39+04.00	185+16.99	64.77' RT	162210.88	1985961.37	N50°37'30"E
47	39+28.00	185+40.41	64.38' RT	162226.11	1985979.92	N50°07'16"E
48	39+52.00	185+63.84	63.99' RT	162241.49	1985998.34	N49°36'17"E
49	39+76.00	185+87.26	63.60' RT	162257.05	1986016.62	N49°05'14"E
50	40+00.00	186+10.70	63.21' RT	162272.76	1986034.76	N48°35'37"E
51	40+24.00	186+34.14	62.82' RT	162288.64	1986052.76	N48°06'31"E
52	40+48.00	186+57.64	62.43' RT	162304.66	1986070.62	N47°39'47"E
53	40+72.00	186+81.18	62.04' RT	162320.83	1986088.36	N47°16'22"E
54	40+96.00	187+04.78	61.64' RT	162337.11	1986105.99	N46°55'08"E
55	41+20.00	187+28.42	61.25' RT	162353.50	1986123.52	N46°36'22"E
56	41+44.00	187+52.12	60.86' RT	162369.99	1986140.96	N46°20'41"E
57	41+68.00	187+75.86	60.46' RT	162386.56	1986158.33	N46°07'24"E
58	41+92.00	187+99.65	60.06' RT	162403.20	1986175.63	N45°57'53"E
59	42+16.00	188+23.48	59.68' RT	162419.88	1986192.88	N45°54'23"E
60	42+40.00	188+47.37	59.32' RT	162436.58	1986210.12	N45°55'14"E
61	42+64.00	188+71.30	59.00' RT	162453.27	1986227.33	N46°[illegible]
62	42+88.00	188+95.29	59.00' RT	162469.75	1986244.81	N46°38'02"E
63	48+88.00	194+95.20	59.00' RT	162881.74	1986681.00	[illegible]

DRAFT - Stage 3 - Not for Construction 09/23/2024

HORIZONTAL SCALE IN FEET
0 50 100 200

CALCULATED TLH
CHECKED BSM

NOISE BARRIER SCHEMATIC PLAN

LAW-7-2.17

680
1247

U:\1736087\14_LAW\75923\noise wall sheets\75923_WB002.dgn 5/22/2024 8:54:37 AM JSnair

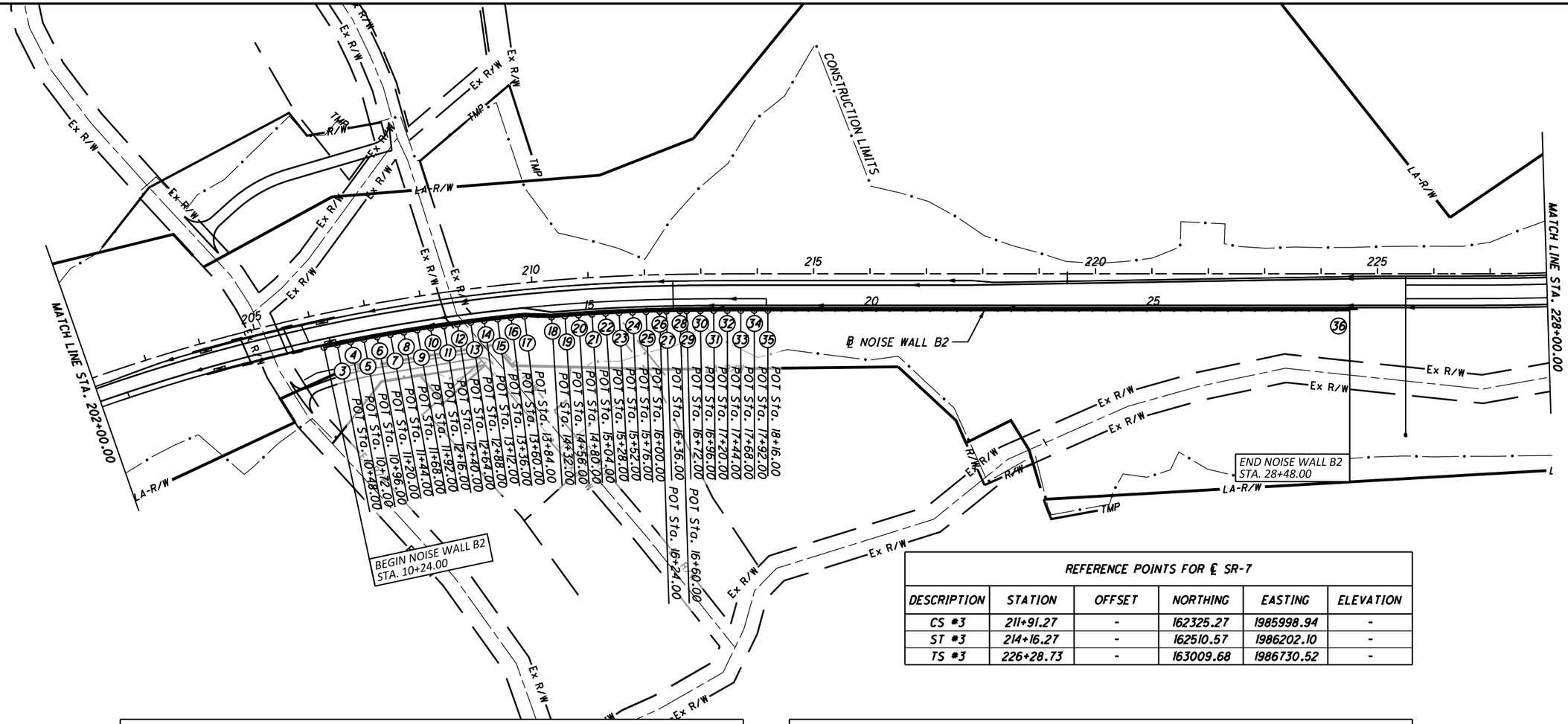

REFERENCE POINTS FOR ℄ SR-7					
DESCRIPTION	STATION	OFFSET	NORTHING	EASTING	ELEVATION
CS #3	211+91.27	-	162325.27	1985998.94	-
ST #3	214+16.27	-	162510.57	1986202.10	-
TS #3	226+28.73	-	163009.68	1986730.52	-

NOISE WALL BASELINE GEOMETRY						
P.I. NO.	NOISE BARRIER STATION	SR-7 STATION	SR-7 OFFSET	NORTHING	EASTING	BEARING
	WALL B2					
1	10+00.00	205+89.89	59.00' RT	163535.82	1987534.38	N61°52'05"E
2	10+24.00	206+14.33	59.00' RT	163547.14	1987555.54	N62°17'42"E
3	10+48.00	206+38.77	59.00' RT	163558.29	1987576.79	N62°43'22"E
4	10+72.00	206+63.21	59.00' RT	163569.29	1987598.12	N63°09'02"E
5	10+96.00	206+87.65	59.00' RT	163580.13	1987619.53	N63°34'41"E
6	11+20.00	207+12.09	59.00' RT	163590.81	1987641.03	N64°00'21"E
7	11+44.00	207+36.53	59.00' RT	163601.33	1987662.60	N64°26'01"E
8	11+68.00	207+60.97	59.00' RT	163611.69	1987684.25	N64°51'41"E
9	11+92.00	207+85.42	59.00' RT	163621.88	1987705.98	N65°17'20"E
10	12+16.00	208+09.86	59.00' RT	163631.92	1987727.78	N65°43'00"E
11	12+40.00	208+34.30	59.00' RT	163641.79	1987749.65	N66°08'40"E
12	12+64.00	208+58.74	59.00' RT	163651.49	1987771.60	N66°34'20"E
13	12+88.00	208+83.18	59.00' RT	163661.04	1987793.63	N66°59'59"E
14	13+12.00	209+07.62	59.00' RT	163670.41	1987815.72	N67°25'39"E
15	13+36.00	209+32.06	59.00' RT	163679.63	1987837.88	N67°51'19"E
16	13+60.00	209+56.50	59.00' RT	163688.67	1987860.11	N68°16'59"E
17	13+84.00	209+80.94	59.00' RT	163697.55	1987882.40	N76°06'08"E
18	14+32.00	210+29.48	65.00' RT	163709.08	1987929.00	N69°33'38"E

NOISE WALL BASELINE GEOMETRY						
P.I. NO.	NOISE BARRIER STATION	SR-7 STATION	SR-7 OFFSET	NORTHING	EASTING	BEARING
	WALL B2					
19	14+56.00	210+53.97	65.00' RT	163717.46	1987951.49	N69°59'21"E
20	14+80.00	210+78.45	65.00' RT	163725.68	1987974.04	N70°25'03"E
21	15+04.00	211+02.94	65.00' RT	163733.72	1987996.65	N70°50'46"E
22	15+28.00	211+27.43	65.00' RT	163741.59	1988019.32	N71°16'29"E
23	15+52.00	211+51.91	65.00' RT	163749.30	1988042.05	N71°42'11"E
24	15+76.00	211+76.40	65.00' RT	163756.83	1988064.84	N72°07'52"E
25	16+00.00	212+00.88	65.00' RT	163764.20	1988087.68	N72°32'21"E
26	16+24.00	212+25.32	65.00' RT	163771.40	1988110.58	N72°54'07"E
27	16+36.00	212+37.52	65.00' RT	163774.93	1988122.04	N73°03'35"E
28	16+48.00	212+61.88	65.00' RT	163781.92	1988145.00	N73°13'03"E
29	16+72.00	212+74.04	65.00' RT	163785.39	1988156.49	N73°29'11"E
30	16+96.00	212+98.31	65.00' RT	163792.21	1988179.50	N73°42'32"E
31	17+20.00	213+22.54	65.00' RT	163798.94	1988202.54	N73°53'07"E
32	17+44.00	213+46.71	65.00' RT	163805.60	1988225.60	N74°00'57"E
33	17+68.00	213+70.84	65.00' RT	163812.21	1988248.67	N74°06'04"E
34	17+92.00	213+94.91	65.00' RT	163818.78	1988271.75	N74°08'28"E
35	18+16.00	214+18.93	65.00' RT	163825.34	1988294.84	N74°08'47"E
36	28+48.00	214+42.93	65.00' RT	163927.29	1989297.58	

HORIZONTAL SCALE IN FEET
0 50 100 200

CALCULATED TLH
CHECKED BSM

NOISE BARRIER SCHEMATIC PLAN

LAW-7-2.17

DRAFT Stage 3 - Not for Construction 09/23/2024

681
1247

U:\1736087\4\LAW\75923\noise wall\sheets\75923_WB003.dgn 5/22/2024 8:54:38 AM JSnair

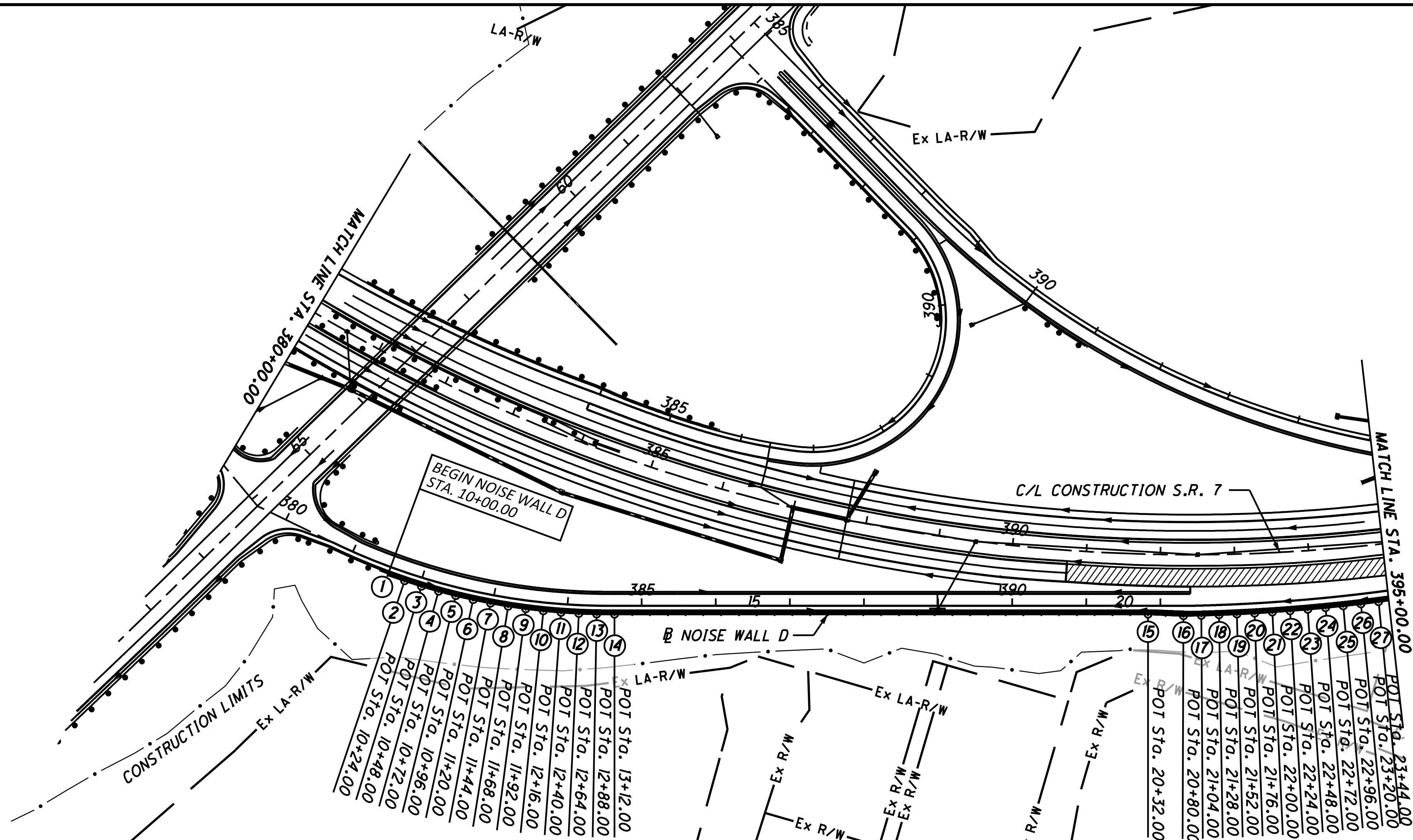

REFERENCE POINTS FOR ℄ RAMP L

DESCRIPTION	STATION	OFFSET	NORTHING	EASTING	ELEVATION
POT #1	379+57.36	-	163222.21	2003191.58	-
PC #1	380+72.73	-	163195.55	2003303.83	-
PVI #1	382+67.06	-	163150.65	2003492.90	-
PT #1	384+54.82	-	163192.36	2003682.70	-
POT #2	392+40.09	-	163360.93	2004449.67	-

NOISE WALL BASELINE GEOMETRY

P.I. NO.	NOISE BARRIER STATION	RAMP STATION	RAMP OFFSET	NORTHING	EASTING	BEARING
	WALL D					
1	10+00.00	381+55.06	11.00' RT	163169.54	2003383.23	S82°59'15"E
2	10+24.00	381+78.75	11.00' RT	163166.61	2003407.05	S84°35'06"E
3	10+48.00	382+02.44	11.00' RT	163164.34	2003430.94	S86°10'55"E
4	10+72.00	382+26.14	11.00' RT	163162.75	2003454.89	S87°46'44"E
5	10+96.00	382+49.83	11.00' RT	163161.82	2003478.87	S89°22'34"E
6	11+20.00	382+73.53	11.00' RT	163161.55	2003502.87	N89°01'36"E
7	11+44.00	382+97.22	11.00' RT	163161.96	2003526.87	N87°25'46"E
8	11+68.00	383+20.92	11.00' RT	163163.04	2003550.84	N85°46'57"E
9	11+92.00	383+44.61	11.00' RT	163164.78	2003574.78	N84°14'07"E
10	12+16.00	383+68.30	11.00' RT	163167.19	2003598.66	N82°38'17"E
11	12+40.00	383+92.00	11.00' RT	163170.27	2003622.46	N81°02'27"E
12	12+64.00	384+15.69	11.00' RT	163174.01	2003646.17	N79°26'38"E
13	12+88.00	384+39.39	11.00' RT	163178.40	2003669.76	N77°56'37"E
14	13+12.00	384+63.19	11.00' RT	163183.42	2003693.23	N77°36'16"E
15	20+32.00	391+83.19	11.00' RT	163337.97	2004396.45	N80°12'27"E
16	20+80.00	392+31.14	13.18' RT	163346.13	2004443.75	N76°20'31"E

REFERENCE POINTS FOR ℄ SR-7

DESCRIPTION	STATION	OFFSET	NORTHING	EASTING	ELEVATION
CS #1	394+68.00	-	163488.18	2004654.67	-

NOISE WALL BASELINE GEOMETRY

P.I. NO.	NOISE BARRIER STATION	SR-7 STATION	SR-7 OFFSET	NORTHING	EASTING	BEARING
	WALL D					
17	21+04.00	392+54.61	81.70' RT	163351.80	2004467.07	N75°47'42"E
18	21+28.00	392+77.78	81.21' RT	163357.69	2004490.34	N75°13'03"E
19	21+52.00	393+00.96	80.73' RT	163363.81	2004513.54	N74°38'23"E
20	21+76.00	393+24.15	80.24' RT	163370.17	2004536.68	N74°03'43"E
21	22+00.00	393+47.34	79.76' RT	163376.76	2004559.76	N73°29'02"E
22	22+24.00	393+70.53	79.27' RT	163383.58	2004582.77	N72°54'21"E
23	22+48.00	393+93.73	78.78' RT	[illegible]	2004605.71	N72°19'40"E
24	22+72.00	394+16.93	78.30' RT	[illegible]	[illegible]	[illegible]
25	22+96.00	394+40.14	77.81' RT	[illegible]	2004651.37	N71°10'16"E
26	23+20.00	394+63.35	77.33' RT	[illegible]	[illegible]	[illegible]
27	23+44.00	394+86.59	76.84' RT	[illegible]	[illegible]	[illegible]

DRAFT Stage 3 - Not for Construction 09/23/2024

HORIZONTAL SCALE IN FEET 0 50 100 200

CALCULATED TLH CHECKED BSM

NOISE BARRIER SCHEMATIC PLAN

LAW-7-2.17

U:\17360871\LAW\75923\noise wall\sheets\75923_WB004.dgn 5/22/2024 8:54:39 AM JSnair

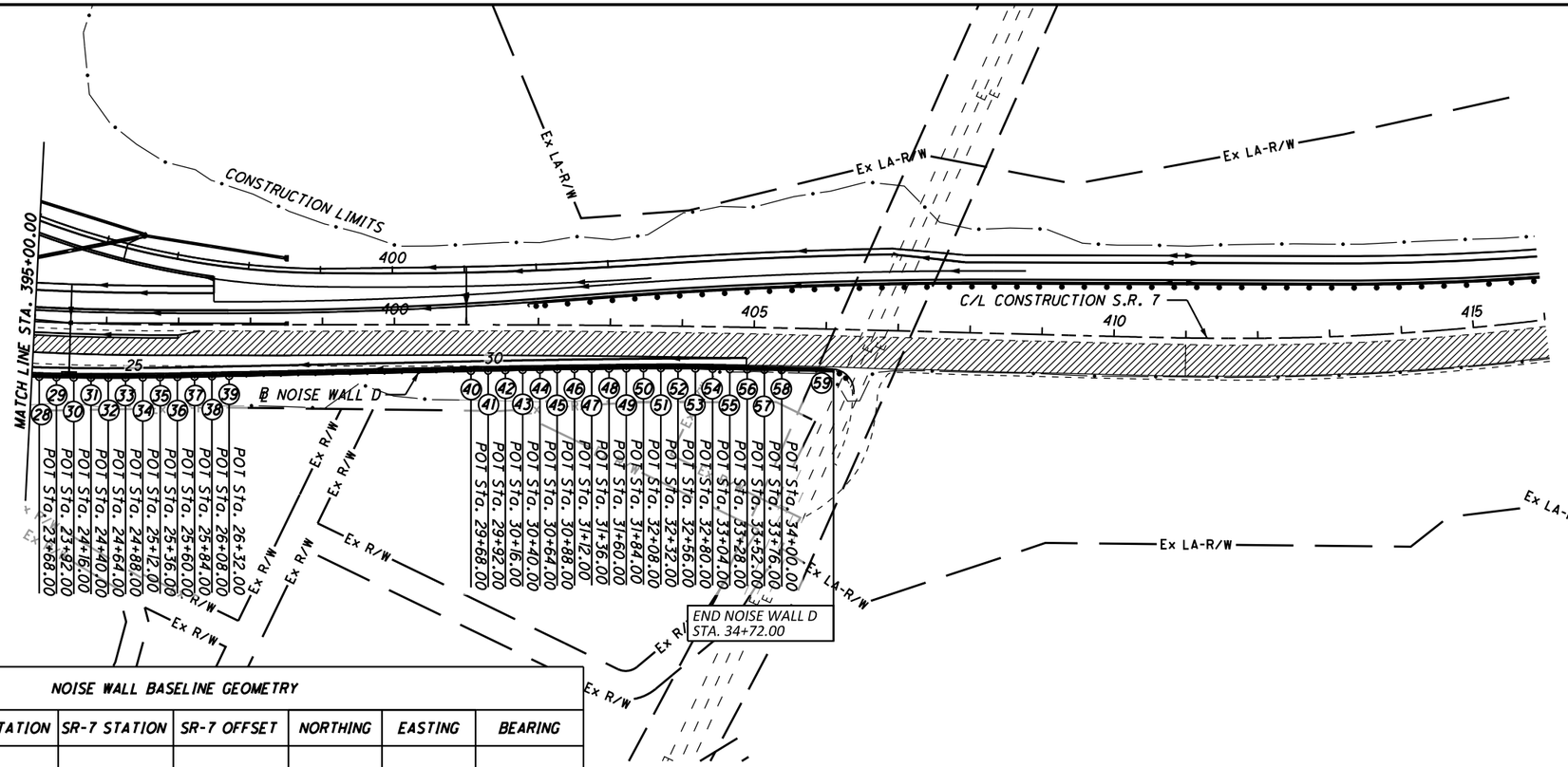

NOISE WALL BASELINE GEOMETRY						
P.I. NO.	NOISE BARRIER STATION	SR-7 STATION	SR-7 OFFSET	NORTHING	EASTING	BEARING
	WALL D					
28	23+68.00	395+09.88	76.35' RT	163429.35	2004719.28	N69°32'44"E
29	23+92.00	395+33.24	75.86' RT	163437.74	2004741.77	N69°05'11"E
30	24+16.00	395+56.67	75.37' RT	163446.30	2004764.19	N68°40'18"E
31	24+40.00	395+80.15	74.88' RT	163455.03	2004786.55	N68°18'07"E
32	24+64.00	396+03.70	74.39' RT	163463.91	2004808.84	N67°58'38"E
33	24+88.00	396+27.31	73.89' RT	163472.90	2004831.09	N67°41'53"E
34	25+12.00	396+50.97	73.40' RT	163482.01	2004853.30	N67°27'53"E
35	25+36.00	396+74.70	74.70' RT	163491.21	2004875.47	N67°16'39"E
36	25+60.00	396+98.50	72.40' RT	163500.48	2004897.60	N67°08'14"E
37	25+84.00	397+22.35	71.90' RT	163509.81	2004919.72	N67°02'37"E
38	26+08.00	397+46.26	71.40' RT	163519.17	2004941.82	N66°59'51"E
39	26+32.00	397+70.23	70.90' RT	163528.54	2004963.91	N66°59'25"E
40	29+68.00	401+06.15	63.86' RT	163659.88	2005273.18	N67°00'31"E
41	29+92.00	401+30.21	63.36' RT	163669.26	2005295.27	N67°04'27"E
42	30+16.00	401+54.28	62.85' RT	163678.61	2005317.37	N67°08'32"E
43	30+40.00	401+78.35	62.35' RT	163687.93	2005339.49	N67°12'36"E
44	30+64.00	402+02.42	61.85' RT	163697.23	2005361.62	N67°16'41"E
45	30+88.00	402+26.48	61.34' RT	163706.50	2005383.75	N67°20'46"E
46	31+12.00	402+50.55	60.84' RT	163715.74	2005405.90	N67°24'50"E
47	31+36.00	402+74.62	60.33' RT	163724.96	2005428.06	N67°28'55"E
48	31+60.00	402+98.68	59.83' RT	163734.15	2005450.23	N67°32'59"E
49	31+84.00	403+22.75	59.32' RT	163743.31	2005472.41	N67°37'04"E
50	32+08.00	403+46.81	58.82' RT	163752.45	2005494.60	N67°41'08"E
51	32+32.00	403+70.88	58.32' RT	163761.56	2005516.81	N68°30'48"E
52	32+56.00	403+94.95	58.13' RT	163770.36	2005539.14	N69°16'13"E
53	32+80.00	404+19.01	58.23' RT	163778.85	2005561.58	N69°10'58"E
54	33+04.00	404+43.08	58.27' RT	163787.38	2005584.02	N69°13'19"E
55	33+28.00	404+67.15	58.30' RT	163795.89	2005606.46	N69°14'15"E
56	33+52.00	404+91.22	58.30' RT	163804.40	2005628.90	N69°07'58"E
57	33+76.00	405+15.29	58.23' RT	163812.95	2005651.32	N69°17'19"E
58	34+00.00	405+39.36	58.20' RT	163821.44	2005673.77	N69°34'52"E
59	34+72.00	406+11.57	58.30' RT	163846.56	2005741.25	-

REFERENCE POINTS FOR ℄ SR-7					
DESCRIPTION	STATION	OFFSET	NORTHING	EASTING	ELEVATION
ST#1	397+68.00	-	163593.54	2004935.50	-
PC #1	401+11.17	-	163721.04	2005254.11	-
PI #1	403+74.19	-	163818.75	2005498.30	-
PT #1	406+37.18	-	163910.11	2005744.94	-

DRAFT Stage 3 - Not for Construction 09/23/2024

HORIZONTAL SCALE IN FEET
0 50 100 200

CALCULATED TLH CHECKED BSM

NOISE BARRIER SCHEMATIC PLAN

LAW-7-2.17

683
1247

U:\1736087\4_LAW\75923\noise wall\sheets\75923_WB005.dgn 5/22/2024 8:54:41 AM JSnair

ITEM SPECIAL - 606 NOISE BARRIER (REFLECTIVE)

THIS ITEM OF WORK CONSITS OF CONSTRUCTION OF A NOISE BARRIER IN ACCORDANCE WITH STANDARD CONSTRUCTION DRAWING NBS-1-09 AND MODIFICATIONS BELOW.

NOISE BARRIER PANELS SHALL BE ARCHITECTURAL POLYMERS LARGE STONE OHIO DRYTACK #9110 OR ENGINEER APPROVED EQUAL, BOTH SIDES OF THE PANEL IN LIEU OF THE ASHLAR STONE PATTERN. NOISE BARRIER SHALL BE GRAY IN COLOR (FEDERAL COLOR NO. 16515).

MAXIMUM PANEL STEP HEIGHT AND BURIED DEPTH OF 1.85' SHALL BE PERMITTED.

THE FOLLOWING QUANTITIES HAVE BEEN CARRIED TO THE GENERAL SUMMARY.

WALL	SQUARE FEET
WALL B1	53,928
WALL B2	25,536
WALL D	34,608

TOTAL CARRIED TO THE GENERAL SUMMARY = 114,072 SQUARE FEET

PAYMENT FOR THE ABOVE WORK SHALL BE MADE AT THE UNIT PRICE BID FOR THE ITEM SPECIAL - NOISE BARRIER (REFLECTIVE), SQUARE FOOT AND SHALL INCLUDE ALL LABOR, TOOLS, EQUIPMENT AND MATERIAL NECESSARY TO CONSTRUCT ITEM SPECIAL - NOISE BARRIER (REFLECTIVE)

LEGEND

1. ITEM 442 - 1 1/2" ASPHALT CONCRETE SURFACE COURSE, 12.5MM, TYPE A (446)
2. ITEM 442 - 1 3/4" ASPHALT CONCRETE INTERMEDIATE COURSE, 19MM, TYPE A (446)
3. ITEM 302 - 7" ASPHALT CONCRETE BASE, PG64-22, (449)
4. ITEM 304 - 6" AGGREGATE BASE
5. ITEM 407 - TACK COAT
6. ITEM 609 - CURB, TYPE 6
7. ITEM 609 - COMBINATION CURB AND GUTTER, TYPE 2
8. ITEM 605 - AGGREGATE DRAIN (SLOPE @ 0.04 MIN., 0.08 DESIRABLE)
9. ITEM 441 - 2" ASPHALT CONCRETE INTERMEDIATE COURSE, TYPE 1, (449), (UNDER GUARDRAIL), AS PER PLAN
10. NOT USED
11. ITEM 605 - 6" SHALLOW PIPE UNDERDRAIN
12. ITEM 605 - 6" BASE PIPE UNDERDRAIN
13. ITEM 441 - 1 1/4" ASPHALT CONCRETE SURFACE COURSE, TYPE 1, (449), PG64-22
14. ITEM 441 - 1 3/4" ASPHALT CONCRETE INTERMEDIATE COURSE, TYPE 2, (449)
15. ITEM 301 - 3" ASPHALT CONCRETE BASE, PG64-22, (449)
16. ITEM 659 - SEEDING AND MULCHING
17. ITEM 204 - SUBGRADE COMPACTION
18. ITEM 204 - PROOF ROLLING
19. ITEM 606 - GUARDRAIL, TYPE MGS
20. ITEM 606 - GUARDRAIL, TYPE MGS WITH LONG POSTS
21. ITEM 609 - CONCRETE MEDIAN
22. ITEM 609 - COMBINATION CURB AND GUTTER, TYPE 9
23. ITEM 622 - CONCRETE BARRIER, SINGLE SLOPE, TYPE D
24. ITEM SPECIAL - NOISE BARRIER
25. ITEM 524 - DRILLED SHAFT
25. ITEM 304 - VARIABLE DEPTH AGGREGATE BASE

NOTE:
ITEM 25 AND 26 ARE INCLUDED WITH ITEM 24, NOISE BARRIER, FOR PAYMENT.

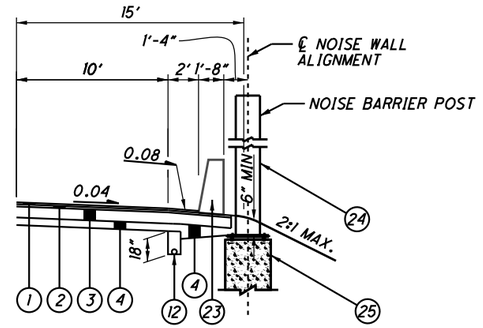

NORMAL SECTION - S.R. 7

SECTION APPLIES:
STA. 156+35.02 TO STA. 170+30.98
STA. 206+14.33 TO STA. 210+29.72

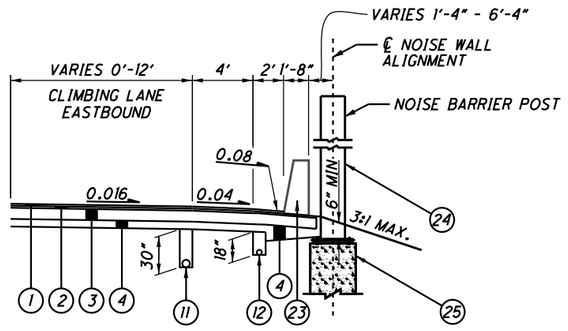

NORMAL SECTION - S.R. 7
WITH CLIMBING LANES

SECTION APPLIES:
STA. 170+30.98 TO STA. 194+95.29
STA. 210+29.72 TO STA. 224+50.93

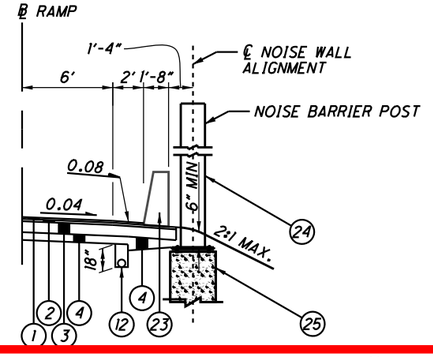

NORMAL SECTION - RAMPS

SECTION APPLIES:
RAMP: STA. 392+00.00 TO STA. 406+11.57
MAINLINE: STA. 392+00.00 TO STA. 406+11.57

DRAFT Stage 3 - Not for Construction 09/23/2024

CALCULATED TLH CHECKED BSM

TYPICAL SECTIONS - NOISE WALL

LAW-7-2.17

U:\1736087\14\LAW\75923\noise wall\sheets\75923_WY001.dgn 5/22/2024 8:54:42 AM JSnair

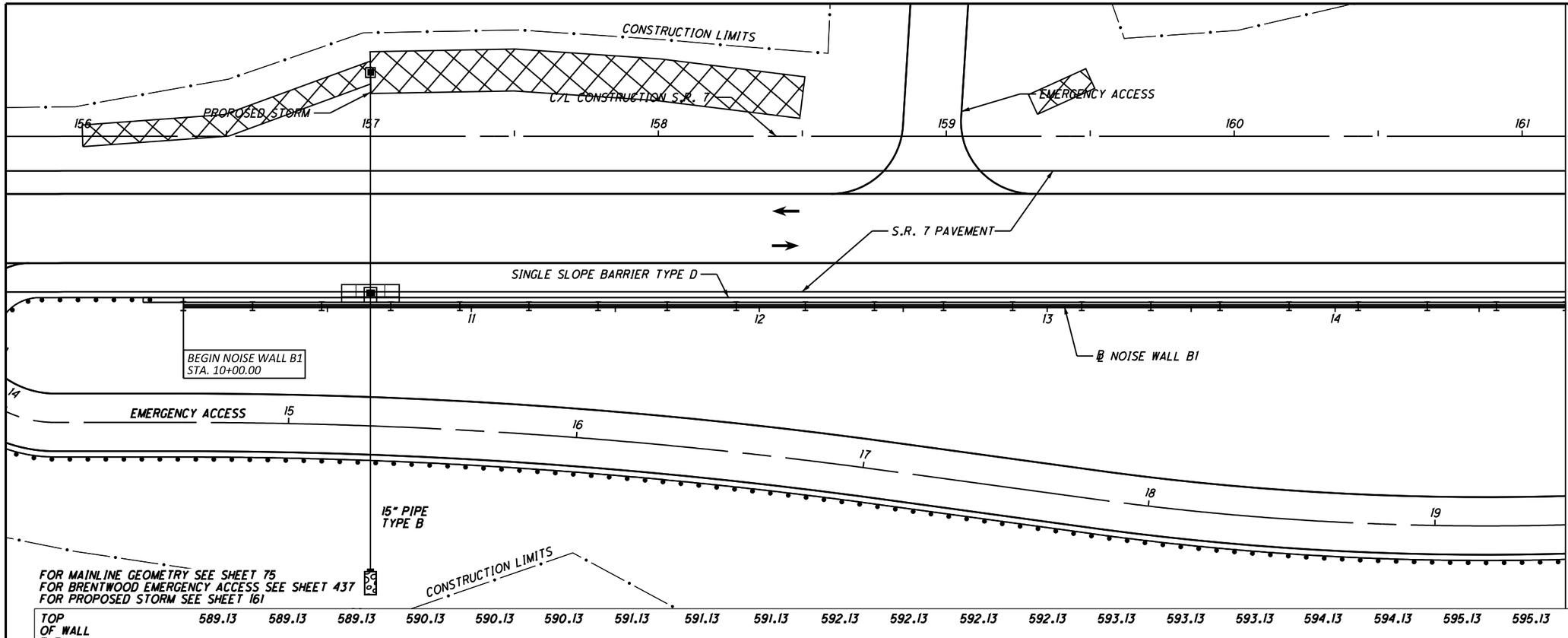

TOP OF WALL ELEV.	589.13	589.13	589.13	590.13	590.13	590.13	591.13	591.13	591.13	592.13	592.13	592.13	592.13	593.13	593.13	593.13	594.13	594.13	595.13	595.13
BOTTOM OF WALL ELEV.	575.13	575.13	575.13	576.13	576.13	576.13	577.13	577.13	577.13	578.13	578.13	578.13	578.13	579.13	579.13	579.13	580.13	580.13	581.13	581.13
PANEL NO.	1	2	3	4	5	6	7	8	9	10	11	12	13	14	15	16	17	18	19	20

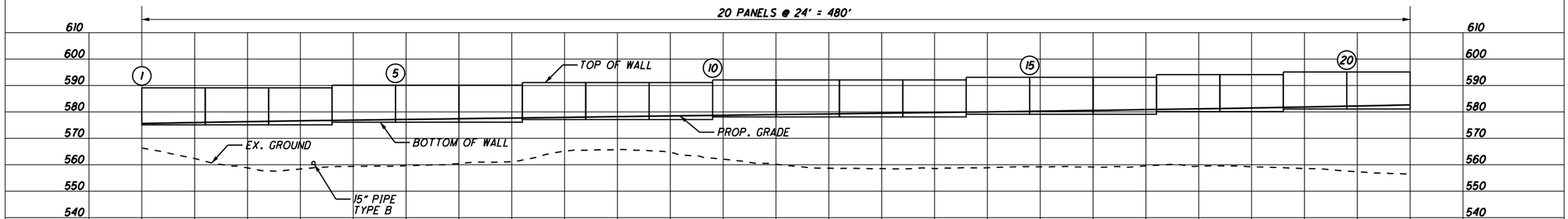

PROP. GRADE ELEV.	575.63	575.98	576.30	576.63	576.90	577.17	577.43	577.69	577.95	578.21	578.47	578.73	578.99	579.25	579.51	579.77	580.03	580.30	580.56	580.86	581.17	581.50	581.88	582.26	582.69
EX. GROUND ELEV.	566.32	562.34	558.82	558.40	559.38	559.65	560.48	561.18	565.13	565.72	564.65	562.11	560.20	558.70	558.53	558.52	558.86	559.23	559.14	559.58	559.44	559.20	558.59	557.38	556.50

10+00 11+00 12+00 13+00 14+00

DRAFT Stage 3 - Not for Construction 09/23/2024

HORIZONTAL SCALE IN FEET
0 10 20 40

CALCULATED TLH
CHECKED BSM

PLAN AND PROFILE - NOISE WALL B1
STA. 10+00 TO STA. 14+80

LAW-7-2.17

685
1247

U:\1736087\4\LAW\75923\noise wall\sheets\75923_WP001.dgn 5/22/2024 8:54:44 AM JSnair

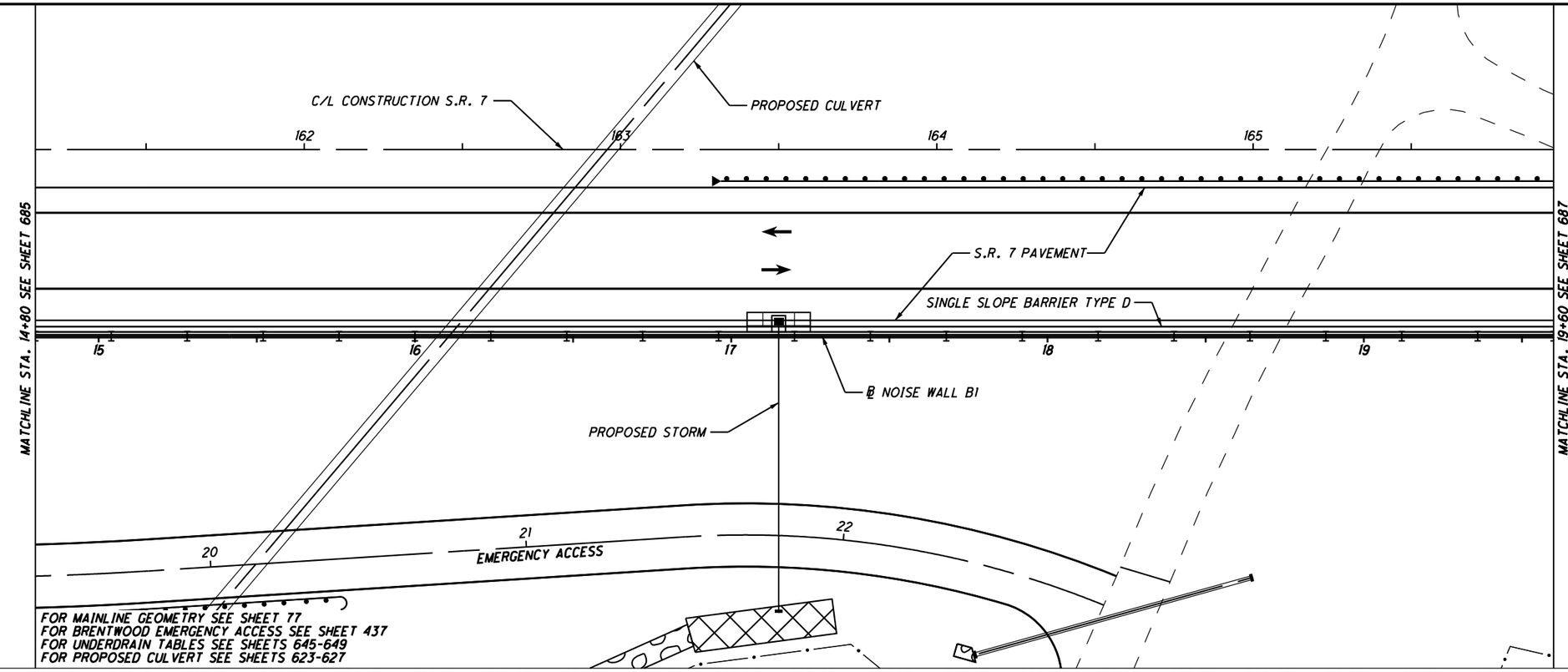

TOP OF WALL ELEV.	596.13	596.13	597.13	597.13	598.13	599.13	599.93	600.73	601.53	602.53	603.23	604.23	605.13	606.13	607.23	608.33	609.43	610.53	611.73	613.03	
BOTTOM OF WALL ELEV.	582.13	582.13	583.13	583.13	584.13	585.13	585.93	586.73	587.53	588.53	589.23	590.23	591.13	592.13	593.23	594.33	595.43	596.53	597.73	599.03	
PANEL NO.	21	22	23	24	25	26	27	28	29	30	31	32	33	34	35	36	37	38	39	40	

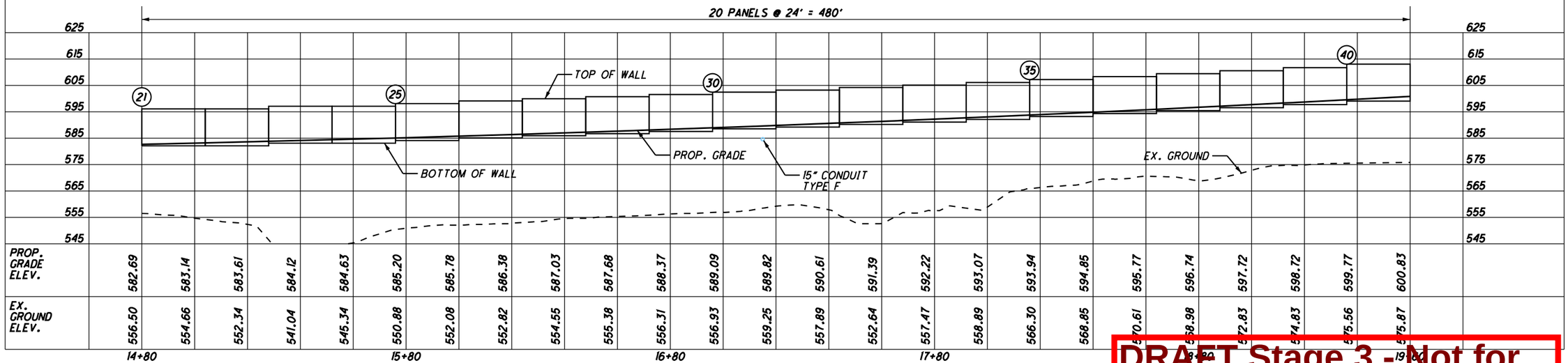

PROP. GRADE ELEV.	582.69	583.14	583.61	584.12	584.63	585.20	585.78	586.38	587.03	587.68	588.37	589.09	589.82	590.61	591.39	592.22	593.07	593.94	594.85	595.77	596.74	597.72	598.72	599.77	600.83	
EX. GROUND ELEV.	556.50	554.66	552.34	541.04	545.34	550.88	552.08	552.82	554.55	555.38	556.31	556.93	559.25	557.89	552.64	557.47	558.89	566.30	568.85	570.61	568.98	572.83	574.83	575.56	575.87	

14+80 15+80 16+80 17+80 18+80 19+00

DRAFT Stage 3 - Not for Construction 09/23/2024

HORIZONTAL SCALE IN FEET
0 10 20 40

CALCULATED TLH
CHECKED BSM

PLAN AND PROFILE - NOISE WALL B1
STA. 14+80 TO STA. 19+60

LAW-7-2.17

686
1247

U:\1736087\4\LAW\75923\noise wall\sheets\75923_WP002.dgn 5/22/2024 8:54:46 AM JSnair

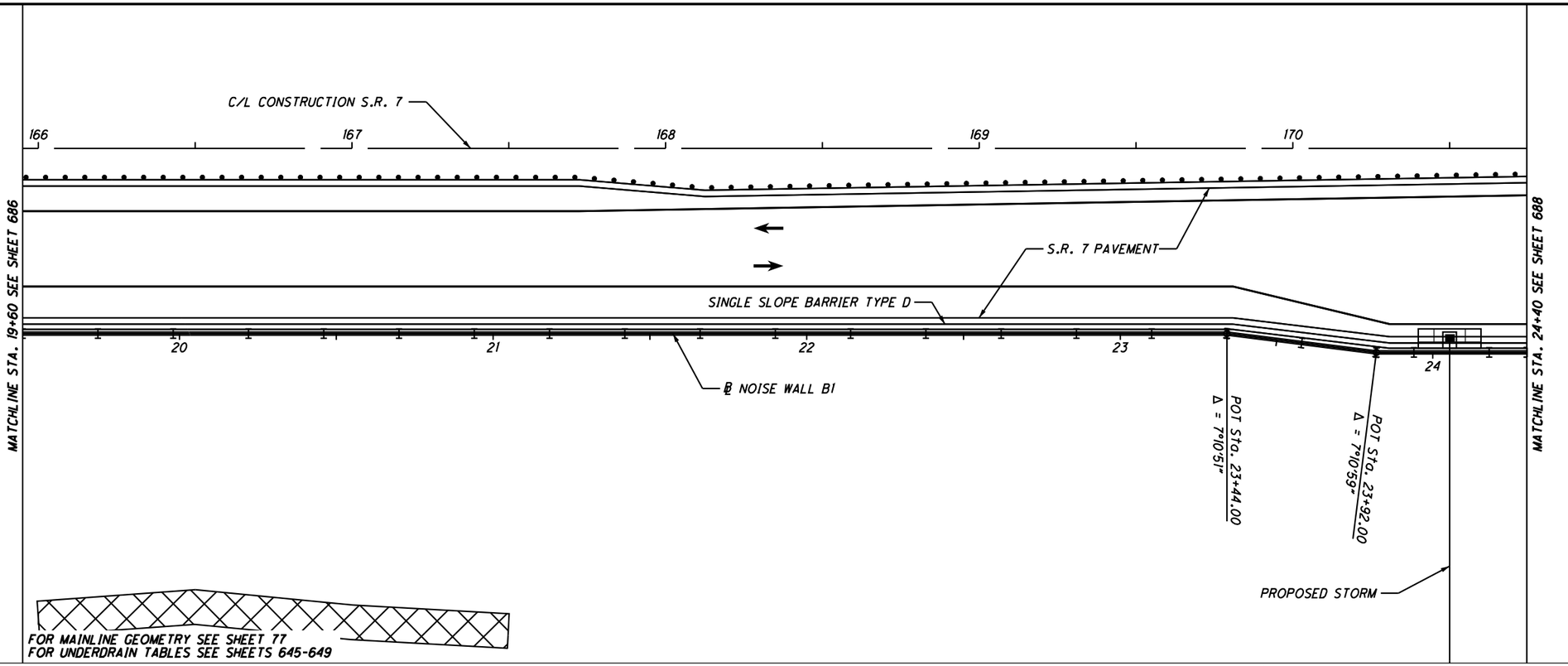

TOP OF WALL ELEV.	614.23	615.63	616.99	618.39	619.81	621.24	622.68	624.12	625.56	627.00	628.44	629.88	631.32	632.76	634.20	635.59	636.81	638.26	639.22	640.20	641.89	
BOTTOM OF WALL ELEV.	600.23	601.63	602.99	604.39	605.81	607.24	608.68	610.12	611.56	613.00	614.44	615.88	617.32	618.76	620.20	621.59	622.81	624.26	625.22	626.20	641.89	
PANEL NO.	41	42	43	44	45	46	47	48	49	50	51	52	53	54	55	56	57	58	59	60	61	

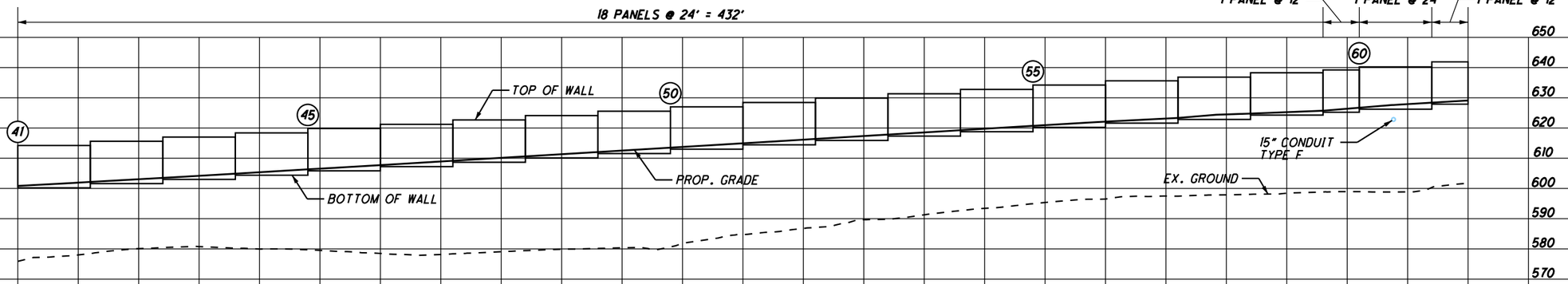

PROP. GRADE ELEV.	600.83	601.93	603.04	604.18	605.36	606.54	607.74	608.94	610.14	611.34	612.54	613.74	614.94	616.14	617.34	618.54	619.74	620.94	622.09	623.11	624.49	625.24	626.37	627.91	629.11	
EX. GROUND ELEV.	575.87	578.03	580.09	580.79	579.98	579.50	578.48	578.13	579.08	579.90	580.36	581.84	584.74	586.72	589.68	591.36	593.44	595.36	596.49	597.49	597.89	598.46	598.93	598.85	601.72	
	19+60					20+60					21+60					22+60				23+60					24+40	

DRAFT Stage 3 - Not for Construction 09/23/2024

PLAN AND PROFILE - NOISE WALL B1
STA. 19+60 TO STA. 24+40

HORIZONTAL SCALE IN FEET
0 10 20 40

CALCULATED TLH
CHECKED BSM

LAW-7-2.17

687
1247

U:\1736087\4\LAW\75923\noise wall\sheets\75923_WP003.dgn 5/22/2024 8:54:47 AM JSnair

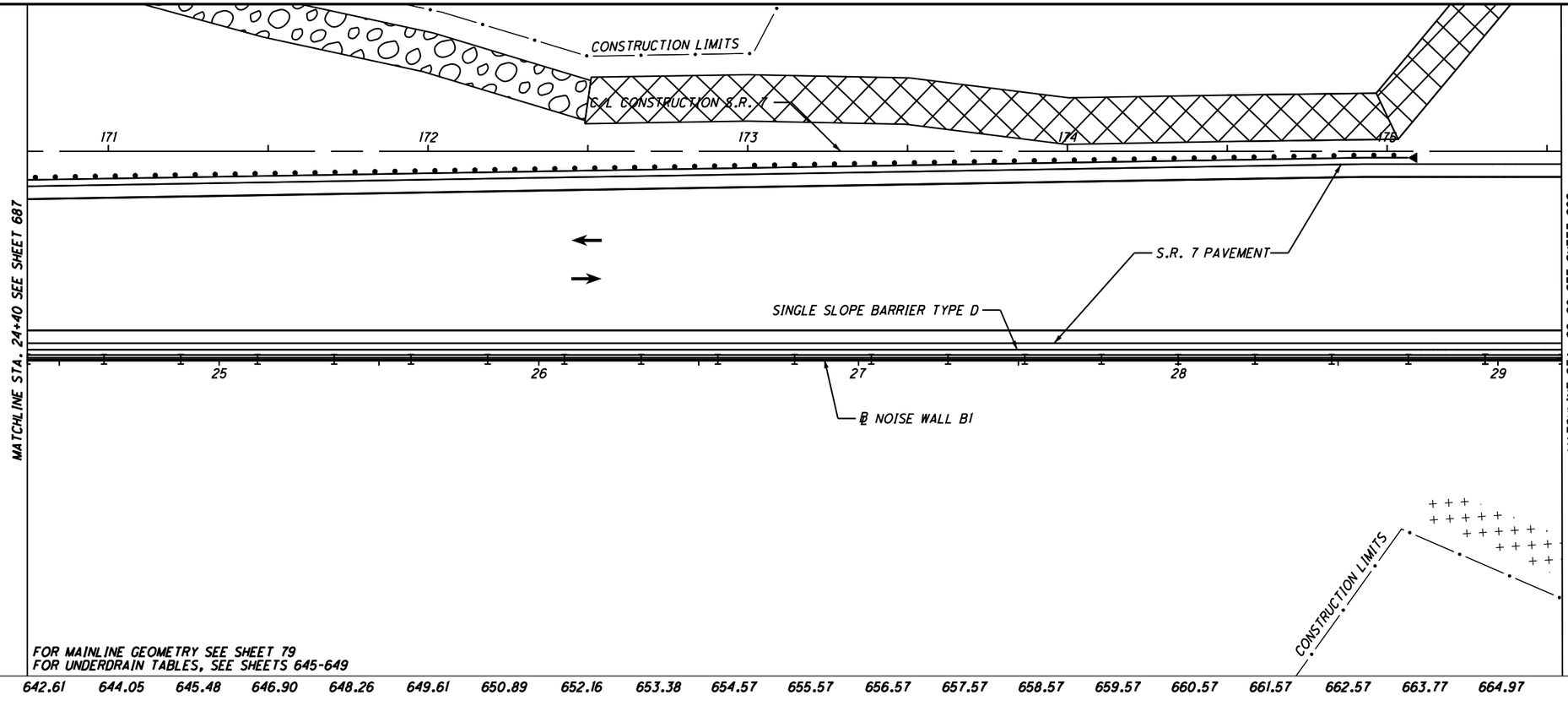

FOR MAINLINE GEOMETRY SEE SHEET 79
FOR UNDERDRAIN TABLES, SEE SHEETS 645-649

TOP OF WALL ELEV.	642.61	644.05	645.48	646.90	648.26	649.61	650.89	652.16	653.38	654.57	655.57	656.57	657.57	658.57	659.57	660.57	661.57	662.57	663.77	664.97
BOTTOM OF WALL ELEV.	628.61	630.05	631.48	632.90	634.26	635.61	636.89	638.16	639.38	640.57	641.57	642.57	643.57	644.57	645.57	646.57	647.57	648.57	649.77	650.97
PANEL NO.	62	63	64	65	66	67	68	69	70	71	72	73	74	75	76	77	78	79	80	81

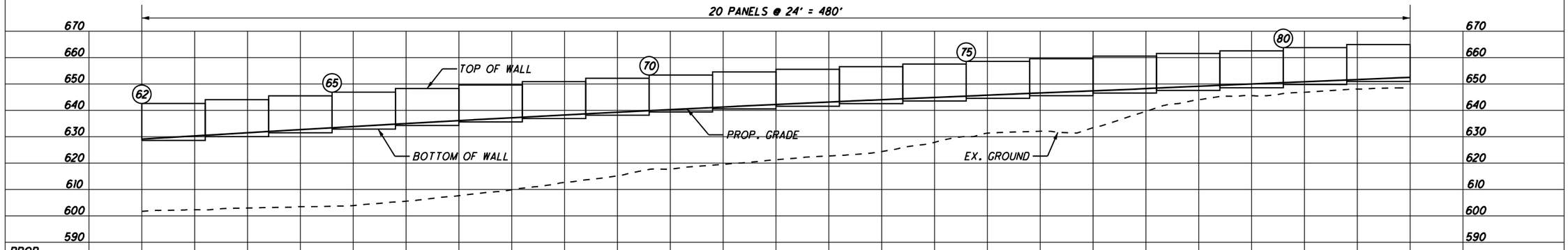

PROP. GRADE ELEV.	629.11	630.31	631.50	632.69	633.86	634.98	636.11	637.18	638.24	639.28	640.28	641.27	642.21	643.14	644.03	644.89	645.76	646.58	647.38	648.27	649.15	650.01	650.86	651.69	652.50
EX. GROUND ELEV.	601.72	602.34	603.00	603.52	603.89	605.58	607.66	609.92	612.69	615.20	617.70	619.50	621.26	622.72	624.37	627.90	631.34	632.09	633.45	639.60	643.99	645.56	646.86	648.06	648.48

24+40 25+40 26+40 27+40 28+40 29+20

DRAFT Stage 3 - Not for Construction 09/23/2024

CALCULATED TLH CHECKED BSM

HORIZONTAL SCALE IN FEET 0 10 20 40

PLAN AND PROFILE - NOISE WALL B1
STA. 24+40 TO STA. 29+20

LAW-7-2.17

688 1247

U:\1736087\4\LAW\75923\noise wall\sheets\75923_WP004.dgn 5/22/2024 8:54:48 AM JSnair

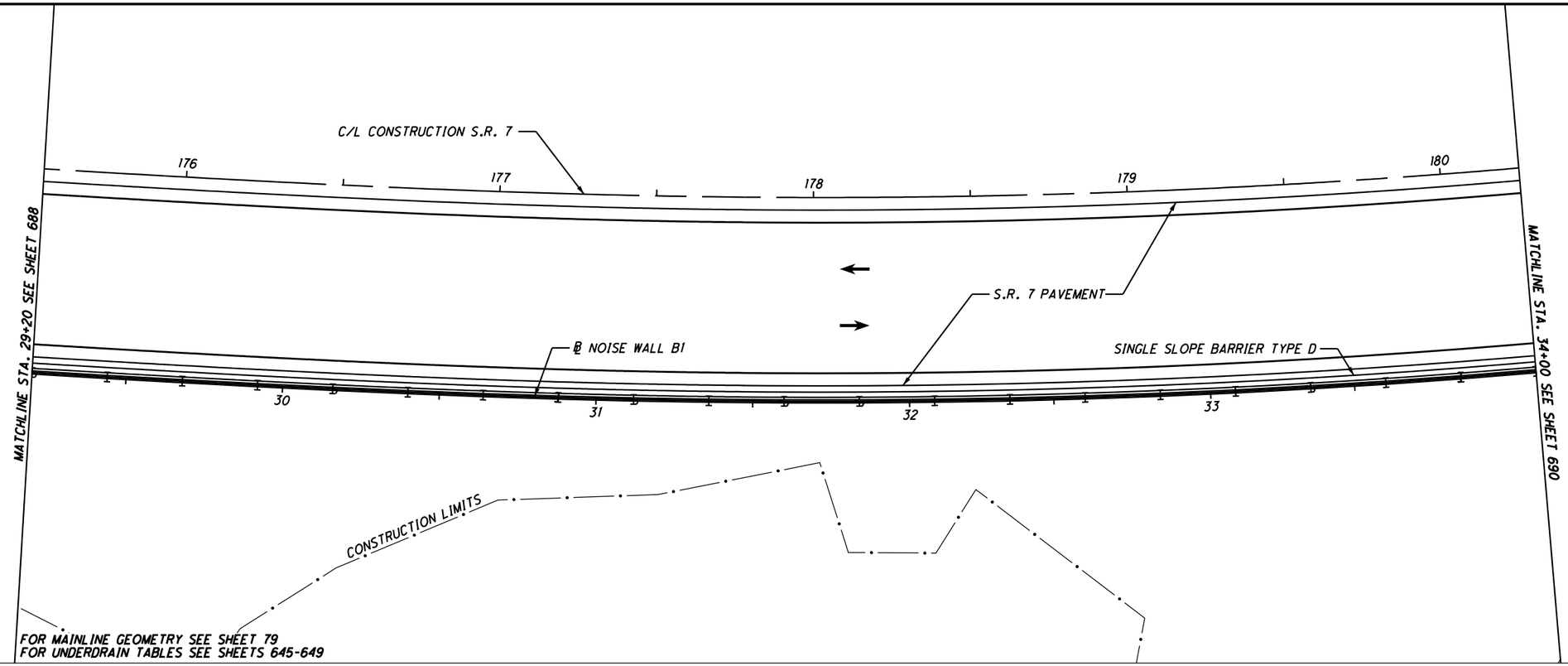

TOP OF WALL ELEV.	666.02	666.87	667.87	668.67	668.67	669.67	670.67	670.67	671.67	671.67	672.67	672.67	672.67	673.67	673.67	673.67	673.67	673.67	673.67	673.67
BOTTOM OF WALL ELEV.	652.02	652.87	653.87	654.67	654.67	655.67	656.67	656.67	657.67	657.67	658.67	658.67	658.67	659.67	659.67	659.67	659.67	659.67	659.67	659.67
PANEL NO.	82	83	84	85	86	87	88	89	90	91	92	93	94	95	96	97	98	99	100	101

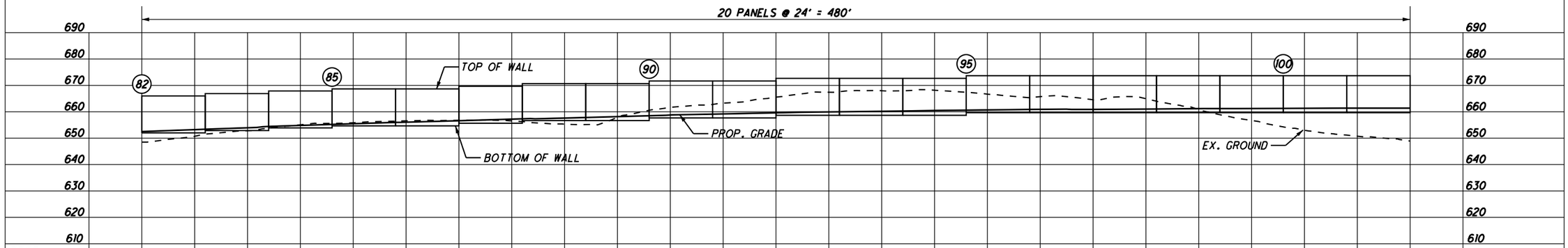

PROP. GRADE ELEV.	652.52	653.23	653.95	654.82	655.47	656.04	656.62	657.22	657.64	658.16	658.78	659.20	659.61	659.94	660.20	660.51	660.71	660.90	660.91	661.03	661.19	661.25	661.32	661.38	661.37
EX. GROUND ELEV.	648.50	650.71	652.81	655.06	655.83	656.56	656.76	656.54	655.30	657.87	661.65	663.28	665.54	667.40	667.97	668.15	666.69	665.73	664.53	654.97	650.84	656.71	653.03	650.76	648.89

29+20 30+20 31+20 32+20 33+20 34+00

DRAFT Stage 3 - Not for Construction 09/23/2024

HORIZONTAL SCALE IN FEET
0 10 20 40

CALCULATED TLH
CHECKED BSM

PLAN AND PROFILE - NOISE WALL B1
STA. 29+20 TO STA. 34+00

LAW-7-2.17

689
1247

U:\173608714\LAW\75923\noise wall\sheets\75923_WP005.dgn 5/22/2024 8:54:49 AM JSnair

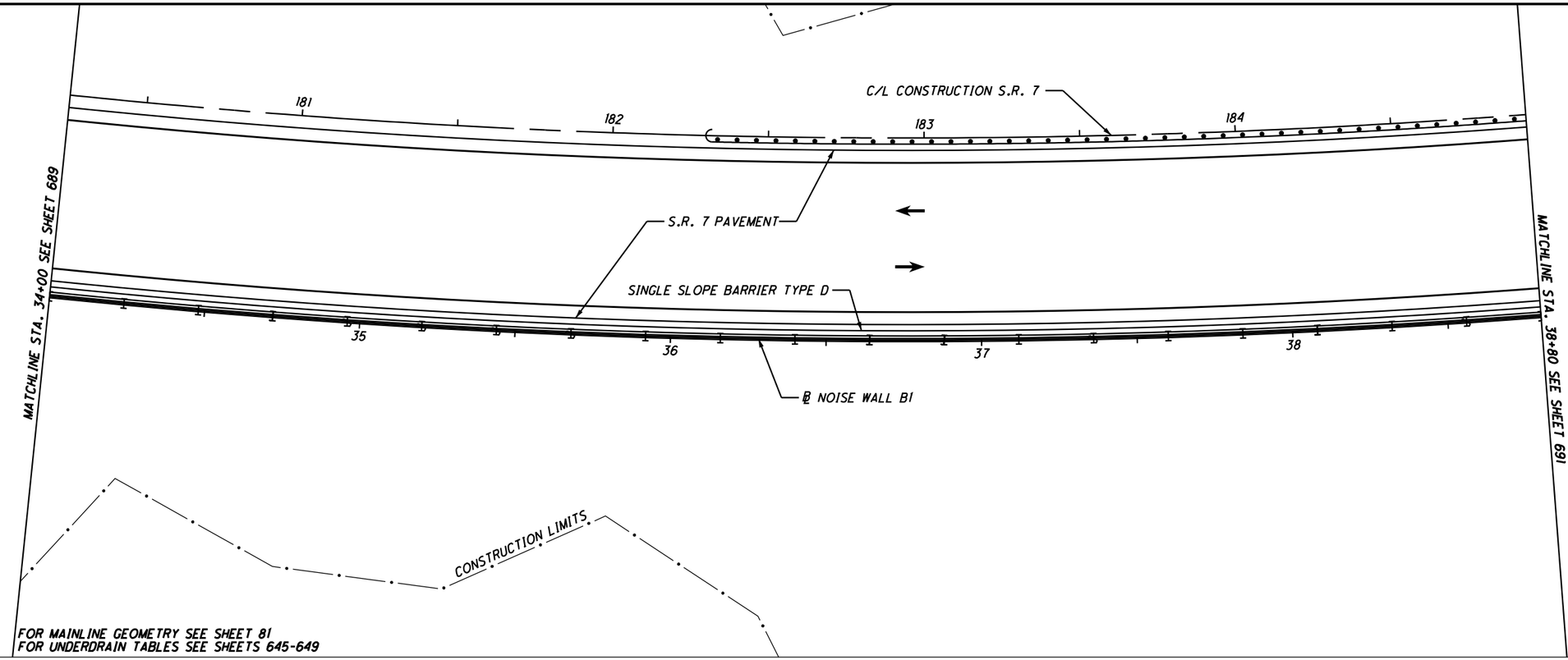

FOR MAINLINE GEOMETRY SEE SHEET 81
FOR UNDERDRAIN TABLES SEE SHEETS 645-649

TOP OF WALL ELEV.	673.67	673.67	673.67	673.67	673.67	673.67	673.67	673.67	672.67	672.67	672.67	671.67	671.67	670.67	670.67	669.67	669.67	668.67	667.87	667.07
BOTTOM OF WALL ELEV.	659.67	659.67	659.67	659.67	659.67	659.67	659.67	659.67	658.67	658.67	658.67	657.67	657.67	656.67	656.67	655.67	655.67	654.67	653.87	653.07
PANEL NO.	102	103	104	105	106	107	108	109	110	111	112	113	114	115	116	117	118	119	120	121

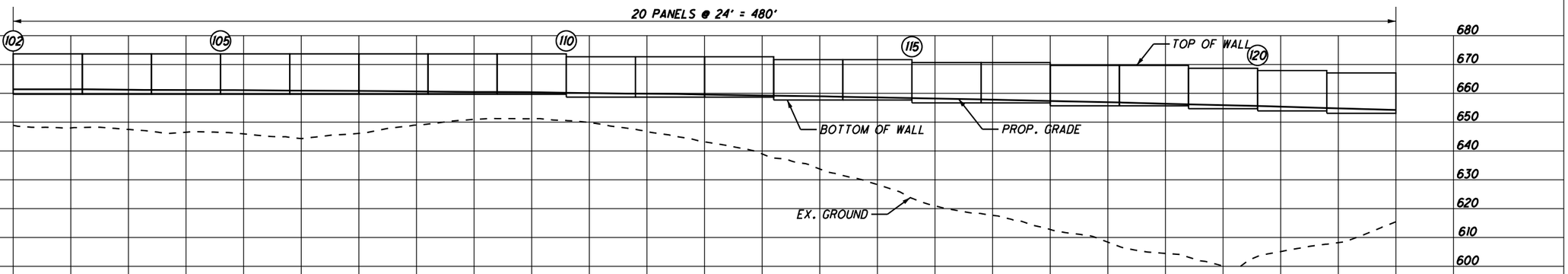

PROP. GRADE ELEV.	661.37	661.40	661.22	661.12	661.08	660.92	660.82	660.65	660.46	660.38	660.09	659.85	659.57	659.24	658.97	658.56	658.18	657.79	657.32	656.92	656.40	655.90	655.40	654.80	654.24
EX. GROUND ELEV.	648.89	647.98	647.45	646.50	645.94	644.29	646.12	649.00	650.94	651.15	649.86	646.73	643.19	639.00	633.76	628.40	620.98	617.69	612.76	608.39	604.46	600.09	595.07	608.20	615.46

34+00 35+00 36+00 37+00 38+00 38+80

DRAFT Stage 3 - Not for Construction 09/23/2024

PLAN AND PROFILE - NOISE WALL B1
STA. 34+00 TO STA. 38+80

HORIZONTAL SCALE IN FEET
0 10 20 40

CALCULATED TLH
CHECKED BSM

LAW-7-2.17

690
1247

U:\173608714\LAW\75923\noise wall\sheets\75923_WP006.dgn 5/22/2024 8:54:50 AM JSnair

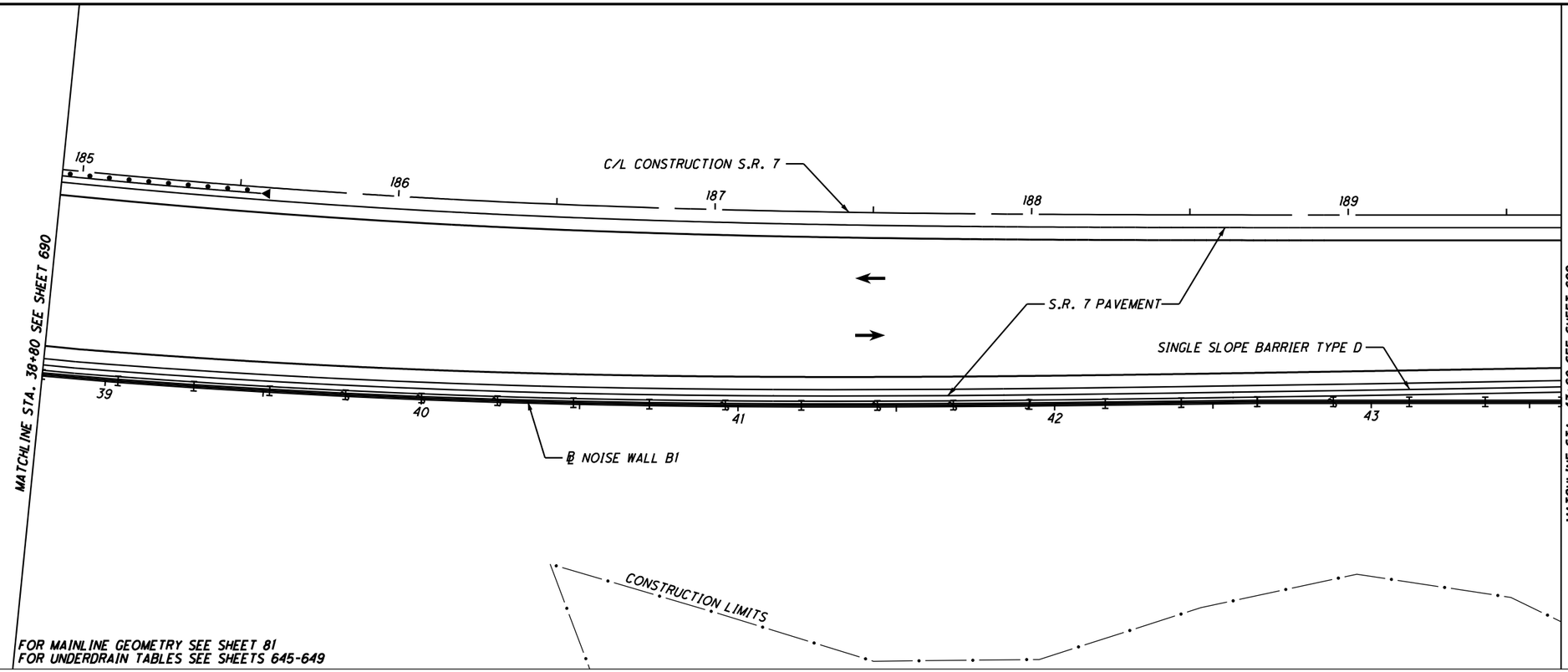

FOR MAINLINE GEOMETRY SEE SHEET 81
FOR UNDERDRAIN TABLES SEE SHEETS 645-649

TOP OF WALL ELEV.	666.37	665.57	664.77	663.97	663.17	662.27	661.27	660.07	658.97	657.77	656.47	655.27	653.97	652.67	651.29	649.84	648.25	646.64	645.03	643.47
BOTTOM OF WALL ELEV.	652.37	651.57	650.77	649.97	649.17	648.27	647.27	646.07	644.97	643.77	642.47	641.27	639.97	638.67	637.29	635.84	634.25	632.64	631.03	629.47
PANEL NO.	122	123	124	125	126	127	128	129	130	131	132	133	134	135	136	137	138	139	140	141

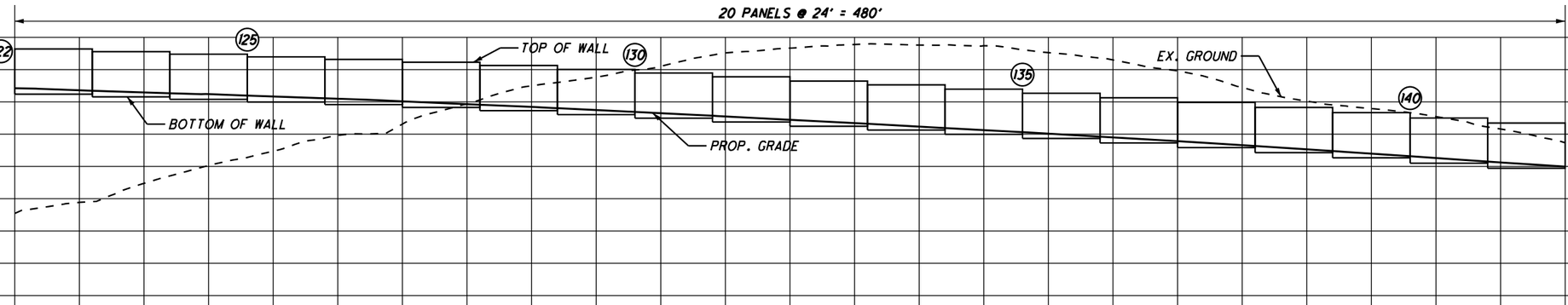

PROP. GRADE ELEV.	654.24	653.60	652.95	652.41	651.67	650.96	650.16	649.29	648.45	647.46	646.50	645.50	644.46	643.44	642.35	641.26	640.15	639.00	637.84	636.60	635.28	633.95	632.60	631.26	629.97
EX. GROUND ELEV.	615.46	618.87	624.74	630.28	634.74	639.64	643.13	649.33	654.96	657.67	661.02	665.17	666.65	667.80	667.61	667.37	665.26	663.01	659.59	654.47	650.23	647.92	645.45	641.60	637.32

38+80 39+80 40+80 41+80 42+80 43+60

DRAFT Stage 3 - Not for Construction 09/23/2024

HORIZONTAL SCALE IN FEET
0 10 20 40

CALCULATED TLH
CHECKED BSM

PLAN AND PROFILE - NOISE WALL B1
STA. 38+80 TO STA. 43+60

LAW-7-2.17

691
1247

U:\173608714\LAW\75923\noise wall\sheets\75923_WP007.dgn 5/22/2024 8:54:51 AM JSnair

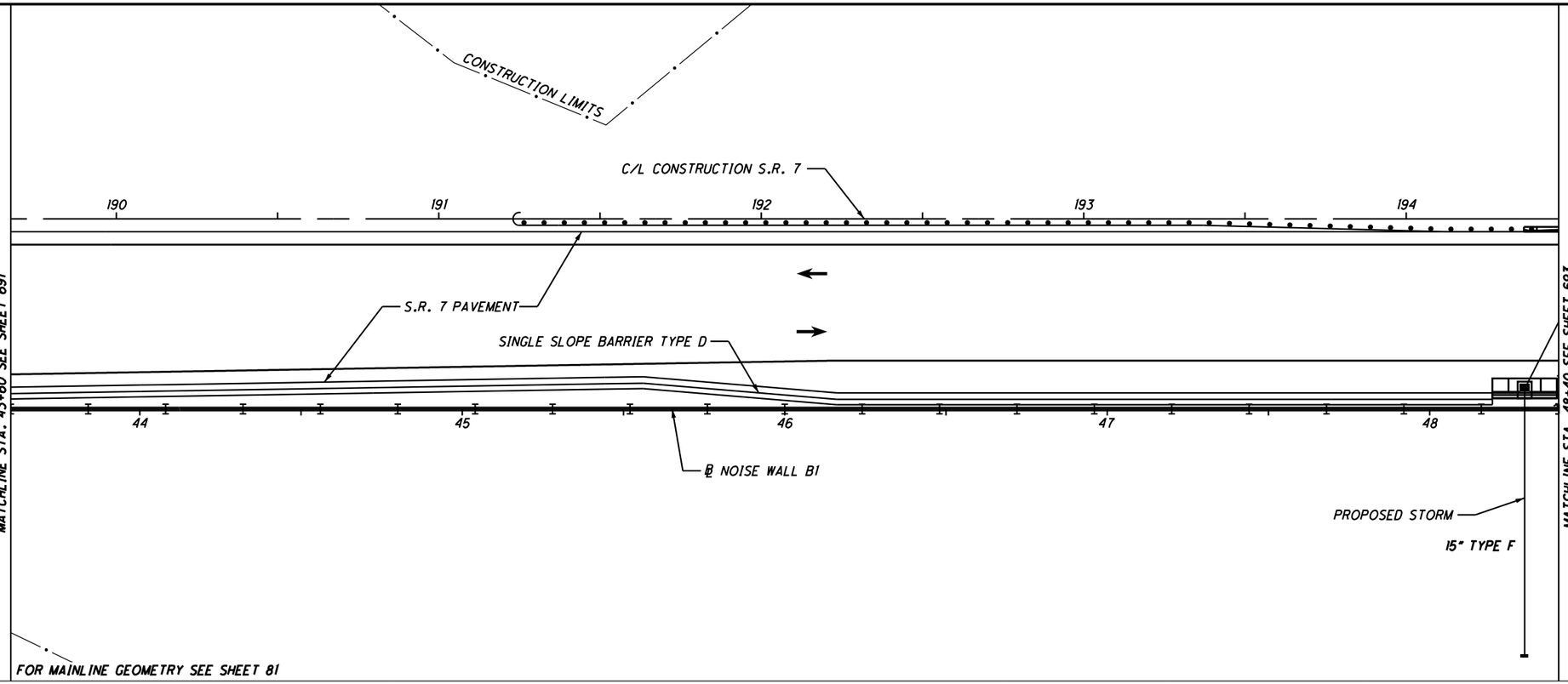

TOP OF WALL ELEV.	641.94	640.40	638.83	636.98	635.41	633.84	632.28	630.88	629.88	628.88	627.78	626.58	625.19	623.77	622.41	621.04	619.74	618.44	617.14	615.94
BOTTOM OF WALL ELEV.	627.94	626.40	624.83	622.98	621.41	619.84	618.28	616.88	615.88	614.88	613.78	612.58	611.19	609.77	608.41	607.04	605.74	604.44	603.14	601.94
PANEL NO.	142	143	144	145	146	147	148	149	150	151	152	153	154	155	156	157	158	159	160	161

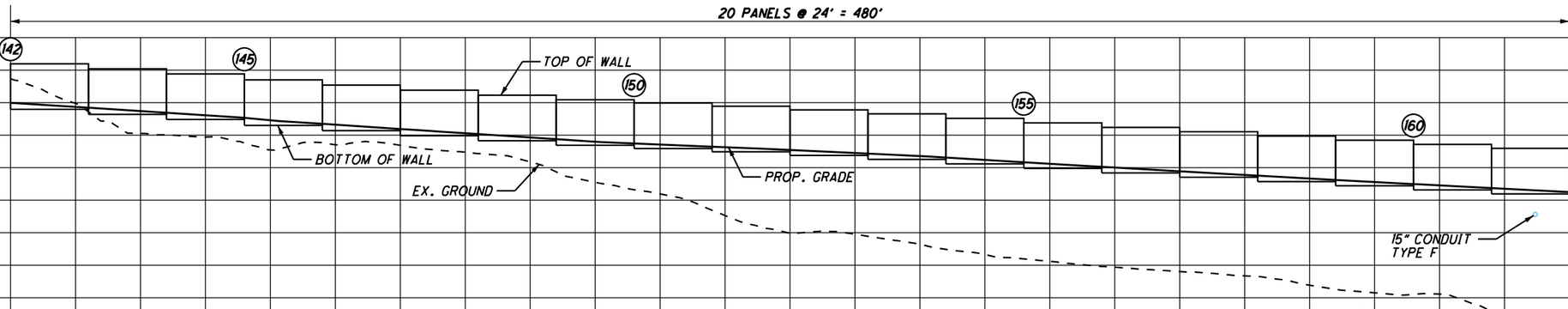

PROP. GRADE ELEV.	629.97	628.69	627.42	626.14	624.59	623.21	621.91	620.60	619.30	617.99	617.11	616.30	615.44	614.50	613.57	612.41	611.22	610.04	608.91	607.77	606.68	605.60	604.55	603.53	602.52
EX. GROUND ELEV.	637.32	629.78	620.53	619.41	615.46	617.06	616.87	614.78	611.81	605.53	601.93	595.29	589.84	589.56	586.49	583.32	581.19	579.41	578.06	576.74	573.84	571.51	571.11	564.93	563.55
	43+60				44+60					45+60						46+60									48+40

DRAFT Stage 3 - Not for Construction 09/23/2024

PLAN AND PROFILE - NOISE WALL B1
STA. 43+60 TO STA. 48+40

HORIZONTAL SCALE IN FEET
0 10 20 40

CALCULATED TLH
CHECKED BSM

LAW-7-2.17

692
1247

U:\1736087\4\LAW\75923\noise wall\sheets\75923_WP008.dgn 5/22/2024 8:54:51 AM JSnair

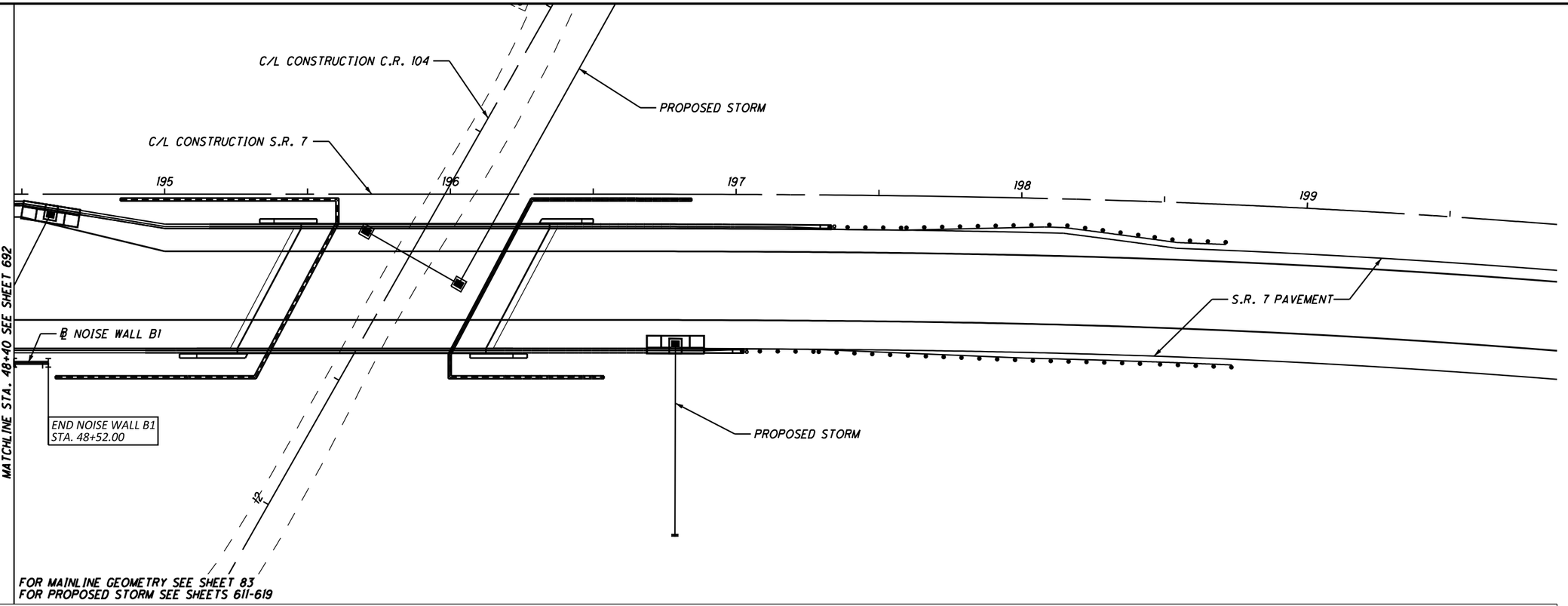

TOP OF WALL ELEV.	614.66	
BOTTOM OF WALL ELEV.	600.66	
PANEL NO.	162	163
PROP. GRADE ELEV.	602.52	601.16
EX. GROUND ELEV.	563.51	563.45

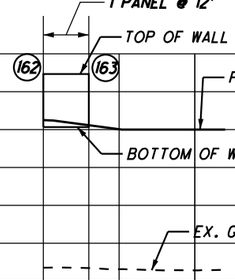

48+40 48+52

DRAFT Stage 3 - Not for Construction 09/23/2024

HORIZONTAL SCALE IN FEET
0 10 20 40

CALCULATED TLH
CHECKED BSM

PLAN AND PROFILE - NOISE WALL B1
STA. 48+40 TO STA. 48+88

LAW-7-2.17

693
1247

U:\1736087\4\LAW\75923\noise wall\sheets\75923_WP009.dgn 5/22/2024 8:54:53 AM JSnair

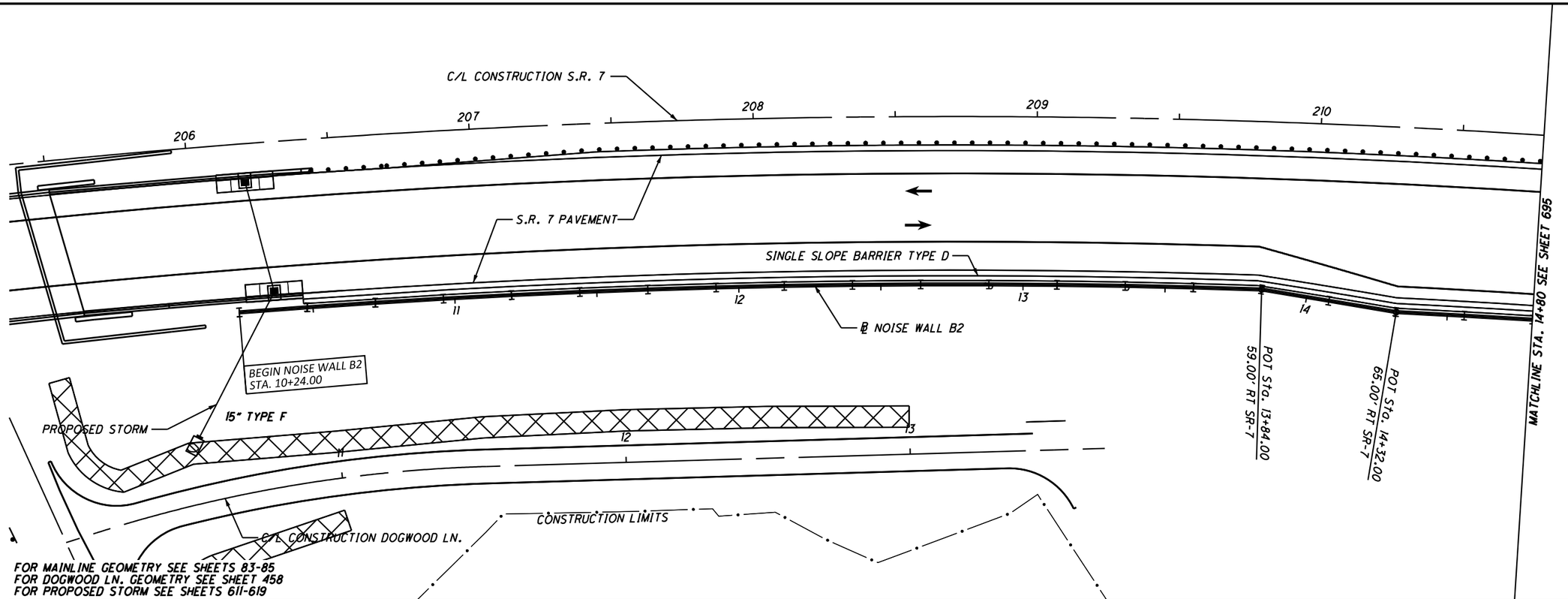

TOP OF WALL ELEV.	598.45	599.45	599.45	600.75	600.75	601.75	602.75	603.65	604.55	605.35	606.25	607.25	608.15	609.15	610.15	610.90	612.10	612.77	614.27
BOTTOM OF WALL ELEV.	584.45	585.45	585.45	586.75	586.75	587.75	588.75	589.65	590.55	591.35	592.25	593.25	594.15	595.15	596.15	596.90	598.10	598.77	600.27
PANEL NO.	1	2	3	4	5	6	7	8	9	10	11	12	13	14	15	16	17	18	19

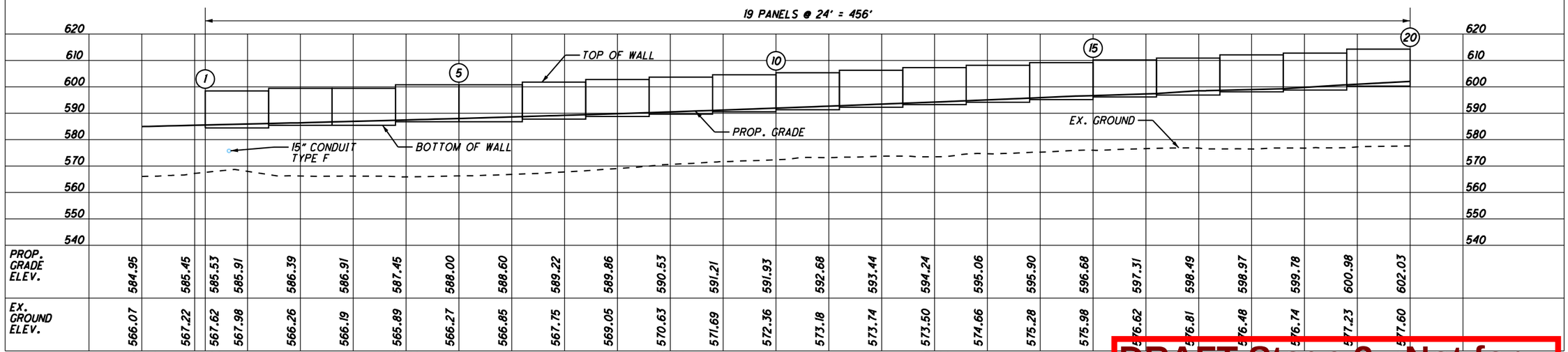

PROP. GRADE ELEV.	584.95	585.45	585.53	585.91	586.39	586.91	587.45	588.00	588.60	589.22	589.86	590.53	591.21	591.93	592.68	593.44	594.24	595.06	595.90	596.68	597.31	598.49	598.97	599.78	600.98	602.03
EX. GROUND ELEV.	566.07	567.22	567.62	567.98	566.26	566.19	565.89	566.27	566.85	567.75	569.05	570.63	571.69	572.36	573.18	573.74	573.50	574.66	575.28	575.98	576.62	576.81	576.48	576.74	577.23	577.60

10+00 10+24 11+00 12+00 13+00 14+00

DRAFT Stage 3 - Not for Construction 09/23/2024

HORIZONTAL SCALE IN FEET
0 10 20 40

CALCULATED TLH CHECKED BSM

PLAN AND PROFILE - NOISE WALL B2
STA. 10+00 TO STA. 14+80

LAW-7-2.17

694
1247

U:\1736087\4\LAW\75923\noise wall\sheets\75923_WP010.dgn 5/22/2024 8:54:54 AM JSnair

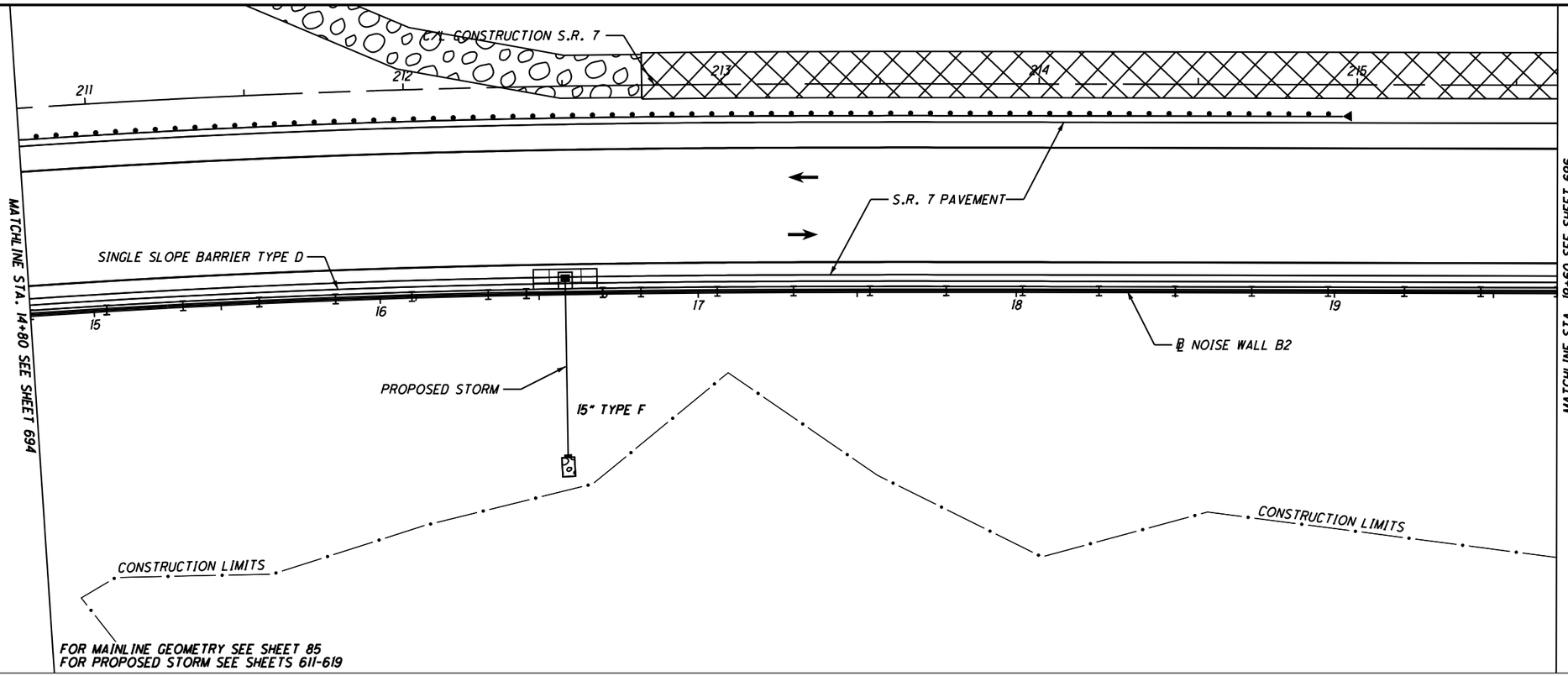

TOP OF WALL ELEV.	615.53	616.73	618.03	619.39	620.82	622.21	623.72	624.53	626.18	626.94	628.44	629.91	631.37	632.81	634.30	635.65	637.00	638.25	639.48	640.48	641.66
BOTTOM OF WALL ELEV.	601.53	602.73	604.03	605.39	606.82	608.21	609.72	610.53	612.18	612.94	614.44	615.91	617.37	618.81	620.30	621.65	623.00	624.25	625.48	626.48	627.66
PANEL NO.	20	21	22	23	24	25	26	27	28	29	30	31	32	33	34	35	36	37	38	39	40

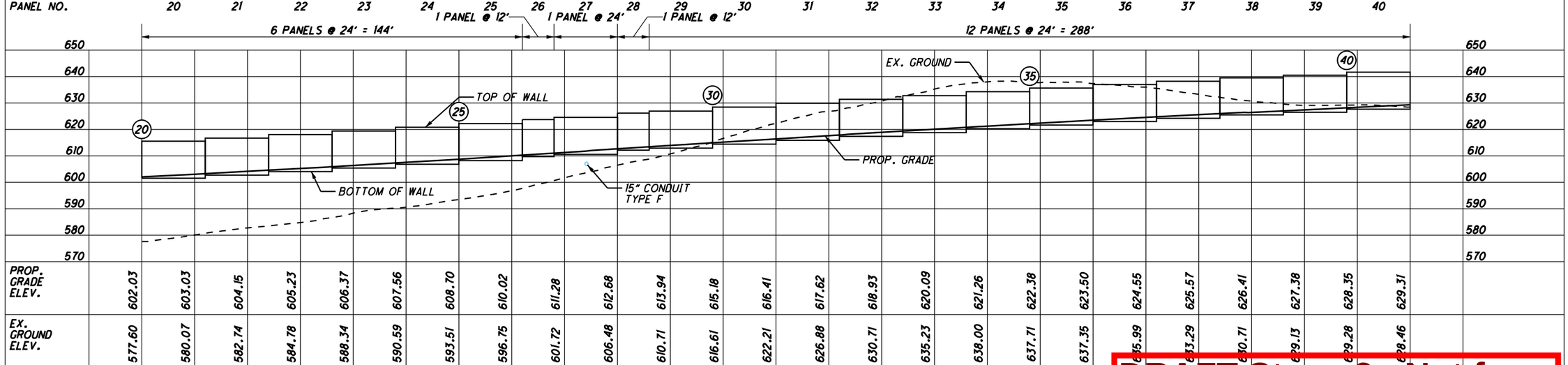

PROP. GRADE ELEV.	602.03	603.03	604.15	605.23	606.37	607.56	608.70	610.02	611.28	612.68	613.94	615.18	616.41	617.62	618.93	620.09	621.26	622.38	623.50	624.55	625.57	626.41	627.38	628.35	629.31
EX. GROUND ELEV.	577.60	580.07	582.74	584.78	588.34	590.59	593.51	596.75	601.72	606.48	610.71	616.61	622.21	626.88	630.71	635.23	638.00	637.71	637.35	635.99	633.29	630.71	629.13	629.28	628.46

14+80 15+80 16+80 17+80 18+80 19+00

DRAFT Stage 3 - Not for Construction 09/23/2024

HORIZONTAL SCALE IN FEET
0 10 20 40

CALCULATED TLH
CHECKED BSM

PLAN AND PROFILE - NOISE WALL B2
STA. 14+80 TO STA. 19+60

LAW-7-2.17

695
1247

U:\1736087f4\LAW\75923\noise wall\sheets\75923_WP01l.dgn 5/22/2024 8:54:55 AM JSnair

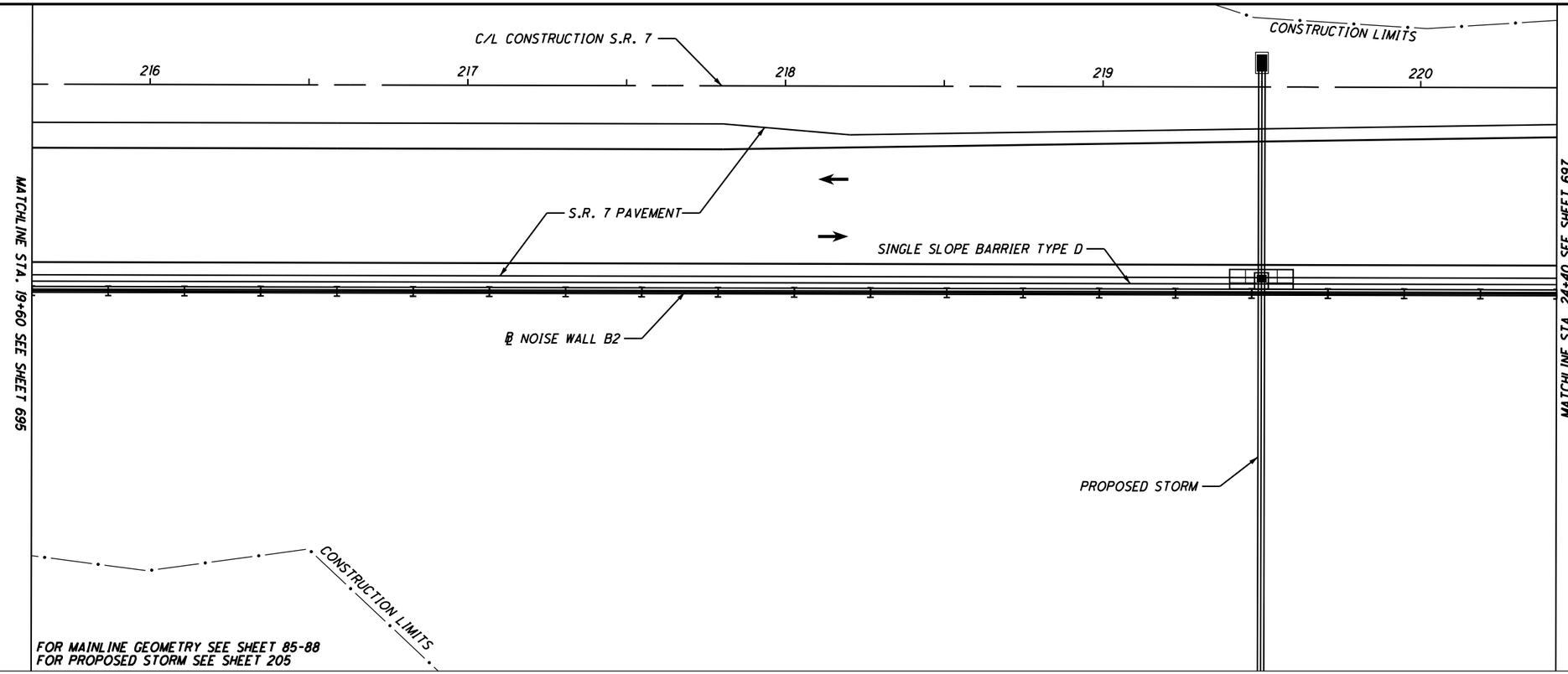

TOP OF WALL ELEV.	642.81	643.91	644.91	646.01	647.11	648.11	649.21	650.21	651.21	652.21	653.21	654.21	655.11	656.01	656.91	657.81	658.71	659.61	660.41	661.21
BOTTOM OF WALL ELEV.	628.81	629.91	630.91	632.01	633.11	634.11	635.21	636.21	637.21	638.21	639.21	640.21	641.11	642.01	642.91	643.81	644.71	645.61	646.41	647.21
PANEL NO.	41	42	43	44	45	46	47	48	49	50	51	52	53	54	55	56	57	58	59	60

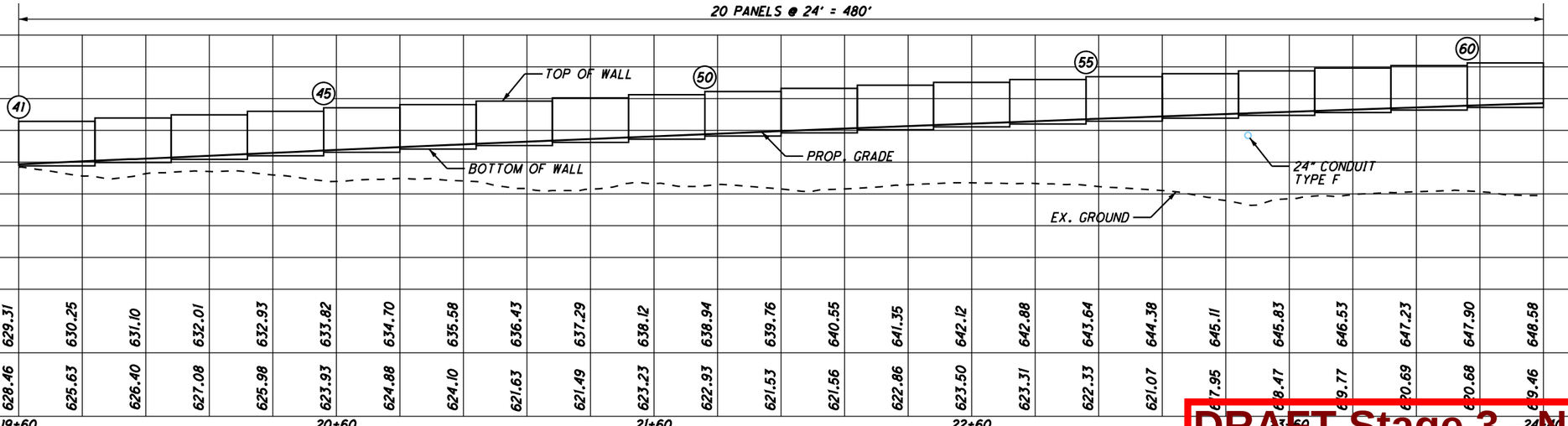

PROP. GRADE ELEV.	629.31	630.25	631.10	632.01	632.93	633.82	634.70	635.58	636.43	637.29	638.12	638.94	639.76	640.55	641.35	642.12	642.88	643.64	644.38	645.11
EX. GROUND ELEV.	628.46	625.63	626.40	627.08	625.98	623.93	624.88	624.10	621.63	621.49	623.23	622.93	621.53	621.56	622.86	623.50	623.31	622.33	621.07	617.95

19+60 20+60 21+60 22+60

DRAFT Stage 3 - Not for Construction 09/23/2024

HORIZONTAL SCALE IN FEET
0 10 20 40

CALCULATED TLH
CHECKED BSM

PLAN AND PROFILE - NOISE WALL B2
STA. 19+60 TO STA. 24+40

LAW-7-2.17

696
1247

U:\1736087\14\LAW\75923\noise wall\sheets\75923_WP012.dgn 5/22/2024 8:54:55 AM JSnair

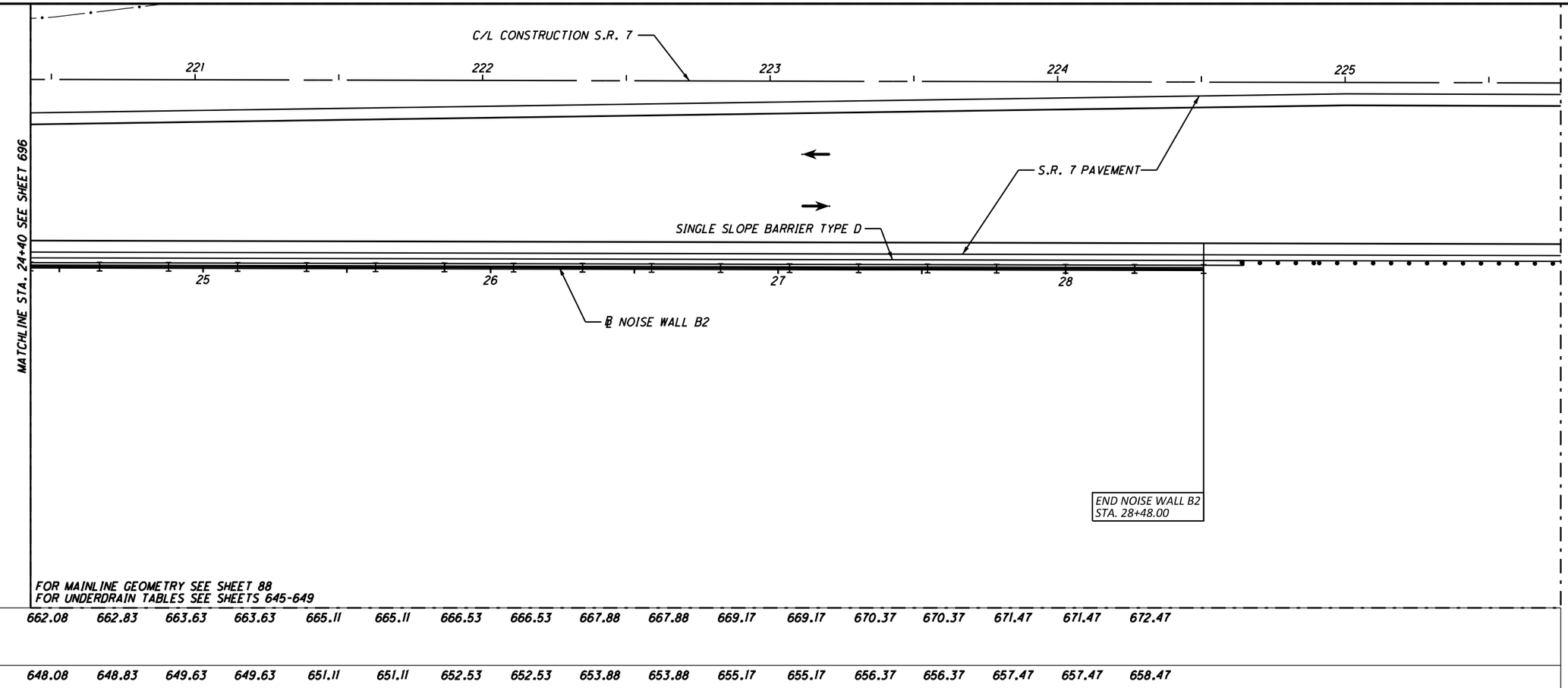

FOR MAINLINE GEOMETRY SEE SHEET 88
FOR UNDERDRAIN TABLES SEE SHEETS 645-649

TOP OF WALL ELEV.	662.08	662.83	663.63	663.63	665.11	665.11	666.53	666.53	667.88	667.88	669.17	669.17	670.37	670.37	671.47	671.47	672.47
BOTTOM OF WALL ELEV.	648.08	648.83	649.63	649.63	651.11	651.11	652.53	652.53	653.88	653.88	655.17	655.17	656.37	656.37	657.47	657.47	658.47
PANEL NO.	61	62	63	64	65	66	67	68	69	70	71	72	73	74	75	76	77

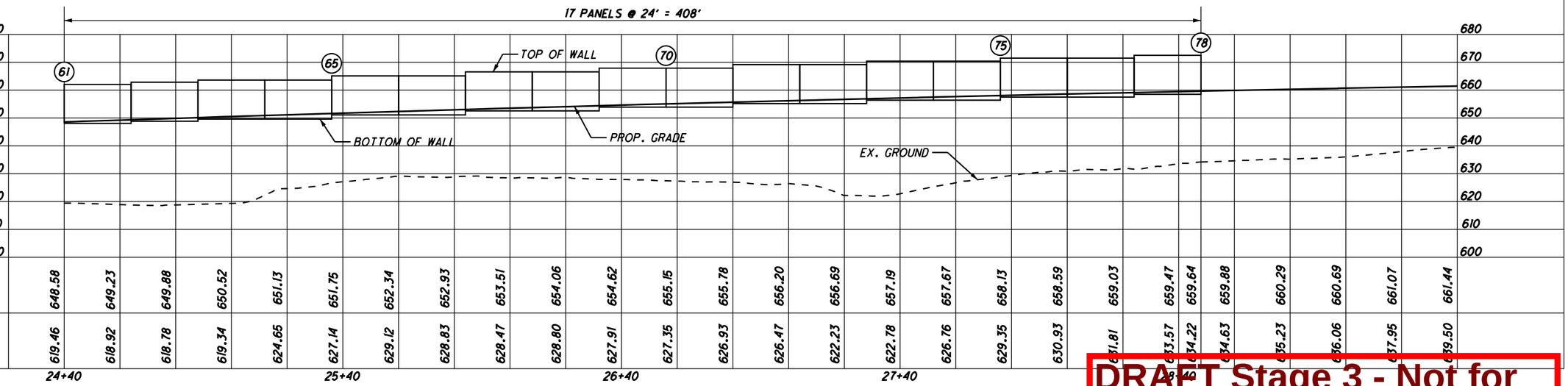

PROP. GRADE ELEV.	648.58	649.23	649.88	650.52	651.13	651.75	652.34	652.93	653.51	654.06	654.62	655.15	655.78	656.20	656.69	657.19	657.67	658.13	658.59	659.03	659.47	659.64	659.88	660.29	660.69	661.07	661.44
EX. GROUND ELEV.	619.46	618.92	618.78	619.34	624.65	627.14	629.12	628.83	628.47	628.80	627.91	627.35	626.93	626.47	622.23	622.78	626.76	629.35	630.93	631.81	633.57	634.22	634.63	635.23	636.06	637.95	639.50
	24+40				25+40					26+40						27+40						28+40					

DRAFT Stage 3 - Not for Construction 09/23/2024

PROFILE - NOISE WALL B2
STA. 24+40 TO STA. 28+48

HORIZONTAL SCALE IN FEET
0 10 20 40

CALCULATED TLH
CHECKED BSM

LAW-7-2.17

697
124.7

U:\1736087\14\LAW\75923\noise wall\sheets\75923_WP013.dgn 5/22/2024 8:54:56 AM JSnair

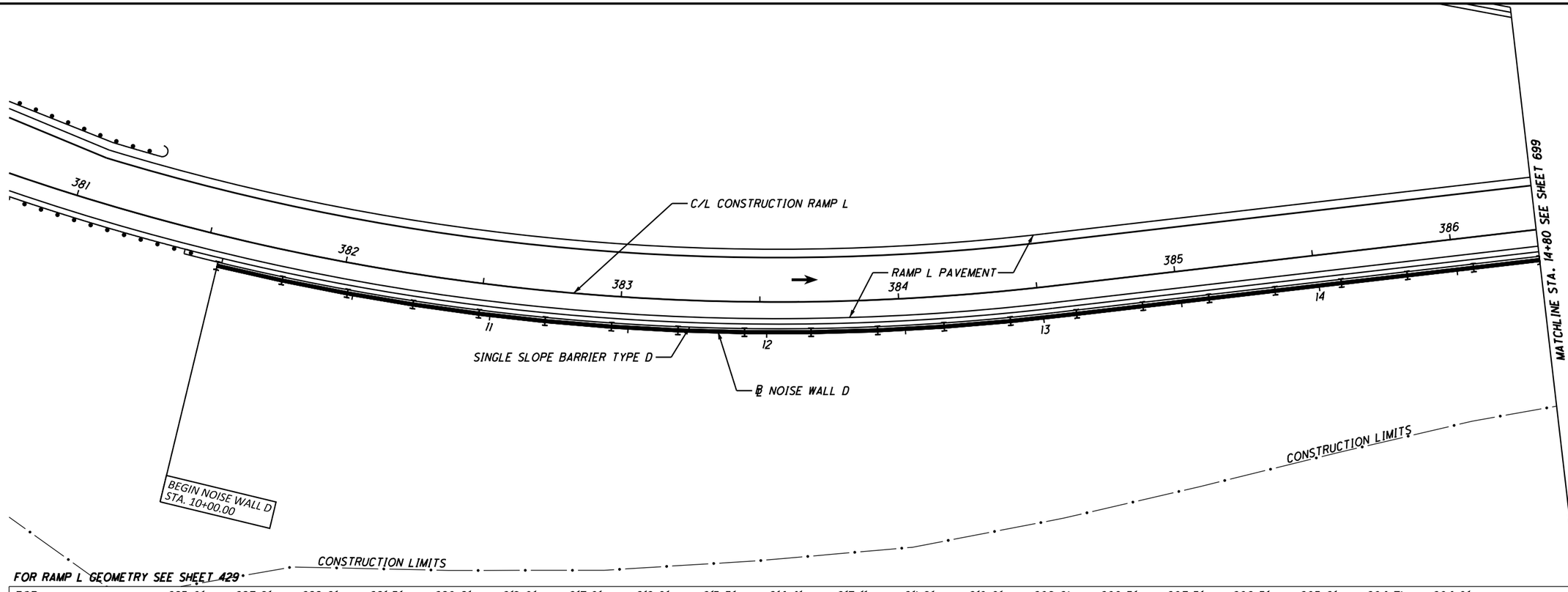

TOP OF WALL ELEV.	625.01	623.91	622.61	621.51	620.21	619.01	617.81	616.81	615.51	614.41	613.11	611.91	610.81	609.61	608.51	607.51	606.51	605.61	604.71	604.01
BOTTOM OF WALL ELEV.	611.01	609.91	608.61	607.51	606.21	605.01	603.81	602.81	601.51	600.41	599.11	597.91	596.81	595.61	594.51	593.51	592.51	591.61	590.71	590.01
PANEL NO.	1	2	3	4	5	6	7	8	9	10	11	12	13	14	15	16	17	18	19	20

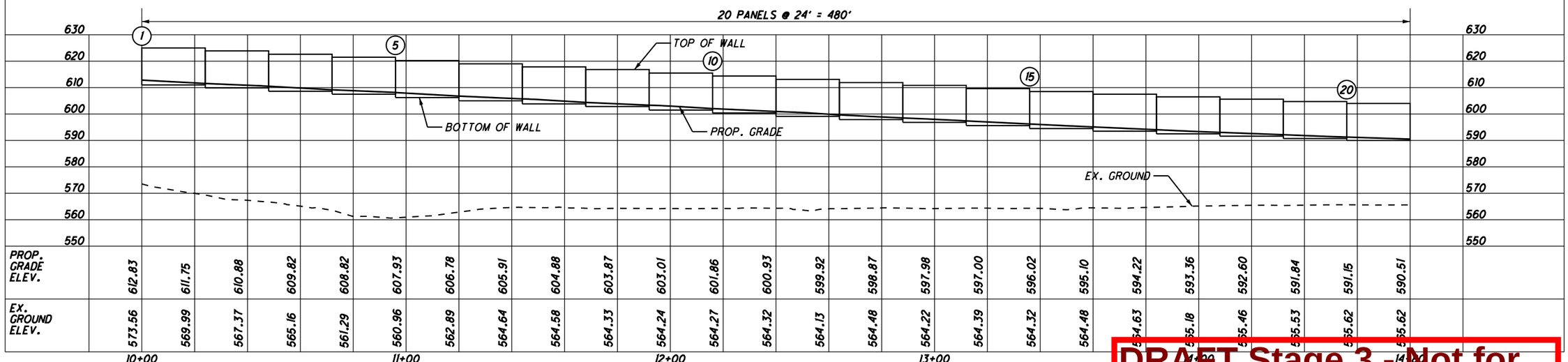

PROP. GRADE ELEV.	612.83	611.75	610.88	609.82	608.82	607.93	606.78	605.91	604.88	603.87	603.01	601.86	600.93	599.92	598.87	597.98	597.00	596.02	595.10	594.22	593.36	592.60	591.84	591.15	590.51
EX. GROUND ELEV.	573.56	569.99	567.37	565.16	561.29	560.96	562.89	564.64	564.58	564.33	564.24	564.27	564.32	564.13	564.48	564.22	564.39	564.32	564.48	564.63	565.18	565.46	565.53	565.62	565.62

10+00 11+00 12+00 13+00 14+00

DRAFT Stage 3 - Not for Construction 09/23/2024

HORIZONTAL SCALE IN FEET
0 10 20 40

CALCULATED TLH
CHECKED BSM

PLAN AND PROFILE - NOISE WALL D
STA. 10+00 TO STA. 14+80

LAW-7-2.17

698
1247

U:\1736087\14\LAW\75923\noise wall\sheets\75923_WP014.dgn 5/22/2024 8:54:57 AM JSnair

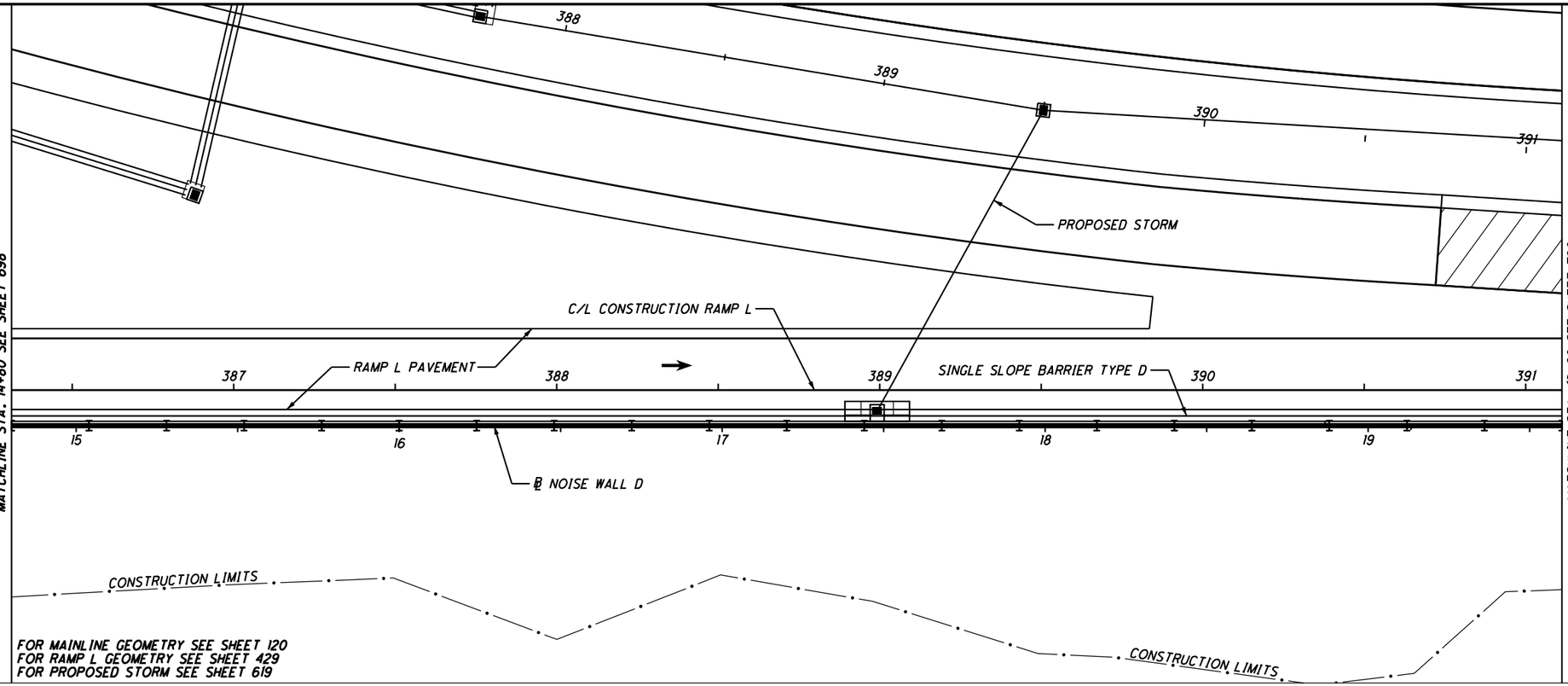

FOR MAINLINE GEOMETRY SEE SHEET 120
FOR RAMP L GEOMETRY SEE SHEET 429
FOR PROPOSED STORM SEE SHEET 619

TOP OF WALL ELEV.	602.65	602.65	601.07	601.07	601.07	599.80	599.80	599.80	599.80	599.80	599.80	599.80	599.80	599.80	599.80	599.80	599.80	600.70	600.70	601.30
BOTTOM OF WALL ELEV.	588.65	588.65	587.07	587.07	587.07	585.80	585.80	585.80	585.80	585.80	585.80	585.80	585.80	585.80	585.80	585.80	585.80	586.70	586.70	587.30
PANEL NO.	21	22	23	24	25	26	27	28	29	30	31	32	33	34	35	36	37	38	39	40

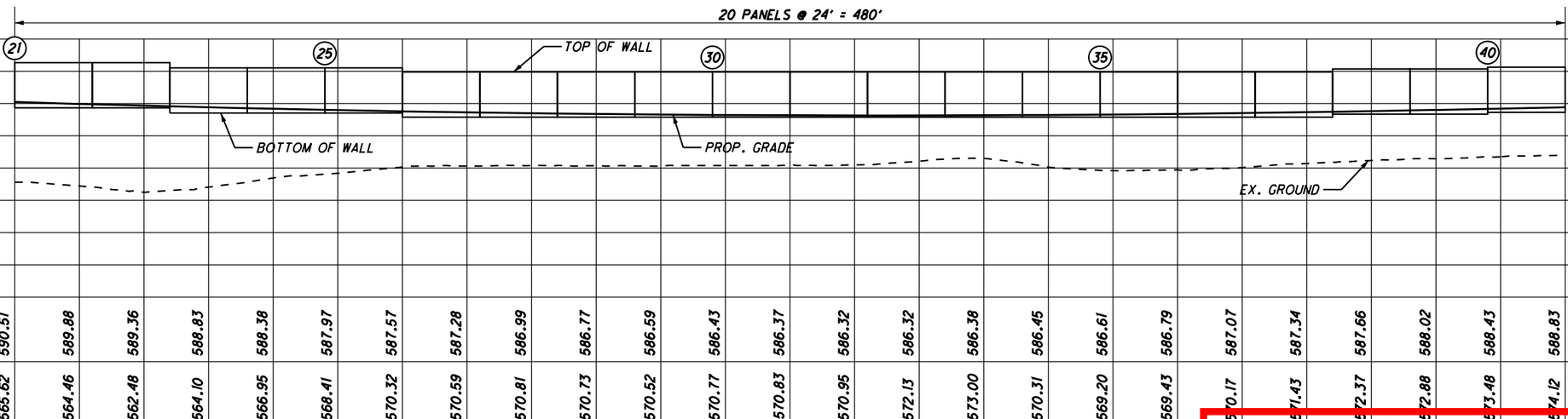

PROP. GRADE ELEV.	590.51	589.88	589.36	588.83	588.38	587.97	587.57	587.28	586.99	586.77	586.59	586.43	586.37	586.32	586.32	586.38	586.45	586.61	586.79	587.07	587.34	587.66	588.02	588.43	588.83	
EX. GROUND ELEV.	565.62	564.46	562.48	564.10	566.95	568.41	570.32	570.59	570.81	570.73	570.52	570.77	570.83	570.95	572.13	573.00	570.31	569.20	569.43	570.17	571.43	572.37	572.88	573.48	574.12	
	14+80					15+80					16+80					17+80				18+80						19+60

DRAFT Stage 3 - Not for Construction 09/23/2024

PLAN AND PROFILE - NOISE WALL D
STA. 14+80 TO STA. 19+60

CALCULATED TLH
CHECKED BSM

HORIZONTAL SCALE IN FEET
0 10 20 40

LAW-7-2.17

699
1247

U:\1736087\14\LAW\75923\noise wall\sheets\75923_WP015.dgn 5/22/2024 8:54:58 AM JSnair

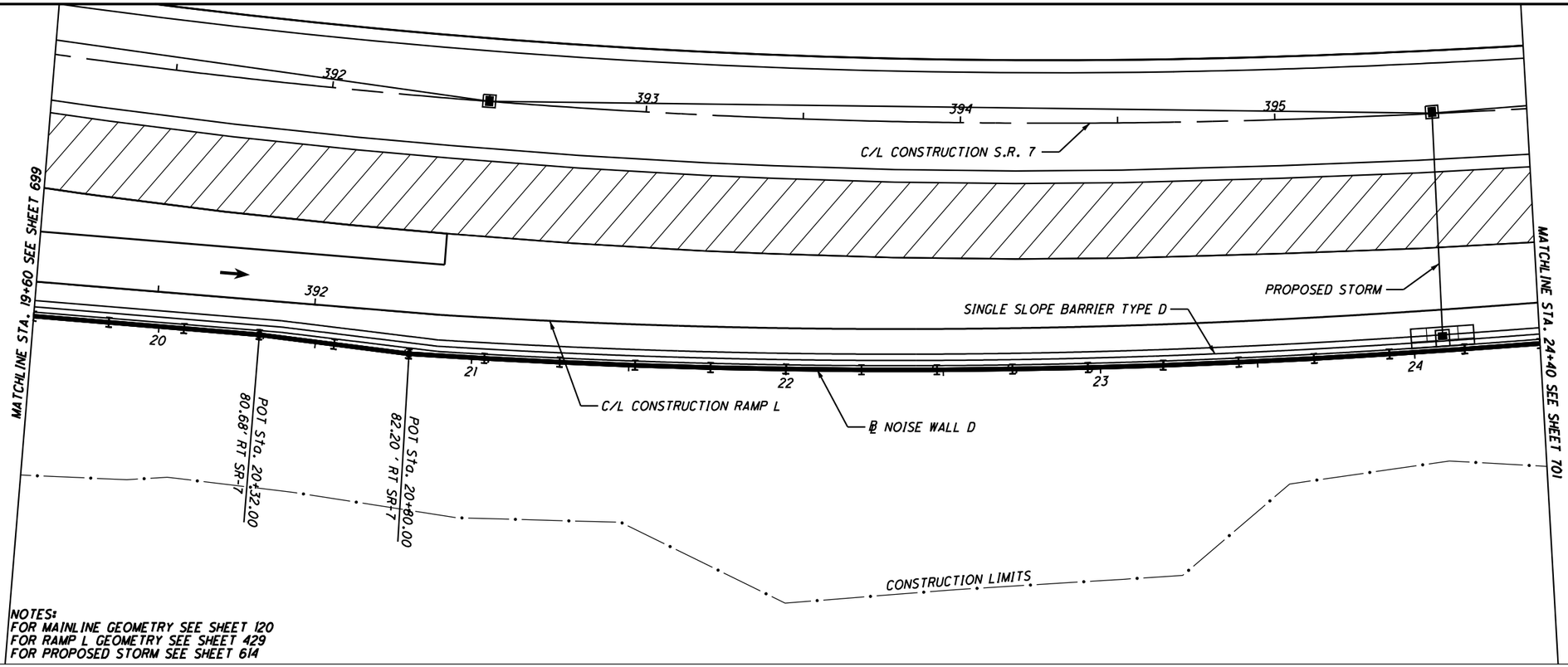

NOTES:
FOR MAINLINE GEOMETRY SEE SHEET 120
FOR RAMP L GEOMETRY SEE SHEET 429
FOR PROPOSED STORM SEE SHEET 614

TOP OF WALL ELEV.		602.33	602.33	603.23	603.23	603.23	604.23	605.43	605.43	605.43	605.43	606.63	606.63	606.63	607.93	607.93	607.93	607.93	607.93	607.93
BOTTOM OF WALL ELEV.		588.33	588.33	589.23	589.23	589.23	590.23	591.43	591.43	591.43	591.43	592.63	592.63	592.63	593.93	593.93	593.93	593.93	593.93	593.93
PANEL NO.		41	42	43	44	45	46	47	48	49	50	51	52	53	54	55	56	57	58	59	60
PROP. GRADE ELEV.	588.83	589.23	589.63	590.07	590.33	590.55	590.91	591.91	592.15	592.46	592.76	593.02	593.36	593.65	593.97	594.30	594.56	594.87	595.00	595.09	595.21	595.30	595.43	595.54	595.65
EX. GROUND ELEV.	574.12	575.27	576.33	577.44	577.74	577.59	577.56	577.51	578.43	578.81	579.32	580.41	581.22	581.99	582.95	583.50	583.94	584.41	585.62	587.19	588.46	589.06	589.33	589.77	590.05
		19+60				20+60					21+60					22+60					23+60					24+00

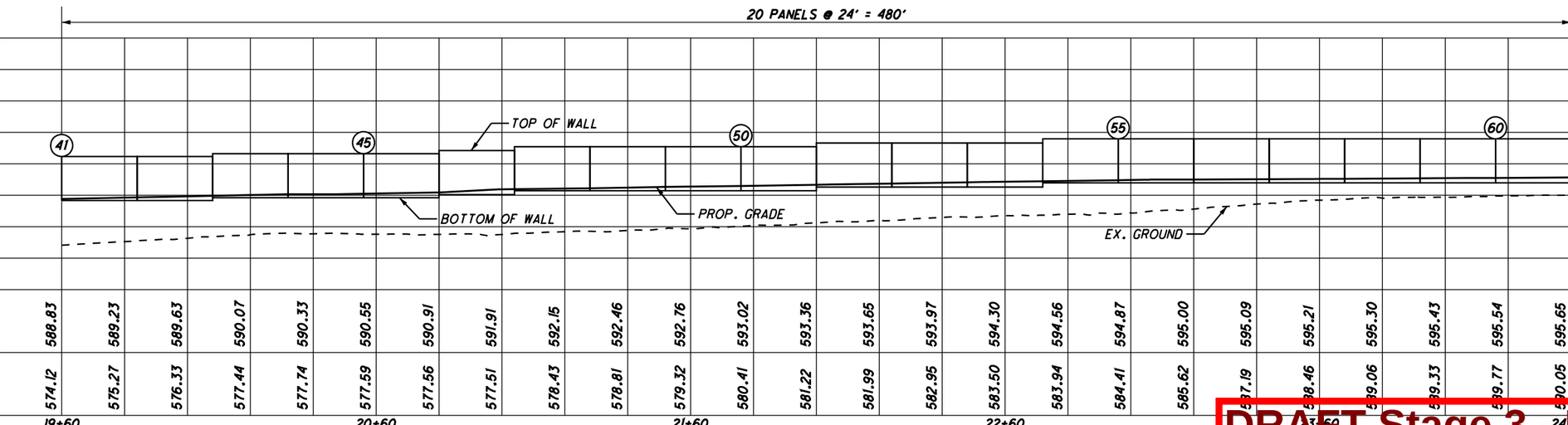

DRAFT Stage 3 - Not for Construction 09/23/2024

HORIZONTAL SCALE IN FEET
0 10 20 40

CALCULATED TLH
CHECKED BSM

PLAN AND PROFILE - NOISE WALL D
STA. 19+60 TO STA. 24+40

LAW-7-2.17

U:\1736087\14\LAW\75923\noise wall\sheets\75923_WP016.dgn 5/22/2024 8:55:00 AM JSnair

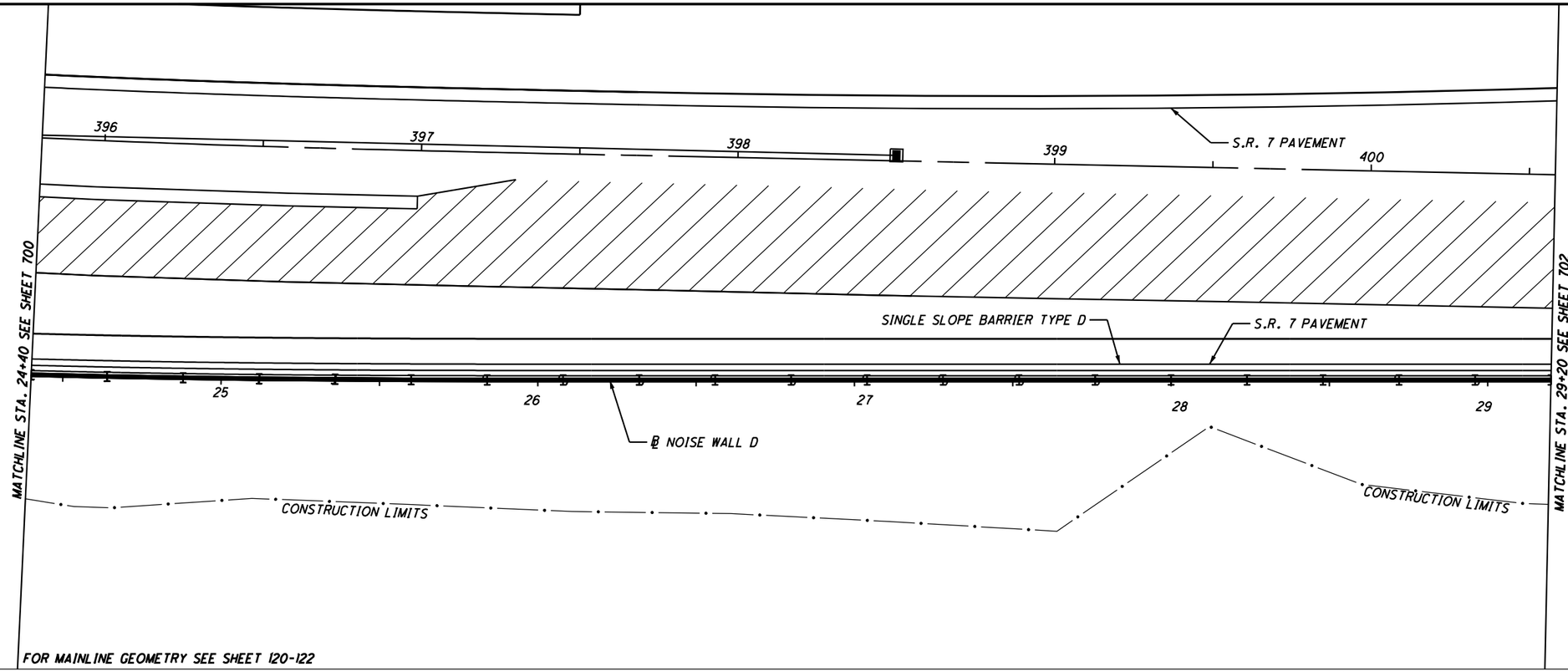

FOR MAINLINE GEOMETRY SEE SHEET 120-122

TOP OF WALL ELEV.	608.85	608.85	608.85	608.85	608.85	608.85	608.85	609.85	609.85	609.85	609.85	610.85	610.85	611.85	611.85	611.85	612.85	612.85	613.85	613.85
BOTTOM OF WALL ELEV.	594.85	594.85	594.85	594.85	594.85	594.85	594.85	595.85	595.85	595.85	595.85	596.85	596.85	597.85	597.85	597.85	598.85	598.85	599.85	599.85
PANEL NO.	61	62	63	64	65	66	67	68	69	70	71	72	73	74	75	76	77	78	79	80

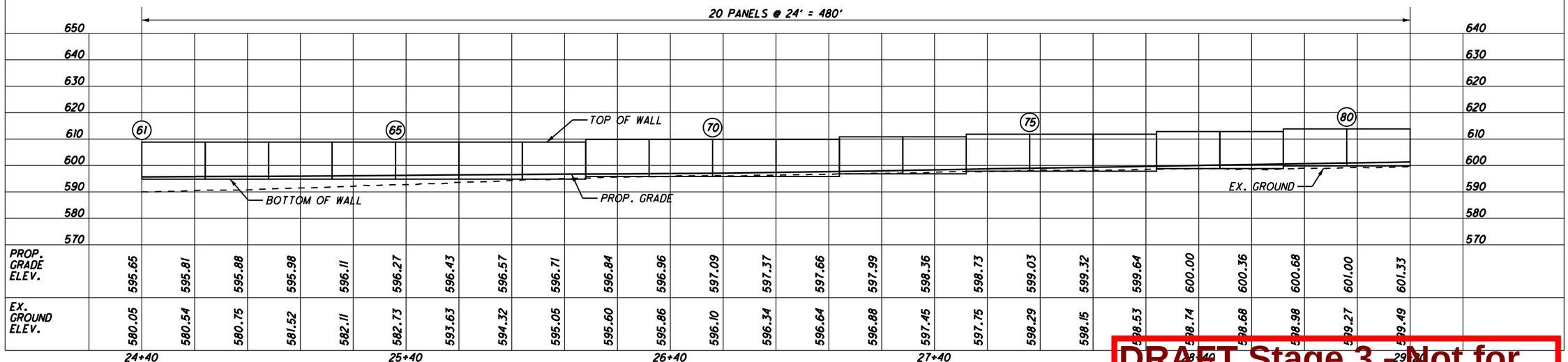

PROP. GRADE ELEV.	595.65	595.81	595.88	595.98	596.11	596.27	596.43	596.57	596.71	596.84	596.96	597.09	597.37	597.66	597.99	598.36	598.73	599.03	599.32	599.64	600.00	600.36	600.68	601.00	601.33
EX. GROUND ELEV.	580.05	580.54	580.75	581.52	582.11	582.73	583.63	584.32	585.05	585.60	585.86	586.10	586.34	586.64	586.88	587.45	587.75	588.29	588.15	588.53	588.74	588.68	588.98	589.27	589.49

24+40 25+40 26+40 27+40 28+40 29+20

DRAFT Stage 3 - Not for Construction 09/23/2024

PLAN AND PROFILE - NOISE WALL D
STA. 24+40 TO STA. 29+20

CALCULATED TLH CHECKED BSM

HORIZONTAL SCALE IN FEET 0 10 20 40

LAW-7-2.17

701 1247

U:\1736087\4\LAW\75923\noise wall\sheets\75923_WP017.dgn 5/22/2024 8:55:00 AM JSnair

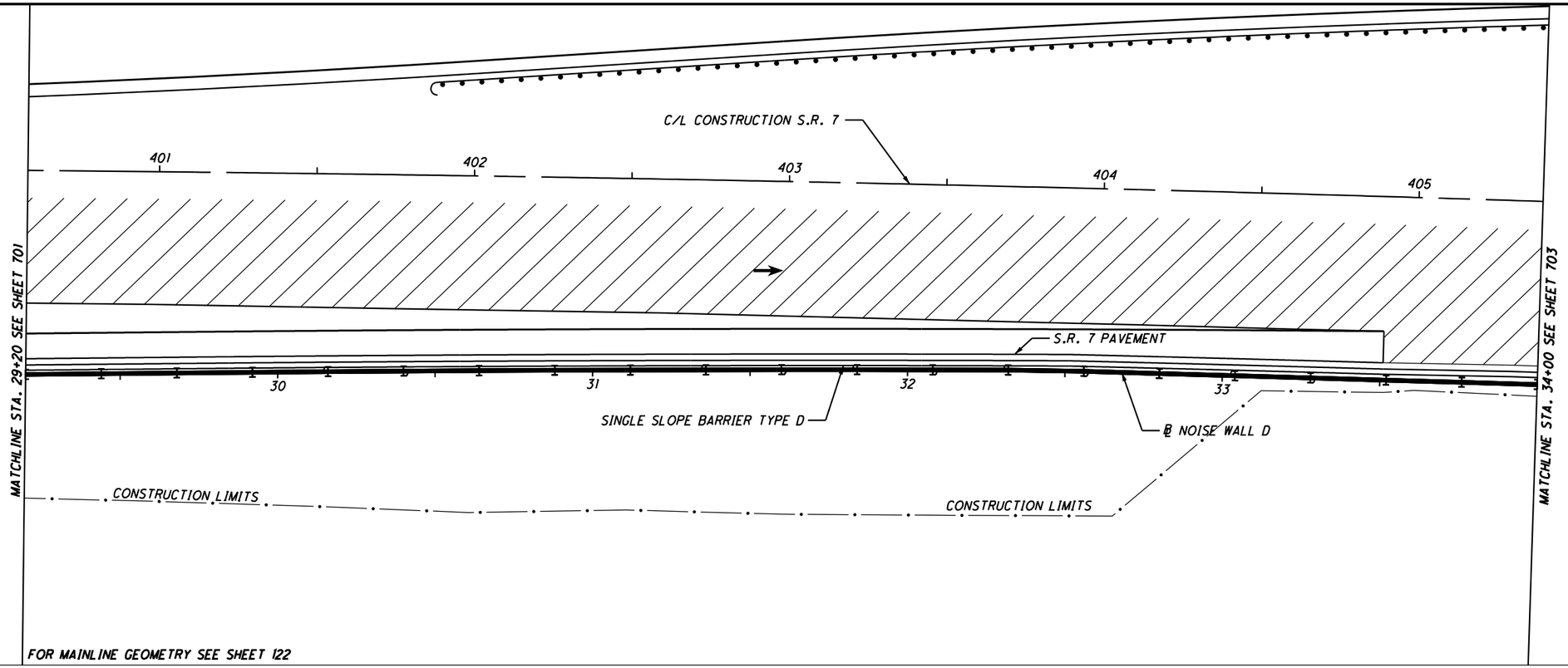

FOR MAINLINE GEOMETRY SEE SHEET 122

TOP OF WALL ELEV.	614.75	614.75	614.75	615.75	615.75	616.75	616.75	616.75	617.75	617.75	617.75	618.75	618.75	618.75	619.75	619.75	619.75	619.75	619.75	620.75
BOTTOM OF WALL ELEV.	600.75	600.75	600.75	601.75	601.75	602.75	602.75	602.75	603.75	603.75	603.75	604.75	604.75	604.75	605.75	605.75	605.75	605.75	605.75	606.75
PANEL NO.	81	82	83	84	85	86	87	88	89	90	91	92	93	94	95	96	97	98	99	100

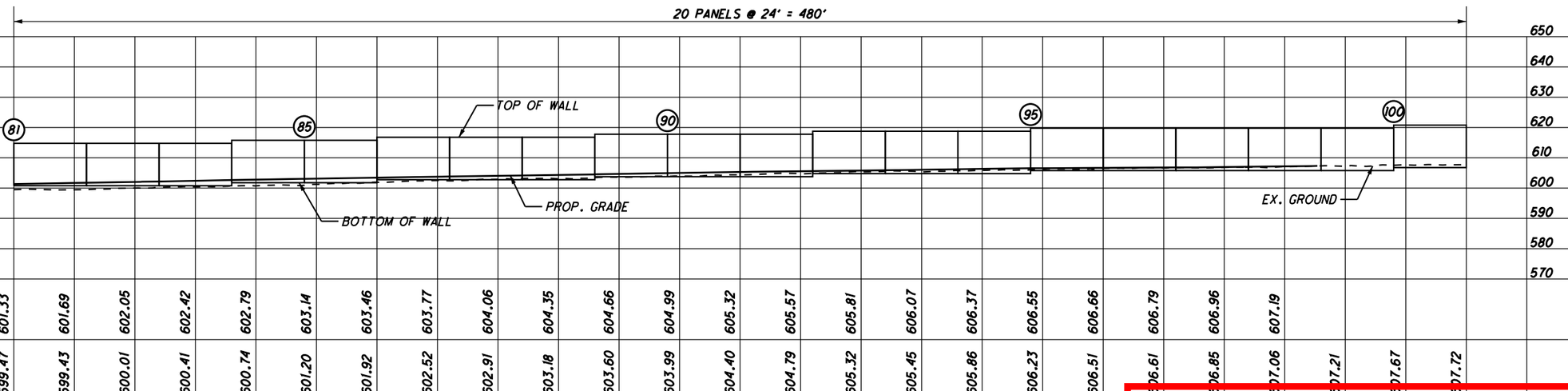

PROP. GRADE ELEV.	601.33	601.69	602.05	602.42	602.79	603.14	603.46	603.77	604.06	604.35	604.66	604.99	605.32	605.57	605.81	606.07	606.37	606.55	606.66	606.79	606.96	607.19			
EX. GROUND ELEV.	599.47	599.43	600.01	600.41	600.74	601.20	601.92	602.52	602.91	603.18	603.60	603.99	604.40	604.79	605.32	605.45	605.86	606.23	606.51	606.61	606.85	607.06	607.21	607.67	607.72
	29+20					30+20					31+20					32+20				33+20				34+00	

DRAFT Stage 3 - Not for Construction 09/23/2024

CALCULATED TLH CHECKED BSM

HORIZONTAL SCALE IN FEET 0 10 20 40

PLAN AND PROFILE - NOISE WALL D STA. 29+20 TO STA. 34+00

LAW-7-2.17

U:\1736087\14\LAW\75923\noise wall\sheets\75923_WP018.dgn 5/22/2024 8:55:02 AM JSnair

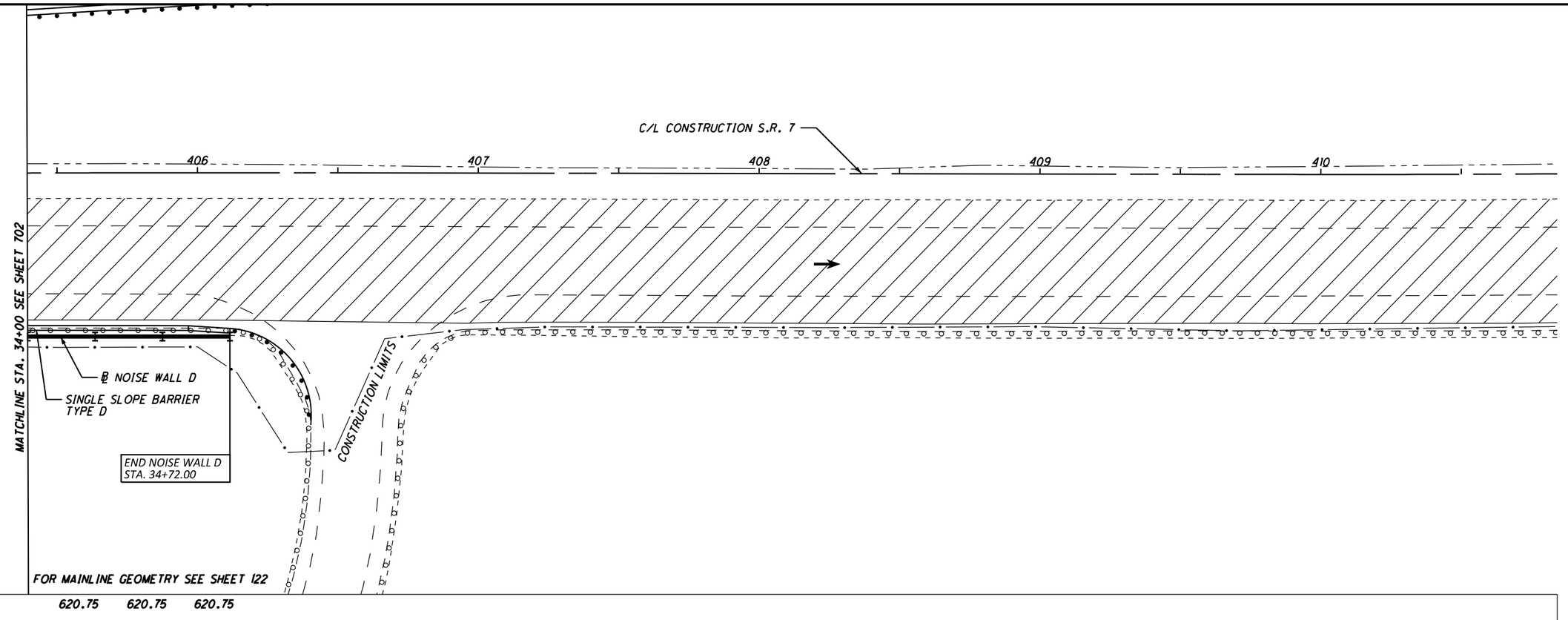

TOP OF WALL ELEV.	620.75	620.75	620.75
BOTTOM OF WALL ELEV.	606.75	606.75	606.75
PANEL NO.	101	102	103

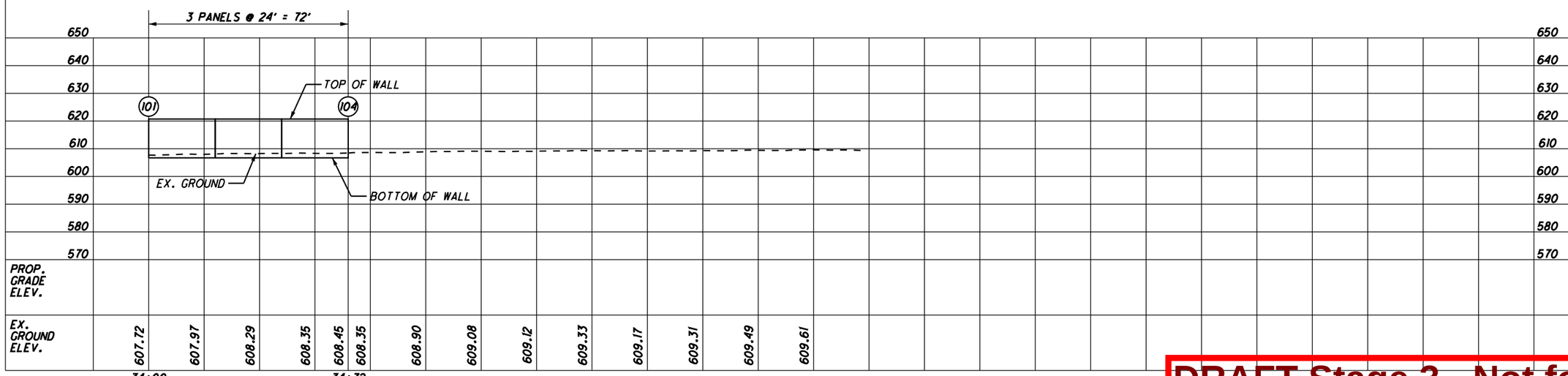

PROP. GRADE ELEV.													
EX. GROUND ELEV.	607.72	607.97	608.29	608.35	608.45	608.35	608.90	609.08	609.12	609.33	609.17	609.31	609.49	609.61
	34+00					34+72								

DRAFT Stage 3 - Not for Construction 09/23/2024

HORIZONTAL SCALE IN FEET
0 10 20 40

CALCULATED TLH
CHECKED BSM

PLAN AND PROFILE - NOISE WALL D
STA. 34+00 TO STA. 34+72

LAW-7-2.17

703
1247

U:\1736087\4\LAW\75923\noise wall\sheets\75923_WP019.dgn 5/22/2024 8:55:03 AM JSnair

NOISE WALL B1

DRILLED SHAFT NO.	WORKPOINT STATION	TOP OF DRILLED SHAFT ELEVATION	SHAFT LENGTH (Feet)
1	10+00.00	574.82	6.5
2	10+24.00	574.82	6.5
3	10+48.00	574.82	6.5
4	10+72.00	574.82	6.5
5	10+96.00	575.82	6.5
6	11+20.00	575.82	6.5
7	11+44.00	575.82	6.5
8	11+68.00	576.82	6.5
9	11+92.00	576.82	6.5
10	12+16.00	576.82	6.5
11	12+40.00	577.82	6.5
12	12+64.00	577.82	6.5
13	12+88.00	577.82	6.5
14	13+12.00	577.82	6.5
15	13+36.00	578.82	6.5
16	13+60.00	578.82	6.5
17	13+84.00	578.82	6.5
18	14+08.00	579.82	6.5
19	14+32.00	579.82	6.5
20	14+56.00	580.82	6.5
21	14+80.00	580.82	6.5
22	15+04.00	581.82	6.5
23	15+28.00	581.82	6.5
24	15+52.00	582.82	6.5
25	15+76.00	582.82	6.5
26	16+00.00	583.82	6.5
27	16+24.00	584.82	6.5
28	16+48.00	585.62	6.5
29	16+72.00	586.62	6.5
30	16+96.00	587.22	6.5
31	17+20.00	588.12	6.5
32	17+44.00	588.92	6.5
33	17+68.00	589.92	6.5
34	17+92.00	590.82	6.5
35	18+16.00	591.82	6.5
36	18+40.00	592.92	6.5
37	18+64.00	594.02	6.5
38	18+88.00	595.12	6.5
39	19+12.00	596.22	6.5
40	19+36.00	597.42	6.5
41	19+60.00	598.72	6.5
42	19+84.00	599.92	6.5
43	20+08.00	601.32	6.5
44	20+32.00	602.68	6.5
45	20+56.00	604.08	6.5
46	20+80.00	605.50	6.5
47	21+04.00	606.93	6.5
48	21+28.00	608.37	6.5
49	21+52.00	609.81	6.5
50	21+76.00	611.25	6.5
51	22+00.00	612.69	6.5
52	22+24.00	614.13	6.5
53	22+48.00	615.57	6.5
54	22+72.00	617.01	6.5
55	22+96.00	618.45	6.5
56	23+20.00	619.89	6.5
57	23+44.00	621.28	6.5
58	23+68.00	622.50	6.5
59	23+92.00	623.95	6.5
60	24+04.00	624.91	6.5
61	24+28.00	625.89	6.5
62	24+40.00	626.86	6.5
63	24+64.00	628.30	6.5
64	24+88.00	629.74	6.5
65	25+12.00	631.17	6.5
66	25+36.00	632.59	6.5
67	25+60.00	633.95	6.5
68	25+84.00	635.30	6.5
69	26+08.00	636.58	6.5
70	26+32.00	637.85	6.5
71	26+56.00	639.07	6.5
72	26+80.00	640.26	6.5
73	27+04.00	641.26	6.5
74	27+28.00	642.26	6.5
75	27+52.00	643.26	6.5
76	27+76.00	644.26	6.5
77	28+00.00	645.26	6.5
78	28+24.00	646.26	6.5
79	28+48.00	647.26	6.5
80	28+72.00	648.26	6.5
81	28+96.00	649.46	6.5
82	29+20.00	650.66	6.5
83	29+44.00	651.71	6.5
84	29+68.00	652.56	6.5
85	29+92.00	653.56	6.5
86	30+16.00	654.36	6.5
87	30+40.00	654.36	6.5
88	30+64.00	655.36	6.5
89	30+88.00	656.36	7
90	31+12.00	656.36	7
91	31+36.00	657.36	7
92	31+60.00	657.36	7
93	31+84.00	658.36	7
94	32+08.00	658.36	7
95	32+32.00	658.36	7
96	32+56.00	659.36	7
97	32+80.00	659.36	7
98	33+04.00	659.36	7
99	33+28.00	659.36	7
100	33+52.00	659.36	7
101	33+76.00	659.36	6.5
102	34+00.00	659.36	6.5
103	34+24.00	659.36	6.5
104	34+48.00	659.36	6.5
105	34+72.00	659.36	6.5
106	34+96.00	659.36	6.5
107	35+20.00	659.36	6.5
108	35+44.00	659.36	6.5
109	35+68.00	659.36	6.5
110	35+92.00	658.36	6.5
111	36+16.00	658.36	6.5
112	36+40.00	658.36	6.5
113	36+64.00	657.36	6.5
114	36+88.00	657.36	6.5
115	37+12.00	656.36	6.5
116	37+36.00	656.36	6.5
117	37+60.00	655.36	6.5
118	37+84.00	655.36	6.5
119	38+08.00	654.36	6.5
120	38+32.00	653.56	6.5
121	38+56.00	652.76	6.5
122	38+80.00	652.06	6.5
123	39+04.00	651.26	6.5
124	39+28.00	650.46	6.5
125	39+52.00	649.66	6.5
126	39+76.00	648.86	6.5
127	40+00.00	647.96	7
128	40+24.00	646.96	7
129	40+48.00	645.76	7
130	40+72.00	644.66	7
131	40+96.00	643.46	7
132	41+20.00	642.16	7
133	41+44.00	640.96	7
134	41+68.00	639.66	7
135	41+92.00	638.66	7
136	42+16.00	636.98	7
137	42+40.00	635.56	7
138	42+64.00	633.94	7
139	42+88.00	632.33	7
140	43+12.00	630.72	7
141	43+36.00	629.16	7
142	43+60.00	627.63	7
143	43+84.00	626.09	7
144	44+08.00	624.52	7
145	44+32.00	622.67	7
146	44+56.00	621.10	6.5
147	44+80.00	619.53	6.5
148	45+04.00	617.97	6.5
149	45+28.00	616.57	6.5
150	45+52.00	615.57	6.5
151	45+76.00	614.57	6.5
152	46+00.00	613.47	6.5
153	46+24.00	612.27	6.5
154	46+48.00	610.88	6.5
155	46+72.00	609.46	6.5
156	46+96.00	608.10	6.5
157	47+20.00	606.73	6.5
158	47+44.00	605.43	6.5
159	47+68.00	604.13	6.5
160	47+92.00	602.83	6.5
161	48+16.00	601.63	6.5
162	48+40.00	600.35	6.5
163	48+52.00	600.35	6.5

NOISE WALL B2

DRILLED SHAFT NO.	WORKPOINT STATION	TOP OF DRILLED SHAFT ELEVATION	SHAFT LENGTH (Feet)
1	10+24.00	584.14	6.5
2	10+48.00	584.14	6.5
3	10+72.00	585.14	6.5
4	10+96.00	585.14	6.5
5	11+20.00	586.44	6.5
6	11+44.00	586.44	6.5
7	11+68.00	587.44	6.5
8	11+92.00	588.44	6.5
9	12+16.00	589.34	6.5
10	12+40.00	590.24	6.5
11	12+64.00	591.04	6.5
12	12+88.00	591.94	6.5
13	13+12.00	592.94	6.5
14	13+36.00	593.84	6.5
15	13+60.00	594.84	6.5
16	13+84.00	595.84	6.5
17	14+08.00	596.59	6.5
18	14+32.00	597.79	6.5
19	14+56.00	598.46	6.5
20	14+80.00	599.96	6.5
21	15+04.00	601.22	6.5
22	15+28.00	602.42	6.5
23	15+52.00	603.72	6.5
24	15+76.00	605.08	6.5
25	16+00.00	606.51	6.5
26	16+24.00	607.90	6.5
27	16+36.00	609.41	6.5
28	16+60.00	610.22	6.5
29	16+72.00	611.87	6.5
30	16+96.00	612.63	7
31	17+20.00	614.13	7
32	17+44.00	615.60	7
33	17+68.00	617.06	7
34	17+92.00	618.50	7
35	18+16.00	619.99	7
36	18+40.00	621.34	7
37	18+64.00	622.69	7
38	18+88.00	623.94	7
39	19+12.00	625.17	7
40	19+36.00	626.17	7
41	19+60.00	627.35	7
42	19+84.00	628.50	7
43	20+08.00	629.60	6.5
44	20+32.00	630.60	6.5
45	20+56.00	631.70	6.5
46	20+80.00	632.80	6.5
47	21+04.00	633.80	6.5
48	21+28.00	634.90	6.5
49	21+52.00	635.90	6.5
50	21+76.00	636.90	6.5
51	22+00.00	637.90	6.5
52	22+24.00	638.90	6.5
53	22+48.00	639.90	6.5
54	22+72.00	640.80	6.5
55	22+96.00	641.70	6.5
56	23+20.00	642.60	6.5
57	23+44.00	643.60	6.5
58	23+68.00	644.40	6.5
59	23+92.00	645.30	6.5
60	24+16.00	646.00	6.5
61	24+40.00	646.90	6.5
62	24+64.00	647.77	6.5
63	24+88.00	648.52	6.5
64	25+12.00	649.32	6.5
65	25+36.00	649.32	6.5
66	25+60.00	650.80	6.5
67	25+84.00	650.80	6.5
68	26+08.00	652.22	6.5
69	26+32.00	652.22	6.5
70	26+56.00	653.57	6.5
71	26+80.00	653.57	6.5
72	27+04.00	654.86	6.5
73	27+28.00	654.86	6.5
74	27+52.00	656.06	6.5
75	27+76.00	656.06	6.5
76	28+00.00	657.16	6.5
77	28+24.00	657.16	6.5
78	28+48.00	658.16	6.5

CALCULATED XXX
CHECKED XXX

NOISE WALL DATA TABLES

LAW-7-2.17

704
1247

DRAFT Stage 3 - Not for Construction

09/23/2024

U:\V736087\4\LAW\75923\noise wall\sheets\75923_WS001.dgn 5/22/2024 8:55:04 AM JSnair

NOISE WALL D

DRILLED SHAFT NO.	WORKPOINT STATION	TOP OF DRILLED SHAFT ELEVATION	SHAFT LENGTH (Feet)
1	10+00.00	610.70	6.5
2	10+24.00	609.60	6.5
3	10+48.00	608.30	6.5
4	10+72.00	607.20	6.5
5	10+96.00	605.90	6.5
6	11+20.00	604.70	6.5
7	11+44.00	603.50	6.5
8	11+68.00	602.50	6.5
9	11+92.00	601.20	6.5
10	12+16.00	600.10	6.5
11	12+40.00	598.80	6.5
12	12+64.00	597.60	6.5
13	12+88.00	596.50	6.5
14	13+12.00	595.30	6.5
15	13+36.00	594.20	6.5
16	13+60.00	593.20	6.5
17	13+84.00	592.20	6.5
18	14+08.00	591.30	6.5
19	14+32.00	590.40	7
20	14+56.00	589.70	7
21	14+80.00	588.34	7
22	15+04.00	588.34	7
23	15+28.00	586.76	7
24	15+52.00	586.76	7
25	15+76.00	586.76	6.5
26	16+00.00	585.49	6.5
27	16+24.00	585.49	6.5
28	16+48.00	585.49	6.5
29	16+72.00	585.49	6.5
30	16+96.00	585.49	6.5
31	17+20.00	585.49	6.5
32	17+44.00	585.49	6.5
33	17+68.00	585.49	6.5
34	17+92.00	585.49	6.5
35	18+16.00	585.49	6.5
36	18+40.00	585.49	6.5
37	18+64.00	585.49	6.5
38	18+88.00	585.49	6.5
39	19+12.00	586.39	6.5
40	19+36.00	586.39	6.5
41	19+60.00	586.99	6.5
42	19+84.00	588.02	6.5
43	20+08.00	588.02	6.5
44	20+32.00	588.92	6.5
45	20+56.00	588.92	6.5
46	20+80.00	588.92	6.5
47	21+04.00	589.92	6.5
48	21+28.00	591.12	6.5
49	21+52.00	591.12	6.5
50	21+76.00	591.12	6.5
51	22+00.00	591.12	6.5
52	22+24.00	592.32	6.5
53	22+48.00	592.32	6.5
54	22+72.00	592.32	6.5
55	22+96.00	593.62	6.5
56	23+20.00	593.62	6.5
57	23+44.00	593.62	6.5
58	23+68.00	593.62	6.5
59	23+92.00	593.62	6.5
60	24+16.00	593.62	6.5

DRILLED SHAFT NO.	WORKPOINT STATION	TOP OF DRILLED SHAFT ELEVATION	SHAFT LENGTH (Feet)
61	24+40.00	593.62	6.5
62	24+64.00	594.54	6.5
63	24+88.00	594.54	6.5
64	25+12.00	594.54	6.5
65	25+36.00	594.54	6.5
66	25+60.00	594.54	6.5
67	25+84.00	594.54	6.5
68	26+08.00	594.54	6.5
69	26+32.00	595.54	6.5
70	26+56.00	595.54	6.5
71	26+80.00	595.54	6.5
72	27+04.00	595.54	6.5
73	27+28.00	596.54	6.5
74	27+52.00	596.54	6.5
75	27+76.00	597.54	6.5
76	28+00.00	597.54	6.5
77	28+24.00	597.54	6.5
78	28+48.00	598.54	6.5
79	28+72.00	598.54	6.5
80	28+96.00	599.54	6.5
81	29+20.00	599.54	6.5
82	29+44.00	600.44	6.5
83	29+68.00	600.44	6.5
84	29+92.00	600.44	6.5
85	30+16.00	601.44	6.5
86	30+40.00	601.44	6.5
87	30+64.00	602.44	6.5
88	30+88.00	602.44	6.5
89	31+12.00	602.44	6.5
90	31+36.00	603.44	6.5
91	31+60.00	603.44	6.5
92	31+84.00	603.44	6.5
93	32+08.00	604.44	6.5
94	32+32.00	604.44	6.5
95	32+56.00	604.44	6.5
96	32+80.00	605.44	6.5
97	33+04.00	605.44	6.5
98	33+28.00	605.44	6.5
99	33+52.00	605.44	6.5
100	33+76.00	605.44	6.5
101	34+00.00	606.44	6.5
102	34+24.00	606.44	6.5
103	34+48.00	606.44	6.5
104	34+72.00	606.44	6.5

DRAFT Stage 3 - Not for Construction 09/23/2024

CALCULATED XXX CHECKED XXX

NOISE WALL DATA TABLES

LAW-7-2.17

705 12.47

U:\1736087f4\LAW\75923\noise wall\sheets\75923_WS002.dgn 5/22/2024 8:55:05 AM JSnair

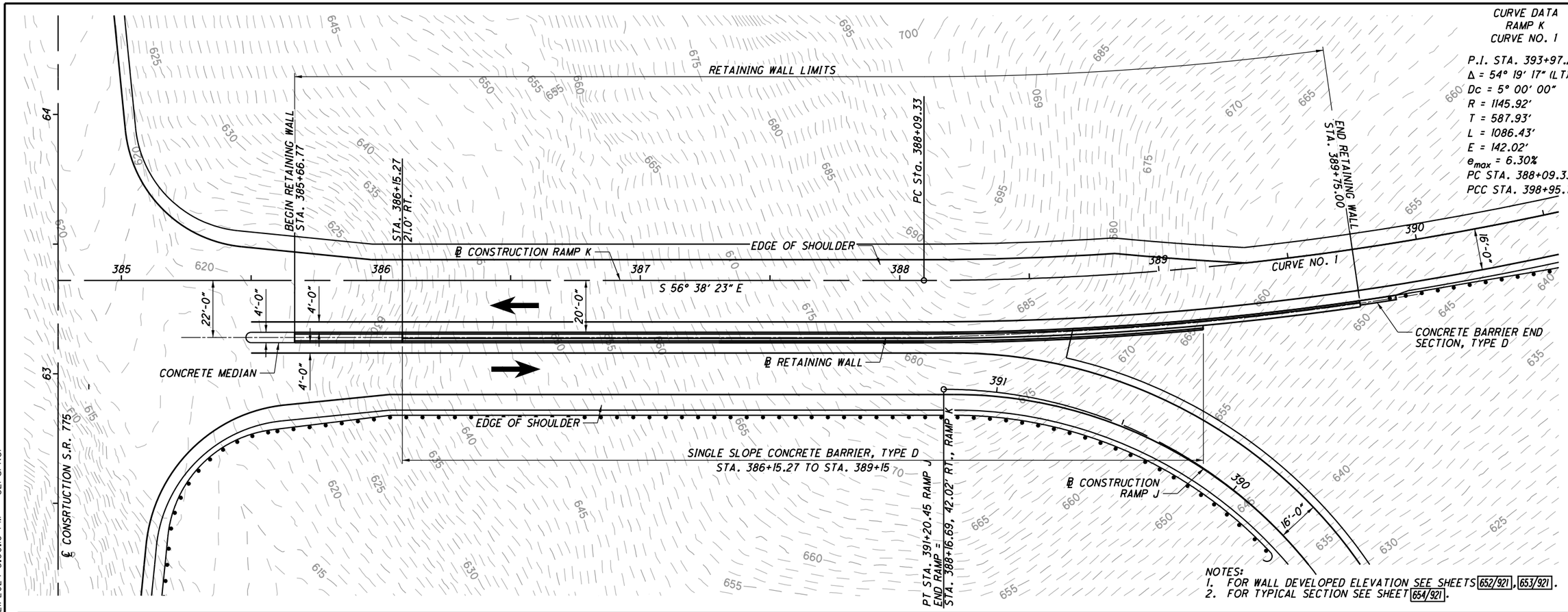

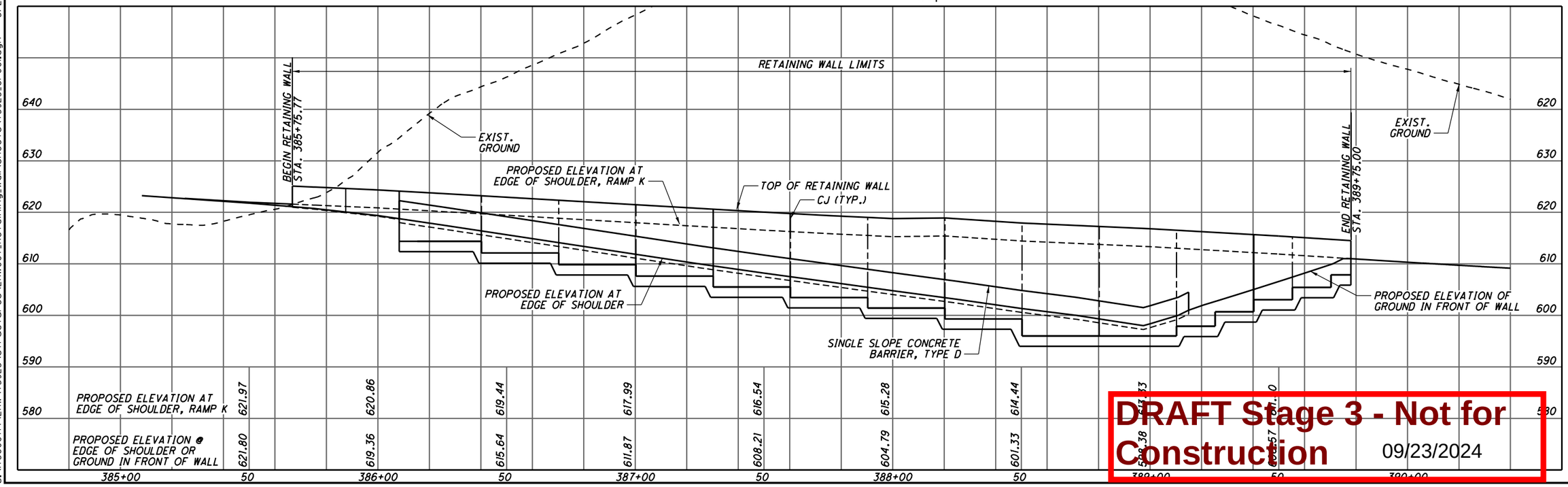

DRAFT Stage 3 - Not for Construction
09/23/2024

RAMP J AND RAMP K RETAINING WALL SITE PLAN

LAW-7-2.17

706
1247

U:\1736087\4\LAW\75923\structures\LAW007_Retaining_Wall\sheets\75923_SP001.dgn 5/21/2024 5:00:16 PM SLParker

STANDARD DRAWINGS AND SUPPLEMENTAL SPECIFICATIONS

REFER TO THE FOLLOWING STANDARD BRIDGE DRAWING(S):

SBR-1-20 REVISED 07-21-23

AND TO THE FOLLOWING SUPPLEMENTAL SPECIFICATION(S):

800 DATED 01-19-24
869 DATED 10-17-14

DESIGN SPECIFICATIONS

THIS STRUCTURE CONFORMS TO THE 9th EDITION OF THE "LRFD BRIDGE DESIGN SPECIFICATIONS" ADOPTED BY THE AMERICAN ASSOCIATION OF STATE HIGHWAY AND TRANSPORTATION OFFICIALS 2020, AND THE ODOT BRIDGE DESIGN MANUAL, 2020.

DESIGN DATA

CONCRETE CLASS QC1:
COMPRESSIVE STRENGTH 4.0 KSI (RETAINING WALL)

CONCRETE REINFORCEMENT:

EPOXY COATED STEEL REINFORCEMENT - MINIMUM YIELD STRENGTH 60-KSI (RETAINING WALL AND FOUNDATION)

FOUNDATION BEARING RESISTANCE

RETAINING WALL FOOTINGS, AS DESIGNED, PRODUCE A MAXIMUM SERVICE LOAD PRESSURE OF 4.50 KIPS PER SQUARE FOOT AND A MAXIMUM STRENGTH LOAD PRESSURE OF 7.06 KIPS PER SQUARE FOOT. THE FACTORED BEARING RESISTANCE IS 9.3 KIPS PER SQUARE FOOT.

ITEM 503 - UNCLASSIFIED EXCAVATION, AS PER PLAN

LIMITS OF EXCAVATION SHALL BE AS SHOWN IN PLANS. BACKFILL SHALL BE GRANULAR MATERIAL TYPE B.

ITEM 509 - EPOXY COATED REINFORCING STEEL, AS PER PLAN

IN ADDITION TO THE PROVISIONS OF ITEM 509, FIELD BEND AND/OR FIELD CUT THE REINFORCING STEEL DESIGNATED IN TEH PLANS, AS NECESSARY, IN ORDER TO MAINTAIN THE REQUIRED CLEARANCES AND BAR SPACINGS. REPAIR ALL DAMAGE TO THE EPOXY COATING, AS A RESULT OF THIS WORK, ACCORDING TO C&MS 709.00.

ABBREVIATIONS

ABUT.	- ABUTMENT
APPR.	- APPROACH
APPROX.	- APPROXIMATELY
B/	- BOTTOM OF
BOT.	- BOTTOM
BRG.	- BEARING
℄	- CENTERLINE
C/C	- CENTER TO CENTER
CJ	- CONSTRUCTION JOINT
CLR.	- CLEAR
CONST.	- CONSTRUCTION
DIA.	- DIAMETER
DWG.	- DRAWING
EF	- EACH FACE
EL.	- ELEVATION
EQ.	- EQUAL
EX.	- EXISTING
EXP	- EXPANSION
F.A.	- FORWARD ABUTMENT
F.F.	- FRONT FACE
℄	- FLOW LINE
HORIZ.	- HORIZONTAL
H.W.	- HIGH WATER
LT.	- LEFT
MAX	- MAXIMUM
MIN.	- MINIMUM
N.F.	- NEAR FACE
NO.	- NUMBER
O/O	- OUT TO OUT
OHW	- ORDINARY HIGH WATER MARK
PVMT.	- PAVEMENT
R.A.	- REAR ABUTMENT
REF.	- REFERENCE
RT.	- RIGHT
SHLD.	- SHOULDER
SP	- SETTLEMENT PLATFORM
SPA.	- SPACE
STA.	- STATION
STD.	- STANDARD
T/	- TOP OF
T/T	- TOE TO TOE
TEMP.	- TEMPORARY
TYP.	- TYPICAL
VERT.	- VERTICAL
YR.	- YEAR

ESTIMATED QUANTITIES

CALCULATED BY: BSM 02/12/24
CHECKED BY: EDA 02/28/24

01/NHS/01	ITEM	EXTENSION	TOTAL	UNIT	DESCRIPTION	SEE SHEET
2,538	503	21101	2,538	CY	UNCLASSIFIED EXCAVATION, AS PER PLAN	
90,706	509	10001	90,706	POUND	EPOXY COATED REINFORCING STEEL	
480	511	46012	480	CY	CLASS QC1 CONCRETE, RETAINING/WINGWALL NOT INCLUDING FOOTING	
237	511	46512	237	CY	CLASS QC1 CONCRETE, FOOTING	
740	512	10100	740	SY	SEALING OF CONCRETE SURFACES (EPOXY-URETHANE)	
440	516	13200	440	SF	1/2" PREFORMED EXPANSION JOINT FILLER	
418	518	20000	418	SY	PREFABRICATED GEOCOMPOSITE DRAIN	
310	622	10160	310	LF	CONCRETE BARRIER, SINGLE SLOPE, TYPE D	
1	622	25000	1	EACH	CONCRETE BARRIER END SECTION, TYPE D	

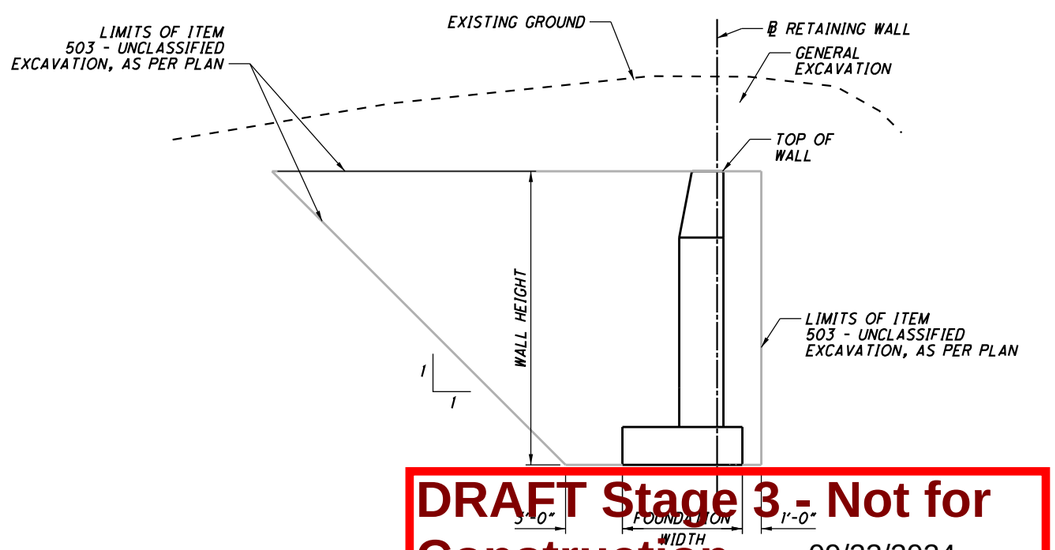

EXCAVATION DETAIL

DRAFT Stage 3 - Not for Construction 09/23/2024

CALCULATED JWS CHECKED BSM

RAMP J & K RETAINING WALL NOTES AND QUANTITIES

LAW-7-2.17

707
1247

U:\1736087\4\LAW\75923\structures\LAW007_Retaining_Wall\sheets\75923_WN001.dgn 5/21/2024 5:00:16 PM SLParker

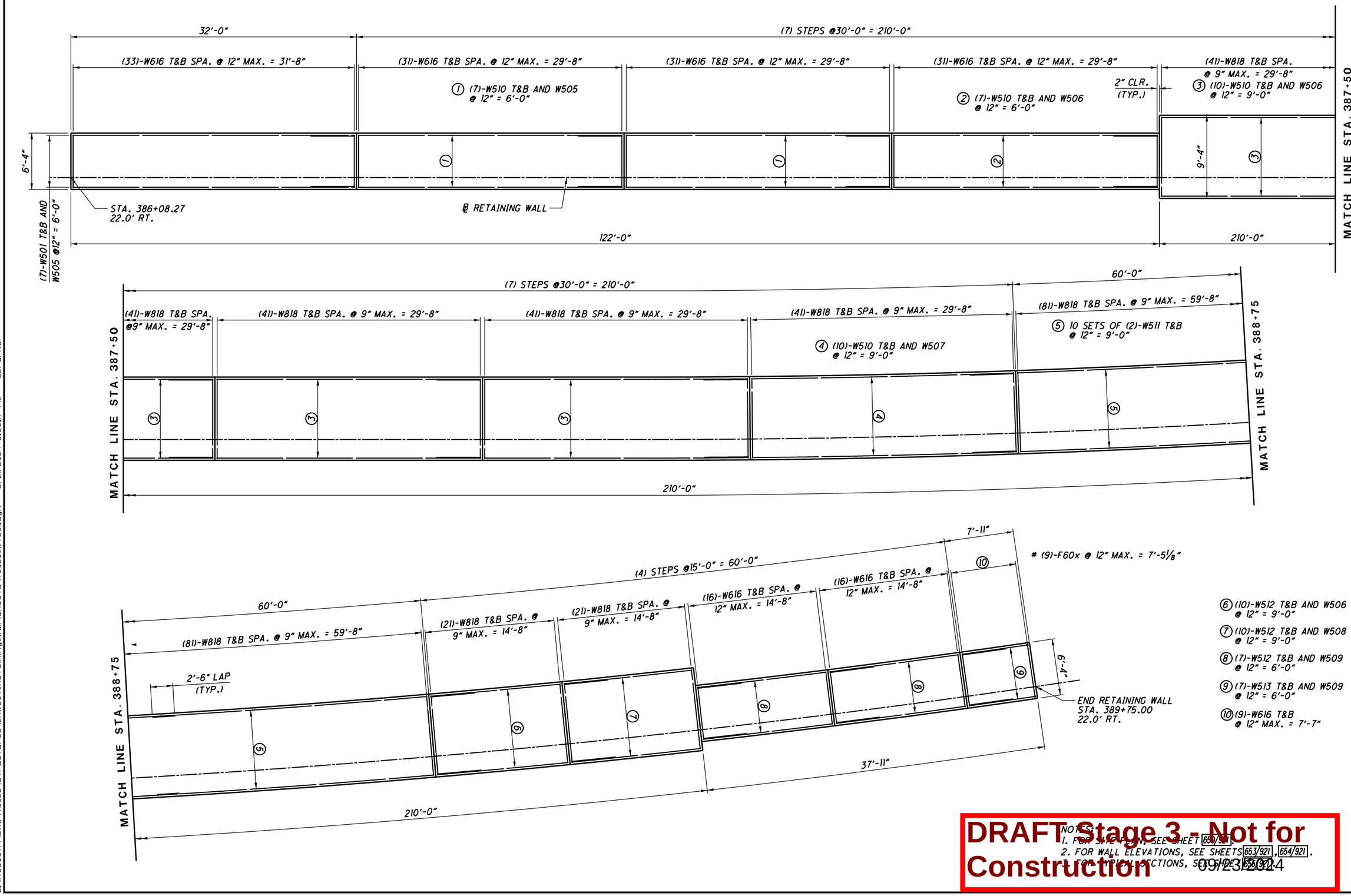

NOTES:
1. FOR SITE PLAN, SEE SHEET 650/921.
2. FOR WALL ELEVATIONS, SEE SHEETS 653/921, 654/921.
3. FOR TYPICAL SECTIONS, SEE SHEET 650/921.

DRAFT Stage 3 - Not for Construction

05/23/2024

HORIZONTAL SCALE IN FEET
0 2.5 5 10

CALCULATED JWS
CHECKED BSM

RAMP J AND RAMP K RETAINING WALL FOUNDATION PLAN

LAW-7-2.17

708
1247

U:\1736087f4\LAW\75923\structures\LAW007_Retaining_Wall\sheets\75923_WT001.dgn 5/21/2024 5:00:17 PM SLParker

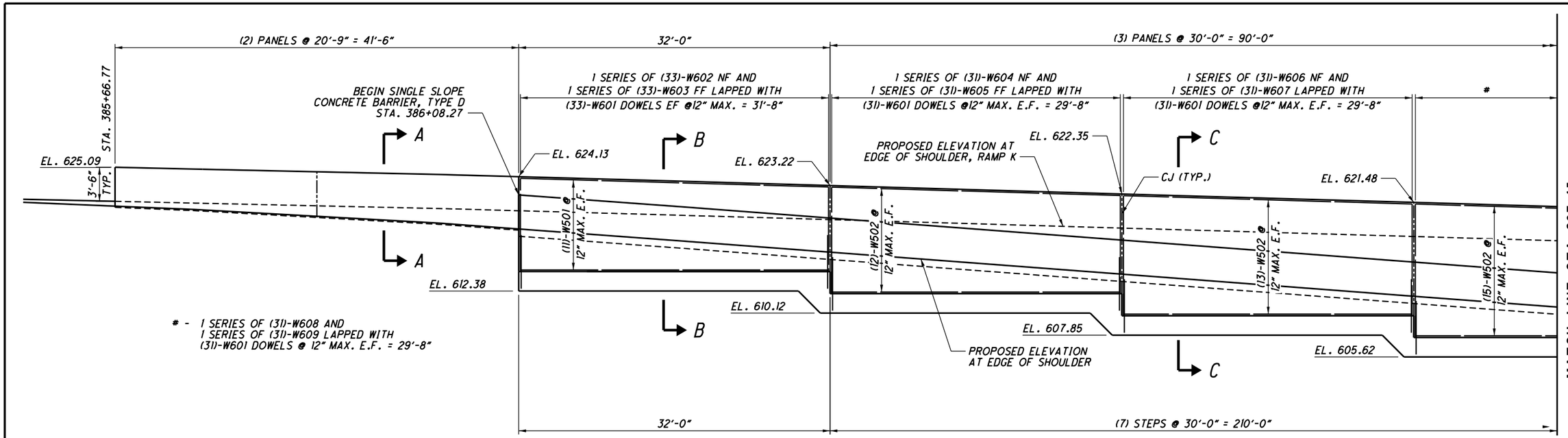

DRAFT Stage 3 - Not for Construction 09/23/2024

CALCULATED JWS CHECKED BSM

RAMP J & K RETAINING WALL ELEVATION

LAW-7-2.17

709
1247

U:\173608714\LAW\75923\structures\LAW007_Retaining_Wall\sheets\75923_WE001.dgn 5/21/2024 5:00:18 PM SLParker

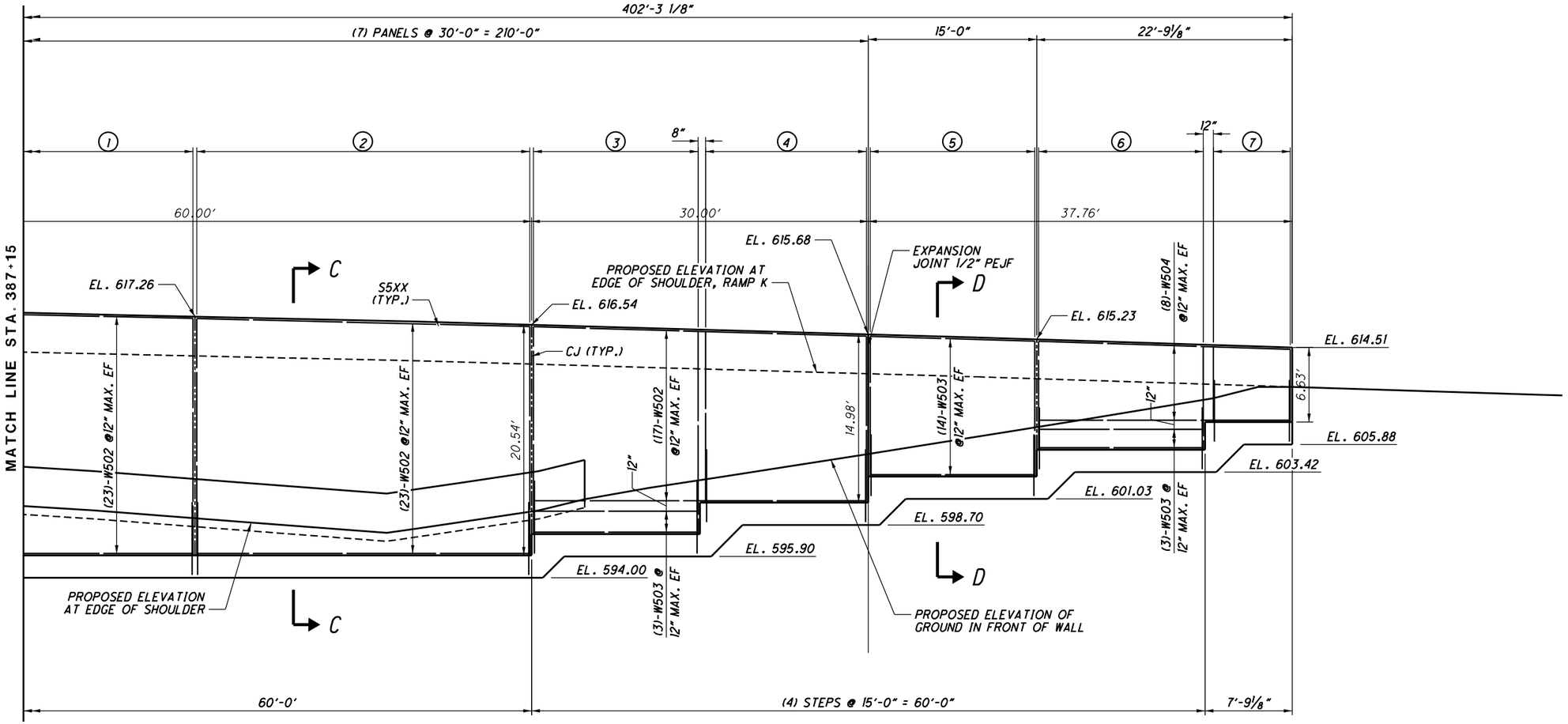

(1) 1 SERIES OF (41)-W810 NF AND
1 SERIES OF (41)-W811 FF LAPPED WITH
(41)-W801 DOWELS @9" MAX. EF = 29'-8"

(2) 1 SERIES OF (41)-W812 NF AND
1 SERIES OF (41)-W813 FF LAPPED WITH
(41)-W801 DOWELS @9" MAX. EF = 29'-8"

(3) 1 SERIES OF (21)-W814 NF AND
1 SERIES OF (21)-W815 FF LAPPED WITH
(21)-W801 DOWELS @9" MAX. EF = 14'-8"

(4) 1 SERIES OF (21)-W816 NF AND
1 SERIES OF (21)-W817 FF LAPPED WITH
(21)-W801 DOWELS @9" MAX. EF = 14'-4"

(5) 1 SERIES OF (16)-W610 NF AND
1 SERIES OF (16)-W611 FF LAPPED WITH
(16)-W601 DOWELS @12" MAX. EF = 14'-8"

(6) 1 SERIES OF (16)-W612 NF AND
1 SERIES OF (16)-W613 FF LAPPED WITH
(16)-W601 DOWELS @12" MAX. EF = 14'-8"

(7) 1 SERIES OF (8)-W614 NF AND
1 SERIES OF (8)-W615 FF LAPPED WITH
(16)-W601 DOWELS @12" MAX. EF = 6'-10"

NOTE:
FOR TYPICAL SECTION SEE SHEET 652/922

LAP LENGTHS
#5 = 2'-6"
#6 = 3'-0"
#8 = 4'-9"

DRAFT Stage 3 - Not for Construction

09/23/2024

CALCULATED JWS
CHECKED BSM

RAMP J & K RETAINING WALL ELEVATION

LAW-7-2.17

710
1247

U:\17360871\4\LAW\75923\structures\LAW007_Retaining_Wall\sheets\75923_WE002.dgn 5/21/2024 5:00:19 PM SLParker

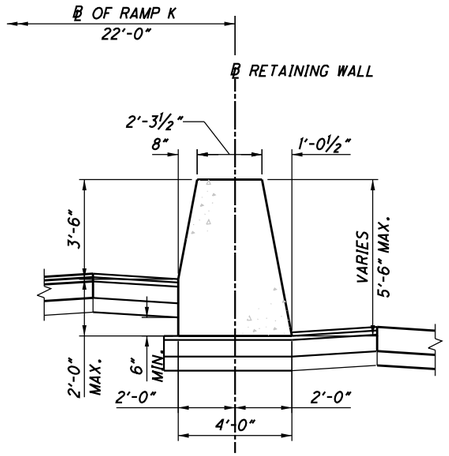

SECTION A-A

SECTION APPLIES:
STA. 385+66.77 TO 386+08.27

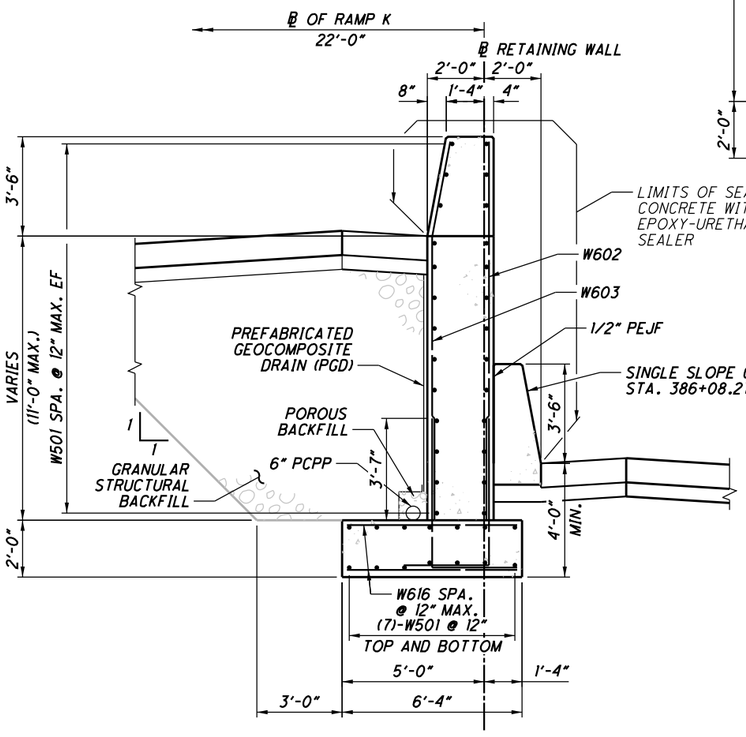

SECTION B-B

SECTION APPLIES:
STA. 386+08.27 TO STA. 387+30.27

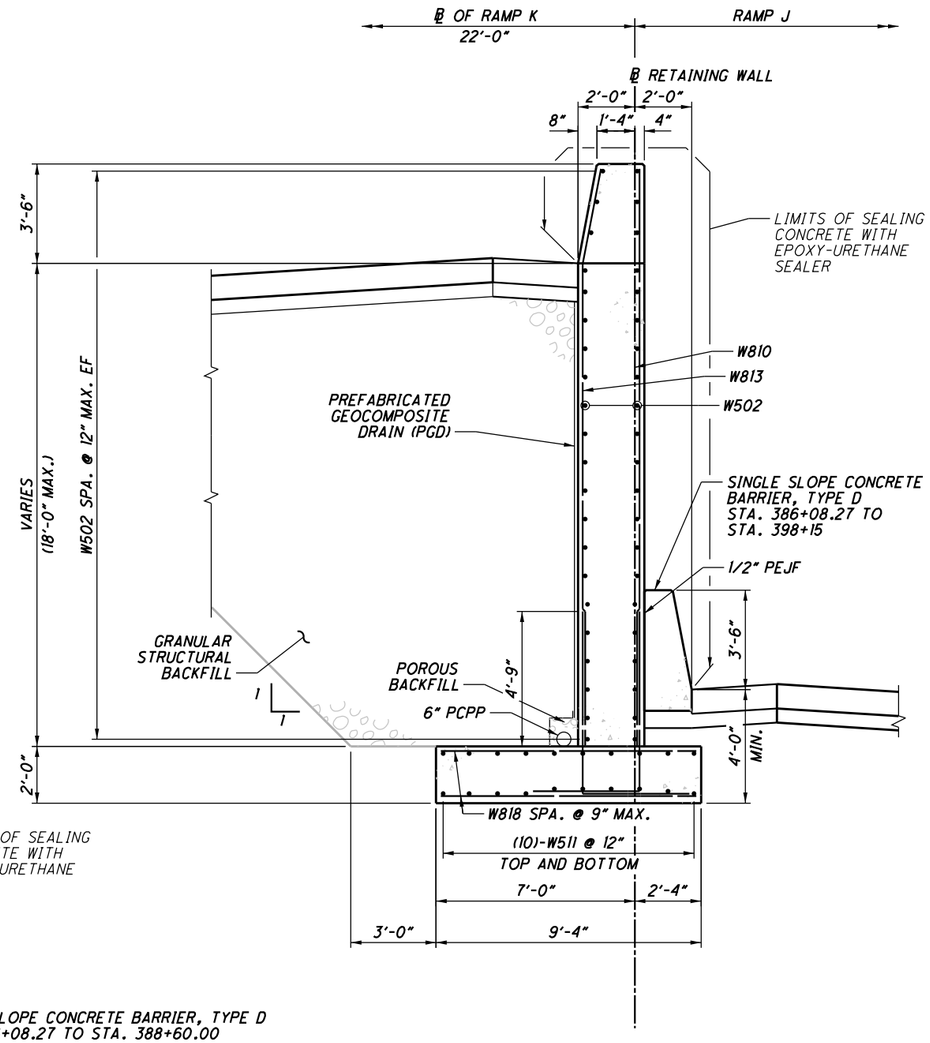

SECTION C-C

SECTION APPLIES:
STA. 387+30.27 TO STA. 389+40.27

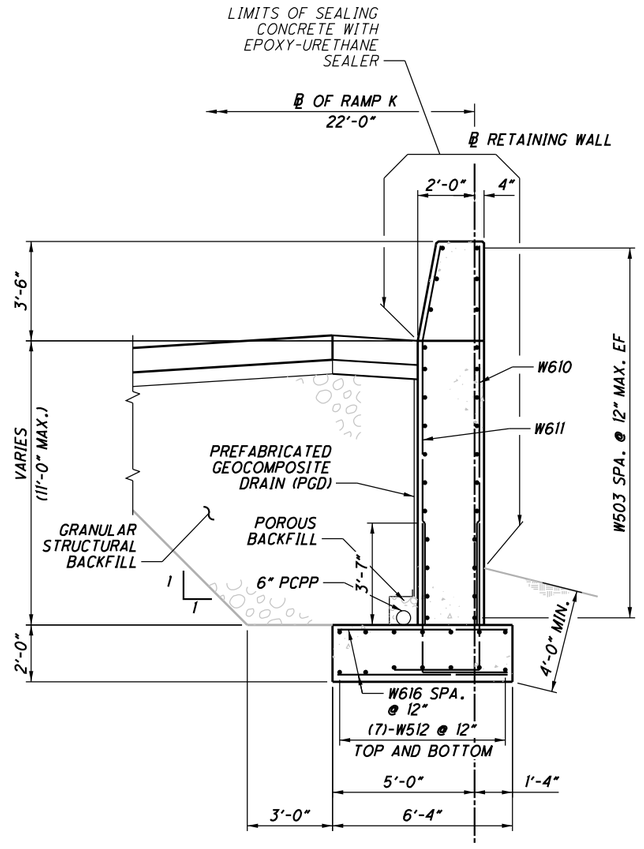

SECTION D-D

SECTION APPLIES:
STA. 389+40.27 TO STA. 389+75.00

NOTES:
1. FOR SITE PLAN, SEE SHEET 650/921.
2. FOR FOUNDATION PLAN, SEE SHEET 652/921.
3. FOR WALL ELEVATIONS, SEE SHEETS 653/921, 654/921.

DRAFT Stage 3 - Not for Construction

05/23/2024

CALCULATED JWS
CHECKED BSM

RAMP J & K RETAINING WALL TYPICAL SECTIONS

LAW-7-2.17

711
1247

U:\1736087f4\LAW\75923\structures\LAW007_Retaining_Wall\sheets\75923_WY001.dgn 5/21/2024 5:00:20 PM SLParker

MARK	NUMBER TOTAL	LENGTH	WEIGHT	TYPE	DIMENSIONS A	B	C	D	E	R	INC
RETAINING WALL											
W501	36	31'-8"	1189	STR							
W502	348	29'-8"	10768	STR							
W503	40	14'-8"	612	STR							
W504	16	22'-5"	374	STR							
W505	21	19'-2"	420	40	2'-6"	4'-6"	3'-10"	0'-9"			
W506	47	18'-5"	903	40	2'-6"	4'-4"	3'-7"	0'-9"			
W507	10	22'-10"	238	40	2'-6"	5'-7"	4'-10"	0'-9"			
W508	10	21'-0"	219	40	2'-6"	5'-1"	4'-4"	0'-9"			
W509	14	19'-8"	287	40	2'-6"	4'-8"	4'-0"	0'-9"			
W510	122	30'-10"	3923	STR							
W511	40	31'-11"	1332	STR							
W512	54	15'-8"	882	STR							
W513	14	7'-7"	111	STR							
W601	348	8'-2"	4269	1	3'-0"	5'-4"					
	1 SR	8'-10"									
W602	OF	TO	456	STR							0'-0 1/4"
	33	9'-7"									
	1 SR	8'-8"			5'-4"						
W603	OF	TO	454	19	TO	3'-4"	0'-7 1/2"				0'-0 1/4"
	33	9'-8"			6'-3"						
	1 SR	10'-1"									
W604	OF	TO	491	STR							0'-0 1/4"
	31	11'-0"									
	1 SR	10'-2"			6'-9"						
W605	OF	TO	493	19	TO	3'-4"	0'-7 1/2"				0'-0 1/4"
	31	11'-1"			7'-8"						
	1 SR	11'-6"									
W606	OF	TO	555	STR							0'-0 1/4"
	31	12'-4"									
	1 SR	11'-7"			8'-2"						
W607	OF	TO	629	19	TO	3'-4"	0'-7 1/2"				0'-0 1/4"
	31	12'-5"			9'-0"						
	1 SR	12'-10"									
W608	OF	TO	617	STR							0'-0 1/4"
	31	13'-8"									
	1 SR	12'-11"			9'-6"						
W609	OF	TO	621	19	TO	3'-4"	0'-7 1/2"				0'-0 1/4"
	31	13'-8"			10'-4"						
	1 SR	12'-0"									
W610	OF	TO	294	STR							0'-0 1/2"
	16	12'-6"									
	1 SR	12'-1"			8'-8"						
W611	OF	TO	296	19	TO	3'-4"	0'-7 1/2"				0'-0 1/2"
	16	12'-7"			9'-2"						
	1 SR	9'-2"									
W612	OF	TO	226	STR							0'-0 1/2"
	16	9'-8"									
	1 SR	9'-3"			5'-10"						
W613	OF	TO	228	19	TO	3'-4"	0'-7 1/2"				0'-0 1/2"
	16	9'-8"			6'-4"						
	1 SR	6'-6"									
W614	OF	TO	80	STR							0'-0 1/2"
	8	6'-9"									
	1 SR	6'-7"			3'-2"						
W615	OF	TO	80	19	TO	3'-4"	0'-7 1/2"				0'-0 1/4"
	8	6'-8"			3'-4"						
W616	334	6'-0"	3010	STR							
SUB-TOTAL			34,057								

MARK	NUMBER TOTAL	LENGTH	WEIGHT	TYPE	DIMENSIONS A	B	C	D	E	R	INC
RETAINING WALL											
W801	576	10'-1"	15502	1	3'-9"	6'-6"					
	1 SR	14'-1"									
W802	OF	TO	1587	STR							0'-0 1/4"
	41	14'-11"									
	1 SR	14'-2"			10'-9"						
W803	OF	TO	1596	19	TO	3'-4"	0'-7 1/2"				0'-0 1/4"
	41	15'-0"			11'-7"						
	1 SR	14'-1"									
W804	OF	TO	1615	STR							0'-0 1/2"
	41	15'-5"									
	1 SR	14'-2"			10'-9"						
W805	OF	TO	1624	19	TO	3'-4"	0'-7 1/2"				0'-0 1/2"
	41	15'-6"			12'-1"						
W806	41	17'-4"	1897	STR							
W807	41	17'-5"	1907	19	14'-0"	3'-4"	0'-7 1/2"				
	1 SR	18'-5"									
W808	OF	TO	2071	STR							0'-0 1/4"
	41	19'-5"									
	1 SR	18'-6"			15'-1"						
W809	OF	TO	2080	19	TO	3'-4"	0'-7 1/2"				0'-0 1/4"
	41	19'-6"			16'-1"						
	1 SR	21'-1"									
W810	OF	TO	2344	STR							0'-0 1/4"
	41	21'-9"									
	1 SR	21'-2"			17'-9"						
W811	OF	TO	2354	19	TO	3'-4"	0'-7 1/2"				0'-0 1/4"
	41	21'-10"			18'-5"						
	1 SR	20'-4"									
W812	OF	TO	2267	STR							0'-0 1/4"
	41	21'-1"									
	1 SR	20'-5"			17'-0"						
W813	OF	TO	2272	19	TO	3'-4"	0'-7 1/2"				0'-0 1/4"
	41	21'-2"			17'-9"						
	1 SR	18'-0"									
W814	OF	TO	1023	STR							0'-0 1/4"
	21	18'-6"									
	1 SR	18'-1"			14'-8"						
W815	OF	TO	1028	19	TO	3'-4"	0'-7 1/2"				0'-0 1/4"
	21	18'-7"			15'-2"						
	1 SR	14'-10"									
W816	OF	TO	843	STR							0'-0 1/4"
	21	15'-3"									
	1 SR	14'-11"			11'-6"						
W817	OF	TO	846	19	TO	3'-4"	0'-7 1/2"				0'-0 1/4"
	21	15'-4"			11'-11"						
W818	574	9'-0"	13793	STR							
SUB-TOTAL			56,649								
TOTAL			90,706								

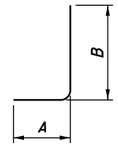

TYPE-1

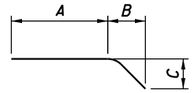

TYPE-19

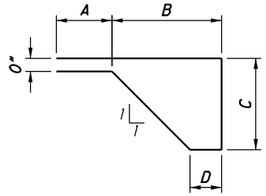

TYPE-40

CALCULATED JWS
CHECKED BSM

RAMP J & K RETAINING WALL REINFORCING STEEL LIST

LAW-7-2.17

712
1247

DRAFT Stage 3 - Not for Construction

09/23/2024

U:\1736087\14\LAW\75923\structures\LAW007_Retaining_Wall\sheets\75923_WL001.dgn 5/21/2024 5:00:21 PM SLParker

SHEET NUMBER										PARTICIPATION			ITEM	ITEM EXT.	GRAND TOTAL	UNIT	DESCRIPTION	SEE SHEET NO.
		714	715	716	717		719	720	721		01/NHS/01							
					10.99						10.99		618	41000	10.99	MILE	RUMBLE STRIPES, EDGE LINE (ASPHALT CONCRETE)	
					3.44						3.44		618	43000	3.44	MILE	RUMBLE STRIPES, EDGE LINE (ASPHALT CONCRETE)	
		612	488								1100		621	00100	1100	EACH	RPM	
									4		4		625	32000	4	EACH	GTROUND ROD	
							2492.1				2492.1		630	03100	2492.1	FT	GROUND MOUNTED SUPPORT, NO. 3 POST	
									103.1		103.1		630	06400	103.1	FT	GROUND MOUNTED STRUCTURAL BEAM SUPPORT, S4X7.7	
									71.8		71.8		630	06500	71.8	FT	GROUND MOUNTED STRUCTURAL BEAM SUPPORT, W6X9	
									159.8		159.8		630	07000	159.8	FT	GROUND MOUNTED STRUCTURAL BEAM SUPPORT, W8X18	
									191.5		191.5		630	07500	191.5	FT	GROUND MOUNTED STRUCTURAL BEAM SUPPORT, W10X22	
									137		137		630	07600	137	FT	GROUND MOUNTED STRUCTURAL BEAM SUPPORT, W10X12	
									54.6		54.6		630	08000	54.6	FT	GROUND MOUNTED STRUCTURAL BEAM SUPPORT, W12X30	
							203				203		630	08004	203	FT	ONE WAY SUPPORT, NO. 3 POST	
							111				111		630	08520	111	FT	STREET NAME SIGN SUPPORT, NO. 3 POST	
							74				74		630	08600	74	EACH	SIGN POST REFLECTOR	
									33		33		630	09000	33	EACH	BREAKAWAY STRUCTURAL BEAM CONNECTION	
									1		1		630	72420	1	EACH	OVERHEAD SIGN SUPPORT, TYPE TC-15.116, DESIGN 2	
									1		1		630	76530	1	EACH	SPAN WIRE SIGN SUPPORT, TPYE TC-17.11, DESIGN 10	
							2				2		630	79600	2	EACH	SIGN SUPPORT ASSEMBLY, BRIDGE MOUNTED, TPYE 1	
							1308.1		73.5		1381.6		630	80100	1381.6	SQ FT	SIGN, FLAT SHEET	
									1490		1490		630	80200	1490	SQ FT	SIGN, GROUND MOUNTED EXTRUSHEET	
									1028		1028		630	80224	1028	SQ FT	SIGN, OVERHEAD EXTRUSHEET	
									35		35		630	80400	35	SQ FT	SIGN, PERMANENT OVERLAY	
							8				8		630	80500	8	EACH	SIGN, DOUBLE FACED, STREET NAME	
									2		2		630	84510	2	EACH	RIGID OVERHEAD SIGN SUPPORT FOUNDATION	
									2		2		630	84520	2	EACH	SPAN WIRE SIGN SUPPORT FOUNDATION	
								103			103		630	84900	103	EACH	REMOVAL OF GROUND MOUNTED SIGN AND DISPOSAL	
							1				1		630	85100	1	EACH	REMOVAL OF GROUND MOUNTED SIGN AND REERCTION	
								67			67		630	86002	67	EACH	REMOVAL OF GROUND MOUNTED POST SUPPORT AND DISPOSAL	
								4			4		630	86102	4	EACH	REMOVAL OF GROUND MOUNTED STRUCTURAL BEAM SUPPORT AND DISPOSAL	
								6			6		630	87400	6	EACH	REMOVAL OF OVERHEAD MOUNTED SIGN AND DISPOSAL	
								1			1		630	89702	1	EACH	REMOVAL OF OVERHEAD SIGN SUPPORT AND DISPOSAL	
		19.89									19.89		644	00104	19.89	MILE	EDGE LINE, 6"	
		5.86									5.86		644	00204	5.86	MILE	LANE LINE, 6"	
			5.59								5.59		644	00300	5.59	MILE	CENTER LINE	
			7145								7145		644	00404	7145	FT	CHANNELIZING LINE, 12"	
				388							338		644	00500	338	FT	STOP LINE	
				2077							2077		644	00700	2077	FT	TRANVERSE/DIAGONAL LINE	
				394							394		644	00720	394	FT	CHEVRON MARKING	
				55							55		644	00900	55	SQ FT	ISLAND MARKING	
			20								20		644	01300	20	EACH	LANE ARROW	
		12									12		644	01350	12	EACH	LANE REDUCTION ARROW	
			2								2		644	01360	2	EACH	WRONG WAY ARROW	
			2								2		644	01410	2	EACH	WORD ON PAVEMENT, 96"	
				10459							10459		644	01510	10459	FT	DOTTED LINE, 6"	
				57							57		644	20800	57	FT	YIELD LINE	
				1735							1735		644	30000	1735	FT	REMOVAL OF PAVEMENT MARKING	
		1.12									1.12		646	10010	1.12	MILE	EDGE LINE, 6"	
		0.21									0.21		646	10110	0.21	MILE	LANE LINE, 6"	
			0.32								0.32		646	10200	0.32	MILE	CENTER LINE	
			633								633		646	10310	633	FT	CHANNELIZING LINE, 24"	
			5								5		646	20300	5	EACH	LANE ARROW	
				808							808		646	20504	808	FT	DOTTED LINE, 6"	

CALCULATED EAE CHECKED MJH

TRAFFIC CONTROL GENERAL SUMMARY

LAW-7-2.17

713
1247

DRAFT Stage 3 - Not for Construction 09/23/2024

SHEET NO.	REFERENCE NO.	LOCATION	STATION FROM	STATION TO	SIDE	621 RPM WHITE	621 RPM YELLOW/RED	621 RPM WHITE/RED	621 SPACING	644 EDGE LINE, 6" WHITE	644 EDGE LINE, 6" YELLOW	644 LANE LINE, 6"	644 LANE REDUCTION ARROW	646 EDGE LINE, 6" WHITE	646 EDGE LINE, 6" YELLOW	646 LANE LINE, 6"	COMMENTS
						EACH	EACH	EACH		FT	FT	FT	EACH	FT	FT	FT	
727-734	WE-1	NB SR 7	114+30	247+00	RT					12257				1013			BRID. NO. LAW-7-0251 = 358'; BRID. NO. LAW-7-0370 = 153' BRID. NO. LAW-7-0376 = 421'; BRID. NO. LAW-7-0387 = 81'
734	WE-2	↓	10+00	23+20	RT					1320							
734-742	WE-3	↓	260+00	373+62	RT					11049				313			BRIDGE NO. LAW-7-0563 = 313'
742-746	WE-4	↓	373+62	392+41	RT					1504				375			BRIDGE NO. LAW-7-0713 R = 375'
746-748	WE-5	↓	392+41	437+17	RT			17	80	4476							RPM'S FOR TRANSITION PER TC-65.11 FROM STA 427+42 TO 441+42
727-734	WE-6	SB SR 7	117+23	247+00	LT					11923				1013			BRIDGES LAW-7-0251, LAW-7-0370, LAW-7-0376, LAW-7-0387
734	WE-7	↓	10+00	23+20	LT					1320							
734-748	WE-8	↓	260+00	437+17	LT			18	80	17029				688			LAW-7-0563 = 313'; LAW-7-0713 L = 375' (RPM'S FOR TRANSITION FROM STA 305+50 TO 319+60)
727,728	WE-9	RAMP D	115+40	120+83	ON					543							
727-729	WE-10	RAMP C	116+23	123+69	LT					746							
730	WE-11	ACCESS ROAD	-	-	LT					573							
734-736	WE-12	SR 243	11+00	21+54	RT					1054							
734-736	WE-13	↓	11+00	21+54	LT					1054							
742,744	WE-14	RAMP I	373+62	380+62	RT					313				387			LAW-7-0711 = 387 FT (OMIT RPM'S ON BRIDGE)
744	WE-15	RAMP J	387+10	394+62	LT					752							BRIDGE NO. LAW-7-0713L = 292'
743,744	WE-16	NB SR 775	45+43	53+95	RT	16			VAR	852							RPM'S FOR STOP APPROACH PER TC-65.11
744	WE-17	NB SR 775	54+80	62+55	RT	8			40	432				343			LAW-775-0105 = 343' (RPM'S FOR STOP APPROACH - OMIT ON BRIDGE)
744,745	WE-18	NB SR 775	63+60	70+75	RT					715							
743,744	WE-19	SB SR 775	45+43	53+90	LT					847							LAW-775-0105= 343' (OMIT RPM'S FOR STOP APPROACH)
744	WE-20	SB SR 775	54+77	64+00	LT					580				343			LAW-775-0105 = 343'
744,745	WE-21	SB SR 775	64+00	70+75	LT	16			VAR	675							RPM'S FOR STOP APPROACH PER TC-65.11
744,746	WE-22	RAMP K	385+17	401+69	LT	16			VAR	1652							RPM'S FOR STOP APPROACH PER TC-65.11
744,746	WE-23	RAMP L	380+00	392+41	RT	16			VAR	1241							RPM'S FOR STOP APPROACH PER TC-65.11
735	WE-24	NB SR 7	14+39	14+52	RT/LT	2				47							TWO (2) RPM'S PER TC-65.11
↓	WE-25	NB SR 7	16+05	16+06	RT/LT	2				52							TWO (2) RPM'S PER TC-65.11
↓	WE-26	NB SR 243	10+78	10+82	RT/LT	2				38							TWO (2) RPM'S PER TC-65.11
727	WE-27	NB SR 7	114+30	117+23	LT					293							
725,727	YE-1	NB SR 7	1400+66	1417+61	RT						1130				565		USE ITEM 646 ON EXISTING BRIDGE DECK
727	YE-1	↓	113+50	120+21	RT						679						
727,728	YE-2	RAMP D	115+50	120+83	RT		7		80'		533						RPM'S ALONG THE RAMP PER TC-65.11
727,729	YE-3	RAMP C	116+33	123+69	LT						736						
734	YE-4	NB SR-7	12+45	14+39	RT		5		40'		194						RPM'S FOR ROUNDABOUT
734	YE-5	↓	16+05	18+45	RT		5		40'		240						RPM'S FOR ROUNDABOUT
740-748	YE-6	↓	314+65	432+89	RT		12		40'		11449				375		LAW-7-0713R = 375'; RPM'S FROM STA 427+42 TO 437+17 (FOR TRANSITION)
727	YE-7	SB SR 7	114+30	119+79	RT		7		80'		549						RPM'S FROM STA 114+30 TO 119+00 (FOR TRANSITION)
734	YE-8	↓	12+45	14+52	LT		5		40'		207						RPM'S FOR ROUNDABOUT
734	YE-9	↓	16+06	18+45	LT		5		40'		239						RPM'S FOR ROUNDABOUT
740-748	YE-10	↓	314+65	432+89	LT		7		80'		11449				375		LAW-7-0713R = 375'; RPM'S FROM STA 314+65 TO 319+60 (FOR TRANSITION)
742-744	YE-11	RAMP I	373+62	380+77	LT		3		80'		328				387		LAW-7-0711 = 387 FT; RPM'S ON OFF-RAMP (OMIT ON BRIDGES)
744	YE-12	RAMP J	383+91	387+10	LT		12		80'		996						RPM'S ALONG THE RAMP PER TC-65.11
744-746	YE-13	RAMP L	380+12	389+90	RT		10		80'		878						RPM'S ALONG THE RAMP PER TC-65.11
744-746	YE-14	RAMP K	385+50	397+55	LT		15		80'		1205						RPM'S ALONG THE RAMP PER TC-65.11
734	YE-15	SR 243	10+78	13+13	RT		5		40'		235						RPM'S FOR ROUNDABOUT
734	YE-16	↓	10+82	13+13	LT		5		40'		231						RPM'S FOR ROUNDABOUT
735	YE-17	ROUNDABOUT	CADD MEASURED		-		9		40'		390						RPM'S FOR ROUNDABOUT
731	LL-1	NB SR 7	170+31	185+00	RT			18	80'			1469	2				
731,732	LL-2	SB SR 7	174+93	194+50	RT			24	80'			1957	2				
732,733	LL-3	NB SR 7	210+30	235+13	RT			31	80'			2483	2				
733,734	LL-4	SB SR 7	225+00	247+00	RT			28	80'			2200	2				
740-747	LL-5	NB SR 7	314+65	427+42	RT			136	80'			10902	2			375	BRIDGE NO. LAW-7-0713 R = 375 FT
740-747	LL-6	SB SR 7	319+60	424+91	LT			127	80'			10156	2			375	BRIDGE NO. LAW-7-0713 L = 375 FT
743,744	LL-7	NB SR 775	45+43	53+95	RT			11	80'			852					
744	LL-8	SB SR 775	52+00	53+95	LT			2	80'			195					
744	LL-9	SB SR 775	54+77	62+55	LT			6	80'			455				343	BRIDGE NO. LAW-7-0105 = 343 FT
744,745	LL-10	SB SR 775	64+00	66+95	LT			4	80'			295					
		SUBTOTAL				78	112	422		73337 FT	31688 FT	30964 FT		4195 FT	1702 FT	1013	
TOTALS TO GENERAL SUMMARY						612				19.89 (MI)		5.86 (MI)	12	1.12 (MI)		0.21 (MI)	

DRAFT Stage 3 - Not for Construction 09/23/2024

CALCULATED EAE CHECKED MJH

PAVEMENT MARKING SUBSUMMARY

LAW-7-2.17

C:\EEC\Projects\LAW-7(Stantec)\CADD\Phase_2B\Traffic\Sheets\714-75923_TS001.dgn Sheet 5/14/2024 7:49:07 AM mhunt

SHEET NO.	REFERENCE NO.	LOCATION	STATION FROM	STATION TO	SIDE	621 RPM YELLOW/RED	621 RPM YELLOW/YELLOW	621 SPACING	644 CENTERLINE	644 CHANNELIZING LINE, 12"	644 LANE ARROW	644 WRONG WAY ARROW	644 WORD ON PAVEMENT, 96"	646 CENTERLINE	646 CHANNELIZING LINE, 12"	646 LANE ARROW	COMMENTS
						EACH	EACH		FT	FT	EACH	EACH	EACH	FT	FT	EACH	
727-734	DSY-1	NB SR 7	119+79	247+00	RT		146	80'	11708					1013			BRID. NO. LAW-7-0251 = 358 FT; BRID. NO. LAW-7-0370 = 153 FT BRID. NO. LAW-7-0376 = 421 FT; BRID. NO. LAW-7-0387 = 81 FT
727,729	DSY-2	↓	119+79	123+22	RT		4	80'	343								
734	DSY-3	↓	18+45	23+20	ON	13	2	20' / 80'	475								
734	DSY-4	↓	18+45	21+17	RT	13		20'	272								
734-740	DSY-5	↓	260+00	314+65	RT		65	80'	5152					313			BRIDGE NO. LAW-7-0563 = 313 FT
740	DSY-6	↓	309+50	314+65	RT		7	80'	515								
748	DSY-7	↓	432+89	437+17	RT		6	80'	428								
748	DSY-8	▼	432+89	437+17	RT		6	80'	428								
734	DSY-9	NB SR 243	13+13	14+50	RT		6	20'	137								
734	DSY-10	↓	13+13	14+50	LT		6	20'	137								
734,736	DSY-11	↓	15+40	21+54	RT		8	80'	614								
736	DSY-12	▼	17+75	21+54	RT		5	80'	379								
734,736,737	DSY-13	CR 69	10+12	56+73	ON				4661								
743,744	DSY-14	SR 775	45+43	53+95	RT		11	80'	852								
743,744	DSY-15	SR 775	45+43	53+95	LT		11	80'	852								
744	DSY-16	↓	54+77	62+88	RT		5	80'	468					343			BRIDGE NO. LAW-7-0105 = 343 FT
744	DSY-17	↓	59+00	62+88	LT		4	80'	388								
744,745	DSY-18	▼	64+00	70+75	RT		9	80'	724								
744	DSY-19	RAMP K	385+07	385+50	RT		3	20'	43								
744	DSY-20	RAMP K	385+07	385+50	RT		3	20'	47								
745	DSY-21	SR 775	66+95	70+75	LT		5	80'	380								
734	DSY-22	SB SR 7	10+00	12+45	LT/RT	12		20'	245								
734	DSY-23	NB SR 7	10+00	12+45	LT/RT	12		20'	245								
727	CH-1A	SB SR 7	1411+50	1417+50	LT					600							
↓	CH-1B	SB SR 7	113+38	117+23	LT			40'		385							
↓	CH-2A	SB SR 7	1411+50	1417+50	LT		15	40'		600							
▼	CH-2B	SB SR 7	113+38	117+23	LT		9	40'		373							
728	CH-3	NB SR 527	120+21	121+87	RT		4	40'		156							
728	CH-4	NB SR 527	120+21	121+87	RT		4	40'		156							
729	CH-5	SB SR 7	123+69	125+43	RT		4	40'		162							
729	CH-6	RAMP C	123+69	125+43	RT		4	40'		162							
734	CH-7	SR 243	13+13	14+50	RT		3	40'		137							
734,736	CH-8	SR 243	15+40	17+45	LT		4	40'		175	2						
742	CH-9	NB SR 7	371+50	373+62	RT		5	40'		212							
742	CH-10	RAMP I	371+50	373+62	RT		5	40'		212							
744	CH-11	SB SR 7	381+00	387+10	LT					610							
744	CH-12	RAMP J	381+00	387+10	LT		15	40'		610							
744	CH-13	NB SR 775	59+00	62+55	RT		9	40'		355	3		1				
744,745	CH-14	SB SR 775	64+00	66+65	LT		7	40'		265	3						
746	CH-15	NB SR 7	389+90	392+41	RT					351							
746	CH-16	RAMP L	389+90	392+41	RT		8	40'		351							
746	CH-17	RAMP K	397+55	401+69	LT		10	40'		414							
746	CH-18	SB SR 7	397+55	401+69	LT		10	40'		414							
742,744	CH-19	RAMP I	376+95	380+62	LT					64	1	1			303	3	BRIDGE NO. LAW-7-0711
744	CH-20	SB SR 775	54+77	58+50	LT					43	1				330	2	BRIDGE NO. LAW-7-0105
744	CH-21	RAMP K	385+17	388+55	RT		8	40'		338	8	1					
727	VAR	ARROWS ON RAMP D	-	-	-						2		1				
		SUBTOTAL				50	438		29493					1669			
TOTALS TO GENERAL SUMMARY						**488**			**5.59 (MI)**	**7145**	**20**	**2**	**2**	**0.32 (MI)**	**663**	**5**	

CALCULATED EAE CHECKED MJH

PAVEMENT MARKING SUBSUMMARY

LAW-7-2.17

DRAFT Stage 3 - Not for Construction 09/23/2024

715 / 1247

C:\EEC\Projects\LAW-7(Stantec)\CADD\Phase_2B\Traffic\Sheets\715-75923_TS002.dgn Sheet 5/14/2024 7:49:36 AM mhunt

SHEET NO.	REFERENCE NO.	LOCATION	STATION FROM	STATION TO	SIDE	644 STOP LINE, 24" FT	644 TRANSVERSE LINE, 12" FT	644 CHEVRON MARKING FT	644 ISLAND MARKING SF	644 DOTTED LINE, 6" FT	644 YIELD LINE FT	644 REMOVAL OF PAVEMENT MARKING FT	646	646 DOTTED LINE, 6" FT	646	646	COMMENTS
727	SL-1	RAMP D	115+40			30											
730	SL-2	ACCESS ROAD	-			11											
730	SL-3	ACCESS ROAD	-			11											
734	SL-4	CR 69	10+12			19											
737	SL-5	CR 118	10+30			26											
738	SL-6	CR 2	10+31			31											
744	SL-7	RAMP I	380+62			56											
744	SL-8	NB SR 775	62+55			34											
744	SL-9	RAMP K	385+17			42											
744	SL-10	SB SR 775	64+00			36											
753	SL-11	LYNN LANE (WEST)	10+20			21											
753	SL-12	LYNN LANE (EAST)	13+92			21											
725-729	TY-1	NB SR 7	1406+70	123+22			490										
736	TY-2	NB SR 243	17+75	21+54			122										
740	TY-3	NB SR 7	309+50	319+60			337										
743,744	TY-4	NB SR 775	45+43	53+95			250										
744	TY-5	NB SR 775	59+00	62+88			177										
744	TY-6	RAMP K	385+07	385+50			42										
745	TY-7	NB SR 775	66+95	70+75			118										
747,748	TY-8	SR 7	425+58	437+17			541										
727	CV-1	SB SR 7	1411+50	117+23	LT			394									
744	IM-1	SR 775	53+95		CL				55								
725	DW-1	EB SR 7	1400+66	1409+00	RT					369				465			USE ITEM 646 ON EXISTING BRIDGE DECK
728	DW-2	NB SR 527	121+87	128+10	RT					1113							
729	DW-3	RAMP C	125+43	132+00	RT					623							
731	DW-4	WB SR 7	167+73	174+93	LT					720							
731	DW-5	EB SR 7	185+00	192+23	RT					723							
732,733	DW-6	WB SR 7	217+80	225+00	LT					720							
733	DW-7	EB SR 7	235+13	242+33	RT					720							
734	DW-8	NB SR 243	11+75	13+13	RT					138							
740	DW-9	WB SR 7	315+00	319+60	LT					460							
742	DW-10	RAMP I	365+89	371+50	RT					561							
742,744	DW-11	RAMP J	371+41	381+00	LT					959							
743,744	DW-12	SB SR 775	45+43	52+00	LT					657							
744	DW-13	NB SR 775	54+77	59+00	RT					80				343			BRIDGE NO. LAW-7-0105 = 343 FT
746,747	DW-14	RAMP L	392+41	404+90	RT					1249							
746,747	DW-15	RAMP K	401+69	407+81	LT					612							
747,748	DW-16	EB SR 7	427+42	432+89	RT					547							
735	DW-17	NB SR 7	CADD MEASURED		RT					41							
735	DW-18	SB SR 7	CADD MEASURED		LT					37							
735	DW-18	EB SR 243	CADD MEASURED		LT					43							
744	DY-1	SR 775	385+07	64+00	RT					87							
735	YL-1	NB SR 7	14+39	-	RT						17						
↓	YL-2	↓	16+06	-	LT						20						
↓	YL-3	NB SR 243	10+82	-	LT						20						
725	PMR-1	EB SR 7	42+63	45+43								691					
728	PMR-2	NB SR 527	120+10	126+25								649					
743	PMR-3	SB SR 775	42+63	45+43								395					
		SUBTOTAL															
TOTALS TO GENERAL SUMMARY						**338**	**2077**	**394**	**55**	**10459**	**57**	**1735**		**808**			

CALCULATED EAE CHECKED MJH

PAVEMENT MARKING SUBSUMMARY

LAW-7-2.17

716 1247

DRAFT Stage 3 - Not for Construction 09/23/2024

C:\EEC\Projects\LAW-7(Stantec)\CADD\Phase_2B\Traffic\Sheets\716-75923_TS003.dgn Sheet 5/14/2024 7:50:01 AM mhunt

SHEET NO.	REFERENCE NO.	LOCATION	STATION FROM	STATION TO	SIDE	SEGMENT LENGTH	RUMBLE STRIPE REDUCTION	618 RUMBLE STRIPES, EDGE LINE (ASPHALT CONCRETE) FT	618 RUMBLE STRIPES, CENTER LINE (ASPHALT CONCRETE) FT							COMMENTS
727-734	RSE-1	NB SR 7	116+23	246+70		13047	1013	12034								REDUCTIONS FOR BRIDGES
734-742	RSE-2	↓	260+00	372+62		11262	313	10949								REDUCTIONS FOR BRIDGE
742-746	RSE-3	↓	372+62	390+90		1828		1828								
746-748	RSE-4	↓	390+90	437+17		4627	116	4511								REDUCTIONS FOR ACCCES DRIVEWAY
727,729	RSE-5	SB SR 7	117+23	124+69		766		766								
729-734	RSE-6	↓	124+69	246+70		12201	1113	11088								REDUCTIONS FOR BRIDGES AND ACCESS ROAD
734-744	RSE-7	↓	260+00	386+10		12610	688	11922								REDUCTIONS FOR BRIDGES
744,746	RSE-8	↓	386+10	398+55		1245		1245								
746-748	RSE-9	↓	398+55	437+17		3682		3682								
727-734	RSC-1	NB SR 7	116+00	247+00		13100	1013		12087							REDUCTIONS FOR BRIDGES
734-740	RSC-2	NB SR 7	260+00	314+65		5465	313		5152							REDUCTIONS FOR BRIDGES
727,729	RSC-3	SB SR 7	119+00	123+22		422			422							
740	RSC-4	SB SR 7	309+50	314+65		515			515							
				SUBTOTAL				58025	18176							
				TOTALS TO GENERAL SUMMARY				10.99 (MI)	3.44 (MI)							

CALCULATED EAE CHECKED MJH

RUMBLE STRIPES SUBSUMMARY

LAW-7-2.17

717 1247

DRAFT Stage 3 - Not for Construction 09/23/2024

C:\EEC\Projects\LAW-7(Stantec)\CADD\Phase_2B\Traffic\Sheets\717-75923_TS004.dgn Sheet 5/14/2024 7:50:28 AM mhunt

SHEET NO.	REFERENCE NO.	LOCATION	STATION	SIDE	SIGN CODE	630 GROUND MOUNTED SUPPORT, NO. 3 POST (FT)	630 ONE WAY SUPPORT, NO. 3 POST (FT)	630 SIGN POST REFLECTOR (EACH)	630 SIGN, FLAT SHEET (SQ. FT)
727	S-1a	NB SR 7	114+30	RT	R5-1	13.5		1	9
	S-1b	NB SR 7	114+30	RT	R5-1	13.5		1	9
	S-2	SB SR 7	115+00	LT	W4-3R	13 / 13			16
	S-3	NB SR 7	118+20	RT	W6-3	14.5			9
	S-4	NB SR 7	119+00	RT	R5-1	14.5		1	9
	S-5	SB SR 7	118+00	LT	W4-3R	13 / 13			16
	S-6	SB SR 7	119+00	RT	R4-7	15 / 15			12
	S-7	NB SR 7	114+78	RT	R6-1R	12 / 12			
	S-8A	RAMP D	115+40	RT	R1-1		17.0	1	9
					R5-1				9
					R6-1L				6.75
					R6-1R				6.75
	S-8B	RAMP D	115+40	LT	R1-1		17.0	1	9
					R5-1				9
					R6-1L				6.75
					R6-1R				6.75
	S-9	RAMP D	118+00	LT	R3-5R			4	7.50
					R5-1a	15 / 15.5			8.75
					R5-1a				8.75
	S-10	RAMP D	118+00	RT	R5-1a	15 / 15.5		4	8.75
					R5-1a				8.75
	S-11	RAMP C	118+90	LT	W1-13L	13 / 13.5			9
					W13-1P				4
	S-12	RAMP C	10 LOCATIONS	RT	W1-8L(x10)		130	10	75
729	S-13	NB SR 7	125+00	RT	R2-1	16 /16			12
	S-14	SB SR 7	122+00	LT	W6-1	14.5			9
730	S-15	ACCESS ROAD	1' LT	LT	R1-1	13.0		1	6.25
	S-16	ACCESS ROAD	220' LT	LT	R1-1	13.0		1	6.25
731	S-17	NB SR 7	180+00	RT	W4-2R	13 / 13			16
	S-18	SB SR 7	180+00	LT	W4-2R	13 / 13			16
733	S-19	NB SR 7	230+00	RT	W4-2R	14			9
	S-20	SB SR 7	230+00	LT	W4-2R	14			9
	S-21	NB SR 7	241+00	RT	R6-5P				6.25
					W16-17P	16 / 16			2
					W13-1P				2.25
	S-22	NB SR 7	245+00	RT	W3-2	15 / 15.5			16
734	S-23	NB SR 7	11+00	RT	M3-4				2
					M1-5-3	16.3			5
					M5-3				2.19
	S-24	NB SR 7	11+00	RT	M3-1				2
					M1-5-2	16.8			4
					M6-3				2.19
	S-25	NB SR 7	12+45	RT	R4-7	14.0			5
	S-26	SB SR 7	18+40	LT	R4-7	14.0			5
	S-27	NB SR 7	20+16	LT	M3-3				2
					M1-5-2	16.3			4
					M6-3				2.19
	S-28	SB SR 7	20+16	LT	M3-4				2
					M1-5-3	16.8			5
					M5-1				2.19
	S-29	SB SR 7	23+00	LT	W3-2	15 / 15.5			16
					TOTALS - COLUMN "A"	575.7	164.0	25	410.8

SHEET NO.	REFERENCE NO.	LOCATION	STATION	SIDE	SIGN CODE		630 GROUND MOUNTED SUPPORT, NO. 3 POST (FT)	630 STREET NAME SIGN SUPPORT, NO. 3 POST (FT)	630 SIGN POST REFLECTOR (EACH)	630 SIGN, FLAT SHEET (SQ. FT)	630 SIGN DOUBLE FACED, STREET NAME (EACH)
734	S-30	NB SR 243	12+70	RT	R3-H8bb		13.0			6.25	
	S-31	SB SR 243	14+50	LT	W3-2		15 / 15.5			16	
	S-32	SB SR 243	13+13	LT	R4-7		14.0			5	
	S-33	SB SR 243	13+00	LT	M3-1		14.8			2	
					M1-5					4	
					M5-3					2.19	
	S-34	SB SR 243	13+00	LT	M3-3		14.8			2	
					M1-5					4	
					M5-1					2.19	
	S-35	SB CR 69	10+12	LT	R1-1			15.5		6.25	
					D3-1						1
735	S-36	NB SR 7	14+39	RT	R1-2		14.1		1	4.5	
	S-37	NB SR 7	14+23	RT	R1-2		14.1		1	4.5	
	S-38	NB SR 7	16+14	RT	M3-1		15.8			2.0	
					M1-5					4.0	
					M6-2					2.19	
	S-39	SB SR 7	16+14	LT	R1-2		14.1		1	4.5	
	S-40	SB SR 7	16+14	LT	R1-2		14.1		1	4.5	
	S-41	NB SR 243	10+87	RT	M3-4		15.8			2.0	
					M1-5-3					5.0	
					M6-2					2.19	
	S-42	SB SR 243	10+88	LT	R1-2		14.1		1	4.5	
	S-43	SB SR 243	10+93	LT	R1-2		14.1		1	4.5	
	S-44	SB SR 7	14+40	LT	M3-3		15.8			2.0	
					M1-5					4.0	
					M6-2					2.19	
	S-45	NB SR 7	14+82	RT	R6-4a		13 / 13			8.0	
	S-46	SB SR 7	15+72	LT	R6-4a		13 / 13			8.0	
	S-47	SB SR 243	10+46	LT	R6-4a		13 / 13			8.0	
736	S-48	NB SR 243	20+00	RT	M3-4		15.5			2	
					M1-5-3					5	
	S-49	SB SR 243	21+00	LT	R6-5P		15 / 15			6.25	
					M1-5					4	
	S-50	SB SR 243	17+75	LT	R3-H8ba		15.5			9	
737	S-51	SB SR 7	263+00	RT	R6-5P					6.25	
					W16-17P		15 / 15.5			2	
					W13-1P					2.25	
	S-52	SB CR 118	10+31	LT	R1-1			15.5		6.25	
					D3-1						2
	S-53	NB CR 69	27+25	RT	M1-H6A		12.3			2.25	
					M6-1L					2.19	
	S-54	NB CR 69	27+25	RT	M1-H6A		12.3			2.25	
					M6-4					2.19	
	S-55	SB CR 69	28+00	LT	M1-H6A		12.3			2.25	
					M6-1R					2.19	
738	S-56	SB SR 7	10+31	LT	R1-1		12.8	15.5		9	
					D3-1						2
	S-57	NB CR 69	38+45	RT	M1-H6A		12.3			2.25	
					M6-1L					2.19	
	S-58	NB CR 69	38+50	RT	M1-H6A		12.3			2.25	
					M6-4					2.19	
	S-59	SB CR 69	39+00	LT	M1-H6A		12.3			2.25	
					M6-1R					2.19	
					TOTALS - COLUMN "B"		447.4	64.5	25	295.1	5

CALCULATED EAE CHECKED MJH

MINOR SIGNING SUBSUMMARY

LAW-7-2.17

718 / 1247

DRAFT Stage 3 - Not for Construction 09/23/2024

C:\EEC\Projects\LAW-7(Stantec)\CADD\Phase_2B\Traffic\Sheets\718-75923_TS005.dgn Sheet 5/14/2024 7:51:10 AM mhunt

SHEET NO.	REFERENCE NO.	LOCATION	STATION	SIDE	SIGN CODE	630 GROUND MOUNTED SUPPORT, NO. 3 POST (FT)	630 SIGN POST REFLECTOR (EACH)	630 SIGN, FLAT SHEET (SQ. FT)
739	S-61	NB CR 69	52+75	RT	W1-1aL	14.1		6.25
	S-62	NB CR 69	6 LOCATIONS	RT	W1-8R(L)	38.0	6	18
	S-63	SB CR 69	59+00	LT	W1-1aR	14.1		6.25
740	S-64	NB SR 7	303+00	RT	W6-2	15.8		9
	S-65	NB SR 7	314+90	RT	R4-7	15 / 15		12
	S-66	NB SR 7	314+90	LT	R5-1	14.5	1	9
	S-67a	SB SR 7	320+00	LT	R5-1a	13.5	1	6
	S-67b	SB SR 7	320+00	LT	R5-1a	13.5	1	6
	S-68	NB SR 7	324+00	RT	R4-3	16 / 16.5		12
	S-69a	SB SR 7	326+50	LT	W4-2L	15 / 15.5		16
	S-69b	SB SR 7	326+50	LT	W4-2L	15 / 15		16
741	S-70a	SB SR 7	334+00	LT	W4-2L	15 / 15.5		16
	S-70b	SB SR 7	334+00	LT	W4-2L	15 / 15		16
	S-71a	SB SR 7	341+00	LT	W6-2	15 / 15.5		16
	S-71b	SB SR 7	341+00	LT	W6-2	15 / 15		16
742	S-72	SB SR 7	362+00	LT	R2-1	16 / 16.5		12
	S-73	SB SR 7	368+00	LT	M3-3	15 / 15.5		4.5
					M1-5			9
744	S-74	RAMP J	8 LOCATIONS	RT	W1-8R	100.0	8	16
745					M3-3			2.0
	S-75	SB SR 775	68+00	LT	M1-5	16.8		4.0
					M5-1			2.19
	S-76	SB SR 775	74+50	LT	M2-1	13.5		2.0
					M1-5			4.0
747	S-77	NB SR 7	411+00	RT	R2-1	16 / 16.5		12
	S-78a	NB SR 7	415+00	RT	W6-2	15 / 15.5		16
	S-78b	NB SR 7	415+00	RT	W6-2	15 / 15		16
	S-79a	NB SR 7	420+00	RT	W4-2L	15 / 15.5		16
	S-79b	NB SR 7	420+00	RT	W4-2L	15 / 15		16
	S-80a	NB SR 7	427+00	RT	R5-1a	12 / 12.5	1	5
	S-80b	NB SR 7	427+00	RT	R5-1a	12 / 12	1	5
748	S-81	SB SR 7	432+70	RT	R4-7	14.6		12
	S-82	NB SR 7	432+70	RT	R5-1	15.5	1	9
	S-83	SB SR 7	444+55	RT	W6-1	14		9
750	S-84 THRU S-105 - SEE COLUMN "D"							
751	S-106	FOREST DR	-	-	W-14-2	14.0		6.25
	S-107	BOOTHE EATON	-	-	W-14-2	14.0		6.25
	S-108	FOREST DR	3 OM-4 SIGNS	-	OM-4	39.0		4.69
	S-109	WOODLAND DR	3 OM-4 SIGNS	-	OM-4	39.0		4.69
	S-110	HENSON HOLLOW 1	3 OM-4 SIGNS	-	OM-4	39.0		4.69
	S-111	HENSON HOLLOW 2	3 OM-4 SIGNS	-	OM-4	39.0		4.69
752	S-112	FOREST DR	NO OUTLET	-	W-14-2	13.5		6.25
752	S-113	FOREST DR	3 OM-4 SIGNS	-	OM-4	39.0		4.69
753	S-114	DOGWOOD LANE	3 OM-4 SIGNS	-	OM-4	39.0		4.69
					TOTALS - COLUMN "C"	1053.3	20	399.1

SHEET NO.	REFERENCE NO.	LOCATION	STATION	SIDE	SIGN CODE	630 GROUND MOUNTED SUPPORT, NO. 3 POST (FT)	630 ONE WAY SUPPORT, NO. 3 POST (FT)	630 STREET NAME SIGN SUPPORT, NO. 3 POST (FT)	630 SIGN POST REFLECTOR (EACH)	630 SIGN SUPPORT ASSEMBLY, BRIDGE MOUNTED, TYPE 1 (FT)	630 SIGN, FLAT SHEET (SQ. FT)	630 SIGN DOUBLE FACED, STREET NAME (EACH)	630 REMOVAL OF GROUND MOUNTED SIGN AND REERECTION (EACH)
753	S-115	LYNN LANE 1	10+20	LT	R1-1			15.5			6.25		
					D3-1							1	
	S-116	LYNN LANE 2	13+92	LT	R1-1			15.5			6.25		
					D3-1							1	
	S-117	DOGWOOD LN	10+16	LT	R1-1			15.5			6.25		
					D3-1							1	
750	S-84	NB SR 775	42+50	RT	M1-5	13.3					4.0		
					M2-1						2.19		
	S-85	NB SR 775	46+00	RT	R4-H3A	13.0					5.0		
	S-86	NB SR 775	50+50	RT	R2-1	12.5					7.5		
	S-87	NB SR 775	55+20	RT	R3-7	12.5					9.0		
	S-88	NB SR 775	65+00	RT	EXIST.	14.0							1
	S-89	NB SR 775	67+00	RT	M1-5	12.8					5.0		
					M2-1						2.19		
	S-90	NB SR 775	69+00	RT	R2-1	12.5					7.5		
	S-91	SB SR 775	68+00	LT	M3-3						2.0		
					M1-5	14.0/14.5					4.0		
					M5-1						2.19		
	S-92	SB SR 775	68+00	LT	M3-1						2.0		
					M1-5	14.5/15.0					4.0		
					M6-3						2.19		
	S-93	SB SR 775	64+00	LT	R3-H8ca	13.5/14.0					10.0		
	S-94	SB SR 775	52+00	LT	R3-7L	14.0					9.0		
	S-95	SB SR 775	49+00	LT	R2-1	12.5					7.5		
	S-96	SB SR 775	46+50	LT	M2-3	13.5					2.19		
					M1-5-3						5.0		
	S-97a	RAMP I	377+00	RT	R3-H8bj						7.5		
					R5-1a				4	1	8.75		
					R5-1a						8.75		
	S-97b	RAMP I	377+00	LT	R3-H8bj						7.5		
					R5-1a				4	1	8.75		
					R5-1a						8.75		
	S-98a	RAMP I	380+54	RT	R1-1						9.0		
					R5-1		13.0		1		9.0		
					R6-1L						3.0		
					R6-1R						3.0		
	S-98b	RAMP I	380+54	LT	R1-1						9.0		
					R5-1		13.0		1		9.0		
					R6-1L						3.0		
					R6-1R						3.0		
	S-99	RAMP L	388+70	RT	W4-1R	14.5/14.5					16.0		
	S-100	RAMP J	394+00	LT	M3-3						2.0		
					M1-5	14.0					4.0		
					M6-2						2.19		
	S-101	RAMP K	385+50	RT	R4-7	13.0					5.0		
	S-102	RAMP K	385+25	LT	R5-1						9.0		
					R6-1L		13.0		1		3.0		
					R6-1R						3.0		
	S-103	RAMP K	388+50	LT	R3-H8bd						6.25		
					R5-1a	14.5/14.5			4		8.75		
					R5-1a						8.75		
	S-104a	RAMP K	390+00	LT	R5-1a	14.5/14.5			4		6.25		
					R5-1a						6.25		
	S-104b	RAMP K	390+00	RT	R5-1a	14.5/14.5			4		6.25		
					R5-1a						6.25		
	S-105	SB SR 7	388+00	RT	W4-1R	13.5/13.5					16.0		
					TOTALS - COLUMN "D"	386.1	52	49.5	23	2	891.1	13	
					TOTALS - COLUMN "A"	575.7	54.0		41		411.0		
					TOTALS - COLUMN "B"	477.0		64.5	6		205.1	5	
					TOTALS - COLUMN "C"	1053.3	20		20		399.1		
					TOTALS TO GENERAL SUMMARY	2492.1	203	111.0	74	2	1308.1	8	

CALCULATED EAE
CHECKED MJH

MINOR SIGNING SUBSUMMARY (CONT.)

LAW-7-2.17

719
1247

DRAFT Stage 3 - Not for Construction
09/23/2024

C:\EEC\Projects\LAW-7(Stantec)\CADD\Phase_2B\Traffic\Sheets\719-75923_TS006.dgn Sheet 5/14/2024 7:51:36 AM mhunt

SHEET NO.	REFERENCE NO.	LOCATION	STATION	630 REMOVAL OF GROUND MOUNTED SIGN AND DISPOSAL	REMOVAL OF GROUND MOUNTED POST SUPPORT AND DISPOSAL	REMOVAL OF GROUND MOUNTED STRUCTURAL BEAM SUPPORT AND DISPOSAL	REMOVAL OF OVEHEAD MOUNTED SIGN AND DISPOSAL	REMOVAL OF OVEHEAD MOUNTED SIGN SUPPORT AND DISPOSAL		
				EACH	EACH	EACH	EACH	EACH		
725	R-1	NB SR 7	1400+35	3	1					
▼	R-2	NB SR 7	1409+00				1			
726	R-3	NB SR 7	1414+00	1						
|	R-4	NB SR 7	114+29	2	1					
|	R-5	MELODY LN	-	1	2					
|	R-6	NB SR 7	115+08	1	1					
|	R-7	NB SR 7	114+38	3	1					
|	R-8	SB SR 7	114+85	1	2					
|	R-9	SB SR 7	115+11	1	1					
|	R-10	SB SR 7	115+11	1	1					
|	R-11	RAMP B	117+21	1						
|	R-12	RAMP B	117+09	1	1					
|	R-13	RAMP B	-	9	9					
▼	R-14	RAMP B	-	1	2					
728	R-15	NB SR 527	133+13				4	1		
|	R-16	SB SR 527	126+12	4	1					
▼	R-17	RAMP D	120+91				1			
736	R-18	SB SR 243	20+60	1	1					
743	R-19	SB SR 775	-	2	1					
747	R-20	SB SR 243	418+80	1	1					
▼	R-21	SB SR 243	418+80	1	1					
749	R-22	NB SR 7	-	1	1					
|	R-23	NB SR 7	-	4	2					
|	R-24	NB SR 7	-	1	1					
|	R-25	NB SR 7	-	1	1					
|	R-26	NB SR 7	-	1	2					
|	R-27	NB SR 7	-	1	1					
|	R-28	NB SR 7	-	5	2					
|	R-29	NB SR 7	-	1	1					
|	R-30	NB SR 7	-	1	1					
|	R-31	NB SR 7	-	1	1					
|	R-32	NB SR 7	-	6	2					
|	R-33	NB SR 7	-	9	3					
|	R-34	NB SR 7	-	2	1					
|	R-35	NB SR 7	-	1	1					
|	R-36	SB SR 7	-	1	1					
|	R-37	SB SR 7	-	1	1					
|	R-38	SB SR 7	-	5		2				
|	R-39	SB SR 7	-	1	1					
|	R-40	NB SR 775	-	1	1					
|	R-41	NB SR 775	-	2	1					
|	R-42	SB SR 775	-	1	1					
|	R-43	SB SR 775	-	3	1					
|	R-44	SB SR 775	-	1	1					
|	R-45	SB SR 775	-	1	2					
|	R-46	SB SR 7	-	4		2				
|	R-47	SB SR 7	-	5	2					
|	R-48	SB SR 7	-	1	1					
▼	R-49	SB SR 7	-	2	2					
751	R-50	FOREST DR	-	2	2					
752	R-51	CR 68	-	1	1					
|	R-52	CR 68	-	1	1					
▼	R-53	CR 68	-	1	1					
TOTALS TO GENERAL SUMMARY				103	67	4	6	1		

CALCULATED EAE CHECKED MJH

SIGN REMOVAL SUBSUMMARY

LAW-7-2.17

720 1247

DRAFT Stage 3 - Not for Construction 09/23/2024

C:\EEC\Projects\LAW-7(Stantec)\CADD\Phase_2B\Traffic\Sheets\720-75923_TS007.dgn Sheet 5/14/2024 7:51:55 AM mhunt

SHEET NO.	REFERENCE NO.	LOCATION	STATION	SIDE	625	630															
					GROUND ROD	GROUND MOUNTED STRUCTURAL BEAM SUPPORT, S4x7.7	GROUND MOUNTED STRUCTURAL BEAM SUPPORT, W6x9	GROUND MOUNTED STRUCTURAL BEAM SUPPORT, W8x18	GROUND MOUNTED STRUCTURAL BEAM SUPPORT, W10x22	GROUND MOUNTED STRUCTURAL BEAM SUPPORT, W10x12	GROUND MOUNTED STRUCTURAL BEAM SUPPORT, W12x30	BREAKAWAY STRUCTURAL BEAM CONNECTION	OVERHEAD SIGN SUPPORT TYPE TC-15.116, DESIGN 2	SPAN WIRE SIGN SUPPORT, TYPE TC-17.11 DESIGN 10	SIGN, FLAT SHEET	SIGN, GROUND MOUNTED EXTRUSHEET	SIGN, OVERHEAD EXTRUSHEET	SIGN, PERMANENT OVERLAY	RIGID OVERHEAD SIGN SUPPORT FOUNDATION	SPAN WIRE SIGN SUPPORT FOUNDATION	COMMENTS
					EACH	FT	FT	FT	FT	FT	FT	EACH	EACH	EACH	SQ. FT	SQ. FT	SQ. FT	SQ. FT	EACH	EACH	
728	OH-1	NB SR 527	133+00	LT/RT	2								1		10.5 10.5		144 192		2		ELEVATION VIEW, SHEET 754
728	OH-2	NB SR 527	120+90	RT													192				MOUNT ON EXISTING TRUSS
750	OH-3	NB SR 527	53+73	RT													154				SEE TRAFFIC SIGNAL PLANS
750	OH-4	NB SR 775	62+31	RT													154				SEE TRAFFIC SIGNAL PLANS
750	OH-5	NB SR 527	59+00	LT/RT	2									1	12.5 7.5 12.5 7.5 12.5					2	ELEVATION VIEW, SHEET 755
725	OH-6	NB SR 7	1409+70	RT													192				MOUNT ON EXISTING TRUSS
724	OV-1	NB SR 7	-	RT														17.5			
724	OV-2	NB SR 7	-	RT														17.5			
729	BM-1	NB SR 7	123+45	RT		35.0						2				30					ELEVATION VIEW, SHEET 756
729	BM-2	SB SR 7	132+00	RT				63.2				3				173.5					
730	BM-3	SB SR 7	139+50	RT						47.0		2				81.5					ELEVATION VIEW, SHEET 757
733	BM-4	NB SR 7	238+00	RT						46.7		2				64.0					
737	BM-5	SB SR 7	270+00	LT						43.3		2				64.0					ELEVATION VIEW, SHEET 758
740	BM-6	NB SR 7	317+00	RT					52.6			2				157.0					
741	BM-7	NB SR 7	339+50	RT					52.6			2				139.5					ELEVATION VIEW, SHEET 759
742	BM-8	NB SR 7	366+00	RT							54.6	2				148					
742	BM-9	RAMP I	374+00	LT		33.7						2				30					ELEVATION VIEW, SHEET 760
745	BM-10	SB SR 775	70+00	RT				48.4				2				80					
746	BM-11	RAMP K	397+00	LT		34.4						2				30					ELEVATION VIEW, SHEET 761
747	BM-12	SB SR 7	408+00	RT					41.7			2				165.5					
747	BM-13	SB SR 7	421+50	RT					44.6			2				157.0					ELEVATION VIEW, SHEET 762
750	BM-14	RAMP I	375+00	RT			36.6					2				45					
750	BM-15	RAMP K	393+00	RT			35.2					2				45					ELEVATION VIEW, SHEET 763
761	BM-16	NB SR 775	48+50	RT				48.2				2				80					
TOTALS TO GENERAL SUMMARY					4	103.1	71.8	159.8	191.5	137.0	54.6	33	1	1	73.5	1410	1028	35	2	2	

CALCULATED EAE CHECKED MJH

MAJOR SIGNING SUBSUMMARY

LAW-7-2.17

DRAFT Stage 3 - Not for Construction 09/23/2024

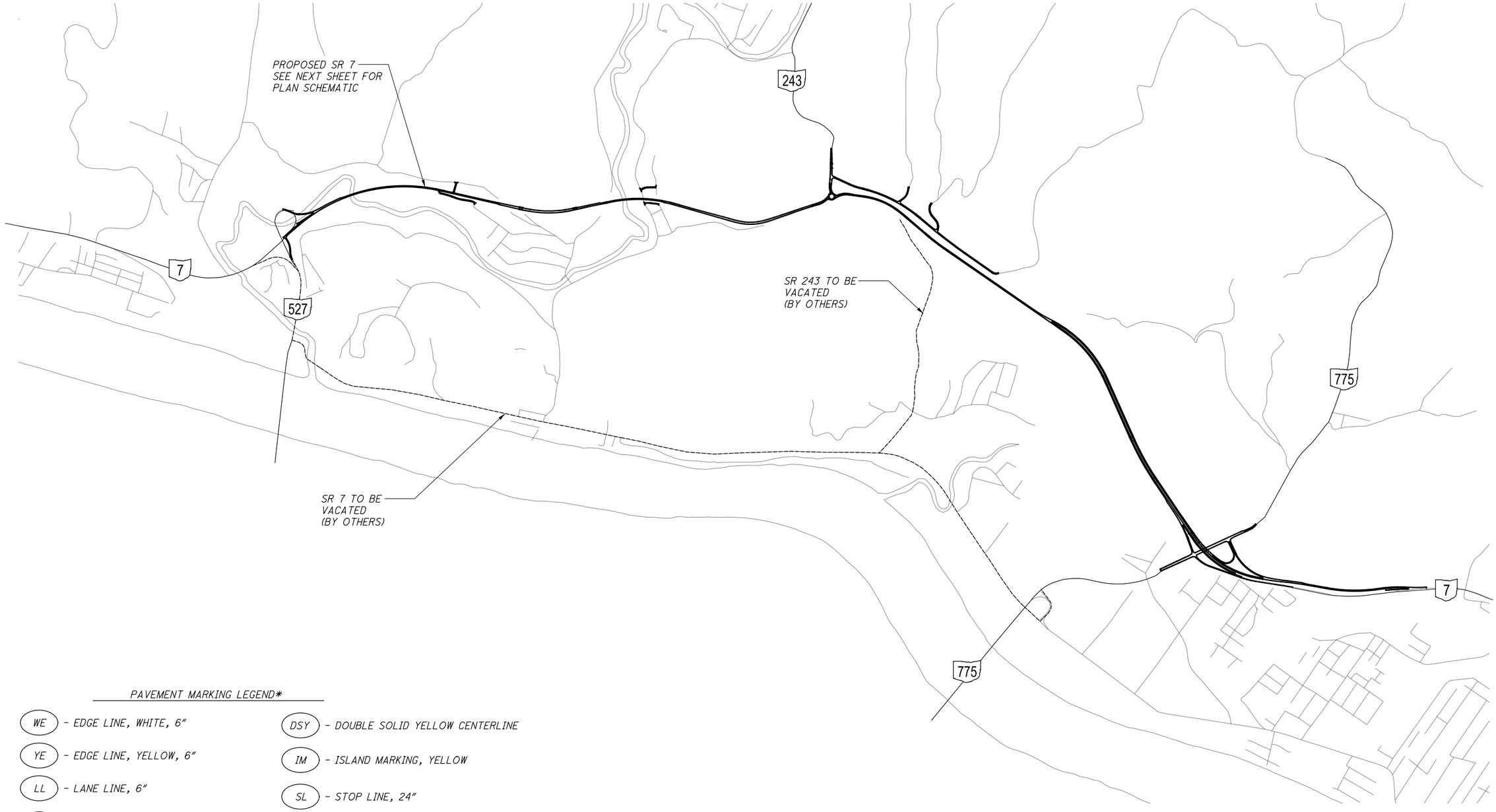

PAVEMENT MARKING LEGEND*

- WE – EDGE LINE, WHITE, 6″
- YE – EDGE LINE, YELLOW, 6″
- LL – LANE LINE, 6″
- TY – TRANSVERSE LINE, YELLOW, (12″ WIDE)
- CH – CHANNELIZING LINE, 12″
- CV – CHEVRON LINE, WHITE, 12″
- DY – DOTTED LINE, YELLOW, 6″
- DW – DOTTED LINE, WHITE, 6″
- DSY – DOUBLE SOLID YELLOW CENTERLINE
- IM – ISLAND MARKING, YELLOW
- SL – STOP LINE, 24″
- YL – YIELD LINE
- RSE – RUMBLE STRIPES, EDGE LINE
- RSC – RUMBLE STRIPES, CENTER LINE
- PMR – PAVEMENT MARKING REMOVAL

* USE ITEM 644 (THERMOPLASTIC) ON ASPHALT PAVEMENT
USE ITEM 646 (EPOXY) ON CONCRETE PAVEMENT

SIGNING CALL-OUT BUBBLES

- R-# – SIGN REMOVAL
- S-# – SIGN, FLAT SHEET ON #3 POST, UNLESS OTHERWISE NOTED
- OH-# – OVERHEAD MOUNTED SIGN STRUCTURE
- BM-# – BEAM MOUNTED SIGN
- OV-# – OVERHEAD SIGN, OVERLAY

SIGN LEGEND

- 7 – EXISTING SIGN, TO REMAIN
- EXISTING SIGN, TO BE REMOVED
- 7 – PROPOSED NEW SIGN
- DIRECTION OF TRAVEL

DRAFT Stage 3 - Not for Construction 09/23/2024

HORIZONTAL SCALE IN FEET
0 600 1200 2400

CALCULATED MJH
CHECKED KAE

TRAFFIC CONTROL PLAN
MASTER SCHEMATIC

LAW-7-2.17

722
1247

C:\EEC\Projects\LAW-7(Stantec)\CADD\Phase_2B\Traffic\Sheets\722-75923_TD001.dgn Sheet 5/13/2024 4:54:21 PM mhunt

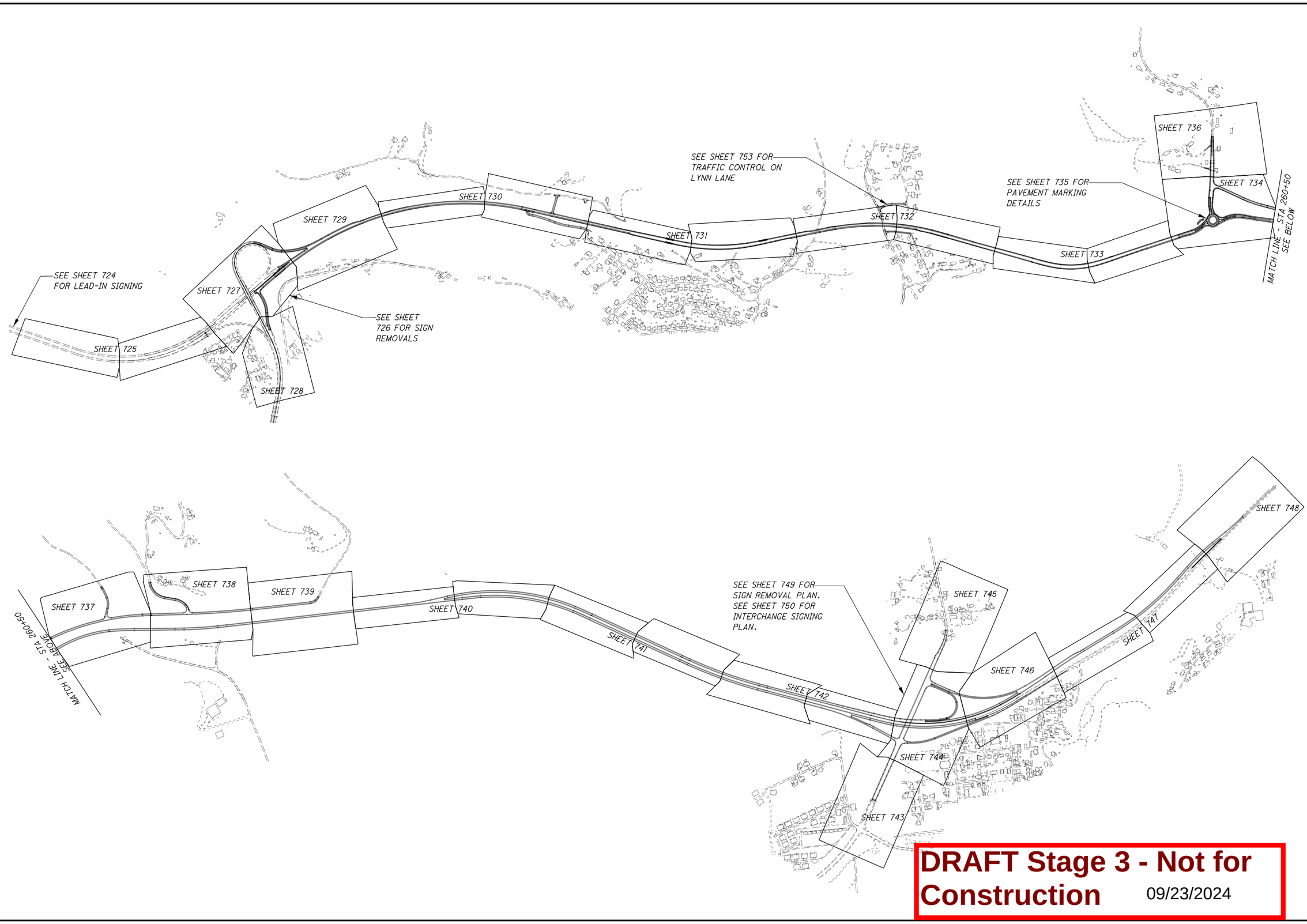

DRAFT Stage 3 - Not for Construction 09/23/2024

HORIZONTAL SCALE IN FEET
0 300 600 1200

CALCULATED MJH
CHECKED KAE

TRAFFIC CONTROL SCHEMATIC
MAINLINE - BEGIN PROJECT TO END PROJECT

LAW-7-2.17

723
1247

C:\EEC\Projects\LAW-7(Stantec)\CADD\Phase_2B\Traffic\Sheets\723-75923_TD002.dgn Sheet 5/14/2024 8:13:31 AM mhunt

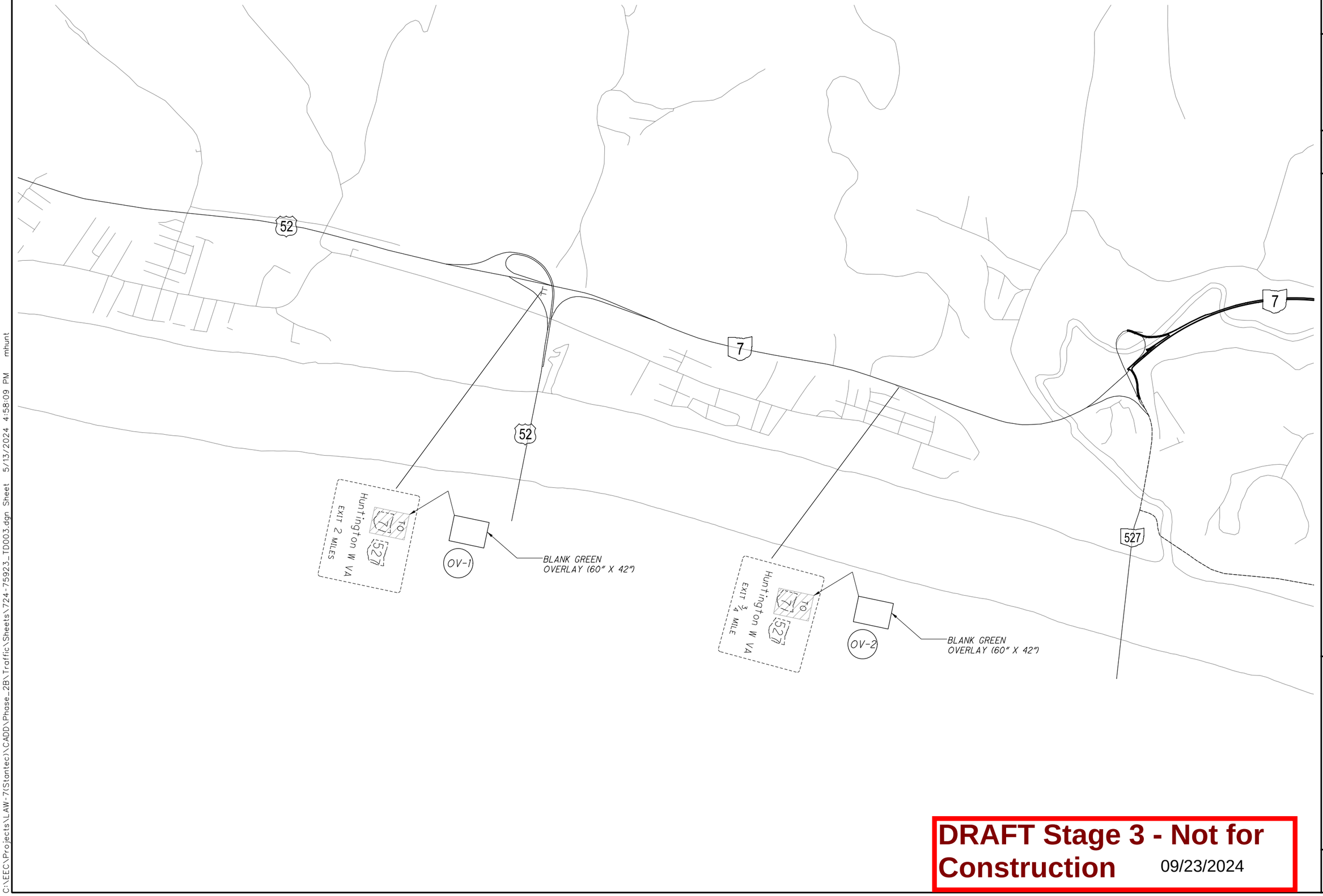

DRAFT Stage 3 - Not for Construction 09/23/2024

0 375 750 1500
HORIZONTAL SCALE IN FEET

CALCULATED MJH
CHECKED KAE

TRAFFIC CONTROL PLAN
LEAD-IN SIGNING - EB SR 7

LAW-7-2.17

724
1247

C:\EEC\Projects\LAW-7(Stantec)\CADD\Phase_2B\Traffic\Sheets\724-75923_TD003.dgn Sheet 5/13/2024 4:58:09 PM mhunt

TRAFFIC CONTROL PLAN
MAINLINE - STA 79+00 TO STA 106+50

LAW-7-2.17

CALCULATED MJH
CHECKED KAE

HORIZONTAL SCALE IN FEET
0 25 50 100

NOTES:
1) SEE SHEET 722 FOR PLAN LEGEND.

2) STRIPE YELLOW EDGE LINE TO PROVIDE TWO TWELVE-FOOT LANES, THROUGH THE EXIT LANE AREA. PROVIDE ONE 12' LANE NORTH OF THE EXIT LANE.

3) USE EPOXY PAVEMENT MARKINGS ON CONCRETE (BRIDGE DECK) SURFACES.

SR 7 NB
SR 7 NB
SPEED LIMIT 55
FALLEN ROCKS
1394
1395
1396
1397
MATCH LINE - STA 93+00 SEE BELOW
LEFT LANE ENDS MERGE RIGHT

MATCH LINE - STA 93+00 SEE ABOVE
ADOPT A HIGHWAY LITTER CONTROL WESBANCO BANK, INC.
SR 7 NB
1398
1399
1400
1401
1402
1403
1404
1405
1406
SR 7 SB
1407
1408
1409
1410
SOUTH 7 OHIO BYWAY
$500 PENALTY FOR LITTERING ORC 3767.32
2
MATCH LINE - STA 106+50 SEE SHEET 727
+66
+00
TY-1
SEE NOTE 3
NORTH
R-1
YE-1
SEE NOTES 2 AND 3
DW-1
SEE NOTE 3
PMR-1
REMOVE CONFLICTING TRANSVERSE LINE =115'
REMOVE EXISTING YELLOW EDGE LINE =576'
OV-3
BLANK GREEN OVERLAY (60" X 42")
OH-6
NORTH 7 Proctorville LEVEL 1 (18' X 12')
R-2
REMOVE BLANK OVERHEAD SIGN
To 7 527
Huntington

DRAFT Stage 3 - Not for Construction 09/23/2024

C:\EEC\Projects\LAW-7(Stantec)\CADD\Phase 2B\Traffic\Sheets\725-75923_TP004.dgn Sheet 5/14/2024 8:15:18 AM mhunt

NOTES:
1) SEE SHEET 722 FOR PLAN LEGEND.

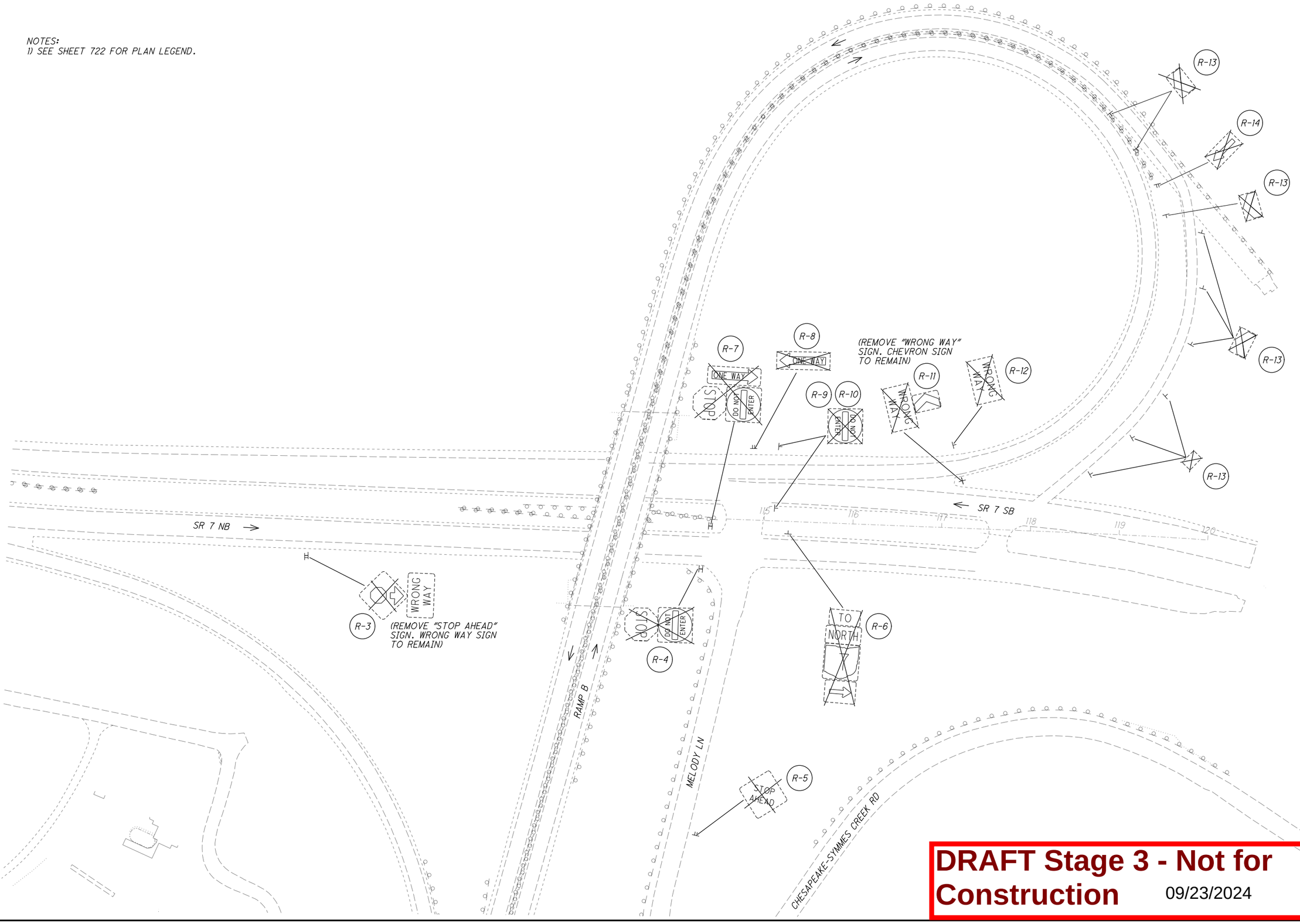

DRAFT Stage 3 - Not for Construction 09/23/2024

HORIZONTAL SCALE IN FEET
0 25 50 100

CALCULATED MJH
CHECKED KAE

TRAFFIC CONTROL PLAN
SIGN REMOVAL - SR 529 INTERCHANGE

LAW-7-2.17

726
1247

C:\EEC\Projects\LAW-7(Stantec)\CADD\Phase_2B\Traffic\Sheets\726-75923_TP005.dgn Sheet 5/13/2024 4:28:15 PM mhunt

NOTES:
1) SEE SHEET 722 FOR PLAN LEGEND.

2) SPACE CHEVRONS AT 60'.

S-12
CHEVRONS
W1-8L (30"X36")

S-8
R6-1L (54"X18")
R6-1R (54"X18")
ONE WAY
DO NOT ENTER
R5-1 (36"X36")
STOP
R1-1 (36"X36")
STA 115+40

W1-8L

Ex LA-R/W

Ex R/W

MATCH LINE - STA 106+50
SEE SHEET 725

MATCH LINE - STA 121+00
SEE SHEET 729

MATCH LINE - STA 119+00
SEE NEXT SHEET

SR 7 NB

SR 7 SB

RAMP A
RAMP B
RAMP C
RAMP D

SYMMES CREEK RD

CRESTVIEW DR

CHESAPEAKE-SYMMES CREEK RD

CV-1 CH-1 CH-2 TY-1 YE-1 YE-2 YE-3 YE-7 WE-27 WE-9 WE-10 RSE-10 WE-6 RSE-5 WE-1 RSE-1 DSY-2 RSC-3 DSY-1 RSC-1 SL-1 RSC-2

S-1 DO NOT ENTER R5-1 (36"X36") STA 114+30

S-2 W4-3R (48"X48") STA 115+00

S-3 W9-2 (36"X36") STA 118+20

S-4 DO NOT ENTER R5-1 (36"X36") STA 119+00

S-5 W4-3R (48"X48") STA 118+00

S-6 R4-7 (36"X48") STA 119+00

S-7 ONE WAY R6-1R (54"X18") STA 114+78

S-8 SL-1 +70

S-9 ONLY R3-5R (30"X36") STA 118+00

S-10 WRONG WAY R5-1a (42"X30")

S-11 W1-13L (36"X36") 25 MPH W13-1P (24"X24") STA 118+90

WRONG WAY

40 MPH RAMP

EXIT

25 MPH

+50 +30 +23 114+30 +30 +40 +70 +85 +70 +33 +79

1411 1412 1413 1414 1415 1416 1417 115 116 117 118 119 120

0 25 50 100 HORIZONTAL SCALE IN FEET

CALCULATED MJH CHECKED KAE

TRAFFIC CONTROL PLAN
MAINLINE - STA 106+50 TO STA 121+00

LAW-7-2.17

727 1247

DRAFT Stage 3 - Not for Construction 09/23/2024

C:\EEC\Projects\LAW-7(Stantec)\CADD\Phase_2B\Traffic\Sheets\727-75923_TP006.dgn Sheet 5/13/2024 4:30:57 PM mhunt

NOTES:
1) SEE SHEET 722 FOR PLAN LEGEND.

R-15
ONLY
OH-1
R3-5a-36 (36"X 42")
ONLY
R3-5a-36 (36"X 42")
Huntington W Va 1
Proctorville 5
Chesapeake CORP LIMIT
NO ENGINE BRAKE
SPEED LIMIT 25
R-16
JCT NORTH
OH-2 BYWAY
SOUTH TO Ironton 7 52
STA 133+40 SEE SHEET 754 FOR ELEVATION
OH-1
NORTH Proctorville 7
SOUTH TO Ironton 7 52
R-15
TRAFFIC LANE MERGE LEFT
SR 527 SB
SR 527 NB
+20
+87
+21
+83
+00
YE-2
RAMP D
WE-9
CH-3
CH-4
DW-2
REMOVE CONFLICTING EDGE LINE AND TRANSVERSE LINES =649'
PMR-2
MATCH LINE - STA 119+00 SEE PREVIOUS SHEET
R-17
REMOVE BLANK SIGN
SOUTH TO Ironton 7 52
NORTH Proctorville 7
OH-2
LEVEL 1 (16" X 12") CENTER SIGN OVER OH-2 ON THE RIGHT LANE

DRAFT Stage 3 - Not for Construction
09/23/2024

HORIZONTAL SCALE IN FEET
0 25 50 100
CALCULATED MJH
CHECKED KAE

TRAFFIC CONTROL PLAN
SR 527 - STA 133+00 TO STA 119+00
LAW-7-2.17

728
1247

C:\EEC\Projects\LAW-7(Stantec)\CADD\Phase_2B\Traffic\Sheets\728-75923_TP007.dgn Sheet 5/13/2024 4:31:32 PM mhunt

NOTES:
1) SEE SHEET 722 FOR PLAN LEGEND.

2) USE EPOXY PAVEMENT MARKINGS ON CONCRETE (BRIDGE DECK) SURFACES.

3) PER NOTE 7 ON TC-65.11, DO NOT INSTALL RPM'S ON BRIDGES LESS THAN 400' IN LENGTH.

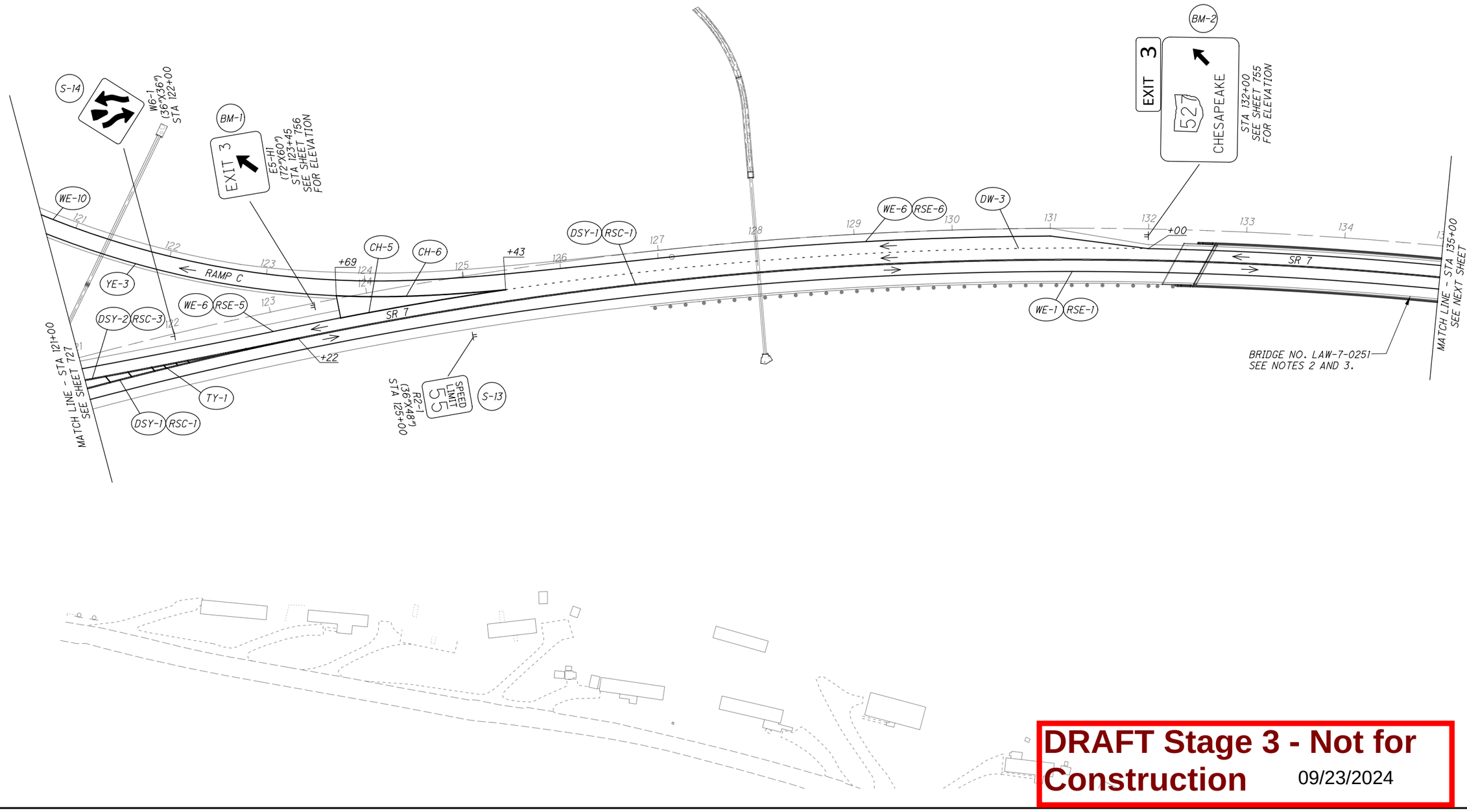

DRAFT Stage 3 - Not for Construction 09/23/2024

HORIZONTAL SCALE IN FEET
0 25 50 100

CALCULATED MJH
CHECKED KAE

TRAFFIC CONTROL PLAN
MAINLINE - STA 121+00 TO STA 135+00

LAW-7-2.17

729
1247

C:\EEC\Projects\LAW-7(Stantec)\CADD\Phase_2B\Traffic\Sheets\729-75923_TP008.dgn Sheet 5/14/2024 8:17:10 AM mhunt

NOTES:
1) SEE SHEET 722 FOR PLAN LEGEND.

2) USE EPOXY PAVEMENT MARKINGS ON CONCRETE (BRIDGE DECK) SURFACES.

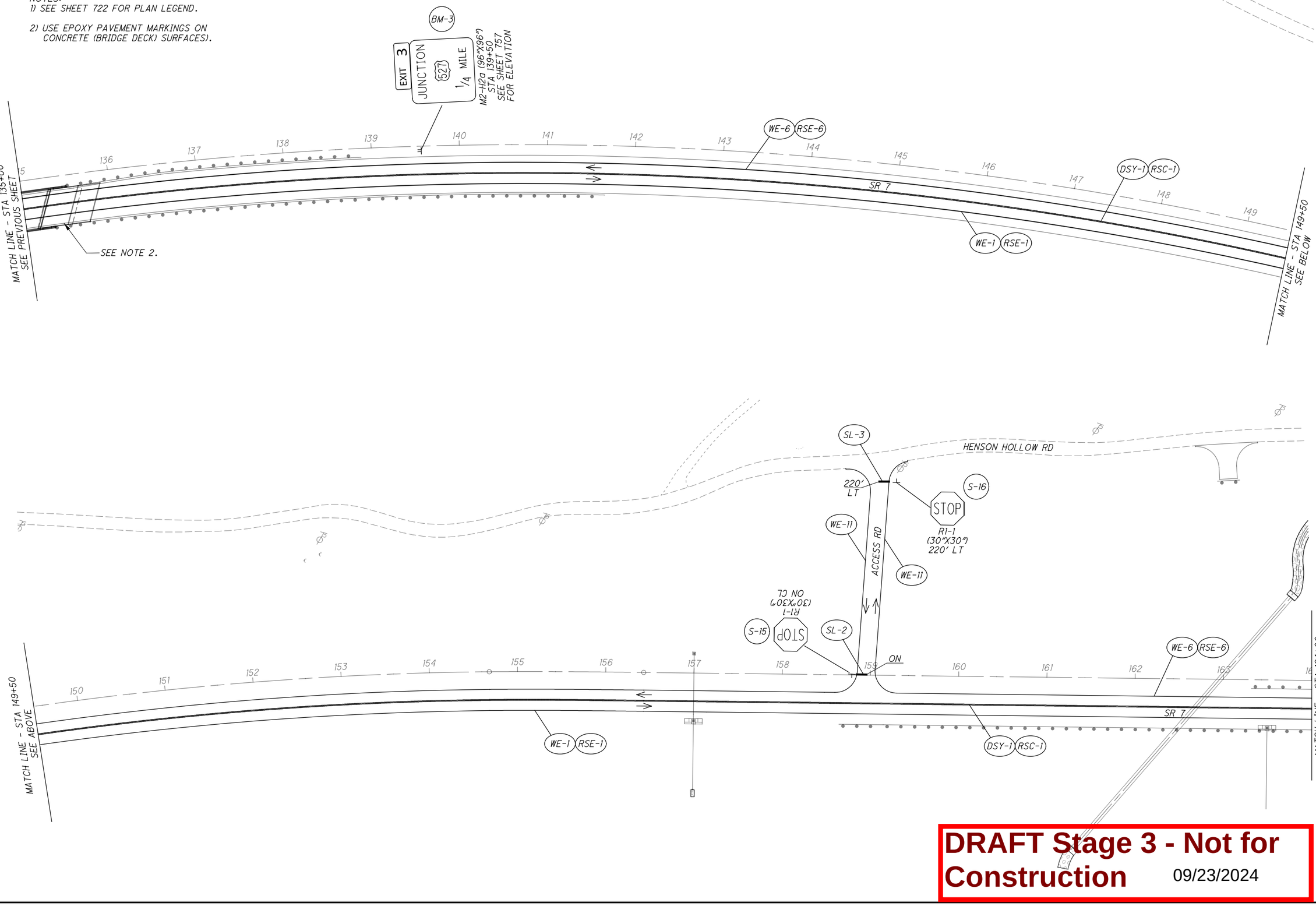

DRAFT Stage 3 - Not for Construction 09/23/2024

HORIZONTAL SCALE IN FEET
0 25 50 100

CALCULATED MJH
CHECKED KAE

TRAFFIC CONTROL PLAN
MAINLINE - STA 135+00 TO STA 164+00

LAW-7-2.17

730
1247

C:\EEC\Projects\LAW-7(Stantec)\CADD\Phase_2B\Traffic\Sheets\730-75923_TP009.dgn Sheet 5/13/2024 4:33:08 PM mhunt

NOTES:
1) SEE SHEET 722 FOR PLAN LEGEND.

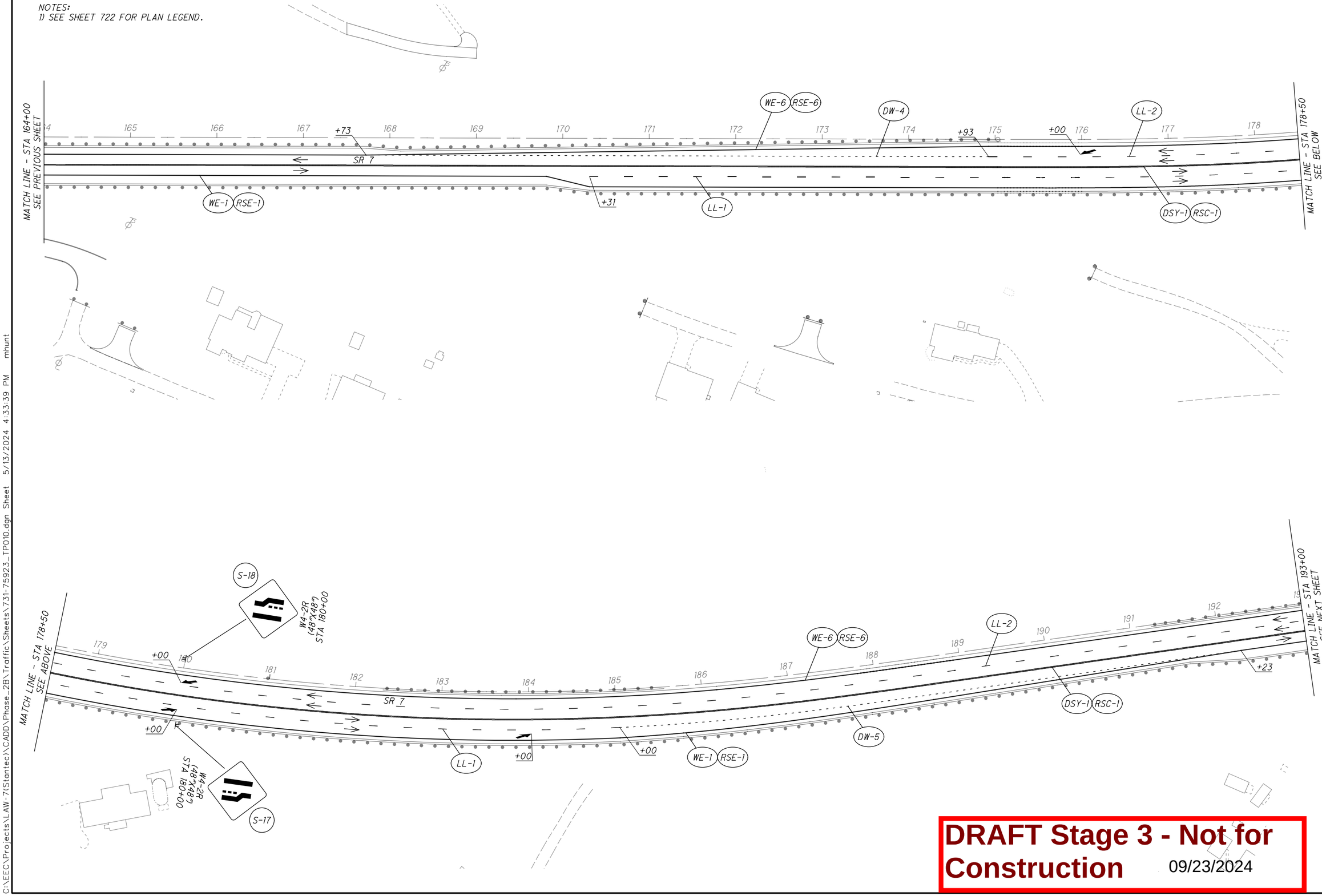

DRAFT Stage 3 - Not for Construction 09/23/2024

HORIZONTAL SCALE IN FEET
0 25 50 100

CALCULATED MJH
CHECKED KAE

TRAFFIC CONTROL PLAN
MAINLINE - STA 164+00 TO STA 193+00

LAW-7-2.17

731
1247

C:\EECV\Projects\LAW-7(Stantec)\CADD\Phase_2B\Traffic\Sheets\731-75923_TP010.dgn Sheet 5/13/2024 4:33:39 PM mhunt

NOTES:
1) SEE SHEET 722 FOR PLAN LEGEND.

2) USE EPOXY PAVEMENT MARKINGS ON CONCRETE (BRIDGE DECK) SURFACES). PER NOTE 7 ON TC-65.11, DO NOT INSTALL RPM'S ON BRIDGES LESS THAN 400' IN LENGTH.

3) TWO-WAY (YELLOW-YELLOW) RPMs SHALL BE INSTALLED AT 80' ON BRIDGE LAW-7-0376.

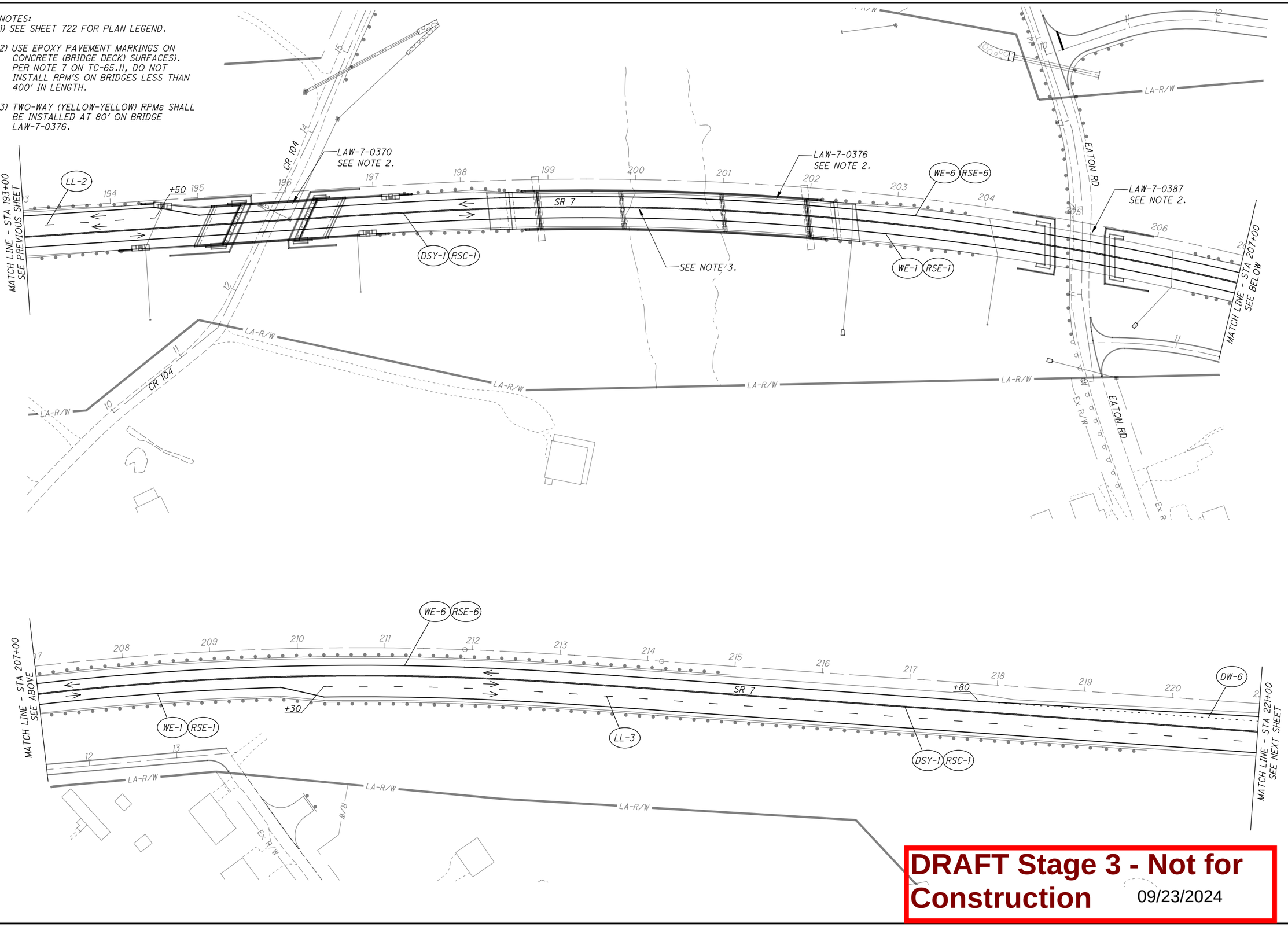

DRAFT Stage 3 - Not for Construction 09/23/2024

HORIZONTAL SCALE IN FEET
0 25 50 100

CALCULATED MJH
CHECKED KAE

TRAFFIC CONTROL PLAN
MAINLINE - STA 193+00 TO STA 221+00

LAW-7-2.17

732
1247

C:\EEC\Projects\LAW-7(Stantec)\CADD\Phase_2B\Traffic\Sheets\732-75923_TP011.dgn Sheet 5/13/2024 4:34:07 PM mhunt

NOTES:
1) SEE SHEET 722 FOR PLAN LEGEND.

2) SIGN ASSEMBLY SQUARE FOOTAGE IS TOO LARGE FOR A SINGLE POST INSTALLATION. FIELD DRILL SIGN ASSEMBLY TO PROVIDE A TWO-POST ASSEMBLY. SPACE YIELD POSTS AT 18", ON CENTER.

3) PROVIDE 48" SIZE SIGN, FOR INCREASED VISIBILITY.

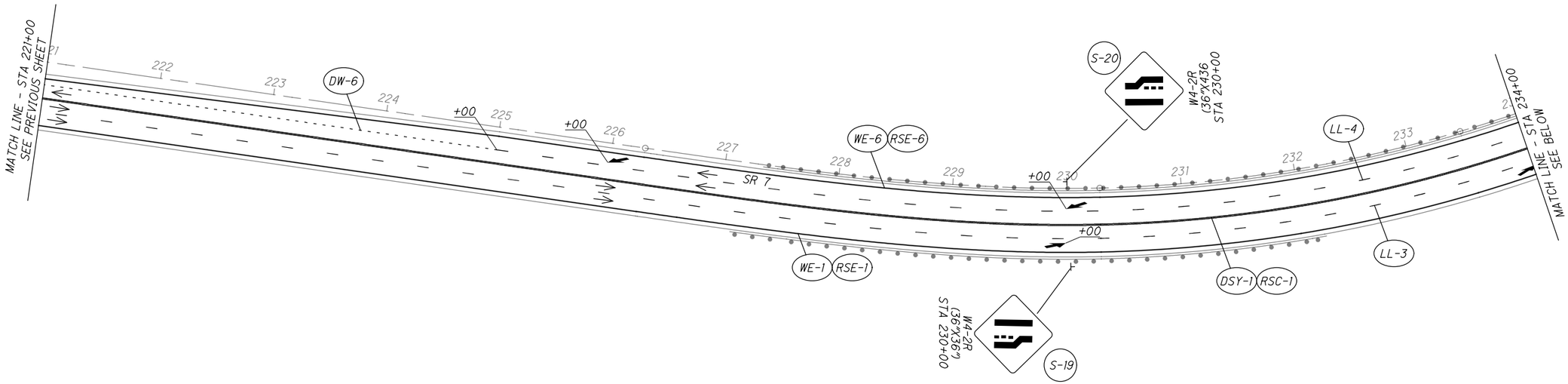

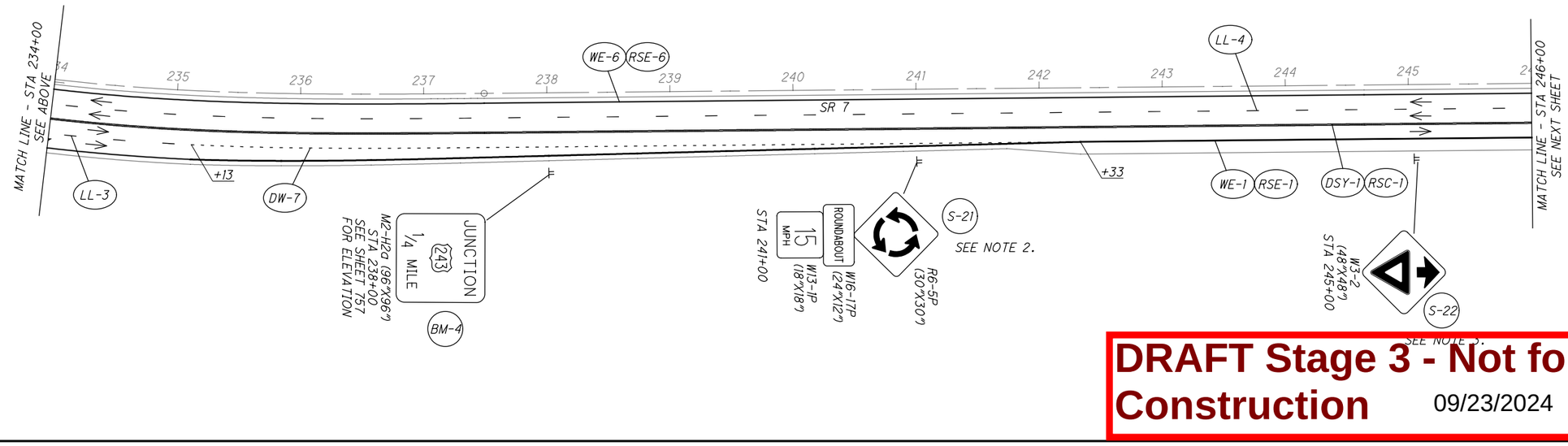

DRAFT Stage 3 - Not for Construction 09/23/2024

HORIZONTAL SCALE IN FEET
0 25 50 100

CALCULATED MJH
CHECKED KAE

TRAFFIC CONTROL PLAN
MAINLINE - STA 221+00 TO STA 246+00

LAW-7-2.17

733
1247

C:\EEC\Projects\LAW-7(Stantec)\CADD\Phase_2B\Traffic\Sheets\733-75923_TP012.dgn Sheet 5/13/2024 4:35:05 PM mhunt

NOTES:
1) SEE SHEET 722 FOR PLAN LEGEND.

2) PROVIDE 48" SIZE SIGN, FOR INCREASED VISIBILITY.

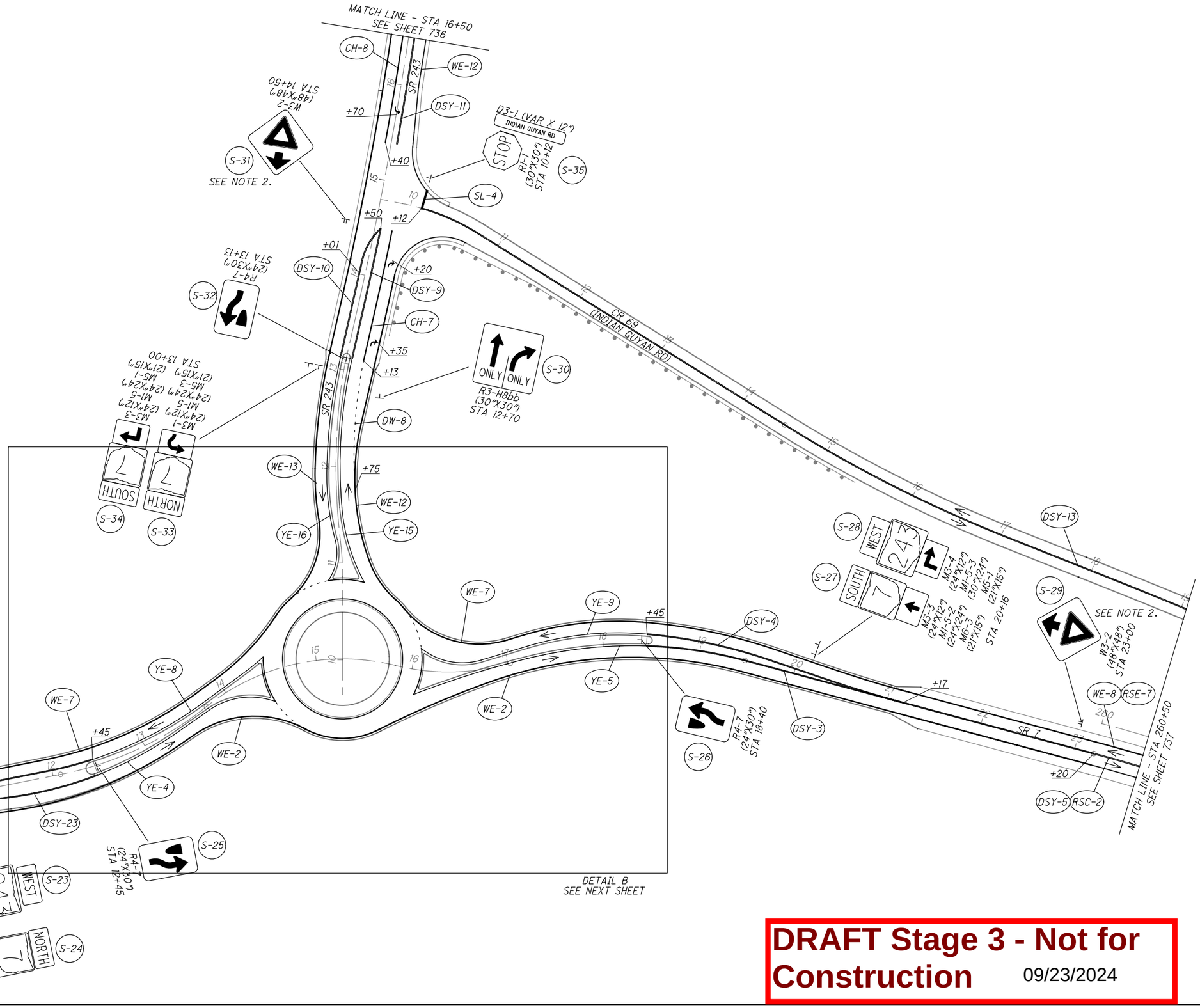

DRAFT Stage 3 - Not for Construction 09/23/2024

HORIZONTAL SCALE IN FEET
0 25 50 100

CALCULATED MJH
CHECKED KAE

TRAFFIC CONTROL PLAN
MAINLINE - STA 246+00 TO STA 260+50

LAW-7-2.17

734
1247

C:\EEC\Projects\LAW-7(Stantec)\CADD\Phase_2B\Traffic\Sheets\734-75923_TP013.dgn Sheet 5/13/2024 4:36:09 PM mhunt

NOTES:
1) SEE SHEET 722 FOR PLAN LEGEND.

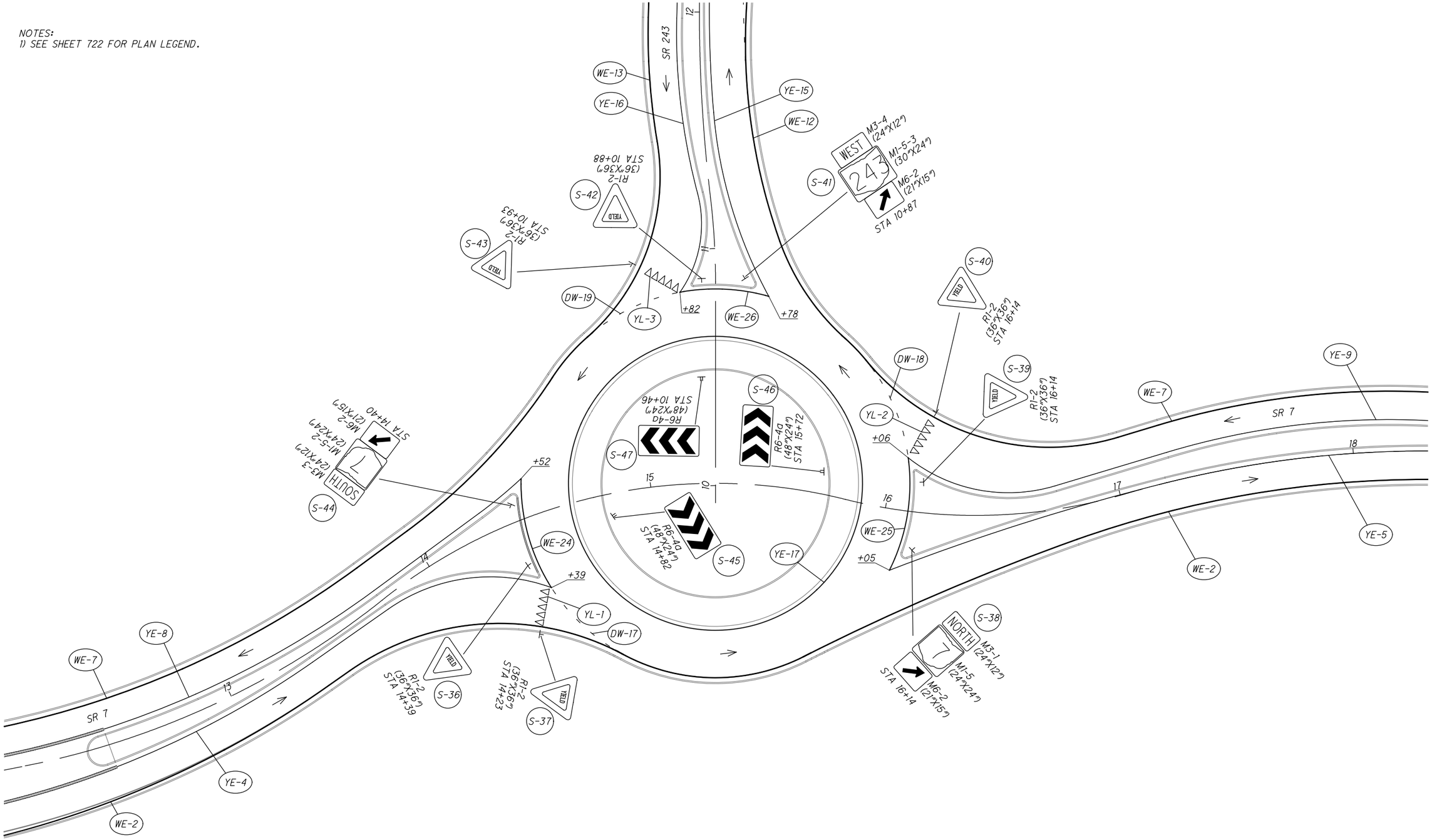

DRAFT Stage 3 - Not for Construction 09/23/2024

TRAFFIC CONTROL PLAN
DETAIL B - STA 12+00 TO STA 18+50

HORIZONTAL SCALE IN FEET
0 10 20 40

CALCULATED MJH
CHECKED KAE

LAW-7-2.17

735
1247

C:\EEC\Projects\LAW-7(Stantec)\CADD\Phase_2B\Traffic\Sheets\735-75923_TP014.dgn Sheet 5/13/2024 4:36:33 PM mhunt

NOTES:
1) SEE SHEET 722 FOR PLAN LEGEND.

2) SIGN ASSEMBLY SQUARE FOOTAGE IS TOO LARGE FOR A SINGLE POST INSTALLATION. FIELD DRILL SIGN ASSEMBLY TO PROVIDE A TWO-POST ASSEMBLY. SPACE YIELD POSTS AT 18", ON CENTER.

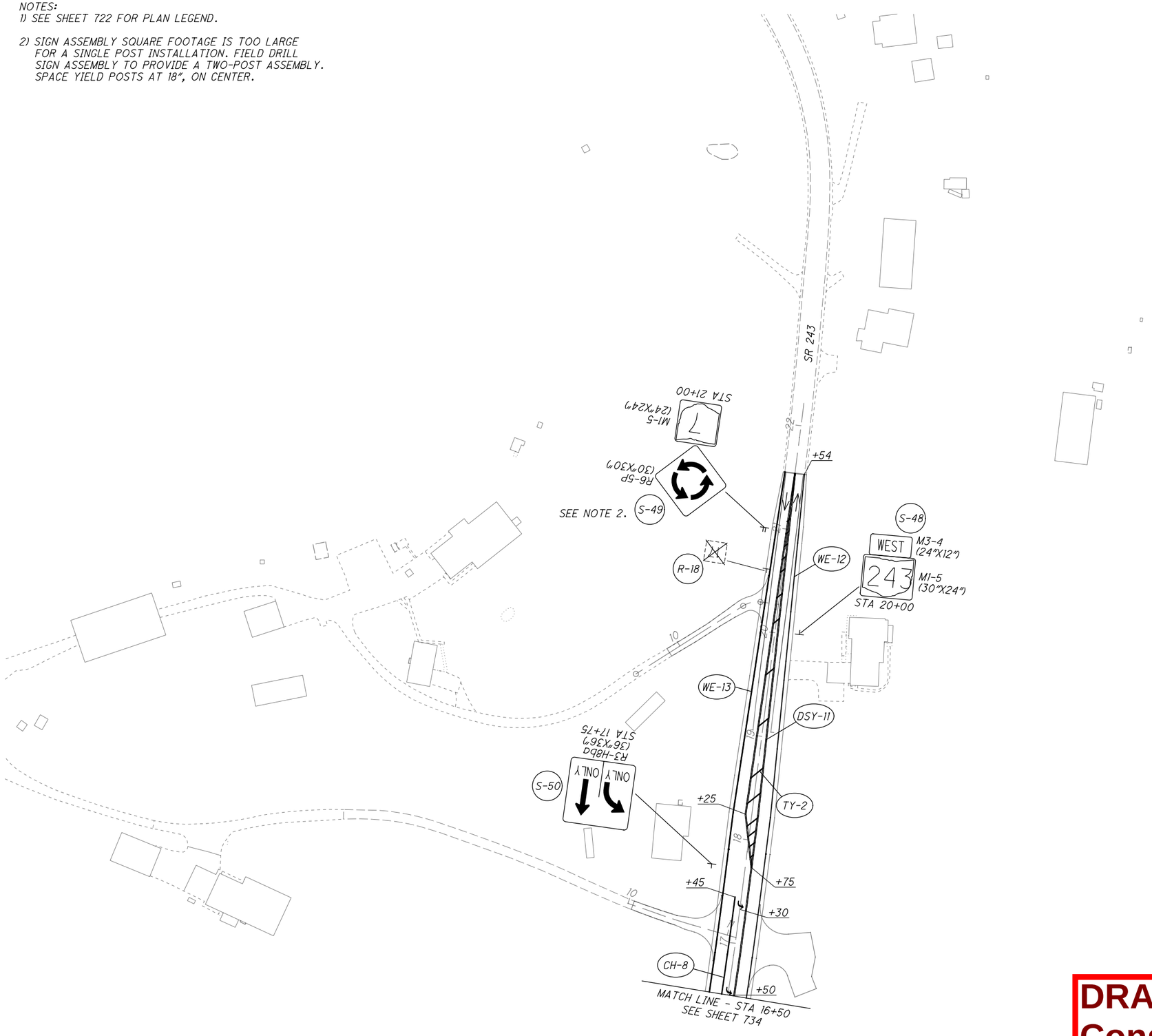

DRAFT Stage 3 - Not for Construction 09/23/2024

HORIZONTAL SCALE IN FEET
0 25 50 100

CALCULATED MJH
CHECKED KAE

TRAFFIC CONTROL PLAN
SR 243 - STA 16+50 TO STA 22+00

LAW-7-2.17

736
1247

C:\EEC\Projects\LAW-7(Stantec)\CADD\Phase_2B\Traffic\Sheets\736-75923_TP015.dgn Sheet 5/13/2024 4:37:11 PM mhunt

NOTES:
1) SEE SHEET 722 FOR PLAN LEGEND.

2) SIGN ASSEMBLY SQUARE FOOTAGE IS TOO LARGE FOR A SINGLE POST INSTALLATION. FIELD DRILL SIGN ASSEMBLY TO PROVIDE A TWO-POST ASSEMBLY. SPACE YIELD POSTS AT 18", ON CENTER.

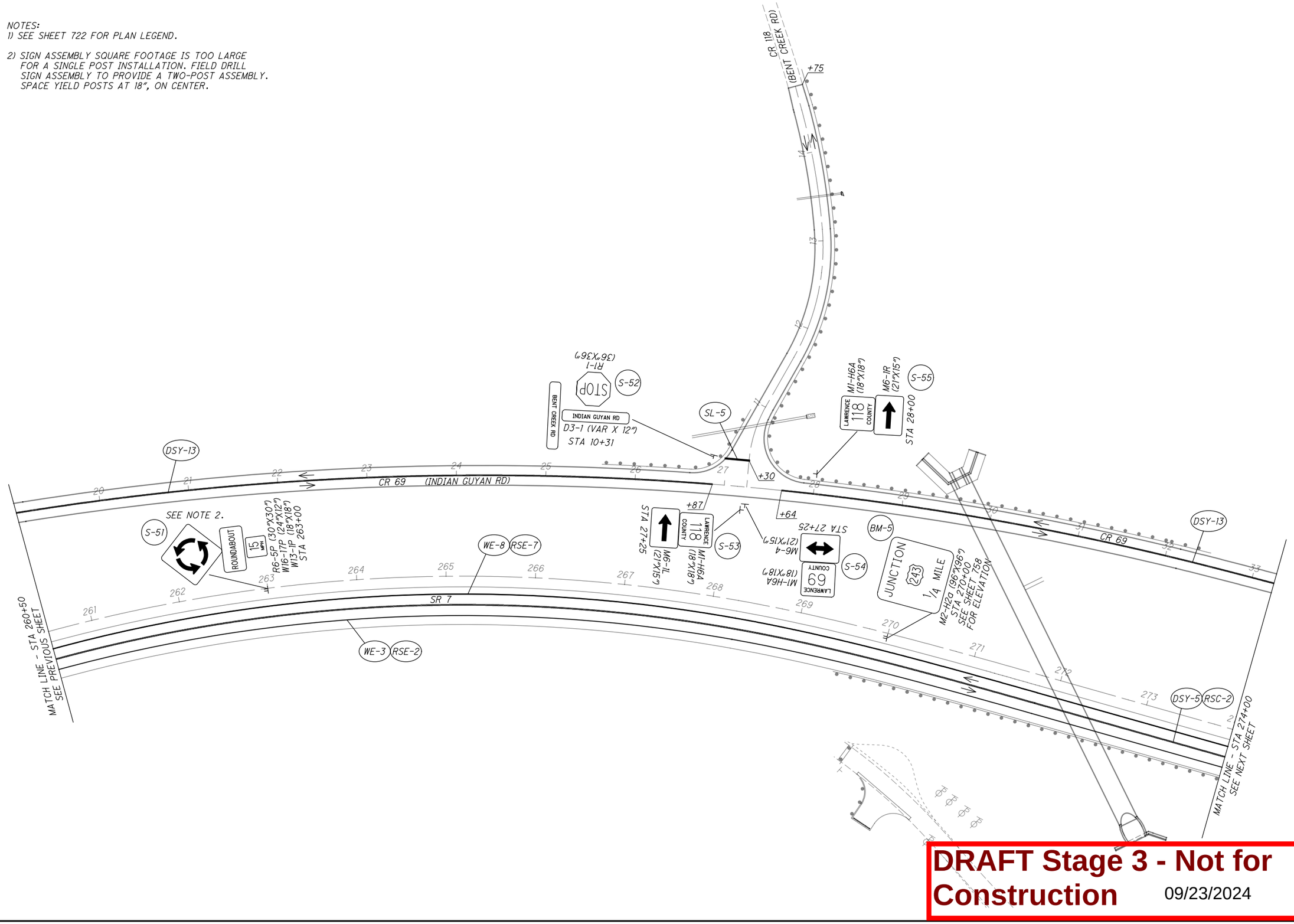

DRAFT Stage 3 - Not for Construction 09/23/2024

HORIZONTAL SCALE IN FEET
0 25 50 100

CALCULATED MJH
CHECKED KAE

TRAFFIC CONTROL PLAN
MAINLINE - STA 260+50 TO STA 274+00

LAW-7-2.17

737
1247

C:\EEC\Projects\LAW-7(Stantec)\CADD\Phase_2B\Traffic\Sheets\737-75923_TP016.dgn Sheet 5/13/2024 4:50:30 PM mhunt

NOTES:
1) SEE SHEET 722 FOR PLAN LEGEND.

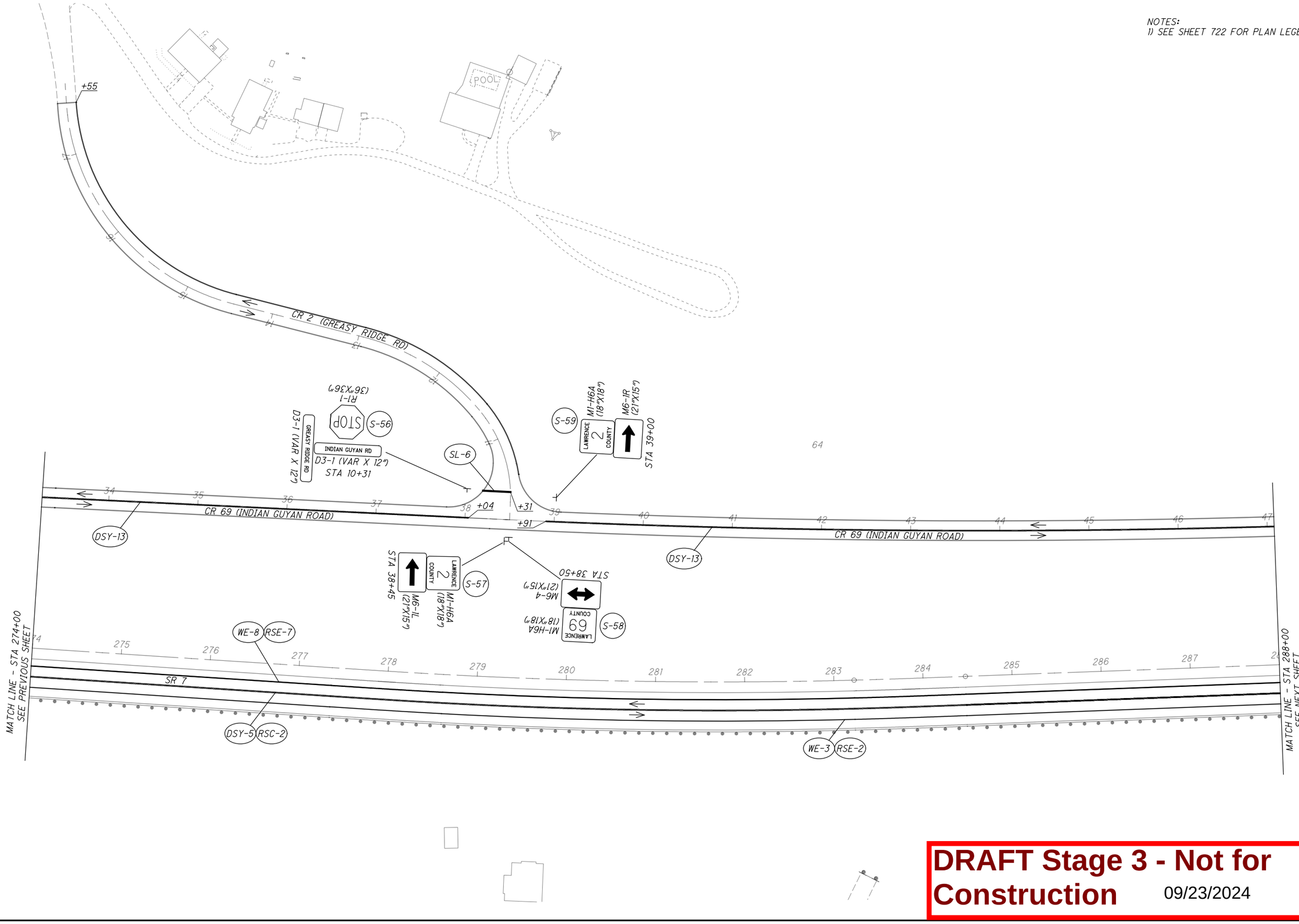

64

DRAFT Stage 3 - Not for Construction 09/23/2024

HORIZONTAL SCALE IN FEET
0 25 50 100

CALCULATED MJH
CHECKED KAE

TRAFFIC CONTROL PLAN
MAINLINE - STA 274+00 TO STA 288+00

LAW-7-2.17

738
1247

C:\EEC\Projects\LAW-7(Stantec)\CADD\Phase 2B\Traffic\Sheets\738-75923_TP017.dgn Sheet 5/13/2024 4:38:41 PM mhunt

NOTES:
1) SEE SHEET 722 FOR PLAN LEGEND.

2) USE EPOXY PAVEMENT MARKINGS ON CONCRETE (BRIDGE DECK) SURFACES). PER NOTE 7 ON TC-65.11, DO NOT INSTALL RPM'S ON BRIDGES LESS THAN 400' IN LENGTH.

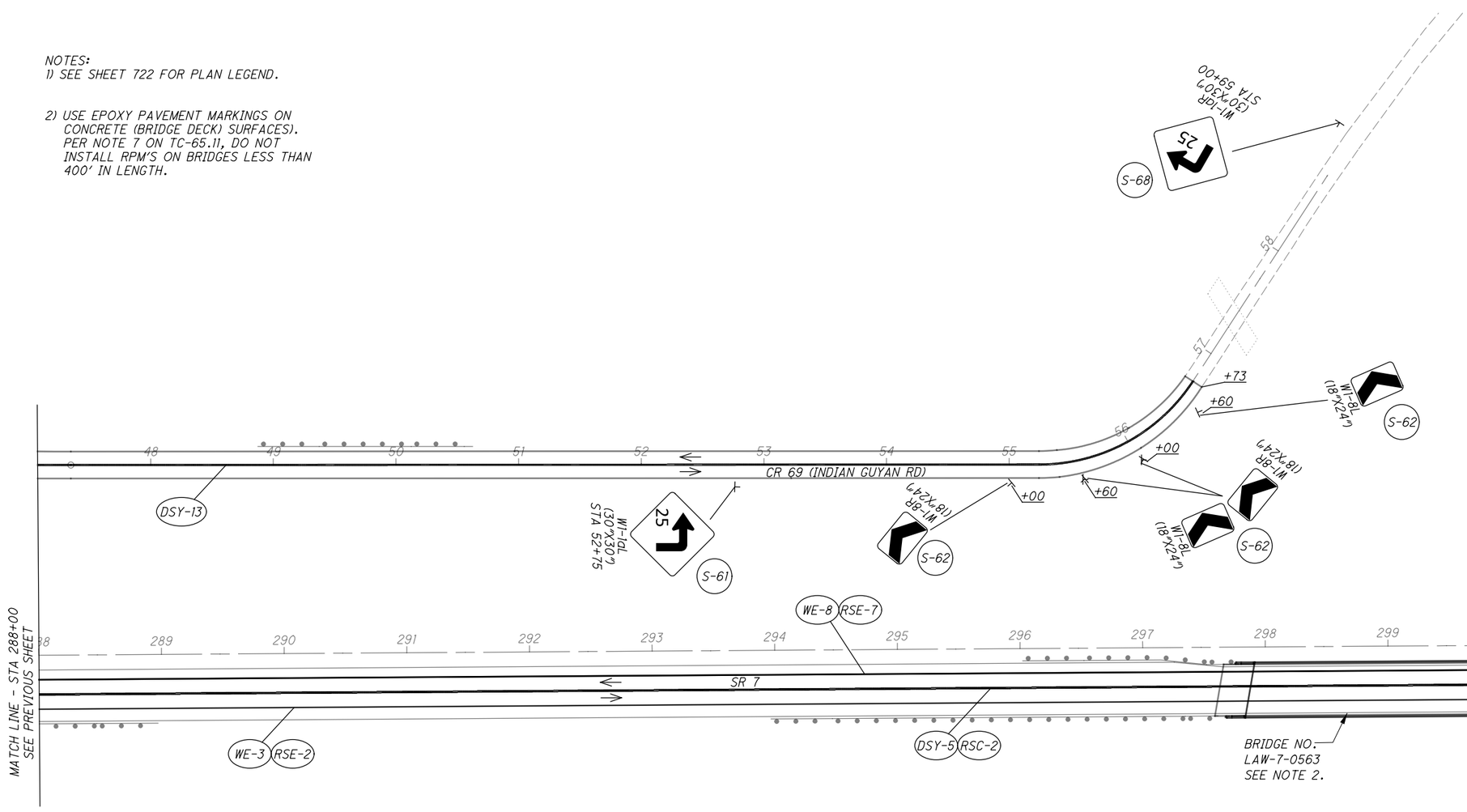

DRAFT Stage 3 - Not for Construction 09/23/2024

HORIZONTAL SCALE IN FEET
0 25 50 100

CALCULATED MJH
CHECKED KAE

TRAFFIC CONTROL PLAN
MAINLINE - STA 288+00 TO STA 302+00

LAW-7-2.17

739
1247

C:\EEC\Projects\LAW-7(Stantec)\CADD\Phase_2B\Traffic\Sheets\739-75923_TP018.dgn Sheet 5/13/2024 4:39:04 PM mhunt

C:\EEC\Projects\LAW-7(Stantec)\CADD\Phase_2B\Traffic\Sheets\740-75923_TP019.dgn Sheet 5/13/2024 4:40:31 PM mhunt

NOTES:
1) SEE SHEET 722 FOR PLAN LEGEND.

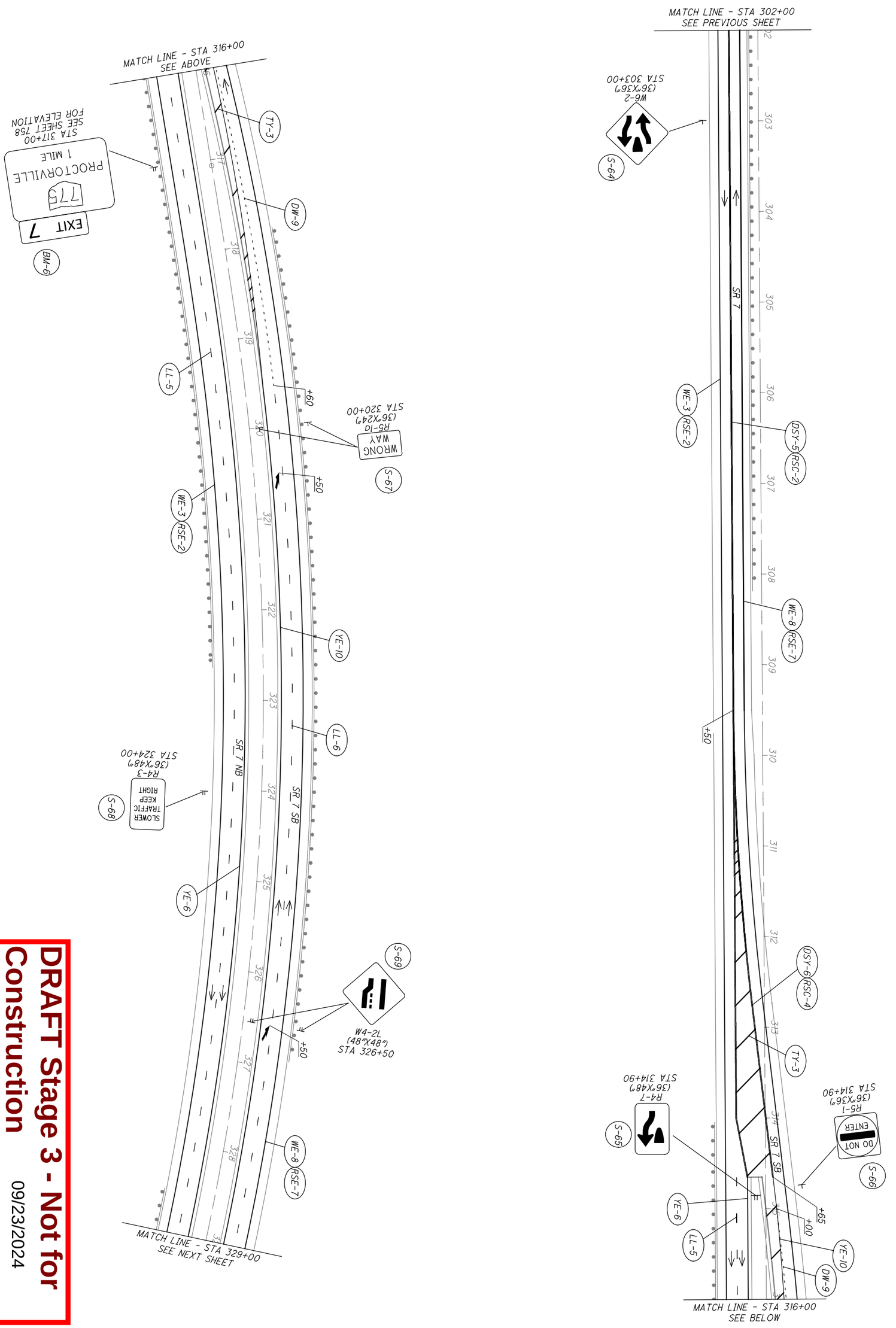

DRAFT Stage 3 - Not for Construction

09/23/2024

740 / 1247	LAW-7-2.17	TRAFFIC CONTROL PLAN MAINLINE - STA 302+00 TO STA 329+00	CALCULATED MJH CHECKED KAE	0 50 25 100 HORIZONTAL SCALE IN FEET

NOTES:
1) SEE SHEET 722 FOR PLAN LEGEND.

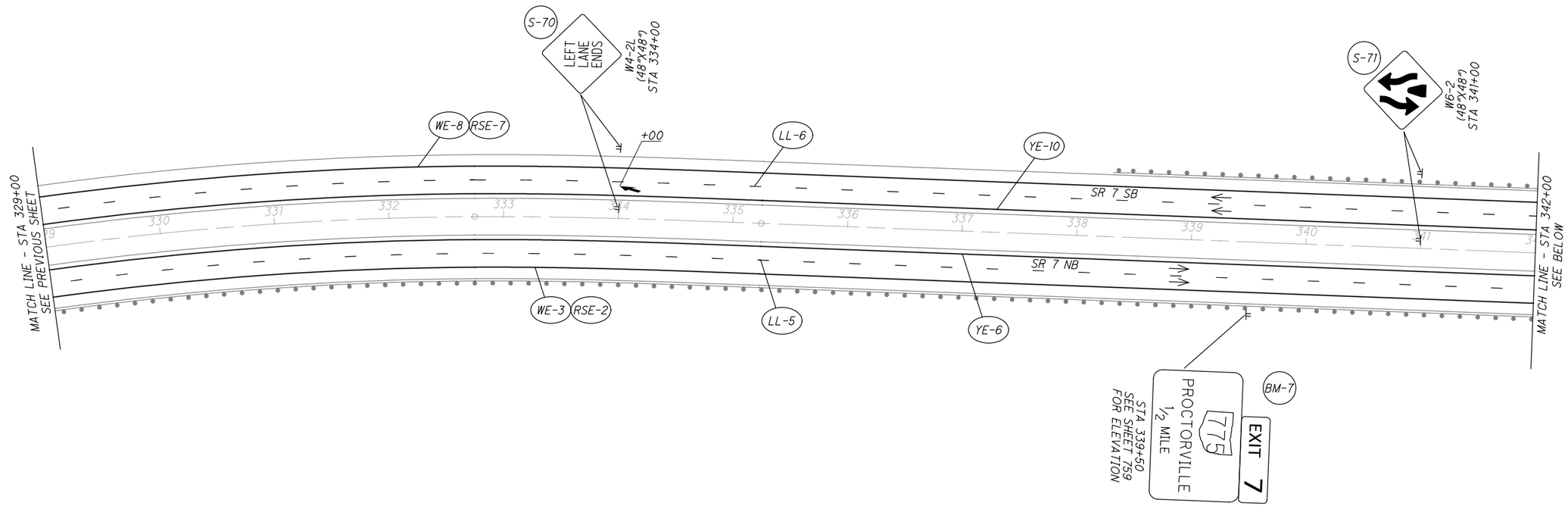

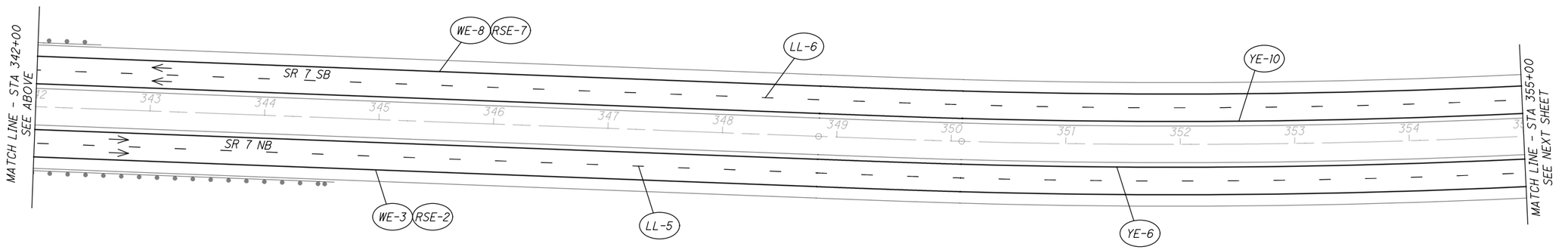

DRAFT Stage 3 - Not for Construction 09/23/2024

HORIZONTAL SCALE IN FEET
0 25 50 100

CALCULATED MJH
CHECKED KAE

TRAFFIC CONTROL PLAN
MAINLINE - STA 329+00 TO STA 355+00

LAW-7-2.17

741
1247

C:\EEC\Projects\LAW-7(Stantec)\CADD\Phase_2B\Traffic\Sheets\741-75923_TP020.dgn Sheet 5/13/2024 4:41:42 PM mhunt

NOTES:
1) SEE SHEET 722 FOR PLAN LEGEND.

2) USE EPOXY PAVEMENT MARKINGS ON CONCRETE (BRIDGE DECK) SURFACES). PER NOTE 7 ON TC-65.11, DO NOT INSTALL RPM'S ON BRIDGES LESS THAN 400' IN LENGTH.

3) SEE SHEET 750 FOR SIGNING ON INTERCHANGE RAMPS.

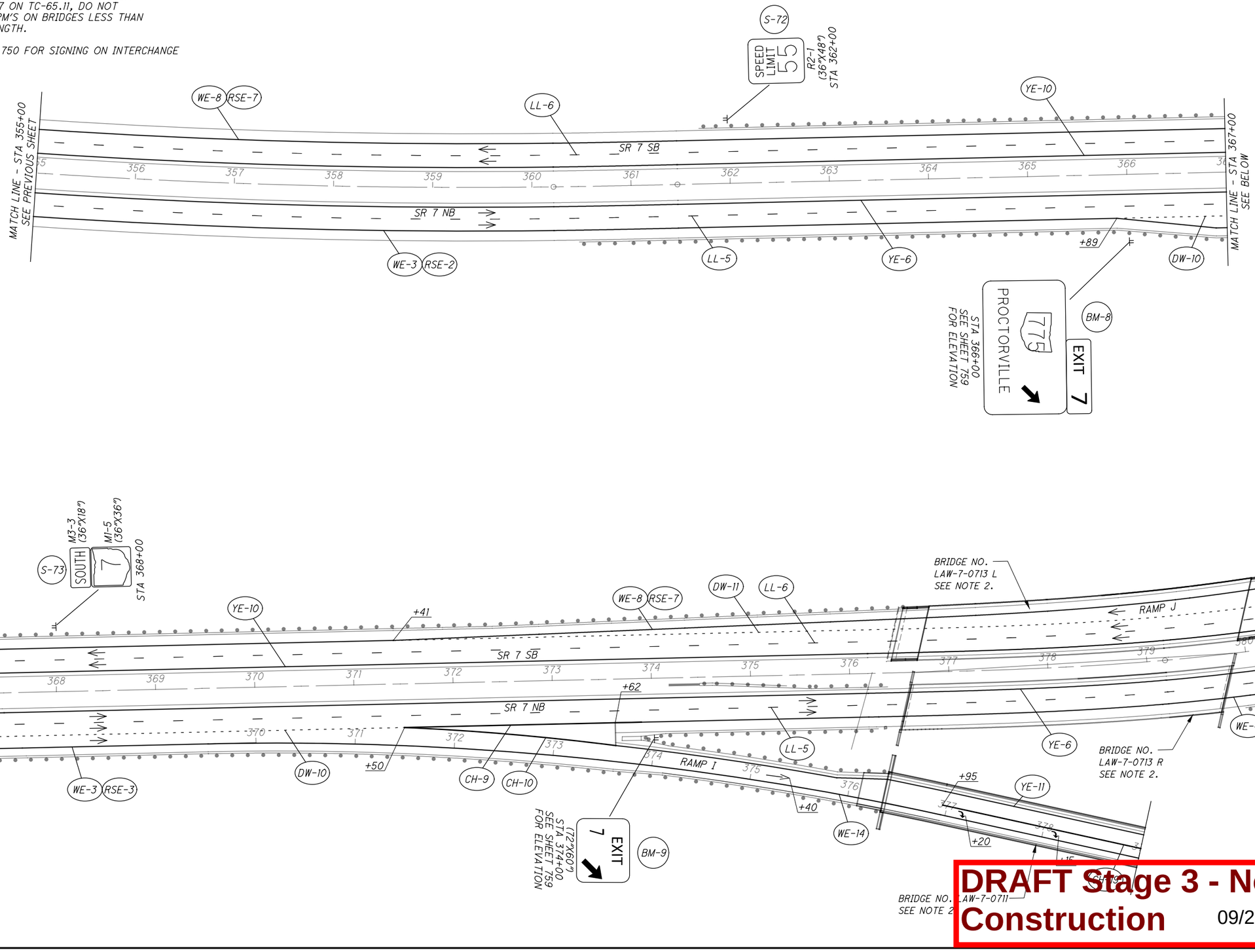

DRAFT Stage 3 - Not for Construction 09/23/2024

HORIZONTAL SCALE IN FEET
0 25 50 100

CALCULATED MJH
CHECKED KAE

TRAFFIC CONTROL PLAN
MAINLINE - STA 355+00 TO STA 380+50

LAW-7-2.17

742
1247

C:\EEC\Projects\LAW-7(Stantec)\CADD\Phase_2B\Traffic\Sheets\742-75923_TP021.dgn Sheet 5/13/2024 4:43:37 PM mhunt

NOTES:
1) SEE SHEET 722 FOR PLAN LEGEND.

SR 775

CR 403

POOL

SOUTH

R-19

COUNTY RD 403

CLIFF VIEW SHORES

ONLY

REMOVE CONFLICTING MARKINGS = 395'

+40

+43

43 44 45 46 47 48 49 50 51

WE-19

DW-12

DSY-15

PMR-3

WE-16

DSY-14

LL-7

TY-4

MATCH LINE - STA 51+50
SEE NEXT SHEET

ONLY

COUNTY RD 403

LAWRENCE COUNTY 403

CR 403

ONLY

Ohio University

DAN LESTER MEMORIAL BRIDGE

DAN LESTER MEMORIAL BRIDGE

DRAFT Stage 3 - Not for Construction 09/23/2024

HORIZONTAL SCALE IN FEET
0 25 50 100

CALCULATED MJH
CHECKED KAE

TRAFFIC CONTROL PLAN
SR 775 - STA 42+00 TO STA 51+50

LAW-7-2.17

743
1247

C:\EEC\Projects\LAW-7(Stantec)\CADD\Phase_2B\Traffic\Sheets\743-75927_TP022.dgn Sheet 5/13/2024 4:43:05 PM mhunt

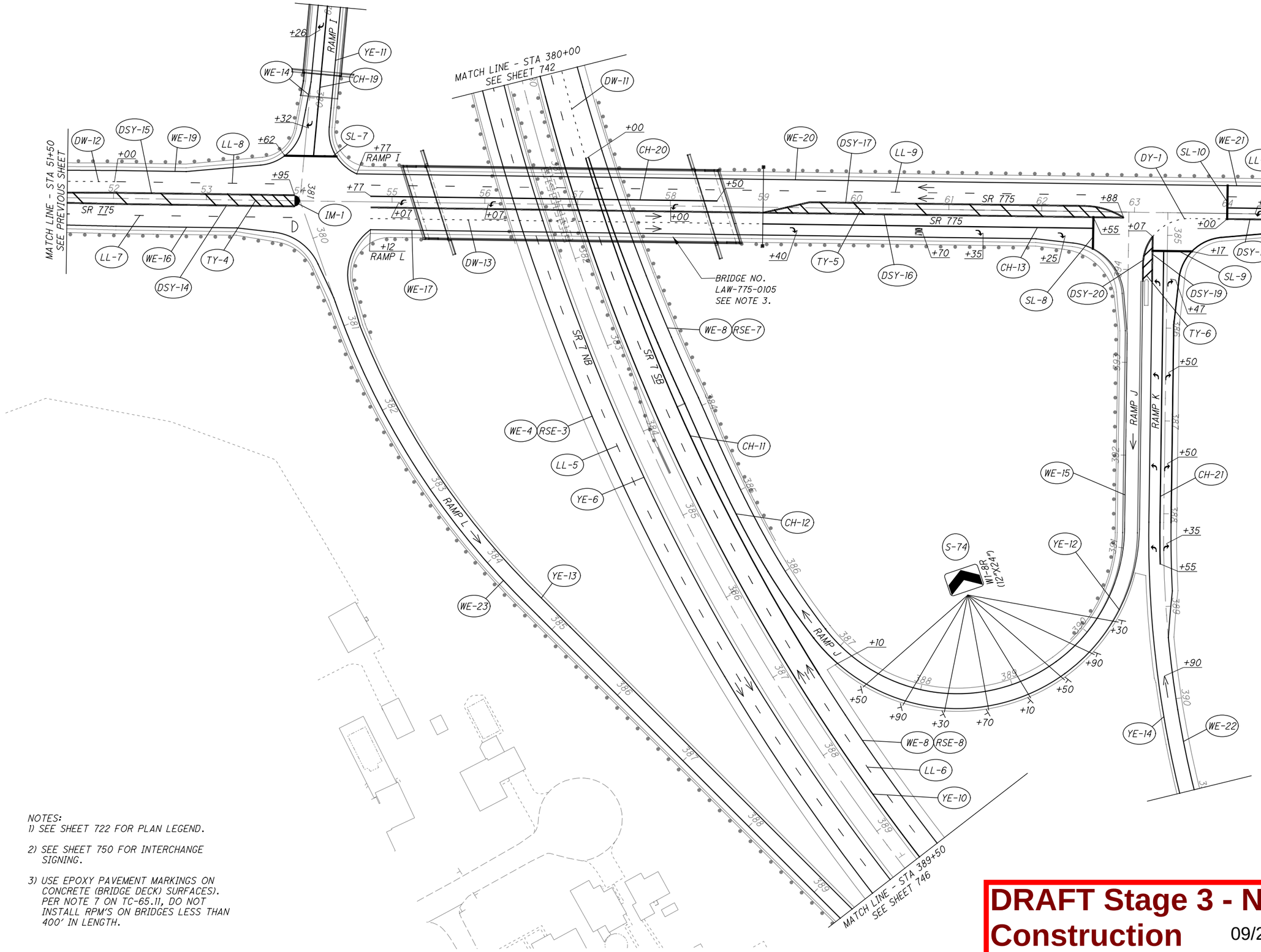

NOTES:
1) SEE SHEET 722 FOR PLAN LEGEND.

2) SEE SHEET 750 FOR INTERCHANGE SIGNING.

3) USE EPOXY PAVEMENT MARKINGS ON CONCRETE (BRIDGE DECK) SURFACES). PER NOTE 7 ON TC-65.11, DO NOT INSTALL RPM'S ON BRIDGES LESS THAN 400' IN LENGTH.

DRAFT Stage 3 - Not for Construction 09/23/2024

HORIZONTAL SCALE IN FEET
0 25 50 100

CALCULATED MJH
CHECKED KAE

TRAFFIC CONTROL PLAN
MAINLINE - STA 380+50 TO STA 389+50

LAW-7-2.17

744
1247

C:\EEC\Projects\LAW-7(Stantec)\CADD\Phase_2B\Traffic\Sheets\744-75923_TP023.dgn Sheet 5/13/2024 4:44:27 PM mhunt

C:\EEC\Projects\LAW-7(Stantec)\CADD\Phase_2B\Traffic\Sheets\745-75923_TP024.dgn Sheet 5/13/2024 4:45:04 PM mhunt

NOTES:
1) SEE SHEET 722 FOR PLAN LEGEND.

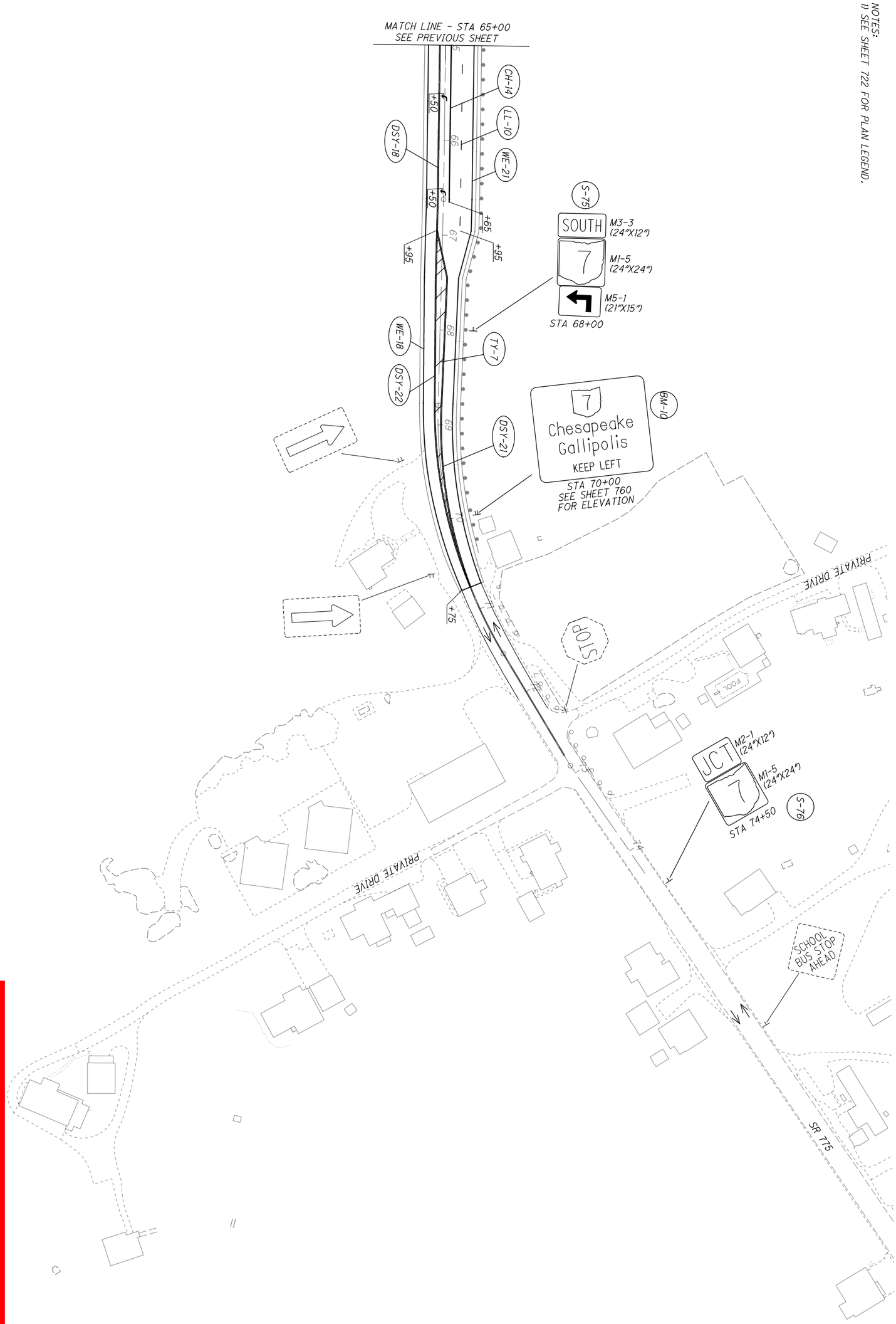

DRAFT Stage 3 - Not for Construction
09/23/2024

745 1247	LAW-7-2.17	TRAFFIC CONTROL PLAN MAINLINE - STA 65+00 TO END	CALCULATED MJH CHECKED KAE	0 50 25 100 HORIZONTAL SCALE IN FEET

NOTES:
1) SEE SHEET 722 FOR PLAN LEGEND.

2) SEE SHEET 750 FOR SIGNING ON INTERCHANGE RAMPS.

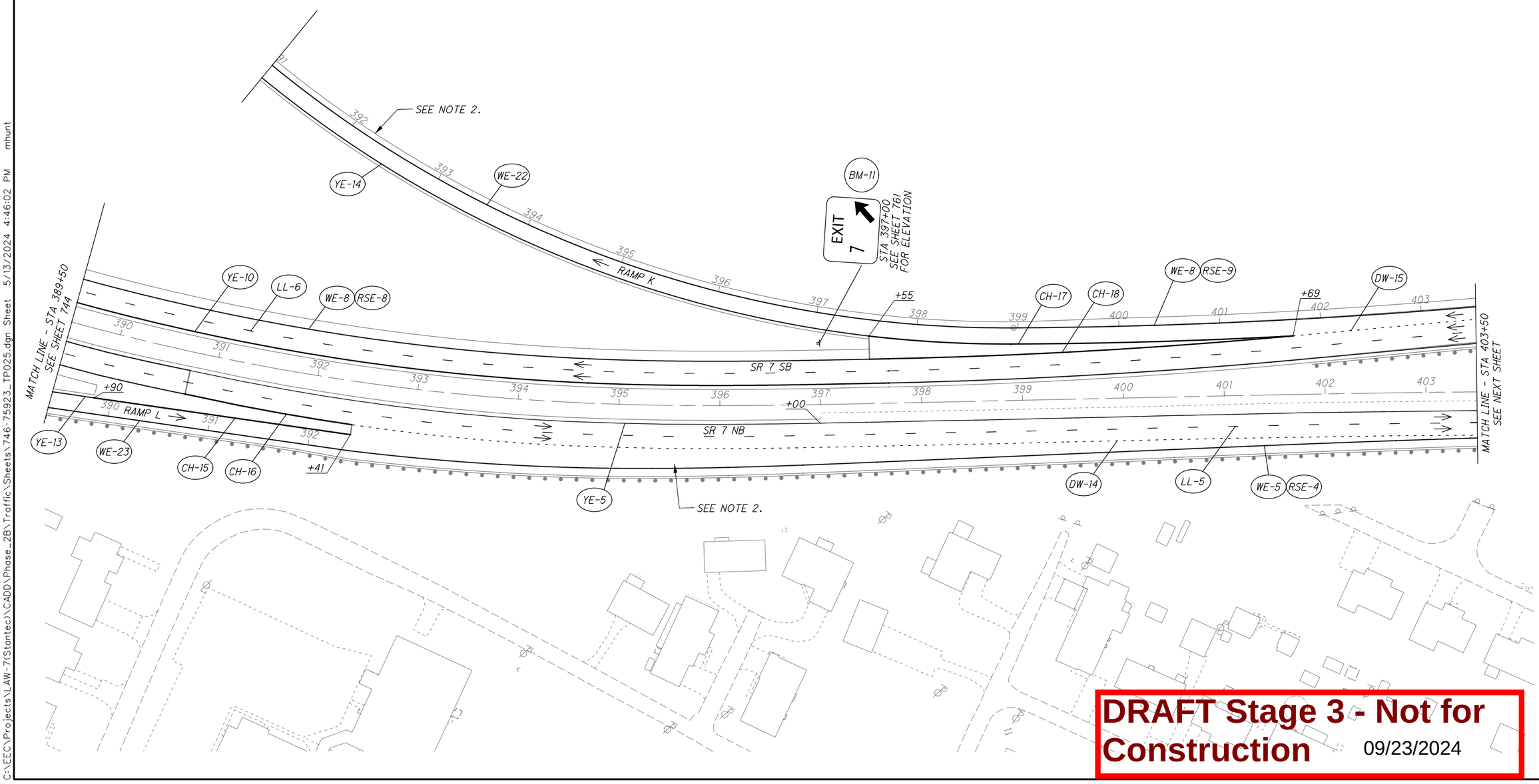

DRAFT Stage 3 - Not for Construction 09/23/2024

HORIZONTAL SCALE IN FEET
0 25 50 100

CALCULATED MJH
CHECKED KAE

TRAFFIC CONTROL PLAN
MAINLINE - STA 389+50 TO STA 403+50

LAW-7-2.17

746
1247

C:\EEC\Projects\LAW-7(Stantec)\CADD\Phase_2B\Traffic\Sheets\746-75923_TP025.dgn Sheet 5/13/2024 4:46:02 PM mhunt

C:\EEC\Projects\LAW-7(Stantec)\CADD\Phase_2B\Traffic\Sheets\747-75923_TP026.dgn Sheet 5/13/2024 4:47:03 PM mhunt

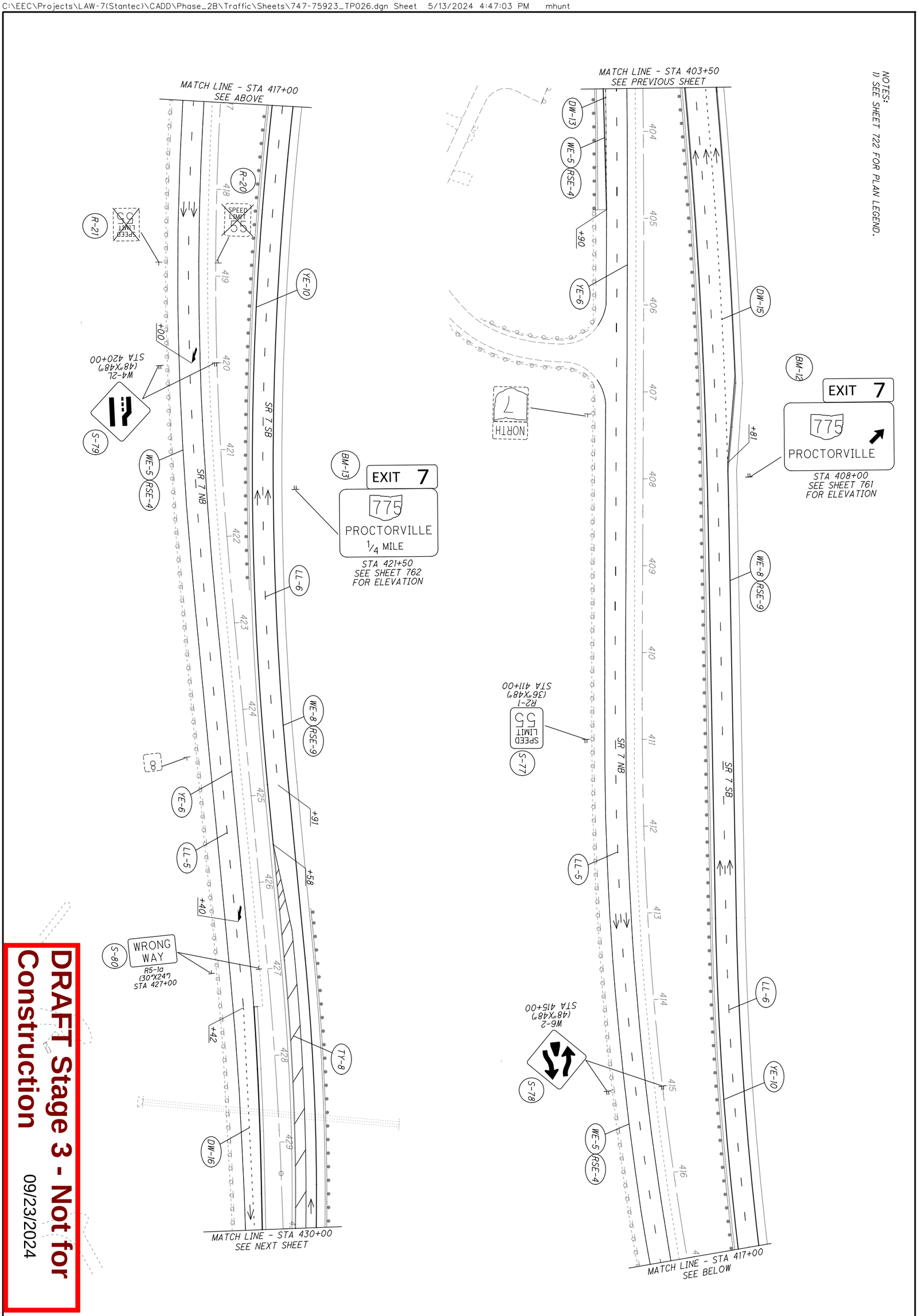

DRAFT Stage 3 - Not for Construction

09/23/2024

747 1247	LAW-7-2.17	TRAFFIC CONTROL PLAN MAINLINE - STA 403+50 TO STA 430+00	CALCULATED MJH CHECKED KAE	0 50 25 100 HORIZONTAL SCALE IN FEET

NOTES:
1) SEE SHEET 722 FOR PLAN LEGEND.

DRAFT Stage 3 - Not for Construction 09/23/2024

HORIZONTAL SCALE IN FEET
0 25 50 100

CALCULATED MJH
CHECKED KAE

TRAFFIC CONTROL PLAN
MAINLINE - STA 430+00 TO END PROJECT

LAW-7-2.17

748
1247

C:\EEC\Projects\LAW-7(Stantec)\CADD\Phase_2B\Traffic\Sheets\748-75923_TP027.dgn Sheet 5/13/2024 4:47:32 PM mhunt

NOTES:
1) SEE SHEET 722 FOR PLAN LEGEND.

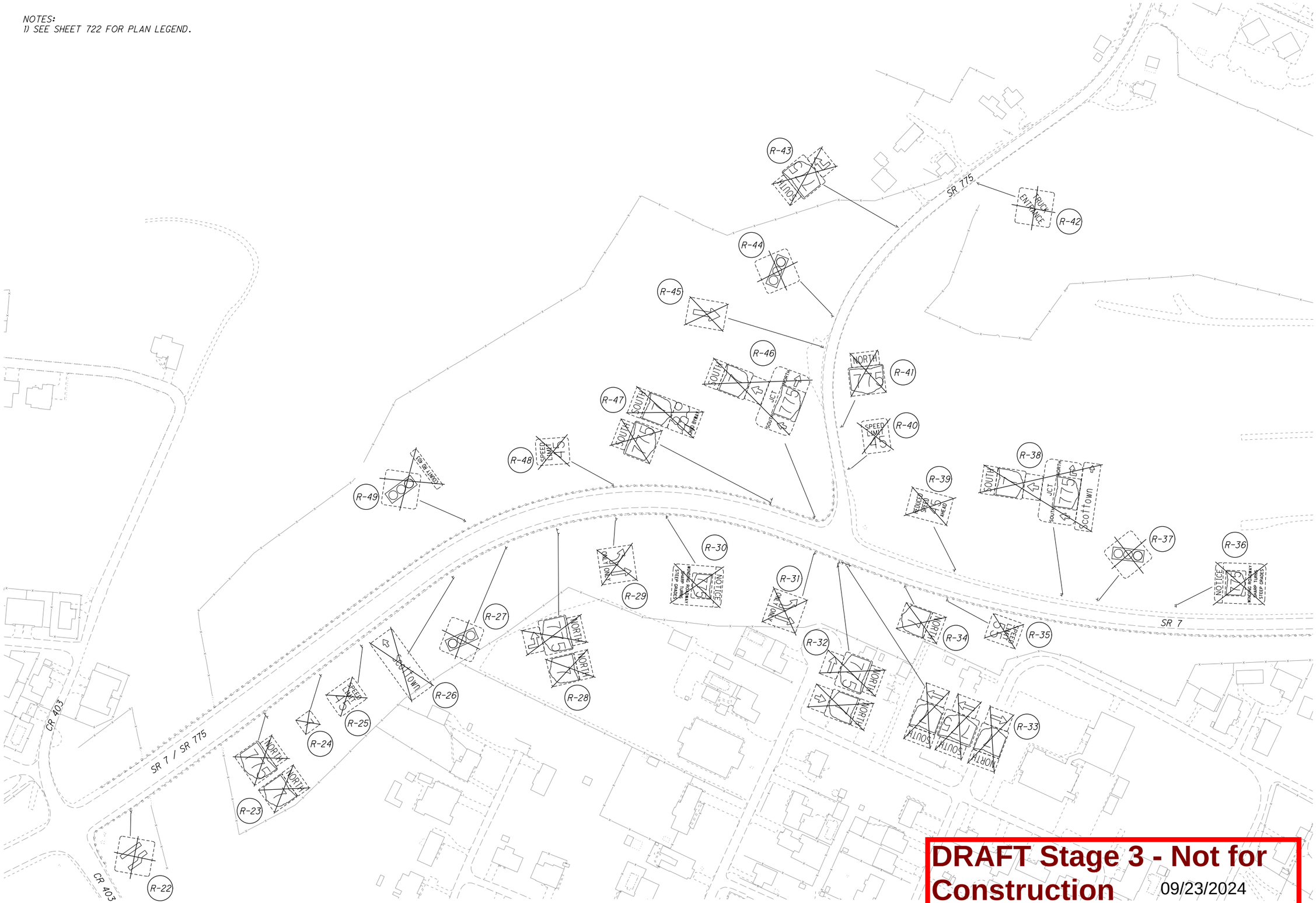

DRAFT Stage 3 - Not for Construction 09/23/2024

HORIZONTAL SCALE IN FEET
0 25 50 100

CALCULATED MJH
CHECKED KAE

TRAFFIC CONTROL PLAN
SIGNING REMOVAL - SR 775 INTERCHANGE

LAW-7-2.17

749
1247

C:\EEC\Projects\LAW-7(Stantec)\CADD\Phase_2B\Traffic Sheets\749-75923_TP028.dgn Sheet 5/13/2024 4:47:54 PM mhunt

NOTES:
1) SEE SHEET 722 FOR PLAN LEGEND.

2) SEE TRAFFIC SIGNAL PLANS FOR SIGN ATTACHMENT DETAILS.

3) RELOCATE EXISTING SIGN ON NEW POST.

4) MOUNT SIGNS ON BRIDGE MOUNTED SIGN SUPPORT.

5) SEE SHEET 744 FOR PLACEMENT OF CHEVRON SIGNS.

TYPE TC-17.11
SEE SHEET 755
FOR ELEVATION
VIEW

OH-2 · M2-1H10 (60"X30") · SOUTH 775 ONLY · R3-5D (36"X30") · NORTH 7 ONLY · M2-1H10 (60"X30") · SOUTH 7 ONLY · M2-1H10 (60"X30")

OH-3 · 7 NORTH Gallipolis · SEE NOTE 2. · 7 NORTH Gallipolis

OH-4 · 7 SOUTH Chesapeake · SEE NOTE 2. · 7 SOUTH Chesapeake

BM-10 · 7 Chesapeake Gallipolis KEEP LEFT · STA 70+00

BM-14 · M2-1H4 (9" X 3") · D7-H1 (9" X 2") · NORTH 775 SOUTH · Proctorville · STA 375+00 SEE SHEET 762 FOR ELEVATION

BM-15 · M2-1H4-108 · D7-H1 · SOUTH 775 NORTH · Proctorville · STA 393+00 SEE SHEET 763 FOR ELEVATION

BM-16 · 7 Gallipolis Chesapeake KEEP RIGHT · STA 48+50 SEE SHEET 763 FOR ELEVATION

S-84 · 7 JCT · M2-1 (21"X15") · M1-5 (24"X24") · STA 42+50

S-85 · THROUGH TRAFFIC KEEP LEFT · R4-13A (24"X30") · STA 46+00

S-86 · SPEED LIMIT 55 · R2-1 (30"X36") · STA 50+50

S-87 · RIGHT LANE MUST TURN RIGHT · R3-7 (36"X36") · STA 55+20

S-88 · NOTICE 775 · WINDING ROADWAY STEEP GRADES · STA 65+00 SEE NOTE 3.

S-89 · NORTH 775 · M2-1 (21"X15") · M1-5 (30"X24") · STA 67+00

S-90 · SPEED LIMIT 45 · R2-1 (30"X36") · STA 69+00

S-91 · NORTH 7 · M3-1 (24"X12") · M6-3 (27"X15") · M1-5 (24"X24") · STA 68+00

S-92 · SOUTH 7 · M3-3 (24"X12") · M6-1 (27"X15") · M1-5 (24"X24")

S-93 · W4-1R (48"X48") · STA. 380+50 · R3-H6cd (48"X30") · ONLY ONLY · STA 64+00

S-94 · LEFT LANE MUST TURN LEFT · R3-7L (36"X36") · STA 52+00

S-95 · SPEED LIMIT 55 · R2-1 (30"X36") · STA 49+00

S-96 · SOUTH 775 · M2-3 (21"X15") · M1-5 (30"X24") · STA 46+50

S-97 · WRONG WAY · R5-1a (42"X30") · WRONG WAY · R5-1a (42"X30") · R3-H8bd (36"X30") · ONLY · STA 377+00 SEE NOTE 4.

S-98a · S-98b

S-99 · W4-1R (48"X48") · STA. 388+70

S-100 · 7 SOUTH · M3-3 (24"X12") · M1-5 (24"X24") · M6-2 (21"X15") · STA 394+00

S-101 · R4-1 (24"X30") · STA 385+50

S-102 · R6-1R (36"X12") · ONE WAY · DO NOT ENTER · R6-1L (36"X12") · R5-1 (36"X36") · STA 385+25

S-103 · WRONG WAY · R5-1a (42"X30") · WRONG WAY · R5-1a (42"X30") · ONLY ONLY · R3-H8bd (30"X30") · STA 388+50

S-104 · WRONG WAY · R5-1a (42"X30") · WRONG WAY · R5-1a (42"X30") · STA 390+00

S-105 · W4-1R (48"X48") · STA. 388+00

SR 775 · NB SR 7 · SB SR 7 · RAMP J · RAMP K · RAMP I · CR 403 · 370 · 375 · 380 · 385 · 390 · 395 · 45 · 50 · 55 · 60 · 65

R1-1 (36"X36") · STOP · R6-1L (36"X12") · ONE WAY · R6-1R (36"X12") · DO NOT ENTER · R5-1 (36"X36") · STA 40+54

DRAFT Stage 3 - Not for Construction

09/23/2024

C:\EEC\Projects\LAW-7(Stantec)\CADD\Phase_2B\Traffic\Sheets\750-75923_TP029.dgn Sheet 5/14/2024 7:45:36 AM mhunt

CALCULATED MJH · CHECKED KAE

HORIZONTAL SCALE IN FEET 0 50 100 200

TRAFFIC CONTROL PLAN
SR 775 INTERCHANGE SIGNING

LAW-7-2.17

750 1247

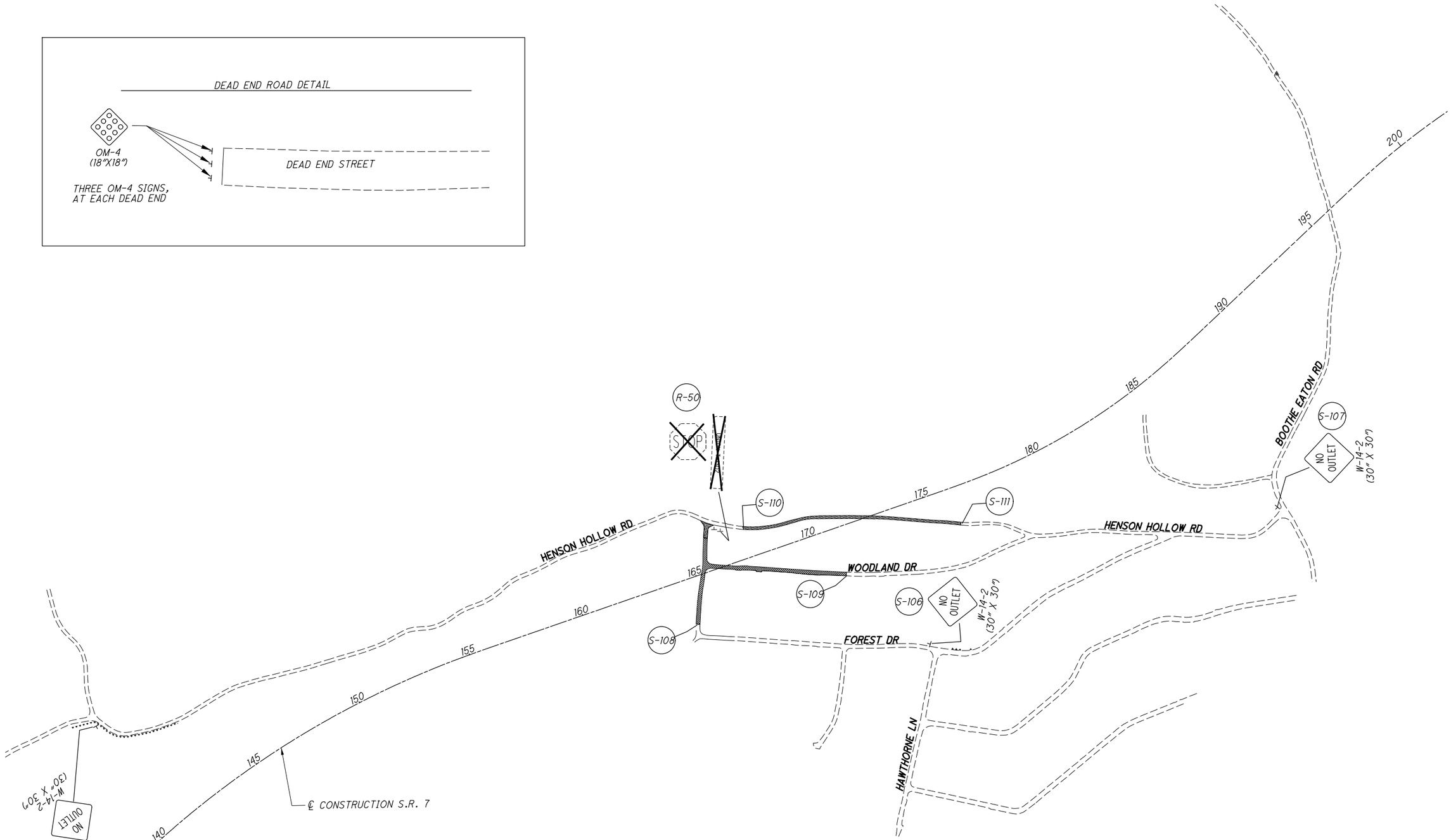

DRAFT Stage 3 - Not for Construction 09/23/2024

HORIZONTAL SCALE IN FEET
0 100 200 400

CALCULATED MJH
CHECKED KAE

TRAFFIC CONTROL PLAN - NO OUTLET SIGNING
STA. 135+00 TO STA. 200+00

LAW-7-2.17

751
1247

C:\EEC\Projects\LAW-7(Stantec)\CADD\Phase_2B\Traffic\Sheets\751-75923TP001-2A.dgn Sheet 5/13/2024 4:51:49 PM mhunt

C:\EEC\Projects\LAW-7(Stantec)\CADD\Phase_2B\Traffic\Sheets\752-75923TP002-2A.dgn Sheet 5/13/2024 4:52:10 PM mhunt

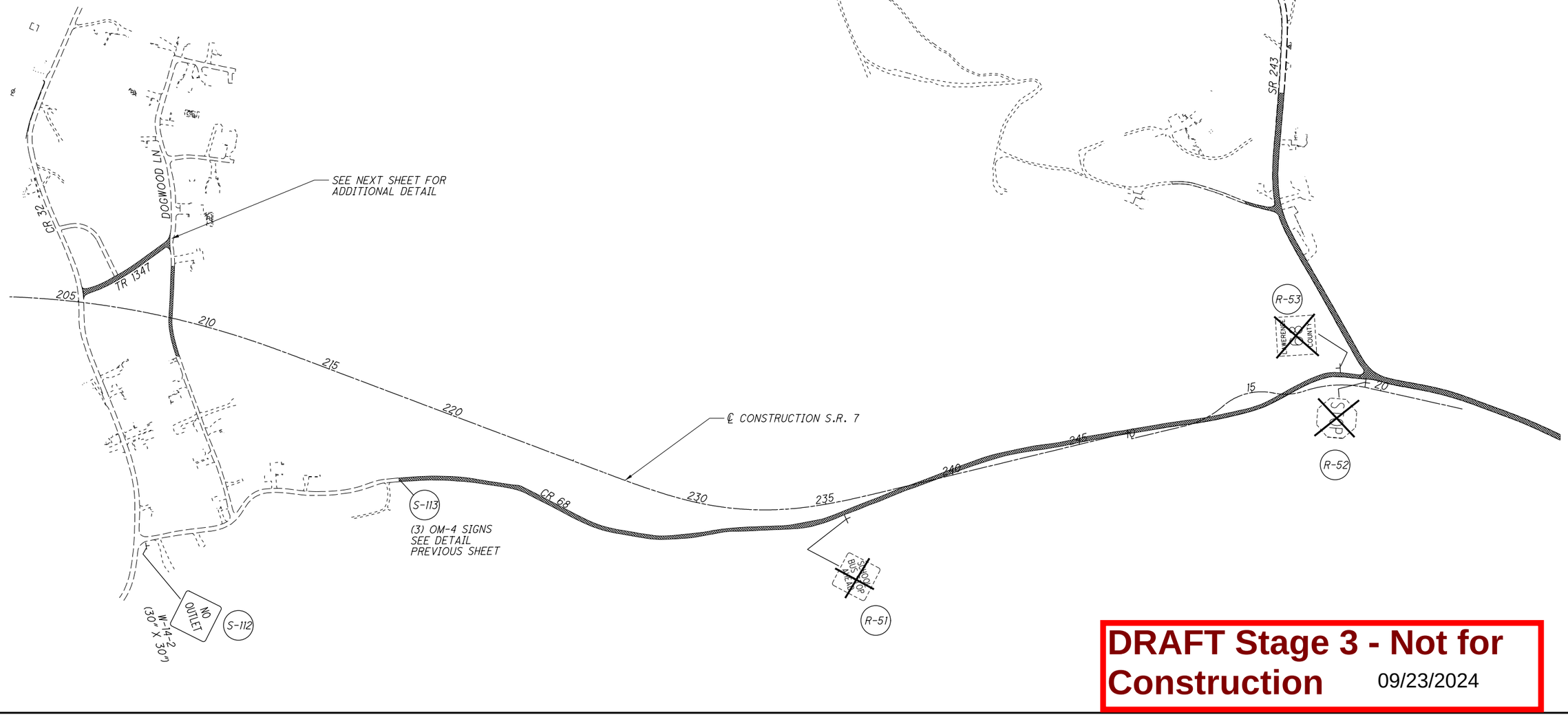

DRAFT Stage 3 - Not for Construction 09/23/2024

TRAFFIC CONTROL PLAN - NO OUTLET SIGNS
STA. 205+00 TO STA. 260+00

CALCULATED MJH
CHECKED KAE

0 100 200 400
HORIZONTAL SCALE IN FEET

LAW-7-2.17

752
1247

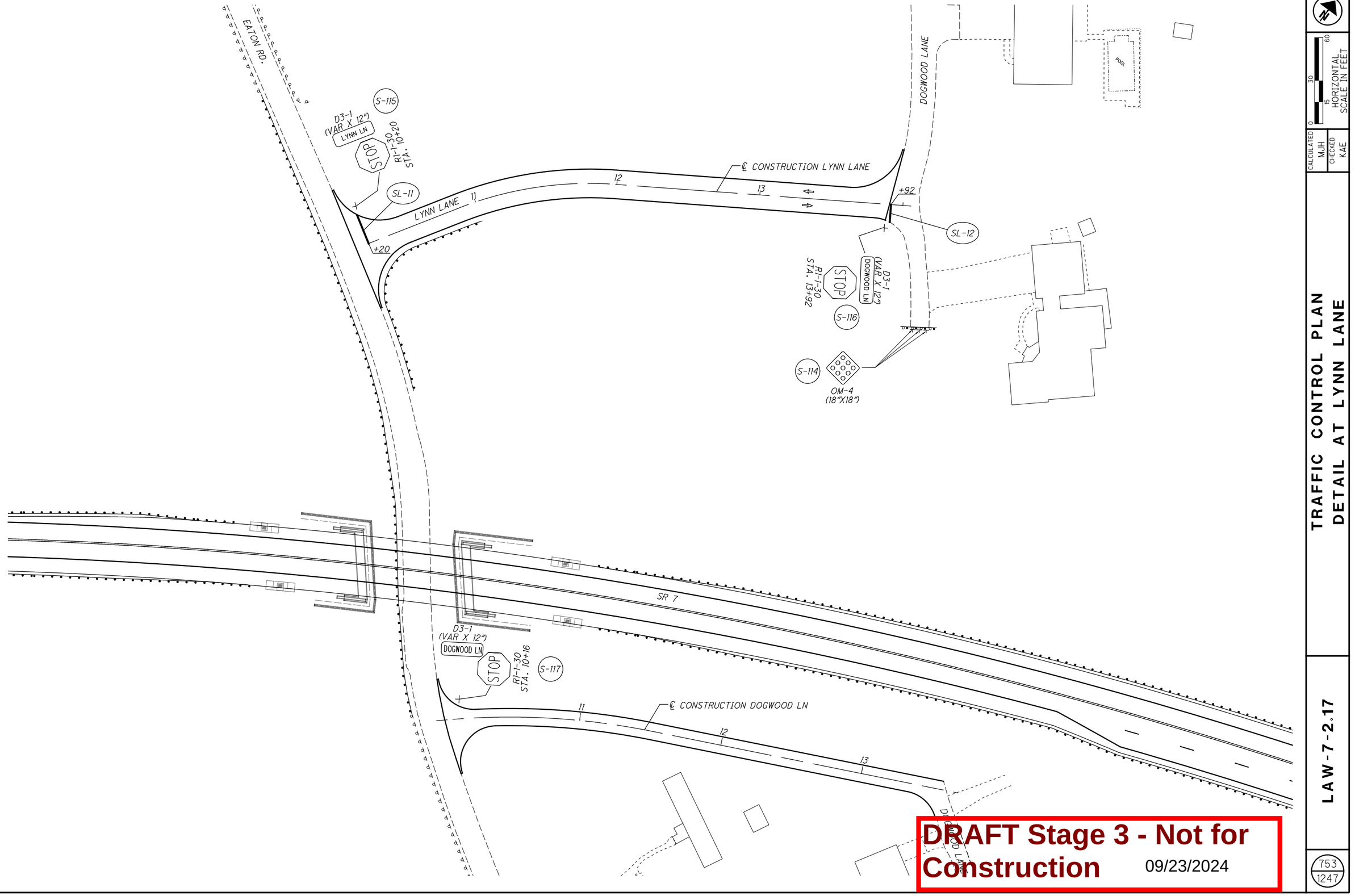

DRAFT Stage 3 - Not for Construction 09/23/2024

HORIZONTAL SCALE IN FEET
0 15 30 60

CALCULATED MJH
CHECKED KAE

TRAFFIC CONTROL PLAN DETAIL AT LYNN LANE

LAW-7-2.17

753 1247

C:\EEC\Projects\LAW-7(Stantec)\CADD\Phase_2B\Traffic\Sheets\753-75923TP003-2A.dgn Sheet 5/13/2024 4:52:28 PM mhunt

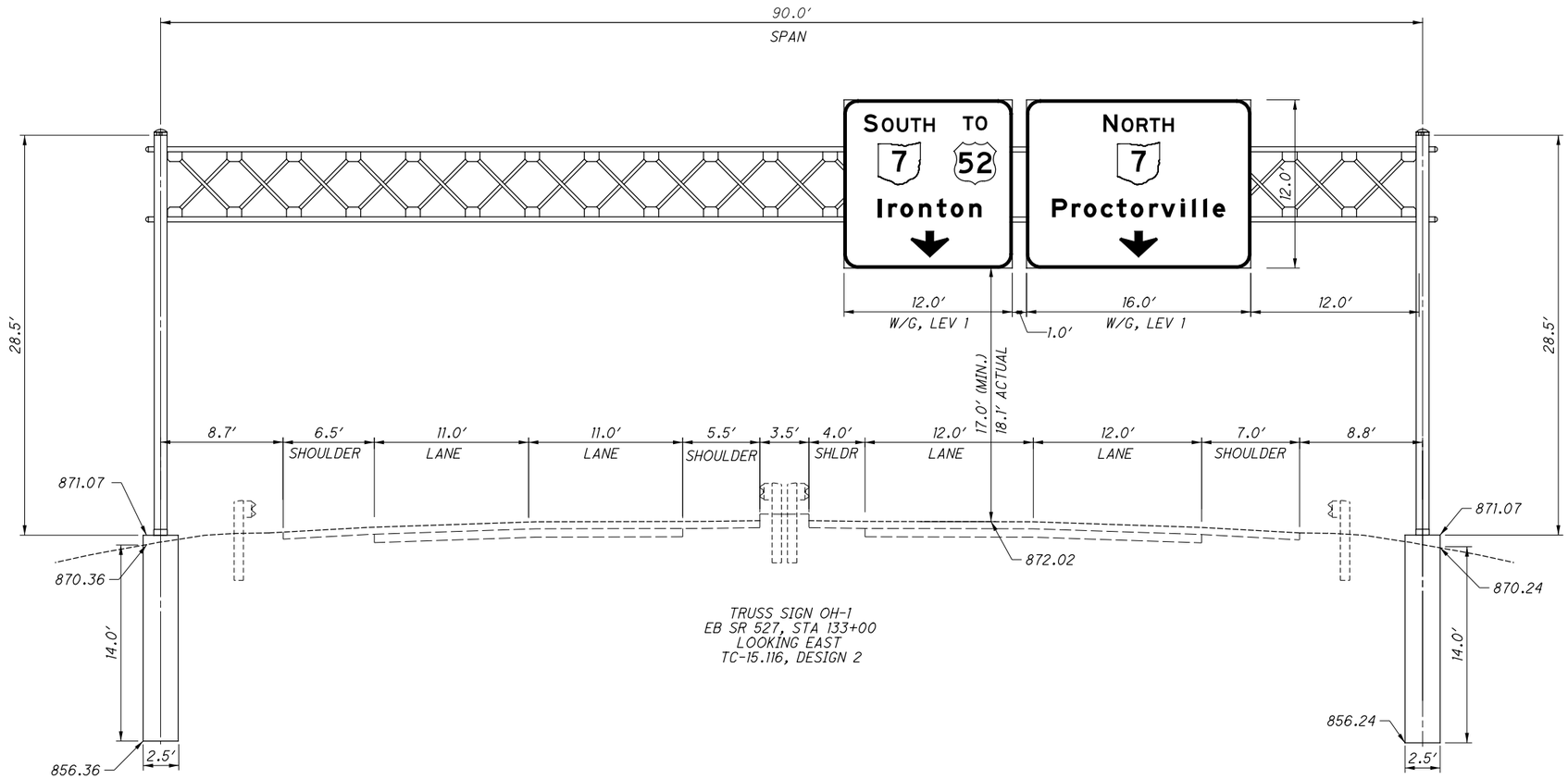

TRUSS SIGN OH-1
EB SR 527, STA 133+00
LOOKING EAST
TC-15.116, DESIGN 2

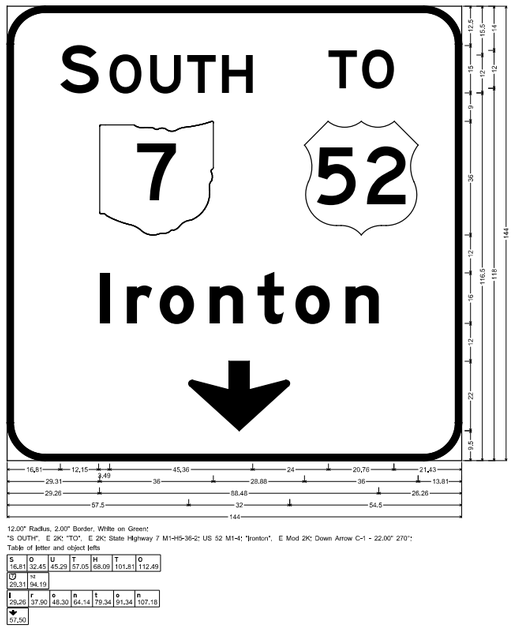

12.00" Radius, 2.00" Border, White on Green:
"S OUTH", E 2K: "TO", E 2K: State Highway 7 M1-H5-36-2: US 52 M1-4: "Ironton", E Mod 2K: Down Arrow C-1 - 22.00" 270°:
Table of letter and object lefts

S 16,81	O 32,45	U 45,29	T 57,05	H 68,09	T 101,81	O 112,49	
29,31	N 94,19						
I 29,26	r 37,90	c 48,30	n 64,14	7 79,34	o 91,34	n 107,18	
57,50							

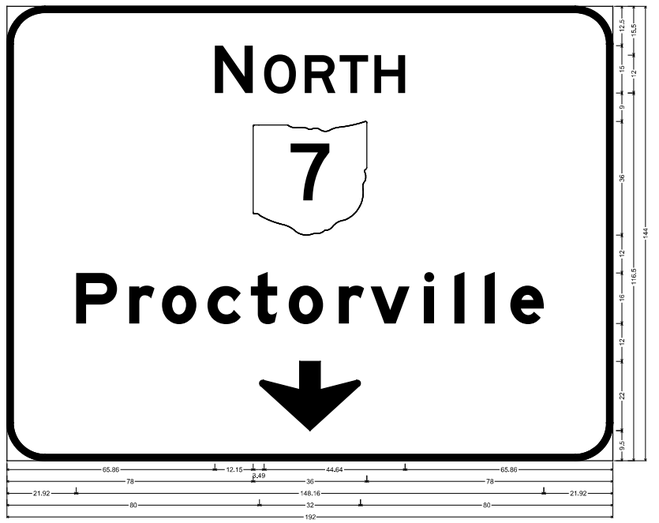

12.00" Radius, 2.00" Border, White on Green:
"N ORTH", E 2K: State Highway 7 M1-H5-36-2: "Proctorville", E Mod 2K: Down Arrow C-1 - 22.00" 270°:
Table of letter and object lefts

N 65,86	O 81,50	R 94,34	T 105,38	H 116,42				
78,00								
P 21,92	r 36,72	o 49,12	c 63,52	7 77,28	o 89,28	r 105,12	V 115,20	I 132,16	I 141,76	I 151,36	e 159,52
80,00								

DRAFT Stage 3 - Not for Construction 09/23/2024

CALCULATED EAE
CHECKED MJH

HORIZONTAL SCALE IN FEET
0 2.5 5 10

SIGN ELEVATION DETAIL
SIGNS OH-1

LAW-7-2.17

754
1247

C:\EEC\Projects\LAW-7(Stantec)\CADD\Phase_2B\Traffic\Sheets\754-75923_TD101-TRUSS.dgn Sheet 5/13/2024 4:23:06 PM mhunt

SUPPORT NO.	SPAN WIRE SIGN SUPPORT TYPE TC-17.11																		ELEVATION (FT)			630	625
	DESIGN NO.	LEFT POLE			RIGHT POLE			SPAN (FT)	L1 (FT)	SIGN 1 AREA (FT)	L2 (FT)	SIGN 2 AREA (FT)	L3 (FT)	SIGN 3 AREA (FT)	L4 (FT)	SIGN 4 AREA (FT)	L5 (FT)	SIGN 5 AREA (SF)	CLEARANCE	A	B	C	SIGN FLATSHEET (SF)	GROUND RODS (EACH)
		STATION (FT)	OFFSET (FT)	HEIGHT (FT)	STATION (FT)	OFFSET (FT)	HEIGHT (FT)																	
TC-17.11	10	59+00	42.5	30.0	59+00	42.5	30.0	85.0	18.5	12.5	30.5	7.5	42.5	12.5	30.5	7.5	18.5	12.5	19.6′	625.15	626.62	625.56	52.5	2

NOTES:

1. ALL SIGN SUPPORTS ARE VIEWED IN DIRECTION OF INCREASING STATIONS
2. SEE TC-81.11 AND TC-21.21 FOR POLE AND FOUNDATION DETAILS
3. THE HANDHOLE SHALL BE LOCATED ON THE SIDE OF THE POLE FARTHEST FROM THE ROADWAY
4. A CAPPED 2″ (5 mm) BLIND HALF COUPLING SHALL BE LOCATED 12″ FROM THE TOP OF POLE FACING TOWARDS THE ROADWAY
5. ALL FOUNDATIONS SHALL CONTAIN ONE 2″ (5 mm) CAPPED CONDUIT ELL FOR FUTURE USE. IT SHALL BE LOCATED PERPENDICULAR TO THE ROADWAY CENTERLINE ON THE SIDE OF THE FOUNDATION FARTHEST FROM THE ROADWAY

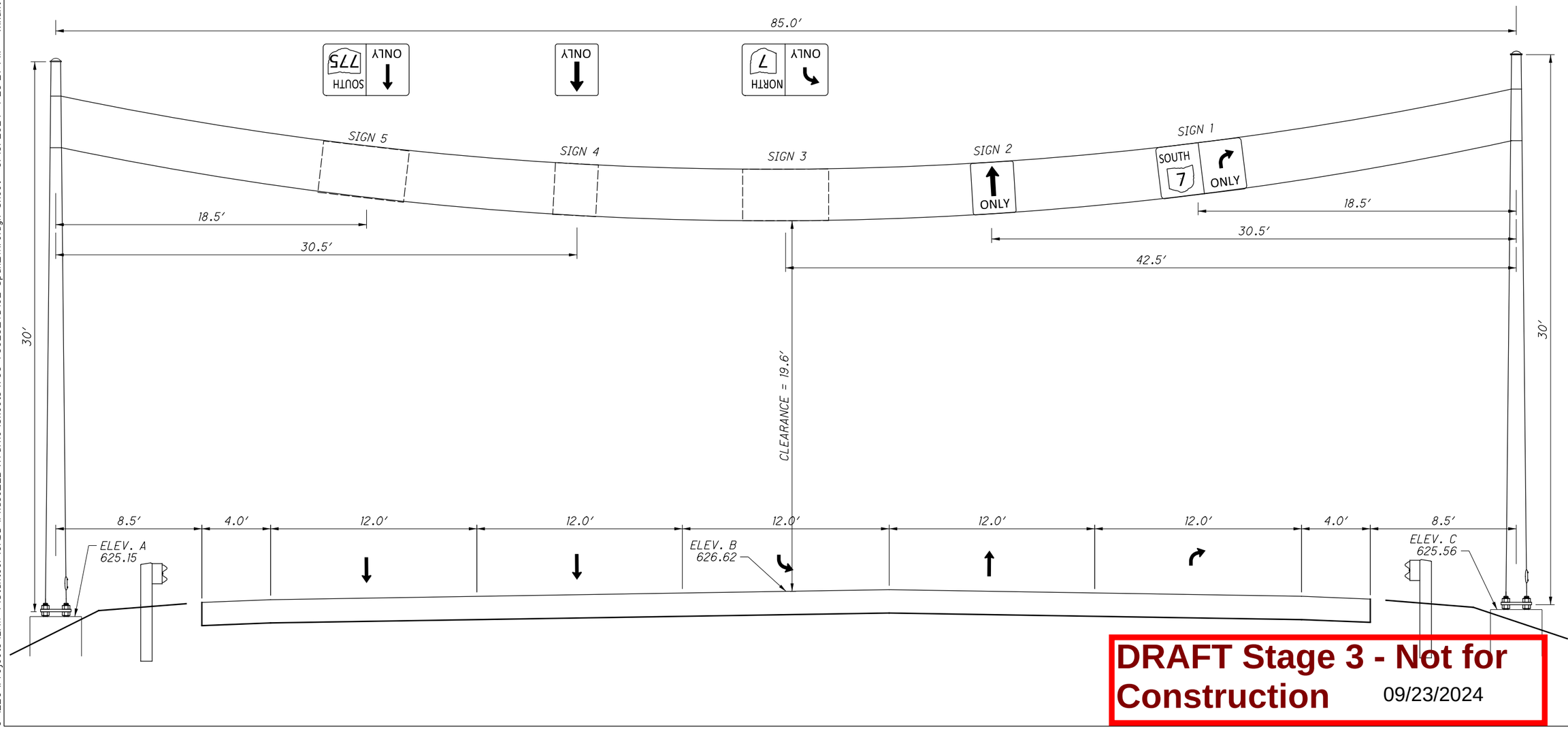

DRAFT Stage 3 - Not for Construction 09/23/2024

CALCULATED EAE
CHECKED MJH

POLE ORIENTATION DIAGRAM - OH-5

LAW-7-2.17

755
1247

C:\EEC\Projects\LAW-7(Stantec)\CADD\Phase_2B\Traffic\Sheets\755-75923_TD102-Span_Wire.dgn Sheet 5/13/2024 4:23:21 PM mhunt

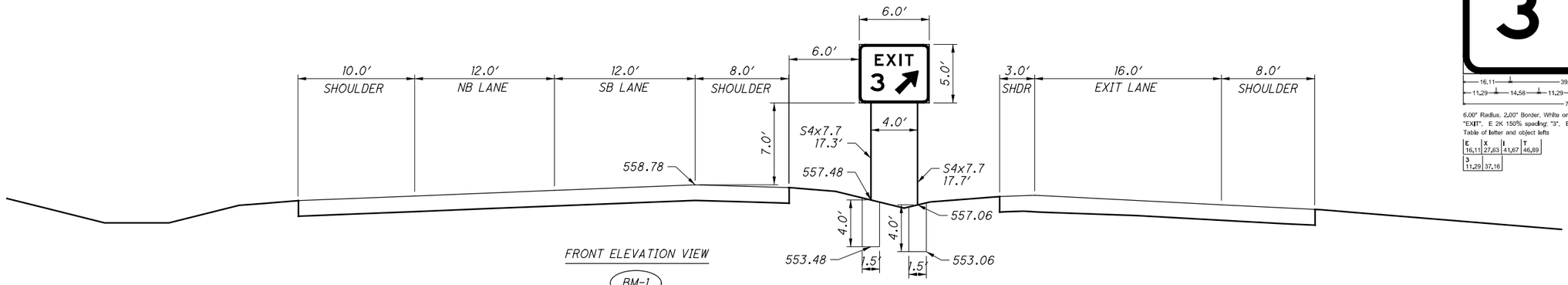

FRONT ELEVATION VIEW

BM-1

SB SR-7 - STA. 123+45
LOOKING SOUTH

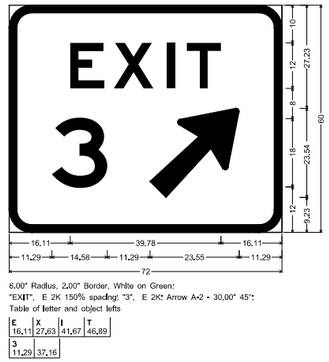

6.00" Radius, 2.00" Border, White on Green:
"EXIT", E 2K 150% spacing; "3", E 2K; Arrow A-2 - 30.00° 45°;
Table of letter and object lefts

E	X	I	T
16,11	27,63	41,67	46,89

3
11,29	37,16

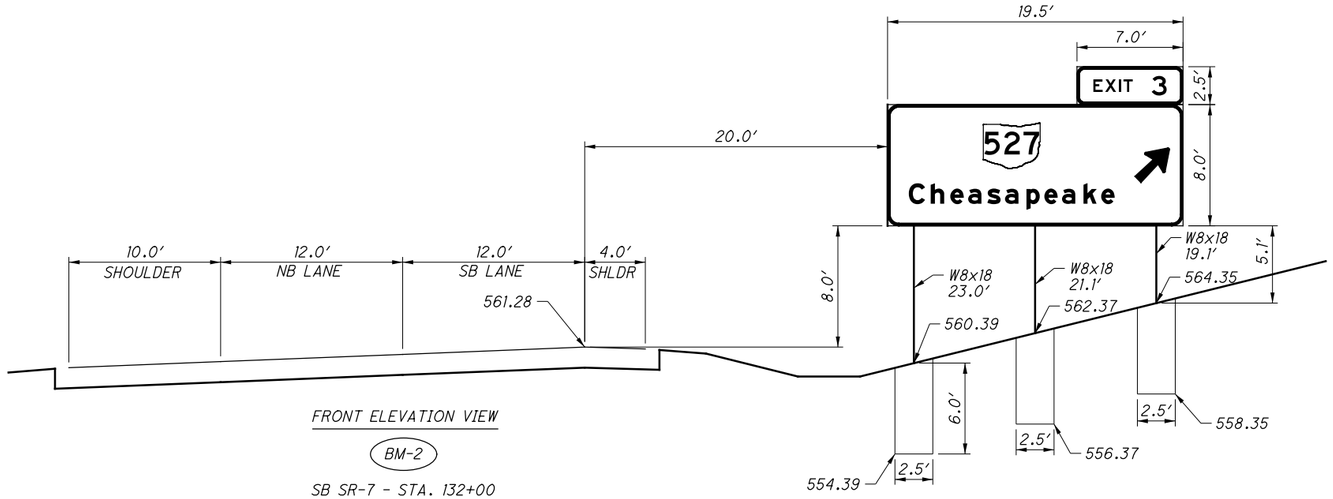

FRONT ELEVATION VIEW

BM-2

SB SR-7 - STA. 132+00
LOOKING SOUTH

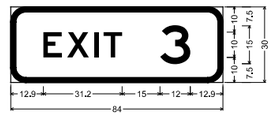

6.0" Radius, 2.0" Border, White on Green:
"EXIT", E: "3", E:
Table of widths and spaces

E		X		I		T		3	
12,9	7,4	2,0	8,6	2,1	1,7	2,1	7,3	15,0	12,0	12,9

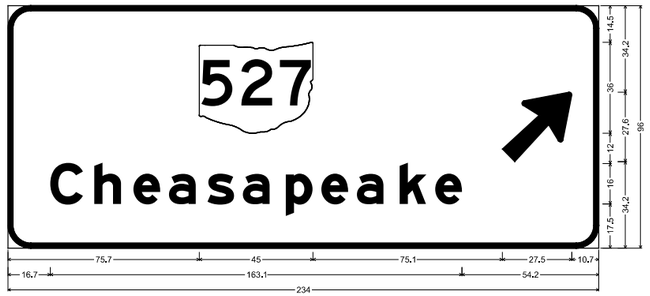

9.0" Radius, 2.0" Border, White on Green:
State Highway 527 M1-H5-36-3; "Cheasapeake", E Mod 2K; Arrow A-1 - 35.0° 45°;
Table of letter and object lefts

527	
75,7	195,8

C	h	e	a	s	a	p	e	a	k	e
1										

DRAFT Stage 3 - Not for Construction 09/23/2024

SIGN ELEVATION DETAIL
BEAM MOUNTED SIGNS - BM-1 & BM-2

HORIZONTAL SCALE IN FEET
0 2.5 5 10

CALCULATED EAE
CHECKED MJH

LAW-7-2.17

756
1247

C:\EEC\Projects\LAW-7(Stantec)\CADD\Phase_2B\Traffic\Sheets\756-75923_TD103-1&2.dgn Sheet 5/13/2024 4:23:37 PM mhunt

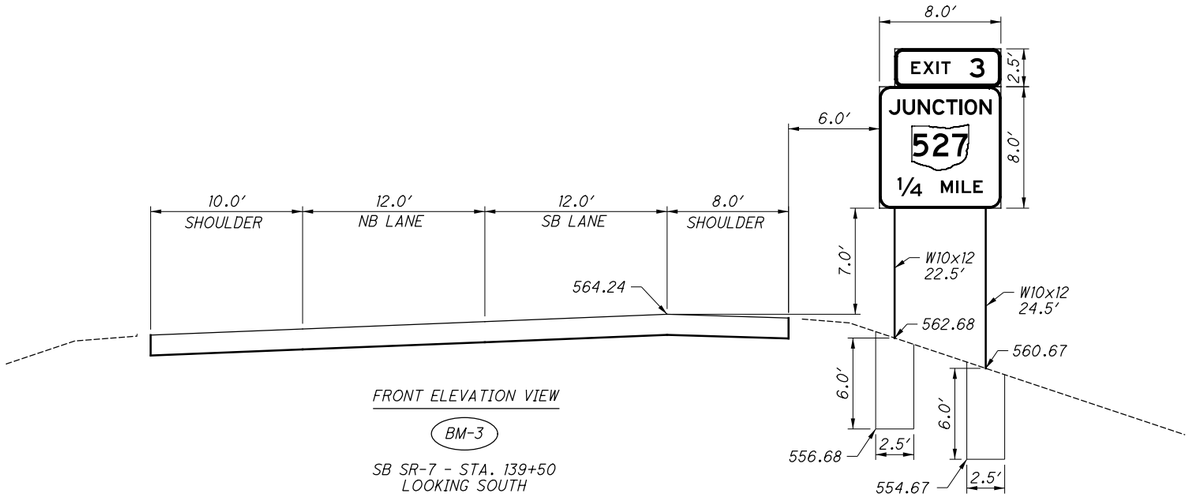

FRONT ELEVATION VIEW

BM-3

SB SR-7 - STA. 139+50
LOOKING SOUTH

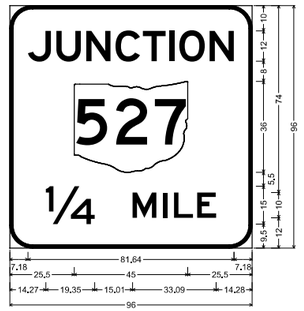

9.00" Radius, 1.25" Border, White on Green;
"JUNCTION", E 2K 68% spacing;
State Highway 527 M1-H5-36-3: "1/4 MILE", E 2K;
Table of letter and object lefts

J	U	N	C	T	I	O	N
7.18	18.42	30.26	41.86	52.72	63.11	67.14	79.10

527
25.50

1/4	M	I	L	E
14.27	48.63	60.63	65.03	74.22

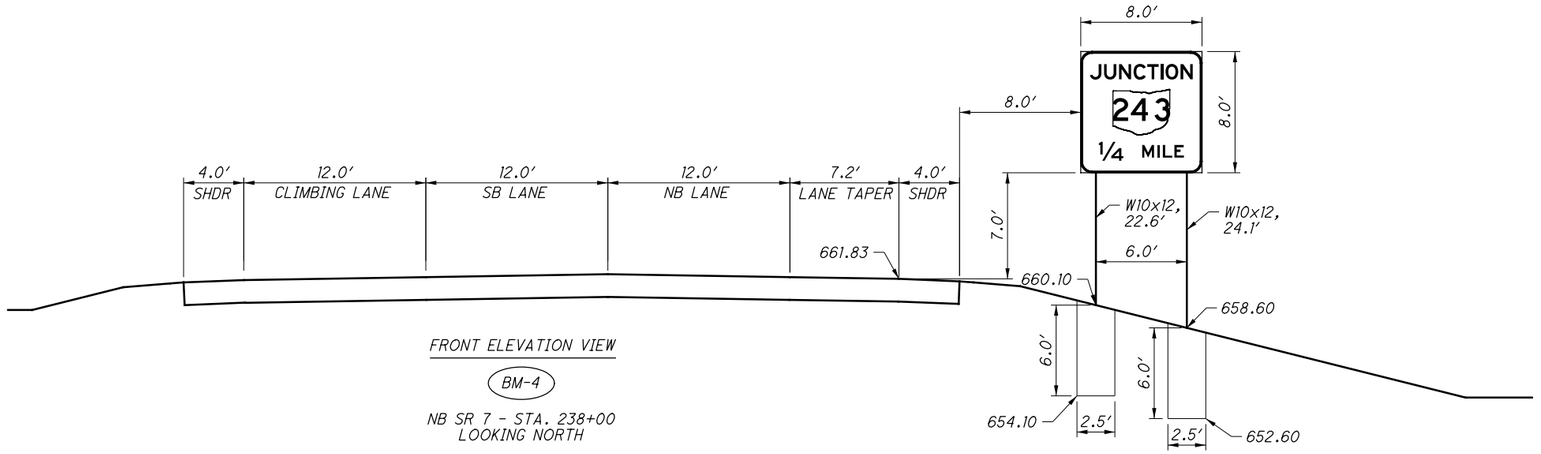

FRONT ELEVATION VIEW

BM-4

NB SR 7 - STA. 238+00
LOOKING NORTH

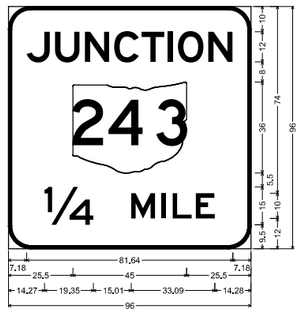

9.00" Radius, 1.25" Border, White on Green;
"JUNCTION", E 2K 68% spacing;
State Highway 243 M1-H5-36-3: "1/4 MILE", E 2K;
Table of letter and object lefts

J	U	N	C	T	I	O	N
7.18	18.42	30.26	41.86	52.72	63.11	67.14	79.10

243
25.50

1/4	M	I	L	E
14.27	48.63	60.63	65.03	74.22

DRAFT Stage 3 - Not for Construction 09/23/2024

SIGN ELEVATION DETAIL
BEAM MOUNTED SIGNS - BM-3 & BM-4

HORIZONTAL SCALE IN FEET
0 2.5 5 10

CALCULATED EAE
CHECKED MJH

LAW-7-2.17

757
1247

C:\EEC\Projects\LAW-7\Stantec\CADD\Phase_2B\Traffic\Sheets\757-75923_TD103-3&4.dgn Sheet 5/13/2024 4:23:54 PM mhunt

C:\EEC\Projects\LAW-7(Stantec)\CADD\Phase_2B\Traffic\Sheets\758-75923_TD104-5&6.dgn Sheet 5/13/2024 4:24:08 PM mhunt

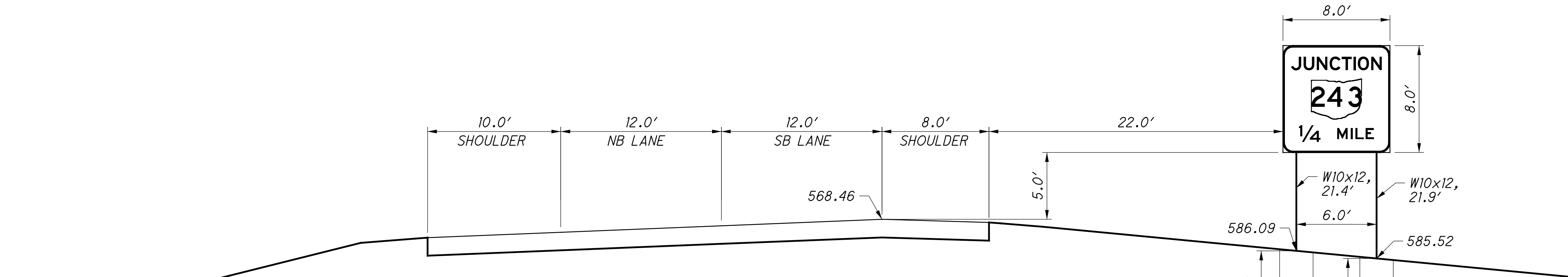

FRONT ELEVATION VIEW

BM-5

SB SR 7 - STA. 270+00
LOOKING SOUTH

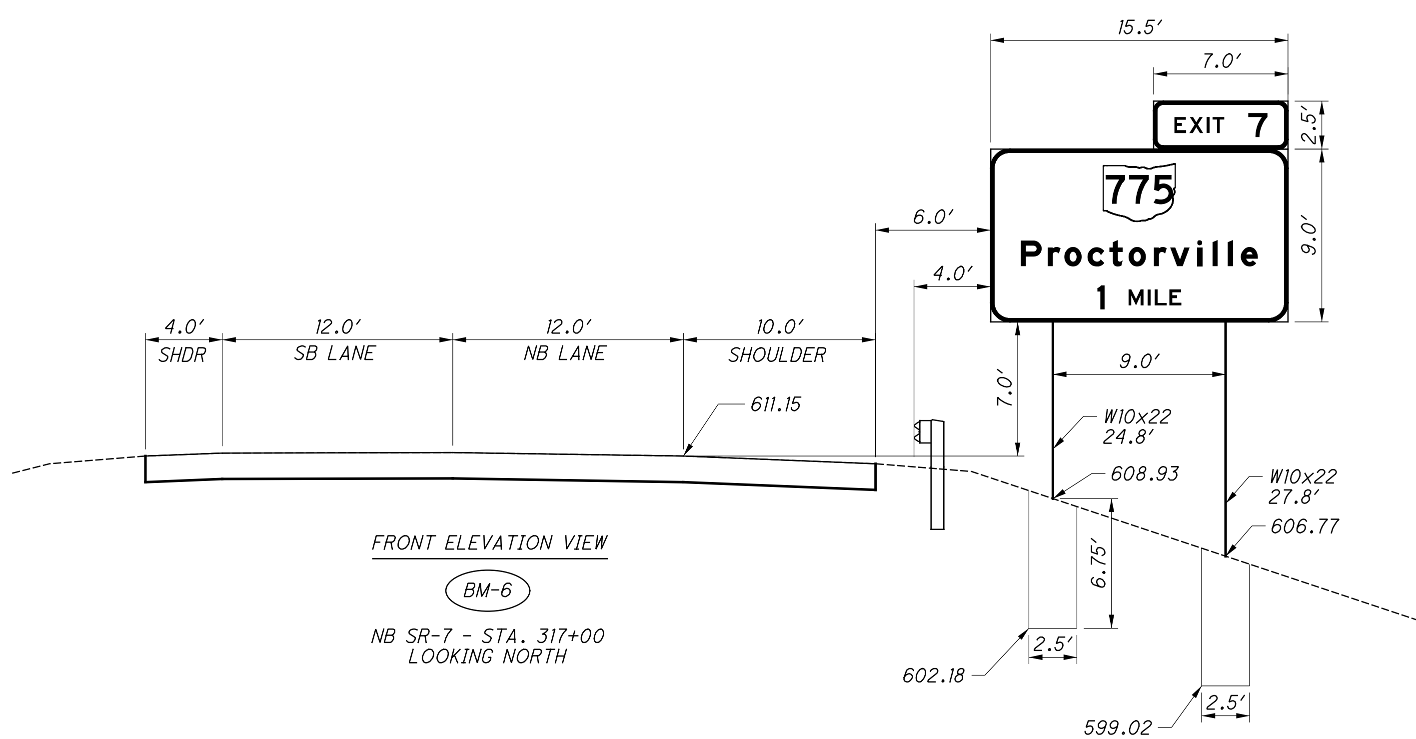

FRONT ELEVATION VIEW

BM-6

NB SR-7 - STA. 317+00
LOOKING NORTH

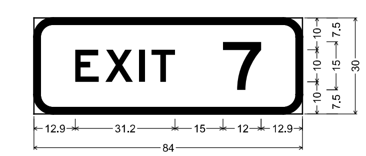

6.0" Radius, 2.0" Border, White on Green;
"EXIT", E; "7", E;
Table of widths and spaces

	E		X		I		T		7	
12.9	7.4	2.0	8.6	2.1	1.7	2.1	7.3	15.0	12.0	12.9

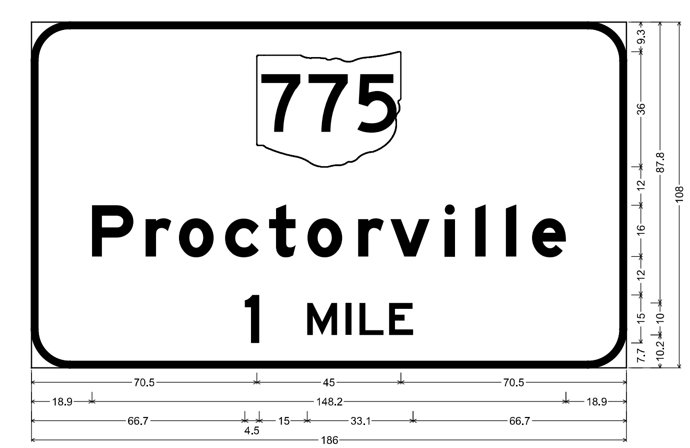

12.0" Radius, 2.0" Border, White on Green;
State Highway 775 M1-H5-36-3; "Proctorville", E Mod 2K; "1 MILE", E 2K;
Table of letter and object lefts

775
70.5

M I L E
66.7 86.2 98.2 102.6 111.8

DRAFT Stage 3 - Not for Construction 09/23/2024

HORIZONTAL SCALE IN FEET (0 2.5 5 10)

CALCULATED EAE
CHECKED MJH

SIGN ELEVATION DETAIL
BEAM MOUNTED SIGNS - BM-5 & BM-6

LAW-7-2.17

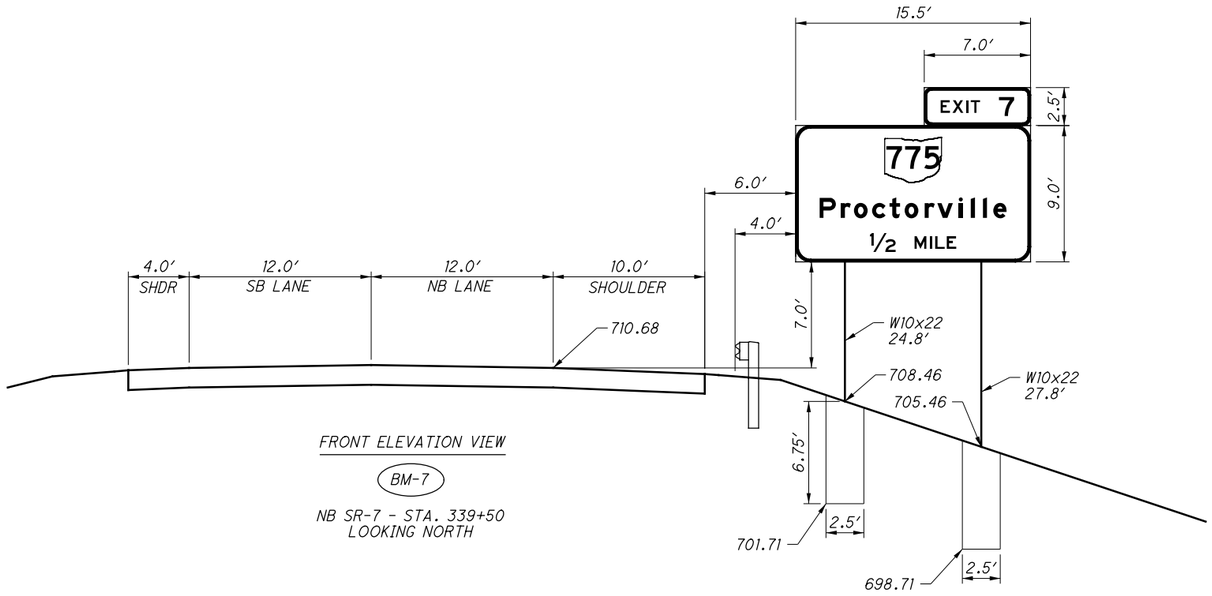

FRONT ELEVATION VIEW

BM-7

NB SR-7 - STA. 339+50
LOOKING NORTH

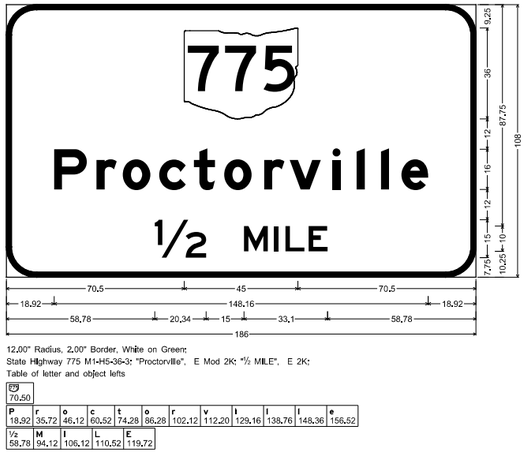

12.00" Radius, 2.00" Border, White on Green:
State Highway 775 M1-H5-36-3: "Proctorville", E Mod 2K: "½ MILE", E 2K:
Table of letter and object lefts

70,50												
P 18,92	r 35,72	o 46,12	c 60,52	t 74,28	o 86,28	r 102,12	v 112,20	i 129,16	i 138,76	i 148,36	e 156,52	
½ 58,78	M 94,12	I 106,12	L 110,52	E 119,72								

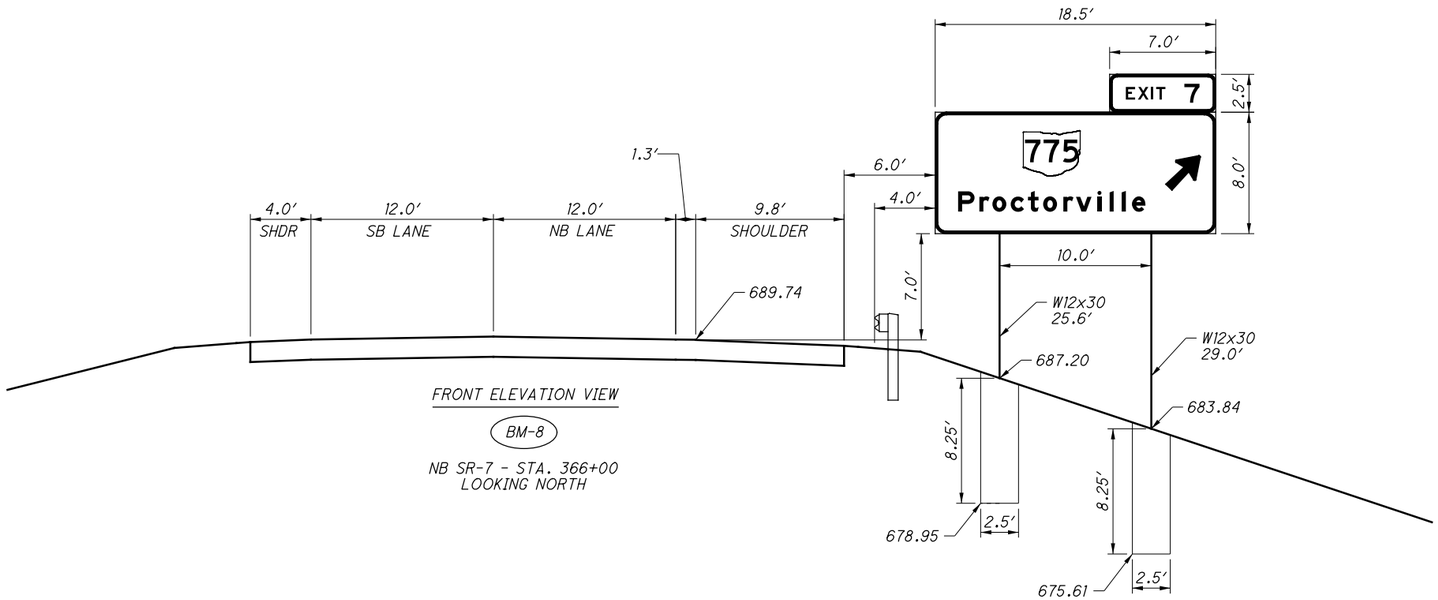

FRONT ELEVATION VIEW

BM-8

NB SR-7 - STA. 366+00
LOOKING NORTH

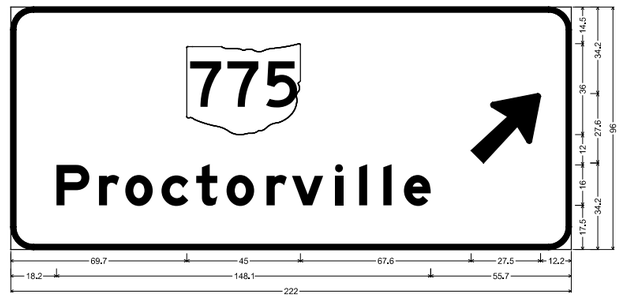

9.0" Radius, 2.0" Border, White on Green:
State Highway 775 M1-H5-36-3: "Proctorville", E Mod 2K: Arrow A-1 - 35.0° 45°:
Table of letter and object lefts

69,7	182,3

P 18,2	r 35,0	o 45,4	c 59,8	t 73,5	o 85,5	r 101,4	v 111,4	i 128,4	i 138,0	i 147,6	e 155,8	

DRAFT Stage 3 - Not for Construction 09/23/2024

HORIZONTAL SCALE IN FEET
0 2.5 5 10

CALCULATED EAE
CHECKED MJH

SIGN ELEVATION DETAIL
BEAM MOUNTED SIGNS - BM-7 & BM-8

LAW-7-2.17

759
1247

C:\EEC\Projects\LAW-7(Stantec)\CADD\Phase_2B\Traffic\Sheets\759-75923_TD105-7&8.dgn Sheet 5/13/2024 4:24:22 PM mhunt

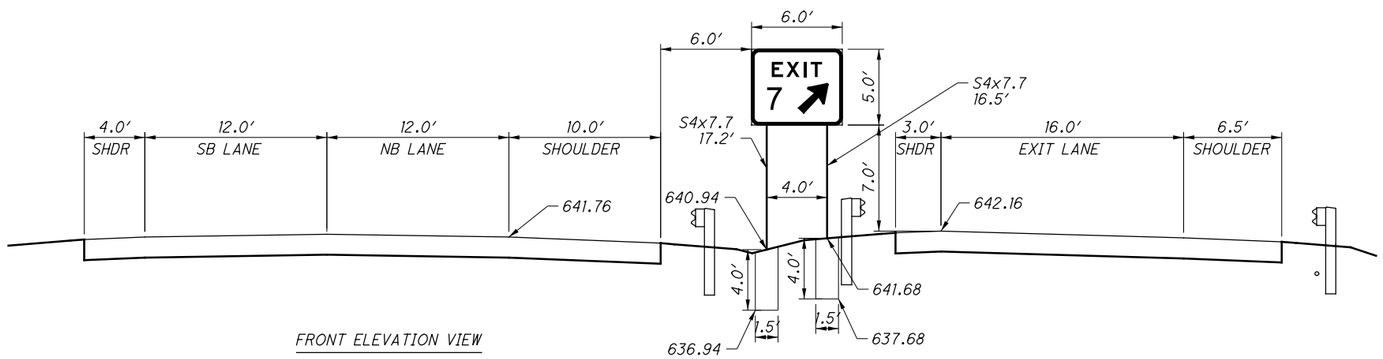

FRONT ELEVATION VIEW

BM-9

NB SR-7, RAMP I - STA. 374+00
LOOKING NORTH

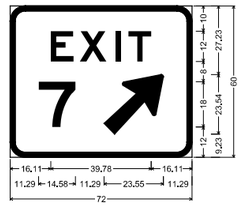

6,00" Radius, 2,00" Border, White on Green:
"EXIT", E 2K 150% spacing; "7", E 2K:
Arrow A-2 - 30,00" 45°:
Table of letter and object lefts

E 16,11	X 27,63	I 41,67	T 46,89
7 11,29	37,16		

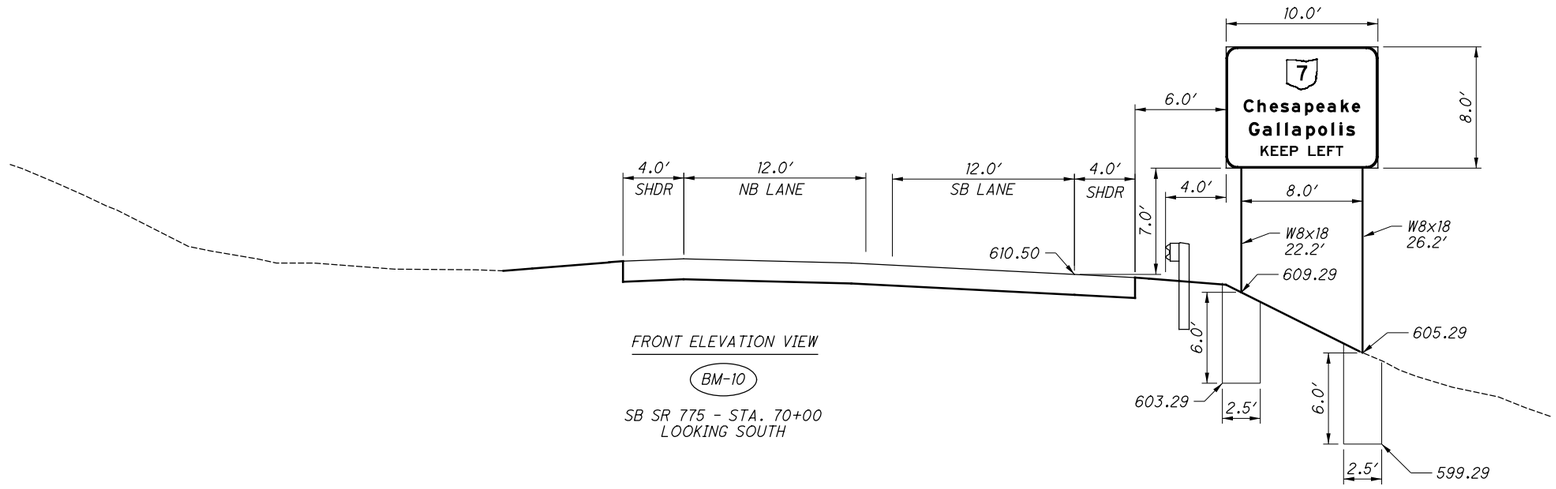

FRONT ELEVATION VIEW

BM-10

SB SR 775 - STA. 70+00
LOOKING SOUTH

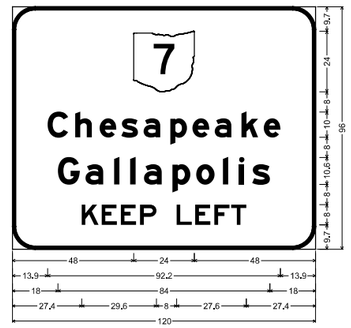

9,0" Radius, 1,3" Border, White on Green:
State Highway 7 M1-H5-24-2; "Chesapeake", E Mod 2K:
"Gallapolis", E Mod 2K "KEEP LEFT", E 2K:
Table of letter and object lefts

U 48,0										
C 13,9	h 24,8	e 34,5	s 43,1	a 51,9	p 62,5	o 71,3	a 80,1	k 90,7	e 99,5	
G 18,0	a 28,9	l 40,2	l 46,6	a 52,1	p 63,4	o 72,7	l 83,3	l 89,7	s 94,9	
K 27,4	E 35,3	E 42,9	P 50,5	L 65,0	E 72,4	F 80,0	T 86,6			

DRAFT Stage 3 - Not for Construction 09/23/2024

HORIZONTAL SCALE IN FEET
0 2.5 5 10

CALCULATED EAE
CHECKED MJH

SIGN ELEVATION DETAIL
BEAM MOUNTED SIGNS - BM-9 & BM-10

LAW-7-2.17

760
1247

C:\EEC\Projects\LAW-7(Stantec)\CADD\Phase_2B\Traffic\Sheets\760-75923_TD106-9&10.dgn Sheet 5/13/2024 4:24:39 PM mhunt

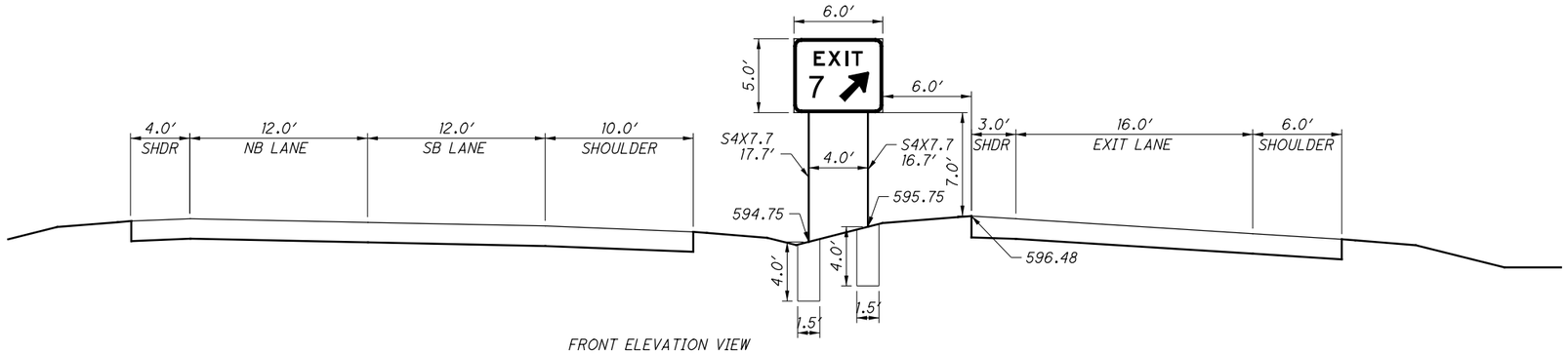

FRONT ELEVATION VIEW

BM-11

SB SR-7, RAMP K - STA. 397+00
LOOKING SOUTH

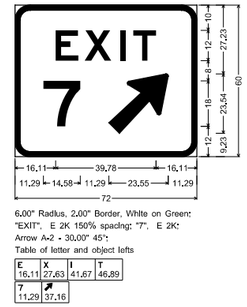

6.00" Radius, 2.00" Border, White on Green:
"EXIT", E 2K 150% spacing; "7", E 2K;
Arrow A-2 - 30.00" 45°;
Table of letter and object lefts

E 16,11	X 27,63	I 41,67	T 46,89
7 11,29	↗ 37,16		

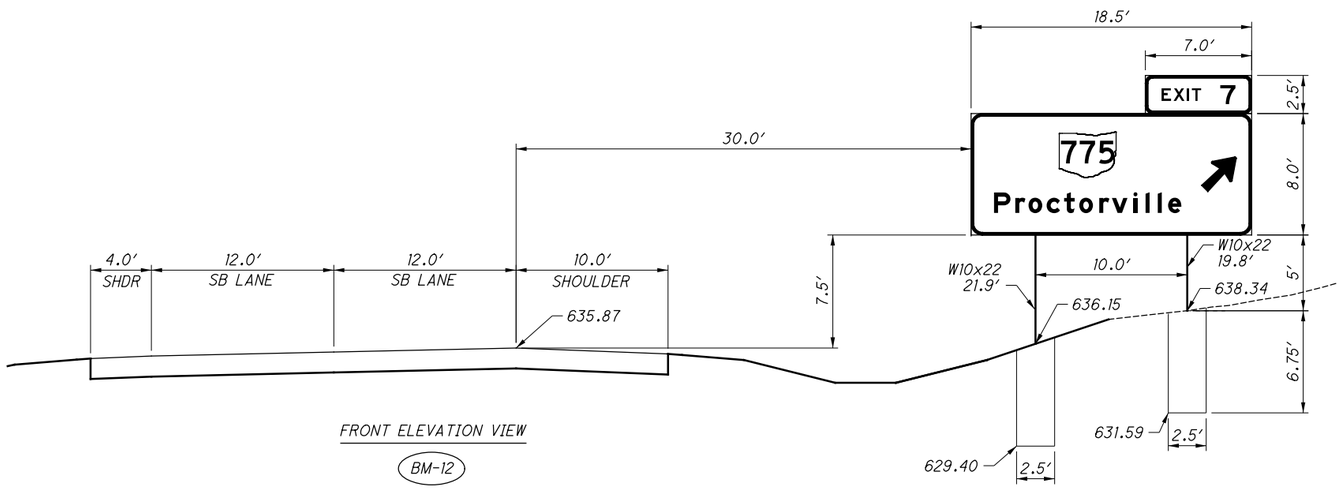

FRONT ELEVATION VIEW

BM-12

SB US-7 - STA. 408+00
LOOKING SOUTH

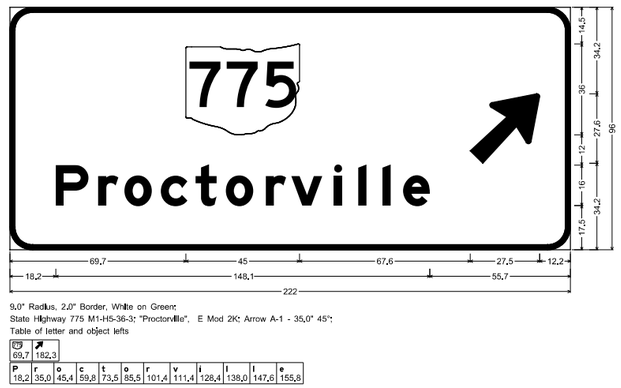

9.0" Radius, 2.0" Border, White on Green:
State Highway 775 M1-H5-36-3; "Proctorville", E Mod 2K; Arrow A-1 - 35.0° 45°;
Table of letter and object lefts

69,7	↗ 182,3

P 18,2	r 35,0	o 45,4	c 59,8	t 73,5	o 85,5	r 101,4	v 111,4	i 128,4	l 138,0	l 147,6	e 155,8		

DRAFT Stage 3 - Not for Construction 09/23/2024

SIGN ELEVATION DETAIL
BEAM MOUNTED SIGN - BM-11 & BM-12

HORIZONTAL SCALE IN FEET
0 2.5 5 10

CALCULATED EAE
CHECKED MJH

LAW-7-2.17

761
1247

C:\EEC\Projects\LAW-7(Stantec)\CADD\Phase_2B\Traffic\Sheets\761-75923_TD107-11&12.dgn Sheet 5/13/2024 4:24:52 PM mhunt

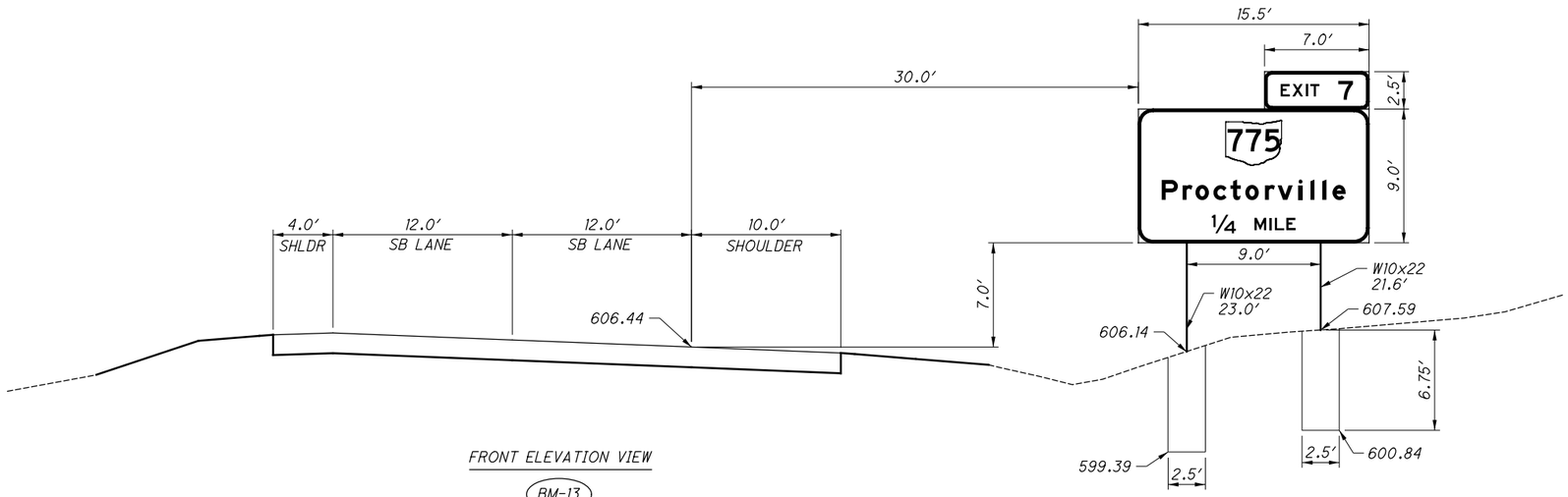

FRONT ELEVATION VIEW

BM-13

SB SR-7 - STA. 421+50
LOOKING SOUTH

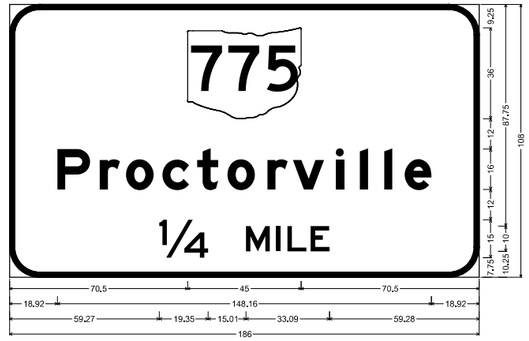

12.00" Radius, 2.00" Border, White on Green:
State Highway 775 M1-H5-36-3: "Proctorville", E Mod 2K: "1/4 MILE", E 2K:
Table of letter and object lefts

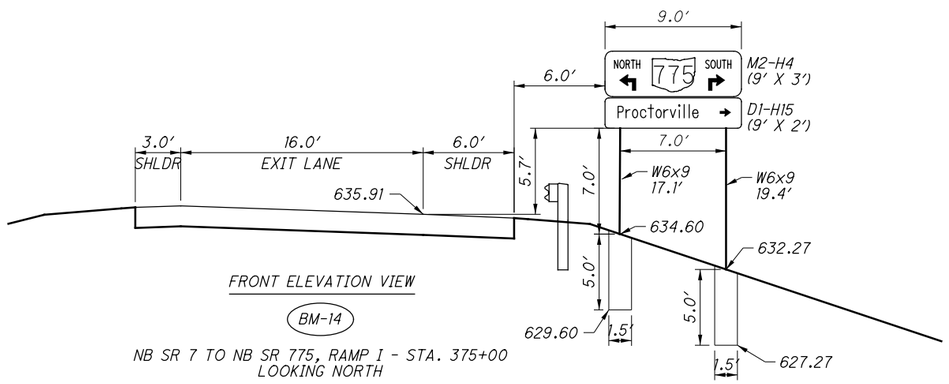

FRONT ELEVATION VIEW

BM-14

NB SR 7 TO NB SR 775, RAMP I - STA. 375+00
LOOKING NORTH

DRAFT Stage 3 - Not for Construction 09/23/2024

SIGN ELEVATION DETAIL
BEAM MOUNTED SIGNS - BM-13 & BM-14

HORIZONTAL SCALE IN FEET
0 2.5 5 10

CALCULATED EAE
CHECKED MJH

LAW-7-2.17

762
1247

C:\EEC\Projects\LAW-7(Stantec)\CADD\Phase_2B\Traffic\Sheets\762-75923_TD108-13&14.dgn Sheet 5/13/2024 4:25:07 PM mhunt

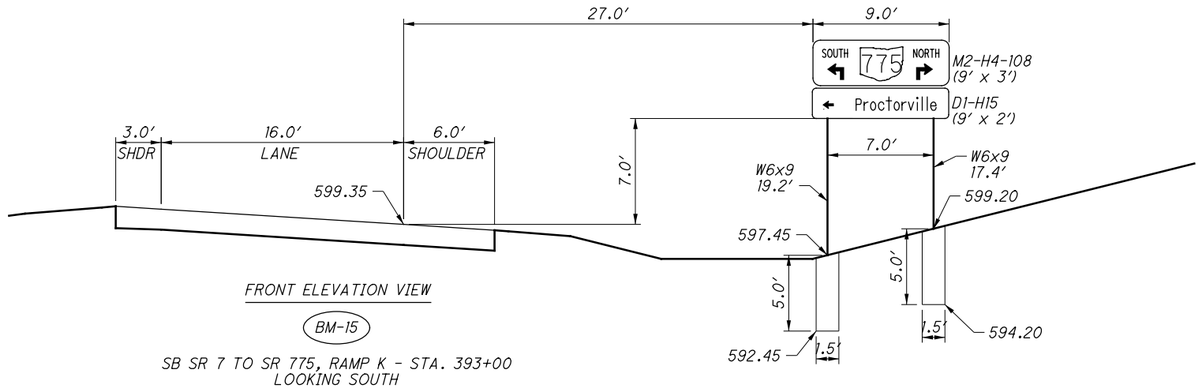

FRONT ELEVATION VIEW

BM-15

SB SR 7 TO SR 775, RAMP K - STA. 393+00
LOOKING SOUTH

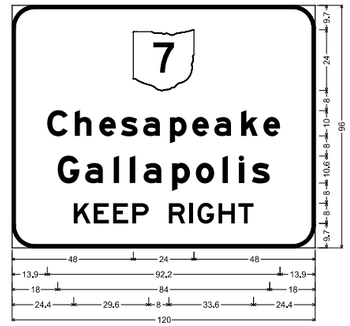

9,0" Radius, 1,3" Border, White on Green;
State Highway 7 M1-H5-24-2; "Chesapeake", E Mod 2K;
"Gallapolis", E Mod 2K; "KEEP RIGHT", E 2K;
Table of letter and object lefts

48,0									
C 13,9	h 24,8	e 34,5	s 43,1	a 51,9	p 62,5	e 71,3	a 80,1	k 90,7	e 99,5
G 18,0	a 28,9	l 40,2	l 46,6	a 52,1	p 63,4	o 72,7	f 83,3	l 89,7	s 94,9
K 24,4	E 32,4	E 40,0	P 47,6	R 62,0	I 70,1	G 73,4	H 81,7	T 89,6	

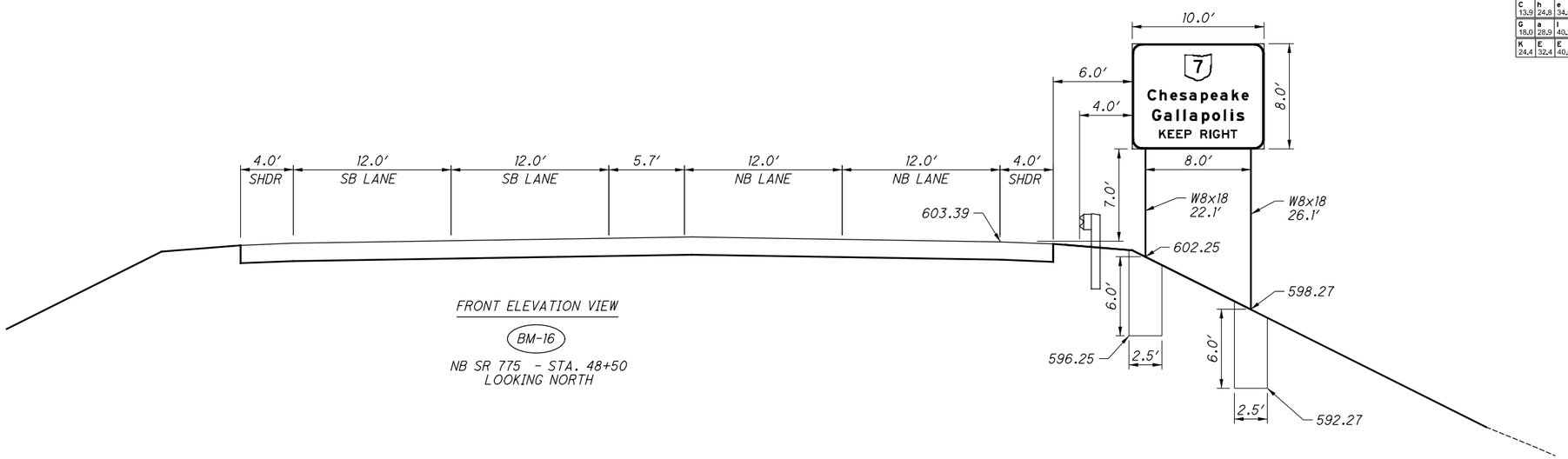

FRONT ELEVATION VIEW

BM-16

NB SR 775 - STA. 48+50
LOOKING NORTH

DRAFT Stage 3 - Not for Construction 09/23/2024

HORIZONTAL SCALE IN FEET
0 2.5 5 10

CALCULATED EE
CHECKED MJH

SIGN ELEVATION DETAIL
BEAM MOUNTED SIGNS - BM-15 & BM-16

LAW-7-2.17

763
1247

C:\EEC\Projects\LAW-7(Stantec)\CADD\Phase_2B\Traffic\Sheets\763-75923_TD109-15&16.dgn Sheet 5/13/2024 4:25:24 PM mhunt

POWER SUPPLY FOR TRAFFIC SIGNALS

ELECTRIC POWER SHALL BE OBTAINED FROM AMERICAN ELECTRIC POWER AT THE LOCATIONS INDICATED ON THE PLANS. POWER SUPPLIED SHALL BE 120 VOLTS.

SIGNAL ACTIVATION

PRIOR TO ACTIVATING THE NEW TRAFFIC SIGNAL TO STOP-AND-GO MODE AND/OR REMOVING THE EXISTING TRAFFIC SIGNAL FROM SERVICE, ALL ITEMS IN THE PROPOSED SIGNAL PLAN SHALL BE FULLY COMPLETED, (I.E., VEHICLE DETECTION, PEDESTRIAN SIGNAL HEADS, ETC). IF THERE ARE CONSTRUCTABILITY ISSUES (I.E., ROADWAY WIDENING, ETC.) THAT PREVENT THE SIGNAL FROM BEING COMPLETED PRIOR TO ACTIVATION, IT SHALL BE BROUGHT TO THE ATTENTION OF THE PROJECT ENGINEER AND DISTRICT TRAFFIC ENGINEER. THE DISTRICT TRAFFIC ENGINEER WILL THEN REVIEW, APPROVE OR REJECT PROPOSALS TO ACTIVATE THE TRAFFIC SIGNAL PRIOR TO COMPLETION.

THE CONTRACTOR SHALL NOTIFY THE PROJECT ENGINEER AND DISTRICT TRAFFIC ENGINEER AT LEAST 10 WORKING DAYS PRIOR TO SCHEDULING THE FINAL INSPECTION OF THE SIGNAL INSTALLATION. FINAL INSPECTION IS NOT CONSIDERED COMPLETE UNTIL DESIGNATED DISTRICT TRAFFIC PERSONNEL INSPECT THE TRAFFIC SIGNAL AND ISSUE WRITTEN APPROVAL. IF ISSUES ARE FOUND DURING THE FINAL INSPECTION THAT EFFECT THE SAFETY OF THE TRAVELING PUBLIC AND/OR THE EFFICIENCY OF THE INTERSECTION, THE SIGNAL SHALL NOT BE ACTIVATED ON THE PROPOSED DATE. ANY PUNCH LIST ITEMS THAT ARE FOUND SHALL BE CORRECTED AND REINSPECTED BY DISTRICT TRAFFIC PERSONNEL PRIOR TO FINAL ACCEPTANCE. ODOT FORCES SHALL ONLY ASSUME DAY TO DAY MAINTENANCE OF THE TRAFFIC SIGNAL AFTER FINAL WRITTEN ACCEPTANCE HAS BEEN ISSUED.

WORK INSPECTION

THE CONTRACTOR SHALL PROVIDE THE PROJECT ENGINEER AND DISTRICT TRAFFIC ENGINEER WITH 72 HOUR NOTICE OF ANY SIGNAL WORK TO BE PERFORMED AT THE SR 775 INTERCHANGE SO THAT INSPECTION SERVICES CAN BE SUPPLIED.

ITEM 632 SIGNALIZATION, MISC.: COMBINATION STRAIN POLE, TYPE TC-81.11 AND SIGN SUPPORT, TC-9.31

THIS SUPPORT SHALL CONSIST OF A TC-81.11 DESIGN 12 POLE WITH A TC-9.31 DESIGN 2 SIGN SUPPORT ARM. ALL SIGNAL SUPPORT ITEMS REQUIRED BY C&MS ITEM 632 AND ALL SIGN SUPPORT ITEMS REQUIRED BY C&MS ITEM 630 SHALL BE INCLUDED AS PART OF THIS SUPPORT.

PAYMENT WILL BE AT THE CONTRACT UNIT PRICE AND WILL BE FULL COMPENSATION FOR ALL LABOR, MATERIALS, TOOLS, EQUIPMENT AND OTHER INCIDENTALS NECESSARY FOR EACH SUPPORT FURNISHED, IN PLACE, COMPLETE AND ACCEPTED.

ITEM 633 CABINET TYPE TS2, AS PER PLAN

THE CABINET SHALL BE FURNISHED AND INSTALLED ACCORDING TO CMS 633 AND 733 AND BE LISTED ON THE TRAFFIC AUTHORIZED PRODUCTS LIST (TAP).

THE GROUND-MOUNTED CABINET SHALL BE A NEMA TS-2, TYPE 1, CABINET SIZE 7 WITH 16 LOAD SWITCH BAYS, LED UNDER-SHELF LIGHTING, POWER HARNESSES FOR BOTH TS2 TYPE 1 AND TYPE 2 CONTROLLERS AND SHALL HAVE A MINIMUM OF THREE SHELVES.

EACH CABINET SHALL COME EQUIPPED WITH TWO 16-CHANNEL CABINET DETECTOR RACKS (CDR) INCLUDING BUS INTERFACE UNITS (BIU). THE LOOP DETECTOR TERMINATION PANEL FOR THE SECOND DETECTOR RACK SHALL BE OMITTED.

THE CABINET SHALL BE FURNISHED WITH AN EDI MMU AS ALLOWED ON THE TAP/APPROVED PRODUCTS LIST.

PAYMENT FOR ITEM 633 CABINET, TYPE TS-2, AS PER PLAN WILL BE AT THE CONTRACT BID PRICE PER EACH COMPLETE AND IN PLACE INCLUDING ALL CONNECTIONS TESTED AND ACCEPTED.

GROUNDING AND BONDING

THE REQUIREMENTS OF THE CONSTRUCTION AND MATERIAL SPECIFICATIONS (C&MS) AND THE TC SERIES OF STANDARD CONSTRUCTION DRAWINGS ARE MODIFIED AS FOLLOWS:

1. ALL METALLIC PARTS CONTAINING ELECTRICAL CONDUCTORS SHALL BE PERMANENTLY JOINED TO FORM AN EFFECTIVE GROUND FAULT CURRENT PATH BACK TO THE GROUNDED CONDUCTOR IN THE POWER SERVICE DISCONNECT SWITCH.

- *A. PROVIDE AN EQUIPMENT GROUNDING CONDUCTOR IN METALLIC CONDUITS (725.04) IN ADDITION TO THE CONDUCTORS SPECIFIED AND BOND THE CONDUIT TO THIS GROUNDING CONDUCTOR.*
- *B. WHEN AN EQUIPMENT GROUNDING CONDUCTOR IS REQUIRED IN PLASTIC CONDUIT (725.05), THE INSTALLATION SHALL INCLUDE A SEPARATE EQUIPMENT GROUNDING CONDUCTOR IN ADDITION TO THE CONDUCTORS SPECIFIED.*
- *C. METALLIC CONDUIT CARRYING THE LOOP WIRES FROM IN THE PAVEMENT TO THE PULL BOX SPLICE LOCATION WILL ONLY BE BONDED AT THE PULL BOX END, AND WILL NOT CONTAIN AN EQUIPMENT GROUNDING CONDUCTOR.*
- *D. IF MULTIPLE CONDUIT RUNS BEGIN AND END AT THE SAME POINTS, ONLY ONE EQUIPMENT GROUNDING CONDUCTOR IS REQUIRED.*
- *E. IF AN EQUIPMENT GROUNDING CONDUCTOR IS NEEDED IN CONDUIT BETWEEN SIGNALIZED INTERSECTIONS FOR UNDERGROUND INTERCONNECT CABLE, THE GROUNDING SYSTEM FOR EACH SIGNALIZED INTERSECTION WILL BE SEPARATED ABOUT MIDWAY BETWEEN THE INTERSECTIONS.*
- *F. THE MESSENGER WIRE AT SIGNALIZED INTERSECTIONS WILL BE USED AS THE CONDUCTIVE PATH FROM CORNER TO CORNER IF CONDUIT IS NOT PROVIDED UNDER THE ROADWAY. WHEN CONDUIT CONNECTS THE CORNERS OF AN INTERSECTION, AN EQUIPMENT GROUNDING CONDUCTOR SHALL BE USED IN THE CONDUIT.*

2. CONDUITS.

- *A. THE 725.04 CONDUIT SHALL HAVE GROUNDING BUSHINGS INSTALLED AT ALL TERMINATION POINTS. THE BUSHING MATERIAL SHALL BE COMPATIBLE WITH GALVANIZED STEEL CONDUIT AND THE GROUNDING LUG MATERIAL SHALL BE COMPATIBLE FOR USE WITH COPPER WIRE. THREADED OR COMPRESSION TYPE BUSHINGS MAY BE USED.*
- *B. THE 725.05 CONDUIT SHALL HAVE THE INSIDE AND OUTSIDE DIAMETERS OF THE CONDUIT DEBURRED AT ALL TERMINATION POINTS.*
- *C. BOTH ENDS OF METALLIC CONDUIT SHALL BE BONDED TO THE EQUIPMENT GROUNDING CONDUCTOR.*
- *D. METALLIC CONDUIT MAY BE BONDED TO METALLIC BOXES THROUGH THE USE OF CONDUIT FITTINGS UL APPROVED FOR THIS TYPE OF CONNECTION, WITH THE BOX BONDED TO THE EQUIPMENT GROUNDING CONDUCTOR.*

3. WIRE FOR GROUNDING AND BONDING.

- *A. USE INSULATED, COPPER WIRE FOR THE EQUIPMENT GROUNDING CONDUCTOR. BONDING JUMPERS IN BOXES AND ENCLOSURES MAY BE BARE OR INSULATED COPPER WIRE. WIRE SIZE SHALL BE AS FOLLOWS:*
  - *I. USE 4 AWG BETWEEN THE POWER SERVICE AND SUPPORTS, POLES, PEDESTALS, CONTROLLER OR FLASHER CABINETS.*
  - *II. USE A MINIMUM 8 AWG BETWEEN LOOP DETECTOR PULL BOXES AND THE FIRST CONDUIT THAT REQUIRES A LARGER SIZE AS SPECIFIED IN 3.A.I ABOVE.*
  - *III. USE A MINIMUM 8 AWG BETWEEN THE "PREPARE TO STOP WHEN FLASHING" INSTALLATION (INCLUDING SUPPORT) AND THE FIRST CONDUIT THAT REQUIRES A LARGER SIZE AS SPECIFIED IN 3.A.I ABOVE.*
  - *IV. THE INSULATION SHALL BE GREEN OR GREEN WITH YELLOW STRIPE(S). FOR 4 AWG OR LARGER, INSULATION MAY ALSO BE BLACK WITH GREEN TAPE/LABELS INSTALLED AT ALL ACCESS POINTS.*
- *B. IN A HIGHWAY LIGHTING SYSTEM, THE EQUIPMENT GROUNDING CONDUCTOR SHALL BE THE SAME WIRE SIZE AS THE DUCT CABLE OR DISTRIBUTION CABLE CIRCUIT CONDUCTORS, WITH THE MINIMUM CONDUCTOR SIZE OF 4 AWG. BONDING JUMPERS WILL BE MINIMUM SIZE 4 AWG.*

4. GROUND ROD.

- *A. A 3/4 INCH SCHEDULE 40 PVC CONDUIT WILL BE USED IN FOUNDATIONS AND CONCRETE WALLS FOR THE GROUNDING CONDUCTOR (GROUND WIRE) RACEWAY TO THE GROUND ROD. SHOULD METALLIC CONDUIT BE USED, BOTH ENDS OF THE CONDUIT SHALL BE BONDED TO THE GROUNDING CONDUCTOR.*
- *B. THE TYPICAL GROUNDING CONDUCTOR (GROUND WIRE) SHALL BE 4 AWG INSULATED, COPPER.*

5. THE GREEN CONDUCTOR IN SIGNAL CABLES (CONDUCTOR #4) SHALL NOT BE USED TO SUPPLY POWER TO A SIGNAL INDICATION. IT WILL BE CONNECTED TO THE SIGNAL BODY AS AN EQUIPMENT GROUND IN ALUMINUM HEADS AND IT WILL BE UNUSED IN PLASTIC HEADS. UNUSED CONDUCTORS SHALL BE GROUNDED IN THE CABINET. TYPICAL USE OF CONDUCTORS IS AS FOLLOWS:

GROUNDING AND BONDING (CONT.)

COND. NO.	*COLOR*	*VEHICLE SIGNAL*	*PEDESTRIAN SIGNAL*
1	*BLACK*	*GREEN BALL*	*#1 WALK*
2	*WHITE*	*AC NEUTRAL*	*AC NEUTRAL*
3	*RED*	*RED BALL*	*#1 DW/FDW*
4	*GREEN*	*EQUIPMENT GROUND*	*EQUIPMENT GROUND*
5	*ORANGE*	*YELLOW BALL*	*#2 DW/FDW*
6	*BLUE*	*GREEN ARROW*	*#2 WALK*
7	*WHITE/BLACK STRIPE*	*YELLOW ARROW*	*NOT USED*

6. POWER SERVICE AND DISCONNECT SWITCH.

- *A. AT THE POWER SERVICE LOCATION, THE GROUNDING CONDUCTOR (GROUND WIRE) FROM THE DISCONNECT SWITCH NEUTRAL (AC-) BAR TO THE GROUND ROD SHALL BE A CONTINUOUS, UNSPLICED CONDUCTOR. IF SPLICED, IT SHALL BE AN EXOTHERMIC WELD BUTT SPLICE.*
- *B. THE SERVICE NEUTRAL (AC-) SHALL ONLY BE CONNECTED TO GROUND AT THE PRIMARY POWER SERVICE DISCONNECT SWITCH.*
  - *I. NEMA CONTROLLER CABINETS: IF A POWER SERVICE DISCONNECT SWITCH IS LOCATED BEFORE THE CONTROLLER CABINET, THE NEUTRAL (AC-) AND THE GROUNDING BARS IN THE CONTROLLER CABINET SHALL NOT BE CONNECTED TOGETHER AS SHOWN IN NEMA TS-2, FIGURE 5-4.*
  - *II. IF SECONDARY DISCONNECT SWITCHES ARE CONNECTED AFTER THE PRIMARY DISCONNECT SWITCH, THE NEUTRAL (AC-) SHALL ONLY BE GROUNDED AT THE PRIMARY SWITCH. EQUIPMENT GROUNDING CONDUCTORS SHALL BE BROUGHT TO THE PRIMARY SWITCH, BUT SHALL BE GROUNDED AT BOTH SECONDARY AND PRIMARY SWITCHES.*

7. PAYMENT ALL MATERIALS AND WORK REQUIRED TO COMPLETE THE EFFECTIVE GROUND FAULT CURRENT PATH SYSTEM ARE INCIDENTAL TO THE CONDUCTORS INSTALLED BY CONTRACT.

DRAFT Stage 3 - Not for Construction 09/23/2024

CALCULATED MJH | CHECKED KAE

TRAFFIC SIGNAL PLAN GENERAL NOTES

LAW-7-2.17

764/1247

C:\EEC\Projects\LAW-7(Stantec)\CADD\Phase_2B\Signals\Sheets\764-75923_CN001.dgn Sheet 5/14/2024 10:06:38 AM mhunt

ITEM 633 UNINTERRUPTIBLE POWER SUPPLY (UPS), 1000 WATT, AS PER PLAN

IN ADDITION TO THE REQUIREMENTS OF C&MS 633 AND 733, POLE ATTACHMENT HARDWARE WILL BE INCLUDED FOR POLE-MOUNTED CABINETS, AND A CABINET RISER (8 INCH MINIMUM) AND ANCHOR BOLTS WILL BE PROVIDED FOR BASE-MOUNTED CABINETS. BEFORE PERFORMING THE WORK, THE CONTRACTOR, THE DISTRICT TRAFFIC ENGINEER AND THE PROJECT ENGINEER WILL PERFORM A SITE INSPECTION TO ESTABLISH THE LOCATION OF THE UPS CABINET AND FOUNDATION.

THE UPS CABINET SHALL INCLUDE A GENERATOR POWER PANEL WITH A HEAVY DUTY POWER RELAY VERSUS THE LINE VOLTAGE GENERATOR SWITCH. THE GENERATOR INLET SHALL BE A RECESSED PANEL WITH A DOOR THAT IS FLUSH WITH THE EXTERNAL SIDE OF THE UPS CABINET. IT SHALL INCLUDE A RECESSED PLUG, AUTOMATIC TRANSFER SWITCH AND A DOOR THAT SECURELY CLOSES OVER THE POWER CORD.

THE CABINET SHALL HAVE A DOOR STOP MECHANISM AND THERMOSTATICALLY CONTROLLED FAN.

AFTER FOUR (4) HOURS OF BATTERY RUNTIME, THE SYSTEM SHALL BE PROGRAMMED TO SWITCH THE INTERSECTION FROM FULL OPERATION TO CONTROLLER AUTOMATIC FLASH OPERATION THROUGH THE MONITOR. THE CONTROLLER SHALL BE PROGRAMMED SO THAT FLASH OPERATION SHALL BEGIN ONCE THE INTERSECTION RUNS MINOR STREET GREEN (TYP. PH. 4 &8), ALL-RED CLEARANCE, AND THEN FLASH OPERATION.

THE UPS OUTPUT NOTIFICATIONS FOR ON BATTERY, BATTERY 2-HOUR TIMER, AND LOW BATTERY SHALL BE WIRED INTO THE TRAFFIC SIGNAL CABINET BACK PANEL TO PROVIDE SPECIAL STATUS ALARMS FOR EACH OUTPUT INTO THE SIGNAL CONTROLLER.

THIS ITEM SHALL INCLUDE A RED LED STATUS INDICATOR LAMP TO ALLOW MAINTENANCE PERSONNEL AND LAW ENFORCEMENT TO QUICKLY ASSESS WHETHER A TRAFFIC SIGNAL CABINET IS BEING POWERED BY A UPS. THE LED HOUSING SHALL BE NEMA 4X, IP65 OR IP66, RATED FOR OUTDOOR USE AND BE TAMPER/ SHATTER RESISTANT. IT SHALL BE A DOMED ENCLOSURE CONTAINING A RED LENS WITH LED THAT IS VISIBLE FROM 100 FOOT MINIMUM. THE ENCLOSURE AND LED MODULE SHOULD BE PLACED AND CENTERED ON THE TOP SURFACE OF THE UPS CABINET AND SEALED FROM WATER INTRUSION. IT SHOULD BE WIRED USING MINIMUM 20GA STRANDED, INSULATED HOOKUP WIRE TO THE STATUS RELAY OUTPUTS OF THE UPS. THE WIRES SHALL BE TERMINATED BY LUGS AT THE DISPLAY END AND PERMANENTLY LABELED "BACKUP POWER STATUS DISPLAY", WITH WIRE POLARITY INDICATED. THE RED LED SHALL ONLY ILLUMINATE TO INDICATE THE CABINET IS OPERATING UNDER UPS BACKUP POWER (THE "BACKUP" OPERATING CONDITION). THIS ITEM INCLUDES PROGRAMMING THE UPS STATUS RELAY OUTPUTS TO PRODUCE THE LAMP STATUS DISPLAYS. THESE STATUS DISPLAYS WILL BE SOLID 100% DUTY CYCLE (NOT FLASHING) DISPLAYS. THE OPERATING VOLTAGE OF THE LED LAMP SHALL BE 120V AC UNLESS OTHERWISE INDICATED.

ITEM 625 LUMINAIRE, CONVENTIONAL, SOLID STATE (LED) AS PER PLAN: 120V

IN ADDITION TO THE REQUIREMENTS OF ODOT'S CONSTRUCTION AND MATERIALS SPECIFICATION, LUMINAIRES SHALL BE:

LUMINAIRES FOR CONVENTIONAL LIGHTING UNITS WITH AN IES M-SC DISTRIBUTION, 3000K CCT, AND 200 WATT (EQUIVALENT) LED LAMPS. LUMINAIRES SHALL BE EATON STREETWORKS NAVION NVN-AE-03-E-U-T3R-10K-7030-AP (15,700 LUMENS), AMERICAN ELECTRIC AUTOBAHN SERIES ATBM-P60-MVOLT-R3-4B-3K (20,000 LUMENS), LUMEC ROADFOCUS RFM-160W48LED-3K-G2-R3M-UNV-GY3 (18,283 LUMENS), OR EQUAL AS APPROVED BY THE ENGINEER. EACH FIXTURE SHALL INCLUDE AN INTEGRAL PHOTOCELL.

PAYMENT WILL BE MADE AT THE UNIT PRICE BID UNDER CMS ITEM 625, "LUMINAIRE, CONVENTIONAL, AS PER PLAN", WHICH SHALL BE FULL COMPENSATION FOR ALL LABOR, MATERIALS AND INCIDENTALS REQUIRED TO COMPLETE THIS ITEM IN A SATISFACTORY AND WORKMANLIKE MANNER.

ADVANCE RADAR DETECTION

THIS ITEM OF WORK SHALL CONSIST OF FURNISHING AND INSTALLING A WAVETRONIX SMARTSENSOR ADVANCE DETECTION UNIT (MODEL SS-200E). THE DETECTION UNIT SHALL INCLUDE THE FOLLOWING:

1. POWER SHALL BE PROVIDED FROM THE TRAFFIC CABINET.
2. ALL REQUIRED INPUTS CARDS SHALL BE INCLUDED IN THE TRAFFIC CABINET AND SHALL BE COMPATIBLE WITH CALTRANS, NEMA TS1 AND NEMA TS2 DETECTOR RACKS. THE CARDS SHALL PROVIDE TRUE PRESENCE DETECTOR CALLS OR CONTACT CLOSURE TO THE TRAFFIC CONTROLLER.
3. THE UNIT SHALL BE MOUNTED DIRECTLY TO A POLE OR MAST ARM, AS RECOMMENDED BY THE MANUFACTURER. CABLE(S) SHALL BE PROVIDED AS REQUIRED AND RECOMMENDED BY THE MANUFACTURER.
4. SURGE PROTECTION DEVICES, AS RECOMMENDED BY THE MANUFACTURER SHALL BE INCLUDED BOTH AT THE POLE WHERE THE UNIT IS LOCATED TO PROTECT THE UNIT AND IN THE TRAFFIC CABINET TO PROTECT THE CABINET ELECTRONICS.
5. THE MANUFACTURER'S REPRESENTATIVE SHALL BE ON SITE DURING INSTALLATION AND TESTING AND SHALL PROVIDE ONSITE TRAINING ON THE SETUP, OPERATION AND MAINTENANCE OF THE UNIT.
6. A SERIAL TO ETHERNET COMMUNICATIONS MODULE AND ETHERNET CABLE (MINIMUM 7 FEET).
7. THE POWER SUPPLY AND COMMUNICATION MODULES SHALL BE SECURED TO A SINGLE PANEL THAT CAN BE MOUNTED INTERIOR TO THE TRAFFIC CABINET. THE PANEL SHALL INCLUDE MODULAR-PLUG STYLE CONNECTIONS FOR UP TO FOUR (4) SENSOR CABLES. ADDITIONAL SENSORS MAY BE HARD-WIRED TO THE COMMUNICATION MODULES, AS NECESSARY.

PAYMENT FOR ITEM 809 ADVANCE RADAR DETECTION SHALL BE MADE AT THE CONTRACT UNIT PRICE FOR EACH UNIT, COMPLETE AND IN PLACE INCLUDING ALL REQUIRED CABINET HARDWARE, MOUNTING BRACKETS, CABLES, CONDUIT, CONNECTIONS TESTED AND ACCEPTED, AND ANY OTHER NECESSARY HARDWARE TO ESTABLISH A FULLY FUNCTIONAL DETECTION SYSTEM.

STOP-LINE RADAR DETECTION

THIS ITEM OF WORK SHALL CONSIST OF FURNISHING AND INSTALLING A WAVETRONIX SMARTSENSOR ADVANCE DETECTION UNIT (MODEL SS-200E). THE DETECTION UNIT SHALL INCLUDE THE FOLLOWING:

1. POWER SHALL BE PROVIDED FROM THE TRAFFIC CABINET.
2. ALL REQUIRED INPUTS CARDS SHALL BE INCLUDED IN THE TRAFFIC CABINET AND SHALL BE COMPATIBLE WITH CALTRANS, NEMA TS1 AND NEMA TS2 DETECTOR RACKS. THE CARDS SHALL PROVIDE TRUE PRESENCE DETECTOR CALLS OR CONTACT CLOSURE TO THE TRAFFIC CONTROLLER.
3. THE UNIT SHALL BE MOUNTED DIRECTLY TO A POLE OR MAST ARM, AS RECOMMENDED BY THE MANUFACTURER. CABLE(S) SHALL BE PROVIDED AS REQUIRED AND RECOMMENDED BY THE MANUFACTURER.
4. SURGE PROTECTION DEVICES, AS RECOMMENDED BY THE MANUFACTURER SHALL BE INCLUDED BOTH AT THE POLE WHERE THE UNIT IS LOCATED TO PROTECT THE UNIT AND IN THE TRAFFIC CABINET TO PROTECT THE CABINET ELECTRONICS.
5. THE MANUFACTURER'S REPRESENTATIVE SHALL BE ON SITE DURING INSTALLATION AND TESTING AND SHALL PROVIDE ONSITE TRAINING ON THE SETUP, OPERATION AND MAINTENANCE OF THE UNIT.
6. A SERIAL TO ETHERNET COMMUNICATIONS MODULE AND ETHERNET CABLE (MINIMUM 7 FEET).
7. THE POWER SUPPLY AND COMMUNICATION MODULES SHALL BE SECURED TO A SINGLE PANEL THAT CAN BE MOUNTED INTERIOR TO THE TRAFFIC CABINET. THE PANEL SHALL INCLUDE MODULAR-PLUG STYLE CONNECTIONS FOR UP TO FOUR (4) SENSOR CABLES. ADDITIONAL SENSORS MAY BE HARD-WIRED TO THE COMMUNICATION MODULES, AS NECESSARY.

PAYMENT FOR ITEM 809 STOP-LINE RADAR DETECTION SHALL BE MADE AT THE CONTRACT UNIT PRICE FOR EACH UNIT, COMPLETE AND IN PLACE INCLUDING ALL REQUIRED CABINET HARDWARE, MOUNTING BRACKETS, CABLES, CONDUIT, CONNECTIONS TESTED AND ACCEPTED, AND ANY OTHER NECESSARY HARDWARE TO ESTABLISH A FULLY FUNCTIONAL DETECTION SYSTEM.

TS-2 SIZE 6/ 7 CABINET DETAIL
CABINET FOUNDATION DETAIL

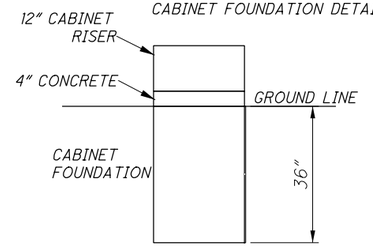

CABINET AND WORK PAD DETAIL

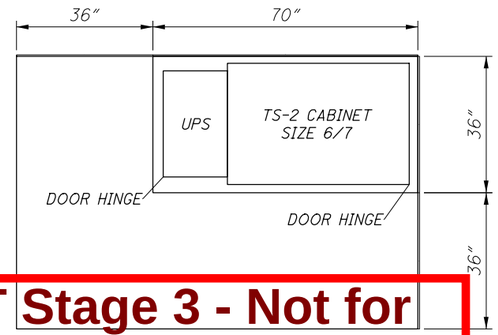

NOTES:

1. The size of the UPS foundation may vary based on the cabinet size provided.
2. The UPS foundation elevation should match the cabinet foundation elevation.
3. The UPS cabinet shall be mounted flush against the signal cabinet and sealed.
4. Conduit and wiring from the signal cabinet to the UPS shall be installed through the cabinet floor.

DRAFT Stage 3 - Not for Construction 09/23/2024

CALCULATED MJH | CHECKED KAE

TRAFFIC SIGNAL PLAN
GENERAL NOTES

LAW-7-2.17

765
1247

C:\EEC\Projects\LAW-7(Stantec)\CADD\Phase_2B\Signals\Sheets\765-75923_CN002.dgn Sheet 5/13/2024 2:56:22 PM mhunt

SHEET NUMBER												PARTICIPATION	ITEM	ITEM EXT.	GRAND TOTAL	UNIT	DESCRIPTION	SEE SHEET NO.
										767	769	01/NHS/01						
																	TRAFFIC SIGNALS	
										4		4	625	18100	4	EACH	BRACKET ARM, 12'	
										882		882	625	23306	882	FT	NO. 10 AWG 600 VOLT DISTRIBUTION CABLE	
										22		22	625	25400	22	FT	CONDUIT, 2", 725.04	
										4		4	625	26250	4	EACH	LUMINAIRE, CONVENTIONAL	
										22		22	625	29000	22	FT	TRENCH	
										10		10	625	32000	10	EACH	GROUND ROD	
										14		14	632	05006	14	EACH	VEHICULAR SIGNAL HEAD, MISC.: 3-SECTION, 12" LENS, 1-WAY, POLYCARBONATE	
										2		2	632	05086	2	EACH	VEHICULAR SIGNAL HEAD, MISC.: 5-SECTION, 12" LENS, 1-WAY, POLYCARBONATE	
										16		16	632	25000	16	EACH	COVERING OF VEHICULAR SIGNAL HEAD	
										728		728	632	29900	728	FT	MESSENGER WIRE, 7 STRAND. 1/4" DIAMETER WITH ACCESSORIES	
										728		728	632	30600	728	FT	TETHER WIRE, WITH ACCESSORIES	
										860		860	632	40500	860	FT	SIGNAL CABLE, 5 CONDUCTOR, NO. 14 AWG	
										458		458	632	40700	458	FT	SIGNAL CABLE, 7 CONDUCTOR, NO. 14 AWG	
										8		8	632	64000	8	EACH	STRAIN POLE FOUNDATION	
										2		2	632	70001	2	EACH	POWER SERVICE, AS PER PLAN	
										2		2	632	86120	2	EACH	STRAIN POLE, TYPE TC-81.11, DESIGN 8	
										3		3	632	87120	3	EACH	COMBINATION STRAIN POLE, TYPE TC-81.11, DESIGN 8	
										1		1	632	87140	1	EACH	COMBINATION STRAIN POLE, TYPE TC-81.11, DESIGN 12	
										2		2	632	90400	2	EACH	SIGNALIZATION, MISC.: COMBINATION STRAIN POLE, TC-81.11 AND TC-9.31	764
										2		2	633	65511	2	EACH	CABINET, TYPE TS-2, AS PER PLAN	764
										2		2	633	67100	2	EACH	CABINET FOUNDATION	
										2		2	633	67200	2	EACH	CONTROLLER WORK PAD	
										2		2	633	75001	2	EACH	UNINTERRUPTIBLE POWER SUPPLY (UPS), 1000 WATT, AS PER PLAN	765
											70	70	644	00500	70	FT	STOP LINE	
										4		4	809	69000	4	EACH	ADVANCE RADAR DETECTION	765
										3		3	809	69100	3	EACH	STOP LINE RADAR DETECTION	765
										2		2	815	30000	2	EACH	SPREAD SPECTRUM RADIO	

CALCULATED E.A.E.
CHECKED M.J.H.

TRAFFIC SIGNAL GENERAL SUMMARY

LAW-7-2.17

766
1247

DRAFT Stage 3 - Not for Construction 09/23/2024

C:\EEC\Projects\LAW-7(Stantec)\CADD\Phase_2B\Signals\Sheets\766-75923_CG001.dgn Sheet 5/14/2024 10:15:06 AM mhunt

SHEET NO.	LOCATION	625					632														633				809		815
		CONDUIT, 2", 725.04	CONDUIT, 3", 725.04	TRENCH	UNDERGROUND WARNING/ MARKING TAPE	GROUND ROD	VEHICULAR SIGNAL HEAD, (LED), 3-SECTION, 12" LENS, 1-WAY, POLYCARBONATE	VEHICULAR SIGNAL HEAD, (LED), 5-SECTION, 12" LENS, 1-WAY, POLYCARBONATE	COVERING OF VEHICULAR SIGNAL HEADS	MESSENGER WIRE, 7 STRAND 3/8" DIAMETER WITH ACCESSORIES	TETHER WIRE WITH ACCESSORIES	SIGNAL CABLE, 5-CONDUCTOR, #14 AWG	SIGNAL CABLE, 7-CONDUCTOR, #14 AWG	STRAIN POLE FOUNDATION	STRAIN POLE TYPE TC-81.11, DESIGN 8	COMBINATION STRAIN POLE TYPE TC-81.11, DESIGN 8	COMBINATION STRAIN POLE TYPE TC-81.11, DESIGN 12	ITEM 632 SIGNALIZATION, MISC.: COMBINATION STRAIN POLE, TYPE TC-81.11 AND SIGN SUPPORT, TC-9.31			CABINET, TYPE TS2, AS PER PLAN	CABINET FOUNDATION	CONTROLLER WORK PAD, AS PER PLAN	UNINTERRUPTIBLE POWER SUPPLY (UPS), 1000 WATT, AS PER PLAN	ADVANCE RADAR DETECTION	STOP-BAR RADAR DETECTION	SPREAD SPECTRUM RADIO
		FT	FT	FT	FT	EACH	EACH	EACH	EACH	FT	FT	FT	FT	EACH	EACH	EACH	EACH	EACH			EACH	EACH	EACH	EACH	EACH	EACH	EACH
768	CONTROL CABINET					1															1	1	1	1			1
	CABINET TO POLE "SP2"	11	11	11	11																						
	POLE "SP2"					1	1		1					1				1							1		
	POLE "SP2" TO POLE "SP1"						2	1	3	110	110																
	POLE "SP1"					1								1		1											
	POLE "SP2" TO POLE "SP4"						2		2	109	109																
	POLE "SP4"					1								1		1										1	
	POLE "SP4" TO POLE "SP3"						2		2	95	95																
	POLE "SP3"					1								1	1										1	1	
	CABINET TO 1A												135														
	1A TO 6B											22															
	6B TO 6A											22															
	CABINET TO 4A											82															
	4A TO 4B											22															
	CABINET TO 2B											191															
	2B TO 2A											22															
	CABINET TO 2C											38															
772	CONTROL CABINET					1															1	1	1	1			
	CABINET TO POLE "SP4"	11	11	11	11																						
	POLE "SP4"					1								1			1										1
	POLE "SP4" TO POLE "SP2"									178	178																
	POLE "SP2"					1								1				1							1	1	
	BULLRING 1 TO POLE "SP1"						3		3	70	70																
	POLE "SP1"					1								1		1											
	BULLRING 2 TO POLE "SP3"						1	1	2	70	70																
	POLE "SP3"					1	1		1					1	1										1		
	POLE "SP1" TO POLE "SP3"						2		2	96	96																
	CABINET TO 2B												105														
	2B-2A											22															
	CABINET TO 6D											184															
	CABINET TO 3B											189															
	3B-3A											22															
	CABINET TO 6C												218														
	6C-6B											22															
	6B-6A											22															
TO GENERAL SUMMARY		22	22	22	22	10	14	2	16	728	728	860	458	8	2	3	1	2			2	2	2	2	4	3	2

SHEET NO.	LOCATION	625					632																				
		BRACKET ARM, 12'	NO. 10 AWG 600 VOLT DISTRIBUTION CABLE	LUMINAIRE, CONVENTIONAL, SOLID STATE (LED), AS PER PLAN "B"			POWER SERVICE	POWER CABLE, 2 CONDUCTOR, NO. 8 AWG	SERVICE CABLE, 3 CONDUCTOR, NO. 8 AWG																	
		EACH	FT	EACH			EACH	FT	FT																		
768	CONTROL CABINET						1	33	35																		
772	CONTROL CABINET						1	33	35																		
768	CABINET TO LT-1	1	786	1																							
768	CABINET TO LT-2	1	129	1																							
772	CABINET TO LT-1	1	753	1																							
772	CABINET TO LT-2	1	129	1																							
TO GENERAL SUMMARY		4	882	4			2	66	70																		

CALCULATED EAE
CHECKED MJH

TRAFFIC SIGNAL SUBSUMMARY
SR 775 INTERCHANGE

LAW-7-2.17

DRAFT Stage 3 - Not for Construction 09/23/2024

767
1247

C:\EEC\Projects\LAW-7(Stantec)\CADD\Phase_2B\Signals\Sheets\767-75923_CS001.dgn Sheet 5/13/2024 3:15:12 PM mhunt

NOTES:
1) OPERATE THE TRAFFIC SIGNAL IN FLASHING MODE ON OPENING DAY. THE TRAFFIC SIGNAL SHALL BE CONVERTED TO FULL STOP AND GO OPERATION WHEN DIRECTED BY THE ENGINEER. SEE NEXT SHEET FOR PLAN DETAILS AND CONTINGENCY QUANTITIES.

2) STRAIN POLE "SP2" IS A COMBINATION SIGN SUPPORT/ STRAIN POLE. SEE TRAFFIC CONTROL PLANS FOR SIGN INFORMATION.

PLAN LEGEND

CONTROLLER CABINET	
COMBINATION SIGNAL SUPPORT	
SIGNAL SUPPORT	
TRAFFIC SIGNAL, 3-UNIT HEAD, 12"	
TRAFFIC SIGNAL, 5-UNIT HEAD, 12"	
DETECTION ZONE	
STOP BAR RADAR DETECTOR	S
DILEMMA RADAR DETECTOR	D
ETHERNET RADIO	
RDC =	RADAR DETECTOR CABLE
SS =	SPREAD SPECTRUM ANTENNA CABLE

SIGNAL INDICATIONS

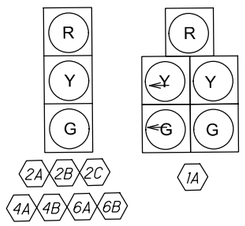

ALL SIGNAL HEADS SHALL BE 12" LENS, LED, WITH BACKPLATES

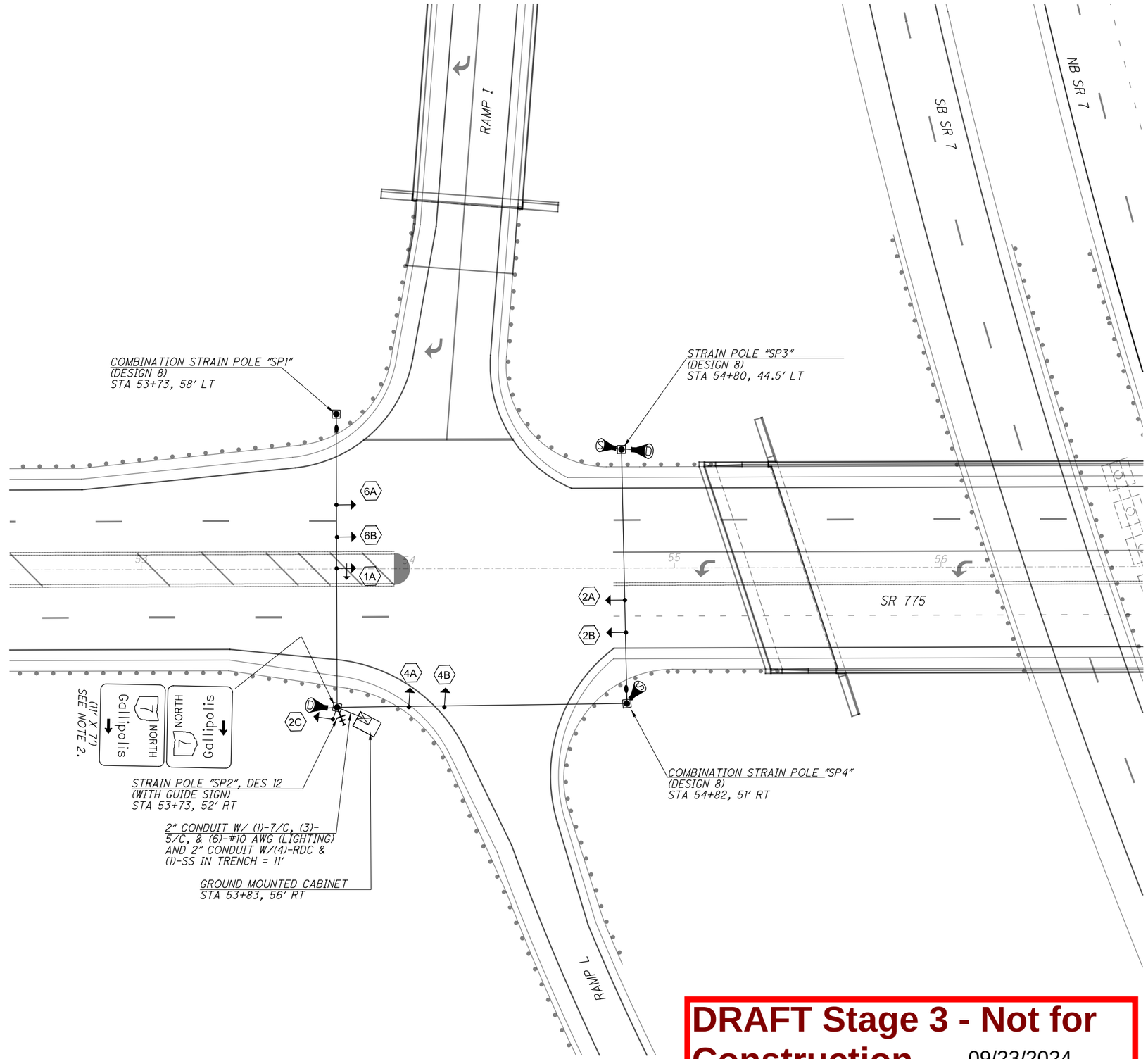

DRAFT Stage 3 - Not for Construction 09/23/2024

HORIZONTAL SCALE IN FEET
0 10 20 40

CALCULATED MJH
CHECKED KAE

TRAFFIC SIGNAL PLAN - FLASHING
SR 775 AT SOUTH RAMPS

LAW-7-2.17

768
1247

C:\EEC\Projects\LAW-7(Stantec)\CADD\Phase_2B\Signals\Sheets\768-75923_CP101.dgn Sheet 5/13/2024 3:02:49 PM mhunt

FIELD WIRING HOOKUP CHART							
SIGNAL HEAD #	INDICATION	FIELD TERMINAL	FLASH	SIGNAL HEAD #	INDICATION	FIELD TERMINAL	FLASH
2A, 2B, 2C (NB)	R	ϕ2 R	Y	6A,6B (SB)	R	ϕ6 R	Y
	Y	ϕ2 Y			Y	ϕ6 Y	
	G	ϕ2 G			G	ϕ6 G	
1A (SB)	R	ϕ6 R	Y	4A,4B (EB)	R	ϕ4 R	R
	Y	ϕ6 Y			Y	ϕ4 Y	
	G	ϕ6 G			G	ϕ4 G	
	←Y	ϕ1 Y					
	←G	ϕ1 G					

NOTES:
1) THE CONTRACTOR SHALL CONVERT THE TRAFFIC SIGNAL TO FULL STOP AND GO OPERATIONS, WHEN DIRECTED BY THE ENGINEER (WITHIN 21 DAYS OF OPENING DAY). THE CONTRACTOR SHALL ACTIVATE THE NEW SIGNAL IN FULL CONFORMANCE WITH MT-120.00. A QUANTITY OF 70′ OF STOP LINE HAS BEEN CARRIED TO THE GENERAL SUMMARY FOR THIS PURPOSE. ALL OTHER COSTS TO ACTIVATE THE SIGNAL, INCLUDING REMOVAL OF PROPOSED STOP SIGNS ON RAMP I, SHALL BE CONSIDERED INCIDENTAL TO OTHER VARIOUS BID ITEMS.

RADAR DETECTION CHART							
RADAR DETECTION NO.	MOVEMENT	ASSOCIATED PHASE	DELAY PROGRAMMED IN CONTROLLER (SEC)	EXTENSION PROGRAMMED IN CONTROLLER (SEC)	DETECTOR NUMBER	PURPOSE	DETECTION ZONE LENGTH (FT)
RDZ4A	EB RT	4	10 SEC	-	RD1	CALL PHASE 4	140′
RDZ4B	EB LT	4	-	-	RD1	CALL PHASE 4	140′
RDZ1	SB LT	1	-	-	RD2	CALL PHASE 1	25′
Z-4*	EB TH	-	-	-	RD3	EXTEND PHASE 2	200′
Z-5*	WB TH	-	-	-	RD4	EXTEND PHASE 6	200′

* PROVIDE A DILEMMA ZONE COVERING THRU LANES FROM A POINT 200′ FROM THE STOP LINE TO A POINT 400′ FROM THE STOP LINE.

INTERSECTION: SR 775 AT SR 7 SOUTH RAMPS
MAINTAING AGENCY: ODOT

START-UP
START IN: FLASH
TIME FOR FLASH, ALL RED: 7 SEC
FIRST PHASE : 2 + 6
COLOR DISPLAYED: GREEN

DUAL ENTRY: | PHASES:
REST IN RED: PHASE 4

OVERLAP	A	B	C	D
PHASES	3	-	-	-

INTERVAL OR FEATURE	CONTROLLER MOVEMENT NO							
INTERSECTION MOVEMENT	1	2	3	4	5	6	7	8
DIRECTION	SBLT	NB	-	WB	-	SB	-	-
MIN GREEN (INITIAL) (SEC)	8	20	-	10	-	20	-	-
ADD INITIAL *(SEC/ACUATION)	-	-	-	-	-	-	-	-
MAX INITIAL (SEC.)	-	-	-	-	-	-	-	-
PASSAGE TIME (PRESET GAP) (SEC.)	2.0	1.0	-	0.5	-	1.0	-	-
TIME BEFORE REDUCTION *(SEC)	-	-	-	-	-	-	-	-
MINIMUM GAP *(SEC)	-	-	-	-	-	-	-	-
TIME TO REDUCE *SEC)	-	-	-	-	-	-	-	-
MAXIMUM GREEN I (SEC)	25.0	60.0	-	30.0	-	60.0	-	-
MAXIMUM GREEN II (SEC)	25.0	60.0	-	30.0	-	60.0	-	-
YELLOW CHANGE (SEC)	3.0	5.5	-	4.0	-	5.5	-	-
ALL RED CLEARANCE (SEC)	2.0	1.0	-	1.0	-	1.0	-	-
WALK (SEC)	-	-	-	-	-	-	-	-
PEDESTRIAN CLEAR (SEC)	-	-	-	-	-	-	-	-
RECALL MAXIMUM (ON/OFF)	-	OFF	-	OFF	-	OFF	-	-
RECALL MINIMUM (ON/OFF)	-	ON	-	OFF	-	ON	-	-
RECALL PED (ON/OFF)	-	OFF	-	OFF	-	OFF	-	-
MEMORY (ON/OFF)	-	ON	-	OFF	-	ON	-	-

* VOLUME DENSITY CONTROLS

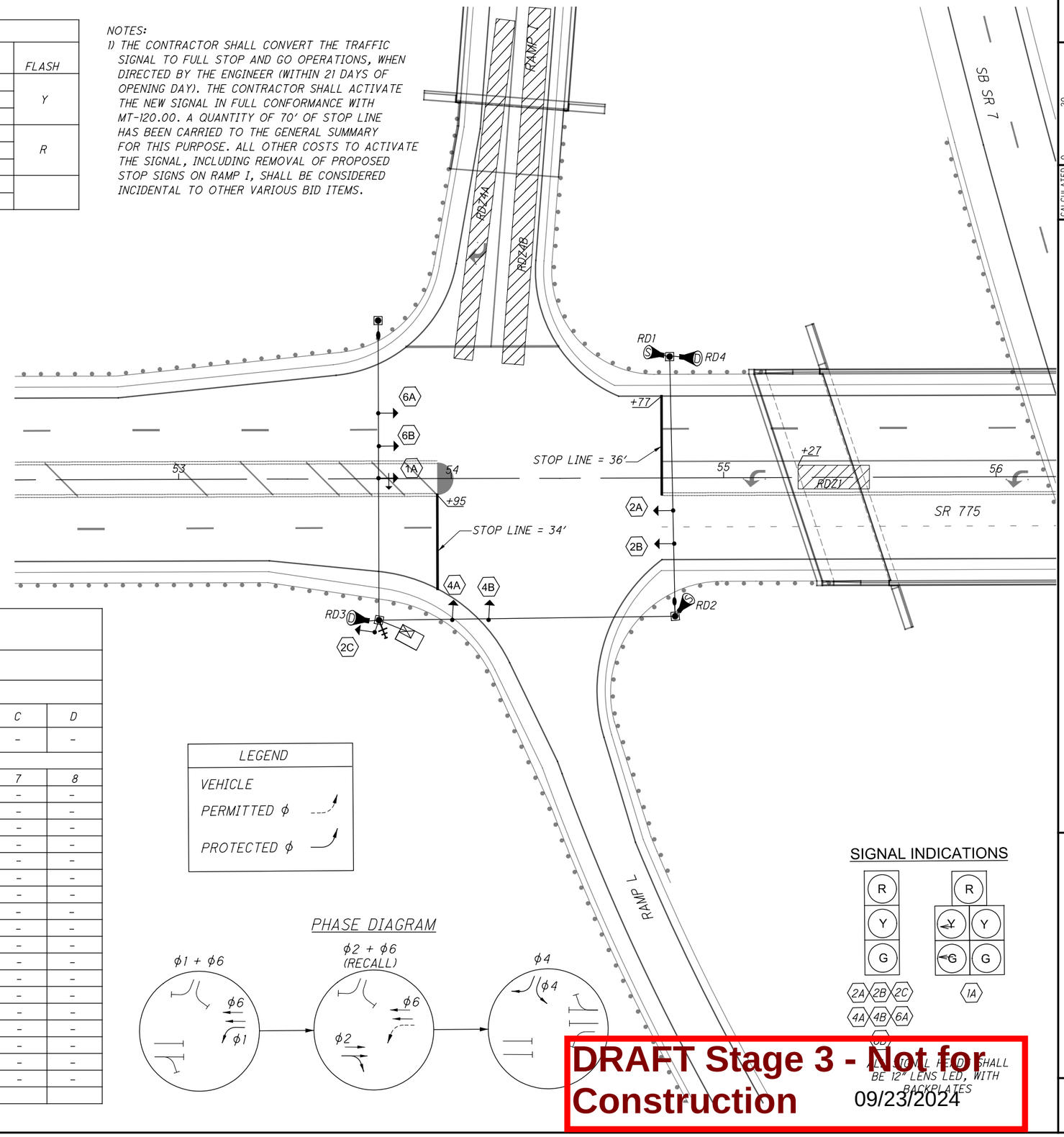

DRAFT Stage 3 - Not for Construction
09/23/2024

HORIZONTAL SCALE IN FEET
0 10 20 40
CALCULATED MJH
CHECKED KAE

TRAFFIC SIGNAL PLAN
SR 775 AT SR 7 SOUTH RAMPS

LAW-7-2.17

769
1247

C:\EEC\Projects\LAW-7(Stantec)\CADD\Phase_2B\Signals\Sheets\769-75923_CP102.dgn Sheet 5/21/2024 10:07:50 AM mhunt

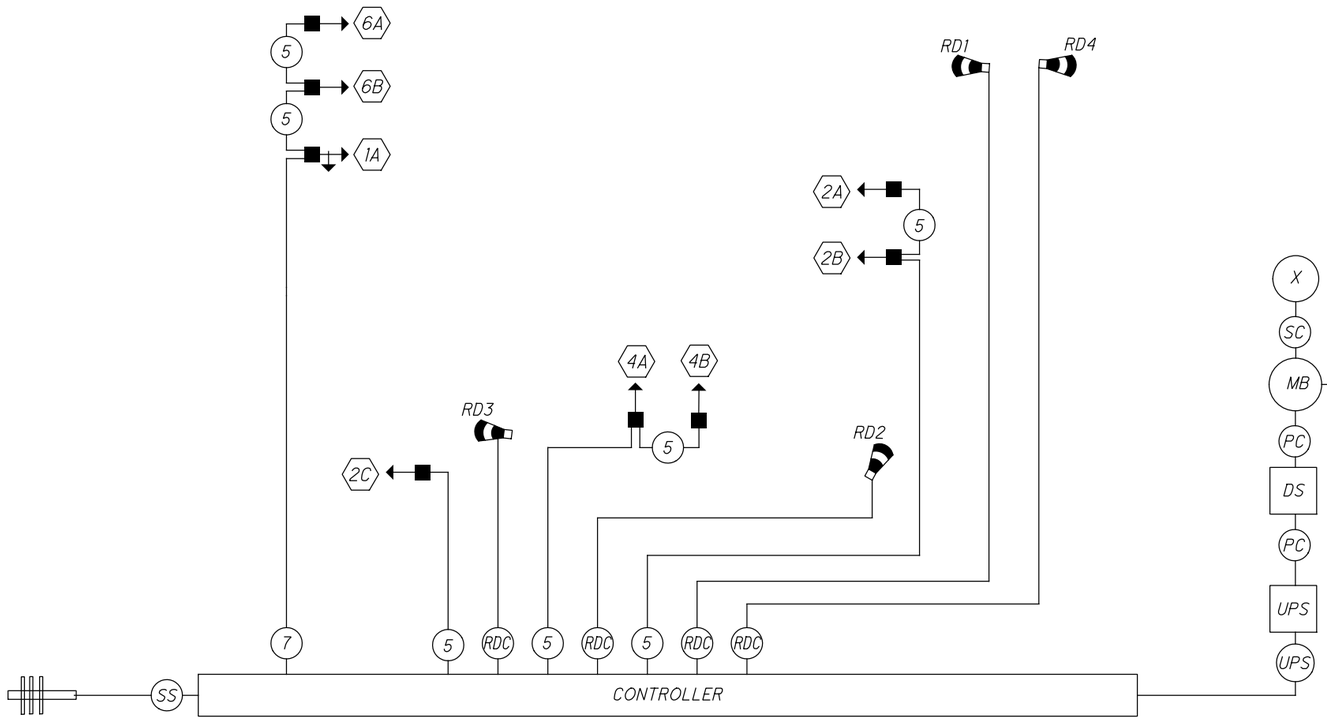

WIRING DIAGRAM LEGEND

- X — POWER SOURCE
- MB — METERBASE
- DS — DISCONNECT SWITCH
- UPS — UNINTERRUPTED POWER SUPPLY
- SPREAD SPECTRUM RADIO ANTENNA
- VEHICLE DETECTION RADAR
- 5-SECTION VEHICULAR SIGNAL HEAD WITH TURN ARROW
- 3-SECTION VEHICULAR SIGNAL HEAD
- LUNMINIARE, CONVENTIONAL
- 7 — SIGNAL CABLE, 7-CONDUCTOR
- 5 — SIGNAL CABLE, 5-CONDUCTOR
- 3 — SIGNAL CABLE, 3-CONDUCTOR
- RDC — RADAR DETECTOR CABLE
- SS — PROPOSED SPREAD SPECTRUM RADIO CABLE
- SC — SERVICE CABLE, 3 CONDUCTOR, NO. 4 AWG
- PC — POWER CABLE, 2 CONDUCTOR, NO. 4 AWG
- UPS — UNINTERRUPTED POWER SUPPLY CABLE
- N10 — ((3)-#10 DISTRIBUTION CABELS

DRAFT Stage 3 - Not for Construction 09/23/2024

HORIZONTAL SCALE IN FEET
0 10 20 40

CALCULATED EAE
CHECKED MJH

TRAFFIC SIGNAL WIRING DIAGRAM
SR 775 AT SOUTH RAMPS

LAW-7-2.17

770
1247

C:\EEC\Projects\LAW-7(Stantec)\CADD\Phase_2B\Signals\Sheets\770-75923_CD101-WIRING.dgn Sheet 5/13/2024 3:03:47 PM mhunt

INTERSECTION	SHEET NUMBER	STATION AND OFFSET	POLE DESIGNATION	DESIGN NUMBER (POLE)	DESIGN NUMBER (SUPPORT TC-9.31)	POLE HEIGHT (FT)	FOUNDATION ELEV.	SPAN ATTACHMENT HEIGHT (FT)	CABLE ENTRANCE DISTANCE FROM TOP (FT.)	INDEX LINE ANGLE	ANGELS (DEG.) FROM INDEX LINE								
											PEDESTRIAN SIGNALS	PEDESTRIAN PUSH BUTTON	POWER SERVICE	CABLE ENTRANCE 1	CABLE ENTRANCE 2	BRACKET ARM	AUX. SIGNAL HEAD	2" CAPPED CONDUIT ELL	GUSSET PLATE 1	GUSSET PLATE 2
SOUTH RAMP	769	53+73, 58' LT	SP1*	8		35	619.67	27	9	180°				180		180		270		
		53+73, 52' RT	SP2+	12	2	30	619.64	27	4	180°			90	180	270		90	90	90	270
		54+80, 44.5' LT	SP3	8		35	622.39	27	9	180°				180				90		
		54+80, 51' RT	SP4*	8		32	619.77	30	3	180°				90		180		270		

MESSENGER WIRE	
SPAN	LENGTH
AB	110'
BD	109'
DC	95'

* DENOTES COMBINATION STRAIN POLE AND STREET LIGHT

\+ DENOTES COMBINATION STRAIN POLE AND SIGN SUPPORT.
MOUNT SIGN PER STANDARD DRAWING TC-9.31.

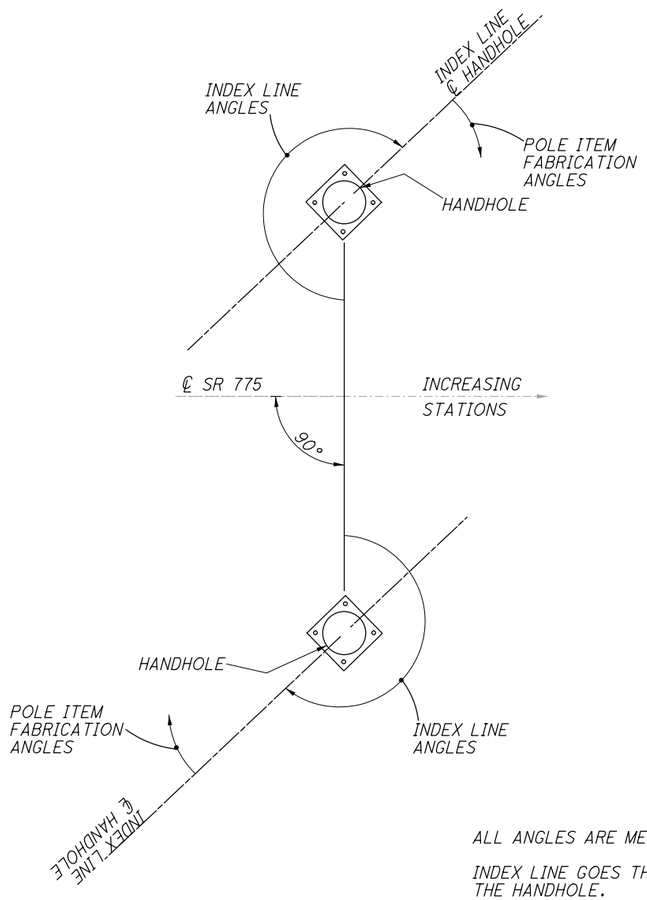

ALL ANGLES ARE MEASURED CLOCKWISE.

INDEX LINE GOES THROUGH CENTER OF THE HANDHOLE.

SR 775 AT SOUTH RAMP
STRAIN POLE ORIENTATION DETAIL

NOT TO SCALE

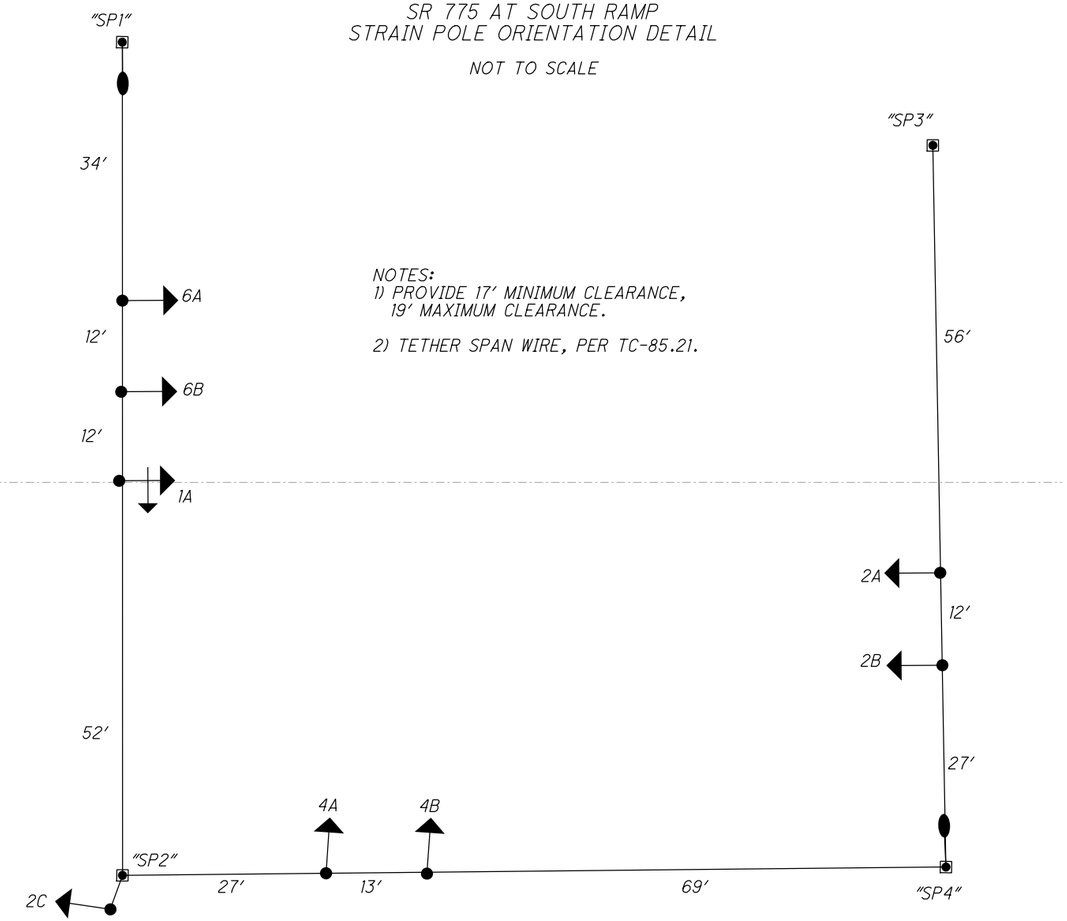

NOTES:
1) PROVIDE 17' MINIMUM CLEARANCE, 19' MAXIMUM CLEARANCE.

2) TETHER SPAN WIRE, PER TC-85.21.

DRAFT Stage 3 - Not for Construction 09/23/2024

CALCULATED EAE
CHECKED MJH

SOUTH RAMP - POLE ORIENTATION DIAGRAM

LAW-7-2.17

771
1247

C:\EEC\Projects\LAW-7(Stantec)\CADD\Phase_2B\Signals\Sheets\771-75923_CD102-POLES.dgn Sheet 5/13/2024 3:19:27 PM mhunt

FIELD WIRING HOOKUP CHART

SIGNAL HEAD #	INDICATION	FIELD TERMINAL	FLASH	SIGNAL HEAD #	INDICATION	FIELD TERMINAL	FLASH
2A (NB)	R	ϕ2 R	Y	6A,6B, 6C,6D (SB)	R	ϕ6 R	Y
	Y	ϕ2 Y			Y	ϕ6 Y	
	G	ϕ2 G			G	ϕ6 G	
2B (NB)	R	ϕ5 R	Y	3A,3B (WB)	R	ϕ3 R	R
	Y	ϕ5 Y			Y	ϕ3 Y	
	G	ϕ5 G			G	ϕ3 G	
	~~Y~~	ϕ3 Y					
	~~G~~	ϕ3 G					

SIGNAL INDICATIONS

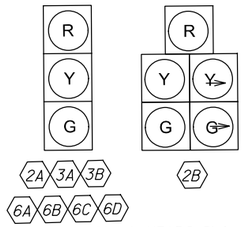

ALL SIGNAL HEADS SHALL BE 12" LENS, LED, BLACK, CUTAWAY VISORS, WITH BACKPLATES

RADAR DETECTION CHART

RADAR DETECTION NO.	MOVEMENT	ASSOCIATED PHASE	DELAY PROGRAMMED IN CONTROLLER (SEC)	EXTENSION PROGRAMMED IN CONTROLLER (SEC)	DETECTOR NUMBER	PURPOSE	DETECTION ZONE LENGTH (FT)
RDZ3A	WB RT	3	10 SEC	-	RD1	CALL PHASE 3	140'
RDZ3B	WB LT	3	-	-	RD1	CALL PHASE 3	140'
Z-3*	EB TH	-	-	-	RD2	EXTEND PHASE 2	200'
Z-4*	WB TH	-	-	-	RD3	EXTEND PHASE 6	200'

* PROVIDE A DILEMMA ZONE COVERING THRU LANES FROM A POINT 200' FROM THE STOP LINE TO A POINT 400' FROM THE STOP LINE.

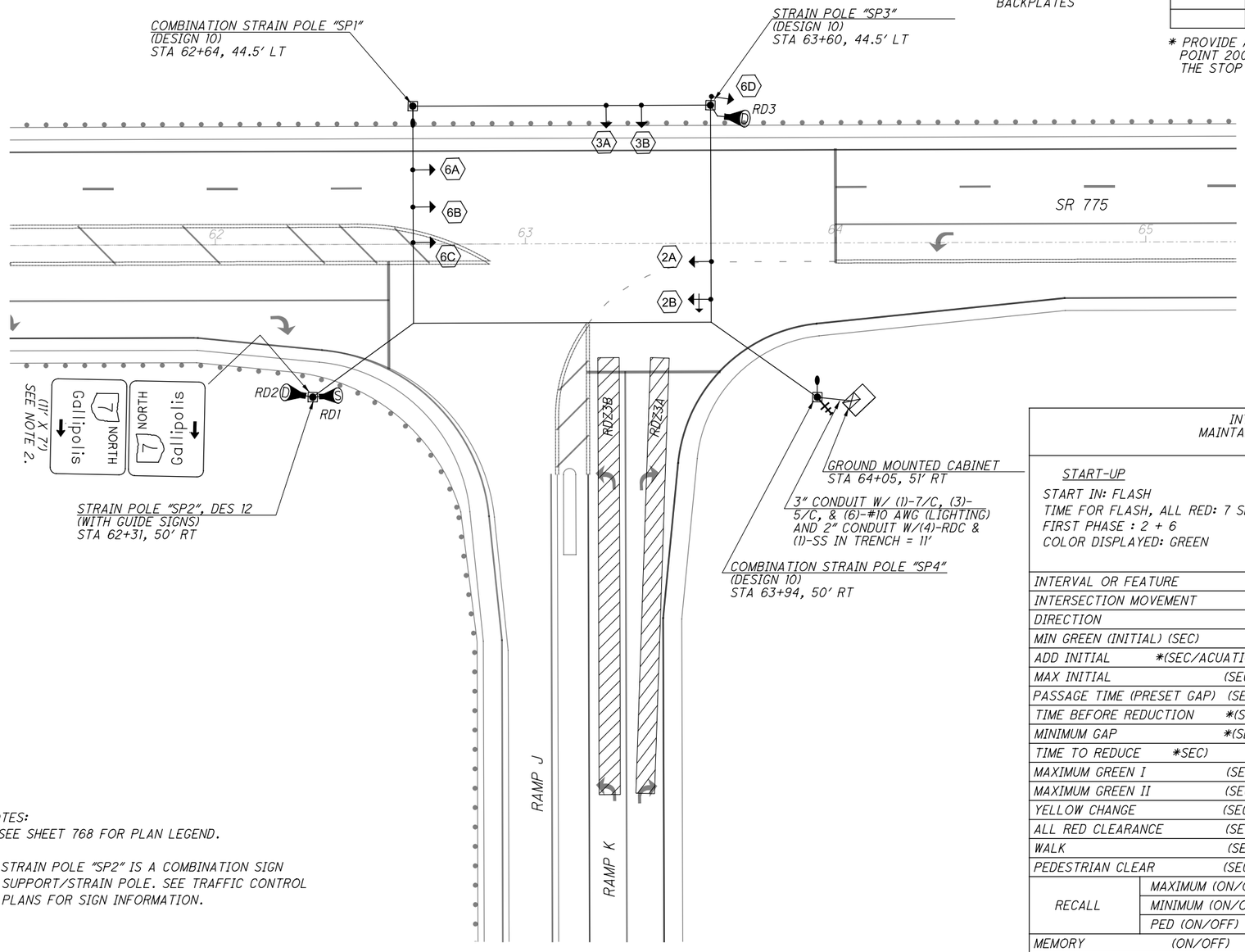

NOTES:
1) SEE SHEET 768 FOR PLAN LEGEND.

2) STRAIN POLE "SP2" IS A COMBINATION SIGN SUPPORT/STRAIN POLE. SEE TRAFFIC CONTROL PLANS FOR SIGN INFORMATION.

LEGEND

VEHICLE
PERMITTED ϕ
PROTECTED ϕ

PHASE DIAGRAM

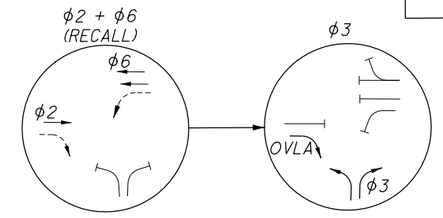

INTERSECTION: SR 775 AT SR 7 NORTH RAMPS
MAINTAING AGENCY: ODOT

START-UP
START IN: FLASH
TIME FOR FLASH, ALL RED: 7 SEC
FIRST PHASE : 2 + 6
COLOR DISPLAYED: GREEN

DUAL ENTRY: | PHASES:
REST IN RED: PHASE 3

OVERLAP	A	B	C	D
PHASES	3	-	-	-

INTERVAL OR FEATURE	CONTROLLER MOVEMENT NO							
INTERSECTION MOVEMENT	1	2	3	4	5	6	7	8
DIRECTION	-	NB	WB	-	-	SB	-	-
MIN GREEN (INITIAL) (SEC)	-	20	10	-	-	20	-	-
ADD INITIAL *(SEC/ACUATION)	-	-	-	-	-	-	-	-
MAX INITIAL (SEC.)	-	-	-	-	-	-	-	-
PASSAGE TIME (PRESET GAP) (SEC.)	-	1.0	0.5	-	-	1.0	-	-
TIME BEFORE REDUCTION *(SEC)	-	-	-	-	-	-	-	-
MINIMUM GAP *(SEC)	-	-	-	-	-	-	-	-
TIME TO REDUCE *SEC)	-	-	-	-	-	-	-	-
MAXIMUM GREEN I (SEC)	-	60.0	30.0	-	-	60.0	-	-
MAXIMUM GREEN II (SEC)	-	60.0	30.0	-	-	60.0	-	-
YELLOW CHANGE (SEC)	-	5.5	4.0	-	-	5.5	-	-
ALL RED CLEARANCE (SEC)	-	1.0	1.0	-	-	1.0	-	-
WALK (SEC)	-	-	-	-	-	-	-	-
PEDESTRIAN CLEAR (SEC)	-	-	-	-	-	-	-	-
RECALL MAXIMUM (ON/OFF)	-	OFF	OFF	-	-	OFF	-	-
RECALL MINIMUM (ON/OFF)	-	ON	OFF	-	-	ON	-	-
RECALL PED (ON/OFF)	-	OFF	OFF	-	-	OFF	-	-
MEMORY (ON/OFF)	-	ON	OFF	-	-	ON	-	-

* VOLUME DENSITY CONTROLS

DRAFT Stage 3 - Not for Construction
09/23/2024

TRAFFIC SIGNAL PLAN
SR 775 AT NORTH RAMPS

HORIZONTAL SCALE IN FEET
0 10 20 40

CALCULATED MJH
CHECKED KAE

LAW-7-2.17

772
1247

C:\EEC\Projects\LAW-7(Stantec)\CADD\Phase_2B\Signals\Sheets\772-75923_CP201.dgn Sheet 5/21/2024 10:10:16 AM mhunt

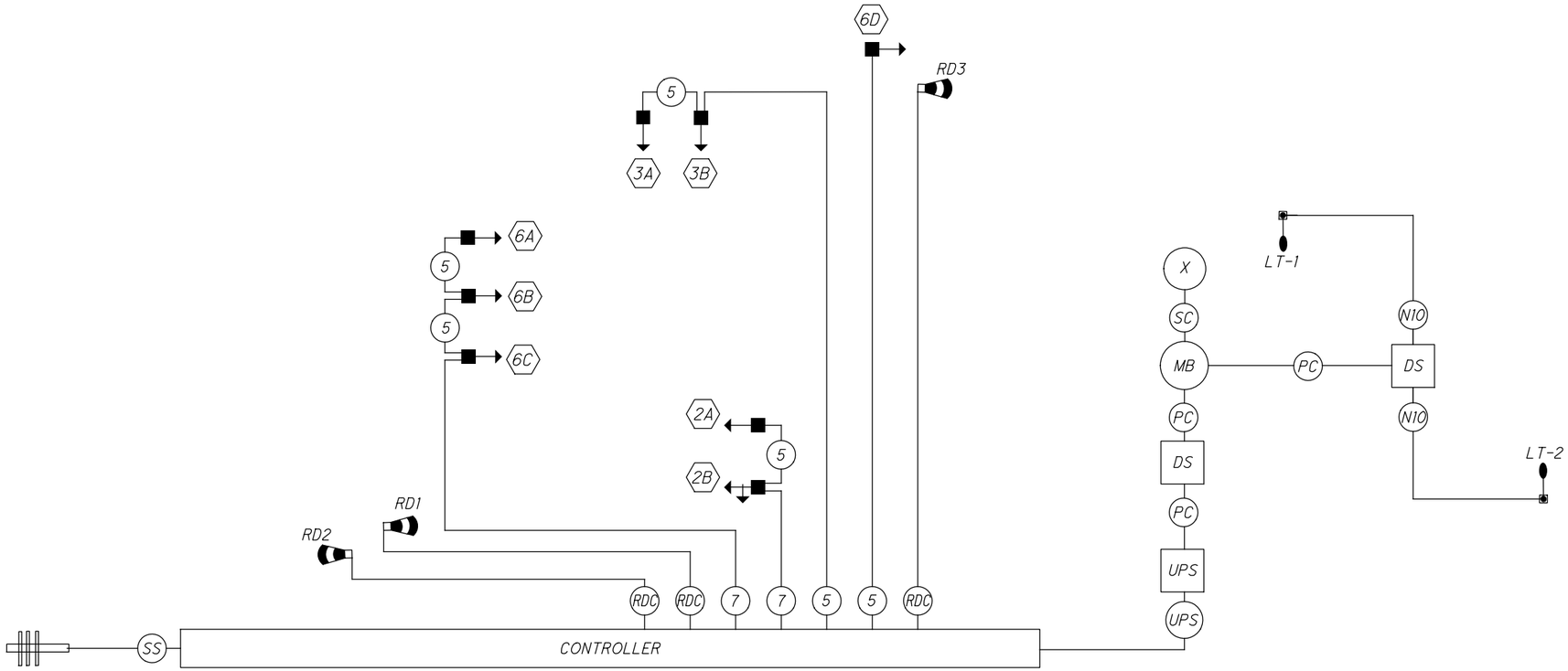

WIRING DIAGRAM LEGEND

- X — POWER SOURCE
- MB — METERBASE
- DS — DISCONNECT SWITCH
- UPS — UNINTERRUPTED POWER SUPPLY
- SPREAD SPECTRUM RADIO ANTENNA
- VEHICLE DETECTION RADAR
- 5-SECTION VEHICULAR SIGNAL HEAD WITH TURN ARROW
- 3-SECTION VEHICULAR SIGNAL HEAD
- LUNMINIARE, CONVENTIONAL
- 7 — SIGNAL CABLE, 7-CONDUCTOR
- 5 — SIGNAL CABLE, 5-CONDUCTOR
- 3 — SIGNAL CABLE, 3-CONDUCTOR
- RDC — RADAR DETECTOR CABLE
- SS — PROPOSED SPREAD SPECTRUM RADIO CABLE
- SC — SERVICE CABLE, 3 CONDUCTOR, NO. 4 AWG
- PC — POWER CABLE, 2 CONDUCTOR, NO. 4 AWG
- UPS — UNINTERRUPTED POWER SUPPLY CABLE
- N10 — ((3)-#10 DISTRIBUTION CABLE

DRAFT Stage 3 - Not for Construction 09/23/2024

HORIZONTAL SCALE IN FEET
0 10 20 40

CALCULATED EAE
CHECKED MJH

TRAFFIC SIGNAL WIRING DIAGRAM
SR 775 AT NORTH RAMPS

LAW-7-2.17

773
1247

C:\EEC\Projects\LAW-7(Stantec)\CADD\Phase_2B\Signals\Sheets\773-75923_CD201-WIRING.dgn Sheet 5/13/2024 3:05:55 PM mhunt

INTERSECTION	SHEET NUMBER	STATION AND OFFSET	POLE DESIGNATION	DESIGN NUMBER (POLE)	DESIGN NUMBER (SUPPORT TC-9.31)	POLE HEIGHT (FT)	FOUNDATION ELEV.	SPAN ATTACHMENT HEIGHT (FT)	CABLE ENTRANCE DISTANCE FROM TOP (FT)	INDEX LINE ANGLE	ANGELS (DEG.) FROM INDEX LINE									
											PEDESTRIAN SIGNALS	PEDESTRIAN PUSH BUTTON	POWER SERVICE	CABLE ENTRANCE 1	CABLE ENTRANCE 2	BRACKET ARM	AUX. SIGNAL HEAD	2" CAPPED CONDUIT ELL	GUSSET PLATE 1	GUSSET PLATE 2
SOUTH RAMP	772	62+64, 44.5′	SP1*	8		35	621.10	29	7	180°				180		180		270		
		62+31, 49.2′	SP2+	12	2	32	621.26	29	4	180°			90	180			90	90	90	270
		63+60, 44.5′	SP3	8		35	622.07	29	7	180°				180				90		
		63+94, 49.7′	SP4*	10		32	621.65	29	4	180°				90	180	180		270		

MESSENGER WIRE	
SPAN	LENGTH
A-BR1	70′
BR1-BR2	96′
BR2-C	70′
AC	96′
B-BR1	40′
D-BR2	42′

* DENOTES COMBINATION STRAIN POLE AND STREET LIGHT.

+ DENOTES COMBINATION STRAIN POLE AND SIGN SUPPORT. MOUNT GUIDE SIGNS PER STANDARD DRAWING TC-9.31.

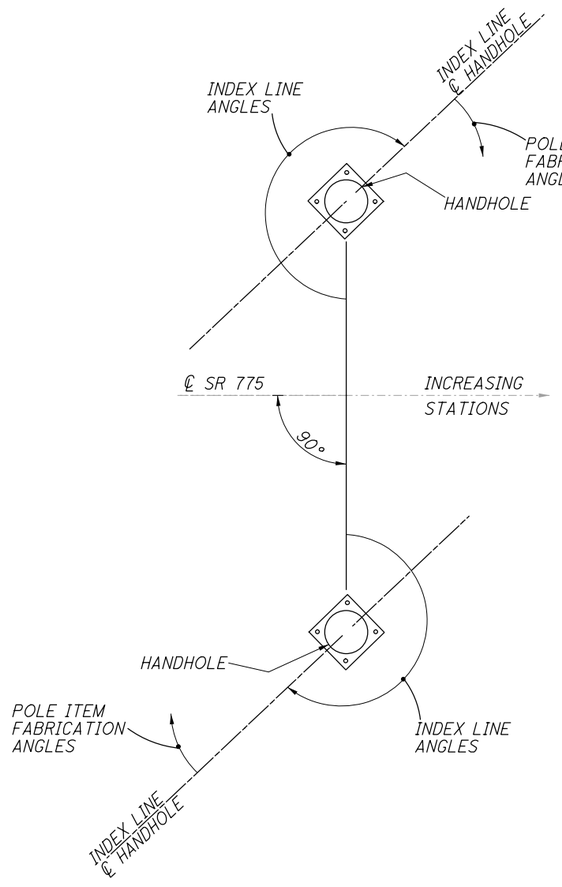

ALL ANGLES ARE MEASURED CLOCKWISE.

INDEX LINE GOES THROUGH CENTER OF THE HANDHOLE.

SR 775 AT NORTH RAMP
STRAIN POLE ORIENTATION DETAIL

NOT TO SCALE

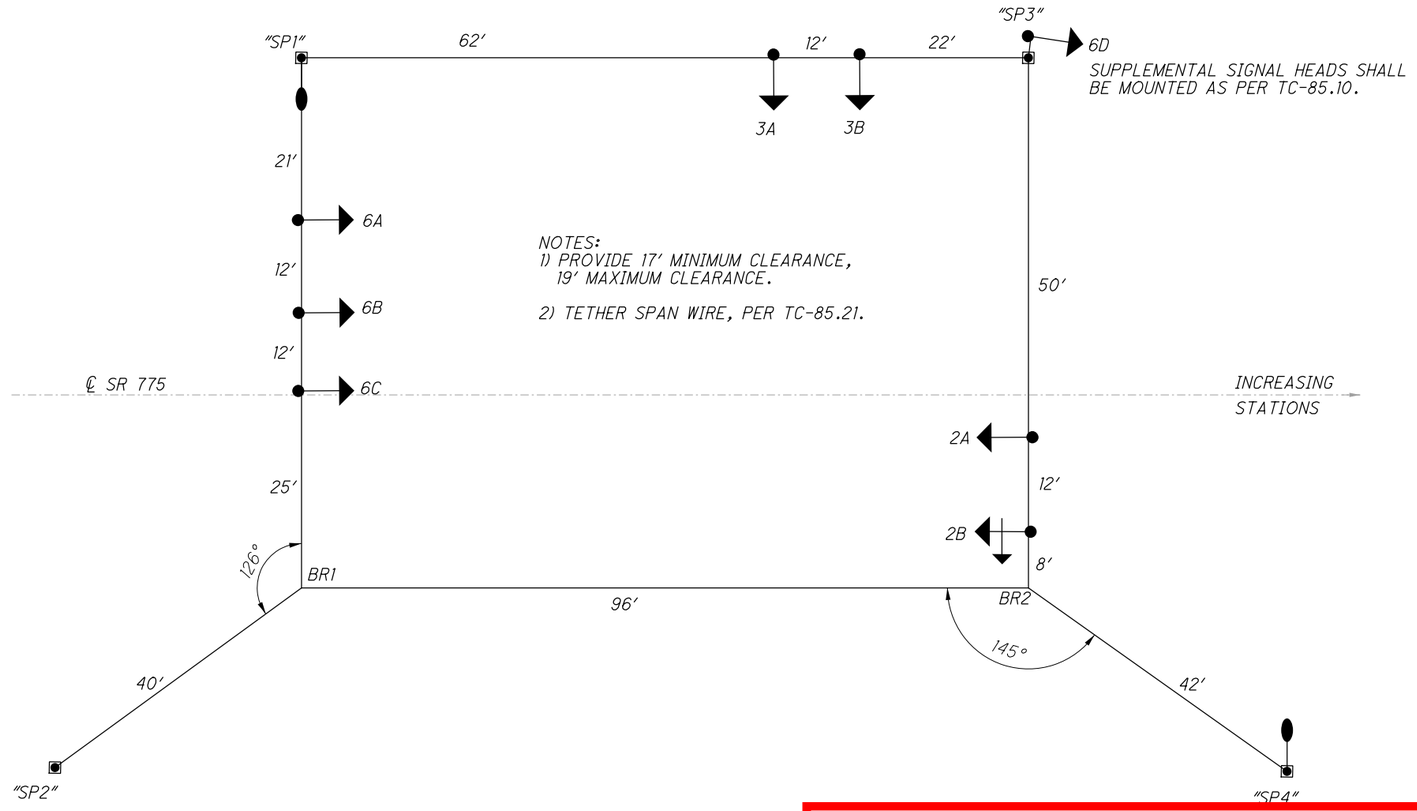

SUPPLEMENTAL SIGNAL HEADS SHALL BE MOUNTED AS PER TC-85.10.

NOTES:
1) PROVIDE 17′ MINIMUM CLEARANCE, 19′ MAXIMUM CLEARANCE.

2) TETHER SPAN WIRE, PER TC-85.21.

DRAFT Stage 3 - Not for Construction 09/23/2024

CALCULATED EAE
CHECKED MJH

NORTH RAMPS - POLE ORIENTATION DIAGRAM

LAW-7-2.17

773A
1247

C:\EEC\Projects\LAW-7(Stantec)\CADD\Phase_2B\Signals\Sheets\773A-75923_CD202-POLES.dgn Sheet 5/13/2024 3:19:50 PM mhunt

ITEM 661 - PLANTING, MISC.: 10" GRAY WASHED RIVER STONE MULCH

THIS ITEM SHALL CONSIST OF THE PLACEMENT OF THE PROPOSED MULCH AS PER ITEM 661 EXCEPT FOR THE FOLLOWING:
THE MULCH SHALL BE A 10" LAYER OF GRAY, TAN, BROWN, WHITE, OR COMBINATION OF THESE COLORS OF WASHED RIVER STONE, 2" TO 3" NOMINAL SIZE. TWO LAYERS OF LANDSCAPE FABRIC SHALL BE LAID PRIOR TO THE PLACEMENT OF THE STONE MULCH. THE COST OF THE FABRIC SHALL BE INCLUDED WITH THIS ITEM.

THE ENGINEER SHALL APPROVE THE EXCAVATED AREA PRIOR TO THE PLACEMENT OF THE STONE.

PAYMENT SHALL BE MADE AT THE UNIT PRICE BID PER SQUARE YARD OF ITEM 661 - PLANTING, MISC.: 10" GRAY WASHED RIVER STONE MULCH AND SHALL INCLUDE ALL LABOR, EQUIPMENT, AND MATERIALS NECESSARY TO PERFORM THE WORK NOTED ABOVE

LANDSCAPING PLAN NOTES

1. THE CONTRACTOR SHALL IDENTIFY ANY UNDERGROUND IMPEDIMENTS PRIOR TO BEGINNING PLANTING OPERATIONS BY CONTACTING OUPS AT 800-362-2764. DO NOT PROCEED WITH CONSTRUCTION AS DESIGNED WHEN UNKNOWN OBSTRUCTIONS AND/OR GRADE DIFFERENCES EXIST THAT MAY NOT HAVE BEEN KNOWN DURING DESIGN. SUCH CONDITIONS SHALL BE IMMEDIATELY BROUGHT TO THE ATTENTION OF THE ENGINEER.
2. FINAL LOCATION OF ALL PLANT MATERIALS SHALL BE SUBJECT TO THE APPROVAL OF THE ENGINEER.
3. SECURE PLANT MATERIAL AS SPECIFIED FROM AVAILABLE SOURCES. ALL PLANTS WILL BE NURSERY GROWN UNDER CLIMATIC CONDITIONS SIMILAR TO THOSE IN THE LOCALITY OF THE PROJECT FOR A MINIMUM OF 2 YEARS. IN THE EVENT THAT PLANT MATERIALS ARE NOT AVAILABLE, CONTACT THE ENGINEER FOR APPROVED SUBSTITUTIONS. NO SUBSTITUTIONS FOR PLANT MATERIALS WILL BE ALLOWED WITHOUT PRIOR WRITTEN APPROVAL BY THE ENGINEER.
4. ALL PLANT MATERIAL SHALL BE APPROVED BY THE ENGINEER UPON DELIVERY TO THE JOB SITE. PRIOR TO INSTALLATION, LABEL ALL PLANT SPECIMENS WITH BOTANICAL GENUS AND SPECIES NAMES.
5. SEE PLANTING DETAILS FOR PLANT SOIL MIX AND BACKFILL REQUIREMENTS ON SHEET [XXX].
6. SHRUB AND GROUND COVER BEDS SHALL BE EXCAVATED IN FULL WIDTHS INDICATED ON THE PLANTING DETAILS.
7. ALL WORK TO BE PERFORMED BY LICENSED CONTRACTORS AND EXPERIENCED WORKERS.
8. ALL PLANT MATERIALS SHALL MATCH SPECIFICATIONS FOR SPECIES AND SHALL COMPLY WITH ANSI Z60.1 "STANDARD FOR THE NURSERY STOCK".
9. ALL PLANTED AREAS ARE TO BE MULCHED WITH A 10" DEEP LAYER OF 2" TO 3" NOMINALLY SIZED WASHED RIVER STONE MULCH. SEE NOTE FOR ITEM 661 - PLANTING, MISC.: 10" GRAY WASHED RIVER STONE MULCH.
10. PROTECT ALL EXISTING TREES AND LANDSCAPING DESIGNATED TO REMAIN. PROVIDE TEMPORARY FENCING, BARRICADES OR OTHER SUITABLE GUARDS OUTSIDE DRIP LINE (OUTER PERIMETER OF BRANCHES) TO PROTECT FROM DAMAGE OF TREES TO REMAIN. DO NOT PERMIT VEHICLES WITHIN DRIP LINE RESTRICT FOOT TRAFFIC WITHIN DRIP LINE TO AVOID EXCESSIVE SOIL COMPACTION.

LANDSCAPING PLAN NOTES (CONT.)

11. SUPPLY SAMPLE (APPROX. ONE GALLON) OF PLANTING SOIL MIX AND MULCH 15 DAYS PRIOR TO PLANTING.
12. THE CONTRACTOR SHALL MAKE CERTAIN THAT PROPOSED PLANTS ARE PROPERLY MAINTAINED AND WATERED DURING TRANSPORTATION AND STORAGE.
13. PLANTING OPERATIONS SHALL STOP WHEN SOIL IS FROZEN OR WHEN TOPSOIL IS MUDDY.
14. THE CONTRACTOR SHALL ENSURE PERCOLATION OF ALL PLANTING PITS PRIOR TO INSTALLATION OF PLANTS.
15. PLANTING PITS TO BE EXCAVATED A MINIMUM OF TWO TIMES (2X) THE WIDTH OF THE ROOT BALL AND BACKFILLED WITH PLANT SOIL MIX.
16. SET PLANTS PLUMB IN PLANTING PIT.
17. EACH PLANTING PIT SHALL BE EXAMINED FOR PROPER DRAINAGE PRIOR TO INSTALLATION OF A PLANT. A DRAINAGE SUMP SHALL BE PROVIDED IF DRAINAGE IS NOT FOUND TO BE ACCEPTABLE.
18. PREPARED PLANT SOIL MIX SHALL CONSIST OF 2/3 CUBIC YARDS OF TOPSOIL, 1/3 CUBIC YARD OF PEAT MOSS, AND 20 CUPS OF FERTILIZER. COST TO BE INCLUDED WITH THE PLANT. FOR QUANTITY CALCULATION PURPOSES ASSUME 3 CUBIC YARDS PER SHRUB OF PREAPRED PLANTING SOIL MIX OR AS DETERMINED BY THE ENGINEER.
19. LIFT PROPOSED PLANTS ONLY FROM THE BOTTOM OF THE ROOT BALL OR CONTAINERS.
20. PRUNE OFF ANY SECONDARY/ADVENTITIOUS, GIRDING, AND POTENTIAL GIRDING ROOTS WITH CLEAN, SHARP PRUNING TOOLS.
21. DO NOT USE PLANTING SOIL MIX THAT IS MUDDY OR FROZEN.
22. AFTER THE SOIL AROUND THE ROOT BALL HAS BEEN TAMPED INTO PLACE, ALL EXCESS SOIL SHALL BE REMOVED.
23. PLANTS SHALL BE WATERED IMMEDIATELY AFTER PLANTING WITH A SLOW, SATURATING WATERING EQUAL TO ONE INCH.
24. THE CONTRACTOR SHALL REPAIR ANY DAMAGE TO SURROUNDING AREA, INCLUDING SEEDING OF GRASS AREAS.
25. ALL TAGS, ETC. SHALL BE REMOVED FROM THE PLANTS PRIOR TO THE END OF THE PLANT GUARANTEE PERIOD.
26. THE CONTRACTOR SHALL ENSURE PLANTS ARE PROPERLY MAINTAINED THROUGHOUT THE PLANT GUARANTEE PERIOD. IN ORDER TO KEEP EACH PLANT IN HEALTHY GROWING CONDITION MAINTENANCE SHALL INCLUDE THE FOLLOWING:
    A. PROVIDE SUPPLEMENTAL WATERING IN THE FIRST SEVERAL MONTHS AFTER PLANTING. FOR PLANTS INSTALLED IN THE SPRING AND/OR DURING EXTREME WEATHER CONDITIONS (HOT, WINDY, OR DRY).
    B. WEED CONTROL IN MULCHED AREAS SHALL BE PROVIDED DURING THE PLANT GUARANTEE PERIOD.

PLANT MATERIAL GUARANTEE

1. THE PERIOD OF ESTABLISHMENT BEGINS IMMEDIATELY UPON COMPLETION OF THE PLANTING OPERATIONS.
2. DURING THE PERIOD OF ESTABLISHMENT, FOLLOW STANDARD HORTICULTURAL PRACTICES TO ENSURE THE VIGOR AND GROWTH OF THE PLANTINGS.
3. WATER, REMULCH, AND CULTIVATE PLANTS AS NECESSARY.
4. PERFORM AT LEAST TWO WEEDINGS OF SUCH INTENSITY AS TO COMPLETELY GET RID OF WEEDS AND GRASSES IN THE PLANTED AND MULCHED AREAS.
5. PRIOR TO FINAL ACCEPTANCE ANY PLANT THAT IS IN A DEAD OR, IN THE OPINION OF THE ENGINEER, IS IN ANY UNHEALTHY OR UNSIGHTLY CONDITION, AND OR HAS LOST ITS NATURAL SHAPE DUE TO DEAD BRANCHES, EXCESSIVE PRUNING, INADEQUATE OR IMPROPER MAINTENANCE, SHALL BE REPLACED IN THE NEXT PLANTING SEASON.
6. ALL PLANTS SUBJECT TO THIS CONTRACT SHALL BE GUARANTEED FOR ONE YEAR FROM THE DATE OF INSTALLATION.

SHEET NO.	LOCATION	661 DECIDUOUS SHRUB, 4' HEIGHT, RHUS AROMATICA		661 PLANTING, MISC.:10" GRAY WASHED RIVER STONE MULCH		662 LANDSCAPE WATERING
		EACH		SY		GAL
	S.R. 7					
775	ROUNDABOUT CENTRAL ISLAND	7		796		49
TOTALS CARRIED TO GENERAL SUMMARY		7		796		49

DRAFT Stage 3 - Not for Construction 09/23/2024

CALCULATED SLP CHECKED ALB

GENERAL NOTES

LAW-7-2.17

774
1247

U:\173608714\LAW\75923\landscape\sheets\75923PN001.dgn 5/21/2024 5:00:22 PM SLParker

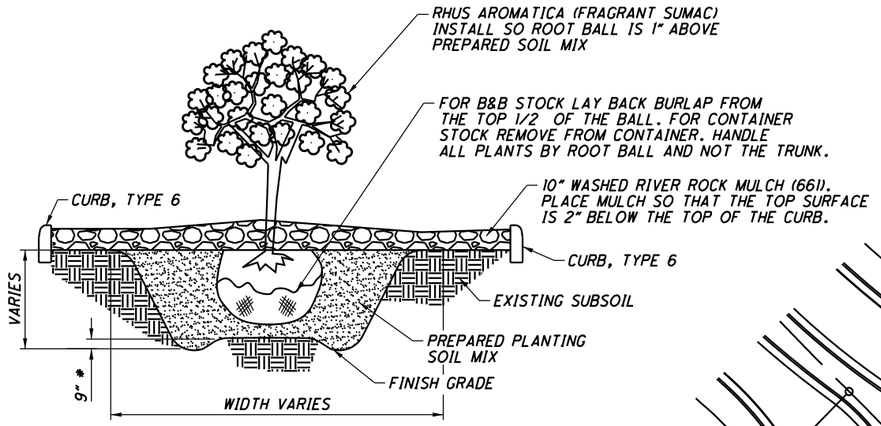

SHRUB PLANTING DETAIL
NOT TO SCALE

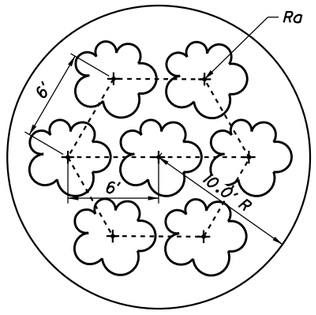

SHRUB LAYOUT PLAN
NOT TO SCALE

UNLESS OTHERWISE INDICATED ON THE LANDSCAPE PLAN, ALL SHRUBS SHALL USE A TRIANGULAR SPACING AT A 6' CENTER TO CENTER PATTERN.

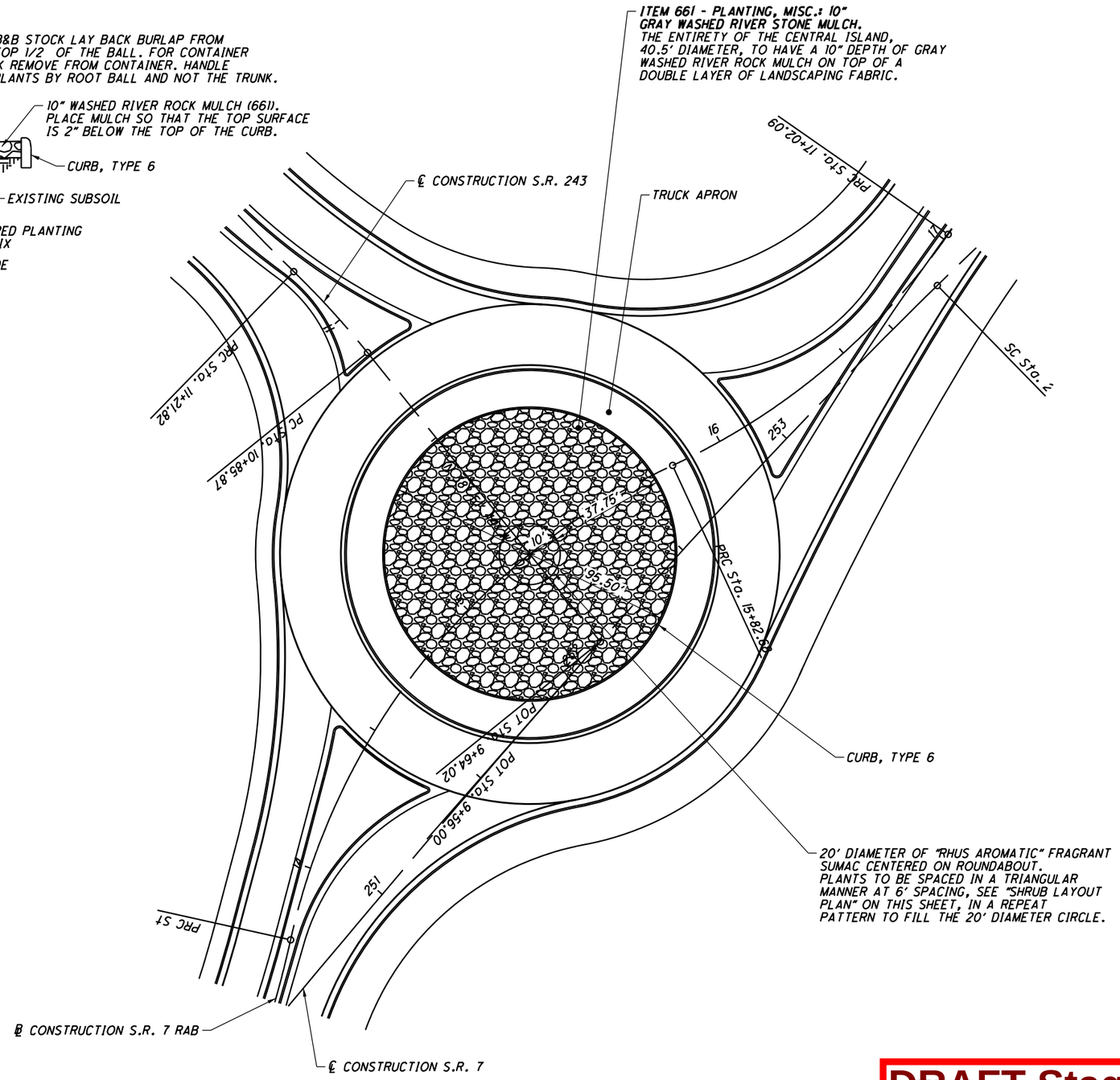

NOTES:
1. FOR ROUNDABOUT GEOMETRY SEE GEOMETRIC DATA SHEET 12

DRAFT Stage 3 - Not for Construction 09/23/2024

HORIZONTAL SCALE IN FEET
0 10 20 40

CALCULATED SLP
CHECKED ALB

LANDSCAPE PLAN
S.R. 7 ROUND-A-BOUT

LAW-7-2.17

775
1247

U:\1736087\14\LAW\75923\landscape\sheets\75923PP001.dgn 5/21/2024 5:00:23 PM SLParker

ITEM 625 - LUMINAIRE, CONVENTIONAL, SOLID STATE (LED), AS PER PLAN: 240V

IN ADDITION TO THE REQUIREMENTS OF ODOT'S CONSTRUCTION AND MATERIALS SPECIFICATION, LUMINAIRES SHALL BE:

LUMINAIRES FOR CONVENTIONAL LIGHTING UNITS WITH AN IES M-SC DISTRIBUTION, 3000K CCT, AND 200 WATT (EQUIVALENT) LED LAMPS. LUMINAIRES SHALL BE EATON STREETWORKS NAVION NVN-AE-03-E-U-T3R-10K-7030-AP (15,700 LUMENS), AMERICAN ELECTRIC AUTOBAHN SERIES ATBM-P60-MVOLT-R3-4B-3K (20,000 LUMENS), LUMEC ROADFOCUS RFM-160W48LED-3K-G2-R3M-UNV-GY3 (18,283 LUMENS), OR EQUAL AS APPROVED BY THE ENGINEER.

PAYMENT WILL BE MADE AT THE UNIT PRICE BID UNDER CMS ITEM 625, "LUMINAIRE, CONVENTIONAL, AS PER PLAN", WHICH SHALL BE FULL COMPENSATION FOR ALL LABOR, MATERIALS AND INCIDENTALS REQUIRED TO COMPLETE THIS ITEM IN A SATISFACTORY AND WORKMANLIKE MANNER.

ITEM 625 - POWER SERVICE, AS PER PLAN

IN ADDITION TO THE REQUIREMENTS OF THE SPECIFICATIONS, THE FOLLOWING IS ADDED. THE POWER SUPPLYING AGENCY FOR THIS PROJECT IS:
POWER COMPANY - AMERICAN ELECTRIC POWER
ADDRESS - 38831 STATE ROUTE 7, REEDSVILLE, OHIO 45772
PHONE NUMBER - (740) 985-3054
CONTACT NAME - CLARKE SAUNDERS

THE CONTRACTOR SHALL COORDINATE WITH THE POWER COMPANY EARLY IN THE PROJECT, TO ARRANGE POWER SERVICE A MINIMUM OF SIX WEEKS PRIOR TO THE ENERGIZATION OF THE POWER SERVICE.

THE ENGINEER SHALL ENSURE THAT EACH POWER SERVICE ELECTRICAL ENERGY ACCOUNT IS IN THE NAME OF AND THAT THE BILLING ADDRESS IS TO THE MAINTAINING AGENCY NOTED IN THE PLANS. THIS SHALL BE DONE NOT ONLY FOR EACH NEW POWER SERVICE ESTABLISHED BY THIS PROJECT BUT FOR EACH EXISTING POWER SERVICE.

PAYMENT WILL BE MADE AT THE UNIT BID PRICE FOR EACH CMS ITEM 625, "POWER SERVICE, AS PER PLAN" WHICH SHALL BE FULL COMPENSATION FOR ALL LABOR, MATERIALS AND INCIDENTALS REQUIRED TO COMPLETE THIS ITEM IN A SATISFACTORY AND WORKMANLIKE MANNER.

PADLOCKS AND KEYS

PADLOCKS FURNISHED FOR ODOT CONTROL CENTERS SHALL BE EITHER BRASS OR BRONZE, EQUAL TO MASTER NO. 4BKA OR WILSON BOHANNAN 660A, AND SHALL BE KEYED IN ACCORDANCE WITH CMS 631.06. PAYMENT SHALL BE INCLUDED IN THE BID FOR THE ITEMS BEING LOCKED.

GROUNDING AND BONDING

THE REQUIREMENTS OF THE CONSTRUCTION AND MATERIAL SPECIFICATIONS (C&MS) AND THE HL AND TC SERIES OF STANDARD CONSTRUCTION DRAWINGS ARE MODIFIED AS FOLLOWS:

1. ALL METALLIC PARTS CONTAINING ELECTRICAL CONDUCTORS SHALL BE PERMANENTLY JOINED TO FORM AN EFFECTIVE GROUND FAULT CURRENT PATH BACK TO THE GROUNDED CONDUCTOR IN THE POWER SERVICE DISCONNECT SWITCH.
   A. PROVIDE AN EQUIPMENT GROUNDING CONDUCTOR IN METALLIC CONDUITS (725.04) IN ADDITION TO THE CONDUCTORS SPECIFIED AND BOND THE CONDUIT TO THIS GROUNDING CONDUCTOR.
2. CONDUITS.
   A. THE 725.04 CONDUIT SHALL HAVE GROUNDING BUSHINGS INSTALLED AT ALL TERMINATION POINTS. THE BUSHING MATERIAL SHALL BE COMPATIBLE WITH GALVANIZED STEEL CONDUIT AND THE GROUNDING LUG MATERIAL SHALL BE COMPATIBLE FOR USE WITH COPPER WIRE. THREADED OR COMPRESSION TYPE BUSHINGS MAY BE USED.
   B. THE 725.05 CONDUIT SHALL HAVE THE INSIDE AND OUTSIDE DIAMETERS OF THE CONDUIT DEBURRED AT ALL TERMINATION POINTS.
   C. BOTH ENDS OF METALLIC CONDUIT SHALL BE BONDED TO THE EQUIPMENT GROUNDING CONDUCTOR.
   D. METALLIC CONDUIT MAY BE BONDED TO METALLIC BOXES THROUGH THE USE OF CONDUIT FITTINGS UL APPROVED FOR THIS TYPE OF CONNECTION, WITH THE BOX BONDED TO THE EQUIPMENT GROUNDING CONDUCTOR.
3. WIRE FOR GROUNDING AND BONDING.
   A. USE INSULATED, COPPER WIRE FOR THE EQUIPMENT GROUNDING CONDUCTOR. BONDING JUMPERS IN BOXES AND ENCLOSURES MAY BE BARE OR INSULATED COPPER WIRE. WIRE SIZE SHALL BE AS FOLLOWS:
      I. USE 4 AWG BETWEEN THE POWER SERVICE AND SUPPORTS, POLES, PEDESTALS, CONTROLLER OR FLASHER CABINETS.
      II. THE INSULATION SHALL BE GREEN OR GREEN WITH YELLOW STRIPE(S). FOR 4 AWG OR LARGER, INSULATION MAY ALSO BE BLACK WITH GREEN TAPE/LABELS INSTALLED AT ALL ACCESS POINTS.
   B. IN A HIGHWAY LIGHTING SYSTEM, THE EQUIPMENT GROUNDING CONDUCTOR SHALL BE THE SAME WIRE SIZE AS THE DUCT CABLE OR DISTRIBUTION CABLE CIRCUIT CONDUCTORS, WITH THE MINIMUM CONDUCTOR SIZE OF 4 AWG. BONDING JUMPERS WILL BE MINIMUM SIZE 4 AWG.
4. GROUND ROD.
   A. A 3/4 INCH SCHEDULE 40 PVC CONDUIT WILL BE USED IN FOUNDATIONS AND CONCRETE WALLS FOR THE GROUNDING CONDUCTOR (GROUND WIRE) RACEWAY TO THE GROUND ROD. SHOULD METALLIC CONDUIT BE USED, BOTH ENDS OF THE CONDUIT SHALL BE BONDED TO THE GROUNDING CONDUCTOR.
   B. THE TYPICAL GROUNDING CONDUCTOR (GROUND WIRE) SHALL BE 4 AWG INSULATED, COPPER.
5. PAYMENT.
   A. ALL MATERIALS AND WORK REQUIRED TO COMPLETE THE EFFECTIVE GROUND FAULT CURRENT PATH SYSTEM ARE INCIDENTAL TO THE CONDUCTORS INSTALLED.
   B. WORK ON BRIDGES MAY BE INCLUDED IN THE BID ITEM FOR "ITEM 625, STRUCTURE GROUNDING."
   C. IN A 3-WIRE HIGHWAY LIGHTING SYSTEM, THE THIRD CONDUCTOR OF THE DUCT CABLE OR DISTRIBUTION CABLE WILL BE USED AS THE EQUIPMENT GROUNDING CONDUCTOR AND MAY AS SUCH BE PART OF THE CABLE BID ITEM.

DRAFT Stage 3 - Not for Construction 09/23/2024

CALCULATED EAE
CHECKED MJH

LIGHTING GENERAL NOTES

LAW-7-2.17

776
1247

C:\EEC\Projects\LAW-7(Stantec)\CADD\Phase_2B\Lighting\Sheets\776-75923_LN001.dgn Sheet 5/23/2024 12:51:44 PM mhunt

SHEET NUMBER								PARTICIPATION				ITEM	ITEM EXT.	GRAND TOTAL	UNIT	DESCRIPTION	SEE SHEET NO.
								778	779	780	01/NHS/01						
																LIGHTING	
								34	28	28	90	625	00450	90	EACH	CONNECTION, FUSED PULL APART	
								18	12	39	69	625	00460	69	EACH	CONNECTION, UNFUSED PULL APART	
									2		2	625	10490	2	EACH	LIGHT POLE, CONVENTIONAL: AT6B40	
									8		8	625	10490	8	EACH	LIGHT POLE, CONVENTIONAL: AT8B40	
									1		1	625	10490	1	EACH	LIGHT POLE, CONVENTIONAL: AT10B40	
								1	3		4	625	10490	4	EACH	LIGHT POLE, CONVENTIONAL: AT12B40	
								6			6	625	10490	6	EACH	LIGHT POLE, CONVENTIONAL: AT15B40	
										10	10	625	10490	10	EACH	LIGHT POLE, CONVENTIONAL: AT16B40	
										1	1	625	10490	1	EACH	LIGHT POLE, CONVENTIONAL: AT18B40	
								7	14	11	32	625	14100	32	EACH	LIGHT POLE FOUNDATION, 24" X 8' DEEP	
								639	798	7245	8862	625	23200	8862	FT	NO. 4 AWG 2400 VOLT DISTRIBUTION CABLE	
								1146	2046	1854	5046	625	23400	5046	FT	NO. 10 AWG POLE AND BRACKET CABLE	
								2810	2084	3843	8737	625	24320	8737	FT	1-1/2" DUCT CABLE WITH THREE NO. 4 AWG 2400 VOLT CABLES	
										974	974	625	25400	974	FT	CONDUIT, 2", 725.04	
								60	37	72	169	625	25500	169	FT	CONDUIT, 3", 725.04	
								183	184	424	791	625	25900	791	FT	CONDUIT, JACKED OR DRILLED; 3"	
								7	14	11	32	625	26253	32	EACH	LUMINAIRE, CONVENTIONAL, SOLID STATE (LED), AS PER PLAN: 240V	776
								2104	1981	4603	8688	625	29002	8688	FT	TRENCH, 24" DEEP	
										4	4	625	29900	4	EACH	JUNCTION BOX	
								5	3	8	16	625	30700	16	EACH	PULL BOX, 725.08, 18"	
									1	1	2	625	30706	2	EACH	PULL BOX, 725.08, 24"	
								7	14	11	32	625	32000	32	EACH	GROUND ROD	
								1	1	1	3	625	34001	3	EACH	POWER SERVICE, AS PER PLAN	776
								2104	1981	4603	8688	625	36010	8688	FT	UNDERGROUND WARNING/MARKING TAPE	
								1			1	625	75510	1	EACH	POWER SERVICE REMOVED	
								21			21	625	75800	21	EACH	DISCONNECT CIRCUIT	

CALCULATED EAE
CHECKED MJH

LIGHTING GENERAL SUMMARY

LAW-7-2.17

DRAFT Stage 3 - Not for Construction 09/23/2024

777
1247

C:\EEC\Projects\LAW-7(Stantec)\CADD\Phase_2B\Lighting\Sheets\777-75923_LG001.dgn Sheet 5/14/2024 10:39:54 AM mhunt

SHEET NO.	CALL-OUT	LOCATION (FROM - TO)	SIDE	625 CONNECTION, FUSED PULL APART (EACH)	CONNECTION, UNFUSED PERMANENT (EACH)	LIGHT POLE, CONVENTIONAL: AT12B40 (EACH)	LIGHT POLE, CONVENTIONAL: AT15B40 (EACH)	LIGHT POLE FOUNDATION, 24" X 8' DEEP (EACH)	NO. 4 AWG 2400 VOLT DISTRIBUTION CABLE (FT)	NO. 10 AWG POLE AND BRACKET CABLE (FT)	1½" DUCT CABLE WITH THREE NO. 4 AWG 2400 VOLT CABLES (FT)	CONDUIT, 3", 725.04 (FT)	CONDUIT, JACKED OR DRILLED; 3" (FT)	LUMINAIRE, CONVENTIONAL, SOLID STATE (LED), AS PER PLAN: 240V (EACH)	TRENCH, 24" DEEP (FT)	PULL BOX, 725.08, 18" (EACH)		GROUND ROD (EACH)	POWER SERVICE, AS PER PLAN (EACH)	UNDERGROUND WARNING/ MARKING TAPE (FT)	POWER SRVICE REMOVED (EACH)	DISCONNECT EXISTING CIRCUIT (EACH)
	SR 527 - RAMP D																					
782	L-01	123+05	RT																1		1	
	L-01 TO PB	123+05 TO 122+96	RT									60										
	L-03	124+75	LT	2			1	1		165				1				1				
	L-03 TO L-04	124+75 TO PB	LT								197				187					187		
	L-04	PULL BOX	RT		3																	1
	POLE A1 TO L-05	121+00 TO 119+75	RT								136				126					126		
	L-05	119+75	LT		3											1						
	L-05 TO L-06	119+75 TO 119+75	LT-RT						162				44									
	L-06	119+75	RT		3											1						
	L-06 TO POLE A2	119+75 TO 119+60	RT								111				27					27		
	L-05 TO L-07	119+75 TO 116+50	RT								881				329					329		
	L-07	116+50	LT	2		1		1		156				1				1				
	L-07 TO L-08	116+50 TO 115+38	LT-RT								158				148					148		
	L-08	115+38	RT	2			1	1		165				1				1				
	SR 7																					
783	L-11	117+72	LT		3											1						
	L-11 TO L-12	117+72 TO 117+91	LT						243				71									
	L-12	117+91	LT		3											1						
	L-12 TO L-13	117+91 TO 121+88	LT								412				402					402		
	L-13	121+88	LT	2			1	1		165				1				1				
	L-13 TO L-14	121+88 TO 122+11	LT-LT						234				68									
	L-14	122+11	LT		3											1						
	L-14 TO L-15	122+11 TO 124+05	LT								201				191					191		
	L-15	124+05	LT	2			1	1		165				1				1				
	L-15 TO L-16	124+09 TO 130+85	LT								689				679					679		
	L-16	130+85	LT	2			1	1		165				1				1				
	L-14 TO L-17	122+31 TO 121+96	LT								25				15					15		
	L-17	121+96	LT	2			1	1		165				1				1				
784	REPLACE CONNECTIONS AT EXIST. POLES			20																	20	
	TOTALS TO THE GENERAL SUMMARY			34	18	1	6	7	639	1146	2810	60	183	7	2104	5		7	1	2104	1	21

CALCULATED EAE
CHECKED MJH

SUMMARY-SR 527 INTERCHANGE

LIGHTING SUBSUMMARY

LLAW-7-2.17

778
1247

DRAFT Stage 3 - Not for Construction 09/23/2024

C:\EEC\Projects\LAW-7(Stantec)\CADD\Phase_2B\Lighting\Sheets\778-75923_LS001.dgn Sheet 5/13/2024 1:51:48 PM mhunt

LIGHTING SUBSUMMARY-SR 243 ROUNDABOUT

CALCULATED EAE CHECKED MJH

SHEET NO.	CALL-OUT	LOCATION FROM - TO	SIDE	625 CONNECTION, FUSED PULL APART	CONNECTION, UNFUSED PERMANENT	LIGHT POLE, CONVENTIONAL: AT6B40	LIGHT POLE, CONVENTIONAL: AT8B40	LIGHT POLE, CONVENTIONAL: AT10B40	LIGHT POLE, CONVENTIONAL: AT12B40	LIGHT POLE FOUNDATION, 24" X 8' DEEP	NO. 4 AWG 2400 VOLT DISTRIBUTION CABLE	NO. 10 AWG POLE AND BRACKET CABLE	1½" DUCT CABLE WITH THREE NO. 4 AWG 2400 VOLT CABLES	CONDUIT, 3", 725.04	CONDUIT, JACKED OR DRILLED; 3"	LUMINAIRE, CONVENTIONAL, SOLID STATE (LED), AS PER PLAN: 240V	TRENCH, 24" DEEP	PULL BOX, 725.08, 18"	PULL BOX, 725.08, 24"	GROUND ROD	POWER SERVICE, AS PER PLAN	UNDERGROUND WARNING/ MARKING TAPE
				EACH	EACH	EACH	EACH	EACH	EACH	EACH	FT	FT	FT	FT	FT	EACH	FT	EACH	EACH	EACH	EACH	FT
785	L-01	15+57	RT																		1	
	L-01 TO L-02	15+57 TO 15+25	RT								156			37			37					37
	L-02	15+25	RT		3														1			
	L-02 TO L-03	15+57 TO 15+25	RT										107				97					97
	L-03	10+80	LT	2		1				1		138				1				1		
	L-02 TO L-04	15+25 TO 15+13	RT-LT								243				71							
	L-04	15+13	LT	2					1	1		156				1				1		
	L-04 TO L-05	15+13 TO 13+34	LT										189				179					179
	L-05	13+34	LT	2					1	1		156				1				1		
	L-05 TO L-06	13+34 TO 11+50	LT										202				192					192
	L-06	11+50	LT		3													1				
	L-06 TO L-07	11+50 TO 14+55	LT										114				104					104
	L-07	14+55	LT	2		1				1		138				1				1		
	L-07 TO L-08	14+55 TO 13+45	LT										156				146					146
	L-08	13+45	LT		3													1				
	L-08 TO L-09	13+45	LT-RT								192				54							
	L-09	13+45	RT		3													1				
	L-09 TO L-10	13+45 TO 12+96	RT										58				48					48
	L-10	12+96	RT	2			1			1		144				1				1		
	L-10 TO L-11	12+96 TO 11+27	RT										187				177					177
	L-11	11+27	RT	2			1			1		144				1				1		
	L-11 TO L-12	11+27 TO 246+78	RT										161				151					151
	L-12	246+78	RT	2				1		1		150				1				1		
	L-09 TO L-13	13+45 TO 14+30	RT										102				92					92
	L-13	14+30	RT	2			1			1		144				1				1		
	L-13 TO L-14	14+30 TO 16+01	RT										147				137					137
	L-14	16+01	RT	2			1			1		144				1				1		
	L-06 TO L-15	11+50 TO 11+55	LT-LT								207				59							
	L-15	11+55	LT	2			1			1		144				1				1		
	L-15 TO L-16	11+55 TO 16+18	LT										151				141					141
	L-16	16+18	LT	2			1			1		144				1				1		
	L-16 TO L-17	16+18 TO 17+50	LT										130				120					120
	L-17	17+50	LT	2					1	1		156				1				1		
	L-17 TO L-18	17+50 TO 19+11	LT										188				178					178
	L-18	19+11	LT	2			1			1		144				1				1		
	L-18 TO L-19	19+11 TO 20+90	LT										192				182					182
	L-19	20+90	LT	2			1			1		144				1				1		
TOTALS TO THE GENERAL SUMMARY				28	12	2	8	1	3	14	798	2046	2084	37	184	14	1981	3	1	14	1	1981

DRAFT Stage 3 - Not for Construction 09/23/2024

LLAW-7-2.17

779
1247

C:\EEC\Projects\LAW-7(Stantec)\CADD\Phase_2B\Lighting\Sheets\779-75923_LS002.dgn Sheet 5/13/2024 1:29:11 PM mhunt

LIGHTING SUBSUMMARY-SR 775 INTERCHANGE

CALCULATED EAE | CHECKED MJH

SHEET NO.	CALL-OUT	LOCATION	SIDE	625																																			
				CONNECTION, FUSED PULL APART	CONNECTION, UNFUSED PERMANENT	LIGHT POLE, CONVENTIONAL: AT16B40	LIGHT POLE, CONVENTIONAL: AT18B40	LIGHT POLE FOUNDATION, 24" X 8' DEEP	NO. 4 AWG 2400 VOLT DISTRIBUTION CABLE	NO. 10 AWG POLE AND BRACKET CABLE	1½" DUCT CABLE WITH THREE NO. 4 AWG 2400 VOLT CABLES	CONDUIT, 2", 725.04	CONDUIT, 3", 725.04	CONDUIT, JACKED OR DRILLED; 3"	LUMINAIRE, CONVENTIONAL, SOLID STATE (LED), AS PER PLAN: 240V	TRENCH, 24" DEEP	JUNCTION BOX	PULL BOX, 725.08, 18"	PULL BOX, 725.08, 24"	GROUND ROD	POWER SERVICE, AS PER PLAN	UNDERGROUND WARNING/ MARKING TAPE																	
		FROM - TO		EACH	EACH	EACH	EACH	EACH	FT	FT	FT	FT	FT	FT	EACH	FT	EACH	EACH	EACH	EACH	EACH	FT																	
	NB SR 7																																						
789	L-01	388+50	RT										23								1																		
	L-01 TO L-02	388+50 TO 388+50	RT						114											1																		
	L-02	388+50	RT		3																																		
	L-02 TO L-03	388+50 TO 388+67	RT-RT						183					51																									
	L-03	388+67	RT		3													1																					
	L-03 TO L-04	388+67 TO 380+30	RT						2610		860					860						860																	
	L-04	380+30	RT		3													1																					
	L-04 TO L-05	380+30 TO 379+30	RT						348			106																											
	L-05	379+30	RT		3												1																					
789-788	L-05 TO L-06	379+30 TO 376+75	RT						807			259																											
788	L-06	376+75	RT		3												1																					
	L-06 TO L-07	376+75 TO 376+00	RT						267			79																											
	L-07	376+00	RT		3													1																					
	L-07 TO L-08	376+00 TO 375+00	RT						342			104																											
	L-08	375+00	LT	2			1	1		174					1						1																		
	L-08 TO L-09	375+00 TO 375+00	RT-RT						270					80																									
	L-09	375+00	RT		3													1																					
	L-09 TO L-10	375+00 TO 373+00	RT								210					200						200																	
	L-10	373+00	RT	2		1		1		168					1						1																		
	L-10 TO L-11	373+00 TO 367+00	RT								608					598						598																	
	L-11	367+00	RT	2		1		1		168					1						1																		
789	L-04 TO L-12	380+30 TO 380+56	RT-LT						450					140																								
	L-12	380+56	LT		3													1																					
	L-12 TO L-13	380+56 TO 379+80	LT						270			80																											
	L-13	379+80	LT		3												1																					
789-788	L-13 TO L-14	379+80 TO 377+10	LT						840			270																											
788	L-14	377+10	LT		3												1																					
	L-14 TO L-15	377+10 TO 376+40	LT						258			76																											
	L-15	376+40	LT		3													1																					
	L-15 TO L-16	376+40 TO 375+25	LT								125					115						115																	
	L-16	375+25	LT	2		1		1		168					1						1																		
788	L-12 TO L-17	380+56 TO 382+50	LT								195					185						185																	
	L-17	382+50	LT	2		1		1		168					1						1																		
789-790	L-02 TO L-18	388+50 TO 393+05	RT								870					860						860																	
790	L-18	393+05	RT	2		1		1		168					1						1																		
	L-18 TO L-19	393+05 TO 396+50	RT								366					356						356																	
	L-19	396+50	RT	2		1		1		168					1						1																		
	L-19 TO L-20	396+50 TO 400+00	RT								361					351						351																	
	L-20	400+00	RT	2		1		1		168					1						1																		
	L-20 TO L-21	400+00 TO 400+00	RT-LT						489					153																									
	L-21	400+00	LT		3													1																					
	L-21 TO L-22	400+00 TO 398+50	LT								159					149						149																	
	L-22	398+50	LT	2		1		1		168					1						1																		
	L-22 TO L-23	400+00 TO 398+50	LT								244					234						234																	
	L-23	398+50	LT		3													1																					
	L-23 TO L-24	398+50 TO 396+50	LT-LT						177				49																										
	L-24	396+50	LT	2		1		1		168					1						1																		
	L-21 TO L-25	400+00 TO 407+00	LT								705					695						695																	
	L-25	407+00	LT	2		1		1		168					1						1																		
TOTALS TO THE GENERAL SUMMARY				28	39	10	1	11	7425	1854	3843	974	72	424	11	4603	4	8	1	11	1	4603																	

DRAFT Stage 3 - Not for Construction 09/23/2024

LLAW-7-2.17

780 1247

C:\EEC\Projects\LAW-7(Stantec)\CADD\Phase_2B\Lighting\Sheets\780-75923_LS003.dgn Sheet 5/13/2024 2:10:50 PM mhunt

PLAN LEGEND

EXISTING		PROPOSED
	LIGHT POLE, CONVENTIONAL	
	PULL BOX/JUNCTION BOX	
	LIGHTING CONTROL CABINET	
— —E— —	CONDUIT WITH LIGHTING CIRCUIT	
	1-1/2" DUCT CABLE	

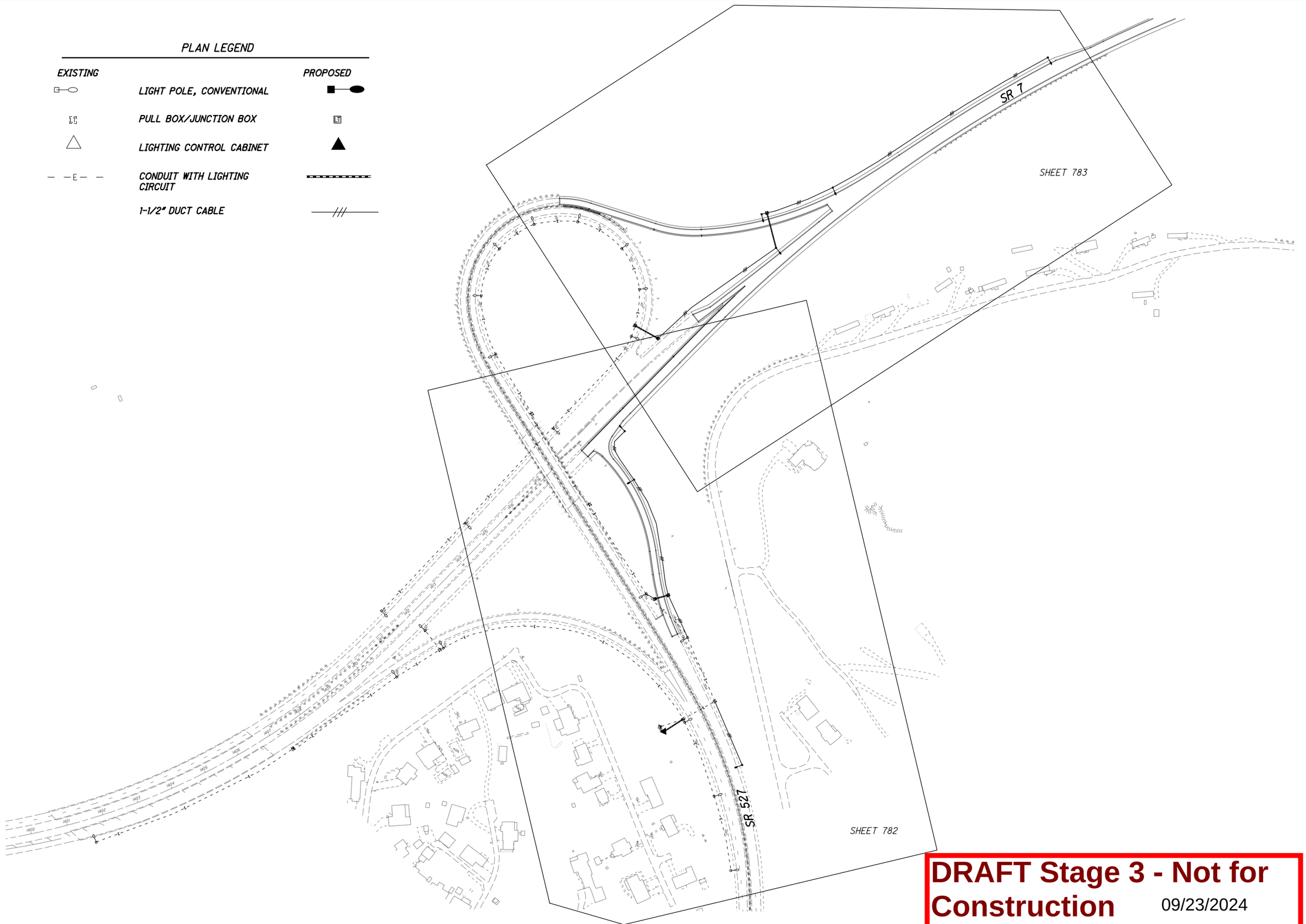

DRAFT Stage 3 - Not for Construction 09/23/2024

HORIZONTAL SCALE IN FEET
0 60 120 240

CALCULATED MJH
CHECKED KAE

PARTIAL INTERCHANGE LIGHTING SCHEMATIC
SR 7 AT SR 527

LAW-7-2.17

781
1247

C:\EEC\Projects\LAW-7(Stantec)\CADD\Phase_2B\Lighting\Sheets\781-75923_LP011.dgn Sheet 5/13/2024 1:32:40 PM mhunt

NOTE:
1) SEE SHEET 781 FOR PLAN LEGEND.

2) LIGHT POLE OFFSETS ARE APPROXIMATE. THE CONTRACTOR SHALL PLACE THE CENTER OF THE FOUNDATION 8.5' FROM THE EDGE OF SHOULDER, AS SHOWN IN STANDARD DRAWING HL-20.11.

3) THE EXISTING CONTROL CENTER PROVIDES A NON-STANDARD ODOT POWER CIRCUIT (480V/ GROUND/NEUTRAL). THE CONTRACTOR SHALL INSTALL A POWER SERVICE TO FEED A STANDARD 240V/240V/NEUTRAL CIRCUIT. SEE SHEET 784 FOR ADDITIONAL QUANTITIES TO CONVERT THE LIGHTING CIRCUITS TO THE STANDARD ODOT CONFIGURATION.

4) REFEED EXISTING CIRCUIT CABLE THROUGH PROPOSED CONDUIT, AND CONNECT TO PROPOSED CONTROL CENTER CABINET.

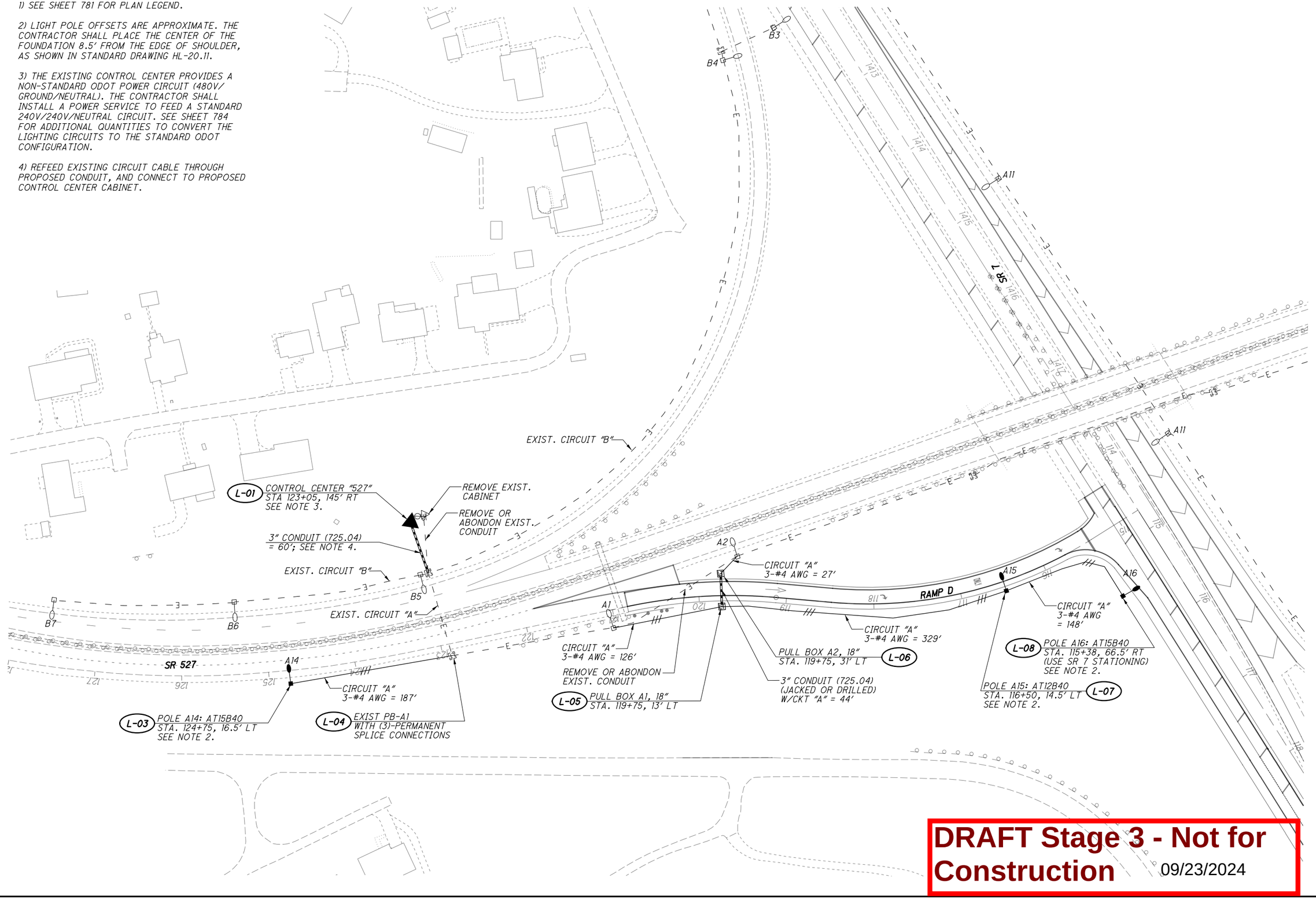

DRAFT Stage 3 - Not for Construction 09/23/2024

HORIZONTAL SCALE IN FEET
0 25 50 100

CALCULATED MJH
CHECKED KAE

PARTIAL INTERCHANGE LIGHTING PLAN
SR 7 AT SR 527 - RAMP D

LAW-7-2.17

782
1247

C:\EEC\Projects\LAW-7(Stantec)\CADD\Phase_2B\Lighting\Sheets\782-75923_LP012.dgn Sheet 5/13/2024 1:36:39 PM mhunt

NOTE:
1) SEE SHEET 781 FOR PLAN LEGEND.

2) LIGHT POLE OFFSETS ARE APPROXIMATE. THE CONTRACTOR SHALL PLACE THE CENTER OF THE FOUNDATION 8.5' FROM THE EDGE OF SHOULDER, AS SHOWN IN STANDARD DRAWING HL-20.11.

3) LOCATION SHOWN IS APPROXIMATE. THE CONTRACTOR SHALL DIG TO EXPOSE THE EXISTING CONDUIT. THE PROPOSED PULL BOX SHALL BE SET OVER, AND CONNECTED TO, THE EXISTING CONDUIT. SPLICE EXISTING DISTRIBUTION CABLE TO THE PROPOSED DISTRIBUTION CABLE IN THE PROPOSED PULL BOX, USING THREE PERMANENT UNFUSED SPLICE CONNECTIONS.

4) REUSE EXISTING CONNECTOR KITS.

5) LOCATION OF TRENCH AND CONDUIT RUNS SHOWN ON THE DRAWING ARE APPROXIMATE MAINTAIN 36" HORIZONTAL CLEARANCE AND 12" VERTICAL CLEARANCE FROM WATER AND GAS LINES. FIELD ADJUST AS NEEDED.

6) ALL CONDUIT UNDER ROADWAYS SHALL BE 3" RMC, JACKED OR DRILLED.

7) ALL FIXTURES SHALL PROVIDE TYPE II DISTRIBUTION, UNLESS OTHERWISE NOTED.

Ex LA-R/W

A6

A7

A8

A9

A10

RAMP C

L-11 PULL BOX A3, 18"
STA. 117+72,
113' LT
SEE NOTE 3.

3" CONDUIT (725.04)
(JACKED OR DRILLED)
W/CKT "A" = 71'

CIRCUIT "A"
3-#4 AWG
= 15'

L-17 POLE A14: AT15B40
STA. 121+96, 8.5' LT
SEE NOTE 2.

3" CONDUIT (725.04)
(JACKED OR DRILLED)
W/CKT "A" = 68'

CIRCUIT "A"
3-#4 AWG = 402'

PULL BOX, 18"
STA. 122+11, 12' LT
(USE RAMP C STATIONING)
SEE NOTE 3.
L-14

LA-R/W

CIRCUIT "A"
3-#4 AWG
= 191'

POLE A14: AT15B40
STA. 124+05, 16.5' LT
(USE RAMP C STATIONING)
SEE NOTE 2.
L-15

CIRCUIT "A"
3-#4 AWG = 679'

L-16 POLE A14: AT15B40
STA. 130+85, 8.5' LT
SEE NOTE 2.

SR 7

POLE A17: AT15B40
STA. 121+88, 7.4' RT
SEE NOTE 2.
L-13

PULL BOX, 18"
STA. 117+91, 45' LT
L-12

117 118 119 120 121 122 123 124 125 126 127 128 129 130 131

PARTIAL INTERCHANGE LIGHTING PLAN
SR 7 AT SR 527 - RAMP C

HORIZONTAL SCALE IN FEET
0 25 50 100

CALCULATED M.JH
CHECKED KAE

LAW-7-2.17

783
1247

DRAFT Stage 3 - Not for Construction 09/23/2024

C:\EEC\Projects\LAW-7(Stantec)\CADD\Phase 2B\Lighting\Sheets\783-75923_LP013.dgn Sheet 5/13/2024 2:15:43 PM mhunt

POWER SERVICE DATA											
CONTROL CENTER	LINE VOLTAGE (VOLTS)	CONTROL CENTER CONNECTED LOAD (KVA)	SERVICE ENTRANCE CABLE (AWG)	ENCLOSURE RATING (AMPS)	FEEDER CIRCUIT CONNECTED LOAD (AMPS)	FEEDER CIRCUIT FUSE SIZE (AMPS)	BRANCH CIRCUIT NO.	BRANCH CIRCUIT LOAD (AMPS)	BRANCH CIRCUIT FUSE SIZE (AMPS)	BRANCH CIRCUIT CABLE SIZE (AWG)	MAINTAINING AGENCY
CC-527	480	3.97	2	60	8.28	20	A	5.76	20	4	ODOT
							B	2.52	20	4	

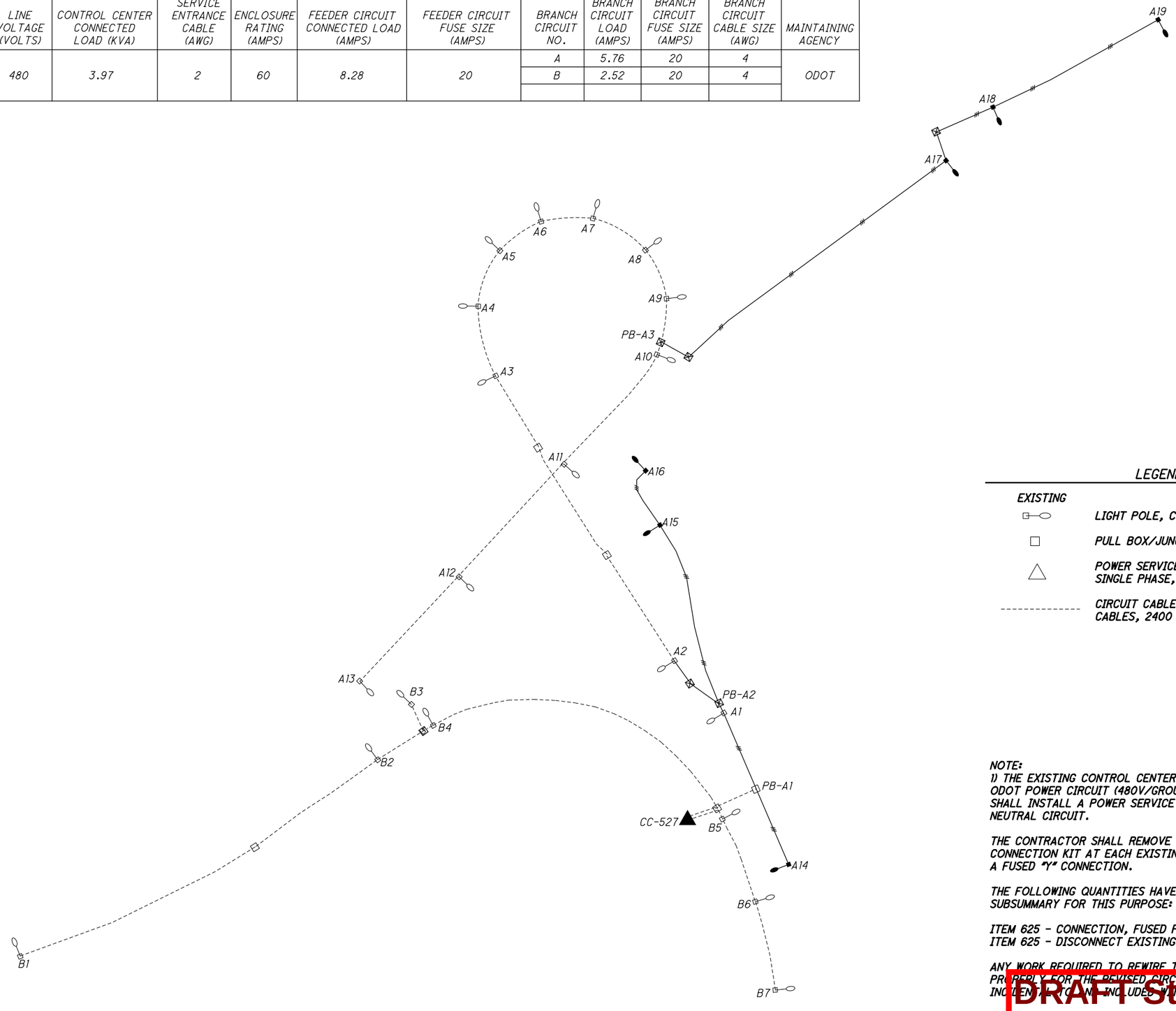

LEGEND

EXISTING		PROPOSED
⊸○	LIGHT POLE, CONVENTIONAL	■—
□	PULL BOX/JUNCTION BOX	⊠
△	POWER SERVICE, 480V, 3-WIRE, SINGLE PHASE, GROUNDED NEUTRAL	▲
----------	CIRCUIT CABLE, THREE- #4 AWG CABLES, 2400 VOLT	/////

NOTE:
1) THE EXISTING CONTROL CENTER PROVIDES A NON-STANDARD ODOT POWER CIRCUIT (480V/GROUND/NEUTRAL). THE CONTRACTOR SHALL INSTALL A POWER SERVICE TO FEED A STANDARD 240V/240V/ NEUTRAL CIRCUIT.

THE CONTRACTOR SHALL REMOVE THE EXISTING THE EXISTING UNFUSED CONNECTION KIT AT EACH EXISTING LIGHT POLE, AND REPLACE IT WITH A FUSED "Y" CONNECTION.

THE FOLLOWING QUANTITIES HAVE BEEN CARRIED TO THE LIGHTING SUBSUMMARY FOR THIS PURPOSE:

ITEM 625 - CONNECTION, FUSED PULL-APART 20 EACH
ITEM 625 - DISCONNECT EXISTING CIRCUIT 20 EACH

ANY WORK REQUIRED TO REWIRE THE EXISTING FIXTURES TO FUNCTION PROPERLY FOR THE REVISED CIRCUIT CONFIGURATION SHALL BE CONSIDERED INCIDENTAL TO AND INCLUDED WITH THE VARIOUS BID ITEMS.

DRAFT Stage 3 - Not for Construction 09/23/2024

SCHEMATIC NOT TO SCALE

CALCULATED MJH CHECKED KAE

LIGHTING WIRING DIAGRAM SR 7 AT SR 527

LAW-7-2.17

C:\EEC\Projects\LAW-7(Stantec)\CADD\Phase_2B\Lighting\Sheets\784-75923_LD014.dgn Sheet 5/13/2024 1:40:22 PM mhunt

NOTE:
1) SEE SHEET 781 FOR PLAN LEGEND.

2) LIGHT POLE OFFSETS ARE APPROXIMATE. THE CONTRACTOR SHALL PLACE THE CENTER OF THE FOUNDATION 8.0' FROM BACK-OF-CURBR

3) LOCATION OF TRENCH AND CONDUIT RUNS SHOWN ON THE DRAWING ARE APPROXIMATE MAINTAIN 36" HORIZONTAL CLEARANCE AND 12" VERTICAL CLEARANCE FROM WATER AND GAS LINES. FIELD ADJUST AS NEEDED.

4) ALL CONDUIT UNDER ROADWAYS SHALL BE 3" RMC, JACKED OR DRILLED.

5) ALL FIXTURES SHALL PROVIDE TYPE III DISTRIBUTION, UNLESS OTHERWISE NOTED.

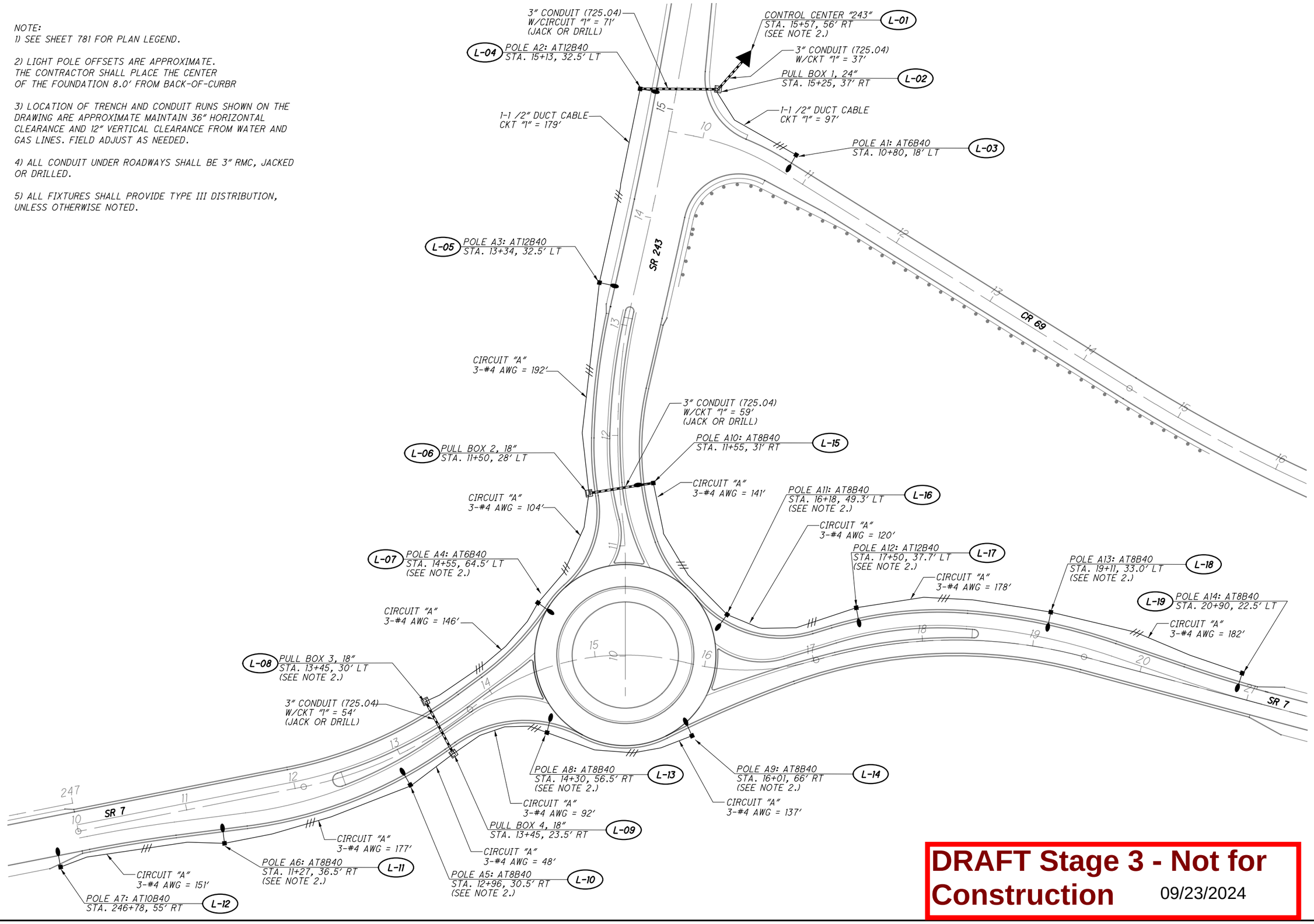

DRAFT Stage 3 - Not for Construction 09/23/2024

HORIZONTAL SCALE IN FEET
0 20 40 80

CALCULATED MJH
CHECKED KAE

LIGHTING PLAN
SR 7 AT SR 243

LAW-7-2.17

785
1247

C:\EEC\Projects\LAW-7(Stantec)\CADD\Phase_2B\Lighting\Sheets\785-75923_LP021.dgn Sheet 5/13/2024 2:16:39 PM mhunt

LEGEND

- LIGHT POLE, CONVENTIONAL
- PULL BOX
- POWER SERVICE, 240V, 3-WIRE, SINGLE PHASE, GROUNDED NEUTRAL
- CIRCUIT CABLE, THREE- #4 AWG CABLES, 2400 VOLT

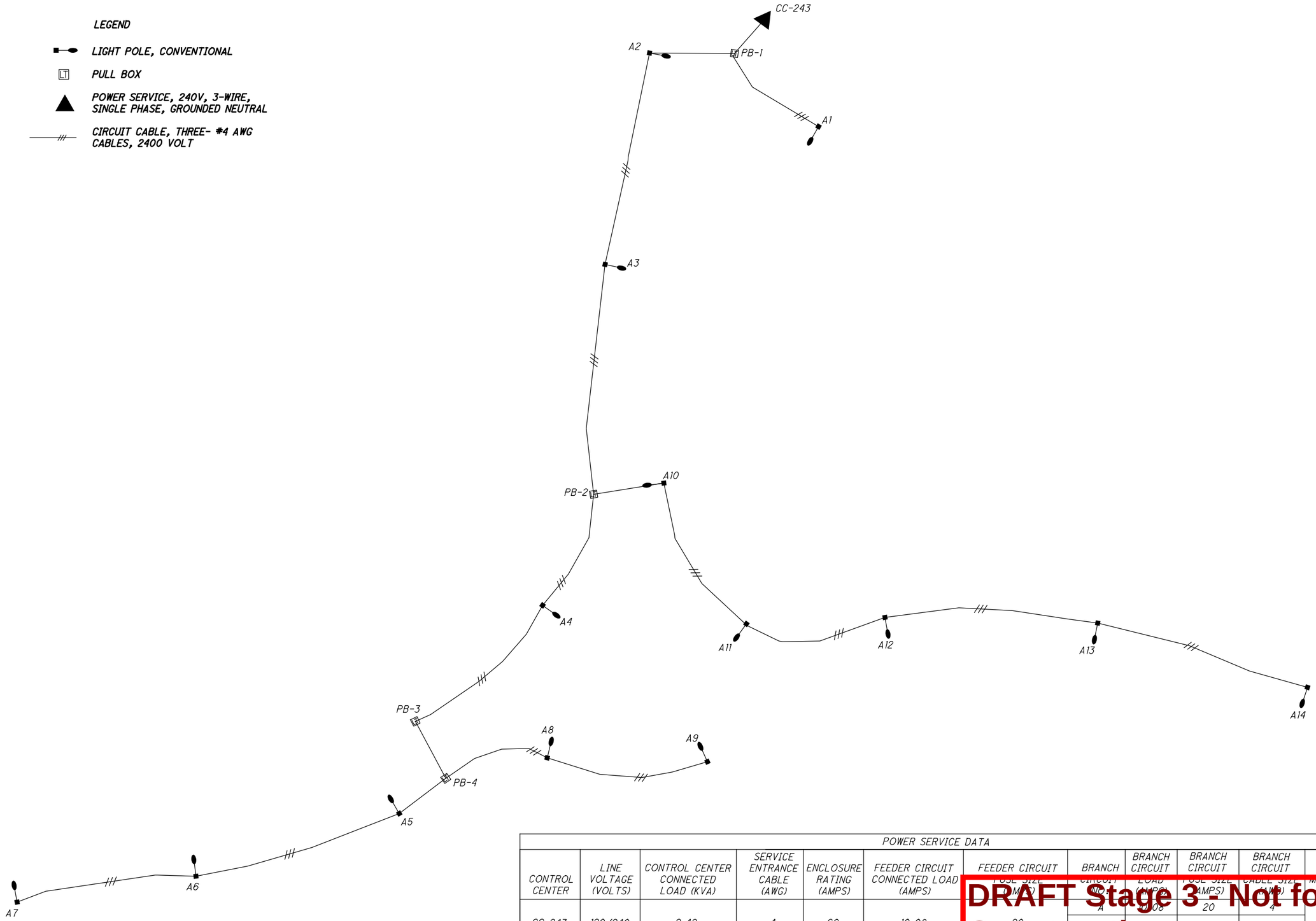

POWER SERVICE DATA											
CONTROL CENTER	LINE VOLTAGE (VOLTS)	CONTROL CENTER CONNECTED LOAD (KVA)	SERVICE ENTRANCE CABLE (AWG)	ENCLOSURE RATING (AMPS)	FEEDER CIRCUIT CONNECTED LOAD (AMPS)	FEEDER CIRCUIT FUSE SIZE (AMPS)	BRANCH CIRCUIT NO.	BRANCH CIRCUIT LOAD (AMPS)	BRANCH CIRCUIT FUSE SIZE (AMPS)	BRANCH CIRCUIT CABLE SIZE (AWG)	MAINTAINING AGENCY
CC-243	120/240	2.42	4	60	10.08	20	A	10.08	20	4	ODOT

DRAFT Stage 3 - Not for Construction 09/23/2024

SCHEMATIC NOT TO SCALE

CALCULATED MJH CHECKED KAE

LIGHTING CIRCUIT DIAGRAM SR 7 AT SR 243

LAW-7-2.17

786 1247

C:\EEC\Projects\LAW-7(Stantec)\CADD\Phase_2B\Lighting\Sheets\786-75923_LD022.dgn Sheet 5/13/2024 1:48:36 PM mhunt

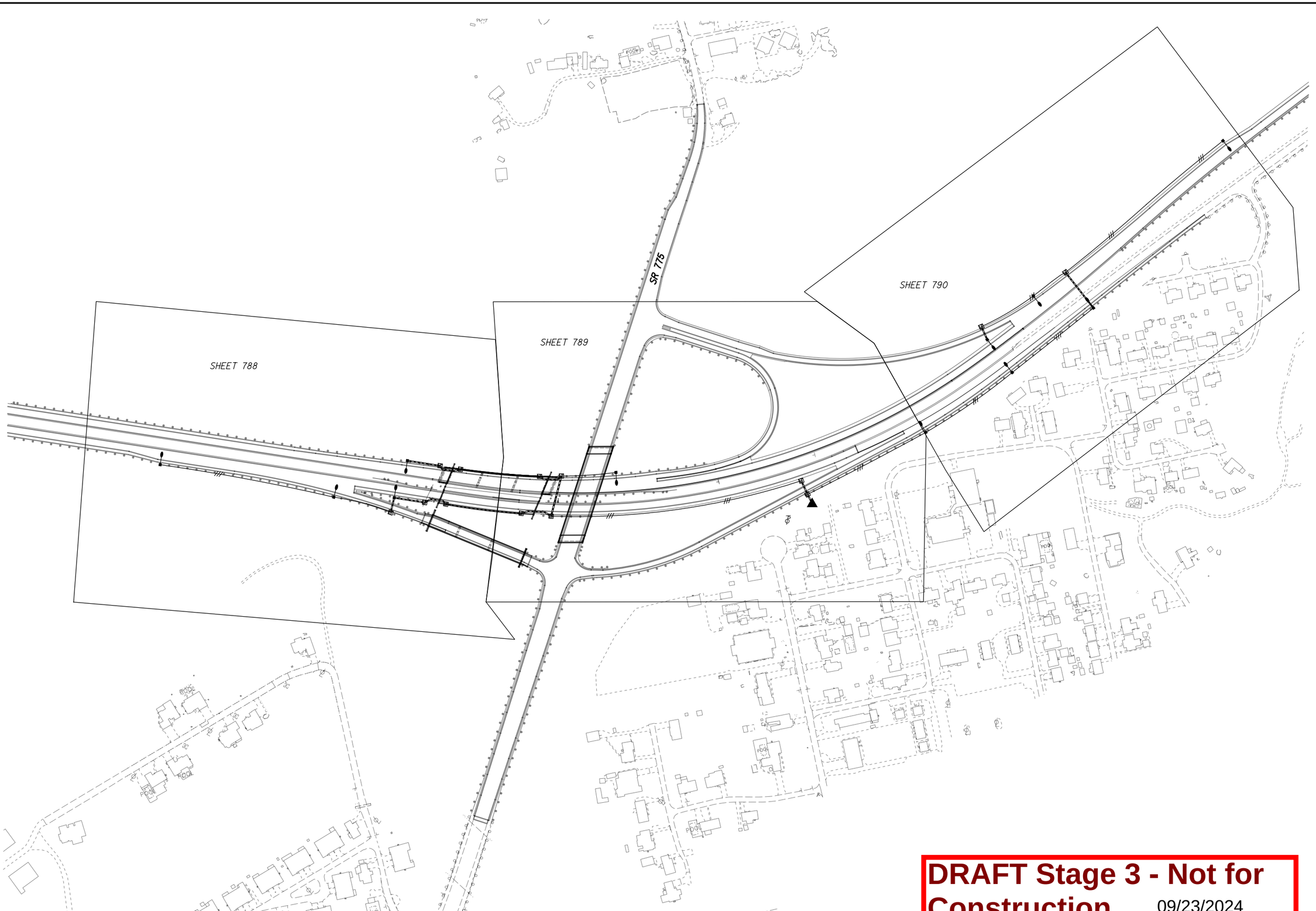

DRAFT Stage 3 - Not for Construction 09/23/2024

CALCULATED	MJH
CHECKED	KAE

HORIZONTAL SCALE IN FEET
0 75 150 300

PARTIAL INTERCHANGE LIGHTING SCHEMATIC
SR 7 AT SR 775

LAW-7-2.17

787
1247

C:\EEC\Projects\LAW-7\Stantec\CADD\Phase_2B\Lighting\Sheets\787-75923_LP031.dgn Sheet 5/13/2024 1:42:25 PM mhunt

NOTE:
1) SEE SHEET 788 FOR PLAN LEGEND.

2) LIGHT POLE OFFSETS ARE APPROXIMATE. THE CONTRACTOR SHALL PLACE THE CENTER OF THE FOUNDATION 8.5' FROM THE EDGE OF SHOULDER.

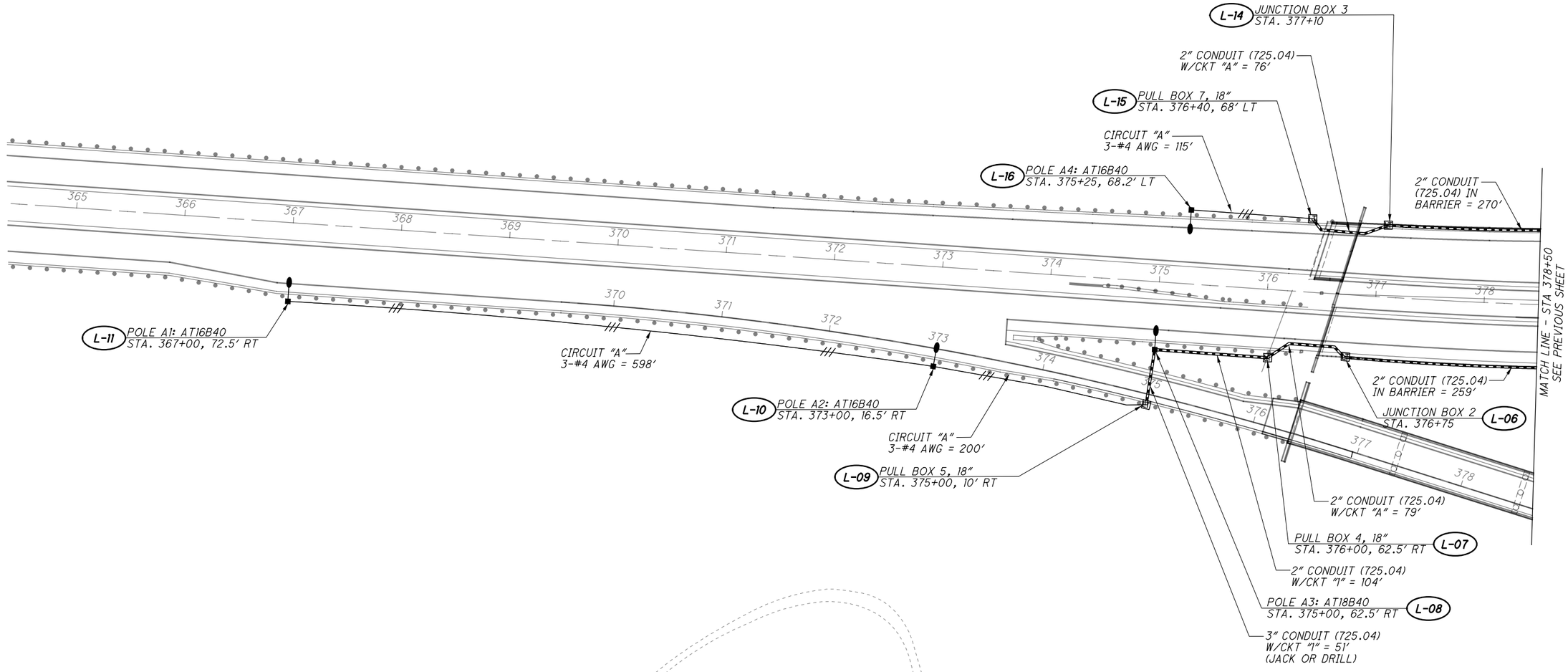

DRAFT Stage 3 - Not for Construction 09/23/2024

HORIZONTAL SCALE IN FEET
0 25 50 100

CALCULATED MJH
CHECKED KAE

INTERCHANGE LIGHTING PLAN
STA 365+00 TO 378+50

LAW-7-2.17

788
1247

C:\EEC\Projects\LAW-7(Stantec)\CADD\Phase_2B\Lighting\Sheets\788-75923_LP032.dgn Sheet 5/13/2024 2:18:16 PM mhunt

NOTE:
1) SEE SHEET 788 FOR PLAN LEGEND.

2) LIGHT POLE OFFSETS ARE APPROXIMATE. THE CONTRACTOR SHALL PLACE THE CENTER OF THE FOUNDATION 8.5' FROM THE EDGE OF SHOULDER.

3) PROVIDE OVERHEAD POWER SERVICE, PER STANDARD DRAWING HL-40.10.

L-12 PULL BOX 6, 18"
STA. 380+56, 28' LT

2" CONDUIT (725.04)
W/CKT "A" = 80'

L-13 JUNCTION BOX 4
STA. 379+80

MATCH LINE - STA 378+50
SEE PREVIOUS SHEET

L-05 JUNCTION BOX 1
STA. 379+30

2" CONDUIT (725.04)
W/CKT "A" = 106'

L-04 PULL BOX 3, 18"
STA. 380+30, 60' RT

CIRCUIT "A"
3-#4 AWG = 185'

POLE A5: AT16B40
STA. 382+50, 18.5' LT L-17

3" CONDUIT (725.04)
W/CKT "A" = 140'
(JACK OR DRILL)

CIRCUIT "A"
3-#4 AWG = 860'

POWER SERVICE POLE

PULL BOX 2, 18"
STA. 388+67, 61' RT L-03

3" CONDUIT (725.04)
W/CKT "A" = 51'
(JACK OR DRILL)

MATCH LINE - STA 393+00
SEE NEXT SHEET

CIRCUIT "B"
3-#4 AWG = 860'

PULL BOX 1, 24"
STA. 388+50, 12' RT L-02

3" CONDUIT (725.04)
W/CKTS "A" & "B" = 23'

CONTROL CENTER "775"
STA. 388+50, 35' RT L-01
(SEE NOTE 3.)

SR 775

DRAFT Stage 3 - Not for Construction 09/23/2024

INTERCHANGE LIGHTING PLAN
STA 378+50 TO STA 393+00

HORIZONTAL SCALE IN FEET
0 25 50 100

CALCULATED MJH
CHECKED KAE

LAW-7-2.17

789
1247

C:\EEC\Projects\LAW-7(Stantec)\CADD\Phase_2B\Lighting\Sheets\789-75923_LP033.dgn Sheet 5/13/2024 2:19:10 PM mhunt

NOTE:
1) SEE SHEET 788 FOR PLAN LEGEND.

2) LIGHT POLE OFFSETS ARE APPROXIMATE. THE CONTRACTOR SHALL PLACE THE CENTER OF THE FOUNDATION 8.5' FROM THE EDGE OF SHOULDER.

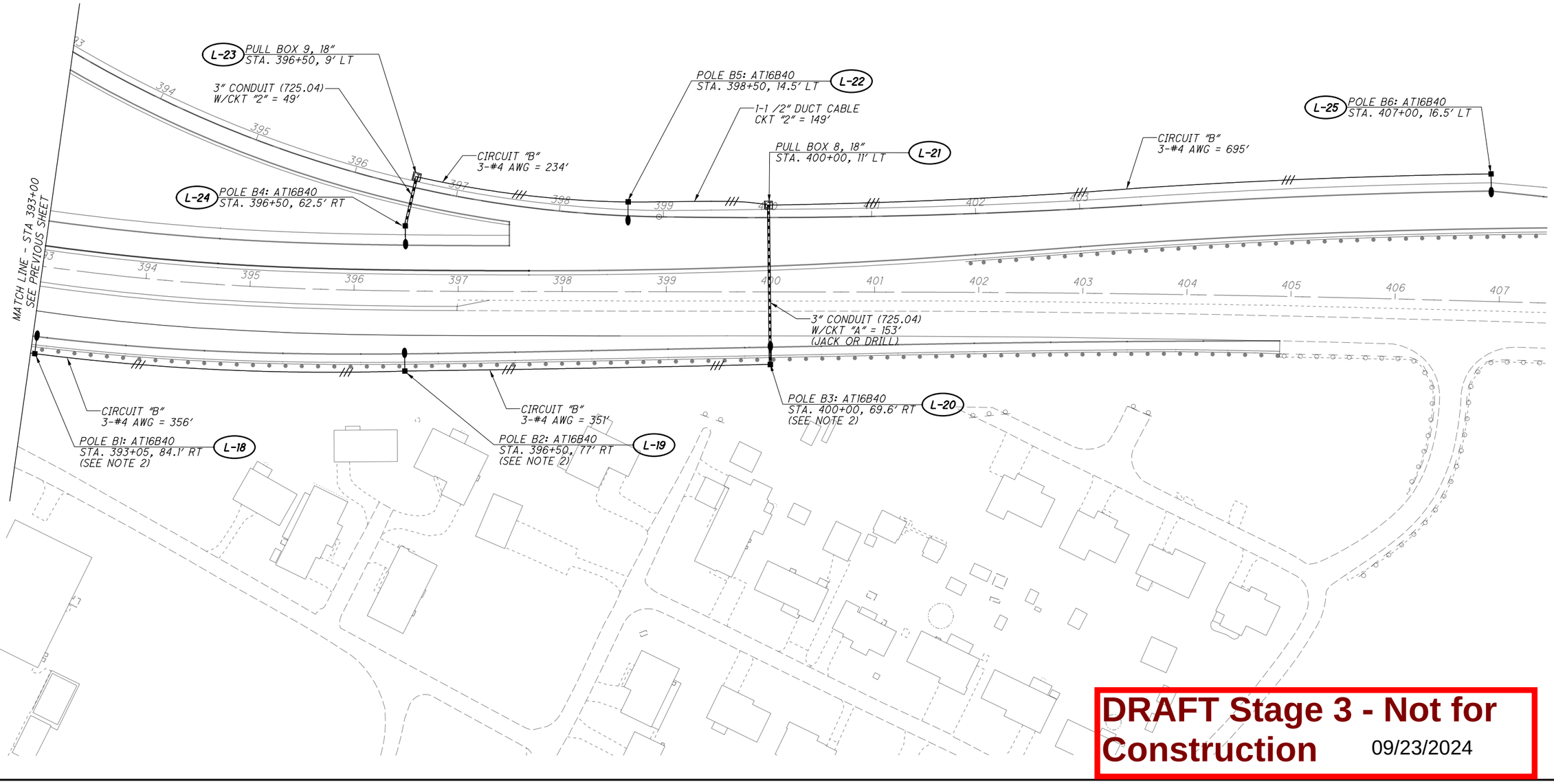

DRAFT Stage 3 - Not for Construction 09/23/2024

N

0 25 50 100 HORIZONTAL SCALE IN FEET

CALCULATED MJH CHECKED KAE

INTERCHANGE LIGHTING PLAN STA 393+00 TO STA 407+25

LAW-7-2.17

790 1247

C:\EEC\Projects\LAW-7(Stantec)\CADD\Phase_2B\Lighting\Sheets\790-75923_LP034.dgn Sheet 5/13/2024 2:11:47 PM mhunt

LEGEND

LIGHT POLE, CONVENTIONAL

PULL BOX/JUNCTION BOX

POWER SERVICE, 240V, 3-WIRE, SINGLE PHASE, GROUNDED NEUTRAL

CIRCUIT CABLE, THREE- #4 AWG CABLES, 2400 VOLT

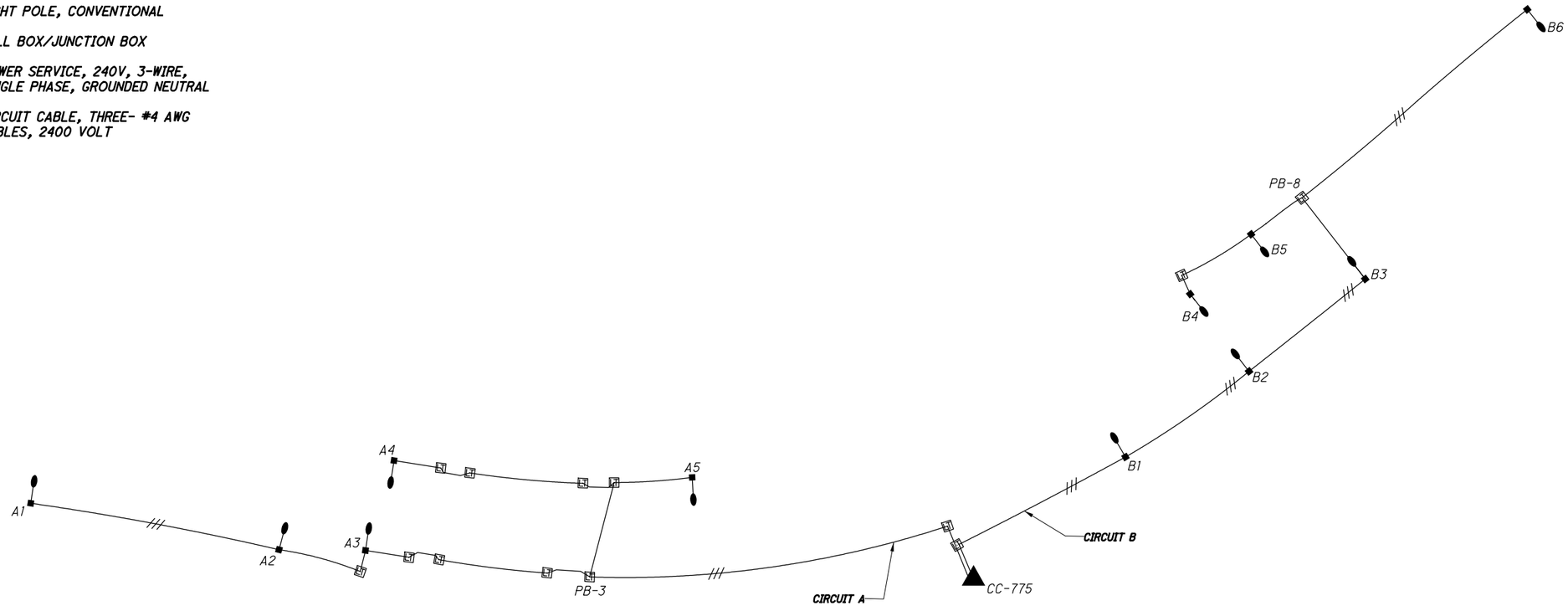

POWER SERVICE DATA											
CONTROL CENTER	LINE VOLTAGE (VOLTS)	CONTROL CENTER CONNECTED LOAD (KVA)	SERVICE ENTRANCE CABLE (AWG)	ENCLOSURE RATING (AMPS)	FEEDER CIRCUIT CONNECTED LOAD (AMPS)	FEEDER CIRCUIT FUSE SIZE (AMPS)	BRANCH CIRCUIT NO.	BRANCH CIRCUIT LOAD (AMPS)	BRANCH CIRCUIT FUSE SIZE (AMPS)	BRANCH CIRCUIT CABLE SIZE (AWG)	MAINTAINING AGENCY
CC-775	120/240	1.90	4	60	7.92	20	A	3.60	10	4	ODOT
							B	4.32	10	4	

DRAFT Stage 3 - Not for Construction 09/23/2024

SCHEMATIC NOT TO SCALE

CALCULATED MJH CHECKED KAE

LIGHTING WIRING DIAGRAM
SR 7 AT SR 775

LAW-7-2.17

791 1247

C:\EEC\Projects\LAW-7(Stantec)\CADD\Phase_2B\Lighting\Sheets\791-75923_LD001.dgn Sheet 5/13/2024 1:46:37 PM mhunt

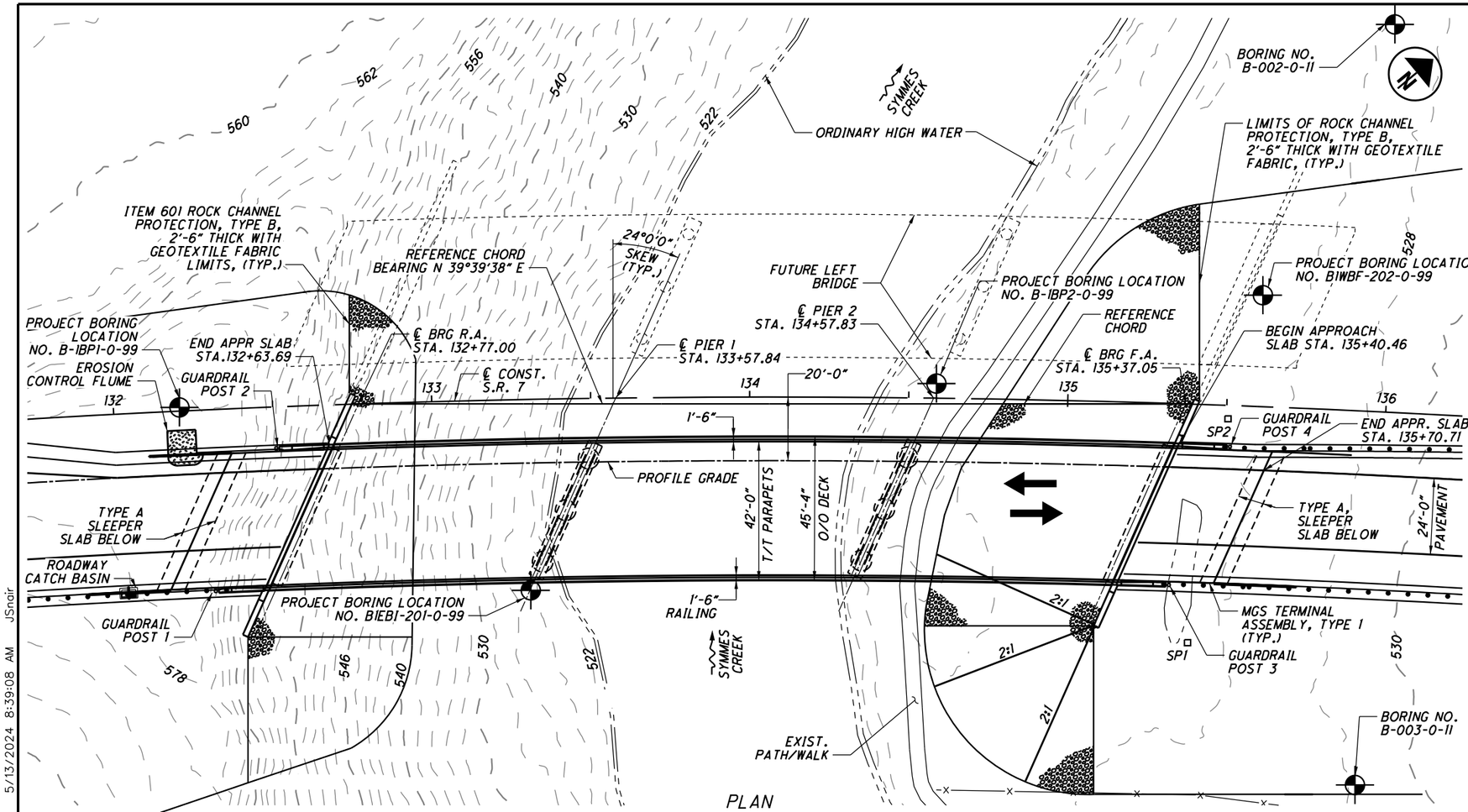

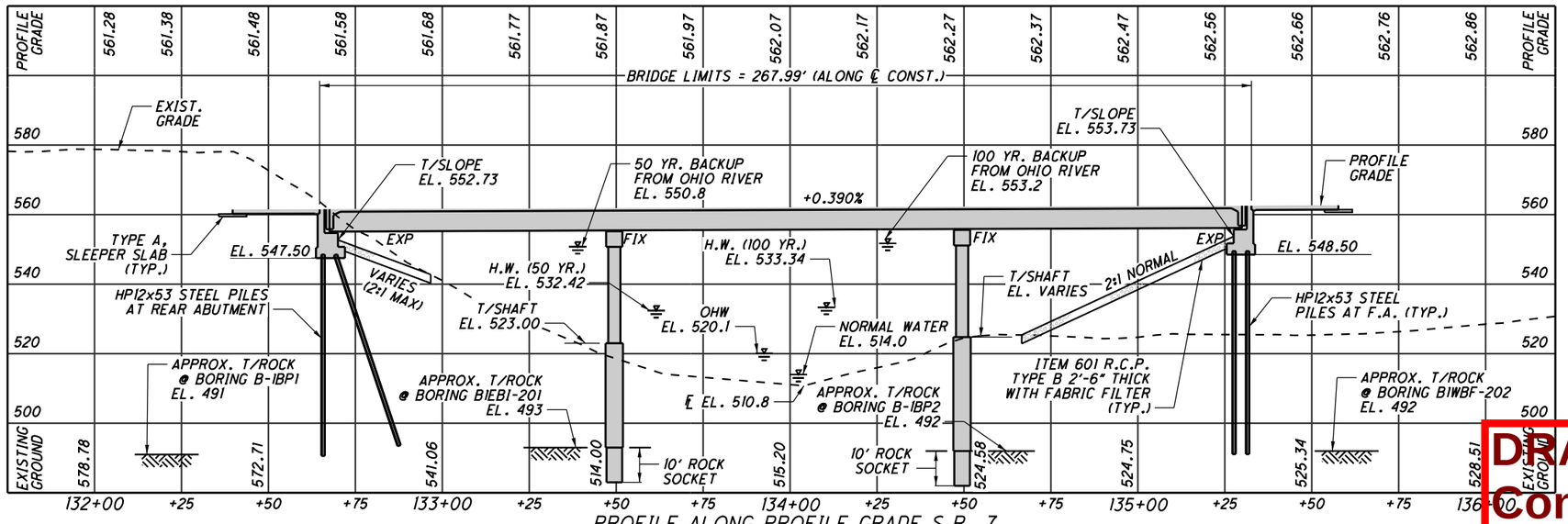

PROFILE ALONG PROFILE GRADE S.R. 7

NOTES

1. EARTHWORK LIMITS SHOWN ARE APPROXIMATE. ACTUAL SLOPES SHALL CONFORM TO PLAN CROSS SECTIONS.
2. FOR PRIMARY PROJECT CONTROL INFORMATION TABLE SEE ROADWAY GENERAL NOTES.
3. BRIDGE DECK DRAINAGE IS CONTROLLED BY ROADWAY CURBS EXTENDING OFF THE EAST END OF THE BRIDGE TO ROADWAY CATCH BASINS.
4. FOR LIST OF ABBREVIATIONS SEE SHEET 4/25.

DESIGN TRAFFIC:
2015 ADT = 10,300 2015 ADTT = 1,133
2035 ADT = 21,400 2035 ADTT = 2,354
DIRECTIONAL DISTRIBUTION = 69/31

LEGEND

- PROJECT BORING LOCATION
- SETTLEMENT PLATFORM
- PROPOSED RIGHT-OF-WAY MONUMENT

HYDRAULIC DATA

DRAINAGE AREA = 351.7 SQ. MILES
Q (50) = 17,000 CFS V (50) = 8.67 FT/S EL. (50) = 532.42
Q (100) = 19,100 CFS V (100) = 9.06 FT/S EL. (100) = 533.34
STRUCTURE CLEARS THE 50 YEAR DESIGN HW BY 23.2 FEET.

ESTIMATED PILE LENGTHS

REAR ABUTMENT HP12x53 = 60 FT.
FORWARD ABUTMENT HP12x53 = 60 FT.

S.R. 7 CURVE NO. 1 DATA		
P.I. STA. 138+60.99	L = 3,508.44'	Ts = 2,076.38'
Δ = 53° 33' 53" (RT)	E = 425.60'	LT = 116.67'
Dc = 1° 27' 15"	TS STA. = 117+84.61	ST = 58.34'
R = 3,940.00'	SC STA. = 119+59.61	e_{max} = 4.00%
T = 1,880.13'	θs = 1° 16' 21"	CS STA. 154+68.05
	Ls = 175.00'	ST STA. 156+43.05

POST NUMBER	FIRST GUARDRAIL POST	STATION
1	EASTBOUND R.A.	132+28.76
2	WESTBOUND R.A.	132+50.63
3	EASTBOUND F.A.	135+33.61
4	WESTBOUND F.A.	135+51.46

PROPOSED STRUCTURE

TYPE: 3-SPAN PRESTRESSED CONCRETE I-BEAMS (60" MODIFIED TYPE 4) COMPOSITE WITH REINFORCED CONCRETE DECK ON CAP & COLUMN PIERS ON DRILLED SHAFTS & STUB TYPE ABUTMENTS ON STEEL HP PILES

SPANS: 78.93', 97.83', 78.91' C/C BRGS (MEASURED ALONG REF. CHORD)

ROADWAY: 42'-0" TOE/TOE PARAPETS

LOADING: HL-93 AND 60 LBS/FT² FUTURE WEARING SURFACE

WEARING SURFACE: 1" MONOLITHIC WEARING SURFACE

SKEW: 24°00'00" L.F. FROM PERPENDICULAR TO REF. CHORD

APPROACH SLABS: AS-1-15 AND APPLICABLE DETAILS FROM AS-2-15, 30'-0" LONG

ALIGNMENT: 2.427° CURVE RIGHT

SUPERELEVATION: 0.0400 FT. PER FT.

COORDINATES: LATITUDE 38° 39' 12"
LONGITUDE 82° 27' 16.08" W

DRAFT Stage 3 - Not for Construction 09/23/2024

DESIGN AGENCY
Stantec
1500 Lake Shore Dr.
Columbus OH 43204
(614) 486-4383

DESIGNED	DRAWN	REVIEWED	DATE
BSM	JWS	MRS	04/2024
CHECKED	REVISED	STRUCTURE FILE NUMBER	
EER		4400070	

LAWRENCE COUNTY
STA. 132+63.69
STA. 135+40.46

SITE PLAN
BRIDGE NO. LAW-7-0251
S.R. 7 OVER SYMMES CREEK

LAW-7-2.17
PID No. 75923

U:\173608714\LAW\75923\structures\LAW007_0251C\sheets\007_0251RSP001.dgn 5/13/2024 8:39:08 AM JSnair

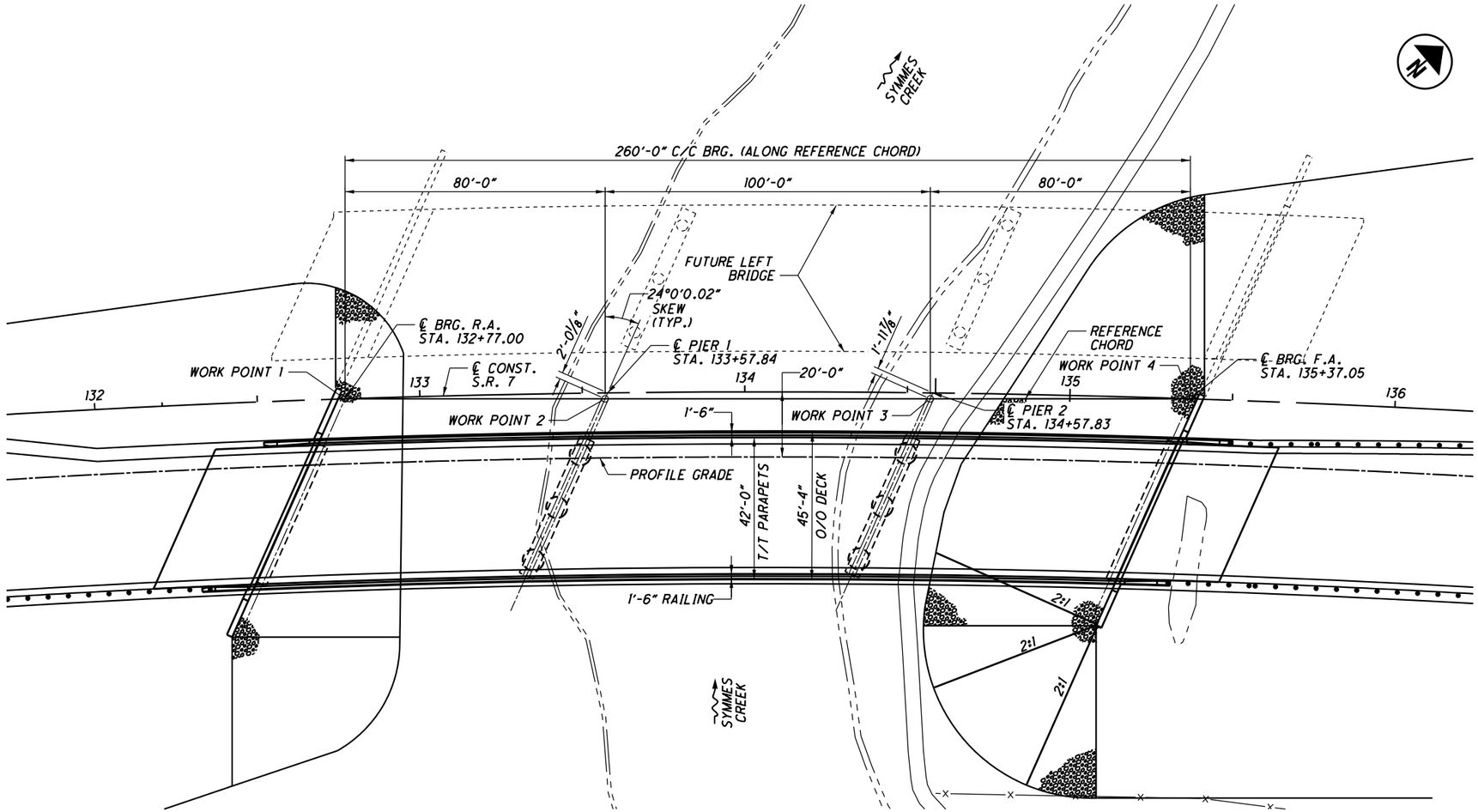

PLAN

S.R. 7 CURVE NO. 1

P.I. STA. 138+60.99
Δ = 53° 33' 53" (RT)
Dc = 1° 27' 15"
R = 3,940.00'
T = 1,880.13'
L = 3,508.44'
E = 425.60'
e_{max} = 4.00%
SC STA. 119+59.61
CS STA. 154+68.05

DRAFT Stage 3 - Not for Construction 09/23/2024

DESIGN AGENCY
Stantec
1500 Lake Shore Dr.
Columbus, OH 43204
(614) 486-4383

DESIGNED	DRAWN	REVIEWED	DATE
BSM	JWS	MRS	04/2024
CHECKED	REVISED	STRUCTURE FILE NUMBER	
EER		4400070	

GENERAL PLAN
BRIDGE NO. LAW-7-0251
S.R. 7 OVER SYMMES CREEK

LAW-7-2.17
PID No. 75923

793
1247

U:\173608714\LAW\75923\structures\LAW007_0251C\sheets\007_0251RGP001.dgn 5/13/2024 8:39:09 AM JSnair

REFER TO THE FOLLOWING STANDARD BRIDGE DRAWINGS:

AS-1-15	REVISED	01-20-23
AS-2-15	REVISED	07-21-23
DM-4.1	REVISED	07-17-20
EXJ-6-17	REVISED	01-19-24
PSID-1-13	REVISED	01-20-23
RM-1.1	REVISED	01-20-23
SBR-1-20	REVISED	07-21-23

AND TO THE FOLLOWING SUPPLEMENTAL SPECIFICATION:

800	DATED	01-19-24
832	DATED	07-21-23

DESIGN SPECIFICATIONS:
THIS STRUCTURE CONFORMS TO THE 9TH EDITION OF "LRFD BRIDGE DESIGN SPECIFICATIONS" ADOPTED BY THE AMERICAN ASSOCIATION OF STATE HIGHWAY AND TRANSPORTATION OFFICIALS, 2000 AND THE ODOT BRIDGE DESIGN MANUAL, 2020.

DESIGN LOADING:
HL-93
FUTURE WEARING SURFACE (FWS) OF 0.060 KIPS/FT²

OPERATIONAL IMPORTANCE:
A LOAD MODIFIER OF 1.00 HAS BEEN ASSUMED FOR THE DESIGN OF THIS STRUCTURE IN ACCORDANCE WITH THE AASHTO LRFD BRIDGE DESIGN SPECIFICATIONS, ARTICLE 1.3.5 AND THE ODOT BRIDGE DESIGN MANUAL.

DESIGN DATA:
CONCRETE CLASS QC2 - COMPRESSIVE STRENGTH 4.5 KSI (SUPERSTRUCTURE)
CONCRETE CLASS QC1 - COMPRESSIVE STRENGTH 4.0 KSI (SUBSTRUCTURE)
CONCRETE CLASS QC5 - WITH 1-IN MAX. AGGREGATE SIZE - COMPRESSIVE STRENGTH 4.5 KSI (DRILLED SHAFT)
REINFORCING STEEL - MINIMUM YIELD STRENGTH 60 KSI

STEEL H-PILES - A572 - YIELD STRENGTH 50 KSI

CONCRETE FOR PRESTRESSED BEAMS:
COMPRESSIVE STRENGTH (FINAL) = 7 KSI
COMPRESSIVE STRENGTH (RELEASE) = 6 KSI
WELDED WIRE FABRIC - YIELD STRENGTH = 70 KSI

PRESTRESSING STRAND:
AREA = 0.217 SQ. IN.
ULTIMATE STRENGTH = 270 K.S.I.
INITIAL STRESS = 202.5 K.S.I.
(LOW RELAXATION STRANDS)

MONOLITHIC WEARING SURFACE:
MONOLITHIC WEARING SURFACE IS ASSUMED, FOR DESIGN PURPOSES, TO BE 1 INCH THICK.

PILE DRIVING CONSTRAINTS:
PRIOR TO DRIVING PILES, CONSTRUCT THE SPILL THROUGH SLOPES AND THE BRIDGE APPROACH EMBANKMENT BEHIND THE ABUTMENTS UP TO THE LEVEL OF THE SUBGRADE ELEVATION FOR A MINIMUM DISTANCE OF 200 FEET BEHIND EACH ABUTMENT (SEE FORWARD APPROACH EMBANKMENT CONSTRUCTION THIS SHEET). DO NOT BEGIN THE EXCAVATION FOR THE ABUTMENT FOOTINGS AND THE INSTALLATION OF THE ABUTMENT PILES UNTIL AFTER THE ABOVE REQUIRED EMBANKMENT HAS BEEN CONSTRUCTED.

PILES TO BEDROCK:
DRIVE PILES THROUGH THE EMBANKMENT REINFORCING. DRIVE PILES TO REFUSAL ON BEDROCK. THE DEPARTMENT WILL CONSIDER REFUSAL TO BE OBTAINED WHEN THE PILE PENETRATION IS AN INCH OR LESS AFTER RECIEVING AT LEAST 20 BLOWS FROM THE PILE HAMMER. SELECT THE HAMMER SIZE TO ACHIEVE THE REQUIRED DEPTH TO BEDROCK AND REFUSAL.

THE TOTAL FACTORED LOAD IS 210.6 KIPS PER PILE FOR THE REAR ABUTMENT PILES.

THE TOTAL FACTORED LOAD IS 206.5 KIPS PER PILE FOR THE FORWARD ABUTMENT PILES.

REAR ABUTMENT PILES:
20 PILES 65 FEET LONG, ORDER LENGTH

FORWARD ABUTMENT PILES:
28 PILES 65 FEET LONG, ORDER LENGTH

PILE SPLICES:
IN LIEU OF USING THE FULL PENETRATION BUTT WELDS SPECIFIED IN CMS 507.09 TO SPLICE STEEL H-PILES, THE CONTRACTOR MAY USE A MANUFACTURED H-PILE SPLICER. FURNISH SPLICERS FROM THE FOLLOWING MANUFACTURER:

ASSOCIATED PILE AND FITTING CORPORATION
8 WOOD HOLLOW RD. PLAZA 1
PARSIPPANY, NEW JERSEY 07054

INSTALL AND WELD THE SPLICER TO THE PILE SECTIONS IN ACCORDANCE WITH THE MANUFACTURER'S WRITTEN ASSEMBLY PROCEDURE SUPPLIED TO THE ENGINEER BEFORE THE WELDING IS PERFORMED.

DRILLED SHAFTS:
PIER 1
THE MAXIMUM FACTORED LOAD TO BE SUPPORTED BY EACH DRILLED SHAFT IS 1,061 KIPS AT PIER 1. THIS LOAD IS RESISTED BY TIP RESISTANCE. ROCK SOCKET DEPTH PROVIDED FOR LATERAL SUPPORT.

PIER 2
THE MAXIMUM FACTORED LOAD TO BE SUPPORTED BY EACH DRILLED SHAFT IS 1,080 KIPS AT PIER 2. THIS LOAD IS RESISTED BY TIP RESISTANCE. ROCK SOCKET DEPTH PROVIDED FOR LATERAL SUPPORT.

DECK PLACEMENT DESIGN ASSUMPTIONS:
THE FOLLOWING ASSUMPTIONS OF CONSTRUCTION MEANS AND METHODS WERE MADE FOR THE ANALYSIS AND DESIGN OF THE SUPERSTRUCTURE. THE CONTRACTOR IS RESPONSIBLE FOR THE DESIGN OF THE FALSEWORK SUPPORT SYSTEM WITHIN THESE PARAMETERS AND WILL ASSUME RESPONSIBILITY FOR SUPERSTRUCTURE ANALYSIS FOR DEVIATION FROM THESE DESIGN ASSUMPTIONS.

AN EIGHT WHEEL FINISHING MACHINE WITH A MAXIMUM WHEEL LOAD OF 2.44 KIPS.

A MINIMUM OUT-TO-OUT WHEEL SPACING AT EACH END OF THE MACHINE OF 103".

A MAXIMUM SPACING OF OVERHANG FALSEWORK BRACKETS OF 48 IN.

A MAXIMUM DISTANCE FROM THE CENTERLINE OF THE FASCIA GIRDER TO THE FACE OF THE SAFETY HANDRAIL OF 65".

APPROACH EMBANKMENT CONSTRUCTION:

THE APPROACH EMBANKMENTS SHALL BE CONSTRUCTED AND THEN UNDERGO AN ESTIMATED WAITING PERIOD OF 180 DAYS PRIOR TO DRIVING PILES.

REFER TO SHEETS XX FOR DETAILS AND NOTES REGARDING REINFORCED SLOPE AND EMBANKMENT CONSTRUCTION.

ABBREVIATIONS

APPROX.	- APPROXIMATELY
BRG.	- BEARING
℄	- CENTERLINE
CLR.	- CLEAR
CONST.	- CONSTRUCTION
DWG.	- DRAWING
EF	- EACH FACE
EL.	- ELEVATION
EQ.	- EQUAL
EXIST.	- EXISTING
F.A.	- FORWARD ABUTMENT
FF	- FAR FACE
℄	- FLOW LINE
H.W.	- HIGH WATER
NF	- NEAR FACE
NO.	- NUMBER
OHW	- ORDINARY HIGH WATER MARK
R.A.	- REAR ABUTMENT
SP	- SETTLEMENT PLATFORM
SPA.	- SPACE
STA.	- STATION
STD.	- STANDARD
T/	- TOP OF
TYP.	- TYPICAL
YR.	- YEAR

DRAFT Stage 3 - Not for Construction 09/23/2024

U:\173608714\LAW\75923\structures\LAW007_0251C\sheets\007_0251RGN001.dgn 5/13/2024 8:39:10 AM JSnair

DESIGN AGENCY
Stantec
1500 Lake Shore Dr.
Columbus OH 43204
(614) 486-4383

DESIGNED	DRAWN	REVIEWED	DATE
BSM	JWS	MRS	04/2024
CHECKED	REVISED	STRUCTURE FILE NUMBER	
EER		4400070	

GENERAL NOTES
BRIDGE NO. LAW-7-0251
S.R. 7 OVER SYMMES CREEK

LAW-7-2.17
PID No. 75923

794
1247

ITEM SPECIAL - SETTLEMENT PLATFORM:

DESCRIPTION: THIS ITEM CONSISTS OF FURNISHING, CONSTRUCTING, AND MAINTAINING SETTLEMENT PLATFORMS AND OBTAINING SETTLEMENT READINGS AS REQUIRED BY THE PLANS OR AS DIRECTED BY THE ENGINEER. SEE SETTLEMENT PLATFORM DETAIL THIS SHEET. AT THE OPTION AND EXPENSE OF THE CONTRACTOR, ADDITIONAL SETTLEMENT PLATFORMS MAY BE INSTALLED AT LOCATIONS APPROVED BY THE ENGINEER. SETTLEMENT READINGS SHALL BE TAKEN WEEKLY DURING CONSTRUCTION AND DURING THE SPECIFIED WAITING PERIOD BEGINNING WITH THE FIRST WEEK FOLLOWING PLACEMENT OF EACH PLATFORM. THE READINGS SHALL BE PLOTTED ON GRAPH PAPER PRESENTING DEFORMATION (ON THE NEGATIVE Y-AXIS) AND FILL HEIGHT (ON THE POSITIVE Y-AXIS) VERSUS TIME (ON THE X-AXIS). A COPY OF EACH CUMULATIVE PLOT SHALL BE SENT TO ODOT, CO, CONSTRUCTION MANAGEMENT/CONSTRUCTION ADMINISTRATION, GEOTECHNICAL AND EARTHWORK ENGINEER AND ODOT, CO, OFFICE OF GEOTECHNICAL ENGINEERING, FOUNDATIONS AND RETAINING WALLS ENGINEER, AFTER EACH SETTLEMENT READING IS RECORDED.

MATERIAL: SOUND LUMBER SUCH AS ¾" EXTERIOR GRADE PLYWOOD SHALL BE USED FOR THE BASE. THE PIPE SHALL BE 2½" STANDARD BLACK PIPE WITH THREADED FITTINGS AS SHOWN ON THE PLANS. A STEEL PLATE 36" X 36" X ⅛" MAY BE SUBSTITUTED FOR THE LUMBER FOR THE PLATFORMS, AT THE CONTRACTOR'S OPTION.

CONSTRUCTION METHODS: THE PLATFORM SHALL CONFORM TO THE SETTLEMENT PLATFORM DETAILS SHOWN ON THIS SHEET. THE PLATFORM SHALL BE SET ON A LEVEL SURFACE. THE PIPE SHALL BE FIRMLY SECURED TO THE PLATFORM AND SHALL BE MAINTAINED IN A PLUMB POSITION DURING THE PLACEMENT OF THE EMBANKMENT. THE PIPE SHALL BE MARKED AT INTERVALS TO FACILITATE MEASUREMENT OF THE DEPTH OF FILL. THE CONTRACTOR SHALL STOP WORK IN ANY LOCATION WHERE THE SETTLEMENT PLATFORM HAS BEEN DISTURBED OR DAMAGED. PLATFORMS OR PIPES DAMAGED OR DISPLACED DURING CONSTRUCTION SHALL BE RESTORED TO THEIR PROPER CONDITION AT THE CONTRACTOR'S EXPENSE.

SETTLEMENT PLATFORMS SHALL BE PLACED AT THE FOLLOWING LOCATIONS:

I.D.	STATION	OFFSET
SP1	135+40	75' RT.
SP2	135+60	10' RT

PRIOR TO PAVING, THE TOP OF THE SETTLEMENT PLATFORM PIPE SHALL BE CUT OFF TWO FEET BELOW THE FINISHED SURFACE OF THE SUBGRADE OR FINISHED GROUND SURFACE, WHICHEVER IS APPLICABLE.

REFER TO ODOT GEOTECHNICAL BULLETIN GB4 "GUIDELINES FOR THE USE OF GEOTECHNICAL INSTRUMENTATION" FOR ADDITIONAL INSTALLATION AND MONITORING INSTRUCTION.

WAITING PERIOD CRITERIA:
THE ENGINEER WILL CONSIDER THE WAITING PERIOD COMPLETE WHEN CONSECUTIVE SETTLEMENT READINGS, RECORDED AFTER EMBANKMENT CONSTRUCTION IS COMPLETE AND AT LEAST ONE WEEK (168 HOURS) APART, RESULT IN ELEVATION DIFFERENCES EQUAL TO OR LESS THAN ⅛ INCH. THE ESTIMATED WAITING PERIOD IS 180 CALENDAR DAYS.

IF SETTLEMENT RATES EXCEED ¾ INCH PER MONTH AFTER EMBANKMENT CONSTRUCTION HAS BEEN COMPLETE FOR 45 CALENDAR DAYS, REMAINING CONSTRUCTION, INCLUDING ANY NECCESARY CORRECTIVE MEASURES, MAY PROCEED ONLY AT THE DIRECTION OF THE ENGINEER.

THE DEPARTMENT WILL CONSIDER VIBRATING WIRE SETTLEMENT MONITORING PLATFORMS IN LIEU OF THE CONVENTIONAL SETTLEMENT PLATFORMS. THE CONTRACTOR SHOULD PROVIDE DETAILS OF THE PROPOSED VIBRATING WIRE SETTLEMENT PLATFORMS AS WELL AS DESIGN DRAWINGS OF THE PROPOSED 30 DAYS PRIOR TO CONSTRUCTION. THE DEPARTMENT WILL REQUIRE 10 WORKING DAYS FOR REVIEW AND APPROVAL. THE DESIGN DRAWINGS SHOULD ILLUSTRATE THE LOCATIONS WITH ALL EXISTING AND PROPOSED SITE FEATURES TO VERIFY THE PROPOSED CABLING WILL NOT CONFLICT WITH EXISTING FACILITIES, PROPOSED FACILITIES OR UTILITIES. NO ADDITIONAL PAYMENT WILL BE PROVIDED IF THE CONTRACTOR ELECTS TO UTILIZE VIBRATING WIRE SETTLEMENT PLATFORMS.

MORE INFORMATION PERTAINING TO EMBANKMENT CONSTRUCTION AND CONTROLLED RATES OF FILL ARE PROVIDED IN THE ROADWAY PLANS.

METHOD OF MEASUREMENT, THE NUMBER OF SETTLEMENT PLATFORMS TO BE PAID FOR SHALL BE THE ACTUAL NUMBER OF SETTLEMENT PLATFORMS COMPLETED, MAINTAINED, AND ACCEPTED BY THE ENGINEER.

BASIS OF PAYMENT: PAYMENT SHALL BE MADE AT THE CONTRACT UNIT PRICE EACH FOR "ITEM SPECIAL - SETTLEMENT PLATFORM" WHICH IS COMPENSATION FOR CONSTRUCTING, MAINTAINING, AND MONITORING THE SETTLEMENT PLATFORMS INCLUDING FURNISHING ALL LABOR, EQUIPMENT, MATERIALS, AND INCIDENTALS NECESSARY TO COMPLETE THE WORK. PAYMENT SHALL NOT BE MADE FOR SETTLEMENT PLATFORMS WHICH BECOME USELESS DUE TO DAMAGE CAUSED BY THE CONTRACTOR'S OPERATIONS. SEE DETAIL THIS SHEET.

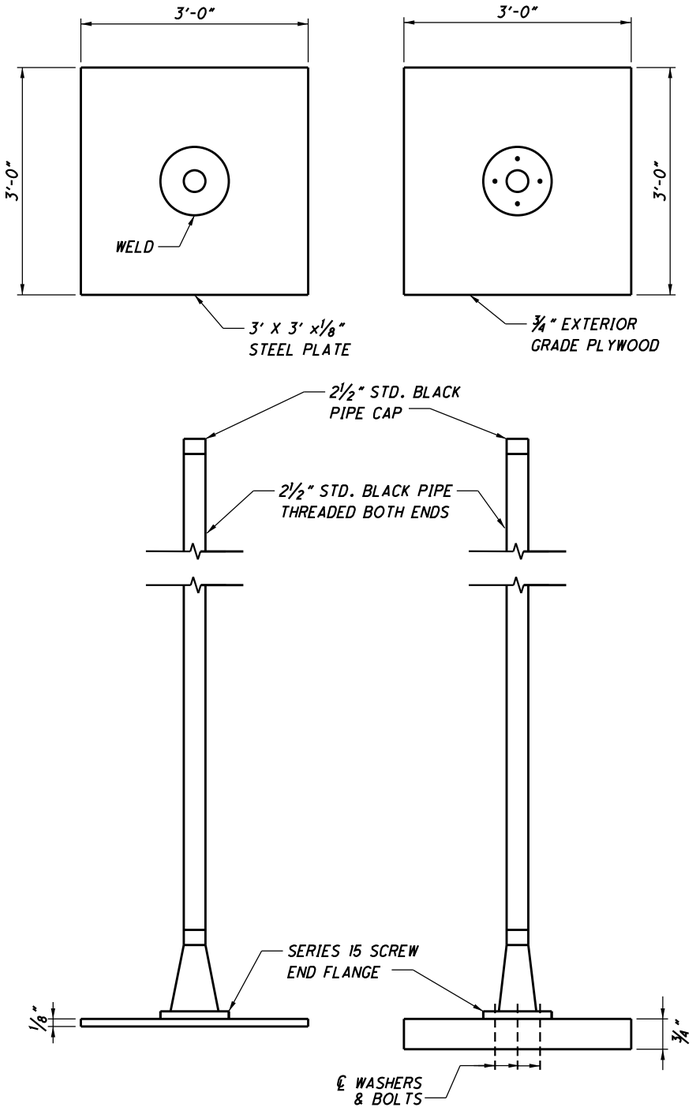

SETTLEMENT PLATFORM

(NOT TO SCALE)

NOTES:

1. SETTLEMENT PLATFORMS SHALL BE ANCHORED BY STAKES DRIVEN AT EACH CORNER TO PREVENT OVERTURNING.

DRAFT Stage 3 - Not for Construction 09/23/2024

DESIGN AGENCY
Stantec
1500 Lake Shore Dr.
Columbus OH 43204
(614) 486-4383

DESIGNED	DRAWN	REVIEWED	DATE
BSM	JWS	MRS	04/2024
CHECKED	REVISED	STRUCTURE FILE NUMBER	
EER		4400070	

GENERAL NOTES 2
BRIDGE NO. LAW-7-0251
S.R. 7 OVER SYMMES CREEK

LAW-7-2.17
PID No. 75923

795
1247

U:\173608714\LAW\75923\structures\LAW007_0251C\sheets\007_0251RGN002.dgn 5/13/2024 8:39:11 AM JSnair

ESTIMATED QUANTITIES

CALCULATED BY: BSM 03/15/24
CHECKED BY: MRS 03/25/24

02/NHS/08	ITEM	EXTENSION	TOTAL	UNIT	DESCRIPTION	R. ABUT.	F. ABUT.	PIER	SUPER.	GEN.	SEE SHEET
2	SPECIAL	20365000	2	EACH	SETTLEMENT PLATFORM					2	4/25
LUMP	503	11100	LUMP	LS	COFFERDAMS AND EXCAVATION BRACING						
LUMP	503	21300	LUMP	LS	UNCLASSIFIED EXCAVATION						
LUMP	505	11100	LUMP	LS	PILE DRIVING EQUIPMENT MOBILIZATION						
3120	507	00200	3120	FT	STEEL PILES HP12X53, FURNISHED	1300	1820				
2880	507	00250	2880	FT	STEEL PILES HP12X53, DRIVEN	1200	1680				
212457	509	10000	212457	LB	EPOXY COATED STEEL REINFORCEMENT	14,475	12,949	77,725	107,308		
9071	509	30020	9071	FT	NO. 4 DEFORMED GFRP REINFORCEMENT				9071		
454	511	34446	454	CY	CLASS QC2 CONCRETE WITH QC/QA, BRIDGE DECK				454		
80	511	34450	80	CY	CLASS QC2 CONCRETE WITH QC/QA, BRIDGE DECK (PARAPET)				80		
280	511	43512	280	CY	CLASS QC1 CONCRETE WITH QC/QA, ABUTMENT INCLUDING FOOTING	141	139				
159	511	45602	159	CY	CLASS QC4 MASS CONCRETE, SUBSTRUCTURE WITH QC/QA			159			
1459	512	10100	1459	SY	SEALING OF CONCRETE SURFACES (EPOXY-URETHANE)	101	104		1254		
38	512	10300	38	SY	SEALING CONCRETE BRIDGE DECKS WITH HMWM RESIN				38		
54	512	33000	54	SY	TYPE 2 WATERPROOFING	28	26				
5	515	15030	5	EACH	DRAPED STRAND PRESTRESSED CONCRETE BRIDGE I-BEAM MEMBERS, LEVEL 3, TYPE 4 MOD. (60 IN.), 79'-11"				5		
5	515	15030	5	EACH	DRAPED STRAND PRESTRESSED CONCRETE BRIDGE I-BEAM MEMBERS, LEVEL 3, TYPE 4 MOD. (60 IN.), 81'-7"				5		
5	515	15030	5	EACH	DRAPED STRAND PRESTRESSED CONCRETE BRIDGE I-BEAM MEMBERS, LEVEL 3, TYPE 4 MOD. (60 IN.), 99'-8"				5		
36	515	20000	36	EACH	INTERMEDIATE DIAPHRAGMS				36		
100	516	12300	100	FT	STRIP SEAL EXPANSION JOINT ANCHORED WITH ELASTOMERIC CONCRETE				100		
30	516	44100	30	EACH	ELASTOMERIC BEARING WITH INTERNAL LAMINATES AND LOAD PLATE (NEOPRENE) (2.968x10"x24½")	5	5	20			
215	518	20000	215	SY	PREFABRICATED GEOCOMPOSITE DRAIN	115	110				
27	518	21200	27	CY	POROUS BACKFILL WITH GEOTEXTILE FABRIC	13	14				
161	518	40000	161	FT	6" PERFORATED CORRUGATED PLASTIC PIPE	83	78				
55	518	40010	55	FT	6" NON-PERFORATED CORRUGATED PLASTIC PIPE, INCLUDING SPECIALS	30	25				
60	524	94950	60	FT	DRILLED SHAFTS, 72" DIAMETER, INTO BEDROCK			60			
189	524	94970	189	FT	DRILLED SHAFTS, 78" DIAMETER, ABOVE BEDROCK			189			
302	526	30011	302	SY	REINFORCED CONCRETE APPROACH SLABS WITH QC/QA (T=17"), AS PER PLAN					302	22/25
100	526	90010	100	FT	TYPE A INSTALLATION					100	
1376	601	32104	1376	CY	ROCK CHANNEL PROTECTION, TYPE B WITH GEOTEXTILE FABRIC					1376	

DRAFT Stage 3 - Not for Construction 09/23/2024

DESIGN AGENCY
Stantec
1500 Lake Shore Dr.
Columbus OH 43204
(614) 486-4383

DESIGNED	DRAWN	REVIEWED	DATE
BSM	JWS	MRS	04/2024
CHECKED	REVISED	STRUCTURE FILE NUMBER	
EER		4400070	

ESTIMATED QUANTITIES
BRIDGE NO. LAW-7-0251
S.R. 7 OVER SYMMES CREEK

LAW-7-2.17
PID No. 75923

5 / 25

796
1247

U:\173608714\LAW\75923\structures\LAW007_0251C\sheets\007_0251REQ001.dgn 5/14/2024 12:13:45 PM bmcneal

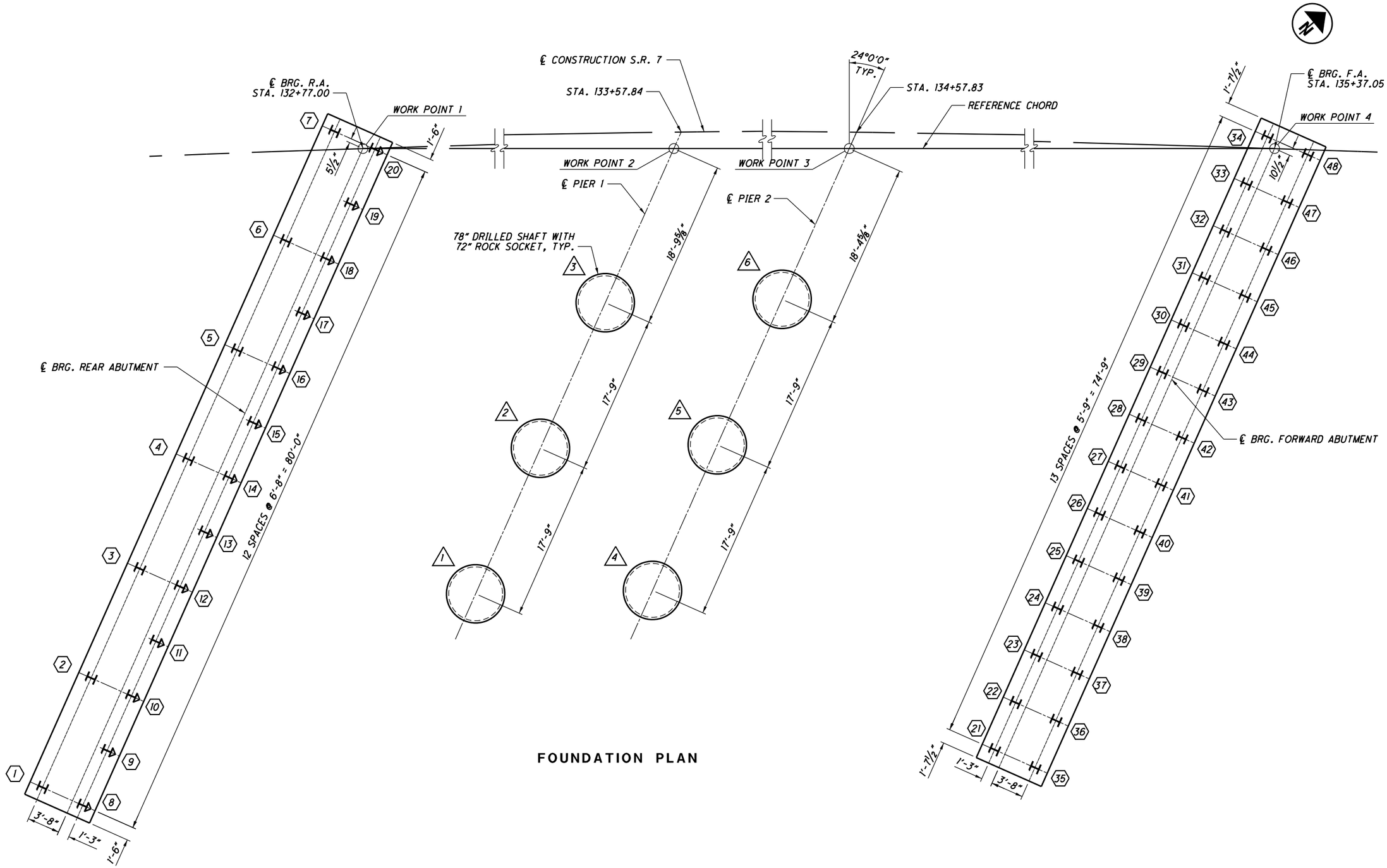

FOUNDATION PLAN

NOTES:
1. ALL PILES ARE HP12x53.
2. (15) DESIGNATES PILE NUMBER AND LOCATION.
3. ⟋ DENOTES PILE BATTERED 1:3 IN DIRECTION OF ARROW.
4. (A) DESIGNATES DRILLED SHAFT NUMBER.

DRAFT Stage 3 - Not for Construction 09/23/2024

DESIGN AGENCY
Stantec
1500 Lake Shore Dr.
Columbus, OH 43204
(614) 486-4383

DESIGNED	DRAWN	REVIEWED	DATE
BSM	JWS	MRS	04/2024
CHECKED	REVISED	STRUCTURE FILE NUMBER	
EER		4400070	

FOUNDATION PLAN
BRIDGE NO. LAW-7-0251
S.R. 7 OVER SYMMES CREEK

LAW-7-2.17
PID No. 75923

6 / 25

797
1247

U:\173608714\LAW\75923\structures\LAW007_0251C\sheets\007_0251RFP001.dgn 5/13/2024 8:39:14 AM JSnair

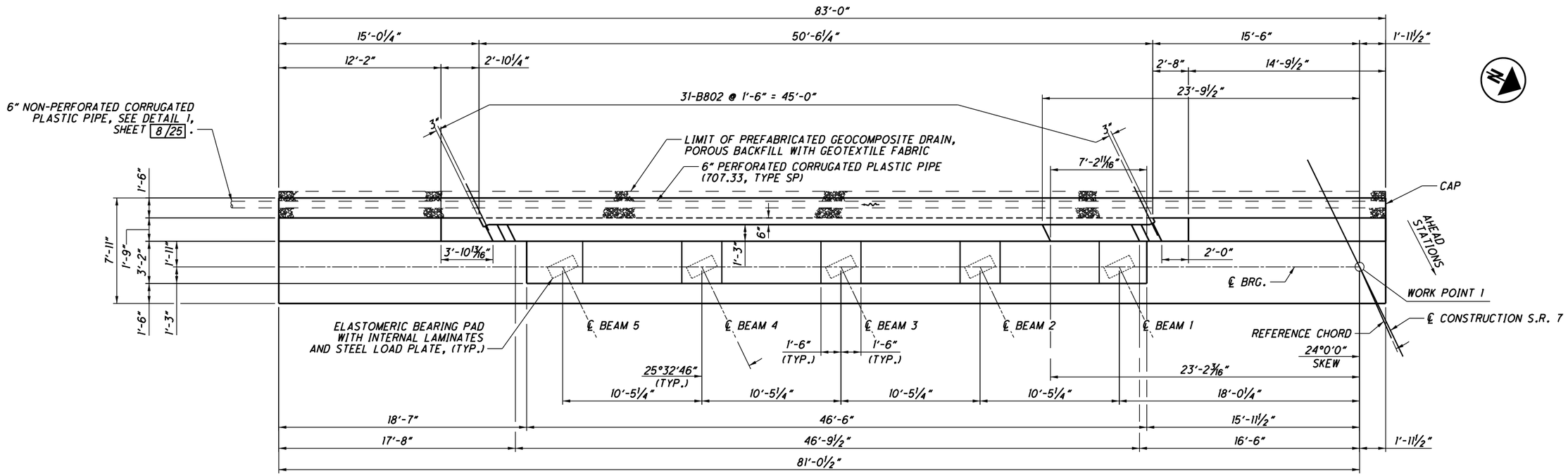

PLAN

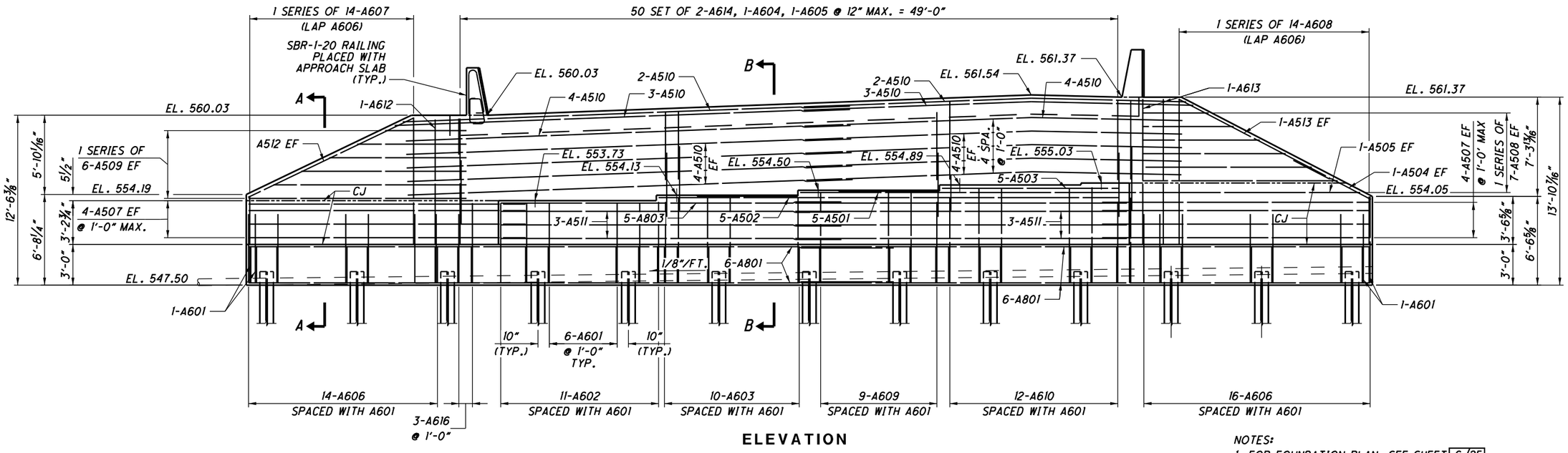

ELEVATION

LAP LENGTHS:
#5 BARS = 3'-3"
#8 BARS = 5'-6"

NOTES:
1. FOR FOUNDATION PLAN, SEE SHEET 6/25.
2. FOR FOOTING PLAN, SEE SHEET 8/25.
3. FOR EXPANSION JOINT DETAILS, SEE STD. DWG. EXJ-6-17.
4. FOR SECTIONS A-A AND B-B, SEE SHEET 8/25.
5. ELEVATIONS SHOWN ARE AT FACE OF BACKWALL.
6. CLEARANCE FOR REINFORCING.

DRAFT Stage 3 - Not for Construction 09/23/2024

DESIGN AGENCY
Stantec
1500 Lake Shore Dr.
Columbus, OH 43204
(614) 486-4383

DESIGNED	DRAWN	REVIEWED	DATE
BSM	JWS	MRS	04/2024
CHECKED	REVISED	STRUCTURE FILE NUMBER	
EER		4400070	

REAR ABUTMENT 1
BRIDGE NO. LAW-7-0251
S.R. 7 OVER SYMMES CREEK

LAW-7-2.17
PID No. 75923

7 / 25
798 / 1247

U:\173608714\LAW\75923\structures\LAW007_0251C\sheets\007_0251RAR001.dgn 5/13/2024 8:39:15 AM JSnair

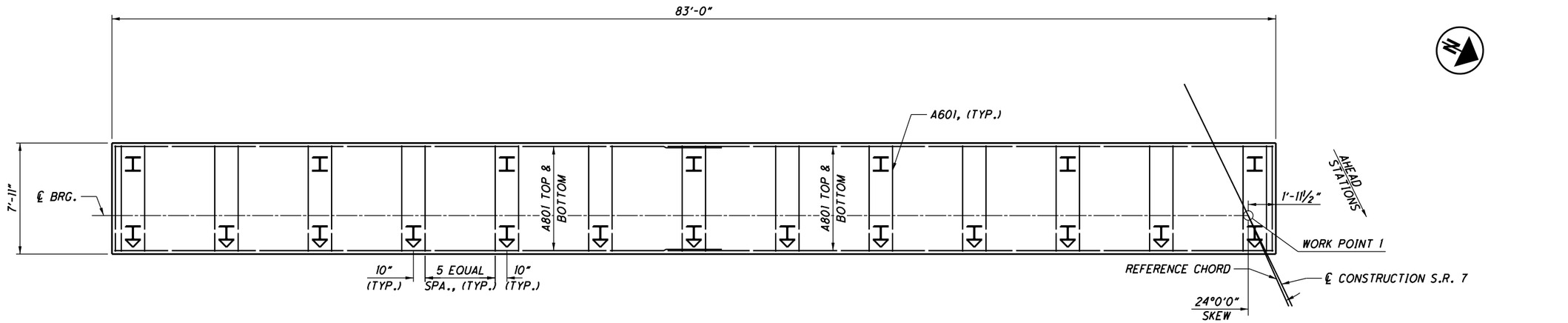

FOOTING PLAN

LAP LENGTHS:
#5 BARS = 3'-3"
#8 BARS = 5'-6"

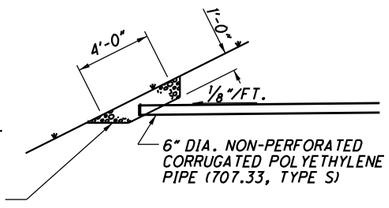

DETAIL 1

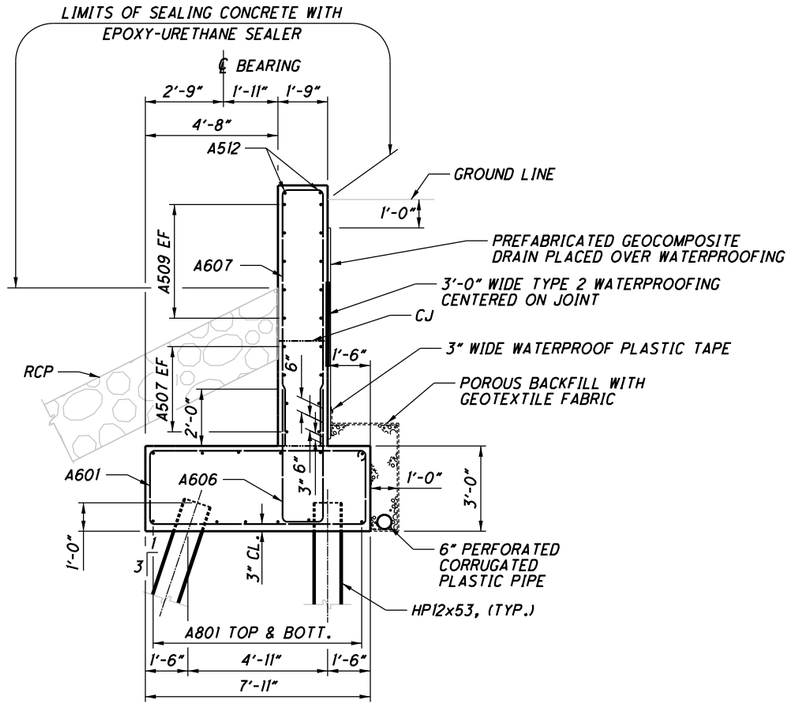

SECTION A-A

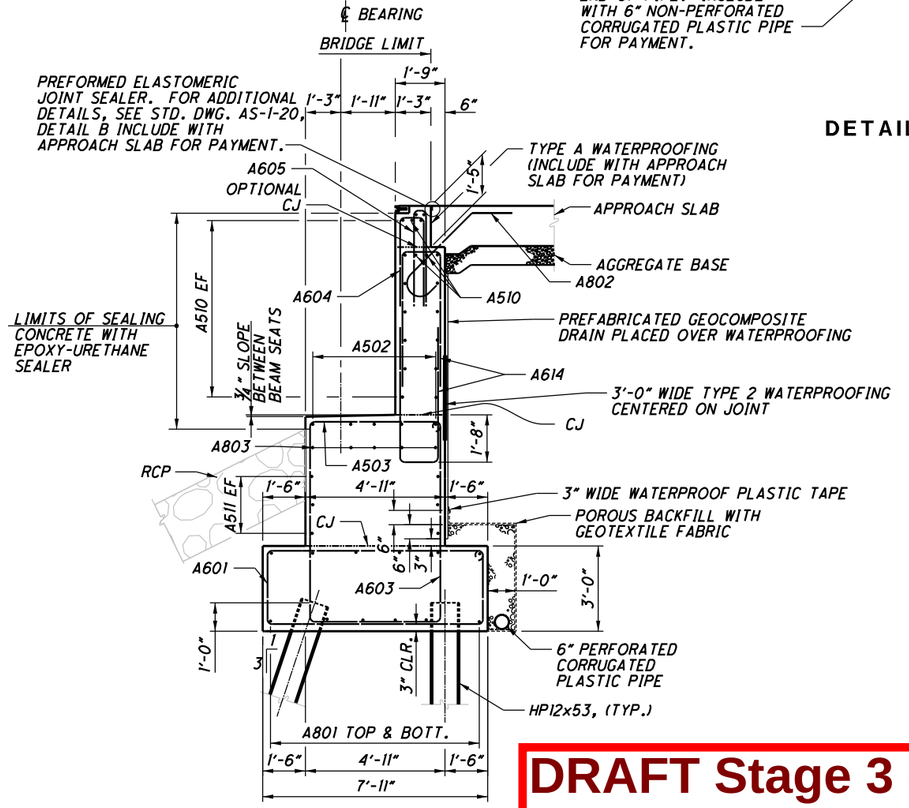

SECTION B-B

NOTE:
FOR FOUNDATION PLAN, SEE SHEET 6/25.

DRAFT Stage 3 - Not for Construction 09/23/2024

DESIGN AGENCY
Stantec
1500 Lake Shore Dr.
Columbus, OH 43204
(614) 486-4383

DESIGNED	DRAWN	REVIEWED	DATE
BSM	JWS	MRS	04/2024
CHECKED	REVISED	STRUCTURE FILE NUMBER	
EER		4400070	

REAR ABUTMENT 2
BRIDGE NO. LAW-7-0251
S.R. 7 OVER SYMMES CREEK

LAW-7-2.17
PID No. 75923

8 / 25

799
1247

U:\173608714\LAW\75923\structures\LAW007_0251C\sheets\007_0251RAR002.dgn 5/13/2024 8:39:17 AM JSnair

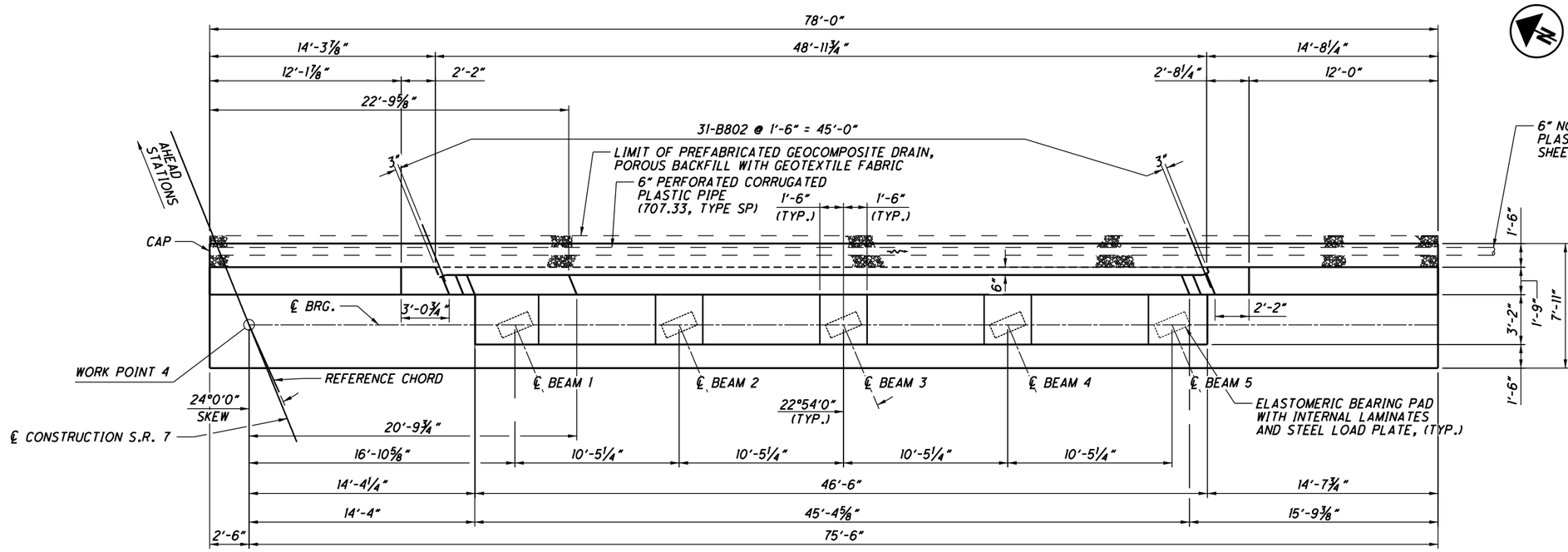

PLAN

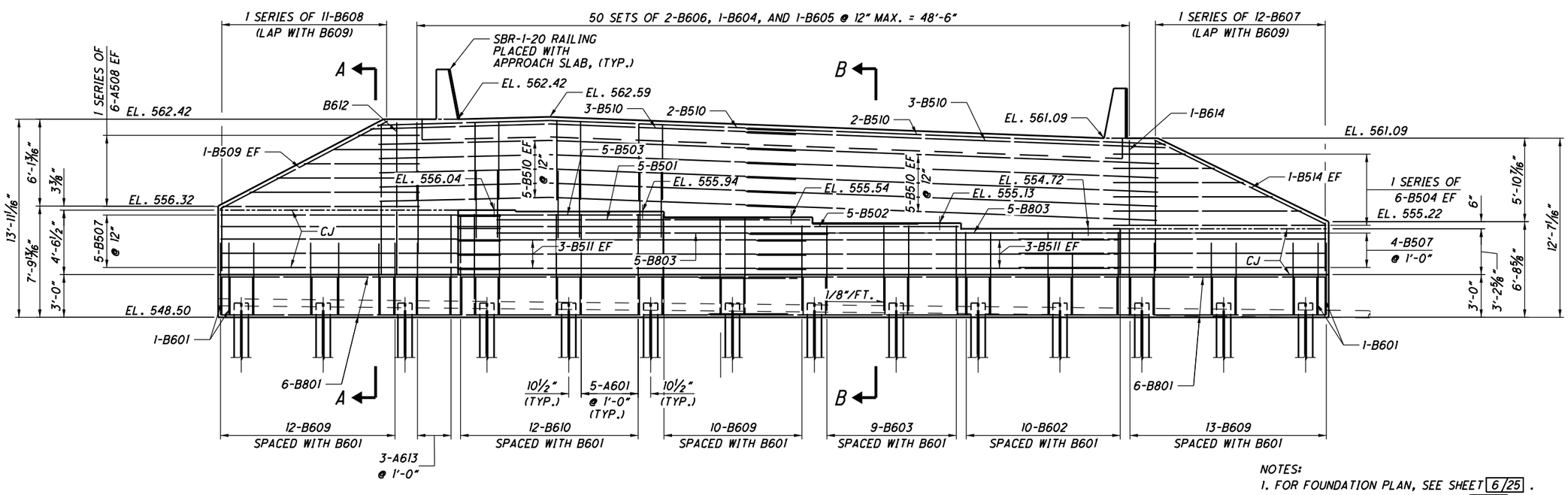

ELEVATION

LAP LENGTHS:
#5 BARS = 3'-3"
#8 BARS = 5'-6"

NOTES:
1. FOR FOUNDATION PLAN, SEE SHEET 6/25 .
2. FOR FOOTING PLAN, SEE SHEET 10/25 .
3. FOR EXPANSION JOINT DETAILS, SEE STD. DWG. EXJ-6-17.
4. FOR SECTIONS A-A AND B-B, SEE SHEET 10/25 .
5. ELEVATIONS SHOWN ARE AT FACE OF BACKWALL.
6. SEE PLANS FOR REINFORCING.

DRAFT Stage 3 - Not for Construction 09/23/2024

DESIGN AGENCY
Stantec
1500 Lake Shore Dr.
Columbus, OH 43204
(614) 486-4383

DESIGNED	DRAWN	REVIEWED	DATE
BSM	JWS	MRS	04/2024
CHECKED	REVISED	STRUCTURE FILE NUMBER	
EER		4400070	

FORWARD ABUTMENT 1
BRIDGE NO. LAW-7-0251
S.R. 7 OVER SYMMES CREEK

LAW-7-2.17
PID No. 75923

9 / 25

800 / 1247

U:\173608714\LAW\75923\structures\LAW007_0251C\sheets\007_0251RAF001.dgn 5/13/2024 8:39:18 AM JSnair

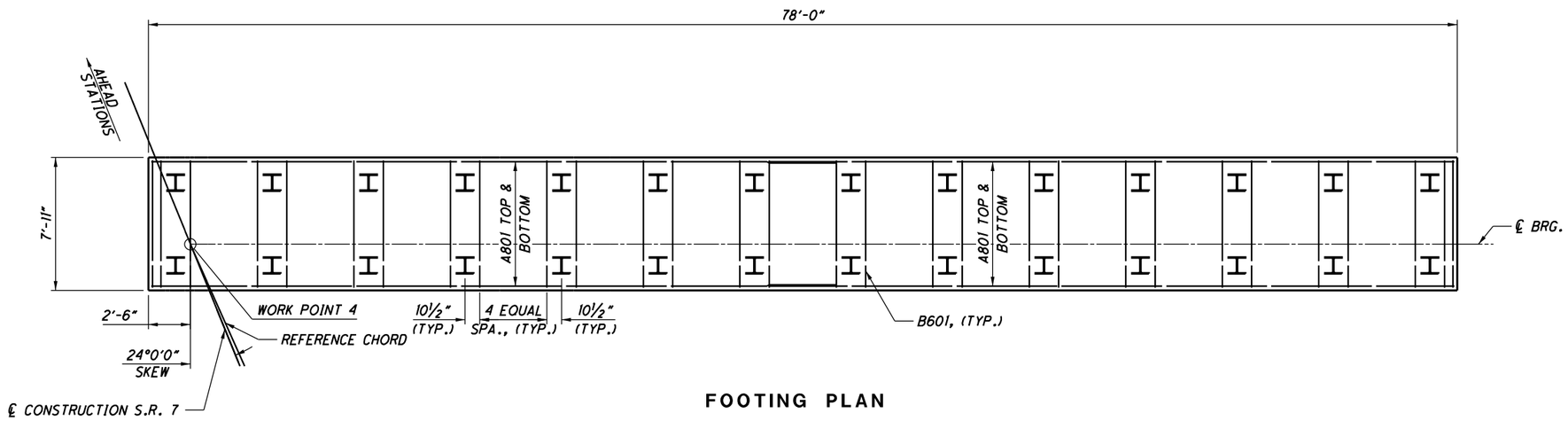

FOOTING PLAN

LAP LENGTHS:
#5 BARS = 3'-3"
#8 BARS = 5'-6"

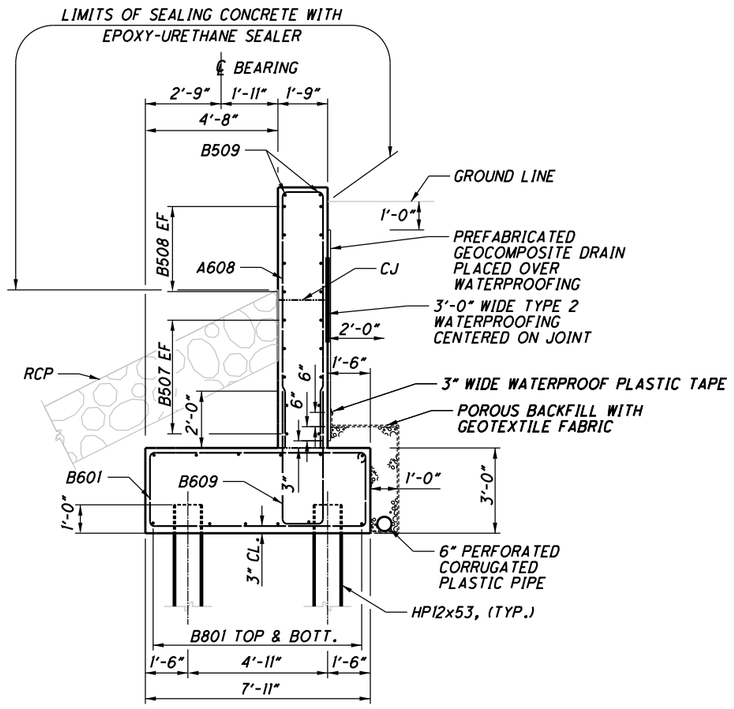

SECTION A-A

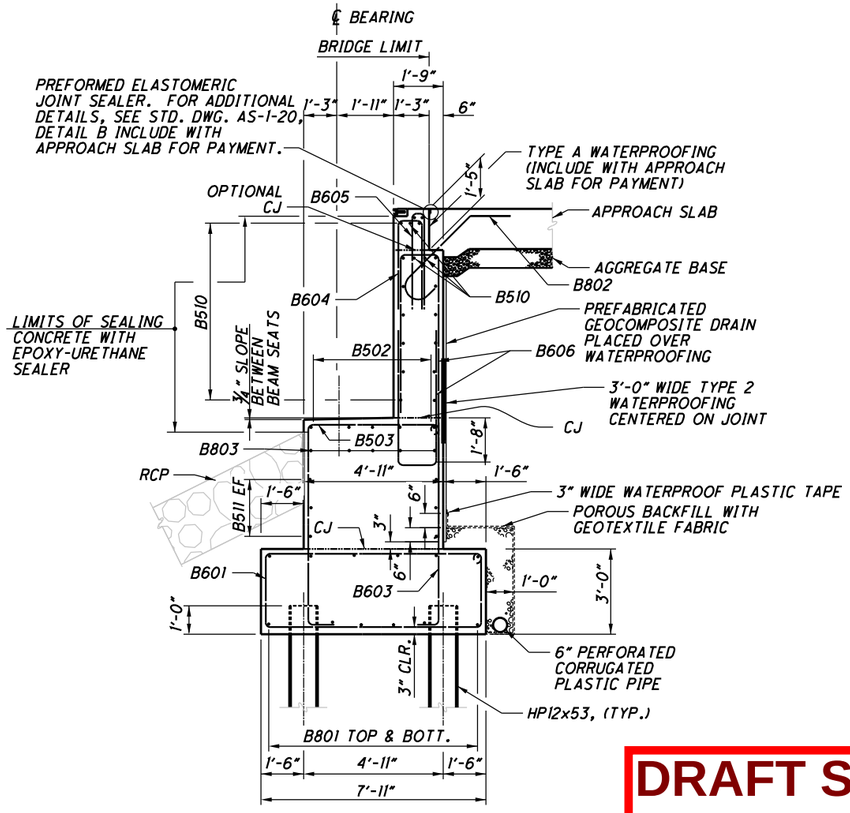

SECTION B-B

NOTE:
FOR FOUNDATION PLAN, SEE SHEET 6/25.

DRAFT Stage 3 - Not for Construction 09/23/2024

DESIGN AGENCY
Stantec
1500 Lake Shore Dr.
Columbus, OH 43204
(614) 486-4383

DESIGNED	DRAWN	REVIEWED	DATE
BSM	JWS	MRS	04/2024
CHECKED	REVISED	STRUCTURE FILE NUMBER	
EER		4400070	

FORWARD ABUTMENT 2
BRIDGE NO. LAW-7-0251
S.R. 7 OVER SYMMES CREEK

LAW-7-2.17
PID No. 75923

10/25

801
1247

U:\173608714\LAW\75923\structures\LAW007_0251C\sheets\007_0251RAF002.dgn 5/13/2024 8:39:20 AM JSnair

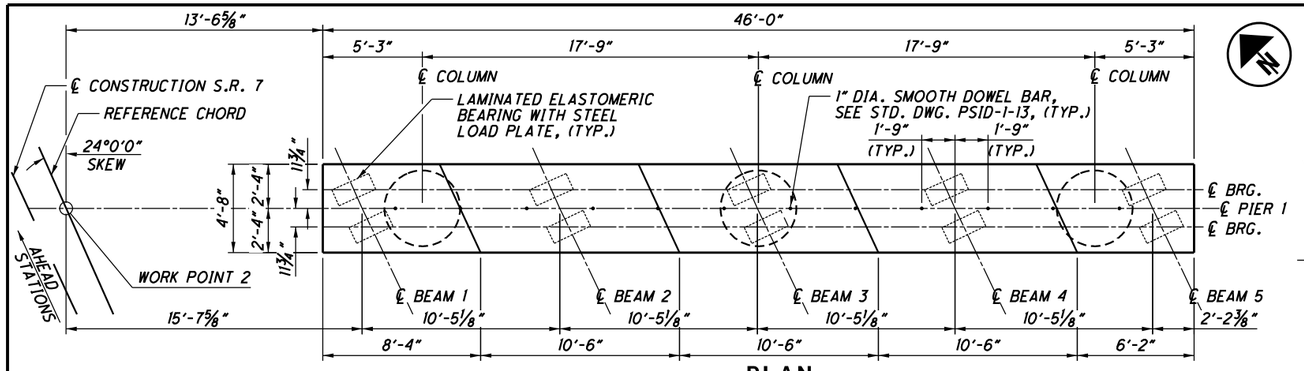

PLAN

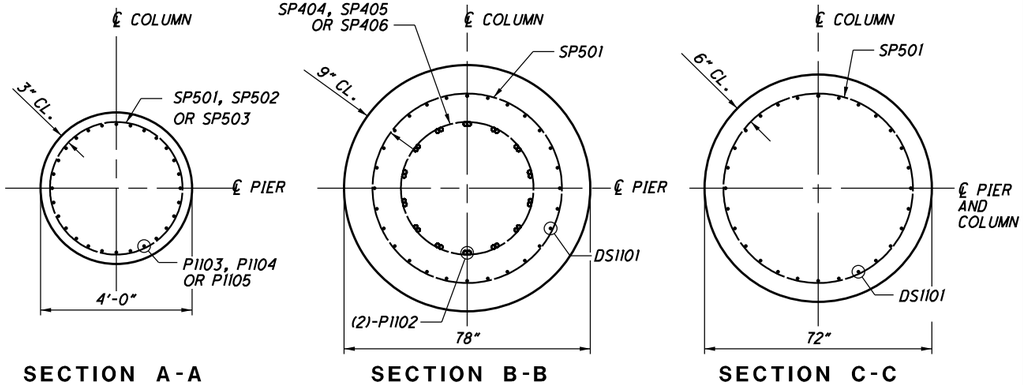

SECTION A-A

SECTION B-B

SECTION C-C

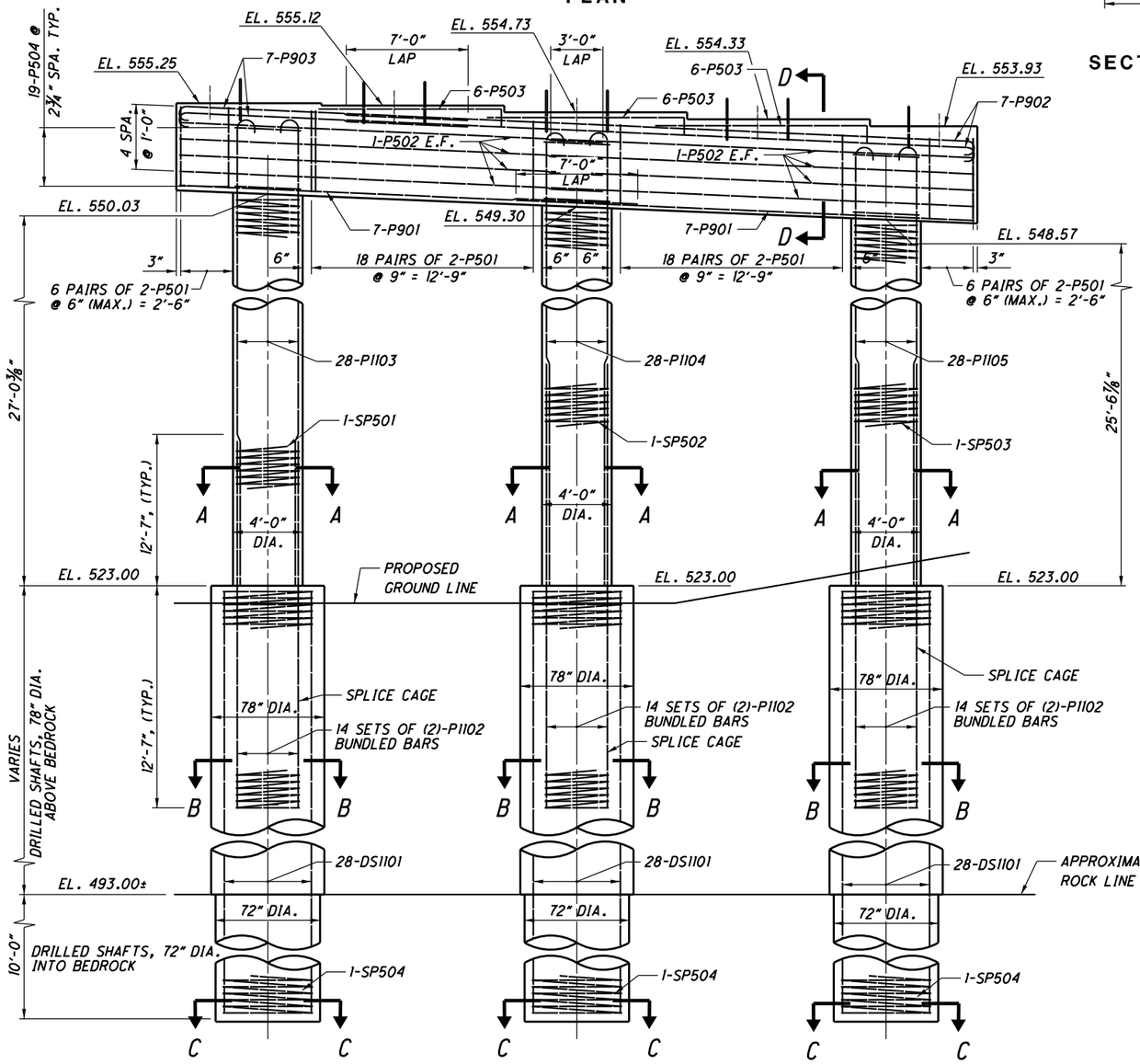

ELEVATION

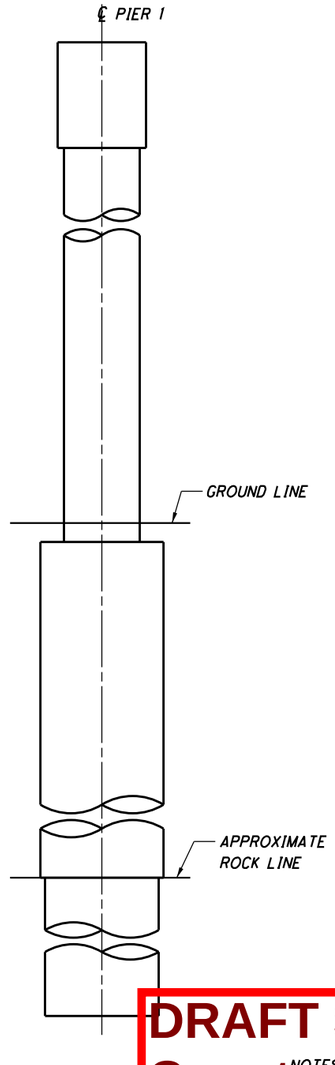

END ELEVATION

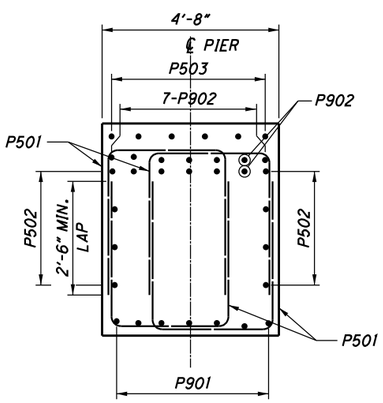

SECTION D-D

NOTES:
FOR LAYOUT OF DRILLED SHAFTS, SEE SHEET 6/25.

DRAFT Stage 3 - Not for Construction

09/23/2024

DESIGN AGENCY
Stantec
1500 Lake Shore Dr.
Columbus, OH 43204
(614) 486-4383

DESIGNED	DRAWN	REVIEWED	DATE
BSM	JWS	MRS	04/2024
CHECKED	REVISED	STRUCTURE FILE NUMBER	
EER		4400070	

PIER 1
BRIDGE NO. LAW-7-0251
S.R. 7 OVER SYMMES CREEK

LAW-7-2.17
PID No. 75923

11/25

802/1247

U:\173608714\LAW\75923\structures\LAW007_0251C\sheets\007_0251RPI001.dgn 5/13/2024 8:39:21 AM JSnair

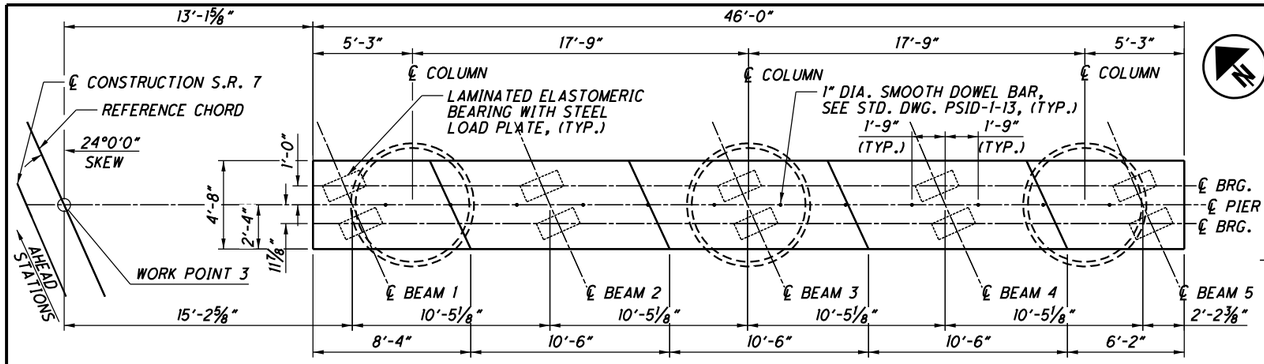

PLAN

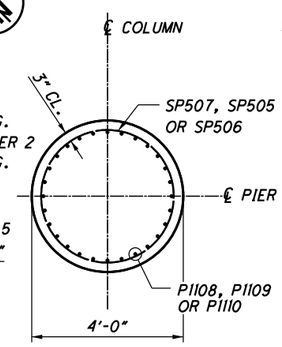

SECTION A-A

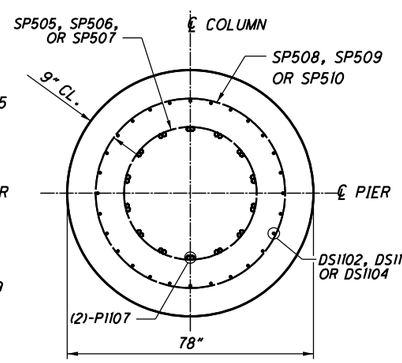

SECTION B-B

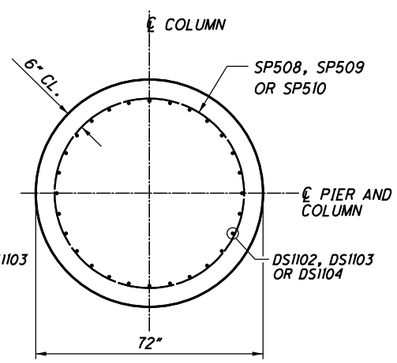

SECTION C-C

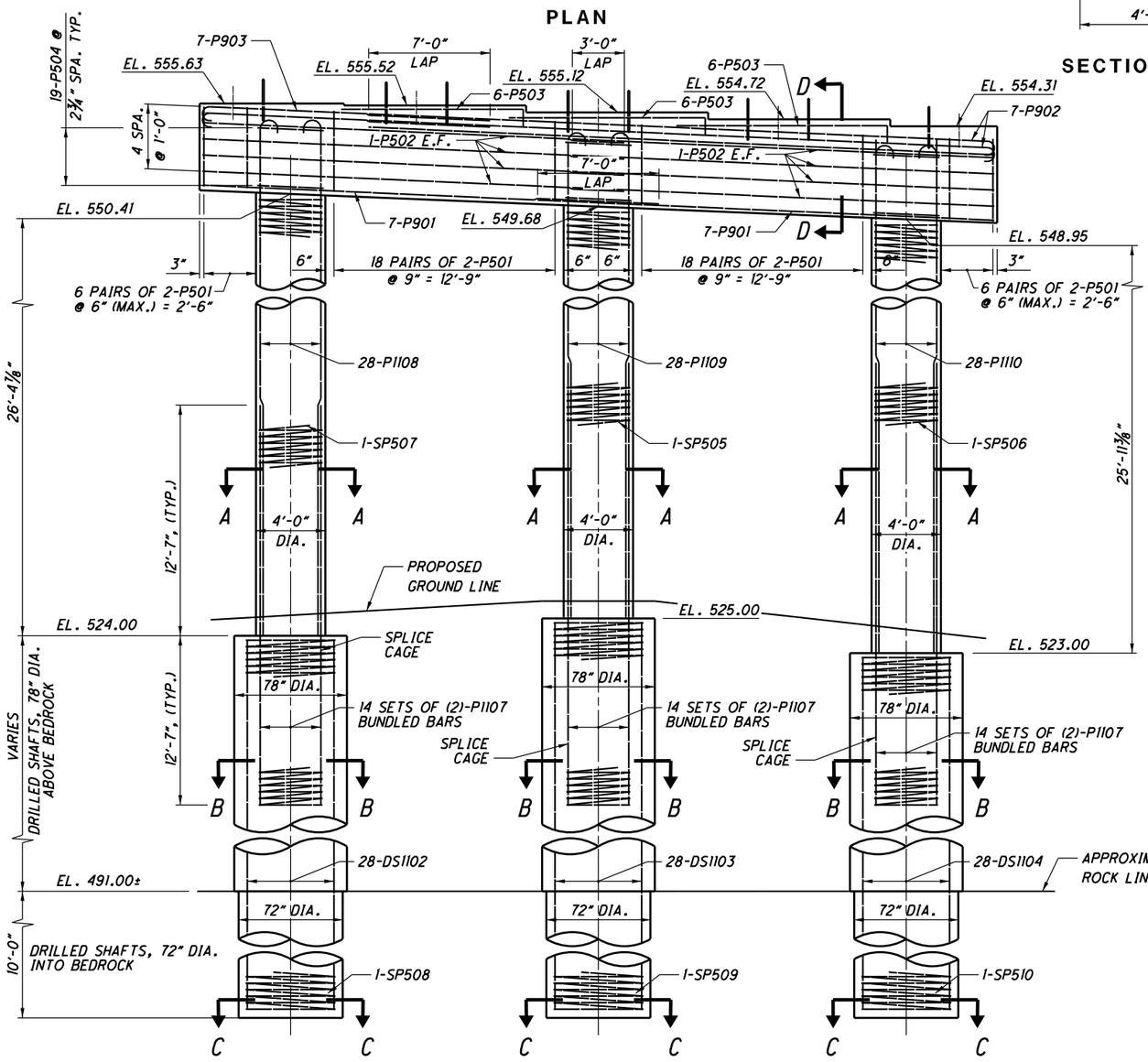

ELEVATION

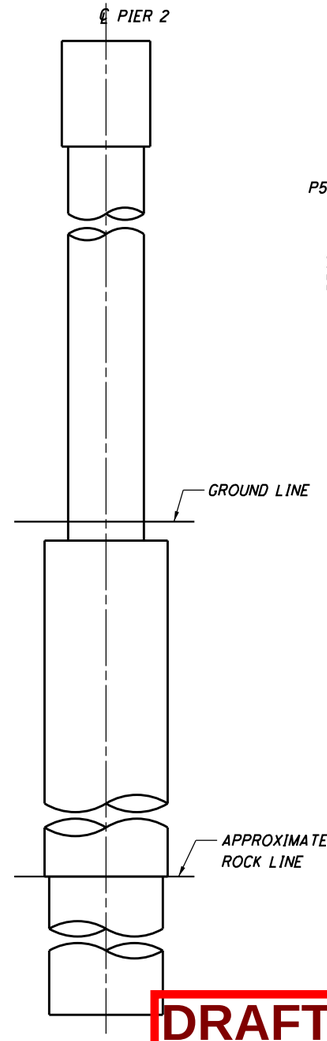

END ELEVATION

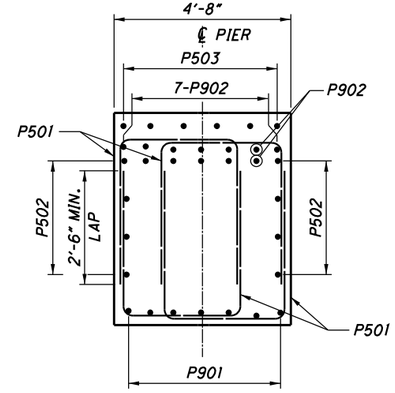

SECTION D-D

NOTES:
1. FOR LAYOUT OF DRILLED SHAFTS, SEE SHEET 6/25.

DRAFT Stage 3 - Not for Construction

08/23/2024

DESIGN AGENCY
Stantec
1500 Lake Shore Dr.
Columbus, OH 43204
(614) 486-4383

DESIGNED	DRAWN	REVIEWED	DATE
BSM	JWS	MRS	04/2024
CHECKED	REVISED	STRUCTURE FILE NUMBER	
EER		4400070	

PIER 2
BRIDGE NO. LAW-7-0251
S.R. 7 OVER SYMMES CREEK

LAW-7-2.17
PID No. 75923

12/25

803/1247

U:\173608714\LAW\75923\structures\LAW007_0251C\sheets\007_0251RPI002.dgn 5/13/2024 8:39:23 AM JSnair

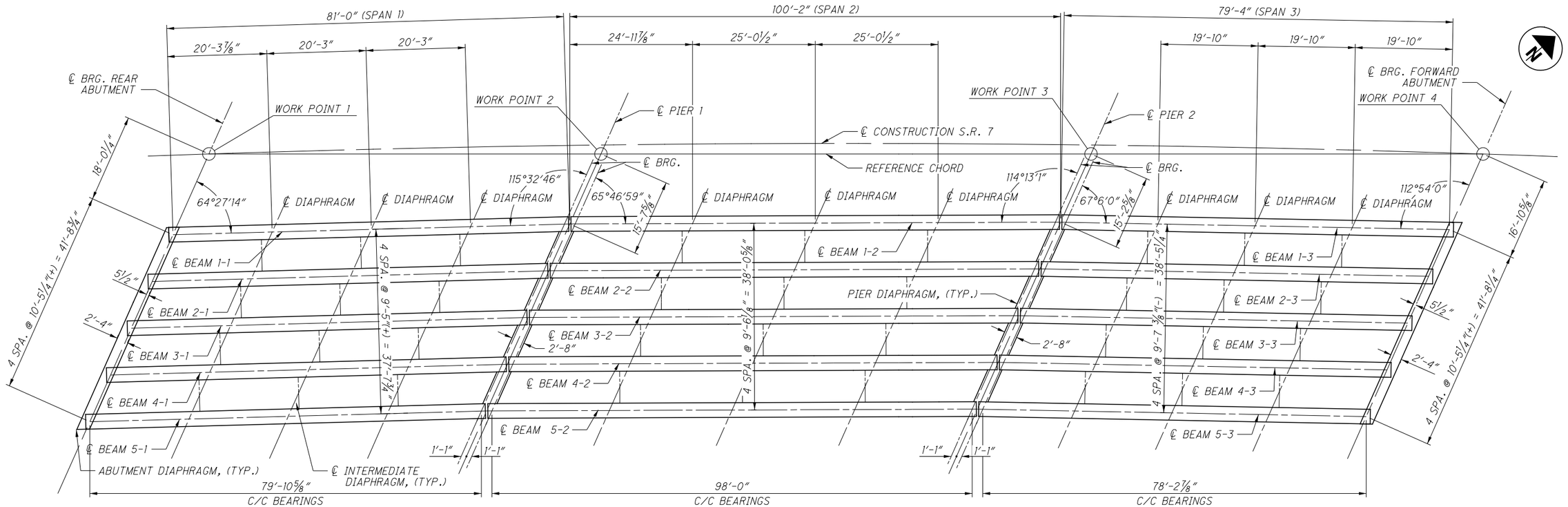

FRAMING PLAN

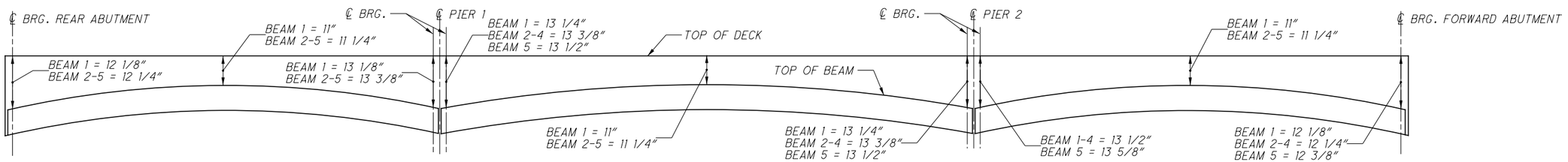

LONGITUDINAL SECTION THRU DECK

SPAN 1

ESTIMATED CAMBER AT DAY 0 (D_0) IS 7/8" INCHES, FOR ALL BEAMS.

ESTIMATED CAMBER AT DAY 30 (D_{30}) IS 1 5/8 INCHES.

DEFLECTION DUE TO REMAINING DEAD LOAD (E.G. CONCRETE DECK, CROSS FRAMES, DIAPHRAGMS, BARRIERS, ETC.) IS 5/8 INCHES, FOR INTERIOR BEAMS AND 5/8 INCHES FOR EXTERIOR BEAMS.

THE BEAM SEAT ELEVATIONS ASSUME ESTIMATED CAMBER D_{30} WITH A SACRIFICIAL HAUNCH THICKNESS OF 2 INCHES MEASURED AT THE EDGE OF THE FLANGE.

SPAN 2

ESTIMATED CAMBER AT DAY 0 (D_0) IS 1 7/8" INCHES, FOR ALL BEAMS.

ESTIMATED CAMBER AT DAY 30 (D_{30}) IS 3 5/8 INCHES.

DEFLECTION DUE TO REMAINING DEAD LOAD (E.G. CONCRETE DECK, CROSS FRAMES, DIAPHRAGMS, BARRIERS, ETC.) IS 1 1/2 INCHES, FOR INTERIOR BEAMS AND 1 3/8 INCHES FOR EXTERIOR BEAMS.

THE BEAM SEAT ELEVATIONS ASSUME ESTIMATED CAMBER D_{30} WITH A SACRIFICIAL HAUNCH THICKNESS OF 2 INCHES MEASURED AT THE EDGE OF THE FLANGE.

SPAN 3

ESTIMATED CAMBER AT DAY 0 (D_0) IS 7/8" INCHES, FOR ALL BEAMS.

ESTIMATED CAMBER AT DAY 30 (D_{30}) IS 1 5/8 INCHES.

DEFLECTION DUE TO REMAINING DEAD LOAD (E.G. CONCRETE DECK, CROSS FRAMES, DIAPHRAGMS, BARRIERS, ETC.) IS 5/8 INCHES, FOR INTERIOR BEAMS AND 1/2 INCHES FOR EXTERIOR BEAMS.

THE BEAM SEAT ELEVATIONS ASSUME ESTIMATED CAMBER D_{30} WITH A SACRIFICIAL HAUNCH THICKNESS OF 2 INCHES MEASURED AT THE EDGE OF THE FLANGE.

NOTES:

1. ABUTMENT DIAPHRAGM CONCRETE: PLACE THE DIAPHRAGM CONCRETE ENCASING THE STRUCTURAL MEMBER ENDS AFTER THE DECK PLACEMENT IN THE ADJACENT SPAN IS COMPLETE. PROCEDURES THAT PLACE THE ABUTMENT DIAPHRAGM WITH THE DECK CONCRETE MAY BE APPROVED BY THE ENGINEER IF THE PLACEMENT SUBMITTAL CAN ASSURE THAT THE DECK CONCRETE IN THE ADJACENT SPAN WILL BE PLACED BEFORE CONCRETE IN THE DIAPHRAGM HAS REACHED ITS INITIAL SET. LOCATE THE DECK CONSTRUCTION JOINT PARALLEL TO THE CENTERLINE OF THE ABUTMENT OFFSET 1-FT FROM THE FACE OF THE DIAPHRAGM TOWARDS THE SPAN.
2. FOR ADDITIONAL BEAM & DIAPHRAGM DETAILS, SEE SHEET 14/25, 16/25, 17/25 AND STD. DWG. PSID-1-13.
3. SLAB THICKNESS FOR CONCRETE QUANTITY: THE ESTIMATED QUANTITY OF CONCRETE WAS MADE ACCORDING TO C&MS 511. IN ADDITION TO THE DESIGN SLAB THICKNESS, THE QUANTITY INCLUDES A VARIABLE HAUNCH THICKNESS THAT PROVIDES FOR VARIATIONS IN VERTICAL GRADE, BEAM CAMBER AND THE 2" SACRIFICIAL HAUNCH THICKNESS.

DRAFT Stage 3 - Not for Construction 09/23/2024

DESIGN AGENCY
Stantec
1500 Lake Shore Dr.
Columbus, OH 43204
(614) 486-4383

DESIGNED	DRAWN	REVIEWED	DATE
BSM	JWS	MRS	04/2024
CHECKED	REVISED	STRUCTURE FILE NUMBER	
EER		4400070	

FRAMING PLAN
BRIDGE NO. LAW-7-0251
S.R. 7 OVER SYMMES CREEK

LAW-7-2.17
PID No. 75923

13 / 25

804
1247

U:\173608714\LAW\75923\structures\LAW007_0251C\sheets\007_0251RSD001.dgn 5/13/2024 9:10:41 AM bmcneal

BEAM MARK	NO. REQ'D	DIMENSIONS A	B	C	D	E	F	G	H	APPROXIMATE WEIGHT (LBS)
1-1	1	81'-7"	69'-10½"	32'-7½"	8'-2"	20'-3"	20'-3"	20'-3"	19'-2"	73,099
2-1	1	81'-7"	69'-10½"	32'-7½"	8'-2"	20'-3"	20'-3"	20'-3"	19'-2"	73,099
3-1	1	81'-7"	69'-10½"	32'-7½"	8'-2"	20'-3"	20'-3"	20'-3"	19'-2"	73,099
4-1	1	81'-7"	69'-10½"	32'-7½"	8'-2"	20'-3"	20'-3"	20'-3"	19'-2"	73,099
5-1	1	81'-7"	69'-10½"	32'-7½"	8'-2"	20'-3"	20'-3"	20'-3"	19'-2"	73,099
1-2	1	99'-8"	87'-11½"	39'-10"	10'-0"	23'-11½"	25'-0½"	25'-0½"	23'-11½"	89,302
2-2	1	99'-8"	87'-11½"	39'-10"	10'-0"	23'-11½"	25'-0½"	25'-0½"	23'-11½"	89,302
3-2	1	99'-8"	87'-11½"	39'-10"	10'-0"	23'-11½"	25'-0½"	25'-0½"	23'-11½"	89,302
4-2	1	99'-8"	87'-11½"	39'-10"	10'-0"	23'-11½"	25'-0½"	25'-0½"	23'-11½"	89,302
5-2	1	99'-8"	87'-11½"	39'-10"	10'-0"	23'-11½"	25'-0½"	25'-0½"	23'-11½"	89,302
1-3	1	79'-11"	68'-2½"	31'-11½"	8'-0"	18'-9"	19'-10"	19'-10"	19'-10"	71,606
2-3	1	79'-11"	68'-2½"	31'-11½"	8'-0"	18'-9"	19'-10"	19'-10"	19'-10"	71,606
3-3	1	79'-11"	68'-2½"	31'-11½"	8'-0"	18'-9"	19'-10"	19'-10"	19'-10"	71,606
4-3	1	79'-11"	68'-2½"	31'-11½"	8'-0"	18'-9"	19'-10"	19'-10"	19'-10"	71,606
5-3	1	79'-11"	68'-2½"	31'-11½"	8'-0"	18'-9"	19'-10"	19'-10"	19'-10"	71,606

BEAM MARK	NUMBER OF STRANDS PER ROW END (SECTION A-A) ①	②	③	④	⑤	⑥	⑦	⑧	⑨	⑩	⑪	⑫	⑬	⑭	MIDSPAN (SECTION B-B) ①	②	③	④	⑤	⑥	⑦	TOTAL STRANDS	CONCRETE STRENGTHS f'ci	f'c
1-1	9	8	2	-	-	-	-	-	-	-	-	1	1	1	9	9	3	1	-	-	-	22	6,000	7,000
2-1	9	8	2	-	-	-	-	-	-	-	-	1	1	1	9	9	3	1	-	-	-	22	6,000	7,000
3-1	9	8	2	-	-	-	-	-	-	-	-	1	1	1	9	9	3	1	-	-	-	22	6,000	7,000
4-1	9	8	2	-	-	-	-	-	-	-	-	1	1	1	9	9	3	1	-	-	-	22	6,000	7,000
5-1	9	8	2	-	-	-	-	-	-	-	-	1	1	1	9	9	3	1	-	-	-	22	6,000	7,000
1-2	8	8	8	6	-	-	-	-	-	1	1	1	1	1	9	9	9	7	1	-	-	35	6,000	7,000
2-2	8	8	8	6	-	-	-	-	-	1	1	1	1	1	9	9	9	7	1	-	-	35	6,000	7,000
3-2	8	8	8	6	-	-	-	-	-	1	1	1	1	1	9	9	9	7	1	-	-	35	6,000	7,000
4-2	8	8	8	6	-	-	-	-	-	1	1	1	1	1	9	9	9	7	1	-	-	35	6,000	7,000
5-2	8	8	8	6	-	-	-	-	-	1	1	1	1	1	9	9	9	7	1	-	-	35	6,000	7,000
1-3	9	8	2	-	-	-	-	-	-	-	-	1	1	1	9	9	3	1	-	-	-	22	6,000	7,000
2-3	9	8	2	-	-	-	-	-	-	-	-	1	1	1	9	9	3	1	-	-	-	22	6,000	7,000
3-3	9	8	2	-	-	-	-	-	-	-	-	1	1	1	9	9	3	1	-	-	-	22	6,000	7,000
4-3	9	8	2	-	-	-	-	-	-	-	-	1	1	1	9	9	3	1	-	-	-	22	6,000	7,000
5-3	9	8	2	-	-	-	-	-	-	-	-	1	1	1	9	9	3	1	-	-	-	22	6,000	7,000

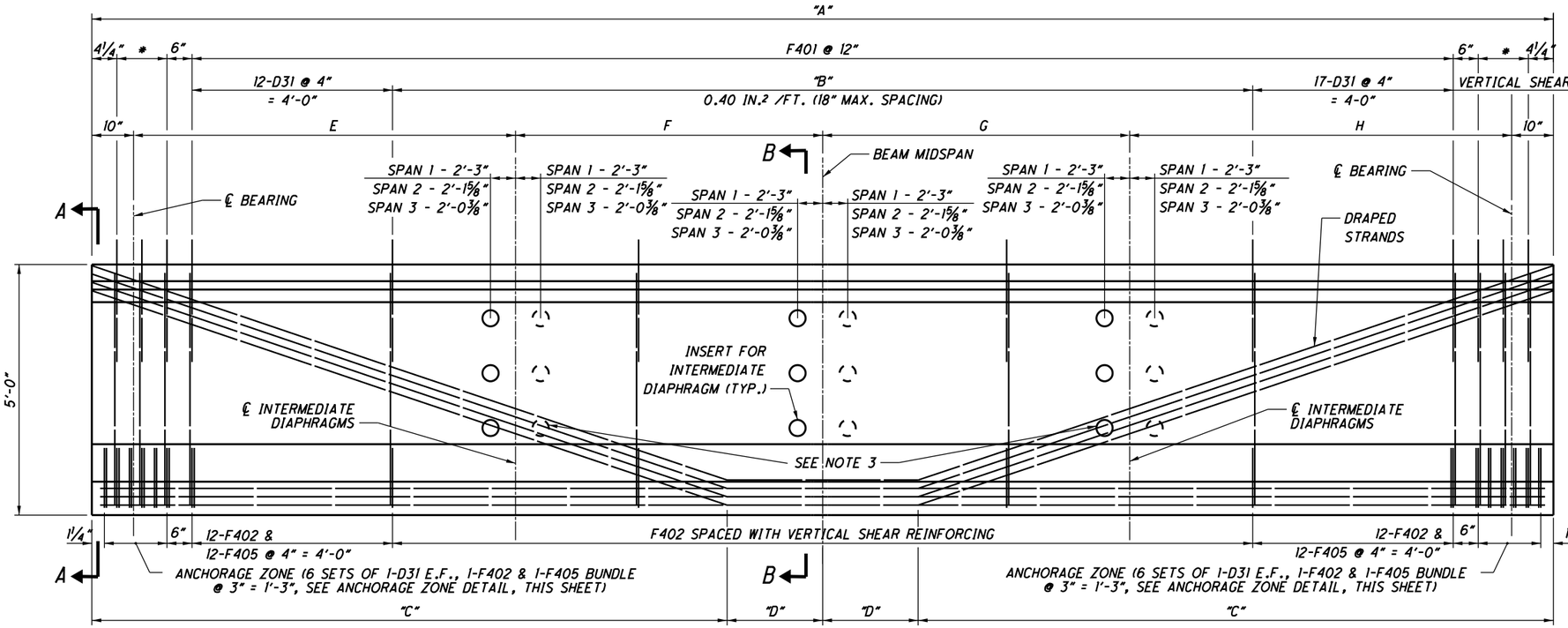

BEAM ELEVATION

(SPANS 1 AND 3 SHOWN, SPAN 2 SIMILAR)

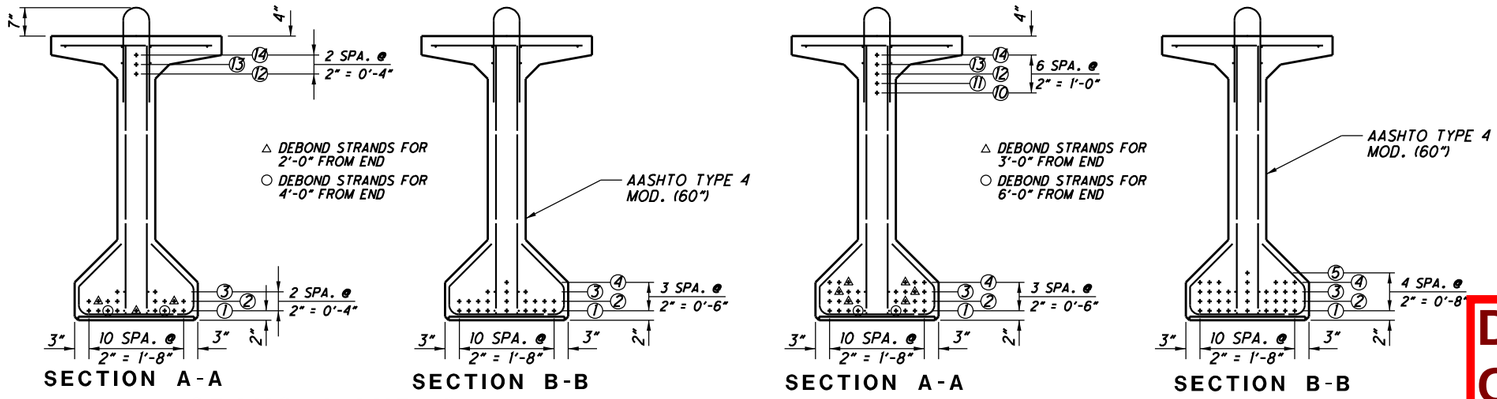

SECTION A-A SECTION B-B SECTION A-A SECTION B-B

SPANS 1 AND 3 SPAN 2

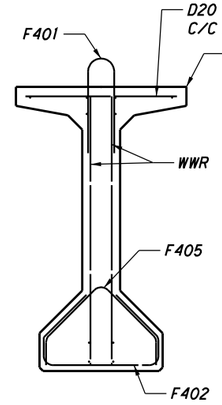

ANCHORAGE ZONE DETAIL

NOTES:
1. FOR BEAM DIMENSIONS AND ADDITIONAL DETAILS, SEE STD. DWG. PSID-1-13.
2. FOR EMBEDDED PLATE DETAILS, SEE SHEET 15/25 AND STD. DWG. PSID-1-13.
3. ADJUST LOCATION OF INSERTS TO MISS DRAPED STRANDS

DRAFT Stage 3 - Not for Construction 09/23/2024

DESIGN AGENCY Stantec 1500 Lake Shore Dr. Columbus OH 43204 (614) 486-4383

DESIGNED	DRAWN	REVIEWED	DATE
BSM	JWS	MRS	04/2024
CHECKED	REVISED	STRUCTURE FILE NUMBER	
EER		4400070	

PRESTRESSED CONCRETE I-BEAM DETAILS
BRIDGE NO. LAW-7-0251
S.R. 7 OVER SYMMES CREEK

LAW-7-2.17
PID No. 75923

14 / 25

805 1247

U:\173608714\LAW\75923\structures\LAW007_0251C\sheets\007_0251RSD005.dgn 5/13/2024 8:39:25 AM JSnair

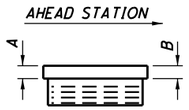

LOAD PLATE DETAIL

LOAD PLATE DIMENSIONS		
LOCATION	A	B
REAR ABUTMENT	2"	2"
PIER 1	2"	2"
PIER 2	2"	2"
FORWARD ABUTMENT	2"	2"

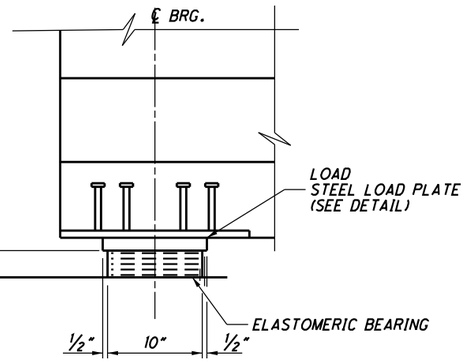

SERVICE REACTIONS
DEAD LOAD = 150 K
LIVE LOAD = 116 K
TOTAL = 266 K

SECTION A-A

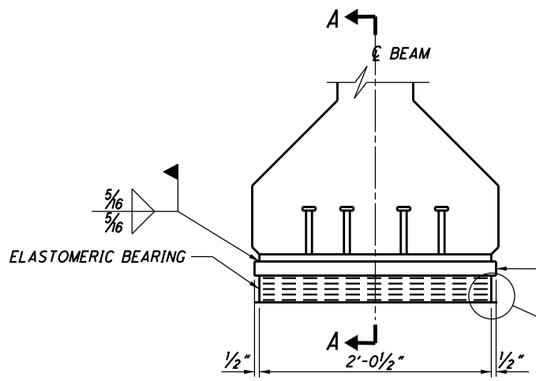

ELEVATION

THICKNESS OF EXTERNAL ELASTOMER = 0.24"
(1 REQUIRED)

THICKNESS OF INTERNAL ELASTOMER = 0.35"
(6 REQUIRED)

INTERNAL STEEL LAMINATE THICKNESS = 0.1046 (12 GAGE)
(6 REQUIRED)

BEARINGS AT PIERS 1 & 2

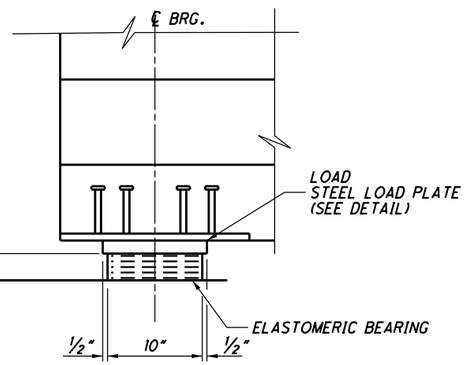

SERVICE REACTIONS
DEAD LOAD = 132 K
LIVE LOAD = 108 K
TOTAL = 240 K

SECTION B-B

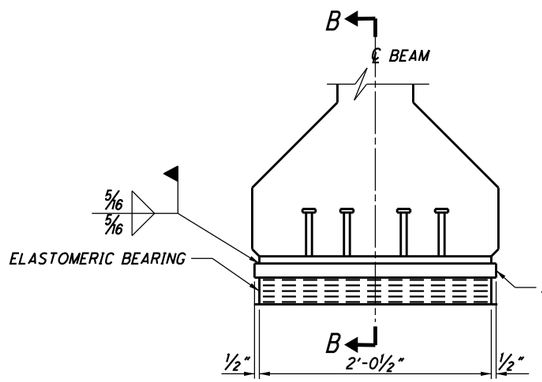

ELEVATION

THICKNESS OF EXTERNAL ELASTOMER = 0.24"
(1 REQUIRED)

THICKNESS OF INTERNAL ELASTOMER = 0.35"
(6 REQUIRED)

INTERNAL STEEL LAMINATE THICKNESS = 0.1046 (12 GAGE)
(6 REQUIRED)

BEARINGS AT ABUTMENTS

NOTES:

1. ELASTOMERIC BEARINGS: THE ELASTOMER SHALL HAVE A HARDNESS OF 50 DUROMETER. THE BEARINGS WERE DESIGNED IN ACCORDANCE WITH SECTION 14.7.6 (METHOD A) OF THE AASHTO LRFD BRIDGE DESIGN SPECIFICATIONS. THE LONGTERM COMPRESSION PROOF LOAD TEST (AASHTO STANDARD SPECIFICATIONS FOR HIGHWAY BRIDGES, DIVISION II, SECTION 18.7.2.6) IS NOT REQUIRED.
2. FOR DETAILS OF THE STUDS AND EMBEDDED PLATE, AND FOR ADDITIONAL INFORMATION, SEE STR. DWG. BSD 1.13.
3. ALL BEARINGS SHALL BE MARKED PRIOR TO SHIPPING. THE MARKS SHALL INDICATE THE BEARING LOCATION ON THE BRIDGE AND A DIRECTION ARROW THAT POINTS UP STATION. ALL MARKS SHALL BE PERMANENT AND BE VISIBLE AFTER THE BEARING IS INSTALLED.

DRAFT Stage 3 - Not for Construction
09/23/2024

DESIGN AGENCY
Stantec
1500 Lake Shore Dr.
Columbus, OH 43204
(614) 486-4383

DESIGNED	DRAWN	REVIEWED	DATE
BSM	JWS	MRS	04/2024
CHECKED	REVISED	STRUCTURE FILE NUMBER	
EER		4400070	

BEARING DETAILS
BRIDGE NO. LAW-7-0251
S.R. 7 OVER SYMMES CREEK

LAW-7-2.17
PID No. 75923

U:\173608714\LAW\75923\structures\LAW007_0251C\sheets\007_0251RSD006.dgn 5/13/2024 8:39:26 AM JSnair

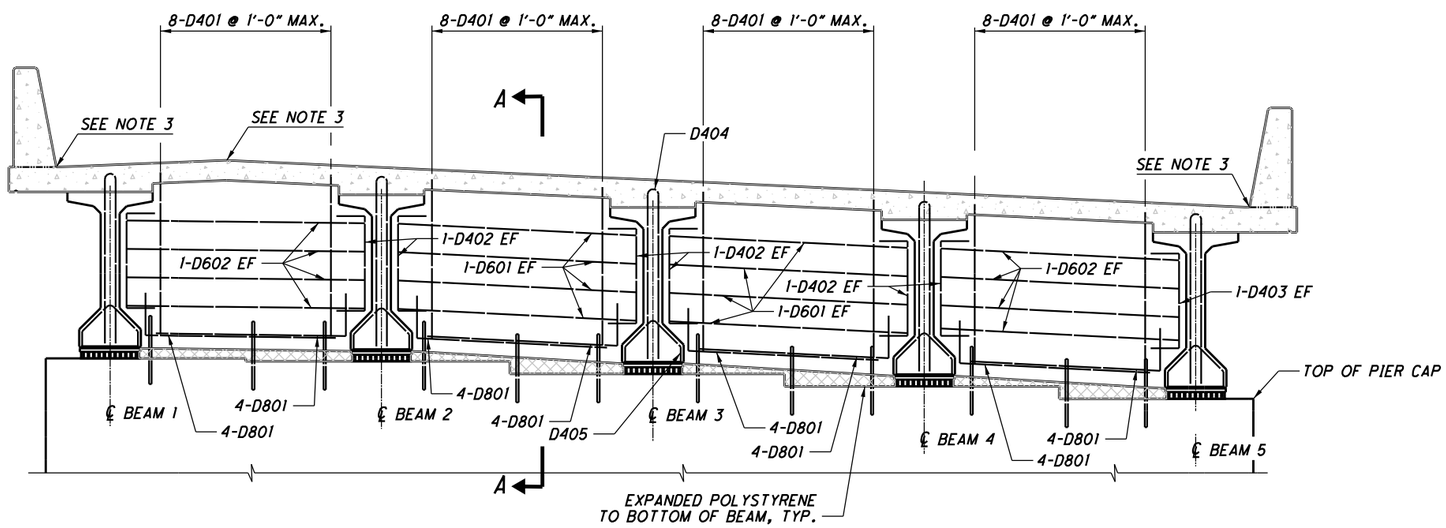

PIER 1 AND PIER 2 DIAPHRAGM

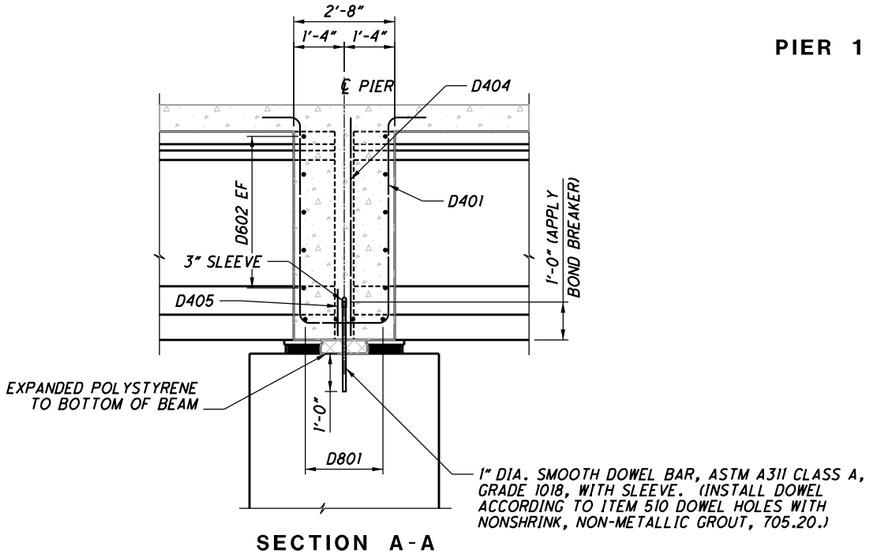

SECTION A-A

NOTES
1. ALL VERTICAL REINFORCING STEEL SHALL BE LOCATED PARALLEL TO THE PIERS.
2. FOR PIER DETAILS, SEE SHEET 11/25 AND 12/25.
3. FOR DECK ELEVATIONS, SEE DECK CONSTRUCTION ELEVATION TABLE, SHEET 20/25.

DRAFT Stage 3 - Not for Construction

10/7/2024

DESIGN AGENCY
Stantec
1500 Lake Shore Dr.
Columbus, OH 43204
(614) 486-4383

DESIGNED	DRAWN	REVIEWED	DATE
BSM	JWS	MRS	04/2024
CHECKED	REVISED	STRUCTURE FILE NUMBER	
EER		4400070	

PIER DIAPHRAGM DETAILS
BRIDGE NO. LAW-7-0251
S.R. 7 OVER SYMMES CREEK

LAW-7-2.17
PID No. 75923

16/25

807/1247

U:\173608714\LAW\75923\structures\LAW007_0251C\sheets\007_0251RSD007.dgn 5/13/2024 8:39:27 AM JSnair

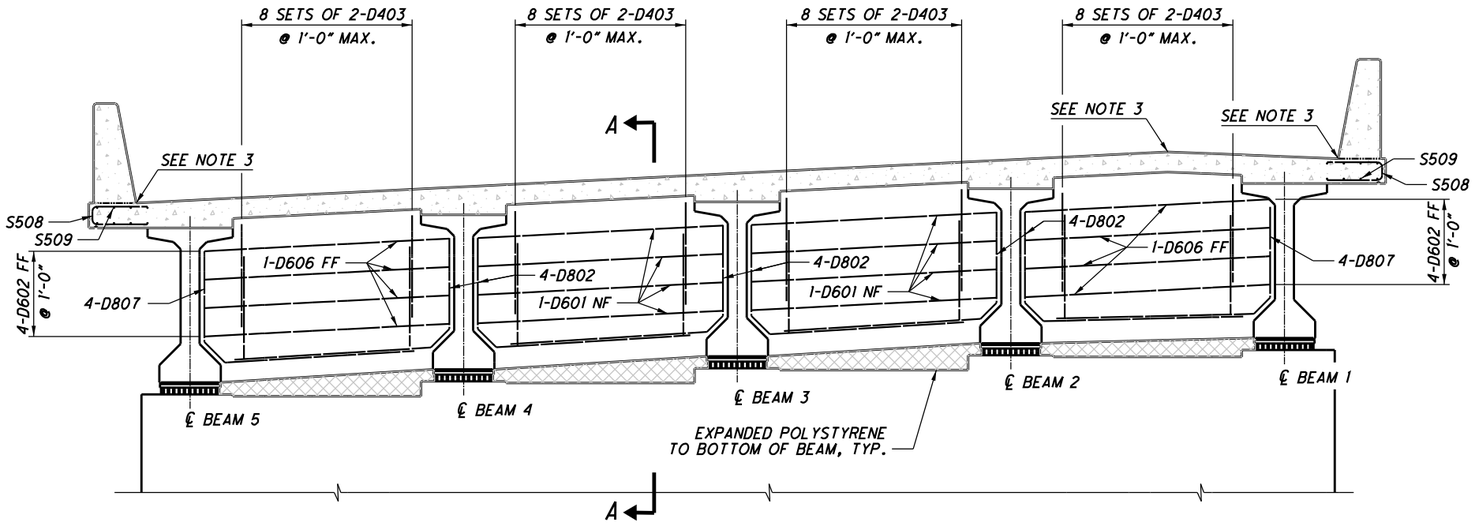

REAR ABUTMENT END DIAPHRAGM

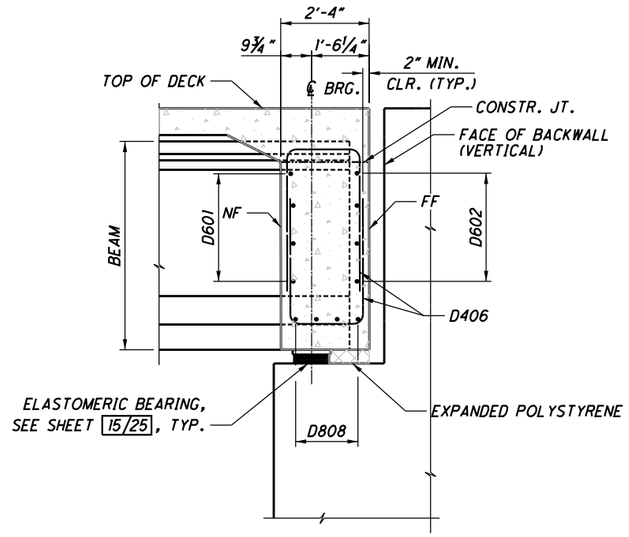

SECTION A-A

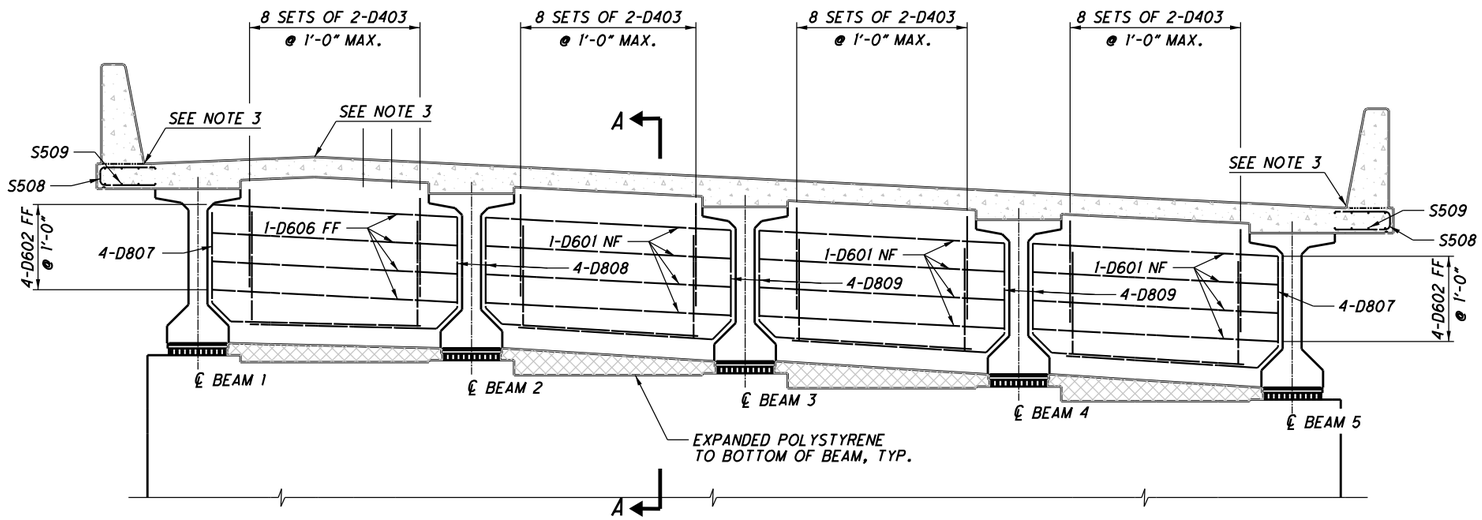

FORWARD ABUTMENT END DIAPHRAGM

LAP LENGTHS:
NO. 6 BARS = 4'-0"

NOTES:
1. ALL VERTICAL REINFORCING STEEL SHALL BE PLACED PARALLEL TO THE BEAMS.
2. FOR ABUTMENT DETAILS, SEE SHEET 7/25 AND 9/25. FOR DECK ELEVATIONS, SEE DECK ELEVATION TABLE, SHEET 20/25.

DRAFT Stage 3 - Not for Construction 08/23/2024

DESIGN AGENCY
Stantec
1500 Lake Shore Dr.
Columbus, OH 43204
(614) 486-4383

DESIGNED	DRAWN	REVIEWED	DATE
BSM	JWS	MRS	04/2024
CHECKED	REVISED	STRUCTURE FILE NUMBER	
EER		4400070	

ABUTMENT END DIAPHRAGM DETAILS
BRIDGE NO. LAW-7-0251
S.R. 7 OVER SYMMES CREEK

LAW-7-2.17
PID No. 75923

17/25

808
1247

U:\173608714\LAW\75923\structures\LAW007_0251C\sheets\007_0251RSD004.dgn 5/13/2024 8:39:28 AM JSnair

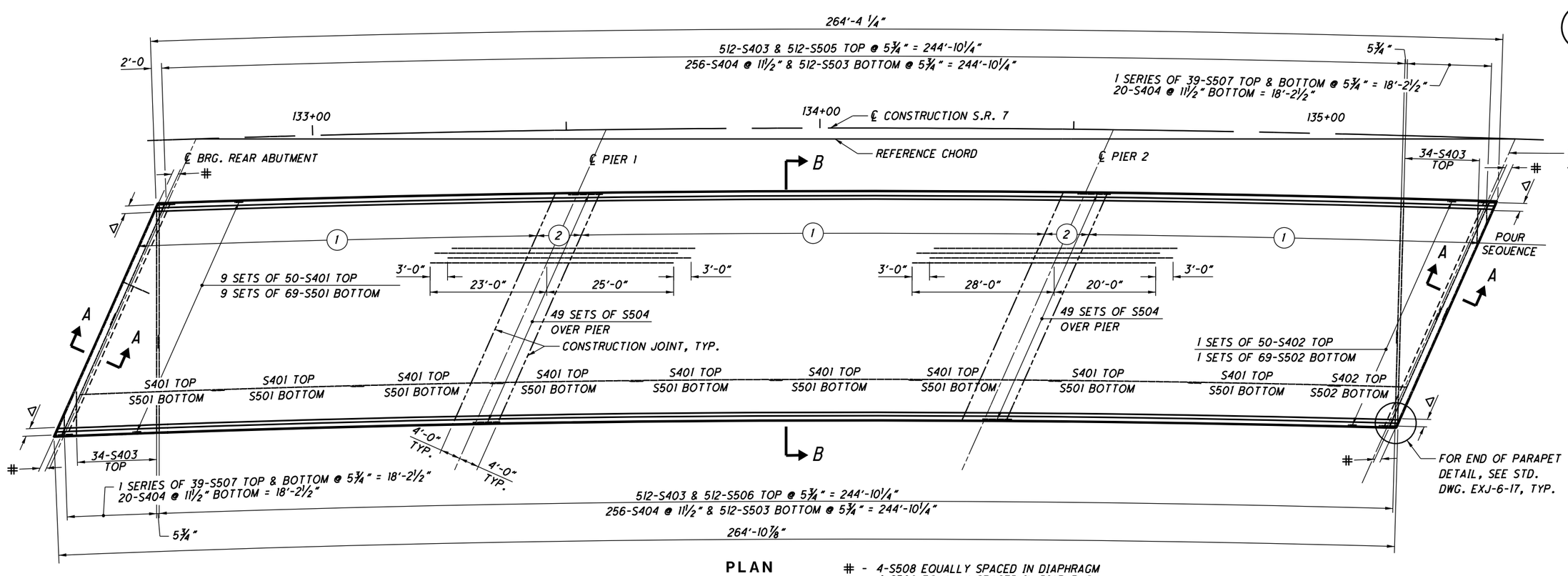

PLAN

- 4-S508 EQUALLY SPACED IN DIAPHRAGM
△ - 4-S508 EQUALLY SPACED IN DIAPHRAGM

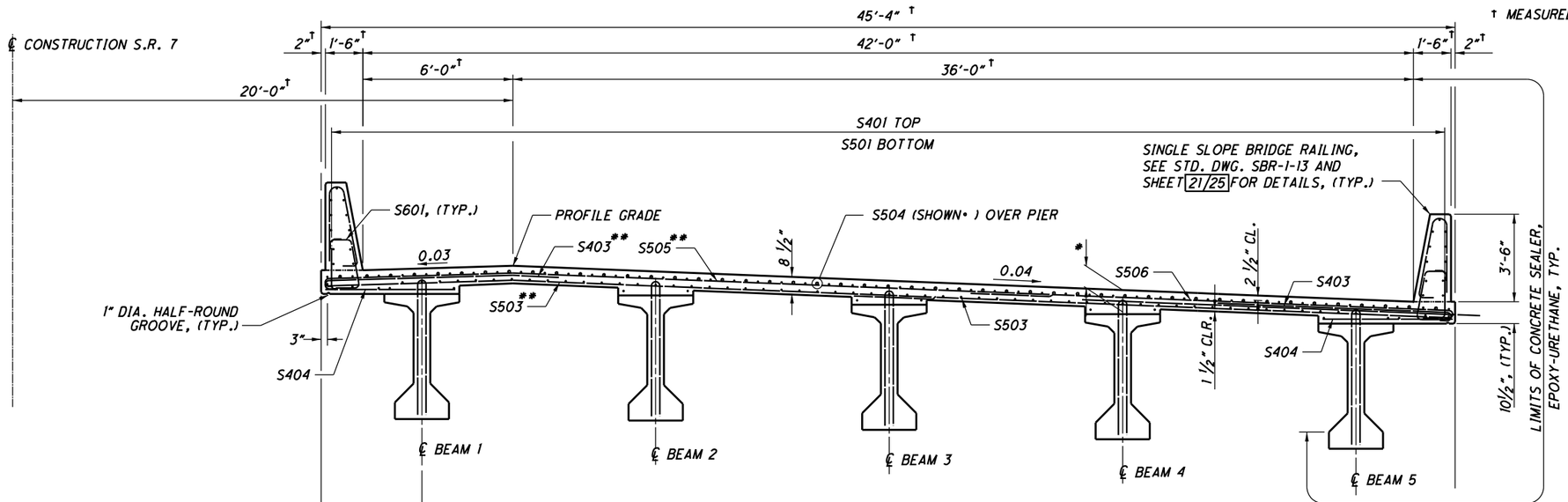

SECTION B-B

† MEASURED RADIALLY

LAP LENGTHS:
NO. 4 BARS = 2'-0"
NO. 5 BARS = 3'-0"

JOINT DIMENSIONS FOR 3" STRIP SEAL GLAND		
	DIM. 'A' @ ABUT.	
TEMP.	REAR	FWD
30°	1 7/8"	1 7/8"
40°	1 3/4"	1 3/4"
50°	1 3/4"	1 3/4"
60°	1 5/8"	1 5/8"
70°	1 1/2"	1 1/2"
80°	1 3/8"	1 3/8"
90°	1 3/8"	1 3/8"

NOTES:
1. CONCRETE OVER THE PIER BETWEEN THE CONSTRUCTION JOINTS SHALL NOT BE PLACED UNTIL CONCRETE IN ADJACENT SPANS HAS BEEN PLACED. SEAL CONSTRUCTION JOINTS WITH 2'-0" STRIP OF HIGH MOLECULAR WEIGHT METHACRYLATE RESIN. FOR ADDITIONAL INFORMATION, SEE STD. DWG. PSID-1-13.
2. * VARIES, SEE SHEET 13/25.
3. FOR ADDITIONAL INFORMATION ON THE PARAPETS AND SAWCUTTING CONTROL JOINTS, SEE SHEET 21/25.
4. FOR SECTION A-A SEE STD. DWG. EXJ-6-17 AND SHEET 15.
5. FOR ADDITIONAL DETAILS OF EXPANSION JOINTS, SEE STD. DWG. EXJ-6-17.
6. STAY-IN-PLACE FORMS SHALL NOT BE USED.

** FIELD BEND BARS AS NEEDED TO MAINTAIN CLEARANCE. SEE GENERAL NOTES FOR ADDITIONAL INFORMATION.

DRAFT Stage 3 - Not for Construction 09/23/2024

DESIGN AGENCY
Stantec
1500 Lake Shore Dr.
Columbus OH 43204
(614) 486-4383

DESIGNED	DRAWN	REVIEWED	DATE
BSM	JWS	MRS	04/2024
CHECKED	REVISED	STRUCTURE FILE NUMBER	
EER		4400070	

SUPERSTRUCTURE DETAILS
BRIDGE NO. LAW-7-0251
S.R. 7 OVER SYMMES CREEK

LAW-7-2.17
PID No. 75923

18 / 25

809
1247

U:\173608714\LAW\75923\structures\LAW007_0251C\sheets\007_0251RSD002.dgn 5/13/2024 8:39:30 AM JSnoir

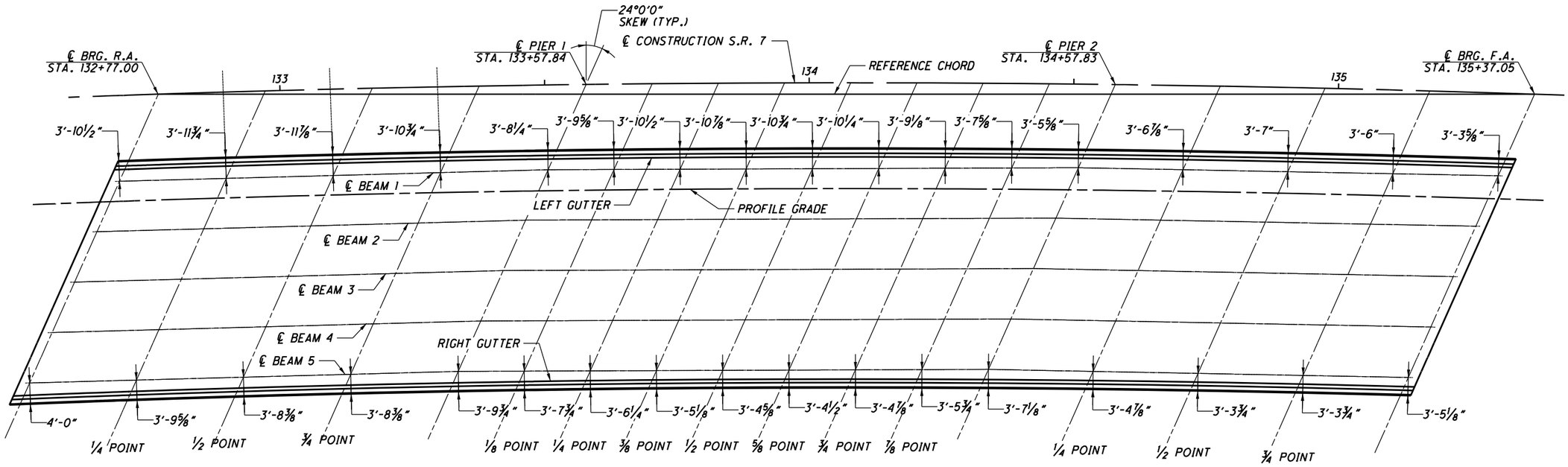

PLAN

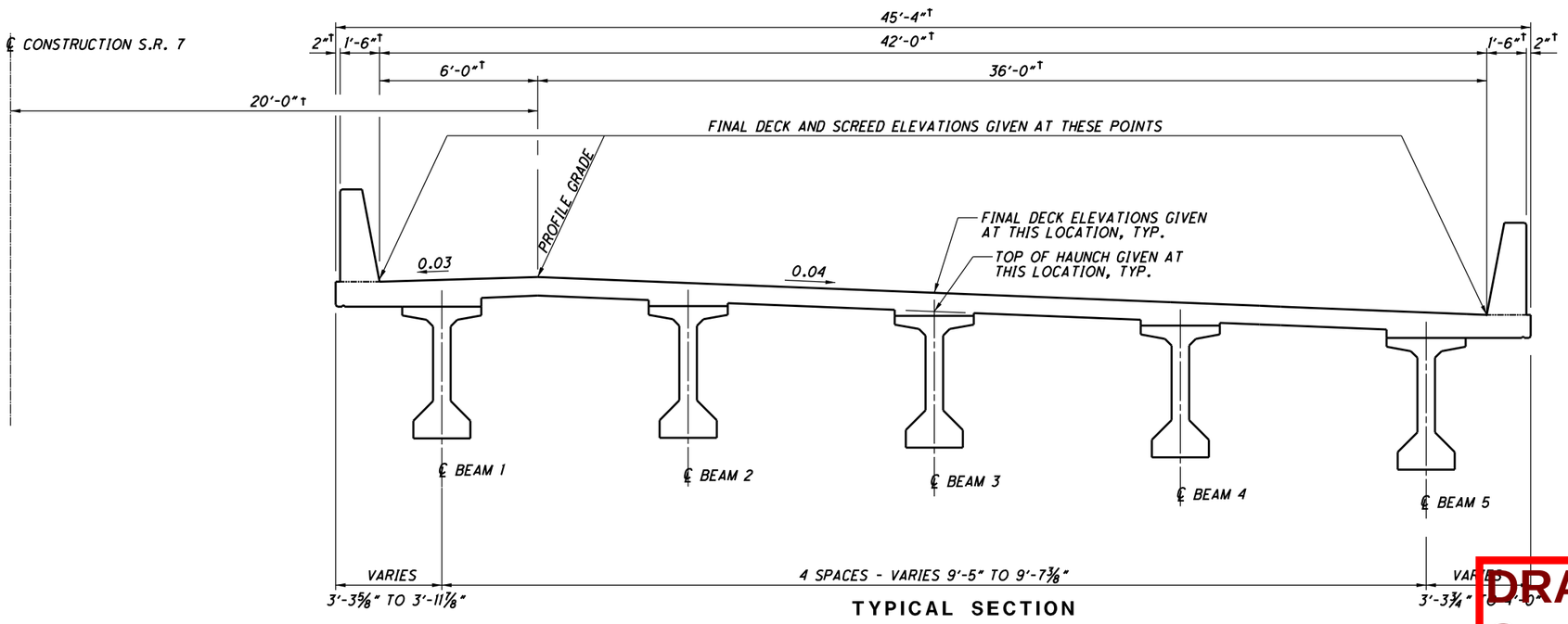

† MEASURED RADIALLY

TYPICAL SECTION

NOTES:
FOR SCREED, TOP OF HAUNCH, AND FINAL DECK ELEVATIONS, SEE SHEET 20/25

DRAFT Stage 3 - Not for Construction 09/23/2024

CONSTRUCTION ELEVATION DIAGRAM AND FASCIA OFFSETS
BRIDGE NO. LAW-7-0251
S.R. 7 OVER SYMMES CREEK

LAW-7-02.17
PID No. 75923

19/25

810/1247

DESIGNED BSM | DRAWN JWS | REVIEWED MRS | DATE 04/2024
CHECKED EER | REVISED | STRUCTURE FILE NUMBER 4400070

DESIGN AGENCY
Stantec
1500 Lake Shore Dr.
Columbus, OH 43204
(614) 486-4383

U:\173608714\LAW\75923\structures\LAW007_0251C\sheets\007_0251RSD008.dgn 5/13/2024 8:39:32 AM JSnair

DECK CONSTRUCTION ELEVATIONS

LOCATION	DESCRIPTION	SPAN 1				SPAN 2								SPAN 3				
		℄ BEARING	1/4 POINT	1/2 POINT	3/4 POINT	℄ PIER	1/8 POINT	1/4 POINT	3/8 POINT	1/2 POINT	5/8 POINT	3/4 POINT	7/8 POINT	℄ PIER	1/4 POINT	1/2 POINT	3/4 POINT	℄ BEARING
LEFT GUTTER	STATION	132+70.18	132+90.48	133+10.78	133+31.07	133+51.37	133+63.92	133+76.48	133+89.03	134+01.58	134+14.14	134+26.69	134+39.24	134+51.79	134+71.68	134+91.57	135+11.45	135+31.34
	OFFSET	14.00'	14.00'	14.00'	14.00'	14.00'	14.00'	14.00'	14.00'	14.00'	14.00'	14.00'	14.00'	14.00'	14.00'	14.00'	14.00'	14.00'
	FINAL DECK EL.	561.38	561.46	561.54	561.62	561.70	561.75	561.80	561.85	561.90	561.94	561.99	562.04	562.09	562.17	562.25	562.33	562.41
	SCREED EL.	561.38	561.50	561.59	561.65	561.70	561.79	561.88	561.95	562.01	562.05	562.07	562.08	562.09	562.20	562.30	562.36	562.41
BEAM 1	STATION	132+69.10	132+89.36	133+09.67	133+30.03	133+50.43	133+62.94	133+75.47	133+88.02	134+00.58	134+13.16	134+25.76	134+38.38	134+51.01	134+70.86	134+90.76	135+10.69	135+30.67
	OFFSET	16.21'	16.32'	16.32'	16.22'	16.02'	16.13'	16.21'	16.24'	16.23'	16.18'	16.10'	15.97'	15.80'	15.91'	15.92'	15.83'	15.64'
	FINAL DECK EL.	561.44	561.52	561.60	561.68	561.75	561.81	561.86	561.91	561.96	562.01	562.05	562.10	562.14	562.23	562.30	562.38	562.45
	HAUNCH EL.	560.73	560.85	560.95	561.01	561.05	561.14	561.23	561.31	561.36	561.40	561.42	561.43	561.44	561.55	561.64	561.70	561.75
PROFILE GRADE	STATION	132+67.24	132+87.57	133+07.91	133+28.25	133+48.58	133+61.16	133+73.74	133+86.31	133+98.89	134+11.46	134+24.04	134+36.61	134+49.19	134+69.11	134+89.03	135+08.96	135+28.88
	OFFSET	20.00'	20.00'	20.00'	20.00'	20.00'	20.00'	20.00'	20.00'	20.00'	20.00'	20.00'	20.00'	20.00'	20.00'	20.00'	20.00'	20.00'
	FINAL DECK EL.	561.55	561.63	561.71	561.79	561.87	561.92	561.97	562.01	562.06	562.11	562.16	562.21	562.26	562.34	562.42	562.50	562.58
	SCREED EL.	561.55	561.66	561.76	561.82	561.87	561.96	562.05	562.13	562.19	562.23	562.25	562.26	562.26	562.38	562.47	562.54	562.58
BEAM 2	STATION	132+64.49	132+84.80	133+05.16	133+25.57	133+46.03	133+58.57	133+71.12	133+83.70	133+96.30	134+08.91	134+21.54	134+34.19	134+46.85	134+66.75	134+86.69	135+06.68	135+26.70
	OFFSET	25.58'	25.71'	25.74'	25.67'	25.49'	25.61'	25.70'	25.75'	25.75'	25.72'	25.65'	25.53'	25.38'	25.51'	25.54'	25.47'	25.29'
	FINAL DECK EL.	561.31	561.39	561.47	561.55	561.64	561.68	561.73	561.77	561.82	561.88	561.93	561.98	562.04	562.11	562.19	562.27	562.36
	HAUNCH EL.	560.60	560.72	560.81	560.88	560.93	561.02	561.10	561.18	561.24	561.28	561.30	561.32	561.33	561.44	561.53	561.60	561.65
BEAM 3	STATION	132+59.87	132+80.22	133+00.63	133+21.09	133+41.60	133+54.17	133+66.75	133+79.36	133+91.99	134+04.63	134+17.29	134+29.97	134+42.67	134+62.61	134+82.60	135+02.64	135+22.71
	OFFSET	34.95'	35.10'	35.16'	35.11'	34.95'	35.09'	35.19'	35.25'	35.27'	35.25'	35.19'	35.09'	34.95'	35.10'	35.15'	35.10'	34.95'
	FINAL DECK EL.	560.92	560.99	561.07	561.15	561.24	561.28	561.33	561.38	561.43	561.48	561.53	561.58	561.64	561.71	561.79	561.87	561.96
	HAUNCH EL.	560.21	560.32	560.42	560.48	560.53	560.62	560.71	560.78	560.84	560.88	560.91	560.92	560.93	561.04	561.13	561.20	561.25
BEAM 4	STATION	132+55.22	132+75.63	132+96.08	133+16.59	133+37.15	133+49.75	133+62.36	133+75.00	133+87.66	134+00.33	134+13.03	134+25.73	134+38.46	134+58.46	134+78.50	134+98.58	135+18.71
	OFFSET	44.31'	44.49'	44.57'	44.54'	44.40'	44.56'	44.67'	44.75'	44.78'	44.77'	44.73'	44.64'	44.51'	44.68'	44.76'	44.73'	44.59'
	FINAL DECK EL.	560.53	560.60	560.68	560.76	560.84	560.89	560.93	560.98	561.03	561.08	561.13	561.18	561.24	561.31	561.39	561.47	561.55
	HAUNCH EL.	559.82	559.93	560.02	560.09	560.14	560.22	560.31	560.38	560.44	560.48	560.51	560.52	560.53	560.64	560.73	560.80	560.85
BEAM 5	STATION	132+50.55	132+71.00	132+91.51	133+12.07	133+32.67	133+45.30	133+57.95	133+70.62	133+83.31	133+96.02	134+08.74	134+21.48	134+34.24	134+54.28	134+74.37	134+94.51	135+14.68
	OFFSET	53.67'	53.87'	53.97'	53.97'	53.85'	54.02'	54.15'	54.24'	54.29'	54.29'	54.26'	54.19'	54.07'	54.27'	54.36'	54.35'	54.24'
	FINAL DECK EL.	560.13	560.21	560.28	560.36	560.45	560.49	560.54	560.58	560.63	560.68	560.73	560.79	560.84	560.91	560.99	561.07	561.15
	HAUNCH EL.	559.42	559.53	559.63	559.69	559.74	559.82	559.90	559.98	560.04	560.08	560.10	560.12	560.13	560.24	560.33	560.39	560.44
RIGHT GUTTER	STATION	132+49.38	132+69.95	132+90.52	133+11.09	133+31.65	133+44.37	133+57.09	133+69.81	133+82.52	133+95.24	134+07.95	134+20.67	134+33.38	134+53.52	134+73.66	134+93.80	135+13.94
	OFFSET	56.00'	56.00'	56.00'	56.00'	56.00'	56.00'	56.00'	56.00'	56.00'	56.00'	56.00'	56.00'	56.00'	56.00'	56.00'	56.00'	56.00'
	FINAL DECK EL.	560.03	560.12	560.20	560.28	560.36	560.41	560.46	560.51	560.56	560.61	560.66	560.71	560.76	560.84	560.92	561.00	561.08
	SCREED EL.	560.03	560.15	560.25	560.31	560.36	560.45	560.54	560.61	560.67	560.71	560.74	560.75	560.76	560.87	560.97	561.03	561.08

NOTES:

1. SCREED ELEVATIONS SHOWN REPRESENT THE THEORETICAL DECK SURFACE LOCATION PRIOR TO DEFLECTIONS CAUSED BY DECK PLACEMENT AND OTHER ANTICIPATED DEAD LOADS.
2. TOP OF HAUNCH ELEVATIONS SHOWN REPRESENT THE THEORETICAL LOCATION OF THE BOTTOM OF THE DECK ABOVE THE BEAM/GIRDER HAUNCH PRIOR TO DEFLECTIONS CAUSED BY DECK PLACEMENT AND OTHER ANTICIPATED DEAD LOADS.
3. FINAL DECK SURFACE ELEVATIONS SHOWN REPRESENT THE DECK SURFACE LOCATION AFTER ALL ANTICIPATED DEAD LOAD DEFLECTIONS HAVE OCCURRED.
4. FOR TYPICAL SECTION SEE SHEET 19/25.

DRAFT Stage 3 Not for Construction 09/23/2024

DESIGN AGENCY
Stantec
1500 Lake Shore Dr.
Columbus, OH 43204
(614) 486-4383

DESIGNED	DRAWN	REVIEWED	DATE
BSM	JWS	MRS	04/2024
CHECKED	REVISED	STRUCTURE FILE NUMBER	
EER		4400070	

DECK CONSTRUCTION ELEVATIONS
BRIDGE NO. LAW-7-0251
S.R. 7 OVER SYMMES CREEK

LAW-7-02.17
PID No. 75923

811 1247

U:\173608714\LAW\75923\structures\LAW007_0251C\sheets\007_0251RSD009.dgn 5/13/2024 8:39:33 AM JSnair

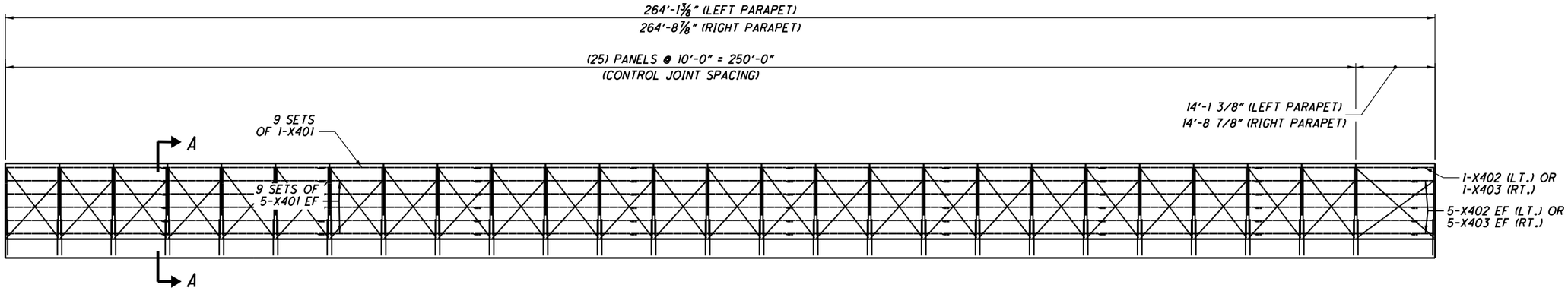

LEFT PARAPET ELEVATION

RIGHT SIDE SIMILAR
(1 REQUIRED PER SIDE)
(EXAGGERATED VERTICAL SCALE)

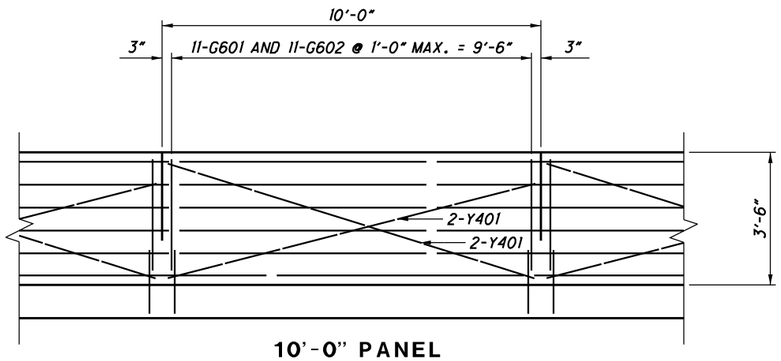

10'-0" PANEL

(25 REQUIRED PER SIDE)
#4 GFRP BAR SPLICE LENGTH = 1'-1"

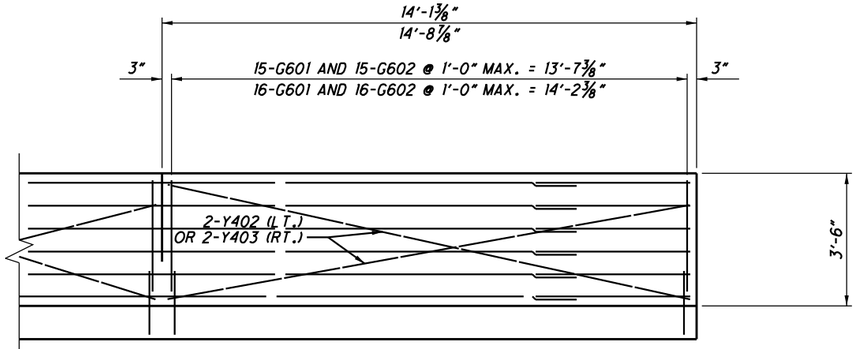

14'-1⅜" OR 14'-8⅞" PANEL

(1 REQUIRED PER SIDE)

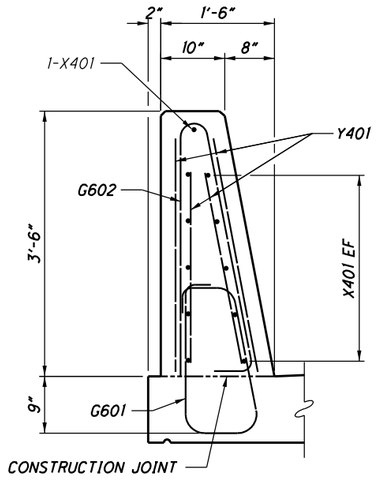

SECTION A-A

NOTES:
1. FOR ADDITIONAL PARAPET INFORMATION SEE STD. DWG. SBR-1.20.

DRAFT Stage 3 - Not for Construction

09/23/2024

DESIGN AGENCY
Stantec
1500 Lake Shore Dr.
Columbus, OH 43204
(614) 486-4383

DESIGNED	DRAWN	REVIEWED	DATE
BSM	JWS	MRS	04/2024
CHECKED	REVISED	STRUCTURE FILE NUMBER	
EER		4400070	

PARAPET DETAILS
BRIDGE NO. LAW-7-0251
S.R. 7 OVER SYMMES CREEK

LAW-7-02.17
PID No. 75923

21 / 25

812
1247

U:\173608714\LAW\75923\structures\LAW007_0251C\sheets\007_0251RSD003.dgn 5/13/2024 8:39:35 AM JSnair

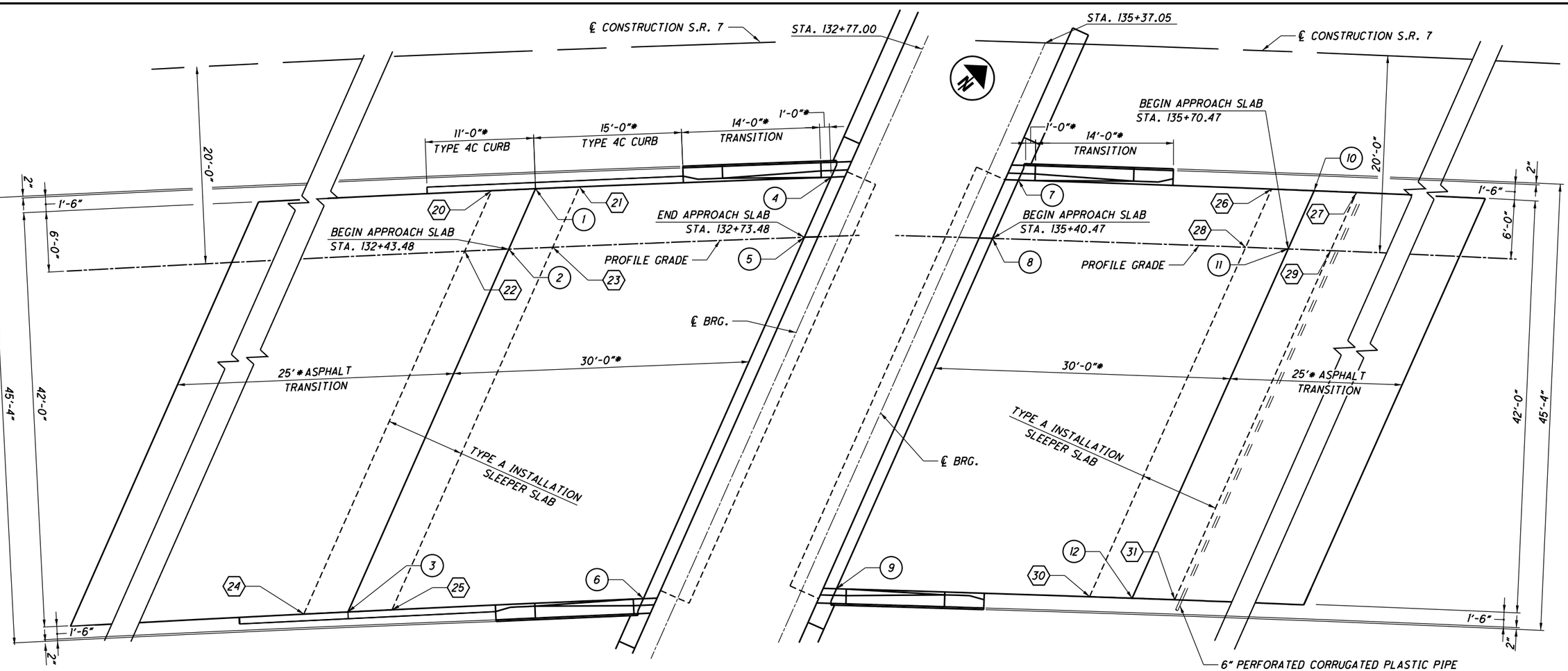

REAR APPROACH SLAB

FORWARD APPROACH SLAB

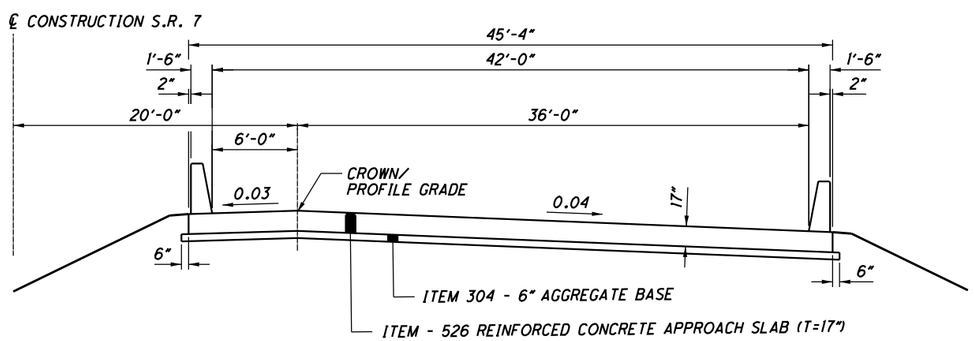

TYPICAL APPROACH SLAB SECTION

NO.	APPROACH SLAB ELEVATIONS
1	561.25
2	561.41
3	560.14
4	561.36
5	561.53
6	560.02
7	562.42
8	562.59
9	561.09
10	562.61
11	562.71
12	562.21

NO.	SLEEPER SLAB SURFACE ELEVATIONS
20	559.81
21	559.84
22	559.98
23	560.01
24	558.46
25	558.50
26	561.10
27	561.14
28	561.27
29	561.31
30	559.78
31	559.81

NOTES:
1. ALL DIMENSIONS MEASURED RADIALLY, UNLESS NOTED WITH AN *.
2. FOR ADDITIONAL DETAILS OF THE BARRIER, SEE STD. DWG. SBR-1-20.
3. FOR ADDITIONAL DETAILS OF THE APPROACH SLAB, SEE STD. DWG. AS-1-15 AND AS-2-15.
4. THE COST OF CONCRETE, TYPE 4A CURB AND INCIDENTALS IN CONNECTION THEREWITH SHALL BE INCLUDED WITH ITEM 526, REINFORCED CONCRETE, APPROACH SLAB WITH OC/OA (T=17"), AS PER PLAN.

DRAFT Stage 3 - Not for Construction 09/23/2024

DESIGN AGENCY
Stantec
1500 Lake Shore Dr.
Columbus, OH 43204
(614) 486-4383

DESIGNED	DRAWN	REVIEWED	DATE
BSM	JWS	MRS	04/2024
CHECKED	REVISED	STRUCTURE FILE NUMBER	
EER		4400070	

APPROACH SLAB DETAILS
BRIDGE NO. LAW-7-0251
S.R. 7 OVER SYMMES CREEK

LAW-7-2.17
PID No. 75923

22 / 25

813
1247

U:\173608714\LAW\75923\structures\LAW007_0251C\sheets\007_025IRMD001.dgn 5/13/2024 8:39:36 AM JSnair

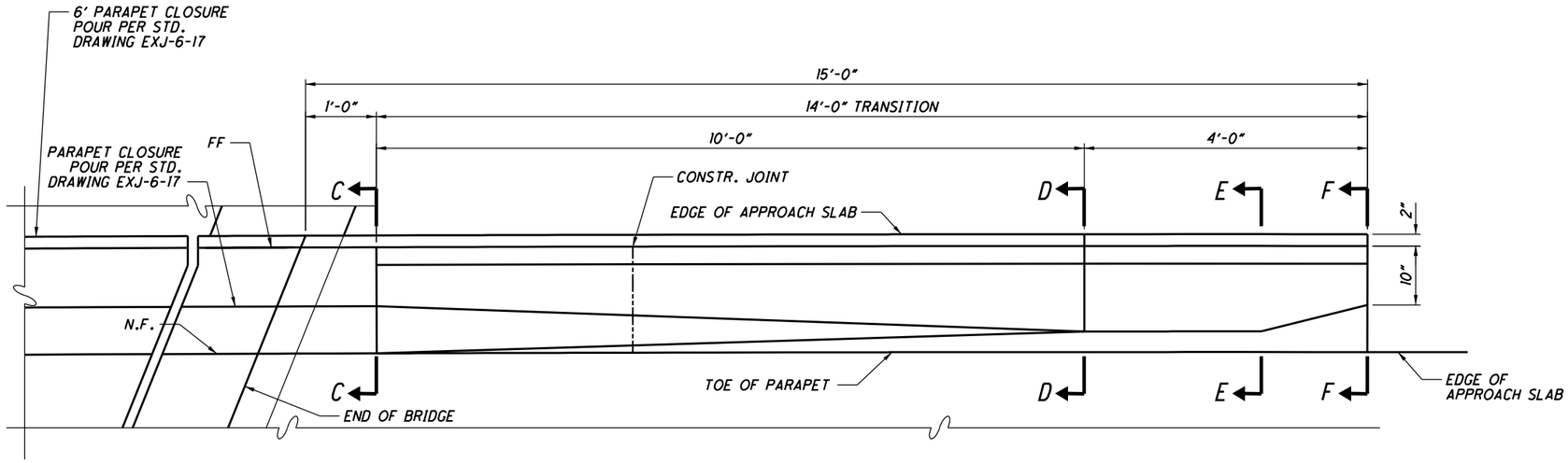

PLAN

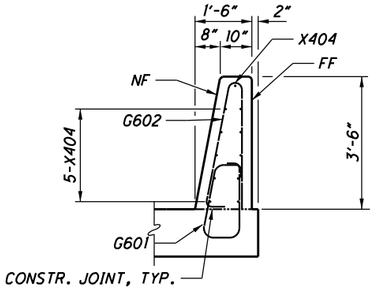

SECTION C-C

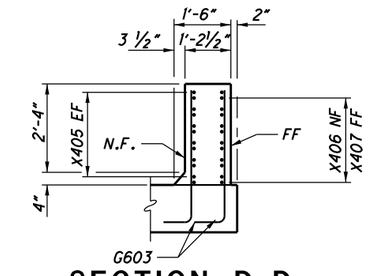

SECTION D-D

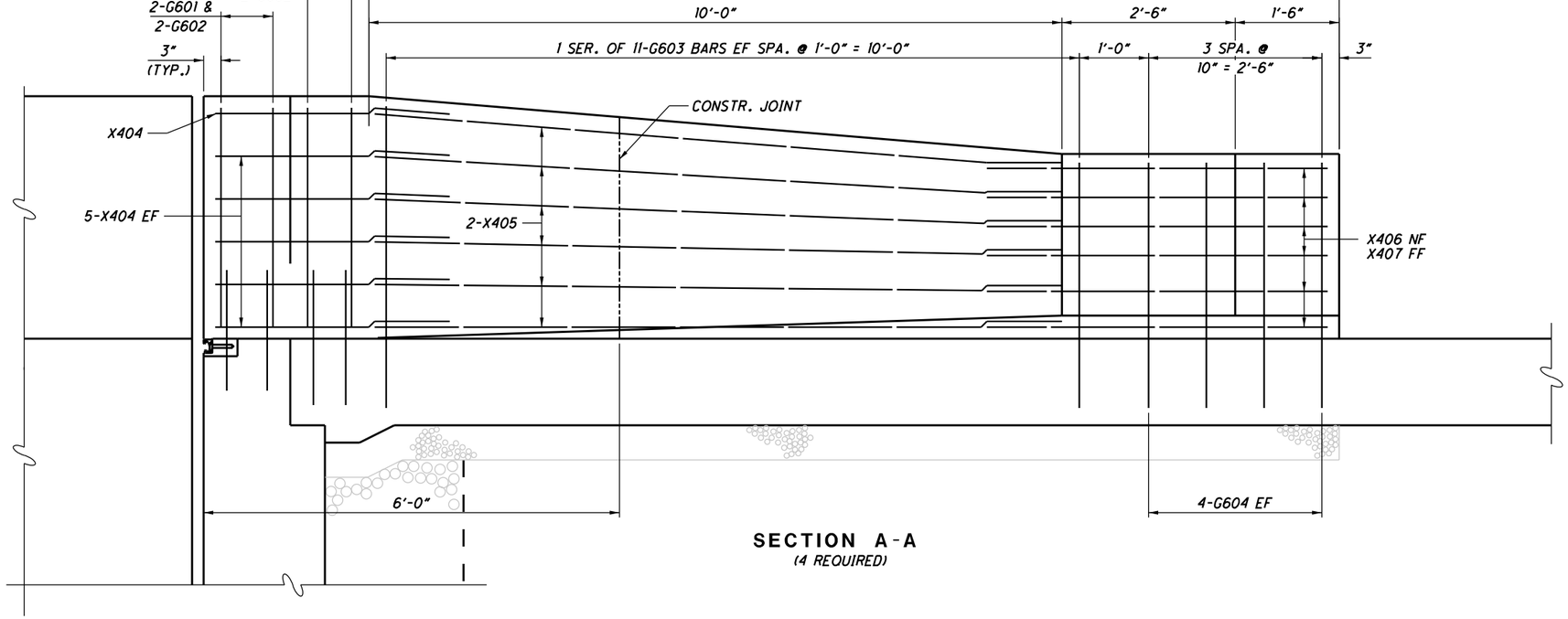

SECTION A-A
(4 REQUIRED)

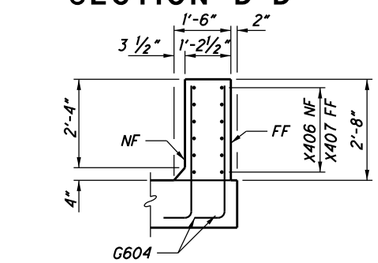

SECTION E-E

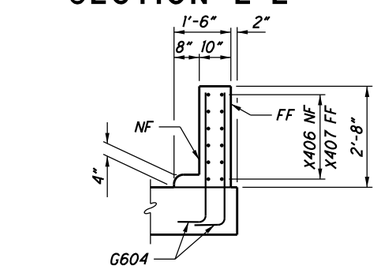

SECTION F-F

NOTES:
1. FOR ADDITIONAL DETAILS OF THE BARRIER, SEE STD. DWG. SBR 1-20.
2. FOR ADDITIONAL DETAILS OF THE APPROACH SLAB, SEE STD. DWG. AS-1-15 AND AS-2-15.
3. THE COST OF CONCRETE, AND INCIDENTIALS IN BARRIER TO BE INCLUDED WITH ITEM 526 REINFORCED CONCRETE APPROACH SLAB WITH OCYDA (T-17), AS PER PLAN.

DRAFT Stage 3 - Not for Construction
09/23/2024

DESIGN AGENCY
Stantec
1500 Lake Shore Dr.
Columbus, OH 43204
(614) 486-4383

DESIGNED	DRAWN	REVIEWED	DATE
BSM	JWS	MRS	04/2024
CHECKED	REVISED	STRUCTURE FILE NUMBER	
EER		4400070	

APPROACH SLAB DETAILS
BRIDGE NO. LAW-7-0251
S.R. 7 OVER SYMMES CREEK

LAW-7-2.17
PID No. 75923

23 / 25

814
1247

U:\173608714\LAW\75923\structures\LAW007_0251C\sheets\007_0251RMD002.dgn 5/13/2024 8:39:38 AM JSnair

MARK	NUMBER TOTAL	LENGTH	WEIGHT	TYPE	DIMENSIONS A	B	C	D	E	R	INC
REAR ABUTMENT (EPOXY COATED STEEL REINFORCEMENT)											
A501	5	22'-6"	117	STR							
A502	5	34'-4"	179	STR							
A503	5	12'-2"	63	STR							
A504	2	6'-2"	13	STR							
A505	2	21'-0"	44	STR							
A507	16	22'-0"	367	STR							
	2 SR	5'-2"									2'-1 3/4"
A508	OF	TO	169	STR							
	7	18'-0"									
	2 SR	5'-2"									2'-0 1/4"
A509	OF	TO	128	STR							
	6	15'-3"									
A510	34	29'-8"	1052	STR							
A511	12	24'-9"	310	STR							
A512	2	13'-3"	28	STR							
A513	2	25'-1"	52	STR							
A601	76	21'-2"	2416	3	2'-7"	7'-7"					
A602	11	21'-6"	355	3	5'-9"	4'-7"					
A603	10	22'-2"	333	3	6'-1"	4'-7"					
A604	50	6'-3"	469	2	2'-10"	0'-11"	2'-10"				
A605	50	7'-5"	557	2	3'-8"	0'-5"	3'-8"				
A606	30	14'-1"	635	2	6'-6"	1'-5"	6'-6"				
	1 SR	8'-1"			3'-6"		3'-6"				
A607	OF	TO	293	2	TO	1'-5"	TO				0'-5 1/2"
	14	19'-9"			9'-4"		9'-4"				
	1 SR	7'-9"			3'-4"		3'-4"				
A608	OF	TO	317	2	TO	1'-5"	TO				0'-6 3/4"
	14	22'-5"			10'-8"		10'-8"				
A609	9	23'-0"	311	3	6'-6"	4'-7"					
A610	12	23'-10"	430	3	6'-11"	4'-7"					
A612	2	19'-9"	59	2	9'-4"	1'-5"	9'-4"				
A613	2	22'-5"	67	2	10'-8"	1'-5"	10'-8"				
A614	100	11'-3"	1690	2	5'-1"	1'-5"	5'-1"				
A616	3	15'-2"	68	3	5'-9"	1'-5"					
A801	24	44'-1"	2825	STR							
A802	31	5'-4"	441	18	3'-2"	1'-0"	1'-0"				
A803	10	25'-10"	690	STR							
SUB-TOTAL			14,475								
FORWARD ABUTMENT (EPOXY COATED STEEL REINFORCEMENT)											
B501	5	24'-7"	128	STR							
B502	5	35'-0"	183	STR							
B503	5	14'-2"	74	STR							
	2 SR	5'-2"									
B504	OF	TO	128	STR							2'-0 1/4"
	6	15'-3"									
B507	18	20'-0"	375	STR							
	2 SR	5'-2"									
B508	OF	TO	125	STR							1'-11"
	6	14'-9"									
B509	2	13'-5"	28	STR							
B510	30	28'-7"	894	STR							
B511	12	24'-9"	310	STR							
B601	69	21'-2"	2194	3	2'-7"	7'-7"					
B602	10	21'-8"	325	3	4'-7"	5'-10"					
B603	9	22'-6"	304	3	4'-7"	6'-3"					
B604	50	6'-3"	469	2	2'-10"	0'-11"	2'-10"				
B605	50	7'-5"	557	2	3'-8"	0'-5"	3'-8"				
B606	84	11'-5"	1440	2	5'-2"	1'-5"	5'-2"				
SUB-TOTAL			7,534								

MARK	NUMBER TOTAL	LENGTH	WEIGHT	TYPE	DIMENSIONS A	B	C	D	E	R	INC
FORWARD ABUTMENT (EPOXY COATED STEEL REINFORCEMENT) (CONT.)											
	1 SR	7'-11"			3'-5"		3'-5"				0'-6 1/2"
B607	OF	TO	249	2	TO	1'-5"	TO				
	12	19'-9"			9'-4"		9'-4"				
	1 SR	10'-5"			4'-8"		4'-8"				0'-7"
B608	OF	TO	270	2	TO	1'-5"	TO				
	11	22'-3"			10'-7"		10'-7"				
B609	25	14'-1"	529	2	6'-6"	1'-5"	6'-6"				
B610	12	24'-0"	433	3	4'-7"	7'-0"					
B612	1	22'-7"	34	2	10'-9"	1'-5"	10'-9"				
B613	3	18'-0"	81	3	7'-2"	1'-5"					
B614	1	15'-4"	23	3	5'-10"	1'-5"					
B801	24	41'-7"	2665	STR							
B802	31	5'-4"	441	18	3'-2"	1'-0"	1'-0"				
B803	10	25'-10"	690	STR							
SUB-TOTAL			5,415								
SUPERSTRUCTURE (EPOXY COATED REINFORCING STEEL)											
S401	450	30'-0"	9018	STR							
S402	50	12'-7"	420	STR							
S403	1092	9'-0"	6565	16	8'-6"						
S404	552	4'-5"	1629	STR							
S501	621	30'-0"	19431	STR							
S502	69	21'-5"	1541	STR							
S503	512	24'-0"	12816	STR							
S504	98	48'-0"	4906	STR							
S505	512	29'-4"	15664	16	28'-9"						
S506	512	19'-10"	10591	16	19'-3"						
	4 SR	4'-0"									
S507	OF	TO	3912	STR							1'-0 3/4"
	39	44'-1"									
S508	16	4'-10"	81	2	2'-0"	1'-1"	2'-0"				
S509	16	4'-4"	72	2	1'-10"	0'-11"	1'-10"				
D401	64	15'-3"	652	6	2'-6"	5'-7"	1'-0"				
D402	32	4'-7"	98	2	1'-0"	2'-10"	1'-0"				
D403	128	8'-10"	755	2	3'-5"	2'-2"	3'-5"				
D404	10	11'-2"	75	24	0'-4"	5'-4"				0'-1 1/2"	
D405	10	2'-8"	18	15		0'-6 1/4"	0'-8"	0'-8"			
D601	96	9'-4"	1346	STR							
D602	16	23'-0"	553	STR							
D801	64	7'-10"	1339	1	1'-0"	7'-0"					
D802	64	10'-7"	1808	13	7'-0"	0'-8"	0'-8"	2'-9"			
SUB-TOTAL			93,290								
TOTAL			113,180								

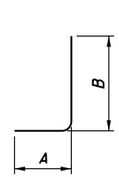

TYPE-1

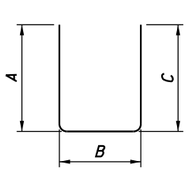

TYPE-2

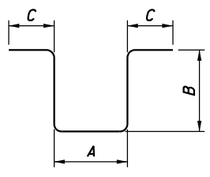

TYPE-6

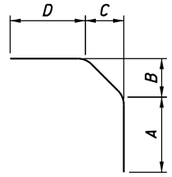

TYPE-13

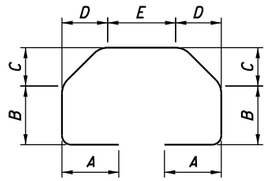

TYPE-15

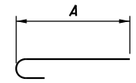

TYPE-16

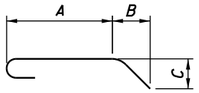

TYPE-18

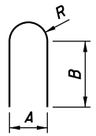

TYPE-24

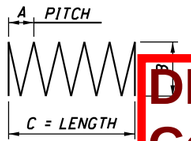

TYPE-27

TYPE-30

NOTES:
1. NUMBER SIZE IS INDICATED IN THE BAR MARK. THE FIRST DIGIT INDICATES THE BAR SIZE NUMBER. FOR EXAMPLE, P501 IS A NUMBER 5 SIZE. BAR DIMENSIONS SHOWN ARE OUT TO OUT UNLESS OTHERWISE NOTED.

DRAFT Stage 3 - Not for Construction 09/23/2024

DESIGN AGENCY
Stantec
1500 Lake Shore Dr.
Columbus OH 43204
(614) 486-4383

DESIGNED	DRAWN	REVIEWED	DATE
BSM	JWS	MRS	04/2024
CHECKED	REVISED	STRUCTURE FILE NUMBER	
EER		4400070	

REINFORCING STEEL LIST 1
BRIDGE NO. LAW-7-0251
S.R. 7 OVER SYMMES CREEK

LAW-7-2.17
PID No. 75923

24 / 25

815
1247

U:\173608714\LAW\75923\structures\LAW007_0251C\sheets\007_0251RRL001.dgn 5/13/2024 8:39:39 AM JSnair

MARK	NUMBER TOTAL	LENGTH	WEIGHT	TYPE	DIMENSIONS A	B	C	D	E	R	INC
PIER 1 (EPOXY COATED STEEL REINFORCEMENT)											
*DS1101	84	39'-3"	17517	STR							
P501	192	11'-9"	2353	2	4'-5"	3'-2"	4'-5"				
P502	16	24'-4"	406	STR							
P503	18	12'-10"	241	1	0'-10"	12'-2"					
P504	114	16'-9"	1992	52	1'-8"	4'-6"					
P901	14	26'-4"	1253	STR							
P902	14	36'-6"	1737	16	35'-3"						
P903	14	18'-9"	892	16	17'-6"						
P1102	84	25'-2"	11232	STR							
P1103	28	33'-4"	4959	16	31'-9"						
P1104	28	32'-10"	4884	16	31'-3"						
P1105	28	32'-1"	4773	16	30'-6"						
SP501	1	39'-9"	1472	27	0'-3 3/4"	3'-6"	39'-9"				
SP502	1	39'-1"	1448	27	0'-3 3/4"	3'-6"	39'-1"				
SP503	1	38'-4"	1421	27	0'-3 3/4"	3'-6"	38'-4"				
*SP504	3	39'-3"	9312	27	0'-2 1/2"	5'-0"	39'-3"				
PIER 2 (EPOXY COATED STEEL REINFORCEMENT)											
*DS1102	28	42'-3"	6285	STR							
*DS1103	28	43'-3"	6434	STR							
*DS1104	28	41'-3"	6137	STR							
P501	192	11'-9"	2353	2	4'-5"	3'-2"	4'-5"				
P502	16	24'-4"	406	STR							
P503	18	12'-10"	241	1	0'-10"	12'-2"					
P504	114	16'-9"	1992	52	1'-8"	4'-6"					
P901	14	26'-4"	1253	STR							
P902	14	36'-6"	1737	16	35'-3"						
P903	14	18'-9"	892	16	17'-6"						
P1107	84	25'-2"	11232	STR							
P1108	28	32'-6"	4835	16	30'-11"						
P1109	28	31'-2"	4636	16	29'-7"						
P1110	28	32'-4"	4810	16	30'-9"						
SP505	1	36'-11"	1388	27	0'-3 3/4"	3'-6"	37'-5"				
SP506	1	38'-2"	1436	27	0'-3 3/4"	3'-6"	38'-9"				
SP507	1	38'-8"	1451	27	0'-3 3/4"	3'-6"	39'-2"				
*SP508	1	42'-3"	3337	27	0'-2 1/2"	5'-0"	42'-3"				
*SP509	1	43'-3"	3415	27	0'-2 1/2"	5'-0"	43'-3"				
*SP510	1	41'-3"	3260	27	0'-2 1/2"	5'-0"	41'-3"				
SUB-TOTAL			77,725								
PARAPET (EPOXY COATED STEEL REINFORCEMENT)											
G601	597	7'-8"	6875	37	1'-0"	9 1/2"	1'-5"	1'-0"	7"		
G602	597	7'-0"	6277	23	6"	3'-3"	3'-3"				
	8 SR	4'-6"				3'-8"					
G603	OF	TO	650	1	1'-0"	TO					0'-1"
	11	5'-4"				4'-6"					
G604	32	4'-6"	216	1	1'-0"	3'-8"					
SUB-TOTAL			14,018								
TOTAL			91,743								
PARAPET (GLASS FIBER REINFORCED POLYMER - GFRP)											
X401	198	30'-0"	5,940'-0"	STR							
X402	11	3'-7"	39'-5"	STR							
X403	11	4'-2"	45'-10"	STR							
X404	44	4'-0"	176'-0"	STR							
X405	48	10'-0"	480'-0"	STR							
X406	24	6'-4"	152'-0"	25	2'-6"	2'-5"	1'-4 1/2"	0'-1 1/2"	0'-5"		
X407	24	5'-1"	122'-0"	STR							
Y401	200	10'-0"	2,000'-0"	STR							
Y402	4	14'-1"	56'-4"	STR							
Y403	4	14'-8"	58'-8"	STR							
TOTAL			9,070'-3"								

* - FOR INFORMATION ONLY. REINFORCING INCLUDED WITH DRILLED SHAFTS FOR PAYMENT.

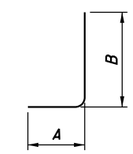

TYPE-1

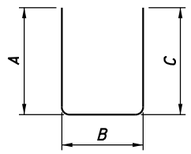

TYPE-2

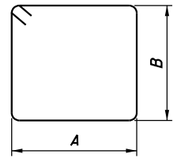

TYPE-3

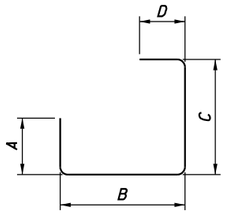

TYPE-7

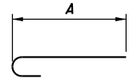

TYPE-16

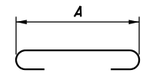

TYPE-17

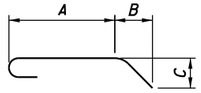

TYPE-18

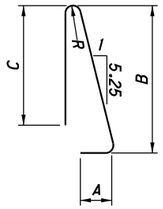

TYPE-23

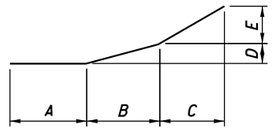

TYPE-25

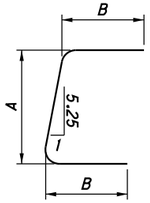

TYPE-28

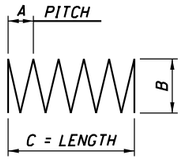

TYPE-27

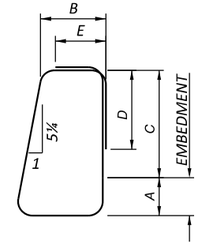

TYPE-37

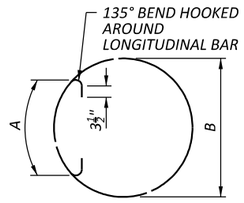

TYPE-52

NOTES:
1. BAR SIZE IS INDICATED IN THE BAR MARK. THE FIRST DIGIT INDICATES THE BAR SIZE NUMBER. FOR EXAMPLE, P501 IS A NUMBER 5 BAR. DIMENSIONS SHOWN ARE OUT TO OUT UNLESS OTHERWISE NOTED.

DRAFT Stage 3 Not for Construction 09/23/2024

DESIGN AGENCY
Stantec
1500 Lake Shore Dr.
Columbus, OH 43204
(614) 486-4383

DESIGNED	DRAWN	REVIEWED	DATE
BSM	JWS	MRS	04/2024
CHECKED	REVISED	STRUCTURE FILE NUMBER	
EER		4400070	

REINFORCING STEEL LIST 2
BRIDGE NO. LAW-7-0251
S.R. 7 OVER SYMMES CREEK

LAW-7-2.17
PID No. 75923

25 / 25

816
1247

U:\173608714\LAW\75923\structures\LAW007_0251C\sheets\007_0251RRL002.dgn 5/13/2024 8:39:41 AM JSnoir

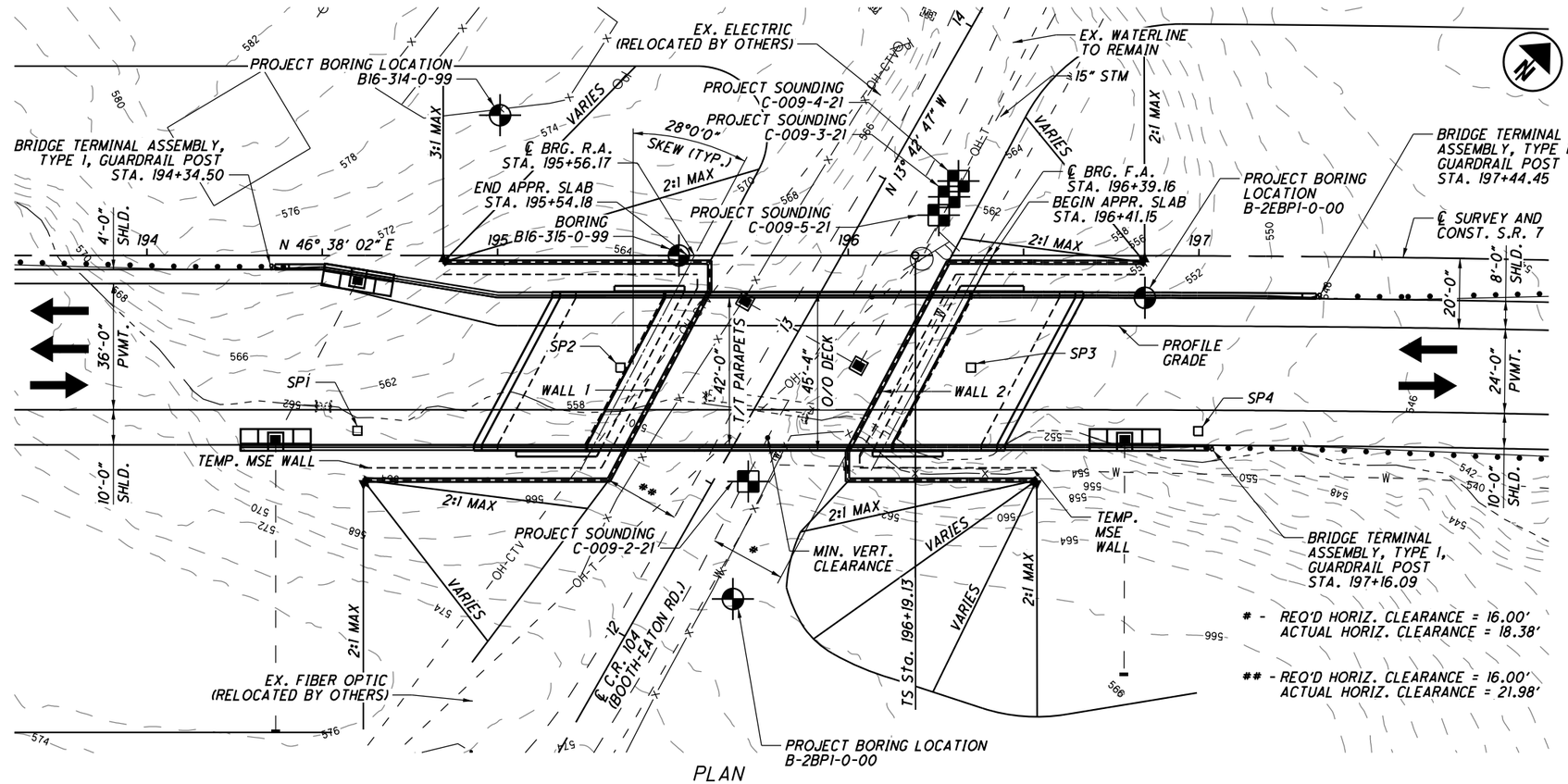

PLAN

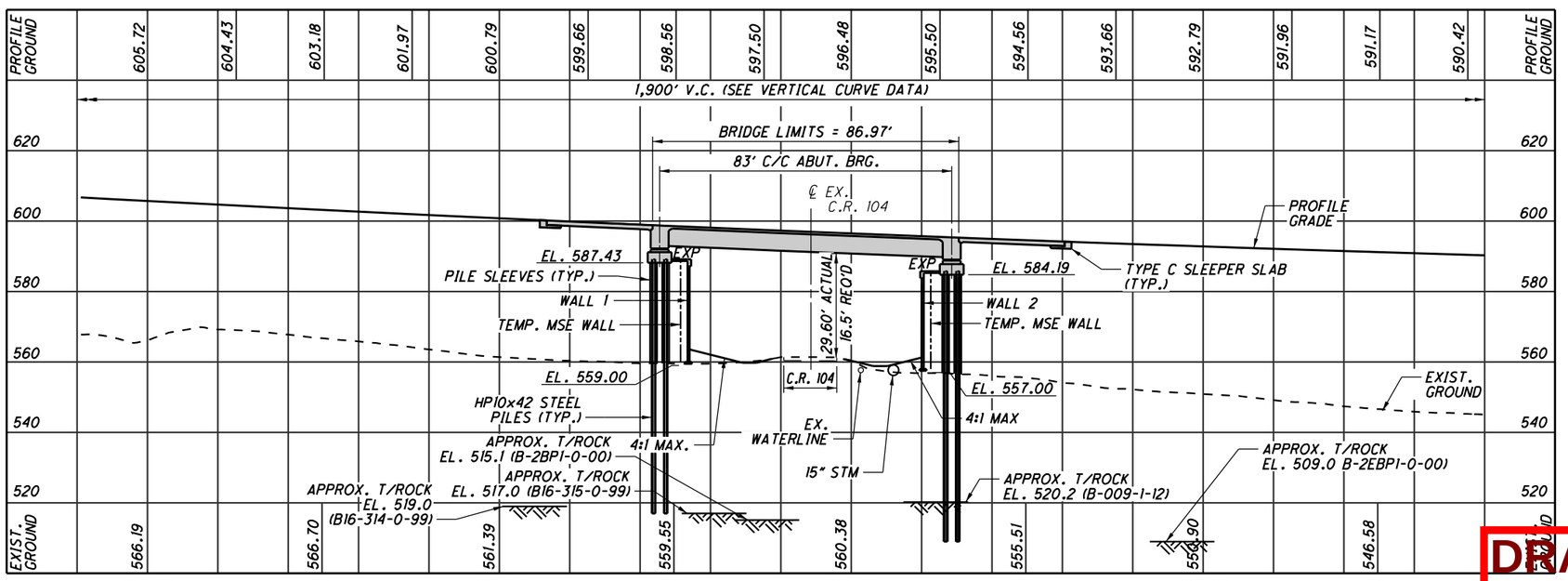

PROFILE ALONG PROFILE GRADE LINE

BENCHMARK DATA

BM #1 STA. 182+35.75, ELEV. 568.32, OFFSET 560.76', RT.
BM #2 STA. 207+14.67, ELEV. 575.38, OFFSET 966.60', LT.

FOR ADDITIONAL BENCHMARK INFORMATION. SEE ROADWAY PLAN SHEET ⊖

NOTES

1. EARTHWORK LIMITS SHOWN ARE APPROXIMATE. ACTUAL SLOPES SHALL CONFORM TO PLAN CROSS SECTIONS.
2. FOR PRIMARY PROJECT CONTROL INFORMATION TABLE SEE ROADWAY GENERAL NOTES.
3. FOR LIST OF ABBREVIATIONS SEE SHEET 2/28.

DESIGN TRAFFIC:
2028 ADT = 13,400 2028 ADTT = 1,072
2048 ADT = 17,500 2048 ADTT = 1,400
DIRECTIONAL DISTRIBUTION = 69/31

LEGEND

- PROJECT BORING LOCATION
- PROJECT CPT SOUNDING LOCATION
- SETTLEMENT PLATFORM

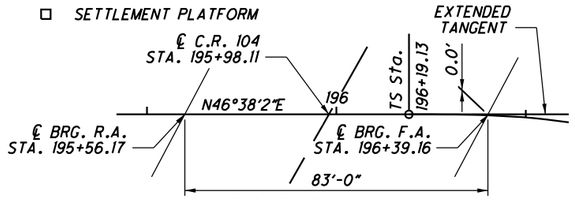

GEOMETRIC LAYOUT
BRIDGE BUILT PARALLEL TO EXTENDED TANGENT

ESTIMATED PILE LENGTHS	
LOCATION	LENGTH
REAR ABUTMENT	75'
FORWARD ABUTMENT	80'

VERTICAL CURVE DATA

LENGTH = 1900'
PVC STA. = 192+75.00 PVC ELEV. = 612.74
PVI STA. = 202+25.00 PVI ELEV. = 555.74
PVT STA. = 211+75.00 PVT ELEV. = 609.67
G1 = -6.00% G2 = 5.68%

CURVE (S.R. 7 CURVE NO. 3)

P.I. STA. 205+33.31
Δ = 27° 30' 45" (RT)
Dc = 1° 45' 00"
R = 3,274.04'
T = 683.24'
L = 1,347.14'
E = 70.53'
TS STA. = 196+19.13
Θs = 1° 58' 07"
Ls = 225.00'
Ts = 914.18'
LT = 150.01'
ST = 75.01'
e_{max} = 4.60%
CS STA. 211+91.27
ST STA. 214+16.27

PROPOSED STRUCTURE

TYPE: PRESTRESSED CONCRETE I-BEAMS (AASHTO TYPE 4) WITH COMPOSITE CONCRETE SLAB SUPPORTED BY SEMI-INTEGRAL ABUTMENTS ON SLEEVED PILES THROUGH MSE WALL FILL.

SPANS: 83'-0" C/C ABUTMENT BEARINGS (MEASURED ALONG EXTENDED TANGENT)
ROADWAY: 42'-0" TOE/TOE PARAPET
LOADING: HL-93 AND 60 LBS/FT² FUTURE WEARING SURFACE
WEARING SURFACE: 1" MONOLITHIC WEARING SURFACE
SKEW: 28°00'00" LEFT FORWARD
APPROACH SLABS: 30'-0" (AS-1-15 & AS-2-15)
ALIGNMENT: TANGENT
CROWN: VARIES (SEE TRANSITION DIAGRAM)
COORDINATES: LATITUDE 38°26'50.63"N
LONGITUDE 82°26'09.62"W
DECK AREA: 3943 SQ. FT.

DRAFT Stage 3 - Not for Construction 09/23/2024

DESIGN AGENCY
Stantec Consulting Services Inc.
1500 Lake Shore Drive, Suite 100
Columbus, Ohio 43204
(614) 486-4383

DESIGNED	DRAWN	REVIEWED	DATE
BSM	JWS	MRS	03/2024
CHECKED	REVISED		STRUCTURE FILE NUMBER
EDA			4400194

LAWRENCE COUNTY
STA. 195+54.18
STA. 196+41.15

SITE PLAN
BRIDGE NO. LAW-7-0370
S.R. 7 OVER C.R. 104 (BOOTHE EATON ROAD)

LAW-7-2.17
PID No. 75923

1 / 28

817
1247

U:\173608714\LAW\75923\structures\LAW007_0370C\sheets\007_75923CSP001.dgn 5/13/2024 8:39:53 AM JSnair

STANDARD DRAWINGS AND SUPPLEMENTAL SPECIFICATIONS

REFER TO THE FOLLOWING STANDARD BRIDGE DRAWING(S):

AS-1-15	REVISED	01-20-23
AS-2-15	REVISED	07-21-23
PSID-1-13	REVISED	01-20-23
SBR-1-20	REVISED	07-21-23
SICD-2-14	REVISED	01-15-21

REFER TO THE FOLLOWING STANDARD CONSTRUCTION DRAWING(S):

1-3D	REVISED	07-15-22
RM-4.5	REVISED	07-21-17
RM-4.6	REVISED	07-19-13

AND TO THE FOLLOWING SUPPLEMENTAL SPECIFICATION(S):

800	DATED	01-19-24
840	DATED	07-21-23
867	DATED	04-15-22

DESIGN SPECIFICATIONS

THIS STRUCTURE CONFORMS TO THE 9TH EDITION OF THE "LRFD BRIDGE DESIGN SPECIFICATIONS" ADOPTED BY THE AMERICAN ASSOCIATION OF STATE HIGHWAY AND TRANSPORTATION OFFICIALS, 2019 AND THE ODOT BRIDGE DESIGN MANUAL, 2020.

OPERATIONAL IMPORTANCE

A LOAD MODIFIER OF 1.0 HAS BEEN ASSUMED FOR THE DESIGN OF THIS STRUCTURE IN ACCORDANCE WITH THE AASHTO LRFD BRIDGE DESIGN SPECIFICATIONS, ARTICLE 1.3.5 AND THE ODOT BRIDGE DESIGN MANUAL.

DESIGN LOADING

VEHICULAR LIVE LOAD: HL-93

FUTURE WEARING SURFACE (FWS) OF 0.060 KIPS/SQ.FT.

DESIGN DATA

CONCRETE CLASS QC2 WITH QC/QA
-COMPRESSIVE STRENGTH 4.5 KSI (SUPERSTRUCTURE)

CONCRETE CLASS QC1 WITH QC/QA
-COMPRESSIVE STRENGTH 4.0 KSI (SUBSTRUCTURE)

REINFORCING STEEL
-MINIMUM YIELD STRENGTH 60 KSI

STEEL H-PILES
-ASTM A572 - YIELD STRENGTH 50 KSI

CONCRETE FOR PRESTRESSED BEAMS:
COMPRESSIVE STRENGTH (FINAL) - 7 KSI
COMPRESSIVE STRENGTH (RELEASE) - 5 KSI

WELDED WIRE FABRIC:
YIELD STRENGTH - 70 KSI

PRESTRESSING STRAND:
AREA = 0.217 SQ.IN.
ULTIMATE STRENGTH = 270 KSI
INITIAL STRESS = 202.5 KSI (LOW RELAXATION STRANDS)

MONOLITHIC WEARING SURFACE

MONOLITHIC WEARING SURFACE IS ASSUMED, FOR DESIGN PURPOSES, TO BE 1 INCH THICK.

PILE DRIVING CONSTRAINTS

PRIOR TO DRIVING ABUTMENT PILES TO REFUSAL ON BEDROCK, CONSTRUCT THE TEMPORARY MSE WALL AND THE BRIDGE APPROACH EMBANKMENT BEHIND THE ABUTMENT UP TO THE BOTTOM OF THE FOOTING FOR A MINIMUM DISTANCE OF 200' BEHIND EACH ABUTMENT, SEE APPROACH EMBANKMENT NOTE. IN THE AREA OF THE MSE WALL PLACE TEMPORARY SOIL FILL OR STACKED NEW JERSEY BARRIERS EQUIVALENT TO THE HEIGHT OF THE PROPOSED FILL ABOVE MSE WALL. THE CONTRACTOR MAY PRE-DRIVE ABUTMENT PILES BEFORE CONSTRUCTING MSE WALLS. PRE-DRIVING CONSISTS OF INSTALLING THE ABUTMENT PILES INTO THE SOIL ONLY AS FAR AS NECESSARY SO THAT THE PILE WILL REMAIN VERTICAL DURING MSE WALL CONSTRUCTION. IF PRE-DRIVING PILES, INSTALL PILE SLEEVES AROUND PILES BEFORE CONSTRUCTING THE MSE WALL. AT LEAST THREE FEET OF PILE MUST EXTEND ABOVE THE TOP OF THE PILE SLEEVE TO MEET THE REQUIREMENTS OF CMS 507.09 REGARDING SPLICES. DO NOT DRIVE ABUTMENT PILES TO REFUSAL ON BEDROCK UNTIL AFTER THE ABOVE REQUIRED MSE WALL AND EMBANKMENT HAVE BEEN CONSTRUCTED AND A 30 CALENDAR DAY WAITING PERIOD HAS ELAPSED. THE ENGINEER MAY ADJUST THE LENGTH OF THE WAITING PERIOD BASED ON SETTLEMENT PLATFORM READINGS. AFTER THE SPECIFIED WAITING PERIOD HAS ELAPSED, DRIVE ABUTMENT PILES TO REFUSAL ON BEDROCK. IN ORDER TO REMOVE ANY NEGATIVE SKIN FRICTION THAT HAS DEVELOPED DURING THE WAITING PERIOD, DRIVE EACH ABUTMENT PILE A DISTANCE OF AT LEAST 0.5 INCH.

IF NOT PRE-DRIVING ABUTMENT PILES, INSTALL THE ABUTMENT PILES THROUGH PILE SLEEVES AFTER THE ABOVE REQUIRED MSE WALL AND EMBANKMENT HAVE BEEN CONSTRUCTED AND THE SPECIFIED WAITING PERIOD HAS ELAPSED.

PILES TO BEDROCK

DRIVE PILES TO REFUSAL ON BEDROCK. THE DEPARTMENT WILL CONSIDER REFUSAL TO BE OBTAINED WHEN THE PILE PENETRATION IS AN INCH OR LESS AFTER RECEIVING AT LEAST 20 BLOWS FROM THE PILE HAMMER. SELECT THE HAMMER SIZE TO ACHIEVE THE REQUIRED DEPTH TO BEDROCK AND REFUSAL.

THE TOTAL FACTORED LOAD IS 166 KIPS PER PILE FOR THE ABUTMENTS PILES.

REAR ABUTMENT PILES:
HP10x42 PILES 80 FEET LONG, ORDER LENGTH

FORWARD PIER PILES:
HP10x42 PILES 85 FEET LONG, ORDER LENGTH

PILE SPLICES

IN LIEU OF USING THE FULL PENETRATION BUTT WELDS SPECIFIED IN CMS 507.09 TO SPLICE STEEL H-PILES, THE CONTRACTOR MAY USE A MANUFACTURED H-PILE SPLICER. FURNISH SPLICERS FROM THE FOLLOWING MANUFACTURER:

ASSOCIATED PILE AND FITTING CORPORATION
8 WOOD HOLLOW RD. PLAZA 1
PARSIPPANY, NEW JERSEY 07054

INSTALL AND WELD THE SPLICER TO THE PILE SECTIONS IN ACCORDANCE WITH THE MANUFACTURER'S WRITTEN ASSEMBLY PROCEDURE SUPPLIED TO THE ENGINEER BEFORE THE WELDING IS PERFORMED.

PROPRIETARY RETAINING WALL DATA

THE PROPRIETARY WALL SUPPLIER SHALL DESIGN THE INTERNAL STABILITY OF A MECHANICALLY STABILIZED EARTH (MSE) WALL IN ACCORDANCE WITH SS840 TO SUPPORT THE ABUTMENT. THE DESIGN FOR INTERNAL STABILITY SHALL INCLUDE A NOMINAL (I.E. UNFACTORED) HORIZONTAL STRIP LOAD DUE TO FRICTION (FR) FROM THE SUPERSTRUCTURE OF 1.04 K/FT APPLIED PERPENDICULAR TO THE FACE OF WALL AT THE BASE OF THE CONCRETE FOOTING. THIS STRIP LOAD DOES NOT INCLUDE EARTH PRESSURE LOADS FROM THE ABUTMENT BACKFILL. HOWEVER, THE PROPRIETARY WALL SUPPLIER SHALL INCLUDE EARTH PRESSURE LOADS FROM THE ABUTMENT BACKFILL IN THE DESIGN CALCULATIONS.

FOUNDATION BEARING RESISTANCE

THE WALL 1 REINFORCED SOIL MASS, AS DESIGNED, PRODUCES A MAXIMUM SERVICE LIMIT STATE BEARING PRESSURE OF 6.51 KIPS PER SQUARE FOOT AND A MAXIMUM STRENGTH LIMIT STATE BEARING PRESSURE OF 9.20 KIPS PER SQUARE FOOT. THE FACTORED BEARING RESISTANCE IS 10.34 KIPS PER SQUARE FOOT.

THE WALL 2 REINFORCED SOIL MASS, AS DESIGNED, PRODUCES A MAXIMUM SERVICE LIMIT STATE BEARING PRESSURE OF 6.34 KIPS PER SQUARE FOOT AND A MAXIMUM STRENGTH LIMIT STATE BEARING PRESSURE OF 8.98 KIPS PER SQUARE FOOT. THE FACTORED BEARING RESISTANCE IS 9.36 KIPS PER SQUARE FOOT.

DECK PLACEMENT DESIGN ASSUMPTIONS

THE FOLLOWING ASSUMPTIONS OF CONSTRUCTION MEANS AND METHODS WERE MADE FOR THE ANALYSIS AND DESIGN OF THE SUPERSTRUCTURE. THE CONTRACTOR IS RESPONSIBLE FOR THE DESIGN OF THE FALSEWORK SUPPORT SYSTEM WITHIN THESE PARAMETERS AND WILL ASSUME RESPONSIBILITY FOR SUPERSTRUCTURE ANALYSIS FOR DEVIATION FROM THESE DESIGN ASSUMPTIONS.

AN EIGHT WHEEL FINISHING MACHINE WITH A MAXIMUM WHEEL LOAD OF 2.48 KIPS.

A MINIMUM OUT-TO-OUT WHEEL SPACING AT EACH END OF THE MACHINE OF 103 INCHES.

A MAXIMUM SPACING OF OVERHANG FALSEWORK BRACKETS OF 48 INCHES.

A MAXIMUM DISTANCE FROM THE CENTERLINE OF THE FASCIA GIRDER TO THE FACE OF THE SAFETY HANDRAIL OF 65 INCHES.

ABBREVIATIONS

ABUT.	- ABUTMENT
APPR.	- APPROACH
APPROX.	- APPROXIMATELY
B/	- BOTTOM OF
BOT.	- BOTTOM
BRG.	- BEARING
℄	- CENTERLINE
C/C	- CENTER TO CENTER
CJ	- CONSTRUCTION JOINT
CLR.	- CLEAR
CONST.	- CONSTRUCTION
DIA.	- DIAMETER
DWG.	- DRAWING
EF	- EACH FACE
EL.	- ELEVATION
EQ.	- EQUAL
EX.	- EXISTING
EXP	- EXPANSION
F.A.	- FORWARD ABUTMENT
F.F.	- FRONT FACE
℄	- FLOW LINE
HORIZ.	- HORIZONTAL
H.W.	- HIGH WATER
LT.	- LEFT
MAX	- MAXIMUM
MIN.	- MINIMUM
N.F.	- NEAR FACE
NO.	- NUMBER
O/O	- OUT TO OUT
OHW	- ORDINARY HIGH WATER MARK
PVMT.	- PAVEMENT
R.A.	- REAR ABUTMENT
REF.	- REFERENCE
RT.	- RIGHT
SHLD.	- SHOULDER
SP	- SETTLEMENT PLATFORM
SPA.	- SPACE
STA.	- STATION
STD.	- STANDARD
T/	- TOP OF
T/T	- TOE TO TOE
TEMP.	- TEMPORARY
TYP.	- TYPICAL
VERT.	- VERTICAL
YR.	- YEAR

DRAFT Stage 3 - Not for Construction 09/23/2024

U:\7360871\4\LAW\75923\structures\LAW007_0370C\sheets\007_75923CSN001.dgn 5/13/2024 8:39:55 AM JSnair

DESIGN AGENCY
Stantec Consulting Services Inc.
1500 Lake Shore Drive, Suite 100
Columbus, Ohio 43204
(614) 486-4383

DESIGNED	DRAWN	REVIEWED	DATE
BSM	JWS	MRS	03/2024
CHECKED	REVISED	STRUCTURE FILE NUMBER	
EDA		4400194	

GENERAL NOTES
BRIDGE NO. LAW-7-0370
S.R. 7 OVER C.R. 104 (BOOTHE EATON ROAD)

LAW-7-2.17
PID No. 75923

ITEM SPECIAL - SETTLEMENT PLATFORM:

DESCRIPTION: THIS ITEM CONSISTS OF FURNISHING, CONSTRUCTING, AND MAINTAINING SETTLEMENT PLATFORMS AND OBTAINING SETTLEMENT READINGS AS REQUIRED BY THE PLANS OR AS DIRECTED BY THE ENGINEER. SEE SETTLEMENT PLATFORM DETAIL THIS SHEET. AT THE OPTION AND EXPENSE OF THE CONTRACTOR, ADDITIONAL SETTLEMENT PLATFORMS MAY BE INSTALLED AT LOCATIONS APPROVED BY THE ENGINEER. SETTLEMENT READINGS SHALL BE TAKEN WEEKLY DURING CONSTRUCTION AND DURING THE SPECIFIED WAITING PERIOD BEGINNING WITH THE FIRST WEEK FOLLOWING PLACEMENT OF EACH PLATFORM. THE READINGS SHALL BE PLOTTED ON GRAPH PAPER PRESENTING DEFORMATION (ON THE NEGATIVE Y-AXIS) AND FILL HEIGHT (ON THE POSITIVE Y-AXIS) VERSUS TIME (ON THE X-AXIS). A COPY OF EACH CUMULATIVE PLOT SHALL BE SENT TO ODOT, CO, CONSTRUCTION MANAGEMENT/CONSTRUCTION ADMINISTRATION, GEOTECHNICAL AND EARTHWORK ENGINEER AND ODOT, CO, OFFICE OF GEOTECHNICAL ENGINEERING, FOUNDATIONS AND RETAINING WALLS ENGINEER, AFTER EACH SETTLEMENT READING IS RECORDED.

MATERIAL: SOUND LUMBER SUCH AS 3/4" EXTERIOR GRADE PLYWOOD SHALL BE USED FOR THE BASE. THE PIPE SHALL BE 2 1/2" STANDARD BLACK PIPE WITH THREADED FITTINGS AS SHOWN ON THE PLANS. A STEEL PLATE 36" X 36" X 1/8" MAY BE SUBSTITUTED FOR THE LUMBER FOR THE PLATFORMS, AT THE CONTRACTOR'S OPTION.

CONSTRUCTION METHODS: THE PLATFORM SHALL CONFORM TO THE SETTLEMENT PLATFORM DETAILS SHOWN ON THIS SHEET. THE PLATFORM SHALL BE SET ON A LEVEL SURFACE. THE PIPE SHALL BE FIRMLY SECURED TO THE PLATFORM AND SHALL BE MAINTAINED IN A PLUMB POSITION DURING THE PLACEMENT OF THE EMBANKMENT. THE PIPE SHALL BE MARKED AT INTERVALS TO FACILITATE MEASUREMENT OF THE DEPTH OF FILL. THE CONTRACTOR SHALL STOP WORK IN ANY LOCATION WHERE THE SETTLEMENT PLATFORM HAS BEEN DISTURBED OR DAMAGED. PLATFORMS OR PIPES DAMAGED OR DISPLACED DURING CONSTRUCTION SHALL BE RESTORED TO THEIR PROPER CONDITION AT THE CONTRACTOR'S EXPENSE.

SETTLEMENT PLATFORMS SHALL BE PLACED AT THE FOLLOWING LOCATIONS:

I.D.	STATION	OFFSET
SP1	194+60	50' RT.
SP2	195+35	32' RT.
SP3	196+35	32' RT.
SP4	197+00	50' RT.

PRIOR TO PAVING, THE TOP OF THE SETTLEMENT PLATFORM PIPE SHALL BE CUT OFF TWO FEET BELOW THE FINISHED SURFACE OF THE SUBGRADE OR FINISHED GROUND SURFACE, WHICHEVER IS APPLICABLE.

REFER TO ODOT GEOTECHNICAL BULLETIN GB4 "GUIDELINES FOR THE USE OF GEOTECHNICAL INSTRUMENTATION" FOR ADDITIONAL INSTALLATION AND MONITORING INSTRUCTION.

WAITING PERIOD CRITERIA: THE ENGINEER WILL CONSIDER THE WAITING PERIOD COMPLETE WHEN CONSECUTIVE SETTLEMENT READINGS, RECORDED AFTER EMBANKMENT CONSTRUCTION IS COMPLETE AND AT LEAST ONE WEEK (168 HOURS) APART, RESULT IN ELEVATION DIFFERENCES EQUAL TO OR LESS THAN 1/8 INCH. THE ESTIMATED WAITING PERIOD IS 30 CALENDAR DAYS.

IF SETTLEMENT RATES EXCEED 3/4 INCH PER MONTH AFTER EMBANKMENT CONSTRUCTION HAS BEEN COMPLETE FOR 30 CALENDAR DAYS, REMAINING CONSTRUCTION, INCLUDING ANY NECCESARY CORRECTIVE MEASURES, MAY PROCEED ONLY AT THE DIRECTION OF THE ENGINEER.

ITEM SPECIAL - SETTLEMENT PLATFORM: (CONT.):

THE DEPARTMENT WILL CONSIDER VIBRATING WIRE SETTLEMENT MONITORING PLATFORMS IN LIEU OF THE CONVENTIONAL SETTLEMENT PLATFORMS. THE CONTRACTOR SHOULD PROVIDE DETAILS OF THE PROPOSED VIBRATING WIRE SETTLEMENT PLATFORMS AS WELL AS DESIGN DRAWINGS OF THE PROPOSED 30 DAYS PRIOR TO CONSTRUCTION. THE DEPARTMENT WILL REQUIRE 10 WORKING DAYS FOR REVIEW AND APPROVAL. THE DESIGN DRAWINGS SHOULD ILLUSTRATE THE LOCATIONS WITH ALL EXISTING AND PROPOSED SITE FEATURES TO VERIFY THE PROPOSED CABLING WILL NOT CONFLICT WITH EXISTING FACILITIES, PROPOSED FACILITIES OR UTILITIES. NO ADDITIONAL PAYMENT WILL BE PROVIDED IF THE CONTRACTOR ELECTS TO UTILIZE VIBRATING WIRE SETTLEMENT PLATFORMS.

MORE INFORMATION PERTAINING TO EMBANKMENT CONSTRUCTION AND CONTROLLED RATES OF FILL ARE PROVIDED IN THE ROADWAY PLANS.

METHOD OF MEASUREMENT, THE NUMBER OF SETTLEMENT PLATFORMS TO BE PAID FOR SHALL BE THE ACTUAL NUMBER OF SETTLEMENT PLATFORMS COMPLETED, MAINTAINED, AND ACCEPTED BY THE ENGINEER.

BASIS OF PAYMENT: PAYMENT SHALL BE MADE AT THE CONTRACT UNIT PRICE EACH FOR "ITEM SPECIAL - SETTLEMENT PLATFORM" WHICH IS COMPENSATION FOR CONSTRUCTING, MAINTAINING, AND MONITORING THE SETTLEMENT PLATFORMS INCLUDING FURNISHING ALL LABOR, EQUIPMENT, MATERIALS, AND INCIDENTALS NECESSARY TO COMPLETE THE WORK. PAYMENT SHALL NOT BE MADE FOR SETTLEMENT PLATFORMS WHICH BECOME USELESS DUE TO DAMAGE CAUSED BY THE CONTRACTOR'S OPERATIONS. SEE DETAIL THIS SHEET.

APPROACH EMBANKMENT CONSTRUCTION:

THE APPROACH EMBANKMENTS SHALL BE CONSTRUCTED AND THEN UNDERGO AN ESTIMATED WAITING PERIOD OF 90 DAYS PRIOR.

TO DRIVING PILES, SEE SHEETS (X/X) AND (X/X) FOR

DETAILS AND NOTES REGARDING REINFORCED SLOPE AND EMBANKMENT AND CONSTRUCTION.

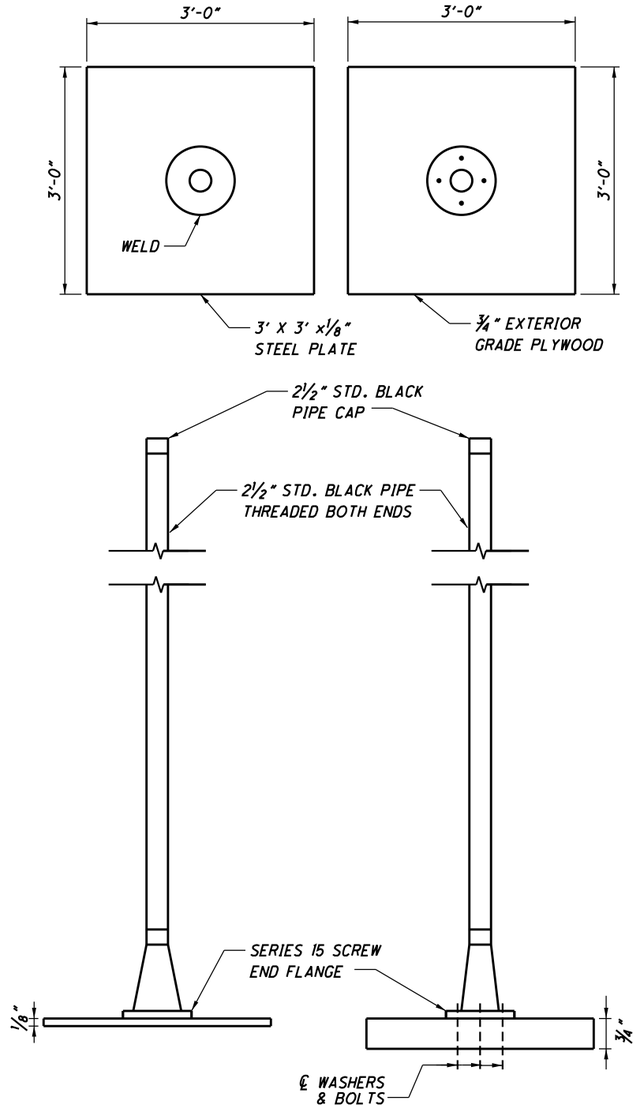

SETTLEMENT PLATFORM

(NOT TO SCALE)

NOTES:

1. SETTLEMENT PLATFORM SHALL BE ANCHORED BY STAKES DRIVEN AT EACH CORNER TO PREVENT OVERTURNING.

DRAFT Stage 3 - Not for Construction 09/23/2024

DESIGN AGENCY
Stantec Consulting Services Inc.
1500 Lake Shore Drive, Suite 100
Columbus, Ohio 43204
(614) 486-4383

DESIGNED BSM | DRAWN JWS | REVIEWED MRS | DATE 03/2024
CHECKED EDA | REVISED | STRUCTURE FILE NUMBER 4400194

GENERAL NOTES
BRIDGE NO. LAW-7-0370
S.R. 7 OVER C.R. 104 (BOOTHE EATON ROAD)

LAW-7-2.17
PID No. 75923

819
1247

U:\7360871\LAW\75923\structures\LAW007_0370C\sheets\007_75923CSN002.dgn 5/13/2024 8:39:56 AM JSnair

ESTIMATED QUANTITIES

CALCULATED BY: BSM 03/10/24
CHECKED BY: MRS 03/14/24

02/NHS/08	ITEM	EXTENSION	TOTAL	UNIT	DESCRIPTION	ABUT	SUPER.	GEN.	SEE SHEET
4	SPEC.	20365000	4	EACH	SETTLEMENT PLATFORM				3
LUMP	505	11100	LUMP	LS	PILE DRIVING EQUIPMENT MOBILIZATION				
2475	507	00100	2475	FT	STEEL PILES HP10X42, FURNISHED	2,475			
2325	507	00150	2325	FT	STEEL PILES HP10X42, DRIVEN	2,325			
73,926	509	10000	73,926	LB	EPOXY COATED STEEL REINFORCEMENT	12,053	39,855		
7034.75	509	30020	7034.75	FT	NO. 4 DEFORMED GFRP REINFORCEMENT				
2	511	33500	2	EA	SEMI-INTEGRAL DIAPHRAGM GUIDE	2			
220	511	34446	220	CY	CLASS QC2 CONCRETE WITH QC/QA, BRIDGE DECK		220		
26	511	34450	26	CY	CLASS QC2 CONCRETE WITH QC/QA, BRIDGE DECK (PARAPET)		26		
162	511	43512	162	CY	CLASS QC1 CONCRETE WITH QC/QA, ABUTMENT INCLUDING FOOTING	162			
662	512	10100	662	SY	SEALING OF CONCRETE SURFACES (EPOXY-URETHANE)	277	385		
5	515	15020	5	EACH	DRAPED STRAND PRESTRESSED CONCRETE BRIDGE I-BEAM MEMBERS, LEVEL 3, TYPE 4 84'-8"		5		
12	515	20000	12	EACH	INTERMEDIATE DIAPHRAGMS		12		
103	516	10010	103	FT	ARMORLESS PREFORMED JOINT SEAL			103	
266	516	13900	266	SF	2" PREFORMED EXPANSION JOINT FILLER	116		150	
124	516	14020	124	FT	SEMI-INTEGRAL ABUTMENT EXPANSION JOINT SEAL	124			
10	516	44100	10	EACH	ELASTOMERIC BEARING WITH INTERNAL LAMINATES AND LOAD PLATE (NEOPRENE) (2.063"x12"x25")	10			
95	518	21200	95	CY	POROUS BACKFILL WITH GEOTEXTILE FABRIC	95			
139	518	40000	139	FT	6" PERFORATED CORRUGATED PLASTIC PIPE	139			
14	518	40010	14	FT	6" NON-PERFORATED CORRUGATED PLASTIC PIPE, INCLUDING SPECIALS	14			
302	526	30011	302	SY	REINFORCED CONCRETE APPROACH SLABS WITH QC/QA (T=17"), AS PER PLAN			302	18&19/26
103	526	90030	103	FT	TYPE C INSTALLATION			103	
3	611	99114	3	EACH	INLET, NO. 3 FOR SINGLE SLOPE BARRIER, TYPE D			3	
4	622	25000	4	EACH	CONCRETE BARRIER END SECTION, TYPE D			4	
4	622	90200	4	EACH	BARRIER, MISC.: SINGLE SLOPE CONCRETE BRIDGE RAILING WITH MOMENT SLAB			4	

NOTE:
FOR RETAINING WALL QUANTITIES, SEE SHEET 28/28.

DRAFT Stage 3 - Not for Construction 09/23/2024

DESIGN AGENCY
Stantec Consulting Services Inc.
1500 Lake Shore Drive, Suite 100
Columbus, Ohio 43204
(614) 486-4383

DESIGNED	DRAWN	REVIEWED	DATE
BSM	JWS	MRS	03/2024
CHECKED	REVISED	STRUCTURE FILE NUMBER	
EDA		4400194	

ESTIMATED QUANTITIES
BRIDGE NO. LAW-7-0370
S.R. 7 OVER C.R. 104 (BOOTHE EATON ROAD)

LAW-7-2.17
PID No. 75923

4 / 28

820
1247

U:\73608714\LAW\75923\structures\LAW007_0370C\sheets\007_75923CS000l.dgn 5/14/2024 12:15:58 PM bmcneal

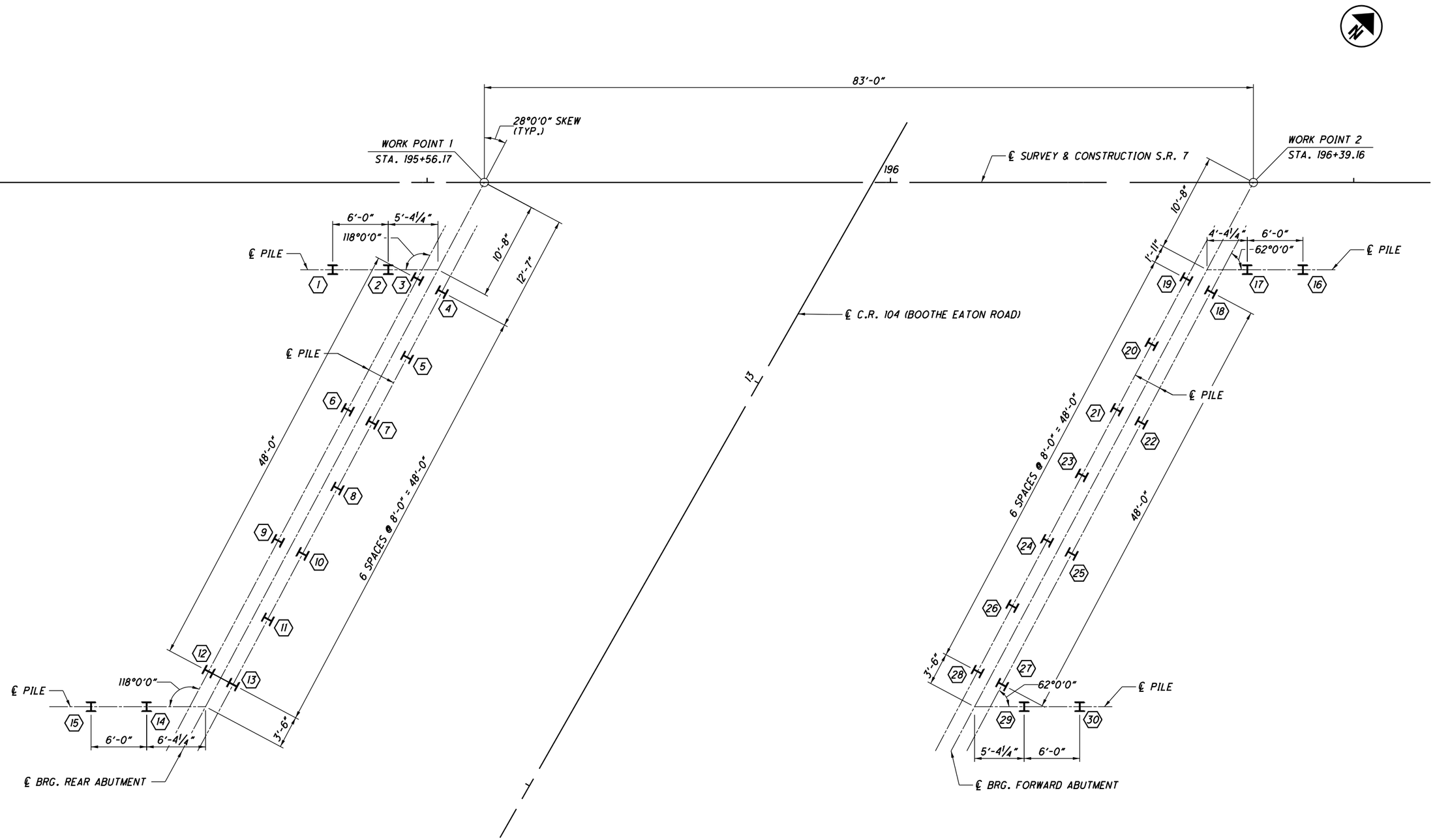

PLAN

NOTES:
1. ALL PILES ARE HP10x42.
2. ⟨5⟩ DESIGNATES PILE NUMBER AND LOCATION.
3. ALL PILES TO BE SLEEVED THROUGH PROPOSED MSE WALL SELECT GRANULAR BACKFILL.

DRAFT Stage 3 - Not for Construction 09/23/2024

DESIGN AGENCY
Stantec Consulting Services Inc.
1500 Lake Shore Drive, Suite 100
Columbus, Ohio 43204
(614) 486-4383

DESIGNED	DRAWN	REVIEWED	DATE
BSM	JWS	MRS	03/2024
CHECKED	REVISED	STRUCTURE FILE NUMBER	
EDA		4400194	

FOUNDATION PLAN
BRIDGE NO. LAW-7-0370
S.R. 7 OVER C.R. 104 (BOOTHE EATON ROAD)

LAW-7-2.17
PID No. 75923

5 / 28

821
1247

U:\173608714\LAW\75923\structures\LAW007_0370C\sheets\007_75923CS0001.dgn 5/13/2024 8:39:58 AM JSnair

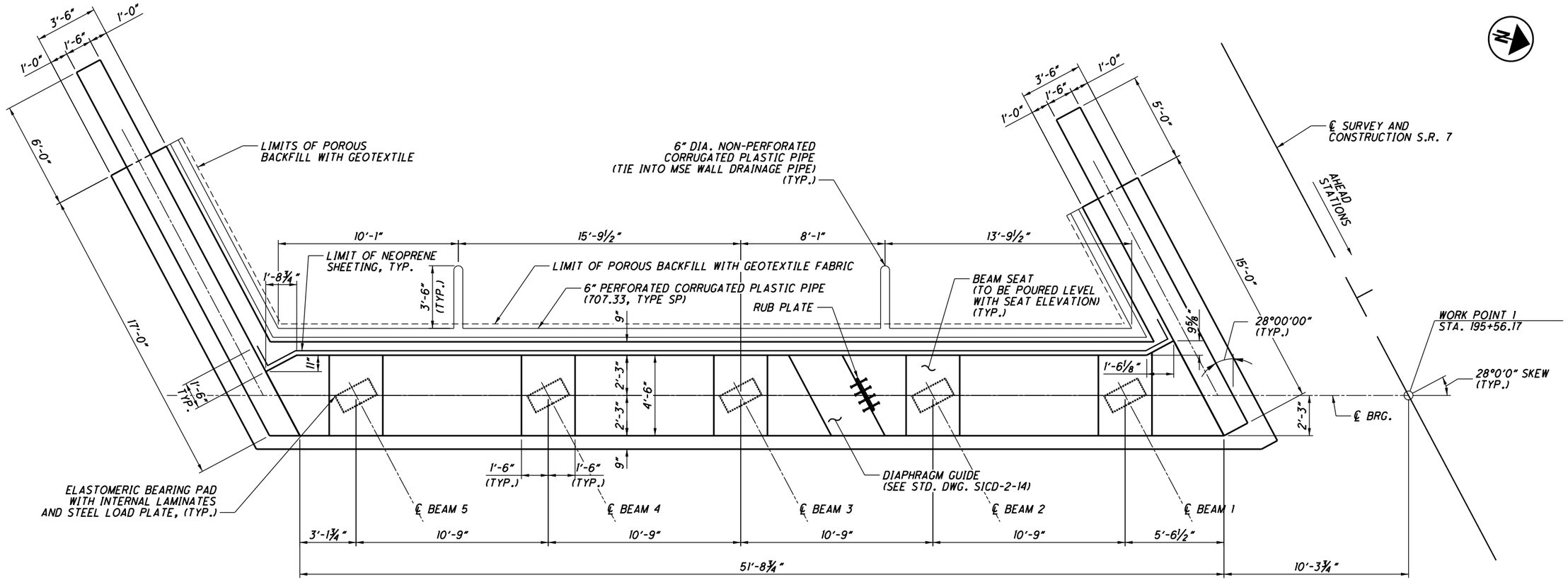

PLAN
(MSE WALL NOT SHOWN)

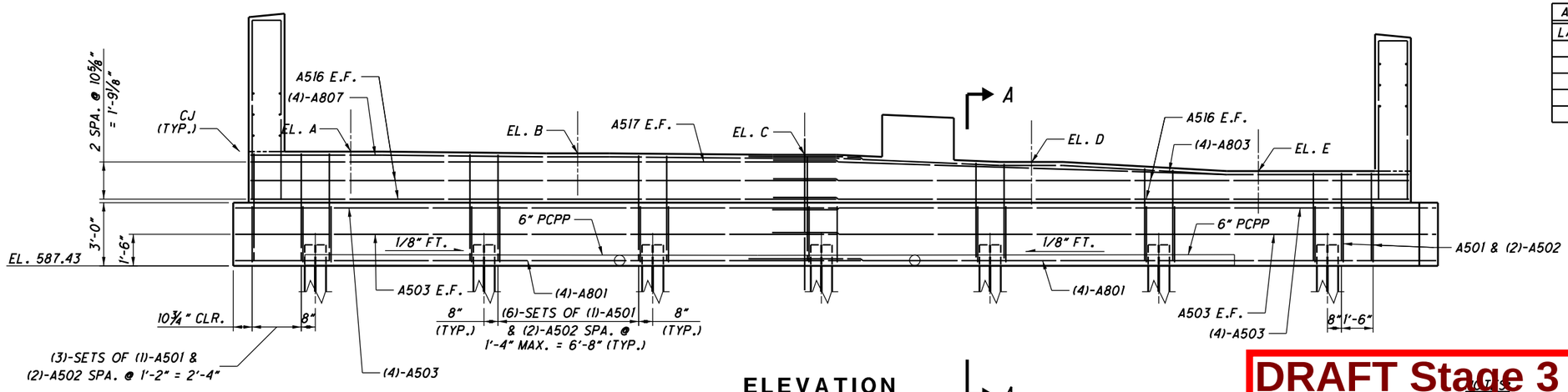

ELEVATION

LAP LENGTHS:
#5 BARS = 3'-0"
#8 BARS = 5'-4"

ABUTMENT ELEVATIONS	
LABEL	ELEVATION
A	592.85
B	592.77
C	592.70
D	592.36
E	591.93

NOTES:
1. FOR PILE LOCATIONS, SEE SHEET 5/28.
2. FOR FOOTING PLAN, SEE SHEET 7/28.
3. FOR SECTION A-A, SEE SHEET 7/28.

DRAFT Stage 3 - Not for Construction

09/23/2024

DESIGN AGENCY
Stantec Consulting Services Inc.
1500 Lake Shore Drive, Suite 100
Columbus, Ohio 43204
(614) 486-4383

DESIGNED	DRAWN	REVIEWED	DATE
BSM	JWS	MRS	04/2022
CHECKED	REVISED	STRUCTURE FILE NUMBER	
EDA		4400194	

REAR ABUTMENT
BRIDGE NO. LAW-7-0370
S.R. 7 OVER C.R. 104 (BOOTHE EATON ROAD)

LAW-7-2.17
PID No. 75923

6 / 28

822
1247

5/13/2024 8:40:00 AM JSnair
U:\173608714\LAW\75923\structures\LAW007_0370C\sheets\007_75923CSR00I.dgn

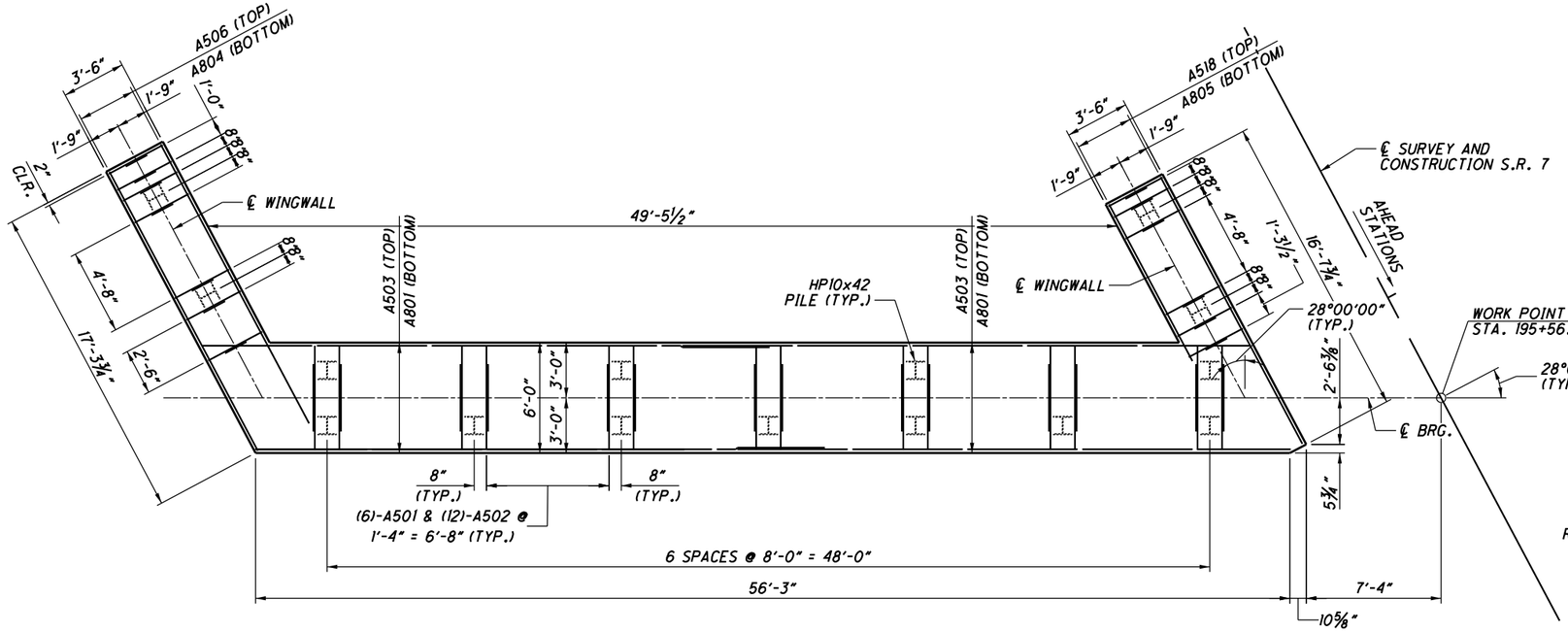

FOOTING PLAN

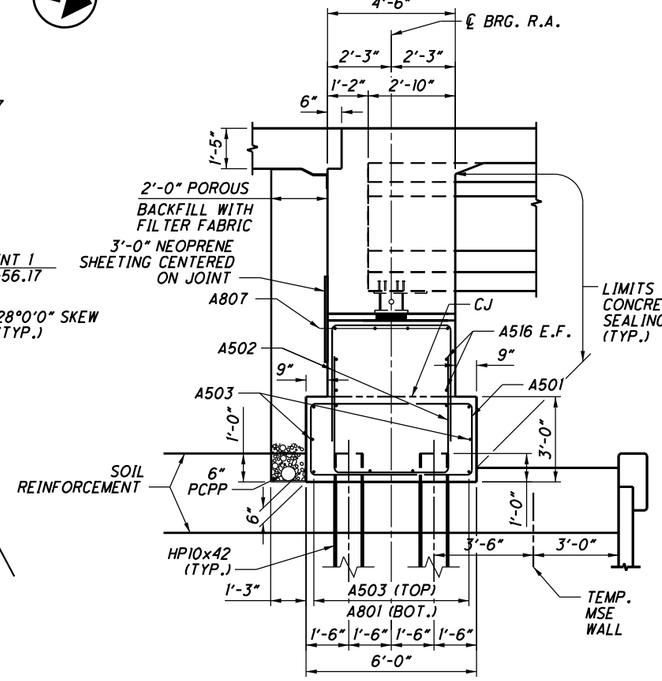

SECTION A-A

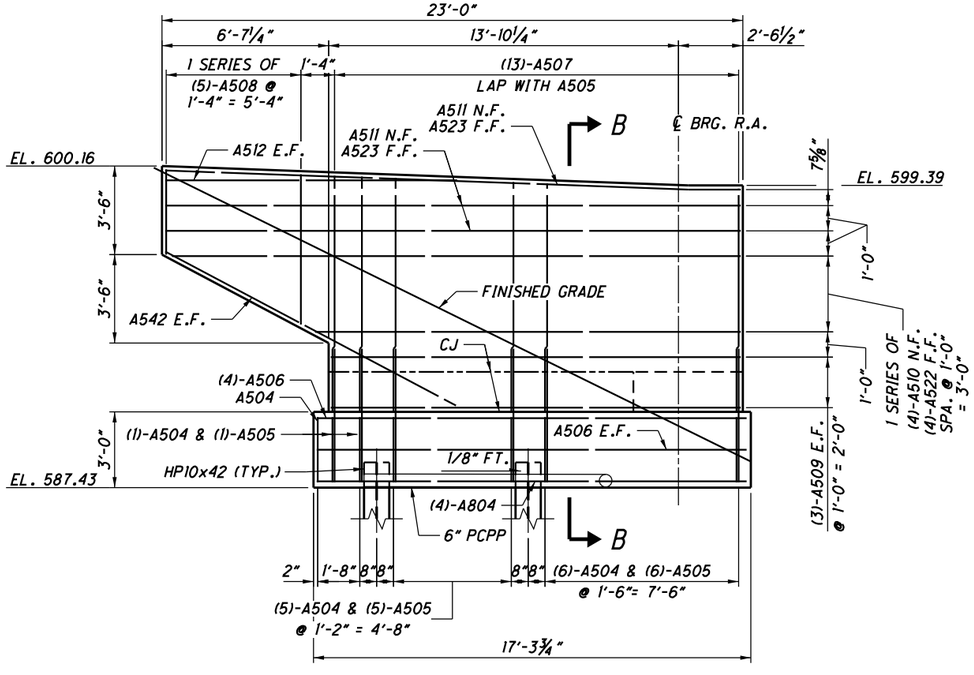

SOUTH WINGWALL

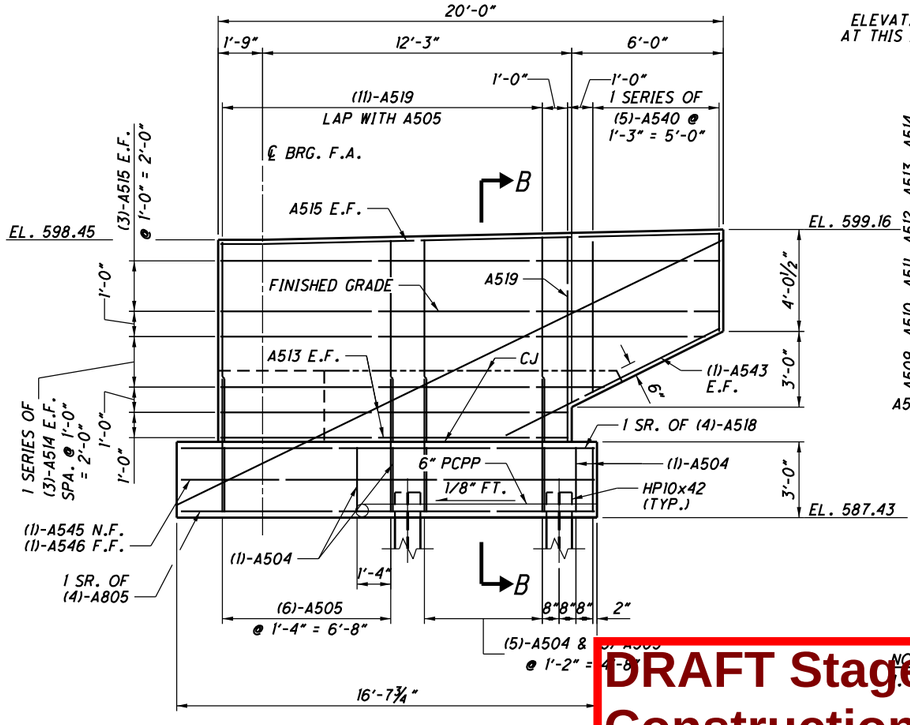

NORTH WINGWALL

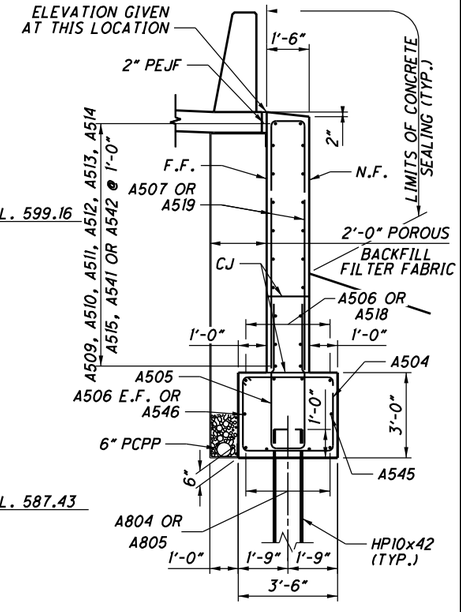

SECTION B-B

NOTE:
FOR PILE LOCATION, SEE SHEET 5/28

LAP LENGTHS:
#6 BARS = 4'-0"
#8 BARS = 5'-4"

DRAFT Stage 3 - Not for Construction 09/23/2024

DESIGN AGENCY
Stantec Consulting Services Inc.
1500 Lake Shore Drive, Suite 100
Columbus, Ohio 43204
(614) 486-4383

DESIGNED	DRAWN	REVIEWED	DATE
BSM	JWS	MRS	04/2022
CHECKED	REVISED	STRUCTURE FILE NUMBER	
EDA		4400194	

REAR ABUTMENT DETAILS
BRIDGE NO. LAW-7-0370
S.R. 7 OVER C.R. 104 (BOOTHE EATON ROAD)

LAW-7-2.17
PID No. 75923

7 / 28

823
1247

U:\7360871\4\LAW\75923\structures\LAW007_0370C\sheets\007_75923CSR002.dgn 5/13/2024 8:40:01 AM JSnair

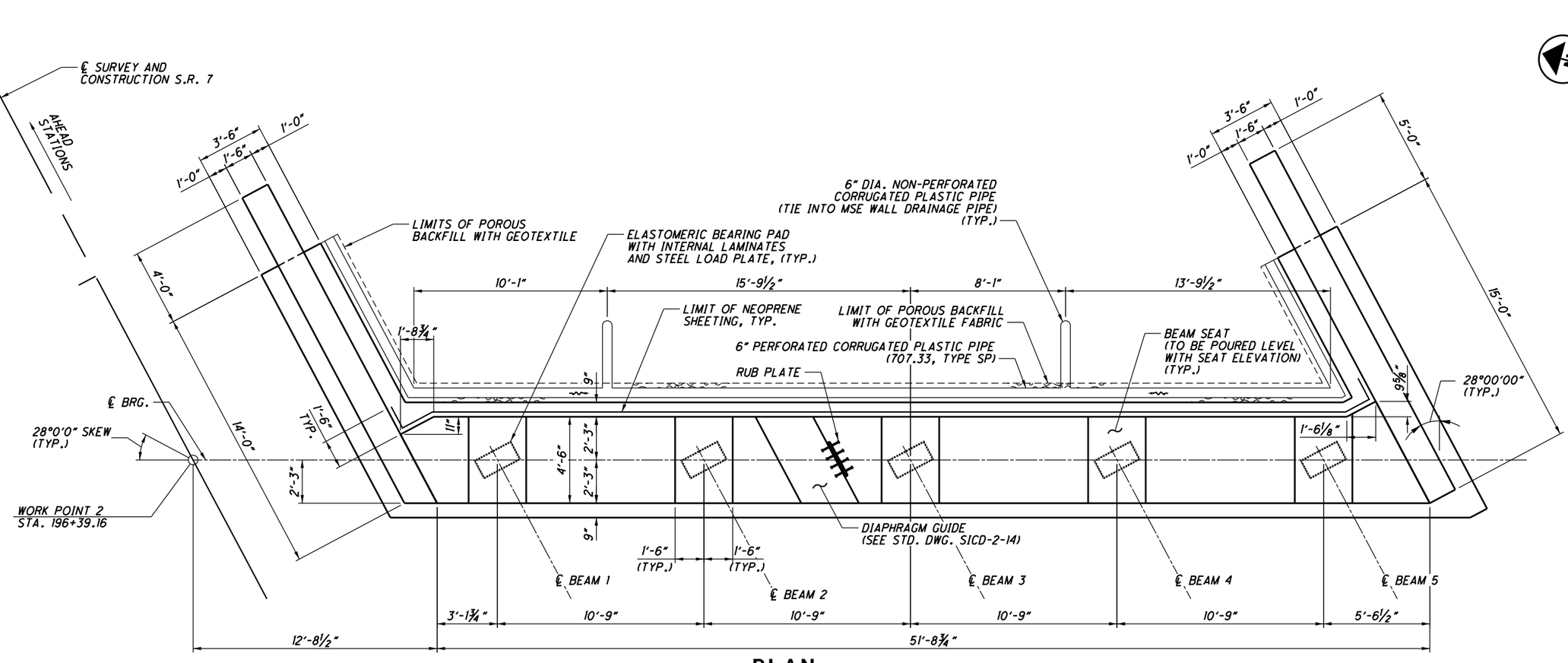

PLAN
(MSE WALL NOT SHOWN)

ABUTMENT ELEVATIONS	
LABEL	ELEVATION
A	589.21
B	589.15
C	589.08
D	588.90
E	588.69

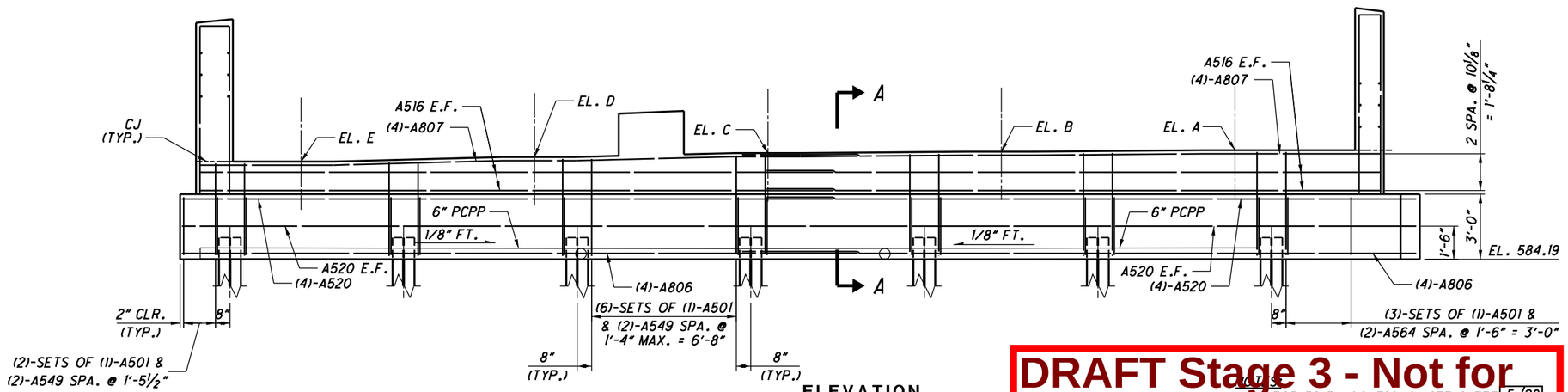

ELEVATION

LAP LENGTHS:
#5 BARS = 3'-0"
#8 BARS = 5'-4"

NOTES:
1. FOR PILE LOCATIONS, SEE SHEET 5/28.
2. FOR FOOTING PLAN, SEE SHEET 9/28.
3. FOR SECTION A-A, SEE SHEET 9/28.

DRAFT Stage 3 - Not for Construction

09/23/2024

DESIGN AGENCY
Stantec Consulting Services Inc.
1500 Lake Shore Drive, Suite 100
Columbus, Ohio 43204
(614) 486-4383

DESIGNED	DRAWN	REVIEWED	DATE
BSM	JWS	MRS	03/2024
CHECKED	REVISED	STRUCTURE FILE NUMBER	
EDA		4400194	

FORWARD ABUTMENT
BRIDGE NO. LAW-7-0370
S.R. 7 OVER C.R. 104 (BOOTHE EATON ROAD)

LAW-7-2.17
PID No. 75923

8 / 28

824
1247

U:\1736087f4\LAW\75923\structures\LAW007_0370C\sheets\007_75923CSF001.dgn 5/13/2024 8:40:02 AM JSnair

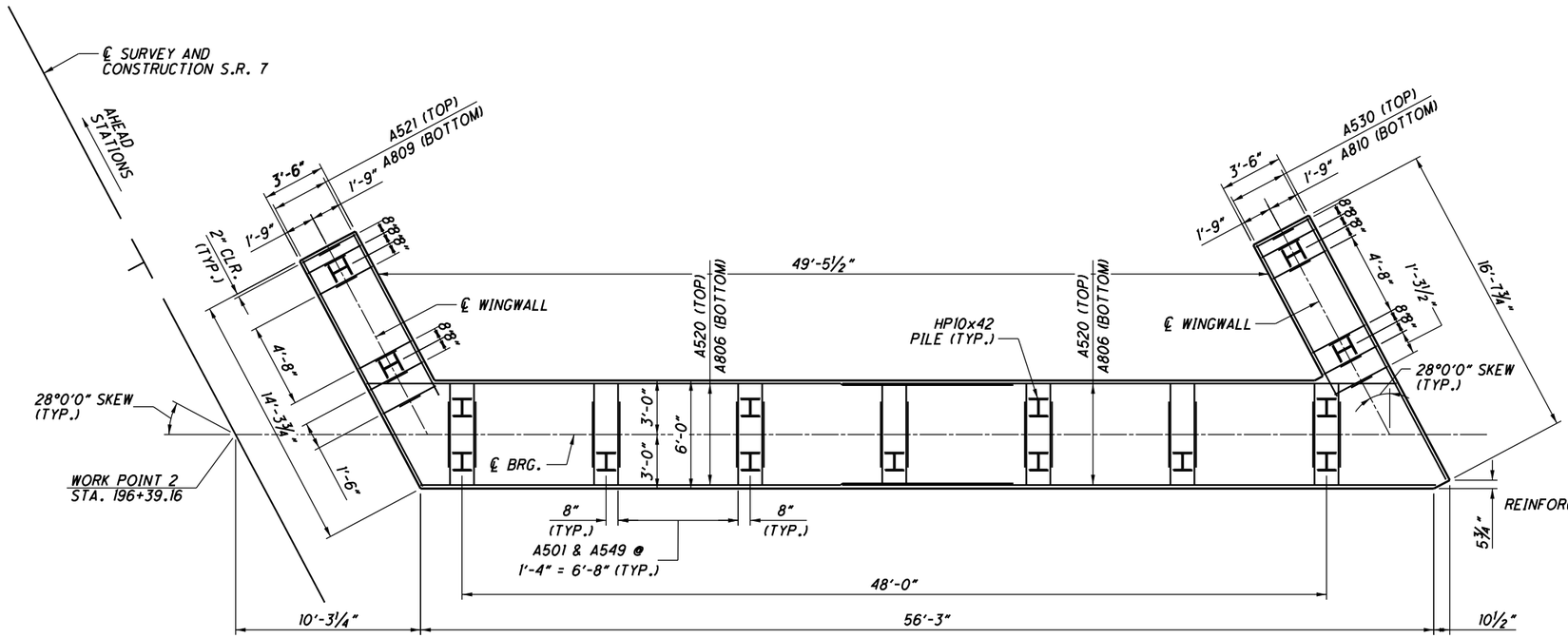

FOOTING PLAN

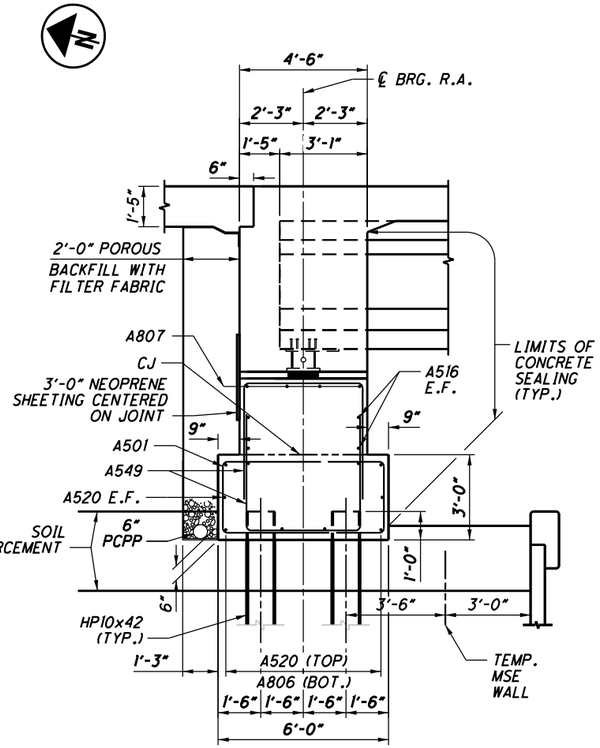

SECTION A-A

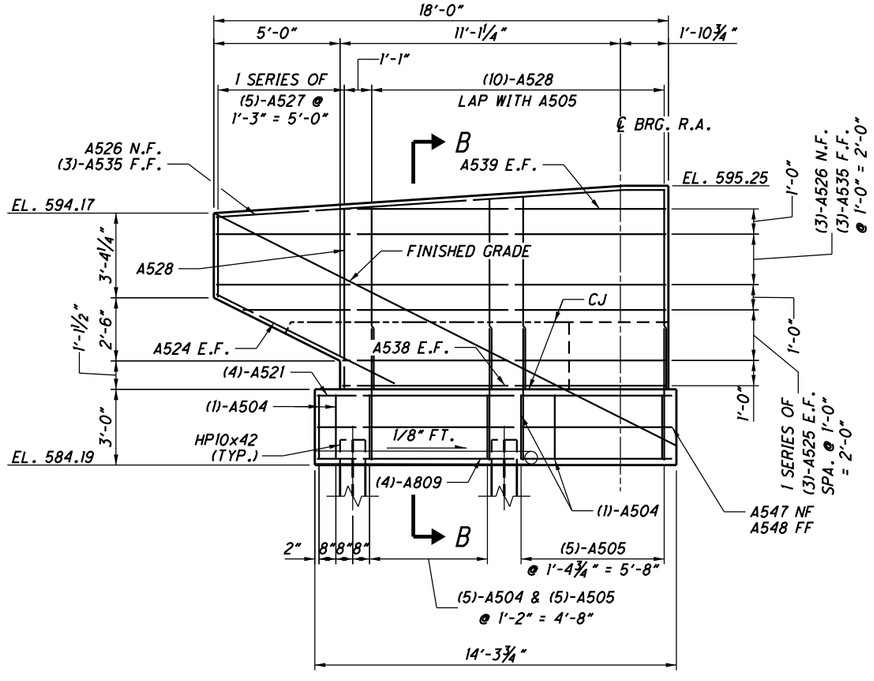

NORTH WINGWALL

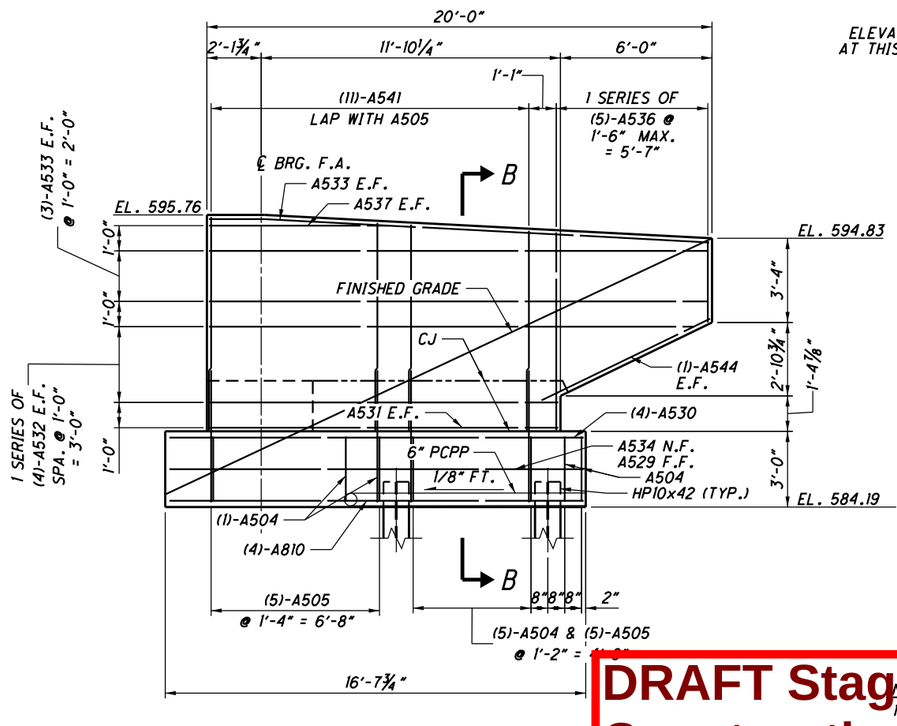

SOUTH WINGWALL

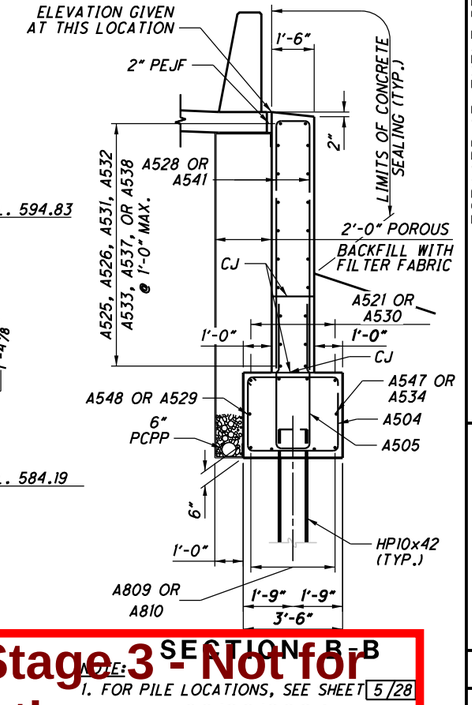

SECTION B-B

NOTE:
1. FOR PILE LOCATIONS, SEE SHEET 5/28

#5 BARS = 3'-0"
#8 BARS = 5'-4"

DRAFT Stage 3 - Not for Construction 09/12/2024

DESIGN AGENCY
Stantec Consulting Services Inc.
1500 Lake Shore Drive, Suite 100
Columbus, Ohio 43204
(614) 486-4383

DESIGNED	DRAWN	REVIEWED	DATE
BSM	JWS	MRS	04/2022
CHECKED	REVISED	STRUCTURE FILE NUMBER	
EDA		4400194	

FORWARD ABUTMENT DETAILS
BRIDGE NO. LAW-7-0370
S.R. 7 OVER C.R. 104 (BOOTHE EATON ROAD)

LAW-7-2.17
PID No. 75923

9 / 28

825 / 1247

U:\173608714\LAW\75923\structures\LAW007_0370C\sheets\007_75923CSF002.dgn 5/13/2024 8:40:03 AM JSnair

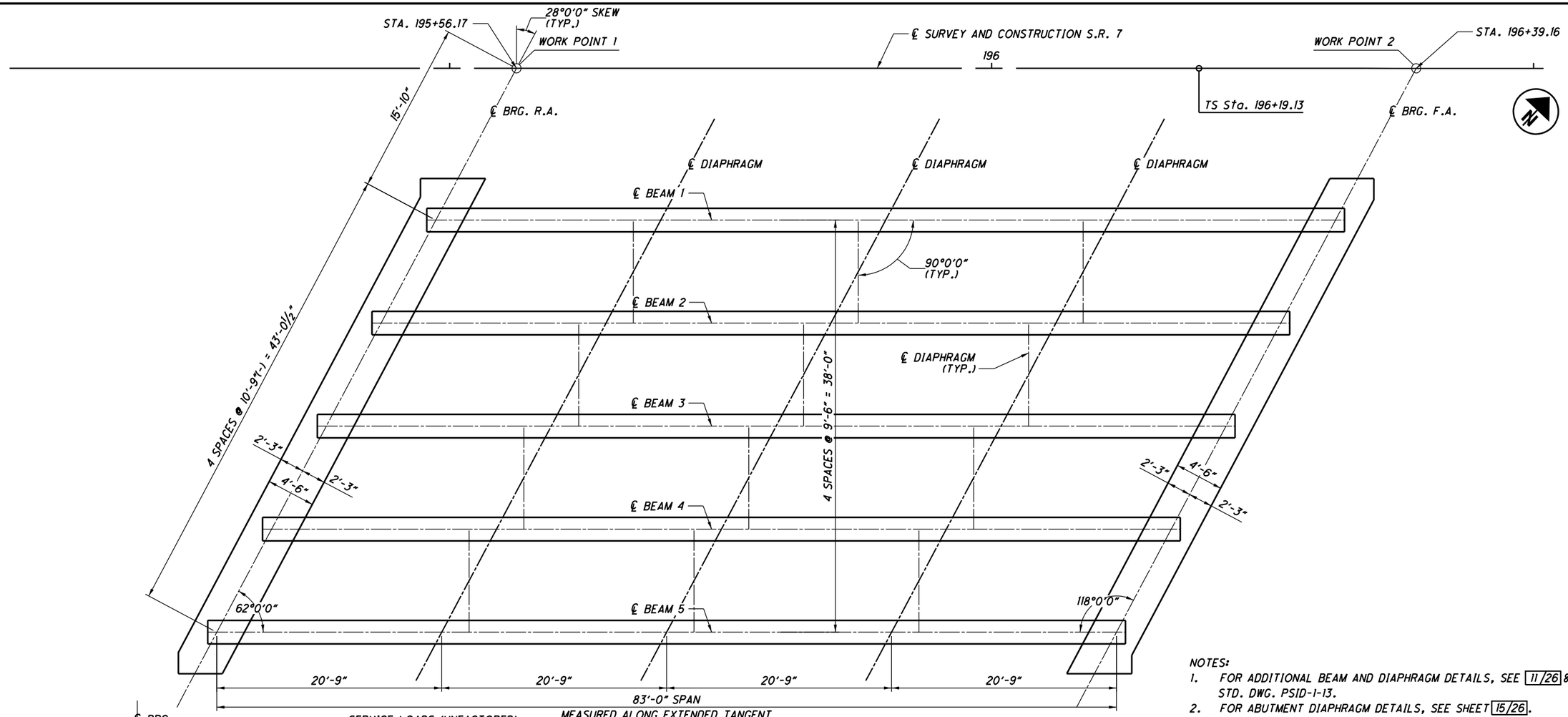

FRAMING PLAN

NOTES:

1. FOR ADDITIONAL BEAM AND DIAPHRAGM DETAILS, SEE 11/26 & STD. DWG. PSID-1-13.
2. FOR ABUTMENT DIAPHRAGM DETAILS, SEE SHEET 15/26.

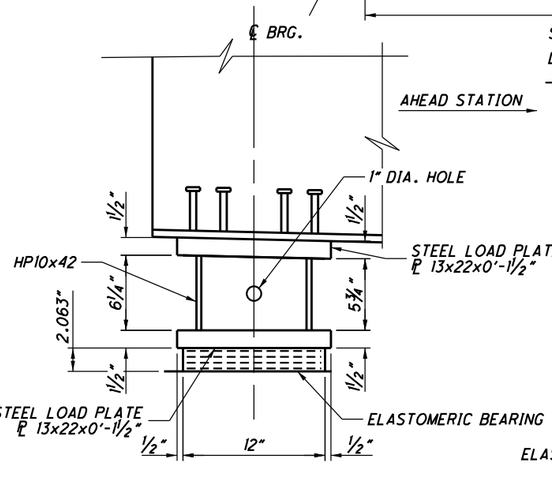

SECTION A-A

SERVICE LOADS (UNFACTORED)
DEAD LOAD REACTION = 123 K
LIVE LOAD REACTION = 54 K
TOTAL REACTION = 177 K

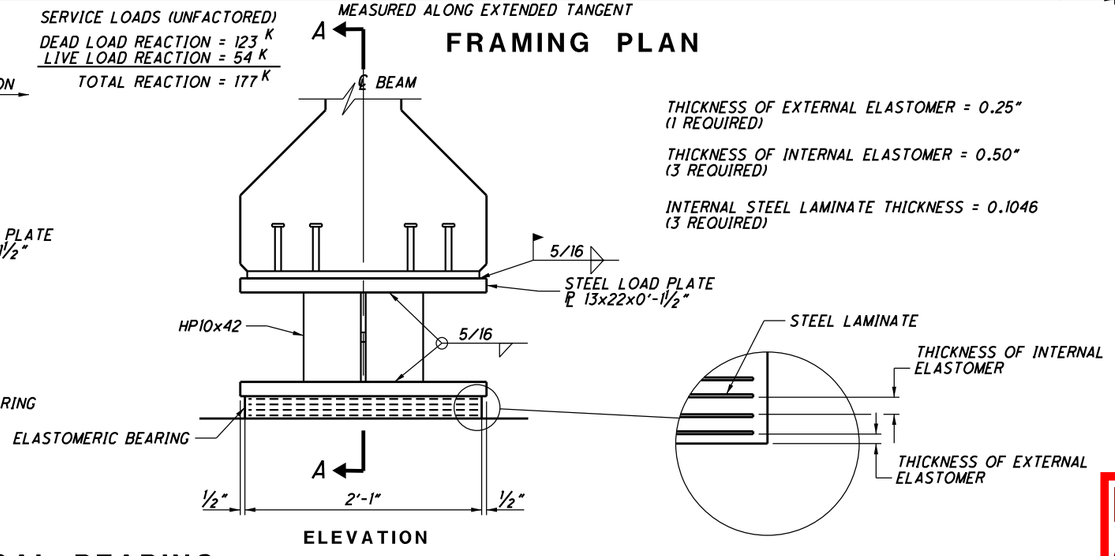

ELEVATION

TYPICAL BEARING

(10 REQUIRED)

BEARING NOTES:

1. ELASTOMERIC BEARINGS: THE ELASTOMER SHALL HAVE A HARDNESS OF 50 DUROMETER. THE BEARINGS WERE DESIGNED IN ACCORDANCE WITH SECTION 14.7.6 (METHOD A) OF THE AASHTO LRFD BRIDGE DESIGN SPECIFICATIONS. THE LONG TERM COMPRESSION PROOF LOAD TEST (AASHTO STANDARD SPECIFICATIONS FOR HIGHWAY BRIDGES, DIVISION II, SECTION 18.7.2.6) IS NOT REQUIRED.
2. STEEL LOAD PLATES: LOAD PLATES SHALL BE A709 GRADE 50 STRUCTURAL STEEL, GALVANIZED PER CMS 711.02, AND BONDED BY VULCANIZATION TO THE ELASTOMER DURING THE MOLDING PROCESS.
3. FOR DETAILS OF THE STUDS AND EMBEDDED PLATE, AND FOR ADDITIONAL INFORMATION, SEE STD. DWG. PSID-1-13.
4. ALL BEARINGS SHALL BE MARKED PRIOR TO SHIPPING. THE MARKS SHALL INCLUDE THE BEARING LOCATION ON THE BRIDGE, AND A DIRECTION ARROW THAT POINTS UP-STATION. ALL MARKS SHALL BE PERMANENT AND BE VISIBLE AFTER THE BEARING IS INSTALLED.
5. BASIS OF PAYMENT: THE UNIT BID PRICE SHALL INCLUDE ALL MATERIALS, LABOR, TESTING, H-PILE, AND INCIDENTALS NECESSARY TO FURNISH AND INSTALL COMPLETE ELASTOMERIC BEARINGS AS DETAILED. PAYMENT WILL BE MADE AT THE CONTRACT PRICE FOR ITEM 516, EACH, ELASTOMERIC BEARING WITH INTERNAL LAMINATES AND LOAD PLATE (NEOPRENE), AS PER PLAN.

DRAFT Stage 3 - Not for Construction 09/23/2024

DESIGN AGENCY
Stantec Consulting Services Inc.
1500 Lake Shore Drive, Suite 100
Columbus, Ohio 43204
(614) 486-4383

DESIGNED	DRAWN	REVIEWED	DATE
BSM	JWS	MRS	04/2022
CHECKED	REVISED	STRUCTURE FILE NUMBER	
EDA		4400194	

FRAMING PLAN & BEARING DETAILS
BRIDGE NO. LAW-7-0370
S.R. 7 OVER C.R. 104 (BOOTHE EATON ROAD)

LAW-7-2.17
PID No. 75923

10 / 28

826
1247

U:\175608714\LAW\75923\structures\LAW007_0370C\sheets\007_75923CSG001.dgn 5/13/2024 8:40:05 AM JSnair

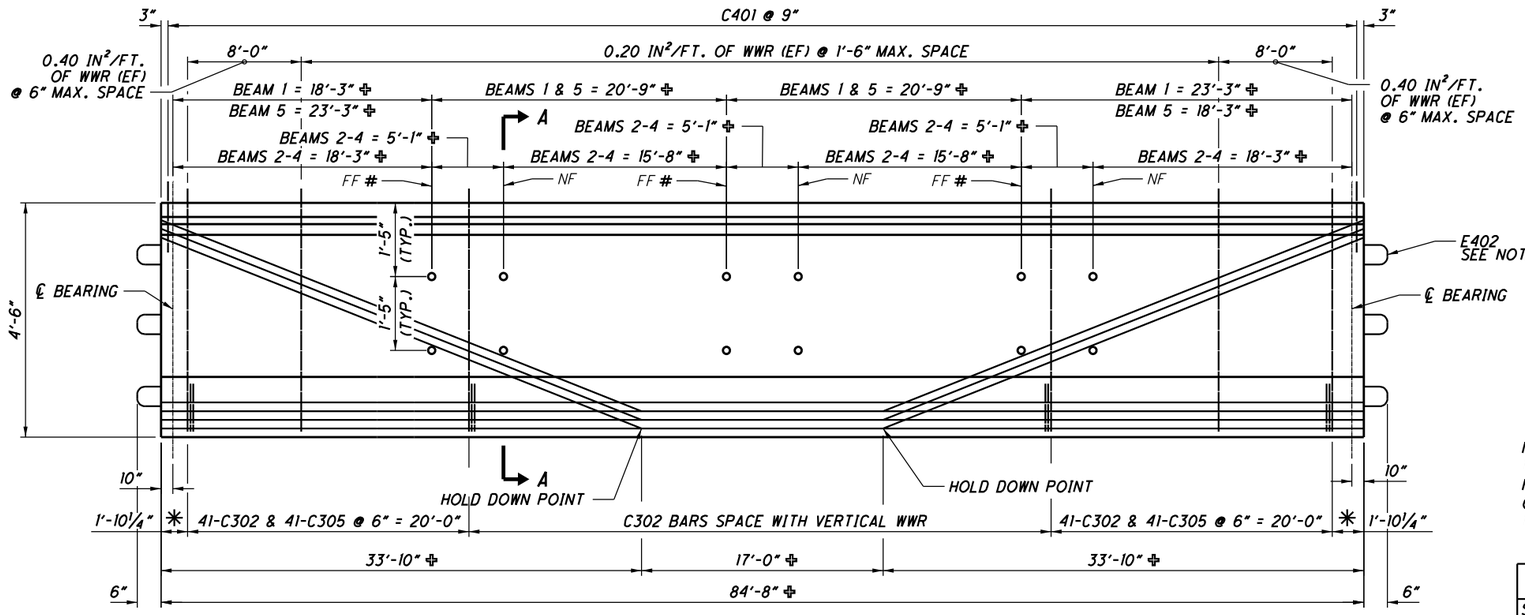

✳ ANCHORAGE ZONE REINFORCING, SEE DETAIL
\# NEAR FACE FOR BEAM 1 AND FAR FACE FOR BEAMS 2-5

BEAM ELEVATION

VERTICAL SCALE EXAGGERATED

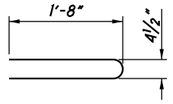

E402

NOTE TO FABRICATOR:
THE DIMENSIONS MEASURED ALONG THE LENGTH OF THE BEAM, MARKED WITH A ✣, DO NOT CONTAIN AN ALLOWANCE FOR THE EFFECT OF THE LONGITUDINAL GRADE. INCLUDE THE PROPER ALLOWANCE FOR THESE DIMENSIONS INTHE SHOP DRAWINGS.

NUMBER OF STRANDS PER ROW									CONCRETE STRENGTH (KSI)	
SECTION	①	②	③	④	⑤	⑥	⑦	TOTAL	f'ci	f'cf
END	8	8	8	4	1	1	1	31	5.0	7.0
MID	9	9	9	4	-	-	-	31		

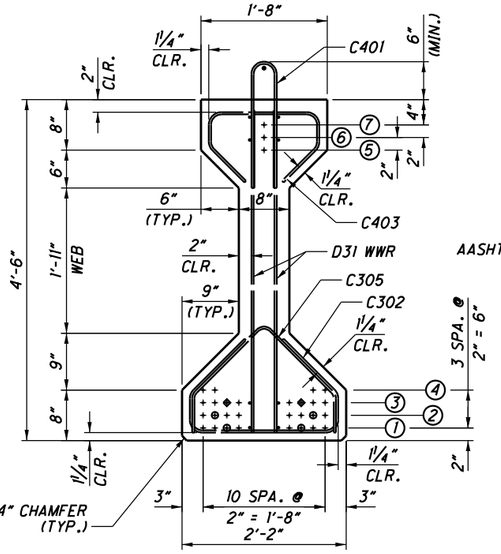

END BEAM SECTION

○ - DEBOND 15'-0" AT EACH END
◇ - DEBOND 7'-6" EACH END

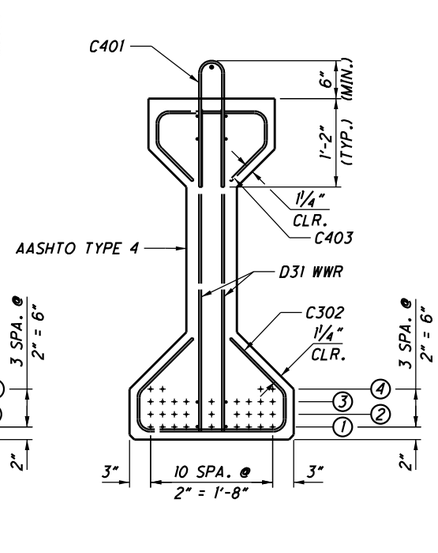

MIDSPAN BEAM SECTION

CAST (2)-1 1/4" DIA. HOLES @ 4" IN WEB WITH SLEEVE AT INTERMEDIATE DIAPHRAGM LOCATIONS, INSTEAD OF THREADED INSERTS.

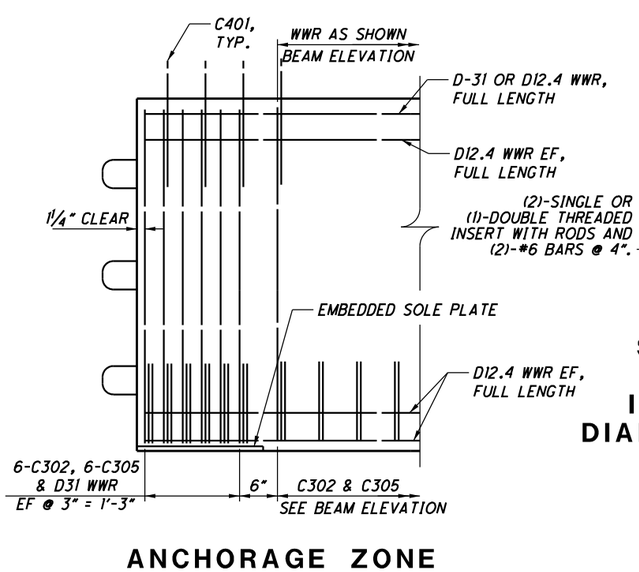

ANCHORAGE ZONE REINFORCING

STRANDS NOT SHOWN FOR CLARITY

(2)-SINGLE OR (1)-DOUBLE THREADED INSERT WITH RODS AND (2)-#6 BARS @ 4". (TYP.)

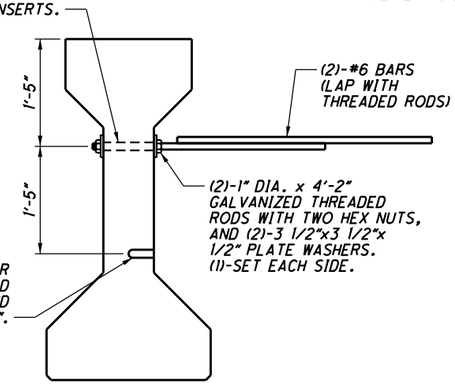

SECTION A-A CONCRETE INTERMEDIATE DIAPHRAGM DETAIL

(TYPICAL BEAMS 1 AND 5)

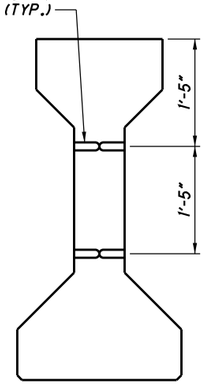

SECTION A-A CONCRETE INTERMEDIATE DIAPHRAGM DETAIL

(TYPICAL BEAMS 2 THRU 4)

NOTES:
1. WWR DENOTES WELDED WIRE REINFORCEMENT.
2. SEE STD. DWG. BSID-I-13 FOR ADDITIONAL DETAILS.
3. STRANDS ARE TO BE LOW RELAXATION, 0.6 INCH DIAMETER, A = 0.217 SQ. INCH, SEVEN WIRE UNCOATED, ASTM A416, GRADE 270.
4. PROVIDE 3-E402 BARS ON CENTERLINE OF BEAM AT THE ABUTMENT ENDS OF BEAMS 2 THRU 5. BARS TO BE EPOXY COATED.

DRAFT Stage 3 - Not for Construction 09/23/2024

DESIGN AGENCY
Stantec Consulting Services Inc.
1500 Lake Shore Drive, Suite 100
Columbus, Ohio 43204
(614) 486-4383

DESIGNED	DRAWN	REVIEWED	DATE
BSM	JWS	MRS	03/2024
CHECKED	REVISED	STRUCTURE FILE NUMBER	
EDA		4400194	

AASHTO TYPE 4 BEAM DETAILS

BRIDGE NO. LAW-7-0370
S.R. 7 OVER C.R. 104 (BOOTHE EATON ROAD)

LAW-7-2.17
PID No. 75923

11 / 28

827 / 1247

U:\173608714\LAW\75923\structures\LAW007_0370C\sheets\007_75923CSD003.dgn 5/13/2024 8:40:06 AM JSnair

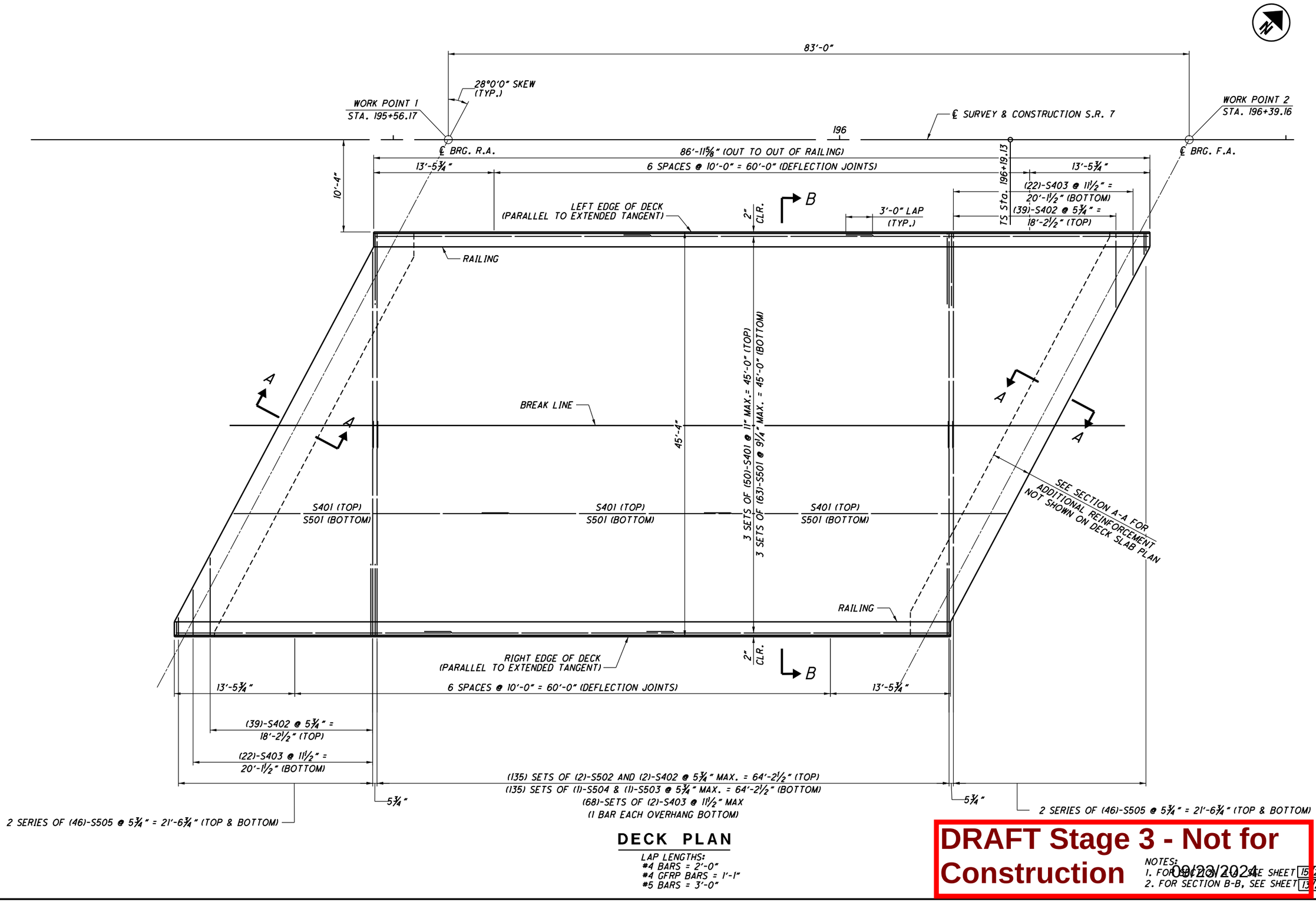

DECK PLAN

LAP LENGTHS:
#4 BARS = 2'-0"
#4 GFRP BARS = 1'-1"
#5 BARS = 3'-0"

NOTES:
1. FOR SECTION A-A, SEE SHEET 15/28.
2. FOR SECTION B-B, SEE SHEET 13/28.

DRAFT Stage 3 - Not for Construction

09/22/2024

DESIGN AGENCY
Stantec Consulting Services Inc.
1500 Lake Shore Drive, Suite 100
Columbus, Ohio 43204
(614) 486-4383

DESIGNED	DRAWN	REVIEWED	DATE
BSM	JWS	MRS	04/2022
CHECKED	REVISED	STRUCTURE FILE NUMBER	
EDA		4400194	

DECK PLAN
BRIDGE NO. LAW-7-0370
S.R. 7 OVER C.R. 104 (BOOTHE EATON ROAD)

LAW-7-2.17
PID No. 75923

12/28

828
1247

U:\173608714\LAW\75923\structures\LAW007_0370C\sheets\007_75923CSD001.dgn 5/13/2024 8:40:08 AM JSnair

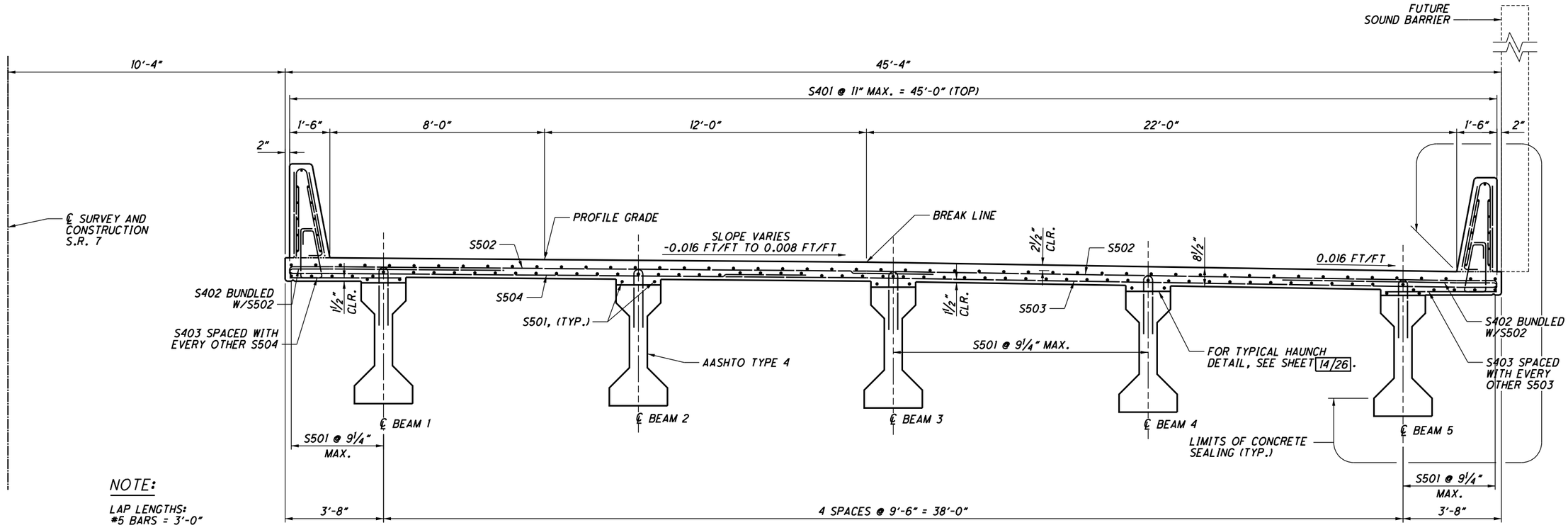

NOTE:

LAP LENGTHS:
#5 BARS = 3'-0"

SECTION B-B

NOTES:
FOR RAILINGS, LONGITUDINAL SECTIONS, HAUNCH AND SUPERELEVATION TRANSITION DETAILS, SEE SHEET 14/28.

DRAFT Stage 3 - Not for Construction 09/23/2024

DESIGN AGENCY
Stantec Consulting Services Inc.
1500 Lake Shore Drive, Suite 100
Columbus, Ohio 43204
(614) 486-4383

DESIGNED	DRAWN	REVIEWED	DATE
BRS	JWS	MRS	04/2022
CHECKED	REVISED	STRUCTURE FILE NUMBER	
EDA		4400194	

TRANSVERSE SECTION
BRIDGE NO. LAW-7-0370
S.R. 7 OVER C.R. 104 (BOOTHE EATON ROAD)

LAW-7-2.17
PID No. 75923

13/28

829/1247

U:\173608714\LAW\75923\structures\LAW007_0370C\sheets\007_75923CST001.dgn 5/13/2024 8:40:09 AM JSnair

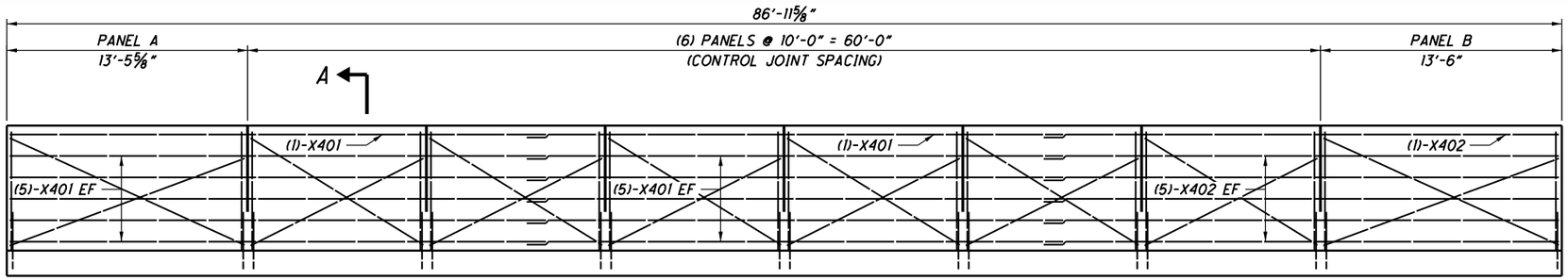

RAILING ELEVATION

(1 REQUIRED PER SIDE)
(EXAGGERATED VERTICAL SCALE)

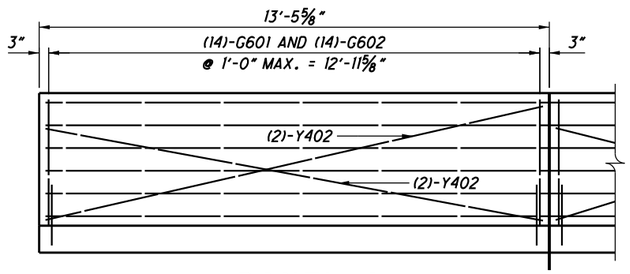

PANEL A

(1 REQUIRED PER SIDE)

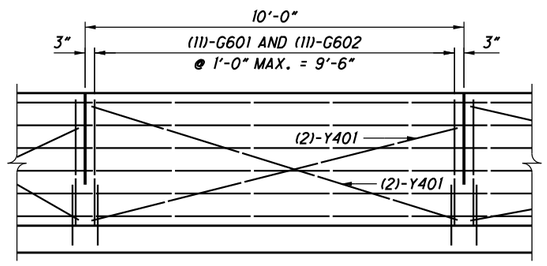

10'-0" PANEL

(6 REQUIRED PER SIDE)

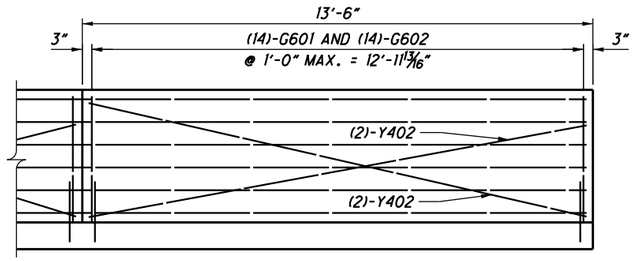

PANEL B

(1 REQUIRED PER SIDE)

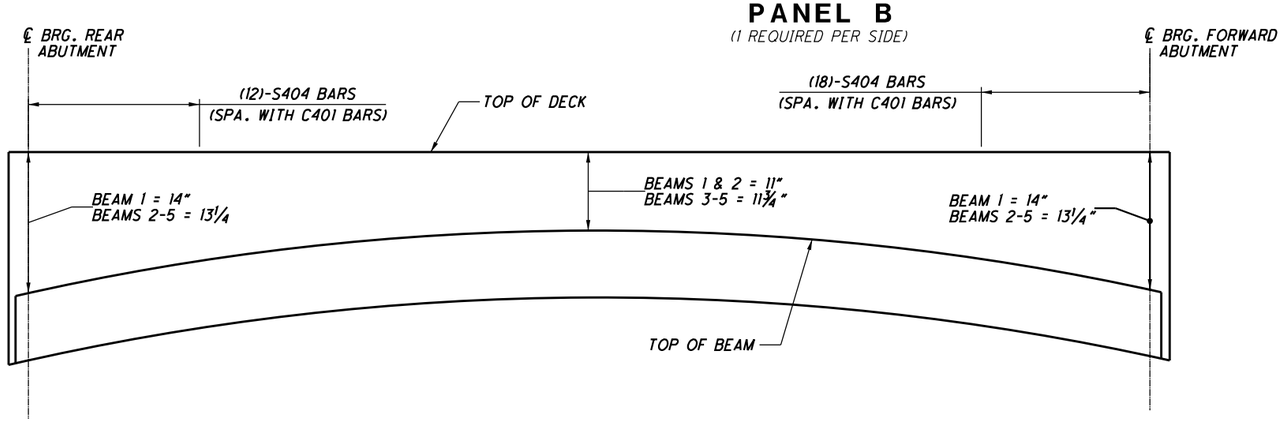

TOPPING THICKNESS DIAGRAM

(THICKNESS GIVEN AT CENTERLINE OF BEAM)

ESTIMATED CAMBER AT DAY 0 (D_0) IS 2½" INCH.

ESTIAMTED CAMBER AT DAY 30 (D_{30}) IS 4⅝ INCHES.

DEFLECTION DUE TO REMAINING DEAD LOAD (E.G. CONCRETE DECK, CROSS-FRAMES, DIAPHRAGMS, BARRIERS, UTILITIES, ETC.) IS 15/16 INCHES.

THE BEAM SEAT ELEVATIONS ASSUME ESTIMATED CAMBER D_a WITH A SACRIFICIAL HAUNCH THICKNESS OF 2½ INCHES MEASURED ON THE CENTERLINE OF GIRDER.

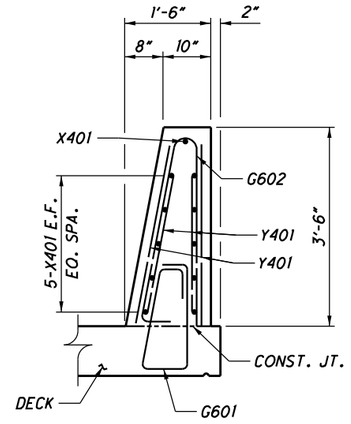

SECTION A-A

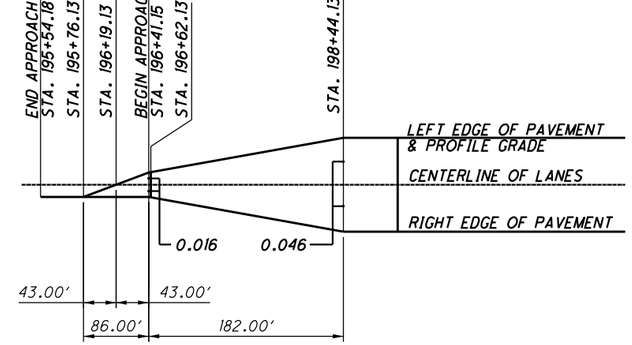

SUPERELEVATION TRANSITION DETAIL

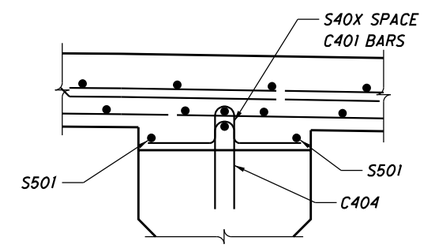

TYPICAL HAUNCH DETAIL

NOTES:

1. DECK SLAB THICKNESS FOR CONCRETE QUANTITY: THE ESTIMATED QUANTITY OF DECK CONCRETE IS MEASURED ACCORDING TO SUM. IN ADDITION TO THE DESIGN SLAB THICKNESS, THE QUANTITY INCLUDES A VARIABLE HAUNCH THICKNESS THAT PROVIDES AN ALLOWANCE FOR BEAM CAMBER AND ADDITIONAL SACRIFICIAL HAUNCH THICKNESS.
2. FOR ADDITIONAL RAILING DETAILS, SEE STD. DWG. SBR-1-20

DRAFT Stage 3 - Not for Construction 09/23/2024

DESIGN AGENCY
Stantec Consulting Services Inc.
1500 Lake Shore Drive, Suite 100
Columbus, OH 43204
(614) 486-4383

DESIGNED	DRAWN	REVIEWED	DATE
BSM	JWS	MRS	03/2024
CHECKED	REVISED	STRUCTURE FILE NUMBER	
EDA		4400194	

LONGITUDINAL SECTION & RAILING DETAILS
BRIDGE NO. LAW-7-0370
S.R. 7 OVER C.R. 104 (BOOTHE EATON ROAD)

LAW-7-2.17
PID No. 75923

U:\1736087\4\LAW\75923\structures\LAW007_0370C\sheets\007_75923CSA001.dgn 5/13/2024 8:40:11 AM JSnair

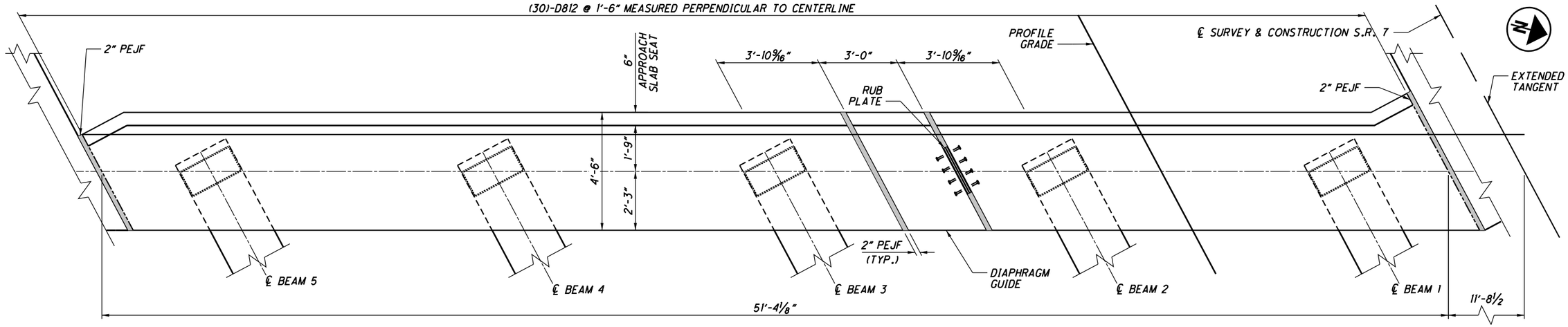

NOTES:

1. ALL ABUTMENT DIAPHRAGM CONCRETE SHALL BE ITEM 511 - CLASS QC2 CONCRETE.
2. PLACE NEOPRENE SHEET, 3'-0" WIDE, CENTERED ON HORIZONTAL AND VERTICAL JOINTS AT WINGWALLS AND DIAPHRAGM GUIDE. FOR VERTICAL JOINTS AT WINGWALLS, PLACE NEOPRENE SHEETING CENTERED ON 2" PEJF AND EXTENDING FROM BEAM SEAT TO THE TOP OF THE WINGWALL.
3. SEE STANDARD DRAWING SCID-2-14 FOR DIAPHRAGM GUIDE DETAILS AND PAYMENT.
4. ABUTMENT DIAPHRAGM CONCRETE: PLACE THE DIAPHRAGM CONCRETE ENCASING THE STRUCTURAL MEMBER ENDS AFTER THE DECK PLACEMENT IN THE ADJACENT SPAN IS COMPLETE. PROCEDURES THAT PLACE THE ABUTMENT DIAPHRAGM WITH THE DECK CONCRETE MAY BE APPROVED BY THE ENGINEER IF THE PLACEMENT SUBMITTAL CAN ASSURE THAT THE DECK CONCRETE IN THE ADJACENT SPAN WILL BE PLACED BEFORE CONCRETE IN THE DIAPHRAGM HAS REACHED ITS INITIAL SET.

ABUTMENT DIAPHRAGM PLAN

REAR ABUTMENT SHOWN, FORWARD ABUTMENT SIMILAR

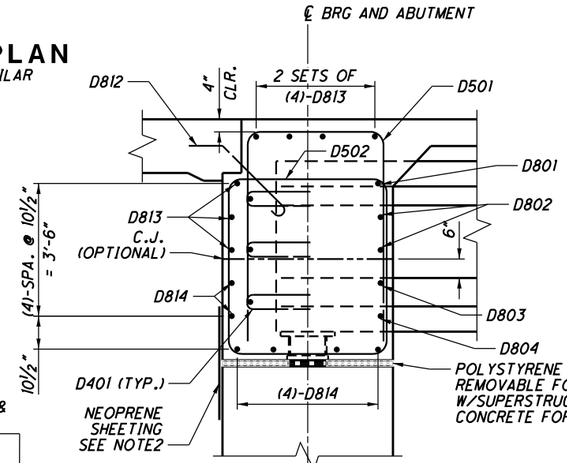

SECTION A-A

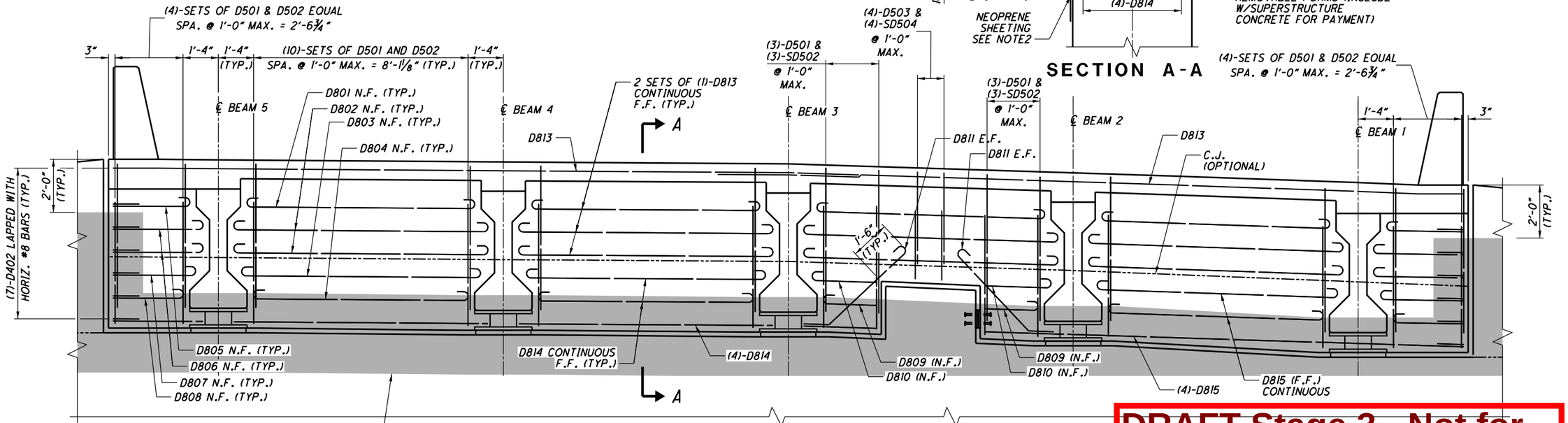

ABUTMENT DIAPHRAGM ELEVATION

REAR ABUTMENT SHOWN, FORWARD ABUTMENT SIMILAR

LAP LENGTH:
#8 BARS = 5'-4"

DRAFT Stage 3 - Not for Construction 09/23/2024

DESIGN AGENCY
Stantec Consulting Services Inc.
1500 Lake Shore Drive, Suite 100
Columbus, Ohio 43204
(614) 486-4383

DESIGNED	DRAWN	REVIEWED	DATE
BSM	JWS	MRS	03/2024
CHECKED	REVISED	STRUCTURE FILE NUMBER	
EDA		4400194	

SUPERSTRUCTURE DETAILS
BRIDGE NO. LAW-7-0370
S.R. 7 OVER C.R. 104 (BOOTHE EATON ROAD)

LAW-7-2.17
PID No. 75923

15 / 28

831
1247

U:\1736087\4\LAW\75923\structures\LAW007_0370C\sheets\007_75923CSS002.dgn 5/13/2024 8:40:12 AM JSnair

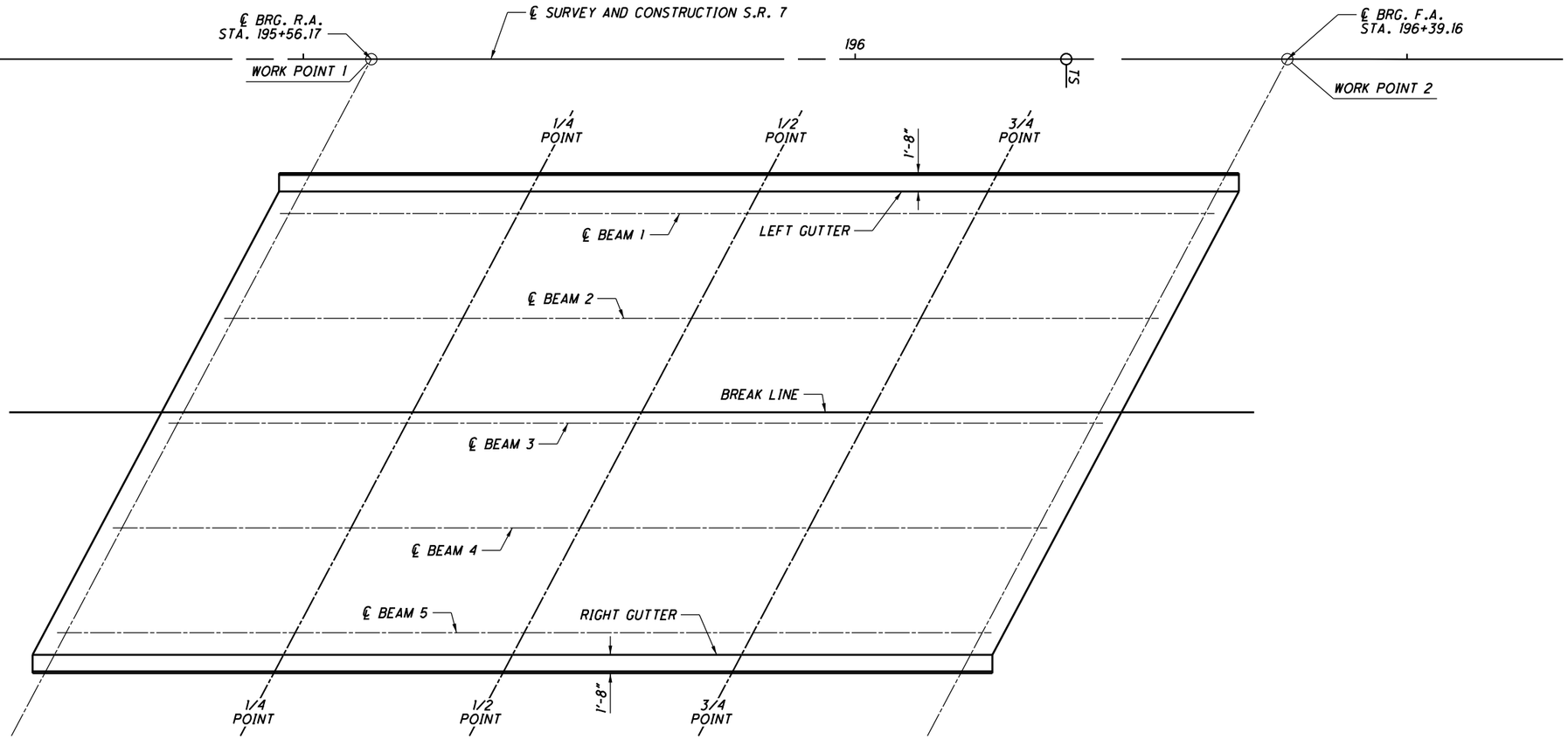

PLAN

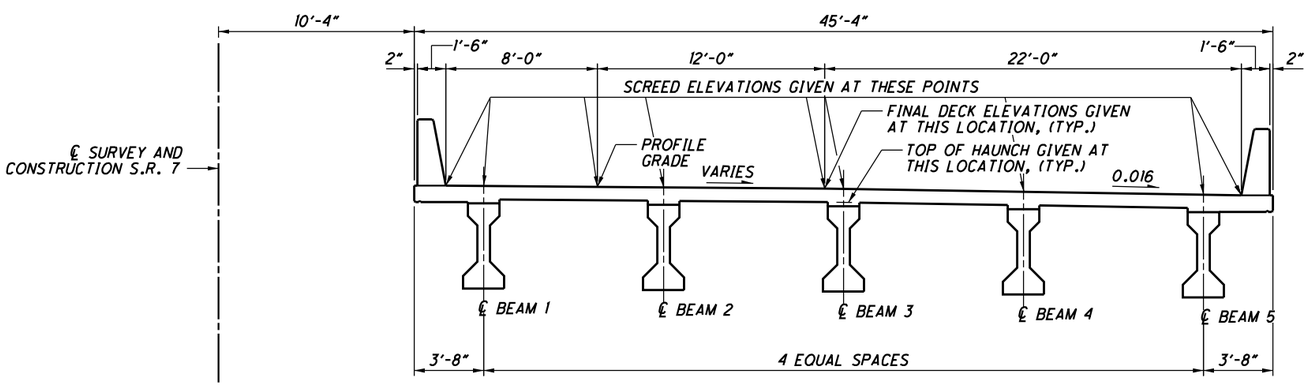

TRANSVERSE SECTION

NOTES:

1. FOR SCREED, TOP OF HAUNCH AND DECK ELEVATIONS, SEE SHEET 17/26.
2. SCREED ELEVATIONS SHOWN REPRESENT THE THEORETICAL DECK SURFACE LOCATION PRIOR TO DEFLECTIONS CAUSED BY DECK PLACEMENT AND OTHER ANTICIPATED DEAD LOADS.

   TOP OF HAUNCH ELEVATIONS SHOWN REPRESENT THE THEORETICAL LOCATION OF THE BOTTOM OF DECK ABOVE THE BEAM/GIRDER HUNCH PRIOR TO DEFLECTIONS CAUSED BY DECK PLACEMENT AND OTHER ANTICIPATED DEAD LOADS.

   FINAL DECK SURFACE ELEVATIONS SHOWN REPRESENT THE DECK SURFACE LOCATION AFTER ALL ANTICIPATED DEAD LOAD DEFLECTIONS HAVE OCCURRED.

DRAFT Stage 3 - Not for Construction

09/23/2024

DESIGN AGENCY
Stantec Consulting Services Inc.
1500 Lake Shore Drive, Suite 100
Columbus, Ohio 43204
(614) 486-4383

DESIGNED	DRAWN	REVIEWED	DATE
BSM	JWS	MRS	03/2024
CHECKED	REVISED	STRUCTURE FILE NUMBER	
EDA		4400194	

SCREEN DIAGRAM
BRIDGE NO. LAW-7-0370
S.R. 7 OVER C.R. 104 (BOOTHE EATON ROAD)

LAW-7-2.17
PID No. 75923

16 / 28

832
1247

U:\1736087\4\LAW\75923\structures\LAW007_0370C\sheets\007_75923CSG002.dgn 5/13/2024 8:40:13 AM JSnair

DECK CONSTRUCTION ELEVATIONS

LOCATION		CL BEARING	1/8 POINT	1/4 POINT	3/8 POINT	1/2 POINT	5/8 POINT	3/4 POINT	7/8 POINT	CL BEARING
LEFT GUTTER	STATION	195+49.78	195+60.16	195+70.53	195+80.91	195+91.28	196+01.66	196+12.03	196+22.41	196+32.79
	OFFSET	12.00	12.00	12.00	12.00	12.00	12.00	12.00	12.00	12.00
	FINAL DECK EL.	598.45	598.00	597.56	597.15	596.75	596.37	595.99	595.61	595.25
	SCREED EL.	598.45	598.03	597.62	597.22	596.83	596.44	596.04	595.64	595.25
BEAM 1	STATION	195+48.72	195+59.10	195+69.47	195+79.85	195+90.22	196+00.60	196+10.97	196+21.35	196+31.72
	OFFSET	14.00	14.00	14.00	14.00	14.00	14.00	14.00	14.00	14.00
	FINAL DECK EL.	598.52	598.08	597.64	597.22	596.82	596.42	596.03	595.65	595.28
	SCREED EL.	598.52	598.52	598.11	597.69	596.89	596.49	596.09	595.68	595.28
	HAUNCH EL.	597.82	597.40	596.99	596.58	596.18	595.78	595.38	594.97	594.57
PROFILE GRADE	STATION	195+45.53	195+55.91	195+66.28	195+76.66	195+87.03	195+97.41	196+07.78	196+18.16	196+28.53
	OFFSET	20.00	20.00	20.00	20.00	20.00	20.00	20.00	20.00	20.00
	FINAL DECK EL.	598.76	598.31	597.87	597.44	597.01	596.59	596.18	595.77	595.37
	SCREED EL.	598.76	598.34	597.93	597.52	597.10	596.67	596.24	595.80	595.37
BEAM 2	STATION	195+43.67	195+54.05	195+64.42	195+74.80	195+85.17	195+95.55	196+05.92	196+16.30	196+26.67
	OFFSET	23.50	23.50	23.50	23.50	23.50	23.50	23.50	23.50	23.50
	FINAL DECK EL.	598.89	598.45	598.01	597.57	597.13	596.70	596.27	595.85	595.43
	SCREED EL.	598.89	598.89	598.48	598.07	597.22	596.78	596.33	595.88	595.43
	HAUNCH EL.	598.19	597.77	597.36	596.95	596.52	596.07	595.62	595.17	594.72
BREAK LINE	STATION	195+39.15	195+49.53	195+59.90	195+70.28	195+80.65	195+91.03	196+01.40	196+11.78	196+22.15
	OFFSET	32.00	32.00	32.00	32.00	32.00	32.00	32.00	32.00	32.00
	FINAL DECK EL.	599.23	598.78	598.33	597.90	597.44	596.97	596.51	596.05	595.60
	SCREED EL.	599.23	599.23	598.81	598.40	597.54	597.06	596.58	596.09	595.60
	HAUNCH EL.	598.52	598.10	597.69	597.27	596.83	596.35	595.87	595.38	594.89
BEAM 3	STATION	195+38.62	195+48.99	195+59.37	195+69.74	195+80.12	195+90.49	196+00.87	196+11.24	196+21.62
	OFFSET	33.00	33.00	33.00	33.00	33.00	33.00	33.00	33.00	33.00
	FINAL DECK EL.	599.23	598.78	598.34	597.90	597.45	596.98	596.52	596.06	595.61
	SCREED EL.	599.23	599.23	598.82	598.40	597.55	597.07	596.58	596.10	595.61
	HAUNCH EL.	598.53	598.11	597.70	597.28	596.84	596.36	595.87	595.39	594.90
BEAM 4	STATION	195+33.57	195+43.94	195+54.32	195+64.69	195+75.07	195+85.44	195+95.82	196+06.19	196+16.57
	OFFSET	42.50	42.50	42.50	42.50	42.50	42.50	42.50	42.50	42.50
	FINAL DECK EL.	599.30	598.85	598.40	597.96	597.53	597.06	596.59	596.13	595.68
	SCREED EL.	599.30	599.30	598.89	598.47	597.62	597.14	596.66	596.17	595.68
	HAUNCH EL.	598.60	598.18	597.76	597.34	596.91	596.44	595.95	595.46	594.97
BEAM 5	STATION	195+28.52	195+38.89	195+49.27	195+59.64	195+70.02	195+80.39	195+90.77	196+01.14	196+11.52
	OFFSET	52.00	52.00	52.00	52.00	52.00	52.00	52.00	52.00	52.00
	FINAL DECK EL.	599.38	598.92	598.47	598.02	597.59	597.14	596.67	596.20	595.74
	SCREED EL.	599.38	599.38	598.95	598.52	597.66	597.21	596.72	596.23	595.74
	HAUNCH EL.	598.67	598.24	597.81	597.39	596.95	596.50	596.01	595.52	595.04
RIGHT GUTTER	STATION	195+27.45	195+37.83	195+48.20	195+58.58	195+68.95	195+79.33	195+89.70	196+00.08	196+10.45
	OFFSET	54.00	54.00	54.00	54.00	54.00	54.00	54.00	54.00	54.00
	FINAL DECK EL.	599.39	598.93	598.48	598.04	597.60	597.15	596.68	596.22	595.76
	SCREED EL.	599.39	598.96	598.54	598.11	597.68	597.22	596.74	596.25	595.76

DRAFT Stage 3 - Not for Construction 09/23/2024

DESIGN AGENCY
Stantec Consulting Services Inc.
1500 Lake Shore Drive, Suite 100
Columbus, Ohio 43204
(614) 486-4383

DESIGNED	DRAWN	REVIEWED	DATE
BSM	JWS	MRS	03/2024
CHECKED	REVISED	STRUCTURE FILE NUMBER	
EDA		4400194	

DECK CONSTRUCTION ELEVATIONS
BRIDGE NO. LAW-7-0370
S.R. 7 OVER C.R. 104 (BOOTHE EATON ROAD)

LAW-7-2.17
PID No. 75923

U:\736087\4\LAW\75923\structures\LAW007_0370C\sheets\007_75923CSD002.dgn 5/13/2024 8:40:14 AM JSnair

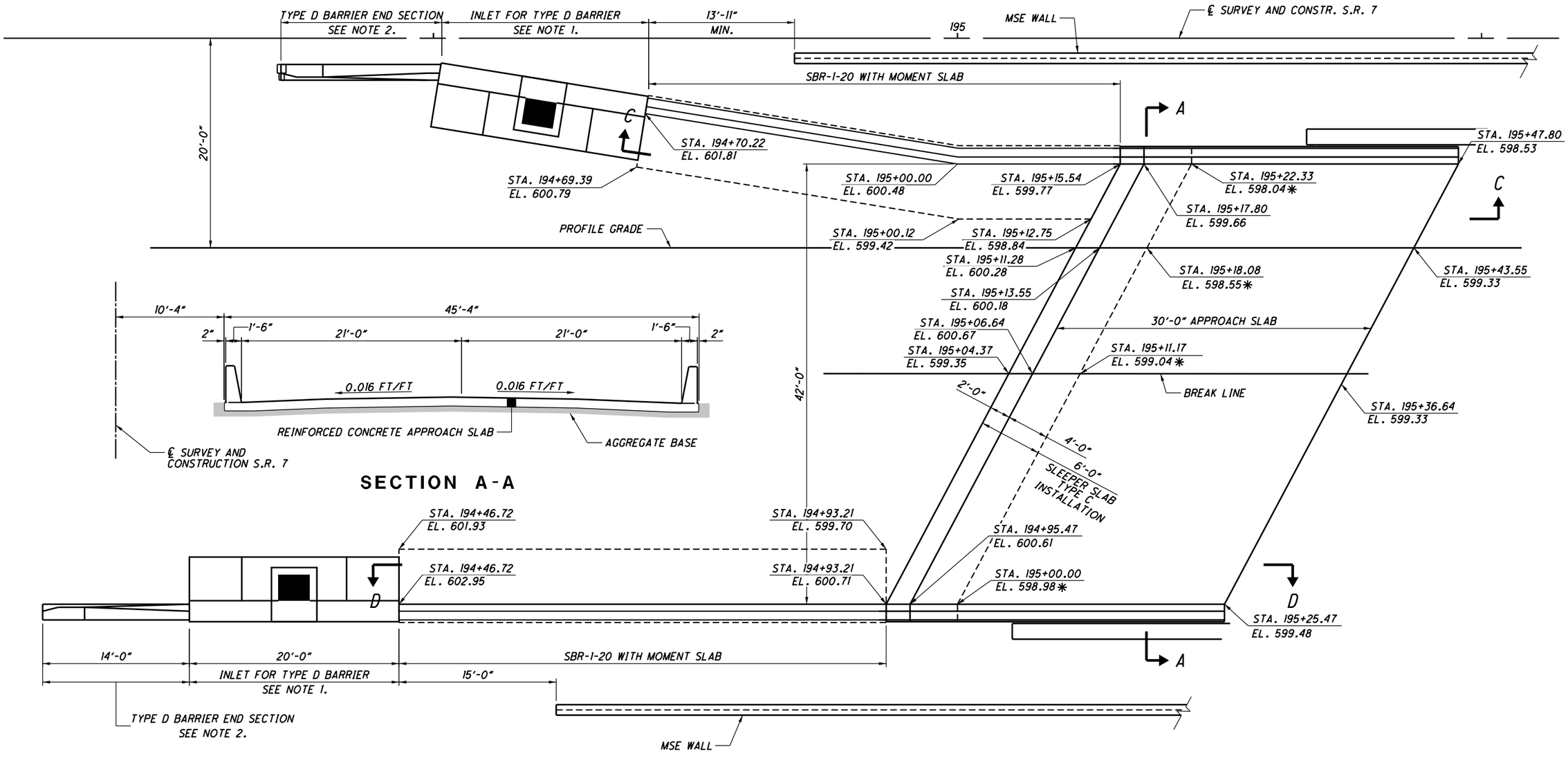

REAR APPROACH SLAB

NOTES:

1. SEE STD. CONSTR. DWG. I-3D FOR INLET NO. 3 AND STD. CONSTR. DWG. RM-4.5 FOR SINGLE SLOPE BARRIER, TYPE D.
2. SEE STD. CONSTR. DWG. RM-4.3 FOR TYPE D BARRIER END SECTION.
2. FOR ADDITIONAL DETAILS OF THE BARRIER, SEE STD. DWG. RM-4.00 AND SHEET 20/28.
3. FOR ADDITIONAL DETAILS OF THE APPROACH SLAB, SEE STD. DWG. AS-1-13 AND AS-2-13.
4. FOR SECTIONS C-C, AND D-D SEE SHEET 20/28.
5. THE COST OF CONCRETE AND INCIDENTALS FOR BARRIER TO BE INCLUDED WITH ITEM 526 REINFORCED CONCRETE, APPROACH SLAB, AS PER PLAN.

DRAFT Stage 3 - Not for Construction 09/23/2024

DESIGN AGENCY
Stantec Consulting Services Inc.
1500 Lake Shore Drive, Suite 100
Columbus, Ohio 43204
(614) 486-4383

DESIGNED	DRAWN	REVIEWED	DATE
BSM	JWS	MRS	03/2024
CHECKED	REVISED	STRUCTURE FILE NUMBER	
EDA		4400194	

REAR APPROACH SLAB
BRIDGE NO. LAW-7-0370
S.R. 7 OVER C.R. 104 (BOOTHE EATON ROAD)

LAW-7-2.17
PID No. 75923

18 / 28

834
1247

U:\1736087f4\LAW\75923\structures\LAW007_0370C\sheets\007_75923CSM001.dgn 5/13/2024 8:40:16 AM JSnair

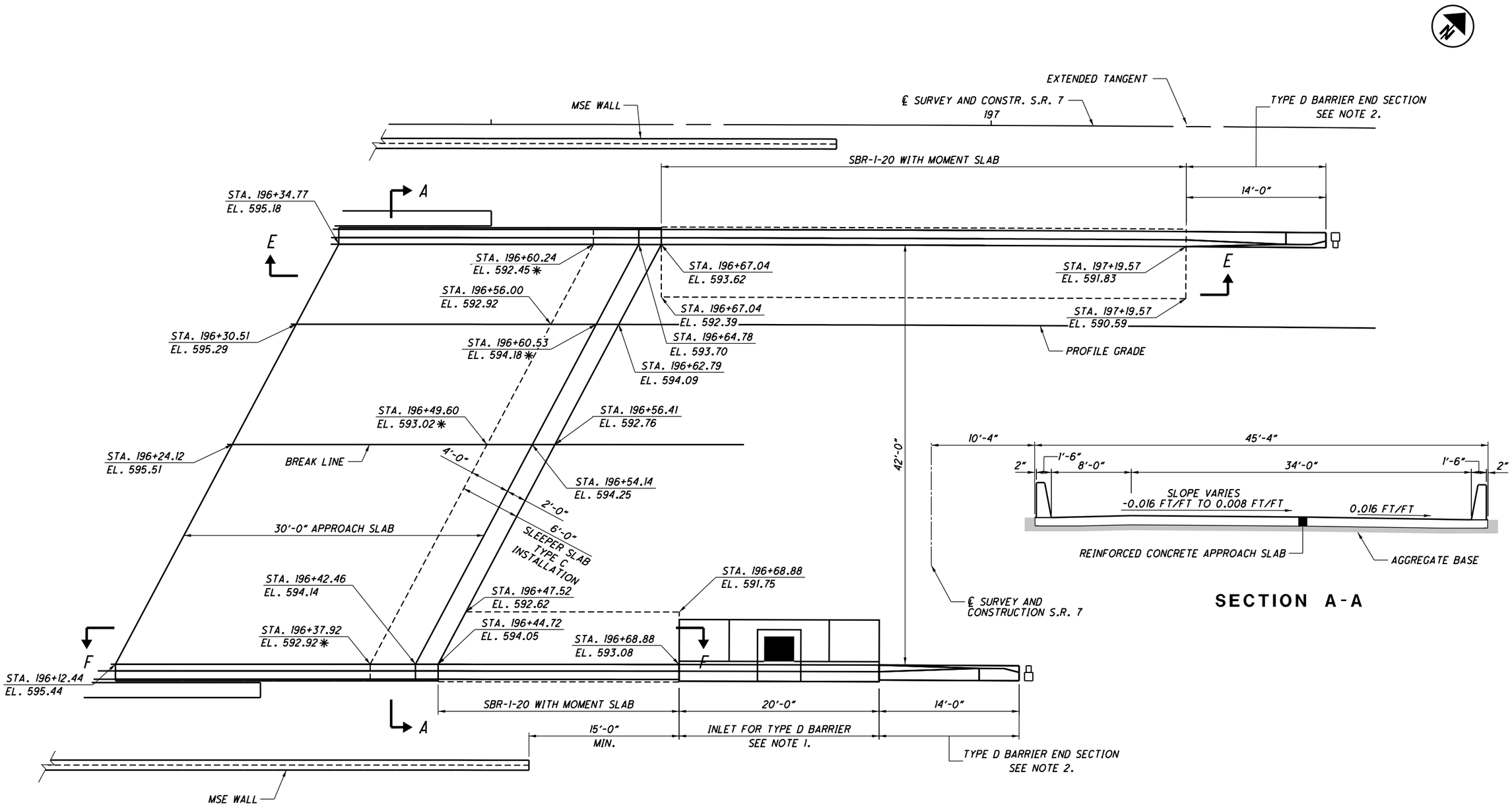

SECTION A-A

✱ - ELEVATION AT TOP OF SLEEPER SLAB.

FORWARD APPROACH SLAB

NOTES:

1. SEE STD. CONSTR. DWG. I-3D FOR INLET NO. 3 AND STD. CONSTR. DWG. RM-4.5 FOR SINGLE SLOPE BARRIER, TYPE D.
2. SEE STD. CONSTR. DWG. RM-4.5 FOR TYPE D BARRIER END SECTION.
2. FOR ADDITIONAL DETAILS OF THE BARRIER, SEE STD. DWG. BR-4.2 AND SHEET 20/28.
3. FOR ADDITIONAL DETAILS OF THE APPROACH SLAB, SEE STD. DWG. AS-1-15 AND AS-2-15.
4. FOR SECTIONS E-E, AND F-F SEE SHEET 21/28.
5. THE COST OF CONCRETE, REINFORCING STEEL AND INCIDENTALS FOR BARRIER TYPE D INCLUDED WITH ITEM 526 REINFORCED CONCRETE, APPROACH SLAB, AS PER PLAN.

DRAFT Stage 3 - Not for Construction 08/23/2024

DESIGN AGENCY
Stantec Consulting Services Inc.
1500 Lake Shore Drive, Suite 100
Columbus, Ohio 43204
(614) 486-4383

DESIGNED	DRAWN	REVIEWED	DATE
BSM	JWS	MRS	03/2024
CHECKED	REVISED	STRUCTURE FILE NUMBER	
EDA		4400194	

FORWARD APPROACH SLAB
BRIDGE NO. LAW-7-0370
S.R. 7 OVER C.R. 104 (BOOTHE EATON ROAD)

LAW-7-2.17
PID No. 75923

19 / 28

835
1247

U:\1736087\4\LAW\75923\structures\LAW007_0370C\sheets\007_75923CSM00IA.dgn 5/13/2024 8:40:17 AM JSnair

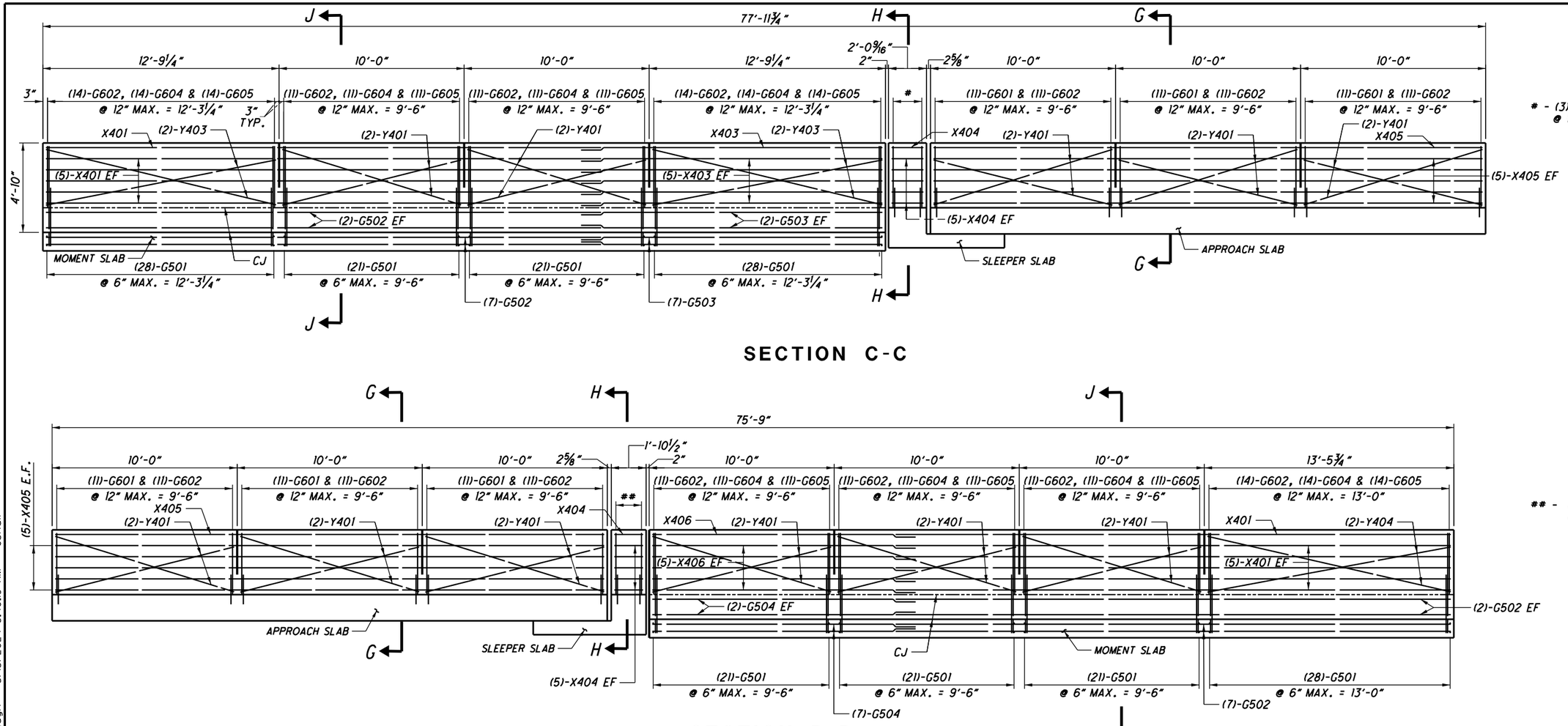

SECTION C-C

SECTION D-D

#5 LAP LENGTH = 3'0"

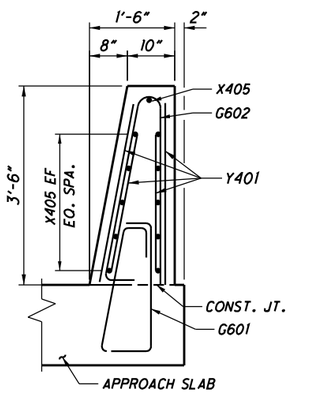

SECTION G-G

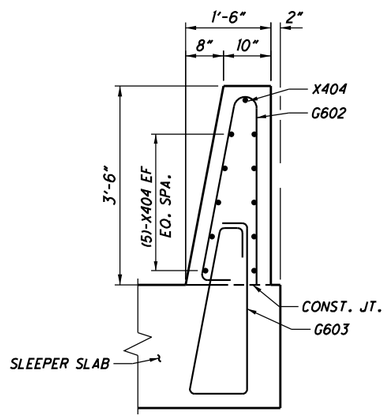

SECTION H-H

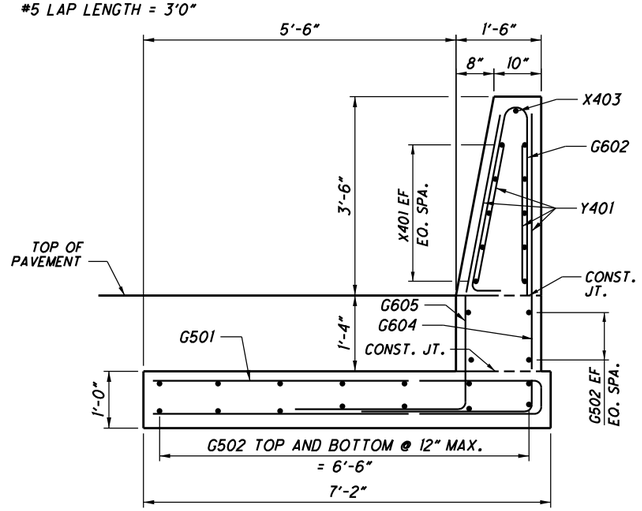

SECTION J-J

DRAFT Stage 3 - Not for Construction

09/23/2024

NOTES:
1. FOR APPROACH SLAB PLAN, SEE SHEETS 18/28, 19/28.
2. SEE ROADWAY PLANS FOR BRIDGE TERMINAL ASSEMBLY DETAILS.

DESIGN AGENCY
Stantec Consulting Services Inc.
1500 Lake Shore Drive, Suite 100
Columbus, Ohio 43204
(614) 486-4383

DESIGNED	DRAWN	REVIEWED	DATE
BSM	JWS	MRS	03/2024
CHECKED	REVISED	STRUCTURE FILE NUMBER	
EDA		4400194	

APPROACH SLAB DETAILS
BRIDGE NO. LAW-7-0370
S.R. 7 OVER C.R. 104 (BOOTHE EATON ROAD)

LAW-7-2.17
PID No. 75923

20/28

836
1247

U:\1736087\4\LAW\75923\structures\LAW007_0370C\sheets\007_75923CSM002.dgn 5/13/2024 8:40:19 AM JSnair

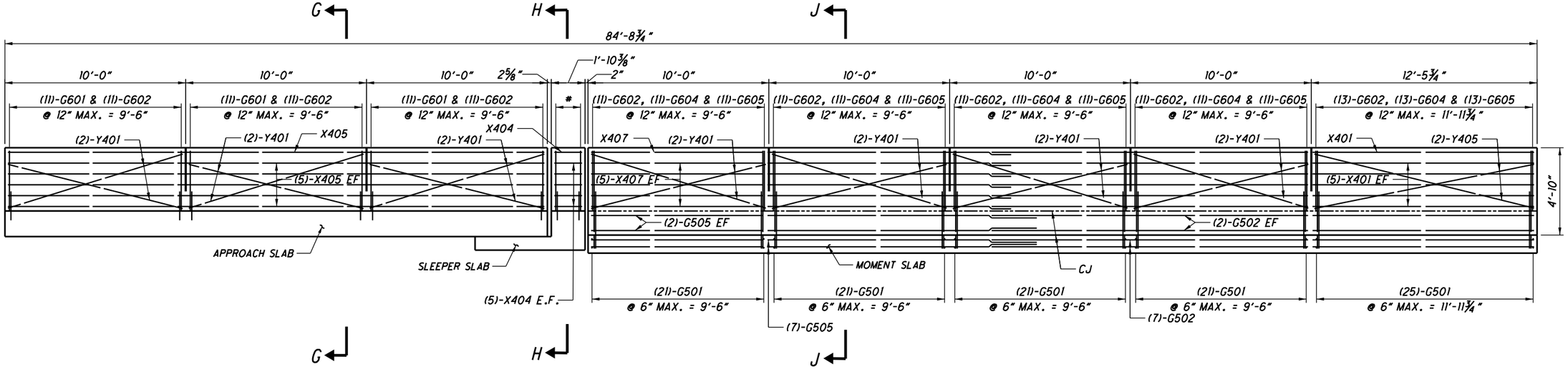

SECTION E-E

- (3)-G603 & (3)-G602 @ 12" MAX. = 1'-4½"

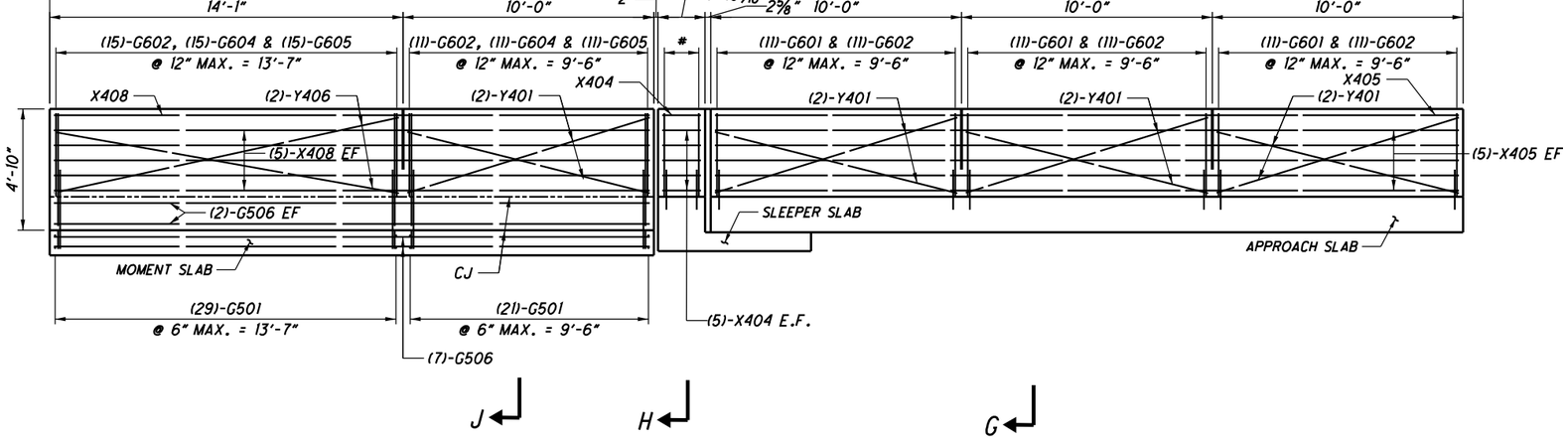

SECTION F-F

NOTES:
1. FOR APPROACH SLAB PLAN, SEE SHEETS 18/28, 19/28.
2. SEE ROADWAY PLANS FOR BRIDGE TERMINAL ASSEMBLY DETAILS.
3. FOR SECTIONS G, H, K SEE SHEET 20/28.

DRAFT Stage 3 - Not for Construction
08/20/2024

DESIGN AGENCY
Stantec Consulting Services Inc.
1500 Lake Shore Drive, Suite 100
Columbus, Ohio 43204
(614) 486-4383

DESIGNED BSM | CHECKED EDA
DRAWN JWS | REVISED
REVIEWED MRS | DATE 04/2022
STRUCTURE FILE NUMBER 4400194

APPROACH SLAB DETAILS
BRIDGE NO. LAW-7-0370
S.R. 7 OVER C.R. 104 (BOOTHE EATON ROAD)

LAW-7-2.17
PID No. 75923

21/28

837/1247

USER:736087/14 LAW\75923\structures\LAW007_0370C\sheets\007_75923CSM003.dgn 5/13/2024 8:40:20 AM JSnair

MARK	NUMBER TOTAL	LENGTH	WEIGHT	TYPE	DIMENSIONS A	B	C	D	E	R	INC
ABUTMENTS (EPOXY COATED STEEL REINFORCMENT)											
A501	82	17'-2"	1468	3	5'-8"	2'-7"					
A502	82	11'-11"	1019	2	4'-0"	4'-2"	4'-0"				
A503	12	30'-6"	382	STR							
A504	45	12'-2"	571	3	3'-2"	2'-7"					
A505	45	13'-5"	630	2	6'-3"	1'-2"	6'-3"				
A506	6	17'-0"	106	STR							
A507	13	18'-1"	245	2	8'-7"	1'-2"	8'-7"				
	1 SR	7'-3"			3'-2"		3'-2"				
A508	OF	TO	56	2	TO	1'-2"	TO				0'-10 1/2"
	5	14'-3"			6'-8"		6'-8"				
A509	6	16'-1"	101	STR							
	1 SR	16'-10"									
A510	OF	TO	82	STR							1'-11 1/4"
	4	22'-8"									
A511	3	22'-8"	71	STR							
A512	2	8'-6"	18	STR							
A513	4	13'-8"	57	STR							
	2 SR	15'-0"									
A514	OF	TO	106	STR							2'-0"
	3	19'-0"									
A515	8	19'-8"	164	STR							
A516	16	28'-11"	483	STR							
A517	2	26'-0"	54	STR							
	1 SR	9'-7"									
A518	OF	TO	54	STR							2'-2 3/4"
	4	16'-3"									
A519	12	16'-3"	203	2	7'-8"	1'-2"	7'-8"				
A520	12	30'-6"	382	STR							
	1 SR	10'-0"									
A521	OF	TO	50	STR							1'-4"
	4	14'-0"									
	1 SR	17'-7"									
A522	OF	TO	86	STR							1'-11 1/4"
	4	23'-5"									
A523	3	23'-5"	73	STR							
A524	2	6'-7"	14	STR							
	2 SR	12'-8"									
A525	OF	TO	91	STR							1'-11"
	3	16'-6"									
A526	8	17'-8"	147	STR							
	1 SR	6'-11"			3'-0"		3'-0"				
A527	OF	TO	49	2	TO	1'-2"	TO				0'-7 1/2"
	5	11'-11"			5'-6"		5'-6"				
A528	11	14'-11"	171	2	7'-0"	1'-2"	7'-0"				
A529	1	9'-7"	10	STR							
	1 SR	9'-5"									
A530	OF	TO	54	STR							2'-3 1/4"
	4	16'-3"									
A531	2	13'-8"	29	STR							
	2 SR	13'-8"									
A532	OF	TO	137	STR							1'-9 3/4"
	4	19'-1"									
A533	8	19'-8"	164	STR							
A534	1	16'-3"	17	STR							
A535	4	18'-5"	77	STR							
	1 SR	6'-11"			3'-0"		3'-0"				
A536	OF	TO	51	2	TO	1'-2"	TO				0'-8 3/4"
	5	12'-9"			5'-11"		5'-11"				
A537	2	4'-0"	8	STR							
A538	2	12'-8"	26	STR							
A539	2	12'-0"	25	STR							
	1 SR	8'-3"			3'-8"		3'-8"				
A540	OF	TO	56	2	TO	1'-2"	TO				0'-7 1/4"
	5	13'-1"			6'-1"		6'-1"				
	SUB-TOTAL		7,587								

MARK	NUMBER TOTAL	LENGTH	WEIGHT	TYPE	DIMENSIONS A	B	C	D	E	R	INC
ABUTMENTS (EPOXY COATED STEEL REINFORCMENT) (CONT.)											
A541	12	16'-1"	201	2	7'-7"	1'-2"	7'-7"				
A542	2	8'-6"	18	STR							
A543	2	7'-9"	16	STR							
A544	2	6'-0"	13	STR							
A545	1	16'-3"	17	STR							
A546	1	9'-7"	10	STR							
A547	1	14'-0"	15	STR							
A548	1	10'-0"	10	STR							
A549	82	11'-3"	962	2	3'-8"	4'-2"	3'-8"				
A801	8	31'-3"	668	STR							
A804	4	17'-0"	182	STR							
	1 SR	9'-7"									
A805	OF	TO	138	STR							2'-2 3/4"
	4	16'-3"									
A806	8	31'-3"	668	STR							
A807	16	30'-0"	1282	STR							
	1 SR	10'-0"									
A809	OF	TO	128	STR							1'-4"
	4	14'-0"									
	1 SR	9'-7"									
A810	OF	TO	138	STR							2'-2 3/4"
	4	16'-3"									
	SUB-TOTAL	4,466									
SUPERSTRUCTURE (EPOXY COATED STEEL REINFORCMENT)											
D401	30	4'-0"	80	STR							
D402	24	6'-0"	96	2	1'-0"	4'-2"	1'-0"				
D501	88	14'-11"	1369	2	5'-6"	4'-2"	5'-6"				
D502	88	19'-2"	1759	3	4'-2"	5'-1"					
D503	8	12'-7"	105	2	4'-4"	4'-2"	4'-4"				
D504	8	14'-10"	124	3	4'-2"	2'-11"					
D801	8	10'-3"	219	17	8'-7"						
D802	16	11'-3"	481	17	9'-7"						
D803	6	10'-8"	171	17	9'-0"						
D804	6	9'-7"	154	17	7'-11"						
D805	4	3'-8"	39	16	2'-10"						
D806	8	4'-2"	89	16	3'-4"						
D807	4	3'-11"	42	16	3'-1"						
D808	4	3'-5"	36	16	2'-7"						
D809	4	2'-10"	30	16	2'-0"						
D810	4	3'-3"	35	16	2'-5"						
D811	8	5'-9"	123	18	4'-0"	0'-8"	0'-8"				
D812	60	4'-10"	774	18	2'-8"	1'-0"	1'-0"				
D813	28	27'-6"	2056	STR							
D814	12	27'-0"	865	STR							
D815	12	18'-1"	579	STR							
S401	150	30'-4"	3039	STR							
S402	348	8'-6"	1976	16	8'-0"						
S403	180	4'-2"	501	STR							
S404	150	10'-2"	1019	50	9'-0"	1'-2"					
S501	189	30'-11"	6095	STR							
S502	270	24'-7"	6923	16	24'-0"						
S503	135	28'-9"	4048	STR							
S504	135	19'-3"	2710	STR							
	4 SR	2'-0"									
S505	OF	TO	4318	STR							2'-11"
	46	43'-0"									
	SUB-TOTAL		39,855								
	TOTAL		51,908								

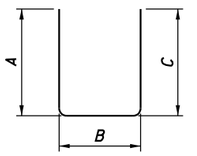

TYPE-2

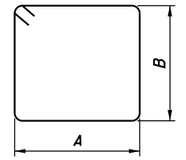

TYPE-3

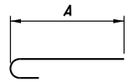

TYPE-16

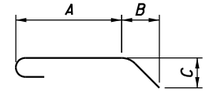

TYPE-18

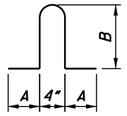

TYPE-50

DRAFT Stage 3 - Not for Construction 09/23/2024

DESIGN AGENCY
Stantec Consulting Services Inc.
1500 Lake Shore Drive, Suite 100
Columbus, Ohio 43204
(614) 486-4383

DESIGNED BSM | DRAWN JWS | CHECKED EDA | REVIEWED MRS | DATE 03/2024 | STRUCTURE FILE NUMBER 4400194 | REVISED

REINFORCING STEEL LIST
BRIDGE NO. LAW-7-0370
S.R. 7 OVER C.R. 104 (BOOTHE EATON ROAD)

LAW-7-2.17
PID No. 75923

22/28

838/1247

U:\173608714\LAW\75923\structures\LAW007_0370C\sheets\007_75923CSL001.dgn 5/13/2024 8:40:21 AM JSnair

MARK	NUMBER TOTAL	LENGTH	WEIGHT	TYPE	DIMENSIONS A	B	C	D	E	R	INC
PARAPET (EPOXY COATED STEEL REINFORCEMENT)											
G501	348	14'-0"	5081	2	6'-10"	0'-7"	6'-10"				
G502	54	30'-0"	1690	STR							
G503	18	18'-2"	341	STR							
G504	18	16'-2"	304	STR							
G505	18	25'-2"	472	STR							
G506	18	23'-9"	446	STR							
G601	320	7'-8"	3685	37	1'-0"	0'-9 ½"	1'-5"	1'-0"	0'-7"		
G602	512	7'-0"	5383	23	0'-6"	3'-3"	3'-3"			0'-2"	
G603	12	9'-11"	178	37	2'-0"	0'-9 ½"	1'-5"	1'-0"	0'-7"		
G604	180	8'-3"	2230	1	3'-0"	5'-5"					
G605	180	8'-2"	2208	38	3'-0"	2'-0"	3'-3"	0'-8"			
		TOTAL	22,018								

MARK	NUMBER TOTAL	LENGTH	TOTAL LENGTH	TYPE	DIMENSIONS A	B	C	D	E	R	INC
PARAPET (GLASS FIBER REINFORCED POLYMER - GFRP)											
X401	77	30'-0"	2310'-0"	STR							
X402	22	28'-10"	643'-4"	STR							
X403	11	16'-4"	179'-8"	STR							
X404	44	1'-7"	69'-8"	STR							
X405	44	29'-8"	1305'-4"	STR							
X406	11	14'-3"	159'-9"	STR							
X407	11	23'-3"	255'-9"	STR							
X408	11	24'-9"	272'-3"	STR							
Y401	136	10'-0"	1360'-0"	STR							
Y402	16	13'-6"	216'-0"	STR							
Y403	8	12'-10"	102'-8"	STR							
Y404	4	13'-6"	54'-0"	STR							
Y405	4	12'-6"	50'-0"	STR							
Y406	4	14'-1"	56'-4"	STR							
		TOTAL	7,034'-9"								

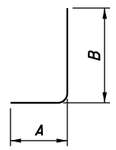

TYPE-1

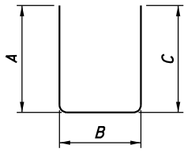

TYPE-2

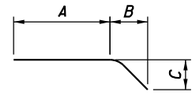

TYPE-19

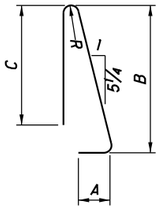

TYPE-23

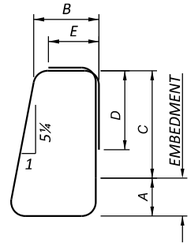

TYPE-37

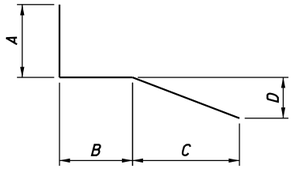

TYPE-38

DRAFT Stage 3 - Not for Construction 09/23/2024

DESIGN AGENCY
Stantec Consulting Services Inc.
1500 Lake Shore Drive, Suite 100
Columbus, Ohio 43204
(614) 486-4383

DESIGNED BSM | DRAWN JWS | CHECKED EDA | REVIEWED MRS | DATE 04/2022 | REVISED | STRUCTURE FILE NUMBER 4400194

REINFORCING STEEL LIST
BRIDGE NO. LAW-7-0370
S.R. 7 OVER C.R. 104 (BOOTHE EATON ROAD)

LAW-7-2.17
PID No. 75923

23 / 28

839
1247

U:\173608714\LAW\75923\structures\LAW007_0370C\sheets\007_75923CSL002.dgn 5/13/2024 8:40:22 AM JSnair

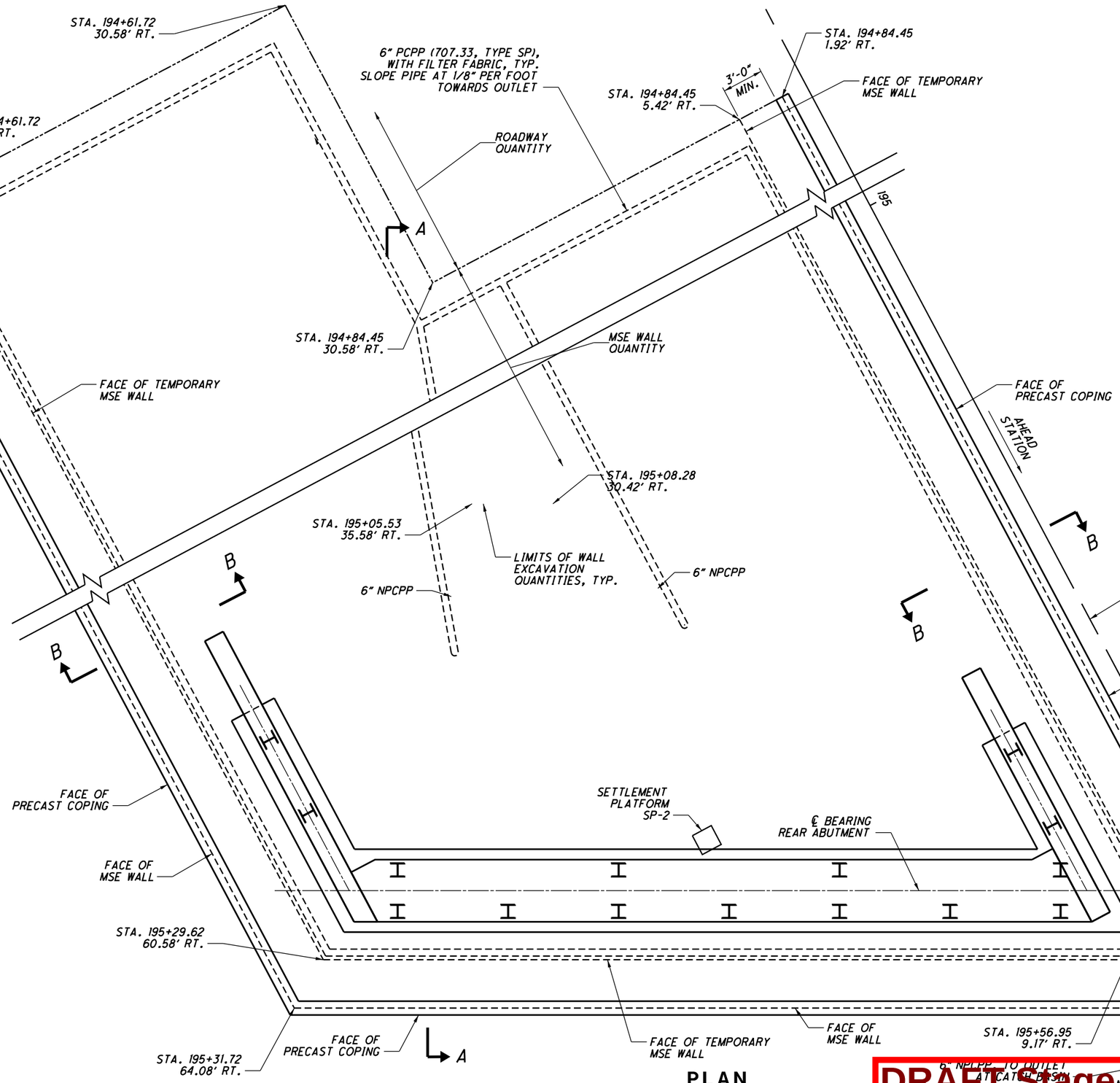

PLAN

NOTES:
1. FOR ELEVATIONS, SEE SHEET 26/28.
2. FOR SECTION A-A, SEE SHEET 27/28.
3. FOR SECTION B-B, SEE SHEET 28/28.

DRAFT Stage 3 - Not for Construction 09/23/2024

DESIGN AGENCY
Stantec Consulting Services Inc.
1500 Lake Shore Drive, Suite 100
Columbus, Ohio 43204
(614) 486-4383

DESIGNED	DRAWN	REVIEWED	DATE
BSM	JWS	MRS	04/2022
CHECKED	REVISED	STRUCTURE FILE NUMBER	
EDA		4400194	

WALL 1 PLAN
BRIDGE NO. LAW-7-0370
S.R. 7 OVER C.R. 104 (BOOTHE EATON ROAD)

LAW-7-2.17
PID No. 75923

24/28

840/1247

U:\173608714\LAW\75923\structures\LAW007_0370C\sheets\007_75923CWP001.dgn 5/13/2024 8:40:23 AM JSnair

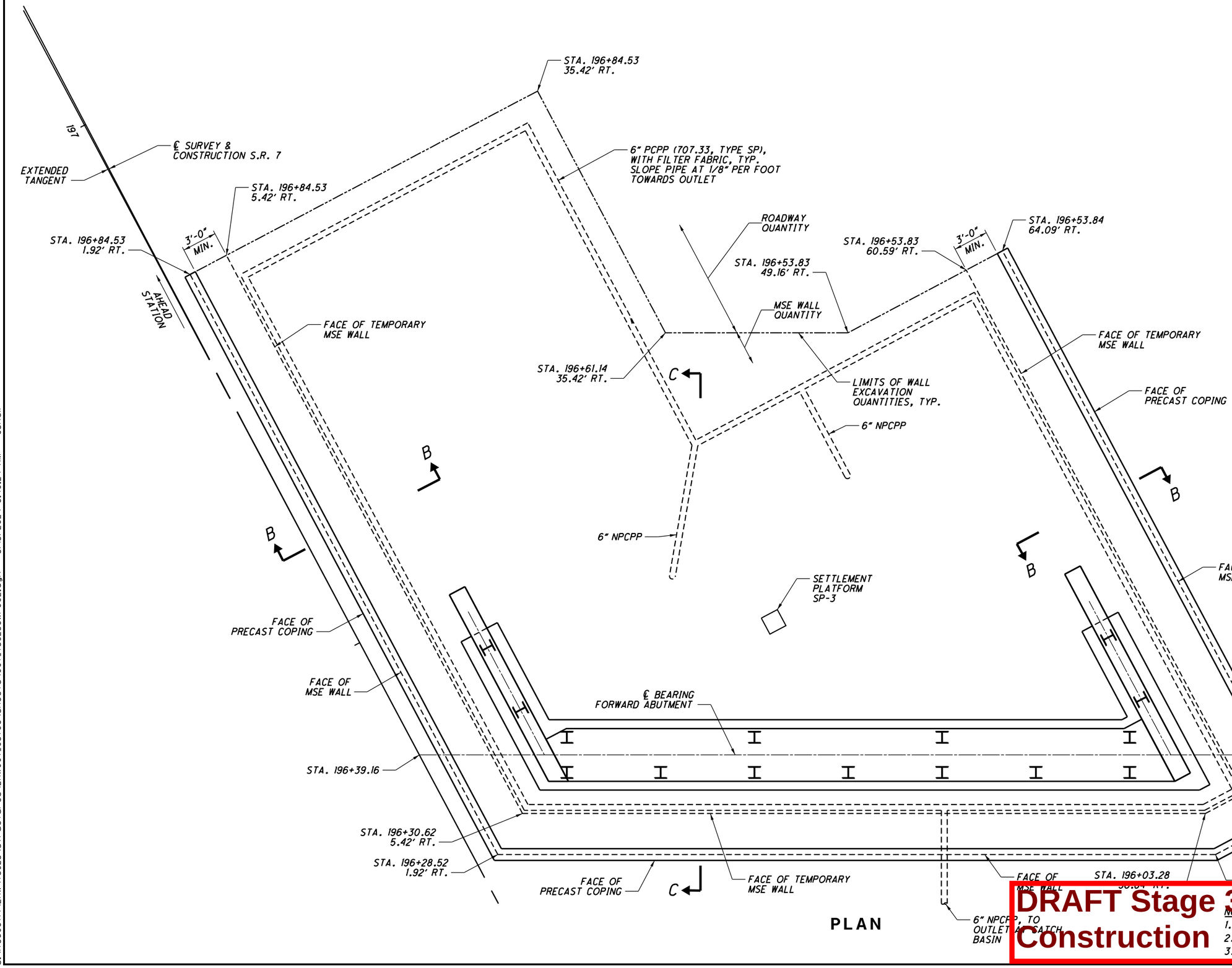

PLAN

NOTES:
1. FOR ELEVATIONS, SEE SHEET 26/28.
2. FOR SECTION A-A, SEE SHEET 27/28.
3. FOR SECTION B-B, SEE SHEET 26/28.

DRAFT Stage 3 - Not for Construction 09/23/2024

DESIGN AGENCY
Stantec Consulting Services Inc.
1500 Lake Shore Drive, Suite 100
Columbus, Ohio 43204
(614) 486-4383

DESIGNED	DRAWN	REVIEWED	DATE
BSM	JWS	MRS	04/2022
CHECKED	REVISED	STRUCTURE FILE NUMBER	
EDA		4400194	

WALL 2 PLAN
BRIDGE NO. LAW-7-0370
S.R. 7 OVER C.R. 104 (BOOTHE EATON ROAD)

LAW-7-2.17
PID No. 75923

25/28

841/1247

U:\173608714\LAW\75923\structures\LAW007_0370C\sheets\007_75923CWP002.dgn 5/13/2024 8:40:24 AM JSnair

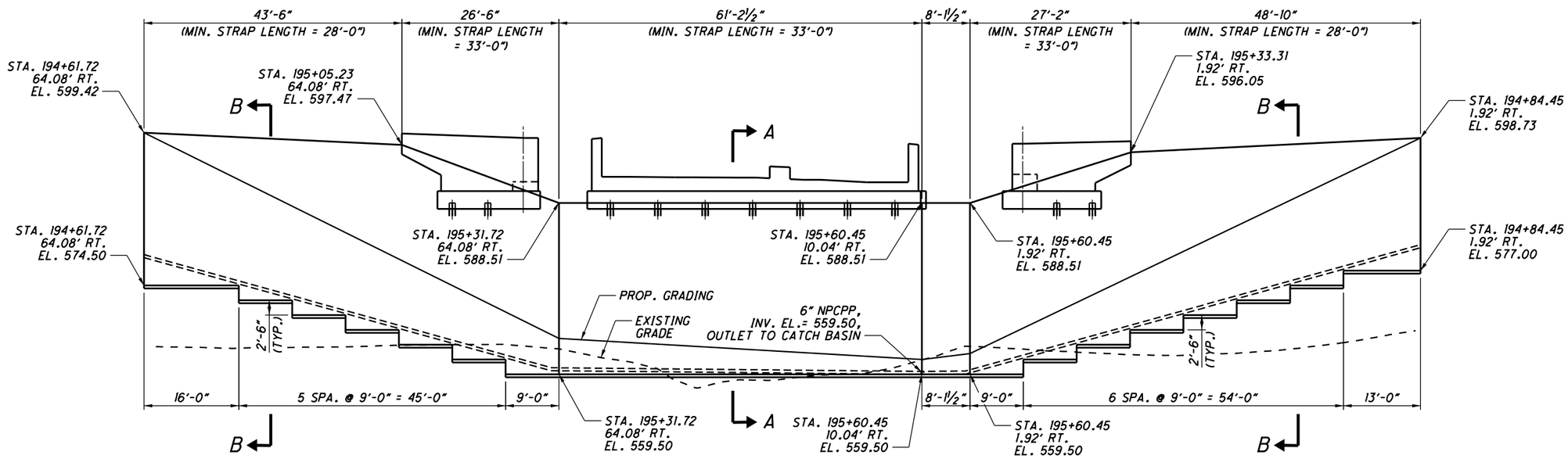

WALL 1 ELEVATION (DEVELOPED)

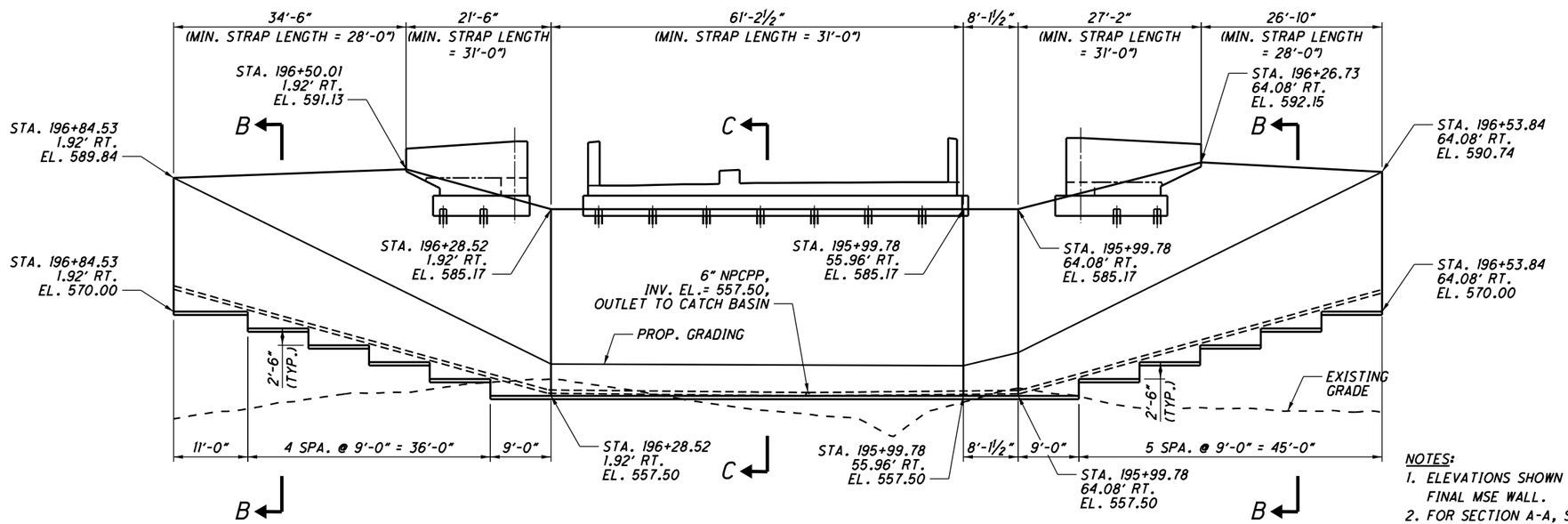

WALL 2 ELEVATION (DEVELOPED)

NOTES:

1. ELEVATIONS SHOWN ARE FOR TEMPORARY AND FINAL MSE WALL.
2. FOR SECTION A-A, SEE SHEET 27/28.
3. FOR SECTION B-B, SEE SHEET 28/28.
4. FOR SECTION C-C, SEE SHEET 28/28.
5. STRAP LENGTHS SHOWN ARE MEASURED FROM THE FACE OF TEMPORARY MSE WALL
6. ALL METAL COMPONENTS OF TEMPORARY WALL SHALL BE GALVANIZED PER SS867.03.A.

DRAFT Stage 3 - Not for Construction 09/23/2024

DESIGN AGENCY
Stantec Consulting Services Inc.
1500 Lake Shore Drive, Suite 100
Columbus, Ohio 43204
(614) 486-4383

DESIGNED	DRAWN	REVIEWED	DATE
BSM	JWS	MRS	03/2024
CHECKED	REVISED	STRUCTURE FILE NUMBER	
EDA		4400194	

WALL 1 AND WALL 2 ELEVATION
BRIDGE NO. LAW-7-0370
S.R. 7 OVER C.R. 104 (BOOTHE EATON ROAD)

LAW-7-2.17
PID No. 75923

842/1247

U:\1736087\4\LAW\75923\structures\LAW007_0370C\sheets\007_75923CWD001.dgn 5/13/2024 8:40:25 AM JSnair

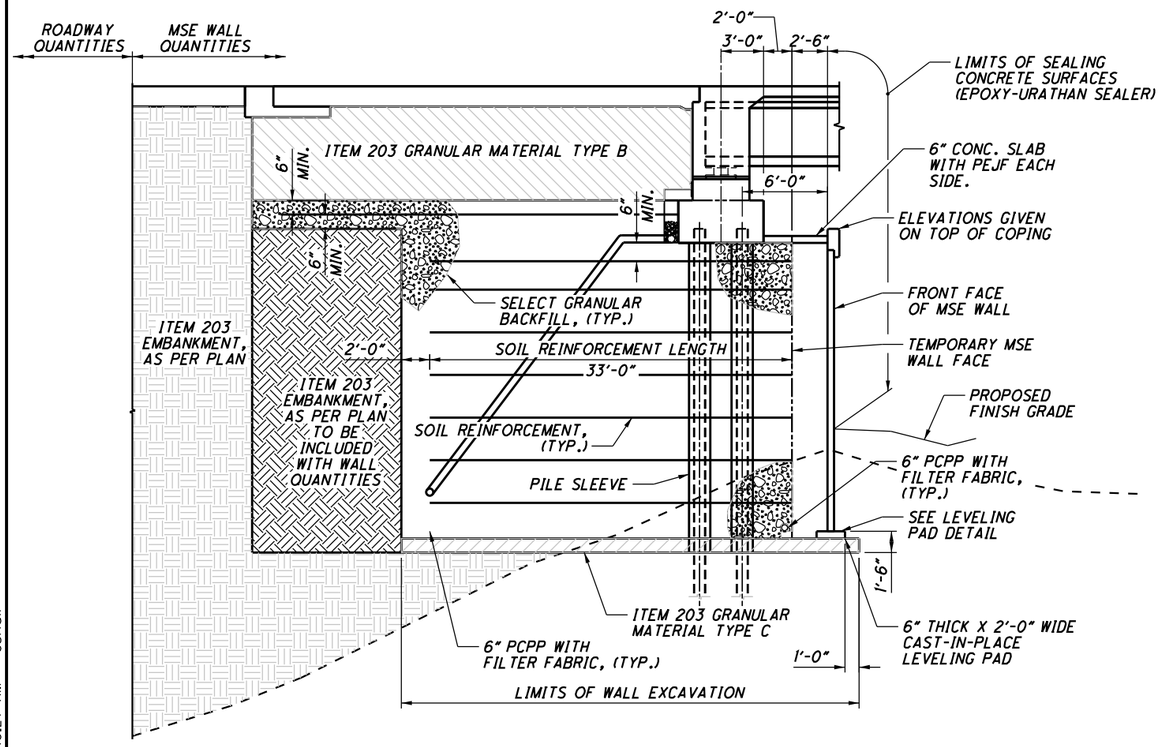

SECTION A-A
(WALL 1)

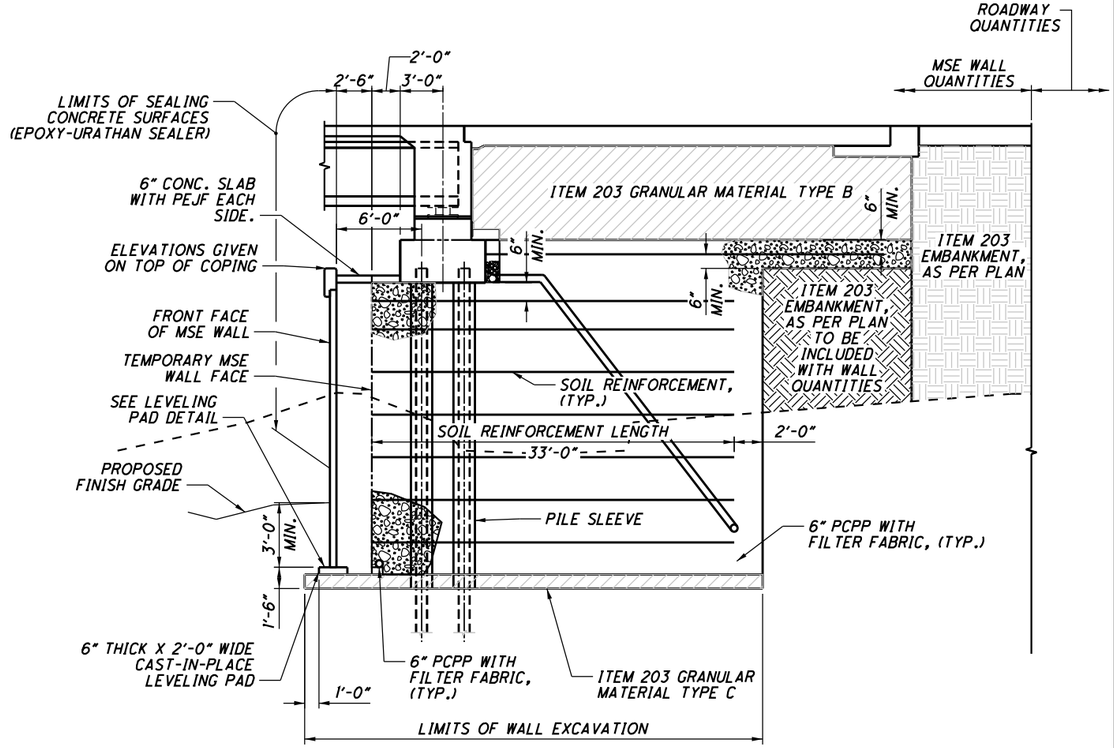

SECTION C-C
(WALL 2)

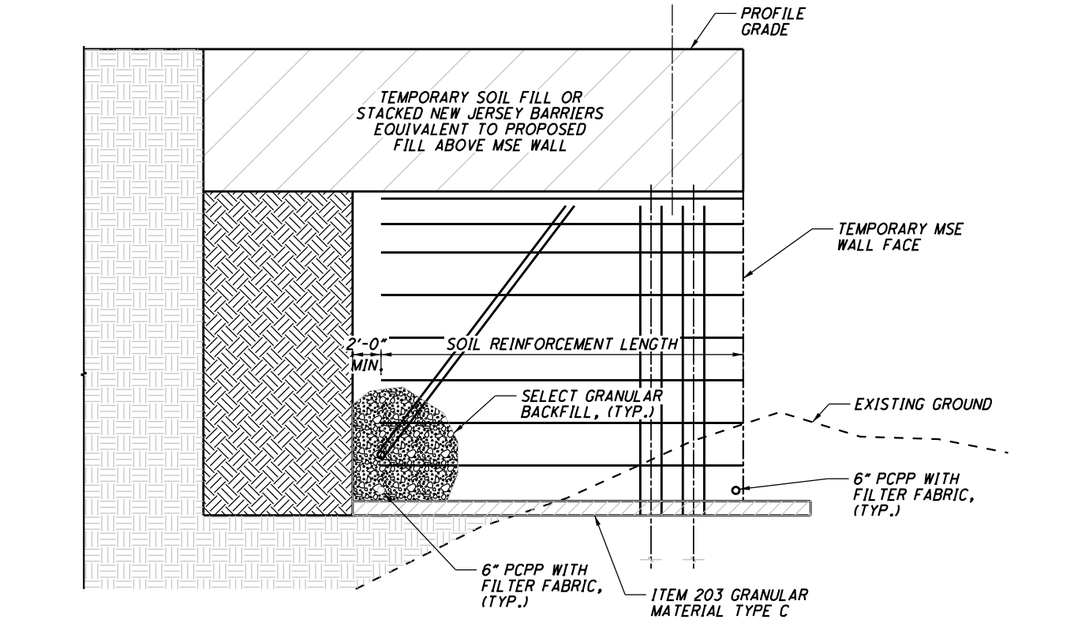

TEMPORARY MSE WALL DETAIL

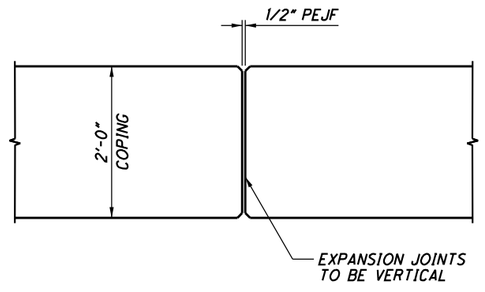

COPING EXPANSION JOINTS

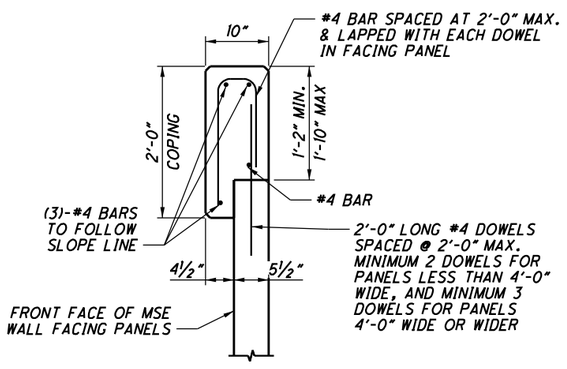

MSE WALL COPING

(ALL REINFORCING STEEL TO BE EPOXY COATED)

NOTE:
ALL METAL COMPONENTS OF THE TEMPORARY MSE WALL SHALL BE GALVANIZED ACCORDING TO SS867.03.A

DRAFT Stage 3 - Not for Construction

DESIGN AGENCY
Stantec Consulting Services Inc.
1500 Lake Shore Drive, Suite 100
Columbus, Ohio 43204
(614) 486-4383

DESIGNED	DRAWN	REVIEWED	DATE
BSM	JWS	MRS	03/2024
CHECKED	REVISED	STRUCTURE FILE NUMBER	
EDA		4400194	

WALL SECTIONS
BRIDGE NO. LAW-7-0370
S.R. 7 OVER C.R. 104 (BOOTHE EATON ROAD)

LAW-7-2.17
PID No. 75923

U:\7360871\4\LAW\75923\structures\LAW007_0370C\sheets\007_75923CWD002.dgn 5/13/2024 8:40:27 AM JSnair

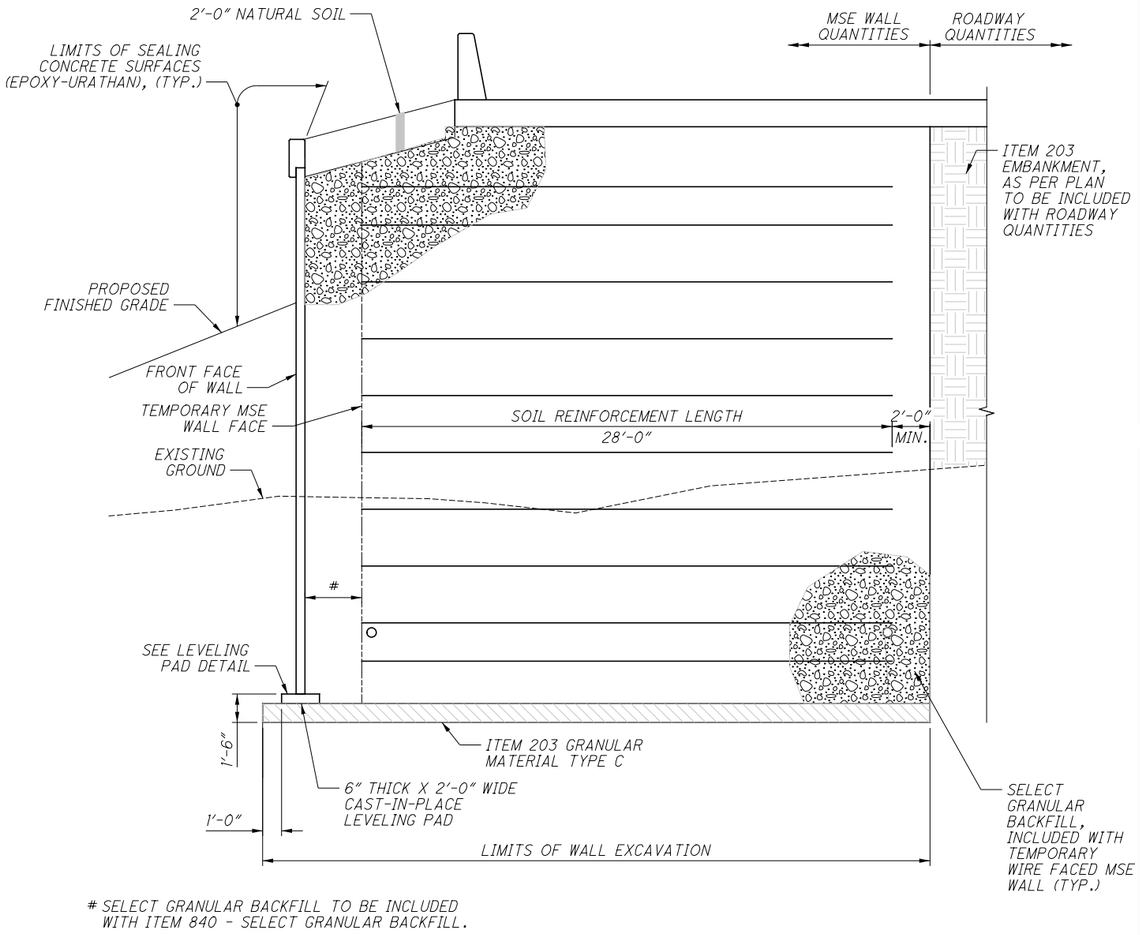

SELECT GRANULAR BACKFILL TO BE INCLUDED WITH ITEM 840 - SELECT GRANULAR BACKFILL.

SECTION B-B

NOTE:

MINIMUM 5½" FACING PANEL THICKNESS, CENTERED ON LEVELING PAD.

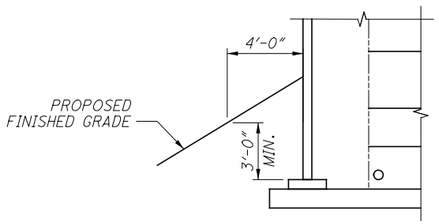

LEVEING PAD DETAIL

	SHORT TERM (UNDRAINED)		LONG TERM (DRAINED)	
MATERIAL TYPE	FRICTION ANGLE (DEGREES)	COHESION (PSF)	FRICTION ANGLE (DEGREES)	COHESION (PSF)
REINFORCED FILL	34	0	34	0
RETAINED SOIL	30	0	30	0
FOUNDATION SOIL	0	2400 / 4000*	23 / 24*	150

* - REAR / FORWARD

ESTIMATED QUANTITIES - WALL 1

CALCULATED BY: BSM 03/11/24
CHECKED BY: MRS 03/21/24

02/NHS/08	ITEM	EXTENSION	TOTAL	UNIT	DESCRIPTION
100	203	20001	100	CY	EMBANKMENT, AS PER PLAN
828	203	35110	828	CY	GRANULAR MATERIAL, TYPE B
LUMP	503	11100	LUMP	LS	COFFERDAMS AND EXCAVATION BRACING
457	512	10050	457	SY	SEALING OF CONCRETE SURFACES (NON-EPOXY)
55	601	37501	55	FT	PAVED GUTTER, TYPE 1-2, AS PER PLAN
6,146	840	20000	6,146	SF	MECHANICALLY STABILIZED EARTH WALL
262	840	21000	262	CY	WALL EXCAVATION
561	840	22000	561	SY	FOUNDATION PREPARATION
5,230	840	23000	5,230	CY	SELECT GRANULAR BACKFILL
76	840	23050	76	CY	NATURAL SOIL
275	840	25010	275	FT	6" DRAINAGE PIPE, PERFORATED
80	840	25020	80	FT	6" DRAINAGE PIPE, NON-PERFORATED
219	840	26000	219	FT	CONCRETE COPING
1.25	840	27000	1.25	DAY	ON-SITE ASSISTANCE
LUMP	840	28000	LUMP	LS	SGB INSPECTION AND COMPACTION TESTING
LUMP	867	00101	LUMP	LS	TEMPORARY WIRED FACED MECHANICALLY STABILIZED EARTH WALL, AS PER PLAN

ESTIMATED QUANTITIES - WALL 2

CALCULATED BY: BSM 03/11/24
CHECKED BY: MRS 03/21/24

02/NHS/08	ITEM	EXTENSION	TOTAL	UNIT	DESCRIPTION
100	203	20001	100	CY	EMBANKMENT, AS PER PLAN
563	203	35110	563	CY	GRANULAR MATERIAL, TYPE B
LUMP	503	11100	LUMP	LS	COFFERDAMS AND EXCAVATION BRACING
355	512	10050	355	SY	SEALING OF CONCRETE SURFACES (NON-EPOXY)
55	601	37501	55	FT	PAVED GUTTER, TYPE 1-2, AS PER PLAN
4,775	840	20000	4,775	SF	MECHANICALLY STABILIZED EARTH WALL
7	840	21000	7	CY	WALL EXCAVATION
447	840	22000	447	SY	FOUNDATION PREPARATION
3,991	840	23000	3,991	CY	SELECT GRANULAR BACKFILL
56	840	23050	56	CY	NATURAL SOIL
245	840	25010	245	FT	6" DRAINAGE PIPE, PERFORATED
35	840	25020	35	FT	6" DRAINAGE PIPE, NON-PERFORATED
181	840	26000	181	FT	CONCRETE COPING
1.25	840	27000	1.25	DAY	ON-SITE ASSISTANCE
LUMP	840	28000	LUMP	LS	SGB INSPECTION AND COMPACTION TESTING
LUMP	867	00101	LUMP	LS	TEMPORARY WIRED FACED MECHANICALLY STABILIZED EARTH WALL, AS PER PLAN

ITEM 867 - TEMPORARY WIRE FACED MECHANICALLY STABILIZED EARTH WALL, AS PER PLAN

THIS PLAN NOTE IS FOR THE CONSTRUCTION OF A TWO-STAGE MSE WALL. THIS PAY ITEM INCLUDES ONLY THE WIRE FACING UNITS, SOIL RETENTION FABIRC, AND SPECIAL CONNECTION DEVICES BETWEEN THE WIRE FACING UNITS AND THE PERMANENT PRECAST CONCRETE FACING OF THE SECOND STAGE OF THE WALL. GALVANIZE THE FURNISED WIRE FACING UNITS AND CONNECTION DEVICES ACCORDING TO SS867.03.A. THE WALL IS TO BE OTHERWISE CONSTRUCTED IN ACCORDANCE WITH SS840, AND ALL OTHER ITEMS FOR THE MSE WALL WILL BE MEASURED AND PAID FOR UNDER SS840 PAY ITEMS.

CONSTRUCT THE FIRST STAGE OF THE WALL WITH WIRE FACING UNITS AND THE EMBANKMENT BEHIND THE WALL FOR A MINIMUM DISTANCE OF 200-FT BEHIND THE WALL. DO NOT BEGIN THE CONSTRUCTION OF THE SECOND STAGE OF HTE WALL WITH PERMANENT PRECAST CONCRETE FACING UNTIL AFTER THE ABOVE REQUIRED WIRE FACED MSE WALL AND EMBANKMENT HAVE BEEN CONSTRUCTED AND A 90 CALENDAR DAY WAITING PERIOD HAS ELAPSED. THE ENGINEER MAY ADJUST THE LENGTH OF THE WAITING PERIOD BASED ON SETTLEMENT PLATEFORM READINGS. THE SPACE BETWEEN THE WIRE FACED WALL AND THE PRECAST CONCRETE FACING IS TO BE FILLED WITH ITEM 840 SELECT GRANULAR BACKFILL IN ACCORDANCE WITH SS840.

NOTE:
ALL METAL COMPONENTS OF THE WIRE FACED MSE WALL ARE TO BE GALVANIZED ACCORDING TO SS867.03.A

DRAFT Stage 3 - Not for Construction 09/23/2024

DESIGN AGENCY
Stantec Consulting Services Inc.
1500 Lake Shore Drive, Suite 100
Columbus, Ohio 43204
(614) 486-4383

DESIGNED	DRAWN	REVIEWED	DATE
BSM	JWS	MRS	03/2024
CHECKED	REVISED	STRUCTURE FILE NUMBER	
EDA		44000194	

WALL SECTION AND ESTIMATED QUANTITIES
BRIDGE NO. LAW-7-0370
S.R. 7 OVER C.R. 104 (BOOTHE EATON ROAD)

LAW-7-2.17
PID No. 75923

844
1247

U:\736087\4\LAW\75923\structures\LAW007.0370C\sheets\007.75923CWD003.dgn 5/14/2024 12:32:32 PM bmcneal

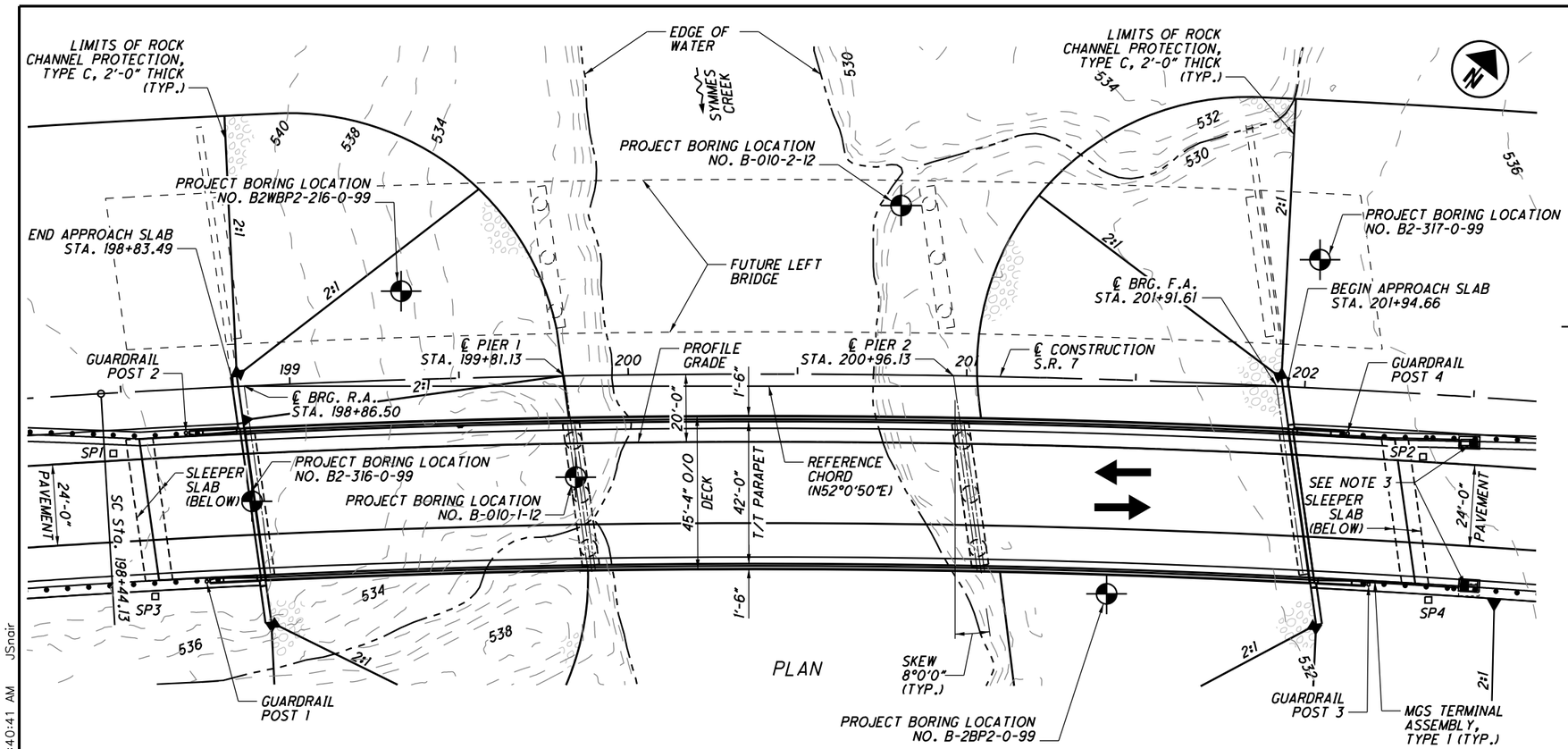

NOTES

1. EARTHWORK LIMITS SHOWN ARE APPROXIMATE. ACTUAL SLOPES SHALL CONFORM TO PLAN CROSS SECTIONS.
2. FOR PRIMARY PROJECT CONTROL INFORMATION TABLE SEE ROADWAY GENERAL NOTES.
3. BRIDGE DECK DRAINAGE IS CONTROLLED BY 1 BRIDGE SCUPPER, (SEE ITEM 518 NOTE ON SHEET 3/25) AND DIRECTED BY ROADWAY CURBS EXTENDING OFF THE EAST END OF THE BRIDGE TO ROADWAY CATCH BASINS.

DESIGN TRAFFIC:
2015 ADT = 10,300 2015 ADTT = 1,133
2035 ADT = 21,400 2035 ADTT = 2,354
DIRECTIONAL DISTRIBUTION = 69/31

LEGEND

PROJECT BORING LOCATION ▫ SETTLEMENT PLATFORM

HYDRAULIC DATA

DRAINAGE AREA = 350.3 SQ. MILES
Q (50) = 17,000 CFS V (50) = 6.46 FT/S DESIGN YEAR
Q (100) = 19,100 CFS V (100) = 6.67 FT/S
STRUCTURE CLEARS THE 50 YEAR DESIGN HW BY 31.22 FEET.

ESTIMATED PILE LENGTHS

REAR ABUTMENT HP12x53 = 75 FT
FORWARD ABUTMENT HP12x53 = 70 FT

ADDITIONAL PROJECT BORING LOCATIONS		
BORING NUMBER	STATION	OFFSET
B-010-0-11	197+89.00	183' LEFT
B-011-0-11	202+02.00	232' LEFT
B-012-0-11	201+90.00	197' RIGHT

S.R. 7 CURVE NO. 3 DATA		
P.I. STA. 205+33.31	L = 1,347.14'	Ts = 914.18'
Δ = 27° 30' 45" (RT)	E = 70.53'	LT = 150.01'
Dc = 1° 45' 00"	TS STA. = 196+19.13	ST = 75.01'
R = 3,274.04'	SC STA. = 198+44.13	e_{max} = 4.60%
T = 683.24'	θs = 1° 58' 07"	CS STA. 211+91.27
	Ls = 225.00'	ST STA. 214+16.27

POST NUMBER	FIRST POST GUARDRAIL	STATION
1	EASTBOUND R.A.	198+72.52
2	WESTBOUND R.A.	198+68.62
3	EASTBOUND F.A.	202+22.03
4	WESTBOUND F.A.	202+13.35

VERTICAL CURVE DATA

LENGTH = 1900'
PVC STA. = 192+75.00 PVC ELEV. = 612.74
PVI STA. = 202+25.00 PVI ELEV. = 555.74
PVT STA. = 211+75.00 PVT ELEV. = 609.67
G1 = -6.00% G2 = 5.68%

PROPOSED STRUCTURE

TYPE: 3-SPAN PRESTRESSED CONCRETE I-BEAM (66" MODIFIED TYPE 4) WITH COMPOSITE REINFORCED CONCRETE DECK SUPPORTED BY STUB TYPE ABUTMENTS ON STEEL PILES AND CAP & COLUMN PIERS ON DRILLED SHAFTS

SPANS: 93.92'-112.83'-93.92', c/c BRGS. (MEASURED ALONG REFERENCE CHORD)

ROADWAY: 42'-0" TOE/TOE PARAPETS

LOADING: HL-93 AND 60 PSF FUTURE WEARING SURFACE

WEARING SURFACE: 1" MONOLITHIC WEARING SURFACE

SKEW: 8°00'00" R.F. FROM PERP. TO REFERENCE CHORD

APPROACH SLABS: AS-1-15, 30'-0" LONG (MODIFIED)

ALIGNMENT: 01°45'00" CURVE RT.

SUPERELEVATION: 0.0460 FT/FT

COORDINATES: LATITUDE 38°26'53.65" N
LONGITUDE 82°26'05.11" W

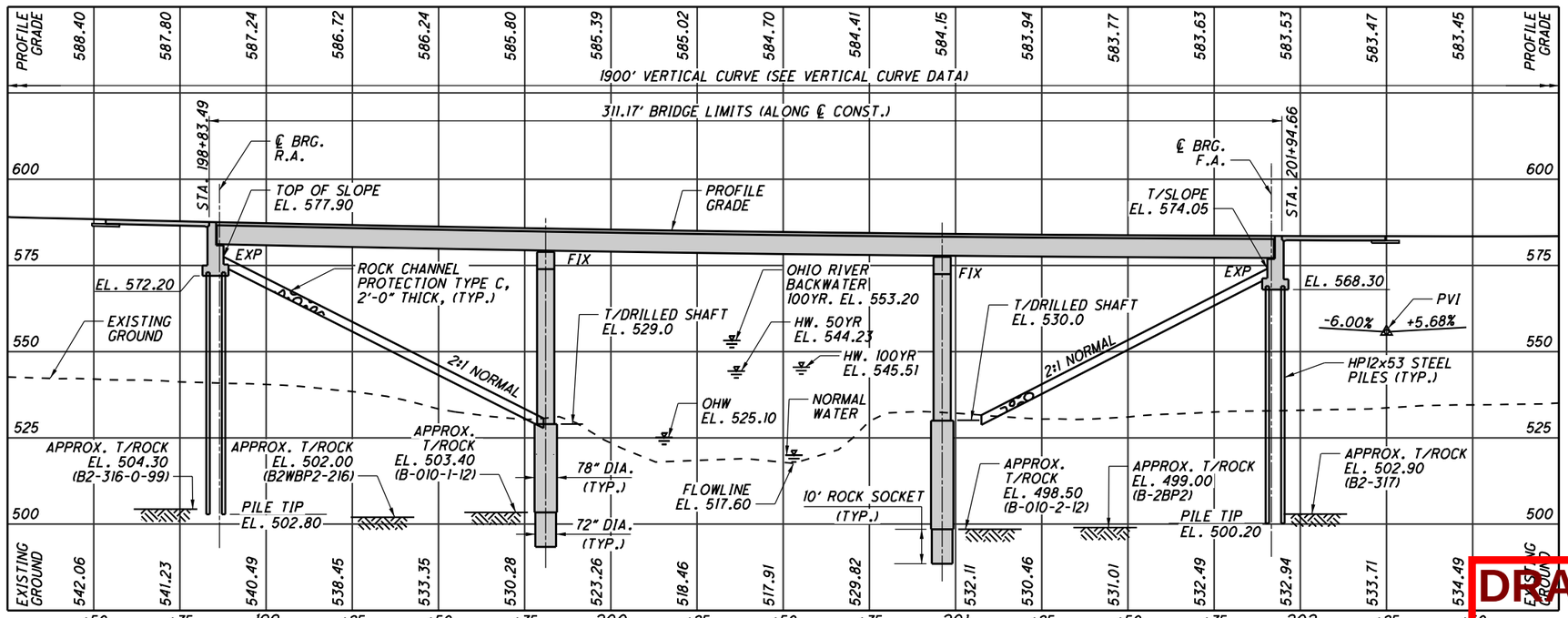

PROFILE ALONG PROFILE GRADE S.R.7

DRAFT Stage 3 - Not for Construction 09/23/2024

DESIGN AGENCY Stantec 1500 Lake Shore Dr. Columbus OH 43204 (614) 486-4383

REVIEWED	DATE
MRS	04/2024

STRUCTURE FILE NUMBER 4400224

DRAWN	REVISED
JWS	

DESIGNED	CHECKED
BSM	EER

LAWRENCE COUNTY
STA. 198+83.49
STA. 201+94.66

SITE PLAN
BRIDGE NO. LAW-7-0376
S.R. 7 OVER SYMMES CREEK

LAW-7-2.17
PID No. 75923

1/25

845/1247

U:\173608714\LAW\75923\structures\LAW007_0376C\sheets\007_0376RSP001.dgn 5/13/2024 8:40:41 AM JSnair

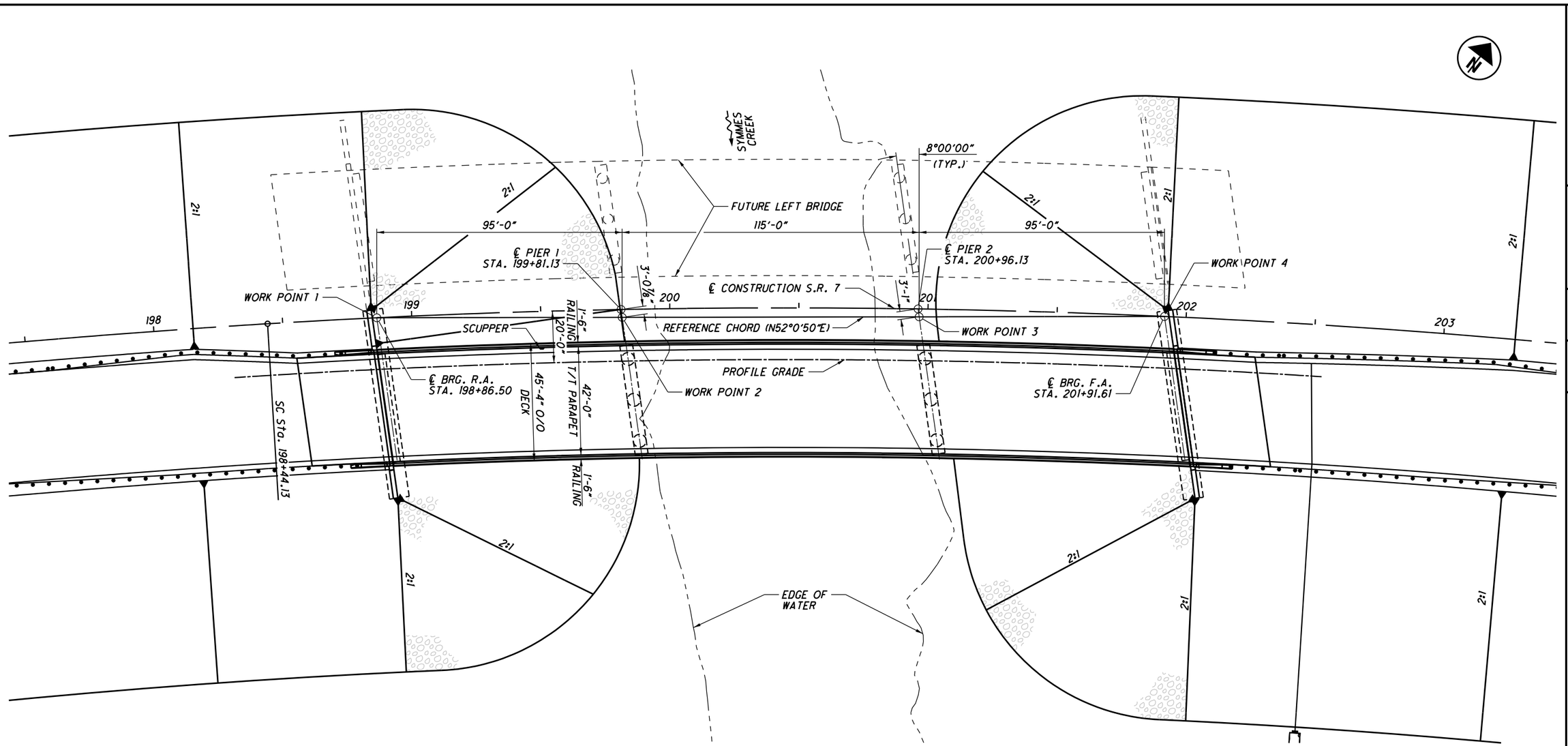

PLAN

S.R. 7 CURVE NO. 3

P.I. STA. 205+33.31
Δ = 27° 30' 45" (RT)
Dc = 1° 45' 00"
R = 3,274.04'
T = 683.24'
L = 1,347.14'
E = 70.53'
e_{max} = 4.60%
SC STA. 198+44.13
CS STA. 211+91.27

DRAFT Stage 3 - Not for Construction 09/23/2024

DESIGN AGENCY
Stantec
1500 Lake Shore Dr.
Columbus, OH 43204
(614) 486-4383

DESIGNED	DRAWN	REVIEWED	DATE
BSM	JWS	MRS	04/2024
CHECKED	REVISED	STRUCTURE FILE NUMBER	
EER		4400224	

GENERAL PLAN
BRIDGE NO. LAW-7-0376
S.R. 7 OVER SYMMES CREEK

LAW-7-2.17
PID No. 75923

2 / 25

846
1247

U:\173608714\LAW\75923\structures\LAW007_0376C\sheets\007_0376RGP001.dgn 5/13/2024 8:40:42 AM JSnair

REFER TO THE FOLLOWING STANDARD BRIDGE DRAWINGS:

AS-1-15	REVISED	01-21-22
AS-2-15	REVISED	01-20-23
EXJ-6-17	REVISED	01-19-24
GSD-1-19	REVISED	01-15-21
PSID-1-13	REVISED	01-20-23
SBR-1-20	REVISED	07-21-23

AND TO THE FOLLOWING SUPPLEMENTAL SPECIFICATIONS:

800	DATED	01-19-24
832	DATED	07-21-23

DESIGN SPECIFICATIONS:
THIS STRUCTURE CONFORMS TO THE "LRFD BRIDGE DESIGN SPECIFICATIONS" ADOPTED BY THE AMERICAN ASSOCIATION OF STATE HIGHWAY AND TRANSPORTATION OFFICIALS, 9TH EDITION AND THE ODOT BRIDGE DESIGN MANUAL, 2021.

DESIGN LOADING:
HL-93
FUTURE WEARING SURFACE (FWS) OF 0.060 KIPS/FT²

OPERATIONAL IMPORTANCE:
A LOAD MODIFIER OF 1.00 HAS BEEN ASSUMED FOR THE DESIGN OF THIS STRUCTURE IN ACCORDANCE WITH THE AASHTO LRFD BRIDGE DESIGN SPECIFICATIONS, ARTICLE 1.3.5 AND THE ODOT BRIDGE DESIGN MANUAL, 2007.

DESIGN DATA:
CONCRETE CLASS QC2 - COMPRESSIVE STRENGTH 4.5 K.S.I. (SUPERSTRUCTURE)
CONCRETE CLASS QC1 - COMPRESSIVE STRENGTH 4.0 K.S.I. (SUBSTRUCTURE)
CONCRETE CLASS QC5 - WITH 1-IN MAX. AGGREGATE SIZE - COMPRESSIVE STRENGTH 4.5 KSI (DRILLED SHAFT)

REINFORCING STEEL - MINIMUM YIELD STRENGTH 60 K.S.I.

STEEL H-PILES - A572 - YIELD STRENGTH 50 K.S.I.

CONCRETE FOR PRESTRESSED BEAMS:
COMPRESSIVE STRENGTH (FINAL) = 7000 P.S.I.
COMPRESSIVE STRENGTH (RELEASE) = 6000 P.S.I.

PRESTRESSING STRAND:
AREA = 0.217 SQ. IN.
ULTIMATE STRENGTH = 270 K.S.I.
INITIAL STRESS = 202.5 K.S.I.
(LOW RELAXATION STRANDS)

WELDED WIRE FABRIC
YIELD STRENGTH - 70 K.S.I.

MONOLITHIC WEARING SURFACE:
MONOLITHIC WEARING SURFACE IS ASSUMED, FOR DESIGN PURPOSES, TO BE 1 INCH THICK.

NOISE BARRIER:
DUE TO THE POTENTIAL FUTURE CONSTRUCTION OF A 12 FOOT TALL NOISE BARRIER ALONG THE RIGHT SIDE OF THE BRIDGE THE PRECAST CONCRETE BEAMS AND CONCRETE DECK HAVE BOTH BEEN DESIGNED TO INCLUDE THE VERTICAL AND LATERAL LOAD CONTRIBUTION DUE TO THE NOISE BARRIER. THE ESTIMATED VERTICAL DEAD LOAD WAS SET AS 167 POUNDS PER FOOT. THE CENTER OF GRAVITY FOR THE NOISE BARRIER WAS SET AT 11 INCHES FROM THE BACK EDGE OF THE STANDARD ODOT SINGLE SLOPE BRIDGE RAILING. LATERAL LOADING ASSUMED, WIND LOAD EQUAL TO 30 POUNDS PER SQUARE FOOT OR A VEHICULAR COLLISION FORCE PER AASHTO SECTION 15.8.4.

THE SINGLE SLOPE BRIDGE RAILING SHOWN IN THE PLANS HAS NOT BEEN MODIFIED FROM THE ODOT STANDARD DRAWINGS AND IS NOT DESIGNED TO SUPPORT THE ABOVE DESCRIBED NOISE BARRIER. IF THE NOISE BARRIER IS CONSTRUCTED IN THE FUTURE THE BRIDGE RAILING WILL NEED TO BE REMOVED AND REPLACED WITH A RAILING THAT IS DESIGNED TO SUPPORT A NOISE BARRIER AND PROPERLY TRANSFER ALL LOADS TO THE EXISTING CONCRETE BRIDGE DECK.

PILE DRIVING CONSTRAINTS:
PRIOR TO DRIVING PILES, CONSTRUCT THE SPILL THROUGH SLOPES AND THE BRIDGE APPROACH EMBANKMENT BEHIND THE ABUTMENTS UP TO THE LEVEL OF THE SUBGRADE ELEVATION FOR A MINIMUM DISTANCE OF 200 FEET BEHIND EACH ABUTMENT (SEE FORWARD AND REAR APPROACH EMBANKMENT CONSTRUCTION THIS SHEET). DO NOT BEGIN THE EXCAVATION FOR THE ABUTMENT FOOTINGS AND THE INSTALLATION OF THE ABUTMENT PILES UNTIL AFTER THE ABOVE REQUIRED EMBANKMENT HAS BEEN CONSTRUCTED.

THE APPROACH EMBANKMENT SHALL BE CONSTRUCTED AND THEN UNDERGO A WAITING PERIOD OF 163 DAYS PRIOR TO DRIVING PILES.

PILES TO BEDROCK:
DRIVE PILES TO REFUSAL ON BEDROCK. THE DEPARTMENT WILL CONSIDER REFUSAL TO BE OBTAINED WHEN THE PILE PENETRATION IS AN INCH OR LESS AFTER RECEIVING AT LEAST 20 BLOWS FROM THE PILE HAMMER. SELECT THE HAMMER SIZE TO ACHIEVE THE REQUIRED DEPTH TO BEDROCK AND REFUSAL.

THE TOTAL FACTORED LOAD IS 188 KIPS PER PILE FOR THE REAR ABUTMENT PILES.

THE TOTAL FACTORED LOAD IS 185 KIPS PER PILE FOR THE FORWARD ABUTMENT PILES.

ABUTMENT PILES:
HP12x53 PILES 80 FEET LONG, ORDER LENGTH, REAR ABUTMENT
HP12x53 PILES 75 FEET LONG, ORDER LENGTH, FORWARD ABUTMENT

PILE SPLICES:
IN LIEU OF USING THE FULL PENETRATION BUTT WELDS SPECIFIED IN CMS 507.09 TO SPLICE STEEL H-PILES, THE CONTRACTOR MAY USE A MANUFACTURED H-PILE SPLICER. FURNISH SPLICERS FROM THE FOLLOWING MANUFACTURER:

ASSOCIATED PILE AND FITTING CORPORATION
8 WOOD HOLLOW RD. PLAZA 1
PARSIPPANY, NEW JERSEY 07054

INSTALL AND WELD THE SPLICER TO THE PILE SECTIONS IN ACCORDANCE WIHT THE MANUFACTURER'S WRITTEN ASSEMBLY PROCEDURE SUPPLIED TO THE ENGINEER BEFORE THE WELDING IS PERFORMED.

DRILLED SHAFTS:
PIER 1
THE MAXIMUM FACTORED LOAD TO BE SUPPORTED BY EACH DRILLED SHAFT IS 1610 KIPS AT THE PIERS. THIS LOAD IS RESISTED BY SIDE RESISTANCE WITHIN A PORTION OF THE BEDROCK SOCKET AND ALSO BY TIP RESISTANCE. THE FACTORED RESISTANCE DEVELOPED BY SIDE RESISTANCE IS 680.1 KIPS, ASSUMED TO ACT ALONG THE BOTTOM 8 FEET OF THE BEDROCK SOCKET FOR THE PIERS. THE FACTORED RESISTANCE PROVIDED BY THE DRILLED SHAFT TIP IS 929.9 KIPS.

PIER 2
THE MAXIMUM FACTORED LOAD TO BE SUPPORTED BY EACH DRILLED SHAFT IS 1612 KIPS AT THE PIERS. THIS LOAD IS RESISTED BY SIDE RESISTANCE WITHIN A PORTION OF THE BEDROCK SOCKET AND ALSO BY TIP RESISTANCE. THE FACTORED RESISTANCE DEVELOPED BY SIDE RESISTANCE IS 680.1 KIPS, ASSUMED TO ACT ALONG THE BOTTOM 8 FEET OF THE BEDROCK SOCKET FOR THE PIERS. THE FACTORED RESISTANCE PROVIDED BY THE DRILLED SHAFT TIP IS 931.9 KIPS.

ITEM 509 - EPOXY COATED REINFORCING STEEL, AS PER PLAN:
IN ADDITION TO THE PROVISIONS OF ITEM 509, FIELD BEND AND/OR FIELD CUT THE REINFORCING STEEL DESIGNATED IN THE PLANS, AS NECESSARY, IN ORDER TO MAINTAIN THE REQUIRED CLEARANCES AND BAR SPACINGS. REPAIR ALL DAMAGE TO THE EPOXY COATING, AS A RESULT OF THIS WORK, ACCORDING TO 709.00.

ITEM 518 - SCUPPERS, INCLUDING SUPPORTS, AS PER PLAN:
REFER TO SHEET 18/25 FOR SCUPPER LOCATION AND SHEET 19/25 FOR DETAILS AND NOTES.

DECK PLACEMENT DESIGN ASSUMPTIONS:
THE FOLLOWING ASSUMPTIONS OF CONSTRUCTION MEANS AND METHODS WERE MADE FOR THE ANALYSIS AND DESIGN OF THE SUPERSTRUCTURE. THE CONTRACTOR IS RESPONSIBLE FOR THE DESIGN OF THE FALSEWORK SUPPORT SYSTEM WITHIN THESE PARAMETERS AND WILL ASSUME RESPONSIBILITY FOR SUPERSTRUCTURE ANALYSIS FOR DEVIATION FROM THESE DESIGN ASSUMPTIONS.

AN EIGHT WHEEL FINISHING MACHINE WITH A MAXIMUM WHEEL LOAD OF 2.32 KIPS.

A MINIMUM OUT-TO-OUT WHEEL SPACING AT EACH END OF THE MACHINE OF 103".

A MAXIMUM SPACING OF OVERHANG FALSEWORK BRACKETS OF 48 IN.

A MAXIMUM DISTANCE FROM THE CENTERLINE OF THE FASCIA GIRDER TO THE FACE OF THE SAFETY HANDRAIL OF 65".

APPROACH EMBANKNMENT CONSTRUCTION:

THE APPROACH EMBANKMENTS SHALL BE CONSTRUCTED AND THEN UNDERGO AN ESTIMATED WAITING PERIOD OF 163 DAYS PRIOR TO DRIVING PILES.

REFER TO SHEETS XX FOR DETAILS AND NOTES REGARDING REINFORCED SLOPE AND EMBANKMENT CONSTRUCTION.

DRAFT Stage 3 - Not for Construction 09/23/2024

DESIGN AGENCY
Stantec
1500 Lake Shore Dr.
Columbus OH 43204
(614) 486-4383

DESIGNED	DRAWN	REVIEWED	DATE
BSM	JWS	MRS	04/2024
CHECKED	REVISED	STRUCTURE FILE NUMBER	
EER		4400224	

GENERAL NOTES 1
BRIDGE NO. LAW-7-0376
S.R. 7 OVER SYMMES CREEK

LAW-7-2.17
PID No. 75923

847/1247

U:\173608714\LAW\75923\structures\LAW007_0376C\sheets\007_0376RGN001.dgn 5/13/2024 8:40:44 AM JSnair

ITEM SPECIAL - SETTLEMENT PLATFORM:

DESCRIPTION: THIS ITEM CONSISTS OF FURNISHING, CONSTRUCTING, AND MAINTAINING SETTLEMENT PLATFORMS AND OBTAINING SETTLEMENT READINGS AS REQUIRED BY THE PLANS OR AS DIRECTED BY THE ENGINEER. SEE SETTLEMENT PLATFORM DETAIL THIS SHEET. AT THE OPTION AND EXPENSE OF THE CONTRACTOR, ADDITIONAL SETTLEMENT PLATFORMS MAY BE INSTALLED AT LOCATIONS APPROVED BY THE ENGINEER. SETTLEMENT READINGS SHALL BE TAKEN WEEKLY DURING CONSTRUCTION AND DURING THE SPECIFIED WAITING PERIOD BEGINNING WITH THE FIRST WEEK FOLLOWING PLACEMENT OF EACH PLATFORM. THE READINGS SHALL BE PLOTTED ON GRAPH PAPER PRESENTING DEFORMATION (ON THE NEGATIVE Y-AXIS) AND FILL HEIGHT (ON THE POSITIVE Y-AXIS) VERSUS TIME (ON THE X-AXIS). A COPY OF EACH CUMULATIVE PLOT SHALL BE SENT TO ODOT, CO, CONSTRUCTION MANAGEMENT/CONSTRUCTION ADMINISTRATION, GEOTECHNICAL AND EARTHWORK ENGINEER AND ODOT, CO, OFFICE OF GEOTECHNICAL ENGINEERING, FOUNDATIONS AND RETAINING WALLS ENGINEER, AFTER EACH SETTLEMENT READING IS RECORDED.

MATERIAL: SOUND LUMBER SUCH AS ¾" EXTERIOR GRADE PLYWOOD SHALL BE USED FOR THE BASE. THE PIPE SHALL BE 2½" STANDARD BLACK PIPE WITH THREADED FITTINGS AS SHOWN ON THE PLANS. A STEEL PLATE 36" X 36" X ⅛" MAY BE SUBSTITUTED FOR THE LUMBER FOR THE PLATFORMS, AT THE CONTRACTOR'S OPTION.

CONSTRUCTION METHODS: THE PLATFORM SHALL CONFORM TO THE SETTTLEMENT PLATFORM DETAILS SHOWN ON THIS SHEET. THE PLATFORM SHALL BE SET ON A LEVEL SURFACE. THE PIPE SHALL BE FIRMLY SECURED TO THE PLATFORM AND SHALL BE MAINTAINED IN A PLUMB POSITION DURING THE PLACEMENT OF THE EMBANKMENT. THE PIPE SHALL BE MARKED AT INTERVALS TO FACILITATE MEASUREMENT OF THE DEPTH OF FILL. THE CONTRACTOR SHALL STOP WORK IN ANY LOCATION WHERE THE SETTLEMENT PLATFORM HAS BEEN DISTURBED OR DAMAGED. PLATFORMS OR PIPES DAMAGED OR DISPLACED DURING CONSTRUCTION SHALL BE RESTORED TO THEIR PROPER CONDITION AT THE CONTRACTOR'S EXPENSE.

SETTLEMENT PLATFORMS SHALL BE PLACED AT THE FOLLOWING LOCATIONS:

I.D.	STATION	OFFSET
SP1	198+47	18' RT.
SP2	202+35	19' RT.
SP3	198+56	61' RT.
SP4	202+40	61' RT.

PRIOR TO PAVING, THE TOP OF THE SETTLEMENT PLATFORM PIPE SHALL BE CUT OFF TWO FEET BELOW THE FINISHED SURFACE OF THE SUBGRADE OR FINISHED GROUND SURFACE, WHICHEVER IS APPLICABLE.

REFER TO ODOT GEOTECHNICAL BULLETIN GB4 "GUIDELINES FOR THE USE OF GEOTECHNICAL INSTRUMENTATION" FOR ADDITIONAL INSTALLATION AND MONITORING INSTRUCTION.

WAITING PERIOD CRITERIA:
THE ENGINEER WILL CONSIDER THE WAITING PERIOD COMPLETE WHEN CONSECUTIVE SETTLEMENT READINGS, RECORDED AFTER EMBANKMENT CONSTRUCTION IS COMPLETE AND AT LEAST ONE WEEK (168 HOURS) APART, RESULT IN ELEVATION DIFFERENCES EQUAL TO OR LESS THAN ⅛ INCH. THE ESTIMATED WAITING PERIOD IS 163 CALENDAR DAYS.

IF SETTLEMENT RATES EXCEED ¾ INCH PER MONTH AFTER EMBANKMENT CONSTRUCTION HAS BEEN COMPLETE FOR 45 CALENDAR DAY, REMAINING CONSTRUCTION, INCLUDING ANY NECCESARY CORRECTIVE MEASURES, MAY PROCEED ONLY AT THE DIRECTION OF THE ENGINEER.

THE DEPARTMENT WILL CONSIDER VIBRATING WIRE SETTLEMENT MONITORING PLATFORMS IN LIEU OF THE CONVENTIONAL SETTLEMENT PLATFORMS. THE CONTRACTOR SHOULD PROVIDE DETAILS OF THE PROPOSED VIBRATING WIRE SETTLEMENT PLATFORMS AS WELL AS DESIGN DRAWINGS OF THE PROPOSED 30 DAYS PRIOR TO CONSTRUCTION. THE DEPARTMENT WILL REQUIRE 10 WORKING DAYS FOR REVIEW AND APPROVAL. THE DESIGN DRAWINGS SHOULD ILLUSTRATE THE LOCATIONS WITH ALL EXISTING AND PROPOSED SITE FEATURES TO VERIFY THE PROPOSED CABLING WILL NOT CONFLICT WITH EXISITING FACILITIES, PROPOSED FACILITIES OR UTILITIES. NO ADDITIONAL PAYMENT WILL BE PROVIDED IF THE CONTRACTOR ELECTS TO UTILIZE VIBRATING WIRE SETTLEMENT PLATFORMS.

MORE INFORMATION PERTAINING TO EMBANKMENT CONSTRUCTION AND CONTROLLED RATES OF FILL ARE PROVIDED IN THE ROADWAY PLANS.

METHOD OF MEASUREMENT, THE NUMBER OF SETTLEMENT PLATFORMS TO BE PAID FOR SHALL BE THE ACTUAL NUMBER OF SETTLEMENT PLATFORMS COMPLETED, MAINTAINED, AND ACCEPTED BY THE ENGINEER.

BASIS OF PAYMENT: PAYMENT SHALL BE MADE AT THE CONTRACT UNIT PRICE EACH FOR "ITEM SPECIAL - SETTLEMENT PLATFORM" WHICH IS COMPENSATION FOR CONSTRUCTING, MAINTAINING, AND MONITORING THE SETTLEMENT PLATFORMS INCLUDING FURNISHING ALL LABOR, EQUIPMENT, MATERIALS, AND INCIDENTALS NECESSARY TO COMPLETE THE WORK. PAYMENT SHALL NOT BE MADE FOR SETTLEMENT PLATFORMS WHICH BECOME USELESS DUE TO DAMAGE CAUSED BY THE CONTRACTOR'S OPERATIONS. SEE DETAIL THIS SHEET.

ABBREVIATIONS:

℄	- CENTERLINE
ABUT.	- ABUTMENTS
BF	- BACK FACE
BOT.	- BOTTOM
BRG.	- BEARINGS
CIP	- CAST IN PLACE
CJ	- CONSTRUCTION JOINT
CONT.	- CONTINUED
EF	- EACH FACE
EQ.	- EQUAL
F.A.	- FORWARD ABUTMENT
FF	- FRONT FACE
GFRP	- GLASS FIBER REINFORCED POLYMER
LT	- LEFT
M.C.	- MECHANICAL CONNECTOR
NPCPP	- NON -PERFORATED CORRUGATED PLASTIC PIPE
PCPP	- PERFORATED CORRUGATED PLASTIC PIPE
R.A.	- REAR ABUTMENT
RCP	- ROCK CHANNEL PROTECTION
RT.	- RIGHT
SPA.	- STATION
SP	- SETTLEMENT PLATFORM
STA.	- STATION
STR	- STRAIGHT
T/	- TOP OF
T&B	- TOP AND BOTTOM
TYP.	- TYPICAL
U.N.O.	- UNLESS NOTED OTHERWISE

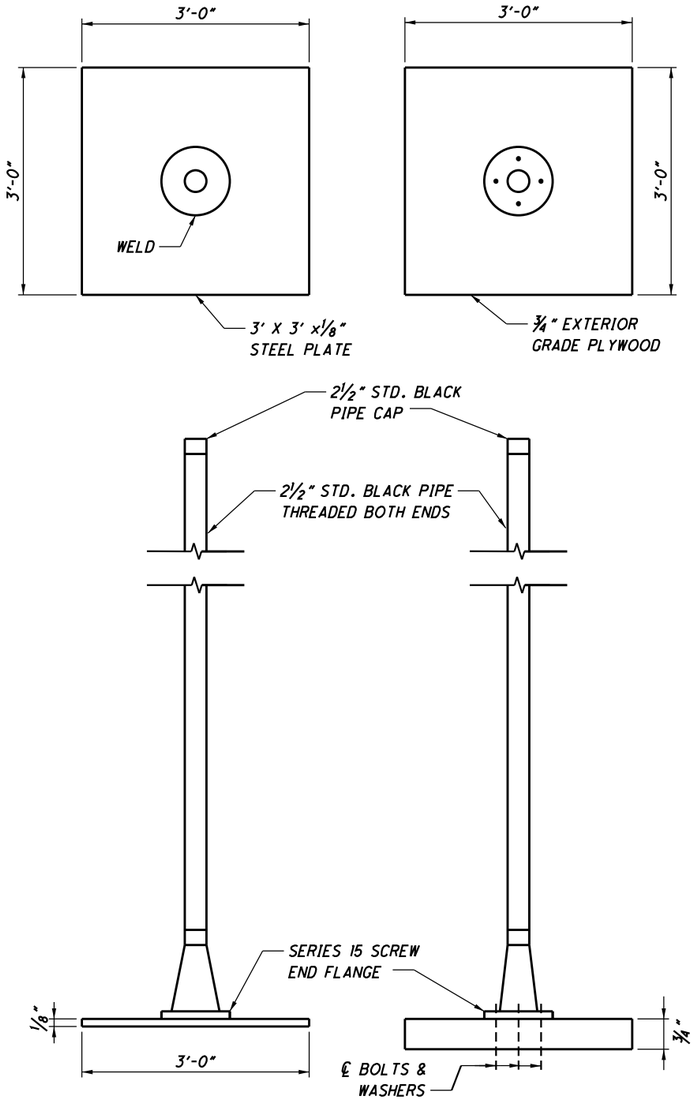

SETTLEMENT PLATFORM
(NOT TO SCALE)

NOTE:

1. SETTLEMENT PLATFORMS SHALL BE ANCHORED BY STAKES DRIVEN AT EACH CORNER TO PREVENT OVERTURNING.

DRAFT Stage 3 - Not for Construction 09/23/2024

DESIGN AGENCY
Stantec
1500 Lake Shore Dr.
Columbus OH 43204
(614) 486-4383

DESIGNED	DRAWN	REVIEWED	DATE
BSM	JWS	MRS	04/2024
CHECKED	REVISED	STRUCTURE FILE NUMBER	
EER		4400224	

GENERAL NOTES 2
BRIDGE NO. LAW-7-0376
S.R. 7 OVER SYMMES CREEK

LAW-7-2.17
PID No. 75923

U:\173608714\LAW\75923\structures\LAW007_0376C\sheets\007_0376RGN002.dgn 5/13/2024 8:40:45 AM JSnair

ESTIMATED QUANTITIES

CALCULATED BY: BSM 03/14/2024
CHECKED BY: MRS 04/17/2024

02/NHS/08	ITEM	EXTENSION	TOTAL	UNIT	DESCRIPTION	R. ABUT.	F. ABUT.	PIERS	SUPER.	GEN.	SEE SHEET
4	SPECIAL	20365000	4	EACH	SPECIAL-SETTLEMENT PLATFORM					LS	
LUMP	503	11100	LUMP	LS	COFFERDAMS AND EXCAVATION BRACING					LS	
LUMP	503	21300	LUMP	LS	UNCLASSIFIED EXCAVATION	LS	LS				
LUMP	505	11100	LUMP	LUMP	PILE DRIVING EQUIPMENT MOBILIZATION					LS	
3,720	507	00200	3,720	FT	STEEL PILES HP12X53, FURNISHED	1920	1800				
3,480	507	00250	3,480	FT	STEEL PILES HP12X53, DRIVEN	1800	1680				
263,183	509	10001	263,183	LB	EPOXY COATED STEEL REINFORCEMENT, AS PER PLAN	13159	13360	100584	136080		18/25
11,345	509	30020	11,345	FT	NO. 4 DEFORMED GFRP REINFORCEMENT				11345		
531	511	34446	531	CY	CLASS QC2 CONCRETE WITH QC/QA, BRIDGE DECK				531		
94	511	34450	94	CY	CLASS QC2 CONCRETE WITH QC/QA, BRIDGE DECK (PARAPET)				94		
270	511	45602	270	CY	CLASS QC4 MASS CONCRETE, SUBSTRUCTURE WITH QC/QA			270			
274	511	43512	274	CY	CLASS QC1 CONCRETE WITH QC/QA, ABUTMENT INCLUDING FOOTING	135	135				
1649	512	10100	1649	SY	SEALING OF CONCRETE SURFACES (EPOXY-URETHANE)	97	97		1455		
38	512	10300	38	SY	SEALING CONCRETE BRIDGE DECKS WITH HMWM RESIN				38		
50	512	33000	50	SY	TYPE 2 WATERPROOFING	25	25				
5	515	15030	5	EACH	DRAPED STRAND PRESTRESSED CONCRETE BRIDGE I-BEAM MEMBERS, LEVEL 3, TYPE 4 MOD. (66 IN.), 95'-2½"				5		
5	515	15030	5	EACH	DRAPED STRAND PRESTRESSED CONCRETE BRIDGE I-BEAM MEMBERS, LEVEL 3, TYPE 4 MOD. (66 IN.), 96'-0¾"				5		
5	515	15040	5	EACH	DRAPED STRAND PRESTRESSED CONCRETE BRIDGE I-BEAM MEMBERS, LEVEL 3, TYPE 4 MOD. (66 IN.), 114'-6"				5		
36	515	20000	36	EACH	INTERMEDIATE DIAPHRAGMS				36		
85	516	12300	85	FT	STRIP SEAL EXPANSION JOINT ANCHORED WITH ELASTOMERIC CONCRETE				85		
30	516	44100	30	EACH	ELASTOMERIC BEARING WITH INTERNAL LAMINATES AND LOAD PLATE (NEOPRENE) (2.968"x10"x24½")	5	5	20			
1	518	12301	1	EACH	SCUPPERS, INCLUDING SUPPORTS, AS PER PLAN				1		19/25
224	518	20000	224	SY	PREFABRICATED GEOCOMPOSITE DRAIN	112	112				
26	518	21200	26	CY	POROUS BACKFILL WITH GEOTEXTILE FABRIC	13	13				
147	518	40000	147	FT	6" PERFORATED CORRUGATED PLASTIC PIPE	73	74				
60	518	40010	60	FT	6" NON-PERFORATED CORRUGATED PLASTIC PIPE, INCLUDING SPECIALS	30	30				
60	524	94950	60	FT	DRILLED SHAFTS, 72" DIAMETER, INTO BEDROCK			60			
168	524	94970	168	FT	DRILLED SHAFTS, 78" DIAMETER, ABOVE BEDROCK			168			
292	526	30011	292	SY	REINFORCED CONCRETE APPROACH SLABS WITH QC/QA (T=17"), AS PER PLAN					292	22/25
85	526	90010	85	FT	TYPE A INSTALLATION					85	
2,726	601	32204	2,726	CY	ROCK CHANNEL PROTECTION, TYPE C WITH GEOTEXTILE FABRIC					2726	

DRAFT Stage 3 - Not for Construction 09/23/2024

U:\173608714\LAW\75923\structures\LAW007_0376C\sheets\007_0376REQ001.dgn 5/14/2024 12:36:34 PM bmcneal

DESIGN AGENCY
Stantec
1500 Lake Shore Dr.
Columbus OH 43204
(614) 486-4383

DESIGNED	DRAWN	REVIEWED	DATE
BSM	JWS	MRS	04/2024
CHECKED	REVISED	STRUCTURE FILE NUMBER	
EER		4400224	

ESTIMATED QUANTITIES
BRIDGE NO. LAW-7-0376
S.R. 7 OVER SYMMES CREEK

LAW-7-2.17
PID No. 75923

849
1247

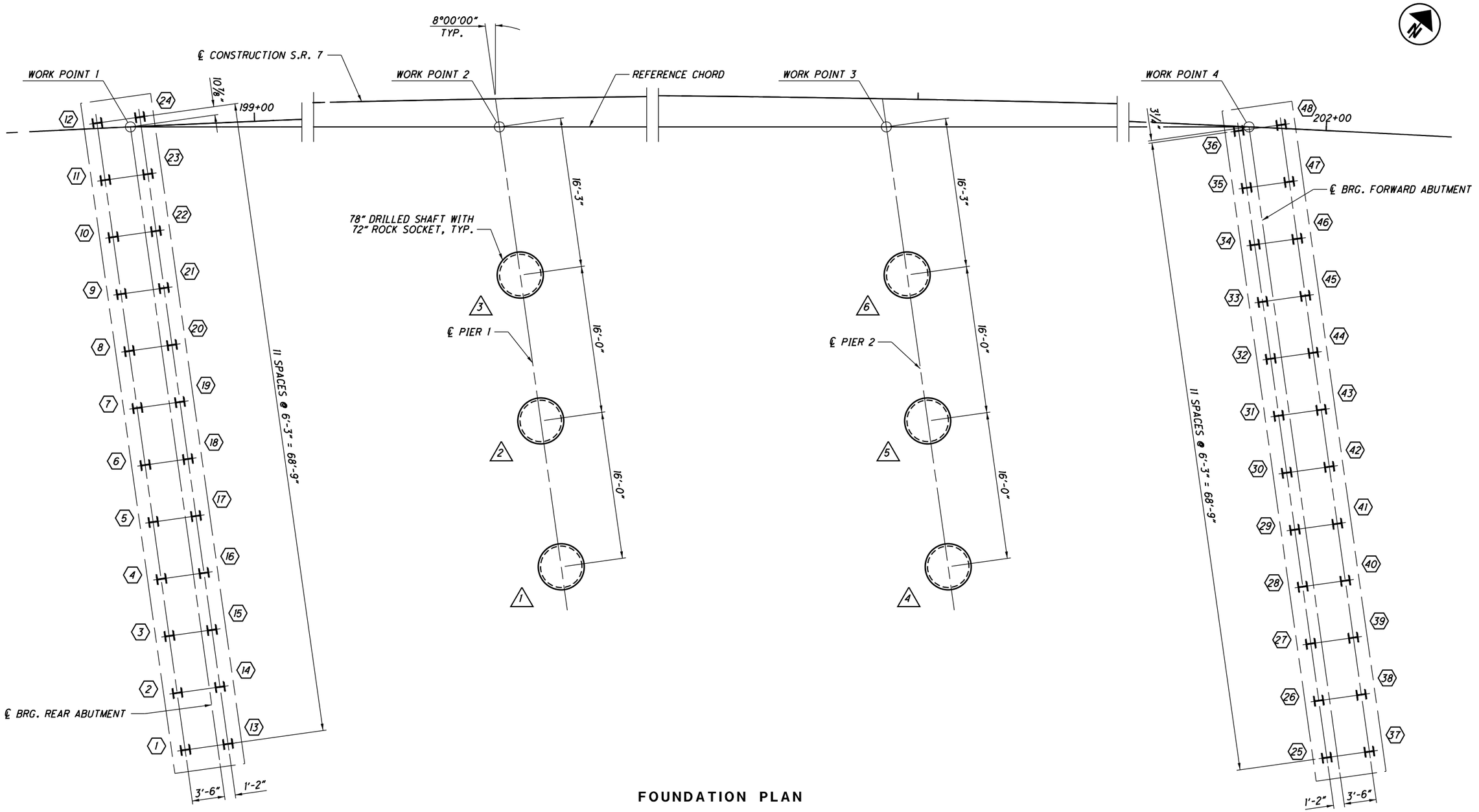

FOUNDATION PLAN

NOTES:
1. ALL PILES ARE HP12x53.
2. (15) DESIGNATES PILE NUMBER AND LOCATION.
3. 4 DESIGNATES DRILLED SHAFT NUMBER.

DRAFT Stage 3 - Not for Construction 09/23/2024

DESIGN AGENCY
Stantec
1500 Lake Shore Dr.
Columbus, OH 43204
(614) 486-4383

DESIGNED	DRAWN	REVIEWED	DATE
BSM	JWS	MRS	04/2024
CHECKED	REVISED	STRUCTURE FILE NUMBER	
EER		4400224	

FOUNDATION PLAN
BRIDGE NO. LAW-7-0376
S.R. 7 OVER SYMMES CREEK

LAW-7-2.17
PID No. 75923

6 / 25

850
1247

U:\173608714\LAW\75923\structures\LAW007_0376C\sheets\007_0376RFP001.dgn 5/13/2024 8:40:48 AM JSnair

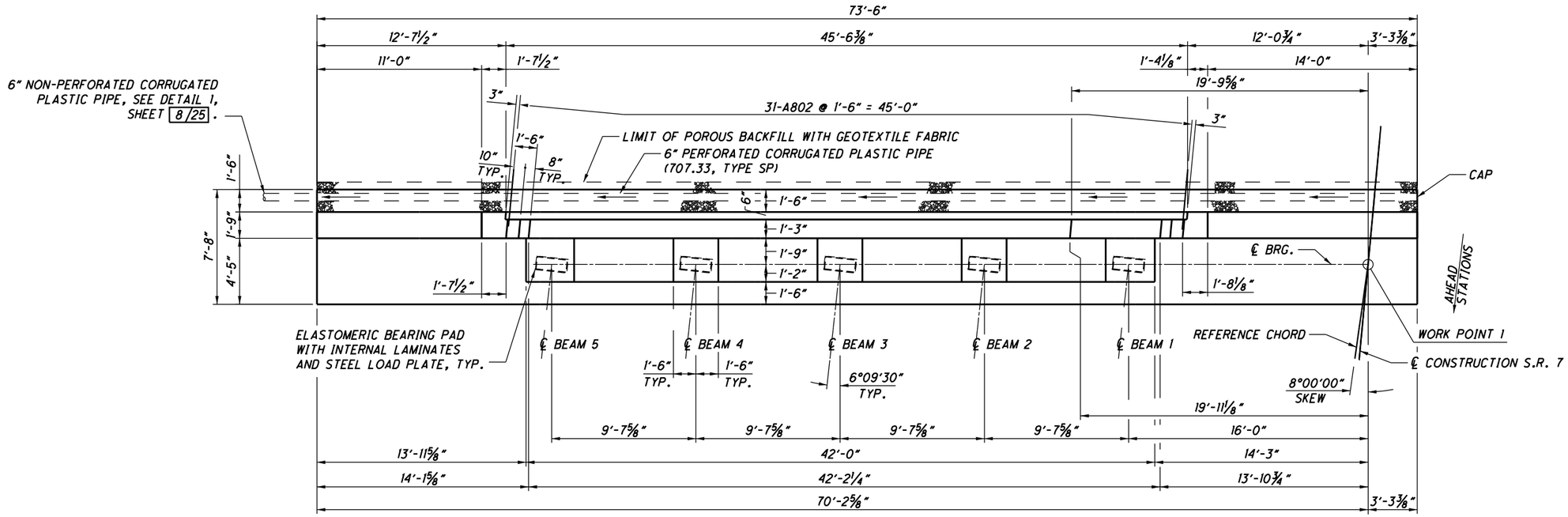

PLAN

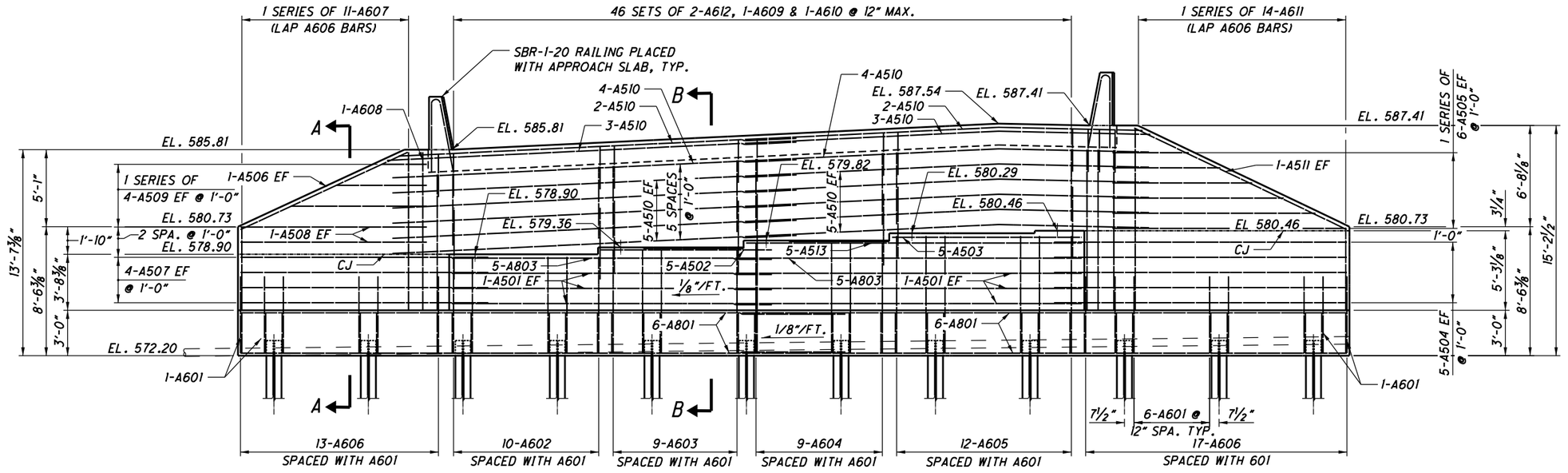

ELEVATION

LAP LENGTHS:
#5 BARS = 3'-3"
#8 BARS = 5'-6"

NOTES:
1. FOR FOUNDATION DETAILS, SEE SHEET 6/25.
2. FOR FOOTING PLAN, SEE SHEET 8/25.
3. FOR EXPANSION JOINT DETAILS, SEE STD. DWG. EXJ-6-17.
4. FOR SECTIONS A-A AND B-B, SEE SHEET 9/25.

DRAFT Stage 3 - Not for Construction 09/23/2024

DESIGN AGENCY
Stantec
1500 Lake Shore Dr.
Columbus, OH 43204
(614) 486-4383

DESIGNED	DRAWN	REVIEWED	DATE
BSM	JWS	MRS	04/2024
CHECKED	REVISED	STRUCTURE FILE NUMBER	
EER		4400224	

REAR ABUTMENT 1
BRIDGE NO. LAW-7-0376
S.R. 7 OVER SYMMES CREEK

LAW-7-2.17
PID No. 75923

7 / 25

851
1247

U:\173608714\LAW\75923\structures\LAW007_0376C\sheets\007_0376RAR001.dgn 5/13/2024 8:40:49 AM JSnair

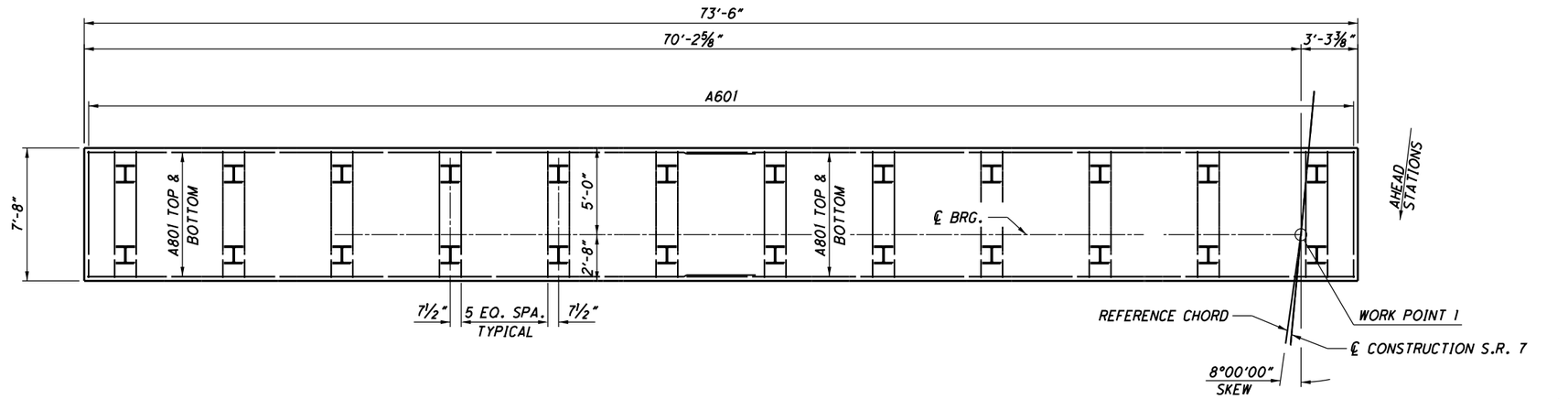

FOOTING PLAN

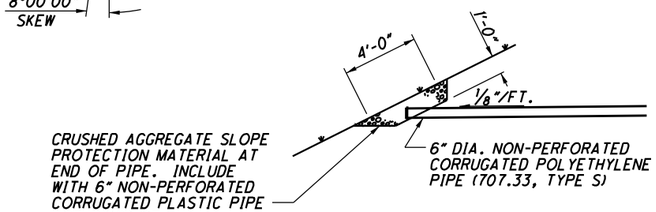

DETAIL 1

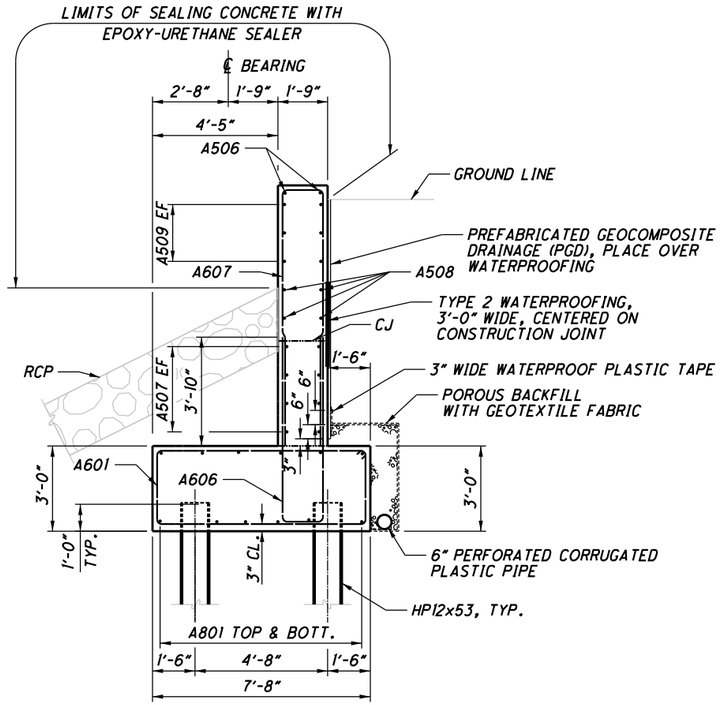

SECTION A-A

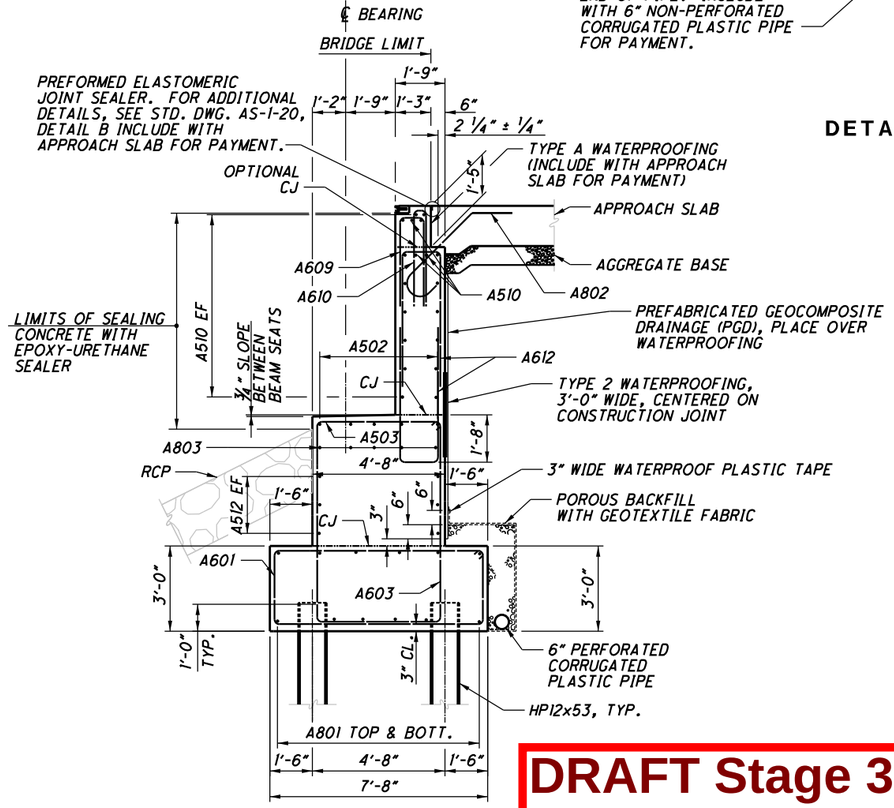

SECTION B-B

NOTE:
FOR FOUNDATION PLAN, SEE SHEET 6/25.

DRAFT Stage 3 - Not for Construction 09/23/2024

DESIGN AGENCY
Stantec
1500 Lake Shore Dr.
Columbus, OH 43204
(614) 486-4383

DESIGNED	DRAWN	REVIEWED	DATE
BSM	JWS	MRS	04/2024
CHECKED	REVISED	STRUCTURE FILE NUMBER	
EER		4400224	

REAR ABUTMENT 2
BRIDGE NO. LAW-7-0376
S.R. 7 OVER SYMMES CREEK

LAW-7-2.17
PID No. 75923

8 / 25

852
1247

U:\173608714\LAW\75923\structures\LAW007_0376C\sheets\007_0376RAR002.dgn 5/13/2024 8:40:50 AM JSnair

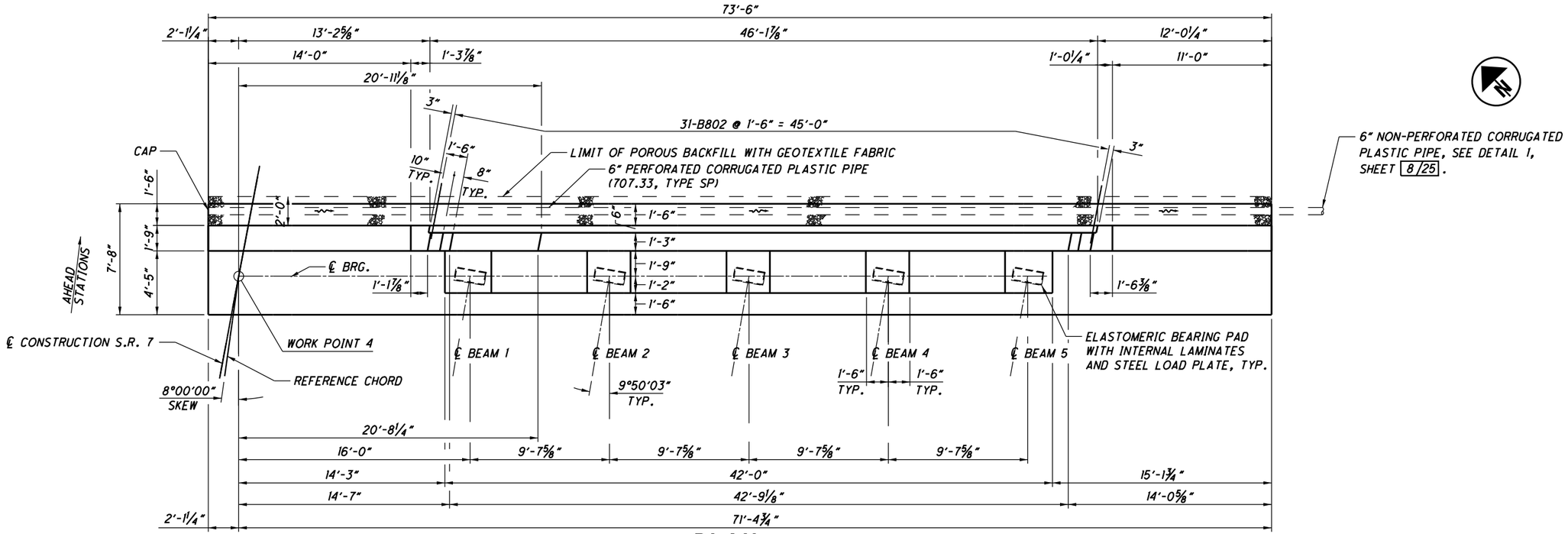

PLAN

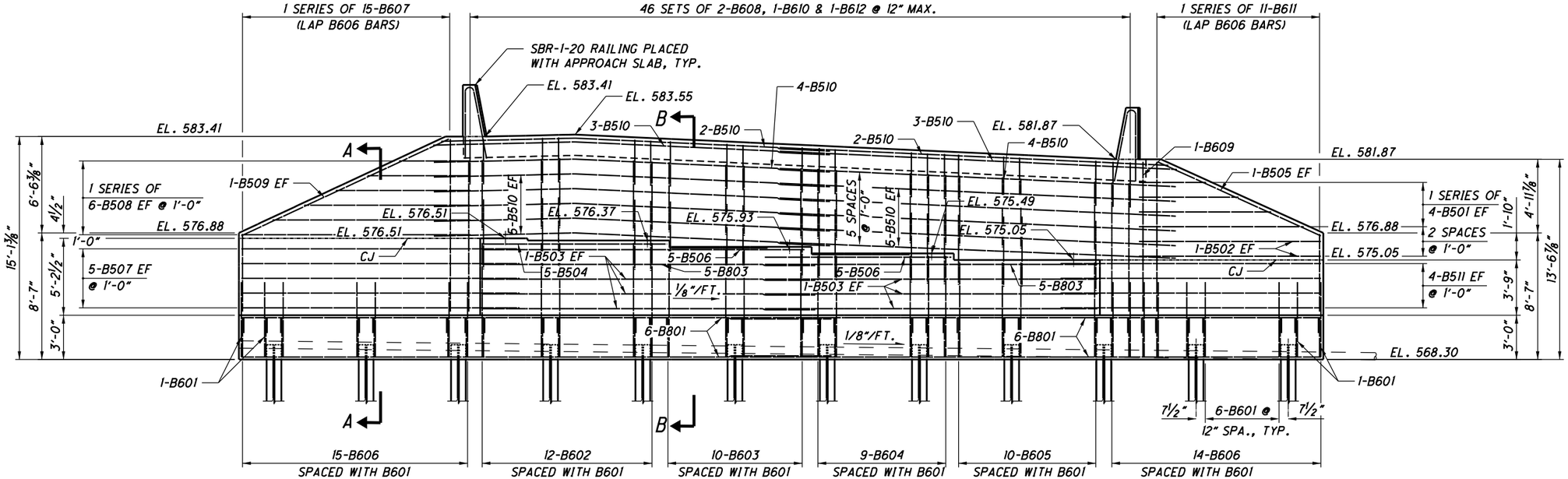

ELEVATION

LAP LENGTHS:
#5 BARS = 3'-3"
#8 BARS = 5'-6"

NOTES:
1. FOR FOUNDATION PLAN, SEE SHEET 6/25.
2. FOR DOWEL LAYOUT, SEE SHEET 10/25.
3. FOR EXPANSION JOINT DETAILS, SEE STD. DWG. EXJ-6-17.
4. FOR SECTION A-A AND B-B, SEE SHEET 7/25.

DRAFT Stage 3 - Not for Construction 09/23/2024

DESIGN AGENCY
Stantec
1500 Lake Shore Dr.
Columbus, OH 43204
(614) 486-4383

DESIGNED	DRAWN	REVIEWED	DATE
BSM	JWS	MRS	04/2024
CHECKED	REVISED	STRUCTURE FILE NUMBER	
EER		4400224	

FORWARD ABUTMENT 1
BRIDGE NO. LAW-7-0376
S.R. 7 OVER SYMMES CREEK

LAW-7-2.17
PID No. 75923

U:\173608714\LAW\75923\structures\LAW007_0376C\sheets\007_0376RAF001.dgn 5/13/2024 8:40:51 AM JSnair

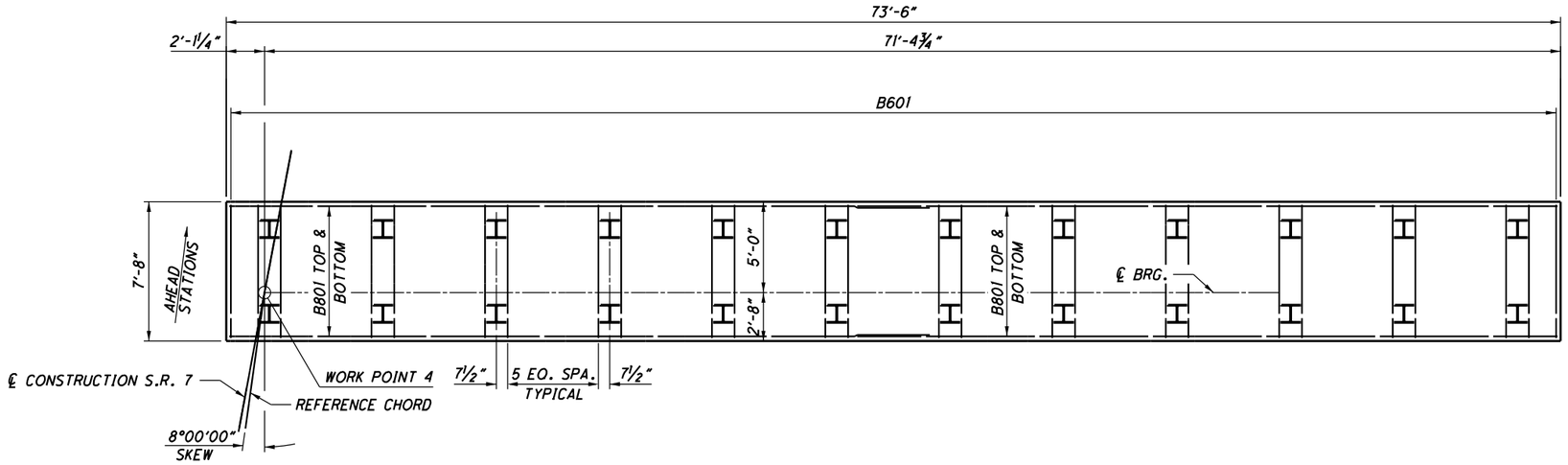

FOOTING PLAN

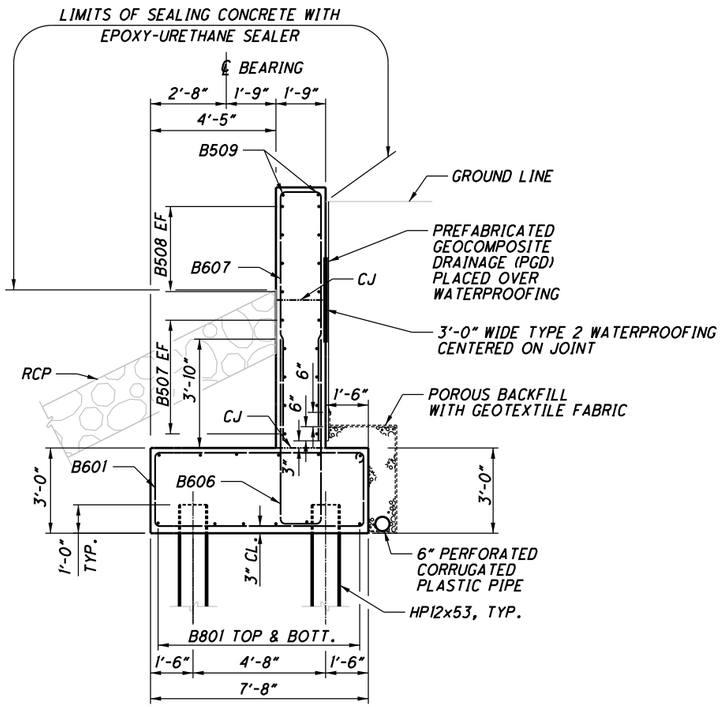

SECTION A-A

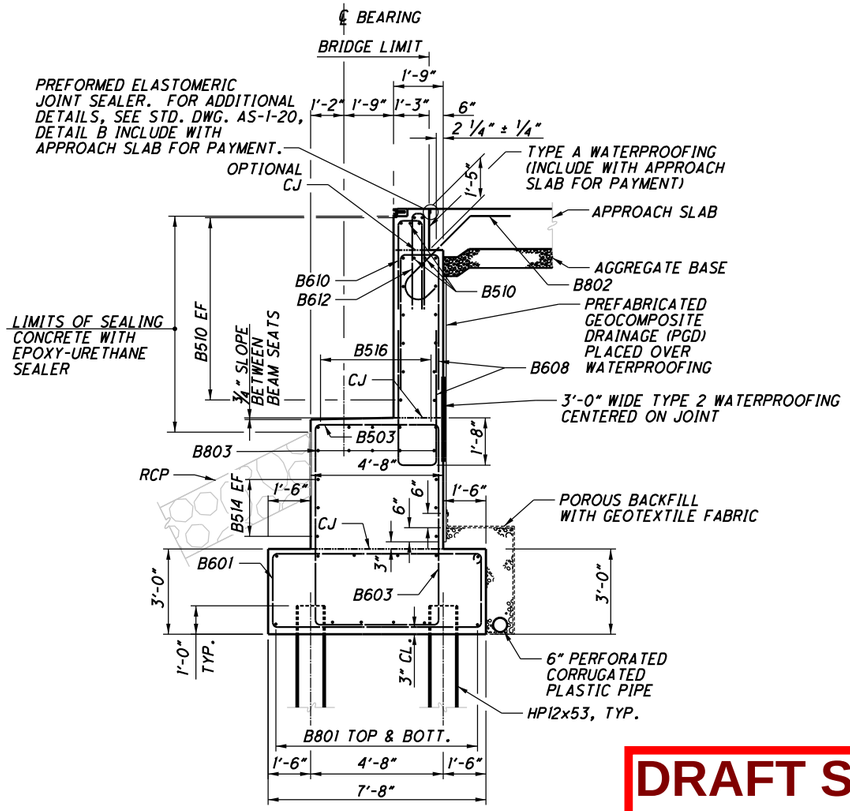

SECTION B-B

NOTE:
FOR FOUNDATION PLAN, SEE SHEET 6/25.

DRAFT Stage 3 - Not for Construction 09/23/2024

DESIGN AGENCY
Stantec
1500 Lake Shore Dr.
Columbus, OH 43204
(614) 486-4383

DESIGNED	DRAWN	REVIEWED	DATE
BSM	JWS	MRS	04/2024
CHECKED	REVISED	STRUCTURE FILE NUMBER	
EER		4400224	

FORWARD ABUTMENT 2
BRIDGE NO. LAW-7-0376
S.R. 7 OVER SYMMES CREEK

LAW-7-2.17
PID No. 75923

10/25

854/1247

U:\173608714\LAW\75923\structures\LAW007_0376C\sheets\007_0376RAF002.dgn 5/13/2024 8:40:52 AM JSnair

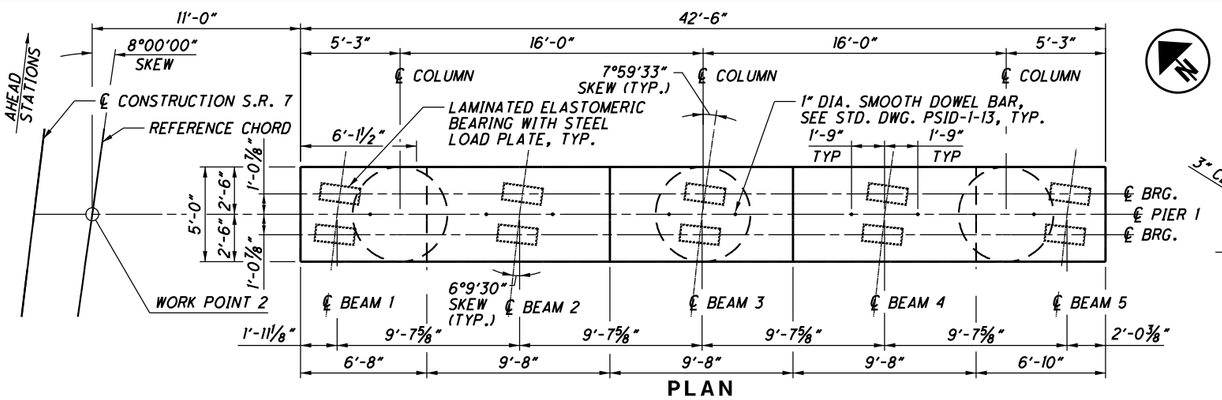

PLAN

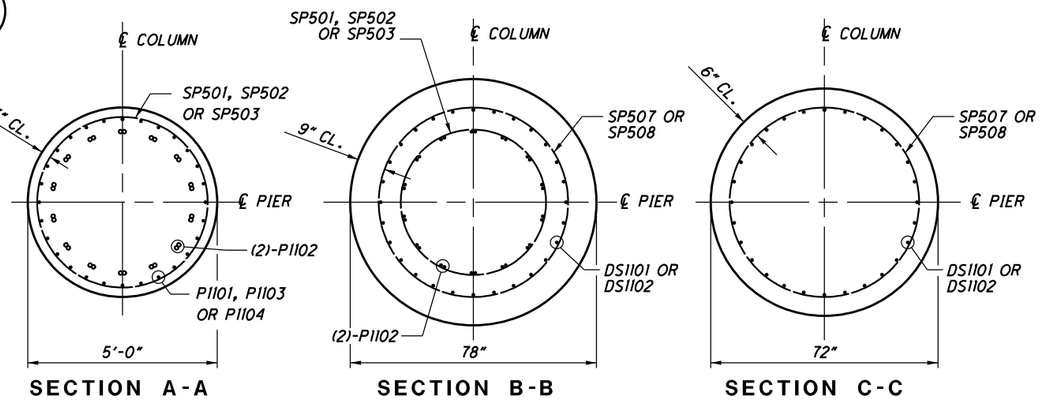

SECTION A-A

SECTION B-B

SECTION C-C

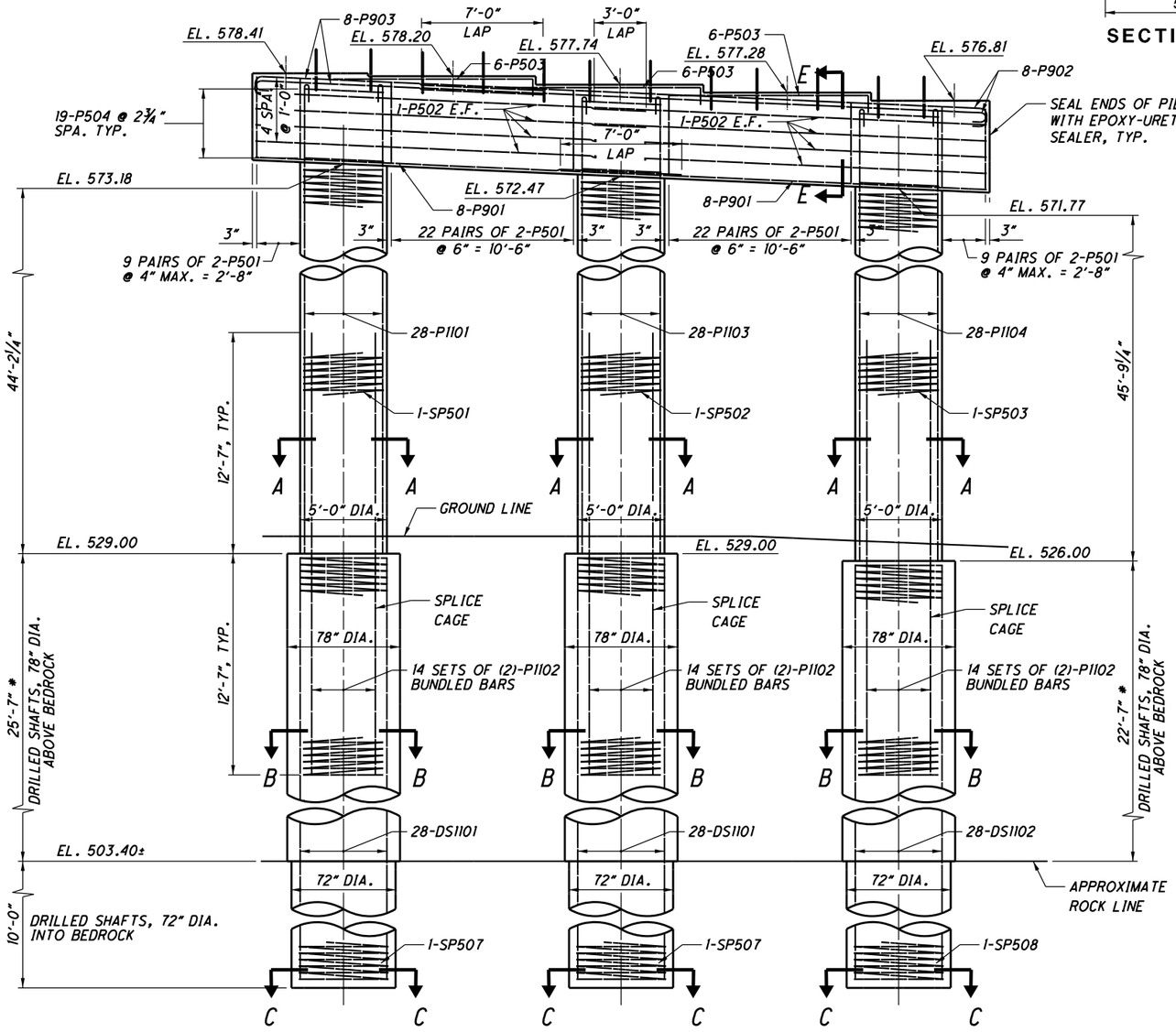

ELEVATION

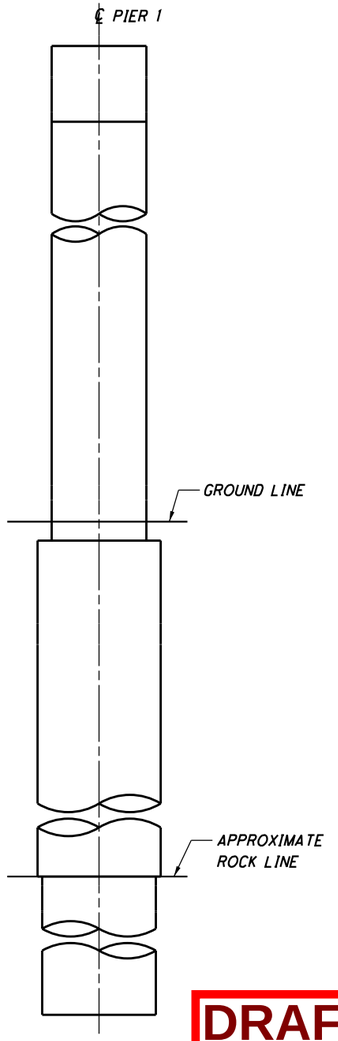

END ELEVATION

NOTES:
1. FOR LAYOUT OF DRILLED SHAFTS, SEE SHEET 6/25.
2. * DIMENSION BASED ON THE APPROXIMATE TOP OF BEDROCK ELEVATIONS.
3. FOR SECTION E-E, SEE SHEET 12/25.

DRAFT Stage 3 - Not for Construction
09/23/2024

DESIGN AGENCY
Stantec
1500 Lake Shore Dr.
Columbus OH 43204
(614) 486-4383

DESIGNED	DRAWN	REVIEWED	DATE
BSM	JWS	MRS	04/2024
CHECKED	REVISED	STRUCTURE FILE NUMBER	
EER		4400224	

PIER 1
BRIDGE NO. LAW-7-0376
S.R. 7 OVER SYMMES CREEK

LAW-7-2.17
PID No. 75923

11 / 25

855
1247

JSnair
U:\173608714\LAW\75923\structures\LAW007_0376C\sheets\007_0376RPI001.dgn 5/13/2024 8:40:54 AM

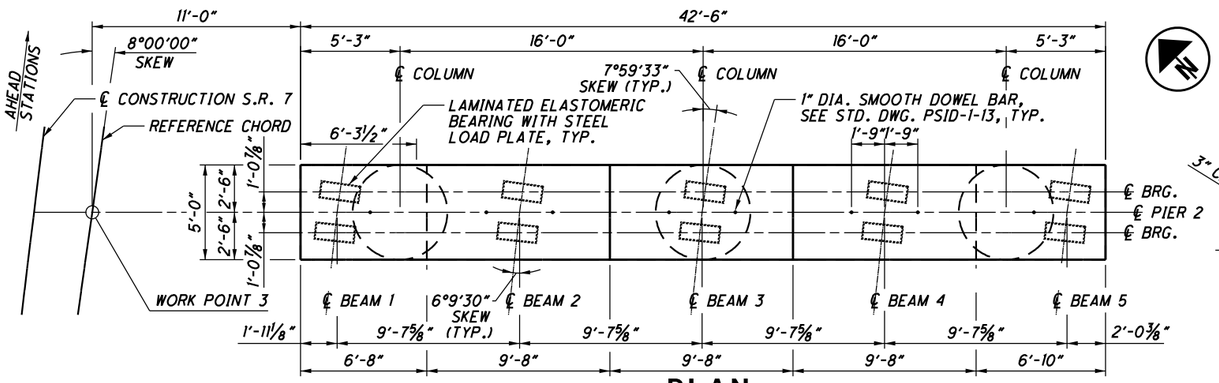

PLAN

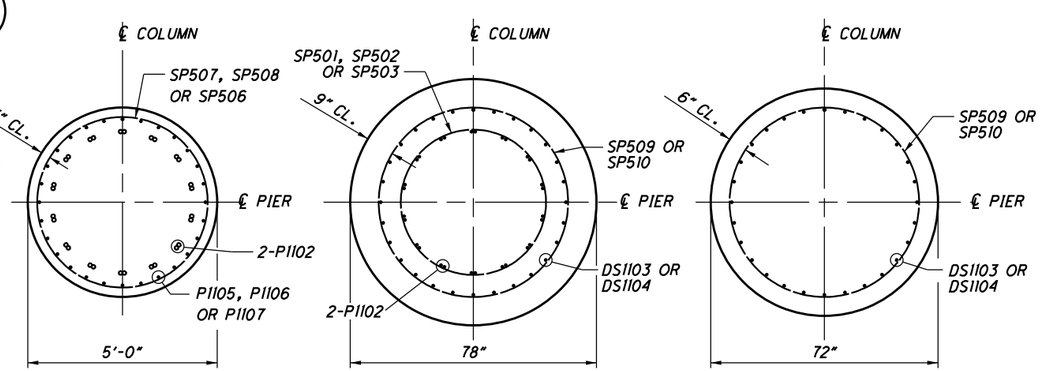

SECTION A-A

SECTION B-B

SECTION C-C

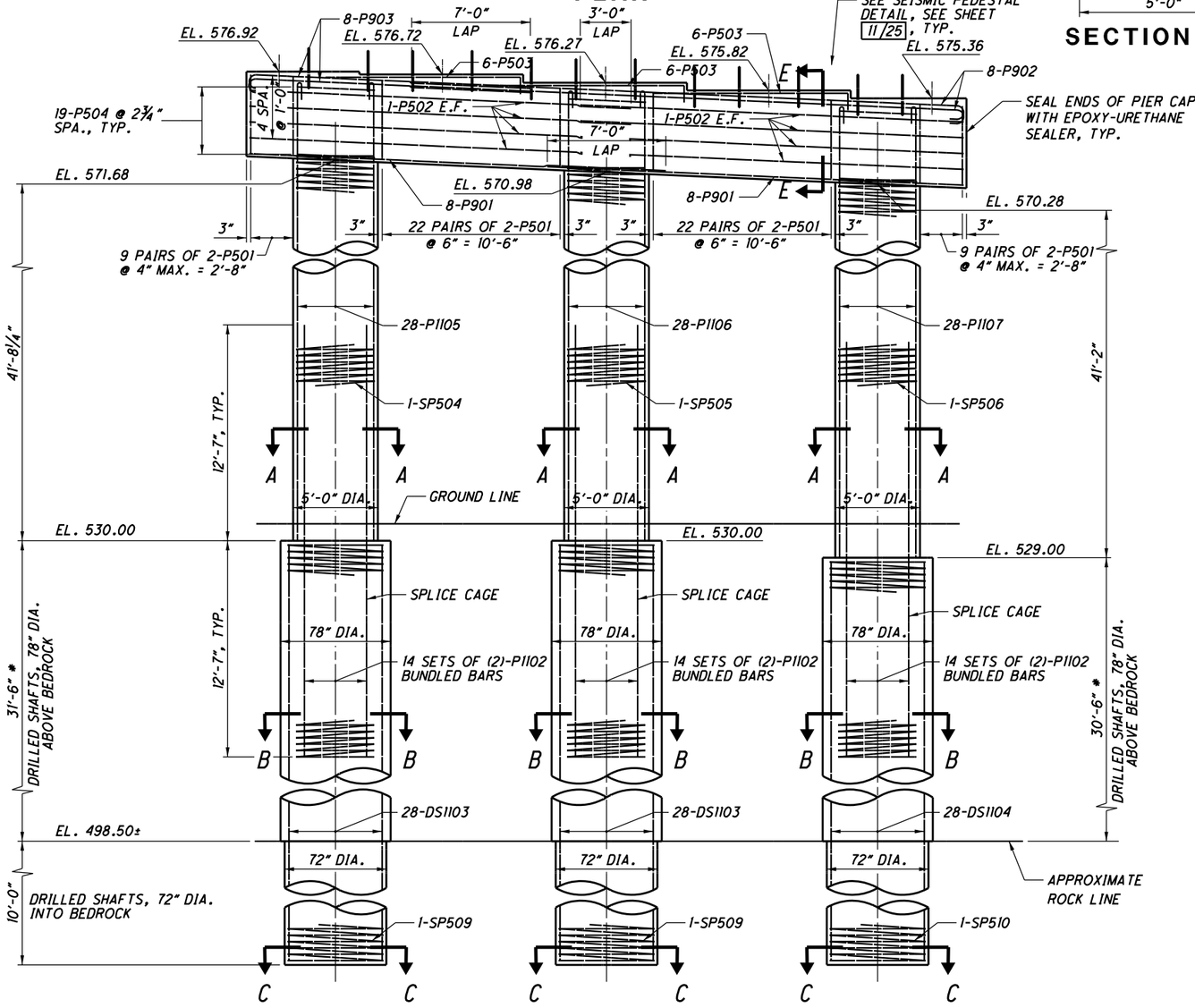

ELEVATION

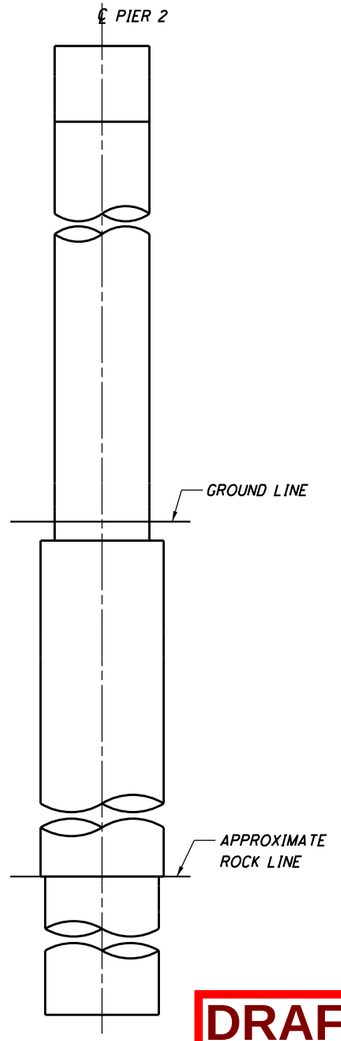

END ELEVATION

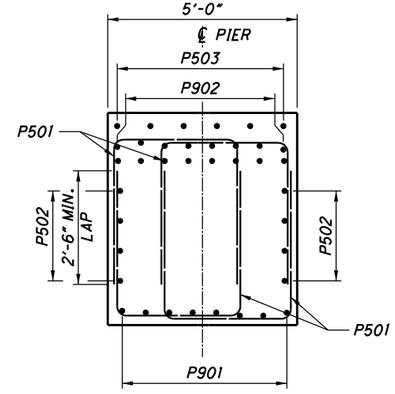

SECTION E-E

NOTES:
1. FOR LAYOUT OF DRILLED SHAFTS, SEE SHEET 6/25. DIMENSIONS SHOWN ON THE APPROXIMATE TOP OF BEDROCK ELEVATIONS.

DRAFT Stage 3 - Not for Construction 09/23/2024

DESIGN AGENCY
Stantec
1500 Lake Shore Dr.
Columbus OH 43204
(614) 486-4383

DESIGNED	DRAWN	REVIEWED	DATE
BSM	JWS	MRS	04/2024
CHECKED	REVISED	STRUCTURE FILE NUMBER	
EER		4400224	

PIER 2
BRIDGE NO. LAW-7-0376
S.R. 7 OVER SYMMES CREEK

LAW-7-2.17
PID No. 75923

12/25

856/1247

U:\173608714\LAW\75923\structures\LAW007_0376C\sheets\007_0376RPI002.dgn 5/13/2024 8:40:55 AM JSnair

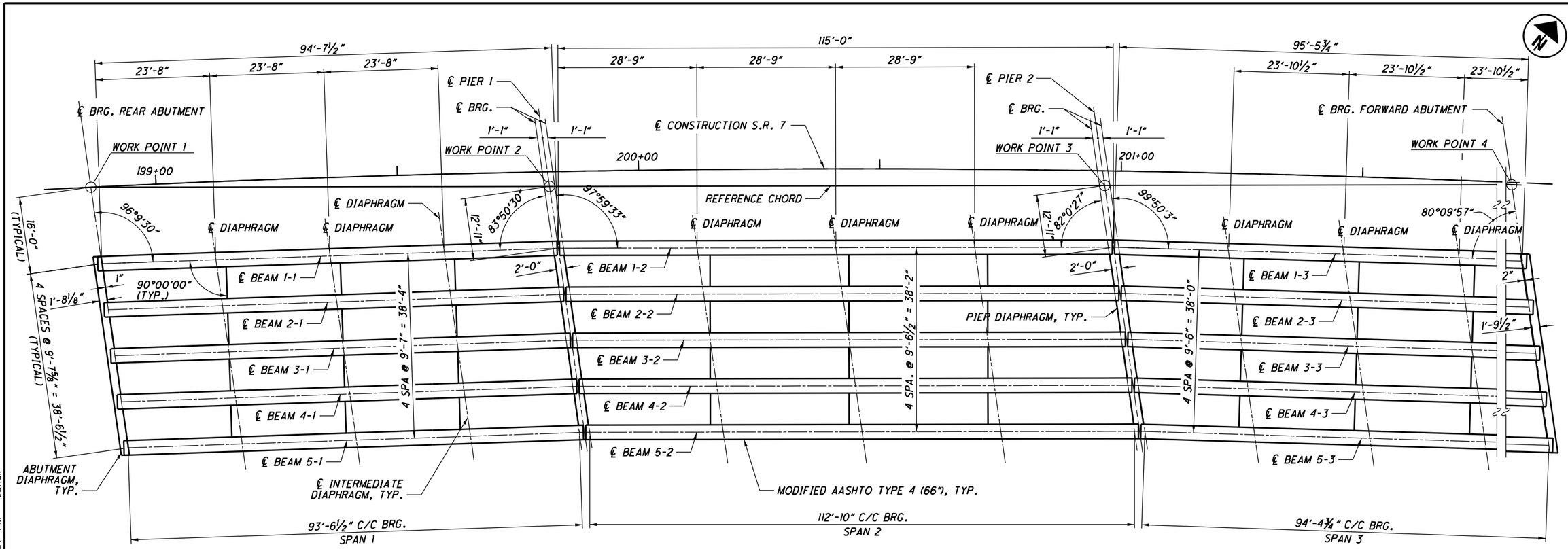

FRAMING PLAN

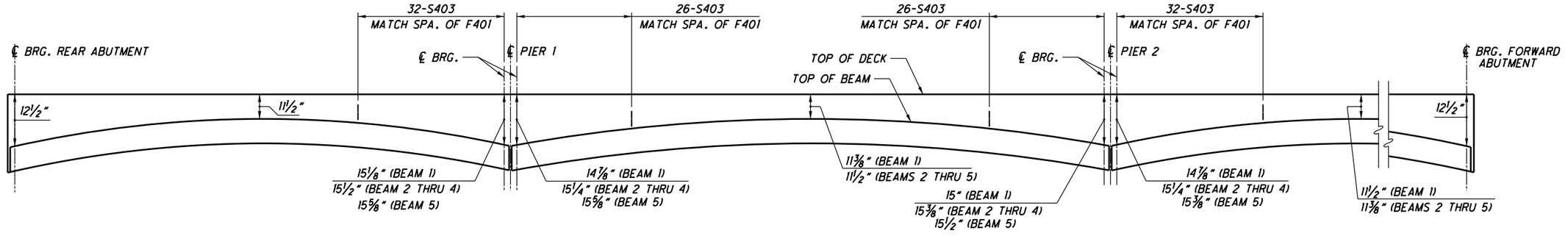

LONGITUDINAL SECTION THRU DECK

(ON ℄ OF BEAM)

SPANS 1 AND 3

CAMBER:
ESTIMATED CAMBER AT DAY 0 (D_0) IS 1¼ INCHES.

ESTIMATED CAMBER AT DAY 30 (D_{30}) IS 2⅜ INCHES.

DEFLECTION DUE TO REMAINING DEAD LOAD (E.G. CONCRETE DECK, CROSSFRAMES, DIAPHRAGMS, BARRIERS, ETC.) IS 1 INCH.

THE BEAM SEAT ELEVATIONS ASSUME ESTIMATED CAMBER D_{30} WITH A SACRIFICIAL HAUNCH THICKNESS OF 2 INCHES MEASURED AT THE EDGE OF THE FLANGE.

SPAN 2

CAMBER:
ESTIMATED CAMBER AT DAY 0 (D_0) IS 2½ INCHES.

ESTIMATED CAMBER AT DAY 30 (D_{30}) IS 4½ INCHES.

DEFLECTION DUE TO REMAINING DEAD LOAD (E.G. CONCRETE DECK, CROSSFRAMES, DIAPHRAGMS, BARRIERS, ETC.) IS 2 INCHES.

THE BEAM SEAT ELEVATIONS ASSUME ESTIMATED CAMBER D_{30} WITH A SACRIFICIAL HAUNCH THICKNESS OF 2 INCHES MEASURED AT THE EDGE OF THE FLANGE.

NOTES:

1. *ABUTMENT DIAPHRAGM CONCRETE: PLACE THE DIAPHRAGM CONCRETE ENCASING THE STRUCTURAL MEMBER ENDS AFTER THE DECK PLACEMENT IN THE ADJACENT SPAN IS COMPLETE. PROCEDURES THAT PLACE THE ABUTMENT DIAPHRAGM WITH THE DECK CONCRETE MAY BE APPROVED BY THE ENGINEER IF THE PLACEMENT SUBMITTAL CAN ASSURE THAT THE DECK CONCRETE IN THE ADJACENT SPAN WILL BE PLACED BEFORE CONCRETE IN THE DIAPHRAGM HAS REACHED ITS INITIAL SET. LOCATE THE DECK CONSTRUCTION JOINT PARALLEL TO THE CENTERLINE OF THE ABUTMENT OFFSET 1-FT FROM THE FACE OF THE DIAPHRAGM TOWARDS THE SPAN.*
2. *FOR ADDITIONAL BEAM & DIAPHRAGM DETAILS, SEE SHEET 14/25, 15/25, 17/25 AND STD. DWG. PSID-1-13.*
3. *DECK SLAB THICKNESS FOR CONCRETE QUANTITY: THE ESTIMATED QUANTITY OF DECK CONCRETE IS ASSUMED ACCORDING TO ITEMS 5% IN ADDITION TO THE DESIGN SLAB THICKNESS, THE QUANTITY INCLUDES A VARIABLE HAUNCH THICKNESS THAT PROVIDES AN ALLOWANCE FOR: VERTICAL GRADE ADJUSTMENT, BEAM CAMBER AND ADDITIONAL SACRIFICIAL HAUNCH THICKNESS.*

DRAFT Stage 3 - Not for Construction 09/23/2024

DESIGN AGENCY
Stantec
1500 Lake Shore Dr.
Columbus OH 43204
(614) 486-4383

DESIGNED	DRAWN	REVIEWED	DATE
BSM	JWS	MRS	04/2024
CHECKED	REVISED	STRUCTURE FILE NUMBER	
EER		4400224	

FRAMING PLAN
BRIDGE NO. LAW-7-0376
S.R. 7 OVER SYMMES CREEK

LAW-7-2.17
PID No. 75923

13 / 25

857
1247

U:\173608714\LAW\75923\structures\LAW007_0376C\sheets\007_0376RSD001.dgn 5/13/2024 8:40:57 AM JSnair

BEAM DIMENSIONS										
BEAM MARK	NO. REQ'D	DIMENSIONS								APPROXIMATE WEIGHT (LBS)
		A	B	C	D	E	F	G	H	
1-1	1	95'-2½"	62'-5"	42'-7¼"	5'-0"	25'-8¾"	23'-8"	23'-8"	20'-5⅝"	90,106
2-1	1	95'-2½"	62'-5"	42'-7¼"	5'-0"	24'-8⅜"	23'-8"	23'-8"	21'-6"	90,106
3-1	1	95'-2½"	62'-5"	42'-7¼"	5'-0"	23'-8"	23'-8"	23'-8"	22'-6½"	90,106
4-1	1	95'-2½"	62'-5"	42'-7¼"	5'-0"	22'-7½"	23'-8"	23'-8"	23'-6⅞"	90,106
5-1	1	95'-2½"	62'-5"	42'-7¼"	5'-0"	21'-7¼"	23'-8"	23'-8"	24'-7¼"	90,106
1-2	1	114'-6"	77'-8½"	51'-9"	5'-6"	30'-4⅛"	28'-9"	28'-9"	25'-0"	108,317
2-2	1	114'-6"	77'-8½"	51'-9"	5'-6"	29'-0"	28'-9"	28'-9"	26'-4"	108,317
3-2	1	114'-6"	77'-8½"	51'-9"	5'-6"	27'-8"	28'-9"	28'-9"	27'-8"	108,317
4-2	1	114'-6"	77'-8½"	51'-9"	5'-6"	26'-4"	28'-9"	28'-9"	29'-0"	108,317
5-2	1	114'-6"	77'-8½"	51'-9"	5'-6"	24'-11⅞"	28'-9"	28'-9"	30'-4⅛"	108,317
1-3	1	96'-0¾"	63'-3¼"	43'-0⅜"	5'-0"	26'-0¼"	23'-10⅝"	23'-10⅝"	20'-7⅛"	90,895
2-3	1	96'-0¾"	63'-3¼"	43'-0⅜"	5'-0"	24'-4½"	23'-10⅝"	23'-10⅝"	22'-2⅞"	90,895
3-3	1	96'-0¾"	63'-3¼"	43'-0⅜"	5'-0"	22'-8¾"	23'-10⅝"	23'-10⅝"	23'-10⅝"	90,895
4-3	1	96'-0¾"	63'-3¼"	43'-0⅜"	5'-0"	21'-1"	23'-10⅝"	23'-10⅝"	25'-6⅜"	90,895
5-3	1	96'-0¾"	63'-3¼"	43'-0⅜"	5'-0"	19'-5¼"	23'-10⅝"	23'-10⅝"	27'-2⅛"	90,895

NUMBER OF STRANDS PER ROW																										
BEAM MARK	END (SECTION A-A)																MIDSPAN (SECTION B-B)								TOTAL STRANDS	CONCRETE STRENGTHS	
	①	②	③	④	⑤	⑥	⑦	⑧	⑨	⑩	⑪	⑫	⑬	⑭	⑮	⑯	①	②	③	④	⑤	⑥	⑦	⑧		f'ci	f'c
1-1	8	8	8	-	-	-	-	-	-	-	-	1	1	1	1	1	9	9	9	1	1	-	-	-	29	6,000	7,000
2-1	8	8	8	-	-	-	-	-	-	-	-	1	1	1	1	1	9	9	9	1	1	-	-	-	29	6,000	7,000
3-1	8	8	8	-	-	-	-	-	-	-	-	1	1	1	1	1	9	9	9	1	1	-	-	-	29	6,000	7,000
4-1	8	8	8	-	-	-	-	-	-	-	-	1	1	1	1	1	9	9	9	1	1	-	-	-	29	6,000	7,000
5-1	8	8	8	-	-	-	-	-	-	-	-	1	1	1	1	1	9	9	9	1	1	-	-	-	29	6,000	7,000
1-2	8	8	8	8	4	-	-	-	1	1	1	1	1	1	1	1	9	9	9	9	5	1	1	1	44	6,000	7,000
2-2	8	8	8	8	4	-	-	-	1	1	1	1	1	1	1	1	9	9	9	9	5	1	1	1	44	6,000	7,000
3-2	8	8	8	8	4	-	-	-	1	1	1	1	1	1	1	1	9	9	9	9	5	1	1	1	44	6,000	7,000
4-2	8	8	8	8	4	-	-	-	1	1	1	1	1	1	1	1	9	9	9	9	5	1	1	1	44	6,000	7,000
5-2	8	8	8	8	4	-	-	-	1	1	1	1	1	1	1	1	9	9	9	9	5	1	1	1	44	6,000	7,000
1-3	8	8	8	-	-	-	-	-	-	-	-	1	1	1	1	1	9	9	9	1	1	-	-	-	29	6,000	7,000
2-3	8	8	8	-	-	-	-	-	-	-	-	1	1	1	1	1	9	9	9	1	1	-	-	-	29	6,000	7,000
3-3	8	8	8	-	-	-	-	-	-	-	-	1	1	1	1	1	9	9	9	1	1	-	-	-	29	6,000	7,000
4-3	8	8	8	-	-	-	-	-	-	-	-	1	1	1	1	1	9	9	9	1	1	-	-	-	29	6,000	7,000
5-3	8	8	8	-	-	-	-	-	-	-	-	1	1	1	1	1	9	9	9	1	1	-	-	-	29	6,000	7,000

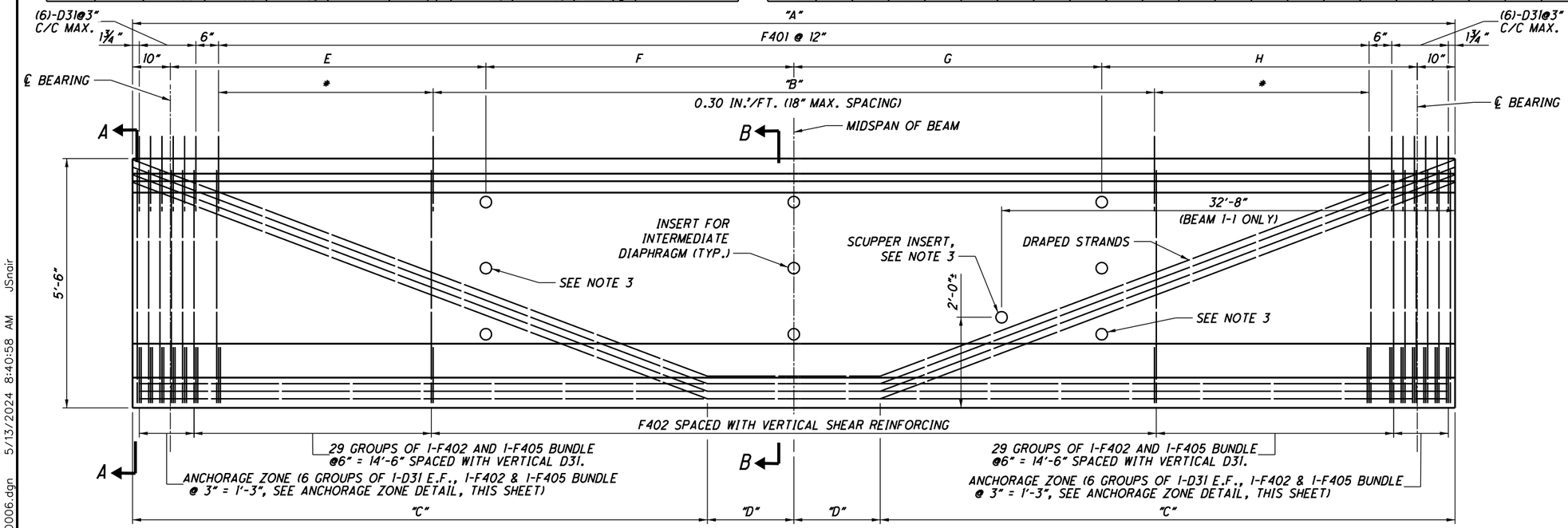

BEAM ELEVATION
(SPANS 1 AND 3 SHOWN, SPAN 2 SIMILAR)

ANCHORAGE ZONE DETAIL

* (30)-F401 AND D31@6" = 14'-6"
FOR BEAMS 1-1 THRU 5-1
AND BEAMS 1-3 THRU 5-3
(34)-F401 AND D31@6" = 16'-6"
FOR BEAMS 1-2 THRU 5-2

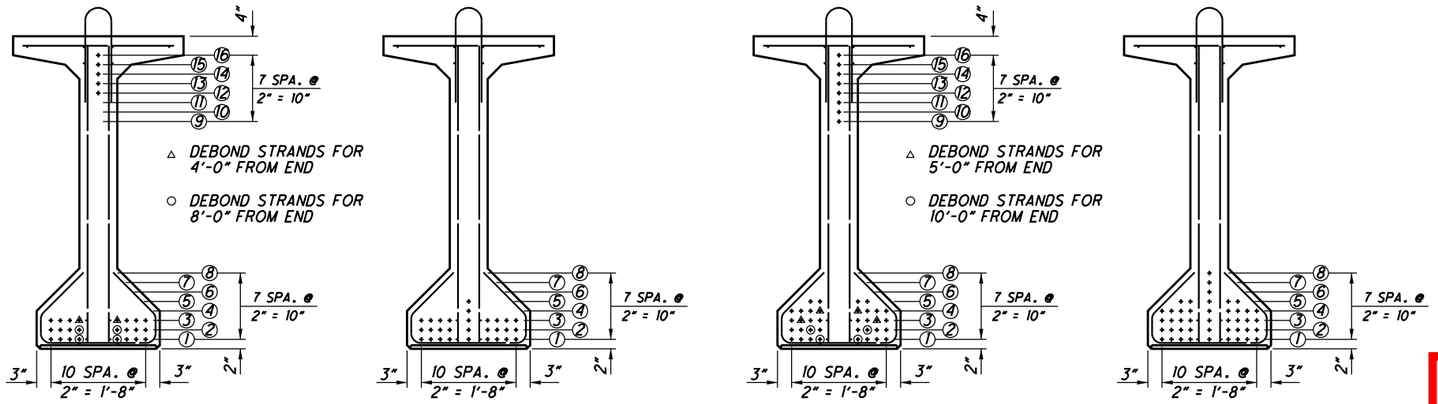

SECTION A-A **SECTION B-B**
SPANS 1 AND 3

SECTION A-A **SECTION B-B**
SPAN 2

NOTES:
1. FOR BEAM DIMENSIONS AND ADDITIONAL DETAILS, SEE STRUCTURAL SIDE VIEW.
2. FOR EMBEDDED PLATE DETAILS, SEE SHEET 15/25 AND STD. DWG. PSID-1-13.
3. ADJUST LOCATION OF INSERTS TO MISS DRAPED STRANDS.

DRAFT Stage 3 - Not for Construction 09/23/2024

DESIGN AGENCY
Stantec
1500 Lake Shore Dr.
Columbus OH 43204
(614) 486-4383

DESIGNED	DRAWN	REVIEWED	DATE
BSM	JWS	MRS	04/2024
CHECKED	REVISED	STRUCTURE FILE NUMBER	
EER		4400224	

PRESTRESSED CONCRETE I-BEAM DETAILS
BRIDGE NO. LAW-7-0376
S.R. 7 OVER SYMMES CREEK

LAW-7-2.17
PID No. 75923

14 / 25

858
1247

U:\173608714\LAW\75923\structures\LAW007_0376C\sheets\007_0376RSD006.dgn 5/13/2024 8:40:58 AM JSnair

BEVELED PLATE DETAIL

BEVELED PLATE DIMENSIONS		
LOCATION	A	B
REAR ABUTMENT	2 1/4"	2"
PIER 1	2 1/8"	2"
PIER 2	2 1/8"	2"
FORWARD ABUTMENT	2"	2"

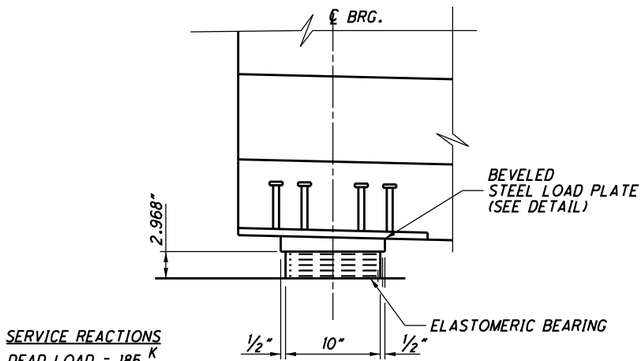

SERVICE REACTIONS
DEAD LOAD = 185 K
LIVE LOAD = 117 K
TOTAL = 302 K

SECTION A-A

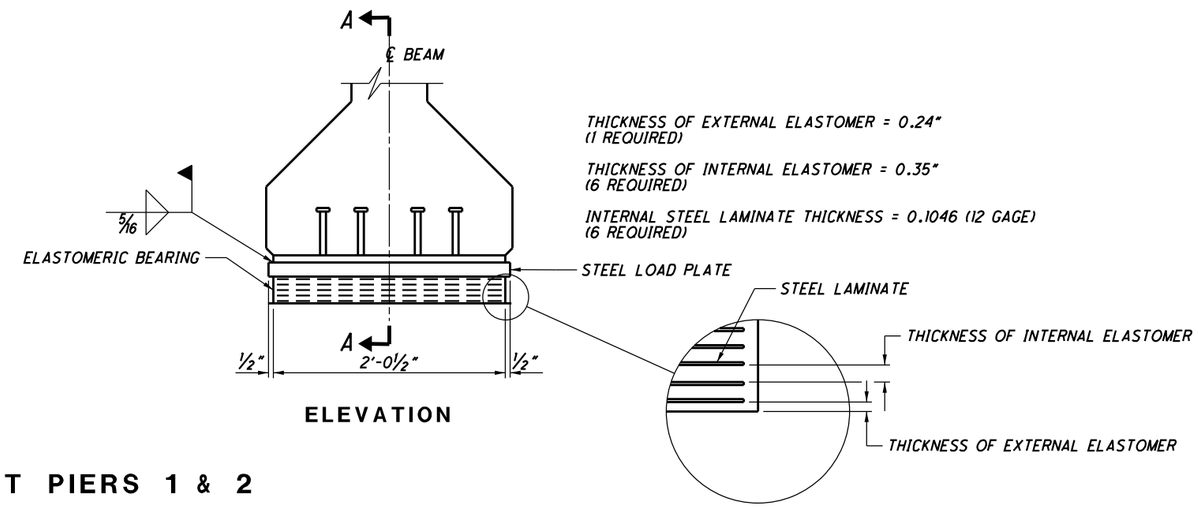

THICKNESS OF EXTERNAL ELASTOMER = 0.24"
(1 REQUIRED)

THICKNESS OF INTERNAL ELASTOMER = 0.35"
(6 REQUIRED)

INTERNAL STEEL LAMINATE THICKNESS = 0.1046 (12 GAGE)
(6 REQUIRED)

ELEVATION

BEARINGS AT PIERS 1 & 2

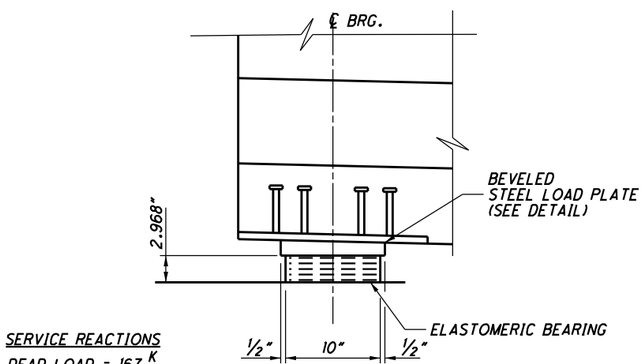

SERVICE REACTIONS
DEAD LOAD = 167 K
LIVE LOAD = 110 K
TOTAL = 277 K

SECTION B-B

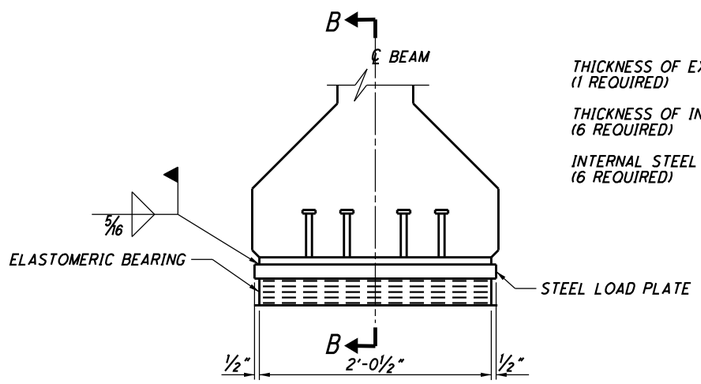

THICKNESS OF EXTERNAL ELASTOMER = 0.24"
(1 REQUIRED)

THICKNESS OF INTERNAL ELASTOMER = 0.35"
(6 REQUIRED)

INTERNAL STEEL LAMINATE THICKNESS = 0.1046 (12 GAGE)
(6 REQUIRED)

ELEVATION

BEARINGS AT ABUTMENTS

NOTES:

1. ELASTOMERIC BEARINGS: THE ELASTOMER SHALL HAVE A HARDNESS OF 50 DUROMETER. THE BEARINGS WERE DESIGNED IN ACCORDANCE WITH SECTION 14.7.6 (METHOD A) OF THE AASHTO LRFD BRIDGE DESIGN SPECIFICATIONS. THE LONGTERM COMPRESSION PROOF LOAD TEST (AASHTO STANDARD SPECIFICATIONS FOR HIGHWAY BRIDGES, DIVISION II, SECTION 18.7.2.6) IS NOT REQUIRED.
2. FOR DETAILS OF THE STUDS AND EMBEDDED PLATE, AND FOR ADDITIONAL INFORMATION, SEE STD. DWG. BSID 1.17.
3. ALL BEARINGS SHALL BE MARKED PRIOR TO SHIPPING. THE MARKS SHALL INDICATE THE BEARING LOCATION ON THE BRIDGE AND A DIRECTION ARROW THAT POINTS UP STATION. ALL MARKS SHALL BE PERMANENT AND BE VISIBLE AFTER THE BEARING IS INSTALLED.

DRAFT Stage 3 Not for Construction
09/23/2024

DESIGN AGENCY
Stantec
1500 Lake Shore Dr.
Columbus, OH 43204
(614) 486-4383

DESIGNED	DRAWN	REVIEWED	DATE
BSM	JWS	MRS	04/2024
CHECKED	REVISED	STRUCTURE FILE NUMBER	
EER		4400224	

BEARING DETAILS
BRIDGE NO. LAW-7-0376
S.R. 7 OVER SYMMES CREEK

LAW-7-2.17
PID No. 75923

U:\173608714\LAW\75923\structures\LAW007_0376C\sheets\007_0376RSD007.dgn 5/13/2024 8:40:59 AM JSnair

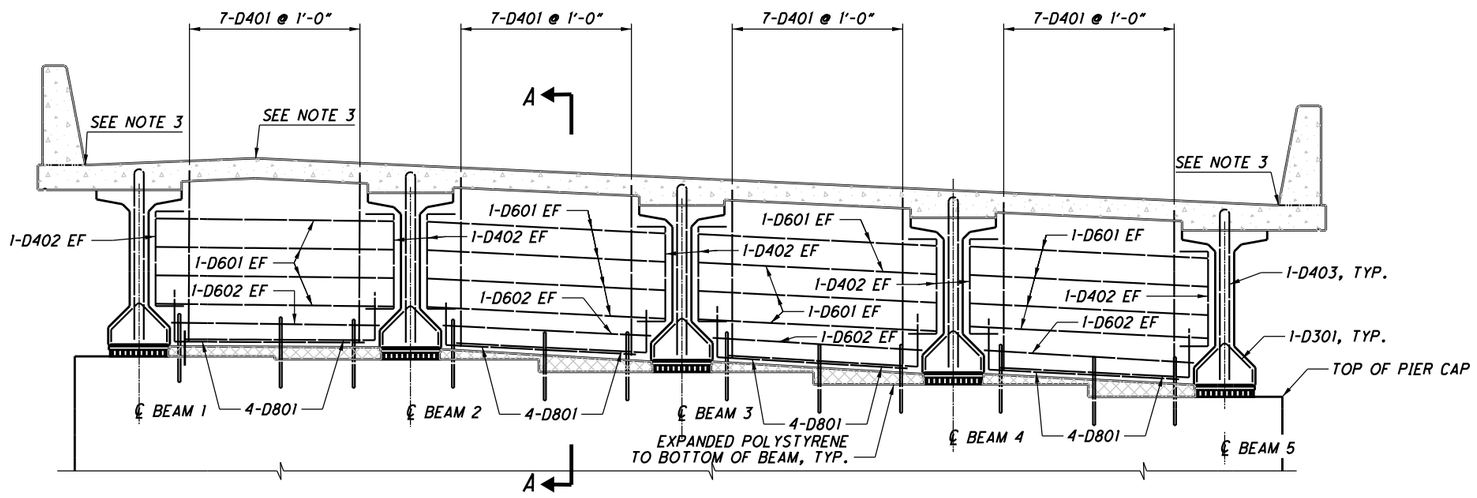

PIER 1 AND PIER 2 DIAPHRAGM

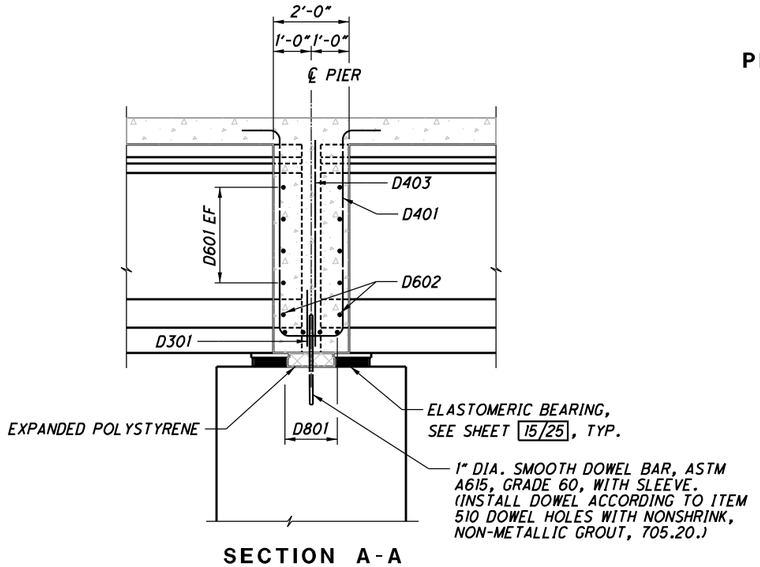

SECTION A-A

NOTES
1. ALL VERTICAL REINFORCING STEEL SHALL BE LAPPED 2'-0" MIN.
2. FOR PIER DETAILS, SEE SHEET 11/25 AND 12/25.
3. FOR PIER ELEVATIONS, SEE PIER CONSTRUCTION ELEVATION TABLE, SHEET 21/25.

DRAFT Stage 3 - Not for Construction

10/25/2024

DESIGN AGENCY
Stantec
1500 Lake Shore Dr.
Columbus, OH 43204
(614) 486-4383

DESIGNED	DRAWN	REVIEWED	DATE
BSM	JWS	MRS	04/2024
CHECKED	REVISED	STRUCTURE FILE NUMBER	
EER		4400224	

PIER DIAPHRAGM DETAILS
BRIDGE NO. LAW-7-0376
S.R. 7 OVER SYMMES CREEK

LAW-7-2.17
PID No. 75923

16/25

860/1247

U:\173608714\LAW\75923\structures\LAW007_0376C\sheets\007_0376RSD008.dgn 5/13/2024 8:41:00 AM JSnair

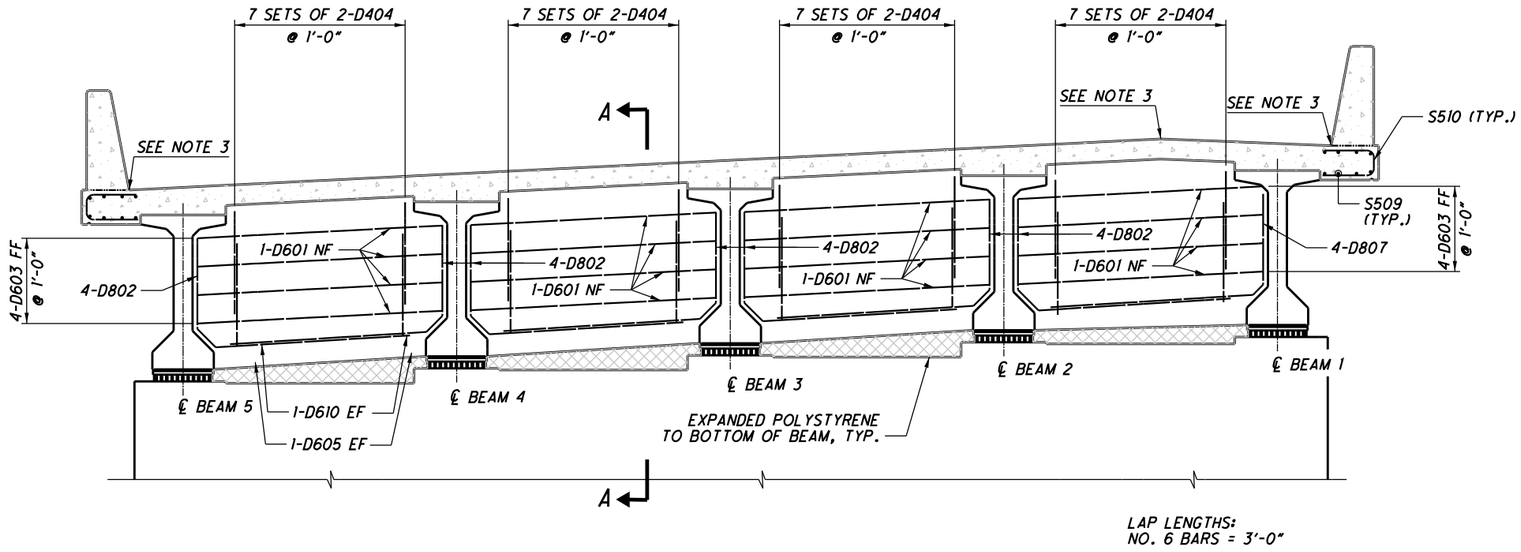

REAR ABUTMENT END DIAPHRAGM

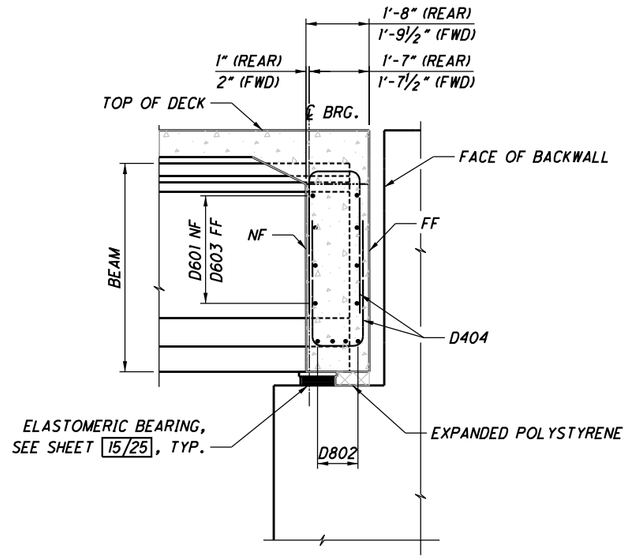

SECTION A-A

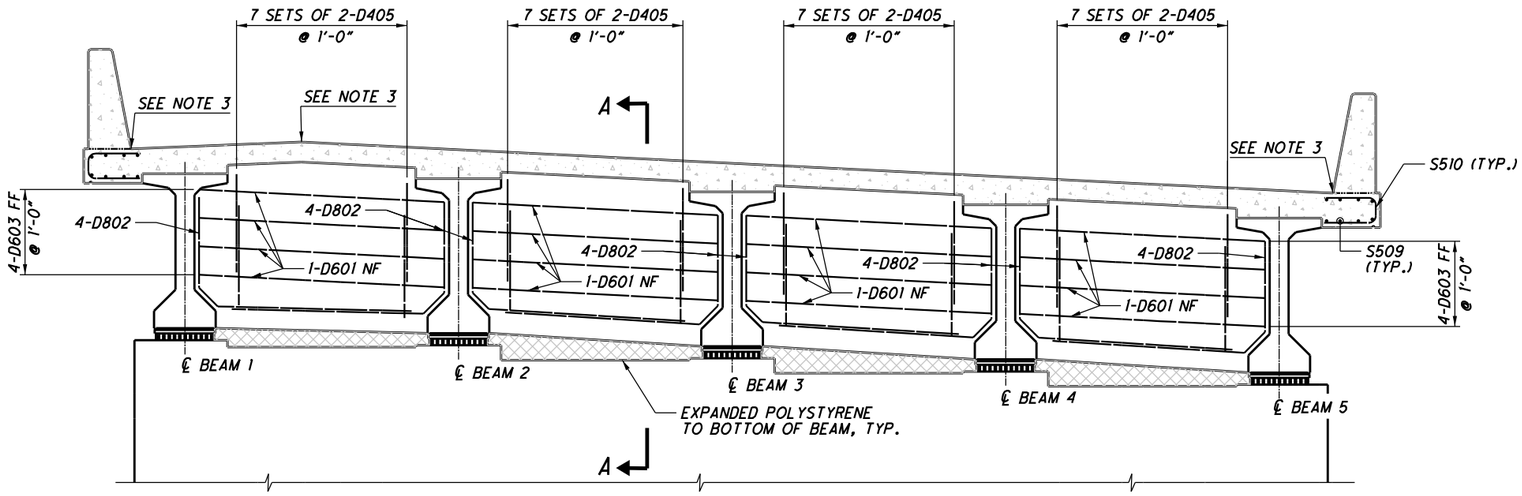

FORWARD ABUTMENT END DIAPHRAGM

NOTES:
1. ALL VERTICAL REINFORCING STEEL SHALL BE PLACED PARALLEL TO THE BEAMS.
2. FOR ABUTMENT DETAILS, SEE SHEET 7/25 AND 9/25.
3. FOR DEFLECTIONS, SEE DEFLECTION ELEVATION TABLE, SHEET 21/25.

DRAFT Stage 3 - Not for Construction 09/23/2024

DESIGN AGENCY
Stantec
1500 Lake Shore Dr.
Columbus, OH 43204
(614) 486-4383

DESIGNED	DRAWN	REVIEWED	DATE
BSM	JWS	MRS	04/2024
CHECKED	REVISED	STRUCTURE FILE NUMBER	
EER		4400224	

ABUTMENT END DIAPHRAGM DETAILS
BRIDGE NO. LAW-7-0376
S.R. 7 OVER SYMMES CREEK

LAW-7-2.17
PID No. 75923

17/25

861/1247

U:\173608714\LAW\75923\structures\LAW007_0376C\sheets\007_0376RSD009.dgn 5/13/2024 8:41:02 AM JSnair

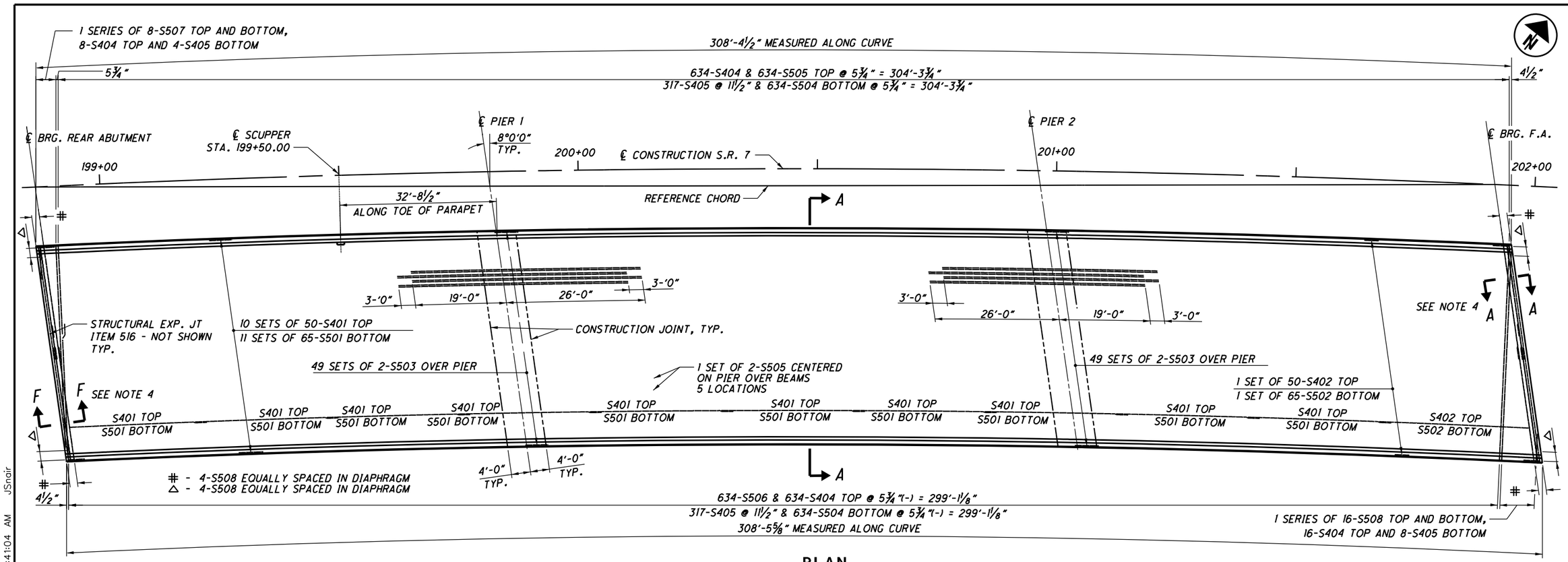

PLAN

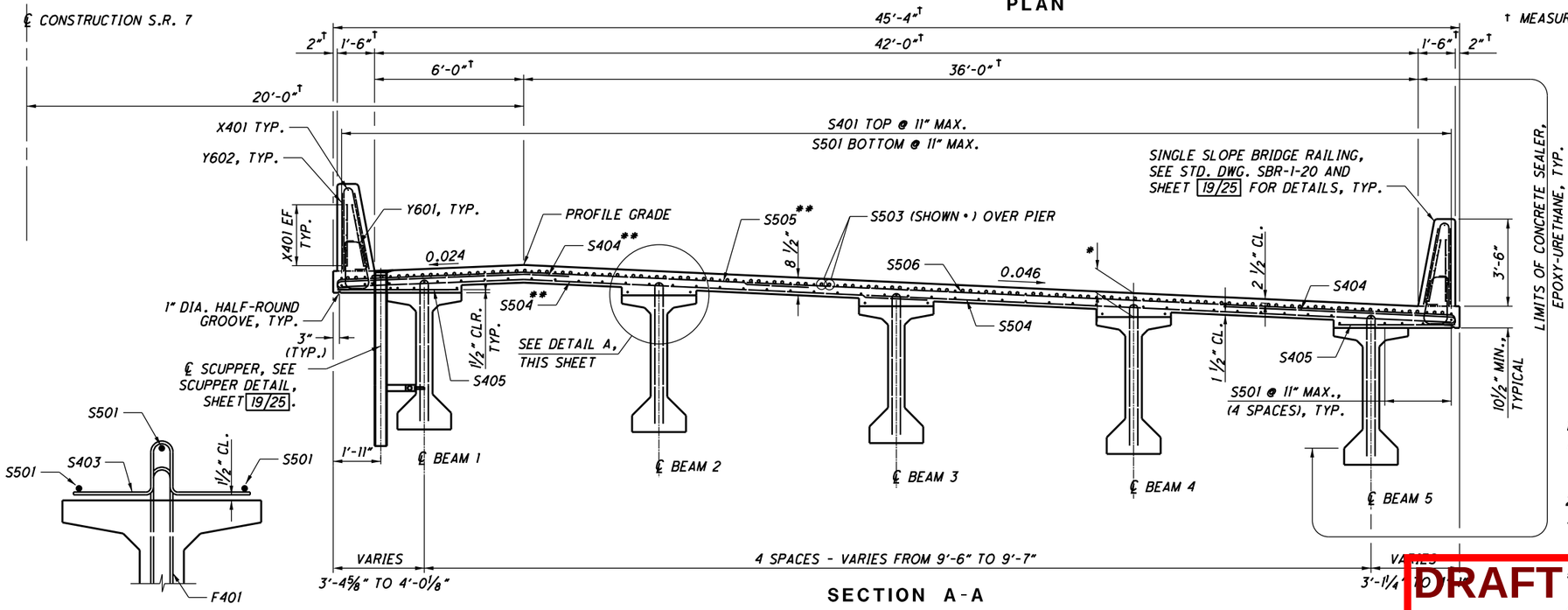

SECTION A-S

DETAIL A

LAP LENGTHS:
NO. 4 BARS = 2'-0"
NO. 5 BARS = 3'-0"
NO. 6 BARS = 3'-0"

JOINT DIMENSIONS FOR 3" STRIP SEAL GLAND		
	DIM. 'A' @ ABUT.	
TEMP.	REAR	FWD.
30°	2"	2"
40°	1¾"	1¾"
50°	1¾"	1¾"
60°	1⅝"	1⅝"
70°	1½"	1½"
80°	1⅜"	1⅜"
90°	1¼"	1¼"

NOTES:
1. FOR REQUIREMENTS REGARDING PLACEMENT OF DECK CONCRETE, SEE GENERAL NOTES IN PSID-1-13, SHEET 10 OF 10.
2. # VARIES, SEE SHEET 13/25.
3. FOR ADDITIONAL INFORMATION ON THE PARAPETS AND SAWCUTTING CONTROL JOINTS, SEE SHEET 19/25.
4. FOR SECTION A-A SEE STD. DWG. EXJ-6-17, SHEET 1/4.
5. PROVIDE A 3" STRIP SEAL AND FOR ADDITIONAL DETAILS OF EXPANSION JOINTS, SEE STD. DWG. EXJ-6-17.
6. STAY IN PLACE FORMS SHALL NOT BE USED.
7. FOR SCUPPER DETAILS, SEE SHEET 19/25.

** FIELD BEND BARS AS NEEDED TO MAINTAIN CLEARANCE. SEE GENERAL NOTES FOR ADDITIONAL INFORMATION.

DRAFT Stage 3 - Not for Construction
05/23/2024

DESIGN AGENCY
Stantec
1500 Lake Shore Dr.
Columbus, OH 43204
(614) 486-4383

DESIGNED	DRAWN	REVIEWED	DATE
BSM	JWS	MRS	04/2024
CHECKED	REVISED	STRUCTURE FILE NUMBER	
EER		4400224	

SUPERSTRUCTURE DETAILS
BRIDGE NO. LAW-7-0376
S.R. 7 OVER SYMMES CREEK

LAW-7-2.17
PID No. 75923

18 / 25

862 / 1247

U:\173608714\LAW\75923\structures\LAW007_0376C\sheets\007_0376RSD002.dgn 5/13/2024 8:41:04 AM JSnair

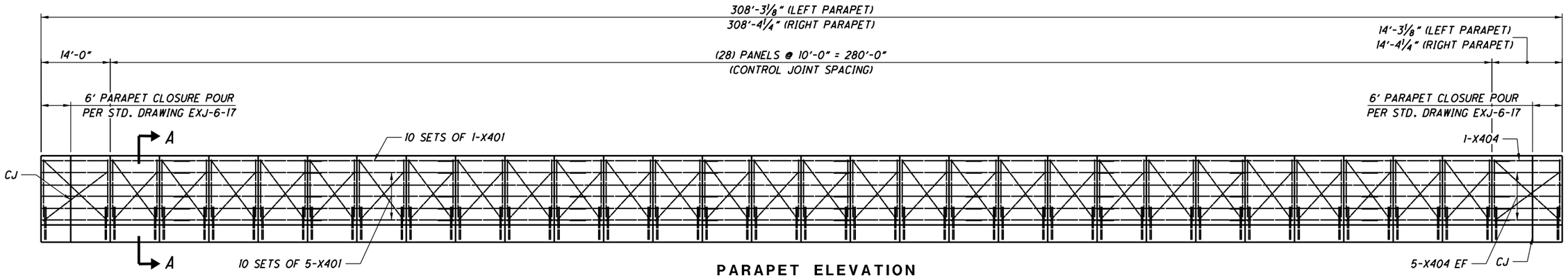

PARAPET ELEVATION

(1 REQUIRED PER SIDE)
(EXAGGERATED VERTICAL SCALE)

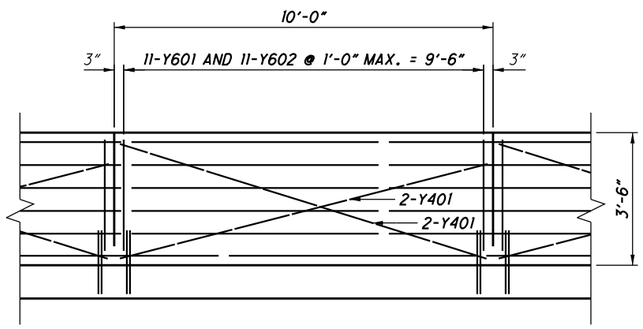

10'-0" PANEL

(28 REQUIRED PER SIDE)

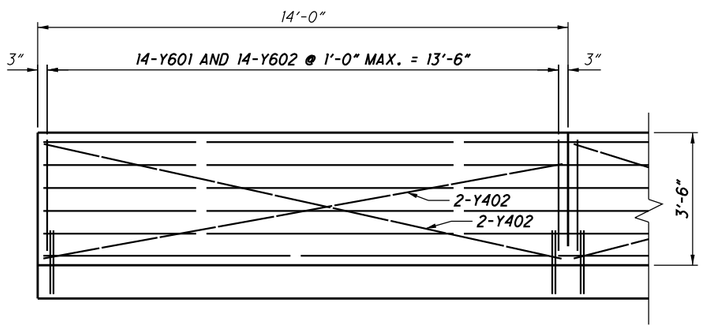

14'-0" PANEL

(1 REQUIRED PER SIDE)

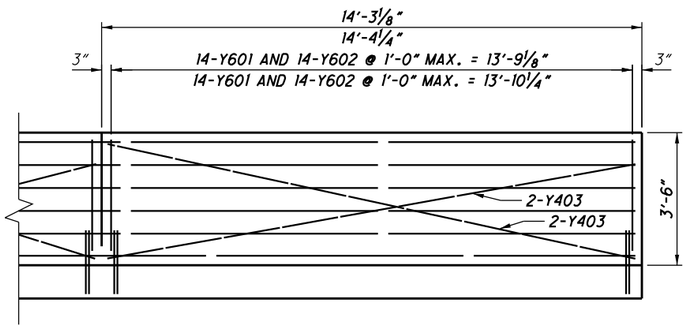

14'-3 1/8" OR 14'-4 1/4" PANEL

(1 REQUIRED PER SIDE)

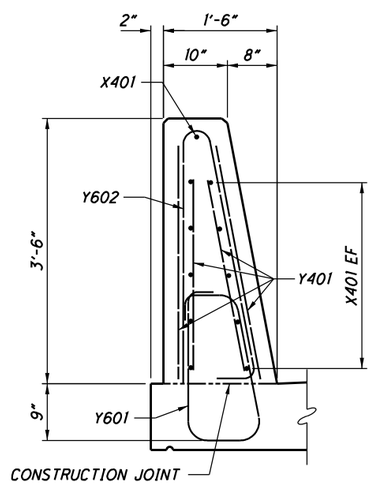

SECTION A-A

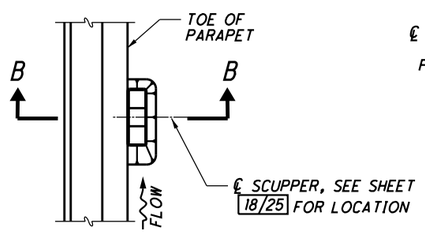

SCUPPER DETAIL

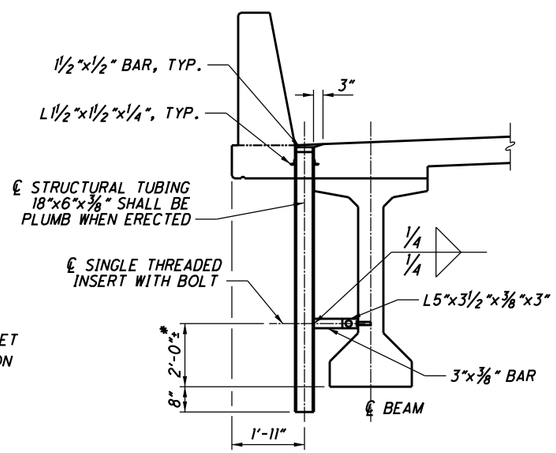

* ADJUST TO MISS BEAM REINFORCING

SECTION B-B

NOTES:
1. FOR ADDITIONAL PARAPET INFORMATION, SEE STD. DWG. SBR-1-20.
2. SUPPORT ANGLES, STRUCTURAL TUBING, BOLTS, NUTS AND WASHERS ARE INCLUDED WITH ITEM 518, SCUPPERS, INCLUDING SUPPORTS, AS PER PLAN FOR PAYMENT.
3. BOLTS SHALL BE ASTM A325 TYPE 1.
4. SCUPPERS, INCLUDING SUPPORT ANGLES, STRUCTURAL TUBING, BOLTS, NUTS, AND WASHERS, SHALL BE GALVANIZED IN ACCORDANCE WITH CMS 711.02.
5. FOR ADDITIONAL NOTES & DETAILS SEE STD. DWG. GSD-1-19, SHEET 4 OF 4.

DRAFT Stage 3 - Not for Construction
09/23/2024

DESIGN AGENCY
Stantec
1500 Lake Shore Dr.
Columbus, OH 43204
(614) 486-4383

DESIGNED	DRAWN	REVIEWED	DATE
BSM	JWS	MRS	04/2024
CHECKED	REVISED	STRUCTURE FILE NUMBER	
EER		4400224	

SUPERSTRUCTURE DETAILS
BRIDGE NO. LAW-7-0376
S.R. 7 OVER SYMMES CREEK

LAW-7-2.17
PID No. 75923

U:\173608714\LAW\75923\structures\LAW007_0376C\sheets\007_0376RSD005.dgn 5/13/2024 8:41:06 AM JSnair

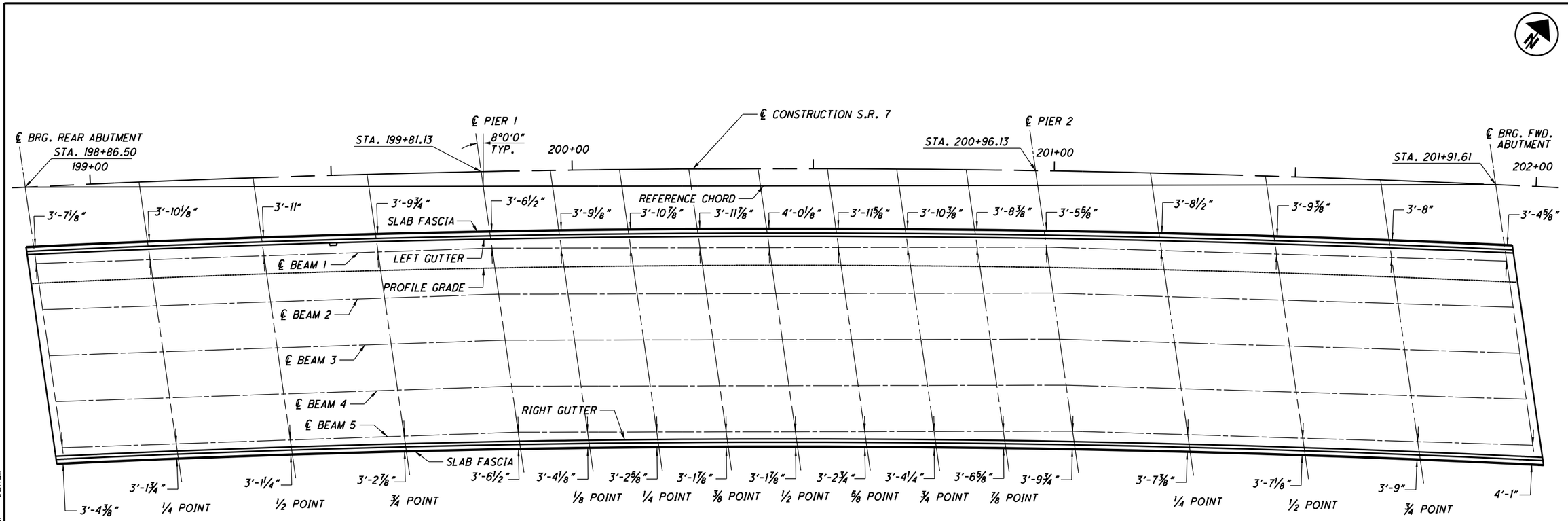

PLAN

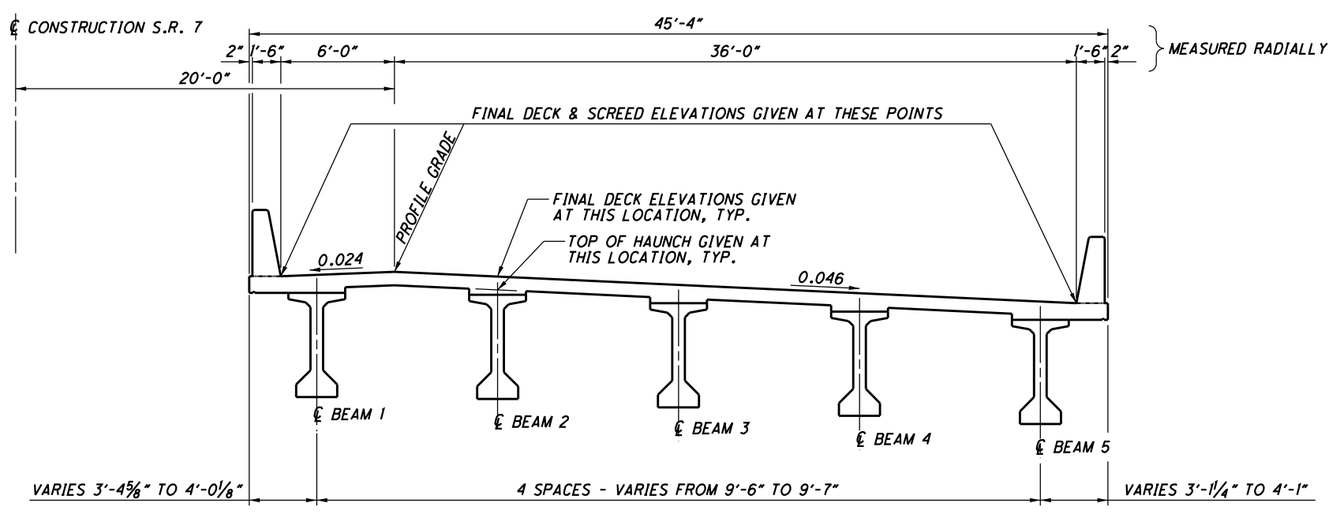

TYPICAL SECTION

NOTES
FOR SCREED, TOP OF HAUNCH, AND FINAL DECK ELEVATIONS, SEE SHEET 21 OF 25.

DRAFT Stage 3 - Not for Construction 09/23/2024

CONSTRUCTION ELEVATION DIAGRAM AND FASCIA OFFSETS
BRIDGE NO. LAW-7-0376
S.R. 7 OVER SYMMES CREEK

LAW-7-2.17
PID No. 75923

20/25

864/1247

DESIGN AGENCY
Stantec
1500 Lake Shore Dr.
Columbus, OH 43204
(614) 486-4383

DESIGNED	DRAWN	REVIEWED	DATE
BSM	JWS	MRS	04/2024
CHECKED	REVISED	STRUCTURE FILE NUMBER	
EER		4400224	

U:\173608714\LAW\75923\structures\LAW007_0376C\sheets\007_0376RSD003.dgn 5/13/2024 8:41:07 AM JSnair

DECK CONSTRUCTION ELEVATIONS

LOCATION	DESCRIPTION	SPAN 1				SPAN 2								SPAN 3				
		℄ BEARING	1/4 POINT	1/2 POINT	3/4 POINT	℄ PIER	1/8 POINT	1/4 POINT	3/8 POINT	1/2 POINT	5/8 POINT	3/4 POINT	7/8 POINT	℄ PIER	1/4 POINT	1/2 POINT	3/4 POINT	℄ BEARING
LEFT GUTTER	STATION	198+87.81	199+11.54	199+35.29	199+59.06	199+82.85	199+97.26	200+11.68	200+26.10	200+40.53	200+54.98	200+69.43	200+83.89	200+98.36	201+22.29	201+46.25	201+70.24	201+94.26
	OFFSET	14.00'	14.00'	14.00'	14.00'	14.00'	14.00'	14.00'	14.00'	14.00'	14.00'	14.00'	14.00'	14.00'	14.00'	14.00'	14.00'	14.00'
	FINAL DECK EL.	587.37	586.86	586.38	585.94	585.53	585.29	585.08	584.87	584.68	584.50	584.33	584.17	584.03	583.82	583.65	583.52	583.41
	SCREED EL.	587.37	586.91	586.46	585.99	585.53	585.36	585.19	585.03	584.85	584.65	584.45	584.24	584.03	583.88	583.74	583.58	583.41
BEAM 1	STATION	198+87.99	199+11.77	199+35.54	199+59.31	199+83.08	199+97.53	200+11.97	200+26.42	200+40.86	200+55.31	200+69.76	200+84.20	200+98.65	201+22.63	201+46.62	201+70.60	201+94.59
	OFFSET	15.93'	16.17'	16.25'	16.15'	15.88'	16.09'	16.24'	16.33'	16.35'	16.31'	16.20'	16.03'	15.80'	16.04'	16.11'	16.00'	15.72'
	FINAL DECK EL.	587.41	586.91	586.43	585.98	585.57	585.34	585.13	584.92	584.73	584.55	584.38	584.22	584.07	583.87	583.70	583.56	583.45
	HAUNCH EL.	586.70	586.25	585.80	585.33	584.86	584.69	584.53	584.37	584.19	583.99	583.79	583.57	583.36	583.22	583.08	582.91	582.75
PROFILE GRADE	STATION	198+88.38	199+12.18	199+35.99	199+59.79	199+83.59	199+98.03	200+12.47	200+26.93	200+41.39	200+55.86	200+70.33	200+84.82	200+99.32	201+23.29	201+47.30	201+71.34	201+95.40
	OFFSET	20.00'	20.00'	20.00'	20.00'	20.00'	20.00'	20.00'	20.00'	20.00'	20.00'	20.00'	20.00'	20.00'	20.00'	20.00'	20.00'	20.00'
	FINAL DECK EL.	587.50	586.99	586.51	586.07	585.66	585.43	585.21	585.00	584.81	584.63	584.46	584.31	584.17	583.96	583.79	583.65	583.55
	SCREED EL.	587.50	587.05	586.59	586.13	585.66	585.49	585.33	585.16	584.98	584.79	584.58	584.37	584.17	584.02	583.88	583.72	583.55
BEAM 2	STATION	198+88.90	199+12.74	199+36.59	199+60.43	199+84.27	199+98.75	200+13.24	200+27.73	200+42.22	200+56.71	200+71.20	200+85.69	201+00.17	201+24.23	201+48.28	201+72.34	201+96.39
	OFFSET	25.52'	25.76'	25.83'	25.72'	25.44'	25.65'	25.79'	25.87'	25.89'	25.84'	25.73'	25.55'	25.32'	25.55'	25.60'	25.48'	25.19'
	FINAL DECK EL.	587.24	586.71	586.23	585.79	585.40	585.16	584.93	584.72	584.53	584.35	584.19	584.04	583.91	583.70	583.53	583.40	583.31
	HAUNCH EL.	586.53	586.06	585.61	585.16	584.69	584.51	584.35	584.18	584.00	583.80	583.60	583.40	583.21	583.05	582.91	582.75	582.60
BEAM 3	STATION	198+89.81	199+13.72	199+37.64	199+61.55	199+85.46	199+99.99	200+14.52	200+29.05	200+43.59	200+58.12	200+72.65	200+87.18	201+01.71	201+25.83	201+49.96	201+74.09	201+98.21
	OFFSET	35.12'	35.35'	35.41'	35.29'	35.01'	35.21'	35.34'	35.42'	35.43'	35.37'	35.26'	35.08'	34.83'	35.05'	35.09'	34.96'	34.65'
	FINAL DECK EL.	586.77	586.25	585.77	585.33	584.94	584.70	584.47	584.26	584.07	583.90	583.74	583.59	583.46	583.25	583.08	582.95	582.87
	HAUNCH EL.	586.07	585.61	585.15	584.68	584.23	584.06	583.89	583.72	583.55	583.36	583.15	582.95	582.75	582.60	582.46	582.31	582.16
BEAM 4	STATION	198+90.73	199+14.71	199+38.70	199+62.68	199+86.66	200+01.24	200+15.81	200+30.38	200+44.96	200+59.53	200+74.11	200+88.68	201+03.25	201+27.45	201+51.65	201+75.84	202+00.04
	OFFSET	44.71'	44.93'	44.98'	44.86'	44.57'	44.76'	44.90'	44.96'	44.97'	44.91'	44.78'	44.60'	44.34'	44.55'	44.58'	44.44'	44.12'
	FINAL DECK EL.	586.31	585.79	585.31	584.87	584.48	584.24	584.01	583.81	583.62	583.44	583.28	583.14	583.01	582.80	582.63	582.51	582.43
	HAUNCH EL.	585.60	585.14	584.69	584.22	583.77	583.60	583.43	583.27	583.09	582.90	582.70	582.50	582.30	582.15	582.02	581.87	581.72
BEAM 5	STATION	198+91.65	199+15.71	199+39.76	199+63.82	199+87.87	200+02.49	200+17.10	200+31.72	200+46.34	200+60.96	200+75.57	200+90.19	201+04.80	201+29.07	201+53.34	201+77.61	202+01.80
	OFFSET	54.30'	54.52'	54.56'	54.43'	54.13'	54.32'	54.45'	54.51'	54.51'	54.44'	54.31'	54.12'	53.86'	54.05'	54.07'	53.92'	53.58'
	FINAL DECK EL.	585.85	585.33	584.85	584.41	584.02	583.78	583.56	583.35	583.16	582.99	582.83	582.68	582.56	582.35	582.19	582.06	581.99
	HAUNCH EL.	585.14	584.68	584.22	583.76	583.31	583.13	582.97	582.80	582.63	582.44	582.24	582.04	581.85	581.70	581.56	581.42	581.28
RIGHT GUTTER	STATION	198+91.82	199+15.86	199+39.93	199+64.01	199+88.11	200+02.71	200+17.32	200+31.93	200+46.56	200+61.19	200+75.84	200+90.49	201+05.15	201+29.41	201+53.69	201+78.00	202+02.35
	OFFSET	56.00'	56.00'	56.00'	56.00'	56.00'	56.00'	56.00'	56.00'	56.00'	56.00'	56.00'	56.00'	56.00'	56.00'	56.00'	56.00'	56.00'
	FINAL DECK EL.	585.77	585.26	584.78	584.34	583.93	583.70	583.48	583.28	583.09	582.91	582.75	582.60	582.46	582.26	582.09	581.97	581.88
	SCREED EL.	585.77	585.32	584.86	584.39	583.93	583.76	583.60	583.44	583.26	583.07	582.87	582.66	582.46	582.32	582.18	582.03	581.88

NOTES:

1. SCREED ELEVATIONS SHOWN REPRESENT THE THEORETICAL DECK SURFACE LOCATION PRIOR TO DEFLECTIONS CAUSED BY DECK PLACEMENT AND OTHER ANTICIPATED DEAD LOADS.
2. TOP OF HAUNCH ELEVATIONS SHOWN REPRESENT THE THEORETICAL LOCATION OF THE BOTTOM OF THE DECK ABOVE THE BEAM/GIRDER HAUNCH PRIOR TO DEFLECTIONS CAUSED BY DECK PLACEMENT AND OTHER ANTICIPATED DEAD LOADS.
3. FINAL DECK SURFACE ELEVATIONS SHOWN REPRESENT THE DECK SURFACE LOCATION AFTER ALL ANTICIPATED DEAD LOAD DEFLECTIONS HAVE OCCURRED.
4. FOR TYPICAL SECTION SEE SHEET 20/25.

DRAFT Stage 3 - Not for Construction 09/23/2024

U:\173608714\LAW\75923\structures\LAW007_0376C\sheets\007_0376RSD004.dgn 5/13/2024 8:41:08 AM JSnair

DESIGN AGENCY
Stantec
1500 Lake Shore Dr.
Columbus OH 43204
(614) 486-4383

DESIGNED BSM | DRAWN JWS | CHECKED EER | REVIEWED MRS | DATE 04/2024 | REVISED | STRUCTURE FILE NUMBER 4400224

DECK CONSTRUCTION ELEVATIONS
BRIDGE NO. LAW-7-0376
S.R. 7 OVER SYMMES CREEK

LAW-7-2.17
PID No. 75923

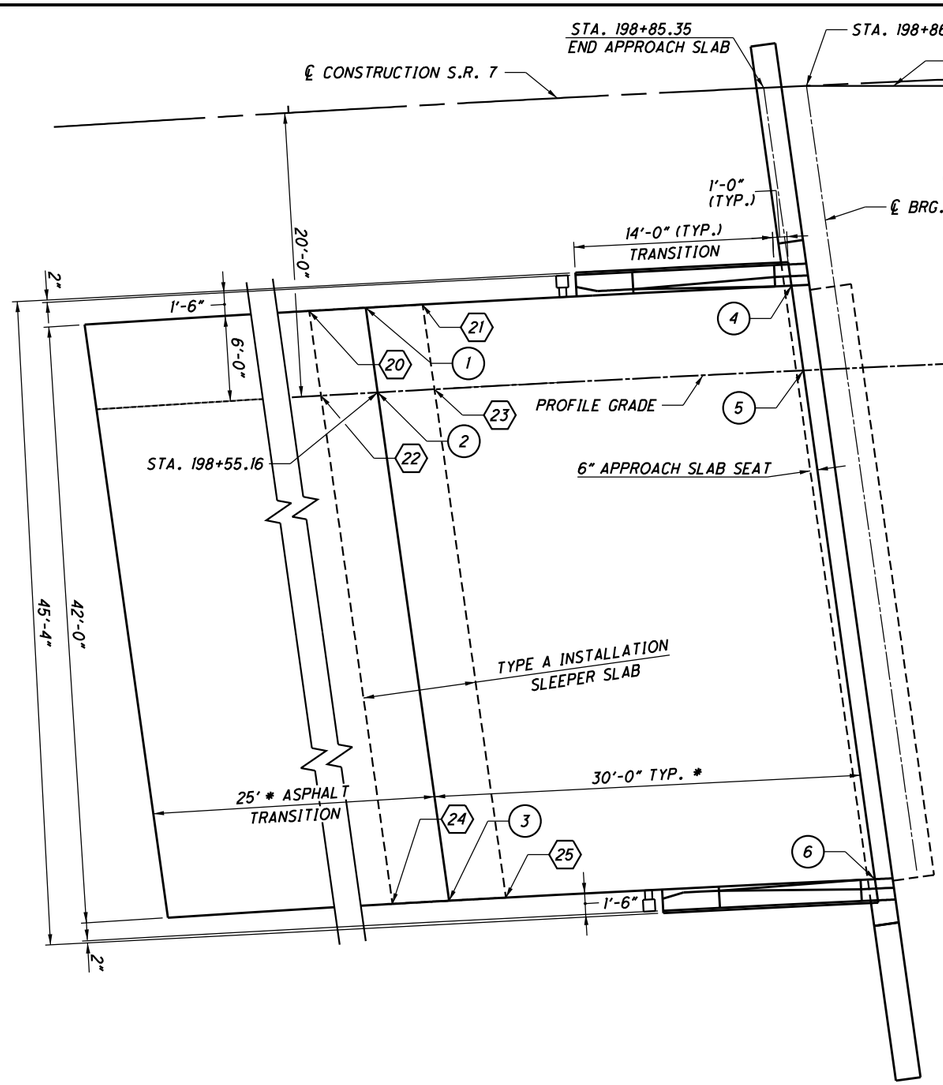

REAR APPROACH SLAB

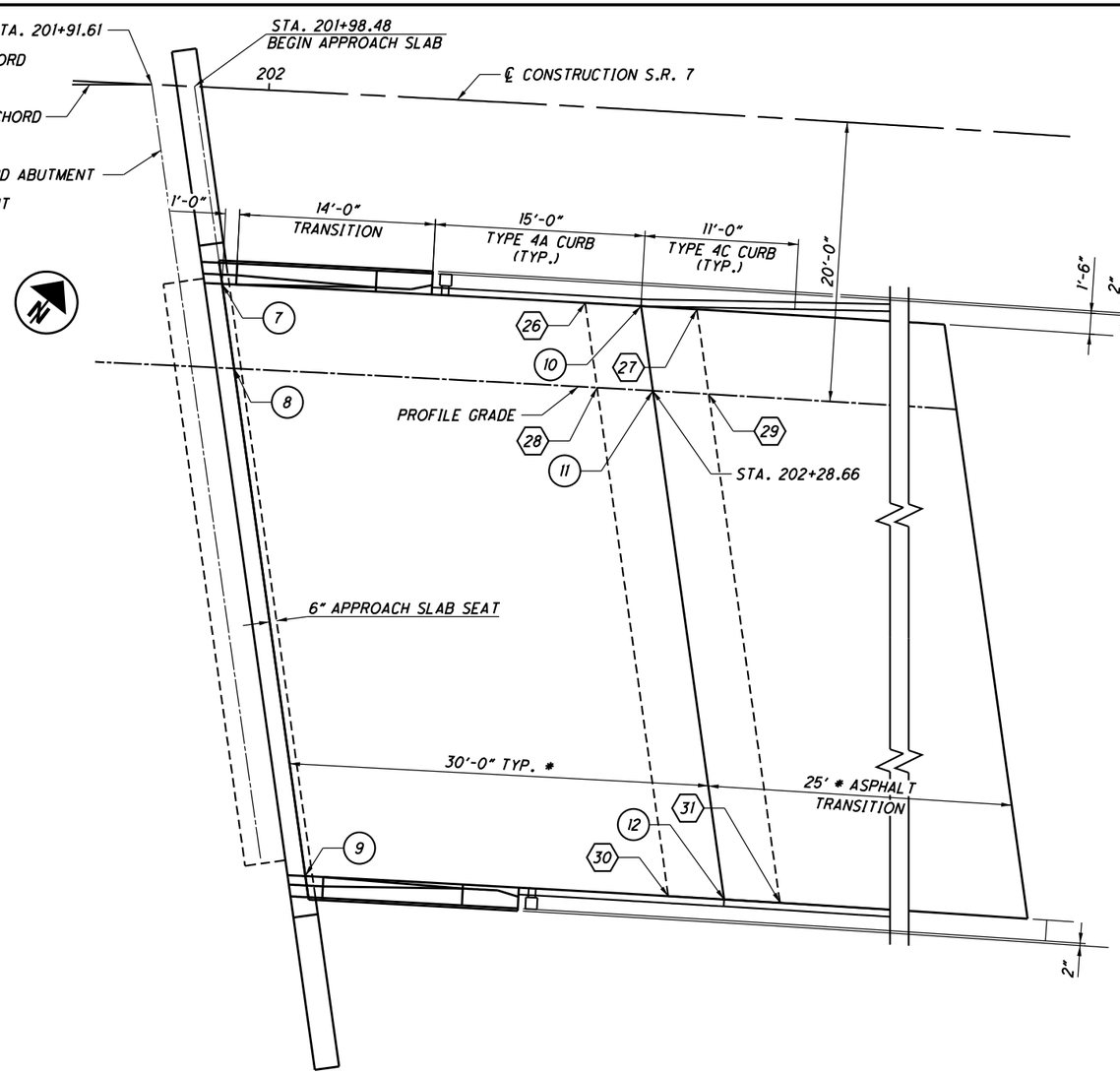

FORWARD APPROACH SLAB

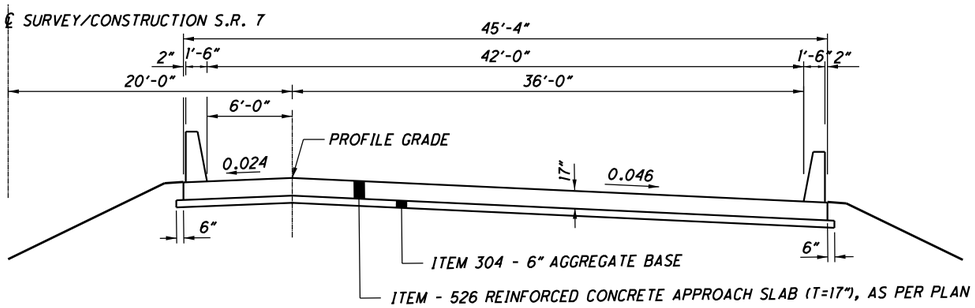

TYPICAL APPROACH SLAB SECTION

NO.	APPROACH SLAB ELEVATIONS
1	588.15
2	588.28
3	586.54
4	587.44
5	587.57
6	585.83
7	583.41
8	583.54
9	581.86
10	583.34
11	583.47
12	581.81

NO.	SLEEPER SLAB SURFACE ELEVATIONS
20	586.83
21	586.63
22	586.95
23	586.76
24	585.23
25	585.03
26	581.92
27	581.91
28	582.06
29	582.05
30	580.40
31	580.39

NOTES:
1. ALL DIMENSIONS MEASURED RADIALLY, UNLESS NOTED WITH AN *.
2. FOR ADDITIONAL DETAILS OF THE BARRIER, SEE SHEET 23/25 AND STD. DWG. SBR-1-20.
3. FOR ADDITIONAL DETAILS OF THE APPROACH SLAB, SEE STD. DWG. AS-1-15 AND AS-2-20.
4. THE COST OF CONCRETE, 4A CURB AND INCIDENTALS IN BARRIER TO BE INCLUDED WITH ITEM 526 REINFORCED CONCRETE APPROACH SLAB (T=17"), AS PER PLAN.

DRAFT Stage 3 - Not for Construction 09/23/2024

DESIGN AGENCY
Stantec
1500 Lake Shore Dr.
Columbus, OH 43204
(614) 486-4383

DESIGNED	DRAWN	REVIEWED	DATE
BSM	JWS	MRS	04/2024
CHECKED	REVISED	STRUCTURE FILE NUMBER	
EER		4400224	

APPROACH SLAB DETAILS
BRIDGE NO. LAW-7-0376
S.R. 7 OVER SYMMES CREEK

LAW-7-2.17
PID No. 75923

U:\173608714\LAW\75923\structures\LAW007_0376C\sheets\007_0376RMD001.dgn 5/13/2024 8:41:10 AM JSnair

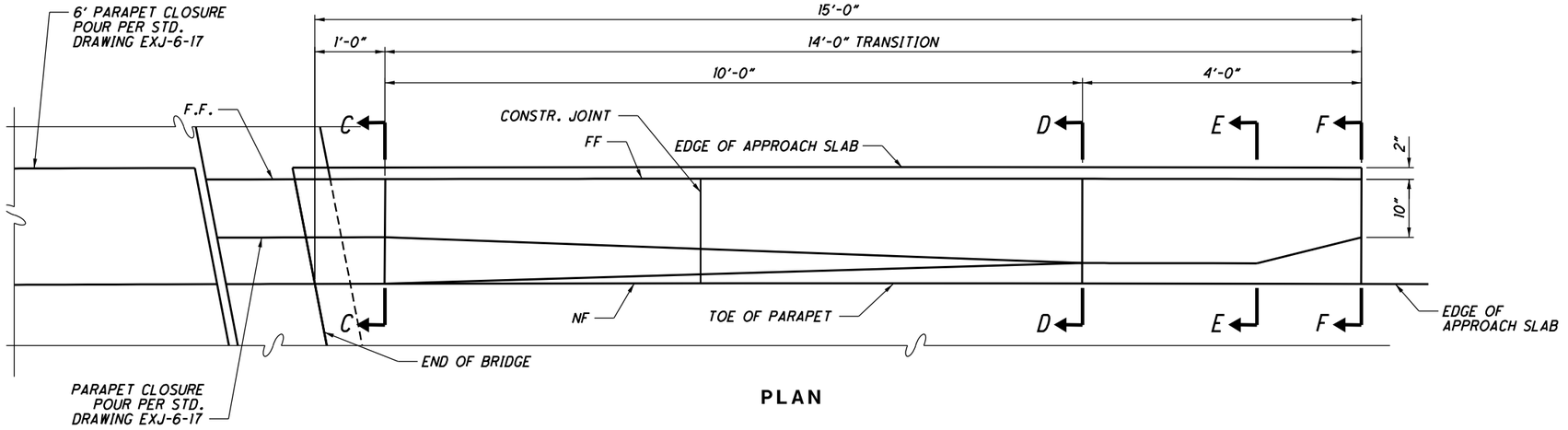

PLAN

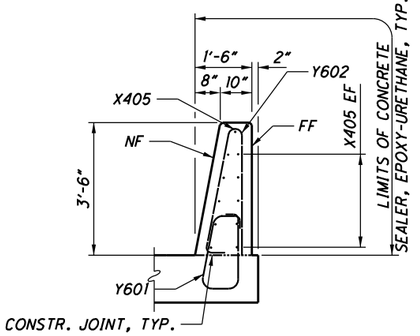

SECTION C-C

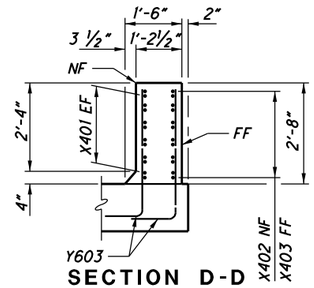

SECTION D-D

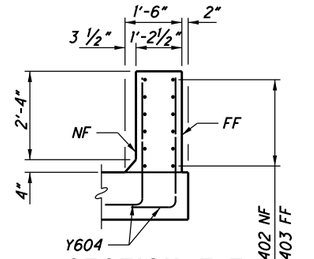

SECTION E-E

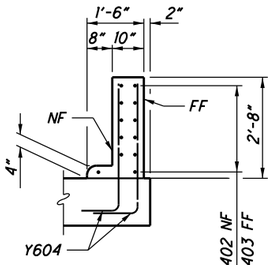

SECTION F-F

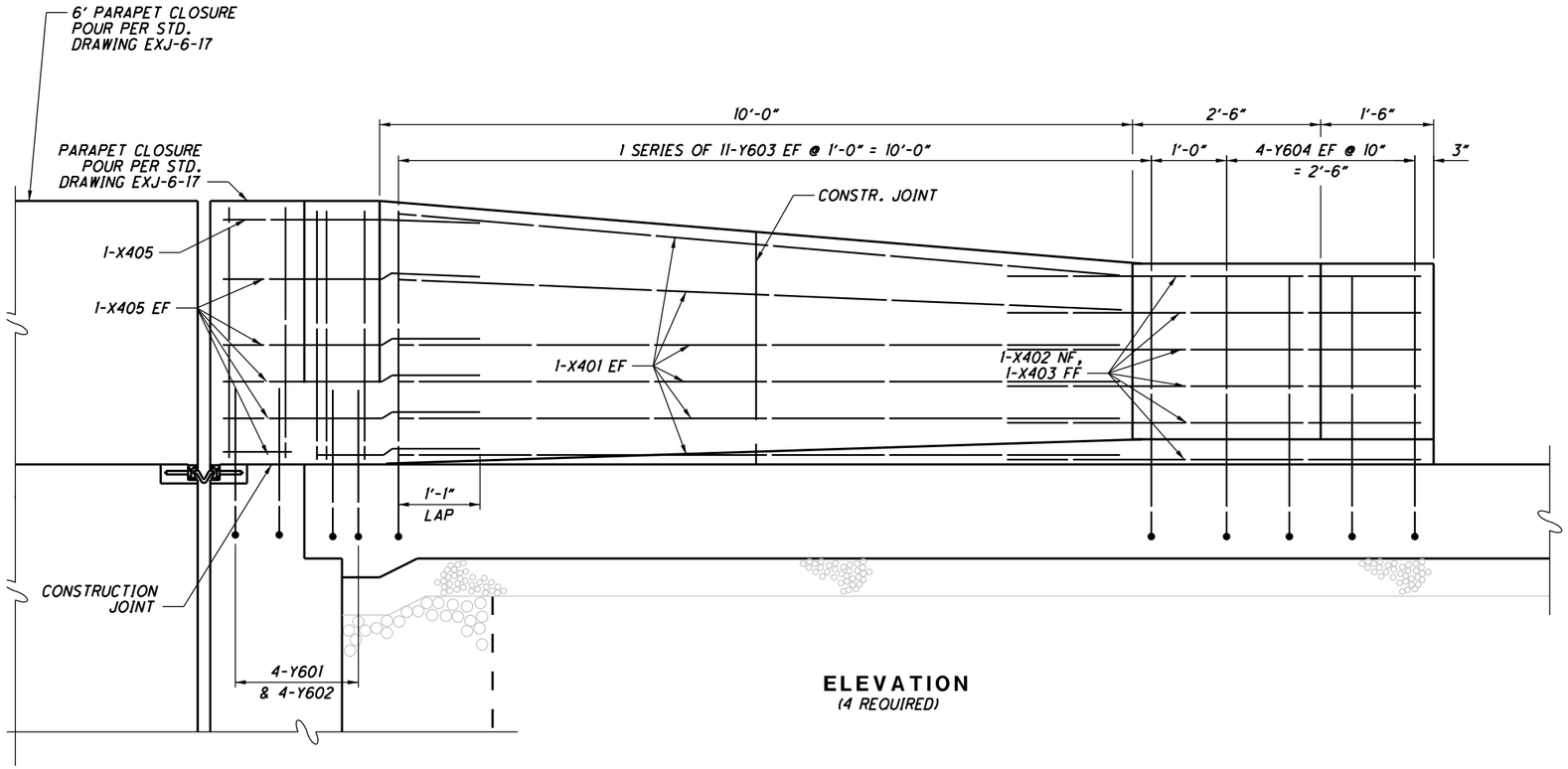

ELEVATION
(4 REQUIRED)

NOTES:
1. FOR ADDITIONAL DETAILS OF THE BARRIER, SEE STD. DWG. SBR-1-20.
2. FOR ADDITIONAL DETAILS OF THE APPROACH SLAB, SEE STD. DWG. AS-1-20.
3. THE COST OF CONCRETE AND INCIDENTALS IN BARRIER TO BE INCLUDED WITH REINFORCED CONCRETE APPROACH SLAB WITH QC/QA (T=17"), AS PER PLAN.

DRAFT Stage 3 - Not for Construction 09/23/2024

DESIGN AGENCY
Stantec
1500 Lake Shore Dr.
Columbus, OH 43204
(614) 486-4383

DESIGNED	DRAWN	REVIEWED	DATE
BSM	JWS	MRS	04/2024
CHECKED	REVISED	STRUCTURE FILE NUMBER	
EER		4400224	

APPROACH SLAB DETAILS
BRIDGE NO. LAW-7-0376
S.R. 7 OVER SYMMES CREEK

LAW-7-2.17
PID No. 75923

23 / 25

867
1247

U:\173608714\LAW\75923\structures\LAW007_0376C\sheets\007_0376RMD002.dgn 5/13/2024 8:41:11 AM JSnair

MARK	NUMBER TOTAL	LENGTH	WEIGHT	TYPE	DIMENSIONS A	B	C	D	E	R	INC
REAR ABUTMENT (EPOXY COATED STEEL REINFORCEMENT)											
A501	12	22'-6"	282	STR							
A502	10	11'-0"	115	STR							
A503	5	12'-6"	65	STR							
A504	5	20'-8"	108	STR							
	2 SR	6'-3"									
A505	OF	TO	147	STR							2'-2 ½"
	6	17'-3"									
A506	2	12'-2"	25	STR							
A507	8	17'-1"	143	STR							
A508	4	14'-3"	59	STR							
	2 SR	7'-0"									
A509	OF	TO	86	STR							2'-2"
	4	13'-6"									
A510	38	26'-0"	1030	STR							
A511	2	15'-6"	32	STR							
A601	70	20'-8"	2173	3	7'-4"	2'-7"					
A602	10	22'-0"	330	3	4'-4"	6'-3"					
A603	9	23'-0"	311	3	4'-4"	6'-9"					
A604	9	24'-0"	324	3	4'-4"	7'-3"					
A605	12	24'-10"	448	3	4'-4"	7'-8"					
A606	30	14'-3"	642	2	6'-7"	1'-5"	6'-7"				
	1 SR	11'-11"			5'-5"		5'-5"				
A607	OF	TO	279	2	TO	1'-5"	TO				0'-6"
	11	21'-11"			10'-5"		10'-5"				
A608	1	21'-11"	33	2	10'-5"	1'-5"	10'-5"				
A609	46	6'-3"	432	2	2'-10"	0'-11"	2'-10"				
A610	46	7'-5"	512	2	3'-8"	0'-5"	3'-8"				
	1 SR	10'-11"			4'-11"		4'-11"				
A611	OF	TO	357	2	TO	1'-5"	TO				0'-5 ½"
	14	23'-1"			11'-0"		11'-0"				
A612	92	11'-11"	1647	2	5'-5"	1'-5"	5'-5"				
A801	24	39'-6"	2531	STR							
A802	31	5'-0"	414	18	2'-10"	1'-0"	1'-0"				
A803	10	23'-9"	634	STR							
SUB-TOTAL			13,159								
FORWARD ABUTMENT (EPOXY COATED STEEL REINFORCEMENT)											
	2 SR	7'-0"									
B501	OF	TO	86	STR							2'-2"
	4	13'-6"									
B502	4	14'-3"	59	STR							
B503	12	22'-6"	282	STR							
B504	5	12'-6"	65	STR							
B505	2	12'-2"	25	STR							
B506	10	11'-0"	115	STR							
B507	10	19'-6"	203	STR							
	2 SR	6'-3"									
B508	OF	TO	147	STR							2'-2 ½"
	6	17'-3"									
B509	2	15'-6"	32	STR							
B510	38	26'-0"	1030	STR							
B511	8	18'-4"	153	STR							
SUB-TOTAL			2,197								

MARK	NUMBER TOTAL	LENGTH	WEIGHT	TYPE	DIMENSIONS A	B	C	D	E	R	INC
FORWARD ABUTMENT (CONTINUED)											
B601	70	20'-8"	2173	3	7'-4"	2'-7"					
B602	12	24'-8"	445	3	4'-4"	7'-7"					
B603	10	23'-10"	358	3	4'-4"	7'-2"					
B604	9	23'-0"	311	3	4'-4"	6'-9"					
B605	10	22'-2"	333	3	4'-4"	6'-4"					
B606	29	14'-3"	621	2	6'-7"	1'-5"	6'-7"				
	1 SR	11'-11"			5'-5"		5'-5"				
B607	OF	TO	415	2	TO	1'-5"	TO				0'-5 ½"
	15	24'-11"			11'-11"		11'-11"				
B608	92	11'-11"	1647	2	5'-5"	1'-5"	5'-5"				
B609	1	21'-11"	33	2	10'-5"	1'-5"	10'-5"				
B610	46	6'-3"	432	2	2'-10"	0'-11"	2'-10"				
	1 SR	11'-11"			5'-5"		5'-5"				
B611	OF	TO	304	2	TO	1'-5"	TO				0'-7¾"
	11	24'-11"			11'-11"		11'-11"				
B612	46	7'-5"	512	2	3'-8"	0'-5"	3'-8"				
B801	24	39'-6"	2531	STR							
B802	31	5'-0"	414	18	2'-10"	1'-0"	1'-0"				
B803	10	23'-9"	634	STR							
SUB-TOTAL			11,163								
PIERS (EPOXY COATED STEEL REINFORCEMENT)											
SP501	1	56'-11"	3665	27	0'-2 ¾"	4'-6"	56'-11"				
SP502	1	56'-3"	3622	27	0'-2 ¾"	4'-6"	56'-3"				
SP503	1	58'-6"	3765	27	0'-2 ¾"	4'-6"	58'-6"				
SP504	1	54'-5"	3506	27	0'-2 ¾"	4'-6"	54'-5"				
SP505	1	53'-9"	3463	27	0'-2 ¾"	4'-6"	53'-9"				
SP506	1	54'-0"	3479	27	0'-2 ¾"	4'-6"	54'-0"				
*SP507	2	34'-10"	5520	27	0'-2 ½"	5'-0"	34'-10"				
*SP508	1	31'-10"	2526	27	0'-2 ½"	5'-0"	31'-10"				
*SP509	2	40'-9"	6441	27	0'-2 ½"	5'-0"	40'-9"				
*SP510	1	39'-9"	3143	27	0'-2 ½"	5'-0"	39'-9"				
P1101	28	50'-3"	7475	16	48'-8"						
P1102	168	25'-2"	22464	STR							
P1103	28	49'-7"	7376	16	48'-0"						
P1104	28	51'-10"	7711	16	50'-3"						
P1105	28	47'-9"	7103	16	46'-2"						
P1106	28	47'-1"	7004	16	45'-6"						
P1107	28	47'-4"	7041	16	45'-9"						
*DS1101	56	34'-10"	10364	STR							
*DS1102	28	31'-10"	4736	STR							
*DS1103	56	40'-9"	12124	STR							
*DS1104	28	39'-9"	5913	STR							
P501	496	10'-8"	5518	2	3'-10"	3'-3"	3'-10"				
P502	32	22'-9"	759	STR							
P503	36	12'-4"	463	1	11'-0"	1'-6"					
P504	114	15'-6"	666	52	1'-8"	4'-6"					
P901	32	24'-7"	2675	STR							
P902	16	34'-0"	1850	16	32'-9"						
P903	16	18'-0"	979	16	16'-9"						
SUB-TOTAL			100,584								
TOTAL			138,510								

* - FOR INFORMATION ONLY. REINFORCING INCLUDED WITH DRILLED SHAFTS FOR PAYMENT.

NOTES:
1. BAR SIZE IS INDICATED IN THE BAR MARK. THE FIRST DIGIT INDICATES THE BAR SIZE NUMBER. FOR EXAMPLE, P501 IS A NUMBER 5 SIZE. BAR DIMENSIONS SHOWN ARE OUT TO OUT UNLESS OTHERWISE NOTED.

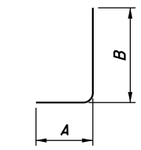

TYPE-1

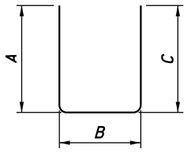

TYPE-2

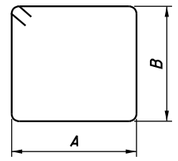

TYPE-3

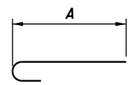

TYPE-16

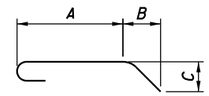

TYPE-18

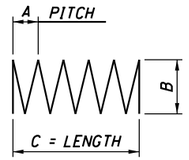

TYPE-27

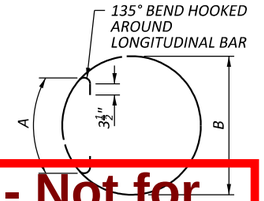

TYPE-52

DRAFT Stage 3 - Not for Construction
09/23/2024

DESIGN AGENCY
Stantec
1500 Lake Shore Dr.
Columbus, OH 43204
(614) 486-4383

DESIGNED BSM | DRAWN JWS | CHECKED EER | REVIEWED MRS | DATE 04/2024 | STRUCTURE FILE NUMBER 4400224 | REVISED

REINFORCING STEEL LIST
BRIDGE NO. LAW-7-0376
S.R. 7 OVER SYMMES CREEK

LAW-7-2.17
PID No. 75923

U:\173608714\LAW\75923\structures\LAW007_0376C\sheets\007_0376RRL001.dgn 5/13/2024 8:41:13 AM JSnair

MARK	NUMBER TOTAL	LENGTH	WEIGHT	TYPE	DIMENSIONS A	B	C	D	E	R	INC
SUPERSTRUCTURE (EPOXY COATED STEEL REINFORCEMENT)											
S401	500	30'-0"	10020	STR							
S402	50	28'-6"	952	STR							
S403	580	4'-6"	1737	50	1'-0"	1'-2"					
S404	1292	9'-0"	7768	16	8'-6"						
S405	646	4'-3"	1834	STR							
S501	715	30'-0"	22372	STR							
S502	65	11'-6"	780	STR							
S503	196	24'-0"	4906	STR							
S504	1238	24'-2"	31205	STR							
S505	634	20'-0"	13225	16	19'-5"						
S506	634	29'-9"	19673	16	29'-2"						
	2 SR	7'-5"			6'-10"						
S507	OF	TO	419	16	TO						5'-0 3/4"
	8	42'-10"			42'-3"						
	2 SR	6'-6"			5'-11"						
S508	OF	TO	848	16	TO						2'-6 1/4"
	16	44'-5"			43'-10"						
S509	16	4'-10"	81	2	2'-0"	1'-1"	2'-0"				
S510	16	4'-4"	72	2	1'-10"	0'-11"	1'-10"				
D301	10	3'-7"	13	15		0'-6 1/4"	0'-11 3/4"	0'-11 3/4"			
D401	56	14'-7"	546	6	1'-8"	6'-0"	0'-8"				
D402	32	5'-0"	107	2	1'-0"	3'-2"	1'-0"				
D403	10	12'-6"	84	24	0'-4"	6'-0"				0'-4"	
D404	56	7'-1"	265	2	3'-0"	1'-4"	3'-0"				
D405	56	7'-3"	271	2	3'-0"	1'-5"	3'-0"				
D601	96	8'-7"	1238	STR							
D602	16	7'-4"	176	STR							
D603	16	21'-0"	505	STR							
D801	64	7'-1"	1210	1	6'-0"	1'-4"					
D802	64	10'-3"	1752	13	6'-0"	0'-9"	0'-9"	3'-4"			
		SUB-TOTAL	122,059								
PARAPET (EPOXY COATED STEEL REINFORCEMENT)											
Y601	688	7'-8"	7923	37	1'-0"	0'-9 1/2"	1'-5"	1'-0"	0'-7"		
Y602	688	7'-4"	5262	23	0'-11"	3'-3"	3'-0"			0'-3"	
	8 SR	4'-4"			3'-6"						
Y603	OF	TO	628	1	TO	1'-0"					0'-1"
	11	5'-2"			4'-4"						
Y604	32	4'-4"	208	1	3'-6"	1'-0"					
		SUB-TOTAL	14,021								
		TOTAL	136,080								
PARAPET (GLASS FIBER REINFORCED POLYMER - GFRP)											
X401	268	30'-0"	8,040'-0"	STR							
X402	24	6'-4"	152'-0"	25	2'-6"	2'-5"	1'-4 1/2"	0'-1 1/2"	0'-5"		
X403	24	5'-1"	122'-0"	STR							
X404	22	19'-0"	418'-0"	STR							
X405	44	3'-4"	146'-8"	STR							
Y401	224	10'-0"	2,240'-0"	STR							
Y402	8	14'-0"	112'-0"	STR							
Y403	8	14'-3"	114'-0"	STR							
		TOTAL	11,344'-8"								

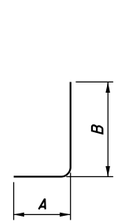

TYPE-1

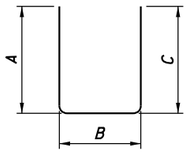

TYPE-2

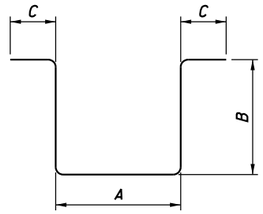

TYPE-6

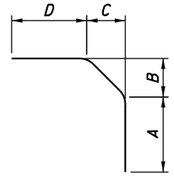

TYPE-13

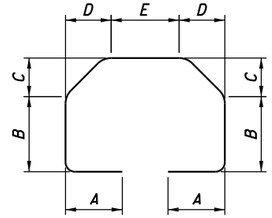

TYPE-15

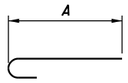

TYPE-16

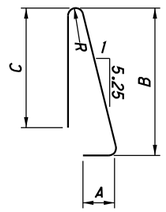

TYPE-23

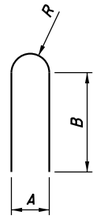

TYPE-24

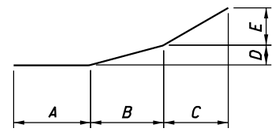

TYPE-25

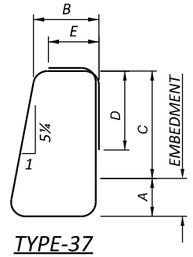

TYPE-37

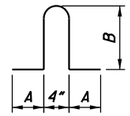

TYPE-50

NOTES:
1. BAR SIZES INDICATED IN THE BAR MARK THE FIRST DIGIT INDICATES THE BAR SIZE NUMBER. FOR EXAMPLE, P501 IS A NUMBER 5 (#5) BAR. DIMENSIONS SHOWN ARE OUT TO OUT UNLESS OTHERWISE NOTED.

DRAFT Stage 3 - Not for Construction
09/23/2024

DESIGN AGENCY
Stantec
1500 Lake Shore Dr.
Columbus, OH 43204
(614) 486-4383

DESIGNED	DRAWN	REVIEWED	DATE
BSM	JWS	MRS	04/2024
CHECKED	REVISED	STRUCTURE FILE NUMBER	
EER		4400224	

REINFORCING STEEL LIST
BRIDGE NO. LAW-7-0376
S.R. 7 OVER SYMMES CREEK

LAW-7-2.17
PID No. 75923

25 / 25

869
1247

U:\173608714\LAW\75923\structures\LAW007_0376C\sheets\007_0376RRL002.dgn 5/13/2024 8:41:14 AM JSnair

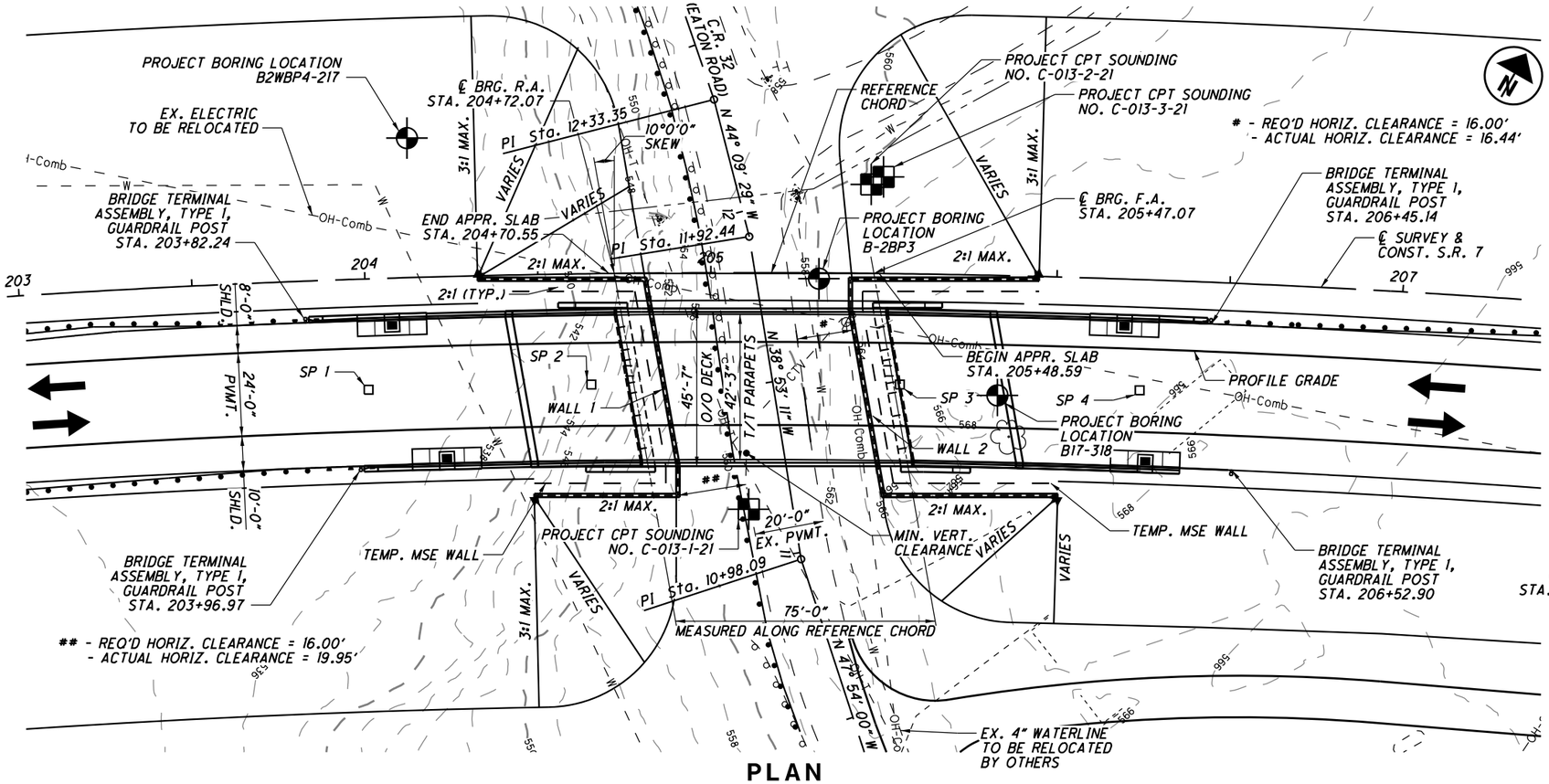

PLAN

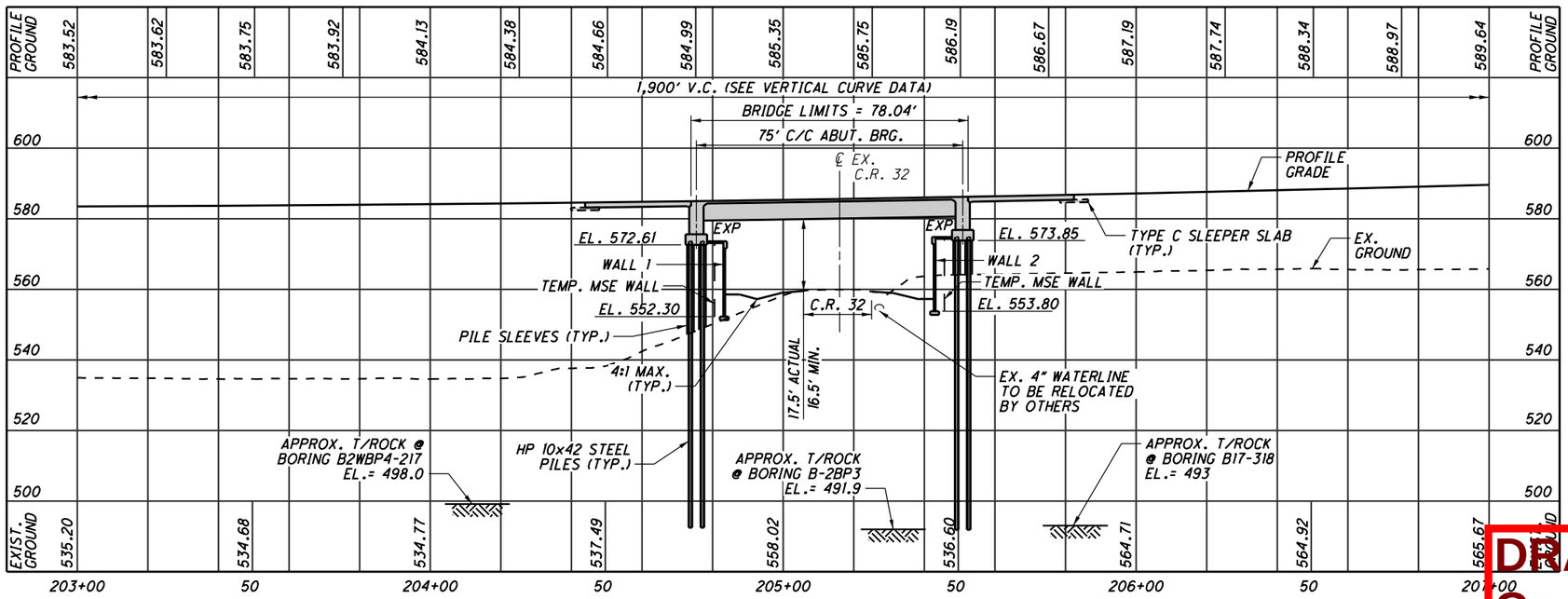

PROFILE ALONG PROFILE GRADE LINE

BENCHMARK DATA

BM #1 STA. 182+35.75, ELEV. 568.32, OFFSET 560.76' RT.
BM #2 STA. 207+14.67, ELEV. 575.38, OFFSET 966.60' LT.

FOR ADDITIONAL BENCHMARK INFORMATION. SEE ROADWAY PLAN SHEET 1

NOTES

1. EARTHWORK LIMITS SHOWN ARE APPROXIMATE. ACTUAL SLOPES SHALL CONFORM TO PLAN CROSS SECTIONS.
2. FOR PRIMARY PROJECT CONTROL INFORMATION TABLE SEE ROADWAY GENERAL NOTES.
3. FOR LIST OF ABBREVIATIONS SEE SHEET 2/28.

DESIGN TRAFFIC:
2028 ADT = 13,400 2028 ADTT = 1,072
2048 ADT = 17,500 2048 ADTT = 1,400
DIRECTIONAL DISTRIBUTION = 53/47

LEGEND

- PROJECT BORING LOCATION
- PROJECT CPT SOUNDING LOCATION
- SETTLEMENT PLATFORM

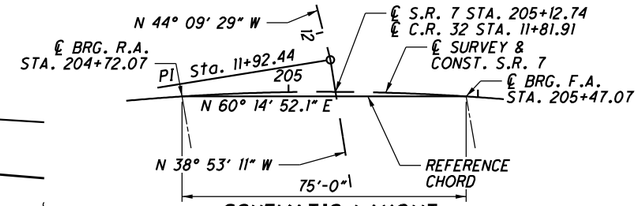

SCHEMATIC LAYOUT

ESTIMATED PILE LENGTHS	
LOCATION	LENGTH
REAR ABUTMENT	80'
FORWARD ABUTMENT	85'

VERTICAL CURVE DATA

LENGTH = 1900'
PVC STA. = 192+75.00 PVC ELEV. = 612.74
PVI STA. = 202+25.00 PVI ELEV. = 555.74
PVT STA. = 211+75.00 PVT ELEV. = 609.67
G1 = -6.00% G2 = 5.68%

CURVE (S.R. 7 CURVE NO. 3)

P.I. STA. 205+33.31 E = 70.53' LT = 150.01'
Δ = 27° 30' 45" (RT) TS STA. = 196+19.13 ST = 75.01'
Dc = 1° 45' 00" SC STA. = 198+44.13 e_{max} = 4.60%
R = 3,274.04' θs = 1° 58' 07" CS STA. 211+91.27
T = 683.24' Ls = 225.00' ST STA. 214+16.27
L = 1,347.14' Ts = 914.18'

PROPOSED STRUCTURE

TYPE: PRESTRESSED CONCRETE I-BEAMS (AASHTO TYPE 4) WITH COMPOSITE CONCRETE SLAB SUPPORTED BY SEMI-INTEGRAL ABUTMENTS ON SLEEVED PILES THROUGH MSE WALL FILL.
SPANS: 75'-0" C/C ABUTMENT BEARINGS (MEASURED ALONG REFERENCE CHORD)
ROADWAY: 42'-3" TOE/TOE PARAPET
LOADING: HL-93 AND 60 LBS/FT² FUTURE WEARING SURFACE
WEARING SURFACE: 1" MONOLITHIC WEARING SURFACE
SKEW: 10°00'00" (RF) (MEASURED WITH RESPECT TO REF. CHORD)
APPROACH SLABS: AS-1-15 & AS-2-15, 30' LONG
ALIGNMENT: REVERSE CURVE RIGHT
SUPERELEVATION: 0.046 FT/FT
COORDINATES: LATITUDE 38°26'56.26" N
LONGITUDE 82°26'00.64" W
DECK AREA: 3558 SF

DRAFT Stage 3 - Not for Construction 09/23/2024

DESIGN AGENCY
Stantec Consulting Services Inc.
1500 Lake Shore Drive, Suite 100
Columbus, Ohio 43204
(614) 486-4383

DESIGNED	DRAWN	REVIEWED	DATE
BSM	JWS	EDA	03/2024
CHECKED	REVISED	STRUCTURE FILE NUMBER	
MRS		4400259	

LAWRENCE COUNTY
STA. 204+70.55
STA. 205+48.59

SITE PLAN
BRIDGE NO. LAW-7-0387
S.R. 7 OVER C.R. 32 (EATON ROAD)

LAW-7-2.17
PID No. 75923

1 / 28

870 / 1247

U:\173608714\LAW\75923\structures\LAW007_038TC\sheets\007_75923CSP001.dgn 5/13/2024 8:41:25 AM JSnair

STANDARD DRAWINGS AND SUPPLEMENTAL SPECIFICATIONS

REFER TO THE FOLLOWING STANDARD BRIDGE DRAWING(S):

AS-1-15	REVISED	01-20-23
AS-2-15	REVISED	07-21-23
PSID-1-13	REVISED	01-20-23
SBR-1-20	REVISED	07-21-23
SICD-2-14	REVISED	01-15-21

REFER TO THE FOLLOWING STANDARD CONSTRUCTION DRAWING(S):

1-2.3	REVISED	07-15-22
RM-4.5	REVISED	07-21-17
RM-4.6	REVISED	07-19-13

AND TO THE FOLLOWING SUPPLEMENTAL SPECIFICATION(S):

800	DATED	01-19-24
840	DATED	07-21-23
867	DATED	04-15-22

DESIGN SPECIFICATIONS

THIS STRUCTURE CONFORMS TO THE 9TH EDITION OF THE "LRFD BRIDGE DESIGN SPECIFICATIONS" ADOPTED BY THE AMERICAN ASSOCIATION OF STATE HIGHWAY AND TRANSPORTATION OFFICIALS, 2019 AND THE ODOT BRIDGE DESIGN MANUAL, 2020.

OPERATIONAL IMPORTANCE

A LOAD MODIFIER OF 1.0 HAS BEEN ASSUMED FOR THE DESIGN OF THIS STRUCTURE IN ACCORDANCE WITH THE AASHTO LRFD BRIDGE DESIGN SPECIFICATIONS, ARTICLE 1.3.5 AND THE ODOT BRIDGE DESIGN MANUAL, 2007.

DESIGN LOADING

DESIGN LOADING: HL-93

FUTURE WEARING SURFACE (FWS) OF 0.060 KIPS/SQ.FT.

DESIGN DATA

CONCRETE CLASS QC2 WITH QC/QA
-COMPRESSIVE STRENGTH 4.5 KSI (SUPERSTRUCTURE)

CONCRETE CLASS QC1 WITH QC/QA
-COMPRESSIVE STRENGTH 4.0 KSI (SUBSTRUCTURE)

REINFORCING STEEL
-MINIMUM YIELD STRENGTH 60 KSI

STEEL H-PILES
-ASTM A572 - YIELD STRENGTH 50 KSI

DESIGN DATA

CONCRETE FOR PRESTRESSED BEAMS:
COMPRESSIVE STRENGTH (FINAL) - 7 KSI
COMPRESSIVE STRENGTH (RELEASE) - 5 KSI

WELDED WIRE FABRIC:
YIELD STRENGTH - 70 KSI

PRESTRESSING STRAND:
AREA = 0.217 SQ.IN.
ULTIMATE STRENGTH = 270 KSI
INITIAL STRESS = 202.5 KSI (LOW RELAXATION STRANDS)

MONOLITHIC WEARING SURFACE

MONOLITHIC WEARING SURFACE IS ASSUMED, FOR DESIGN PURPOSES, TO BE 1 INCH THICK.

PILE DRIVING CONSTRAINTS

PRIOR TO DRIVING ABUTMENT PILES TO REFUSAL ON BEDROCK, CONSTRUCT THE TEMPORARY MSE WALL AND THE BRIDGE APPROACH EMBANKMENT BEHIND THE ABUTMENT UP TO THE BOTTOM OF THE FOOTING FOR A MINIMUM DISTANCE OF 200' BEHIND EACH ABUTMENT, SEE APPROACH EMBANKMENT NOTE.THE CONTRACTOR MAY PRE-DRIVE ABUTMENT PILES BEFORE CONSTRUCTING MSE WALLS. PRE-DRIVING CONSISTS OF INSTALLING THE ABUTMENT PILES INTO THE SOIL ONLY AS FAR AS NECESSARY SO THAT THE PILE WILL REMAIN VERTICAL DURING MSE WALL CONSTRUCTION. IF PRE-DRIVING PILES, INSTALL PILE SLEEVES AROUND PILES BEFORE CONSTRUCTING THE MSE WALL. AT LEAST THREE FEET OF PILE MUST EXTEND ABOVE THE TOP OF THE PILE SLEEVE TO MEET THE REQUIREMENTS OF CMS 507.09 REGARDING SPLICES. DO NOT DRIVE ABUTMENT PILES TO REFUSAL ON BEDROCK UNTIL AFTER THE ABOVE REQUIRED MSE WALL AND EMBANKMENT HAVE BEEN CONSTRUCTED AND A 130 CALENDAR DAY WAITING PERIOD HAS ELAPSED. THE ENGINEER MAY ADJUST THE LENGTH OF THE WAITING PERIOD BASED ON SETTLEMENT PLATFORM READINGS. AFTER THE SPECIFIED WAITING PERIOD HAS ELAPSED, DRIVE ABUTMENT PILES TO REFUSAL ON BEDROCK. IN ORDER TO REMOVE ANY NEGATIVE SKIN FRICTION THAT HAS DEVELOPED DURING THE WAITING PERIOD, DRIVE EACH ABUTMENT PILE A DISTANCE OF AT LEAST 0.5 INCH.

IF NOT PRE-DRIVING ABUTMENT PILES, INSTALL THE ABUTMENT PILES THROUGH PILE SLEEVES AFTER THE ABOVE REQUIRED MSE WALL AND EMBANKMENT HAVE BEEN CONSTRUCTED AND THE SPECIFIED WAITING PERIOD HAS ELAPSED.

PILES TO BEDROCK

DRIVE PILES TO REFUSAL ON BEDROCK. THE DEPARTMENT WILL CONSIDER REFUSAL TO BE OBTAINED WHEN THE PILE PENETRATION IS AN INCH OR LESS AFTER RECEIVING AT LEAST 20 BLOWS FROM THE PILE HAMMER. SELECT THE HAMMER SIZE TO ACHIEVE THE REQUIRED DEPTH TO BEDROCK AND REFUSAL.

THE TOTAL FACTORED LOAD IS 140 KIPS PER PILE FOR THE REAR ABUTMENT PILES. THE TOTAL FACTORED LOAD IS 140 KIPS PER PILE FOR THE FORWARD ABUTMENT PILES.

REAR ABUTMENT PILES:
13 PILES 85 FEET LONG, ORDER LENGTH

FORWARD PIER PILES:
13 PILES 90 FEET LONG, ORDER LENGTH

PILE SPLICES

IN LIEU OF USING THE FULL PENETRATION BUTT WELDS SPECIFIED IN CMS 507.09 TO SPLICE STEEL H-PILES, THE CONTRACTOR MAY USE A MANUFACTURED H-PILE SPLICER. FURNISH SPLICERS FROM THE FOLLOWING MANUFACTURER:

ASSOCIATED PILE AND FITTING CORPORATION
8 WOOD HOLLOW RD. PLAZA 1
PARSIPPANY, NEW JERSEY 07054

INSTALL AND WELD THE SPLICER TO THE PILE SECTIONS IN ACCORDANCE WITH THE MANUFACTURER'S WRITTEN ASSEMBLY PROCEDURE SUPPLIED TO THE ENGINEER BEFORE THE WELDING IS PERFORMED.

PROPRIETARY RETAINING WALL DATA

THE PROPRIETARY WALL SUPPLIER SHALL DESIGN THE INTERNAL STABILITY OF A MECHANICALLY STABILIZED EARTH (MSE) WALL IN ACCORDANCE WITH SS840 TO SUPPORT THE ABUTMENT. THE DESIGN FOR INTERNAL STABILITY SHALL INCLUDE A NOMINAL (I.E. UNFACTORED) HORIZONTAL STRIP LOAD DUE TO FRICTION (FR) FROM THE SUPERSTRUCTURE OF 0.40 K/FT APPLIED PERPENDICULAR TO THE FACE OF WALL AT THE BASE OF THE CONCRETE FOOTING. THIS STRIP LOAD DOES NOT INCLUDE EARTH PRESSURE LOADS FROM THE ABUTMENT BACKFILL. HOWEVER, THE PROPRIETARY WALL SUPPLIER SHALL INCLUDE EARTH PRESSURE LOADS FROM THE ABUTMENT BACKFILL IN THE DESIGN CALCULATIONS.

FOUNDATION BEARING RESISTANCE

THE WALL 1 REINFORCED SOIL MASS, AS DESIGNED, PRODUCES A MAXIMUM SERVICE LIMIT STATE BEARING PRESSURE OF 5.42 KIPS PER SQUARE FOOT AND A MAXIMUM STRENGTH LIMIT STATE BEARING PRESSURE OF 7.75 KIPS PER SQUARE FOOT. THE FACTORED BEARING RESISTANCE IS 8.02 KIPS PER SQUARE FOOT.

THE WALL 2 REINFORCED SOIL MASS, AS DESIGNED, PRODUCES A MAXIMUM SERVICE LIMIT STATE BEARING PRESSURE OF 5.41 KIPS PER SQUARE FOOT AND A MAXIMUM STRENGTH LIMIT STATE BEARING PRESSURE OF 7.70 KIPS PER SQUARE FOOT. THE FACTORED BEARING RESISTANCE IS 8.02 KIPS PER SQUARE FOOT.

DECK PLACEMENT DESIGN ASSUMPTIONS

THE FOLLOWING ASSUMPTIONS OF CONSTRUCTION MEANS AND METHODS WERE MADE FOR THE ANALYSIS AND DESIGN OF THE SUPERSTRUCTURE. THE CONTRACTOR IS RESPONSIBLE FOR THE DESIGN OF THE FALSEWORK SUPPORT SYSTEM WITHIN THESE PARAMETERS AND WILL ASSUME RESPONSIBILITY FOR SUPERSTRUCTURE ANALYSIS FOR DEVIATION FROM THESE DESIGN ASSUMPTIONS.

AN EIGHT WHEEL FINISHING MACHINE WITH A MINIMUM WHEEL LOAD OF 2.32 KIPS.

A MINIMUM OUT-TO-OUT WHEEL SPACING AT EACH END OF THE MACHINE OF 103 INCHES.

A MAXIMUM SPACING OF OVERHANG FALSEWORK BRACKETS OF 48 INCHES.

A MAXIMUM DISTANCE FROM THE CENTERLINE OF THE FASCIA GIRDER TO THE FACE OF THE SAFETY HANDRAIL OF 65 INCHES.

ABBREVIATIONS

ABUT.	- ABUTMENT
APPR.	- APPROACH
APPROX.	- APPROXIMATELY
B/	- BOTTOM OF
BOT.	- BOTTOM
BRG.	- BEARING
℄	- CENTERLINE
C/C	- CENTER TO CENTER
CJ	- CONSTRUCTION JOINT
CLR.	- CLEAR
CONST.	- CONSTRUCTION
DIA.	- DIAMETER
DWG.	- DRAWING
EF	- EACH FACE
EL.	- ELEVATION
EQ.	- EQUAL
EX.	- EXISTING
EXP	- EXPANSION
F.A.	- FORWARD ABUTMENT
F.F.	- FRONT FACE
℄	- FLOW LINE
HORIZ.	- HORIZONTAL
H.W.	- HIGH WATER
LT.	- LEFT
MAX	- MAXIMUM
MIN.	- MINIMUM
N.F.	- NEAR FACE
NO.	- NUMBER
O/O	- OUT TO OUT
OHW	- ORDINARY HIGH WATER MARK
PVMT.	- PAVEMENT
R.A.	- REAR ABUTMENT
REF.	- REFERENCE
RT.	- RIGHT
SHRD.	- SHOULDER
SP	- SETTLEMENT PLATFORM
SPA.	- SPACE
STA.	- STATION
STD.	- STANDARD
T/	- TOP OF
T/T	- TOE TO TOE
TEMP.	- TEMPORARY
TYP.	- TYPICAL
VERT.	- VERTICAL
YR.	- YEAR

DRAFT Stage 3 - Not for Construction 09/23/2024

U:\7360871\4\LAW\75923\structures\LAW007_0387C\sheets\007_75923CSN001.dgn 5/13/2024 8:41:26 AM JSnair

DESIGN AGENCY
Stantec Consulting Services Inc.
1500 Lake Shore Drive, Suite 100
Columbus, Ohio 43204
(614) 486-4383

DESIGNED BSM | DRAWN JWS | CHECKED MRS | REVIEWED EDA | DATE 03/2024 | REVISED | STRUCTURE FILE NUMBER 4400259

GENERAL NOTES
BRIDGE NO. LAW-7-0387
S.R. 7 OVER C.R. 32 (EATON ROAD)

LAW-7-2.17
PID No. 75923

ITEM SPECIAL - SETTLEMENT PLATFORM:

DESCRIPTION: THIS ITEM CONSISTS OF FURNISHING, CONSTRUCTING, AND MAINTAINING SETTLEMENT PLATFORMS AND OBTAINING SETTLEMENT READINGS AS REQUIRED BY THE PLANS OR AS DIRECTED BY THE ENGINEER. SEE SETTLEMENT PLATFORM DETAIL THIS SHEET. AT THE OPTION AND EXPENSE OF THE CONTRACTOR, ADDITIONAL SETTLEMENT PLATFORMS MAY BE INSTALLED AT LOCATIONS APPROVED BY THE ENGINEER. SETTLEMENT READINGS SHALL BE TAKEN WEEKLY DURING CONSTRUCTION AND DURING THE SPECIFIED WAITING PERIOD BEGINNING WITH THE FIRST WEEK FOLLOWING PLACEMENT OF EACH PLATFORM. THE READINGS SHALL BE PLOTTED ON GRAPH PAPER PRESENTING DEFORMATION (ON THE NEGATIVE Y-AXIS) AND FILL HEIGHT (ON THE POSITIVE Y-AXIS) VERSUS TIME (ON THE X-AXIS). A COPY OF EACH CUMULATIVE PLOT SHALL BE SENT TO ODOT, CO, CONSTRUCTION MANAGEMENT/CONSTRUCTION ADMINISTRATION, GEOTECHNICAL AND EARTHWORK ENGINEER AND ODOT, CO, OFFICE OF GEOTECHNICAL ENGINEERING, FOUNDATIONS AND RETAINING WALLS ENGINEER, AFTER EACH SETTLEMENT READING IS RECORDED.

MATERIAL: SOUND LUMBER SUCH AS 3/4" EXTERIOR GRADE PLYWOOD SHALL BE USED FOR THE BASE. THE PIPE SHALL BE 2 1/2" STANDARD BLACK PIPE WITH THREADED FITTINGS AS SHOWN ON THE PLANS. A STEEL PLATE 36" X 36" X 1/8" MAY BE SUBSTITUTED FOR THE LUMBER FOR THE PLATFORMS, AT THE CONTRACTOR'S OPTION.

CONSTRUCTION METHODS: THE PLATFORM SHALL CONFORM TO THE SETTLEMENT PLATFORM DETAILS SHOWN ON THIS SHEET. THE PLATFORM SHALL BE SET ON A LEVEL SURFACE. THE PIPE SHALL BE FIRMLY SECURED TO THE PLATFORM AND SHALL BE MAINTAINED IN A PLUMB POSITION DURING THE PLACEMENT OF THE EMBANKMENT. THE PIPE SHALL BE MARKED AT INTERVALS TO FACILITATE MEASUREMENT OF THE DEPTH OF FILL. THE CONTRACTOR SHALL STOP WORK IN ANY LOCATION WHERE THE SETTLEMENT PLATFORM HAS BEEN DISTURBED OR DAMAGED. PLATFORMS OR PIPES DAMAGED OR DISPLACED DURING CONSTRUCTION SHALL BE RESTORED TO THEIR PROPER CONDITION AT THE CONTRACTOR'S EXPENSE.

SETTLEMENT PLATFORMS SHALL BE PLACED AT THE FOLLOWING LOCATIONS:

I.D.	STATION	OFFSET
SP1	204+00	32' RT.
SP2	204+65	32' RT.
SP3	205+55	32' RT.
SP4	206+25	32' RT.

PRIOR TO PAVING, THE TOP OF THE SETTLEMENT PLATFORM PIPE SHALL BE CUT OFF TWO FEET BELOW THE FINISHED SURFACE OF THE SUBGRADE OR FINISHED GROUND SURFACE, WHICHEVER IS APPLICABLE.

REFER TO ODOT GEOTECHNICAL BULLETIN GB4 "GUIDELINES FOR THE USE OF GEOTECHNICAL INSTRUMENTATION" FOR ADDITIONAL INSTALLATION AND MONITORING INSTRUCTION.

WAITING PERIOD CRITERIA: THE ENGINEER WILL CONSIDER THE WAITING PERIOD COMPLETE WHEN CONSECUTIVE SETTLEMENT READINGS, RECORDED AFTER EMBANKMENT CONSTRUCTION IS COMPLETE AND AT LEAST ONE WEEK (168 HOURS) APART, RESULT IN ELEVATION DIFFERENCES EQUAL TO OR LESS THAN 1/8 INCH. THE ESTIMATED WAITING PERIOD IS 90 DAYS.

IF SETTLEMENT RATES EXCEED 3/4 INCH PER MONTH AFTER EMBANKMENT CONSTRUCTION HAS BEEN COMPLETE FOR 45 CALENDAR DAYS, REMAINING CONSTRUCTION, INCLUDING ANY NECCESARY CORRECTIVE MEASURES, MAY PROCEED ONLY AT THE DIRECTION OF THE ENGINEER.

ITEM SPECIAL - SETTLEMENT PLATFORM: (CONT.):

THE DEPARTMENT WILL CONSIDER VIBRATING WIRE SETTLEMENT MONITORING PLATFORMS IN LIEU OF THE CONVENTIONAL SETTLEMENT PLATFORMS. THE CONTRACTOR SHOULD PROVIDE DETAILS OF THE PROPOSED VIBRATING WIRE SETTLEMENT PLATFORMS AS WELL AS DESIGN DRAWINGS OF THE PROPOSED 30 DAYS PRIOR TO CONSTRUCTION. THE DEPARTMENT WILL REQUIRE 10 WORKING DAYS FOR REVIEW AND APPROVAL. THE DESIGN DRAWINGS SHOULD ILLUSTRATE THE LOCATIONS WITH ALL EXISTING AND PROPOSED SITE FEATURES TO VERIFY THE PROPOSED CABLING WILL NOT CONFLICT WITH EXISTING FACILITIES, PROPOSED FACILITIES OR UTILITIES. NO ADDITIONAL PAYMENT WILL BE PROVIDED IF THE CONTRACTOR ELECTS TO UTILIZE VIBRATING WIRE SETTLEMENT PLATFORMS.

MORE INFORMATION PERTAINING TO EMBANKMENT CONSTRUCTION AND CONTROLLED RATES OF FILL ARE PROVIDED IN THE ROADWAY PLANS.

METHOD OF MEASUREMENT, THE NUMBER OF SETTLEMENT PLATFORMS TO BE PAID FOR SHALL BE THE ACTUAL NUMBER OF SETTLEMENT PLATFORMS COMPLETED, MAINTAINED, AND ACCEPTED BY THE ENGINEER.

BASIS OF PAYMENT: PAYMENT SHALL BE MADE AT THE CONTRACT UNIT PRICE EACH FOR "ITEM SPECIAL - SETTLEMENT PLATFORM" WHICH IS COMPENSATION FOR CONSTRUCTING, MAINTAINING, AND MONITORING THE SETTLEMENT PLATFORMS INCLUDING FURNISHING ALL LABOR, EQUIPMENT, MATERIALS, AND INCIDENTALS NECESSARY TO COMPLETE THE WORK. PAYMENT SHALL NOT BE MADE FOR SETTLEMENT PLATFORMS WHICH BECOME USELESS DUE TO DAMAGE CAUSED BY THE CONTRACTOR'S OPERATIONS. SEE DETAIL THIS SHEET.

APPROACH EMBANKMENT CONSTRUCTION:

THE APPROACH EMBANKMENTS SHALL BE CONSTRUCTED AND THEN UNDERGO AN ESTIMATED WAITING PERIOD OF 90 DAYS PRIOR.

TO DRIVING PILES, SEE SHEETS (X/X) AND (X/X) FOR

DETAILS AND NOTES REGARDING REINFORCED SLOPE AND EMBANKMENT AND CONSTRUCTION.

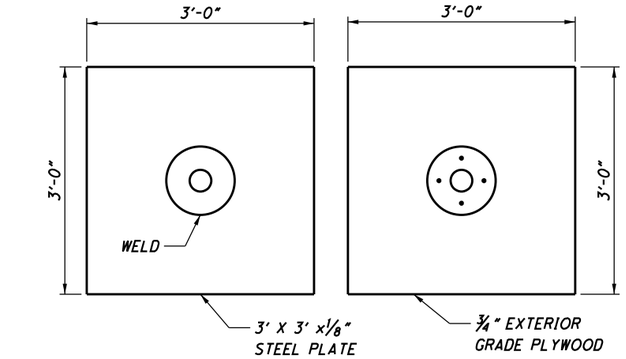

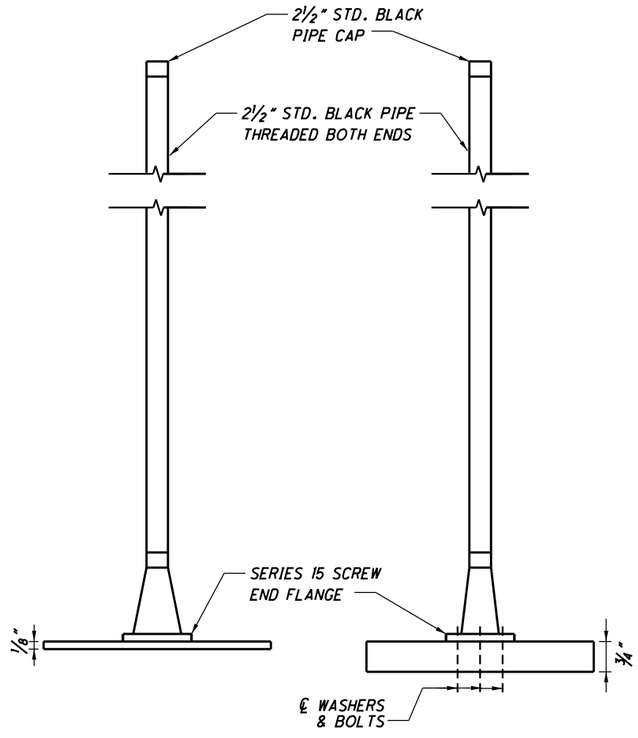

SETTLEMENT PLATFORM

(NOT TO SCALE)

NOTES:

1. SETTLEMENT PLATFORM SHALL BE ANCHORED BY STAKES DRIVEN AT EACH CORNER TO PREVENT OVERTURNING.

DRAFT Stage 3 - Not for Construction 09/23/2024

DESIGN AGENCY
Stantec Consulting Services Inc.
1500 Lake Shore Drive, Suite 100
Columbus, Ohio 43204
(614) 486-4383

DESIGNED	DRAWN	REVIEWED	DATE
BSM	JWS	EDA	03/2024

CHECKED MRS | REVISED | STRUCTURE FILE NUMBER 4400259

GENERAL NOTES
BRIDGE NO. LAW-7-0387
S.R. 7 OVER C.R. 32 (EATON ROAD)

LAW-7-2.17
PID No. 75923

872 / 1247

U:\73608714\LAW\75923\structures\LAW007_0387C\sheets\007_75923CSN002.dgn 5/13/2024 8:41:27 AM JSnair

ESTIMATED QUANTITIES

CALCULATED BY: BSM 03/08/24
CHECKED BY: MRS 03/14/24

02/NHS/08	ITEM	EXTENSION	TOTAL	UNIT	DESCRIPTION	ABUT	SUPER.	GEN.	SEE SHEET
4	SPEC	20365000	4	EACH	SETTLEMENT PLATFORM			4	3/28
LUMP	503	11100	LUMP	LS	COFFERDAMS AND EXCAVATION BRACING			LUMP	
LUMP	505	11100	LUMP	LS	PILE DRIVING EQUIPMENT MOBILIZATION			LUMP	
2275	507	00100	2275	FT	STEEL PILES HP10X42, FURNISHED	2275			
2145	507	00151	2145	FT	STEEL PILES HP10X42, DRIVEN, AS PER PLAN	2145			
59666	509	10000	59666	POUND	EPOXY COATED STEEL REINFORCEMENT	10808	48858		
5475.25	509	30020	5475.25	FT	NO. 4 DEFORMED GFRP REINFORCEMENT		547.25		
2	511	33500	2	EA	SEMI-INTEGRAL DIAPHRAGM GUIDE	2			
176	511	34446	176	CY	CLASS QC2 CONCRETE WITH QC/QA, BRIDGE DECK		176		
24	511	34450	24	CY	CLASS QC2 CONCRETE WITH QC/QA, BRIDGE DECK (PARAPET)		24		
190	511	43512	190	CY	CLASS QC1 CONCRETE WITH QC/QA, ABUTMENT INCLUDING FOOTING	190			
544	512	10100	544	SY	SEALING OF CONCRETE SURFACES (EPOXY-URETHANE)	198	346		
5	515	15020	5	EACH	DRAPED STRAND PRESTRESSED CONCRETE BRIDGE I-BEAM MEMBERS, LEVEL 3, TYPE 4, 76'-8"		5		
4	515	20000	4	EACH	INTERMEDIATE DIAPHRAGMS		4		
93	516	10010	93	FT	ARMORLESS PREFORMED JOINT SEAL	93			
254	516	13900	254	SF	2" PREFORMED EXPANSION JOINT FILLER	254			
118	516	14020	118	FT	SEMI-INTEGRAL ABUTMENT EXPANSION JOINT SEAL	118			
10	516	44100	10	EACH	ELASTOMERIC BEARING WITH INTERNAL LAMINATES AND LOAD PLATE (NEOPRENE) (2.063"x12"x25")	10			
76	518	21200	76	CY	POROUS BACKFILL WITH GEOTEXTILE FABRIC	76			
129	518	40000	129	FT	6" PERFORATED CORRUGATED PLASTIC PIPE	129			
14	518	40010	14	FT	6" NON-PERFORATED CORRUGATED PLASTIC PIPE, INCLUDING SPECIALS	14			
304	526	30011	304	SY	REINFORCED CONCRETE APPROACH SLABS WITH QC/QA (T=17"), AS PER PLAN			304	18&19/26
93	526	90030	93	FT	TYPE C INSTALLATION			93	
102	601	37501	102	FT	PAVED GUTTER 1-2, AS PER PLAN			102	
4	611	99114	4	EACH	INLET, NO. 3 FOR SINGLE SLOPE BARRIER, TYPE D			4	
4	622	25000	4	EACH	CONCRETE BARRIER END SECTION, TYPE D			4	
4	622	90200	4	EACH	BARRIER, MISC.: SINGLE SLOPE CONCRETE BRIDGE RAILING WITH MOMENT SLAB			4	

NOTE:
FOR RETAINING WALL QUANTITIES, SEE SHEET 28/28.

DRAFT Stage 3 - Not for Construction
09/23/2024

DESIGN AGENCY
Stantec Consulting Services Inc.
1500 Lake Shore Drive, Suite 100
Columbus, Ohio 43204
(614) 486-4383

DESIGNED	DRAWN	REVIEWED	DATE
BSM	JWS	EDA	03/2024
CHECKED	REVISED	STRUCTURE FILE NUMBER	
MRS		4400259	

ESTIMATED QUANTITIES
BRIDGE NO. LAW-7-0387
S.R. 7 OVER C.R. 32 (EATON ROAD)

LAW-7-2.17
PID No. 75923

4 / 28

873
1247

U:\1736087\4\LAW\75923\structures\LAW007_0387C\sheets\007_75923CS0001.dgn 5/14/2024 10:18 PM bmcneal

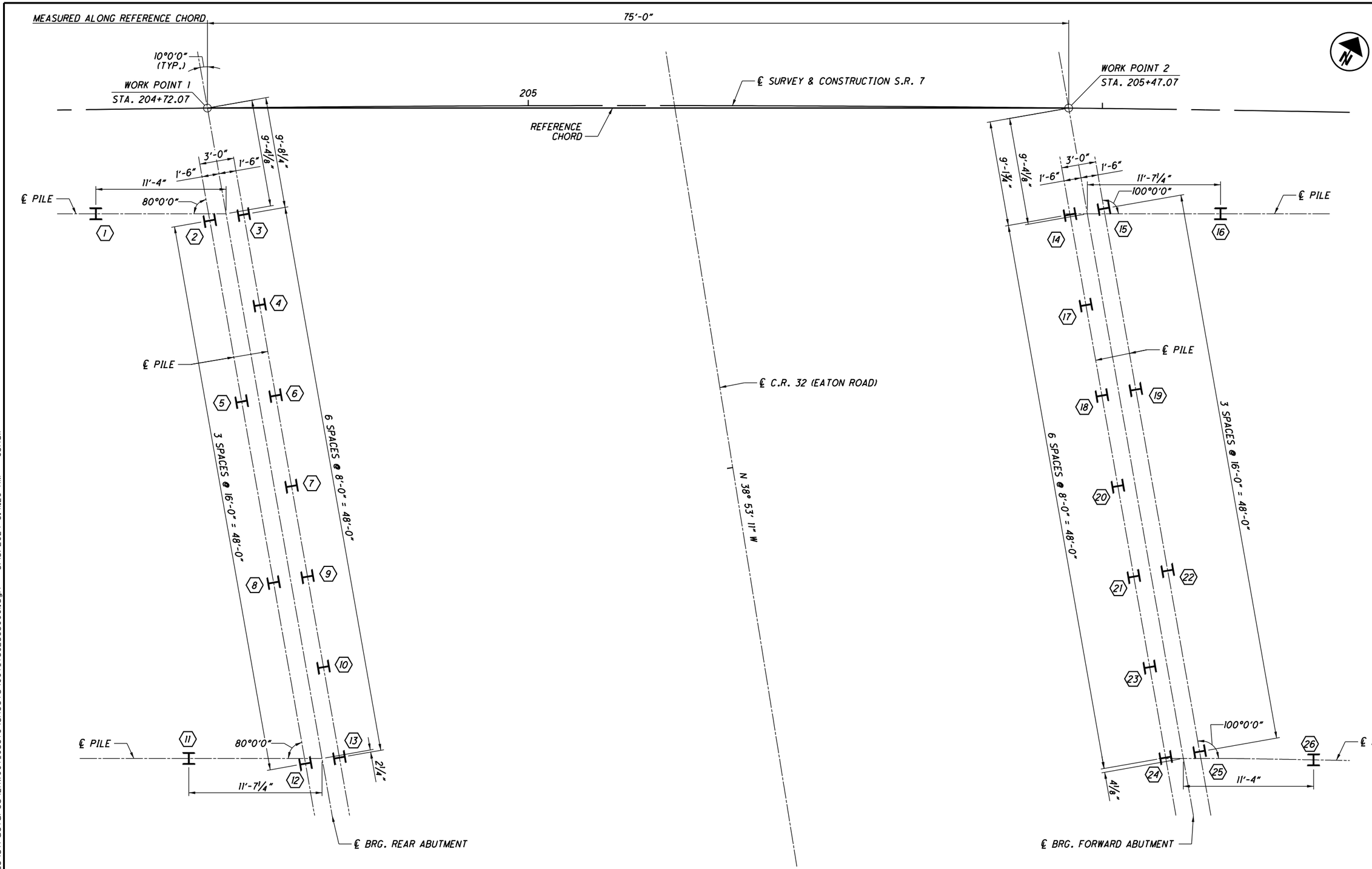

PLAN

NOTES:

1. ALL PILES ARE HP10x42.
2. GRADE DESIGNATES PILE NUMBER ALLOCATION.
3. ALL PILES TO BE SLEEVED THROUGH PROPOSED MSE WALL SELECT GRANULAR BACKFILL.

DRAFT Stage 3 - Not for Construction 09/23/2024

DESIGN AGENCY
Stantec Consulting Services Inc.
1500 Lake Shore Drive, Suite 100
Columbus, Ohio 43204
(614) 486-4383

DESIGNED	DRAWN	REVIEWED	DATE
BSM	JWS	EDA	03/2024
CHECKED	REVISED	STRUCTURE FILE NUMBER	
MRS		4400259	

FOUNDATION PLAN
BRIDGE NO. LAW-7-0387
S.R. 7 OVER C.R. 32 (EATON ROAD)

LAW-7-2.17
PID No. 75923

U:\173608714\LAW\75923\structures\LAW007_0387C\sheets\007_75923CS0001.dgn 5/13/2024 8:41:29 AM JSnair

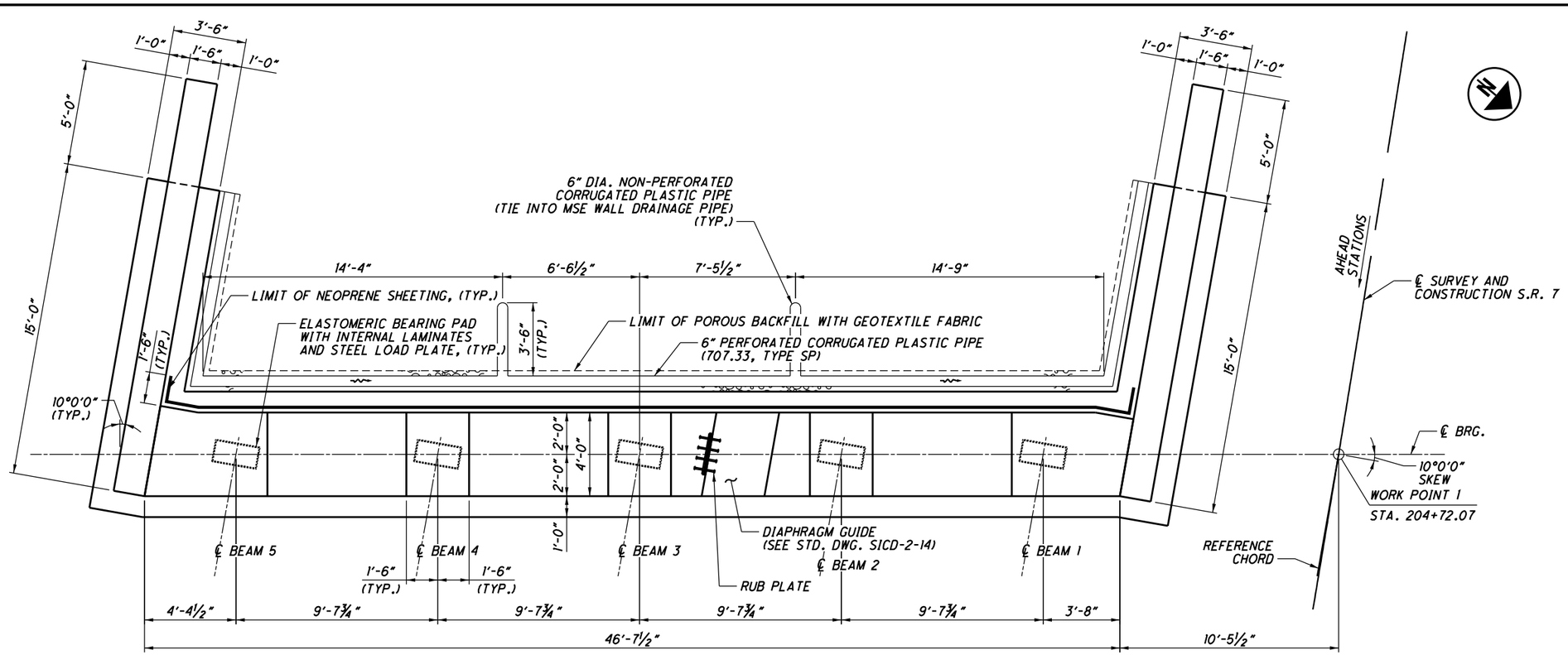

PLAN
(MSE WALL NOT SHOWN)

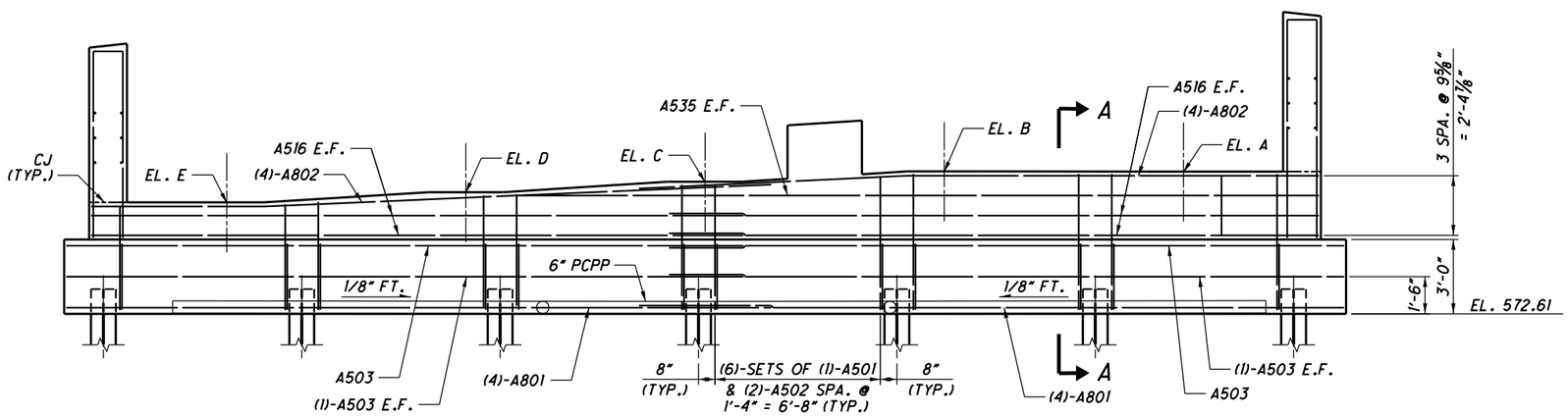

ELEVATION
LAP LENGTHS:
#5 BARS = 3'-0"
#8 BARS = 5'-4"

ABUTMENT ELEVATIONS	
LABEL	ELEVATION
A	578.35
B	578.36
C	577.94
D	577.52
E	577.11

NOTES:
1. FOR PILE LOCATIONS, SEE SHEET 5/28.
2. FOR FOOTING PLAN, SEE SHEET 7/28.
3. FOR SECTIONS A-A AND B-B, SEE SHEET 7/28.

DRAFT Stage 3 - Not for Construction

09/23/2024

DESIGN AGENCY
Stantec Consulting Services Inc.
1500 Lake Shore Drive, Suite 100
Columbus, Ohio 43204
(614) 486-4383

DESIGNED	DRAWN	REVIEWED	DATE
BSM	JWS	EDA	03/2024
CHECKED	REVISED	STRUCTURE FILE NUMBER	
MRS		4400259	

REAR ABUTMENT
BRIDGE NO. LAW-7-0387
S.R. 7 OVER C.R. 32 (EATON ROAD)

LAW-7-2.17
PID No. 75923

6/28

875/1247

U:\173608714\LAW\75923\structures\LAW007_0387C\sheets\007_75923CSR001.dgn 5/13/2024 8:41:31 AM JSnair

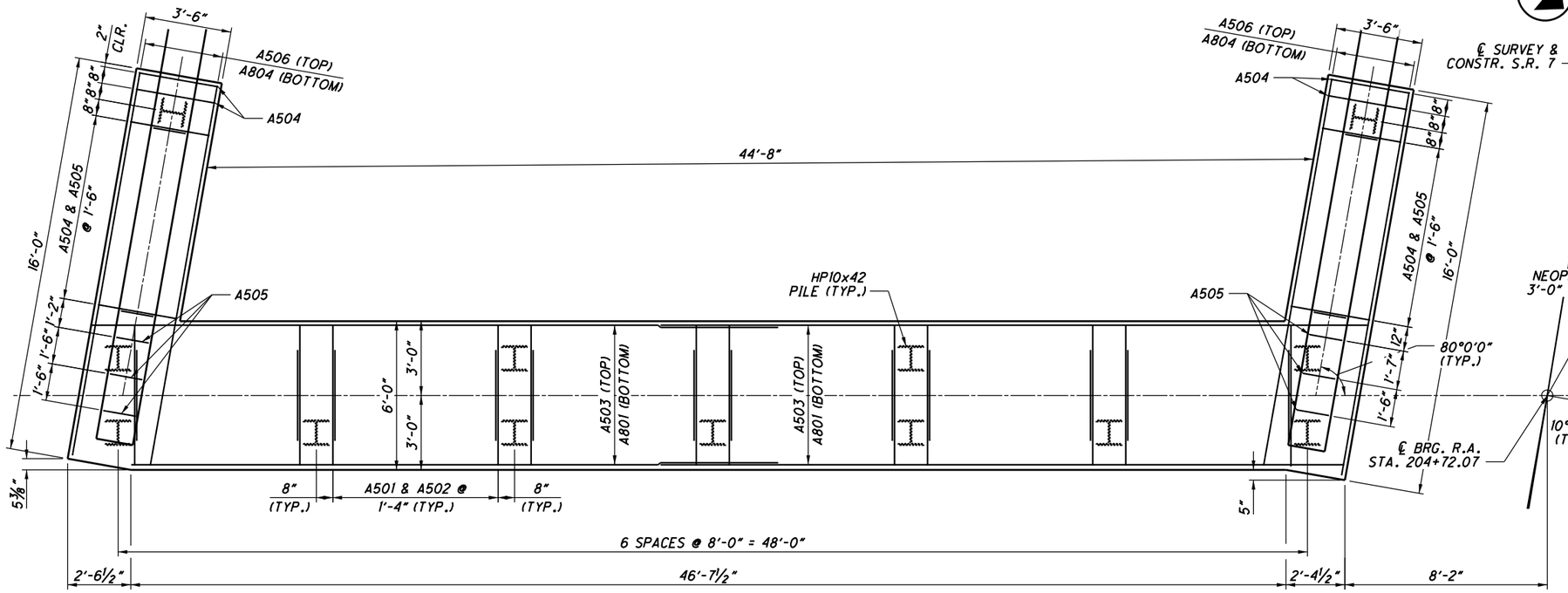

PLAN

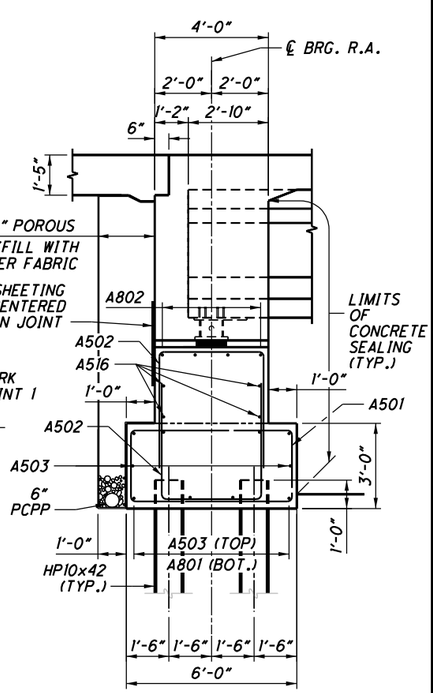

SECTION A-A

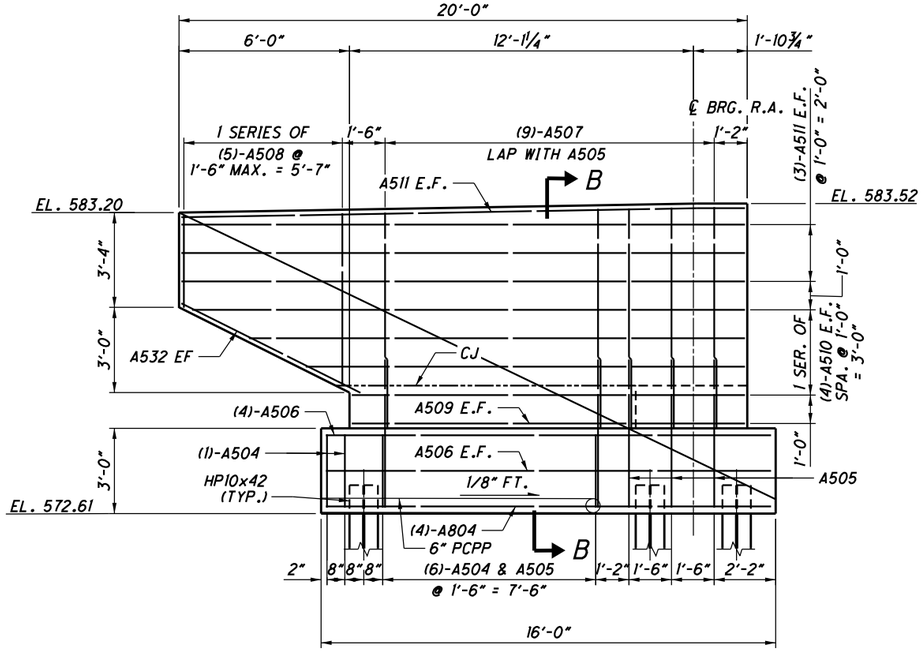

SOUTH WINGWALL

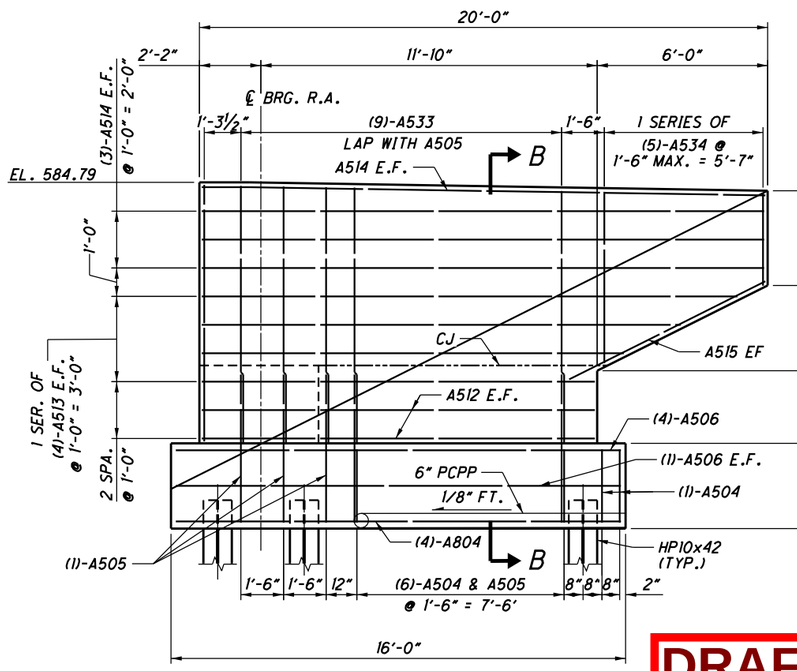

NORTH WINGWALL

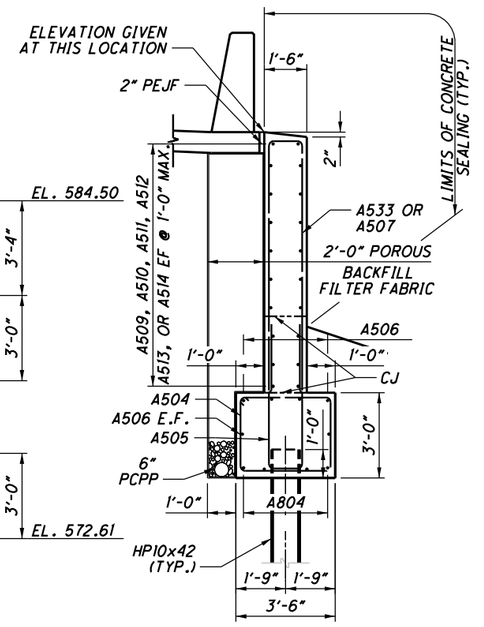

SECTION B-B

NOTE:
FOR PILE LOCATIONS SEE SHEET 5/20.

LAP LENGTHS:
#8 BARS = 5'-4"

DRAFT Stage 3 - Not for Construction

09/03/2024

DESIGN AGENCY
Stantec Consulting Services Inc.
1500 Lake Shore Drive, Suite 100
Columbus, Ohio 43204
(614) 486-4383

DESIGNED	DRAWN	REVIEWED	DATE
BSM	JWS	EDA	03/2024
CHECKED	REVISED	STRUCTURE FILE NUMBER	
MRS		4400259	

REAR ABUTMENT AND MISCELLANEOUS DETAILS
BRIDGE NO. LAW-7-0387
S.R. 7 OVER C.R. 32 (EATON ROAD)

LAW-7-2.17
PID No. 75923

7 / 28

876
1247

U:\173608714\LAW\75923\structures\LAW007_0387C\sheets\007_75923CSR002.dgn 5/13/2024 8:41:32 AM JSnair

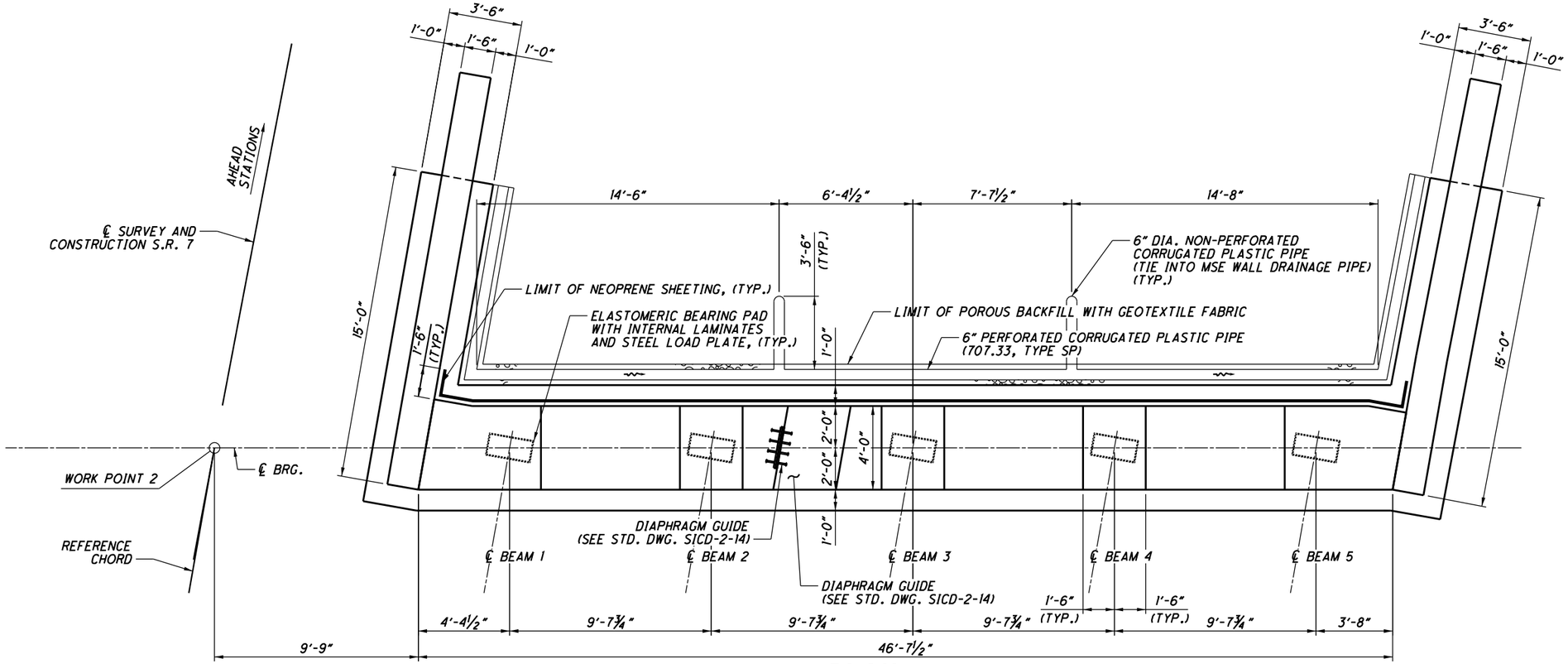

PLAN

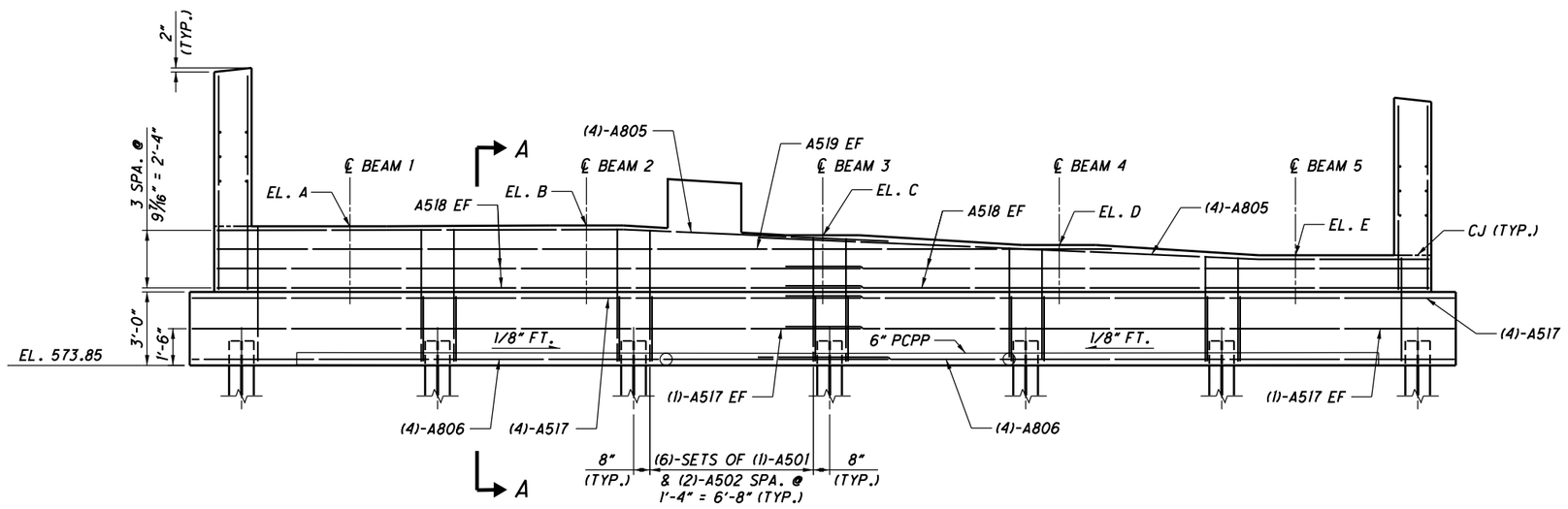

ELEVATION

LAP LENGTHS:
#5 BARS = 3'-0"
#8 BARS = 5'-4"

ABUTMENT ELEVATIONS	
LABEL	ELEVATION
A	579.51
B	579.54
C	579.14
D	578.74
E	578.33

NOTE:
1. FOR PILE LOCATIONS, SEE SHEET 5/28.
2. FOR FOOTING REINFORCEMENT, SEE SHEET 9/28.
3. FOR SECTIONS A-A AND B-B, SEE SHEET 9/28.

DRAFT Stage 3 - Not for Construction 09/28/2021

DESIGN AGENCY
Stantec Consulting Services Inc.
1500 Lake Shore Drive, Suite 100
Columbus, Ohio 43204
(614) 486-4383

DESIGNED	DRAWN	REVIEWED	DATE
BSM	JWS	EDA	03/2024
CHECKED	REVISED	STRUCTURE FILE NUMBER	
MRS		4400259	

FORWARD ABUTMENT
BRIDGE NO. LAW-7-0387
S.R. 7 OVER C.R. 32 (EATON ROAD)

LAW-7-2.17
PID No. 75923

8 / 28

877
1247

U:\1736087114\LAW\75923\structures\LAW007_0387C\sheets\007_75923CSF001.dgn 5/13/2024 8:41:32 AM JSnair

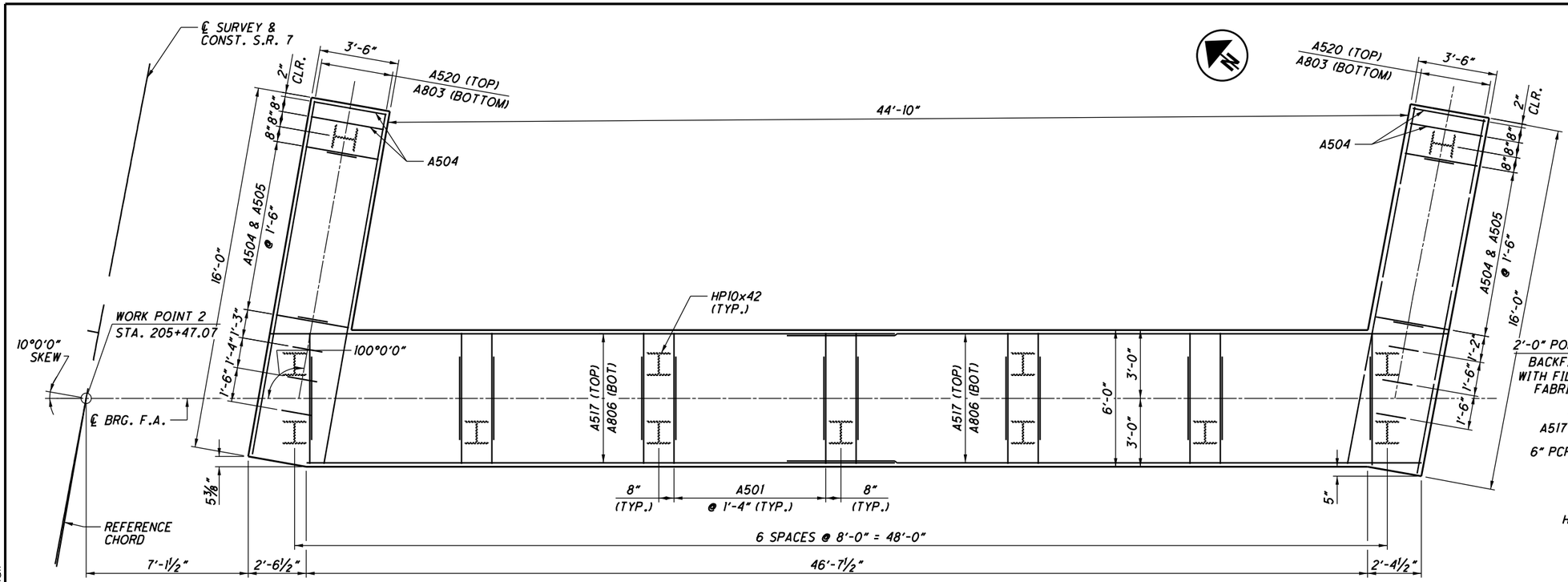

PLAN

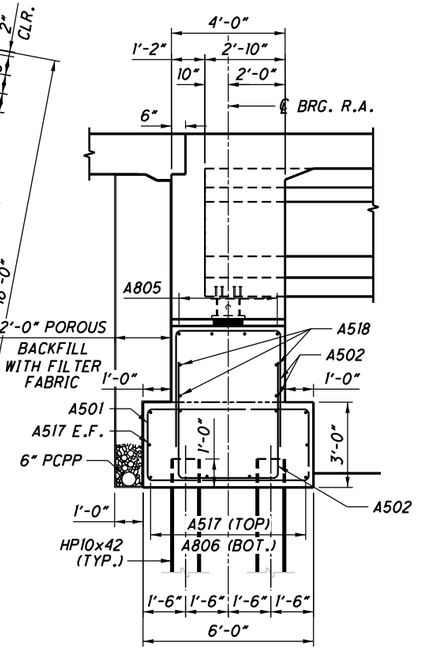

SECTION A-A

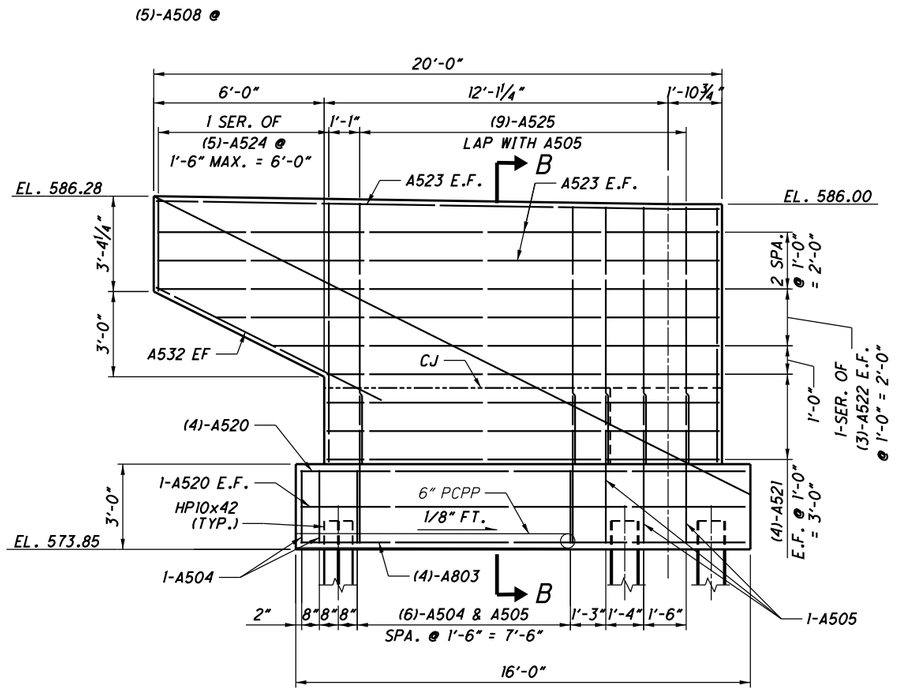

NORTH WINGWALL

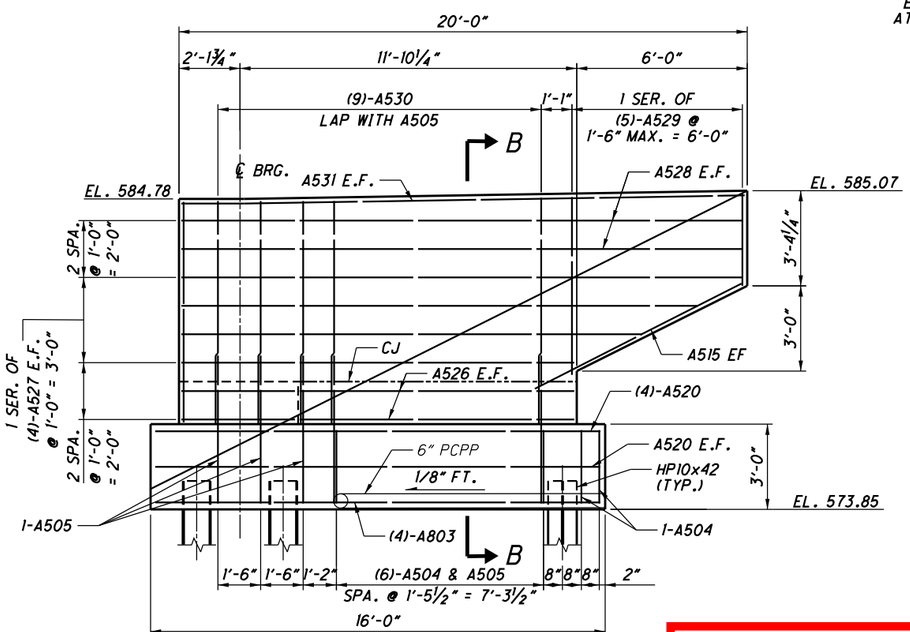

SOUTH WINGWALL

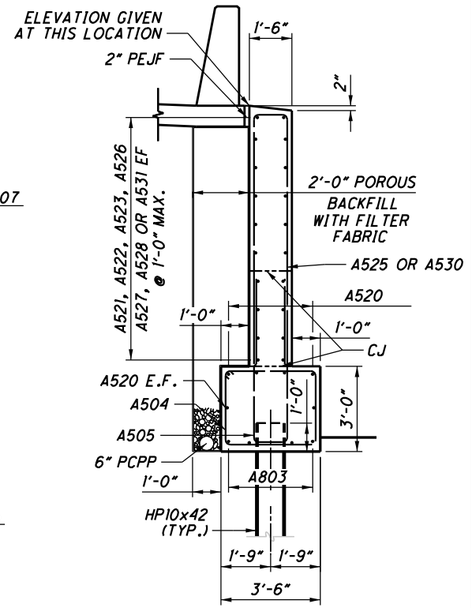

SECTION B-B

NOTE:
1. FOR PILE LOCATIONS, SEE SHEET 5/28.
LAP LENGTHS:
#5 BARS - 1'-6"
#8 BARS - 2'-4"

DRAFT Stage 3 - Not for Construction

5/13/2024

DESIGN AGENCY
Stantec Consulting Services Inc.
1500 Lake Shore Drive, Suite 100
Columbus, Ohio 43204
(614) 486-4383

DESIGNED	DRAWN	REVIEWED	DATE
BSM	JWS	EDA	03/2024
CHECKED	REVISED	STRUCTURE FILE NUMBER	
MRS		4400259	

FORWARD ABUTMENT AND MISCELLANEOUS DETAILS
BRIDGE NO. LAW-7-0387
S.R. 7 OVER C.R. 32 (EATON ROAD)

LAW-7-2.17
PID No. 75923

9 / 28

878 / 1247

U:\1736087\14\LAW\75923\structures\LAW007_0387C\sheets\007_75923CSF002.dgn 5/13/2024 8:41:33 AM JSnair

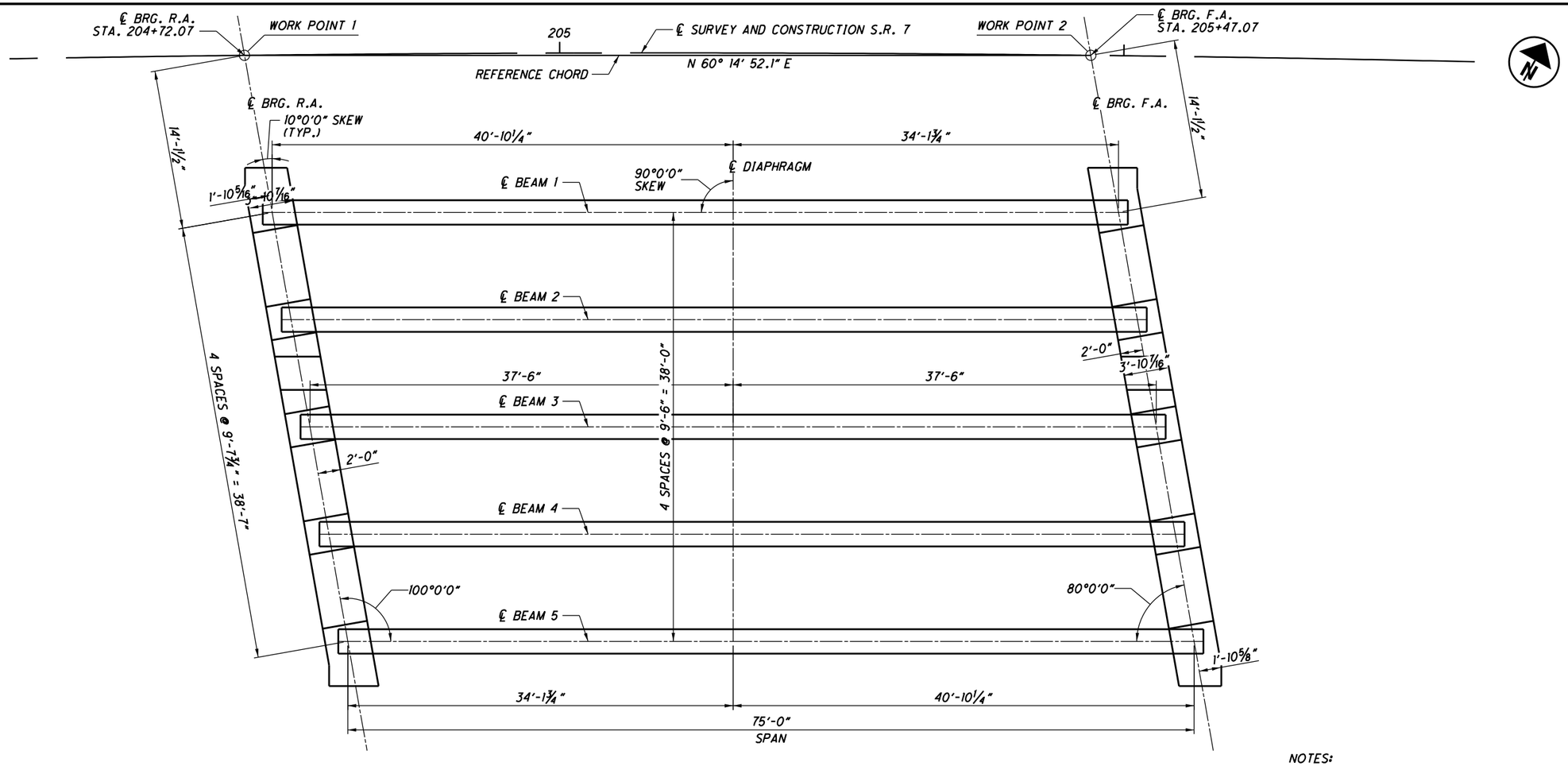

FRAMING PLAN

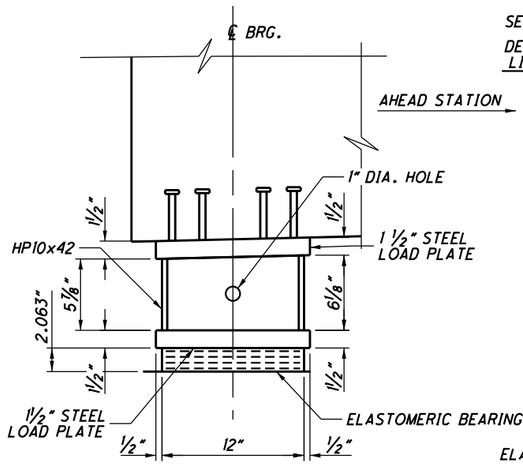

SECTION A-A

SERVICE LOADS (UNFACTORED)
DEAD LOAD REACTION = 136 K
LIVE LOAD REACTION = 52 K
TOTAL REACTION = 188 K

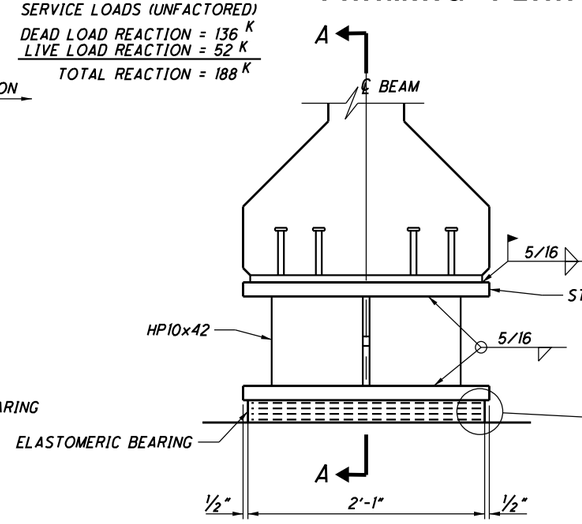

ELEVATION

THICKNESS OF EXTERNAL ELASTOMER = 0.25" (1 REQUIRED)

THICKNESS OF INTERNAL ELASTOMER = 0.50" (3 REQUIRED)

INTERNAL STEEL LAMINATE THICKNESS = 0.1046 (3 REQUIRED)

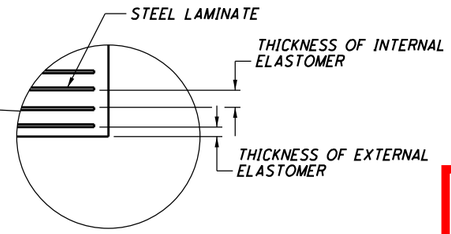

TYPICAL BEARING
(10 REQUIRED)

NOTES:
1. FOR ADDITIONAL BEAM AND DIAPHRAGM DETAILS, SEE STD. DWG. PSID-1-13.
2. FOR ABUTMENT DIAPHRAGM DETAILS, SEE SHEET 15/28.

BEARING NOTES:

1. ELASTOMERIC BEARINGS: THE ELASTOMER SHALL HAVE A HARDNESS OF 50 DUROMETER. THE BEARINGS WERE DESIGNED IN ACCORDANCE WITH SECTION 14.7.6 (METHOD A) OF THE AASHTO LRFD BRIDGE DESIGN SPECIFICATIONS. THE LONG TERM COMPRESSION PROOF LOAD TEST (AASHTO STANDARD SPECIFICATIONS FOR HIGHWAY BRIDGES, DIVISION II, SECTION 18.7.2.6) IS NOT REQUIRED.
2. STEEL LOAD PLATES: LOAD PLATES SHALL BE A709 GRADE 50 STRUCTURAL STEEL, GALVANIZED PER CMS 711.02, AND BONDED BY VULCANIZATION TO THE ELASTOMER DURING THE MOLDING PROCESS.
3. FOR DETAILS OF THE STUDS AND EMBEDDED PLATE, AND FOR ADDITIONAL INFORMATION, SEE STD. DWG. PSID-1-13.
4. ALL BEARINGS SHALL BE MARKED PRIOR TO SHIPPING. THE MARKS SHALL INCLUDE THE BEARING LOCATION ON THE BRIDGE, AND A DIRECTION ARROW THAT POINTS UP-STATION. ALL MARKS SHALL BE PERMANENT AND BE VISIBLE AFTER THE BEARING IS INSTALLED.
5. BASIS OF PAYMENT: THE UNIT BID PRICE SHALL INCLUDE ALL MATERIALS, LABOR, TESTING, H-PILE, AND INCIDENTALS NECESSARY TO FURNISH AND INSTALL MONITEL ELASTOMERIC BEARINGS AS DETAILED, PAYMENT WILL BE MADE AT THE CONTRACT PRICE FOR ITEM 516, EACH ELASTOMERIC BEARING WITH INTERNAL LAMINATES AND LOAD PLATE (NEOPRENE), AS PER PLAN.

DRAFT Stage 3 Notice for Construction 09/23/2024

DESIGN AGENCY
Stantec Consulting Services Inc.
1500 Lake Shore Drive, Suite 100
Columbus, Ohio 43204
(614) 486-4383

DESIGNED	DRAWN	REVIEWED	DATE
BSM	JWS	EDA	03/2024
CHECKED	REVISED	STRUCTURE FILE NUMBER	
MRS		4400259	

FRAMING PLAN AND BEARING DETAILS
BRIDGE NO. LAW-7-0387
S.R. 7 OVER C.R. 32 (EATON ROAD)

LAW-7-2.17
PID No. 75923

10 / 28

879
1247

U:\173608714\LAW\75923\structures\LAW007_0387C\sheets\007_75923CSG001.dgn 5/13/2024 8:41:34 AM JSnair

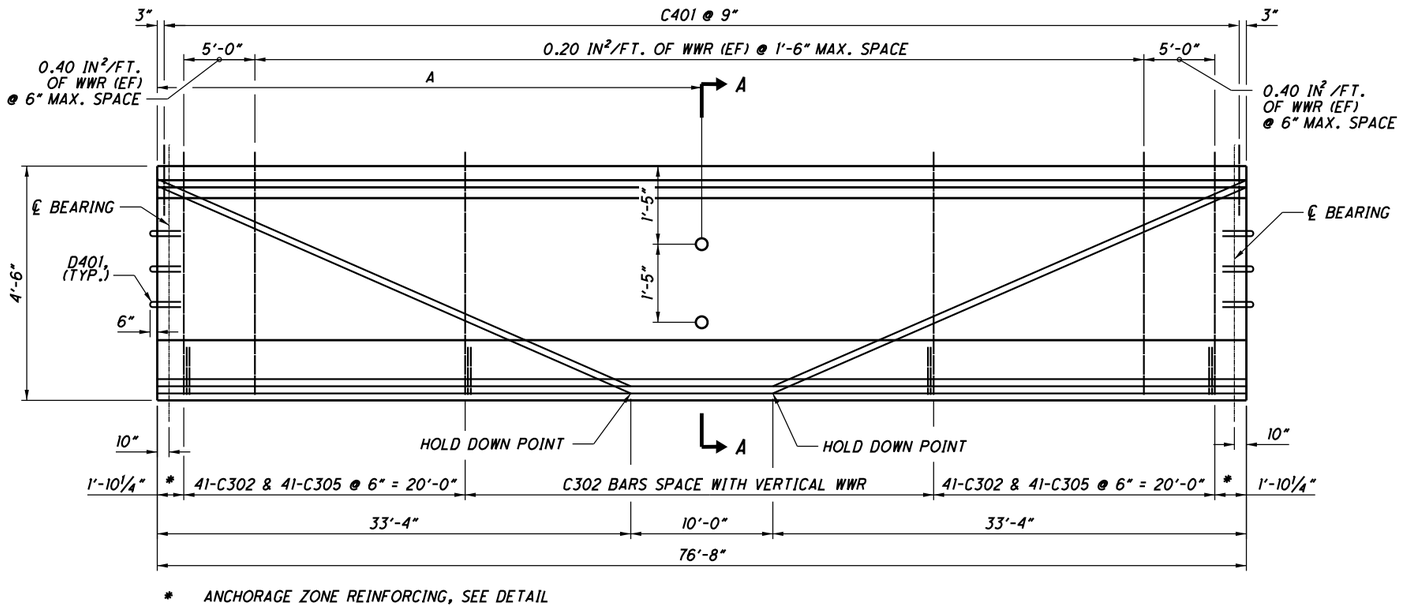

* ANCHORAGE ZONE REINFORCING, SEE DETAIL

BEAM ELEVATION

VERTICAL SCALE EXAGGERATED

	DIMENSION A
1	41'-8 1/4"
2	40'-0"
3	38'-4"
4	36'-8"
5	34'-11 3/4"

NUMBER OF STRANDS PER ROW							CONCRETE STRENGTH (KSI)	
SECTION	(1)	(2)	(3)	(4)	(5)	TOTAL	f'ci	f'cf
END	8	8	8	1	1	26	5.0	7.0
MID	9	9	8	-	-	26		

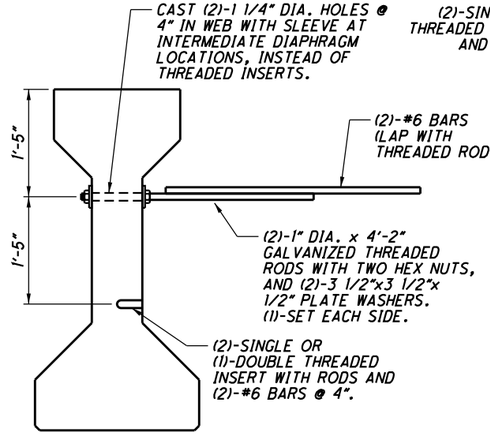

SECTION A-A CONCRETE INTERMEDIATE DIAPHRAGM DETAIL

(TYPICAL BEAMS 1 AND 5)

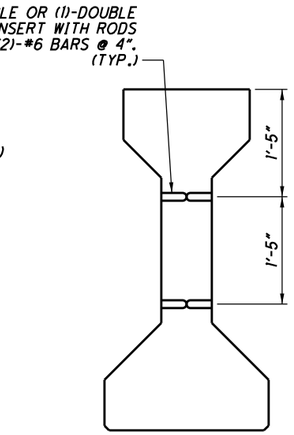

SECTION A-A CONCRETE INTERMEDIATE DIAPHRAGM DETAIL

(TYPICAL BEAMS 2 THRU 4)

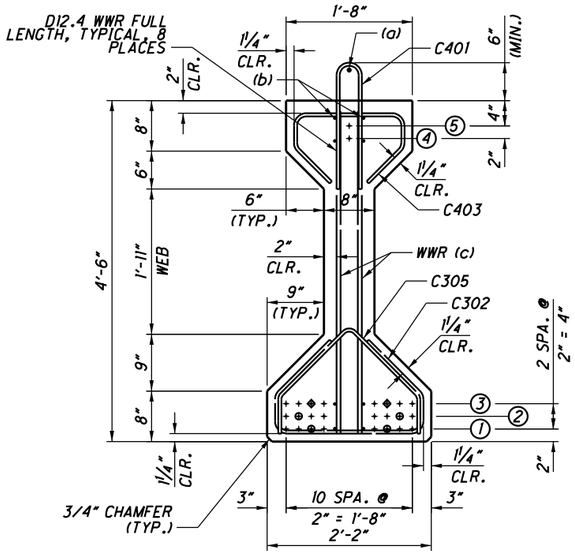

END BEAM SECTION

○ - DEBOND 15'-0" AT EACH END

◇ - DEBOND 10'-0" AT EACH END

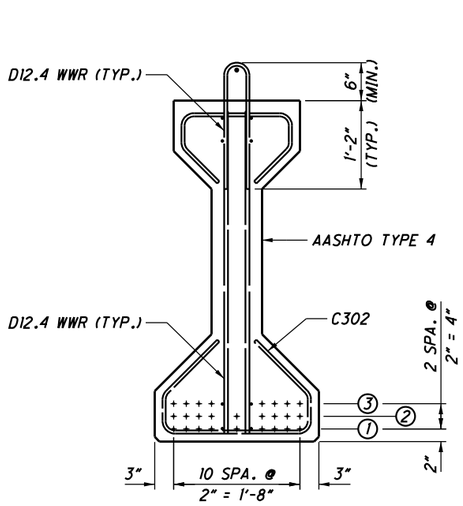

MIDSPAN BEAM SECTION

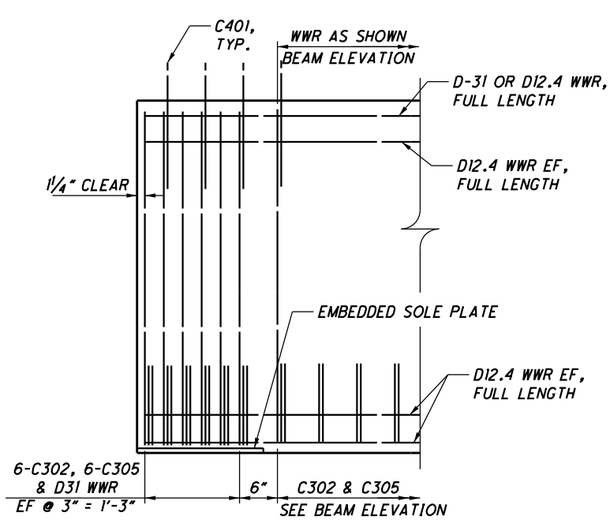

ANCHORAGE ZONE REINFORCING

STRANDS NOT SHOWN FOR CLARITY

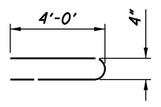

D401

NOTES:

1. WWR DENOTES WELDED WIRE REINFORCEMENT.

2. SEE STD. DWG. PSID-1-13 FOR ADDITIONAL DETAILS.

3. STRANDS ARE TO BE LOW-RELAXATION 0.6 INCH DIAMETER (A = 0.217 SQ. IN.) SEVEN WIRE UNCOATED, ASTM A416, GRADE 270.

4. REINFORCEMENT PROJECTING FROM BEAM TO BE EPOXY COATED.

DRAFT Stage 3 - Not for Construction

06/03/2024

DESIGNED BSM | DRAWN JWS | REVIEWED EDA | DATE 03/2024

CHECKED MRS | REVISED | STRUCTURE FILE NUMBER 4400259

DESIGN AGENCY
Stantec Consulting Services Inc.
1500 Lake Shore Drive, Suite 100
Columbus, Ohio 43204
(614) 486-4383

AASHTO TYPE 4 BEAM DETAILS
BRIDGE NO. LAW-7-0387
S.R. 7 OVER C.R. 32 (EATON ROAD)

LAW-7-2.17
PID No. 75923

11 / 28

880 / 1247

U:\173608714\LAW\75923\structures\LAW007_0387C\sheets\007_75923CSD003.dgn 5/13/2024 8:41:35 AM JSnair

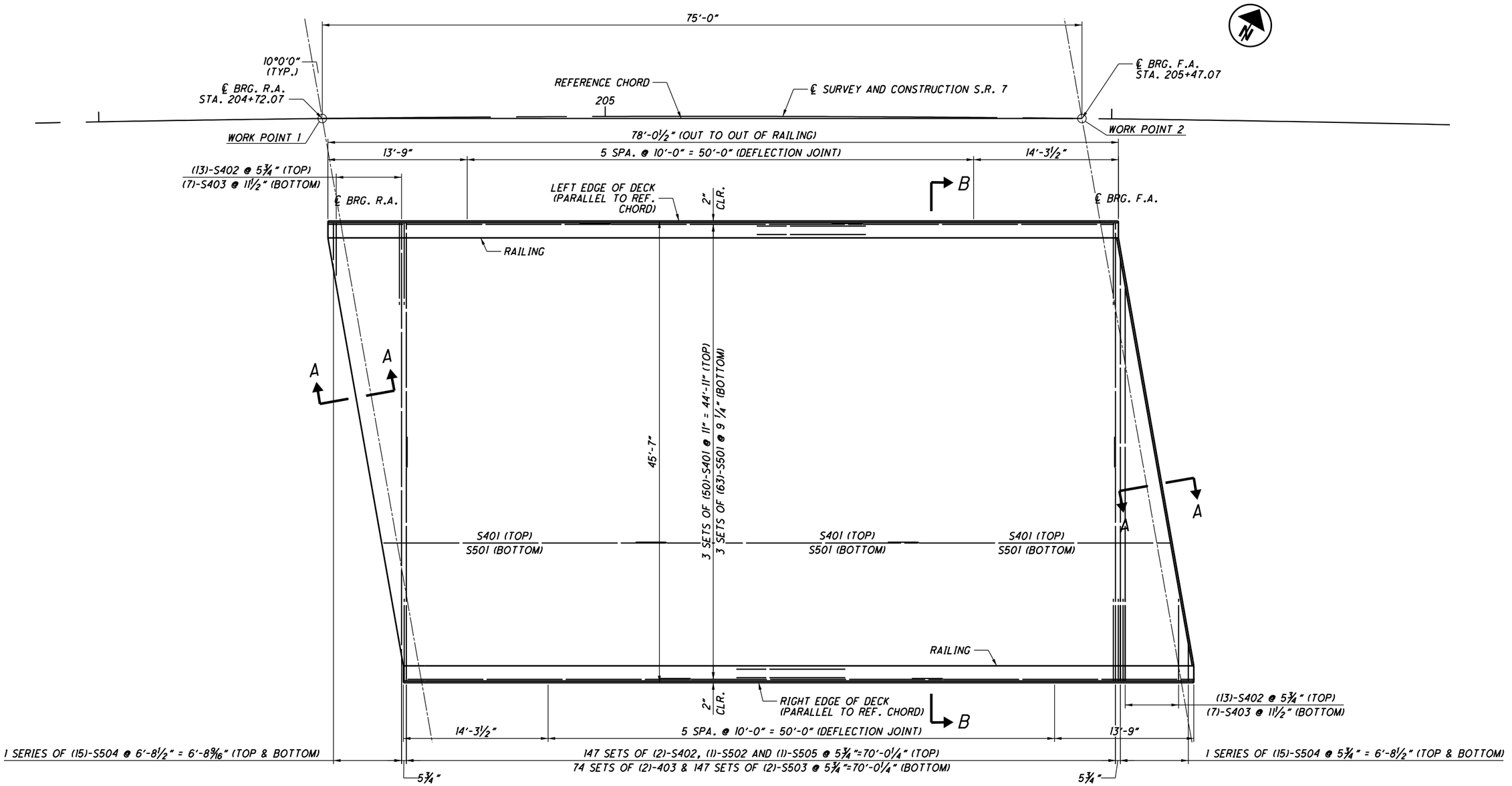

DECK PLAN

LAP LENGTHS:
#4 BARS = 2'-0"
#5 BARS = 3'-0"

NOTES:
1. FOR SECTION A-A, SEE SHEET 15 28.
2. FOR SECTION B-B, SEE SHEET 15 28.

DRAFT Stage 3 - Not for Construction 09/20/2024

DESIGN AGENCY
Stantec Consulting Services Inc.
1500 Lake Shore Drive, Suite 100
Columbus, Ohio 43204
(614) 486-4383

DESIGNED	DRAWN	REVIEWED	DATE
BSM	JWS	EDA	03/2024
CHECKED	REVISED	STRUCTURE FILE NUMBER	
MRS		4400259	

DECK PLAN
BRIDGE NO. LAW-7-0387
S.R. 7 OVER C.R. 32 (EATON ROAD)

LAW-7-2.17
PID No. 75923

12 / 28

881
1247

U:\173608714\LAW\75923\structures\LAW007_0387C\sheets\007_75923CSD001.dgn 5/13/2024 8:41:36 AM JSnair

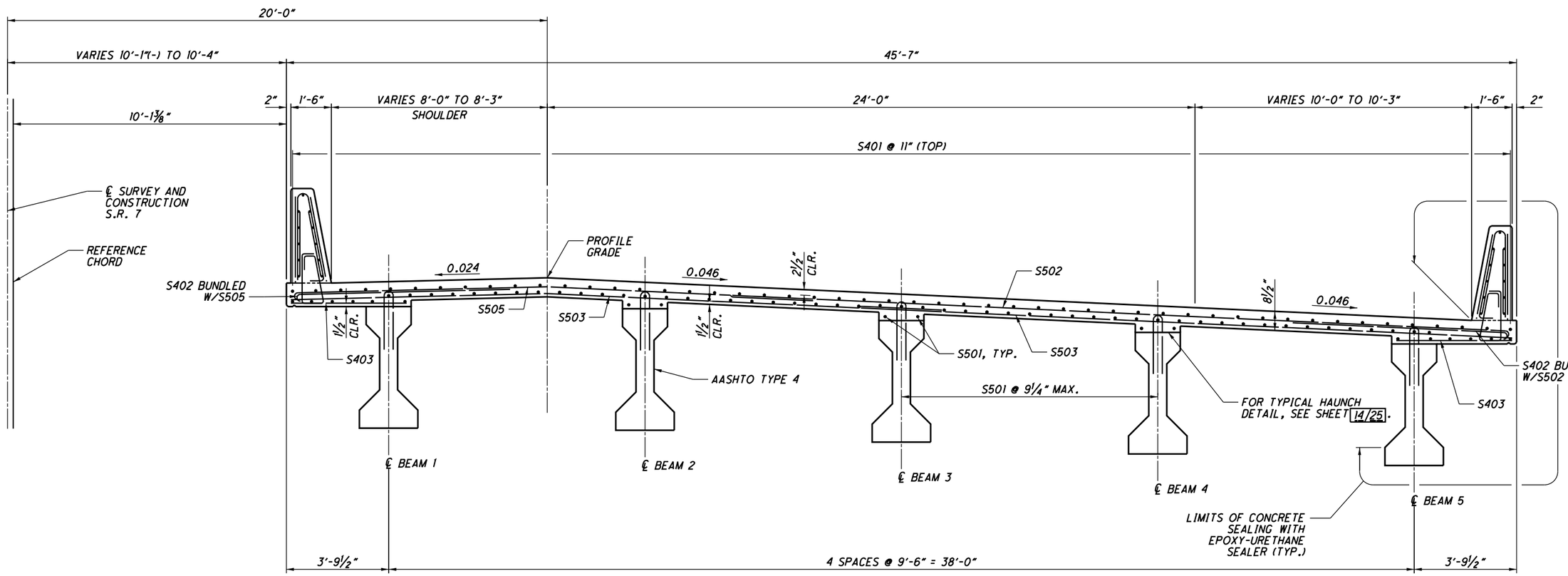

SECTION B-B

NOTE:

LAP LENGTHS:
#5 BARS = 3'-0"

NOTES:
1. FOR RAILINGS AND TYPICAL HAUNCH DETAILS, SEE SHEET 14/23.

DRAFT Stage 3 - Not for Construction 09/23/2024

U:\1736087\14\LAW\75923\structures\LAW007_0387C\sheets\007_75923CST001.dgn 5/13/2024 8:41:36 AM JSnair

DESIGN AGENCY
Stantec Consulting Services Inc.
1500 Lake Shore Drive, Suite 100
Columbus, Ohio 43204
(614) 486-4383

DESIGNED	DRAWN	REVIEWED	DATE
BSM	JWS	EDA	03/2024
CHECKED	REVISED	STRUCTURE FILE NUMBER	
MRS		4400259	

TRANSVERSE SECTION AND REINFORCING STEEL DETAILS
BRIDGE NO. LAW-7-0387
S.R. 7 OVER C.R. 32 (EATON ROAD)

LAW-7-2.17
PID No. 75923

13 / 28

882
1247

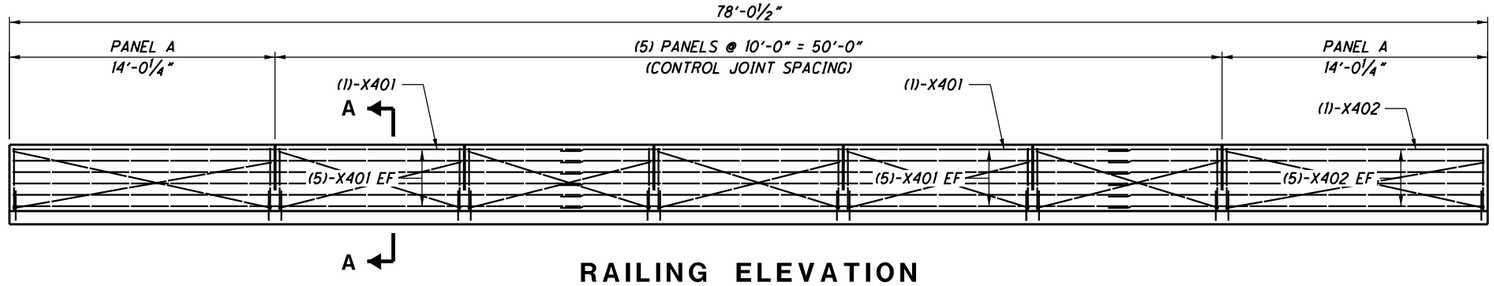

RAILING ELEVATION

(1 REQUIRED PER SIDE)
(EXAGGERATED VERTICAL SCALE)

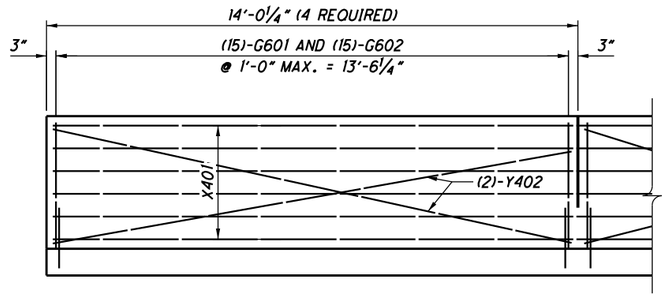

PANEL A

(2 REQUIRED PER SIDE)

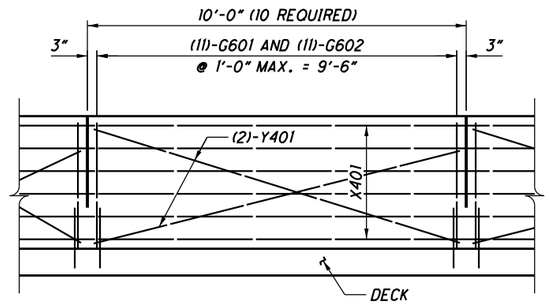

10'-0" PANEL

(5 REQUIRED PER SIDE)

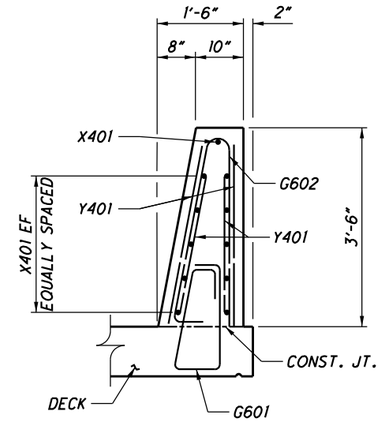

SECTION A-A

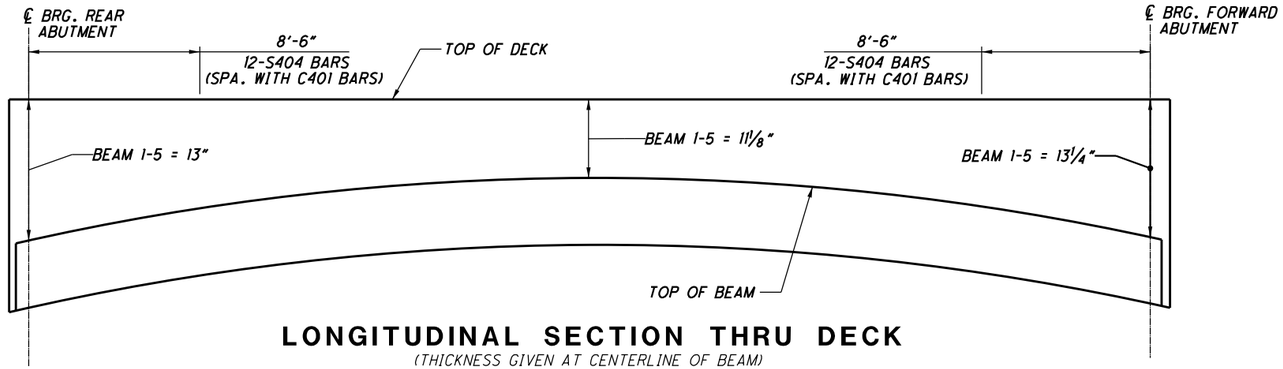

LONGITUDINAL SECTION THRU DECK

(THICKNESS GIVEN AT CENTERLINE OF BEAM)

ESTIMATED CAMBER AT DAY 0 (D_i) IS 1 INCH.

ESTIAMTED CAMBER AT DAY 30 (D_f) IS 1¾ INCHES.

DEFLECTION DUE TO REMAINING DEAD LOAD (E.G. CONCRETE DECK, CROSS-FRAMES, DIAPHRAGMS, BARRIERS, UTILITIES, ETC.) IS ⅝ INCHES.

THE BEAM SEAT ELEVATIONS ASSUME ESTIMATED CAMBER D_f WITH A SACRIFICIAL HAUNCH THICKNESS OF 2⅜ INCHES MEASURED ON THE CENTERLINE OF GIRDER.

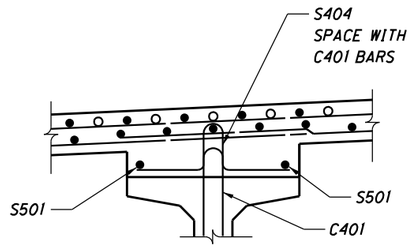

TYPICAL HAUNCH DETAIL

NOTES:

1. DECK SLAB THICKNESS FOR CONCRETE QUANTITY: THE ESTIMATED QUANTITY OF DECK CONCRETE IS MEASURED ACCORDING TO SECTION 511. IN ADDITION TO THE DESIGN SLAB THICKNESS THE QUANTITY INCLUDES A VARIABLE HAUNCH THICKNESS THAT PROVIDES AN ALLOWANCE FOR BEAM CAMBER AND ADDITIONAL SACRIFICIAL HAUNCH THICKNESS.
2. FOR ADDITIONAL DETAILS, SEE STD. DWG. SBR-1-20

DRAFT Stage 3 - Not for Construction 09/23/2024

DESIGN AGENCY
Stantec Consulting Services Inc.
1500 Lake Shore Drive, Suite 100
Columbus, OH 43204
(614) 486-4383

DESIGNED	DRAWN	REVIEWED	DATE
BSM	JWS	EDA	03/2024
CHECKED	REVISED	STRUCTURE FILE NUMBER	
MRS		4400259	

LONGITUDINAL SECTION AND RAILING DETAILS
BRIDGE NO. LAW-7-0387
S.R. 7 OVER C.R. 32 (EATON ROAD)

LAW-7-2.17
PID No. 75923

883
1247

U:\173608714\LAW\75923\structures\LAW007_0387C\sheets\007_75923CSA001.dgn 5/13/2024 8:41:37 AM JSnair

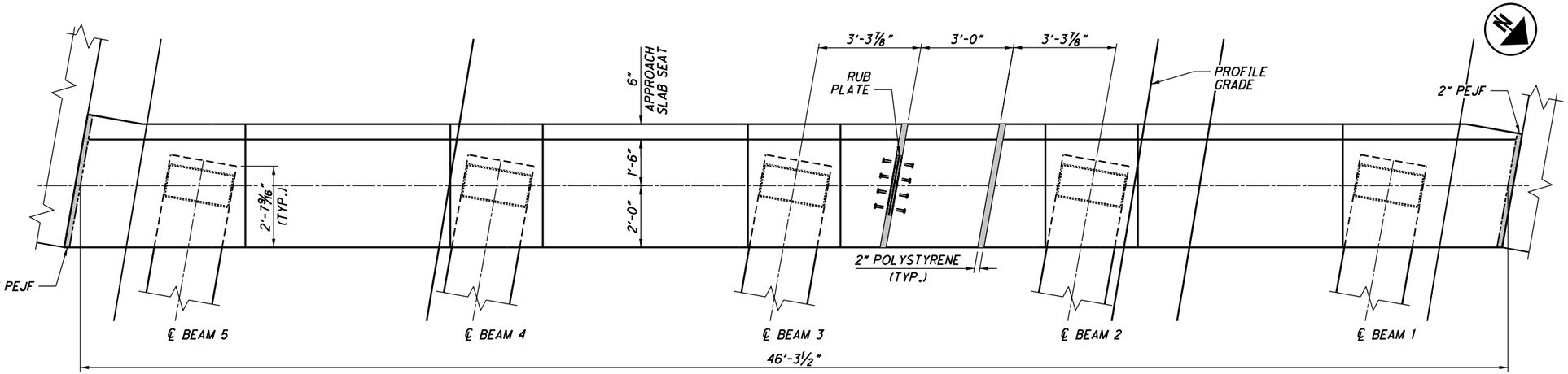

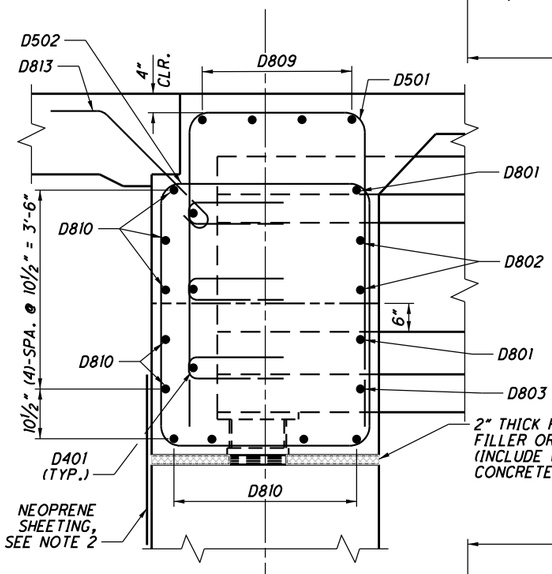

SECTION A-A

ABUTMENT DIAPHRAGM PLAN

REAR ABUTMENT SHOWN, FORWARD ABUTMENT OPPOSITE HAND

NOTES:

1. ALL ABUTMENT DIAPHRAGM CONCRETE SHALL BE ITEM 511 - CLASS QC2 CONCRETE.
2. PLACE NEOPRENE SHEET, 3'-0" WIDE, CENTERED ON HORIZONTAL AND VERTICAL JOINTS AT WINGWALLS AND DIAPHRAGM GUIDE. FOR VERTICAL JOINTS AT WINGWALLS, PLACE NEOPRENE SHEETING CENTERED ON 2" PEJF AND EXTENDING FROM BEAM SET TO THE TOP OF THE WINGWALL.
3. SEE STANDARD DRAWING SICD-2-14 FOR DIAPHRAGM GUIDE DETAILS AND PAYMENT.
4. PLACE THE DIAPHRAGM CONCRETE ENCASING THE STRUCTURAL MEMBER ENDS AFTER THE DECK PLACEMENT IN THE ADJACENT SPAN IS COMPLETE. PROCEDURES THAT PLACE THE ABUTMENT DIAPHRAGM WITH THE DECK CONCRETE MAY BE APPROVED BY THE ENGINEER IF THE PLACEMENT SUBMITTAL CAN ASSURE THAT THE DECK CONCRETE IN THE ADJACENT SPAN WILL BE PLACED BEFORE CONCRETE IN THE DIAPHRAGM HAS REACHED ITS INITIAL SET.

   LOCATE THE DECK CONSTRUCTION JOINT PARALLEL TO THE CENTERLINE OF THE ABUTMENT OFFSET 1-FT FROM THE FACE OF THE DIAPHRAGM TOWARD THE SPAN.

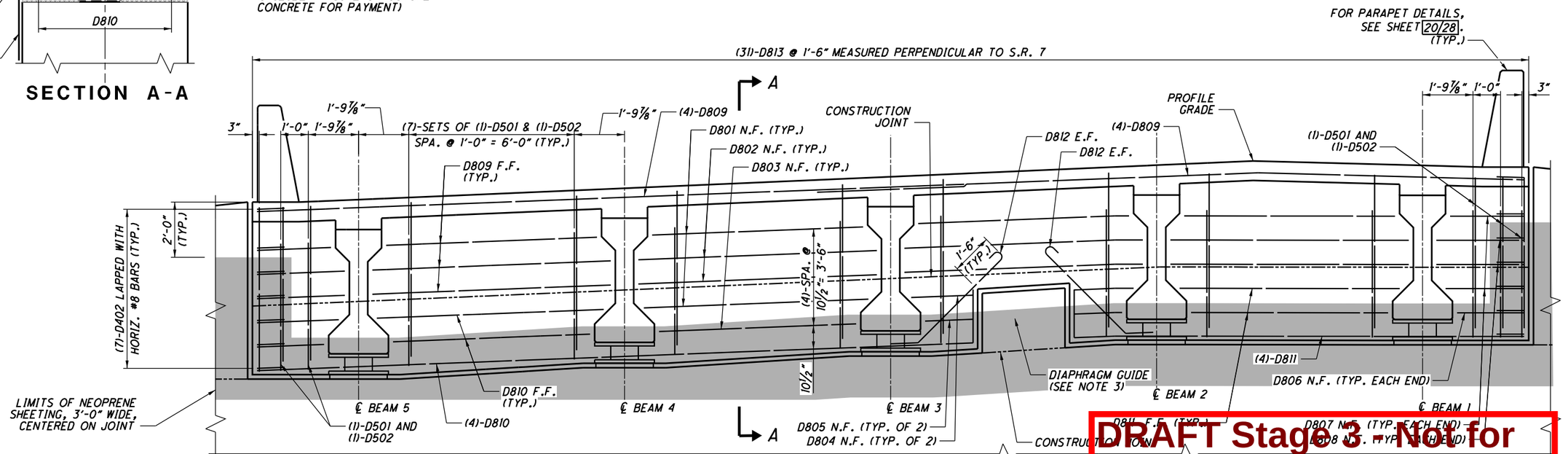

ABUTMENT DIAPHRAGM ELEVATION

REAR ABUTMENT SHOWN, FORWARD ABUTMENT OPPOSITE HAND

DRAFT Stage 3 - Not for Construction 09/23/2024

DESIGN AGENCY
Stantec Consulting Services Inc.
1500 Lake Shore Drive, Suite 100
Columbus, Ohio 43204
(614) 486-4383

DESIGNED	DRAWN	REVIEWED	DATE
BSM	JWS	EDA	03/2024
CHECKED	REVISED	STRUCTURE FILE NUMBER	
MRS		4400259	

SUPERSTRUCTURE DETAILS
BRIDGE NO. LAW-7-0387
S.R. 7 OVER C.R. 32 (EATON ROAD)

LAW-7-2.17
PID No. 75923

15 / 28

884
1247

U:\1736087\14\LAW\75923\structures\LAW007_0387C\sheets\007_75923CSS001.dgn 5/13/2024 8:41:39 AM JSnair

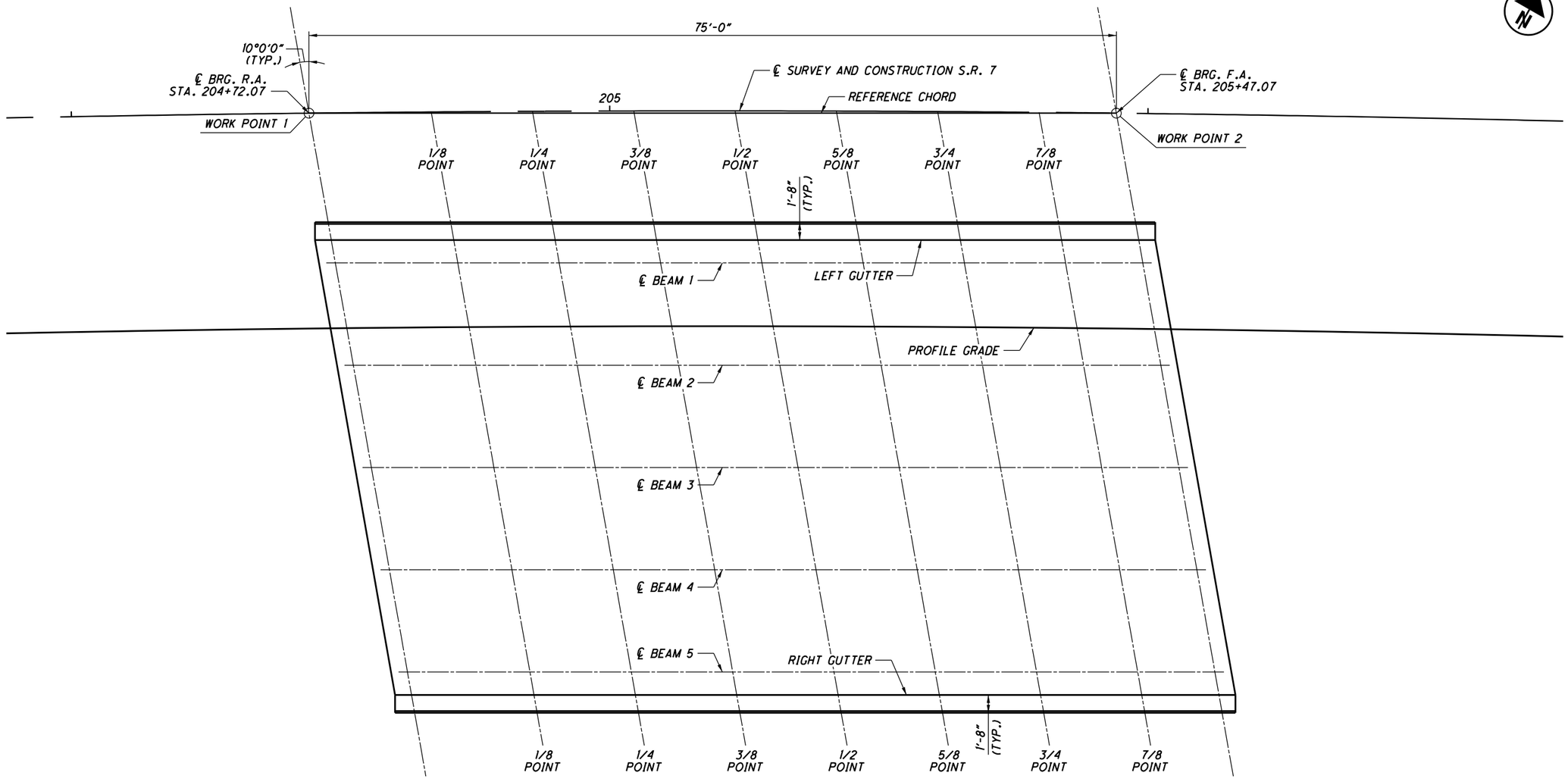

PLAN

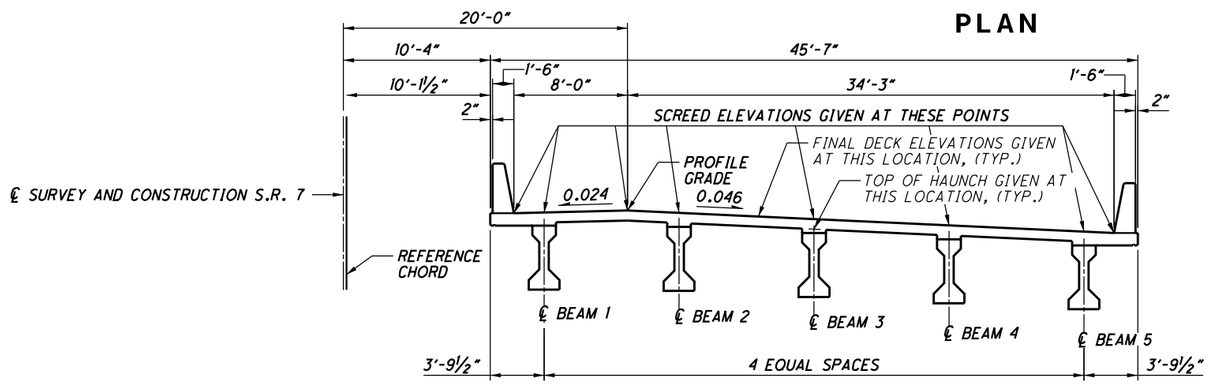

TRANSVERSE SECTION

NOTES:

1. FOR SCREED, TOP OF HAUNCH AND DECK ELEVATIONS, SEE SHEET 17/28.
2. SCREED ELEVATIONS SHOWN REPRESENT THE THEORETICAL DECK SURFACE LOCATION PRIOR TO DEFLECTIONS CAUSED BY DECK PLACEMENT AND OTHER ANTICIPATED DEAD LOADS.

   TOP OF HAUNCH ELEVATIONS SHOWN REPRESENT THE THEORETICAL LOCATION OF THE BOTTOM OF DECK ABOVE THE BEAM/GIRDER HUNCH PRIOR TO DEFLECTIONS CAUSED BY DECK PLACEMENT AND OTHER ANTICIPATED DEAD LOADS.

   FINAL DECK SURFACE ELEVATIONS SHOWN REPRESENT THE DECK SURFACE LOCATION AFTER ALL ANTICIPATED DEAD LOAD DEFLECTIONS HAVE OCCURRED.

DRAFT Stage 3 - Not for Construction 09/23/2024

DESIGN AGENCY
Stantec Consulting Services Inc.
1500 Lake Shore Drive, Suite 100
Columbus, Ohio 43204
(614) 486-4383

DESIGNED	DRAWN	REVIEWED	DATE
BSM	JWS	EDA	03/2024
CHECKED	REVISED	STRUCTURE FILE NUMBER	
MRS		4400259	

SCREED DIAGRAM & FASCIA OFFSETS
BRIDGE NO. LAW-7-0387
S.R. 7 OVER C.R. 32 (EATON ROAD)

LAW-7-2.17
PID No. 75923

16 / 28

885
1247

U:\73608714\LAW\75923\structures\LAW007_0387C\sheets\007_75923CSG002.dgn 5/13/2024 8:41:40 AM JSnair

DECK CONSTRUCTION ELEVATIONS

LOCATION		CL BEARING	1/8 POINT	1/4 POINT	3/8 POINT	1/2 POINT	5/8 POINT	3/4 POINT	7/8 POINT	CL BEARING
LEFT GUTTER	STATION	204+74.02	204+83.42	204+92.83	205+02.24	205+11.65	205+21.06	205+30.47	205+39.88	205+49.29
	OFFSET	11.81	11.90	11.96	11.99	12.00	11.98	11.93	11.86	11.76
	FINAL DECK EL.	584.79	584.92	585.06	585.21	585.35	585.51	585.67	585.83	586.00
	SCREED EL.	584.79	584.92	585.06	585.21	585.35	585.51	585.67	585.83	586.00
BEAM 1	STATION	204+74.37	204+83.78	204+93.20	205+02.61	205+12.03	205+21.45	205+30.86	205+40.28	205+49.69
	OFFSET	13.94	14.02	14.08	14.12	14.12	14.10	14.06	13.98	13.88
	FINAL DECK EL.	584.85	584.98	585.12	585.26	585.41	585.57	585.72	585.89	586.05
	SCREED EL.	584.85	584.85	585.00	585.15	585.46	585.61	585.76	585.90	586.05
	HAUNCH EL.	584.12	584.27	584.43	584.58	584.73	584.88	585.03	585.18	585.32
PROFILE GRADE	STATION	204+75.38	204+84.81	204+94.25	205+03.68	205+13.12	205+22.55	205+31.98	205+41.42	205+50.85
	OFFSET	20.00	20.00	20.00	20.00	20.00	20.00	20.00	20.00	20.00
	FINAL DECK EL.	585.01	585.14	585.28	585.42	585.57	585.73	585.89	586.05	586.22
	SCREED EL.	585.01	585.14	585.28	585.42	585.57	585.73	585.89	586.05	586.22
BEAM 2	STATION	204+75.95	204+85.40	204+94.84	205+04.28	205+13.72	205+23.17	205+32.61	205+42.05	205+51.49
	OFFSET	23.45	23.54	23.59	23.62	23.62	23.60	23.55	23.47	23.36
	FINAL DECK EL.	584.86	584.98	585.12	585.26	585.41	585.57	585.73	585.90	586.08
	SCREED EL.	584.86	584.86	585.01	585.16	585.47	585.62	585.77	585.92	586.08
	HAUNCH EL.	584.13	584.28	584.43	584.59	584.74	584.89	585.04	585.19	585.35
BEAM 3	STATION	204+77.55	204+87.02	204+96.49	205+05.96	205+15.43	205+24.90	205+34.37	205+43.84	205+53.31
	OFFSET	32.97	33.05	33.10	33.12	33.12	33.09	33.03	32.95	32.84
	FINAL DECK EL.	584.44	584.57	584.71	584.85	585.00	585.16	585.33	585.50	585.68
	SCREED EL.	584.44	584.44	584.59	584.75	585.06	585.22	585.37	585.52	585.68
	HAUNCH EL.	583.71	583.86	584.02	584.18	584.33	584.49	584.64	584.79	584.95
BEAM 4	STATION	204+79.15	204+88.65	204+98.15	205+07.64	205+17.14	205+26.64	205+36.14	205+45.64	205+55.13
	OFFSET	42.49	42.56	42.61	42.63	42.62	42.58	42.52	42.43	42.31
	FINAL DECK EL.	584.02	584.16	584.30	584.44	584.60	584.76	584.92	585.10	585.28
	SCREED EL.	584.02	584.02	584.18	584.34	584.65	584.81	584.96	585.12	585.28
	HAUNCH EL.	583.30	583.45	583.61	583.77	583.92	584.08	584.23	584.39	584.55
BEAM 5	STATION	204+80.76	204+90.29	204+99.81	205+09.34	205+18.87	205+28.39	205+37.92	205+47.45	205+56.97
	OFFSET	52.00	52.07	52.11	52.13	52.11	52.07	52.00	51.91	51.79
	FINAL DECK EL.	583.61	583.74	583.88	584.03	584.19	584.35	584.52	584.69	584.87
	SCREED EL.	583.61	583.61	583.76	583.92	584.24	584.39	584.55	584.71	584.87
	HAUNCH EL.	582.88	583.03	583.19	583.35	583.51	583.66	583.82	583.98	584.14
RIGHT GUTTER	STATION	204+81.12	204+90.66	205+00.19	205+09.72	205+19.25	205+28.79	205+38.32	205+47.85	205+57.38
	OFFSET	54.13	54.20	54.24	54.25	54.24	54.20	54.13	54.03	53.91
	FINAL DECK EL.	583.52	583.65	583.79	583.94	584.10	584.26	584.43	584.60	584.78
	SCREED EL.	583.52	583.65	583.79	583.94	584.10	584.26	584.43	584.60	584.78

DRAFT Stage 3 - Not for Construction 09/23/2024

DESIGN AGENCY
Stantec Consulting Services Inc.
1500 Lake Shore Drive, Suite 100
Columbus, Ohio 43204
(614) 486-4383

DESIGNED BSM | DRAWN JWS | REVIEWED EDA | DATE 03/2024
CHECKED MRS | REVISED | STRUCTURE FILE NUMBER 4400259

DECK CONSTRUCTION ELEVATIONS
BRIDGE NO. LAW-7-0387
S.R. 7 OVER C.R. 32 (EATON ROAD)

LAW-7-2.17
PID No. 75923

886/1247

U:\173608714\LAW\75923\structures\LAW007_0387C\sheets\007_75923CSD002.dgn 5/13/2024 8:41:41 AM JSnair

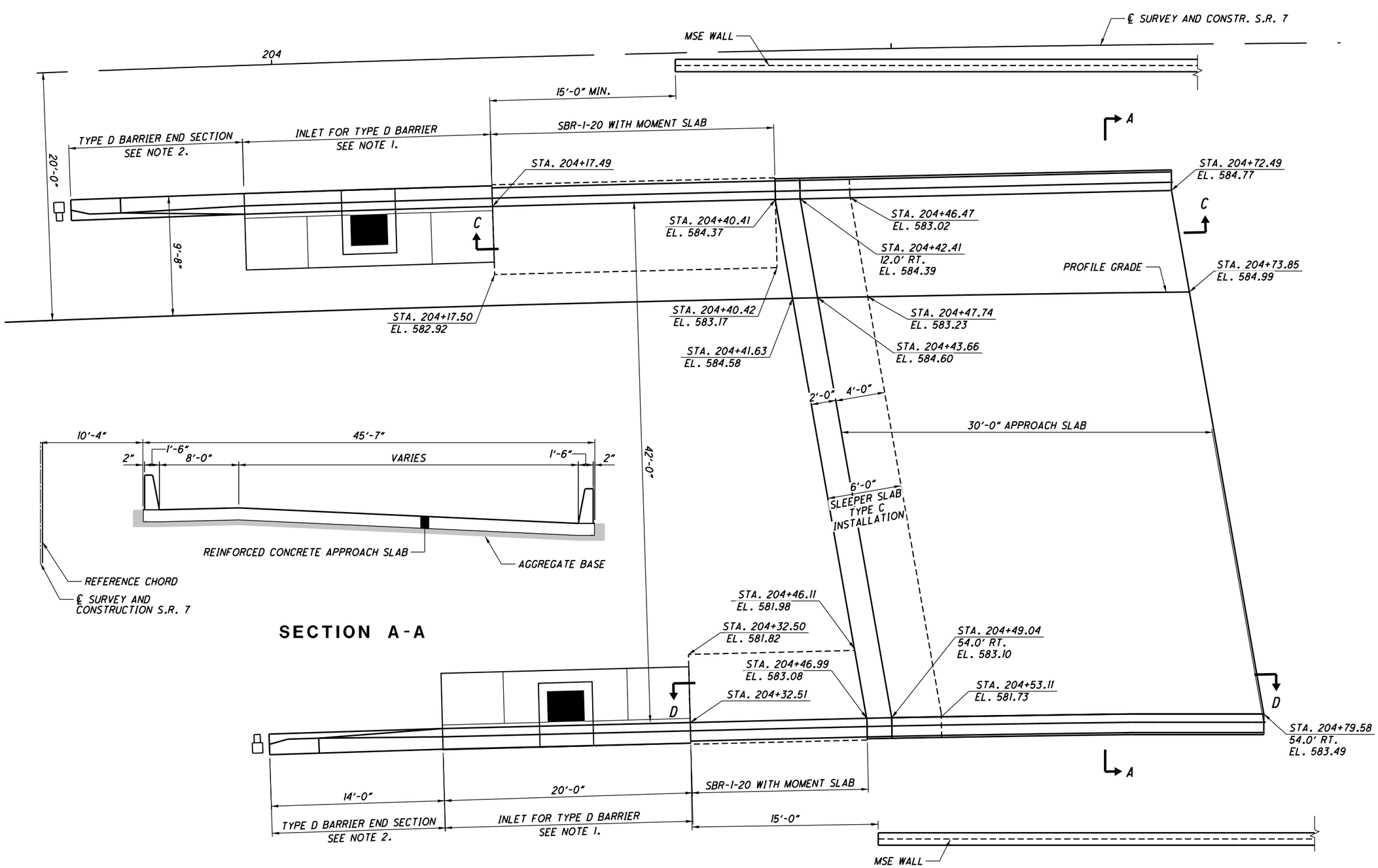

REAR APPROACH SLABS

REAR APPROACH SLAB

* - ELEVATION AT TOP OF SLEEPER SLAB

NOTES:

1. SEE STD. CONSTR. DWG. I-2.3 FOR INLET NO. 3 AND STD. CONSTR. DWG. RM-4.5 FOR SINGLE SLOPE BARRIER, TYPE D.
2. SEE STD. CONSTR. DWG. RM-4.6 FOR TYPE D BARRIER END SECTION.
2. FOR ADDITIONAL DETAILS OF THE BARRIER, SEE STD. DWG. SBR-1-20, AND SHEET 20/28.
3. FOR ADDITIONAL DETAILS OF THE APPROACH SLAB, SEE STD. DWG. AS-1-15 AND AS-2-15.
4. FOR SECTIONS C-C, AND D-D SEE SHEET 20/28.
5. THE COST OF CONCRETE IN BARRIER TO BE INCLUDED WITH ITEM 526 REINFORCED CONCRETE, APPROACH SLAB, AS PER PLAN.

DRAFT Stage 3 - Not for Construction 09/23/2024

DESIGN AGENCY
Stantec Consulting Services Inc.
1500 Lake Shore Drive, Suite 100
Columbus, Ohio 43204
(614) 486-4383

DESIGNED	DRAWN	REVIEWED	DATE
BSM	JWS	EDA	03/2024
CHECKED	REVISED	STRUCTURE FILE NUMBER	
MRS		4400259	

REAR APPROACH SLABS
BRIDGE NO. LAW-7-0387
S.R. 7 OVER C.R. 32 (EATON ROAD)

LAW-7-2.17
PID No. 75923

887/1247

U:\1736087\4\LAW\75923\structures\LAW007_0387C\sheets\007_75923CSM001.dgn 5/13/2024 8:41:42 AM JSnair

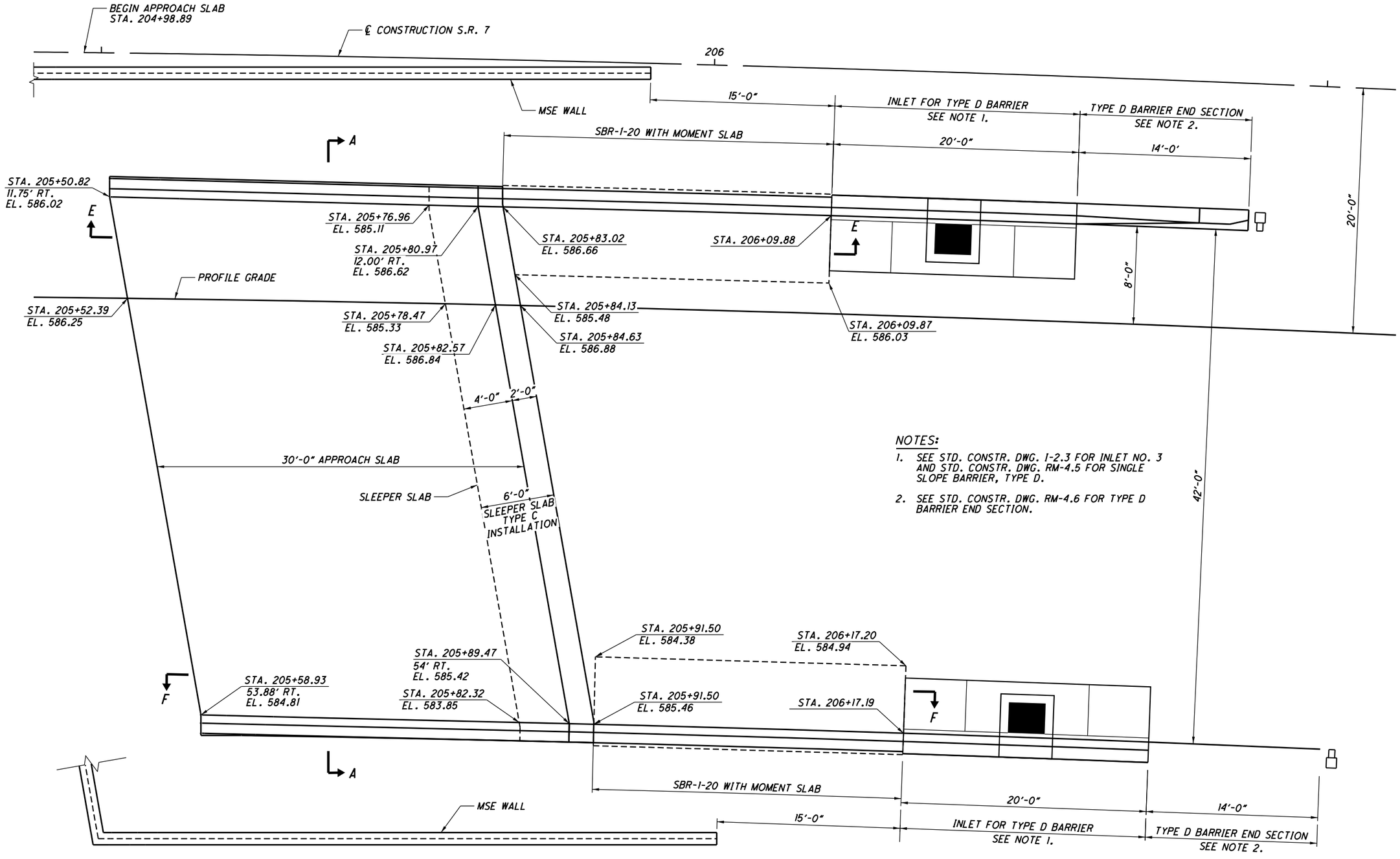

NOTES:

1. SEE STD. CONSTR. DWG. I-2.3 FOR INLET NO. 3 AND STD. CONSTR. DWG. RM-4.5 FOR SINGLE SLOPE BARRIER, TYPE D.
2. SEE STD. CONSTR. DWG. RM-4.6 FOR TYPE D BARRIER END SECTION.

FORWARD APPROACH SLAB

* - ELEVATION AT TOP OF SLEEPER SLAB

NOTES:

1. FOR ADDITIONAL DETAILS OF THE BARRIER, SEE STD. DWG. SBR-1-20, AND SHEET 20/28.
2. FOR ADDITIONAL DETAILS OF THE APPROACH SLABS, SEE NOTES AS-1-15 AND AS-7-15.
3. FOR SECTION A-A, SEE SHEET 18/28.
4. FOR SECTIONS E-E AND F-F SEE SHEET 21/28.
5. THE COST OF CONCRETE, AND REINFORCEMENT IN BARRIER TO BE INCLUDED WITH ITEM 526 REINFORCED CONCRETE, APPROACH SLAB, AS PER PLAN.

DRAFT Stage 2 Not for Construction 09/23/2024

U:\1736087\4\LAW\75923\structures\LAW007_0387C\sheets\007_75923CSM001A.dgn 5/13/2024 8:41:44 AM JSnair

DESIGN AGENCY
Stantec Consulting Services Inc.
1500 Lake Shore Drive, Suite 100
Columbus, Ohio 43204
(614) 486-4383

DESIGNED	DRAWN	REVIEWED	DATE
BSM	JWS	EDA	03/2024
CHECKED	REVISED	STRUCTURE FILE NUMBER	
MRS		4400259	

FORWARD APPROACH SLABS
BRIDGE NO. LAW-7-0387
S.R. 7 OVER C.R. 32 (EATON ROAD)

LAW-7-2.17
PID No. 75923

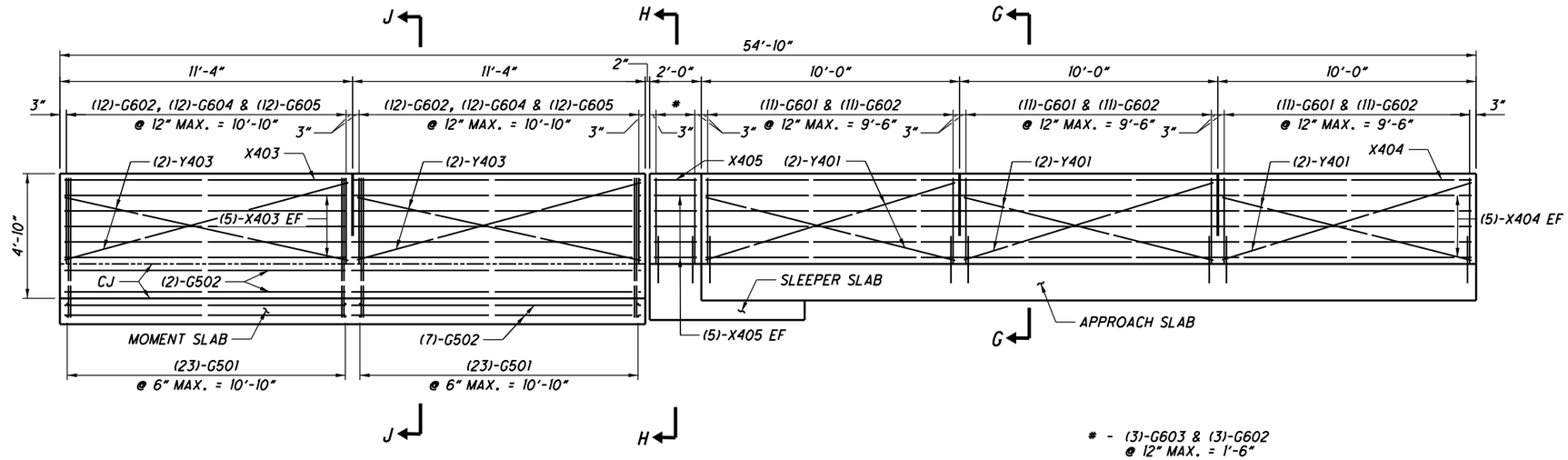

SECTION C-C

\# - (3)-G603 & (3)-G602
@ 12" MAX. = 1'-6"

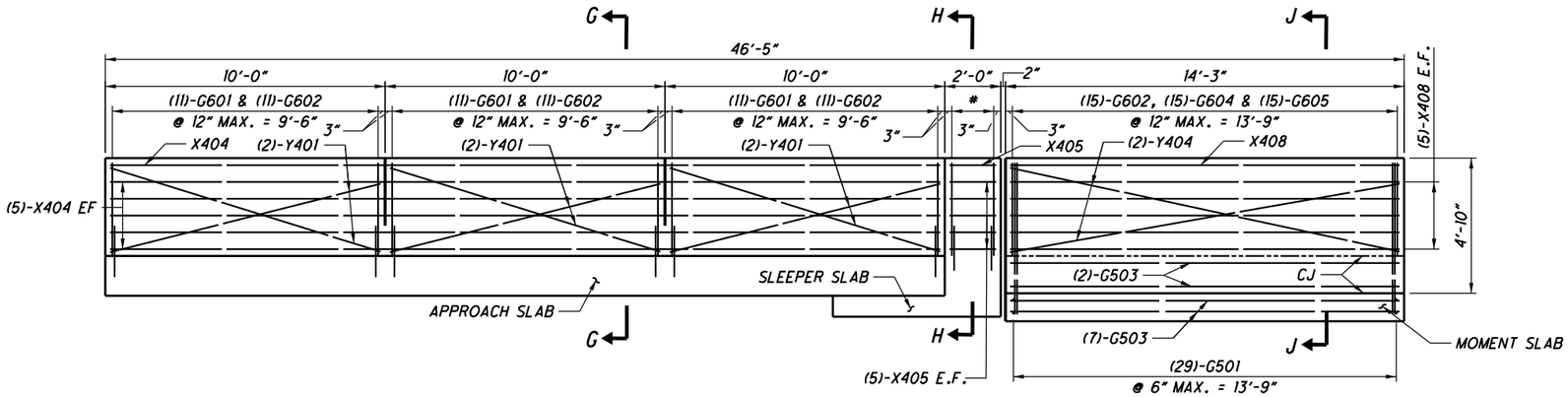

SECTION D-D

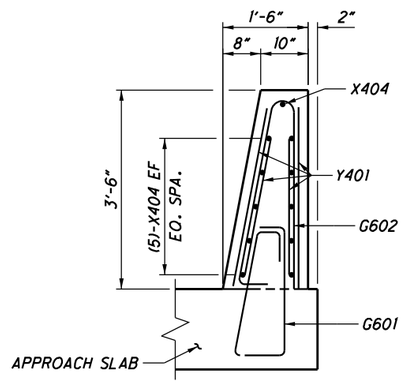

SECTION G-G

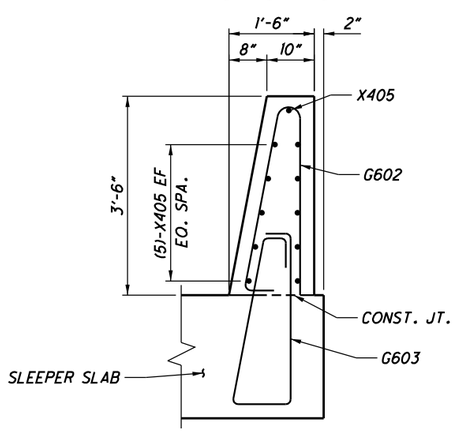

SECTION H-H

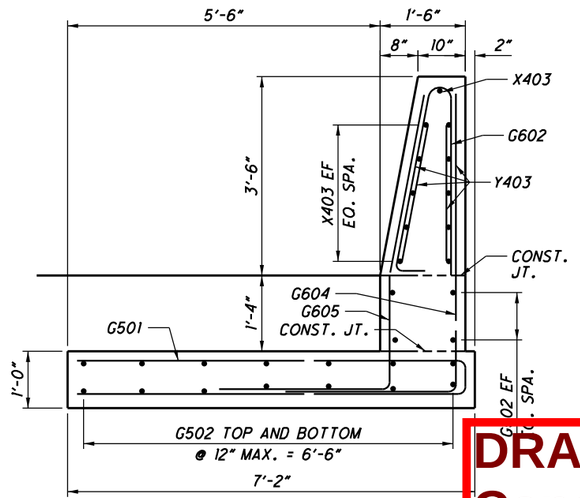

SECTION J-J

NOTES:
1. FOR APPROACH SLAB PLAN, SEE SHEETS 18/28, 19/28.
2. SEE ROADWAY PLANS FOR BRIDGE TERMINAL ASSEMBLY DETAILS.

DRAFT Stage 3 - Not for Construction 09/23/2024

DESIGN AGENCY
Stantec Consulting Services Inc.
1500 Lake Shore Drive, Suite 100
Columbus, Ohio 43204
(614) 486-4383

DESIGNED	DRAWN	REVIEWED	DATE
BSM	JWS	EDA	03/2024
CHECKED	REVISED	STRUCTURE FILE NUMBER	
MRS		4400259	

PARAPET ELEVATIONS AND SECTIONS
BRIDGE NO. LAW-7-0387
S.R. 7 OVER C.R. 32 (EATON ROAD)

LAW-7-2.17
PID No. 75923

20/28

889/1247

U:\173608714\LAW\75923\structures\LAW007_0387C\sheets\007_75923CSM002.dgn 5/13/2024 8:41:45 AM JSnair

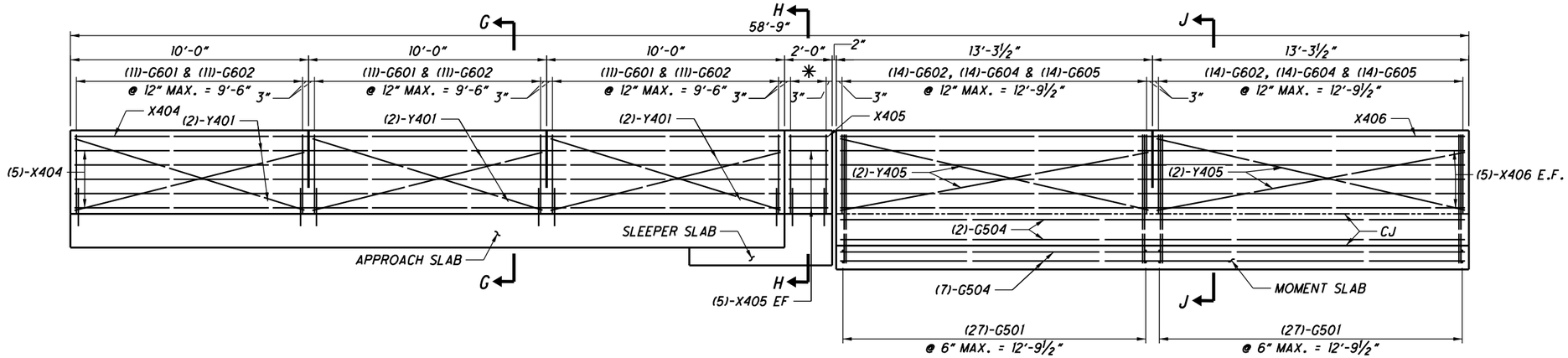

SECTION E-E

✳ - (3)-G603 & (3)-G602
@ 12" MAX. - 1'-6"

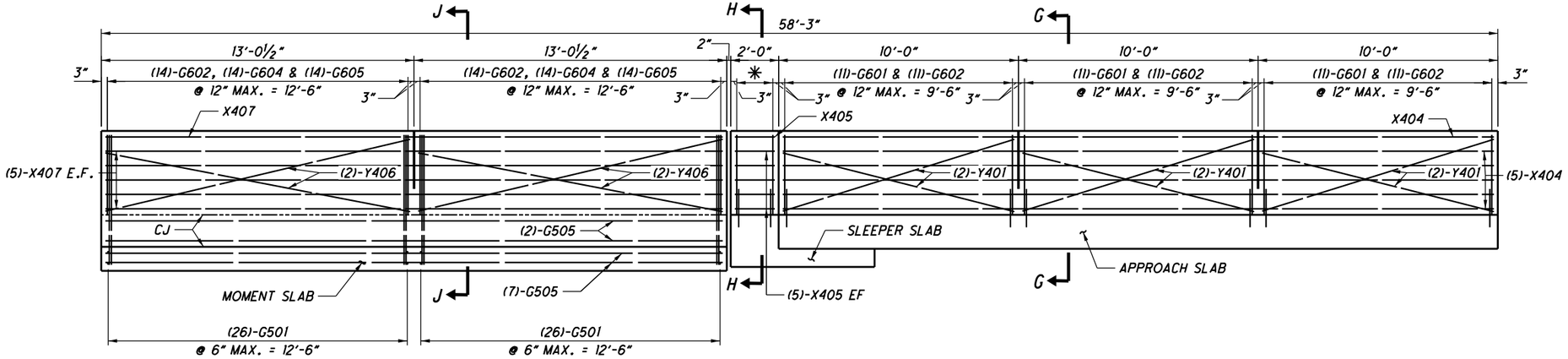

SECTION F-F

NOTES:
1. FOR APPROACH SLAB PLAN, SEE SHEETS 19/28, 19/28.
2. SEE ROADWAY PLANS FOR BRIDGE TERMINAL ASSEMBLY DETAILS.

DRAFT Stage 3 - Not for Construction

05/23/2024

DESIGN AGENCY
Stantec Consulting Services Inc.
1500 Lake Shore Drive, Suite 100
Columbus, Ohio 43204
(614) 486-4383

DESIGNED	DRAWN	REVIEWED	DATE
BSM	JWS	EDA	03/2024
CHECKED	REVISED	STRUCTURE FILE NUMBER	
MRS		4400259	

PARAPET ELEVATIONS AND SECTIONS
BRIDGE NO. LAW-7-0387
S.R. 7 OVER C.R. 32 (EATON ROAD)

LAW-7-2.17
PID No. 75923

21/28

890/1247

U:\173608714\LAW\75923\structures\LAW007_0387C\sheets\007_75923CSM003.dgn 5/13/2024 8:41:46 AM JSnair

MARK	NUMBER TOTAL	LENGTH	WEIGHT	TYPE	DIMENSIONS A	B	C	D	E	R	INC
ABUTMENTS (EPOXY COATED STEEL REINFORCMENT)											
A501	72	17'-2"	1289	3	5'-8"	2'-7"					
A502	144	11'-5"	1715	2	4'-0"	3'-8"	4'-0"				
A503	12	27'-4"	342	STR							
A504	32	12'-2"	406	3	3'-2"	2'-7"					
A505	36	11'-11"	447	2	5'-6"	1'-2"	5'-6"				
A506	12	15'-6"	194	STR							
A507	9	15'-7"	146	2	7'-4"	1'-2"	7'-4"				
	1 SR	6'-7"			2'-10"		2'-10"				
A508	OF	TO	50	2	TO	1'-2"	TO				0'-9"
	5	12'-7"			5'-10"		5'-10"				
A509	2	13'-6"	28	STR							
	2 SR	13'-6"									
A510	OF	TO	138	STR							2'-0"
	4	19'-6"									
A511	8	19'-6"	163	STR							
A512	4	13'-6"	56	STR							
	2 SR	13'-6"									
A513	OF	TO	135	STR							1'-9 1/4"
	4	18'-10"									
A514	8	19'-6"	163	STR							
A515	4	7'-9"	32	STR							
A516	8	26'-4"	220	STR							
A517	12	27'-4"	342	STR							
A518	8	26'-4"	220	STR							
A519	2	32'-4"	67	STR							
A520	12	15'-6"	194	STR							
A521	8	13'-6"	113	STR							
	2 SR	15'-9"									
A522	OF	TO	110	STR							1'-10 1/2"
	3	19'-6"									
A523	6	19'-6"	122	STR							
	1 SR	6'-7"			2'-10"		2'-10"				
A524	OF	TO	50	2	TO	1'-2"	TO				0'-9"
	5	12'-7"			5'-10"		5'-10"				
A525	9	18'-7"	174	2	8'-10"	1'-2"	8'-10"				
A526	4	13'-6"	56	STR							
	2 SR	13'-6"									
A527	OF	TO	139	STR							2'-1"
	4	19'-9"									
A528	4	19'-6"	81	STR							
	1 SR	6'-7"			2'-10"		2'-10"				
A529	OF	TO	50	2	TO	1'-2"	TO				0'-9"
	5	12'-7"			5'-10"		5'-10"				
A530	9	16'-1"	151	2	7'-7"	1'-2"	7'-7"				
A531	2	19'-6"	41	STR							
A532	4	7'-9"	32	STR							
A533	9	18'-3"	171	2	8'-8"	1'-2"	8'-8"				
	1 SR	6'-7"			2'-10"		2'-10"				
A534	OF	TO	50	2	TO	1'-2"	TO				0'-9"
	5	12'-7"			5'-10"		5'-10"				
A535	2	32'-4"	67	STR							
A801	8	28'-6"	609	STR							
A802	8	27'-6"	587	STR							
A803	8	15'-6"	331	STR							
A804	8	15'-6"	331	STR							
A805	8	27'-6"	587	STR							
A806	8	28'-6"	609	STR							
		SUB-TOTAL	10,808								

MARK	NUMBER TOTAL	LENGTH	WEIGHT	TYPE	DIMENSIONS A	B	C	D	E	R	INC
SUPERSTRUCTURE (EPOXY COATED STEEL REINFORCEMENT)											
S401	150	27'-4"	2739	STR							
S402	320	8'-8"	1853	16	8'-2"						
S403	162	4'-3"	460	STR							
S404	120	4'-2"	334	50	0'-9 1/2"	0'-6"					
S501	189	28'-0"	5520	STR							
S502	147	29'-6"	4523	16	28'-11"						
S503	294	24'-2"	7411	STR							
	2 SR	3'-8"									
S504	OF	TO	711	STR							2'-8 3/4"
	15	41'-9"									
S505	147	20'-0"	3066	16	19'-5"						
D401	30	4'-0"	80	STR						0'-2"	
D402	28	5'-6"	103	28	3'-8"	1'-0"	3/16				
D501	68	13'-5"	952	2	5'-3"	3'-2"	5'-3"				
D502	68	17'-6"	1241	3	4'-9"	3'-8"					
D801	16	7'-6"	320	STR							
D802	14	8'-6"	318	STR							
D803	6	7'-0"	112	STR							
D804	4	2'-1"	22	STR							
D805	4	1'-10"	20	STR							
D806	4	2'-7"	28	STR							
D807	8	8'-6"	182	STR							
D808	8	3'-1"	66	STR							
D809	28	25'-9"	1925	STR							
D810	12	26'-1"	836	STR							
D811	12	16'-5"	526	STR							
D812	8	6'-7"	141	18	4'-5"	1'-0"	1'-0"				
D813	62	4'-10"	800	18	2'-8"	1'-0"	1'-0"				
		SUB-TOTAL	34,289								

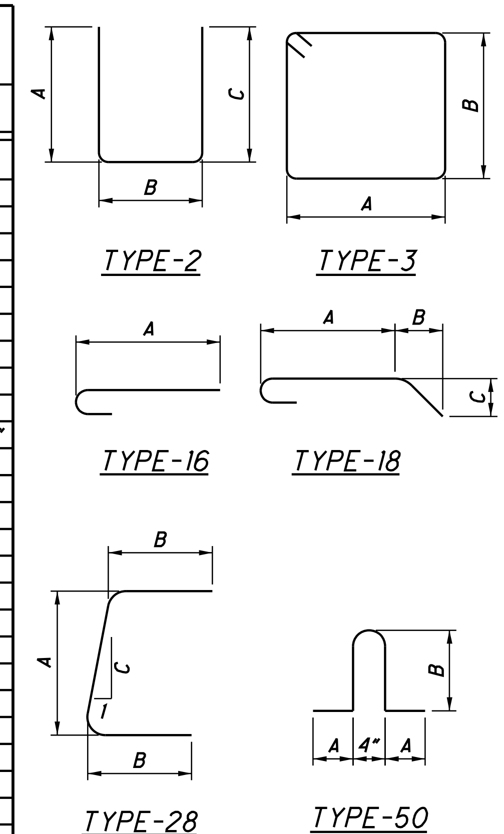

DESIGN AGENCY
Stantec Consulting Services Inc.
1500 Lake Shore Drive, Suite 100
Columbus, Ohio 43204
(614) 486-4383

DATE 03/2024
REVIEWED EDA
STRUCTURE FILE NUMBER 4400259
DRAWN JWS
REVISED
DESIGNED BSM
CHECKED MRS

REINFORCING STEEL LIST
BRIDGE NO. LAW-7-0387
S.R. 7 OVER C.R. 32 (EATON ROAD)

LAW-7-2.17
PID No. 75923

22/28

891/1247

DRAFT Stage 3 - Not for Construction 09/23/2024

U:\173608714\LAW\75923\structures\LAW007_0387C\sheets\007_75923CSL001.dgn 5/13/2024 8:41:46 AM JSnair

MARK	NUMBER TOTAL	LENGTH	WEIGHT	TYPE	DIMENSIONS						
					A	B	C	D	E	R	INC
PARAPET (EPOXY COATED STEEL REINFORCMENT)											
G501	181	14'-0"	2643	2	6'-10"	0'-7"	6'-10"				
G502	18	22'-4"	419	STR							
G503	18	13'-11"	261	STR							
G504	18	26'-3"	493	STR							
G505	18	25'-9"	483	STR							
G601	302	7'-8"	3476	37	1'-0"	0'-9 ½"	1'-5"	1'-0"	0'-7"		
G602	409	7'-0"	4300	23	0'-6"	3'-3"	3'-3"			0'-2"	
G603	12	8'-5"	152	37	1'-3"	0'-9 ½"	1'-5"	1'-0"	0'-7"		
G604	95	8'-3"	1177	1	3'-0"	5'-5"					
G605	95	8'-2"	1165	10	3'-3"	0'-8"	2'-0"	3'-0"			
		TOTAL	14,569								

MARK	NUMBER TOTAL	LENGTH	TOTAL LENGTH	TYPE	DIMENSIONS						
					A	B	C	D	E	R	INC
PARAPET (GLASS FIBER REINFORCED POLYMER - GFRP)											
X401	44	30'-0"	1,320'-0"	STR							
X402	22	19'-11"	438'-2"	STR							
X403	11	22'-4"	245'-8"	STR							
X404	44	29'-8"	1,305'-4"	STR							
X405	44	1'-8"	73'-4"	STR							
X406	11	26'-3"	288'-9"	STR							
X407	11	25'-9"	283'-3"	STR							
X408	11	13'-11"	153'-1"	STR							
Y401	88	10'-0"	880'-0"	STR							
Y402	16	14'-0"	224'-0"	STR							
Y403	8	11'-4"	90'-8"	STR							
Y404	4	14'-3"	57'-0"	STR							
Y405	8	13'-3"	106'-0"	STR							
Y406	8	13'-0"	10'-0"	STR							
		TOTAL	5,475'-3"								

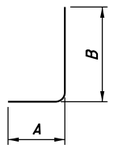

TYPE-1

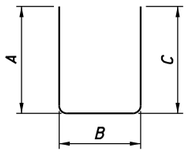

TYPE-2

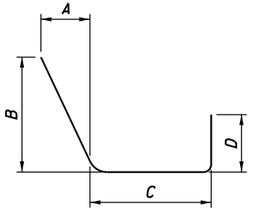

TYPE-10

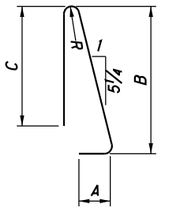

TYPE-23

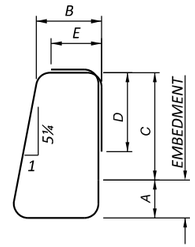

TYPE-37

DRAFT Stage 3 - Not for Construction 09/23/2024

DESIGN AGENCY
Stantec Consulting Services Inc.
1500 Lake Shore Drive, Suite 100
Columbus, Ohio 43204
(614) 486-4383

DESIGNED	DRAWN	REVIEWED	DATE
BSM	JWS	EDA	03/2024
CHECKED	REVISED	STRUCTURE FILE NUMBER	
MRS		4400259	

REINFORCING STEEL LIST
BRIDGE NO. LAW-7-0387
S.R. 7 OVER C.R. 32 (EATON ROAD)

LAW-7-2.17
PID No. 75923

892/1247

U:\173608714\LAW\75923\structures\LAW007_0387C\sheets\007_75923CSL002.dgn 5/13/2024 8:41:55 AM JSnair

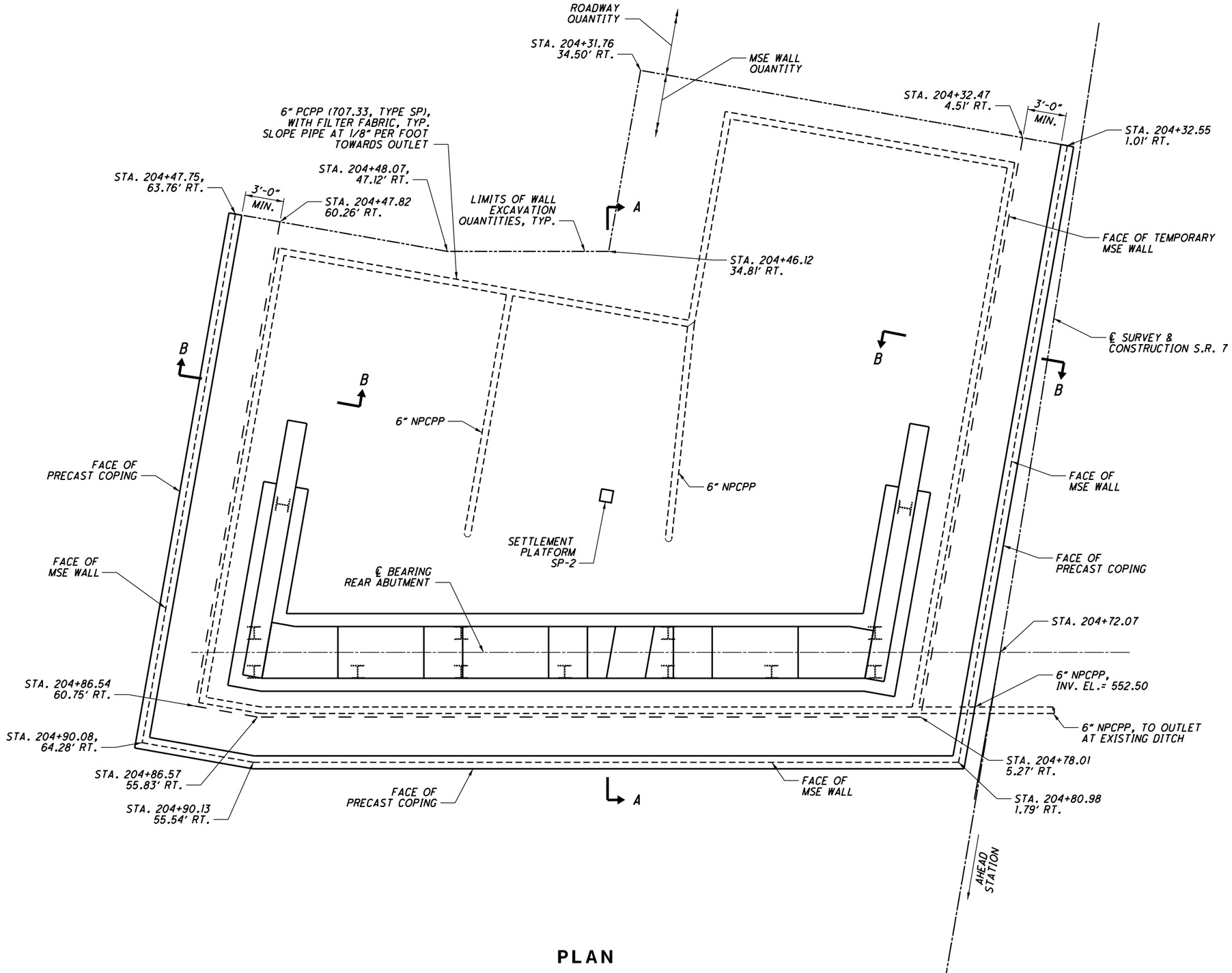

PLAN

NOTES:
1. FOR ELEVATIONS, SEE SHEET 26/28.
2. FOR SECTION A-A, SEE SHEET 27/28.
3. FOR SECTIONS B-B, SEE SHEET 28/28.

DRAFT Stage 3 - Not for Construction 09/23/2024

DESIGN AGENCY
Stantec Consulting Services Inc.
1500 Lake Shore Drive, Suite 100
Columbus, Ohio 43204
(614) 486-4383

DESIGNED	DRAWN	REVIEWED	DATE
BSM	JWS	EDA	03/2024
CHECKED	REVISED	STRUCTURE FILE NUMBER	
MRS		4400259	

WALL 1 PLAN
BRIDGE NO. LAW-7-0387
S.R. 7 OVER C.R. 32 (EATON ROAD)

LAW-7-2.17
PID No. 75923

U:\736087f4\LAW\75923\structures\LAW007_0387C\sheets\007_75923CWP001.dgn 5/13/2024 8:41:56 AM JSnair

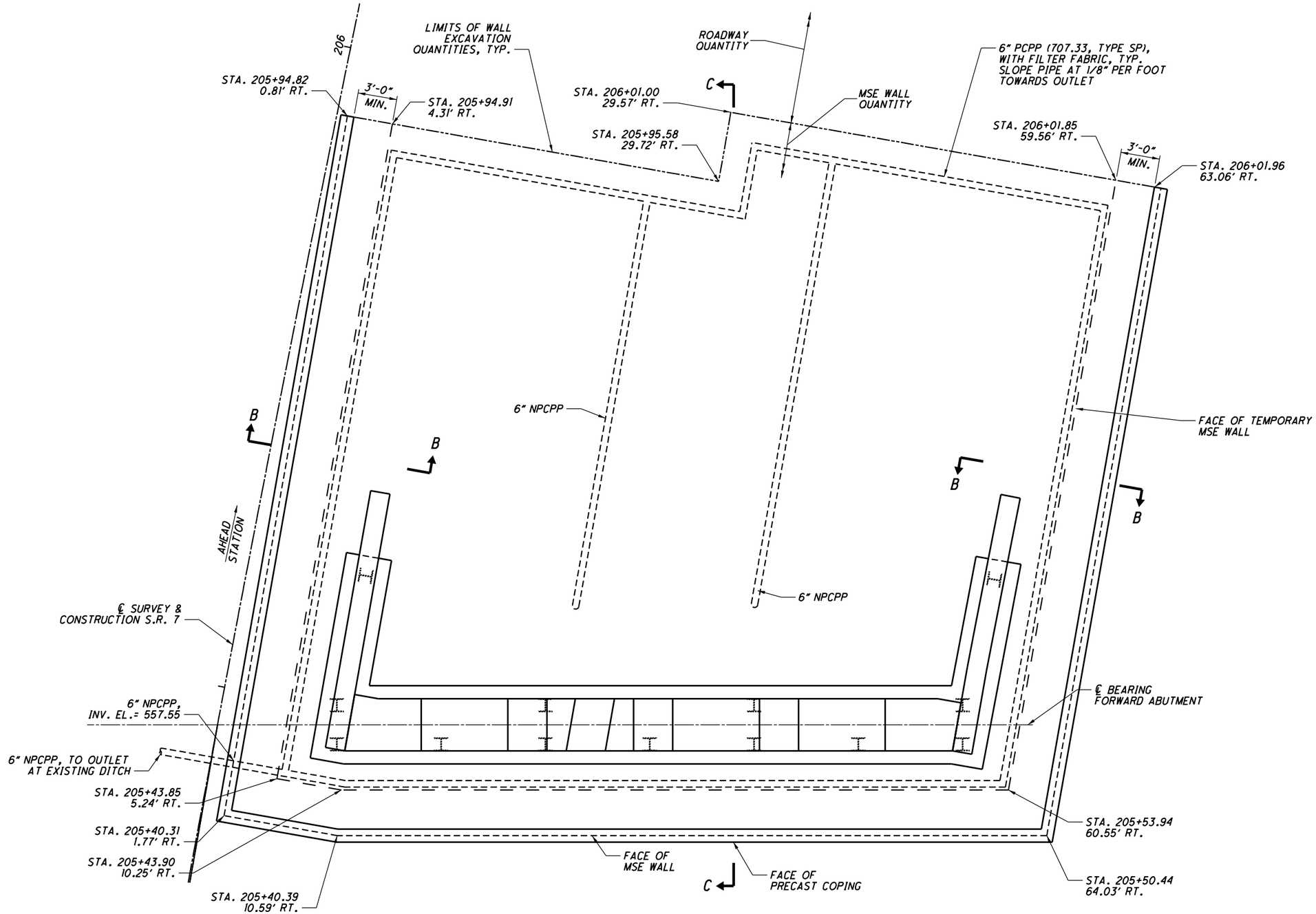

PLAN

NOTES:
1. FOR ELEVATIONS, SEE SHEET 26/28.
2. FOR SECTION B-B, SEE SHEET 28/28.
3. FOR SECTION C-C, SEE SHEET 27/28.

DRAFT Stage 3 - Not for Construction 09/20/2024

DESIGN AGENCY
Stantec Consulting Services Inc.
1500 Lake Shore Drive, Suite 100
Columbus, Ohio 43204
(614) 486-4383

DESIGNED	DRAWN	REVIEWED	DATE
BSM	JWS	EDA	03/2024
CHECKED	REVISED	STRUCTURE FILE NUMBER	
MRS		4400259	

WALL 2 PLAN
BRIDGE NO. LAW-7-0387
S.R. 7 OVER C.R. 32 (EATON ROAD)

LAW-7-2.17
PID No. 75923

25/28

894/1247

U:\1736087\4\LAW\75923\structures\LAW007_0387C\sheets\007_75923CWP002.dgn 5/13/2024 8:41:57 AM JSnair

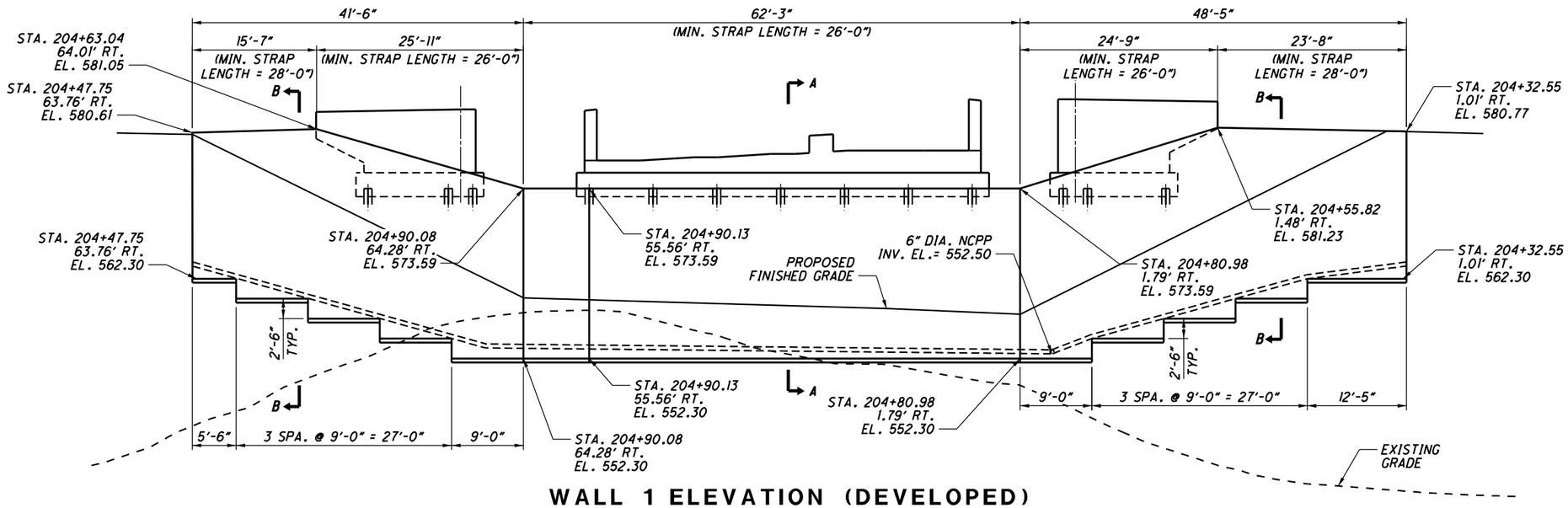

WALL 1 ELEVATION (DEVELOPED)

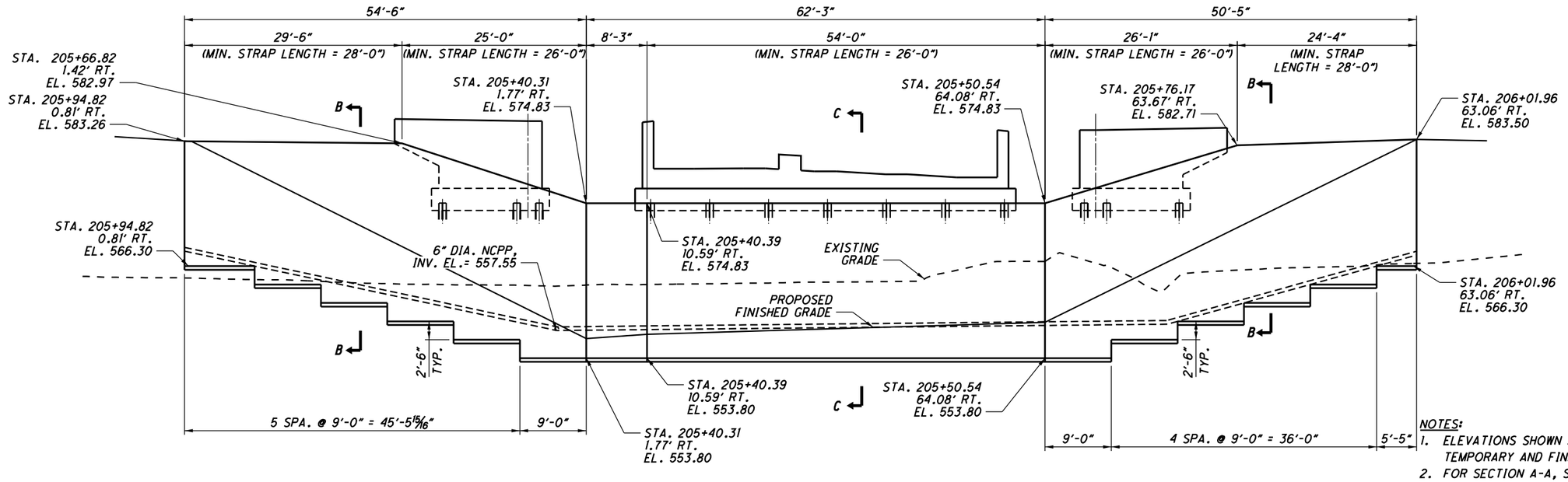

WALL 2 ELEVATION (DEVELOPED)

NOTES:

1. ELEVATIONS SHOWN ARE FOR TEMPORARY AND FINAL MSE WALL.
2. FOR SECTION A-A, SEE SHEET 27/28.
3. FOR SECTION B-B, SEE SHEET 28/28.
4. FOR SECTION C-C, SEE SHEET 27/28.
5. STRAP LENGTHS SHOWN ARE MEASURED FROM THE FACE OF TEMPORARY MSE WALL.
6. ALL METAL COMPONENTS OF TEMPORARY MSE WALL SHALL BE GALVANIZED PER SS867.03.A.

DRAFT Stage 3 - Not for Construction 5/23/2024

U:\1736087\14\LAW\75923\structures\LAW007_0387C\sheets\007_75923CWD001.dgn 5/13/2024 8:41:57 AM JSnair

DESIGN AGENCY
Stantec Consulting Services Inc.
1500 Lake Shore Drive, Suite 100
Columbus, Ohio 43204
(614) 486-4383

DESIGNED	DRAWN	REVIEWED	DATE
BSM	JWS	EDA	06/2021
CHECKED	REVISED	STRUCTURE FILE NUMBER	
MRS		4400259	

WALL 1 AND 2 ELEVATION
BRIDGE NO. LAW-7-0387
S.R. 7 OVER C.R. 32 (EATON ROAD)

LAW-7-2.17
PID No. 75923

895/1247

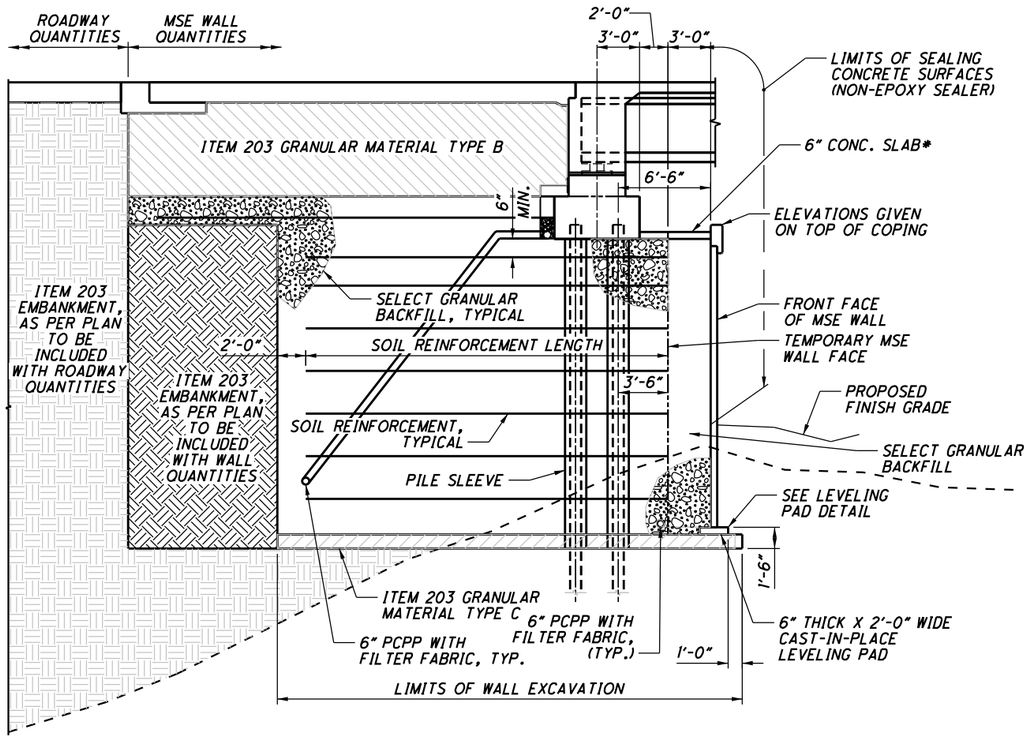

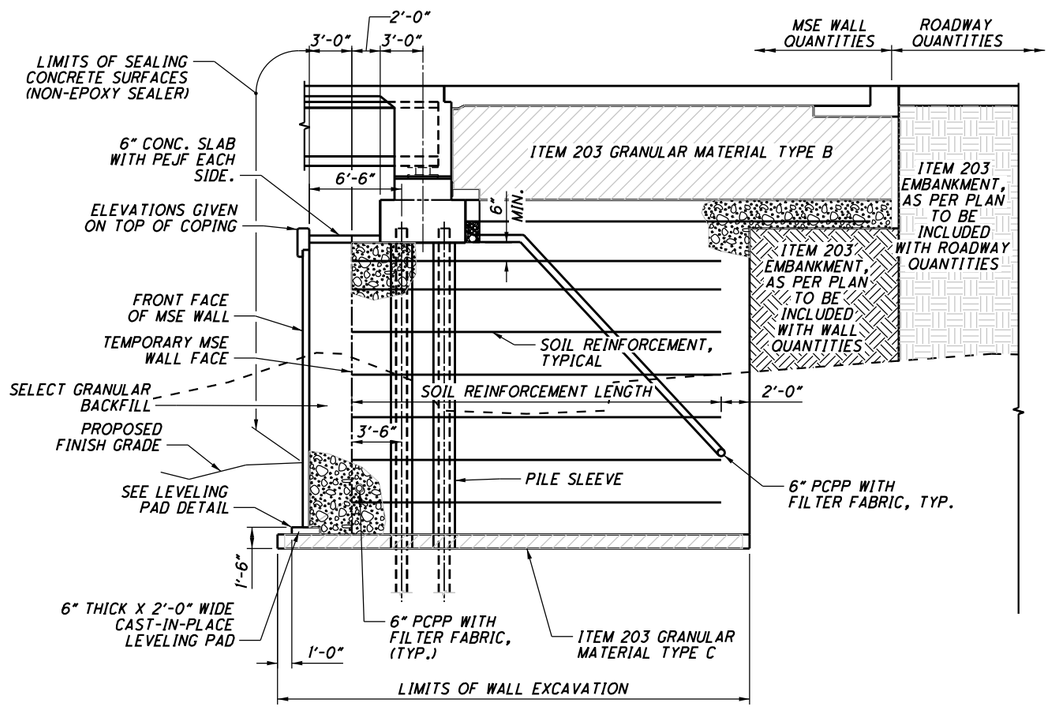

* PAID UNDER ITEM 601 PAVED GUTTER, TYPE 1-2, AS PER PLAN.

SECTION A-A
(WALL 1)

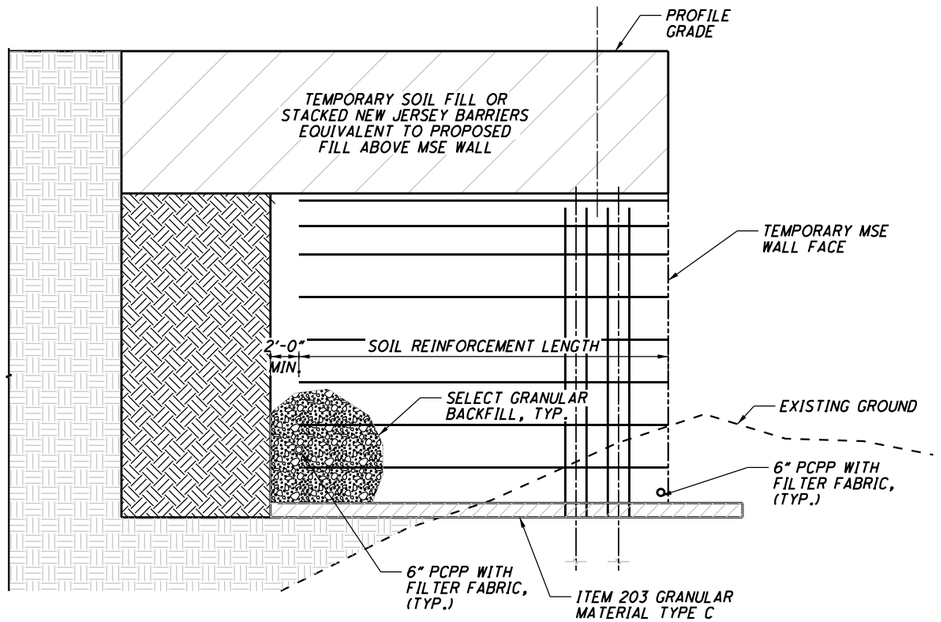

TEMPORARY MSE WALL DETAIL

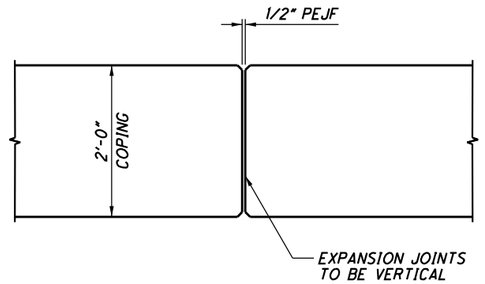

COPING EXPANSION JOINTS

SECTION C-C
(WALL 2)

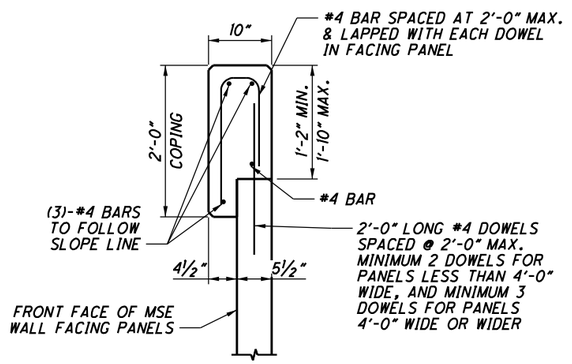

MSE WALL COPING
(ALL REINFORCING STEEL TO BE EPOXY COATED)

NOTE:
ALL METAL COMPONENTS OF THE TEMPORARY MSE WALL SHALL BE GALVANIZED ACCORDING TO SS867.03.A.

DRAFT Stage 2 - Not for Construction 09/23/2024

DESIGN AGENCY
Stantec Consulting Services Inc.
1500 Lake Shore Drive, Suite 100
Columbus, Ohio 43204
(614) 486-4383

DESIGNED	DRAWN	REVIEWED	DATE
BSM	JWS	EDA	03/2024
CHECKED	REVISED	STRUCTURE FILE NUMBER	
MRS		4400259	

WALL SECTIONS
BRIDGE NO. LAW-7-0387
S.R. 7 OVER C.R. 32 (EATON ROAD)

LAW-7-2.17
PID No. 75923

U:\173608714\LAW\75923\structures\LAW007_0387C\sheets\007_75923CWD002.dgn 5/13/2024 8:41:59 AM JSnair

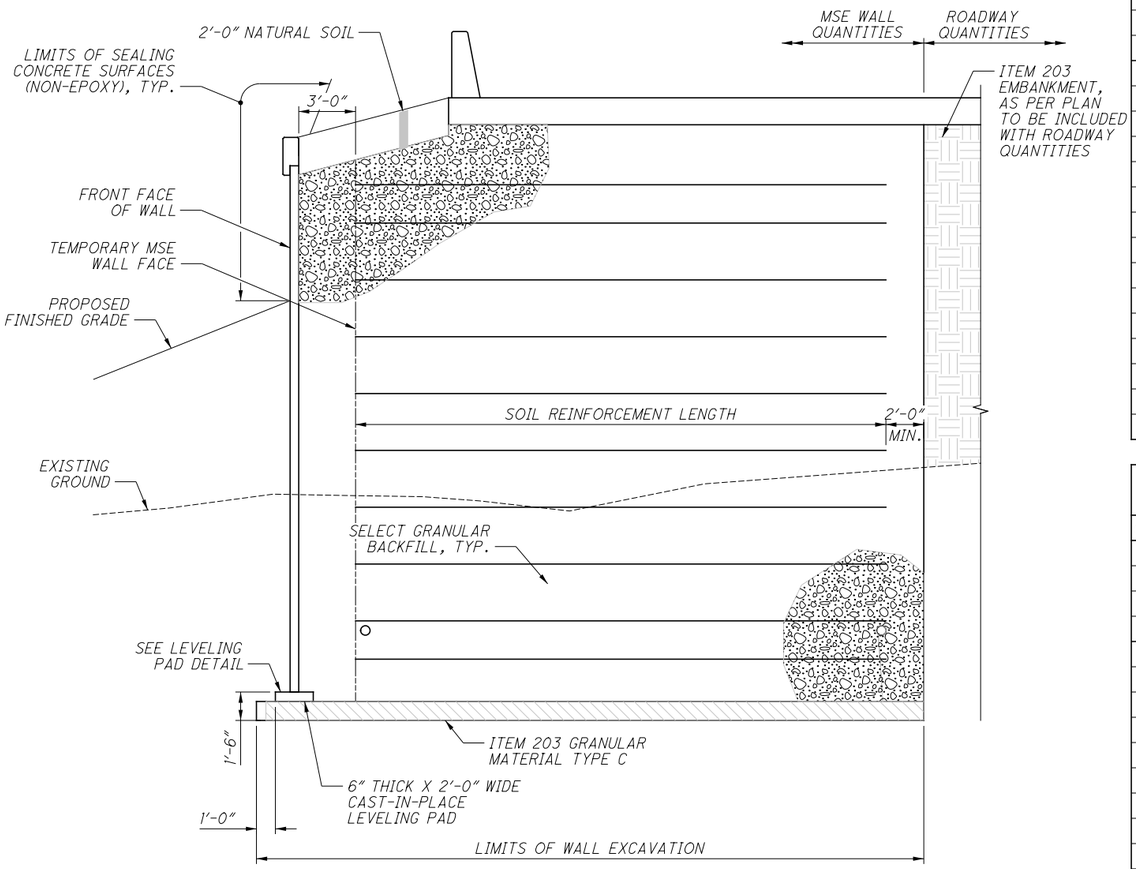

SECTION B-B

NOTE:

MINIMUM 5½" FACING PANEL THICKNESS, CENTERED ON LEVELING PAD.

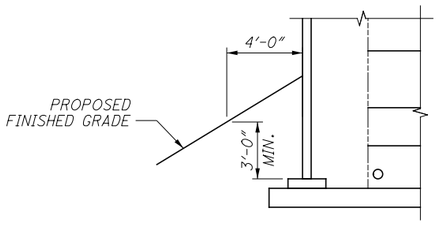

LEVEING PAD DETAIL

ESTIMATED QUANTITIES - WALL 1

CALCULATED BY: BSM 03/11/24
CHECKED BY: MRS 03/21/24

02/NHS/08	ITEM	EXTENSION	TOTAL	UNIT	DESCRIPTION
100	203	20001	100	CY	EMBANKMENT, AS PER PLAN
561	203	35110	370	CY	GRANULAR MATERIAL, TYPE B
LUMP	503	11100	LUMP	LS	COFFERDAMS AND EXCAVATION BRACING
263	512	10050	211	SY	SEALING OF CONCRETE SURFACES (NON-EPOXY)
63	601	37501	63	FT	PAVED GUTTER, TYPE 1-2, AS PER PLAN
3,530	840	20000	3,272	SF	MECHANICALLY STABILIZED EARTH WALL
1,442	840	21000	68	CY	WALL EXCAVATION
405	840	22000	357	SY	FOUNDATION PREPARATION
2,737	840	23000	2,384	CY	SELECT GRANULAR BACKFILL
49	840	23050	44	CY	NATURAL SOIL
208	840	25010	204	FT	6" DRAINAGE PIPE, PERFORATED
110	840	25020	100	FT	6" DRAINAGE PIPE, NON-PERFORATED
170	840	26000	170	FT	CONCRETE COPING
1.25	840	27000	1.25	DAY	ON-SITE ASSISTANCE
LUMP	840	28000	LUMP	LS	SGB INSPECTION AND COMPACTION TESTING
LUMP	867	00101	LUMP	LS	TEMPORARY WIRED FACED MECHANICALLY STABILIZED EARTH WALL, AS PER PLAN

ESTIMATED QUANTITIES - WALL 2

CALCULATED BY: BSM 03/11/24
CHECKED BY: MRS 03/21/24

02/NHS/08	ITEM	EXTENSION	TOTAL	UNIT	DESCRIPTION
100	203	20001	100	CY	EMBANKMENT, AS PER PLAN
561	203	35110	561	CY	GRANULAR MATERIAL, TYPE B
LUMP	503	11100	LUMP	LS	COFFERDAMS AND EXCAVATION BRACING
263	512	10050	263	SY	SEALING OF CONCRETE SURFACES (NON-EPOXY)
63	601	37501	63	FT	PAVED GUTTER, TYPE 1-2, AS PER PLAN
3,530	840	20000	3,530	SF	MECHANICALLY STABILIZED EARTH WALL
1,442	840	21000	1,442	CY	WALL EXCAVATION
405	840	22000	405	SY	FOUNDATION PREPARATION
2,737	840	23000	2,737	CY	SELECT GRANULAR BACKFILL
49	840	23050	49	CY	NATURAL SOIL
208	840	25010	208	FT	6" DRAINAGE PIPE, PERFORATED
110	840	25020	110	FT	6" DRAINAGE PIPE, NON-PERFORATED
170	840	26000	170	FT	CONCRETE COPING
1.25	840	27000	1.25	DAY	ON-SITE ASSISTANCE
LUMP	840	28000	LUMP	LS	SGB INSPECTION AND COMPACTION TESTING
LUMP	867	00101	LUMP	LS	TEMPORARY WIRED FACED MECHANICALLY STABILIZED EARTH WALL, AS PER PLAN

MATERIAL TYPE	SHORT TERM (UNDRAINED)		LONG TERM (DRAINED)	
	FRICTION ANGLE (DEGREES)	COHESION (PSF)	FRICTION ANGLE (DEGREES)	COHESION (PSF)
REINFORCED FILL	34	0	34	0
RETAINED SOIL	30	0	30	0
FOUNDATION SOIL	0	2400	23	150

ITEM 867 - TEMPORARY WIRE FACED MECHANICALLY STABILIZED EARTH WALL, AS PER PLAN

THIS PLAN NOTE IS FOR THE CONSTRUCTION OF A TWO-STAGE MSE WALL. THIS PAY ITEM INCLUDES ONLY THE WIRE FACING UNITS, SOIL RETENTION FABIRC, AND SPECIAL CONNECTION DEVICES BETWEEN THE WIRE FACING UNITS AND THE PERMANENT PRECAST CONCRETE FACING OF THE SECOND STAGE OF THE WALL. GALVANIZE THE FURNISED WIRE FACING UNITS AND CONNECTION DEVICES ACCORDING TO SS867.03.A. THE WALL IS TO BE OTHERWISE CONSTRUCTED IN ACCORDANCE WITH SS840, AND ALL OTHER ITEMS FOR THE MSE WALL WILL BE MEASURED AND PAID FOR UNDER SS840 PAY ITEMS.

CONSTRUCT THE FIRST STAGE OF THE WALL WITH WIRE FACING UNITS AND THE EMBANKMENT BEHIND THE WALL FOR A MINIMUM DISTANCE OF 200-FT BEHIND THE WALL. DO NOT BEGIN THE CONSTRUCTION OF THE SECOND STAGE OF HTE WALL WITH PERMANENT PRECAST CONCRETE FACING UNTIL AFTER THE ABOVE REQUIRED WIRE FACED MSE WALL AND EMBANKMENT HAVE BEEN CONSTRUCTED AND A 90 CALENDAR DAY WAITING PERIOD HAS ELAPSED. THE ENGINEER MAY ADJUST THE LENGTH OF THE WAITING PERIOD BASED ON SETTLEMENT PLATFORM READINGS. THE SPACE BETWEEN THE WIRE FACED WALL AND THE PRECAST CONCRETE FACING IS TO BE FILLED WITH ITEM 840 SELECT GRANULAR BACKFILL IN ACCORDANCE WITH SS840.

NOTE:
ALL WALL COMPONENTS INCLUDING WIRE FACED MSE WALL SHALL BE GALVANIZED ACCORDING TO SS867.03.A.

DRAFT Stage 3 - Not for Construction 09/23/2024

DESIGN AGENCY
Stantec Consulting Services Inc.
1500 Lake Shore Drive, Suite 100
Columbus, Ohio 43204
(614) 486-4383

DESIGNED	DRAWN	REVIEWED	DATE
BSM	JWS	EDA	03/2024
CHECKED	REVISED	STRUCTURE FILE NUMBER	
MRS		4400259	

WALL SECTION AND ESTIMATED QUANTITIES

BRIDGE NO. LAW-7-0387
S.R. 7 OVER C.R. 32 (EATON ROAD)

LAW-7-2.17
PID No. 75923

897
1247

U:\736087\4\LAW\75923\structures\LAW007_0387C\sheets\007_75923CWD003.dgn 5/14/2024 1:06:02 PM bmcneal

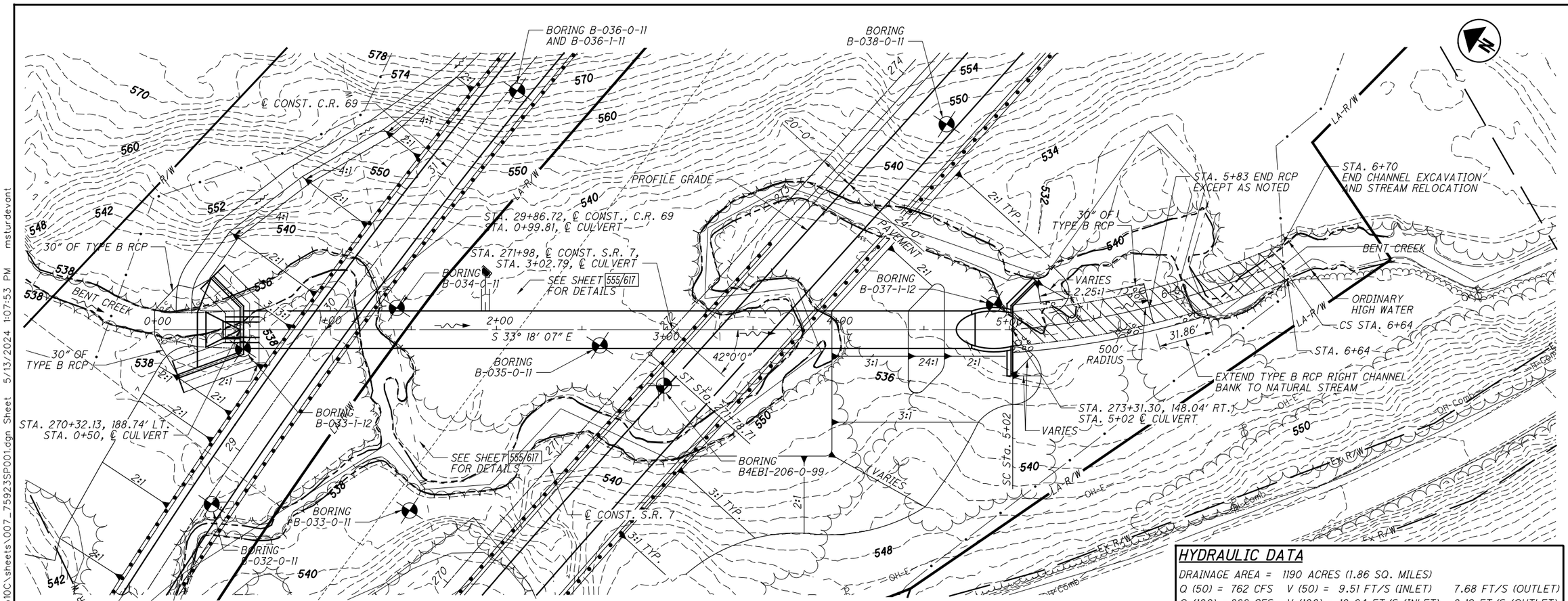

PLAN

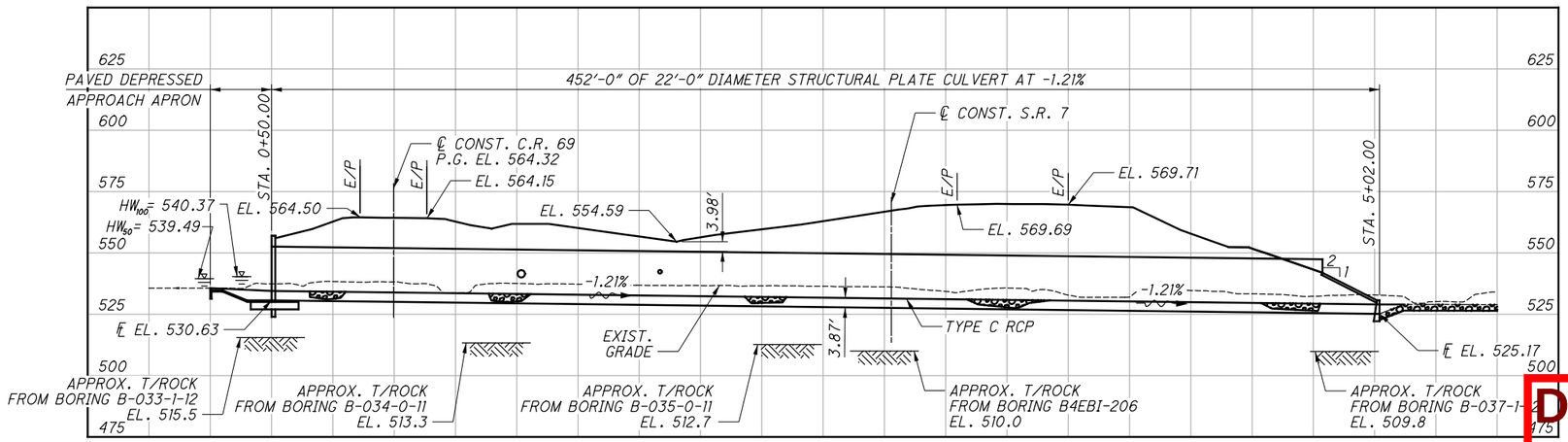

PROFILE ALONG ℄ CULVERT

HYDRAULIC DATA

DRAINAGE AREA = 1190 ACRES (1.86 SQ. MILES)
Q (50) = 762 CFS V (50) = 9.51 FT/S (INLET) 7.68 FT/S (OUTLET)
Q (100) = 888 CFS V (100) = 10.04 FT/S (INLET) 8.19 FT/S (OUTLET)
ORDINARY HIGH WATER MARK= 532.7'
PH: 7.6
ABRASIVE: YES

NOTES

1. EARTHWORK LIMITS SHOWN ARE APPROXIMATE. ACTUAL SLOPES SHALL CONFORM TO PLAN CROSS SECTIONS.
2. SEE SHEET 6/9 FOR STREAM EXCAVATION DETAILS.

DESIGN TRAFFIC:
2015 ADT = 10,300 2015 ADTT = 1,133
2035 ADT = 21,400 2035 ADTT = 2,354
DIRECTIONAL DISTRIBUTION = 61/31

LEGEND

- PROJECT BORING LOCATION
- CHANNEL EXCAVATION

PROPOSED STRUCTURE

TYPE: 22' DIA. STRUCUTRAL PLATE (MIN. 8 GAGE) PIPE CULVERT WITH REINFORCED CONCRETE HEADWALLS
SPANS: 22'-0"
ROADWAY: 42' EDGE TO EDGE OF SHOULDER
LOADING: HL-93 AND FWS (60 PSF)
SKEW: 20° RT.
APPROACH SLABS: NONE
COORDINATES: LATITUDE 38°27'25.92"
LONGITUDE 82°24'49.82"

DRAFT Stage 3 - Not for Construction 09/23/2024

DESIGN AGENCY
Stantec
1500 Lake Shore Dr.
Columbus, OH 43204
(614) 486-4383

DESIGNED	DRAWN	REVIEWED	DATE
EDA	JWS	BSM	2/2024
CHECKED	REVISED		STRUCTURE FILE NUMBER
MRS			4400348

SITE PLAN
LAW-7-0510
S.R. 7 OVER BENT CREEK

LAW-7-2.17
PID No. 75923

1 / 9

898
1247

V:\1736\active\173608714\LAW\engineering\75923_LAW-7-2.17\Design\structures\LAW007_0510C\sheets\007_75923SP001.dgn Sheet 5/13/2024 1:07:53 PM msturdevant

ESTIMATED QUANTITIES (PARTICIPATION CODE 02/NHS/08)

CALCULATED BY: EDA 3/7/2018
CHECKED BY: ALH 3/7/2018

ITEM	EXTENSION	TOTAL	UNIT	DESCRIPTION	GEN.	SEE SHEET
203	10000	3124	CY	EXCAVATION	-	
503	21100	949	CY	UNCLASSIFIED EXCAVATION	"	
509	10000	51501	LB	EPOXY COATED REINFORCING STEEL	-	
511	46010	248	CY	CLASS QC1 CONCRETE, RETAINING/WINGWALL NOT INCLUDING FOOTING	"	
511	46510	219	CY	CLASS QC1 CONCRETE, FOOTING	-	
512	33000	2868	SY	TYPE A WATERPROOFING	-	
512	10100	180	SY	SEALING OF CONCRETE SURFACES (EPOXY-URETHANE)		
518	21200	74	CY	POROUS BACKFILL WITH GEOTEXTILE FABRIC	-	
518	40000	74	FT	6" PERFORATED CORRUGATED PLASTIC PIPE	"	
518	40010	30	FT	6" NON-PERFORATED CORRUGATED PLASTIC PIPE, INCLUDING SPECIALS		
601	11001	108	SY	RIPRAP, TYPE D, AS PER PLAN		
601	32104	321	CY	ROCK CHANNEL PROTECTION, TYPE B WITH GEOTEXTILE FABRIC		
601	34200	782	CY	ROCK CHANNEL PROTECTION, TYPE C WITHOUT FILTER		
611	97400	452	FT	CONDUIT, MISC.: 22' DIA., TYPE A, 707.03		

GENERAL NOTES

DESIGN SPECIFICATIONS:
THIS STRUCTURE CONFORMS TO THE "LRFD BRIDGE DESIGN SPECIFICATIONS" ADOPTED BY THE AMERICAN ASSOCIATION OF STATE HIGHWAY AND TRANSPORTATION OFFICIALS, 2014, INCLUDING 2015 AND 2016 INTERIM SPECIFICATIONS AND THE ODOT BRIDGE DESIGN MANUAL, 2007.

OPERATIONAL IMPORTANCE:
A LOAD MODIFIER OF 1.0 HAS BEEN ASSUMED FOR THE DESIGN OF THIS STRUCTURE IN ACCORDANCE WITH THE AASHTO LRFD BRIDGE DESING SPECIFICATIONS, ARTICLE 1.3.5 AND THE ODOT BRIDGE DESIGN MANUAL, 2007.

DESIGN DATA:
CONCRETE CLASS QC1 - COMPRESSIVE STRENGTH 4.0 K.S.I.
(SUBSTRUCTURE)

REINFORCING STEEL - MINIMUM YIELD STRENGTH 60 K.S.I.

DESIGN LOADING:
HL-93
FUTURE WEARING SURFACE (FWS) OF 0.060 KIPS/FT²

FOUNDATION BEARING RESISTANCE:
HEADWALL FOOTINGS, AS DESIGNED, PRODUCE A MAXIMUM SERVICE LOAD PRESSURE OF 3.021 KIPS PER SQUARE FOOT AND A MAXIMUM STRENGTH LOAD PRESSURE OF 4.256 KIPS PER SQUARE FOOT. THE BEARING RESISTANCE IS 3.025 KIPS PER SQUARE FOOT FOR SERVICE AND 5.5 KIPS PER SQUARE FOOT FOR STRENGTH.

ITEM 511 CLASS QC1 CONC. MISC. PAVED INLET:
THE ITEM INCLUDES ALL MATERIAL, LABOR, AND ACCESSORIES NECESSARY TO FURNISH AND PLACE THE PAVED CONCRETE INLET AND CUTOFF WALLS.
ITEM 601 RIPRAP, TYPE D, AS PER PLAN:
CONSTRUCT A RIPRAP CUTOFF WALL AS DETAILED ON SHEET 5/9 .

ITEM 611 22'-0" CONDUIT, TYPE A:
WORK SHALL CONFORM TO ITEM 611 PIPE CULVERTS, SEWERS, DRAINS, AND DRAINAGE STRUCTURES. STEEL STRUCTURAL PLATE (707.03) WITH MINIMUM 8 GA. THICKNESS PER ODOT DURABILITY DESIGN SPREAD SHEET, THE PAVED INVERT SPECIFIED BY THE DURABILITY DESIGN SPREADSHEET SHALL BE OMITTED AS THE CULVERT INVERT IS FILLED WITH TYPE C ROCK CHANNEL PROTECTION.

ANCHOR BOLTS FOR ANCHORING BOTH ENDS OF THE METAL PIPE, MEETING ASTM A307 AND GALVANIZED ACCORDING TO ASTM A153, SHALL BE INCLUDED IN THE PRICE BID PER FOOT OF ITEM 611 22'-0" CONDUIT, TYPE A, 707.03, AS PER PLAN.

ABBREVIATIONS:

APPROX.	-	APPROXIMATELY
ABUT.	-	ABUTMENTS
BF	-	BACK FACE
B/	-	BOTTOM OF
BRG.	-	BEARINGS
℄	-	CENTERLINE
CJ	-	CONSTRUCTION JOINT
CLR.	-	CLEAR
CONC.	-	CONCRETE
CONST.	-	CONSTRUCTION
CONT.	-	CONTINUED
DIA.	-	DIAMETER
DWG.	-	DRAWING
EF	-	EACH FACE
EL.	-	ELEVATION
EQ.	-	EQUAL
EXIST.	-	EXISTING
℄	-	FLOW LINE
FF	-	FRONT FACE
GFRP	-	GLASS FIBER REINFORCED POLYMER
H.W.	-	HIGH WATER
LT	-	LEFT
MAX.	-	MAXIMUM
M.C.	-	MECHANICAL CONNECTOR
MISC.	-	MISCELLANEOUS
NO.	-	NUMBER
NPCPP	-	NON-PERFORATED CORRUGATED PLASTIC PIPE
OHWM	-	ORDINARY HIGH WATER MARK
PCPP	-	PERFORATED CORRUGATED PLASTIC PIPE
RCP	-	ROCK CHANNEL PROTECTION
RT.	-	RIGHT
SPA.	-	SPACE
SP	-	SETTLEMENT PLATFORM
STA.	-	STATION
STD.	-	STANDARD
STR	-	STRAIGHT
T/	-	TOP OF
T&B	-	TOP AND BOTTOM
TYP.	-	TYPICAL
U.N.O.	-	UNLESS NOTED OTHERWISE
YR.	-	YEAR

DRAFT Stage 3 - Not for Construction 09/23/2024

DESIGN AGENCY
Stantec 1500 West Third Ave. Columbus, OH 43212 614.486.4383

DESIGNED	DRAWN	REVIEWED	DATE
EDA	JWS	BSM	2/2024
CHECKED	REVISED	STRUCTURE FILE NUMBER	
MRS		4400348	

GENERAL NOTES & ESTIMATED QUANTITIES
LAW-7-0510
S.R. 7 OVER BENT CREEK

LAW-7-2.17
PID No. 75923

2 / 9

899
1247

V:\17366\active\17366874\LAW\engineering\75923_LAW-7-2.17\Design\structures\LAW007_0510C\sheets\007_75923GN001.dgn Sheet 5/14/2024 11:34:53 AM mstur@evon1

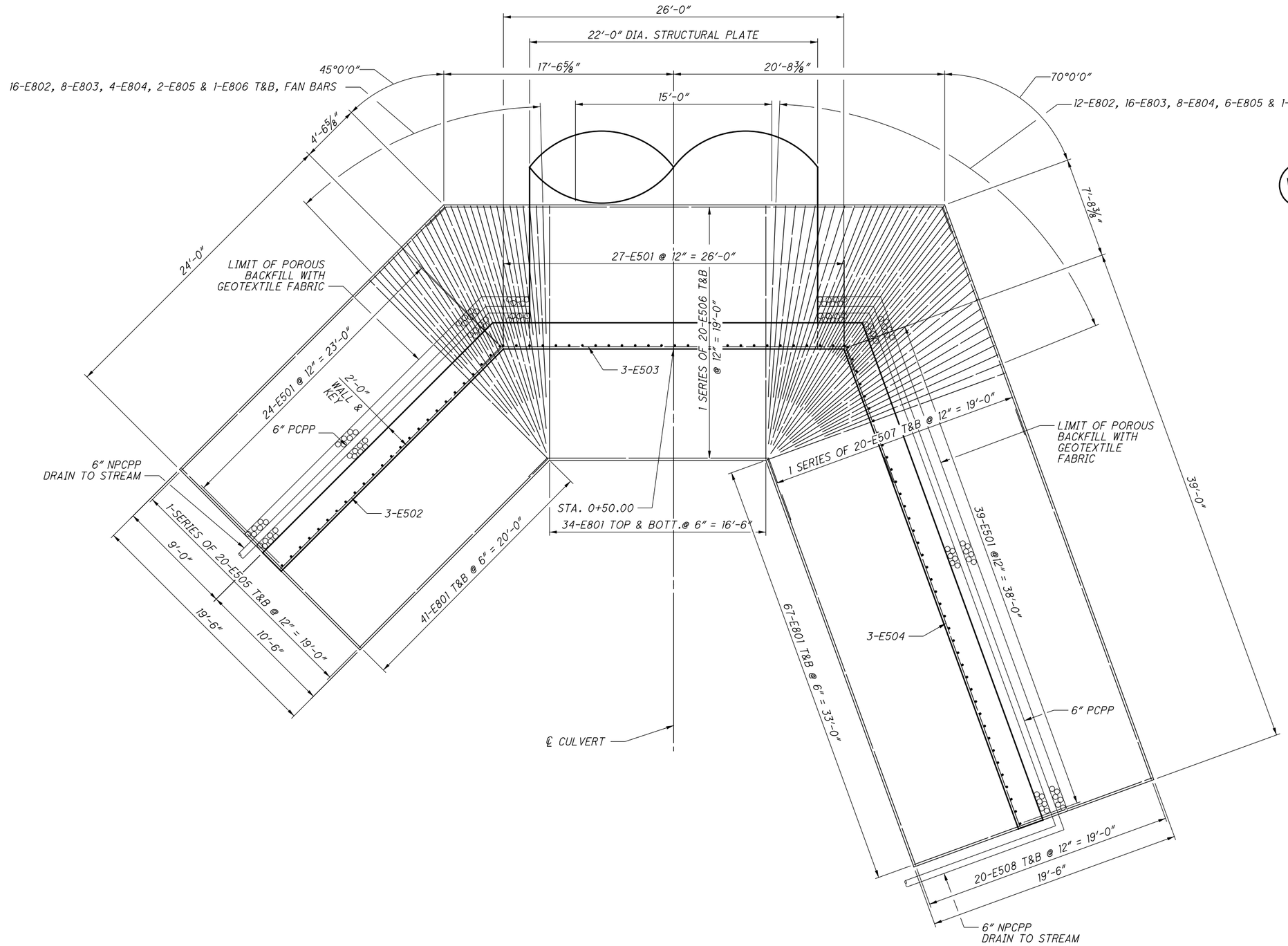

INLET FOOTING PLAN

LAP LENGTHS:
#5 BAR = 3'-3"

DRAFT Stage 3 - Not for Construction 09/23/2024

NOTE:
FOR WALL REINFORCING, SEE SHEET 4/9

DESIGN AGENCY
Stantec
1500 Lake Shore Dr.
Columbus, OH 43204
(614) 486-4383

DESIGNED	DRAWN	REVIEWED	DATE
EDA	JWS	BSM	2/2024
CHECKED	REVISED	STRUCTURE FILE NUMBER	
MRS		4400348	

INLET FOOTING PLAN
LAW-7-0510
S.R. 7 OVER BENT CREEK

LAW-7-2.17
PID No. 75923

3 / 9

900
1247

V:\1736\active\173608714\LAW\engineering\75923_LAW-7-2.17\Design\structures\LAW007_0510C\sheets\007_75923FP001.dgn Sheet 5/13/2024 1:07:58 PM msturdevant

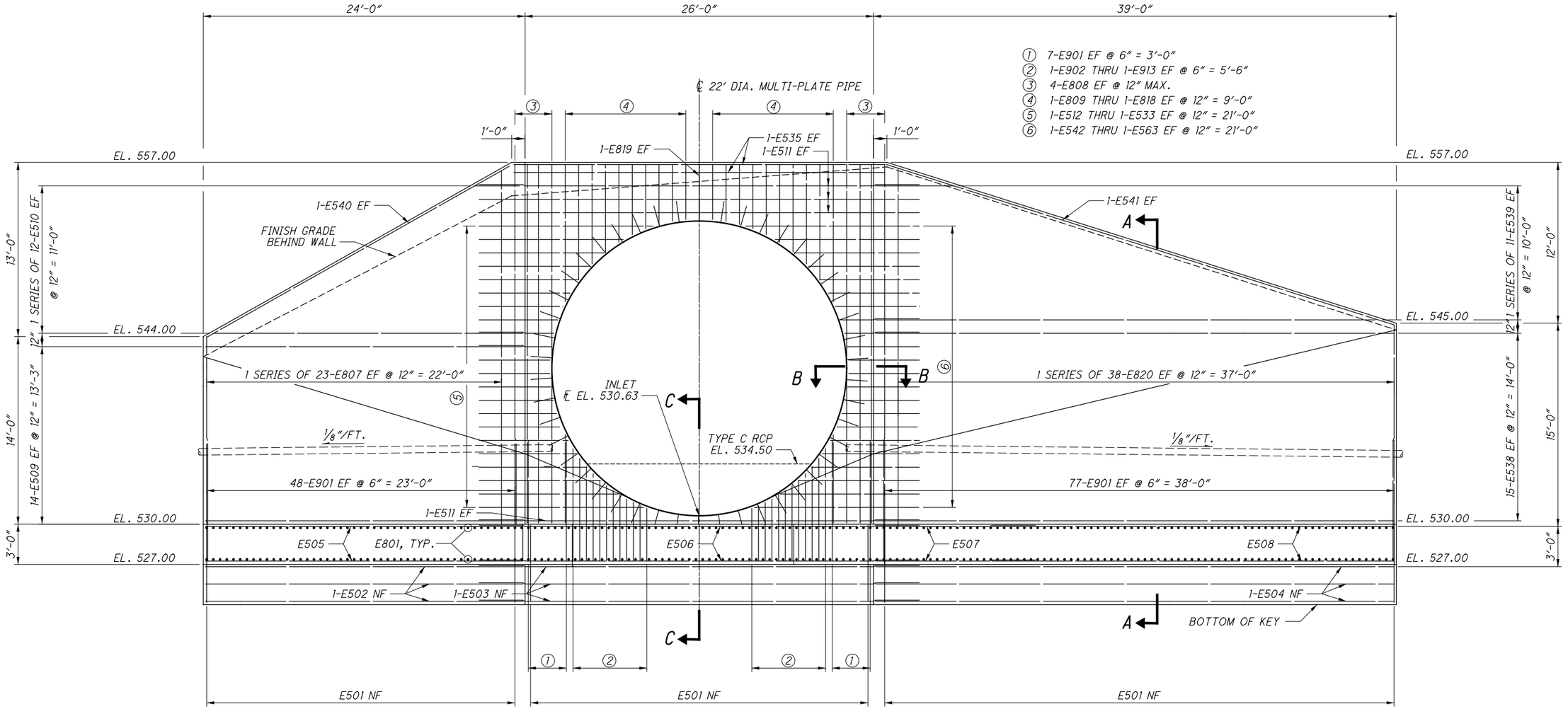

① 7-E901 EF @ 6" = 3'-0"
② 1-E902 THRU 1-E913 EF @ 6" = 5'-6"
③ 4-E808 EF @ 12" MAX.
④ 1-E809 THRU 1-E818 EF @ 12" = 9'-0"
⑤ 1-E512 THRU 1-E533 EF @ 12" = 21'-0"
⑥ 1-E542 THRU 1-E563 EF @ 12" = 21'-0"

INLET HEADWALL
(DEVELOPED VIEW)

LAP LENGTHS:
#5 BARS = 3'-3"

NOTES:
1. ANCHORS AROUND CIRCUMFERENCE OF PIPE AT HEADWALL 18" ON CENTER, USE 3/4" DIA. SIX THOUSAND BOLTS. HOOK SHALL BE CUT OFF AS NECESSARY TO ACCOMODATE THE HEADWALL FOOTING NEAR THE INVERT OF THE PIPE. DOUBLE NUT BOLTS.
2. FOR SECTIONS A-A, B-B AND C-C, SEE SHEET 5/9 .

DRAFT Stage 3 - Not for Construction
09/23/2024

DESIGN AGENCY
Stantec
1500 Lake Shore Dr.
Columbus, OH 43204
(614) 486-4383

DESIGNED	DRAWN	REVIEWED	DATE
EDA	JWS	BSM	2/2024
CHECKED	REVISED	STRUCTURE FILE NUMBER	
MRS		4400348	

INLET HEADWALL ELEVATION
LAW-7-0510
S.R. 7 OVER BENT CREEK

LAW-7-2.17
PID No. 75923

V:\1736\active\173608714\LAW\engineering\75923_LAW-7-2.17\Design\structures\LAW007_0510C\sheets\007_75923GP001.dgn Sheet 5/13/2024 1:07:59 PM msturdevant

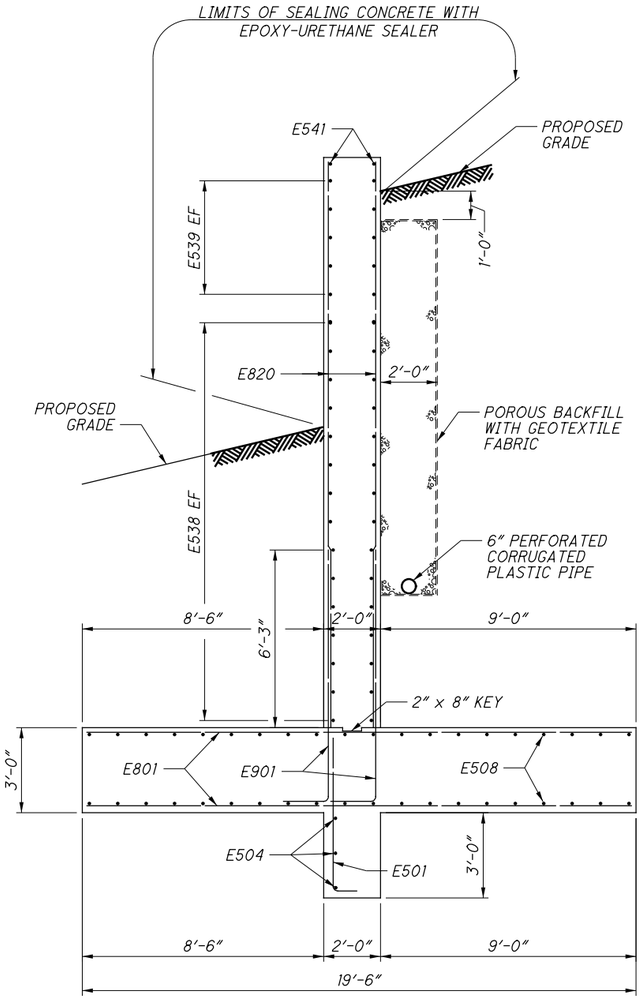

SECTION A-A

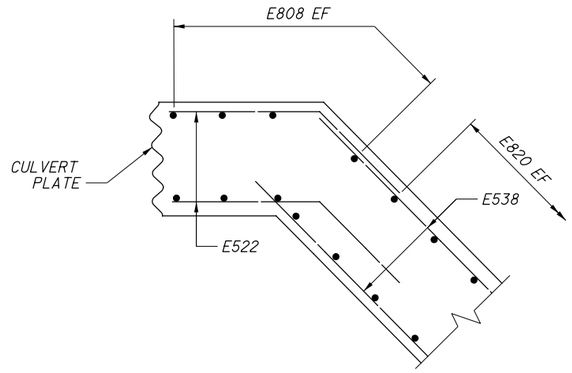

SECTION B-B

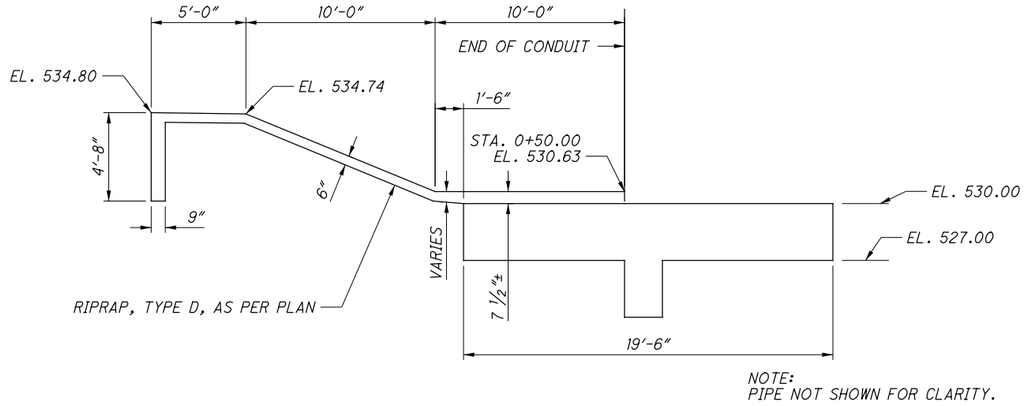

NOTE:
PIPE NOT SHOWN FOR CLARITY.

SECTION C-C

NOTES:
1. ANCHORS ALONG CIRCUMFERENCE OF THE ATTACHMENT ON HEADWALL 18" ON CENTER SHALL BE 3#4" DIA. x 19"x5" HOOK BOLTS. HOOK SHALL BE CUT OFF AS NECESSARY TO ACCOMODATE THE HEADWALL LOOPS NEAR THE INVERT OF THE PIPE. DOUBLE NUT EACH BOLT.

DRAFT Stage 3 - Not for Construction
09/23/2024

V:\1736\active\173608714\LAW\engineering\75923_LAW-7-2.17\Design\structures\LAW007_0510C\sheets\007_75923GP003.dgn Sheet 5/13/2024 1:08:01 PM msturdevant

DESIGN AGENCY
Stantec
1500 Lake Shore Dr.
Columbus, OH 43204
(614) 486-4383

DESIGNED	DRAWN	REVIEWED	DATE
EDA	JWS	BSM	2/2024
CHECKED	REVISED	STRUCTURE FILE NUMBER	
MRS		44000348	

INLET HEADWALL DETAILS
LAW-7-0510
S.R. 7 OVER BENT CREEK

LAW-7-2.17
PID No. 75923

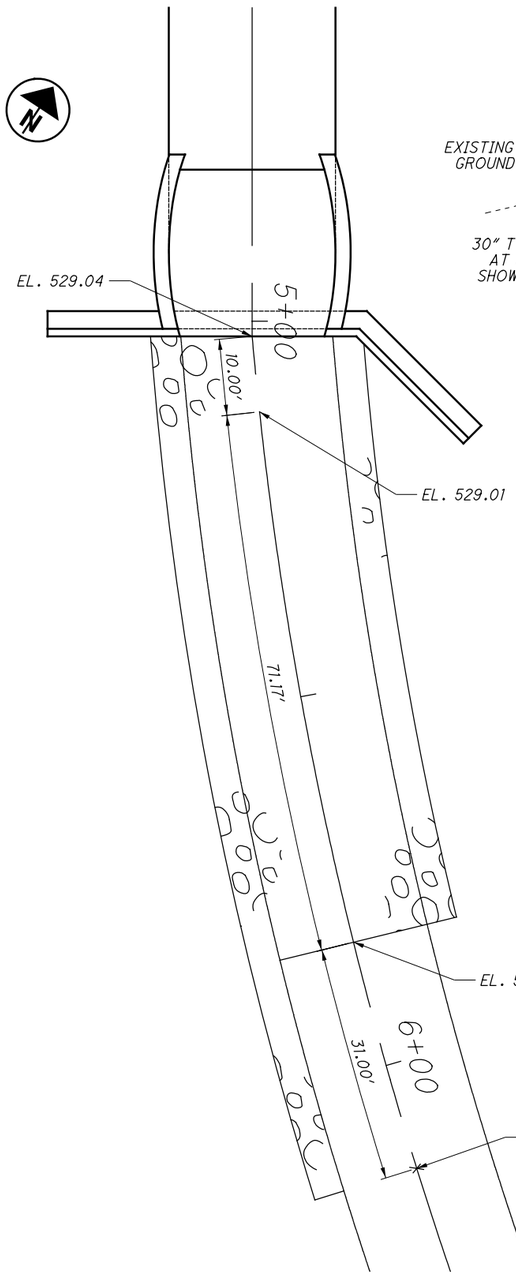

STREAN EXCAVATION PLAN

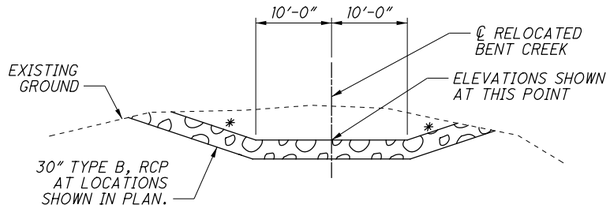

TYPICAL STREAN EXCAVATION SECTION

* - 3:1 SLOPE (TYP.)

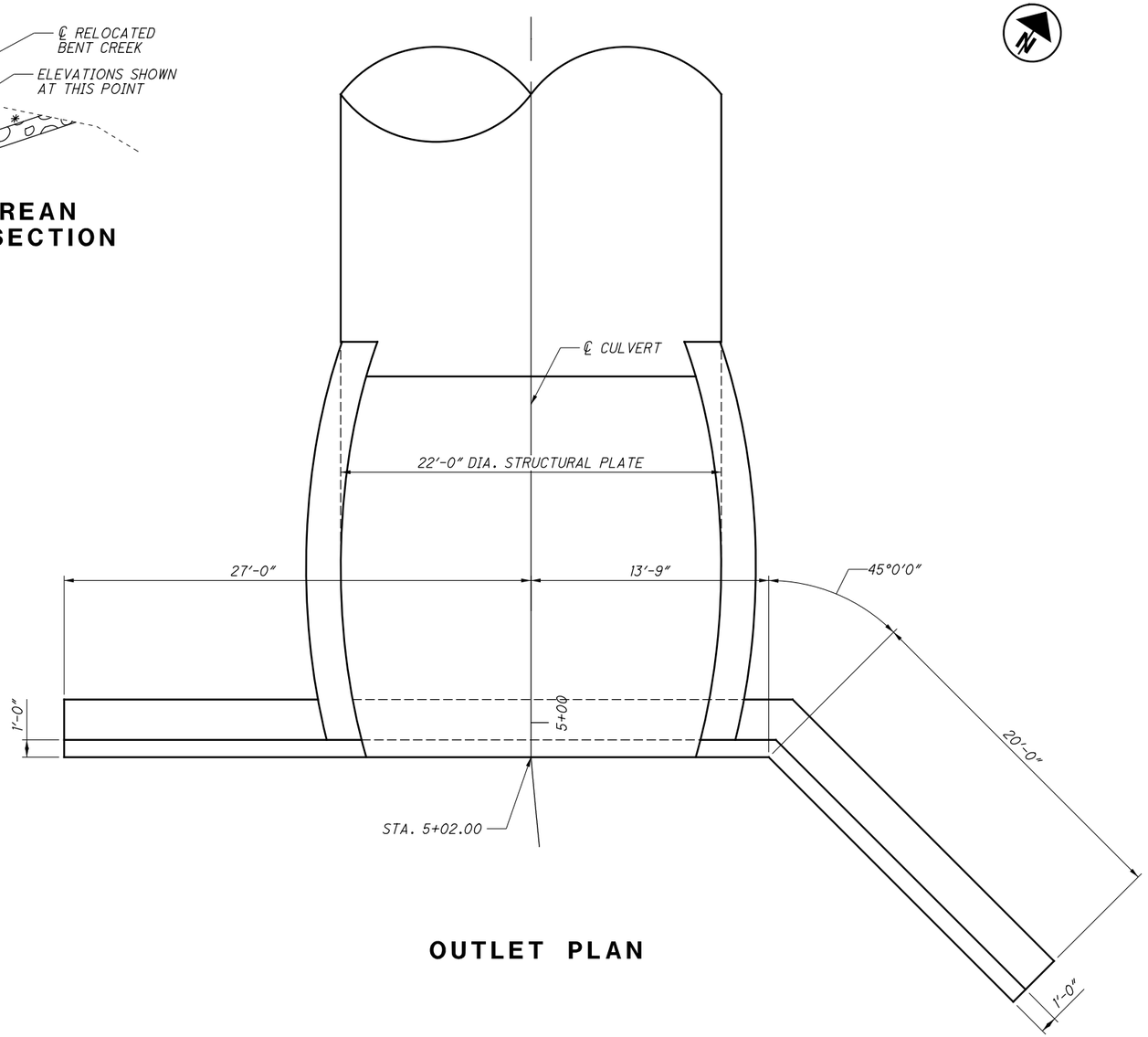

OUTLET PLAN

DRAFT Stage 3 - Not for Construction

09/23/2024

NOTE: FOR WALL REINFORCING, SEE SHEET 7/9.

DESIGN AGENCY
Stantec
1500 Lake Shore Dr.
Columbus, OH 43204
(614) 486-4383

DESIGNED	DRAWN	REVIEWED	DATE
EDA	JWS	EER	2/2024
CHECKED	REVISED	STRUCTURE FILE NUMBER	
MRS		4400348	

OUTLET PLAN
LAW-7-0510
S.R. 7 OVER BENT CREEK

LAW-7-2.17
PID No. 75923

6 / 9

903
1247

V:\1736\active\173608714\LAW\engineering\75923_LAW-7-2.17\Design\structures\LAW007_0510C\sheets\007_75923FP002.dgn Sheet 5/13/2024 1:08:03 PM msturdevant

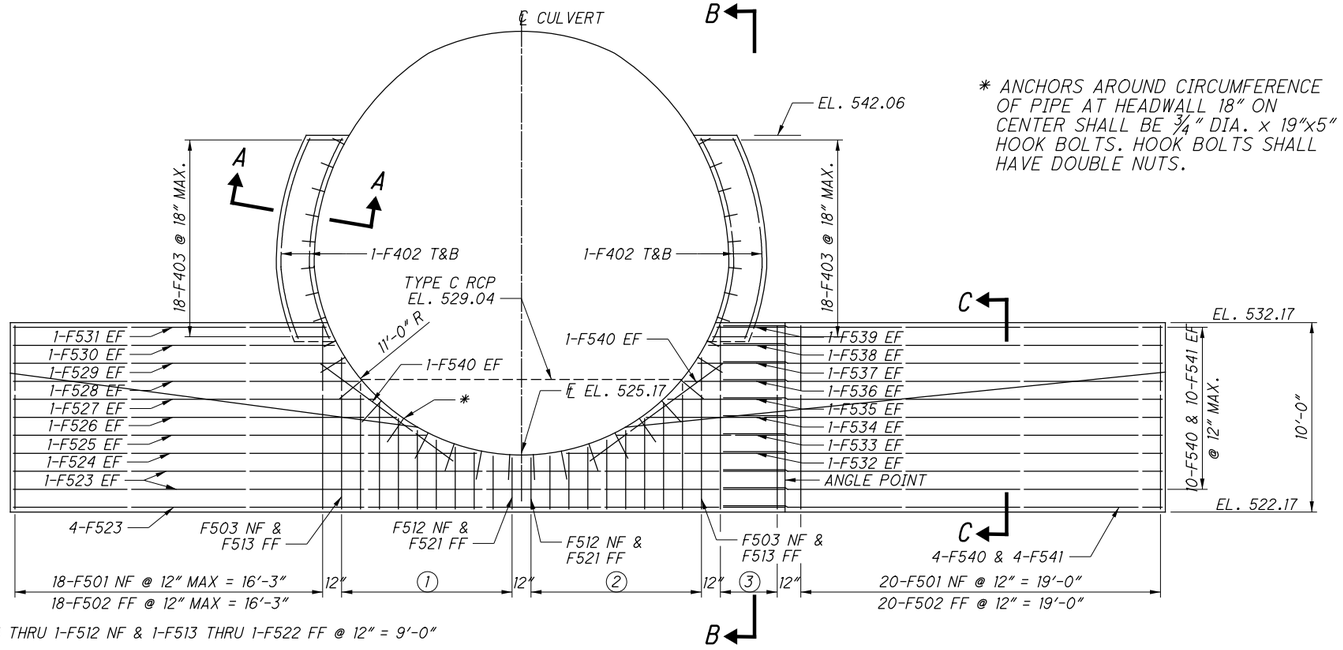

* ANCHORS AROUND CIRCUMFERENCE OF PIPE AT HEADWALL 18" ON CENTER SHALL BE ¾" DIA. x 19"x5" HOOK BOLTS. HOOK BOLTS SHALL HAVE DOUBLE NUTS.

① 1-F503 THRU 1-F512 NF & 1-F513 THRU 1-F522 FF @ 12" = 9'-0"

② 1-F512 THRU 1-F503 NF & 1-F522 THRU 1-F513 FF @ 12" = 9'-0"

③ 4-F501 NF & 4-F502 FF @ 12" = 3'-0"

OUTLET HEADWALL
DEVELOPED ELEVATION

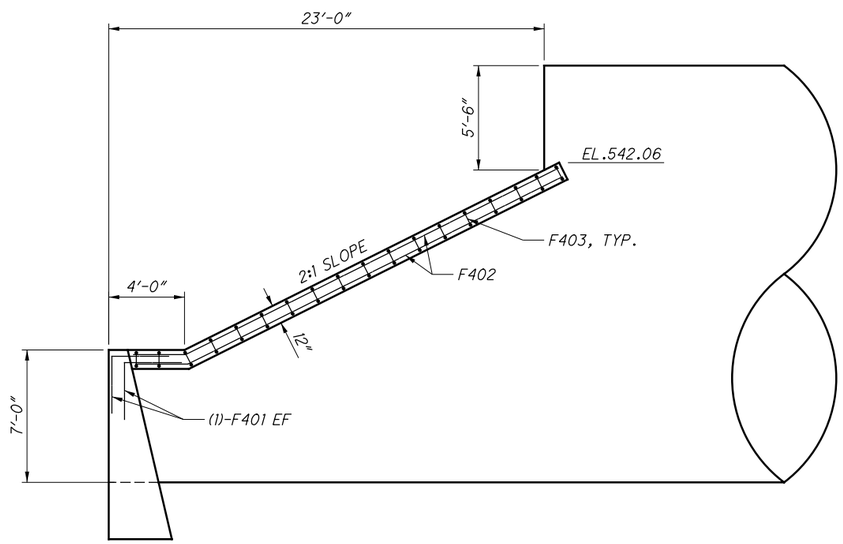

SECTION B-B

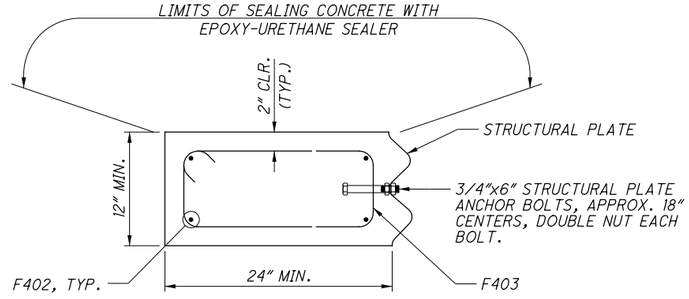

SECTION A-A

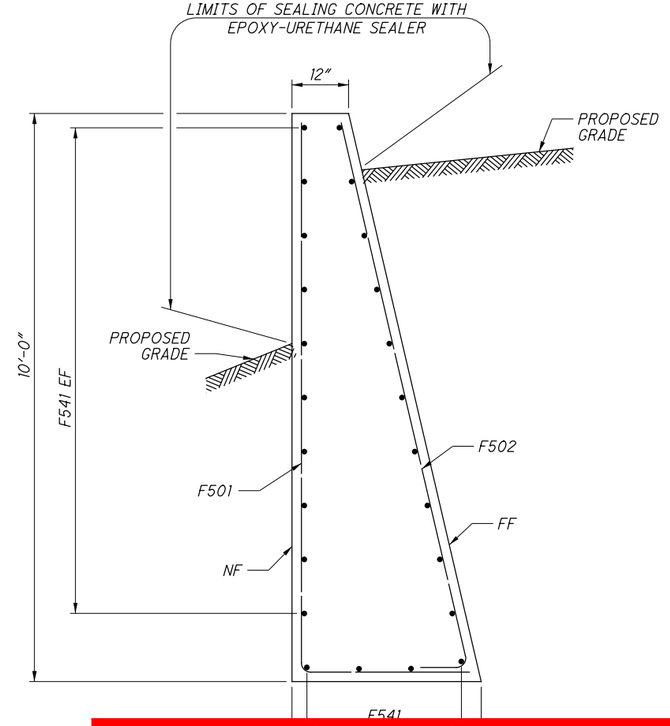

SECTION C-C

DRAFT Stage 3 - Not for Construction 09/23/2024

DESIGN AGENCY
Stantec
1500 Lake Shore Dr.
Columbus, OH 43204
(614) 486-4383

DESIGNED	DRAWN	REVIEWED	DATE
EDA	JWS	BSM	2/2024
CHECKED	REVISED	STRUCTURE FILE NUMBER	
MRS		4400348	

OUTLET HEADWALL ELEVATION
LAW-7-0510
S.R. 7 OVER BENT CREEK

LAW-7-2.17
PID No. 75923

7 / 9

904
1247

V:\1736\active\173608714\LAW\engineering\75923_LAW-7-2.17\Design\structures\LAW007_0510C\sheets\007_75923GP002.dgn Sheet 5/13/2024 1:08:04 PM msturdevant

MARK	NUMBER TOTAL	LENGTH	WEIGHT	TYPE	DIMENSIONS A	B	C	D	E	R	INC
INLET (EPOXY COATED STEEL REINFORCEMENT)											
E901	278	10'-4"	9767	1	1'-7"	9'-0"					
E902	4	9'-8"	131	1	1'-7"	8'-4"					
E903	4	8'-11"	121	1	1'-7"	7'-7"					
E904	4	8'-4"	113	1	1'-7"	7'-0"					
E905	4	7'-10"	107	1	1'-7"	6'-6"					
E906	4	7'-4"	100	1	1'-7"	6'-0"					
E907	4	6'-11"	94	1	1'-7"	5'-7"					
E908	4	6'-6"	88	1	1'-7"	5'-2"					
E909	4	6'-2"	84	1	1'-7"	4'-10"					
E910	4	5'-11"	80	1	1'-7"	4'-7"					
E911	4	5'-8"	77	1	1'-7"	4'-4"					
E912	4	5'-5"	74	1	1'-7"	4'-1"					
E913	4	5'-3"	71	1	1'-7"	3'-11"					
E801	284	19'-2"	14,534	STR.							
E802	56	9'-8"	1445	STR.							
E803	48	14'-7"	1869	STR.							
E804	24	17'-0"	1089	STR.							
E805	16	18'-6"	790	STR.							
E806	4	20'-4"	217	STR.							
	2	13'-8"									
E807	SERIES OF	TO	2456	STR.							6 7/8"
	23	26'-4"									
E808	16	26'-10"	1146	STR.							
E809	4	10'-2"	109	STR.							
E810	4	8'-7"	92	STR.							
E811	4	7'-4"	78	STR.							
E812	4	6'-6"	69	STR.							
E813	4	5'-9"	61	STR.							
E814	4	5'-2"	55								
E815	4	4'-9"	51								
E816	4	4'-5"	47	STR.							
E817	4	4'-2"	45	STR.							
E818	4	4'-1"	44	STR.							
E819	2	4'-0"	21	STR.							
	2	14'-8"									
E820	SERIES OF	TO	4194	STR.							
	38	26'-8"									3 7/8"
E501	90	6'-4"	595	1	10"	5'-7"					
E502	3	23'-10"	75	STR.							
E503	3	30'-2"	94	20	2'-4"	2'-4"	26'-5"	1'-1 3/8"	3'-0 5/8"		
E504	3	38'-11"	122	STR.							
	2	20'-4"									
E505	SERIES OF	TO	1015	STR.							5"
	20	28'-4"									
	2	20'-9"			2'-4"	2'-4"	16'-11"	1'-1 3/8"	3'-0 5/8"		
E506	SERIES OF	TO	1304	20			TO				1'-11/4"
	20	41'-9"			2'-4"	2'-4"	37'-11"	1'-1 3/8"	3'-0 5/8"		
SUB-TOTAL		42,524									

MARK	NUMBER TOTAL	LENGTH	WEIGHT	TYPE	DIMENSIONS A	B	C	D	E	R	INC
INLET (EPOXY COATED STEEL REINFORCEMENT)											
	2	6'-0"									
E507	SERIES OF	TO	537	STR.							8 5/8"
	20	19'-9"									
E508	40	30'-0"	1252	STR.							
E509	28	24'-7"	718	STR.							
	2	4'-3"									
E510	SERIES OF	TO	350	STR.							1'-9 1/4"
	12	23'-9"									
E511	8	32'-0"	267	20	2'-4"	2'-4"	28'-0"	1'-1 3/8"	3'-0 5/8"		
E512	2	12'-11"	27	19	9'-8"	2'-4"	2'-4"				
E513	2	10'-11"	23	19	7'-8"	8"	1'-10"				
E514	2	9'-7"	20	19	6'-4"	8"	1'-10"				
E515	2	8'-7"	18	19	5'-4"	8"	1'-10"				
E516	2	7'-10"	16	19	4'-7"	8"	1'-10"				
E517	2	7'-3"	15	19	4'-0"	8"	1'-10"				
E518	2	6'-9"	14	19	3'-6"	8"	1'-10"				
E519	2	6'-4"	13	19	3'-1"	8"	1'-10"				
E520	2	6'-1"	13	19	2'-10"	8"	1'-10"				
E521	2	5'-11"	12	19	2'-8"	8"	1'-10"				
E522	2	5'-10"	12	19	2'-7"	8"	1'-10"				
E523	2	5'-10"	12	19	2'-7"	8"	1'-10"				
E524	2	5'-11"	12	19	2'-8"	8"	1'-10"				
E525	2	6'-1"	13	19	2'-10"	8"	1'-10"				
E526	2	6'-5"	13	19	3'-2"	8"	1'-10"				
E527	2	6'-10"	14	19	3'-7"	8"	1'-10"				
E528	2	7'-4"	15	19	4'-1"	8"	1'-10"				
E529	2	8'-0"	17	19	4'-9"	8"	1'-10"				
E530	2	8'-10"	18	19	5'-7"	8"	1'-10"				
E531	2	9'-10"	21	19	6'-7"	8"	1'-10"				
E532	2	11'-4"	24	19	8'-1"	8"	1'-10"				
E533	2	13'-6"	28	19	10'-3"	2'-4"	2'-4"				
E534	NOT	USED									
E535	4	28'-0"	117	STR.							
E536	NOT	USED									
E537	NOT	USED									
E538	30	40'-1"	1254	STR.							
	2	7'-0"									
E539	SERIES OF	TO	524	STR.							
	11	38'-8"									
E540	2	25'-11"	54	STR.							
SUB-TOTAL		47,967									

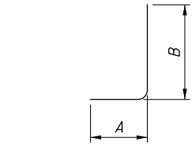

TYPE-1

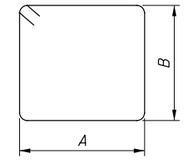

TYPE-3

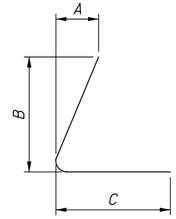

TYPE-11

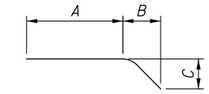

TYPE-19

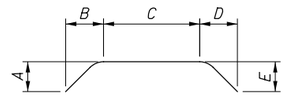

TYPE-20

NOTES:
1. BAR SIZE IS INDICATED IN THE BAR MARK. THE FIRST DIGIT INDICATES THE BAR SIZE NUMBER. FOR EXAMPLE, E501 IS NUMBER 5 SIZE. BAR DIMENSIONS SHOWN ARE OUT TO OUT UNLESS OTHERWISE NOTED.
2. ALL REINFORCING STEEL TO BE EPOXY COATED.

DRAFT Stage 3 - Not for Construction 09/23/2024

DESIGN AGENCY
Stantec
1500 Lake Shore Dr.
Columbus, OH 43204
(614) 486-4383

DESIGNED EDA | DRAWN JWS | REVIEWED EER | DATE 2/2024
CHECKED MRS | REVISED | STRUCTURE FILE NUMBER 4400348

REINFORCING STEEL LIST
LAW-7-0510
S.R. 7 OVER BENT CREEK

LAW-7-2.17
PID No. 75923

8 / 9

905
1247

V:\1736\active\173608714\LAW\engineering\75923_LAW-7-2.17\Design\structures\LAW007_0510C\sheets\007_75923RL001.dgn Sheet 5/13/2024 1:08:06 PM msturdevant

MARK	NUMBER TOTAL	LENGTH	WEIGHT	TYPE	DIMENSIONS A	B	C	D	E	R	INC
INLET (EPOXY COATED STEEL REINFORCEMENT)											
E541	2	39'-8"	83	STR.							
E542	2	13'-5"	28	19	10'-2"	1'-1⅜"	3'-0⅝"				
E543	2	11'-3"	24	19	8'-2"	1'-5"	1'-5"				
E544	2	10'-1"	21	19	6'-10"	1'-5"	1'-5"				
E545	2	9'-1"	19	19	5'-10"	1'-5"	1'-5"				
E546	2	8'-4"	17	19	5'-1"	1'-5"	1'-5"				
E547	2	7'-9"	16	19	4'-6"	1'-5"	1'-5"				
E548	2	7'-3"	15	19	4'-0"	1'-5"	1'-5"				
E549	2	6'-10"	14	19	3'-7"	1'-5"	1'-5"				
E550	2	6'-7"	14	19	3'-4"	1'-5"	1'-5"				
E551	2	6'-5"	13	19	3'-2"	1'-5"	1'-5"				
E552	2	6'-4"	13	19	3'-1"	1'-5"	1'-5"				
E553	2	6'-4"	13	19	3'-1"	1'-5"	1'-5"				
E554	2	6'-5"	13	19	3'-2"	1'-5"	1'-5"				
E555	2	6'-7"	14	19	3'-4"	1'-5"	1'-5"				
E556	2	6'-11"	14	19	3'-8"	1'-5"	1'-5"				
E557	2	7'-4"	15	19	4'-1"	1'-5"	1'-5"				
E558	2	7'-10"	16	19	4'-7"	1'-5"	1'-5"				
E559	2	8'-6"	18	19	5'-3"	1'-5"	1'-5"				
E560	2	9'-4"	19	19	6'-1"	1'-5"	1'-5"				
E561	2	10'-4"	22	19	7'-1"	1'-5"	1'-5"				
E562	2	11'-10"	25	19	8'-7"	1'-5"	1'-5"				
E563	2	14'-0"	29	19	10'-9"	1'-1⅜"	3'-0⅝"				
SUB-TOTAL			48,442								

MARK	NUMBER TOTAL	LENGTH	WEIGHT	TYPE	DIMENSIONS A	B	C	D	E	R	INC
OUTLET (EPOXY COATED STEEL REINFORCEMENT)											
F501	42	12'-5"	544	1	2'-11"	9'-7"					
F502	42	10'-7"	464	11	2'-3"	9'-7"	10"				
F503	2	10'-8"	22	1	2'-11"	7'-10"					
F504	2	9'-4"	19	1	2'-11"	6'-6"					
F505	2	8'-4"	17	1	2'-11"	5'-6"					
F506	2	7'-6	16	1	2'-11"	4'-8"					
F507	2	6'-10"	14	1	2'-11"	4'-0"					
F508	2	6'-4"	13	1	2'-11"	3'-6"					
F509	2	5'-11"	12	1	2'-11"	3'-1"					
F510	2	5'-8"	12	1	2'-11"	2'-10"					
F511	2	5'-6"	12	1	2'-11"	2'-8"					
F512	2	5'-5"	12	1	2'-11"	2'-7"					
F513	2	9'-1"	19	11	2'-3"	7'-10"	10"				
F514	2	7'-10"	16	11	2'-3"	6'-6"	10"				
F515	2	6'-11"	14	11	2'-3"	5'-6"	10"				
SUB-TOTAL			1206								

MARK	NUMBER TOTAL	LENGTH	WEIGHT	TYPE	DIMENSIONS A	B	C	D	E	R	INC
OUTLET (EPOXY COATED STEEL REINFORCEMENT)											
F516	2	6'-3"	13	11	2'-3"	4'-8"	10"				
F517	2	5'-8"	12	11	2'-3"	4'-0"	10"				
F518	2	5'-3"	11	11	2'-3"	3'-6"	10"				
F519	2	5'-0"	10	11	2'-3"	3'-1"	10"				
F520	2	4'-10"	10	11	2'-3"	2'-10"	10"				
F521	2	4'-8"	10	11	2'-3"	2'-8"	10"				
F522	2	4'-7"	10	11	2'-3"	2'-7"	10"				
F523	8	40'-8"	339	STR.							
F524	2	24'-5"	51	STR.							
F525	2	21'-9"	45	STR.							
F526	2	20'-3"	42	STR.							
F527	2	19'-1"	40	STR.							
F528	2	18'-3"	38	STR.							
F529	2	17'-6"	37	STR.							
F530	2	17'-0"	35	STR.							
F531	2	16'-6"	34	STR.							
F532	2	11'-6"	24	STR.							
F532	2	8'-10"	18	STR.							
F534	2	7'-4"	18	STR.							
F535	2	6'-2"	13	STR.							
F536	2	5'-4"	11	STR.							
F537	2	4'-8"	10	STR.							
F538	2	4'-0"	8	STR.							
F539	2	3'-8"	8	STR.							
F540	24	9'-0"	225	19	4'-6"	3'-2"	3'-2"				
F541	24	19'-9"	494	STR.							
F401	8	5'-11"	32	1	3'-0"	3'-0"					
F402	8	24'-10"	133	19	22'-1"	2'-5"	1'-3"				
F403	36	5'-1"	122	3	8"	1'-8"					
SUB-TOTAL			3059								

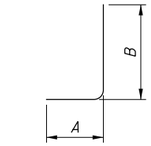

TYPE-1

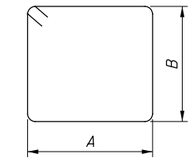

TYPE-3

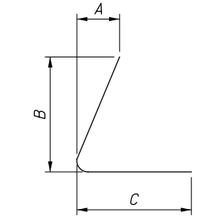

TYPE-11

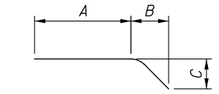

TYPE-19

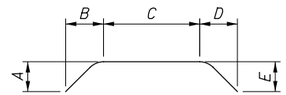

TYPE-20

NOTES:
1. BAR SIZE IS INDICATED IN THE BAR MARK. THE FIRST DIGIT INDICATES BAR SIZE NUMBER. FOR EXAMPLE, F501 IS NUMBER 5 SIZE. BAR DIMENSIONS SHOWN ARE OUT TO OUT UNLESS OTHERWISE NOTED.
2. ALL REINFORCING STEEL TO BE EPOXY COATED.

DRAFT Stage 3 - Not for Construction 09/23/2024

DESIGN AGENCY
Stantec
1500 Lake Shore Dr.
Columbus, OH 43204
(614) 486-4383

DESIGNED	DRAWN	REVIEWED	DATE
EDA	JWS	EER	2/2024
CHECKED	REVISED	STRUCTURE FILE NUMBER	
MRS		4400348	

REINFORCING STEEL LIST
LAW-7-0510
S.R. 7 OVER BENT CREEK

LAW-7-2.17
PID No. 75923

9 / 9

906
1247

V:\1736\active\173608714\LAW\engineering\75923_LAW-7-2.17\Design\structures\LAW007_0510C\sheets\007_75923RL002.dgn Sheet 5/13/2024 1:08:07 PM msturdevant

BRIDGE NO. B-5

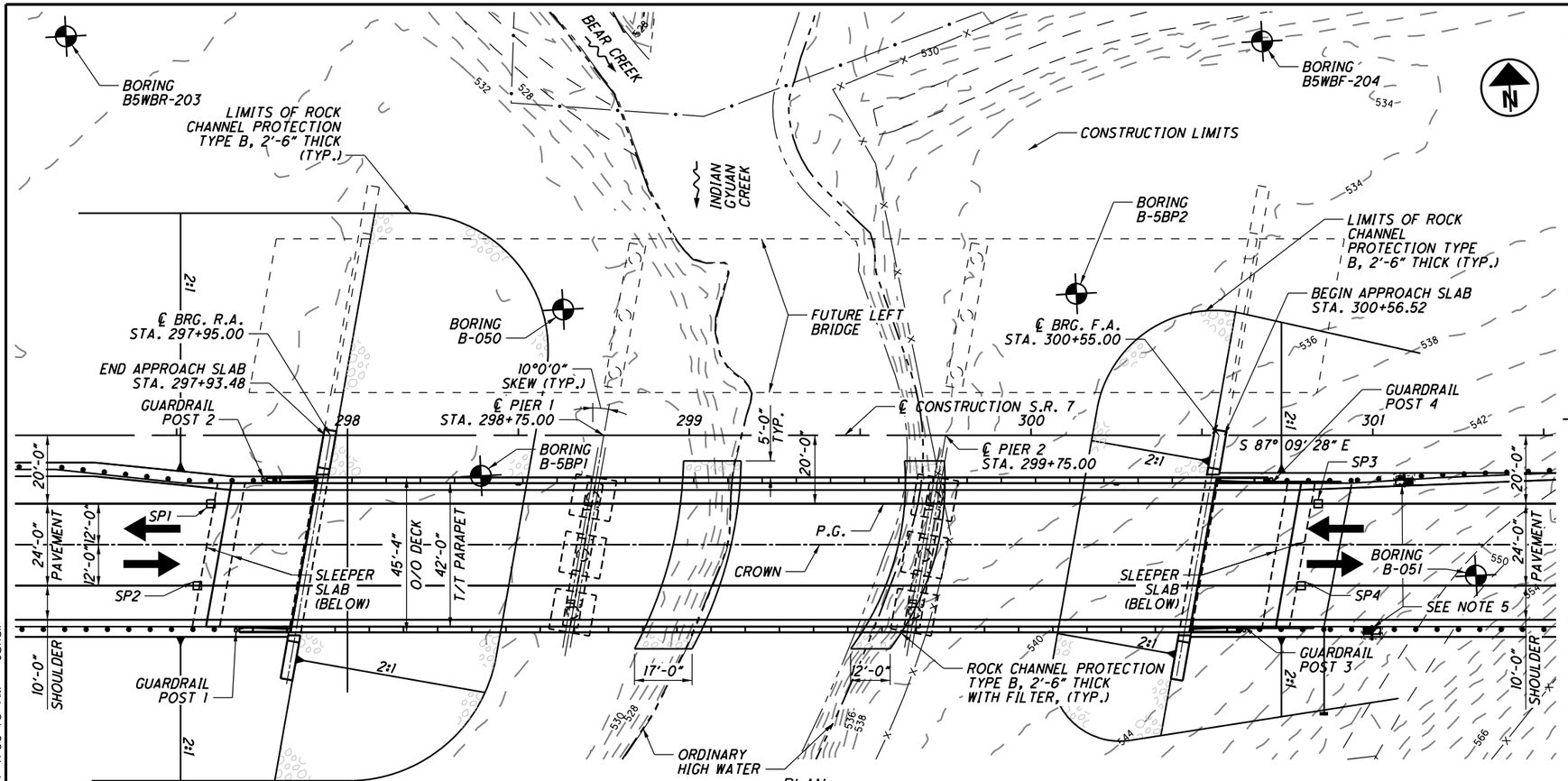

PLAN

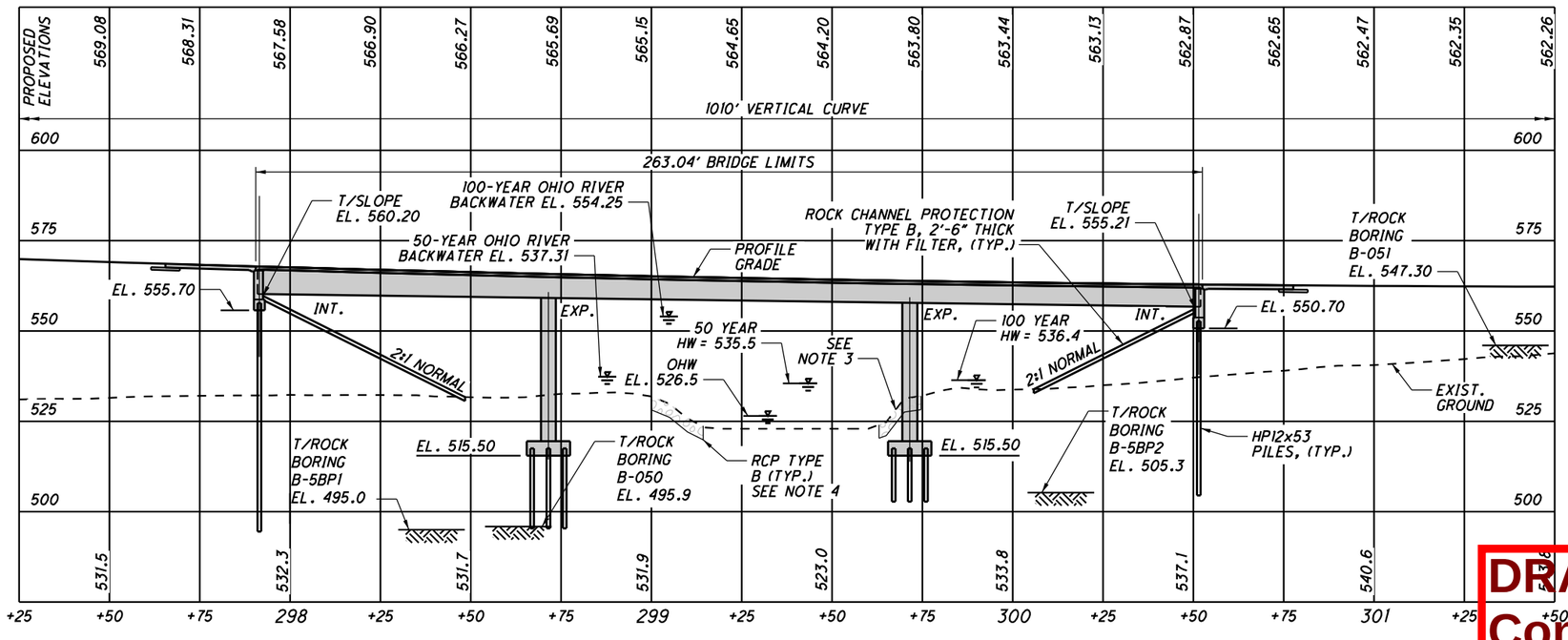

PROFILE ALONG PROFILE GRADE S.R. 7

NOTES

1. EARTHWORK LIMITS SHOWN ARE APPROXIMATE. ACTUAL SLOPES SHALL CONFORM TO PLAN CROSS SECTIONS.
2. FOR PRIMARY PROJECT CONTROL INFORMATION TABLE SEE ROADWAY GENERAL NOTES.
3. RESTORE EXISTING GROUND AT PIER 2 INCORPORATING ROCK CHANNEL PROTECTION SHOWN IN THE PLAN AND PROFILE.
4. PLACE ROCK CHANNEL PROTECTION AT THE WEST BANK AS SHOWN IN THE PLAN AND PROFILE.
5. BRIDGE DECK DRAINAGE IS CONTROLLED BY 2 SCUPPERS ALONG THE LEFT TOE OF PARAPET. TOTAL DECK FLOW IS CONTROLLED BY CATCH BASIN INLETS OFF THE BRIDGE AT THE EAST END.

DESIGN TRAFFIC:
2015 ADT = 10,300 2015 ADTT = 1,133
2035 ADT = 21,400 2035 ADTT = 2,354
DIRECTIONAL DISTRIBUTION = 69/31

LEGEND

PROJECT BORING LOCATION
SETTLEMENT PLATFORM

HYDRAULIC DATA

DRAINAGE AREA = 75.2 SQ. MILES
Q (50) = 7050 CFS V (50) = 8.1 FT/S
Q (100) = 8010 CFS V (100) = 8.5 FT/S
STRUCTURE CLEARS THE 50 YEAR DESIGN HW BY 21.2 FEET.

ESTIMATED PILE LENGTHS

REAR ABUTMENT HP12x53 = 65 FT.
PIER 1 HP12x53 = 25 FT.
PIER 2 HP12x53 = 25 FT.
FORWARD ABUTMENT HP12x53 = 50 FT.

POST NUMBER	FIRST POST GUARDRAIL	STATION
1	EASTBOUND R.A.	297+67.35
2	WESTBOUND R.A.	297+75.34
3	EASTBOUND F.A.	300+62.31
4	WESTBOUND F.A.	300+70.31

VERTICAL CURVE DATA

LENGTH = 1010'
PVC STA. = 297+05.00 PVC ELEV. = 570.58
PVI STA. = 302+10.00 PVI ELEV. = 552.90
PVT STA. = 307+15.00 PVT ELEV. = 572.65
G1 = -3.50% G2 = 3.91%

PROPOSED STRUCTURE

TYPE: 3 SPAN PRESTRESSED CONCRETE I-BEAM (60" MODIFIED TYPE 4) WITH COMPOSITE REINFORCED CONCRETE DECK SUPPORTED ON INTEGRAL ABUTMENTS ON STEEL HP PILES AND CAP & COLUMN PIERS ON STEEL HP PILES.

SPANS: 78.92', 97.833', 78.92' C/C BRGS. (ALONG ℄ CONST.)

ROADWAY: 42'-0" TOE/TOE PARAPET

LOADING: HL-93 AND 60 LBS/FT² FUTURE WEARING SURFACE

WEARING SURFACE: 1" MONOLITHIC WEARING SURFACE

SKEW: 10° LT. FWD.

APPROACH SLABS: AS-1-15 AND APPLICABLE DETAILS FROM AS-2-15, 25'-0" LONG

ALIGNMENT: TANGENT

GROWN: 0.016 FT/FT

COORDINATES LATITUDE 38° 24' 21.90"
LONGITUDE 82° 24' 15.61" W

09/23/2024

DRAFT Stage 3 - Not for Construction

DESIGN AGENCY
Stantec
1500 Lake Shore Dr.
Columbus OH 43204
(614) 486-4383

DESIGNED	DRAWN	REVIEWED	DATE
BSM	JWS	MRS	03/2024
CHECKED	REVISED	STRUCTURE FILE NUMBER	
EER		4400372	

LAWRENCE COUNTY
STA. 297+93.47
STA. 300+56.52

SITE PLAN
BRIDGE NO. LAW-7-0563
S.R. 7 OVER INDIAN GUYAN CREEK

LAW-7-2.17
PID No. 75923

1 / 24

907
1247

U:\1736087714\LAW\75923\structures\LAW007_0563C\sheets\007_0563RSP001.dgn 5/13/2024 11:06:46 AM JSnair

REFER TO THE FOLLOWING STANDARD BRIDGE DRAWINGS:

AS-1-15	REVISED	01-20-23
AS-2-15	REVISED	07-21-23
GSD-1-19	REVISED	01-15-21
PSID-1-20	REVISED	01-20-23
SBR-1-20	REVISED	07-21-23

AND TO THE FOLLOWING SUPPLEMENTAL SPECIFICATION:

800	DATED	01-19-24

DESIGN SPECIFICATIONS:
THIS STRUCTURE CONFORMS TO THE 9TH EDITION OF THE "LRFD BRIDGE DESIGN SPECIFICATION" ADOPTED BY THE AMERICAN ASSOCIATION OFTHE STATE HIGHWAY AND TRANSPORTATION OFFICIALS 2020, AND THE ODOT BRIDGE DESIGN MANUAL, 2020.

DESIGN LOADING:
HL-93
FUTURE WEARING SURFACE (FWS) OF 0.060 KIPS/FT²

OPERATIONAL IMPORTANCE:
A LOAD MODIFIER OF 1.00 HAS BEEN ASSUMED FOR THE DESIGN OF THIS STRUCTURE IN ACCORDANCE WITH THE AASHTO LRFD BRIDGE DESIGN SPECIFICATIONS, ARTICLE 1.3.5 AND THE ODOT BRIDGE DESIGN MANUAL, 2020.

DESIGN DATA:
CONCRETE CLASS QC2 WITH QC/QA - COMPRESSIVE STRENGTH 4.5 K.S.I. (SUPERSTRUCTURE)
CONCRETE CLASS QC1 WITH QC/QA - COMPRESSIVE STRENGTH 4.0 K.S.I. (SUBSTRUCTURE)

REINFORCING STEEL - MINIMUM YIELD STRENGTH 60 K.S.I.

STEEL H-PILES - A572 - YIELD STRENGTH 50 K.S.I.

CONCRETE FOR PRESTRESSED BEAMS:
COMPRESSIVE STRENGTH (FINAL) = 7000 P.S.I.
COMPRESSIVE STRENGTH (RELEASE) = 6000 P.S.I.

PRESTRESSING STRAND:
AREA = 0.217 SQ. IN.
ULTIMATE STRENGTH = 270 K.S.I.
INITIAL STRESS = 202.5 K.S.I.
(LOW RELAXATION STRANDS)

WELDED WIRE FABRIC:
YIELD STRENGTH = 70 K.S.I.

MONOLITHIC WEARING SURFACE:
MONOLITHIC WEARING SURFACE IS ASSUMED, FOR DESIGN PURPOSES, TO BE 1 INCH THICK.

PILE DRIVING CONSTRAINTS:
PRIOR TO DRIVING PILES, CONSTRUCT THE SPILL THROUGH SLOPES AND THE BRIDGE APPROACH EMBANKMENT BEHIND THE ABUTMENTS UP TO THE LEVEL OF THE SUBGRADE ELEVATION FOR A MINIMUM DISTANCE OF 200 FEET BEHIND EACH ABUTMENT (SEE FORWARD AND REAR APPROACH EMBANKMENT CONSTRUCTION THIS SHEET). DO NOT BEGIN THE EXCAVATION FOR THE ABUTMENT FOOTINGS AND THE INSTALLATION OF THE ABUTMENT PILES UNTIL AFTER THE ABOVE REQUIRED EMBANKMENT HAS BEEN CONSTRUCTED.

THE APPROACH SLAB EMBANKMENT SHALL BE CONSTRUCTED AND THEN UNDERGO A WAITING PERIOD OF 133 DAYS.

PILES TO BEDROCK:
DRIVE PILES TO REFUSAL ON BEDROCK. THE DEPARTMENT WILL CONSIDER REFUSAL TO BE OBTAINED WHEN THE PILE PENETRATION IS AN INCH OR LESS AFTER RECIEVING AT LEAST 20 BLOWS FROM THE PILE HAMMER. SELECT THE HAMMER SIZE TO ACHIEVE THE REQUIRED DEPTH TO BEDROCK AND REFUSAL.

THE TOTAL FACTORED LOAD IS 226 KIPS PER PILE FOR THE REAR ABUTMENT PILES.
THE TOTAL FACTORED LOAD IS 238 KIPS PER PILE FOR THE FORWARD ABUTMENT PILES.

THE TOTAL FACTORED LOAD IS 243 KIPS PER PILE FOR THE PIER 1 PILES.
THE TOTAL FACTORED LOAD IS 238 KIPS PER PILE FOR THE PIER 2 PILES.

ABUTMENT PILES:
REAR ABUTMENT PILES:
10 PILES 70 FEET LONG, ORDER LENGTH.

FORWARD ABUTMENT PILES:
10 PILES 55 FEET LONG, ORDER LENGTH.

PIER PILES:
24 PILES 30 FEET LONG, ORDER LENGTH AT PIER 1.
24 PILES 30 FEET LONG, ORDER LENGTH AT PIER 2.

PILE SPLICES:
IN LIEU OF USING THE FULL PENETRATION BUTT WELDS SPECIFIED IN CMS 507.09 TO SPLICE STEEL H-PILES, THE CONTRACTOR MAY USE A MANUFACTURED H-PILE SPLICER. FURNISH SPLICERS FROM THE FOLLOWING MANUFACTURER:

ASSOCIATED PILE AND FITTING CORPORATION
8 WOOD HOLLOW RD. PLAZA 1
PARSIPPANY, NEW JERSEY 07054

INSTALL AND WELD THE SPLICER TO THE PILE SECTIONS IN ACCORDANCE WITH THE MANUFACTURER'S WRITTEN ASSEMBLY PROCEDURE SUPPLIED TO THE ENGINEER BEFORE THE WELDING IS PERFORMED.

ITEM 509 - EPOXY COATED STEEL REINFORCEMENT, AS PER PLAN:
IN ADDITION TO THE PROVISIONS OF ITEM 509, FIELD BEND AND/OR FIELD CUT THE REINFORCING STEEL DESIGNATED IN THE PLANS, AS NECESSARY, IN ORDER TO MAINTAIN THE REQUIRED CLEARENCES AND BAR SPACING. REPAIR ALL DAMAGE TO EPOXY COATING, AS A RESULT OF THIS WORK, ACCORDING TO 709.00.

ITEM 511 - CLASS QC2 CONCRETE WITH QC/QA, SUPERSTRUCTURE, AS PER PLAN:
FURNISH POLYSTYRENE MATERIAL MEETING THE REQUIRMENTS OF ASTM C578 TYPE IV. NEATLY CUT MATERIAL AS NECESSARY TO ALLOW FOR PROPER INSTALLATION. JOINTS AT ABUTTING PIECES SHALL BE SEALED WITH DUCT TAPE.

DECK PLACEMENT DESIGN ASSUMPTIONS:
THE FOLLOWING ASSUMPTIONS OF CONSTRUCTION MEANS AND METHODS WERE MADE FOR THE ANALYSIS AND DESIGN OF THE SUPERSTRUCTURE. THE CONTRACTOR IS RESPONSIBLE FOR THE DESIGN OF THE FALSEWORK SUPPORT SYSTEM WITHIN THESE PARAMETERS AND WILL ASSUME RESPONSIBILITY FOR SUPERSTRUCTURE ANALYSIS FOR DEVIATION FROM THESE DESIGN ASSUMPTIONS.

AN EIGHT WHEEL FINISHING MACHINE WITH A MAXIMUM WHEEL LOAD OF 2.37 KIPS.

A MINIMUM OUT-TO-OUT WHEEL SPACING AT EACH END OF THE MACHINE OF 103".

A MAXIMUM SPACING OF OVERHANG FALSEWORK BRACKETS OF 48 IN.

A MAXIMUM DISTANCE FROM THE CENTERLINE OF THE FASCIA GIRDER TO THE FACE OF THE SAFETY HANDRAIL OF 65".

FORWARD AND REAR APPROACH EMBANKMENT CONSTRUCTION:
THE APPROACH EMBANKMENT SHALL BE CONSTRUCTED AND THEN UNDERGO AN ESTIMATED WAITING PERIOD OF 133 DAYS PRIOR

TO DRIVING PILES. SEE SHEETS (XX/XX) AND (XX/XX) FOR DETAILS

AND NOTES REGARDING REINFORCED SLOPE AND EMBANKMENT CONSTRUCTION.

DRAFT Stage 3 - Not for Construction 09/23/2024

DESIGN AGENCY
Stantec
1500 Lake Shore Dr.
Columbus OH 43204
(614) 486-4383

DESIGNED BSM | DRAWN JWS | REVIEWED MRS | DATE 03/2024
CHECKED EER | REVISED | STRUCTURE FILE NUMBER 4400372

GENERAL NOTES 1
BRIDGE NO. LAW-7-0563
S.R. 7 OVER INDIAN GUYAN CREEK

LAW-7-2.17
PID No. 75923

908/1247

U:\173608714\LAW\75923\structures\LAW007_0563C\sheets\007_0563RGN001.dgn 5/13/2024 11:06:49 AM JSnair

ITEM SPECIAL - SETTLEMENT PLATFORM:

DESCRIPTION: THIS ITEM CONSISTS OF FURNISHING, CONSTRUCTING, AND MAINTAINING SETTLEMENT PLATFORMS AND OBTAINING SETTLEMENT READINGS AS REQUIRED BY THE PLANS OR AS DIRECTED BY THE ENGINEER. SEE SETTLEMENT PLATFORM DETAIL THIS SHEET. AT THE OPTION AND EXPENSE OF THE CONTRACTOR, ADDITIONAL SETTLEMENT PLATFORMS MAY BE INSTALLED AT LOCATIONS APPROVED BY THE ENGINEER. SETTLEMENT READINGS SHALL BE TAKEN WEEKLY DURING CONSTRUCTION AND DURING THE SPECIFIED WAITING PERIOD BEGINNING WITH THE FIRST WEEK FOLLOWING PLACEMENT OF EACH PLATFORM. THE READINGS SHALL BE PLOTTED ON GRAPH PAPER PRESENTING DEFORMATION (ON THE NEGATIVE Y-AXIS) AND FILL HEIGHT (ON THE POSITIVE Y-AXIS) VERSUS TIME (ON THE X-AXIS). A COPY OF EACH CUMULATIVE PLOT SHALL BE SENT TO ODOT, CO, CONSTRUCTION MANAGEMENT/CONSTRUCTION ADMINISTRATION, GEOTECHNICAL AND EARTHWORK ENGINEER AND ODOT, CO, OFFICE OF GEOTECHNICAL ENGINEERING, FOUNDATIONS AND RETAINING WALLS ENGINEER, AFTER EACH SETTLEMENT READING IS RECORDED.

MATERIAL: SOUND LUMBER SUCH AS ¾" EXTERIOR GRADE PLYWOOD SHALL BE USED FOR THE BASE. THE PIPE SHALL BE 2½" STANDARD BLACK PIPE WITH THREADED FITTINGS AS SHOWN ON THE PLANS. A STEEL PLATE 36" X 36" X ⅛" MAY BE SUBSTITUTED FOR THE LUMBER FOR THE PLATFORMS, AT THE CONTRACTOR'S OPTION.

CONSTRUCTION METHODS: THE PLATFORM SHALL CONFORM TO THE SETTTLEMENT PLATFORM DETAILS SHOWN ON THIS SHEET. THE PLATFORM SHALL BE SET ON A LEVEL SURFACE. THE PIPE SHALL BE FIRMLY SECURED TO THE PLATFORM AND SHALL BE MAINTAINED IN A PLUMB POSITION DURING THE PLACEMENT OF THE EMBANKMENT. THE PIPE SHALL BE MARKED AT INTERVALS TO FACILITATE MEASUREMENT OF THE DEPTH OF FILL. THE CONTRACTOR SHALL STOP WORK IN ANY LOCATION WHERE THE SETTLEMENT PLATFORM HAS BEEN DISTURBED OR DAMAGED. PLATFORMS OR PIPES DAMAGED OR DISPLACED DURING CONSTRUCTION SHALL BE RESTORED TO THEIR PROPER CONDITION AT THE CONTRACTOR'S EXPENSE.

SETTLEMENT PLATFORMS SHALL BE PLACED AT THE FOLLOWING LOCATIONS:

I.D.	STATION	OFFSET
SP1	297+60	20' RT.
SP2	297+56	44' RT.
SP3	300+84	20' RT.
SP4	300+79	44' RT.

PRIOR TO PAVING, THE TOP OF THE SETTLEMENT PLATFORM PIPE SHALL BE CUT OFF TWO FEET BELOW THE FINISHED SURFACE OF THE SUBGRADE OR FINISHED GROUND SURFACE, WHICHEVER IS APPLICABLE.

REFER TO ODOT GEOTECHNICAL BULLETIN GB4 "GUIDELINES FOR THE USE OF GEOTECHNICAL INSTRUMENTATION" FOR ADDITIONAL INSTALLATION AND MONITORING INSTRUCTION.

WAITING PERIOD CRITERIA: THE ENGINEER WILL CONSIDER THE WAITING PERIOD COMPLETE WHEN CONSECUTIVE SETTLEMENT READINGS, RECORDED AFTER EMBANKMENT CONSTRUCTION IS COMPLETE AND AT LEAST ONE WEEK (168 HOURS) APART, RESULT IN ELEVATION DIFFERENCES EQUAL TO OR LESS THAN ⅛ INCH. THE ANTICIPATED WAITING PERIOD IS 133 CALENDAR DAYS.

IF SETTLEMENT RATES EXCEED ¾ INCH PER MONTH AFTER EMBANKMENT CONSTRUCTION HAS BEEN COMPLETE FOR 45 CALENDAR DAYS. REMAINING CONSTRUCTION, INCLUDING ANY NECESSARY CORRECTIVE MEASURES, MAY PROCEED ONLY AT THE DIRECTION OF THE ENGINEER.

THE DEPARTMENT WILL CONSIDER VIBRATING WIRE SETTLEMENT MONITORING PLATFORMS IN LIEU OF THE CONVENTIONAL SETTLEMENT PLATFORMS. THE CONTRACTOR SHOULD PROVIDE DETAILS OF THE PROPOSED VIBRATING WIRE SETTLEMENT PLATFORMS AS WELL AS DESIGN DRAWINGS OF THE PROPOSED PLATFORM AND CABLING LAYOUT TO THE ENGINEER AT LEAST 30 DAYS PRIOR TO CONSTRUCTION. THE DEPARTMENT WILL REQUIRE 10 WORKING DAYS FOR REVIEW AND APPROVAL. THE DESIGN DRAWINGS SHOULD ILLUSTRATE THE PROPOSED SETTLEMENT VIBRATING WIRE SETTLEMENT PLATFORM LOCATIONS WITH ALL EXISTING AND PROPOSED SITE FEATURES TO VERIFY THE PROPOSED CABLING WILL NOT CONFLICT WITH EXISTING FACILITIES, PROPOSED FACILITIES OR UTILITIES. NO ADDITIONAL PAYMENT WILL BE PROVIDED IF THE CONTRACTOR ELECTS TO UTILIZE VIBRATING WIRE SETTLEMENT PLATFORMS.

METHOD OF MEASUREMENT, THE NUMBER OF SETTLEMENT PLATFORMS TO BE PAID FOR SHALL BE THE ACTUAL NUMBER OF SETTLEMENT PLATFORMS COMPLETED, MAINTAINED, AND ACCEPTED BY THE ENGINEER.

BASIS OF PAYMENT: PAYMENT SHALL BE MADE AT THE CONTRACT UNIT PRICE EACH FOR "ITEM SPECIAL - SETTLEMENT PLATFORM" WHICH IS COMPENSATION FOR CONSTRUCTING, MAINTAINING, AND MONITORING THE SETTLEMENT PLATFORMS INCLUDING FURNISHING ALL LABOR, EQUIPMENT, MATERIALS, AND INCIDENTALS NECESSARY TO COMPLETE THE WORK. PAYMENT SHALL NOT BE MADE FOR SETTLEMENT PLATFORMS WHICH BECOME USELESS DUE TO DAMAGE CAUSED BY THE CONTRACTOR'S OPERATIONS. SEE DETAIL THIS SHEET.

ABBREVIATIONS:

℄	-	CENTERLINE
ABUT.	-	ABUTMENTS
BF	-	BACK FACE
BOT.	-	BOTTOM
BRG.	-	BEARING
CIP	-	CAST IN PLACE
CJ	-	CONSTRUCTION JOINT
CONT.	-	CONTINUED
CONST.	-	CONSTRUCTION
DIA.	-	DIAMETER
EF	-	EACH FACE
EL.	-	ELEVATION
EQ.	-	EQUAL
EXIST.	-	EXISTING
EXP.	-	EXPANSION
F.A.	-	FORWARD ABUTMENT
FF	-	FRONT FACE
INT.	-	INTERMEDIATE
JT.	-	JOINT
LT	-	LEFT
M.C.	-	MECHANICAL CONNECTOR
NPCPP	-	NON - PERFORATED CORRUGATED PLASTIC PIPE
PCPP	-	PERFORATED CORRUGATED PLASTIC PIPE
P.G.	-	PROFILE GRADE
R.A.	-	REAR ABUTMENT
RCP	-	ROCK CHANNEL PROTECTION
RT.	-	RIGHT
SPA.	-	STATION
SP	-	SETTLEMENT PLATFORM
STA.	-	STATION
STR	-	STRAIGHT
T/	-	TOP OF
T/T	-	TOE TO TOE
T&B	-	TOP AND BOTTOM
TYP.	-	TYPICAL
U.N.O.	-	UNLESS NOTED OTHERWISE

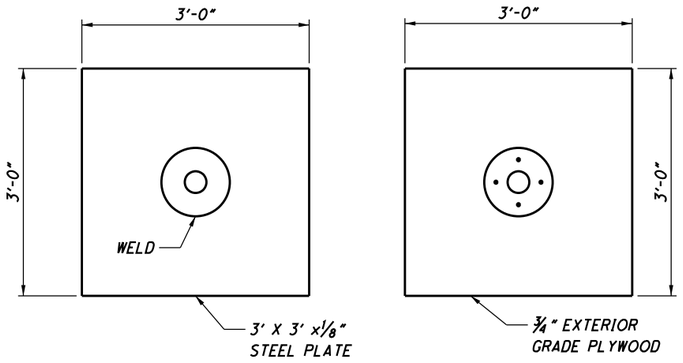

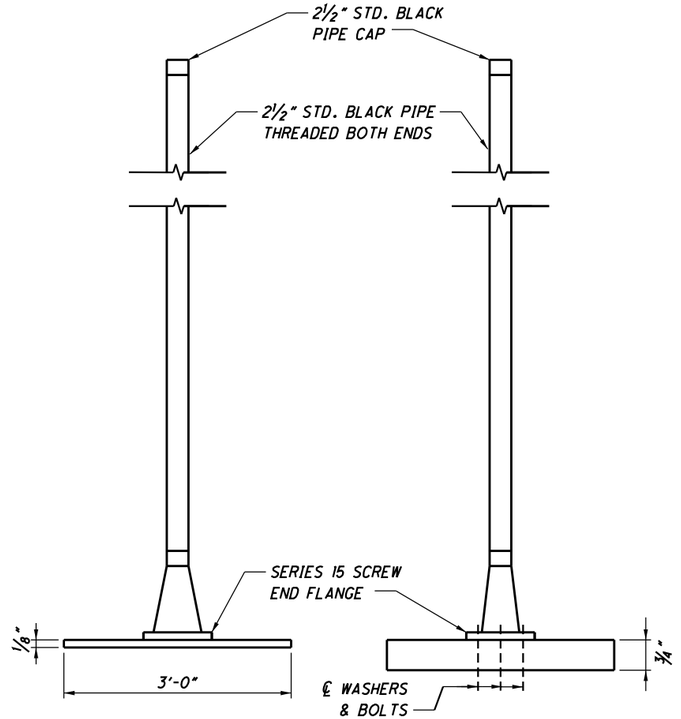

NOTES:

1. SETTLEMENT PLATFORMS SHALL BE PLACED AT THE LOCATION INDICATED IN THE PLANS, UNLESS ORTHERWISE DIRECTED BY THE ENGINEER.

SETTLEMENT PLATFORM
(NOT TO SCALE)

DRAFT Stage 3 - Not for Construction 09/23/2024

DESIGN AGENCY
Stantec
1500 Lake Shore Dr.
Columbus OH 43204
(614) 486-4383

DESIGNED	DRAWN	REVIEWED	DATE
BSM	JWS	MRS	03/2024
CHECKED	REVISED	STRUCTURE FILE NUMBER	
EER		4400372	

GENERAL NOTES 2
BRIDGE NO. LAW-7-0563
S.R. 7 OVER INDIAN GUYAN CREEK

LAW-7-2.17
PID No. 75923

909
1247

U:\173608714\LAW\75923\structures\LAW007_0563C\sheets\007_0563RGN002.dgn 5/13/2024 11:06:51 AM JSnair

ESTIMATED QUANTITIES

CALCULATED BY: BSM 3/20/18
CHECKED BY: EER 3/28/18

02/NHS/08	ITEM	EXTENSION	TOTAL	UNIT	DESCRIPTION	R. ABUT.	F. ABUT.	PIERS	SUPER.	GEN.	SEE SHEET
4	SPEC	20365000	4	EACH	SETTLEMENT PLATFORM					4	3/24
LUMP	503	11100	LUMP	LS	COFFERDAMS AND EXCAVATION BRACING					LUMP	
LUMP	503	21300	LUMP	LS	UNCLASSIFIED EXCAVATION					LUMP	
LUMP	505	11100	LUMP	LS	PILE DRIVING EQUIPMENT MOBILIZATION					LUMP	
2,690	507	00200	2,690	FT	STEEL PILES HP12X53, FURNISHED	700	550	1,440			
2,350	507	00250	2,350	FT	STEEL PILES HP12X53, DRIVEN	650	500	1,200			
195,337	509	10001	195,337	LB	EPOXY COATED STEEL REINFORCEMENT, AS PER PLAN	10,754	10,753	55,714	118,116		2/24
8,919	509	30020	8,919	FT	NO. 4 DEFORMED GFRP REINFORCEMENT				8,919		
467	511	34447	467	CY	CLASS QC2 CONCRETE WITH QC/QA, BRIDGE DECK, AS PER PLAN				467		2/24
80	511	34450	80	CY	CLASS QC2 CONCRETE WITH QC/QA, BRIDGE DECK (PARAPET)				80		
149	511	41012	149	CY	CLASS QC1 CONCRETE WITH QC/QA, PIER ABOVE FOOTINGS			149			
146	511	43512	146	CY	CLASS QC1 CONCRETE WITH QC/QA, ABUTMENT INCLUDING FOOTING	73	73				
128	511	46512	128	CY	CLASS QC1 CONCRETE WITH QC/QA, FOOTING			128			
1,658	512	10100	1,658	SY	SEALING OF CONCRETE SURFACES (EPOXY-URETHANE)	55	55	310	1238		
38	512	10300	38	SY	SEALING CONCRETE BRIDGE DECKS WITH HMWM RESIN						
5	515	15030	5	EACH	DRAPED STRAND PRESTRESSED CONCRETE BRIDGE I-BEAM MEMBERS, LEVEL 3, TYPE 4 MOD. (60 IN.), 99'-6"				5		
10	515	15030	10	EACH	DRAPED STRAND PRESTRESSED CONCRETE BRIDGE I-BEAM MEMBERS, LEVEL 3, TYPE 4 MOD. (60 IN.), 80'-7"				10		
36	515	20000	36	EACH	INTERMEDIATE DIAPHRAGMS				36		
120	516	13600	120	SF	1" PREFORMED EXPANSION JOINT FILLER	52	52		16		
118	516	14014	118	FT	INTEGRAL ABUTMENT EXPANSION JOINT SEAL						
20	516	44100	20	EACH	ELASTOMERIC BEARING WITH INTERNAL LAMINATES AND LOAD PLATE (NEOPRENE), 1'-11"x11"x2.773"			20			
10	516	44101	10	EACH	ELASTOMERIC BEARING WITH INTERNAL LAMINATES AND LOAD PLATE (NEOPRENE), AS PER PLAN, 1'-0"x11"x2.110"	5	5				14/24
2	518	12301	2	EACH	SCUPPERS, INCLUDING SUPPORTS, AS PER PLAN				2		18/24
118	518	21200	118	CY	POROUS BACKFILL WITH GEOTEXTILE FABRIC	59	59				
148	518	40000	148	FT	6" PERFORATED CORRUGATED PLASTIC PIPE	72	72				
50	518	40010	50	FT	6" NON-PERFORATED CORRUGATED PLASTIC PIPE, INCLUDING SPECIALS	25	25				
243	526	25011	243	SY	REINFORCED CONCRETE APPROACH SLABS WITH QC/QA (T=15"), AS PER PLAN					243	21,22/24
85	526	90010	85	FT	TYPE A INSTALLATION					85	
1,550	601	32104	1,550	CY	ROCK CHANNEL PROTECTION, TYPE B WITH GEOTEXTILE FABRIC						

DRAFT Stage 3 - Not for Construction 09/23/2024

U:\173608714\LAW\75923\structures\LAW007_0563C\sheets\007_0563REQ001.dgn 5/14/2024 1:09:15 PM bmcneal

DESIGN AGENCY
Stantec
1500 Lake Shore Dr.
Columbus, OH 43204
(614) 486-4383

DESIGNED	DRAWN	REVIEWED	DATE
BSM	JWS	MRS	03/2024
CHECKED	REVISED	STRUCTURE FILE NUMBER	
EER		4400372	

ESTIMATED QUANTITIES
BRIDGE NO. LAW-7-0563
S.R. 7 OVER INDIAN GUYAN CREEK

LAW-7-2.17
PID No. 75923

910
1247

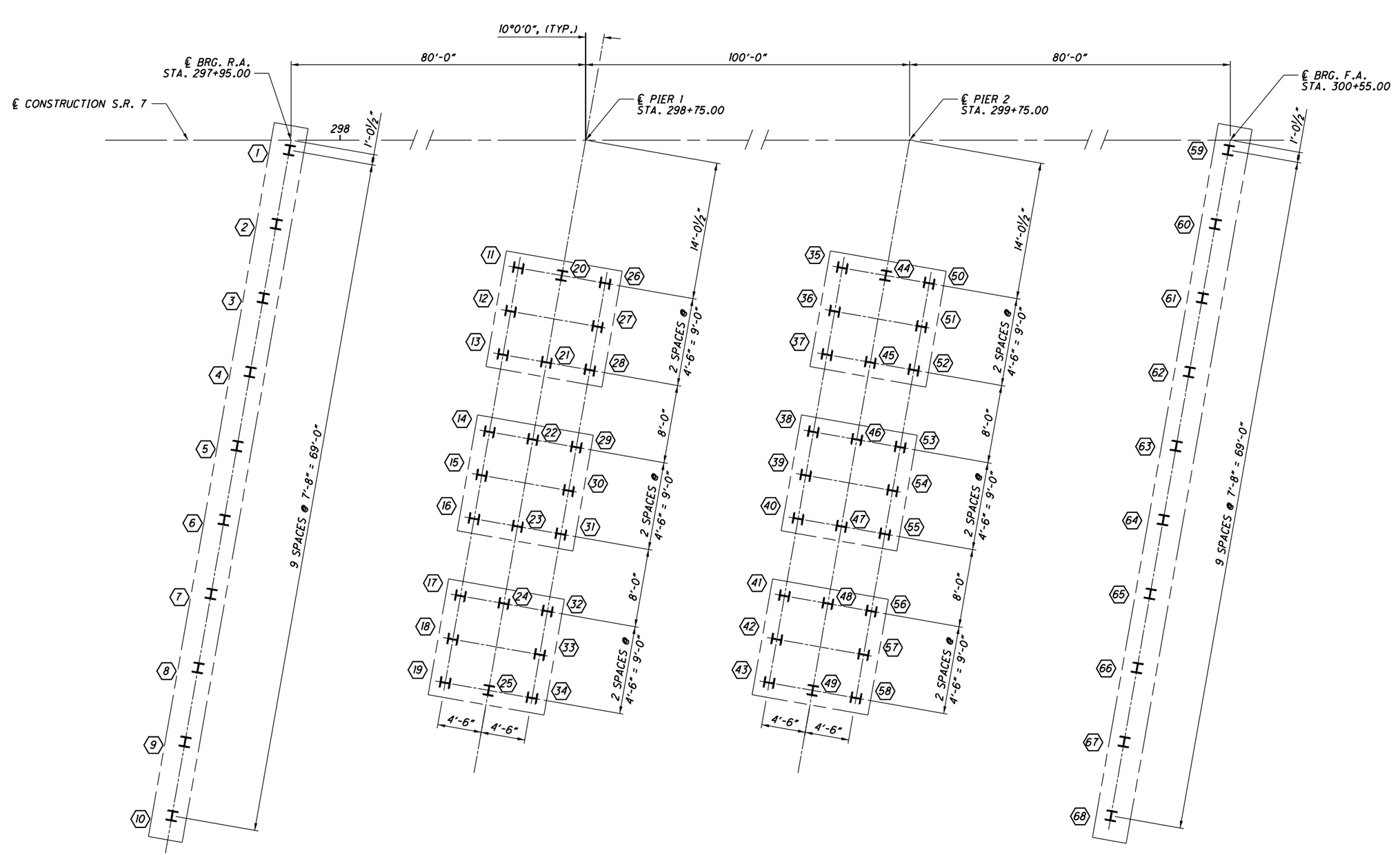

FOUNDATION PLAN

NOTES:
1. ALL PILES ARE HP12x53.
2. (45) H DESIGNATES PILE NUMBER AND LOCATION.

DRAFT Stage 3 - Not for Construction 09/23/2024

DESIGNED BSM	DRAWN JWS	REVIEWED MRS	DATE 03/2024
CHECKED EER	REVISED	STRUCTURE FILE NUMBER 4400372	

DESIGN AGENCY
Stantec
1500 Lake Shore Dr.
Columbus, OH 43204
(614) 486-4383

FOUNDATION PLAN
BRIDGE NO. LAW-7-0563
S.R. 7 OVER INDIAN GUYAN CREEK

LAW-7-2.17
PID No. 75923

5 / 24

911
1247

U:\173608714\LAW\75923\structures\LAW007_0563C\sheets\007_0563RFP001.dgn 5/13/2024 11:06:54 AM JSnair

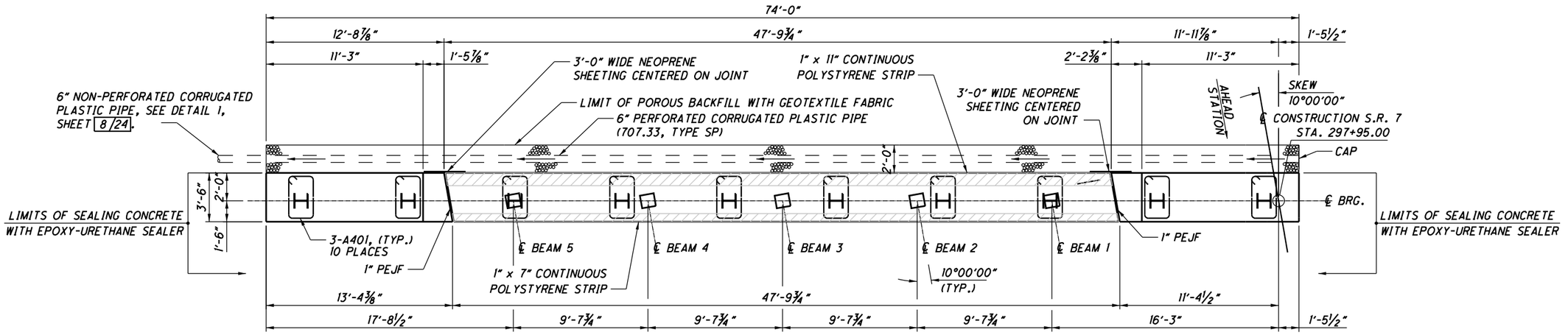

PLAN

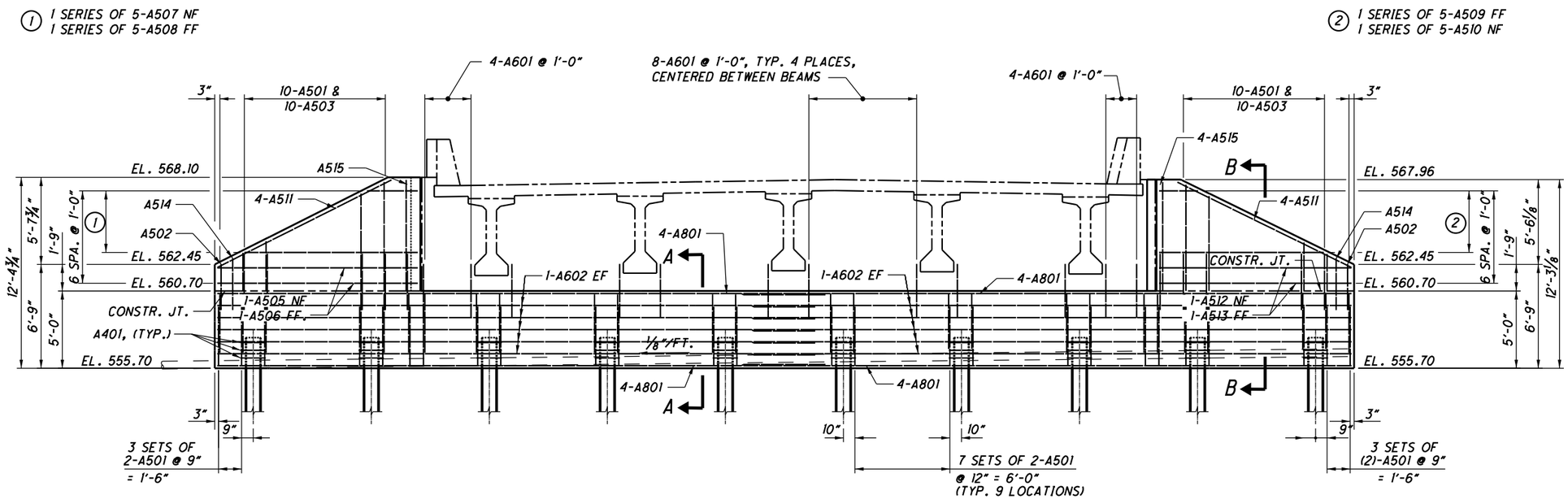

ELEVATION

LAP LENGTHS:
NO. 5 BARS = 3'-0"
NO. 6 BARS = 4'-0"
NO. 8 BARS = 5'-4"

NOTES:
1. FOR PILE LAYOUT, SEE SHEET 5/24.
2. FOR SECTION A-A AND B-B, SEE SHEET 8/24.

DRAFT Stage 3 - Not for Construction 09/23/2024

DESIGN AGENCY
Stantec
1500 Lake Shore Dr.
Columbus OH 43204
(614) 486-4383

DESIGNED	DRAWN	REVIEWED	DATE
BSM	JWS	MRS	03/2024
CHECKED	REVISED	STRUCTURE FILE NUMBER	
EER		4400372	

REAR ABUTMENT
BRIDGE NO. LAW-7-0563
S.R. 7 OVER INDIAN GUYAN CREEK

LAW-7-2.17
PID No. 75923

6/24

912/1247

U:\173608714\LAW\75923\structures\LAW007_0563C\sheets\007_0563RAR001.dgn 5/13/2024 11:06:56 AM JSnair

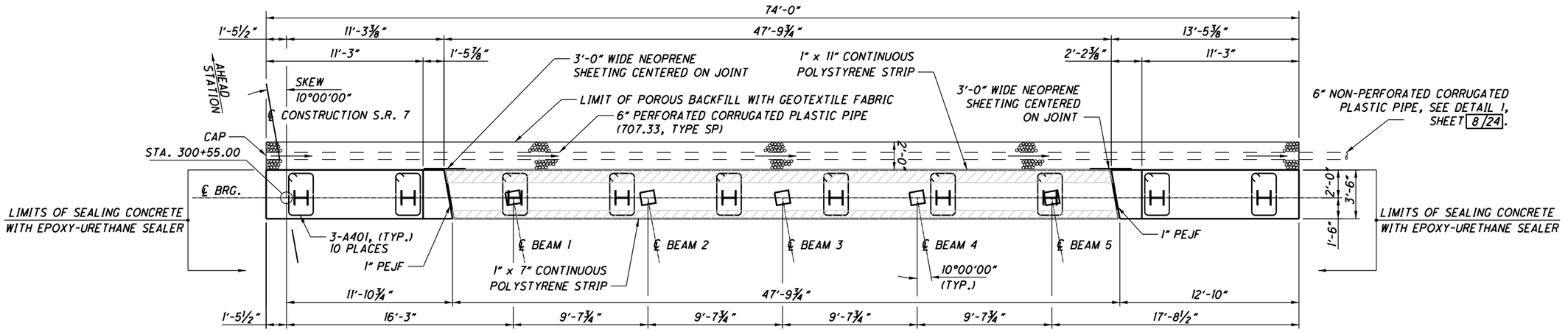

PLAN

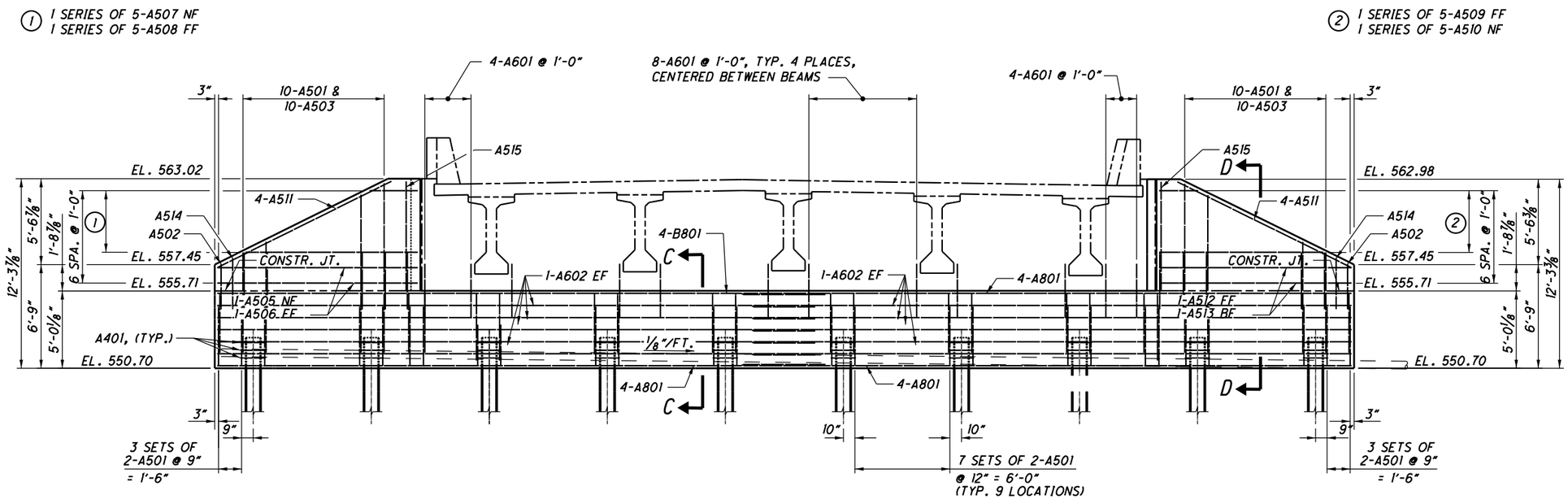

ELEVATION

LAP LENGTHS:
NO. 5 BARS = 3'-0"
NO. 8 BARS = 4'-0"
NO. 8 BARS = 5'-4"

NOTES:
1. FOR PILE LAYOUT, SEE SHEET 5/24.
2. FOR SECTION C-C AND D-D, SEE SHEET 8/24.

DRAFT Stage 3 - Not for Construction 09/23/2024

DESIGN AGENCY
Stantec
1500 Lake Shore Dr.
Columbus, OH 43204
(614) 486-4383

DESIGNED	DRAWN	REVIEWED	DATE
BSM	JWS	MRS	03/2024
CHECKED	REVISED	STRUCTURE FILE NUMBER	
EER		4400372	

FORWARD ABUTMENT
BRIDGE NO. LAW-7-0563
S.R. 7 OVER INDIAN GUYAN CREEK

LAW-7-2.17
PID No. 75923

7/24

913/1247

U:\173608714\LAW\75923\structures\LAW007_0563C\sheets\007_0563RAF001.dgn 5/13/2024 11:06:58 AM JSnair

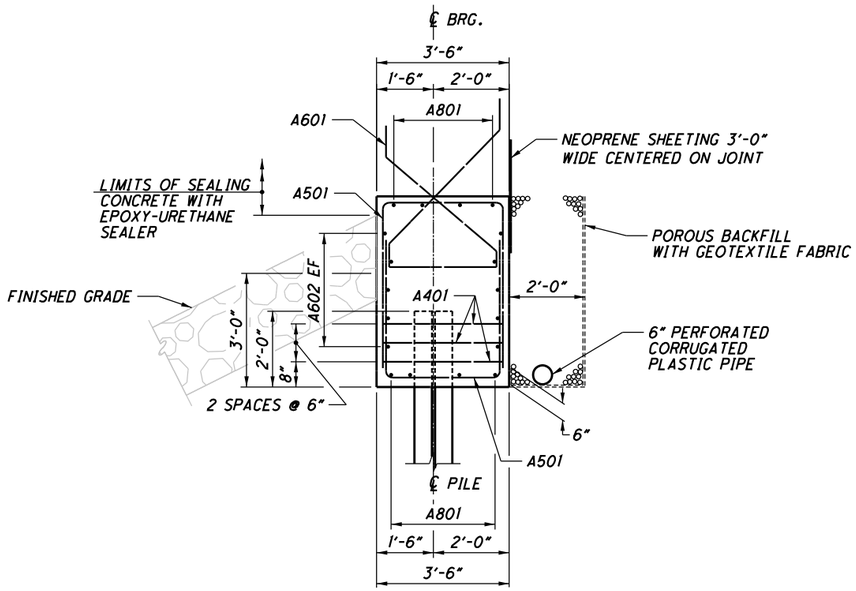

SECTION A-A

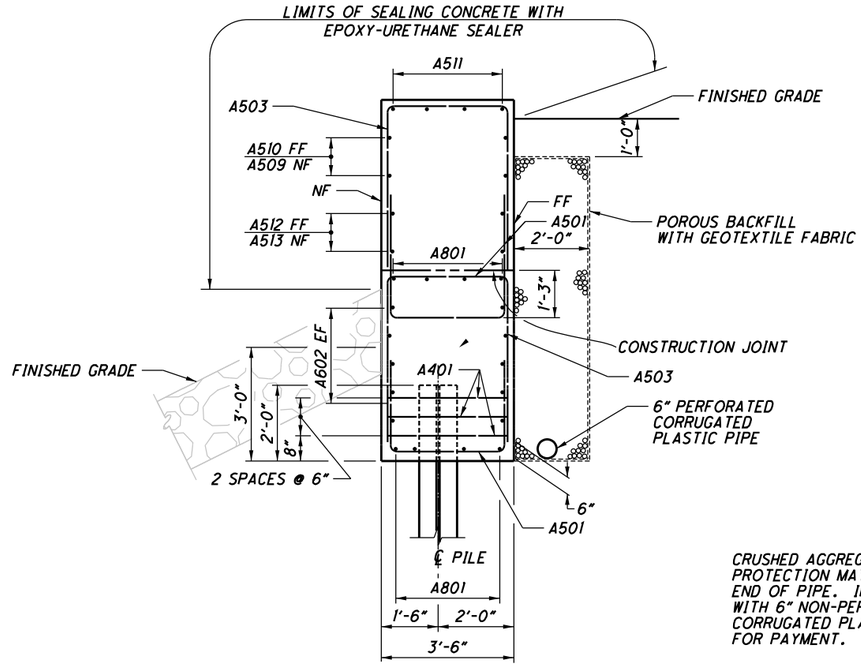

SECTION B-B

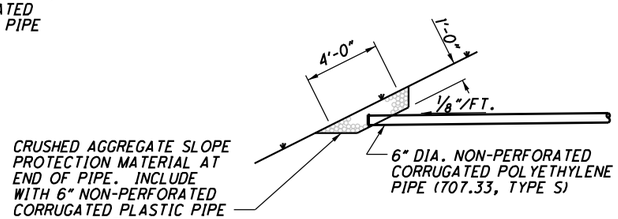

DETAIL 1

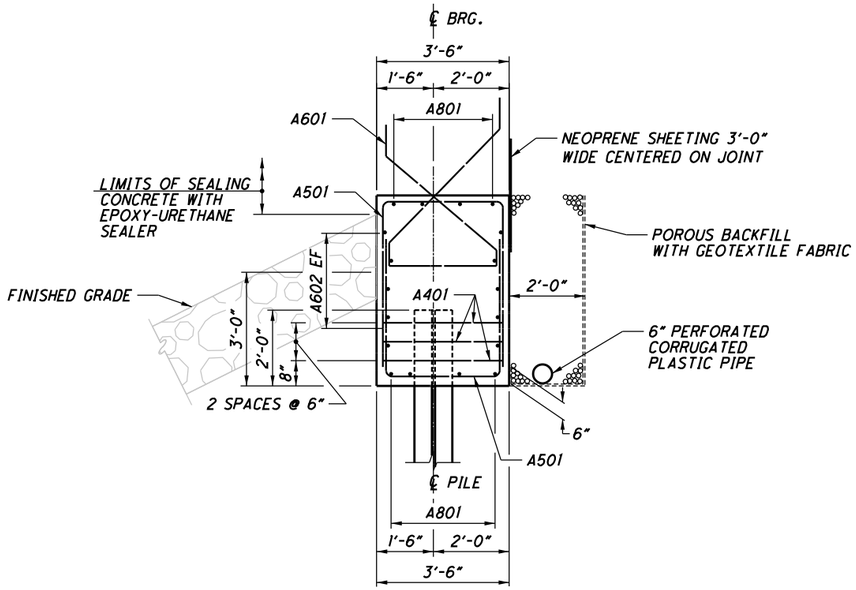

SECTION C-C

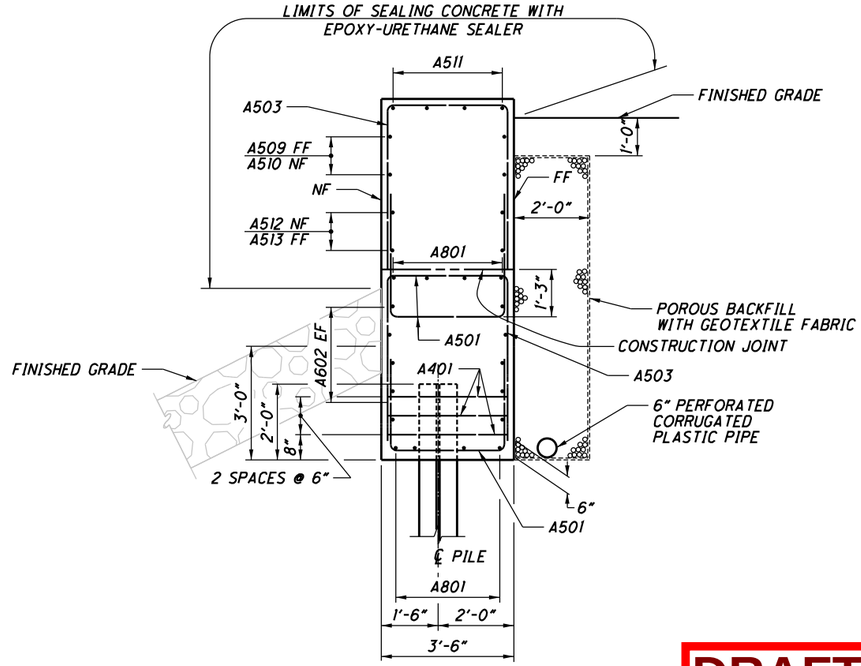

SECTION D-D

DRAFT Stage 3 - Not for Construction 09/23/2024

DESIGN AGENCY
Stantec
1500 Lake Shore Dr.
Columbus OH 43204
(614) 486-4383

DESIGNED	DRAWN	REVIEWED	DATE
BSM	JWS	MRS	03/2024
CHECKED	REVISED	STRUCTURE FILE NUMBER	
EER		4400372	

ABUTMENT DETAILS
BRIDGE NO. LAW-7-0563
S.R. 7 OVER INDIAN GUYAN CREEK

LAW-7-2.17
PID No. 75923

914 1247

U:\173608714\LAW\75923\structures\LAW007_0563C\sheets\007_0563RAR002.dgn 5/13/2024 11:07:00 AM JSnair

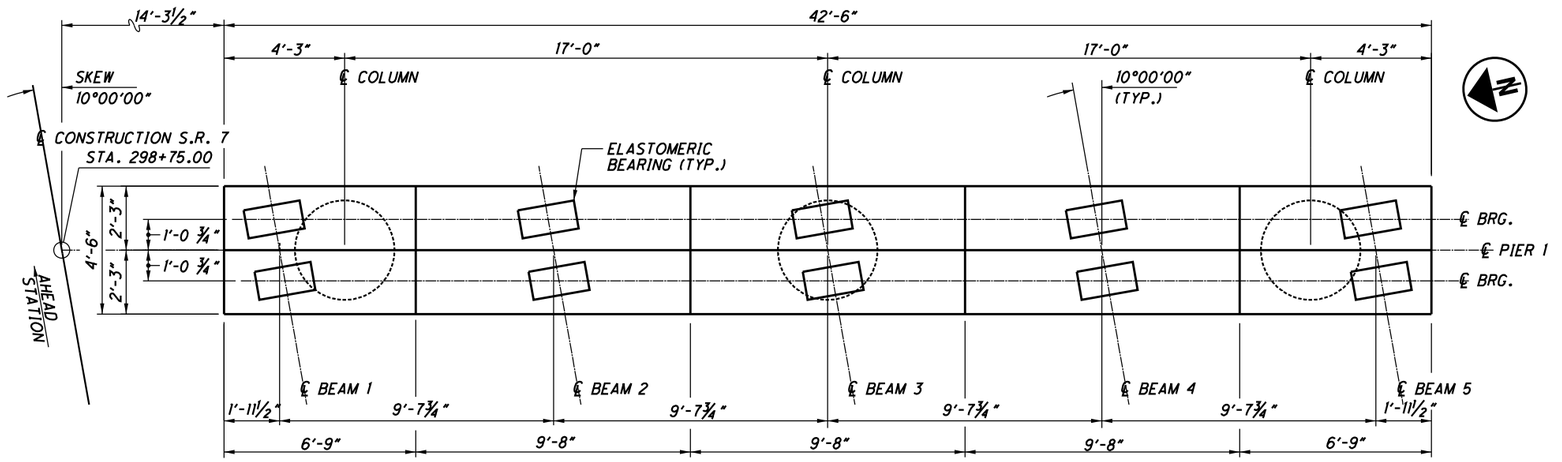

CAP PLAN

NOTES:

1. FOR SECTIONS A-A, B-B AND C-C SEE SHEET 11/24.
2. FOR FOOTING PLAN, SEE SHEET 11/24.
3. POSITION P902 BARS TO ENABLE COLUMN BARS P903 TO BE LOCATED AS SHOWN IN SECTION C-C.

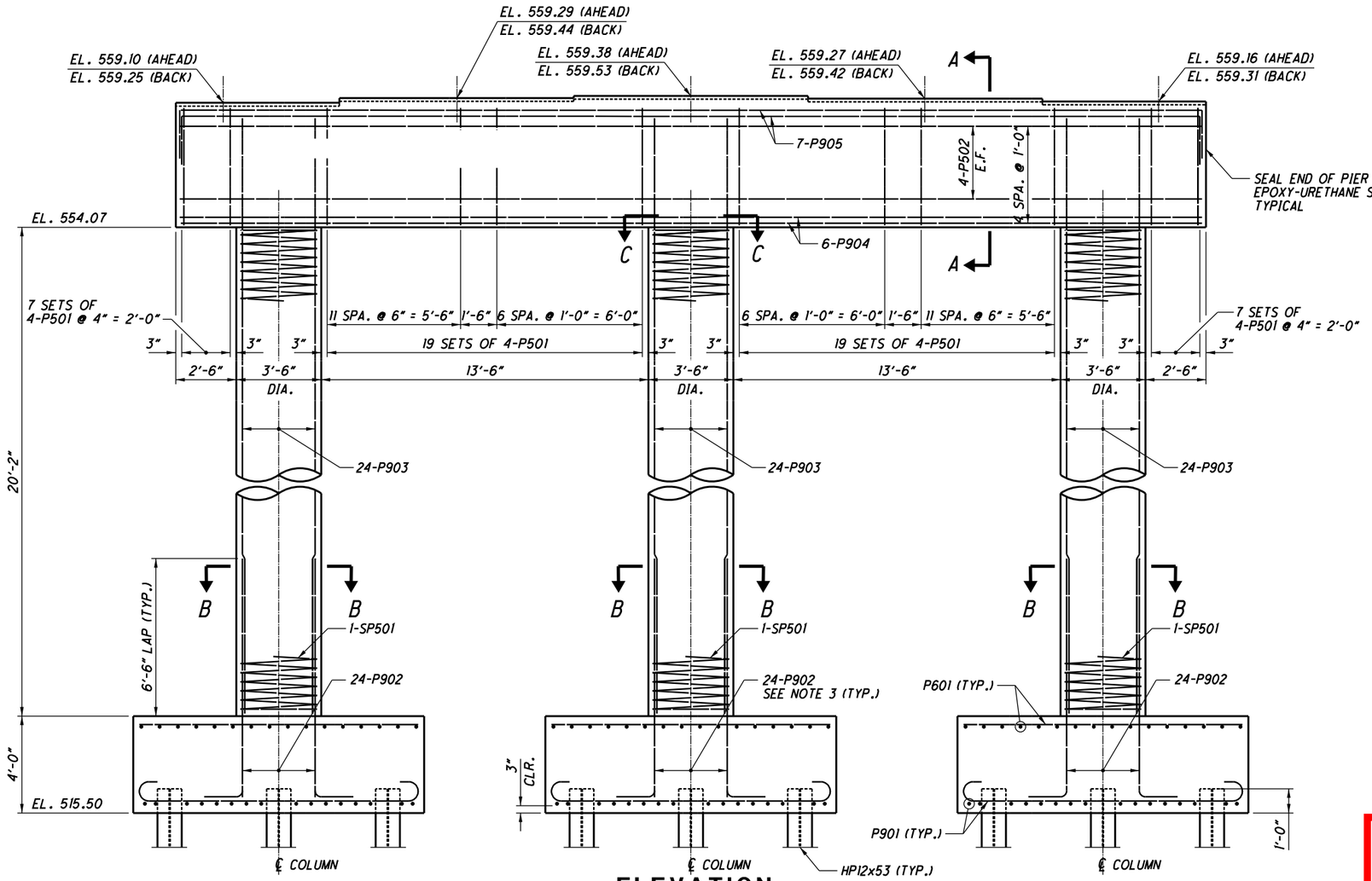

ELEVATION

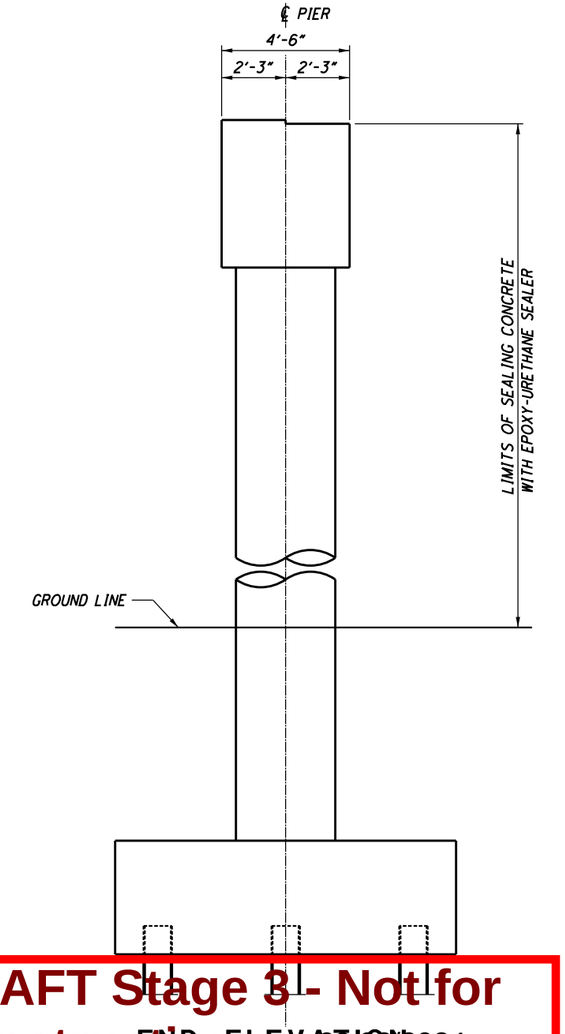

END ELEVATION

DRAFT Stage 3 - Not for Construction

09/28/2024

DESIGN AGENCY
Stantec
1500 Lake Shore Dr.
Columbus OH 43204
(614) 486-4383

DESIGNED	DRAWN	REVIEWED	DATE
BSM	JWS	MRS	03/2024
CHECKED	REVISED	STRUCTURE FILE NUMBER	
EER		4400372	

PIER 1
BRIDGE NO. LAW-7-0563
S.R. 7 OVER INDIAN GUYAN CREEK

LAW-7-2.17
PID No. 75923

9 / 24

915
1247

U:\173608714\LAW\75923\structures\LAW007_0563C\sheets\007_0563RPI001.dgn 5/13/2024 11:07:02 AM JSnair

NOTES:
1. FOR SECTIONS A-A, B-B AND C-C SEE SHEET 11/24.
2. FOR FOOTING PLAN, SEE SHEET 11/24.
3. POSITION P902 BARS TO ENABLE COLUMN BARS P906 TO BE LOCATED AS SHOWN IN SECTION C-C.

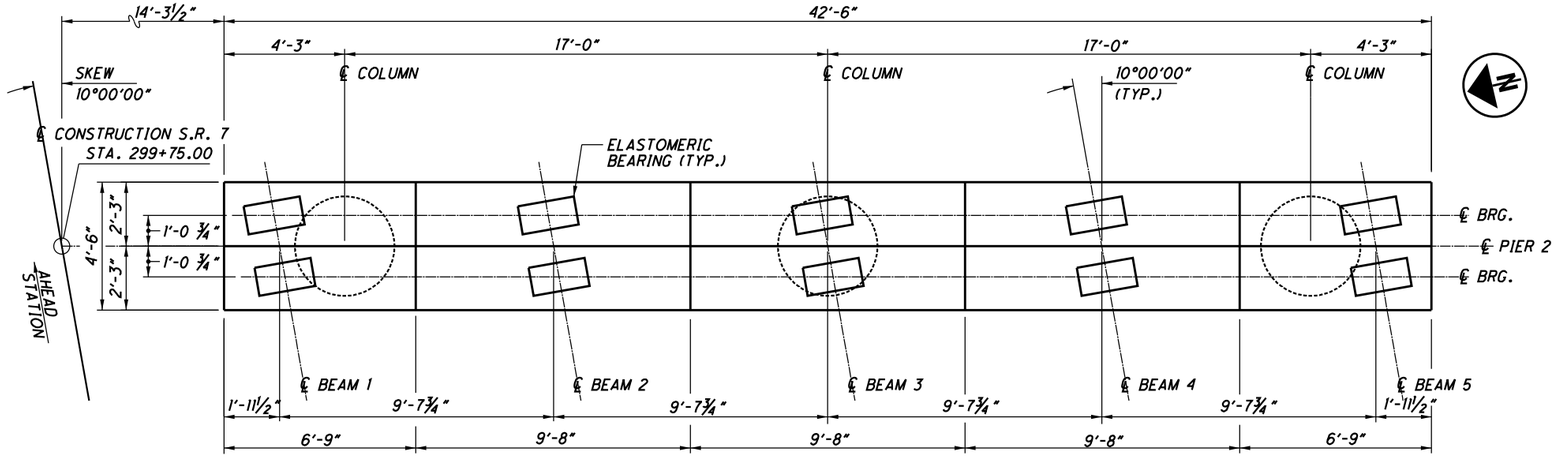

CAP PLAN

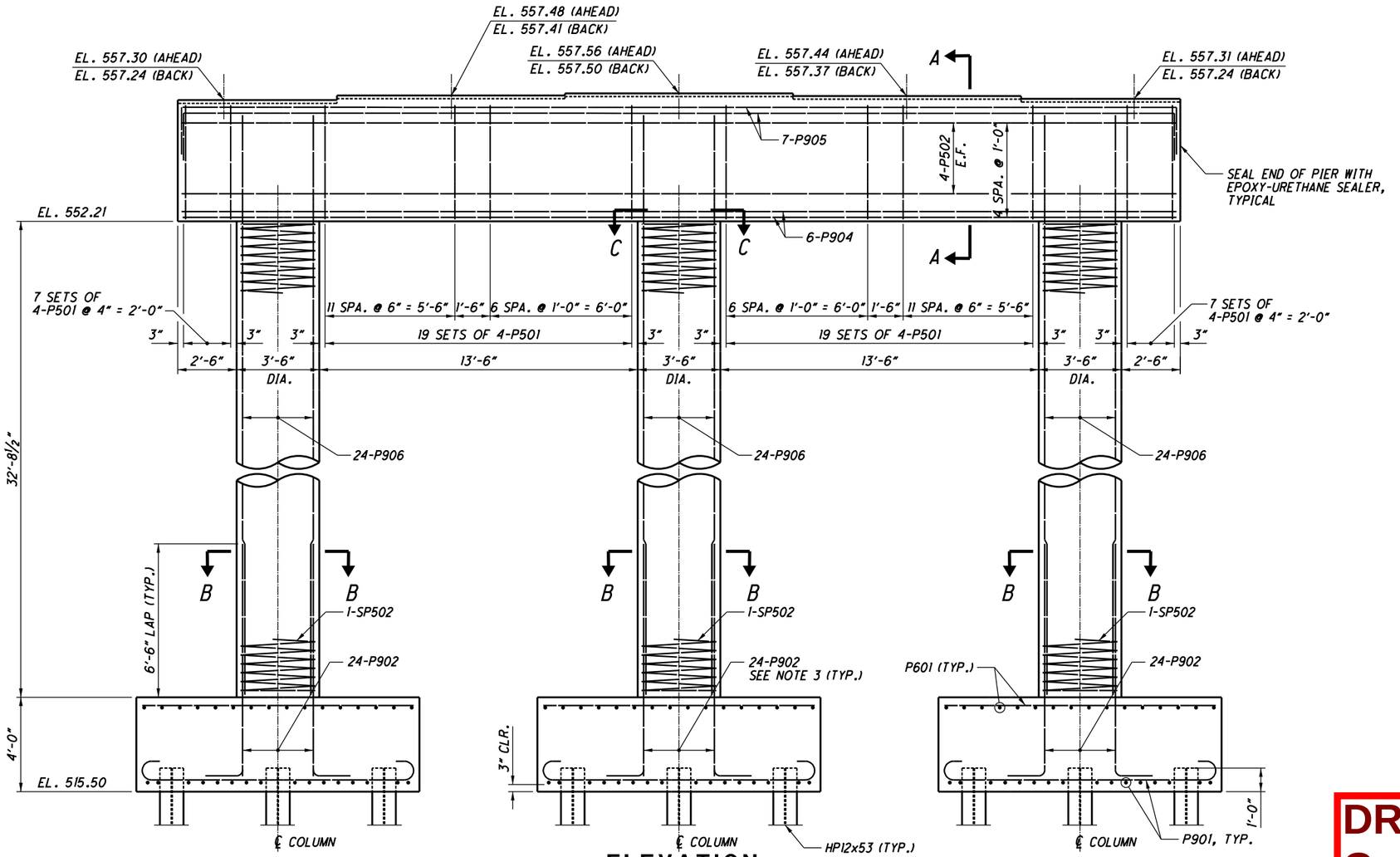

ELEVATION

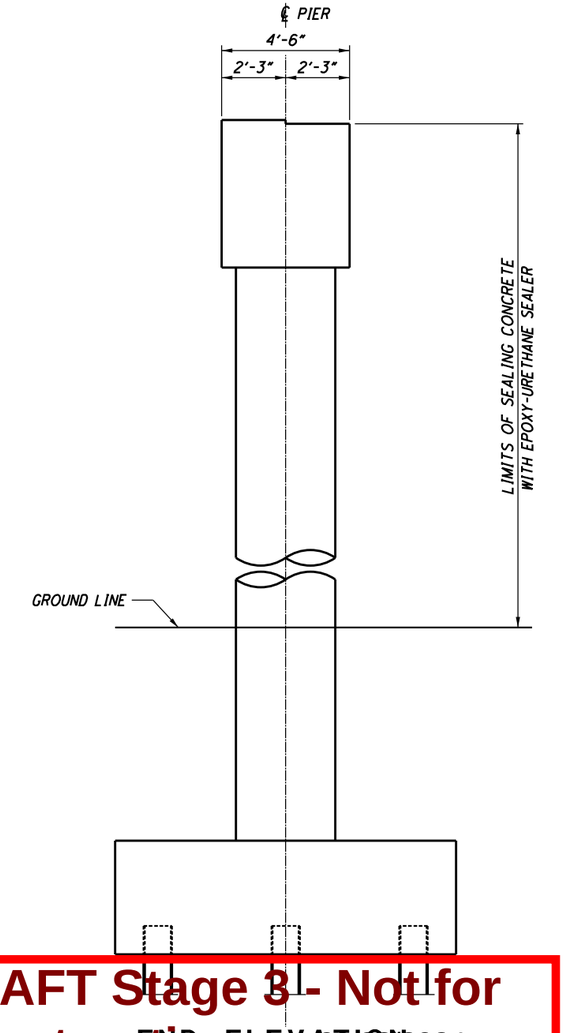

END ELEVATION

DRAFT Stage 3- Not for Construction 09/28/2024

DESIGN AGENCY
Stantec
1500 Lake Shore Dr.
Columbus OH 43204
(614) 486-4383

DESIGNED	DRAWN	REVIEWED	DATE
BSM	JWS	MRS	03/2024
CHECKED	REVISED	STRUCTURE FILE NUMBER	
EER		4400372	

PIER 2
BRIDGE NO. LAW-7-0563
S.R. 7 OVER INDIAN GUYAN CREEK

LAW-7-2.17
PID No. 75923

10/24

916
1247

U:\173608714\LAW\75923\structures\LAW007_0563C\sheets\007_0563RPI002.dgn 5/13/2024 11:07:04 AM JSnair

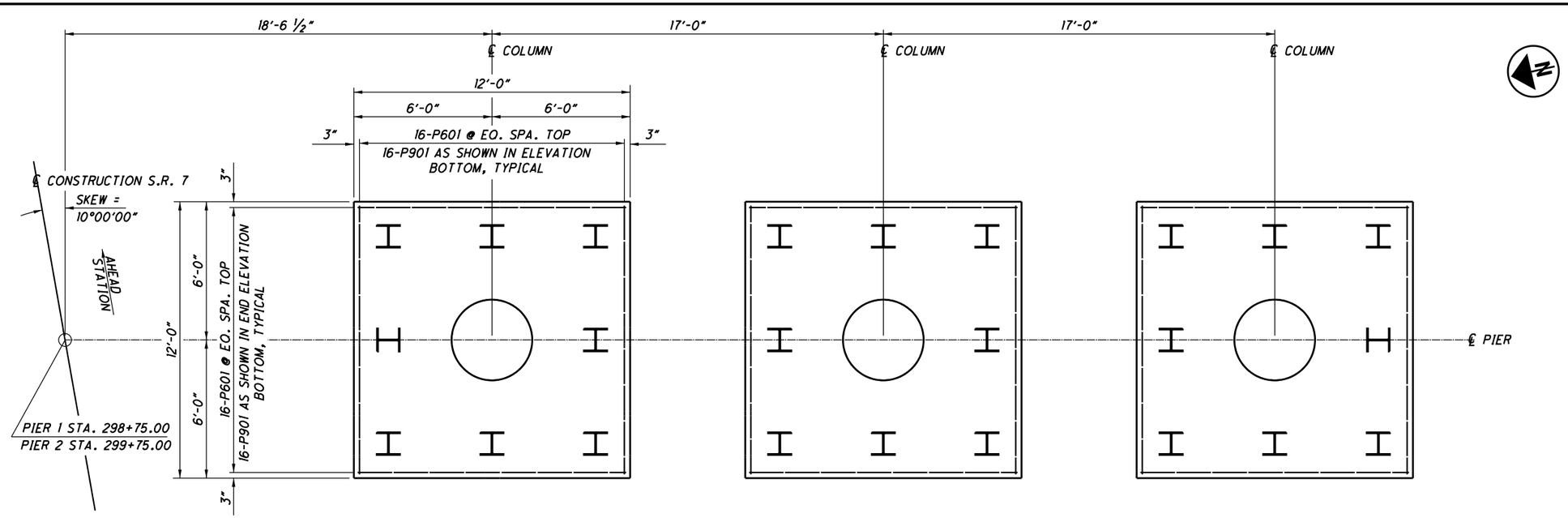

FOOTING PLAN

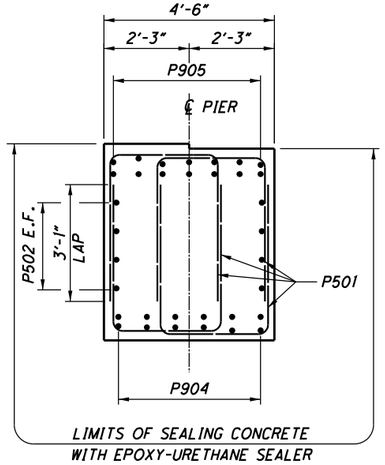

SECTION A-A

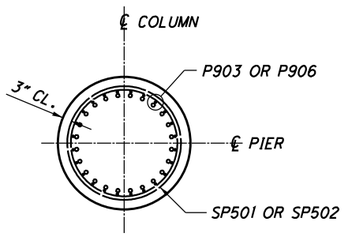

SECTION B-B

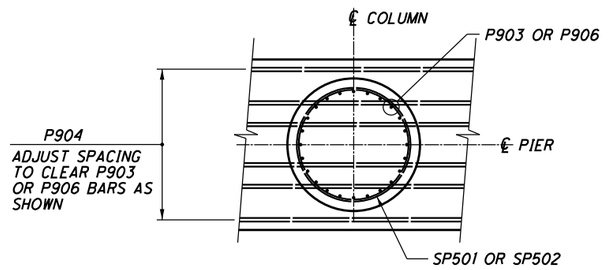

SECTION C-C

NOTE: FOR PIER ELEVATION AND PILE TIP ELEVATION, SEE SHEETS 9/24 AND 10/24.

DRAFT Stage 3 - Not for Construction 09/23/2024

DESIGN AGENCY
Stantec
1500 Lake Shore Dr.
Columbus, OH 43204
(614) 486-4383

DESIGNED	DRAWN	REVIEWED	DATE
BSM	JWS	MRS	03/2024
CHECKED	REVISED	STRUCTURE FILE NUMBER	
EER		4400372	

PIER DETAILS
BRIDGE NO. LAW-7-0563
S.R. 7 OVER INDIAN GUYAN CREEK

LAW-7-2.17
PID No. 75923

11 / 24

917
1247

U:\173608714\LAW\75923\structures\LAW007_0563C\sheets\007_0563RPI003.dgn 5/13/2024 11:07:06 AM JSnair

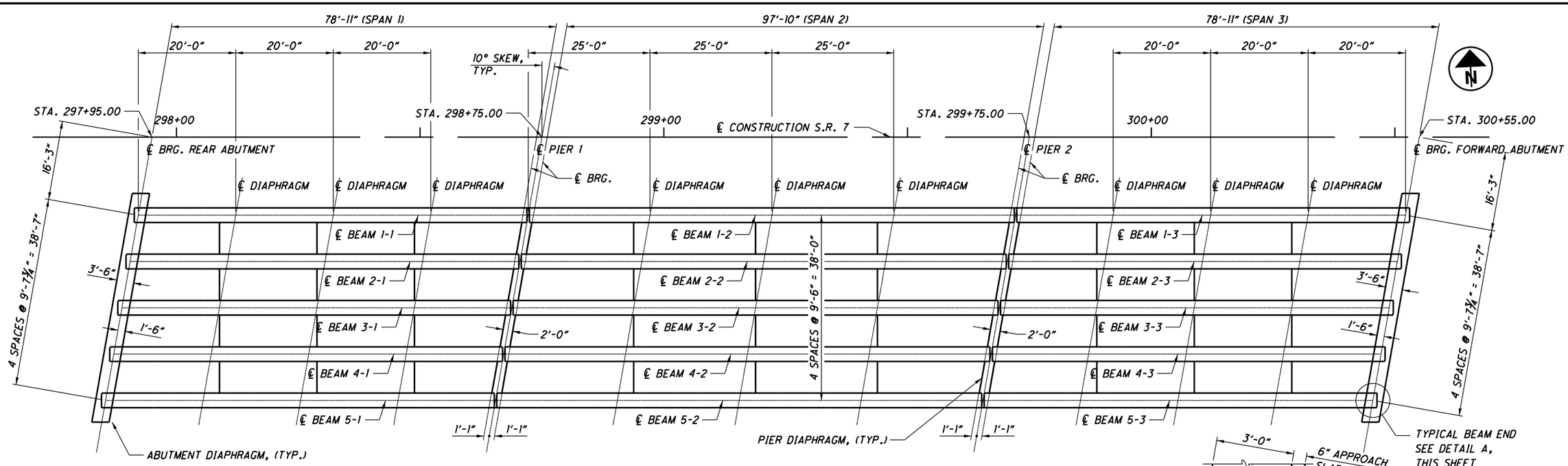

FRAMING PLAN

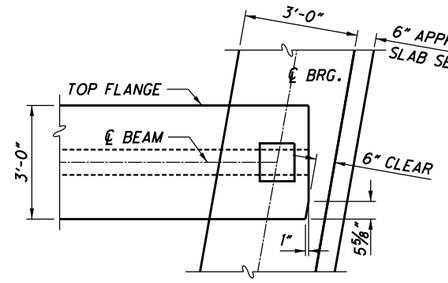

DETAIL A
(TYPICAL EACH END)

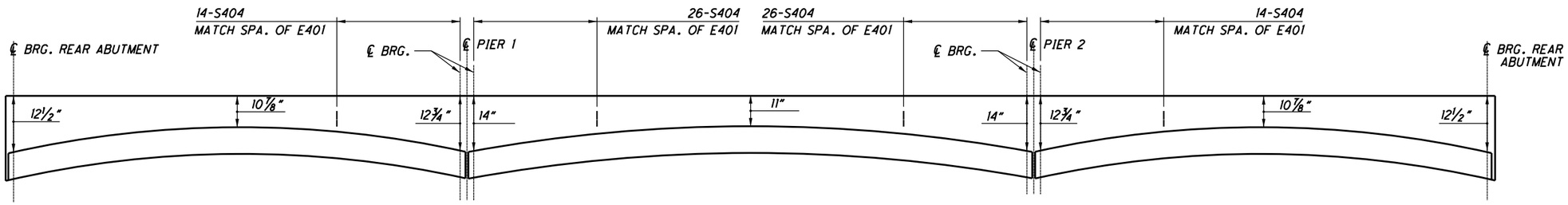

TOPPING THICKNESS DIAGRAM
(ALONG ℄ BEAMS)

SPANS 1 AND 3

CAMBER:
ESTIMATED CAMBER AT DAY 0 (D_0) IS 15/16 INCHES.

ESTIMATED CAMBER AT DAY 30 (D_{30}) IS 1 13/16 INCHES.

DEFLECTION DUE TO REMAINING DEAD LOAD (E.G. CONCRETE DECK, CROSSFRAMES, DIAPHRAGMS, BARRIERS, UTILITIES, ETC.) IS 5/8 INCH.

THE BEAM SEAT ELEVATIONS ASSUME ESTIMATED CAMBER D_0 WITH A SACRIFICIAL HAUNCH THICKNESS OF 2 INCHES.

SPAN 2

CAMBER:
ESTIMATED CAMBER AT DAY 0 (D_0) IS 1 15/16 INCHES.

ESTIMATED CAMBER AT DAY 30 (D_{30}) IS 3 1/16 INCHES.

DEFLECTION DUE TO REMAINING DEAD LOAD (E.G. CONCRETE DECK, CROSSFRAMES, DIAPHRAGMS, BARRIERS, UTILITIES, ETC.) IS 1 9/16 INCHES.

THE BEAM SEAT ELEVATIONS ASSUME ESTIMATED CAMBER D_0 WITH A SACRIFICIAL HAUNCH THICKNESS OF 2 INCHES.

NOTES:
1. SEE SHEET 13/24 AND PSID-1-13 FOR THE BEAM DETAILS AND SEE SHEET 15/24 AND 16/24 AND PSID-1-13 FOR THE DIAPHRAGM DETAILS.

2. DECK SLAB THICKNESS FOR CONCRETE QUANTITY: THE ESTIMATED QUANTITY OF DECK CONCRETE IS MEASURED ACCORDING TO C&MS 511. IN ADDITION TO THE DESIGN SLAB THICKNESS, THE QUANTITY INCLUDES A VARIABLE HAUNCH THICKNESS THAT PROVIDES AN ALLOWANCE FOR: VERTICAL GRADE ADJUSTMENT, BEAM CAMBER AND ADDITIONAL SACRIFICIAL HAUNCH THICKNESS.

DRAFT Stage 3 - Not for Construction 09/23/2024

U:\173608714\LAW\75923\structures\LAW007_0563C\sheets\007_0563RSD001.dgn 5/13/2024 11:07:08 AM JSnair

DESIGN AGENCY
Stantec
1500 Lake Shore Dr.
Columbus OH 43204
(614) 486-4383

DESIGNED	DRAWN	REVIEWED	DATE
BSM	JWS	MRS	03/2024
CHECKED	REVISED	STRUCTURE FILE NUMBER	
EER		4400372	

FRAMING PLAN
BRIDGE NO. LAW-7-0563
S.R. 7 OVER INDIAN GUYAN CREEK

LAW-7-2.17
PID No. 75923

BEAM DIMENSIONS											
BEAM MARK	NO. REQ'D	DIMENSIONS									APPROXIMATE WEIGHT (LBS)
		A	B	C	D	E	F	G	H	J	
1-1	1	80'-7"	48'-10½"	35'-3½"	5'-0"	16'-7 ¾"	20'-0"	20'-0"	22'-3 ¼"	107	72,203
2-1	1	80'-7"	48'-10½"	35'-3½"	5'-0"	18'-3 ⅛"	20'-0"	20'-0"	20'-7 ⅛"	107	72,203
3-1	1	80'-7"	48'-10½"	35'-3½"	5'-0"	20'-0"	20'-0"	20'-0"	18'-11"	107	72,203
4-1	1	80'-7"	48'-10½"	35'-3½"	5'-0"	21'-8 ⅛"	20'-0"	20'-0"	17'-2 ⅛"	107	72,203
5-1	1	80'-7"	48'-10½"	35'-3½"	5'-0"	23'-4 ¼"	20'-0"	20'-0"	15'-6 ¾"	107	72,302
1-2	1	99'-6"	63'-9½"	48'-9"	6'-0"	20'-6 ¾"	25'-0"	25'-0"	27'-3 ¼"	132	89,152
2-2	1	99'-6"	63'-9½"	48'-9"	6'-0"	22'-2 ⅞"	25'-0"	25'-0"	25'-7 ⅛"	132	89,152
3-2	1	99'-6"	63'-9½"	48'-9"	6'-0"	23'-11"	25'-0"	25'-0"	25'-11"	132	89,152
4-2	1	99'-6"	63'-9½"	48'-9"	6'-0"	25'-7 ⅛"	25'-0"	25'-0"	22'-2 ⅛"	132	89,152
5-2	1	99'-6"	63'-9½"	48'-9"	6'-0"	27'-3 ¼"	25'-0"	25'-0"	20'-6 ¾"	132	89,152
1-3	1	80'-7"	48'-10½"	35'-3½"	5'-0"	15'-6 ¾"	20'-0"	20'-0"	23'-4 ¼"	107	72,203
2-3	1	80'-7"	48'-10½"	35'-3½"	5'-0"	17'-2 ⅛"	25'-0"	25'-0"	21'-8 ⅛"	107	72,203
3-3	1	80'-7"	48'-10½"	35'-3½"	5'-0"	18'-11"	25'-0"	25'-0"	20'-0"	107	72,203
4-3	1	80'-7"	48'-10½"	35'-3½"	5'-0"	20'-7 ⅛"	25'-0"	25'-0"	18'-3 ⅛"	107	72,203
5-3	1	80'-7"	48'-10½"	35'-3½"	5'-0"	22'-3 ¼"	25'-0"	25'-0"	16'-7 ¾"	107	72,203

NUMBER OF STRANDS PER ROW																		CONCRETE STRENGTHS	
BEAM MARK	END (SECTION A-A)										MIDSPAN (SECTION B-B)					TOTAL STRANDS		
	①	②	③	④	⑤	⑥	⑦	⑧	⑨	⑩	①	②	③	④	⑤		f'ci	f'c
1-1	8	8	4	-	-	-	-	1	1	1	9	9	5	-	-	23	6,000	7,000
2-1	8	8	4	-	-	-	-	1	1	1	9	9	5	-	-	23	6,000	7,000
3-1	8	8	4	-	-	-	-	1	1	1	9	9	5	-	-	23	6,000	7,000
4-1	8	8	4	-	-	-	-	1	1	1	9	9	5	-	-	23	6,000	7,000
5-1	8	8	4	-	-	-	-	1	1	1	9	9	5	-	-	23	6,000	7,000
1-2	8	8	8	6	-	1	1	1	1	1	9	9	9	7	1	35	6,000	7,000
2-2	8	8	8	6	-	1	1	1	1	1	9	9	9	7	1	35	6,000	7,000
3-2	8	8	8	6	-	1	1	1	1	1	9	9	9	7	1	35	6,000	7,000
4-2	8	8	8	6	-	1	1	1	1	1	9	9	9	7	1	35	6,000	7,000
5-2	8	8	8	6	-	1	1	1	1	1	9	9	9	7	1	35	6,000	7,000
1-3	8	8	4	-	-	-	-	1	1	1	9	9	5	-	-	23	6,000	7,000
2-3	8	8	4	-	-	-	-	1	1	1	9	9	5	-	-	23	6,000	7,000
3-3	8	8	4	-	-	-	-	1	1	1	9	9	5	-	-	23	6,000	7,000
4-3	8	8	4	-	-	-	-	1	1	1	9	9	5	-	-	23	6,000	7,000
5-3	8	8	4	-	-	-	-	1	1	1	9	9	5	-	-	23	6,000	7,000

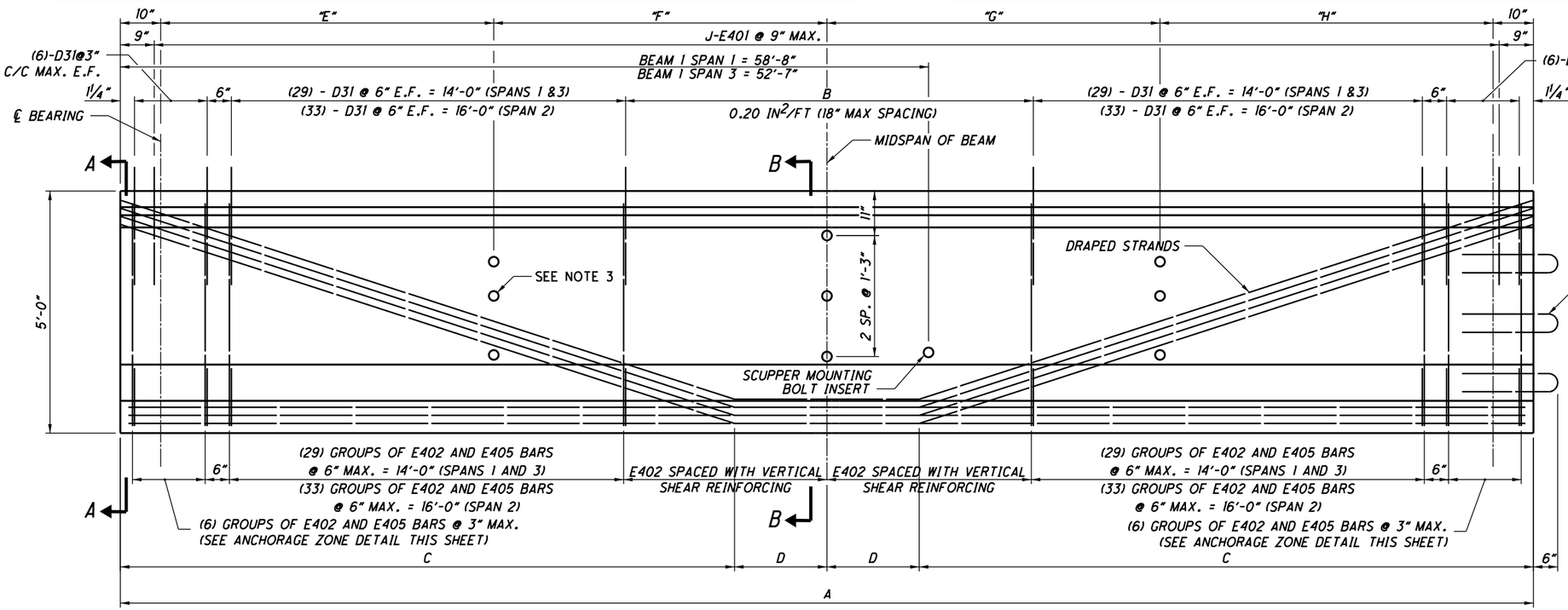

BEAM ELEVATION

(SPANS 1 AND 3 SHOWN, SPAN 2 SIMILAR)

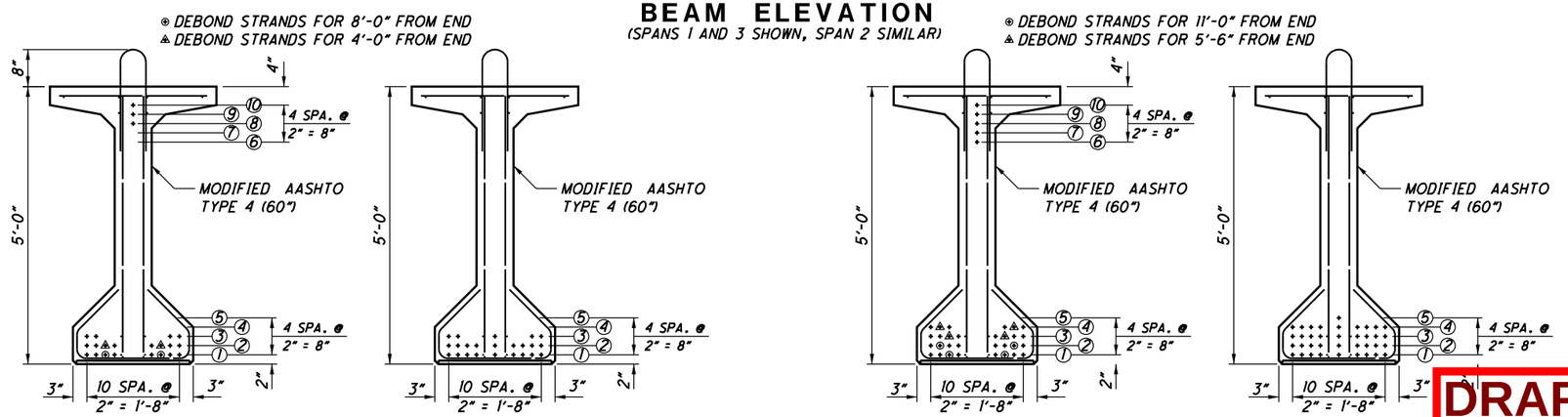

SECTION A-A SECTION B-B

SPANS 1 AND 3

SECTION A-A SECTION B-B

SPAN 2

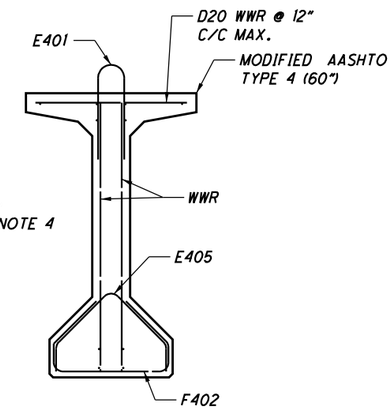

ANCHORAGE ZONE DETAIL

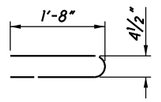

E402

NOTES:
1. FOR BEAM DIMENSIONS AND ADDITIONAL DETAILS, SEE STD. DWG. PSID-1-13.
2. FOR EMBEDDED PLATE DETAILS, SEE STD. DWG. PSID-1-13.
3. ADJUST LOCATION OF INSERTS TO MISS DRAPED STRANDS.
4. PROVIDE 3 E402 BARS ON CENTERLINE OF BEAM AT THE ABUTMENT ENDS OF BEAMS 1 THRU 5 IN SPANS 1 AND 3. BARS ARE NOT SHOWN FOR CLARITY.

DRAFT Stage 3 - Not for Construction 09/23/2024

DESIGN AGENCY: Stantec, 1500 Lake Shore Dr., Columbus, OH 43204, (614) 486-4383

DESIGNED	DRAWN	REVIEWED	DATE
BSM	JWS	MRS	03/2024
CHECKED	REVISED	STRUCTURE FILE NUMBER	
EER		4400372	

PRESTRESSED CONCRETE I-BEAM DETAILS

BRIDGE NO. LAW-7-0563

S.R. 7 OVER INDIAN GUYAN CREEK

LAW-7-2.17

PID No. 75923

13 / 24

919 / 1247

U:\173608714\LAW\75923\structures\LAW007_0563C\sheets\007_0563RSD008.dgn 5/13/2024 11:07:10 AM JSnair

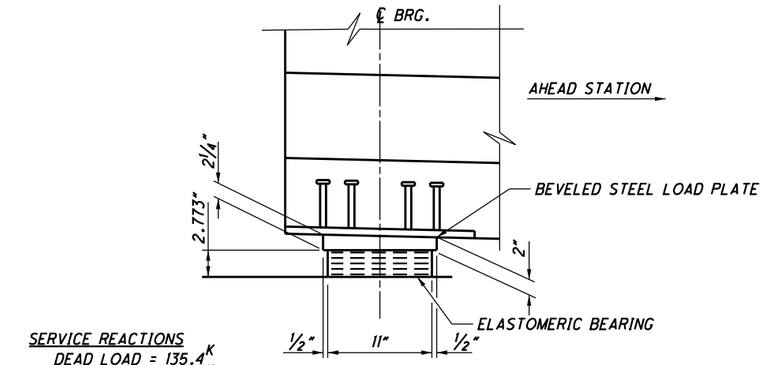

SERVICE REACTIONS
DEAD LOAD = 135.4 K
LIVE LOAD = 88.2 K
TOTAL REACTION = 223.6 K

SECTION A-A

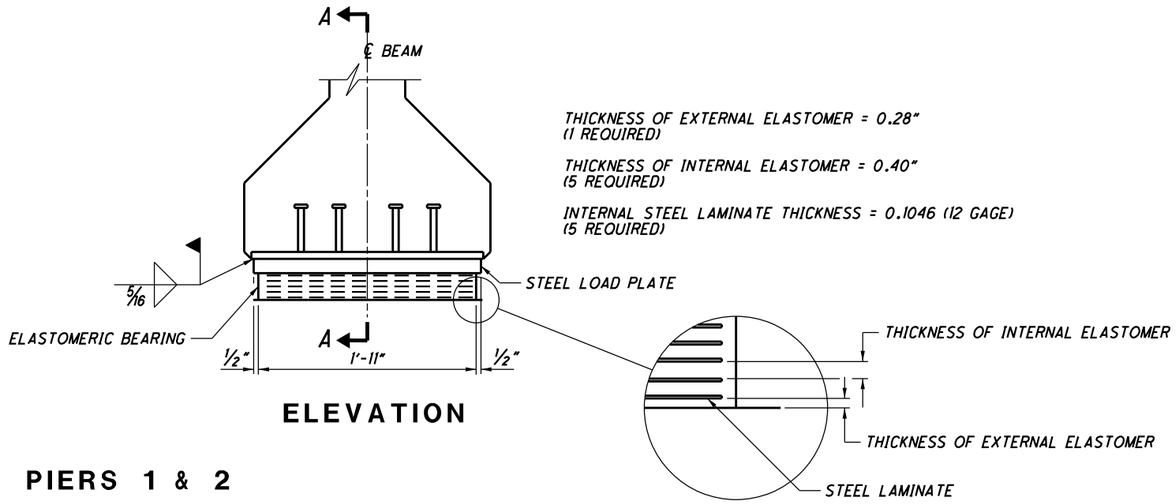

ELEVATION

BEARINGS AT PIERS 1 & 2

BEARING HEIGHT TABLE			
BEAM	AT	H	HE
1-1	RA	12"	7"
2-1	RA	14½"	9½"
3-1	RA	15¾"	10¾"
4-1	RA	14½"	9½"
5-1	RA	13¼"	8¼"
1-3	FA	12⅜"	7⅜"
2-3	FA	14½"	9½"
3-3	FA	15⅜"	10⅜"
4-3	FA	13¾"	8¾"
5-3	FA	12"	7"

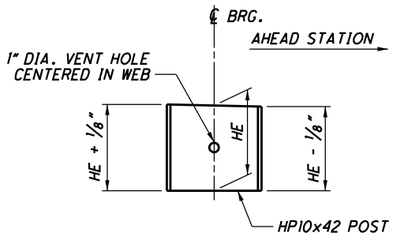

ABUTMENT BEVELED POST

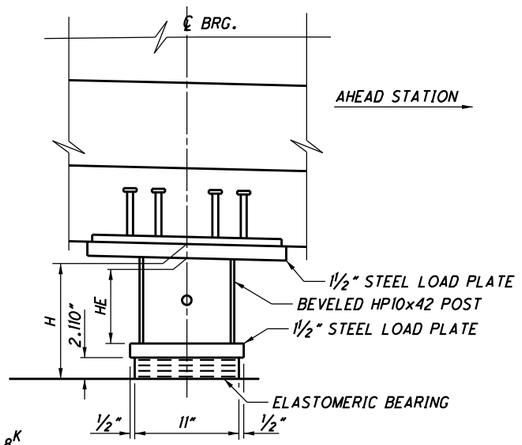

SERVICE REACTIONS
DEAD LOAD = 102.8 K
LIVE LOAD = 0 K
TOTAL REACTION = 102.8 K

SECTION B-B

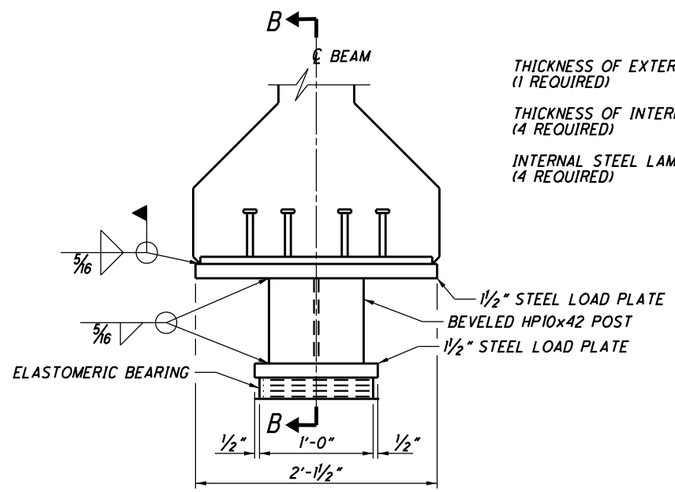

ELEVATION

BEARINGS AT ABUTMENTS

NOTES:
1. ELASTOMERIC BEARINGS: THE ELASTOMER SHALL HAVE A HARDNESS OF 50 DUROMETER. THE BEARINGS WERE DESIGNED IN ACCORDANCE WITH SECTION 14.7.6 (METHOD A) OF THE AASHTO LRFD BRIDGE DESIGN SPECIFICATIONS. THE LONG TERM COMPRESSION PROOF LOAD TEST (AASHTO STANDARD SPECIFICATIONS FOR HIGHWAY BRIDGES, DIVISION II, SECTION 18.7.2.6) IS NOT REQUIRED.
2. FOR DETAILS OF THE STUDS AND EMBEDDED PLATE, AND FOR ADDITIONAL INFORMATION, SEE STR. DWG. BSID 1.17.
3. ALL BEARING SHALL BE MARKED PRIOR TO SHIPPING. THE MARK SHALL INDICATE BEARING LOCATION IN THE PIER, AND A DIRECTION ARROW THAT POINTS UP-STATION. ALL MARKS SHALL BE PERMANENT AND BE VISIBLE AFTER BEARING IS INSTALLED.

DRAFT Stage 3 - Not for Construction
09/23/2024

DESIGN AGENCY
Stantec
1500 Lake Shore Dr.
Columbus, OH 43204
(614) 486-4383

DESIGNED	DRAWN	REVIEWED	DATE
BSM	JWS	MRS	03/2024
CHECKED	REVISED	STRUCTURE FILE NUMBER	
EER		4400372	

BEARING DETAILS
BRIDGE NO. LAW-7-0563
S.R. 7 OVER INDIAN GUYAN CREEK

LAW-7-2.17
PID No. 75923

920
1247

U:\173608714\LAW\75923\structures\LAW007_0563C\sheets\007_0563RSD007.dgn 5/13/2024 11:07:12 AM JSnair

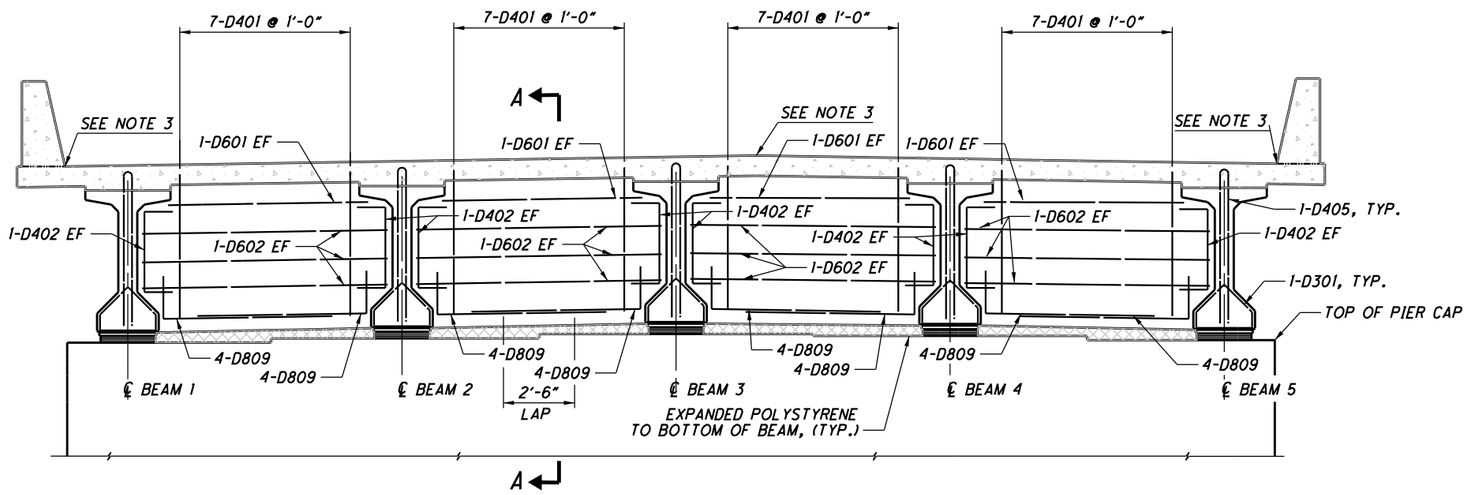

PIER 1 AND PIER 2 DIAPHRAGM

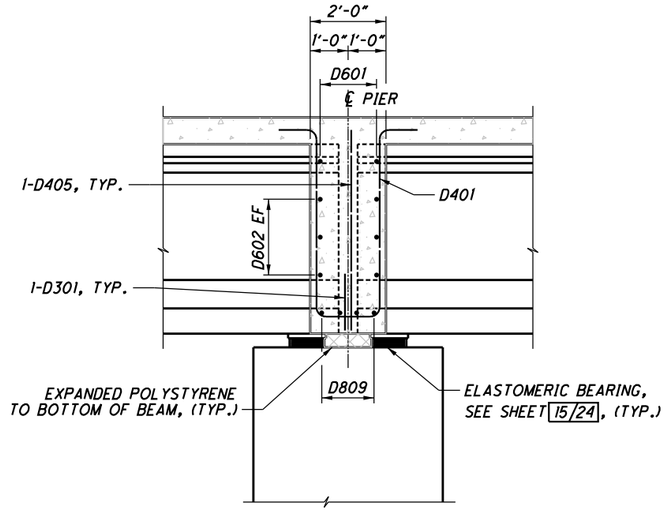

SECTION A-A

NOTES:
1. ALL VERTICAL REINFORCING STEEL SHALL BE PLACED PARALLEL TO THE BEAMS.
2. FOR PIER DETAILS, SEE SHEET 9/24 AND 10/24.
3. FOR DIMENSIONS, SEE DEPARTMENT CONSTRUCTION ELEVATION TABLE, SHEET 20/24.

DRAFT Stage 3 - Not for Construction 09/26/2024

DESIGN AGENCY
Stantec
1500 Lake Shore Dr.
Columbus, OH 43204
(614) 486-4383

DESIGNED	DRAWN	REVIEWED	DATE
BSM	JWS	MRS	03/2024
CHECKED	REVISED	STRUCTURE FILE NUMBER	
EER		4400372	

PIER DIAPHRAGM DETAILS
BRIDGE NO. LAW-7-0563
S.R. 7 OVER INDIAN GUYAN CREEK

LAW-7-2.17
PID No. 75923

U:\173608714\LAW\75923\structures\LAW007_0563C\sheets\007_0563RSD009.dgn 5/13/2024 11:07:14 AM JSnair

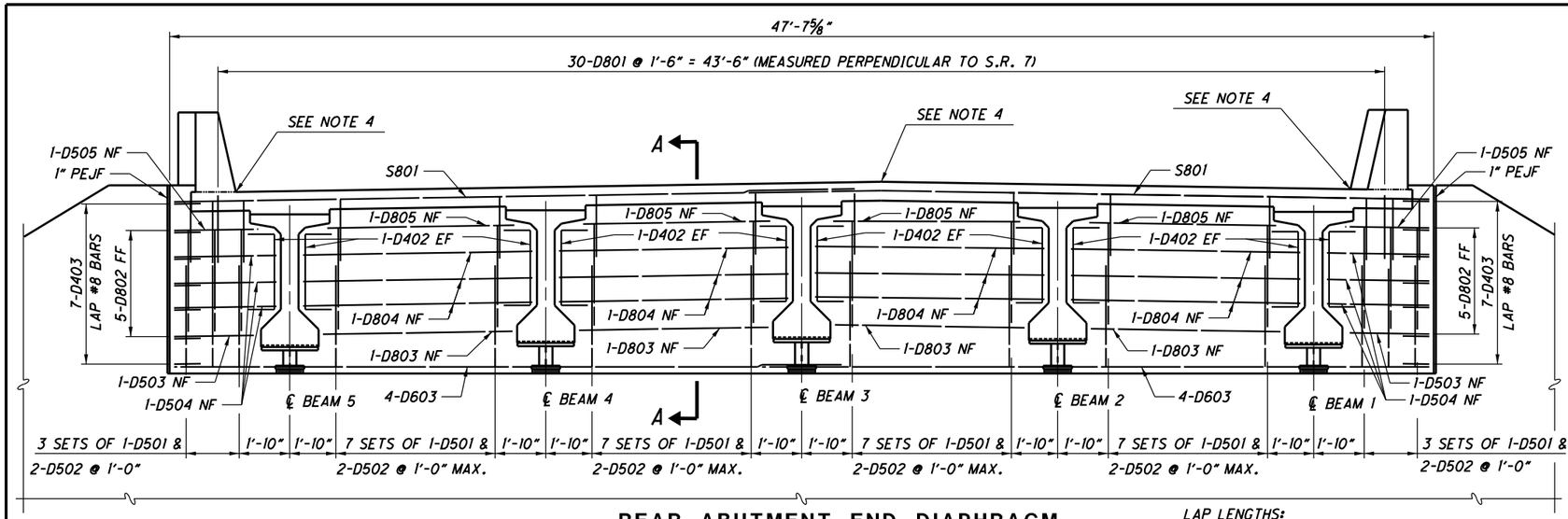

REAR ABUTMENT END DIAPHRAGM

LAP LENGTHS:
NO. 6 BARS = 3'-9"
NO. 8 BARS = 5'-4"

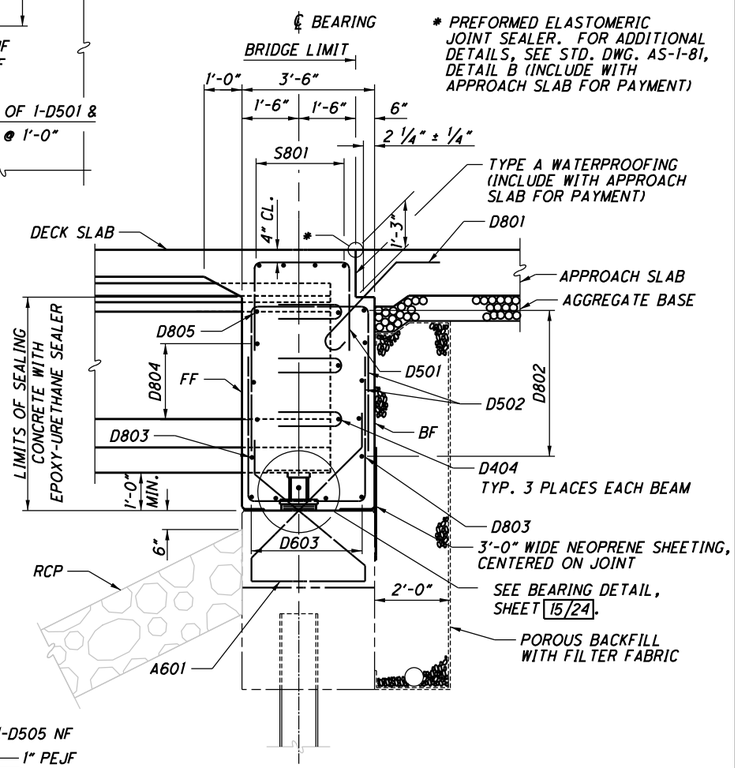

SECTION A-A

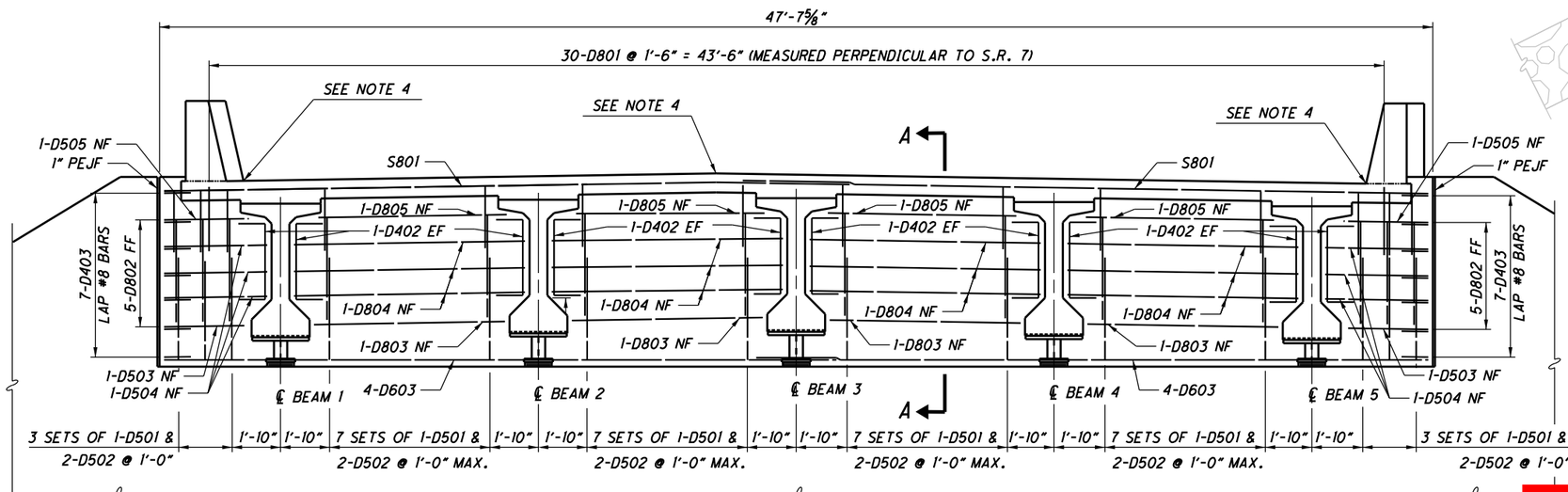

FORWARD ABUTMENT END DIAPHRAGM

LAP LENGTHS:
NO. 8 BARS = 5'-4"

NOTES:
1. ALL VERTICAL REINFORCING STEEL SHALL BE PLACED PARALLEL TO THE BEAMS.
2. FOR ABUTMENT DETAILS, SEE SHEET 6/24 THRU 8/24.
3. PLACE THE DIAPHRAGM CONCRETE ENCASING THE STRUCTURE MEMBER ENDS AFTER THE DECK PLACEMENT IN THE ADJACENT SPAN IS COMPLETE. PROCEDURES THAT PLACE THE ABUTMENT DIAPHRAGM WITH THE DECK CONCRETE MAY BE APPROVED BY THE ENGINEER IF THE PLACEMENT SUBMITTAL CAN ASSURE THAT THE DECK CONCRETE IN THE ADJACENT SPAN WILL BE PLACED BEFORE CONCRETE IN THE DIAPHRAGM HARDENS TO ITS INITIAL SET.
4. FOR DECK ELEVATIONS, SEE DECK CONSTRUCTION ELEVATION TABLE, SHEET 20/24.

DRAFT Stage 3 - Not for Construction 09/23/2024

DESIGN AGENCY
Stantec
1500 Lake Shore Dr.
Columbus, OH 43204
(614) 486-4383

DESIGNED	DRAWN	REVIEWED	DATE
BSM	JWS	MRS	03/2024
CHECKED	REVISED	STRUCTURE FILE NUMBER	
EER		4400372	

ABUTMENT END DIAPHRAGM DETAILS
BRIDGE NO. LAW-7-0563
S.R. 7 OVER INDIAN GUYAN CREEK

LAW-7-2.17
PID No. 75923

16/24

922/1247

U:\173608714\LAW\75923\structures\LAW007_0563C\sheets\007_0563RSD006.dgn 5/13/2024 11:07:16 AM JSnair

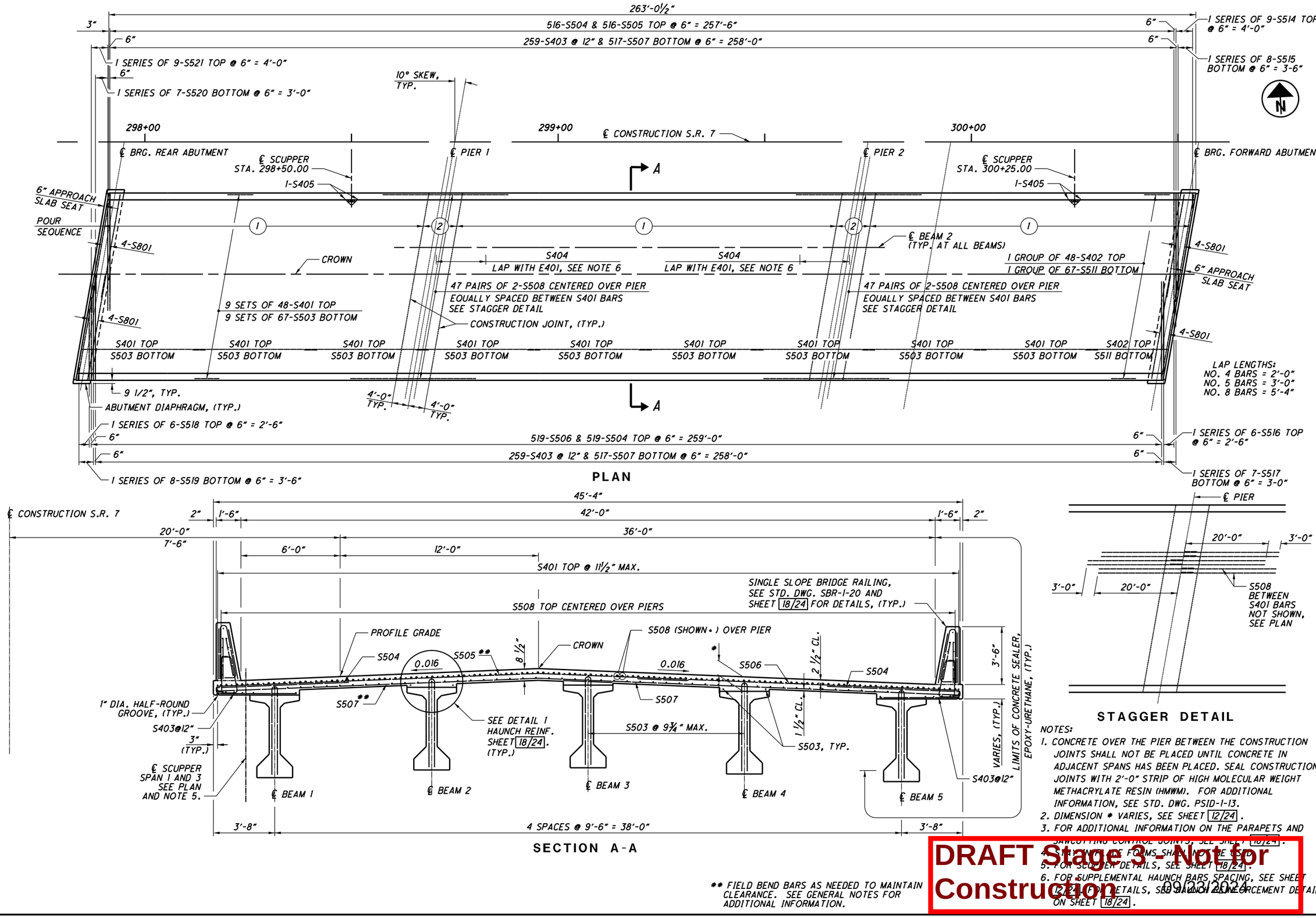

** FIELD BEND BARS AS NEEDED TO MAINTAIN CLEARANCE. SEE GENERAL NOTES FOR ADDITIONAL INFORMATION.

NOTES:

1. CONCRETE OVER THE PIER BETWEEN THE CONSTRUCTION JOINTS SHALL NOT BE PLACED UNTIL CONCRETE IN ADJACENT SPANS HAS BEEN PLACED. SEAL CONSTRUCTION JOINTS WITH 2'-0" STRIP OF HIGH MOLECULAR WEIGHT METHACRYLATE RESIN (HMWM). FOR ADDITIONAL INFORMATION, SEE STD. DWG. PSID-1-13.
2. DIMENSION * VARIES, SEE SHEET 12/24.
3. FOR ADDITIONAL INFORMATION ON THE PARAPETS AND SAWCUTTING CONTROL JOINTS, SEE SHEET 18/24.
4. FALSEWORK AND FORMS SHALL NOT BE REMOVED
5. FOR SCUPPER DETAILS, SEE SHEET 18/24.
6. FOR SUPPLEMENTAL HAUNCH BARS SPACING, SEE SHEET 12/24. FOR DETAILS, SEE HAUNCH REINFORCEMENT DETAIL ON SHEET 18/24.

DRAFT Stage 3 - Not for Construction 09/22/2024

DESIGN AGENCY
Stantec
1500 Lake Shore Dr.
Columbus, OH 43204
(614) 486-4383

DESIGNED	DRAWN	REVIEWED	DATE
BSM	JWS	MRS	03/2024
CHECKED	REVISED	STRUCTURE FILE NUMBER	
EER		4400372	

SUPERSTRUCTURE DETAILS
BRIDGE NO. LAW-7-0563
S.R. 7 OVER INDIAN GUYAN CREEK

LAW-7-2.17
PID No. 75923

17 / 24

923 / 1247

U:\173608714\LAW\75923\structures\LAW007_0563C\sheets\007_0563RSD002.dgn 5/13/2024 11:07:18 AM JSnair

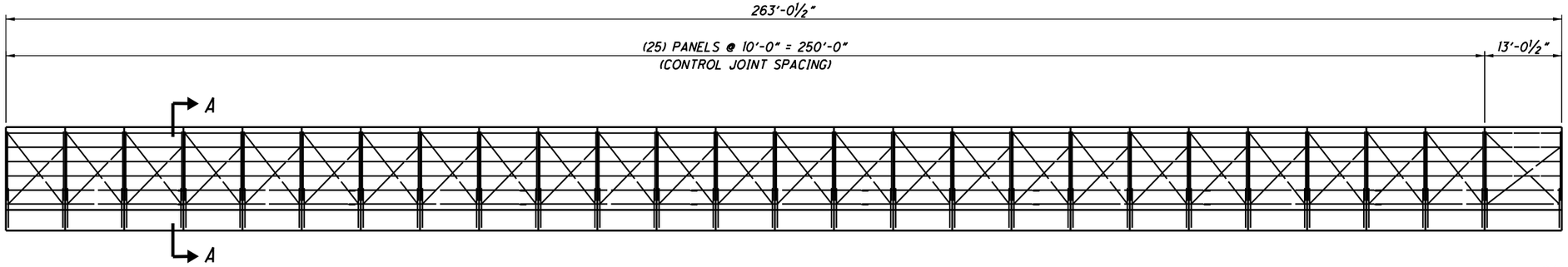

PARAPET ELEVATION
(1 REQUIRED PER SIDE)
(EXAGGERATED VERTICAL SCALE)

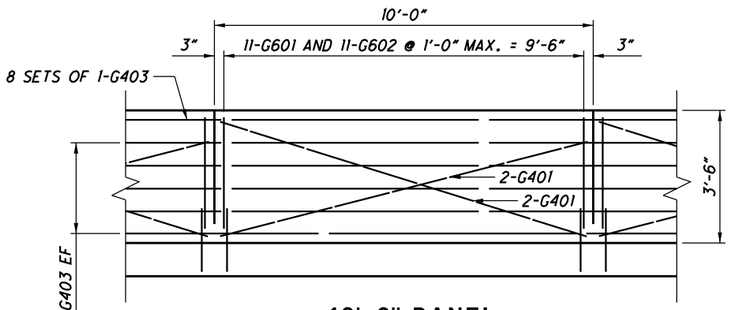

10'-0" PANEL
(25 REQUIRED PER SIDE)

#4 GFRP BAR SPLICE LENGTH = 1'-1"

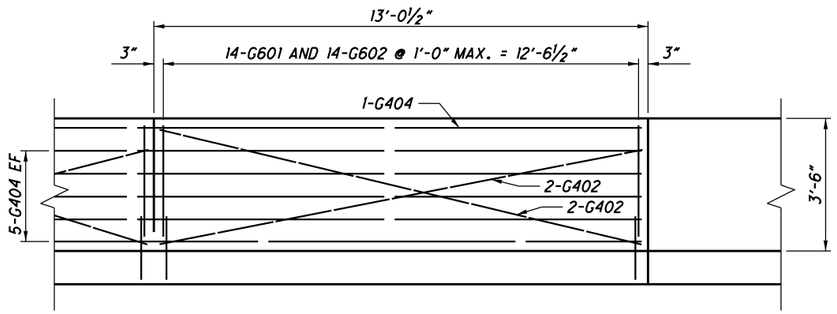

13'-0½" PANEL
(1 REQUIRED PER SIDE)

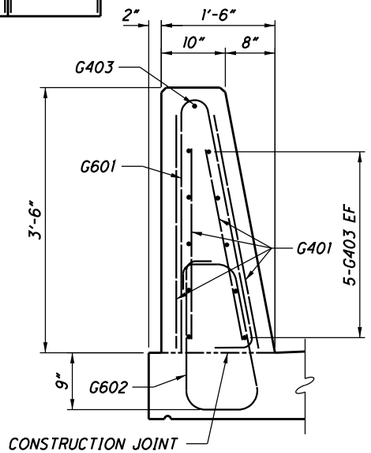

SECTION A-A

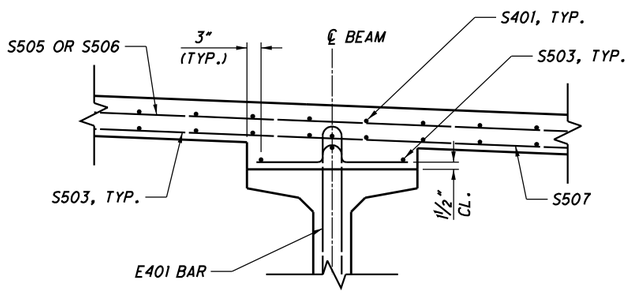

HAUNCH REINFORCEMENT DETAIL

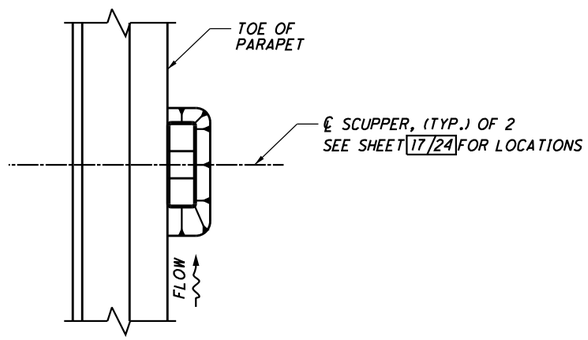

SCUPPER LAYOUT PLAN

SCUPPER NOTES:
1. *SUPPORT ANGLES, STRUCTURAL TUBING, BOLTS, NUTS AND WASHERS ARE INCLUDED WITH ITEM 518, SCUPPERS, INCLUDING SUPPORTS, AS PER PLAN FOR PAYMENT.*
2. *SCUPPERS, INCLUDING SUPPORT ANGLES, STRUCTURAL TUBING, BOLTS, NUTS, AND WASHERS, SHALL BE GALVANIZED IN ACCORDANCE WITH CMS 711.02.*
3. *ALL BOLTS SHALL BE ASTM A325 TYPE 1 GALVANIZED.*
4. *CONTRACTOR TO ADJUST DIMENSION TO AVOID REINFORCING AND STRANDS.*
5. *FOR ADDITIONAL NOTES & DETAILS SEE STD. DWG. GSD-1-19 SHEET 3 OF 3.*

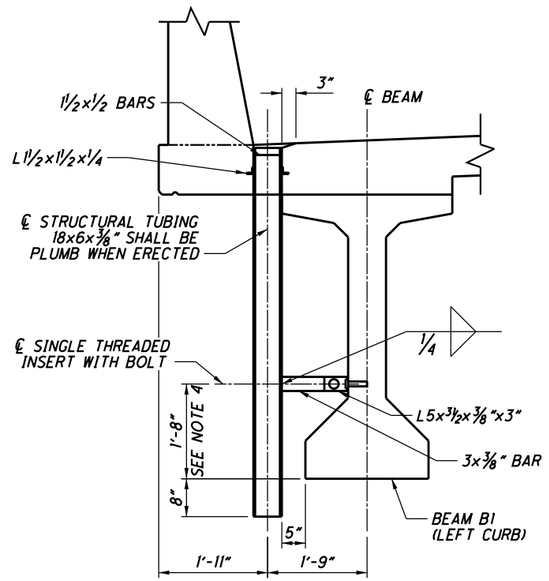

SCUPPER LAYOUT DETAIL
LOOKING UP STATION

NOTE:
1. FOR ADDITIONAL PARAPET INFORMATION, SEE STD. DWG. SBR-1-20.

DRAFT Stage 3 - Not for Construction 09/23/2024

DESIGN AGENCY
Stantec
1500 Lake Shore Dr.
Columbus, OH 43204
(614) 486-4383

DESIGNED	DRAWN	REVIEWED	DATE
BSM	JWS	MRS	03/2024
CHECKED	REVISED	STRUCTURE FILE NUMBER	
EER		4400372	

SUPERSTRUCTURE DETAILS
BRIDGE NO. LAW-7-0563
S.R. 7 OVER INDIAN GUYAN CREEK

LAW-7-2.17
PID No. 75923

18/24

924/1247

U:\173608714\LAW\75923\structures\LAW007_0563C\sheets\007_0563RSD005.dgn 5/13/2024 11:07:20 AM JSnair

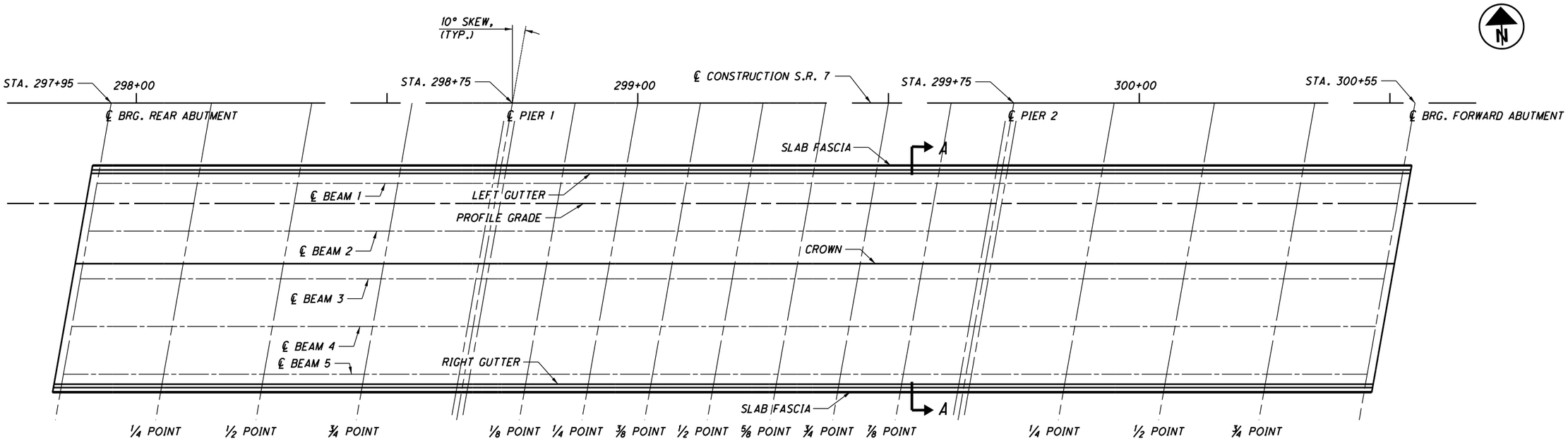

PLAN

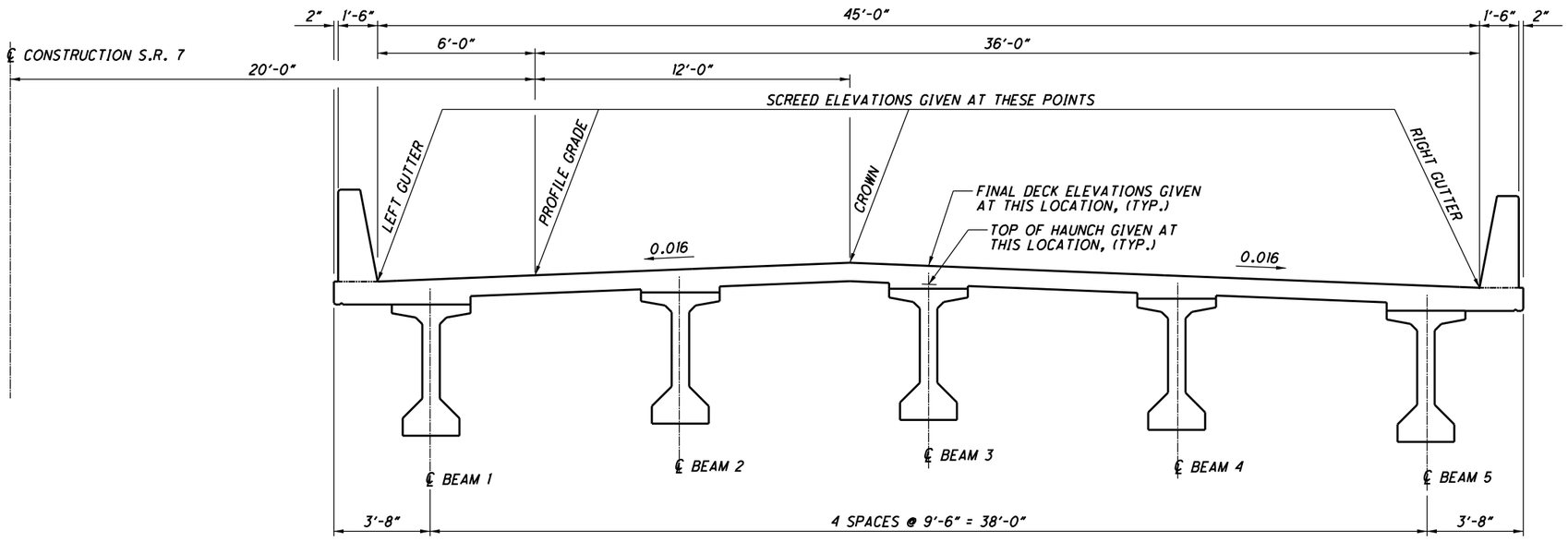

SECTION A-A

NOTES:
1. FOR SCREED, TOP OF HAUNCH, AND FINAL DECK ELEVATIONS, SEE SHEET 20/24

DRAFT Stage 3 - Not for Construction

DESIGN AGENCY
Stantec
1500 Lake Shore Dr.
Columbus, OH 43204
(614) 486-4383

DESIGNED	DRAWN	REVIEWED	DATE
BSM	JWS	MRS	03/2024
CHECKED	REVISED	STRUCTURE FILE NUMBER	
EER		4400372	

SCREED DIAGRAM
BRIDGE NO. LAW-7-0563
S.R. 7 OVER INDIAN GUYAN CREEK

LAW-7-2.17
PID No. 75923

U:\173608714\LAW\75923\structures\LAW007_0563C\sheets\007_0563RSD003.dgn 5/13/2024 11:07:22 AM JSnair

DECK CONSTRUCTION ELEVATIONS

LOCATION	DESCRIPTION	SPAN 1					SPAN 2								SPAN 3				
		℄ BEARING	1/4 POINT	1/2 POINT	3/4 POINT	℄ PIER	1/8 POINT	1/4 POINT	3/8 POINT	1/2 POINT	5/8 POINT	3/4 POINT	7/8 POINT	℄ PIER	1/4 POINT	1/2 POINT	3/4 POINT	℄ BEARING
LEFT GUTTER	STATION	297+92.53	298+12.53	298+32.53	298+52.53	298+72.53	298+85.03	298+97.53	299+10.03	299+22.53	299+35.03	299+47.53	299+60.03	299+72.53	299+92.53	300+12.53	300+32.53	300+52.53
	OFFSET	14.00'	14.00'	14.00'	14.00'	14.00'	14.00'	14.00'	14.00'	14.00'	14.00'	14.00'	14.00'	14.00'	14.00'	14.00'	14.00'	14.00'
	FINAL DECK EL.	567.70	567.14	566.61	566.11	565.64	565.37	565.10	564.84	564.60	564.37	564.15	563.94	563.74	563.45	563.18	562.95	562.75
	SCREED EL.	567.70	567.18	566.67	566.15	565.64	565.41	565.19	564.96	564.73	564.49	564.24	563.99	563.74	563.49	563.24	562.99	562.75
BEAM 1	STATION	297+92.18	298+12.18	298+32.18	298+52.18	298+72.18	298+84.68	298+97.18	299+09.68	299+22.18	299+34.68	299+47.18	299+59.68	299+72.18	299+92.18	300+12.18	300+32.18	300+52.18
	OFFSET	16.00'	16.00'	16.00'	16.00'	16.00'	16.00'	16.00'	16.00'	16.00'	16.00'	16.00'	16.00'	16.00'	16.00'	16.00'	16.00'	16.00'
	FINAL DECK EL.	567.74	567.18	566.65	566.15	565.68	565.41	565.14	564.88	564.64	564.41	564.19	563.98	563.78	563.49	563.22	562.99	562.78
	HAUNCH EL.	567.03	566.51	566.00	565.48	564.98	564.74	564.52	564.29	564.06	563.82	563.57	563.31	563.07	562.82	562.57	562.32	562.07
PROFILE GRADE	STATION	297+91.47	298+11.47	298+31.47	298+51.47	298+71.47	298+83.97	298+96.47	299+08.97	299+21.47	299+33.97	299+46.47	299+58.97	299+71.47	299+91.47	300+11.47	300+31.47	300+51.47
	OFFSET	20.00'	20.00'	20.00'	20.00'	20.00'	20.00'	20.00'	20.00'	20.00'	20.00'	20.00'	20.00'	20.00'	20.00'	20.00'	20.00'	20.00'
	FINAL DECK EL.	567.82	567.26	566.74	566.24	565.77	565.49	565.22	564.96	564.72	564.48	564.26	564.05	563.85	563.56	563.29	563.06	562.85
	SCREED EL.	567.82	567.31	566.79	566.28	565.77	565.52	565.31	565.09	564.85	564.61	564.36	564.10	563.85	563.60	563.35	563.10	562.85
BEAM 2	STATION	297+90.50	298+10.50	298+30.50	298+50.50	298+70.50	298+83.00	298+95.50	299+08.00	299+20.50	299+33.00	299+45.50	299+58.00	299+70.50	299+90.50	300+10.50	300+30.50	300+50.50
	OFFSET	25.50'	25.50'	25.50'	25.50'	25.50'	25.50'	25.50'	25.50'	25.50'	25.50'	25.50'	25.50'	25.50'	25.50'	25.50'	25.50'	25.50'
	FINAL DECK EL.	567.94	567.38	566.85	566.35	565.88	565.60	565.33	565.07	564.82	564.59	564.37	564.16	563.96	563.66	563.39	563.16	562.95
	HAUNCH EL.	567.23	566.71	566.20	565.68	565.17	564.92	564.72	564.49	564.26	564.01	563.76	563.50	563.25	562.99	562.75	562.49	562.24
CROWN	STATION	297+89.36	298+09.36	298+29.36	298+49.36	298+69.36	298+81.86	298+94.36	299+06.86	299+19.36	299+31.86	299+44.36	299+56.86	299+69.36	299+89.36	300+09.36	300+29.36	300+49.36
	OFFSET	32.00	32.00	32.00	32.00	32.00	32.00	32.00	32.00	32.00	32.00	32.00	32.00	32.00	32.00	32.00	32.00	32.00
	FINAL DECK EL.	568.08	567.51	566.98	566.48	566.01	565.72	565.45	565.20	564.95	564.71	564.49	564.28	564.08	563.78	563.51	563.27	563.06
	SCREED EL.	568.08	575.53	568.53	562.48	566.01	579.38	577.97	574.97	571.22	562.48	558.25	554.53	564.08	572.15	567.86	559.25	563.06
BEAM 3	STATION	297+88.83	298+08.83	298+28.83	298+48.83	298+68.83	298+81.33	298+93.83	299+06.33	299+18.83	299+31.33	299+43.83	299+56.33	299+68.83	299+88.83	300+08.83	300+28.83	300+48.83
	OFFSET	35.00'	35.00'	35.00'	35.00'	35.00'	35.00'	35.00'	35.00'	35.00'	35.00'	35.00'	35.00'	35.00'	35.00'	35.00'	35.00'	35.00'
	FINAL DECK EL.	568.04	567.48	566.95	566.44	565.97	565.69	565.42	565.16	564.91	564.68	564.45	564.24	564.04	563.74	563.47	563.23	563.02
	HAUNCH EL.	567.33	566.82	566.30	565.78	565.26	565.01	564.81	564.58	564.34	564.10	563.84	563.58	563.33	563.07	562.83	562.57	562.31
BEAM 4	STATION	297+87.15	298+07.15	298+27.15	298+47.15	298+67.15	298+79.65	298+92.15	299+04.65	299+17.15	299+29.65	299+42.15	299+54.65	299+67.15	299+87.15	300+07.15	300+27.15	300+47.15
	OFFSET	44.50'	44.50'	44.50'	44.50'	44.50'	44.50'	44.50'	44.50'	44.50'	44.50'	44.50'	44.50'	44.50'	44.50'	44.50'	44.50'	44.50'
	FINAL DECK EL.	567.94	567.37	566.84	566.33	565.86	565.57	565.30	565.04	564.79	564.56	564.33	564.12	563.91	563.61	563.34	563.10	562.89
	HAUNCH EL.	567.23	566.71	566.19	565.67	565.15	564.88	564.69	564.46	564.23	563.98	563.72	563.46	563.20	562.95	562.69	562.44	562.18
BEAM 5	STATION	297+85.48	298+05.48	298+25.48	298+45.48	298+65.48	298+77.98	298+90.48	299+02.98	299+15.48	299+27.98	299+40.48	299+52.98	299+65.48	299+85.48	300+05.48	300+25.48	300+45.48
	OFFSET	54.00'	54.00'	54.00'	54.00'	54.00'	54.00'	54.00'	54.00'	54.00'	54.00'	54.00'	54.00'	54.00'	54.00'	54.00'	54.00'	54.00'
	FINAL DECK EL.	567.84	567.27	566.73	566.22	565.74	565.46	565.19	564.92	564.67	564.43	564.21	563.99	563.79	563.48	563.21	562.97	562.75
	HAUNCH EL.	567.13	566.60	566.08	565.55	565.03	564.80	564.57	564.33	564.09	563.89	563.59	563.33	563.08	562.81	562.56	562.30	562.04
RIGHT GUTTER	STATION	297+85.13	298+05.13	298+25.13	298+45.13	298+65.13	298+77.63	298+90.13	299+02.63	299+15.13	299+27.63	299+40.13	299+52.63	299+65.13	299+85.13	300+05.13	300+25.13	300+45.13
	OFFSET	56.00'	56.00'	56.00'	56.00'	56.00'	56.00'	56.00'	56.00'	56.00'	56.00'	56.00'	56.00'	56.00'	56.00'	56.00'	56.00'	56.00'
	FINAL DECK EL.	567.81	567.25	566.71	566.20	565.72	565.43	565.16	564.90	564.65	564.41	564.18	563.97	563.76	563.46	563.18	562.94	562.72
	SCREED EL.	567.81	567.29	566.76	566.24	565.72	565.48	565.25	565.02	564.78	564.57	564.27	564.01	563.76	563.50	563.24	562.98	562.72

NOTES:
1. SCREED ELEVATIONS SHOWN REPRESENT THE THEORETICAL DECK SURFACE LOCATION PRIOR TO DEFLECTIONS CAUSED BY DECK PLACEMENT AND OTHER ANTICIPATED DEAD LOADS.
2. TOP OF HAUNCH ELEVATIONS SHOWN REPRESENT THE THEORETICAL LOCATION OF THE BOTTOM OF THE DECK ABOVE THE BEAM/GIRDER HAUNCH PRIOR TO DEFLECTIONS CAUSED BY DECK PLACEMENT AND OTHER ANTICIPATED DEAD LOADS.
3. FINAL DECK SURFACE ELEVATIONS SHOWN REPRESENT THE DECK SURFACE LOCATION AFTER ALL ANTICIPATED DEAD LOAD DEFLECTIONS HAVE OCCURED.
4. FOR TYPICAL SECTION SEE SHEET 19/24.

DRAFT Stage 2 - Not for Construction 09/23/2024

DESIGN AGENCY
Stantec
1500 Lake Shore Dr.
Columbus, OH 43204
(614) 486-4383

DESIGNED BSM | DRAWN JWS | CHECKED EER | REVIEWED MRS | DATE 03/2024

REVISED

STRUCTURE FILE NUMBER 4400372

DECK CONSTRUCTION ELEVATIONS
BRIDGE NO. LAW-7-0563
S.R. 7 OVER INDIAN GUYAN CREEK

LAW-7-2.17
PID No. 75923

20/24

926/1247

U:\173608714\LAW\75923\structures\LAW007_0563C\sheets\007_0563RSD004.dgn 5/13/2024 11:07:24 AM JSnair

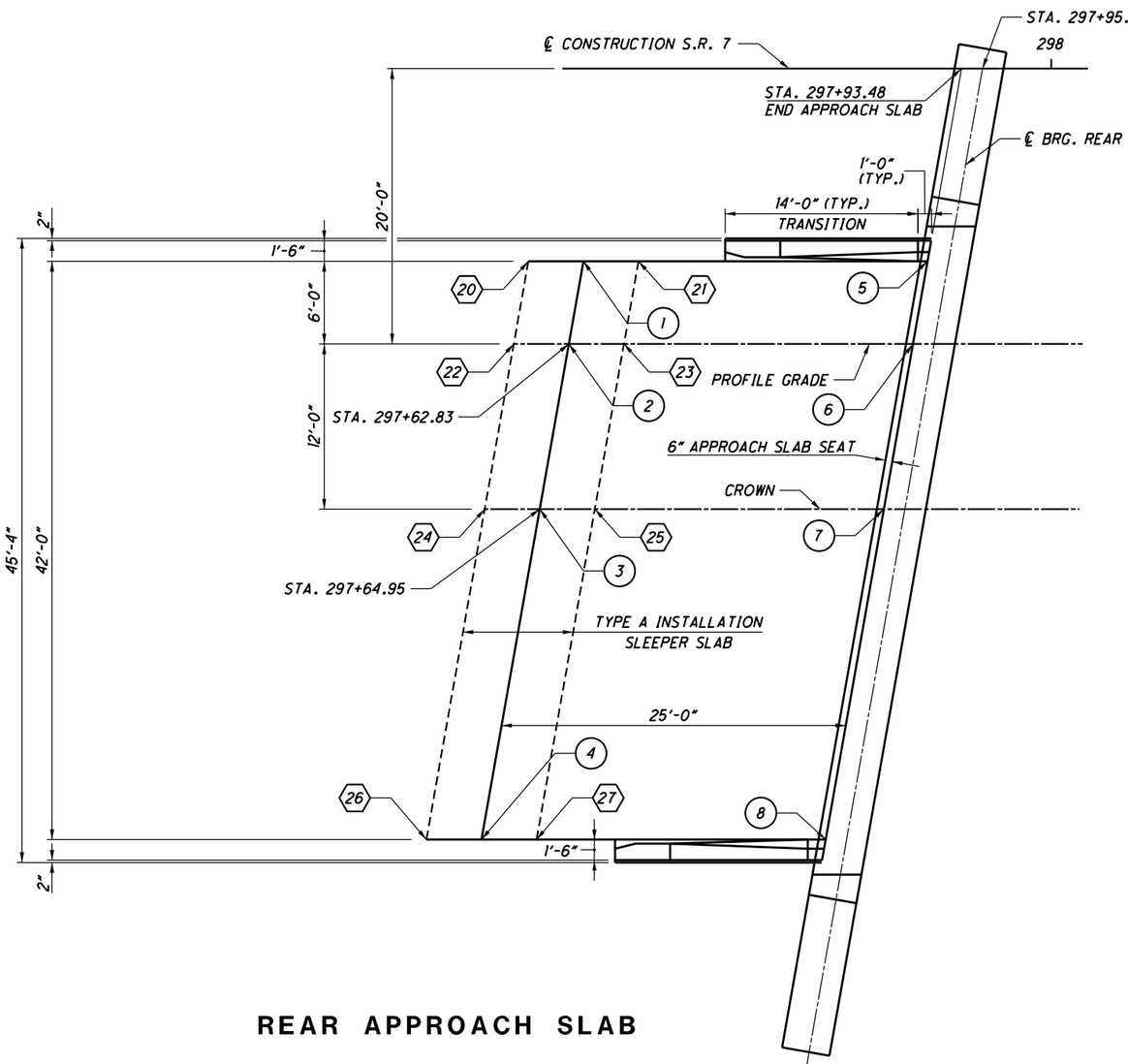

REAR APPROACH SLAB

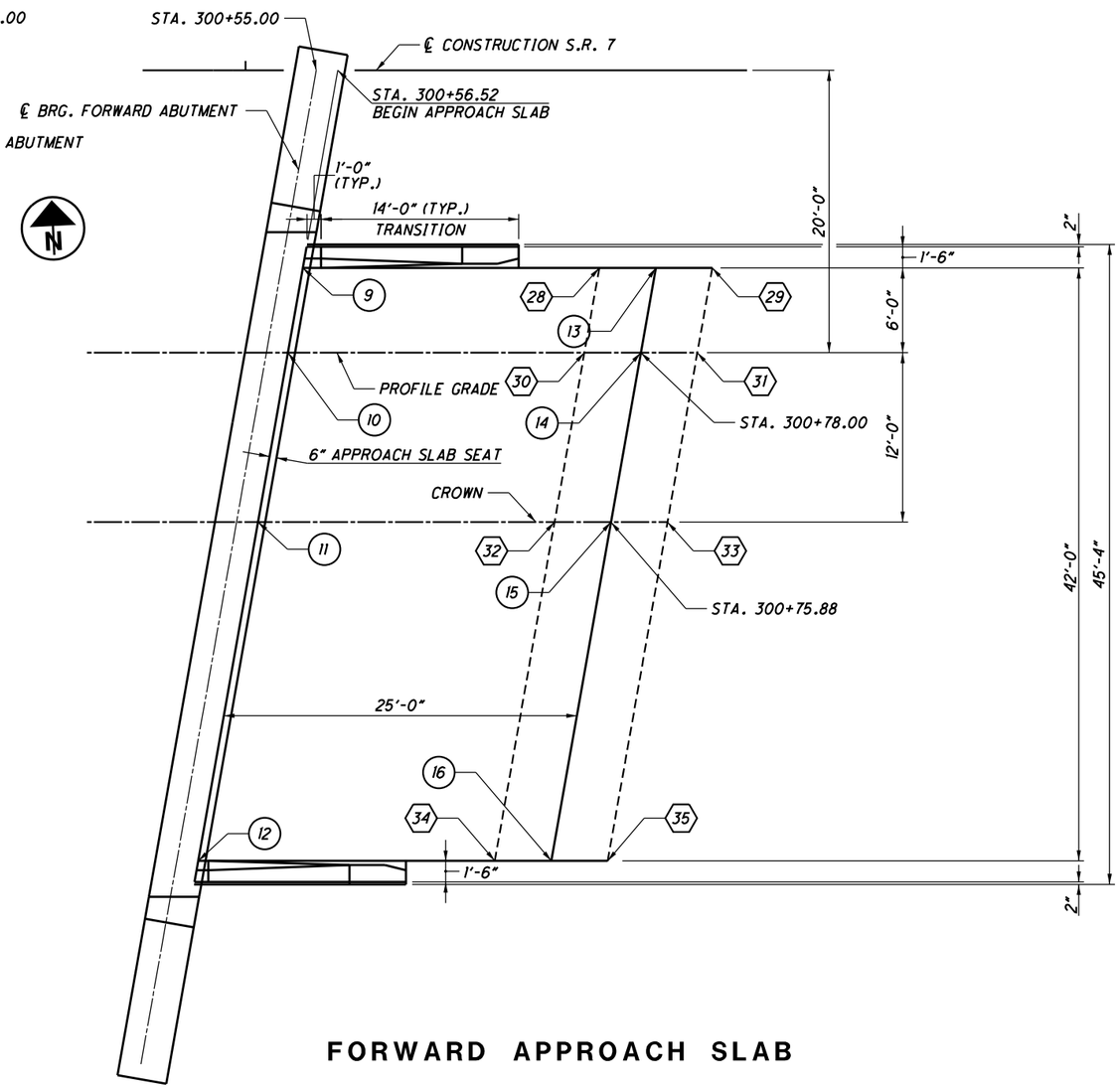

FORWARD APPROACH SLAB

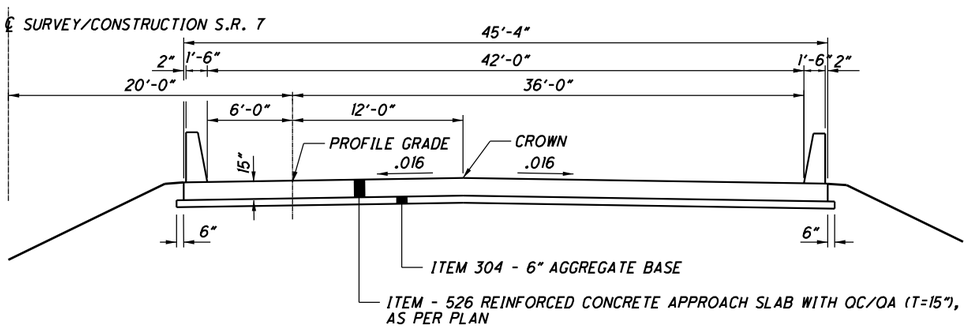

TYPICAL APPROACH SLAB SECTION

NO.	APPROACH SLAB ELEVATIONS
1	568.48
2	568.61
3	568.86
4	568.61
5	567.74
6	567.87
7	568.12
8	567.86
9	562.73
10	562.84
11	563.05
12	562.71
13	562.52
14	562.62
15	562.83
16	562.48

NO.	SLEEPER SLAB SURFACE ELEVATIONS
20	567.35
21	567.10
22	567.48
23	567.24
24	567.42
25	567.49
26	567.49
27	567.24
28	561.30
29	561.24
30	561.40
31	561.34
32	561.61
33	561.55
34	561.27
35	561.20

NOTES:
1. FOR ADDITIONAL DETAILS OF THE BARRIER, SEE SHEET 22/24 AND STD. DWG. SBP-1-20.
2. FOR ADDITIONAL DETAILS OF THE APPROACH SLAB, SEE STD. DWG. BP-4.2-15.
3. THE COST OF CONCRETE, AND INCIDENTALS IN BARRIER TO BE INCLUDED WITH ITEM 526 REINFORCED CONCRETE, APPROACH SLAB WITH OC/OA (T=15"), AS PER PLAN.

DRAFT Stage 3 - Not for Construction 6/3/2024

DESIGN AGENCY
Stantec
1500 Lake Shore Dr.
Columbus, OH 43204
(614) 486-4383

DESIGNED	DRAWN	REVIEWED	DATE
BSM	JWS	MRS	03/2024
CHECKED	REVISED	STRUCTURE FILE NUMBER	
EER		4400372	

APPROACH SLAB DETAILS
BRIDGE NO. LAW-7-0563
S.R. 7 OVER INDIAN GUYAN CREEK

LAW-7-2.17
PID No. 75923

927
1247

U:\173608714\LAW\75923\structures\LAW007_0563C\sheets\007_0563RMD001.dgn 5/13/2024 11:07:26 AM JSnair

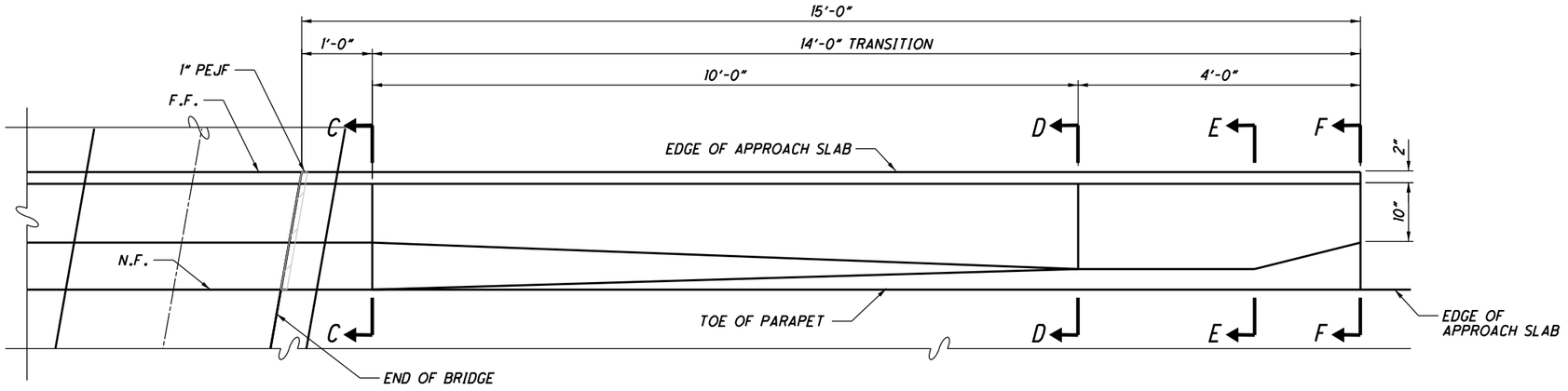

PLAN

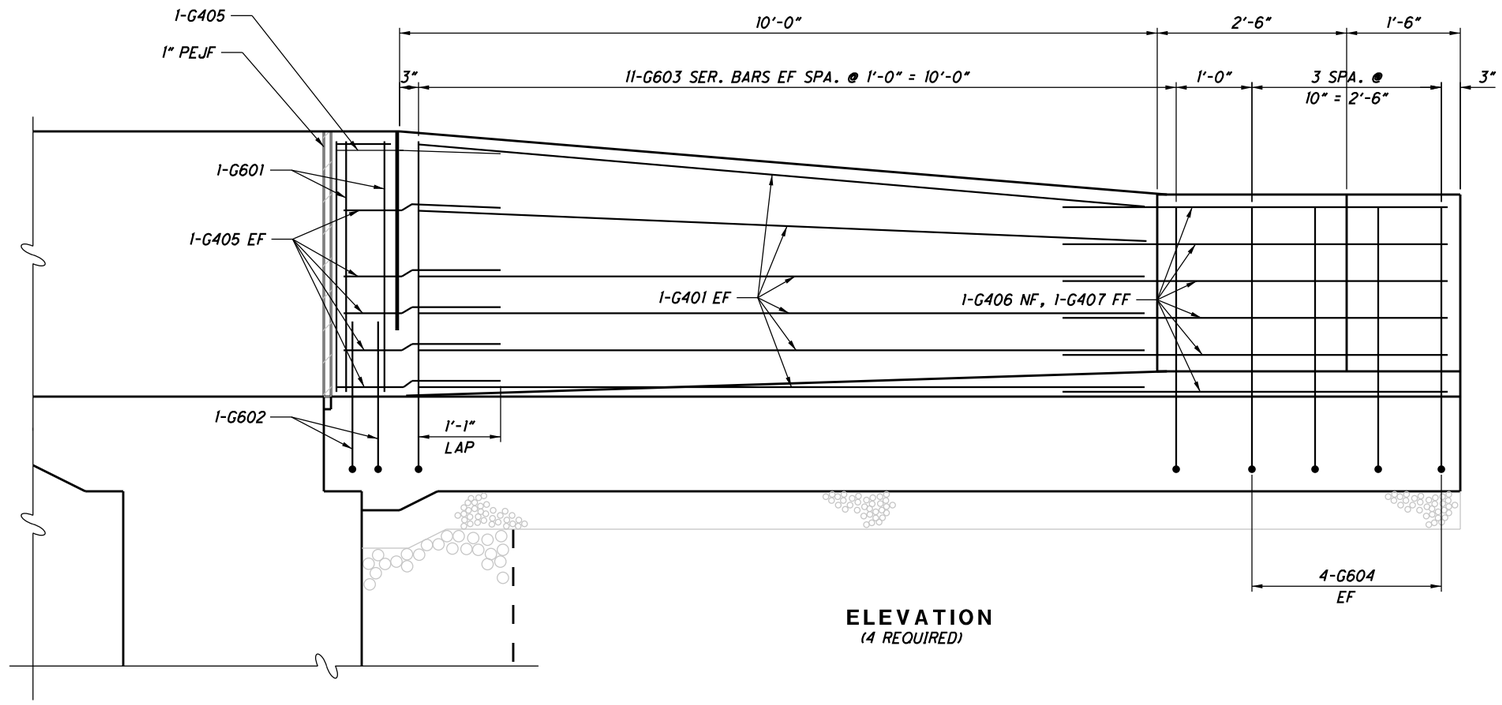

ELEVATION
(4 REQUIRED)

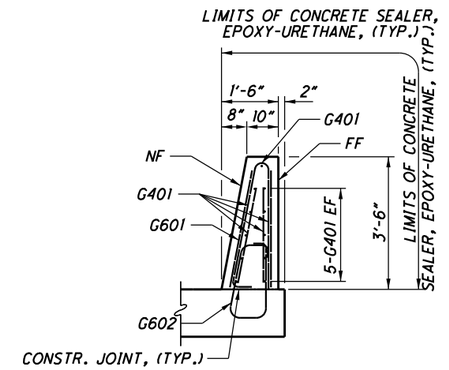

SECTION C-C

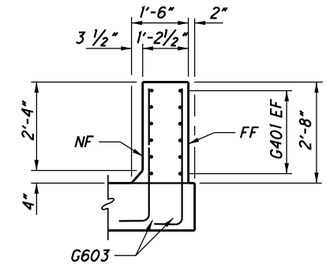

SECTION D-D

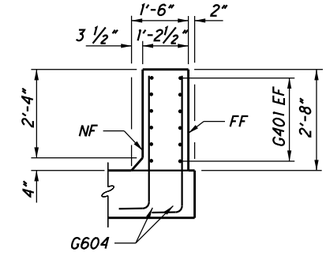

SECTION E-E

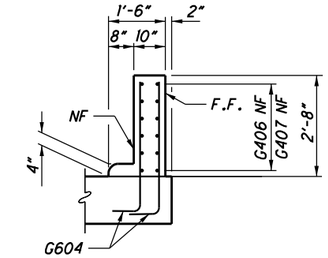

SECTION F-F

NOTES:
1. FOR ADDITIONAL DETAILS OF THE BARRIER, SEE STD. DWG. SBR-1-20.
2. FOR ADDITIONAL DETAILS OF THE APPROACH SLAB, SEE STD. DWG. AS-1-15 AND AS-2-15.
3. THE COST OF CONCRETE, AND INCIDENTALS IN BARRIER TO BE INCLUDED WITH ITEM 526 REINFORCED CONCRETE APPROACH SLAB, 1'-0", AS PER PLAN.

DRAFT Stage 3 - Not for Construction 09/23/2024

DESIGN AGENCY
Stantec
1500 Lake Shore Dr.
Columbus, OH 43204
(614) 486-4383

DESIGNED	DRAWN	REVIEWED	DATE
BSM	JWS	MRS	03/2024
CHECKED	REVISED	STRUCTURE FILE NUMBER	
EER		4400372	

APPROACH SLAB DETAILS
BRIDGE NO. LAW-7-0563
S.R. 7 OVER INDIAN GUYAN CREEK

LAW-7-2.17
PID No. 75923

22 / 24

928
1247

U:\173608714\LAW\75923\structures\LAW007_0563C\sheets\007_0563RMD002.dgn 5/13/2024 11:07:28 AM JSnair

MARK	NUMBER TOTAL	LENGTH	WEIGHT	TYPE	DIMENSIONS A	B	C	D	E	R	INC
ABUTMENT (EPOXY COATED STEEL REINFORCEMENT)											
A401	60	9'-9"	391	3	2'-8"	2'-0"					
A501	320	10'-3"	3421	2	3'-8"	3'-2"	3'-8"				
A502	4	8'-9"	37	2	2'-11"	3'-2"	2'-11"				
	4 SR	7'-9"			2'-5"		2'-5"				
A503	OF	TO	511	2	TO	3'-2"	TO				0'-6"
	10	16'-9"			6'-11"		6'-11"				
A505	4	13'-0"	54	STR							
A506	4	12'-4"	51	STR							
	2 SR	3'-3"									
A507	OF	TO	76	STR							2'-0"
	5	11'-3"									
	2 SR	2'-8"									
A508	OF	TO	70	STR							2'-0"
	5	10'-8"									
	2 SR	3'-1"									
A509	OF	TO	75	STR							2'-0 3/4"
	5	11'-4"									
	2 SR	2'-6"									
A510	OF	TO	69	STR							2'-0 1/2"
	5	10'-8"									
A511	16	12'-7"	210	STR							
A512	4	12'-6"	52	STR							
A513	4	13'-1"	55	STR							
A514	4	7'-1"	30	2	2'-1"	3'-2"	2'-1"				
A515	4	19'-7"	82	2	8'-4"	3'-2"	8'-4"				
A601	80	16'-1"	1933	26	3'-3"	1'-7"	3'-3"				
A602	40	38'-10"	2333	STR							
A801	32	39'-6"	3375	STR							
DIAPHRAGMS (EPOXY COATED STEEL REINFORCMENT)											
D301	10	3'-10"	14	38	0'-6"	1'-0"					
D401	56	13'-3"	496	6	1'-8"	5'-0"	1'-0"				
D402	72	4'-7"	220	2	1'-0"	2'-10"	1'-0"				
D403	28	5'-1"	94	2	1'-0"	3'-3"	1'-0"				
D404	15	4'-0"	40	STR							
D405	10	9'-4"	62	24	5'-6"	0'-4"				0'-2"	
D501	68	7'-1"	502	2	2'-4"	2'-8"	2'-4"				
D502	136	10'-11"	1549	2	4'-0"	3'-2"	4'-0"				
D503	4	3'-1"	13	STR							
D504	12	3'-10"	48	STR							
D505	4	3'-2"	13	STR							
D601	16	7'-0"	168	STR							
D602	48	8'-7"	619	STR							
D603	16	25'-2"	605	STR							
D801	60	4'-10"	774	18	2'-8"	1'-0"	1'-0"				
D802	20	26'-6"	1415	STR							
D803	8	7'-2"	153	STR							
D804	24	8'-7"	550	STR							
D805	8	7'-0"	150	STR							
D809	64	7'-1"	1196	1	1'-3"	6'-0"					
SUB-TOTAL		21,507									

MARK	NUMBER PIER 1	PIER 2	TOTAL	LENGTH	WEIGHT	TYPE	DIMENSIONS A	B	C	D	E	R	INC
PIERS (EPOXY COATED STEEL REINFORCMENT)													
P501	208	208	416	10'-3"	4447	2	3'-10"	2'-10"	3'-10"				
P502	8	8	16	42'-2"	704	STR							
P601	96	96	192	11'-8"	3365	STR							
P901	96	96	192	14'-2"	9248	17	11'-8"						
P902	72	72	144	11'-3"	5508	1	1'-3"	10'-3"					
P903	72	—	72	39'-0"	9547	STR							
P904	12	12	24	42'-2"	3441	STR							
P905	14	14	28	44'-11"	4276	2	1'-8"	42'-2"	1'-8"				
P906	—	72	72	37'-3"	9119	STR							
SP501	3	—	3	34'-9"	3113	27	0'-4"	3'-0"	34'-9"				
SP502	—	3	3	34'-10"	2946	27	0'-4"	3'-0"	32'-10"				
SUB-TOTAL			55,714										

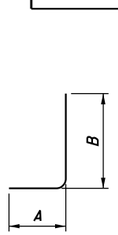

TYPE-1

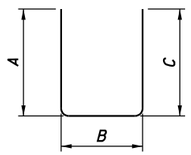

TYPE-2

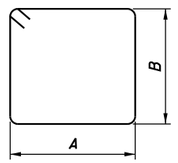

TYPE-3

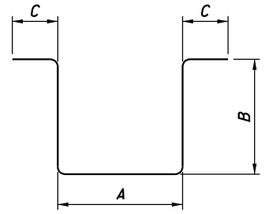

TYPE-6

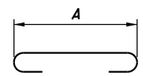

TYPE-17

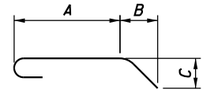

TYPE-18

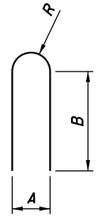

TYPE-24

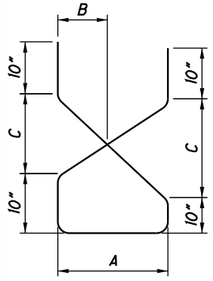

TYPE-26

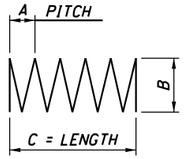

TYPE-27

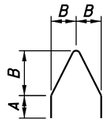

TYPE-38

NOTES:
1. BAR SIZE IS INDICATED IN THE BAR MARK. THE FIRST DIGIT INDICATES THE BAR SIZE NUMBER. FOR EXAMPLE, P501 IS A NUMBER 5 BAR. BAR DIMENSIONS SHOWN ARE OUT TO OUT UNLESS OTHERWISE NOTED.

DRAFT Stage 3 - Not for Construction

5/23/2024

DESIGN AGENCY
Stantec
1500 Lake Shore Dr.
Columbus OH 43204
(614) 486-4383

DESIGNED	DRAWN	REVIEWED	DATE
BSM	JWS	MRS	03/2024
CHECKED	REVISED	STRUCTURE FILE NUMBER	
EER		4400372	

REINFORCING STEEL LIST
BRIDGE NO. LAW-7-0563
S.R. 7 OVER INDIAN GUYAN CREEK

LAW-7-2.17
PID No. 75923

929 1247

U:\173608714\LAW\75923\structures\LAW007_0563C\sheets\007_0563RRL001.dgn 5/13/2024 11:07:30 AM JSnair

MARK	NUMBER TOTAL	LENGTH	WEIGHT	TYPE	DIMENSIONS A	B	C	D	E	R	INC
SUPERSTRUCTURE (EPOXY COATED STEEL REINFORCMENT)											
S401	432	30'-0"	8657	STR							
S402	48	10'-11"	350	STR							
S403	518	5'-0"	1730	STR							
S404	200	4'-2"	560	50	10"	1'-2"					
S405	4	3'-0"	8	STR							
S503	603	30'-0"	18868	STR							
S504	1035	8'-8"	9356	16	8'-1"						
S505	516	29'-3"	15742	16	28'-8"						
S506	519	20'-1"	10871	16	19'-6"						
S507	1034	24'-0"	25883	STR							
S508	376	23'-0"	9020	STR							
S511	67	20'-0"	1398	STR							
	1 SR	4'-1"			3'-6"						
S514	OF	TO	145	16	TO						2'-10"
	9	26'-10"			26'-3"						
	1 SR	3'-6"									
S515	OF	TO	112	STR							2'-10"
	8	23'-4"									
	1 SR	3'-10"			3'-3"						
S516	OF	TO	82	16	TO						3'-9"
	6	22'-7"			22'-0"						
	1 SR	5'-0"									
S517	OF	TO	99	STR							2'-10"
	7	22'-0"									
	1 SR	3'-7"			3'-0"						
S518	OF	TO	66	16	TO						2'-9 ¾"
	6	17'-8"			17'-1"						
	1 SR	3'-0"									
S519	OF	TO	107	STR							2'-9 ¾"
	8	22'-9"									
	1 SR	5'-0"									
S520	OF	TO	129	STR							3'-0"
	8	26'-0"									
	1 SR	4'-5"			3'-10"						
S521	OF	TO	97	16	TO						4'-5 ¼"
	6	26'-7"			26'-0"						
S801	16	26'-4"	1125	STR							
PARAPET (EPOXY COATED STEEL REINFORCMENT)											
G601	586	7'-0"	6161	23	0'-6"	3'-3"	3'-3"				
G602	586	7'-8"	6748	37	1'-0"	9½"	1'-5"	1'-0"	7"		
	8 SR	4'-2"				3'-4"					
G603	OF	TO	606	1	1'-0"	TO					0'-1"
	11	4'-11"				4'-1"					
G604	32	4'-1"	196	1	1'-0"	3'-3"					
		TOTAL	118,116								

MARK	NUMBER TOTAL	LENGTH	TOTAL LEGNTH	TYPE	DIMENSIONS A	B	C	D	E	R	INC
PARAPET (GLASS FIBER REINFORCED POLYMER - GFRP)											
G401	248	10'-0"	2480'-0"	STR							
G402	8	13'-0"	104'-0"	STR							
G403	176	30'-0"	5280'-0"	STR							
G404	22	31'-2"	685'-8"	STR							
G405	44	2'-2"	95'-4"	STR							
G406	24	6'-4"	152'-0"	25	2'-6"	2'-5"	1'-4"	0'-1 ½"	0'-5"		
G407	24	5'-1"	122'-0"	STR							
		TOTAL	8,919'-0"								

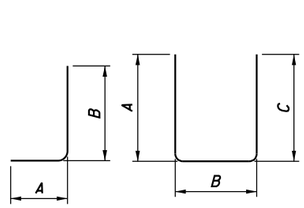

TYPE-1 TYPE-2

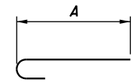

TYPE-16

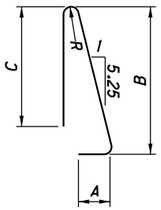

TYPE-23

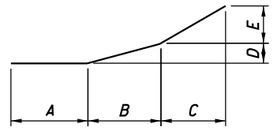

TYPE-25

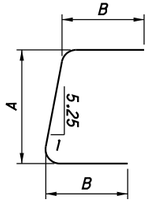

TYPE-28

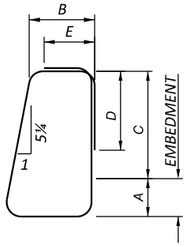

TYPE-37

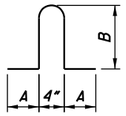

TYPE-50

NOTES:
1. BAR SIZE IS INDICATED IN THE BAR MARK. THE FIRST DIGIT INDICATES THE BAR SIZE NUMBER. FOR EXAMPLE, S501 IS NUMBER 5 SIZE. BAR DIMENSIONS SHOWN ARE OUT TO OUT UNLESS OTHERWISE NOTED.

DRAFT Stage 3 - Not for Construction 09/23/2024

DESIGN AGENCY
Stantec
1500 Lake Shore Dr.
Columbus, OH 43204
(614) 486-4383

DESIGNED	DRAWN	REVIEWED	DATE
BSM	JWS	MRS	03/2024
CHECKED	REVISED	STRUCTURE FILE NUMBER	
EER		4400372	

REINFORCING STEEL LIST
BRIDGE NO. LAW-7-0563
S.R. 7 OVER INDIAN GUYAN CREEK

LAW-7-2.17
PID No. 75923

24 / 24

930
1247

U:\173608714\LAW\75923\structures\LAW007_0563C\sheets\007_0563RRL002.dgn 5/13/2024 11:07:32 AM JSnair

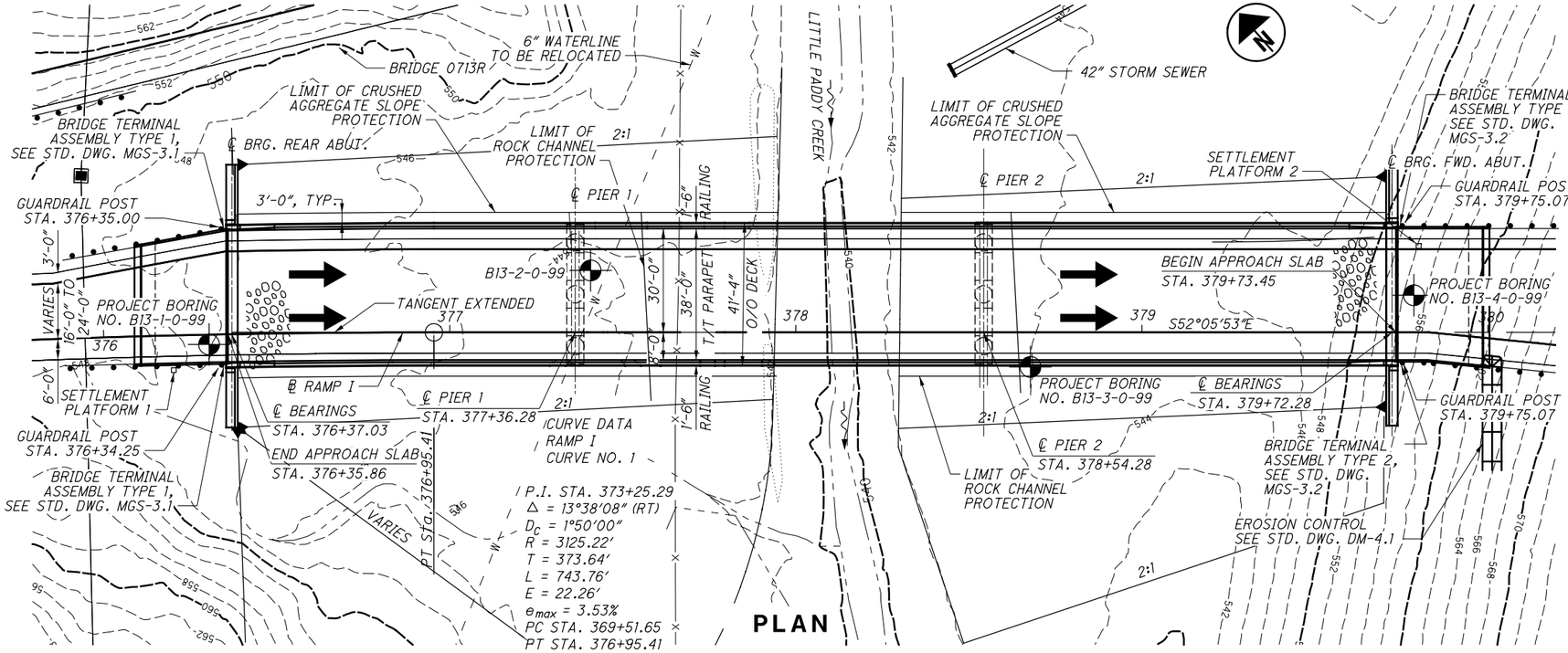

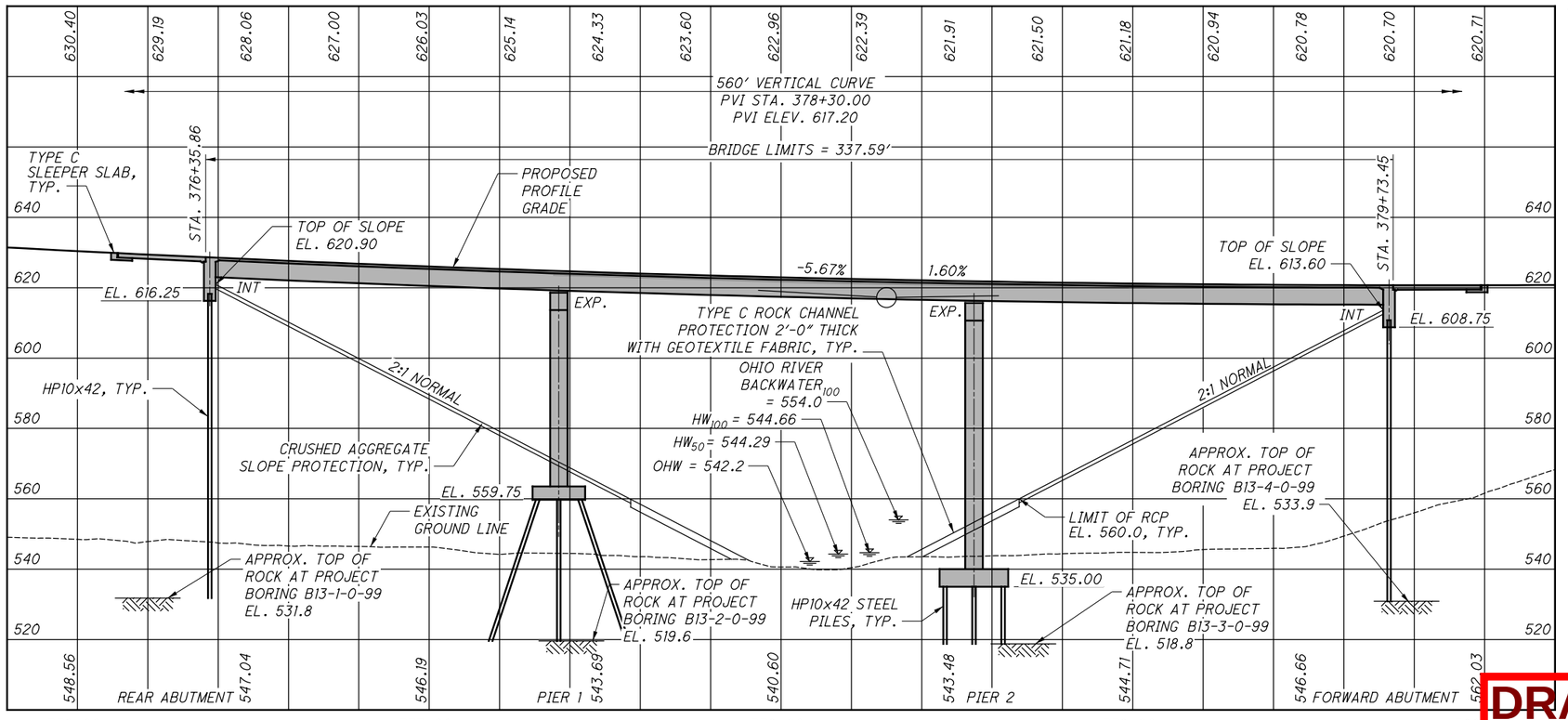

PROFILE

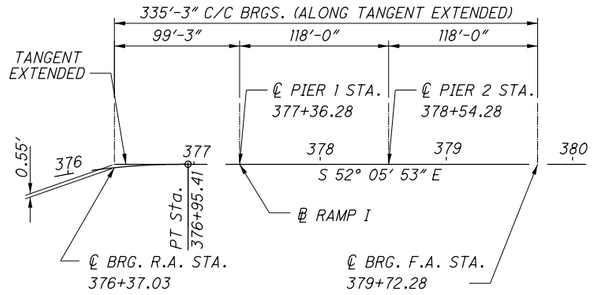

GEOMETRIC LAYOUT

BENCHMARK DATA

	EASTING	NORTHING	ELEVATION
BM #1	1999157.677	167390.5880	804.00
BM #2	2004654.695	163488.2738	951.00

FOR ADDITIONAL BENCHMARK INFORMATION. SEE ROADWAY PLAN SHEET ⊖

NOTES

EARTHWORK LIMITS SHOWN ARE APPROXIMATE. ACTUAL SLOPES SHALL CONFORM TO PLAN CROSS SECTIONS.

DESIGN TRAFFIC:
2028 ADT = 3,300 2028 ADTT = 231
2048 ADT = 5,100 2048 ADTT = 357
ALL TRAFFIC EASTBOUND ON THIS EXIT RAMP

LEGEND

PROJECT BORING LOCATION

HYDRAULIC DATA

DRAINAGE AREA = 1.74 SQ. MILES
Q (50) = 954 CFS V (50) = 5.42 FT/S
Q (100) = 1160 CFS V (100) = 5.87 FT/S
STRUCTURE CLEARS THE 50 YEAR DESIGN HW BY 70.81 FEET.

ESTIMATED LENGTH OF PILING	
REAR ABUT.	90 FT.
PIER 1	45 FT.
PIER 2	25 FT.
FWD. ABUT.	80 FT.

PROPOSED STRUCTURE

TYPE: PRESTRESSED CONCRETE I-BEAMS (WF54-49) WITH COMPOSITE CONCRETE SLAB SUPPORTED BY INTEGRAL ABUTMENTS AND CAP & COLUMN PIERS ON PILES
SPANS: 98'-2", 115'-10", 116'-11" C/C BEARINGS (MEASURED ALONG TANGENT EXTENDED)
ROADWAY: 38'-0" TOE/TOE BRIDGE RAILING
VEHICULAR LIVE LOAD: HL-93
SKEW: 0°00'00" (WITH RESPECT TO TANGENT EXTENDED)
FUTURE WEARING SURFACE: 0.060 KIP/FT²
APPROACH SLABS: 25' LONG (T=15") AS-1-15 (MODIFIED) & AS-2-15, TYPE C
ALIGNMENT: 1°50'00" CURVE (RT) - TANGENT
SUPERELEVATION: VARIES (.0263 MAX)
COORDINATES: LATITUDE N 38° 26' 58.01"
LONGITUDE W 82° 32' 47.56"
DECK AREA: 13,951 SF

DRAFT Stage 3 - Not for Construction 09/23/2024

DESIGN AGENCY
Stantec Consulting Services Inc.
1500 Lake Shore Drive, Suite 100
Columbus, Ohio 43204
(614) 486-4383

DESIGNED	DRAWN	REVIEWED	DATE
EDA	ALH	BSM	4/5/24
CHECKED	REVISED	STRUCTURE FILE NUMBER	
MRS	XXX	4400496	

LAWRENCE COUNTY
STA. 376+35.86
STA. 379+73.45

SITE PLAN
BRIDGE NO. LAW-7-07.11P
RAMP I OVER LITTLE PADDY CREEK

LAW-7-2.17
PID No. 75923

1 / 30

931 / 1247

Y:\1736\active\173608714\LAW\engineering\75923_LAW-7-2.17\Design\structures\LAW007_07IIP\Sheets\007_07IIP_SP001.dgn Design 5/13/2024 1:32:03 PM mstur devant

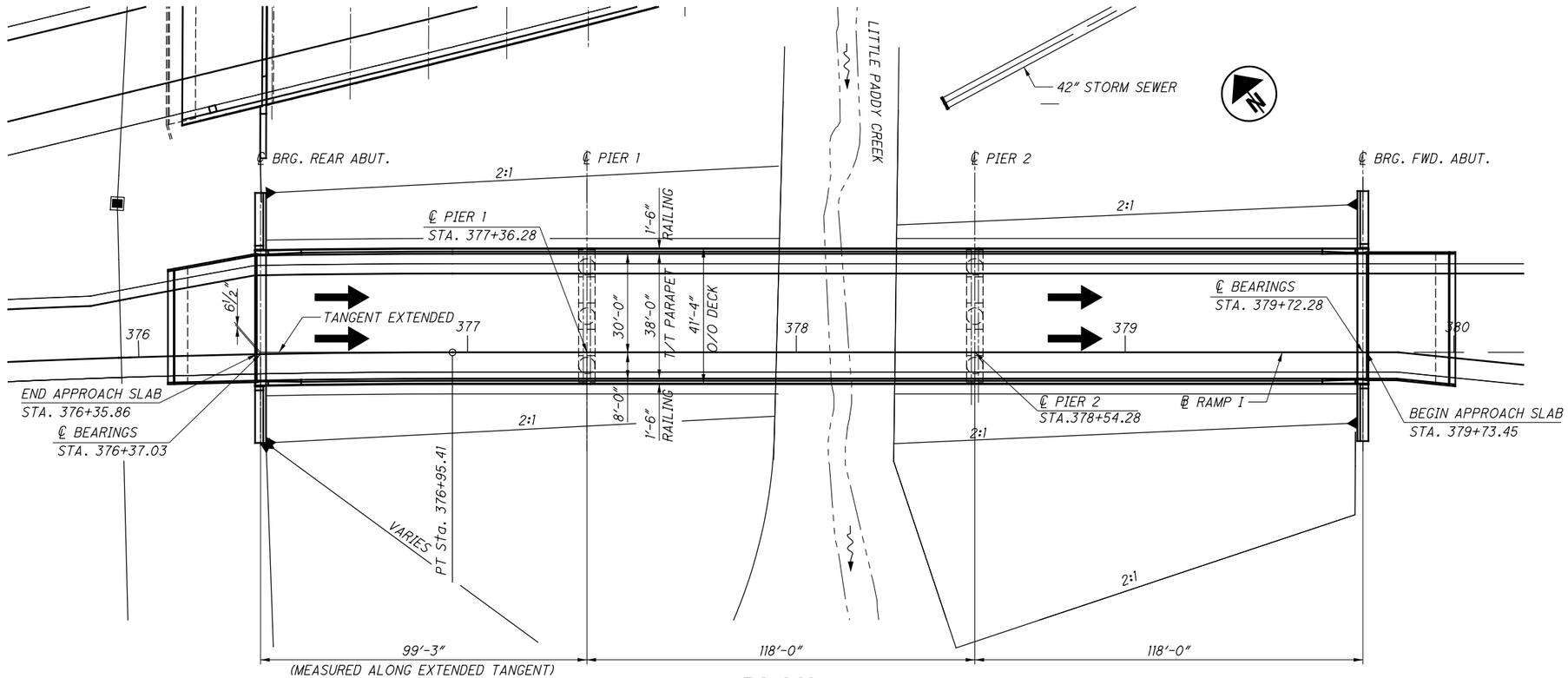

PLAN

DRAFT Stage 3 - Not for Construction 09/23/2024

DESIGN AGENCY
Stantec Consulting Services Inc.
1500 Lake Shore Drive, Suite 100
Columbus, Ohio 43204
(614) 486-4383

DESIGNED	DRAWN	REVIEWED	DATE
EDA	ALH	BSM	4/5/24
CHECKED	REVISED	STRUCTURE FILE NUMBER	
MRS	XXX	4400496	

GENERAL PLAN
BRIDGE NO. LAW-7-0711
RAMP I OVER LITTLE PADDY CREEK

LAW-7-2.17
PID No. 75923

2 / 30

932
1247

\\US0268-PPFSS01\workgroup\1736\active\173608714\LAW\engineering\75923_LAW-7-2.17\Design\structures\LAW007_07IIP\Sheets\007_07IIP_SG001.dgn Design 5/13/2024 1:32:12 PM msturdevant

\\US0268-PPFSS01\workgroup\1736\active\173608714\LAW\engineering\75923_LAW-7-2.17\Design\structures\LAW007_07IP\Sheets\007_07IP_SN001.dgn Sheet 5/13/2024 1:32:13 PM msturdevant

STANDARD DRAWINGS AND SUPPLEMENTAL SPECIFICATIONS

REFER TO THE FOLLOWING STANDARD BRIDGE DRAWING(S):

AS-1-15 REVISED 01-20-23
AS-2-15 REVISED 07-21-23
PSID-1-13 REVISED 01-20-23
SBR-1-20 REVISED 07-21-23

AND TO THE FOLLOWING SUPPLEMENTAL SPECIFICATION

800 DATED 01-19-24

DESIGN SPECIFICATIONS

THIS STRUCTURE CONFORMS TO THE "LRFD BRIDGE DESIGN SPECIFICATIONS" ADOPTED BY THE AMERICAN ASSOCIATION OF STATE HIGHWAY AND TRANSPORTATION OFFICIALS, 9TH EDITION AND THE ODOT BRIDGE DESIGN MANUAL, 2020.

OPERATIONAL IMPORTANCE

A LOAD MODIFIER OF 1.0 HAS BEEN ASSUMED FOR THE DESIGN OF THIS STRUCTURE IN ACCORDANCE WITH THE AASHTO LRFD BRIDGE DESIGN SPECIFICATIONS, ARTICLE 1.3.5 AND THE ODOT BRIDGE DESIGN MANUAL, 2020

DESIGN LOADING

DESIGN LOADING: HL-93

FUTURE WEARING SURFACE (FWS) OF 0.060 KIPS/SQ.FT.

DESIGN DATA

CONCRETE CLASS QC2 WITH QC/QA
-COMPRESSIVE STRENGTH 4.5 KSI (SUPERSTRUCTURE)

CONCRETE CLASS QC1 WITH QC/QA
-COMPRESSIVE STRENGTH 4.0 KSI (PIERS)

CONCRETE CLASS QC4 WITH QC/QA
-COMPRESSIVE STRENGTH 4.0 KSI (SUBSTRUCTURE)

REINFORCING STEEL
-MINIMUM YIELD STRENGTH 60 KSI

STEEL H-PILES - ASTM A572 - YIELD STRENGTH 50 KSI

STRUCTURAL STEEL - ASTM A709 GRADE 50
-YIELD STRENGTH 50 KSI

CONCRETE FOR PRESTRESSED BEAMS:
COMPRESSIVE STRENGTH (FINAL) - 7 KSI
COMPRESSIVE STRENGTH (RELEASE) - 6 KSI

WELDED WIRE FABRIC:
YIELD STRENGTH - 70 KSI

PRESTRESSING STRAND:
AREA = 0.217 SQ.IN.
ULTIMATE STRENGTH = 270 KSI
INITIAL STRESS = 202.5 KSI (LOW RELAXATION STRANDS)

MONOLITHIC WEARING SURFACE

MONOLITHIC WEARING SURFACE IS ASSUMED, FOR DESIGN PURPOSES, TO BE 1 INCH THICK.

PILE DRIVING CONSTRAINTS

PRIOR TO DRIVING PILES, CONSTRUCT THE SPILL THROUGH SLOPES AND THE BRIDGE APPROACH EMBANKMENT BEHIND THE ABUTMENTS UP TO THE LEVEL OF THE SUBGRADE ELEVATION FOR A MINIMUM DISTANCE OF 200 FEET BEHIND EACH ABUTMENT. DO NOT BEGIN THE EXCAVATION FOR THE ABUTMENT AND PIER FOOTINGS AND THE INSTALLATION OF THE ABUTMENT AND PIER PILES UNTIL AFTER THE ABOVE REQUIRED EMBANKMENT HAS BEEN CONSTRUCTED AND A 128 CALENDAR DAY WAITING PERIOD HAS ELAPSED. THE ENGINEER MAY ADJUST THE LENGTH OF THE WAITING PERIOD BASED ON SETTLEMENT PLATFORM READINGS. AFTER THE SPECIFIED WAITING PERIOD HAS ELAPSED, DRIVE THE ABUTMENT AND PIER 1 AND 2 PILES TO REFUSAL ON BEDROCK.

PILES TO BEDROCK

DRIVE PILES TO REFUSAL ON BEDROCK THE DEPARTMENT WILL CONSIDER REFUSAL TO BE OBTAINED WHEN THE PILE PENETRATION IS AN INCH OR LESS AFTER RECEIVING AT LEAST 20 BLOWS FROM THE PILE HAMMER. SELECT THE HAMMER SIZE TO ACHIEVE THE REQUIRED DEPTH TO BEDROCK AND REFUSAL.

THE TOTAL FACTORED LOAD IS 177 KIPS PER PILE FOR THE REAR ABUTMENT PILES AND 203 KIPS PER PILE FOR THE FORWARD ABUTMENT PILES. NO ADDITIONAL LOADING DUE TO DOWNDRAG IS ANTICIPATED AS LONG AS THE WAITING PERIOD FOR THE APPROACH EMBANKMENTS IS OBSERVED. THE TOTAL FACTORED LOAD IS 181 KIPS PER PILE FOR THE PIER 1 PILES AND 230 KIPS PER PILE FOR THE PIER 2 PILES .

REAR ABUTMENT PILES:
10 HP 10X42 PILES 95 FEET LONG, ORDER LENGTH

PIER 1 PILES:
27 HP 10X42 PILES 50 FEET LONG, ORDER LENGTH

PIER 2 PILES:
27 HP 10X42 PILES 30 FEET LONG, ORDER LENGTH

FORWARD ABUTMENT PILES:
10 HP 10X42 PILES 85 FEET LONG, ORDER LENGTH

PILE SPLICES

IN LIEU OF USING THE FULL PENETRATION BUTT WELDS SPECIFIED IN CMS 507.09 TO SPLICE STEEL H-PILES, THE CONTRACTOR MAY USE A MANUFACTURED H-PILE SPLICER. FURNISH SPLICERS FROM THE FOLLOWING MANUFACTURER:

ASSOCIATED PILE AND FITTING CORPORATION
8 WOOD HOLLOW RD. PLAZA 1
PARSIPPANY, NEW JERSEY 07054

INSTALL AND WELD THE SPLICER TO THE PILE SECTIONS IN ACCORDANCE WITH THE MANUFACTURER'S WRITTEN ASSEMBLY PROCEDURE SUPPLIED TO THE ENGINEER BEFORE THE WELDING IS PERFORMED.

DECK PLACEMENT DESIGN ASSUMPTIONS

THE FOLLOWING ASSUMPTIONS OF CONSTRUCTION MEANS AND METHODS WERE MADE FOR THE ANALYSIS AND DESIGN OF THE SUPERSTRUCTURE. THE CONTRACTOR IS RESPONSIBLE FOR THE DESIGN OF THE FALSEWORK SUPPORT SYSTEM WITHIN THESE PARAMETERS AND WILL ASSUME RESPONSIBILITY FOR SUPERSTRUCTURE ANALYSIS FOR DEVIATION FROM THESE DESIGN ASSUMPTIONS.

AN EIGHT WHEEL FINISHING MACHINE WITH A MAXIMUM WHEEL LOAD OF 2.4 KIPS.

A MINIMUM OUT-TO-OUT WHEEL SPACING AT EACH END OF THE MACHINE OF 103".

A MAXIMUM SPACING OF OVERHANG FALSEWORK BRACKETS OF 48 IN.

A MAXIMUM DISTANCE FROM THE CENTERLINE OF THE FASCIA GIRDER TO THE FACE OF THE SAFETY HANDRAIL OF 65".

APPROACH EMBANKMENT CONSTRUCTION:

THE APPROACH EMBANKMENTS SHALL BE CONSTRUCTED AND THEN UNDERGO A WAITING PERIOD OF 128 DAYS PRIOR TO DRIVING PILES.

SEE SHEETS XX FOR SLOPE REINFORCEMENT DETAILS AND NOTES REGARDING EMBANKMENT CONSTRUCTION.

ABBREVIATIONS:

ABUT	-	ABUTMENT
APPROX.	-	APPROXIMATE
BM	-	BENCHMARK
BRG.	-	BEARING
B/	-	BOTTOM OF
℄	-	CENTERLINE
CONC.	-	CONCRETE
CLR.	-	CLEARANCE
CONST.	-	CONSTRUCTION
DIA.	-	DIAMETER
DWG.	-	DRAWING
EF	-	EACH FACE
EL.	-	ELEVATION
EQ.	-	EQUAL
EST.	-	ESTIMATED
EXIST.	-	EXISTING
EXP.	-	EXPANSION
F.A.	-	FORWARD ABUTMENT
FF	-	FAR FACE
FNDN.	-	FOUNDATION
FTG.	-	FOOTING
FWD.	-	FORWARD
F/F	-	FACE TO FACE
HLMR	-	HIGH LOAD MULTI-ROTATIONAL BEARINGS
JT.	-	JOINT
LT.	-	LEFT
MAX.	-	MAXIMUM
MIN.	-	MINIMUM
NF	-	NEAR FACE
NO.	-	NUMBER
O/O	-	OUT TO OUT
PAVT.	-	PAVEMENT
PEJF	-	PREFORMED EXPANSION JOINT FILLER
R.A.	-	REAR ABUTMENT
REF.	-	REFERENCE
RF	-	RIGHT FORWARD
REINF.	-	REINFORCED
RT.	-	RIGHT
SP.	-	SETTLEMENT PLATFORM
SPA.	-	SPACE
S.R.	-	STATE ROUTE
STA.	-	STATION
STD.	-	STANDARD
TYP.	-	TYPICAL
T/	-	TOP OF
T/T	-	TOE TO TOE
T&B	-	TOP AND BOTTOM
VAR.	-	VARIES
REQ'D	-	REQUIRED

DRAFT Stage 3 - Not for Construction 09/23/2024

DESIGN AGENCY
Stantec Consulting Services Inc.
1500 Lake Shore Drive, Suite 100
Columbus, Ohio 43204
(614) 486-4383

DESIGNED	DRAWN	REVIEWED	DATE
EDA	ALH	BSM	4/5/24
CHECKED	REVISED	STRUCTURE FILE NUMBER	
MRS		4400496	

GENERAL NOTES
BRIDGE NO. LAW-7-0711
RAMP I OVER LITTLE PADDY CREEK

LAW-7-2.17
PID No. 75923

933
1247

\\US0268-PPFSSON\workgroup\1736\active\173608714\LAW\engineering\75923_LAW-7-2.17\Design\structures\LAW007_07IP\Sheets\007_07IP_SN002.dgn Sheet 5/13/2024 1:32:14 PM mstur devant

ITEM SPECIAL - SETTLEMENT PLATFORM:

DESCRIPTION: THIS ITEM CONSISTS OF FURNISHING, CONSTRUCTING, AND MAINTAINING SETTLEMENT PLATFORMS AND OBTAINING SETTLEMENT READINGS AS REQUIRED BY THE PLANS OR AS DIRECTED BY THE ENGINEER. SEE SETTLEMENT PLATFORM DETAIL THIS SHEET. AT THE OPTION AND EXPENSE OF THE CONTRACTOR, ADDITIONAL SETTLEMENT PLATFORMS MAY BE INSTALLED AT LOCATIONS APPROVED BY THE ENGINEER. SETTLEMENT READINGS SHALL BE TAKEN WEEKLY BEGINNING WITH THE FIRST WEEK FOLLOWING PLACEMENT OF EACH PLATFORM. THE READINGS SHALL BE PLOTTED ON GRAPH PAPER PRESENTING DEFORMATION (ON THE NEGATIVE Y-AXIS) AND FILL HEIGHT (ON THE POSITIVE Y-AXIS) VERSUS TIME (ON THE X-AXIS). A COPY OF EACH CUMULATIVE PLOT SHALL BE SENT TO ODOT, CO, CONSTRUCTION MANAGEMENT/CONSTRUCTION ADMINISTRATION, GEOTECHNICAL AND EARTHWORK ENGINEER AND ODOT, CO, OFFICE OF GEOTECHNICAL ENGINEERING, FOUNDATIONS AND RETAINING WALLS ENGINEER, AFTER EACH SETTLEMENT READING IS RECORDED.

MATERIAL: SOUND LUMBER SUCH AS ¾" EXTERIOR GRADE PLYWOOD SHALL BE USED FOR THE BASE. THE PIPE SHALL BE 2½" STANDARD BLACK PIPE WITH THREADED FITTINGS AS SHOWN ON THE PLANS. A STEEL PLATE 36" X 36" X ⅛" MAY BE SUBSTITUTED FOR THE LUMBER FOR THE PLATFORMS, AT THE CONTRACTOR'S OPTION.

CONSTRUCTION METHODS: THE PLATFORM SHALL CONFORM TO THE SETTLEMENT PLATFORM DETAILS SHOWN ON THIS SHEET. THE PLATFORM SHALL BE SET ON A LEVEL SURFACE. THE PIPE SHALL BE FIRMLY SECURED TO THE PLATFORM AND SHALL BE MAINTAINED IN A PLUMB POSITION DURING THE PLACEMENT OF THE EMBANKMENT. THE PIPE SHALL BE MARKED AT INTERVALS TO FACILITATE MEASUREMENT OF THE DEPTH OF FILL. THE CONTRACTOR SHALL STOP WORK IN ANY LOCATION WHERE THE SETTLEMENT PLATFORM HAS BEEN DISTURBED OR DAMAGED. PLATFORMS OR PIPES DAMAGED OR DISPLACED DURING CONSTRUCTION SHALL BE RESTORED TO THEIR PROPER CONDITION AT THE CONTRACTOR'S EXPENSE.

SETTLEMENT PLATFORMS SHALL BE PLACED AT THE FOLLOWING LOCATIONS:

I.D.	STATION	OFFSET
SP1	376+20	10' RIGHT
SP2	379+80	25' LEFT

PRIOR TO PAVING, THE TOP OF THE SETTLEMENT PLATFORM PIPE SHALL BE CUT OFF TWO FEET BELOW THE FINISHED SURFACE OF THE SUBGRADE OR FINISHED GROUND SURFACE, WHICHEVER IS APPLICABLE.

REFER TO ODOT GEOTECHNICAL BULLETIN GB4 "GUIDELINES FOR THE USE OF GEOTECHNICAL INSTRUMENTATION" FOR ADDITIONAL INSTALLATION AND MONITORING INSTRUCTION.

WAITING PERIOD CRITERIA:
THE ENGINEER WILL CONSIDER THE WAITING PERIOD COMPLETE WHEN CONSECUTIVE SETTLEMENT READINGS, RECORDED AFTER EMBANKMENT CONSTRUCTION IS COMPLETE AND AT LEAST ONE WEEK (168 HOURS) APART, RESULT IN ELEVATION DIFFERENCES EQUAL TO OR LESS THAN ⅛ INCH. THE ESTIMATED WAITING PERIOD IS 128 CALENDAR DAYS.

IF SETTLEMENT RATES EXCEED ¾ INCH PER MONTH AFTER EMBANKMENT CONSTRUCTION HAS BEEN COMPLETE FOR 128 CALENDAR DAYS, REMAINING CONSTRUCTION, INCLUDING ANY NECCESARY CORRECTIVE MEASURES, MAY PROCEED ONLY AT THE DIRECTION OF THE ENGINEER.

THE DEPARTMENT WILL CONSIDER VIBRATING WIRE SETTLEMENT MONITORING PLATFORMS IN LIEU OF THE CONVENTIONAL SETTLEMENT PLATFORMS. THE CONTRACTOR SHOULD PROVIDE DETAILS OF THE PROPOSED VIBRATING WIRE SETTLEMENT PLATFORMS AS WELL AS DESIGN DRAWINGS OF THE PROPOSED 30 DAYS PRIOR TO CONSTRUCTION. THE DEPARTMENT WILL REQUIRE 10 WORKING DAYS FOR REVIEW AND APPROVAL. THE DESIGN DRAWINGS SHOULD ILLUSTRATE THE LOCATIONS WITH ALL EXISTING AND PROPOSED SITE FEATURES TO VERIFY THE PROPOSED CABLING WILL NOT CONFLICT WITH EXISTING FACILITIES, PROPOSED FACILITIES OR UTILITIES. NO ADDITIONAL PAYMENT WILL BE PROVIDED IF THE CONTRACTOR ELECTS TO UTILIZE VIBRATING WIRE SETTLEMENT PLATFORMS.

MORE INFORMATION PERTAINING TO EMBANKMENT CONSTRUCTION AND CONTROLLED RATES OF FILL ARE PROVIDED IN THE ROADWAY PLANS.

METHOD OF MEASUREMENT, THE NUMBER OF SETTLEMENT PLATFORMS TO BE PAID FOR SHALL BE THE ACTUAL NUMBER OF SETTLEMENT PLATFORMS COMPLETED, MAINTAINED, AND ACCEPTED BY THE ENGINEER.

BASIS OF PAYMENT: PAYMENT SHALL BE MADE AT THE CONTRACT UNIT PRICE EACH FOR "ITEM SPECIAL - SETTLEMENT PLATFORM" WHICH IS COMPENSATION FOR CONSTRUCTING, MAINTAINING, AND MONITORING THE SETTLEMENT PLATFORMS INCLUDING FURNISHING ALL LABOR, EQUIPMENT, MATERIALS, AND INCIDENTALS NECESSARY TO COMPLETE THE WORK. PAYMENT SHALL NOT BE MADE FOR SETTLEMENT PLATFORMS WHICH BECOME USELESS DUE TO DAMAGE CAUSED BY THE CONTRACTOR'S OPERATIONS. SEE DETAIL THIS SHEET.

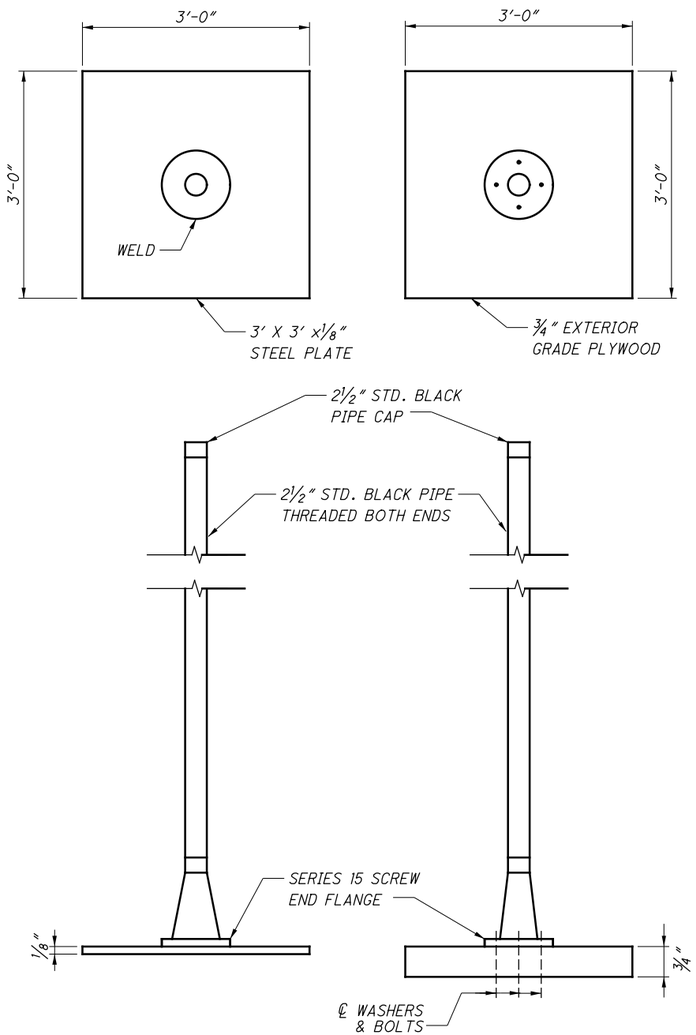

SETTLEMENT PLATFORM

(NOT TO SCALE)

NOTES:

1. SETTLEMENT PLATFORMS SHALL BE ANCHORED BY STAKES DRIVEN AT EACH CORNER TO PREVENT OVERTURNING.

DRAFT Stage 3 - Not for Construction 09/23/2024

DESIGN AGENCY
Stantec Consulting Services Inc.
1500 Lake Shore Drive, Suite 100
Columbus, Ohio 43204
(614) 486-4383

DESIGNED	DRAWN	REVIEWED	DATE
EDA	ALH	BSM	4/5/24
CHECKED	REVISED	STRUCTURE FILE NUMBER	
MRS		4400496	

GENERAL NOTES
BRIDGE NO. LAW-7-0711
RAMP I OVER LITTLE PADDY CREEK

LAW-7-2.17
PID No. 75923

934
1247

ESTIMATED QUANTITIES (PARTICIPATION CODE 02/NHS/08)

ITEM	EXTENSION	TOTAL	UNIT	DESCRIPTION	ABUT.	PIERS	SUPER.	GEN.	SHEET NO.
SPECIAL	203E65000	2	EACH	SETTLEMENT PLATFORM				2	
503	21300	LUMP	LS	UNCLASSIFIED EXCAVATION				LUMP	
505	11100	LUMP	LS	PILE DRIVING EQUIPMENT MOBILIZATION				LUMP	
507	00100	3960	FT	STEEL PILES HP10X42, FURNISHED	1800	2160			
507	00150	3590	FT	STEEL PILES HP10X42, DRIVEN	1700	1890			
509	10000	263,032	LB	EPOXY COATED STEEL REINFORCEMENT	19,155	102,960	140,917		
509	30020	10,402	FT	NO. 4 DEFORMED GFRP REINFORCEMENT			10,402		
511	34446	570	CY	CLASS QC2 CONCRETE WITH QC/QA, BRIDGE DECK			570		
511	34450	102	CY	CLASS QC2 CONCRETE WITH QC/QA, BRIDGE DECK (PARAPET)			102		
511	43512	137	CY	CLASS QC1 CONCRETE WITH QC/QA, ABUTMENT INCLUDING FOOTING	137				
511	45602	342	CY	CLASS QC4 MASS CONCRETE, SUBSTRUCTURE WITH QC/QA		342			
511	46512	205	CY	CLASS QC1 CONCRETE WITH QC/QA, FOOTING		205			
512	10100	1681	SY	SEALING OF CONCRETE SURFACES (EPOXY-URETHANE)	115	1566			
515	15100	5	EACH	DRAPED STRAND PRESTRESSED CONCRETE BRIDGE I-BEAM MEMBERS, LEVEL 3, TYPE WF54-49, 99'-10"			5		
515	15100	5	EACH	DRAPED STRAND PRESTRESSED CONCRETE BRIDGE I-BEAM MEMBERS, LEVEL 3, TYPE WF54-49, 117'-6"			5		
515	15100	5	EACH	DRAPED STRAND PRESTRESSED CONCRETE BRIDGE I-BEAM MEMBERS, LEVEL 3, TYPE WF54-49, 118'-7"			5		
515	20000	36	EACH	INTERMEDIATE DIAPHRAGMS			36		
516	10010	83	LF	ARMORLESS PREFORMED JOINT SEAL				83	
516	13200	83	SF	½" PREFORMED EXPANSION JOINT FILLER	83				
516	13600	83	SF	1" PREFORMED EXPANSION JOINT FILLER	83				
516	13900	62	SF	2" PREFORMED EXPANSION JOINT FILLER	62				
516	25000	307	SF	NYLON REINFORCED NEOPRENE SHEETING	307				
516	44101	10	EACH	ELASTOMERIC BEARING WITH INTERNAL LAMINATES AND LOAD PLATE (NEOPRENE) 2.398" X 10" X 1'-6", AS PER PLAN	10				13/30
516	44100	5	EACH	ELASTOMERIC BEARING WITH INTERNAL LAMINATES AND LOAD PLATE (NEOPRENE) 2.898" X 9" X 3'-3"		5			
516	44200	15	EACH	ELASTOMERIC BEARING WITH INTERNAL LAMINATES AND LOAD PLATE (NEOPRENE) 3.273" X 12" X 3'-3"		15			
518	21200	119	CY	POROUS BACKFILL WITH GEOTEXTILE FABRIC	119				
518	40000	152	FT	6" PERFORATED CORRUGATED PLASTIC PIPE	152				
518	40010	80	FT	6" NON-PERFORATED CORRUGATED PLASTIC PIPE, INCLUDING SPECIALS	80				
526	25010	230	SY	REINFORCED CONCRETE APPROACH SLABS WITH QC/QA (T=15")				230	
526	90030	83	FT	TYPE C INSTALLATION				83	
601	20000	1315	SY	CRUSHED AGGREGATE SLOPE PROTECTION				1315	
601	32204	260	CY	ROCK CHANNEL PROTECTION, TYPE C WITH GEOTEXTILE FABRIC				260	

DRAFT Stage 3 - Not for Construction 09/23/2024

DESIGN AGENCY
Stantec Consulting Services Inc.
1500 Lake Shore Drive, Suite 100
Columbus, Ohio 43204
(614) 486-4383

DESIGNED EDA | DRAWN ALH | REVIEWED BSM | DATE 4/5/24
CHECKED MRS | REVISED XXX | STRUCTURE FILE NUMBER 4400496

ESTIMATED QUANTITIES
BRIDGE NO. LAW-7-0711
RAMP I OVER LITTLE PADDY CREEK

LAW-7-2.17
PID No. 75923

935
1247

\\US0268-PPFSS01\workgroup\1736\active\173608714\LAW\engineering\75923_LAW-7-2.17\Design\structures\LAW007_07IP\Sheets\007_07IP_S000.dgn Sheet 5/13/2024 1:32:6 PM mstur devant

\\US0268-PFFSS01\workgroup\1736\active\173608714\LAW\engineering\75923_LAW-7-2.17\Design\structures\LAW007_07IIP\Sheets\007_07IIP_S000i.dgn Sheet 5/13/2024 1:32:9 PM msturdevant

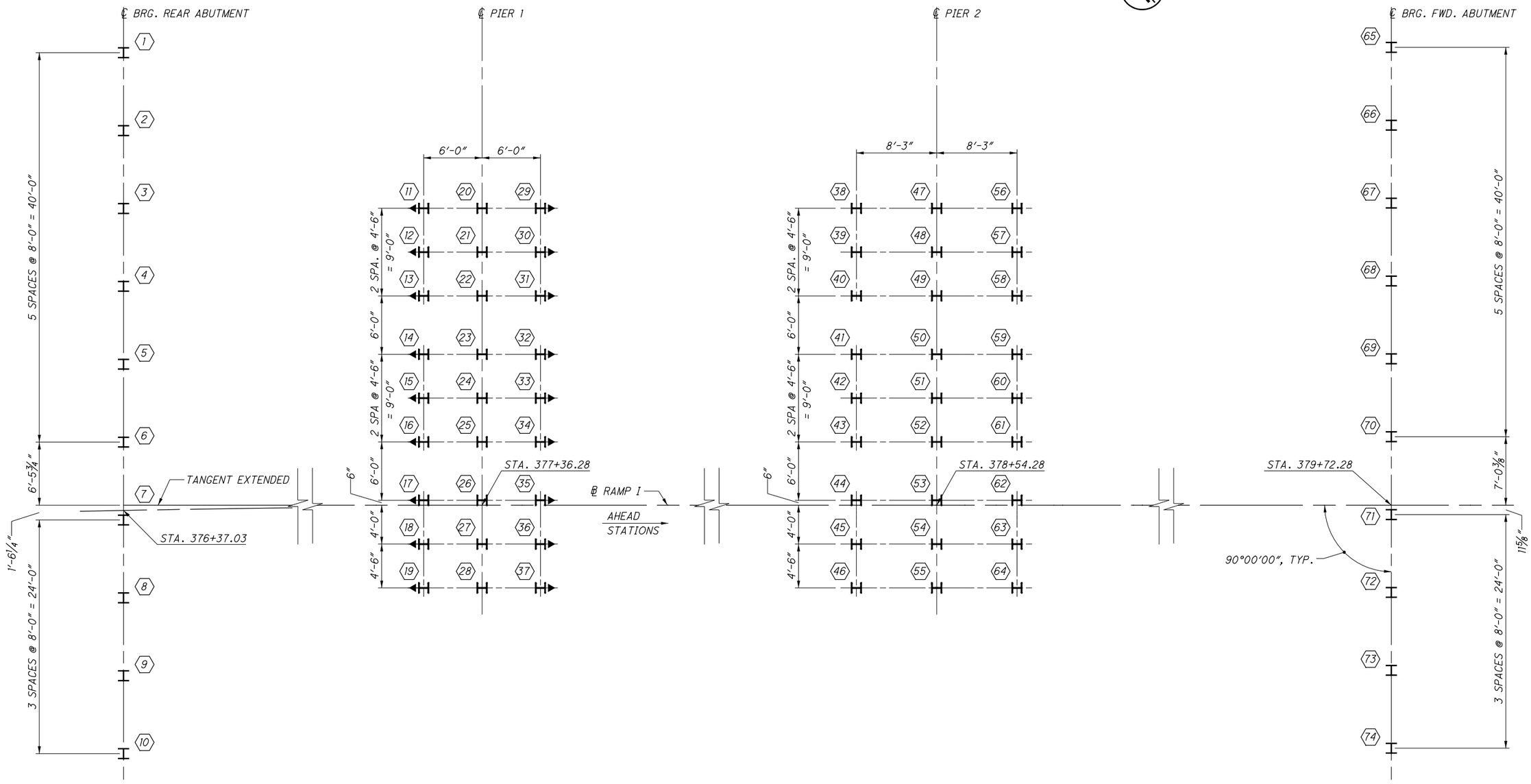

FOUNDATION PLAN

NOTES:
1. ALL PILES ARE HP 14x89.
2. H DESIGNATES PILE NUMBER AND LOCATION.
3. DENOTES PILE BATTERED BATTERED 1:3 IN DIRECTION OF ARROW.

DRAFT Stage 3 - Not for Construction 09/23/2024

DESIGN AGENCY
Stantec Consulting Services Inc.
1500 Lake Shore Drive, Suite 100
Columbus, Ohio 43204
(614) 486-4383

DESIGNED	DRAWN	REVIEWED	DATE
EDA	ALH	BSM	4/5/24
CHECKED	REVISED	STRUCTURE FILE NUMBER	
MRS	XXX	4400496	

FOUNDATION PLAN
BRIDGE NO. LAW-7-0711
RAMP I OVER LITTLE PADDY CREEK

LAW-7-2.17
PID No. 75923

6 / 30

936
1247

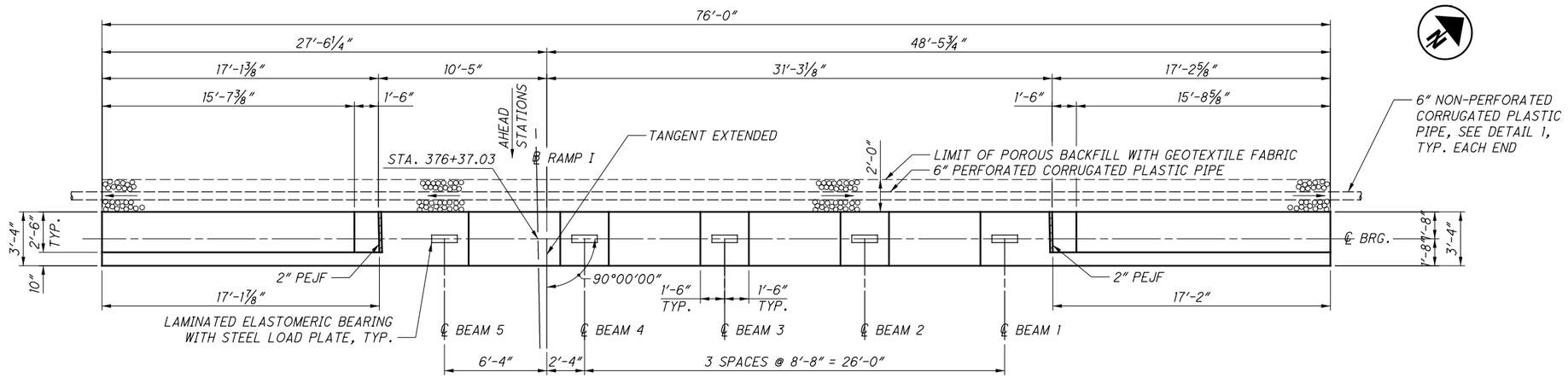

PLAN

① 1 SERIES OF 5-A505 EF

② 1 SERIES OF 5-A510 EF

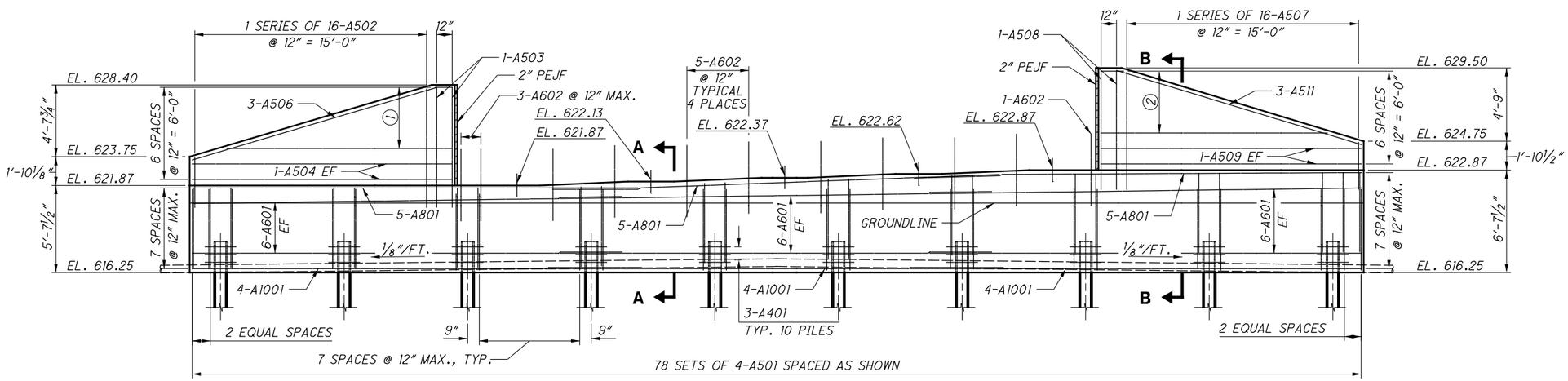

ELEVATION

LAP LENGTHS:
#6 BARS = 4'-0"
#8 BARS = 5'-6"
#10 BARS = 6'-0"

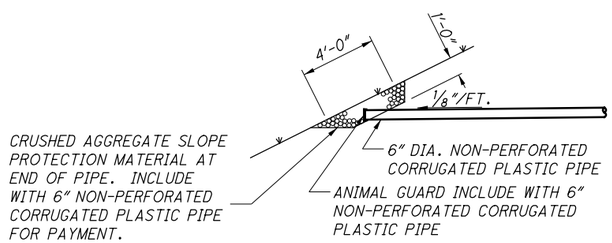

DETAIL 1

NOTES:
1. FOR PILE LAYOUT, SEE SHEET [illegible].
2. FOR SECTIONS AND SECTION B-B, SEE SHEET [illegible].
3. UNLESS NOTED OTHERWISE ALL REINFORCING SHALL BE INSTALLED WITH A MINIMUM CLEARANCE OF 2" TO THE CONCRETE SURFACE.
4. SEAL EXCAVATION PRIOR TO LIMITS SHOWN IN SECTION A-A AND B-B, INCLUDING ENDS OF WINGWALLS/CAP ABOVE GROUND LINE.

DRAFT Stage 3 - Not for Construction
09/23/2024

DESIGN AGENCY
Stantec Consulting Services Inc.
1500 Lake Shore Drive, Suite 100
Columbus, Ohio 43204
(614) 486-4383

DESIGNED	DRAWN	REVIEWED	DATE
EDA	ALH	BSM	4/5/24
CHECKED	REVISED	STRUCTURE FILE NUMBER	
MRS	XXX	4400496	

REAR ABUTMENT DETAILS

BRIDGE NO. LAW-7-0711
RAMP I OVER LITTLE PADDY CREEK

LAW-7-2.17
PID No. 75923

\\US0268-PPFSS01\workgroup\1736\active\173608714\LAW\engineering\75923_LAW-7-2.17\Design\structures\LAW007_07IIP\Sheets\007_07IIP_SR001.dgn Sheet 5/13/2024 1:32:20 PM mstur devant

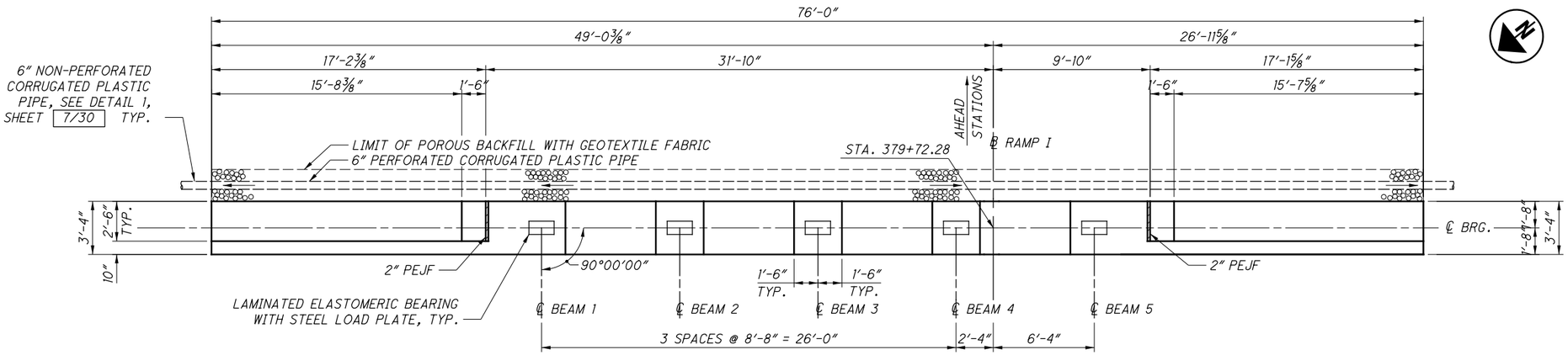

PLAN

① 1 SERIES OF 5-B505 EF

② 1 SERIES OF 5-B510 EF

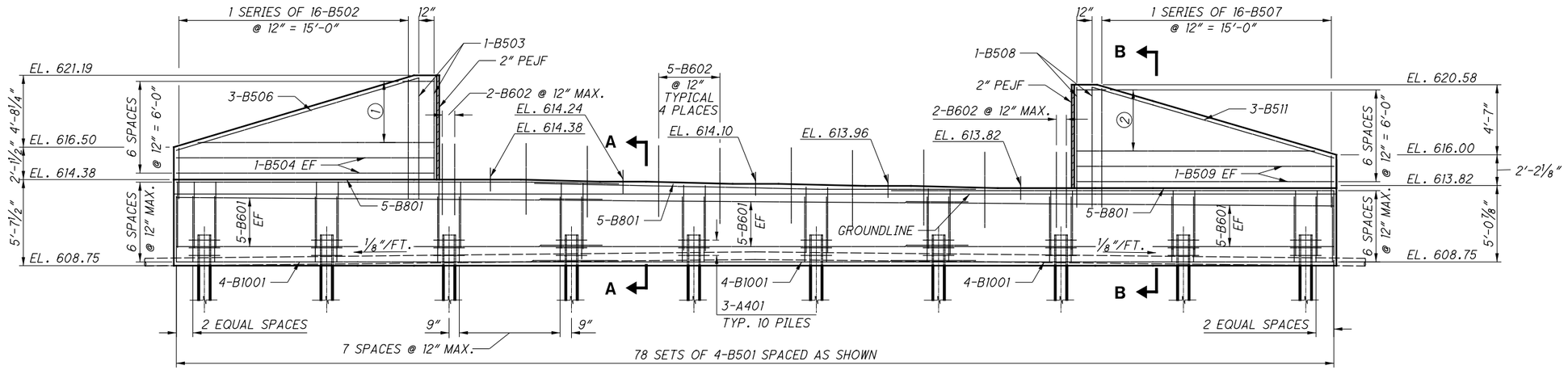

ELEVATION

LAP LENGTHS:
#6 BARS = 4'-0"
#8 BARS = 5'-6"
#10 BARS = 6'-0"

NOTES:
1. FOR PILE LAYOUT, SEE SHEET 6/30 .
2. FOR SECTIONS A-A, SEE SECTION B-B, SHEET 9/30 .
3. UNLESS NOTED OTHERWISE ALL REINFORCING SHALL BE INSTALLED WITH A MINIMUM CLEARANCE OF 2" TO THE CONCRETE SURFACE.
4. SEE BACKFILL NOTE TO LIMITS SHOWN IN SECTION A-A AND B-B, INCLUDING ENDS OF WINGWALLS/CAP ABOVE GROUND LINE.

DRAFT Stage 3 - Not for Construction 09/23/2024

DESIGN AGENCY
Stantec Consulting Services Inc.
1500 Lake Shore Drive, Suite 100
Columbus, Ohio 43204
(614) 486-4383

DESIGNED	DRAWN	REVIEWED	DATE
EDA	ALH	BSM	4/5/24
CHECKED	REVISED	STRUCTURE FILE NUMBER	
MRS	XXX	4400496	

FORWARD ABUTMENT DETAILS
BRIDGE NO. LAW-7-0711
RAMP I OVER LITTLE PADDY CREEK

LAW-7-2.17
PID No. 75923

8 / 30

938
1247

\\US0268-PPFSS01\workgroup\1736\active\173608714\LAW\engineering\75923_LAW-7-2.17\Design\structures\LAW007_07IIP\Sheets\007_07IIP_SF001.dgn Sheet 5/13/2024 1:32:21 PM mturdevant

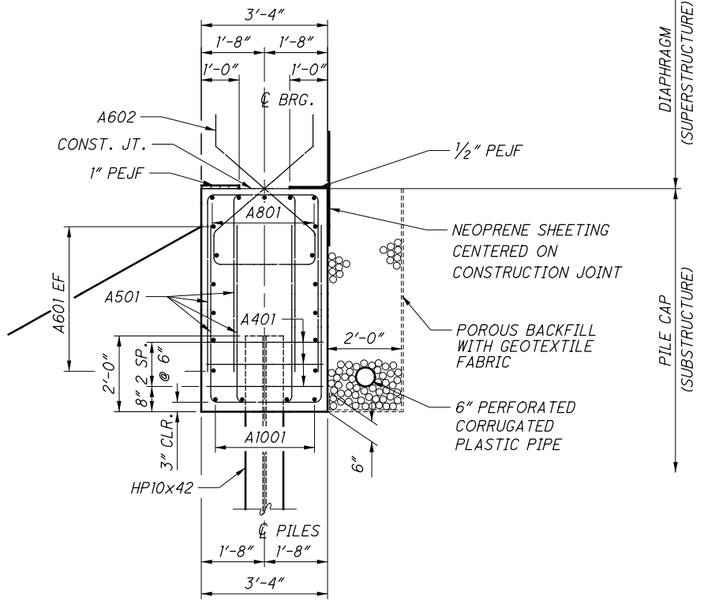

SECTION A-A

(REAR ABUTMENT SHOWN, FORWARD ABUTMENT SIMILAR)

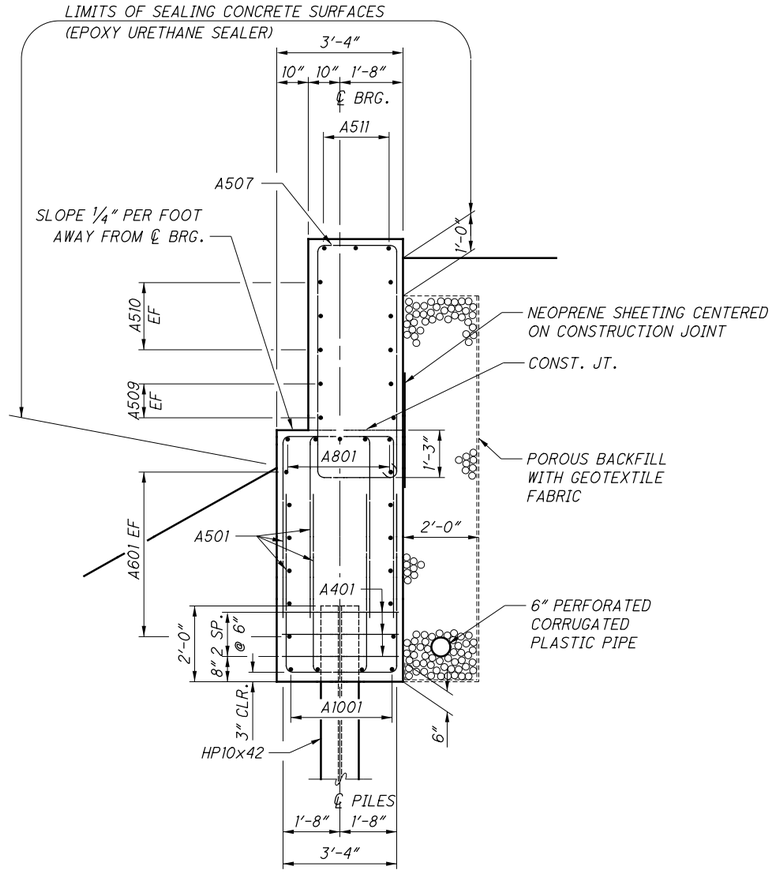

SECTION B-B

(REAR ABUTMENT SHOWN, FORWARD ABUTMENT SIMILAR)

NOTE:
WHERE NOTED THAT ALL REINFORCING BARS ARE INSTALLED WITH A MINIMUM CLEARANCE OF 2″ TO THE CONCRETE SURFACE.

DRAFT Stage 3 - Not for Construction 09/23/2024

DESIGN AGENCY
Stantec Consulting Services Inc.
1500 Lake Shore Drive, Suite 100
Columbus, Ohio 43204
(614) 486-4383

DESIGNED	DRAWN	REVIEWED	DATE
EDA	ALH	BSM	4/5/24
CHECKED	REVISED	STRUCTURE FILE NUMBER	
MRS	XXX	4400496	

ABUTMENT DETAILS
BRIDGE NO. LAW-7-0711
RAMP I OVER LITTLE PADDY CREEK

LAW-7-2.17
PID No. 75923

9 / 30

939
1247

\\US0268-PPFSSON\workgroup\1736\active\173608714\LAW\engineering\75923_LAW-7-2.17\Design\structures\LAW007_071IP\Sheets\007_071IP_SR002.dgn Sheet 5/13/2024 1:32:22 PM msturdevant

\\US0268-PPFSS01\workgroup\1736\active\173608714\LAW\engineering\75923_LAW-7-2.17\Design\structures\LAW007_07IIP\Sheets\007_07IIP_S001.dgn Sheet 5/13/2024 1:32:25 PM msturdevant

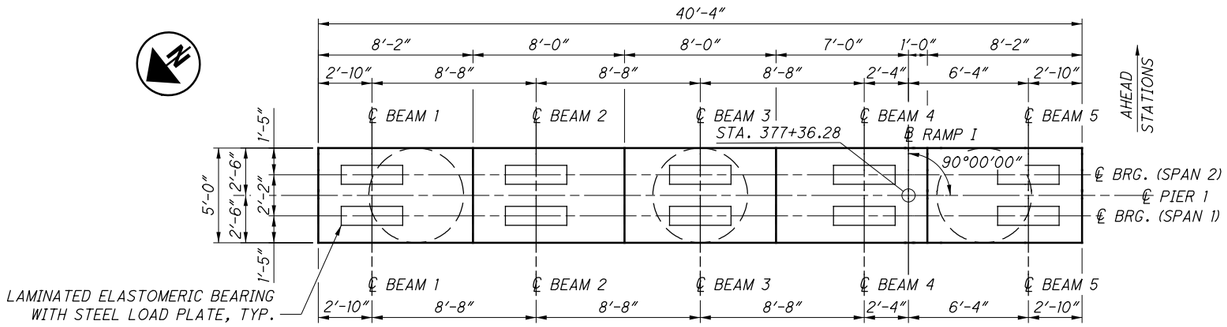

PLAN

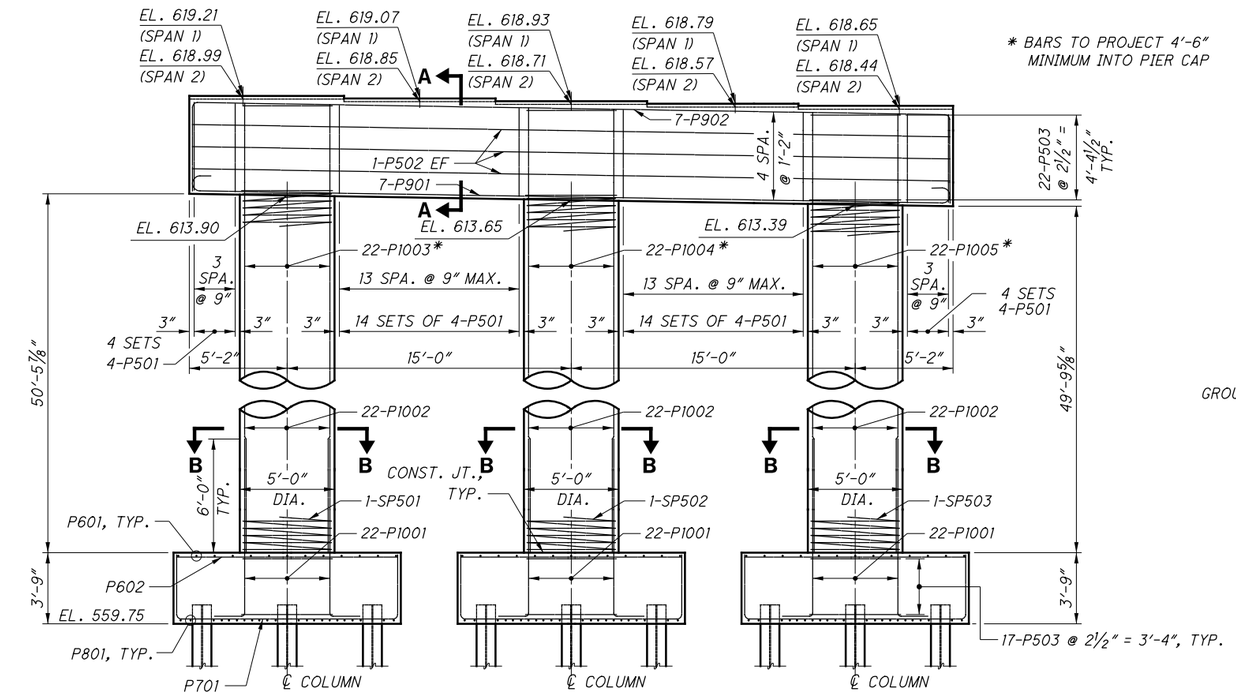

ELEVATION

* BARS TO PROJECT 4'-6" MINIMUM INTO PIER CAP

FOOTING PLAN

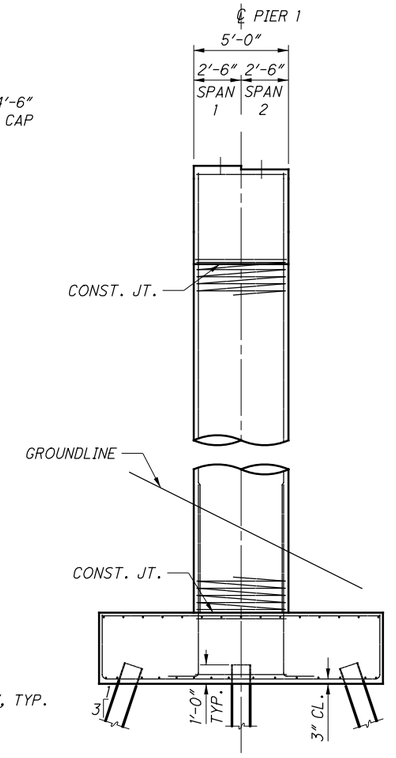

END ELEVATION

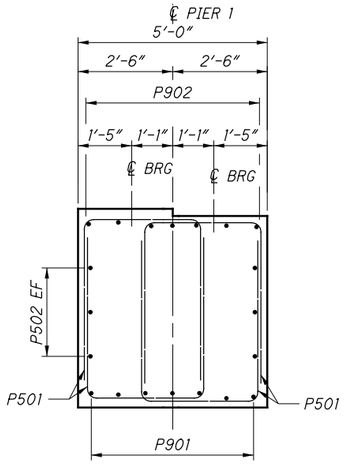

SECTION A-A

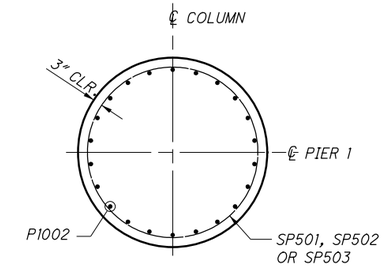

SECTION B-B

LAP LENGTHS:
#10 BARS = 6'-0"

NOTES:
1. UNLESS NOTED OTHERWISE, ALL REINFORCING SHALL BE INSTALLED WITH A MINIMUM CLEARANCE OF 2" TO THE CONCRETE SURFACE.
2. SEAL SLAB COLUMNS SHALL BE CONSIDERED MASS CONCRETE AND CLASS QC4 CONCRETE SHALL BE USED FOR THESE MEMBERS.

DRAFT Stage 3 - Not for Construction 09/23/2024

DESIGN AGENCY
Stantec Consulting Services Inc.
1500 Lake Shore Drive, Suite 100
Columbus, Ohio 43204
(614) 486-4383

DESIGNED	DRAWN	REVIEWED	DATE
EDA	ALH	BSM	4/5/24
CHECKED	REVISED	STRUCTURE FILE NUMBER	
MRS		4400496	

PIER 1
BRIDGE NO. LAW-7-0711
RAMP I OVER LITTLE PADDY CREEK

LAW-7-2.17
PID No. 75923

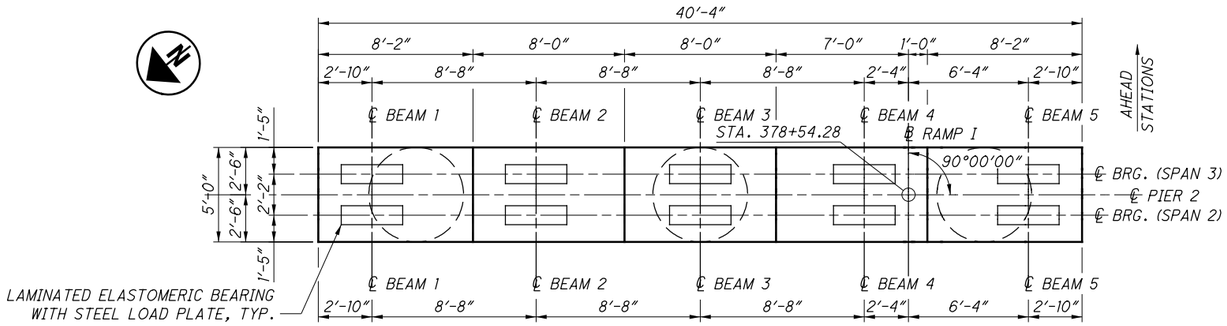

PLAN

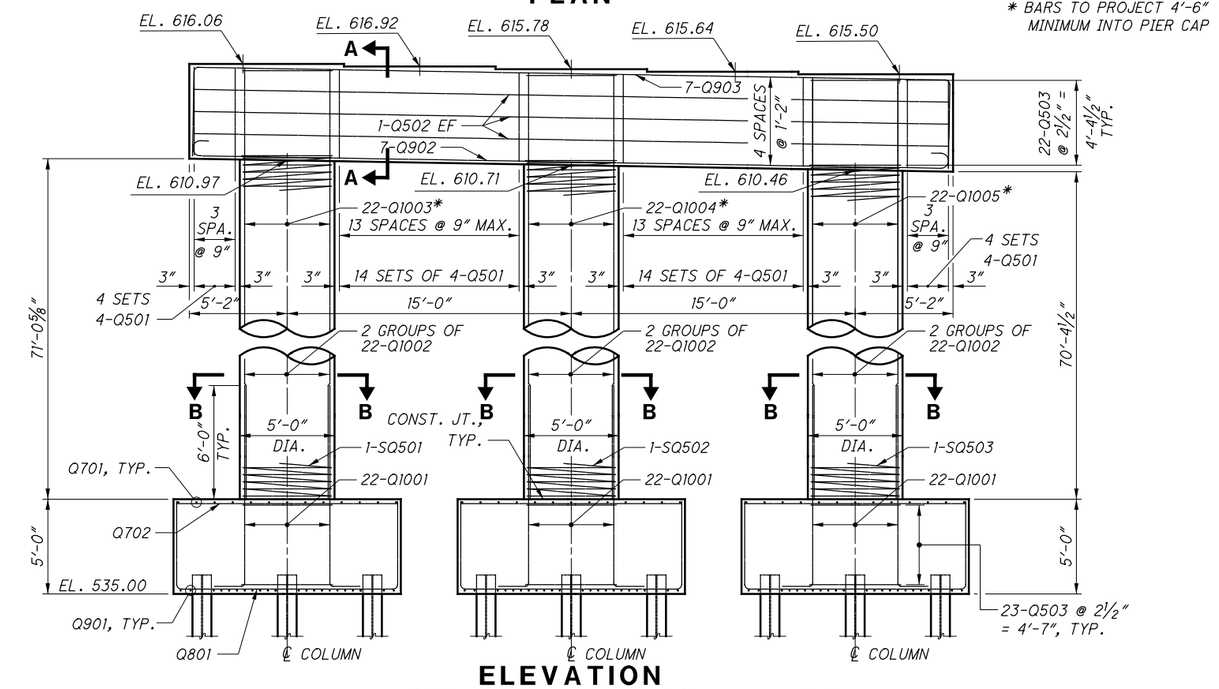

ELEVATION

* BARS TO PROJECT 4'-6" MINIMUM INTO PIER CAP

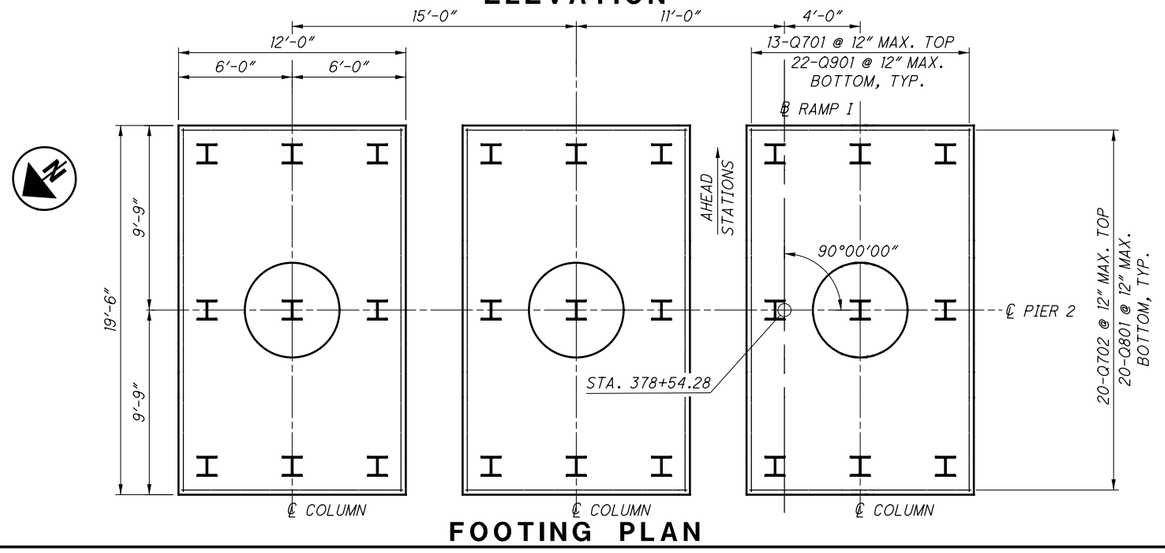

FOOTING PLAN

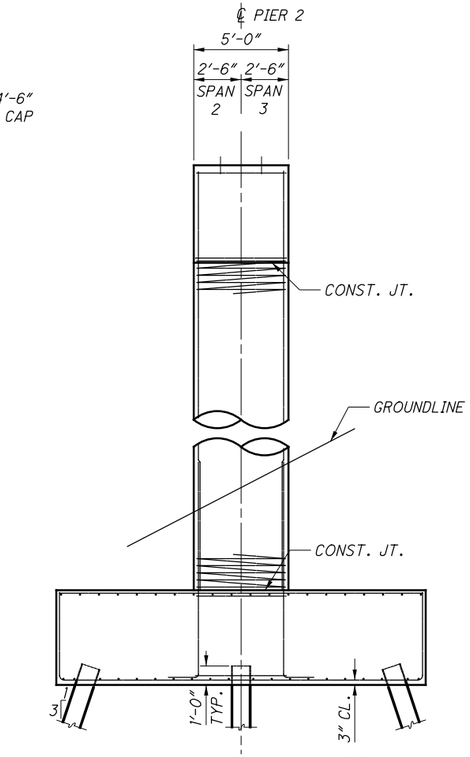

END ELEVATION

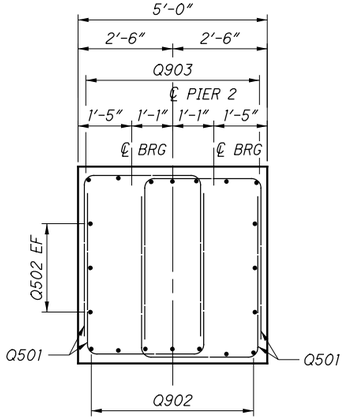

SECTION A-A

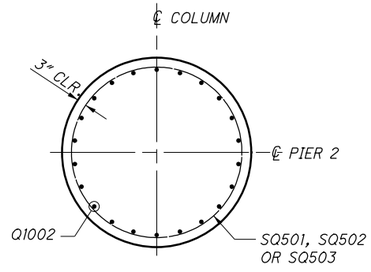

SECTION B-B

LAP LENGTHS:
#10 BARS = 6'-0"

NOTES:
1. UNLESS NOTED OTHERWISE, ALL REINFORCING SHALL BE INSTALLED WITH A MINIMUM CLEARANCE OF 2" TO THE CONCRETE SURFACE.
2. STEM AND COLUMN ARE CONSIDERED MASS CONCRETE AND CLASS QC4 CONCRETE SHALL BE USED FOR THESE MEMBERS.

DRAFT Stage 3 - Not for Construction 09/23/2024

DESIGN AGENCY
Stantec Consulting Services Inc.
1500 Lake Shore Drive, Suite 100
Columbus, Ohio 43204
(614) 486-4383

DESIGNED	DRAWN	REVIEWED	DATE
EDA	ALH	BSM	4/5/24
CHECKED	REVISED	STRUCTURE FILE NUMBER	
MRS		4400496	

PIER 2
BRIDGE NO. LAW-7-0711
RAMP I OVER LITTLE PADDY CREEK

LAW-7-2.17
PID No. 75923

11 / 30

941 / 1247

\\US0268-PFFSS01\workgroup\1736\active\173608714\LAW\engineering\75923_LAW-7-2.17\Design\structures\LAW007_07IIP\Sheets\007_07IIP_SI002.dgn Sheet 5/13/2024 1:32:28 PM mstur devant

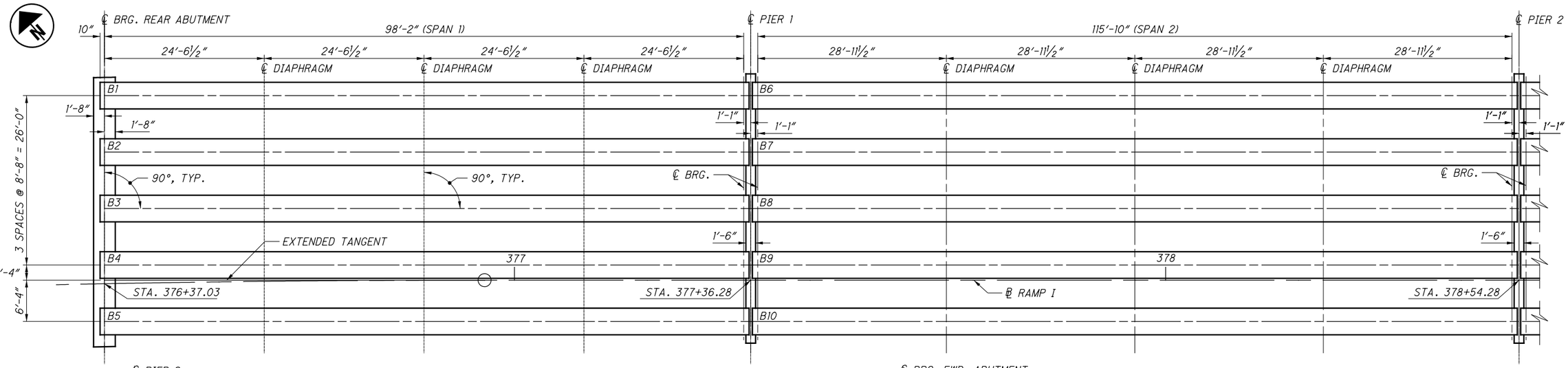

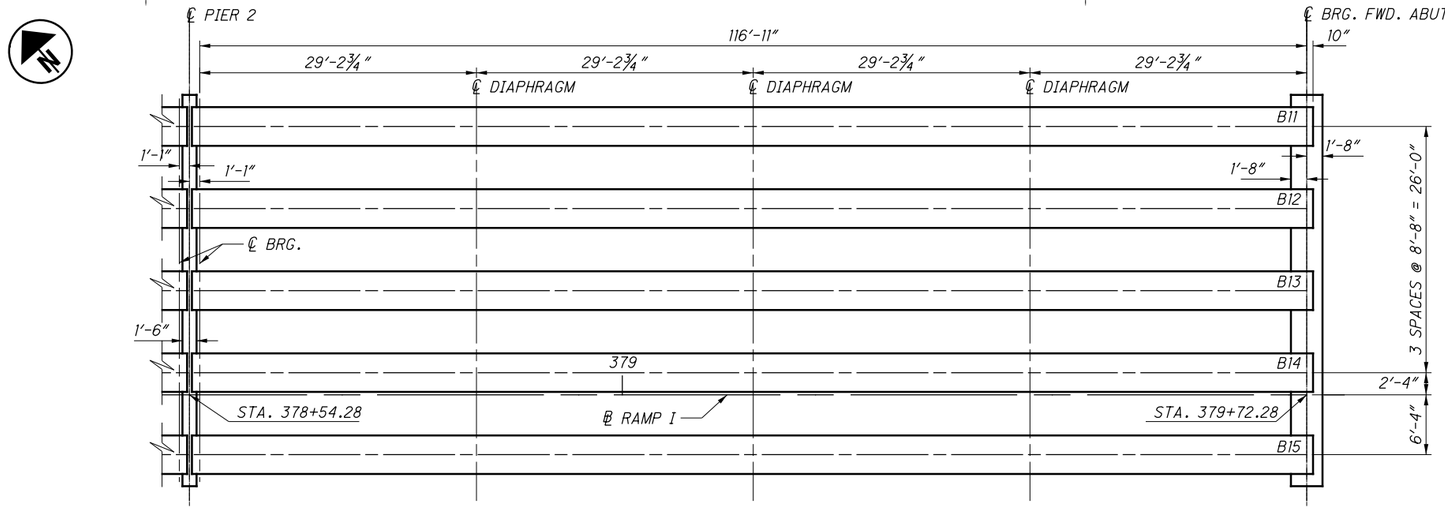

FRAMING PLAN

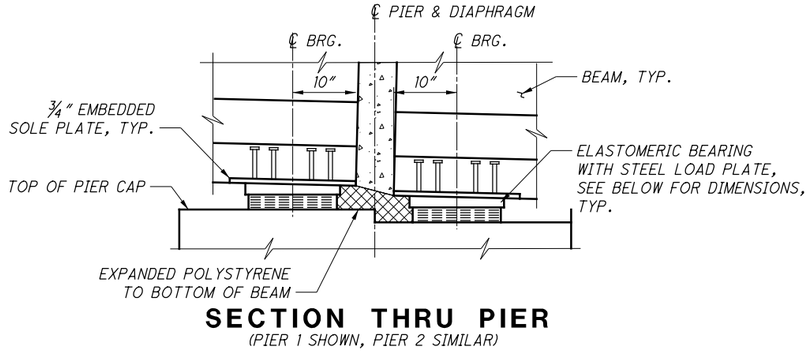

SECTION THRU PIER

(PIER 1 SHOWN, PIER 2 SIMILAR)

NOTES:

1. FOR ADDITIONAL BEAM AND DIAPHRAGM DETAILS, SEE STD. DWG. BSD 1.1.
2. FOR ADDITIONAL BEAM DETAILS, SEE SHEET 14/30 THRU 16/30 .
3. FOR ADDITIONAL PIER CAP DETAILS, SEE SHEET 23/30 THRU 24/30 .
4. FOR ABUTMENT BEARING DETAILS, SEE SHEET 15/30 .

DRAFT Stage 3 - Not for Construction 09/23/2024

DESIGN AGENCY
Stantec Consulting Services Inc.
1500 Lake Shore Drive, Suite 100
Columbus, Ohio 43204
(614) 486-4383

DESIGNED	DRAWN	REVIEWED	DATE
EDA	ALH	BSM	4/5/24
CHECKED	REVISED	STRUCTURE FILE NUMBER	
MRS	XXX	4400496	

FRAMING PLAN
BRIDGE NO. LAW-7-0711
RAMP I OVER LITTLE PADDY CREEK

LAW-7-2.17
PID No. 75923

12 / 30

942
1247

\\US0268-PFFSS01\workgroup\1736\active\173608714\LAW\engineering\75923_LAW-7-2.17\Design\structures\LAW007_07IIP\Sheets\007_07IIP_SD001.dgn Sheet 5/13/2024 1:32:29 PM mstur devant

\\US0268-PFFSSON\workgroup\1736\active\173608714\LAW\engineering\75923_LAW-7-2.17\Design\structures\LAW007_07IIP\Sheets\007_07IIP_SD015.dgn Sheet 5/13/2024 1:32:30 PM mstur devant

FORWARD ABUTMENT
SERVICE LOADS (UNFACTORED)
DEAD LOAD REACTION = 335 K
LIVE LOAD REACTION = 62 K
TOTAL REACTION = 397 K

REAR ABUTMENT
SERVICE LOADS (UNFACTORED)
DEAD LOAD REACTION = 283 K
LIVE LOAD REACTION = 58 K
TOTAL REACTION = 341 K

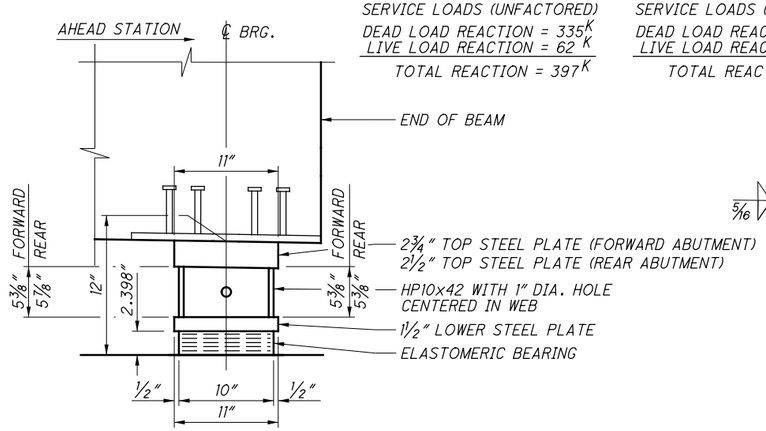

SECTION B-B

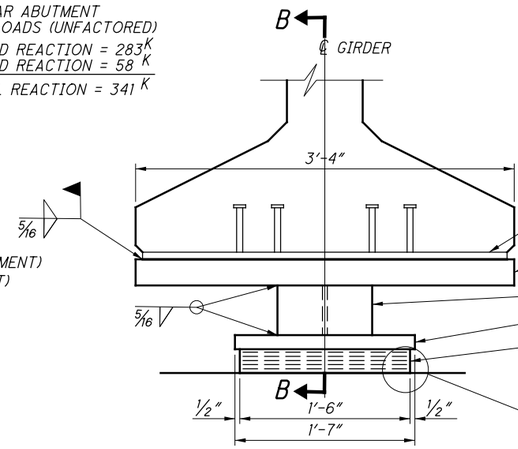

ELEVATION

THICKNESS OF EXTERNAL ELASTOMER = 0.225″
(1 REQUIRED)

THICKNESS OF INTERNAL ELASTOMER = 0.330″
(5 REQUIRED)

INTERNAL STEEL LAMINATE THICKNESS = 0.1046″
(5 REQUIRED)

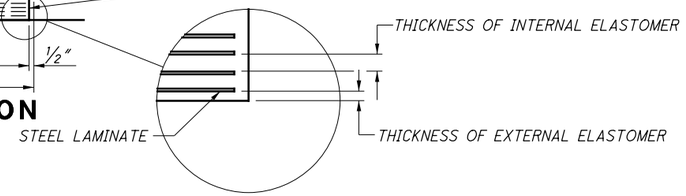

BEARINGS AT ABUTMENTS

(FORWARD ABUTMENT SHOWN, REAR ABUTMENT SIMILAR)
(10 REQUIRED)

SERVICE LOADS (UNFACTORED)
DEAD LOAD REACTION = 283 K
LIVE LOAD REACTION = 58 K
TOTAL REACTION = 341 K

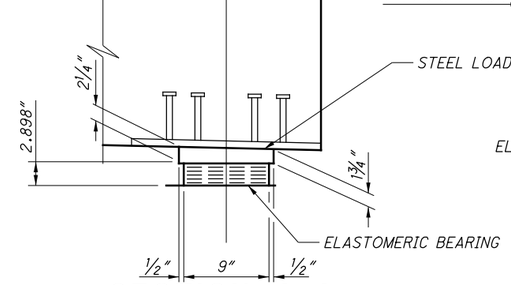

SECTION A-A

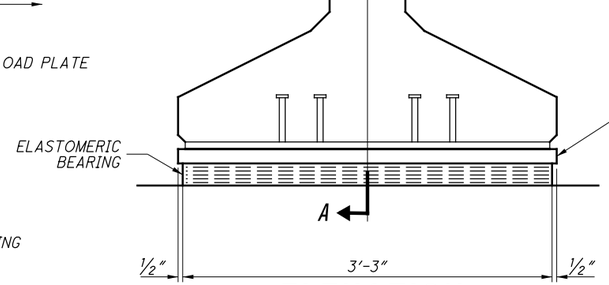

ELEVATION

PIER 1, SPAN 1 BEARING

(5 REQUIRED)

THICKNESS OF EXTERNAL ELASTOMER = 0.275″
(1 REQUIRED)

THICKNESS OF INTERNAL ELASTOMER = 0.420″
(5 REQUIRED)

INTERNAL STEEL LAMINATE THICKNESS = 0.1046″
(5 REQUIRED)

SERVICE LOADS (UNFACTORED)
DEAD LOAD REACTION = 335 K
LIVE LOAD REACTION = 62 K
TOTAL REACTION = 397 K

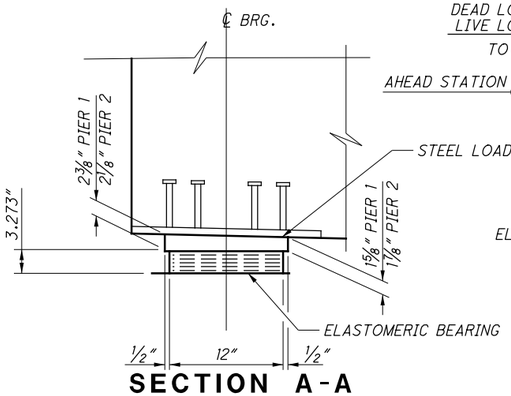

SECTION A-A

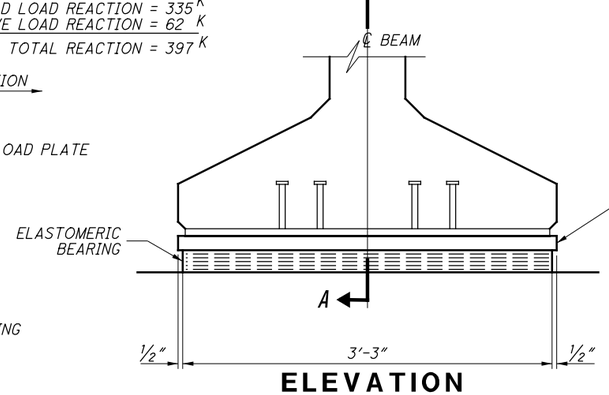

ELEVATION

PIER 1, SPAN 2 BEARING
PIER 2, SPANS 2 AND 3 BEARING

(5 REQUIRED PIER 1, 10 REQUIRED PIER 2)

THICKNESS OF EXTERNAL ELASTOMER = 0.250″
(1 REQUIRED)

THICKNESS OF INTERNAL ELASTOMER = 0.500″
(5 REQUIRED)

INTERNAL STEEL LAMINATE THICKNESS = 0.1046″
(5 REQUIRED)

BEARING NOTES:

1. ELASTOMERIC BEARINGS: THE ELASTOMER SHALL HAVE A HARDNESS OF 50 DUROMETER. THE BEARINGS WERE DESIGNED IN ACCORDANCE WITH SECTION 14.7.6 (METHOD A) OF THE AASHTO LRFD BRIDGE DESIGN SPECIFICATIONS. THE LONG TERM COMPRESSION PROOF LOAD TEST (AASHTO STANDARD SPECIFICATIONS FOR HIGHWAY BRIDGES, DIVISION II, SECTION 18.7.2.6) IS NOT REQUIRED.
2. STEEL LOAD PLATES: LOAD PLATES SHALL BE BONDED BY VULCANIZATION TO THE ELASTOMER DURING THE MOLDING PROCESS.
3. FOR DETAILS OF THE STUDS AND EMBEDDED PLATE, AND FOR ADDITIONAL INFORMATION, SEE STD. DWG. PSID-1-13.
4. ALL BEARINGS SHALL BE MARKED PRIOR TO SHIPPING. THE MARKS SHALL INCLUDE THE BEARING LOCATION ON THE BRIDGE, AND A DIRECTION ARROW THAT POINTS UP-STATION. ALL MARKS SHALL BE PERMANENT AND BE VISIBLE AFTER THE BEARING IS INSTALLED.
5. STEEL FOR LOAD PLATES AND INTERNAL LAMINATES SHALL BE GRADE 50.
6. PER CMS 516.03, GALVANIZE STEEL COMPONENTS OF BEARING ASSEMBLIES (UPPER AND LOWER LOAD PLATES AND HP SHAPES).
7. UPPER STEEL LOAD PLATES AND HP SHAPES SHALL BE CONSIDERED COMPONENTS OF THE ELASTOMERIC BEARING ASSEMBLY FOR PAYMENT. THE ¾″ THICK EMBEDDED STEEL SOLE PLATE IS INCIDENTAL TO THE COST OF I-BEAMS.

DRAFT Stage 3 - Not for Construction 09/23/2024

DESIGN AGENCY
Stantec Consulting Services Inc.
1500 Lake Shore Drive, Suite 100
Columbus, Ohio 43204
(614) 486-4383

DESIGNED	DRAWN	REVIEWED	DATE
EDA	ALH	BSM	4/5/24
CHECKED	REVISED	STRUCTURE FILE NUMBER	
MRS	XXX	4400496	

BEARING DETAILS
BRIDGE NO. LAW-7-0711
RAMP I OVER LITTLE PADDY CREEK

LAW-7-2.17
PID No. 75923

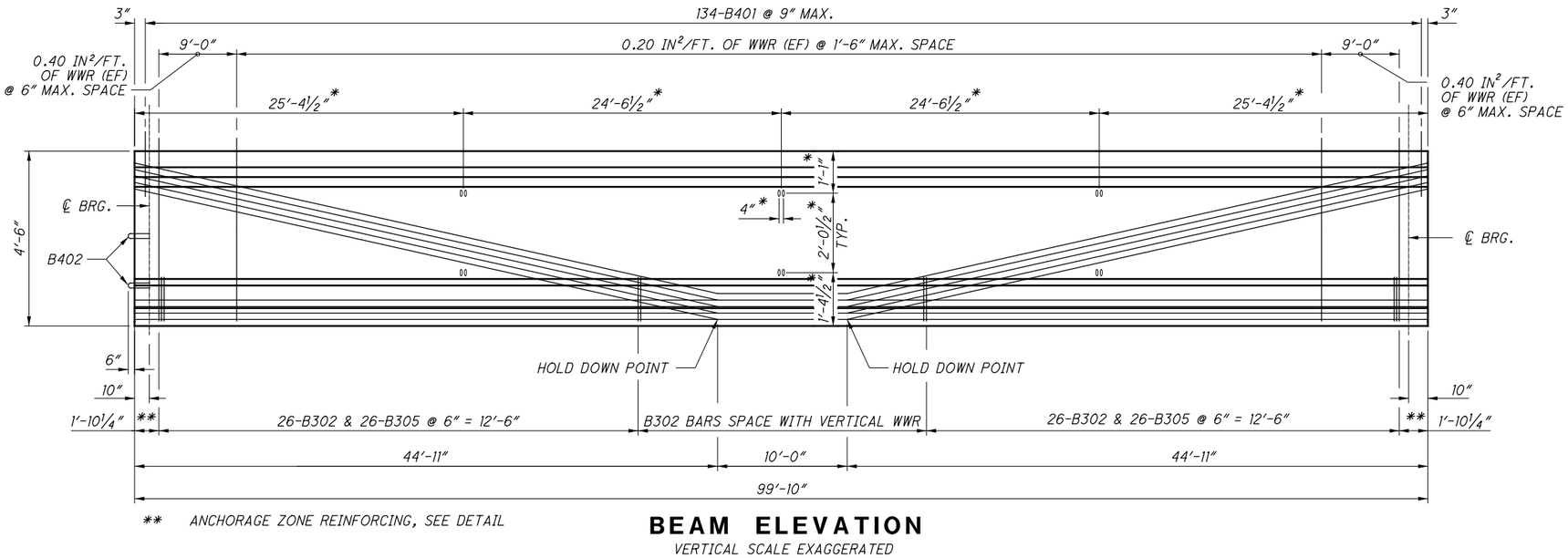

** ANCHORAGE ZONE REINFORCING, SEE DETAIL

BEAM ELEVATION

VERTICAL SCALE EXAGGERATED

NUMBER OF STRANDS PER ROW										CONCRETE STRENGTH (KSI)	
SECTION	(1)	(2)	(3)	(4)	(5)	(6)	(7)	(8)	TOTAL	f′ci	f′cf
END	14	16	2	-	1	1	1	1	36	6.0	7.0
MID	15	17	3	1	-	-	-	-	36		

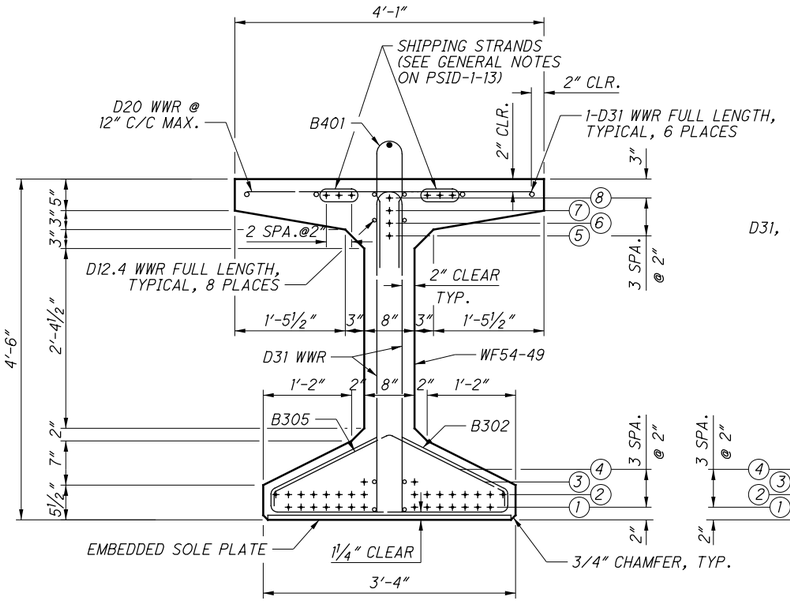

END BEAM SECTION

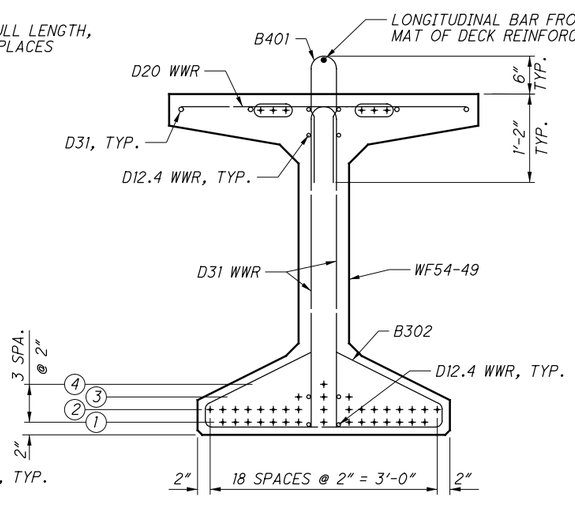

MIDSPAN BEAM SECTION

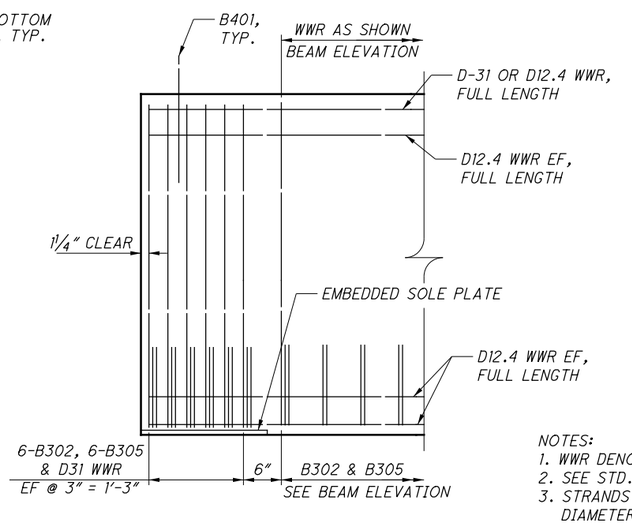

ANCHORAGE ZONE REINFORCING

STRANDS NOT SHOWN FOR CLARITY

NOTES:
1. WWR DENOTES WELDED WIRE REINFORCEMENT.
2. SEE STD. DWG. PSID-1-13 FOR ADDITIONAL DETAILS.
3. STRANDS ARE TO BE LOW RELAXATION, 0.6 INCH DIAMETER (A = 0.217 SQ. IN.) SEVEN WIRE UNCOATED, ASTM A416, GRADE 270.
4. REINFORCEMENT PROJECTING FROM BEAM TO BE [illegible].
5. SHOP MARK EACH BEAM WITH BEAM NUMBER AND ORIENTATION DIRECTION.
6. CLEAR THE B2-B402 BARS ON CENTERLINE OF BEAM AS SHOWN AT ABUTMENT END OF BEAM.

DRAFT Stage 3 - Not for Construction 09/23/2024

DESIGN AGENCY
Stantec Consulting Services Inc.
1500 Lake Shore Drive, Suite 100
Columbus, Ohio 43204
(614) 486-4383

DESIGNED EDA | DRAWN ALH | REVIEWED BSM | DATE 4/5/24
CHECKED MRS | REVISED XXX | STRUCTURE FILE NUMBER 4400496

PRESTRESSED BEAM DETAILS - SPAN 1
BRIDGE NO. LAW-7-0711
RAMP I OVER LITTLE PADDY CREEK

LAW-7-2.17
PID No. 75923

14 / 30

944 / 1247

\\US0268-PPFSS01\workgroup\1736\active\173608714\LAW\engineering\75923_LAW-7-2.17\Design\structures\LAW007_07IIP\Sheets\007_07IIP_SD012.dgn Sheet 5/13/2024 1:32:32 PM mturdevant

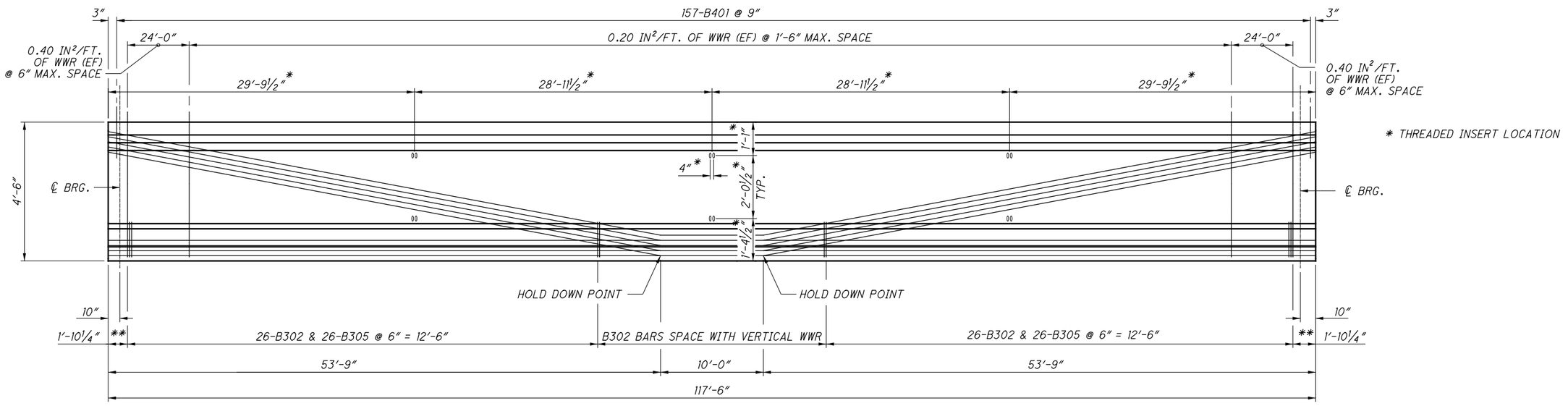

BEAM ELEVATION

VERTICAL SCALE EXAGGERATED

NUMBER OF STRANDS PER ROW												CONCRETE STRENGTH (KSI)	
SECTION	(1)	(2)	(3)	(4)	(5)	(6)	(7)	(8)	(9)	(10)	TOTAL	f′ci	f′cf
END	14	16	12	4	-	1	1	1	1	1	51	6.0	7.0
MID	15	17	13	5	1	-	-	-	-	-	51		

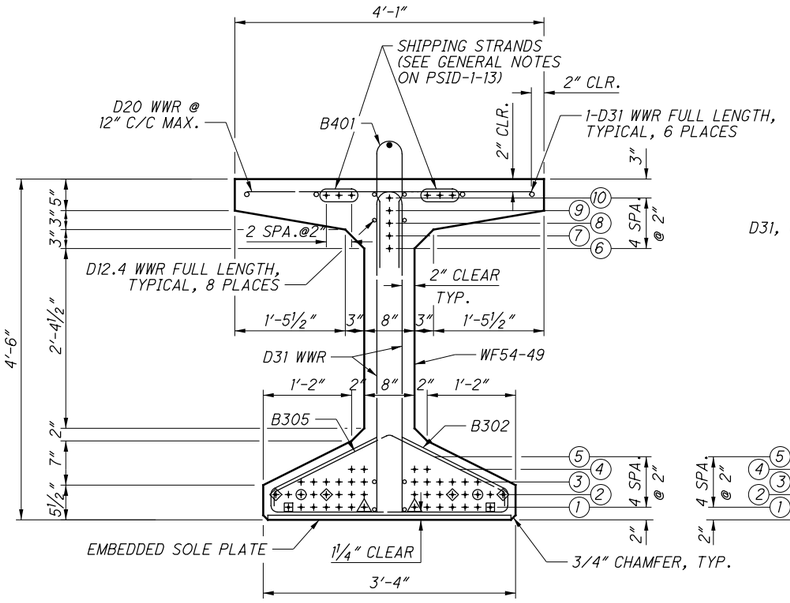

END BEAM SECTION

○ - DEBOND 2′-0″ AT EACH END
◇ - DEBOND 4′-0″ AT EACH END
□ - DEBOND 6′-0″ AT EACH END
△ - DEBOND 12′-0″ AT EACH END

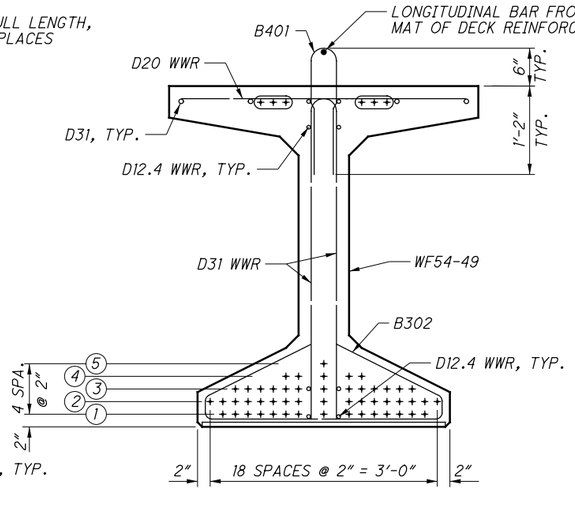

MIDSPAN BEAM SECTION

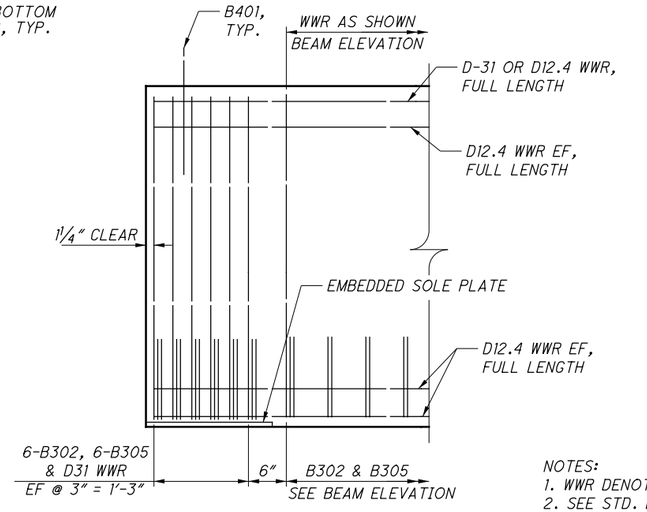

ANCHORAGE ZONE REINFORCING

STRANDS NOT SHOWN FOR CLARITY

NOTES:
1. WWR DENOTES WELDED WIRE REINFORCEMENT.
2. SEE STD. DWG. PSID-1-13 FOR ADDITIONAL DETAILS.
3. STRANDS ARE TO BE LOW RELAXATION, 0.6 INCH DIAMETER (A 0.217 SQ. IN.) SEVEN WIRE UNCOATED, GRADE 270.
4. REINFORCEMENT PROJECTING FROM BEAM TO BE EPOXY COATED.
5. STENCIL MARK EACH BEAM WITH BEAM NUMBER AND UP-STATION DIRECTION.

DRAFT Stage 3 - Not for Construction 09/23/2024

DESIGN AGENCY
Stantec Consulting Services Inc.
1500 Lake Shore Drive, Suite 100
Columbus, Ohio 43204
(614) 486-4383

DESIGNED	DRAWN	REVIEWED	DATE
EDA	ALH	BSM	4/5/24
CHECKED	REVISED	STRUCTURE FILE NUMBER	
MRS	XXX	4400496	

PRESTRESSED BEAM DETAILS - SPAN 2
BRIDGE NO. LAW-7-0711
RAMP I OVER LITTLE PADDY CREEK

LAW-7-2.17
PID No. 75923

15 / 30

945 / 1247

\\US0268-PFPSS01\workgroup\1736\active\173608714\LAW\engineering\75923_LAW-7-2.17\Design\structures\LAW007_07IIP\Sheets\007_07IIP_SD013.dgn Sheet 5/13/2024 1:32:33 PM mstur devant

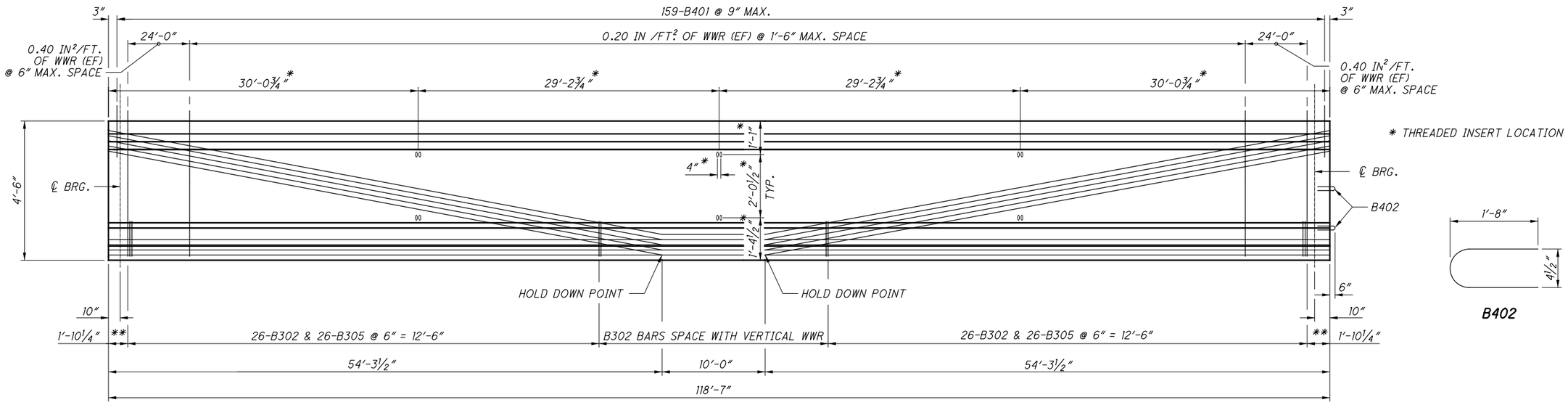

** ANCHORAGE ZONE REINFORCING, SEE DETAIL

BEAM ELEVATION

VERTICAL SCALE EXAGGERATED

NUMBER OF STRANDS PER ROW												CONCRETE STRENGTH (KSI)	
SECTION	(1)	(2)	(3)	(4)	(5)	(6)	(7)	(8)	(9)	(10)	TOTAL	f′ci	f′cf
END	14	16	12	4	-	1	1	1	1	1	51	6.0	7.0
MID	15	17	13	5	1	-	-	-	-	-	51		

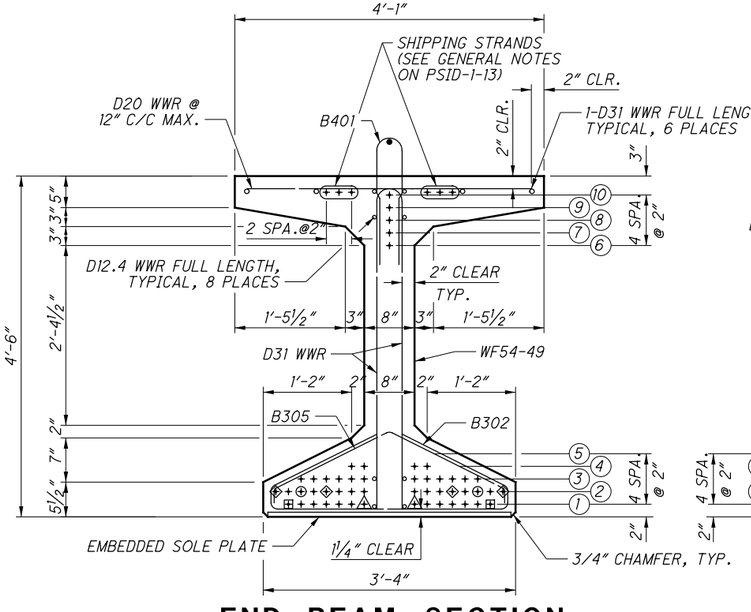

END BEAM SECTION

○ - DEBOND 2′-0″ AT EACH END
◇ - DEBOND 4′-0″ AT EACH END
□ - DEBOND 6′-0″ AT EACH END
△ - DEBOND 12′-0″ AT EACH END

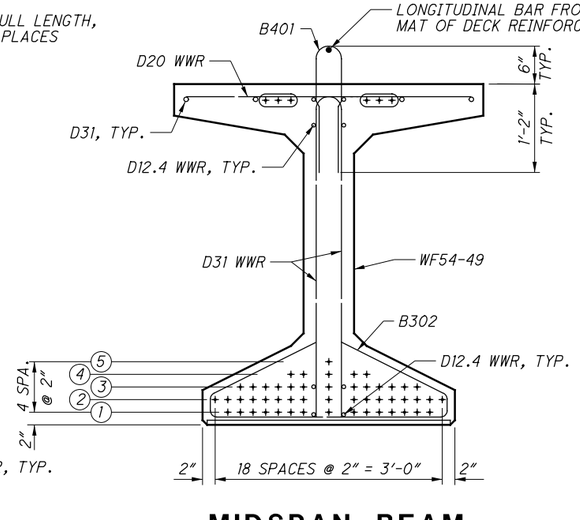

MIDSPAN BEAM SECTION

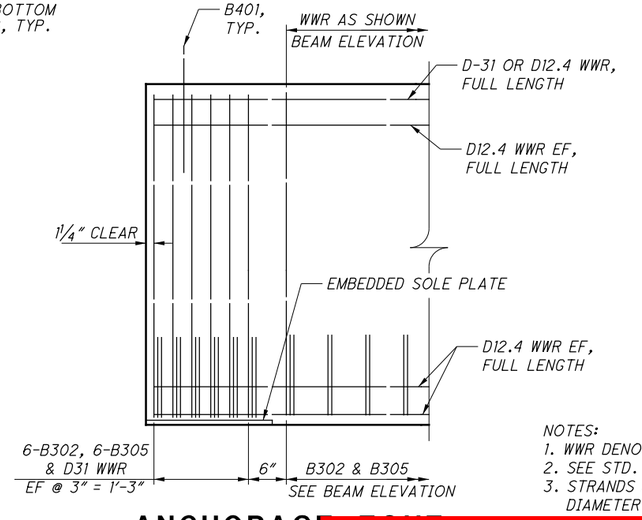

ANCHORAGE ZONE REINFORCING

STRANDS NOT SHOWN FOR CLARITY

NOTES:
1. WWR DENOTES WELDED WIRE REINFORCEMENT.
2. SEE STD. DWG. PSID-1-13 FOR ADDITIONAL DETAILS.
3. STRANDS ARE TO BE LOW RELAXATION, 0.6 INCH DIAMETER (A = 0.217 SQ. IN.) SEVEN WIRE UNCOATED, ASTM A416, GRADE 270.
4. REINFORCEMENT PROJECTING FROM BEAM TO BE FIELD LOCATED.
5. SHOP MARK EACH BEAM WITH BEAM NUMBER AND ORIENTATION DIRECTION.
6. CENTER THE 2-B402 BARS ON CENTERLINE OF BEAM AS SHOWN AT ABUTMENT END OF BEAM.

DRAFT Stage 3 - Not for Construction 09/23/2024

DESIGN AGENCY
Stantec Consulting Services Inc.
1500 Lake Shore Drive, Suite 100
Columbus, Ohio 43204
(614) 486-4383

DESIGNED	DRAWN	REVIEWED	DATE
EDA	ALH	BSM	4/5/24
CHECKED	REVISED	STRUCTURE FILE NUMBER	
MRS	XXX	4400496	

PRESTRESSED BEAM DETAILS - SPAN 3

BRIDGE NO. LAW-7-0711
RAMP I OVER LITTLE PADDY CREEK

LAW-7-2.17
PID No. 75923

\\US0268-PPFSSON\workgroup\1736\active\173608714\LAW\engineering\75923_LAW-7-2.17\Design\structures\LAW007_07IIP\Sheets\007_07IIP_SD014.dgn Sheet 5/13/2024 1:32:34 PM msturdevant

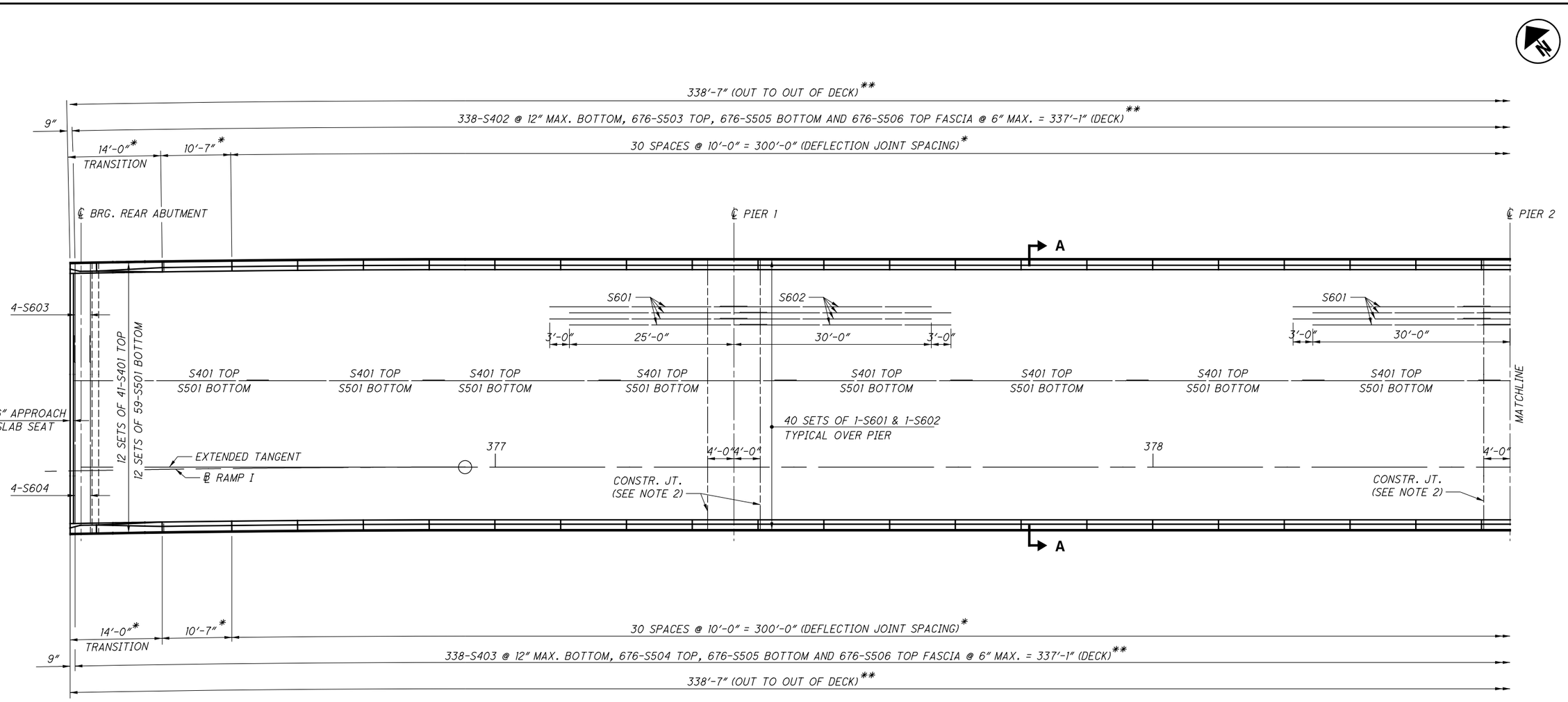

DECK PLAN

LAP LENGTHS:
#4 BARS = 2'-0"
#5 BARS = 2'-6" (TRANSVERSE)
#5 BARS = 3'-0" (LONGITUDINAL)
#6 BARS = 3'-0"

NOTES:
1. FOR SECTION A-A, SEE SHEET 20/30 .
2. SEE GENERAL NOTES IN PSID-1-13, SHEET 10 OF 10, FOR REQUIREMENTS REGARDING PLACEMENT OF DECK CONCRETE
3. FOR RAILING REINFORCING AND DETAILS, SEE SHEET 21/30 .

LEGEND:
CONSTR. JT. MEASURED ALONG OUTSIDE FACE OF RAILING MEASURED ALONG SLAB FASCIA

DRAFT Stage 3 - Not for Construction 09/23/2024

DESIGN AGENCY
Stantec Consulting Services Inc.
1500 Lake Shore Drive, Suite 100
Columbus, Ohio 43204
(614) 486-4383

DESIGNED	DRAWN	REVIEWED	DATE
EDA	ALH	BSM	4/5/24
CHECKED	REVISED	STRUCTURE FILE NUMBER	
MRS	XXX	4400496	

DECK PLAN (1)
BRIDGE NO. LAW-7-0711
RAMP I OVER LITTLE PADDY CREEK

LAW-7-2.17
PID No. 75923

\\US0268-PPFSS01\workgroup\1736\active\173608714\LAW\engineering\75923_LAW-7-2.17\Design\structures\LAW007_07IP\Sheets\007_07IP_SD002.dgn Sheet 5/13/2024 1:32:36 PM msturdevant

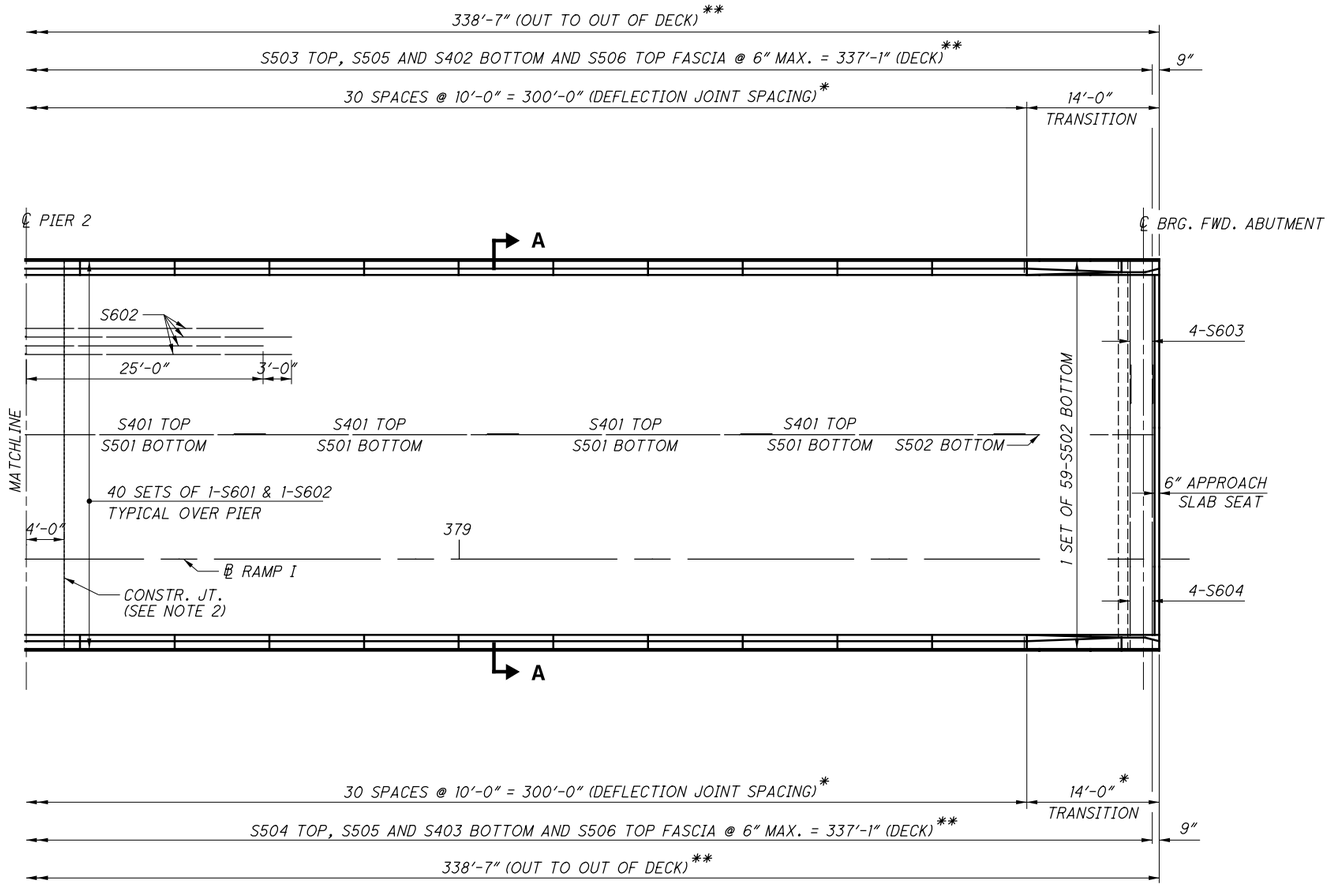

DECK PLAN

LAP LENGTHS:
#4 BARS = 2'-0"
#5 BARS = 2'-6" (TRANSVERSE)
#5 BARS = 3'-0" (LONGITUDINAL)
#6 BARS = 3'-0"

NOTES:
1. FOR SECTION A-A, SEE SHEET 20/30 .
2. SEE GENERAL NOTES IN PSID-1-13, SHEET 10 OF 10, FOR REQUIREMENTS REGARDING PLACEMENT OF DECK CONCRETE.
3. FOR RAILING REINFORCING AND DETAILS, SEE SHEET 21/30 .

LEGEND:
S-- DENOTES BARS ALONG OUTSIDE FACE OF RAILING MEASURED ALONG SLAB FASCIA

DRAFT Stage 3 - Not for Construction 09/23/2024

\\US0268-PPFSS01\workgroup\1736\active\173608714\LAW\engineering\75923_LAW-7-2.17\Design\structures\LAW007_07IIP\Sheets\007_07IIP_SD003.dgn Sheet 5/13/2024 1:32:37 PM msturdevant

DESIGN AGENCY
Stantec Consulting Services Inc.
1500 Lake Shore Drive, Suite 100
Columbus, Ohio 43204
(614) 486-4383

DESIGNED	DRAWN	REVIEWED	DATE
EDA	ALH	BSM	4/5/24
CHECKED	REVISED	STRUCTURE FILE NUMBER	
MRS	XXX	4400496	

DECK PLAN (2)
BRIDGE NO. LAW-7-0711
RAMP I OVER LITTLE PADDY CREEK

LAW-7-2.17
PID No. 75923

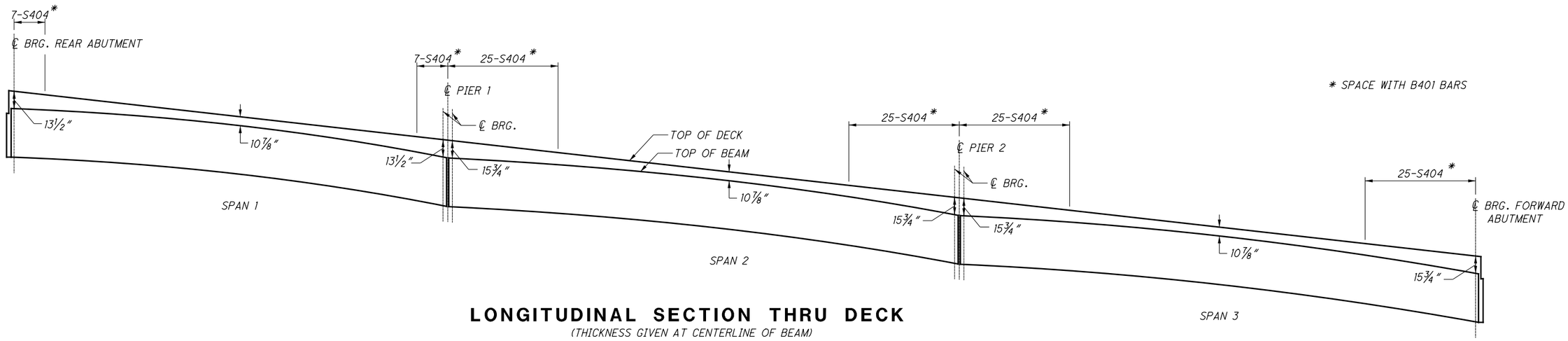

LONGITUDINAL SECTION THRU DECK

(THICKNESS GIVEN AT CENTERLINE OF BEAM)

SPAN 1

CALCULATED CAMBER AT DAY 0 (D_0) IS 1¾ INCHES.

CALCULATED CAMBER AT DAY 30 (D_{30}) IS 3 ⅛ INCHES.

DEFLECTION DUE TO REMAINING DEAD LOAD (E.G. CONCRETE DECK, CROSS-FRAMES, DIAPHRAGMS, BARRIERS,UTILITIES, ETC.) IS ½ INCHES.

THE BEAM SEAT ELEVATIONS ASSUME ESTIMATED CAMBER D_{30} WITH A SACRIFICIAL HAUNCH THICKNESS OF 4⅝ INCHES MEASURED ON THE CENTERLINE OF GIRDER.

SPAN 2

CALCULATED CAMBER AT DAY 0 (D_0) IS 3⅛ INCHES.

CALCULATED CAMBER AT DAY 30 (D_{30}) IS 5½ INCHES.

DEFLECTION DUE TO REMAINING DEAD LOAD (E.G. CONCRETE DECK, CROSS-FRAMES, DIAPHRAGMS, BARRIERS,UTILITIES, ETC.) IS ⅝ INCHES.

THE BEAM SEAT ELEVATIONS ASSUME ESTIMATED CAMBER D_{30} WITH A SACRIFICIAL HAUNCH THICKNESS OF 6⅞ INCHES MEASURED ON THE CENTERLINE OF GIRDER.

SPAN 3

CALCULATED CAMBER AT DAY 0 (D_0) IS 3⅛ INCHES.

CALCULATED CAMBER AT DAY 30 (D_{30}) IS 5½ INCHES.

DEFLECTION DUE TO REMAINING DEAD LOAD (E.G. CONCRETE DECK, CROSS-FRAMES, DIAPHRAGMS, BARRIERS,UTILITIES, ETC.) IS ¾ INCHES.

THE BEAM SEAT ELEVATIONS ASSUME ESTIMATED CAMBER D_{30} WITH A SACRIFICIAL HAUNCH THICKNESS OF [illegible] INCHES MEASURED ON THE CENTERLINE OF GIRDER.

DRAFT Stage 3 - Not for Construction 09/23/2024

DESIGN AGENCY
Stantec Consulting Services Inc.
1500 Lake Shore Drive, Suite 100
Columbus, Ohio 43204
(614) 486-4383

DESIGNED	DRAWN	REVIEWED	DATE
EDA	ALH	BSM	4/5/24
CHECKED	REVISED	STRUCTURE FILE NUMBER	
MRS	XXX	4400496	

LONGITUDINAL SECTION
BRIDGE NO. LAW-7-0711
RAMP I OVER LITTLE PADDY CREEK

LAW-7-2.17
PID No. 75923

\\US0268-PFPSS01\workgroup\1736\active\173608714\LAW\engineering\75923_LAW-7-2.17\Design\structures\LAW007_07IIP\Sheets\007_07IIP_SD004.dgn Sheet 5/13/2024 1:32:39 PM msturdevant

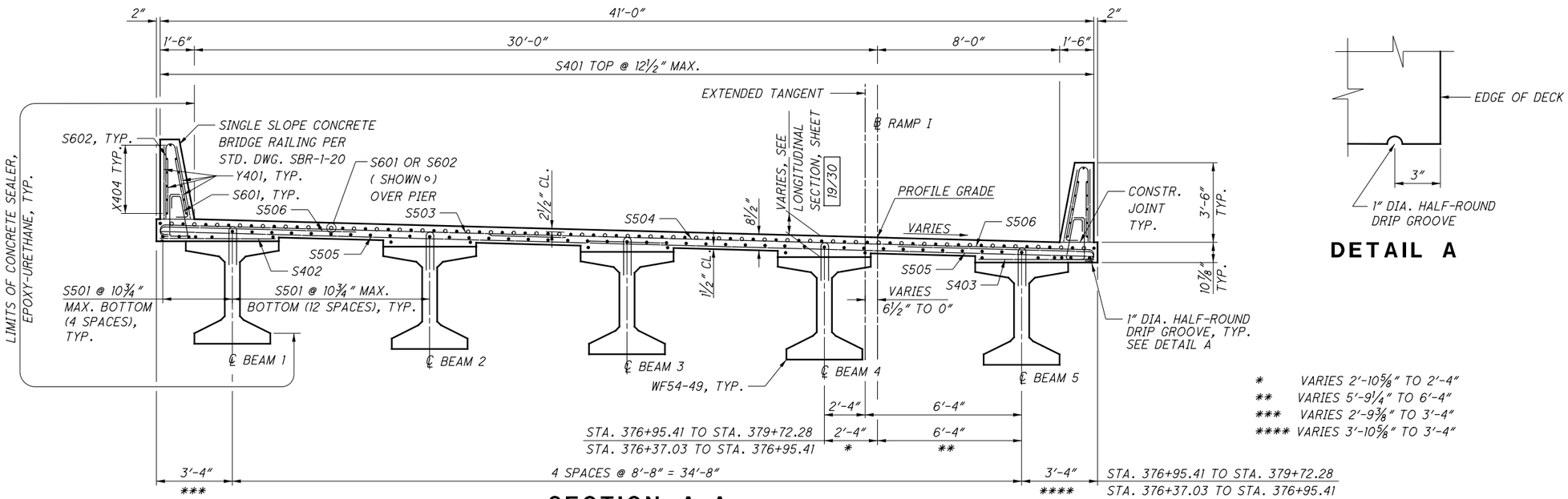

SECTION A-A

DETAIL A

* VARIES 2′-10⅝″ TO 2′-4″
** VARIES 5′-9¼″ TO 6′-4″
*** VARIES 2′-9⅜″ TO 3′-4″
**** VARIES 3′-10⅝″ TO 3′-4″

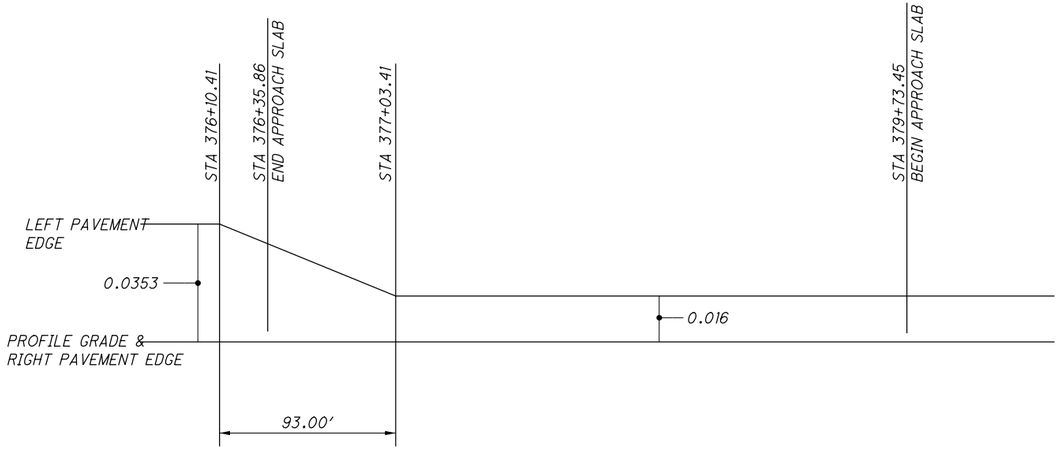

SUPERELEVATION TRANSITION DETAIL

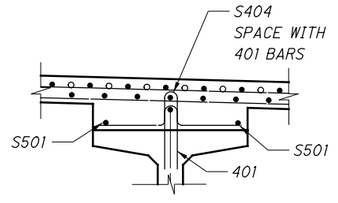

TYPICAL HAUNCH DETAIL

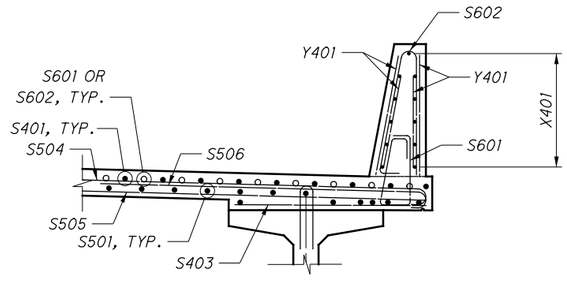

OVERHANG DETAIL

NOTE:
1. DECK SLAB THICKNESS FOR CONCRETE QUANTITY: THE ESTIMATED QUANTITY OF DECK CONCRETE IS MEASURED ACCORDING TO C&MS 511. IN ADDITION TO THE DESIGN SLAB THICKNESS, THE QUANTITY INCLUDES A VARIABLE SLAB THICKNESS TO PROVIDE AN ALLOWANCE FOR: VERTICAL GRADE ADJUSTMENT, BEAM CAMBER AND ADDITIONAL SACRIFICIAL HAUNCH THICKNESS.
2. FOR LOCATION OF SECTION A-A, SEE SHEETS 17/30 AND 18/30.

DRAFT Stage 3 - Not for Construction 09/23/2024

DESIGN AGENCY
Stantec Consulting Services Inc.
1500 Lake Shore Drive, Suite 100
Columbus, Ohio 43204
(614) 486-4383

DESIGNED	DRAWN	REVIEWED	DATE
EDA	ALH	BSM	4/5/24
CHECKED	REVISED	STRUCTURE FILE NUMBER	
MRS		4400496	

TRANSVERSE SECTION
BRIDGE NO. LAW-7-0711
RAMP I OVER LITTLE PADDY CREEK

LAW-7-2.17
PID No. 75923

20/30

950/1247

\\US0268-PFPSS01\workgroup\1736\active\173608714\LAW\engineering\75923_LAW-7-2.17\Design\structures\LAW007_07IP\Sheets\007_07IP_TS001.dgn Sheet 5/13/2024 1:32:41 PM mturdevant

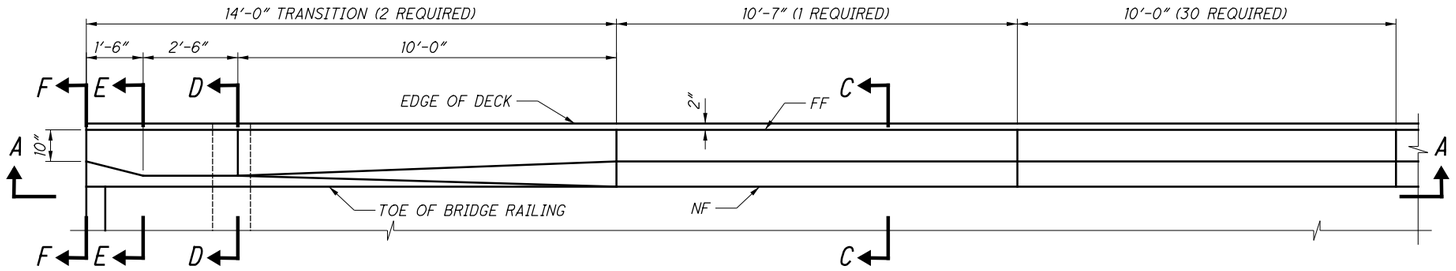

LEFT RAILING

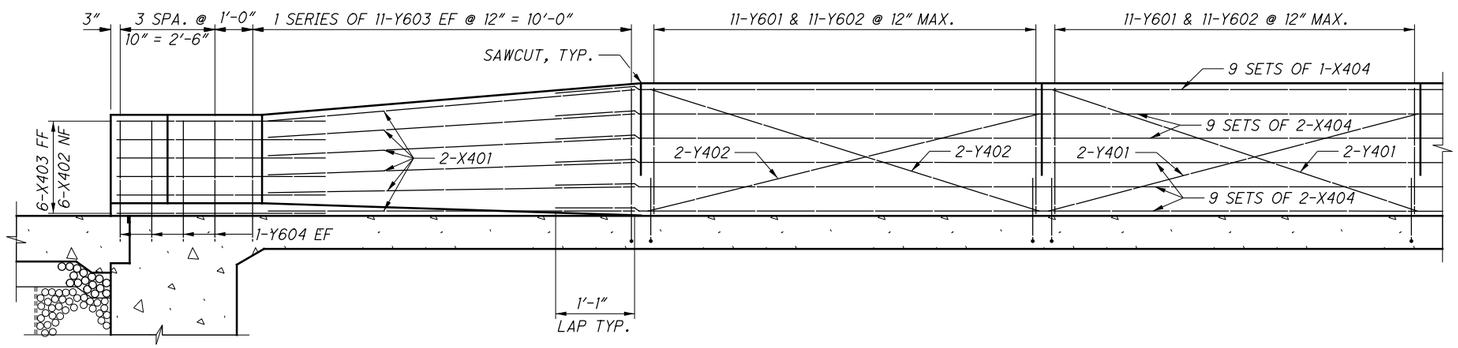

SECTION A-A

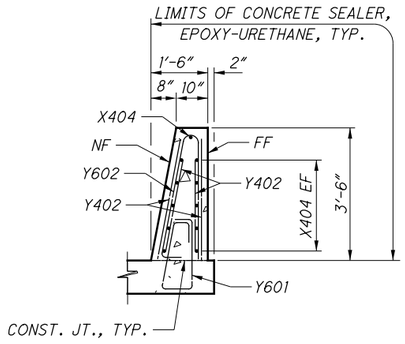

SECTION C-C

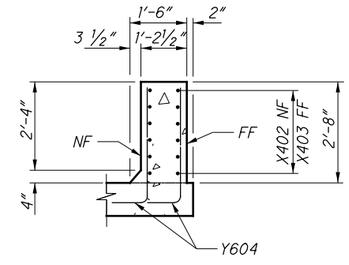

SECTION D-D

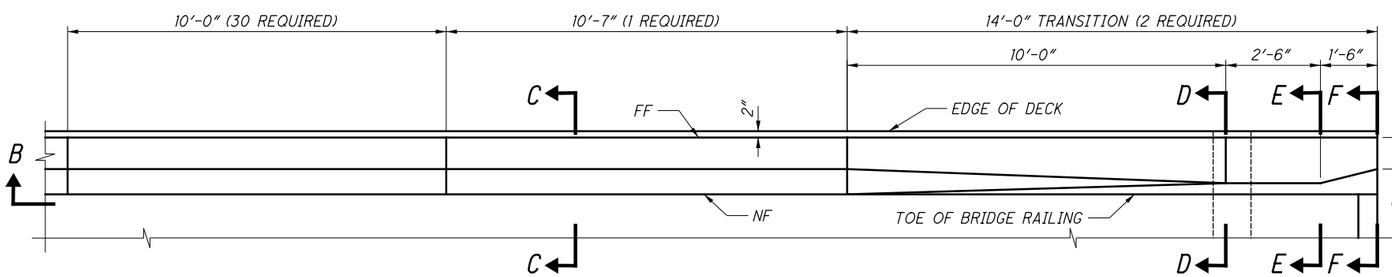

RIGHT RAILING

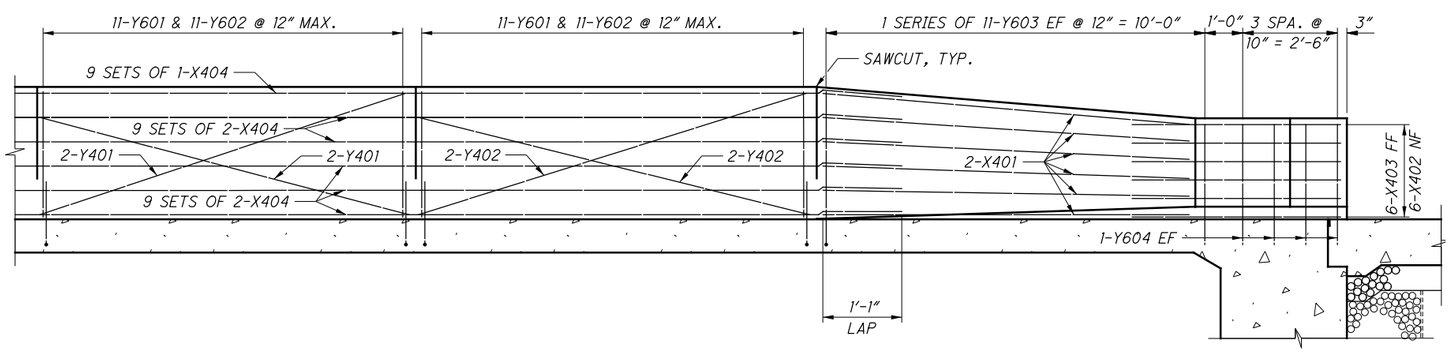

SECTION B-B

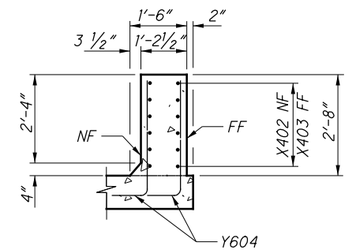

SECTION E-E

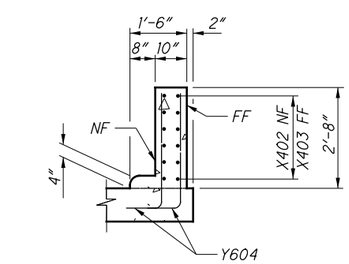

SECTION F-F

NOTES:
1. SEE ROADWAY PLANS FOR BRIDGE TERMINAL ASSEMBLY DETAILS.
2. FOR ADDITIONAL DETAILS, SEE STD. DWG. SBR-1-20.

DRAFT Stage 3 - Not for Construction 09/23/2024

DESIGN AGENCY
Stantec Consulting Services Inc.
1500 Lake Shore Drive, Suite 100
Columbus, Ohio 43204
(614) 486-4383

DESIGNED	DRAWN	REVIEWED	DATE
EDA	ALH	BSM	4/5/24
CHECKED	REVISED	STRUCTURE FILE NUMBER	
MRS	XXX	4400496	

RAILING DETAILS
BRIDGE NO. LAW-7-0711
RAMP I OVER LITTLE PADDY CREEK

LAW-7-2.17
PID No. 75923

21/30

951/1247

\\US0268-PPFSSON\workgroup\1736\active\173608714\LAW\engineering\75923_LAW-7-2.17\Design\structures\LAW007_07IIP\Sheets\007_07IIP_SD0II.dgn Sheet 5/13/2024 1:32:42 PM msturdevant

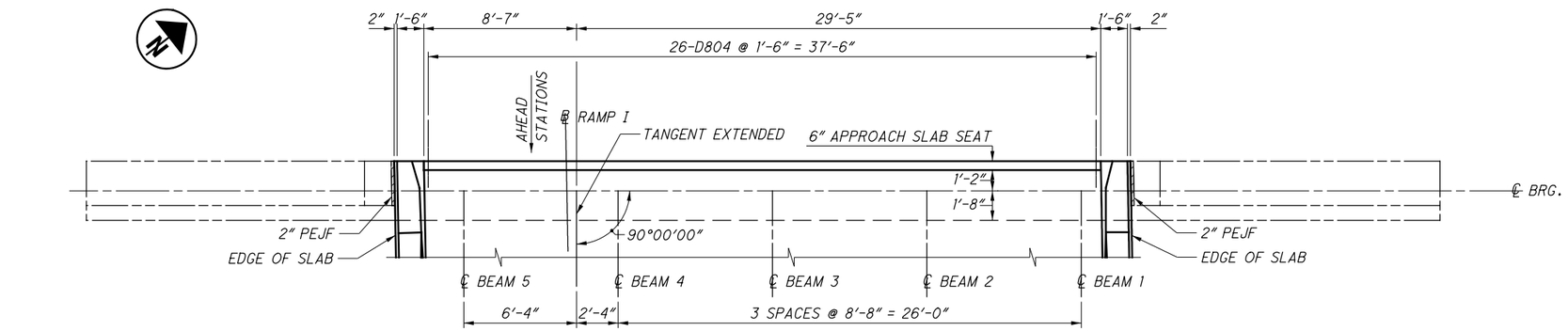

PLAN

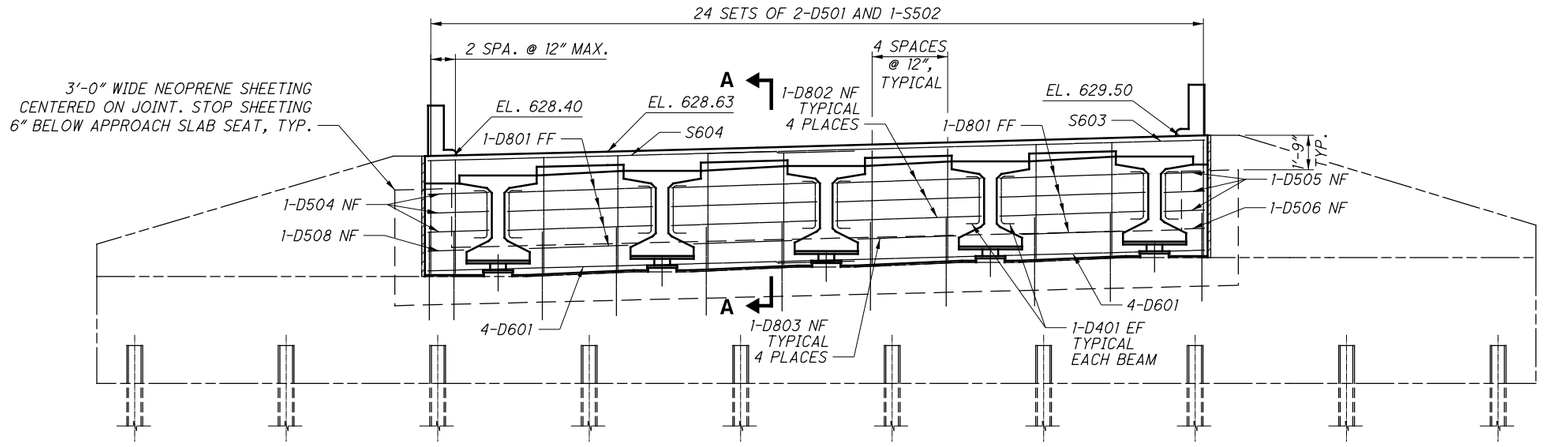

ELEVATION

LAP LENGTHS:
#6 BARS = 4′-0″
#8 BARS = 5′-6″

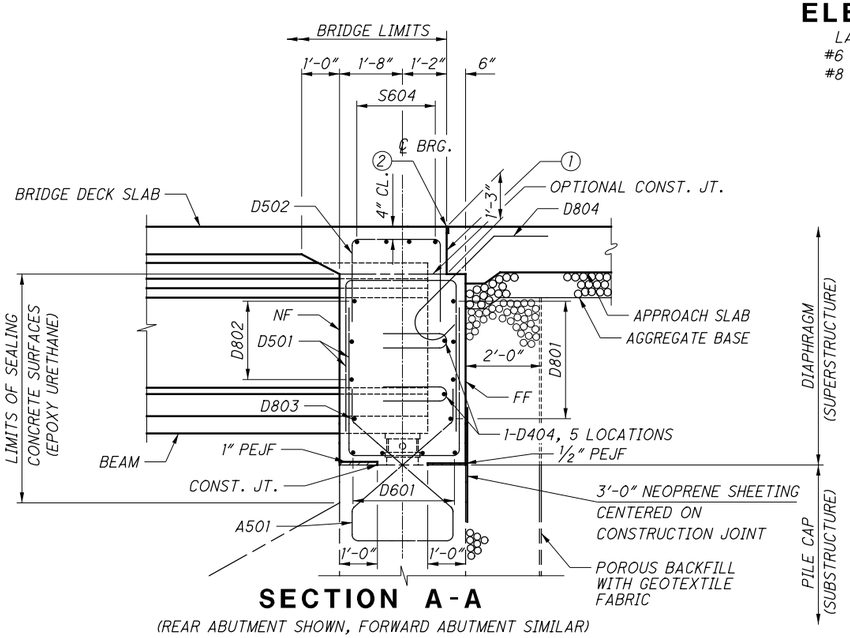

SECTION A-A

(REAR ABUTMENT SHOWN, FORWARD ABUTMENT SIMILAR)

① TYPE A WATERPROOFING (INCLUDE WITH APPROACH SLAB FOR PAYMENT)

② PREFORMED ELASTOMERIC COMPRESSION JOINT SEAL. FOR ADDITIONAL DETAILS, SEE STD. DWG. AS-1-15, DETAIL B (INCLUDE WITH APPROACH SLAB FOR PAYMENT)

NOTES:

1. ELEVATIONS ARE GIVEN ON THE CENTERLINE OF BEARING.
2. UNLESS NOTED OTHERWISE ALL REINFORCING SHALL BE INSTALLED WITH A MINIMUM CLEARANCE OF 2″ TO THE CONCRETE SURFACE.
3. ABUTMENT DIAPHRAGM CONCRETE PLACE THE DIAPHRAGM CONCRETE ENCASING THE STRUCTURAL MEMBER ENDS WITH THE BEAM CONCRETE AT LEAST 24 HOURS BEFORE PLACEMENT OF THE DECK CONCRETE. IF PLACED SEPARATELY, LOCATE THE HORIZONTAL CONSTRUCTION JOINT IN THE DIAPHRAGM AS SHOWN ON PSID-1-13, SHEET 7 OF 10 FOR PRESTRESSED I-BEAM SUPERSTRUCTURES AND PLACE REMAINING DIAPHRAGM CONCRETE WITH THE DECK.

DRAFT Stage 3 - Not for Construction 09/23/2024

DESIGN AGENCY
Stantec Consulting Services Inc.
1500 Lake Shore Drive, Suite 100
Columbus, Ohio 43204
(614) 486-4383

DESIGNED	DRAWN	REVIEWED	DATE
EDA	ALH	BSM	4/5/24
CHECKED	REVISED	STRUCTURE FILE NUMBER	
MRS	XXX	4400496	

DIAPHRAGM DETAILS AT REAR ABUTMENT

BRIDGE NO. LAW-7-0711
RAMP I OVER LITTLE PADDY CREEK

LAW-7-2.17
PID No. 75923

22/30
952/1247

\\US0268-PPFSSON\workgroup\1736\active\173608714\LAW\engineering\75923_LAW-7-2.17\Design\structures\LAW007_07IIP\Sheets\007_07IIP_SD009.dgn Sheet 5/13/2024 1:32:44 PM msturdevant

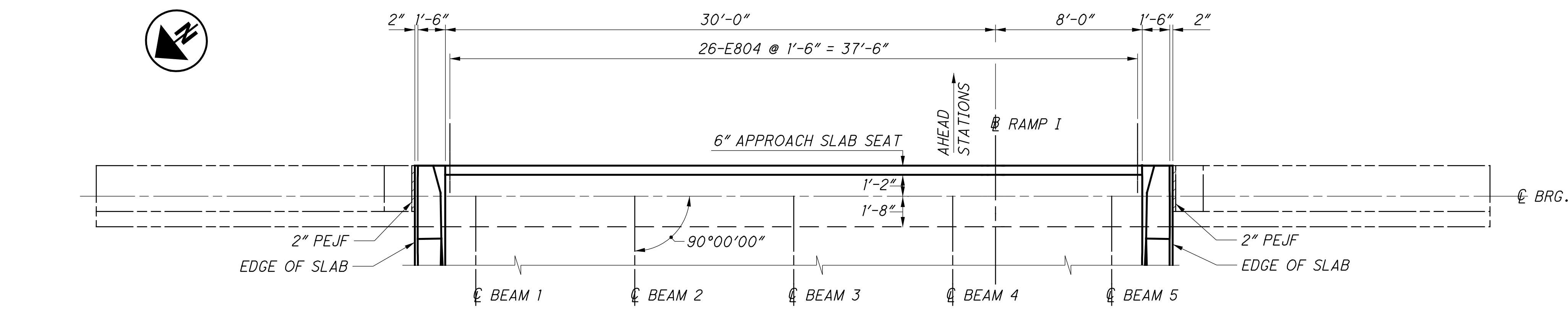

PLAN

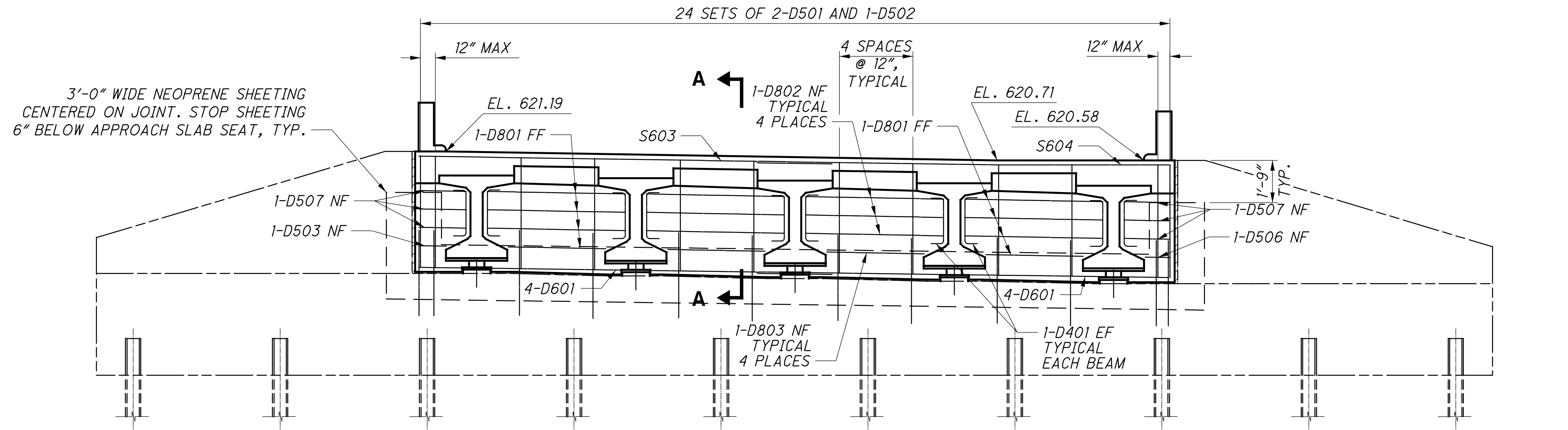

ELEVATION

LAP LENGTHS:
#6 BARS = 4'-0"
#8 BARS = 5'-6"

NOTES:

1. ELEVATIONS ARE GIVEN ON THE CENTERLINE OF BEARING.
2. UNLESS NOTED OTHERWISE ALL REINFORCING SHALL BE INSTALLED WITH A MINIMUM CLEARANCE OF 2" TO THE CONCRETE SURFACE.
3. ABUTMENT DIAPHRAGM CONCRETE: PLACE THE DIAPHRAGM CONCRETE ENCASING THE STRUCTURAL MEMBERS ENDS WITH THE DECK CONCRETE OR AT LEAST 48 HOURS BEFORE PLACEMENT OF THE DECK CONCRETE. IF PLACED SEPARATELY, LOCATE A HORIZONTAL CONSTRUCTION JOINT IN THE DIAPHRAGM AS SHOWN ON PSID-1-13, SHEET 7 OF 10 FOR PRESTRESSED I-BEAM SUPERSTRUCTURES AND PLACE REMAINING DIAPHRAGM CONCRETE WITH THE DECK.
4. FOR SECTION A-A, SEE SHEET 22/30.

DRAFT Stage 3 - Not for Construction 09/23/2024

DESIGN AGENCY
Stantec Consulting Services Inc.
1500 Lake Shore Drive, Suite 100
Columbus, Ohio 43204
(614) 486-4383

REVIEWED BSM	DATE 4/5/24
STRUCTURE FILE NUMBER 4400496	
DRAWN ALH	REVISED XXX
DESIGNED EDA	CHECKED MRS

DIAPHRAGM DETAILS AT FORWARD ABUTMENT

BRIDGE NO. LAW-7-0711
RAMP I OVER LITTLE PADDY CREEK

LAW-7-2.17
PID No. 75923

23/30

953/1247

\\US0268-PPFSS01\workgroup\1736\active\173608714\LAW\engineering\75923_LAW-7-2.17\Design\structures\LAW007_0711P\Sheets\007_0711P_SD010.dgn Sheet 5/13/2024 1:32:45 PM msturdevant

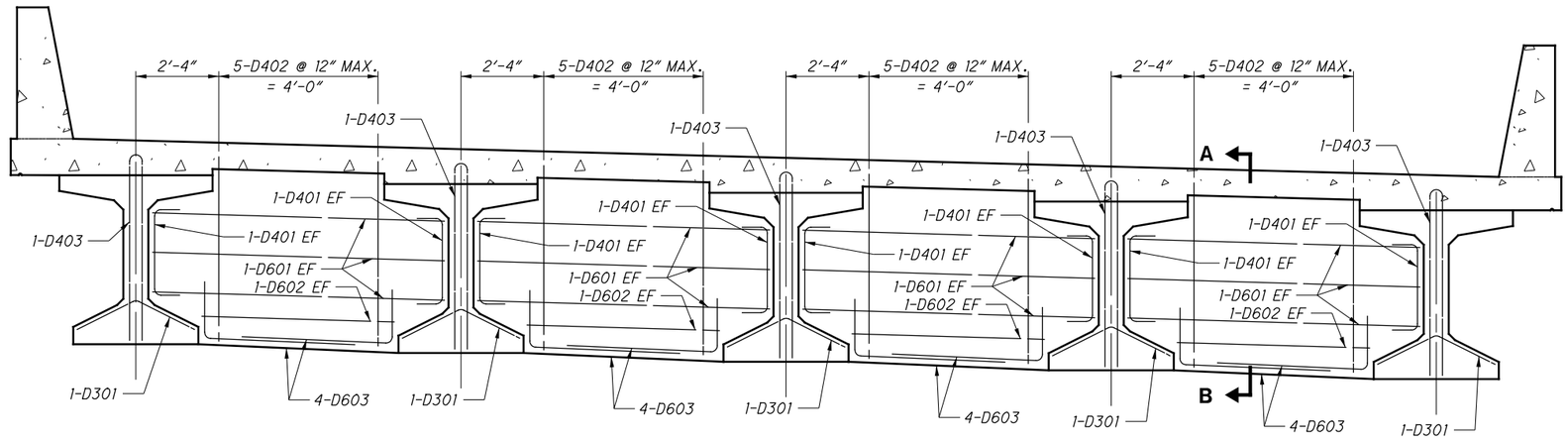

TYPICAL PIER DIAPHRAGM

(2 REQUIRED)

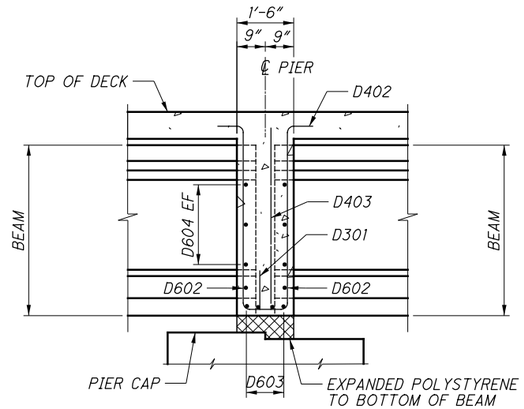

SECTION A-A

DRAFT Stage 3 - Not for Construction 09/23/2024

NOTE:

1. FOR ADDITIONAL DIAPHRAGM DETAILS, SEE STD. DWG. PSID-1-13

DESIGN AGENCY
Stantec Consulting Services Inc.
1500 Lake Shore Drive, Suite 100
Columbus, Ohio 43204
(614) 486-4383

DESIGNED	DRAWN	REVIEWED	DATE
EDA	ALH	BSM	4/5/24
CHECKED	REVISED	STRUCTURE FILE NUMBER	
MRS	XXX	4400496	

DIAPHRAGM DETAILS AT PIERS

BRIDGE NO. LAW-7-0711

RAMP I OVER LITTLE PADDY CREEK

LAW-7-2.17

PID No. 75923

24/30

954
1247

\\US0268-PPFSS01\workgroup\1736\active\173608714\LAW\engineering\75923_LAW-7-2.17\Design\structures\LAW007_07IIP\Sheets\007_07IIP_SD008.dgn Sheet 5/13/2024 11:32:46 PM msturdevant

\\US0268-PFFS01\workgroup\1736\active\173608714\LAW\engineering\75923_LAW-7-2.17\Design\structures\LAW007_07IIP\Sheets\007_07IIP_SD005.dgn Sheet 5/13/2024 1:32:48 PM msturdevant

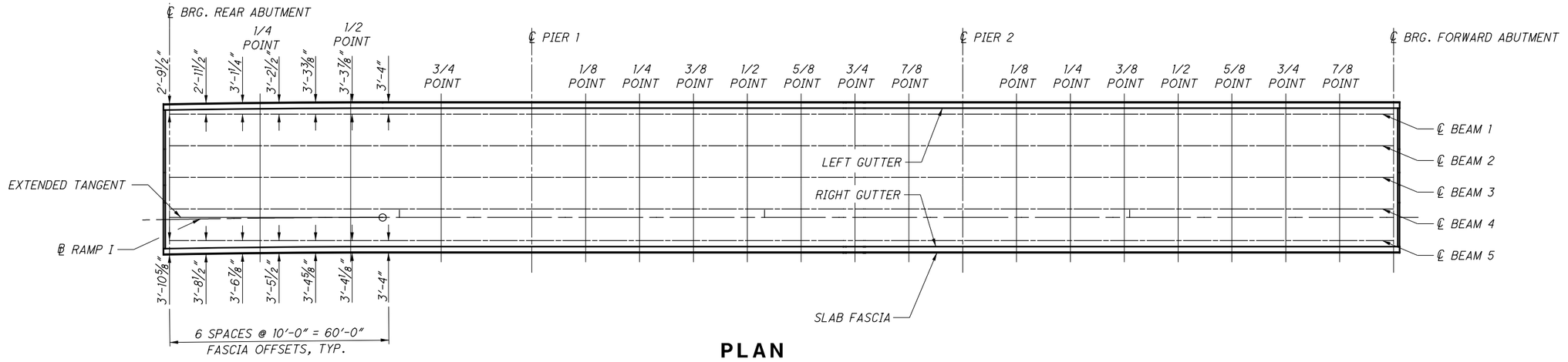

PLAN

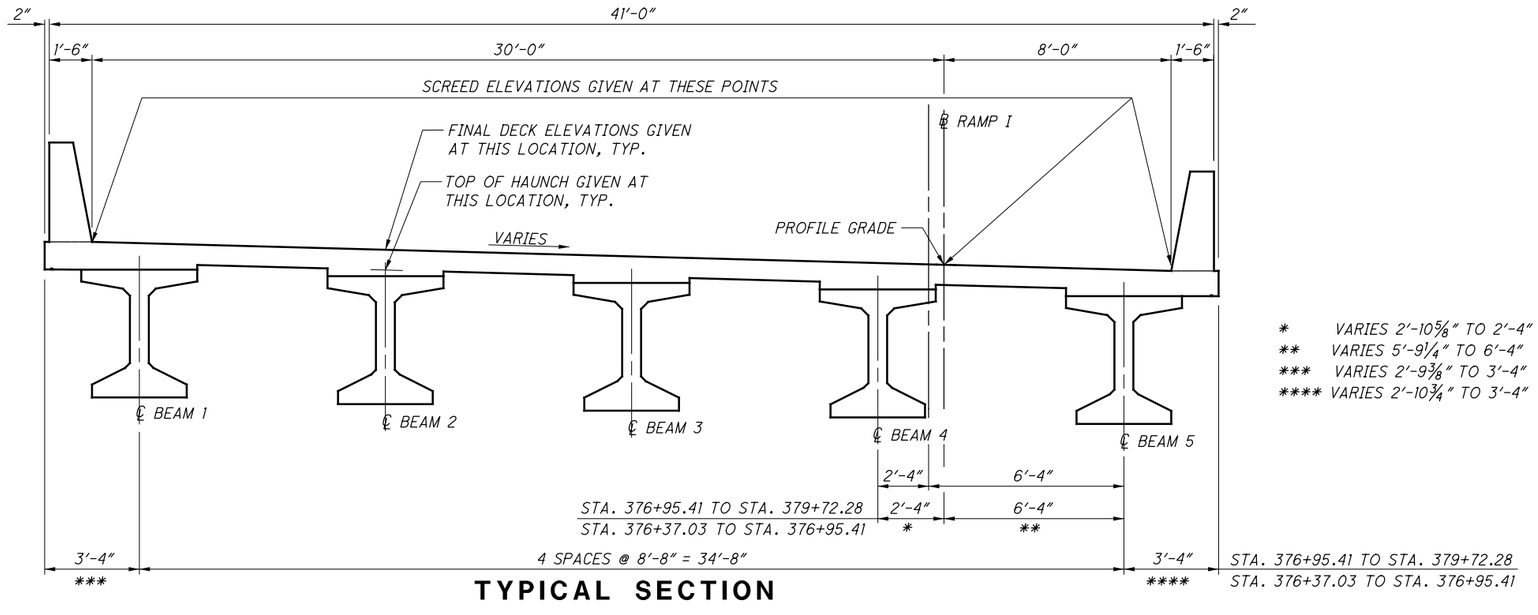

TYPICAL SECTION

* VARIES 2'-10⅝" TO 2'-4"
** VARIES 5'-9¼" TO 6'-4"
*** VARIES 2'-9⅜" TO 3'-4"
**** VARIES 2'-10¾" TO 3'-4"

FOR SCREED, TOP OF HAUNCH AND FINAL DECK ELEVATIONS, SEE SHEET 26/30 AND 27/30 .

SCREED ELEVATIONS SHOWN REPRESENT THE THEORETICAL DECK SURFACE LOCATION PRIOR TO DEFLECTIONS CAUSED BY DECK PLACEMENT AND OTHER ANTICIPATED DEAD LOADS.

TOP OF HAUNCH ELEVATIONS SHOWN REPRESENT THE THEORETICAL LOCATION OF THE BOTTOM OF THE DECK ABOVE THE BEAM/GIRDER HAUNCH PRIOR TO DEFLECTIONS CAUSED BY DECK PLACEMENT AND OTHER ANTICIPATED DEAD LOADS.

FINAL DECK SURFACE ELEVATIONS SHOWN REPRESENT THE DECK SURFACE LOCATION AFTER ALL ANTICIPATED DEAD LOAD DEFLECTIONS HAVE OCCURRED.

DRAFT Stage 3 - Not for Construction 09/23/2024

DESIGN AGENCY
Stantec Consulting Services Inc.
1500 Lake Shore Drive, Suite 100
Columbus, Ohio 43204
(614) 486-4383

DESIGNED	DRAWN	REVIEWED	DATE
EDA	ALH	BSM	4/5/24
CHECKED	REVISED	STRUCTURE FILE NUMBER	
MRS	XXX	4400496	

SCREED DIAGRAM AND FASCIA OFFSETS

BRIDGE NO. LAW-7-0711
RAMP I OVER LITTLE PADDY CREEK

LAW-7-2.17
PID No. 75923

SCREED ELEVATIONS

LOCATION	SPAN 1					SPAN 2							
	℄ BEARING	1/4 POINT	1/2 POINT	3/4 POINT	℄ PIER	1/8 POINT	1/4 POINT	3/8 POINT	1/2 POINT	5/8 POINT	3/4 POINT	7/8 POINT	℄ PIER
LEFT GUTTER	STA. 376+37.58	STA. 376+62.16	STA. 376+86.74	STA. 377+11.47	STA. 377+36.28	STA. 377+51.03	STA. 377+65.78	STA. 378+80.53	STA. 377+95.28	STA. 378+10.03	STA. 378+24.78	STA. 378+39.53	STA. 378+54.28
	629.50	628.33	627.22	626.17	625.25	624.84	624.45	624.10	623.74	623.38	623.03	622.66	622.31
PROFILE GRADE	STA. 376+37.03	STA. 376+61.84	STA. 376+86.66	STA. 377+11.47	STA. 377+36.28	STA. 377+51.03	STA. 377+65.78	STA. 378+80.53	STA. 377+95.28	STA. 378+10.03	STA. 378+24.78	STA. 378+39.53	STA. 378+54.28
	628.63	627.61	626.65	625.70	624.77	624.36	623.99	623.64	623.29	622.92	622.57	622.19	621.83
RIGHT GUTTER	STA. 376+36.88	STA. 376+61.76	STA. 376+86.63	STA. 377+11.47	STA. 377+36.28	STA. 377+51.03	STA. 377+65.78	STA. 378+80.53	STA. 377+95.28	STA. 378+10.03	STA. 378+24.78	STA. 378+39.53	STA. 378+54.28
	628.40	627.41	626.48	625.56	624.64	624.23	623.84	623.49	623.13	622.77	622.42	622.05	621.71

SCREED ELEVATIONS

LOCATION	SPAN 3								
	℄ PIER	1/8 POINT	1/4 POINT	3/8 POINT	1/2 POINT	5/8 POINT	3/4 POINT	7/8 POINT	℄ BEARING
LEFT GUTTER	STA. 378+54.28	STA. 378+69.03	STA. 379+83.78	STA. 378+98.53	STA. 379+13.28	STA. 379+28.03	STA. 379+42.78	STA. 379+57.53	STA. 379+72.28
	622.31	622.13	621.97	621.85	621.72	621.58	621.45	621.31	621.19
PROFILE GRADE	STA. 378+54.28	STA. 378+69.03	STA. 379+83.78	STA. 378+98.53	STA. 379+13.28	STA. 379+28.03	STA. 379+42.78	STA. 379+57.53	STA. 379+72.28
	621.83	621.66	621.51	621.39	621.26	621.13	621.00	620.85	620.71
RIGHT GUTTER	STA. 378+54.28	STA. 378+69.03	STA. 379+83.78	STA. 378+98.53	STA. 379+13.28	STA. 379+28.03	STA. 379+42.78	STA. 379+57.53	STA. 379+72.28
	621.71	621.52	621.37	621.24	621.11	620.97	620.85	620.71	620.58

TOP OF HAUNCH ELEVATIONS

LOCATION	SPAN 1					SPAN 2							
	℄ BEARING	1/4 POINT	1/2 POINT	3/4 POINT	℄ PIER	1/8 POINT	1/4 POINT	3/8 POINT	1/2 POINT	5/8 POINT	3/4 POINT	7/8 POINT	℄ PIER
BEAM 1	STA. 376+37.56	STA. 376+62.15	STA. 376+86.73	STA. 377+11.47	STA. 377+36.28	STA. 377+51.03	STA. 377+65.78	STA. 377+80.53	STA. 377+95.28	STA. 378+10.03	STA. 378+24.78	STA. 378+39.53	STA. 378+54.28
	628.74	627.56	626.46	625.41	624.49	624.08	623.70	623.34	622.98	622.62	622.27	621.91	621.56
BEAM 2	STA. 376+37.40	STA. 376+62.05	STA. 376+86.71	STA. 377+11.47	STA. 377+36.28	STA. 377+51.03	STA. 377+65.78	STA. 377+80.53	STA. 377+95.28	STA. 378+10.03	STA. 378+24.78	STA. 378+39.53	STA. 378+54.28
	628.49	627.36	626.30	625.29	624.35	623.95	623.57	623.23	622.87	622.51	622.15	621.78	621.42
BEAM 3	STA. 376+37.24	STA. 376+61.96	STA. 376+86.69	STA. 377+11.47	STA. 377+36.28	STA. 377+51.03	STA. 377+65.78	STA. 377+80.53	STA. 377+95.28	STA. 378+10.03	STA. 378+24.78	STA. 378+39.53	STA. 378+54.28
	628.24	627.15	626.13	625.15	624.21	623.81	623.43	623.09	622.73	622.37	622.01	621.64	621.28
BEAM 4	STA. 376+37.08	STA. 376+61.87	STA. 376+86.66	STA. 377+11.47	STA. 377+36.28	STA. 377+51.03	STA. 377+65.78	STA. 377+80.53	STA. 377+95.28	STA. 378+10.03	STA. 378+24.78	STA. 378+39.53	STA. 378+54.28
	627.99	626.94	625.97	625.01	624.07	623.67	623.30	622.95	622.59	622.23	621.88	621.50	621.14
BEAM 5	STA. 376+36.92	STA. 376+61.78	STA. 376+86.64	STA. 377+11.47	STA. 377+36.28	STA. 377+51.03	STA. 377+65.78	STA. 377+80.53	STA. 377+95.28	STA. 378+10.03	STA. 378+24.78	STA. 378+39.53	STA. 378+54.28
	627.74	626.73	625.80	624.87	623.94	623.53	623.16	622.81	622.45	622.09	621.74	621.36	621.00

TOP OF HAUNCH ELEVATIONS

LOCATION	SPAN 3								
	℄ PIER	1/8 POINT	1/4 POINT	3/8 POINT	1/2 POINT	5/8 POINT	3/4 POINT	7/8 POINT	℄ BEARING
BEAM 1	STA. 378+54.28	STA. 378+69.03	STA. 379+83.78	STA. 378+98.53	STA. 379+13.28	STA. 379+28.03	STA. 379+42.78	STA. 379+57.53	STA. 379+72.28
	621.56	621.37	621.22	621.09	620.96	620.82	620.70	620.56	620.43
BEAM 2	STA. 378+54.28	STA. 378+69.03	STA. 379+83.78	STA. 378+98.53	STA. 379+13.28	STA. 379+28.03	STA. 379+42.78	STA. 379+57.53	STA. 379+72.28
	621.42	621.24	621.10	620.98	620.85	620.71	620.58	620.43	620.29
BEAM 3	STA. 378+54.28	STA. 378+69.03	STA. 379+83.78	STA. 378+98.53	STA. 379+13.28	STA. 379+28.03	STA. 379+42.78	STA. 379+57.53	STA. 379+72.28
	621.28	621.11	620.96	620.84	620.71	620.57	620.44	620.29	620.15
BEAM 4	STA. 378+54.28	STA. 378+69.03	STA. 379+83.78	STA. 378+98.53	STA. 379+13.28	STA. 379+28.03	STA. 379+42.78	STA. 379+57.53	STA. 379+72.28
	621.14	620.97	620.82	620.70	620.57	620.43	620.30	620.15	620.02
BEAM 5	STA. 378+54.28	STA. 378+69.03	STA. 379+83.78	STA. 378+98.53	STA. 379+13.28	STA. 379+28.03	STA. 379+42.78	STA. 379+57.53	STA. 379+72.28
	621.00	620.83	620.86	620.56	620.43	620.30	620.17	620.02	619.88

DRAFT Stage 3 - Not for Construction 09/23/2024

\\US0268-PPFSSON\workgroup\1736\active\173608714\LAW\engineering\75923_LAW-7-2.17\Design\structures\LAW007_07IIP\Sheets\007_07IIP_SD006.dgn Sheet 5/13/2024 1:32:50 PM msturdevant

DESIGN AGENCY
Stantec Consulting Services Inc.
1500 Lake Shore Drive, Suite 100
Columbus, Ohio 43204
(614) 486-4383

DESIGNED	DRAWN	REVIEWED	DATE
EDA	ALH	BSM	4/5/24
CHECKED	REVISED	STRUCTURE FILE NUMBER	
MRS	XXX	4400496	

DECK CONSTRUCTION ELEVATIONS (1)
BRIDGE NO. LAW-7-0711
RAMP I OVER LITTLE PADDY CREEK

LAW-7-2.17
PID No. 75923

956
1247

DECK ELEVATIONS

LOCATION	SPAN 1					SPAN 2							
	℄ BEARING	1/4 POINT	1/2 POINT	3/4 POINT	℄ PIER	1/8 POINT	1/4 POINT	3/8 POINT	1/2 POINT	5/8 POINT	3/4 POINT	7/8 POINT	℄ PIER
LEFT GUTTER	STA. 376+37.58	STA. 376+62.16	STA. 376+86.74	STA. 377+11.47	STA. 377+36.28	STA. 377+51.03	STA. 377+65.78	STA. 378+80.53	STA. 377+95.28	STA. 378+10.03	STA. 378+24.78	STA. 378+39.53	STA. 378+54.28
	629.50	628.27	627.12	626.09	625.25	624.78	624.34	623.93	623.55	623.20	622.88	622.58	622.31
BEAM 1	STA. 376+37.56	STA. 376+62.15	STA. 376+86.73	STA. 377+11.47	STA. 377+36.28	STA. 377+51.03	STA. 377+65.78	STA. 378+80.53	STA. 377+95.28	STA. 378+10.03	STA. 378+24.78	STA. 378+39.53	STA. 378+54.28
	629.47	628.23	627.09	626.07	625.22	624.75	624.32	623.91	623.53	623.17	622.85	622.55	622.29
BEAM 2	STA. 376+37.40	STA. 376+62.05	STA. 376+86.71	STA. 377+11.47	STA. 377+36.28	STA. 377+51.03	STA. 377+65.78	STA. 378+80.53	STA. 377+95.28	STA. 378+10.03	STA. 378+24.78	STA. 378+39.53	STA. 378+54.28
	629.22	628.03	626.92	625.93	625.08	624.62	624.18	623.77	623.39	623.04	622.71	622.42	622.15
BEAM 3	STA. 376+37.24	STA. 376+61.96	STA. 376+86.69	STA. 377+11.47	STA. 377+36.28	STA. 377+51.03	STA. 377+65.78	STA. 378+80.53	STA. 377+95.28	STA. 378+10.03	STA. 378+24.78	STA. 378+39.53	STA. 378+54.28
	628.97	627.82	626.75	625.79	624.94	624.48	624.04	623.63	623.25	622.90	622.57	622.28	622.01
BEAM 4	STA. 376+37.08	STA. 376+61.87	STA. 376+86.66	STA. 377+11.47	STA. 377+36.28	STA. 377+51.03	STA. 377+65.78	STA. 378+80.53	STA. 377+95.28	STA. 378+10.03	STA. 378+24.78	STA. 378+39.53	STA. 378+54.28
	628.72	627.61	626.59	625.65	624.80	624.34	624.90	623.49	623.11	622.76	622.43	622.14	621.87
PROFILE GRADE	STA. 376+37.03	STA. 376+61.84	STA. 376+86.66	STA. 377+11.47	STA. 377+36.28	STA. 377+51.03	STA. 377+65.78	STA. 378+80.53	STA. 377+95.28	STA. 378+10.03	STA. 378+24.78	STA. 378+39.53	STA. 378+54.28
	628.63	627.55	626.54	625.61	624.77	624.30	623.86	623.45	623.07	622.72	622.40	622.10	621.83
BEAM 5	STA. 376+36.92	STA. 376+61.78	STA. 376+86.64	STA. 377+11.47	STA. 377+36.28	STA. 377+51.03	STA. 377+65.78	STA. 378+80.53	STA. 377+95.28	STA. 378+10.03	STA. 378+24.78	STA. 378+39.53	STA. 378+54.28
	628.47	627.40	626.42	625.51	624.67	624.20	623.76	623.35	622.97	622.62	622.30	622.00	621.73
RIGHT GUTTER	STA. 376+36.88	STA. 376+61.76	STA. 376+86.63	STA. 377+11.47	STA. 377+36.28	STA. 377+51.03	STA. 377+65.78	STA. 378+80.53	STA. 377+95.28	STA. 378+10.03	STA. 378+24.78	STA. 378+39.53	STA. 378+54.28
	628.40	627.35	626.38	625.49	624.64	624.17	623.74	623.33	622.95	622.59	622.27	621.97	621.71

DECK ELEVATIONS

LOCATION	SPAN 3								
	℄ PIER	1/8 POINT	1/4 POINT	3/8 POINT	1/2 POINT	5/8 POINT	3/4 POINT	7/8 POINT	℄ BEARING
LEFT GUTTER	STA. 378+54.28	STA. 378+69.03	STA. 379+83.78	STA. 378+98.53	STA. 379+13.28	STA. 379+28.03	STA. 379+42.78	STA. 379+57.53	STA. 379+72.28
	622.31	622.07	621.86	621.68	621.52	621.40	621.30	621.23	621.19
BEAM 1	STA. 378+54.28	STA. 378+69.03	STA. 379+83.78	STA. 378+98.53	STA. 379+13.28	STA. 379+28.03	STA. 379+42.78	STA. 379+57.53	STA. 379+72.28
	622.29	622.05	621.84	621.65	621.50	621.37	621.27	621.20	621.16
BEAM 2	STA. 378+54.28	STA. 378+69.03	STA. 379+83.78	STA. 378+98.53	STA. 379+13.28	STA. 379+28.03	STA. 379+42.78	STA. 379+57.53	STA. 379+72.28
	622.15	621.91	621.70	621.51	621.36	621.23	621.13	621.06	621.02
BEAM 3	STA. 378+54.28	STA. 378+69.03	STA. 379+83.78	STA. 378+98.53	STA. 379+13.28	STA. 379+28.03	STA. 379+42.78	STA. 379+57.53	STA. 379+72.28
	622.01	621.77	621.56	621.38	621.22	621.09	621.00	620.93	620.88
BEAM 4	STA. 378+54.28	STA. 378+69.03	STA. 379+83.78	STA. 378+98.53	STA. 379+13.28	STA. 379+28.03	STA. 379+42.78	STA. 379+57.53	STA. 379+72.28
	621.87	621.63	621.42	621.24	621.08	620.96	620.86	620.79	620.74
PROFILE GRADE	STA. 378+54.28	STA. 378+69.03	STA. 379+83.78	STA. 378+98.53	STA. 379+13.28	STA. 379+28.03	STA. 379+42.78	STA. 379+57.53	STA. 379+72.28
	621.83	621.59	621.38	621.20	621.04	620.92	620.82	620.75	620.71
BEAM 5	STA. 378+54.28	STA. 378+69.03	STA. 379+83.78	STA. 378+98.53	STA. 379+13.28	STA. 379+28.03	STA. 379+42.78	STA. 379+57.53	STA. 379+72.28
	621.73	621.49	621.28	621.10	620.94	620.82	620.72	620.65	620.61
RIGHT GUTTER	STA. 378+54.28	STA. 378+69.03	STA. 379+83.78	STA. 378+98.53	STA. 379+13.28	STA. 379+28.03	STA. 379+42.78	STA. 379+57.53	STA. 379+72.28
	621.71	621.47	621.25	621.07	620.92	620.79	620.69	620.62	620.58

DRAFT Stage 3 - Not for Construction 09/23/2024

DESIGN AGENCY
Stantec Consulting Services Inc.
1500 Lake Shore Drive, Suite 100
Columbus, Ohio 43204
(614) 486-4383

DESIGNED EDA | DRAWN ALH | REVIEWED BSM | DATE 4/5/24
CHECKED MRS | REVISED XXX | STRUCTURE FILE NUMBER 4400496

DECK CONSTRUCTION ELEVATIONS (2)
BRIDGE NO. LAW-7-0711
RAMP I OVER LITTLE PADDY CREEK

LAW-7-2.17
PID No. 75923

\\US0268-PPFSS01\workgroup\1736\active\173608714\LAW\engineering\75923_LAW-7-2.17\Design\structures\LAW007_07IP\Sheets\007_07IP_SD007.dgn Sheet 5/13/2024 14:32:51 PM mstur devant

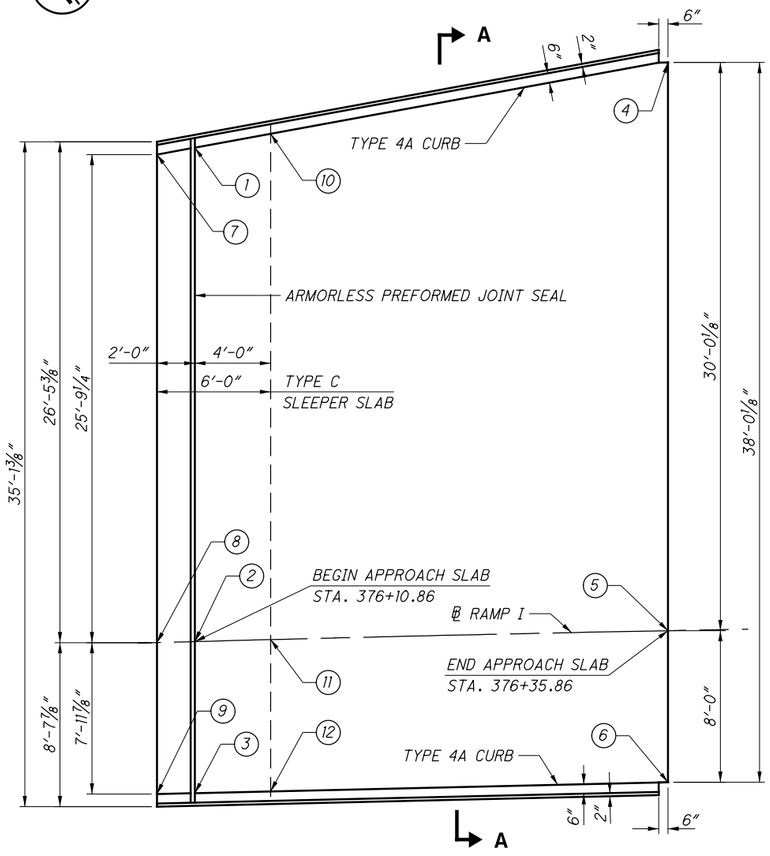

REAR APPROACH SLAB		
POINT	STATION	ELEVATION
1	376+11.56	630.75
2	376+10.86	629.87
3	376+10.64	629.59
4	376+36.43	629.56
5	376+35.86	628.69
6	376+35.71	628.45
REAR SLEEPER SLAB		
POINT	STATION	ELEVATION
7	376+09.57	630.84
8	376+08.86	629.96
9	376+08.64	629.69
10	376+15.54	630.55
11	376+14.86	629.67
12	376+14.66	629.41

FORWARD APPROACH SLAB		
POINT	STATION	ELEVATION
1	379+98.45	621.18
2	379+98.45	620.70
3	379+98.45	620.55
4	379+73.45	621.19
5	379+73.45	620.71
6	379+73.45	620.58
FORWARD SLEEPER SLAB		
POINT	STATION	ELEVATION
7	380+00.45	621.19
8	380+00.45	620.71
9	380+00.45	620.55
10	379+94.45	621.18
11	379+73.45	620.71
12	379+73.45	620.58

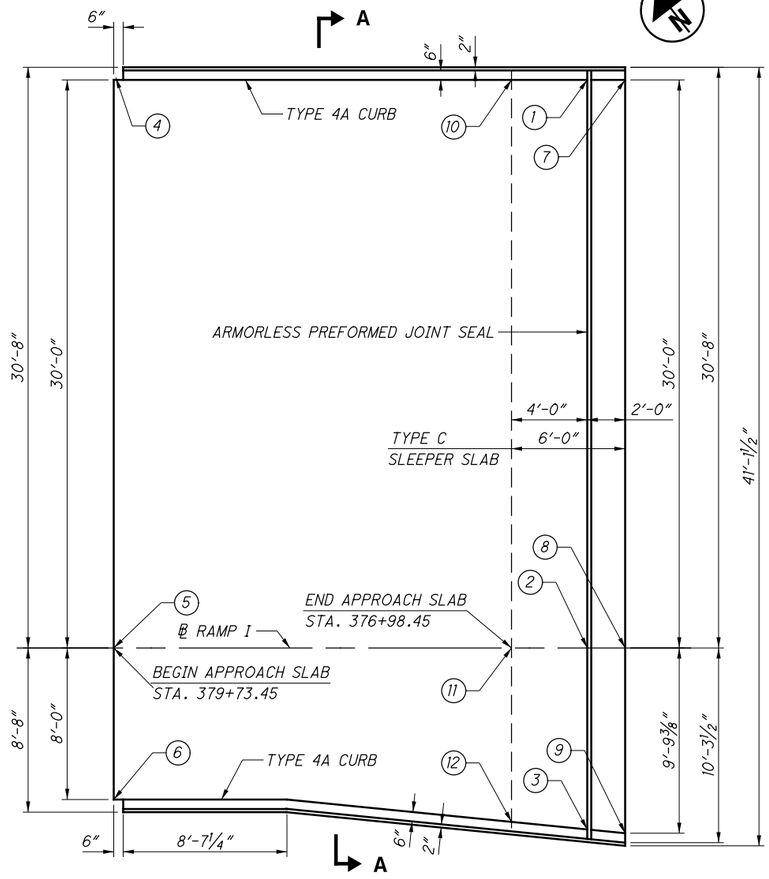

REAR APPROACH SLAB

FORWARD APPROACH SLAB

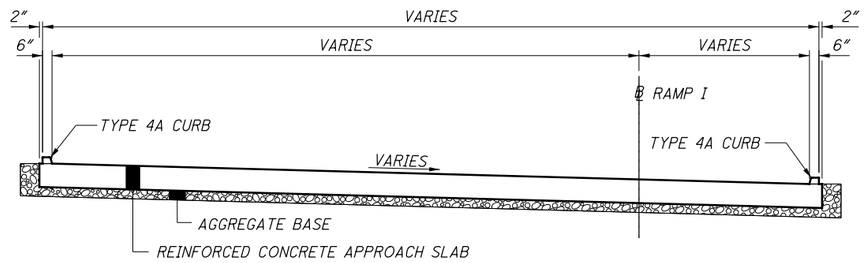

SECTION A-A

NOTES:
FOR ADDITIONAL DETAILS ON APPROACH SLAB, SEE STD. DWG. AS-1-13 AND AS-2-15.

DRAFT Stage 3 - Not for Construction 09/23/2024

DESIGN AGENCY
Stantec Consulting Services Inc.
1500 Lake Shore Drive, Suite 100
Columbus, Ohio 43204
(614) 486-4383

DESIGNED	DRAWN	REVIEWED	DATE
EDA	ALH	BSM	4/5/24
CHECKED	REVISED	STRUCTURE FILE NUMBER	
MRS	XXX	4400496	

APPROACH SLABS
BRIDGE NO. LAW-7-0711
RAMP I OVER LITTLE PADDY CREEK

LAW-7-2.17
PID No. 75923

\\US0268-PPFSS01\workgroup\1736\active\173608714\LAW\engineering\75923_LAW-7-2.17\Design\structures\LAW007_07IIP\Sheets\007_07IIP_SM001.dgn Sheet 5/13/2024 1:32:54 PM mstur devant

MARK	NUMBER TOTAL	LENGTH	WEIGHT	TYPE	DIMENSIONS A	B	C	D	E	R	INC
REAR ABUTMENT (EPOXY COATED STEEL REINFORCEMENT)											
A1001	12	29′-3″	1510	STR.							
A801	15	28′-11″	1158	STR.							
A601	36	27′-11″	1510	STR.							
A602	24	14′-4″	517	22	3′-0″						
A501	312	12′-7″	4095	2	5′-2″	2′-6″	5′-2″				
	1	10′-11″			3′-0″						
A502	SERIES OF 16	TO 19′-11″	257	3	TO 7′-6″	2′-2″					7¼″
A503	2	20′-3″	42	3	7′-8″	2′-2″					
A504	4	16′-10″	70	STR.							
	1	1′-1″									
A505	SERIES OF 5	TO 14′-7″	41	STR.							
A506	3	16′-2″	51	STR.							
	1	10′-11″			3′-0″						
A507	SERIES OF 16	TO 20′-1″	259	3	TO 7′-7″	2′-2″					7⅜″
A508	2	21′-1″	44	3	7′-9″	2′-2″					
A509	4	16′-10″	70	STR.							
	1	1′-1″									
A510	SERIES OF 5	TO 14′-7″	41	STR.							3′-3
A511	3	16′-4″	51	STR.							
A401	30	9′-7″	192	3	2′-6″	2′-0″					
		SUB-TOTAL	9908								

MARK	NUMBER TOTAL	LENGTH	WEIGHT	TYPE	DIMENSIONS A	B	C	D	E	R	INC
FORWARD ABUTMENT (EPOXY COATED STEEL REINFORCEMENT)											
B1001	12	29′-3″	1510	STR.							
B801	15	28′-11″	1158	STR.							
B601	30	27′-11″	1258	STR.							
B602	24	14′-4″	517	22	3′-0″						
B501	312	11′-3″	3661	2	4′-6″	2′-6″	4′-6″				
	1	11′-5″			3′-3″						
B502	SERIES OF 16	TO 20′-5″	266	3	TO 7′-9″	2′-2″					7¼″
B503	2	20′-9″	43	3	7′-11″	2′-2″					
B504	4	16′-10″	70	STR.							
	1	2′-0″									
B505	SERIES OF 5	TO 15′-5″	45	STR.							3′-4¼″
B506	3	16′-2″	51	STR.							
	1	11′-5″			3′-3″						
B507	SERIES OF 16	TO 20′-5″	266	3	TO 7′-9″	2′-2″					7⅜″
B508	2	21′-3″	44	3	7′-10″	2′-2″					
B509	4	16′-9″	70	STR.							
	1	1′-11″									
B510	SERIES OF 5	TO 15′-7″	46	STR.							3′-5″
B511	3	16′-1″	50	STR.							
B401	30	9′-7″	192	3	2′-6″	2′-0″					
		SUB-TOTAL	9247								

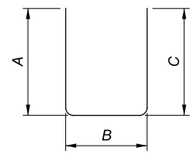

TYPE-2

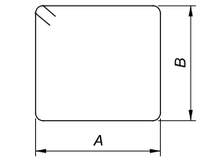

TYPE-3

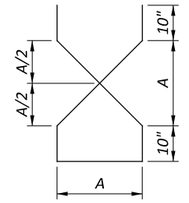

TYPE-22

DRAFT Stage 3 - Not for Construction 09/23/2024

DESIGN AGENCY
Stantec Consulting Services Inc.
1500 Lake Shore Drive, Suite 100
Columbus, Ohio 43204
(614) 486-4383

DESIGNED EDA | DRAWN ALH | REVIEWED BSM | DATE 4/5/24
CHECKED MRS | REVISED XXX | STRUCTURE FILE NUMBER 4400496

REINFORCING STEEL LIST
BRIDGE NO. LAW-7-0711
RAMP I OVER LITTLE PADDY CREEK

LAW-7-2.17
PID No. 75923

959/1247

\\US0268-PPFSS01\workgroup\1736\active\173608714\LAW\engineering\75923_LAW-7-2.17\Design\structures\LAW007_07IIP\Sheets\007_07IIP_SL001.dgn Sheet 5/13/2024 1:32:56 PM mstur devant

MARK	NUMBER TOTAL	LENGTH	WEIGHT	TYPE	DIMENSIONS						
					A	B	C	D	E	R	INC
PIER 1 (EPOXY COATED STEEL REINFORCEMENT)											
P1001	66	10′-10″	3077	1	9′-4″	1′-10″					
P1002	66	30′-0″	8520	STR.							
P1003	22	31′-0″	2935	STR.							
P1004	22	30′-9″	2911	STR.							
P1005	22	30′-6″	2887	STR.							
P901	7	42′-6″	1012	17	40′-0″						
P902	7	48′-10″	1162	2	4′-8″	40′-0″	4′-8″				
P801	66	20′-11″	3686	2	3′-4″	14′-8″	3′-4″				
P701	45	17′-11″	1648	2	3′-4″	11′-8″	3′-4″				
P601	39	14′-8″	859	STR.							
P602	45	11′-8″	789	STR.							
P501	144	11′-9″	1765	2	4′-6″	3′-0″	4′-6″				
P502	6	40′-0″	250	STR.							
P503	117	16′-7″	2024	52	1′-6″	4′-6″					
SP501	1	50′-7″	3268	27	2¾″	4′-6″	50′-7″				
SP502	1	50′-4″	3252	27	2¾″	4′-6″	50′-4″				
SP503	1	50′-1″	3237	27	2¾″	4′-6″	50′-1″				
		SUB-TOTAL	43,282								

MARK	NUMBER TOTAL	LENGTH	WEIGHT	TYPE	DIMENSIONS						
					A	B	C	D	E	R	INC
PIER 2 (EPOXY COATED STEEL REINFORCEMENT)											
Q1001	66	12′-6″	3550	1	10′-9″	1′-10″					
Q1002	132	30′-0″	17,040	STR.							
Q1003	22	27′-6″	2603	STR.							
Q1004	22	27′-3″	2580	STR.							
Q1005	22	27′-0″	2556	STR.							
Q901	66	28′-1″	6302	2	4′-7″	19′-2″	4′-7″				
Q902	7	42′-6″	1012	17	40′-0″						
Q903	7	48′-10″	1162	2	4′-8″	40′-0″	4′-8″				
Q801	60	11′-8″	1869	2	4′-7″	11′-8″	4′-7″				
Q701	39	19′-2″	1528	STR.							
Q702	60	11′-8″	1431	STR.							
Q501	144	11′-9″	1765	2	4′-6″	3′-0″	4′-6″				
Q502	6	40′-0″	250	STR.							
Q503	135	16′-7″	2335	52	1′-6″	4′-6″					
SQ501	1	71′-2″	4581	27	2¾″	4′-6″	71′-2″				
SQ502	1	70′-11″	4565	27	2¾″	4′-6″	70′-11″				
SQ503	1	70′-8″	4549	27	2¾″	4′-6″	70′-8″				
		SUB-TOTAL	59,678								

MARK	NUMBER TOTAL	LENGTH	WEIGHT	TYPE	DIMENSIONS						
					A	B	C	D	E	R	INC
SUPERSTRUCTURE (EPOXY COATED STEEL REINFORCEMENT)											
D801	16	23′-3″	993	STR.							
D802	24	7′-8″	491	STR.							
D803	8	5′-2″	110	STR.							
D804	52	4′-11″	683	18	2′-7″	1′-0″	1′-0″				
D601	16	22′-6″	541	STR.							
D602	16	5′-2″	124	STR.							
D603	32	5′-2″	248	1	4′-0″	1′-3″					
D501	96	11′-9″	1201	2	4′-6″	3′-0″	4′-6″				
D502	48	7′-5″	379	2	2′-7″	2′-6″	2′-7″				
D503	2	1′-10″	4	STR.							
D504	3	3′-2″	10	STR.							
D505	3	2′-2″	7	STR.							
D506	1	9″	1	STR.							
D507	6	2′-8″	17	STR.							
D508	1	1′-10″	2	STR.							
D401	72	3′-8″	176	2	8″	2′-6″	8″				
D402	40	13′-0″	347	6	1′-2″	5′-6″	8″				
D403	10	10′-8″	71	24	4″	5′-1″					
D404	20	4′-0″	53	STR.							
D301	10	3′-4″	13	32	9″	1′-6″					
S601	80	30′-0″	3605	STR.							
S602	80	32′-0″	3845	STR.							
S603	8	15′-0″	180	STR.							
S604	8	30′-0″	360	STR.							
S501	708	30′-0″	22,153	STR.							
S502	59	13′-3″	815	STR.							
S503	676	18′-0″	12,691	16	17′-5″						
S504	676	27′-3″	19,213	16	26′-8″						
S505	1352	22′-2″	31,258	STR.							
S506	1352	8′-7″	12,104	16	8′-0″						
S401	492	30′-0″	9860	STR.							
S402	338	4′-8″	1054	STR.							
S403	338	5′-2″	1167	STR.							
S404	570	5′-7″	2126	50	1′-0″	4′-0″					
Y601	682	7′-2″	7341	37	9″	9½″	1′-5″	1′-0″	7″		
Y602	682	7′-0″	7171	23	6″	3′-3″	3′-3″			2″	
	4	4′-2″				3′-3″					
Y603	SERIES OF	TO	303	1	1′-0″	TO					1″
	11	5′-0″				4′-1″					
Y604	32	4′-2″	200	1	1′-0″	3′-3″					
		SUB-TOTAL	140,917								

MARK	NUMBER TOTAL	LENGTH	TOTAL LENGTH	TYPE	DIMENSIONS						
					A	B	C	D	E	R	INC
SUPERSTRUCTURE (GLASS FIBER REINFORCED POLYMER - GFRP)											
X401	48	10′-0″	480′-0″	STR.							
X402	24	6′-4″	152′-0″	25	2′-6″	2′-5″	1′-4″	1½″	5″		
X403	24	5′-1″	122′-0″	STR.							
X404	198	35′-9″	7078′-6″	STR.							
Y401	240	10′-0″	2400′-0″	STR.							
Y402	16	10′-7″	169′-4″	STR.							
		SUB-TOTAL	10,402′								

TYPE-1

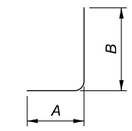

TYPE-2

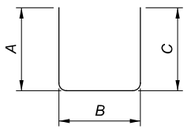

TYPE-6

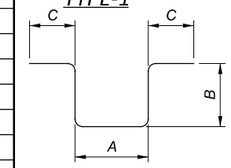

TYPE-16

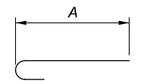

TYPE-17

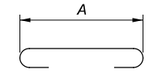

TYPE-18

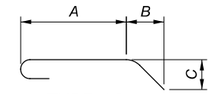

TYPE-23

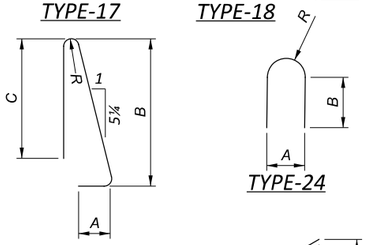

TYPE-24

TYPE-25

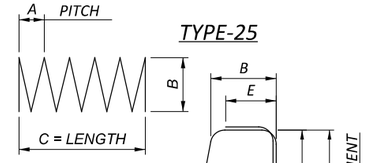

TYPE-27

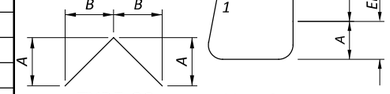

TYPE-32

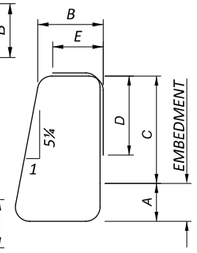

TYPE-37

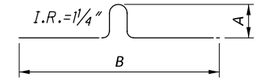

TYPE-50

TYPE-52

DRAFT Stage 3 - Not for Construction

09/23/2024

DESIGN AGENCY
Stantec Consulting Services Inc.
1500 Lake Shore Drive, Suite 100
Columbus, Ohio 43204
(614) 486-4383

REVIEWED BSM DATE 4/5/2024
DRAWN ALH REVISED XXX
DESIGNED EDA CHECKED MRS
STRUCTURE FILE NUMBER 4400496

REINFORCING STEEL LIST
BRIDGE NO. LAW-7-0711
RAMP I OVER LITTLE PADDY CREEK

LAW-7-2.17
PID No. 75923

30/30

960
1247

\\US0268-PPFSS01\workgroup\1736\active\173608714\LAW\engineering\75923_LAW-7-2.17\Design\structures\LAW007_07IIP\Sheets\007_07IIP_SL002.dgn Sheet 5/13/2024 1:32:58 PM msturdevant

BRIDGE B-6

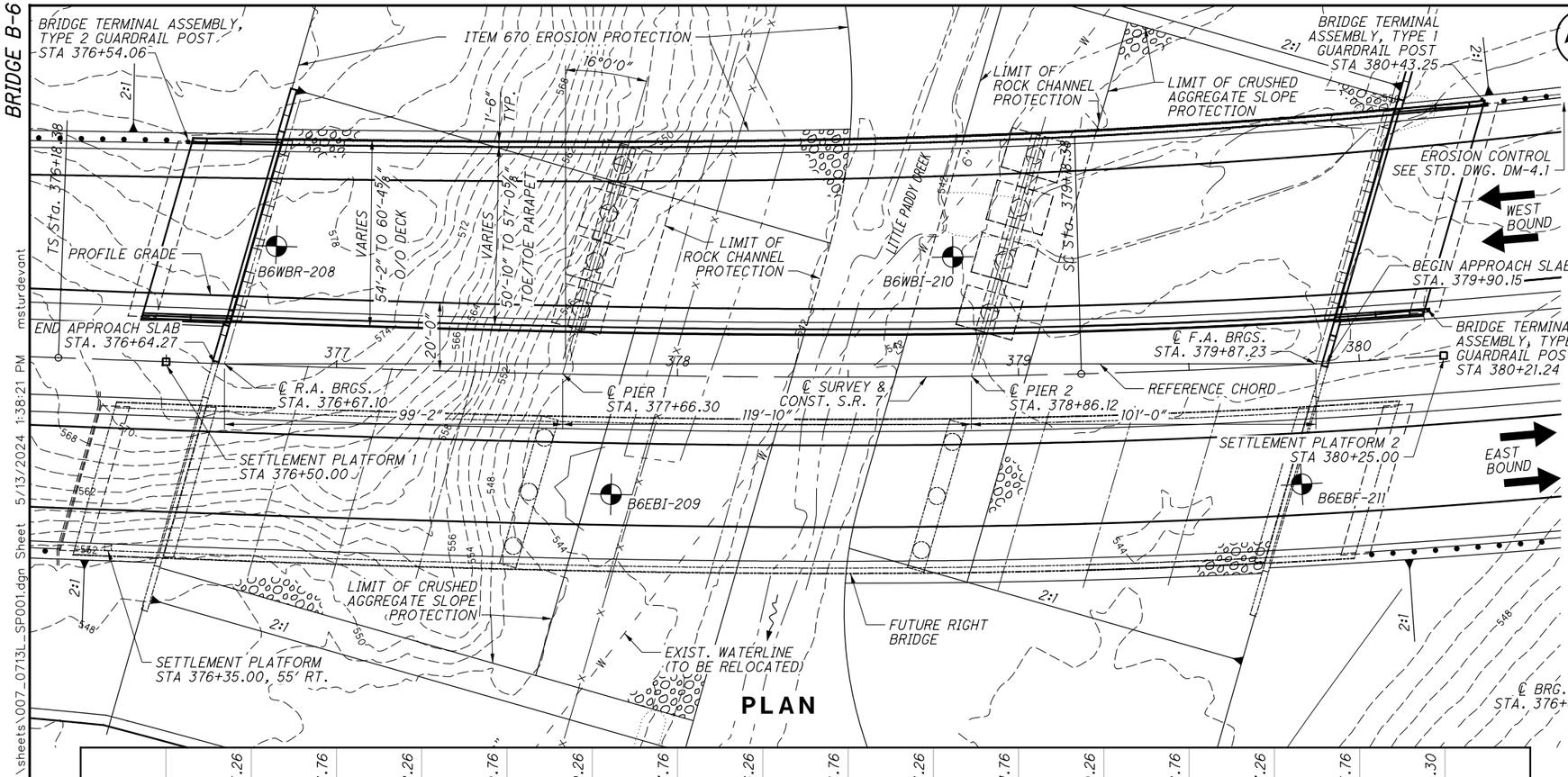

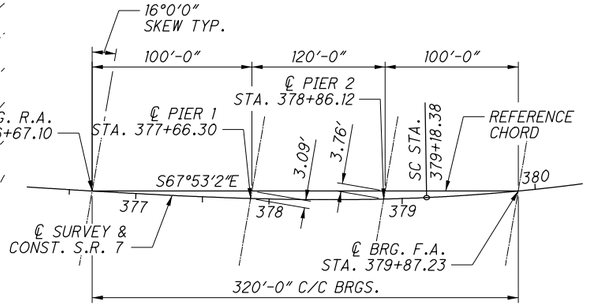

GEOMETRIC LAYOUT

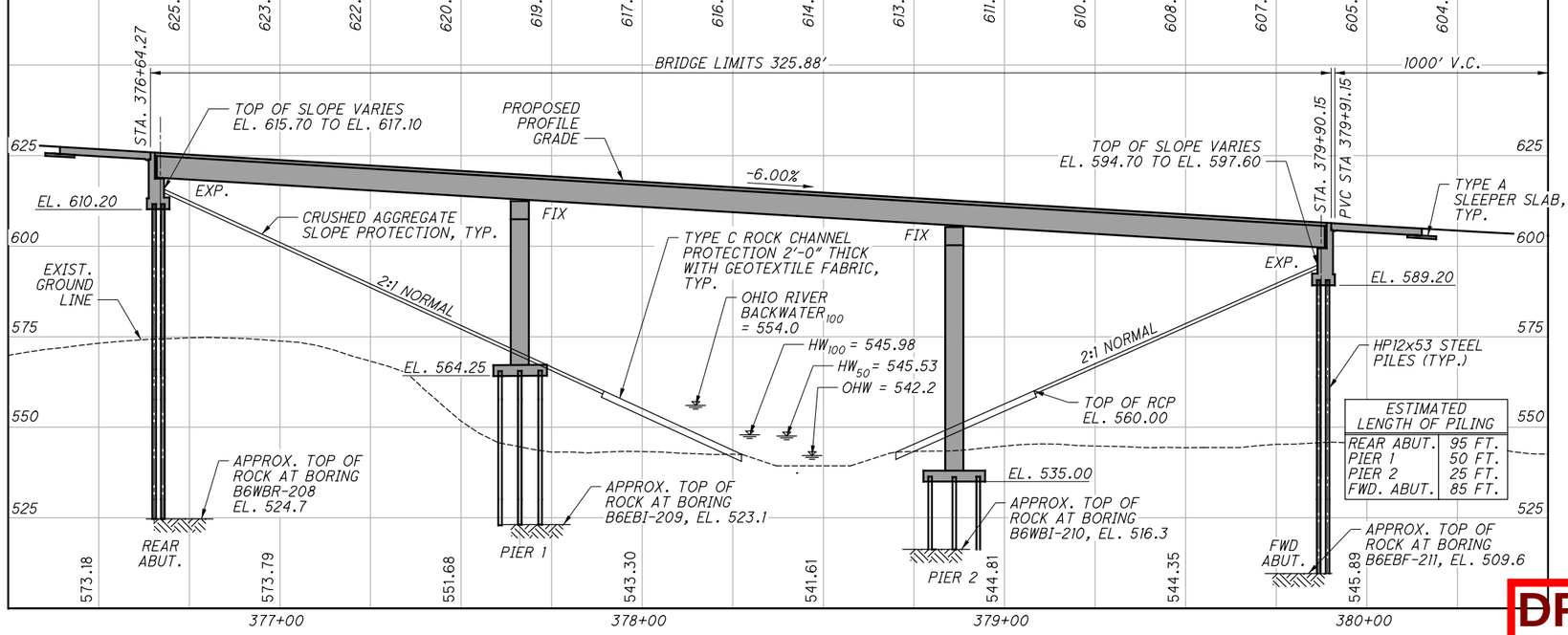

PROFILE ALONG S.R. 7 PROFILE GRADE

BENCHMARK DATA

BM #1 STA. 394+68.00, EL. 590.43, OFFSET 0.00,
BM #2 STA. 407+19.64, EL. 608.57, OFFSET 65.06,

FOR ADDITIONAL BENCHMARK INFORMATION. SEE ROADWAY PLAN SHEET ⊖

NOTES

EARTHWORK LIMITS SHOWN ARE APPROXIMATE. ACTUAL SLOPES SHALL CONFORM TO PLAN CROSS SECTIONS.

DESIGN TRAFFIC:
2028 ADT = 6,298 2028 ADTT = 693
2048 ADT = 8,225 2048 ADTT = 905
WESTBOUND TRAFFIC

LEGEND

⊕ PROJECT BORING LOCATION

HYDRAULIC DATA

DRAINAGE AREA = 1.74 SQ. MILES
Q (50) = 954 CFS V (50) = 4.23 FT/S EL. = 545.53
Q (100) = 1160 CFS V (100) = 4.46 FT/S EL. = 545.98
STRUCTURE CLEARS THE 50 YEAR DESIGN HW BY 50.61 FEET.

CURVE DATA (S.R. 7 CURVE NO. 9)

P.I. STA. 387+47.15	E = 136.98'	LT = 200.04'
Δ = 46° 04' 34" (LT)	TS STA. 376+18.38	ST = 100.04'
Dc = 2° 29' 28"	SC STA. 379+18.38	e_{max} = 6.20%
R = 2,300.00'	θs = 3° 44' 12"	CS STA. 394+68.00
T = 805.51'	Ls = 300.00'	ST STA. 397+68.00
L = 1,549.62'	Ts = 1,128.77'	

PROPOSED STRUCTURE

TYPE: PRESTRESSED CONCRETE I-BEAMS (66" AASHTO MODIFIED TYPE 4) WITH COMPOSITE CONCRETE SLAB SUPPORTED BY STUB TYPE ABUTMENTS AND CAP & COLUMN PIERS ON PILES
SPANS: 98'-11", 117'-10", 98'-11" C/C BEARINGS MEASURED ALONG REFERENCE CHORD
ROADWAY: VARIES FROM 50'-9½" TO 57'-0½"
LOADING: HL-93 AND 60 LBS/FT' FUTURE WEARING SURFACE
WEARING SURFACE: 1" MONOLITHIC WEARING SURFACE
SKEW: 16°00'00" LF MEASURED TO REFERENCE CHORD
APPROACH SLABS: AS-1-15 & AS-2-15, 25' LONG (MODIFIED)
ALIGNMENT: 05°44'12" SPIRAL AND 02°29'28" CURVE LEFT
SUPERELEVATION: 0.062 MAX.
COORDINATES: LATITUDE N 38° 26' 56.76"
LONGITUDE W 82°[illegible]
DECK AREA: 18,860 SF

DRAFT Stage 3-Not for Construction 09/23/2024

DESIGN AGENCY Stantec 1500 Lake Shore Dr. Columbus, OH 43204 (614) 486-4383
DATE 2/2024
REVIEWED BSM
DRAWN JWS
DESIGNED MRS
CHECKED EDA
STRUCTURE FILE NUMBER 4400534
REVISED

LAWRENCE COUNTY
STA. 376+64.27
STA. 379+90.15

SITE PLAN
BRIDGE NO. LAW-7-0713 L
S.R. 7 OVER LITTLE PADDY CREEK

LAW-7-2.17
PID No. 75923

1 / 28

961
1247

V:\1736\active\173608714\LAW\engineering\75923_LAW-7-2.17\Design\structures\LAW007_0713L\sheets\007_0713L_SP001.dgn Sheet 5/13/2024 1:38:21 PM msturdevant

CURVE DATA
S.R. 7
CURVE NO. 9

P.I. STA. 387+47.15	θs = 3° 44′ 12″
Δ = 46° 04′ 34″ (LT)	Ls = 300.00′
Dc = 2° 29′ 28″	Ts = 1,128.77′
R = 2,300.00′	LT = 200.04′
T = 805.51′	ST = 100.04′
L = 1,549.62′	e_{max} = 6.20%
E = 136.98′	CS STA. 394+68.00
TS STA. 376+18.38	ST STA. 397+68.00
SC STA. 379+18.38	

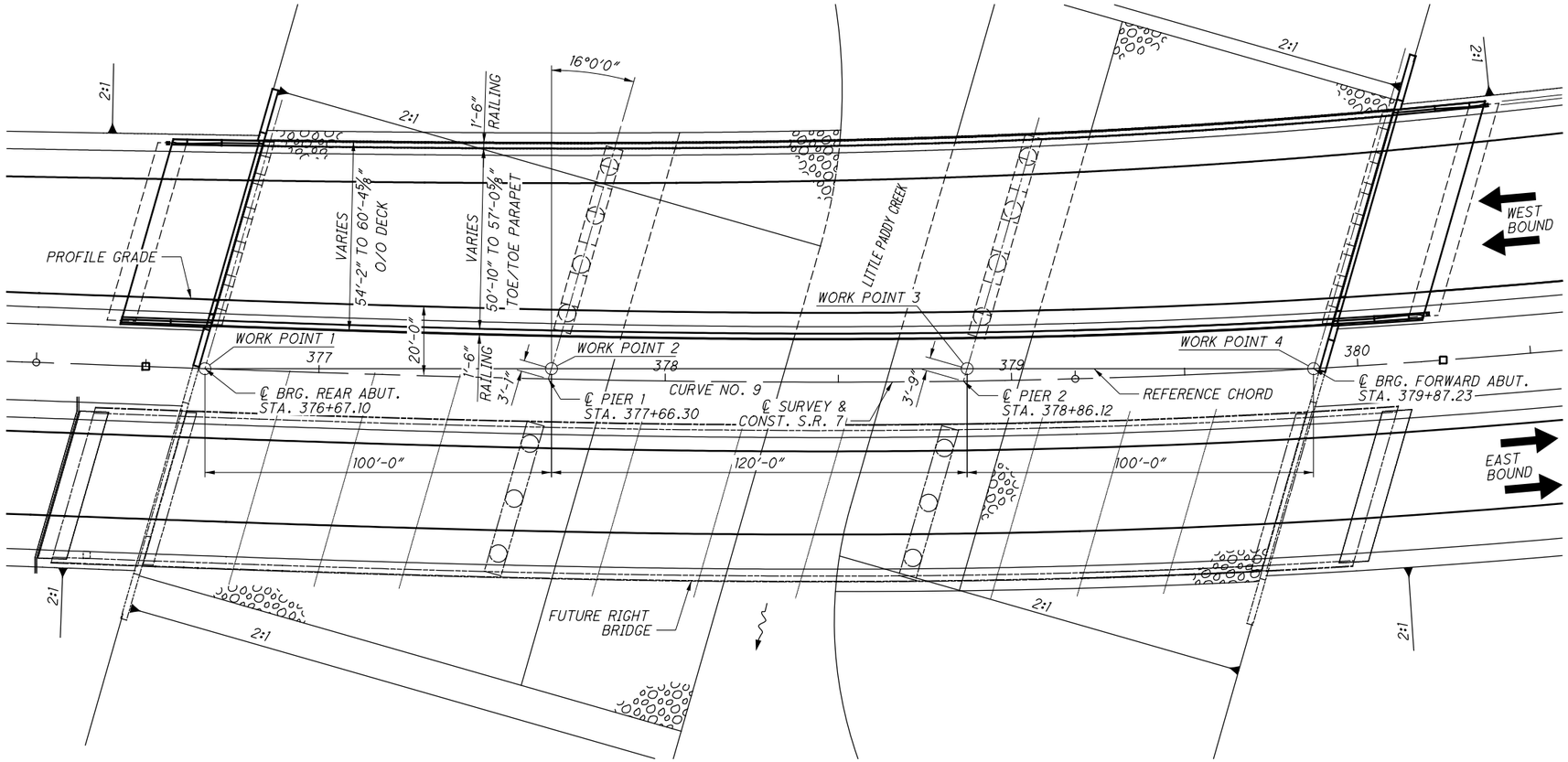

PLAN

DRAFT Stage 3 - Not for Construction 09/23/2024

DESIGN AGENCY
Stantec 1500 Lake Shore Dr. Columbus, OH 43204 (614) 486-4383

DESIGNED	DRAWN	REVIEWED	DATE
MRS	JWS	BSM	2/2024
CHECKED	REVISED	STRUCTURE FILE NUMBER	
EDA		4400534	

GENERAL PLAN
BRIDGE NO. LAW-7-0713 L
S.R. 7 OVER LITTLE PADDY CREEK

LAW-7-2.17
PID No. 75923

V:\1736\active\173608714\LAW\engineering\75923_LAW-7-2.17\Design\structures\LAW007_0713L\sheets\007_0713L_SG001.dgn 5/13/2024 1:38:28 PM msturdevant

STANDARD DRAWINGS AND SUPPLEMENTAL SPECIFICATIONS

REFER TO THE FOLLOWING STANDARD BRIDGE DRAWING(S):

AS-1-15	REVISED	01-20-23
AS-2-15	REVISED	07-21-23
EXJ-6-17	REVISED	01-19-24
PSID-1-13	REVISED	01-20-23
SBR-1-20	DATED	07-21-23

AND TO THE FOLLOWING SUPPLEMENTAL SPECIFICATION

800	DATED	01-19-24

DESIGN SPECIFICATIONS

THIS STRUCTURE CONFORMS TO THE "LRFD BRIDGE DESIGN SPECIFICATIONS" ADOPTED BY THE AMERICAN ASSOCIATION OF STATE HIGHWAY AND TRANSPORTATION OFFICIALS, 9TH EDITION AND THE ODOT BRIDGE DESIGN MANUAL, 2021.

OPERATIONAL IMPORTANCE

A LOAD MODIFIER OF 1.0 HAS BEEN ASSUMED FOR THE DESIGN OF THIS STRUCTURE IN ACCORDANCE WITH THE AASHTO LRFD BRIDGE DESIGN SPECIFICATIONS, ARTICLE 1.3.5 AND THE ODOT BRIDGE DESIGN MANUAL, 2020

DESIGN LOADING

DESIGN LOADING: HL-93

FUTURE WEARING SURFACE (FWS) OF 0.060 KIPS/SQ.FT.

DESIGN DATA

CONCRETE CLASS QC2 WITH QC/QA
-COMPRESSIVE STRENGTH 4.5 KSI (SUPERSTRUCTURE)

CONCRETE CLASS QC1 WITH QC/QA
-COMPRESSIVE STRENGTH 4.0 KSI (SUBSTRUCTURE)

CONCRETE CLASS QC4 MASS CONCRETE WITH QC/QA
-COMPRESSIVE STRENGTH 4.0 KSI (PIER CAPS AND COLUMNS)

REINFORCING STEEL
-MINIMUM YIELD STRENGTH 60 KSI

STEEL H-PILES - ASTM A572 - YIELD STRENGTH 50 KSI

CONCRETE FOR PRESTRESSED BEAMS:
COMPRESSIVE STRENGTH (FINAL) - 7 KSI
COMPRESSIVE STRENGTH (RELEASE) - 6 KSI

WELDED WIRE FABRIC:
YIELD STRENGTH - 70 KSI

PRESTRESSING STRAND:
AREA = 0.217 SQ.IN.
ULTIMATE STRENGTH = 270 KSI
INITIAL STRESS = 202.5 KSI
(LOW RELAXATION STRANDS)

MONOLITHIC WEARING SURFACE

MONOLITHIC WEARING SURFACE IS ASSUMED, FOR DESIGN PURPOSES, TO BE 1 INCH THICK.

PILE DRIVING CONSTRAINTS

PRIOR TO DRIVING PILES, CONSTRUCT THE SPILL THROUGH SLOPES AND THE BRIDGE APPROACH EMBANKMENT BEHIND THE ABUTMENTS UP TO THE LEVEL OF THE SUBGRADE ELEVATION FOR A MINIMUM DISTANCE OF 200 FEET BEHIND EACH ABUTMENT. DO NOT BEGIN THE EXCAVATION FOR THE ABUTMENT AND PIER FOOTINGS AND THE INSTALLATION OF THE ABUTMENT AND PIER 1 AND 2 PILES UNTIL AFTER THE ABOVE REQUIRED EMBANKMENT HAS BEEN CONSTRUCTED AND A 180 CALENDAR DAY WAITING PERIOD HAS ELAPSED. THE ENGINEER MAY ADJUST THE LENGTH OF THE WAITING PERIOD BASED ON SETTLEMENT PLATFORM READINGS. AFTER THE SPECIFIED WAITING PERIOD HAS ELAPSED, DRIVE THE ABUTMENT AND PIER 1 AND 2 PILES TO REFUSAL ON BEDROCK.

PILES TO BEDROCK

DRIVE PILES TO REFUSAL ON BEDROCK. THE DEPARTMENT WILL CONSIDER REFUSAL TO BE OBTAINED WHEN THE PILE PENETRATION IS AN INCH OR LESS AFTER RECEIVING AT LEAST 20 BLOWS FROM THE PILE HAMMER. SELECT THE HAMMER SIZE TO ACHIEVE THE REQUIRED DEPTH TO BEDROCK AND REFUSAL.

THE TOTAL FACTORED LOAD IS 250 KIPS PER PILE FOR THE REAR ABUTMENT PILES AND 235 KIPS PER PILE FOR THE FORWARD ABUTMENT PILES. NO ADDITIONAL LOADING DUE TO DOWNDRAG IS ANTICIPATED AS LONG AS THE WAITING PERIOD FOR THE APPROACH EMBANKMENTS IS OBSERVED. THE TOTAL FACTORED LOAD IS 322 KIPS PER PILE FOR THE PIER 1 PILES AND 319 KIPS PER PILE FOR THE PIER 2 PILES .

REAR ABUTMENT PILES:
18 HP 12X53 PILES 100 FEET LONG, ORDER LENGTH

PIER 1 PILES:
36 HP 12X53 PILES 55 FEET LONG, ORDER LENGTH

PIER 2 PILES:
36 HP 12X53 PILES 30 FEET LONG, ORDER LENGTH

REAR ABUTMENT PILES:
22 HP 12X53 PILES 90 FEET LONG, ORDER LENGTH

PILE SPLICES

IN LIEU OF USING THE FULL PENETRATION BUTT WELDS SPECIFIED IN CMS 507.09 TO SPLICE STEEL H-PILES, THE CONTRACTOR MAY USE A MANUFACTURED H-PILE SPLICER. FURNISH SPLICERS FROM THE FOLLOWING MANUFACTURER:

ASSOCIATED PILE AND FITTING CORPORATION
8 WOOD HOLLOW RD. PLAZA 1
PARSIPPANY, NEW JERSEY 07054

INSTALL AND WELD THE SPLICER TO THE PILE SECTIONS IN ACCORDANCE WITH THE MANUFACTURER'S WRITTEN ASSEMBLY PROCEDURE SUPPLIED TO THE ENGINEER BEFORE THE WELDING IS PERFORMED.

PILE DRIVING:

THE MINIMUM RATED ENERGY OF THE HAMMER USED TO INSTALL THE PILES SHALL BE 20,100 FOOT-POUNDS. ENSURE THAT STRESSES IN THE PILES DURING DRIVING DO NOT EXCEED 45,000 POUNDS PER SQUARE INCH.

DECK PLACEMENT DESIGN ASSUMPTIONS

THE FOLLOWING ASSUMPTIONS OF CONSTRUCTION MEANS AND METHODS WERE MADE FOR THE ANALYSIS AND DESIGN OF THE SUPERSTRUCTURE. THE CONTRACTOR IS RESPONSIBLE FOR THE DESIGN OF THE FALSEWORK SUPPORT SYSTEM WITHIN THESE PARAMETERS AND WILL ASSUME RESPONSIBILITY FOR SUPERSTRUCTURE ANALYSIS FOR DEVIATION FROM THESE DESIGN ASSUMPTIONS.

AN EIGHT WHEEL FINISHING MACHINE WITH A MAXIMUM WHEEL LOAD OF 2.4 KIPS.

A MINIMUM OUT-TO-OUT WHEEL SPACING AT EACH END OF THE MACHINE OF 103".

A MAXIMUM SPACING OF OVERHANG FALSEWORK BRACKETS OF 48 IN.

A MAXIMUM DISTANCE FROM THE CENTERLINE OF THE FASCIA GIRDER TO THE FACE OF THE SAFETY HANDRAIL OF 65".

APPROACH EMBANKMENT CONSTRUCTION:

THE APPROACH EMBANKMENTS SHALL BE CONSTRUCTED AND THEN UNDERGO AN ESTIMATED WAITING PERIOD OF 180 DAYS PRIOR TO DRIVING PILES.

REFER TO SHEETS XX FOR DETAILS AND NOTES REGARDING REINFORCED SLOPE AND EMBANKMENT CONSTRUCTION.

ACCORDINGLY, MULTIPLE APPLICATIONS OF SIGNIFICANT QUANTITIES OF WATER AS WELL AS CONSIDERABLE EFFORT WILL BE REQUIRED TO PROPERLY BREAK DOWN AND MOISTURE CONDITION THE SHALE FOR USE IN EMBANKMENT CONSTRUCTION.

ABBREVIATIONS:

ABUT	-	ABUTMENT
APPROX.	-	APPROXIMATE
BM	-	BENCHMARK
BRG.	-	BEARING
B/	-	BOTTOM OF
℄	-	CENTERLINE
CONC.	-	CONCRETE
CLR.	-	CLEARANCE
CONST.	-	CONSTRUCTION
DIA.	-	DIAMETER
EF	-	EACH FACE
EL.	-	ELEVATION
EQ.	-	EQUAL
EST.	-	ESTIMATED
EXIST.	-	EXISTING
EXP.	-	EXPANSION
F.A.	-	FORWARD ABUTMENT
FF	-	FAR FACE
FNDN.	-	FOUNDATION
FTG.	-	FOOTING
FWD.	-	FORWARD
F/F	-	FACE TO FACE
JT.	-	JOINT
LT.	-	LEFT
MAX.	-	MAXIMUM
MIN.	-	MINIMUM
NF	-	NEAR FACE
O/O	-	OUT TO OUT
PAVT.	-	PAVEMENT
PEJF	-	PREFORMED EXPANSION JOINT FILLER
R.A.	-	REAR ABUTMENT
REF.	-	REFERENCE
RF	-	RIGHT FORWARD
REINF.	-	REINFORCED
RT.	-	RIGHT
SP.	-	SETTLEMENT PLATFORM
SPA.	-	SPACE
S.R.	-	STATE ROUTE
STA.	-	STATION
TYP.	-	TYPICAL
T/	-	TOP OF
T/T	-	TOE TO TOE
T&B	-	TOP AND BOTTOM
VAR.	-	VARIES
REQ'D	-	REQUIRED

DRAFT Stage 3 - Not for Construction 09/23/2024

V:\1736\active\173608714\LAW\engineering\75923_LAW-7-2.17\Design\structures\LAW007_0713L_SN001.dgn 5/13/2024 1:38:29 PM mstur devant

DESIGN AGENCY
Stantec
1500 Lake Shore Dr.
Columbus, OH 43204
(614) 486-4383

DESIGNED	DRAWN	REVIEWED	DATE
MRS	JWS	BSM	2/2024
CHECKED	REVISED	STRUCTURE FILE NUMBER	
EDA		4400534	

GENERAL NOTES
BRIDGE NO. LAW-7-0713 L
S.R. 7 OVER LITTLE PADDY CREEK

LAW-7-2.17
PID No. 75923

ESTIMATED QUANTITIES (PARTICIPATION CODE 02/NHS/08)

ITEM	EXTENSION	TOTAL	UNIT	DESCRIPTION	ABUT.	PIERS	SUPER.	GEN.	SHEET NO.
503	21300	LUMP	LS	UNCLASSIFIED EXCAVATION				LUMP	
505	11100	LUMP	LS	PILE DRIVING EQUIPMENT MOBILIZATION				LUMP	
507	00200	6570	FT	STEEL PILES HP12X53, FURNISHED	3690	2880			
507	00250	6010	FT	STEEL PILES HP12X53, DRIVEN	3490	2520			
509	10000	311,389	LB	EPOXY COATED STEEL REINFORCEMENT	26,180	96,262	188,947		
509	30020	11,750	FT	NO. 4 DEFORMED GFRP REINFORCEMENT			11,750		
511	34446	718	CY	CLASS QC2 CONCRETE WITH QC/QA, BRIDGE DECK			718		
511	34450	98	CY	CLASS QC2 CONCRETE WITH QC/QA, BRIDGE DECK (PARAPET)			98		
511	43512	313	CY	CLASS QC1 CONCRETE WITH QC/QA, ABUTMENT INCLUDING FOOTING	313				
511	45602	425	CY	CLASS QC4 MASS CONCRETE, SUBSTRUCTURE WITH QC/QA		425			
511	46512	224	CY	CLASS QC1 CONCRETE WITH QC/QA, FOOTING		224			
512	10100	2778	SY	SEALING OF CONCRETE SURFACES (EPOXY-URETHANE)	249	900	1629		
512	10300	50	SY	SEALING CONCRETE BRIDGE DECKS WITH HMWM RESIN			50		
512	33000	60	SY	TYPE 2 WATERPROOFING	60				
515	14041	1	EACH	DRAPED STRAND PRESTRESSED CONCRETE BRIDGE I-BEAM MEMBERS, LEVEL 3, TYPE 4 MOD. (66"), AS PER PLAN 120'-4 3/8"			1		14/28
515	14041	1	EACH	DRAPED STRAND PRESTRESSED CONCRETE BRIDGE I-BEAM MEMBERS, LEVEL 3, TYPE 4 MOD. (66"), AS PER PLAN 119'-11 3/8"			1		14/28
515	14041	5	EACH	DRAPED STRAND PRESTRESSED CONCRETE BRIDGE I-BEAM MEMBERS, LEVEL 3, TYPE 4 MOD. (66"), AS PER PLAN 119'-0 5/8"			5		14/28
515	14041	1	EACH	DRAPED STRAND PRESTRESSED CONCRETE BRIDGE I-BEAM MEMBERS, LEVEL 3, TYPE 4 MOD. (66"), AS PER PLAN 100'-2 7/8"			1		13/28
515	14041	5	EACH	DRAPED STRAND PRESTRESSED CONCRETE BRIDGE I-BEAM MEMBERS, LEVEL 3, TYPE 4 MOD. (66"), AS PER PLAN 99'-9 3/8"			5		13/28
515	14041	1	EACH	DRAPED STRAND PRESTRESSED CONCRETE BRIDGE I-BEAM MEMBERS, LEVEL 3, TYPE 4 MOD. (66"), AS PER PLAN 102'-5"			1		13/28
515	14041	6	EACH	DRAPED STRAND PRESTRESSED CONCRETE BRIDGE I-BEAM MEMBERS, LEVEL 3, TYPE 4 MOD. (66"), AS PER PLAN 102'-1 3/8"			6		13/28
515	20000	51	EACH	INTERMEDIATE DIAPHRAGMS			51		
516	12300	120	FT	STRIP SEAL EXPANSION JOINT ANCHORED WITH ELASTOMERIC CONCRETE			120		
516	44100	40	EACH	ELASTOMERIC BEARING WITH INTERNAL LAMINATES AND LOAD PLATE (NEOPRENE) 2.468" X 1'-0" X 2'-1"	13	27			
518	20000	204	SY	PREFABRICATED GEOCOMPOSITE DRAIN	204				
518	21200	30	CY	POROUS BACKFILL WITH GEOTEXTILE FABRIC	30				
518	40000	178	FT	6" PERFORATED CORRUGATED PLASTIC PIPE	178				
518	40011	40	FT	6" NON-PERFORATED CORRUGATED PLASTIC PIPE, INCLUDING SPECIALS, AS PER PLAN	40				7/28
526	25011	319	SY	REINFORCED CONCRETE APPROACH SLABS WITH QC/QA (T=15"), AS PER PLAN				319	24/28
526	90010	115	FT	TYPE A INSTALLATION				115	
601	20000	1949	SY	CRUSHED AGGREGATE SLOPE PROTECTION				1949	
601	32204	634	CY	ROCK CHANNEL PROTECTION, TYPE C WITH GEOTEXTILE FABRIC				634	

DRAFT Stage 3 - Not for Construction 09/23/2024

DESIGN AGENCY
Stantec
1500 Lake Shore Dr.
Columbus, OH 43204
(614) 486-4383

DESIGNED MRS | DRAWN JWS | CHECKED EDA | REVIEWED BSM | DATE 2/2024 | REVISED | STRUCTURE FILE NUMBER 4400534

ESTIMATED QUANTITIES
BRIDGE NO. LAW-7-0713 L
S.R. 7 OVER LITTLE PADDY CREEK

LAW-7-2.17
PID No. 75923

964
1247

V:\1736\active\173608714\LAW\engineering\75923_LAW-7-2.17\Design\structures\LAW007_0713L_S000i.dgn 5/13/2024 1:38:30 PM mstur devant

V:\1736\active\173608714\LAW\engineering\75923_LAW-7-2.17\Design\structures\LAW007_0713L_S000I.dgn 5/13/2024 1:38:32 PM msturdevant

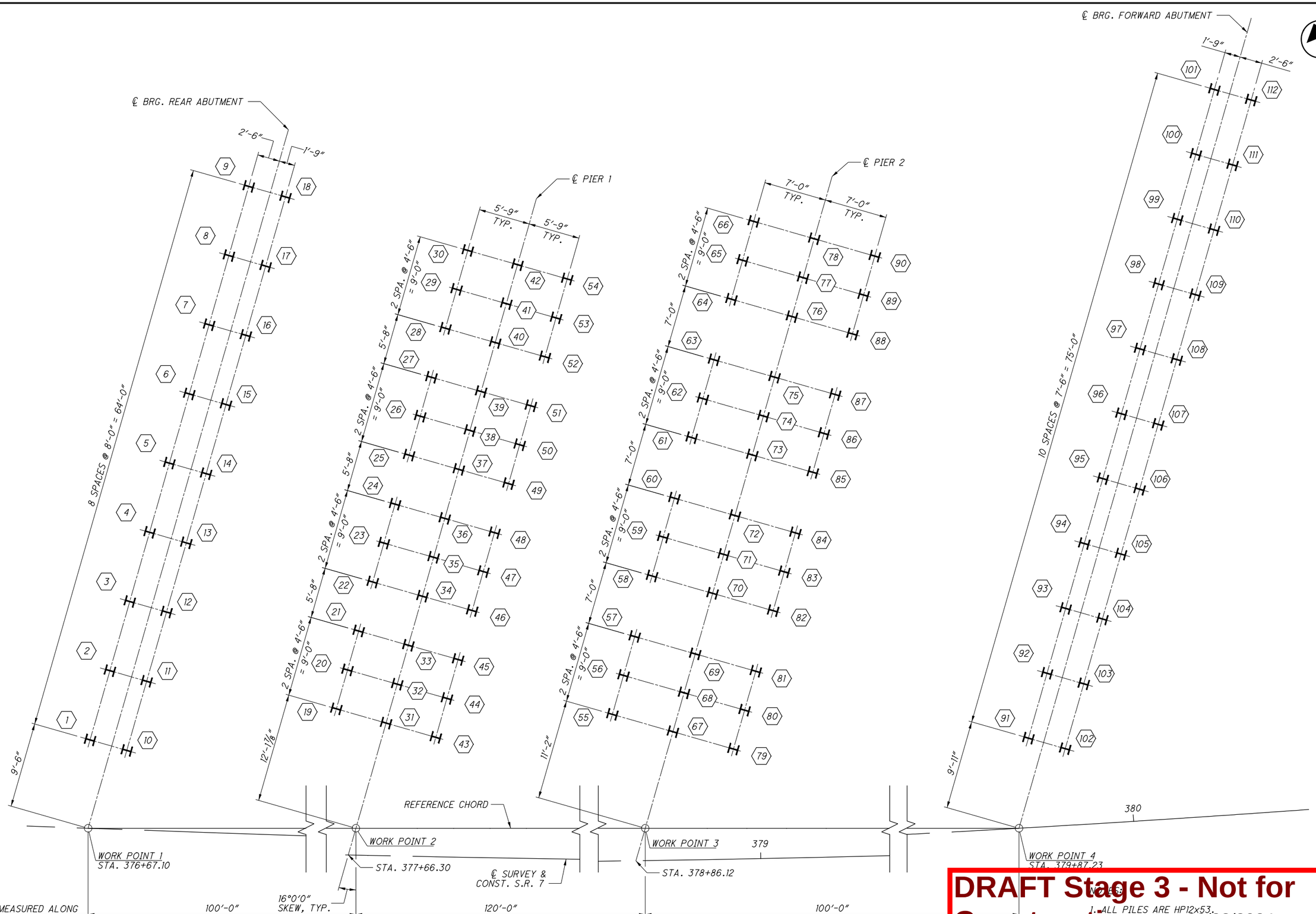

FOUNDATION PLAN

NOTES:
1. ALL PILES ARE HP12x53.
2. ⟨X⟩ DESIGNATES PILE NUMBER AND LOCATION.

DRAFT Stage 3 - Not for Construction
09/23/2024

DESIGN AGENCY
Stantec
1500 Lake Shore Dr.
Columbus, OH 43204
(614) 486-4383

DESIGNED	DRAWN	REVIEWED	DATE
BSM	JWS	MRS	2/2024
CHECKED	REVISED	STRUCTURE FILE NUMBER	
EER		4400534	

FOUNDATION PLAN
BRIDGE NO. LAW-7-0713 L
S.R. 7 OVER LITTLE PADDY CREEK

LAW-7-2.17
PID No. 75923

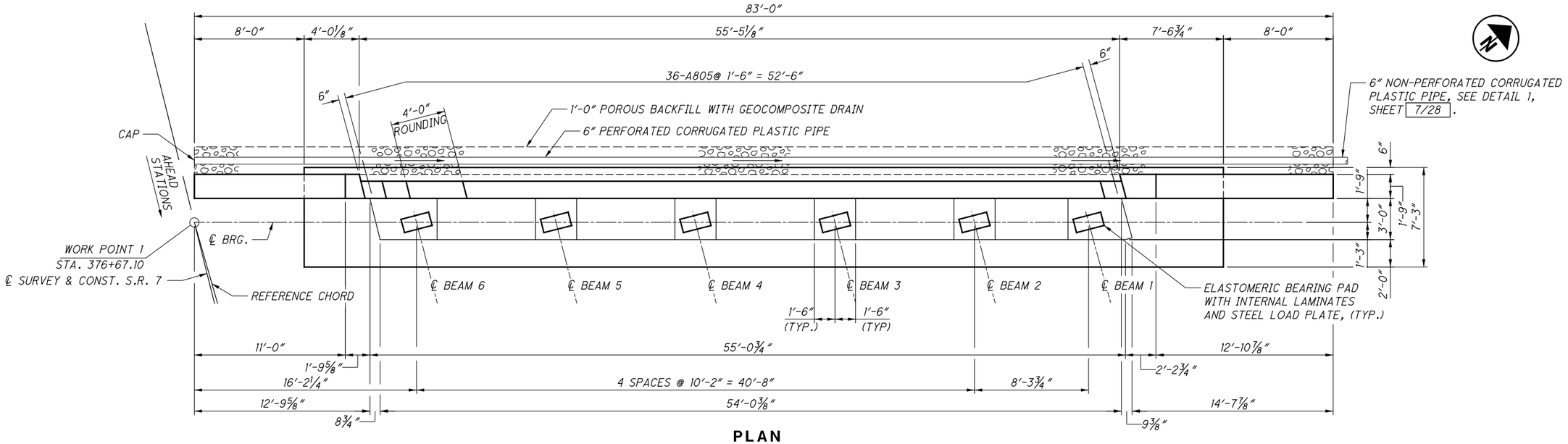

PLAN

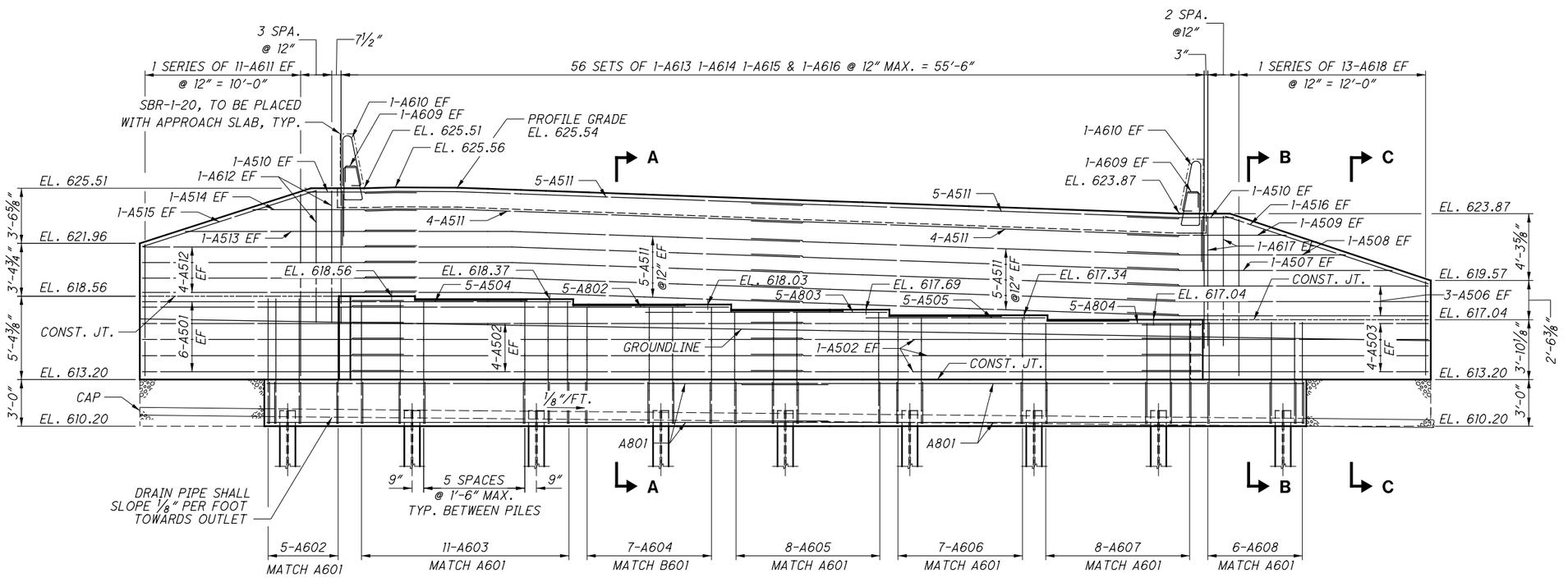

ELEVATION

LAP LENGTHS:
#5 BARS = 3'-3"
#8 BARS = 5'-6"

NOTE:
A603 AND A607 BARS AT EACH END OF BEAM SEAT SHALL BE PLACED PARALLEL TO THE SKEWED END OF BEAM SEAT.

NOTES:
1. FOR PILE LAYOUT, SEE SHEET 5/28
2. FOR FOOTING PLAN AND SECTION A-A, SECTION B-B AND SECTION C-C, SEE SHEET 6/28
3. FOR EXPANSION JOINT DETAILS, SEE STD. DWG. EXP-6.17.
4. UNLESS NOTED OTHERWISE ALL REINFORCING SHALL BE INSTALLED WITH A MINIMUM CLEARANCE OF 2" TO THE CONCRETE SURFACE.

DRAFT Stage 3 - Not for Construction 09/23/2024

DESIGN AGENCY
Stantec
1500 Lake Shore Dr.
Columbus, OH 43204
(614) 486-4383

DESIGNED	DRAWN	REVIEWED	DATE
MRS	JWS	BSM	2/2024
CHECKED	REVISED	STRUCTURE FILE NUMBER	
EDA		4400534	

REAR ABUTMENT
BRIDGE NO. LAW-7-0713 L
S.R. 7 OVER LITTLE PADDY CREEK

LAW-7-2.17
PID No. 75923

6 / 28
966
1247

Y:\1736\active\736087\4\LAW\engineering\75923_LAW-7-2.17\Design\structures\LAW007_0713L_SR001.dgn 5/13/2024 1:38:34 PM mstur devant

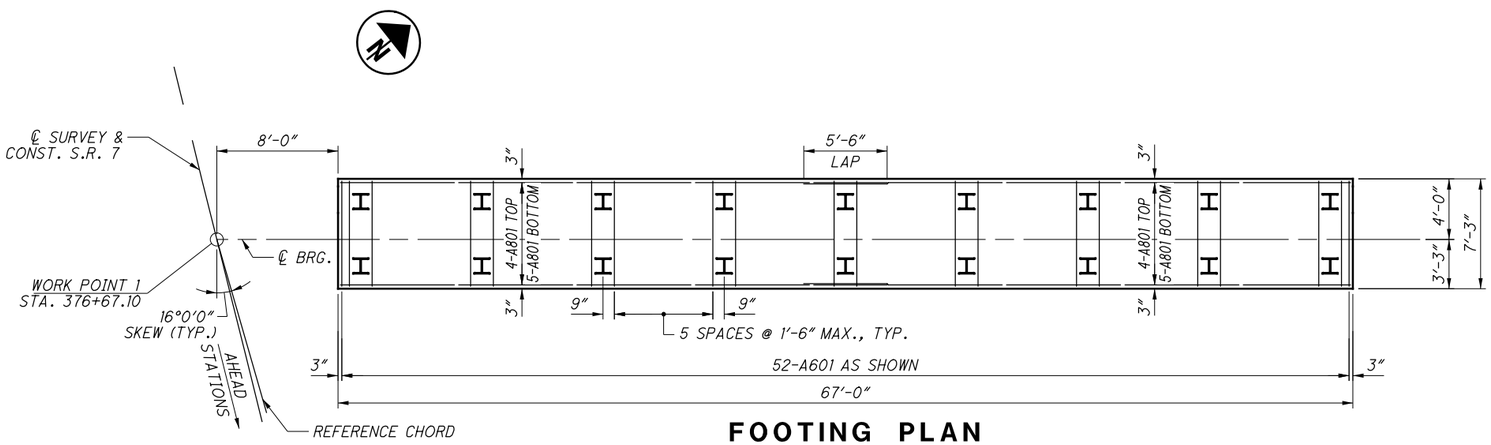

FOOTING PLAN

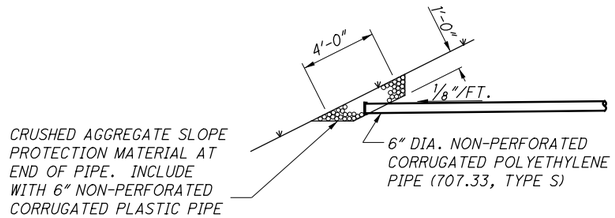

DETAIL 1

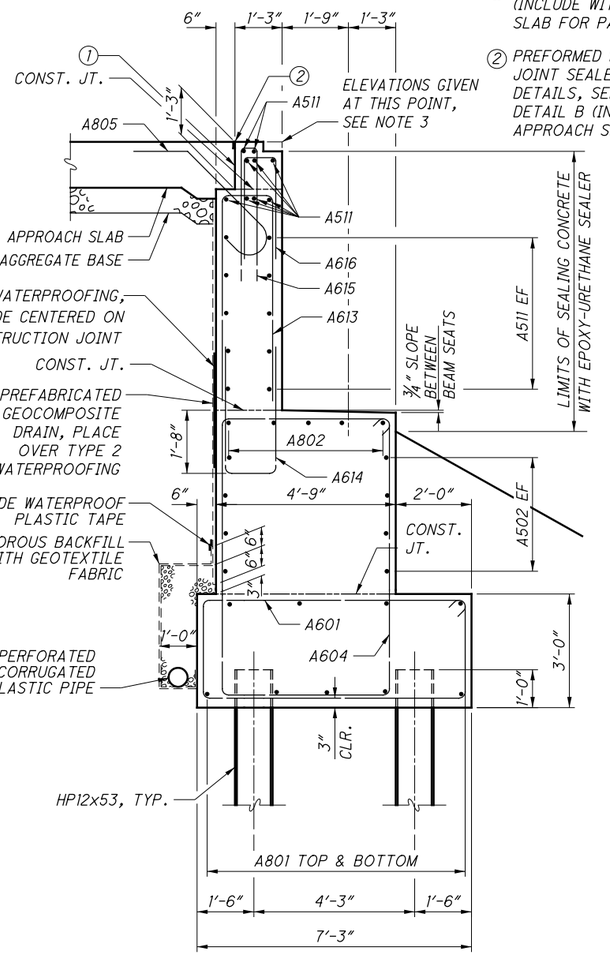

SECTION A-A

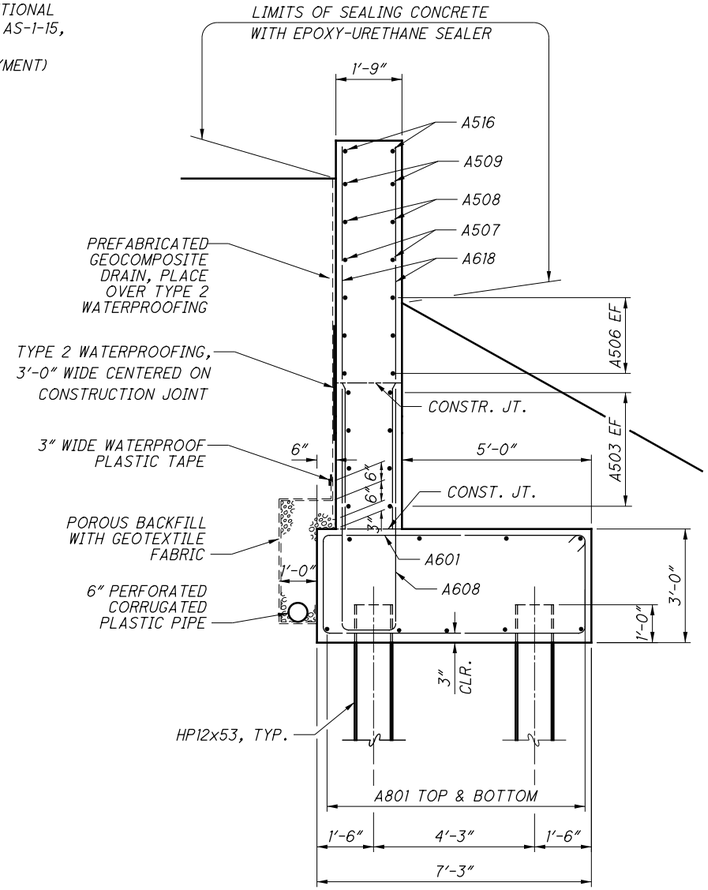

SECTION B-B

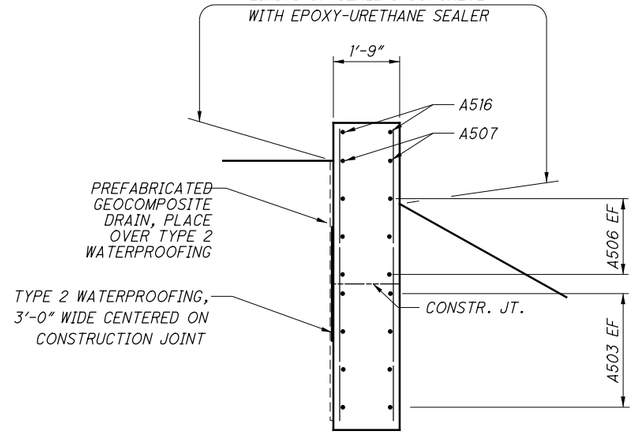

SECTION C-C

NOTES:
1. FOR PIPE ANCHOR SEE SHEET [illegible].
2. FOR EXPANSION JOINT DETAILS, SEE STD. DWG. EXJ-6-17.
3. UNLESS NOTED OTHERWISE, ALL REINFORCING SHALL BE INSTALLED AT A MINIMUM COVERAGE OF 2" TO CONCRETE SURFACE.

DRAFT Stage 3 - Not for Construction 09/23/2024

DESIGN AGENCY
Stantec
1500 Lake Shore Dr.
Columbus, OH 43204
(614) 486-4383

DESIGNED	DRAWN	REVIEWED	DATE
MRS	JWS	BSM	2/2024
CHECKED	REVISED	STRUCTURE FILE NUMBER	
EDA		4400534	

REAR ABUTMENT & MISCELLANEOUS DETAILS
BRIDGE NO. LAW-7-0713 L
S.R. 7 OVER LITTLE PADDY CREEK

LAW-7-2.17
PID No. 75923

7 / 28

967
1247

V:\1736\active\173608714\LAW\engineering\75923_LAW-7-2.17\Design\structures\LAW007_0713L\sheets\007_0713L_SR002.dgn 5/13/2024 1:38:37 PM mstur devant

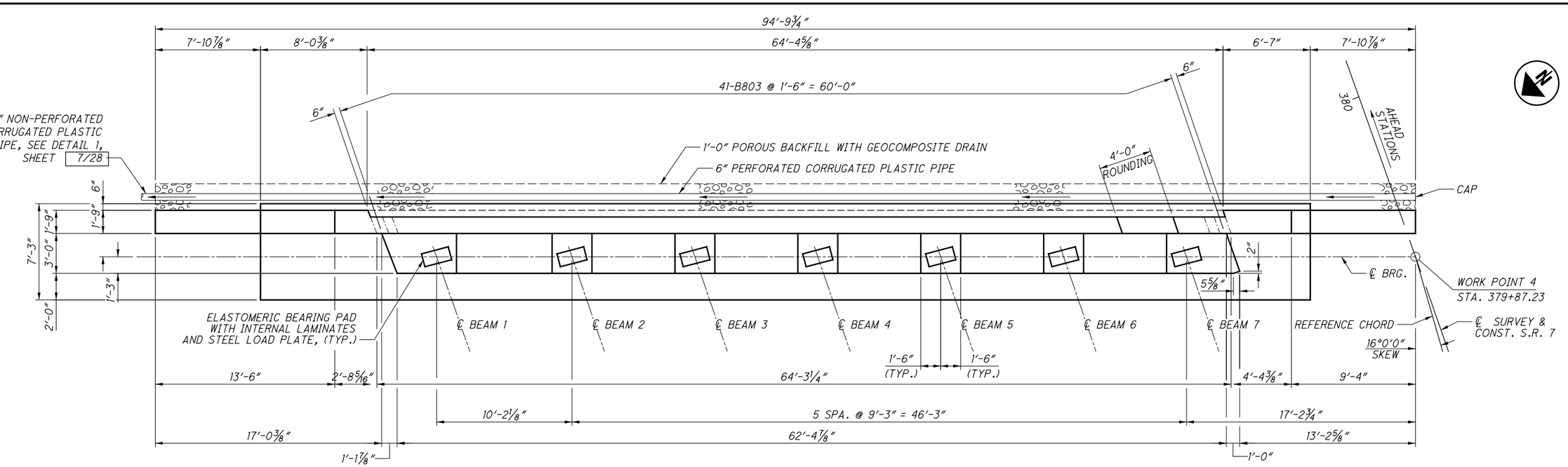

PLAN

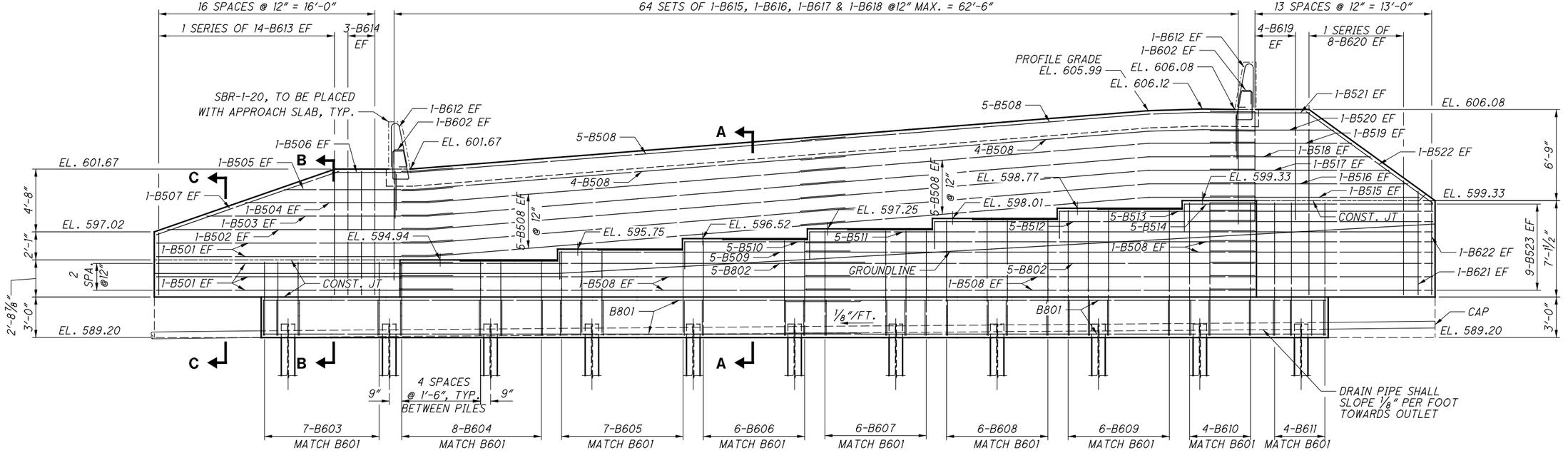

ELEVATION

LAP LENGTHS:
#5 BARS = 3'-3"
#8 BARS = 5'-6"

NOTE:
A603 AND A610 BARS AT EACH END OF BEAM SEAT SHALL BE PLACED PARALLEL TO THE SKEWED END OF BEAM SEAT.

NOTES:
1. FOR PILE LAYOUT, SEE SHEET 5/28
2. FOR FOOTING PLAN AND SECTION A-A, SECTION B-B AND SECTION C-C, SEE SHEET 6/28
3. FOR EXPANSION JOINT DETAILS, SEE STD. DWG. EXP-6-17.
4. UNLESS NOTED OTHERWISE ALL REINFORCING SHALL BE CLEARED WITH A MINIMUM CLEARANCE OF 2" TO THE CONCRETE SURFACE.

DRAFT Stage 3 - Not for Construction 09/23/2024

DESIGN AGENCY
Stantec
1500 Lake Shore Dr.
Columbus, OH 43204
(614) 486-4383

DESIGNED	DRAWN	REVIEWED	DATE
MRS	JWS	BSM	2/2024
CHECKED	REVISED	STRUCTURE FILE NUMBER	
EDA		4400534	

FORWARD ABUTMENT
BRIDGE NO. LAW-7-0713 L
S.R. 7 OVER LITTLE PADDY CREEK

LAW-7-2.17
PID No. 75923

8 / 28

968
1247

Y:\1736\active\173608714\LAW\engineering\75923_LAW-7-2.17\Design\structures\LAW007_0713L\sheets\007_0713L_SF001.dgn 5/13/2024 1:38:38 PM msturdevant

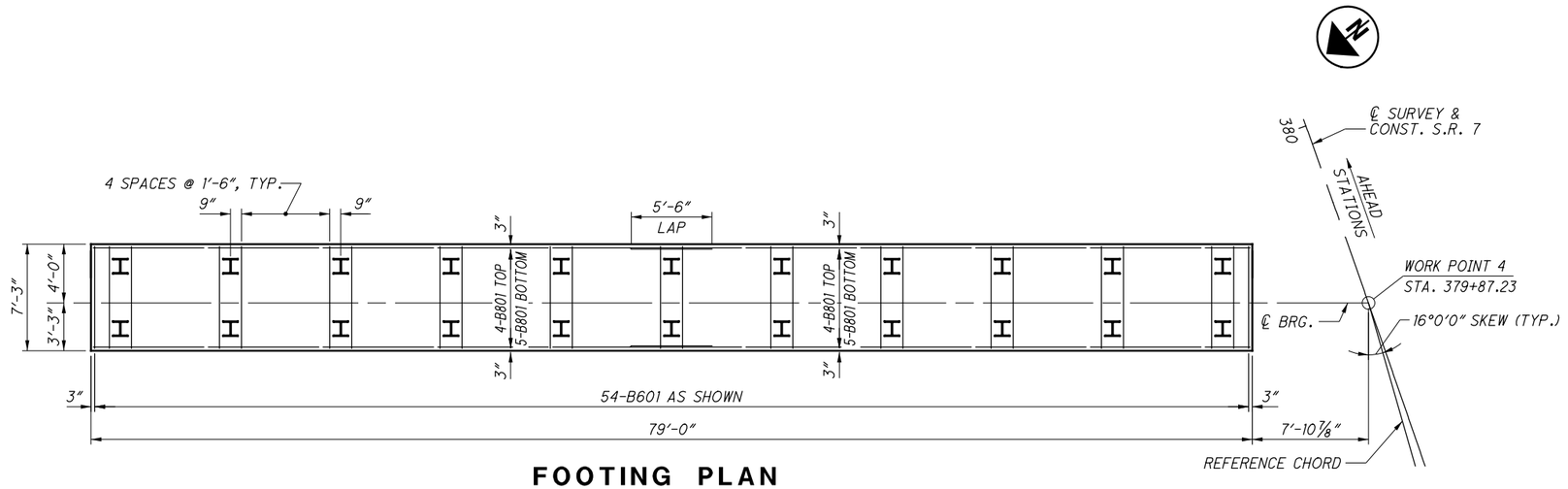

FOOTING PLAN

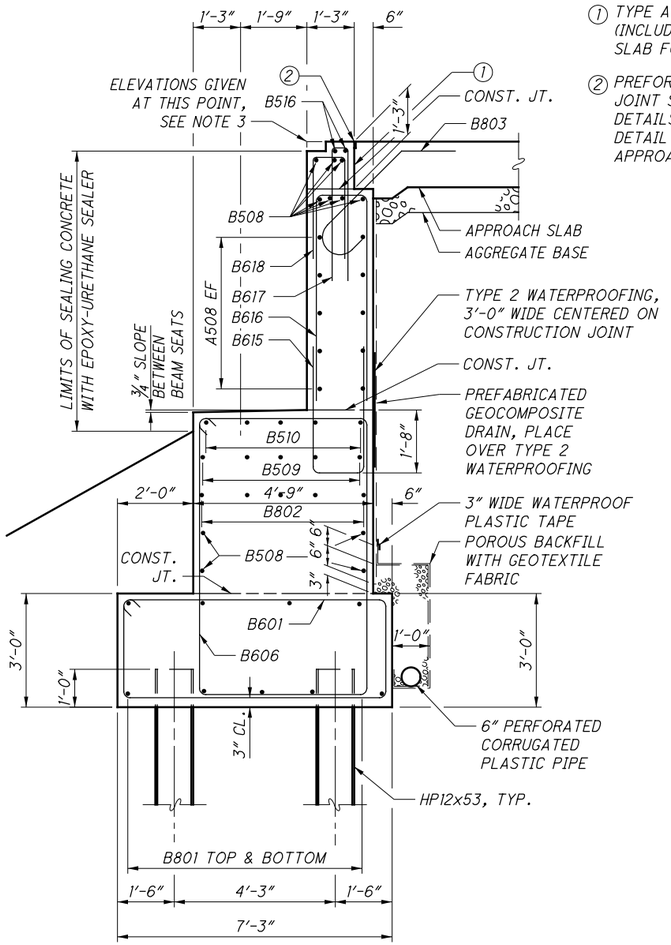

SECTION A-A

① TYPE A WATERPROOFING (INCLUDE WITH APPROACH SLAB FOR PAYMENT)

② PREFORMED ELASTOMERIC JOINT SEALER. FOR ADDITIONAL DETAILS, SEE SDT. DWG. AS-1-15, DETAIL B (INCLUDE WITH APPROACH SLAB FOR PAYMENT)

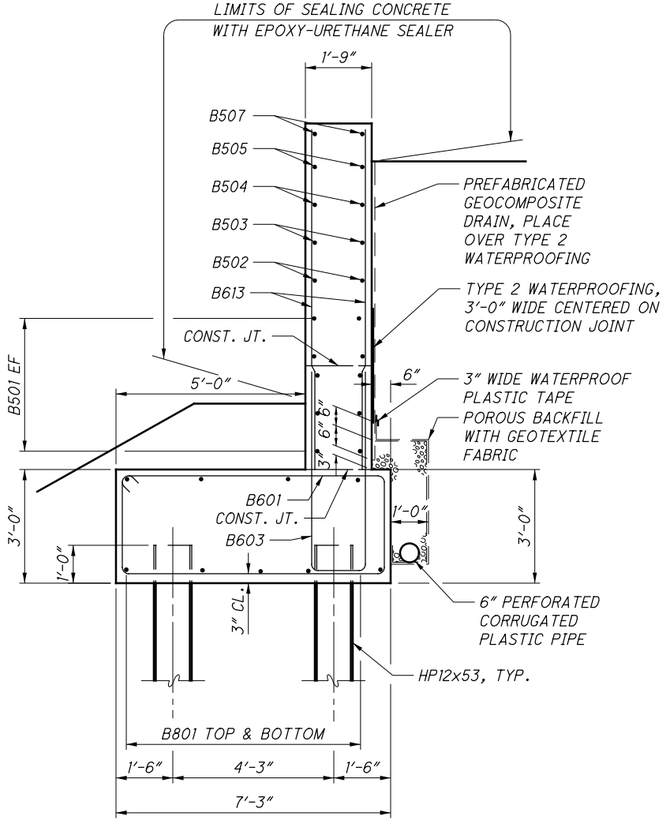

SECTION B-B

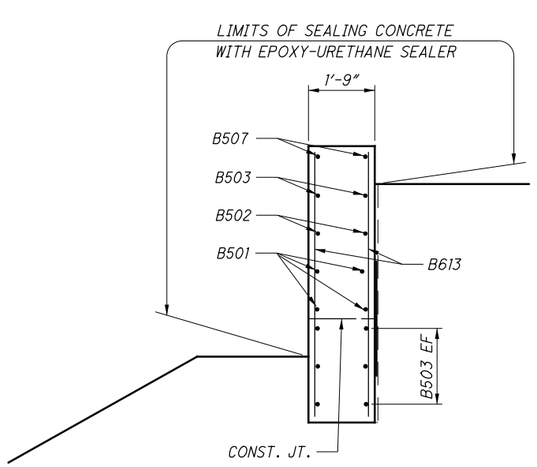

SECTION C-C

NOTES:
1. FOR SLEEVE LAYOUT, SEE SHEET 928.
2. FOR REINFORCEMENT BAR DETAILS, SEE SDT DWG. AS-1-6-17.
3. UNLESS NOTED OTHERWISE, ALL REINFORCING SHALL BE PLACED WITH A MINIMUM CLEARANCE OF 2" TO CONCRETE SURFACE.

DRAFT Stage 3 - Not for Construction 09/23/2024

DESIGN AGENCY
Stantec
1500 Lake Shore Dr.
Columbus, OH 43204
(614) 486-4383

DESIGNED	DRAWN	REVIEWED	DATE
MRS	JWS	BSM	2/2024
CHECKED	REVISED	STRUCTURE FILE NUMBER	
EDA		4400534	

FORWARD ABUTMENT & MISCELLANSOUS DETAILS
BRIDGE NO. LAW-7-0713 L
S.R. 7 OVER LITTLE PADDY CREEK

LAW-7-2.17
PID No. 75923

9 / 28

969
1247

V:\1736\active\173608714\LAW\engineering\75923_LAW-7-2.17\Design\structures\LAW007_0713L\sheets\007_0713L_SF002.dgn 5/13/2024 1:38:40 PM msturdevant

V:\1736\active\173608714\LAW\engineering\75923_LAW-7-2.17\Design\structures\LAW007_0713L_S001.dgn 5/13/2024 4:38:42 PM msturdevant

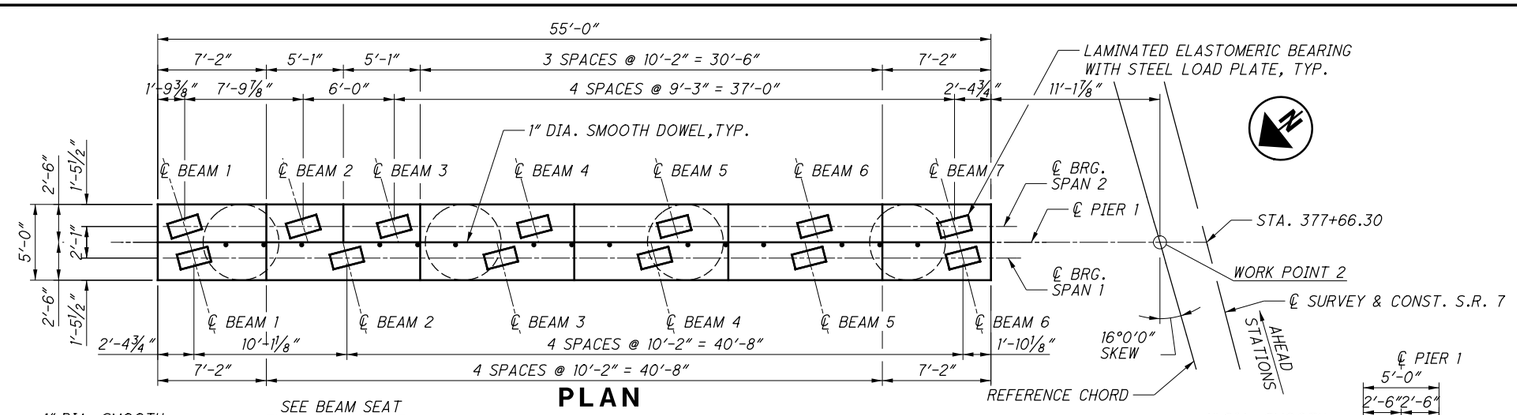

PLAN

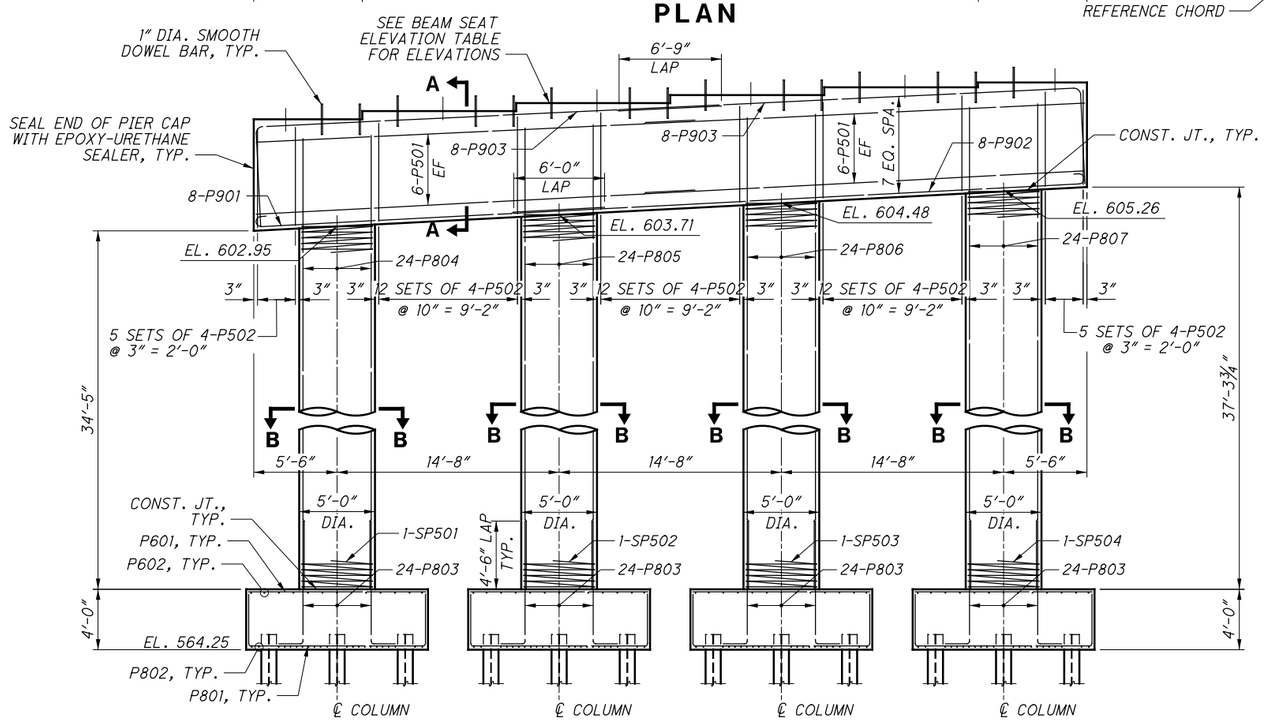

ELEVATION

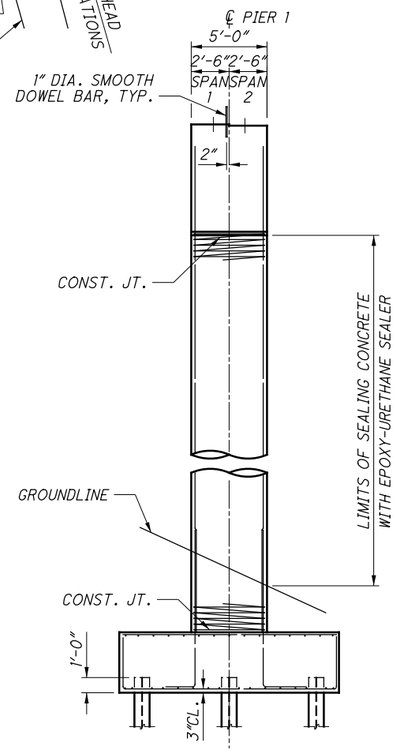

END ELEVATION

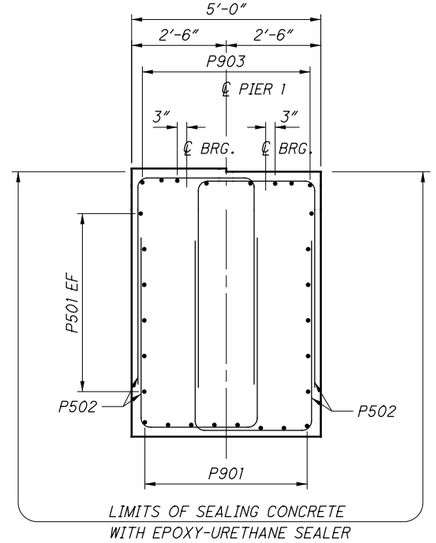

SECTION A-A

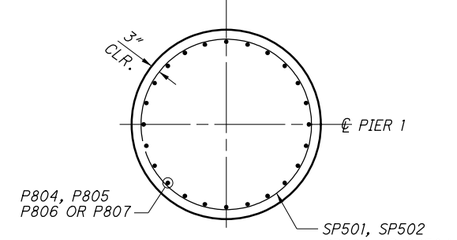

SECTION B-B

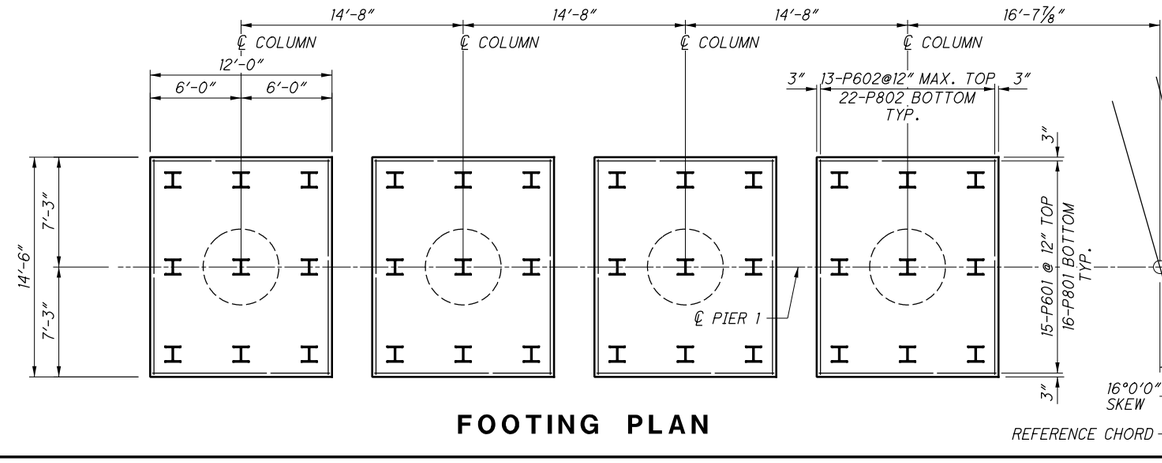

FOOTING PLAN

LAP LENGTHS:
#5 BARS = 3'-3"
#8 BARS = 3'-9"

BEAM SEAT ELEVATION		
BEAM	SPAN 1	SPAN 2
1	610.02	610.00
2	610.56	610.41
3	611.09	610.73
4	611.62	611.22
5	612.14	611.70
6	612.45	612.17
7	-	612.44

NOTES:
1. UNLESS NOTED OTHERWISE, ALL REINFORCING SHALL BE INSTALLED WITH A MINIMUM COVER OF 2" TO CONCRETE SURFACE.
2. PIER CAP AND COLUMNS ARE CONSIDERED MASS CONCRETE AND CLASS QC4 CONCRETE SHALL BE USED FOR THESE MEMBERS.
3. FOR SPLICING OF #8 SMOOTH DOWELS, SEE SHEET 20/28.

DRAFT Stage 3 - Not for Construction 09/23/2024

DESIGN AGENCY
Stantec
1500 Lake Shore Dr.
Columbus, OH 43204
(614) 486-4383

DESIGNED	DRAWN	REVIEWED	DATE
MRS	JWS	BSM	2/2024
CHECKED	REVISED	STRUCTURE FILE NUMBER	
EDA		4400534	

PIER 1
BRIDGE NO. LAW-7-0713 L
S.R. 7 OVER LITTLE PADDY CREEK

LAW-7-2.17
PID No. 75923

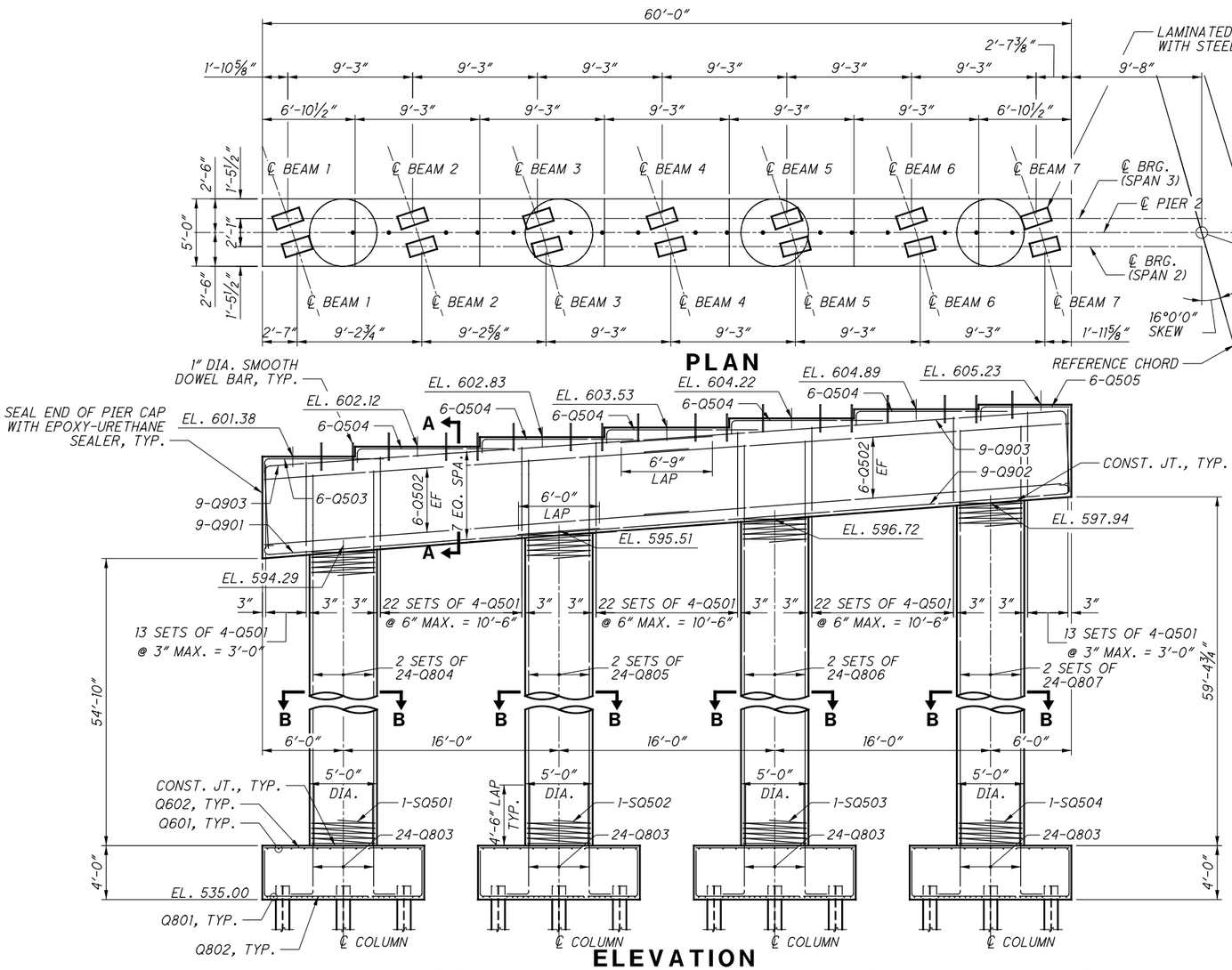

NOTES:
1. UNLESS NOTED OTHERWISE, ALL REINFORCING SHALL BE INSTALLED WITH A MINIMUM COVER OF 2" TO CONCRETE SURFACE.
2. PIER CAP AND COLUMNS ARE CONSIDERED MASS CONCRETE AND CLASS QC4 CONCRETE SHALL BE USED FOR THESE MEMBERS.
3. FOR SEALING OF 1" DIA. SMOOTH DOWELS, SEE SHEET 20/28.

DRAFT Stage 3 - Not for Construction 9/23/2024

DESIGN AGENCY
Stantec
1500 Lake Shore Dr.
Columbus, OH 43204
(614) 486-4383

DESIGNED	DRAWN	REVIEWED	DATE
MRS	JWS	BSM	2/2024
CHECKED	REVISED	STRUCTURE FILE NUMBER	
EDA		4400534	

PIER 2
BRIDGE NO. LAW-7-0713 L
S.R. 7 OVER LITTLE PADDY CREEK

LAW-7-2.17
PID No. 75923

11 / 28

971 / 1247

V:\1736\active\173608714\LAW\engineering\75923_LAW-7-2.17\Design\structures\LAW007_0713L\sheets\007_0713L_S1002.dgn 5/13/2024 1:38:48 PM mstur devant

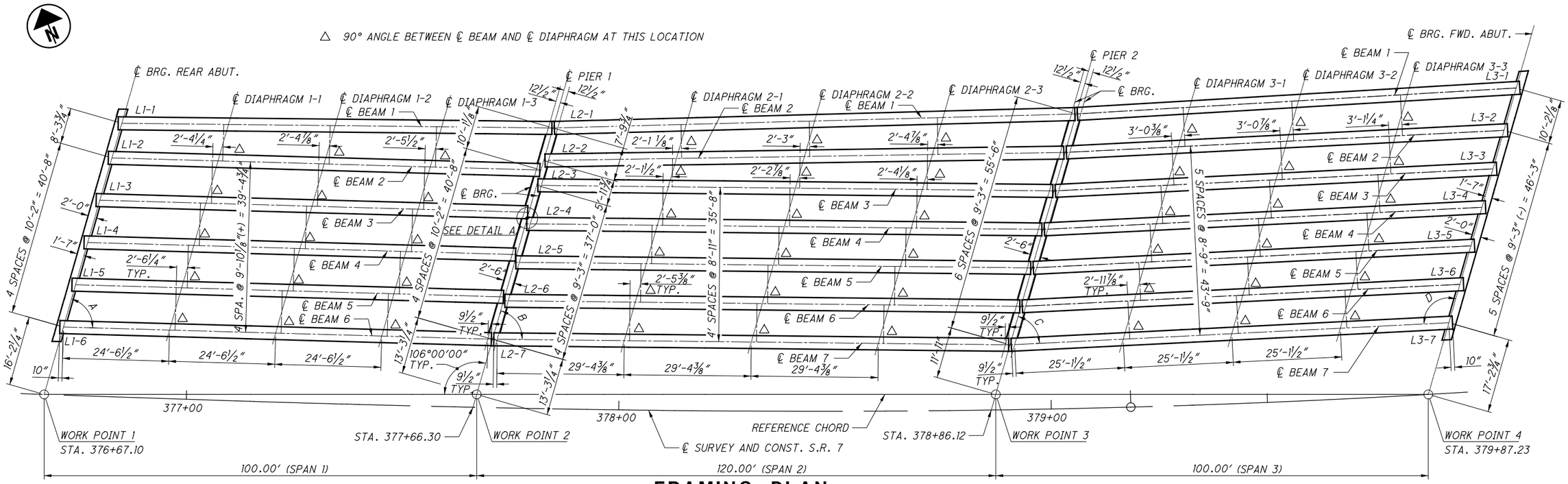

FRAMING PLAN

DISTANCE C/C BEAM	DIAPHRAGM DIMENSION								
	1-1	1-2	1-3	2-1	2-2	2-3	3-1	3-2	3-3
1-2	8'-8 5/8"	8'-10 3/4"	9'-3 7/8"	7'-9 3/4"	8'-1 3/4"	8'-5 7/8"	8'-11 5/8"	9'-2 1/4"	9'-4 7/8"
2-3	9'-10 1/8"	9'-10 1/8"	9'-10 1/8"	6'-6 1/2"	7'-3 3/4"	8'-1"	8'-9"	8'-9"	8'-9"

ANGLE				
LOCATION	A	B	C	D
BEAM 1	74°37'19"	72°28'19"	70°37'19"	109°22'41"
BEAM 2	75°37'19"	73°07'19"	71°07'19"	108°52'41"
BEAM 3	75°37'19"	74°37'19"	71°07'19"	108°52'41"
BEAM 4	75°37'19"	74°37'19"	71°07'19"	108°52'41"
BEAM 5	75°37'19"	74°37'19"	71°07'19"	108°52'41"
BEAM 6	75°37'19"	74°37'19"	71°07'19"	108°52'41"
BEAM 7	-	74°37'19"	71°07'19"	108°52'41"

NOTES:
1. FOR ADDITIONAL BEAM AND DIAPHRAGM DETAILS, SEE STD. DWG. PSID-1-13.
2. FOR ADDITIONAL BEAM DETAILS, SEE SHEET 13/28 AND 14/28 .
3. FOR PIER AND ABUTMENT DIAPHRAGM DETAILS, SEE SHEETS 19/28 AND 20/28 .

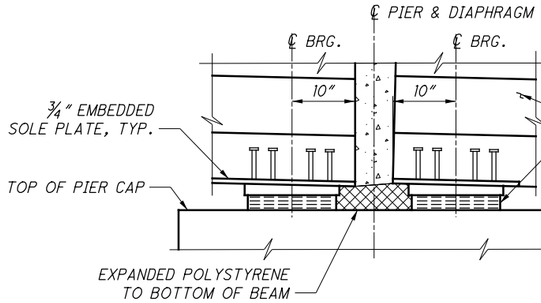

SECTION THRU PIER

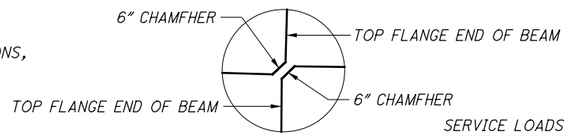

DETAIL A

SERVICE LOADS (UNFACTORED)

DEAD LOAD REACTION = 183 K
LIVE LOAD REACTION = 119 K
TOTAL REACTION = 302 K

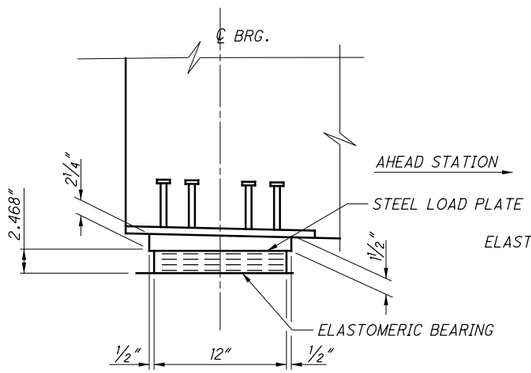

SECTION A-A

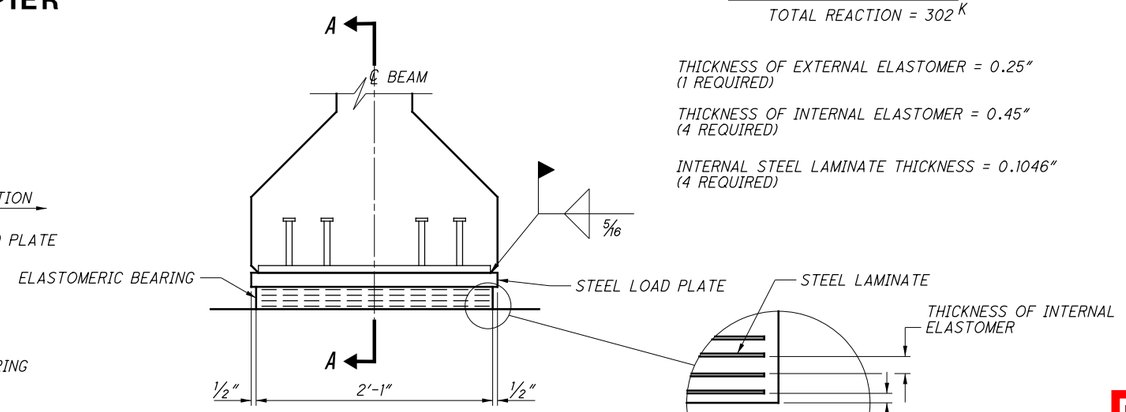

ELEVATION

THICKNESS OF EXTERNAL ELASTOMER = 0.25"
(1 REQUIRED)

THICKNESS OF INTERNAL ELASTOMER = 0.45"
(4 REQUIRED)

INTERNAL STEEL LAMINATE THICKNESS = 0.1046"
(4 REQUIRED)

TYPICAL BEARING
(40 REQUIRED)

BEARING NOTES:
1. ELASTOMERIC BEARINGS: THE ELASTOMER SHALL HAVE A HARDNESS OF 50 DUROMETER. THE BEARINGS WERE DESIGNED IN ACCORDANCE WITH SECTION 14.7.6 (METHOD A) OF THE AASHTO LRFD BRIDGE DESIGN SPECIFICATIONS. THE LONG TERM COMPRESSION PROOF LOAD TEST (AASHTO STANDARD SPECIFICATIONS FOR HIGHWAY BRIDGES, DIVISION II, SECTION 18.7.2.6) IS NOT REQUIRED.
2. STEEL LOAD PLATES: LOAD PLATES SHALL BE A709 GRADE 50 STRUCTURAL STEEL, GALVANIZED PER CMS 711.02, AND BONDED BY VULCANIZATION TO THE ELASTOMER DURING THE MOLDING PROCESS.
3. FOR DETAILS OF THE STUDS AND EMBEDDED PLATE, AND FOR ADDITIONAL INFORMATION, SEE STD. DWG. PSID-1-13.
4. ALL BEARINGS SHALL BE MARKED PRIOR TO SHIPPING. THE MARKS SHALL INCLUDE THE BEARING LOCATION ON THE BRIDGE, AND A DIRECTION ARROW THAT POINTS UP-STATION.
5. [illegible] PERMANENT [illegible] AFTER THE BEARING IS INSTALLED.

DRAFT Stage 3 - Not for Construction 09/23/2024

DESIGN AGENCY
Stantec
1500 Lake Shore Dr.
Columbus, OH 43204
(614) 486-4383

DESIGNED	DRAWN	REVIEWED	DATE
MRS	JWS	ALH	2/2024
CHECKED	REVISED	STRUCTURE FILE NUMBER	
EDA		4400534	

FRAMING PLAN AND BEARING DETAILS
BRIDGE NO. LAW-7-0713 L
S.R. 7 OVER LITTLE PADDY CREEK

LAW-7-2.17
PID No. 75923

12 / 28

972
1247

V:\1736\active\173608714\LAW\engineering\75923_LAW-7-2.17\Design\structures\LAW007_0713L\sheets\007_0713L_SD001.dgn 5/13/2024 1:38:53 PM msturdevant

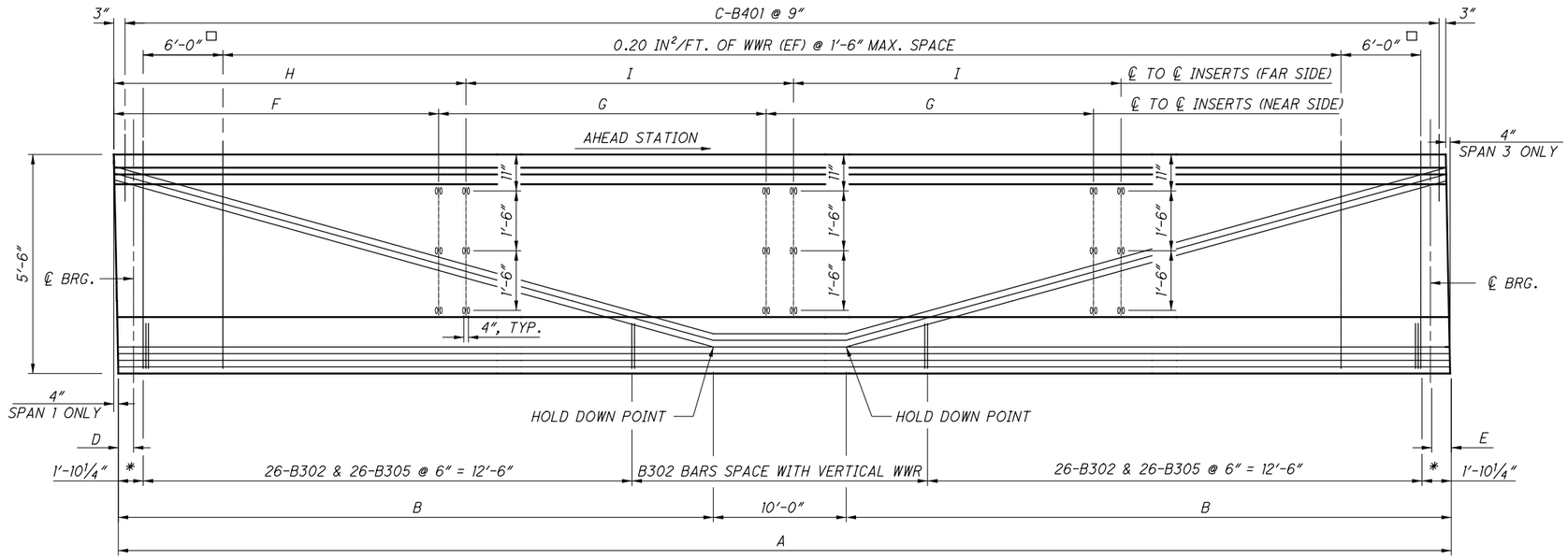

* ANCHORAGE ZONE REINFORCING, SEE DETAIL

□ 0.40 IN /FT. OF WWR (EF) @ 6″ MAX. SPACE

BEAM ELEVATION

VERTICAL SCALE EXAGGERATED

NUMBER OF STRANDS PER ROW											CONCRETE STRENGTH (KSI)	
SECTION	①	②	③	④	⑤	⑥	⑦	⑧	⑨	TOTAL	f′ci	f′cf
END	9	9	9	4	–	–	1	1	1	34	6.0	7.0
MID	9	9	9	5	1	1	–	–	–	34		

BEAM	DIMENSION **								
	A	B	C	D	E	F	G	H	I
L1-1	100′-2⅞″	45′-1⅞″	134	10″	9½″	24′-5⅜″	24′-7¾″	–	–
L1-2	99′-9⅜″	44′-10⅛″	134	10″	9½″	24′-1⅞″	24′-7″	26′-6⅛″	24′-7⅝″
L1-3 THRU L1-6	99′-9⅜″	44′-10⅛″	134	10″	9½″	24′-1⅞″	24′-7″	26′-8¼″	24′-7″
L3-1	102′-5″	46′-2½″	137	9½″	10″	24′-6″	25′-2½″	–	–
L3-2	102′-1⅜″	46′- 0⅛″	137	9½″	10″	24′-5½″	25′-2″	27′-6″	25′-2½″
L3-3 THRU L3-7	102′-1⅜″	46′- 0⅛″	137	9½″	10″	24′-5½″	25′-2″	27′-5⅝″	25′-2″

** DIMENSIONS MEASURED ALONG BEAM ADJUSTED FOR LONGITUDINAL GRADE.

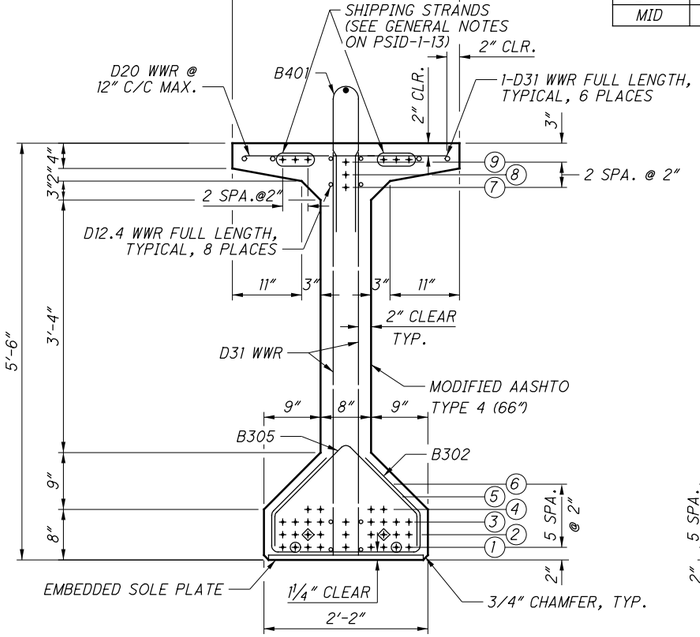

END BEAM SECTION

○ - DEBOND 3′-0″ AT EACH END

◇ - DEBOND 6′-0″ AT EACH END

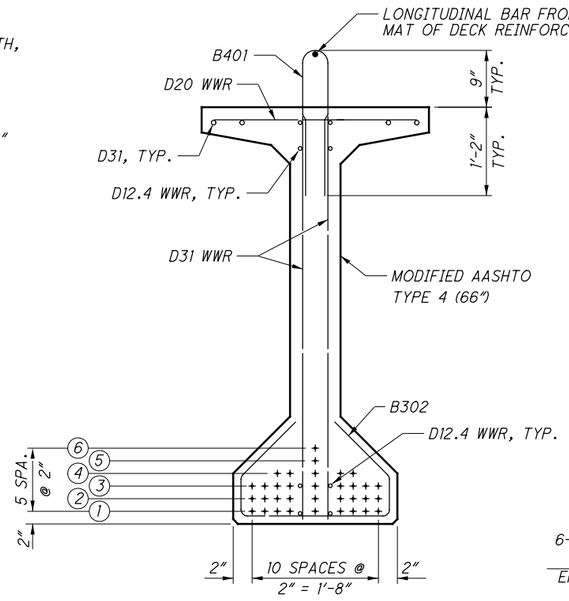

MIDSPAN BEAM SECTION

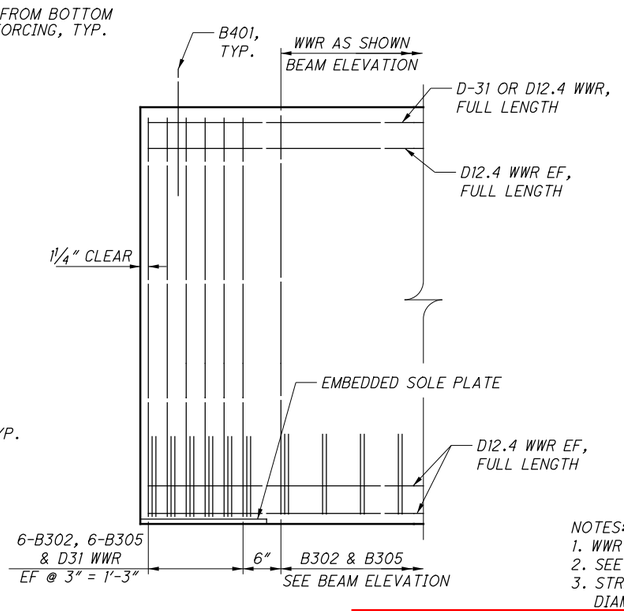

ANCHORAGE ZONE REINFORCING

STRANDS NOT SHOWN FOR CLARITY

NOTES:
1. WWR DENOTES WELDED WIRE REINFORCEMENT.
2. SEE STD. DWG. PSID-1-13 FOR ADDITIONAL DETAILS.
3. STRANDS ARE TO BE LOW RELAXATION, 0.6 INCH DIAMETER (A = 0.217 SQ. IN.) SEVEN WIRE UNCOATED, ASTM A416, GRADE 270.
4. STRAND PATTERN PROJECTED FROM END TO BE LOCALLY COATED.
5. ABUTMENT ENDS OF BEAMS SHALL BE CAST TO BE VERTICAL WHEN BEAMS ARE IN FINAL POSITION.
6. LEGIBLY MARK EACH BEAM WITH BEAM NUMBER AND UP-STATION DIRECTION.

DRAFT Stage 3 - Not for Construction 09/23/2024

DESIGN AGENCY: Stantec, 1500 Lake Shore Dr., Columbus, OH 43204, (614) 486-4383

DESIGNED	DRAWN	REVIEWED	DATE
MRS	ALH	BSM	2/2024
CHECKED	REVISED	STRUCTURE FILE NUMBER	
EDA		4400534	

MODIFIED AASHTO TYPE 4 (66″) BEAM DETAILS

BRIDGE NO. LAW-7-0713

S.R. 7 OVER LITTLE PADDY CREEK

LAW-7-2.17

PID No. 75923

13 / 28

973 / 1247

V:\1736\active\173608714\LAW\engineering\75923_LAW-7-2.17\Design\structures\LAW007_0713L\sheets\007_0713L_SD008.dgn 5/13/2024 1:38:55 PM msturdevant

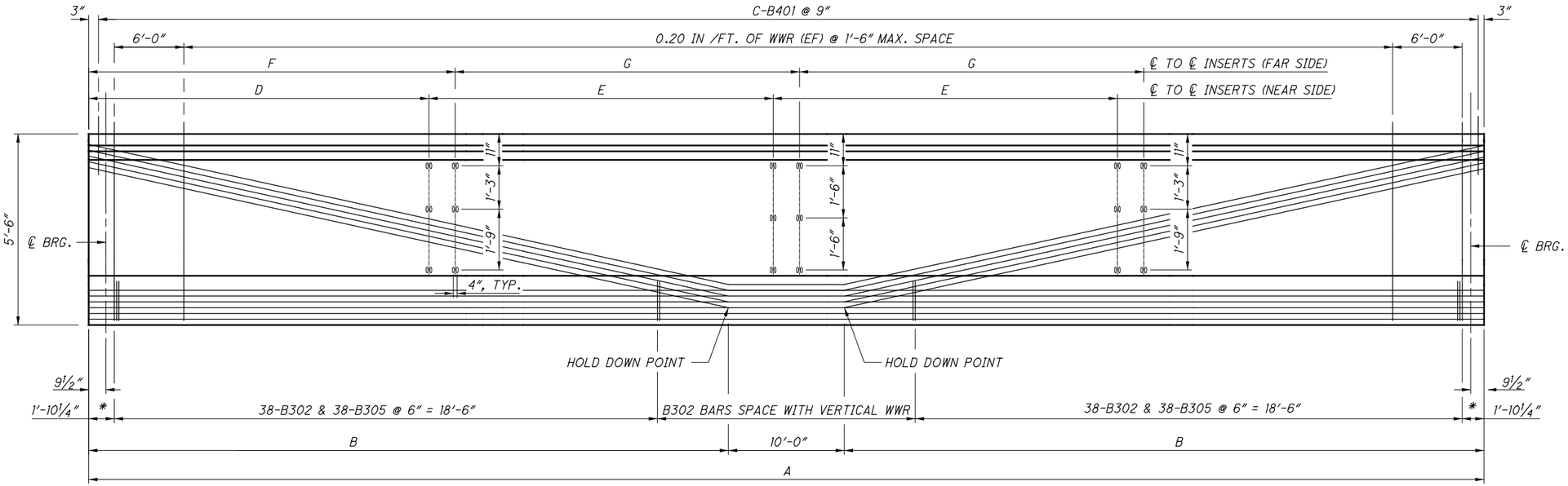

* ANCHORAGE ZONE REINFORCING, SEE DETAIL

□ 0.40 IN /FT.^{2} OF WWR (EF) @ 6″ MAX. SPACE

BEAM ELEVATION

VERTICAL SCALE EXAGGERATED

BEAM	DIMENSION **						
	A	B	C	D	E	F	G
L2-1	120′-4 3/8″	55′-2 3/16″	161	29′-4 1/8″	29′-8 3/8″	-	-
L2-2	119′-11 3/8″	54′-11 11/16″	161	29′-6 3/8″	29′-6 3/8″	31′-7 3/8″	29′-8 1/4″
L2-3	119′-0 5/8″	54′-6 5/16″	159	28′-11 3/4″	29′-5″	31′-1 3/8″	29′-6 1/4″
L2-4 THRU L2-7	119′-0 5/8″	54′-6 5/16″	159	28′-11 3/4″	29′-5″	31′-5 1/4″	29′-5″

** DIMENSIONS MEASURED ALONG BEAM ADJUSTED FOR LONGITUDINAL GRADE.

NUMBER OF STRANDS PER ROW														CONCRETE STRENGTH (KSI)	
SECTION	①	②	③	④	⑤	⑥	⑦	⑧	⑨	⑩	⑪	⑫	TOTAL	f′ci	f′cf
END	9	9	8	8	6	2	-	1	1	1	1	1	47	6.0	7.0
MID	9	9	9	9	7	3	1	-	-	-	-	-	47		

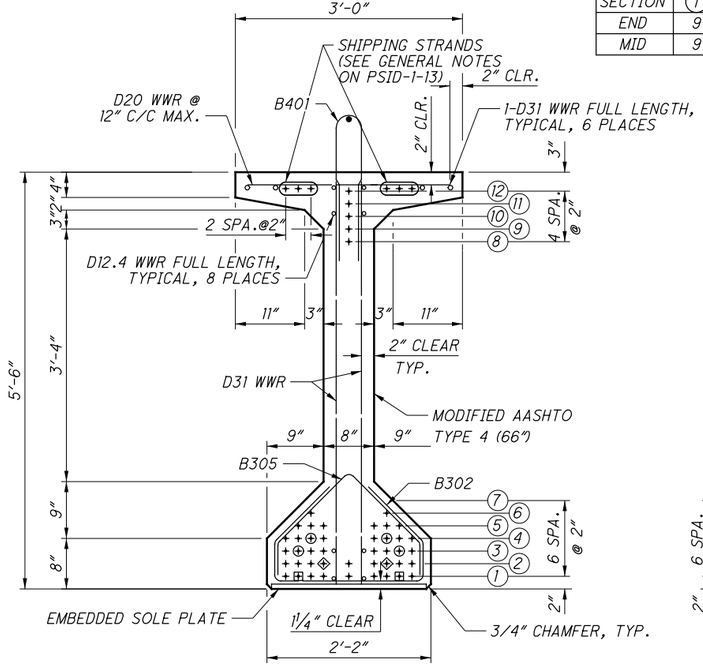

END BEAM SECTION

○ - DEBOND 4′-0″ AT EACH END

◇ - DEBOND 7′-0″ AT EACH END

□ - DEBOND 12′-0″ AT EACH END

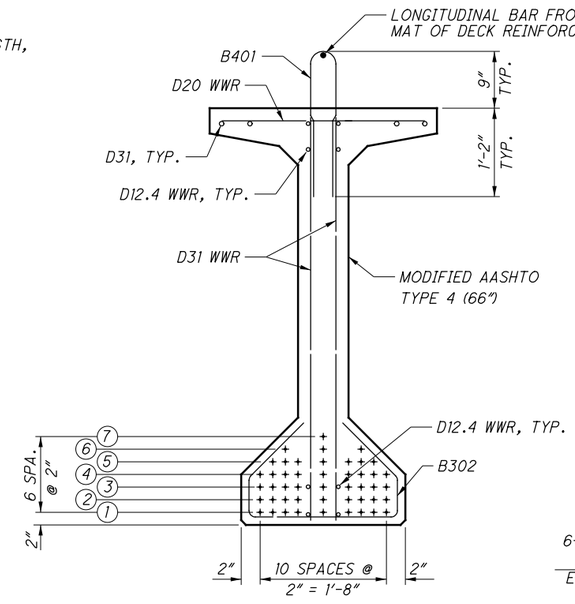

MIDSPAN BEAM SECTION

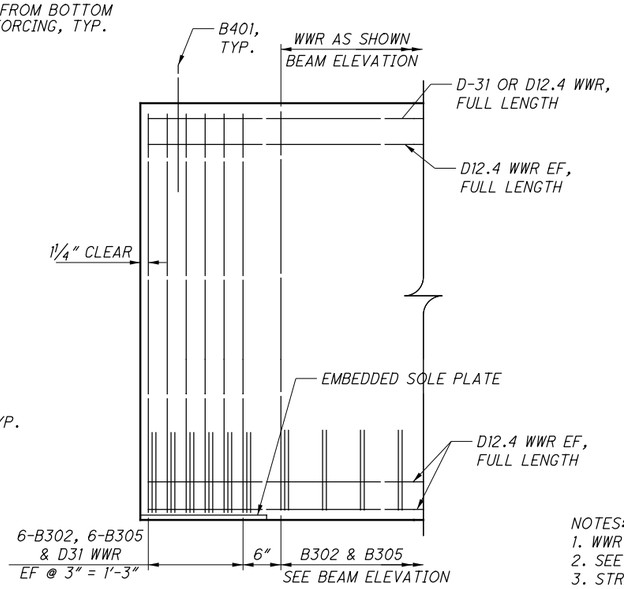

ANCHORAGE ZONE REINFORCING

STRANDS NOT SHOWN FOR CLARITY

NOTES:

1. WWR DENOTES WELDED WIRE REINFORCEMENT.
2. SEE STD. DWG. PSID-1-13 FOR ADDITIONAL DETAILS.
3. STRANDS ARE TO BE LOW RELAXATION, 0.6 INCH DIAMETER (A = 0.217 SQ. IN.) SEVEN WIRE UNCOATED, ASTM A416, GRADE 270.
4. REINFORCEMENT PROJECTING FROM CAP TO BE EPOXY COATED.
5. SHOP MARK EACH BEAM WITH BEAM NUMBER AND U-STATION/DIRECTION.

DRAFT Stage 3 - Not for Construction 09/23/2024

DESIGN AGENCY: Stantec, 1500 Lake Shore Dr, Columbus, OH 43204, (614) 486-4383

DESIGNED	DRAWN	REVIEWED	DATE
MRS	ALH	BSM	2/2024
CHECKED	REVISED	STRUCTURE FILE NUMBER	
EDA		4400534	

MODIFIED AASHTO TYPE 4 (66″) BEAM DETAILS

BRIDGE NO. LAW-7-0713 L

S.R. 7 OVER LITTLE PADDY CREEK

LAW-7-2.17

PID No. 75923

V:\1736\active\173608714\LAW\engineering\75923_LAW-7-2.17\Design\structures\LAW007_0713L\sheets\007_0713L_SD009.dgn 5/13/2024 1:38:57 PM mturdevant

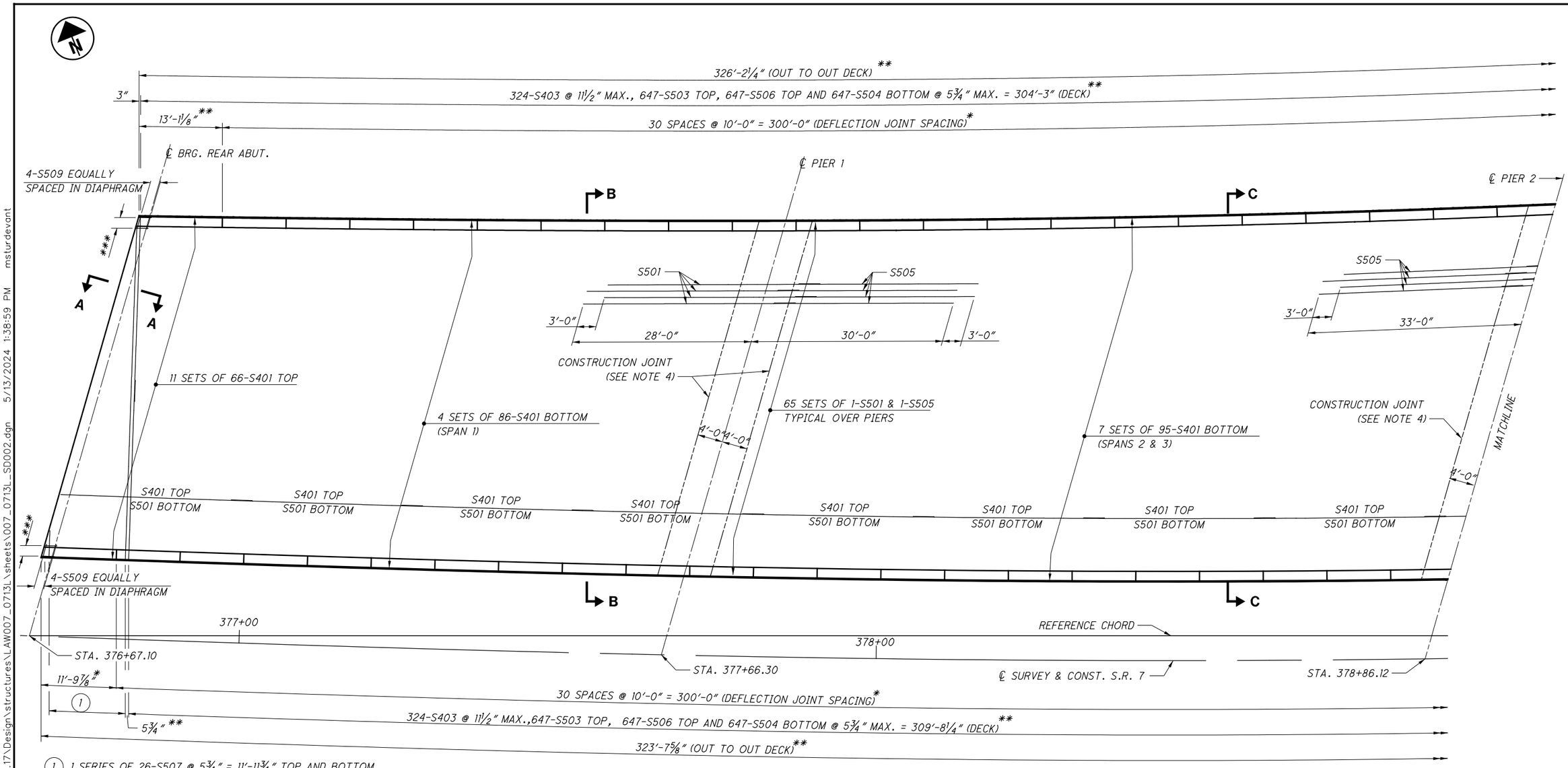

DECK PLAN

LAP LENGTHS:
#4 BARS = 2'-0"
#5 BARS = 2'-6" (TRANSVERSE)
#5 BARS = 3'-0" (LONGITUDINAL)
#4 GFRP BARS = 1'-1"

NOTES:
1. FOR SECTION A-A, SEE STD. DWG. EXJ-6-17, SHEET 1/5 .
2. FOR SECTION B-B, SEE SHEET 17/28 .
3. FOR JOINT OPENING WIDTHS, SEE SHEET 16/28 .
4. DO NOT PLACE CONCRETE BETWEEN THE CONSTRUCTION JOINTS PRIOR TO PLACING CONCRETE IN EACH ADJACENT SPAN. UPON COMPLETION OF CONCRETE PLACEMENT IN ADJACENT SPANS, PLACE PIER DIAPHRAGM AND DECK CONCRETE BETWEEN THE CONSTRUCTION JOINTS.SEAL JOINTS WITH 2'-0 WIDE STRIP OF HIGH WEIGHT METH-ACRYLATE RESIN (HMWM). SEE STD. DWG. PSID-1-13 FOR ADDITIONAL INFORMATION.

LEGEND
* MEASURED ALONG OUTSIDE FACE OF RAILING
** MEASURED ALONG SLAB FASCIA
*** 4-S510 EQUALLY SPACED

DRAFT Stage 3 - Not for Construction 09/23/2024

DESIGN AGENCY
Stantec 1500 Lake Shore Dr. Columbus, OH 43204 (614) 486-4383

DESIGNED	DRAWN	REVIEWED	DATE
MRS	ALH	BSM	2/2024
CHECKED	REVISED	STRUCTURE FILE NUMBER	
EDA		4400534	

DECK PLAN (1)
BRIDGE NO. LAW-7-0713 L
S.R. 7 OVER LITTLE PADDY CREEK

LAW-7-2.17
PID No. 75923

15 / 28

975 / 1247

V:\1736\active\173608714\LAW\engineering\75923_LAW-7-2.17\Design\structures\LAW007_0713L\sheets\007_0713L_SD002.dgn 5/13/2024 1:38:59 PM mslurdevant

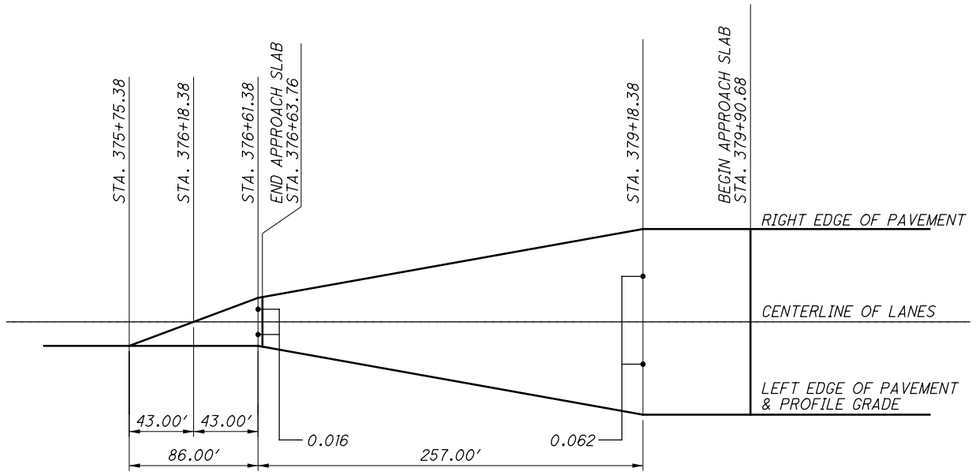

SUPERELEVATION TRANSITION DETAIL

JOINT OPENING FOR 3" STRIP SEAL GLAND	
TEMP (°F)	DIM A
30	2"
40	1 7/8"
50	1 3/4"
60	1 5/8"
70	1 3/8"
80	1 1/4"
90	1 1/4"

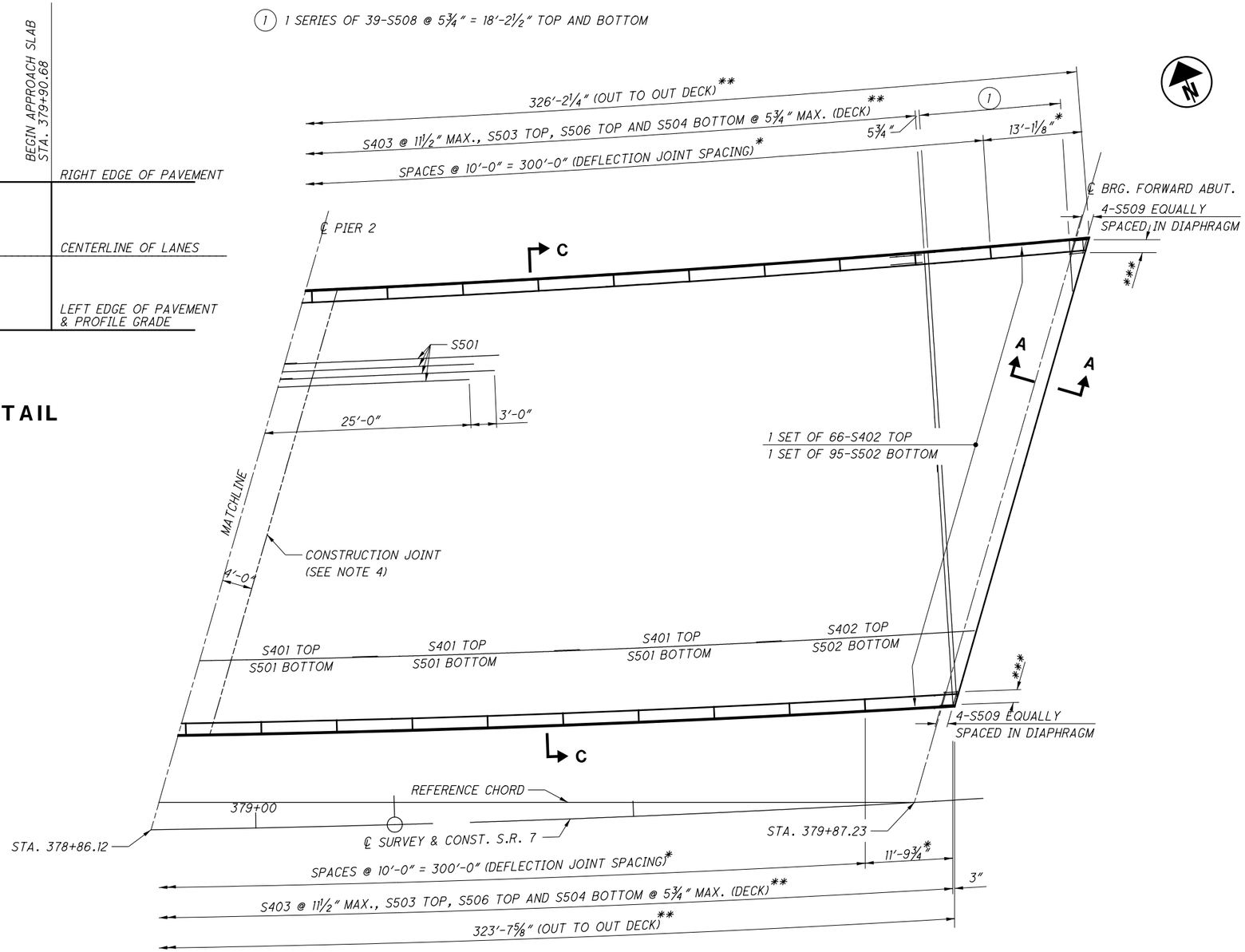

DECK PLAN

LAP LENGTHS:
#4 BARS = 2'-0"
#5 BARS = 2'-6" (TRANSVERSE)
#5 BARS = 3'-0" (LONGITUDINAL)
#4 GFRP BARS = 1'-1"

NOTES:
1. FOR SECTION A-A, SEE STD. DWG. EXJ-6-17, SHEET 1/5 .
2. FOR SECTION B-B, SEE SHEET 17/28 .
3. DO NOT PLACE CONCRETE BETWEEN THE CONSTRUCTION JOINTS PRIOR TO PLACING CONCRETE IN EACH ADJACENT SPAN. UPON COMPLETION OF CONCRETE PLACEMENT IN ADJACENT SPANS, PLACE PIER DIAPHRAGM AND DECK CONCRETE BETWEEN THE CONSTRUCTION JOINTS.

LEGEND
* MEASURED ALONG OUTSIDE FACE OF RAILING
** MEASURED ALONG SLAB FASCIA
*** S510 EQUALLY SPACED

DRAFT Stage 3 - Not for Construction 09/23/2024

DESIGN AGENCY
Stantec 1500 Lake Shore Dr. Columbus, OH 43204 (614) 486-4383

DESIGNED	DRAWN	REVIEWED	DATE
MRS	ALH	BSM	2/2024
CHECKED	REVISED	STRUCTURE FILE NUMBER	
EDA		4400534	

DECK PLAN (2)
BRIDGE NO. LAW-7-0713 L
S.R. 7 OVER LITTLE PADDY CREEK

LAW-7-2.17
PID No. 75923

16 / 28

976
1247

V:\1736\active\173608714\LAW\engineering\75923_LAW-7-2.17\Design\structures\LAW007_0713L\sheets\007_0713L_SD003.dgn 5/13/2024 1:39:00 PM msturdevant

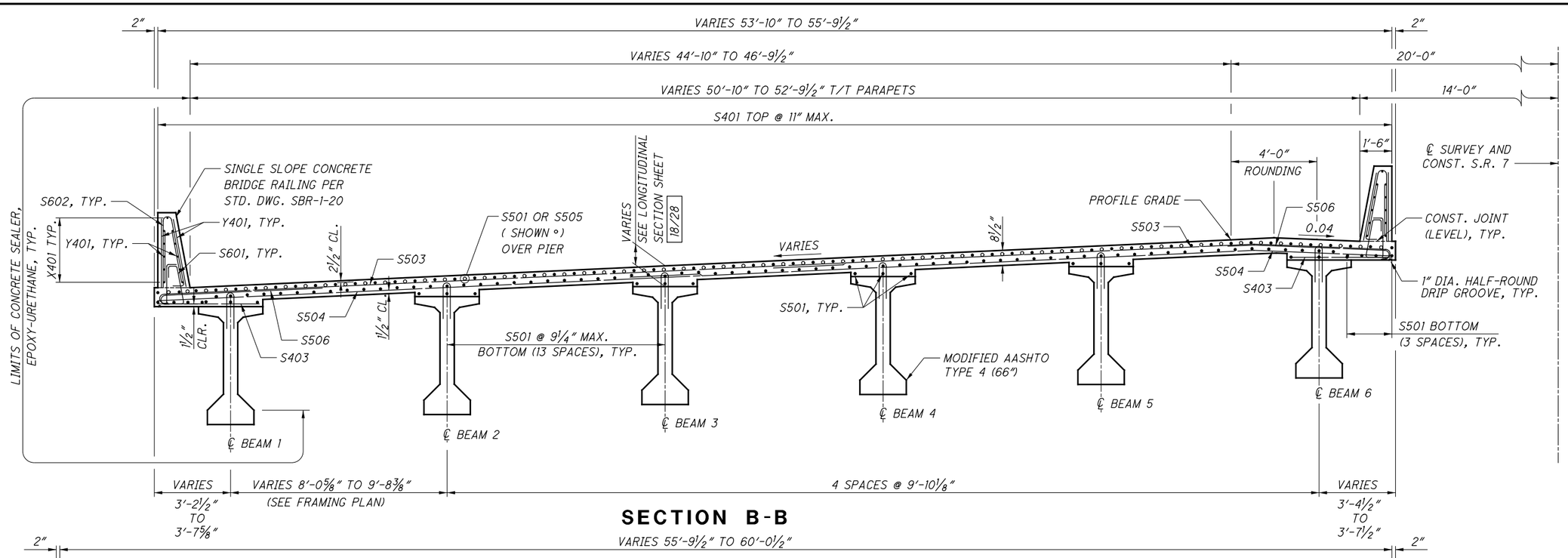

SECTION B-B

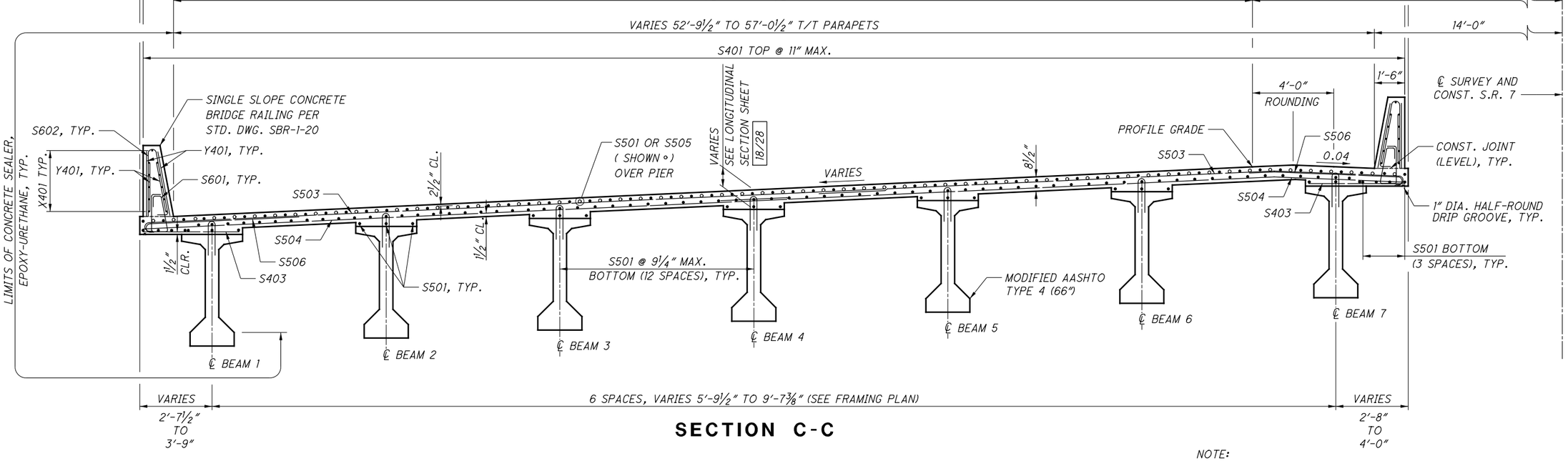

SECTION C-C

NOTE:
1. DECK SLAB THICKNESS FOR CONCRETE QUANTITY: THE ESTIMATED QUANTITY OF DECK CONCRETE IS MEASURED ACCORDING TO C&MS 511. IN ADDITION TO THE DESIGN SLAB THICKNESS, THE QUANTITY INCLUDES A VARIABLE HAUNCH THICKNESS THAT PROVIDES AN ALLOWANCE FOR CAMBER AND ADDITIONAL SLAB THICKNESS. HAUNCH THICKNESS.
2. FOR RAILING AND OVERHANG DETAILS, SEE SHEET 18/28 .
3. FOR ADDITIONAL INFORMATION ON HAUNCH, SEE HAUNCH DETAIL, SHEET 18/28 .

DRAFT Stage 3 - Not for Construction 09/23/2024

DESIGN AGENCY
Stantec
1500 Lake Shore Dr.
Columbus, OH 43204
(614) 486-4383

DESIGNED	DRAWN	REVIEWED	DATE
MRS	ALH	BSM	2/2024
CHECKED	REVISED	STRUCTURE FILE NUMBER	
EDA		4400534	

TRANSVERSE SECTION
BRIDGE NO. LAW-7-0713 L
S.R. 7 OVER LITTLE PADDY CREEK

LAW-7-2.17
PID No. 75923

17 / 28

977 / 1247

V:\1736\active\173608714\LAW\engineering\75923_LAW-7-2.17\Design\structures\LAW007_0713L\sheets\007_0713L_0713L_TS001.dgn 5/13/2024 1:39:02 PM mstur.devont

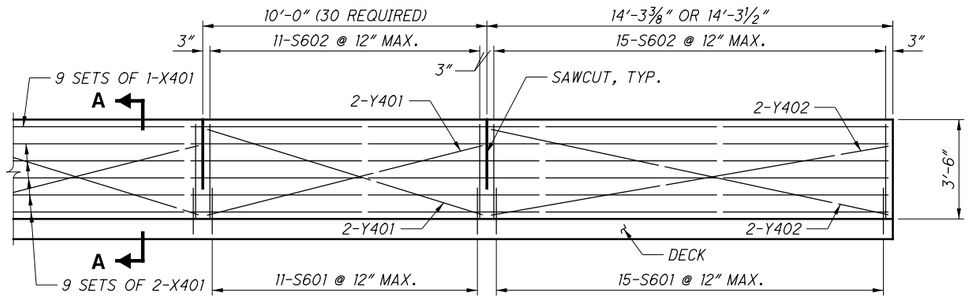

LEFT RAILING ELEVATION

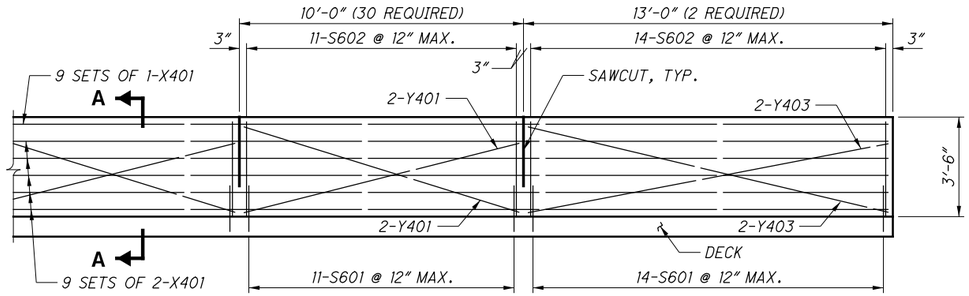

RIGHT RAILING ELEVATION

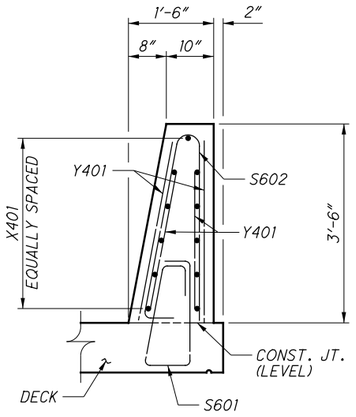

SECTION A-A

NOTES:
1. SEE STD. DWG SBR-1-20 FOR ADDITIONAL DETAILS.

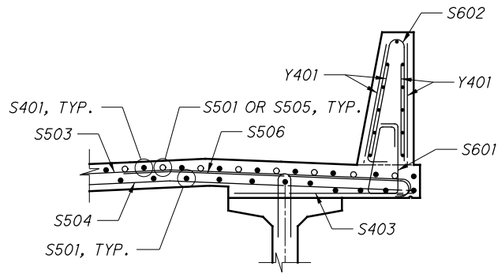

OVERHANG DETAIL

NUMBER OF S404 BARS					
BEAM	V	W	X	Y	Z
1	35	32	35	17	27
2	40	20	20	17	31
3	40	20	20	20	21
4	40	20	20	24	21
5	40	20	20	28	14
6	40	33	33	33	10
7	--	54	57	65	10

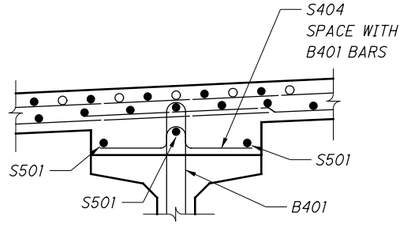

TYPICAL HAUNCH DETAIL

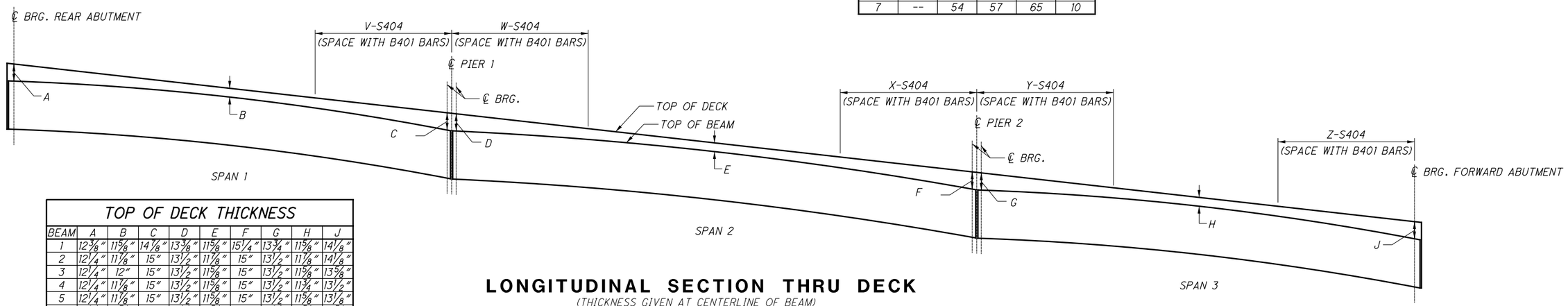

LONGITUDINAL SECTION THRU DECK

(THICKNESS GIVEN AT CENTERLINE OF BEAM)

TOP OF DECK THICKNESS									
BEAM	A	B	C	D	E	F	G	H	J
1	12 3/8"	11 3/8"	14 1/8"	13 3/8"	11 5/8"	15 1/4"	13 3/4"	11 5/8"	14 1/8"
2	12 1/4"	11 1/8"	15"	13 1/2"	11 1/8"	15"	13 1/2"	11 1/8"	14 1/8"
3	12 1/4"	12"	15"	13 1/2"	11 5/8"	15"	13 1/2"	11 5/8"	13 5/8"
4	12 1/4"	11 1/8"	15"	13 1/2"	11 5/8"	15"	13 1/2"	11 3/4"	13 1/2"
5	12 1/4"	11 1/8"	15"	13 1/2"	11 5/8"	15"	13 1/2"	11 5/8"	13 1/8"
6	12 1/4"	11 1/8"	15"	13 1/2"	11 5/8"	15"	13 1/2"	11 1/4"	12 7/8"
7	--	--	--	13 3/8"	12 1/4"	15 1/2"	14"	12 1/4"	12 3/4"

SPANS 1 AND 3

ESTIMATED CAMBER AT DAY 0 (D_0) IS 1 5/8 INCHES.

ESTIMATED CAMBER AT DAY 30 (D_{30}) IS 2 5/8 INCHES.

DEFLECTION DUE TO REMAINING DEAD LOAD (E.G. CONCRETE DECK, CROSS-FRAMES, DIAPHRAGMS, BARRIERS,UTILITIES, ETC.) IS 1 INCH.

THE BEAM SEAT ELEVATIONS ASSUME ESTIMATED CAMBER D_{30} WITH A SACRIFICIAL HAUNCH THICKNESS OF 3⅛ INCHES MEASURED ON THE CENTERLINE OF GIRDER.

SPAN 2

ESTIMATED CAMBER AT DAY 0 (D_0) IS 2 7/8 INCHES.

ESTIMATED CAMBER AT DAY 30 (D_{30}) IS 4 3/4 INCHES.

DEFLECTION DUE TO REMAINING DEAD LOAD (E.G. CONCRETE DECK, CROSS-FRAMES, DIAPHRAGMS, BARRIERS,UTILITIES, ETC.) IS 2 INCHES.

THE BEAM SEAT ELEVATIONS ASSUME ESTIMATED CAMBER D_{30} WITH A SACRIFICIAL HAUNCH THICKNESS OF 3⅛ INCHES MEASURED ON THE CENTERLINE OF GIRDER.

NOTES:
1. DECK SLAB THICKNESS FOR CONCRETE QUANTITY: THE ESTIMATED QUANTITY OF DECK CONCRETE IS MEASURED ACCORDING TO C&MS 511. IN ADDITION TO THE DESIGN SLAB THICKNESS, THE QUANTITY INCLUDES A VARIABLE DEPTH THICKNESS THAT PROVIDES AN ALLOWANCE FOR BEAM CAMBER AND ADDITIONAL SACRIFICIAL HAUNCH THICKNESS.

DRAFT Stage 3 Not for Construction
09/23/2024

DESIGN AGENCY
Stantec
1500 Lake Shore Dr.
Columbus, OH 43204
(614) 486-4383

DESIGNED	DRAWN	REVIEWED	DATE
MRS	ALH	BSM	2/2024
CHECKED	REVISED	STRUCTURE FILE NUMBER	
EDA		4400534	

LONGITUDINAL SECTION & RAILING DETAILS

BRIDGE NO. LAW-7-0713 L
S.R. 7 OVER LITTLE PADDY CREEK

LAW-7-2.17
PID No. 75923

V:\1736\active\173608714\LAW\engineering\75923_LAW-7-2.17\Design\structures\LAW007_0713L\sheets\007_0713L_SD007.dgn 5/13/2024 1:39:04 PM mturdevant

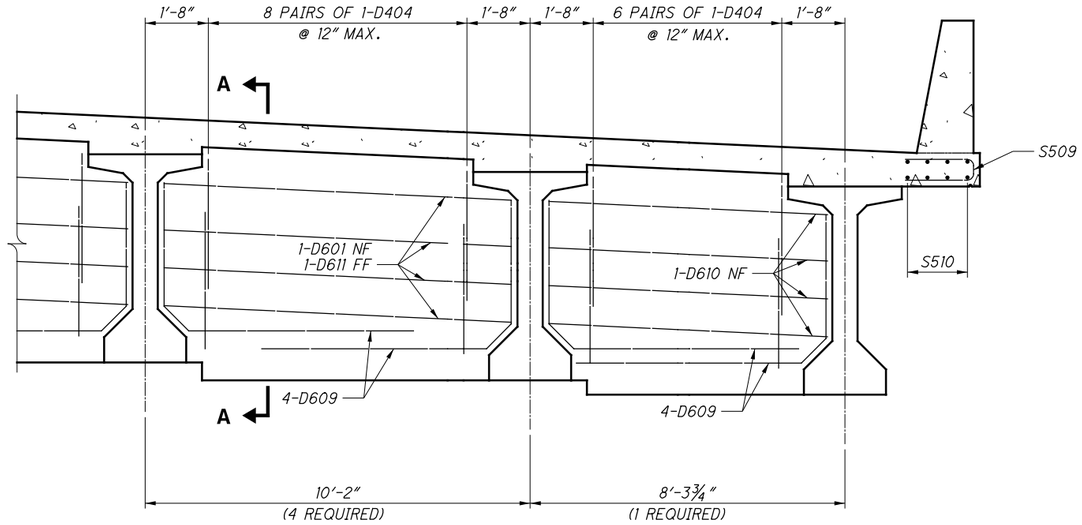

REAR ABUTMENT DIAPHRAGM

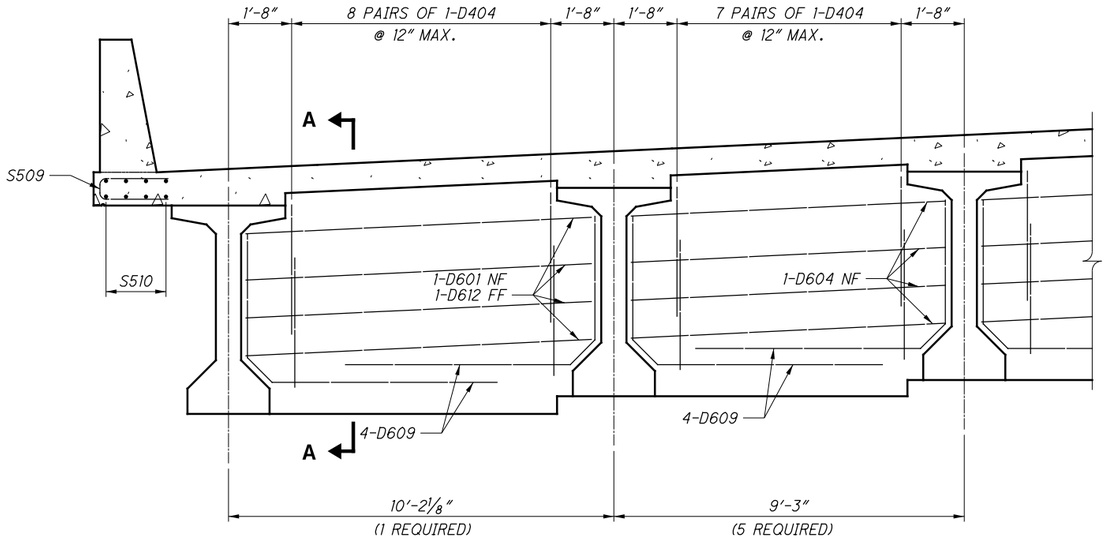

FORWARD ABUTMENT DIAPHRAGM

* FOR LOCATION OF S510, SEE SHEETS 15/28 AND 16/28 .

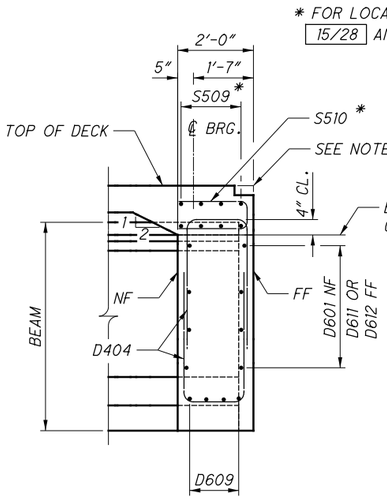

SECTION A-A

NOTES:
FOR ADDITIONAL DIAPHRAGM DETAILS, SEE STD. DWG. PSID-1-13
FOR EXPANSION JOINT DETAILS, SEE STD. DWG. EXJ-6-17.

DRAFT Stage 3 - Not for Construction 09/23/2024

DESIGN AGENCY
Stantec
1500 Lake Shore Dr.
Columbus, OH 43204
(614) 486-4383

DESIGNED	DRAWN	REVIEWED	DATE
MRS	ALH	BSM	2/2024
CHECKED	REVISED	STRUCTURE FILE NUMBER	
EDA		4400534	

SUPERSTRUCTURE DETAILS
BRIDGE NO. LAW-7-0713 L
S.R. 7 OVER LITTLE PADDY CREEK

LAW-7-2.17
PID No. 75923

19 / 28

979
1247

V:\1736\active\173608714\LAW\engineering\75923_LAW-7-2.17\Design\structures\LAW007_0713L\sheets\007_0713L_SD010.dgn 5/13/2024 1:39:06 PM msturdevant

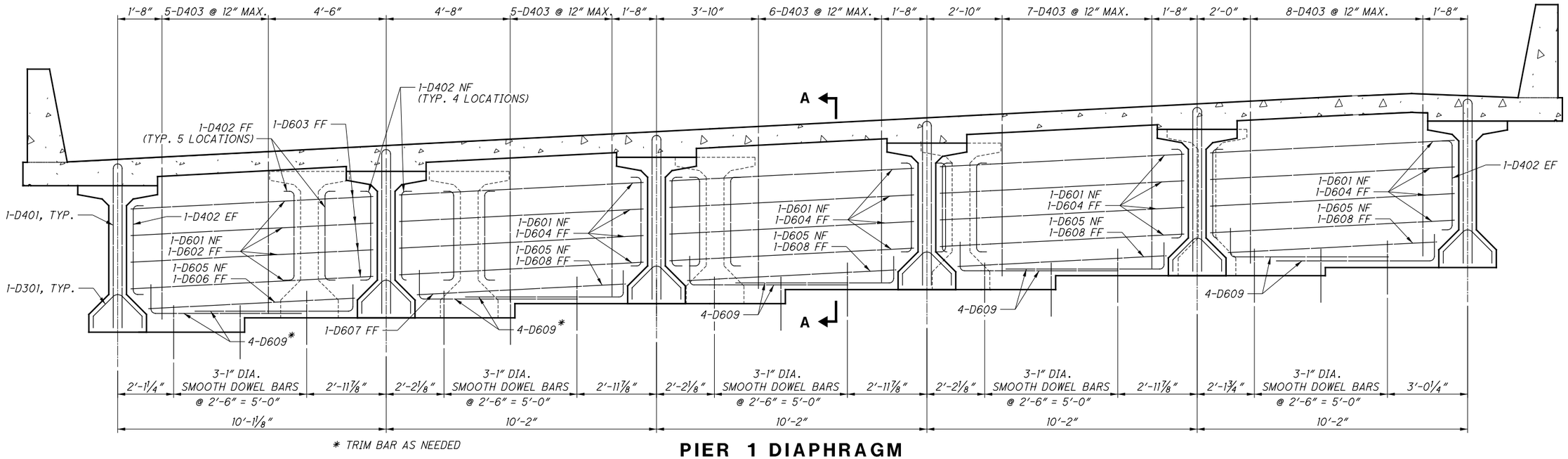

* TRIM BAR AS NEEDED

PIER 1 DIAPHRAGM

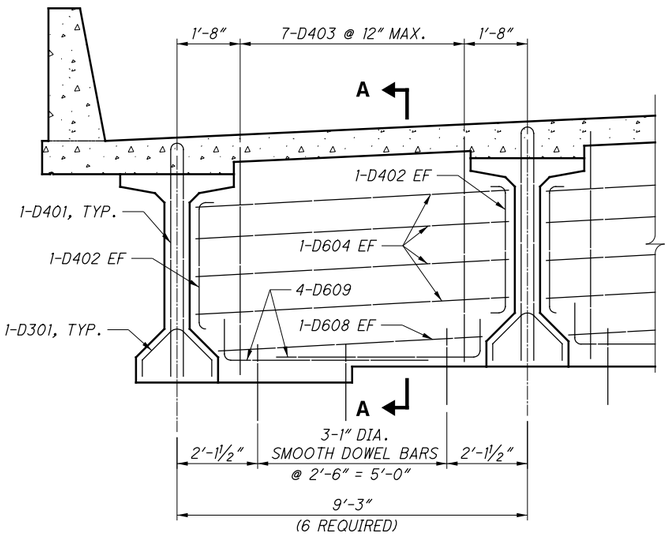

PIER 2 DIAPHRAGM

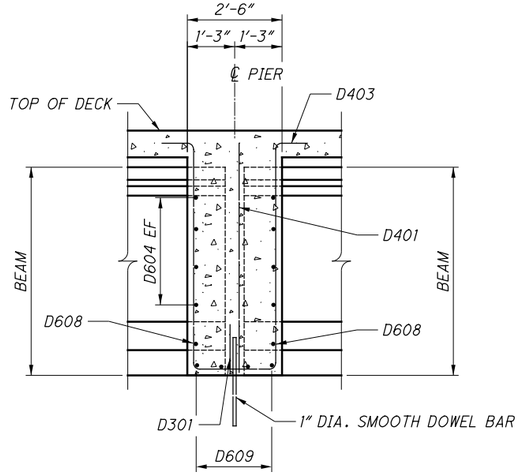

SECTION A-A

(PIER 2 SHOWN, PIER 1 SIMILAR)

NOTES:
1. FOR ADDITIONAL DIAPHRAGM DETAILS, SEE SDD DWG. PSID-1-13

DRAFT Stage 3 - Not for Construction

09/23/2024

DESIGN AGENCY
Stantec
1500 Lake Shore Dr.
Columbus, OH 43204
(614) 486-4383

DESIGNED	DRAWN	REVIEWED	DATE
MRS	ALH	BSM	2/2024
CHECKED	REVISED	STRUCTURE FILE NUMBER	
EDA		4400534	

SUPERSTRUCTURE DETAILS
BRIDGE NO. LAW-7-0713 L
S.R. 7 OVER LITTLE PADDY CREEK

LAW-7-2.17
PID No. 75923

20/28

980
1247

V:\1736\active\173608714\LAW\engineering\75923_LAW-7-2.17\Design\structures\LAW007_0713L\sheets\007_0713L_SD011.dgn 5/13/2024 1:39:08 PM msturdevant

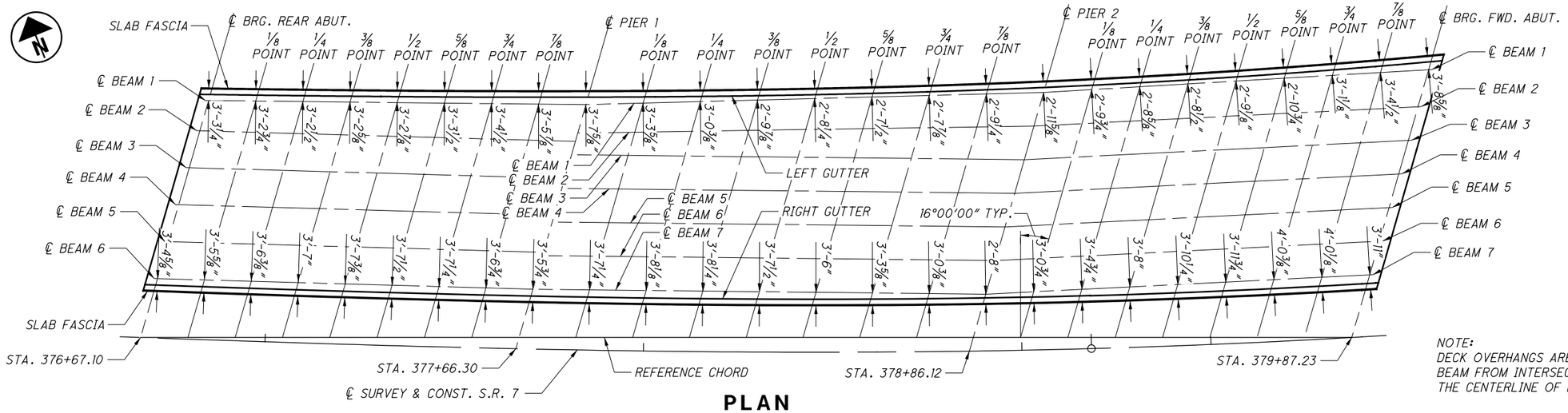

PLAN

NOTE:
DECK OVERHANGS ARE MEASURED PERPENDICULAR TO BEAM FROM INTERSECTION OF THE EIGHTH POINTS AND THE CENTERLINE OF BEAM TO THE EDGE OF DECK.

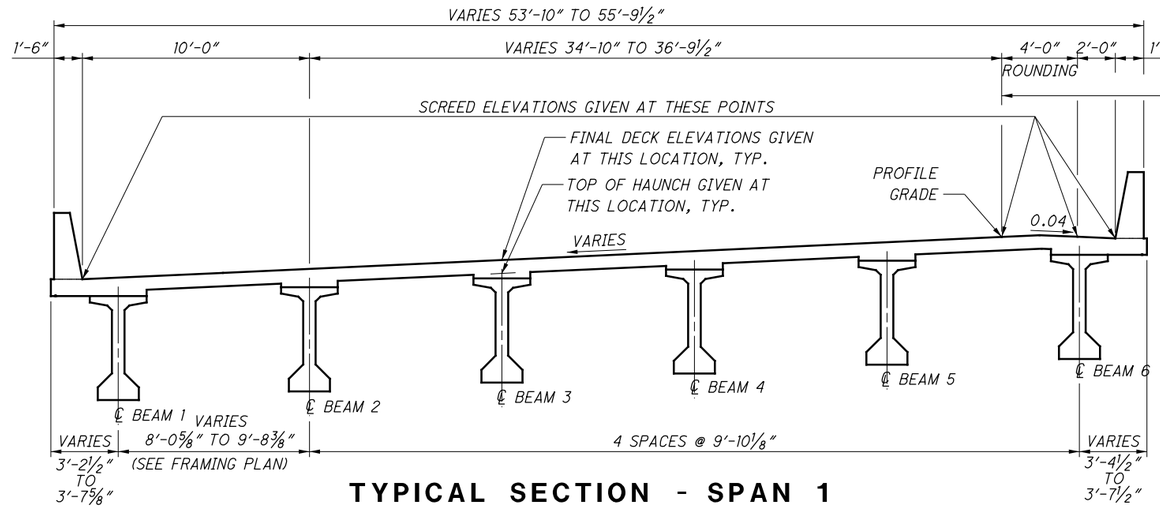

TYPICAL SECTION - SPAN 1

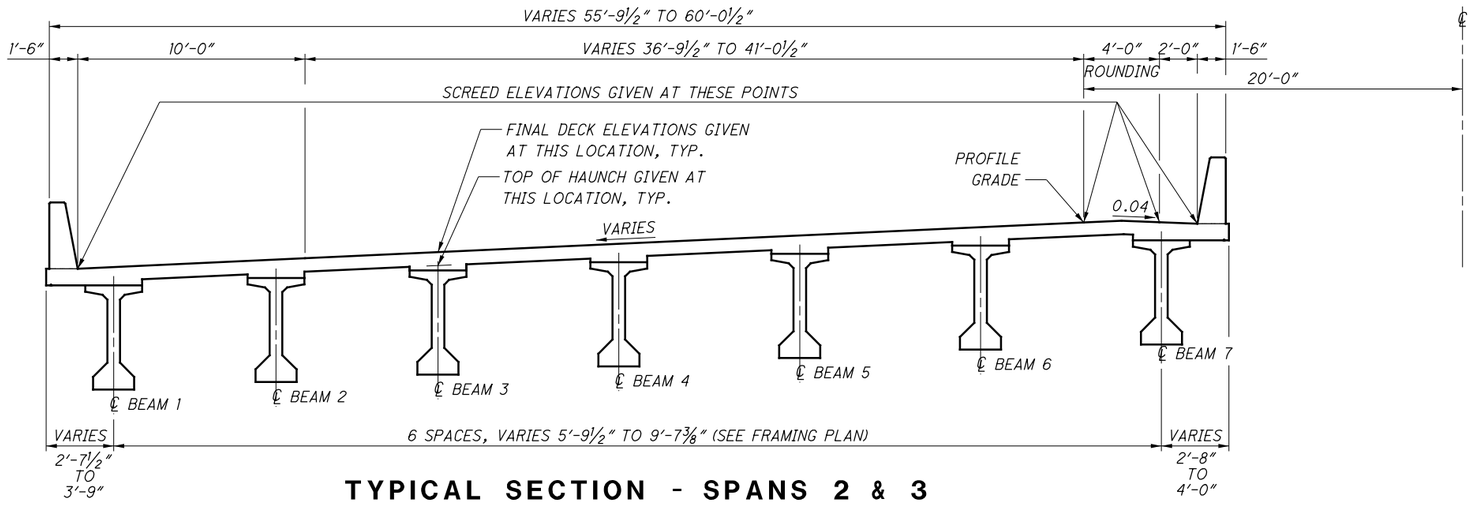

TYPICAL SECTION - SPANS 2 & 3

FOR SCREED, TOP OF HAUNCH AND FINAL DECK ELEVATIONS, SEE SHEETS 22/28 AND 23/28 .

SCREED ELEVATIONS SHOWN REPRESENT THE THEORETICAL DECK SURFACE LOCATION PRIOR TO DEFLECTIONS CAUSED BY DECK PLACEMENT AND OTHER ANTICIPATED DEAD LOADS.

TOP OF HAUNCH ELEVATIONS SHOWN REPRESENT THE THEORETICAL LOCATION OF THE BOTTOM OF THE DECK ABOVE THE BEAM/GIRDER HAUNCH PRIOR TO DEFLECTIONS CAUSED BY DECK PLACEMENT AND OTHER ANTICIPATED DEAD LOADS.

FINAL DECK SURFACE ELEVATIONS SHOWN REPRESENT THE THEORETICAL LOCATION AFTER ANTICIPATED DEAD LOAD DEFLECTIONS HAVE Ooccurred.

DRAFT Stage 3 - Not for Construction 09/23/2024

DESIGN AGENCY
Stantec
1500 Lake Shore Dr.
Columbus, OH 43204
(614) 486-4383

DESIGNED	DRAWN	REVIEWED	DATE
MRS	ALH	BSM	2/2024
CHECKED	REVISED	STRUCTURE FILE NUMBER	
EDA		4400534	

SCREED DIAGRAM AND FASCIA OFFSETS
BRIDGE NO. LAW-7-0713 L
S.R. 7 OVER LITTLE PADDY CREEK

LAW-7-2.17
PID No. 75923

21 / 28

981
1247

V:\1736\active\173608714\LAW\engineering\75923_LAW-7-2.17\Design\structures\LAW007_0713L\sheets\007_0713L_SD004.dgn 5/13/2024 1:39:09 PM msturdevant

DECK CONSTRUCTION ELEVATIONS

LOCATION		SPAN 1								SPAN 2				
		℄ BEARING	1/8 POINT	1/4 POINT	3/8 POINT	1/2 POINT	5/8 POINT	3/4 POINT	7/8 POINT	℄ PIER	1/8 POINT	1/4 POINT	3/8 POINT	1/2 POINT
LEFT GUTTER	STATION	376+83.30	376+95.83	377+08.39	377+20.96	377+33.56	377+46.18	377+58.83	377+71.50	377+84.20	377+99.47	378+14.79	378+30.15	378+45.56
	OFFSET	64.85	65.10	65.36	65.61	65.86	66.11	66.36	66.62	66.87	67.18	67.48	67.79	68.10
	FINAL DECK EL.	623.87	623.01	622.15	621.29	620.42	619.55	618.68	617.81	616.93	615.87	614.81	613.74	612.67
	SCREED EL.	623.87	623.04	622.21	621.36	620.50	619.63	618.74	617.84	616.93	615.94	614.93	613.90	612.84
BEAM 1	STATION	376+82.90	376+95.44	377+07.99	377+20.56	377+33.15	377+45.75	377+58.37	377+71.01	377+83.66	377+99.01	378+14.40	378+29.81	378+45.26
	OFFSET	63.24	63.53	63.80	64.05	64.28	64.48	64.65	64.79	64.89	65.53	66.11	66.63	67.07
	FINAL DECK EL.	623.93	623.07	622.21	621.36	620.49	619.63	618.77	617.90	617.04	615.97	614.90	613.82	612.74
	SCREED EL.	623.93	623.10	622.27	621.43	620.58	619.71	618.83	617.94	617.04	616.03	615.01	613.97	612.91
	HAUNCH EL.	623.22	622.40	621.57	620.72	619.87	619.00	618.12	617.23	616.33	615.33	614.31	613.27	612.20
BEAM 2	STATION	376+80.87	376+93.34	377+05.83	377+18.33	377+30.84	377+43.36	377+55.90	377+68.45	377+81.61	377+96.89	378+12.19	378+27.51	378+42.86
	OFFSET	55.17	55.25	55.30	55.34	55.35	55.34	55.30	55.23	57.34	57.82	58.23	58.59	58.87
	FINAL DECK EL.	624.22	623.39	622.56	621.73	620.90	620.07	619.24	618.41	617.46	616.42	615.38	614.34	613.30
	SCREED EL.	624.22	623.43	622.64	621.83	621.01	620.17	619.32	618.45	617.46	616.45	615.53	614.53	613.51
	HAUNCH EL.	623.51	622.72	621.93	621.12	620.30	619.46	618.61	617.75	616.75	615.74	614.82	613.82	612.80
BEAM 3	STATION	376+78.40	376+90.86	377+03.33	377+15.81	377+28.30	377+40.80	377+53.31	377+65.83	377+80.05	377+95.19	378+10.36	378+25.54	378+40.74
	OFFSET	45.31	45.39	45.44	45.48	45.50	45.49	45.46	45.39	51.57	51.66	51.69	51.65	51.55
	FINAL DECK EL.	624.57	623.77	622.96	622.16	621.35	620.54	619.74	618.93	617.78	616.78	615.79	614.79	613.80
	SCREED EL.	624.57	623.81	623.03	622.25	621.45	620.64	619.81	618.97	617.78	616.81	615.93	614.98	614.00
	HAUNCH EL.	623.87	623.10	622.33	621.54	620.74	619.93	619.10	618.26	617.07	616.10	615.22	614.27	613.29
BEAM 4	STATION	376+75.93	376+88.38	377+00.83	377+13.29	377+25.76	377+38.24	377+50.72	377+63.22	377+77.64	377+92.75	378+07.87	378+23.01	378+38.17
	OFFSET	35.45	35.52	35.59	35.63	35.65	35.65	35.62	35.56	42.63	42.73	42.77	42.75	42.66
	FINAL DECK EL.	624.92	624.13	623.35	622.57	621.78	621.00	620.22	619.43	618.27	617.30	616.33	615.36	614.39
	SCREED EL.	624.92	624.17	623.42	622.66	621.89	621.09	620.29	619.47	618.27	617.32	616.47	615.54	614.59
	HAUNCH EL.	624.21	623.46	622.71	621.95	621.18	620.39	619.58	618.77	617.56	616.61	615.76	614.84	613.89
BEAM 5	STATION	376+73.47	376+85.90	376+98.34	377+10.79	377+23.24	377+35.69	377+48.15	377+60.62	377+75.24	377+90.32	378+05.41	378+20.50	378+35.61
	OFFSET	25.58	25.66	25.73	25.77	25.80	25.80	25.78	25.73	33.69	33.80	33.85	33.84	33.76
	FINAL DECK EL.	625.25	624.49	623.73	622.97	622.21	621.45	620.69	619.93	618.75	617.80	616.86	615.91	614.97
	SCREED EL.	625.25	624.53	623.80	623.06	622.31	621.54	620.76	619.97	618.75	617.82	617.00	616.10	615.18
	HAUNCH EL.	624.54	623.82	623.09	622.35	621.60	620.83	620.05	619.26	618.04	617.12	616.29	615.39	614.47
BEAM 6	STATION	376+71.01	376+83.43	376+95.86	377+08.29	377+20.72	377+33.15	377+45.59	377+58.03	377+72.86	377+87.90	378+02.95	378+18.01	378+33.07
	OFFSET	15.71	15.80	15.87	15.92	15.95	15.96	15.94	15.89	24.76	24.87	24.93	24.93	24.86
	FINAL DECK EL.	625.44	624.71	623.97	623.23	622.49	621.75	621.00	620.26	619.22	618.30	617.38	616.46	615.55
	SCREED EL.	625.44	624.74	624.03	623.30	622.57	621.82	621.06	620.29	619.22	618.38	617.52	616.65	615.75
	HAUNCH EL.	624.74	624.03	623.32	622.60	621.86	621.12	620.35	619.58	618.51	617.67	616.81	615.94	615.04
PROFILE GRADE	STATION	376+72.08	376+84.48	376+96.90	377+09.32	377+21.75	377+34.20	377+46.65	377+59.11	377+71.59	377+86.58	378+01.60	378+16.63	378+31.69
	OFFSET	20.00	20.00	20.00	20.00	20.00	20.00	20.00	20.00	20.00	20.00	20.00	20.00	20.00
	FINAL DECK EL.	625.44	624.69	623.95	623.20	622.46	621.71	620.96	620.21	619.46	618.57	617.66	616.76	615.86
	SCREED EL.	625.44	624.73	624.01	623.29	622.55	621.79	621.03	620.25	619.46	618.64	617.79	616.93	616.04
BEAM 7	STATION	-	-	-	-	-	-	-	-	377+70.48	377+85.49	378+00.50	378+15.52	378+30.55
	OFFSET	-	-	-	-	-	-	-	-	15.82	15.94	16.01	16.02	15.96
	FINAL DECK EL.	-	-	-	-	-	-	-	-	619.51	618.62	617.73	616.84	615.94
	SCREED EL.	-	-	-	-	-	-	-	-	619.51	618.69	617.85	616.99	616.11
	HAUNCH EL.	-	-	-	-	-	-	-	-	618.81	617.98	617.14	616.28	615.40
RIGHT SIDE OF ROUNDING	STATION	376+71.08	376+83.48	376+95.89	377+08.31	377+20.73	377+33.16	377+45.61	377+58.06	377+70.53	377+85.51	378+00.50	378+15.52	378+30.56
	OFFSET	16.00	16.00	16.00	16.00	16.00	16.00	16.00	16.00	16.00	16.00	16.00	16.00	16.00
	FINAL DECK EL.	625.45	624.71	623.97	623.23	622.49	621.75	621.01	620.26	619.52	618.63	617.73	616.84	615.94
	SCREED EL.	625.45	624.74	624.03	623.31	622.57	621.82	621.06	620.30	619.52	618.69	617.85	616.99	616.11
RIGHT GUTTER	STATION	376+70.59	376+82.98	376+95.39	377+07.80	377+20.22	377+32.65	377+45.09	377+57.54	377+70.00	377+84.97	377+99.96	378+14.97	378+30.00
	OFFSET	14.00	14.00	14.00	14.00	14.00	14.00	14.00	14.00	14.00	14.00	14.00	14.00	14.00
	FINAL DECK EL.	625.40	624.66	623.92	623.18	622.44	621.70	620.96	620.21	619.47	618.58	617.68	616.79	615.89
	SCREED EL.	625.40	624.69	623.98	623.26	622.52	621.78	621.02	620.25	619.47	618.64	617.80	616.94	616.06

DRAFT Stage 3 - Not for Construction 09/23/2024

NOTE:
STATIONS AND ELEVATIONS AT ℄ PIER 1 ARE GIVEN FOR BEAMS IN SPAN 2.

DESIGN AGENCY
Stantec
1500 Lake Shore Dr.
Columbus, OH 43204
(614) 486-4383

DESIGNED	DRAWN	REVIEWED	DATE
MRS	ALH	BSM	2/2024
CHECKED	REVISED	STRUCTURE FILE NUMBER	
EDA		4400534	

DECK CONSTRUCTION ELEVATIONS 1
BRIDGE NO. LAW-7-0713 L
S.R. 7 OVER LITTLE PADDY CREEK

LAW-7-2.17
PID No. 75923

V:\1736\active\173608714\LAW\engineering\75923_LAW-7-2.17\Design\structures\LAW007_0713L\sheets\007_0713L_SD005.dgn 5/13/2024 1:39:11 PM msturdevant

DECK CONSTRUCTION ELEVATIONS

LOCATION		SPAN 2				SPAN 3							
		5/8 POINT	3/4 POINT	7/8 POINT	℄ PIER	1/8 POINT	1/4 POINT	3/8 POINT	1/2 POINT	5/8 POINT	3/4 POINT	7/8 POINT	℄ BEARING
LEFT GUTTER	STATION	378+61.02	378+76.53	378+92.10	379+07.73	379+20.79	379+33.90	379+47.03	379+60.18	379+73.37	379+86.59	379+99.83	380+13.11
	OFFSET	68.41	68.72	69.03	69.34	69.60	69.87	70.13	70.39	70.66	70.92	71.18	71.45
	FINAL DECK EL.	611.59	610.51	609.42	608.33	607.44	606.63	605.83	605.02	604.22	603.41	602.60	601.80
	SCREED EL.	611.75	610.63	609.49	608.33	607.47	606.70	605.91	605.11	604.30	603.47	602.63	601.80
BEAM 1	STATION	378+60.73	378+76.23	378+91.75	379+07.30	379+20.42	379+33.54	379+46.67	379+59.80	379+72.93	379+86.07	379+99.20	380+12.33
	OFFSET	67.44	67.73	67.92	68.03	68.45	68.80	69.08	69.28	69.42	69.48	69.46	69.38
	FINAL DECK EL.	611.66	610.59	609.51	608.44	607.53	606.72	605.92	605.12	604.32	603.53	602.74	601.97
	SCREED EL.	611.82	610.71	609.58	608.44	607.56	606.78	606.00	605.20	604.40	603.59	602.78	601.97
	HAUNCH EL.	611.11	610.00	608.87	607.73	606.86	606.08	605.29	604.50	603.69	602.88	602.07	601.27
BEAM 2	STATION	378+58.23	378+73.63	378+89.04	379+04.48	379+17.50	379+30.54	379+43.57	379+56.61	379+69.65	379+82.69	379+95.73	380+08.77
	OFFSET	59.08	59.21	59.25	59.20	59.52	59.78	59.96	60.07	60.11	60.08	59.97	59.80
	FINAL DECK EL.	612.26	611.23	610.19	609.16	608.27	607.46	606.67	605.88	605.09	604.31	603.54	602.78
	SCREED EL.	612.45	611.37	610.21	609.16	608.31	607.54	606.77	605.99	605.19	604.39	603.58	602.78
	HAUNCH EL.	611.74	610.66	609.50	608.45	607.60	606.83	606.06	605.28	604.48	603.68	602.87	602.07
BEAM 3	STATION	378+55.95	378+71.18	378+86.42	379+01.68	379+14.65	379+27.63	379+40.62	379+53.61	379+66.59	379+79.58	379+92.57	380+05.56
	OFFSET	51.38	51.12	50.79	50.36	50.70	50.98	51.18	51.30	51.36	51.34	51.26	51.10
	FINAL DECK EL.	612.81	611.82	610.84	609.87	609.00	608.18	607.39	606.60	605.82	605.04	604.27	603.51
	SCREED EL.	613.00	611.97	610.86	609.87	609.04	608.26	607.49	606.71	605.92	605.12	604.31	603.51
	HAUNCH EL.	612.29	611.26	610.16	609.16	608.33	607.55	606.78	606.00	605.21	604.41	603.60	602.80
BEAM 4	STATION	378+53.33	378+68.51	378+83.70	378+98.90	379+11.82	379+24.75	379+37.68	379+50.62	379+63.56	379+76.50	379+89.44	380+02.37
	OFFSET	42.50	42.26	41.94	41.53	41.88	42.17	42.39	42.53	42.60	42.60	42.53	42.39
	FINAL DECK EL.	613.43	612.47	611.51	610.57	609.72	608.90	608.11	607.33	606.55	605.77	605.00	604.23
	SCREED EL.	613.61	612.61	611.54	610.57	609.76	608.98	608.21	607.43	606.64	605.84	605.04	604.23
	HAUNCH EL.	612.91	611.90	610.83	609.86	609.05	608.27	607.50	606.73	605.94	605.14	604.33	603.53
BEAM 5	STATION	378+50.73	378+65.86	378+81.00	378+96.14	379+09.01	379+21.89	379+34.77	379+47.66	379+60.55	379+73.44	379+86.33	379+99.21
	OFFSET	33.61	33.39	33.08	32.69	33.06	33.36	33.59	33.75	33.84	33.86	33.81	33.68
	FINAL DECK EL.	614.04	613.10	612.18	611.26	610.43	609.62	608.83	608.05	607.27	606.49	605.72	604.96
	SCREED EL.	614.22	613.25	612.20	611.26	610.47	609.69	608.93	608.16	607.37	606.57	605.77	604.96
	HAUNCH EL.	613.52	612.54	611.49	610.55	609.77	608.99	608.22	607.45	606.66	605.86	605.06	604.25
BEAM 6	STATION	378+48.15	378+63.23	378+78.32	378+93.41	379+06.22	379+19.05	379+31.89	379+44.72	379+57.56	379+70.40	379+83.24	379+96.08
	OFFSET	24.73	24.51	24.22	23.85	24.23	24.55	24.80	24.97	25.08	25.11	25.08	24.97
	FINAL DECK EL.	614.64	613.73	612.83	611.93	611.13	610.34	609.55	608.77	607.99	607.22	606.45	605.69
	SCREED EL.	614.83	613.87	612.91	611.93	611.18	610.41	609.65	608.88	608.09	607.30	606.49	605.69
	HAUNCH EL.	614.12	613.17	612.20	611.23	610.47	609.70	608.94	608.17	607.38	606.59	605.78	604.98
PROFILE GRADE	STATION	378+46.78	378+61.90	378+77.04	378+92.22	379+04.90	379+17.60	379+30.32	379+43.07	379+55.84	379+68.64	379+81.46	379+94.30
	OFFSET	20.00	20.00	20.00	20.00	20.00	20.00	20.00	20.00	20.00	20.00	20.00	20.00
	FINAL DECK EL.	614.95	614.05	613.14	612.23	611.47	610.70	609.94	609.18	608.41	607.64	606.87	606.10
	SCREED EL.	615.12	614.18	613.21	612.23	611.50	610.77	610.03	609.27	608.50	607.71	606.91	606.10
BEAM 7	STATION	378+45.58	378+60.61	378+75.65	378+90.69	379+03.46	379+16.24	379+29.02	379+41.81	379+54.60	379+67.39	379+80.18	379+92.96
	OFFSET	15.84	15.64	15.36	15.00	15.40	15.73	16.00	16.19	16.31	16.36	16.34	16.25
	FINAL DECK EL.	615.04	614.13	613.22	612.31	611.57	610.82	610.06	609.30	608.54	607.77	607.01	606.24
	SCREED EL.	615.19	614.25	613.29	612.31	611.60	610.88	610.14	609.39	608.62	607.84	607.04	606.24
	HAUNCH EL.	614.48	613.54	612.58	611.60	610.89	610.17	609.44	608.68	607.91	607.13	606.33	605.53
RIGHT SIDE OF ROUNDING	STATION	378+45.63	378+60.72	378+75.84	378+90.99	379+03.65	379+16.32	379+29.02	379+41.75	379+54.49	379+67.26	379+80.06	379+92.88
	OFFSET	16.00	16.00	16.00	16.00	16.00	16.00	16.00	16.00	16.00	16.00	16.00	16.00
	FINAL DECK EL.	615.04	614.14	613.24	612.33	611.58	610.82	610.06	609.30	608.53	607.77	607.00	606.23
	SCREED EL.	615.19	614.26	613.30	612.33	611.61	610.89	610.14	609.39	608.62	607.83	607.03	606.23
RIGHT GUTTER	STATION	378+45.05	378+60.13	378+75.24	378+90.38	379+03.02	379+15.69	379+28.37	379+41.09	379+53.82	379+66.58	379+79.36	379+92.17
	OFFSET	14.00	14.00	14.00	14.00	14.00	14.00	14.00	14.00	14.00	14.00	14.00	14.00
	FINAL DECK EL.	614.99	614.10	613.19	612.29	611.54	610.78	610.02	609.26	608.49	607.73	606.96	606.19
	SCREED EL.	615.15	614.21	613.26	612.29	611.57	610.84	610.10	609.35	608.58	607.79	607.00	606.19

DRAFT Stage 3 - Not for Construction 09/23/2024

DESIGN AGENCY
Stantec
1500 Lake Shore Dr.
Columbus, OH 43204
(614) 486-4383

DESIGNED	DRAWN	REVIEWED	DATE
MRS	JWS	BSM	2/2024
CHECKED	REVISED	STRUCTURE FILE NUMBER	
EDA		4400534	

DECK CONSTRUCTION ELEVATIONS 2
BRIDGE NO. LAW-7-0713 L
S.R. 7 OVER LITTLE PADDY CREEK

LAW-7-2.17
PID No. 75923

983
1247

V:\1736\active\173608714\LAW\engineering\75923_LAW-7-2.17\Design\structures\LAW007_0713L\sheets\007_0713L_SD006.dgn 5/13/2024 1:39:12 PM mstur devant

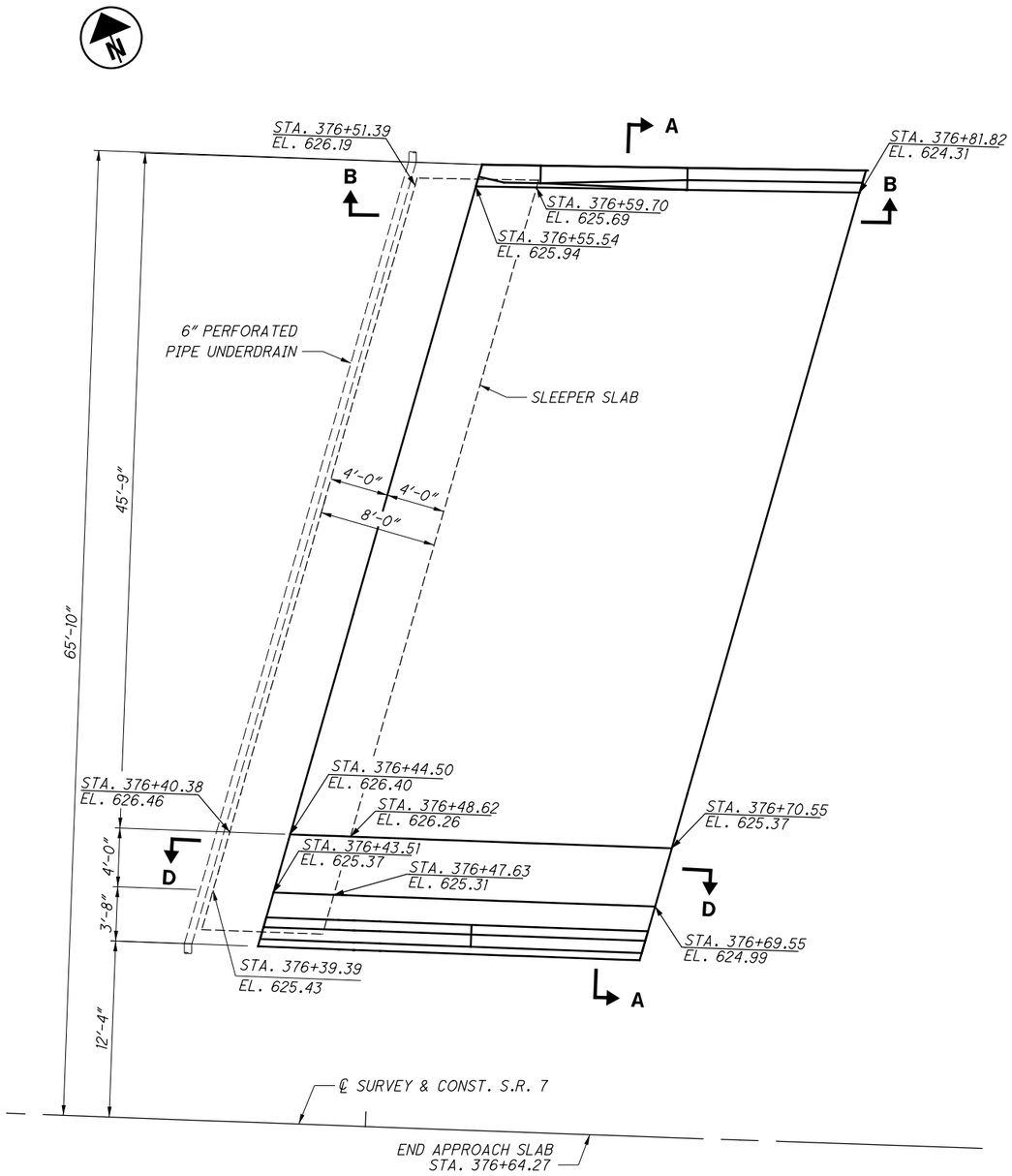

REAR APPROACH SLAB

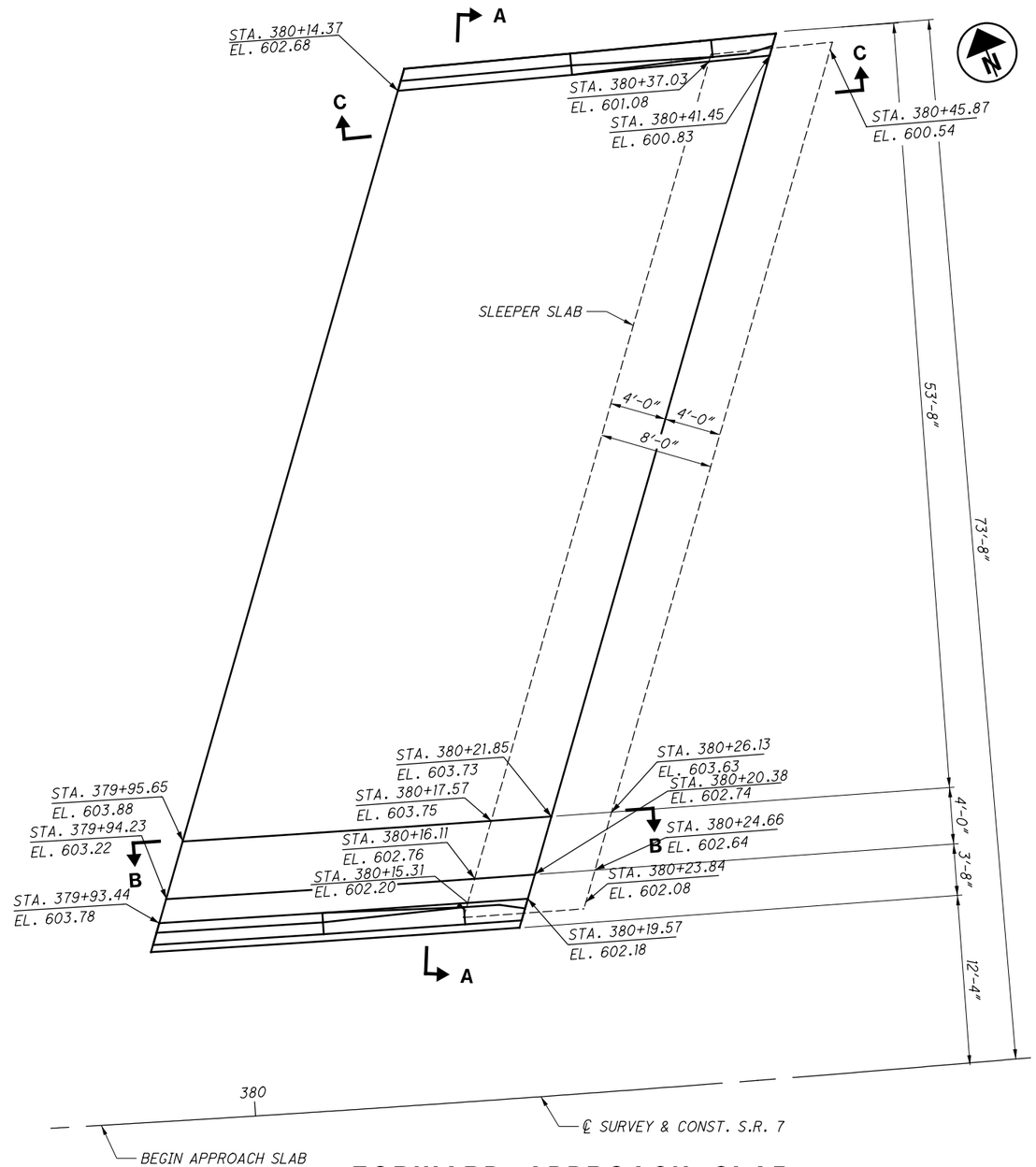

FORWARD APPROACH SLAB

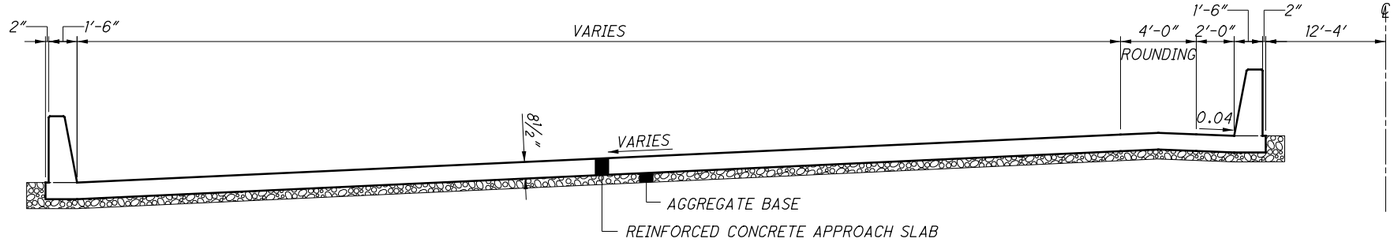

SECTION A-A

NOTES:

1. FOR ADDITIONAL DETAILS OF THE BARRIER, SEE STD. DWG. SBR-1-20 AND SHEET 25/28 .
2. FOR ADDITIONAL DETAILS OF THE APPROACH SLAB, SEE STD. DWG. AS-1-15 AND AS-2-15.
3. FOR SECTION B-B THRU SECTION D-D, SEE SHEET 25/28 .
4. OUTLET 6" PERFORATED PIPE UNDERDRAIN IN ACCORDANCE WITH STD. DWG. [illegible]-2-15.
5. THE COST OF CONCRETE AND INCIDENTALS IN BARRIER TO BE INCLUDED WITH ITEM 526 REINFORCED CONCRETE, APPROACH SLAB WITH QC/QA, AS PER PLAN.

DRAFT Stage 3 - Not for Construction 09/23/2024

DESIGN AGENCY
Stantec
1500 Lake Shore Dr.
Columbus, OH 43204
(614) 486-4383

DESIGNED	DRAWN	REVIEWED	DATE
MRS	ALH	BSM	2/2024
CHECKED	REVISED	STRUCTURE FILE NUMBER	
EDA		4400534	

APPROACH SLABS
BRIDGE NO. LAW-7-0713 L
S.R. 7 OVER LITTLE PADDY CREEK

LAW-7-2.17
PID No. 75923

24 / 28

984
1247

V:\1736\active\173608714\LAW\engineering\75923_LAW-7-2.17\Design\structures\LAW007_0713L\sheets\007_0713L_SM001.dgn 5/13/2024 1:39:16 PM msturdevant

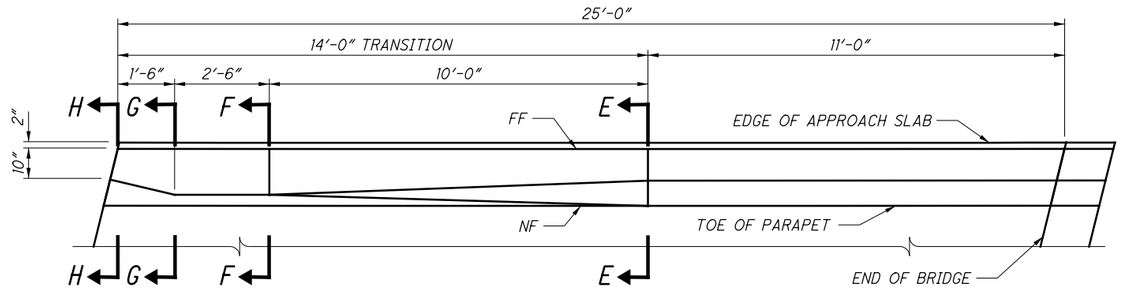

PLAN

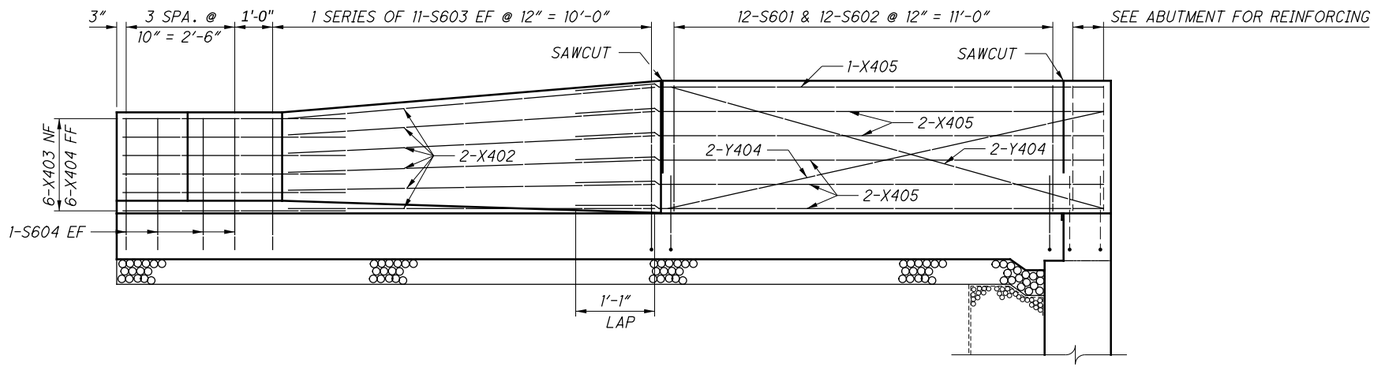

SECTION B-B & SECTION C-C

(SECTION C-C OPPOSITE HAND)

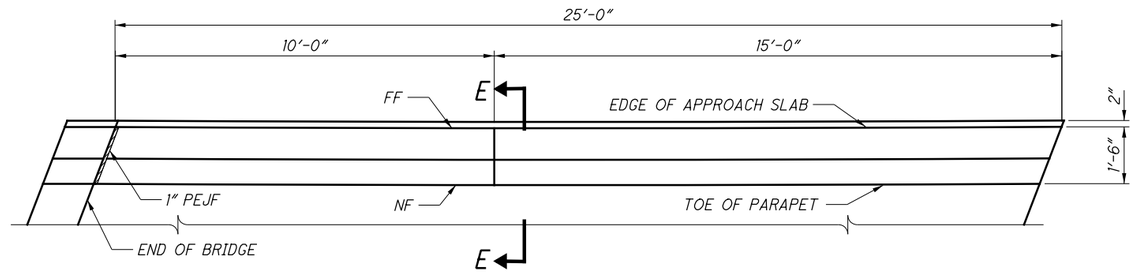

PLAN

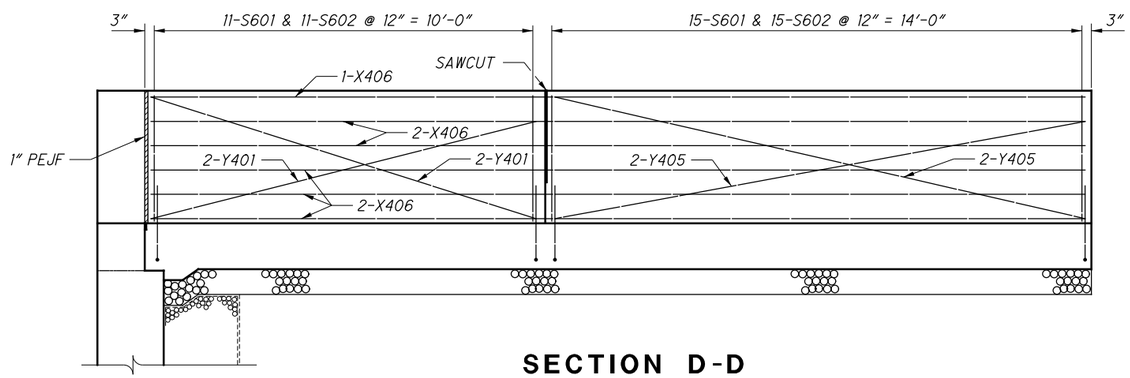

SECTION D-D

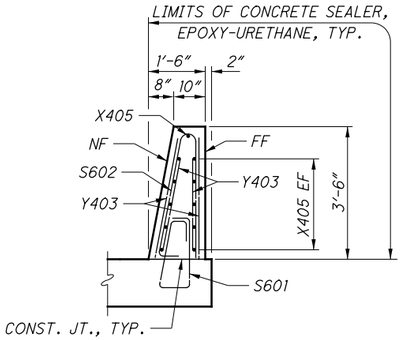

SECTION E-E

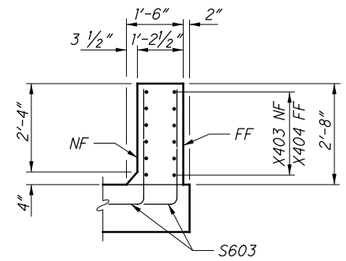

SECTION F-F

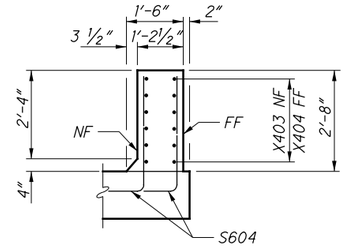

SECTION G-G

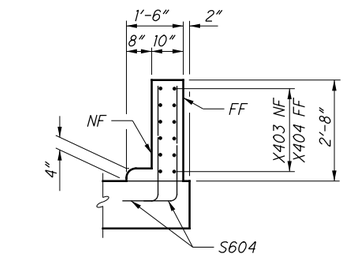

SECTION H-H

DRAFT Stage 3 - Not for Construction

09/23/2024

NOTES:

1. SEE ROADWAY PLAN FOR BRIDGE TERMINAL ASSEMBLY DETAILS.

DESIGN AGENCY
Stantec
1500 Lake Shore Dr.
Columbus, OH 43204
(614) 486-4383

DESIGNED	DRAWN	REVIEWED	DATE
MRS	ALH	BSM	2/2024
CHECKED	REVISED	STRUCTURE FILE NUMBER	
EDA		4400534	

APPROACH SLAB DETAILS
BRIDGE NO. LAW-7-0713 L
S.R. 7 OVER LITTLE PADDY CREEK

LAW-7-2.17
PID No. 75923

25 / 28

985
1247

V:\1736\active\173608714\LAW\engineering\75923_LAW-7-2.17\Design\structures\LAW007_0713L_SM002.dgn 5/13/2024 1:39:18 PM mstur.devant

MARK	NUMBER TOTAL	LENGTH	WEIGHT	TYPE	DIMENSIONS						
					A	B	C	D	E	R	INC
REAR ABUTMENT (EPOXY COATED STEEL REINFORCEMENT)											
A801	18	36'-1"	1734	STR.							
A802	5	24'-2"	323	STR.							
A803	5	15'-6"	207	STR.							
A804	5	28'-10"	385	STR.							
A805	36	4'-7"	441	18	2'-8"	1'-0"	1'-0"				
A601	52	19'-3"	1504	3	6'-11"	2'-7"					
A602	5	16'-8"	125	2	7'-11"	1'-5"	7'-11"				
A603	11	19'-8"	325	2	7'-9"	4'-5"	7'-9"				
A604	7	19'-0"	200	2	7'-5"	4'-5"	7'-5"				
A605	8	18'-4"	220	2	7'-1"	4'-5"	7'-1"				
A606	7	17'-6"	184	2	6'-8"	4'-5"	6'-8"				
A607	8	17'-2"	206	2	6'-5"	4'-5"	6'-5"				
A608	6	14'-2"	128	2	6'-5"	1'-5"	6'-5"				
A609	4	7'-2"	43	37	9"	9½"	1'-5"	1'-0"	7"		
A610	4	7'-0"	42	23	3'-3"	3'-3"				2"	
	2	8'-4"									
A611	SERIES OF	TO	329	STR.							
	11	11'-7"									
A612	4	12'-2"	73	STR.							
A613	56	7'-9"	652	2	3'-4"	1'-5"	3'-4"				
A614	56	12'-3"	1030	2	5'-7"	1'-5"	5'-7"				
A615	56	7'-1"	596	2	3'-6"	5"	3'-6"				
A616	56	6'-7"	554	2	2'-8"	1'-5"	2'-8"				
A617	4	10'-6"	63	STR.							
	2	5'-11"									
A618	SERIES OF	TO	309	STR.							4"
	13	9'-11"									
A501	12	16'-10"	211	STR.							
A502	14	28'-10"	421	STR.							
A503	8	18'-5"	154	STR.							
A504	5	14'-0"	73	STR.							
A505	5	11'-6"	60	STR.							
A506	6	19'-4"	121	STR.							
A507	2	17'-0"	35	STR.							
A508	2	14'-1"	29	STR.							
A509	2	10'-3"	21	STR.							
A510	4	6'-10"	29	STR.							
A511	38	27'-10"	1103	STR.							
A512	8	17'-8"	174	STR.							
A513	2	14'-10"	37	STR.							
A514	2	10'-6"	22	STR.							
A515	2	11'-8"	24	STR.							
A516	2	13'-9"	29	STR.							
		SUB-TOTAL	12,216								

MARK	NUMBER TOTAL	LENGTH	WEIGHT	TYPE	DIMENSIONS						
					A	B	C	D	E	R	INC
FORWARD ABUTMENT (EPOXY COATED STEEL REINFORCEMENT)											
B801	18	42'-1"	2023	STR.							
B802	10	34'-5"	919	STR.							
B803	41	4'-7"	502	18	2'-8"	1'-0"	1'-0"				
B601	54	19'-3"	1561	3	6'-11"	2'-7"					
B602	4	7'-2"	43	37	9"	9½"	1'-5"	1'-0"	7"		
B603	7	11'-9"	124	2	5'-4"	1'-5"	5'-4"				
B604	8	14'-9"	177	2	5'-4"	4'-5"	5'-4"				
B605	7	16'-5"	162	2	6'-2"	4'-5"	6'-2"				
B606	6	17'-11"	161	2	6'-11"	4'-5"	6'-11"				
B607	6	19'-5"	166	2	7'-8"	4'-5"	7'-8"				
B608	6	20'-11"	189	2	8'-5"	4'-5"	8'-5"				
B609	6	22'-5"	202	2	9'-2"	4'-5"	9'-2"				
B610	4	23'-7"	142	2	9'-9"	4'-5"	9'-9"				
B611	4	20'-7"	124	2	9'-9"	1'-5"	9'-9"				
B612	4	7'-0"	42	23	3'-3"	3'-3"				2"	
	2	4'-5"									
B613	SERIES OF	TO	287	STR.							
	14	9'-3"									
B614	6	9'-3"	83	STR.							
B615	64	7'-9"	745	2	3'-4"	1'-5"	3'-4"				
B616	64	12'-3"	1278	2	5'-7"	1'-5"	5'-7"				
B617	64	7'-1"	681	2	3'-6"	5"	3'-6"				
B618	64	6'-7"	633	2	2'-8"	1'-5"	2'-8"				
B619	8	8'-3"	99	STR.							
	2	8'-4"									
B620	SERIES OF	TO	264	STR.							
	8	13'-8"									
B621	2	7'-5"	22	STR.							
B622	2	6'-8"	20	STR.							
B501	10	21'-11"	229	STR.							
B502	2	21'-2"	44	STR.							
B503	2	18'-3"	38	STR.							
B504	2	15'-4"	32	STR.							
B505	2	12'-6"	26	STR.							
B506	2	8'-11"	19	STR.							
B507	2	14'-0"	29	STR.							
B508	50	33'-2"	1730	STR.							
B509	5	23'-5"	122	1	2'-0"	21'-6"					
B510	5	14'-2"	74	1	2'-0"	12'-3"					
B511	5	34'-10"	182	1	2'-0"	32'-11"					
B512	5	25'-7"	133	1	2'-0"	23'-8"					
B513	5	16'-4"	85	1	2'-0"	14'-5"					
B514	5	7'-1"	37	1	2'-0"	5'-2"					
B515	2	16'-0"	33	STR.							
B516	2	14'-8"	31	STR.							
B517	2	13'-3"	28	STR.							
B518	2	11'-11"	25	STR.							
B519	2	10'-6"	22	STR.							
B520	2	9'-2"	19	STR.							
B521	2	7'-5"	15	STR.							
B522	2	11'-6"	24	STR.							
B523	18	18'-0"	338	STR.							
		SUB-TOTAL	13,964								

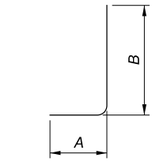

TYPE-1

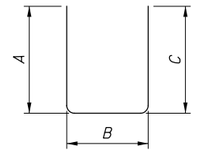

TYPE-2

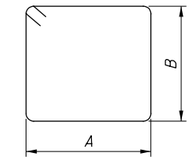

TYPE-3

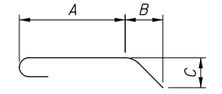

TYPE-18

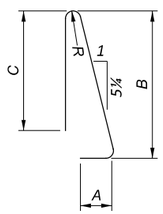

TYPE-23

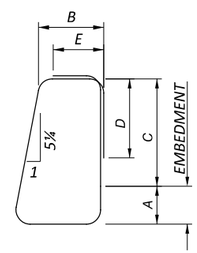

TYPE-37

DRAFT Stage 3 - Not for Construction 09/23/2024

DESIGN AGENCY
Stantec
1500 Lake Shore Dr.
Columbus, OH 43204
(614) 486-4383

DESIGNED	DRAWN	REVIEWED	DATE
MRS	ALH	BSM	2/2024
CHECKED	REVISED	STRUCTURE FILE NUMBER	
EDA		4400534	

REINFORCING STEEL LIST 1
BRIDGE NO. LAW-7-0713 L
S.R. 7 OVER LITTLE PADDY CREEK

LAW-7-2.17
PID No. 75923

986/1247

V:\1736\active\736087\4\LAW\engineering\75923_LAW-7-2.17\Design\structures\LAW007_0713L_SL001.dgn 5/13/2024 1:39:19 PM msturdevant

MARK	NUMBER TOTAL	LENGTH	WEIGHT	TYPE	DIMENSIONS A	B	C	D	E	R	INC
PIER 1 (EPOXY COATED STEEL REINFORCEMENT)											
P901	8	24'-3"	660	16	23'-0"						
P902	8	38'-11"	1059	16	37'-8"						
P903	16	36'-10"	2004	1	6'-4"	30'-9"					
P801	64	18'-5"	3147	2	3'-7"	11'-8"	3'-7"				
P802	88	20'-9"	4875	2	3'-6"	14'-2"	3'-6"				
P803	96	9'-4"	2392	1	1'-4"	8'-3"					
P804	24	40'-9"	2611	STR.							
P805	24	41'-6"	2659	STR.							
P806	24	42'-3"	2707	STR.							
P807	24	43'-0"	2455	STR.							
P601	60	11'-8"	1051	STR.							
P602	52	14'-2"	1106	STR.							
P501	24	29'-0"	726	STR.							
P502	184	12'-10"	2463	2	5'-0"	3'-1"	5'-0"				
SP501	1	34'-11"	2270	27	$2\frac{3}{4}$	4'-6"	34'-11"				
SP502	1	35'-8"	2318	27	$2\frac{3}{4}$	4'-6"	35'-8"				
SP503	1	36'-4"	2360	27	$2\frac{3}{4}$	4'-6"	36'-4"				
SP504	1	37'-2"	2413	27	$2\frac{3}{4}$	4'-6"	37'-2"				
		SUB-TOTAL	39,276								

MARK	NUMBER TOTAL	LENGTH	WEIGHT	TYPE	DIMENSIONS A	B	C	D	E	R	INC
PIER 2 (EPOXY COATED STEEL REINFORCEMENT)											
Q901	9	26'-1"	798	16	24'-10"						
Q902	9	42'-1"	1326	16	40'-10"						
Q903	18	39'-0"	2387	1	6'-0"	33'-3"					
Q801	88	23'-3"	5463	2	3'-6"	16'-8"	3'-6"				
Q802	72	18'-5"	3540	2	3'-7"	11'-8"	3'-7"				
Q803	96	9'-4"	2392	1	1'-4"	8'-3"					
Q804	48	33'-0"	4229	STR.							
Q805	48	33'-6"	4293	STR.							
Q806	48	34'-2"	4379	STR.							
Q807	48	36'-3"	4646	STR.							
Q601	52	16'-8"	1302	STR.							
Q602	72	11'-8"	1262	STR.							
Q501	368	12'-10"	4926	2	5'-0"	3'-1"	5'-0"				
Q502	24	31'-6"	789	STR.							
Q503	6	9'-7"	60	1	10"	8'-10"					
Q504	30	12'-0"	375	1	10"	11'-3"					
Q505	6	7'-3"	45	1	10"	6'-6"					
SQ501	1	55'-5"	3577	27	$2\frac{3}{4}$	4'-6"	55'-5"				
SQ502	1	56'-8"	3656	27	$2\frac{3}{4}$	4'-6"	56'-8"				
SQ503	1	57'-10"	3731	27	$2\frac{3}{4}$	4'-6"	57'-10"				
SQ504	1	59'-1"	3810	27	$2\frac{3}{4}$	4'-6"	59'-1"				
		SUB-TOTAL	56,986								

MARK	NUMBER TOTAL	LENGTH	WEIGHT	TYPE	DIMENSIONS A	B	C	D	E	R	INC
SUPERSTRUCTURE AND APPROACH SLAB RAILING (EPOXY COATED STEEL REINFORCEMENT)											
D601	40	9'-1"	546	STR.							
D602	4	6'-2"	37	STR.							
D603	4	5'-0"	30	STR.							
D604	84	8'-3"	1041	STR.							
D605	5	7'-8"	58	STR.							
D606	1	5'-3"	8	STR.							
D607	1	3'-6"	5	STR.							
D608	16	6'-9"	162	STR.							
D609	176	9'-11"	2621	13	5'-9"	8"	8"	3'-3"			
D610	4	7'-4"	44	STR.							
D611	4	49'-4"	296	STR.							
D612	4	56'-9"	341	STR.							
D401	14	12'-5"	116	24	4"	6'-1"				2"	
D402	46	4'-6"	138	2	8"	3'-4"	8"				
D403	73	14'-11"	727	6	2'-2"	5'-11"	8"				
D404	162	9'-10"	1064	2	4'-2"	1'-8"	4'-2"				
D301	14	3'-4"	18	39	5"	11"	11"				
S601	780	7'-2"	8396	37	9"	$9\frac{1}{2}$"	1'-5"	1'-0"	7"		
S602	780	7'-0"	8201	23	6"	3'-3"	3'-3"				
	6	4'-4"				3'-6"					
S603	SERIES OF	TO	471	1	1'-0"	TO					
	11	5'-2"				4'-4"					
S604	24	4'-4"	156	1	1'-0"	3'-6"					
S501	1139	30'-0"	35,639	STR.							
S502	95	29'-0"	2873	STR.							
S503	1294	32'-1"	43,201	16	31'-6"						
S504	1294	31'-3"	42,176	STR.							
S505	130	31'-0"	4203	STR.							
S506	1294	9'-1"	12,259	16	8'-6"						
	2	4'-1"									
S507	SERIES OF	TO	1523	STR.							1'-11"
	26	52'-1"									
	2	6'-9"									
S508	SERIES OF	TO	2668	STR.							$1'-4\frac{1}{2}$"
	39	58'-10"									
S509	16	4'-10"	81	2	2'-0"	1'-1"	2'-0"				
S510	16	4'-4"	72	2	1'-10"	11"	1'-10"				
S401	726	30'-0"	14,549	STR.							
S402	66	18'-0"	794	STR.							
S403	648	3'-10"	1659	STR.							
S404	977	4'-3"	2774	50	11"	1'-2"					
		SUB-TOTAL	188,947								

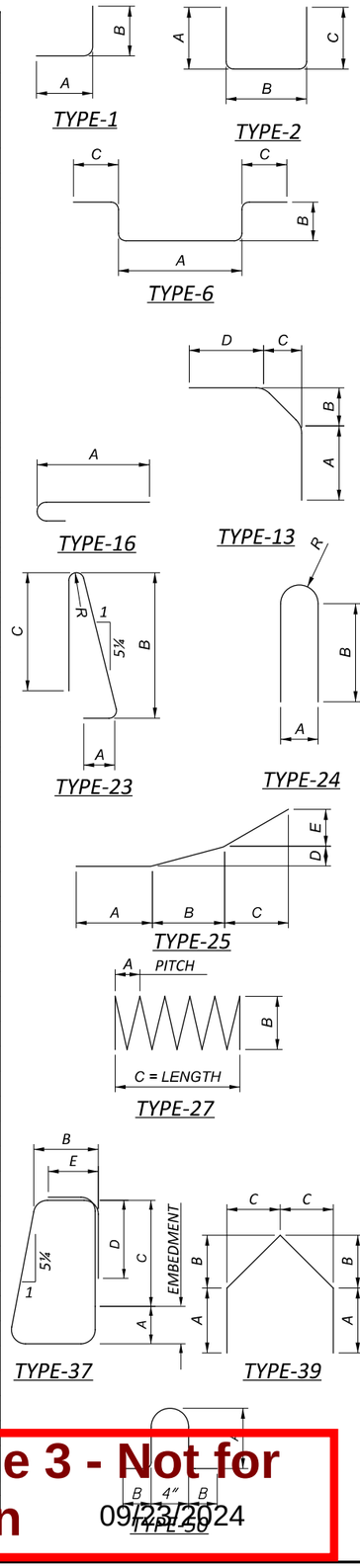

DRAFT Stage 3 - Not for Construction

09/23/2024

V:\1736\active\173608714\LAW\engineering\75923_LAW-7-2.17\Design\structures\LAW007_0713L\sheets\007_0713L_SL002.dgn 5/13/2024 1:39:20 PM msturdevant

DESIGN AGENCY
Stantec
1500 Lake Shore Dr.
Columbus, OH 43204
(614) 486-4383

DATE 2/2024
REVIEWED BSM
STRUCTURE FILE NUMBER 4400534
DRAWN ALH
REVISED
DESIGNED MRS
CHECKED EDA

REINFORCING STEEL LIST 2
BRIDGE NO. LAW-7-0713 L
S.R. 7 OVER LITTLE PADDY CREEK

LAW-7-2.17
PID No. 75923

MARK	NUMBER TOTAL	LENGTH	TOTAL LENGTH	TYPE	DIMENSIONS						
					A	B	C	D	E	R	INC
SUPERSTRUCTURE AND APPROACH SLAB RAILING (GLASS FIBER REINFORCED POLYMER - GFRP)											
X401	198	37'-3"	7375'-6"	STR.							
X402	36	10'-0"	360'-0"	STR.							
X403	18	6'-4"	114'-0"	25	2'-6"	2'-5"	1'-4"	1½	5"		
X404	18	5'-1"	91'-6"	STR.							
X405	33	13'-2"	434'-6"	STR.							
X406	11	24'-8"	271'-4"	STR.							
Y401	244	11'-3"	2745'-0"	STR.							
Y402	8	14'-3"	114'-0"	STR.							
Y403	4	13'-0"	52'-0"	STR.							
Y404	12	11'-0"	132'-0"	STR.							
Y405	4	15'-0"	60'-0"	STR.							
		SUB-TOTAL	11,749'-10"								

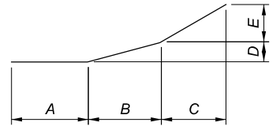

TYPE-25

DRAFT Stage 3 - Not for Construction 09/23/2024

DESIGN AGENCY
Stantec
1500 Lake Shore Dr.
Columbus, OH 43204
(614) 486-4383

DESIGNED	DRAWN	REVIEWED	DATE
MRS	ALH	BSM	2/2024
CHECKED	REVISED	STRUCTURE FILE NUMBER	
EDA		4400534	

REINFORCING STEEL LIST 2
BRIDGE NO. LAW-7-0713 L
S.R. 7 OVER LITTLE PADDY CREEK

LAW-7-2.17
PID No. 75923

28/28

988
1247

Y:\1736\active\173608714\LAW\engineering\75923_LAW-7-2.17\Design\structures\LAW007_0713L\sheets\007_0713L_SL003.dgn Sheet 5/13/2024 1:39:22 PM msturdevant

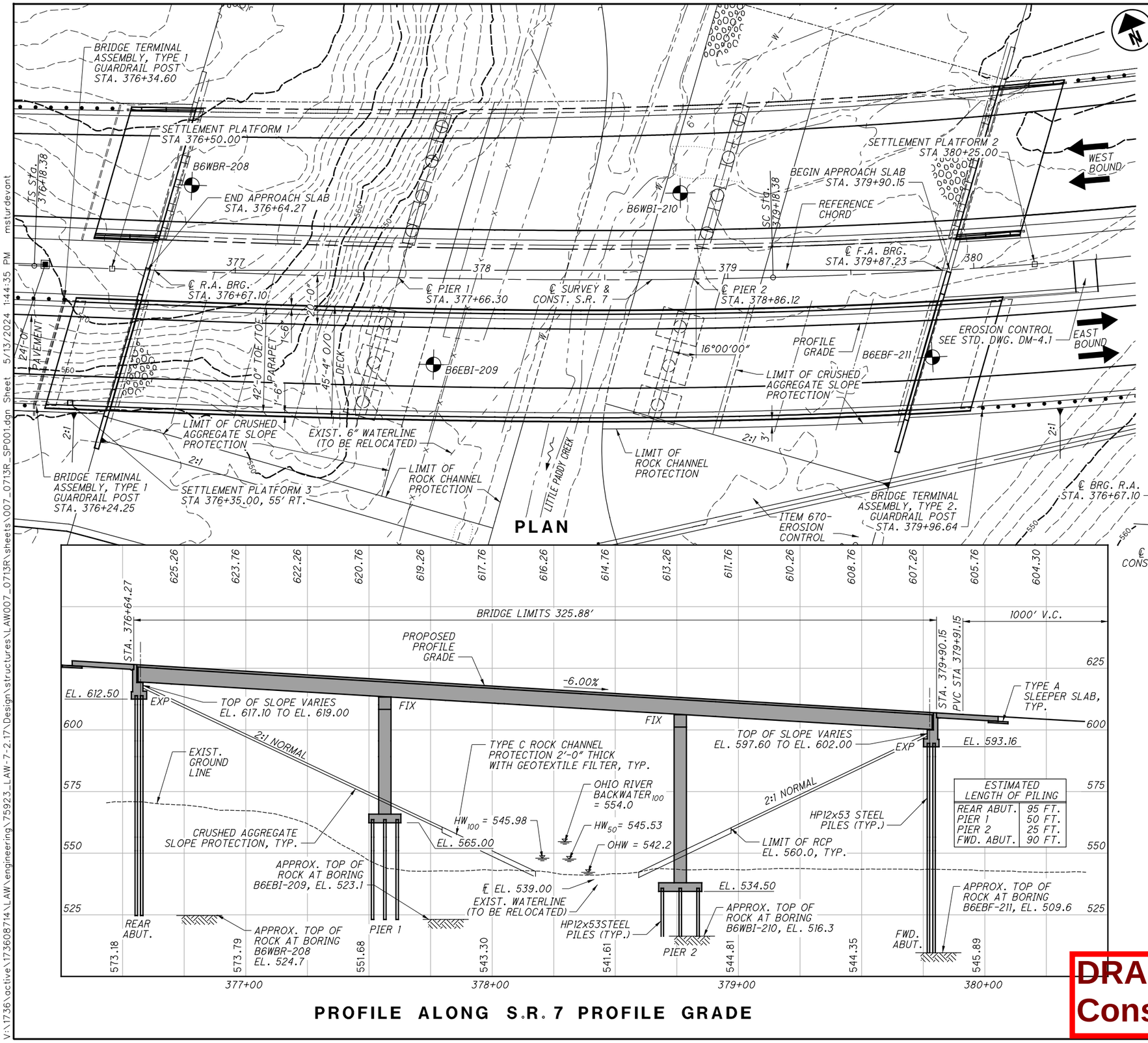

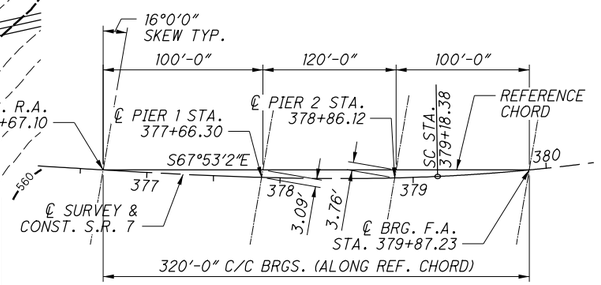

GEOMETRIC LAYOUT

PROFILE ALONG S.R. 7 PROFILE GRADE

BENCHMARK DATA

BM #1 STA. 394+68.00, EL. 590.43 , OFFSET 0.00 ,
BM #2 STA. 407+19.64, EL. 608.57 , OFFSET 65.06', RT.

FOR ADDITIONAL BENCHMARK INFORMATION. SEE ROADWAY PLAN SHEET ⊖

NOTES

EARTHWORK LIMITS SHOWN ARE APPROXIMATE. ACTUAL SLOPES SHALL CONFORM TO PLAN CROSS SECTIONS.

NO WORK IS PERMITTED WITHIN LIMITS OF ORDINARY HIGH WATER

DESIGN TRAFFIC:
2028 ADT = 7,102 2028 ADTT = 781
2048 ADT = 9,275 2048 ADTT = 1,020
EASTBOUND TRAFFIC

LEGEND

PROJECT BORING LOCATION

HYDRAULIC DATA

DRAINAGE AREA = 1.74 SQ. MILES
Q (50) = 954 CFS V (50) = 4.23 FT/S
Q (100) = 1160 CFS V (100) = 4.46 FT/S
STRUCTURE CLEARS THE 50 YEAR DESIGN HW BY 53.51 FEET.

CURVE DATA (S.R. 7 CURVE NO. 9)

P.I. STA. 387+47.15	E = 136.98'	LT = 200.04'
Δ = 46° 04' 34" (LT)	TS STA. 376+18.38	ST = 100.04'
Dc = 2° 29' 28"	SC STA. 379+18.38	e_{max} = 6.20%
R = 2,300.00'	θs = 3° 44' 12"	CS STA. 394+68.00
T = 805.51'	Ls = 300.00'	ST STA. 397+68.00
L = 1,549.62'	Ts = 1,128.77'	

PROPOSED STRUCTURE

TYPE: PRESTRESSED CONCRETE I-BEAMS (66" AASHTO MODIFIED TYPE 4) WITH COMPOSITE CONCRETE SLAB SUPPORTED BY STUB TYPE ABUTMENTS AND CAP & COLUMN PIERS ON PILES
SPANS: 98'-11", 117'-10", 98'-11" C/C BEARINGS (MEASURED ALONG REFERENCE CHORD)
ROADWAY: 42'-0" TOE/TOE PARAPET
LOADING: HL-93 AND 60 PSF FUTURE WEARING SURFACE
WEARING SURFACE: 1" MONOLITHIC WEARING SURFACE
SKEW: 16°0'0" LF (MEASURED WITH RESPECT TO REFERENCE CHORD)
APPROACH SLABS: AS-1-15 & AS-2-15, 25' LONG (MODIFIED)
ALIGNMENT: 05 44 12 SPIRAL AND 02 29 28 CURVE LEFT
SUPERELEVATION RATES: 0.062 MAX.
COORDINATES: LATITUDE 38° 26' 56.16"
LONGITUDE -82° 09' 21.36"
DECK AREA: 14,655 SF

DRAFT Stage 3 - Not for Construction 09/23/2024

DESIGN AGENCY: Stantec, 1500 Lake Shore Dr, Columbus, OH 43204, (614) 486-4383
DESIGNED MRS | DRAWN ALH | CHECKED EDA | REVIEWED BSM | DATE 2/2024 | REVISED | STRUCTURE FILE NUMBER 4400526
LAWRENCE COUNTY
STA. 376+64.27
STA. 379+90.15

SITE PLAN
BRIDGE NO. LAW-7-0713 R
S.R. 7 OVER LITTLE PADDY CREEK

LAW-7-2.17
PID No. 75923

1 / 26
989 / 1247

V:\1736\active\173608714\LAW\engineering\75923_LAW-7-2.17\Design\structures\LAW007_0713R\sheets\007_0713R_SP001.dgn Sheet 5/13/2024 1:44:35 PM msturdevant

V:\1736\active\173608714\LAW\engineering\75923_LAW-7-2.17\Design\structures\LAW007_0713R\sheets\007_0713R_SG001.dgn Sheet 5/13/2024 1:45:02 PM msturdevant

CURVE DATA
S.R. 7
CURVE NO. 9

P.I. STA. 387+47.15
Δ = 46° 04′ 34″ (LT)
Dc = 2° 29′ 28″
R = 2,300.00′
T = 805.51′
L = 1,549.62′
E = 136.98′
TS STA. 376+18.38
SC STA. 379+18.38

θs = 3° 44′ 12″
Ls = 300.00′
Ts = 1,128.77′
LT = 200.04′
ST = 100.04′
e_{max} = 6.20%
CS STA. 394+68.00
ST STA. 397+68.00

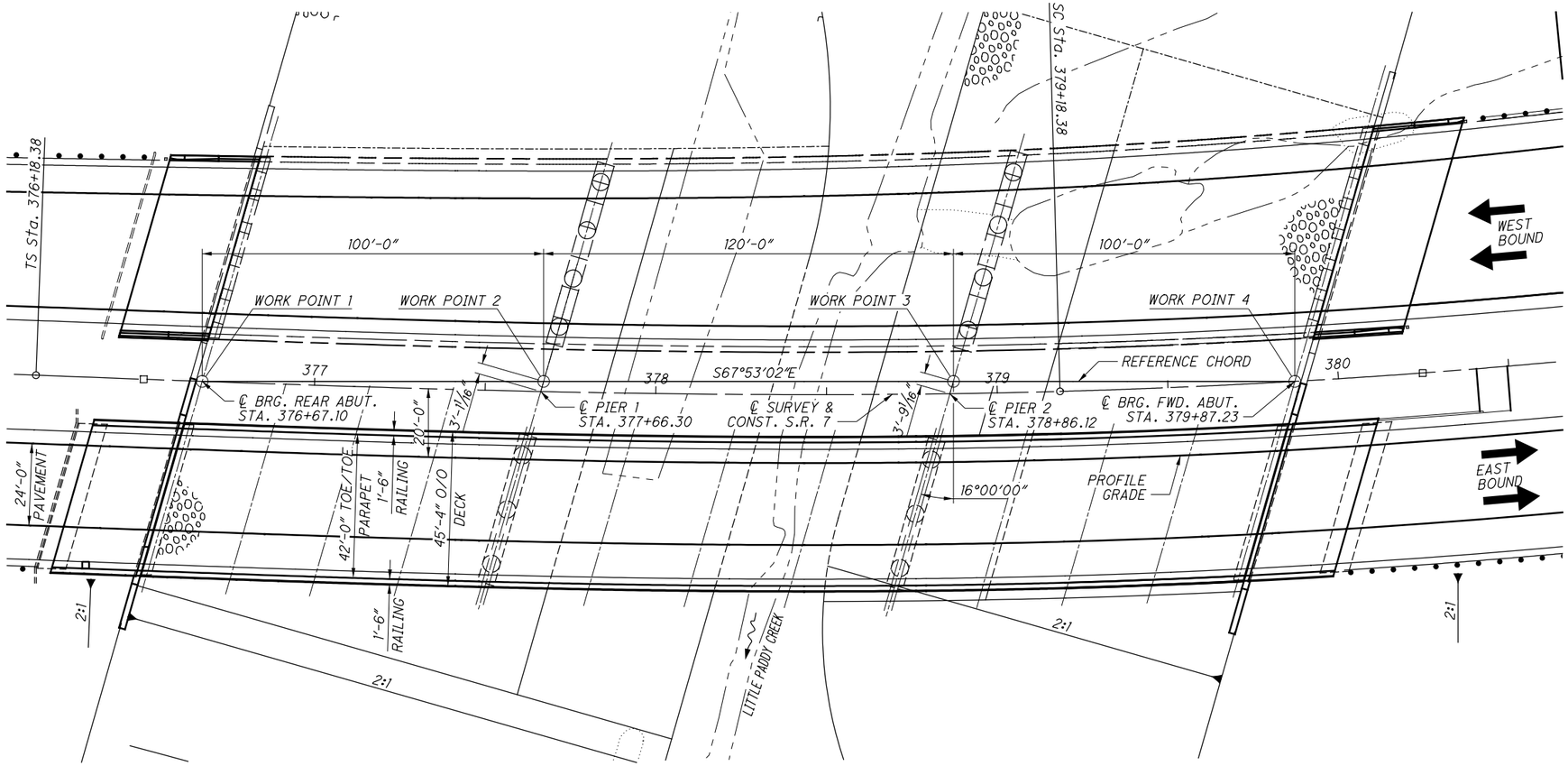

PLAN

DESIGN AGENCY
Stantec
1500 Lake Shore Dr.
Columbus, OH 43204
(614) 486-4383

DESIGNED	DRAWN	REVIEWED	DATE
MRS	ALH	BSM	2/2024
CHECKED	REVISED	STRUCTURE FILE NUMBER	
EDA		4400526	

GENERAL PLAN
BRIDGE NO. LAW-7-0713 R
S.R. 7 OVER LITTLE PADDY CREEK

LAW-7-2.17
PID No. 75923

990
1247

DRAFT Stage 3 - Not for Construction 09/23/2024

STANDARD DRAWINGS AND SUPPLEMENTAL SPECIFICATIONS

REFER TO THE FOLLOWING STANDARD BRIDGE DRAWING(S):

AS-1-15	REVISED	01-20-23
AS-2-15	REVISED	07-21-23
EXJ-6-17	REVISED	01-19-24
PSID-1-13	REVISED	01-20-23
SBR-1-20	DATED	07-21-23

AND TO THE FOLLOWING SUPPLEMENTAL SPECIFICATION

800	DATED	01-19-24

DESIGN SPECIFICATIONS

THIS STRUCTURE CONFORMS TO THE "LRFD BRIDGE DESIGN SPECIFICATIONS" ADOPTED BY THE AMERICAN ASSOCIATION OF STATE HIGHWAY AND TRANSPORTATION OFFICIALS, 9TH EDITION AND THE ODOT BRIDGE DESIGN MANUAL, 2021.

OPERATIONAL IMPORTANCE

A LOAD MODIFIER OF 1.0 HAS BEEN ASSUMED FOR THE DESIGN OF THIS STRUCTURE IN ACCORDANCE WITH THE AASHTO LRFD BRIDGE DESIGN SPECIFICATIONS, ARTICLE 1.3.5 AND THE ODOT BRIDGE DESIGN MANUAL, 2020

DESIGN LOADING

DESIGN LOADING: HL-93

FUTURE WEARING SURFACE (FWS) OF 0.060 KIPS/SQ.FT.

DESIGN DATA

CONCRETE CLASS QC2 WITH QC/QA
-COMPRESSIVE STRENGTH 4.5 KSI (SUPERSTRUCTURE)

CONCRETE CLASS QC1 WITH QC/QA
-COMPRESSIVE STRENGTH 4.0 KSI (SUBSTRUCTURE)

CONCRETE CLASS QC4 MASS CONCRETE WITH QC/QA
-COMPRESSIVE STRENGTH 4.0 KSI (PIER CAPS AND COLUMNS)

REINFORCING STEEL
-MINIMUM YIELD STRENGTH 60 KSI

STEEL H-PILES - ASTM A572 - YIELD STRENGTH 50 KSI

CONCRETE FOR PRESTRESSED BEAMS:
COMPRESSIVE STRENGTH (FINAL) - 7 KSI
COMPRESSIVE STRENGTH (RELEASE) - 6 KSI

WELDED WIRE FABRIC:
YIELD STRENGTH - 70 KSI

PRESTRESSING STRAND:
AREA = 0.217 SQ.IN.
ULTIMATE STRENGTH = 270 KSI
INITIAL STRESS = 202.5 KSI
(LOW RELAXATION STRANDS)

MONOLITHIC WEARING SURFACE

MONOLITHIC WEARING SURFACE IS ASSUMED, FOR DESIGN PURPOSES, TO BE 1 INCH THICK.

PILE DRIVING CONSTRAINTS

PRIOR TO DRIVING PILES, CONSTRUCT THE SPILL THROUGH SLOPES AND THE BRIDGE APPROACH EMBANKMENT BEHIND THE ABUTMENTS UP TO THE LEVEL OF THE SUBGRADE ELEVATION FOR A MINIMUM DISTANCE OF 200 FEET BEHIND EACH ABUTMENT. DO NOT BEGIN THE EXCAVATION FOR THE ABUTMENT AND PIER FOOTINGS AND THE INSTALLATION OF THE ABUTMENT AND PIER 1 AND 2 PILES UNTIL AFTER THE ABOVE REQUIRED EMBANKMENT HAS BEEN CONSTRUCTED AND A 180 CALENDAR DAY WAITING PERIOD HAS ELAPSED. THE ENGINEER MAY ADJUST THE LENGTH OF THE WAITING PERIOD BASED ON SETTLEMENT PLATFORM READINGS. AFTER THE SPECIFIED WAITING PERIOD HAS ELAPSED, DRIVE THE ABUTMENT AND PIER 1 AND 2 PILES TO REFUSAL ON BEDROCK.

PILES TO BEDROCK

DRIVE PILES TO REFUSAL ON BEDROCK THE DEPARTMENT WILL CONSIDER REFUSAL TO BE OBTAINED WHEN THE PILE PENETRATION IS AN INCH OR LESS AFTER RECEIVING AT LEAST 20 BLOWS FROM THE PILE HAMMER. SELECT THE HAMMER SIZE TO ACHIEVE THE REQUIRED DEPTH TO BEDROCK AND REFUSAL.

THE TOTAL FACTORED LOAD IS 250 KIPS PER PILE FOR THE ABUTMENT PILES. NO ADDITIONAL LOADING DUE TO DOWNDRAG IS ANTICIPATED AS LONG AS THE WAITING PERIOD FOR THE APPROACH EMBANKMENTS IS OBSERVED. THE TOTAL FACTORED LOAD IS 322 KIPS PER PILE FOR THE PIER 1 PILES AND 319 KIPS PER PILE FOR THE PIER 2 PILES .

REAR ABUTMENT PILES:
HP 12X53 PILES 100 FEET LONG, ORDER LENGTH

PIER 1 PILES:
HP 12X53 PILES 55 FEET LONG, ORDER LENGTH

PIER 2 PILES:
HP 12X53 PILES 30 FEET LONG, ORDER LENGTH

FORWARD ABUTMENT PILES:
HP 12X53 PILES 95 FEET LONG, ORDER LENGTH

PILE SPLICES

IN LIEU OF USING THE FULL PENETRATION BUTT WELDS SPECIFIED IN CMS 507.09 TO SPLICE STEEL H-PILES, THE CONTRACTOR MAY USE A MANUFACTURED H-PILE SPLICER. FURNISH SPLICERS FROM THE FOLLOWING MANUFACTURER:

ASSOCIATED PILE AND FITTING CORPORATION
8 WOOD HOLLOW RD. PLAZA 1
PARSIPPANY, NEW JERSEY 07054

INSTALL AND WELD THE SPLICER TO THE PILE SECTIONS IN ACCORDANCE WITH THE MANUFACTURER'S WRITTEN ASSEMBLY PROCEDURE SUPPLIED TO THE ENGINEER BEFORE THE WELDING IS PERFORMED.

DECK PLACEMENT DESIGN ASSUMPTIONS

THE FOLLOWING ASSUMPTIONS OF CONSTRUCTION MEANS AND METHODS WERE MADE FOR THE ANALYSIS AND DESIGN OF THE SUPERSTRUCTURE. THE CONTRACTOR IS RESPONSIBLE FOR THE DESIGN OF THE FALSEWORK SUPPORT SYSTEM WITHIN THESE PARAMETERS AND WILL ASSUME RESPONSIBILITY FOR SUPERSTRUCTURE ANALYSIS FOR DEVIATION FROM THESE DESIGN ASSUMPTIONS.

AN EIGHT WHEEL FINISHING MACHINE WITH A MAXIMUM WHEEL LOAD OF 2.4 KIPS.

A MINIMUM OUT-TO-OUT WHEEL SPACING AT EACH END OF THE MACHINE OF 103".

A MAXIMUM SPACING OF OVERHANG FALSEWORK BRACKETS OF 48 IN.

A MAXIMUM DISTANCE FROM THE CENTERLINE OF THE FASCIA GIRDER TO THE FACE OF THE SAFETY HANDRAIL OF 65".

APPROACH EMBANKMENT CONSTRUCTION:

THE APPROACH EMBANKMENTS SHALL BE CONSTRUCTED AND THEN UNDERGO AN ESTIMATED WAITING PERIOD OF 180 DAYS PRIOR TO DRIVING PILES.

REFER TO SHEETS XX FOR DETAILS AND NOTES REGARDING REINFORCED SLOPE AND EMBANKMENT CONSTRUCTION.

ACCORDINGLY, MULTIPLE APPLICATIONS OF SIGNIFICANT QUANTITIES OF WATER AS WELL AS CONSIDERABLE EFFORT WILL BE REQUIRED TO PROPERLY BREAK DOWN AND MOISTURE CONDITION THE SHALE FOR USE IN EMBANKMENT CONSTRUCTION.

ABBREVIATIONS:

ABUT	-	ABUTMENT
APPROX.	-	APPROXIMATE
BM	-	BENCHMARK
BRG.	-	BEARING
B/	-	BOTTOM OF
℄	-	CENTERLINE
CONC.	-	CONCRETE
CLR.	-	CLEARANCE
CONST.	-	CONSTRUCTION
DIA.	-	DIAMETER
EF	-	EACH FACE
EL.	-	ELEVATION
EQ.	-	EQUAL
EST.	-	ESTIMATED
EXIST.	-	EXISTING
EXP.	-	EXPANSION
F.A.	-	FORWARD ABUTMENT
FF	-	FAR FACE
FNDN.	-	FOUNDATION
FTG.	-	FOOTING
FWD.	-	FORWARD
F/F	-	FACE TO FACE
JT.	-	JOINT
LT.	-	LEFT
MAX.	-	MAXIMUM
MIN.	-	MINIMUM
NF	-	NEAR FACE
O/O	-	OUT TO OUT
PAVT.	-	PAVEMENT
PEJF	-	PREFORMED EXPANSION JOINT FILLER
R.A.	-	REAR ABUTMENT
REF.	-	REFERENCE
RF	-	RIGHT FORWARD
REINF.	-	REINFORCED
RT.	-	RIGHT
SP.	-	SETTLEMENT PLATFORM
SPA.	-	SPACE
S.R.	-	STATE ROUTE
STA.	-	STATION
TYP.	-	TYPICAL
T/	-	TOP OF
T/T	-	TOE TO TOE
T&B	-	TOP AND BOTTOM
VAR.	-	VARIES
REQ'D	-	REQUIRED

DRAFT Stage 3 - Not for Construction 09/23/2024

V:\1736\active\173608714\LAW\engineering\75923_LAW-7-2.17\Design\structures\LAW007_0713R\sheets\007_0713R_SN001.dgn Sheet 5/13/2024 1:45:05 PM msturdevant

DESIGN AGENCY
Stantec
1500 Lake Shore Dr.
Columbus, OH 43204
(614) 486-4383

DESIGNED	DRAWN	REVIEWED	DATE
MRS	ALH	BSM	2/2024
CHECKED	REVISED	STRUCTURE FILE NUMBER	
EDA		4400526	

GENERAL NOTES
BRIDGE NO. LAW-7-0713 R
S.R. 7 OVER LITTLE PADDY CREEK

LAW-7-2.17
PID No. 75923

991
1247

ITEM SPECIAL - SETTLEMENT PLATFORM:

DESCRIPTION: THIS ITEM CONSISTS OF FURNISHING, CONSTRUCTING, AND MAINTAINING SETTLEMENT PLATFORMS AND OBTAINING SETTLEMENT READINGS AS REQUIRED BY THE PLANS OR AS DIRECTED BY THE ENGINEER. SEE SETTLEMENT PLATFORM DETAIL THIS SHEET. AT THE OPTION AND EXPENSE OF THE CONTRACTOR, ADDITIONAL SETTLEMENT PLATFORMS MAY BE INSTALLED AT LOCATIONS APPROVED BY THE ENGINEER. SETTLEMENT READINGS SHALL BE TAKEN WEEKLY DURING CONSTRUCTION AND DURING THE SPECIFIED WAITING PERIOD BEGINNING WITH THE FIRST WEEK FOLLOWING PLACEMENT OF EACH PLATFORM. THE READINGS SHALL BE PLOTTED ON GRAPH PAPER PRESENTING DEFORMATION (ON THE NEGATIVE Y-AXIS) AND FILL HEIGHT (ON THE POSITIVE Y-AXIS) VERSUS TIME (ON THE X-AXIS). A COPY OF EACH CUMULATIVE PLOT SHALL BE SENT TO ODOT, CO, CONSTRUCTION MANAGEMENT/CONSTRUCTION ADMINISTRATION, GEOTECHNICAL AND EARTHWORK ENGINEER AND ODOT, CO, OFFICE OF GEOTECHNICAL ENGINEERING, FOUNDATIONS AND RETAINING WALLS ENGINEER, AFTER EACH SETTLEMENT READING IS RECORDED.

MATERIAL: SOUND LUMBER SUCH AS ¾" EXTERIOR GRADE PLYWOOD SHALL BE USED FOR THE BASE. THE PIPE SHALL BE 2½" STANDARD BLACK PIPE WITH THREADED FITTINGS AS SHOWN ON THE PLANS. A STEEL PLATE 36" X 36" X ⅛" MAY BE SUBSTITUTED FOR THE LUMBER FOR THE PLATFORMS, AT THE CONTRACTOR'S OPTION.

CONSTRUCTION METHODS: THE PLATFORM SHALL CONFORM TO THE SETTLEMENT PLATFORM DETAILS SHOWN ON THIS SHEET. THE PLATFORM SHALL BE SET ON A LEVEL SURFACE. THE PIPE SHALL BE FIRMLY SECURED TO THE PLATFORM AND SHALL BE MAINTAINED IN A PLUMB POSITION DURING THE PLACEMENT OF THE EMBANKMENT. THE PIPE SHALL BE MARKED AT INTERVALS TO FACILITATE MEASUREMENT OF THE DEPTH OF FILL. THE CONTRACTOR SHALL STOP WORK IN ANY LOCATION WHERE THE SETTLEMENT PLATFORM HAS BEEN DISTURBED OR DAMAGED. PLATFORMS OR PIPES DAMAGED OR DISPLACED DURING CONSTRUCTION SHALL BE RESTORED TO THEIR PROPER CONDITION AT THE CONTRACTOR'S EXPENSE.

SETTLEMENT PLATFORMS SHALL BE PLACED AT THE FOLLOWING LOCATIONS:

I.D.	*STATION*	*OFFSET*
SP1	*376+50*	*0'*
SP2	*380+25*	*0'*
SP3	*376+35*	*55'*

PRIOR TO PAVING, THE TOP OF THE SETTLEMENT PLATFORM PIPE SHALL BE CUT OFF TWO FEET BELOW THE FINISHED SURFACE OF THE SUBGRADE OR FINISHED GROUND SURFACE, WHICHEVER IS APPLICABLE.

REFER TO ODOT GEOTECHNICAL BULLETIN GB4 "GUIDELINES FOR THE USE OF GEOTECHNICAL INSTRUMENTATION" FOR ADDITIONAL INSTALLATION AND MONITORING INSTRUCTION.

WAITING PERIOD CRITERIA:
THE ENGINEER WILL CONSIDER THE WAITING PERIOD COMPLETE WHEN CONSECUTIVE SETTLEMENT READINGS, RECORDED AFTER EMBANKMENT CONSTRUCTION IS COMPLETE AND AT LEAST ONE WEEK (168 HOURS) APART, RESULT IN ELEVATION DIFFERENCES EQUAL TO OR LESS THAN ⅛ INCH. THE MINIMUM WAITING PERIOD IS 90 CALENDAR DAYS.

IF SETTLEMENT RATES EXCEED ¾ INCH PER MONTH AFTER EMBANKMENT CONSTRUCTION HAS BEEN COMPLETE FOR 45 CALENDAR DAYS, REMAINING CONSTRUCTION, INCLUDING ANY NECCESARY CORRECTIVE MEASURES, MAY PROCEED ONLY AT THE DIRECTION OF THE ENGINEER.

THE DEPARTMENT WILL CONSIDER VIBRATING WIRE SETTLEMENT MONITORING PLATFORMS IN LIEU OF THE CONVENTIONAL SETTLEMENT PLATFORMS. THE CONTRACTOR SHOULD PROVIDE DETAILS OF THE PROPOSED VIBRATING WIRE SETTLEMENT PLATFORMS AS WELL AS DESIGN DRAWINGS OF THE PROPOSED 30 DAYS PRIOR TO CONSTRUCTION. THE DEPARTMENT WILL REQUIRE 10 WORKING DAYS FOR REVIEW AND APPROVAL. THE DESIGN DRAWINGS SHOULD ILLUSTRATE THE LOCATIONS WITH ALL EXISTING AND PROPOSED SITE FEATURES TO VERIFY THE PROPOSED CABLING WILL NOT CONFLICT WITH EXISTING FACILITIES, PROPOSED FACILITIES OR UTILITIES. NO ADDITIONAL PAYMENT WILL BE PROVIDED IF THE CONTRACTOR ELECTS TO UTILIZE VIBRATING WIRE SETTLEMENT PLATFORMS.

MORE INFORMATION PERTAINING TO EMBANKMENT CONSTRUCTION AND CONTROLLED RATES OF FILL ARE PROVIDED IN THE ROADWAY PLANS.

METHOD OF MEASUREMENT, THE NUMBER OF SETTLEMENT PLATFORMS TO BE PAID FOR SHALL BE THE ACTUAL NUMBER OF SETTLEMENT PLATFORMS COMPLETED, MAINTAINED, AND ACCEPTED BY THE ENGINEER.

BASIS OF PAYMENT: PAYMENT SHALL BE MADE AT THE CONTRACT UNIT PRICE EACH FOR "ITEM SPECIAL - SETTLEMENT PLATFORM" WHICH IS COMPENSATION FOR CONSTRUCTING, MAINTAINING, AND MONITORING THE SETTLEMENT PLATFORMS INCLUDING FURNISHING ALL LABOR, EQUIPMENT, MATERIALS, AND INCIDENTALS NECESSARY TO COMPLETE THE WORK. PAYMENT SHALL NOT BE MADE FOR SETTLEMENT PLATFORMS WHICH BECOME USELESS DUE TO DAMAGE CAUSED BY THE CONTRACTOR'S OPERATIONS. SEE DETAIL THIS SHEET.

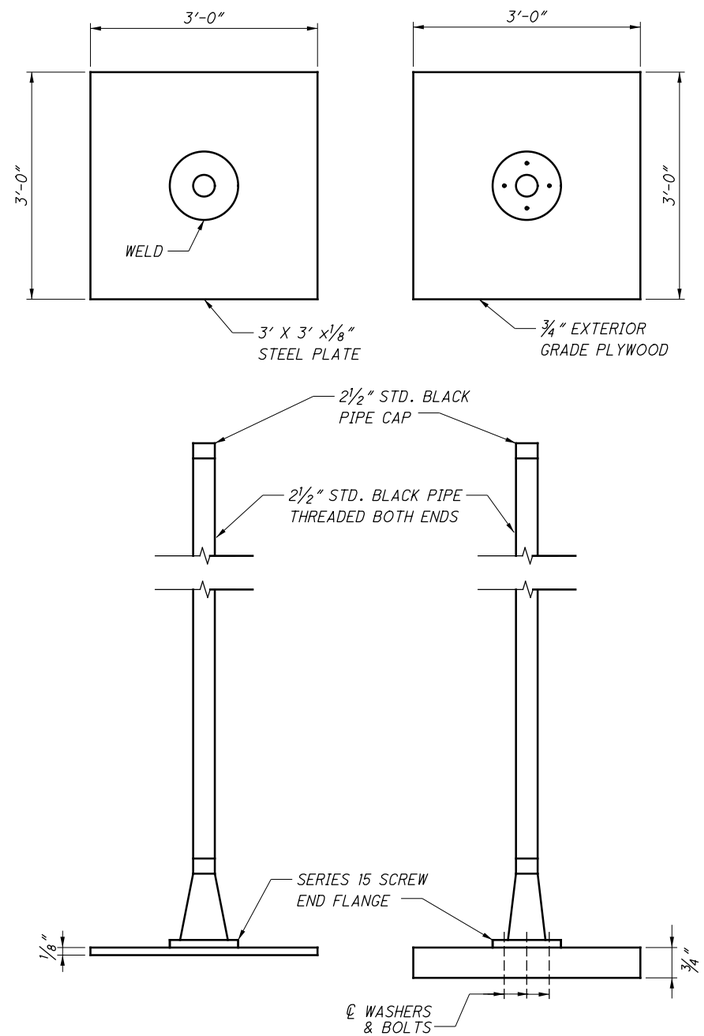

SETTLEMENT PLATFORM

(NOT TO SCALE)

NOTES:

1. SETTLEMENT PLATFORMS SHALL BE ANCHORED BY STAKES DRIVEN AT EACH CORNER TO PREVENT OVERTURNING.

DRAFT Stage 3 - Not for Construction 09/23/2024

DESIGN AGENCY
Stantec
1500 Lake Shore Dr.
Columbus, OH 43204
(614) 486-4383

DESIGNED	DRAWN	REVIEWED	DATE
MRS	ALH	BSM	2/2024
CHECKED	REVISED	STRUCTURE FILE NUMBER	
EDA		4400526	

GENERAL NOTES
BRIDGE NO. LAW-7-0713 R
S.R. 7 OVER LITTLE PADDY CREEK

LAW-7-2.17
PID No. 75923

992
1247

V:\1736\active\173608714\LAW\engineering\75923_LAW-7-2.17\Design\structures\LAW007_0713R\sheets\007_0713R_SN002.dgn Sheet 5/13/2024 1:45:06 PM mstur devant

ESTIMATED QUANTITIES (PARTICIPATION CODE 02/NHS/08)

ITEM	EXTENSION	TOTAL	UNIT	DESCRIPTION	ABUT.	PIERS	SUPER.	GEN.	SHEET NO.
SPECIAL	203E65000	3	EA	SETTLEMENT PLATFORM				3	
503	21300	LUMP	LS	UNCLASSIFIED EXCAVATION				LUMP	
505	11100	LUMP	LS	PILE DRIVING EQUIPMENT MOBILIZATION				LUMP	
507	00200	5415	FT	STEEL PILES HP12X53, FURNISHED	3120	2295			
507	00250	4985	FT	STEEL PILES HP12X53, DRIVEN	2960	2025			
509	10000	249,777	LB	EPOXY COATED STEEL REINFORCEMENT	21,360	79,198	149,219		
509	30020	11,871	FT	NO. 4 DEFORMED GFRP REINFORCEMENT			11,871		
511	34446	533	CY	CLASS QC2 CONCRETE WITH QC/QA, BRIDGE DECK			533		
511	34450	98	CY	CLASS QC2 CONCRETE WITH QC/QA, BRIDGE DECK (PARAPET)			98		
511	43512	245	CY	CLASS QC1 CONCRETE WITH QC/QA, ABUTMENT INCLUDING FOOTING	245				
511	45602	294	CY	CLASS QC4 MASS CONCRETE, SUBSTRUCTURE WITH QC/QA		294			
511	46512	142	CY	CLASS QC1 CONCRETE WITH QC/QA, FOOTING		142			
512	10100	2383	SY	SEALING OF CONCRETE SURFACES (EPOXY-URETHANE)	204	565	1614		
512	10300	39	SY	SEALING CONCRETE BRIDGE DECKS WITH HMWM RESIN			39		
512	33000	51	SY	TYPE 2 WATERPROOFING	51				
515	14041	5	EACH	DRAPED STRAND PRESTRESSED CONCRETE BRIDGE I-BEAM MEMBERS, LEVEL 3, TYPE 4 MOD. (66"), AS PER PLAN 119'-4½"			5		
515	14041	5	EACH	DRAPED STRAND PRESTRESSED CONCRETE BRIDGE I-BEAM MEMBERS, LEVEL 3, TYPE 4 MOD. (66"), AS PER PLAN 100'-1½"			5		14/26
515	14041	5	EACH	DRAPED STRAND PRESTRESSED CONCRETE BRIDGE I-BEAM MEMBERS, LEVEL 3, TYPE 4 MOD. (66"), AS PER PLAN 101'-7⅜"			5		14/26
515	20000	36	EACH	INTERMEDIATE DIAPHRAGMS			36		
516	12300	94	FT	STRIP SEAL EXPANSION JOINT ANCHORED WITH ELASTOMERIC CONCRETE			94		
516	44100	30	EACH	ELASTOMERIC BEARING WITH INTERNAL LAMINATES AND LOAD PLATE (NEOPRENE) 2.349" X 1'-0" X 2'-1"	10	20			
518	20000	165	SY	PREFABRICATED GEOCOMPOSITE FABRIC	165				
518	21200	26	CY	POROUS BACKFILL WITH GEOTEXTILE FABRIC	26				
518	40000	154	FT	6" PERFORATED CORRUGATED PLASTIC PIPE	154				
518	40011	50	FT	6" NON-PERFORATED CORRUGATED PLASTIC PIPE, INCLUDING SPECIALS, AS PER PLAN	50				8/26
526	25011	251	SY	REINFORCED CONCRETE APPROACH SLABS WITH QC/QA (T=15"), AS PER PLAN				251	23/26
526	90010	91	FT	TYPE A INSTALLATION	91				
601	20000	1769	SY	CRUSHED AGGREGATE SLOPE PROTECTION				1769	
601	32204	497	CY	ROCK CHANNEL PROTECTION, TYPE C WITH GEOTEXTILE FABRIC				497	

DRAFT Stage 3 - Not for Construction 09/23/2024

DESIGN AGENCY
Stantec
1500 Lake Shore Dr.
Columbus, OH 43204
(614) 486-4383

DESIGNED MRS | DRAWN ALH | REVIEWED BSM | DATE 2/2024 | STRUCTURE FILE NUMBER 4400526
CHECKED EDA | REVISED

ESTIMATED QUANTITIES
BRIDGE NO. LAW-7-0713 R
S.R. 7 OVER LITTLE PADDY CREEK

LAW-7-2.17
PID No. 75923

V:\1736\active\173608714\LAW\engineering\75923_LAW-7-2.17\Design\structures\LAW007_0713R\sheets\007_0713R_SQ001.dgn Sheet 5/13/2024 1:45:08 PM msturdevant

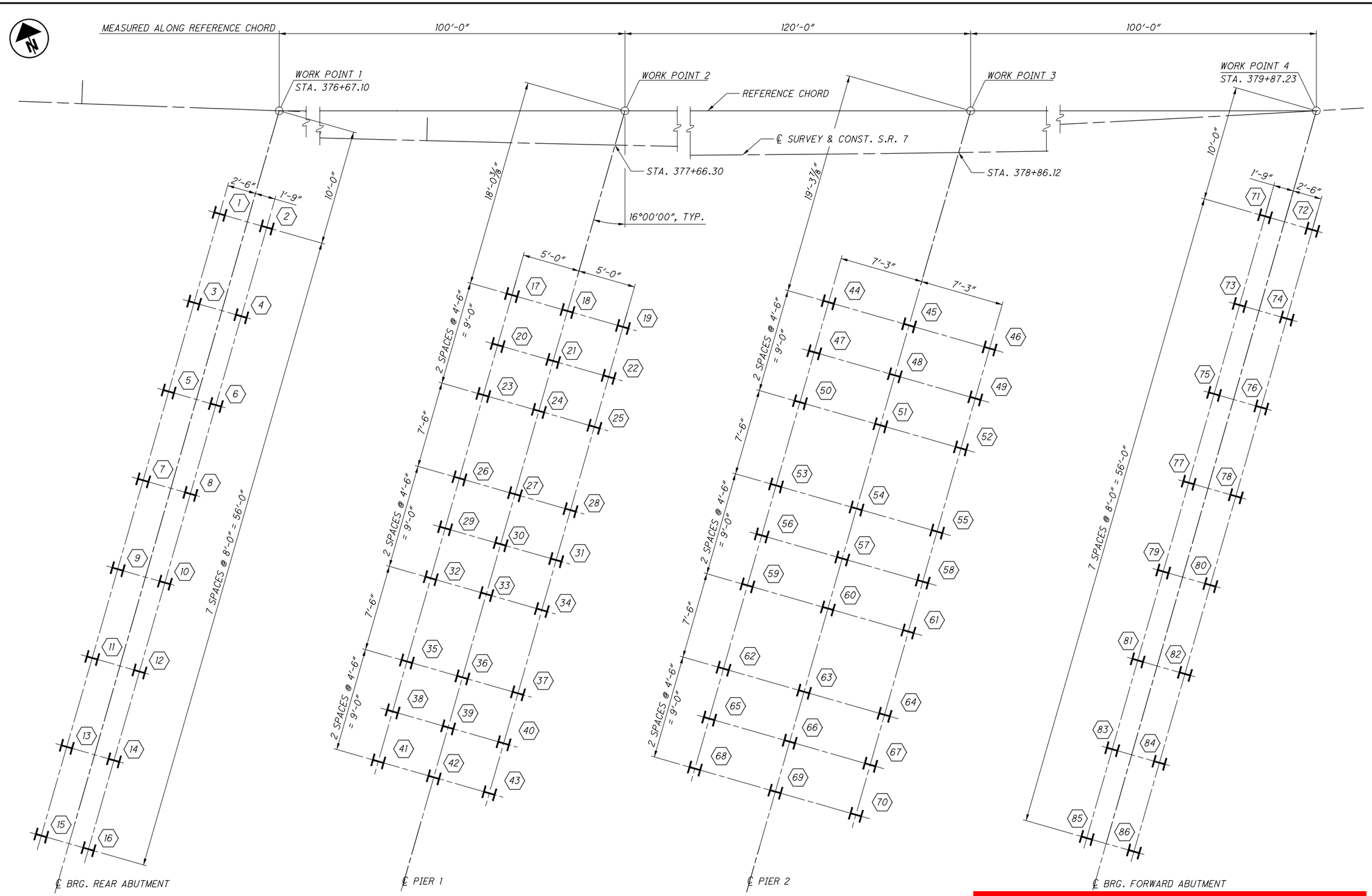

FOUNDATION PLAN

NOTES:
1. ALL PILES ARE HP 12X53.
2. (30) DESIGNATES PILE NUMBER AND LOCATION.

DRAFT Stage 3 - Not for Construction 09/23/2024

DESIGN AGENCY
Stantec
1500 Lake Shore Dr.
Columbus, OH 43204
(614) 486-4383

DESIGNED	DRAWN	REVIEWED	DATE
MRS	ALH	BSM	2/2024
CHECKED	REVISED	STRUCTURE FILE NUMBER	
EDA		4400526	

FOUNDATION PLAN
BRIDGE NO. LAW-7-0713 R
S.R. 7 OVER LITTLE PADDY CREEK

LAW-7-2.17
PID No. 75923

6 / 26

994
1247

V:\1736\active\173608714\LAW\engineering\75923_LAW-7-2.17\Design\structures\LAW007_0713R\sheets\007_0713R_S0001.dgn Sheet 5/13/2024 1:45:12 PM msturdevant

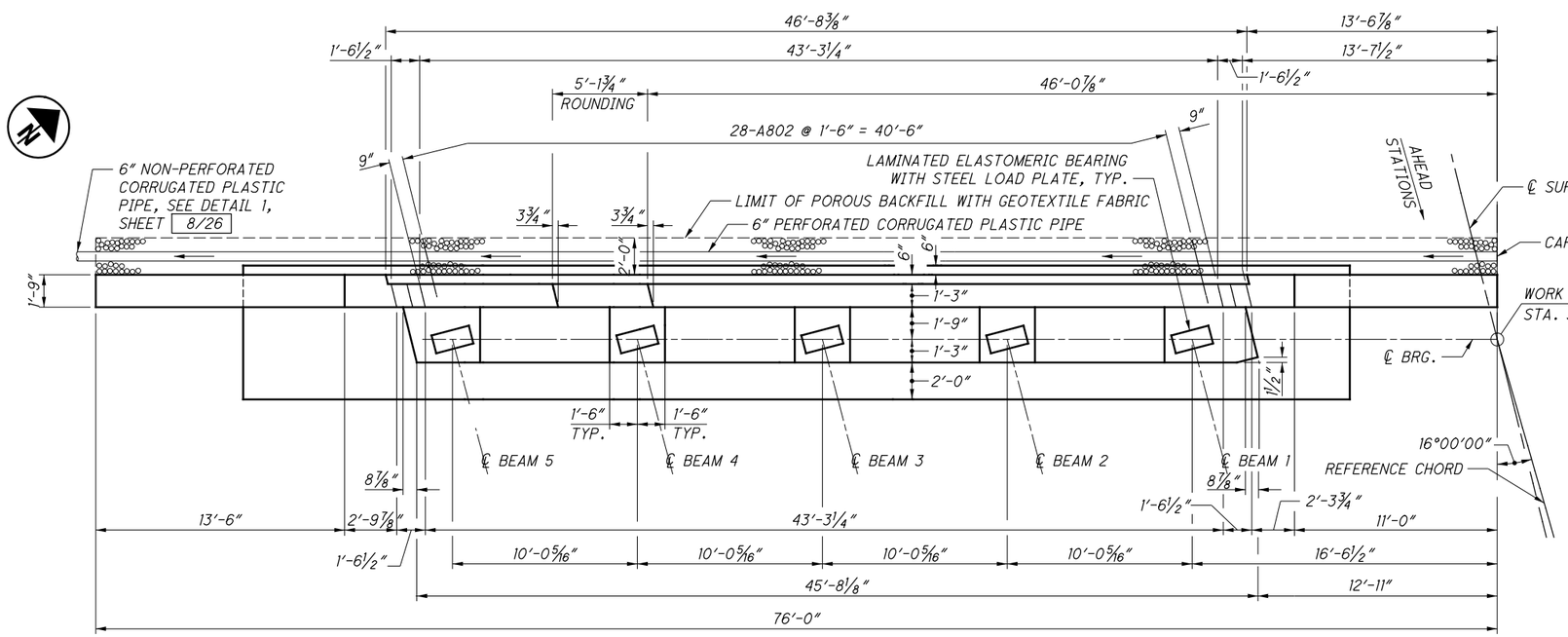

PLAN

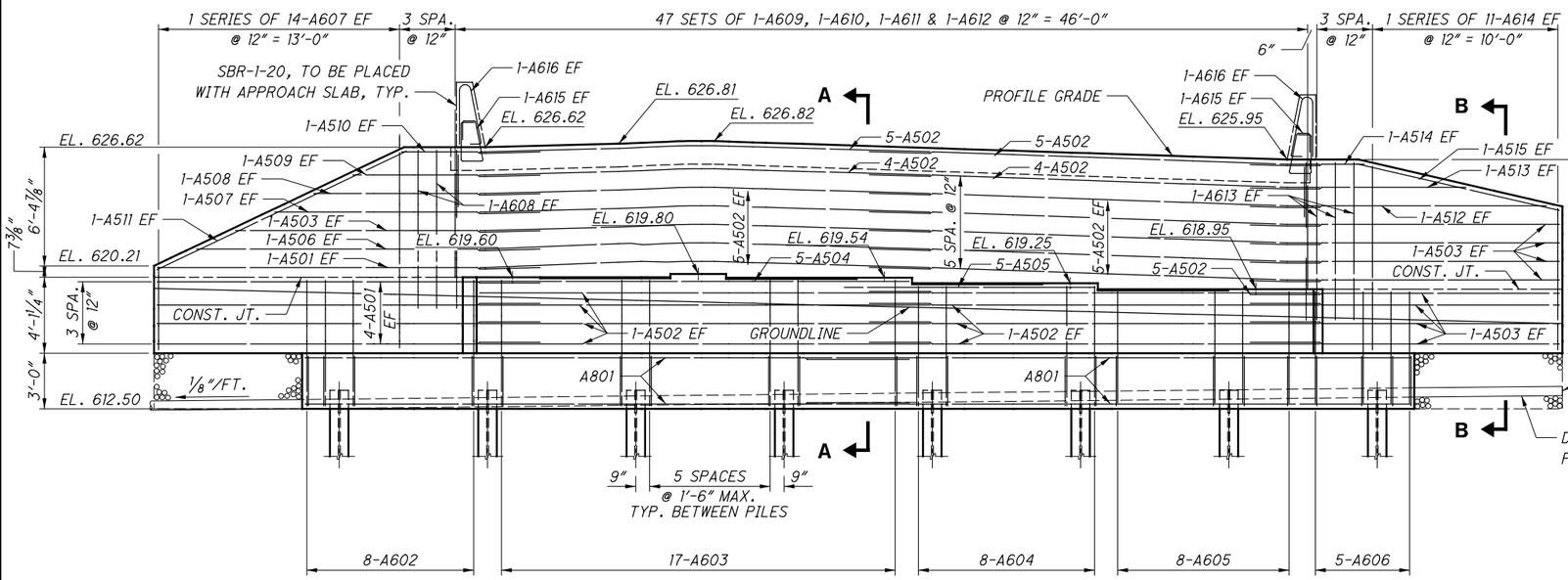

ELEVATION

LAP LENGTHS:
#5 BARS = 3′-3″
#8 BARS = 5′-6″

NOTE:
A603 AND A605 BARS AT EACH END OF BEAM SEAT SHALL BE PLACED PARALLEL TO THE SKEWED END OF BEAM SEAT.

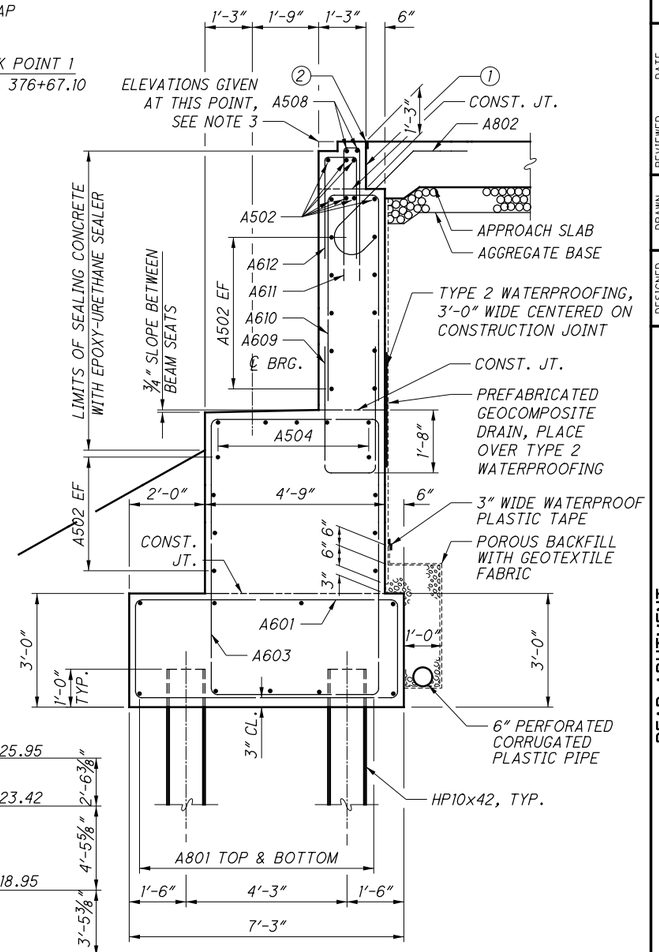

SECTION A-A

① TYPE A WATERPROOFING (INCLUDE WITH APPROACH SLAB FOR PAYMENT)

② PREFORMED ELASTOMERIC JOINT SEALER. FOR ADDITIONAL DETAILS, SEE SDT. DWG. AS-1-15, DETAIL B (INCLUDE WITH APPROACH SLAB FOR PAYMENT)

NOTES:
1. FOR PILE LAYOUT, SEE SHEET 6/26
2. FOR CUTTING PLAN, SEE SHEET 8/26
3. FOR EXPANSION JOINT DETAILS, SEE STD. DWG. BEL-1-87
4. FOR SECTION B-B, SEE SHEET 8/26 .
5. UNLESS OTHERWISE NOTED, ALL REINFORCEMENT SHALL BE INSTALLED WITH A MINIMUM CLEARANCE OF 2″ TO THE CONCRETE SURFACE.

DRAFT Stage 3 - Not for Construction 09/23/2024

DESIGN AGENCY
Stantec
1500 Lake Shore Dr.
Columbus, OH 43204
(614) 486-4383

DESIGNED	DRAWN	REVIEWED	DATE
MRS	ALH	BSM	2/2024
CHECKED	REVISED	STRUCTURE FILE NUMBER	
EDA		4400526	

REAR ABUTMENT
BRIDGE NO. LAW-7-0713 R
S.R. 7 OVER LITTLE PADDY CREEK

LAW-7-2.17
PID No. 75923

V:\1736\active\173608714\LAW\engineering\75923_LAW-7-2.17\Design\structures\LAW007_0713R\sheets\007_0713R_SR001.dgn Sheet 5/13/2024 1:45:15 PM msturdevant

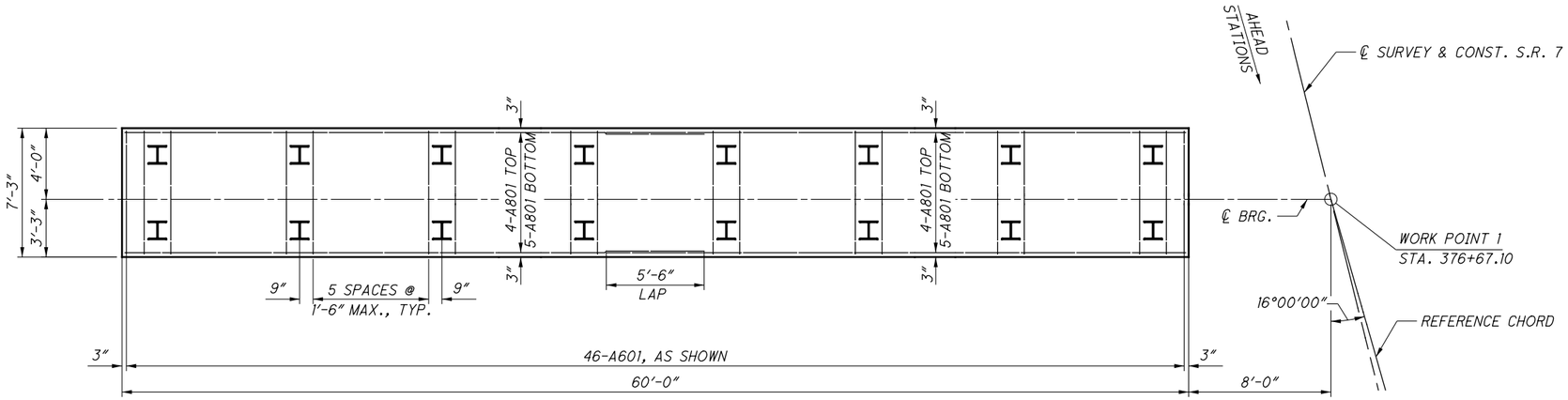

FOOTING PLAN

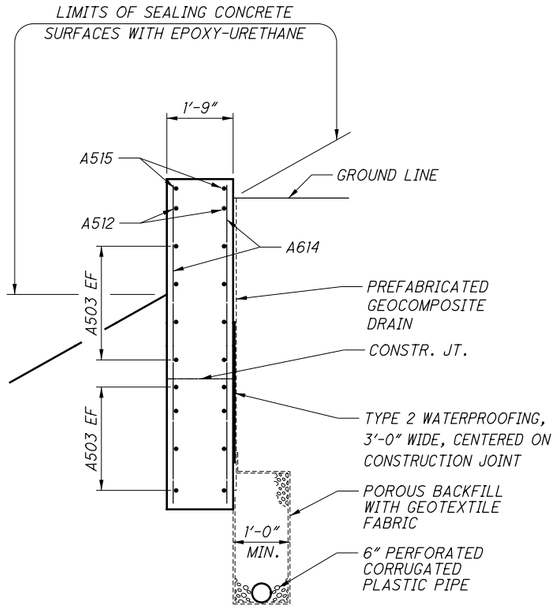

SECTION B-B

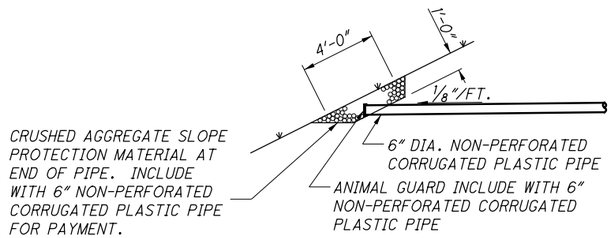

DETAIL 1

NOTES:
1. FOR PILE LAYOUT PLAN, SEE SHEET 6/26 .

DRAFT Stage 3 - Not for Construction 09/23/2024

DESIGN AGENCY
Stantec
1500 Lake Shore Dr.
Columbus, OH 43204
(614) 486-4383

DESIGNED	DRAWN	REVIEWED	DATE
MRS	ALH	BSM	2/2024
CHECKED	REVISED	STRUCTURE FILE NUMBER	
EDA		4400526	

REAR ABUTMENT (2)
BRIDGE NO. LAW-7-0713 R
S.R. 7 OVER LITTLE PADDY CREEK

LAW-7-2.17
PID No. 75923

8 / 26

996
1247

V:\1736\active\173608714\LAW\engineering\75923_LAW-7-2.17\Design\structures\LAW007_0713R\sheets\007_0713R_SR002.dgn Sheet 5/13/2024 1:45:18 PM msturdevant

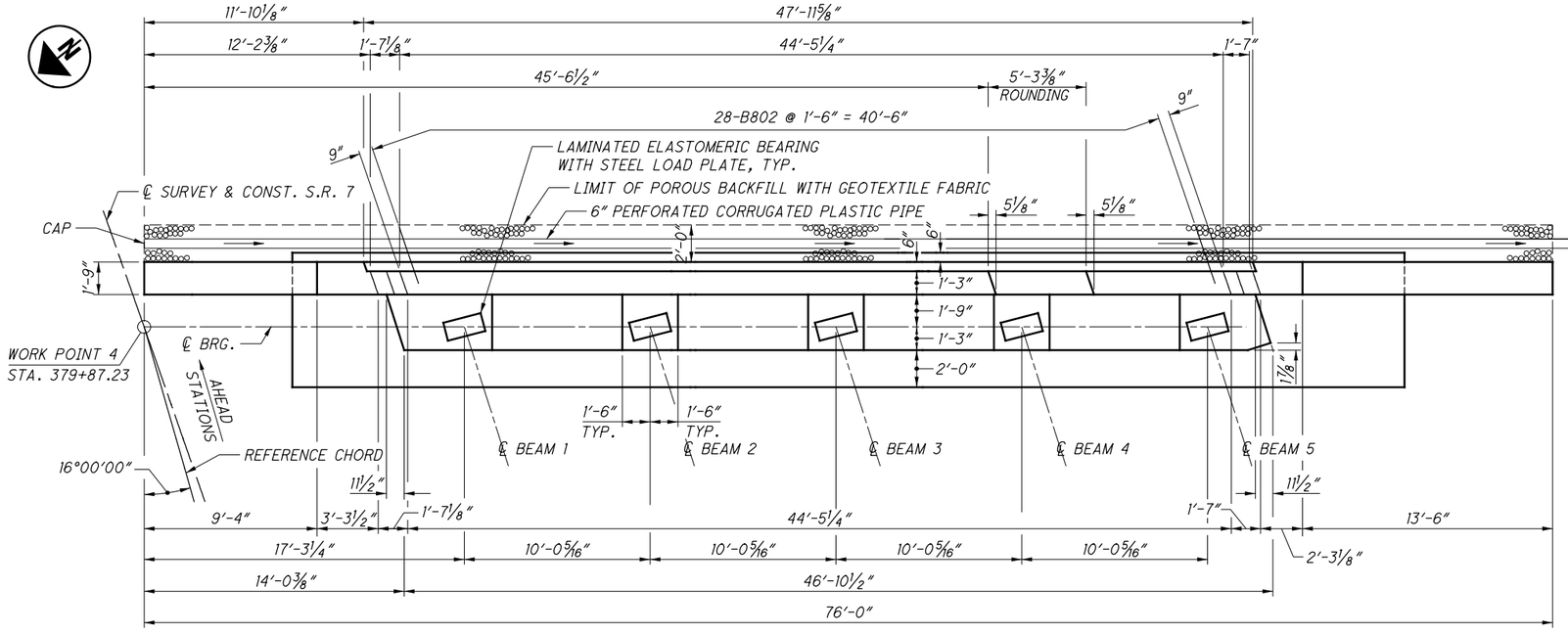

PLAN

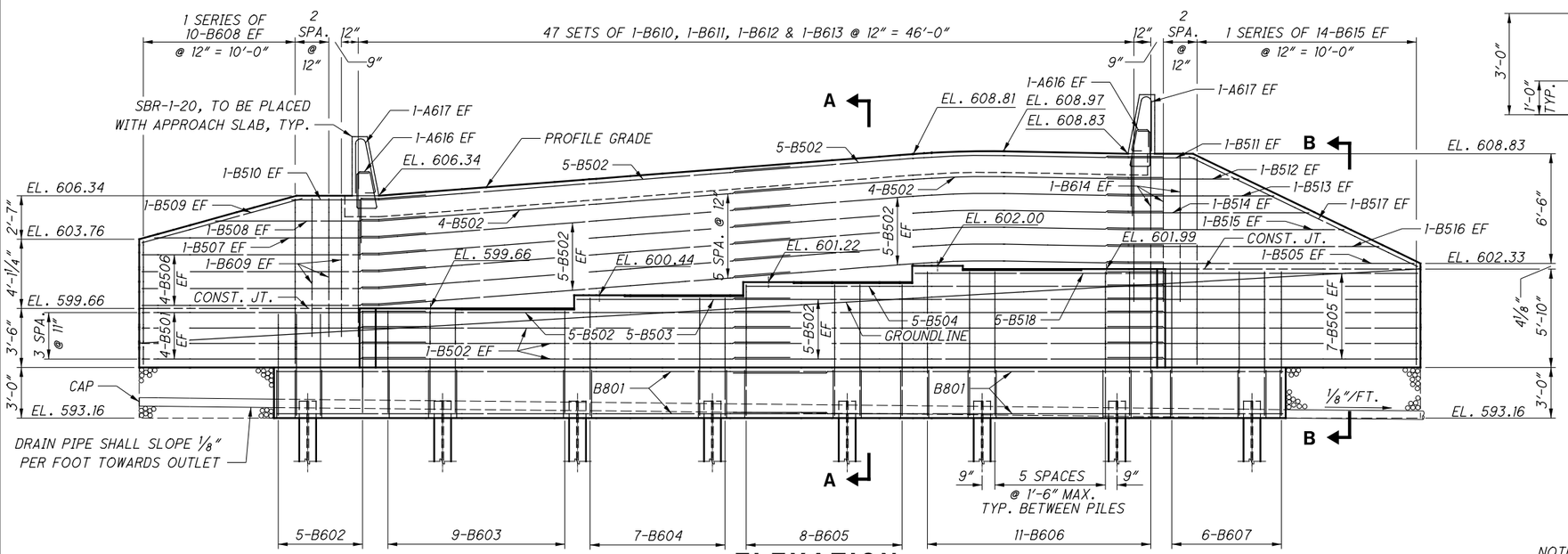

ELEVATION

LAP LENGTHS:
#5 BARS = 3′-3″
#8 BARS = 5′-6″

NOTE:
B603 AND B606 BARS AT EACH END OF BEAM SEAT SHALL BE PLACED PARALLEL TO THE SKEWED END OF BEAM SEAT.

① TYPE A WATERPROOFING (INCLUDE WITH APPROACH SLAB FOR PAYMENT)

② PREFORMED ELASTOMERIC JOINT SEALER. FOR ADDITIONAL DETAILS, SEE SDT. DWG. AS-1-15, DETAIL B (INCLUDE WITH APPROACH SLAB FOR PAYMENT)

6″ NON-PERFORATED CORRUGATED PLASTIC PIPE, SEE DETAIL 1, SHEET 8/26

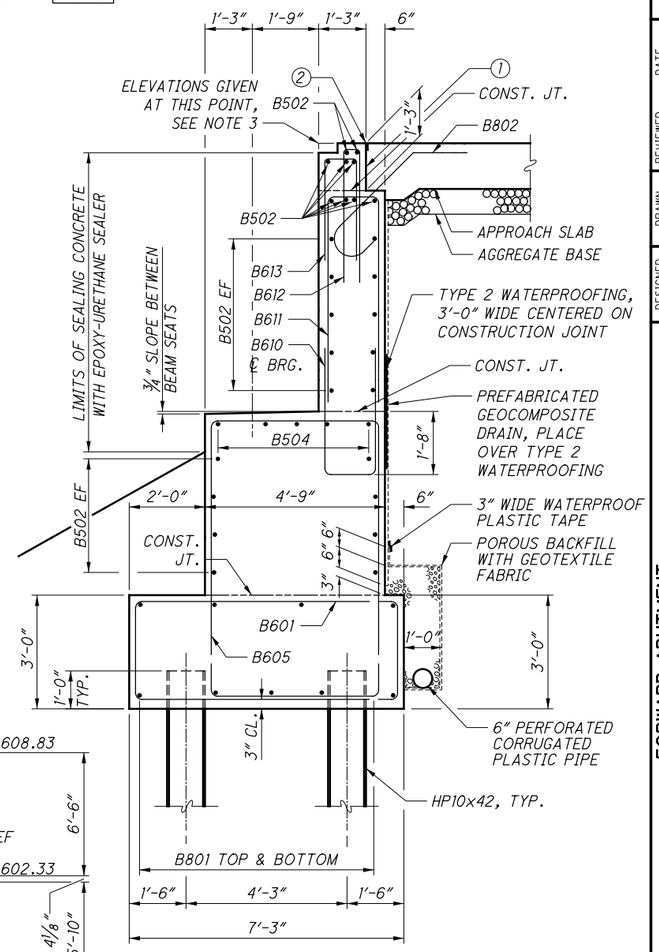

SECTION A-A

NOTES:
1. FOR PILE LAYOUT, SEE SHEET 6/26
2. FOR FOOTING DETAILS, SEE SHEET 10/26
3. FOR EXPANSION JOINT DETAILS, SEE STD. DWG. EXJ-6-17.
4. FOR SECTION B-B, SEE SHEET 10/26
5. UNLESS NOTED OTHERWISE ALL REINFORCING SHALL BE INSTALLED WITH A MINIMUM CLEARANCE OF 2″ TO THE CONCRETE SURFACE.

DRAFT Stage 3 - Not for Construction 09/23/2024

DESIGN AGENCY
Stantec
1500 Lake Shore Dr.
Columbus, OH 43204
(614) 486-4383

DESIGNED	DRAWN	REVIEWED	DATE
MRS	ALH	BSM	2/2024
CHECKED	REVISED	STRUCTURE FILE NUMBER	
EDA		4400526	

FORWARD ABUTMENT
BRIDGE NO. LAW-7-0713 R
S.R. 7 OVER LITTLE PADDY CREEK

LAW-7-2.17
PID No. 75923

9 / 26

997
1247

V:\1736\active\173608714\LAW\engineering\75923_LAW-7-2.17\Design\structures\LAW007_0713R\sheets\007_0713R_SF001.dgn Sheet 5/13/2024 1:45:21 PM msturdevant

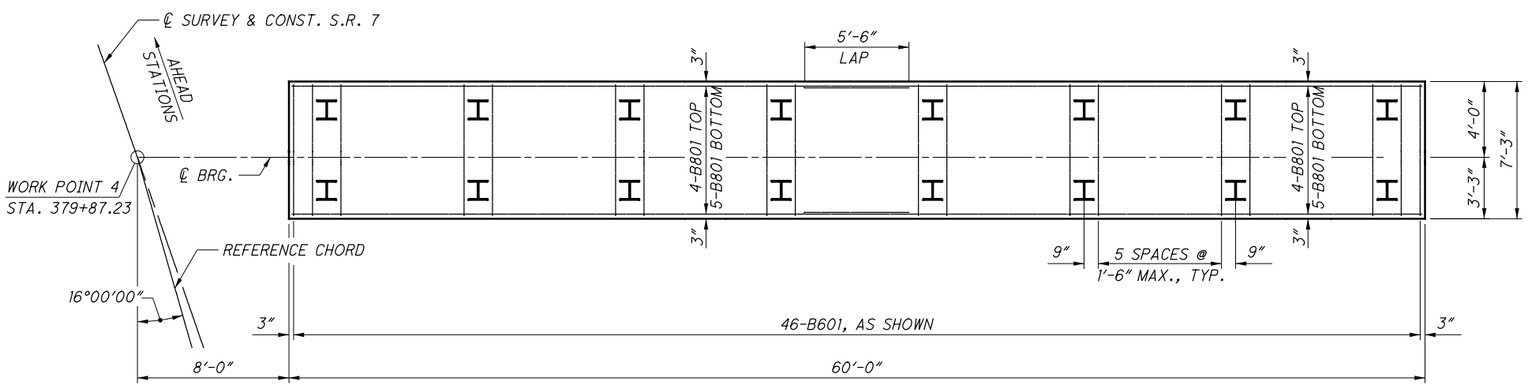

FOOTING PLAN

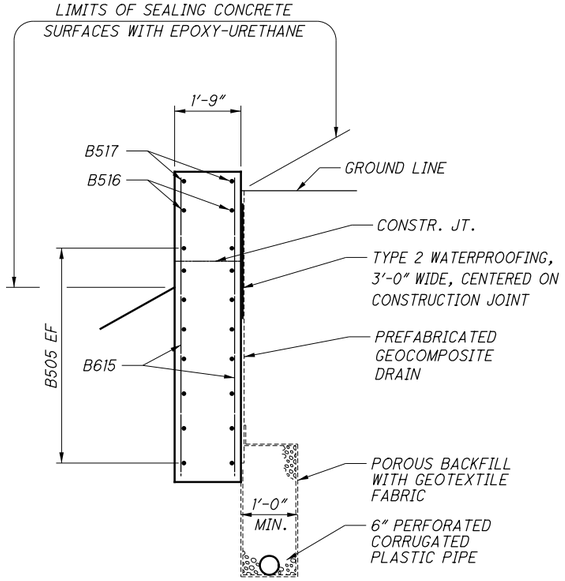

SECTION B-B

NOTES:
1. FOR PILE LAYOUT PLAN, SEE SHEET 6/26 .

DRAFT Stage 3 - Not for Construction 09/23/2024

V:\1736\active\173608714\LAW\engineering\75923_LAW-7-2.17\Design\structures\LAW007_0713R\sheets\007_0713R_SF002.dgn Sheet 5/13/2024 1:45:24 PM msturdevant

DESIGN AGENCY
Stantec 1500 Lake Shore Dr. Columbus, OH 43204 (614) 486-4383

DESIGNED	DRAWN	REVIEWED	DATE
MRS	ALH	BSM	2/2024
CHECKED	REVISED	STRUCTURE FILE NUMBER	
EDA		4400526	

FORWARD ABUTMENT (2)
BRIDGE NO. LAW-7-0713 R
S.R. 7 OVER LITTLE PADDY CREEK

LAW-7-2.17
PID No. 75923

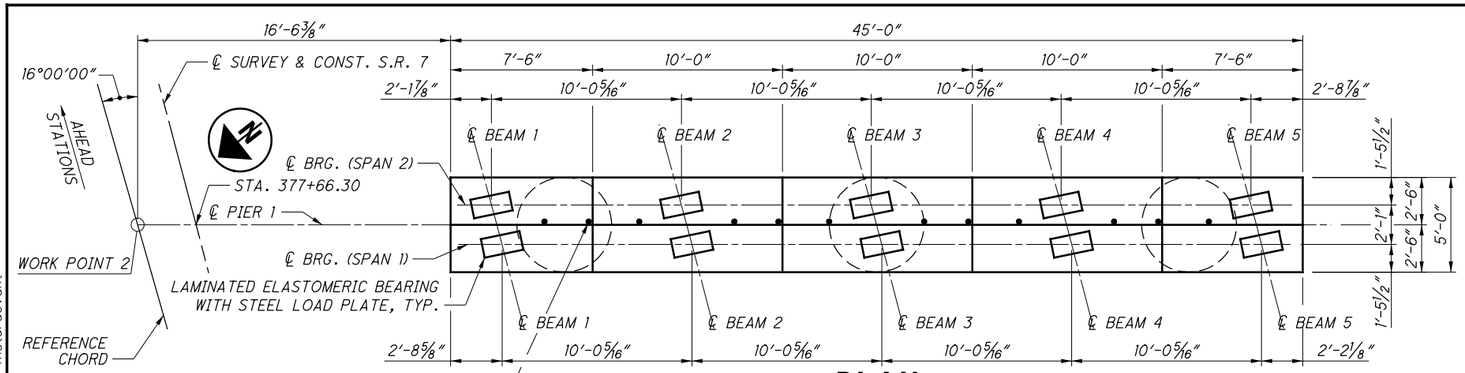

PLAN

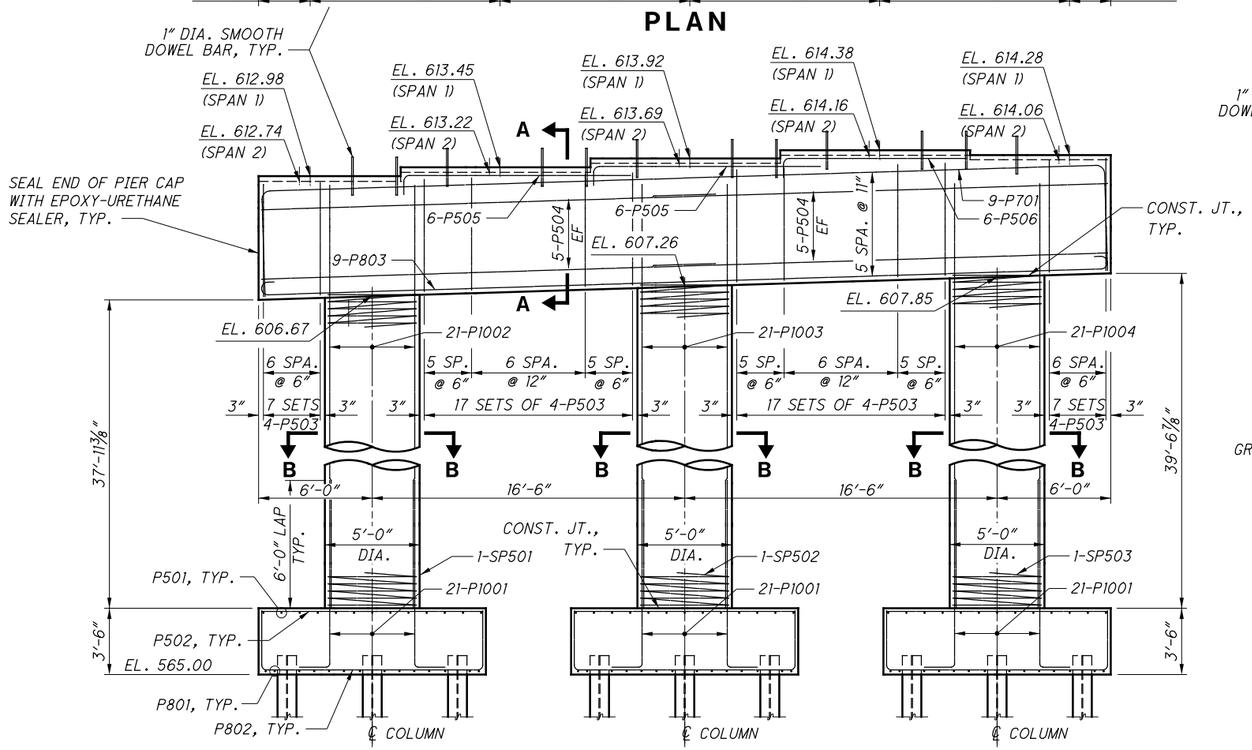

ELEVATION

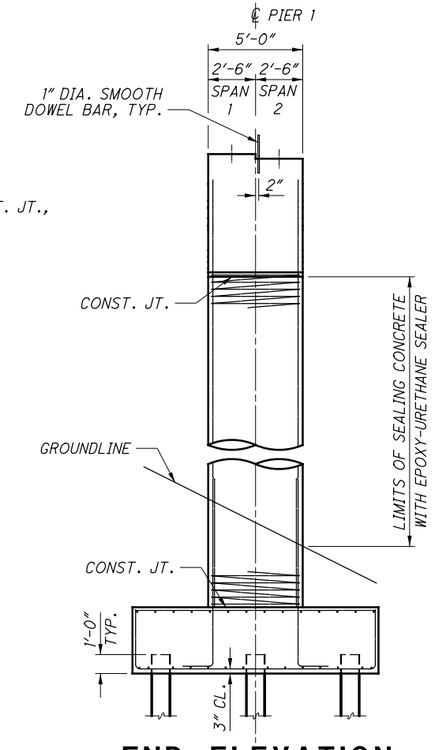

END ELEVATION

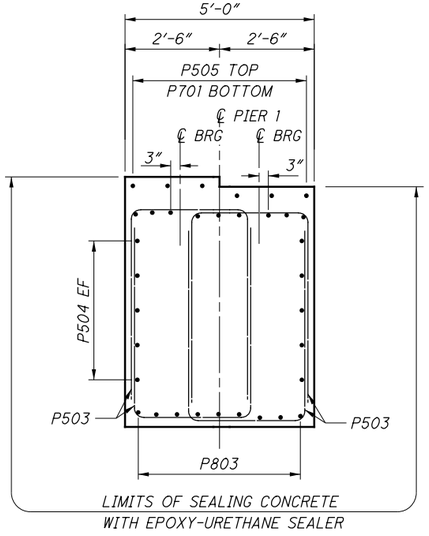

SECTION A-A

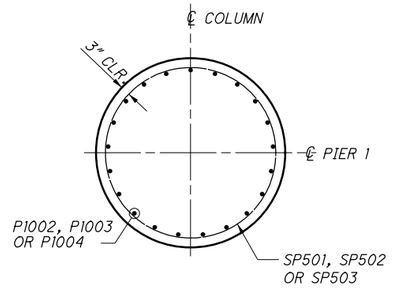

SECTION B-B

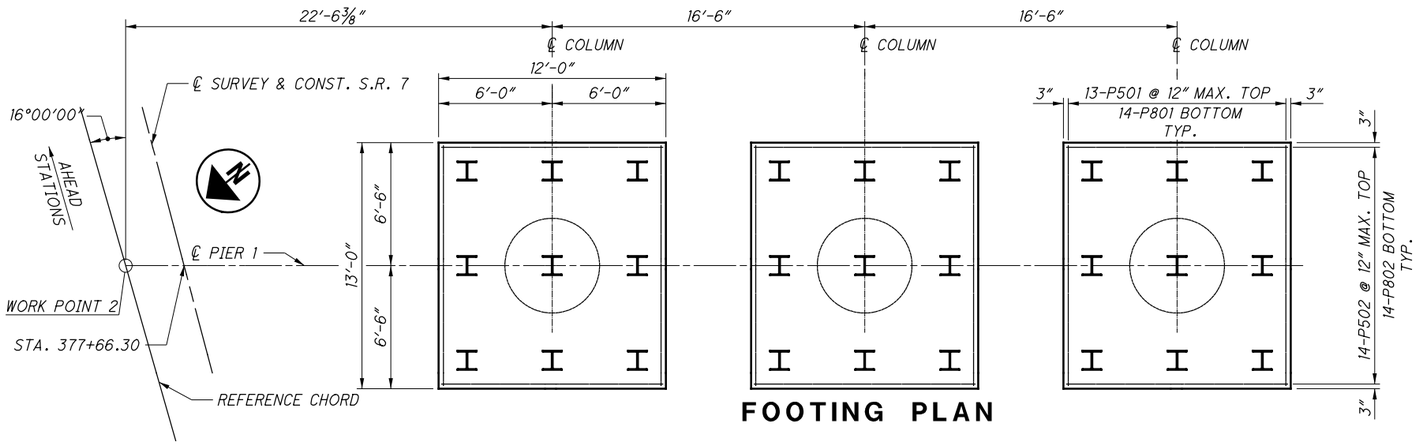

FOOTING PLAN

LAP LENGTHS:
#5 BARS = 3'-3"
#10 BARS = 6'-0"

NOTES:
1. UNLESS NOTED OTHERWISE, ALL REINFORCING STEEL TO BE INSTALLED WITH A MINIMUM CLEARANCE OF 2" TO THE CONCRETE SURFACE.
2. PIER CAP AND COLUMNS ARE CONSIDERED MASS CONCRETE AND SPECIAL CONCRETE SHALL BE USED FOR THESE MEMBERS.
3. FOR SPACING OF 1" DIA. SMOOTH DOWELS, SEE SHEET 20/26 .

DRAFT Stage 3 - Not for Construction 09/23/2024

DESIGN AGENCY
Stantec
1500 Lake Shore Dr.
Columbus, OH 43204
(614) 486-4383

DESIGNED	DRAWN	REVIEWED	DATE
MRS	ALH	BSM	2/2024
CHECKED	REVISED	STRUCTURE FILE NUMBER	
EDA		4400526	

PIER 1
BRIDGE NO. LAW-7-0713 R
S.R. 7 OVER LITTLE PADDY CREEK

LAW-7-2.17
PID No. 75923

11 / 26

999
1247

V:\1736\active\173608714\LAW\engineering\75923_LAW-7-2.17\Design\structures\LAW007_0713R\sheets\007_0713R_SI001.dgn Sheet 5/13/2024 1:45:27 PM msturdevant

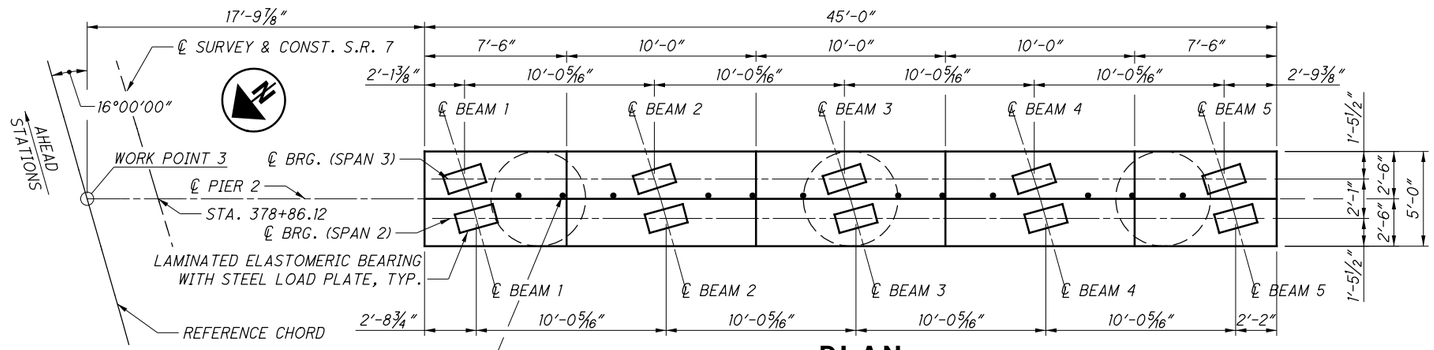

PLAN

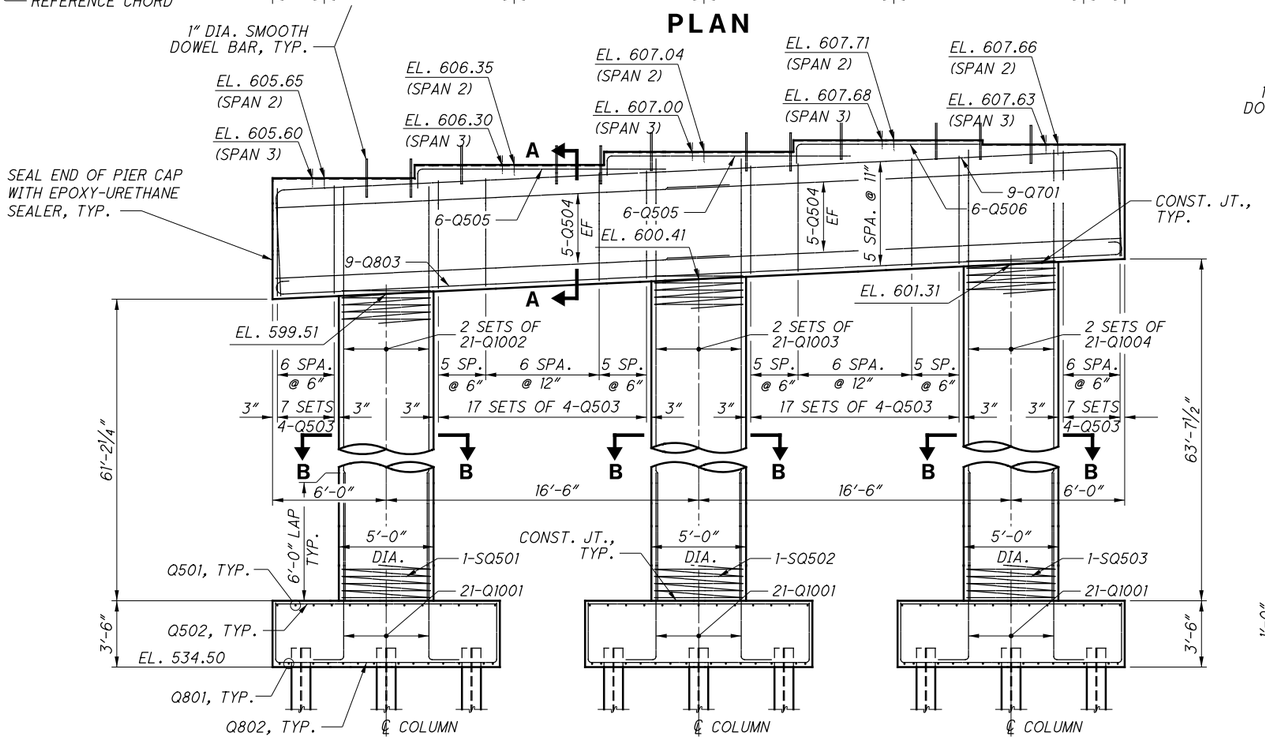

ELEVATION

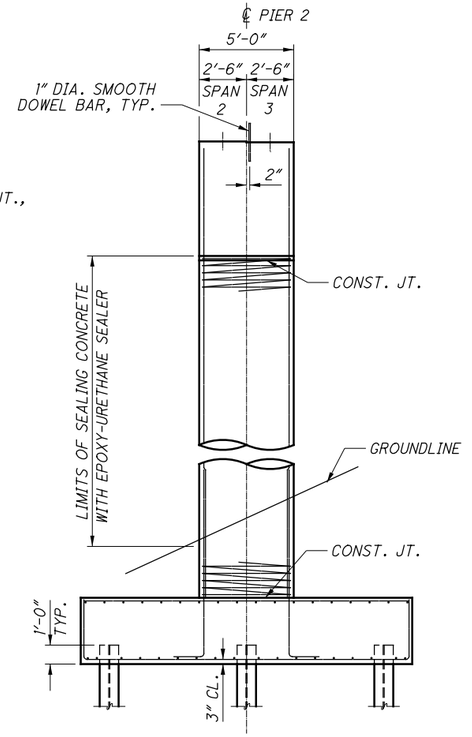

END ELEVATION

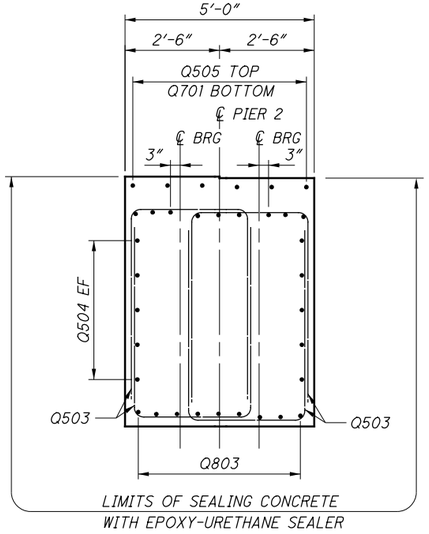

SECTION A-A

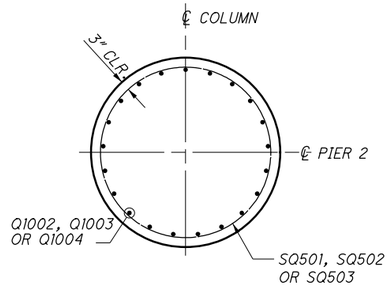

SECTION B-B

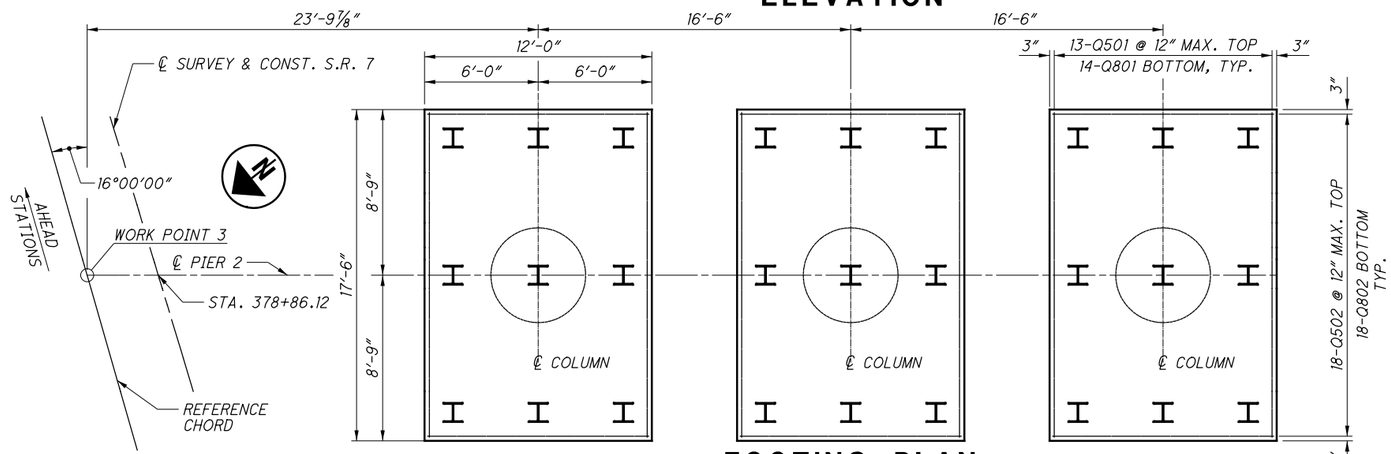

FOOTING PLAN

LAP LENGTHS:
#5 BAR = 3′-3″
#10 bar = 6′-0″

NOTES:
1. UNLESS NOTED OTHERWISE, ALL REINFORCING STEEL TO BE INSTALLED WITH A MINIMUM CLEARANCE OF 2″ TO THE CONCRETE SURFACE.
2. PIER CAP AND COLUMNS ARE CONSIDERED MASS CONCRETE AND SPECIAL CONCRETE SHALL BE USED PER CMS 499.
3. FOR SPACING OF 1″ DIA. SMOOTH DOWELS, SEE SHEET 20/26 .

DRAFT Stage 3 - Not for Construction
09/23/2024

DESIGN AGENCY
Stantec
1500 Lake Shore Dr.
Columbus, OH 43204
(614) 486-4383

DESIGNED	DRAWN	REVIEWED	DATE
MRS	ALH	BSM	2/2024
CHECKED	REVISED	STRUCTURE FILE NUMBER	
EDA		4400526	

PIER 2
BRIDGE NO. LAW-7-0713 R
S.R. 7 OVER LITTLE PADDY CREEK

LAW-7-2.17
PID No. 75923

12 / 26

1000
1247

V:\1736\active\173608714\LAW\engineering\75923_LAW-7-2.17\Design\structures\LAW007_0713R\sheets\007_0713R_SI002.dgn Sheet 5/13/2024 1:45:29 PM msturdevant

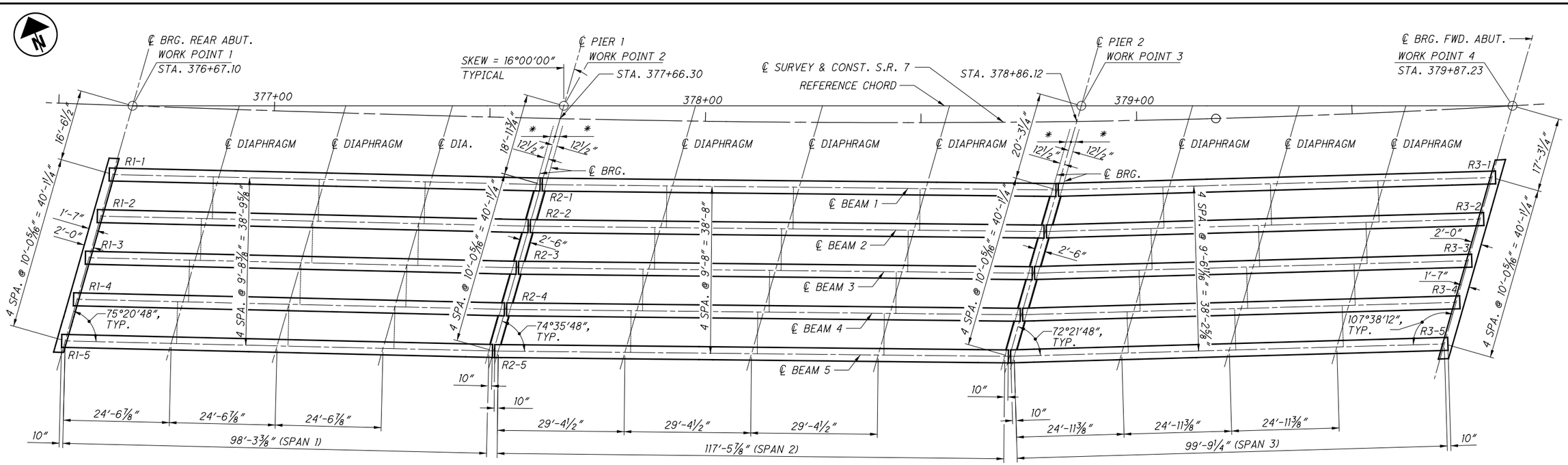

* 1'-1" MEASURED PARALLEL TO REFERENCE CHORD

FRAMING PLAN

FRAMING PLAN NOTES:

1. FOR ADDITIONAL BEAM AND INTERMEDIATE DIAPHRAGM DETAILS, SEE STD. DWG. PSID-1-13.
2. FOR ADDITIONAL BEAM DETAILS, SEE SHEET 14/26 AND 15/26 .
3. FOR PIER AND ABUTMENT DIAPHRAGM DETAILS, SEE STD. DWG. PSID-1-13 AND SHEET 20/26.

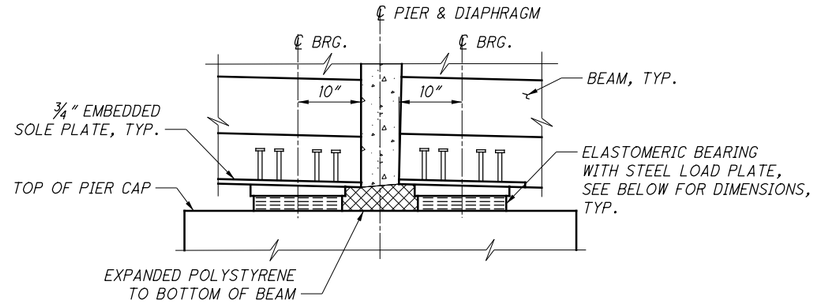

SECTION THRU PIER

SERVICE LOADS (UNFACTORED)

DEAD LOAD REACTION = 183 K
LIVE LOAD REACTION = 119 K
TOTAL REACTION = 302 K

THICKNESS OF EXTERNAL ELASTOMER = 0.25" (1 REQUIRED)

THICKNESS OF INTERNAL ELASTOMER = 0.45" (4 REQUIRED)

INTERNAL STEEL LAMINATE THICKNESS = 0.1046" (4 REQUIRED)

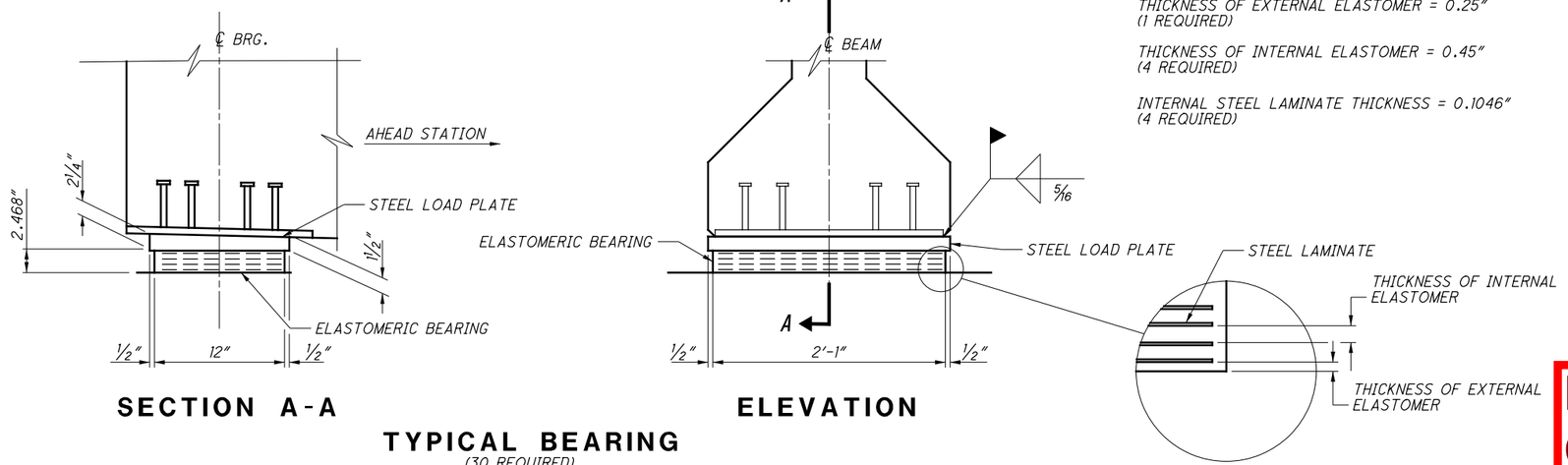

SECTION A-A

ELEVATION

TYPICAL BEARING

(30 REQUIRED)

BEARING NOTES:

1. ELASTOMERIC BEARINGS: THE ELASTOMER SHALL HAVE A HARDNESS OF 50 DUROMETER. THE BEARINGS WERE DESIGNED IN ACCORDANCE WITH SECTION 14.7.6 (METHOD A) OF THE AASHTO LRFD BRIDGE DESIGN SPECIFICATIONS. THE LONG TERM COMPRESSION PROOF LOAD TEST (AASHTO STANDARD SPECIFICATIONS FOR HIGHWAY BRIDGES, DIVISION II, SECTION 18.7.2.6) IS NOT REQUIRED.
2. STEEL LOAD PLATES: LOAD PLATES SHALL BE A709 GRADE 50 STRUCTURAL STEEL, GALVANIZED PER CMS 711.02, AND BONDED BY VULCANIZATION TO THE ELASTOMER DURING THE MOLDING PROCESS.
3. FOR DETAILS OF THE STUDS AND EMBEDDED PLATE, AND FOR ADDITIONAL INFORMATION, SEE STD. DWG. PSID-1-13.
4. ALL BEARINGS SHALL BE MARKED PRIOR TO SHIPPING. THE MARKS SHALL INDICATE THE BEARING LOCATION ON THE BRIDGE, AND A DIRECTION ARROW THAT POINTS UP-STATION. THE MARKS SHALL BE PERMANENT AND VISIBLE AFTER THE BEARING IS INSTALLED.

DRAFT Stage 3 - Not for Construction 09/23/2024

DESIGN AGENCY
Stantec
1500 Lake Shore Dr.
Columbus, OH 43204
(614) 486-4383

DESIGNED	DRAWN	REVIEWED	DATE
MRS	ALH	BSM	2/2024
CHECKED	REVISED	STRUCTURE FILE NUMBER	
EDA		4400526	

FRAMING PLAN AND BEARING DETAILS
BRIDGE NO. LAW-7-0713 R
S.R. 7 OVER LITTLE PADDY CREEK

LAW-7-2.17
PID No. 75923

13 / 26

1001
1247

V:\1736\active\173608714\LAW\engineering\75923_LAW-7-2.17\Design\structures\LAW007_0713R\sheets\007_0713R_SD001.dgn Sheet 5/13/2024 1:45:31 PM msturdevant

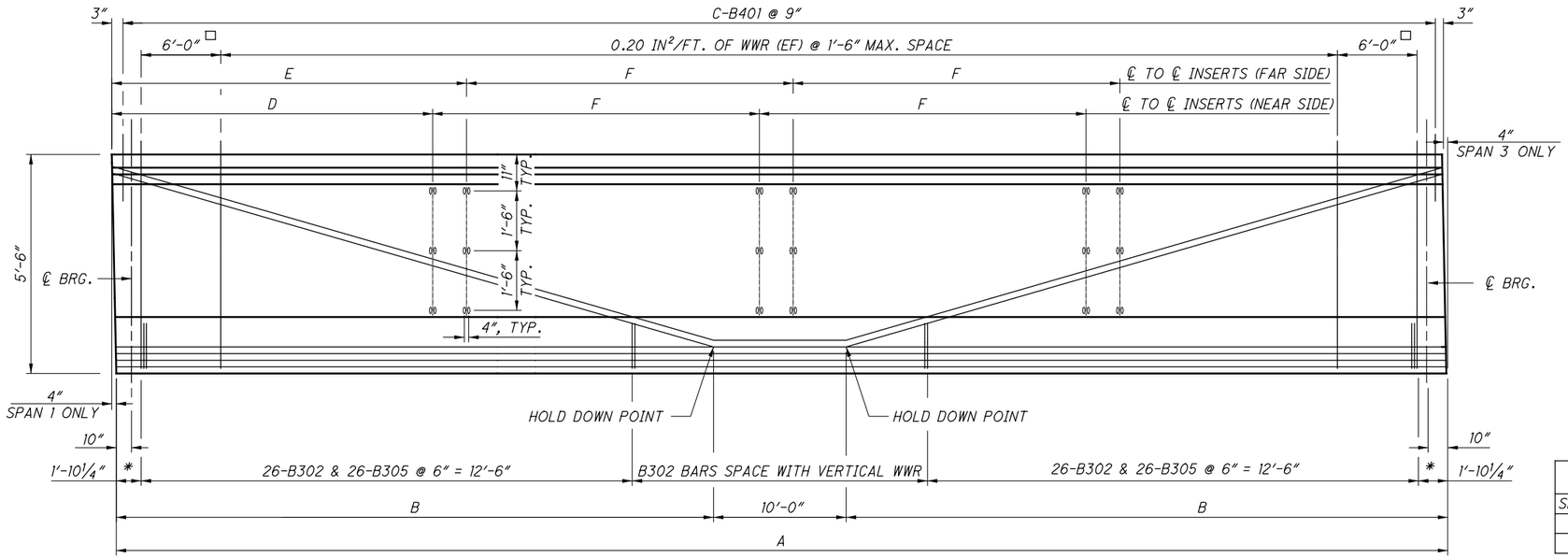

* ANCHORAGE ZONE REINFORCING, SEE DETAIL

□ 0.40 IN²/FT. OF WWR (EF) @ 6″ MAX. SPACE

BEAM ELEVATION

VERTICAL SCALE EXAGGERATED

NUMBER OF STRANDS PER ROW									CONCRETE STRENGTH (KSI)	
SECTION	①	②	③	④	⑤	⑥	⑦	TOTAL	f′ci	f′cf
END	9	9	9	4	-	1	1	33	6.0	7.0
MID	9	9	9	5	1	-	-	33		

BEAM	DIMENSION **					
	A	B	C	D	E	F
R1-1 THRU R1-5	100′-1½″	45′-0¾″	134	24′-2⅛″	26′-8¾″	24′-7⅜″
R3-1 THRU R3-5	101′-7⅜″	45′-9⅝″	136	24′-3⅝″	27′-4¼″	24′-11⅞″

** DIMENSIONS MEASURED ALONG BEAM ADJUSTED FOR LONGITUDINAL GRADE.

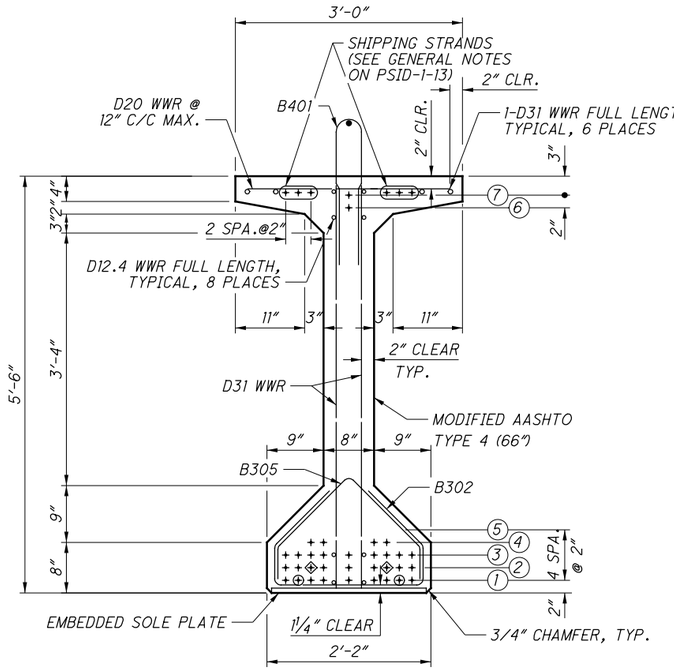

END BEAM SECTION

○ - DEBOND 3′-0″ AT EACH END

◇ - DEBOND 6′-0″ AT EACH END

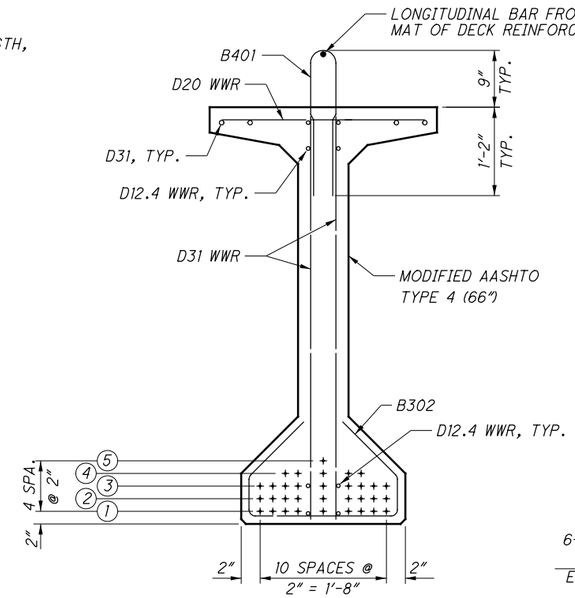

MIDSPAN BEAM SECTION

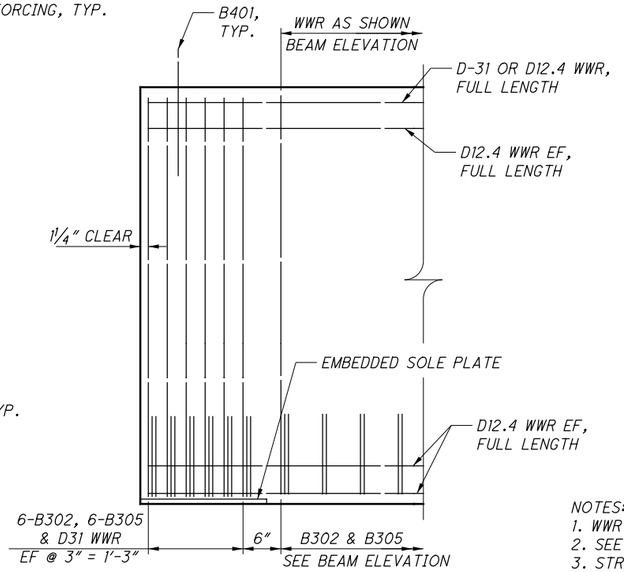

ANCHORAGE ZONE REINFORCING

STRANDS NOT SHOWN FOR CLARITY

NOTES:
1. WWR DENOTES WELDED WIRE REINFORCEMENT.
2. SEE STD. DWG. PSID-1-13 FOR ADDITIONAL DETAILS.
3. STRANDS ARE TO BE LOW RELAXATION, 0.6 INCH DIAMETER (A = 0.217 SQ. IN.) SEVEN WIRE UNCOATED, ASTM A416, GRADE 270.
4. REINFORCEMENT PROJECTING FROM ENDS TO BE EPOXY COATED.
5. ABUTMENT ENDS OF BEAMS SHALL BE CAST TO BE VERTICAL WHEN BEAMS ARE IN FINAL POSITION.
6. STAMP MARK EACH BEAM WITH BEAM NUMBER AND UP-STATION DIRECTION.

DRAFT Stage 3 - Not for Construction 09/23/2024

DESIGN AGENCY
Stantec
1500 Lake Shore Dr.
Columbus, OH 43204
(614) 486-4383

DESIGNED	DRAWN	REVIEWED	DATE
MRS	ALH	BSM	2/2024
CHECKED	REVISED	STRUCTURE FILE NUMBER	
EDA		4400526	

PRESTRESSED BEAM DETAILS - SPANS 1 & 3

BRIDGE NO. LAW-7-0713 R

S.R. 7 OVER LITTLE PADDY CREEK

LAW-7-2.17

PID No. 75923

V:\1736\active\173608714\LAW\engineering\75923_LAW-7-2.17\Design\structures\LAW007_0713R\sheets\007_0713R_SD007.dgn Sheet 5/13/2024 1:45:33 PM msturdevant

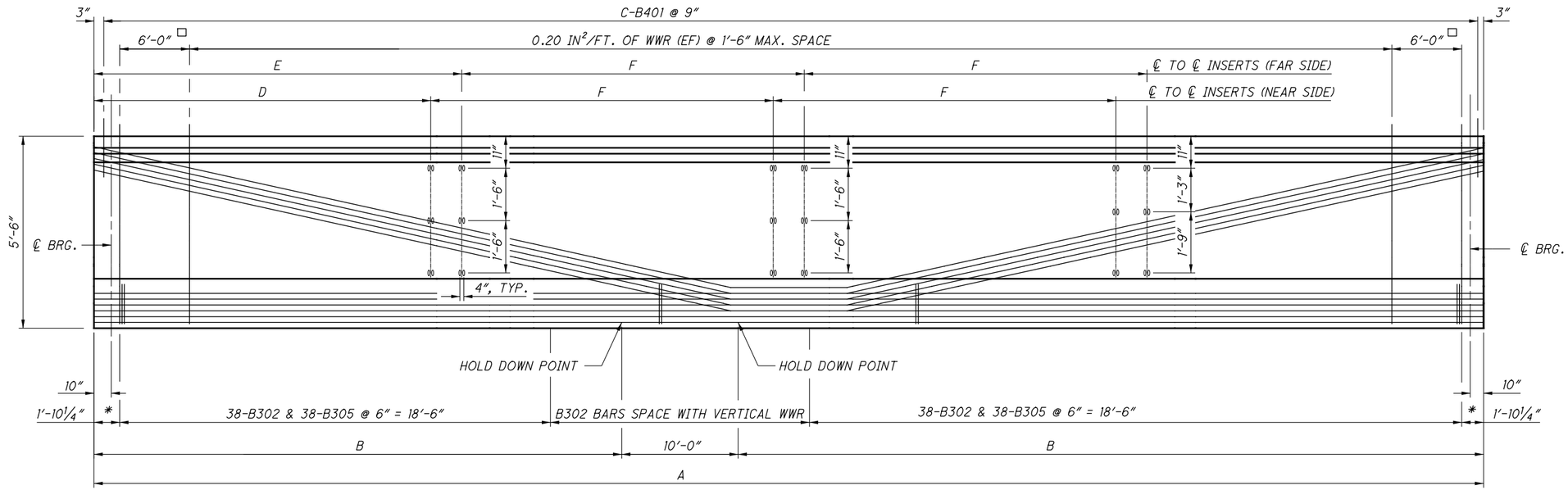

* ANCHORAGE ZONE REINFORCING, SEE DETAIL

□ 0.40 IN²/FT. OF WWR (EF) @ 6″ MAX. SPACE

BEAM ELEVATION

VERTICAL SCALE EXAGGERATED

NUMBER OF STRANDS PER ROW													CONCRETE STRENGTH (KSI)	
SECTION	(1)	(2)	(3)	(4)	(5)	(6)	(7)	(8)	(9)	(10)	(11)	(12)	TOTAL	f'ci	f'cf
END	9	9	8	8	6	2	-	1	1	1	1	1	47	6.0	7.0
MID	9	9	9	9	7	3	1	-	-	-	-	-	47		

BEAM	DIMENSION **					
	A	B	C	D	E	F
R2-1 THRU R2-5	119′-4½″	54′-8¼″	160	28′-11⅛″	31′-7⅛″	29′-5⅛″

** DIMENSIONS MEASURED ALONG BEAM ADJUSTED FOR LONGITUDINAL GRADE.

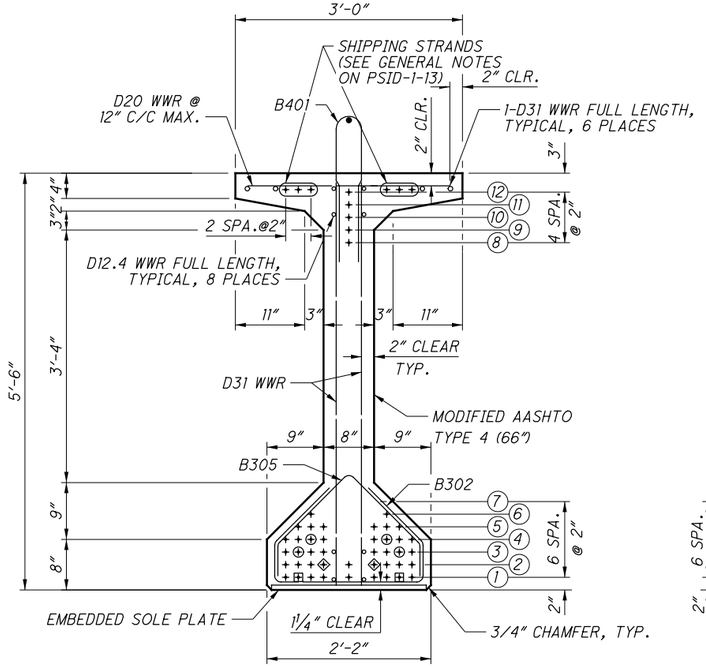

END BEAM SECTION

○ - DEBOND 4′-0″ AT EACH END

◇ - DEBOND 7′-0″ AT EACH END

□ - DEBOND 12′-0″ AT EACH END

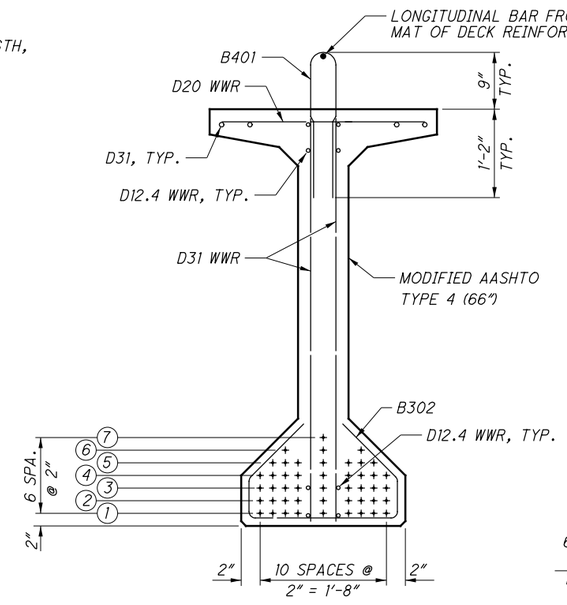

MIDSPAN BEAM SECTION

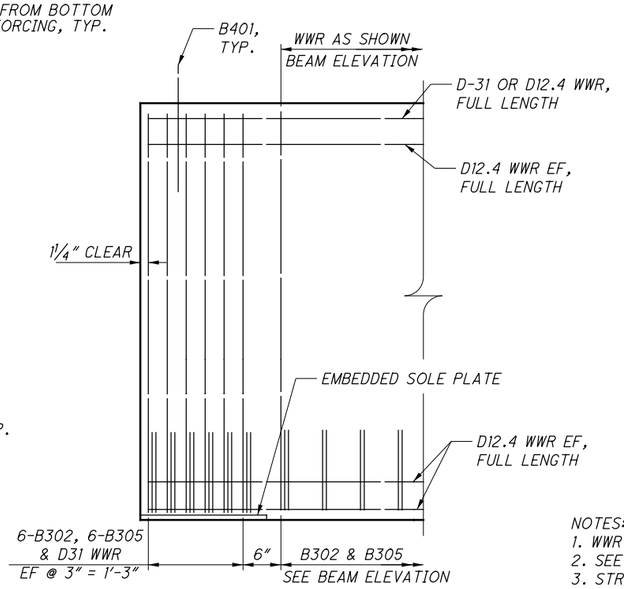

ANCHORAGE ZONE REINFORCING

STRANDS NOT SHOWN FOR CLARITY

NOTES:
1. WWR DENOTES WELDED WIRE REINFORCEMENT.
2. SEE STD. DWG. PSID-1-13 FOR ADDITIONAL DETAILS.
3. STRANDS ARE TO BE LOW RELAXATION, 0.6 INCH DIAMETER (A = 0.217 SQ. IN.) SEVEN WIRE UNCOATED, ASTM A416, GRADE 270.
4. REINFORCEMENT PROJECTING FROM CAST ITEM TO BE EPOXY COATED.
5. SHOP MARK EACH BEAM WITH BEAM NUMBER AND U-STAR ORIENTATION.

DRAFT Stage 3 - Not for Construction 09/23/2024

DESIGN AGENCY
Stantec
1500 Lake Shore Dr.
Columbus, OH 43204
(614) 486-4383

DESIGNED	DRAWN	REVIEWED	DATE
MRS	ALH	BSM	2/2024
CHECKED	REVISED	STRUCTURE FILE NUMBER	
EDA		4400526	

PRESTRESSED BEAM DETAILS - SPAN 2

BRIDGE NO. LAW-7-0713 R
S.R. 7 OVER LITTLE PADDY CREEK

LAW-7-2.17
PID No. 75923

15 / 26

1003
1247

V:\1736\active\173608714\LAW\engineering\75923_LAW-7-2.17\Design\structures\LAW007_0713R\sheets\007_0713R_SD008.dgn Sheet 5/13/2024 1:45:36 PM msturdevant

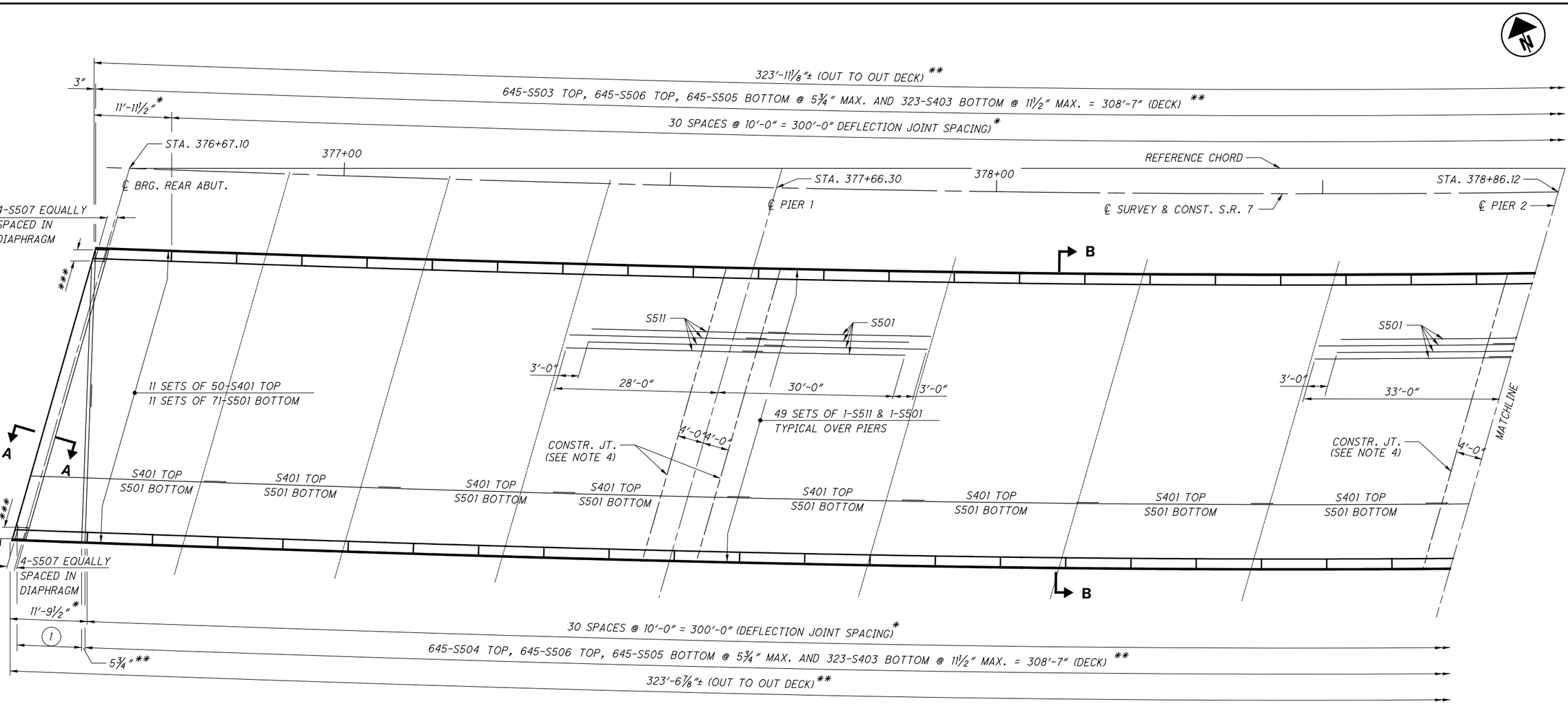

DECK PLAN

LAP LENGTHS:
#4 BARS = 2′-0″
#5 BARS = 2′-6″ (TRANSVERSE)
#5 BARS = 3′-0″ (LONGITUDINAL)
#4 GFRP BARS = 1′-1″

(1) 1 SERIES OF 21-S508 @ 5¾″ = 9′-7″ TOP AND BOTTOM

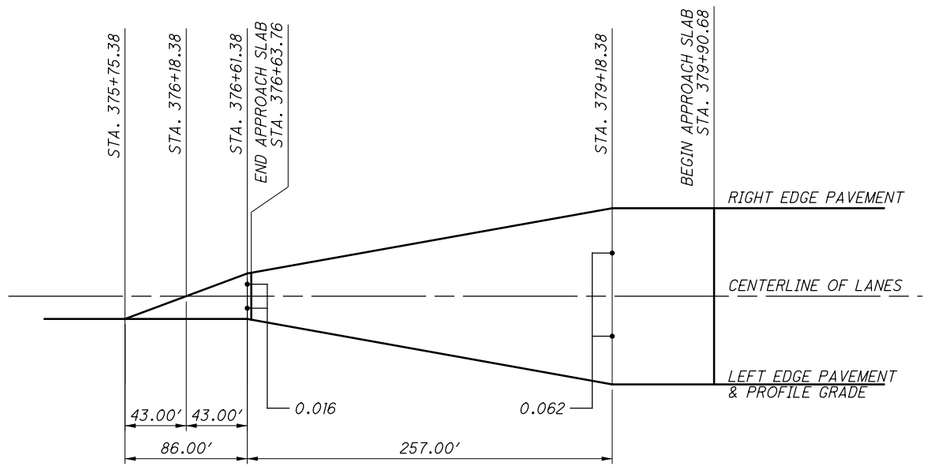

SUPERELEVATION TRANSITION DETAIL

NOTES:
1. FOR SECTION A-A, SEE STD. DWG. EXJ-6-17, SHEET 1/5.
2. FOR SECTION B-B, SEE SHEET 18/26 .
3. FOR JOINT OPENING WIDTHS, SEE SHEET 17/26 .
4. DO NOT PLACE CONCRETE BETWEEN THE CONSTRUCTION JOINTS PRIOR TO PLACING CONCRETE IN EACH ADJACENT SPAN. UPON COMPLETION OF CONCRETE PLACEMENT IN ADJACENT SPANS, PLACE PIER DIAPHRAGM AND DECK CONCRETE BETWEEN THE CONSTRUCTION JOINTS. SEAL JOINTS WITH 2′-0 WIDE STRIP OF HIGH WEIGHT METH-ACRYLATE RESIN (HMWM). SEE STD. DWG. PSID-1-13 FOR ADDITIONAL INFORMATION.

LEGEND:
* MEASURED ALONG OUTSIDE FACE OF RAILING
** MEASURED ALONG SLAB FACE
*** 4-S510 EQUALLY SPACED

DRAFT Stage 3 - Not for Construction 09/23/2024

DESIGN AGENCY
Stantec 1500 Lake Shore Dr. Columbus, OH 43204 (614) 486-4383

DESIGNED	DRAWN	REVIEWED	DATE
MRS	ALH	BSM	2/2024
CHECKED	REVISED	STRUCTURE FILE NUMBER	
EDA		4400526	

DECK PLAN (1)
BRIDGE NO. LAW-7-0713 R
S.R. 7 OVER LITTLE PADDY CREEK

LAW-7-2.17
PID No. 75923

16 / 26

1004 / 1247

V:\1736\active\173608714\LAW\engineering\75923_LAW-7-2.17\Design\structures\LAW007_0713R\sheets\007_0713R_SD002.dgn Sheet 5/13/2024 1:45:44 PM msturdevant

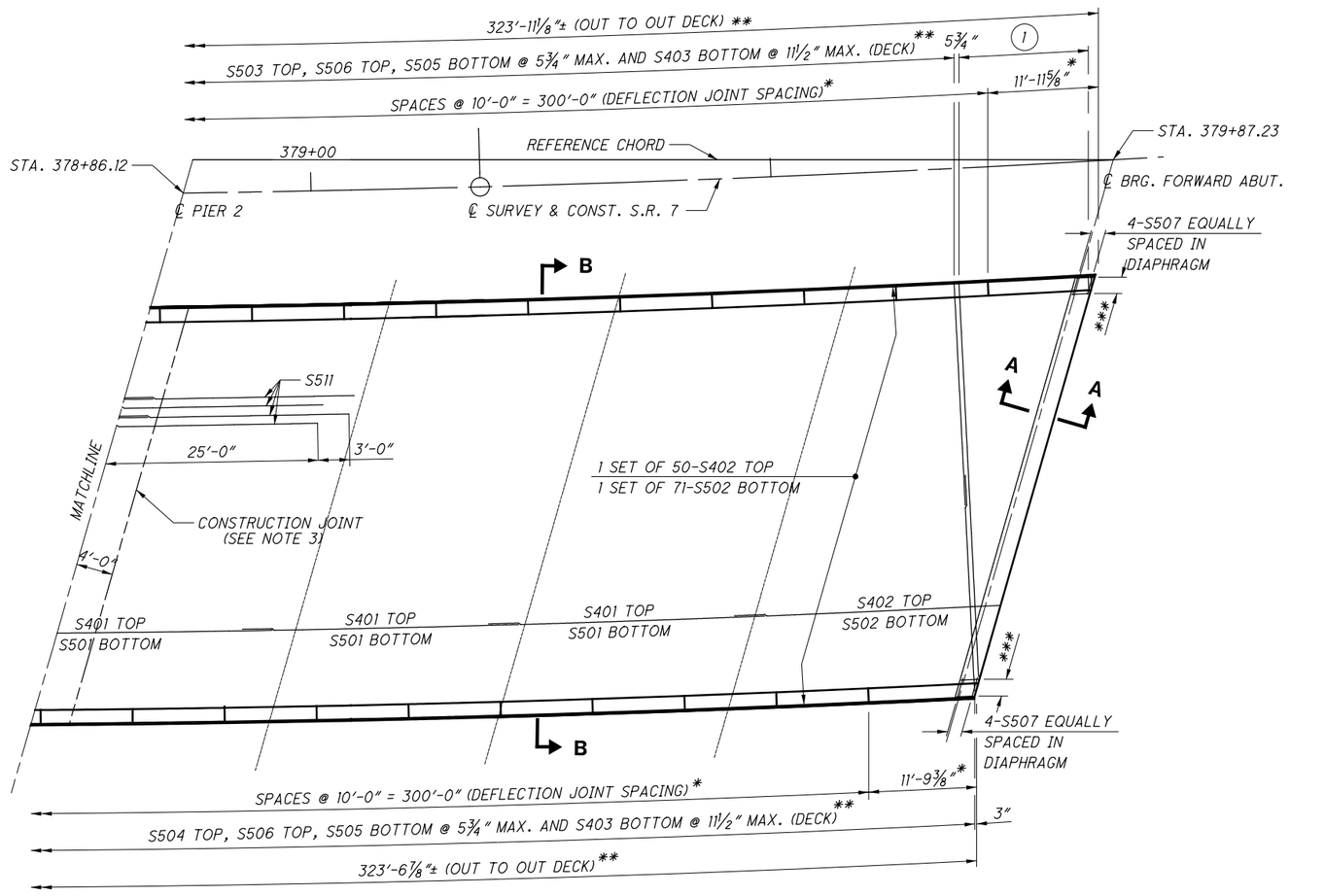

1 1 SERIES OF 30-S509 @ 5¾" = 13'-10¾" TOP AND BOTTOM

DECK PLAN

LAP LENGTHS:
#4 BARS = 2'-0"
#5 BARS = 2'-6" (TRANSVERSE)
#5 BARS = 3'-0" (LONGITUDINAL)
#4 GFRP BARS = 1'-1"

JOINT OPENING FOR 3" STRIP SEAL GLAND	
TEMP (F)	DIM A
30	2"
40	1 7/8"
50	1 3/4"
60	1 5/8"
70	1 3/8"
80	1 1/4"
90	1 1/4"

NOTES:
1. FOR SECTION A-A, SEE STD. DWG. EXJ-6-17, SHEET 1/5.
2. FOR SECTION B-B, SEE SHEET 18/26 .
3. DO NOT PLACE CONCRETE BETWEEN THE CONSTRUCTION JOINTS PRIOR TO PLACING CONCRETE IN EACH ADJACENT SPAN. UPON COMPLETION OF CONCRETE PLACEMENT IN ADJACENT SPANS, PLACE PIER DIAPHRAGM AND DECK CONCRETE BETWEEN THE CONSTRUCTION JOINTS.

LEGEND
* MEASURED ALONG OUTSIDE FACE OF RAILING
** MEASURED ALONG SLAB FASCIA
*** EQUALLY SPACED

DRAFT Stage 3 - Not for Construction 09/23/2024

DESIGN AGENCY
Stantec
1500 Lake Shore Dr.
Columbus, OH 43204
(614) 486-4383

DESIGNED	DRAWN	REVIEWED	DATE
MRS	ALH	BSM	2/2024
CHECKED	REVISED	STRUCTURE FILE NUMBER	
EDA		4400526	

DECK PLAN (2)
BRIDGE NO. LAW-7-0713 R
S.R. 7 OVER LITTLE PADDY CREEK

LAW-7-2.17
PID No. 75923

17 / 26

1005
1247

V:\1736\active\173608714\LAW\engineering\75923_LAW-7-2.17\Design\structures\LAW007_0713R\sheets\007_0713R_SD003.dgn Sheet 5/13/2024 1:45:48 PM msturdevant

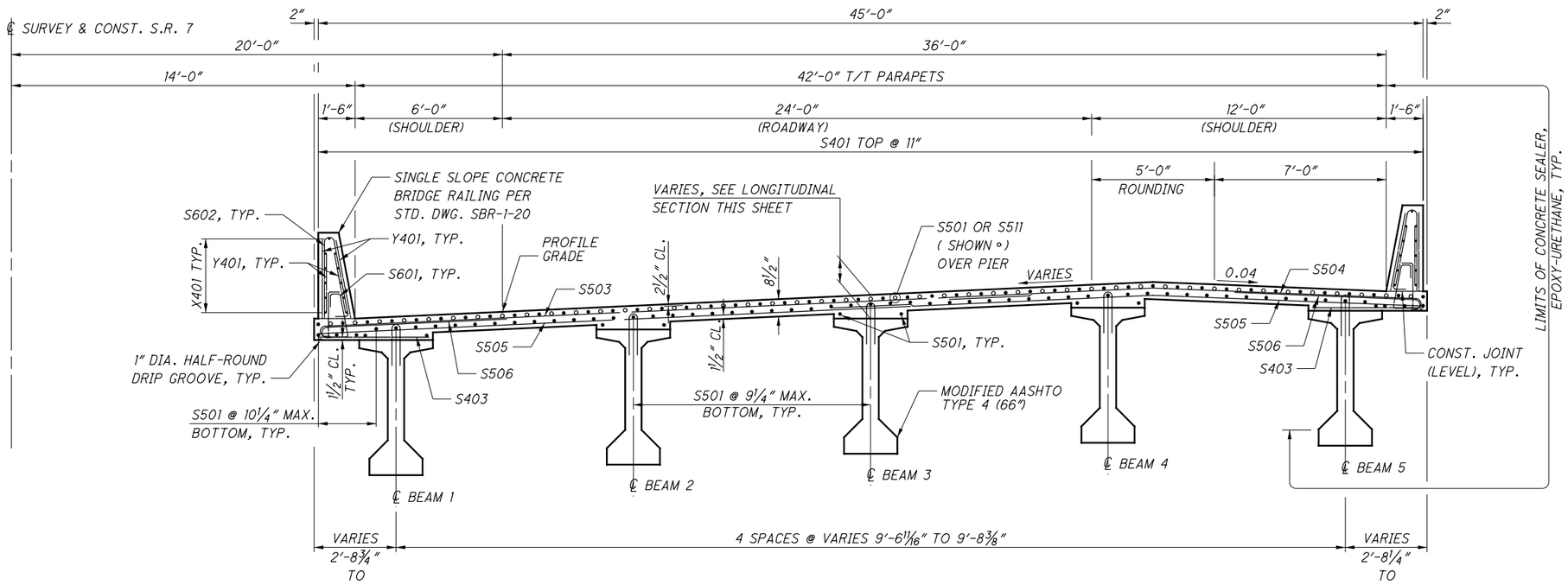

SECTION B-B

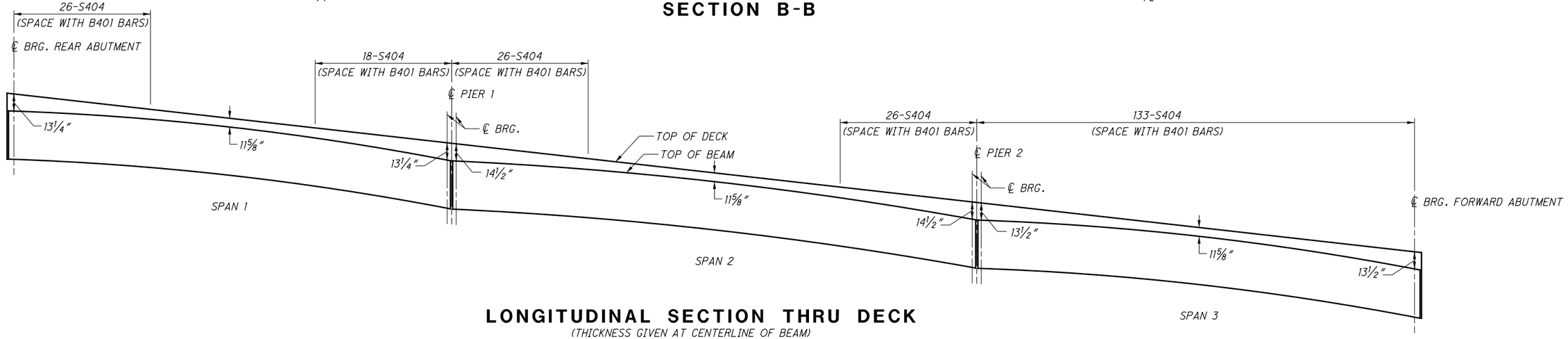

LONGITUDINAL SECTION THRU DECK

(THICKNESS GIVEN AT CENTERLINE OF BEAM)

SPANS 1 AND 3

ESTIMATED CAMBER AT DAY 0 (D_0) IS 1 5/8 INCHES.

ESTIMATED CAMBER AT DAY 30 (D_{30}) IS 2 5/8 INCHES.

DEFLECTION DUE TO REMAINING DEAD LOAD (E.G. CONCRETE DECK, CROSS-FRAMES, DIAPHRAGMS, BARRIERS,UTILITIES, ETC.) IS 1 INCH.

THE BEAM SEAT ELEVATIONS ASSUME ESTIMATED CAMBER D_{30} WITH A SACRIFICIAL HAUNCH THICKNESS OF 3⅛ INCHES MEASURED ON THE CENTERLINE OF GIRDER.

SPAN 2

ESTIMATED CAMBER AT DAY 0 (D_0) IS 2 7/8 INCHES.

ESTIMATED CAMBER AT DAY 30 (D_{30}) IS 4 3/4 INCHES.

DEFLECTION DUE TO REMAINING DEAD LOAD (E.G. CONCRETE DECK, CROSS-FRAMES, DIAPHRAGMS, BARRIERS,UTILITIES, ETC.) IS 2 INCHES.

THE BEAM SEAT ELEVATIONS ASSUME ESTIMATED CAMBER D_{30} WITH A SACRIFICIAL HAUNCH THICKNESS OF 3⅛ INCHES MEASURED ON THE CENTERLINE OF GIRDER.

NOTES:

1. DECK SLAB THICKNESS FOR CONCRETE QUANTITY: THE ESTIMATED QUANTITY OF DECK CONCRETE IS MEASURED ACCORDING TO C&MS 511. IN ADDITION TO THE DESIGN SLAB THICKNESS, THE QUANTITY INCLUDES A VARIABLE DEPTH THICKNESS INTENDED TO PROVIDE AN ALLOWANCE FOR BEAM CAMBER AND ADDITIONAL SACRIFICIAL HAUNCH THICKNESS.
2. FOR HAUNCH DESIGN, HAUNCH AND CONSTRUCTION, SEE SHEET 19/26.

DRAFT Stage 3 - Not for Construction 09/23/2024

DESIGN AGENCY
Stantec
1500 Lake Shore Dr.
Columbus, OH 43204
(614) 486-4383

DESIGNED	DRAWN	REVIEWED	DATE
MRS	ALH	BSM	2/2024
CHECKED	REVISED	STRUCTURE FILE NUMBER	
EDA		4400526	

SUPERSTRUCTURE SECTIONS
BRIDGE NO. LAW-7-0713 R
S.R. 7 OVER LITTLE PADDY CREEK

LAW-7-2.17
PID No. 75923

18 / 26

1006
1247

V:\1736\active\173608714\LAW\engineering\75923_LAW-7-2.17\Design\structures\LAW007_0713R\sheets\007_0713R_TS001.dgn Sheet 5/13/2024 1:45:51 PM msturdevant

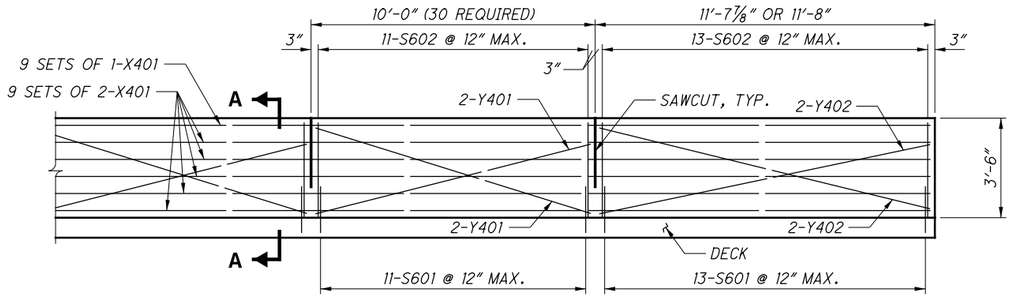

LEFT RAILING ELEVATION

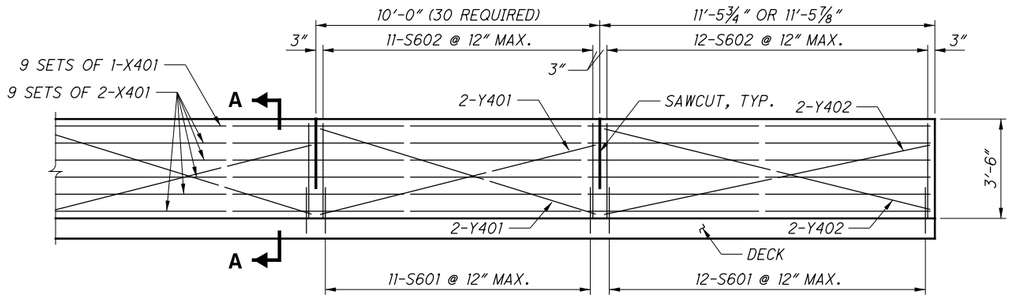

RIGHT RAILING ELEVATION

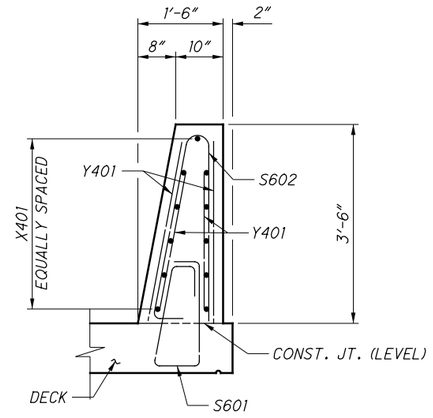

SECTION A-A

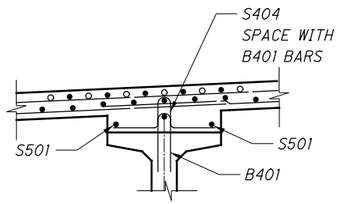

TYPICAL HAUNCH DETAIL

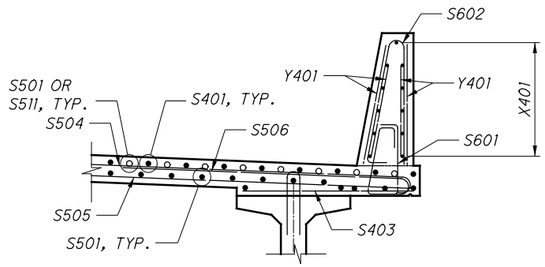

OVERHANG DETAIL

DRAFT Stage 3 - Not for Construction 09/23/2024

NOTES:
1. SEE STD. DWG SBR-1-20 FOR ADDITIONAL DETAILS

V:\1736\active\173608714\LAW\engineering\75923_LAW-7-2.17\Design\structures\LAW007_0713R\sheets\007_0713R_SD006.dgn Sheet 5/13/2024 1:45:53 PM msturdevant

DESIGN AGENCY
Stantec
1500 Lake Shore Dr.
Columbus, OH 43204
(614) 486-4383

DESIGNED	DRAWN	REVIEWED	DATE
MRS	ALH	BSM	2/2024
CHECKED	REVISED	STRUCTURE FILE NUMBER	
EDA		4400526	

RAILING DETAILS
BRIDGE NO. LAW-7-0713 R
S.R. 7 OVER LITTLE PADDY CREEK

LAW-7-2.17
PID No. 75923

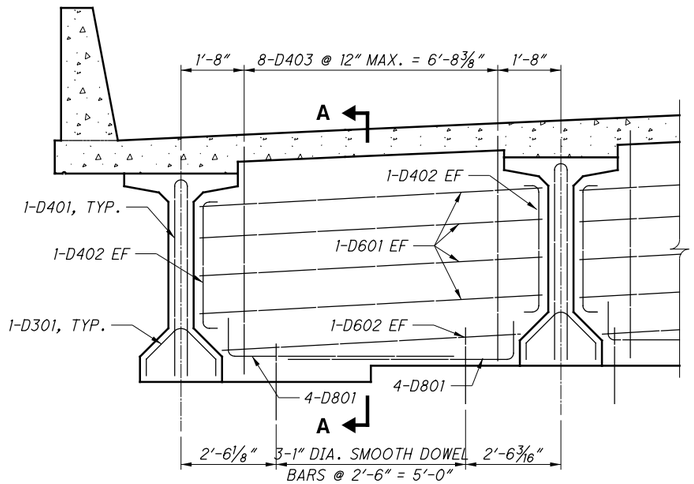

TYPICAL PIER DIAPHRAGM

(TYPICAL 8 PLACES)

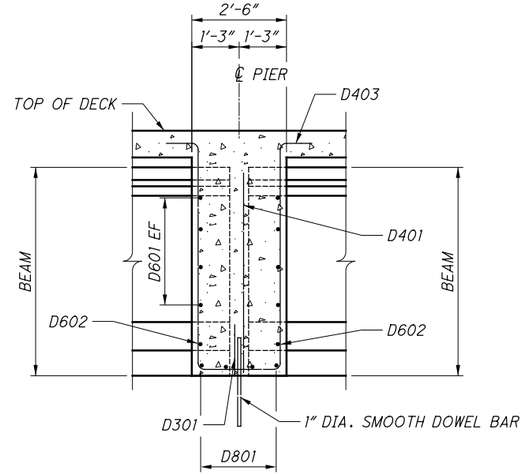

SECTION A-A

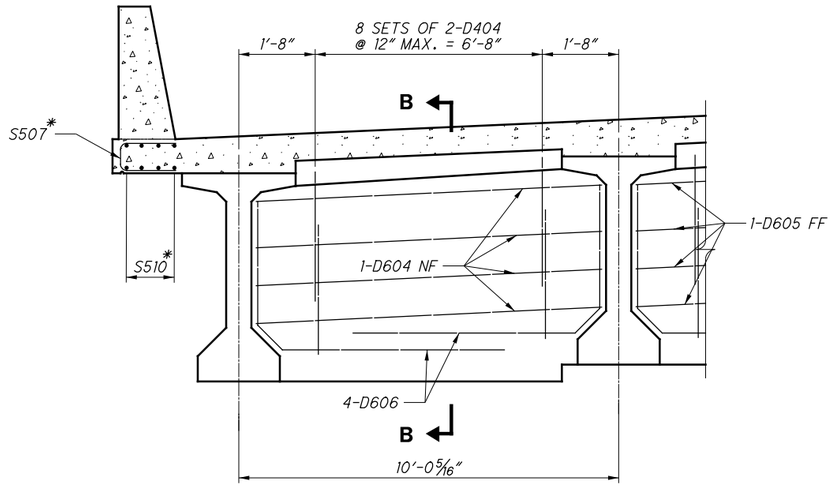

TYPICAL ABUTMENT DIAPHRAGM

(TYPICAL 8 PLACES)

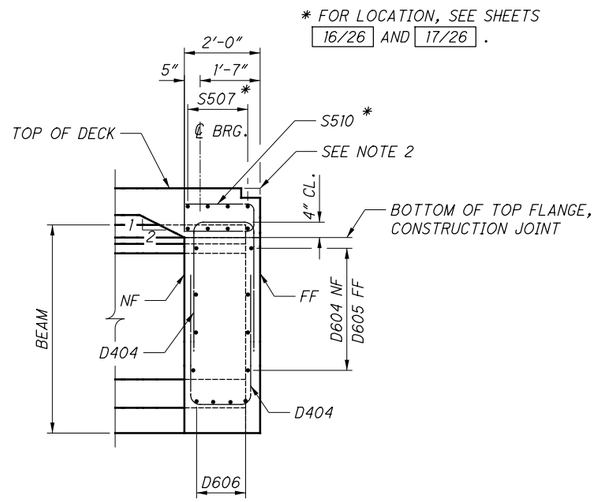

SECTION B-B

NOTES:

1. FOR ADDITIONAL DIAPHRAGM DETAILS, SEE STD. DWG. PSID-1-13
2. FOR EXPANSION JOINT DETAILS, SEE STD. DWG. EXJ-6-17.

DRAFT Stage 3 - Not for Construction 09/23/2024

DESIGN AGENCY
Stantec
1500 Lake Shore Dr.
Columbus, OH 43204
(614) 486-4383

DESIGNED	DRAWN	REVIEWED	DATE
MRS	ALH	BSM	2/2024
CHECKED	REVISED	STRUCTURE FILE NUMBER	
EDA		4400526	

SUPERSTRUCTURE DETAILS
BRIDGE NO. LAW-7-0713 R
S.R. 7 OVER LITTLE PADDY CREEK

LAW-7-2.17
PID No. 75923

20 / 26

1008
1247

V:\1736\active\173608714\LAW\engineering\75923_LAW-7-2.17\Design\structures\LAW007_0713R\sheets\007_0713R_SD009.dgn Sheet 5/13/2024 1:45:56 PM msturdevant

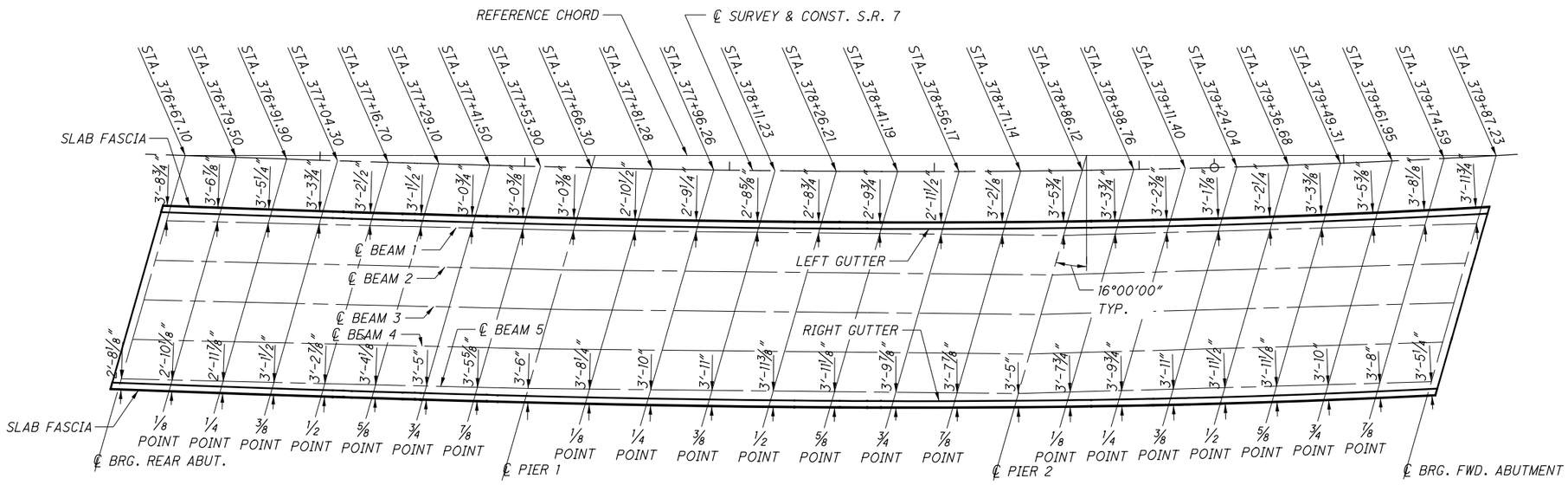

PLAN

NOTE:
DECK OVERHANGS ARE MEASURED PERPENDICULAR TO BEAM FROM INTERSECTION OF THE EIGHTH POINTS AND THE CENTERLINE OF BEAM TO THE EDGE OF DECK.

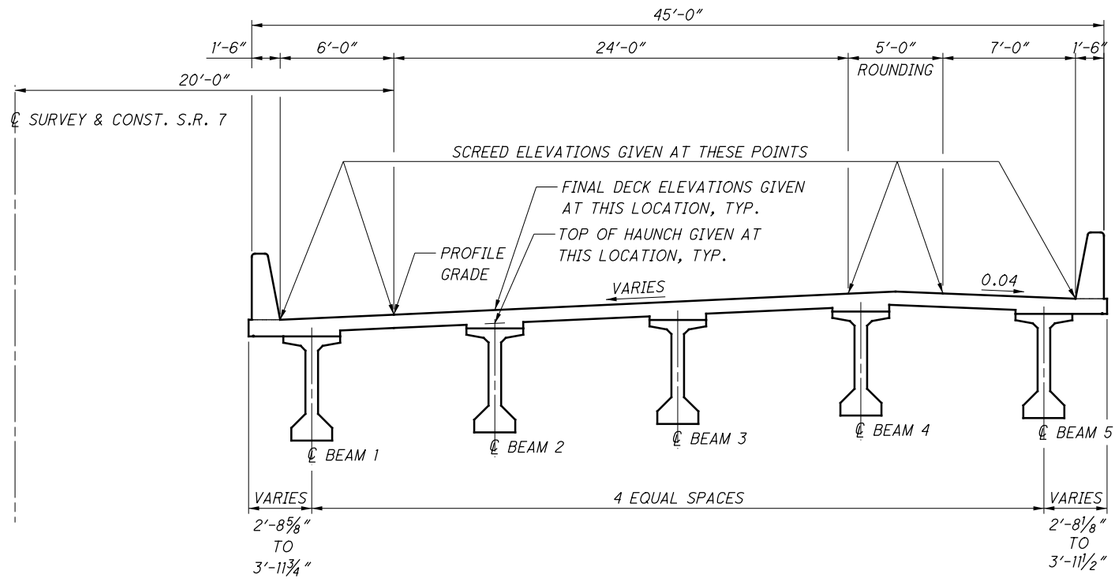

TYPICAL SECTION

FOR SCREED, TOP OF HAUNCH AND FINAL DECK ELEVATIONS, SEE SHEET 22/26 .

SCREED ELEVATIONS SHOWN REPRESENT THE THEORETICAL DECK SURFACE LOCATION PRIOR TO DEFLECTIONS CAUSED BY DECK PLACEMENT AND OTHER ANTICIPATED DEAD LOADS.

TOP OF HAUNCH ELEVATIONS SHOWN REPRESENT THE THEORETICAL LOCATION OF THE BOTTOM OF THE DECK ABOVE THE BEAM/GIRDER HAUNCH PRIOR TO DEFLECTIONS CAUSED BY DECK PLACEMENT AND OTHER ANTICIPATED DEAD LOADS.

FINAL DECK SURFACE ELEVATIONS SHOWN REPRESENT THE DECK SURFACE LOCATION AFTER ALL ANTICIPATED DEAD LOAD DEFLECTIONS HAVE OCCURRED.

DRAFT Stage 3 - Not for Construction 09/23/2024

DESIGN AGENCY
Stantec
1500 Lake Shore Dr.
Columbus, OH 43204
(614) 486-4383

DESIGNED	DRAWN	REVIEWED	DATE
MRS	ALH	BSM	2/2024
CHECKED	REVISED	STRUCTURE FILE NUMBER	
EDA		4400526	

CONSTRUCTION ELEVATION DIAGRAM AND FASCIA OFFSETS
BRIDGE NO. LAW-7-0713 R
S.R. 7 OVER LITTLE PADDY CREEK

LAW-7-2.17
PID No. 75923

21/26

1009
1247

V:\1736\active\173608714\LAW\engineering\75923_LAW-7-2.17\Design\structures\LAW007_0713R\sheets\007_0713R_SD004.dgn Sheet 5/13/2024 1:45:58 PM msturdevant

SCREED ELEVATIONS

LOCATION	SPAN 1								SPAN 2				
	℄ BEARING	1/8 POINT	1/4 POINT	3/8 POINT	1/2 POINT	5/8 POINT	3/4 POINT	7/8 POINT	℄ PIER	1/8 POINT	1/4 POINT	3/8 POINT	1/2 POINT
	STA. 376+67.10	STA. 376+79.50	STA. 376+91.90	STA. 377+04.30	STA. 377+16.70	STA. 377+29.10	STA. 377+41.50	STA. 377+53.90	STA. 377+68.30	STA. 376+81.28	STA. 377+96.26	STA. 378+11.23	STA. 378+26.21
LEFT GUTTER	625.84	625.12	624.39	623.65	622.90	622.14	621.37	620.58	619.80	618.95	618.09	617.22	616.32
PROFILE GRADE	626.03	625.32	624.61	623.89	623.15	622.41	621.64	620.87	620.10	619.27	618.44	617.59	616.71
LEFT SIDE OF ROUNDING	626.73	626.10	625.44	624.78	624.10	623.41	622.70	621.98	621.26	620.50	619.75	618.97	618.16
RIGHT SIDE OF ROUNDING	626.72	626.11	625.46	624.80	624.13	623.44	622.74	622.03	621.31	620.56	619.82	619.04	618.24
RIGHT GUTTER	626.53	625.92	625.26	624.60	623.93	623.24	622.54	621.84	621.13	620.37	619.61	618.83	618.03

SCREED ELEVATIONS

LOCATION	SPAN 2			SPAN 3								
	5/8 POINT	3/4 POINT	7/8 POINT	℄ PIER	1/8 POINT	1/4 POINT	3/8 POINT	1/2 POINT	5/8 POINT	3/4 POINT	7/8 POINT	℄ BEARING
	STA. 378+41.19	STA. 378+56.17	STA. 378+71.14	STA. 378+86.12	STA. 378+98.76	STA. 379+11.40	STA. 379+24.04	STA. 379+36.68	STA. 379+49.31	STA. 379+61.95	STA. 379+74.59	STA. 378+26.21
LEFT GUTTER	615.40	614.45	613.48	612.51	611.78	611.04	610.29	609.55	608.78	608.01	607.23	606.45
PROFILE GRADE	615.80	614.87	613.91	612.95	612.24	611.52	610.79	610.05	609.28	608.51	607.73	606.94
LEFT SIDE OF ROUNDING	617.32	616.45	615.56	614.67	614.02	613.36	612.70	612.00	611.24	610.48	609.70	608.92
RIGHT SIDE OF ROUNDING	617.41	616.55	615.67	614.79	614.14	613.49	612.83	612.15	611.39	610.63	609.85	609.08
RIGHT GUTTER	617.21	616.36	615.49	614.62	613.97	613.32	612.65	611.98	611.23	610.47	609.71	608.94

TOP OF HAUNCH ELEVATIONS

LOCATION	SPAN 1								SPAN 2				
	℄ BEARING	1/8 POINT	1/4 POINT	3/8 POINT	1/2 POINT	5/8 POINT	3/4 POINT	7/8 POINT	℄ PIER	1/8 POINT	1/4 POINT	3/8 POINT	1/2 POINT
	STA. 376+67.10	STA. 376+79.50	STA. 376+91.90	STA. 377+04.30	STA. 377+16.70	STA. 377+29.10	STA. 377+41.50	STA. 377+53.90	STA. 377+68.30	STA. 376+81.28	STA. 377+96.26	STA. 378+11.23	STA. 378+26.21
BEAM 1	625.20	624.47	623.74	623.01	622.26	621.49	620.72	619.94	619.16	618.30	617.45	616.57	615.68
BEAM 2	625.50	624.80	624.10	623.39	622.67	621.92	621.17	620.41	619.64	618.82	618.01	617.17	616.30
BEAM 3	625.78	625.12	624.44	623.75	623.05	622.33	621.60	620.85	620.11	619.32	618.53	617.72	616.89
BEAM 4	626.05	625.42	624.77	624.10	623.42	622.72	622.01	621.29	620.57	619.81	619.05	618.26	617.46
BEAM 5	625.85	625.24	624.59	623.93	623.26	622.58	621.88	621.18	620.47	619.72	618.96	618.18	617.38

TOP OF HAUNCH ELEVATIONS

LOCATION	SPAN 2			SPAN 3								
	5/8 POINT	3/4 POINT	7/8 POINT	℄ PIER	1/8 POINT	1/4 POINT	3/8 POINT	1/2 POINT	5/8 POINT	3/4 POINT	7/8 POINT	℄ BEARING
	STA. 378+41.19	STA. 378+56.17	STA. 378+71.14	STA. 378+86.12	STA. 378+98.76	STA. 379+11.40	STA. 379+24.04	STA. 379+36.68	STA. 379+49.31	STA. 379+61.95	STA. 379+74.59	STA. 378+26.21
BEAM 1	614.76	613.83	612.88	611.94	611.19	610.46	609.71	608.96	608.21	607.45	606.69	605.93
BEAM 2	615.41	614.50	613.57	612.64	611.93	611.21	610.49	609.76	609.00	608.24	607.48	606.71
BEAM 3	616.02	615.13	614.23	613.33	612.64	611.95	611.25	610.53	609.78	609.02	608.25	607.49
BEAM 4	616.62	615.76	614.88	614.01	613.34	612.68	612.00	611.30	610.55	609.79	609.03	608.27
BEAM 5	616.55	615.70	614.83	913.95	613.31	612.66	612.00	611.31	610.57	609.81	609.04	608.26

FINAL DECK SURFACE ELEVATIONS

LOCATION	SPAN 1								SPAN 2				
	℄ BEARING	1/8 POINT	1/4 POINT	3/8 POINT	1/2 POINT	5/8 POINT	3/4 POINT	7/8 POINT	℄ PIER	1/8 POINT	1/4 POINT	3/8 POINT	1/2 POINT
	STA. 376+67.10	STA. 376+79.50	STA. 376+91.90	STA. 377+04.30	STA. 377+16.70	STA. 377+29.10	STA. 377+41.50	STA. 377+53.90	STA. 377+68.30	STA. 376+81.28	STA. 377+96.26	STA. 378+11.23	STA. 378+26.21
LEFT GUTTER	625.84	625.09	624.33	623.57	622.82	622.06	621.31	620.55	619.80	618.89	617.98	617.06	616.15
BEAM 1	625.91	625.15	624.39	623.64	622.88	622.13	621.37	620.62	619.87	618.95	618.04	617.13	616.22
PROFILE GRADE	626.03	625.29	624.55	623.80	623.06	622.32	621.58	620.84	620.10	619.20	618.31	617.41	616.52
BEAM 2	626.21	625.47	624.74	624.01	623.27	622.54	621.81	621.08	620.35	619.46	618.57	617.69	616.81
BEAM 3	626.49	625.79	625.08	624.36	623.65	622.94	622.23	621.52	620.82	619.96	619.10	618.24	617.39
LEFT SIDE OF ROUNDING	626.73	626.06	625.37	624.69	624.00	623.31	622.63	621.94	621.26	620.43	619.61	618.78	617.96
BEAM 4	626.76	626.09	625.40	624.71	624.02	623.34	622.65	621.96	621.28	620.44	619.61	618.78	617.96
RIGHT SIDE OF ROUNDING	626.72	626.07	625.39	624.71	624.03	623.35	622.67	621.99	621.31	620.49	619.67	618.86	618.04
BEAM 5	626.56	625.92	625.24	624.56	623.89	623.21	622.53	621.85	621.18	620.36	619.55	618.74	617.92
RIGHT GUTTER	626.53	625.89	625.21	624.52	623.84	623.16	622.49	621.81	621.13	620.31	619.50	618.68	617.87

FINAL DECK SURFACE ELEVATIONS

LOCATION	SPAN 2			SPAN 3								
	5/8 POINT	3/4 POINT	7/8 POINT	℄ PIER	1/8 POINT	1/4 POINT	3/8 POINT	1/2 POINT	5/8 POINT	3/4 POINT	7/8 POINT	℄ BEARING
	STA. 378+41.19	STA. 378+56.17	STA. 378+71.14	STA. 378+86.12	STA. 378+98.76	STA. 379+11.40	STA. 379+24.04	STA. 379+36.68	STA. 379+49.31	STA. 379+61.95	STA. 379+74.59	STA. 378+26.21
LEFT GUTTER	615.24	614.33	613.42	612.51	611.74	610.98	610.21	609.46	608.71	607.95	607.20	606.45
BEAM 1	615.32	614.42	613.53	612.65	611.87	611.11	610.33	609.58	608.84	608.10	607.37	606.64
PROFILE GRADE	615.63	614.74	613.84	612.95	612.20	611.45	610.70	609.95	609.20	608.44	607.69	606.94
BEAM 2	615.93	615.06	614.20	613.35	612.59	611.85	611.10	610.36	609.61	608.88	608.15	607.42
BEAM 3	616.54	615.70	614.86	614.04	613.31	612.58	611.86	611.13	610.39	609.65	608.93	608.20
LEFT SIDE OF ROUNDING	617.13	616.31	615.49	614.67	613.98	613.29	612.60	611.89	611.15	610.4	[illegible]	[illegible]
BEAM 4	617.14	616.32	615.52	614.71	614.01	613.31	612.61	611.90	611.16	610.4	[illegible]	[illegible]
RIGHT SIDE OF ROUNDING	617.23	616.41	615.60	614.79	614.10	613.42	612.73	612.04	611.30	610.5	[illegible]	[illegible]
BEAM 5	617.11	616.29	615.48	614.66	613.98	613.30	612.62	611.93	611.20	610.4	609.72	608.97
RIGHT GUTTER	617.05	616.24	615.43	614.62	613.94	613.25	612.57	611.89	611.15	610.4	[illegible]	[illegible]

DRAFT Stage 3 - Not for Construction

09/23/2024

DESIGN AGENCY
Stantec
1500 Lake Shore Dr.
Columbus, OH 43204
(614) 486-4383

DESIGNED	DRAWN	REVIEWED	DATE
MRS	ALH	BSM	2/2024
CHECKED	REVISED	STRUCTURE FILE NUMBER	
EDA		4400526	

DECK CONSTRUCTION ELEVATIONS
BRIDGE NO. LAW-7-0713 R
S.R. 7 OVER LITTLE PADDY CREEK

LAW-7-2.17
PID No. 75923

1010
1247

V:\1736\active\173608714\LAW\engineering\75923_LAW-7-2.17\Design\structures\LAW007_0713R\sheets\007_0713R_SD005.dgn Sheet 5/13/2024 1:46:01 PM msturdevant

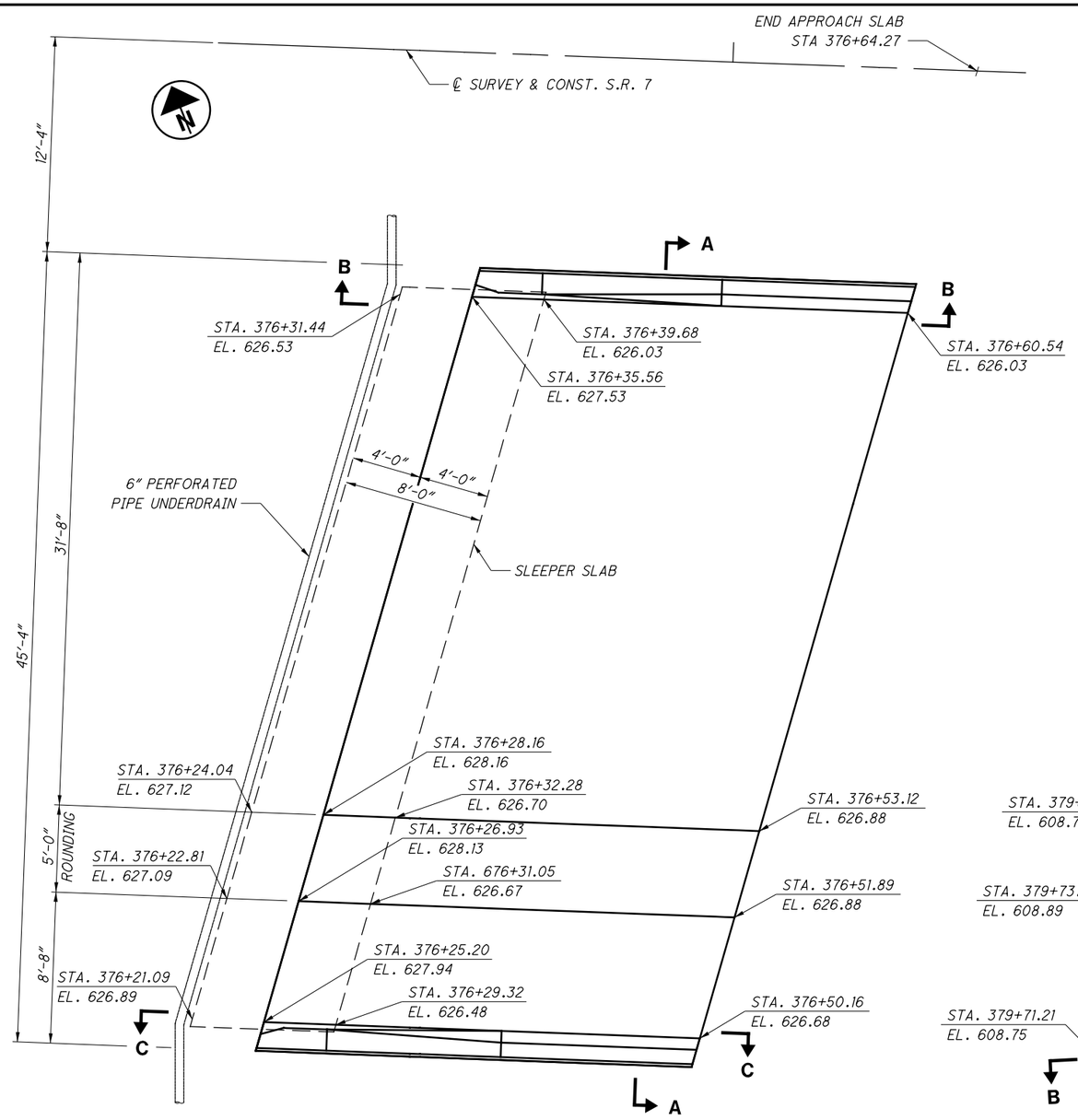

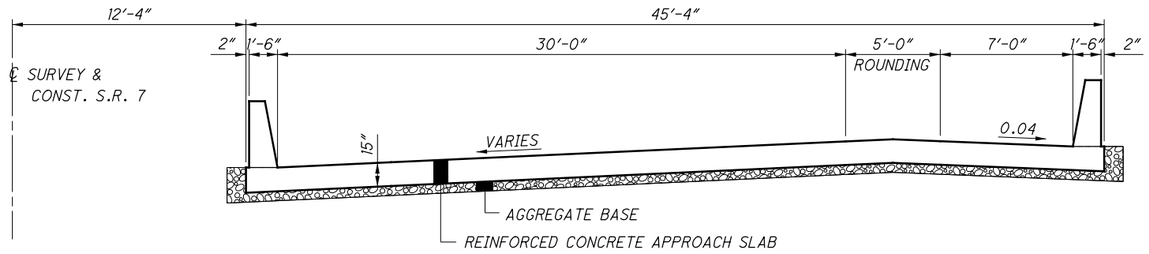

SECTION A-A

NOTES:
1. FOR ADDITIONAL DETAILS OF THE BARRIER, SEE STD. DWG. SBR-1-20 AND SHEET 24/26 .
2. FOR ADDITIONAL DETAILS OF THE APPROACH SLAB, SEE STD. DWG. AS-1-15 AND AS-2-15.
3. FOR SECTION B-B THRU SECTION D-D, SEE SHEET 24/26 .
4. OUTLET PERFORATED PIPE UNDERDRAIN IN ACCORDANCE WITH STD. DWG. AS-2-15.
5. THE COST OF CONCRETE AND INCIDENTALS IN BARRIER TO BE INCLUDED IN ITEM 526 REINFORCED CONCRETE, APPROACH SLAB WITH QC/QA, AS PER PLAN.

DRAFT Stage 3 - Not for Construction 09/23/2024

DESIGN AGENCY
Stantec
1500 Lake Shore Dr.
Columbus, OH 43204
(614) 486-4383

DESIGNED	DRAWN	REVIEWED	DATE
MRS	ALH	BSM	2/2024
CHECKED	REVISED	STRUCTURE FILE NUMBER	
EDA		4400526	

APPROACH SLABS
BRIDGE NO. LAW-7-0713 R
S.R. 7 OVER LITTLE PADDY CREEK

LAW-7-2.17
PID No. 75923

23 / 26

1011
1247

V:\1736\active\173608714\LAW\engineering\75923_LAW-7-2.17\Design\structures\LAW007_0713R\sheets\007_0713R_SM001.dgn Sheet 5/13/2024 1:46:12 PM msturdevant

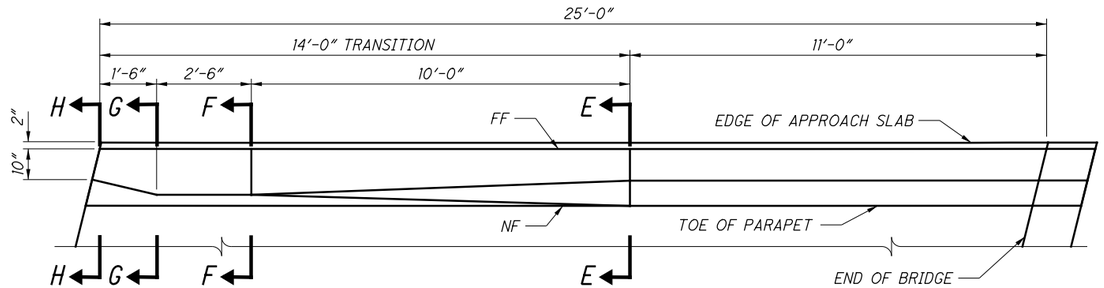

PLAN

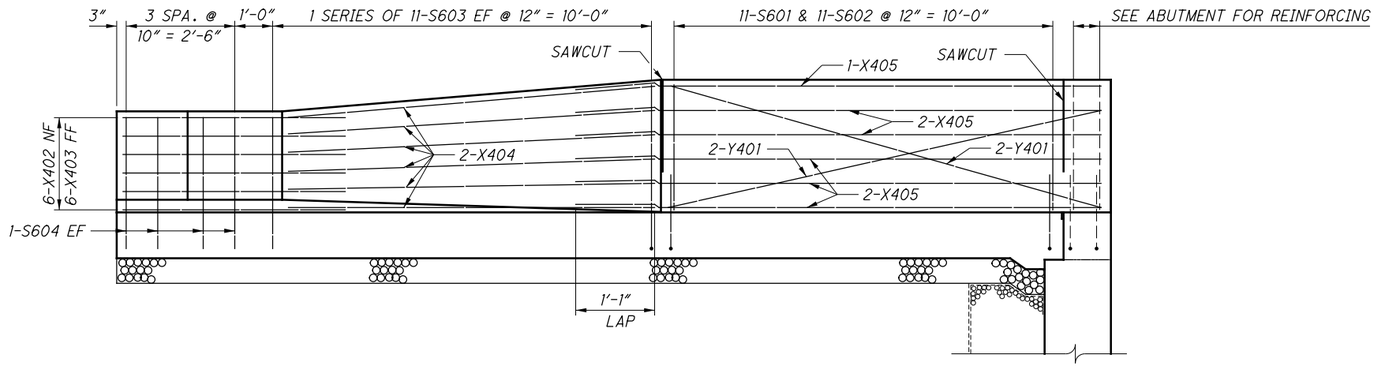

SECTION B-B & SECTION C-C

(SECTION C-C OPPOSITE HAND)

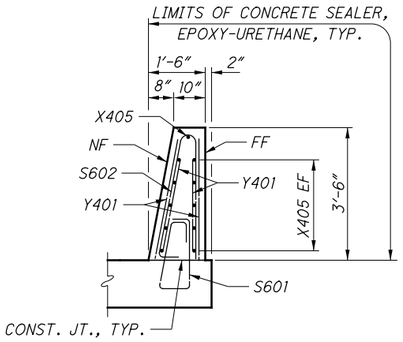

SECTION E-E

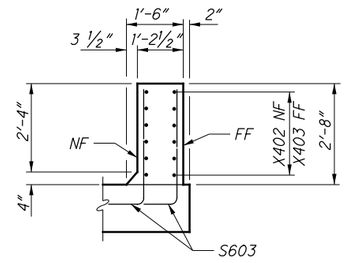

SECTION F-F

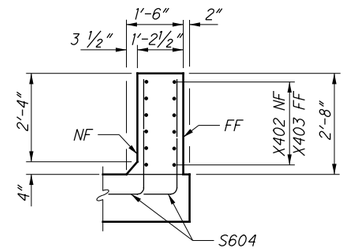

SECTION G-G

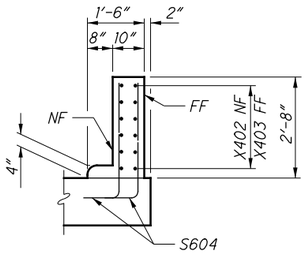

SECTION H-H

DRAFT Stage 3 - Not for Construction 09/23/2024

NOTES:
1. SEE ROADWAY PLAN FOR BRIDGE TERMINAL ASSEMBLY DETAILS.

DESIGN AGENCY
Stantec
1500 Lake Shore Dr.
Columbus, OH 43204
(614) 486-4383

DESIGNED	DRAWN	REVIEWED	DATE
MRS	ALH	BSM	2/2024
CHECKED	REVISED	STRUCTURE FILE NUMBER	
EDA		4400526	

APPROACH SLAB DETAILS
BRIDGE NO. LAW-7-0713 R
S.R. 7 OVER LITTLE PADDY CREEK

LAW-7-2.17
PID No. 75923

24 / 26

1012
1247

V:\1736\active\173608714\LAW\engineering\75923_LAW-7-2.17\Design\structures\LAW007_0713R\sheets\007_0713R_SM002.dgn Sheet 5/13/2024 1:46:16 PM msturdevant

MARK	NUMBER TOTAL	LENGTH	WEIGHT	TYPE	DIMENSIONS						
					A	B	C	D	E	R	INC
REAR ABUTMENT (EPOXY COATED STEEL REINFORCEMENT)											
A801	18	32'-1"	1542	STR.							
A802	28	5'-0"	374	18	2'-8"	1'-0"	1'-0"				
A601	46	19'-3"	1307	3	6'-11"	2'-7"					
A602	8	16'-5"	197	3	1'-5"	6'-8"					
A603	17	22'-5"	572	3	4'-5"	6'-8"					
A604	8	21'-9"	261	3	4'-5"	6'-4"					
A605	8	21'-1"	253	3	4'-5"	6'-0"					
A606	5	15'-1"	113	3	1'-5"	6'-0"					
	2	4'-5"									
A607	SERIES OF	TO	314	STR.							5⅝"
	14	10'-6"									
A608	4	8'-6"	51	STR.							
A609	47	11'-7"	818	2	5'-3"	1'-5"	5'-3"				
A610	47	12'-3"	865	2	5'-7"	1'-5"	5'-7"				
A611	47	7'-1"	500	2	3'-6"	5"	3'-6"				
A612	47	5'-11"	418	2	2'-8"	11"	2'-8"				
A613	6	8'-5"	76	STR.							
	2	7'-7"									
A614	SERIES OF	TO	289	STR.							2⅜"
	11	9'-11"									
A615	4	7'-2"	30	37	9"	9½	1'-5"	1'-0"	7"		
A616	4	7'-0"	29	23	3'-3"	3'-3"				2"	
A501	10	20'-8"	216	STR.							
A502	57	24'-4"	1447	STR.							
A503	18	16'-8"	313	STR.							
A504	5	23'-2"	121	STR.							
A505	5	13'-6"	70	STR.							
A506	2	18'-6"	39	STR.							
A507	2	14'-4"	30	STR.							
A508	2	12'-3"	26	STR.							
A509	2	10'-2"	21	STR.							
A510	2	7'-6"	16	STR.							
A511	2	14'-9"	31	STR.							
A512	2	16'-0"	21	STR.							
A513	2	11'-8"	24	STR.							
A514	2	6'-2"	13	STR.							
A515	2	11'-2"	23	STR.							
	SUB-TOTAL		10,420								

MARK	NUMBER TOTAL	LENGTH	WEIGHT	TYPE	DIMENSIONS						
					A	B	C	D	E	R	INC
FORWARD ABUTMENT (EPOXY COATED STEEL REINFORCEMENT)											
B801	18	32'-7"	1566	STR.							
B802	28	5'-0"	374	18	2'-8"	1'-0"	1'-0"				
B601	46	19'-3"	1330	3	6'-11"	2'-7"					
B602	5	15'-3"	115	3	1'-5"	6'-1"					
B603	9	21'-3"	287	3	4'-5"	6'-1"					
B604	7	22'-9"	239	3	4'-5"	6'-10"					
B605	8	24'-3"	291	3	4'-5"	7'-7"					
B606	11	25'-11"	428	3	4'-5"	8'-5"					
B607	6	20'-6"	185	3	1'-5"	8'-5"					
	2	7'-3"									
B608	SERIES OF	TO	255	STR.							3⅜
	10	9'-9"									
B609	6	9'-9"	88	STR.							
B610	47	11'-7"	818	2	5'-3"	1'-5"	5'-3"				
B611	47	11'-7"	818	2	5'-3"	1'-5"	5'-3"				
B612	47	7'-1"	500	2	3'-6"	5"	3'-6"				
B613	47	5'-11"	418	2	2'-8"	11"	2'-8"				
B614	6	8'-7"	77	STR.							
	2	5'-11"									
B615	SERIES OF	TO	380	STR.							5⅜
	14	12'-2"									
B616	4	7'-2"	30	37	9"	9½	1'-5"	1'-0"	7"		
B617	4	7'-0"	29	23	3'-3"	3'-3"				2"	
B501	8	16'-10"	140	STR.							
B502	59	24'-11"	1533	STR.							
B503	5	13'-3"	69	STR.							
B504	5	23'-8"	123	STR.							
B505	16	18'-5"	307	STR.							
B506	8	16'-10"	140	STR.							
B507	2	16'-1"	34	STR.							
B508	2	12'-6"	26	STR.							
B509	2	9'-10"	21	STR.							
B510	2	8'-0"	17	STR.							
B511	2	5'-3"	11	STR.							
B512	2	7'-10"	16	STR.							
B513	2	9'-11"	21	STR.							
B514	2	12'-0"	25	STR.							
B515	2	14'-0"	29	STR.							
B516	2	16'-1"	34	STR.							
B517	2	15'-0"	31	STR.							
B518	5	13'-9"	72	STR.							
	SUB-TOTAL		10,940								

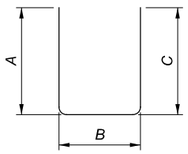

TYPE-2

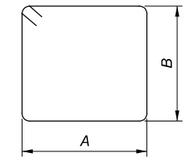

TYPE-3

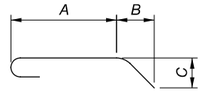

TYPE-18

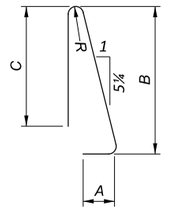

TYPE-23

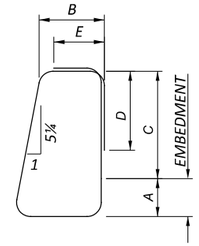

TYPE-37

DRAFT Stage 3 - Not for Construction 09/23/2024

DESIGN AGENCY
Stantec
1500 Lake Shore Dr.
Columbus, OH 43204
(614) 486-4383

DESIGNED	DRAWN	REVIEWED	DATE
MRS	ALH	BSM	2/2024
CHECKED	REVISED	STRUCTURE FILE NUMBER	
EDA		4400526	

REINFORCING STEEL LIST
BRIDGE NO. LAW-7-0713 R
S.R. 7 OVER LITTLE PADDY CREEK

LAW-7-2.17
PID No. 75923

1013
1247

V:\1736\active\173608714\LAW\engineering\75923_LAW-7-2.17\Design\structures\LAW007_0713R\sheets\007_0713R_SL001.dgn Sheet 5/13/2024 1:46:18 PM msturdevant

MARK	NUMBER TOTAL	LENGTH	WEIGHT	TYPE	DIMENSIONS A	B	C	D	E	R	INC
PIER 1 (EPOXY COATED STEEL REINFORCEMENT)											
P1001	63	10'-9"	2914	1	1'-10"	9'-3"					
P1002	21	43'-3"	3908	STR.							
P1003	21	44'-2"	3991	STR.							
P1004	21	44'-5"	4014	STR.							
P801	42	18'-3"	2047	2	3'-0"	12'-8"	3'-0"				
P802	42	17'-3"	1935	2	3'-0"	11'-8"	3'-0"				
P803	9	46'-4"	1113	17	44'-8"						
P701	9	55'-2"	1015	2	5'-6"	44'-6"	5'-6"				
P501	39	12'-8"	515	STR.							
P502	42	11'-8"	511	STR.							
P503	192	11'-10"	2370	2	4'-6"	3'-1"	4'-6"				
P504	20	24'-0"	501	STR.							
P505	12	12'-11"	162	1	1'-0"	12'-0"					
P506	6	10'-7"	66	1	1'-0"	9'-8"					
SP501	1	38'-4"	2488	27	2¾	4'-6"	38'-4"				
SP502	1	38'-11"	2525	27	2¾	4'-6"	38'-11"				
SP503	1	39'-6"	2562	27	2¾	4'-6"	39'-6"				
		SUB-TOTAL	32,637								

MARK	NUMBER TOTAL	LENGTH	WEIGHT	TYPE	DIMENSIONS A	B	C	D	E	R	INC
PIER 2 (EPOXY COATED STEEL REINFORCEMENT)											
Q1001	63	10'-9"	2914	1	1'-10"	9'-3"					
Q1002	42	36'-4"	6566	STR.							
Q1003	42	36'-9"	6642	STR.							
Q1004	42	37'-2"	6717	STR.							
Q801	42	22'-9"	2551	2	3'-0"	17'-2"	3'-0"				
Q802	54	17'-3"	2488	2	3'-0"	11'-8"	3'-0"				
Q803	9	46'-4"	1114	17	44'-8"						
Q701	9	55'-2"	1015	2	5'-6"	44'-6"	5'-6"				
Q501	39	17'-2"	698	STR.							
Q502	54	11'-8"	657	STR.							
Q503	192	11'-10"	2370	2	4'-6"	3'-1"	4'-6"				
Q504	20	24'-0"	501	STR.							
Q505	12	12'-11"	162	1	1'-0"	12'-0"					
Q506	6	10'-7"	66	1	1'-0"	9'-8"					
SQ501	1	61'-8"	3975	27	2¾	4'-6"	61'-8"				
SQ502	1	62'-7"	4033	27	2¾	4'-6"	62'-7"				
SQ503	1	63'-6"	4092	27	2¾	4'-6"	63'-6"				
		SUB-TOTAL	46,561								

MARK	NUMBER TOTAL	LENGTH	WEIGHT	TYPE	DIMENSIONS A	B	C	D	E	R	INC
SUPERSTRUCTURE AND APPROACH SLAB RAILING (EPOXY COATED STEEL REINFORCEMENT)											
D801	64	6'-11"	1182	1	1'-0"	6'-0"					
D601	64	9'-0"	865	STR.							
D602	16	7'-10"	188	STR.							
D604 *	32	9'-1"	437	STR.							
D605	8	40'-5"	486	STR.							
D606	64	10'-0"	961	13	5'-10"	8"	8"	3'-3"			
D401	10	12'-6"	84	24	4"	6'-0"				2"	
D402	32	4'-6"	96	2	8"	3'-4"	8"				
D403	64	14'-9"	631	6	2'-2"	5'-11"	8"				
D404	128	9'-6"	812	2	4'-0"	1'-8"	4'-0"				
D301	10	3'-4"	13	39	5"	11"					
S601	754	7'-2"	8116	37	9"	9½	1'-5"	1'-0"	7"		
S602	754	7'-0"	7928	23	6"	3'-3"	3'-3"			2"	
	8	4'-4"				3'-6"					
S603	SERIES OF	TO	628	1	1'-0"	TO					7¼
	11	5'-2"				4'-4"					
S604	32	3'-6"	168	STR.							
S501	879	30'-0"	27,504	STR.							
S502	71	26'-7"	1969	STR.							
S503	645	29'-6"	19,846	16	28'-6"						
S504	645	20'-0"	13,455	16	19'-0"						
S505	1290	23'-9"	31,955	STR.							
S506	1290	9'-1"	12,221	16	8'-6"						
S507	16	5'-10"	97	2	2'-0"	1'-1"	2'-0"				
	2	2'-3"									
S508	SERIES OF	TO	973	STR.							2'-1¼
	21	42'-2"									
	2	1'-8"									
S509	SERIES OF	TO	1392	STR.							
	30	42'-10"									1'-7"
S510	16	4'-4"	72	2	1'-10"	11"	1'-10"				
S511	98	31'-0"	3169	STR.							
S401	550	30'-0"	11,022	STR.							
S402	50	15'-7"	520	STR.							
S403	646	3'-10"	1654	STR.							
S404	290	4'-0"	775	50	9½"	1'-2"					
		SUB-TOTAL	149,219								

MARK	NUMBER TOTAL	LENGTH	TOTAL LENGTH	TYPE	DIMENSIONS A	B	C	D	E	R	INC
SUPERSTRUCTURE AND APPROACH SLAB RAILING (GLASS FIBER REINFORCED POLYMER - GFRP)											
X401	198	37'-0"	7326'-0"	STR.							
X402	24	6'-4"	152'-0"	25	2'-6"	2'-5"	1'-4"	1½	5"		
X403	24	5'-1"	122'-0"	STR.							
X404	48	10'-0"	480'-0"	STR.							
X405	44	12'-4"	542'-8"	STR.							
Y401	256	11'-3"	2880'-0"	STR.							
Y402	32	11'-6"	368'-0"	STR.							
		SUB-TOTAL	11,870'-8"								

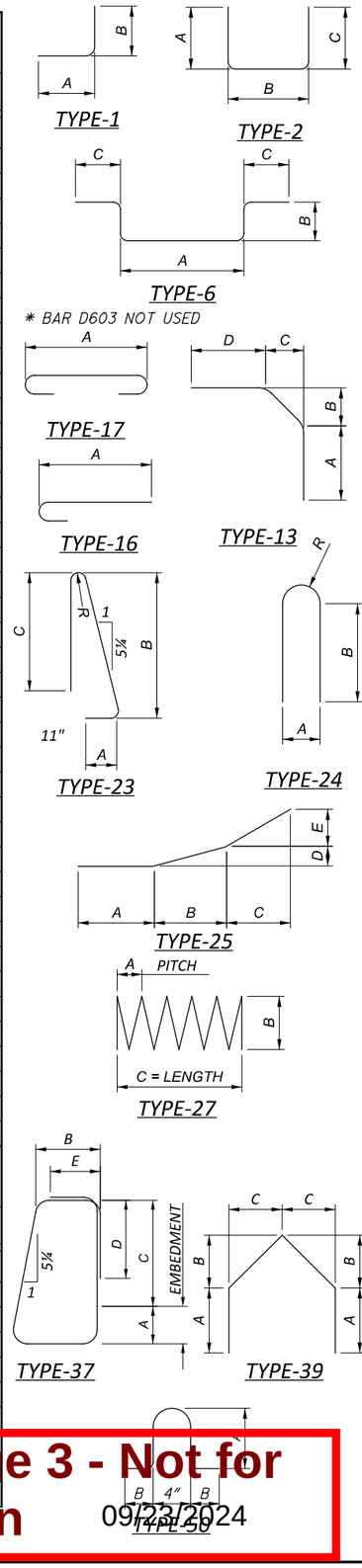

DRAFT Stage 3 - Not for Construction
09/23/2024

DESIGN AGENCY
Stantec
1500 Lake Shore Dr.
Columbus, OH 43204
(614) 486-4383

DESIGNED MRS | DRAWN ALH | CHECKED EDA | REVIEWED BSM | DATE 2/2024 | STRUCTURE FILE NUMBER 4400526

REINFORCING STEEL LIST
BRIDGE NO. LAW-7-0713 R
S.R. 7 OVER LITTLE PADDY CREEK

LAW-7-2.17
PID No. 75923

V:\1736\active\173608714\LAW\engineering\75923_LAW-7-2.17\Design\structures\LAW007_0713R\sheets\007_0713R_SL002.dgn Sheet 5/13/2024 1:46:21 PM msturdevant

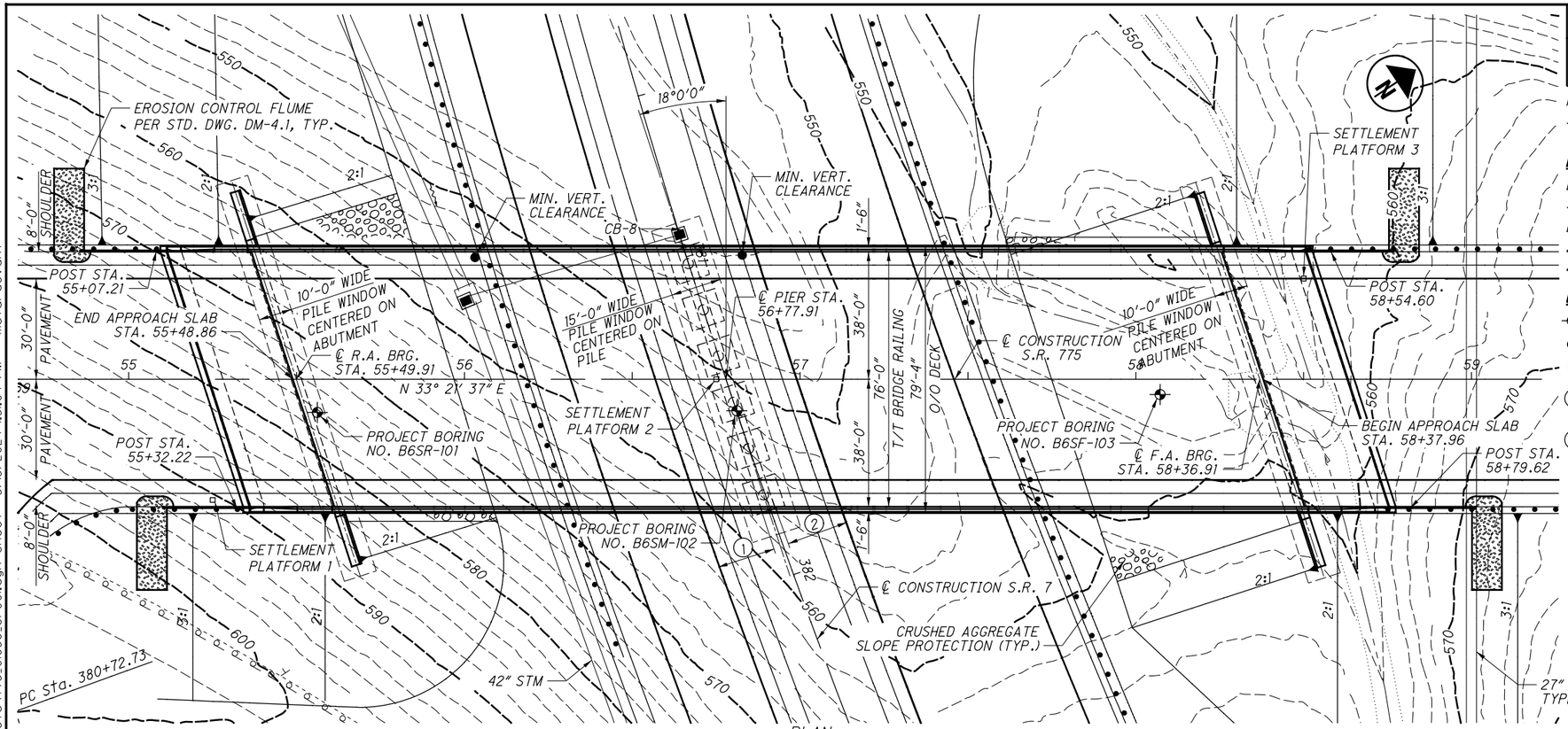

BENCHMARK DATA

BM #1 STA. 394+68.05, ELEV. 590.34, OFFSET 0.08', LEFT
BM #2 STA. 407+19.64, ELEV. 608.56, OFFSET 65.06', RIGHT

FOR ADDITIONAL BENCHMARK INFORMATION. SEE ROADWAY PLAN SHEET ⊖

NOTES

EARTHWORK LIMITS SHOWN ARE APPROXIMATE. ACTUAL SLOPES SHALL CONFORM TO PLAN CROSS SECTIONS.

DESIGN TRAFFIC:

2028 ADT = 19,400 2028 ADTT = 776
2048 ADT = 29,100 2048 ADTT = 1164

LEGEND

- ✣ PROJECT BORING LOCATION
- ● 16'-6" REQUIRED MINIMUM VERTICAL CLEARANCE
- 16'-9½" ACTUAL MINIMUM VERTICAL CLEARANCE
- ① 30'-0" REQUIRED MINIMUM HORIZONTAL CLEARANCE
  17'-5" ACTUAL MINIMUM HORIZONTAL CLEARANCE
- ② 30'-0" REQUIRED MINIMUM HORIZONTAL CLEARANCE
  17'-11 5/8" ACTUAL MINIMUM HORIZONTAL CLEARANCE

NOTE:
CRUSHED AGGREGATE SLOPE PROTECTION INCLUDED WITH ROADWAY QUANTITIES FOR PAYMENT.

CURVE DATA (S.R. 7 CURVE NO. 9)

P.I. STA. 387+47.15	E = 136.98'	LT = 200.04'
Δ = 46° 04' 34" (LT)	TS STA. 376+18.38	ST = 100.04'
Dc = 2° 29' 28"	SC STA. 379+18.38	e_{max} = 6.20%
R = 2,300.00'	θs = 3° 44' 12"	CS STA. 394+68.00
T = 805.51'	Ls = 300.00'	ST STA. 397+68.00
L = 1,549.62'	Ts = 1,128.77'	

PROPOSED STRUCTURE

TYPE: CONTINUOUS STEEL PLATE GIRDERS (GR 50W) COMPOSITE WITH REINFORCED CONCRETE DECK, SUPPORTED BY INTEGRAL ABUTMENTS AND CAP AND COLUMN PIER.

SPANS: 128'-0" & 159'-0" C/C BRGS. (MEASURED ALONG ℄ CONST.)
ROADWAY: 76'-0" TOE/TOE OF BRIDGE RAILING
LOADING: HL-93 AND 0.06 KIP/FT² FUTURE WEARING SURFACE
WEARING SURFACE: 1" MONOLITHIC WEARING SURFACE
SKEW: 18°00'00" RF
APPROACH SLABS: AS-1-15, AS-2-15, 25'-0" LONG
ALIGNMENT: TANGENT
CROWN SLOPE: 2%
DECK AREA: 22,941 SQ. FT.
COORDINATES: LATITUDE 38° 28' 33.34"
LONGITUDE 82° 22' 42.05"

DRAFT Stage 3 - Not for Construction 09/23/2024

DESIGN AGENCY
Stantec
1500 Lake Shore Dr.
Columbus, OH 43204
(614) 486-4383

DESIGNED	DRAWN	REVIEWED	DATE
MRS	ALH	BSM	2/2024
CHECKED	REVISED	STRUCTURE FILE NUMBER	
EDA	XXX	4404378	

LAWRENCE COUNTY
STA. 55+48.86
STA. 58+37.96

SITE PLAN
BRIDGE NO. LAW-775-0105
S.R. 775 OVER S.R. 7

LAW-7-2.17
PID No. 75923

1 / 24

1015
1247

V:\1736\active\173608714\LAW\engineering\75923_LAW-7-2.17\Design\structures\LAW775_0105C\sheets\775_0105C_SP001.dgn Sheet 5/13/2024 1:51:04 PM mstur devant

STANDARD DRAWINGS AND SUPPLEMENTAL SPECIFICATIONS

REFER TO THE FOLLOWING STANDARD BRIDGE DRAWING(S):

AS-1-15	REVISED	01-20-23
AS-2-15	REVISED	07-21-23
GSD-1-19	REVISED	01-15-21
SBR-1-20	REVISED	07-21-23

AND TO THE FOLLOWING SUPPLEMENTAL SPECIFICATION

800	DATED	01-19-24
869	DATED	10-17-14

DESIGN SPECIFICATIONS

THIS STRUCTURE CONFORMS TO THE 9TH EDITION OF THE "LRFD BRIDGE DESIGN SPECIFICATIONS" ADOPTED BY THE AMERICAN ASSOCIATION OF STATE HIGHWAY AND TRANSPORTATION OFFICIALS 2020, AND THE ODOT BRIDGE DESIGN MANUAL, 2020.

OPERATIONAL IMPORTANCE

A LOAD MODIFIER OF 1.0 HAS BEEN ASSUMED FOR THE DESIGN OF THIS STRUCTURE IN ACCORDANCE WITH THE AASHTO LRFD BRIDGE DESIGN SPECIFICATIONS, ARTICLE 1.3.5 AND THE ODOT BRIDGE DESIGN MANUAL, 2020

DESIGN LOADING

DESIGN LOADING: HL-93

FUTURE WEARING SURFACE (FWS) OF 0.060 KIPS/SQ.FT.

DESIGN DATA

CONCRETE CLASS QC2 WITH QC/QA
-COMPRESSIVE STRENGTH 4.5 KSI (SUPERSTRUCTURE)

CONCRETE CLASS QC1 WITH QC/QA
-COMPRESSIVE STRENGTH 4.0 KSI (SUBSTRUCTURE)

REINFORCING STEEL
-MINIMUM YIELD STRENGTH 60 KSI

STEEL H-PILES - ASTM A572 - YIELD STRENGTH 50 KSI

STRUCTURAL STEEL - ASTM A709 GRADE 50W
-YIELD STRENGTH 50 KSI

MONOLITHIC WEARING SURFACE

MONOLITHIC WEARING SURFACE IS ASSUMED, FOR DESIGN PURPOSES, TO BE 1 INCH THICK.

PILE DRIVING CONSTRAINTS

PRIOR TO DRIVING PILES, CONSTRUCT THE SPILL THROUGH SLOPES AND THE BRIDGE APPROACH EMBANKMENT BEHIND THE ABUTMENTS UP TO THE LEVEL OF THE SR 775 SUBGRADE ELEVATION FOR A MINIMUM DISTANCE OF 200 FEET BEHIND EACH ABUTMENT. ALSO CONSTRUCT THE EMBANKMENT UNDER THE BRIDGE UP TO THE LEVEL OF THE SR 7 SUBGRADE ELEVATION FOR A MINIMUM DISTANCE OF 200 FEET FROM BOTH SIDES OF THE BRIDGE.

TO FACILITATE INSTALLATION OF PILES THROUGH THE NEW EMBANKMENT, THE CONTRACTOR SHALL CONSTRUCT AN APPROXIMATE 10 FEET WIDE ZONE OF SOIL FREE OF BEDROCK, COBBLES AND BOULDERS DIRECTLY BENEATH THE BRIDGE ABUTMENTS AND 15 FEET WIDE AT PIER 1. DO NOT BEGIN THE INSTALLATION OF THE ABUTMENTS AND PIER 1 PILES UNTIL AFTER THE ABOVE REQUIRED EMBANKMENT HAS BEEN CONSTRUCTED AND AN ESTIMATED 120 CALENDAR DAY WAITING PERIOD HAS ELAPSED. THE ENGINEER OF RECORD MAY ADJUST THE LENGTH OF THE WAITING PERIOD BASED ON SETTLEMENT PLATFORM READINGS. AFTER THE SPECIFIED WAITING PERIOD HAS ELAPSED DRIVE PILES TO REFUSAL ON BEDROCK. ALL LABOR, EQUIPMENT, MATERIALS AND INCIDENTALS REQUIRED TO CONSTRUCT THE PILE WINDOW SHALL BE INCLUDED FOR PAYMENT IN ITEM 203, EMBANKMENT IN THE ROADWAY QUANTITIES.

PILES TO BEDROCK

DRIVE PILES TO REFUSAL ON BEDROCK. THE DEPARTMENT WILL CONSIDER REFUSAL TO BE OBTAINED WHEN THE PILE PENETRATION IS AN INCH OR LESS AFTER RECEIVING AT LEAST 20 BLOWS FROM THE PILE HAMMER. SELECT THE HAMMER SIZE TO ACHIEVE THE REQUIRED DEPTH TO BEDROCK AND REFUSAL.

THE TOTAL FACTORED LOAD IS 208 KIPS PER PILE FOR THE REAR ABUTMENT PILES. THE TOTAL FACTORED LOAD IS 231 KIPS PER PILE FOR THE FORWARD ABUTMENT PILES. THE TOTAL FACTORED LOAD IS 288 KIPS PER PILE FOR THE PIER PILES. NO ADDITIONAL LOADING DUE TO DOWNDRAG IS ANTICIPATED AS LONG AS THE WAITING PERIOD PER PLAN NOTE "PILE DRIVING CONSTRAINTS" IS OBSERVED.

REAR ABUTMENT PILES:
HP 10X42 PILES 130 FEET LONG, ORDER LENGTH

PIER 1 PILES:
HP 10X42 PILES 110 FEET LONG, ORDER LENGTH

FORWARD ABUTMENT PILES:
HP 10X42 PILES 130 FEET LONG, ORDER LENGTH

PILE SPLICES

IN LIEU OF USING THE FULL PENETRATION BUTT WELDS SPECIFIED IN CMS 507.09 TO SPLICE STEEL H-PILES, THE CONTRACTOR MAY USE A MANUFACTURED H-PILE SPLICER. FURNISH SPLICERS FROM THE FOLLOWING MANUFACTURER:

ASSOCIATED PILE AND FITTING CORPORATION
8 WOOD HOLLOW RD. PLAZA 1
PARSIPPANY, NEW JERSEY 07054

INSTALL AND WELD THE SPLICER TO THE PILE SECTIONS IN ACCORDANCE WITH THE MANUFACTURER'S WRITTEN ASSEMBLY PROCEDURE SUPPLIED TO THE ENGINEER BEFORE THE WELDING IS PERFORMED.

DECK PLACEMENT DESIGN ASSUMPTIONS

THE FOLLOWING ASSUMPTIONS OF CONSTRUCTION MEANS AND METHODS WERE MADE FOR THE ANALYSIS AND DESIGN OF THE SUPERSTRUCTURE. THE CONTRACTOR IS RESPONSIBLE FOR THE DESIGN OF THE FALSEWORK SUPPORT SYSTEM WITHIN THESE PARAMETERS AND WILL ASSUME RESPONSIBILITY FOR SUPERSTRUCTURE ANALYSIS FOR DEVIATION FROM THESE DESIGN ASSUMPTIONS.

AN EIGHT WHEEL FINISHING MACHINE WITH A MAXIMUM WHEEL LOAD OF 2.85 KIPS.

A MINIMUM OUT-TO-OUT WHEEL SPACING AT EACH END OF THE MACHINE OF 103".

A MAXIMUM SPACING OF OVERHANG FALSEWORK BRACKETS OF 48 IN.

A MAXIMUM DISTANCE FROM THE CENTERLINE OF THE FASCIA GIRDER TO THE FACE OF THE SAFETY HANDRAIL OF 65".

APPROACH EMBANKMENT CONSTRUCTION:

THE APPROACH EMBANKMENTS SHALL BE CONSTRUCTED AND THEN UNDERGO AN ESTIMATED WAITING PERIOD OF 120 DAYS PRIOR TO DRIVING PILES. SEE SHEETS X/X AND X/X FOR DETAILS AND NOTES REGARDING REINFORCED SLOPE AND EMBANKMENT CONSTRUCTION.

ABBREVIATIONS:

ABUT	-	ABUTMENT
APPROX.	-	APPROXIMATE
BM	-	BENCHMARK
BRG.	-	BEARING
B/	-	BOTTOM OF
℄	-	CENTERLINE
CONC.	-	CONCRETE
CLR.	-	CLEARANCE
CONST.	-	CONSTRUCTION
DIA.	-	DIAMETER
DWG.	-	DRAWING
EF	-	EACH FACE
EL.	-	ELEVATION
EQ.	-	EQUAL
EST.	-	ESTIMATED
EXIST.	-	EXISTING
EXP.	-	EXPANSION
F.A.	-	FORWARD ABUTMENT
FF	-	FAR FACE
FNDN.	-	FOUNDATION
FTG.	-	FOOTING
FWD.	-	FORWARD
F/F	-	FACE TO FACE
HLMR	-	HIGH LOAD MULTI-ROTATIONAL BEARINGS
JT.	-	JOINT
LT.	-	LEFT
MAX.	-	MAXIMUM
MIN.	-	MINIMUM
NF	-	NEAR FACE
NO.	-	NUMBER
O/O	-	OUT TO OUT
PAVT.	-	PAVEMENT
PEJF	-	PREFORMED EXPANSION JOINT FILLER
R.A.	-	REAR ABUTMENT
REF.	-	REFERENCE
RF	-	RIGHT FORWARD
REINF.	-	REINFORCED
RT.	-	RIGHT
SP.	-	SETTLEMENT PLATFORM
SPA.	-	SPACE
S.R.	-	STATE ROUTE
STA.	-	STATION
STD.	-	STANDARD
TYP.	-	TYPICAL
T/	-	TOP OF
T/T	-	TOE TO TOE
T&B	-	TOP AND BOTTOM
VAR.	-	VARIES
REQ'D	-	REQUIRED

DRAFT Stage 3 - Not for Construction 09/23/2024

V:\1736\active\173608714\LAW\engineering\75923_LAW-7-2.17\Design\structures\LAW775_0105C\sheets\775_0105C_SN001.dgn 5/13/2024 1:51:14 PM msturdevant

DESIGN AGENCY
Stantec
1500 Lake Shore Dr.
Columbus, OH 43204
(614) 486-4383

DESIGNED	DRAWN	REVIEWED	DATE
MRS	ALH	BSM	2/2024
CHECKED	REVISED	STRUCTURE FILE NUMBER	
EDA		4404378	

GENERAL NOTES
BRIDGE NO. LAW-775-0105
S.R. 775 OVER S.R. 7

LAW-7-2.17
PID No. 75923

ITEM SPECIAL - SETTLEMENT PLATFORM:

DESCRIPTION: THIS ITEM CONSISTS OF FURNISHING, CONSTRUCTING, AND MAINTAINING SETTLEMENT PLATFORMS AND OBTAINING SETTLEMENT READINGS AS REQUIRED BY THE PLANS OR AS DIRECTED BY THE ENGINEER. SEE SETTLEMENT PLATFORM DETAIL THIS SHEET. AT THE OPTION AND EXPENSE OF THE CONTRACTOR, ADDITIONAL SETTLEMENT PLATFORMS MAY BE INSTALLED AT LOCATIONS APPROVED BY THE ENGINEER. SETTLEMENT READINGS SHALL BE TAKEN WEEKLY BEGINNING WITH THE FIRST WEEK FOLLOWING PLACEMENT OF EACH PLATFORM. THE READINGS SHALL BE PLOTTED ON GRAPH PAPER PRESENTING DEFORMATION (ON THE NEGATIVE Y-AXIS) AND FILL HEIGHT (ON THE POSITIVE Y-AXIS) VERSUS TIME (ON THE X-AXIS). A COPY OF EACH CUMULATIVE PLOT SHALL BE SENT TO ODOT, CO, CONSTRUCTION MANAGEMENT/CONSTRUCTION ADMINISTRATION, GEOTECHNICAL AND EARTHWORK ENGINEER AND ODOT, CO, OFFICE OF GEOTECHNICAL ENGINEERING, FOUNDATIONS AND RETAINING WALLS ENGINEER, AFTER EACH SETTLEMENT READING IS RECORDED.

MATERIAL: SOUND LUMBER SUCH AS ¾" EXTERIOR GRADE PLYWOOD SHALL BE USED FOR THE BASE. THE PIPE SHALL BE 2½" STANDARD BLACK PIPE WITH THREADED FITTINGS AS SHOWN ON THE PLANS. A STEEL PLATE 36" X 36" X ⅛" MAY BE SUBSTITUTED FOR THE LUMBER FOR THE PLATFORMS, AT THE CONTRACTOR'S OPTION.

CONSTRUCTION METHODS: THE PLATFORM SHALL CONFORM TO THE SETTLEMENT PLATFORM DETAILS SHOWN ON THIS SHEET. THE PLATFORM SHALL BE SET ON A LEVEL SURFACE. THE PIPE SHALL BE FIRMLY SECURED TO THE PLATFORM AND SHALL BE MAINTAINED IN A PLUMB POSITION DURING THE PLACEMENT OF THE EMBANKMENT. THE PIPE SHALL BE MARKED AT INTERVALS TO FACILITATE MEASUREMENT OF THE DEPTH OF FILL. THE CONTRACTOR SHALL STOP WORK IN ANY LOCATION WHERE THE SETTLEMENT PLATFORM HAS BEEN DISTURBED OR DAMAGED. PLATFORMS OR PIPES DAMAGED OR DISPLACED DURING CONSTRUCTION SHALL BE RESTORED TO THEIR PROPER CONDITION AT THE CONTRACTOR'S EXPENSE.

SETTLEMENT PLATFORMS SHALL BE PLACED AT THE FOLLOWING LOCATIONS:

I.D.	STATION	OFFSET
SP1	55+25	36' RIGHT
SP2	56+75	0'
SP3	58+50	36' LEFT

PRIOR TO PAVING, THE TOP OF THE SETTLEMENT PLATFORM PIPE SHALL BE CUT OFF TWO FEET BELOW THE FINISHED SURFACE OF THE SUBGRADE OR FINISHED GROUND SURFACE, WHICHEVER IS APPLICABLE.

REFER TO ODOT GEOTECHNICAL BULLETIN GB4 "GUIDELINES FOR THE USE OF GEOTECHNICAL INSTRUMENTATION" FOR ADDITIONAL INSTALLATION AND MONITORING INSTRUCTION.

WAITING PERIOD CRITERIA:
THE ENGINEER WILL CONSIDER THE WAITING PERIOD COMPLETE WHEN CONSECUTIVE SETTLEMENT READINGS, RECORDED AFTER EMBANKMENT CONSTRUCTION IS COMPLETE AND AT LEAST ONE WEEK (168 HOURS) APART, RESULT IN ELEVATION DIFFERENCES EQUAL TO OR LESS THAN ⅛ INCH.

IF SETTLEMENT RATES EXCEED ¾ INCH PER MONTH AFTER EMBANKMENT CONSTRUCTION HAS BEEN COMPLETE FOR 45 CALENDAR DAYS, REMAINING CONSTRUCTION, INCLUDING ANY NECCESARY CORRECTIVE MEASURES, MAY PROCEED ONLY AT THE DIRECTION OF THE ENGINEER.

THE DEPARTMENT WILL CONSIDER VIBRATING WIRE SETTLEMENT MONITORING PLATFORMS IN LIEU OF THE CONVENTIONAL SETTLEMENT PLATFORMS. THE CONTRACTOR SHOULD PROVIDE DETAILS OF THE PROPOSED VIBRATING WIRE SETTLEMENT PLATFORMS AS WELL AS DESIGN DRAWINGS OF THE PROPOSED 30 DAYS PRIOR TO CONSTRUCTION. THE DEPARTMENT WILL REQUIRE 10 WORKING DAYS FOR REVIEW AND APPROVAL. THE DESIGN DRAWINGS SHOULD ILLUSTRATE THE LOCATIONS WITH ALL EXISTING AND PROPOSED SITE FEATURES TO VERIFY THE PROPOSED CABLING WILL NOT CONFLICT WITH EXISTING FACILITIES, PROPOSED FACILITIES OR UTILITIES. NO ADDITIONAL PAYMENT WILL BE PROVIDED IF THE CONTRACTOR ELECTS TO UTILIZE VIBRATING WIRE SETTLEMENT PLATFORMS.

MORE INFORMATION PERTAINING TO EMBANKMENT CONSTRUCTION AND CONTROLLED RATES OF FILL ARE PROVIDED IN THE ROADWAY PLANS.

METHOD OF MEASUREMENT, THE NUMBER OF SETTLEMENT PLATFORMS TO BE PAID FOR SHALL BE THE ACTUAL NUMBER OF SETTLEMENT PLATFORMS COMPLETED, MAINTAINED, AND ACCEPTED BY THE ENGINEER.

BASIS OF PAYMENT: PAYMENT SHALL BE MADE AT THE CONTRACT UNIT PRICE EACH FOR "ITEM SPECIAL - SETTLEMENT PLATFORM" WHICH IS COMPENSATION FOR CONSTRUCTING, MAINTAINING, AND MONITORING THE SETTLEMENT PLATFORMS INCLUDING FURNISHING ALL LABOR, EQUIPMENT, MATERIALS, AND INCIDENTALS NECESSARY TO COMPLETE THE WORK. PAYMENT SHALL NOT BE MADE FOR SETTLEMENT PLATFORMS WHICH BECOME USELESS DUE TO DAMAGE CAUSED BY THE CONTRACTOR'S OPERATIONS. SEE DETAIL THIS SHEET.

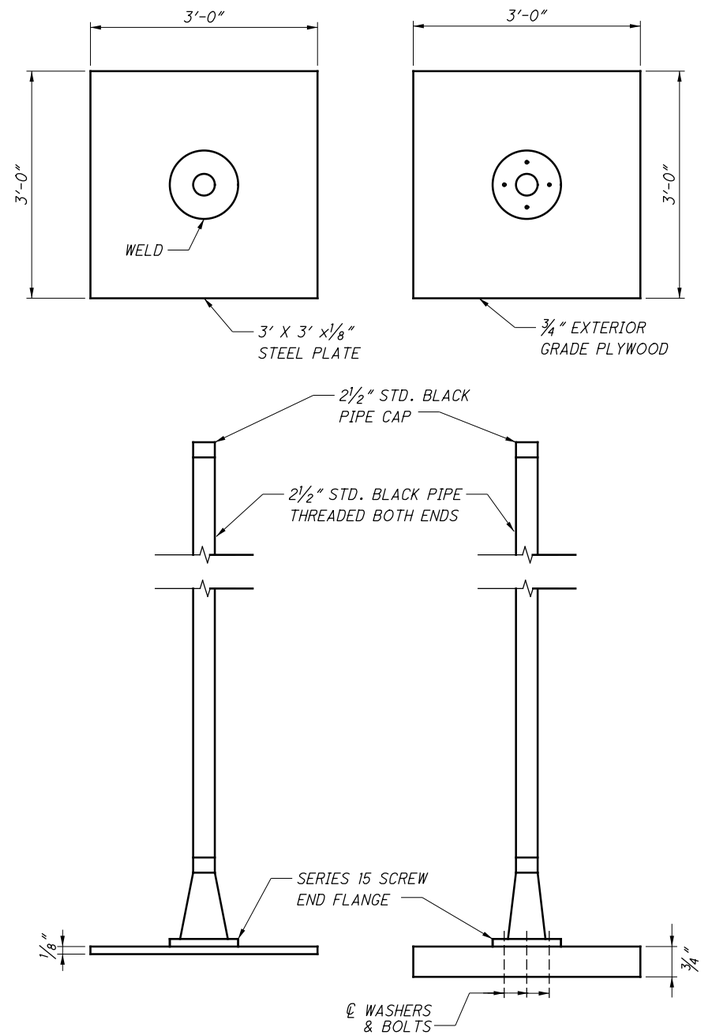

SETTLEMENT PLATFORM

(NOT TO SCALE)

NOTES:

1. SETTLEMENT PLATFORMS SHALL BE ANCHORED BY STAKES DRIVEN AT EACH CORNER TO PREVENT OVERTURNING.

DRAFT Stage 3 - Not for Construction 09/23/2024

DESIGN AGENCY
Stantec
1500 Lake Shore Dr.
Columbus, OH 43204
(614) 486-4383

DESIGNED	DRAWN	REVIEWED	DATE
MRS	ALH	BSM	2/2024
CHECKED	REVISED	STRUCTURE FILE NUMBER	
EDA		4404378	

GENERAL NOTES
BRIDGE NO. LAW-775-0105
S.R. 775 OVER S.R. 7

LAW-7-2.17
PID No. 75923

1017
1247

V:\1736\active\173608714\LAW\engineering\75923_LAW-7-2.17\Design\structures\LAW775_0105C\sheets\775_0105C_SN002.dgn 5/13/2024 1:51:15 PM msturdevant

ESTIMATED QUANTITIES (PARTICIPATION CODE 02/NHS/08)

ITEM	EXTENSION	TOTAL	UNIT	DESCRIPTION	ABUT.	PIER	SUPER.	GEN.	SHEET NO.
SPECIAL	203E65000	3	EA	SETTLEMENT PLATFORM				3	3 / 24
503	21300	LUMP	LS	UNCLASSIFIED EXCAVATION				LUMP	
505	11100	LUMP	LS	PILE DRIVING EQUIPMENT MOBILIZATION				LUMP	
507	00100	8380	FT	STEEL PILES HP10X42, FURNISHED	4420	3960			
507	00150	8030	FT	STEEL PILES HP10X42, DRIVEN	4250	3780			
507	92200	1404	FT	PREBORED HOLES		1404			
509	10000	296,213	LB	EPOXY COATED STEEL REINFORCEMENT	34,270	52,512	207,665	1766	
509	30020	10,281'-6"	FT	NO. 4 DEFORMED GFRP REINFORCEMENT			8868'-6"	1413'-0"	
511	34446	796	CY	CLASS QC2 CONCRETE WITH QC/QA, BRIDGE DECK			796		
511	34450	88	CY	CLASS QC2 CONCRETE WITH QC/QA, BRIDGE DECK (PARAPET)			88		
511	41012	100	CY	CLASS QC1 CONCRETE WITH QC/QA, PIER ABOVE FOOTINGS		100			
511	43512	206	CY	CLASS QC1 CONCRETE WITH QC/QA, ABUTMENT INCLUDING FOOTING	206				
511	46512	78	CY	CLASS QC1 CONCRETE WITH QC/QA, FOOTING		78			
512	10100	1106	SY	SEALING OF CONCRETE SURFACES (EPOXY-URETHANE)	50	273	694	88	
513	10281	907,132	LB	STRUCTURAL STEEL MEMBERS, LEVEL 4, AS PER PLAN			907,132		10 / 24
513	20000	8424	EACH	WELDED STUD SHEAR CONNECTORS			8424		
516	10010	167	FT	ARMORLESS PREFORMED JOINT SEAL			167		
516	13200	140	SF	½" PREFORMED EXPANSION JOINT FILLER			140		
516	13600	156	SF	1" PREFORMED EXPANSION JOINT FILLER			156		
516	13900	72	SF	2" PREFORMED EXPANSION JOINT FILLER			72		
516	25000	598	SF	NYLON REINFORCED NEOPRENE SHEETING	598				
516	44100	9	EACH	ELASTOMERIC BEARING WITH INTERNAL LAMINATES AND LOAD PLATE (NEOPRENE) 2.349" X 11" X 1'-6"	9				
516	44100	9	EACH	ELASTOMERIC BEARING WITH INTERNAL LAMINATES AND LOAD PLATE (NEOPRENE) 2.349" X 12" X 1'-6"	9				
518	21200	200	CY	POROUS BACKFILL WITH GEOTEXTILE FABRIC	200				
518	40000	240	FT	6" PERFORATED CORRUGATED PLASTIC PIPE	240				
518	40010	100	FT	6" NON-PERFORATED CORRUGATED PLASTIC PIPE, INCLUDING SPECIALS	100				
526	25011	441	SY	REINFORCED CONCRETE APPROACH SLABS WITH QC/QA (T=15"), AS PER PLAN				441	20 / 24
526	90030	167	FT	TYPE C INSTALLATION	167				
601	20000	1503	SY	CRUSHED AGGREGATE SLOPE PROTECTION				1503	
869	00100	9	EACH	HIGH LOAD MULTI-ROTATIONAL (HLMR) BEARINGS		9			

DRAFT Stage 3 - Not for Construction 09/23/2024

DESIGN AGENCY
Stantec
1500 Lake Shore Dr.
Columbus, OH 43204
(614) 486-4383

DESIGNED	DRAWN	REVIEWED	DATE
MRS	ALH	BSM	2/2024
CHECKED	REVISED	STRUCTURE FILE NUMBER	
EDA		4404378	

ESTIMATED QUANTITIES
BRIDGE NO. LAW-775-0105
S.R. 775 OVER S.R. 7

LAW-7-2.17
PID No. 75923

1018
1247

V:\1736\active\173608714\LAW\engineering\75923_LAW-7-2.17\Design\structures\LAW775_0105C\sheets\775_0105C_SQ001.dgn 5/13/2024 1:51:17 PM msturdevant

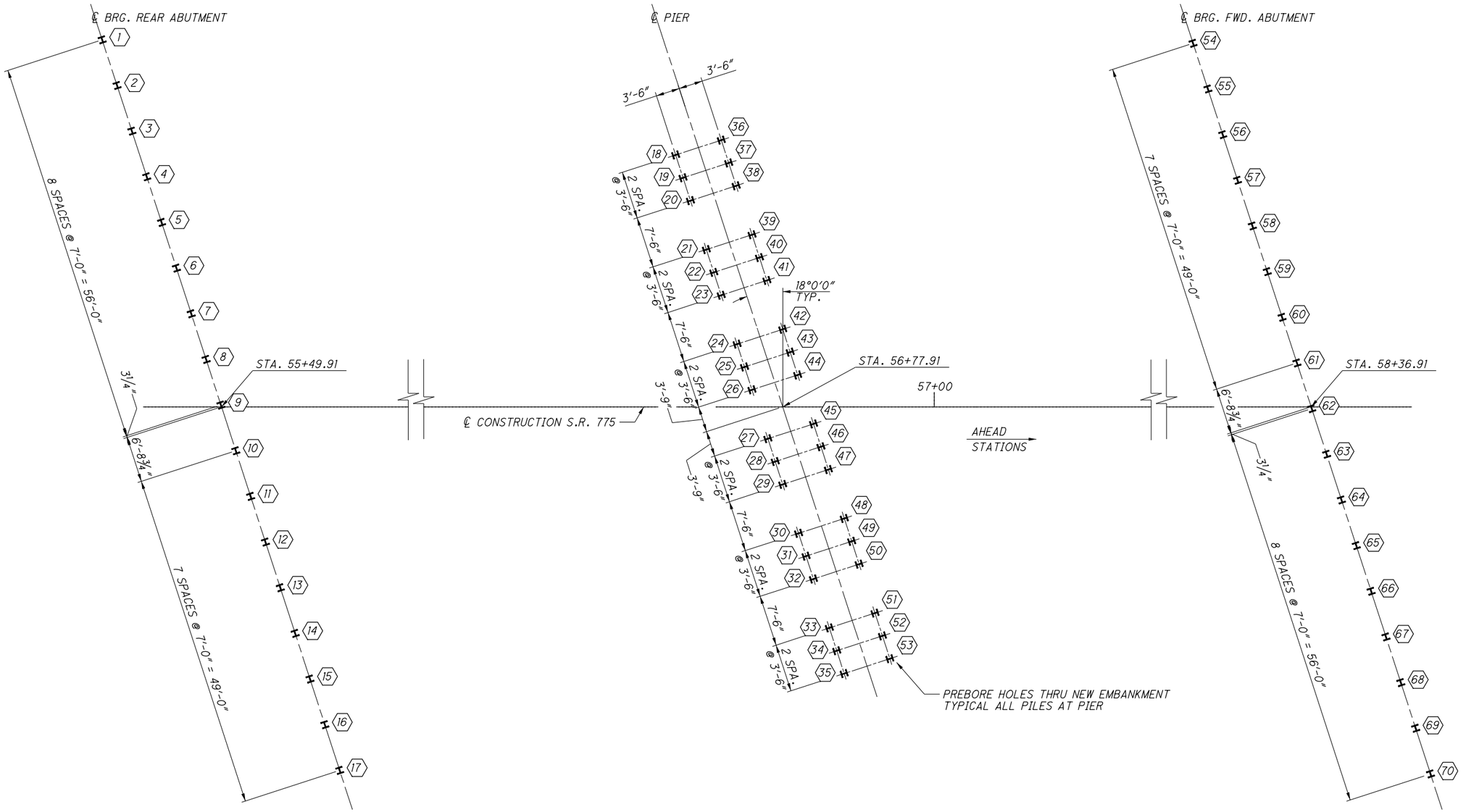

FOUNDATION PLAN

NOTE:
1. ALL PILES ARE HP 10x42.
2. (55) DESIGNATES PILE NUMBER AND LOCATION.

DRAFT Stage 3 - Not for Construction

09/23/2024

DESIGN AGENCY
Stantec
1500 Lake Shore Dr.
Columbus, OH 43204
(614) 486-4383

DESIGNED	DRAWN	REVIEWED	DATE
MRS	ALH	BSM	2/2024
CHECKED	REVISED	STRUCTURE FILE NUMBER	
EDA	XXX	4404378	

FOUNDATION PLAN
BRIDGE NO. LAW-775-0105
S.R. 775 OVER S.R. 7

LAW-7-2.17
PID No. 75923

5 / 24

1019
1247

V:\1736\active\173608714\LAW\engineering\75923_LAW-7-2.17\Design\structures\LAW775_0105C\sheets\LAW775_0105C_S0001.dgn 5/13/2024 1:51:20 PM msturdevant

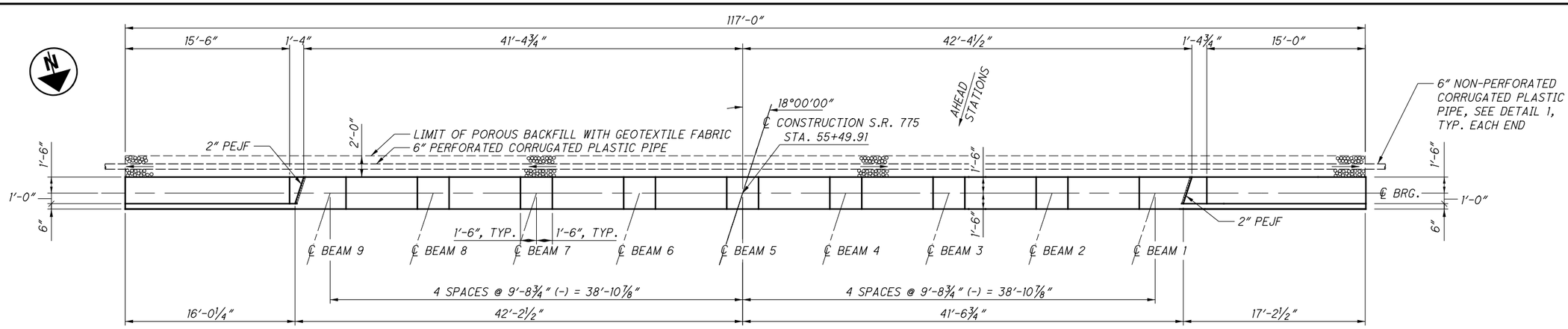

PLAN

① 1 SERIES OF 6-A507 NF & 1 SERIES OF 6-A508 FF @ 12″ = 5′-0″

② 1 SERIES OF 7-A509 NF & 1 SERIES OF 7-A510 FF @ 12″ = 6′-0″

* BARS PLACED PARALLEL TO BEAMS @ 12″ MAX. SPACING

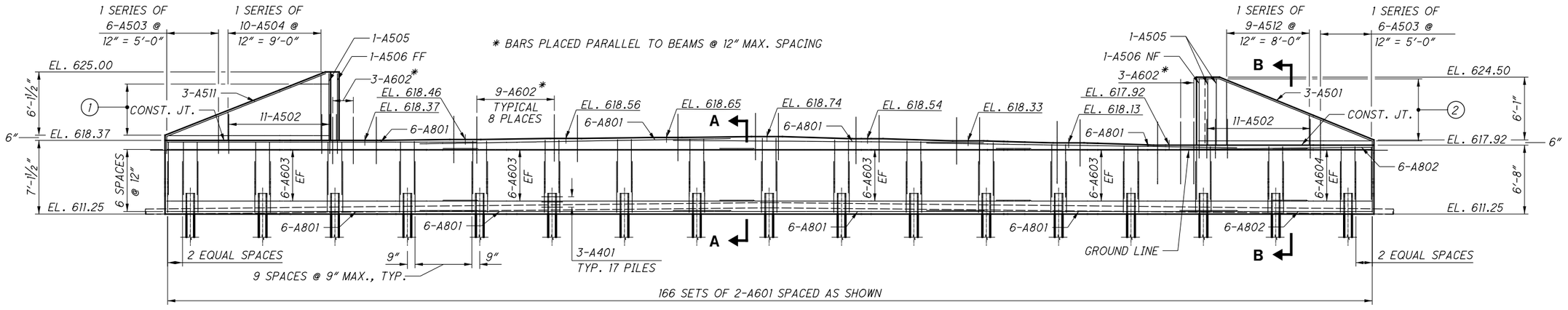

ELEVATION

LAP LENGTHS:
#6 BARS = 4′-0″
#8 BARS = 5′-6″

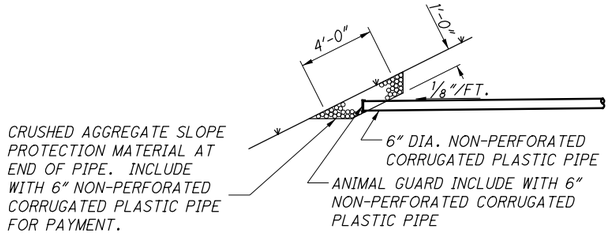

DETAIL 1

NOTES:
1. FOR PILE LAYOUT, SEE SHEET [illegible] 5/24].
2. FOR SECTIONS A-A, SECTION B-B, SEE SHEET [illegible].
3. UNLESS NOTED OTHERWISE ALL REINFORCING SHALL BE INSTALLED WITH A MINIMUM CLEARANCE OF 2″ TO THE CONCRETE SURFACE.
4. SEAL EXPOSED CONCRETE TO LIMITS SHOWN IN SECTION A-A AND B-B, INCLUDING ENDS OF WINGWALLS/CAP ABOVE GROUND LINE.

DRAFT Stage 3 - Not for Construction 09/23/2024

DESIGN AGENCY
Stantec
1500 Lake Shore Dr.
Columbus, OH 43204
(614) 486-4383

DESIGNED	DRAWN	REVIEWED	DATE
EDA	ALH	BSM	2/2024
CHECKED	REVISED	STRUCTURE FILE NUMBER	
MRS	XXX	4404378	

REAR ABUTMENT
BRIDGE NO. LAW-775-0105
S.R. 775 OVER S.R. 7

LAW-7-2.17
PID No. 75923

6 / 24

1020
1247

V:\1736\active\173608714\LAW\engineering\75923_LAW-7-2.17\Design\structures\LAW775_0105C\sheets\LAW775_0105C_SR001.dgn 5/13/2024 1:51:22 PM msturdevant

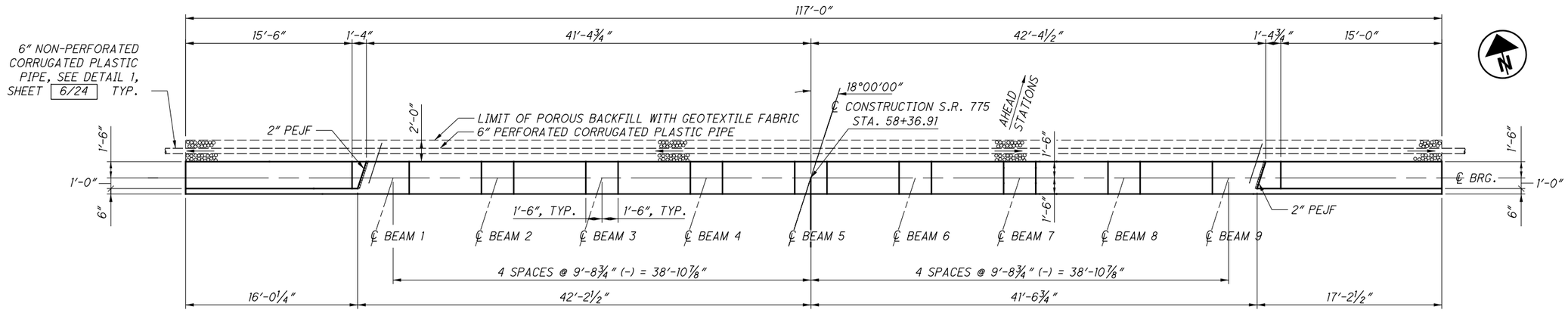

PLAN

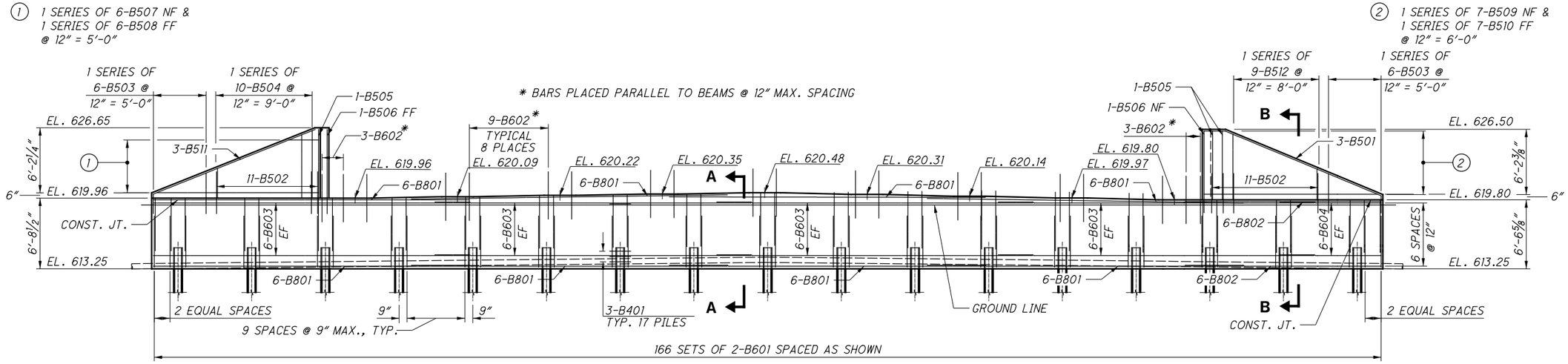

ELEVATION

LAP LENGTHS:
#6 BARS = 4'-0"
#8 BARS = 5'-6"

1 1 SERIES OF 6-B507 NF & 1 SERIES OF 6-B508 FF @ 12" = 5'-0"

2 1 SERIES OF 7-B509 NF & 1 SERIES OF 7-B510 FF @ 12" = 6'-0"

NOTES:
1. FOR PILE LAYOUT, SEE SHEET [6/24].
2. FOR SECTIONS A-A & SECTION B-B, SEE SHEET [8/24].
3. UNLESS NOTED OTHERWISE ALL REINFORCING SHALL BE INSTALLED WITH A MINIMUM CLEARANCE OF 2" TO THE CONCRETE SURFACE.
4. SEAL EXCAVATION PIT TO LIMITS SHOWN IN SECTION A-A AND B-B, INCLUDING ENDS OF WINGWALLS/CAP ABOVE GROUND LINE.

DRAFT Stage 3 - Not for Construction
09/23/2024

DESIGN AGENCY
Stantec
1500 Lake Shore Dr.
Columbus, OH 43204
(614) 486-4383

DESIGNED	DRAWN	REVIEWED	DATE
EDA	ALH	BSM	2/2024
CHECKED	REVISED	STRUCTURE FILE NUMBER	
MRS	XXX	4404378	

FORWARD ABUTMENT
BRIDGE NO. LAW-775-0105
S.R. 775 OVER S.R. 7

LAW-7-2.17
PID No. 75923

V:\1736\active\173608714\LAW\engineering\75923_LAW-7-2.17\Design\structures\LAW775_0105C_SF001.dgn 5/13/2024 1:51:23 PM msturdevant

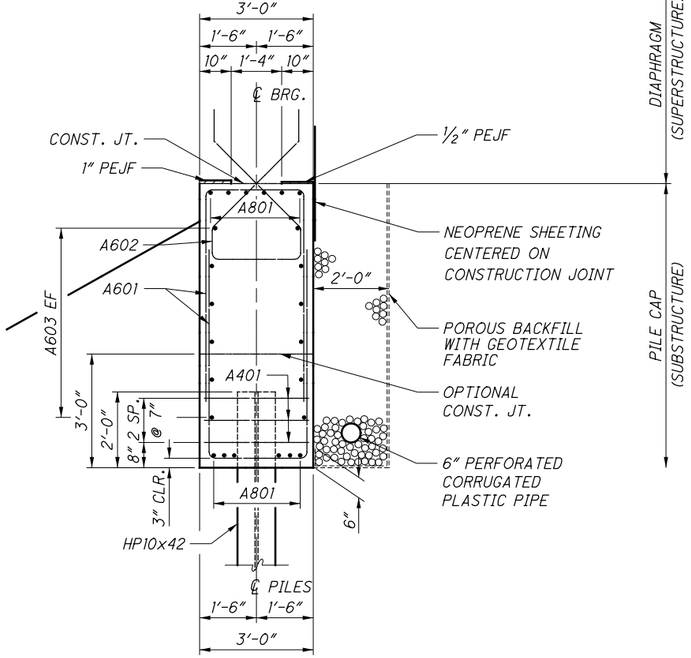

SECTION A-A

(REAR ABUTMENT SHOWN, FORWARD ABUTMENT SIMILAR)

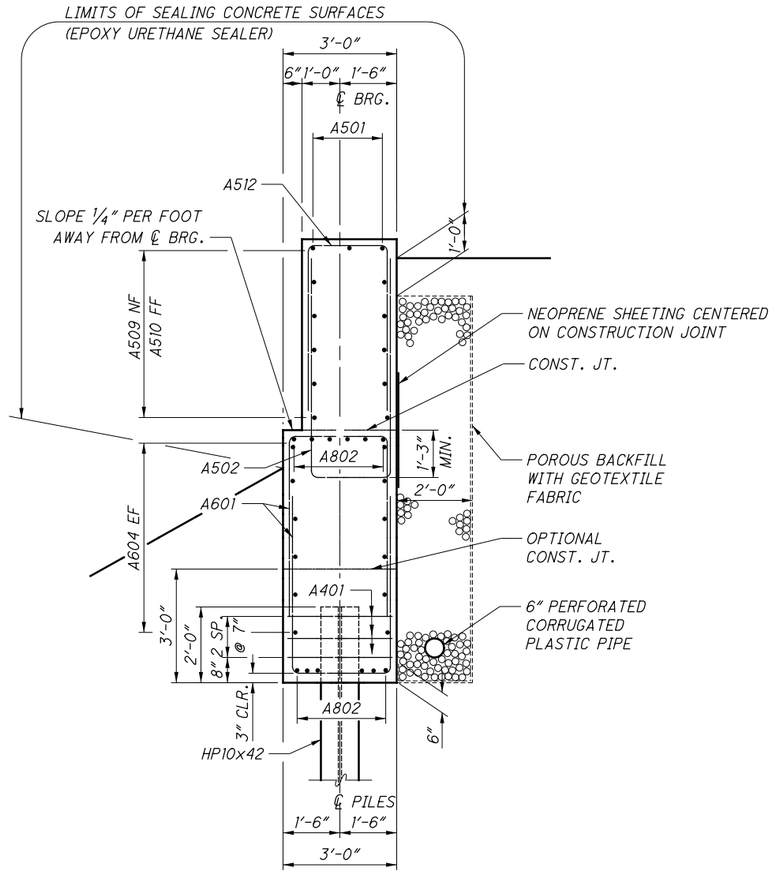

SECTION B-B

(REAR ABUTMENT SHOWN, FORWARD ABUTMENT SIMILAR)

NOTE:
ENSURE NO DETAILING OF ALL REINFORCING STEEL IS INSTALLED WITH A MINIMUM CLEARANCE OF 2" TO THE CONCRETE SURFACE.

DRAFT Stage 3 - Not for Construction 09/23/2024

DESIGN AGENCY
Stantec
1500 Lake Shore Dr.
Columbus, OH 43204
(614) 486-4383

DESIGNED	DRAWN	REVIEWED	DATE
EDA	ALH	BSM	2/2024
CHECKED	REVISED	STRUCTURE FILE NUMBER	
MRS	XXX	4404378	

ABUTMENT DETAILS
BRIDGE NO. LAW-775-0105
S.R. 775 OVER S.R. 7

LAW-7-2.17
PID No. 75923

8 / 24

1022
1247

V:\1736\active\173608714\LAW\engineering\75923_LAW-7-2.17\Design\structures\LAW775_0105C\sheets\775_0105C_SR002.dgn 5/13/2024 1:51:38 PM msturdevant

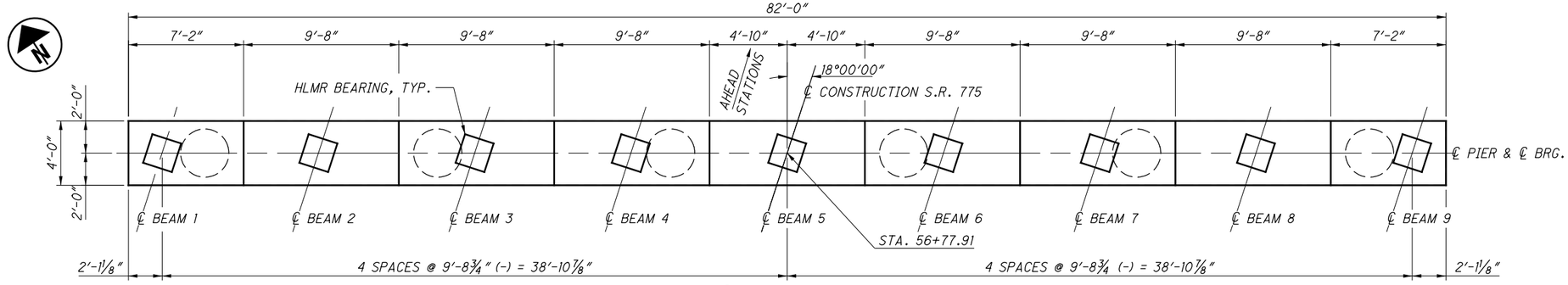

CAP PLAN

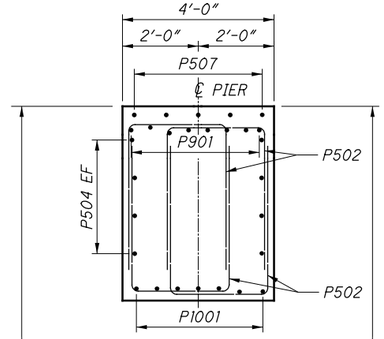

LIMITS OF SEALING CONCRETE WITH EPOXY-URETHANE SEALER

SECTION A-A

THE PIER BEAM SEAT ELEVATIONS ARE BASED ON BEARING HEIGHTS PROVIDED IN THE TABLE BELOW. IF THE CONTRACTOR'S SELECTED BEARING MANUFACTURER HAS A DESIGN THAT DOES NOT CONFORM TO THE HEIGHTS PROVIDED IN THE TABLE, ADJUST THE BEARING SEAT ELEVATIONS AT NO ADDITIONAL COST TO THE STATE. ADJUST THE LOCATION OF REINFORCING STEEL HORIZONTALLY AS NECESSARY TO AVOID INTERFERENCE WITH THE BEARING ANCHOR BOLTS. MAINTAIN THE MINIMUM CONCRETE COVER AND MINIMUM SPACING REQUIRED BY THE PROJECT PLANS. IF THE REINFORCING STEEL CANNOT BE MOVED TO PROVIDE THE REQUIRED POSITION FOR THE ANCHOR BOLTS, THE CONTRACTOR'S BEARING MANUFACTURER SHALL RE-DESIGN THE BEARINGS TO ACCOMMODATE AN ACCEPTABLE ANCHOR BOLT CONFIGURATION.

BEARING HEIGHT	
LOCATION	DIMENSION
GIRDER LINE 1	6"
GIRDER LINE 2	6"
GIRDER LINE 3	6"
GIRDER LINE 4	6"
GIRDER LINE 5	6"
GIRDER LINE 6	6"
GIRDER LINE 7	6"
GIRDER LINE 8	6"
GIRDER LINE 9	6"

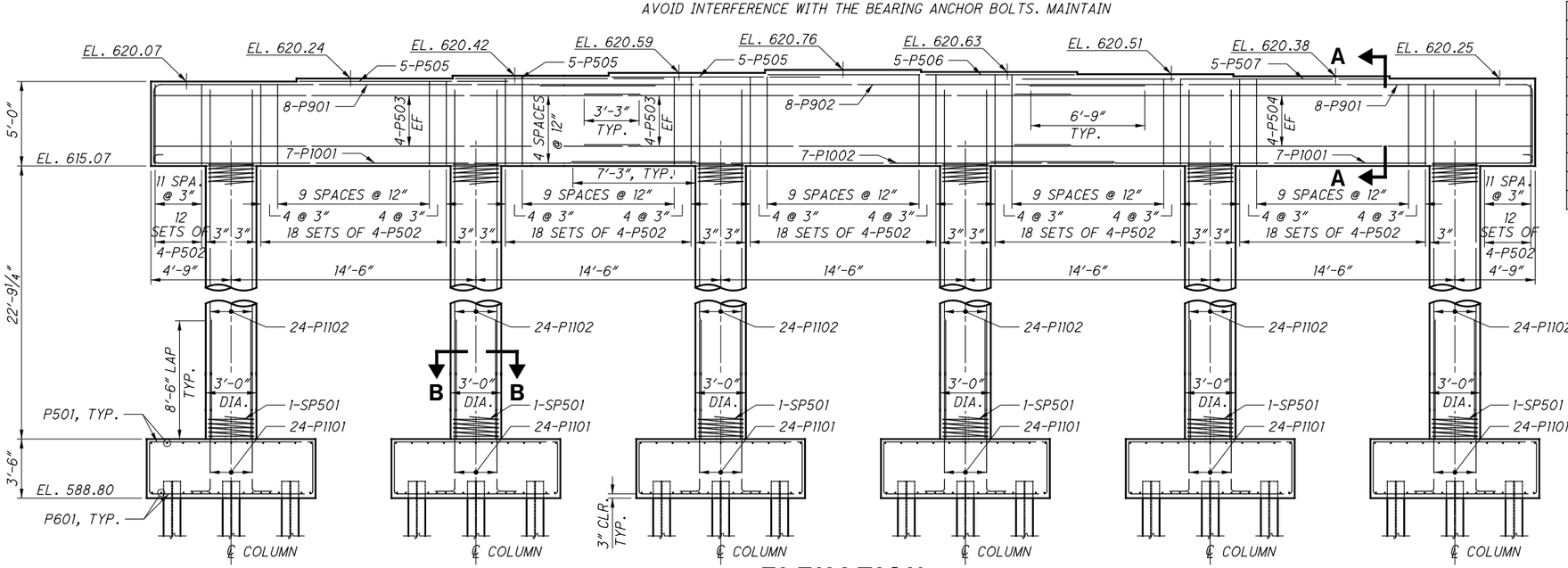

ELEVATION

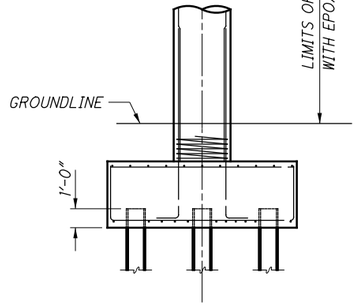

END ELEVATION

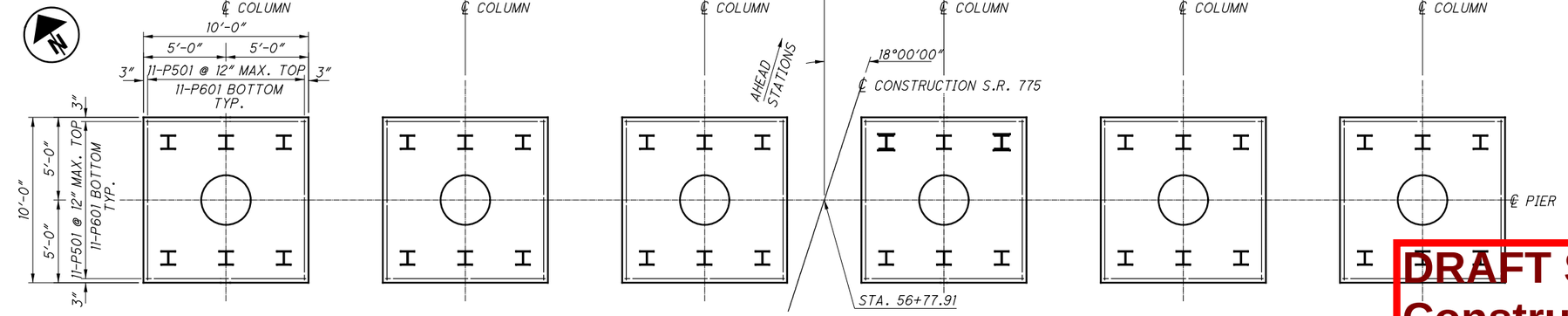

FOOTING PLAN

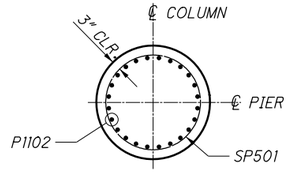

SECTION B-B

NOTES:
1. UNLESS NOTED OTHERWISE, ALL REINFORCING SHALL BE PROVIDED WITH A MINIMUM CLEAR COVER OF 2" TO THE CONCRETE SURFACE.

DRAFT Stage 3 - Not for Construction 09/23/2024

DESIGN AGENCY
Stantec
1500 Lake Shore Dr.
Columbus, OH 43204
(614) 486-4383

DESIGNED	DRAWN	REVIEWED	DATE
EDA	ALH	BSM	2/2024
CHECKED	REVISED	STRUCTURE FILE NUMBER	
MRS	XXX	4404378	

PIER
BRIDGE NO. LAW-775-0105
S.R. 775 OVER S.R. 7

LAW-7-2.17
PID No. 75923

9 / 24

1023
1247

Y:\1736\active\173608714\LAW\engineering\75923_LAW-7-2.17\Design\structures\LAW775_0105C_S001.dgn 5/13/2024 1:51:46 PM mstur devant

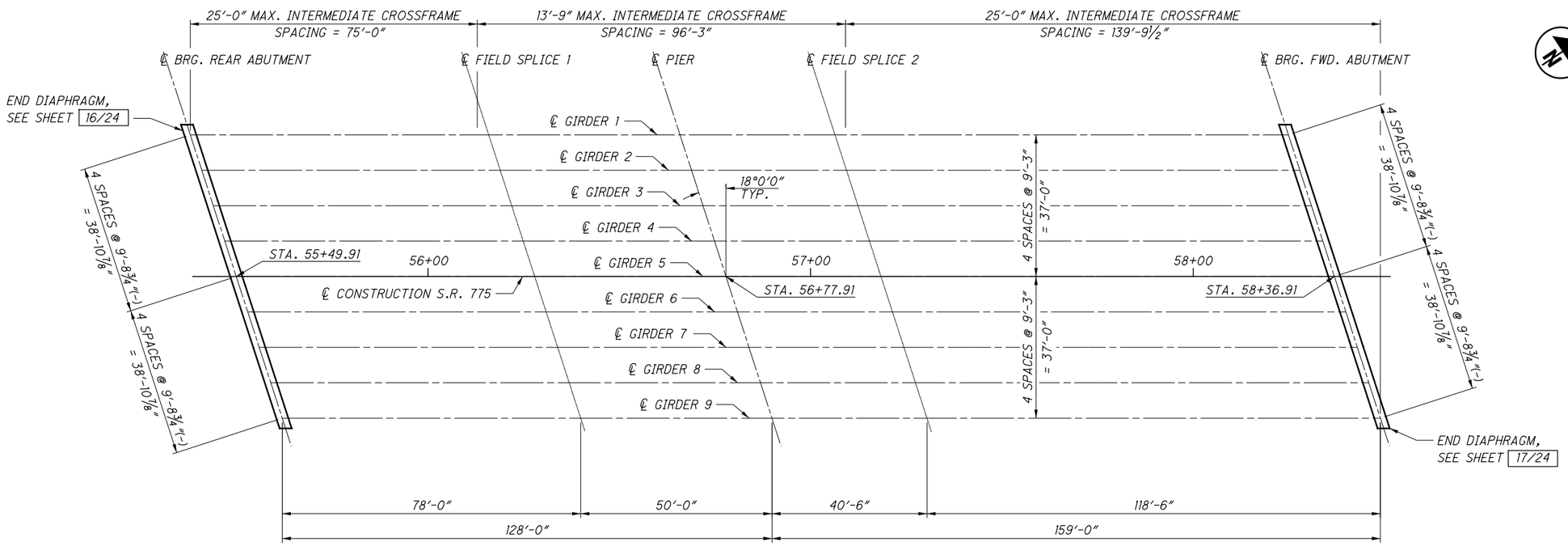

FRAMING PLAN

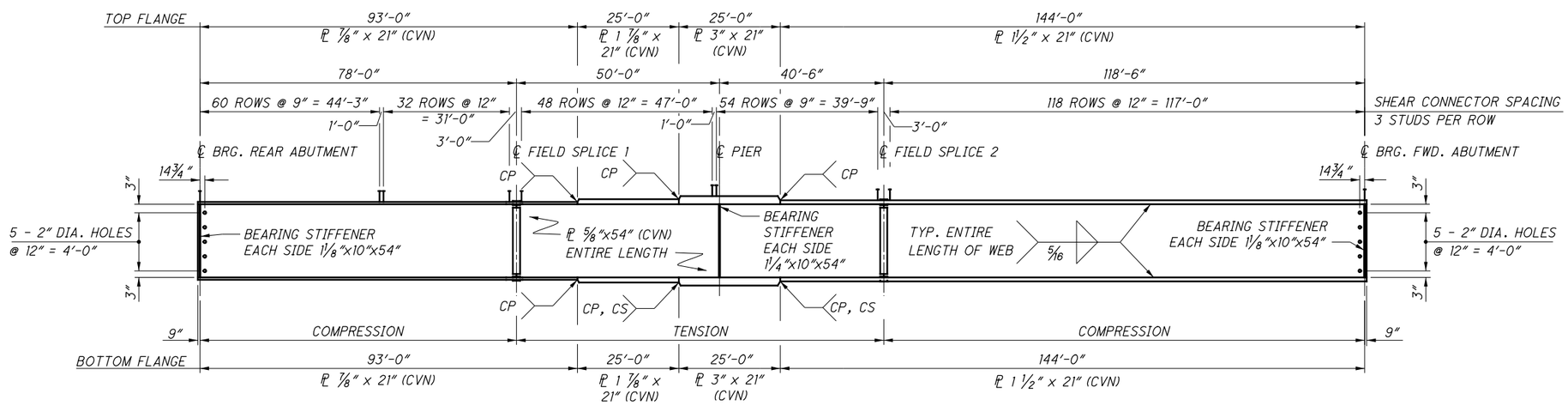

GIRDER ELEVATION

NOTES:

1. WHERE A SHAPE OR PLATE IS DESIGNATED (CVN) THE MATERIAL SHALL MEET SPECIFIED MINIMUM NOTCH TOUGHNESS REQUIREMENTS AS SPECIFIED IN 711.01 OF CMS.
2. WELD ATTACHMENT OF SUPPORTS FOR CONCRETE DECK FINISHING MACHINE TO AREAS OF THE FASCIA STRINGER FLANGES DESIGNATED "COMPRESSION". DO NOT WELD ATTACHMENTS TO AREAS DESIGNATED "TENSION". FILLET WELDS TO COMPRESSION FLANGES SHALL BE AT LEAST 1" FROM EDGE OF FLANGE, BE NO MORE THAN 2" LONG, AND BE AT LEAST 1/4" FOR THICKNESSES UP TO 3/4" OR 5/16" FOR GREATER THAN 3/4" THICK.
3. COMPRESSION = BOTTOM FLANGE IN TENSION, TOP FLANGE IN COMPRESSION.
   TENSION = TOP FLANGE IN TENSION, BOTTOM FLANGE IN COMPRESSION.
4. CS - INDICATES BUTT WELD SUBJECT TO COMPRESSIVE STRESSES ONLY.
   CP - INDICATES COMPLETE JOINT PENETRATION WELD.
5. FOR ADDITIONAL DETAILS, SEE SHEET 11/24 .
6. ALL BUTT WELDS SHALL HAVE WELD REINFORCEMENT REMOVED BY GRINDING IN DIRECTION PARALLEL TO CENTERLINE OF GIRDER.
7. FOR DETAILS OF STIFFENERS AND GIRDERS, SEE STD. DWG. GSD-1-19.
8. ALL STEEL SHALL BE GRADE 50W.
9. APPLY INORGANIC ZINC PRIME COAT TO EACH END OF GIRDER, EXTENDING 2'-0" FROM END OF GIRDER. PAYMENT FOR THIS WORK SHALL BE INCLUDED IN ITEM 513, STRUCTURAL STEEL MEMBERS, WELDED, AS PER PLAN.

DRAFT Stage 3 - Not for Construction 09/23/2024

DESIGN AGENCY
Stantec
1500 Lake Shore Dr.
Columbus, OH 43204
(614) 486-4383

DESIGNED	DRAWN	REVIEWED	DATE
MRS	ALH	BSM	2/2024
CHECKED	REVISED	STRUCTURE FILE NUMBER	
EDA	XXX	4404378	

FRAMING PLAN
BRIDGE NO. LAW-775-0105
S.R. 775 OVER S.R. 7

LAW-7-2.17
PID No. 75923

10/24

1024
1247

Y:\1736\active\173608714\LAW\engineering\75923_LAW-7-2.17\Design\structures\LAW775_0105C_SD001.dgn 5/13/2024 1:51:48 PM msturdevant

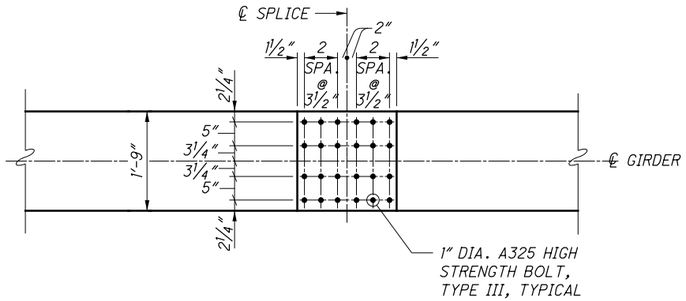

TOP PLAN

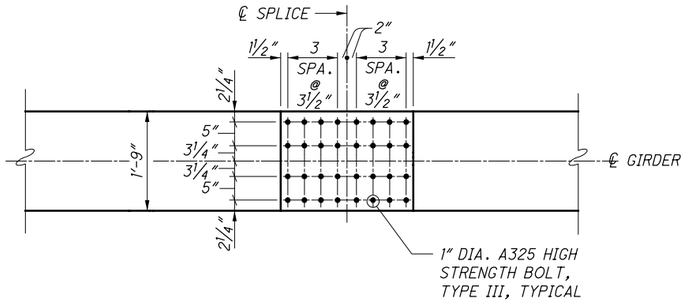

TOP PLAN

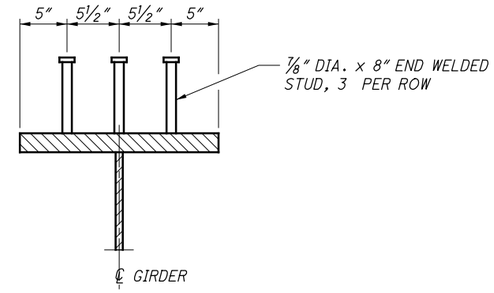

SHEAR CONNECTOR DETAIL

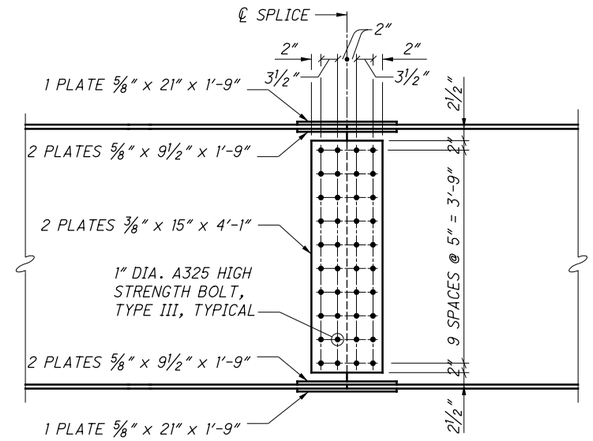

ELEVATION

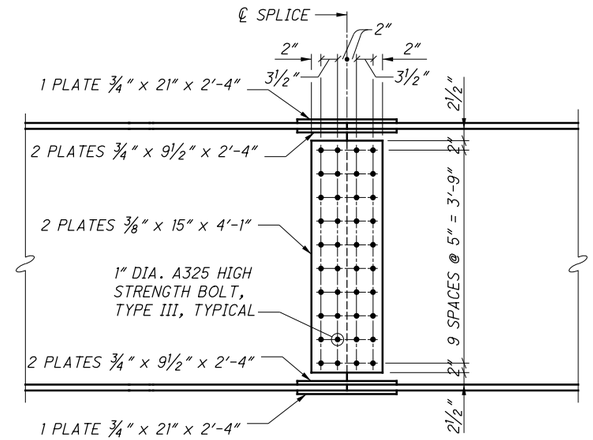

ELEVATION

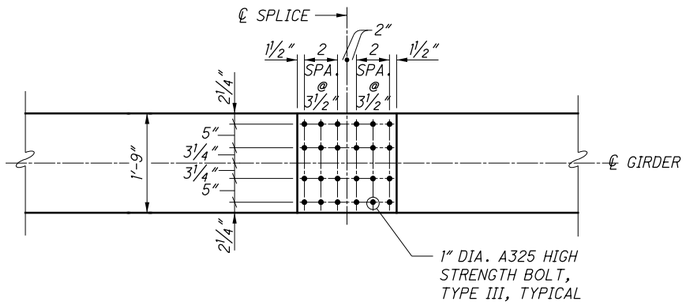

BOTTOM PLAN

SPLICE 1 DETAIL

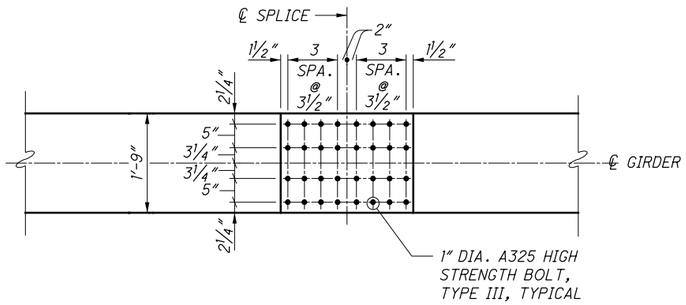

BOTTOM PLAN

SPLICE 2 DETAIL

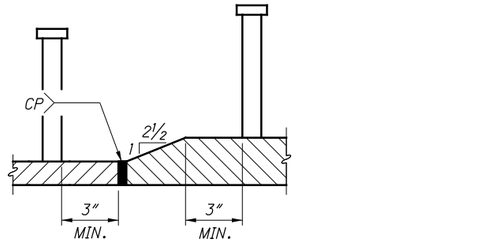

FLANGE THICKNESS TRANSITION DETAIL

DRAFT Stage 3 - Not for Construction 09/23/2024

DESIGN AGENCY
Stantec
1500 Lake Shore Dr.
Columbus, OH 43204
(614) 486-4383

DESIGNED	DRAWN	REVIEWED	DATE
MRS	ALH	BSM	2/2024
CHECKED	REVISED	STRUCTURE FILE NUMBER	
EDA	XXX	4404378	

STRUCTURAL STEEL DETAILS
BRIDGE NO. LAW-775-0105
S.R. 775 OVER S.R. 7

LAW-7-2.17
PID No. 75923

11 / 24

1025
1247

V:\1736\active\173608714\LAW\engineering\75923_LAW-7-2.17\Design\structures\LAW775_0105C\sheets\775_0105C_S0006.dgn 5/13/2024 1:51:50 PM mstur devant

STEEL DEFLECTION & CAMBER TABLE (VALUES IN INCHES)

GIRDERS 1 AND 9

	LOCATION																		
	℄ BRG. REAR ABUT.	1/8 POINT	1/4 POINT	3/8 POINT	1/2 POINT	SPLICE 1	5/8 POINT	3/4 POINT	7/8 POINT	℄ PIER	1/8 POINT	1/4 POINT	SPLICE 2	3/8 POINT	1/2 POINT	5/8 POINT	3/4 POINT	7/8 POINT	℄ BRG. REAR ABUT.
DEFLECTION DUE TO WEIGHT OF STEEL	0	-1/8	-1/4	-3/16	-1/8	0	0	1/8	1/8	0	-5/16	-13/16	-13/16	-1 1/4	-1 6/16	-1 9/16	-1 1/4	-11/16	0
DEFLECTION DUE TO REMAINING DEAD LOAD	0	-7/16	-13/16	-7/8	-11/16	-7/16	-3/8	1/16	1/8	0	-9/16	-1 7/16	-1 7/16	-2 5/16	-2 7/8	-2 7/8	-2 3/8	-1 5/16	0
ADJUSTMENT FOR VERTICAL CURVE	0	15/16	1 5/8	2	2 1/8	2 1/16	2	1 5/8	15/16	0	1 7/16	2 1/2	2 1/2	3 1/8	3 5/16	3 1/8	2 1/2	1 7/16	0
REQUIRED SHOP CAMBER	0	1 1/2	2 11/16	3 1/16	2 15/16	2 1/2	2 3/8	1 9/16	11/16	0	2 5/16	4 3/4	4 3/4	6 11/16	7 3/4	7 9/16	6 1/8	3 7/16	0

STEEL DEFLECTION & CAMBER TABLE (VALUES IN INCHES)

GIRDERS 2 THRU 8

	LOCATION																		
	℄ BRG. REAR ABUT.	1/8 POINT	1/4 POINT	3/8 POINT	1/2 POINT	SPLICE 1	5/8 POINT	3/4 POINT	7/8 POINT	℄ PIER	1/8 POINT	1/4 POINT	SPLICE 2	3/8 POINT	1/2 POINT	5/8 POINT	3/4 POINT	7/8 POINT	℄ BRG. REAR ABUT.
DEFLECTION DUE TO WEIGHT OF STEEL	0	-1/8	-1/4	-3/16	-1/8	0	0	1/8	1/8	0	-5/16	-13/16	-13/16	-1 1/4	-1 9/16	-1 9/16	-1 1/4	-11/16	0
DEFLECTION DUE TO REMAINING DEAD LOAD	0	-9/16	-1	-1 1/16	-7/8	-1/2	-7/16	-1/16	1/8	0	-11/16	-1 13/16	-1 13/16	-2 7/8	-3 9/16	-3 5/8	-3	-1 11/16	0
ADJUSTMENT FOR VERTICAL CURVE	0	15/16	1 5/8	2	2 1/8	2 1/16	2	1 5/8	15/16	0	1 7/16	2 1/2	2 1/2	3 1/8	3 5/16	3 1/8	2 1/2	1 7/16	0
REQUIRED SHOP CAMBER	0	1 5/8	2 7/8	3 1/4	3 1/8	2 9/16	2 7/16	1 9/16	11/16	0	2 7/16	5 1/8	5 1/8	7 1/4	8 7/16	8 5/16	6 3/4	3 13/16	0

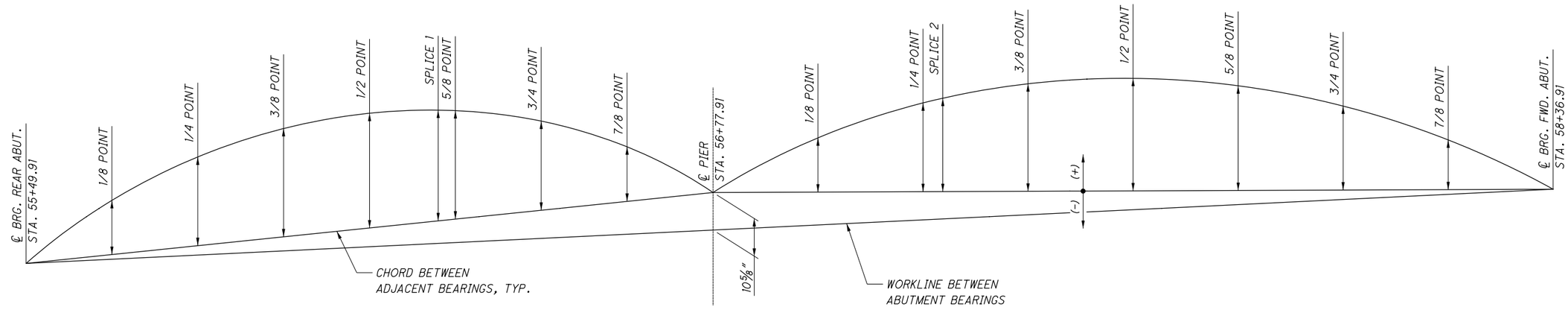

CAMBER DIAGRAM

DRAFT Stage 3 - Not for Construction 09/23/2024

DESIGN AGENCY
Stantec
1500 Lake Shore Dr.
Columbus, OH 43204
(614) 486-4383

DESIGNED	DRAWN	REVIEWED	DATE
MRS	ALH	BSM	2/2024
CHECKED	REVISED	STRUCTURE FILE NUMBER	
EDA	XXX	4404378	

DEFLECTION AND CAMBER DETAILS

BRIDGE NO. LAW-775-0105
S.R. 775 OVER S.R. 7

LAW-7-2.17
PID No. 75923

12 / 24

1026
1247

Y:\1736\active\173608714\LAW\engineering\75923_LAW-7-2.17\Design\structures\LAW775_0105C_SD007.dgn 5/13/2024 1:51:51 PM mstur devant

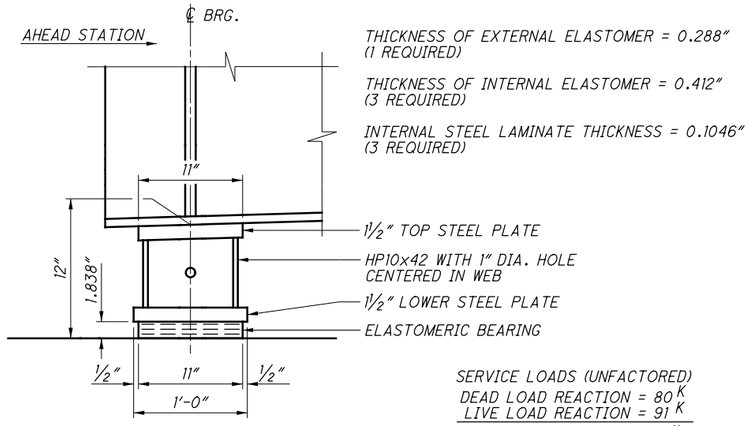

THICKNESS OF EXTERNAL ELASTOMER = 0.288"
(1 REQUIRED)

THICKNESS OF INTERNAL ELASTOMER = 0.412"
(3 REQUIRED)

INTERNAL STEEL LAMINATE THICKNESS = 0.1046"
(3 REQUIRED)

1½" TOP STEEL PLATE

HP10x42 WITH 1" DIA. HOLE
CENTERED IN WEB

1½" LOWER STEEL PLATE

ELASTOMERIC BEARING

SERVICE LOADS (UNFACTORED)
DEAD LOAD REACTION = 80 K
LIVE LOAD REACTION = 91 K
TOTAL REACTION = 171 K

SECTION A-A

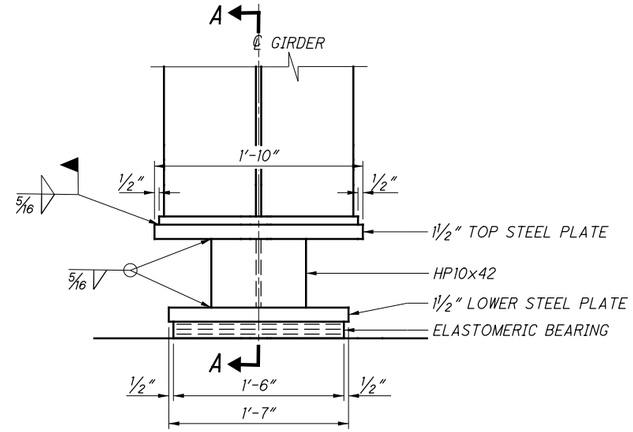

1½" TOP STEEL PLATE

HP10x42

1½" LOWER STEEL PLATE

ELASTOMERIC BEARING

ELEVATION

BEARINGS AT REAR ABUTMENT

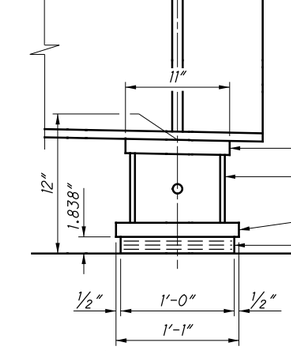

THICKNESS OF EXTERNAL ELASTOMER = 0.288"
(1 REQUIRED)

THICKNESS OF INTERNAL ELASTOMER = 0.412"
(3 REQUIRED)

INTERNAL STEEL LAMINATE THICKNESS = 0.1046"
(3 REQUIRED)

1½" TOP STEEL PLATE

HP10x42 WITH 1" DIA. HOLE
CENTERED IN WEB

1½" LOWER STEEL PLATE

ELASTOMERIC BEARING

SERVICE LOADS (UNFACTORED)
DEAD LOAD REACTION = 123 K
LIVE LOAD REACTION = 99 K
TOTAL REACTION = 222 K

SECTION B-B

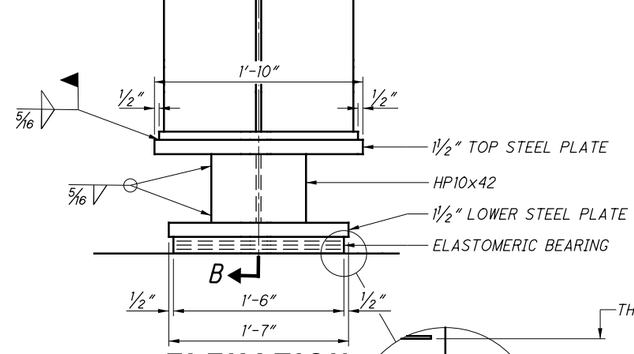

1½" TOP STEEL PLATE

HP10x42

1½" LOWER STEEL PLATE

ELASTOMERIC BEARING

ELEVATION

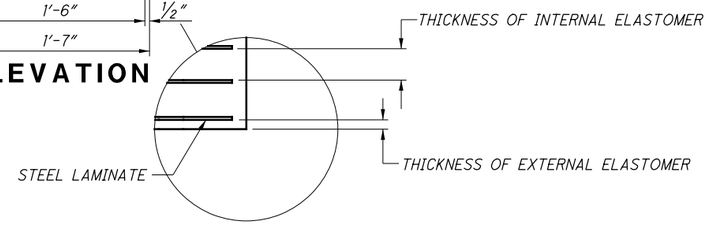

BEARINGS AT FORWARD ABUTMENT

BEARINGS AT PIER (HLMR)												
LOADS (KIPS)												
LOCATION	BEARING TYPE	LIMIT STATE	VERTICAL						HORIZONTAL			MAXIMUM ROTATION (ONE-WAY) (RADIANS)	NUMBER OF BEARINGS REQUIRED
			DL		LL + I		TOTAL		TRANSVERSE	LONGITUDINAL	RESOLUTION		
			MIN	MAX	MIN	MAX	MIN	MAX					
PIER	EXPANSION	STR ENV.	319	501	0	415	313	921	12.9	27.1	30.0	0.002	9
		SER 1	286	382	0	309	381	690	12.0	26.1	28.7		

NOTES:
1. STEEL LOAD PLATE(S) SHALL BE VULCANIZED TO THE ELASTOMERIC BEARING DURING THE MOLDING PROCESS.
2. BEARINGS AT PIER SHALL BE HIGH LOAD MULTI-ROTATIONAL BEARINGS (HLMR) IN ACCORDANCE WITH SS869.
3. ELASTOMERIC BEARINGS: THE ELASTOMER SHALL HAVE A HARDNESS OF 50 DUROMETER. THE BEARINGS WERE DESIGNED IN ACCORDANCE WITH SECTION 14.7.6 (METHOD A) OF THE AASHTO LRFD BRIDGE DESIGN SPECIFICATIONS. THE LONG-TERM COMPRESSION PROOF LOAD TEST (AASHTO STANDARD SPECIFICATIONS FOR HIGHWAY BRIDGES, DIVISION I, SECTION 14.7.2) SHALL BE REQUIRED.
4. ALL BEARINGS SHALL BE MARKED PRIOR TO SHIPPING. THE MARKS SHALL INCLUDE THE BEARING LOCATION ON THE BRIDGE AND A DIRECTION ARROW TO INDICATE ORIENTATION. ALL MARKS SHALL BE PERMANENT AND BE VISIBILE AFTER THE BEARING IS INSTALLED.

DRAFT Stage 3 - Not for Construction 09/23/2024

V:\1736\active\736087\4\LAW\engineering\75923_LAW-7-2.17\Design\structures\LAW775_0105C_SD005.dgn 5/13/2024 1:51:52 PM msturdevant

DESIGN AGENCY
Stantec
1500 Lake Shore Dr.
Columbus, OH 43204
(614) 486-4383

DESIGNED EDA | DRAWN ALH | REVIEWED BSM | DATE 2/2024
CHECKED MRS | REVISED XXX | STRUCTURE FILE NUMBER 4404378

BEARING DETAILS
BRIDGE NO. LAW-775-0105
S.R. 775 OVER S.R. 7

LAW-7-2.17
PID No. 75923

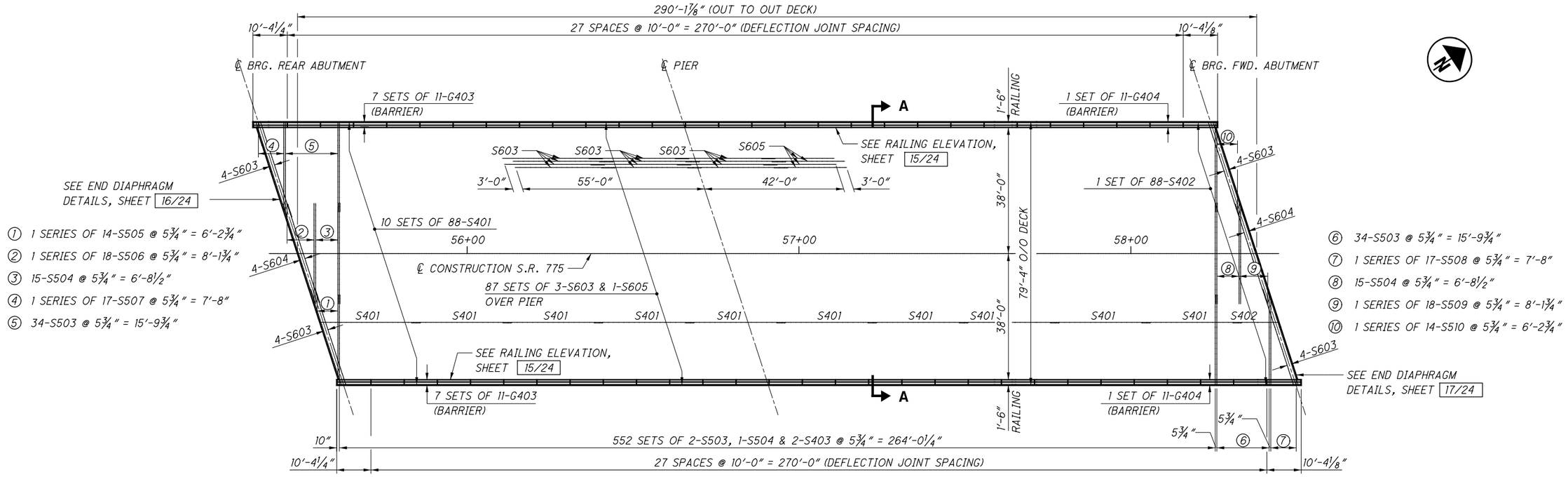

DECK PLAN - TOP LAYER OF REINFORCING STEEL

LAP LENGTHS:
#4 BARS = 2'-0"
#5 BARS = 3'-0"
#6 BARS = 3'-0"
#4 GFRP BARS = 1'-1"

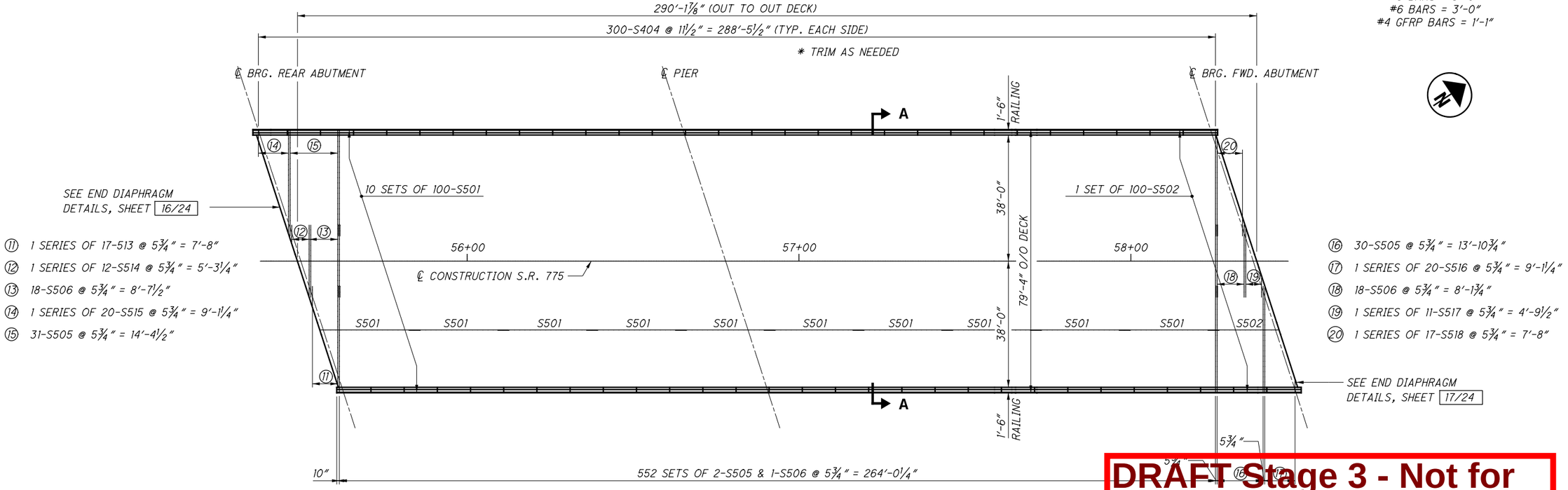

DECK PLAN - BOTTOM LAYER OF REINFORCING STEEL

DRAFT Stage 3 - Not for Construction

DATE: 09/23/2024

FOR SECTION A-A, SEE SHEET 15/24 .

DESIGN AGENCY
Stantec
1500 Lake Shore Dr.
Columbus, OH 43204
(614) 486-4383

DESIGNED	DRAWN	REVIEWED	DATE
MRS	ALH	BSM	2/2024
CHECKED	REVISED	STRUCTURE FILE NUMBER	
EDA	XXX	4404378	

SLAB PLAN
BRIDGE NO. LAW-775-0105
S.R. 775 OVER S.R. 7

LAW-7-2.17
PID No. 75923

V:\1736\active\173608714\LAW\engineering\75923_LAW-7-2.17\Design\structures\LAW775_0105C_SD004.dgn 5/13/2024 1:51:54 PM mstur devant

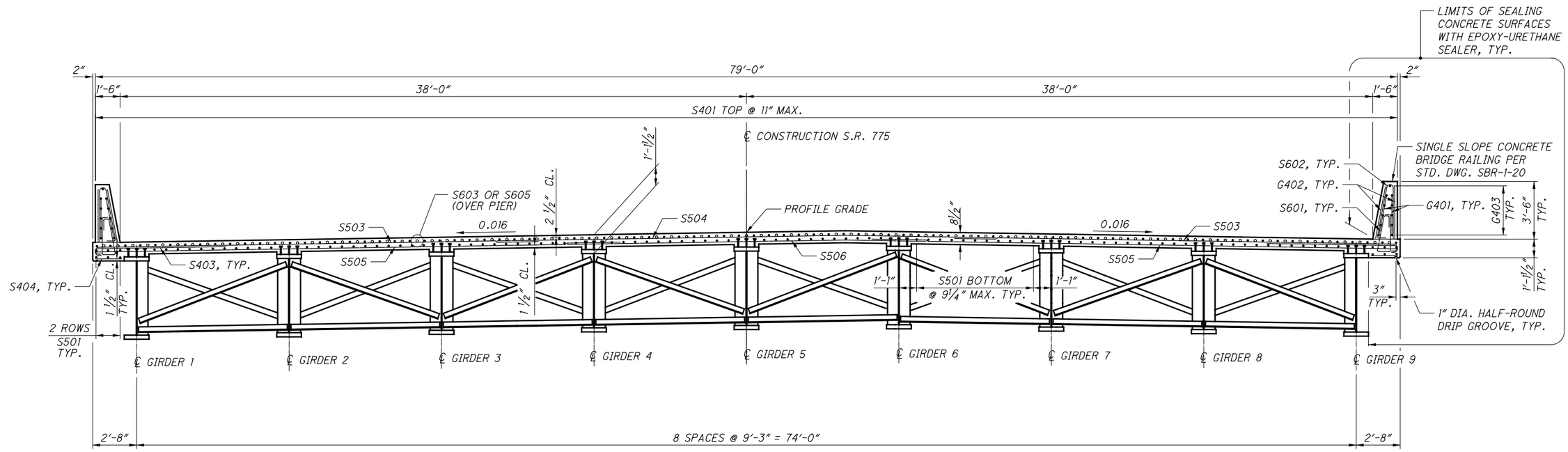

SECTION A-A

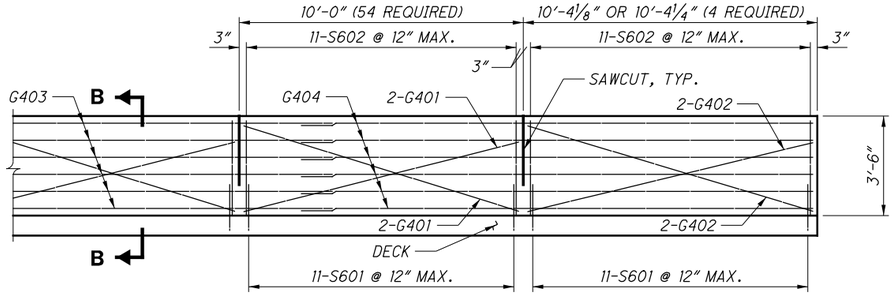

RAILING ELEVATION

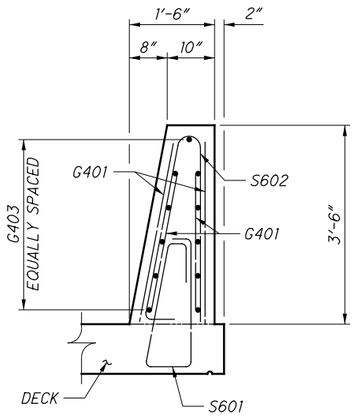

SECTION B-B

DECK SLAB CONCRETE QUANTITY

THE ESTIMATED QUANTITY OF DECK SLAB CONCRETE IS BASED ON THE CONSTANT DECK SLAB THICKNESS, AS SHOWN, PLUS THE QUANTITY OF CONCRETE THAT FORMS EACH BEAM/GIRDER HAUNCH. THE ESTIMATE ASSUMES A CONSTANT HAUNCH THICKNESS OF 5" INCHES AND A HAUNCH WIDTH EQUAL TO THE TOP FLANGE WIDTH. DEVIATE FROM THIS HAUNCH THICKNESS AS NECESSARY TO PLACE THE DECK SURFACE AT THE FINISHED GRADE.

THE HAUNCH THICKNESS WAS MEASURED AT THE CENTERLINE OF THE BEAM/GIRDER, FROM THE SURFACE OF THE DECK TO THE BOTTOM OF THE TOP FLANGE MINUS THE DECK SLAB THICKNESS. THE AREA OF ALL EMBEDDED STEEL PLATES HAS BEEN DEDUCTED FROM THE HAUNCH QUANTITY IN ACCORDANCE WITH 511.21.

NOTES:

1. FOR ADDITIONAL BRIDGE RAILING DETAILS, SEE STD. DWG. SBR-1-20.

DRAFT Stage 3 - Not for Construction 09/23/2024

TYPICAL SECTION AND RAILING DETAILS
BRIDGE NO. LAW-775-0105
S.R. 775 OVER S.R. 7

LAW-7-2.17
PID No. 75923

15 / 24

1029
1247

DESIGNED MRS
DRAWN ALH
CHECKED EDA
REVISED XXX
REVIEWED BSM
DATE 2/2024
STRUCTURE FILE NUMBER 4404378

DESIGN AGENCY
Stantec
1500 Lake Shore Dr.
Columbus, OH 43204
(614) 486-4383

Y:\1736\active\736087\4\LAW\engineering\75923_LAW-7-2.17\Design\structures\LAW775_0105C\sheets\LAW775_0105C_ST001.dgn 5/13/2024 1:51:55 PM msturdevant

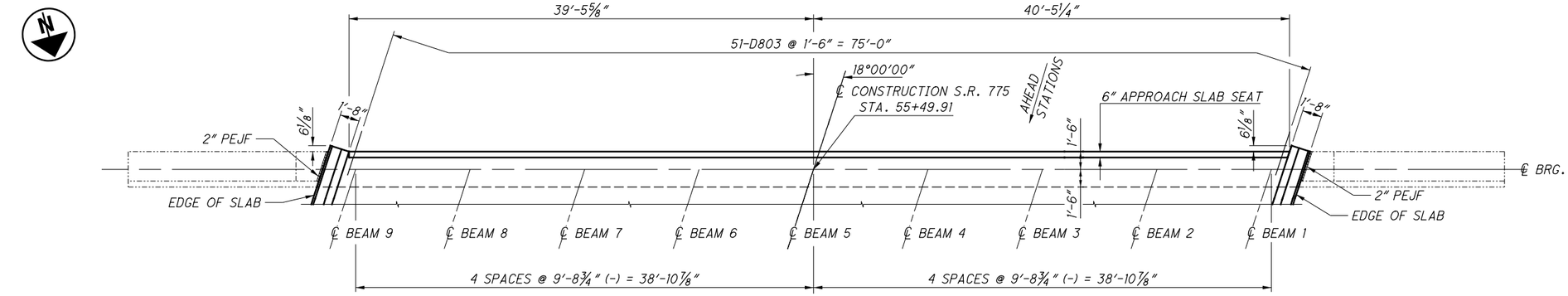

PLAN

* BARS PLACED PARALLEL TO BEAMS

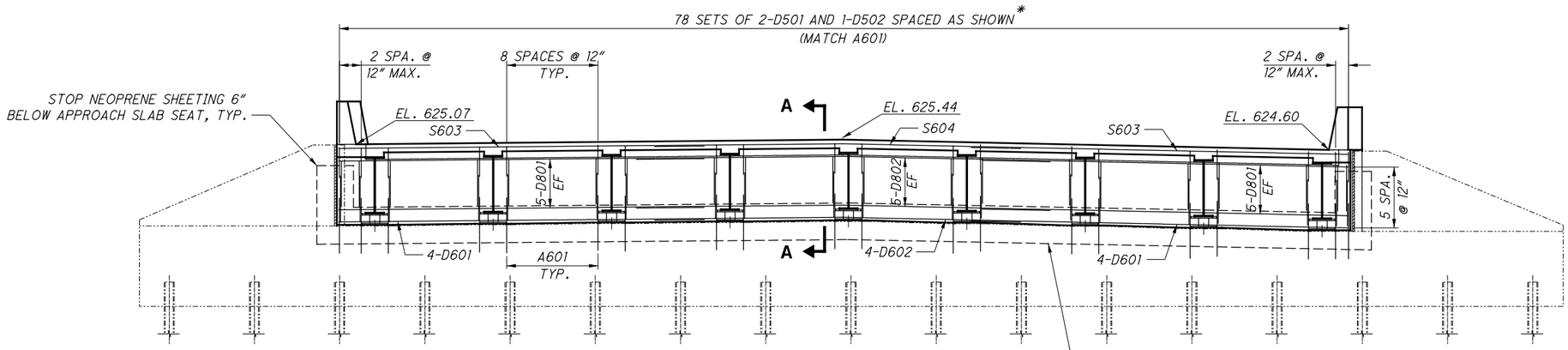

ELEVATION

LAP LENGTHS:
#6 BARS = 4′-0″
#8 BARS = 5′-6″

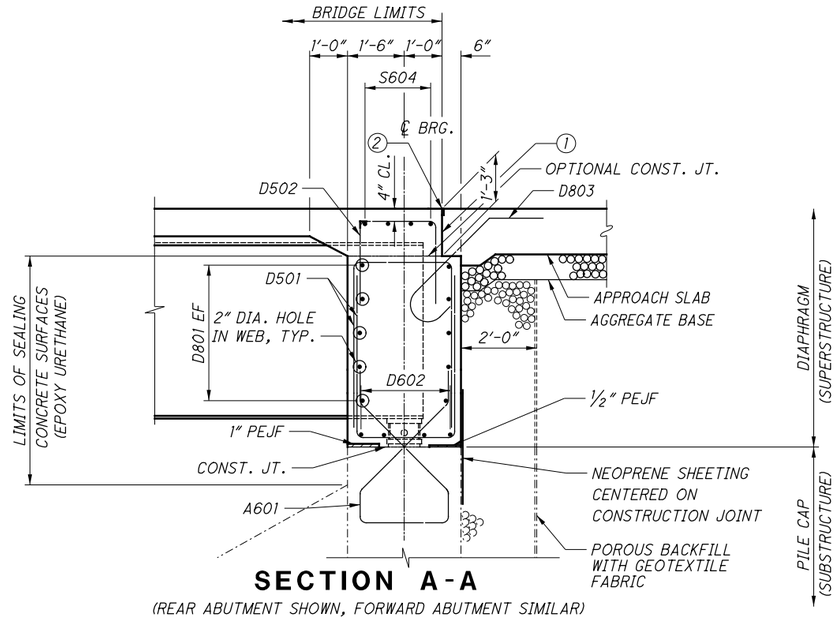

SECTION A-A

(REAR ABUTMENT SHOWN, FORWARD ABUTMENT SIMILAR)

① TYPE A WATERPROOFING (INCLUDE WITH APPROACH SLAB FOR PAYMENT)

② PREFORMED ELASTOMERIC COMPRESSION JOINT SEAL. FOR ADDITIONAL DETAILS, SEE STD. DWG. AS-1-15, DETAIL B (INCLUDE WITH APPROACH SLAB FOR PAYMENT)

NOTES:
1. ELEVATIONS ARE GIVEN ON THE CENTERLINE OF BEARING.
2. ALL REINFORCEMENT SHALL BE INSTALLED WITH A MINIMUM CLEARANCE OF 2″ TO THE CONCRETE SURFACE.

DRAFT Stage 3 - Not for Construction 09/23/2024

DESIGN AGENCY
Stantec
1500 Lake Shore Dr.
Columbus, OH 43204
(614) 486-4383

DESIGNED	DRAWN	REVIEWED	DATE
EDA	ALH	BSM	2/2024
CHECKED	REVISED	STRUCTURE FILE NUMBER	
MRS	XXX	4404378	

DIAPHRAGM DETAILS AT REAR ABUTMENT

BRIDGE NO. LAW-775-0105
S.R. 775 OVER S.R. 7

LAW-7-2.17
PID No. 75923

16 / 24

1030
1247

V:\1736\active\173608714\LAW\engineering\75923_LAW-7-2.17\Design\structures\LAW775_0105C\sheets\LAW775_0105C_SD009.dgn 5/13/2024 1:5:57 PM mstur devant

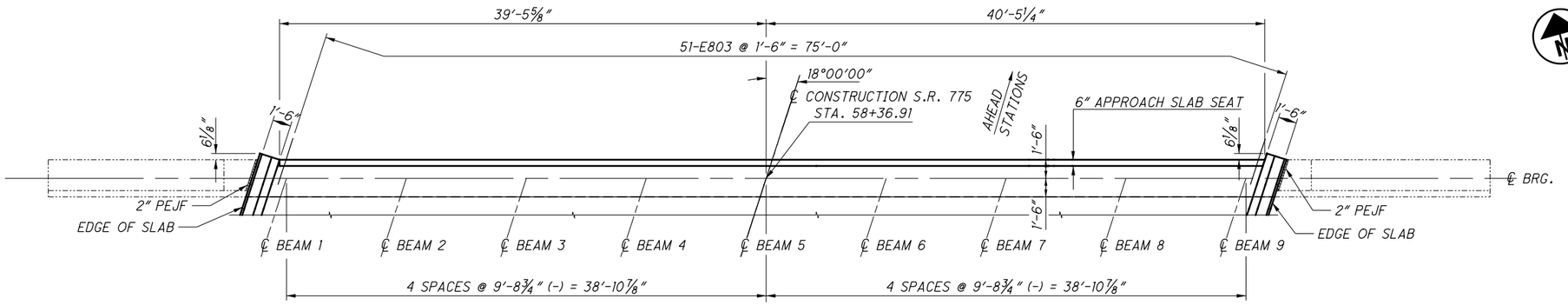

PLAN

* BARS PLACED PARALLEL TO BEAMS

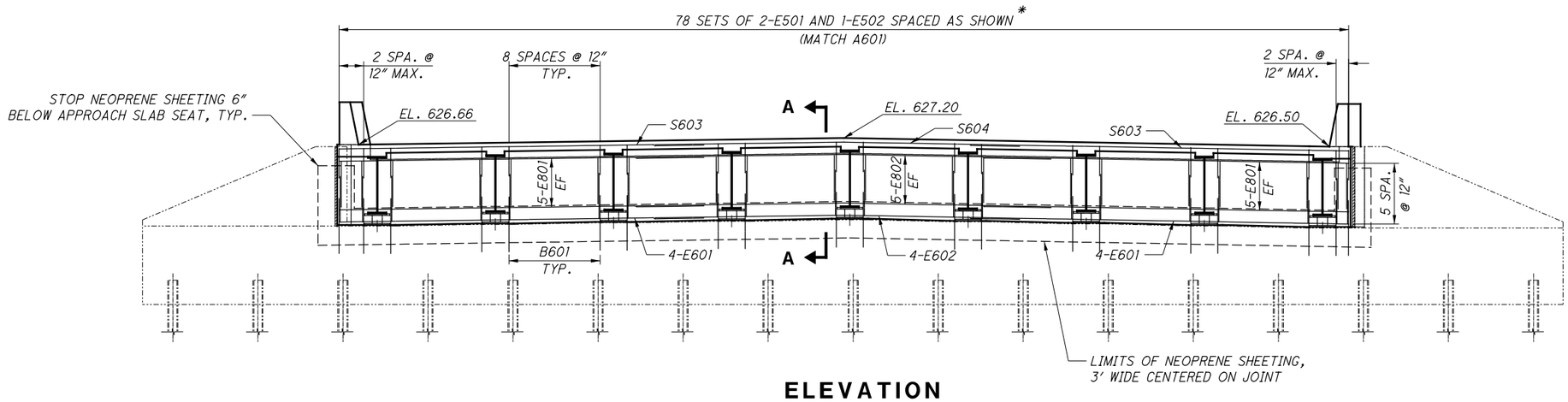

ELEVATION

LAP LENGTHS:
#6 BARS = 4′-0″
#8 BARS = 5′-6″

NOTES:
1. FOR SECTION A-A, SEE SHEET 16/24 .
2. ELEVATIONS ARE GIVEN ON THE CENTERLINE OF BEARING.
3. STIRRUPS SHALL BE PLACED SO THAT ALL REINFORCING CAN BE INSTALLED WITH A MINIMUM CLEARANCE OF 2″ TO THE CONCRETE SURFACE.

DRAFT Stage 3 - Not for Construction 09/23/2024

DESIGN AGENCY
Stantec
1500 Lake Shore Dr.
Columbus, OH 43204
(614) 486-4383

DESIGNED	DRAWN	REVIEWED	DATE
MRS	ALH	BSM	2/2024
CHECKED	REVISED	STRUCTURE FILE NUMBER	
EDA	XXX	4404378	

DIAPHRAGM DETAILS AT FORWARD ABUTMENT
BRIDGE NO. LAW-775-0105
S.R. 775 OVER S.R. 7

LAW-7-2.17
PID No. 75923

17 / 24

1031
1247

V:\1736\active\173608714\LAW\engineering\75923_LAW-7-2.17\Design\structures\LAW775_0105C\sheets\775_0105C_SD008.dgn 5/13/2024 1:54:58 PM mstur devant

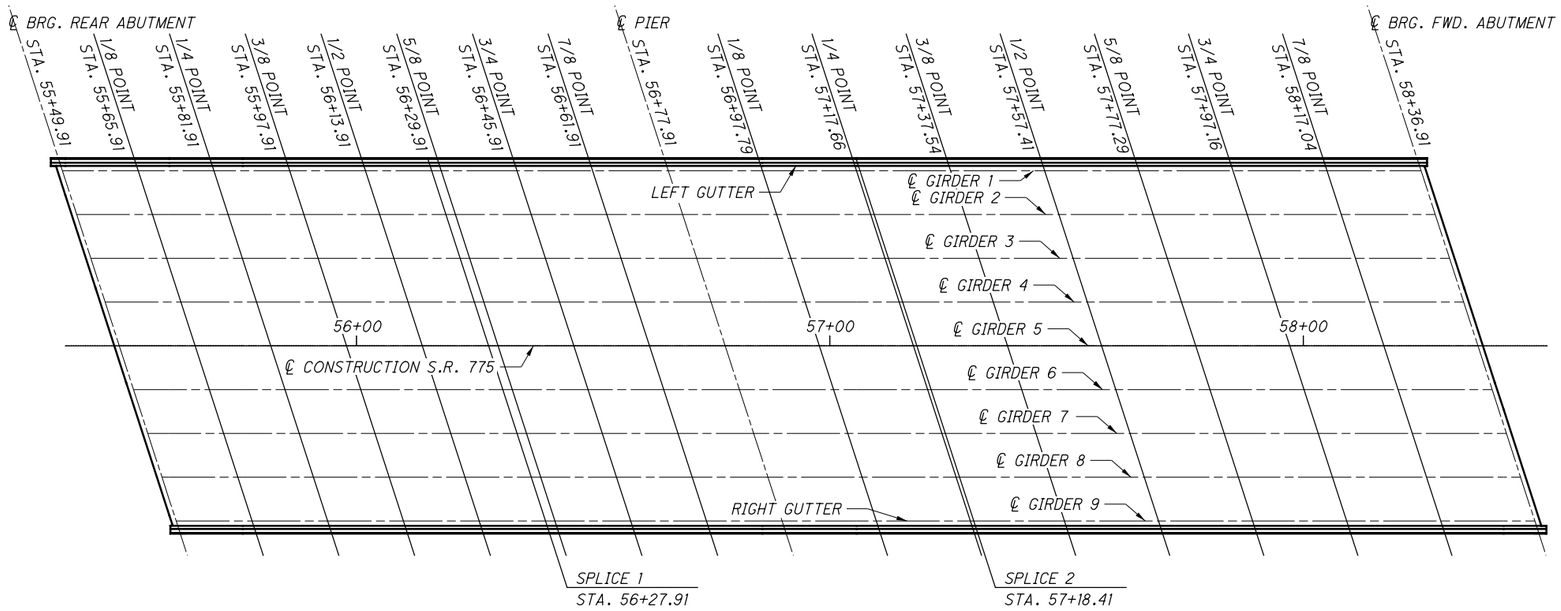

PLAN

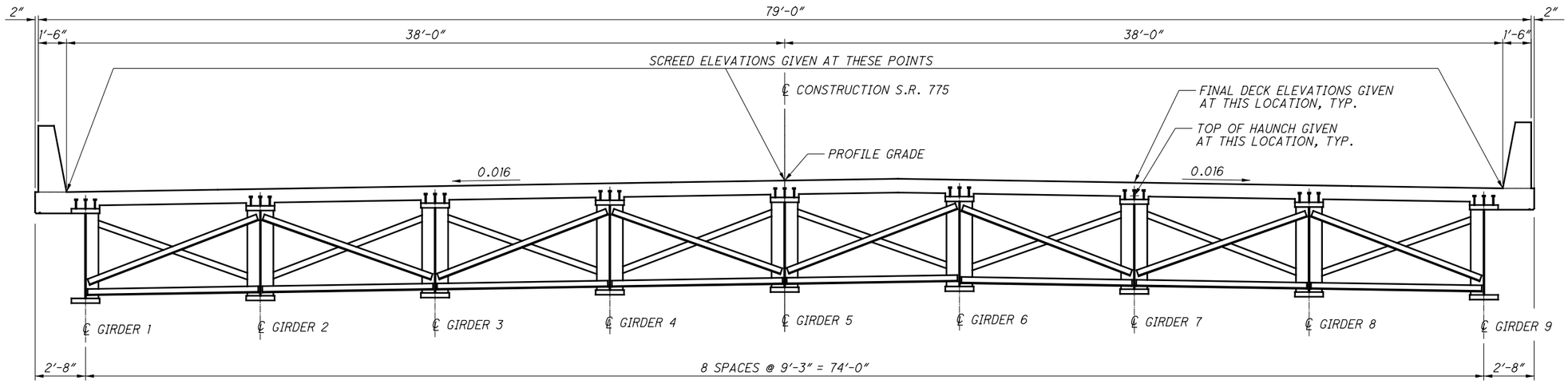

TYPICAL SECTION

DRAFT Stage 3 - Not for Construction 09/23/2024

NOTE:
FOR DOC CONSTRUCTION ELEVATIONS, SEE SHEET 19/24 .

DESIGN AGENCY
Stantec
1500 Lake Shore Dr.
Columbus, OH 43204
(614) 486-4383

DESIGNED	DRAWN	REVIEWED	DATE
MRS	ALH	BSM	2/2024
CHECKED	REVISED	STRUCTURE FILE NUMBER	
EDA	XXX	4404378	

CONSTRUCTION ELEVATION DIAGRAM
BRIDGE NO. LAW-775-0105
S.R. 775 OVER S.R. 7

LAW-7-2.17
PID No. 75923

18 / 24

1032
1247

V:\1736\active\173608714\LAW\engineering\75923_LAW-7-2.17\Design\structures\LAW775_0105C\sheets\775_0105C_S0002.dgn 5/13/2024 1:52:00 PM mturdevant

SCREED ELEVATIONS

LOCATION	LEFT GUTTER		PROFILE GRADE		RIGHT GUTTER	
	STATION	ELEVATION	STATION	ELEVATION	STATION	ELEVATION
℄ BRG. REAR ABUT.	55+37.57	624.60	55+49.91	625.44	55+62.26	625.06
1/8 POINT	55+53.57	624.96	55+65.91	625.79	55+78.26	625.39
1/4 POINT	55+69.57	625.28	55+81.91	626.10	55+94.26	625.67
3/8 POINT	55+85.57	625.55	55+97.91	626.35	56+10.26	625.90
1/2 POINT	56+01.57	625.76	56+13.91	626.54	56+26.26	626.08
SPLICE 1	56+15.57	625.91	56+27.91	626.68	56+40.26	626.20
5/8 POINT	56+17.57	625.93	56+29.91	626.69	56+42.26	626.22
3/4 POINT	56+33.57	626.08	56+45.91	626.82	56+58.26	626.34
7/8 POINT	56+49.57	626.24	56+61.91	626.96	56+74.26	626.46
PIER 1	56+65.57	626.41	56+77.91	627.11	56+90.26	626.59
1/8 POINT	56+85.45	626.64	56+97.79	627.33	57+10.14	626.79
1/4 POINT	57+05.32	626.89	57+17.66	627.57	57+30.01	626.99
SPLICE 2	57+06.07	626.90	57+18.41	627.58	57+30.76	627.00
3/8 POINT	57+25.20	627.10	57+37.54	627.77	57+49.89	627.16
1/2 POINT	57+45.07	627.23	57+57.41	627.88	57+69.76	627.25
5/8 POINT	57+64.95	627.25	57+77.29	627.88	57+89.64	627.22
3/4 POINT	57+84.82	627.15	57+97.16	627.75	58+09.51	627.08
7/8 POINT	58+04.70	626.95	58+17.04	627.52	58+29.39	626.83
℄ BRG. FWD. ABUT.	58+24.57	626.66	58+36.91	627.20	58+49.26	626.50

TOP OF HAUNCH ELEVATIONS

LOCATION	GIRDER 1		GIRDER 2		GIRDER 3		GIRDER 4		GIRDER 5		GIRDER 6		GIRDER 7		GIRDER 8		GIRDER 9	
	STATION	ELEVATION	STATION	ELEVATION	STATION	ELEVATION	STATION	ELEVATION	STATION	ELEVATION	STATION	ELEVATION	STATION	ELEVATION	STATION	ELEVATION	STATION	ELEVATION
℄ BRG. REAR ABUT.	55+37.89	623.91	55+40.90	624.12	55+43.90	624.32	55+46.91	624.53	55+49.91	624.73	55+52.92	624.64	55+55.92	624.55	55+58.93	624.45	55+61.93	624.36
1/8 POINT	55+53.89	624.27	55+56.90	624.48	55+59.90	624.68	55+62.91	624.88	55+65.91	625.08	55+68.92	624.99	55+71.92	624.89	55+74.93	624.79	55+77.93	624.69
1/4 POINT	55+69.89	624.59	55+72.90	624.80	55+75.90	625.00	55+78.91	625.19	55+81.91	625.39	55+84.92	625.29	55+87.92	625.19	55+90.93	625.09	55+93.93	624.98
3/8 POINT	55+85.89	624.86	55+88.90	625.06	55+91.90	625.26	55+94.91	625.45	55+97.91	625.64	56+00.92	625.53	56+03.92	625.43	56+06.93	625.32	56+09.93	625.21
1/2 POINT	56+01.89	625.07	56+04.90	625.27	56+07.90	625.46	56+10.91	625.65	56+13.91	625.84	56+16.92	625.73	56+19.92	625.62	56+22.93	625.50	56+25.93	625.39
SPLICE 1	56+15.89	625.22	56+18.90	625.41	56+21.90	625.60	56+24.91	625.78	56+27.91	625.97	56+30.92	625.85	56+33.92	625.74	56+36.93	625.63	56+39.93	625.51
5/8 POINT	56+17.89	625.24	56+20.90	625.43	56+23.90	625.62	56+26.91	625.80	56+29.91	625.98	56+32.92	625.87	56+35.92	625.76	56+38.93	625.64	56+41.93	625.52
3/4 POINT	56+33.89	625.39	56+36.90	625.58	56+39.90	625.76	56+42.91	625.94	56+45.91	626.12	56+48.92	626.00	56+51.92	625.88	56+54.93	625.76	56+57.93	625.64
7/8 POINT	56+49.89	625.55	56+52.90	625.72	56+55.90	625.90	56+58.91	626.08	56+61.91	626.25	56+64.92	626.13	56+67.92	626.01	56+70.93	625.88	56+73.93	625.76
PIER 1	56+65.89	625.72	56+68.90	625.89	56+71.90	626.06	56+74.91	626.23	56+77.91	626.40	56+80.92	626.28	56+83.92	626.15	56+86.93	626.02	56+89.93	625.90
1/8 POINT	56+85.77	625.95	56+88.78	626.13	56+91.78	626.29	56+94.79	626.46	56+97.79	626.63	57+00.80	626.50	57+03.80	626.36	57+06.81	626.23	57+09.81	626.09
1/4 POINT	57+05.64	626.20	57+08.65	626.38	57+11.65	626.54	57+14.66	626.70	57+17.66	626.86	57+20.67	626.72	57+23.67	626.59	57+26.68	626.45	57+29.68	626.30
SPLICE 2	57+06.39	626.21	57+09.40	626.39	57+12.40	626.55	57+15.41	626.71	57+18.41	626.87	57+21.42	626.73	57+24.42	626.60	57+27.43	626.46	57+30.43	626.31
3/8 POINT	57+25.52	626.41	57+28.53	626.59	57+31.53	626.75	57+34.54	626.90	57+37.54	627.06	57+40.55	626.92	57+43.55	626.77	57+46.56	626.63	57+49.56	626.47
1/2 POINT	57+45.39	626.54	57+48.40	626.72	57+51.40	626.87	57+54.41	627.02	57+57.41	627.17	57+60.42	627.02	57+63.42	626.88	57+66.43	626.73	57+69.43	626.55
5/8 POINT	57+65.27	626.56	57+68.28	626.73	57+71.28	626.88	57+74.29	627.02	57+77.29	627.17	57+80.30	627.02	57+83.30	626.86	57+86.31	626.71	57+89.31	626.53
3/4 POINT	57+85.14	626.46	57+88.15	626.62	57+91.15	626.76	57+94.16	626.91	57+97.16	627.04	58+00.17	626.89	58+03.17	626.73	58+06.18	626.57	58+09.18	626.39
7/8 POINT	58+05.02	626.25	58+08.03	626.40	58+11.03	626.54	58+14.04	626.67	58+17.04	626.81	58+20.05	626.65	58+23.05	626.48	58+26.06	626.32	58+29.06	626.14
℄ BRG. FWD. ABUT.	58+24.89	625.97	58+27.90	626.10	58+30.90	626.23	58+33.91	626.36	58+36.91	626.49	58+39.92	626.32	58+42.92	626.15	58+45.93	625.98	58+48.93	625.81

SCREED ELEVATIONS SHOWN REPRESENT THE THEORETICAL DECK SURFACE LOCATION PRIOR TO DEFLECTIONS CAUSED BY DECK PLACEMENT AND OTHER ANTICIPATED DEAD LOADS.

TOP OF HAUNCH ELEVATIONS SHOWN REPRESENT THE THEORETICAL LOCATION OF THE BOTTOM OF THE DECK ABOVE THE BEAM/GIRDER HAUNCH PRIOR TO DEFLECTIONS CAUSED BY DECK PLACEMENT AND OTHER ANTICIPATED DEAD LOADS.

FINAL DECK SURFACE ELEVATIONS SHOWN REPRESENT THE DECK SURFACE LOCATION AFTER ALL ANTICIPATED DEAD LOAD DEFLECTIONS HAVE OCCURRED.

FINAL DECK SURFACE ELEVATIONS

LOCATION	LEFT GUTTER		GIRDER 1		GIRDER 2		GIRDER 3		GIRDER 4		P.G./ GIRDER 5		GIRDER 6		GIRDER 7		GIRDER 8		GIRDER 9		RIGHT GUTTER	
	STATION	ELEVATION	STATION	ELEVATION	STATION	ELEVATION	STATION	ELEVATION	STATION	ELEVATION	STATION	ELEVATION	STATION	ELEVATION	STATION	ELEVATION	STATION	ELEVATION	STATION	ELEVATION	STATION	ELEVATION
℄ BRG. REAR ABUT.	55+37.57	624.60	55+37.89	624.62	55+40.90	624.82	55+43.90	625.03	55+46.91	625.24	55+49.91	625.44	55+52.92	625.35	55+55.92	625.26	55+58.93	625.16	55+61.93	625.07	55+62.26	625.06
1/8 POINT	55+53.57	624.90	55+53.89	624.92	55+56.90	625.12	55+59.90	625.33	55+62.91	625.53	55+65.91	625.73	55+68.92	625.63	55+71.92	625.53	55+74.93	625.44	55+77.93	625.34	55+78.26	625.33
1/4 POINT	55+69.57	625.18	55+69.89	625.20	55+72.90	625.40	55+75.90	625.60	55+78.91	625.80	55+81.91	625.99	55+84.92	625.89	55+87.92	625.79	55+90.93	625.69	55+93.93	625.59	55+94.26	625.57
3/8 POINT	55+85.57	625.44	55+85.89	625.46	55+88.90	625.66	55+91.90	625.85	55+94.91	626.04	55+97.91	626.24	56+00.92	626.13	56+03.92	626.02	56+06.93	625.92	56+09.93	625.81	56+10.26	625.80
1/2 POINT	56+01.57	625.68	56+01.89	625.70	56+04.90	625.89	56+07.90	626.08	56+10.91	626.27	56+13.91	626.46	56+16.92	626.35	56+19.92	626.24	56+22.93	626.13	56+25.93	626.01	56+26.26	626.00
SPLICE 1	56+15.57	625.87	56+15.89	625.89	56+18.90	626.08	56+21.90	626.26	56+24.91	626.45	56+27.91	626.63	56+30.92	626.52	56+33.92	626.40	56+36.93	626.29	56+39.93	626.17	56+40.26	626.16
5/8 POINT	56+17.57	625.89	56+17.89	625.91	56+20.90	626.10	56+23.90	626.29	56+26.91	626.47	56+29.91	626.65	56+32.92	626.54	56+35.92	626.43	56+38.93	626.31	56+41.93	626.20	56+42.26	626.18
3/4 POINT	56+33.57	626.09	56+33.89	626.11	56+36.90	626.29	56+39.90	626.47	56+42.91	626.65	56+45.91	626.83	56+48.92	626.71	56+51.92	626.59	56+54.93	626.47	56+57.93	626.35	56+58.26	626.34
7/8 POINT	56+49.57	626.26	56+49.89	626.28	56+52.90	626.45	56+55.90	626.63	56+58.91	626.81	56+61.91	626.98	56+64.92	626.86	56+67.92	626.74	56+70.93	626.61	56+73.93	626.49	56+74.26	626.48
PIER 1	56+65.57	626.41	56+65.89	626.42	56+68.90	626.60	56+71.90	626.77	56+74.91	626.94	56+77.91	627.11	56+80.92	626.99	56+83.92	626.86	56+86.93	626.73	56+89.93	626.60	56+90.26	626.59
1/8 POINT	56+85.45	626.56	56+85.77	626.58	56+88.78	626.75	56+91.78	626.91	56+94.79	627.08	56+97.79	627.24	57+00.80	627.11	57+03.80	626.98	57+06.81	626.85	57+09.81	626.72	57+10.14	626.70
1/4 POINT	57+05.32	626.68	57+05.64	626.69	57+08.65	626.86	57+11.65	627.02	57+14.66	627.18	57+17.66	627.34	57+20.67	627.21	57+23.67	627.07	57+26.68	626.93	57+29.68	626.79	57+30.01	626.78
SPLICE 2	57+06.07	626.68	57+06.39	626.70	57+09.40	626.86	57+12.40	627.02	57+15.41	627.18	57+18.41	627.34	57+21.42	627.21	57+24.42	627.07	57+27.43	626.93	57+30.43	626.79	57+30.76	626.78
3/8 POINT	57+25.20	626.76	57+25.52	626.78	57+28.53	626.94	57+31.53	627.09	57+34.54	627.25	57+37.54	627.40	57+40.55	627.26	57+43.55	627.12	57+46.56	626.98	57+49.56	626.83	57+49.89	626.82
1/2 POINT	57+45.07	626.81	57+45.39	626.83	57+48.40	626.98	57+51.40	627.13	57+54.41	627.28	57+57.41	627.43	57+60.42	627.28	57+63.42	627.14	57+66.43	626.99	57+69.43	626.84	57+69.76	626.82
5/8 POINT	57+64.95	626.83	57+65.27	626.84	57+68.28	626.99	57+71.28	627.13	57+74.29	627.28	57+77.29	627.43	57+80.30	627.27	57+83.30	627.12	57+86.31	626.97	57+89.31	626.81	57+89.64	626.80
3/4 POINT	57+84.82	626.81	57+85.14	626.82	57+88.15	626.96	57+91.15	627.10	57+94.16	627.24	57+97.16	627.38	58+00.17	627.23	58+03.17	627.07	58+06.18	626.91	58+09.18	626.75	58+09.51	626.73
7/8 POINT	58+04.70	626.75	58+05.02	626.77	58+08.03	626.90	58+11.03	627.04	58+14.04	627.17	58+17.04	627.31	58+20.05	627.15	58+23.05	626.98	58+26.06	626.82	58+29.06	626.65	58+29.39	626.64
℄ BRG. FWD. ABUT.	58+24.57	626.66	58+24.89	626.68	58+27.90	626.81	58+30.90	626.94	58+33.91	627.07	58+36.91	627.20	58+39.92	627.03	58+42.92	626.86	58+45.93	626.69	58+48.93	626.52	58+49.26	626.50

P.G. = PROFILE GRADE

NOTE
FOR CONSTRUCTION ELEVATION DIAGRAM, SEE SHEET 18/24

DRAFT Stage 3 - Not for Construction 09/23/2024

DESIGN AGENCY
Stantec
1500 Lake Shore Dr.
Columbus, OH 43204
(614) 486-4383

DESIGNED	DRAWN	REVIEWED	DATE
MRS	ALH	BSM	2/2024
CHECKED	REVISED	STRUCTURE FILE NUMBER	
EDA	XXX	4404378	

DECK CONSTRUCTION ELEVATIONS
BRIDGE NO. LAW-775-0105
S.R. 775 OVER S.R. 7

LAW-7-2.17
PID No. 75923

19/24

1033
1247

V:\1736\active\736087\4 LAW\engineering\75923_LAW-7-2.17\Design\structures\LAW775_0105C_SD003.dgn 5/13/2024 1:52:02 PM mturdevant

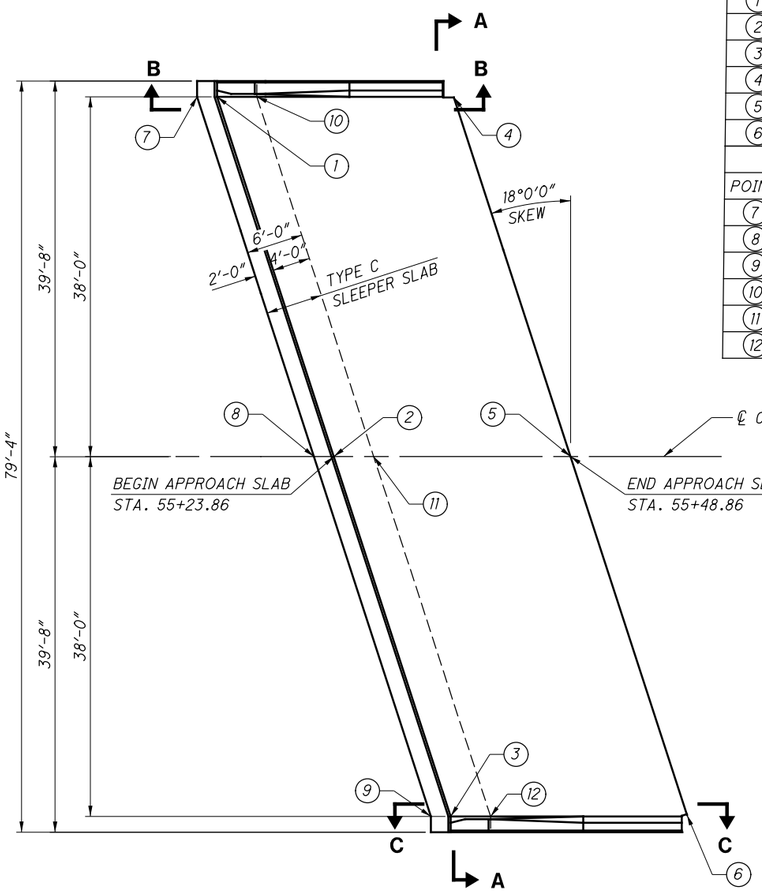

REAR APPROACH SLAB		
POINT	STATION	ELEVATION
1	55+11.51	624.05
2	55+23.86	624.92
3	55+36.21	624.57
4	55+36.51	624.57
5	55+48.86	625.42
6	55+61.21	625.04
REAR SLEEPER SLAB		
POINT	STATION	ELEVATION
7	55+09.41	622.76
8	55+21.76	623.63
9	55+34.11	623.28
10	55+15.72	622.89
11	55+28.07	623.76
12	55+40.41	623.40

REAR APPROACH SLAB

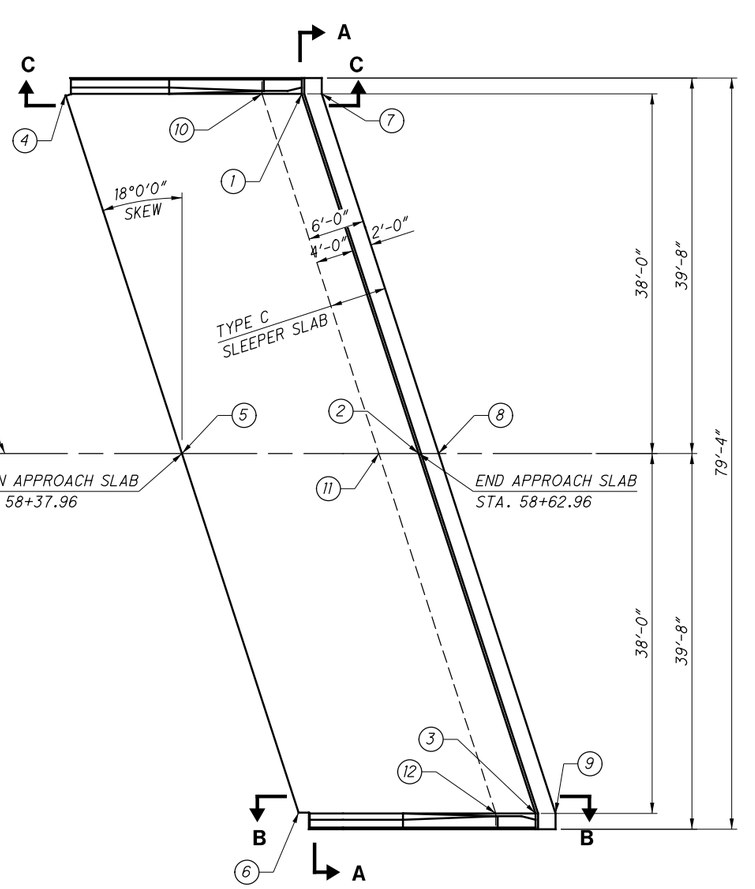

FORWARD APPROACH SLAB		
POINT	STATION	ELEVATION
1	58+50.62	626.49
2	58+62.96	627.00
3	58+75.31	626.28
4	58+25.62	626.66
5	58+37.96	627.19
6	58+50.31	626.50
FORWARD SLEEPER SLAB		
POINT	STATION	ELEVATION
7	58+52.72	625.23
8	58+65.07	625.73
9	58+77.41	625.01
10	58+46.41	625.28
11	58+58.76	625.79
12	58+71.11	625.07

FORWARD APPROACH SLAB

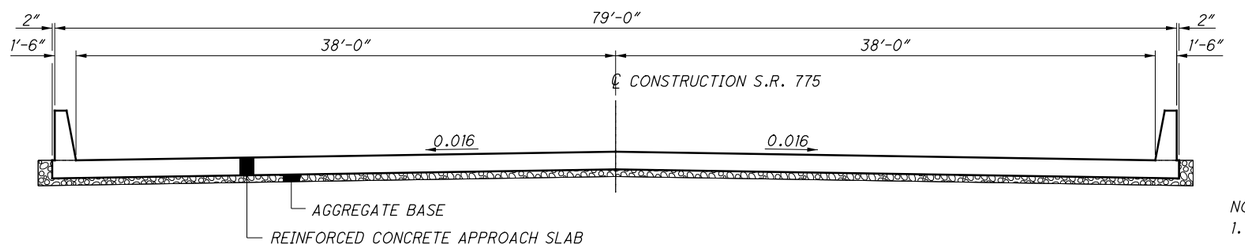

SECTION A-A

NOTES:
1. FOR ADDITIONAL DETAILS OF THE BRIDGE RAILING, SEE STD. DWG. SBR-1-20 AND SHEET 15/24 .
2. FOR ADDITIONAL DETAILS OF THE APPROACH SLAB, SEE STD. DWGS. BE-1.1 AND AS-1.15.
3. FOR SECTIONS B-B AND C-C, SEE SHEET 24/24 .
4. THE COST OF CONCRETE, REINFORCING STEEL, GFRP BARS AND INCIDENTALS FOR BRIDGE RAILING SHALL BE INCLUDED WITH ITEM 526 REINFORCED CONCRETE, APPROACH SLAB, AS PER PLAN.

DRAFT Stage 3 - Not for Construction 09/23/2024

DESIGN AGENCY
Stantec 1500 Lake Shore Dr. Columbus, OH 43204 (614) 486-4383

DESIGNED	DRAWN	REVIEWED	DATE
MRS	ALH	BSM	2/2024
CHECKED	REVISED	STRUCTURE FILE NUMBER	
EDA	XXX	4404378	

APPROACH SLABS
BRIDGE NO. LAW-775-0105
S.R. 775 OVER S.R. 7

LAW-7-2.17
PID No. 75923

20/24

1034
1247

V:\1736\active\173608714\LAW\engineering\75923_LAW-7-2.17\Design\structures\LAW775_0105C_SM001.dgn 5/13/2024 1:52:03 PM mstur.devant

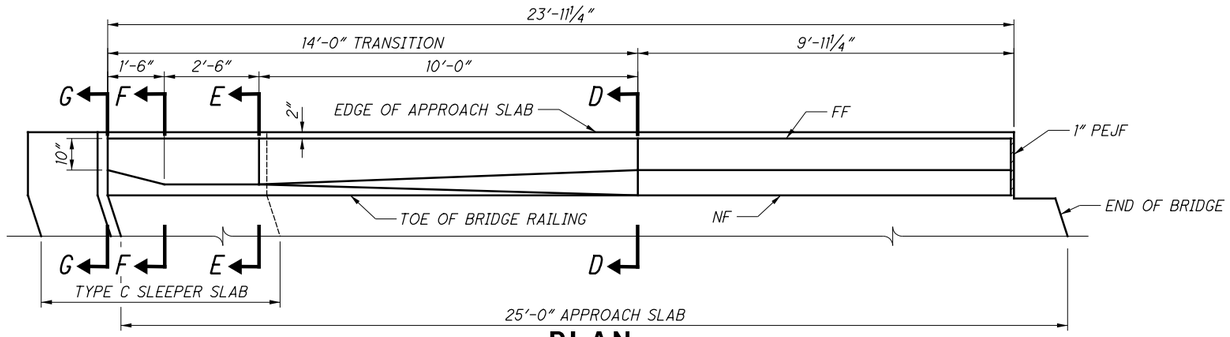

PLAN

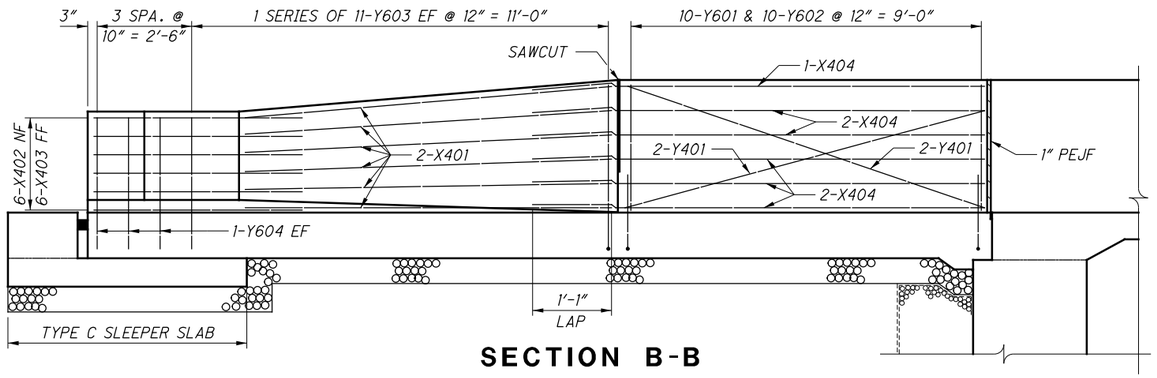

SECTION B-B

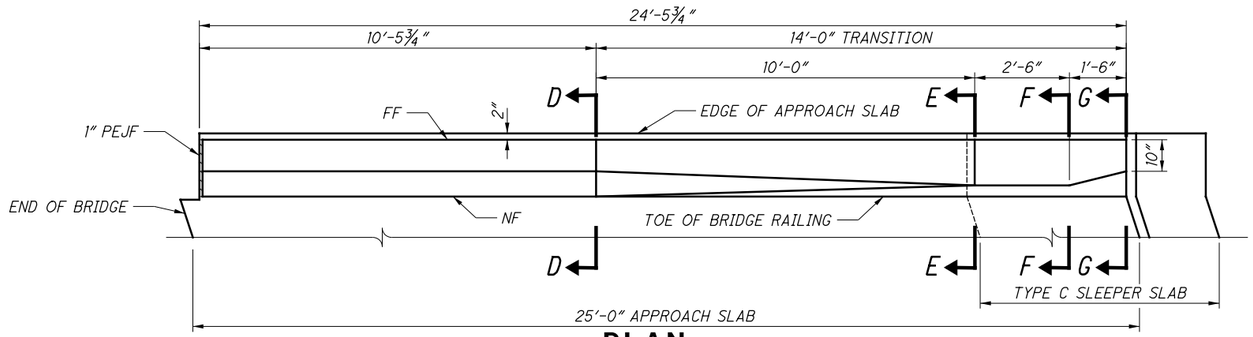

PLAN

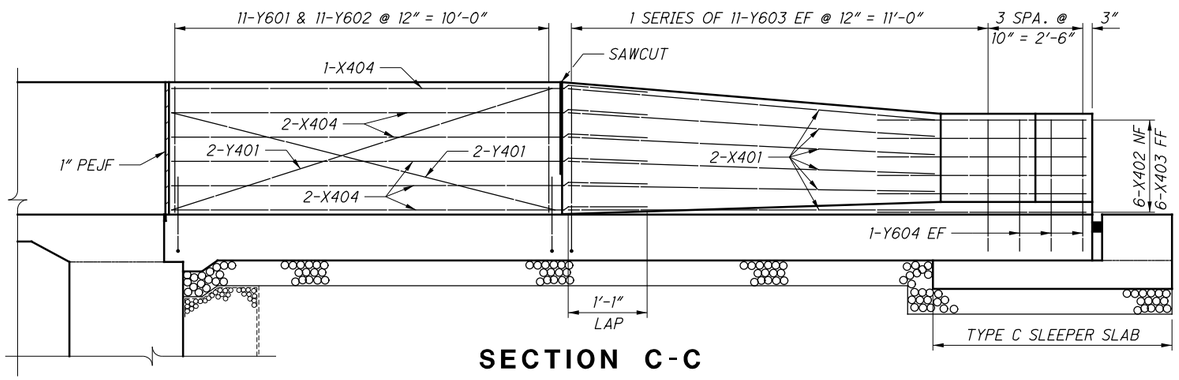

SECTION C-C

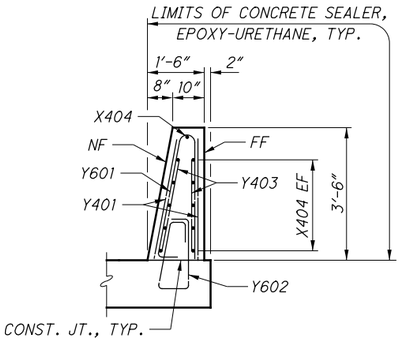

SECTION D-D

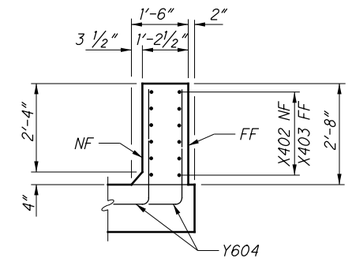

SECTION E-E

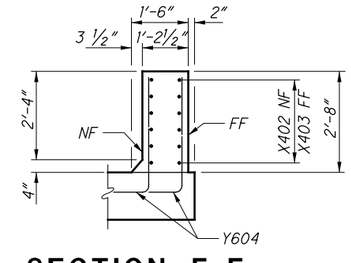

SECTION F-F

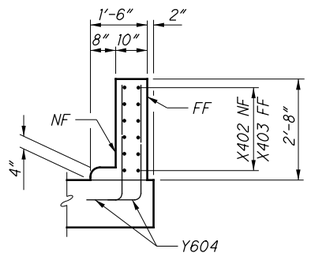

SECTION G-G

DRAFT Stage 3 - Not for Construction 09/23/2024

NOTES:
1. SEE ROADWAY PLAN FOR BRIDGE TERMINAL ASSEMBLY DETAILS.

DESIGN AGENCY
Stantec
1500 Lake Shore Dr.
Columbus, OH 43204
(614) 486-4383

DESIGNED	DRAWN	REVIEWED	DATE
MRS	ALH	BSM	2/2024
CHECKED	REVISED	STRUCTURE FILE NUMBER	
EDA	XXX	4404378	

APPROACH SLAB DETAILS
BRIDGE NO. LAW-775-0105
S.R. 775 OVER S.R. 7

LAW-7-2.17
PID No. 75923

21 / 24

1035
1247

V:\1736\active\173608714\LAW\engineering\75923_LAW-7-2.17\Design\structures\LAW775_0105C\sheets\775_0105C_SM002.dgn 5/13/2024 1:52:05 PM mturdevant

MARK	NUMBER TOTAL	LENGTH	WEIGHT	TYPE	DIMENSIONS A	B	C	D	E	R	INC
REAR ABUTMENT (EPOXY COATED STEEL REINFORCEMENT)											
A801	48	30'-0"	3845	STR.							
A802	12	18'-8"	598	STR.							
A601	332	13'-6"	6732	2	5'-7"	2'-8"	5'-7"				
A602	78	13'-4"	1562	22	2'-9½"						
A603	48	30'-0"	2163	STR.							
A604	48	12'-8"	913	STR.							
A501	3	16'-0"	50	STR.							
A502	22	9'-11"	228	2	3'-9"	2'-8"	3'-9"				
	2	5'-7"			1'-7"		1'-7"				
A503	SERIES OF	TO	95	2	TO	2'-8"	TO				$9\frac{5}{8}$"
	6	9'-7"			3'-7"		3'-7"				
	1	7'-9"			2'-8"		2'-8"				
A504	SERIES OF	TO	118	2	TO	2'-8"	TO				$9\frac{1}{2}$"
	10	14'-11"			6'-3"		6'-3"				
A505	3	15'-3"	48	2	6'-5"	2'-8"	6'-5"				
A506	2	6'-0"	13	STR.							
	1	2'-10"									
A507	SERIES OF	TO	57	STR.							2'-6⅜"
	6	15'-6"									
	1	3'-8"									
A508	SERIES OF	TO	62	STR.							2'-6⅜"
	6	16'-3"									
	1	1'-2"									
A509	SERIES OF	TO	62	STR.							2'-5½"
	7	15'-11"									
	1	2'-0"									
A510	SERIES OF	TO	68	STR.							2'-5½"
	7	16'-9"									
A511	3	16'-6"	52	STR.							
	1	8'-1"			2'-10"		2'-10"				
A512	SERIES OF	TO	106		TO	2'-8"	TO				
	9	14'-7"			6'-1"		6'-1"				
A401	51	11'-2"	380	3	2'-8"	2'-8"					
		SUB-TOTAL	17,152								

MARK	NUMBER TOTAL	LENGTH	WEIGHT	TYPE	DIMENSIONS A	B	C	D	E	R	INC
FORWARD ABUTMENT (EPOXY COATED STEEL REINFORCEMENT)											
B801	48	30'-0"	3845	STR.							
B802	12	18'-8"	598	STR.							
B601	332	13'-2"	6565	2	5'-5"	2'-8"	5'-5"				
B602	78	13'-4"	1562	22	2'-9½"						
B603	48	30'-0"	2163	STR.							
B604	48	12'-8"	913	STR.							
B501	3	16'-0"	50	STR.							
B502	22	9'-11"	228	2	3'-9"	2'-8"	3'-9"				
	2	6'-1"			1'-10"		1'-10"				
B503	SERIES OF	TO	101	2	TO	2'-8"	TO				$9\frac{5}{8}$"
	6	10'-0"			3'-10"		3'-10"				
	2	7'-11"			2'-9"		2'-9"				
B504	SERIES OF	TO	242	2	TO	2'-8"	TO				$9\frac{3}{4}$"
	10	15'-3"			6'-5"		6'-5"				
B505	3	15'-5"	48	2	6'-5"	2'-8"	6'-5"				
B506	2	6'-0"	14	STR.							
	1	2'-10"									
B507	SERIES OF	TO	57	STR.							2'-6"
	6	15'-4"									
	1	3'-8"									
B508	SERIES OF	TO	62	STR.							$2'-6\frac{1}{8}$"
	6	16'-3"									
	1	2'-0"									2'-5"
B509	SERIES OF	TO	68	STR.							
	7	16'-6"									
	1	1'-2"									2'-5"
B510	SERIES OF	TO	61	STR.							
	7	15'-8"									
B511	3	16'-6"	52	STR.							
	1	8'-3"			2'-11"		2'-11"				
B512	SERIES OF	TO	109		TO	2'-8"	TO				
	9	14'-11"			6'-3"		6'-3"				
B401	51	11'-2"	380	3	2'-8"	2'-8"					
		SUB-TOTAL	17,118								

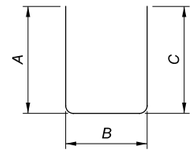

TYPE-2

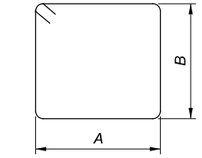

TYPE-3

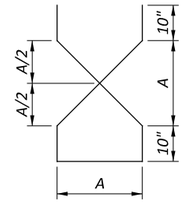

TYPE-22

DRAFT Stage 3 - Not for Construction 09/23/2024

DESIGN AGENCY
Stantec
1500 Lake Shore Dr.
Columbus, OH 43204
(614) 486-4383

DESIGNED	DRAWN	REVIEWED	DATE
MRS	ALH	BSM	2/2024
CHECKED	REVISED	STRUCTURE FILE NUMBER	
EDA	XXX	4404378	

REINFORCING STEEL LIST

BRIDGE NO. LAW-775-0105
S.R. 775 OVER S.R. 7

LAW-7-2.17
PID No. 75923

1036
1247

V:\1736\active\173608714\LAW\engineering\75923_LAW-7-2.17\Design\structures\LAW775_0105C_SL001.dgn 5/13/2024 1:52:07 PM mstur devant

MARK	NUMBER TOTAL	LENGTH	WEIGHT	TYPE	DIMENSIONS						
					A	B	C	D	E	R	INC
PIER (EPOXY COATED STEEL REINFORCEMENT)											
P1101	144	13′-5″	10,265	1	2′-0″	11′-9″					
P1102	144	27′-5″	20,976	STR.							
P1001	14	33′-6″	2018	16	32′-1″						
P1002	7	32′-0″	964	STR.							
P901	16	34′-2″	1859	1	4′-8″	29′-9″					
P902	8	35′-9″	972	STR.							
P601	132	15′-6″	3073	2	3′-1″	9′-8″	3′-1″				
P501	132	9′-8″	1331	STR.							
P502	456	11′-3″	5351	2	4′-6″	2′-6″	4′-6″				
P503	16	30′-0″	501	STR.							
P504	8	28′-2″	235	STR.							
P505	15	12′-4″	193	STR.							
P506	5	19′-0″	99	STR.							
P507	5	21′-7″	113	STR.							
SP501	6	22′-11″	4562	27	3″	2′-6″	22′-11″				
		SUB-TOTAL	52,512								

MARK	NUMBER TOTAL	LENGTH	WEIGHT	TYPE	DIMENSIONS						
					A	B	C	D	E	R	INC
APPROACH SLAB RAILING (EPOXY COATED STEEL REINFORCEMENT)											
Y601	42	7′-8″	484	37	1′-0″	9½″	1′-5″	1′-0″	7″		
Y602	42	7′-0″	442	23	6″	3′-3″	3′-3″				2″
	8	4′-4″				3′-6″					
Y603	SERIES OF	TO	628	1	1′-0″	TO					
	11	5′-2″				4′-4″					
Y604	32	4′-5″	212	1	1′-0″	3′-6″					
		SUB-TOTAL	1766								

MARK	NUMBER TOTAL	LENGTH	TOTAL LENGTH	TYPE	DIMENSIONS						
					A	B	C	D	E	R	INC
APPROACH SLAB RAILING (GLASS FIBER REINFORCED POLYMER - GFRP)											
X401	48	10′-0″	480′-0″	STR.							
X402	24	6′-4″	152′-0″*	25	2′-6″	2′-5″	1′-4″	1½″	5″		
X403	24	5′-1″	122′-0″	STR.							
X404	44	11′-4″	499′-0″	STR.							
Y401	16	10′-0″	160′-0″	STR.							
		SUB-TITLE	1413′-0″								

TYPE-1

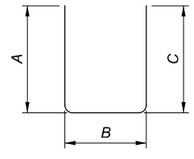

TYPE-2

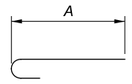

TYPE-16

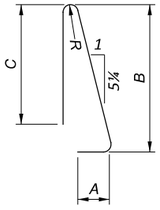

TYPE-23

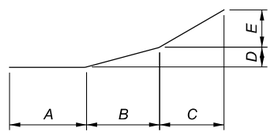

TYPE-25

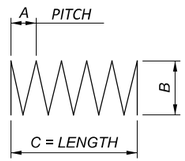

TYPE-27

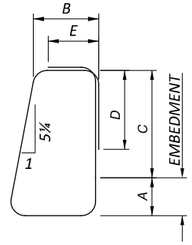

TYPE-37

* EPOXY COATED STEEL REINFORCEMENT MAY BE USED IF GFRP FRABRICATED SHAPE IS NOT AVAILABLE.

DRAFT Stage 3 - Not for Construction 09/23/2024

DESIGN AGENCY Stantec 1500 Lake Shore Dr. Columbus, OH 43204 (614) 486-4383

DESIGNED	DRAWN	REVIEWED	DATE
MRS	ALH	BSM	2/2024
CHECKED	REVISED	STRUCTURE FILE NUMBER	
EDA	XXX	4404378	

REINFORCING STEEL LIST

BRIDGE NO. LAW-775-0105
S.R. 775 OVER S.R. 7

LAW-7-2.17
PID No. 75923

23/24

1037
1247

V:\1736\active\736087\4\LAW\engineering\75923_LAW-7-2.17\Design\structures\LAW775_0105C_SL002.dgn 5/13/2024 1:52:08 PM mturdevant

MARK	NUMBER TOTAL	LENGTH	WEIGHT	TYPE	DIMENSIONS						
					A	B	C	D	E	R	INC
SUPERSTRUCTURE (EPOXY COATED STEEL REINFORCEMENT)											
S601	638	7'-8"	7347	37	1'-0"	9½"	1'-5"	1'-0"	7"		
S602	638	7'-0"	6708	23	6"	3'-3"	3'-3"			2"	
S603	277	30'-0"	12,482	STR.							
S604	8	29'-1"	349	STR.							
S605	87	19'-0"	2483	STR.							
S501	1000	30'-0"	31,290	STR.							
S502	100	19'-10"	2069	STR.							
S503	1172	27'-2"	33,208	STR.							
S504	582	30'-9"	18,666	STR.							
S505	1165	31'-9"	38,579	STR.							
S506	588	21'-6"	13,186	STR.							
	1	5'-9"									
	1	5'-3"									
S505	SERIES OF	TO	216	STR.							1'-5¾"
	14	24'-4"									
	1	4'-10"									
S506	SERIES OF	TO	326	STR.							1'-5¾"
	18	29'-11"									
	1	2'-9"									
S507	SERIES OF	TO	273	STR.							1'-5¾"
	17	26'-4"									
	1	2'-3"									
S508	SERIES OF	TO	249	STR.							1'-5¾"
	17	25'-10"									
	1	4'-5"									
S509	SERIES OF	TO	318	STR.							1'-5¾"
	18	29'-6"									
	1	4'-9"									
S510	SERIES OF	TO	209	STR.							1'-5¾"
	14	23'-11"									
S511	NOT	USED									
S512	NOT	USED									
	1	5'-9"									
S513	SERIES OF	TO	312	STR.							1'-5¾"
	17	29'-5"									
	1	5'-0"									
S514	SERIES OF	TO	164	STR.							1'-5¾"
	12	21'-3"									
	1	2'-8"									
S515	SERIES OF	TO	348	STR.							1'-5¾"
	20	30'-8"									
	1	3'-6"									
S516	SERIES OF	TO	365	STR.							1'-5¾"
	20	31'-6"									
	1	5'-9"									
S517	SERIES OF	TO	151	STR.							1'-5¾"
	11	20'-6"									
	1	5'-1"									
S518	SERIES OF	TO	299	STR.							1'-5¾"
	17	28'-8"									

MARK	NUMBER TOTAL	LENGTH	WEIGHT	TYPE	DIMENSIONS						
					A	B	C	D	E	R	INC
SUPERSTRUCTURE (EPOXY COATED STEEL REINFORCEMENT)											
S401	880	30'-0"	17,635	STR.							
S402	88	9'-10"	578	STR.							
S404	600	1'-7"	635	STR.							
S403	1204	8'-6"	6836	16	7'-0"						
D801	20	30'-0"	1602	STR.							
D802	10	34'-1"	910	STR.							
D803	51	5'-1"	692	18	2'-9"	1'-0"	1'-0"				
D601	8	30'-0"	360	STR.							
D602	4	31'-1"	187	STR.							
D501	156	11'-7"	1885	2	4'-6"	2'-10"	4'-6"				
D502	78	6'-10"	556	2	2'-5"	2'-3"	2'-5"				
E801	20	30'-0"	1602	STR.							
E802	10	34'-1"	910	STR.							
E803	51	5'-1"	692	18	2'-9"	1'-0"	1'-0"				
E601	8	30'-0"	360	STR.							
E602	4	31'-1"	187	STR.							
E501	156	11'-7"	1885	2	4'-6"	2'-10"	4'-6"				
E502	78	6'-10"	556	2	2'-5"	2'-3"	2'-5"				
		SUB-TOTAL	207,665								

MARK	NUMBER TOTAL	LENGTH	TOTAL LENGTH	TYPE	DIMENSIONS						
					A	B	C	D	E	R	INC
SUPERSTRUCTURE (GLASS FIBER REINFORCED POLYMER - GFRP)											
G401	216	10'-0"	2160'-0" *	STR.							
G402	16	10'-4"	165'-4" *	STR.							
G403	154	40'-0"	6160'-0" *	STR.							
G404	22	17'-5"	383'-2" *	STR.							
		SUB-TOTAL	8868'-6" *								

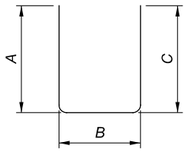

TYPE-2

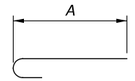

TYPE-16

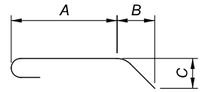

TYPE-18

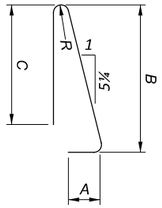

TYPE-23

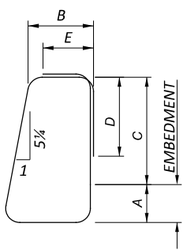

TYPE-37

DRAFT Stage 3 - Not for Construction 09/23/2024

DESIGN AGENCY
Stantec
1500 Lake Shore Dr.
Columbus, OH 43204
(614) 486-4383

DESIGNED MRS | DRAWN ALH | CHECKED EDA | REVIEWED BSM | DATE 2/2024 | REVISED XXX | STRUCTURE FILE NUMBER 4404378

REINFORCING STEEL LIST
BRIDGE NO. LAW-775-0105
S.R. 775 OVER S.R. 7

LAW-7-2.17
PID No. 75923

24/24

1038
1247

V:\1736\active\173608714\LAW\engineering\75923_LAW-7-2.17\Design\structures\LAW775_0105C\sheets\775_0105C_SL003.dgn Sheet 5/13/2024 1:52:10 PM mstur devant

LEFT OF MAINLINE					
STATION	OFFSET	LOCATION	POST TYPE	ITEM 607 - FENCE, TYPE 47 (FEET)	ITEM 607 - FENCE, TYPE CLT (FEET)
122+23.33	218.71 LT.	S.R. 7	C.P.A.		
122+27.34	201.71 LT.	S.R. 7	HEADWALL	17.52	
122+32.53	197.34 LT.	S.R. 7	HEADWALL		
123+00.43	153.86 LT.	S.R. 7	I.A.P.A.	83.19	
127+99.94	136.15 LT.	S.R. 7	CROSSING TYPE 1		
127+80.35	363.57 LT.	S.R. 7	I.A.P.A.	569.55	
131+90.12	92.98 LT.	S.R. 7	I.A.P.A.	352.99	
133+30.85	126.62 LT.	S.R. 7	C.P.A.	148.49	
132+65.27	12.33 RT.	S.R. 7	ABUTMENT	154.05	
135+37.57	12.33 RT.	S.R. 7	ABUTMENT		
136+30.21	217.97 LT.	S.R. 7	C.P.A.	249.13	
138+61.39	200.64 LT.	S.R. 7	C.P.A.	244.04	
141+09.87	198.00 LT.	S.R. 7	I.A.P.A.	261.02	
146+05.27	150.43 LT.	S.R. 7	L.P.A.	519.13	
151+04.24	168.42 LT.	S.R. 7	C.P.A.	519.13	
151+04.24	168.42 LT.	S.R. 7	C.P.A.		
154+35.04	139.00 LT.	S.R. 7	I.A.P.A.		344.85
158+00.14	191.59 LT.	S.R. 7	CROSSING TYPE 3		
158+50.13	199.01 LT.	S.R. 7	I.A.P.A.		423.92
158+93.59	203.98 LT.	S.R. 7	E.P.A.		43.74
159+21.41	207.15 LT.	S.R. 7	E.P.A.		
161+99.00	238.88 LT.	S.R. 7	C.P.A.		279.40
161+99.00	168.89 LT.	S.R. 7	C.P.A.		69.99
163+70.22	187.07 LT.	S.R. 7	C.P.A.		172.18
164+04.59	193.82 LT.	S.R. 7	C.P.A.		35.03
164+09.10	188.84 LT.	S.R. 7	CROSSING TYPE 3		
164+18.01	178.99 LT.	S.R. 7	C.P.A.		20.00
164+64.95	205.66 LT.	S.R. 7	C.P.A.		53.98
166+99.68	119.05 LT.	S.R. 7	L.P.A.		250.20
167+80.35	94.63 LT.	S.R. 7	L.P.A.		84.28
168+58.93	75.32 LT.	S.R. 7	C.P.A.		80.93
169+11.00	68.91 LT.	S.R. 7	C.P.A.		52.46
169+11.00	149.16 LT.	S.R. 7	C.P.A.		80.25
171+05.17	143.99 LT.	S.R. 7	C.P.A.		194.24
173+00.83	251.93 LT.	S.R. 7	C.P.A.		223.46
174+35.90	679.52 LT.	S.R. 7	C.P.A.		448.41
175+00.54	759.08 LT.	S.R. 7	C.P.A.		102.51
176+37.12 [L]	781.43 LT.	S.R. 7	C.P.A.		128.93
178+98.25	690.45 LT.	S.R. 7	C.P.A.		218.45
181+34.03	369.44 LT.	S.R. 7	C.P.A.		371.84
183+15.66	161.10 LT.	S.R. 7	C.P.A.		264.60
184+56.65	204.18 LT.	S.R. 7	CROSSING TYPE 3		
188+44.793 [L]	287.14 LT.	S.R. 7	C.P.A.		508.87
189+99.60	254.83 LT.	S.R. 7	C.P.A.		157.71
191+82.20	128.74 LT.	S.R. 7	C.P.A.		221.91
192+78.66	210.59 LT.	S.R. 7	CROSSING TYPE 3		
193+00.37	229.00 LT.	S.R. 7	C.P.A.		154.97
194+57.60	230.40 LT.	S.R. 7	C.P.A.		157.24
195+32.88	163.97 LT.	S.R. 7	C.P.A.		100.40
195+32.15	151.99 LT.	S.R. 7	CROSSING TYPE 1		
195+31.35	139.02 LT.	S.R. 7	C.P.A.		25.00
195+86.89	116.31 LT.	S.R. 7	C.P.A.		60.00
195+85.77	36.32 LT.	S.R. 7	C.P.A.		80.00
195+60.95	1.42 LT.	S.R. 7	MSE WALL		45.17
196+28.22 [L]	1.42 LT.	S.R. 7	MSE WALL		
196+70.99 [L]	69.81 LT.	S.R. 7	I.A.P.A.		83.12
197+77.93 [L]	298.18 LT.	S.R. 7	L.P.A.		253.50
197+98.48 [L]	353.25 LT.	S.R. 7	C.P.A.		59.33
198+55.38	294.82 LT.	S.R. 7	C.P.A.		85.24
199+40.00	254.97 LT.	S.R. 7	E.P.A.		100.00
200+53.00	226.75 LT.	S.R. 7	C.P.A.		
201+49.92	219.00 LT.	S.R. 7	I.A.P.A.		103.80
202+30.32	210.41 LT.	S.R. 7	CROSSING TYPE 3		
202+78.13	206.32 LT.	S.R. 7	C.P.A.		137.12

LEFT OF MAINLINE					
STATION	OFFSET	LOCATION	POST TYPE	ITEM 607 - FENCE, TYPE 47 (FEET)	ITEM 607 - FENCE, TYPE CLT (FEET)
203+70.75	275.35 LT.	S.R. 7	C.P.A.		121.04
204+60.59	91.50 LT.	S.R. 7	C.P.A.		206.86
204+81.41	1.30 LT.	S.R. 7	MSE WALL		95.17
205+39.80	1.28 LT.	S.R. 7	MSE WALL		
205+32.69	81.59 LT.	S.R. 7	C.P.A.		83.18
205+05.43	115.37 LT.	S.R. 7	C.P.A.		43.93
205+13.75	122.50 LT.	S.R. 7	CROSSING TYPE 1		
205+21.75	129.41 LT.	S.R. 7	C.P.A.		22.00
205+17.39	148.89 LT.	S.R. 7	C.P.A.		20.00
206+80.10	198.98 LT.	S.R. 7	C.P.A.		178.50
211+30.17	179.40 LT.	S.R. 7	C.P.A.		476.10
212+90.06 [L]	239.63 LT.	S.R. 7	C.P.A.		179.04
214+94.19	492.82 LT.	S.R. 7	E.P.A.		327.22
214+94.19	492.82 LT.	S.R. 7	E.P.A.		
218+40.94	733.22 LT.	S.R. 7	I.A.P.A.	421.94	
220+59.34	817.60 LT.	S.R. 7	C.P.A.	234.14	
223+43.83	457.45 LT.	S.R. 7	L.P.A.	458.96	
226+28.32	97.30 LT.	S.R. 7	C.P.A.	458.96	
229+41.69 [S]	281.96 LT.	S.R. 7	C.P.A.	344.22	
229+48.30 [S]	279.13 LT.	S.R. 7	CROSSING TYPE 2		
231+89.26	147.95 LT.	S.R. 7	C.P.A.	244.79	
233+50.21	147.93 LT.	S.R. 7	C.P.A.	141.10	
237+18.68 [L]	516.31 LT.	S.R. 7	C.P.A.	489.41	
238+48.66	147.79 LT.	S.R. 7	C.P.A.	390.61	
241+00.64	183.79 LT.	S.R. 7	CROSSING TYPE 3		
241+27.11	187.57 LT.	S.R. 7	CROSSING TYPE 3		
242+19.34	200.74 LT.	S.R. 7	CROSSING TYPE 3		
242+69.93	207.97 LT.	S.R. 7	I.A.P.A.	425.55	
244+51.85	169.90 LT.	S.R. 7	CROSSING TYPE 3		
246+99.76	118.01 LT.	S.R. 7	I.A.P.A.	439.14	
251+14.26 [L]	103.82 LT.	S.R. 7	E.P.A.	415.49	
253+03.50 [L]	102.28 LT.	S.R. 7	E.P.A.		
255+00.02	117.99 LT.	S.R. 7	I.A.P.A.	208.90	
257+49.92	108.00 LT.	S.R. 7	I.A.P.A.	265.88	
259+00.00	90.00 LT.	S.R. 7	L.P.A.	159.48	
261+00.00	90.00 LT.	S.R. 7	I.A.P.A.	209.77	
263+00.00	70.00 LT.	S.R. 7	L.P.A.	208.64	
265+00.00	70.00 LT.	S.R. 7	I.A.P.A.	207.83	
267+00.00	75.00 LT.	S.R. 7	I.A.P.A.	208.17	
270+00.30 [L]	84.95 LT.	S.R. 7	I.A.P.A.	311.81	
271+78.71 [L]	83.36 LT.	S.R. 7	C.P.A.	180.58	
271+78.71 [L]	117.85 LT.	S.R. 7	C.P.A.	34.48	
276+21.34	124.90 LT.	S.R. 7	L.P.A.	442.69	
280+69.99	125.61 LT.	S.R. 7	L.P.A.	442.68	
286+63.54	115.07 LT.	S.R. 7	L.P.A.	586.80	
292+50.03	95.94 LT.	S.R. 7	I.A.P.A.	586.80	
296+80.39	123.02 LT.	S.R. 7	I.A.P.A.	431.21	
297+73.67	153.72 LT.	S.R. 7	C.P.A.	98.21	
297+92.03	139.81 LT.	S.R. 7	CROSSING TYPE 1		
298+14.38	122.86 LT.	S.R. 7	C.P.A.	51.08	
297+90.54	12.33 RT.	S.R. 7	ABUTMENT	137.28	
297+73.67	153.72 LT.	S.R. 7	C.P.A.		
298+02.00	191.08 LT.	S.R. 7	E.P.A.	46.89	
300+55.11	12.33 RT.	S.R. 7	ABUTMENT		
300+88.58	177.50 LT.	S.R. 7	C.P.A.	192.76	
304+99.80	158.01 LT.	S.R. 7	I.A.P.A.	411.68	
307+00.21	127.95 LT.	S.R. 7	I.A.P.A.	202.65	
310+80.92	268.21 LT.	S.R. 7	I.A.P.A.	405.73	
313+89.80	477.45 LT.	S.R. 7	C.P.A.	373.09	
314+58.44	413.72 LT.	S.R. 7	I.A.P.A.	93.67	
316+24.06	147.72 LT.	S.R. 7	C.P.A.	313.34	
317+41.31 [L]	175.68 LT.	S.R. 7	CROSSING TYPE 3		
318+05.94 [L]	191.57 LT.	S.R. 7	CROSSING TYPE 3		
319+57.14	233.32 LT.	S.R. 7	L.P.A.	352.84	

LEFT OF MAINLINE					
STATION	OFFSET	LOCATION	POST TYPE	ITEM 607 - FENCE, TYPE 47 (FEET)	ITEM 607 - FENCE, TYPE CLT (FEET)
319+83.09	241.47 LT.	S.R. 7	CROSSING TYPE 3		
320+87.66	277.36 LT.	S.R. 7	CROSSING TYPE 3		
322+18.19	329.39 LT.	S.R. 7	CROSSING TYPE 3		
322+60.28	347.97 LT.	S.R. 7	I.A.P.A.	352.84	
323+57.34	341.88 LT.	S.R. 7	CROSSING TYPE 3		
325+56.24	340.93 LT.	S.R. 7	I.A.P.A.	331.47	
328+50.35	368.03 LT.	S.R. 7	I.A.P.A.	331.46	
333+52.27 [L]	579.22 LT.	S.R. 7	C.P.A.	618.72	
339+69.86	447.99 LT.	S.R. 7	I.A.P.A.	642.86	
339+83.42	448.86 LT.	S.R. 7	CROSSING TYPE 3		
343+59.87	472.99 LT.	S.R. 7	L.P.A.	390.81	
347+49.88	497.99 LT.	S.R. 7	I.A.P.A.	390.81	
351+47.36	423.22 LT.	S.R. 7	L.P.A.	391.15	
355+49.85	327.96 LT.	S.R. 7	I.A.P.A.	391.15	
361+58.00	381.82 LT.	S.R. 7	L.P.A.	581.81	
366+78.01	411.43 LT.	S.R. 7	CROSSING TYPE 3		
367+38.86	414.90 LT.	S.R. 7	L.P.A.	581.80	
373+19.72	447.98 LT.	S.R. 7	I.A.P.A.	581.80	
377+02.12 [L]	315.82 LT.	S.R. 7	C.P.A.	403.04	
377+24.73 [L]	244.14 LT.	S.R. 7	I.A.P.A.	74.90	
376+78.99 [L]	66.26 LT.	S.R. 7	ABUTMENT	183.44	
377+02.12 [L]	315.82 LT.	S.R. 7	C.P.A.		
377+95.23 [S]	398.18 LT.	S.R. 7	E.P.A.	118.61	
389+52.91	1082.21 LT.	S.R. 7	E.P.A.		
390+05.99	1061.35 LT.	S.R. 7	I.A.P.A.	35.19	
395+68.19	837.81 LT.	S.R. 7	C.P.A.	401.84	
395+37.59	746.91 LT.	S.R. 7	C.P.A.	93.78	
TOTALS CARRIED TO SHEET 1041				21644.97	8030.07

CALCULATED SER CHECKED ALB

ROADWAY FENCE PLAN

LAW-7-2.17

1039
1247

DRAFT Stage 3 - Not for Construction 09/23/2024

U:\173608714\LAW\75923\roadway\sheets\75923GX001.dgn 5/21/2024 5:00:24 PM SLPorker

RIGHT OF MAINLINE					
STATION	OFFSET	LOCATION	POST TYPE	ITEM 607 - FENCE, TYPE 47 (FEET)	ITEM 607 - FENCE, TYPE CLT (FEET)
114+57.60	588.90 RT.	S.R. 7	C.P.A.		
114+98.48	438.57 RT.	S.R. 7	I.A.P.A.	226.61	
115+68.75	307.73 RT.	S.R. 7	I.A.P.A.	148.52	
117+57.72	167.94 RT.	S.R. 7	C.P.A.	235.05	
122+22.79	219.80 RT.	S.R. 7	I.A.P.A.	450.07	
126+19.26	195.93 RT.	S.R. 7	L.P.A.	376.15	
130+06.84	134.84 RT.	S.R. 7	I.A.P.A.	376.15	
131+90.95	157.55 RT.	S.R. 7	C.P.A.	178.70	
132+42.74	57.67 RT.	S.R. 7	ABUTMENT	111.87	
135+18.87	57.67 RT.	S.R. 7	ABUTMENT		
134+89.06	127.62 RT.	S.R. 7	C.P.A.	75.76	
137+24.84	157.99 RT.	S.R. 7	I.A.P.A.	229.22	
139+95.04	156.75 RT.	S.R. 7	I.A.P.A.	259.36	
141+49.96	148.00 RT.	S.R. 7	I.A.P.A.	149.18	
145+00.00	147.03 RT.	S.R. 7	C.P.A.	336.82	
145+00.00	125.08 RT.	S.R. 7	C.P.A.	21.96	
145+52.42	116.14 RT.	S.R. 7	I.A.P.A.	51.60	
146+02.43	113.46 RT.	S.R. 7	I.A.P.A.	48.62	
149+69.54	99.17 RT.	S.R. 7	I.A.P.A.	357.36	
151+01.53	96.24 RT.	S.R. 7	I.A.P.A.	128.74	
151+51.58	111.34 RT.	S.R. 7	I.A.P.A.	51.01	
152+50.00	105.34 RT.	S.R. 7	C.P.A.	95.90	
152+50.00	118.06 RT.	S.R. 7	C.P.A.	12.72	
153+00.08	112.98 RT.	S.R. 7	I.A.P.A.	48.87	
155+35.48 [L]	148.28 RT.	S.R. 7	E.P.A.	230.76	
155+35.48 [L]	148.28 RT.	S.R. 7	E.P.A.		
157+00.09	169.00 RT.	S.R. 7	I.A.P.A.		164.64
160+00.29	189.02 RT.	S.R. 7	C.P.A.		300.86
161+04.32	246.24 RT.	S.R. 7	CROSSING TYPE 3		
161+49.85	271.29 RT.	S.R. 7	C.P.A.		170.70
162+39.60	189.01 RT.	S.R. 7	C.P.A.		121.75
164+31.02	182.81 RT.	S.R. 7	I.A.P.A.		191.52
165+88.26	164.99 RT.	S.R. 7	C.P.A.		158.25
166+87.10	174.51 RT.	S.R. 7	C.P.A.		99.29
169+81.74	297.19 RT.	S.R. 7	C.P.A.		319.15
170+13.51	219.10 RT.	S.R. 7	C.P.A.		84.30
170+75.52	209.08 RT.	S.R. 7	C.P.A.		62.82
171+03.53	170.53 RT.	S.R. 7	C.P.A.		47.65
172+16.52	216.32 RT.	S.R. 7	C.P.A.		121.92
172+59.88	193.94 RT.	S.R. 7	C.P.A.		48.79
173+20.07	208.99 RT.	S.R. 7	C.P.A.		62.05
175+09.40 [L]	189.06 RT.	S.R. 7	C.P.A.		190.38
175+39.31 [L]	139.18 RT.	S.R. 7	C.P.A.		58.23
176+22.11 [L]	138.99 RT.	S.R. 7	C.P.A.		84.04
176+98.04	172.48 RT.	S.R. 7	C.P.A.		85.36
177+08.85	140.05 RT.	S.R. 7	C.P.A.		34.34
180+40.03	168.99 RT.	S.R. 7	C.P.A.		351.13
182+40.57	158.99 RT.	S.R. 7	C.P.A.		213.23
183+06.24	298.86 RT.	S.R. 7	C.P.A.		157.02
183+48.64	288.92 RT.	S.R. 7	CROSSING TYPE 3		
183+94.78	279.04 RT.	S.R. 7	C.P.A.		100.24
184+59.52	249.14 RT.	S.R. 7	C.P.A.		77.25
185+59.65	159.35 RT.	S.R. 7	C.P.A.		140.36
186+71.68	155.38 RT.	S.R. 7	I.A.P.A.		118.47
189+80.15	159.00 RT.	S.R. 7	C.P.A.		313.73
192+40.14	234.00 RT.	S.R. 7	C.P.A.		270.59
192+79.56	233.71 RT.	S.R. 7	CROSSING TYPE 3		
193+56.77	233.14 RT.	S.R. 7	C.P.A.		116.63
194+85.13	142.69 RT.	S.R. 7	C.P.A.		157.03
195+32.02	64.58 RT.	S.R. 7	MSE WALL		91.10
195+60.95	1.42 RT.	S.R. 7	MSE WALL		
196+25.22	1.42 RT.	S.R. 7	MSE WALL		
195+99.28	64.58 RT.	S.R. 7	MSE WALL		
195+81.03	96.77 RT.	S.R. 7	C.P.A.		37.00

RIGHT OF MAINLINE					
STATION	OFFSET	LOCATION	POST TYPE	ITEM 607 - FENCE, TYPE 47 (FEET)	ITEM 607 - FENCE, TYPE CLT (FEET)
195+68.65	112.48 RT.	S.R. 7	C.P.A.		20.00
194+86.21	54.73 RT.	S.R. 7	C.P.A.		47.13
198+70.13	239.00 RT.	S.R. 7	C.P.A.		326.72
200+13.32	236.12 RT.	S.R. 7	E.P.A.		132.82
201+34.18	229.14 RT.	S.R. 7	E.P.A.		
205+30.50	176.30 RT.	S.R. 7	C.P.A.		375.28
205+00.47	88.93 RT.	S.R. 7	I.A.P.A.		92.00
204+90.59	64.78 RT.	S.R. 7	MSE WALL		26.00
204+81.41	1.30 RT.	S.R. 7	MSE WALL		
205+39.80	1.28 RT.	S.R. 7	MSE WALL		
205+80.12	64.59 RT.	S.R. 7	MSE WALL		
205+65.08	108.16 RT.	S.R. 7	C.P.A.		45.94
205+91.79	100.41 RT.	S.R. 7	C.P.A.		27.00
207+51.10	96.51 RT.	S.R. 7	I.A.P.A.		154.55
208+54.35	98.70 RT.	S.R. 7	I.A.P.A.		100.19
209+21.01	102.81 RT.	S.R. 7	C.P.A.		64.74
209+49.05	142.81 RT.	S.R. 7	C.P.A.		48.26
212+39.74 [S]	167.22 RT.	S.R. 7	I.A.P.A.		278.17
216+50.39	164.00 RT.	S.R. 7	C.P.A.		407.13
217+53.42	259.41 RT.	S.R. 7	C.P.A.		140.42
217+70.71	298.64 RT.	S.R. 7	C.P.A.		42.87
218+50.04	258.86 RT.	S.R. 7	C.P.A.		88.74
219+00.79	289.31 RT.	S.R. 7	C.P.A.		59.18
219+16.31	325.69 RT.	S.R. 7	C.P.A.		39.55
218+90.60	337.03 RT.	S.R. 7	C.P.A.		28.09
219+08.80	397.97 RT.	S.R. 7	E.P.A.		63.60
219+08.80	397.97 RT.	S.R. 7	E.P.A.		
224+53.09	366.89 RT.	S.R. 7	L.P.A.	545.17	
229+58.42 [S]	350.39 RT.	S.R. 7	I.A.P.A.	545.18	
229+74.36 [S]	343.74 RT.	S.R. 7	CROSSING TYPE 3		
233+55.63 [S]	264.84 RT.	S.R. 7	L.P.A.	501.71	
238+10.02	317.98 RT.	S.R. 7	I.A.P.A.	501.72	
238+30.22	315.24 RT.	S.R. 7	CROSSING TYPE 3		
244+00.00	238.01 RT.	S.R. 7	I.A.P.A.	595.11	
247+69.92	198.00 RT.	S.R. 7	L.P.A.	372.32	
247+86.29	196.23 RT.	S.R. 7	CROSSING TYPE 3		
251+41.97 [L]	157.79 RT.	S.R. 7	I.A.P.A.	372.32	
253+72.06	188.12 RT.	S.R. 7	C.P.A.	216.71	
254+41.66	338.01 RT.	S.R. 7	C.P.A.	161.13	
258+71.35	297.70 RT.	S.R. 7	C.P.A.	353.62	
258+94.28	161.72 RT.	S.R. 7	CROSSING TYPE 3		
259+03.75	97.78 RT.	S.R. 7	C.P.A.	201.98	
262+00.11	107.99 RT.	S.R. 7	I.A.P.A.	278.92	
267+29.95	107.98 RT.	S.R. 7	I.A.P.A.	495.52	
269+31.91 [S]	117.61 RT.	S.R. 7	I.A.P.A.	190.19	
270+75.89 [L]	136.70 RT.	S.R. 7	I.A.P.A.	140.15	
271+63.65 [L]	180.64 RT.	S.R. 7	I.A.P.A.	97.00	
271+79.40	203.11 RT.	S.R. 7	C.P.A.	27.42	
274+60.00	270.87 RT.	S.R. 7	C.P.A.	288.67	
274+84.10	246.95 RT.	S.R. 7	CROSSING TYPE 2		
275+28.46	202.93 RT.	S.R. 7	C.P.A.	96.45	
277+98.13 [L]	214.72 RT.	S.R. 7	CROSSING TYPE 3		
278+61.58 [S]	217.97 RT.	S.R. 7	C.P.A.	335.79	
279+49.73	157.80 RT.	S.R. 7	C.P.A.	109.13	
281+40.25	227.96 RT.	S.R. 7	I.A.P.A.	209.05	
283+71.12 [L]	208.09 RT.	S.R. 7	I.A.P.A.	240.12	
285+50.36	268.01 RT.	S.R. 7	I.A.P.A.	189.83	
285+62.16	268.40 RT.	S.R. 7	CROSSING TYPE 3		
289+47.81	281.26 RT.	S.R. 7	CROSSING TYPE 3		
291+49.84	287.99 RT.	S.R. 7	I.A.P.A.	599.82	
296+40.92	193.96 RT.	S.R. 7	I.A.P.A.	500.00	
297+67.93	140.59 RT.	S.R. 7	C.P.A.	137.76	
297+82.55	57.67 RT.	S.R. 7	ABUTMENT	84.21	
297+90.54	12.33 RT.	S.R. 7	ABUTMENT		

RIGHT OF MAINLINE					
STATION	OFFSET	LOCATION	POST TYPE	ITEM 607 - FENCE, TYPE 47 (FEET)	ITEM 607 - FENCE, TYPE CLT (FEET)
300+55.11	12.33 RT.	S.R. 7	ABUTMENT		
300+47.12	57.67 RT.	S.R. 7	ABUTMENT		
300+40.93	92.75 RT.	S.R. 7	CROSSING TYPE 1		
300+36.44	118.22 RT.	S.R. 7	C.P.A.	61.49	
300+90.75	107.82 RT.	S.R. 7	C.P.A.	55.30	
301+60.77	187.84 RT.	S.R. 7	C.P.A.	106.33	
304+59.85	138.00 RT.	S.R. 7	I.A.P.A.	303.21	
309+99.96	148.00 RT.	S.R. 7	I.A.P.A.	540.20	
315+50.63	117.96 RT.	S.R. 7	C.P.A.	551.49	
317+71.73 [L]	288.09 RT.	S.R. 7	I.A.P.A.	278.34	
318+00.00 [L]	294.43 RT.	S.R. 7	C.P.A.	28.08	
318+00.00 [L]	272.98 RT.	S.R. 7	C.P.A.	21.45	
318+50.00 [L]	292.36 RT.	S.R. 7	I.A.P.A.	51.44	
319+50.00 [S]	311.54 RT.	S.R. 7	C.P.A.	93.80	
319+50.00 [S]	324.28 RT.	S.R. 7	C.P.A.	12.73	
320+40.00	338.38 RT.	S.R. 7	I.A.P.A.	80.84	
321+01.53	323.64 RT.	S.R. 7	HEADWALL	56.38	
321+12.81	326.82 RT.	S.R. 7	HEADWALL		
321+50.00	352.05 RT.	S.R. 7	C.P.A.	41.37	
326+25.30	367.99 RT.	S.R. 7	I.A.P.A.	415.39	
328+00.00	409.66 RT.	S.R. 7	C.P.A.	156.61	
328+00.00	397.10 RT.	S.R. 7	C.P.A.	12.56	
328+50.00	394.80 RT.	S.R. 7	I.A.P.A.	43.15	
329+00.00	399.31 RT.	S.R. 7	I.A.P.A.	43.31	
329+50.00	408.84 RT.	S.R. 7	C.P.A.	43.99	
329+50.00	437.25 RT.	S.R. 7	C.P.A.	28.41	
331+50.52	463.04 RT.	S.R. 7	I.A.P.A.	170.93	
335+24.69	551.81 RT.	S.R. 7	I.A.P.A.	342.80	
336+43.43	544.57 RT.	S.R. 7	HEADWALL	118.96	
336+53.36	547.98 RT.	S.R. 7	HEADWALL		
337+62.05	607.85 RT.	S.R. 7	C.P.A.	124.09	
339+02.31	491.39 RT.	S.R. 7	C.P.A.	182.31	
339+15.07	506.75 RT.	S.R. 7	C.P.A.	19.97	
340+49.29	418.07 RT.	S.R. 7	C.P.A.	160.87	
345+57.45	355.04 RT.	S.R. 7	L.P.A.	512.06	
350+60.53	293.13 RT.	S.R. 7	L.P.A.	512.06	
355+50.89	257.97 RT.	S.R. 7	C.P.A.	512.05	
357+01.06	458.20 RT.	S.R. 7	C.P.A.	255.28	
358+99.33	507.76 RT.	S.R. 7	C.P.A.	218.55	
361+59.05	198.07 RT.	S.R. 7	C.P.A.	411.34	
365+54.63	168.02 RT.	S.R. 7	L.P.A.	396.73	
369+50.22	137.98 RT.	S.R. 7	I.A.P.A.	396.72	
372+65.59	233.02 RT.	S.R. 7	L.P.A.	329.38	
375+80.96	328.06 RT.	S.R. 7	C.P.A.	329.38	
376+22.03	158.75 RT.	S.R. 7	CROSSING TYPE 2		
376+26.93 [L]	138.54 RT.	S.R. 7	ABUTMENT	195.02	
376+36.08 [L]	100.78 RT.	S.R. 7	ABUTMENT		
376+46.52 [L]	57.67 RT.	S.R. 7	ABUTMENT	44.37	
376+59.41 [L]	12.33 RT.	S.R. 7	ABUTMENT		
376+65.45 [L]	12.00 LT.	S.R. 7	ABUTMENT	25.07	
375+80.96	328.06 RT.	S.R. 7	C.P.A.		
376+80.31 [L]	358.36 RT.	S.R. 7	C.P.A.	104.80	
377+53.15 [L]	486.91 RT.	S.R. 7	E.P.A.	150.00	
TOTALS CARRIED TO SHEET 1041				21126.61	7158.20

DRAFT Stage 3 - Not for Construction 09/23/2024

CALCULATED SER CHECKED ALB

ROADWAY FENCE PLAN

LAW-7-2.17

1040
1247

U:\173608714\LAW\75923\roadway\sheets\75923GX002.dgn 5/21/2024 5:00:25 PM SLParker

S.R. 775					
STATION	OFFSET	LOCATION	POST TYPE	ITEM 607 - FENCE, TYPE 47 (FEET)	ITEM 607 - FENCE, TYPE CLT (FEET)
51+07.21	291.63 LT.	S.R. 775	E.P.A.		
52+21.20	388.13 LT.	S.R. 775	C.P.A.		
52+35.20	491.99 LT.	S.R. 775	C.P.A.		
375+80.96	328.06 RT.	S.R. 7	C.P.A.		
60+25.71	333.66 LT.	S.R. 775	C.P.A.		
60+60.62	350.00 LT.	S.R. 775	C.P.A.	38.54	
64+09.26	93.06 LT.	S.R. 775	C.P.A.	433.09	
67+80.13	57.98 LT.	S.R. 775	I.A.P.A.	373.39	
68+50.02	72.96 LT.	S.R. 775	I.A.P.A.	71.48	
69+39.29	53.38 LT.	S.R. 775	E.P.A.	84.10	
69+08.13	35.00 RT.	S.R. 775	E.P.A.		
69+08.25	70.19 RT.	S.R. 775	I.A.P.A.		
390+05.99	1061.35 LT.	S.R. 7	I.A.P.A.		
TOTALS THIS SHEET				1000.60	0.00
TOTALS FROM SHEET 1039				21644.97	8030.07
TOTALS FROM SHEET 1040				21126.61	7158.20
TOTALS				43772.18	15188.27
TOTALS CARRIED TO GENERAL SUMMARY				43773	15189

GROUND RODS				
STATION	OFFSET	LOCATION	O.H.E. TRANS. LINE	ITEM 625 - GROUND ROD (EACH)
276+75.26	209.44 RT.	S.R. 7	138 Kv	1
277+36.19	126.74 LT.	S.R. 7	138 Kv	1
278+43.36	128.18 LT.	S.R. 7	138 Kv	1
277+88.50	127.54 LT.	S.R. 7	138 Kv	1
TOTALS CARRIED TO GENERAL SUMMARY				4

CALCULATED SER CHECKED ALB

ROADWAY FENCE PLAN

LAW-7-2.17

1041
1247

DRAFT Stage 3 - Not for Construction 09/23/2024

U:\173608714\LAW\75923\roadway\sheets\75923GX003.dgn 5/21/2024 5:00:26 PM SLParker

PROJECT DESCRIPTION
THIS PROJECT CONSISTS OF THE GEOTECHNICAL EXPLORATION FOR THE CONSTRUCTION OF THE NEW STATE ROUTE (SR) 7 TWO-LANE HIGHWAY, WITH OPTION OF EXPANDING TO FOUR-LANE, TRAVELING NORTH OF THE TOWN OF CHESAPEAKE IN LAWRENCE COUNTY, OHIO. THE NEW ROADWAY WILL CONNECT THE EXISTING SR 7 EAST OF CHESAPEAKE AT STATION 114+57.60 TO SR 7 NEAR PROCTORVILLE, OHIO AT STATION 408+12.36. EIGHT BRIDGES, ALONG WITH SIDE ROAD CONNECTORS AND IMPROVEMENTS ARE INCLUDED IN THE PROJECT.

PREVIOUS EXPLORATION
BBCM ENGINEERING CONDUCTED AN EXPLORATION FOR THE PROJECT CONSISTING OF 110 BORING BETWEEN JUNE AND SEPTEMBER, 1999. THE FINDINGS FOR THESE BORINGS ARE INCLUDED IN THE PLAN SET. ADDITIONALLY, BBCM COMPLETED LANDSLIDE BORINGS BETWEEN 2000 AND 2005. AVAILABLE INFORMATION FOR THESE BORINGS IS INCLUDED IN THE PLAN SET.

GEOLOGY
THE PROJECT AREA IS LOCATED IN THE UNGLACIATED APPALACHIAN PLATEAU REGION OF OHIO. THE TOPOGRAPHY ALONG THE PROJECT LENGTH IS CHARACTERIZED BY UPLAND HILLS, ALONG WITH THE OHIO RIVER AND SMALLER RIVER AND STREAM FLOODPLAINS. THE SOILS IN THE UPLAND HILLS CONSIST OF COLLUVIUM DERIVED FROM THE UNDERLYING BEDROCK. IN THE FLOODPLAINS, SOILS CONSIST OF MIXED DEPOSITS OF COLLUVIAL AND ALLUVIAL/OUTWASH DEPOSITS. LANDSLIDES ARE PREVELANT IN THE AREA.

BEDROCK IN THE PROJECT AREA CONSISTS OF THE PENNSYLVANIAN-AGE MONONGAHELA AND CONEMAUGH FORMATIONS. THESE FORMATIONS CONSIST OF SHALE, SILTSTONE, LIMESTONE, SANDSTONE, MUDSTONE AND COAL. THE DEPTH TO BEDROCK IS GENERALLY SHALLOW IN THE HILLY TERRAIN, WITH OUTCROPS PRESENT IN PLACES. ALONG THE FLOODPLAINS, BEDROCK IS GENERALLY ENCOUNTERED AT GREATER DEPTHS.

SUBSURFACE EXPLORATION
A TOTAL OF 126 BORINGS WERE ADVANCED DURING THE STANTEC EXPLORATION DURING THREE SEPERATE MOBILIZATIONS FROM MAY 17, 2011 TO JUNE 29, 2021. OF THOSE BORINGS, 103 WERE ADVANCED FOR THE PURPOSE OF EVALUATING ROADWAY, CUT-SLOPE, AND EMBANKMENT STABILITY, WITH THE REMAINING 16 BEING FOR STRUCTURAL FOUNDATION PURPOSES. THE BORINGS WERE ADVANCED USING TRACK-MOUNTED AND TRUCK-MOUNTED DRILL RIGS USING 3.25-INCH I.D. HOLLOW-STEM AUGERS. STANDARD PENETRATION TEST (SPT) SAMPLES WERE OBTAINED USING CALIBRATED AUTOMATIC HAMMERS WITH ENERGY RATIOS (ER) OF 81.9, 74.4, 85.9, 62.0, 88.7 AND 81.7 PERCENT. FOR THE ROADWAY BORINGS, A MINIMUM OF 4 SPT TESTS WERE PERFORMED AT 2.5-FOOT INTERVALS. FOR THE CUT-SLOPE AND EMBANKMENT BORINGS, SPT AND UNDISTURBED SHELBY TUBE (ST) TESTS WERE PERFORMED AT 2.5-FOOT INTERVALS TO A DEPTH OF 30 FEET AND AT 5-FOOT INTERVALS BELOW THAT, OR UNTIL BEDROCK WAS ENOUNTERED. FOR THE CUT-SLOPE BORINGS, ROCK CORING WAS PERFORMED USING NQ-SIZED CORING EQUIPMENT DOWN TO A PREDETERMINED DEPTH BASED UPON THE DEPTH OF THE PROPOSED CUT. FOR THE STRUCTUE BORINGS, SPT AND ST SAMPLES WERE OBTAINED AT 2.5-FOOT INTERVALS TO REFUSAL ON BEDROCK, AND THEN A MINIMUM OF 10 FEET OF BEDROCK WAS CORED. AT THE COMPLETION OF DRILLING OPERATIONS, BORINGS WERE BACKFILLED WITH AUGER CUTTINGS WHEN NO WATER WAS ENCOUNTERED OR WITH CEMENT-BENTONITE GROUT WHEN NECESSARY. ASPHALT COLD PATCH WAS USED TO PATCH PAVEMENT WHERE NECESSARY.

EXPLORATION FINDINGS
IN GENERAL, ALONG THE FLOODPLAINS, SOILS CONSISTED OF A RELATIVELY THIN LAYER OF COHESIVE SILT AND CLAY (A-6a), SILTY CLAY (A-6b) AND SANDY SILT (A-4a) OVERLYING NON-COHESIVE GRAVEL WITH SAND (A-1-b), COARSE AND FINE SAND (A-3a) FINE SAND (A-3) AND SANDY SILT. ALONG THE HILLY AREAS, THE SOILS CONSISTED MAINLY OF COHESIVE SILT AND CLAY, SILTY CLAY, CLAY (A-7-6) ELASTIC CLAY (A-7-5) AND SANDY SILT. GRAVEL WITH SAND SILT AND CLAY (A-2-6), GRAVEL WITH SAND AND SILT (A-2-4) AND SILT (A-4b) WERE ALSO ENCOUNTERED IN LESSER AMOUNTS ACROSS THE PROJECT LENGTH.

THE BEDROCK ENCOUNTERED CONSISTED OF SHALE, MUDSTONE, SANDSTONE AND SILTSTONE. TYPICALLY AND LAYER OF WEATHERED ROCK WITH A THICKNESS OF A FEW FEET WAS ENCOUNTERED ABOVE COMPETENT ROCK. IN GENERAL, THE SANDSTONE AND SILTSTONE WAS DESCRIBED AS SLIGHTLY TO UNWEATHERED AND STRONG, WHILE THE SHALE AND MUDSTONE WAS DESCRIBED AS SLIGHTLY TO HIGHLY WEATHERED AND WEAK TO SLIGHTLY STRONG. SLICKENSIDES WERE NOTED IN MANY OF THE SHALE AND MUDSTONE LAYERS.

SPECIFICATIONS
THIS GEOTECHNICAL EXPLORATION WAS PERFORMED IN ACCORDANCE WITH THE STATE OF OHIO, DEPARTMENT OF TRANSPORTATION, OFFICE OF GEOTECHNICAL ENGINEERING, SPECIFICATIONS FOR GEOTECHNICAL EXPLORATION (SGE) JANUARY 20, 2012 REVISION.

AVAILABLE INFORMATION
THE SOIL, BEDROCK, AND GROUNDWATER INFORMATION COLLECTED FOR THIS SUBSURFACE EXPLORATION THAT CAN BE CONVENIENTLY DISPLAYED ON THE GEOTECHNICAL PROFILE SHEETS HAS BEEN PRESENTED. GEOTECHNICAL REPORTS, IF PREPARED, ARE AVAILABLE FOR REVIEW ON THE OFFICE OF CONTRACT SALE WEBSITE.

LEGEND

STANTEC & BBC&M BORINGS

DESCRIPTION	ODOT CLASS	CLASSIFIED MECH./VISUAL	
GRAVEL AND/OR STONE FRAGMENTS	A-1-a	2	2
GRAVEL AND/OR STONE FRAGMENTS WITH SAND	A-1-b	11	11
GRAVEL WITH SAND AND SILT	A-2-4	13	12
GRAVEL WITH SAND, SILT AND CLAY	A-2-6	10	16
FINE SAND	A-3	1	1
COARSE AND FINE SAND	A-3a	22	38
SANDY SILT	A-4a	48	63
SILT	A-4b	10	11
SILT AND CLAY	A-6a	88	91
SILTY CLAY	A-6b	97	145
ELASTIC CLAY	A-7-5	5	0
CLAY	A-7-6	82	71
ROCK		0	89
	TOTAL	389	550

WEATHERED SHALE, MUDSTONE, SILTSTONE — VISUAL
SHALE, SANDSTONE — VISUAL

PAVEMENT OR BASE = X = APPROXIMATE THICKNESS — VISUAL
SOD AND TOPSOIL = X = APPROXIMATE THICKNESS — VISUAL

PROJECT BORING LOCATION - PLAN VIEW.

HISTORICAL BORING LOCATION - PLAN VIEW.

DRIVE SAMPLE AND/OR ROCK CORE BORING PLOTTED TO VERTICAL SCALE ONLY. HORIZONTAL BAR INDICATES A CHANGE IN STRATIGRAPHY.

WC INDICATES WATER CONTENT IN PERCENT.

N_{60} INDICATES STANDARD PENETRATION RESISTANCE NORMALIZED TO 60% DRILL ROD ENERGY RATIO.

N INDICATES STANDARD PENETRATION RESISTANCE.

⊖ WATER CONTENT NEARLY EQUAL TO OR GREATER THAN LIQUID LIMIT.

● INDICATES A NON-PLASTIC MATERIAL WITH A HIGH WATER CONTENT.

▼ INDICATES FREE WATER.

W INDICATES FREE WATER.

SS INDICATES A SPLIT SPOON SAMPLE.

ST INDICATES A SHELBY TUBE SAMPLE.

NP INDICATES A NON-PLASTIC SAMPLE.

TR INDICATES TOP OF ROCK.

RECON. - JS 5/11 & JM 4/22
DRILLING - BBCM, 10/98-5/05, STANTEC 5/17/11-6/29/21
DRAWN - MJ 7/2011-6/2022 & 05/2024
REVIEWED - EMK 05/2024

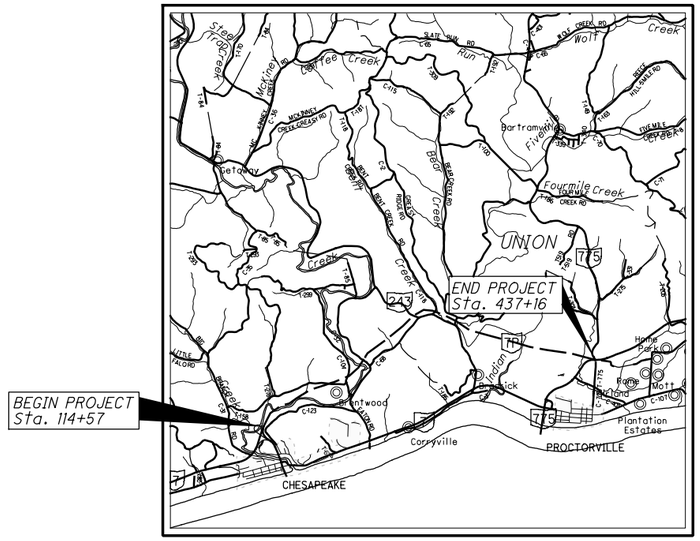

LOCATION MAP
SCALE IN MILES
0 1 2 3 4

PARTICLE SIZE DEFINITIONS

12″	3″	2.0 mm	0.42 mm	0.074 mm	0.005 mm
BOULDERS	COBBLES	GRAVEL	COARSE SAND	FINE SAND	SILT	CLAY
		No. 10 SIEVE	No. 40 SIEVE	No. 200 SIEVE	

SCOUR SAMPLES (BRIDGE LAW-7-07.11)					
EXPLOR. ID	ELEVATION (FT.)	D_{50} VALUE (mm)	T_C VALUE (psf)	D_{50} EQUIV (mm)	EROSION CATEGORY (EC)
B-13-2-0-99 (PIER 1)	543.3'-535.8'	0.7223	0.0677	3.2411	3.255
	535.8'-532.3'	0.0143	0.0428	2.0502	2.211
	532.3'-529.8'	0.0121	0.1194	5.7170	3.075
	529.8'-522.8'	0.0164	0.0477	2.2863	2.868
B-13-3-0-99 (PIER 2)	544.6'-540.1'	0.0241	0.0640	3.0636	3.550
	540.1'-538.6'	0.0122	0.1789	8.5668	3.337
	538.6'-531.6'	0.0185	0.1888	9.0398	3.168
	531.6'-524.1'	0.0112	0.1910	9.1463	3.413

D_{50} VALUES

BORING NO.	DEPTH (FEET)	ELEVATION (FEET)	D_{50} VALUE
B-010-1-12	9.5-11.0	520.9-519.4	0.18 mm
	11.0-12.5	519.4-517.9	0.027 mm
	12.5-14.0	517.9-516.4	1.3 mm
	14.0-15.5	516.4-514.9	0.15 mm
B-010-2-12	9.5-11.0	519.5-518.0	0.09 mm
	11.0-12.5	518.0-516.5	0.09 mm
	12.5-14.0	516.5-515.0	0.17 mm
	14.0-15.5	515.0-513.5	0.24 mm
B-050-0-11	5.0-7.5	529.4-527.9	0.183 mm
	7.5-12.5	524.9-519.9	0.16 mm
	12.5-17.0	519.9-515.4	0.24 mm
	17.0-24.0	515.4-508.4	0.203 mm
	24.0-38.5	508.4-493.9	0.009 mm

DRAFT Stage 3 - Not for Construction 09/23/2024

DESIGN AGENCY
STANTEC CONSULTING SERVICES INC.
CINCINNATI, OHIO

PID NO. 75923

SOIL PROFILE - ROADWAY

LAW-7-2.17

U:\173608714\LAW\75923\geotechnical\sheets\Coversheet_SS_Lab\75923ICO01.dgn 5/16/2024 5:10:24 PM MJennings

INDEX OF SHEETS

EXPLORATION NOTES (CONT.), SHEET 2.

SUMMARY OF SOILS TEST DATA, SHEETS 3-13

LABORATORY TEST DATA, SHEETS 14-43

LOCATION FROM STA. TO STA.	PLAN VIEW SHEET	PROFILE SHEET	CROSS SECTION SHEET	CUT Max/Min	FILL Max/Min
LAW-7-2.17					
114+57.60 137+00	44	45	-	17	42
STRUCTURE - LAW-7-2.51	46	46			
137+00 162+00	47	48	-	-	32
162+00 187+00	49	50	-	23	50
187+00 212+00	51	52	-	30	55
STRUCTURE - LAW-7-3.70	53	53			
STRUCTURE - LAW-7-3.76	54	54			
STRUCTURE - LAW-7-3.87	55	55			
212+00 237+00	56	57	-	10	83
237+00 262+00	58	59	-	-	25
262+00 287+00	60	61	-	5	37
STRUCTURE - LAW-7-5.10	62	62			
287+00 312+00	63	64	-	65	55
STRUCTURE - LAW-7-5.63	65	65			
312+00 337+00	66	67	-	45	95
337+00 361+00	68	69	-	128	52
361+00 387+00	70	71	-	17	87
STRUCTURE - LAW-7-7.13	72	72			
387+00 412+00	73	74	-	-	1
412+00 437+16	75	76	-	-	-
136+00	-	-	77	-	36
159+00	-	-	78	-	26
160+00	-	-	79	-	26
176+00	-	-	80	32	-
184+00	-	-	80A	8	54
197+50	-	-	81	2	50
202+50	-	-	82	-	54
215+00	-	-	83	32	12
219+00	-	-	84	2	40
228+50	-	-	85	6	60
229+50	-	-	85A	6	74
237+50	-	-	86	20	-
242+00	-	-	87	8	26
245+50	-	-	88	-	26
253+00	-	-	89	-	30
256+00	-	-	90	10	32
274+00	-	-	91	10	26
288+50	-	-	92	18	20
293+00	-	-	93	-	52
297+00	-	-	94	-	45
301+50	-	-	95	22	22
311+00	-	-	96	107	-
313+00	-	-	97	70	-
322+00	-	-	98	18	50
329+00	-	-	99	25	48
334+00	-	-	100	36	-
336+00	-	-	101	-	90
340+00	-	-	102	-	125
349+00	-	-	103	115	-
359+50	-	-	104	102	-
371+00	-	-	105	-	71
374+00	-	-	106	-	71
394+50	-	-	107	-	2
395+50	-	-	108	-	2
396+00	-	-	109	-	2
396+50	-	-	110	-	1
397+49.13	-	-	111	-	2
398+50	-	-	112	-	2
405+00	-	-	113	-	2
414+00	-	-	114	-	2
415+50	-	-	115	-	2
419+50	-	-	116	-	2
423+00	-	-	117	-	2

INDEX OF SHEETS (CONTINUED)

LOCATION FROM STA. TO STA.	PLAN VIEW SHEET	PROFILE SHEET	CROSS SECTION SHEET	CUT Max/Min	FILL Max/Min
424+00	-	-	118	-	2
425+00	-	-	119	-	1
426+00	-	-	120	-	2
436+50	-	-	121	-	1
SR 7 RAMP C					
116+00.00 127+10.00	122	122	-	-	5
123+50	-	-	123	-	8
SR 7 RAMP D					
115+00.00 121+00.00	124	124	-	-	5
SR 7 RAMP I					
370+00.00 381+00.00	125	125	-	-	5
376+00	-	-	126	-	90
379+98.45	-	-	126	-	51
STRUCTURE - LAW-7-7.11P	127	127			
SR 7 RAMP J					
384+00.00 391+00.00	128	128	-	20	100
SR 7 RAMP K					
385+00.00 396+00.00	129	129	-	5	90
396+00.00 403+54.87	130	130	-	8	10
388+00	-	-	131	90	-
392+00	-	-	132	25	-
RAMP J & K RETAINING WALL					
385+75.00 389+75.00	133	133	-	90	-
SR 7 RAMP L					
379+57.36 392+40.09	134	134	-	-	80
LYNN LANE					
10+00 14+00	135	135	-	2	4
SR 243					
10+82.95 21+54.00	136	136	-	21	14
11+50	-	-	137	-	-
13+00	-	-	137	-	-
CR 69					
10+00 24+00	138	138	-	19	14
24+00 38+00	139	139	-	14	15
38+00 51+00	140	140	-	17	10
51+00 56+73.01	141	141	-	8	13
15+00	-	-	142	-	-
24+00	-	-	142	-	-
33+50	-	-	143	-	-
42+00	-	-	143	-	-
46+50	-	-	144	-	-
CR 118					
10+12.21 14+76.01	145	145	-	-	11
CR 2					
10+07.28 17+58.28	146	146	-	6	3
SR 775					
45+42.93 57+00	147	147	-	-	24
57+00 70+45.38	148	148	-	-	35
54+00	-	-	149	-	-
59+00	-	-	149	-	-
67+00	-	-	150	-	-
STRUCTURE - LAW-775-01.05	151	151			

STRUCTURE BORING LOGS/LANDSLIDE BORING LOGS/CPT SOUNDING LOGS, SHEETS 152-206

BEDROCK TEST SUMMARY

BORING ID	SAMPLE ELEVATION	SAMPLE DEPTH	Qu (PSI)	SDI (%)	LITHOLOGY
B-010-1-12	492.9' – 492.5'*	37.5' – 37.9'*	222	-	SHALE
B-010-2-12	473.9' – 473.5'*	55.1' – 55.5'*	11,042	-	SHALE
B2-316-0-02	501.5' – 502.0'	38.8' – 39.3'	194	-	SHALE
B13-1-0-00	524.5' – 523.9'	23.3' – 23.9'	189	-	SANDSTONE
B13-3-0-00	511.8' – 511.3'	30.0' – 30.5'	172	-	SHALE
SL-1-0-04	584.3' – 583.7'	31.4' – 32.0'	63	-	SHALE
SL-5-0-04	528.8' – 528.3'	42.5' – 43.0'	100	-	SHALE
SL-8-0-04	551.0' – 550.7'	71.5' – 71.8'	1,211	-	SHALE
B-026-0-11	592.7' – 592.3'	19.3' – 19.7'	8,580	-	SANDSTONE
B-053-0-11	687.1' – 686.6'	14.1' – 14.6'	-	67.8	SANDSTONE
B-053-0-11	677.8' – 677.2'	23.4' – 24.0'	-	93.7	SANDSTONE
B-053-0-11	677.2' – 676.8'	24.0' – 24.4'	5,400	-	SANDSTONE
B-053-0-11	674.4' – 674.0'	26.8' – 27.2'	1,637	-	SANDSTONE
B-053-0-11	673.8' – 673.2'	27.4' – 28.0'	-	78.2	SANDSTONE
B-053-0-11	662.5' – 661.9'	38.7' – 39.3'	-	0	SHALE
B-053-0-11	659.6' – 659.0'	41.6' – 42.2'	1,546	-	SHALE
B-053-0-11	658.5' – 657.9'	42.7' – 43.3'	-	88.8	SHALE
B-053-0-11	656.0' – 655.5'	45.2' – 45.7'	-	84.7	SHALE
B-053-0-11	650.8' – 650.4'	50.4' – 50.8'	8,840	-	LIMESTONE
B-053-0-11	650.4' – 649.5'	50.8' – 51.7'	-	96.1	SANDSTONE
B-053-0-11	641.5' – 641.0'	59.7' – 60.2'	-	56.7	SHALE
B-053-0-11	633.8' – 633.2'	67.4' – 68.0'	-	0	SHALE
B-053-0-11	621.8' – 621.2'	79.4' – 80.0'	-	45.4	SHALE
B-058-0-11	687.1' – 686.6'	50.1' – 50.6'	-	85.3	SANDSTONE
B-058-0-11	686.6' – 686.0'	50.6' – 51.2'	4,750	-	SANDSTONE
B-068-0-11	683.7' – 683.1'	53.5' – 54.1'	-	85.3	SHALE
B-058-0-11	673.5' – 672.8'	63.7' – 64.4'	643	-	CLAYSTONE
B-068-0-11	670.7' – 670.2'	66.5' – 67.0'	-	0	SHALE
B-058-0-11	661.1' – 660.4'	76.1' – 76.8'	1,766	-	SHALE
B-058-0-11	660.4' – 659.9'	76.8' – 77.3'	-	88.3	SHALE
B-059-0-11	806.4' – 806.0'	13.0' – 13.4'	4,020	-	SANDSTONE
B-059-0-11	805.8' – 805.1'	13.6' – 14.3'	-	94.9	SHALE
B-059-0-11	802.8' – 802.3'	16.6' – 17.1'	-	92.3	SHALE
B-059-0-11	799.9' – 799.4'	19.5' – 20.0'	-	38.8	SHALE
B-059-0-11	792.6' – 792.2'	26.8' – 27.2'	16	-	CLAYSTONE
B-059-0-11	792.0' – 791.4'	27.4' – 28.0'	-	0.2	SHALE
B-059-0-11	783.7' – 783.2'	35.7' – 36.2'	-	8.6	SHALE
B-059-0-11	783.2' – 782.8'	36.2' – 36.6'	727	-	CLAYSTONE
B-059-0-11	781.2' – 780.8'	38.2' – 38.6'	1,025	-	CLAYSTONE
B-059-0-11	779.5' – 778.9'	39.9' – 40.5'	-	96.6	SHALE
B-059-0-11	778.3' – 777.9'	41.1' – 41.5'	4,060	-	SHALE
B-059-0-11	769.4' – 768.8'	50.0' – 50.6'	-	85.3	SANDSTONE
B-059-0-11	768.8' – 768.2'	50.6' – 51.2'	5,170	-	SANDSTONE
B-059-0-11	756.6' – 756.1'	62.8' – 63.3'	-	6.5	SHALE
B-059-0-11	754.2' – 753.6'	65.2' – 65.8'	-	17.7	SHALE
B-059-0-11	749.3' – 748.7'	70.1' – 70.7'	-	0.1	SHALE
B-059-0-11	743.3' – 742.9'	76.1' – 76.5'	2,641	-	SHALE
B-059-0-11	742.8' – 742.3'	76.6' – 77.1'	-	98.5	SHALE

BORING ID	SAMPLE ELEVATION	SAMPLE DEPTH	Qu (PSI)	SDI (%)	LITHOLOGY
B-066-0-11	791.3' – 790.7'	25.3' – 25.9'	-	95.4	SHALE
B-066-0-11	787.4' – 787.0'	29.2' – 29.6'	5,980	-	SANDSTONE
B-066-0-11	787.0' – 786.4'	29.6' – 30.2'	-	72.7	SHALE
B-066-0-11	781.3' – 780.7'	35.3' – 35.9'	328	-	CLAYSTONE
B-066-0-11	780.4' – 779.8'	36.2' – 36.8'	-	6.4	SHALE
B-069-0-11	782.6' – 782.0'	15.1' – 15.7'	-	95.6	SANDSTONE
B-069-0-11	781.5' – 781.1'	16.2' – 16.6'	7,860	-	SANDSTONE
B-069-0-11	778.2' – 777.6'	19.5' – 20.1'	-	89.1	SHALE
B-069-0-11	769.8' – 769.2'	27.9' – 28.5'	-	1.9	SHALE
B-069-0-11	765.2' – 764.7'	32.5' – 33.0'	413	-	CLAYSTONE
B-069-0-11	756.9' – 756.3'	40.8' – 41.4'	-	92.6	SHALE
B-069-0-11	751.9' – 751.5'	45.8' – 46.2'	10,520	-	LIMESTONE
B-069-0-11	738.9' – 738.3'	59.6' – 60.2'	-	81.7	SHALE
B-069-0-11	735.4' – 735.0'	62.3' – 62.7'	1,138	-	CLAYSTONE
B-069-0-11	720.0' – 719.6'	77.7' – 78.1'	3,450	-	SHALE
B-069-0-11	719.4' – 718.8'	78.3' – 78.9'	-	96.6	SHALE
B-069-0-11	710.7' – 709.9'	87.0' – 87.8'	-	0.5	SHALE
B-069-0-11	703.9' – 703.5'	93.8' – 94.2'	5,220	-	SHALE
B-069-0-11	702.4' – 701.8'	95.3' – 95.9'	-	96.8	SANDSTONE
B-069-0-11	685.2' – 684.7'	112.5' – 113.0'	9,160	-	SANDSTONE
B-069-0-11	684.2' – 683.7'	113.5' – 114.0'	-	97.8	SANDSTONE
B-069-0-11	673.2' – 672.8'	124.5' – 124.9'	8,480	-	SANDSTONE
B-069-0-11	672.6' – 672.1'	125.1' – 125.6'	-	97.6	SANDSTONE
B-069-0-11	665.5' – 661.9'	132.2' – 135.8'	-	0.9	SHALE
B-069-0-11	656.7' – 655.1'	142.0' – 142.6'	-	77.8	SHALE
B-069-0-11	655.0' – 654.7'	142.7' – 143.0'	5,230	-	SHALE
B-073-0-12	546.1' – 545.5'	31.6' – 32.2'	-	90.4	SHALE
B-083-1-12	708.4' – 707.9'	36.5' – 37.0'	-	62.5	SANDSTONE
B-083-1-12	690.2' – 689.7'	54.7' – 55.2'	-	90	SHALE
B-087-0-12	597.4' – 596.9'	18.0' – 18.5'	-	84.4	SHALE
B-087-1-12	607.1' – 606.5'	47.4' – 48.0'	-	59.6	SHALE
B-088-0-12	607.0' – 606.4'	38.6' – 39.2'	-	92.8	SHALE
B-089-0-12	639.3' – 638.7'	26.7' – 27.3'	-	82.3	SHALE
B-089-0-12	632.6' – 632.2'	33.4' – 34.0'	-	39.3	SHALE
B-098-0-12	623.2' – 622.6'	73.7' – 74.3'	-	93.1	SHALE
B-098-1-12	699.0' – 698.4'	36.3' – 36.9'	-	86.9	SHALE
B-102-0-12	600.2' – 599.7'	31.0' – 31.5'	-	90.8	SHALE
B-098-1-20	664.9' – 664.2'	16.8' – 17.5'	-	51.4	CLAYSTONE
B-098-1-20	652.7' – 651.7'	29.0' – 30.0'	-	92.4	SANDSTONE
B-098-1-20	641.4' – 640.2'	40.3' – 41.5'	-	97.5	SANDSTONE
B-106-1-20	589.5' – 589.2'	33.3' – 33.6'	31	-	CLAYSTONE
B-106-2-20	648.7' – 648.4'	14.3' – 14.6	3,661	-	SANDSTONE
B-106-2-20	628.7' – 628.0'	34.3' – 35.0'	-	91	SILTSTONE
B-106-2-20	625.8' – 625.4'	37.2' – 37.6'	385	-	SILTSTONE

* Data estimated from historic boring log

SCOUR SAMPLES (BRIDGE LAW-7-07.11)					
EXPLOR. ID	ELEVATION (FT.)	D_{50} VALUE (mm)	T_C VALUE (psf)	D_{50} EQUIV (mm)	EROSION CATEGORY (EC)
B-13-2-0-99 (PIER 1)	543.3'-535.8'	0.7223	0.0677	3.2411	3.255
	535.8'-532.3'	0.0143	0.0428	2.0502	2.211
	532.3'-529.8'	0.0121	0.1194	5.7170	3.075
	529.8'-522.8'	0.0164	0.0477	2.2863	2.868
B-13-3-0-99 (PIER 2)	544.6'-540.1'	0.0241	0.0640	3.0636	3.550
	540.1'-538.6'	0.0122	0.1789	8.5668	3.337
	538.6'-531.6'	0.0185	0.1888	9.0398	3.168
	531.6'-524.1'	0.0112	0.1910	9.1463	3.413

DRAFT Stage 3 - Not for Construction 09/23/2024

DESIGN AGENCY
STANTEC CONSULTING SERVICES INC.
CINCINNATI, OHIO

PID NO. 75923

SOIL PROFILE - ROADWAY

LAW-7-2.17

SUMMARY OF SOIL TEST DATA
STATE ROUTE 7 MAINLINE

EXPLORATION NO., STATION & OFFSET	FROM	TO	SAMPLE ID	% REC	% AGG	% CS	% FS	% SILT	% CLAY	LL	PL	PI	% WC	ODOT CLASS
B-001-0-11	2.5	-4.0	SS-1	87	0	0	2	48	50	43	21	22	15	A-7-6 (13)
STA. 114+91, 25' LT.	5.0	6.5	SS-2	73				SAME AS SS-1					14	A-7-6 (VISUAL)
NORTHING=158261.6	7.5	9.0	SS-3	100	3	4	6	41	46	38	16	22	10	A-6b (13)
EASTING=1980663.9	10.0	11.5	SS-4	100				SAME AS SS-3					9	A-6b (VISUAL)
R-202-0-99	6.0	7.5	SS-2	-	-	-	-	-	-	34	23	11	12	EST. A-6a
STA. 120+00, 40' LT.														
NORTHING=158745.8														
EASTING=1980716.2														
R-203-0-99	8.5	10.0	SS-3	-	6	6	8	41	39	41	25	16	17	A-7-6 (11)
STA. 124+00, 40' RT.														
NORTHING=159086.2														
EASTING=1980940.7														
R-204-0-99	8.5	10.0	SS-3	-	-	-	-	-	-	44	25	19	23	EST. A-7-6
STA. 128+00, 40' LT.	18.5	20.0	SS-5	-	-	-	-	-	-	45	25	20	27	EST. A-7-6
NORTHING=159476.8														
EASTING=1981057.4														
B-003-0-11	0.0	1.5	SS-1	100				SAME AS SS-2					23	A-6a (VISUAL)
STA. 135+96, 118' RT.	2.5	-4.0	SS-2	100	0	0	6	63	31	39	25	14	30	A-6a (10)
NORTHING=160021.9	5.0	7.0	ST-3	100	0	0	10	63	27	33	23	10	30	A-4b (8)
EASTING=1981740.7	7.5	9.0	SS-4	87				SAME AS SS-5					12	A-4a (VISUAL)
	10.0	11.5	SS-5	100	0	5	48	32	15	23	17	6	25	A-4a (2)
	12.5	14.0	SS-6	100				SAME AS SS-5					25	A-4a (VISUAL)
	15.0	16.5	SS-7	100				SAME AS SS-8					26	A-1-b (VISUAL)
	17.5	19.0	SS-8	100	0	60	28	9	3	NP	NP	NP	22	A-1-b (0)
	20.0	21.5	SS-9	100				SAME AS SS-8					25	A-1-b (VISUAL)
	25.0	26.5	SS-10	100				SAME AS SS-11					26	A-4a (VISUAL)
	30.0	31.5	SS-11	67	0	4	29	45	22	25	15	10	20	A-4a (6)
	35.0	36.0	SS-12	7				SAME AS SS-11					14	A-4a (VISUAL)
B-002-0-11	0.0	1.5	SS-1	100				SAME AS SS-2					26	A-6a (VISUAL)
STA. 135+97, 122' LT.	2.5	-4.0	SS-2	100	0	0	16	51	33	36	22	14	32	A-6a (10)
NORTHING=160184.2	5.0	7.0	ST-3	75	0	1	20	39	40	38	22	16	43	A-6b (10)
EASTING=1981564.6	7.5	9.0	SS-4	67				SAME AS ST-3					-	A-6b (VISUAL)
	10.0	11.5	SS-5	20				SAME AS SS-7					33	A-1-b (VISUAL)
	12.5	14.0	SS-6	87				SAME AS SS-7					39	A-1-b (VISUAL)
	15.0	16.5	SS-7	100	1	65	27	4	3	NP	NP	NP	25	A-1-b (0)
	17.5	19.0	SS-8	100				SAME AS SS-7					24	A-1-b (VISUAL)
	20.0	21.5	SS-9	33				SAME AS SS-10					25	A-3a (VISUAL)
	25.0	26.5	SS-10	100	3	41	37	12	7	NP	NP	NP	21	A-3a (0)
	30.0	31.5	SS-11	100				SAME AS SS-10					18	A-3a (VISUAL)
R-205-0-99	6.0	7.5	SS-2	-	-	-	-	-	-	46	28	18	28	EST. A-7-6
STA. 139+49, 45' RT.	7.5	9.0	SS-3	-	0	1	26	49	24	31	22	9	27	A-4a (8)
NORTHING=160311.1	33.5	35.0	SS-8	-	-	-	-	-	-	30	20	10	20	EST. A-4a
EASTING=1981845.5														
R-206-0-99	23.5	25.0	SS-6	-	0	0	24	44	32	31	22	9	27	A-4a (8)
STA. 143+50, 40' LT.														
NORTHING=160631.0														
EASTING=1982100.4														

SUMMARY OF SOIL TEST DATA
STATE ROUTE 7 MAINLINE

EXPLORATION NO., STATION & OFFSET	FROM	TO	SAMPLE ID	% REC	% AGG	% CS	% FS	% SILT	% CLAY	LL	PL	PI	% WC	ODOT CLASS
R-207-0-99	13.5	15.0	SS-4	-	0	0	24	52	24	28	20	8	22	A-4b (8)
STA. 147+50, 40' RT.	23.5	25.0	SS-6	-	-	-	-	-	-	32	20	12	16	EST. A-6b
NORTHING=160786.5														
EASTING=1982477.3														
B-004-0-11	0.0	1.5	SS-1	80	10	12	15	29	34	43	23	20	21	A-7-6 (10)
STA. 150+00, 74' LT.	2.5	-4.0	SS-2	53				SAME AS SS-1					21	A-7-6 (VISUAL)
NORTHING=161014.7	5.0	6.5	SS-3	13				SAME AS SS-1					18	A-7-6 (VISUAL)
EASTING=1982730.4	7.5	9.0	SS-4	67	17	15	12	24	32	36	18	18	17	A-6b (7)
	10.0	12.0	ST-5	0				SAME AS SS-4					-	A-6b (VISUAL)
	12.5	14.0	SS-6	100	0	8	13	32	47	40	18	22	19	A-6b (13)
	15.0	16.5	SS-7	93				SAME AS SS-6					16	A-6b (VISUAL)
	17.5	19.0	SS-8	93				SAME AS SS-9					18	A-7-6 (VISUAL)
	20.0	21.5	SS-9	100	5	11	9	29	46	41	21	20	15	A-7-6 (12)
B-005-0-11	0.0	1.5	SS-1	87				SAME AS SS-2					20	A-6a (VISUAL)
STA. 153+86, 82' LT.	2.5	-4.0	SS-2	100	0	14	23	37	26	28	17	11	14	A-6a (6)
NORTHING=161184.1	5.0	6.5	SS-3	100				SAME AS SS-2					12	A-6a (VISUAL)
EASTING=198084.7	7.5	9.0	SS-4	100				SAME AS SS-5					12	A-3a (VISUAL)
	10.0	11.5	SS-5	100	0	11	57	18	14	NP	NP	NP	11	A-3a (0)
	12.5	14.0	SS-6	87				SAME AS SS-5					12	A-3a (VISUAL)
	15.0	16.5	SS-7	33				SAME AS SS-8					13	A-6a (VISUAL)
	17.5	19.0	SS-8	100	6	14	25	27	28	29	14	15	12	A-6a (6)
	20.0	21.5	SS-9	100				SAME AS SS-8					21	A-6a (VISUAL)
R-209-0-99	3.0	4.5	SS-1	-	1	6	10	42	41	44	24	20	20	A-7-6 (13)
STA. 155+50, 40' RT.														
NORTHING=161120.7														
EASTING=1983194.0														
R-210-0-99	3.0	4.5	SS-1	-	0	1	3	55	41	40	26	14	25	A-6a (10)
STA. 159+50, 40' LT.	18.5	20.0	SS-5	-	-	-	-	-	-	35	24	11	12	EST. A-6a
NORTHING=161327.3														
EASTING=1983545.5														
B-006-0-11	2.5	-4.0	SS-1	100				SAME AS ST-2					25	A-6a (VISUAL)
STA. 160+00, 19' LT.	5.0	7.0	ST-2	100	0	1	3	48	48	34	22	12	20	A-6a (9)
NORTHING=161331.3	7.5	9.0	SS-3	100				SAME AS SS-4					20	A-6a (VISUAL)
EASTING=1983687.4	10.0	11.5	SS-4	100	0	4	13	49	34	31	16	15	19	A-6a (10)
	12.5	14.0	SS-5	100				SAME AS SS-4					15	A-6a (VISUAL)
	15.0	16.5	SS-6	100				SAME AS SS-7					16	A-6b (VISUAL)
	17.5	19.0	SS-7	100	0	2	22	30	46	35	18	17	18	A-6b (11)
	20.0	21.5	SS-8	80				SAME AS SS-7					19	A-6b (VISUAL)
	25.0	26.5	SS-9	67	0	12	57	19	12	NP	NP	NP	18	A-3a (0)
	30.0	31.5	SS-10	67				COMBINED WITH SS-9					15	A-3a (0)
B-007-0-11	0.0	1.5	SS-1	100				SAME AS SS-2					20	A-2-4 (VISUAL)
STA. 160+03, 175' RT.	2.5	-4.0	SS-2	100	19	23	24	19	15	27	18	9	12	A-2-4 (0)
NORTHING=161149.0	5.0	6.5	SS-3	7				SAME AS SS-2					25	A-2-4 (VISUAL)
EASTING=1983754.0	7.5	9.0	SS-4	100				SAME AS ST-5					24	A-6b (VISUAL)
	10.0	12.0	ST-5	100	0	0	1	34	65	39	23	16	25	A-6b (10)
	12.5	14.0	SS-6	100				SAME AS ST-5					27	A-6b (VISUAL)
	15.0	16.5	SS-7	100	5	25	29	26	15	27	18	9	16	A-4a (1)
	17.5	19.0	SS-8	100				SAME AS SS-10					16	A-7-6 (VISUAL)
	20.0	21.5	SS-9	100				SAME AS SS-10					17	A-7-6 (VISUAL)
	25.0	26.5	SS-10	100	0	3	15	29	53	50	23	27	29	A-7-6 (17)
	30.0	31.5	SS-11	87				SAME AS SS-10					24	A-7-6 (VISUAL)

DRAFT Stage 3 - Not for Construction 09/23/2024

DRAWN MSJ
CHECKED EMK

SOIL PROFILE - ROADWAY
SUMMARY OF SOIL TEST DATA

LAW-7-2.17

U:\173608714\LAW\75923\geotechnical\sheets\Coversheet_SS_Lab\75923IC003.dgn 5/15/2024 8:45:12 AM MJennings

SUMMARY OF SOIL TEST DATA

STATE ROUTE 7 MAINLINE

EXPLORATION NO., STATION & OFFSET	FROM	TO	SAMPLE ID	% REC	% AGG	% CS	% FS	% SILT	% CLAY	LL	PL	PI	% WC	ODOT CLASS
R-211-0-99	6.0	7.5	SS-2	-	-	-	-	-	-	52	31	21	19	EST. A-7-5
STA. 162+50, CENTERLINE	8.5	10.0	SS-3	-	-	-	-	-	-	61	25	36	18	EST. A-7-6
NORTHING=161387.6														
EASTING=1983842.0														
R-212-0-99	3.0	4.5	SS-1	-	10	12	18	34	26	35	22	13	19	A-6a (6)
STA. 167+25, 40' RT.	23.5	25.0	SS-6	-	-	-	-	-	-	51	29	22	24	EST. A-7-6
NORTHING=161505.2														
EASTING=1984304.0														
R-2P1-0-99	3.0	3.6	SS-1	-	12	8	30	30	20	-	-	-	-	EST. A-4a
STA. 179+30, 2' RT.	6.0	7.5	SS-2	-	0	4	41	29	26	32	21	11	14	A-6a (4)
NORTHING=161951.6	13.5	15.0	SS-4	-	1	2	4	40	53	41	24	17	15	A-7-6 (11)
EASTING=1985423.7	28.5	29.3	S-7	-	5	2	2	39	52	32	19	13	7	A-6a (9)
B-008-0-11	0.0	1.5	SS-1	100	0	17	13	38	32	44	23	21	21	A-7-6 (12)
STA. 183+86, 111' RT.	2.5	-4.0	SS-2	73				SAME AS SS-1					34	A-7-6 (VISUAL)
NORTHING=162099.9	5.0	7.0	ST-3	80	0	1	2	31	66	49	22	27	24	A-7-6 (17)
EASTING=1985968.9	7.5	9.0	SS-4	93	0	1	5	50	44	41	22	19	14	A-7-6 (12)
	10.0	11.5	SS-5	86				SAME AS SS-4					10	A-7-6 (VISUAL)
	12.5	14.0	SS-6	63				SHALE, TAN, SEVERELY WEATHERED					-	ROCK (VISUAL)
	15.0	16.5	SS-7	75				SAME AS SS-6					-	ROCK (VISUAL)
B-009-0-11	0.0	1.5	SS-1	67				SAME AS SS-2					13	A-6a (VISUAL)
STA. 183+93,233' RT.	2.5	-4.0	SS-2	100	7	21	24	25	23	32	17	15	19	A-6a (4)
NORTHING=162004.5	5.0	6.5	SS-3	100				SAME AS SS-2					13	A-6a (VISUAL)
EASTING=1986045.8	7.5	9.0	SS-4	100				SAME AS SS-5					16	A-6a (VISUAL)
	10.0	11.5	SS-5	100	0	4	26	40	30	30	18	12	17	A-6a (8)
	12.5	14.0	SS-6	100	2	2	15	43	38	32	17	15	22	A-6a (10)
	15.0	16.5	SS-7	87	2	7	35	35	21	30	19	11	17	A-6a (5)
	17.5	19.0	SS-8	93				SANDSTONE, BROWN, SEVERELY WEATHERED					13	ROCK (VISUAL)
	20.0	21.5	SS-9	100				SAME AS SS-8					19	ROCK (VISUAL)
R-217-0-99	3.0	4.5	SS-1	-	-	-	-	-	-	50	30	20	17	EST. A-7-5
STA. 191+50, 40' LT.														
NORTHING=162716.6														
EASTING=1986362.0														
B-010-0-11	0.0	1.5	SS-1	100				SAME AS SS-1					25	A-6a (VISUAL)
STA.197+89,183' LT.	2.5	-4.0	SS-2	100	0	6	14	45	35	39	24	15	29	A-6a (10)
NORTHING=163268.7	5.0	7.0	ST-3	100	1	4	14	40	41	36	21	15	21	A-6a (10)
EASTING=1986820.0	7.5	9.0	SS-4	100	0	0	2	40	58	51	27	24	29	A-7-6 (16)
	10.0	11.5	SS-5	100				SAME AS SS-4					30	A-7-6 (VISUAL)
	12.5	14.5	ST-6	50	0	1	9	46	44	40	22	18	34	A-6b (11)
	15.0	16.5	SS-7	100				SAME AS SS-9					39	A-1-b (VISUAL)
	17.5	19.0	SS-8	100				SAME AS SS-9					18	A-1-b (VISUAL)
	20.0	21.5	SS-9	100	18	32	32	12	6	NP	NP	NP	20	A-1-b (0)
B-012-0-11	0.0	1.5	SS-1	100				SAME AS SS-2					27	A-4a (VISUAL)
STA. 201+90, 197' RT.	2.5	-4.0	SS-2	100	0	0	31	48	21	28	20	8	23	A-4a (7)
NORTHING=163223.1	5.0	7.0	ST-3	100	0	0	52	34	14	NP	NP	NP	24	A-4a (3)
EASTING=1987368.9	7.5	9.0	SS-4	100				SAME AS SS-5					30	A-3a (VISUAL)
	10.0	11.5	SS-5	100	0	11	73	11	5	NP	NP	NP	28	A-3a (0)
	12.5	14.0	SS-6	100				SAME AS SS-5					-	A-3a (VISUAL)
	15.0	16.5	SS-7	100				SAME AS SS-8					23	A-3a (VISUAL)
	17.5	19.0	SS-8	100	1	36	43	12	8	NP	NP	NP	23	A-3a (0)
	20.0	21.5	SS-9	100				SAME AS SS-8					25	A-3a (VISUAL)
	25.0	26.5	SS-10	100				SAME AS SS-11					21	A-3a (VISUAL)
	30.0	31.5	SS-11	100	10	27	44	14	5	NP	NP	NP	13	A-3a (0)

SUMMARY OF SOIL TEST DATA

STATE ROUTE 7 MAINLINE

EXPLORATION NO., STATION & OFFSET	FROM	TO	SAMPLE ID	% REC	% AGG	% CS	% FS	% SILT	% CLAY	LL	PL	PI	% WC	ODOT CLASS
B-011-0-11	0.0	1.5	SS-1	67				SAME AS SS-2					23	A-4a (VISUAL)
STA. 202+02, 232' LT.	2.5	-4.0	SS-2	100	0	0	39	43	18	NP	NP	NP	23	A-4a (5)
NORTHING=163580.3	5.0	7.0	ST-3	100	0	0	63	21	16	NP	NP	NP	17	A-4a (0)
EASTING=1987131.3	7.5	9.0	SS-4	100	0	0	73	17	10	NP	NP	NP	21	A-3a (0)
	10.0	11.5	SS-5	100				SAME AS SS-4					20	A-3a (VISUAL)
	12.5	14.0	SS-6	100	0	0	90	7	3	NP	NP	NP	27	A-3 (0)
	15.0	16.5	SS-7	100				SAME AS SS-6					26	A-3 (VISUAL)
	17.5	19.0	SS-8	100				SAME AS SS-9					24	A-3a (VISUAL)
	20.0	21.5	SS-9	100	12	15	55	11	7	NP	NP	NP	24	A-3a (0)
	25.0	26.5	SS-10	100				SAME AS SS-9					25	A-3a (VISUAL)
	30.0	31.5	SS-11	100				SAME AS SS-9					16	A-3a (VISUAL)
R-218-0-99	8.5	10.0	SS-3	-	-	-	-	-	-	41	23	18	22	EST. A-7-6
STA. 209+49, 32' RT.														
NORTHING=163710.6														
EASTING=1987843.1														
R-220-0-99	3.0	4.5	SS-1	-	-	-	-	-	-	33	17	16	15	EST. A-6b
STA. 217+49, 11' RT.	8.5	10.0	SS-3	-	-	-	-	-	-	38	24	14	10	EST. A-6a
NORTHING=163967.1														
EASTING=1988597.4														
B-017-0-11	0.0	1.5	SS-1	33				SAME AS SS-3					11	A-6a (VISUAL)
STA. 218+77, 270' RT.	2.5	-4.0	SS-2	73				SAME AS SS-3					15	A-6a (VISUAL)
NORTHING=163760.3	5.0	6.5	SS-3	100	15	12	24	26	23	35	21	14	22	A-6a (4)
EASTING=1988880.0	8.0	9.5	SS-4	73				SAME AS SS-5					6	A-2-4 (VISUAL)
	10.0	11.5	SS-5	100	44	14	19	12	11	26	19	7	14	A-2-4 (0)
	12.5	14.0	SS-6	93				SAME AS SS-5					15	A-2-4 (VISUAL)
	15.0	16.5	SS-7	100	12	24	34	20	10	NP	NP	NP	16	A-3a (0)
	17.5	19.0	SS-8	100				SAME AS SS-7					15	A-3a (VISUAL)
	20.0	21.5	SS-9	80				SAME AS SS-10					18	A-4a (VISUAL)
	25.0	26.5	SS-10	100	0	3	27	37	33	29	19	10	19	A-4a (7)
	30.0	31.5	SS-11	100				SAME AS SS-10					20	A-4a (VISUAL)
B-015-0-11	0.0	1.5	SS-1	47				SAME AS SS-2					22	A-6a (VISUAL)
STA. 218+91, 79' LT.	2.5	-4.0	SS-2	80	7	13	22	26	32	33	18	15	19	A-6a (7)
NORTHING=164099.9	5.0	6.5	SS-3	73				SAME AS SS-2					14	A-6a (VISUAL)
EASTING=1988798.0	7.5	9.0	SS-4	100	9	7	12	30	42	41	19	22	16	A-7-6 (12)
	10.0	11.5	SS-5	100				SAME AS SS-4					17	A-7-6 (VISUAL)
	12.5	14.0	SS-6	67	2	8	28	29	33	30	17	13	12	A-6a (7)
	15.0	16.5	SS-7	71				SHALE, SEVERELY WEATHERED					7	ROCK (VISUAL)
B-016-0-11	0.0	1.5	SS-1	100	6	6	21	31	36	37	21	16	15	A-6b (9)
STA. 218+94,12' RT.	2.5	-4.0	SS-2	80				SAME AS SS-1					19	A-6b (VISUAL)
NORTHING=163913.6	5.0	7.0	ST-3	95	8	8	7	35	42	42	25	17	14	A-7-6 (11)
EASTING=1988854.0	7.5	9.0	SS-4	100				SAME AS ST-3					26	A-7-6 (VISUAL)
	10.0	11.5	SS-5	100	1	7	7	29	56	42	23	19	16	A-7-6 (12)
	12.5	14.0	SS-6	100				SAME AS SS-5					15	A-7-6 (VISUAL)
R-221-0-99	8.5	10.0	SS-3	-	-	-	-	-	-	44	23	21	18	EST. A-7-6
STA.221+45, 84' LT.														
NORTHING=164167.1														
EASTING=1988953.0														

DRAFT Stage 3 - Not for Construction 09/23/2024

DRAWN MSJ CHECKED EMK

SOIL PROFILE - ROADWAY
SUMMARY OF SOIL TEST DATA

LAW-7-2.17

1045 1247

U:\173608714\LAW\75923\geotechnical\sheets\Coversheet_SS_Lab\75923IC003.dgn 5/15/2024 8:45:38 AM MJennings

SUMMARY OF SOIL TEST DATA

STATE ROUTE 7 MAINLINE

EXPLORATION NO., STATION & OFFSET	FROM	TO	SAMPLE ID	% REC	% AGG	% CS	% FS	% SILT	% CLAY	LL	PL	PI	% WC	ODOT CLASS
B-018-0-11	0.0	1.5	SS-1	13				SAME AS ST-3					15	A-6b (VISUAL)
STA. 225+07, 3' RT.	2.5	4.0	SS-2	40				SAME AS ST-3					19	A-6b (VISUAL)
NORTHING=164190.0	5.0	7.0	ST-3	100	10	7	13	37	33	37	19	18	18	A-6b (10)
EASTING=1989413.2	7.5	9.0	SS-4	87				SAME AS ST-3					19	A-6b (VISUAL)
	10.0	11.5	SS-5	73	15	12	29	25	19	24	14	11	11	A-6a (2)
	12.5	14.0	SS-6	60				SAME AS SS-5					17	A-6a (VISUAL)
	15.0	15.7	ST-7	100	14	1	2	35	48	41	20	21	18	A-7-6 (13)
	15.7	16.1	SS-8	100			SHALE,SEVERELY WEATHERED						5	ROCK(VISUAL)
R-223-0-99	6.0	7.5	SS-2	-	5	10	31	33	21	30	19	11	15	A-6a (4)
STA. 227+75, 222' RT.														
NORTHING=164046.9														
EASTING=1989647.3														
B-019-0-11	0.0	1.5	SS-1	67				SAME AS SS-2					32	A-7-6 (VISUAL)
STA. 228+76, CENTERLINE	2.5	4.0	SS-2	67	0	0	2	35	63	49	24	25	19	A-7-6 (16)
NORTHING=164298.4	5.0	7.0	ST-3	100	10	0	5	40	45	42	22	20	15	A-7-6 (12)
EASTING=1989765.7	7.5	9.0	SS-4	100	0	3	4	50	43	40	23	17	16	A-6b (11)
	10.0	11.1	SS-5	100			SHALE,SEVERELYWEATHERED						10	ROCK (VISUAL)
B-021-0-11	0.0	1.5	SS-1	100	14	5	10	23	48	44	22	22	22	A-7-6 (13)
STA. 230+85, 275' RT.	2.5	4.0	SS-2	100	3	9	18	49	21	31	21	10	8	A-4a (7)
NORTHING=164138.3	5.0	6.5	SS-3	100	17	11	12	32	28	35	22	13	8	A-6a (6)
EASTING=1990087.1	7.5	9.0	SS-4	100				SAME AS SS-3					8	A-6a (VISUAL)
B-020-0-11	0.0	1.5	SS-1	67	18	10	19	28	25	30	20	10	18	A-4a (4)
STA. 231+17, 233' LT.	2.5	4.0	SS-2	100				SAME AS SS-3					9	A-2-4 (VISUAL)
NORTHING=164599.1	5.0	7.0	SS-3	100	43	16	9	20	12	32	22	10	6	A-2-4 (0)
EASTING=1989870.4	7.5	9.0	SS-4	100				SAME AS SS-3					14	A-2-4 (VISUAL)
	10.0	11.5	SS-5	100	5	2	3	30	60	44	24	20	12	A-7-6 (13)
	12.5	14.0	SS-6	100				SAME AS SS-5					15	A-7-6 (VISUAL)
	15.0	16.5	SS-7	100				SAME AS SS-8					14	A-6b (VISUAL)
	17.5	19.0	SS-8	100	0	1	5	45	49	39	22	17	9	A-6b (11)
	20.0	21.5	SS-9	100				SAME AS SS-8					10	A-6b (VISUAL)
B-022-0-11	0.0	1.5	SS-1	100				SAME AS SS-2					23	A-4a (VISUAL)
STA. 235+95,44' RT.	2.5	4.0	SS-2	73	6	9	15	44	26	34	24	10	17	A-4a (7)
NORTHING=164674.6	5.0	6.5	SS-3	87				SAME AS SS-2					25	A-4a (VISUAL)
EASTING=1990381.0	7.5	9.0	SS-4	100				SAME AS SS-5					11	A-6a (VISUAL)
	10.0	11.5	SS-5	100	0	0	3	48	49	37	22	15	12	A-6a (10)
	12.5	14.0	SS-6	80				SAME AS SS-5					13	A-6a (VISUAL)
	15.0	16.5	SS-7	100				SAME AS SS-8					13	A-7-6 (VISUAL)
	17.5	19.0	SS-8	100	2	1	3	42	52	43	22	21	14	A-7-6 (13)
	20.0	21.5	SS-9	100				SAME AS SS-8					10	A-7-6 (VISUAL)
R-226-0-99	18.5	20.0	SS-4	-	3	2	1	94		-	-	-	12	EST. A-7-6
STA. 237+60, 215' RT.														
NORTHING=164684.7														
EASTING=1990531.7														
R-227-0-99	23.5	25.0	SS-5	-	10	16	22	27	25	27	20	7	14	A-4a (3)
STA. 241+40, 363' LT.														
NORTHING=165346.5														
EASTING=1990332.2														
R-229-0-99	3.0	4.5	SS-1	-	21	11	12	33	23	37	23	14	13	A-6a (6)
STA. 245+77, 97' LT.														
NORTHING=165511.2														
EASTING=1990817.1														

SUMMARY OF SOIL TEST DATA

STATE ROUTE 7 MAINLINE

EXPLORATION NO., STATION & OFFSET	FROM	TO	SAMPLE ID	% REC	% AGG	% CS	% FS	% SILT	% CLAY	LL	PL	PI	% WC	ODOT CLASS
B-023-0-11	0.0	1.5	SS-1	67	52	8	14	14	12	35	20	15	8	A-2-6 (1)
STA. 247+64, 12' RT.	2.5	4.0	SS-2	87	48	11	17	13	11	29	19	10	20	A-2-4 (0)
NORTHING=165607.4	5.0	5.7	SS-3	100				SAME AS SS-2					10	A-2-4 (VISUAL)
EASTING=1991090.8	7.5	8.0	SS-4	100			SHALE, SEVERELY WEATHERED						6	ROCK (VISUAL)
	10.0	10.8	SS-5	100				SAME AS SS-4					5	ROCK (VISUAL)
R-232-0-99	8.5	10.0	SS-3	-	-	-	-	-	-	42	21	21	22	EST. A-7-6
STA. 250+61, 44' RT.	18.5	20.0	SS-5	-	0	3	21	40	36	31	19	12	27	A-6a (9)
NORTHING=165792.0														
EASTING=1991235.6														
R-233-0-99*	06.00	07.50	SS-1	11	-	-	-	VISUAL	-	-	-	-	-	A-7-6(VISUAL)
STA. 253+75, 29' RT.	08.50	10.00	SS-2	12	-	-	-	VISUAL	-	-	-	-	18	A-6a(VISUAL)
NORTHING=166032.0	11.0	12.50	SS-3	15	-	-	-	VISUAL	-	-	-	-	-	A-7-6(VISUAL)
EASTING=1991432.2	13.5	15.00	SS-4	14	-	-	-	VISUAL	-	-	-	-	-	A-7-6(VISUAL)
B-026-0-11	0.0	1.5	SS-1	100				SAME AS SS-2					21	A-6a (VISUAL)
STA. 255+99, 82' RT.	2.5	4.0	SS-2	100	15	14	17	31	23	33	21	12	22	A-6a (5)
NORTHING=166140.5	5.0	6.5	SS-3	100				SAME AS SS-2					21	A-6a (VISUAL)
EASTING=1991719.6	7.5	9.0	SS-4	100				SAME AS SS-2					21	A-6a (VISUAL)
	10.0	11.5	SS-5	100	1	3	5	43	48	46	21	25	13	A-7-6 (15)
	12.5	14.0	SS-6	93				SAME AS SS-5					10	A-7-6 (VISUAL)
	15.0	16.5	SS-7	100				SAME AS SS-5					9	A-7-6 (VISUAL)
	17.5	18.3	SS-8	100				SAME AS SS-5					8	A-7-6 (VISUAL)
B-3SP-1-99	7.0	8.5	SS-3	-	0	11	22	38	29	30	19	11	15	A-6a (7)
STA. 256+47, 66' LT.	14.5	16.0	SS-6	-	-	-	-	-	-	29	16	13	23	EST. A-6a
NORTHING=166280.6	24.5	26.0	SS-9	-	7	4	9	40	40	32	19	13	6	A-6a (9)
EASTING=1991583.1														
B-029-0-11	2.5	4.0	SS-1	100	0	11	24	36	29	29	17	12	13	A-6a (7)
STA. 261+96, 14' RT.	5.0	6.5	SS-2	100				SAME AS SS-1					11	A-6a (VISUAL)
NORTHING=166464.9	7.5	9.0	SS-3	100	8	16	23	33	20	26	16	10	13	A-4a (3)
EASTING=1992202.7	10.0	11.5	SS-4	100				SAME AS SS-3					13	A-4a (VISUAL)
	12.5	14.0	SS-5	87	7	14	22	32	25	27	14	13	15	A-6a (6)
	15.0	16.5	SS-6	87	9	20	16	33	22	27	17	10	13	A-4a (4)
	17.5	19.0	SS-7	100				SAME AS SS-6					18	A-4a (VISUAL)
	20.0	21.5	SS-8	100	6	13	41	24	16	NP	NP	NP	14	A-4a (1)
B-037-0-11	2.5	4.0	SS-1	100	0	8	19	32	41	37	19	18	22	A-6b (11)
STA. 271+55, 221' RT.	5.0	6.5	SS-2	67				SAME AS SS-1					26	A-6b (VISUAL)
NORTHING=166301.5	7.5	9.0	SS-3	93	8	21	30	22	19	27	14	13	11	A-6a (2)
EASTING=1993113.9	10.0	10.5	SS-4	73				SAME AS SS-3					20	A-6a (VISUAL)
B-041-0-11	0.0	1.5	SS-1	53	12	6	17	33	32	35	18	17	19	A-6b (9)
STA. 277+97, 3' LT.	2.5	4.0	SS-2	67		SANDSTONE, BROWN, SEVERELY WEATHERED							11	ROCK (VISUAL)
NORTHING=166425.3														
EASTING=1993782.3														
B-043-0-11	0.0	1.5	SS-1	80				SAME AS SS-2					15	A-7-6 (VISUAL)
STA. 282+04, 10' RT.	2.5	4.0	SS-2	100	7	8	7	38	40	44	22	22	17	A-7-6 (14)
NORTHING=166365.8	5.0	6.5	SS-3	100	11	12	6	30	41	38	21	17	17	A-6b (10)
EASTING=1994184.7	7.5	8.5	SS-4	100				SAME AS SS-3					7	A-6b (VISUAL)
B-044-0-11	0.0	1.5	SS-1	100	28	7	6	29	30	40	20	20	14	A-6b (9)
STA. 286+94, CENTERLINE	2.5	4.0	SS-2	67	2	2	3	35	58	49	25	24	22	A-7-6 (15)
NORTHING=166347.8	5.0	6.5	SS-3	100				SAME AS SS-3					10	A-7-6 (VISUAL)
EASTING=1994675.1														

*DATA FOR BORING WAS ESTIMATED FROM GRAPHIC LOG PROVIDED IN PROFILE. ORIGINAL BORING LOG WAS NOT LOCATED

DRAFT Stage 3 - Not for Construction 09/23/2024

DRAWN MSJ CHECKED EMK

SOIL PROFILE - ROADWAY
SUMMARY OF SOIL TEST DATA

LAW-7-2.17

5 / 206

1046 / 1247

U:\173608714\LAW\75923\geotechnical\sheets\Coversheet_SS_Lab\75923C003.dgn 5/15/2024 8:45:57 AM MJennings

SUMMARY OF SOIL TEST DATA

STATE ROUTE 7 MAINLINE

EXPLORATION NO., STATION & OFFSET	FROM	TO	SAMPLE ID	% REC	% AGG	% CS	% FS	% SILT	% CLAY	LL	PL	PI	% WC	ODOT CLASS
B-048-0-11	0.0	1.5	SS-1	87				SAME AS SS-1					31	A-6b (VISUAL)
STA. 292+96, 195′ RT.	2.5	-4.0	SS-2	100	3	1	20	38	38	39	19	20	24	A-6b (12)
NORTHING=166123.9	5.0	6.5	SS-3	100	1	0	34	39	26	29	18	11	25	A-6a (6)
EASTING=1995266.6	7.5	9.5	ST-4	100	0	6	63	18	13	NP	NP	NP	26	A-3a (0)
	10.0	11.5	SS-5	100				SAME AS ST-4					24	A-3a (VISUAL)
	12.5	14.0	SS-6	100	15	19	47	11	8	NP	NP	NP	29	A-3a (0)
	15.0	16.5	SS-7	100	10	16	29	21	24	22	14	8	31	A-4a (2)
	17.5	19.0	SS-8	67				SAME AS SS-7					26	A-4a (VISUAL)
	20.0	22.0	ST-9	35	0	0	4	48	48	31	19	12	27	A-6a (9)
	25.0	26.5	SS-10	100				SAME AS ST-9					27	A-6a (VISUAL)
	30.0	31.5	SS-11	35	0	2	7	45	46	33	20	13	25	A-6a (9)
	35.0	36.5	SS-12	88				SAME AS SS-11					23	A-6a (VISUAL)
	40.0	40.7	SS-13	100				SHALE, GRAY,SEVERELY WEATHERED					14	ROCK (VISUAL)
B-047-0-11	0.0	1.5	SS-1	80				SAME AS SS-2					36	A-7-6 (VISUAL)
STA. 293+00, 12′ RT.	2.5	-4.0	SS-2	100	0	2	4	38	56	51	27	24	32	A-7-6 (16)
NORTHING=166305.9	5.0	6.5	SS-3	100	10	1	3	24	62	66	32	34	50	A-7-5 (20)
EASTING=1995279.4	7.5	9.0	SS-4	80				SAME AS SS-5					44	A-7-6 (VISUAL)
	10.0	11.5	SS-5	100	1	4	7	36	52	49	23	26	39	A-7-6 (16)
	12.5	14.0	SS-6	33				SAME AS SS-8					26	A-4a (VISUAL)
	15.0	16.5	SS-7	80				SAME AS SS-8					26	A-4a (VISUAL)
	17.5	19.0	SS-8	100	6	17	35	26	16	19	12	7	27	A-4a (1)
	20.0	21.5	SS-9	73				SAME AS SS-8					28	A-4a (VISUAL)
	25.0	26.5	SS-10	100				SAME AS SS-8					20	A-4a (VISUAL)
	30.0	31.5	SS-11	100	23	27	27	16	7	NP	NP	NP	13	A-1-b (0)
	35.0	36.5	SS-12	100				SAME AS SS-11					21	A-1-b (VISUAL)
	38.7	39.2	SS-13	100				SHALE, SEVERELY WEATHERED					-	ROCK (VISUAL)
B-047-1-11	4.5	6.5	ST-1	100	7	2	3	20	68	66	29	37	40	A-7-6 (20)
STA. 293+00, 13′ RT.														
NORTHING=166305.9														
EASTING=1995279.4														
B-047-2-11	4.5	6.5	ST-1	100	0	1	1	19	79	66	30	36	46	A-7-5 (20)
STA. 293+00, 14′ RT.	6.5	8.5	ST-2	100	0	8	14	24	54	44	21	23	30	A-7-6 (14)
NORTHING=166305.9														
EASTING=1995279.4														
R-241-0-99	8.5	10.0	SS-3	-	0	0	44	36	20	26	21	5	26	A-4a (4)
STA. 294.47, 143′ RT.														
NORTHING=166160.3														
EASTING=1995331.2														
B-052-0-11	0.0	1.5	SS-1	87	36	5	22	19	18	29	18	11	13	A-6a (1)
STA. 305+98, 7′ RT.	2.5	-4.0	SS-2	67				SHALE, BROWN, SEVERELY WEATHERED					5	ROCK (VISUAL)
NORTHING=166247.0														
EASTING=1996576.6														
B-053-0-11	0.0	1.5	SS-1	73	1	4	6	30	59	52	24	28	24	A-7-6 (18)
STA. 313+13, 262′ LT.	2.5	-4.0	SS-2	27				COMBINED WITH SS-1					26	A-7-6 (18)
NORTHING=166480.0	5.0	6.5	SS-3	67				MUDSTONE, RED AND GRAY, SEVERELY WEATHERED					15	ROCK (VISUAL)
EASTING=1997294.3	7.5	8.7	SS-4	100				SAME AS SS-3					8	ROCK (VISUAL)
	10.0	10.4	SS-5	100				SAME AS SS-3					8	ROCK (VISUAL)
	12.0	12.5	SS-6	100				SAME AS SS-3					4	ROCK (VISUAL)
R-244-0-99	8.5	10.0	SS-2	-	-	-	-	-	-	26	16	10	15	EST. A-4a
STA. 314+50, 20′ LT.														
NORTHING=166223.8														
EASTING=1997340.2														

SUMMARY OF SOIL TEST DATA

STATE ROUTE 7 MAINLINE

EXPLORATION NO., STATION & OFFSET	FROM	TO	SAMPLE ID	% REC	% AGG	% CS	% FS	% SILT	% CLAY	LL	PL	PI	% WC	ODOT CLASS
R-246-0-99	8.8	10.0	SS-3	-	3	10	10	32	45	43	27	16	13	A-7-6 (11)
STA. 321+71, 23′ LT.														
NORTHING=166170.5														
EASTING=1998061.6														
B-054-0-11	0.0	1.5	SS-1	73				SAME AS SS-1					9	A-7-6 (VISUAL)
STA. 321+91, 200′ LT.	2.5	-4.0	SS-2	100	2	8	6	38	46	46	25	21	20	A-7-6 (14)
NORTHING=166348.4	5.0	6.5	SS-3	33				SAME AS SS-1					10	A-7-6 (VISUAL)
EASTING=1998200.5	7.5	9.0	SS-4	67				SAME AS SS-5					11	A-7-6 (VISUAL)
	10.0	11.5	SS-5	67	1	1	2	39	57	43	21	22	14	A-7-6 (13)
	12.5	14.0	SS-6	87				SAME AS SS-5					15	A-7-6 (VISUAL)
B-055-0-11	0.0	1.5	SS-1	67				SAME AS SS-2					26	A-7-6 (VISUAL)
STA. 321+94, 283′ RT.	2.5	-4.0	SS-2	100	7	2	7	26	58	54	26	28	29	A-7-6 (18)
NORTHING=165872.2	5.0	6.5	SS-3	87	27	10	16	19	28	36	17	19	15	A-6b (5)
EASTING=1998119.2	7.5	9.0	SS-4	100	8	12	10	25	45	53	20	33	45	A-7-6 (17)
	10.0	10.6	SS-5	50				SHALE, SEVERELY WEATHERED					5	ROCK (VISUAL)
	12.5	13.0	SS-6	100				SAME AS SS-5					6	ROCK (VISUAL)
	15.0	15.6	SS-7	100				SAME AS SS-5					5	ROCK (VISUAL)
B-055-1-11	4.0	6.0	ST-1	100	13	1	6	21	59	51	27	24	24	A-7-6 (16)
STA. 321+94, 282′ RT.														
NORTHING=165872.2														
EASTING=1998119.2														
B-055-2-11	3.0	5.0	ST-1	100	0	0	6	21	73	58	30	28	29	A-7-5 (19)
STA. 321+94, 281′ RT.	5.0	7.0	ST-2	100	29	12	15	18	26	38	21	17	16	A-6b (4)
NORTHING=165872.2														
EASTING=1998119.2														
B-055-3-11	4.0	6.0	ST-1	100	8	1	4	23	64	51	27	24	23	A-7-6 (16)
STA. 321+94, 280′ RT.														
NORTHING=165872.2														
EASTING=1998119.2														
R-248-0-99	6.0	7.5	SS-2	-	-	-	-	-	-	51	24	27	16	EST. A-7-6
STA. 328+42, 57′ RT.														
NORTHING=165906.6														
EASTING=1998677.7														
B-056-0-11	0.0	1.5	SS-1	87				SAME AS SS-2					19	A-6b (VISUAL)
STA. 328+92, 152′ RT.	2.5	-4.0	SS-2	100	16	15	10	27	32	40	19	21	16	A-6b (9)
NORTHING=165807.8	5.0	6.5	SS-3	20				SAME AS SS-2					19	A-6b (VISUAL)
EASTING=1998772.2	7.5	9.0	SS-4	33				SAME AS SS-2					16	A-6b (VISUAL)
	10.0	11.5	SS-5	87	0	3	15	37	45	36	18	18	12	A-6b (11)
	12.5	14.0	SS-6	73				SAME AS SS-5					7	A-6b (VISUAL)
B-057-0-11	0.0	1.5	SS-1	80				SAME AS ST-3					19	A-6b (VISUAL)
STA. 329+15, 321′ RT.	2.5	-4.0	SS-2	100				SAME AS ST-3					20	A-6b (VISUAL)
NORTHING=165644.4	4.0	6.0	ST-3	70	11	14	10	27	38	39	20	19	20	A-6b (10)
EASTING=1998721.8	7.5	9.0	SS-4	100				SAME AS ST-5					21	A-6b (VISUAL)
	10.0	12.0	ST-5	50	0	0	11	40	49	39	20	19	21	A-6b (12)
	12.5	14.0	SS-6	100				SAME AS ST-5					24	A-6b (VISUAL)
	15.0	16.5	SS-7	100				SAME AS SS-8					24	A-6b (VISUAL)
	17.5	19.0	SS-8	100	0	0	6	54	40	39	22	17	24	A-6b (11)
	20.0	21.5	SS-9	100				SAME AS SS-8					14	A-6b (VISUAL)
	25.0	26.5	SS-10	67				SHALE, SEVERELY WEATHERED					10	ROCK (VISUAL)
B-057-1-11	4.0	6.0	ST-1	100	22	7	11	26	34	37	18	19	17	A-6b (9)
STA. 329+15, 320′ RT.	6.0	8.0	ST-2	100	33	4	8	24	31	39	20	16	18	A-6b (8)
NORTHING=165644.4	8.0	10.0	ST-3	100	15	2	5	28	56	47	24	23	22	A-7-6 (15)
EASTING=1998721.8														

DRAWN MSJ
CHECKED EMK

SOIL PROFILE - ROADWAY
SUMMARY OF SOIL TEST DATA

LAW-7-2.17

6 / 206

1047
1247

DRAFT Stage 3 - Not for Construction 09/23/2024

U:\173608714\LAW\75923\geotechnical\sheets\Coversheet_SS_Lab\75923IC003.dgn 5/15/2024 8:46:17 AM MJennings

SUMMARY OF SOIL TEST DATA

STATE ROUTE 7 MAINLINE

EXPLORATION NO., STATION & OFFSET	FROM	TO	SAMPLE ID	% REC	% AGG	% CS	% FS	% SILT	% CLAY	LL	PL	PI	% WC	ODOT CLASS
B-059-0-11	0.0	1.5	SS-1	67				SAME AS SS-2					31	A-2-6 (VISUAL)
STA. 334+12, 698' LT.	2.5	-4.0	SS-2	93	60	11	5	12	12	34	19	15	7	A-2-6 (0)
NORTHING=166273.9	5.0	6.5	SS-3	67				SAME AS SS-2					16	A-2-6 (VISUAL)
EASTING=1999675.4	7.5	9.0	SS-4	87	0	10	14	26	50	54	29	25	20	A-7-6 (17)
B-058-0-11	0.0	1.5	SS-1	80	7	13	14	30	36	37	21	16	17	A-6b (9)
STA. 334+27, 285' LT.	2.5	-4.0	SS-2	53				SAME AS SS-1					16	A-6b (VISUAL)
NORTHING=165921.7	5.0	6.5	SS-3	100	54	18	7	14	7	30	17	13	7	A-2-6 (0)
EASTING=1999458.9	7.5	9.0	SS-4	47				SAME AS SS-3					10	A-2-6 (VISUAL)
	10.0	10.8	SS-5	100				SAME AS SS-3					8	A-2-6 (VISUAL)
	12.5	14.0	SS-6	40				SAME AS SS-3					6	A-2-6 (VISUAL)
	15.0	16.5	SS-7	33				SAME AS SS-8					6	A-2-6 (VISUAL)
	17.5	19.0	SS-8	73	62	11	7	13	7	31	16	15	11	A-2-6 (0)
	20.0	21.5	SS-9	93				SAME AS SS-8					6	A-2-6 (VISUAL)
	25.0	25.8	SS-10	100				MUDSTONE, SEVERELY WEATHERED					5	ROCK (VISUAL)
	30.0	31.5	SS-11	100				SAME AS SS-10					5	ROCK (VISUAL)
	35.0	35.9	SS-12	100				SAME AS SS-10					8	ROCK (VISUAL)
	40.0	40.9	SS-13	89				SAME AS SS-10					8	ROCK (VISUAL)
	45.0	-45.4	SS-14	100				SAME AS SS-10					7	ROCK (VISUAL)
B-060-0-11	0.0	1.5	SS-1	73				SAME AS SS-2					15	A-6b (VISUAL)
STA. 335+71, 175' RT.	2.5	-4.0	SS-2	100	4	10	15	35	36	40	21	19	19	A-6b (11)
NORTHING=165459.7	5.0	7.0	ST-3	100	7	4	11	32	46	36	16	20	16	A-6b (12)
EASTING=1999321.0	7.5	9.0	SS-4	100				SAME AS SS-5					14	A-6b (VISUAL)
	10.0	11.5	SS-5	100	6	9	7	42	36	36	17	19	13	A-6b (12)
	12.5	14.0	SS-6	100				SAME AS SS-5					14	A-6b (VISUAL)
	15.0	16.5	SS-7	100				MUDSTONE, SEVERELY WEATHERED					9	ROCK (VISUAL)
	17.5	19.0	SS-8	100				SAME AS SS-7					10	ROCK (VISUAL)
	20.0	21.5	SS-9	100				SAME AS SS-7					12	ROCK (VISUAL)
	25.0	26.5	SS-10	100				SAME AS SS-7					11	ROCK (VISUAL)
B-061-0-11	0.0	1.5	SS-1	100	1	1	3	39	56	54	28	26	27	A-7-6 (17)
STA. 336+17, 517' RT.	2.5	-4.0	SS-2	100				SAME AS SS-1					31	A-7-6 (VISUAL)
NORTHING=165151.3	5.0	6.5	SS-3	73				SAME AS SS-1					31	A-7-6 (VISUAL)
EASTING=1999166.9	7.5	9.5	ST-4	95	0	0	7	46	47	44	24	20	25	A-7-6 (13)
	10.0	11.5	SS-5	100				SAME AS ST-4					26	A-7-6 (VISUAL)
	12.5	14.0	SS-6	100				SAME AS ST-4					16	A-7-6 (VISUAL)
R-250-0-99	3.0	4.5	SS-1	-	12	11	10	32	35	38	20	18	14	A-6b (10)
STA. 336+43, 35' RT.	8.5	10.0	SS-3	-	-	-	-	-	-	29	17	12	9	EST. A-6a
NORTHING=165527.3														
EASTING=1999370.7														
R-251-0-99	3.0	4.5	SS-1	-	-	-	-	-	-	44	20	24	12	EST. A-7-6
STA.338+78, 60' LT.	6.0	7.5	SS-2	-	0	1	4	59	36	37	22	15	12	A-6a (10)
NORTHING=165473.7														
EASTING=1999618.5														
B-063-0-11	0.0	1.5	SS-1	33				SAME AS ST-3					23	A-6b (VISUAL)
STA. 340+04, 171' LT.	2.5	-4.0	SS-2	87				SAME AS ST-3					17	A-6b (VISUAL)
NORTHING=165502.1	5.0	6.0	ST-3	100	20	2	5	36	37	36	15	21	24	A-6b (12)
EASTING=1999873.6	7.5	9.0	SS-4	100				SAME AS ST-3					7	A-6b (VISUAL)
	10.0	11.5	SS-5	67				SAME AS SS-6					8	A-6b (VISUAL)
	12.5	14.0	SS-6	73	1	1	2	45	51	37	18	19	12	A-6b (12)
	15.0	16.5	SS-7	100				SAME AS SS-6					12	A-6b (VISUAL)
	17.5	18.5	SS-8	100				SHALE, SEVERELY WEATHERED					9	ROCK (VISUAL)
	20.0	21.0	SS-9	100				SAME AS SS-8					11	ROCK (VISUAL)

SUMMARY OF SOIL TEST DATA

STATE ROUTE 7 MAINLINE

EXPLORATION NO., STATION & OFFSET	FROM	TO	SAMPLE ID	% REC	% AGG	% CS	% FS	% SILT	% CLAY	LL	PL	PI	% WC	ODOT CLASS
B-064-0-11	0.0	1.5	SS-1	73	0	5	12	46	37	39	19	20	21	A-6b (12)
STA. 340+06, 175' RT.	2.5	-4.0	SS-2	27				SAME AS SS-1					18	A-6b (VISUAL)
NORTHING=165214.6	5.0	6.5	SS-3	20				SAME AS SS-1					11	A-6b (VISUAL)
EASTING=1999680.8	7.5	9.0	SS-4	33				SAME AS SS-1					17	A-6b (VISUAL)
	10.0	11.5	SS-5	80	0	0	3	27	70	47	16	31	13	A-7-6 (17)
	12.5	14.0	SS-6	100				SAME AS SS-5					7	A-7-6 (VISUAL)
	15.0	16.5	SS-7	100				SAME AS SS-8					8	A-7-6 (VISUAL)
	17.5	19.0	SS-8	100	2	2	2	41	53	41	20	21	9	A-7-6 (13)
	20.0	21.5	SS-9	100				SANDSTONE, SEVERELY WEATHERED					7	ROCK (VISUAL)
	25.0	26.5	SS-10	100				SAME AS SS-9					11	ROCK (VISUAL)
B-062-0-11	0.0	1.5	SS-1	67	5	12	24	33	26	28	16	12	17	A-6a (6)
STA. 340+07, 326' LT.	2.5	-4.0	SS-2	67				SAME AS SS-1					14	A-6a (VISUAL)
NORTHING=165628.7	5.0	7.0	ST-3	75	7	2	10	37	44	33	19	14	19	A-6a (10)
EASTING=1999963.9	7.5	9.5-0	SS-4	100				SAME AS SS-5					16	A-6b (VISUAL)
	10.0	11.5	SS-5	87	0	1	10	39	50	38	17	21	13	A-6b (12)
	12.5	13.3	SS-6	63				SANDSTONE, SEVERELY WEATHERED					3	ROCK (VISUAL)
B-065-0-11	0.0	1.5	SS-1	87				SAME AS SS-2					17	A-6b (VISUAL)
STA. 340+19, 382' RT.	2.5	-4.0	SS-2	80	11	9	10	37	33	39	19	20	17	A-6b (11)
NORTHING=165036.8	5.0	6.5	SS-3	87				SAME AS SS-2					17	A-6b (VISUAL)
EASTING=1999575.8	7.5	9.0	SS-4	73				SAME AS SS-5					14	A-6b (VISUAL)
	10.0	11.5	SS-5	100	4	3	4	38	51	39	18	21	10	A-6b (12)
	12.5	14.0	SS-6	87				SAME AS SS-8					12	A-7-6 (VISUAL)
	15.0	16.5	SS-7	93				SAME AS SS-8					14	A-7-6 (VISUAL)
	17.5	19.0	SS-8	100	0	0	3	38	59	43	19	24	12	A-7-6 (14)
	20.0	21.5	SS-9	100				SAME AS SS-8					10	A-7-6 (VISUAL)
B-067-0-11	0.0	1.5	SS-1	67	6	14	14	35	31	38	22	16	15	A-6b (9)
STA. 348+94, 243' RT.	2.5	3.6	SS-2	91				SANDSTONE, SEVERELY WEATHERED					12	ROCK (VISUAL)
NORTHING=164659.5														
EASTING=2000376.8														
B-066-0-11	0.0	1.5	SS-1	67				SAME AS SS-2					16	A-7-6 (VISUAL)
STA. 349+26, 626' LT.	2.5	-4.0	SS-2	73	0	8	16	32	44	45	21	24	20	A-7-6 (15)
NORTHING=165360.0	5.0	6.5	SS-3	87				SAME AS SS-2					12	A-7-6 (VISUAL)
EASTING=2000891.9	7.5	9.0	SS-4	87	0	20	18	45	17	29	20	9	9	A-4a (5)
	10.0	11.5	SS-5	73				SAME AS SS-4					18	A-4a (VISUAL)
	12.5	14.0	SS-6	87				SHALE, SEVERELYWEATHERED					13	ROCK (VISUAL)
	15.0	15.6	SS-7	100				SAME AS SS-6					23	ROCK (VISUAL)
B-070-0-11	0.0	1.5	SS-1	67	0	13	14	36	37	38	20	18	17	A-6b (11)
STA. 358+89, 287' LT.	2.5	-4.0	SS-2	87				SAME AS SS-1					14	A-6b (VISUAL)
NORTHING=164616.6	5.0	6.5	SS-3	80	5	14	11	33	37	40	22	18	17	A-6b (10)
EASTING=2001497.8	7.5	9.0	SS-4	93				SAME AS SS-3					15	A-6b (VISUAL)
	10.0	10.8	SS-5	100				SHALE, SEVERELY WEATHERED					24	ROCK (VISUAL)
B-068-0-11	0.0	1.5	SS-1	100	0	7	12	53	28	27	17	10	18	A-4b (8)
STA. 359+03, 461' RT.	2.5	-4.0	SS-2	100	11	16	13	41	19	33	20	13	13	A-6a (6)
NORTHING=163938.3	5.0	6.1	SS-3	91				SANDSTONE, SEVERELY WEATHERED					13	ROCK (VISUAL)
EASTING=2001183.6														
B-069-0-11	0.0	1.5	SS-1	80				SAME AS SS-2					16	A-6b (VISUAL)
STA. 359+62, 105' RT.	2.5	-4.0	SS-2	100	1	12	20	34	33	35	19	16	21	A-6b (9)
NORTHING=164232.4	5.0	6.5	SS-3	53				SAME AS SS-2					22	A-6b (VISUAL)
EASTING=2001392.9	7.5	8.2	SS-4	100				SHALE, SEVERELY WEATHERED					13	ROCK (VISUAL)
	10.0	10.3	SS-5	100				SAME AS SS-4					6	ROCK (VISUAL)
R-255-0-99	18.5	20.0	SS-5	-	7	8	14	48	23	30	22	8	7	A-4a (7)
STA. 362+43, 40' LT.														
NORTHING=164239.7														
EASTING=2001621.2														

DRAFT Stage 3 - Not for Construction 09/23/2024

DRAWN MSJ | CHECKED EMK

SOIL PROFILE - ROADWAY
SUMMARY OF SOIL TEST DATA

LAW-7-2.17

1048
1247

U:\17360871\4\LAW\75923\geotechnical\sheets\Coversheet_SS_Lab\75923IC003.dgn 5/15/2024 8:46:35 AM MJennings

SUMMARY OF SOIL TEST DATA

STATE ROUTE 7 MAINLINE

EXPLORATION NO., STATION & OFFSET	FROM	TO	SAMPLE ID	% REC	% AGG	% CS	% FS	% SILT	% CLAY	LL	PL	PI	% WC	ODOT CLASS
B-072-0-11	0.0	1.5	SS-1	100	9	22	18	32	19	32	22	10	21	A-4a (3)
STA. 371+03, 131' LT.	2.5	-4.0	SS-2	73				SAME AS SS-1					13	A-4a (VISUAL)
NORTHING=163976.8	5.0	6.5	SS-3	67				SAME AS SS-1					21	A-4a (VISUAL)
EASTING=2002531.1	7.5	9.0	SS-4	87	0	1	2	65	32	35	19	16	25	A-6b (10)
	10.0	11.5	SS-5	80				SAME AS SS-4					19	A-6b (VISUAL)
	12.5	14.0	SS-6	100	0	1	9	51	39	35	19	16	19	A-6b (10)
	15.0	16.5	SS-7	100				SAME AS SS-6					17	A-6b (VISUAL)
	17.5	19.5	ST-8	55	3	3	11	42	41	35	19	16	19	A-6b (10)
	20.0	21.5	SS-9	100				SAME AS ST-8					18	A-6b (VISUAL)
B-071-0-11	0.0	1.5	SS-1	33				SAME AS SS-3					14	A-6b (VISUAL)
STA. 371+07, 264' LT.	2.5	-4.0	SS-2	73				SAME AS SS-3					15	A-6b (VISUAL)
NORTHING=164096.1	5.0	6.5	SS-3	87	2	8	23	38	29	37	20	17	18	A-6b (9)
EASTING=2002589.8	7.5	9.0	SS-4	100				SAME AS SS-3					21	A-6b (VISUAL)
	10.0	11.5	SS-5	100				SAME AS SS-6					18	A-6b (VISUAL)
	12.5	14.0	SS-6	100	0	4	23	33	40	36	17	19	14	A-6b (11)
	15.0	16.5	SS-7	100				SAME AS SS-6					15	A-6b (VISUAL)
	17.5	19.0	SS-8	100				SAME AS SS-6					16	A-6b (VISUAL)
	20.0	21.5	SS-9	100				SAME AS SS-6					20	A-6b (VISUAL)
B-073-0-12	0.0	1.5	SS-1	100				SAME AS SS-2					21	A-4a (VISUAL)
STA. 374+00, 260' LT.	3.5	5.0	SS-2	100	0	2	36	36	26	23	13	10	24	A-4a (5)
NORTHING= 163972.1	6.0	7.5	SS-3	100				SAME AS SS-2					25	A-4a (VISUAL)
EASTING= 2002855.4	8.5	10.0	SS-4	100				SAME AS SS-2					24	A-4a (VISUAL)
	11.0	11.8	SS-5	100				SHALE, GRAY SEVERELY WEATHERED					10	ROCK (VISUAL)
	13.5	14.2	SS-6	100				SHALE, GRAY SEVERELY WEATHERED					10	ROCK (VISUAL)
R-119-0-99	13.5	15.0	SS-4	-	0	0	6	69	25	30	20	10	27	A-4b (8)
STA. 384+83, 43' RT.														
NORTHING=163346.9														
EASTING=2003677.3														
B-074-1-12	0.0	1.5	SS-1	100				SAME AS SS-3					11	A-6b (VISUAL)
STA. 387+00, CENTERLINE	3.5	5.0	SS-2	100				SAME AS SS-3					11	A-6b (VISUAL)
NORTHING= 163382.4	6.0	7.5	SS-3	100	23	10	14	36	17	30	16	14	16	A-6b (5)
EASTING= 2003987.8	8.5	10.0	SS-4	100				SAME AS SS-3					21	A-6b (VISUAL)
R-120-0-99	3.5	5.0	SS-2	-	0	2	7	41	50	46	21	25	17	A-7-6 (15)
STA. 388+25, 44' LT.														
NORTHING=163419.7														
EASTING=2004021.8														
B-075-1-12	0.0	1.5	SS-1	100				SAME AS SS-2					13	A-6b (VISUAL)
STA. 391+00, CENTERLINE	3.5	5.0	SS-2	100	19	10	12	28	31	36	15	21	14	A-6b (9)
NORTHING= 163409.7	6.0	7.5	SS-3	100				SAME AS SS-2					18	A-6b (VISUAL)
EASTING= 2004386.4	8.5	10.0	SS-4	100				SAME AS SS-2					14	A-6b (VISUAL)
R-121-0-99	1.0	2.5	SS-1	-	5	10	18	32	35	41	22	19	15	A-7-6 (10)
STA. 392+43, 44' RT.														
NORTHING=163385.9														
EASTING=2004446.8														
B-076-1-12	0.0	1.5	SS-1	100				SAME AS SS-2					14	A-6b (VISUAL)
STA. 395+00, CENTERLINE	4.0	5.5	SS-2	100	4	12	9	33	42	38	19	19	17	A-6b (12)
NORTHING= 163505.6	6.0	7.5	SS-3	100				SAME AS SS-2					14	A-6b (VISUAL)
EASTING= 2004774.2	8.0	9.5	SS-4	100	7	24	24	33	12	19	14	5	6	A-4a (2)

SUMMARY OF SOIL TEST DATA

STATE ROUTE 7 MAINLINE

EXPLORATION NO., STATION & OFFSET	FROM	TO	SAMPLE ID	% REC	% AGG	% CS	% FS	% SILT	% CLAY	LL	PL	PI	% WC	ODOT CLASS
R-122-0-99	6.0	7.5	SS-2	-	0	5	6	26	63	45	24	21	14	A-7-6 (13)
STA. 396+48, 45' LT.														
NORTHING=163591.5														
EASTING=2004807.5														
B-077-1-12	0.0	1.5	SS-1	100				SAME AS SS-2					14	A-6b (VISUAL)
STA. 399+00, CENTERLINE	4.0	5.5	SS-2	100	14	17	10	27	32	36	20	16	14	A-6b (7)
NORTHING= 163649.9	6.0	7.5	SS-3	100				SAME AS SS-2					16	A-6b (VISUAL)
EASTING= 2005147.3	8.0	9.5	SS-4	100				SAME AS SS-2					16	A-6b (VISUAL)
R-123-0-99	3.5	5.0	SS-2	-	34	34	22	10		-	-	-	-	A-1-b (0)
STA. 400+41, 58' RT.														
NORTHING=163640.6														
EASTING=2005210.5														
B-078-1-12	0.0	1.5	SS-1	100				SAME AS SS-2					12	A-6a (VISUAL)
STA. 403+00, CENTERLINE	4.0	5.5	SS-2	100	18	9	14	32	27	34	20	14	15	A-6a (6)
NORTHING= 163797.7	6.0	7.5	SS-3	100				SAME AS SS-2					19	A-6a (VISUAL)
EASTING= 2005519.0	8.0	9.5	SS-4	100				SAME AS SS-2					13	A-6a (VISUAL)
R-124-0-99	6.0	7.5	SS-2	-	12	10	7	26	45	45	20	25	15	A-7-6 (14)
STA. 404+38, 48' LT.														
NORTHING=163885.0														
EASTING=2005540.9														
S-103-0-99	8.5	10.0	SS-2	-	3	3	3	32	59	43	25	18	14	A-7-6 (12)
STA. 404+76, 194' LT.														
NORTHING=164035.2														
EASTING=2005524.9														
B-079-1-12	0.0	1.5	SS-1	100				SAME AS SS-3					15	A-6b (VISUAL)
STA. 407+00, CENTERLINE	4.0	4.2	SS-2	100				SAME AS SS-3, COBBLE AT 4.2'					8	A-6b (VISUAL)
NORTHING= 163939.2	6.0	7.5	SS-3	100	12	14	9	26	39	40	18	22	14	A-6b (11)
EASTING= 2005893.1	8.0	9.5	SS-4	100				SAME AS SS-3					12	A-6b (VISUAL)
R-125-0-99	6.0	7.5	SS-2	-	5	23	13	32	27	35	18	17	11	A-6b (8)
STA. 408+52, 7' LT.														
NORTHING=163991.5														
EASTING=2005944.2														

LABORATORY TESTING DATA NOT AVAILABLE FOR THE FOLLOWING BORINGS: R-208-0-99, S-201-0-99, R-213-0-99, R-214-0-99, R-215-0-99, R-216-0-99, R-219-0-99, R-222-0-99, R-224-0-99, R-225-0-99, R-228-0-99, R-234-0-99, R-235-0-99, R-236-0-99, R-239-0-99, R-242-0-99, R-243-0-99, R-245-0-99, R-247-0-99, R-248-0-99, R-249-0-99, R-252-0-99, R-253-0-99, R-254-0-99, R-256-0-99, R-257-0-99, S-202-0-99, S-203-0-99, S-204-0-99, S-205-0-99, S-206-0-99, S-207-0-99, S-3P1-0-99, S-208-0-99, S-212-0-99, S-210-0-99, S-209-0-99, R-230-0-99, R-231-0-99, S-4P2-0-99, S-214-0-99, S-215-0-99, S-216-0-99, S-701-0-99

DRAFT Stage 3 - Not for Construction 09/23/2024

DRAWN MSJ
CHECKED EMK

SOIL PROFILE - ROADWAY
SUMMARY OF SOIL TEST DATA

LAW-7-2.17

1049
1247

U:\173608714\LAW\75923\geotechnical\sheets\Coversheet_SS_Lab\75923IC003.dgn 5/16/2024 5:14:39 PM MJennings

SUMMARY OF SOIL TEST DATA
State Route 7, Ramp C

EXPLORATION NO., STATION & OFFSET	FROM	TO	SAMPLE ID	% REC	% AGG	% CS	% FS	% SILT	% CLAY	LL	PL	PI	% WC	ODOT CLASS
B-075-0-12	0.0	1.5	SS-1	100				SAME AS SS-3					17	A-6b (VISUAL)
STA. 120+00, CENTERLINE	4.0	5.5	SS-2	100				SAME AS SS-3					15	A-6b (VISUAL)
NORTHING= 158900.7	6.0	7.5	SS-3	100	5	8	10	38	39	35	18	17	16	A-6b (11)
EASTING= 1980610.6	8.0	9.5	SS-4	100				SAME AS SS-3					12	A-6b (VISUAL)
B-076-0-12	0.0	1.5	SS-1	100				SAME AS SS-2					26	A-6b (VISUAL)
STA. 123+50, CENTERLINE	4.0	5.5	SS-2	100	5	5	12	44	34	36	20	16	20	A-6b (10)
NORTHING= 159115.5	6.5	8.0	SS-3	100				SAME AS SS-2					28	A-6b (VISUAL)
EASTING= 1980883.8	9.0	11.0	ST-4	79	0	0	11	48	41	34	19	15	-	A-6a (10)
	11.5	13.0	SS-5	100				SAME AS ST-4					27	A-6a (VISUAL)
	14.0	15.5	SS-6	100				SAME AS ST-4					39	A-6a (VISUAL)
	17.0	18.5	SS-7	100				SAME AS SS-8					24	A-4a (VISUAL)
	19.0	20.5	SS-8	100	13	23	28	22	14	22	15	7	18	A-4a (0)
	21.5	23.0	SS-9	100				SAME AS SS-8					18	A-4a (VISUAL)
	24.0	25.5	SS-10	100				SAME AS SS-8					16	A-4a (VISUAL)
	26.5	28.0	SS-11	100				SAME AS SS-8					24	A-4a (VISUAL)
	29.0	30.5	SS-12	100				SAME AS SS-8					21	A-4a (VISUAL)
B-077-0-12	0.0	1.5	SS-1	100				SILTY CLAY WITH SAND, BROWN, MOIST					24	A-6b (VISUAL)
STA. 123+50, 80' LT.	4.0	5.5	SS-2	100				SAME AS SS-1					15	A-6b (VISUAL)
NORTHING= 159167.9	6.5	8.0	SS-3	100	4	9	12	52	23	32	19	13	10	A-6a (9)
EASTING= 1980823.3	9.0	10.5	SS-4	100				SAME AS SS-3					13	A-6a (VISUAL)
	11.5	13.0	SS-5	100				SAME AS SS-3					13	A-6a (VISUAL)
	14.0	15.5	SS-6	100				SAME AS SS-3					15	A-6a (VISUAL)
	16.5	18.0	SS-7	100	28	20	18	21	13	25	16	9	14	A-2-4 (0)
	19.0	20.5	SS-8	100				SAME AS SS-9					15	A-3a (VISUAL)
	21.5	23.0	SS-9	100	0	36	48	10	6	NP	NP	NP	22	A-3a (0)
	24.0	25.5	SS-10	100				SAME AS SS-9					22	A-3a (VISUAL)
	26.5	28.0	SS-11	100				SAME AS SS-9					20	A-3a (VISUAL)
	29.0	30.5	SS-12	100				SAME AS SS-9					14	A-3a (VISUAL)
	31.5	33.0	SS-13	100	38	21	23	13	5	NP	NP	NP	14	A-1-b (0)
	34.0	35.1	SS-14	100				SHALE, GRAY, SEVERELY WEATHERED					13	ROCK (VISUAL)

SUMMARY OF SOIL TEST DATA
State Route 7, Ramp D Access Road

EXPLORATION NO., STATION & OFFSET	FROM	TO	SAMPLE ID	% REC	% AGG	% CS	% FS	% SILT	% CLAY	LL	PL	PI	% WC	ODOT CLASS
B-078-0-12	0.0	1.5	SS-1	100	1	1	5	70	23	26	22	4	20	A-4b (8)
STA. 120+17, 0.1' RT.	4.5	6.0	SS-2	100				SAME AS SS-1					29	A-4b (VISUAL)
NORTHING= 157909.0	6.5	8.0	SS-3	100				SAME AS SS-1					26	A-4b (VISUAL)
EASTING= 1981095.2	8.5	10.0	SS-4	100				SAME AS SS-1					25	A-4b (VISUAL)

EXPLORATION NO., STATION & OFFSET	FROM	TO	SAMPLE ID	% REC	% AGG	% CS	% FS	% SILT	% CLAY	LL	PL	PI	% WC	ODOT CLASS
B-079-0-12	0.0	1.5	SS-1	100				SAME AS SS-3					28	A-4b (VISUAL)
STA. 117+71, 4.7' LT.	3.0	4.5	SS-2	100				SAME AS SS-3					29	A-4b (VISUAL)
NORTHING= 158103.4	5.5	7.0	SS-3	100	0	0	8	62	30	27	18	9	21	A-4b (8)
EASTING= 1980944.3	8.0	9.5	SS-4	100				SAME AS SS-3					27	A-4b (VISUAL)
	10.5	12.0	SS-5	100				SAME AS SS-3					27	A-4b (VISUAL)
	16.0	14.5	SS-6	100				SAME AS SS-3					28	A-4b (VISUAL)
	15.5	17.0	SS-7	100	4	7	15	43	31	29	16	13	16	A-6a (9)
	18.0	19.5	SS-8	100				SAME AS SS-7					18	A-6a (VISUAL)
	20.5	22.0	SS-9	100				SAME AS SS-7					17	A-6a (VISUAL)
	23.0	24.5	SS-10	100				SAME AS SS-7					18	A-6a (VISUAL)

SUMMARY OF SOIL TEST DATA
State Route 7, Ramp D Access Road (Continued)

EXPLORATION NO., STATION & OFFSET	FROM	TO	SAMPLE ID	% REC	% AGG	% CS	% FS	% SILT	% CLAY	LL	PL	PI	% WC	ODOT CLASS
R-201-0-99	3.0	4.5	SS-1	-	0	0	1	70	29	33	25	8	28	A-4a (8)
STA. 117+12, 4.0' RT.														
NORTHING= 158129.5														
EASTING= 1980806.1														
B-080-0-12	0.0	1.5	SS-1	100	3	3	8	45	41	40	21	19	15	A-6b (12)
STA. 115+58, 225.8' LT.	4.0	4.9	SS-2	100				SAME AS SS-3, COBBLE AT 4.9'					9	A-6a (VISUAL)
NORTHING= 158426.4	6.0	7.5	SS-3	100	5	7	13	41	34	34	20	14	9	A-6a (10)
EASTING= 1980839.5	8.0	8.5	SS-4	100				SAME AS SS-3, COBBLE AT 8.5					7	A-6a (VISUAL)

SUMMARY OF SOIL TEST DATA
State Route 7, Ramp I

EXPLORATION NO., STATION & OFFSET	FROM	TO	SAMPLE ID	% REC	% AGG	% CS	% FS	% SILT	% CLAY	LL	PL	PI	% WC	ODOT CLASS
B-073-1-20	0.0	1.5	SS-1	93	3	5	10	42	40	44	24	20	24	A-7-6 (13)
STA. 376+06, 113' RT.	2.5	4.0	SS-2	87				SAME AS SS-1					24	A-7-6 (VISUAL)
NORTHING=163435.2	5.0	5.5	SS-3	100				SANDSTONE, BROWN TO GRAY, SEVERELY WEATHERED					4	Rock (VISUAL)
EASTING=2002803.2	7.5	8.1	SS-4	100				SAME AS SS-3					5	Rock (VISUAL)
	10.0	10.5	SS-5	100				SAME AS SS-3					4	Rock (VISUAL)
B-073-2-20	2.5	4.0	SS-1	47	75	9	7	6	3 NP	NP	NP		1	A-1-a (0)
STA. 379+17, 144' RT.	5.0	6.5	SS-2	72				SAME AS SS-1					1	A-1-a (VISUAL)
NORTHING=163235.0	7.5	9.0	SS-3	53				SAME AS SS-1					1	A-1-a (VISUAL)
EASTING=2003027.0	10.0	11.5	SS-4	67	1	3	11	48	37	42	24	18	26	A-7-6 (12)
	12.5	14.5	ST-1	100	2	4	22	43	29	36	20	16	24	A-6b (10)
	14.5	16.5	ST-2	100	1	4	14	49	32	38	21	17	22	A-6b (11)
	16.5	18.0	SS-5	53				SAME AS ST-2					22	A-6b (VISUAL)
	20.0	22.0	ST-3	100	12	4	17	41	26	34	20	14	19	A-6a (8)
	22.5	24.0	SS-6	100	17	35	23	14	11	31	17	14	21	A-2-6 (0)
	25.0	26.5	SS-7	100	12	23	37	19	9	21	15	6	21	A-3a (0)
	27.5	29.0	SS-8	72	27	20	22	24	7	24	19	5	18	A-2-4 (0)
	30.0	31.5	SS-9	87	11	16	21	41	11	25	19	6	17	A-4a (3)
	32.5	34.0	SS-10	87	2	3	18	62	15 NP	NP	NP		19	A-4b (8)
	35.0	37.0	ST-4	100	0	0	9	74	17	25	21	4	23	A-4b (8)

SUMMARY OF SOIL TEST DATA
State Route 7, Ramp J

EXPLORATION NO., STATION & OFFSET	FROM	TO	SAMPLE ID	% REC	% AGG	% CS	% FS	% SILT	% CLAY	LL	PL	PI	% WC	ODOT CLASS
B-100-0-12	3.5	5.0	SS-1	100	0	1	2	66	31	29	22	7	25	A-4b (8)
STA. 384+50, CENTERLINE	6.0	7.5	SS-2	100				SAME AS SS-1					22	A-4b (VISUAL)
NORTHING= 163468.2	8.5	8.8	SS-3	100				SAME AS SS-1					26	A-4b (VISUAL)
EASTING= 2003749.0														
B-101-0-12	0.0	1.5	SS-1	100	43	12	10	20	15	32	22	10	10	A-2-4 (0)
STA. 386+50, CENTERLINE	3.5	5.0	SS-2	100	43	12	10	20	15	32	22	10	23	A-2-4 (0)
NORTHING= 163456.2	6.0	7.5	SS-3	100				SAME AS SS-1					23	A-2-4 (VISUAL)
EASTING= 2003948.3	8.5	10.0	SS-4	100				SAME AS SS-1					19	A-2-4 (VISUAL)
B-102-0-12	0.0	0.9	SS-1	100	8	21	6	40	25	37	23	14	6	A-6a (8)
STA. 389+50, 20' LT.	3.5	3.9	SS-2	100	8	21	6	40	25	37	23	14	6	A-6a (8)
NORTHING= 163644.0														
EASTING= 2004117.9														

DRAFT Stage 3 - Not for Construction 09/23/2024

DRAWN MSJ
CHECKED EMK

SOIL PROFILE - ROADWAY
SUMMARY OF SOIL TEST DATA

LAW-7-2.17

1050/1247

U:\173608714\LAW\75923\geotechnical\sheets\Coversheet_SS_Lab\75923ICO03.dgn 5/15/2024 8:47:12 AM MJennings

SUMMARY OF SOIL TEST DATA
State Route 7, Ramp K

B-097-1-20	0.0-1.5	SS-1	33	1	1	4	42	52	50	25	25	20	A-7-6 (16)
STA. 386+46, 23' RT.	2.5-2.9	SS-2	100				SANDSTONE, BLUISH GRAY, HIGHLY WEATHERED				-		Rock (VISUAL)
NORTHING=163897.8	5.0-5.4	SS-3	80				SAME AS SS-2					7	Rock (VISUAL)
EASTING=2003924.3													
B-098-1-20	0.0-1.5	SS-1	61				SAME AS SS-3					7	A-4a (VISUAL)
STA. 386+46, 15' RT.	2.5-4.0	SS-2	67				SAME AS SS-3					6	A-4a (VISUAL)
NORTHING=163811.6	5.0-6.5	SS-3	67	8	10	20	47	15	32	22	10	5	A-4a (5)
EASTING=2004125.9	7.5-8.3	SS-4	100				CLAYSTONE, RED, SEVERLY WEATHERED				-		Rock (VISUAL)
	10.0-10.8	SS-5	70				SAME AS SS-4					5	Rock (VISUAL)
B-106-1-20	0.0-1.7	ST-1	60	14	12	13	28	33	40	20	20	12	A-6b (9)
STA. 392+31, 21' RT.	2.5-4.0	SS-1	94	33	13	14	24	16	34	21	13	8	A-6a (2)
NORTHING=163643.8	5.0-6.5	SS-2	44				SAME AS SS-2					12	A-6a (VISUAL)
EASTING=2004456.0	7.5-9.0	SS-3	100	9	9	8	32	42	45	21	24	16	A-7-6 (14)
	10.0-11.5	SS-4	78				SAME AS SS-3					13	A-7-6 (VISUAL)
	12.5-13.3	SS-5	100				SANDSTONE, TAN, SEVERLY WEATHERED					13	Rock (VISUAL)
	15.0-15.3	SS-6	100				SAME AS SS-5					10	Rock (VISUAL)
	17.5-17.9	SS-7	100				SAME AS SS-5					5	Rock (VISUAL)
	20.0-20.4	SS-8	100				SAME AS SS-5					5	Rock (VISUAL)
	22.5-22.9	SS-9	80				SAME AS SS-5				-		Rock (VISUAL)
B-106-2-20	0.0-1.5	SS-1	78				SAME AS B-106-3-20 ST-1					13	A-6b (VISUAL)
STA. 392+10, 170' LT.	5.0-5.4	SS-2	100				SANDSTONE, TAN TO GRAY, SEVERLY WEATHERED					5	Rock (VISUAL)
NORTHING=163834.1													
EASTING=2004479.0													
B-106-3-20	0.0-2.0	ST-1	100	1	4	8	60	27	35	18	17	14	A-6b (11)
STA. 392+10, 170' LT.	2.5-4.5	ST-2	46				SAME AS ST-1				-		A-6b (VISUAL)
NORTHING=163834.1													
EASTING=2004479.0													

SUMMARY OF SOIL TEST DATA
State Route 7, Ramp L

EXPLORATION NO., STATION & OFFSET	FROM	TO	SAMPLE ID	% REC	% AGG	% CS	% FS	% SILT	% CLAY	LL	PL	PI	% WC	ODOT CLASS
B-103-0-12	1.5	3.0	SS-1	100	15	12	9	32	32	36	21	15	17	A-6a (8)
STA. 380+65, CENTERLINE	3.0	4.5	SS-2	100	15	12	9	32	32	36	21	15	17	A-6a (8)
NORTHING= 163204.6	6.0	7.5	SS-3	100				SAME AS SS-1					16	A-6a (VISUAL)
EASTING= 2003385.5	8.5	10.0	SS-4	100				SAME AS SS-1					12	A-6a (VISUAL)
	11.0	12.5	SS-5	100				SAME AS SS-1					17	A-6a (VISUAL)
	13.5	15.0	SS-6	100				SAME AS SS-1					16	A-6a (VISUAL)
	16.0	17.5	SS-7	100				SAME AS SS-8					12	A-6a (VISUAL)
	18.5	20.0	SS-8	100	26	17	10	25	22	34	21	13	14	A-6a (3)
R-110-0-99	8.5	10.0	SS-3	-	0	0	3	73	24	27	21	8	24	A-4b (8)
STA. 383+24, 79' RT.	33.5	34.3	SS-8	-	15	55	26	4		-	-	-	-	A-1-b (0)
NORTHING=163095.1														
EASTING=2003558.7														
R-118-0-99	8.5	10.0	SS-3	-	0	1	2	64	33	38	22	16	25	A-6b (10)
STA. 386+74, 68' RT.														
NORTHING=163173.0														
EASTING=2003911.3														

SUMMARY OF SOIL TEST DATA
State Route 7, RAMP K

EXPLORATION NO., STATION & OFFSET	FROM	TO	SAMPLE ID	% REC	% AGG	% CS	% FS	% SILT	% CLAY	LL	PL	PI	% WC	ODOT CLASS
B-097-0-12	0.0	1.5	SS-1	100			SILT AND CLAY, HARD, GRAY						13	A-6a (VISUAL)
STA. 385+00, CENTERLINE	4.5	6.0	SS-2	100	4	1	60	25	10	NP	NP	NP	18	A-3a (0)
NORTHING= 163979.4	6.5	8.0	SS-3	100				SAME AS SS-2					20	A-3a (VISUAL)
EASTING= 2003835.0	8.5	10.0	SS-4	100	4	11	13	42	30	31	18	13	16	A-6a (9)
B-098-0-12	0.0	1.5	SS-1	100				SAME AS SS-4					22	A-6b (VISUAL)
STA. 388+0, 40' LT.	3.5	5.0	SS-2	100				SAME AS SS-4					-	A-6b (VISUAL)
NORTHING= 163847.8	6.0	7.5	SS-3	100				SAME AS SS-4					16	A-6b (VISUAL)
EASTING= 2004107.6	8.5	10.0	SS-4	100	0	5	6	49	40	35	19	16	8	A-6b (10)
	11.0	11.4	SS-5	100			SANDSTONE, GRAY, HIGHLY WEATHERED						5	ROCK (VISUAL)
B-098-1-12	0.0	1.5	SS-1	100	2	5	7	53	33	33	20	13	12	A-6a (9)
STA. 388+00, 300' LT.	4.0	4.6	SS-2	100				SAME AS SS-1					8	A-6a (VISUAL)
NORTHING= 164065.0														
EASTING= 2004250.6														

DRAWN MSJ
CHECKED EMK

SOIL PROFILE - ROADWAY
SUMMARY OF SOIL TEST DATA

LAW-7-2.17

10/206

1051
1247

DRAFT Stage 3 - Not for Construction 09/23/2024

U:\17360714\LAW\7523\geotechnical\sheets\Coversheet_SS_Lab\7523ICO03.dgn 5/15/2024 8:47:39 AM MJennings

SUMMARY OF SOIL TEST DATA
State Route 7, Ramp L (Continued)

EXPLORATION NO., STATION & OFFSET	FROM TO	SAMPLE ID	% REC	% AGG	% CS	% FS	% SILT	% CLAY	LL	PL	PI	% WC	ODOT CLASS
B-104-0-12	0.0 - 1.5	SS-1	100	36	9	10	19	26	36	18	18	22	A-6b (4)
STA. 389+12, 11' RT.	4.0 - 5.5	SS-2	100				SAME AS SS-1					19	A-6b (VISUAL)
NORTHING= 163286.9	6.5 - 8.0	SS-3	100				SAME AS SS-4					25	A-7-6 (VISUAL)
EASTING=2004220.7	9.0 - 10.5	SS-4	100	0	3	4	40	53	48	26	22	25	A-7-6 (14)

SUMMARY OF SOIL TEST DATA
Lynn Lane

EXPLORATION NO., STATION & OFFSET	FROM TO	SAMPLE ID	% REC	% AGG	% CS	% FS	% SILT	% CLAY	LL	PL	PI	% WC	ODOT CLASS
B-013-0-11	0.0 - 1.5	SS-1	93				SAME AS SS-1					23	A-6b (VISUAL)
STA.10+90, 41' LT.	2.5 -4.0	SS-2	100	0	0	1	35	64	39	21	18	23	A-6b (11)
NORTHING=163776.5	5.0 - 6.5	SS-3	100				SAME AS SS-1					26	A-6b (VISUAL)
EASTING=1987386.3	7.5 - 9.0	SS-4	100	1	1	4	35	59	38	21	17	21	A-6b (11)
	10.0 - 11.5	SS-5	100				SAME AS SS-4					24	A-6b (VISUAL)
B-014-0-11	2.5 -4.0	SS-1	100	0	0	0	36	64	41	20	21	22	A-7-6 (13)
STA. 13+93, 3' RT.	5.0 - 6.5	SS-2	100				SAME AS SS-1					24	A-7-6 (VISUAL)
NORTHING=163931.9	7.5 - 9.0	SS-3	100	0	1	1	49	49	34	20	14	26	A-6a (10)
EASTING=1987663.2	10.0 - 11.5	SS-4	87				SAME AS SS-3					22	A-6a (VISUAL)

SUMMARY OF SOIL TEST DATA
State Route 243

EXPLORATION NO., STATION & OFFSET	FROM TO	SAMPLE ID	% REC	% AGG	% CS	% FS	% SILT	% CLAY	LL	PL	PI	% WC	ODOT CLASS
B-083-1-12	0.0 - 1.1	SS-1	100	35	15	18	19	13	25	18	7	6	A-2-4 (0)
STA. 13+00, 300' LT.	2.5 - 2.7	SS-2	100				COMBINED WITH SS-1					6	A-2-4 (0)
NORTHING= 166070.3	5.0 - 5.5	SS-3	100				COMBINED WITH SS-1					7	A-2-4 (0)
EASTING= 1990907.7													
B-025-0-11	2.5 -4.0	SS-1	100	28	21	24	13	14	27	16	11	13	A-2-6 (0)
STA. 17+03, 46' RT.	5.0 - 6.0	SS-2	50				SAME AS SS-1					12	A-2-6 (VISUAL)
NORTHING=166580.9	7.5 - 9.0	SS-3	100				SAME AS SS-1					10	A-2-6 (VISUAL)
EASTING=1991026.9	10.0 - 11.5	SS-4	100	0	1	3	38	58	48	22	26	24	A-7-6 (16)
B-084-0-12	1.5 - 3.0	SS-1	100				SAME AS SS-2					16	A-4a (VISUAL)
STA. 18+00, CENTERLINE	3.5 - 5.0	SS-2	100	0	11	47	19	23	25	17	8	16	A-4a (1)
NORTHING= 166639.7	6.0 - 7.5	SS-3	100	0	10	42	22	26	23	14	9	17	A-4a (3)
EASTING= 1990936.3	8.5 - 10.0	SS-4	100				SAME AS SS-3					17	A-4a (VISUAL)

SUMMARY OF SOIL TEST DATA
County Road 69

EXPLORATION NO., STATION & OFFSET	FROM TO	SAMPLE ID	% REC	% AGG	% CS	% FS	% SILT	% CLAY	LL	PL	PI	% WC	ODOT CLASS
B-085-0-12	0.0 - 1.5	SS-1	100				SAME AS SS-2					24	A-4a (VISUAL)
NORTHING= 166377.5	5.0 - 6.5	SS-3	100				SAME AS SS-2					19	A-4a (VISUAL)
EASTING= 1991124.7	7.5 - 9.0	SS-4	100	6	21	25	19	29	31	20	11	24	A-6a (3)
	10.0 - 10.7	SS-5	100				SHALE, GRAY SEVERELY WEATHERED					11	ROCK (VISUAL)

SUMMARY OF SOIL TEST DATA
County Road 69 (Continued)

EXPLORATION NO., STATION & OFFSET	FROM TO	SAMPLE ID	% REC	% AGG	% CS	% FS	% SILT	% CLAY	LL	PL	PI	% WC	ODOT CLASS
B-024-0-11	0.0 - 1.5	SS-1	67	6	11	15	33	35	38	20	18	12	A-6b (10)
STA. 10+95, 7' LT.	2.5 -4.0	SS-2	100				SAME AS SS-1					12	A-6b (VISUAL)
NORTHING=166250.3	5.0 - 6.5	SS-3	100				SAME AS SS-5					7	A-6b (VISUAL)
EASTING=1991259.8	7.5 - 8.5	SS-4	100				SAME AS SS-5					6	A-6b (VISUAL)
	10.0 - 11.5	SS-5	100	0	5	11	48	36	40	21	19	11	A-6b (12)
	12.5 - 14.0	SS-6	100				SHALE, SEVERELY WEATHERED					8	ROCK (VISUAL)
B-027-0-11	0.0 - 1.5	SS-1	80				SAME AS SS-2					14	A-6b (VISUAL)
STA. 13+87, 12' LT	2.5 -4.0	SS-2	87	10	18	22	23	27	36	18	18	14	A-6b (6)
NORTHING=166381.8	5.0 - 6.5	SS-3	100	1	2	4	42	51	35	17	18	11	A-6b (11)
EASTING=1991520.1	7.5 - 9.0	SS-4	93				SAME AS SS-4					11	A-6b (VISUAL)
	10.0 - 10.8	SS-5	100				SANDSTONE, TAN, SEVERELY WEATHERED					11	ROCK (VISUAL)
B-086-0-12	0.0 - 1.5	SS-1	100				SAME AS SS-2					14	A-6a (VISUAL)
STA. 15+00, 30' LT.	2.5 - 4.0	SS-2	100	18	25	10	30	17	33	22	11	12	A-6a (3)
NORTHING= 166480.1	5.0 - 6.5	SS-3	100				SAME AS SS-2					12	A-6a (VISUAL)
EASTING= 1991613.5	7.5 - 8.8	SS-4	100	5	3	7	47	38	33	20	13	12	A-6a (9)
B-086-1-12	0.0 - 1.5	SS-1	100				SAME AS SS-2					24	A-6b (VISUAL)
STA. 15+00, 260' LT.	2.5 - 4.0	SS-2	100	6	10	10	37	37	38	19	19	18	A-6b (11)
NORTHING= 166707.3	5.0 - 6.5	SS-3	100	6	10	10	37	37	38	19	19	12	A-6b (11)
EASTING= 1991577.7	7.5 - 9.0	SS-4	100				SAME AS SS-5					13	A-7-6 (VISUAL)
	10.0 - 11.5	SS-5	100	8	2	3	34	53	42	19	23	13	A-7-6 (14)
	12.5 - 13.4	SS-6	100				SAME AS SS-5					10	A-7-6 (VISUAL)
B-028-0-11	0.0 - 1.5	SS-1	67	14	12	9	31	34	39	20	19	11	A-6b (10)
STA. 18+53, 7' RT.	2.5 -4.0	SS-2	73				COMBINED WITH SS-1					14	A-6b (10)
NORTHING=166533.7	5.0 - 6.5	SS-3	33				SAME AS SS-5					21	A-6a (VISUAL)
EASTING=1991961.0	7.5 - 9.0	SS-4	67				SAME AS SS-5					18	A-6a (VISUAL)
	10.0 - 11.5	SS-5	100	8	2	18	44	28	29	18	11	11	A-6a (8)
B-030-0-11	0.0 - 1.5	SS-1	80	13	19	9	29	30	35	22	13	12	A-6a (6)
STA. 22+85, 9' LT.	2.5 -4.0	SS-2	100	5	6	12	38	39	38	20	18	11	A-6b (11)
NORTHING=166649.0	5.0 - 6.5	SS-3	100	8	3	9	44	36	33	18	15	11	A-6a (10)
EASTING=1992376.2	7.5 - 9.0	SS-4	100				SAME AS SS-3					10	A-6a (VISUAL)
	10.0 - 11.5	SS-5	100				SHALE,SEVERELY WEATHERED					4	ROCK (VISUAL)
B-087-0-12	0.0 - 1.5	SS-1	100	38	21	10	19	12	33	21	12	10	A-2-6 (0)
STA. 24+00, 120' LT.	4.5 - 5.2	SS-2	100				SAME AS SS-1					7	A-2-6 (VISUAL)
NORTHING= 166776.6													
EASTING= 1992476.9													
B-087-1-12	0.0 - 1.5	SS-1	100				SAME AS SS-2					35	A-6b (VISUAL)
STA. 24+00, 350' LT.	4.5 - 6.0	SS-2	100	19	4	3	32	42	39	21	18	14	A-6b (11)
NORTHING= 167004.5	7.0 - 8.5	SS-3	100				SAME AS SS-4					13	A-6b (VISUAL)
EASTING= 1992446.4	9.5 - 11.0	SS-4	100	0	0	3	45	52	40	22	18	12	A-6b (11)
	12.0 - 13.3	SS-5	100				SAME AS SS-4					10	A-6b (VISUAL)
	14.5 - 15.7	SS-6	100				MUDSTONE, RED & GRAY, MOD. WEATHERED, WEAK					9	ROCK (VISUAL)
	17.0 - 18.4	SS-7	100				SAME AS SS-6					9	ROCK (VISUAL)
	19.5 - 20.3	SS-8	100				SAME AS SS-6					10	ROCK (VISUAL)
	21.5 - 22.2	SS-9	100				SAME AS SS-6					9	ROCK (VISUAL)

DRAFT Stage 3 - Not for Construction 09/23/2024

DRAWN MSJ | CHECKED EMK

SOIL PROFILE - ROADWAY
SUMMARY OF SOIL TEST DATA

LAW-7-2.17

11 / 206

1052
1247

U:\173608714\LAW\75923\geotechnical\sheets\Coversheet_SS_Lab\75923IC003.dgn 5/15/2024 8:48:00 AM MJennings

SUMMARY OF SOIL TEST DATA
County Road 69 (Continued)

EXPLORATION NO., STATION & OFFSET	FROM TO	SAMPLE ID	% REC	% AGG	% CS	% FS	% SILT	% CLAY	LL	PL	PI	% WC	ODOT CLASS
STA. 31+67, 5' RT.	6.5 - 8.5	ST-2	100	2	3	8	44	43	36	21	15	13	A-6a (10)
NORTHING= 166657.3	8.5 - 9.5	ST-3	100	18	5	10	38	29	31	17	14	12	A-6a (8)
EASTING= 1993168.5													
B-088-0-12	0.0 - 1.5	SS-1	100				SAME AS SS-2					17	A-6b (VISUAL)
STA. 33+50, 120' LT.	5.0 - 6.5	SS-2	100	6	3	5	46	40	39	19	20	16	A-6b (12)
NORTHING= 166766.0	7.5 - 9.0	SS-3	100				SAME AS SS-2					12	A-6b (VISUAL)
EASTING= 1993455.7	10.0 - 11.5	SS-4	100				SAME AS SS-5					10	A-6b (VISUAL)
	12.5 - 14.0	SS-5	100	0	3	8	44	45	38	20	18	8	A-6b (11)
B-042-0-11	0.0 - 1.5	SS-1	80	0	1	3	35	61	52	26	26	19	A-7-6 (17)
STA. 39+30, 5' LT.	2.5 - 3.6	SS-2	91			SHALE, TAN, SEVERELY WEATHERED						11	ROCK (VISUAL)
NORTHING=166574.4													
EASTING=1994014.6													
B-089-0-12	0.0 - 1.5	SS-1	100				SAME AS SS-2					23	A-7-6 (VISUAL)
STA. 46+50, 110' LT.	2.5 - 4.0	SS-2	100	1	2	6	50	41	41	19	22	17	A-7-6 (13)
NORTHING= 166611.1	4.5 - 6.0	SS-3	100				SAME AS SS-2					13	A-7-6 (VISUAL)
EASTING= 1994738.0	7.5 - 9.0	SS-4	100				SAME AS SS-5					10	A-7-6 (VISUAL)
	9.5 - 11.0	SS-5	100	6	1	3	43	47	42	19	23	11	A-7-6 (14)
	12.5 - 13.9	SS-6	100			SHALE, RED, SEVERELY WEATHERED						12	ROCK (VISUAL)
B-045-0-11	0.0 - 1.5	SS-1	53				SAME AS SS-2					27	A-6b (VISUAL)
STA. 46+85, 8' LT.	2.5 -4.0	SS-2	100	8	4	5	38	45	38	18	20	12	A-6b (12)
NORTHING=166506.9	5.0 - 6.5	SS-3	73				SAME AS SS-2					19	A-6b (VISUAL)
EASTING=1994766.2	7.5 - 9.0	SS-4	100	2	1	3	46	48	39	20	19	8	A-6b (12)
	10.0 - 11.5	SS-5	67				SAME AS SS-4					8	A-6b (VISUAL)
B-046-0-11	0.0 - 1.5	SS-1	80				AGGREGATE BASE MATERIAL					8	A-1-b (VISUAL)
STA. 51+18, 7' RT.	2.5 -4.0	SS-2	80	18	8	8	32	34	39	23	16	25	A-6b (9)
NORTHING=166467.8	5.0 - 6.5	SS-3	100				SAME AS SS-2					25	A-6b (VISUAL)
EASTING=1995198.2	7.5 - 9.0	SS-4	100	3	1	1	33	62	38	21	17	28	A-6b (11)
	10.0 - 11.5	SS-5	100				SAME AS SS-4					27	A-6b (VISUAL)
B-049-0-11	0.0 - 1.5	SS-1	100				SAME AS SS-2					26	A-7-6 (VISUAL)
STA. 54+86, 4' RT.	2.5 -4.0	SS-2	100	4	11	8	38	39	43	18	25	19	A-7-6 (15)
NORTHING=166450.4	5.0 - 6.5	SS-3	100				SAME AS SS-2					22	A-7-6 (VISUAL)
EASTING=1995565.5	7.5 - 9.0	SS-4	100	0	4	5	40	51	42	23	19	26	A-7-6 (12)
	10.0 - 11.5	SS-5	100				SAME AS SS-4					27	A-7-6 (VISUAL)

LABORATORY TESTING DATA NOT AVAILABLE FOR THE FOLLOWING BORINGS: S-213-0-99, R-237-0-99, R-238-0-99, R-240-0-99

SUMMARY OF SOIL TEST DATA
County Road 118

EXPLORATION NO., STATION & OFFSET	FROM TO	SAMPLE ID	% REC	% AGG	% CS	% FS	% SILT	% CLAY	LL	PL	PI	% WC	ODOT CLASS
B-090-0-12	0.0 - 1.5	SS-1	100	4	14	16	40	26	34	21	13	26	A-6a (7)
STA. 11+00, CENTERLINE													
NORTHING= 166775.9													
EASTING= 1992826.5													
B-031-0-11	0.0 - 1.5	SS-1	40				SAME AS SS-2					20	A-6a (VISUAL)
STA. 14+42, 9' RT.	5.0 - 5.6	SS-3	100				SAME AS SS-2					8	A-6b (VISUAL)
NORTHING=167040.7													
EASTING=1993491.0													

LABORATORY TESTING DATA NOT AVAILABLE FOR THE FOLLOWING BORING: S-214-0-99

SUMMARY OF SOIL TEST DATA
State Route 775

EXPLORATION NO., STATION & OFFSET	FROM TO	SAMPLE ID	% REC	% AGG	% CS	% FS	% SILT	% CLAY	LL	PL	PI	% WC	ODOT CLASS
B-092-0-12	1.0 - 2.5	SS-1	100	35	13	9	20	23	34	18	16	18	A-6b (3)
STA. 46+00, CENTERLINE	4.5 - 6.0	SS-2	100				SAME AS SS-1					16	A-6b (VISUAL)
NORTHING= 162560.5	6.5 - 8.0	SS-3	100				SAME AS SS-1					18	A-6b (VISUAL)
EASTING= 2002840.3	8.5 - 10.0	SS-4	100				SAME AS SS-1					10	A-6b (VISUAL)
R-108-0-99	13.5 - 15.0	SS-4	-	5	22	12	37	24	33	21	12	19	A-6a (6)
STA. 47+72, 17' RT.	28.5 - 30.0	SS-7	-	0	37	58	5		-	-	-	-	A-3 (0)
NORTHING=162687.1													
EASTING=2002861.7													
B-093-0-12	1.0 - 2.5	SS-1	100				SAME AS SS-2					12	A-6b (VISUAL)
STA. 50+00, CENTERLINE	4.5 - 6.0	SS-2	100	23	11	9	27	30	37	21	16	11	A-6b (7)
NORTHING= 162894.6	6.5 - 8.0	SS-3	100				SAME AS SS-2					16	A-6b (VISUAL)
EASTING= 2003060.3	8.5 - 10.0	SS-4	100				SAME AS SS-2					14	A-6b (VISUAL)
R-109-0-99	3.5 - 5.0	SS-2	-	1	1	25	52	21	32	23	9	28	A-4b (8)
STA. 51+82, 13' RT.													
NORTHING=163032.0													
EASTING=2003082.4													
B-094-0-12	1.5 - 3.0	SS-1	100				SAME AS SS-2					10	A-6a (VISUAL)
STA. 53+91, 19' RT.	3.0 - 4.5	SS-2	100	20	23	11	25	21	34	20	14	10	A-6a (3)
NORTHING= 163210.8	6.0 - 7.5	SS-3	100	20	23	11	25	21	34	20	14	8	A-6a (3)
EASTING=2003291.2	8.5 - 10.0	SS-4	100				SAME AS SS-2					12	A-6a (VISUAL)
	11.0 - 12.5	SS-5	100				SAME AS SS-2					11	A-6a (VISUAL)
	13.5 - 15.0	SS-6	100				SAME AS SS-2					11	A-6a (VISUAL)
	16.0 - 17.5	SS-7	100				SAME AS SS-10					11	A-6a (VISUAL)
	18.5 - 20.0	SS-8	100				SAME AS SS-10					14	A-6a (VISUAL)
	21.0 - 21.3	SS-9	100				SAME AS SS-10					13	A-6a (VISUAL)
	23.5 - 25.0	SS-10	100	10	8	13	36	33	33	19	14	12	A-6a (8)
	26.0 - 27.5	SS-11	100	10	8	13	36	33	33	19	14	8	A-6a (8)
	28.5 - 30.0	SS-12	100				SAME AS SS-10					11	A-6a (VISUAL)
	31.0 - 32.5	SS-13	100				SAME AS SS-10					10	A-6a (VISUAL)
R-117-0-99	3.5 - 5.0	SS-1	-	0	1	37	45	17	-	-	-	16	EST. A-6a
STA. 60+44, 5' RT.	8.6 - 9.8	SS-3	-	0	1	6	75	18	33		8	28	A-4b (8)
NORTHING=163756.8	23.5 - 25.0	SS-6	-	0	0	6	70	24	26		7	21	A-4a (8)
EASTING=2003549.9													
R-116-0-99	3.0 - 4.5	SS-1	-	10	4	30	35	21	24		10	12	A-4a (4)
STA. 64+58, 1.4' LT.	8.5 - 10.0	SS-3	-	0	0	58	42		-	-	-	-	EST. A-4a
NORTHING=164104.1													
EASTING=2003773.9													
B-095-0-12	0.0 - 1.5	SS-1	100				SAME AS SS-3					28	A-6b (VISUAL)
STA. 67+00, 110' RT.	3.5 - 5.0	SS-2	100				SAME AS SS-3					13	A-6b (VISUAL)
NORTHING= 164252.7	6.0 - 7.5	SS-3	100	6	4	3	39	48	39	22	17	13	A-6b (11)
EASTING= 2004086.6	8.5 - 10.0	SS-4	100				SAME AS SS-3					11	A-6b (VISUAL)
	11.0 - 11.9	SS-5	100			SHALE, BROWN, SEVERELY WEATHERED						6	ROCK (VISUAL)
B-096-0-12	1.5 - 3.0	SS-1	100	0	3	25	49	23	25	21	4	18	A-4a (7)
STA. 68+50, CENTERLINE	4.5 - 6.0	SS-2	100				SAME AS SS-1					22	A-4a (VISUAL)
NORTHING= 164438.6	6.5 - 8.0	SS-3	100				SAME AS SS-1					19	A-4a (VISUAL)
EASTING= 2004079.6	8.5 - 10.0	SS-4	100				SAME AS SS-1					15	A-4a (VISUAL)

DRAFT Stage 3 - Not for Construction 09/23/2024

DRAWN MSJ CHECKED EMK

SOIL PROFILE - ROADWAY
SUMMARY OF SOIL TEST DATA

LAW-7-2.17

12/206

1053
1247

U:\173608714\LAW\75923\geotechnical\sheets\Coversheet_SS_Lab\75923ICO03.dgn 5/15/2024 8:48:18 AM MJennings

BORINGS CONVERTED TO LAT/LONG COORDINATES

R-201-0-99 Lat38.434143 Long-82.457043

B-001-0-11 Lat38.434506 Long-82.457540

R-202-0-99 Lat38.435835 Long-82.457356

R-203-0-99 Lat38.436770 Long-82.456572

R-204-0-99 Lat38.437842 Long-82.456164

B-003-0-11 Lat38.439338 Long-82.453778

B-002-0-11 Lat38.439784 Long-82.454392

R-205-0-99 Lat38.440132 Long-82.453411

R-206-0-99 Lat38.441010 Long-82.452521

R-207-0-99 Lat38.441436 Long-82.451205

B-004-0-11 Lat38.442062 Long-82.450321

B-005-0-11 Lat38.442507 Long-88.449391

R-209-0-99 Lat38.442353 Long-82.448702

R-210-0-99 Lat38.442919 Long-82.447475

B-006-0-11 Lat38.442930 Long-82.446979

B-007-0-11 Lat38.442429 Long-82.446747

R-211-0-99 Lat38.443084 Long-82.446439

R-212-0-99 Lat38.443406 Long-82.444826

R-2P1-0-99 Lat38.444630 Long-82.440916

B-008-0-11 Lat38.445036 Long-82.439012

B-009-0-11 Lat38.444774 Long-82.438744

R-217-0-99 Lat38.446729 Long-82.437638

B-010-0-11 Lat38.448243 Long-82.436038

B-012-0-11 Lat38.448118 Long-82.434122

B-011-0-11 Lat38.449099 Long-82.434950

R-218-0-99 Lat38.449455 Long-82.432465

R-220-0-99 Lat38.450158 Long-82.429831

B-017-0-11 Lat38.449589 Long-82.428845

B-015-0-11 Lat38.450522 Long-82.429130

B-016-0-11 Lat38.450010 Long-82.428935

R-221-0-99 Lat38.450706 Long-82.428589

B-018-0-11 Lat38.450768 Long-82.426982

R-223-0-99 Lat38.450375 Long-82.426165

B-019-0-11 Lat38.451065 Long-82.425751

B-021-0-11 Lat38.450624 Long-82.424629

B-020-0-11 Lat38.451890 Long-82.425384

B-022-0-11 Lat38.452096 Long-82.423601

R-226-0-99 Lat38.452124 Long-82.423075

R-227-0-99 Lat38.453941 Long-82.423770

R-229-0-99 Lat38.454392 Long-82.422076

B-023-0-11 Lat38.454656 Long-82.421120

R-232-0-99 Lat38.455162 Long-82.420614

R-233-0-99 Lat38.455821 Long-82.419926

B-026-0-11 Lat38.456118 Long-82.418923

B-3SP-1-99 Lat38.456503 Long-82.419399

B-029-0-11 Lat38.457007 Long-82.417235

B-037-0-11 Lat38.456556 Long-82.414054

B-041-0-11 Lat38.456895 Long-82.411719

B-043-0-11 Lat38.456730 Long-82.410314

B-044-0-11 Lat38.456679 Long-82.408602

B-048-0-11 Lat38.456063 Long-82.406538

B-047-0-11 Lat38.456563 Long-82.406492

B-047-1-11 Lat38.456563 Long-82.406492

B-047-2-11 Lat38.456563 Long-82.406492

R-241-0-99 Lat38.456163 Long-82.406312

B-052-0-11 Lat38.456397 Long-82.401963

B-053-0-11 Lat38.457035 Long-82.399456

R-244-0-99 Lat38.456331 Long-82.399297

R-246-0-99 Lat38.456183 Long-82.396778

B-054-0-11 Lat38.456671 Long-82.396292

B-055-0-11 Lat38.455363 Long-82.396578

B-055-1-11 Lat38.455363 Long-82.396578

B-055-2-11 Lat38.455363 Long-82.396578

B-053-0-11 Lat38.457035 Long-82.399456

R-244-0-99 Lat38.456331 Long-82.399297

R-246-0-99 Lat38.456183 Long-82.396778

B-054-0-11 Lat38.456671 Long-82.396292

B-055-0-11 Lat38.455363 Long-82.396578

B-055-1-11 Lat38.455363 Long-82.396578

B-055-2-11 Lat38.455363 Long-82.396578

B-055-3-11 Lat38.455363 Long-82.396578

R-248-0-99 Lat38.455456 Long-82.394628

B-056-0-11 Lat38.455184 Long-82.394298

B-057-0-11 Lat38.454736 Long-82.394475

B-057-1-11 Lat38.454736 Long-82.394475

B-059-0-11 Lat38.456461 Long-82.391143

B-058-0-11 Lat38.455495 Long-82.391810

B-060-0-11 Lat38.454227 Long-82.392383

B-061-0-11 Lat38.453381 Long82.392923

R-250-0-99 Lat38.454412 Long-82.392210

R-251-0-99 Lat38.454264 Long-82.391345

B-063-0-11 Lat38.454341 Long-82.390454

B-064-0-11 Lat38.453553 Long-82.391128

B-062-0-11 Lat38.454689 Long-82.390138

B-065-0-11 Lat38.453065 Long-82.391495

B-067-0-11 Lat38.452026 Long-82.388700

B-066-0-11 Lat38.453948 Long-82.386899

B-070-0-11 Lat38.451950 Long-82.384786

B-068-0-11 Lat38.450043 Long-82.385887

B-069-0-11 Lat38.450850 Long-82.385154

R-255-0-99 Lat38.450869 Long-82.384357

B-072-0-11 Lat38.450144 Long-82.381182

B-071-0-11 Lat38.450472 Long-82.380976

B-073-0-11 Lat38.450130 Long-82.380049

R-119-0-99 Lat38.448411 Long-82.377183

B-074-0-11 Lat38.448507 Long-82.376098

R-120-0-99 Lat38.448609 Long-82.375980

B-075-0-11 Lat38.448580 Long-82.374707

R-121-0-99 Lat38.448515 Long-82.374496

B-076-0-11 Lat38.448843 Long-82.373352

R-122-0-99 Lat38.449078 Long-82.373236

B-077-0-11 Lat38.449237 Long 9.000000

R-123-0-99 Lat38.449211 Long-82.371828

B-078-0-11 Lat38.449641 Long-82.370750

R-124-0-99 Lat38.449881 Long-82.370673

S-103-0-99 Lat38.450293 Long-82.370729

B-079-0-11 Lat38.450028 Long-82.369444

R-125-0-99 Lat38.450172 Long-82.369265

B-075-0-12 Lat38.436261 Long-82.457725

B-076-0-12 Lat38.436850 Long-82.456771

B-077-0-12 Lat38.436994 Long-82.456982

B-078-0-12 Lat38.433537 Long-82.456035

B-079-0-12 Lat38.434071 Long-82.456561

B-080-0-12 Lat38.434958 Long-82.456926

B-073-0-20 Lat38.448656 Long-82.380234

B-073-1-20 Lat38.448106 Long-82.379454

B-100-0-12 Lat38.448743 Long-82.376932

B-101-0-12 Lat38.448710 Long-82.376236

B-102-0-12 Lat38.449225 Long-82.375643

B-097-1-20 Lat38.449922 Long-82.376318

B-098-1-20 Lat38.449685 Long-82.375614

B-106-1-20 Lat38.449223 Long-82.374463

B-106-2-20 Lat38.449745 Long-82.374381

B-106-3-20 Lat38.449745 Long-82.374381

B-103-0-12 Lat38.448021 Long-82.378202

R-110-0-99 Lat38.447720 Long-82.377598

R-118-0-99 Lat38.447932 Long-82.376367

B-104-0-12 Lat38.448244 Long-82.375286

B-013-0-11 Lat38.449637 Long-82.434060

B-014-0-11 Lat38.450063 Long-82.433092

B-083-1-12 Lat38.455927 Long-82.421758

B-025-0-11 Lat38.457329 Long-82.421340

B-084-0-12 Lat38.457490 Long-82.421656

B-085-0-12 Lat38.456770 Long-82.420999

B-024-0-11 Lat38.456421 Long-82.420528

B-027-0-11 Lat38.456781 Long-82.419619

B-086-0-12 Lat38.457051 Long-82.419292

B-086-1-12 Lat38.457675 Long-82.419417

B-028-0-11 Lat38.457197 Long-82.418079

B-030-0-11 Lat38.457512 Long-82.416628

B-087-0-11 Lat38.457863 Long-82.416276

B-087-0-11 Lat38.458488 Long-82.416382

unknown Lat38.457533 Long-82.413862

B-088-0-11 Lat38.457831 Long-82.412859

B-042-0-11 Lat38.457303 Long-82.410908

B-089-0-11 Lat38.457402 Long-82.408382

B-045-0-11 Lat38.457116 Long-82.408284

B-046-0-11 Lat38.457007 Long-82.406775

B-049-0-11 Lat38.456959 Long-82.405493

B-090-0-11 Lat38.457860 Long-82.415056

B-031-0-11 Lat38.458585 Long-82.412734

B-092-0-12 Lat38.446255 Long-82.380109

R-108-0-99 Lat38.446602 Long-82.380033

B-093-0-12 Lat38.447171 Long-82.379339

R-109-0-99 Lat38.447548 Long-82.379261

B-094-0-12 Lat38.448038 Long-82.378531

R-117-0-99 Lat38.449537 Long-82.377626

R-116-0-99 Lat38.450437 Long-82.377842

B-095-0-12 Lat38.450796 Long-82.377748

B-096-0-12 Lat38.451407 Long-82.375773

B-097-0-12 Lat38.450147 Long-82.376629

B-098-0-12 Lat38.449784 Long-82.375678

B-098-1-12 Lat38.450380 Long-82.375178

DRAFT Stage 3 - Not for Construction 09/23/2024

DRAWN MSJ
CHECKED EMK

SOIL PROFILE - ROADWAY
SUMMARY OF SOIL TEST DATA

LAW-7-2.17

13 / 206

1054 1247

U:\17360871\4\LAW\75923\geotechnical\sheets\Coversheet_SS_Lab\75923IC003.dgn 5/15/2024 8:48:34 AM MJennings

UNCONFINED COMPRESSION TEST OF COHESIVE SOIL (AASHTO T 028)

PROJECT DESIGNATION: LAW-7-2.17 PID 75923

EXPLORATION ID: B-076-0-12

ALIGNMENT, STATION & OFFSET: STA. 123+50, CENTERLINE

SAMPLE ID: ST-4 DEPTH: 9.4' - 9.9' LAB NO.: 11

SPECIMEN DATA

DIAMETER: 2.832 in WET DENSITY: 121.1 pcf

HEIGHT: 2.1 in DRY DENSITY: 93.1 pcf

VISUAL DESCRIPTION: LEAN CLAY, BROWN, MOIST FIRM

PHYSICAL CHARACTERISTICS

% AGG	% CS	% FS	% Silt	% Clay	LL	PL	PI	WC
0	0	11	48	41	34	19	15	-

Stress vs. Strain

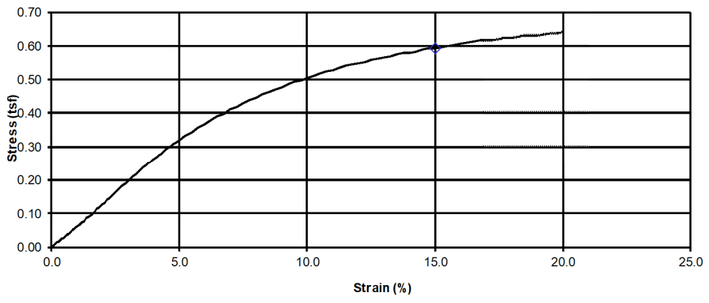

Failure Sketch

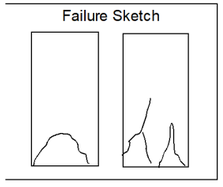

Pocket Penetrometer Reading (tsf) .6

Torvane Reading (kg/cm^2) .21

Comments

Cut two cons from 9.9' - 10.4'

Put out for class

REMARKS: Qu = 0.59 tsf @ 15.0% STRAIN

UNCONFINED COMPRESSION TEST OF COHESIVE SOIL (AASHTO T 028)

PROJECT DESIGNATION: LAW-7-2.17 PID 75923

EXPLORATION ID: B-003-0-11

ALIGNMENT, STATION & OFFSET: STA. 135+96, 118.0' RT.

SAMPLE ID: ST-3 DEPTH: 5.0' - 5.5' LAB NO.: 428A

SPECIMEN DATA

DIAMETER: 2.866 in WET DENSITY: 113.7 pcf

HEIGHT: 2.1 in DRY DENSITY: 87.8 pcf

VISUAL DESCRIPTION: MEDIUM STIFF, BROWN SILT, SOME CLAY, LITTLE SAND, MOIST

PHYSICAL CHARACTERISTICS

% AGG	% CS	% FS	% Silt	% Clay	LL	PL	PI	WC
0	0	10	63	27	33	23	10	30

Stress vs. Strain

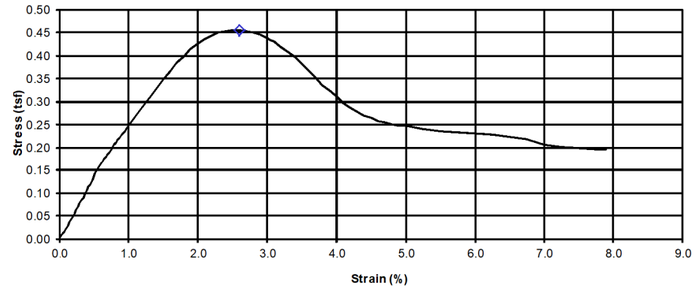

Failure Sketch

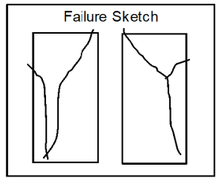

Pocket Penetrometer Reading (tsf) 1.0

Torvane Reading (kg/cm^2) 2.5

Comments

Has been put out for class

REMARKS: Qu = 0.46tsf @ 2.6% STRAIN

DRAFT Stage 3 - Not for Construction 09/23/2024

DRAWN MSJ CHECKED EMK

SOIL PROFILE - ROADWAY LABORATORY TEST DATA

LAW-7-2.17

1055 1247

U:\17360871 4\LAW\75923\geotechnical\sheets\Coversheet_SS_Lab\UC\75923ID001.dgn 5/15/2024 8:36:43 AM MJennings

UNCONFINED COMPRESSION TEST OF COHESIVE SOIL (AASHTO T 028)

PROJECT DESIGNATION: LAW-7-2.17 PID 75923

EXPLORATION ID: B-003-0-11

ALIGNMENT, STATION & OFFSET: STA. 135+96, 118.0' RT.

SAMPLE ID: ST-3 DEPTH: 5.0' - 7.0' LAB NO.: 428B

SPECIMEN DATA

DIAMETER: 2.895 in WET DENSITY: 114.4 pcf

HEIGHT: 6.062 in DRY DENSITY: 88.3 pcf

VISUAL DESCRIPTION: MEDIUM STIFF, BROWN SILT, SOME CLAY, LITTLE SAND, MOIST

PHYSICAL CHARACTERISTICS

% AGG	% CS	% FS	% Silt	% Clay	LL	PL	PI	WC
0	0	10	63	27	33	23	10	30

Stress vs. Strain

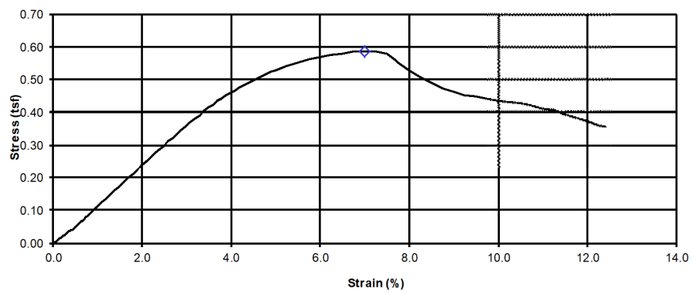

Failure Sketch

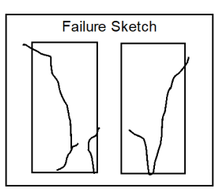

Pocket Penetrometer Reading (tsf) 1.0

Torvane Reading (kg/cm^2) 2.5

Comments

REMARKS: Qu = 0.59tsf @ 7.0% STRAIN

UNCONFINED COMPRESSION TEST OF COHESIVE SOIL (AASHTO T 028)

PROJECT DESIGNATION: LAW-7-2.17 PID 75923

EXPLORATION ID: B-008

ALIGNMENT, STATION & OFFSET: STA. 183+86, 111.1' RT.

SAMPLE ID: ST-3 DEPTH: 5.0' - 5.5' LAB NO.: 479A

SPECIMEN DATA

DIAMETER: 2.884 in WET DENSITY: 130.3 pcf

HEIGHT: 5.940 in DRY DENSITY: 103.3 pcf

VISUAL DESCRIPTION: VERY STIFF TO HARD, RED-BROWN, CLAY, SOME SILT, TRACE SAND, DAMP

PHYSICAL CHARACTERISTICS

% AGG	% CS	% FS	% Silt	% Clay	LL	PL	PI	WC
0	1	2	31	66	49	22	27	19

Stress vs. Strain

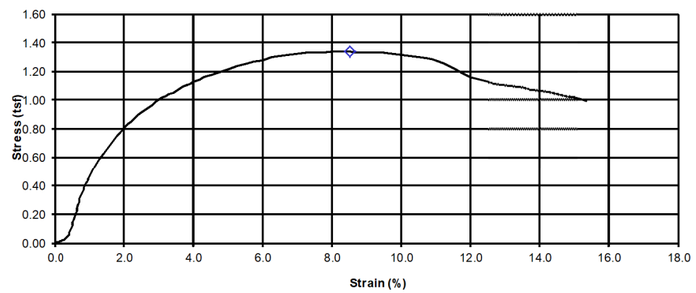

Failure Sketch

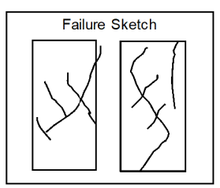

Pocket Penetrometer Reading (tsf) 2.75

Torvane Reading (kg/cm^2) 6.0

Comments

REMARKS: Qu = 1.34tsf @ 8.5% STRAIN

DRAWN MSJ CHECKED EMK

SOIL PROFILE - ROADWAY
LABORATORY TEST DATA

LAW-7-2.17

15 /206

1056
1247

DRAFT Stage 3 - Not for Construction 09/23/2024

U:\173608714\LAW\75923\geotechnical\sheets\Coversheet_SS_Lab\UC\75923ID001.dgn 5/15/2024 8:37:09 AM MJennings

UNCONFINED COMPRESSION TEST OF COHESIVE SOIL (AASHTO T 028)

PROJECT DESIGNATION: LAW-7-2.17 PID 75923

EXPLORATION ID: B-008

ALIGNMENT, STATION & OFFSET: STA. 183+86, 111.1' RT.

SAMPLE ID: ST-3 DEPTH: 5.5' - 6.0' LAB NO.: 479B

SPECIMEN DATA

DIAMETER: 2.890 in WET DENSITY: 128.1 pcf

HEIGHT: 5.855 in DRY DENSITY: 104.2 pcf

VISUAL DESCRIPTION: VERY STIFF TO HARD, RED-BROWN, CLAY, SOME SILT, TRACE SAND, DAMP

PHYSICAL CHARACTERISTICS

% AGG	% CS	% FS	% Silt	% Clay	LL	PL	PI	WC
0	1	2	31	66	49	22	27	21

Stress vs. Strain

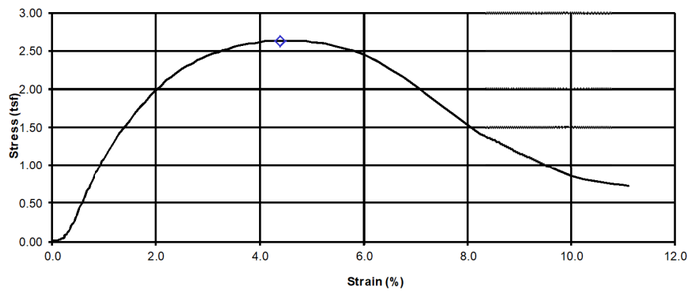

Failure Sketch

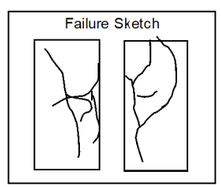

Pocket Penetrometer Reading (tsf) 2.75

Torvane Reading (kg/cm^2) 6.0

Comments

REMARKS: Qu = 2.63tsf @ 4.4% STRAIN

UNCONFINED COMPRESSION TEST OF COHESIVE SOIL (AASHTO T 028)

PROJECT DESIGNATION: LAW-7-2.17 PID 75923

EXPLORATION ID: B-010-1-12

ALIGNMENT, STATION & OFFSET: STA. 199+84, 30.0' RT.

SAMPLE ID: ST-4 DEPTH: 7.7' - 8.3 LAB NO.: 5

SPECIMEN DATA

DIAMETER: 2.879 in WET DENSITY: 115.5

HEIGHT: 6.052 DRY DENSITY: 88.9

VISUAL DESCRIPTION: LEAN CLAY, BROWN, WET, SOFT

PHYSICAL CHARACTERISTICS

% AGG	% CS	% FS	% Silt	% Clay	LL	PL	PI	WC
0	0	22	43	35	35	19	16	30

Stress vs. Strain

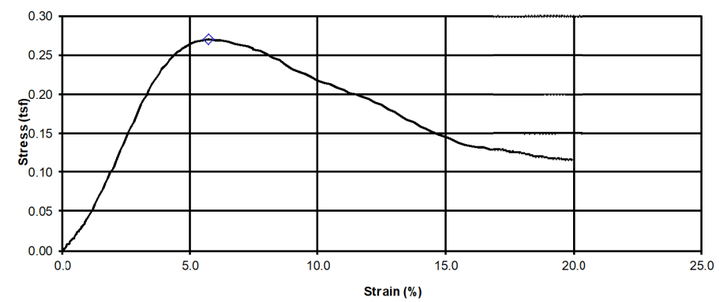

Failure Sketch

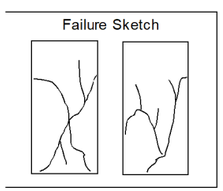

Pocket Penetrometer Reading (tsf) 0

Torvane Reading (kg/cm^2) .04

Comments

Cut con from 8.35' - 8.6'

Rough cut saved 7.1' - 7.7'

1F

REMARKS: Qu = 0.27f @ 5.7 STRAIN

DRAFT Stage 3 - Not for Construction 09/23/2024

DRAWN MSJ CHECKED EMK

SOIL PROFILE - ROADWAY LABORATORY TEST DATA

LAW-7-2.17

16/206

1057/1247

U:\173608714\LAW\75923\geotechnical\sheets\Coversheet_SS_Lab\UC\75923ID001.dgn 5/15/2024 8:37:27 AM MJennings

UNCONFINED COMPRESSION TEST OF COHESIVE SOIL (AASHTO T 028)

PROJECT DESIGNATION: LAW-7-2.17 PID 75923

EXPLORATION ID: B-010-2-12

ALIGNMENT, STATION & OFFSET: STA. 200+80, 50.0' LT.

SAMPLE ID: ST-4 DEPTH: 8.1' -8.6' LAB NO.: 6

SPECIMEN DATA

DIAMETER: 2.843 in WET DENSITY: 121.1 pcf

HEIGHT: 6.019 in DRY DENSITY: 96.4 pcf

VISUAL DESCRIPTION: LEAN CLAY, BROWN, MOIST, FIRM

PHYSICAL CHARACTERISTICS

% AGG	% CS	% FS	% Silt	% Clay	LL	PL	PI	WC
0	0	22	50	28	33	19	14	26

Stress vs. Strain

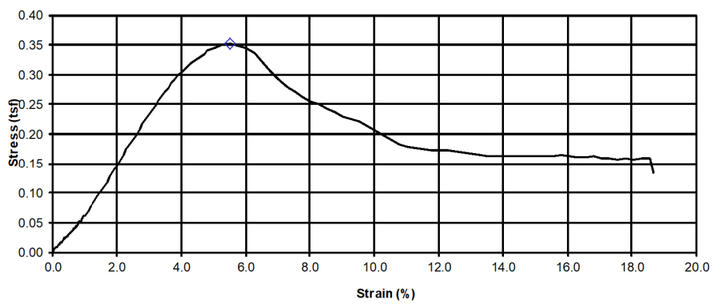

Failure Sketch

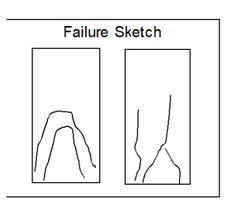

Pocket Penetrometer Reading (tsf) 1.0

Torvane Reading (kg/cm^2) .27

Comments

Extra 6" untrimmed sample (7.6' - 8.1')

1F

7.1' - 7.6' put out for class

REMARKS: Qu = 0.35tsf @ 5.5% STRAIN

UNCONFINED COMPRESSION TEST OF COHESIVE SOIL (AASHTO T 028)

PROJECT DESIGNATION: LAW-7-2.17 PID 75923

EXPLORATION ID: B-016

ALIGNMENT, STATION & OFFSET: STA. 218+94, 120.0' RT.

SAMPLE ID: ST-3 DEPTH: 5.0' - 5.5' LAB NO.: 513A

SPECIMEN DATA

DIAMETER: 2.827 in WET DENSITY: 128.1 pcf

HEIGHT: 6.165 in DRY DENSITY: 112.5 pcf

VISUAL DESCRIPTION: HARD, MOTTLED BROWN AND GRAY, CLAY, SOME SILT, LITTLE SAND, TRACE STONE FRAGMENTS, DAMP

PHYSICAL CHARACTERISTICS

% AGG	% CS	% FS	% Silt	% Clay	LL	PL	PI	WC
8	8	7	35	42	42	25	17	14

Stress vs. Strain

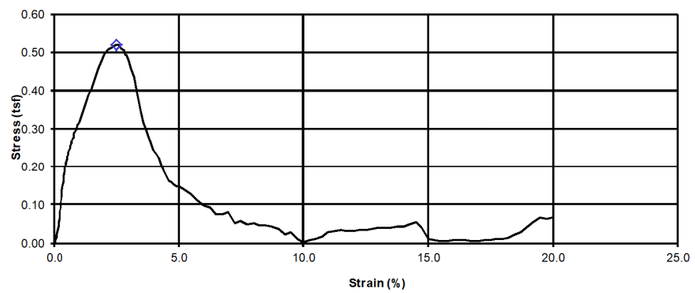

Failure Sketch

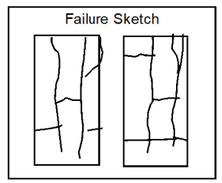

Pocket Penetrometer Reading (tsf) 3.75

Torvane Reading (kg/cm^2) 1.5

Comments

Fragile

REMARKS: Qu = 0.52tsf @ 2.5% STRAIN

DRAWN MSJ CHECKED EMK

SOIL PROFILE - ROADWAY LABORATORY TEST DATA

LAW-7-2.17

17 /206

1058 1247

DRAFT Stage 3 - Not for Construction 09/23/2024

U:\17360814\LAW\75923\geotechnical\sheets\Coversheet_SS_Lab\UC\75923D001.dgn 5/15/2024 8:37:49 AM MJennings

UNCONFINED COMPRESSION TEST OF COHESIVE SOIL (AASHTO T 028)

PROJECT DESIGNATION: LAW-7-2.17 PID 75923

EXPLORATION ID: B-016

ALIGNMENT, STATION & OFFSET: STA. 218+94, 120.0' RT.

SAMPLE ID: ST-3 DEPTH: 5.5' - 6.0' LAB NO.: 513B

SPECIMEN DATA

DIAMETER: 2.799 in WET DENSITY: 125.2 pcf

HEIGHT: 6.113 in DRY DENSITY: 110.6 pcf

VISUAL DESCRIPTION: HARD, MOTTLED BROWN AND GRAY, CLAY, SOME SILT, LITTLE SAND, TRACE STONE FRAGMENTS, DAMP

PHYSICAL CHARACTERISTICS

% AGG	% CS	% FS	% Silt	% Clay	LL	PL	PI	WC
8	8	7	35	42	42	25	17	14

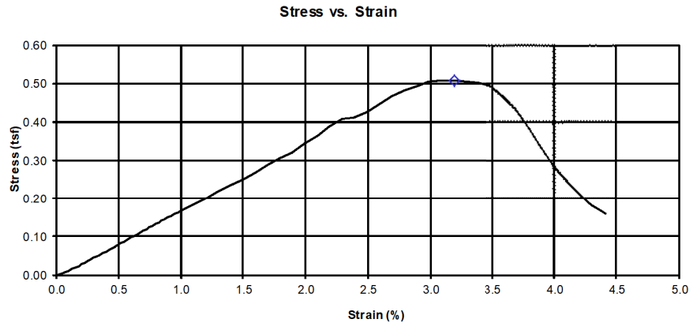

Failure Sketch

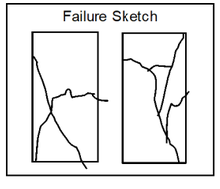

Pocket Penetrometer Reading (tsf) 3.75

Torvane Reading (kg/cm^2) 1.5

Comments

REMARKS: Qu = 0.51tsf @ 3.2% STRAIN

UNCONFINED COMPRESSION TEST OF COHESIVE SOIL (AASHTO T 028)

PROJECT DESIGNATION: LAW-7-2.17 PID 75923

EXPLORATION ID: B-018

ALIGNMENT, STATION & OFFSET: STA. 225+07, 3.0' RT.

SAMPLE ID: ST-3 DEPTH: 5.6' - 6.1' LAB NO.: 246B

SPECIMEN DATA

DIAMETER: 2.862 in WET DENSITY: 134.0 pcf

HEIGHT: 6.090 in DRY DENSITY: 113.6 pcf

VISUAL DESCRIPTION: SOFT TO MEDIUM STIFF, GRAY TO MOTTLED BROWN AND GRAY, SILTY CLAY, SOME SAND, TRACE GRAVEL, DAMP TO MOIST

PHYSICAL CHARACTERISTICS

% AGG	% CS	% FS	% Silt	% Clay	LL	PL	PI	WC
10	7	13	37	33	37	19	18	18

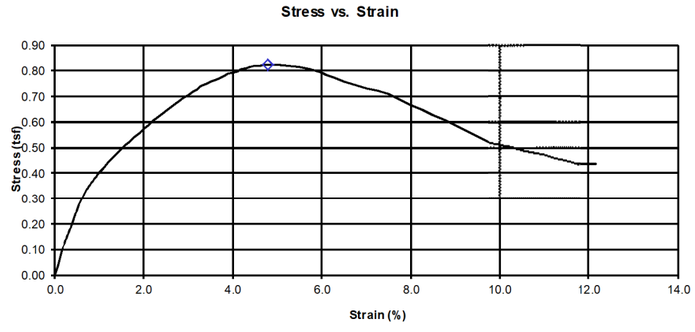

Failure Sketch

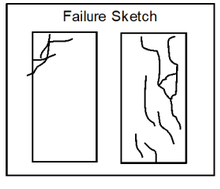

Pocket Penetrometer Reading (tsf) 1.75

Torvane Reading (kg/cm^2) N/A

Comments

One + 1 1/2" shale rock found in center of specimen after testing.

REMARKS: Qu = 0.82tsf @ 4.8% STRAIN

DRAWN MSJ CHECKED EMK

SOIL PROFILE - ROADWAY LABORATORY TEST DATA

LAW-7-2.17

1059 1247

DRAFT Stage 3 - Not for Construction 09/23/2024

U:\173608714\LAW\75923\geotechnical\sheets\Coversheet_SS_Lab\UC\75923D001.dgn 5/15/2024 8:38:11 AM MJennings

UNCONFINED COMPRESSION TEST OF COHESIVE SOIL (AASHTO T 028)

PROJECT DESIGNATION: LAW-7-2.17 PID 75923

EXPLORATION ID: B-019

ALIGNMENT, STATION & OFFSET: STA. 228+76, ℄

SAMPLE ID: ST-3 DEPTH: 5.4' - 5.9' LAB NO.: 530A

SPECIMEN DATA

DIAMETER: 2.893 in WET DENSITY: 136.2 pcf

HEIGHT: 6.171 in DRY DENSITY: 116.9 pcf

VISUAL DESCRIPTION: STIFF, BROWN GRADING TO RED-BROWN, CLAY AND SILT, TRACE SAND AND GRAVEL, DAMP

PHYSICAL CHARACTERISTICS

% AGG	% CS	% FS	% Silt	% Clay	LL	PL	PI	WC
10	0	5	40	45	42	22	20	15

Stress vs. Strain

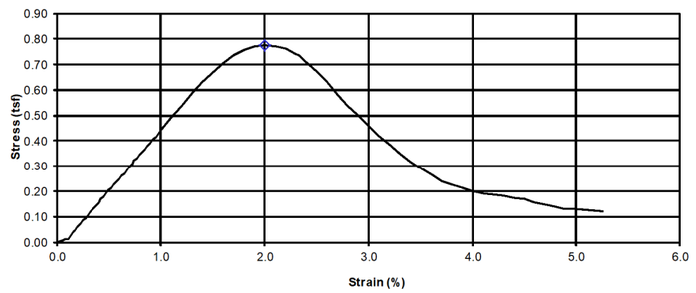

Failure Sketch

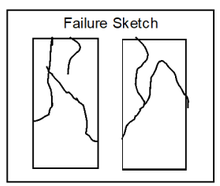

Pocket Penetrometer Reading (tsf) 3.5

Torvane Reading (kg/cm^2) 2.5

Comments

Very Fragile

REMARKS: Qu = 0.77†sf @ 2.0% STRAIN

UNCONFINED COMPRESSION TEST OF COHESIVE SOIL (AASHTO T 028)

PROJECT DESIGNATION: LAW-7-2.17 PID 75923

EXPLORATION ID: B-019

ALIGNMENT, STATION & OFFSET: STA. 228+76, ℄

SAMPLE ID: ST-3 DEPTH: 5.9' - 6.4' LAB NO.: 530B

SPECIMEN DATA

DIAMETER: 2.895 in WET DENSITY: 137.5 pcf

HEIGHT: 6.194 in DRY DENSITY: 121.6 pcf

VISUAL DESCRIPTION: STIFF, BROWN GRADING TO RED-BROWN, CLAY AND SILT, TRACE SAND AND GRAVEL, DAMP

PHYSICAL CHARACTERISTICS

% AGG	% CS	% FS	% Silt	% Clay	LL	PL	PI	WC
10	0	5	40	45	42	22	20	13

Stress vs. Strain

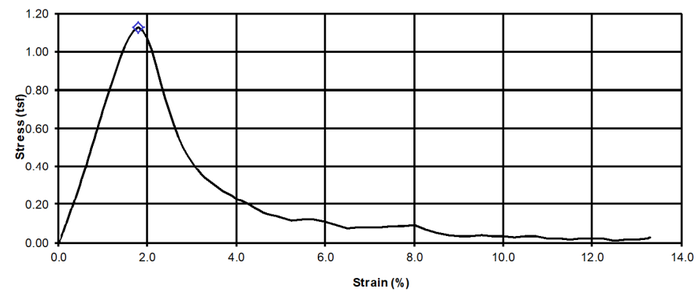

Failure Sketch

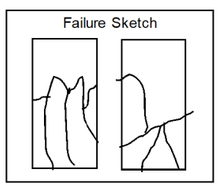

Pocket Penetrometer Reading (tsf) 3.5

Torvane Reading (kg/cm^2) 2.5

Comments

Very fragile

REMARKS: Qu = 1.13†sf @ 1.8% STRAIN

DRAFT Stage 3 - Not for Construction 09/23/2024

DRAWN MSJ CHECKED EMK

SOIL PROFILE - ROADWAY LABORATORY TEST DATA

LAW-7-2.17

U:\17360714\LAW\7592 3\geotechnical\sheets\Coversheet_SS_Lab\UC\75923ID001.dgn 5/15/2024 8:38:31 AM MJennings

UNCONFINED COMPRESSION TEST
OF COHESIVE SOIL
(AASHTO T 028)

PROJECT DESIGNATION: LAW-7-2.17 PID 75923

EXPLORATION ID: B-034

ALIGNMENT, STATION & OFFSET: STA. 271+00, 128.0' LT.

SAMPLE ID: ST-7 DEPTH: 13.0' - 13.5' LAB NO.: 28

SPECIMEN DATA

DIAMETER: 2.843 in WET DENSITY: 126.0 pcf

HEIGHT: 6.007 in DRY DENSITY: 98.4 pcf

VISUAL DESCRIPTION: MEDIUM STIFF, GRAY, CLAY, LITTLE SILT, TRACE SAND AND GRAVEL, MOIST

PHYSICAL CHARACTERISTICS

% AGG	% CS	% FS	% Silt	% Clay	LL	PL	PI	WC
6	4	5	17	68	42	20	22	29

Stress vs. Strain

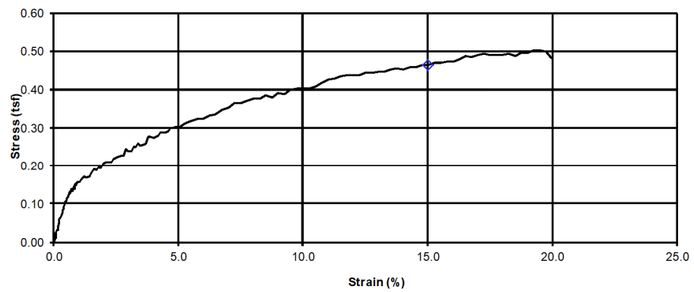

Failure Sketch

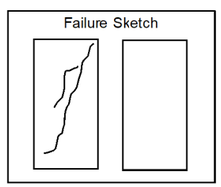

Pocket Penetrometer Reading (tsf) N/A

Torvane Reading (kg/cm^2) 0.35

Comments

REMARKS: Qu = 0.47tsf @ 15.0% STRAIN

UNCONFINED COMPRESSION TEST
OF COHESIVE SOIL
(AASHTO T 028)

PROJECT DESIGNATION: LAW-7-2.17 PID 75923

EXPLORATION ID: B-034

ALIGNMENT, STATION & OFFSET: STA. 271+00, 128.0' LT.

SAMPLE ID: ST-10 DEPTH: 20.8' - 21.3' LAB NO.: 31B

SPECIMEN DATA

DIAMETER: 2.813 in WET DENSITY: 129.2 pcf

HEIGHT: 6.027 in DRY DENSITY: N/A

VISUAL DESCRIPTION: STIFF TO VERY STIFF, GRAY, SILTY CLAY, TRACE SAND AND GRAVEL, MOIST

PHYSICAL CHARACTERISTICS

% AGG	% CS	% FS	% Silt	% Clay	LL	PL	PI	WC
4	2	5	43	46	40	20	20	25

Stress vs. Strain

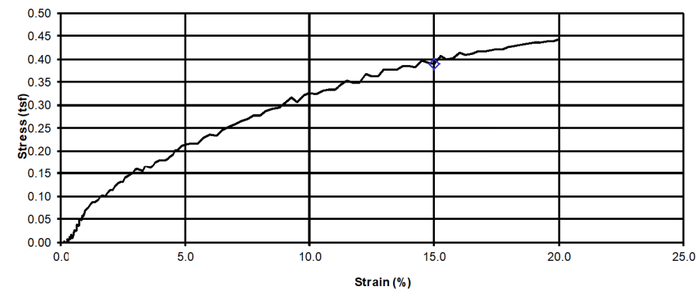

Failure Sketch

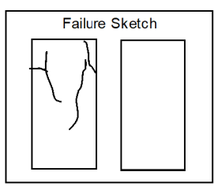

Pocket Penetrometer Reading (tsf) N/A

Torvane Reading (kg/cm^2) N/A

Comments

REMARKS: Qu = 0.39tsf @ 15.0% STRAIN

DRAWN MSJ CHECKED EMK

SOIL PROFILE - ROADWAY
LABORATORY TEST DATA

LAW-7-2.17

20/206

1061
1247

DRAFT Stage 3 - Not for Construction 09/23/2024

U:\173608714\LAW\75923\geotechnical\sheets\Coversheet_SS_Lab\UC\75923ID001.dgn 5/15/2024 8:38:51 AM MJennings

UNCONFINED COMPRESSION TEST OF COHESIVE SOIL (AASHTO T 028)

PROJECT DESIGNATION: LAW-7-2.17 PID 75923

EXPLORATION ID: B-048

ALIGNMENT, STATION & OFFSET: STA. 292+96, 195.0' RT.

SAMPLE ID: ST-4 DEPTH: 7.5' - 8.0' LAB NO.: 84A

SPECIMEN DATA

DIAMETER: 2.879 in WET DENSITY: 123.5 pcf

HEIGHT: 5.779 in DRY DENSITY: 97.8 pcf

VISUAL DESCRIPTION: LOOSE, BROWN, COARSE AND FINE SAND, LITTLE SILT AND CLAY, MOIST TO WET

PHYSICAL CHARACTERISTICS

% AGG	% CS	% FS	% Silt	% Clay	LL	PL	PI	WC
0	6	63	18	13	NP	NP	NP	26

Stress vs. Strain

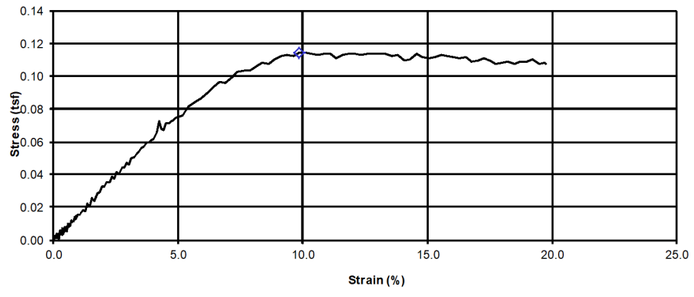

Failure Sketch

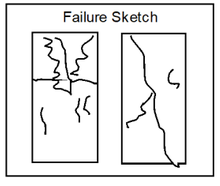

Pocket Penetrometer Reading (tsf) 0.25

Torvane Reading (kg/cm^2) 1.0

Comments

REMARKS: Qu = 0.11tsf @ 9.9% STRAIN

UNCONFINED COMPRESSION TEST OF COHESIVE SOIL (AASHTO T 028)

PROJECT DESIGNATION: LAW-7-2.17 PID 75923

EXPLORATION ID: B-048

ALIGNMENT, STATION & OFFSET: STA. 292+96, 195.0' RT.

SAMPLE ID: ST-4 DEPTH: 8.3' - 8.8' LAB NO.: 84B

SPECIMEN DATA

DIAMETER: 2.907 in WET DENSITY: 120.3 pcf

HEIGHT: 5.887 in DRY DENSITY: 95.7 pcf

VISUAL DESCRIPTION: LOOSE, BROWN, COARSE AND FINE SAND, LITTLE SILT AND CLAY, MOIST TO WET

PHYSICAL CHARACTERISTICS

% AGG	% CS	% FS	% Silt	% Clay	LL	PL	PI	WC
0	6	63	18	13	NP	NP	NP	26

Stress vs. Strain

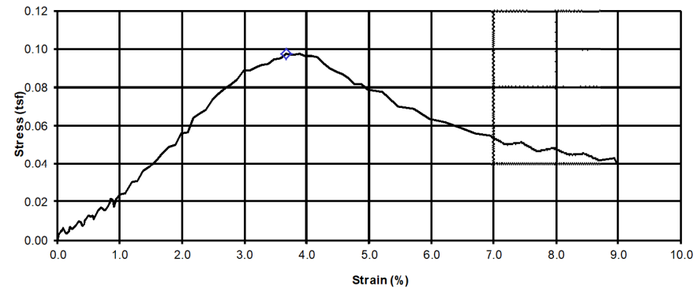

Failure Sketch

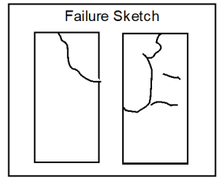

Pocket Penetrometer Reading (tsf) 1.0

Torvane Reading (kg/cm^2) 0.7

Comments

REMARKS: Qu = 0.10tsf @ 3.7% STRAIN

DRAFT Stage 3 - Not for Construction 09/23/2024

DRAWN MSJ CHECKED EMK

SOIL PROFILE - ROADWAY
LABORATORY TEST DATA

LAW-7-2.17

U:\173608714\LAW\75923\geotechnical\sheets\Coversheet_SS_Lab\UC\75923ID001.dgn 5/15/2024 8:39:10 AM MJennings

UNCONFINED COMPRESSION TEST OF COHESIVE SOIL (AASHTO T 028)

PROJECT DESIGNATION: LAW-7-2.17 PID 75923

EXPLORATION ID: B-048

ALIGNMENT, STATION & OFFSET: STA. 292+96, 195.0' RT.

SAMPLE ID: ST-9 DEPTH: 20.0' - 20.5' LAB NO.: 89

SPECIMEN DATA

DIAMETER: 2.884 in WET DENSITY: 124.2 pcf

HEIGHT: 5.951 in DRY DENSITY: 97.6 pcf

VISUAL DESCRIPTION: STIFF, GRAY, SILT AND CLAY, TRACE SAND, MOIST

PHYSICAL CHARACTERISTICS

% AGG	% CS	% FS	% Silt	% Clay	LL	PL	PI	WC
0	0	4	48	48	31	19	12	27

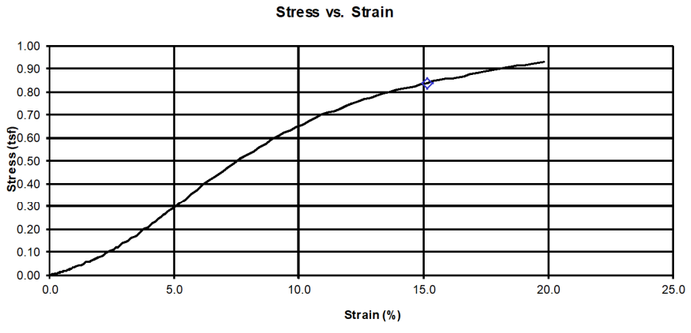

Failure Sketch

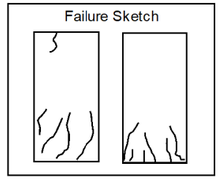

Pocket Penetrometer Reading (tsf) 0.75

Torvane Reading (kg/cm^2) N/A

Comments

REMARKS: Qu = 0.84tsf @ 15.1% STRAIN

UNCONFINED COMPRESSION TEST OF COHESIVE SOIL (AASHTO T 028)

PROJECT DESIGNATION: LAW-7-2.17 PID 75923

EXPLORATION ID: B-047-2

ALIGNMENT, STATION & OFFSET: STA. 293+00, 12.0' RT.

SAMPLE ID: ST-1 DEPTH: 5.4'- 5.9' LAB NO.: 559B

SPECIMEN DATA

DIAMETER: 2.884 in WET DENSITY: 110.7 pcf

HEIGHT: 6.056 in DRY DENSITY: 79.8 pcf

VISUAL DESCRIPTION: MEDIUM STIFF, LIGHT BROWN, ELASTIC CLAY, LITTLE SILT, TRACE SAND, MOIST

PHYSICAL CHARACTERISTICS

% AGG	% CS	% FS	% Silt	% Clay	LL	PL	PI	WC
0	1	1	19	79	66	30	36	46

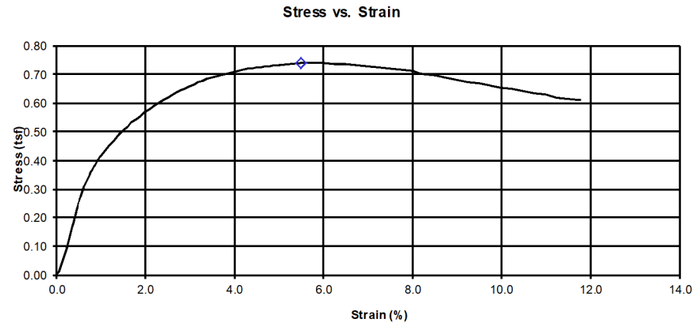

Failure Sketch

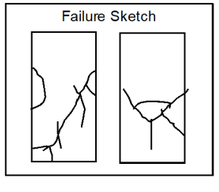

Pocket Penetrometer Reading (tsf) 1.75

Torvane Reading (kg/cm^2) 6.5

Comments

REMARKS: Qu = 0.74tsf @ 5.5% STRAIN

DRAFT Stage 3 - Not for Construction 09/23/2024

DRAWN MSJ CHECKED EMK

SOIL PROFILE - ROADWAY LABORATORY TEST DATA

LAW-7-2.17

1063 1247

U:\17360871 4\LAW\75923\geotechnical\sheets\Coversheet_SS_Lab\UC\75923ID001.dgn 5/15/2024 8:39:29 AM MJennings

UNCONFINED COMPRESSION TEST OF COHESIVE SOIL (AASHTO T 028)

PROJECT DESIGNATION: LAW-7-2.17 PID 75923

EXPLORATION ID: B-057-1

ALIGNMENT, STATION & OFFSET: STA. 329+15, 321.0' RT.

SAMPLE ID: ST-1 DEPTH: 4.0' - 4.5' LAB NO.: 564A

SPECIMEN DATA

DIAMETER: 2.871 in WET DENSITY: 125.4 pcf

HEIGHT: 6.170 in DRY DENSITY: 106.2 pcf

VISUAL DESCRIPTION: STIFF, BROWN SILTY CLAY, SOME GRAVEL, LITTLE SAND, DAMP TO MOIST

PHYSICAL CHARACTERISTICS

% AGG	% CS	% FS	% Silt	% Clay	LL	PL	PI	WC
22	7	11	26	34	37	18	19	17

Stress vs. Strain

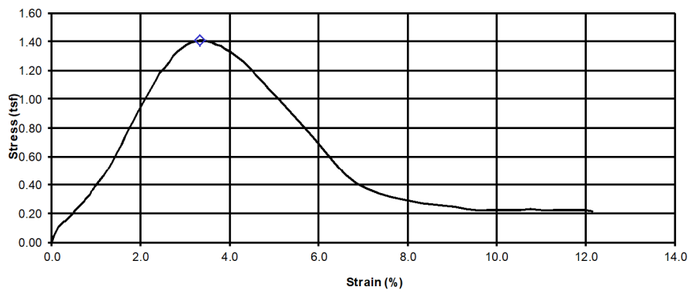

Failure Sketch

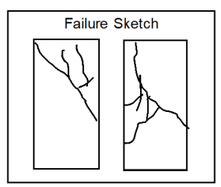

Pocket Penetrometer Reading (tsf) 4

Torvane Reading (kg/cm^2) 4

Comments

REMARKS: Qu = 1.41tsf @ 3.3% STRAIN

UNCONFINED COMPRESSION TEST OF COHESIVE SOIL (AASHTO T 028)

PROJECT DESIGNATION: LAW-7-2.17 PID 75923

EXPLORATION ID: B-057-1

ALIGNMENT, STATION & OFFSET: STA. 329+15, 321.0' RT.

SAMPLE ID: ST-1 DEPTH: 4.5' - 5.0' LAB NO.: 564B

SPECIMEN DATA

DIAMETER: 2.876 in WET DENSITY: 125.4 pcf

HEIGHT: 6.187 in DRY DENSITY: 109.7 pcf

VISUAL DESCRIPTION: STIFF, BROWN SILTY CLAY, SOME GRAVEL, LITTLE SAND, DAMP TO MOIST

PHYSICAL CHARACTERISTICS

% AGG	% CS	% FS	% Silt	% Clay	LL	PL	PI	WC
22	7	11	26	34	37	18	19	18

Stress vs. Strain

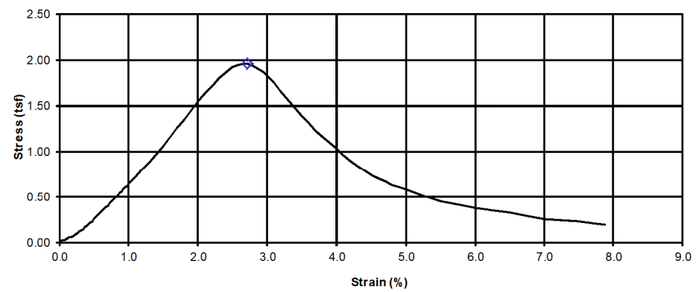

Failure Sketch

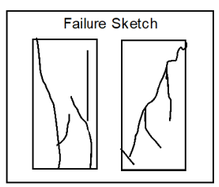

Pocket Penetrometer Reading (tsf) 4

Torvane Reading (kg/cm^2) 4

Comments

REMARKS: Qu = 1.95tsf @ 2.7% STRAIN

DRAWN MSJ CHECKED EMK

SOIL PROFILE - ROADWAY LABORATORY TEST DATA

LAW-7-2.17

23/206

1064 1247

DRAFT Stage 3 - Not for Construction 09/23/2024

U:\17360814\LAW\7592\geotechnical\sheets\Coversheet_SS_Lab\UC\75923ID001.dgn 5/15/2024 8:39:58 AM MJennings

UNCONFINED COMPRESSION TEST OF COHESIVE SOIL (AASHTO T 028)

PROJECT DESIGNATION: LAW-7-2.17 PID 75923

EXPLORATION ID: B-057-1

ALIGNMENT, STATION & OFFSET: STA. 329+15, 321.0' RT.

SAMPLE ID: ST-1 DEPTH: 5.0' - 5.5' LAB NO.: 564C

SPECIMEN DATA

DIAMETER: 2.888 in WET DENSITY: 129.2 pcf

HEIGHT: 6.095 in DRY DENSITY: 109.7 pcf

VISUAL DESCRIPTION: STIFF, BROWN SILTY CLAY, SOME GRAVEL, LITTLE SAND, DAMP TO MOIST

PHYSICAL CHARACTERISTICS

% AGG	% CS	% FS	% Silt	% Clay	LL	PL	PI	WC
22	7	11	26	34	37	18	19	22

Stress vs. Strain

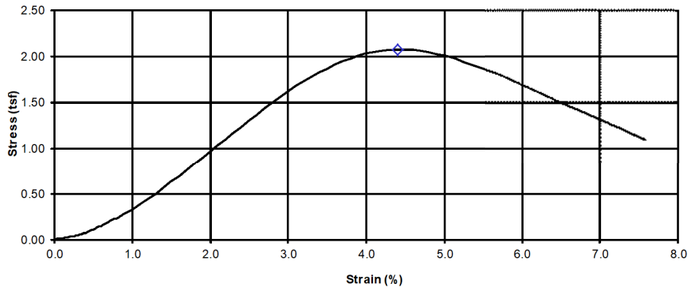

Failure Sketch

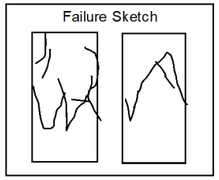

Pocket Penetrometer Reading (tsf) 4

Torvane Reading (kg/cm^2) 4

Comments

REMARKS: Qu = 2.07tsf @ 4.4% STRAIN

UNCONFINED COMPRESSION TEST OF COHESIVE SOIL (AASHTO T 028)

PROJECT DESIGNATION: LAW-7-2.17 PID 75923

EXPLORATION ID: B-057-1

ALIGNMENT, STATION & OFFSET: STA. 329+15, 321.0' RT.

SAMPLE ID: ST-3 DEPTH: 8.5' - 9.0' LAB NO.: 566B

SPECIMEN DATA

DIAMETER: 2.888 in WET DENSITY: 123.4 pcf

HEIGHT: 5.822 in DRY DENSITY: 100.6 pcf

VISUAL DESCRIPTION: STIFF, BROWN, CLAY AND SILT, TRACE SAND, DAMP

PHYSICAL CHARACTERISTICS

% AGG	% CS	% FS	% Silt	% Clay	LL	PL	PI	WC
0	2	4	38	56	47	24	23	22

Stress vs. Strain

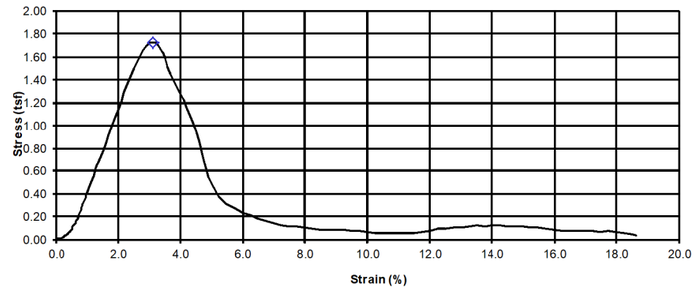

Failure Sketch

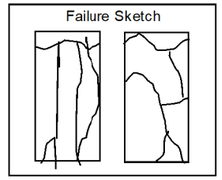

Pocket Penetrometer Reading (tsf) N/A

Torvane Reading (kg/cm^2) N/A

Comments

REMARKS: Qu = 1.73tsf @ 3.1% STRAIN

DRAWN MSJ CHECKED EMK

SOIL PROFILE - ROADWAY LABORATORY TEST DATA

LAW-7-2.17

24/206

1065/1247

DRAFT Stage 3 - Not for Construction 09/23/2024

U:\17360871 4\LAW\75923\geotechnical\sheets\Coversheet_SS_Lab\UC\75923ID001.dgn 5/15/2024 8:40:18 AM MJennings

UNCONFINED COMPRESSION TEST OF COHESIVE SOIL (AASHTO T 028)

PROJECT DESIGNATION: LAW-7-2.17 PID 75923

EXPLORATION ID: B-057-1

ALIGNMENT, STATION & OFFSET: STA. 329+15, 321.0' RT.

SAMPLE ID: ST-3 DEPTH: 9.0' - 9.5' LAB NO.: 566C

SPECIMEN DATA

DIAMETER: 2.892 in WET DENSITY: 124.3 pcf

HEIGHT: 6.026 in DRY DENSITY: 101.5 pcf

VISUAL DESCRIPTION: STIFF, BROWN, CLAY AND SILT, TRACE SAND, DAMP

PHYSICAL CHARACTERISTICS

% AGG	% CS	% FS	% Silt	% Clay	LL	PL	PI	WC
0	2	4	38	56	47	24	23	22

Stress vs. Strain

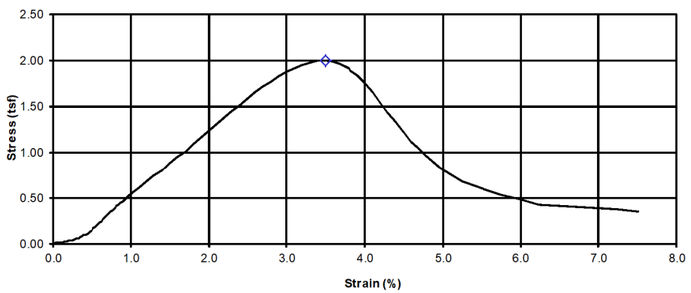

Failure Sketch

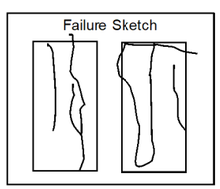

Pocket Penetrometer Reading (tsf) N/A

Torvane Reading (kg/cm^2) N/A

Comments

REMARKS: Qu = 1.99tsf @ 3.5% STRAIN

UNCONFINED COMPRESSION TEST OF COHESIVE SOIL (AASHTO T 028)

PROJECT DESIGNATION: LAW-7-2.17 PID 75923

EXPLORATION ID: B-060

ALIGNMENT, STATION & OFFSET: STA. 335+71, 175.0' RT.

SAMPLE ID: ST-3 DEPTH: 5.1' - 5.6' LAB NO.: 297A

SPECIMEN DATA

DIAMETER: 2.854 in WET DENSITY: 126.1 pcf

HEIGHT: 6.150 in DRY DENSITY: 108.7 pcf

VISUAL DESCRIPTION: STIFF TO VERY STIFF, BROWN, SILTY CLAY, LITTLE TO SOME SAND, TRACE GRAVEL, DAMP TO MOIST

PHYSICAL CHARACTERISTICS

% AGG	% CS	% FS	% Silt	% Clay	LL	PL	PI	WC
7	4	11	32	46	36	16	20	16

Stress vs. Strain

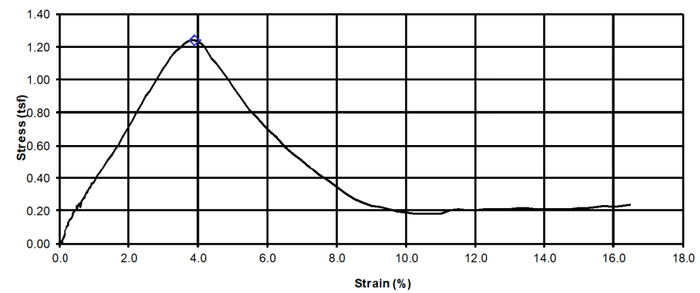

Failure Sketch

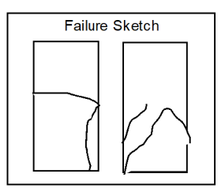

Pocket Penetrometer Reading (tsf) 2.75

Torvane Reading (kg/cm^2) N/A

Comments

REMARKS: Qu = 1.24tsf @ 3.9% STRAIN

DRAWN MSJ CHECKED EMK

SOIL PROFILE - ROADWAY LABORATORY TEST DATA

LAW-7-2.17

25/206

1066/1247

DRAFT Stage 3 - Not for Construction 09/23/2024

U:\17360814\LAW\75923\geotechnical\sheets\Coversheet_SS_Lab\UC\75923D001.dgn 5/15/2024 8:40:38 AM MJennings

UNCONFINED COMPRESSION TEST
OF COHESIVE SOIL
(AASHTO T 028)

PROJECT DESIGNATION: LAW-7-2.17 PID 75923

EXPLORATION ID: B-060

ALIGNMENT, STATION & OFFSET: STA. 335+71, 175.0' RT.

SAMPLE ID: ST-3 DEPTH: 5.6' - 6.1' LAB NO.: 297B

SPECIMEN DATA

DIAMETER: 2.868 in WET DENSITY: 128.4 pcf

HEIGHT: 6.063 in DRY DENSITY: 109.9 pcf

VISUAL DESCRIPTION: STIFF TO VERY STIFF, BROWN, SILTY CLAY, LITTLE TO SOME SAND, TRACE GRAVEL, DAMP TO MOIST

PHYSICAL CHARACTERISTICS

% AGG	% CS	% FS	% Silt	% Clay	LL	PL	PI	WC
7	4	11	32	46	36	16	20	16

Stress vs. Strain

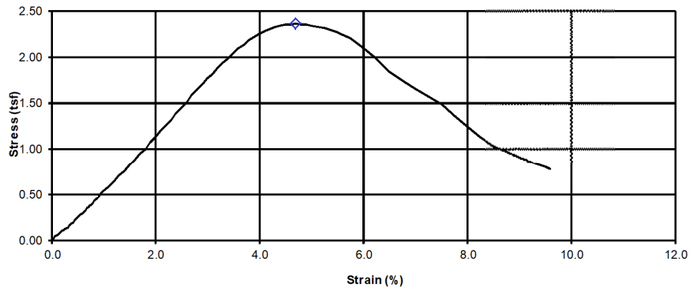

Failure Sketch

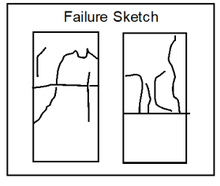

Pocket Penetrometer Reading (tsf) 3.5

Torvane Reading (kg/cm^2) N/A

Comments

REMARKS: Qu = 2.36tsf @ 4.7% STRAIN

UNCONFINED COMPRESSION TEST
OF COHESIVE SOIL
(AASHTO T 028)

PROJECT DESIGNATION: LAW-7-2.17 PID 75923

EXPLORATION ID: B-061

ALIGNMENT, STATION & OFFSET: STA. 336+17, 517.0' RT.

SAMPLE ID: ST-4 DEPTH: 7.5' - 8.0' LAB NO.: 158A

SPECIMEN DATA

DIAMETER: 2.868 in WET DENSITY: 119.7 pcf

HEIGHT: 5.993 in DRY DENSITY: 93.7 pcf

VISUAL DESCRIPTION: MEDIUM STIFF, BROWN, CLAY AND SILT, TRACE SAND, DAMP TO MOIST

PHYSICAL CHARACTERISTICS

% AGG	% CS	% FS	% Silt	% Clay	LL	PL	PI	WC
0	0	7	46	47	44	24	20	25

Stress vs. Strain

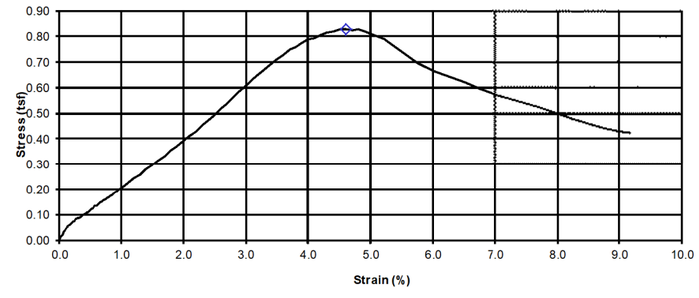

Failure Sketch

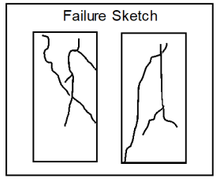

Pocket Penetrometer Reading (tsf) 3.25

Torvane Reading (kg/cm^2) 8.5

Comments

REMARKS: Qu = 0.83tsf @ 4.6% STRAIN

DRAWN MSJ CHECKED EMK

SOIL PROFILE - ROADWAY
LABORATORY TEST DATA

LAW-7-2.17

1067
1247

DRAFT Stage 3 - Not for Construction 09/23/2024

U:\173608714\LAW\75923\geotechnical\sheets\Coversheet_SS_Lab\UC\75923D001.dgn 5/15/2024 8:40:58 AM MJennings

UNCONFINED COMPRESSION TEST OF COHESIVE SOIL (AASHTO T 028)

PROJECT DESIGNATION: LAW-7-2.17 PID 75923

EXPLORATION ID: B-061

ALIGNMENT, STATION & OFFSET: STA. 336+17, 517.0' RT.

SAMPLE ID: ST-4 DEPTH: 8.4' - 8.9' LAB NO.: 158B

SPECIMEN DATA

DIAMETER: 2.867 in WET DENSITY: 122.4 pcf

HEIGHT: 5.986 in DRY DENSITY: 98.0 pcf

VISUAL DESCRIPTION: MEDIUM STIFF, BROWN, CLAY AND SILT, TRACE SAND, DAMP TO MOIST

PHYSICAL CHARACTERISTICS

% AGG	% CS	% FS	% Silt	% Clay	LL	PL	PI	WC
0	0	7	46	47	44	24	20	25

Stress vs. Strain

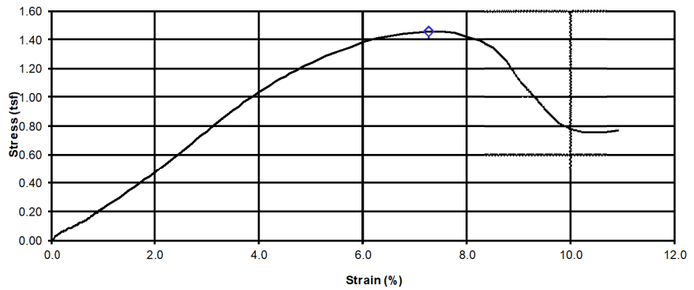

Failure Sketch

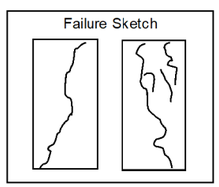

Pocket Penetrometer Reading (tsf) 2.5

Torvane Reading (kg/cm^2) 7.0

Comments

REMARKS: Qu = 1.46tsf @ 7.3% STRAIN

UNCONFINED COMPRESSION TEST OF COHESIVE SOIL (AASHTO T 028)

PROJECT DESIGNATION: LAW-7-2.17 PID 75923

EXPLORATION ID: B-072

ALIGNMENT, STATION & OFFSET: STA. 371+03, 131.0' LT.

SAMPLE ID: ST-8 DEPTH: 17.5' - 18.0' LAB NO.: 347A

SPECIMEN DATA

DIAMETER: 2.881 in WET DENSITY: 129.7 pcf

HEIGHT: 5.968 in DRY DENSITY: 111.3 pcf

VISUAL DESCRIPTION: MEDIUM STIFF TO STIFF, BROWN, SILTY CLAY, LITTLE SAND, TRACE GRAVEL, DAMP TO MOIST

PHYSICAL CHARACTERISTICS

% AGG	% CS	% FS	% Silt	% Clay	LL	PL	PI	WC
3	3	11	42	41	35	19	16	19

Stress vs. Strain

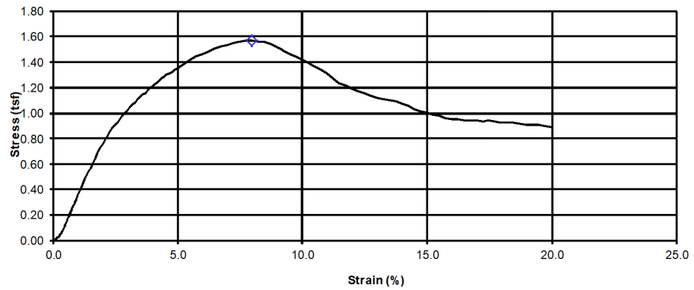

Failure Sketch

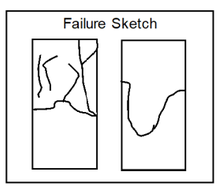

Pocket Penetrometer Reading (tsf) N/A

Torvane Reading (kg/cm^2) N/A

Comments

REMARKS: Qu = 1.57tsf @ 8.0% STRAIN

DRAFT Stage 3 - Not for Construction 09/23/2024

DRAWN MSJ CHECKED EMK

SOIL PROFILE - ROADWAY
LABORATORY TEST DATA

LAW-7-2.17

U:\17360871 4\LAW\75923\geotechnical\sheets\Coversheet_SS_Lab\UC\75923ID001.dgn 5/15/2024 8:41:21 AM MJennings

UNCONFINED COMPRESSION TEST
OF COHESIVE SOIL
(AASHTO T 028)

PROJECT DESIGNATION: LAW-7-2.17 PID 75923

EXPLORATION ID: B-072

ALIGNMENT, STATION & OFFSET: STA. 371+03, 131.0' LT.

SAMPLE ID: ST-8 DEPTH: 18.0' - 18.5' LAB NO.: 347B

SPECIMEN DATA

DIAMETER: 2.883 in WET DENSITY: 132.8 pcf

HEIGHT: 6.046 in DRY DENSITY: 110.1 pcf

VISUAL DESCRIPTION: MEDIUM STIFF TO STIFF, BROWN, SILTY CLAY, LITTLE SAND, TRACE GRAVEL, DAMP TO MOIST

PHYSICAL CHARACTERISTICS

% AGG	% CS	% FS	% Silt	% Clay	LL	PL	PI	WC
3	3	11	42	41	35	19	16	19

Stress vs. Strain

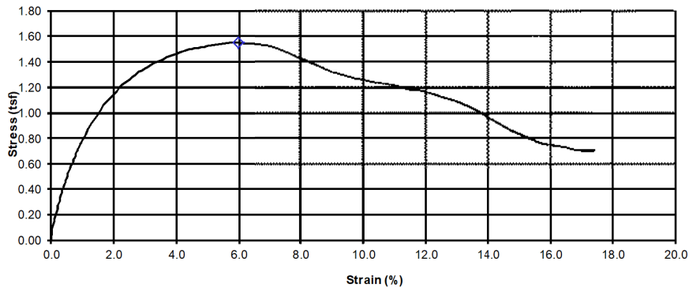

Failure Sketch

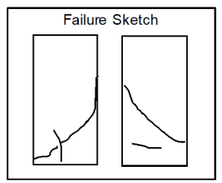

Pocket Penetrometer Reading (tsf) N/A

Torvane Reading (kg/cm^2) N/A

Comments

REMARKS: Qu = 1.55tsf @ 6.0% STRAIN

Unconfined Compressive Strength of Cohesive Soil (ASTM D2166)

(Project: LAW-7-2.17, Boring Location: B-073-2-20, ST-1, Depth: 13.0 - 13.5ft)

Tested Date: 4/23/2021

Specimen Properties

Average Dia., D_{avg} (in):	2.87
Average Height H_{avg} (in):	5.69
Area, A (in^2):	6.48
Volume, V (in^3):	36.87
Wet Mass of Specimen (lb):	2.8
Moisture Content (%):	21.9
Dry Mass of Specimen (lb):	2.3
Wet Unit Weight, γ (lb/ft^3):	129.0
Dry Unit Weight, γ_d (lb/ft^3):	105.8

Final Specimen Figure

Results

Unconfined Compressive Strength (psf):	**1191**
Strain (%):	**15.0**

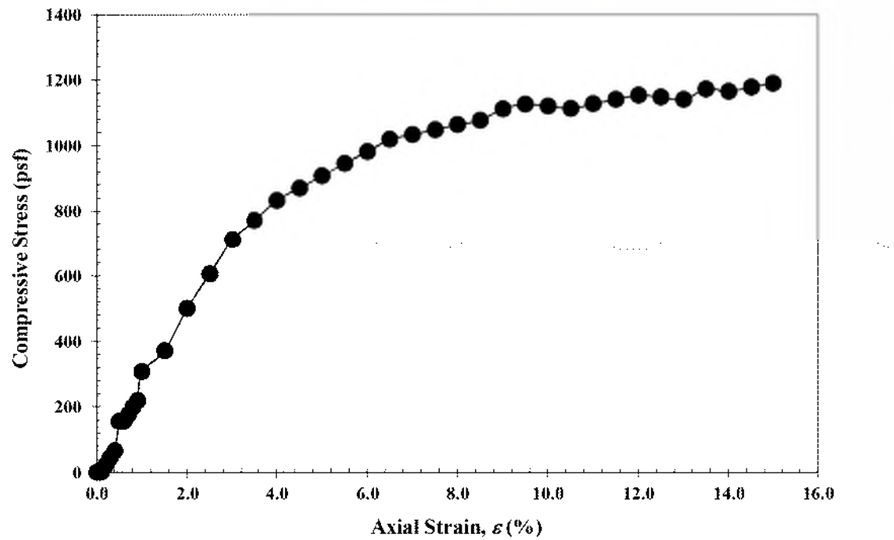

Notes: Medium stiff, brown, SILTY CLAY, some sand, trace gravel, moist. Please note that this specimen exceeded equipment strain limitations and testing was stopped at 15.0% strain. Please also note that the specimen top surface had differing strengths causing the surface to exceed 5.0% slope.

DRAFT Stage 3 - Not for Construction 09/23/2024

DRAWN MSJ CHECKED EMK

SOIL PROFILE - ROADWAY
LABORATORY TEST DATA

LAW-7-2.17

28/206

1069
1247

U:\173608714\LAW\75923\geotechnical\sheets\Coversheet_SS_Lab\UC\75923ID001.dgn 5/15/2024 8:41:54 AM MJennings

Unconfined Compressive Strength of Cohesive Soil (ASTM D2166)

(Project: LAW-7-2.17, Boring Location: B-073-2-20, ST-3, Depth: 20.5 - 21.0ft)

Tested Date: 4/14/2021

Specimen Properties

Average Dia., D_{avg} (in):	2.86
Average Height H_{avg} (in):	5.74
Area, A (in^2):	6.42
Volume, V (in^3):	36.88
Wet Mass of Specimen (lb):	2.8
Moisture Content (%):	20.8
Dry Mass of Specimen (lb):	2.3
Wet Unit Weight, γ (lb/ft^3):	131.6
Dry Unit Weight, γ_d (lb/ft^3):	108.9

Final Specimen Figure

Results

Unconfined Compressive Strength (psf):	**2032**
Strain (%):	**8.5**

Notes: Stiff, brown mottled with dark brown, SILT AND CLAY, some sand, little gravel, moist. Please note that when the specimen was split after compression, at least two pieces of gravel exceeding 1/6 sepcimen diameter were observed, including one piece (located mid-specimen) measuring approximately 2"x1.5"x1.25", and the results reported may differ from a specimen that meets the maximum particle size allowance of D2166.

Unconfined Compressive Strength of Cohesive Soil (ASTM D2166)

(Project: LAW-7-2.17, Boring Location: B-073-2-20, ST-4, Depth: 36.5 - 37.0ft)

Tested Date: 4/23/2021

Specimen Properties

Average Dia., D_{avg} (in):	2.89
Average Height H_{avg} (in):	5.66
Area, A (in^2):	6.57
Volume, V (in^3):	37.17
Wet Mass of Specimen (lb):	2.8
Moisture Content (%):	23.0
Dry Mass of Specimen (lb):	2.3
Wet Unit Weight, γ (lb/ft^3):	129.0
Dry Unit Weight, γ_d (lb/ft^3):	104.9

Final Specimen Figure

Results

Unconfined Compressive Strength (psf):	**1533**
Strain (%):	**11.5**

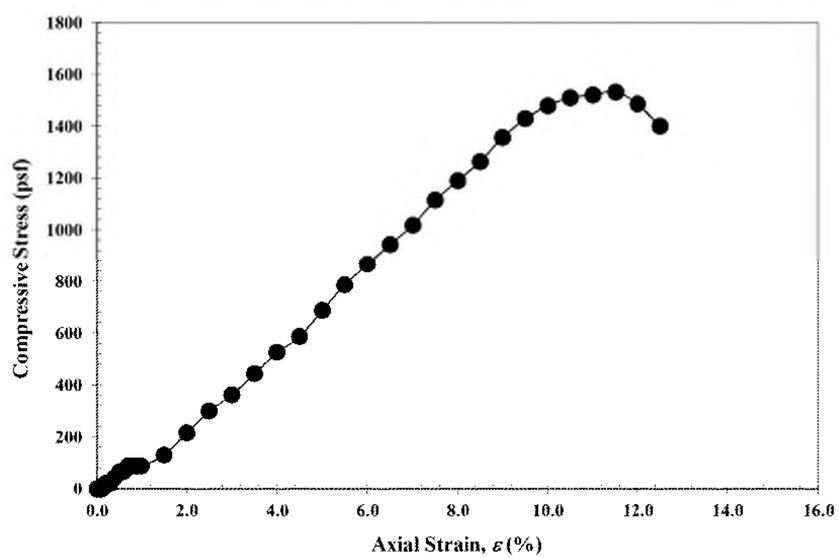

Notes: Medium stiff, gray, SILT, little clay, trace sand, trace gravel, moist.

DRAFT Stage 3 - Not for Construction 09/23/2024

SOIL PROFILE - ROADWAY
LABORATORY TEST DATA

LAW-7-2.17

DRAWN MSJ
CHECKED EMK

29/206

1070
1247

U:\173608714\LAW\75923\geotechnical\sheets\Coversheet_SS_Lab\UC\75923ID001.dgn 5/16/2024 5:22:23 PM MJennings

Unconfined Compressive Strength of Cohesive Soil (ASTM D2166)

(Project: LAW-7-2.17, Boring Location: B-106-1-20, ST-1, Depth: 0.9 - 1.4ft)

Tested Date: 7/8/2021

Specimen Properties

Average Dia., D_{avg} (in):	2.84
Average Height H_{avg} (in):	5.76
Area, A (in^2):	6.34
Volume, V (in^3):	36.48
Wet Mass of Specimen (lb):	2.8
Moisture Content (%):	12.7
Dry Mass of Specimen (lb):	2.5
Wet Unit Weight, γ (lb/ft^3):	131.3
Dry Unit Weight, γ_d (lb/ft^3):	116.5

Final Specimen Figure

Results

Unconfined Compressive Strength (psf):	**3608**
Strain (%):	**2.0**

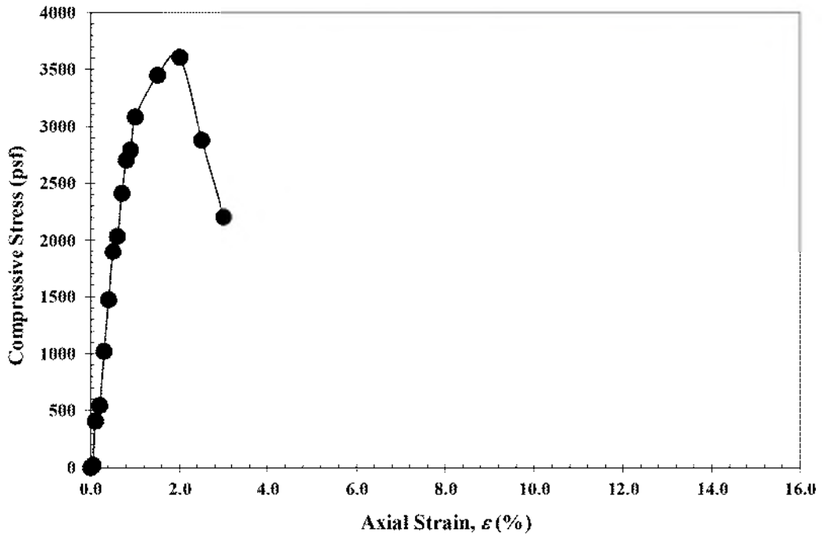

Notes: Stiff, brown and reddish brown, SILTY CLAY, some sand, little gravel and stone fragments, damp. Contains multiple stone fragments exceeding 1/6 specimen diameter and the results reported may differ from a specimen that meets the maximum particle size allowance of D2166

Unconfined Compressive Strength of Cohesive Soil (ASTM D2166)

(Project: LAW-7-2.17, Boring Location: B-106-3-20, ST-2, Depth: 2.7 - 3.2ft)

Tested Date: 7/22/2021

Specimen Properties

Average Dia., D_{avg} (in):	2.86
Average Height H_{avg} (in):	5.75
Area, A (in^2):	6.44
Volume, V (in^3):	37.04
Wet Mass of Specimen (lb):	2.8
Moisture Content (%):	14.1
Dry Mass of Specimen (lb):	2.5
Wet Unit Weight, γ (lb/ft^3):	130.6
Dry Unit Weight, γ_d (lb/ft^3):	114.5

Final Specimen Figure

Results

Unconfined Compressive Strength (psf):	**3733**
Strain (%):	**4.0**

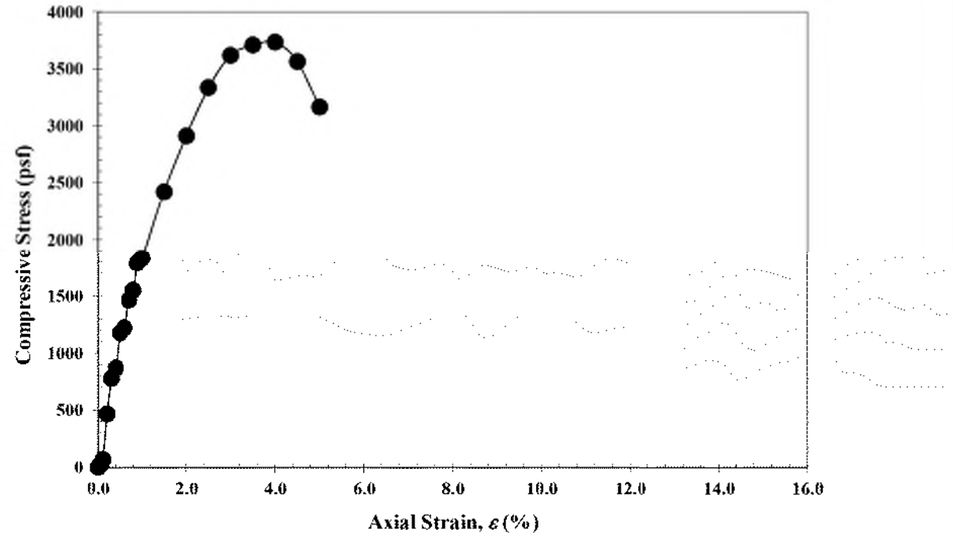

Notes: Stiff, brown, SILTY CLAY, little sand, trace gravel, damp.

DRAFT Stage 3 - Not for Construction 09/23/2024

DRAWN MSJ
CHECKED EMK

SOIL PROFILE - ROADWAY
LABORATORY TEST DATA

LAW-7-2.17

30/206

1071
1247

U:\173608714\LAW\75923\geotechnical\sheets\Coversheet_SS_Lab\UC\75923ID001.dgn 5/15/2024 8:42:50 AM MJennings

Consolidated-Undrained Triaxial Compression Test (AASHTO T 297 / ASTM D4767)

Project: LAW-7-2.17 Project ID: 75923
Sample ID: B-073-2-20 / ST-2 (@14.5-16.5') Page: 1/2
Description: Stiff, brown, SILTY CLAY, little sand, trace gravel, damp

Sample No.	Height (in)	Diameter (in)	Moisture (%)	Bulk Density (pcf)	Dry Density (pcf)	Void Ratio
1	5.75	2.87	23.5%	128.4	104.0	0.603
2	5.00	2.86	24.1%	147.2	118.6	0.404
3	5.75	2.86	25.6%	125.7	100.1	0.664

Liquid Limit: 38 Plastic Limit: 21

Failure Criterion: Maximum Deviator Stress

	Total	Effective
C, psi	5.0	2.2
ϕ, deg	17.4	27.5
Tan (ϕ)	0.31	0.52

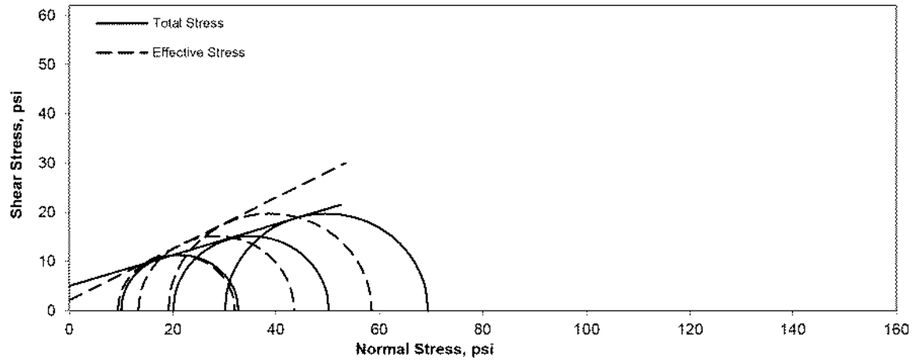

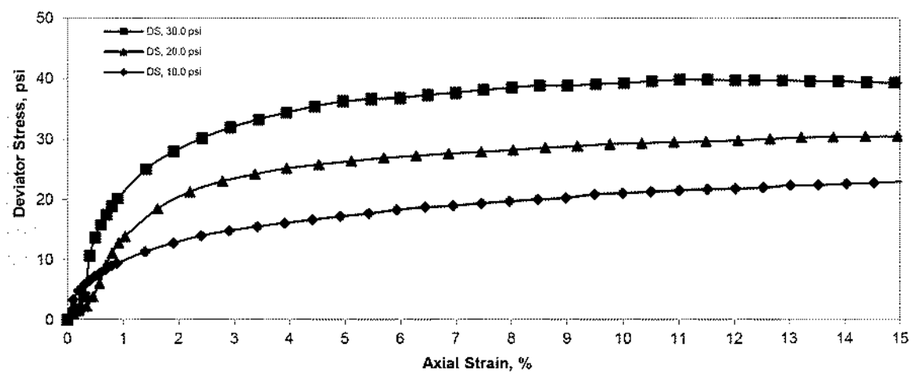

Assumed Specific Gravity Gs = 2.67

Consolidated-Undrained Triaxial Compression Test (AASHTO T 297 / ASTM D4767)

Project: LAW-7-2.17 Project ID: 75923
Sample ID: B-073-2-20 / ST-2 (@14.5-16.5') Page: 2/2
Description: Stiff, brown, SILTY CLAY, little sand, trace gravel, damp

Failure Criterion: Maximum Effective Principal Stress Ratio

	Total	Effective
c, psi	3.2	0.4
ϕ, deg	18.1	31.5
Tan (ϕ)	0.33	0.61

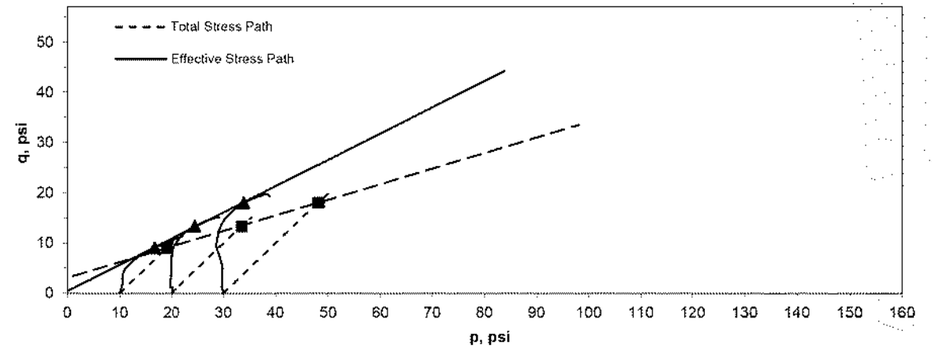

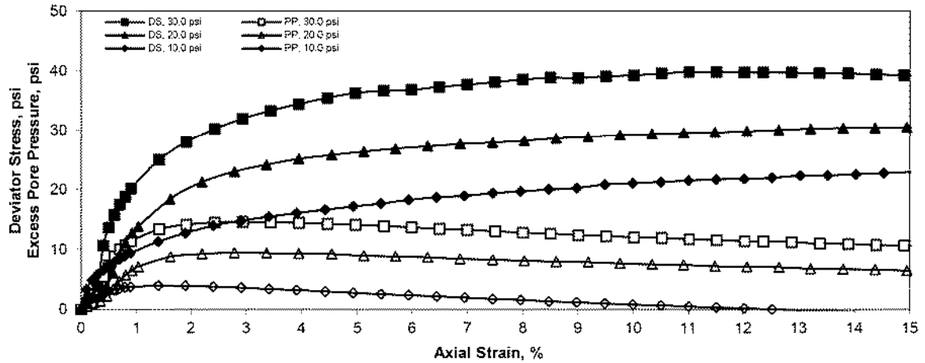

DRAFT Stage 3 - Not for Construction 09/23/2024

DRAWN MSJ CHECKED EMK

SOIL PROFILE - ROADWAY
LABORATORY TEST DATA

LAW-7-2.17

U:\173608714\LAW\75923\geotechnical\sheets\Coversheet_SS_Lab\UC\75923ID001.dgn 5/15/2024 8:43:24 AM MJennings

CONSOLIDATED UNDRAINED TRIAXIAL TEST
ASTM D4767-04

Project Name LAW-7-2.17

Project 173608714
Set ID 3

Test	Lab ID	Source	Description	Gs	LL	PL	PI
A	456A	B-006-0-11, 5.0'-5.5'	Lean Clay (CL), brown, moist, firm	2.75			
B	456B	B-006-0-11, 5.5'-6.0'	Lean Clay (CL), brown, moist, firm	2.75			
C	456C	B-006-0-11, 6.0'-6.5'	Lean Clay (CL), brown, moist, firm	2.75			

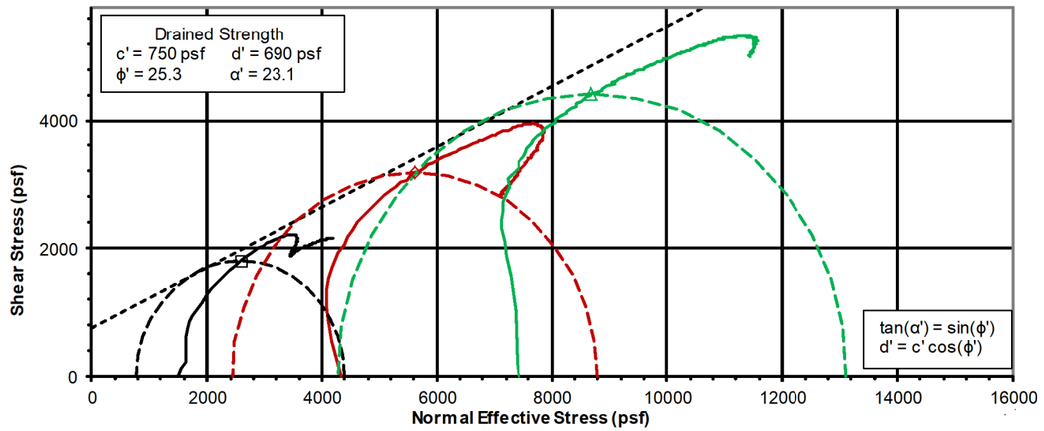

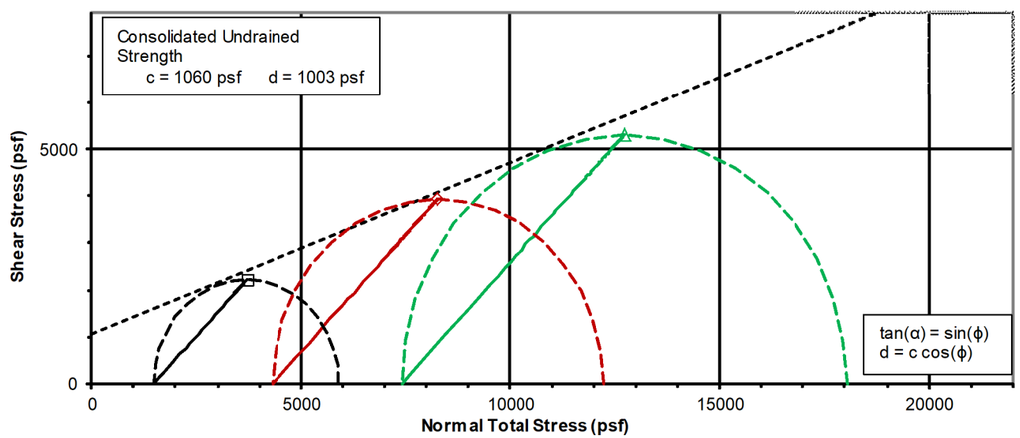

CONSOLIDATED UNDRAINED TRIAXIAL TEST
ASTM D4767-04

Project Name LAW-7-2.17

Project 173608714
Set ID 4

Test	Lab ID	Source	Description	Gs	LL	PL	PI
A	470A	B-007-0-11, 10.0'-10.5'	Lean Clay (CL), brown, moist, firm	2.72			
B	470B	B-007-0-11, 10.5'-11.0'	Lean Clay (CL), brown, moist, firm	2.72			
C	470C	B-007-0-11, 11.0'-11.5'	Lean Clay (CL), brown, moist, firm	2.72			

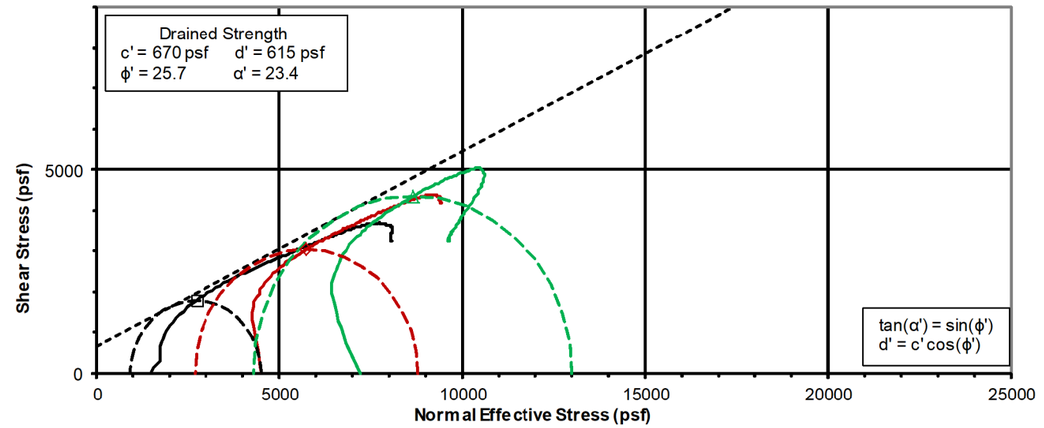

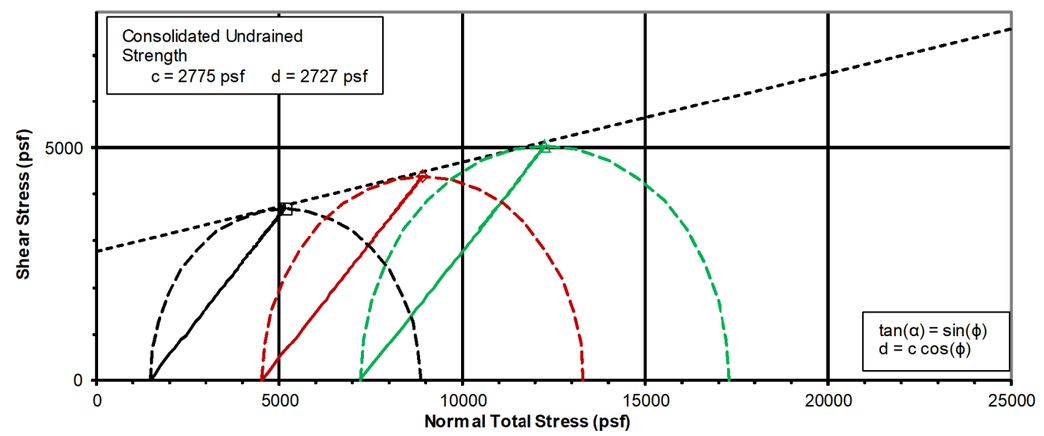

DRAFT Stage 3 - Not for Construction 09/23/2024

DRAWN MSJ
CHECKED EMK

SOIL PROFILE - ROADWAY
LABORATORY TEST DATA

LAW-7-2.17

32/206

1073
1247

U:\173608714\LAW\75923\geotechnical\sheets\Coversheet_SS_Lab\Triaxial\759231D014_TRIAXIAL.dgn 5/15/2024 8:32:49 AM MJennings

CONSOLIDATED UNDRAINED TRIAXIAL TEST
ASTM D4767-04

Project Name LAW-7-2.17

Project 173608714
Set ID 2A_3_2

Test	Lab ID	Source	Description	Gs	LL	PL	PI
A	2A	B-009-1-12, 7.2'-7.7'	Clayey Sand (SC), brown, moist, firm	2.70	27	17	10
B	3	B-009-1-12, 12.6'-13.2'	Clayey Sand (SC), brown, moist, firm	2.70	28	16	12
C	2	B-009-1-12, 7.7'-8.2'	Clayey Sand (SC), brown, moist, firm	2.70	27	17	10

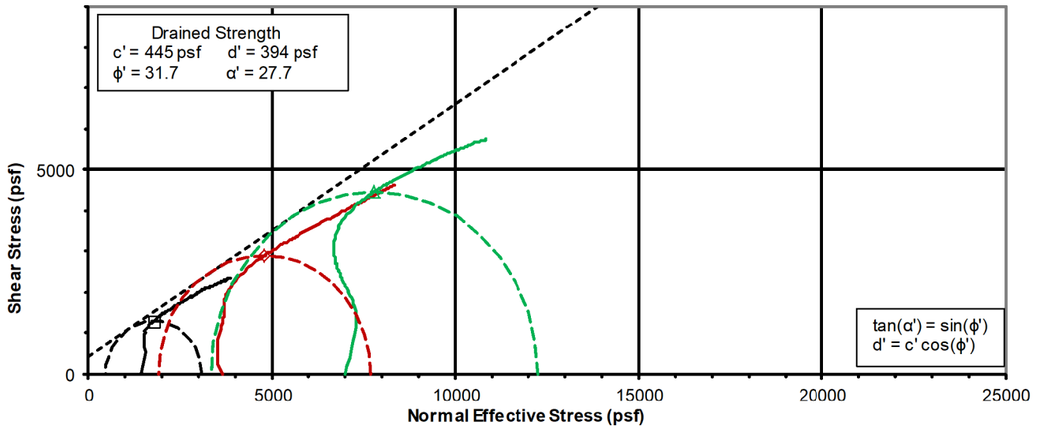

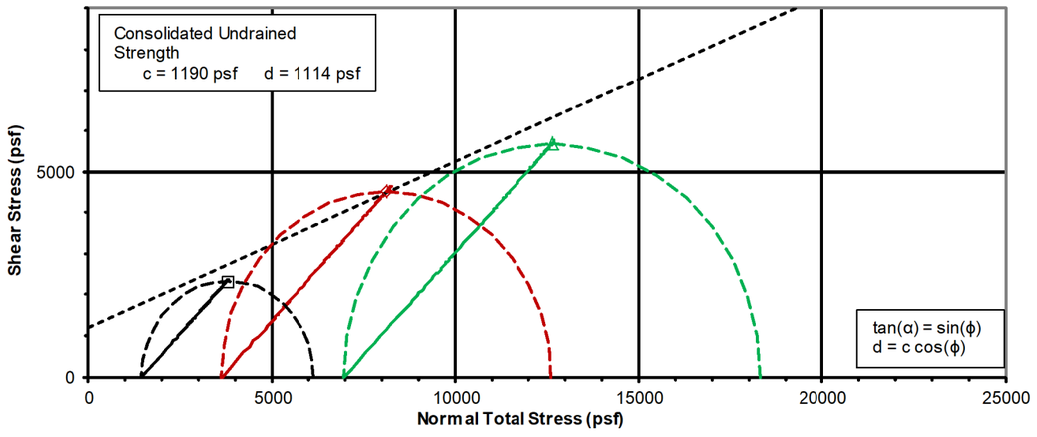

CONSOLIDATED UNDRAINED TRIAXIAL TEST
ASTM D4767-04

Project Name LAW-7-2.17

Project 173608714
Set ID 5

Test	Lab ID	Source	Description	Gs	LL	PL	PI
A	486A	B-010-0-11, 5.0'-5.5'	Lean Clay (CL), brown, moist, firm, Mn	2.73			
B	486B	B-010-0-11, 5.5'-6.0'	Lean Clay (CL), brown, moist, firm, Mn	2.73			

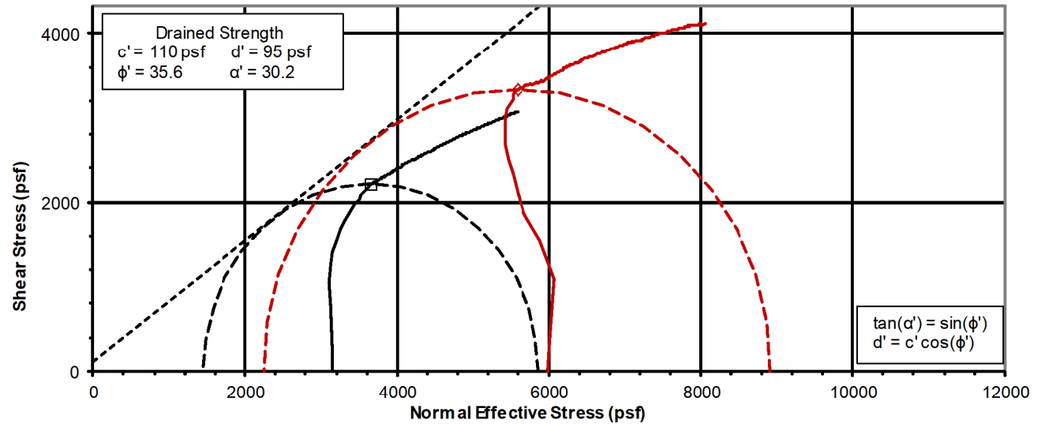

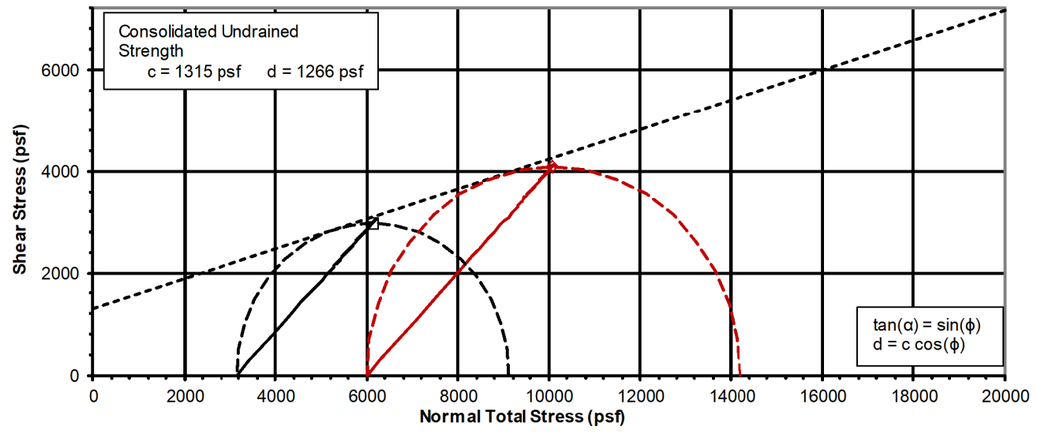

DRAFT Stage 3 - Not for Construction 09/23/2024

DRAWN MSJ
CHECKED EMK

SOIL PROFILE - ROADWAY
LABORATORY TEST DATA

LAW-7-2.17

1074
1247

U:\173608714\LAW\75923\geotechnical\sheets\Coversheet_SS_Lab\Trioxial\75923ID014_TRIAXIAL.dgn 5/15/2024 8:33:14 AM MJennings

CONSOLIDATED UNDRAINED TRIAXIAL TEST
ASTM D4767-04

Project Name LAW-7-2.17

Project 173608714
Set ID 7

Test	Lab ID	Source	Description	Gs	LL	PL	PI
A	559A	B-047-2-11, 4.5'-5.0'	Lean Clay (CL), gray brown, moist, firm	2.71			
B	558A	B-047-1-11, 4.7'-5.2'	Lean Clay (CL), gray brown, moist, firm	2.71			
C	558B	B-047-1-11, 5.2'-5.7'	Lean Clay (CL), gray brown, moist, firm, Mn	2.71			

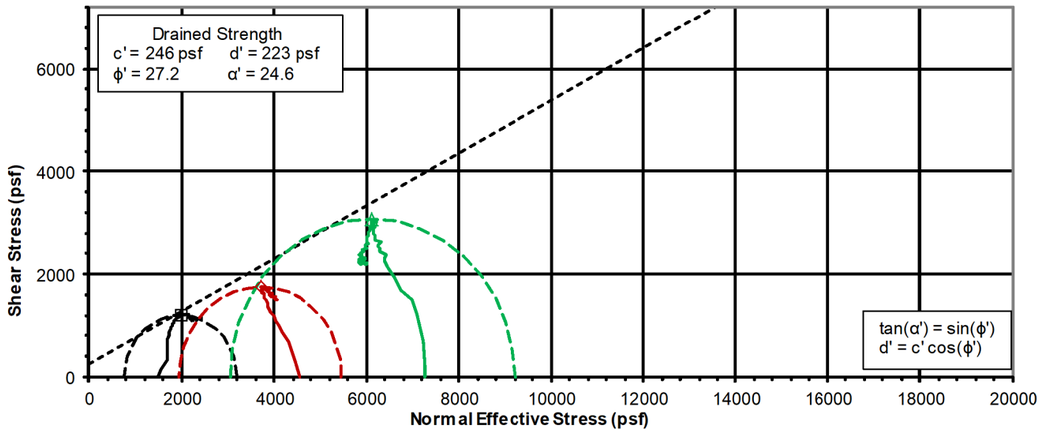

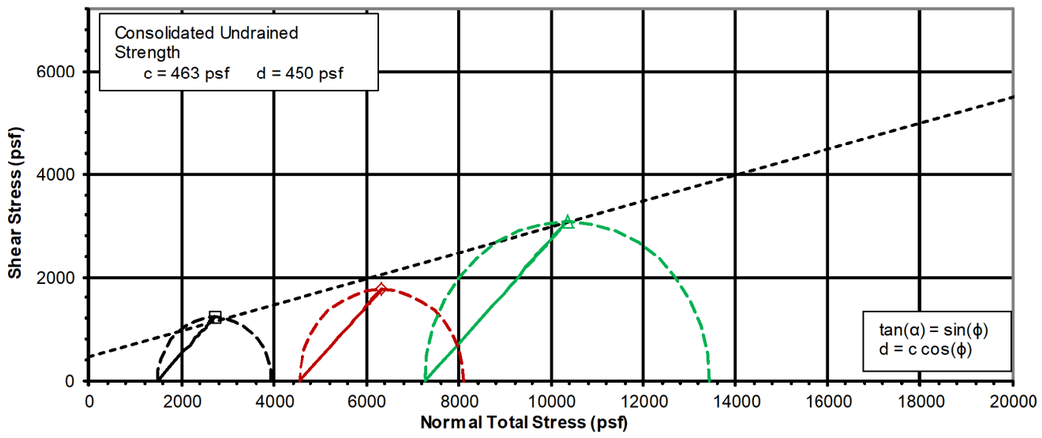

CONSOLIDATED UNDRAINED TRIAXIAL TEST
ASTM D4767-04

Project Name LAW-7-2.17

Project 173608714
Set ID 8

Test	Lab ID	Source	Description	Gs	LL	PL	PI
A	560A	B-047-2-11, 6.5'-7.0'	Lean Clay with Sand (CL), gray brown, moist, firm	2.73	44	21	23
B	560B	B-047-2-11, 7.0'-7.5'	Lean Clay with Sand (CL), gray brown, moist, firm	2.73			
C	560C	B-047-2-11, 7.5'-8.0'	Lean Clay with Sand (CL), gray brown, moist, firm	2.73			

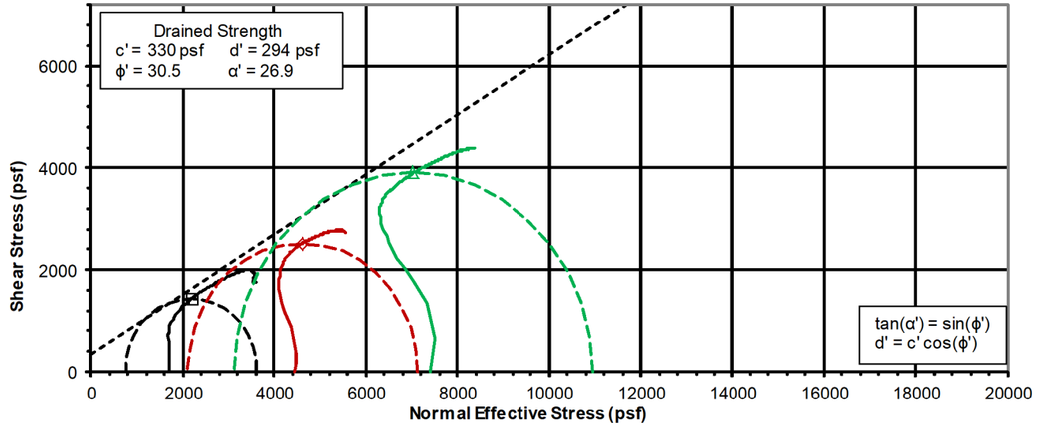

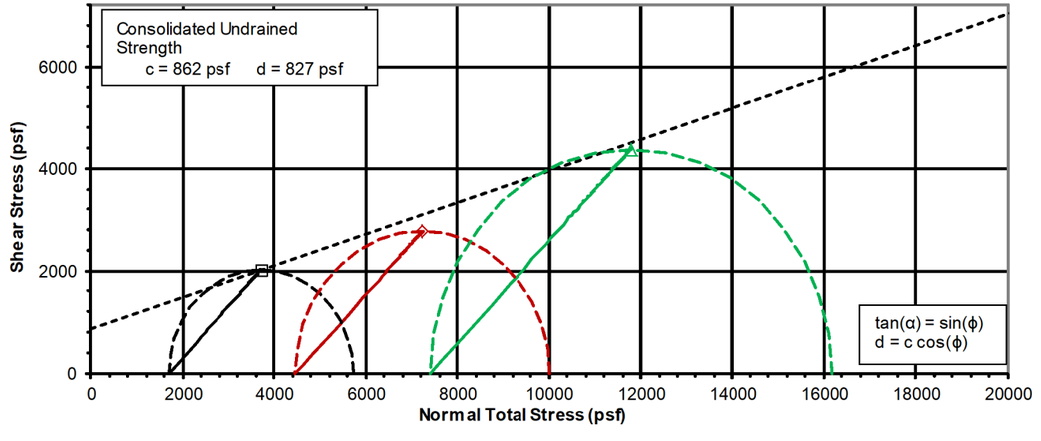

DRAFT Stage 3 - Not for Construction 09/23/2024

DRAWN MSJ CHECKED EMK

SOIL PROFILE - ROADWAY
LABORATORY TEST DATA

LAW-7-2.17

1075
1247

U:\173608714\LAW\75923\geotechnical\sheets\Coversheet_SS_Lab\Triaxial\75923ID014_TRIAXIAL.dgn 5/15/2024 8:33:33 AM MJennings

CONSOLIDATED UNDRAINED TRIAXIAL TEST
ASTM D4767-04

Project Name LAW-7-2.17

Project 173608714
Set ID 9

Test	Lab ID	Source	Description	Gs	LL	PL	PI
A	561B	B-055-1-11, 3.5'-4.0'	Lean Clay (CL), brown, moist, hard	2.72			
B	563B	B-055-2-11, 4.7'-5.2'	Fat Clay (CH), brown, moist, firm	2.72	51	27	24
C	563C	B-055-2-11, 5.2'-5.7'	Lean Clay with Gravel (CL), brown, moist, firm	2.72			

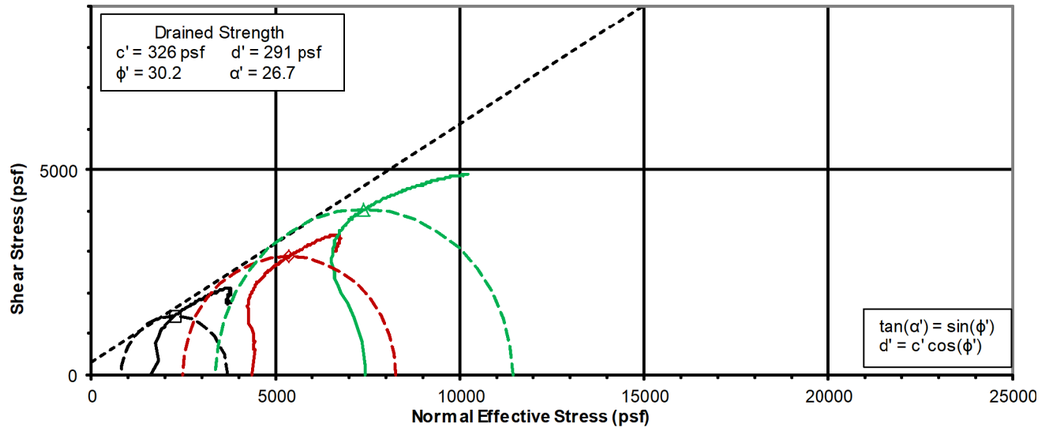

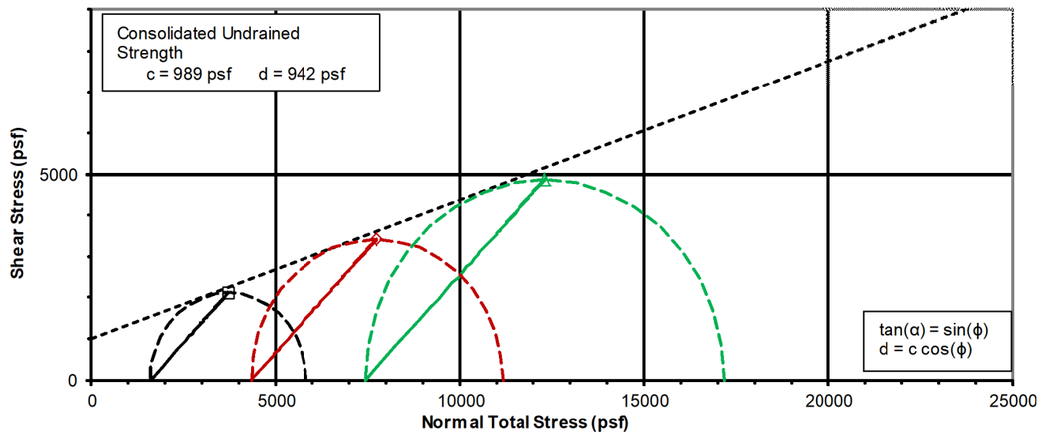

CONSOLIDATED UNDRAINED TRIAXIAL TEST
ASTM D4767-04

Project Name LAW-7-2.17

Project 173608714
Set ID 1

Test	Lab ID	Source	Description	Gs	LL	PL	PI
A	147A	B-057-0-11, 4.0'-4.5'	Sandy Lean Clay (CL), brown, moist, firm	2.73	39	20	19
B	147B	B-057-0-11, 4.7'-5.2'	Sandy Lean Clay (CL), brown, moist, firm	2.73	39	20	19
C	149	B-057-0-11, 10.0'-10.7'	Lean Clay (CL), brown, moist, firm	2.73	39	20	19

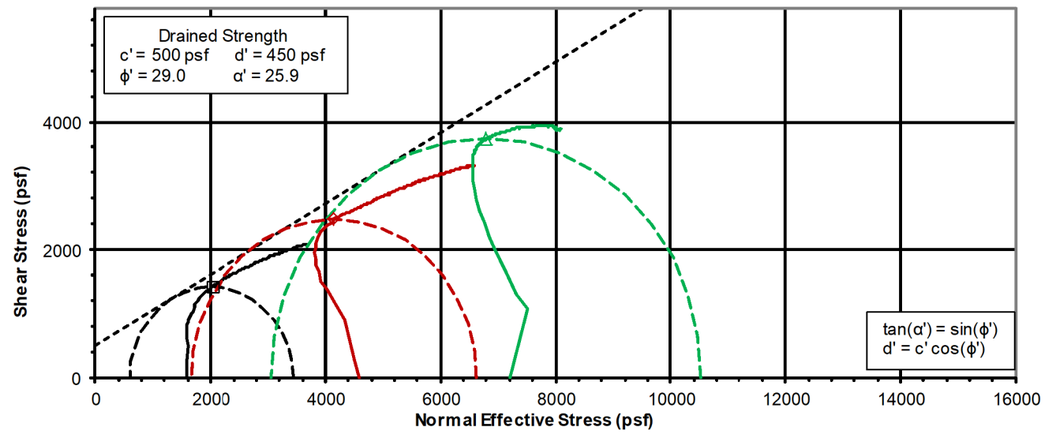

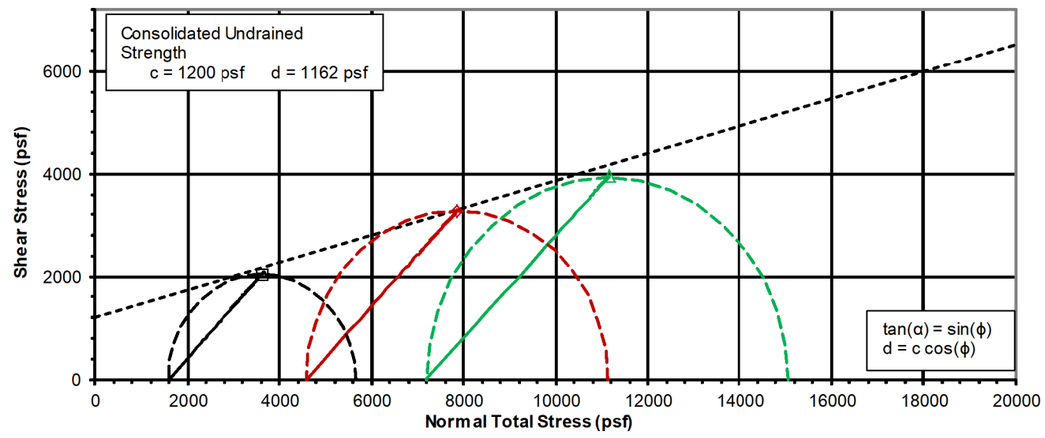

DRAFT Stage 3 - Not for Construction 09/23/2024

DRAWN MSJ
CHECKED EMK

SOIL PROFILE - ROADWAY
LABORATORY TEST DATA

LAW-7-2.17

U:\173608714\LAW\75923\geotechnical\sheets\Coversheet_SS_Lab\Trioxial\75923ID014_TRIAXIAL.dgn 5/15/2024 8:33:51 AM MJennings

CONSOLIDATED UNDRAINED TRIAXIAL TEST
ASTM D4767-04

Project Name LAW-7-2.17

Project 173608714
Set ID 10

Test	Lab ID	Source	Description	Gs	LL	PL	PI
A	565A	B-057-1-11, 6.1'-6.6'	Lean Clay (CL), brown, moist, firm, sandstone ar	2.78			
B	565B	B-057-1-11, 6.8'-7.3'	Lean Clay (CL), brown, moist, firm, weathered sa	2.78			
C	566A	B-057-1-11, 8.0'-8.5'	Lean Clay (CL), brown, moist, firm, weathered sh	2.78			

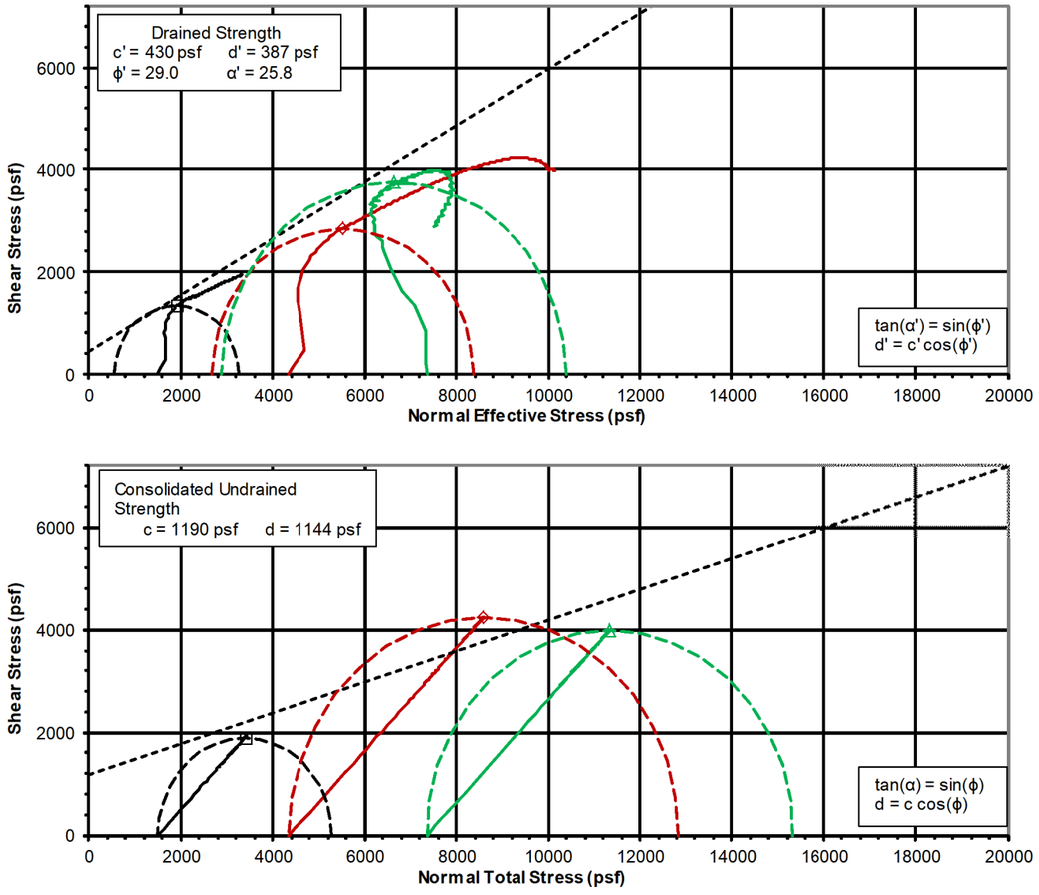

CONSOLIDATED UNDRAINED TRIAXIAL TEST
ASTM D4767-04

Project Name LAW-7-2.17

Project 173608714
Set ID 2

Test	Lab ID	Source	Description	Gs	LL	PL	PI
A	206	B-063-0-11, 5.0'-6.0'	Lean Clay with Gravel (CL), red brown, moist, firr	2.75	36	15	21
B	200A	B-062-0-11, 5.1'-5.6'	Lean Clay with Sand (CL), red brown, moist, firm	2.76	33	19	14
C	200B	B-062-0-11, 5.6'-6.1'	Lean Clay with Sand (CL), red brown, moist, firm	2.76	33	19	14

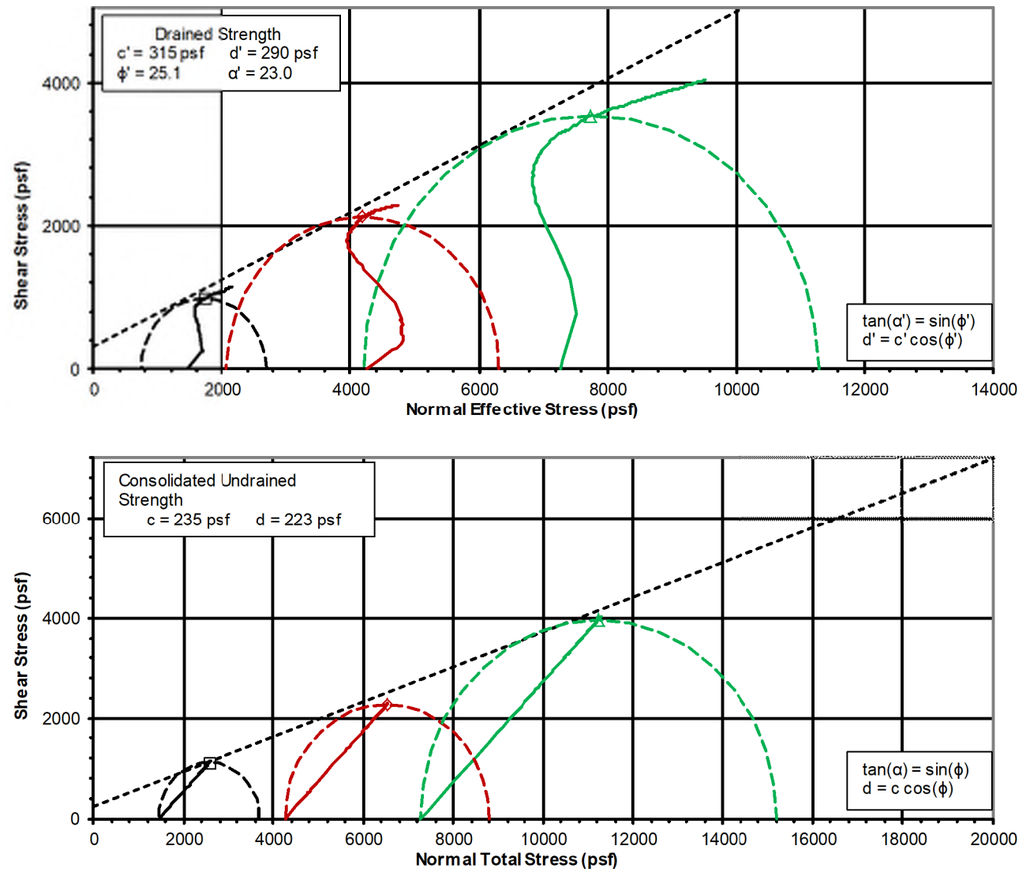

DRAFT Stage 3 - Not for Construction 09/23/2024

DRAWN MSJ CHECKED EMK

SOIL PROFILE - ROADWAY
LABORATORY TEST DATA

LAW-7-2.17

U:\173608714\LAW\75923\geotechnical\sheets\Coversheet_SS_Lab\Triaxial\75923I0014_TRIAXIAL.dgn 5/15/2024 8:34:09 AM MJennings

CONSOLIDATED UNDRAINED TRIAXIAL TEST
ASTM D4767-04

Project Name LAW-7-2.17

Project 173608714
Set ID 6

Test	Lab ID	Source	Description	Gs	LL	PL	PI
A	555B	B-036-1-11, 5.0'-5.5'	Lean Clay (CL), light brown, moist, firm to hard	2.75			
B	556A	B-036-1-11, 6.5'-7.0'	Lean Clay (CL), red brown, moist, firm	2.75			
C	556B	B-036-1-11, 7.4'-7.9'	Lean Clay (CL), red brown, moist, firm	2.75			

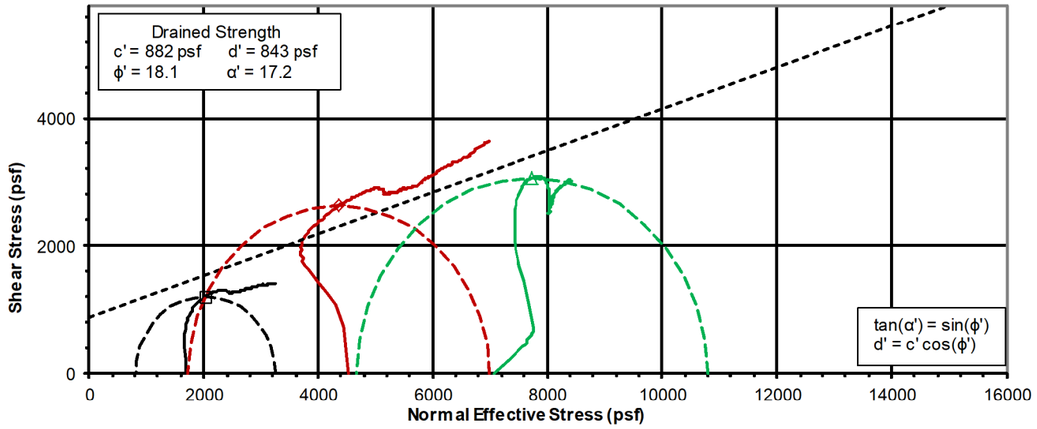

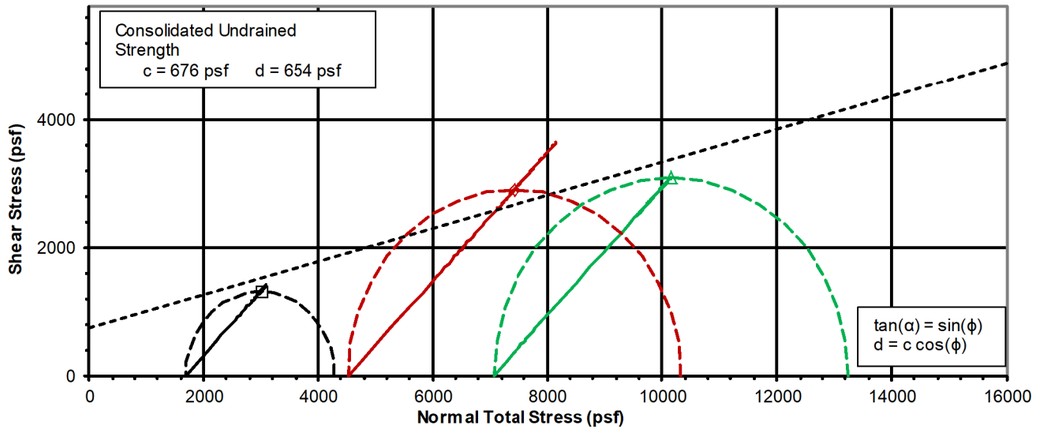

CONSOLIDATED UNDRAINED TRIAXIAL TEST
ASTM D4767-04

Project Name LAW-7-2.17

Project 173608714
Set ID 12@11.5%

Test	Lab ID	Source	Description	Gs	LL	PL	PI
A	2A@11.5	Embankment @ 11.5%	Mudstone, reddish brown to gray (non-bedded)	2.70	33	19	14
B	2B@11.5	Embankment @ 11.5%	Mudstone, reddish brown to gray (non-bedded)	2.70	33	19	14
C	2C@11.5	Embankment @ 11.5%	Mudstone, reddish brown to gray (non-bedded)	2.70	33	19	14

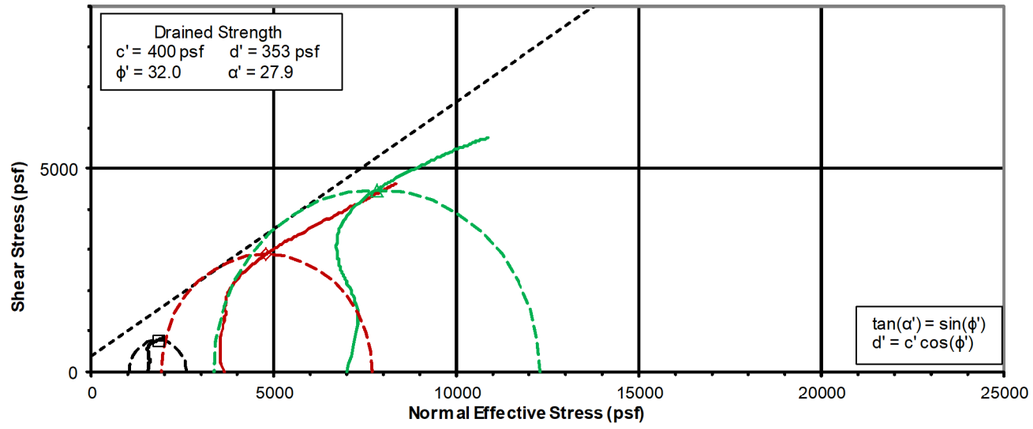

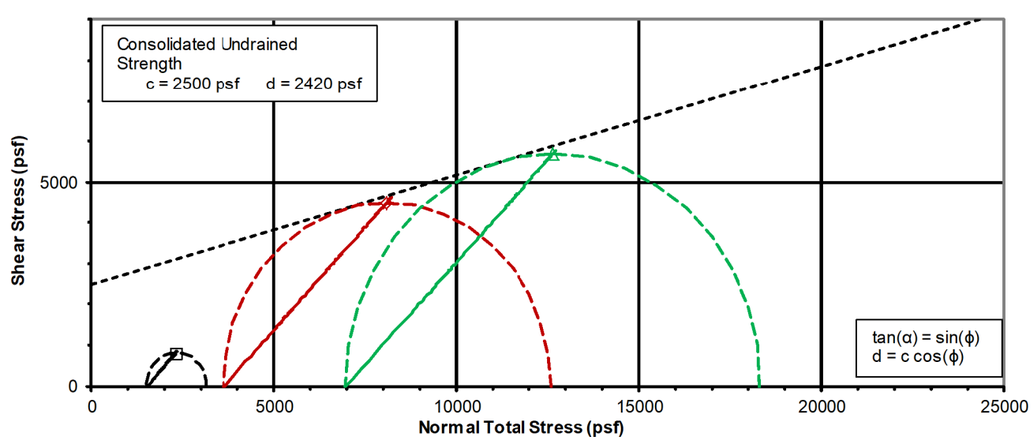

DRAFT Stage 3 - Not for Construction 09/23/2024

DRAWN MSJ
CHECKED EMK

SOIL PROFILE - ROADWAY
LABORATORY TEST DATA

LAW-7-2.17

U:\173608714\LAW\75923\geotechnical\sheets\Coversheet_SS_Lab\Triaxial\75923D014_TRIAXIAL.dgn 5/15/2024 8:34:28 AM MJennings

CONSOLIDATED UNDRAINED TRIAXIAL TEST
ASTM D4767-04

Project Name LAW-7-2.17

Project 173608714
Set ID 11

Test	Lab ID	Source	Description	Gs	LL	PL	PI
A	611	Embankment @ 13.5% MC	Mudstone, reddish brown to gray, non-bedded	2.71			
B	611	Embankment @ 13.5% MC	Mudstone, reddish brown to gray, non-bedded	2.71			
C	611	Embankment @ 13.5% MC	Mudstone, reddish brown to gray, non-bedded	2.71			

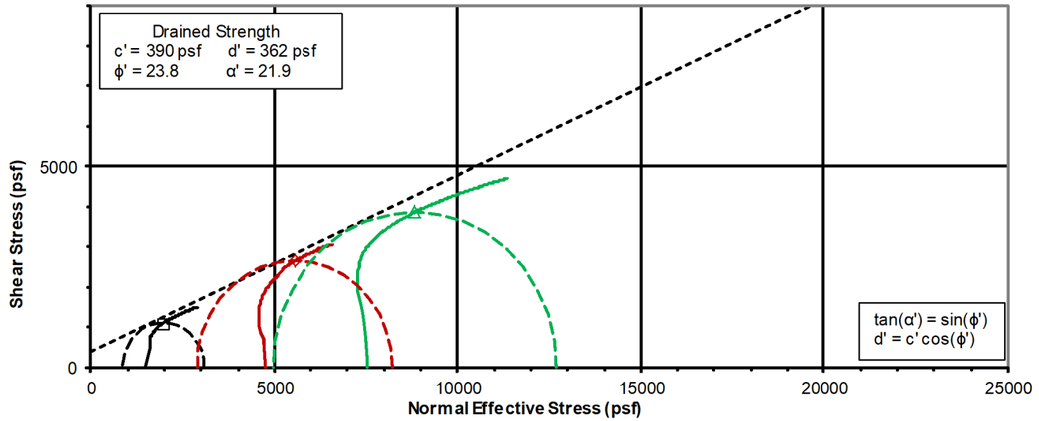

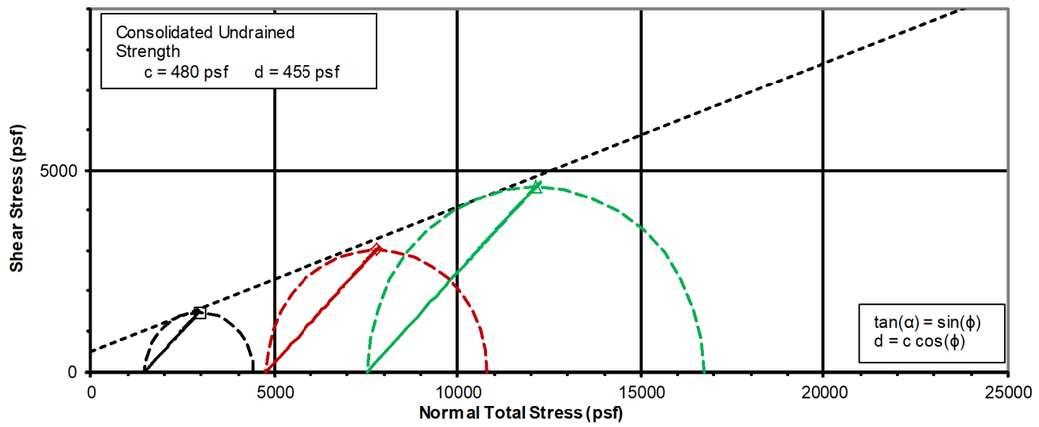

CONSOLIDATED UNDRAINED TRIAXIAL TEST
ASTM D4767-04

Project Name LAW-7-2.17

Project 173608714
Set ID 12@15.5%

Test	Lab ID	Source	Description	Gs	LL	PL	PI
A	2A@15.5	Embankment @ 15.5% MC	Mudstone, reddish brown to gray, non-bedded	2.70	33	19	14
B	2A@15.5	Embankment @ 15.5% MC	Mudstone, reddish brown to gray, non-bedded	2.70	33	19	14
C	2A@15.5	Embankment @ 15.5% MC	Mudstone, reddish brown to gray, non-bedded	2.70	33	19	14

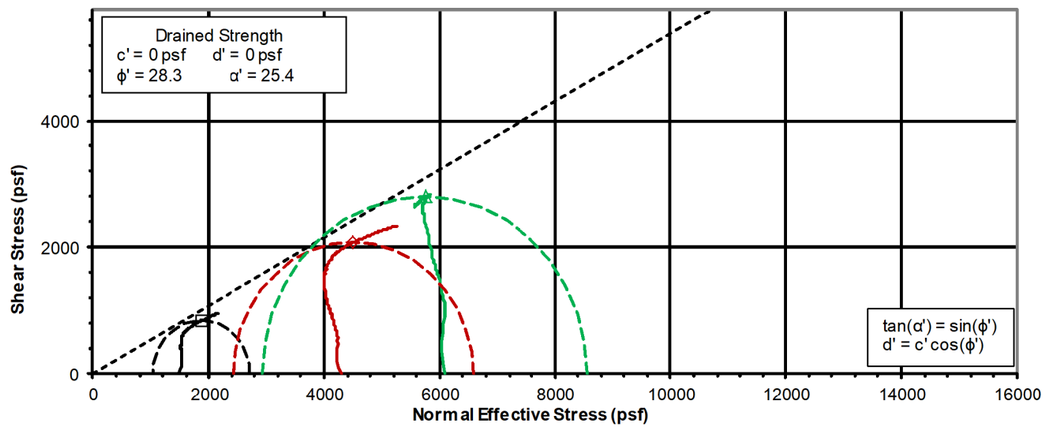

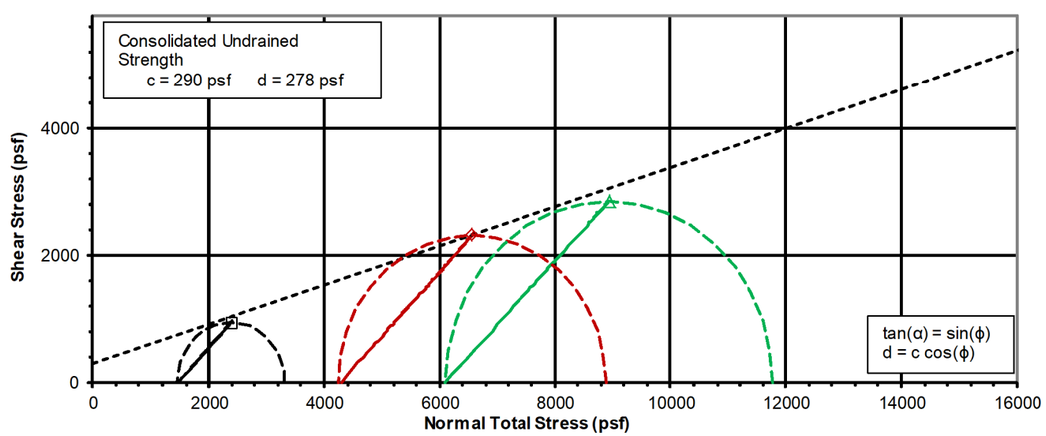

DRAFT Stage 3 - Not for Construction 09/23/2024

DRAWN MSJ
CHECKED EMK

SOIL PROFILE - ROADWAY
LABORATORY TEST DATA

LAW-7-2.17

1079
1247

U:\173608714\LAW\75923\geotechnical\sheets\Coversheet_SS_Lab\Triaxial\75923ID014_TRIAXIAL.dgn 5/15/2024 8:34:46 AM MJennings

ONE-DIMENSIONAL CONSOLIDATION OF SOILS
ASTM D2435-96

Project Name LAW-7-2.17
Source B-076-0-12, 9.9'-10.15'
Description Lean Clay (CL), brown, moist, firm
Specimen Type Undisturbed

Project No. 173608714
Lab ID 11
Date Received 06/05/2013

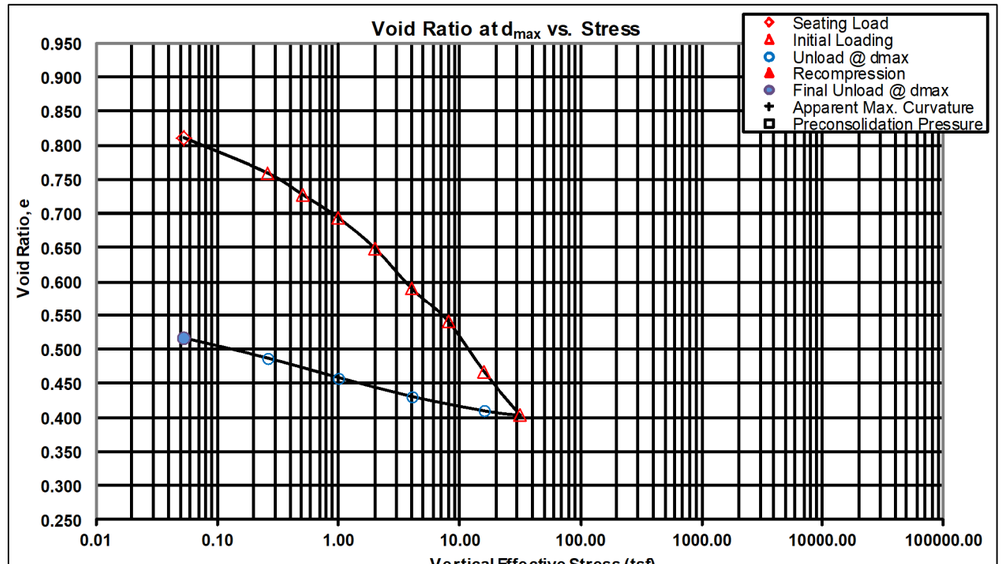

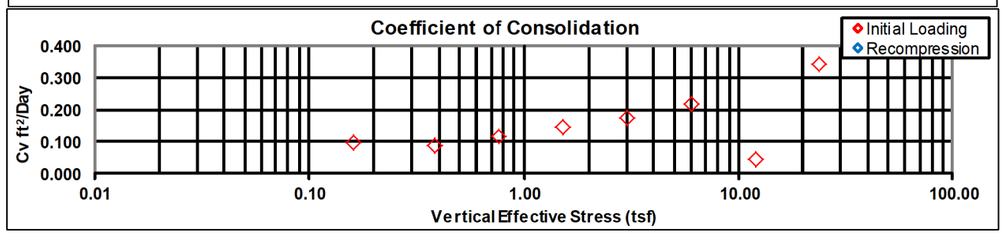

ONE-DIMENSIONAL CONSOLIDATION OF SOILS
ASTM D2435-96

Project Name LAW-7-2.17
Source B-009-1-12, 13.2'-13.5'
Description Clayey Sand (SC), brown, moist, firm
Specimen Type Undisturbed

Project No. 173608714
Lab ID 3
Date Received 06/05/2013

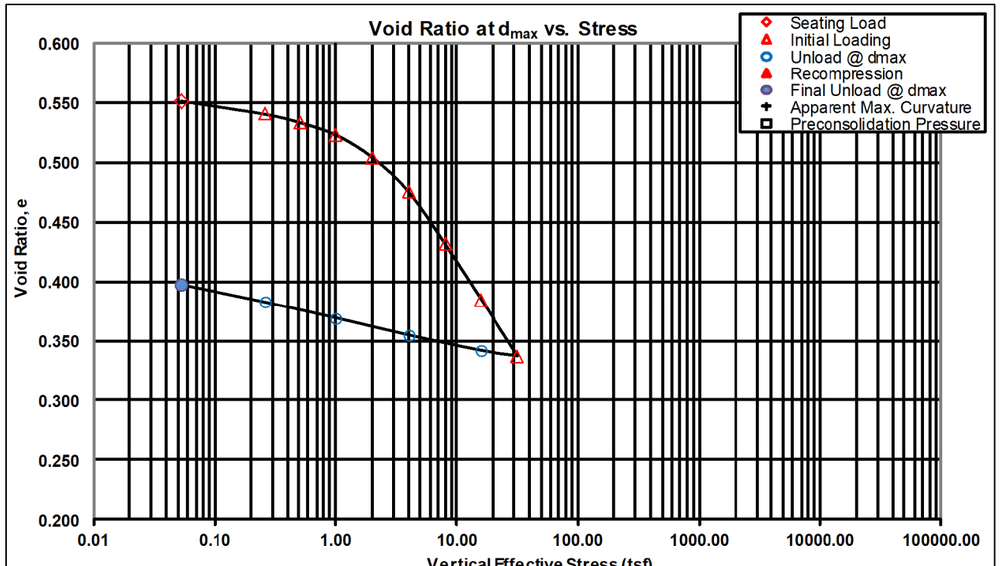

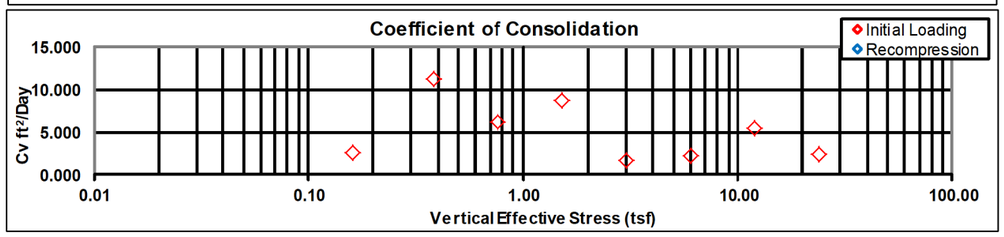

DRAFT Stage 3 - Not for Construction 09/23/2024

DRAWN MSJ
CHECKED EMK

SOIL PROFILE - ROADWAY
LABORATORY TEST DATA

LAW-7-2.17

39/206

1080
1247

U:\173608714\LAW\75923\geotechnical\sheets\Coversheet_SS_Lab\Consolidation\75923ID017.dgn 5/15/2024 8:29:50 AM MJennings

ONE-DIMENSIONAL CONSOLIDATION OF SOILS
ASTM D2435-96

Project Name LAW-7-2.17 | Project No. 173608714
Source B-010-0-11, 5.0'-7.0' | Lab ID 486C
Description Lean Clay with Sand (CL), brown, moist, firm, Mn | Date Received 06/25/2011
Specimen Type Undisturbed

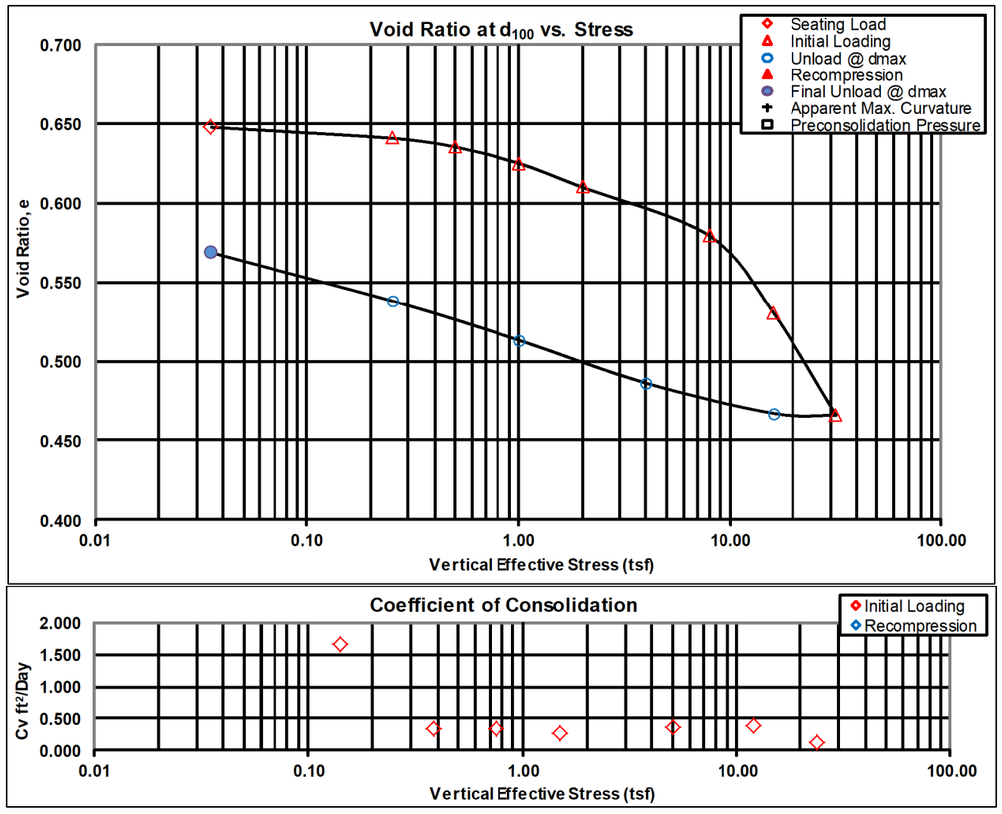

ONE-DIMENSIONAL CONSOLIDATION OF SOILS
ASTM D2435-96

Project Name LAW-7-2.17 | Project No. 173608714
Source B-010-1-12, 8.35'-8.6' | Lab ID 5
Description Lean Clay with Sand (CL), gray brown, wet, soft | Date Received 06/05/2013
Specimen Type Undisturbed

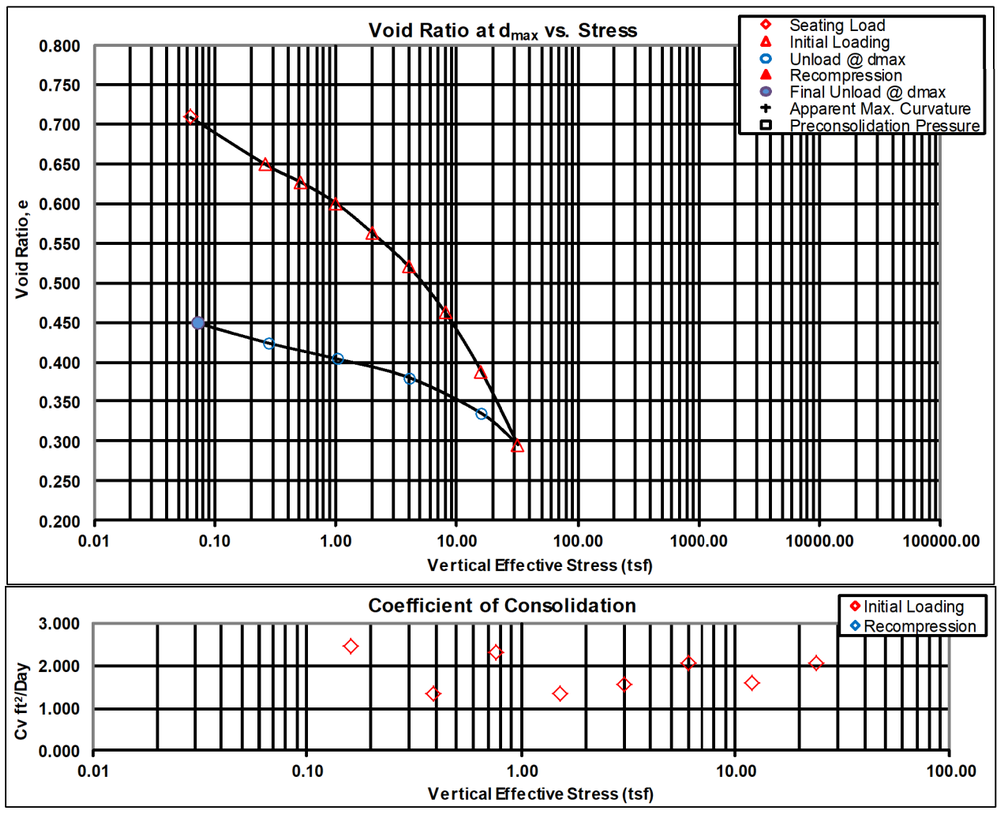

DRAWN MSJ
CHECKED EMK

SOIL PROFILE - ROADWAY
LABORATORY TEST DATA

LAW-7-2.17

40/206

1081
1247

DRAFT Stage 3 - Not for Construction 09/23/2024

U:\173608714\LAW\75923\geotechnical\sheets\Coversheet_SS_Lab\Consolidation\75923ID017.dgn 5/15/2024 8:30:18 AM MJennings

ONE-DIMENSIONAL CONSOLIDATION OF SOILS
ASTM D2435-96

Project Name LAW-7-2.17
Source B-012-0-11, 5.0'-7.0'
Description Silty Sand (SP), brown, moist, soft
Specimen Type Undisturbed

Project No. 173608714
Lab ID 495
Date Received 07/02/2011

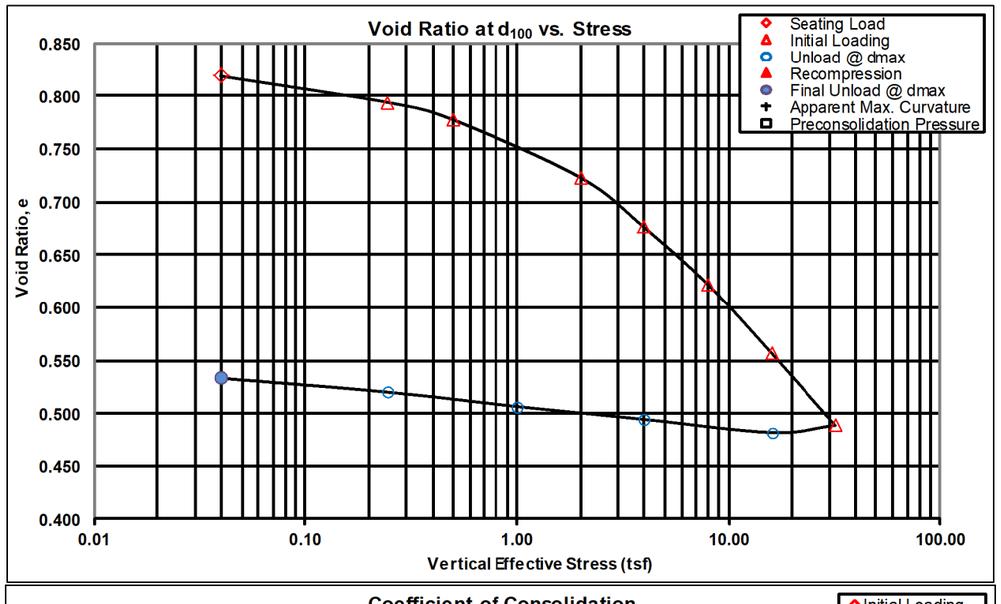

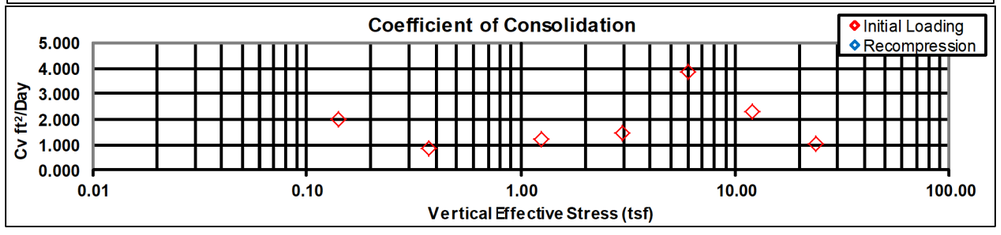

ONE-DIMENSIONAL CONSOLIDATION OF SOILS
ASTM D2435-96

Project Name LAW-7-2.17
Source B-019-2-12, 5.8'-6.1'
Description Lean Clay (CL), red brown, moist, firm
Specimen Type Undisturbed

Project No. 173608714
Lab ID 10
Date Received 06/05/2013

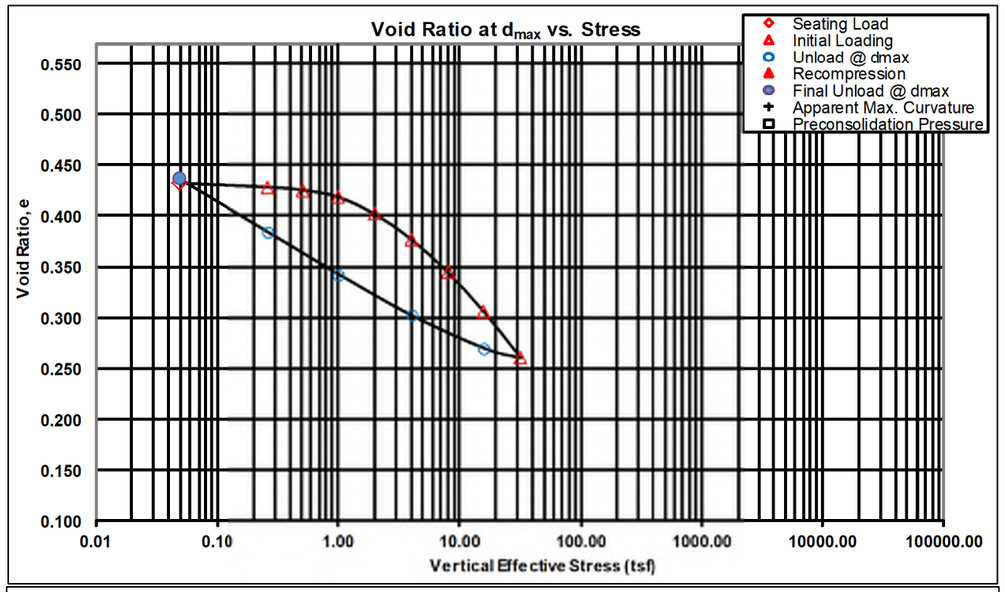

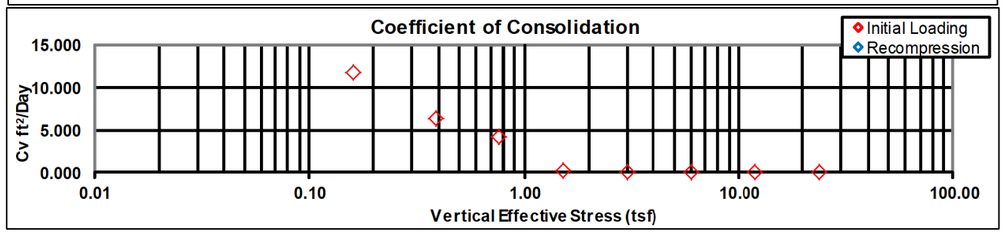

DRAFT Stage 3 - Not for Construction 09/23/2024

DRAWN MSJ
CHECKED EMK

SOIL PROFILE - ROADWAY
LABORATORY TEST DATA

LAW-7-2.17

U:\173608714\LAW\75923\geotechnical\sheets\Coversheet_SS_Lab\Consolidation\759231D017.dgn 5/15/2024 8:30:39 AM MJennings

ONE-DIMENSIONAL CONSOLIDATION OF SOILS
ASTM D2435-96

Project Name LAW-7-2.17
Source B-034-0-11, 20.0'-22.0', TI - 21.4'-21.9'
Description Lean Clay (CL), gray, moist, firm, layers of sandstone
Specimen Type Undisturbed

Project No. 173608714
Lab ID 31A
Date Received 05/24/2011

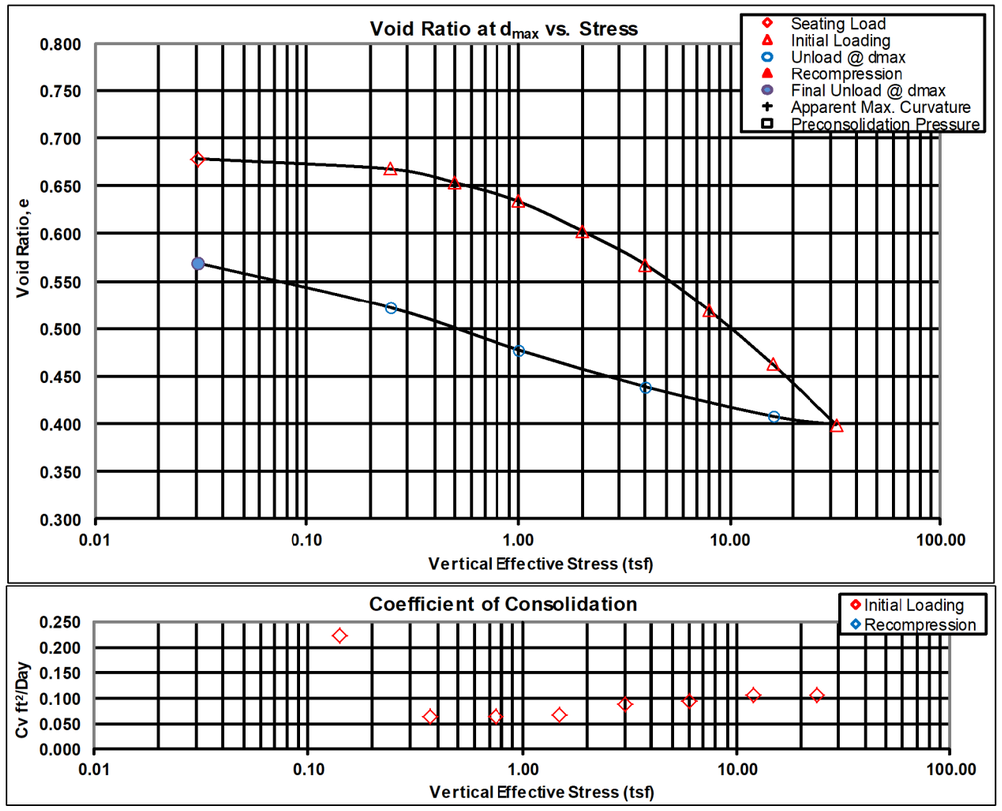

ONE-DIMENSIONAL CONSOLIDATION OF SOILS
ASTM D2435-96

Project Name LAW-7-2.17
Source B-036-1-11, 4.5'-6.5'
Description Lean Clay with Sand (CL), light brown, moist, firm to hard
Specimen Type Undisturbed

Project No. 173608714
Lab ID 555A
Date Received 07/18/2011

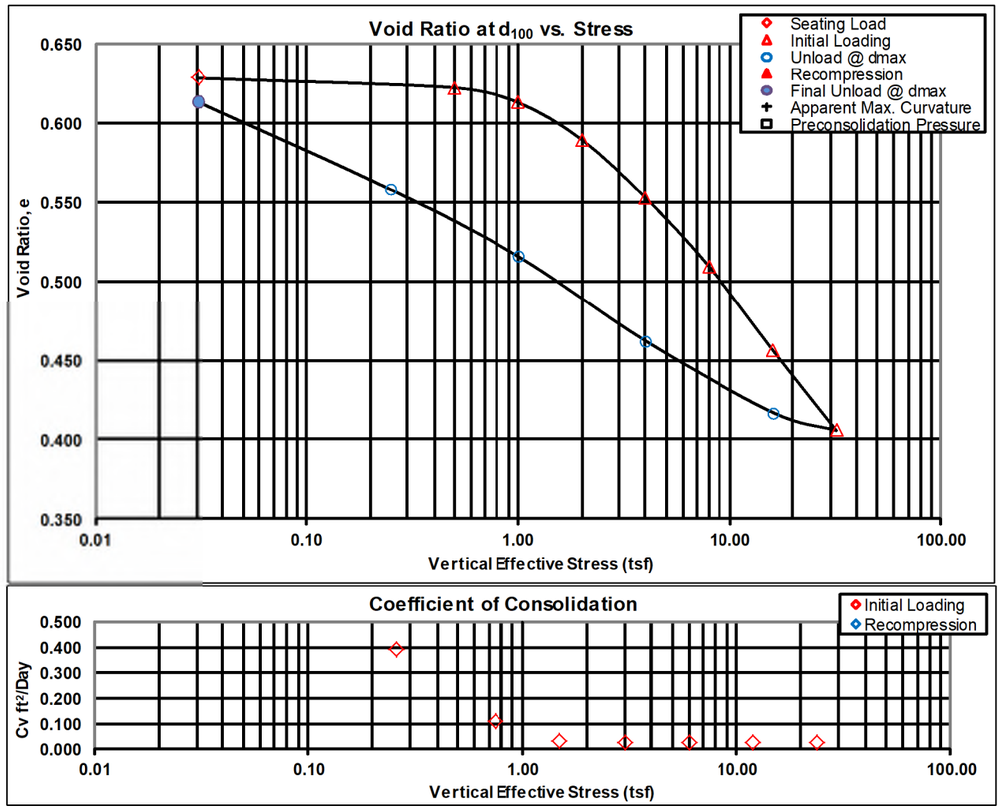

DRAWN MSJ
CHECKED EMK

SOIL PROFILE - ROADWAY
LABORATORY TEST DATA

LAW-7-2.17

DRAFT Stage 3 - Not for Construction 09/23/2024

U:\173608714\LAW\75923\geotechnical\sheets\Coversheet_SS_Lab\Consolidation\75923ID017.dgn 5/15/2024 8:30:58 AM MJennings

ONE-DIMENSIONAL CONSOLIDATION OF SOILS
ASTM D2435-96

Project Name LAW-7-2.17 | Project No. 173608714
Source B-038-0-11, 10.0'-12.0' | Lab ID 57
Description Lean Clay (CL), brown, moist, firm | Date Received 05/31/2011
Specimen Type Undisturbed

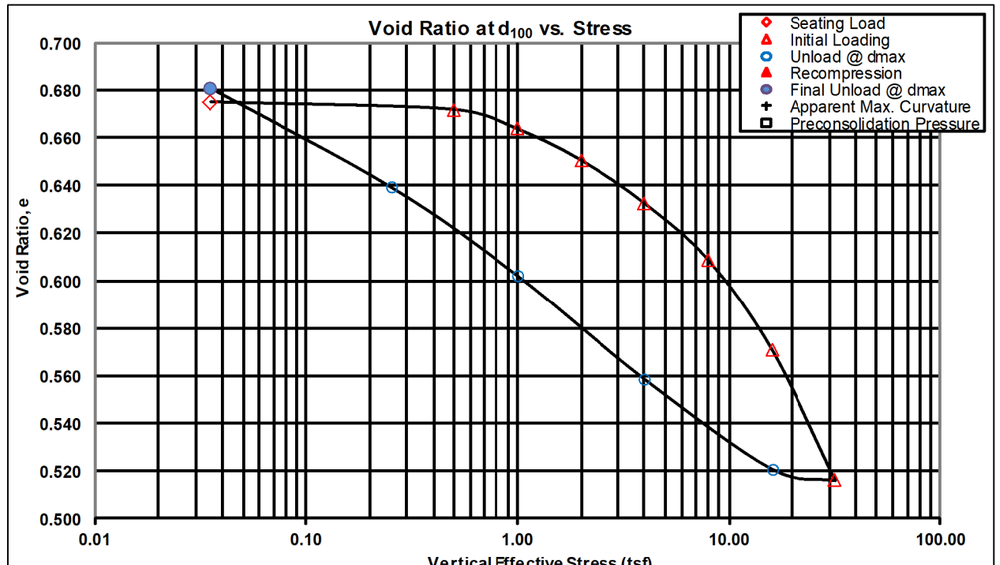

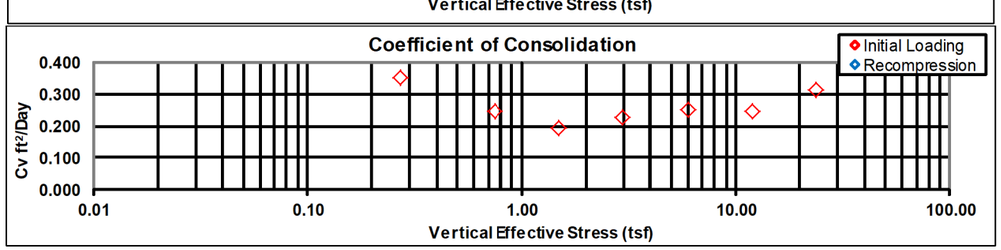

ONE-DIMENSIONAL CONSOLIDATION OF SOILS
ASTM D2435-96

Project Name LAW-7-2.17 | Project No. 173608714
Source Bulk Core 1, 9.0'-11.0' (Embankment) | Lab ID 12
Description Lean Clay with Sand (CL), gray brown, moist, firm | Date Received 06/05/2013
Specimen Type Compacted

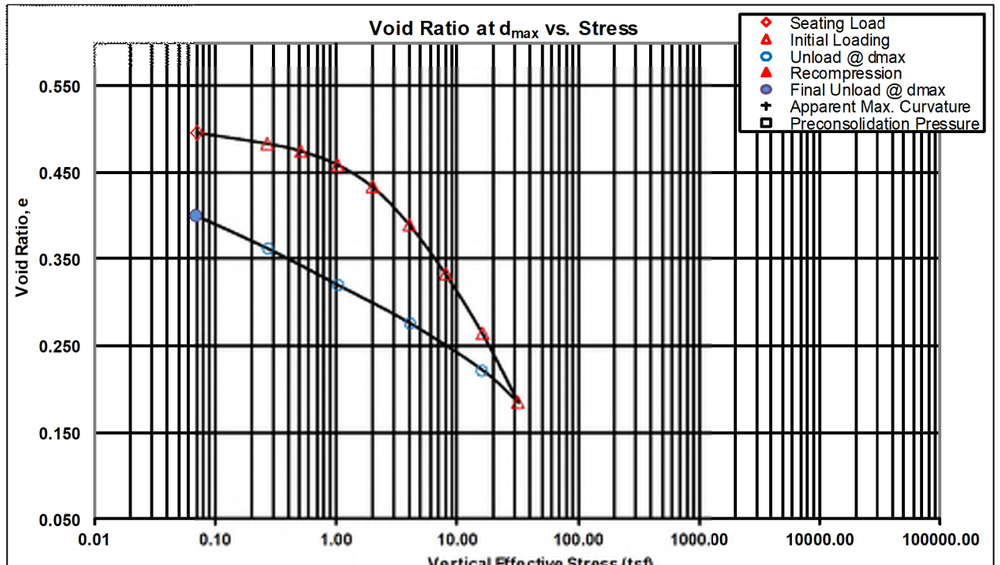

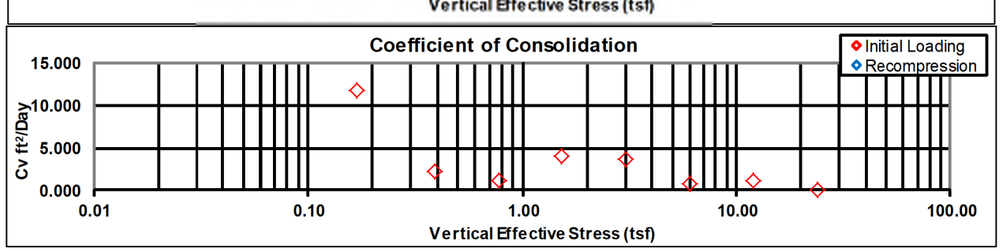

DRAFT Stage 3 - Not for Construction 09/23/2024

DRAWN MSJ | CHECKED EMK

SOIL PROFILE - ROADWAY
LABORATORY TEST DATA

LAW-7-2.17

U:\173608714\LAW\75923\geotechnical\sheets\Coversheet_SS_Lab\Consolidation\75923ID017.dgn 5/15/2024 8:31:15 AM MJennings

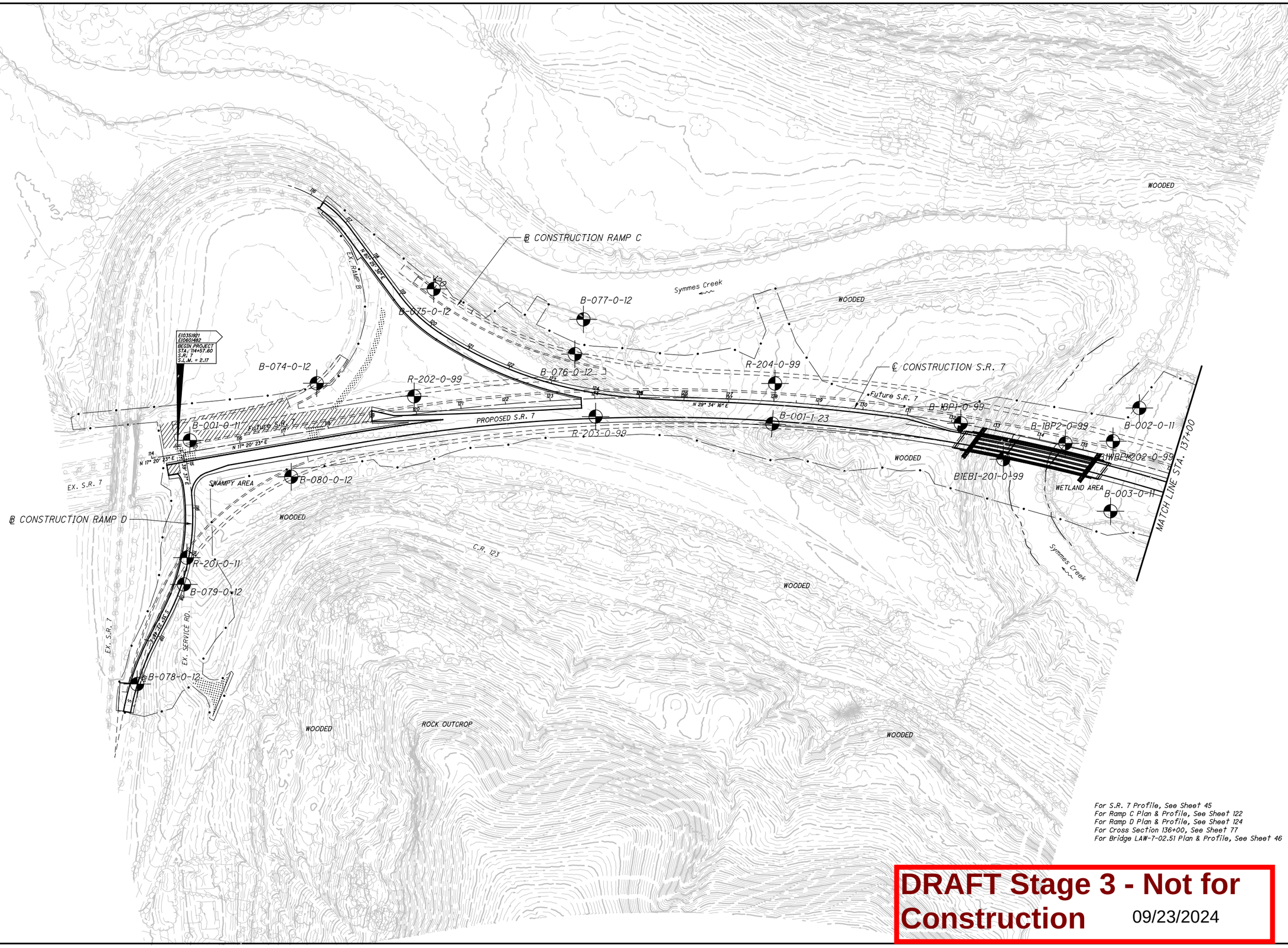

For S.R. 7 Profile, See Sheet 45
For Ramp C Plan & Profile, See Sheet 122
For Ramp D Plan & Profile, See Sheet 124
For Cross Section 136+00, See Sheet 77
For Bridge LAW-7-02.51 Plan & Profile, See Sheet 46

DRAFT Stage 3 - Not for Construction 09/23/2024

DRAWN MSJ
CHECKED EMK

SOIL PROFILE - ROADWAY
STA. 114+57.60 - 137+00

LAW-7-2.17

44/206

1085
1247

U:\173608714\LAW\75923\geotechnical\sheets\75923IP001.dgn 5/15/2024 9:12:12 AM M.Jennings

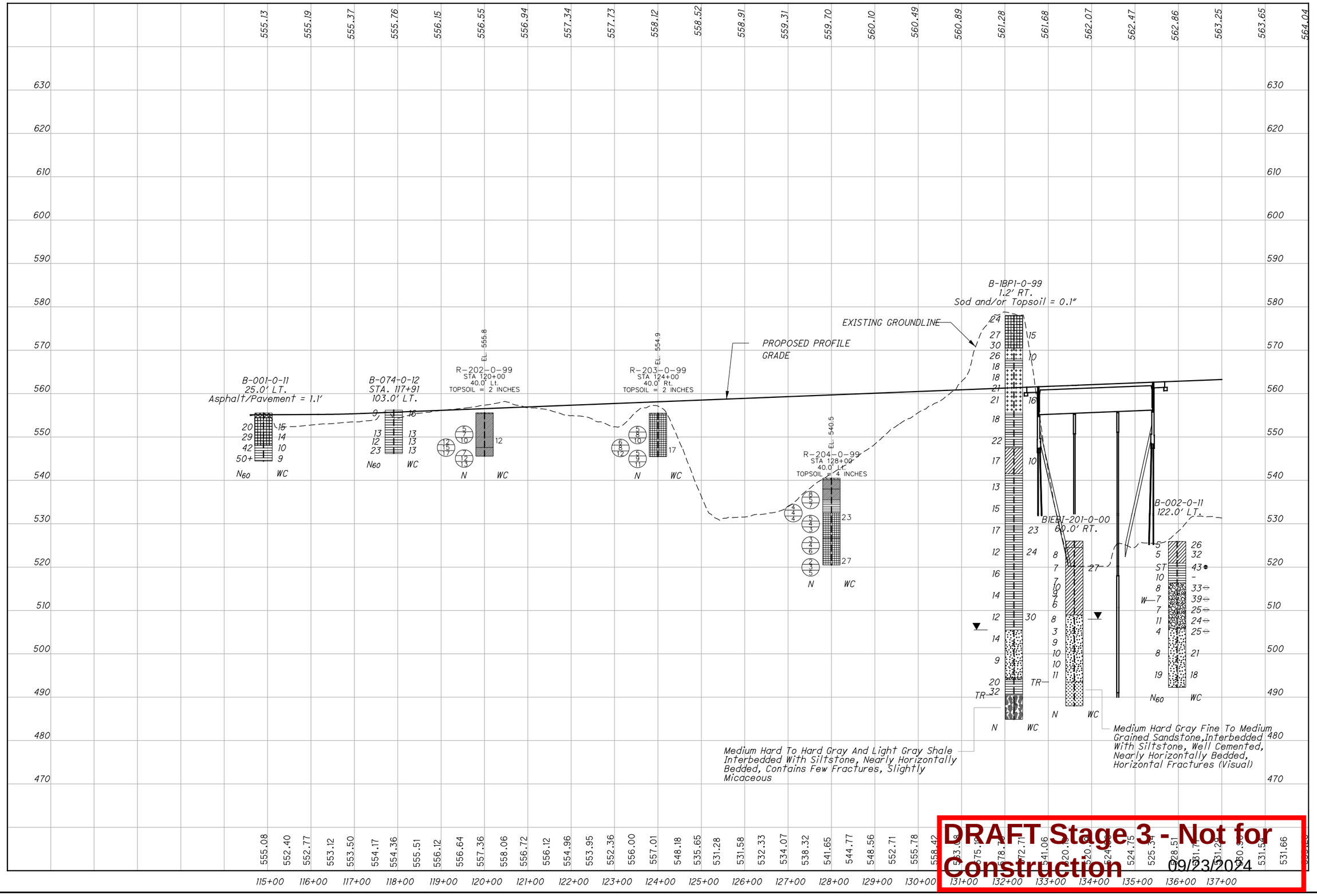

DRAFT Stage 3 - Not for Construction
09/23/2024

HORIZONTAL SCALE IN FEET
0 50 100 200

DRAWN MSJ
CHECKED EMK

SOIL PROFILE - ROADWAY
STA. 114+57.60 - 137+00

LAW-7-2.17

45 / 206

1086
1247

U:\173608714\LAW\75923\geotechnical\sheets\75923IF001.dgn 5/15/2024 9:14:07 AM MJennings

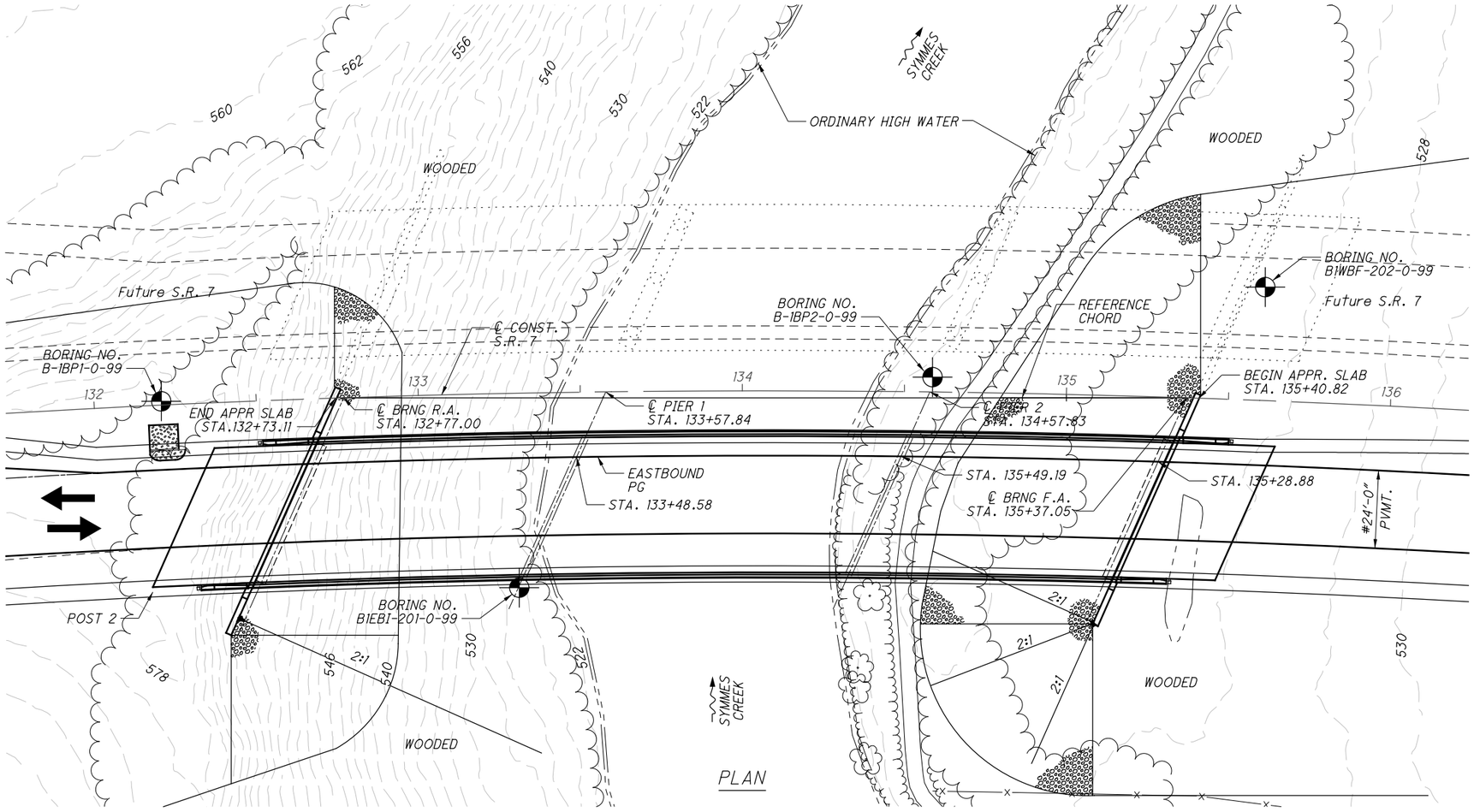

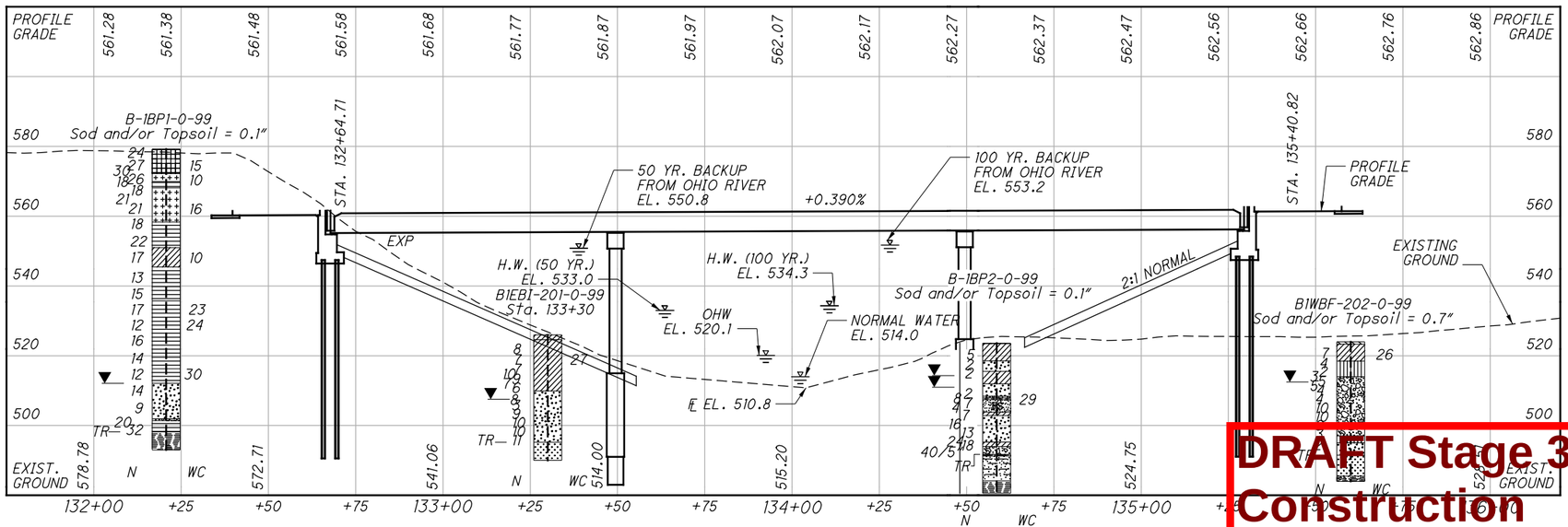

DRAFT Stage 3 - Not for Construction

09/23/2024

DRAWN MSJ
CHECKED EMK

HORIZONTAL SCALE IN FEET
0 10 20 40

STRUCTURE FOUNDATION EXPLORATION
LAW-7-2.51
S.R. 7 OVER SYMMES CREEK

LAW-7-2.17

46/206

1087/1247

U:\173608714\LAW\75923\geotechnical\sheets\LAW-7-02.51\759237P001.dgn 5/15/2024 9:20:43 AM MJennings

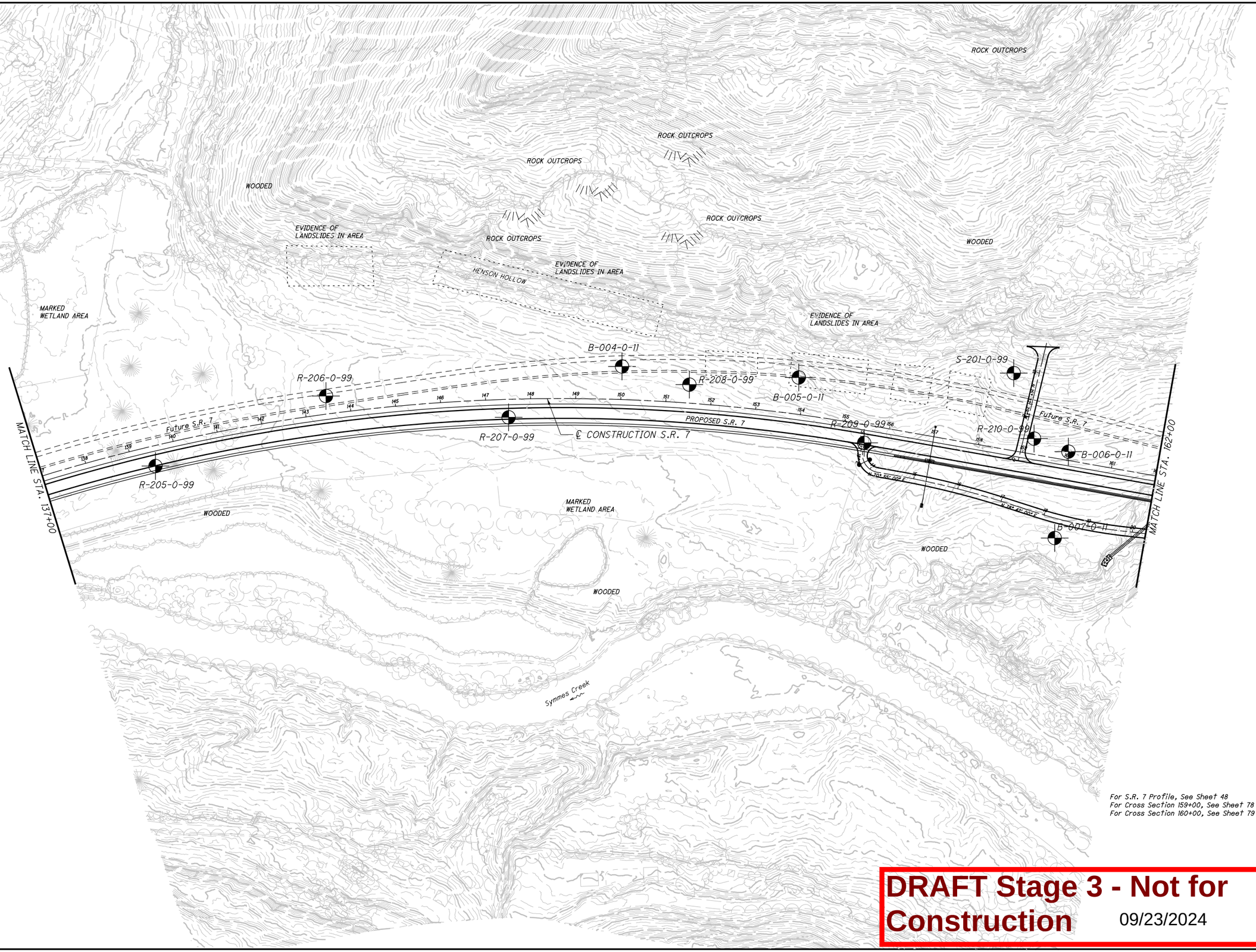

For S.R. 7 Profile, See Sheet 48
For Cross Section 159+00, See Sheet 78
For Cross Section 160+00, See Sheet 79

DRAFT Stage 3 - Not for Construction 09/23/2024

HORIZONTAL SCALE IN FEET
0 50 100 200

DRAWN MSJ
CHECKED EMK

SOIL PROFILE - ROADWAY
STA. 137+00 - 162+00

LAW-7-2.17

47/206

1088
1247

U:\173608714\LAW\7923\geotechnical\sheets\75923IP002.dgn 5/15/2024 9:34:01 AM MJennings

PROPOSED PROFILE GRADE

EXISTING GROUNDLINE

B-004-0-11
74.0' LT.
Sod and/or Topsoil = 0.6'

B-005-0-11
81.6' LT.

B-006-0-11
19.4' LT.

R-205-0-99
STA 139+50
40.0' Rt.
TOPSOIL = 5 INCHES
EL. 533.0

R-206-0-99
STA 143+50
40.0' Lt.
TOPSOIL = 6 INCHES
EL. 541.1

R-207-0-99
STA 147+50
40.0' Rt.
TOPSOIL = 6 INCHES
EL. 546.5

R-208-0-99
STA 151+26
40.0' Lt.
TOPSOIL = 5 INCHES
EL. 563.8

R-209-0-99
STA 155+50
40.0' Rt.
TOPSOIL = 7 INCHES
EL. 567.4

S-201-0-99
STA 158+50
170.0' Lt.
TOPSOIL = 3 INCHES
EL. 605.2

R-210-0-99
STA 159+50
40.0' Lt.
EL. 571.4

TOP OF BEDROCK

BEDROCK DESCRIPTIONS
FOR BORING S-201-0-99

MEDIUM-HARD YELLOW-BROWN
BECOMING BLUE-GRAY FINE
TO MEDIUM GRAINED
SANDSTONE
VERY-SOFT TO SOFT
BLUE-GRAY SHALE
VERY-SOFT TO SOFT
REDDISH-BROWN SHALE
VERY-SOFT TO SOFT
BLUE-GRAY SHALE
VERY-SOFT TO SOFT
BLUE-GRAY SHALE
INTERBEDDED WITH
MEDIUM-HARD
SANDSTONE

HORIZONTAL SCALE IN FEET
0 50 100 200

DRAWN MSJ
CHECKED EMK

SOIL PROFILE - ROADWAY
STA. 137+00 - 162+00

LAW-7-2.17

48/206

1089/1247

DRAFT Stage 3 - Not for Construction
09/23/2024

U:\17360871\4\LAW\75923\geotechnical\sheets\75923IF002.dgn 5/15/2024 9:24:52 AM MJennings

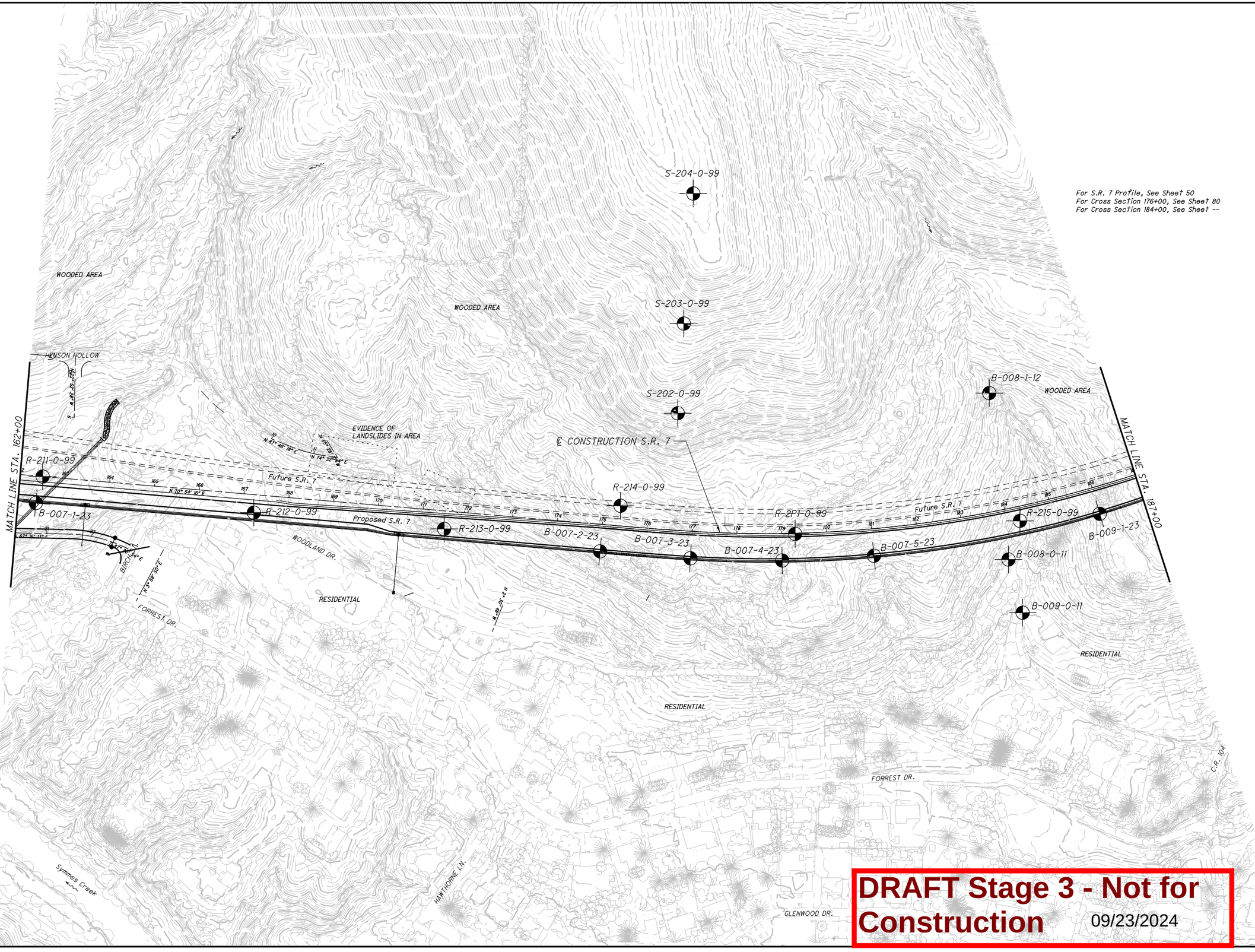

For S.R. 7 Profile, See Sheet 50
For Cross Section 176+00, See Sheet 80
For Cross Section 184+00, See Sheet --

HORIZONTAL SCALE IN FEET
0 50 100 200

DRAWN MSJ
CHECKED EMK

SOIL PROFILE - ROADWAY
STA. 162+00 - 187+00

LAW-7-2.17

49/206

1090/1247

DRAFT Stage 3 - Not for Construction 09/23/2024

U:\173608714\LAW\75923\geotechnical\sheets\75923JP003.dgn 5/15/2024 1:53:18 PM MJennings

SOIL PROFILE - ROADWAY
STA. 162+00 - 187+00

HORIZONTAL SCALE IN FEET
0 50 100 200

DRAWN MSJ
CHECKED EMK

LAW-7-2.17

50/206
1091/1247

U:\17360714\LAW\75923\geotechnical\sheets\75923IF003.dgn 5/15/2024 1:54:35 PM MJennings

585.56 588.64 592.38 596.80 601.89 607.64 613.64 619.64 625.64 631.64 637.41 642.54 647.01 650.83 653.98 656.48 658.32 659.51 660.03 659.90 659.11 657.67 655.56 652.80 649.38 645.31

690 680 670 660 650 640 630 620 610 600 590 580 570 560 550 540 530 520

EXISTING GROUNDLINE

PROPOSED PROFILE GRADE

R-214-0-99
STA 175+37
45.0' Lt.
TOPSOIL = 6 INCHES
EL. 678.9

TOP OF BEDROCK
VERY-SOFT TO SOFT LIGHT-BROWN SILTSTONE
SOFT TO MEDIUM-HARD BROWN AND GRAY SILTSTONE INTERBEDDED WITH FINE TO MEDIUM GRAINED SANDSTONE
SOFT LIGHT-BROWN SHALE
SOFT TO MEDIUM-HARD LIGHT-BROWN FINE GRAINED SANDSTONE
SOFT REDDISH-BROWN AND GRAY SHALE

R-2P1-0-99
STA 179+30
1.0 Rt.
TOPSOIL = 6 INCHES
EL. 670.5

TOP OF BEDROCK
MEDIUM-HARD GRAY FINE GRAINED SANDSTONE
VERY-SOFT GRAY WITH SEAMS OF RED-BROWN SHALE

R-213-0-99
STA 171+50
40.0' Rt.
EL. 608.7

TOP OF BEDROCK
SOFT BROWN AND GRAY SHALE
AUGER REFUSAL

R-215-0-99
STA 184+30
35.0' Rt.
TOPSOIL = 4 INCHES
EL. 606.6

TOP OF BEDROCK
VERY-SOFT RED BECOMING LIGHT-BROWN SHALE
SOFT LIGHT-BROWN SHALE
MEDIUM-HARD LIGHT-BROWN SILTSTONE

R-212-0-99
STA 167+25
40.0' Rt.
ASPHALT = 2 INCHES
GRANULAR BASE = 12 INCHES
EL. 577.4

R-211-0-99
STA 162+50
℄
EL. 546.7

STA. 162+95.83
℄ 66" TYPE A
= 548.29

559.36 547.53 556.22 560.55 563.85 567.05 568.63 568.36 571.47 573.99 577.12 580.46 587.02 588.70 593.95 599.87 604.62 608.85 610.94 617.14 624.13 630.64 632.16 635.06 646.30 653.15 664.11 666.60 669.66 669.63 671.26 674.03 680.91 679.49 673.75 668.72 668.22 662.79 661.25 653.53 655.55 644.59 632.54 619.80 609.20 614.81 632.43 642.56 655.40 663.76

162+00 163+00 164+00 165+00 166+00 167+00 168+00 169+00 170+00 171+00 172+00 173+00 174+00 175+00 176+00 177+00 178+00 179+00 180+00 181+00 182+00 183+00 184+00 185+00 186+00 187+00

DRAFT Stage 3 - Not for Construction
09/23/2024

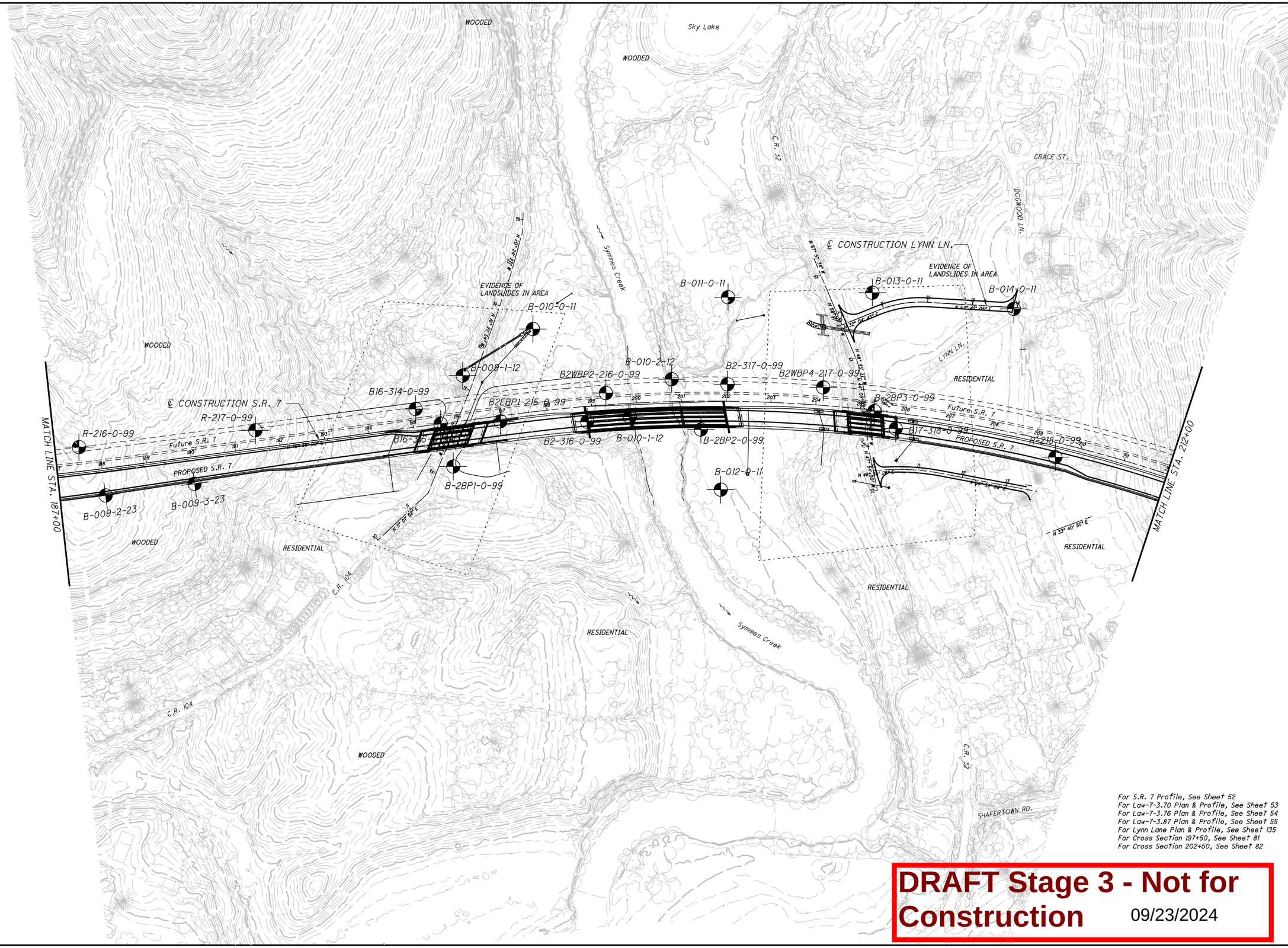

For S.R. 7 Profile, See Sheet 52
For Law-7-3.70 Plan & Profile, See Sheet 53
For Law-7-3.76 Plan & Profile, See Sheet 54
For Law-7-3.87 Plan & Profile, See Sheet 55
For Lynn Lane Plan & Profile, See Sheet 135
For Cross Section 197+50, See Sheet 81
For Cross Section 202+50, See Sheet 82

DRAFT Stage 3 - Not for Construction 09/23/2024

0 50 100 200
HORIZONTAL SCALE IN FEET

DRAWN MSJ
CHECKED EMK

SOIL PROFILE - ROADWAY
STA. 187+00 - 212+00

LAW-7-2.17

51/206

1092
1247

U:\173608714\LAW\75923\geotechnical\sheets\75923IP004.dgn 5/15/2024 2:05:31 PM MJennings

SOIL PROFILE - ROADWAY
STA. 187+00 - 212+00

HORIZONTAL SCALE IN FEET
0 50 100 200

DRAWN MSJ
CHECKED EMK

R-216-0-99
STA. 187+65
54.0' Lt.
EL. 673.3

TOP OF BEDROCK
SOFT TO MEDIUM-HARD YELLOW-BROWN SHALE
MEDIUM-HARD YELLOW-BROWN FINE TO MEDIUM GRAINED SANDSTONE
MEDIUM-HARD GRAY FINE TO MEDIUM GRAINED SANDSTONE
VERY-SOFT TO SOFT REDDISH-BROWN AND GRAY SHALE
VERY-SOFT TO SOFT REDDISH-BROWN BECOMING GRAY SHALE

R-217-0-99
STA 191+50
40.0' Lt.
TOPSOIL = 3 INCHES
EL. 619.3

TOP OF BEDROCK
VERY-SOFT BROWN-GRAY SHALE

PROPOSED PROFILE GRADE

EXISTING GROUNDLINE

B16-315-0-99
STA. 195+61
℄

B2-316-0-99
STA. 198+8
22.2' RT.
Sod and/or Topsoil = 0.6"

B17-318-0-02
STA.205+83, 34.6' RT.
Sod and/or Topsoil = 0.6"

R-218-0-99
STA 209+49
32.0' Rt.
TOPSOIL = 2 INCHES
EL. 573.8

187+00 188+00 189+00 190+00 191+00 192+00 193+00 194+00 195+00 196+00 197+00 198+00 199+00 200+00 201+00 202+00 203+00 204+00 205+00 206+00 207+00 208+00 209+00 210+00 211+00 212+00

LAW-7-2.17

52 / 206

1093 / 1247

DRAFT Stage 3 - Not for Construction
09/23/2024

U:\173608714\LAW\75923\geotechnical\sheets\75923IF004.dgn 5/15/2024 2:07:13 PM MJennings

BRIDGE NO. B-16

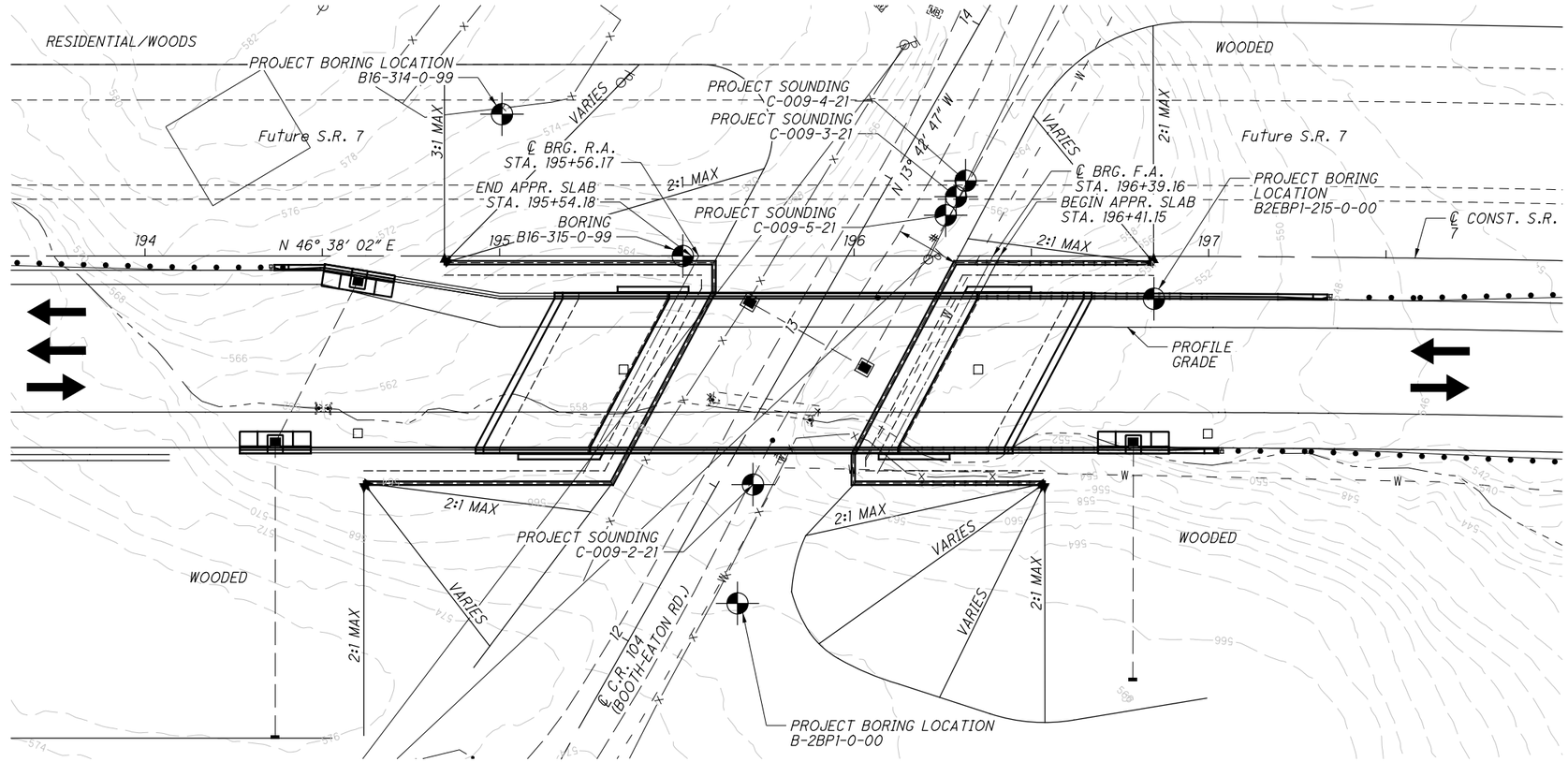

PLAN

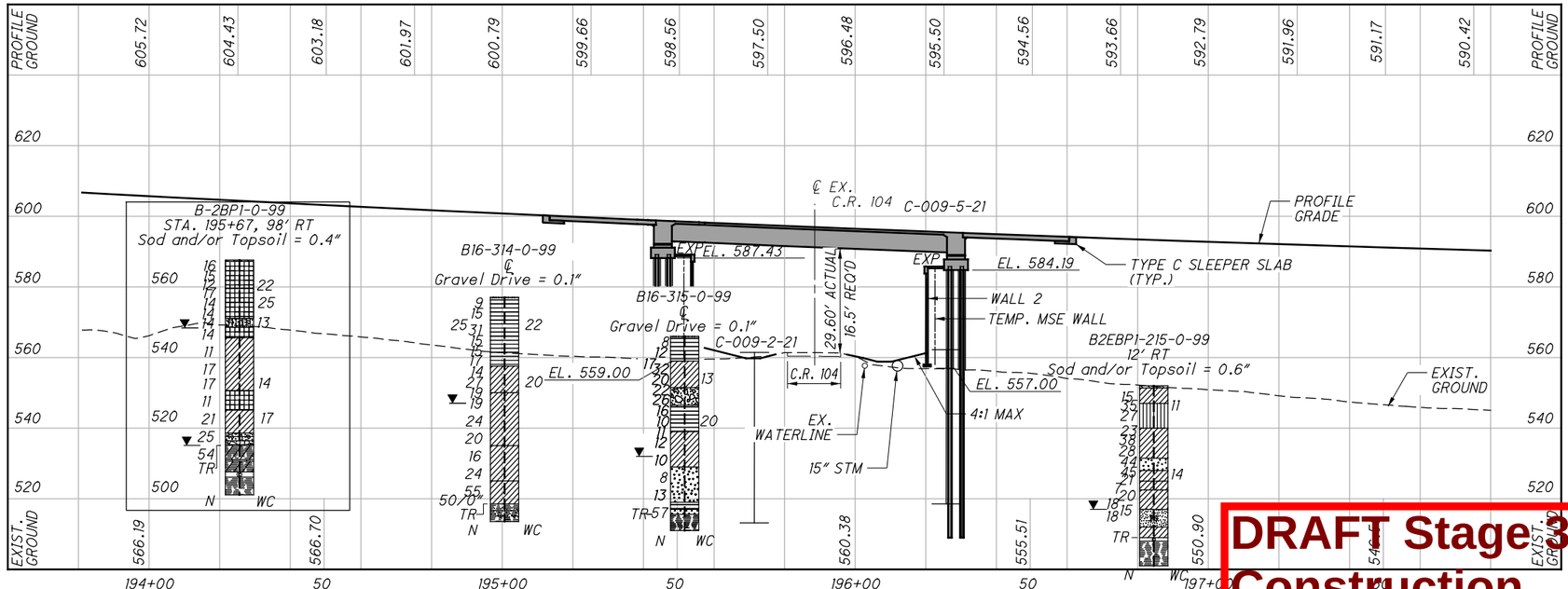

PROFILE ALONG PROFILE GRADE LINE

DRAFT Stage 3 - Not for Construction 09/23/2024

HORIZONTAL SCALE IN FEET

DESIGNED MSJ CHECKED EMK

STRUCTURE FOUNDATION EXPLORATION
BRIDGE NO. LAW-7-0370
S.R. 7 OVER COUNTY ROAD 104 (BOOTHE EATON ROAD)

LAW-7-2.17

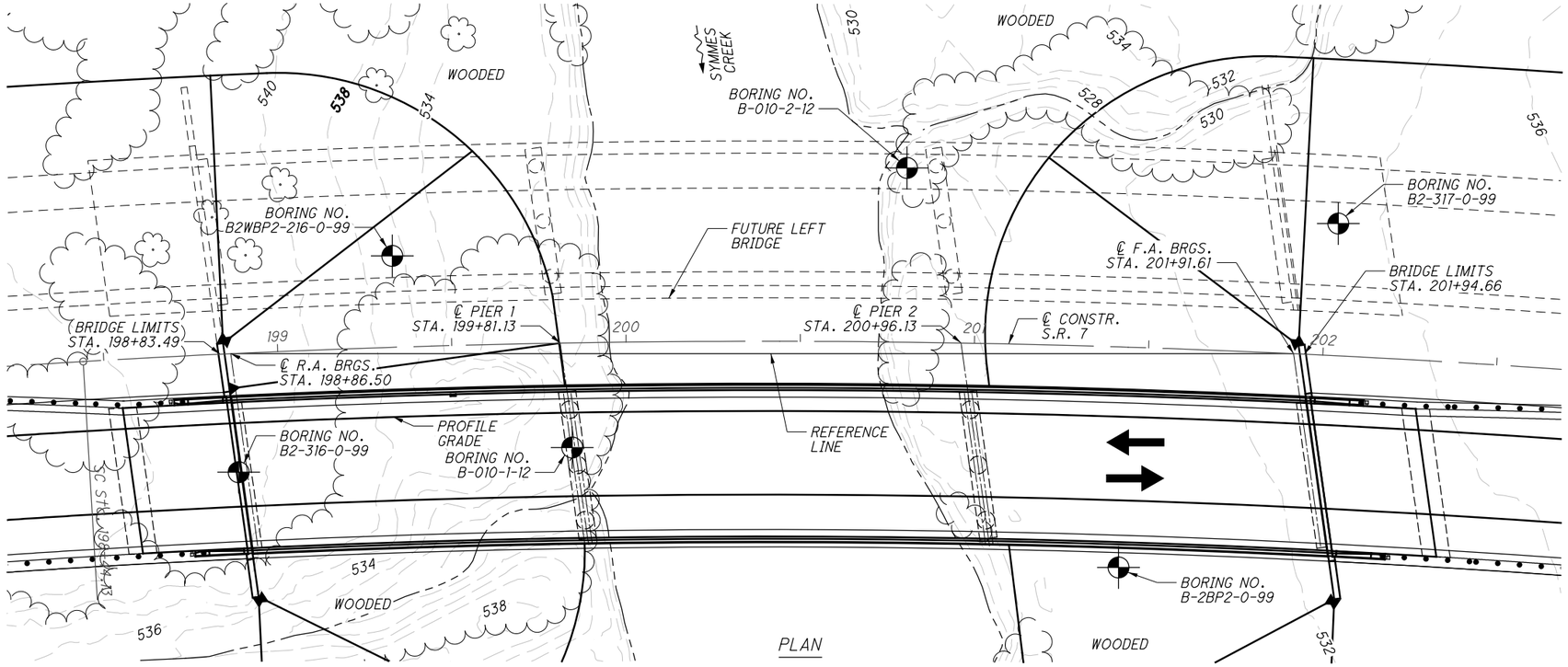

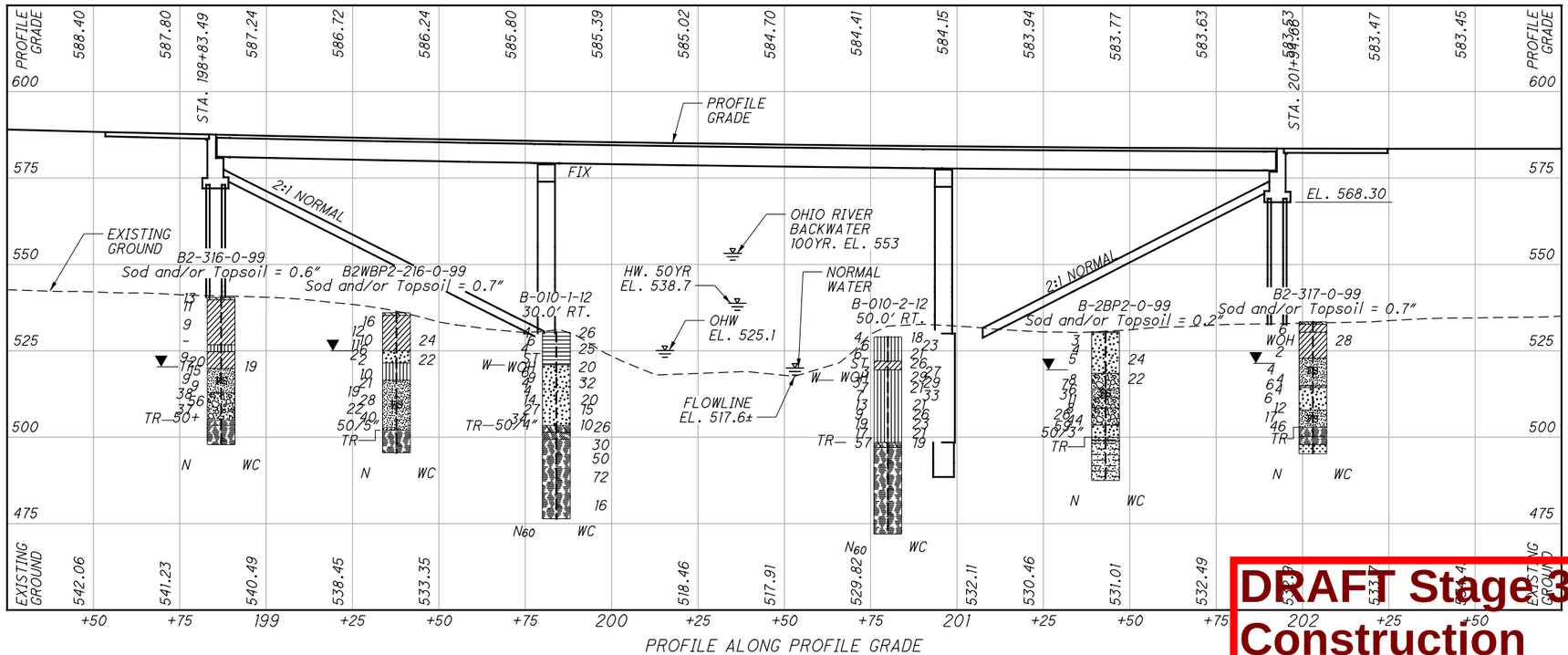

DRAFT Stage 3 - Not for Construction
09/23/2024

HORIZONTAL SCALE IN FEET
0 12.5 25 50

DRAWN MSJ
CHECKED EMK

STRUCTURE FOUNDATION EXPLORATION
LAW-7-3.76
OVER SYMMES CREEK
S.R. 7

LAW-7-2.17

I:\17360871\LAW\75923\geotechnical\sheets\LAW-7-03.76\75923TP001.dgn 5/15/2024 2:16:31 PM MJennings

BRIDGE NO. B-17

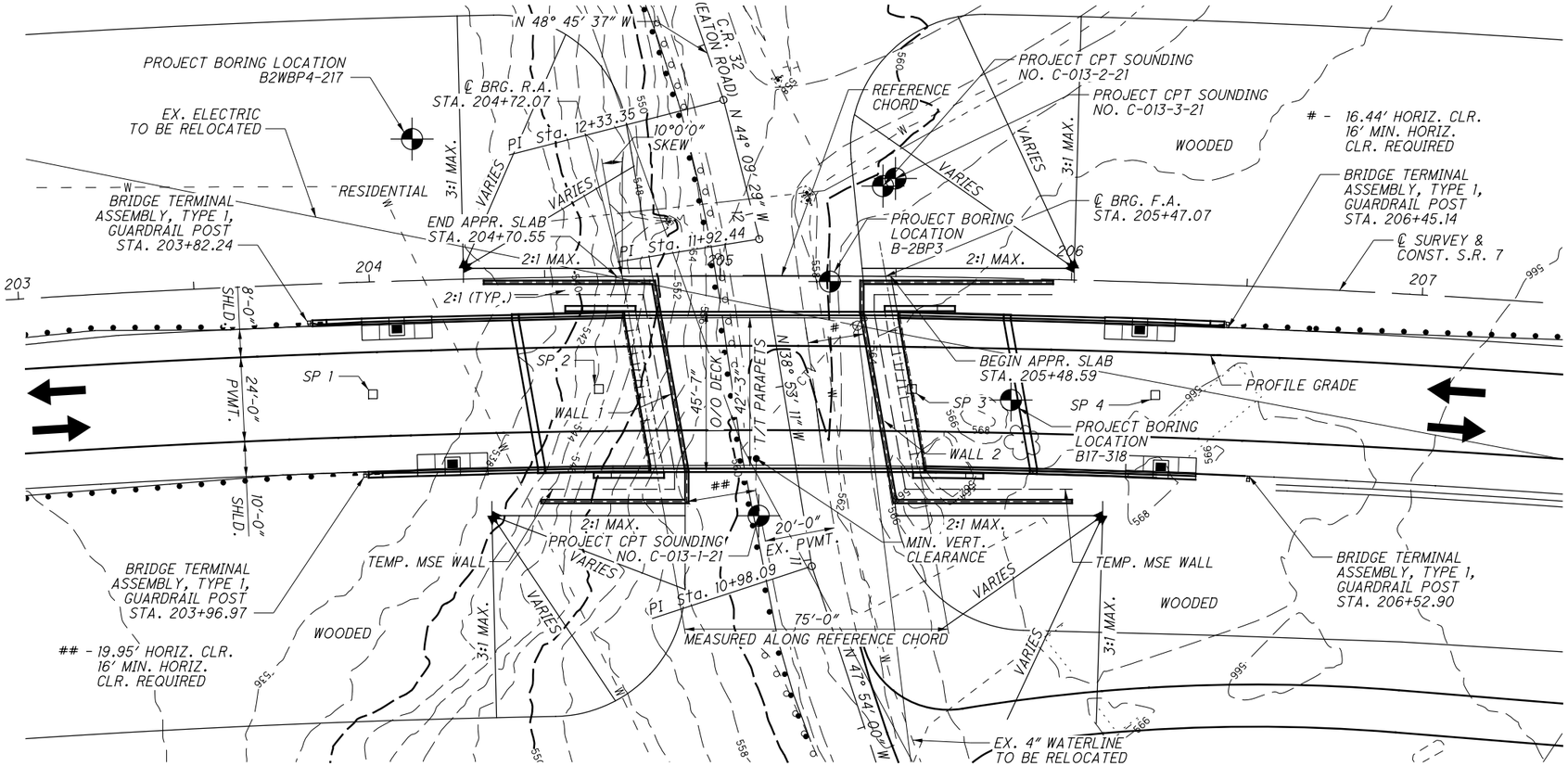

PLAN

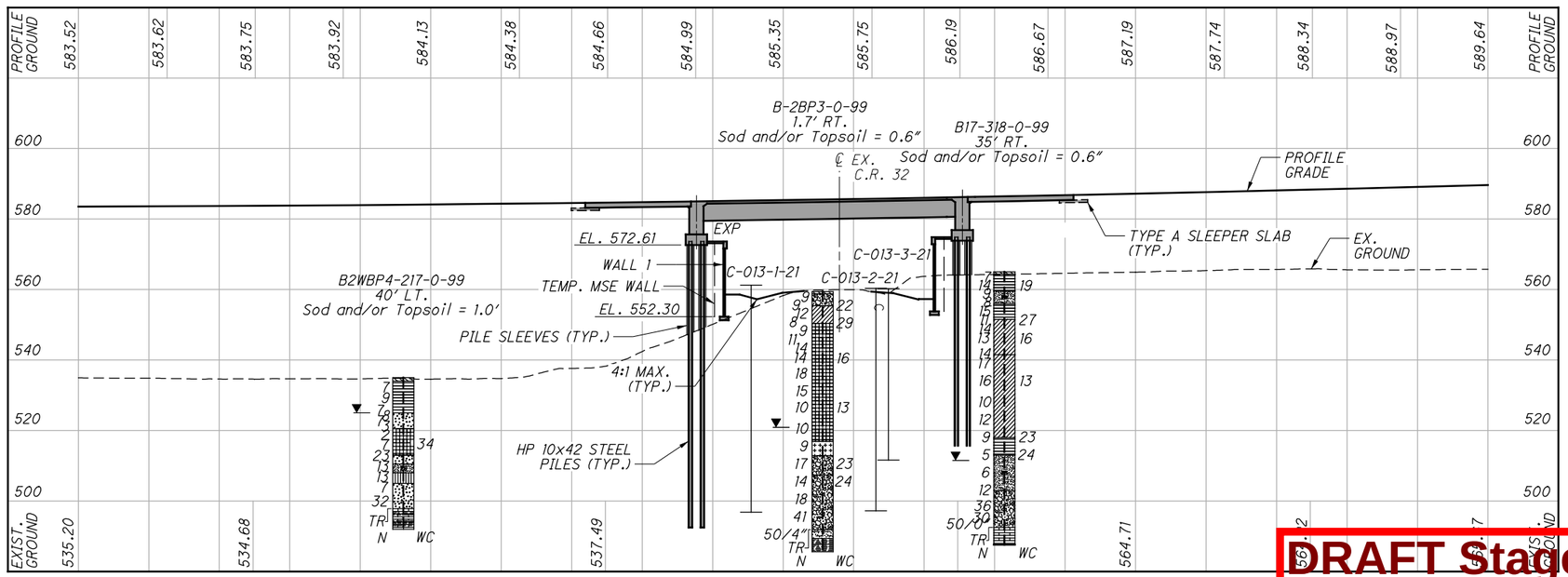

PROFILE ALONG PROFILE GRADE LINE

DRAFT Stage 3 - Not for Construction 09/23/2024

HORIZONTAL SCALE IN FEET
0 10 20 40

DESIGNED MSJ
CHECKED EMK

STRUCTURE FOUNDATION EXPLORATION
BRIDGE NO. LAW-7-3.87
S.R. 7 OVER C.R. 32 (EATON ROAD)

LAW-7-2.17

55/206

1096
1247

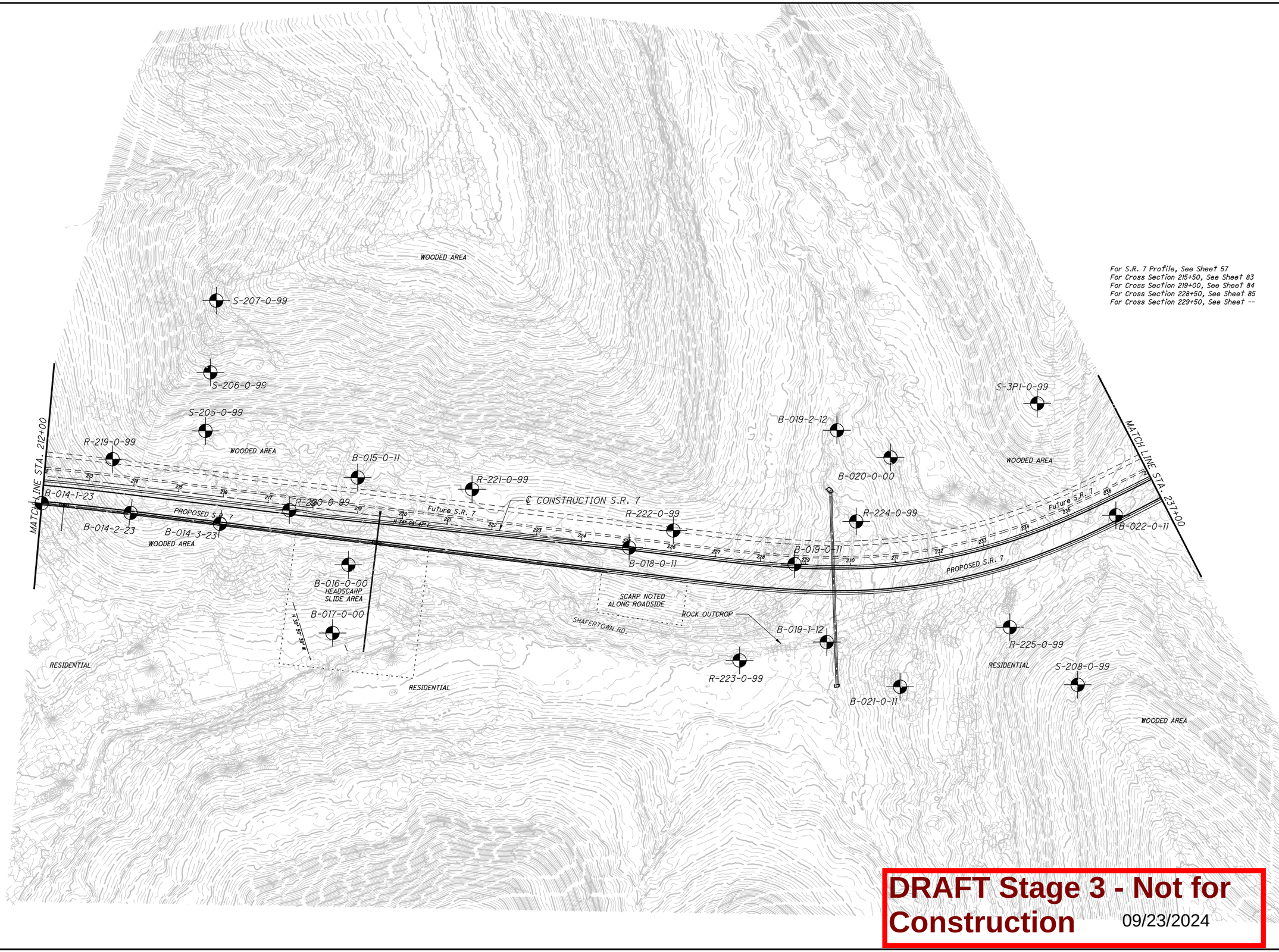

For S.R. 7 Profile, See Sheet 57
For Cross Section 215+50, See Sheet 83
For Cross Section 219+00, See Sheet 84
For Cross Section 228+50, See Sheet 85
For Cross Section 229+50, See Sheet --

DRAFT Stage 3 - Not for Construction 09/23/2024

HORIZONTAL SCALE IN FEET
0 50 100 200

DRAWN MSJ
CHECKED EMK

SOIL PROFILE
STA. 212+00 - 237+00
LAW-7-2.17

56/206
1097/1247

U:\173608714\LAW\75923\geotechnical\sheets\75923JP005.dgn 5/15/2024 3:18:53 PM MJennings

611.09 616.73 622.11 627.19 631.97 636.46 640.65 644.54 648.14 651.43 654.43 657.13 659.54 661.64 663.45 664.96 666.17 667.09 667.71 668.03 668.05 667.78 667.21 666.34 665.17 663.71

720 710 700 690 680 670 660 650 640 630 620 610 600 590 580 570 560

R-219-0-99
STA 213+46
53.4' Lt.
TOPSOIL = 4 INCHES
EL. 654.4
TOP OF BEDROCK
VERY-SOFT REDDISH-BROWN SHALE
SOFT LIGHT-BROWN SILTSTONE
MEDIUM-HARD LIGHT-GRAY LIMESTONE
MEDIUM-HARD LIGHT-GRAY SILTSTONE INTERBEDDED WITH SANDSTONE
SOFT GRAY AND BROWN SILTSTONE INTERBEDDED WITH SHALE
N

R-220-0-99
STA 217+49
11.3' Rt.
TOPSOIL = 3 INCHES
EL. 632.4
TOP OF BEDROCK
SOFT LIGHT-BROWN SILTSTONE
MEDIUM-HARD LIGHT-BROWN AND GRAY LIMESTONE
MEDIUM-HARD LIGHT-GRAY SILTSTONE
N WC

R-221-0-99
STA 221+45
84.0' Lt.
TOPSOIL = 4 INCHES
EL. 662.9
N WC

PROPOSED PROFILE GRADE

EXISTING GROUNDLINE

B-018-0-11
3.0' RT.
ST
TR-50+
N_{60}
WC (Augered)
Weathered Shale

B-019-0-11
Sod and/or Topsoil = 0.5'
ST
TR-73
N_{60} WC
Weathered Shale (Augered)

R-222-0-99
STA 226+00
47.3' Lt.
TOPSOIL = 4 INCHES
EL. 655.0
N

R-223-0-99
STA 227+80.1
222.6' Rt.
TOPSOIL = 2 INCHES
EL. 591.3
TOP OF BEDROCK
SOFT TO MEDIUM-HARD YELLOW-BROWN ARENACEOUS SHALE
N WC

STA. 229+61.63
E 60" TYPE A
= 606.24

R-225-0-99
STA 233+06.3
189.3' Rt.
TOPSOIL = 5 INCHES
EL. 674.0
TOP OF BEDROCK
VERY-SOFT REDDISH-BROWN AND GRAY-BROWN SHALE
N

B-022-0-11
44.0' RT.
Sod and/or Topsoil = 0.5'
N_{60} WC

B-019-1-11
STA. 229+50
170' RT.
W
TR-11/50/2"
N_{60} WC
Weathered Shale (Augered)
Shale, Gray, Slightly To Moderately Weathered, Weak To Slightly Strong, Laminated
Sandstone, Gray, Unweathered, Very Strong, Fine Grained, Thick To Very Thick Bedded

603.51 616.08 628.76 641.51 649.09 651.49 648.87 648.31 646.51 645.17 644.53 641.23 643.22 642.13 642.14 637.04 641.68 644.58 645.82 647.16 650.09 649.04 649.87 649.67 652.34 652.65 653.34 653.98 654.42 653.57 648.30 643.47 635.61 625.85 619.14 601.64 603.25 609.33 616.6 622.44 638.16 640.94 648.54 655.83 661.82 669.09 681.48 680.00 677.42 672.22 668.86

212+00 213+00 214+00 215+00 216+00 217+00 218+00 219+00 220+00 221+00 222+00 223+00 224+00 225+00 226+00 227+00 228+00 229+00 230+00 231+00 232+00 233+00 234+00 235+00 236+00 237+00

DRAFT Stage 3- Not for Construction
09/23/2024

HORIZONTAL SCALE IN FEET
0 50 100 200

DRAWN MSJ
CHECKED EMK

SOIL PROFILE - ROADWAY
STA. 212+00 - 237+00

LAW-7-2.17

57/206

1098
1247

U:\173608714\LAW\75923\geotechnical\sheets\75923IF005.dgn 5/15/2024 3:20:25 PM MJennings

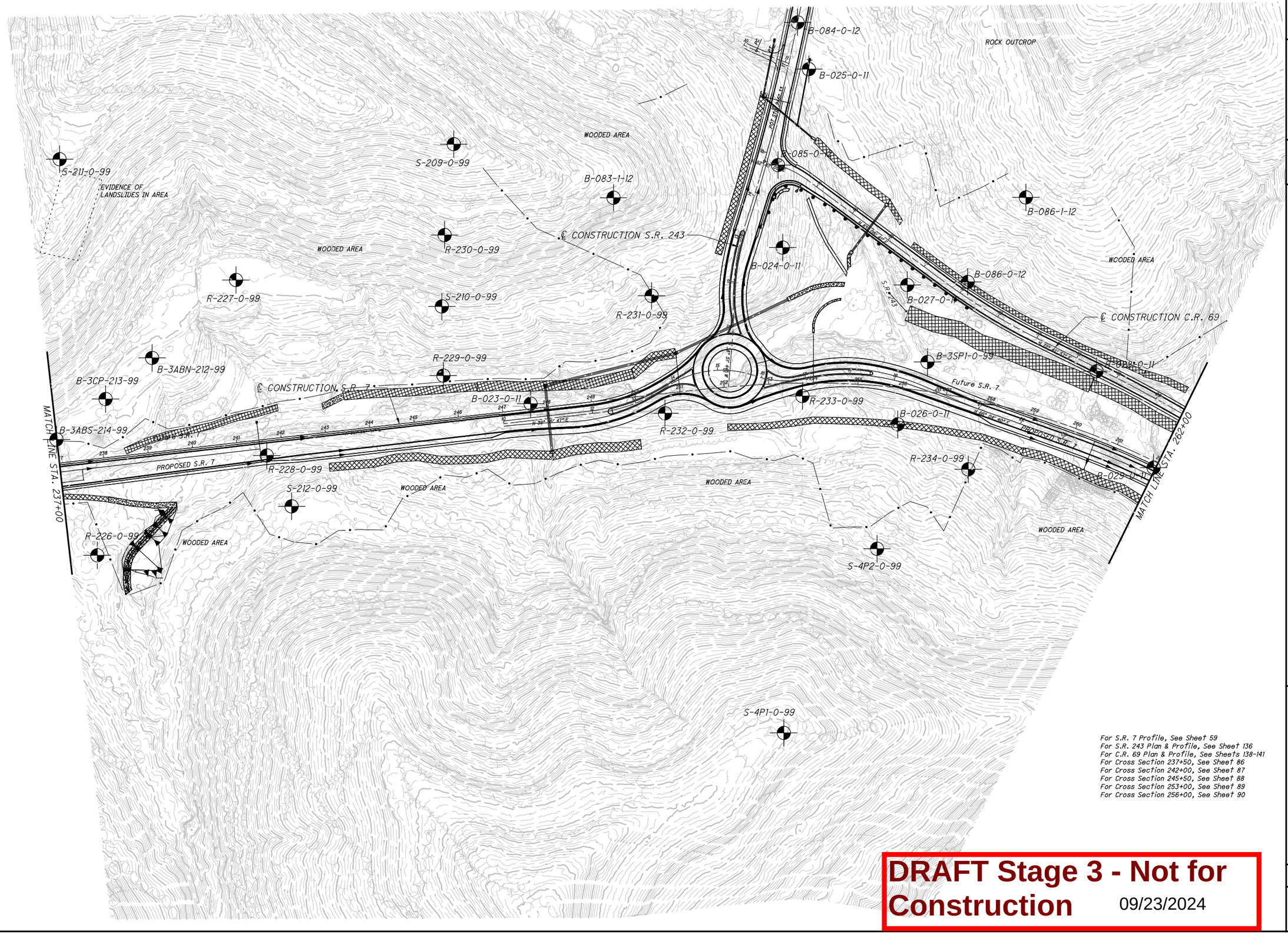

For S.R. 7 Profile, See Sheet 59
For S.R. 243 Plan & Profile, See Sheet 136
For C.R. 69 Plan & Profile, See Sheets 138-141
For Cross Section 237+50, See Sheet 86
For Cross Section 242+00, See Sheet 87
For Cross Section 245+50, See Sheet 88
For Cross Section 253+00, See Sheet 89
For Cross Section 256+00, See Sheet 90

DRAFT Stage 3 - Not for Construction 09/23/2024

0 50 100 200 HORIZONTAL SCALE IN FEET

DRAWN MSJ CHECKED EMK

SOIL PROFILE - ROADWAY
STA. 237+00 - 262+00

LAW-7-2.17

58/206

1099/1247

U:\173608714\LAW\75923\geotechnical\sheets\75923IP006.dgn 5/15/2024 3:45:35 PM MJennings

SOIL PROFILE- ROADWAY
STATION 237+00 - 262+00

HORIZONTAL SCALE IN FEET
0 50 100 200

DRAWN MSJ
CHECKED EMK

663.71 661.94 659.88 657.53 654.87 651.92 648.71 645.46 642.21 638.96 635.71 632.46 629.21 625.96 622.71 619.46 616.21 612.96 609.71 606.46 603.21 599.96 596.71 593.46 590.21 586.96

700 690 680 670 660 650 640 630 620 610 600 590 580 570 560 550 540

EXISTING GROUNDLINE

PROPOSED PROFILE GRADE

R-226-0-99
STA. 237+61.5
215.0' Rt.
EL. 661.1
N

R-228-0-99
STA. 241+64
36.0' Rt.
EL. 639.1
TOP OF BEDROCK
VERY-SOFT TO SOFT YELLOW-BROWN AND GRAY SHALE INTERBEDDED WITH SANDSTONE
VERY-SOFT TO SOFT GREENISH-GRAY SHALE
MEDIUM-HARD GRAY FINE TO MEDIUM GRAINED SANDSTONE
W
N

R-229-0-99
STA. 245+77
96.0' Lt.
EL. 623.9
TOPSOIL = 4 INCHES
13
N

B-023-0-11
12.0' LT.
N WC
TR 50+ 50+ 50+
Weathered Shale (Augered)
N60 WC

R-232-0-99
STA 250+61
44.0' Rt.
EL. 597.1
ASPHALT = 5 INCHES
GRANULAR BASE = 7 INCHES
S/H
22 30 27 W
TOP OF BEDROCK
MEDIUM-HARD BLUE-GRAY ARENACEOUS SHALE
50 0"
N WC

R-233-0-99
STA. 253+75
29.0' Rt.
EL. 610.3
TOPSOIL = 6 INCHES
18
N WC
Siltstone, Gray, Slightly Weathered, Strong, Thin Bedded, Arenaceous, Iron Staining

B-026-0-11
82.0' RT.
TR 50+
N60 WC

R-234-0-99
STA. 257+84
155.0' Rt.
EL. 617.0
TOP OF BEDROCK
VERY-SOFT TO SOFT GRAY SHALE
SOFT TO MEDIUM-HARD BLUE-GRAY SHALE INTERBEDDED WITH MEDIUM-HARD SANDSTONE

B-029-0-11
14.0' RT.
Asphalt/Pavement = 0.8'
Aggregate Base = 0.8'
N60 WC

668.53 662.43 659.27 656.26 651.89 646.81 640.17 633.04 630.76 628.06 635.68 632.78 631.20 625.95 625.87 626.10 623.07 619.96 616.81 613.59 610.76 610.04 609.49 607.92 604.75 602.46 596.24 597.77 592.58 594.38 587.03 594.93 596.85 602.59 608.39 611.03 599.15 587.84 587.34 585.46 581.76 580.33 578.22 576.34 571.48 570.70 569.76 568.26 566.51 564.62

237+00 238+00 239+00 240+00 241+00 242+00 243+00 244+00 245+00 246+00 247+00 248+00 249+00 250+00 251+00 252+00 253+00 254+00 255+00 256+00 257+00 258+00 259+00 260+00 261+00 262+00

DRAFT Stage 3 - Not for Construction
09/23/2024

LAW-7-2.17

59 / 206

1100 / 1247

U:\173608714\LAW\75923\geotechnical\sheets\75923IF006.dgn 5/15/2024 3:47:01 PM MJennings

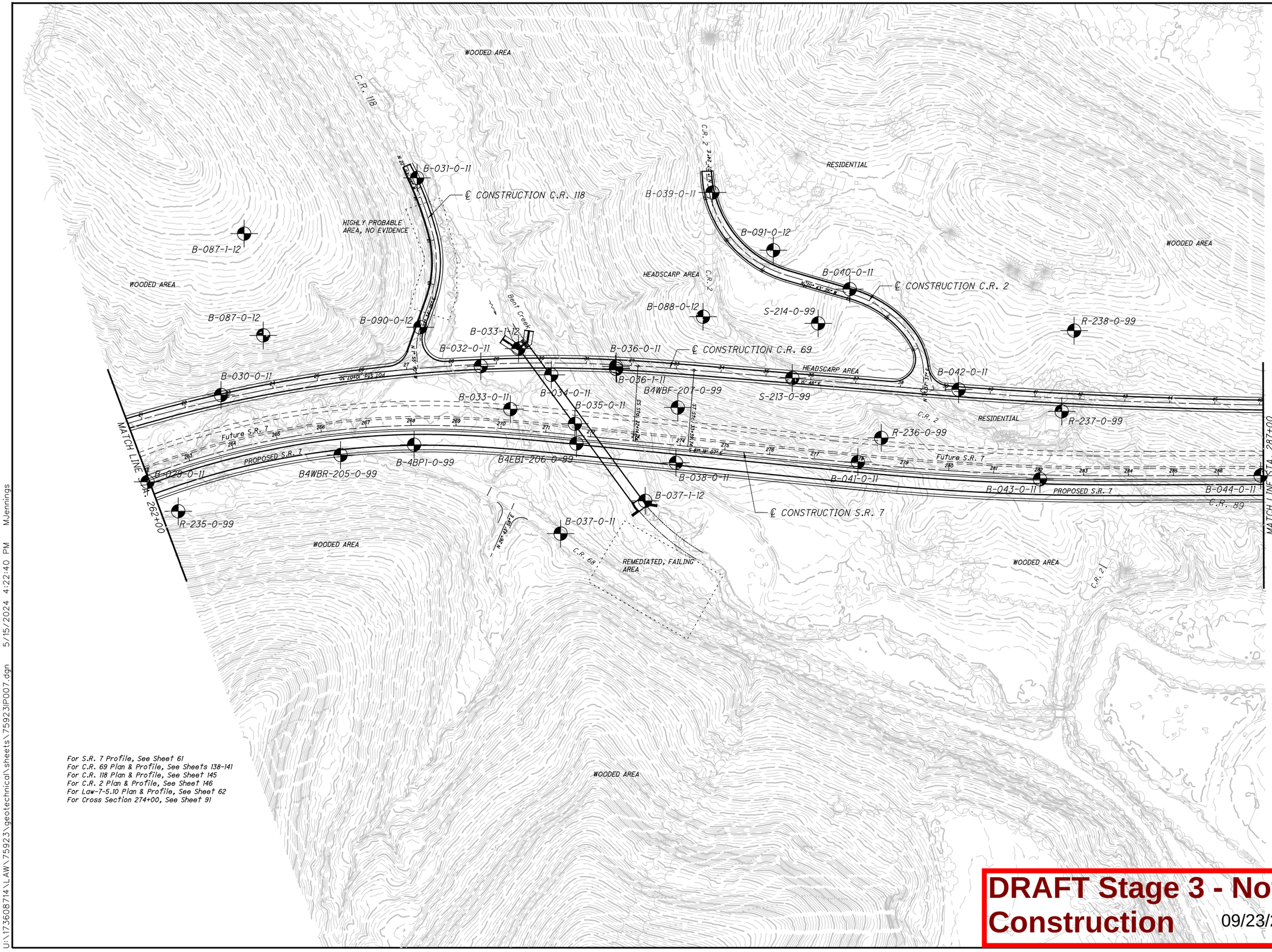

For S.R. 7 Profile, See Sheet 61
For C.R. 69 Plan & Profile, See Sheets 138-141
For C.R. 118 Plan & Profile, See Sheet 145
For C.R. 2 Plan & Profile, See Sheet 146
For Law-7-5.10 Plan & Profile, See Sheet 62
For Cross Section 274+00, See Sheet 91

DRAFT Stage 3 - Not for Construction 09/23/2024

HORIZONTAL SCALE IN FEET
0 50 100 200

DRAWN MSJ
CHECKED EMK

SOIL PROFILE - ROADWAY
STA. 262+00 - 287+00

LAW-7-2.17

60/206

1101
1247

U:\173608714\LAW\75923\geotechnical\sheets\75923IP007.dgn 5/15/2024 4:22:40 PM MJennings

B4EBI-206-0-99
STA. 271+70.4
18.0' RT.

Medium-Hard Gray And Brown Siltstone, NearlyHorizontally Bedded, Few Horizontal Fractures (Visual)

Very-Soft to Soft Gray Shale, Nearly Horizontally Bedded, Fragmental Sturcture, Many Fractures (Visual)

R-236-0-99
STA. 278+44
60.7' Lt.
ASPHALT = 8 INCHES
GRANULAR BASE = 6 INCHES
EL. 582.8

TOP OF BEDROCK
SOFT YELLOW-BROWN SHALE
SOFT TO MEDIUM-HARD GRAY SHALE
VERY-SOFT DARK-GRAY SHALE INTERBEDDED WITH CARBONACEOUS SHALE
VERY-SOFT TO SOFT GRAY SHALE
SOFT TO MEDIUM-HARD GRAY SHALE INTERBEDDED WITH MEDIUM-HARD SANDSTONE

B-035-0-11
STA. 271+63
25.0' LT.
(BEDROCK DESCRIPTIONS)

Shale, Gray, Severely Weathered (Augered)
Shale, Gray To Gray-Brown, Slightly Weathered, Slightly To Moderately Strong, Laminated, Friable
Sandstone, Gray, Slightly Weathered, Strong, Thin Bedded
Shale, Gray To Gray-Brown, Slightly Weathered, Slightly To Moderately Strong, Laminated, Friable, Slickensides

B-037-0-11
STA. 271+55, 221.0' RT.
Asphalt/Pavement= 1.2'

PROPOSED PROFILE GRADE

B-044-0-11
℄

R-235-0-99
STA. 262+39
98.0' Rt.
EL. 575.8

TOP OF BEDROCK
VERY-SOFT TO SOFT GRAY SHALE

EXISTING GROUNDLINE

B-043-0-11
10.0' RT.

B-041-0-11
3.0' LT.

Weathered Sandstone
WC (Augered)

B-035-0-11
STA. 271+63
25.0' LT.

B-033-0-11
44.0' LT.

B-038-0-11
39.0' RT.

Shale, Brown, Severely Weathered (Augered)
Sandstone, Gray, Slightly To Moderately Weathered, Slightly To Moderately Strong, Laminated
Shale, Gray, Slightly To Moderately Weathered, Slightly To Moderately Strong, Laminated

13 Shale, Gray, Severely Weathered (Augered)
Shale, Gray, Moderately Weathered, Slightly Strong, Laminated, Slickensides

DRAFT Stage 3 - Not for Construction
09/23/2024

HORIZONTAL SCALE IN FEET
0 50 100 200

DRAWN MSJ
CHECKED EMK

SOIL PROFILE- ROADWAY
STA. 262+00 - 287+00

LAW-7-2.17

61 / 206

1102
1247

U:\173608714\LAW\75923\geotechnical\sheets\75923IF007.dgn 5/15/2024 4:03:04 PM MJennings

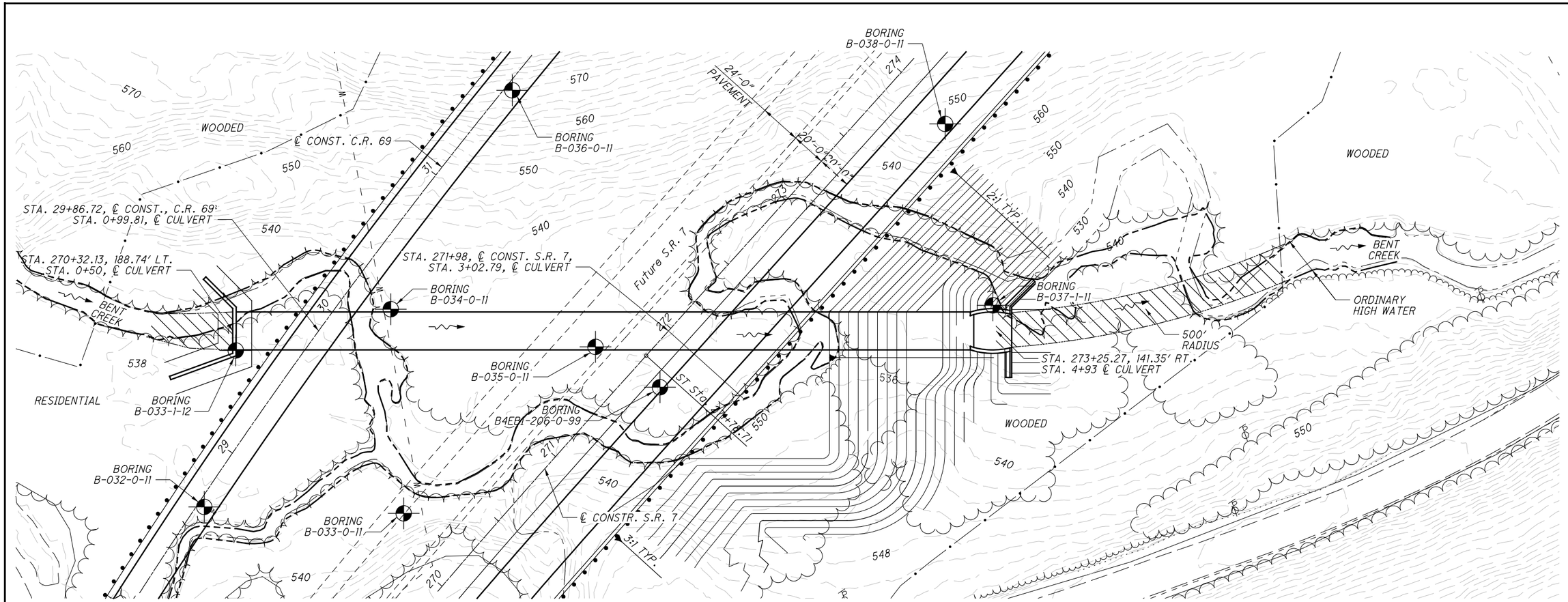

PLAN

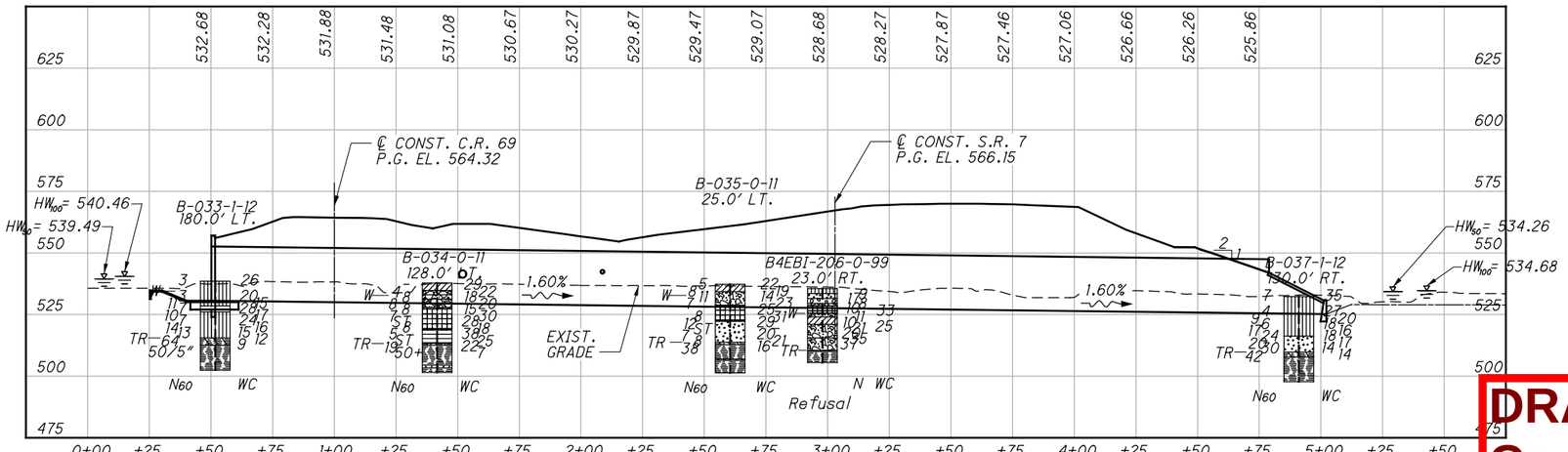

PROFILE ALONG ℄ 22'ϕ MULTI-PLATE CULVERT

DRAFT Stage 3 - Not for Construction 09/23/2024

HORIZONTAL SCALE IN FEET

DRAWN MSJ
CHECKED EMK

STRUCTURE FOUNDATION EXPLORATION
LAW-7-05.10
22' DIA. CULVERT STA. 271+98

LAW-7-2.17

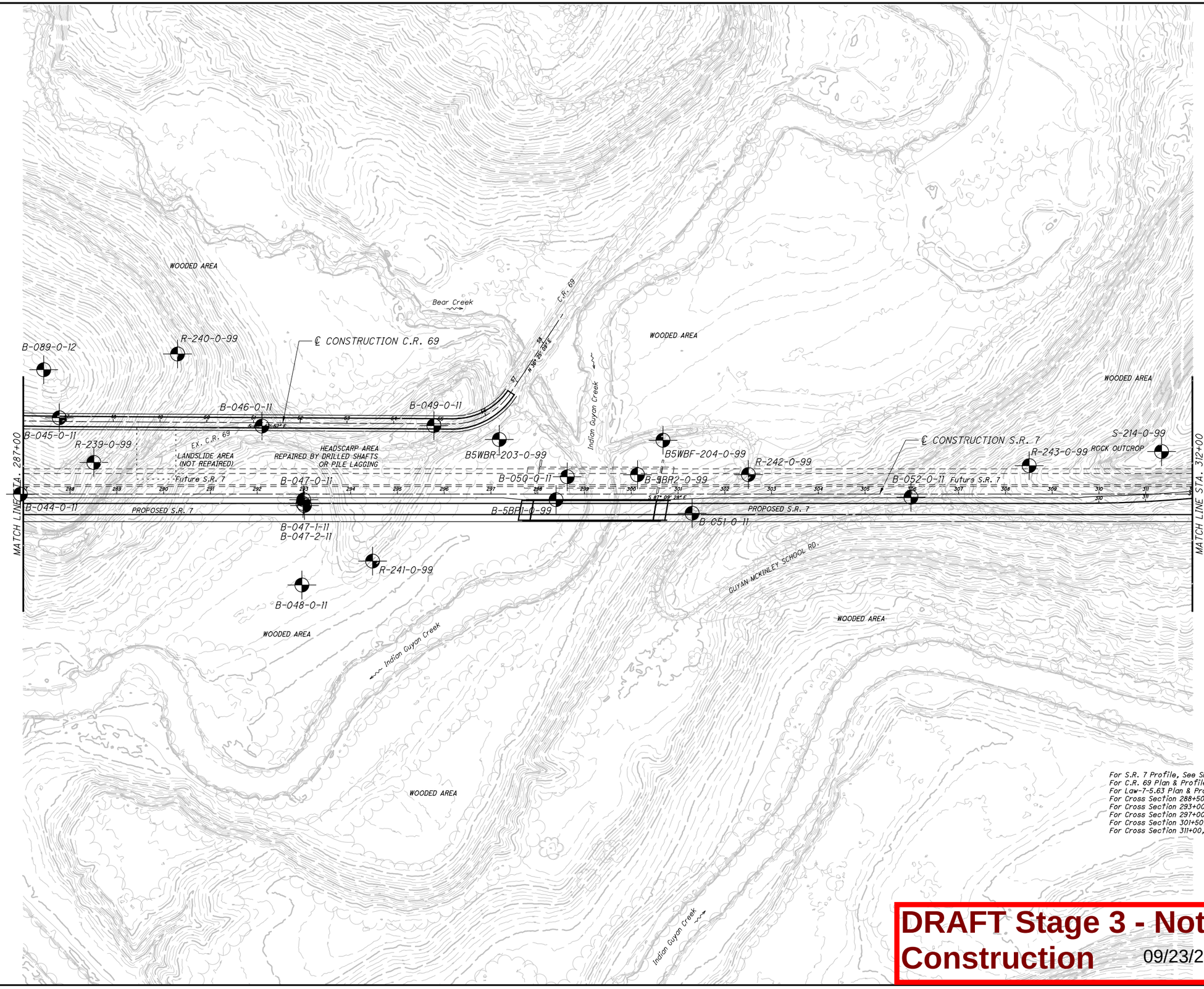

For S.R. 7 Profile, See Sheet 64
For C.R. 69 Plan & Profile, See Sheets 138-141
For Law-7-5.63 Plan & Profile, See Sheet 65
For Cross Section 288+50, See Sheet 92
For Cross Section 293+00, See Sheet 93
For Cross Section 297+00, See Sheet 94
For Cross Section 301+50, See Sheet 95
For Cross Section 311+00, See Sheet 96

DRAFT Stage 3 - Not for Construction 09/23/2024

0 50 100 200 HORIZONTAL SCALE IN FEET

DRAWN MSJ
CHECKED EMK

SOIL PROFILE - ROADWAY
STA. 287+00 - 312+00

LAW-7-2.17

63 / 206

1104
1247

U:\173608714\LAW\75923\geotechnical\sheets\75923IP008.dgn 5/15/2024 4:18:57 PM MJennings

SOIL PROFILE - ROADWAY
STA. 287+00 - 312+00

HORIZONTAL SCALE IN FEET
0 50 100 200

DRAWN MSJ
CHECKED EMK

LAW-7-2.17

64/206

1105/1247

U:\173608714\LAW\75923\geotechnical\sheets\75923lf008.dgn 5/15/2024 4:25:09 PM MJennings

DRAFT Stage 3 - Not for Construction 09/23/2024

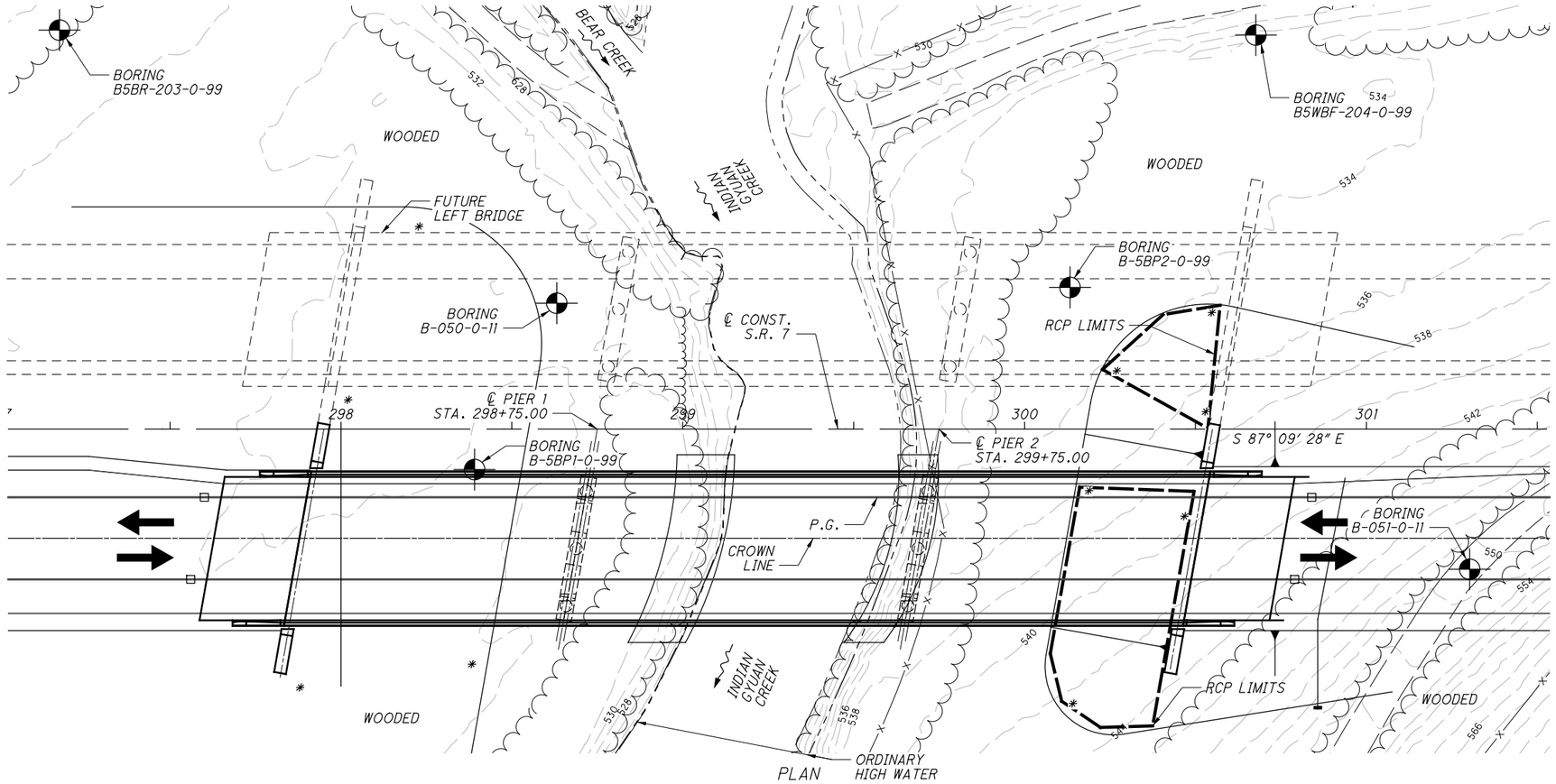

DRAFT Stage 3 - Not for Construction

09/23/2024

HORIZONTAL SCALE IN FEET

DRAWN MSJ CHECKED EWK

STRUCTURE FOUNDATION EXPLORATION
LAW-7-05.63
S.R. 7 OVER INDIAN GUYAN CREEK

LAW-7-2.17

65/206

1106/1247

U:\73608714\LAW_7592.3\geotechnical\sheets\LAW-7-05.63\759237P001.dgn 5/15/2024 4:32:50 PM MJennings

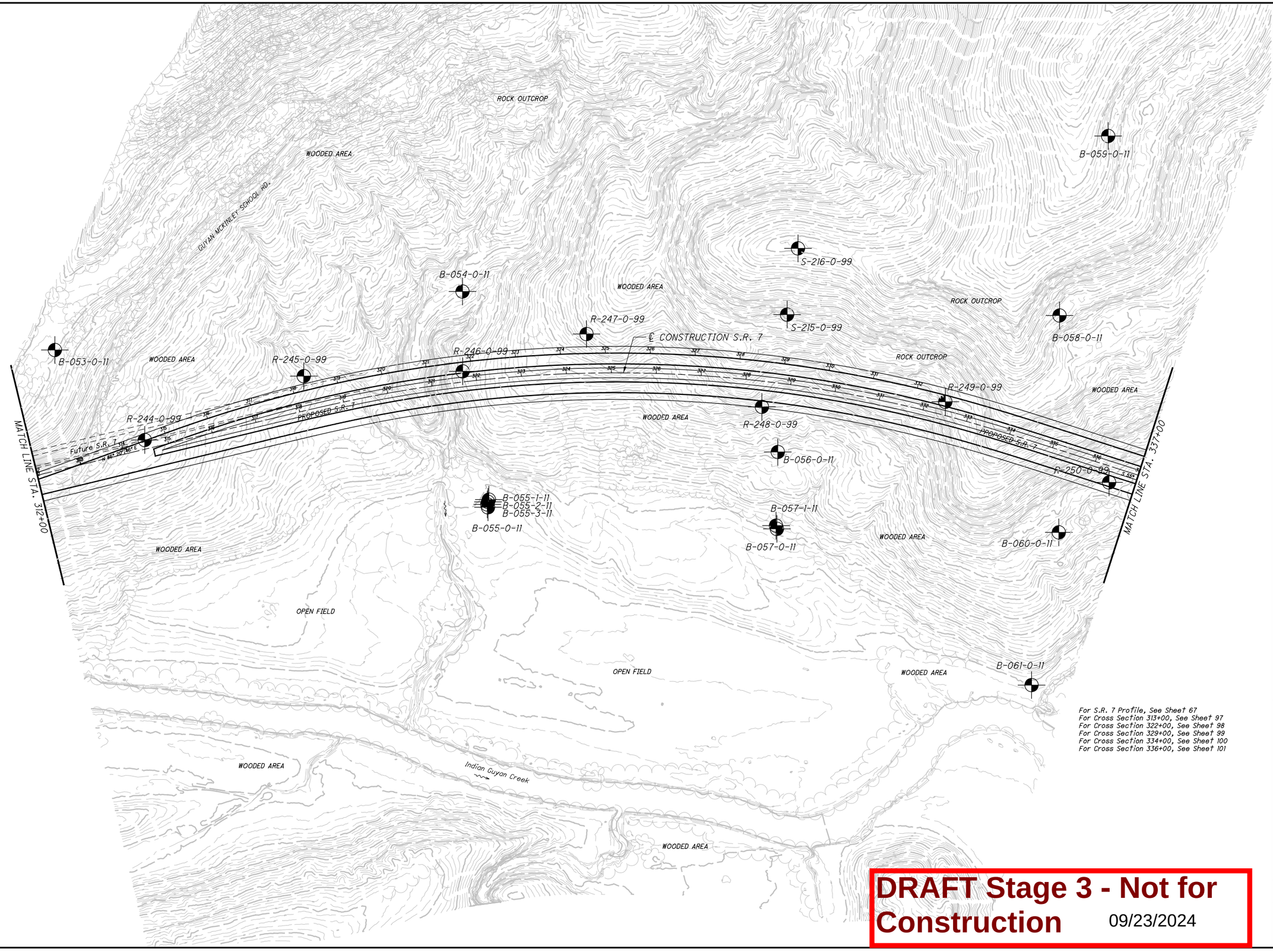

For S.R. 7 Profile, See Sheet 67
For Cross Section 313+00, See Sheet 97
For Cross Section 322+00, See Sheet 98
For Cross Section 329+00, See Sheet 99
For Cross Section 334+00, See Sheet 100
For Cross Section 336+00, See Sheet 101

DRAFT Stage 3 - Not for Construction 09/23/2024

N

0 50 100 200
HORIZONTAL SCALE IN FEET

DRAWN MSJ
CHECKED EMK

SOIL PROFILE - ROADWAY STA. 312+00 - 337+00

LAW-7-2.17

66/206

1107/1247

U:\173608714\LAW\75923\geotechnical\sheets\75923IP009.dgn 5/15/2024 4:35:59 PM M.Jennings

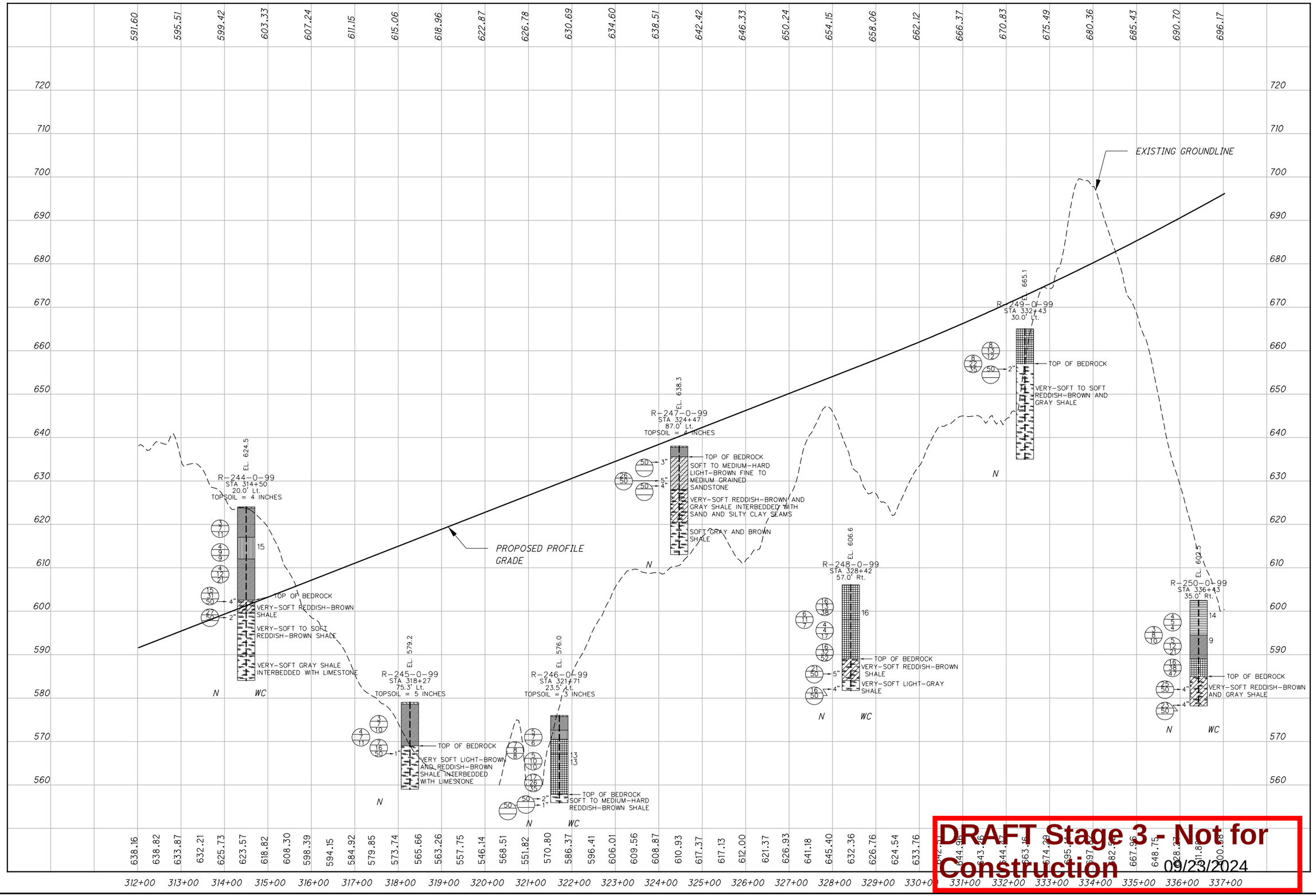

DRAFT Stage 3 - Not for Construction
09/23/2024

0 50 100 200
HORIZONTAL SCALE IN FEET

DRAWN MSJ
CHECKED EMK

SOIL PROFILE - ROADWAY
STA. 312+00 - 337+00

LAW-7-2.17

U:\173608714\LAW\7923\geotechnical\sheets\7923IF009.dgn 5/15/2024 4:37:24 PM MJennings

For S.R. & Profile, See Sheet 69
For Cross Section 340+00, See Sheet 102
For Cross Section 349+00, See Sheet 103
For Cross Section 359+50, See Sheet 104

B-066-0-11

WOODED AREA

WOODED AREA

B-062-0-11

ROCK OUTCROP

B-063-0-11

S-701-0-99

B-070-0-11

R-251-0-99

MATCH LINE STA. 337+00

MATCH LINE STA. 362+00

℄ CONSTRUCTION S.R. 7

R-254-0-99

PROPOSED S.R. 7

R-252-0-99

R-253-0-99

PROPOSED S.R. 7

B-064-0-11

B-069-0-11

WOODED AREA

B-067-0-11

B-065-0-11

B-068-0-11

ROCK OUTCROP

WOODED AREA

WOODED AREA

ROCK OUTCROP

ROCK OUTCROP

ROCK OUTCROP

DRAFT Stage 3 - Not for Construction 09/23/2024

N

0 50 100 200
HORIZONTAL SCALE IN FEET

DRAWN MSJ
CHECKED EMK

SOIL PROFILE - ROADWAY
STA. 337+00 - 362+00

LAW-7-2.17

68/206

1109
1247

U:\17360871 4\LAW\75923\geotechnical\sheets\75923IP010.dgn 5/15/2024 4:50:35 PM MJennings

SOIL PROFILE - ROADWAY
STA. 337+00 - 361+00
LAW-7-2.17

HORIZONTAL SCALE IN FEET
0 50 100 200

DRAWN MSJ
CHECKED EMK

S-701-0-99 - BEDROCK DESCRIPTIONS

VERY-SOFT BROWN FINE TO MEDIUM GRAINED SANDSTONE
SOFT TO MEDIUM-HARD LIGHT-BROWN TO LIGHT-GRAY FINE TO MEDIUM GRAINED SANDSTONE
MEDIUM-HARD BROWN BECOMING GRAY SHALE
MEDIUM-HARD GRAY SILTSTONE
SOFT GRAY SHALE
MEDIUM-HARD GRAY SHALE
SOFT TO MEDIUM-HARD RED-BROWN SHALE
SOFT TO MEDIUM-HARD GRAY AND GREENISH-GRAY SHALE
SOFT TO MEDIUM-HARD GRAY SHALE
VERY-SOFT TO SOFT GRAY SHALE
MEDIUM-HARD LIGHT-GRAY TO DARK-GRAY FINE GRAINED SANDSTONE
MEDIUM-HARD GRAY SHALE INTERBEDDED WITH FINE GRAINED SANDSTONE AND SILTSTONE
MEDIUM-HARD GRAY SHALE
SOFT TO MEDIUM-HARD GRAY TO RED-BROWN SHALE
MEDIUM-HARD GRAY SILTSTONE
MEDIUM-HARD GRAY TO LIGHT-GRAY SILTSTONE
SOFT TO MEDIUM-HARD GRAY SHALE
SOFT TO MEDIUM-HARD RED-BLACK SHALE

696.17 701.84 707.72 713.65 719.58 725.52 731.09 736.01 740.27 743.88 746.83 750.78 751.78 752.12 751.80 750.83 749.21 746.94 744.01 740.42 736.18 731.29 725.75 719.76

EL. 880.3
S-701-0-99
STA 347+98
183.6 Lt.
TOPSOIL - 4 INCHES
TOP OF BEDROCK

EL. 867.5
R-254-0-99
STA. 357+93
40.0' Lt.
TOP OF BEDROCK
VERY-SOFT YELLOW-BROWN FINE TO MEDIUM GRAINED SANDSTONE
MEDIUM-HARD YELLOW-BROWN FINE TO MEDIUM GRAINED SANDSTONE
SOFT TO MEDIUM-HARD YELLOW-BROWN ARENACEOUS SHALE

EXISTING GROUNDLINE

EL. 787.6
R-253-0-99
STA. 352+43
35.0' Rt.
TOP OF BEDROCK
SOFT TO MEDIUM-HARD GRAY AND YELLOW-BROWN SHALE
SOFT TO MEDIUM-HARD GRAY SHALE INTERBEDDED WITH MEDIUM-HARD SANDSTONE

B-069-0-11
105.0' RT.
TR

B-069-0-11
105.0' RT.
(CONTINUED)

EL. 774.5
R-252-0-99
STA. 344+43
35.0' Rt.
TOP OF BEDROCK
SOFT TO MEDIUM-HARD YELLOW-BROWN SHALE
MEDIUM-HARD GRAY FINE TO MEDIUM GRAINED ARGILLACEOUS SANDSTONE
SOFT TO MEDIUM-HARD GRAY SHALE

EL. 576.5
R-251-0-99
STA 338+85
59.0' Lt.
TOP OF BEDROCK
VERY-SOFT GRAY SHALE
SOFT GRAY LIMESTONE

B-063-0-11
171.0' LT.
TR
Shale, Severely Weathered, (Augered)

PROPOSED PROFILE GRADE

N WC

880 870 860 850 840 830 820 810 800 790 780 770 760 750 740 730 720 710 700 690

600.38 603.48 592.75 578.60 561.53 577.09 597.44 603.66 630.20 659.33 681.47 704.93 716.99 730.09 747.87 770.64 781.12 800.27 829.41 849.62 851.63 842.79 837.26 832.03 829.35 822.85 825.94 824.81 818.69 810.14 802.37 798.68 793.88 801.30 806.38 810.23 814.81 824.22 828.58 838.04 856.35 864.29 843.67 829.78 807.98 785.57 782.92

337+00 338+00 339+00 340+00 341+00 342+00 343+00 344+00 345+00 346+00 347+00 348+00 349+00 350+00 351+00 352+00 353+00 354+00 355+00 356+00 357+00 358+00 359+00 360+00 361+00

DRAFT Stage 3 - Not for Construction
09/23/2024

69/206
1110/1247

U:\173608714\LAW\75923\geotechnical\sheets\75923IF010.dgn 5/15/2024 4:52:08 PM MJennings

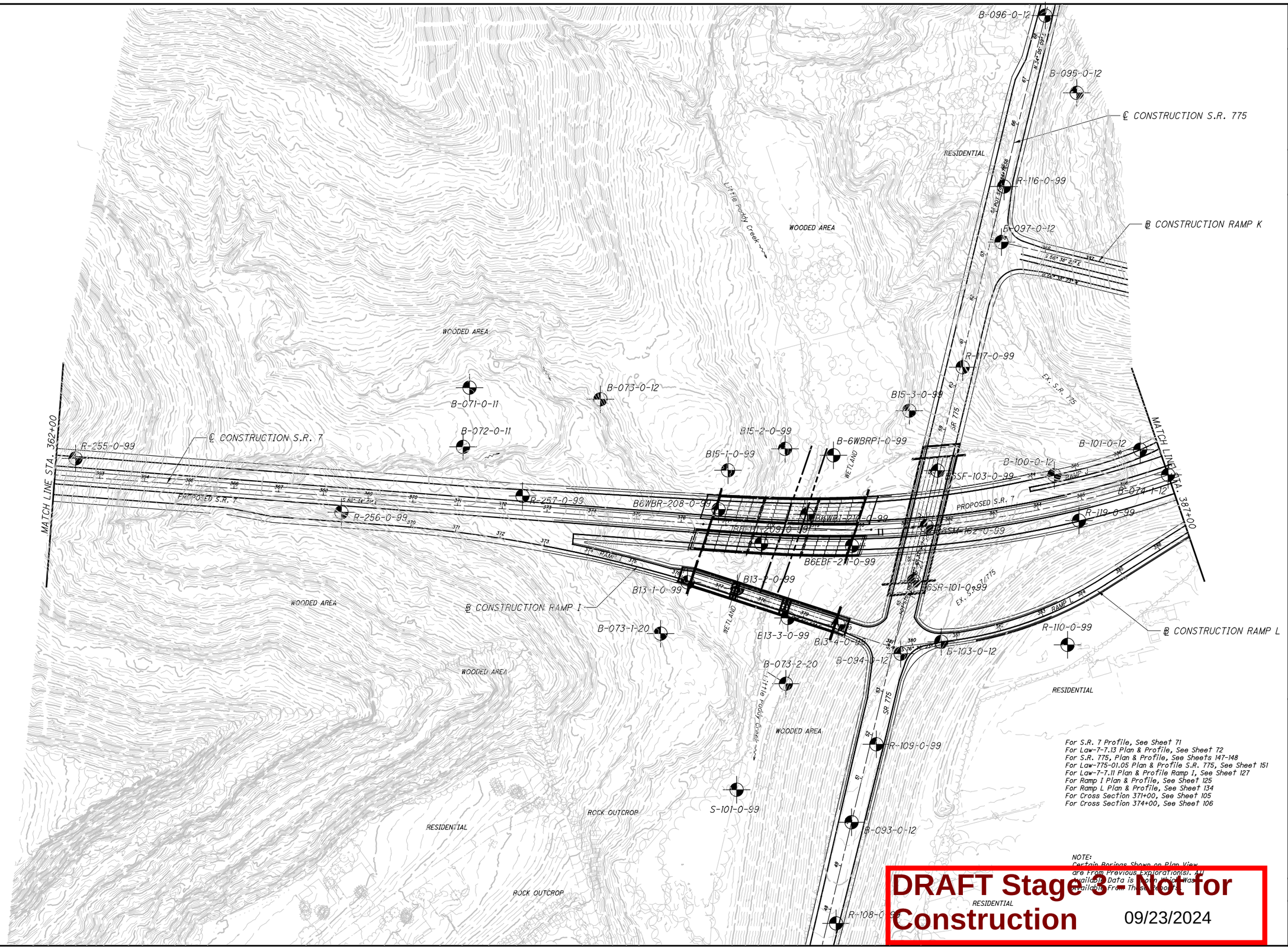

DRAFT Stage 3 - Not for Construction 09/23/2024

HORIZONTAL SCALE IN FEET
0 50 100 200

DRAWN MSJ
CHECKED EMK

SOIL PROFILE - ROADWAY
STATION 362+00 - 387+00

LAW-7-2.17

70 / 206

1111 / 1247

U:\173608714\LAW\75923\geotechnical\sheets\75923IP011.dgn 5/15/2024 5:08:28 PM MJennings

PROPOSED PROFILE GRADE

EXISTING GROUNDLINE

R-255-0-99
EL. 722.7
STA. 362+43
40.0' Lt.
WC 10 7 3" 4"
N

R-256-0-99
EL. 629.4
STA. 368+43
35.0' Rt.
TOP OF BEDROCK
VERY-SOFT TO SOFT REDDISH-BROWN SHALE
VERY-SOFT TO SOFT GRAY SHALE
MEDIUM-HARD YELLOW-BROWN FINE TO MEDIUM GRAINED SANDSTONE
AUGER REFUSAL
N

B-072-0-11
131.0' LT.

R-257-0-99
EL. 582.5
STA. 372+43
40.0' Lt.
TOP OF BEDROCK
VERY-SOFT TO SOFT YELLOW-BROWN SHALE
AUGER REFUSAL
N

B-073-1-20
RAMP I
STA. 376+06, 133.0' RT.
Sandstone, Yellowish-Brown, Moderately to Highly Weathered, Weak to Slightly Strong
TR— 15/50/1"
50
N60 WC

B6WBR-208-0-99
35.0' LT.
Sod and/or Topsoil = 2.0'
N WC

B6WBR-208-0-99 (CONTINUED)
40 25 29 12 47 TR—
N WC
Refusal

B-100-0-12
STA. 384+52
68.4' LT.
15 7 50/3" 25 22 26
N60 WC

B-101-0-12
STA. 386+58
72.7' LT.
10 5 18 18 10 23 23 19
N60 WC

R-119-0-99
EL. 566.6
STA 384+83
42.75' Rt.
TOPSOIL = 5 INCHES
27
N WC

B-074-1-12
STA. 387+00
13 20 13 19 11 11 16 21
N60 WC

361+00 362+00 363+00 364+00 365+00 366+00 367+00 368+00 369+00 370+00 371+00 372+00 373+00 374+00 375+00 376+00 377+00 378+00 379+00 380+00 381+00 382+00 383+00 384+00 385+00 386+00 387+00

HORIZONTAL SCALE IN FEET
0 50 100 200

DRAWN MSJ
CHECKED EMK

SOIL PROFILE - ROADWAY
STATION 361+00 - 387+00

LAW-7-2.17

71/206

1112
1247

DRAFT Stage 3 - Not for Construction
09/23/2024

U:\1736087\14\LAW\75923\geotechnical\sheets\75923IF011.dgn 5/15/2024 5:09:59 PM MJennings

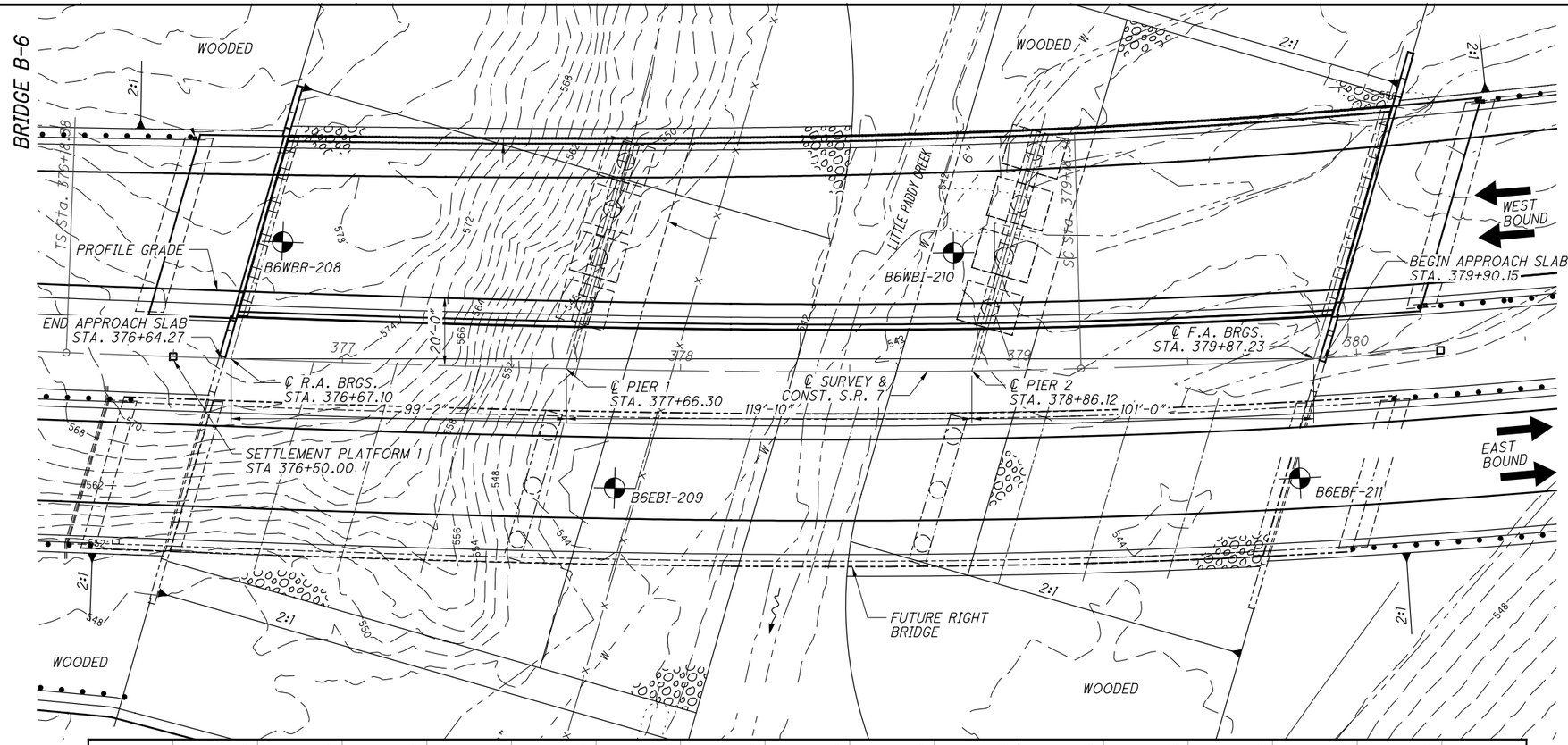

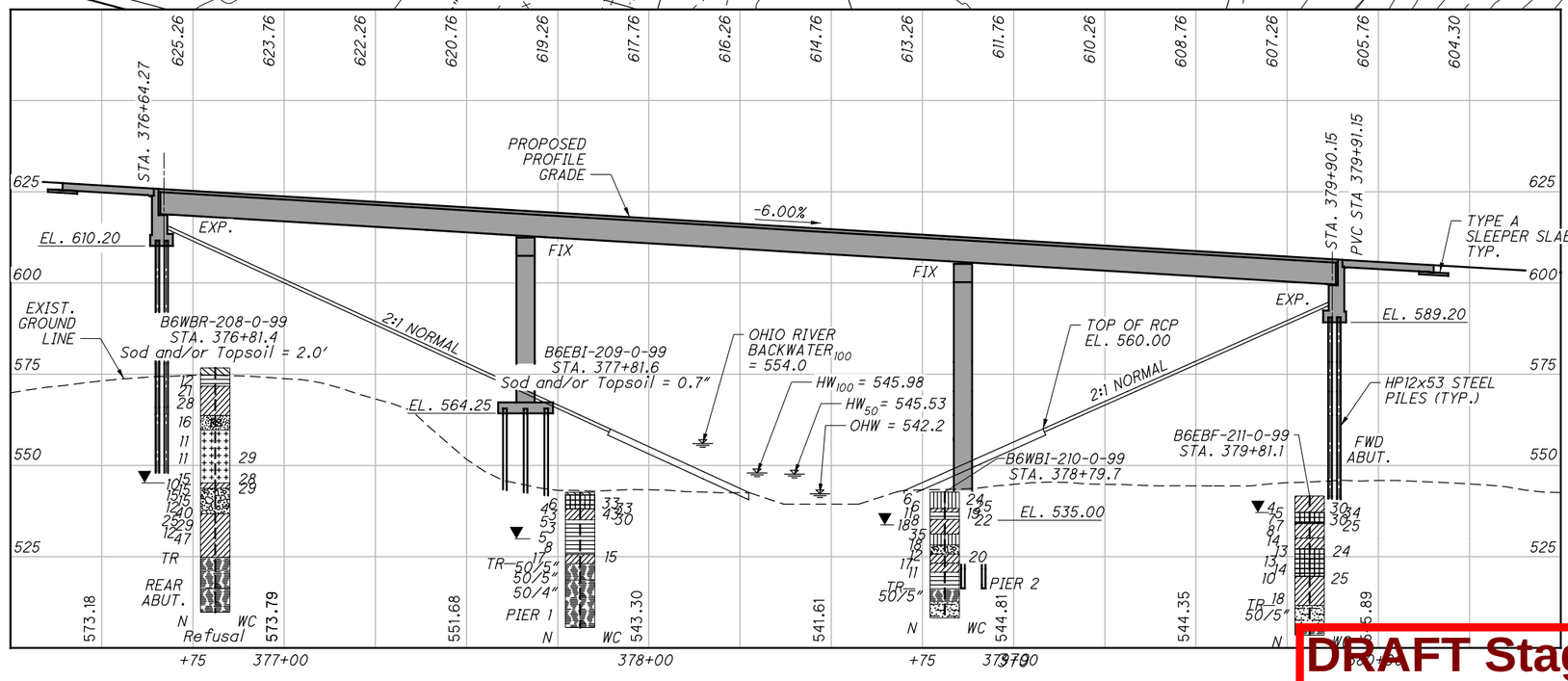

ESTIMATED LENGTH OF PILING	
REAR ABUT.	95 FT.
PIER 1	50 FT.
PIER 2	25 FT.
FWD. ABUT.	85 FT.

DRAFT Stage 3 - Not for Construction 09/23/2024

0 12.5 25 50 HORIZONTAL SCALE IN FEET

DRAWN MSJ
CHECKED EMK

STRUCTURE FOUNDATION EXPLORATION
LAW-7-07.13 L & R
S.R. 7 OVER LITTLE PADDY CREEK

LAW-7-2.17

72 / 206

1113
1247

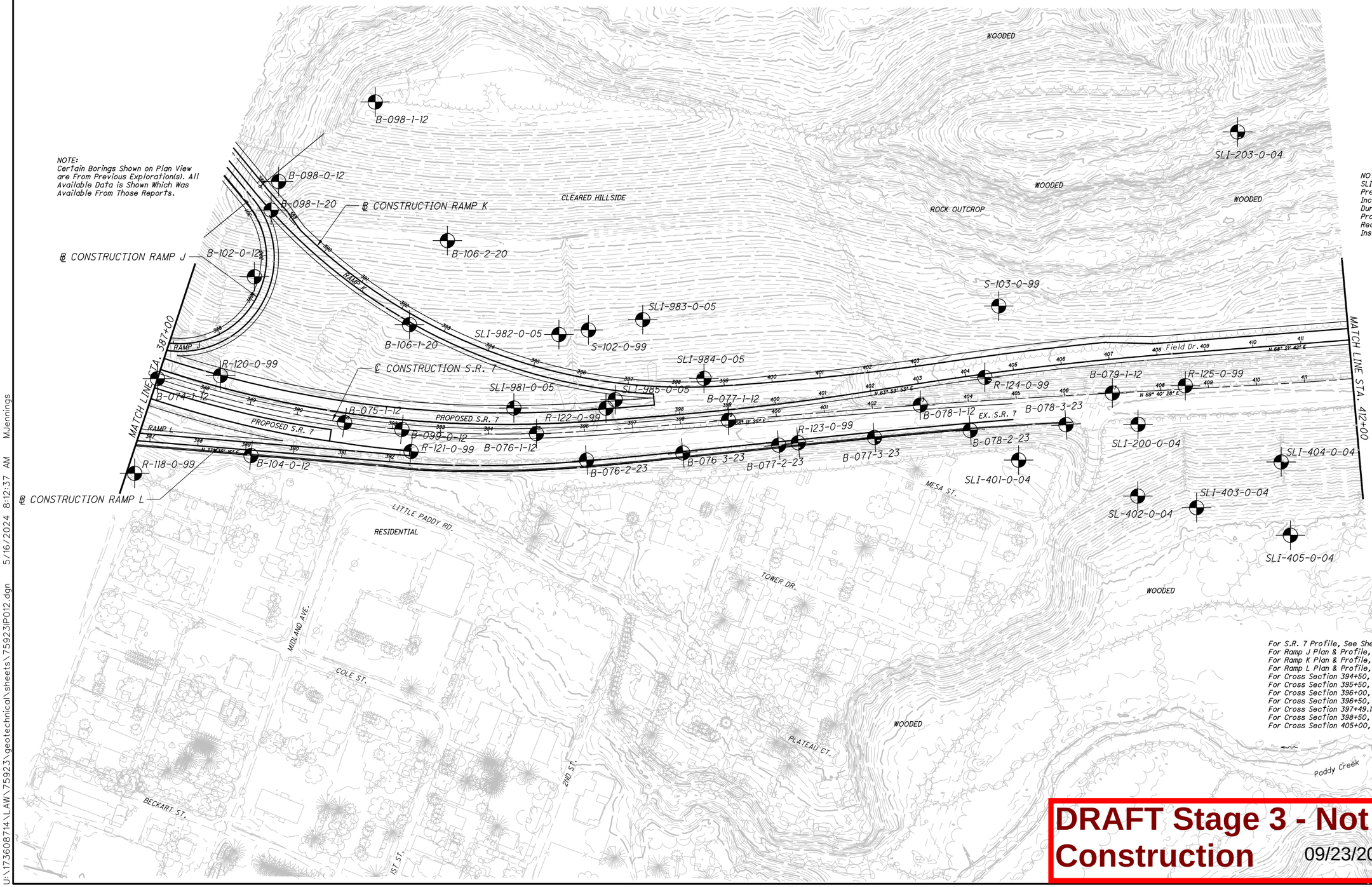

HORIZONTAL SCALE IN FEET
0 50 100 200

DRAWN MSJ
CHECKED EMK

SOIL PROFILE - ROADWAY
STATION 387+00 - 412+00

LAW-7-2.17

73/206

1114/1247

U:\17360871 4\LAW\75923\geotechnical\sheets\75923P012.dgn 5/16/2024 8:12:37 AM MJennings

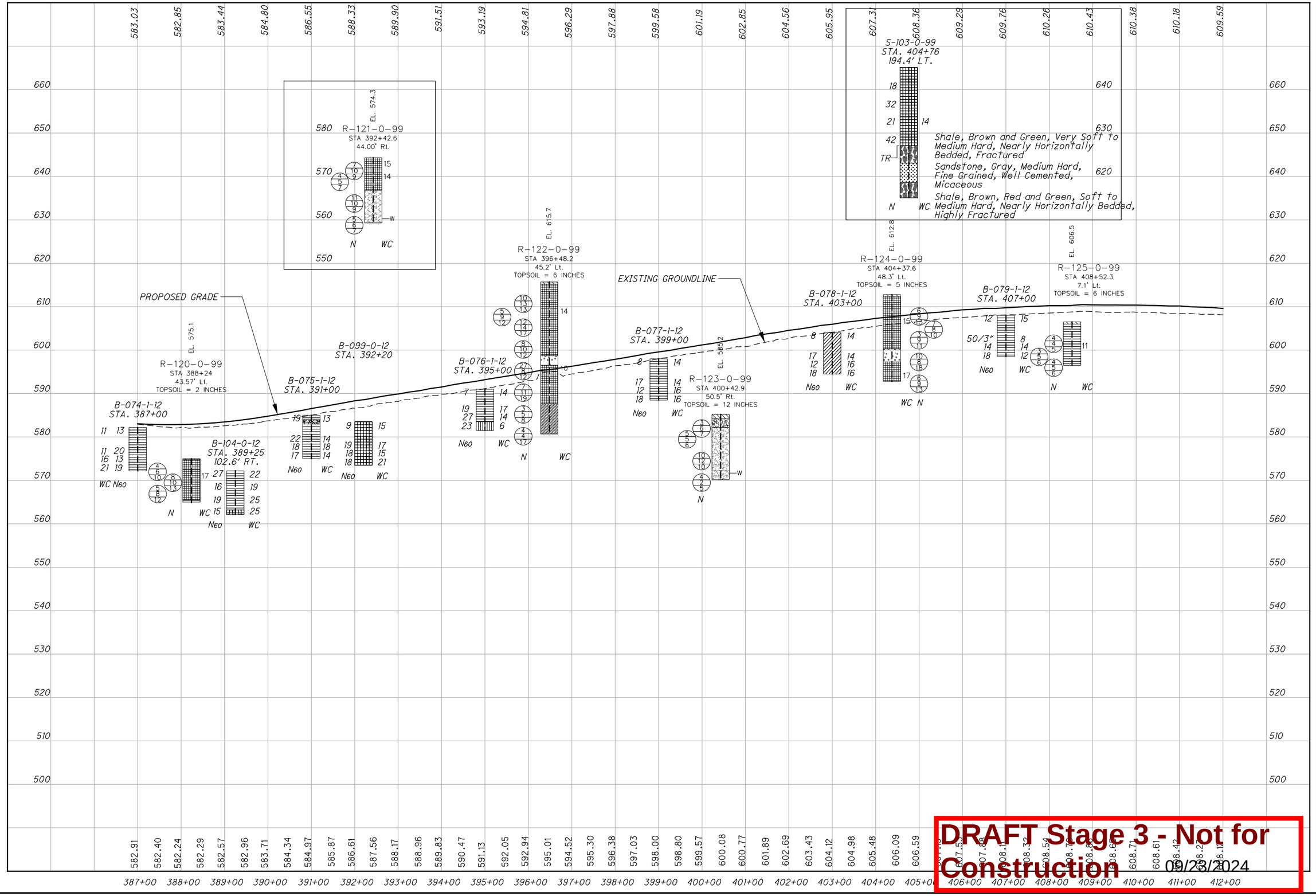

DRAFT Stage 3 - Not for Construction
09/23/2024

HORIZONTAL SCALE IN FEET
0 50 100 200

DRAWN MSJ
CHECKED EMK

SOIL PROFILE - ROADWAY
STATION 387+00 - 412+00

LAW-7-2.17

74/206

1115
1247

U:\173608714\LAW\75923\geotechnical\sheets\75923IF012.dgn 5/16/2024 8:14:08 AM MJennings

For S.R. 7 Profile, See Sheet 76
For Cross Section 414+00, See Sheet 114
For Cross Section 415+50, See Sheet 115
For Cross Section 419500, See Sheet 116
For Cross Section 423+00, See Sheet 117
For Cross Section 424+00, See Sheet 118
For Cross Section 425+00, See Sheet 119
For Cross Section 426+00, See Sheet 120
For Cross Section 436+50, See Sheet 121

NOTE:
FROM STATION 412+00 TO 437+16.83 EARTHWORK FOR MAINLINE HAS BEEN PERFORMED. SOME BORINGS SHOWN ARE REPORTED IN SEPERATE SOIL PROFILES.

NOTE:
SLI-2XX-04 Locations are Presumably Where Slope Inclinometers were Installed During Landslide Repair Projects. Logs were not Recovered for these Installations.

SLI-207-0-04
ROCK OUTCROP
SLI-206-0-04
SLI-210-0-04
SLI-211-0-04
SLI-209-0-04
SLI-205-0-04
SLI-210-0-04
S-104-0-99
SLI-204-0-04
SLI-211-0-99
SL-8-0-04
SL-9-0-04
MATCH LINE STA. 412+00
R-126-0-99
R-128-0-99
SL-1-0-04
SL-2-0-04
C-104-0-99
R-130-0-99
S-105A-0-99
R-127-0-99
SL-3-0-04
℄ CONSTRUCTION S.R. 7
SL-11-0-04
EX. S.R. 7
R-129-0-99
SL-4-0-04
C-103-0-99
R-132-0-99
SL-10-0-04
SL-5-0-04
SL-7-0-04
SLI-406-0-04
SLI-409-0-04
SLI-410-0-04
SLI-407-0-04
SL-6-0-04
SLI-408-0-04
S-105-0-99
℄ CONSTRUCTION S.R. 7 WESTBOUND
EI0351921
EI0601482
END WORK
END PROJECT
STA. 437+16.83
S-7-7
S.L.M. = 8.26
STA. 437+16.83 BEGIN SHOULDER TAPER, 3'-1" RT.
STA. 437+16.83 END SHOULDER TAPER, 9'-8" RT.

DRAFT Stage 3 - Not for Construction 09/23/2024

HORIZONTAL SCALE IN FEET
0 50 100 200

DRAWN MSJ
CHECKED EMK

SOIL PROFILE - ROADWAY
STATION 412+00 - 437+16.83

LAW-7-2.17

75 / 206
1116 / 1247

U:\173608714\LAW\75923\geotechnical\sheets\75923IP013.dgn 5/16/2024 8:24:38 AM MJennings

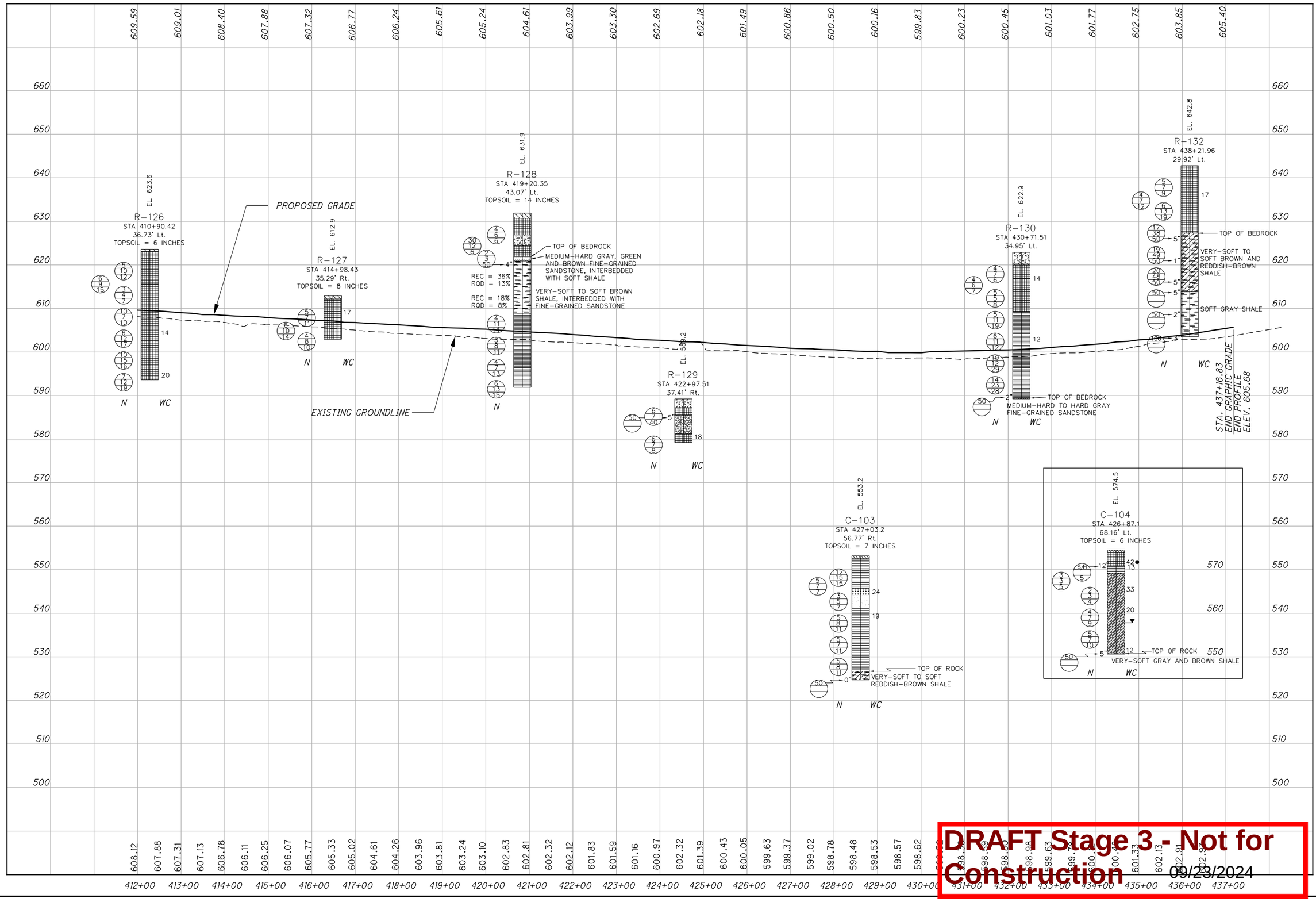

DRAFT Stage 3 - Not for Construction
09/23/2024

HORIZONTAL SCALE IN FEET
0 50 100 200

DRAWN MSJ
CHECKED EMK

SOIL PROFILE - ROADWAY
STATION 412+00 - 437+16.83

LAW-7-2.17

U:\173608714\LAW\75923\geotechnical\sheets\75923IF013.dgn 5/16/2024 8:25:51 AM MJennings

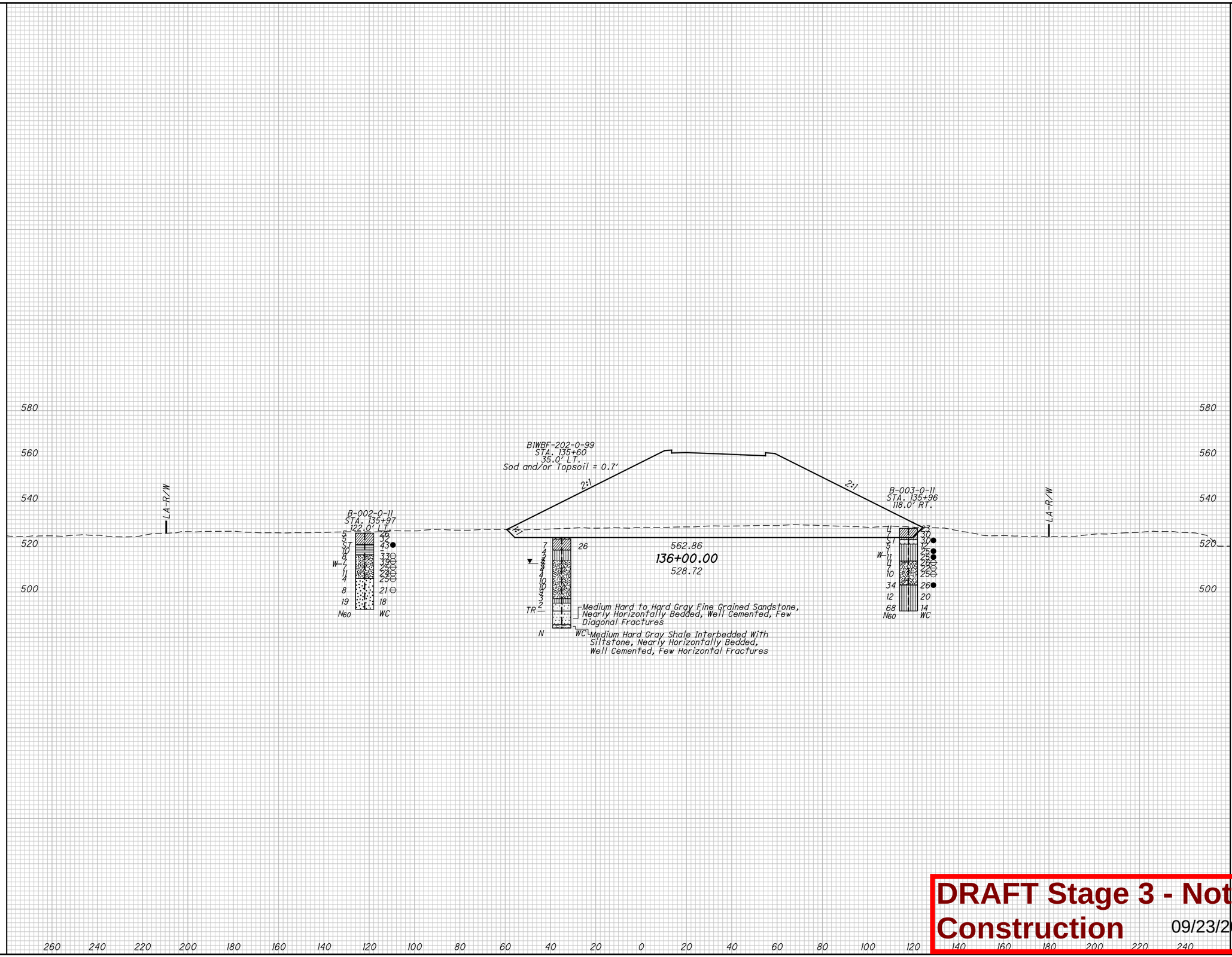

DRAWN MSJ
CHECKED EMK

0 10 20 40
HORIZONTAL SCALE IN FEET

CROSS SECTION - S.R. 7
STATION 136+00.00

LAW-7-2.17

77/206

1118/1247

DRAFT Stage 3 - Not for Construction 09/23/2024

U:\173608714\LAW\75923\geotechnical\sheets\x-sect\75923XS13600.dgn 5/16/2024 8:27:56 AM MJennings

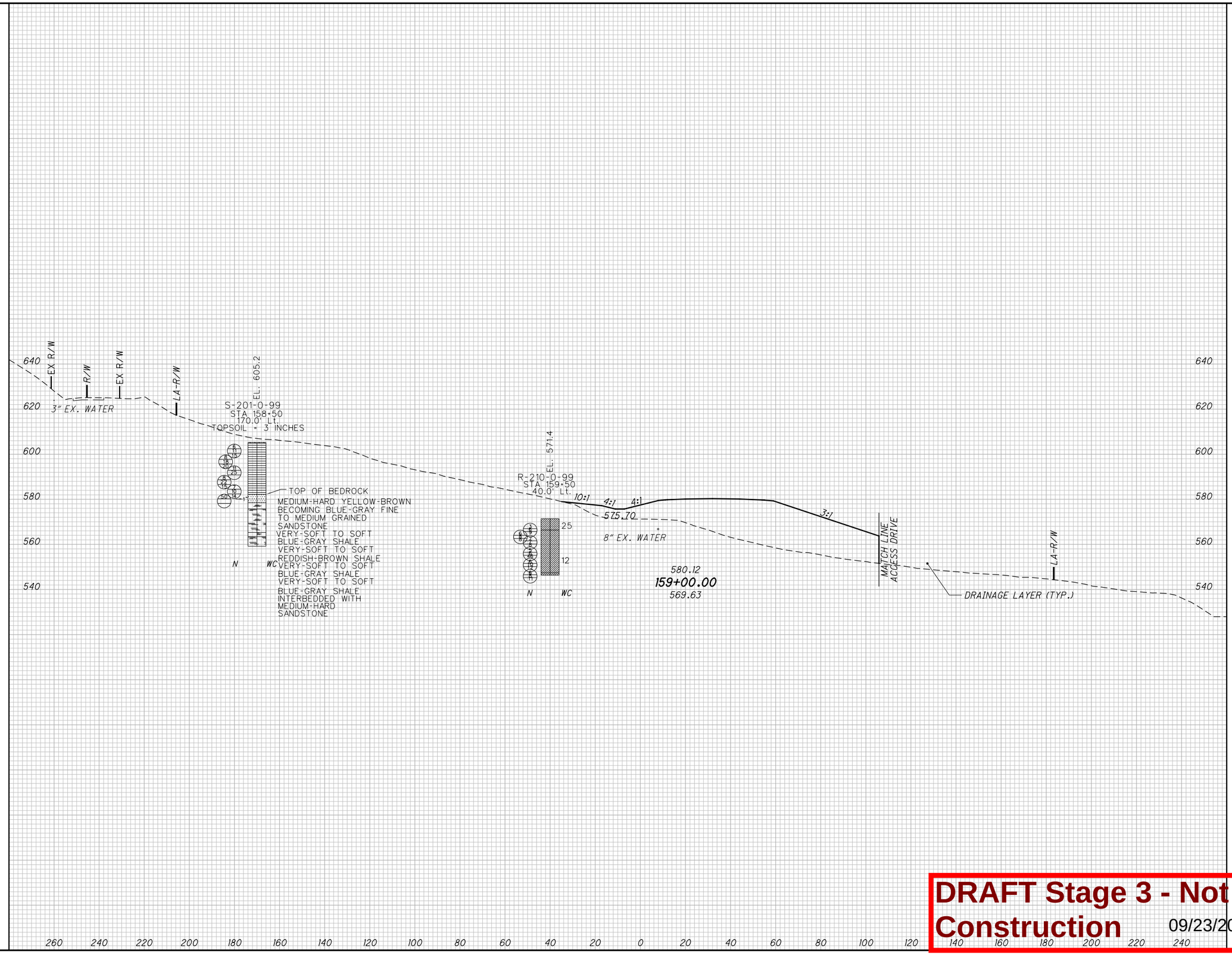

DRAFT Stage 3 - Not for Construction 09/23/2024

HORIZONTAL SCALE IN FEET
0 10 20 40

DRAWN MSJ
CHECKED EMK

CROSS SECTION - S.R. 7
STATION 159+00.00

LAW-7-2.17

78/206
1119/1247

U:\173608714\LAW\75923\geotechnical\sheets\x-sect\75923XS15900.dgn 5/16/2024 8:29:02 AM MJennings

U:\173608714\LAW\75923\geotechnical\sheets\x-sect\75923XS16000.dgn 5/16/2024 8:35:12 AM MJennings

0 10 20 40
HORIZONTAL SCALE IN FEET

DRAWN MSJ
CHECKED EMK

CROSS SECTION - S.R. 7
STATION 160+00.00

LAW-7-2.17

79/206

1120/1247

DRAFT Stage 3 - Not for Construction 09/23/2024

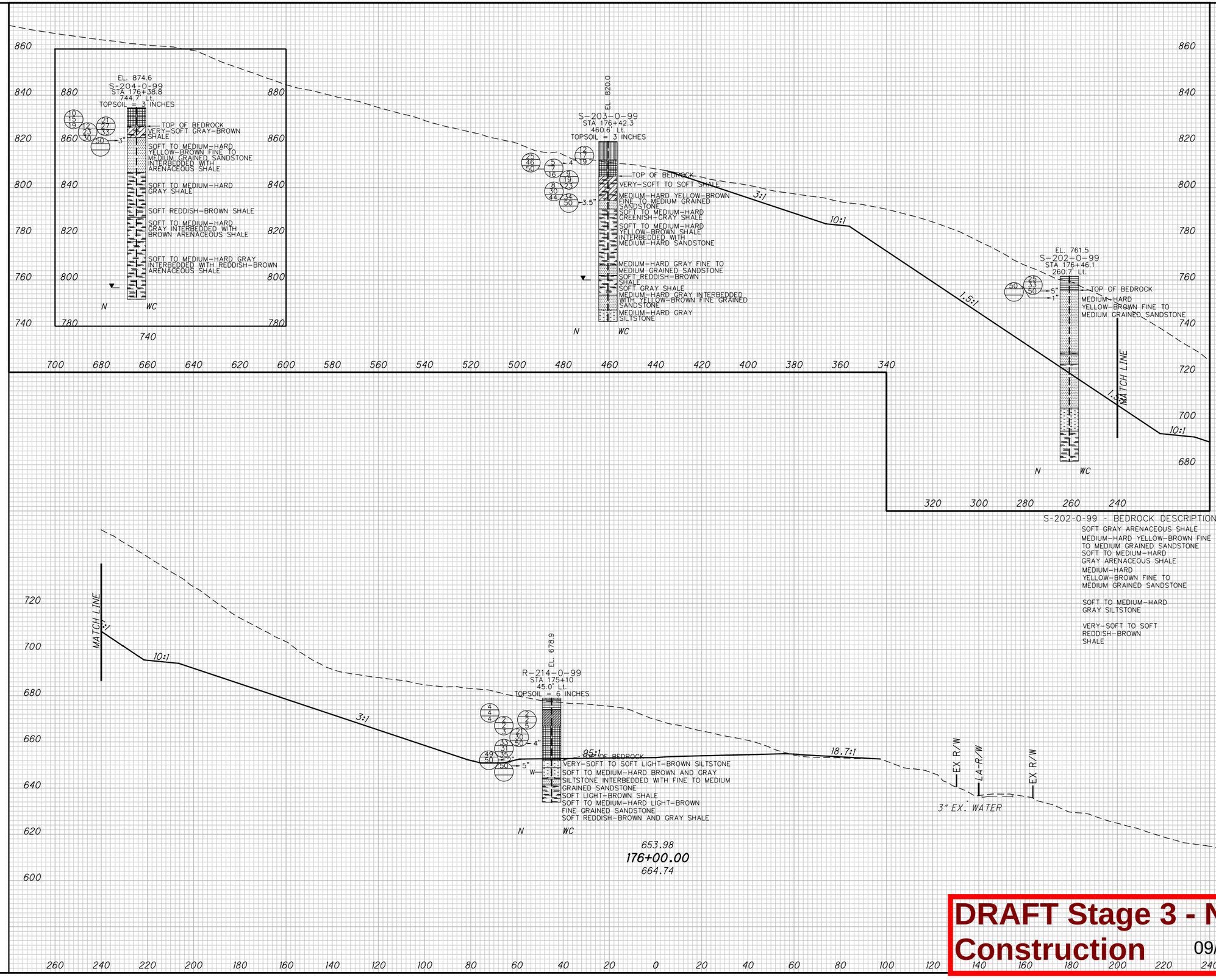

CROSS SECTION - S.R. 7
STATION 176+00.00

HORIZONTAL SCALE IN FEET
0 10 20 40

DRAWN MSJ
CHECKED EMK

LAW-7-2.17

80/206
1121/1247

DRAFT Stage 3 - Not for Construction 09/23/2024

U:\173608714\LAW\75923\geotechnical\sheets\x-sect\75923XS17600.dgn 5/16/2024 8:36:19 AM MJennings

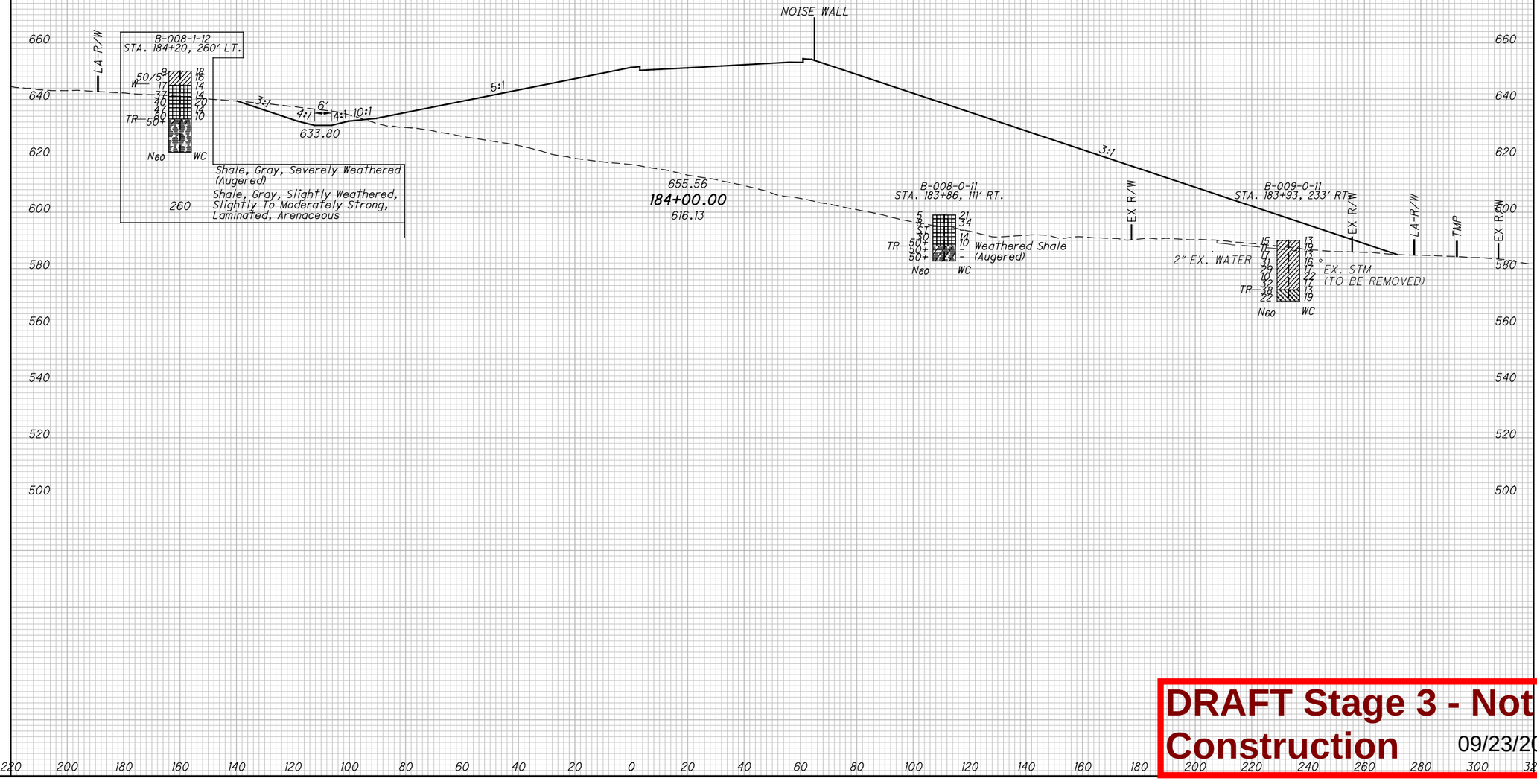

DRAWN MSJ
CHECKED EMK

0 10 20 40
HORIZONTAL SCALE IN FEET

CROSS SECTION - S.R. 7
STATION 184+00.00

LAW-7-2.17

80A/206

1121A
1247

DRAFT Stage 3 - Not for Construction 09/23/2024

U:\173608714\LAW\75923\geotechnical\sheets\x-sect\75923XS18400.dgn 5/20/2024 2:24:54 PM MJennings

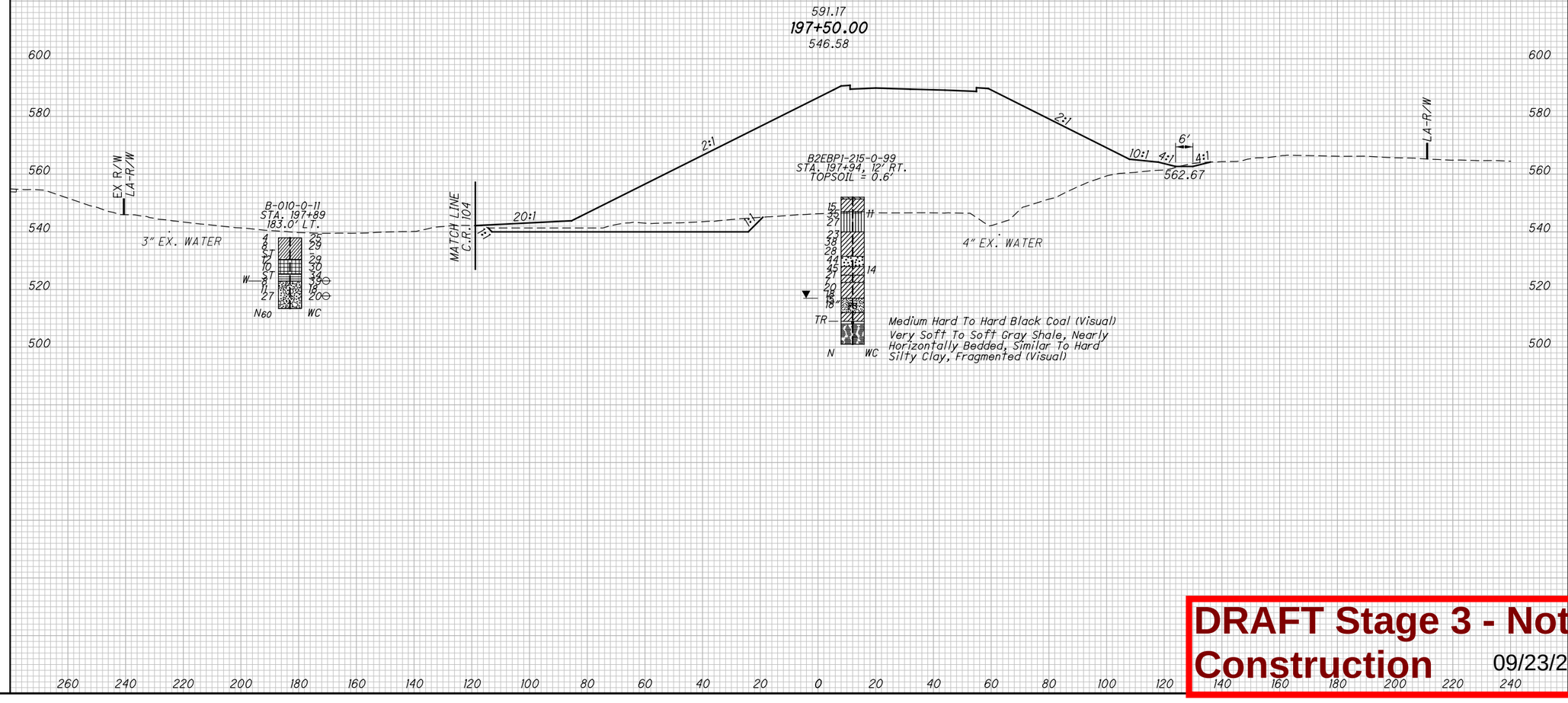

U:\17360871\4\LAW\75923\geotechnical\sheets\x-sect\75923XS19750.dgn 5/16/2024 8:39:01 AM MJennings

HORIZONTAL SCALE IN FEET
0 10 20 40

DRAWN MSJ
CHECKED EMK

CROSS SECTION - S.R. 7
STATION 197+50.00

LAW-7-2.17

81/206

1122
1247

DRAFT Stage 3 - Not for Construction 09/23/2024

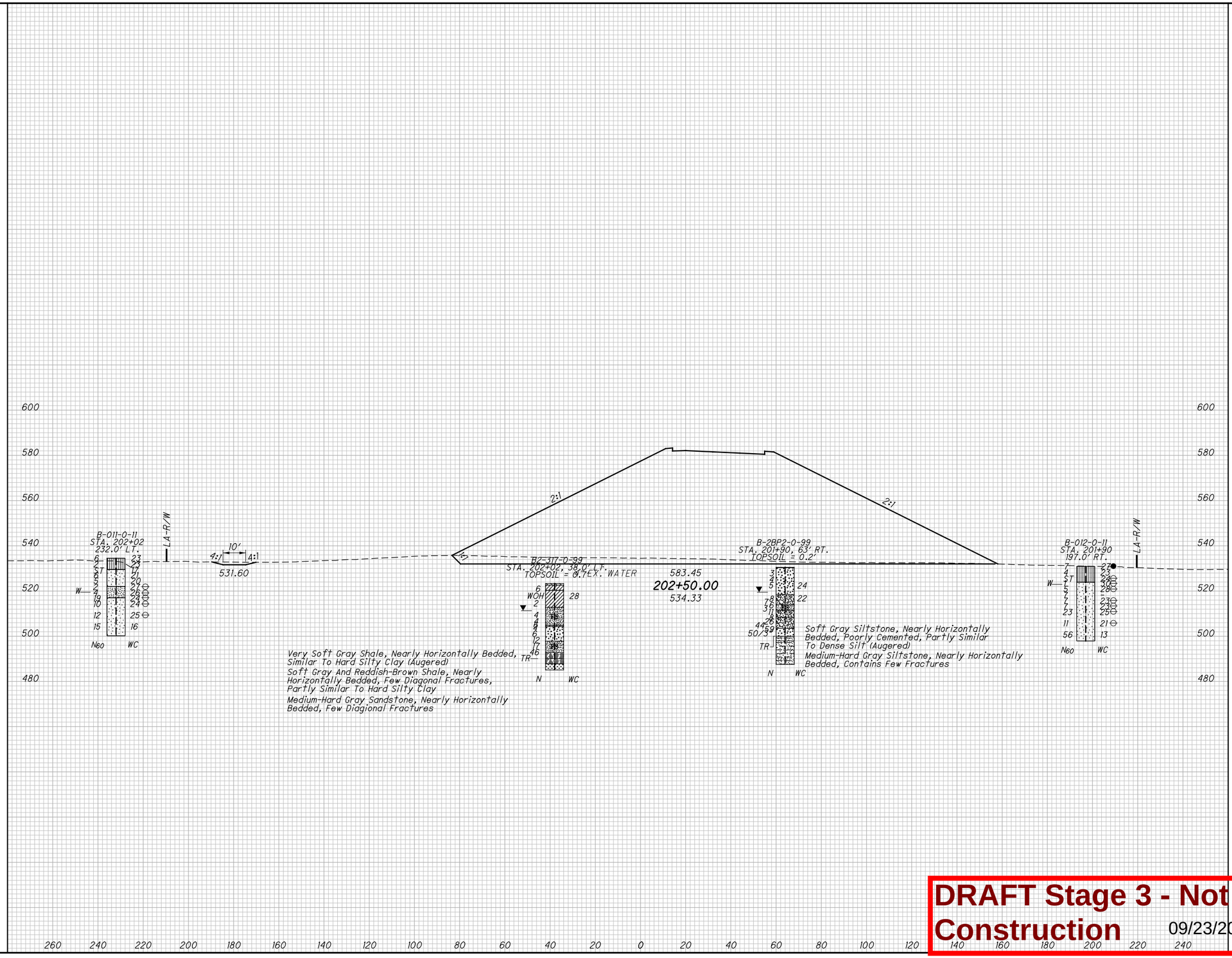

DRAWN MSJ
CHECKED EMK

0 10 20 40
HORIZONTAL SCALE IN FEET

CROSS SECTION - S.R. 7
STATION 202+50.00

LAW-7-2.17

82/206

1123/1247

DRAFT Stage 3 - Not for Construction 09/23/2024

U:\173608714\LAW\75923\geotechnical\sheets\x-sect\75923XS20250.dgn 5/16/2024 8:39:58 AM MJennings

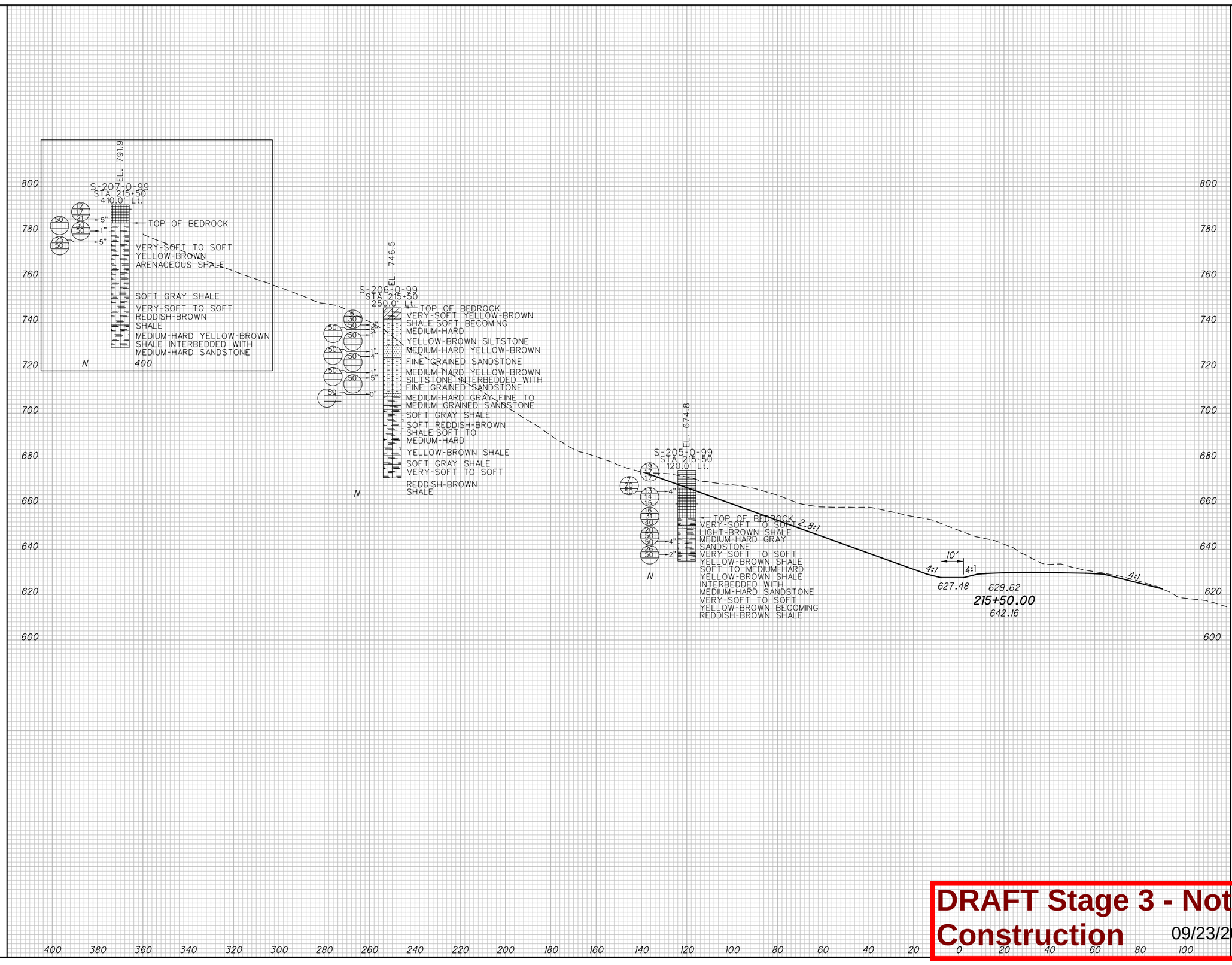

DRAWN MSJ
CHECKED EMK

0 10 20 40
HORIZONTAL SCALE IN FEET

CROSS SECTION - S.R. 7
STATION 215+50.00

LAW-7-2.17

83 / 206

1124 / 1247

DRAFT Stage 3 - Not for Construction 09/23/2024

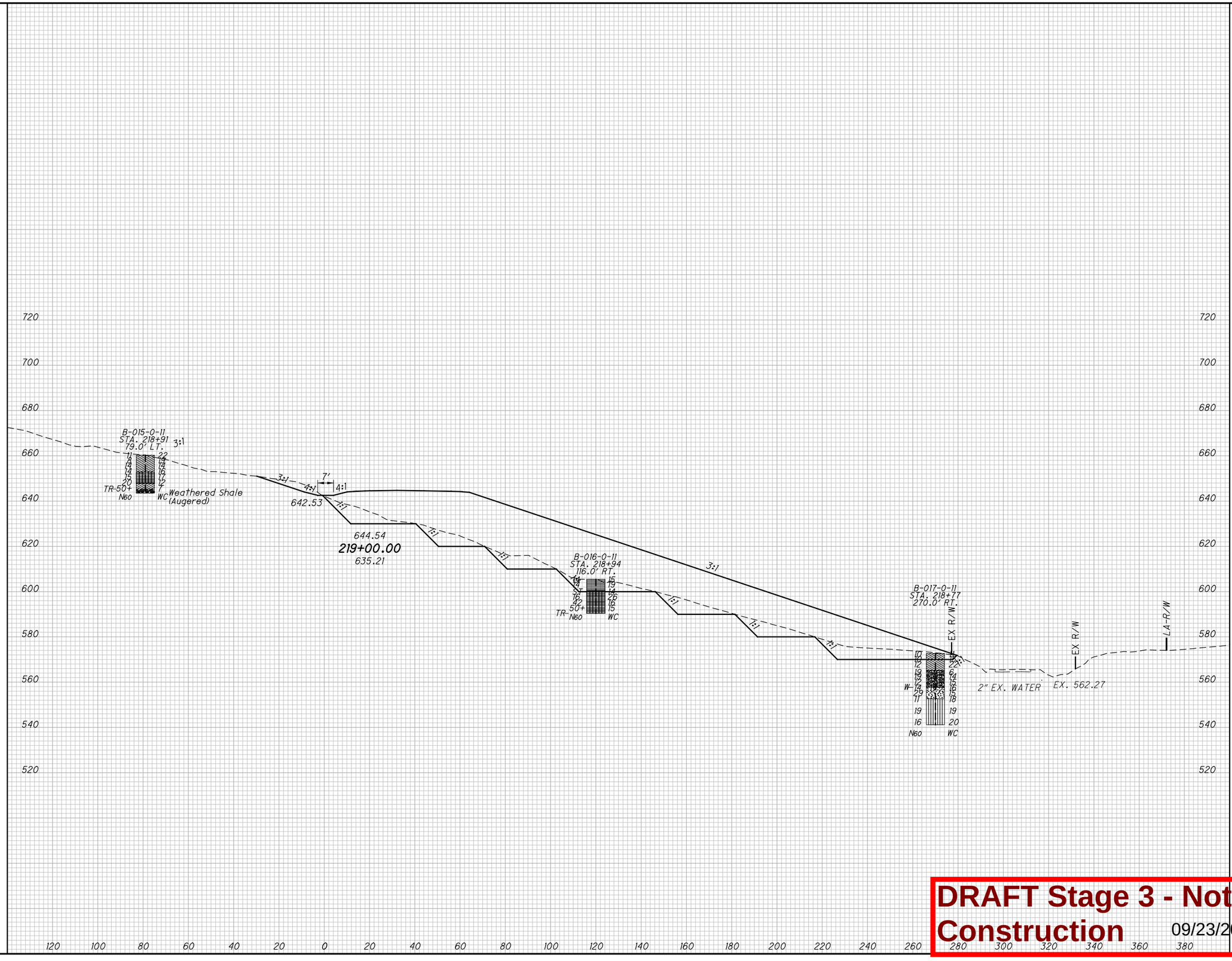

DRAFT Stage 3 - Not for Construction 09/23/2024

0 10 20 40
HORIZONTAL SCALE IN FEET

DRAWN MSJ
CHECKED EMK

CROSS SECTION - S.R. 7
STATION 219+00.00

LAW-7-2.17

84/206

1125
1247

U:\173608714\LAW\75923\geotechnical\sheets\x-sect\75923XS21900.dgn 5/16/2024 8:42:01 AM MJennings

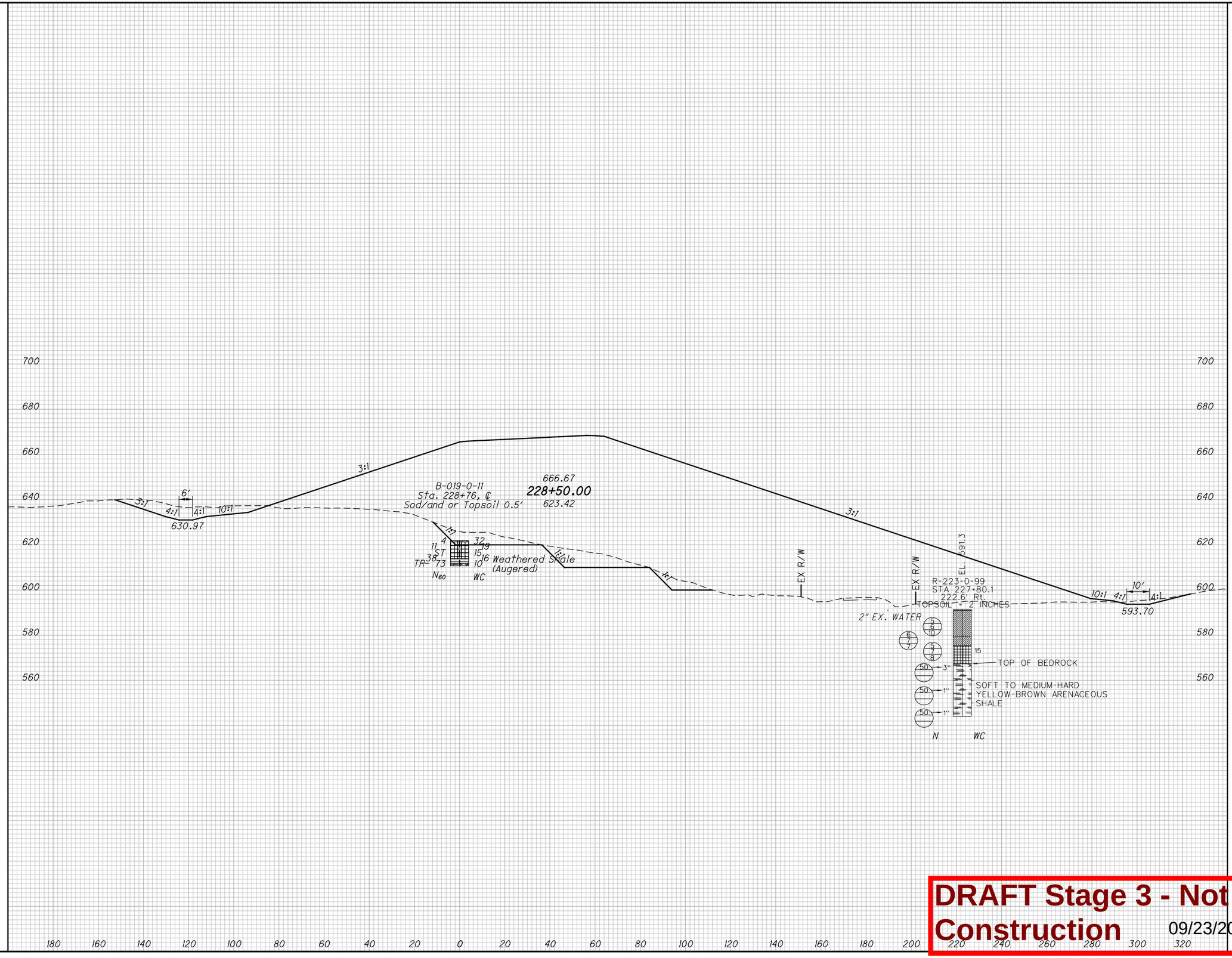

DRAWN MSJ
CHECKED EMK

0 10 20 40
HORIZONTAL
SCALE IN FEET

CROSS SECTION - S.R. 7
STATION 228+50.00

LAW-7-2.17

85/206

1126
1247

DRAFT Stage 3 - Not for Construction 09/23/2024

U:\173608714\LAW\75923\geotechnical\sheets\x-sect\75923XS22850.dgn 5/16/2024 8:43:10 AM MJennings

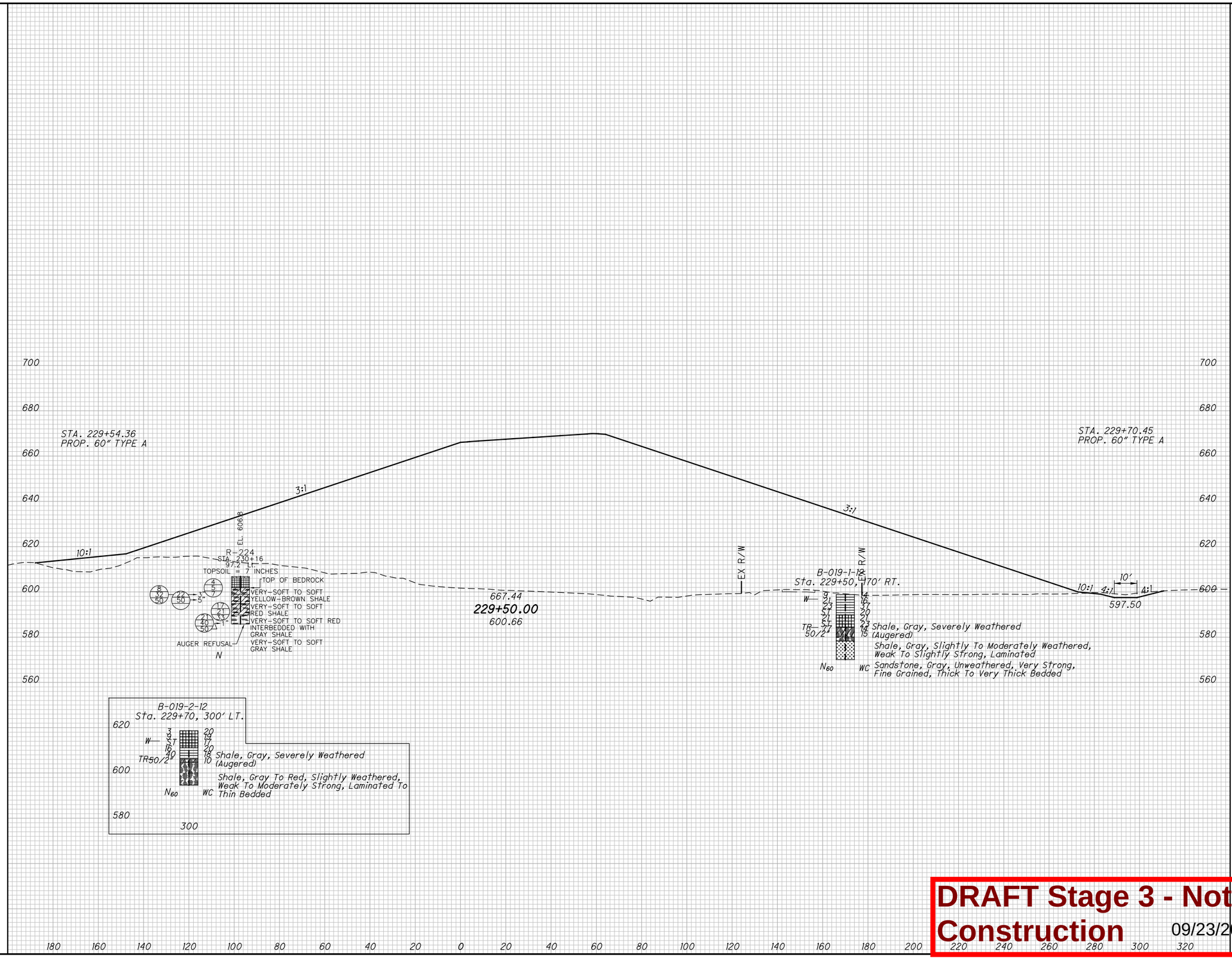

DRAWN MSJ
CHECKED EMK

HORIZONTAL SCALE IN FEET
0 10 20 40

CROSS SECTION - S.R. 7
STATION 229+50.00

LAW-7-2.17

85A/206
1126A
1247

DRAFT Stage 3 - Not for Construction 09/23/2024

U:\173608714\LAW\75923\geotechnical\sheets\x-sect\75923XS22950.dgn 5/17/2024 1:11:53 PM MJennings

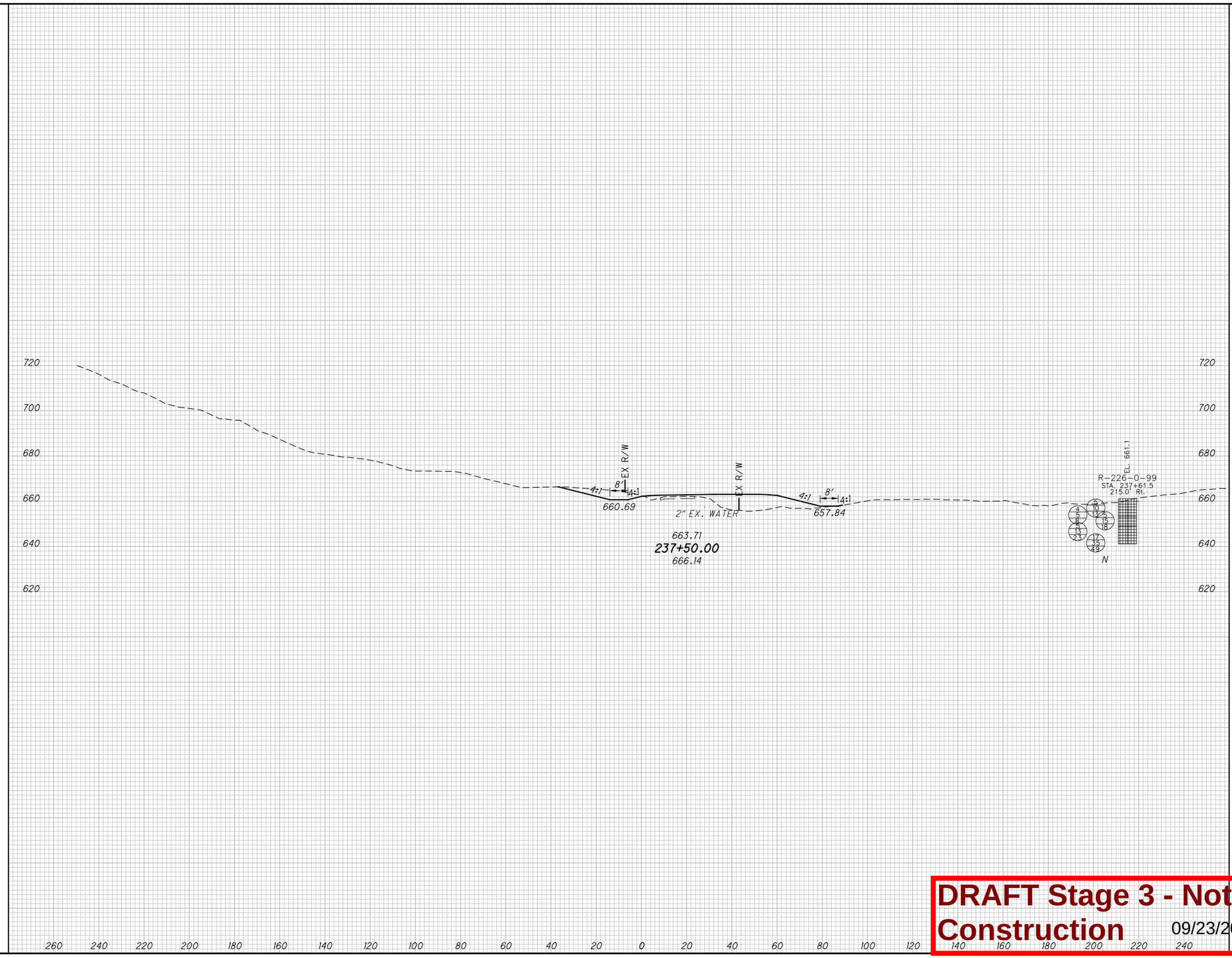

U:\173608714\LAW\75923\geotechnical\sheets\x-sect\75923XS23750.dgn 5/16/2024 8:44:56 AM MJennings

CROSS SECTION - S.R. 7
STATION 237+50.00

DRAWN MSJ
CHECKED EMK

0 10 20 40
HORIZONTAL SCALE IN FEET

LAW-7-2.17

86/206

1127/1247

DRAFT Stage 3 - Not for Construction 09/23/2024

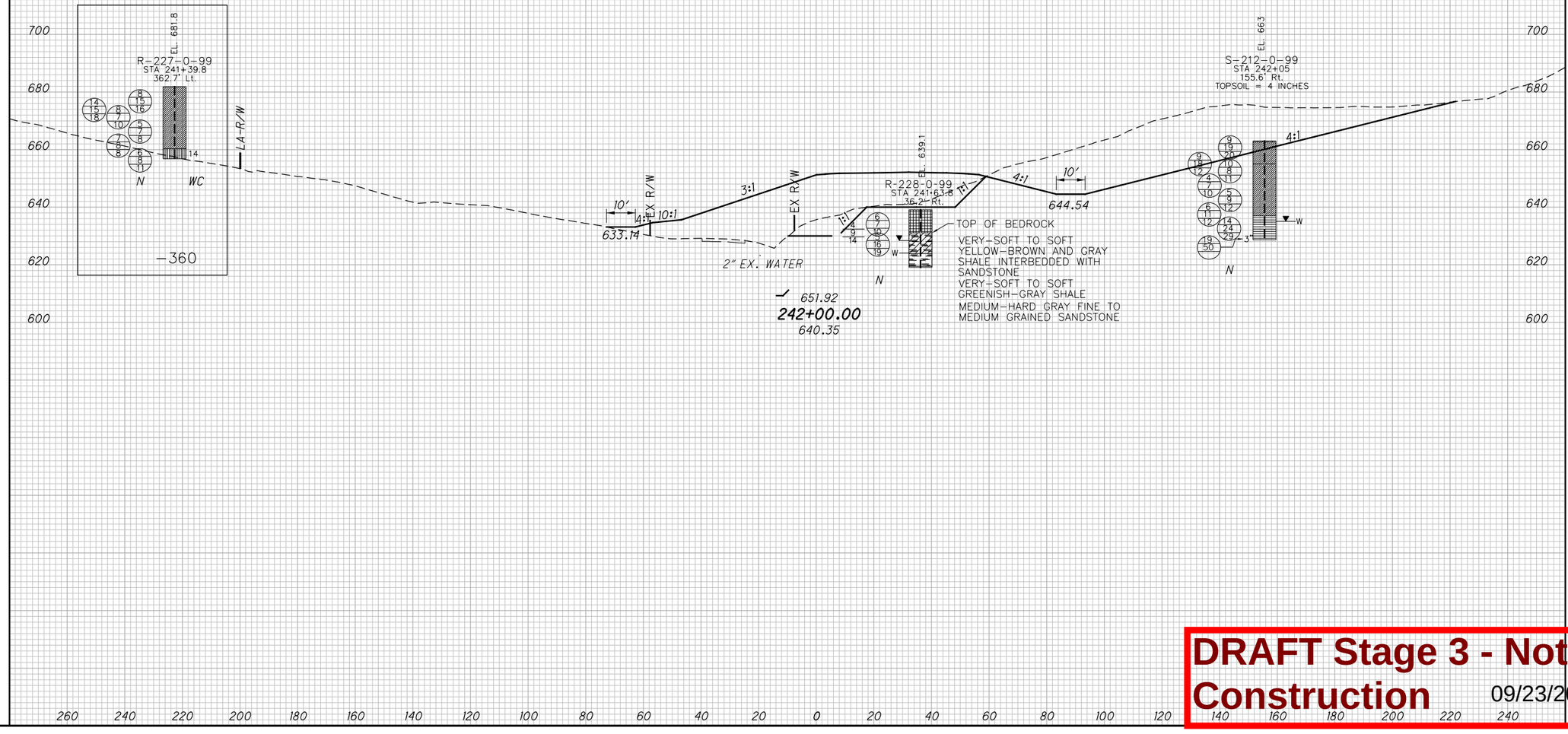

DRAWN MSJ
CHECKED EMK

0 10 20 40
HORIZONTAL SCALE IN FEET

CROSS SECTION - S.R. 7
STATION 242+00.00

LAW-7-2.17

87 / 206

1128 / 1247

DRAFT Stage 3 - Not for Construction 09/23/2024

U:\173608714\LAW\75923\geotechnical\sheets\x-sect\75923XS24200.dgn 5/16/2024 8:46:10 AM MJennings

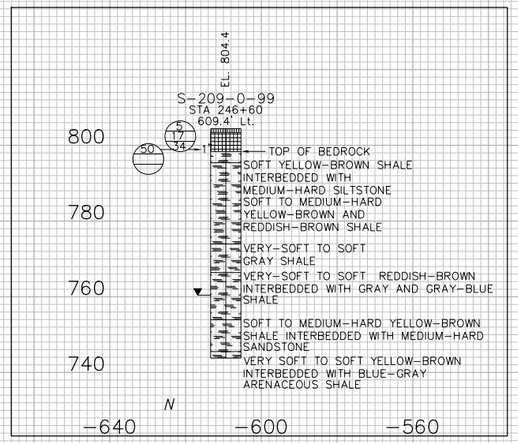

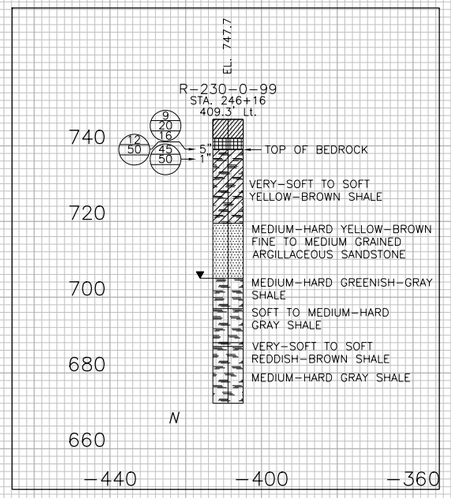

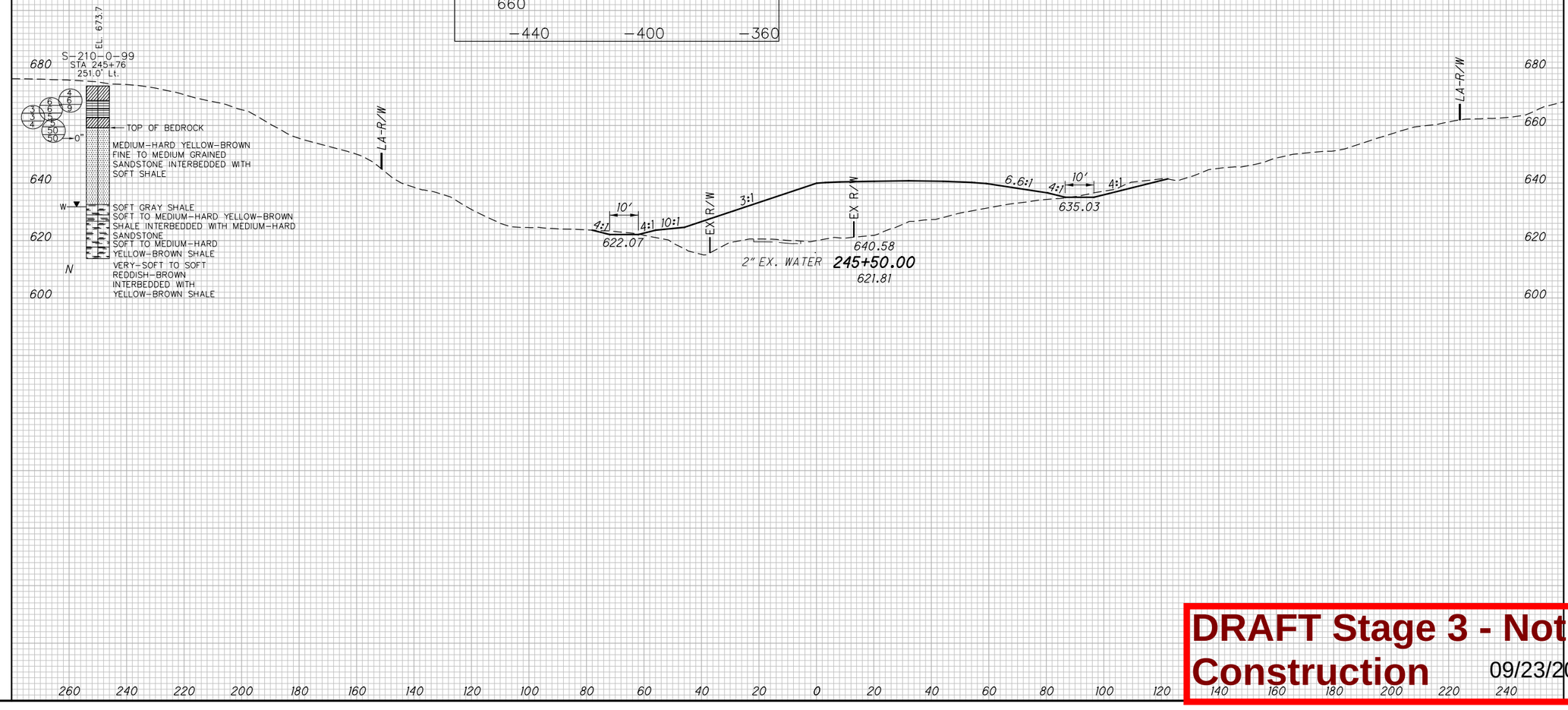

CROSS SECTION - S.R. 7
STATION 245+50.00

0 10 20 40
HORIZONTAL SCALE IN FEET

DRAWN MSJ
CHECKED EMK

LAW-7-2.17

88/206

1129
1247

DRAFT Stage 3 - Not for Construction 09/23/2024

U:\17360871 4\LAW\7592 3\geotechnical\sheets\x-sect\75923XS24550.dgn 5/16/2024 8:47:08 AM MJennings

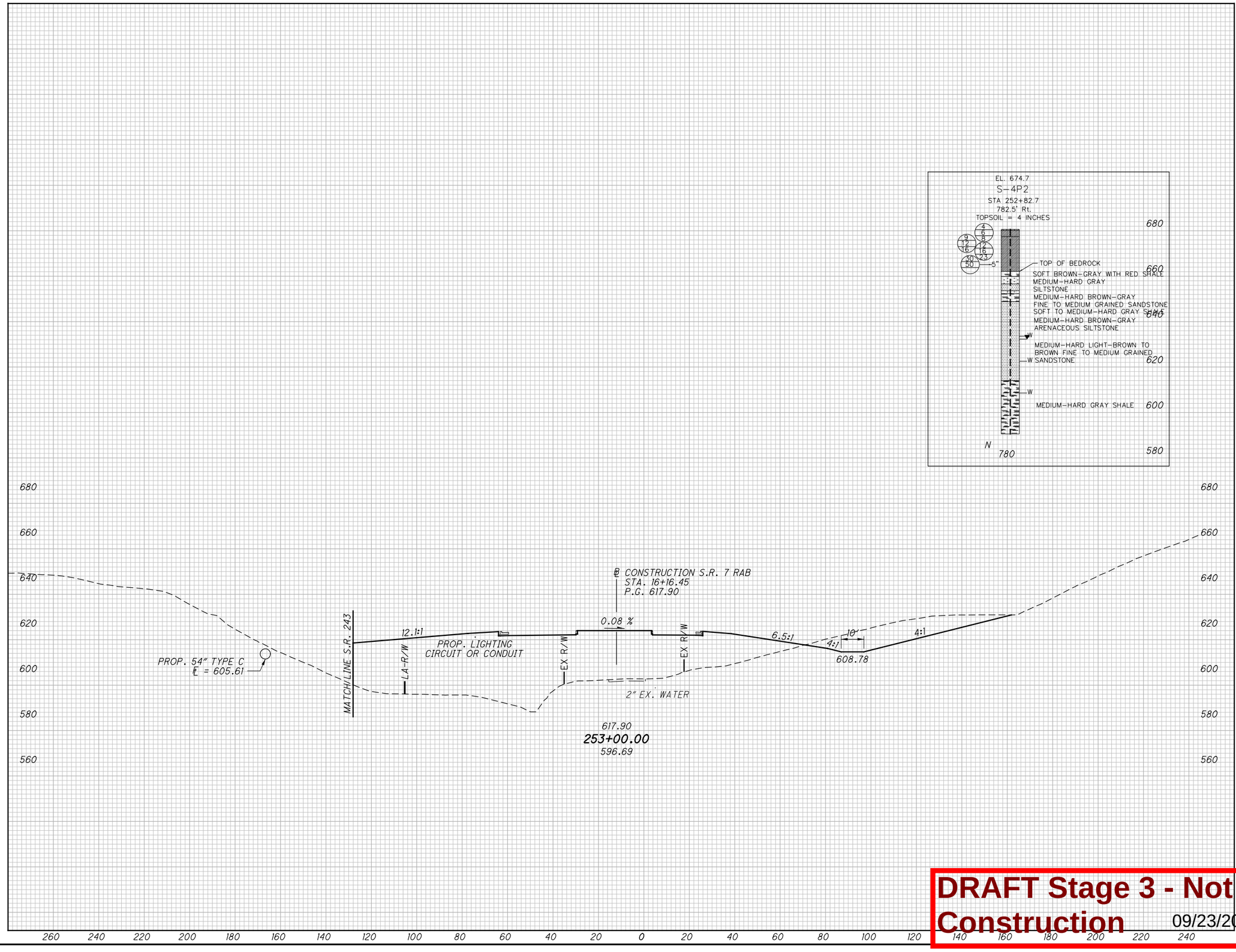

DRAFT Stage 3 - Not for Construction 09/23/2024

HORIZONTAL SCALE IN FEET
0 10 20 40

DRAWN MSJ
CHECKED EMK

CROSS SECTION - S.R. 7
STATION 253+00

LAW-7-2.17

U:\173608714\LAW\75923\geotechnical\sheets\x-sect\75923XS25300.dgn 5/16/2024 8:48:19 AM MJennings

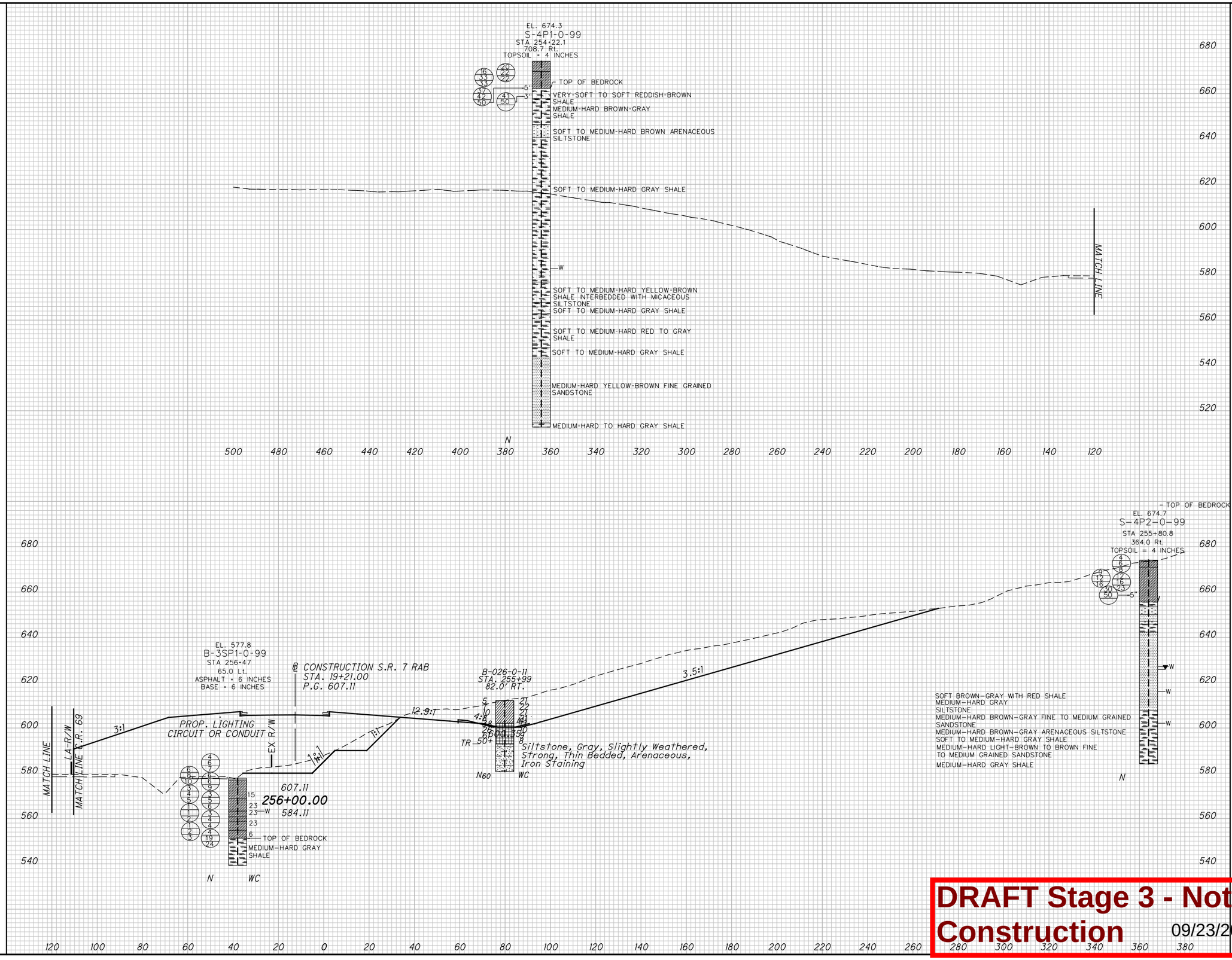

DRAWN MSJ
CHECKED EMK

HORIZONTAL SCALE IN FEET
0 10 20 40

CROSS SECTION- S.R. 7
STATION 256+00.00

LAW-7-2.17

90/206
1131/1247

DRAFT Stage 3 - Not for Construction 09/23/2024

U:\173608714\LAW\75923\geotechnical\sheets\x-sect\75923XS25600.dgn 5/16/2024 8:49:21 AM MJennings

U:\173608714\LAW\75923\geotechnical\sheets\x-sect\75923XS27400.dgn 5/16/2024 8:50:53 AM MJennings

640
620
600
580
560
540
520
500
480

16" EX. WATER

LA-R/W

B4WBF-207-0-99
STA. 273+87
84.0' LT.

14 15 19 69 53 50/5" 9 9
TR— N WC

Very-Soft To Soft Gray Shale, Nearly Horizontally Bedded, Similar To Hard Silty Clay (Visual)
Medium Hard Gray Fine Grained Sandstone, Nearly Horizontally Bedded, Well Cemented, Few Horizontal Fractures (Visual)
Soft To Medium Hard Gray Siltstone, Nearly Horizontally Bedded, Few Diagonal And Vertical Fractures, Partly Calcareous (Visual)
Very-Soft To Soft Gray Becoming Reddish-Brown Shale, Nearly Horizontally Bedded, Similar To Silty Clay, Highly Fractured (Visual)

10'
4:1
3:1
4:1
560.41
B-038-0-11
STA. 273+95
39.0' RT.
2:1
1:1
1:1
2:1
1:1
LA-R/W

10 18 25 42 41 20 15 TR— 72 ST 35 27 20 72 19 27 19 25 13 15 12 14 23 17 13
N60 WC

573.08
274+00.00
551.49

260 240 220 200 180 160 140 120 100 80 60 40 20 0 20 40 60 80 100 120 140 160 180 200 220 240

DRAFT Stage 3 - Not for Construction 09/23/2024

0 10 20 40 HORIZONTAL SCALE IN FEET

DRAWN MSJ
CHECKED EMK

CROSS SECTION - S.R. 7
STATION 274+00.00

LAW-7-2.17

91/206

1132
1247

680
660
640
620
600
580
560
540
520

LA-R/W

R-230-0-99
STA. 288+50
67.7 Rt.
EL. 613.1

MATCH LINE STA. 288+50.00

TOP OF BEDROCK
VERY-SOFT TO SOFT REDDISH-BROWN AND YELLOW-BROWN SHALE
SOFT TO MEDIUM-HARD GRAY AND YELLOW-BROWN SHALE INTERBEDDED WITH SANDSTONE
SOFT TO MEDIUM-HARD GRAY SHALE

EX R/W

599.04
288+50.00
597.80

4" EX. WATER

EX R/W

DRAINAGE LAYER

LA-R/W

4:1
10:1
4:1
4:1
1:1
1:1
1:1
3:1

N

220 200 180 160 140 120 100 80 60 40 20 0 20 40 60 80 100 120 140 160 180 200 220 240 260 280

DRAFT Stage 3 - Not for Construction 09/23/2024

U:\173608714\LAW\75923\geotechnical\sheets\x-sect\75923XS28850.dgn 5/16/2024 8:51:53 AM MJennings

0 10 20 40
HORIZONTAL SCALE IN FEET

DRAWN MSJ
CHECKED EMK

CROSS SECTION - S.R. 7
STATION 288+50.00

LAW-7-2.17

92/206

1133/1247

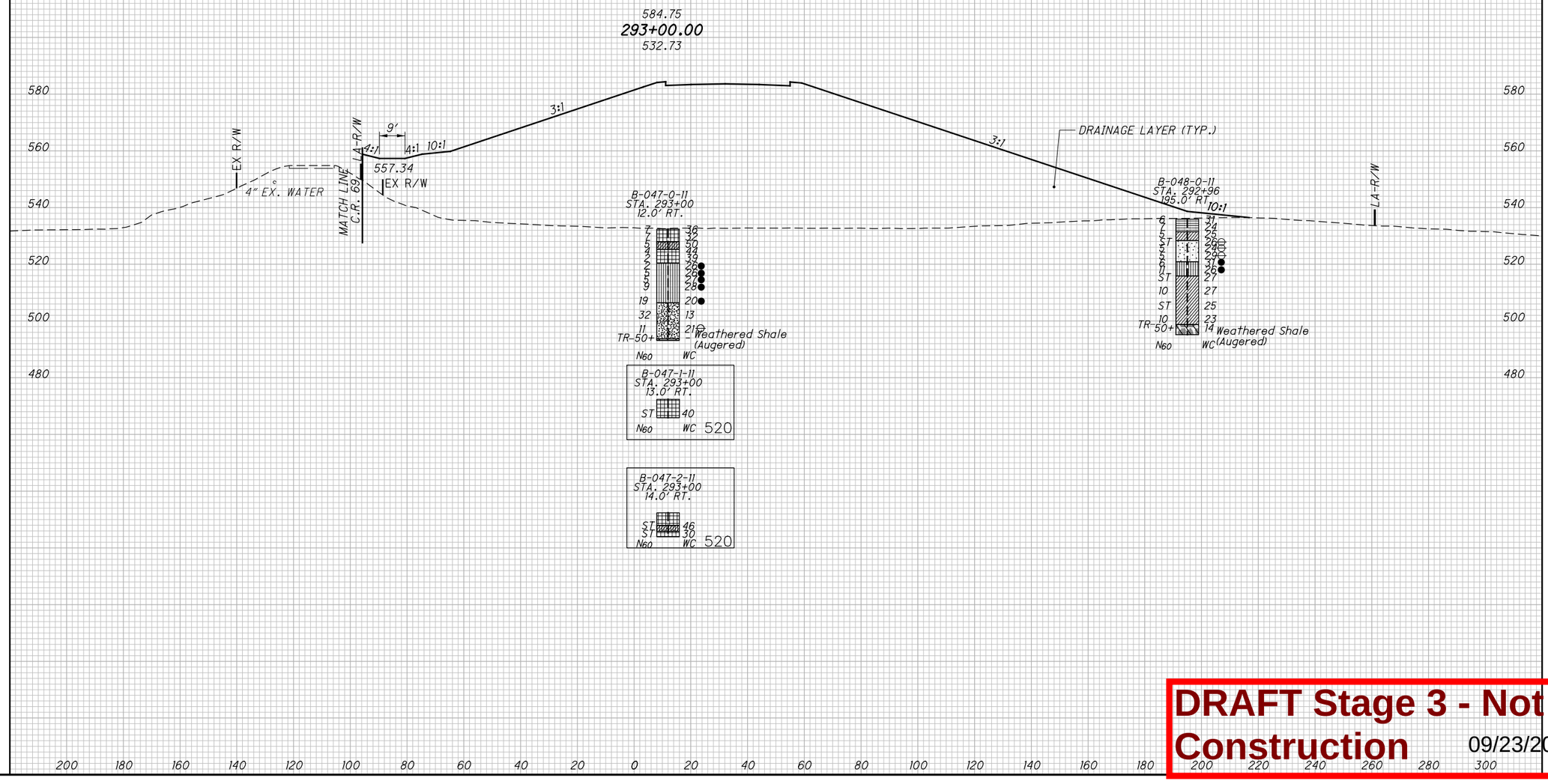

DRAFT Stage 3 - Not for Construction 09/23/2024

HORIZONTAL SCALE IN FEET
0 10 20 40

DRAWN MSJ
CHECKED EMK

CROSS SECTION - S.R. 7
STATION 293+00.00

LAW-7-2.17

93/206

1134/1247

U:\173608714\LAW\75923\geotechnical\sheets\x-sect\75923XS29300.dgn 5/16/2024 8:52:58 AM MJennings

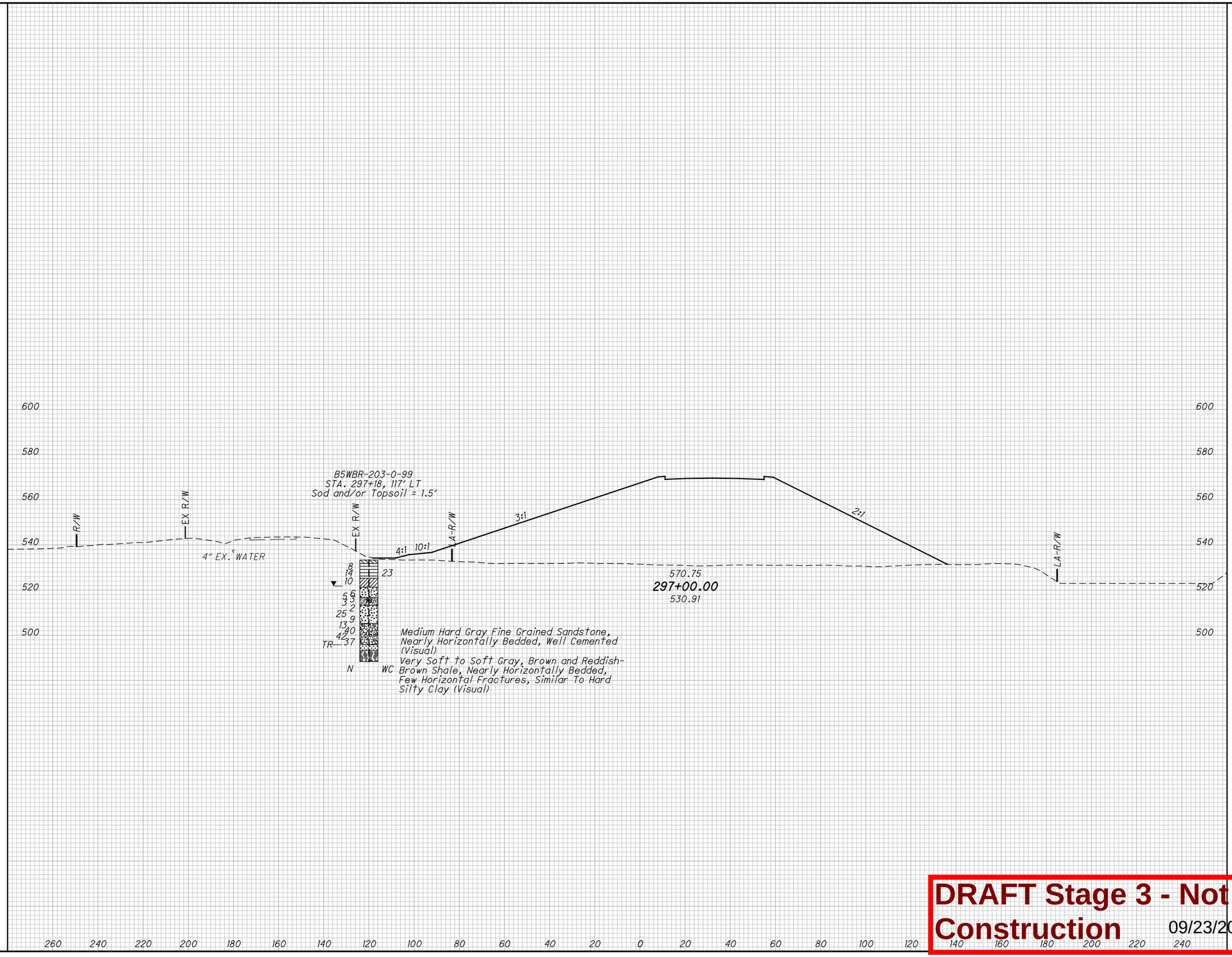

U:\173608714\LAW\75923\geotechnical\sheets\x-sect\75923XS29700.dgn 5/16/2024 8:53:51 AM MJennings

0 10 20 40
HORIZONTAL SCALE IN FEET

DRAWN MSJ
CHECKED EMK

CROSS SECTION - S.R. 7
STATION 297+00.00

LAW-7-2.17

DRAFT Stage 3 - Not for Construction 09/23/2024

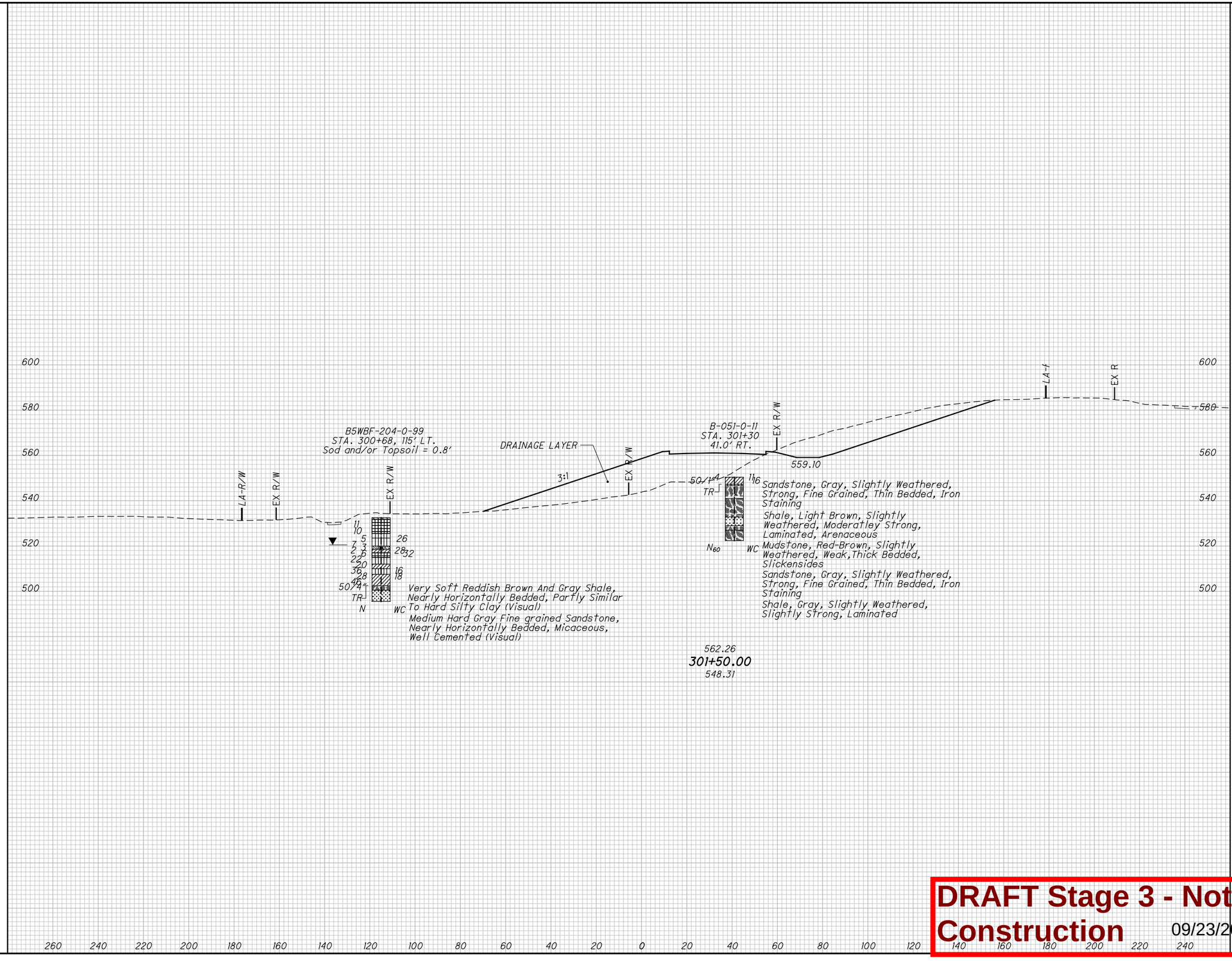

DRAFT Stage 3 - Not for Construction 09/23/2024

HORIZONTAL SCALE IN FEET
0 10 20 40

DRAWN MSJ
CHECKED EMK

CROSS SECTION - S.R. 7
STATION 301+50.00

LAW-7-2.17

U:\173608714\LAW\75923\geotechnical\sheets\x-sect\75923XS30150.dgn 5/16/2024 9:07:19 AM MJennings

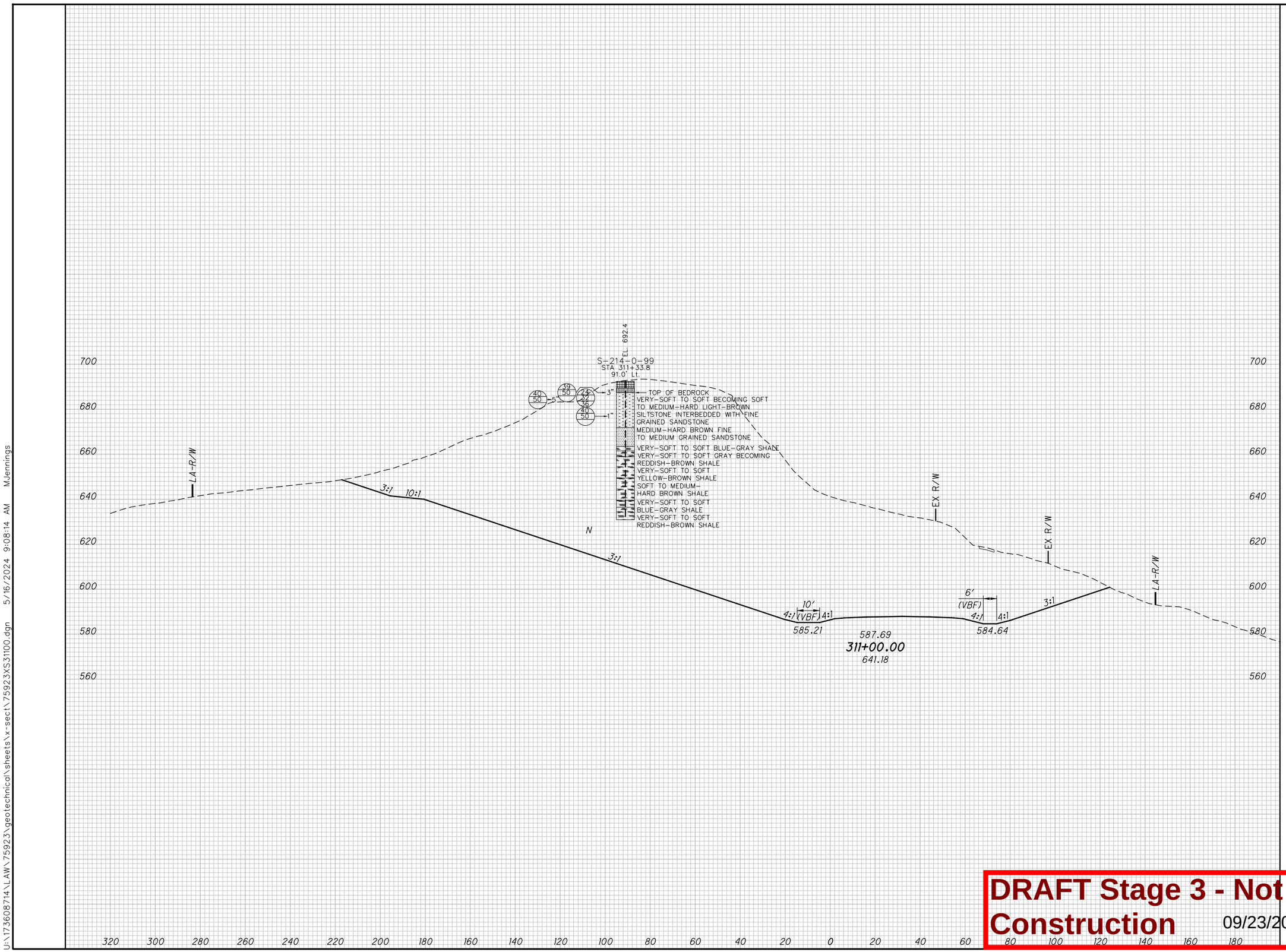

DRAFT Stage 3 - Not for Construction 09/23/2024

CROSS SECTION - S.R. 7
STATION 311+00.00

DRAWN MSJ
CHECKED EMK

HORIZONTAL SCALE IN FEET
0 10 20 40

LAW-7-2.17

96/206

1137/1247

U:\173608714\LAW\75923\geotechnical\sheets\x-sect\75923XS31100.dgn 5/16/2024 9:08:14 AM MJennings

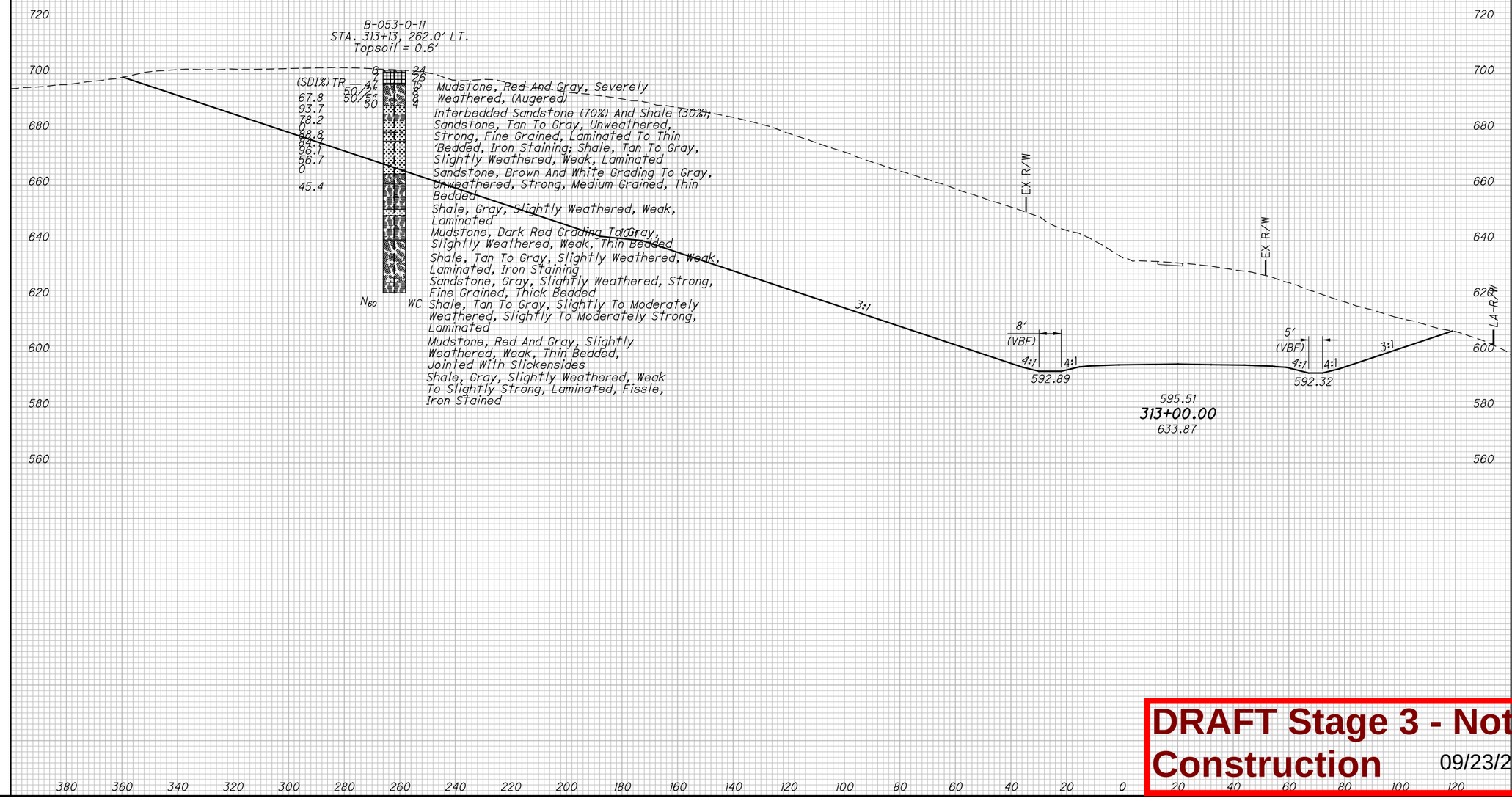

DRAWN MSJ
CHECKED EMK

0 10 20 40
HORIZONTAL SCALE IN FEET

CROSS SECTION - S.R. 7
STATION 313+00.00

LAW-7-2.17

97/206

1138/1247

DRAFT Stage 3 - Not for Construction 09/23/2024

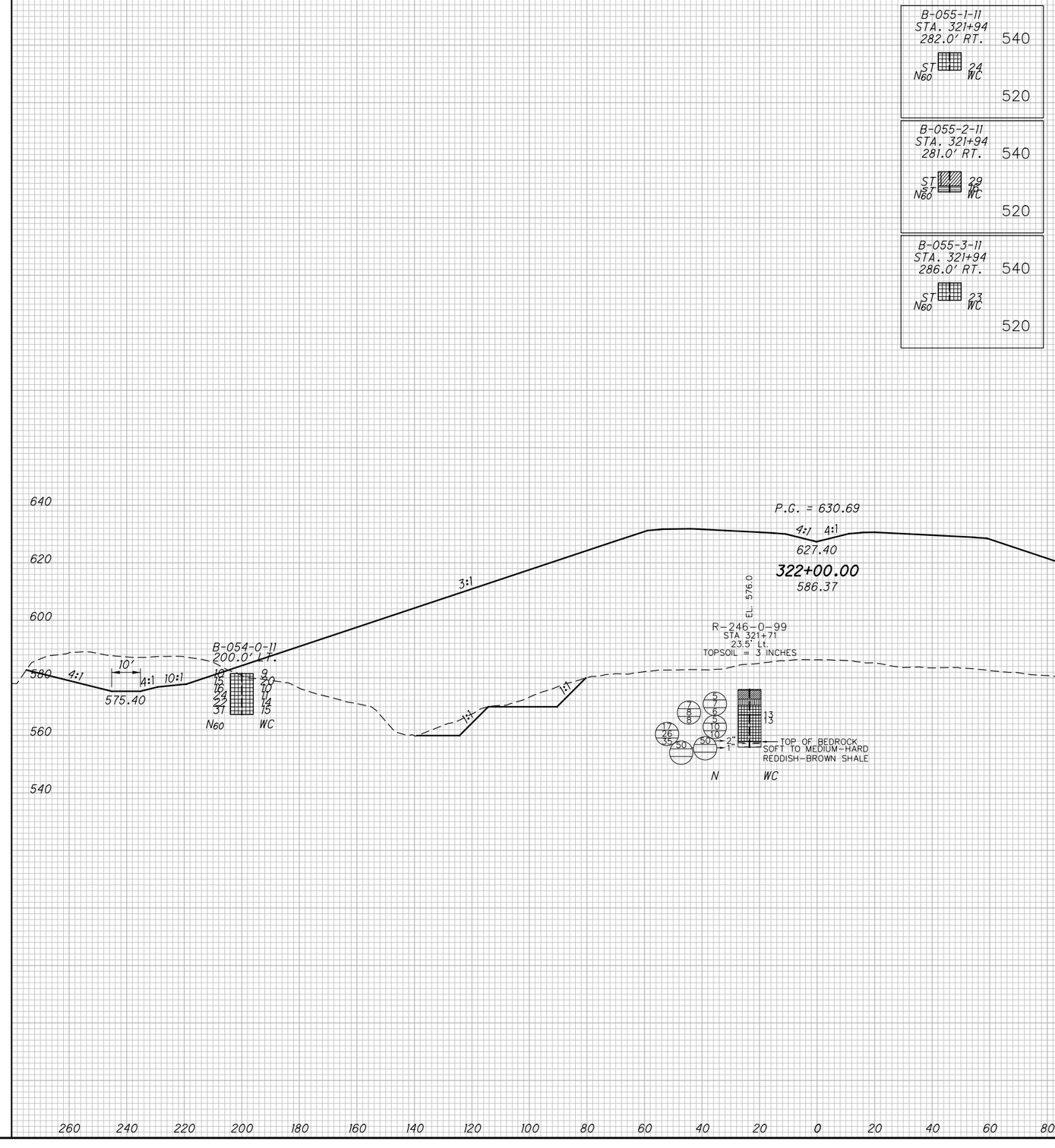

DRAWN MSJ
CHECKED EMK

0 10 20 40
HORIZONTAL SCALE IN FEET

CROSS SECTION - S.R. 7
STATION 322+00.00

LAW-7-2.17

98/206

1139/1247

DRAFT Stage 3 - Not for Construction 09/23/2024

U:\173608714\LAW\75923\geotechnical\sheets\x-sect\75923XS32200.dgn 5/16/2024 9:11:21 AM MJennings

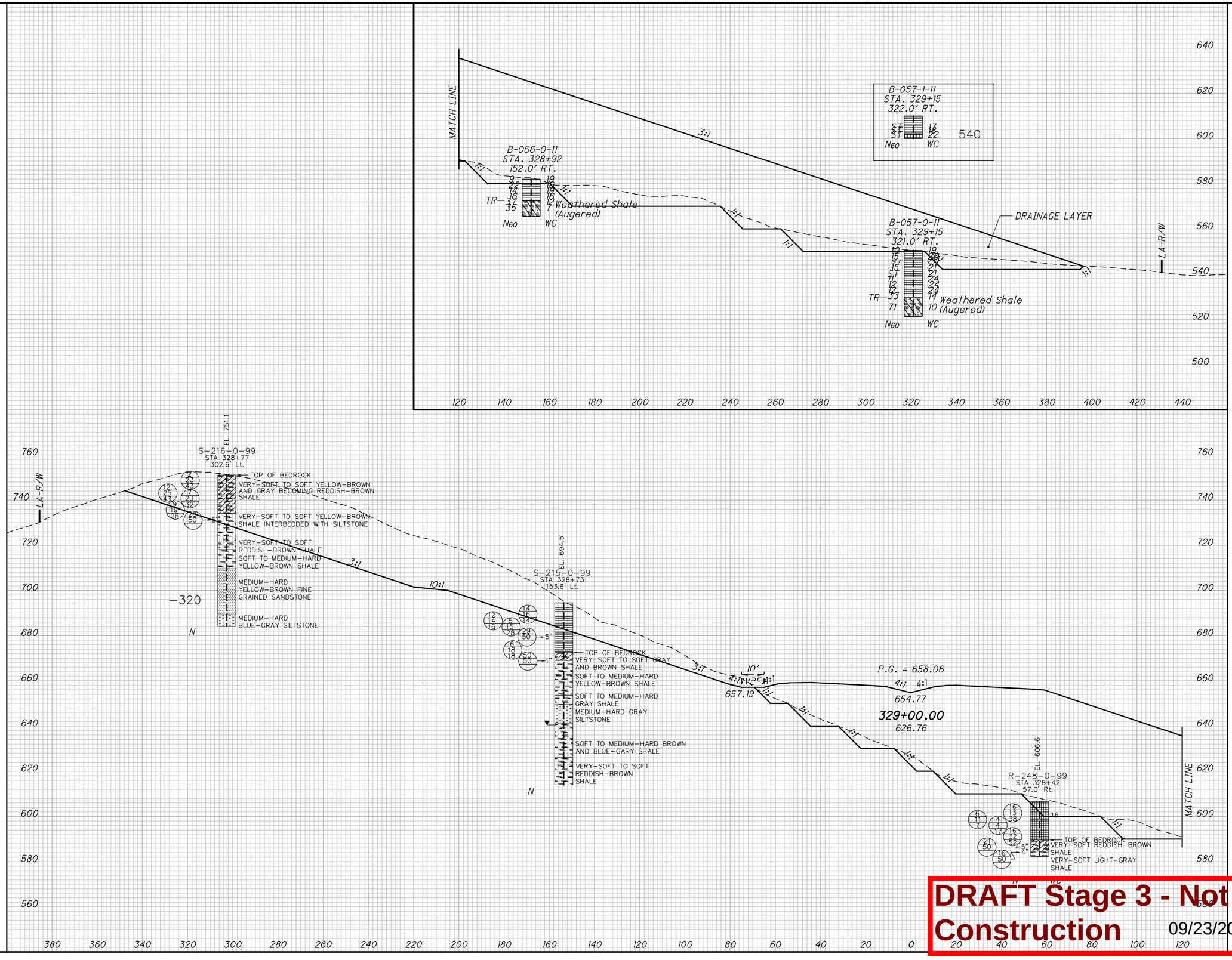

DRAFT Stage 3 - Not for Construction 09/23/2024

HORIZONTAL SCALE IN FEET
0 10 20 40

DRAWN MSJ
CHECKED EMK

CROSS SECTION - S.R. 7
STATION 329+00.00

LAW-7-2.17

99/206

1140/1247

U:\173608714\LAW\75923\geotechnical\sheets\x-sect\75923XS32900.dgn 5/16/2024 9:12:18 AM MJennings

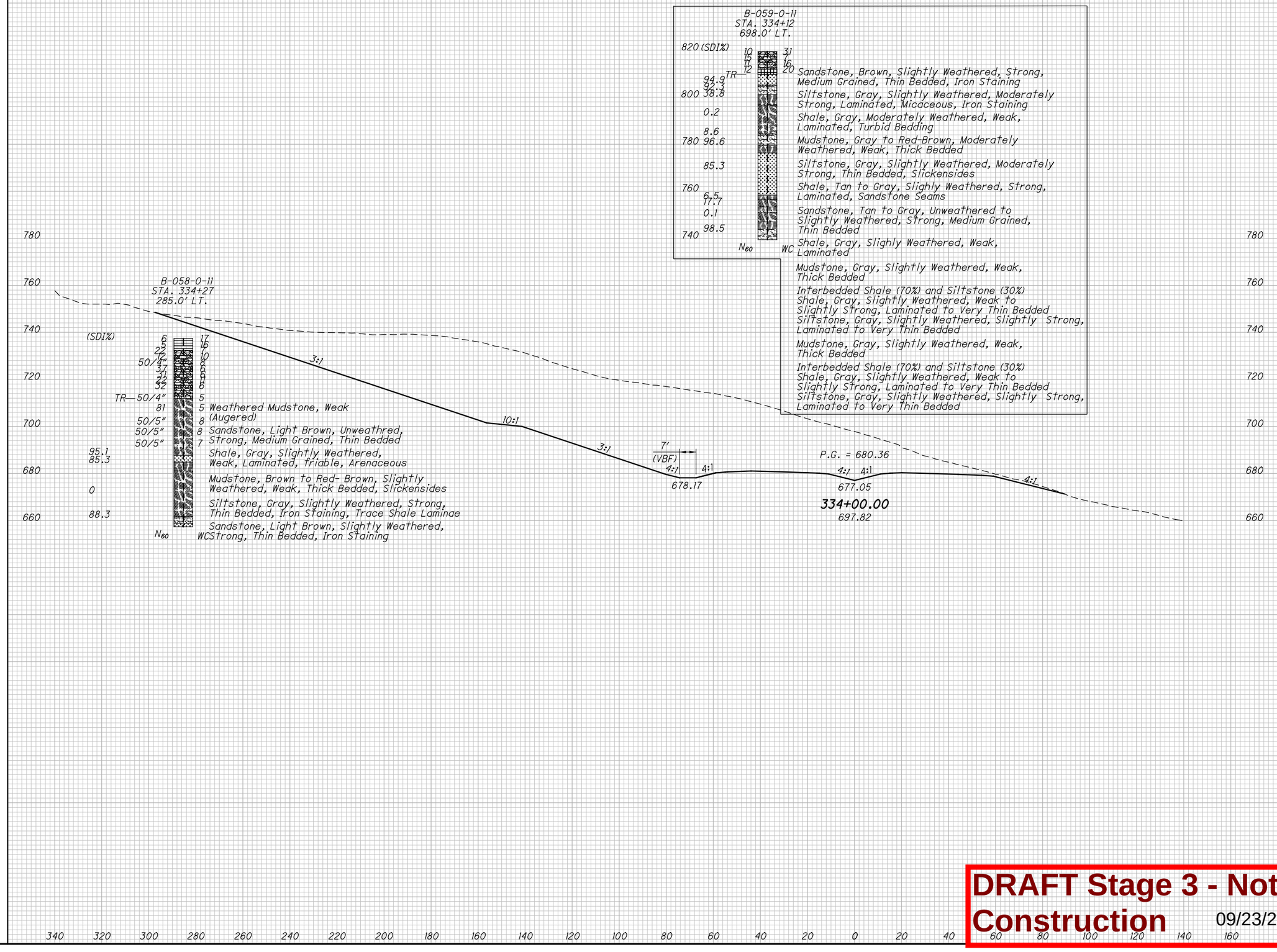

DRAFT Stage 3 - Not for Construction 09/23/2024

0 20 10 40
HORIZONTAL SCALE IN FEET

DRAWN MSJ
CHECKED EWK

CROSS SECTION - S.R. 7
STATION 334+00.00

LAW-7-2.17

100/206

1141/1247

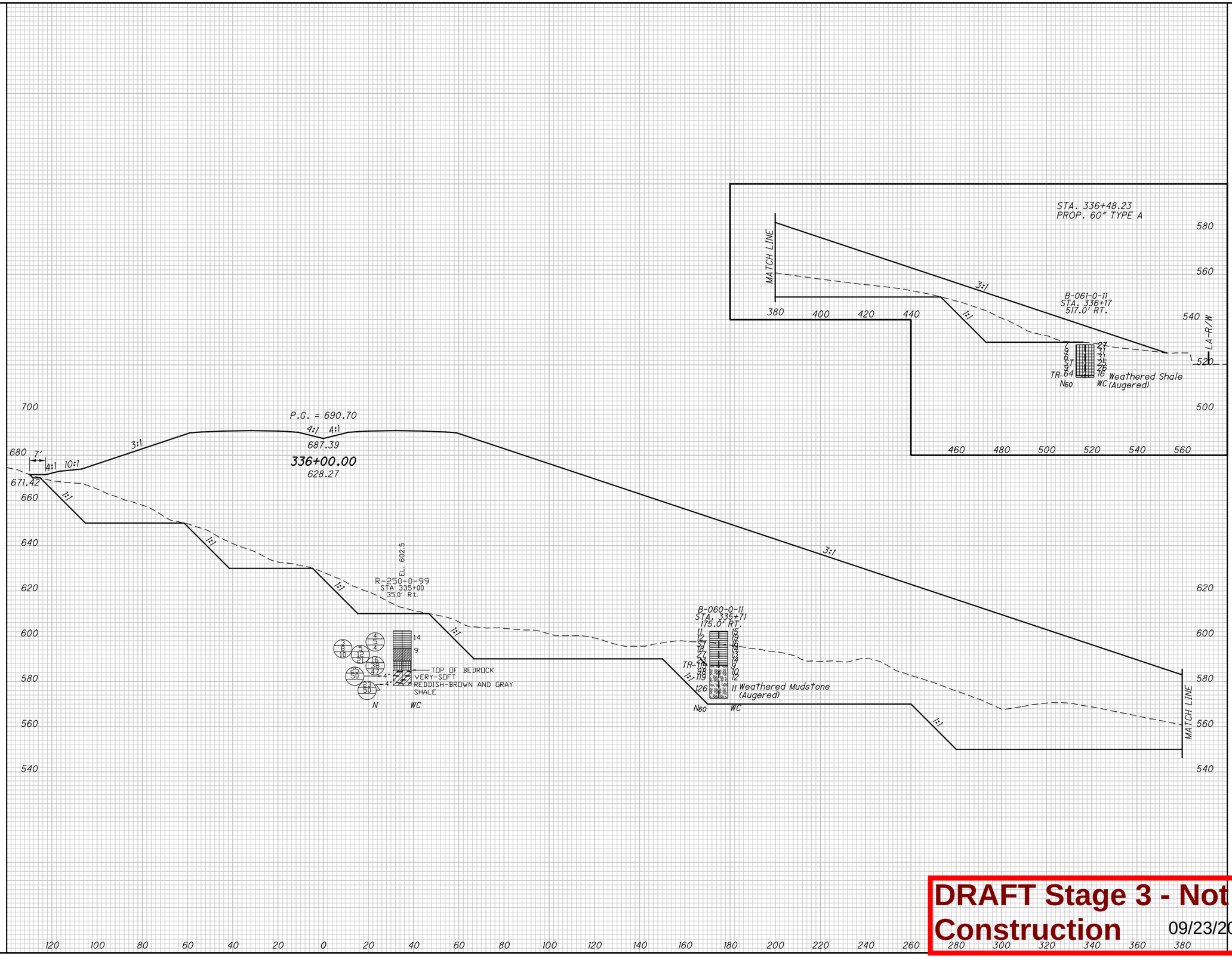

DRAWN MSJ
CHECKED EMK

HORIZONTAL SCALE IN FEET
0 10 20 40

CROSS SECTION - S.R. 7 STATION 336+00.00

LAW-7-2.17

101/206

1142/1247

DRAFT Stage 3 - Not for Construction 09/23/2024

U:\173608714\LAW\75923\geotechnical\sheets\x-sect\75923XS33600.dgn 5/16/2024 9:14:06 AM MJennings

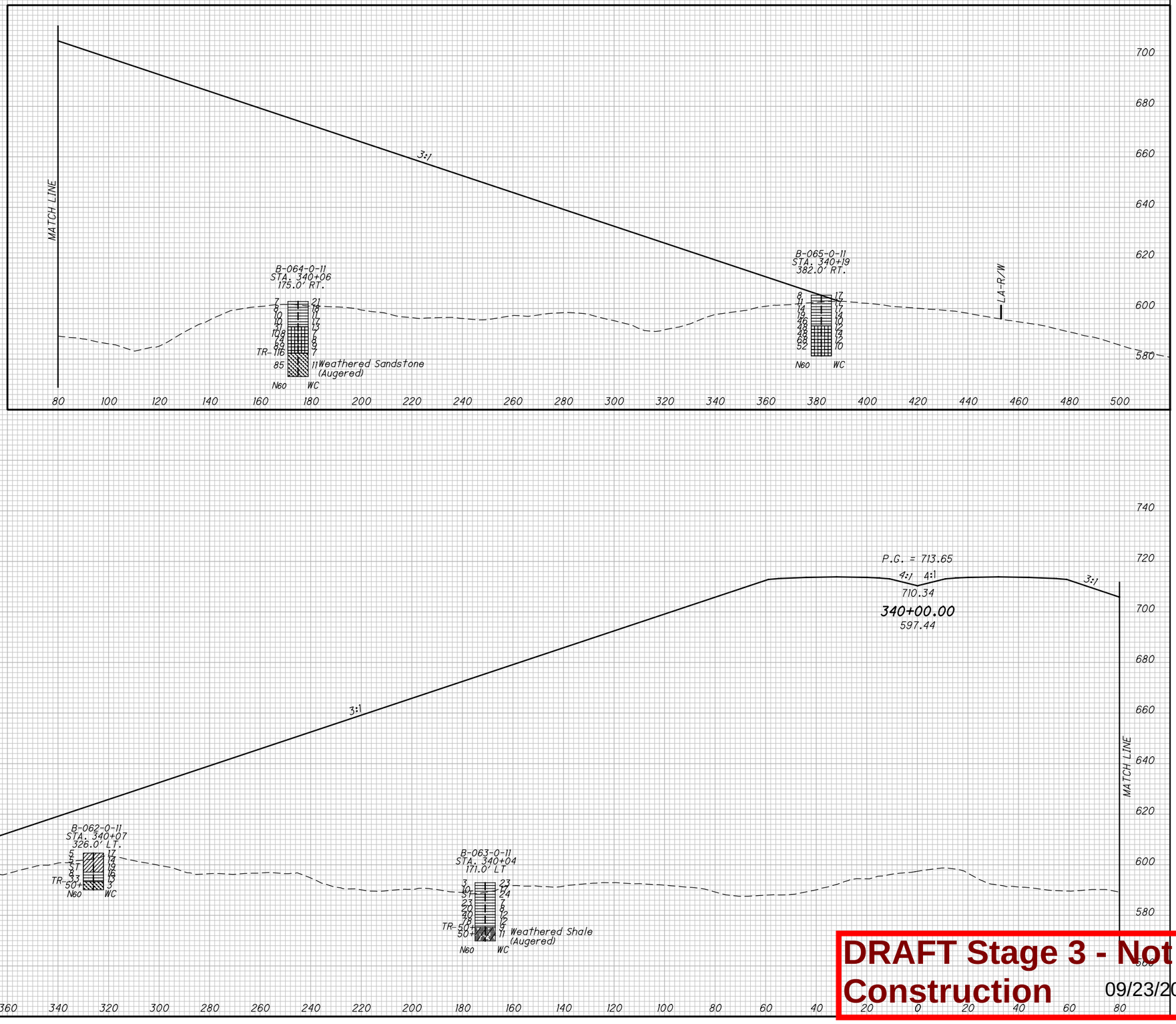

0 10 20 40
HORIZONTAL SCALE IN FEET

DRAWN MSJ
CHECKED EMK

CROSS SECTION - S.R. 7
STATION 340+00.00

LAW-7-2.17

102/206

1143
1247

DRAFT Stage 3 - Not for Construction 09/23/2024

U:\173608714\LAW\75923\geotechnical\sheets\x-sect\75923XS34000.dgn 5/16/2024 9:15:02 AM MJennings

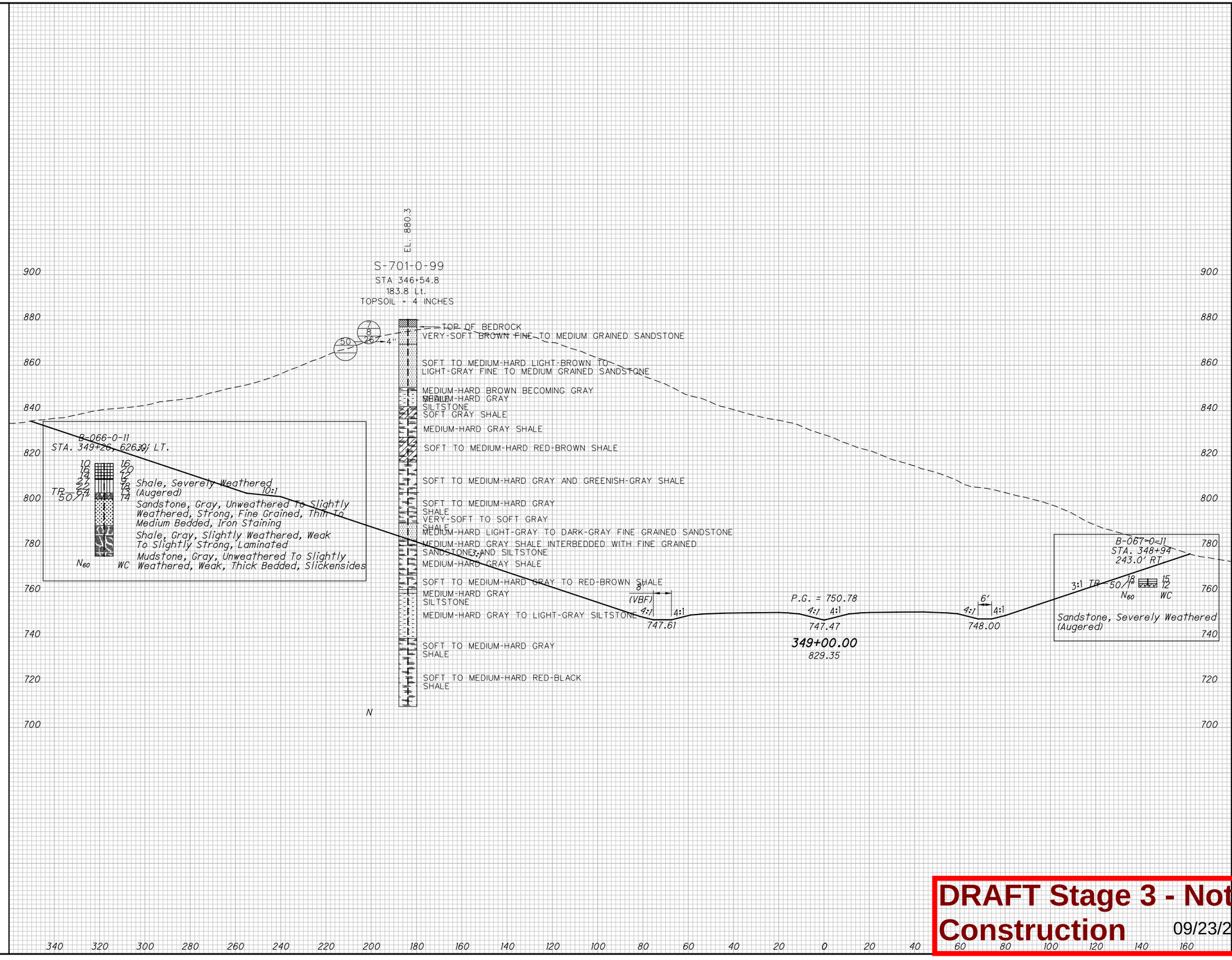

DRAFT Stage 3 - Not for Construction 09/23/2024

HORIZONTAL SCALE IN FEET
0 10 20 40

DRAWN MSJ
CHECKED EMK

CROSS SECTION - S.R. 7
STATION 349+00.00

LAW-7-2.17

103/206

1144
1247

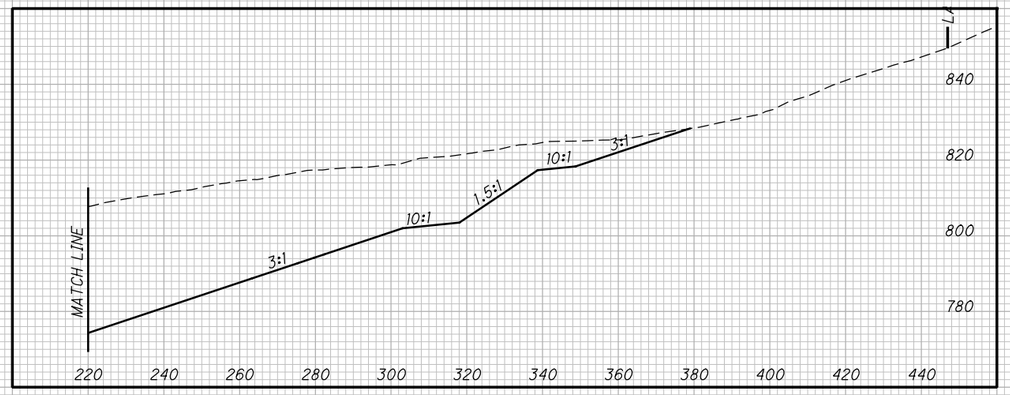

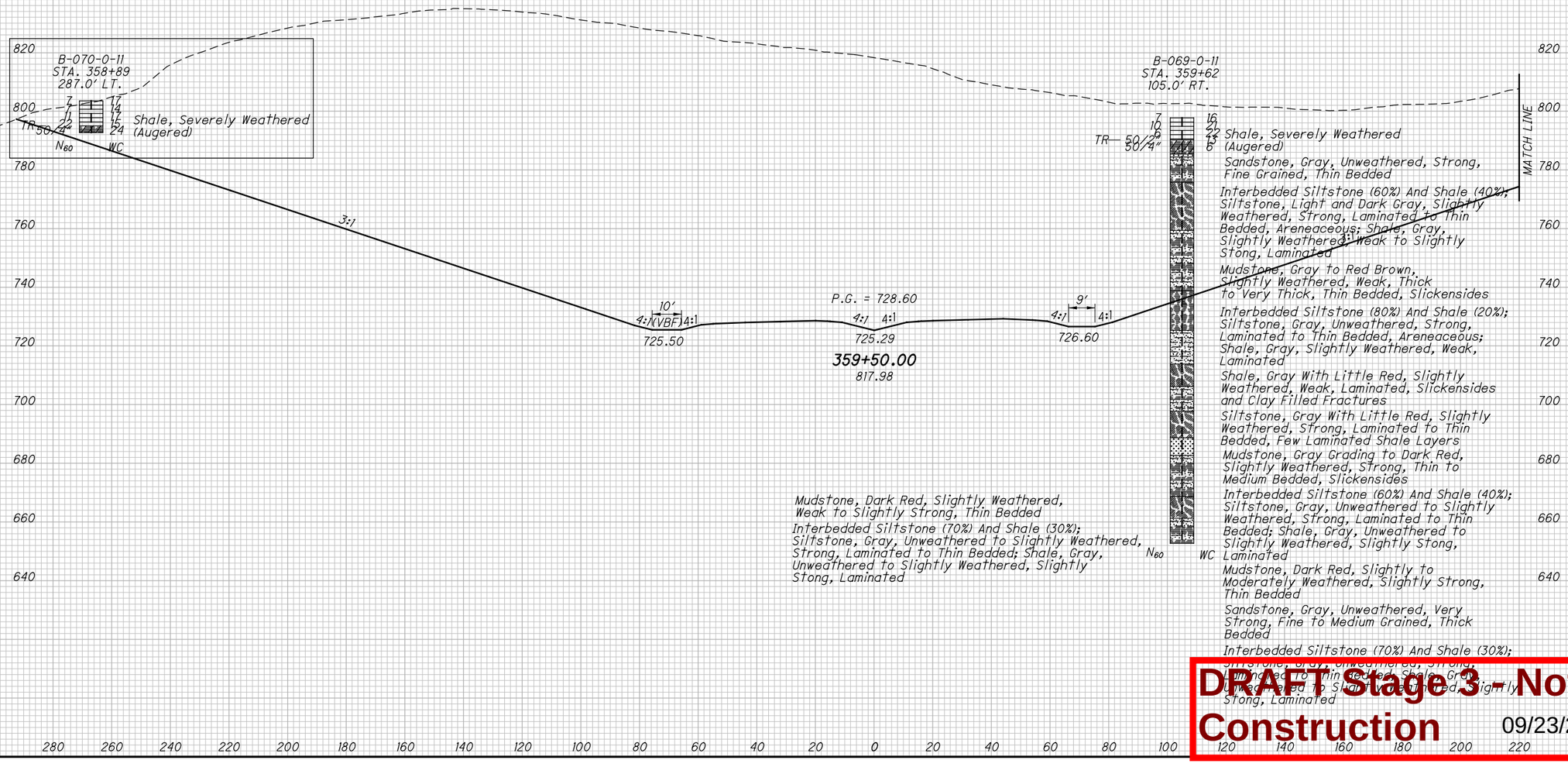

0 10 20 40
HORIZONTAL SCALE IN FEET

DRAWN MSJ
CHECKED EMK

CROSS SECTION - S.R. 7
STATION 359+50.00

LAW-7-2.17

104/206

1145
1247

DRAFT Stage 3 - Not for Construction 09/23/2024

680
660
640
620
600
580
560

P.G. = 659.76
4:1 4:1
656.45
371+00.00
594.94
PROP. LIGHTING CIRCUIT OR CONDUIT
3:1
10:1 4:1
10'
638.14
1:1
3:1

B-071-0-11
STA. 371+07
264.0' LT.
TR- 7 11 12 16 34 25 31 31 14 15 18 17 14 14 15 16 20
N60 WC

B-072-0-11
STA. 371+03
131.0' LT.
TR- 8 6 7 11 15 16 81 21 13 21 25 19 19 17 19 18
N60 WC

340 320 300 280 260 240 220 200 180 160 140 120 100 80 60 40 20 0 20 40 60 80 100 120 140 160

HORIZONTAL SCALE IN FEET
0 10 20 40

DRAWN MSJ
CHECKED EMK

CROSS SECTION - S.R. 7
STATION 371+00.00

LAW-7-2.17

105/206

1146
1247

DRAFT Stage 3 - Not for Construction 09/23/2024

U:\173608714\LAW\75923\geotechnical\sheets\x-sect\75923XS37100.dgn 5/16/2024 9:19:19 AM MJennings

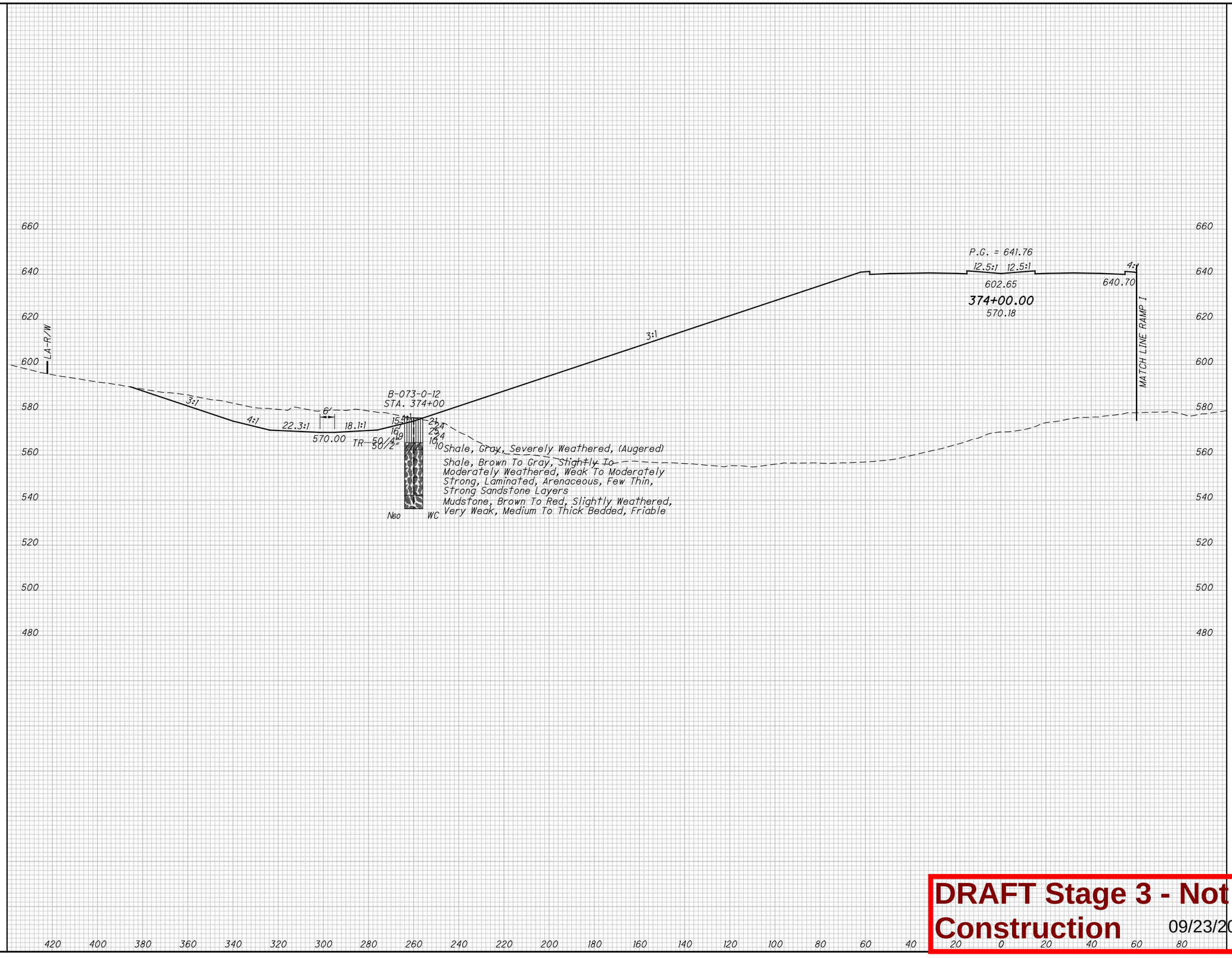

U:\17360714\LAW\75923\geotechnical\sheets\x-sect\75923XS37400.dgn 5/16/2024 9:21:18 AM MJennings

0 10 20 40
HORIZONTAL SCALE IN FEET

DRAWN MSJ
CHECKED EMK

CROSS SECTION - S.R. 7
STATION 374+00.00

LAW-7-2.17

106/206

1147/1247

DRAFT Stage 3 - Not for Construction 09/23/2024

U:\173608714\LAW\75923\geotechnical\sheets\x-sect\75923XS39450.dgn 5/16/2024 9:24:00 AM MJennings

760 740 720 700 680 660 640 620 600 580 560 540 520 500 480

760 740 720 700 680 660 640 620 600 580 560 540 520 500 480

340 320 300 280 260 240 220 200 180 160 140 120 100 80 60 40 20 0 20 40 60 80 100 120 140 160 180

MATCH LINE RAMP K

SLI-981-0-05
STA. 394+53.1

10'

4:1

4:1

586.55

P.G. = 592.32

P.G. = 592.41

4:1

4:1

589.25

NOISE WALL

1:1

3:1

1:1

PROP. LIGHTING
CIRCUIT OR CONDUIT

12 20 17 18 19 14 15 18 17 30 15 13

394+50.00
590.47

Q_u(psi*)
80.7
346.0

50/4"

TR

Shale, Interbedded with Fine Grained Sandstone and Siltstone, Gray,Very Soft to Soft, Nearly Horizontally Bedded, Many Diagonal Fractures

Sandstone, Gray, Hard, Fine Grained, Well Cemented, Few Diagonal Fractures

N WC Shale, Gray, Very Soft to Medium Hard, Nearly Horizontally Bedded ,Many Diagonal Fractures

DRAFT Stage 3 - Not for Construction 09/23/2024

HORIZONTAL SCALE IN FEET
0 10 20 40

DRAWN MSJ
CHECKED EMK

CROSS SECTION - S.R. 7
STATION 394+50.00

LAW-7-2.17

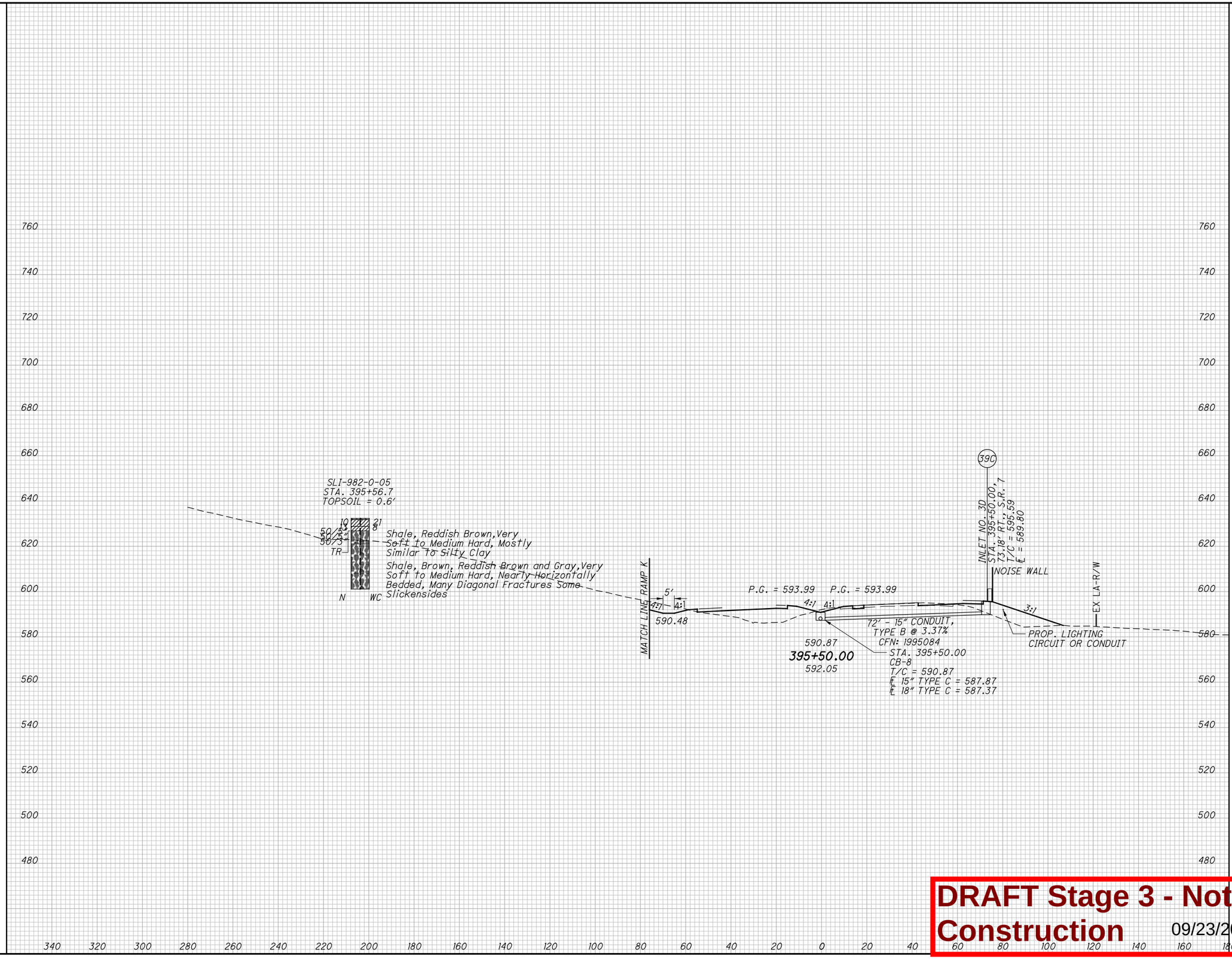

DRAFT Stage 3 - Not for Construction 09/23/2024

0 10 20 40 HORIZONTAL SCALE IN FEET

DRAWN MSJ
CHECKED EMK

CROSS SECTION - S.R. 7
STATION 395+50.00

LAW-7-2.17

108/206

1149
1247

U:\173608714\LAW\75923\geotechnical\sheets\x-sect\75923XS39550.dgn 5/16/2024 9:25:43 AM MJennings

U:\173608714\LAW\75923\geotechnical\sheets\x-sect\75923XS39600.dgn 5/16/2024 9:26:48 AM MJennings

760 740 720 700 680 660 640 620 600 580 560 540 520 500 480

760 740 720 700 680 660 640 620 600 580 560 540 520 500 480

S-102-0-99
STA. 396+22

49
25 12
TR
N WC

Shale, Brown, Red and Green, Soft to Medium Hard, Interbedded with Siltstone, Few Vertical Fractures, Few Sand filled Cracks

Shale, Gray, Soft, Horizontally Bedded, Highly Fractured, Similar to Hard Silty Clay

MATCH LINE RAMP K

5'
4:1 4:1
591.60

℄ 15" TYPE C =
588.39

P.G. = 594.82
P.G. = 594.81
4:1 4:1
591.69
396+00.00
592.94

NOISE WALL
3:1
EX LA-R/W

PROP. LIGHTING CIRCUIT OR CONDUIT

340 320 300 280 260 240 220 200 180 160 140 120 100 80 60 40 20 0 20 40 60 80 100 120 140 160 180

DRAFT Stage 3 - Not for Construction 09/23/2024

0 10 20 40
HORIZONTAL SCALE IN FEET

DRAWN MSJ
CHECKED EMK

CROSS SECTION - S.R. 7
STATION 396+00.00

LAW-7-2.17

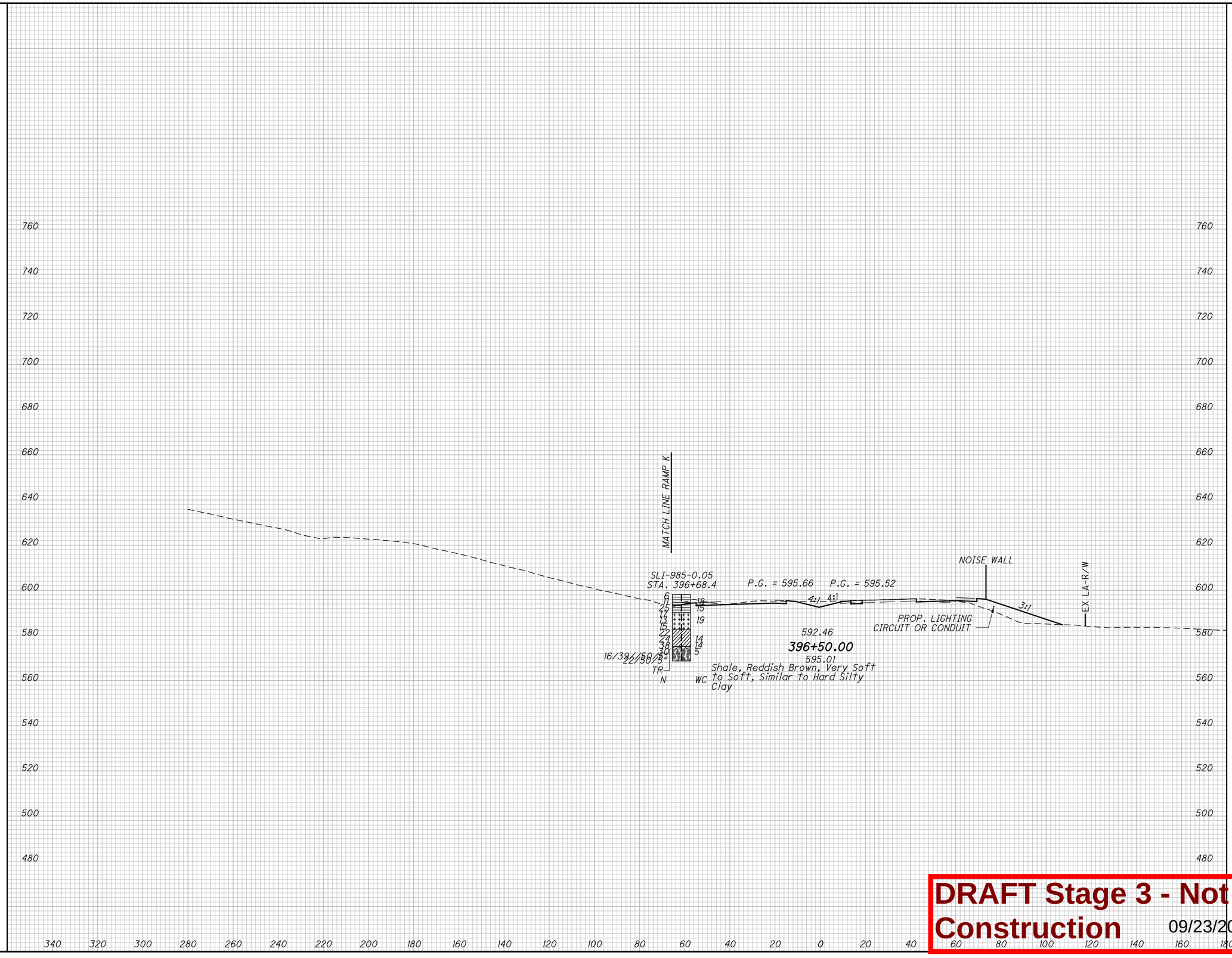

DRAWN MSJ
CHECKED EMK

HORIZONTAL SCALE IN FEET
0 10 20 40

CROSS SECTION - S.R. 7
STATION 396+50.00

LAW-7-2.17

110/206

1151/1247

DRAFT Stage 3 - Not for Construction 09/23/2024

U:\173608714\LAW\75923\geotechnical\sheets\x-sect\75923XS39650.dgn 5/16/2024 9:29:07 AM MJennings

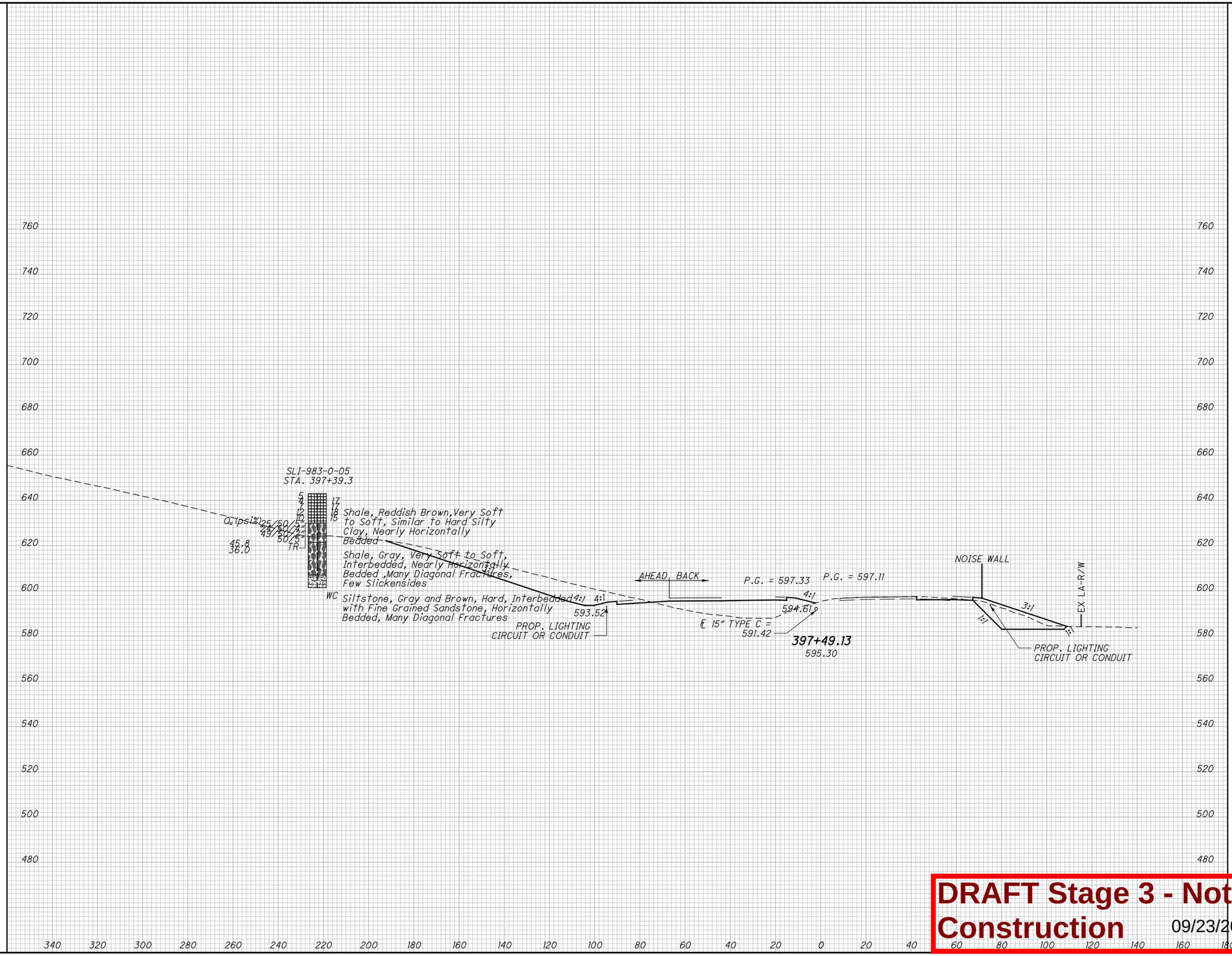

DRAFT Stage 3 - Not for Construction 09/23/2024

0 10 20 40
HORIZONTAL SCALE IN FEET

DRAWN MSJ
CHECKED EMK

CROSS SECTION - S.R. 7
STATION 397+49.13

LAW-7-2.17

111/206

1152
1247

U:\173608714\LAW\75923\geotechnical\sheets\x-sect\75923XS39750.dgn 5/16/2024 9:30:48 AM MJennings

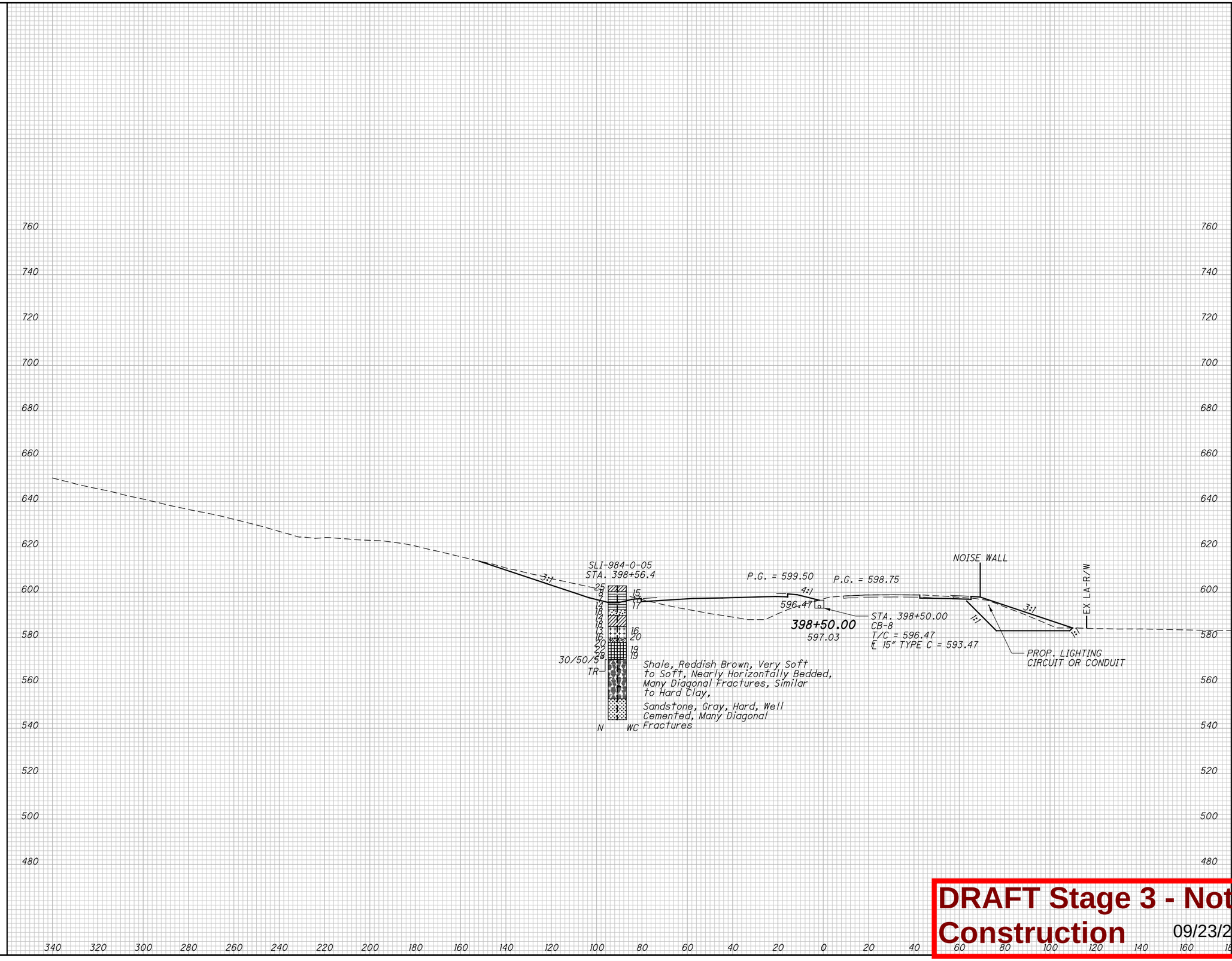

DRAFT Stage 3 - Not for Construction 09/23/2024

0 10 20 40 HORIZONTAL SCALE IN FEET

DRAWN MSJ
CHECKED EMK

CROSS SECTION - S.R. 7
STATION 398+50.00

LAW-7-2.17

U:\173608714\LAW\75923\geotechnical\sheets\x-sect\75923XS39850.dgn 5/16/2024 9:32:13 AM MJennings

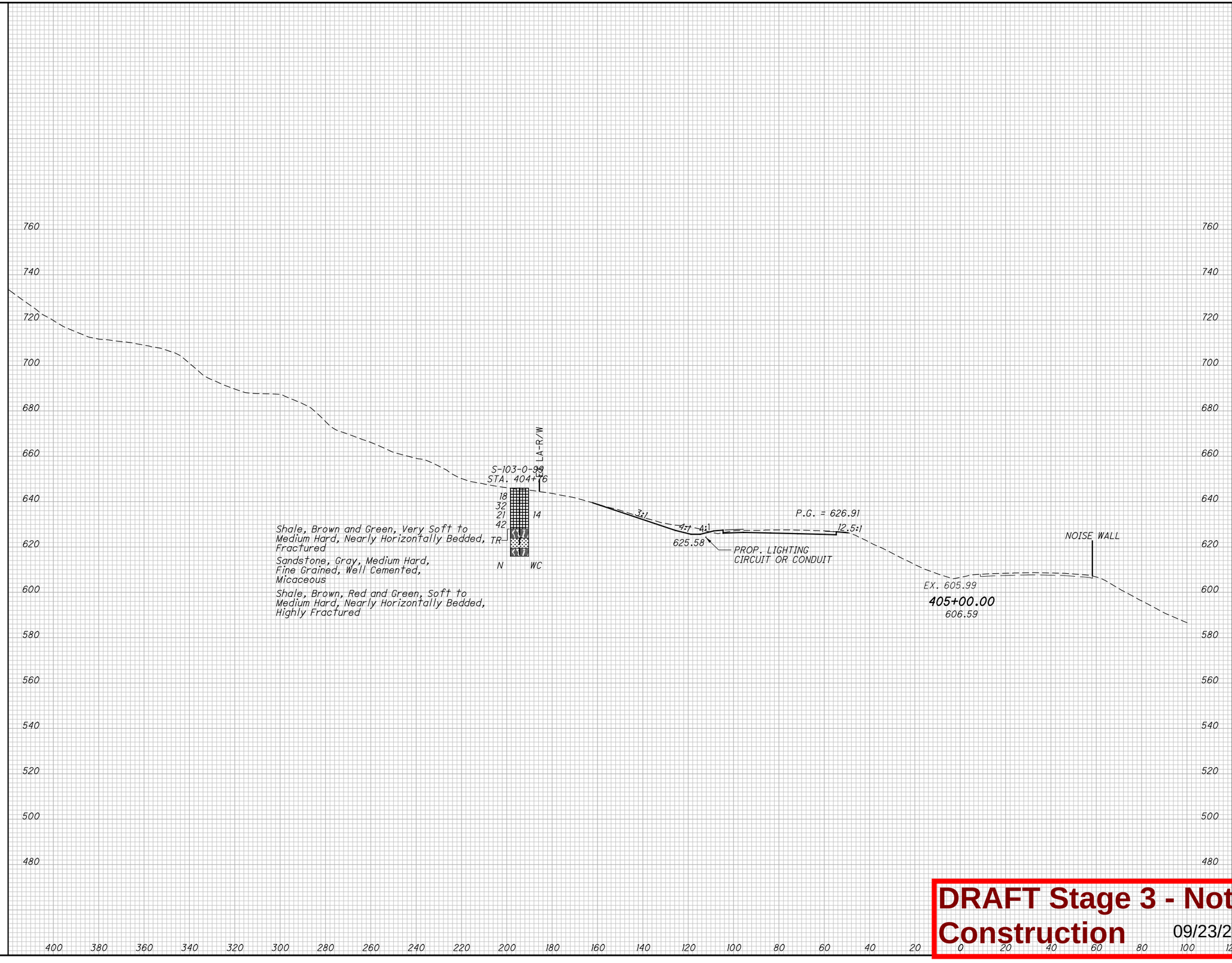

DRAWN MSJ
CHECKED EMK

0 10 20 40
HORIZONTAL SCALE IN FEET

CROSS SECTION - S.R. 7
STATION 405+00.00

LAW-7-2.17

113 / 206

1154 / 1247

DRAFT Stage 3 - Not for Construction 09/23/2024

U:\173608714\LAW\75923\geotechnical\sheets\x-sect\75923XS40500.dgn 5/16/2024 9:34:16 AM MJennings

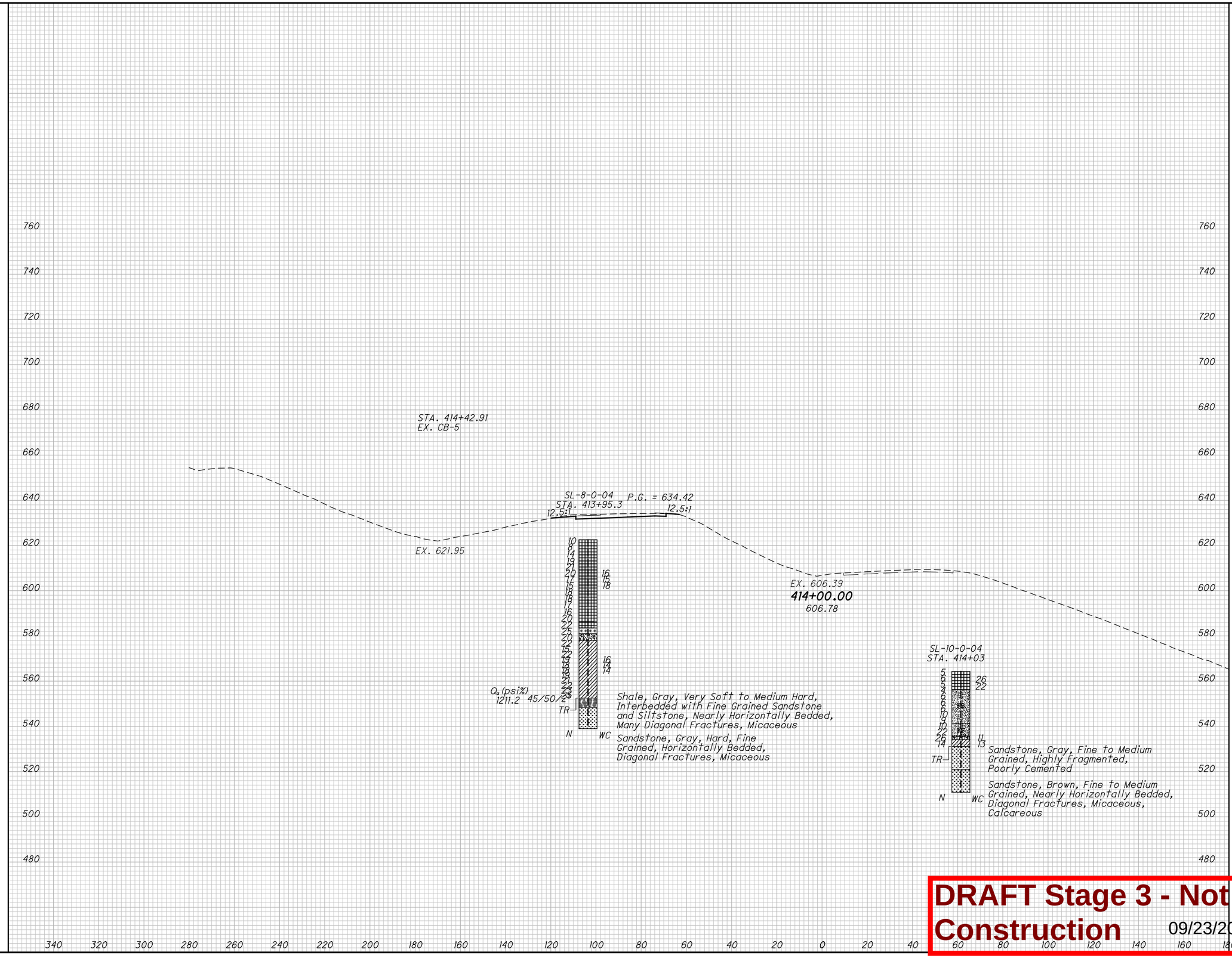

DRAFT Stage 3 - Not for Construction 09/23/2024

HORIZONTAL SCALE IN FEET
0 10 20 40

DRAWN MSJ
CHECKED EMK

CROSS SECTION - S.R. 7
STATION 414+00.00

LAW-7-2.17

114/206

1155/1247

U:\173608714\LAW\75923\geotechnical\sheets\x-sect\75923XS41400.dgn 5/16/2024 9:35:28 AM MJennings

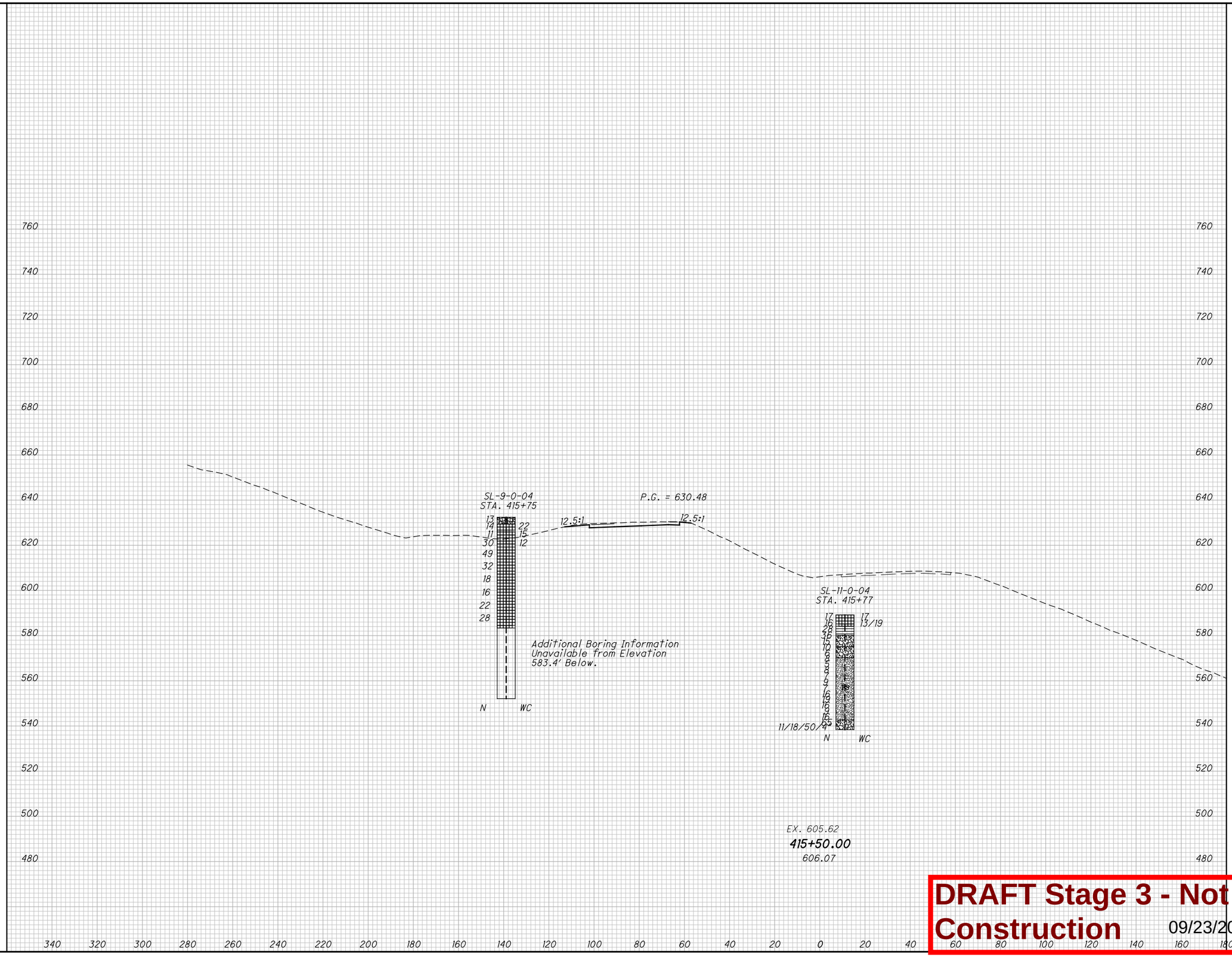

DRAFT Stage 3 - Not for Construction 09/23/2024

U:\173608714\LAW\75923\geotechnical\sheets\x-sect\75923XS41550.dgn 5/16/2024 9:36:29 AM MJennings

0 10 20 40
HORIZONTAL
SCALE IN FEET

DRAWN MSJ
CHECKED EMK

CROSS SECTION - S.R. 7
STATION 415+50.00

LAW-7-2.17

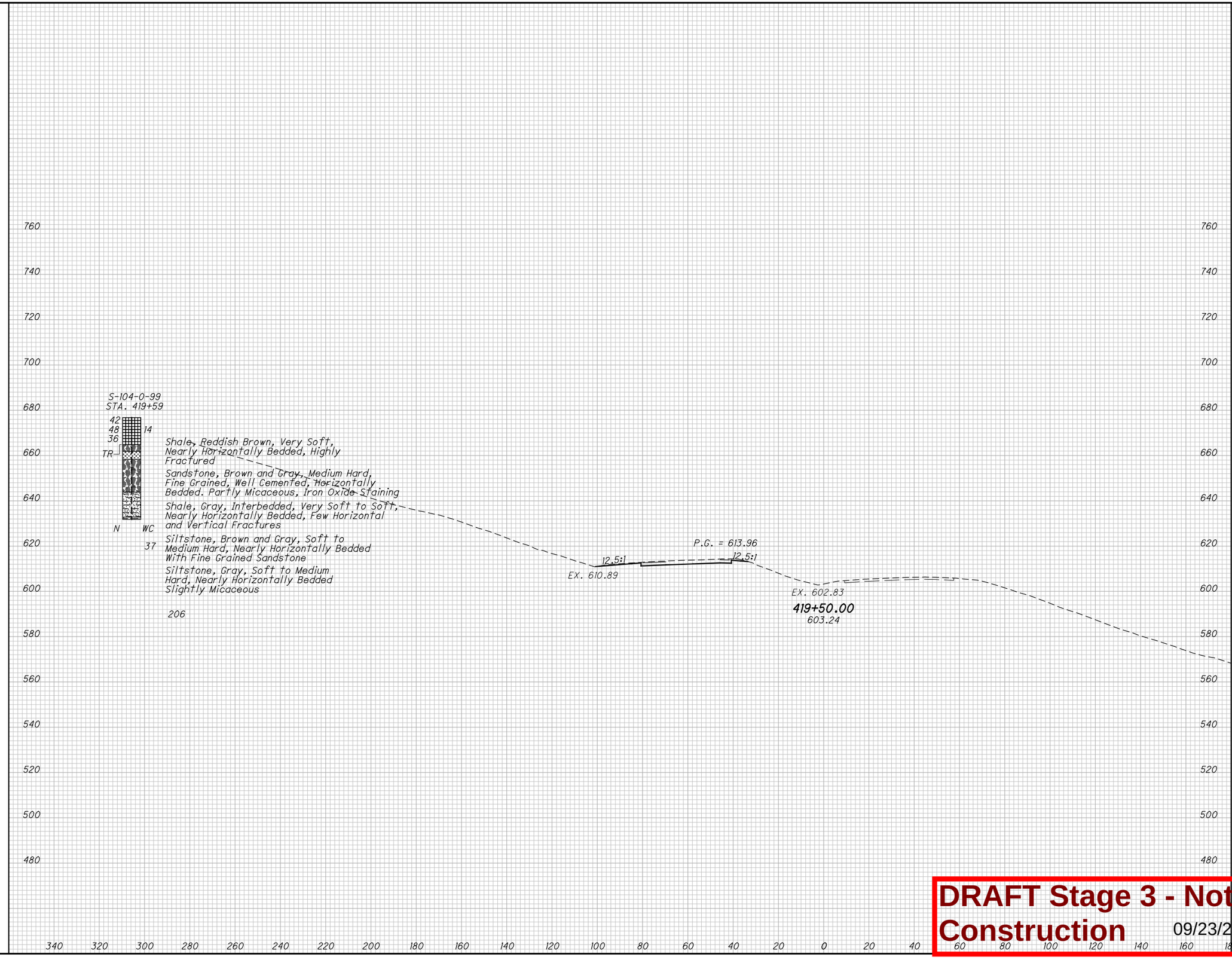

DRAFT Stage 3 - Not for Construction 09/23/2024

0 10 20 40
HORIZONTAL SCALE IN FEET

DRAWN MSJ
CHECKED EMK

CROSS SECTION - S.R. 7
STATION 419+50.00

LAW-7-2.17

116/206

1157/1247

U:\173608714\LAW\75923\geotechnical\sheets\x-sect\75923XS41950.dgn 5/16/2024 9:37:52 AM MJennings

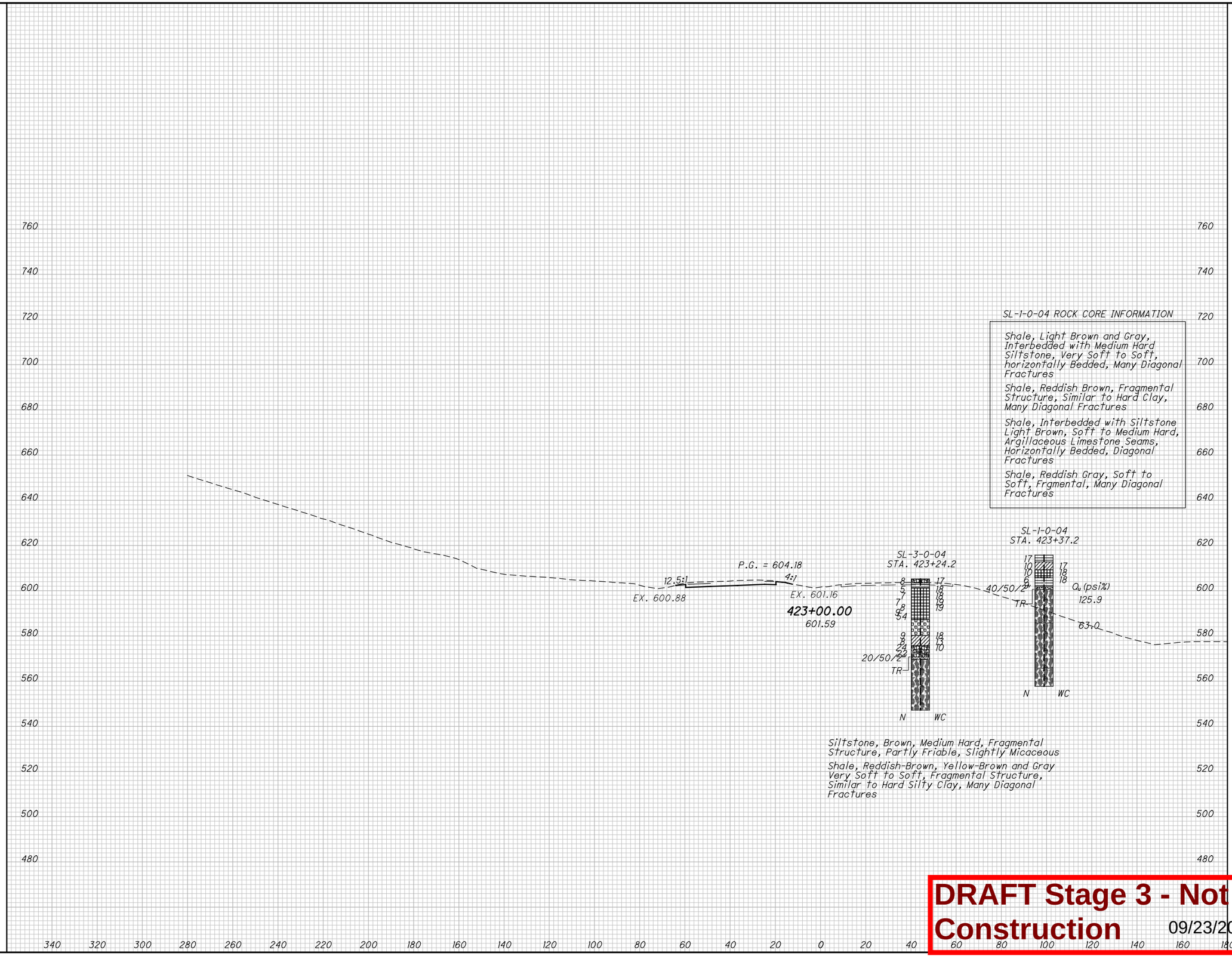

DRAWN MSJ
CHECKED EMK

0 10 20 40
HORIZONTAL SCALE IN FEET

CROSS SECTION - S.R. 7
STATION 423+00.00

LAW-7-2.17

117 / 206

1158 / 1247

DRAFT Stage 3 - Not for Construction 09/23/2024

U:\173608714\LAW\75923\geotechnical\sheets\x-sect\75923XS42300.dgn 5/16/2024 10:22:38 AM MJennings

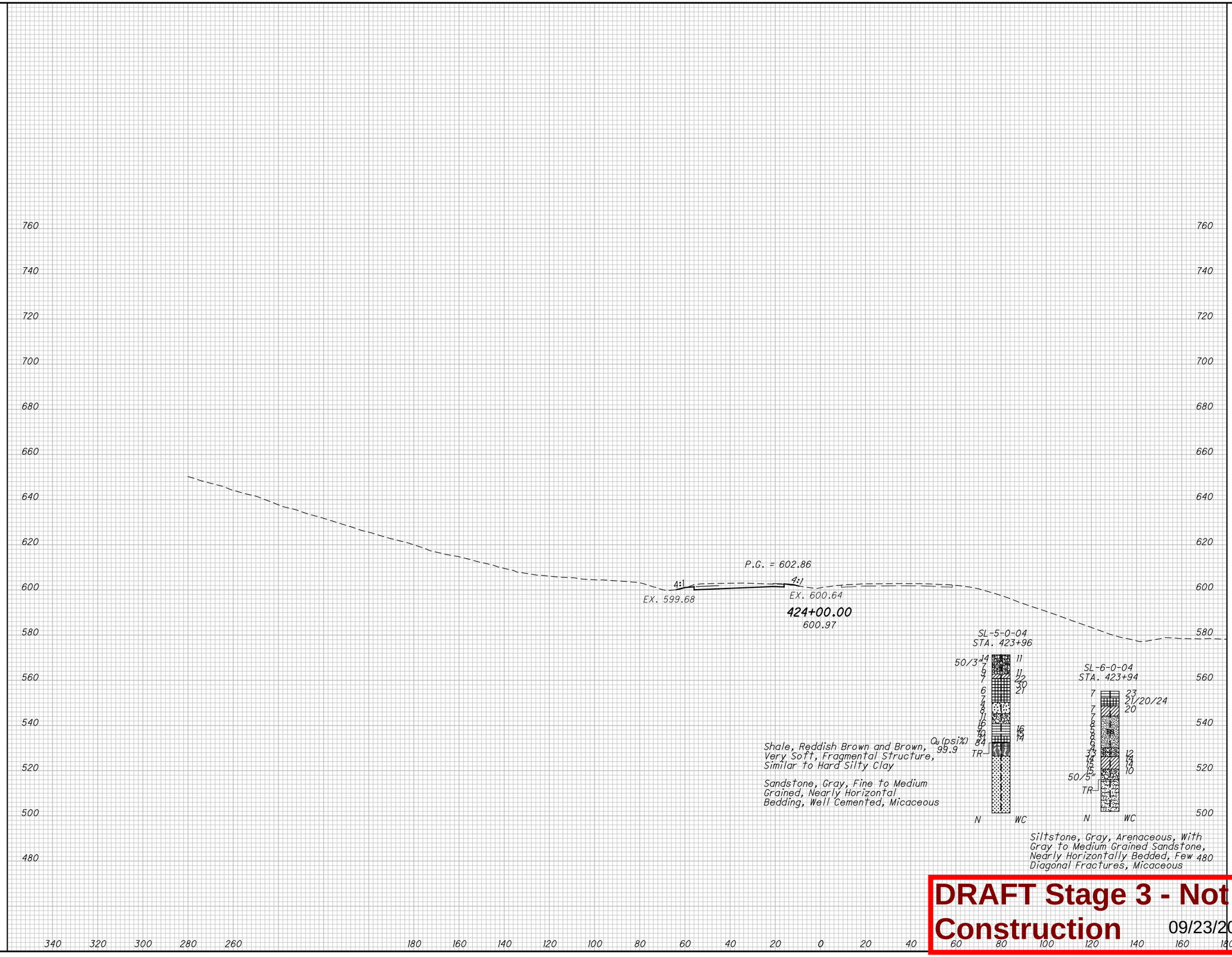

DRAFT Stage 3 - Not for Construction 09/23/2024

0 10 20 40
HORIZONTAL SCALE IN FEET

DRAWN MSJ
CHECKED EMK

CROSS SECTION - S.R. 7
STATION 424+00.00

LAW-7-2.17

118/206

1159/1247

MJennings
U:\173608714\LAW\75923\geotechnical\sheets\x-sect\75923XS42400.dgn 5/16/2024 10:30:21 AM

U:\173608714\LAW\75923\geotechnical\sheets\x-sect\75923XS42500.dgn 5/16/2024 10:32:08 AM MJennings

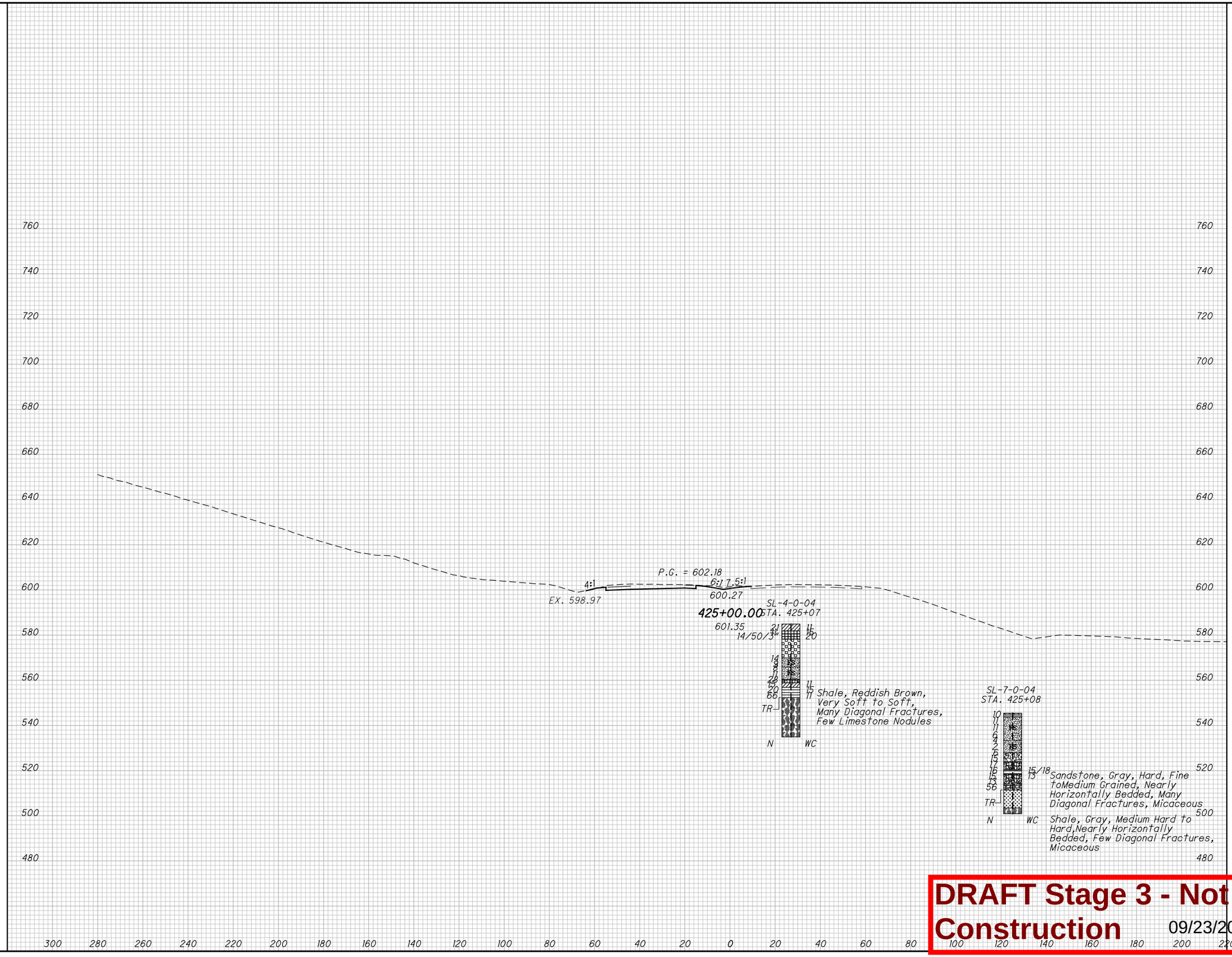

DRAFT Stage 3 - Not for Construction 09/23/2024

0 10 20 40
HORIZONTAL SCALE IN FEET

DRAWN MSJ
CHECKED EMK

CROSS SECTION - S.R. 7
STATION 425+00.00

LAW-7-2.17

U:\173608714\LAW\75923\geotechnical\sheets\x-sect\75923XS42600.dgn 5/16/2024 10:33:56 AM MJennings

760 740 720 700 680 660 640 620 600 580 560 540 520 500 480

EX LA-R/W

SL-2-O-04
STA. 426+16.1
P.G. = 601.49
3.4:1
12.5:1
EX. 599.89

4
17
10
8
50/2
TR
13/14
21
19

426+00.00
600.05

Shale, Interbedded with Siltstone, Yellow Brown and Gray,Very Soft to Medium Hard, Horizontally Bedded, Many Diagonal Fractures, Micaceous

Shale, Interbedded with Siltstone Reddish Brown and Gray, Very Soft to Medium Hard, Fragmental Structure, Many Diagonal Fractures, Limestone Nodules

N WC

EX LA-R/W

300 280 260 240 220 200 180 160 140 120 100 80 60 40 20 0 20 40 60 80 100 120 140 160 180 200 220

DRAFT Stage 3 - Not for Construction 09/23/2024

0 10 20 40
HORIZONTAL SCALE IN FEET

DRAWN MSJ
CHECKED EMK

CROSS SECTION - S.R. 7
STATION 426+00.00

LAW-7-2.17

U:\173608714\LAW\75923\geotechnical\sheets\x-sect\75923XS43650.dgn 5/16/2024 10:36:38 AM MJennings

S-105-0-99
STA. 436+52
OFFSET 421.6' LT.
TOPSOIL = 0.6'

50/2"
50/5"
50/4"
43/50/4"
TR

Shale, Brown, Very Soft, Nearly Horizontally Bedded, Highly Fissle, Many Horizontal and Vertical Fractures, Micaceous

Shale, Brown and Gray, Very Soft, Nearly Horizontally Bedded, Highly Fissle, Many Horizontal and Vertical Fractures, Micaceous, Few Slickensides

Soft to Medium Hard Black Coal, Highly Fractured

Shale, Gray, Very Soft to Soft, Nearly Horizontally Bedded, Highly Fissle, Few Slickensides, Slightly Micaceous

Shale, Gray and Red, Very Soft to Soft, Nearly Horizontally Bedded, Similar to Hard Silty Clay, Many Horizontal Fractures

Shale, Brown to Gray, Very Soft to Soft, Interbedded with Hard Siltstone, Nearly Horizontally Bedded, Fragmented, Few Diagonal Fractures, Slightly Micaceous

N WC Siltstone, Gray, Medium Hard, Interbedded with Fine Grained Sandstone, Nearly Horizontally Bedded. Well Cemented

Sandstone, Gray, Medium Hard, Fine Grained, Nearly Horizontally Bedded. Well Cemented, Micaceous

Shale, Brown and Gray, Soft to Medium Hard, Nearly Horizontally Bedded, Highly Fractured, Micaceous, Thinly Bedded

Shale, Gray, Soft to Medium Hard, Interbedded With Siltstone, Nearly Horizontally Bedded, Micaceous, Few Horizontal Fractures

Limetone, Brown and Gray, Medium Hard, Partly Crystalline Structure, Few Horizontal and Vertical Fractures

Shale, Brown and Gray, Soft to Medium Hard, Few Horizontal Fractures Few Vertical and Diagonal Fractures, Slightly Micaceous

Siltstone, Gray, Medium Hard, Nearly Horizontally Bedded, Few Horizontal Fractures, Partly Micaceous

Shale, Red, Interbedded, Soft, Nearly Horizontally Bedded, Few Horizontal Fractures, Few Slickensides

4:1

S-105A-0-99
STA. 436+05

39
16 13
50/5"
TR

Shale, Brown and Reddish Brown, Very Soft to Soft, Nearly Horizontally Bedded, Fissle

Sandstone, Brown and Gray, Medium Hard, Fine Grained, Interbedded with Siltstone, Nearly Horizontally Bedded, Well Cemented Fractured, Micaceous, Iron Oxide Staining

Shale, Red, Very Soft to Soft, Interbedded with Medium hard Siltstone, Nearly Horizontally Bedded, Few Horizontal Fractures, Slickensides

Siltstone, Brown and Gray, Medium Hard, Nearly Horizontally Bedded, Micaceous

Shale, Blue Gray, Soft, Nearly Horizontally Bedded, Few Horizontal Fractures, Slickensides, Iron Oxide Staining

P.C. 604.62

Siltstone, Brown and Gray, Medium Hard, Few Horizontally Fractures, Iron Oxide Staining

4:1

602.09

N 436+50.00

WC Sandstone, Brown and Gray, Medium Hard, Fine Grained, Interbedded with Siltstone, Few Horizontally Fractures, Well Cemented Fractured, Partly Micaceous, Iron Oxide Staining

602.53

Shale, Gray and Brown, Soft to Medium Hard, Nearly Horizontally Bedded, Few Horizontal and Vertical Fractures

Sandstone, Gray, Medium Hard, Fine to Medium Grained, Nearly Horizontally Bedded, Well Cemented, Partly Micaceous

Shale, Gray and Red, Soft to Medium Hard, Interbedded with Siltstone, Nearly Horizontally Bedded, Few Horizontal and Vertical Fractures

Shale, Red, Very Soft to Soft, Interbedded, Nearly Horizontally Bedded, Few Horizontal and Vertical Fractures, Slickensides, Thin Layers of Siltstone and Argillaceous Limestone

800 780 760 740 720 700 680 660 640 620 600 580 560 540 520 500 480

300 280 260 240 220 200 180 160 140 120 100 80 60 40 20 0 20 40 60 80 100 120 140 160 180 200 220

HORIZONTAL SCALE IN FEET
0 10 20 40

DRAWN MSJ
CHECKED EMK

CROSS SECTION - S.R. 7
STATION 436+50.00

LAW-7-2.17

121/206

1162/1247

DRAFT Stage 3 - Not for Construction 09/23/2024

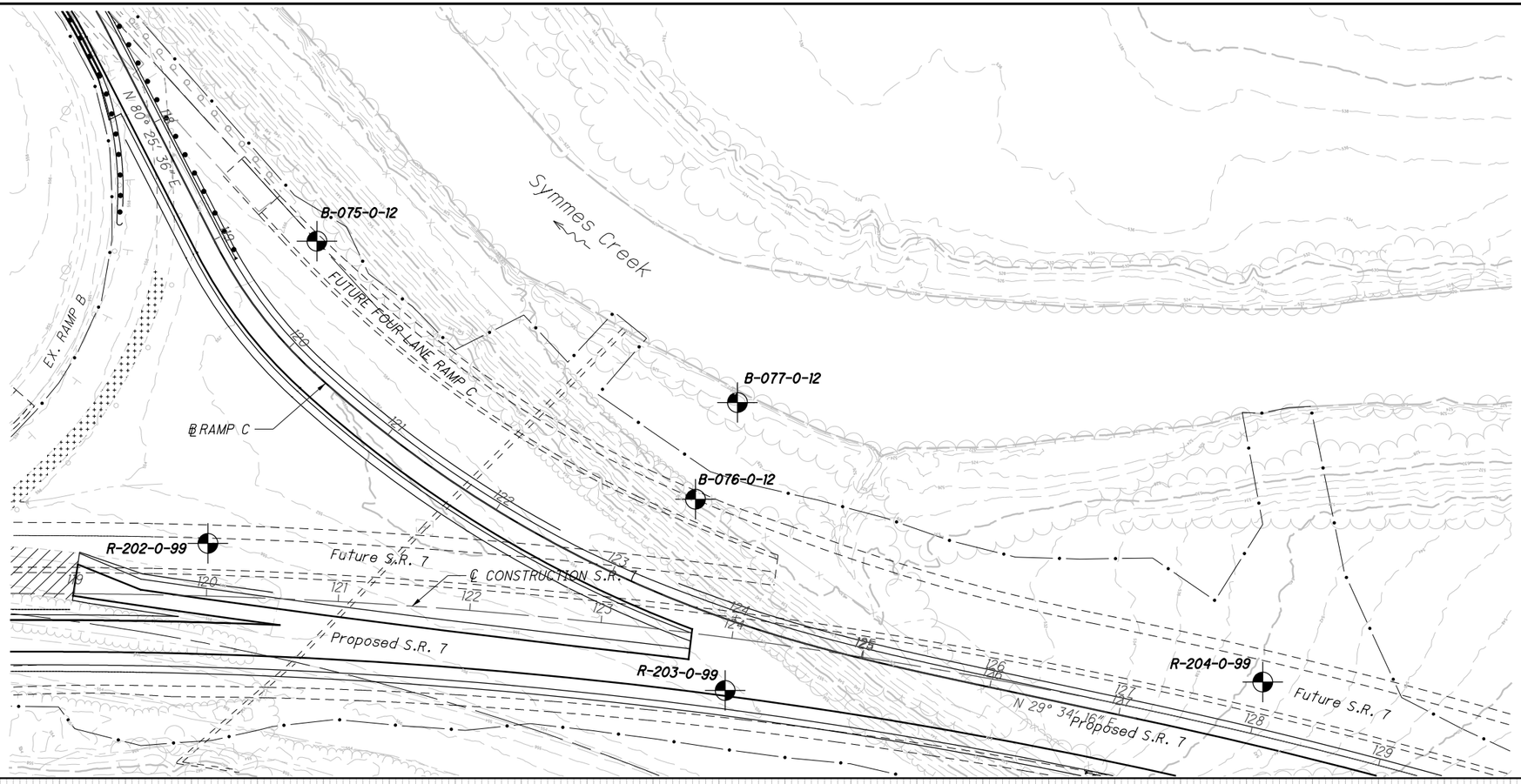

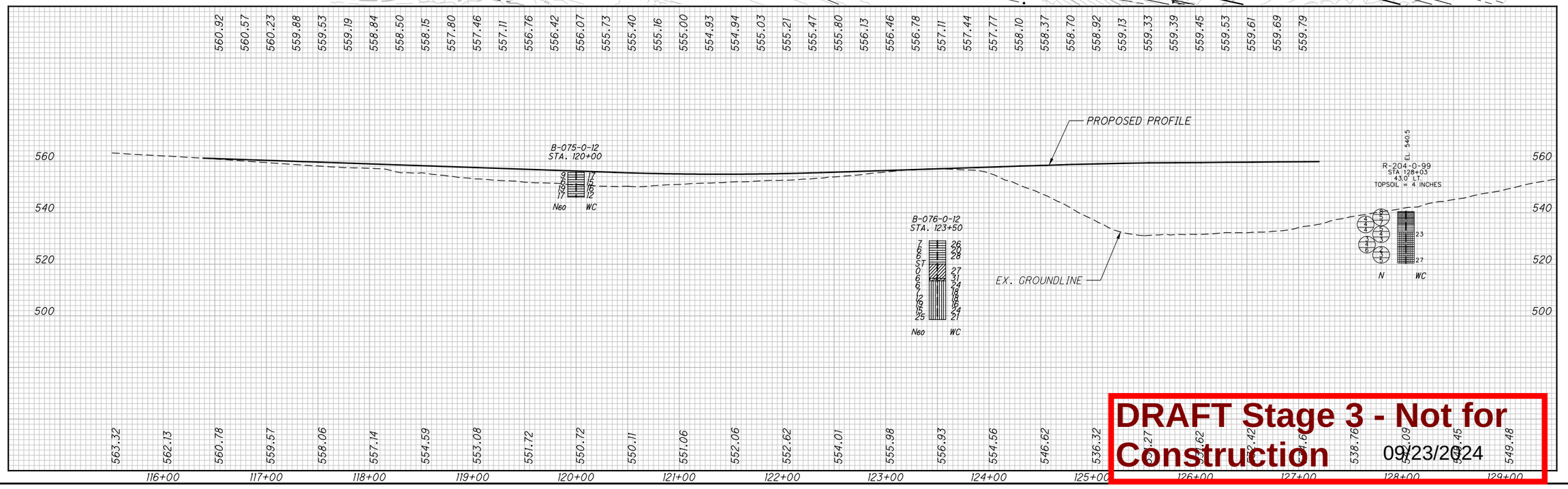

DRAFT Stage 3 - Not for Construction 09/23/2024

SOIL PROFILE - ROADWAY
RAMP C

DRAWN MSJ
CHECKED EMK

HORIZONTAL SCALE IN FEET
0 25 50 100

LAW-7-2.17

122/206

1163
1247

U:\173608714\LAW\75923\geotechnical\sheets\RAMP C\75923IP001.dgn 5/16/2024 6:09:09 PM MJennings

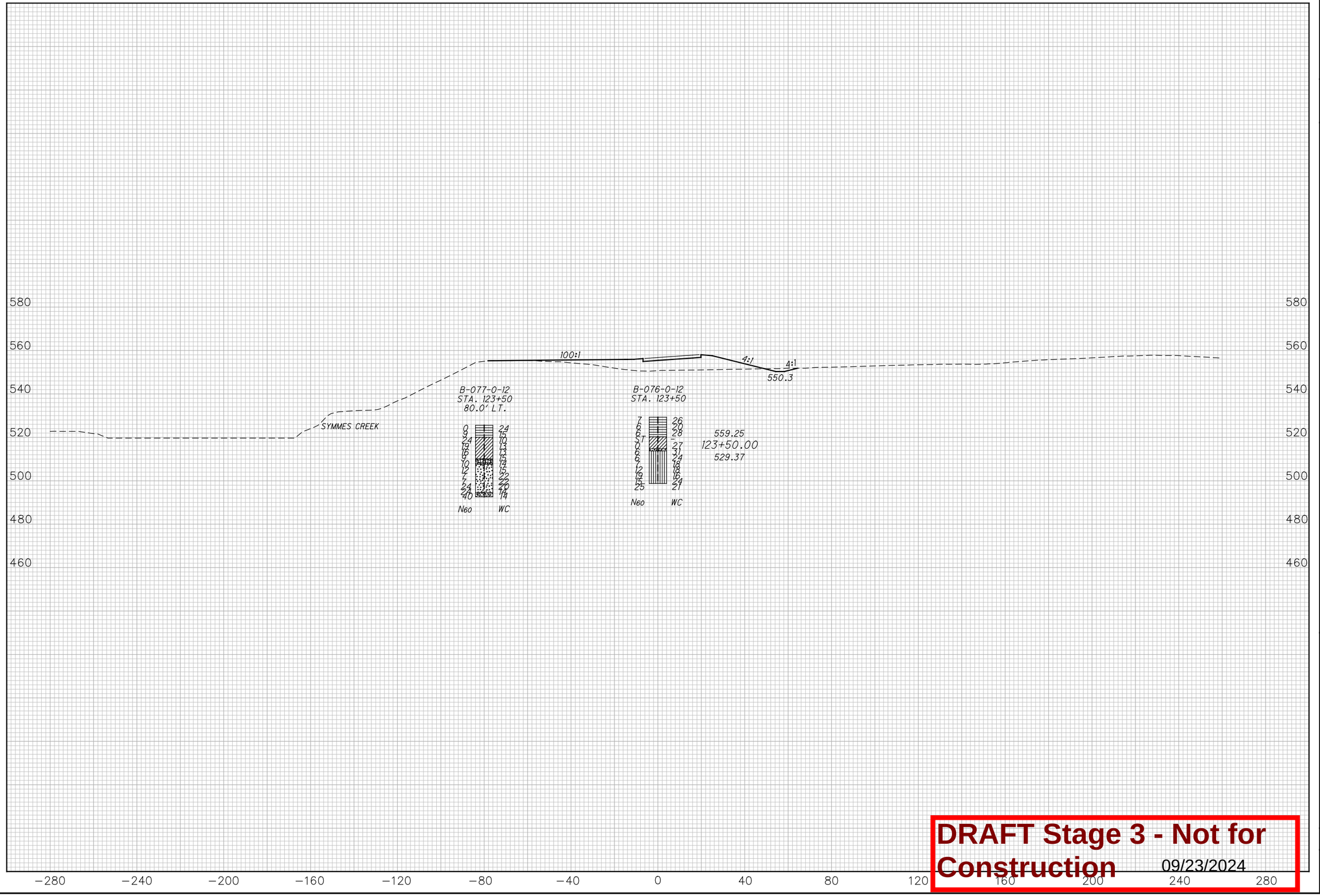

DRAFT Stage 3 - Not for Construction 09/23/2024

HORIZONTAL SCALE IN FEET
0 10 20 40

DRAWN MSJ
CHECKED EMK

CROSS SECTION
RAMP C STATION 123+50

LAW-7-2.17

123/206

1164/1247

U:\173608714\LAW\75923\geotechnical\sheets\RAMP C\75923XS12350.dgn 5/16/2024 6:10:45 PM MJennings

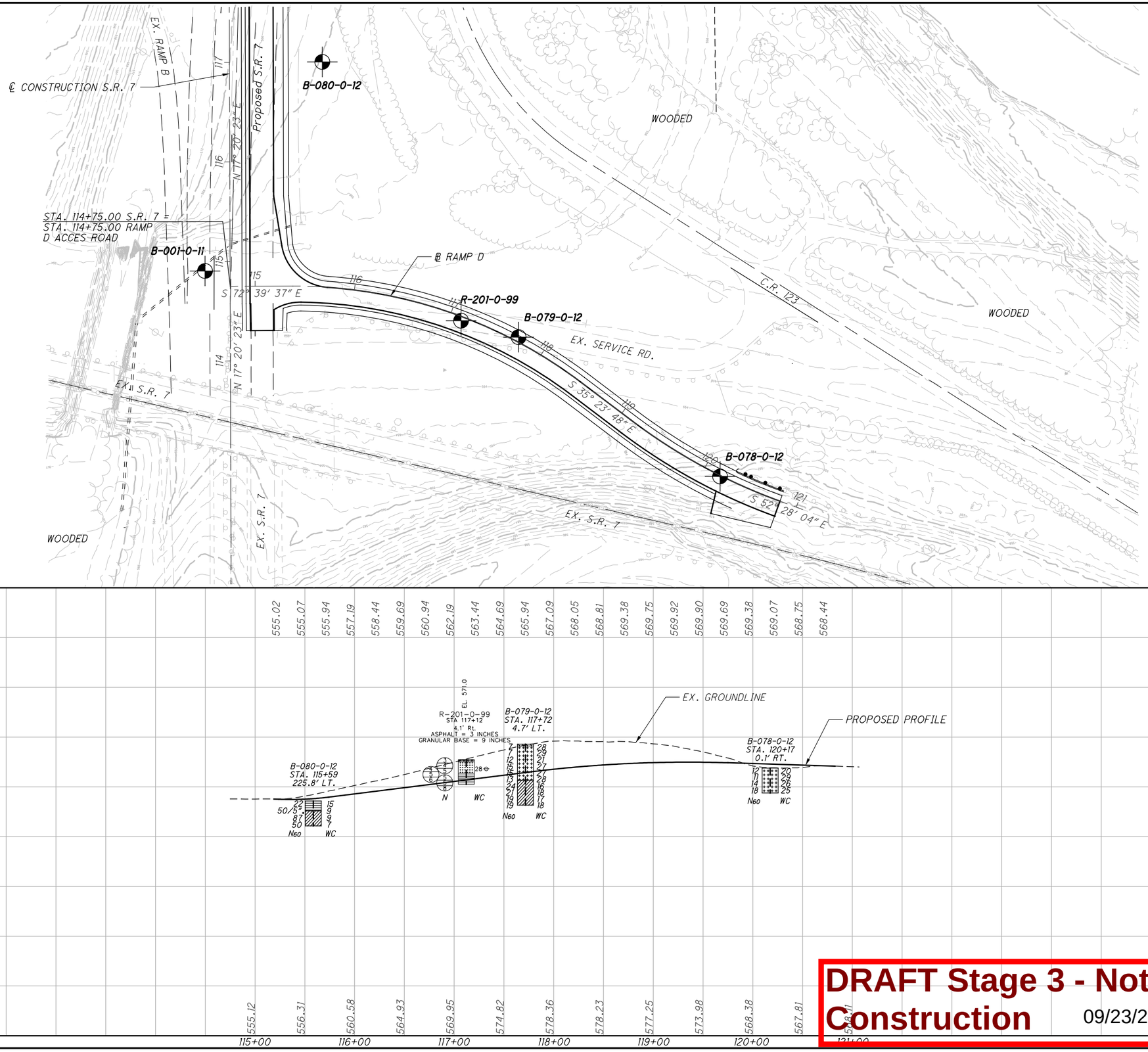

DRAFT Stage 3 - Not for Construction 09/23/2024

SOIL PROFILE - ROADWAY
RAMP D

HORIZONTAL SCALE IN FEET
0 25 50 100

DRAWN MSJ
CHECKED EMK

LAW-7-2.17

124/206

1165/1247

U:\173608714\LAW\75923\geotechnical\sheets\RAMP D\75923IP001.dgn 5/17/2024 7:36:34 AM MJennings

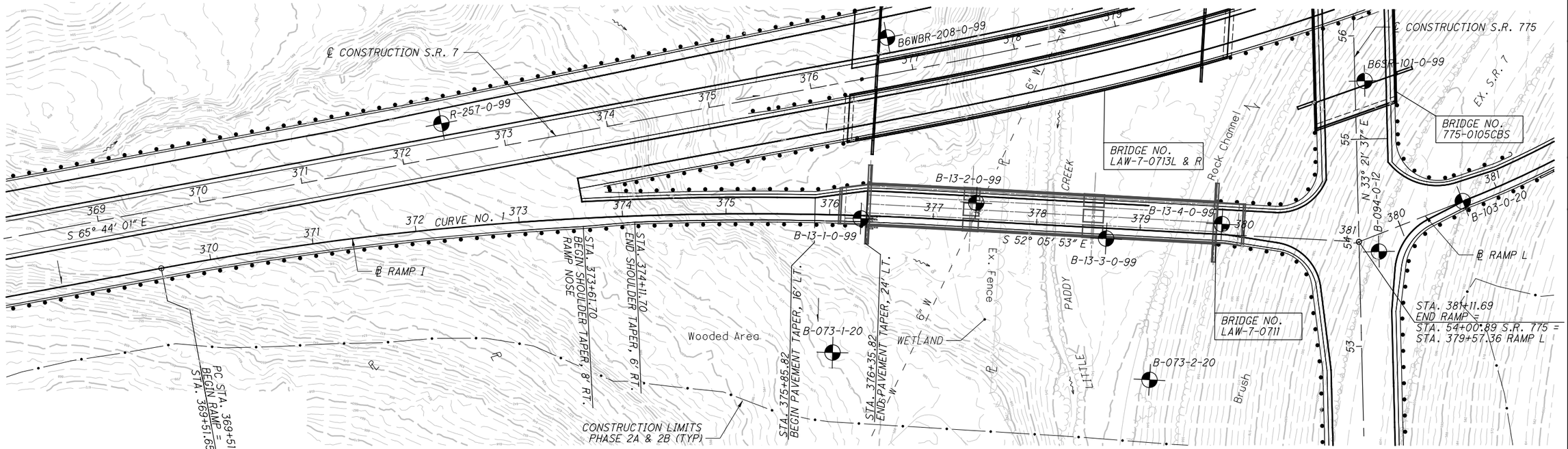

FOR S.R. 7 PLAN & PROFILE, SEE SHEETS 70-71
FOR S.R 775 PLAN &PROFILE, SEE SHEETS 147-148
FOR RAMP L PLAN & PROFILE, SEE SHEET 134
FOR BRIDGE LAW-7-0173L & R PLAN & PROFILE, SEE SHEET 72
FOR BRIDGE LAW-7-0711 PLAN & PROFILE, SEE SHEET 127
FOR BRIDGE 775-0105CBS PLAN & PROFILE, SEE SHEET 151
FOR CROSS SECTION 376+00 RAMP I, SEE SHEET 126
FOR CROSS SECTION 379+98.45 RAMP I, SEE SHEET 126

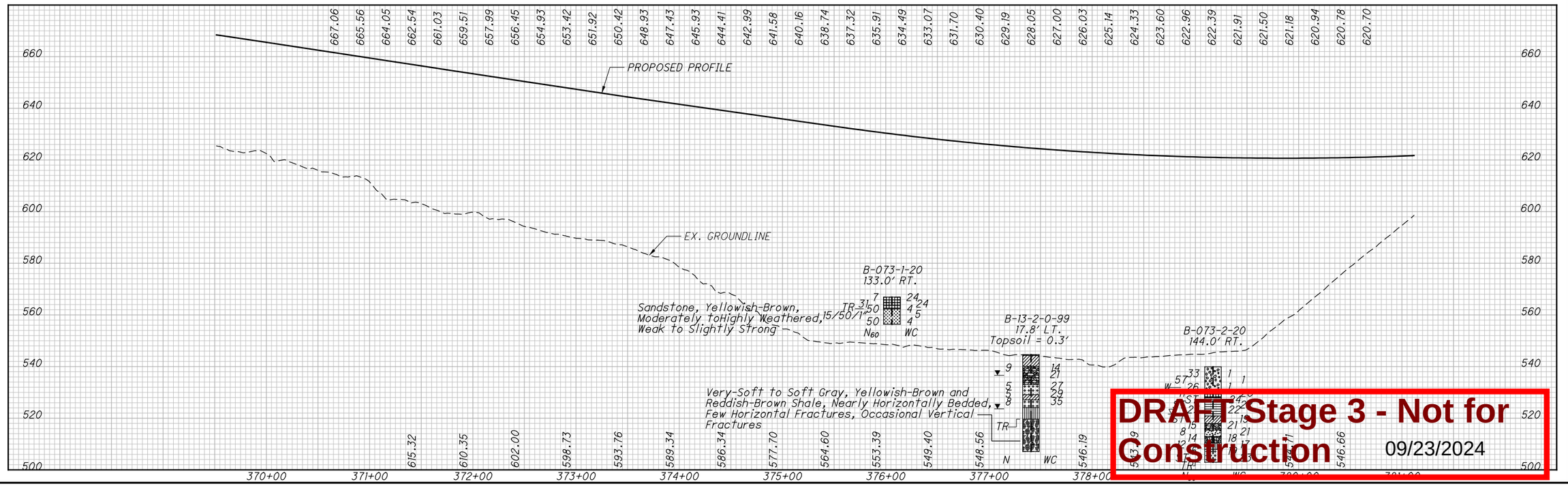

DRAFT - Stage 3 - Not for Construction
09/23/2024

SOIL PROFILE - ROADWAY
RAMP I

HORIZONTAL SCALE IN FEET
0 25 50 100

DRAWN MSJ
CHECKED EMK

LAW-7-2.17

125/206

1166/1247

U:\173608714\LAW\75923\geotechnical\sheets\RAMP I\75923IP001.dgn 5/17/2024 7:38:01 AM MJennings

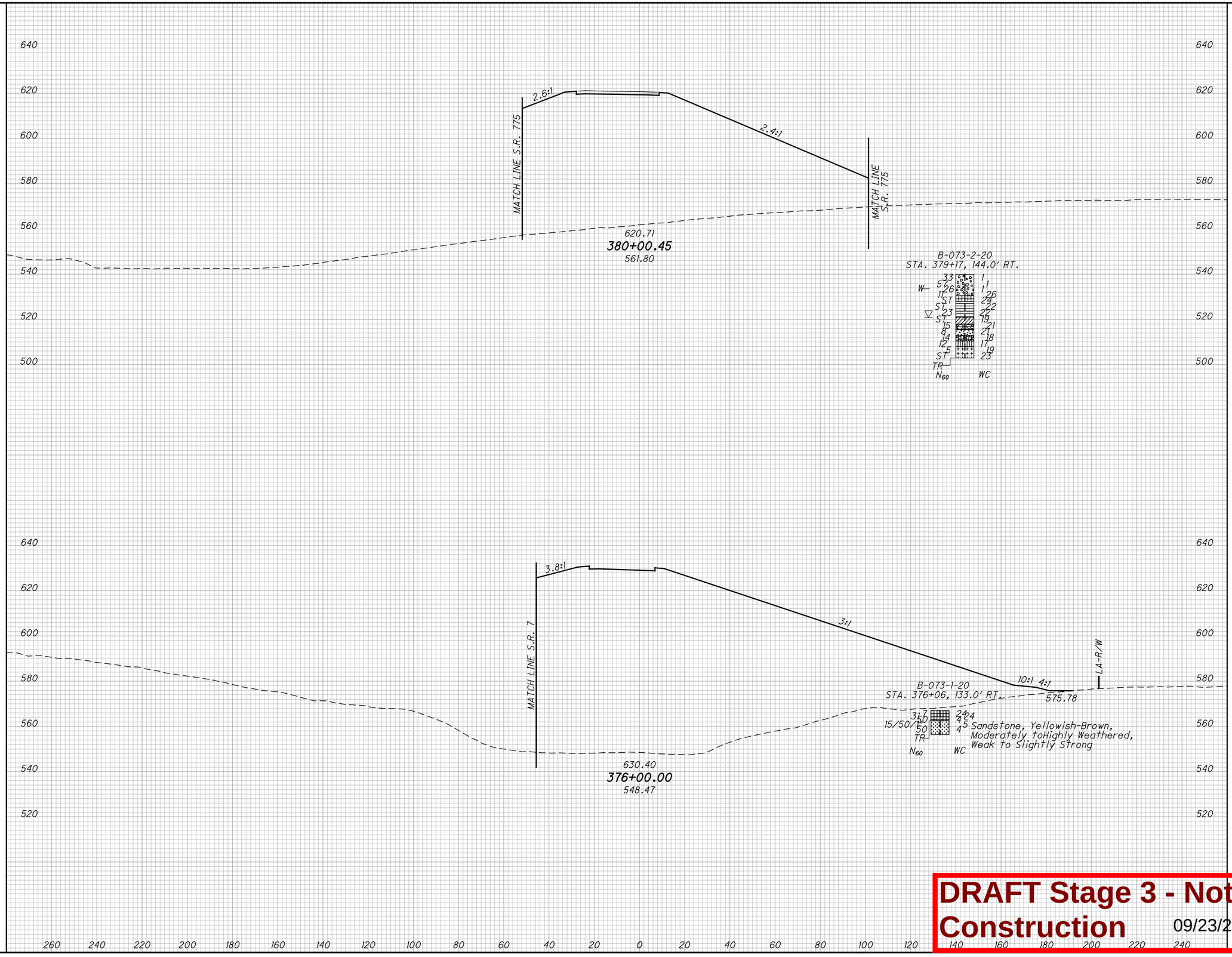

DRAFT Stage 3 - Not for Construction 09/23/2024

HORIZONTAL SCALE IN FEET
0 10 20 40

DRAWN MSJ
CHECKED EMK

CROSS SECTIONS
STATIONS 376+00.00 & 379+98.45 - PROPOSED RAMP I

LAW-7-2.17

126/206

1167/1247

U:\173608714\LAW\75923\geotechnical\sheets\RAMP I\75923XSRAMPI.dgn 5/17/2024 7:38:53 AM MJennings

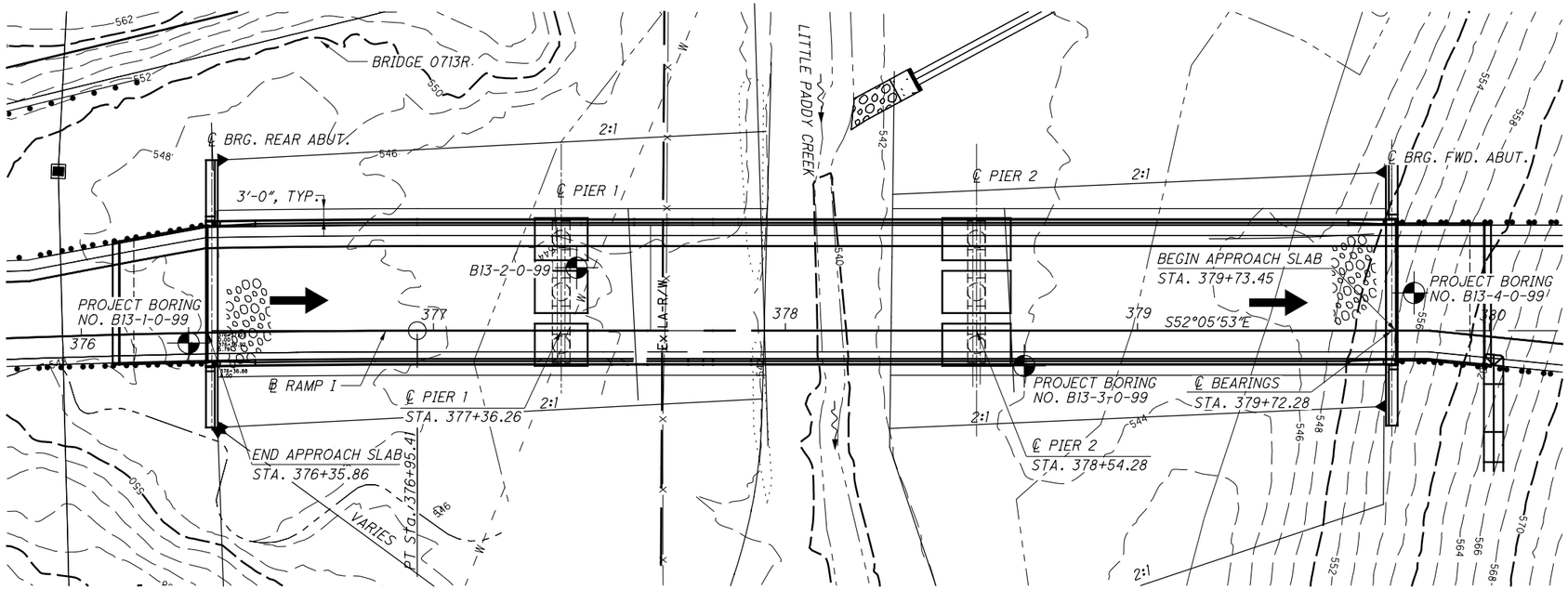

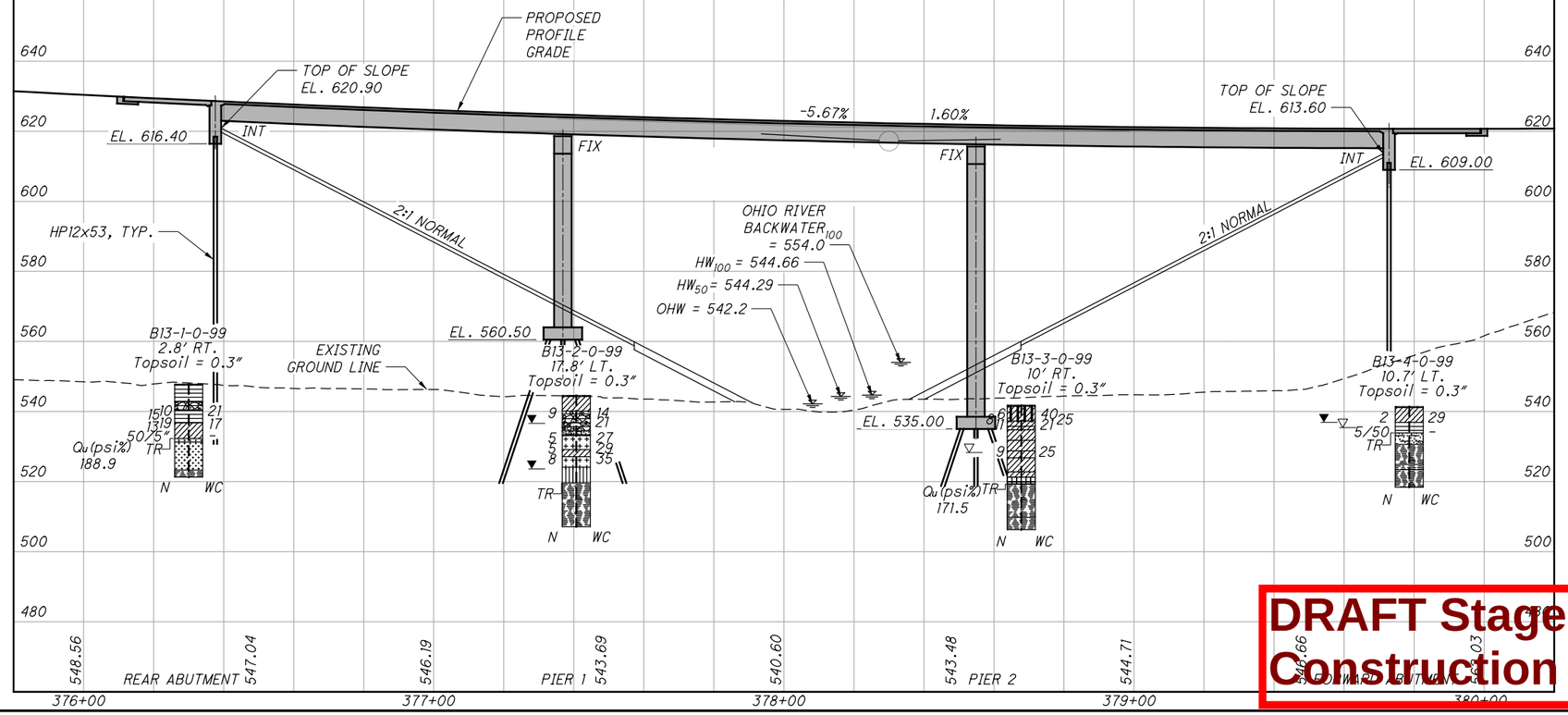

DRAFT Stage 3 - Not for Construction

09/23/2024

HORIZONTAL SCALE IN FEET

0 10 20 40

DESIGNED MSJ
CHECKED EMK

STRUCTURE FOUNDATION EXPLORATION
BRIDGE NO. LAW-7-0711P
RAMP I OVER LITTLE PADDY CREEK

LAW-7-2.17

127/206

1168/1247

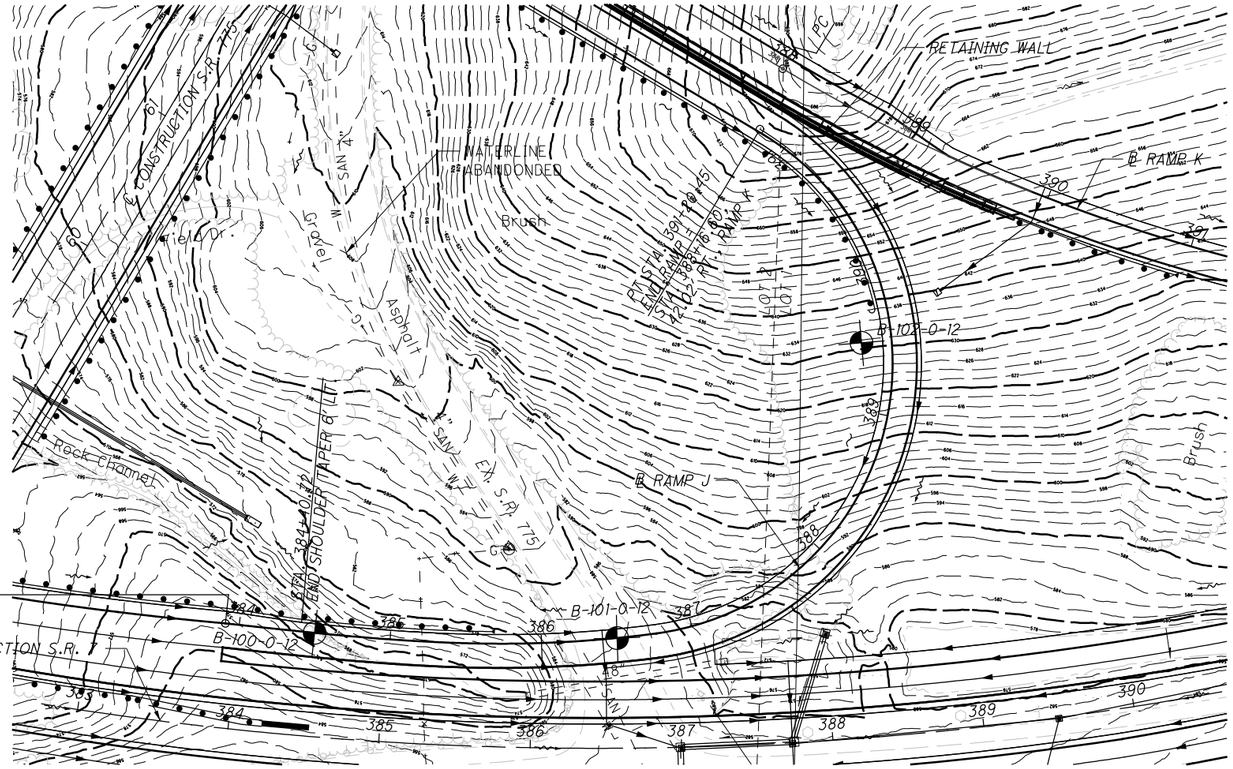

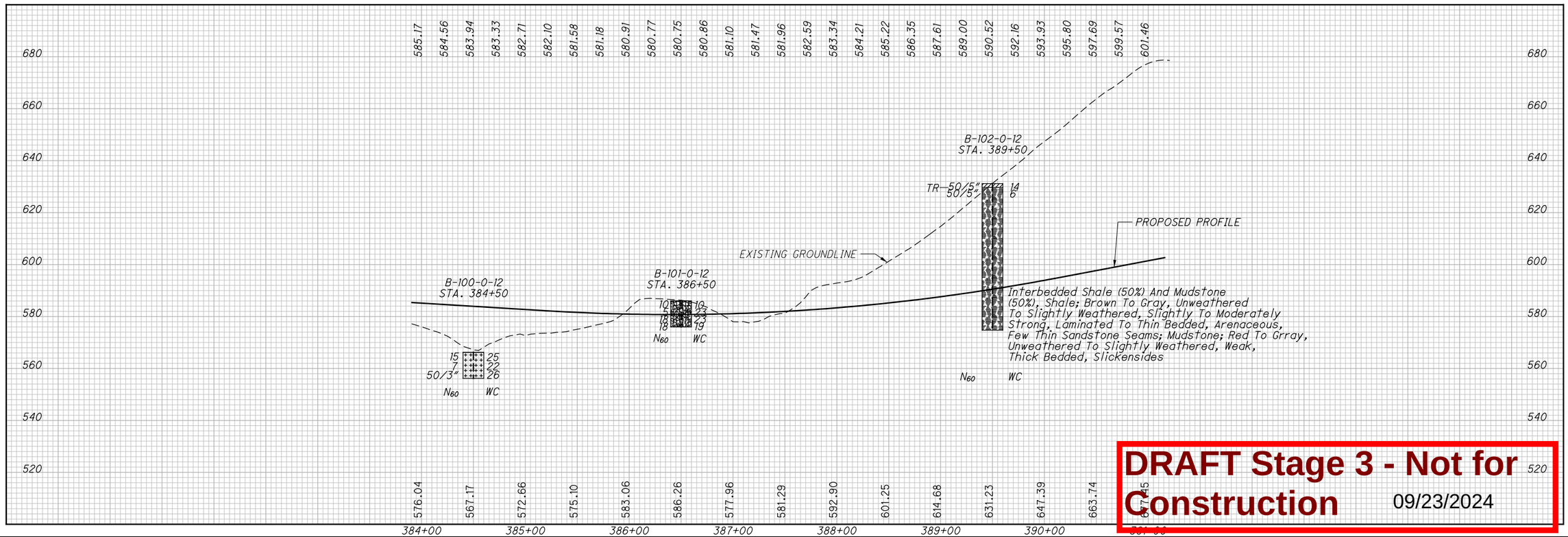

DRAFT Stage 3 - Not for Construction 09/23/2024

SOIL PROFILE - ROADWAY
RAMP J STA. 383+90.72 TO STA. 391+20.45

DRAWN MSJ
CHECKED EMK

HORIZONTAL SCALE IN FEET
0 25 50 100

LAW-7-2.17

128/206

1169/1247

U:\173608714\LAW\75923\geotechnical\sheets\RAMP J\75923JP001.dgn 5/17/2024 7:50:12 AM MJennings

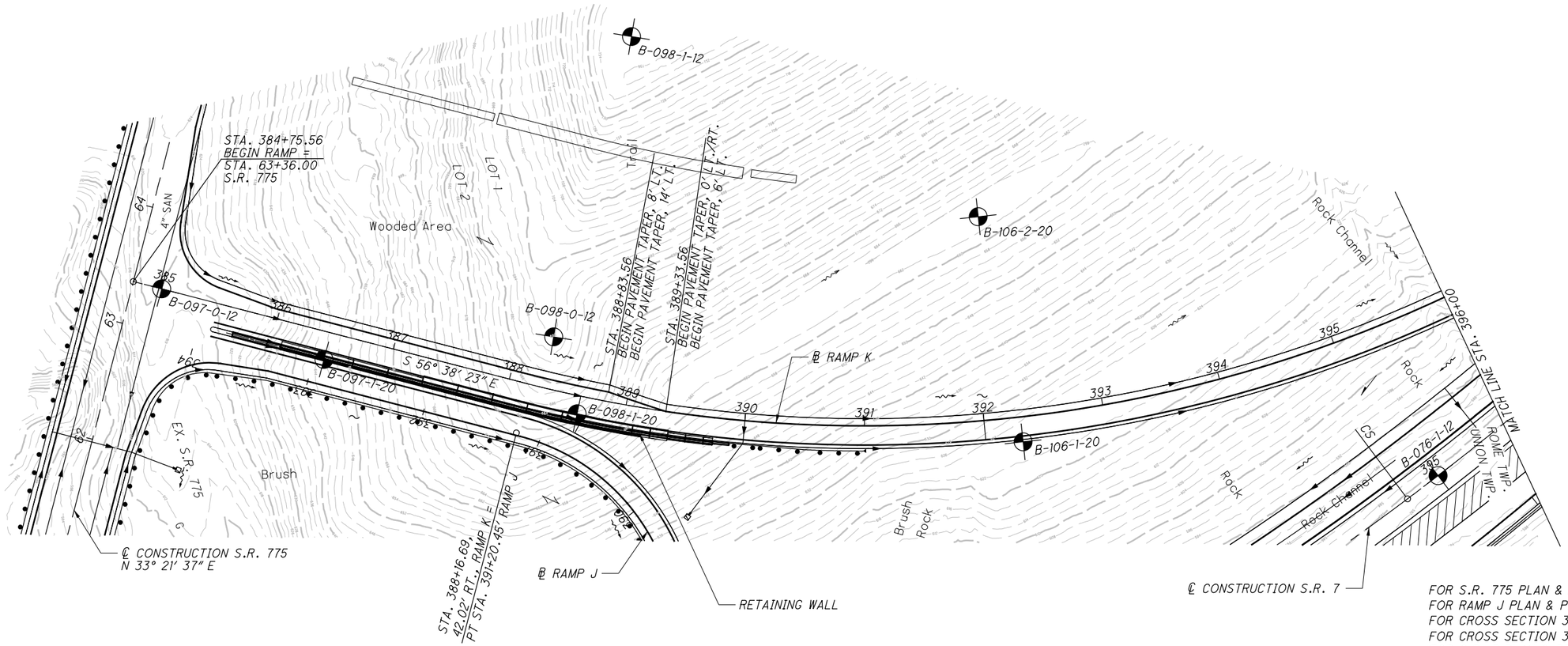

FOR S.R. 775 PLAN & PROFILE, SEE SHEET 148
FOR RAMP J PLAN & PROFILE, SEE SHEET 128
FOR CROSS SECTION 388+00, SEE SHEET 131
FOR CROSS SECTION 392+00, SEE SHEET 132
FOR S.R. 7 PLAN & PROFILE, SEE SHEETS 73-74

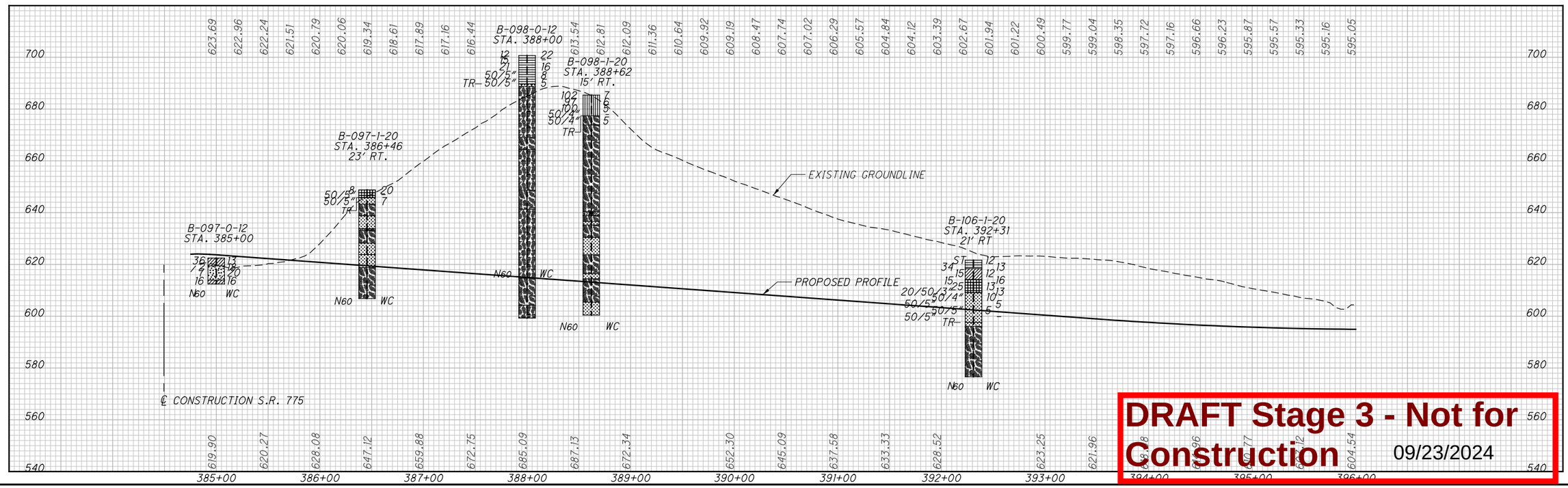

DRAFT Stage 3 - Not for Construction 09/23/2024

SOIL PROFILE - ROADWAY
RAMP K

LAW-7-2.17

129/206

1170/1247

HORIZONTAL SCALE IN FEET
0 25 50 100

DRAWN MSJ CHECKED EMK

U:\173608714\LAW\75923\geotechnical\sheets\RAMP K\75923IP001.dgn 5/17/2024 7:51:21 AM MJennings

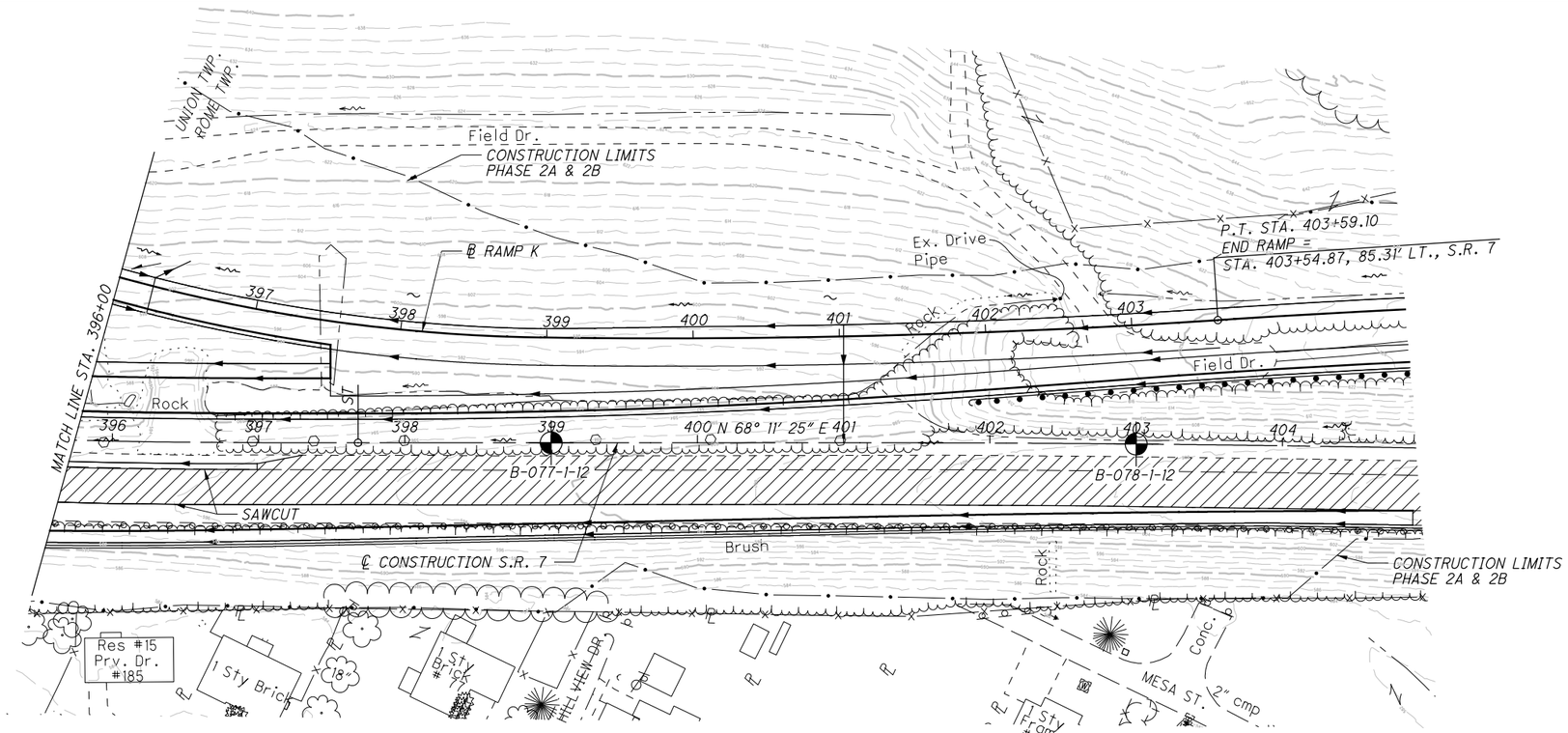

FOR S.R. 7 PLAN & PROFILE, SEE SHEETS 73-74

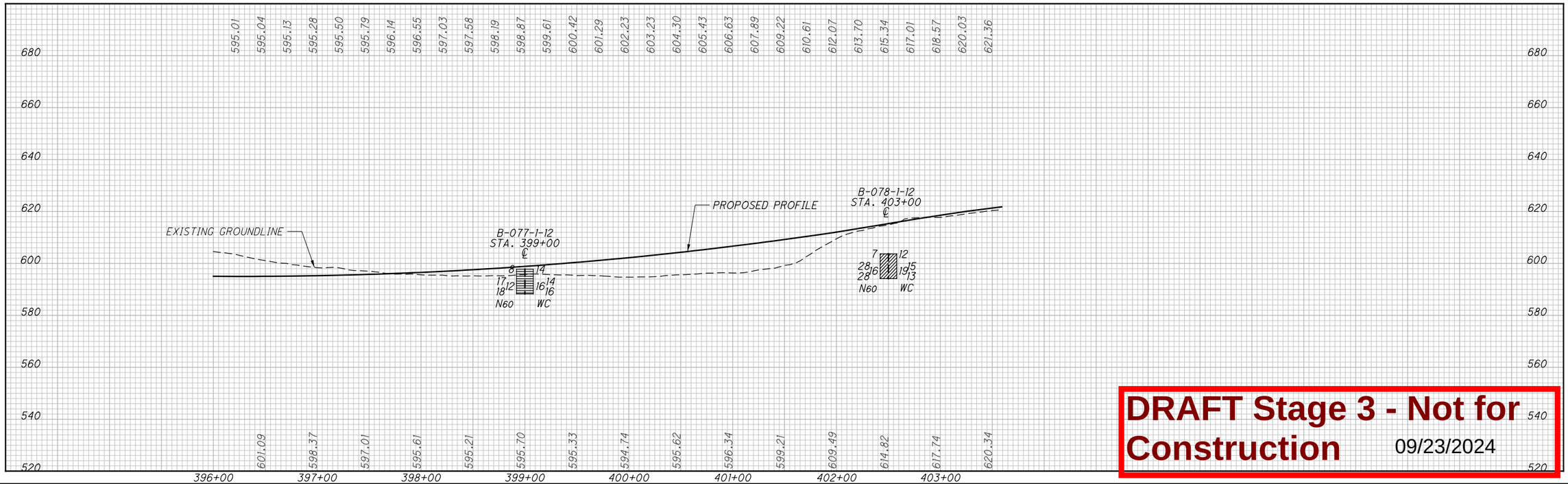

DRAFT Stage 3 - Not for Construction 09/23/2024

SOIL PROFILE - ROADWAY
RAMP K

LAW-7-2.17

130/206

1171
1247

DRAWN MSJ
CHECKED EMK

HORIZONTAL SCALE IN FEET
0 25 50 100

U:\173608714\LAW\75923\geotechnical\sheets\RAMP K\75923IP002.dgn 5/17/2024 7:52:07 AM MJennings

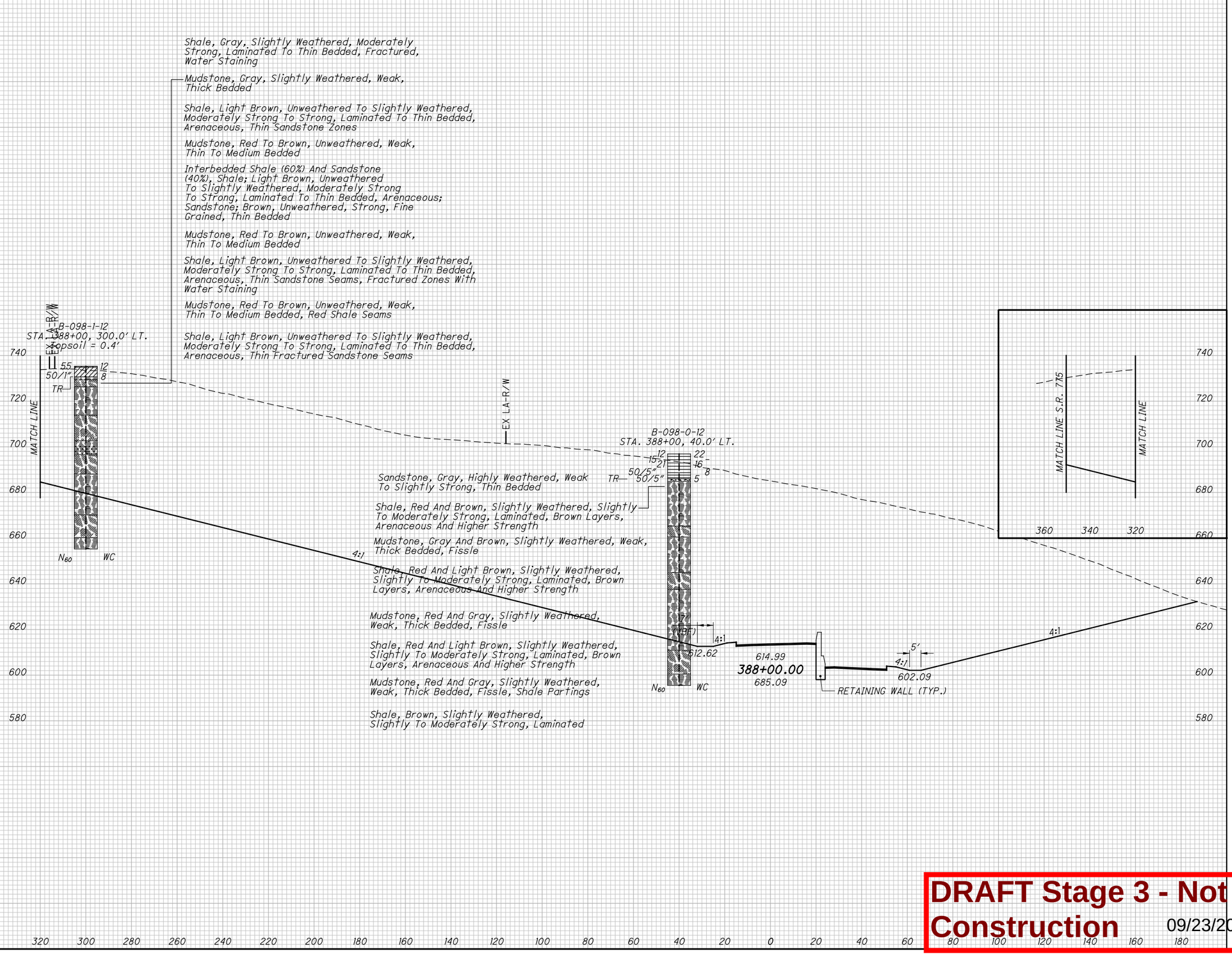

DRAFT Stage 3 - Not for Construction
09/23/2024

0 10 20 40
HORIZONTAL SCALE IN FEET

DRAWN MSJ
CHECKED EWK

CROSS SECTION
STATION 388+00.00 - PROPOSED RAMP K

LAW-7-2.17

131/206
1172/1247

U:\173608714\LAW\75923\geotechnical\sheets\RAMP K\75923XS388-00.dgn 5/17/2024 7:52:54 AM MJennings

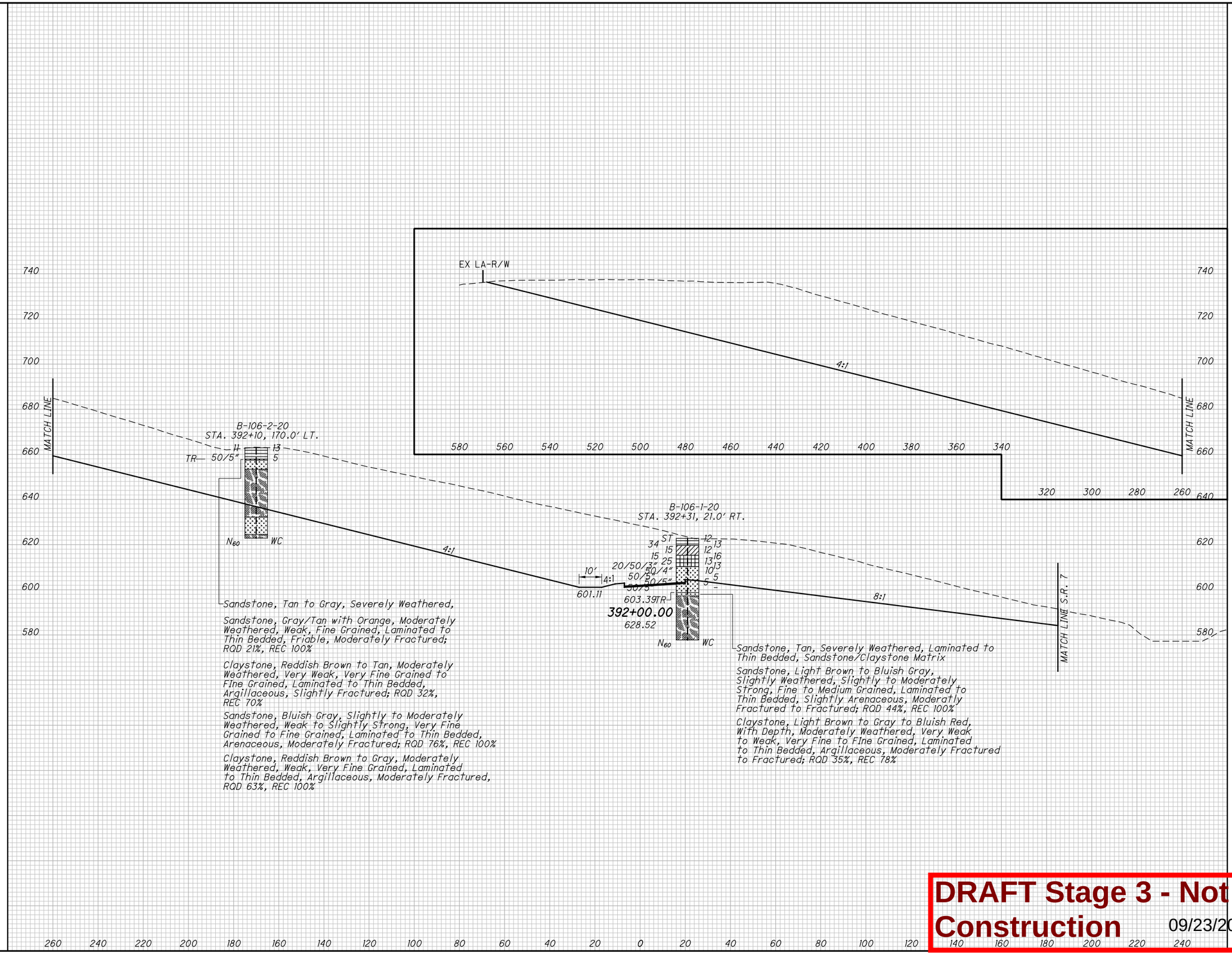

DRAWN MSJ
CHECKED EMK

HORIZONTAL SCALE IN FEET
0 10 20 40

CROSS SECTION
STATION 392+00.00 - PROPOSED RAMP K

LAW-7-2.17

132/206

1173/1247

DRAFT Stage 3 - Not for Construction 09/23/2024

U:\17360871 4\LAW\75923\geotechnical\sheets\RAMP K\75923XS392+00.dgn 5/17/2024 7:53:45 AM MJennings

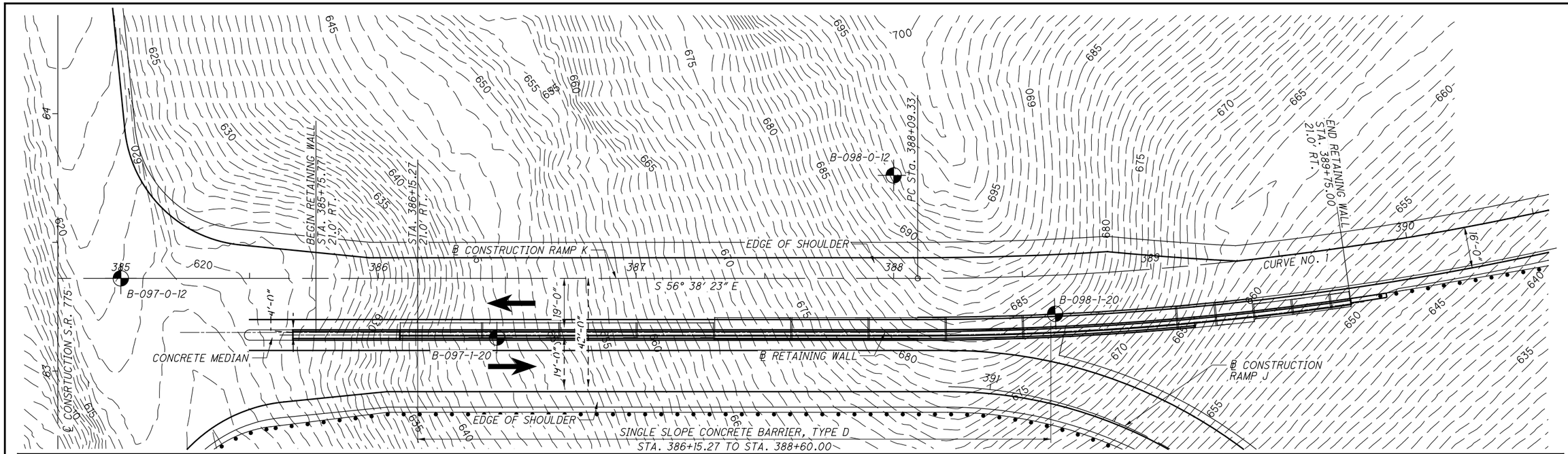

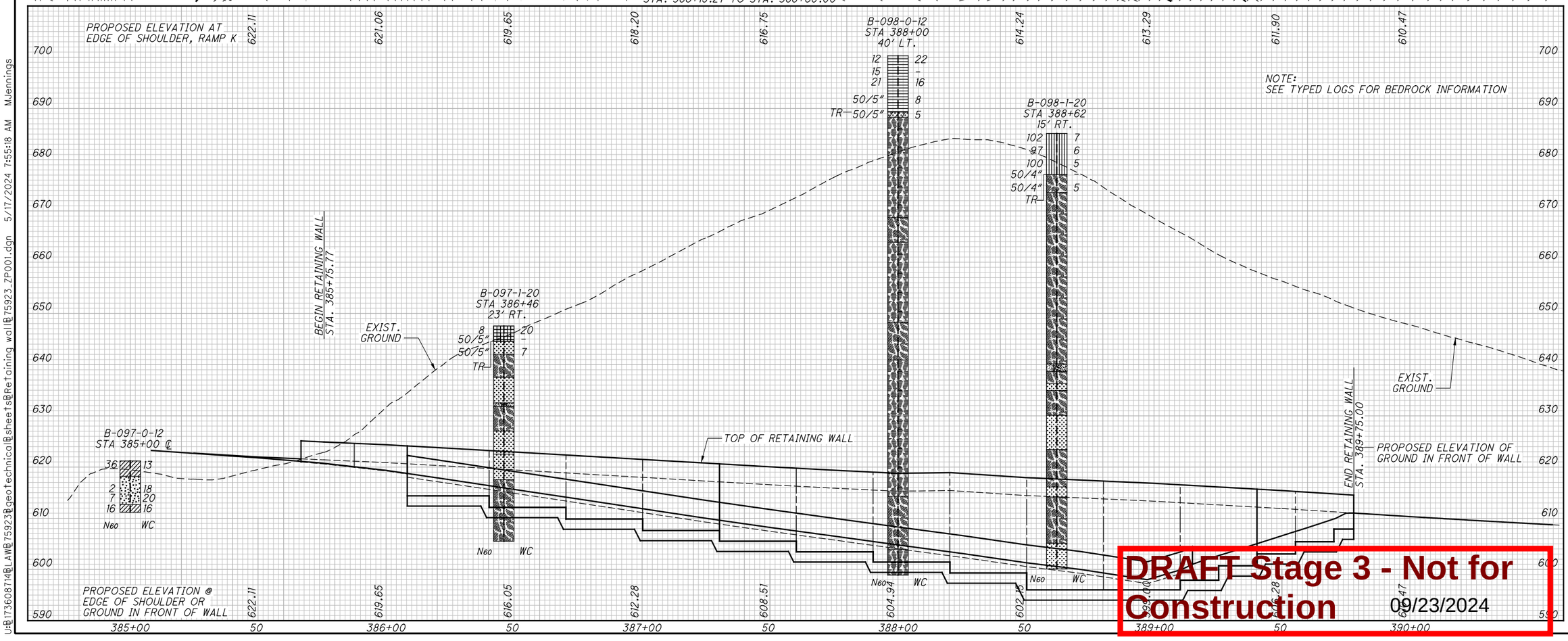

DRAFT Stage 3 - Not for Construction 09/23/2024

HORIZONTAL SCALE IN FEET
0 10 20 40

DESIGNED MSJ
CHECKED EMK

STRUCTURE FOUNDATION EXPLORATION
RAMP J AND RAMP K RETAINING WALL

LAW-7-2.17

133/206
1174/1247

U:\PID 113608714\LAW\PID 75923\geoTechnical\sheets\Retaining wall\PID 75923_ZP001.dgn 5/17/2024 7:55:18 AM MJennings

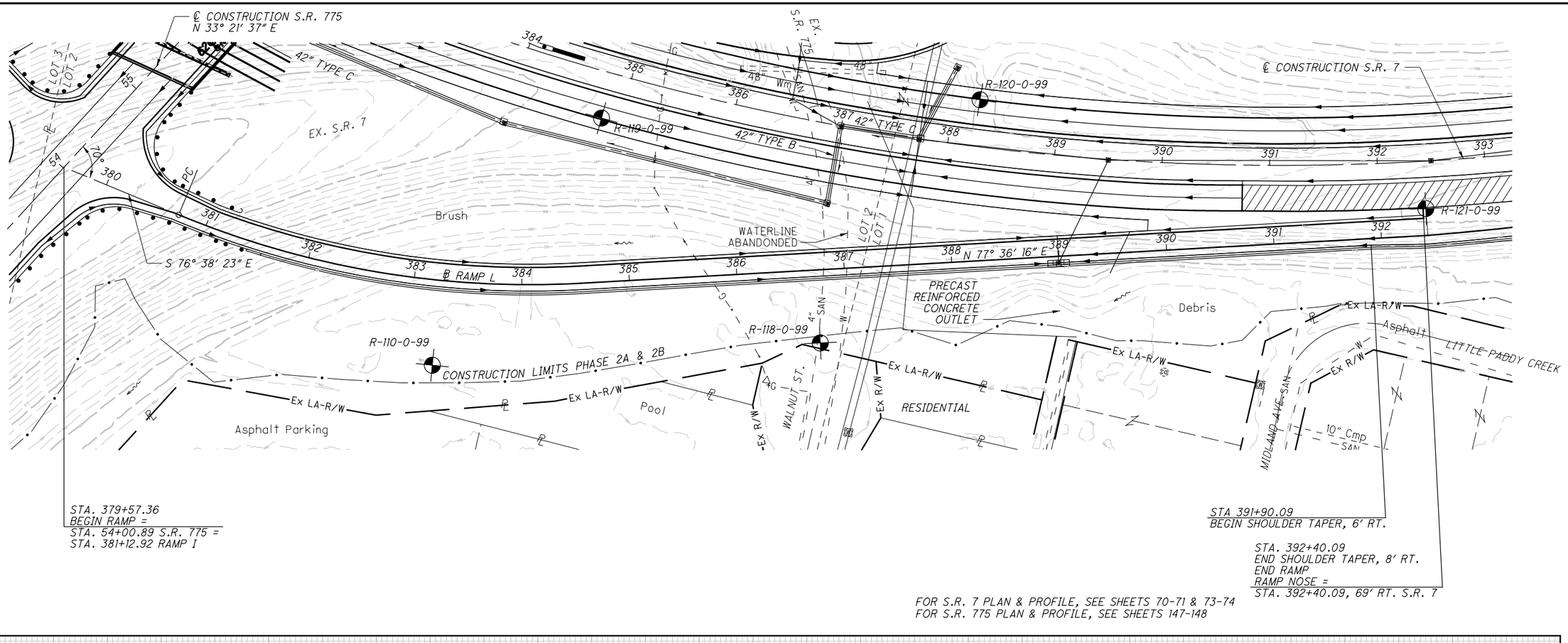

FOR S.R. 7 PLAN & PROFILE, SEE SHEETS 70-71 & 73-74
FOR S.R. 775 PLAN & PROFILE, SEE SHEETS 147-148

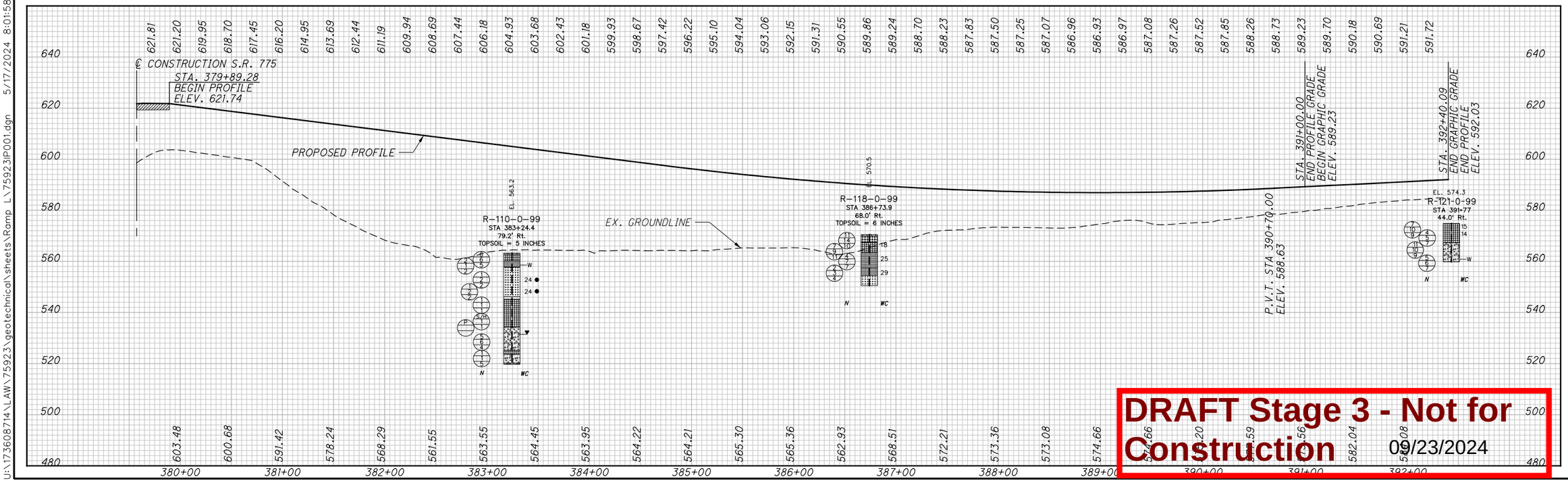

DRAFT Stage 3 - Not for Construction
09/23/2024

HORIZONTAL SCALE IN FEET
0 25 50 100

DRAWN MSJ
CHECKED EMK

SOIL PROFILE - ROADWAY
RAMP L

LAW-7-2.17

134/206
1175/1247

U:\173608714\LAW\75923\geotechnical\sheets\Ramp L\75923IP001.dgn 5/17/2024 8:01:58 AM MJennings

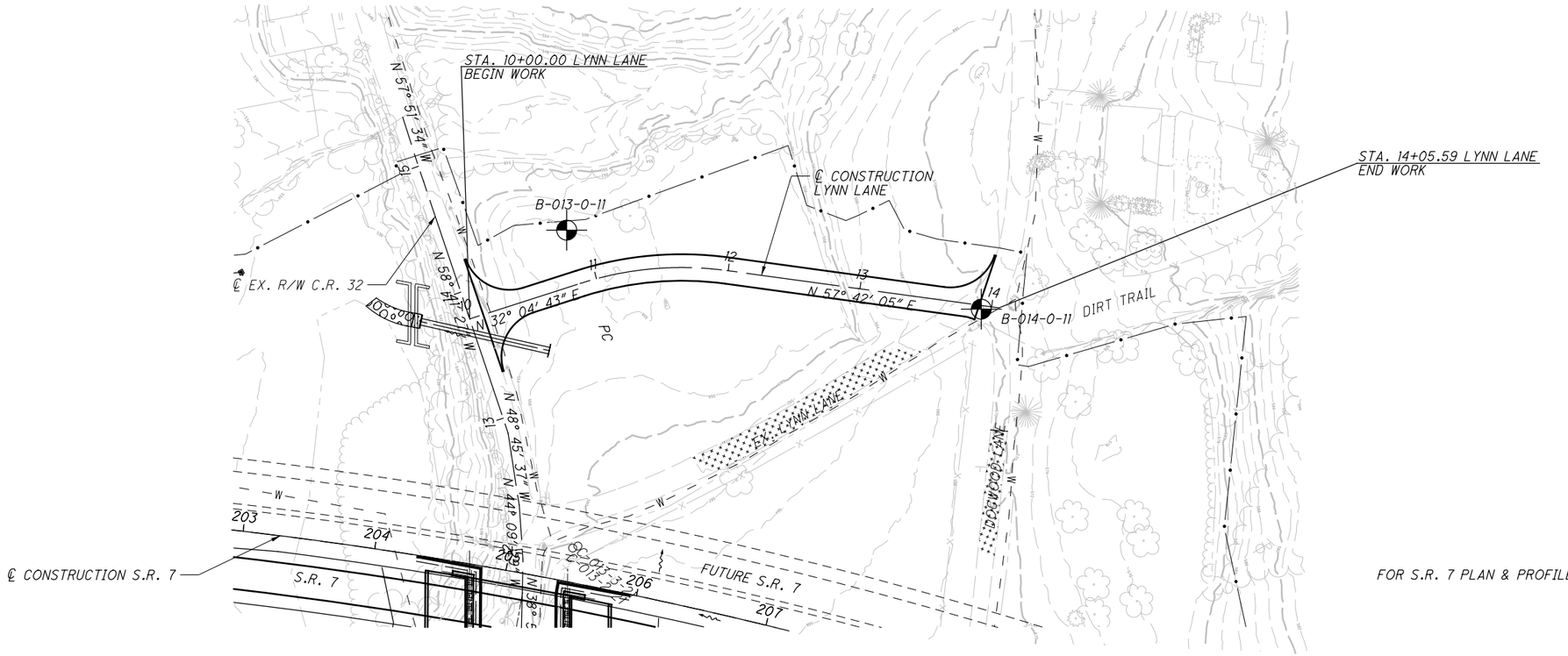

FOR S.R. 7 PLAN & PROFILE, SEE SHEETS 51-52

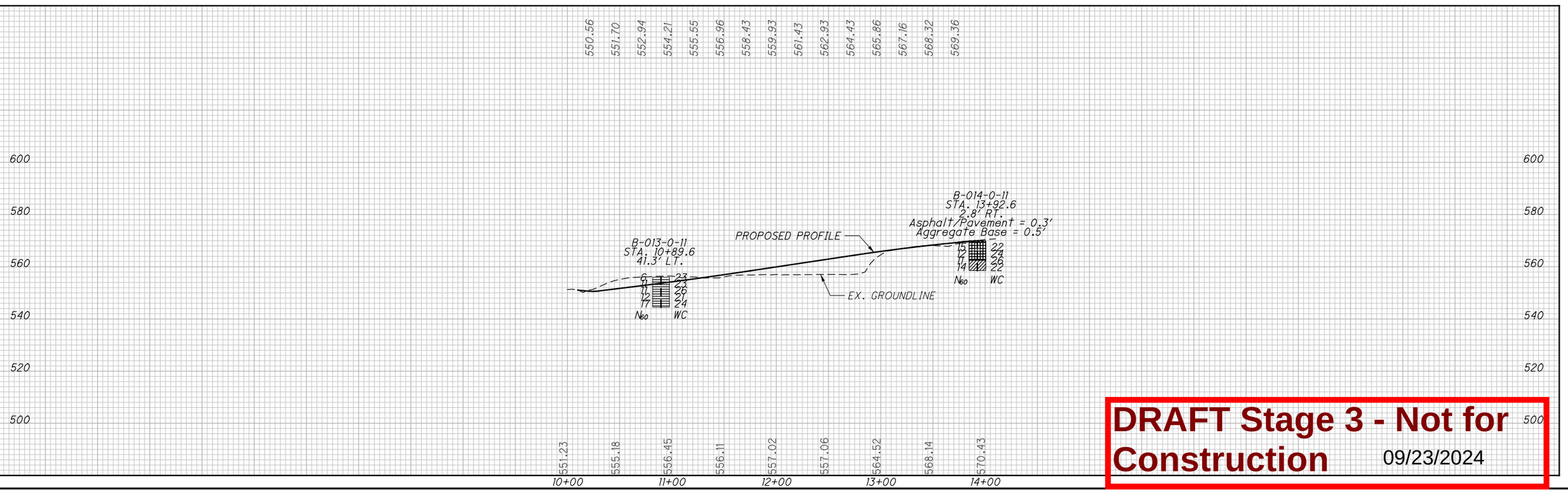

DRAFT Stage 3 - Not for Construction 09/23/2024

HORIZONTAL SCALE IN FEET
0 25 50 100

DRAWN MSJ
CHECKED EMK

SOIL PROFILE - ROADWAY
LYNN LANE STA. 10+00.00 - 14+05.59

LAW-7-2.17

135/206

1176/1247

U:\173608714\LAW\75923\geotechnical\sheets\LYNN_LANE\75923IP001.dgn 5/17/2024 8:03:53 AM MJennings

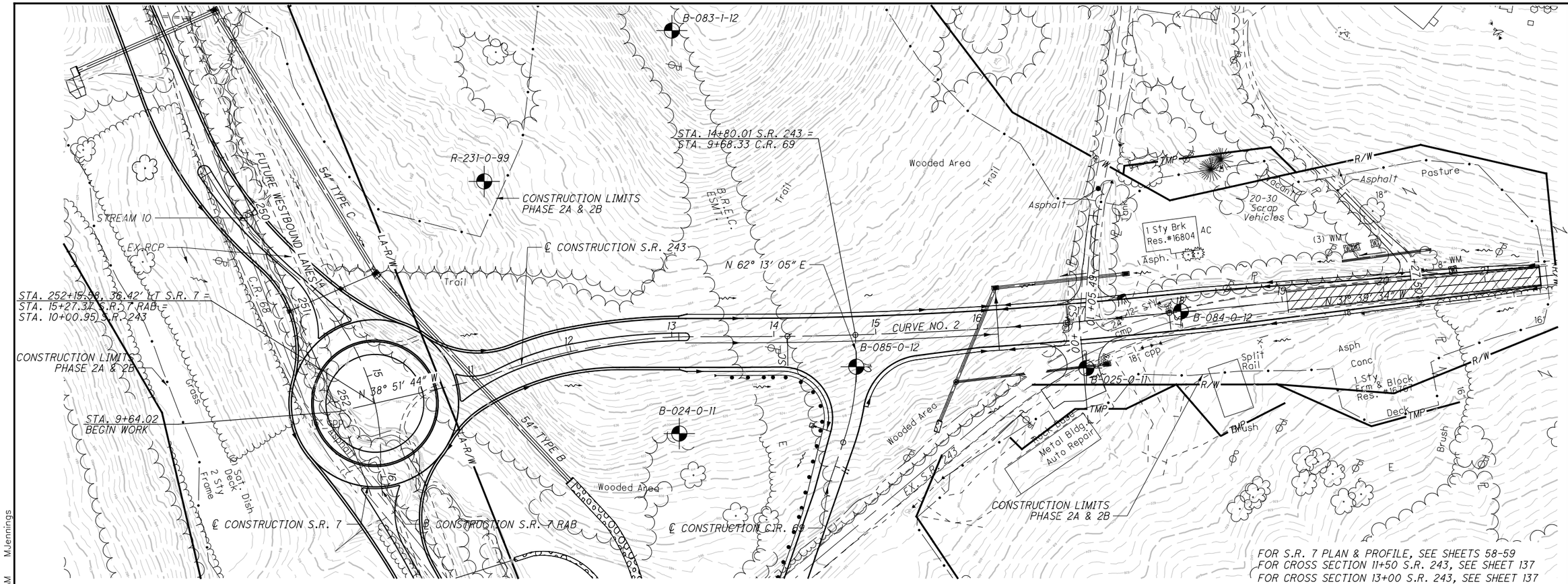

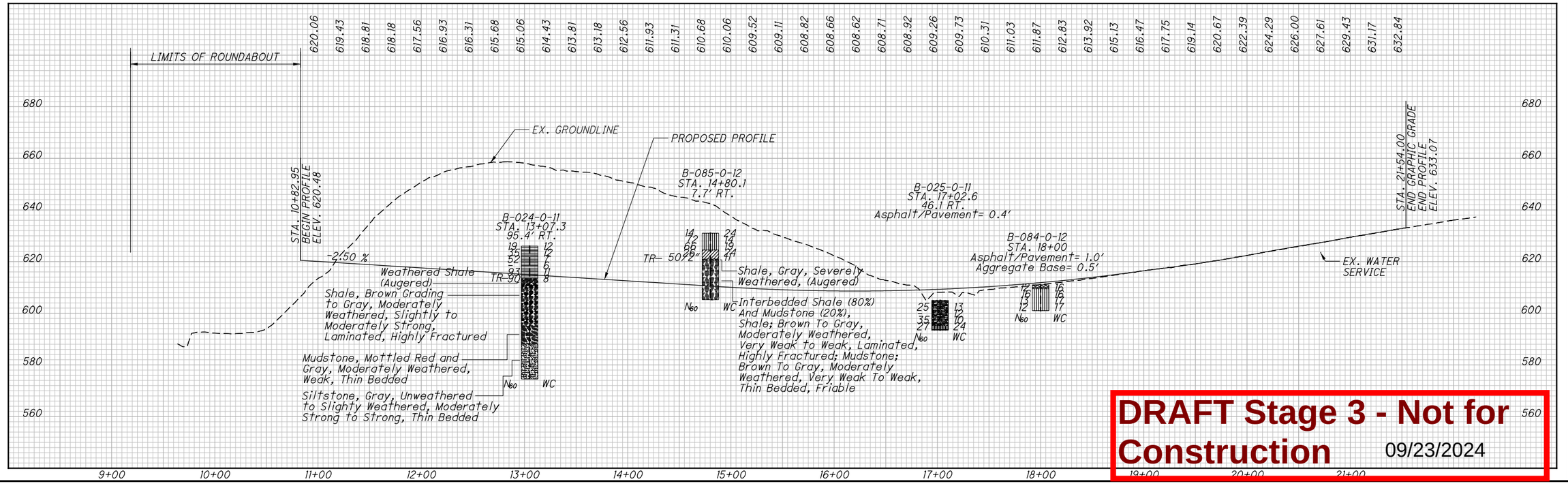

DRAFT Stage 3 - Not for Construction 09/23/2024

HORIZONTAL SCALE IN FEET
0 25 50 100

DRAWN MSJ
CHECKED EMK

SOIL PROFILE - ROADWAY
S.R. 243 - STA. 9+64.02 - 21+54.00

LAW-7-2.17

136/206

1177
1247

U:\1736871\4\LAW\75923\geotechnical\sheets\SR 243\75923IP001.dgn 5/17/2024 8:05:12 AM MJennings

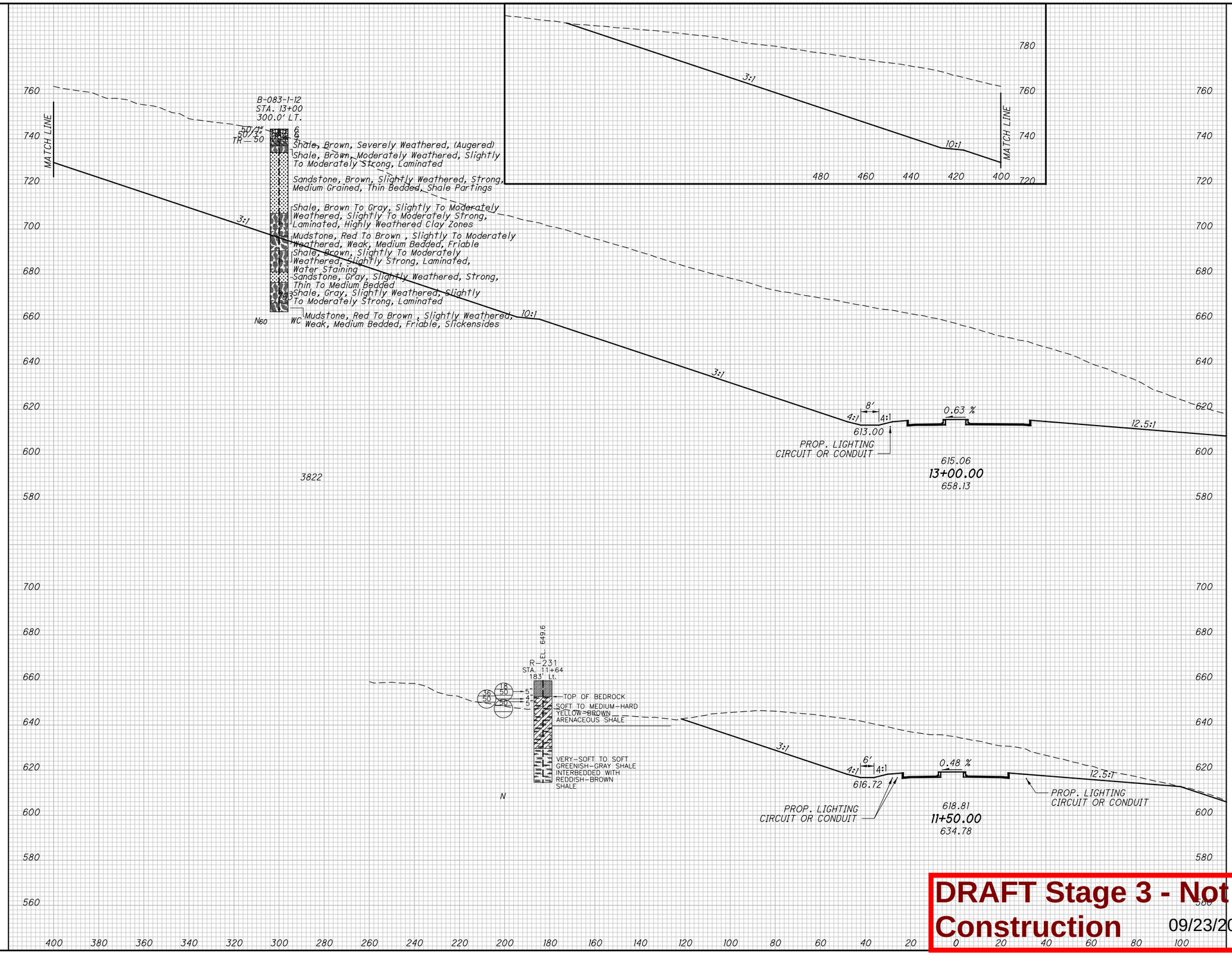

DRAFT Stage 3 - Not for Construction 09/23/2024

HORIZONTAL SCALE IN FEET
0 10 20 40

DRAWN MSJ
CHECKED EMK

CROSS SECTIONS - S.R. 243
STATIONS 11+50.00 & 13+00.00

LAW-7-2.17

137/206
1178/1247

U:\173608714\LAW\75923\geotechnical\sheets\SR 243\75923XS.dgn 5/17/2024 8:06:02 AM MJennings

FOR S.R. 7 PLAN & PROFILE, SEE SHEET 58-59
FOR S.R. 243 PLAN & PROFILE, SEE SHEET 136
FOR CROSS SECTION STATION 15+00, SEE SHEET 142
FOR CROSS SECTION STATION 24+00, SEE SHEET 142

B-086-1-12
B-087-1-12
B-085-0-12
B-086-0-12
B-087-0-12
B-024-0-11
B-027-0-11
B-030-0-11
N 68° 13' 05" E
Wooded Area
℄ EX. R/W S.R. 243
℄ CONSTRUCTION S.R. 243
CONSTRUCTION LIMITS PHASE 2A & 2B
R/W
Brush
Barn
24"
STA. 9+68.33 O.R. 169
BEGIN WORK
STA. 14+80.02 S.R. 243
1 Sty Frm Res. #16949
Shed
Stockade
Deck
2 Sty Brick & Frm Res. #16971
(LF)
Gravel
Conc.
Ex R/W
1-Sty Duplex Res. 17001
STREAM 10
LA-R/W
Excv Area
Cone
Garage
2 Sty Brk Res. #17039
Spiral
Conc. & Brick Walls
Ex R/W
℄ CONSTRUCTION C.R. 69
EXISTING WESTBOUND LANES
EX R/W
MATCH LINE STA. 24+00
N 66° 04' 40" E

℄ CONSTRUCTION S.R. 243
B-085-0-12
STA. 10+00
B-024-0-11
STA. 10+95.4
7.3' LT.
℄ EX. R/W S.R. 243
℄ 42" TYPE A = 592.33
B-027-0-11
STA. 13+86.9
11.6' LT.
B-086-0-12
STA. 15+00
120.0' LT.
2" EX. WATER
PROPOSED PROFILE
B-028-0-11
STA. 18+52.8
6.8' LT.
B-030-0-11
STA. 22+84.5
9.0' LT.
EX. GROUNDLINE
TR-90
TR-50"
TR-50+
N60
WC
Weathered Shale (Augered)
Shale, Brown Grading to Gray, Moderately Weathered, Slightly to Moderately Strong, Laminated, Highly Fractured Mudstone, Mottled Red and Gray, Moderately Weathered, Weak, Thin Bedded Siltstone, Gray, Unweathered to Slightly Weathered, Moderately Strong to Strong, Thin Bedded
Weathered WC Sandstone (Augered)
Sandstone, Brown, Slightly Weathered, Strong, Fine Grained, Thin Bedded, Shale Seams
Shale, Gray, Slightly Weathered, Moderately Strong To Strong, Laminated To Thin Bedded, Arenaceous
Mudstone, Gray To Red, Slightly Weathered, Weak, Thin Bedded, Friable
Shale, Gray, Slightly Weathered, Moderately Strong To Strong, Laminated To Thin Bedded, Arenaceous
Mudstone, Gray To Red, Slightly Weathered, Weak, Thin Bedded, Friable
Weathered Shale (Augered)
B-085-0-12
(ROCK DESCRIPTIONS)
Shale, Gray, Severely Weathered, (Augered)
Interbedded Shale (80%) And Mudstone (20%), Shale; Brown To Gray, Moderately Weathered, Very Weak To Weak, Laminated, Highly Fractured; Mudstone; Brown To Gray, Moderately Weathered, Very Weak To Weak, Thin Bedded, Friable
611.61 611.33 610.99 610.65 610.28 609.87 609.42 608.92 608.38 607.79 607.16 606.49 605.77 605.00 604.21 603.43 602.64 601.85 601.06 600.27 599.49 598.70 597.91 597.12 596.34 595.55 594.76 593.97 593.18 592.40 591.61 590.82 590.03 589.25 588.46 587.67 586.88 586.09 585.31 584.52 583.73 582.94 582.16 581.37 580.58 579.79 579.00 578.22 577.43 576.64 575.85 575.07 574.28 573.49 572.70 571.92 571.13
660 640 620 600 580 560 540 520
630.70 617.12 602.74 596.60 589.32 587.36 588.52 599.01 604.28 603.47 594.47 589.40 586.65 584.21 581.84 573.19 564.28 561.16 560.37 557.28 559.09 564.73 563.63
10+00 11+00 12+00 13+00 14+00 15+00 16+00 17+00 18+00 19+00 20+00 21+00 22+00 23+00 24+00

DRAFT Stage 3 - Not for Construction
09/23/2024

HORIZONTAL SCALE IN FEET
0 25 50 100
DRAWN MSJ
CHECKED EMK

SOIL PROFILE - ROADWAY
C.R. 69 STA. 9+68.33 - 24+00.00

LAW-7-2.17

138/206
1179
1247

U:\173608714\LAW\75923\geotechnical\sheets\CR 69\75923GP110-2B.dgn 5/17/2024 8:16:38 AM MJennings

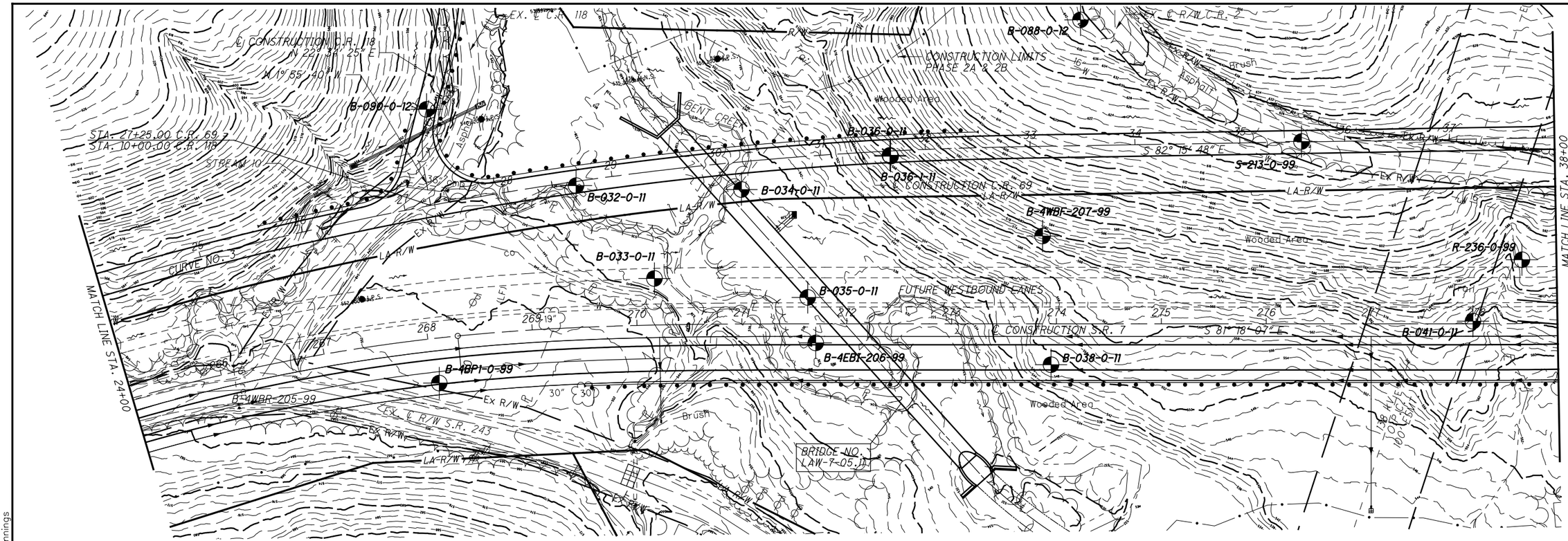

FOR S.R. 7 PLAN & PROFILE, SEE SHEETS 60-61
FOR C.R. 118 PLAN AND PROFILE, SEE SHEET 145
FOR CROSS SECTION STATION 33+50, SEE SHEET 143
FOR BRIDGE LAW-7-05.10 PLAN & PROFILE, SEE SHEET 61
FOR C.R. 2 PLAN & PROFILE, SEE SHEET 146

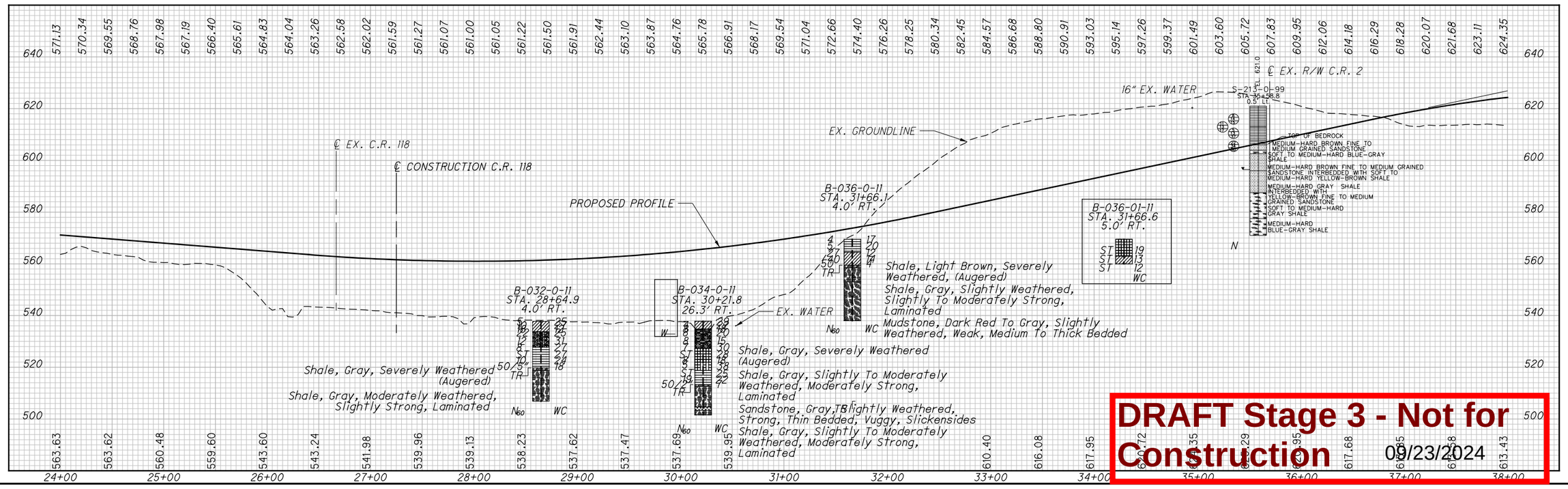

DRAFT Stage 3 - Not for Construction
09/23/2024

HORIZONTAL SCALE IN FEET
0 25 50 100

DRAWN MSJ
CHECKED EMK

SOIL PROFILE - ROADWAY
C.R. 69 STA. 24+00.00 - 38+00.00
LAW-7-2.17

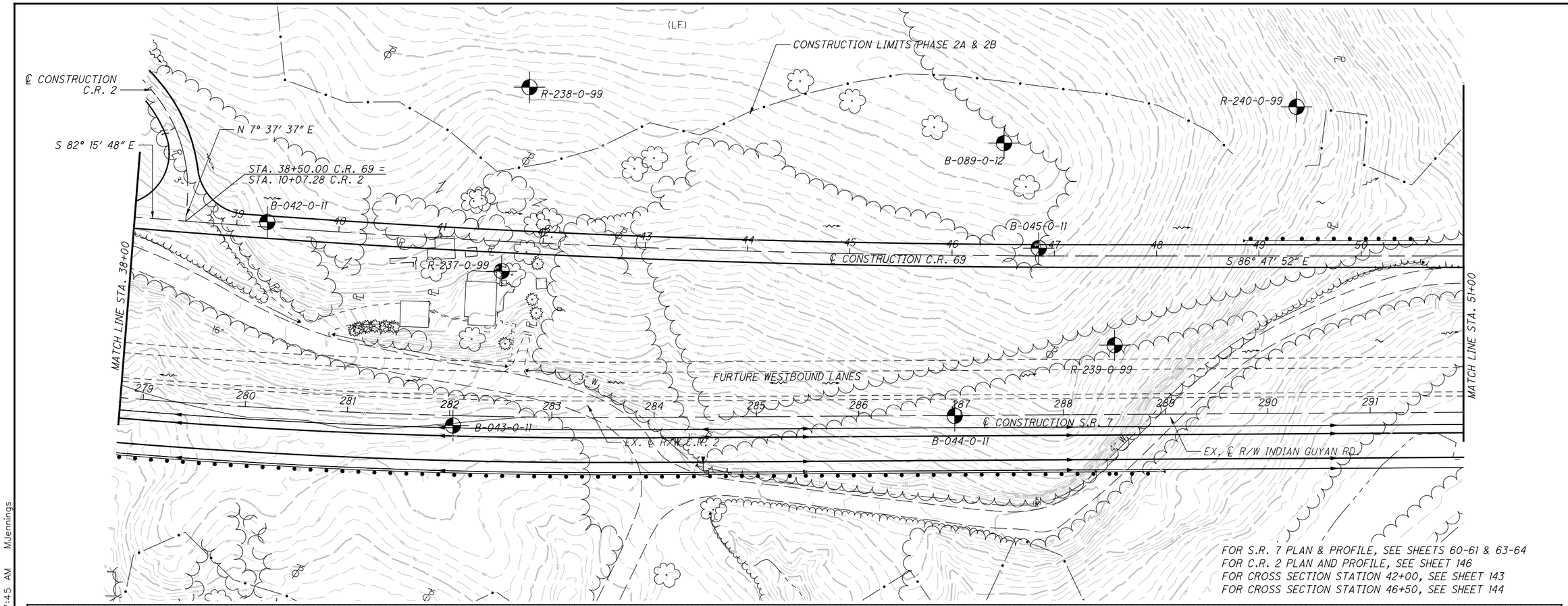

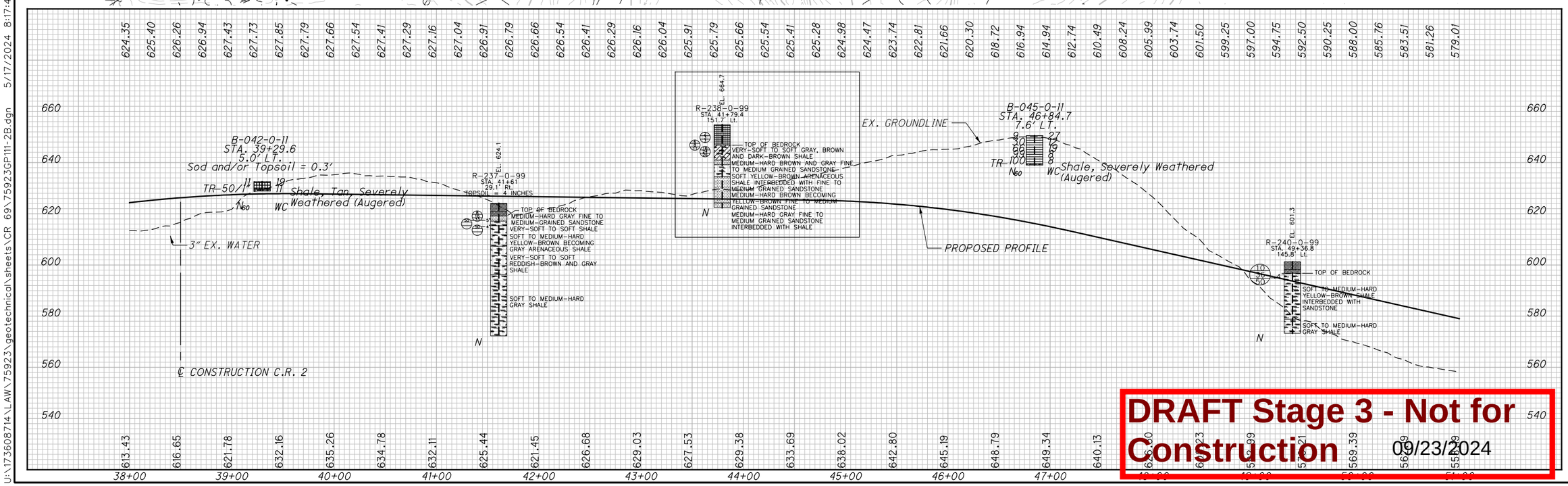

DRAFT Stage 3 - Not for Construction 09/23/2024

HORIZONTAL SCALE IN FEET
0 25 50 100

DRAWN MSJ
CHECKED EMK

SOIL PROFILE - ROADWAY
C.R. 69 STA. 38+00.00 - 51+00.00

LAW-7-2.17

140/206
1181/1247

U:\17360871\4\LAW\75923\geotechnical\sheets\CR 69\75923GP111-2B.dgn 5/17/2024 8:17:45 AM MJennings

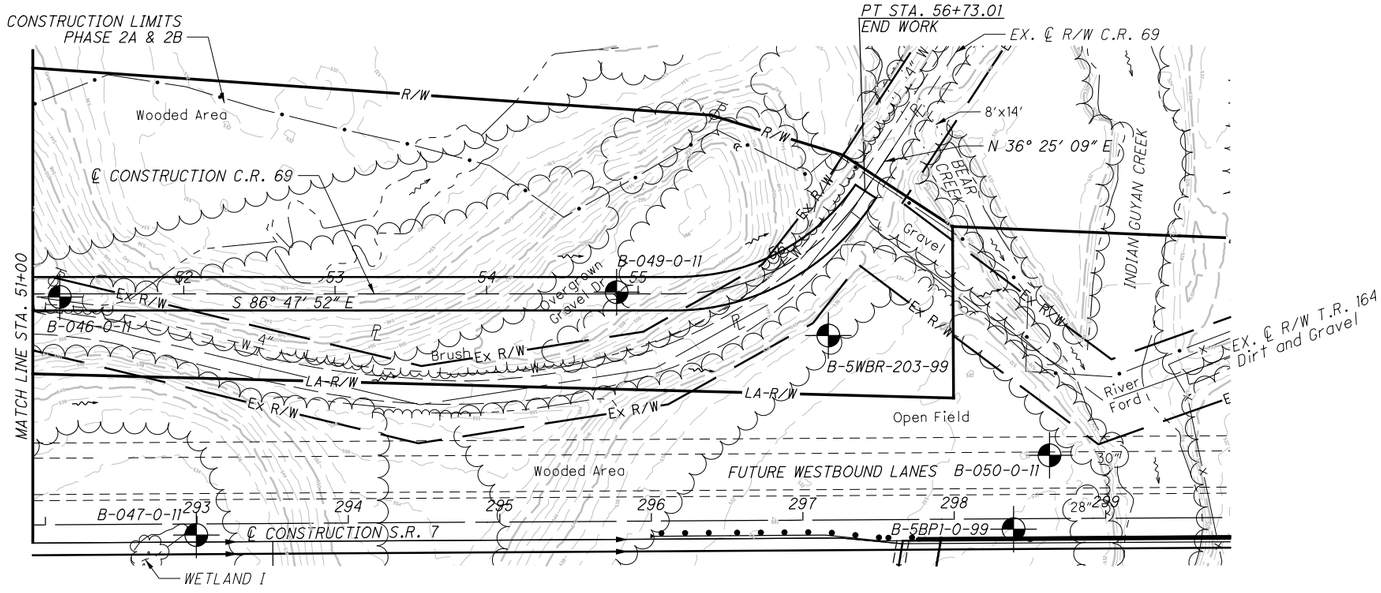

FOR S.R. 7 PLAN & PROFILE, SEE SHEETS 63-64
FOR LAW-7-5.63 PLAN & PROFILE, SEE SHEET 65

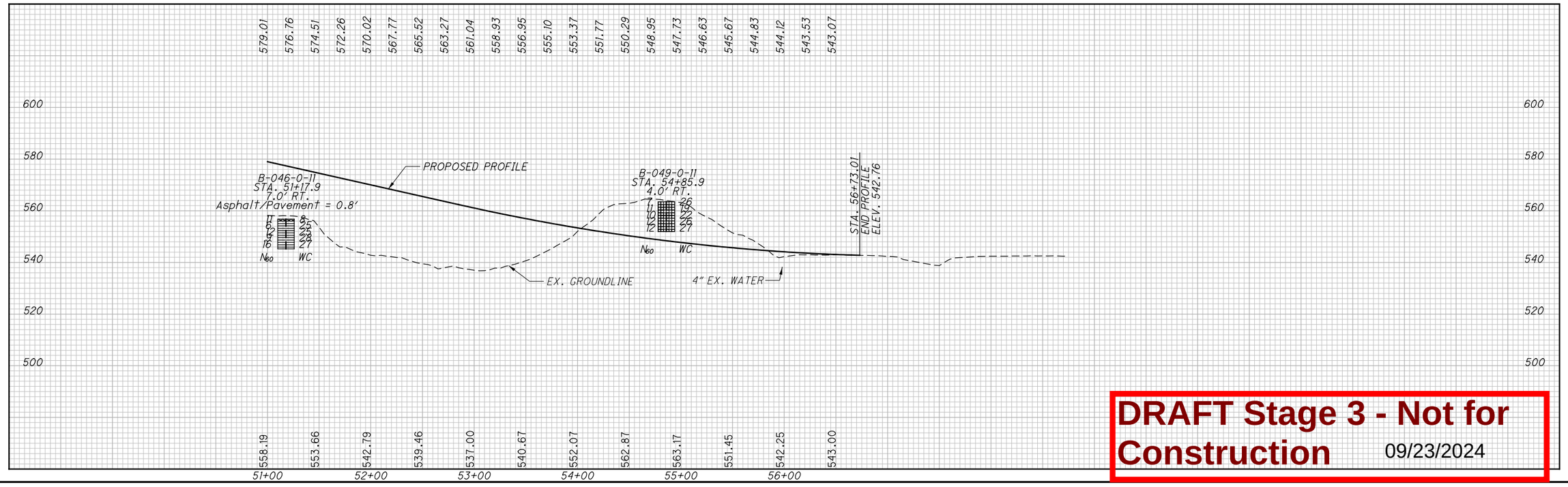

DRAFT Stage 3 - Not for Construction 09/23/2024

HORIZONTAL SCALE IN FEET
0 25 50 100

DRAWN MSJ
CHECKED EMK

SOIL PROFILE - ROADWAY
C.R. 69 STA. 51+00.00 - 56+73.01

LAW-7-2.17

141/206

1182/1247

U:\173608714\LAW\75923\geotechnical\sheets\CR 69\75923GP112-2B.dgn 5/17/2024 8:18:34 AM MJennings

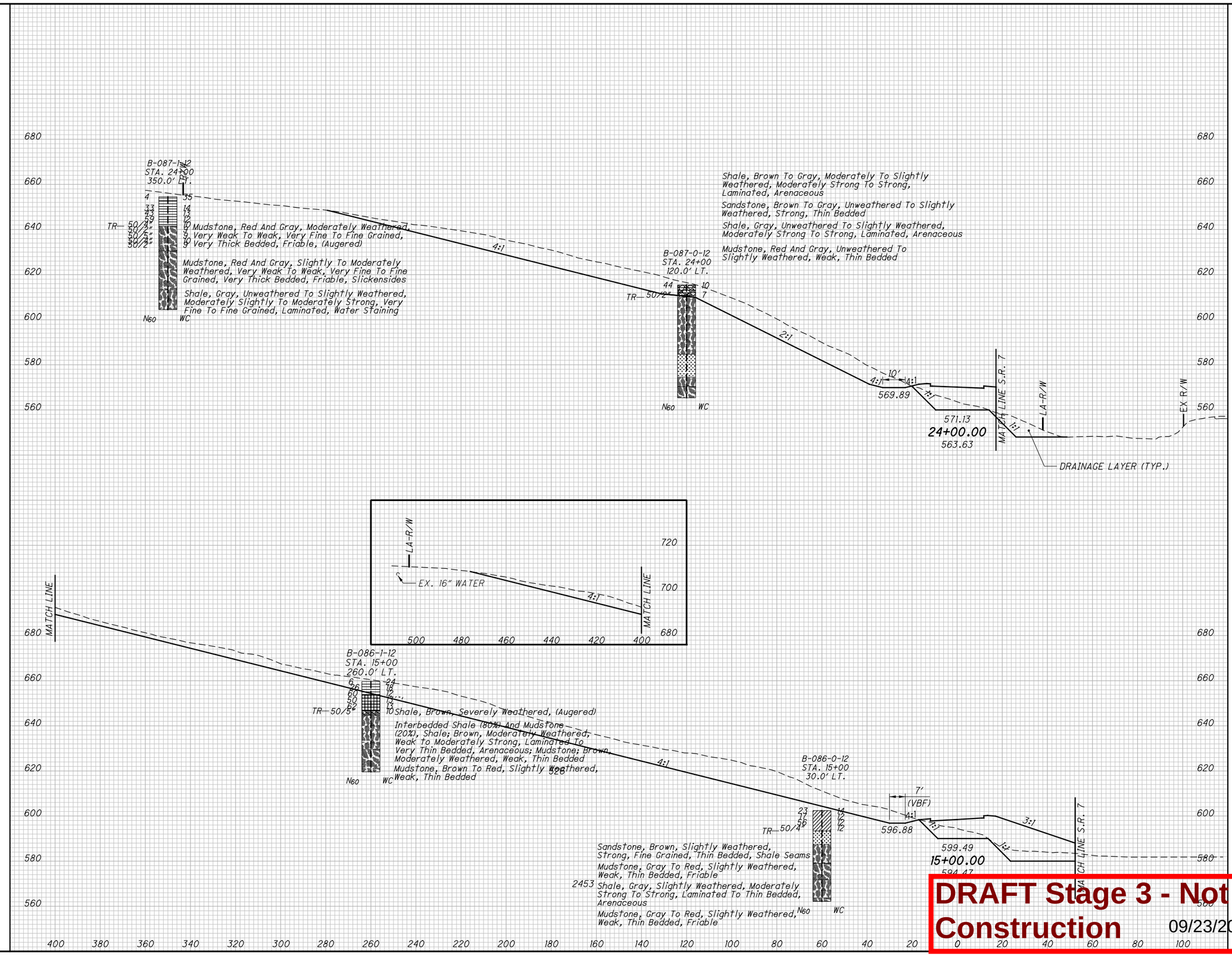

HORIZONTAL SCALE IN FEET
0 10 20 40

DRAWN MSJ
CHECKED EMK

CROSS SECTIONS - C.R. 69
STATIONS 15+00.00 & 24+00.00

LAW-7-2.17

142/206
1183/1247

DRAFT Stage 3 - Not for Construction
09/23/2024

U:\173608714\LAW\75923\geotechnical\sheets\CR 69\75923XS69-1.dgn 5/17/2024 8:19:22 AM MJennings

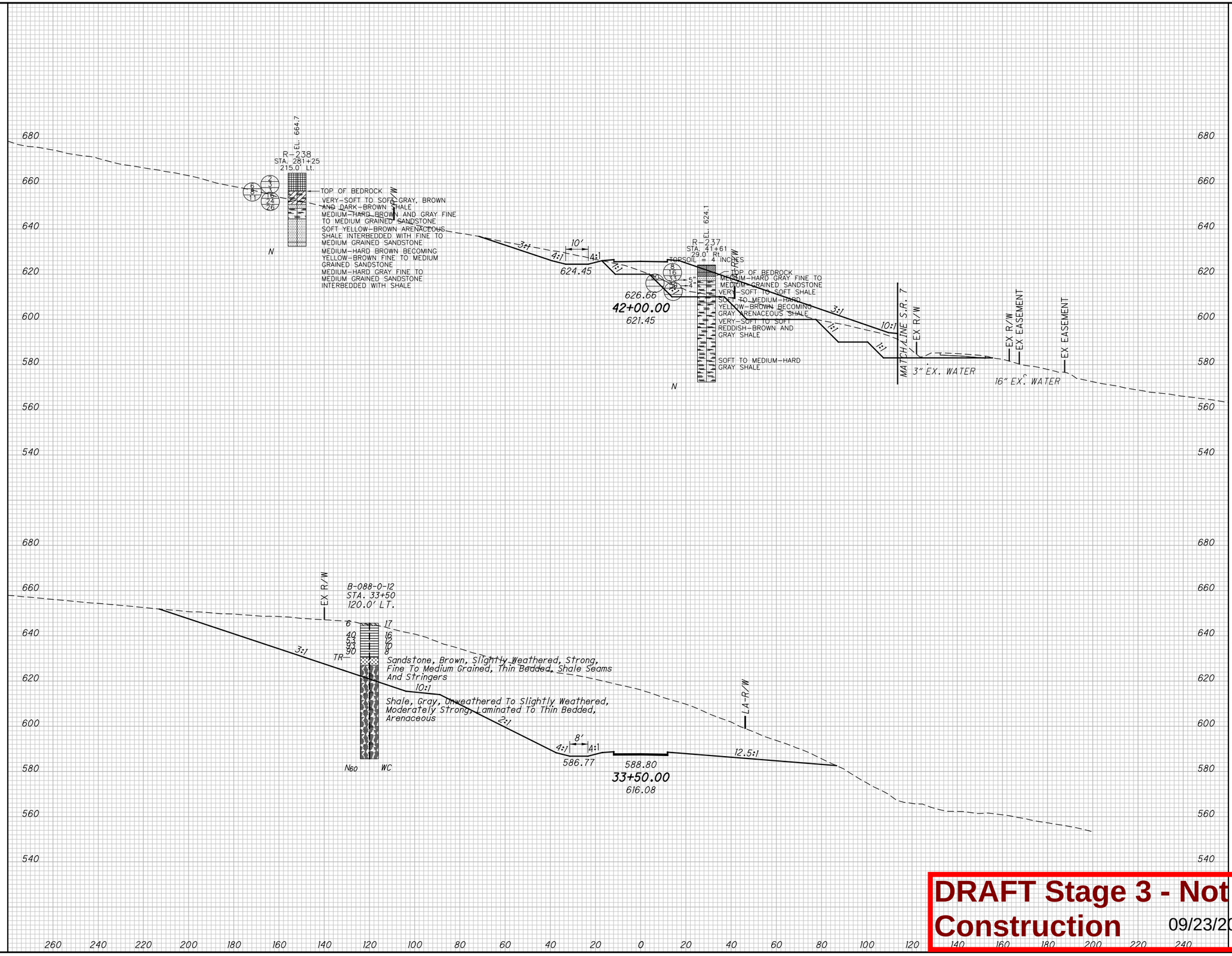

0 10 20 40
HORIZONTAL SCALE IN FEET

DRAWN MSJ
CHECKED EMK

CROSS SECTIONS - C.R. 69
STATIONS 33+50.00 & 42+00.00

LAW-7-2.17

143/206

1184/1247

DRAFT Stage 3 - Not for Construction 09/23/2024

U:\17360714\LAW\75923\geotechnical\sheets\CR 69\75923XS69-2.dgn 5/17/2024 8:20:16 AM MJennings

CROSS SECTION - C.R. 69
STATION 46+50.00

HORIZONTAL SCALE IN FEET
0 10 20 40

DRAWN MSJ
CHECKED EMK

LAW-7-2.17

144/206
1185/1247

DRAFT Stage 3 - Not for Construction 09/23/2024

U:\17360871 4\LAW\75923\geotechnical\sheets\CR 69\75923XS69-3.dgn 5/17/2024 8:20:57 AM MJennings

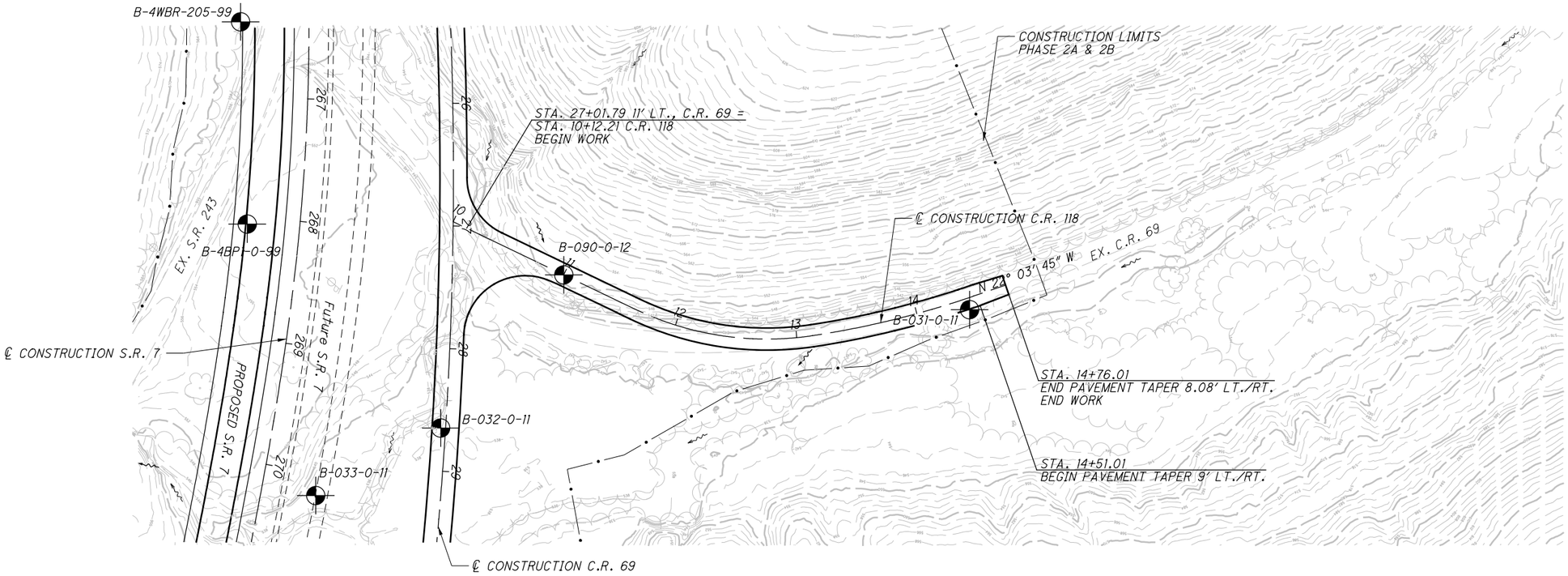

FOR S.R. 7 PLAN & PROFILE, SEE SHEETS 60-61
FOR C.R. 69 PLAN & PROFILE, SEE SHEETS 138-141

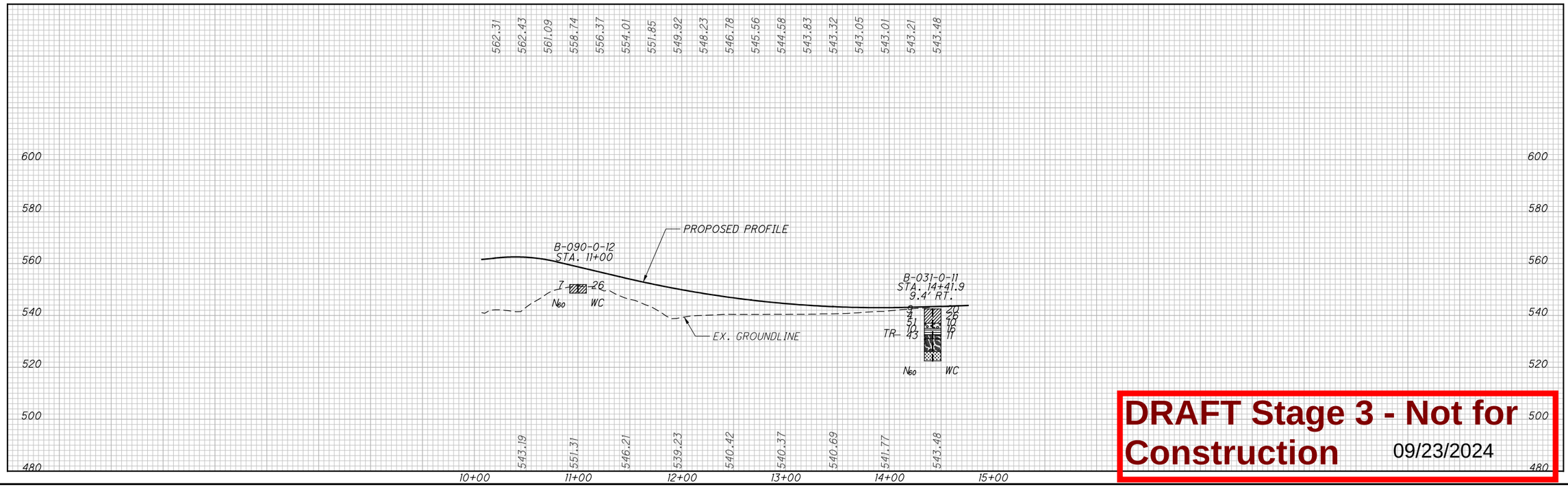

DRAFT Stage 3 - Not for Construction 09/23/2024

SOIL PROFILE - ROADWAY
C.R. 118 - STA. 10+00 - 14+76.01

LAW-7-2.17

145/206

1186
1247

HORIZONTAL SCALE IN FEET
0 25 50 100

DRAWN MSJ
CHECKED EMK

U:\173608714\LAW\75923\geotechnical\sheets\CR 118\75923IP001.dgn 5/17/2024 8:28:28 AM MJennings

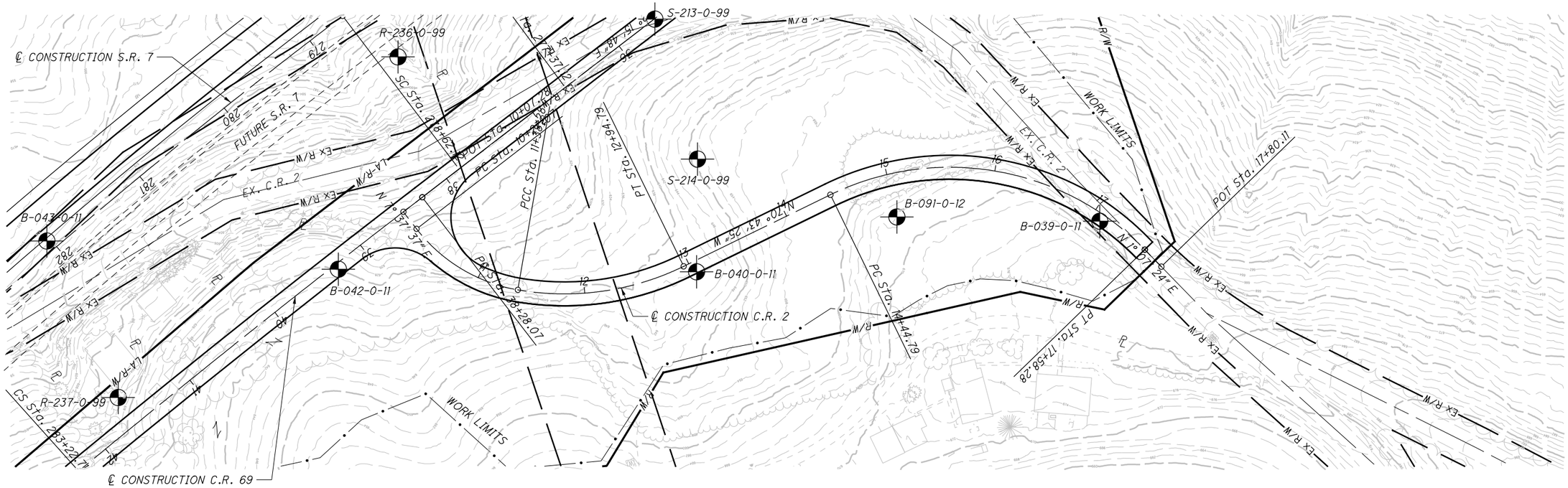

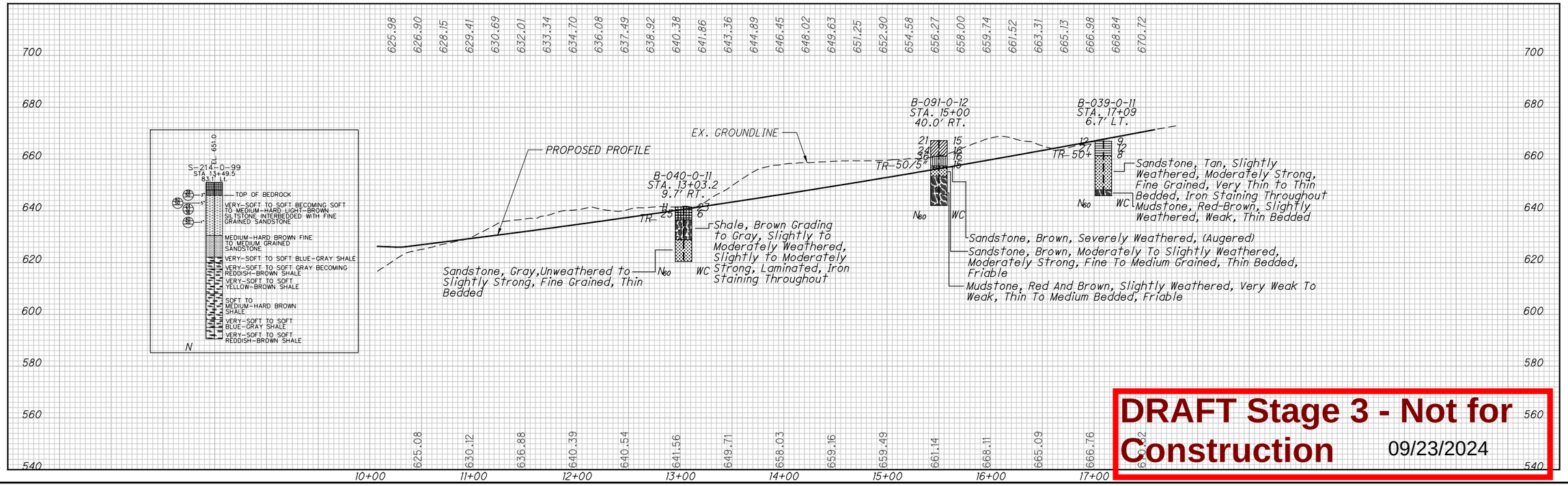

DRAFT Stage 3 - Not for Construction 09/23/2024

HORIZONTAL SCALE IN FEET
0 25 50 100

DRAWN MSJ
CHECKED EMK

SOIL PROFILE - ROADWAY
C.R. 2 STA. 10+07.28 - 17+58.28

LAW-7-2.17

146/206

1187
1247

U:\173608714\LAW\75923\geotechnical\sheets\CR 2\75923IP001.dgn 5/17/2024 8:29:33 AM MJennings

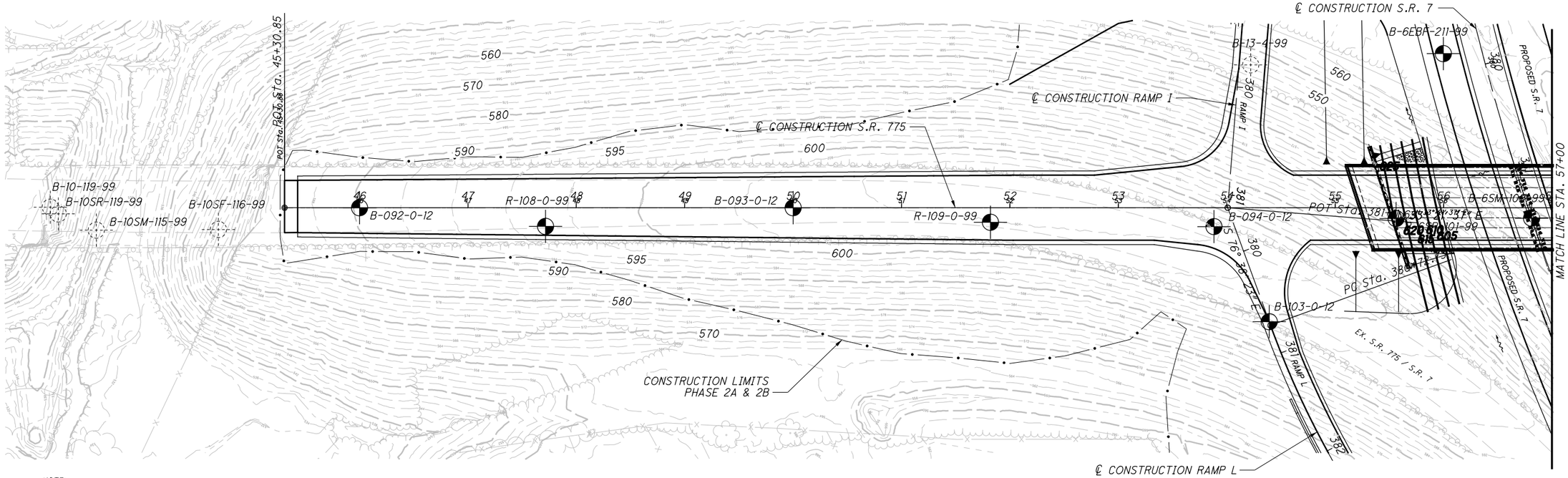

NOTE:
Borings B-10-99 Shown on Plan View are From Previous Exploration Law 7-7.25 By BBCM Dated 10/30/2000. All Available Data is Shown Which Was Available From Those Reports.

FOR S.R. 7 PLAN & PROFILE, SEE SHEETS 70-71
FOR S.R. 775 BRIDGE LAW-775-1.05, SEE SHEET 151
FOR RAMP I PLAN AND PROFILE, SEE SHEET 125
FOR RAMP L PLAN AND PROFILE, SEE SHEET 134

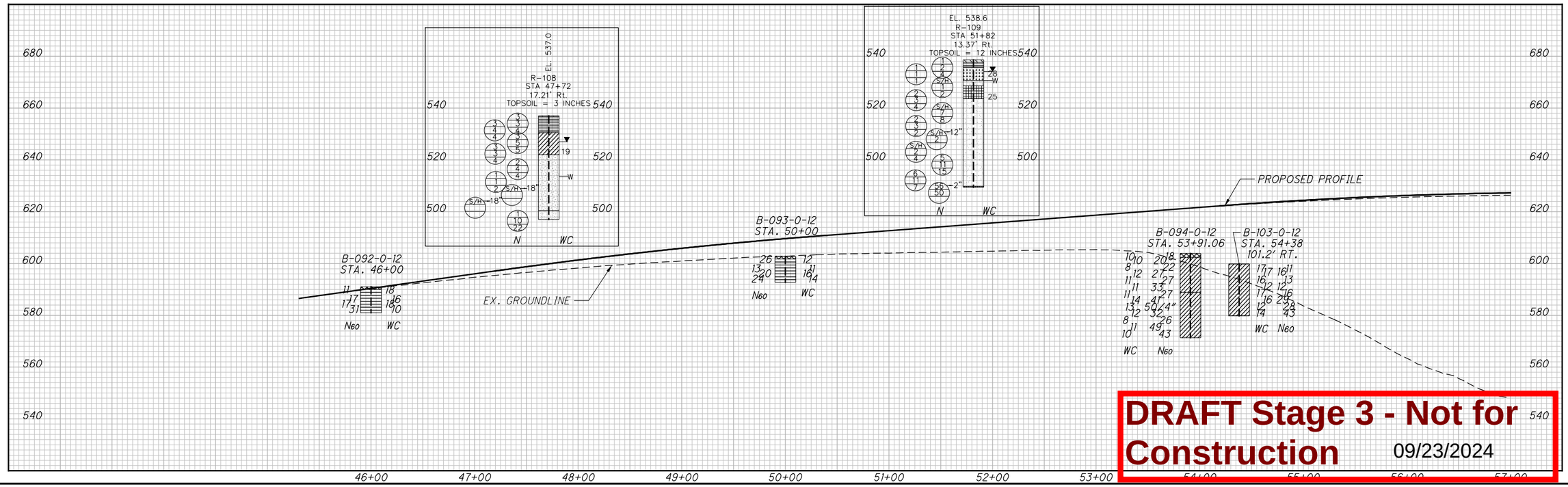

DRAFT Stage 3 - Not for Construction 09/23/2024

SOIL PROFILE - ROADWAY
S.R. 775 - STA. 45+42.93 - 55+00.00

HORIZONTAL SCALE IN FEET
0 25 50 100

DRAWN MSJ CHECKED EMK

LAW-7-2.17

147/206

1188/1247

U:\173608714\LAW\75923\geotechnical\sheets\SR 775\75923IP001.dgn 5/17/2024 8:30:44 AM MJennings

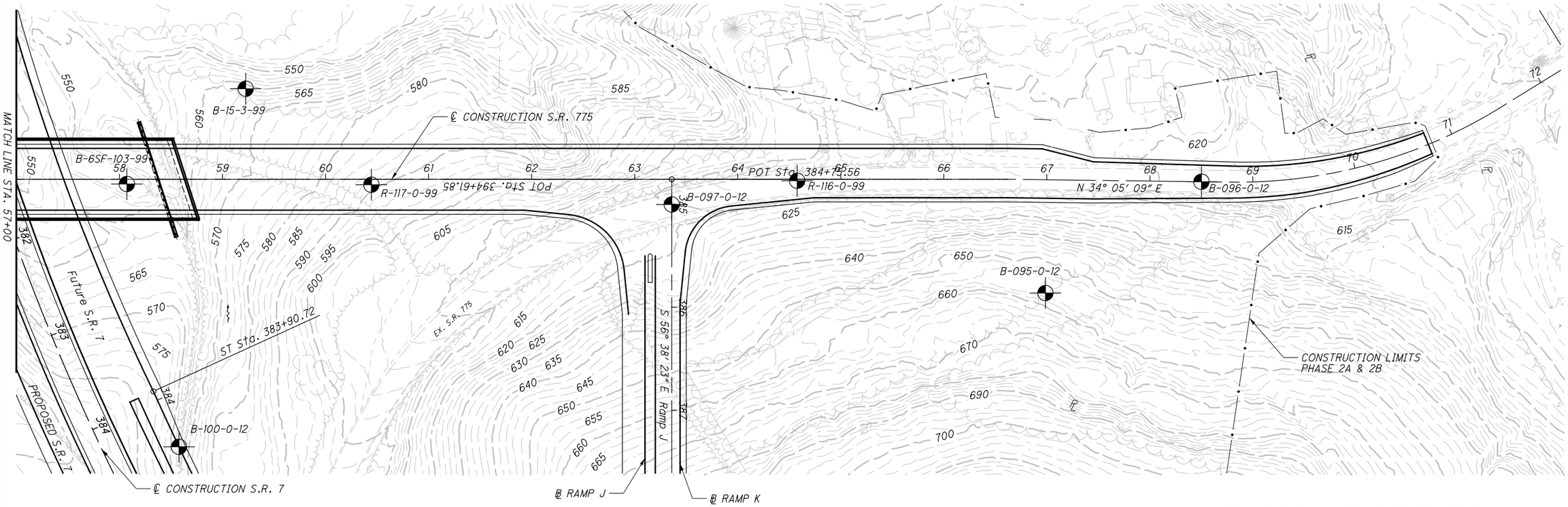

FOR S.R. 7 PLAN & PROFILE, SEE SHEETS 70-71
FOR S.R. 775 BRIDGE LAW-775-1.05, SEE SHEET 151
FOR RAMP J PLAN AND PROFILE, SEE SHEET 128
FOR RAMP K PLAN AND PROFILE, SEE SHEET 129

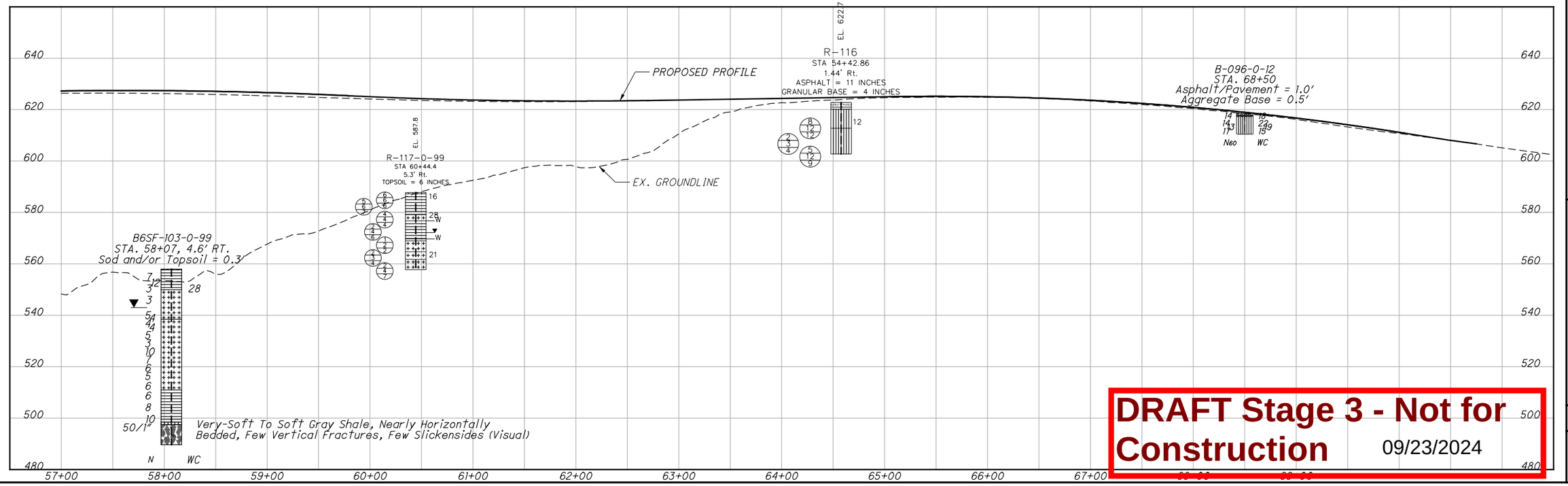

DRAFT Stage 3 - Not for Construction 09/23/2024

HORIZONTAL SCALE IN FEET
0 25 50 100

DRAWN MSJ
CHECKED EMK

SOIL PROFILE - ROADWAY
S.R. 775 - STA. 57+00 - 70+45.38

LAW-7-2.17

148/206

1189
1247

U:\173608714\LAW\75923\geotechnical\sheets\SR 775\75923IP002.dgn 5/17/2024 8:31:26 AM MJennings

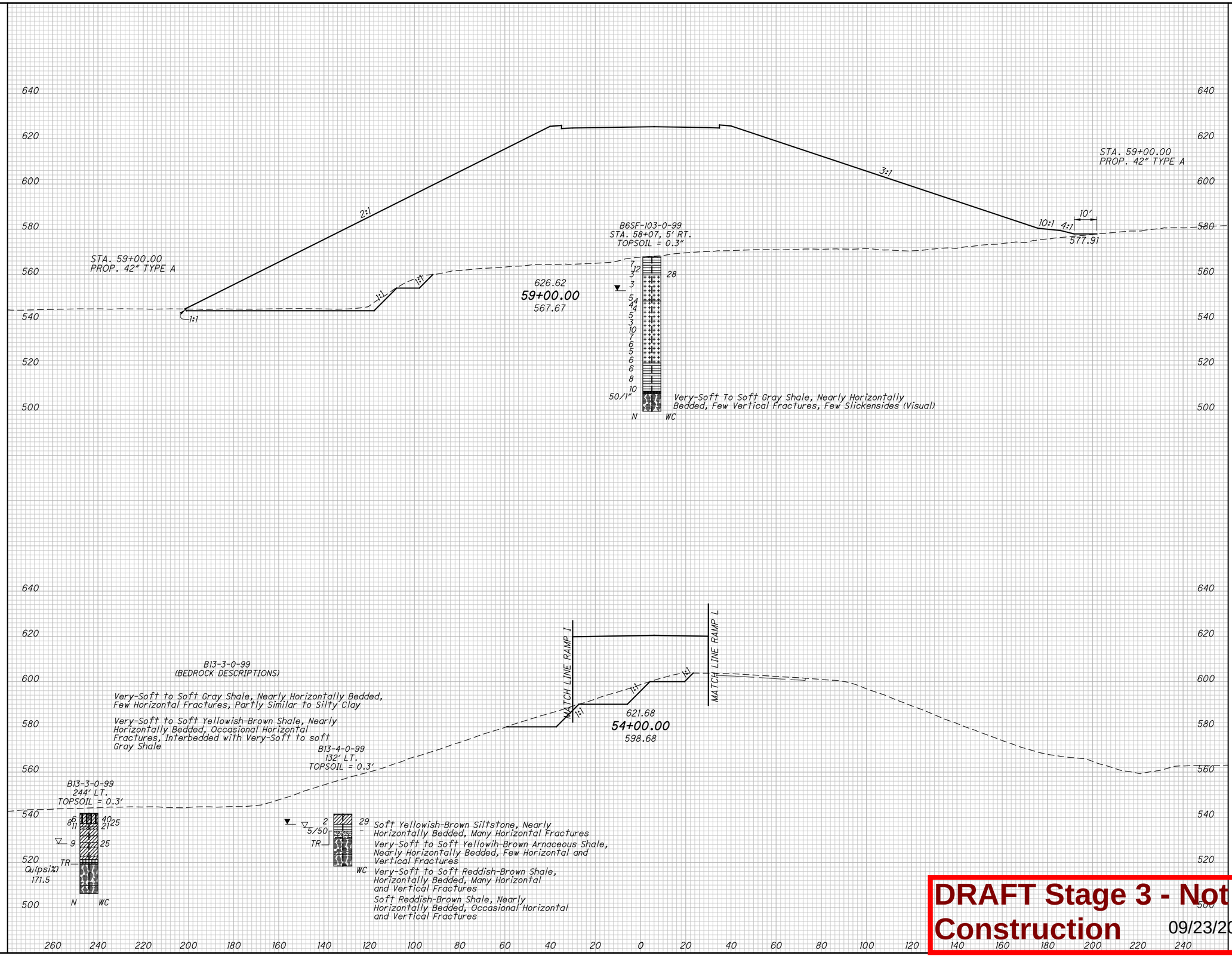

DRAFT Stage 3 - Not for Construction 09/23/2024

HORIZONTAL SCALE IN FEET
0 10 20 40

DRAWN MSJ
CHECKED EMK

CROSS SECTIONS - S.R. 775
STATIONS 54+00.00 & 59+00.00

LAW-7-2.17

149/206

1190
1247

U:\173608714\LAW\75923\geotechnical\sheets\SR 775\75923XS5400.dgn 5/17/2024 8:32:28 AM MJennings

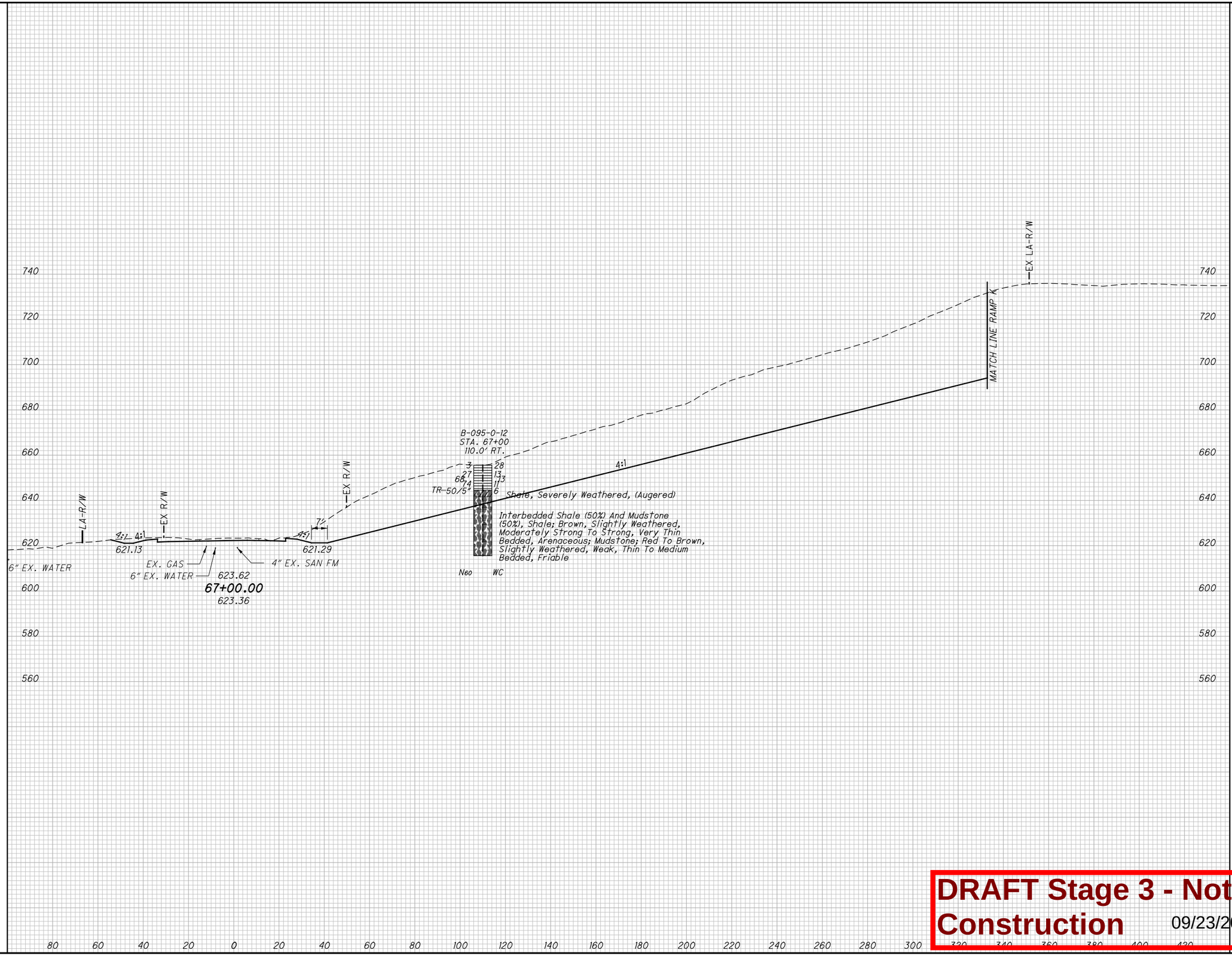

DRAFT Stage 3 - Not for Construction 09/23/2024

0 10 20 40
HORIZONTAL SCALE IN FEET

DRAWN MSJ
CHECKED EMK

CROSS SECTION - S.R. 775
STATION 67+00.00

LAW-7-2.17

150/206

1191
1247

U:\173608714\LAW\75923\geotechnical\sheets\SR 775\75923XS6700.dgn 5/17/2024 8:33:11 AM MJennings

BRIDGE NO. B-14

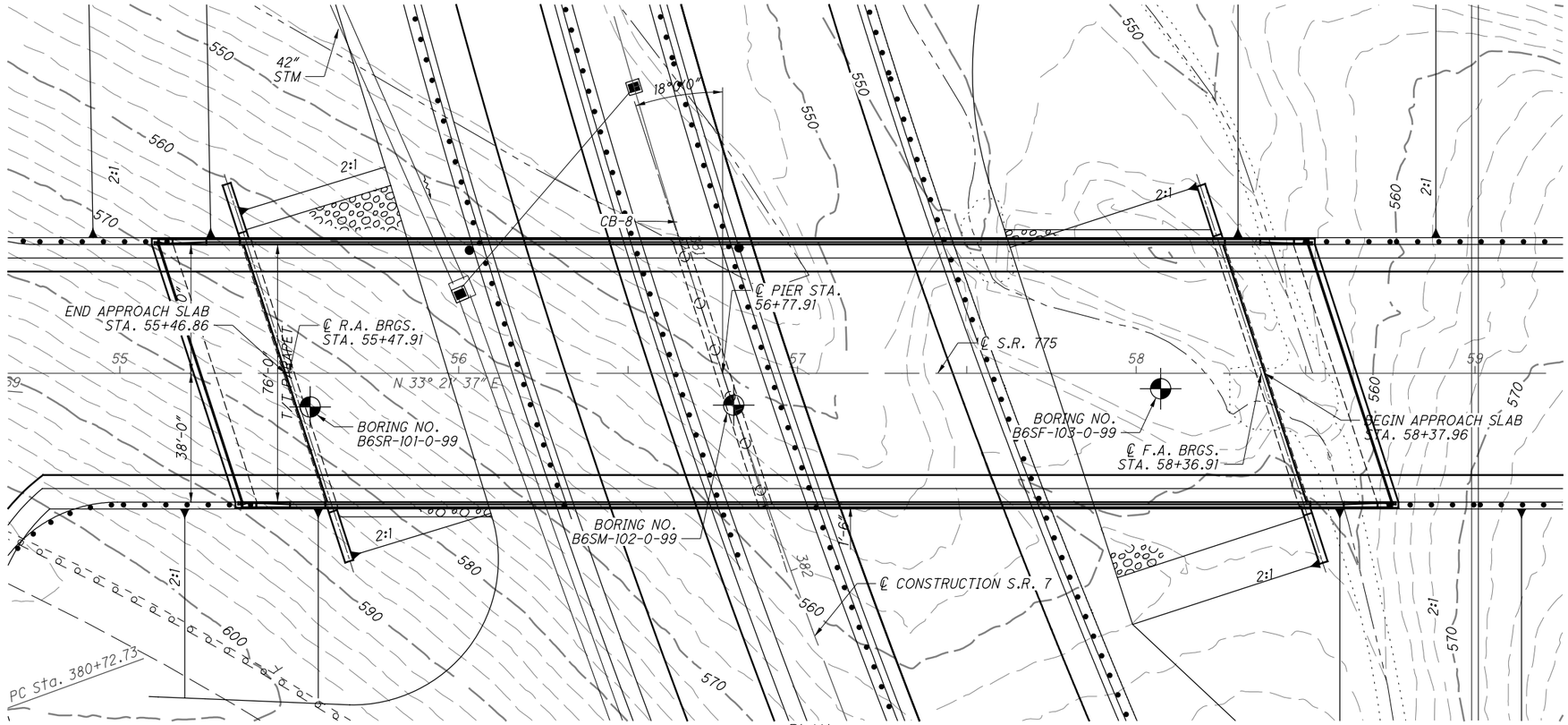

PLAN

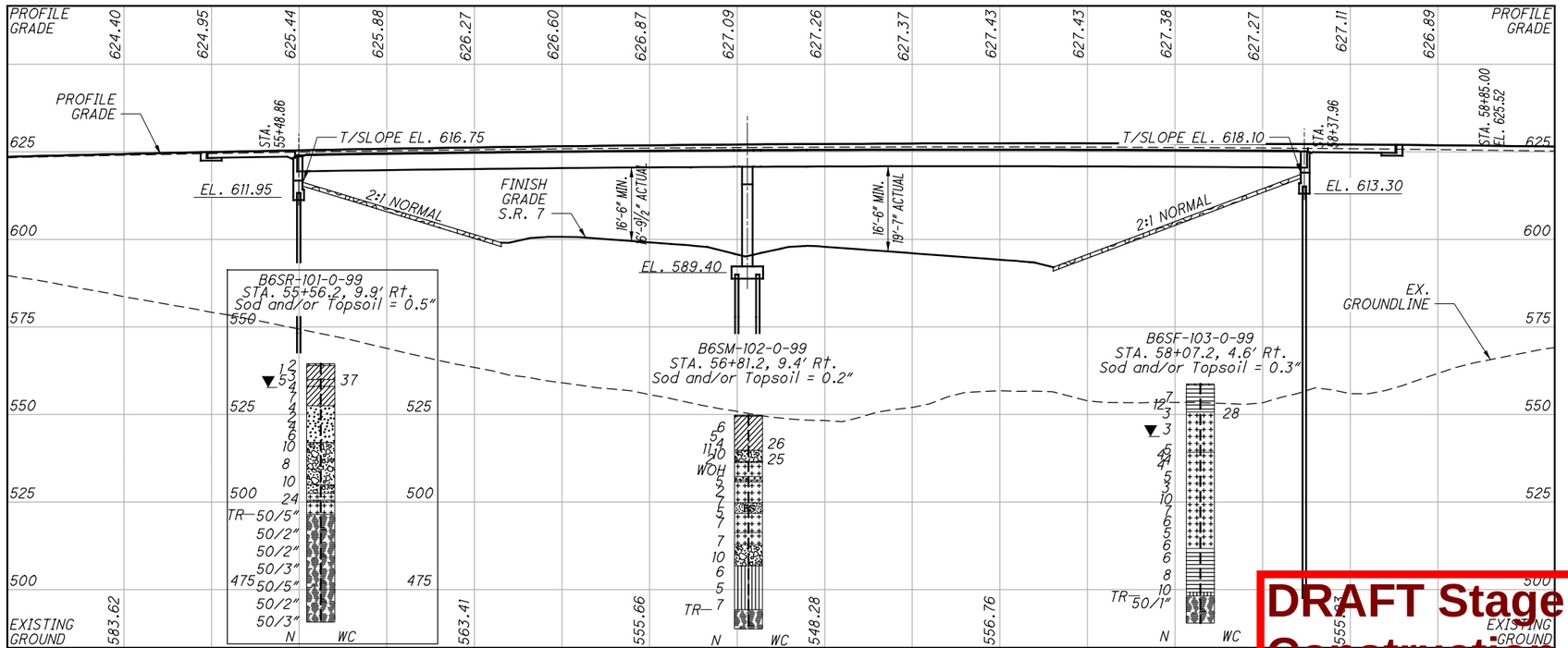

PROFILE ALONG ℄ SURVEY & CONST. S.R. 775

DRAFT Stage 3 - Not for Construction
09/23/2024

HORIZONTAL SCALE IN FEET
0 12.5 25 50

DRAWN MSJ
CHECKED EMK

STRUCTURE FOUNDATION EXPLORATION
LAW-775-01.05
S.R. 775 OVER S.R. 7

LAW-7-2.17

151/206

1192/1247

U:\173608714\LAW 75923\geotechnical\sheets\LAW-7-SR775-01-05\759237P001.dgn 5/17/2024 8:39:39 AM MJennings

BRIDGE-LAW-7-02.51: STA. 132+20.7, 1.2' Lt. of PROPOSED SR 7 CENTERLINE

LAW-7-02.51

BBC&M ENGINEERING INC.

LOG OF BORING NO. B-1BP1
LAW-7 PRELIMINARY INVESTIGATION
LAWRENCE COUNTY, OHIO

Page 1 of 3

TYPE: 3-1/4" I.D. Hollow-stem Auger; 2" O.D. Split-barrel Sampler; NXM Rock Core Barrel
LOCATION: Sta. 132+20.7, 1.2' Lt. of Proposed SR7 Centerline
COMPLETION DEPTH: 93.1' ELEVATION: 578.1 DATE: 11/9/98 11/10/98

DEPTH, FEET	SAMPLE NO.	SAMPLES SAMPLING EFFORT	HAND PENE-TROMETER tsf	MOISTURE CONTENT %	LIQUID LIMIT %	PLASTIC LIMIT %	AGG.	C.S.	F.S.	SILT/CLAY	DESCRIPTION
0											TOPSOIL - 1 INCH
	1	4/12 12	4.5+								Hard light-brown mottled with gray silty clay, trace fine to coarse sand, contains few silt seams, desiccated.
5	2	18/24 14	4.5+	15	51	33	0	1	1	49	49
	3	10/24 10	4.5+								A-7-6(17)
	4	13/24 12		30							Medium-dense brown silt, little fine sand. Est. A-4b
10	5	8/24 9	4.5+								Hard light-brown silty clay, interbedded with silt, trace fine sand, desiccated. Est. A-6b
	6	8/24 9									Medium-dense brown silt, interbedded with silty clay, trace fine sand.
15	7	10/24 10									Est. A-4b
	8	16/24 16		16							Hard brown mottled with gray silty clay, contains silt seams, slightly desiccated.
20	9	8/24 9	4.25+4.5								Est. A-6b
25	10A	8/24 11	4.5+								Hard brown silty clay, interbedded with silt and fine sand, desiccated.
	10B		4.5+								Est. A-6b
30	11	9/24 9	4.5+	31	38	26	0	0	3	36	64
											Hard brown silty clay, slightly desiccated, few traces of iron oxide staining, contains silt seams. A-6a(9)
35											

WATER LEVEL: ▽
WATER NOTE: Caved at 29'5"
DATE: 11/10/98

JOB: 6405.1 CONTINUED- PLATE 5

LAW-7-02.51

BBC&M ENGINEERING INC.

LOG OF BORING NO. B-1BP1
LAW-7 PRELIMINARY INVESTIGATION
LAWRENCE COUNTY, OHIO

Page 2 of 3

TYPE: 3-1/4" I.D. Hollow-stem Auger; 2" O.D. Split-barrel Sampler; NXM Rock Core Barrel
LOCATION: Sta. 132+20.7, 1.2' Lt. of Proposed SR7 Centerline
COMPLETION DEPTH: 93.1' ELEVATION: 578.1 DATE: 11/9/98 11/10/98

DEPTH, FEET	SAMPLE NO.	SAMPLES SAMPLING EFFORT	HAND PENE-TROMETER tsf	MOISTURE CONTENT %	LIQUID LIMIT %	PLASTIC LIMIT %	AGG.	C.S.	F.S.	SILT/CLAY	DESCRIPTION - CONTINUED
35											Hard brown silty clay, slightly desiccated, few traces of iron oxide staining, contains silt seams. A-6a(9)
	12	6/24 9	4.0-4.5+								Very-stiff to hard dark-brown mottled with gray silty clay, contains thin seams of silt.
40											Est. A-6b
	13	7/24 8	3.75-4.5								Very-stiff gray-brown silty clay, interbedded with very thin seams of fine sand. Est. A-6b
45	14A	6/24 9	1.25-3.5	23							Very-stiff to hard gray-brown becoming gray silty clay, trace to little fine sand, few seams of gray silt.
	14B		4.5+								
50											
	15	5/24 6	3.0-3.5	24							
55											
	16	8/24 9	3.75-4.5								
60											
	17	7/24 8	2.5+4.0								
65											
	18	4/24 5	1.2-2.7	39	38	24					Stiff to very-stiff gray silty clay, few to many fine to medium sand seams, few silt seams. Est. A-6b
70											

WATER LEVEL: ▽
WATER NOTE: Caved at 29'5"
DATE: 11/10/98

JOB: 6405.1 CONTINUED- PLATE 6

LAW-7-02.51

BBC&M ENGINEERING INC.

LOG OF BORING NO. B-1BP1
LAW-7 PRELIMINARY INVESTIGATION
LAWRENCE COUNTY, OHIO

Page 1 of 3

TYPE: 3-1/4" I.D. Hollow-stem Auger; 2" O.D. Split-barrel Sampler; NXM Rock Core Barrel
LOCATION: Sta. 132+20.7, 1.2' Lt. of Proposed SR7 Centerline
COMPLETION DEPTH: 93.1' ELEVATION: 578.1 DATE: 11/9/98 11/10/98

DEPTH, FEET	SAMPLE NO.	SAMPLES SAMPLING EFFORT	HAND PENE-TROMETER tsf	MOISTURE CONTENT %	LIQUID LIMIT %	PLASTIC LIMIT %	AGG.	C.S.	F.S.	SILT/CLAY	DESCRIPTION
0											TOPSOIL - 1 INCH
	1	4/12 12	4.5+								Hard light-brown mottled with gray silty clay, trace fine to coarse sand, contains few silt seams, desiccated.
5	2	18/24 14	4.5+	15	51	33	0	1	1	49	49
	3	10/24 10	4.5+								A-7-6(17)
	4	13/24 12		30							Medium-dense brown silt, little fine sand. Est. A-4b
10	5	8/24 9	4.5+								Hard light-brown silty clay, interbedded with silt, trace fine sand, desiccated. Est. A-6b
	6	8/24 9									Medium-dense brown silt, interbedded with silty clay, trace fine sand.
15	7	10/24 10									Est. A-4b
	8	16/24 16		16							Hard brown mottled with gray silty clay, contains silt seams, slightly desiccated.
20	9	8/24 9	4.25+4.5								Est. A-6b
25	10A	8/24 11	4.5+								Hard brown silty clay, interbedded with silt and fine sand, desiccated.
	10B		4.5+								Est. A-6b
30	11	9/24 9	4.5+	31	38	26	0	0	3	36	64
											Hard brown silty clay, slightly desiccated, few traces of iron oxide staining, contains silt seams. A-6a(9)
35											

WATER LEVEL: ▽
WATER NOTE: Caved at 29'5"
DATE: 11/10/98

JOB: 6405.1 CONTINUED- PLATE 5

DRAFT Stage 3 - Not for Construction 09/23/2024

DRAWN MSJ
CHECKED EMK

STRUCTURE FOUNDATION EXPLORATION
LAW-7-02.51

LAW-7-2.17

152/206

1193/1247

BRIDGE-LAW-7-02.51: STA. 133+30, 60.0' Rt. of PROPOSED SR 7 CENTERLINE

LAW-7-02.51

BBC&M ENGINEERING INC.

LOG OF BORING NO. B1EB-201
PHASE 2 SUBSURFACE INVESTIGATION, LAW-7
LAWRENCE COUNTY, OHIO

Page 1 of 1

TYPE: 3-1/4" I.D. Hollow-stem Auger; 2" O.D. Split-barrel Sampler; NXM Rock Core Barrel
LOCATION: Sta. 133+30, 60' Rt. of Proposed SR 7 Centerline
COMPLETION DEPTH: 38.0' ELEVATION: 526.0 DATE: 4/4/00

DEPTH, FEET	SAMPLE NO.	SAMPLES SAMPLING EFFORT	HAND PENE-TROMETER tsf	MOISTURE CONTENT %	LIQUID LIMIT %	PLASTIC LIMIT %	AGG.	C.S.	F.S.	SILT,CLAY
0										
5	1	2-3-3	2.5-3.25							
	2	2-3-3	2.0-3.5	27	36	23	0	1	4	95
10	3	2-3-4	2.0-3.5							
	4	2-3-6	2.5-3.75				0	0	2	53 / 45
	5	2-3-5	2.5-3.0				0	0	2	48 / 50
15	6	2-3-4	1.5-2.75				0	0	4	48 / 50
	7	2-2-2	1.0-1.75				0	0	3	49 / 48
20	8	2-2-4								
	9	1-1-2					0	18	65	17
25	10	2-3-5								
	11	4-5-6								
30	12	4-5-5								
	13	4-6-5								
35	14	NXM REC 97% RQD 23%								
40										
45										

DESCRIPTION

Very-soft to soft brown silty clay, trace fine to coarse sand, trace fine gravel, slightly organic.

Est. A-6a

Stiff to very-stiff brown mottled with gray silty clay, trace fine to coarse sand, slightly organic, many silt seams.

A-6a (9)

Very-loose becoming medium-dense brown and gray fine to medium sand, trace coarse sand, trace to little silt, few seams of gray silty clay.

A-3a (0)

Medium-hard gray fine to medium-grained sandstone, interbedded with siltstone, well cemented, nearly horizontally bedded, few horizontal fractures.

Visual

-Encountered water at 16'

WATER LEVEL: ▽ ▽ ▽ ▽ ▽ ▽
WATER NOTE:
DATE:

JOB: 01106405.002

PLATE 8

BRIDGE-LAW-7-02.51: STA. 134+58.6, 4.6' Lt. of PROPOSED SR 7 CENTERLINE

LAW-7-02.51

BBC&M ENGINEERING INC.

LOG OF BORING NO. B-1BP2
LAW-7-2.17 PRELIMINARY INVESTIGATION
LAWRENCE COUNTY, OHIO

Page 1 of 2

TYPE: 3-1/4" I.D. Hollow-stem Auger; 2" O.D. Split-barrel Sampler; NXM Rock Core Barrel
LOCATION: Sta. 134+58.6, 4.6' Lt. of Proposed SR 7 Centerline, Mercer
COMPLETION DEPTH: 42.5' ELEVATION: 523.6 DATE: 11/10/98

DEPTH, FEET	SAMPLE NO.	SAMPLES SAMPLING EFFORT	HAND PENE-TROMETER tsf	MOISTURE CONTENT %	LIQUID LIMIT %	PLASTIC LIMIT %	AGG.	C.S.	F.S.	SILT,CLAY
0										
5	1	2-3-2	1.75-3.5							
	2	2-3-1								
10	3	2-3-1	0.5-3.0							
	4	1-1-1								
15	5A	2-3-2								
	5B	2-3-5	1.0	22			4	44	35	17
	5C	3-3-4		29	31	23	7	61	23	3 / 6
	6	2-2-2					0	1	8	54 / 37
	7A	2-2-3					1	14	78	7
	7B		0.75				0	23	74	3
20	8A	2-3-4	1.0							
	8B						2	33	52	9 / 4
	9	5-7-8								
25	10*	9-14-9								
	10B	9-15-10	1.5							
30	12**	8-15-25								
	13	50-5"R	4.5+							
	14	NXM REC 100% RQD 39%								
35										

DESCRIPTION

TOPSOIL - 1 INCH

Stiff to very-stiff brown silty clay, little fine to medium sand, contains many seams and lenses of fine to medium sand, few roots.

Est. A-6a

Very-loose brown fine to medium sand, little clayey silt, few zones of clayey silt interbedded with fine to medium sand, partly organic.

Est. A-3a

Medium-stiff to stiff dark-gray organic silty clay, interbedded with fine to medium sand, contains decayed vegetation.

Visual

Very-loose gray fine to medium sand, trace coarse sand, little clayey silt, contains wood fragments.

A-3a(0)

Very-loose gray fine to medium sand, trace coarse sand, trace clayey silt.

A-1-b(0)

Stiff gray clayey silt, trace fine to medium sand, slightly organic.

Est. A-4b

Loose gray fine sand, little to some medium to coarse sand, trace silt, slightly organic.

A-3(0)

Medium-stiff to stiff organic silty clay, trace fine sand, contains silt and fine sand seams.

Visual

Loose to medium-dense dark-gray becoming gray fine to medium sand, trace coarse sand, little clayey silt, trace fine gravel, slightly organic.

A-3a(0)

Stiff gray silty clay, interbedded with fine to medium sand, slightly organic.

Est. A-6a

Medium-dense gray fine to medium sand, little clayey silt.

Est. A-1-b

Very-soft to soft gray siltstone.

Medium-hard gray siltstone, nearly horizontally bedded, contains many diagonal fractures and fractures along bedding planes, few seams of shale.

Visual

WATER LEVEL: ▽ 9.5 ▽ ▽ ▽ ▽ ▽
WATER NOTE:
DATE: 11/10/98

JOB: 6405.1

-CONTINUED-

PLATE 9

LAW-7-02.51

BBC&M ENGINEERING INC.

LOG OF BORING NO. B-1BP2
LAW-7-2.17 PRELIMINARY INVESTIGATION
LAWRENCE COUNTY, OHIO

Page 2 of 2

TYPE: 3-1/4" I.D. Hollow-stem Auger; 2" O.D. Split-barrel Sampler; NXM Rock Core Barrel
LOCATION: Sta. 134+58.6, 4.6' Lt. of Proposed SR 7 Centerline, Mercer
COMPLETION DEPTH: 42.5' ELEVATION: 523.6 DATE: 11/10/98

DEPTH, FEET	SAMPLE NO.	SAMPLES SAMPLING EFFORT	HAND PENE-TROMETER tsf	MOISTURE CONTENT %	LIQUID LIMIT %	PLASTIC LIMIT %	AGG.	C.S.	F.S.	SILT,CLAY
40	15	REC 100% RQD 75%								
45										
50										
55										
60										
65										
70										
75										

DESCRIPTION - CONTINUED

Medium-hard gray shale, nearly horizontally bedded, contains few fractures along bedding planes.

Visual

- Encountered water at 12.5'.
- Encountered auger refusal at 32.0'.
- * Blowin during driving.
- # 3" of blow-in ("heave") - cleaned out prior to sampling
- ** 1" of blow-in ("heave") - cleaned out before blow counts.

WATER LEVEL: ▽ 9.5 ▽ ▽ ▽ ▽ ▽
WATER NOTE:
DATE: 11/10/98

JOB: 6405.1

PLATE 10

DRAFT Stage 3 - Not for Construction 09/23/2024

DRAWN M.S.J. CHECKED E.M.K.

STRUCTURE FOUNDATION EXPLORATION
LAW-7-02.51

LAW-7-2.17

BRIDGE-LAW-7-02.51: STA. 135+60, 35.0' Lt. of PROPOSED SR 7 CENTERLINE

LAW-7-02.51

BBC&M ENGINEERING, INC.

LOG OF BORING NO. B1WBF-202
PHASE 2 SUBSURFACE INVESTIGATION, LAW-7
LAWRENCE COUNTY, OHIO

Page 1 of 1

TYPE: 3-1/4" I.D. Hollow-stem Auger; 2" O.D. Split-barrel Sampler; NXM Rock Core Barrel

LOCATION: Sta. 135+60, 35' Lt. of Proposed SR 7 Centerline

COMPLETION DEPTH: 46.0' ELEVATION: 524.0 DATE: 4/3/06

DEPTH FEET	SAMPLE NO.	SAMPLES SAMPLING RECOVERY	BLOWS PER 6"	N-VALUE OR RQD TREATMENT	MOISTURE CONTENT %	LIQUID LIMIT	PLASTIC LIMIT	GRAVEL %	SAND %	SILT %	CLAY %	DESCRIPTION
0												TOPSOIL - 7 INCHES
	1	2/3/3										Medium-stiff to stiff brown silty clay, trace fine to medium sand, few silt seams.
5	2	2/3/3	9-73-1	7%	26	36	24	0	1	20	79	A-6a (9)
	3	2/3/3										Very-loose to loose brown and gray fine to medium sand, some to "and" clayey silt, contains decayed wood fragments, slightly organic.
	4	2/3/3										Est. A-4a
10	5	2/3/3										Very-loose to loose brown and gray fine to coarse sand, trace to little clayey silt, trace fine gravel, contains decayed wood fragments, slightly organic.
	6	2/3/3						4	38	53	5	
15	7	2/3/3										
	8	2/3/3										
20	9	4/5/5										
	10	3/5/5										
25	11	3/5/4										A-1-b (0)
	12	3/5/4	9-5-1-25									Medium-stiff to stiff gray clayey silt, some fine to medium sand.
30	13	5/11-12		12								Est. A-4a
												Very-loose gray and brown fine to coarse sand, trace fine to coarse gravel, trace silt.
35												Est. A-3a
	14	50-5"R NXM REC 90% RQD 82%										Medium-hard to hard gray fine-grained sandstone, nearly horizontally bedded, well cemented, few diagonal fractures, vertical fracture at 38.0'.
40												Visual
												Medium-hard gray shale, interbedded with siltstone, nearly horizontally bedded, well cemented, few horizontal fractures.
45												Visual
												-Encountered water at 11.5'

WATER LEVEL: ▽ ▼ ▼ ▽ ▽ ▽
WATER NOTE:
DATE:

JOB: 01106405.002

PLATE 11

DRAFT Stage 3 - Not for Construction 09/23/2024

DRAWN M.S.J. CHECKED E.M.K.

STRUCTURE FOUNDATION EXPLORATION
LAW-7-02.51

LAW-7-2.17

PROJECT: LAW - 7 - 2.17	DRILLING FIRM / OPERATOR: HORN / T.L.	DRILL RIG: CME 55 TRACK	STATION / OFFSET: 196+24, 100 LT	EXPLORATION ID B-009-1-12
TYPE: STRUCTURE	SAMPLING FIRM / LOGGER: HORN / T.L.	HAMMER: CME AUTOMATIC	ALIGNMENT: MAINLINE	
PID: 75923 BR ID:	DRILLING METHOD: 3.25" HSA / NQ	CALIBRATION DATE: 4/30/13	ELEVATION: 565.5 (MSL) EOB: 58.7 ft.	PAGE 1 OF 1
START: 5/1/13 END: 5/1/13	SAMPLING METHOD: SPT/ST/NQ	ENERGY RATIO (%): 85.9	LAT / LONG: Not Recorded	

MATERIAL DESCRIPTION AND NOTES	ELEV. 565.5	DEPTHS	SPT/ RQD	N60	REC (%)	SAMPLE ID	HP (tsf)	GRADATION (%) GR	CS	FS	SI	CL	ATTERBERG LL	PL	PI	WC	ODOT CLASS (GI)	ABAN-DONED
MEDIUM STIFF, BROWN, **SANDY SILT**, SOME CLAY, TRACE TO NO GRAVEL, MOIST			1 1 2	4	100	SS-1	-	-	-	-	-	-	-	-	-	21	A-4a (V)	
		2.5	WOH WOH WOH	0	100	SS-2	-	0	0	29	44	27	29	19	10	23	A-4a (7)	
		5.0	3 2 2	6	100	SS-3	-	-	-	-	-	-	-	-	-	24	A-4a (V)	
		7.5			92	ST-4	-	12	14	27	27	20	27	17	10	10	A-4a (2)	
	556.0																	
VERY STIFF TO HARD, BROWN, **SILT AND CLAY**, AND SAND, TRACE GRAVEL, DAMP TO MOIST		10.0	5 11 10	30	100	SS-5	-	-	-	-	-	-	-	-	-	13	A-6a (V)	
		12.5			100	ST-6	-	9	14	28	23	26	28	16	12	-	A-6a (3)	
		15.0	4 10 8	26	100	SS-7	-	-	-	-	-	-	-	-	-	17	A-6a (V)	
		17.5	6 6 7	19	100	SS-8	-	-	-	-	-	-	-	-	-	19	A-6a (V)	
	546.0																	
VERY STIFF, BROWN, **SILTY CLAY**, LITTLE SAND, MOIST		20.0			100	ST-9	-	0	1	16	38	45	35	17	18	-	A-6b (11)	
		22.5	4 7 8	21	100	SS-10	-	-	-	-	-	-	-	-	-	21	A-6b (V)	
		25.0	4 5 6	16	100	SS-11	-	-	-	-	-	-	-	-	-	24	A-6b (V)	
		27.5	4 6 7	19	100	SS-12	-	-	-	-	-	-	-	-	-	20	A-6b (V)	
		30.0	3 3 4	10	100	SS-13	-	-	-	-	-	-	-	-	-	18	A-6b (V)	
	533.5																	
MEDIUM DENSE, BROWN, **COARSE AND FINE SAND**, LITTLE SILT AND CLAY, WET		W 32.5	6 7 7	20	100	SS-14	-	0	1	74	14	11	NP	NP	NP	25	A-3a (0)	
		35.0	4 4 6	14	100	SS-15	-	-	-	-	-	-	-	-	-	23	A-3a (V)	
		37.5																
		40.0	3 8 8	23	100	SS-16	-	-	-	-	-	-	-	-	-	22	A-3a (V)	
		42.5																
	520.2	TR 45.0	6 13 17	43	100	SS-17	-	-	-	-	-	-	-	-	-	17	Rock (V)	
MUDSTONE, BROWN, SEVERELY WEATHERED, (AUGERED).		47.5																
	516.8																	
MUDSTONE, GRAY AND BROWN, SLIGHTLY WEATHERED, WEAK, THIN BEDDED, GRAY SANDSTONE SEAM 51.3' - 52.2', COAL SEAM 55.5' - 55.9'; RQD 8%, REC 94%.		50.0	17		90	NQ-1											CORE	
		52.5																
		55.0	0		98	NQ-2											CORE	
	506.8	EOB 57.5																

NOTES: NONE

ABANDONMENT METHODS, MATERIALS, QUANTITIES:TREMIED 100 GAL. BENTONITE GROUT

DRAFT Stage 3 - Not for Construction
09/23/2024

BRIDGE-LAW-7-3.70: STA. 195+10, 40.0' Lt. of PROPOSED SR 7 CENTERLINE

LAW-7-3.70

BBCM

LOG OF BORING NO. B16-314
PHASE 2 SUBSURFACE INVESTIGATION, LAW-7-2.17
LAWRENCE COUNTY, OHIO

Page 1 of 2

TYPE: 3-1/4" I.D. Hollow-stem Auger; 7-7/8" Tricone Bit w/ Drilling Mud; 2" O.D. Split-barrel Sampler; NX Rock Core Barrel
LOCATION: Sta. 195+10, 40' Lt. of Proposed SR 7 Centerline
COMPLETION DEPTH: 63.5' ELEVATION: 577+/- DATE: 5/1/02 - 5/2/02

DEPTH, FEET	SAMPLE NO.	SAMPLES: SAMPLING METHOD	BLOWS PER 6"	SPT N-VALUE	HAND PENETROMETER, TSF	MOISTURE CONTENT, %	LIQUID LIMIT	PLASTIC LIMIT	GRAVEL, %	COARSE SAND, %	FINE SAND, %	SILT, %	CLAY, %
0	1	2	2-4-4	8	2.0-4.5								
5	2	3	3-4-5	9	3.5-4.5								
10	3	4	5-7-8	15	4.5+	23	40	24	0	0	1	32	66
	4	5	7-8-7	15	4.0-4.5								
15	5	6	4-6-7	13	4.5+								
	6	7	5-7-8	15	4.5+								
20	7	8	5-7-7	14	3.0-4.5								
	8	9	4-6-7	13	2.5-4.5								
25	9	10	7-8-6	14	2.5-4.5								
	10	11	5-7-9	16	3.0-3.5								
30	11	12	5-7-9	16	2.5-3.5								
35	12	13	10-13-14	27	2.5-2.7	16	31	18	15	12	32	19	22

DESCRIPTION

EXISTING GRAVEL DRIVEWAY - 1 INCH

Very-stiff to hard brown mottled with gray silty clay, trace to little fine to coarse sand, trace fine gravel, contains few silt lenses, desiccated.

A-6b (10)

Very-stiff to hard brown silty clay, trace to little fine to coarse sand, trace fine gravel, contains silt lenses.

Est. A-6b

Very-stiff to hard reddish-brown silty clay, little to some fine to coarse sand, trace fine to coarse gravel.

Est. A-6a

Very-stiff reddish-brown mottled with dark-gray silty clay, some fine to coarse sand, trace to little fine to coarse gravel, contains few sand pockets, few cobbles.

A-6a (2)

WATER LEVEL: ▽ 30.0
WATER NOTE: Before Mud Rotary
DATE: 5/02/02

JOB: 01106408.002

-CONTINUED-

PLATE 5

LAW-7-3.70

BBCM

LOG OF BORING NO. B16-314
PHASE 2 SUBSURFACE INVESTIGATION, LAW-7-2.17
LAWRENCE COUNTY, OHIO

Page 2 of 2

TYPE: 3-1/4" I.D. Hollow-stem Auger; 7-7/8" Tricone Bit w/ Drilling Mud; 2" O.D. Split-barrel Sampler; NX Rock Core Barrel
LOCATION: Sta. 195+10, 40' Lt. of Proposed SR 7 Centerline
COMPLETION DEPTH: 63.5' ELEVATION: 577+/- DATE: 5/1/02 - 5/2/02

DEPTH, FEET	SAMPLE NO.	SAMPLES: SAMPLING METHOD	BLOWS PER 6"	SPT N-VALUE	HAND PENETROMETER, TSF	MOISTURE CONTENT, %	LIQUID LIMIT	PLASTIC LIMIT	GRAVEL, %	COARSE SAND, %	FINE SAND, %	SILT, %	CLAY, %
35													
40	12	13	5-9-11	20	2.0-2.9								
45	14	15	6-8-10	18	1.5-2.2								
50	15	16	7-7-9	16	2.0-2.7								
55	16	17	7-9-12	21	4.5+								
60	17	18	50-0"/6"										
65			NX RUN: 87% SOLID 83%										
70													

DESCRIPTION - CONTINUED

Very-stiff reddish-brown mottled with dark-gray silty clay, some fine to coarse sand, trace to little fine to coarse gravel, contains few sand pockets, few cobbles.

A-6a (2)

Stiff to very-stiff reddish-brown silty clay interbedded with many seams and pockets of fine to medium sand, trace fine to coarse gravel.

Est. A-6a

Hard reddish-brown mottled with gray and brown silty clay, similar to very soft shale, little fine to coarse sand, trace fine gravel.

Visual

Soft to medium-hard gray shale interbedded with siltstone, nearly horizontally bedded, few diagonal fractures.

Visual

- No seepage or groundwater encountered before switching to mud rotary at 17.5'.

WATER LEVEL: ▽ 35.0
WATER NOTE: Before Mud Rotary
DATE: 5/02/02

JOB: 01106408.002

PLATE 6

DRAWN M.S.J. CHECKED E.M.K.

STRUCTURE FOUNDATION EXPLORATION
LAW-7-3.70

LAW-7-2.17

156/206

1197/1247

DRAFT Stage 3 - Not for Construction 09/23/2024

BRIDGE-LAW-7-3.70, STA. 195+61, CENTERLINE of PROPOSED SR 7

LAW-7-3.70

BBCM

LOG OF BORING NO. B16-315
PHASE 2 SUBSURFACE INVESTIGATION, LAW-7-2.17
LAWRENCE COUNTY, OHIO

Page 1 of 2

TYPE: 3-1/4" I.D. Hollow-stem Auger; 2" O.D. Split-barrel Sampler; NX Rock Core Barrel
LOCATION: Sta. 195+61, Centerline of Proposed SR 7 Centerline
COMPLETION DEPTH: 55.0' ELEVATION: 866+/- DATE: 5/2/02 - 5/3/02

DEPTH FEET	SAMPLE NO.	SAMPLER SAMPLING EFFORT	HAND PEN. TROMETER	MOISTURE CONTENT %	LIQUID LIMIT	PLASTIC LIMIT	%GR	%SA	%SI	%CL	DESCRIPTION
0											EXISTING GRAVEL DRIVEWAY - 1 INCH
	1	4 7 7	3.4+4.3								Very-stiff to hard brown mottled with gray silty clay, little to some fine to coarse sand, trace fine to coarse gravel, contains few fine to medium sand seams, desiccated, contains few roots.
5	2	4 5 7	2.1-2.9								Est. A-6b
	3	5 7 10	2.4-4.5								Very-stiff to hard brown mottled with reddish-brown silty clay, some to "and" fine to coarse sand, trace fine gravel.
10	4	13 15 17	3.2-4.5								
	5	6 7 13	3.5-4.5+	13	31	16	15	8	25	25	27
15	6	7 10 12									A-6a (5)
	7	10 13 23									Medium-dense brown and reddish-brown fine to coarse sand, "and" silty clay, trace fine gravel.
20	8	4 5 11	2.4-3.7								Est. A-1-b
	9	5 7 9	2.4-3.1	20	35	19	2	1	17	37	45
25	10	4 7 7	1.5-3.5								Very-stiff reddish-brown mottled with gray silty clay, little to some fine to coarse sand, trace fine to coarse gravel.
	11	4 5 7	2.9-3.1								A-6b (10)
30											Very-stiff reddish-brown mottled with brown and gray silty clay, little becoming "and" fine to coarse sand, trace fine to coarse gravel, contains few fine sand and silt lenses.
	12	5 7 7	1.4-3.8								Est. A-6a
35											

WATER LEVEL: ▽ 34.0 ▼ ▼ ▼ ▼ ▼
WATER NOTE: Before Rock Coring
DATE: 5/2/02

JOB: 01106405.002

-CONTINUED-

PLATE 7

LAW-7-3.70

BBCM

LOG OF BORING NO. B16-315
PHASE 2 SUBSURFACE INVESTIGATION, LAW-7-2.17
LAWRENCE COUNTY, OHIO

Page 2 of 2

TYPE: 3-1/4" I.D. Hollow-stem Auger; 2" O.D. Split-barrel Sampler; NX Rock Core Barrel
LOCATION: Sta. 195+61, Centerline of Proposed SR 7 Centerline
COMPLETION DEPTH: 55.0' ELEVATION: 866+/- DATE: 5/2/02 - 5/3/02

DEPTH FEET	SAMPLE NO.	SAMPLER SAMPLING EFFORT	HAND PEN. TROMETER	MOISTURE CONTENT %	LIQUID LIMIT	PLASTIC LIMIT	%GR	%SA	%SI	%CL	DESCRIPTION - CONTINUED
35											Very-stiff reddish-brown mottled with brown and gray silty clay, little becoming "and" fine to coarse sand, trace fine to coarse gravel, contains few fine sand and silt lenses.
	13	3 3 4					11	1	78	21	Est. A-6a
40											Loose to medium-dense brown fine to medium sand, trace coarse sand, little to some silt, trace clay.
	14	7 6 7									A-3a (3)
45											Hard reddish-brown mottled with gray silty clay, little fine to coarse sand, trace fine to coarse gravel, similar to very-soft shale. Visual
	15A	17 50/3"	4.5+								Soft gray fine-grained sandstone fragments. Visual
50	15B										
	15C										Soft to medium-hard reddish-brown and light-gray shale, nearly horizontally bedded, few diagonal and vertical clay filled fractures.
		SRR:									
		RQD:									Visual
	16	SCR:									
55											
60											- Encountered seepage from 38.5' to 45.0'.
											- Lost partial water circulation below 52.0' while rock coring.
65											
70											

WATER LEVEL: ▽ 34.0 ▼ ▼ ▼ ▼ ▼
WATER NOTE: Before Rock Coring
DATE: 5/3/02

JOB: 01106405.002

PLATE 8

DRAFT Stage 3 - Not for Construction 09/23/2024

DRAWN M.S.J. CHECKED E.M.K.

STRUCTURE FOUNDATION EXPLORATION
LAW-7-3.70

LAW-7-2.17

157/206

1198/1247

BRIDGE-LAW-7-3.70: STA. 195+76, 98.0' Rt. of PROPOSED SR 7 CENTERLINE

LAW-7-3.70

BBCM

LOG OF BORING NO. B-2BP1
LAW-7, PRELIMINARY SUBSURFACE INVESTIGATION
LAWRENCE COUNTY, OHIO

Page 1 of 2

TYPE: 3-1/4" I.D. Hollow-stem Auger; 2" O.D. Split-barrel Sampler; NXM Rock-core Barrel
LOCATION: Sta. 195+76, 98' Rt. of Proposed SR 7 Centerline
COMPLETION DEPTH: 66.5' ELEVATION: 567.6(±) DATE: 10/29/98

DEPTH, FEET	SAMPLE NO.	SAMPLES: SAMPLING EFFORT	HAND PENE-TROMETER	MOISTURE CONTENT, %	LIQUID LIMIT	PLASTIC LIMIT	% GRAVEL	% SAND	% SILT	% CLAY
0			tsf							
	1	5 7/7/9	4.5+							
5	2	5 7/7/8	4.5+							
	3	4 7/8/7	4.5+	22	44	20	0	1	5	36	79
10	4	5 7/7/10	4.5+							
	5	5 7/8/9	4.5+	28						
15	6	4 7/6/8	4.5+							
	7	5 7/7/9		33	24	17	26	13	28	14	29
20	8	4 6/6/8	3.5-4.5							
	9	5 7/8/9	3.5-4.0	18						
25										
30	10	6 7/9/10	4.5+							
35										

DESCRIPTION

TOPSOIL - 4 INCHES

Hard brown mottled with gray silty clay, little fine to coarse sand, trace fine gravel.

Est. A-7-6

Hard brown becoming brown mottled with gray silty clay, trace fine to coarse sand.

A-7-6(13)

Medium-dense brown fine to coarse sand, some clayey silt, little fine to coarse gravel.

A-2-4(0)

Very-stiff to hard brown mottled with dark-brown silty clay, trace fine sand, contains silt seams and lenses.

Est. A-7-6

Very-stiff to hard brown mottled with gray silty clay, some fine to coarse sand, little becoming some fine to coarse gravel.

Est. A-6a

WATER LEVEL: ▽ 19.2
WATER NOTE: After Rock Coring
DATE: 10/29/98

-CONTINUED-

JOB: 01106405.001

PLATE 9

LAW-7-3.70

BBCM

LOG OF BORING NO. B-2BP1
LAW-7, PRELIMINARY SUBSURFACE INVESTIGATION
LAWRENCE COUNTY, OHIO

Page 2 of 2

TYPE: 3 1/4" I.D. Hollow-stem Auger; 2" O.D. Split-barrel Sampler; NXM Rock-core Barrel
LOCATION: Sta. 195+76, 98' Rt. of Proposed SR 7 Centerline
COMPLETION DEPTH: 66.5' ELEVATION: 567.6(0) DATE: 10/29/98

DEPTH, FEET	SAMPLE NO.	SAMPLES: SAMPLING EFFORT	HAND PENE-TROMETER	MOISTURE CONTENT, %	LIQUID LIMIT	PLASTIC LIMIT	% GRAVEL	% SAND	% SILT	% CLAY
35	11	5 7/8/11	2.5-2.75	14	29	17				
40	12	5 7/8/9	2.7-3.2							
45	13	5 7/9/12	2.5-4.5+	19						
50	14	5 7/8/12								
55	15	8 7/11/23								
		NXM ROC 98% RQD 98% NXM REC								
60	16									
		REC 95% RQD 57% REC								
65	17									
70										

DESCRIPTION - CONTINUED

Very-stiff to hard brown mottled with gray silty clay, some fine to coarse sand, little becoming some fine to coarse gravel.

Est. A-6a

Very-stiff brown mottled with gray silty clay, little fine to coarse sand, trace fine gravel.

Est. A-7-6

Very-stiff to hard brown silty clay, "and" fine to coarse sand, little fine to coarse gravel.

Est. A-6a

Medium-dense brown fine to coarse gravel, some fine to coarse sand, little silty clay.

Est. A-2-6

Very-soft to soft gray weathered shale, nearly horizontally bedded, partly similar to hard silty clay.

Visual

Medium-hard light-gray limestone, nearly horizontally bedded.

Visual

Very-soft gray weathered shale, nearly horizontally bedded, partly similar to hard silty clay, becoming carbonaceous with depth.

Visual

Medium-hard black coal, nearly horizontally bedded.

Visual

Very-soft to soft gray weathered shale, partly similar to silty clay, nearly horizontally bedded with many fractures.

Visual

- Encountered water at 52.5'.

WATER LEVEL: ▽ 19.2
WATER NOTE: After Rock Coring
DATE: 10/29/98

JOB: 01106405.001

PLATE 10

DRAFT Stage 3 - Not for Construction 09/23/2024

DRAWN M.S.J.
CHECKED E.M.K.

STRUCTURE FOUNDATION EXPLORATION
LAW-7-3.70

LAW-7-2.17

158/206

1199/1247

BRIDGE-LAW-7-3.70: STA. 196+94, 12.0' Rt. of PROPOSED SR 7 CENTERLINE

LAW-7-3.70

LOG OF BORING NO. B2EBP1-215
PHASE 2 SUBSURFACE INVESTIGATION, LAW-7-2.17
LAWRENCE COUNTY, OHIO

Page 1 of 2

TYPE: 4-1/4" I.D. Hollow-stem Auger; 2" O.D. Split-barrel Sampler; NX Rock Core Barrel
LOCATION: Sta. 196+94, 12' Rt. of Proposed SR 7 Centerline
COMPLETION DEPTH: 51.0' ELEVATION: 552+/- DATE: 4/5/00

DEPTH FEET	SAMPLE NO.	SAMPLES TYPE	SAMPLING REPORT	HAND PENE-TROMETER	NATURAL MOISTURE CONTENT %	LIQUID LIMIT	PLASTIC LIMIT	GRAVEL %	SAND %	SILT %	CLAY %
0				tsf	%						
	1	SS	3 /5 /5 /10	3.5-4.25							
5	2	SS	8 /15 /20		11	27	19	7	24	23	26
	3	SS	7 /15 /24								
10	4	SS	5 /10 /13	4.5+							
15	5	SS	7 /18 /24	4.5+							
	6	SS	4 /9 /10	2.0-4.5+							
	7	SS	7 /8 /26	3.0-4.5+							
20	8	SS	9 /18 /27		14	26	21	13	22	31	34
25	9	SS	3 /9 /13	2.0-4.5+							
	10	SS	2 /3 /5	0.5-1.25							
30	11	SS	4 /8 /14	3.0-4.5+							
	12	SS	3 /8 /10	2.0-3.0							
35											

DESCRIPTION

TOPSOIL - 6 INCHES

Very-stiff to hard brown silty clay, trace fine to coarse sand, trace fine to coarse gravel, slightly organic.

Est. A-6a

Medium-dense to dense brown, gray and reddish-brown fine to coarse sand, "and" clayey silt, trace to little fine to coarse gravel, few silt seams, contains sandstone and shale fragments.

Est. A-4a (0)

Very-stiff to hard brown mottled with gray and reddish-brown silty clay, little to some fine to coarse sand, trace to little fine to coarse gravel, contains sandstone and shale fragments.

Est. A-6a

Dense brown and gray fine to coarse sand, some clayey silt, trace fine gravel.

A-3a (0)

Very-stiff to hard brown silty clay, little fine to coarse sand, trace fine to coarse gravel, contains sandstone fragments.

Est. A-6a

Medium-stiff to stiff brown mottled with gray silty clay, trace fine to medium sand.

Est. A-6a

Very-stiff to hard brown mottled with gray silty clay, trace fine to medium sand, few silt seams.

Est. A-6a

WATER LEVEL:
WATER NOTE:
DATE:

JOB: 01106405.602

-CONTINUED-

PLATE 11

LAW-7-3.70

LOG OF BORING NO. B2EBP1-215
PHASE 2 SUBSURFACE INVESTIGATION, LAW-7-2.17
LAWRENCE COUNTY, OHIO

Page 3 of 2

TYPE: 4-1/4" I.D. Hollow-stem Auger; 2" O.D. Split-barrel Sampler; NX Rock Core Barrel
LOCATION: Sta. 196+94, 12' Rt. of Proposed SR 7 Centerline
COMPLETION DEPTH: 51.0' ELEVATION: 552+/- DATE: 4/5/00

DEPTH FEET	SAMPLE NO.	SAMPLES TYPE	SAMPLING REPORT	HAND PENE-TROMETER	NATURAL MOISTURE CONTENT %	LIQUID LIMIT	PLASTIC LIMIT	GRAVEL %	SAND %	SILT %	CLAY %
35	13	SS	5 /6 /9	tsf	%						
	14	SS	50/3"					0	10	84	6
40											
	15	SS	REC 47% RQD 40%								
45	16	SS	REC 90% RQD 67%								
50											
55											
60											
65											
70											

DESCRIPTION - CONTINUED

Medium-dense becoming very-loose brown fine to medium sand, trace coarse sand, trace fine gravel, trace to little clayey silt.

A-3 (0)

Hard (est.) gray mottled with brown silty clay, similar to very-soft shale.

Medium-hard to hard black coal.

Visual

Very-soft to soft gray shale, nearly horizontally bedded, similar to hard silty clay, fragmented below 50.5'.

Visual

-Encountered water at 35.0

WATER LEVEL:
WATER NOTE:
DATE:

JOB: 01106405.602

PLATE 12

DRAFT Stage 3 - Not for Construction 09/23/2024

DRAWN MSJ
CHECKED EMK

STRUCTURE FOUNDATION EXPLORATION
LAW-7-3.70

LAW-7-2.17

159/206

1200/1247

PROJECT: LAW - 7 - 2.17	DRILLING FIRM / OPERATOR: HORN / T.L.	DRILL RIG: CME 55 TRACK	STATION / OFFSET: 199+84, 30 RT	EXPLORATION ID B-010-1-12
TYPE: STRUCTURE	SAMPLING FIRM / LOGGER: HORN / T.L.	HAMMER: CME AUTOMATIC	ALIGNMENT: MAINLINE	
PID: 75923 BR ID:	DRILLING METHOD: 3.25" HSA / NQ	CALIBRATION DATE: 4/30/13	ELEVATION: 530.4 (MSL) EOB: 54.0 ft.	PAGE 1 OF 1
START: 5/1/13 END: 5/2/13	SAMPLING METHOD: SPT/ST/NQ	ENERGY RATIO (%): 85.9	LAT / LONG: Not Recorded	

MATERIAL DESCRIPTION AND NOTES	ELEV.	DEPTHS	SPT/ RQD	N60	REC (%)	SAMPLE ID	HP (tsf)	GRADATION (%) GR	CS	FS	SI	CL	ATTERBERG LL	PL	PI	WC	ODOT CLASS (GI)	ABAN-DONED
SOFT TO MEDIUM STIFF, BROWN, **SILTY CLAY**, SOME SAND, MOIST	530.4		1 / 1 / 2	4	100	SS-1	-	-	-	-	-	-	-	-	-	26	A-6b (V)	
		2.5	1 / 2 / 2	6	100	SS-2	-	-	-	-	-	-	-	-	-	26	A-6b (V)	
		5.0	1 / 1 / 2	4	100	SS-3	-	-	-	-	-	-	-	-	-	25	A-6b (V)	
		7.5			100	ST-4	-	0	0	22	43	35	35	19	16	30	A-6b (10)	
	520.9	W																
LOOSE TO MEDIUM DENSE, BROWN AND GRAY, **COARSE AND FINE SAND**, TRACE TO LITTLE SILT AND CLAY, TRACE GRAVEL, WET		10.0	WOH / WOH / 2	3	100	SS-5	-	0	26	50	16	8	-	-	-	20	A-3a (V)	
			2 / 2 / 2	6	100	SS-6	-	2	37	41	13	7	NP	NP	NP	50	A-3a (0)	
INCREASED GRAVEL		12.5	3 / 3 / 3	9	100	SS-7	-	46	20	28	4	2	-	-	-	-	A-3a (V)	
ENCOUNTERED WOOD FROM 14.1' - 15.5'		15.0	WOH / 1 / 2	4	100	SS-8	-	2	17	51	19	11	-	-	-	32	A-3a (V)	
		17.5	WOH / 1 / 2	4	100	SS-9	-	-	-	-	-	-	-	-	-	72	A-3a (V)	
		20.0	1 / 4 / 6	14	100	SS-10	-	10	27	30	21	12	21	17	4	20	A-3a (0)	
INCREASED DENSITY		22.5	9 / 9 / 10	27	100	SS-11	-	-	-	-	-	-	-	-	-	15	A-3a (V)	
		25.0	13 / 10 / 14	34	100	SS-12	-	-	-	-	-	-	-	-	-	16	A-3a (V)	
	503.4	TR																
SHALE, GRAY, SEVERELY WEATHERED, (AUGERED).		27.5	38 / 50/4"	-	100	SS-13	-	-	-	-	-	-	-	-	-	10	Rock (V)	
	501.4																	
MUDSTONE, GRAY, MODERATELY WEATHERED, WEAK, THIN BEDDED, FRIABLE; RQD 0%, REC 50%.	499.4	30.0	0		34	NQ-1											CORE	
SHALE, GRAY, UNWEATHERED, MODERATELY STRONG TO STRONG, LAMINATED TO THIN BEDDED, ARENACEOUS, TOP 3' HIGHLY WEATHERED, THIN SANDSTONE SEAMS THROUGHOUT; RQD 46%, REC 85%.		32.5																
		35.0	42		78	NQ-2											CORE	
UCR Qu=16 tsf		37.5																
		40.0	70		100	NQ-3											CORE	
		42.5																
		45.0	70		100	NQ-4											CORE	
		47.5																
		50.0	30		100	NQ-5											CORE	
	476.4	52.5 EOB																

NOTES: NONE

ABANDONMENT METHODS, MATERIALS, QUANTITIES: TREMIED 100 GAL. BENTONITE GROUT

DRAFT Stage 3 - Not for Construction
09/23/2024

PROJECT: LAW - 7 - 2.17	DRILLING FIRM / OPERATOR: HORN / T.L.	DRILL RIG: CME 55 TRACK	STATION / OFFSET: 200+80, 50 LT	EXPLORATION ID B-010-2-12
TYPE: STRUCTURE	SAMPLING FIRM / LOGGER: HORN / T.L.	HAMMER: CME AUTOMATIC	ALIGNMENT: MAINLINE	
PID: 75923 BR ID:	DRILLING METHOD: 3.25" HSA / NQ	CALIBRATION DATE: 4/30/13	ELEVATION: 529.0 (MSL) EOB: 57.0 ft.	PAGE 1 OF 1
START: 5/2/13 END: 5/2/13	SAMPLING METHOD: SPT/ST/NQ	ENERGY RATIO (%): 85.9	LAT / LONG: Not Recorded	

MATERIAL DESCRIPTION AND NOTES	ELEV.	DEPTHS	SPT/ RQD	N60	REC (%)	SAMPLE ID	HP (tsf)	GRADATION (%) GR	CS	FS	SI	CL	ATTERBERG LL	PL	PI	WC	ODOT CLASS (GI)	ABAN-DONED
SOFT TO MEDIUM STIFF, BROWN, **SANDY SILT**, SOME CLAY, MOIST	529.0		1	4	100	SS-1	-	-	-	-	-	-	-	-	-	18	A-4a (V)	
		2.5	1	6	100	SS-2	-	-	-	-	-	-	-	-	-	23	A-4a (V)	
		5.0	1	6	100	SS-3	-	0	0	25	49	26	28	18	10	21	A-4a (8)	
SOFT, BROWN, **SILT AND CLAY**, SOME SAND, MOIST	522.0	7.5			100	ST-4	-	0	0	22	50	28	33	19	14	26	A-6a (10)	
LOOSE TO MEDIUM DENSE, BROWN AND GRAY, **SANDY SILT**, TRACE TO LITTLE CLAY, TRACE GRAVEL, WET WOOD FRAGMENTS IN SAMPLE FROM 9.5' - 12.5'	519.5	10.0	1	3	100	SS-5	-	0	0	54	30	16	NP	NP	NP	27	A-4a (2)	
		W 12.5	WOH	4	100	SS-6	-	1	2	52	30	15	-	-	-	29	A-4a (V)	
			2	3	100	SS-7	-	7	17	51	17	8	-	-	-	29	A-4a (V)	
		15.0	3	7	100	SS-8	-	5	31	43	14	7	-	-	-	21	A-4a (V)	
		17.5	1	7	100	SS-9	-	-	-	-	-	-	-	-	-	33	A-4a (V)	
		20.0	3	13	100	SS-10	-	-	-	-	-	-	-	-	-	21	A-4a (V)	
		22.5	3	9	100	SS-11	-	-	-	-	-	-	-	-	-	26	A-4a (V)	
		25.0	4	19	100	SS-12	-	-	-	-	-	-	-	-	-	23	A-4a (V)	
		27.5	3	17	100	SS-13	-	1	3	47	30	19	NP	NP	NP	21	A-4a (3)	
	498.5	TR 30.0	6	57	100	SS-14	-	-	-	-	-	-	-	-	-	19	A-4a (V)	
SHALE, GRAY, SEVERELY WEATHERED, (AUGERED).	497.0	32.5	48		80	NQ-1											CORE	
SHALE, GRAY, SLIGHTLY TO MODERATELY WEATHERED, MODERATELY STRONG TO STRONG, LAMINATED TO THIN BEDDED, ARENACEOUS, TOP 3' HIGHLY WEATHERED, THIN SANDSTONE SEAMS THROUGHOUT; RQD 48%, REC 92%.		37.5	48		92	NQ-2											CORE	
		42.5	53		100	NQ-3											CORE	
		47.5	8		87	NQ-4											CORE	
UCS: Qu=765 tsf		52.5	80		100	NQ-5											CORE	
	472.0	EOB 55.0																

NOTES: NONE

ABANDONMENT METHODS, MATERIALS, QUANTITIES: TREMIED 100 GAL. BENTONITE GROUT

DRAFT Stage 3 - Not for Construction
09/23/2024

BRIDGE-LAW-7-03.76: STA. 198+87, 35.0' Rt. of PROPOSED SR 7 CENTERLINE

LAW-7-03.76

BBCM

LOG OF BORING NO. B2-316
PHASE 2 SUBSURFACE INVESTIGATION, LAW-7-2.17
LAWRENCE COUNTY, OHIO

Page 1 of 1

TYPE: 4-1/2" O.D. Continuous-flight Auger; 3-7/8" Tricone Bit w/ Drilling Mud; 2" and 2-1/2" O.D. Split-barrel Samplers; NX Rock Core Barrel
LOCATION: Sta. 198+87, 35' Rt. of Proposed SR 7 Centerline
COMPLETION DEPTH: 42.5' ELEVATION: 540.3 DATE: 5/17/02

DEPTH, FEET	SAMPLE NO.	SAMPLER SAMPLING EFFORT	HAND PENE-TROMETER	MOISTURE CONTENT	LIQUID LIMIT	PLASTIC LIMIT	GRAVEL %	SAND %	SILT %	CLAY %	DESCRIPTION
0											TOPSOIL - 6 INCHES
	1	4 7 6 / 12	1.4-2.3								Stiff to very-stiff brown mottled with gray silty clay, little to some fine to coarse sand, trace fine to coarse gravel, desiccated.
5	2	3 4 7 / 11	1.0-2.9								
	3	3 4 4 / 8	1.4-2.8								
10											
	4A	S&H					0	1	63	36	Est. A-6a
15	4B	6 6 / 12									Very-loose brown and gray fine to medium sand, trace coarse sand, "and" clayey silt, contains few silt pockets. A-4a (0)
	5	3 4 4 / 8	1.5-3.4								Stiff to very-stiff brown, reddish-brown and gray silty clay, little to some fine to coarse sand, trace fine gravel, contains few silt seams.
20	6	5 6 10 / 16	2.6-3.7								
	7A	5 7 7 / 14	2.4-2.7	19	29	18	0	5	29	71	
	7B	7 8 7 / 15									A-6a (8)
	8	7 8 7 / 15									Loose to medium-dense brown fine to medium sand, trace coarse sand, little silt, contains few silty clay seams.
25	9	4 4 5 / 9									
	10	5 7 7 / 14									
30	11	14 15 23 / 38									Est. A-3
	12	23 25 31 / 56									Dense to very-dense brown fine to coarse sand, some fine to coarse gravel, trace silt, partly similar to sandstone.
35	13	15 19 27 / 46									
	14	7 19 38 / 57 REC 92% RQD 60%									Est. A-1-b
40	15										Very-soft gray shale, nearly horizontally bedded, similar to hard silty clay.
											Visual
45											Soft to medium-hard gray shale, nearly horizontally bedded, highly fractured from 37.5' to 38.5', few horizontal and diagonal fractures from 38.5' to 41.5', many horizontal fractures from 41.5' to 42.5'. Qu = 194.3 psi between 38.8' and 39.3'.
50											Visual
											- Encountered seepage from 12.5' to 16.0'.
											- Encountered water at 20.0'.

WATER LEVEL: ▽ 11.8 ▽ 11.0 ▽ ▽ ▽ ▽
WATER NOTE: Before Mud Rotary / After Mud Rotary
DATE: 5/17/02 5/17/02

JOB: 611106405.002

PLATE 5

BRIDGE-LAW-7-03.76: STA. 199+33.7, 26.0' Lt. of PROPOSED SR 7 CENTERLINE

LAW-7-03.76

BBCM

LOG OF BORING NO. B2WBP2-216
PHASE 2 SUBSURFACE INVESTIGATION, LAW-7-2.17
LAWRENCE COUNTY, OHIO

Page 1 of 1

TYPE: 4-1/4" I.D. Hollow-stem Auger; 2" O.D. Split-barrel Sampler; NQ Rock Core Barrel
LOCATION: Sta. 199+33.7, 26' Lt. of Proposed SR 7 Centerline
COMPLETION DEPTH: 49.5' ELEVATION: 536.6 DATE: 4/5/06

DEPTH, FEET	SAMPLE NO.	SAMPLER SAMPLING EFFORT	HAND PENE-TROMETER	MOISTURE CONTENT	LIQUID LIMIT	PLASTIC LIMIT	GRAVEL %	SAND %	SILT %	CLAY %	DESCRIPTION
0											TOPSOIL - 7 INCHES
	1	7 7 9 / 16	2.0-4.5+								Stiff to hard brown mottled with gray and dark-brown silty clay, little to some fine to medium sand, few silt and fine sand seams.
5	2	4 6 6 / 12	2.0-3.0								
	3	3 4 4 / 8	1.0-2.5	24	34	22	0	2	33	65	
10	4	3 4 4 / 8	2.0-3.0				0	3	12	55	33
	5	2 3 3 / 6					0	40	47	13	A-6a (8)
	6	1 1 2 / 3					1	3	66	30	Very-loose to loose brown and gray fine to medium sand, trace to little silt, contains decayed wood, slightly organic.
15	7	2 2 3 / 5		22	22	17	0	1	51	48	Est. A-3a
	8	4 5 5 / 10									Very-loose to loose brown and gray fine to medium sand, "and" clayey silt.
20	9	4 7 8 / 15									
	10	8 10 9 / 19									A-4a (8)
	11	9 10 8 / 18									Medium-dense to dense brown and gray fine to medium sand, trace coarse sand, trace fine gravel, trace to little clayey silt, contains sandstone and shale fragments, contains decayed wood fragments, slightly organic.
25	12	14 18 12 / 30									
	13	15 19 30 / 49									
30	14	50/5"R NQ 10% 43% RQD 0%									Est. A-3
35	15										Very-soft to soft gray shale, highly fractured, similar to hard clayey silt, few seams of hard gray fine-grained sandstone.
											Visual
40											-Encountered water at 11.0'
45											
50											

WATER LEVEL: ▽ ▽ ▽ ▽ ▽ ▽
WATER NOTE:
DATE:

B: 611106405.002

PLATE 6

DRAFT Stage 3 - Not for Construction 09/23/2024

DRAWN M.S.J. CHECKED E.M.K.

STRUCTURE FOUNDATION EXPLORATION
LAW-7-03.76

LAW-7-2.17

BRIDGE-LAW-7-03.76: STA. 201+43, 63.0' Rt. of PROPOSED SR 7 CENTERLINE

LAW-7-03.76

BBCM

LOG OF BORING NO. B-2BP2
LAW-7, PRELIMINARY SUBSURFACE INVESTIGATION
LAWRENCE COUNTY, OHIO

Page 1 of 2

TYPE: 3-1/4" I.D. Hollow-stem Auger; 2" O.D. Split-barrel Sampler; NXM Rock-core Barrel
LOCATION: Sta. 201+43, 63' Rt. of Proposed SR 7 Centerline
COMPLETION DEPTH: 43.0' ELEVATION: 530.5(G) DATE: 10/27/98 - 10/28/98

DEPTH, FEET	SAMPLE NO.	RECOVERY, SAMPLING EFFORT	HAND PENE-TROMETER	MOISTURE CONTENT	LIQUID LIMIT	PLASTIC LIMIT	%GR	%S	%SI	%CL	DESCRIPTION
0			tsf								TOPSOIL - 2 INCHES
	1	1 2 2									Very-loose to loose brown fine to medium sand, trace coarse sand, trace fine gravel, trace to little clayey silt.
5	2	2 2 3					0	19	63	7	9
	3	2 2 3									A-3a(0)
10											Loose brown fine to medium sand, trace coarse sand, trace fine gravel, trace clayey silt.
	4	3 3 5					4	56	28	9	4
15	5	2 3 4					1	53	41	5	
	6	2 3 5					0	48	50	2	
	7	1 1 7		24			2	43	51	4	
20	8	4 6 6									A-3(0)
											Medium-dense light-gray fine to medium sand, trace coarse sand, little fine to coarse gravel, trace silt.
	9	3 2 6									Est. A-1-b
25											Loose to medium-dense brown fine to medium sand, trace coarse sand, trace fine gravel, little clayey silt.
	10	7 11 15		18			7	51	30	5	7
	11	8 13 32									A-1-b(0)
30	12A	2 19 50									Medium-dense to dense brown and gray fine to medium sand, trace coarse sand, trace fine gravel, trace silt.
	12B										Est. A-3a
	13	50-3"R									Soft gray siltstone, nearly horizontally bedded, poorly cemented, partly similar to dense silt.
35		NXM									Visual
	14	REC 100% RQD 100%									Medium-hard gray siltstone, nearly horizontally bedded, contains few fractures.
40		REC 100%									- From 41.0' to 42.5': Soft to medium-hard light-gray shale with carbonaceous seams.
	15	RQD 92%									Visual
45											- Encountered seepage at 8.5'.
											- Encountered water at 11.0'.
50											

WATER LEVEL: ▽ ▽ ▽ ▽ ▽ ▽
WATER NOTE:
DATE:

OB: 01106405.001

PLATE 7

BRIDGE-LAW-7-03.76: STA. 202+03, 38.0' Lt. of PROPOSED SR 7 CENTERLINE

LAW-7-03.76

BBCM

LOG OF BORING NO. B2-317
PHASE 2 SUBSURFACE INVESTIGATION, LAW-7-2.17
LAWRENCE COUNTY, OHIO

Page 1 of 1

TYPE: 4-1/2" O.D. Continuous-flight Auger; 3-7/8" Tricone Bit w/ Drilling Mud; 2" O.D. Split-barrel Sampler; NX Rock Core Barrel
LOCATION: Sta. 202+03, 38' Lt. of Proposed SR 7 Centerline
COMPLETION DEPTH: 39.2' ELEVATION: 533.4 DATE: 5/6/02 - 5/7/02

DEPTH, FEET	SAMPLE NO.	RECOVERY, SAMPLING EFFORT	HAND PENE-TROMETER	MOISTURE CONTENT	LIQUID LIMIT	PLASTIC LIMIT	%GR	%S	%SI	%CL	DESCRIPTION
0			tsf								TOPSOIL - 7 INCHES
	1	5 7 12	1.75-2.25								Stiff to very-stiff reddish-brown silty clay, little fine to medium sand, contains many silt seams and lenses.
5	2	S-01 S-02	0.0-0.3	25	31	20	0	76	50	24	Est. A-6a
	3	S-03 S-04	0.5-0.8								Very-soft to medium-stiff reddish-brown silty clay, some fine to medium sand, contains many silt seams.
10											A-6a (8)
	4	S-05									Loose brown and gray fine to coarse sand, trace fine gravel, trace silt.
15	5	7 12 12									Est. A-3
	6A	2 3 3	0.0								Very-soft gray silty clay, trace fine to medium sand, contains few silt seams.
20	6B										Est. A-6a
	7	1 3 3						13	20	50	17
	8	1 3 3									Loose gray fine to coarse sand, trace fine to coarse gravel, little silt, contains seam of silty clay from 24.2' to 24.3'.
	9	3 3 3									A-3a (0)
25											Medium-dense to dense brown and gray fine to coarse sand, trace to little fine to coarse gravel, trace to little silt.
	10	6 7 6									Est. A-3
	11	5 12 16									Very-soft gray shale, nearly horizontally bedded, similar to hard silty clay.
30	12	16 30 50/2"									Visual
		REC 71% RQD 47%									Soft gray and reddish-brown shale, nearly horizontally bedded, few diagonal fractures, partly similar to hard silty clay.
35	13										Visual
											Medium-hard gray sandstone, nearly horizontally bedded, few diagonal fractures.
40											Visual
											- Encountered water at 12.0'.
45											- Encountered auger refusal at 33.2'.
50											

WATER LEVEL: ▽ 15.0 ▽ ▽ ▽ ▽ ▽
WATER NOTE:
DATE: 5/8/02

OB: 01106405.002

PLATE 8

DRAFT Stage 3 - Not for Construction 09/23/2024

DRAWN M.S.J. CHECKED E.M.K.

STRUCTURE FOUNDATION EXPLORATION

LAW-7-03.76

LAW-7-2.17

BRIDGE-LAW-7-03.87: STA. 204+13.4, 40.0' Lt. of PROPOSED SR 7 CENTERLINE

LAW-7-03.87

BBCM

LOG OF BORING NO. B2WBP4-217
PHASE 2 SUBSURFACE INVESTIGATION, LAW-7-2.17
LAWRENCE COUNTY, OHIO

Page 1 of 1

TYPE: 3-1/4" I.D. Hollow-stem Auger; 2" O.D. Split-barrel Sampler; NX Rock Core Barrel
LOCATION: Sta. 204+13.4, 40' Lt. of Proposed SR 7 Centerline
COMPLETION DEPTH: 43.0' ELEVATION: 519.6 DATE: 4/6/08

DEPTH, FEET	SAMPLE NO.	SAMPLES SAMPLING EFFORT	HAND PENE-TROMETER tsf	MOISTURE CONTENT %	LIQUID LIMIT %	PLASTIC LIMIT %	%GR	%CS	%FS	%SI/CL	%CLAY
0											
	1	7/12	2.5-3.25								
5	2	4/12	2.5-3.5								
	3	7/12	0.5-1.75								
10	4	4/12									
	5	2/12					0	4	72	22	
	6	2/12									
15	7	2/12									
	8	1/12	0.75-1.5	34	42	25	0	1	7	92	
20	9	2/6/12	0.5-1.5								
	10	2/12									
25	11	3/12									
	12	4/12									
30											
	13	12/17									
35		50-0"R NXC 80% RQD 40%									
	14										
40											
45											

DESCRIPTION

TOPSOIL - 12 INCHES

Very-stiff brown mottled with gray and dark-brown silty clay, little fine to medium sand, few roots.

Est. A-6b

Medium-stiff to stiff brown mottled with gray silty clay, little fine sand.

Est. A-6b

Loose becoming very-loose brown and gray fine to medium sand, some silt, few seams of silty clay.

A-3a (0)

Medium-stiff to stiff gray silty clay, trace to little fine to medium sand, slightly organic.

A-7-6 (11)

Medium-dense gray fine to medium sand, some clayey silt, contains seam of silty clay.

Est. A-3a

Medium-dense gray and brown fine to medium sand, little silt, contains seam of silty clay.

Est. A-3

Loose gray, brown, and black fine to medium sand, "and" silty clay.

Est. A-4a

Medium-dense to dense gray and black fine to coarse sand, trace fine gravel, trace silt, slightly organic.

Est. A-3a

Medium-hard to hard gray and dark-gray limestone interbedded with shale, nearly horizontally bedded, many horizontal and diagonal fractures.

Visual

- Encountered water at 10.0'

WATER LEVEL:
WATER NOTE:
DATE:

JOB: 01106405.002

PLATE 5

BRIDGE-LAW-7-03.87: STA. 205+31.2, 1.7' Rt. of PROPOSED SR 7 CENTERLINE

LAW-7-03.87

BBCM

LOG OF BORING NO. B-2BP3
LAW-7, PRELIMINARY SUBSURFACE INVESTIGATION
LAWRENCE COUNTY, OHIO

Page 1 of 2

TYPE: 3-1/4" I.D. Hollow-stem Auger; 2" O.D. Split-barrel Sampler; NXM Rock-core Barrel
LOCATION: Sta. 205+31.2, 1.7' Rt. of Proposed SR 7 Centerline
COMPLETION DEPTH: 73.5' ELEVATION: 559.4(0) DATE: 11/3/08

DEPTH, FEET	SAMPLE NO.	SAMPLES SAMPLING EFFORT	HAND PENE-TROMETER tsf	MOISTURE CONTENT %	LIQUID LIMIT %	PLASTIC LIMIT %	%GR	%CS	%FS	%SI/CL	%CLAY
0											
	1	4/12									
5	2	5/12	2.75-3.5	22	34	21	0	1	5	46	47
	3	7/12	2.5-3.5								
10	4	3/12	3.25-4.1	29							
	5	4/12	2.75-3.5								
15	6	5/12	3.0-4.25	25							
	7	4/12	2.75-4.1								
20	8	7/12	3.5-4.5	24							
	9	3/12	1.75-3.7								
25											
	10	2/12	3.75-4.5								
30											
	11	4/12	2.5-4.5	13	41	22	0	0	3	33	64
35											
	12	2/12	2.75-3.7								
40											
	13	2/12	1.0-1.7								
45											

DESCRIPTION

TOPSOIL - 6 INCHES

Loose brown fine to medium sand, trace coarse sand, little silt.

Est. A-1-b

Very-stiff brown mottled with gray silty clay, little fine to medium sand.

A-6a(9)

Very-stiff to hard brown with gray seams of silty clay, contains silt seams, laminated.

Est. A-7-6

Very-stiff to hard brown silty clay, trace fine sand with silt lenses.

Est. A-7-6

Stiff to very-stiff gray silty clay, trace fine to medium sand, contains silt seams.

Est. A-7-6

Very-stiff to hard gray silty clay, trace fine to medium sand.

A-7-6(12)

Stiff gray silty clay, interbedded with silt.

Est. A-6b

WATER LEVEL:
WATER NOTE:
DATE:

JOB: 01106405.001

-CONTINUED-

PLATE 6

LAW-7-03.87

BBCM

LOG OF BORING NO. B-2BP3
LAW-7, PRELIMINARY SUBSURFACE INVESTIGATION
LAWRENCE COUNTY, OHIO

Page 2 of 2

TYPE: 3-1/4" I.D. Hollow-stem Auger; 2" O.D. Split-barrel Sampler; NXM Rock-core Barrel
LOCATION: Sta. 205+31.2, 1.7' Rt. of Proposed SR 7 Centerline
COMPLETION DEPTH: 73.5' ELEVATION: 559.4(0) DATE: 11/3/08

DEPTH, FEET	SAMPLE NO.	SAMPLES SAMPLING EFFORT	HAND PENE-TROMETER tsf	MOISTURE CONTENT %	LIQUID LIMIT %	PLASTIC LIMIT %	%GR	%CS	%FS	%SI/CL	%CLAY
45											
	14	S/D-18"									
50											
	15	10/12					2	48	43	5	2
55											
	16	8/12									
60											
	17	12/18/23									
65											
	18	59.4"R NXM RUC 60% RQD 60%									
70											
	19										
75											
80											
85											
90											

DESCRIPTION - CONTINUED

Stiff gray silty clay, interbedded with silt.

Est. A-6b

Very-loose gray fine to medium sand, trace coarse sand, trace silt.

Est. A-1-b

Medium-dense to dense gray fine to medium sand, trace fine gravel, trace silt, slightly organic.

A-1-b(0)

Very-soft gray siltstone, nearly horizontally bedded, few fractures.

Visual

Soft to medium-hard gray shale, nearly horizontally bedded, few to many fractures.

Visual

Medium-hard light-gray shale, becoming arenaceous and micaceous with depth, nearly horizontally bedded, few fractures.

Visual

- Encountered water at 38.5'.

WATER LEVEL:
WATER NOTE:
DATE:

JOB: 01106405.001

PLATE 7

DRAWN M.S.J.
CHECKED E.M.K.

STRUCTURE FOUNDATION EXPLORATION
LAW-7-03.87

LAW-7-2.17

164/206

1205/1247

DRAFT Stage 3 - Not for Construction 09/23/2024

BRIDGE-LAW-7-03.87: STA. 205+83.6, 34.6' Rt. of PROPOSED SR 7 CENTERLINE

LAW-7-03.87

BBCM

LOG OF BORING NO. B17-318
PHASE 2 SUBSURFACE INVESTIGATION, LAW-7-2.17
LAWRENCE COUNTY, OHIO

Page 1 of 2

TYPE: 3-1/4" I.D. Hollow-stem Auger; 2" O.D. Split-barrel Sampler; NX Rock Core Barrel
LOCATION: Sta. 205+83.6, 34.6' Rt. of Proposed SR 7 Centerline
COMPLETION DEPTH: 72.4' ELEVATION: 565+/- DATE: 4/29/02 - 4/30/02

DEPTH, FEET	SAMPLE NO.	SAMPLES: TYPE	SAMPLING EFFORT	HAND PENETROMETER	MOISTURE CONTENT, %	LIQUID LIMIT	PLASTIC LIMIT	GRAVEL %	SAND %	SILT %	CLAY %
0				TSF							
	1		7/7/5	3.0-2.5							
5	2		5/7/7	3.0-4.5+	19	48	29	0	2	21	40	37
	3		3/4/5									
	4A		4/4/4	1.5-2.5								
10	4B											
	5		6/7/8	2.5-3.0								
15	6		5/5/6	1.0-3.0	27	35	32	0	4	1	44	54
	7		5/6/8	3.0-4.5								
20	8		5/5/6	3.5-4.5								
	9		5/6/8	2.5-3.5								
25	10		5/8/9	2.5-4.5								
	11A		5/7/8	1.5-3.5								
30	11B			2.5-4.5								
	12		5/6/6	1.5-3.5								
35												
	13		4/5/7	2.5-4.5								
40	14		3/4/5	1.5-3.5								
45												

DESCRIPTION

TOPSOIL - 6 INCHES

Stiff becoming hard brown mottled with gray silty clay, little to some fine to coarse sand, trace fine gravel, contains few silt lenses, few roots.

A-6b (11)

Loose brown fine to medium sand, trace coarse sand, trace silty clay.

Est. A-3

Stiff to very-stiff brown mottled with gray silty clay, little fine to coarse sand, trace fine gravel.

Est. A-6b

Stiff becoming hard brown silty clay, trace fine to coarse sand, contains many silt seams and few fine sand lenses.

A-6a (9)

Stiff to hard gray mottled with brown silty clay, trace to little fine to coarse sand, trace fine gravel, contains many silt seams and few pockets of fine to coarse sand.

Est. A-6a

WATER LEVEL: ▽ 41.0
WATER NOTE: After Rock Coring
DATE: 4/30/02

JOB: 01106-305.002

-CONTINUED-

PLATE 8

LAW-7-03.87

BBCM

LOG OF BORING NO. B17-318
PHASE 2 SUBSURFACE INVESTIGATION, LAW-7-2.17
LAWRENCE COUNTY, OHIO

Page 2 of 2

TYPE: 3-1/4" I.D. Hollow-stem Auger; 2" O.D. Split-barrel Sampler; NX Rock Core Barrel
LOCATION: Sta. 205+83.6, 34.6' Rt. of Proposed SR 7 Centerline
COMPLETION DEPTH: 72.4' ELEVATION: 565+/- DATE: 4/29/02 - 4/30/02

DEPTH, FEET	SAMPLE NO.	SAMPLES: TYPE	SAMPLING EFFORT	HAND PENETROMETER	MOISTURE CONTENT, %	LIQUID LIMIT	PLASTIC LIMIT	GRAVEL %	SAND %	SILT %	CLAY %
45				TSF							
	15		2/2/3	0.7-1.5	39	36	19	0	0	16	39	61
50												
	16		2/3/3									
55												
	17		5/14/8									
60												
	18		13/22/14									
65												
	19		21/13/12									
70												
	20		50-0"/R		NX Rec 82% RQD 58%							
75												
80												
85												
90												

DESCRIPTION - CONTINUED

Stiff to hard gray mottled with brown silty clay, trace to little fine to coarse sand, trace fine gravel, contains many silt seams and few pockets of fine to coarse sand.

Est. A-6a

Medium-stiff to stiff gray silty clay, little fine to coarse sand, contains seam of fine to medium sand.

A-6b (11)

Loose to medium-dense gray and brown fine to medium sand, trace coarse sand, trace silt, contains thin seam of silty clay at 53.9'.

Est. A-3

Dense brown and gray fine to coarse sand, trace to little fine to coarse gravel, trace silt.

Est. A-1-b

Medium-hard gray coarse-grained sandstone.

Visual

Soft gray limestone, nearly horizontally bedded, few horizontal fractures, highly fractured from 72.6' to 73.2'.

Visual

- Encountered seepage from 4.5' to 8.8'.
- Encountered water at 53.5'.
- Encountered heaving sands at 58.5', (changed to mud rotary drilling techniques).
- Lost partial mud circulation below 75.4' while rock coring.

WATER LEVEL: ▽ 41.0
WATER NOTE: After Rock Casing
DATE: 4/30/02

JOB: 01106-305.002

PLATE 9

DRAFT Stage 3 - Not for Construction 09/23/2024

DRAWN M.S.J. CHECKED E.M.K.

STRUCTURE FOUNDATION EXPLORATION
LAW-7-03.87

LAW-7-2.17

165/206

1206/1247

PROJECT: LAW – 7 – 2.17 | DRILLING FIRM / OPERATOR: STANTEC / S.B. | DRILL RIG: CME 45 TRACK | STATION / OFFSET: 269+48, 135 LT | EXPLORATION ID B-032-0-11

TYPE: STRUCTURE | SAMPLING FIRM / LOGGER: STANTEC / J.M. | HAMMER: CME AUTOMATIC | ALIGNMENT:

PID: 75923 BR ID: LAW-7-05.10 | DRILLING METHOD: 3.25" HSA / NQ | CALIBRATION DATE: 2/24/10 | ELEVATION: 537.7 (MSL) EOB: 30.9 ft. | PAGE 1 OF 1

START: 5/18/11 END: 5/18/11 | SAMPLING METHOD: SPT / ST | ENERGY RATIO (%): 81.9 | LAT / LONG: Not Recorded

MATERIAL DESCRIPTION AND NOTES	ELEV.	DEPTHS	SPT/RQD	N60	REC (%)	SAMPLE ID	HP (tsf)	GRADATION (%) GR	CS	FS	SI	CL	ATTERBERG LL	PL	PI	WC	ODOT CLASS (GI)	INST.
MEDIUM STIFF TO STIFF, BROWN, SILT AND CLAY, SOME SAND, TRACE GRAVEL, MOIST	537.7		2	5	67	SS-1	–	5	4	20	47	24	36	21	15	25	A-6a (9)	
			3	10	53	SS-2	–	–	–	–	–	–	–	–	–	27	A-6a (V)	
	533.7		3	18	60	SS-3	–	–	–	–	–	–	–	–	–	12	A-6a (V)	
MEDIUM DENSE, BROWN, GRAVEL AND/OR STONE FRAGMENTS WITH SAND AND SILT, LITTLE CLAY, WET		W	8	22	33	SS-4	–	42	16	19	13	10	25	15	10	25	A-2-4 (0)	
			12															
			6	12	7	SS-5	–	–	–	–	–	–	–	–	–	31	A-2-4 (V)	
	527.7		5															
MEDIUM STIFF TO STIFF, GRAY, SILTY CLAY, LITTLE SAND AND GRAVEL, SAND SEAMS, MOIST			3	8	67	SS-6	–	–	–	–	–	–	–	–	–	27	A-6b (V)	
					100	ST-7	–	10	5	8	19	58	37	20	17	27	A-6b (11)	
			3	10	73	SS-8	–	–	–	–	–	–	–	–	–	24	A-6b (V)	
	519.7	TR	50/5"	–	67	SS-9	–	–	–	–	–	–	–	–	–	18	Rock (V)	
SHALE, GRAY, SEVERELY WEATHERED, (AUGERED).	518.7																	
SHALE, GRAY, MODERATELY WEATHERED, SLIGHTLY STRONG, LAMINATED; RQD 67%, REC 92%.			18		55	NQ-1											CORE	
			78		100	NQ-2											CORE	
	506.8	EOB																

NOTES: NONE

ABANDONMENT METHODS, MATERIALS, QUANTITIES: PUMPED BENTONITE GROUT

PROJECT: LAW – 7 – 2.17 | DRILLING FIRM / OPERATOR: STANTEC / S.B. | DRILL RIG: CME 45 TRACK | STATION / OFFSET: 270+18, 44 LT | EXPLORATION ID B-033-0-11

TYPE: STRUCTURE | SAMPLING FIRM / LOGGER: STANTEC / J.M. | HAMMER: CME AUTOMATIC | ALIGNMENT:

PID: 75923 BR ID: LAW-7-05.10 | DRILLING METHOD: 3.25" HSA / NQ | CALIBRATION DATE: 2/24/10 | ELEVATION: 536.4 (MSL) EOB: 35.4 ft. | PAGE 1 OF 1

START: 5/17/11 END: 5/18/11 | SAMPLING METHOD: SPT / ST | ENERGY RATIO (%): 81.9 | LAT / LONG: Not Recorded

MATERIAL DESCRIPTION AND NOTES	ELEV.	DEPTHS	SPT/RQD	N60	REC (%)	SAMPLE ID	HP (tsf)	GRADATION (%) GR	CS	FS	SI	CL	ATTERBERG LL	PL	PI	WC	ODOT CLASS (GI)	INST.
LOOSE TO MEDIUM DENSE, BROWN AND GRAY, GRAVEL WITH SAND, SILT, AND CLAY, MOIST TO WET	536.4		WOH	4	60	SS-1	–	–	–	–	–	–	–	–	–	20	A-2-6 (V)	
			2	11	53	SS-2	–	–	–	–	–	–	–	–	–	22	A-2-6 (V)	
			4	12	73	SS-3	–	37	10	19	18	16	31	16	15	15	A-2-6 (1)	
			5	7	67	SS-4	–	–	–	–	–	–	–	–	–	20	A-2-6 (V)	
			3															
			6	10	67	SS-5	–	21	21	24	14	20	26	14	12	28	A-2-6 (0)	
	526.4	W	3															
STIFF, GRAY, SILT AND CLAY, AND SAND, TRACE GRAVEL, MOIST TO WET			5	15	100	SS-6	–	–	–	–	–	–	–	–	–	24	A-6a (V)	
					100	ST-7	–	6	10	27	23	34	26	14	12	23	A-6a (5)	
	521.4																	
MEDIUM DENSE, BLUE GRAY, GRAVEL AND/OR STONE FRAGMENTS WITH SAND AND SILT, TRACE CLAY, MOIST			8	19	100	SS-8	–	30	25	22	14	9	21	14	7	15	A-2-4 (0)	
			5	12	67	SS-9	–	–	–	–	–	–	–	–	–	17	A-2-4 (V)	
			4	14	53	SS-10	–	–	–	–	–	–	–	–	–	16	A-2-4 (V)	
	513.2	TR	24	74	67	SS-11	–	–	–	–	–	–	–	–	–	13	Rock (V)	
SHALE, BROWN, SEVERELY WEATHERED, (AUGERED).	511.0		50/5"	–	100	SS-12	–	–	–	–	–	–	–	–	–	16	Rock (V)	
SANDSTONE, GRAY, SLIGHTLY WEATHERED, STRONG, THIN BEDDED; RQD 90%, REC 100%.	510.0																	
SHALE, GRAY, SLIGHTLY TO MODERATELY WEATHERED, SLIGHTLY TO MODERATELY STRONG, LAMINATED; RQD 67%, REC 89%.			70		90	NQ-1											CORE	
	501.0	EOB																

NOTES: NONE

ABANDONMENT METHODS, MATERIALS, QUANTITIES: PUMPED BENTONITE GROUT

DRAFT Stage 3 Not for Construction
09/23/2024

PROJECT: LAW - 7 - 2.17	DRILLING FIRM / OPERATOR: HORN / R.C.	DRILL RIG: CME 55 TRACK	STATION / OFFSET: 270+25, 180 LT	EXPLORATION ID B-033-1-12
TYPE: STRUCTURE	SAMPLING FIRM / LOGGER: HORN / R.C.	HAMMER: CME AUTOMATIC	ALIGNMENT: MAINLINE	
PID: 75923 BR ID:	DRILLING METHOD: 3.25" HSA / NQ	CALIBRATION DATE: 4/30/13	ELEVATION: 538.5 (MSL) EOB: 36.0 ft.	PAGE 1 OF 1
START: 4/23/13 END: 4/24/13	SAMPLING METHOD: SPT / NQ	ENERGY RATIO (%): 85.9	LAT / LONG: Not Recorded	

MATERIAL DESCRIPTION AND NOTES	ELEV.	DEPTHS	SPT/ RQD	N60	REC (%)	SAMPLE ID	HP (tsf)	GRADATION (%) GR	CS	FS	SI	CL	ATTERBERG LL	PL	PI	WC	ODOT CLASS (GI)	ABAN-DONED
SOFT TO MEDIUM STIFF, BROWN, **SANDY SILT**, SOME CLAY, LITTLE GRAVEL, MOIST	538.5	W	WOH WOH 2	3	100	SS-1	-	-	-	-	-	-	-	-	-	26	A-4a (V)	
		2.5	1 1 1	3	100	SS-2	-	-	-	-	-	-	-	-	-	20	A-4a (V)	
	528.5	5.0	4 5 3	11	100	SS-3	-	13	23	24	17	23	23	15	8	15	A-4a (1)	
MEDIUM STIFF, BROWN, **SILTY CLAY**, TRACE GRAVEL AND SAND, MOIST	526.0	7.5	1 2 3	7	100	SS-4	-	1	5	5	23	66	38	21	17	28	A-6b (11)	
MEDIUM STIFF TO STIFF, BROWN, **SANDY SILT**, SOME CLAY, LITTLE GRAVEL, MOIST TO WET		10.0	2 4 3	10	100	SS-5	-	13	26	20	18	23	25	15	10	17	A-4a (1)	
		12.5	2 2 3	7	100	SS-6	-	-	-	-	-	-	-	-	-	24	A-4a (V)	
		15.0	2 3 7	14	100	SS-7	-	-	-	-	-	-	-	-	-	16	A-4a (V)	
		17.5	6 4 5	13	100	SS-8	-	-	-	-	-	-	-	-	-	15	A-4a (V)	
	515.5	20.0 TR	10 21 24	64	100	SS-9	-	-	-	-	-	-	-	-	-	12	Rock (V)	
SHALE, GRAY, SEVERELY WEATHERED, (AUGERED).	512.5	22.5	22 50/5"	-	100	SS-10	-	-	-	-	-	-	-	-	-	9	Rock (V)	
SHALE, GRAY, SLIGHTLY WEATHERED, WEAK TO SLIGHTLY STRONG, THIN BEDDED, CALCAREOUS, SMALL ZONES OF GRAY SANDSTONE; RQD 49%, REC 94%.		25.0	57		100	NQ-1											CORE	
		27.5																
		30.0	48		88	NQ-2											CORE	
	502.5	32.5 EOB																
		35.0																

NOTES: NONE

ABANDONMENT METHODS, MATERIALS, QUANTITIES: TREMIED 100 GAL. BENTONITE GROUT

DRAFT Stage 3 - Not for Construction
09/23/2024

PROJECT: LAW – 7 – 2.17	DRILLING FIRM / OPERATOR: STANTEC / S.B.	DRILL RIG: CME 45 TRACK	STATION / OFFSET: 271+00, 128 LT	EXPLORATION ID B-034-0-11
TYPE: STRUCTURE	SAMPLING FIRM / LOGGER: STANTEC / J.M.	HAMMER: CME AUTOMATIC	ALIGNMENT:	
PID: 75923 BR ID: LAW-7-05.10	DRILLING METHOD: 3.25" HSA / NQ	CALIBRATION DATE: 2/24/10	ELEVATION: 537.8 (MSL) EOB: 36.2 ft.	PAGE 1 OF 1
START: 5/19/11 END: 5/19/11	SAMPLING METHOD: SPT / ST	ENERGY RATIO (%): 81.9	LAT / LONG: Not Recorded	

MATERIAL DESCRIPTION AND NOTES	ELEV.	DEPTHS	SPT/ RQD	N60	REC (%)	SAMPLE ID	HP (tsf)	GRADATION (%) GR	CS	FS	SI	CL	ATTERBERG LL	PL	PI	WC	ODOT CLASS (GI)	INST.
VERY SOFT TO SOFT, BROWN, SILT AND CLAY, AND SAND, MOIST	537.8		WOH	–	67	SS-1	–	0	2	34	41	23	34	20	14	29	A-6a (7)	
			WOH															
	534.8	2.5	1	4	67	SS-2	–	–	–	–	–	–	–	–	–	22	A-6a (V)	
LOOSE, BROWN, GRAVEL WITH SAND, SILT, AND CLAY, MOIST			3 2	8	87	SS-3	–	–	–	–	–	–	–	–	–	18	A-2-6 (V)	
		W	4 2															
		5.0	3 3	8	100	SS-4	–	38	21	19	12	10	28	16	12	20	A-2-6 (0)	
		7.5	3 3	8	80	SS-5	–	–	–	–	–	–	–	–	–	15	A-2-6 (V)	
	527.3		3 3															
MEDIUM STIFF, GRAY, CLAY, LITTLE SILT, TRACE SAND AND GRAVEL, MOIST		10.0	2 3	7	100	SS-6	–	–	–	–	–	–	–	–	–	30	A-7-6 (V)	
		12.5			100	ST-7	–	6	4	5	17	68	42	20	22	28	A-7-6 (13)	
		15.0	2 3	8	100	SS-8	–	–	–	–	–	–	–	–	–	18	A-7-6 (V)	
	518.8	17.5	1 3	5	100	SS-9	–	–	–	–	–	–	–	–	–	38	A-7-6 (V)	
STIFF TO VERY STIFF, GRAY GRADING TO DARK BROWN, SILTY CLAY, TRACE SAND AND GRAVEL,, MOIST		20.0			100	ST-10	–	4	2	5	43	46	40	20	20	25	A-6b (12)	
		22.5	3 5 9	19	67	SS-11	–	–	–	–	–	–	–	–	–	22	A-6b (V)	
	513.3	TR																
SHALE, GRAY, SEVERELY WEATHERED, (AUGERED).	512.6	25.0	50/2"	–	100	SS-12	–	–	–	–	–	–	–	–	–	7	Rock (V)	
SHALE, GRAY, SLIGHTLY TO MODERATELY WEATHERED, MODERATELY STRONG, LAMINATED; RQD 50%, REC 62%.			70		90	NQ-1											CORE	
		27.5																
		30.0	72		90	NQ-2											CORE	
	504.6	32.5																
SANDSTONE, GRAY, SLIGHTLY WEATHERED, STRONG, THIN BEDDED, VUGGY, SLICKENSIDES; RQD 95%, REC 100%.	503.4																	
SHALE, GRAY, SLIGHTLY TO MODERATELY WEATHERED, MODERATELY STRONG, LAMINATED; RQD 66%, REC 100%.	501.6	35.0 EOB																

NOTES: NONE

ABANDONMENT METHODS, MATERIALS, QUANTITIES: PUMPED BENTONITE GROUT

DRAFT Stage 3 - Not for Construction 09/23/2024

PROJECT: LAW – 7 – 2.17
TYPE: STRUCTURE
PID: 75923 BR ID: LAW-7-05.10
START: 5/19/11 END: 5/20/11

DRILLING FIRM / OPERATOR: STANTEC / S.B.
SAMPLING FIRM / LOGGER: STANTEC / J.M.
DRILLING METHOD: 3.25" HSA / NQ
SAMPLING METHOD: SPT / ST

DRILL RIG: CME 45 TRACK
HAMMER: CME AUTOMATIC
CALIBRATION DATE: 2/24/10
ENERGY RATIO (%): 81.9

STATION / OFFSET: 271+63, 25 LT
ALIGNMENT:
ELEVATION: 536.2 (MSL) EOB: 35.9 ft.
LAT / LONG: Not Recorded

EXPLORATION ID B-035-0-11
PAGE 1 OF 1

MATERIAL DESCRIPTION AND NOTES	ELEV.	DEPTHS	SPT/RQD	N60	REC (%)	SAMPLE ID	HP (tsf)	GRADATION (%) GR	CS	FS	SI	CL	ATTERBERG LL	PL	PI	WC	ODOT CLASS (GI)	INST.
	536.2																	
MEDIUM STIFF, BROWN, SILT AND CLAY, AND SAND, LITTLE GRAVEL, MOIST			2	5	60	SS-1	–	–	–	–	–	–	–	–	–	22	A-6a (V)	
	533.2		2 3	8	67	SS-2	–	19	14	23	26	18	28	15	13	19	A-6a (3)	
LOOSE, BROWN, GRAVEL AND/OR STONE FRAGMENTS WITH SAND, TRACE SILT AND CLAY, MOIST TO WET		W	3 3	11	40	SS-3	–	–	–	–	–	–	–	–	–	14	A-1-b (V)	
		2.5	4 1	7	100	SS-4	–	35	37	17	7	4	NP	NP	NP	23	A-1-b (0)	
		5.0	2 3															
	527.7	7.5	2 2	–	80	SS-5 A	–	–	–	–	–	–	–	–	–	17	A-1-b (V)	
MEDIUM STIFF TO STIFF, GRAY, CLAY, SOME SILT, TRACE SAND, MOIST			2 1		100	SS-5 B	–	–	–	–	–	–	–	–	–	33	A-7-6 (V)	
		10.0	3 3	8	100	SS-6	–	0	0	1	23	76	41	20	21	31	A-7-6 (13)	
		12.5	3 5	12	100	SS-7	–	–	–	–	–	–	–	–	–	29	A-7-6 (V)	
	521.2	15.0			85	ST-8	–	–	–	–	–	–	–	–	–	–	A-3a (V)	
LOOSE, GRAY, COARSE AND FINE SAND, LITTLE SILT AND CLAY, TRACE GRAVEL, WET			2 2	7	113	SS-9	–	3	38	31	12	16	NP	NP	NP	20	A-3a (0)	
		17.5	1 4	8	100	SS-10	–	–	–	–	–	–	–	–	–	21	A-3a (V)	
		20.0	4 20	38	100	SS-11	–	–	–	–	–	–	–	–	–	16	A-3a (V)	
	512.7	22.5 TR																
SHALE, GRAY, SEVERELY WEATHERED, (AUGERED).	511.7																	
SHALE, GRAY TO GRAY-BROWN, MODERATELY WEATHERED, SLIGHTLY TO MODERATELY STRONG, LAMINATED, FRIABLE; RQD 58%, REC 95%.			43		79	NQ-1											CORE	
	505.9	25.0																
SANDSTONE, GRAY, SLIGHTLY WEATHERED, STRONG, THIN BEDDED; RQD 100%, REC 100%.	505.4	27.5	62		100	NQ-2											CORE	
SHALE, GRAY TO GRAY-BROWN, SLIGHTLY WEATHERED, SLIGHTLY TO MODERATELY STRONG, LAMINATED, FRIABLE, SLICKENSIDES; RQD 58%, REC 100%.		30.0																
	500.3	32.5 EOB																
		35.0																

NOTES: NONE
ABANDONMENT METHODS, MATERIALS, QUANTITIES: PUMPED BENTONITE GROUT

PROJECT: LAW – 7 – 2.17
TYPE: STRUCTURE
PID: 75923 BR ID: LAW-7-05.10
START: 5/20/11 END: 5/23/11

DRILLING FIRM / OPERATOR: STANTEC / S.B.
SAMPLING FIRM / LOGGER: STANTEC / J.M.
DRILLING METHOD: 3.25" HSA / NQ
SAMPLING METHOD: SPT / ST

DRILL RIG: CME 45 TRACK
HAMMER: CME AUTOMATIC
CALIBRATION DATE: 2/24/10
ENERGY RATIO (%): 81.9

STATION / OFFSET: 272+41, 161 LT
ALIGNMENT:
ELEVATION: 569.4 (MSL) EOB: 31.4 ft.
LAT / LONG: Not Recorded

EXPLORATION ID B-036-0-11
PAGE 1 OF 1

MATERIAL DESCRIPTION AND NOTES	ELEV.	DEPTHS	SPT/RQD	N60	REC (%)	SAMPLE ID	HP (tsf)	GRADATION (%) GR	CS	FS	SI	CL	ATTERBERG LL	PL	PI	WC	ODOT CLASS (GI)	INST.
	569.4																	
SOFT TO MEDIUM STIFF, LIGHT BROWN, SILTY CLAY, AND GRAVEL, LITTLE SAND, DAMP			1 2	4	60	SS-1	–	35	8	7	25	25	38	21	17	17	A-6b (5)	
	564.4	2.5	1 2	5	60	SS-2	–	–	–	–	–	–	–	–	–	20	A-6b (V)	
VERY STIFF TO HARD, MOTTLED RED AND BROWN, SILT AND CLAY, LITTLE SAND, TRACE GRAVEL, DAMP		5.0	6 10	27	40	SS-3	–	–	–	–	–	–	–	–	–	12	A-6a (V)	
		7.5	9 18	40	93	SS-4	–	1	2	9	44	44	36	21	15	14	A-6a (10)	
	559.4	10.0 TR																
SHALE, LIGHT BROWN, SEVERELY WEATHERED, (AUGERED).	558.4		50	–	100	ST-5	–	–	–	–	–	–	–	–	–	–	Rock (V)	
					100	SS-6	–	–	–	–	–	–	–	–	–	4	Rock (V)	
SHALE, GRAY, SLIGHTLY WEATHERED, SLIGHTLY TO MODERATELY STRONG, LAMINATED; RQD 19%, REC 100%.		12.5	19		100	NQ-1											CORE	
	553.0	15.0																
MUDSTONE, DARK RED TO GRAY, SLIGHTLY WEATHERED, WEAK, MEDIUM TO THICK BEDDED; RQD 0%, REC 85%.		17.5	0		90	NQ-2											CORE	
		20.0																
		22.5																
		25.0																
		27.5	0		76	NQ-3											CORE	
	538.0	30.0 EOB																

NOTES: 16.7' TO 26.4' – CORE SAMPLE SWELLED IN CORE BARREL, RQD UNKNOWN AFTER REMOVAL
ABANDONMENT METHODS, MATERIALS, QUANTITIES: PLACED AUGER CUTTINGS

DRAFT Stage 3 - Not for Construction
09/23/2024

PROJECT: LAW - 7 - 2.17	DRILLING FIRM / OPERATOR: HORN / R.C.	DRILL RIG: CME 55 TRACK	STATION / OFFSET: 273+35, 130 RT	EXPLORATION ID B-037-1-12
TYPE: STRUCTURE	SAMPLING FIRM / LOGGER: HORN / R.C.	HAMMER: CME AUTOMATIC	ALIGNMENT: MAINLINE	
PID: 75923 BR ID:	DRILLING METHOD: 3.25" HSA / NQ	CALIBRATION DATE: 4/30/13	ELEVATION: 532.3 (MSL) EOB: 34.5 ft.	PAGE 1 OF 1
START: 4/25/13 END: 4/26/13	SAMPLING METHOD: SPT / NQ	ENERGY RATIO (%): 85.9	LAT / LONG: Not Recorded	

MATERIAL DESCRIPTION AND NOTES	ELEV.	DEPTHS	SPT/ RQD	N60	REC (%)	SAMPLE ID	HP (tsf)	GRADATION (%) GR	CS	FS	SI	CL	ATTERBERG LL	PL	PI	WC	ODOT CLASS (GI)	ABAN-DONED
MEDIUM STIFF TO STIFF, BROWN, **SANDY SILT**, SOME CLAY, TRACE GRAVEL, MOIST TO WET	532.3	0.0	1 2 3	7	100	SS-1	-	-	-	-	-	-	-	-	-	35	A-4a (V)	
		2.5																
		5.0	2 2 1	4	100	SS-2	-	-	-	-	-	-	-	-	-	27	A-4a (V)	
		7.5	2 2 4	9	100	SS-3	-	2	18	26	25	29	24	15	9	20	A-4a (4)	
		10.0	3 2 2	6	100	SS-4	-	-	-	-	-	-	-	-	-	18	A-4a (V)	
INCREASING TO VERY STIFF @ 12.5'		12.5	5 7 5	17	100	SS-5	-	-	-	-	-	-	-	-	-	16	A-4a (V)	
	516.3	15.0	5 7 10	24	100	SS-6	-	-	-	-	-	-	-	-	-	18	A-4a (V)	
MEDIUM DENSE TO DENSE, GRAY, **COARSE AND FINE SAND**, SOME SILT, LITTLE GRAVEL AND CLAY, WET		17.5	4 8 6	20	100	SS-7	-	18	21	28	22	11	23	18	5	17	A-3a (0)	
		20.0	7 10 11	30	100	SS-8	-	-	-	-	-	-	-	-	-	14	A-3a (V)	
	509.8	TR																
SHALE, GRAY, SEVERELY WEATHERED, (AUGERED).		22.5	6 12 17	42	100	SS-9	-	-	-	-	-	-	-	-	-	14	Rock (V)	
	507.8																	
SHALE, GRAY, SLIGHTLY TO MODERATELY WEATHERED, MODERATELY STRONG, THIN BEDDED, ARENACEOUS, FRACTURED, SOME THIN SANDSTONE ZONES; RQD 14%, REC 78%.		25.0	28		82	NQ-1											CORE	
		27.5																
		30.0	0		73	NQ-2											CORE	
	497.8	32.5 EOB																

NOTES: NONE

ABANDONMENT METHODS, MATERIALS, QUANTITIES: TREMIED 100 GAL. BENTONITE GROUT

DRAFT Stage 3 - Not for Construction 09/23/2024

PROJECT: LAW – 7 – 2.17	DRILLING FIRM / OPERATOR: STANTEC / S.B.	DRILL RIG: CME 45 TRACK	STATION / OFFSET: 273+95, 39 RT	EXPLORATION ID B-038-0-11
TYPE: STRUCTURE	SAMPLING FIRM / LOGGER: STANTEC / J.M.	HAMMER: CME AUTOMATIC	ALIGNMENT:	
PID: 75923 BR ID: LAW-7-05.10	DRILLING METHOD: 3.25" HSA / NQ	CALIBRATION DATE: 2/24/10	ELEVATION: 548.3 (MSL) EOB: 50.6 ft.	PAGE 1 OF 1
START: 5/24/11 END: 5/24/11	SAMPLING METHOD: SPT / ST	ENERGY RATIO (%): 81.9	LAT / LONG: Not Recorded	

MATERIAL DESCRIPTION AND NOTES	ELEV.	DEPTHS	SPT / RQD	N60	REC (%)	SAMPLE ID	HP (tsf)	GRADATION (%) GR	CS	FS	SI	CL	ATTERBERG LL	PL	PI	WC	ODOT CLASS (GI)	INST.
MEDIUM STIFF TO STIFF, BROWN, SILTY CLAY, AND SAND, TRACE GRAVEL, RELATIVE CONSISTENCY INCREASES WITH INCREASING DEPTH, MOIST	548.3	0.0	WOH 1 2	4	67	SS-1	–	–	–	–	–	–	–	–	–	21	A-6b (V)	
		2.5	2 2 3	7	60	SS-2	–	–	–	–	–	–	–	–	–	22	A-6b (V)	
		5.0	3 3 4	10	73	SS-3	–	6	9	27	27	31	35	18	17	19	A-6b (7)	
	540.8	7.5	3 4 5	12	47	SS-4	–	–	–	–	–	–	–	–	–	19	A-6b (V)	
VERY STIFF, BROWN, CLAY, SOME SILT, TRACE SAND AND GRAVEL, MOIST			4 5 8	18	87	SS-5	–	–	–	–	–	–	–	–	–	27	A-7-6 (V)	
	535.8	10.0			80	ST-6	–	2	1	3	22	72	44	23	21	25	A-7-6 (13)	
VERY STIFF TO HARD, MOTTLED BROWN AND GRAY, SILT AND CLAY, SOME SAND AND GRAVEL, MOIST		12.5	4 10 8	25	33	SS-7	–	–	–	–	–	–	–	–	–	19	A-6a (V)	
		15.0	4 11 15	35	100	SS-8	–	24	5	24	22	25	26	12	14	15	A-6a (4)	
		17.5	8 15 16	42	87	SS-9	–	–	–	–	–	–	–	–	–	13	A-6a (V)	
		20.0	2 10 10	27	53	SS-10	–	–	–	–	–	–	–	–	–	15	A-6a (V)	
	525.8	22.5	4 12 18	41	100	SS-11	–	27	8	22	22	21	24	15	9	12	A-4a (2)	
VERY STIFF TO HARD, BROWN, SANDY SILT, SOME GRAVEL AND CLAY, MOIST		25.0	2 6 9	20	100	SS-12	–	–	–	–	–	–	–	–	–	14	A-4a (V)	
	520.8	27.5	1 6 9	20	87	SS-13	–	–	–	–	–	–	–	–	–	23	A-6a (V)	
VERY STIFF, RED-BROWN, SILT AND CLAY, SOME SAND, LITTLE GRAVEL, MOIST		30.0	3 5 6	15	100	SS-14	–	16	9	15	28	32	28	14	14	17	A-6a (7)	
	513.3 TR	32.5																
SHALE, GRAY, SEVERELY WEATHERED, (AUGERED).	511.4	35.0	9 10 43	72	87	SS-15	–	–	–	–	–	–	–	–	–	13	Rock (V)	
SHALE, GRAY, MODERATELY WEATHERED, SLIGHTLY STRONG, LAMINATED, SLICKENSIDES; RQD 53%, REC 80%.		37.5	30		39	NQ-1											CORE	
		40.0																
		42.5	65		100	NQ-2											CORE	
	497.7 EOB	45.0																
		47.5																
		50.0																

NOTES: NONE

ABANDONMENT METHODS, MATERIALS, QUANTITIES: PLACED AUGER CUTTINGS

DRAFT Stage 3 - Not for Construction 09/23/2024

1212 1247	171/206	LAW-7-2.17	STRUCTURE FOUNDATION EXPLORATION LAW-7-05.10

DRAWN MSJ
CHECKED EMK

BRIDGE-LAW-7-05.10: STA. 271+70.4, 18.2' Rt. of PROPOSED SR 7 CENTERLINE

LAW-7-05.10

BBC&M ENGINEERING, INC.

LOG OF BORING NO. B4EBI-206
PHASE 2 SUBSURFACE INVESTIGATION, LAW-7
LAWRENCE COUNTY, OHIO

Page 1 of 1

TYPE: 3-1/4" I.D. Hollow-stem Auger; 2" O.D. Split-barrel Sampler; NXM Rock Core Barrel
LOCATION: Sta. 271+70.4, 18.2' Rt. of Proposed SR 7 Centerline
COMPLETION DEPTH: 30.0' ELEVATION: 535.0 DATE: 12/29/99 - 12/30/99

DEPTH (feet)	SAMPLE NO	SAMPLE SOUNDING (BPF/6")	ROCK CORE RUN (feet)	PENETROMETER (tsf)	MOISTURE CONTENT (%)	LIQUID LIMIT (%)	PLASTIC LIMIT (%)	GRAVEL (%)	SAND (%)	SILT (%)	CLAY (%)	DESCRIPTION
0												Stiff to very-stiff brown clayey silt, little fine to coarse sand, few roots. Est. A-4a
	1	5 7 7/6"						23	26	31	20	Loose brown fine to coarse sand, little fine to coarse gravel, little silty clay, few roots. A-3a(0)
5	2	3 4 6/6"						61	15	13	13	Medium-dense brown fine to coarse gravel, "and" fine to coarse sand, little silty clay, many sandstone fragments. A-1-a(0)
	3	2 2 4/6"						46	21	17	16	Loose brown fine to coarse sand, some fine to coarse gravel, little silty clay, few sandstone fragments. A-1-b(0)
	4	3 3 4/6"	1.0-2.25	3.5	44	25	6	9	5	9	77	Stiff to very-stiff gray silty clay, trace fine sand, few silt lenses. A-7-6(12)
10	5	3 4 5/6"						17	25	26	20	15 Medium-dense gray fine to coarse sand, little silty clay, trace fine gravel, few seams of silty clay. Est. A-1-b
	6	4 4 6/6"	1.5-2.0	2.5	34	20	10	9	33	35	44	Stiff gray mottled with brown silty clay, some fine to coarse sand, trace fine gravel, few silt and fine sand lenses. A-6a(8)
	7	4 5 6/6"										Medium-dense gray fine to coarse sand, some fine to coarse gravel (sandstone fragments), some clayey silt. Est. A-1-b
15	8	6 8 11/6"										
	9	5 13 12/6"										Dense gray, brown and reddish-brown fine to coarse sand, some fine to coarse gravel (sandstone fragments), little clayey silt, few zones of fine to medium sand. Est. A-1-b
20	10	15 14 9/6"										
	11	NXM REC 45% RQD 0%										Medium-hard gray and brown siltstone, nearly horizontally bedded, few horizontal fractures. Visual
25												Very-soft to soft gray shale, nearly horizontally bedded, fragmental structure, many fractures. Visual
30												- Encountered slight seepage from 4.3' to 7.0' and at 14.5'. - Auger refusal at 25.0'.
35												

WATER LEVEL: ▼ "Dry" ▼ ▼ ▼ ▼ ▼
WATER NOTE: Before Coring
DATE: 12/30/99

JOB: 01186405.002 PLATE 8

BRIDGE-LAW-7-05.10: STA. 273+86.7, 83.7' Lt. of PROPOSED SR 7 CENTERLINE

LAW-7-05.10

BBC&M ENGINEERING, INC.

LOG OF BORING NO. B4WBF-207
PHASE 2 SUBSURFACE INVESTIGATION, LAW-7
LAWRENCE COUNTY, OHIO

Page 1 of 1

TYPE: 3-1/4" I.D. Hollow-stem Auger; 2" O.D. Split-barrel Sampler; NXM Rock Core Barrel
LOCATION: Sta. 273+86.7, 83.7' Lt. of Proposed SR 7 Centerline
COMPLETION DEPTH: 29.5' ELEVATION: 575.6 DATE: 1/10/00 - 1/11/00

DEPTH (feet)	SAMPLE NO	SAMPLE SOUNDING (BPF/6")	ROCK CORE RUN (feet)	PENETROMETER (tsf)	MOISTURE CONTENT (%)	LIQUID LIMIT (%)	PLASTIC LIMIT (%)	GRAVEL (%)	SAND (%)	SILT (%)	CLAY (%)	DESCRIPTION
0												Medium-dense brown fine to coarse sand, "and" clayey silt, little fine to coarse gravel. A-4a(2)
	1	6 7 9/6"						9	32	23	36	
5	2	4 6 9/6"		3.0-4.0								Very-stiff gray mottled with brown silty clay, little fine to coarse sand, trace fine to coarse gravel, slightly organic, few shale fragments. Est. A-6b
	3	10 15 17/6"		4.5+								
	4	16 20 23/6"		4.5+								Hard gray mottled with brown and reddish-brown silty clay, similar to very-soft shale, few calcite streaks.
	5	15 18 36/6"		4.5+								Est. A-6b
15	6	12 33			9	36	21	01	5	3	17	14 Very-soft to soft brown and gray shale, nearly horizontally bedded, similar to hard silty clay, few thin layers of siltstone. Visual
	7	50-5"/0										
20	8	NXM REC 33% RQD 18%										Medium-hard gray fine-grained sandstone, nearly horizontally bedded, well cemented, few horizontal fractures, few seams of shale Visual
	9	NXM REC 73% RQD 0%										Soft to medium-hard gray siltstone, nearly horizontally bedded, few diagonal and vertical fractures, partly calcareous, few seams of very-soft shale. Visual
25												Very-soft to soft gray becoming reddish-brown shale, nearly horizontally bedded, similar to hard silty clay, highly fractured, few limestone nodules. Visual
30												- No water encountered. - Auger refusal at 19.5'.
35												

WATER LEVEL: ▼ "Dry" ▼ ▼ ▼ ▼ ▼
WATER NOTE: Before Coring
DATE: 01/11/00

JOB: 01186405.002 PLATE 9

DRAFT Stage 3 - Not for Construction 09/23/2024

DRAWN MSJ
CHECKED EMK

STRUCTURE FOUNDATION EXPLORATION
LAW-7-05.10

LAW-7-2.17

172/206

1213/1247

BRIDGE-LAW-7-05.10: STA. 266+37, 55.7' Rt. of PROPOSED SR 7 CENTERLINE

LAW-7-05.10

BBC&M ENGINEERING, INC.

LOG OF BORING NO. B4WBR-205
PHASE 2 SUBSURFACE INVESTIGATION, LAW-7
LAWRENCE COUNTY, OHIO

Page 1 of 1

TYPE: 3-1/4" I.D. Hollow-stem Auger; 2" O.D. Split-barrel Sampler; NQ Rock Core Barrel
LOCATION: Sta. 266+37, 55.7' Rt. of Proposed SR 7 Centerline
COMPLETION DEPTH: 34.5' ELEVATION: 557.5 DATE: 12/28/99 - 12/29/99

DEPTH, FEET	SAMPLE NO.	SAMPLES	SAMPLING EFFORT	HAND PENE-TROMETER tsf	MOISTURE CONTENT %	LIQUID LIMIT %	PLASTIC LIMIT %	AGG.	C. S.	F. S.	SILT/CLAY	DESCRIPTION
0												TOPSOIL - 14 INCHES
	1	SS	3-7-7 (14)	2.5+4.5	23	36	25	2	9	23	31	37 — Very-stiff brown silty clay, some fine to coarse sand, trace fine gravel, slightly organic, few roots. A-6a(8)
5	2	SS	6-7-9 (16)	4.5+	15							Hard brown clayey silt, "and" fine to coarse sand, some fine to coarse gravel (sandstone and siltstone fragments), desiccated. Est. A-4a
	3	SS	5-7-11 (18)	2.5+4.5								Very-stiff to hard brown mottled with reddish-brown and gray silty clay, little fine to coarse sand, trace to little fine to coarse gravel (shale and sandstone fragments), few seams of clayey silt. Est. A-6a
10	4	SS	5-7-10 (17)	3.0+4.5+								
	5	SS	11-12-R 50-3"-R									Very-soft to soft brown interbedded with reddish-brown shale, nearly horizontally bedded, similar to hard silty clay. Visual
20	6	SS	42 50-4"-R									Very-soft to soft brownish-gray shale, nearly horizontally bedded. Visual
25	7	SS	53									Soft to medium-hard gray shale, interbedded with sandstone and siltstone, nearly horizontally bedded, few very-soft seams, few seams of medium-hard limestone.
30	8	NXM	RUN 48% RQD 27%									Visual
35												- No seepage encountered.
												-Auger refusal at 29.5'.
40												

WATER LEVEL: ▽ 21.0
WATER NOTE: Before Coring
DATE: 12/29/99

JOB: 01106405.002

PLATE 5

BRIDGE-LAW-7-05.10: STA. 268+6.2, 42.8' Rt. of PROPOSED SR 7 CENTERLINE

LAW-7-05.10

BBC&M ENGINEERING, INC.

LOG OF BORING NO. B-4BPI
LAW-7-2.17 PRELIMINARY INVESTIGATION
LAWRENCE COUNTY, OHIO

Page 1 of 2

TYPE: 3-1/4" I.D. Hollow-stem Auger; 2" O.D. Split-barrel Sampler; NXM Rock Core Barrel
LOCATION: Sta. 268+6.2, 42.8' Rt. of Proposed SR 7 Centerline
COMPLETION DEPTH: 43.8' ELEVATION: 551.5 DATE: 11/16/98

DEPTH, FEET	SAMPLE NO.	SAMPLES	SAMPLING EFFORT	HAND PENE-TROMETER tsf	MOISTURE CONTENT %	LIQUID LIMIT %	PLASTIC LIMIT %	AGG.	C. S.	F. S.	SILT/CLAY	DESCRIPTION
0												TOPSOIL - 8 INCHES
	1	SS	2-2-3 (5)	2.25-3.5								Very-stiff brown silty clay, little fine to coarse sand, trace fine to coarse gravel. Est. A-6b
	2	SS	3-5-10 (15)		15	26	19	42	15	16	11	16 — Medium-dense brown fine to coarse sand, some clayey silt, some fine gravel. A-2-4(0)
5	3A 3B	SS	4-6-9 (15)	3.75-4.5	28	66	26					
	4	SS	5-6-9 (15)	4.0-4.5								Very-stiff to hard brown mottled with gray silty clay, trace fine to coarse sand, trace fine gravel. Est. A-7-6
	5	SS	5-6-9 (15)	3.25-4.5	26							
10	6	SS	5-7-8 (15)	3.25-4.25								Very-stiff to hard gray silty clay, trace fine to coarse sand, contains few silt seams. Est. A-7-6
	7	SS	5-6-9 (15)	1.75-2.7	18	38	22					Stiff to very-stiff gray silty clay, some fine to coarse sand, little fine to coarse gravel. Est. A-6b
15	8	SS	5-6-9 (15)	2.25-3.25								
	9	SS	5-6-9 (15)	2.0-4.5								Very-stiff to hard brown silty clay, some fine to coarse sand, little fine gravel. Est. A-6a
20	10	SS	15-34-44 (78)		24	35	24					Very-soft red shale, nearly horizontally bedded, highly weathered, partly similar to silty clay. Visual
	11	SS	37 60R				8					Very soft brown weathered shale, nearly horizontally bedded, partly similar to clayey silt. Visual
25												Soft to medium-hard gray siltstone, nearly horizontally bedded, contains many fractures. Visual
30	12	NXM	30-4"-R RUN 60% RQD									Medium-hard gray siltstone, interbedded with shale, nearly horizontally bedded, contains many diagonal fractures. Visual
35	13											

WATER LEVEL: ▽
WATER NOTE:
DATE:

JOB: 6405.1

-CONTINUED-

PLATE 6

LAW-7-05.10

BBC&M ENGINEERING, INC.

LOG OF BORING NO. B-4BPI
LAW-7-2.17 PRELIMINARY INVESTIGATION
LAWRENCE COUNTY, OHIO

Page 2 of 2

TYPE: 3-1/4" I.D. Hollow-stem Auger; 2" O.D. Split-barrel Sampler; NXM Rock Core Barrel
LOCATION: Sta. 268+6.2, 42.8' Rt. of Proposed SR 7 Centerline
COMPLETION DEPTH: 43.8' ELEVATION: 551.5 DATE: 11/16/98

DEPTH, FEET	SAMPLE NO.	SAMPLES	SAMPLING EFFORT	HAND PENE-TROMETER tsf	MOISTURE CONTENT %	LIQUID LIMIT %	PLASTIC LIMIT %	AGG.	C. S.	F. S.	SILT/CLAY	DESCRIPTION
40	14	NXM	42% REC 98% RQD 87%									DESCRIPTION - CONTINUED — Soft to medium-hard gray shale, nearly horizontally bedded, contains few diagonal fractures, few iron-oxide filled fractures. Visual
45	15	NXM	REC 100% RQD 100%									- Encountered water at 33.5'.
50												
55												
60												
65												
70												

WATER LEVEL: ▽
WATER NOTE:
DATE:

JOB: 6405.1

PLATE 7

DRAWN M.S.J.
CHECKED E.M.K.

STRUCTURE FOUNDATION EXPLORATION
LAW-7-05.10

LAW-7-2.17

173/206

1214
1247

DRAFT Stage 3 - Not for Construction 09/23/2024

PROJECT: LAW - 7 - 2.17	DRILLING FIRM / OPERATOR: STANTEC / M.M.	DRILL RIG: CME 55 #1 TRUCK	STATION / OFFSET: 301+30, 41 RT	EXPLORATION ID B-051-0-11
TYPE: STRUCTURE	SAMPLING FIRM / LOGGER: STANTEC / M.M.	HAMMER: CME AUTOMATIC	ALIGNMENT:	
PID: 75923 BR ID: LAW-7-05.63	DRILLING METHOD: 3.25" HSA / NQ	CALIBRATION DATE: 2/24/10	ELEVATION: 550.4 (MSL) EOB: 28.0 ft.	PAGE 1 OF 1
START: 5/26/11 END: 5/26/11	SAMPLING METHOD: SPT	ENERGY RATIO (%): 74.4	LAT / LONG: Not Recorded	

MATERIAL DESCRIPTION AND NOTES	ELEV. 550.4	DEPTHS	SPT / RQD	N60	REC (%)	SAMPLE ID	HP (tsf)	GRADATION (%) GR	CS	FS	SI	CL	ATTERBERG LL	PL	PI	WC	ODOT CLASS (GI)	INST.
SOFT, BROWN, SILT AND CLAY, SOME GRAVEL, LITTLE SAND, DAMP			2 1 2	4	53	SS-1	-	34	9	13	22	22	36	21	15	11	A-6a (3)	
	547.3	TR	7 50/1"	-	100	SS-2	-	-	-	-	-	-	-	-	-	16	A-6a (V)	
SANDSTONE, GRAY, SLIGHTLY WEATHERED, STRONG, FINE GRAINED, THIN BEDDED, IRON STAINING; RQD 100%, REC 100%.	546.7	2.5																
SHALE, LIGHT BROWN, SLIGHTLY WEATHERED, MODERATELY STRONG, LAMINATED, ARENACEOUS; RQD 25%, REC 79%.	541.0	5.0	31		100	NQ-1											CORE	
		7.5	32		61	NQ-2											CORE	
MUDSTONE, RED-BROWN, SLIGHTLY WEATHERED, WEAK, THICK BEDDED, SLICKENSIDES; RQD 0%, REC 86%.	532.9	10.0 12.5 15.0	17		89	NQ-3											CORE	
SANDSTONE, LIGHT BROWN, SLIGHTLY WEATHERED, STRONG, THIN BEDDED; RQD 95%, REC 100%.	529.0	17.5 20.0																
SHALE, GRAY, SLIGHTLY WEATHERED, SLIGHTLY STRONG, LAMINATED; RQD 100%, REC 100%.	527.0	22.5	47		92	NQ-4											CORE	
MUDSTONE, RED-BROWN, SLIGHTLY WEATHERED, WEAK, THICK BEDDED, SLICKENSIDES; RQD 0%, REC 95%.	522.4	25.0 EOB 27.5																

NOTES: NONE

ABANDONMENT METHODS, MATERIALS, QUANTITIES: PLACED AUGER CUTTINGS

DRAFT Stage 3 - Not for Construction
09/23/2024

PROJECT: LAW – 7 – 2.17	DRILLING FIRM / OPERATOR: STANTEC / M.M.	DRILL RIG: CME 55 #1 TRUCK	STATION / OFFSET: 298+63, 37 LT	EXPLORATION ID B-050-0-11
TYPE: STRUCTURE	SAMPLING FIRM / LOGGER: STANTEC / M.M.	HAMMER: CME AUTOMATIC	ALIGNMENT:	
PID: 75923 BR ID: LAW-7-05.63	DRILLING METHOD: 3.25" HSA / NQ	CALIBRATION DATE: 2/24/10	ELEVATION: 532.4 (MSL) EOB: 51.0 ft.	PAGE 1 OF 1
START: 5/23/11 END: 5/24/11	SAMPLING METHOD: SPT	ENERGY RATIO (%): 74.4	LAT / LONG: Not Recorded	

MATERIAL DESCRIPTION AND NOTES	ELEV. 532.4	DEPTHS	SPT/RQD	N60	REC (%)	SAMPLE ID	HP (tsf)	GRADATION (%) GR	CS	FS	SI	CL	ATTERBERG LL	PL	PI	WC	ODOT CLASS (GI)	INST.
VERY LOOSE TO LOOSE, BROWN, SANDY SILT, LITTLE CLAY, MOIST			1	2	100	SS-1	–	–	–	–	–	–	–	–	–	25	A-4a (V)	
	527.9	2.5	1 2	4	73	SS-2	–	0	8	56	22	14	NP	NP	NP	21	A-4a (0)	
			2 2	5	87	SS-3	–	0	7	46	29	18	NP	NP	NP	22	A-4a (2)	
MEDIUM STIFF, BROWN, SILT AND CLAY, AND SAND, TRACE GRAVEL, MOIST		5.0	2 2	5	80	SS-4	–	–	–	–	–	–	–	–	–	24	A-6a (V)	
	524.9		2 2	5	100	SS-5	–	1	8	31	39	21	27	16	11	22	A-6a (5)	
VERY LOOSE TO LOOSE, BROWN GRADING TO GRAY, COARSE AND FINE SAND, LITTLE GRAVEL AND SILT, TRACE CLAY, MOIST TO WET		7.5	2 2	6	100	SS-6	–	0	17	59	14	10	NP	NP	NP	23	A-3a (0)	
		10.0	2 3	5	100	SS-7	–	–	–	–	–	–	–	–	–	27	A-3a (V)	
		W	2 2															
		12.5	1 WOH	1	100	SS-8	–	–	–	–	–	–	–	–	–	30	A-3a (V)	
		15.0	1 1	2	100	SS-9	–	18	18	47	10	7	NP	NP	NP	55	A-3a (0)	
		17.5	2 4	9	80	SS-10	–	–	–	–	–	–	–	–	–	27	A-3a (V)	
	512.4	20.0	2 4	9	100	SS-11	–	0	2	8	47	43	31	18	13	21	A-6a (9)	
MEDIUM STIFF TO STIFF, GRAY, SILT AND CLAY, TRACE SAND, MOIST		22.5	3 3	7	100	SS-12	–	–	–	–	–	–	–	–	–	26	A-6a (V)	
	507.4	25.0	2 5	12	87	SS-13	–	–	–	–	–	–	–	–	–	22	A-6b (V)	
STIFF TO VERY STIFF, GRAY, SILTY CLAY, TRACE SAND AND GRAVEL, DAMP TO MOIST		27.5	3 7	16	100	SS-14	–	2	1	9	49	39	37	19	18	21	A-6b (11)	
		30.0	2 3	6	100	SS-15	–	–	–	–	–	–	–	–	–	23	A-6b (V)	
		32.5	8 8	20	100	SS-16	–	–	–	–	–	–	–	–	–	17	A-6b (V)	
	495.9	TR 35.0	7 11 21	40	100	SS-17	–	–	–	–	–	–	–	–	–	14	A-6b (V)	
SHALE, GRAY, SLIGHTLY WEATHERED, SLIGHTLY STRONG, LAMINATED, SANDSTONE SEAM @ 36.7' TO 37.1'; RQD 54%, REC 100%.	493.1	37.5	29		100	NQ-1											CORE	
MUDSTONE, BROWN AND GRAY, MODERATELY WEATHERED, WEAK TO SLIGHTLY STRONG, THICK BEDDED, SLICKENSIDES; RQD 0%, REC 91%.		40.0	0		84	NQ-2											CORE	
		42.5																
		45.0	0		92	NQ-3											CORE	
	481.4	47.5 EOB 50.0																

NOTES: NONE

ABANDONMENT METHODS, MATERIALS, QUANTITIES: PUMPED BENTONITE GROUT

DRAFT Stage 3 - Not for Construction 09/23/2024

BRIDGE-LAW-7-05.63: STA. 297+17.6, 116.8 Lt. of PROPOSED SR 7 CENTERLINE

LAW-7-05.63

BBC&M ENGINEERING, INC.

LOG OF BORING NO. BSWBR-203
PHASE 2 SUBSURFACE INVESTIGATION, LAW-7
LAWRENCE COUNTY, OHIO

Page 1 of 2

TYPE: 3-1/4" I.D. Hollow-stem Auger; 2" O.D. Split-barrel Sampler; NXM Rock Core Barrel

LOCATION: Sta. 297+17.6, 116.8' Lt. of Proposed SR 7 Centerline

COMPLETION DEPTH: 44.9' ELEVATION: 532.5 DATE: 12/22/99 - 12/23/99

Sample No.	Sampling Effort	Hand Penetrometer (tsf)	Moisture Content %	Liquid Limit %	Plastic Limit %	Agg. %	C. S. %	F. S. %	Silt & Clay %
1	4/6/4	2.25-2.75							
2	4/6/8	3.5-4.5+	23	43	24	0	0	11	89
3	3/5/5	3.0-4.5+							
4	1/3/3					0	2	68	30
5	1/2/3					0	3	63	34
6	1/1/2					0	2	74	24
7	1/1/2					0	33	63	3
8	2/1/1								
9	8/9/16								
10	2/3/6								
11	6/10/7								
12	13/19/21								
13	14/19/23								
14	14/16/21								

DESCRIPTION

TOPSOIL - 18 INCHES

Very-stiff to hard brown organic silty clay, little fine to medium sand, few roots. Visual

Very-stiff to hard brown mottled with gray organic clayey silt, little fine to medium sand, few roots. Visual

Very-loose to loose brown and gray fine sand, some clayey silt, trace medium sand, few silt and clayey silt seams. A-3a(0)

Very-loose gray fine to medium sand, trace silt, interbedded with silt and silty clay below 19.0 feet. A-3(0)

Loose to medium-dense gray and brown fine to coarse sand, trace to little fine to coarse gravel (shale and sandstone fragments), trace clayey silt. Est. A-3a

Dense brown and gray fine to coarse sand, little fine gravel, trace to little clayey silt, few sandstone and shale fragments. Est. A-1-b

WATER LEVEL:
WATER NOTE:
DATE:

JOB: 01106405.002 -CONTINUED- PLATE 5

LAW-7-05.63

BBC&M ENGINEERING, INC.

LOG OF BORING NO. BSWBR-203
PHASE 2 SUBSURFACE INVESTIGATION, LAW-7
LAWRENCE COUNTY, OHIO

Page 2 of 2

TYPE: 3-1/4" I.D. Hollow-stem Auger; 2" O.D. Split-barrel Sampler; NXM Rock Core Barrel

LOCATION: Sta. 297+17.6, 116.8' Lt. of Proposed SR 7 Centerline

COMPLETION DEPTH: 44.9' ELEVATION: 532.5 DATE: 12/22/99 - 12/23/99

Sample No.	Sampling Effort
15	70R
16	NXM REC 53% RQD 12%

DESCRIPTION - CONTINUED

Dense brown and gray fine to coarse sand, little fine gravel, trace to little clayey silt, few sandstone and shale fragments. Est. A-1-b

Medium-hard gray fine-grained sandstone, nearly horizontally bedded, well cemented. Visual

Very-soft to soft gray, brown and reddish-brown shale, nearly horizontally bedded, few horizontal fractures, similar to hard silty clay. Visual

- Encountered water from 13.5' to 13.3'.

-Auger refusal at 39.9'.

WATER LEVEL:
WATER NOTE:
DATE:

JOB: 01106405.002 PLATE 6

DRAWN M.S.J. CHECKED E.M.K.

STRUCTURE FOUNDATION EXPLORATION LAW-7-05.63

LAW-7-2.17

DRAFT Stage 3 - Not for Construction 09/23/2024

BRIDGE-LAW-7-05.63: STA. 298+39.1, 11.9 Rt. of PROPOSED SR 7 CENTERLINE

LAW-7-05.63

BBC&M ENGINEERING INC.

LOG OF BORING NO. B-5BP1
LAW-7-2.17 PRELIMINARY INVESTIGATION
LAWRENCE COUNTY, OHIO

Page 1 of 2

TYPE: 3 1/4" I.D. Hollow-stem Auger; 2" O.D. Split barrel Sampler; NXM Rock Core Barrel

LOCATION: Sta. 298+39.1, 11.9' Rt. of Proposed SR 7 Centerline

COMPLETION DEPTH: 46.5' ELEVATION: 530.3 DATE: 10/12/98 10/13/98

DEPTH, FEET	SAMPLE NO.	SAMPLES SAMPLING EFFORT	HAND PENE-TROMETER tsf	MOISTURE CONTENT %	LIQUID LIMIT %	PLASTIC LIMIT %	GRAD. C.S.	GRAD. F.S.	GRAD. SILT %	GRAD. CLAY %	DESCRIPTION
0											TOPSOIL, 4 INCHES
	1	2-3-3/12									Very-loose to loose brown fine to medium sand, trace coarse sand, little to some silt.
5	2	3-3-3/12									
	3	1-2-2/12									Bor. A 3a
10	4	2-3-3/12					1	60	34	4	Medium-dense gray and brown fine to medium sand, trace coarse sand, trace silt.
15	5	3-4-3/12	2.5-2.75	22	30	21	1	5	10	34	A-1-b(0)
	6	3-5-4/9	2.5-2.75	25	30	21	0	3	5	33	Stiff to very-stiff gray silty clay, trace fine to coarse sand, trace fine gravel.
	7	2-5-5/6	1.75-2.5	26	36	23	0	2	6	33	58
20	8	3-4-4/6	1.0-2.2								61
	9	2-5-5/6	2.5	25	42	23	0	1	6	29	64
25	10	3-4-4/6	1.7-2.2								A-6a(10)
	11	2-5-5/6	1.75-2.5	27							Stiff to very-stiff brown mottled with gray silty clay, trace fine to coarse sand.
30	12	2-2-3/6									A-7-6(12)
	13	3-4-3/6					7	54	29	10	Loose gray fine to medium sand, trace coarse sand, some silty clay.
35											A-1-b(0)

WATER LEVEL: ▽ 11.0 ▼ 9.3
WATER NOTE: DATE: 10/12/98 10/13/98

JOB: 6405.1 CONTINUED PLATE 7

LAW-7-05.63

BBC&M ENGINEERING INC.

LOG OF BORING NO. B-5BP1
LAW-7-2.17 PRELIMINARY INVESTIGATION
LAWRENCE COUNTY, OHIO

Page 2 of 2

TYPE: 3 1/4" I.D. Hollow-stem Auger; 2" O.D. Split barrel Sampler; NXM Rock Core Barrel

LOCATION: Sta. 298+39.1, 11.9' Rt. of Proposed SR 7 Centerline

COMPLETION DEPTH: 46.5' ELEVATION: 530.3 DATE: 10/12/98 10/13/98

DEPTH, FEET	SAMPLE NO.	SAMPLES SAMPLING EFFORT	HAND PENE-TROMETER tsf	MOISTURE CONTENT %	LIQUID LIMIT %	PLASTIC LIMIT %	GRAD. C.S.	GRAD. F.S.	GRAD. SILT %	GRAD. CLAY %	DESCRIPTION - CONTINUED
40	14	50/3"R									Medium-hard gray shale, nearly horizontally bedded, many directional fractures.
	15	NXM REC. 6'/6' RQD 0'/6'									Visual
45	16	REC. 0'/6' RQD 0'/6'									Soft to medium-hard green-brown and red shale, many directional fractures, contains slickensides, no recovery below 41.5'.
50											Visual
55											- Encountered water at 25.9'.
60											- Sample 16 was ground up in core barrel, description based on cuttings.
65											
70											

WATER LEVEL: ▽ 11.5 ▼ 9.3
WATER NOTE: DATE: 10/12/98 10/13/98

JOB: 6405.1 PLATE 8

DRAWN M.S.J. CHECKED E.M.K.

STRUCTURE FOUNDATION EXPLORATION
LAW-7-05.63

LAW-7-2.17

177/206

1218/1247

DRAFT Stage 3 - Not for Construction 09/23/2024

BRIDGE-LAW-7-05.63: STA. 300+13.3, 41.4 Lt. of PROPOSED SR 7 CENTERLINE

LAW-7-05.63

BBC&M ENGINEERING INC.

LOG OF BORING NO. B-5BP2
LAW-7-2.17 PRELIMINARY INVESTIGATION
LAWRENCE COUNTY, OHIO

Page 1 of 2

TYPE: 3-1/4" I.D. Hollow-stem Auger; 2" O.D. Split-barrel Sampler; NXM Rock Core Barrel
LOCATION: Sta. 300+13.3, 41.4' Lt. of Proposed SR 7 Centerline
COMPLETION DEPTH: 40.0' ELEVATION: 532.8 DATE: 10/14/98 10/15/98

DEPTH, FEET	SAMPLE NO.	SAMPLES SAMPLING EFFORT	HAND PENE-TROMETER tsf	MOISTURE CONTENT %	LIQUID LIMIT %	PLASTIC LIMIT %	AGG.	S.	F. S.	SILT/CLAY	DESCRIPTION
0											TOPSOIL - 4 INCHES
	1	4/6/7	4.5+								Very-stiff hard brown silty clay, trace to little fine sand, contains silt seams.
5	2	4/6/8	3.7								Est. A-7-6
	3	3/4/3									Loose brown fine to medium sand, little silt.
10											Est. A-3a
	4	6/10/8	2.5 3.5 3.5	17	29	17	7	12	35	29	36	Very-stiff red brown mottled with gray clayey silt, fine to coarse sand, trace fine gravel.
15											A-4a(6)
	5	7/8/14	1.0 4.0	23	45	23	0	1	7	57	35	Very-stiff to hard brown and brown mottled with gray silty clay, trace to little fine to medium sand, trace coarse sand.
	6	9/10/17	1.0 4.0				1	2	5	55	37	
20	7	5/9/12	3.5 4.5	21			1	1	13	38	47	
	8	5/9/13	4.5+									
	9	5/7/11	3.0 3.5 3.5	20			0	1	17	37	45	
25											A-7-6(14)
	10	5/4/6	1.0 2.0								Stiff brown mottled with gray silty clay, some fine to medium sand.
											Est. A-7-6
	11	38/50-5"		8	29	23						Very-soft red to gray shale, nearly horizontally bedded, partly similar to silty clay.
30											Visual
	12	NXM REC 86% RQD 60%										Soft to medium-hard gray shale, nearly horizontally bedded, contains many fractures, few seams of red shale.
											Visual
35											Medium-hard to hard gray siltstone, nearly horizontally bedded, few diagonal fractures with iron oxide staining, micaceous.

WATER LEVEL: ▽ 9.5 ▼ 10.5
WATER NOTE:
DATE: 10/15/98 10/16/98

JOB: 6405.1 -CONTINUED- PLATE 9

LAW-7-05.63

BBC&M ENGINEERING INC.

LOG OF BORING NO. B-5BP2
LAW-7-2.17 PRELIMINARY INVESTIGATION
LAWRENCE COUNTY, OHIO

Page 2 of 2

TYPE: 3-1/4" I.D. Hollow-stem Auger; 2" O.D. Split-barrel Sampler; NXM Rock Core Barrel
LOCATION: Sta. 300+13.3, 41.4' Lt. of Proposed SR 7 Centerline
COMPLETION DEPTH: 40.0' ELEVATION: 532.8 DATE: 10/14/98 10/15/98

DEPTH, FEET	SAMPLE NO.	SAMPLES SAMPLING EFFORT	HAND PENE-TROMETER tsf	MOISTURE CONTENT %	LIQUID LIMIT %	PLASTIC LIMIT %	AGG.	S.	F. S.	SILT/CLAY	DESCRIPTION - CONTINUED
35											Visual
		REC 100% RQD 55%									Medium-hard to hard gray siltstone, nearly horizontally bedded, few diagonal fractures with iron oxide staining, micaceous.
40	13										Visual
											Medium-hard gray shale, nearly horizontally bedded, contains many fractures, few seams of brown shale.
45											Visual
											- Encountered water at 8.5'.
50											
55											
60											
65											
70											

WATER LEVEL: ▽ 9.5 ▼ 10.5
WATER NOTE:
DATE: 10/15/98 10/16/98

JOB: 6405.1 PLATE 10

DRAWN M.S.J. CHECKED E.M.K.

STRUCTURE FOUNDATION EXPLORATION
LAW-7-05.63

LAW-7-2.17

178/206

1219/1247

DRAFT Stage 3 - Not for Construction 09/23/2024

BRIDGE-LAW-7-05.63: STA. 300+67.7, 115.3 Lt. of PROPOSED SR 7 CENTERLINE

LAW-7-05.63

BBC&M ENGINEERING, INC.

LOG OF BORING NO. B5WBF-284
PHASE 2 SUBSURFACE INVESTIGATION, LAW-7
LAWRENCE COUNTY, OHIO

Page 1 of 2

TYPE: 3-1/4" I.D. Hollow-stem Auger; 2" O.D. Split-barrel Sampler; NXM Rock Core Barrel
LOCATION: Sta. 300+67.7, 115.3' Lt. of Proposed SR 7 Centerline
COMPLETION DEPTH: 37.0' ELEVATION: 529.1 DATE: 12/27/99 - 12/28/99

DEPTH (FEET)	SAMPLE NO.	SAMPLES: SAMPLING METHOD	HAND PENE. (TONS/SQ FT)	MOISTURE CONTENT (%)	LIQUID LIMIT	PLASTIC LIMIT	DESCRIPTION
0							TOPSOIL - 5 INCHES
	1	SS	3.5+				Very-stiff brown and reddish-brown silty clay, little fine sand, slightly organic, few roots near top of stratum.
5							Est. A-7-6
	2	SS	3.5+				Medium-stiff to stiff brown clayey silt, "and" fine sand, few silt and fine sand seams.
	3	SS	0.5-2.0	26	23	21	A-4a(5)
10							Loose grey fine sand, "and" clayey silt, trace medium sand, few silt and fine sand seams.
	4	SS					Est. A-4a/
	5	SS					Very-loose brown fine to medium sand, trace coarse sand, trace silt.
15	6	SS	0.5-0.75	28	30	17	A-3(0)/
	7	SS	2.0-4.75	32	41	24	Very-soft gray silty clay, some fine to medium sand, few silt and fine sand seams.
	8	SS	3.0-3.5				A-6a(8)/
20							Stiff gray silty clay, trace fine sand, few sandstone fragments, few silt lenses.
	9	SS	3.0-4.5+				A-7-6(11)/
	10	SS	3.0-4.5+	16	27	21	Very-stiff gray clayey silt, some fine to coarse sand, little fine to coarse gravel, few shale and sandstone fragments.
25							Est. A-4a/
	11	SS	4.5+	18			Very-stiff to hard brown mottled with gray silty clay, little fine to coarse sand, trace fine gravel, few shale and sandstone fragments.
	12	SS	4.5+				Est. A-6a/
30							Very-stiff to hard brown and gray clayey silt, little fine to coarse sand, little fine to coarse gravel, few shale and sandstone fragments.
	13	SS/NXM	50-4"/6				A-4a(5)/
	14	NXM REC 98%					Hard reddish-brown and brown mottled with gray silty clay, some fine to coarse sand, trace fine gravel, becoming similar to very-soft shale.
35							Est. A-6a
							Very-soft reddish brown and gray shale, nearly horizontally bedded, partly similar to hard silty clay.
							Visual
							Medium-hard gray fine-grained sandstone, nearly horizontally bedded, micaceous, well cemented.
							Visual

WATER LEVEL: ▼ ▼ ▼ ▼ ▼ ▼
WATER NOTE:
DATE:

JOB: 01106405.002 -CONTINUED- PLATE 11

LAW-7-05.63

BBC&M ENGINEERING, INC.

LOG OF BORING NO. B5WBF-284
PHASE 2 SUBSURFACE INVESTIGATION, LAW-7
LAWRENCE COUNTY, OHIO

Page 2 of 2

TYPE: 3-1/4" I.D. Hollow-stem Auger; 2" O.D. Split-barrel Sampler; NXM Rock Core Barrel
LOCATION: Sta. 300+67.7, 115.3' Lt. of Proposed SR 7 Centerline
COMPLETION DEPTH: 37.0' ELEVATION: 529.1 DATE: 12/27/99 - 12/28/99

DEPTH (FEET)	SAMPLE NO.	SAMPLES: SAMPLING METHOD	HAND PENE. (TONS/SQ FT)	MOISTURE CONTENT (%)	LIQUID LIMIT	PLASTIC LIMIT	DESCRIPTION - CONTINUED
35		NXM RQD 95%					Medium-hard gray fine-grained sandstone, nearly horizontally bedded, micaceous, well cemented.
							Visual
							Soft to medium-hard gray shale, nearly horizontally bedded, few horizontal fractures.
40							Visual
							- Encountered water from 12.0' to 14.0'.
45							- Auger refusal at 32.0'.
50							
55							
60							
65							
70							

WATER LEVEL: ▼ ▼ ▼ ▼ ▼ ▼
WATER NOTE:
DATE:

JOB: 01106405.002 PLATE 12

DRAWN M.S.J. CHECKED E.M.K.

STRUCTURE FOUNDATION EXPLORATION
LAW-7-05.63

LAW-7-2.17

179/206

1220/1247

DRAFT Stage 3 - Not for Construction 09/23/2024

BRIDGE-LAW-7-07.13: STA. 376+81.4, 35.0' Lt. of PROPOSED SR 7 CENTERLINE

LAW-7-07.13

BBC&M ENGINEERING, INC.

LOG OF BORING NO. B6WBR-208
PHASE 2 SUBSURFACE INVESTIGATION, LAW-7-2.17
LAWRENCE COUNTY, OHIO

Page 1 of 2

TYPE: 4-1/4" I.D. Hollow-stem Auger; 2" O.D. Split-barrel Sampler; NQ Rock Core Barrel
LOCATION: Sta. 376+81.4, 35' Lt. of Proposed SR 7 Centerline
COMPLETION DEPTH: 67.0' ELEVATION: 576.7 DATE: 12/20/99 - 12/21/99

DEPTH, FEET	SAMPLE NO.	SAMPLES: SAMPLING EFFORT	HAND PENE-TROMETER	MOISTURE CONTENT, %	LIQUID LIMIT	PLASTIC LIMIT	%GR	%CS	%FS	%SI/CL	%CLAY
0											
5	1	4 5½ 7	2.0-3.5	25	39	23	0	3	3	58	36
	2	5 7½ 11	4.5+								
10	3	3 4½ 16	4.5+								
15	4	4 7½ 19									
20	5	2 5½ 6	2.5								
25	6	3 5½ 6	2.0-3.5	39	26	21	0	1	10	69	20
30	7	4 5½ 8	2.5-3.5								
	8	3 5½ 5	3.0-3.5	38	29	22	0	6	2	77	21
	9	4 5½ 10	0.5-1.0	29							
35	10	5 7½ 8					48	12	11	29	
	11	4 7½ 8					39	10	13	38	
40	12	4 7½ 8									
	13	10 18½ 22	4.5+								
	14	7 18½ 15	3.0-4.5+								

DESCRIPTION

TOPSOIL - 24 INCHES

Very-stiff brown silty clay, trace fine to medium sand.

A-6b(10)

Hard brown mottled with gray silty clay, little fine to medium sand, contains silt filled desiccation cracks.

Est. A-6a

Medium-dense brown fine to medium sand, trace coarse sand, trace silty clay.

Est. A-3

Very-stiff brown becoming gray clayey silt, trace to little fine to medium sand, few silty clay and fine to coarse sand seams.

A-4b(8)

Medium-stiff brown mottled with gray silty clay, some fine to coarse sand, little fine to coarse gravel, few clayey silt seams.

Est. A-6a

Medium-dense brown, gray and reddish-brown fine to coarse sand, "and" silt, some fine gravel, trace clay, many sandstone and shale fragments, few silt and silty clay seams.

Est. A-1-b

Very-stiff to hard brown, gray and reddish-brown clayey silt, some fine to coarse sand, little fine to coarse gravel (shale and sandstone fragments), desiccated.

Est. A-4a

WATER LEVEL: ▽ ▽ ▽ ▽ ▽ ▽
WATER NOTE:
DATE:

JOB: 01106405.002

-CONTINUED-

PLATE 5

LAW-7-07.13

BBC&M ENGINEERING, INC.

LOG OF BORING NO. B6WBR-208
PHASE 2 SUBSURFACE INVESTIGATION, LAW-7-2.17
LAWRENCE COUNTY, OHIO

Page 2 of 2

TYPE: 4-1/4" I.D. Hollow-stem Auger; 2" O.D. Split-barrel Sampler; NQ Rock Core Barrel
LOCATION: Sta. 376+81.4, 35' Lt. of Proposed SR 7 Centerline
COMPLETION DEPTH: 67.0' ELEVATION: 576.7 DATE: 12/20/99 - 12/21/99

DEPTH, FEET	SAMPLE NO.	SAMPLES: SAMPLING EFFORT	HAND PENE-TROMETER	MOISTURE CONTENT, %	LIQUID LIMIT	PLASTIC LIMIT	%GR	%CS	%FS	%SI/CL	%CLAY
45	15	9 19½ 20	1.5-3.5								
50	16	3 5½ 7	1.5-2.5	24	34	20	0	0	18	45	37
	17	13 21½ 26									
	18	50R									
55											
	19	47 50R									
60		50/ REC 69% RQD 35%									
65											
70											
75											
80											
85											

DESCRIPTION - CONTINUED

Stiff to very-stiff reddish-brown mottled with blue-gray silty clay, little fine sand, few shale and sandstone fragments, slightly organic.

A-6a(10)

Very-soft to soft blue-gray mottled with reddish-brown shale, similar to hard silty clay, nearly horizontally bedded.

Visual

Very-soft to soft blue-gray shale, nearly horizontally bedded, partly similar to hard silty clay.

Visual

Soft to medium-hard gray mottled with reddish-brown shale, nearly horizontally bedded, few horizontal fractures, few seams of very-soft shale.

Visual

- Encountered seepage from 28.5' to 31.5'.
- Encountered water at 31.5'.
- Auger refusal at 61.0'.

WATER LEVEL: ▽ ▽ ▽ ▽ ▽ ▽
WATER NOTE:
DATE:

JOB: 01106405.002

PLATE 6

BRIDGE-LAW-7-07.13: STA. 377+81.6, 35.0' Rt. of PROPOSED SR 7 CENTERLINE

LAW-7-07.13

BBC&M ENGINEERING, INC.

LOG OF BORING NO. B6EB1-209
PHASE 2 SUBSURFACE INVESTIGATION, LAW-7-2.17
LAWRENCE COUNTY, OHIO

Page 1 of 1

TYPE: 4-1/4" I.D. Hollow-stem Auger; 2" O.D. Split-barrel Sampler; NQ Rock Core Barrel
LOCATION: Sta. 377+81.6, 35' Rt. of Proposed SR 7 Centerline
COMPLETION DEPTH: 37.0' ELEVATION: 542.6 DATE: 12/16/99 - 12/17/99

DEPTH, FEET	SAMPLE NO.	SAMPLES: SAMPLING EFFORT	HAND PENE-TROMETER	MOISTURE CONTENT, %	LIQUID LIMIT	PLASTIC LIMIT	%GR	%CS	%FS	%SI/CL	%CLAY
0											
	1	1 2½ 3	1.0-2.5	33	41	28	0	0	11	60	29
5	2	2 2½ 3	0.5-1.5	33	35	23	0	1	11	59	29
	3	2 2½ 3	0.5-1.5	43							
	4	2 2½ 3	0.5-1.5	39	36	23	0	1	12	52	35
10	5	2 2½ 3	0.5-1.5								
	6	2 2½ 3	1.5								
	7	2 2½ 3	0.5-1.5								
15	8	4 7½ 12	2.0-3.0	15	32	20	0	9	17	45	29
	9	22 50/5"R									
	10	50/5"R									
20											
25											
	11	50/5"R									
30		50 REC 77% RQD 25%									
35	12										

DESCRIPTION

TOPSOIL - 7 INCHES

Stiff to very-stiff brown mottled with gray silty clay, little fine sand, desiccated, few roots, slightly organic.

A-7-6(9)

Medium-stiff to stiff gray interbedded with brown silty clay, little fine to medium sand, few roots, slightly organic.

A-6a(9)

Medium-stiff to stiff brown mottled with gray silty clay, little fine to coarse sand, trace fine to coarse gravel, few seams of very-soft clayey silt, few pockets of fine to coarse gravel.

A-6b(10)

Very-stiff blue-gray mottled with reddish-brown silty clay, some fine to medium sand, trace coarse sand, trace fine gravel, few shale and sandstone fragments, partly similar to very-soft shale.

A-6a(9)

Very-soft to soft reddish-brown and gray shale, nearly horizontally bedded, similar to hard silty clay.

Visual

Soft to medium-hard gray and reddish-brown shale, nearly horizontally bedded, few seams of very-soft shale, few siltstone seams, many diagonal and vertical fractures.

Visual

- Encountered seepage at 10.2'.
- Encountered water at 12.7'.
- Auger refusal at 30.0'.

WATER LEVEL: ▽ 12.0 ▽ ▽ ▽ ▽ ▽
WATER NOTE: Before Coring
DATE: 12/17/99

JOB: 01106405.002

PLATE 7

DRAFT Stage 3 - Not for Construction 09/23/2024

DRAWN M.S.J. CHECKED E.M.K.

STRUCTURE FOUNDATION EXPLORATION

LAW-7-07.13

LAW-7-2.17

BRIDGE-LAW-7-07.13: STA. 378+79.7, 35.0' Lt. of PROPOSED SR 7 CENTERLINE

LAW-7-07.13

BBC&M ENGINEERING INC

LOG OF BORING NO. B6WBJ-210
PHASE 2 SUBSURFACE INVESTIGATION, LAW-7-2.17
LAWRENCE COUNTY, OHIO

Page 1 of 1

TYPE: 4-1/4" I.D. Hollow-stem Auger; 2" O.D. Split-barrel Sampler; NQ Rock Core Barrel
LOCATION Sta. 378+79.7, 35' Lt. of Proposed SR 7 Centerline
COMPLETION DEPTH: 34.5' ELEVATION: 542.8 DATE: 12/15/99 - 12/16/99

DEPTH, FEET	SAMPLE NO.	SAMPLER SAMPLING EFFORT	HAND PENE-TROMETER	MOISTURE CONTENT	LIQUID LIMIT	PLASTIC LIMIT	GRAD. C.	GRAD. F.	GRAD. S.	GRAD. G.	DESCRIPTION
0			tsf	%	%	%	%	%	%	%	
											Medium-stiff to stiff brown clayey silt, "and" fine to coarse sand, trace fine gravel, few roots, slightly organic. A-4a(5)
5	1	2 2/4	0.5-1.5	24	35	20	2	9	11	36	22
	2	3 3/5	1.5-2.5	25	35	21	2	10	25	39	24
	3	3 3/6	2.0-3.5	18	38	21	2	10	15	39	36
	4	2 2/4	1.5-3.5	22	36	21	3	6	14	43	34
10											Stiff to very-stiff brown silty clay, some fine to coarse sand, trace fine gravel. A-6a(11)
	5	4 5/13									
											Very-stiff to hard brown mottled with gray clayey silt, little to some fine to coarse sand, trace fine gravel (sandstone fragments). Est. A-4a
	6	10/16	3.0-4.5+								
15											Medium-dense brown fine to coarse gravel (sandstone fragments), some fine to coarse sand, little silty clay, desiccated. Est. A-1-b
	7	10									
	8	4 4/8	1.5-3.0	20							Stiff to very-stiff brown mottled with gray silty clay, little fine to coarse sand, trace fine to coarse gravel (sandstone and siltstone fragments). Est. A-6a
20	9	7 7/9	0.75-1.5	24	32	20	8	2	17	42	31
	10	2 3/7	2.0-2.5								Medium-stiff to stiff brown mottled with gray silty clay, some fine to coarse sand, trace fine to coarse gravel. A-6a(8)
25											Very-stiff brown mottled with gray silty clay, little fine to medium sand. Est. A-6b
											Very-soft gray shale, similar to hard silty clay, nearly horizontally bedded, highly fractured Visual
30	11	12 50-5"R									
	12	NQ REC 33% RQD 6%									Soft to medium-hard gray siltstone, nearly horizontally bedded, many diagonal and vertical fractures, few seams of very-soft shale. Visual
35											- Topsoil stripped for levelling pad. - Encountered water at 9.0'. - Auger refusal at 29.5'.
40											

WATER LEVEL: ▽ 4.2
WATER NOTE: Before Coring
DATE: 12/16/99

JOB: 01106405.002

PLATE 8

BRIDGE-LAW-7-07.13: STA. 379+81.1, 35.0' Lt. of PROPOSED SR 7 CENTERLINE

LAW-7-07.13

BBC&M ENGINEERING INC

LOG OF BORING NO. B6EBF-211
PHASE 2 SUBSURFACE INVESTIGATION, LAW-7-2.17
LAWRENCE COUNTY, OHIO

Page 1 of 2

TYPE: 4-1/4" I.D. Hollow-stem Auger; 2" O.D. Split-barrel Sampler; NQ Rock Core Barrel
LOCATION Sta. 379+81.1, 35' Rt. of Proposed SR 7 Centerline
COMPLETION DEPTH: 38.1' ELEVATION: 541.6 DATE: 12/14/99 - 12/15/99

DEPTH, FEET	SAMPLE NO.	SAMPLER SAMPLING EFFORT	HAND PENE-TROMETER	MOISTURE CONTENT	LIQUID LIMIT	PLASTIC LIMIT	GRAD. C.	GRAD. F.	GRAD. S.	GRAD. G.	DESCRIPTION
0			tsf	%	%	%	%	%	%	%	
											Soft to medium-stiff brown silty clay, some fine to coarse sand, slightly organic, few roots, few silt seams. A-6a(8)
5	1	2 2/4	0.25-0.75	30	33	25	1	7	24	43	25
	2	3 3/5	0.75-1.25	34	44	25	4	8	23	37	28
	3	2 2/4	0.75-1.5	30	42	23	3	11	24	32	30
	4	3 3/5	1.5-2.5	25	36	22	0	11	25	64	
10											Medium-stiff to stiff brown silty clay, some fine to coarse sand, trace fine gravel, slightly organic, few roots, few silt seams. A-7-6 (10)
	5	2 2/5	1.0-2.25								
											Stiff to very-stiff brown silty clay, some to "and" fine to medium sand, desiccated. A-6a(7)
	6	3 3/5	3.5-4.5+								
15											Very-stiff to hard brown mottled with gray silty clay, little fine to coarse sand, trace silt. Est. A-6a
	7	3 3/5	2.5-3.5	25	42	21	0	0	9	46	45
	8	3 3/5	2.5-3.5								Very-stiff reddish-brown mottled with brown silty clay, trace to little fine sand, few seams of fine to coarse sand, desiccated. A-7-6(13)
20	9	3 3/5	2.25-3.5								
	10	3 3/5	2.0-3.0	25	38	23	0	10	42	48	Very-stiff brown mottled with gray silty clay, trace to little fine sand, desiccated. A-6a(10)
25											
	11	2 2/5	2.0-4.0								
30											

WATER LEVEL: ▽ 2.2
WATER NOTE: Before Coring
DATE: 12/15/99

JOB: 01106405.002

-CONTINUED-

PLATE 9

LAW-7-07.13

BBC&M ENGINEERING INC

LOG OF BORING NO. B6EBF-211
PHASE 2 SUBSURFACE INVESTIGATION, LAW-7-2.17
LAWRENCE COUNTY, OHIO

Page 2 of 2

TYPE: 4-1/4" I.D. Hollow-stem Auger; 2" O.D. Split-barrel Sampler; NQ Rock Core Barrel
LOCATION Sta. 379+81.1, 35' Rt. of Proposed SR 7 Centerline
COMPLETION DEPTH: 38.1' ELEVATION: 541.6 DATE: 12/14/99 - 12/15/99

DEPTH, FEET	SAMPLE NO.	SAMPLER SAMPLING EFFORT	HAND PENE-TROMETER	MOISTURE CONTENT	LIQUID LIMIT	PLASTIC LIMIT	GRAD. C.	GRAD. F.	GRAD. S.	GRAD. G.	DESCRIPTION - CONTINUED
12		50-1"R	tsf	%	%	%	%	%	%	%	Medium-hard gray siltstone, interbedded with sandstone, nearly horizontally bedded, micaceous, many horizontal fractures, two vertical fractures near top of stratum. Visual
35											
	13	NQ REC 86% RQD 57%									Soft to medium-hard gray shale, nearly horizontally bedded, few horizontal fractures, few very-soft layers, few seams of siltstone. Visual
											- Encountered water at 4.5'. -Auger refusal at 33.0'.
40											
45											
50											
55											
60											

WATER LEVEL: ▽ 2.1
WATER NOTE: Before Coring
DATE: 12/15/99

JOB: 01106405.002

PLATE 10

DRAWN M.S.J. CHECKED E.M.K.

STRUCTURE FOUNDATION EXPLORATION
LAW-7-07.13

LAW-7-2.17

181/206

1222/1247

DRAFT Stage 3 - Not for Construction 09/23/2024

LAW-775-1.05

BBC&M ENGINEERING INC

LOG OF BORING NO. B6SF-103
PHASE 2 SUBSURFACE INVESTIGATION, LAW-7-2.17
LAWRENCE COUNTY, OHIO

TYPE: 3-1/4" I.D. Hollow-stem Auger; 2" and 2-1/2" O.D. Split-barrel Samplers; NX Rock Core Barrel
LOCATION: Sta. 380+44.96, 120.88' Lt. of Proposed SR 7 Centerline
COMPLETION DEPTH: 68.3' ELEVATION: 558.6 DATE: 6/29/99 - 6/30/99

DEPTH, FEET	SAMPLE NO.	SAMPLES SAMPLING EFFORT	HAND PENE-TROMETER tsf	MOISTURE CONTENT %	LIQUID LIMIT %	PLASTIC LIMIT %	AGG.	C. S.	F. S.	SIL/CLAY	DESCRIPTION
0											TOPSOIL - 3 INCHES
											Very-stiff brown mottled with gray silty clay, little fine to coarse sand, trace fine gravel, many fine sand and silt seams.
5	1	3/3/4	2.5-3.0								
	2	5/5/7	3.0-3.5								Est. A-6b
10	3	1/1/2	1.0-1.5	28	33	23		0	5	71 / 24	Stiff to very-stiff brown mottled with gray clayey silt, trace to some fine to medium sand, few silt and fine sand seams.
15	4	1/2/1	1.75-2.5								
	5A	1/2/3					0	1	27	67 / 25	A-4b (8)
20	5B	3/2/2					0	0	18	72 / 10	Very-loose brown and gray silt, little to some fine sand, trace clay, trace medium to coarse sand, trace fine gravel, few fine to coarse sand seams.
	6	3/2/2							0	24 / 68 / 8	
	7	2/2/2					0	0	24	67 / 9	
25									12	82 / 6	
	9	2/3/2									
	10	1/1/2									
30	11	3/5/5					8	3	4	85	
	12	2/3/4									Est. A-4b (8)
35											

WATER LEVEL: ▽ 15.0 ▽ ▽ ▽ ▽ ▽
WATER NOTE: After Core
DATE: 6/30/99

JOB: 01106465.002

-CONTINUED-

LAW-775-1.05

BBC&M ENGINEERING INC

LOG OF BORING NO. B6SF-103
PHASE 2 SUBSURFACE INVESTIGATION, LAW-7-2.17
LAWRENCE COUNTY, OHIO

TYPE: 3-1/4" I.D. Hollow-stem Auger; 2" and 2-1/2" O.D. Split-barrel Samplers; NX Rock Core Barrel
LOCATION: Sta. 380+44.96, 120.88' Lt. of Proposed SR 7 Centerline
COMPLETION DEPTH: 68.3' ELEVATION: 558.6 DATE: 6/29/99 - 6/30/99

DEPTH, FEET	SAMPLE NO.	SAMPLES SAMPLING EFFORT	HAND PENE-TROMETER tsf	MOISTURE CONTENT %	LIQUID LIMIT %	PLASTIC LIMIT %	AGG.	C. S.	F. S.	SIL/CLAY	DESCRIPTION - CONTINUED
35											Very-loose brown and gray silt, little to some fine sand, trace clay, trace medium to coarse sand, trace fine gravel, few fine to coarse sand seams.
	13	1/2/4									
40	14	3/3/2									Est. A-4b (8)
	15	2/2/4									Soft to stiff gray silty clay interbedded with silt, trace fine sand, few fine sand seams.
45											
	16	2/3/3	0.25-2.0								
50											
	17	2/3/5	1.0-2.0					0	0	2 / 98	
55											
	18A	S/H	1.0-1.5								Est. A-6b
60	18B	4/4/6	1.0-2.0								Stiff gray clayey silt, some fine to coarse sand, little fine to coarse gravel.
											Est. A-4a/
	19	50-1"R									Very-soft gray shale, nearly horizontally bedded, few vertical fractures, few slickensides.
65		NX REC 17% RQD 0%									
	20										Visual
70											- Encountered water at 23.0'.

WATER LEVEL: ▽ 15.0 ▽ ▽ ▽ ▽ ▽
WATER NOTE: After Core
DATE: 6/30/99

JOB: 01106465.002

DRAWN MSJ
CHECKED EMK

STRUCTURE FOUNDATION EXPLORATION
LAW-775-1.05

LAW-7-2.17

DRAFT Stage 3 - Not for Construction 09/23/2024

LAW-775-1.05

BBC&M ENGINEERING, INC.

LOG OF BORING NO. B6SM-102
PHASE 2 SUBSURFACE INVESTIGATION, LAW-7
LAWRENCE COUNTY, OHIO

TYPE: 3-1/4" I.D. Hollow-stem Auger; 2" O.D. Split-barrel Sampler; NXM Rock Core Barrel
LOCATION: Sta. 380+07.46, 8.11' Lt. of Proposed SR 7 Centerline
COMPLETION DEPTH: 61.0' ELEVATION: 549.7 DATE: 6/23/99 - 6/24/99

DEPTH, FEET	SAMPLE NO.	SAMPLES	SAMPLING EFFORT	HAND PENE-TROMETER tsf	MOISTURE CONTENT %	LIQUID LIMIT %	PLASTIC LIMIT %	AGG. %	C. S. %	F. S. %	SILT/CLAY %	DESCRIPTION
0												TOPSOIL - 2 INCHES
												Hard becoming stiff brown silty clay, little fine to medium sand, few roots near top of stratum, few silt and fine sand seams.
	1	S	3/3/3	3.5-4.5+								
5												A-6a (9)
	2	S	2/2/3	2.0-3.0								
	3	S	1/2/2	1.5-2.0	26	33	20	0	1	10	62 \ 27	
10	4	S	4/5/6					19	52	24	3 \ 2	Loose to medium-dense brown fine to coarse sand, trace to little fine gravel, trace to little clayey silt.
	5	S	2/4/6					4	70	21	2 \ 3	A-1-b (0)
	6A	S	2/1/1	1.5-2.0	25			21	46	19	6 \ 8	Stiff brown silty clay, little fine to coarse sand, trace fine to coarse gravel.
	6B							0	1	12	73 \ 14	Est. A-6a
15	6C											
	7	S	1/0/0									Very-loose brown silt, little fine to medium sand, little clay.
	8	S	4/3/2									Est. A-4b
20												Loose brown fine to coarse sand, trace fine to coarse gravel, trace silt, few cobbles.
	9	S	1/1/1									Est. A-3a
	10	S/H	1/2/5					0	1	5	84 \ 10	Stiff reddish-brown silty clay, little fine to coarse sand, trace fine gravel.
25												Est. A-6a
	11	S	1/2/3									Very-loose to loose brown and gray silt, trace fine to medium sand, trace fine gravel, few fine sand seams.
	12	S	3/4/3					8	7	21	64	A-4b(8)
30												Loose brown fine to medium sand, trace coarse sand, trace silt.
	13	S	1/3/4	1.75-3.5				0	0	7	72 \ 21	Est. A-3
35												Loose brown and gray silt, some fine to coarse sand, trace clay, trace fine to coarse gravel.
												Est. A-4b
												Stiff to very-stiff gray mottled with brown clayey silt, trace fine sand.
												Est. A-4b

WATER LEVEL: ▽ ▼ ▽ ▼ ▽ ▼
WATER NOTE:
DATE:

JOB: 01106405.002

-CONTINUED-

PLATE 7

ODOT11 1640703.GPJ BBCM.GDT 4/1/02

LAW-775-1.05

BBC&M ENGINEERING, INC.

LOG OF BORING NO. B6SM-102
PHASE 2 SUBSURFACE INVESTIGATION, LAW-7
LAWRENCE COUNTY, OHIO

TYPE: 3-1/4" I.D. Hollow-stem Auger; 2" O.D. Split-barrel Sampler; NXM Rock Core Barrel
LOCATION: Sta. 380+07.46, 8.11' Lt. of Proposed SR 7 Centerline
COMPLETION DEPTH: 61.0' ELEVATION: 549.7 DATE: 6/23/99 - 6/24/99

DEPTH, FEET	SAMPLE NO.	SAMPLES	SAMPLING EFFORT	HAND PENE-TROMETER tsf	MOISTURE CONTENT %	LIQUID LIMIT %	PLASTIC LIMIT %	AGG. %	C. S. %	F. S. %	SILT/CLAY %	DESCRIPTION - CONTINUED
	14	S	5/5/5									Loose gray and brown fine to coarse sand, little fine to coarse gravel, trace silt.
40												Est. A-1-b
	15	S	1/2/4	2.0-2.5								Stiff to very-stiff gray mottled with brown clayey silt, some fine sand, trace medium to coarse sand, few fragments of sandstone at 55.0'.
45												
	16	S	1/2/3	1.5-2.25								
50												
	17	S	1/2/5	1.25-2.0	9	25	19	0	1	29	47 \ 23	A-4a (7)
55		NXM										Very-soft to soft brown and gray shale, nearly horizontally bedded, many horizontal fractures, few diagonal fractures, few slickensides.
	18	REC 62% RQD 24%										Visual
60												- Encountered slight seepage from 12.0' to 13.6'.
												- Encountered water at 25.5'.
65												- Encountered heaving sand at 28.5'.
70												

WATER LEVEL: ▽ ▼ ▽ ▼ ▽ ▼
WATER NOTE:
DATE:

JOB: 01106405.002

PLATE 8

ODOT11 1640703.GPJ BBCM.GDT 4/1/02

DRAFT Stage 3 - Not for Construction 09/23/2024

DRAWN MSJ
CHECKED EMK

STRUCTURE FOUNDATION EXPLORATION
LAW-775-1.05

LAW-7-2.17

BBC&M ENGINEERING INC.

LOG OF BORING NO. B6SR-101
PHASE 2 SUBSURFACE INVESTIGATION, LAW-7
LAWRENCE COUNTY, OHIO

TYPE: 4-1/2" O.D. Continuous-flight Auger; 3-1/4" I.D. Hollow-stem Auger; 2" and 2-1/2" O.D. Split-barrel Samplers

LOCATION: Sta. 379+70.10, 118.87' Rt. of Proposed SR 7 Centerline

COMPLETION DEPTH: 73.8' ELEVATION: 539.5 DATE: 6/24/99 - 6/28/99

DEPTH, FEET	SAMPLE NO.	SAMPLES	SAMPLING EFFORT	HAND PENE-TROMETER tsf	MOISTURE CONTENT %	LIQUID LIMIT %	PLASTIC LIMIT %	AGG.	C. S	F. S.	SILT/CLAY	DESCRIPTION
0												TOPSOIL - 5 INCHES
	1	SS	1/1/1	2.5+2.75								Stiff to very-stiff brown silty clay, trace fine sand, contains few silt seams, few roots.
	2	SS	1/2/2	1.75+2.5				0	0	6	63 / 32	
	3	SS	1/1/2	1.75+2.5				0	0	9	60 / 31	Est. A-6a
5	4	SS	2/3/2	0.75+1.0	37	39	24	0	0	21	47 / 32	Medium-stiff gray mottled with brown silty clay, some fine sand, few roots.
	5	SS	1/2/2	1.5+2.25				0	0	10	48 / 42	A-6a (10)
10	6	SS	2/3/4	1.75+2.5								Stiff to very-stiff brown mottled with gray silty clay, trace to little fine to coarse sand, trace fine gravel.
	7	SS	1/2/2									Est. A-6a
15	8	SS	2/2/2									Very-loose to loose brown and gray fine sand, trace medium to coarse sand, trace fine gravel, little to some silty clay, contains few silt seams.
	9	SS	1/1/1					0	1	66	33	
20	10	SS	1/2/4									A-3a(0)
	11	SS	1/3/2									Loose brown and gray fine to medium sand, trace silt, trace medium sand, few zones of fine to coarse sand.
25												
	12	SS	3/3/3									A-1-b(0)
30												Loose brown and gray fine to coarse sand, some fine to coarse gravel, little silty clay. Est. A-1-b
	13A	SS	2/4/6					1	1	65	29 / 5	Medium-dense brown and gray silt, little fine to medium sand, little clay.
	13B											A-4b(8)
35												Medium-dense greenish-gray fine to coarse gravel, some fine to coarse sand, little silty clay. Est. A-1-b
	14A	SS	2/4/5					0	1	16	71 / 12	Medium-dense gray and brown silt, trace fine to medium sand. Est. A-4b
	14B											
40	14C											

(CONTINUED)

WATER LEVEL: ▽ 6.8
WATER NOTE:
DATE: 6/25/99

JOB: 01106405.002

PLATE 5

BBC&M ENGINEERING INC.

LOG OF BORING NO. B6SR-101
PHASE 2 SUBSURFACE INVESTIGATION, LAW-7
LAWRENCE COUNTY, OHIO

TYPE: 4-1/2" O.D. Continuous-flight Auger; 3-1/4" I.D. Hollow-stem Auger; 2" and 2-1/2" O.D. Split-barrel Samplers

LOCATION: Sta. 379+70.10, 118.87' Rt. of Proposed SR 7 Centerline

COMPLETION DEPTH: 73.8' ELEVATION: 539.5 DATE: 6/24/99 - 6/28/99

DEPTH, FEET	SAMPLE NO.	SAMPLES	SAMPLING EFFORT	HAND PENE-TROMETER tsf	MOISTURE CONTENT %	LIQUID LIMIT %	PLASTIC LIMIT %	AGG.	C. S	F. S.	SILT/CLAY	DESCRIPTION - CONTINUED
45	15	SS	26/41/50-5"R	4.5+								Very-soft to soft gray shale, nearly horizontally bedded, highly fissile, similar to hard silty clay, few seams of hard reddish-brown clay.
50	16	SS	20/45/50-2"R	4.5+								
55	17	SS	26/50-2"R	4.5+								
60	18	SS	50-3"R	4.5+								
65	19	SS	50-5"R	4.5+								
70	20	SS	50-2"R	4.5+								
75	21	SS	50-3"R	4.5+								Visual
80												- Encountered water at 7.0'.
85												- Encountered heaving sand at 28.5' and 33.5'

WATER LEVEL: ▽ 6.8
WATER NOTE:
DATE: 6/28/99

JOB: 01106405.002

PLATE 6

DRAWN MSJ
CHECKED EMK

STRUCTURE FOUNDATION EXPLORATION
LAW-775-1.05

LAW-7-2.17

184/206

1225/1247

DRAFT Stage 3 - Not for Construction 09/23/2024

BRIDGE-LAW-7-07.11: PROPOSED RAMP I
PROPOSED SR 7 CENTERLINE

LAW-7-0711

BBC&M ENGINEERING, INC.

LOG OF BORING NO. B13-1
PHASE 2 SUBSURFACE INVESTIGATION, LAW-7-2.17
LAWRENCE COUNTY, OHIO

Page 1 of 1

TYPE: 3-1/4" I.D. Hollow-stem Auger; NQ Rock Core Barrel; 2" O.D. Split-barrel Sampler
LOCATION: Sta. 376+81.3, 132.2' Rt. of Proposed SR 7 Centerline
COMPLETION DEPTH: 36.5' ELEVATION: 547.6 DATE: 11/9/00

DEPTH FEET	SAMPLE NO	SAMPLES: SAMPLING EFFORT	HAND PENE-TROMETER tsf	MOISTURE CONTENT %	LIQUID LIMIT %	PLASTIC LIMIT %	AGG. %	C. S. %	F. S. %	SILT/CLAY %
0										
	1	3/5/6	2.0-3.5							
5	2	6/10/12								
	3	7/14/15/10	1.5-3.5	21	37	21	6	5	17	49 32
10	4	9/10		17			32	13	16	21 18
	5	4/15/8								
15	6	50-5"R								
	7	NQ REC 100% RQD 77%								
20	8	REC 90% RQD 70%								
25										
30										
35										
40										
45										

DESCRIPTION

TOPSOIL - 3 INCHES

Very-stiff brown silty clay, some fine to medium sand, contains roots.

Est. A-6b

Medium-dense brown fine to coarse gravel, some fine to coarse sand, some silty clay.

Est. A-2-6

Stiff to very-stiff reddish-brown silty clay, some fine to coarse sand, trace fine gravel.

A-6b (10)

Medium-dense reddish-brown fine to coarse sand, little fine to coarse gravel, "and" silty clay.

Est. A-6a

Medium-hard yellowish-brown sandstone fragments.

Medium-hard blue-green and gray fine to medium-grained sandstone, well cemented, nearly horizontally bedded, becoming soft to medium-hard shale, few horizontal fractures, occasional diagonal fractures.

Q_u = 188.9 psi between 23.3' and 23.9'.

Very-soft to soft reddish-brown shale, nearly horizontally bedded, few horizontal and diagonal fractures.

- No seepage encountered prior to coring.

WATER LEVEL: ▽ "Dry"
WATER NOTE: Before Coring
DATE: 11/09/00

JOB: 01106405.002

LAW-7-0711

BBC&M ENGINEERING, INC.

LOG OF BORING NO. B13-2
PHASE 2 SUBSURFACE INVESTIGATION, LAW-7-2.17
LAWRENCE COUNTY, OHIO

Page 1 of 1

TYPE: 3-1/4" I.D. Hollow-stem Auger; NQ Rock Core Barrel; 2" O.D. Split-barrel Sampler
LOCATION: Sta. 375+93.5, 137.4' Rt. of Proposed SR 7 Centerline
COMPLETION DEPTH: 37.5' ELEVATION: 544.6 DATE: 11/8/00

DEPTH FEET	SAMPLE NO	SAMPLES: SAMPLING EFFORT	HAND PENE-TROMETER tsf	MOISTURE CONTENT %	LIQUID LIMIT %	PLASTIC LIMIT %	AGG. %	C. S. %	F. S. %	SILT/CLAY %
0										
	1	3/3/2	1.2-2.5							
5	2	3/5/4		14	34	21	42	12	16	17 13
	3	7/17/7 5/18/9								
10		3/4/5								
	4	1/2/3		22	27	25		0	1	79 20
15	5	1/2/3	0.5-1.5	29	33	22	0	0	8	62 30
	6	2/3/5	0.5-1.5	35	37	28	1	2	17	52 28
20	7	4/6/7	1.1-2.1							
	8	6/6/12	1.5-2.9							
25	9	9/15" 50-5"R	4.5+							
		NQ REC 80% RQD 70%								
30	10	REC 100% RQD 92%								
35	11									
40										
45										

DESCRIPTION

TOPSOIL - 3 INCHES

Stiff to very-stiff brown silty clay, little fine to coarse sand, trace fine gravel, contains roots.

Est. A-6a

Loose to medium-dense reddish-brown fine to coarse sand, some fine to coarse gravel, some silty clay.

A-2-6 (0)

Loose gray silt, some clay, trace fine to medium sand, few clay seams.

A-4b (8)

Medium-stiff to stiff dark-gray silty clay, trace fine sand, contains decayed vegetation.

A-6a (8)

Medium-stiff to stiff gray clayey silt, little fine to coarse sand, trace fine gravel, contains decayed wood fragments, many silt lenses.

A-4b (8)

Stiff to very-stiff gray clayey silt, some fine to coarse sand, little fine to coarse gravel.

Est. A-4a

Very-soft to soft gray, yellowish-brown and reddish-brown shale, nearly horizontally bedded, few horizontal fractures, occasional vertical fractures.

- Encountered seepage at 8.0' and 21.0'.

WATER LEVEL:
WATER NOTE:
DATE:

JOB: 01106405.002

LAW-7-0711

BBC&M ENGINEERING, INC.

LOG OF BORING NO. B13-3
PHASE 2 SUBSURFACE INVESTIGATION, LAW-7-2.17
LAWRENCE COUNTY, OHIO

Page 1 of 1

TYPE: 3-1/4" I.D. Hollow-stem Auger; NQ Rock Core Barrel; 2" O.D. Split-barrel Sampler
LOCATION: Sta. 376+97.6, 196.3' Rt. of Proposed SR 7 Centerline
COMPLETION DEPTH: 35.5' ELEVATION: 541.8 DATE: 11/8/00

DEPTH FEET	SAMPLE NO	SAMPLES: SAMPLING EFFORT	HAND PENE-TROMETER tsf	MOISTURE CONTENT %	LIQUID LIMIT %	PLASTIC LIMIT %	AGG. %	C. S. %	F. S. %	SILT/CLAY %
0										
	1	3/3/3	0.5-1.0	40	53	36	12	2	16	46 24
5	2	2/4/4	0.7-1.4	25	38	24	1	1	15	48 35
	3	3/6/5	1.4-2.4	21	34	22	5	6	16	43 30
10	4	3/3/4	0.7-1.1							
	5	3/5/7	1.5-2.8							
15	6	2/4/5	0.5-1.3	25	37	22	0	3	15	45 37
	7	4/4/9	2.0-3.0							
	8A	7/8/11	1.4-2.9							
20	8B		3.4-4.5+							
	9	9/14/50	3.0-4.5+							
25	10	20/50	3.5-4.5+							
		50-PR NQ REC 85% RQD 60%								
30	11	REC 96% RQD 92%								
35	12									
40										
45										

DESCRIPTION

TOPSOIL - 3 INCHES

Medium-stiff to stiff brown silty clay, trace fine to coarse sand, many roots, partly organic.

A-7-5 (12)

Medium-stiff to stiff brown silty clay, little fine to coarse sand, contains many silt lenses.

A-6a (10)

Stiff to very-stiff brown silty clay, some fine to coarse sand, trace fine gravel.

A-6a (8)

Medium-stiff to stiff brown silty clay, some fine to coarse sand, trace fine gravel.

Est. A-6a

Stiff to very-stiff brown mottled with gray silty clay, little fine to coarse sand, trace fine gravel.

Est. A-6a

Medium-stiff to stiff brown silty clay, little fine to medium sand, few pockets of fine sand.

A-6a (10)

Stiff to very-stiff brown silty clay, little to some fine to coarse sand, trace fine to coarse gravel.

Est. A-6a

Very-stiff to hard yellowish-brown silty clay, some fine to coarse sand, little fine to coarse gravel.

Est. A-6a

Very-stiff to hard reddish-brown mottled with gray silty clay, partly similar to very-soft shale.

Est. A-7-6

Very-soft to soft gray shale, nearly horizontally bedded, few horizontal fractures, partly similar to silty clay.

Q_u = 171.5 psi between 30.0' and 30.5'.

Very-soft to soft yellowish-brown shale, nearly horizontally bedded, occasional horizontal fractures, interbedded with very-soft to soft gray shale.

WATER LEVEL: ▽ 13.5
WATER NOTE:
DATE: 11/08/00

JOB: 01106405.002

DRAWN M.S.J. CHECKED E.M.K.

STRUCTURE FOUNDATION EXPLORATION
LAW-7-07.11

LAW-7-2.17

185/206

1226/1247

DRAFT Stage 3 - Not for Construction 09/23/2024

BRIDGE-LAW-7-07.11: PROPOSED RAMP I
PROPOSED SR 7 CENTERLINE

LAW-7-0711

BBC&M ENGINEERING, INC.

LOG OF BORING NO. B13-4 — Page 1 of 1
PHASE 2 SUBSURFACE INVESTIGATION, LAW-7-2.17
LAWRENCE COUNTY, OHIO

TYPE: 3-1/4" I.D. Hollow-stem Auger; NQ Rock Core Barrel; 2" O.D. Split-barrel Sampler
LOCATION: Sta. 378+6.7, 269.9' Rt. of Proposed SR 7 Centerline
COMPLETION DEPTH: 23.0' ELEVATION: 541.4 DATE: 11/7/00 - 11/8/00

DEPTH, FEET	SAMPLE NO.	SAMPLES: SAMPLING EFFORT	HAND PENE-TROMETER	MOISTURE CONTENT	LIQUID LIMIT	PLASTIC LIMIT	% GRAVEL	% SAND	% SILT	% CLAY	DESCRIPTION
0											TOPSOIL - 3 INCHES
5	1	SPT 1 1 1	0.25-0.5	29	32	21	0	1	26	51	22
	2	1 1 1	2.5-2.5								Very-soft to soft brown silty clay, some fine sand, trace medium sand, few roots.
	3	1 2 2	1.0-2.5								A-6a (8)
	4	5 5 5									Stiff to very-stiff brown silty clay, little fine sand, few roots.
10	5	SPT R NQ REC 75% RQD 46%									Est. A-6b
15	6	REC 100% RQD 47%									Soft yellowish-brown siltstone, nearly horizontally bedded, many horizontal fractures.
20	7	REC 98% RQD 96%									Very-soft to soft yellowish-brown arenaceous shale, nearly horizontally bedded, few horizontal and vertical fractures.
25											Very-soft to soft reddish-brown shale, nearly horizontally bedded, many horizontal and vertical fractures.
30											Soft reddish-brown shale, nearly horizontally bedded, occasional horizontal and vertical fractures.
35											- Encountered seepage at 4.5'.
40											- Encountered water at 6.0'.
45											

WATER LEVEL: ▽ 6.0
WATER NOTE:
DATE: 11/08/00

JOB: 01106405.002

DRAWN M.S.J. CHECKED E.M.K.

STRUCTURE FOUNDATION EXPLORATION
LAW-7-07.11

LAW-7-2.17

DRAFT Stage 3 - Not for Construction 09/23/2024

PROJECT: LAW - 7 - 2.17
TYPE: STRUCTURE
PID: 75923 BR ID:
START: 5/7/13 END: 5/7/13

DRILLING FIRM / OPERATOR: HORN / T.L.
SAMPLING FIRM / LOGGER: HORN / T.L.
DRILLING METHOD: 3.25" HSA / NQ
SAMPLING METHOD: SPT/ST/NQ

DRILL RIG: CME 55 TRACK
HAMMER: CME AUTOMATIC
CALIBRATION DATE: 4/30/13
ENERGY RATIO (%): 85.9

STATION / OFFSET: 229+50, 170 RT
ALIGNMENT: MAINLINE
ELEVATION: 598.8 (MSL) EOB: 28.7 ft.
LAT / LONG: Not Recorded

EXPLORATION ID B-019-1-12
PAGE 1 OF 1

MATERIAL DESCRIPTION AND NOTES	ELEV.	DEPTHS	SPT/ RQD	N60	REC (%)	SAMPLE ID	HP (tsf)	GRADATION (%) GR	CS	FS	SI	CL	ATTERBERG LL	PL	PI	WC	ODOT CLASS (GI)	ABAN-DONED
STIFF TO VERY STIFF, BROWN, **SILTY CLAY**, LITTLE SAND, DAMP TO MOIST	598.8	W	2 4 2	9	100	SS-1	-	-	-	-	-	-	-	-	-	14	A-6b (V)	
		2.5	2 4 11	21	100	SS-2	-	-	-	-	-	-	-	-	-	16	A-6b (V)	
		5.0	4 5 11	23	100	SS-3	-	-	-	-	-	-	-	-	-	37	A-6b (V)	
	589.8	7.5			46	ST-4	-	0	3	13	33	51	40	17	23	20	A-6b (13)	
VERY STIFF, BROWN, **CLAY**, SOME SILT, LITTLE SAND, DAMP TO MOIST		10.0	3 6 9	21	100	SS-5	-	-	-	-	-	-	-	-	-	21	A-7-6 (V)	
		12.5			79	ST-6	-	0	7	4	26	63	50	23	27	23	A-7-6 (17)	
	584.3	TR																
SHALE, GRAY, SEVERELY WEATHERED, (AUGERED).		15.0	10 24 30	77	100	SS-7	-	-	-	-	-	-	-	-	-	14	Rock (V)	
	580.1	17.5	11 50/2"	-	100	SS-8	-	-	-	-	-	-	-	-	-	15	Rock (V)	
SHALE, GRAY, SLIGHTLY TO MODERATELY WEATHERED, WEAK TO SLIGHTLY STRONG, LAMINATED; RQD 0%, REC 33%.	578.3	20.0		63		77	NQ-1										CORE	
SANDSTONE, GRAY, UNWEATHERED, VERY STRONG, FINE GRAINED, THICK TO VERY THICK BEDDED; RQD 95%, REC 100%.		22.5																
		25.0		87		100	NQ-2										CORE	
	570.1	27.5 EOB																

NOTES: NONE

ABANDONMENT METHODS, MATERIALS, QUANTITIES: TREMIED 75 GAL. BENTONITE GROUT

PROJECT: LAW - 7 - 2.17
TYPE: STRUCTURE
PID: 75923 BR ID:
START: 5/8/13 END: 5/8/13

DRILLING FIRM / OPERATOR: HORN / T.L.
SAMPLING FIRM / LOGGER: HORN / T.L.
DRILLING METHOD: 3.25" HSA / NQ
SAMPLING METHOD: SPT/ST/NQ

DRILL RIG: CME 55 TRACK
HAMMER: CME AUTOMATIC
CALIBRATION DATE: 4/30/13
ENERGY RATIO (%): 85.9

STATION / OFFSET: 229+70, 300 LT
ALIGNMENT: MAINLINE
ELEVATION: 618.6 (MSL) EOB: 24.0 ft.
LAT / LONG: Not Recorded

EXPLORATION ID B-019-2-12
PAGE 1 OF 1

MATERIAL DESCRIPTION AND NOTES	ELEV.	DEPTHS	SPT/ RQD	N60	REC (%)	SAMPLE ID	HP (tsf)	GRADATION (%) GR	CS	FS	SI	CL	ATTERBERG LL	PL	PI	WC	ODOT CLASS (GI)	ABAN-DONED
SOFT TO MEDIUM STIFF, BROWN, **CLAY**, SOME SILT, TRACE SAND, DAMP TO MOIST	618.6	W	1 1 1	3	100	SS-1	-	-	-	-	-	-	-	-	-	20	A-7-6 (V)	
		2.5	2 3 3	9	100	SS-2	-	-	-	-	-	-	-	-	-	19	A-7-6 (V)	
	611.1	5.0			63	ST-3	-	0	2	4	30	64	41	20	21	17	A-7-6 (13)	
VERY STIFF TO HARD, DARK BROWN, **SILTY CLAY**, SOME STONE FRAGMENTS AND SAND, DAMP TO MOIST		7.5	3 5 6	16	100	SS-4	-	-	-	-	-	-	-	-	-	20	A-6b (V)	
		10.0	4 12 16	40	100	SS-5	-	25	10	11	24	30	37	19	18	18	A-6b (7)	
	606.1	TR 12.5																
SHALE, GRAY, SEVERELY WEATHERED, (AUGERED).	604.6		20 50/2"	-	100	SS-6	-	-	-	-	-	-	-	-	-	10	Rock (V)	
SHALE, GRAY TO RED, SLIGHTLY WEATHERED, WEAK TO MODERATELY STRONG, LAMINATED TO THIN BEDDED; RQD 75%, REC 96%.		15.0		72		92	NQ-1										CORE	
		17.5																
		20.0		78		100	NQ-2										CORE	
	594.6	22.5 EOB																

NOTES: NONE

ABANDONMENT METHODS, MATERIALS, QUANTITIES: TREMIED 50 GAL. BENTONITE GROUT

DRAFT Stage 3 - Not for Construction
09/23/2024

PROJECT: LAW - 7 - 2.17	DRILLING FIRM / OPERATOR: HORN / T.L.	DRILL RIG: CME 55 TRACK	STATION / OFFSET: 184+20, 260 LT	EXPLORATION ID B-008-1-12
TYPE: STRUCTURE	SAMPLING FIRM / LOGGER: HORN / T.L.	HAMMER: CME AUTOMATIC	ALIGNMENT: MAINLINE	
PID: 75923 BR ID:	DRILLING METHOD: 3.25" HSA / NQ	CALIBRATION DATE: 4/30/13	ELEVATION: 650.5 (MSL) EOB: 28.7 ft.	PAGE 1 OF 1
START: 5/8/13 END: 5/9/13	SAMPLING METHOD: SPT / NQ	ENERGY RATIO (%): 85.9	LAT / LONG: Not Recorded	

MATERIAL DESCRIPTION AND NOTES	ELEV.	DEPTHS	SPT/ RQD	N60	REC (%)	SAMPLE ID	HP (tsf)	GRADATION (%) GR	CS	FS	SI	CL	ATTERBERG LL	PL	PI	WC	ODOT CLASS (GI)	ABAN-DONED
STIFF, BROWN, **SILT AND CLAY**, SOME SAND, LITTLE GRAVEL, DAMP	650.5		2 3 3	9	100	SS-1	-	15	9	22	28	26	32	21	11	18	A-6a (4)	
		2.5	50/5"	-	100	SS-2	-	-	-	-	-	-	-	-	-	16	A-6a (V)	
	645.5	W																
VERY STIFF TO HARD, RED AND BROWN, **CLAY**, AND SILT, TRACE GRAVEL AND SAND, DAMP		5.0	3 6 6	17	100	SS-3	-	-	-	-	-	-	-	-	-	14	A-7-6 (V)	
		7.5	6 13 13	37	100	SS-4	-	-	-	-	-	-	-	-	-	14	A-7-6 (V)	
		10.0	6 13 15	40	100	SS-5	-	-	-	-	-	-	-	-	-	20	A-7-6 (V)	
		12.5	11 16 17	47	100	SS-6	-	9	2	6	42	41	41	19	22	14	A-7-6 (13)	
		15.0	16 27 29	80	100	SS-7	-	-	-	-	-	-	-	-	-	10	A-7-6 (V)	
	633.5	TR																
SHALE, GRAY, SEVERELY WEATHERED, (AUGERED).	631.8	17.5	25 50	-	100	SS-8	-	-	-	-	-	-	-	-	-	10	Rock (V)	
SHALE, GRAY, SLIGHTLY WEATHERED, SLIGHTLY TO MODERATELY STRONG, LAMINATED, ARENACEOUS; RQD 89%, REC 99%.		20.0	80		100	NQ-1											CORE	
		22.5																
		25.0	98		98	NQ-2											CORE	
	621.8	27.5 EOB																

NOTES: NONE

ABANDONMENT METHODS, MATERIALS, QUANTITIES: TREMIED 50 GAL. BENTONITE GROUT

DRAFT Stage 3 - Not for Construction
09/23/2024

LANDSLIDE BORINGS FROM PREVIOUS SUBSURFACE INVESTIGATIONS

BBC&M ENGINEERING, INC.

LOG OF BORING NO. S-102
PHASE 2 SUBSURFACE INVESTIGATION, LAW-7-3.669
LAWRENCE COUNTY, OHIO

Page 1 of 1

TYPE: 3-1/4" I.D. Hollow-stem Auger; 2" O.D. Split-barrel Sampler; 5-7/8" Diameter Tricone Bit; 4" Diameter Casing; NX Rock Core Barrel
LOCATION: Sta. 394+81.03, 289.7' L. of proposed SR 7 centerline
COMPLETION DEPTH: 36.9' ELEVATION: 650.1 DATE: 7/9/99 - 7/13/99

DEPTH, FEET	SAMPLE NO.	SAMPLES: SAMPLING EFFORT	HAND PENE-TROMETER tsf	MOISTURE CONTENT %	LIQUID LIMIT %	PLASTIC LIMIT %	AGG. %	C. S. %	F. S. %	SILT/CLAY %	DESCRIPTION
0											Hard brown silty clay, trace fine to coarse sand, trace fine gravel, similar to very-soft shale.
	1	7 /9/40									Est. A-2-6
5											BOULDER: Medium-hard brown fine-grained sandstone, well cemented, micaceous, pyritic, nearly vertically bedded.
	2	50-0"R NX REC 60% RQD 0%									Visual
10											Very-stiff to hard reddish-brown silty clay, trace fine to coarse sand, trace fine to coarse gravel, similar to very-soft shale, contains few sandstone fragments.
	3	6 /11/15	4.5+	12	37	19					Est. A-6b
15											Soft to medium-hard brown, red and green shale, nearly horizontally bedded, interbedded with siltstone, few vertical fractures, few sand-filled desiccation cracks.
20	4	50-4"R NX REC 55% RQD 55%									Visual
	5	REC 90% RQD 73%									Soft gray shale, nearly horizontally bedded, highly fractured, partly similar to hard silty clay.
25	6	REC 77% RQD 22%									Visual
30	7	5									- Topsoil stripped for rig access.
35											
40											

WATER LEVEL: ▽ ▽ ▽ ▽ ▽ ▽
WATER NOTE:
DATE:

JOB: 6405.2

PLATE 3

BBC&M ENGINEERING, INC.

LOG OF BORING NO. S-103
PHASE 2 SUBSURFACE INVESTIGATION, LAW-7-3.669
LAWRENCE COUNTY, OHIO

Page 1 of 1

TYPE: 4-1/4" I.D. Hollow-stem Auger; 2" O.D. Split-barrel Sampler
LOCATION: Sta. 403+44.51, 185.05' L. of proposed SR 7 centerline
COMPLETION DEPTH: 30.0' ELEVATION: 645.9 DATE: 8/1/99

DEPTH, FEET	SAMPLE NO.	SAMPLES: SAMPLING EFFORT	HAND PENE-TROMETER tsf	MOISTURE CONTENT %	LIQUID LIMIT %	PLASTIC LIMIT %	AGG. %	C. S. %	F. S. %	SILT/CLAY %	DESCRIPTION
0											Hard reddish-brown silty clay, little fine to coarse sand, trace fine gravel, contains few sandstone and shale fragments.
	1	7 /9/9	4.5+								
5	2	7 /12/20	4.5+								
	3	5 /11/10	4.5+	14	43	25	1	3	3	32	59
10	4	7 /18/24	4.5+								A-7-6(12)
15											Soft to medium-hard brown and green shale, nearly horizontally bedded, fractured.
20	5	50-5"R									Visual
	6	180-4"R									Medium-hard gray fine-grained sandstone, well cemented, micaceous.
25	7	100-5"R									Visual
30											Soft to medium-hard brown, red and green shale, nearly horizontally bedded, highly fractured.
35											Visual
											- No seepage encountered.

WATER LEVEL: ▽ "Dry" ▽ ▽ ▽ ▽ ▽
WATER NOTE:
DATE: 8/1/99

JOB: 6405.2

PLATE 4

BBC&M ENGINEERING, INC.

LOG OF BORING NO. S-104
PHASE 2 SUBSURFACE INVESTIGATION, LAW-7-3.669
LAWRENCE COUNTY, OHIO

Page 1 of 2

TYPE: 4-1/4" I.D. Hollow-stem Auger; 2" O.D. Split-barrel Sampler; NQ Rock Core Barrel
LOCATION: Sta. 417+86.56, 226.97' L. of proposed SR 7 centerline
COMPLETION DEPTH: 45.0' ELEVATION: 676.8 DATE: 8/4/99

DEPTH, FEET	SAMPLE NO.	SAMPLES: SAMPLING EFFORT	HAND PENE-TROMETER tsf	MOISTURE CONTENT %	LIQUID LIMIT %	PLASTIC LIMIT %	AGG. %	C. S. %	F. S. %	SILT/CLAY %	DESCRIPTION
0											Hard brown and reddish-brown mottled with gray silty clay, little to some fine to medium sand, trace coarse sand, trace fine gravel, few shale fragments, few roots near top of stratum.
	1	5 /20/22	4.5+								
5	2	10/28/20	4.5+	16	41	23	0	10	10	30	44
	3	7 /10/16	4.5+								A-7-6(11)
10											Very-soft reddish-brown shale, nearly horizontally bedded, highly fractured.
15	4	50-5"R NQ REC 87% RQD 77%									Visual
											Medium-hard brown and gray fine-grained sandstone, well cemented, nearly horizontally bedded, partly micaceous, contains iron oxide staining.
20	5										Visual
											Very-soft to soft gray interbedded with reddish-brown shale, nearly horizontally bedded, few horizontal and vertical fractures, few layers of soft to medium-hard shale, similar to soil at 30.5'.
25		REC 89% RQD 73%									
	6	6/6									
30		REC 58% RQD 43%									Visual
35	7	7									Soft to medium-hard brown and gray siltstone, nearly horizontally bedded, interbedded with fine-grained sandstone, micaceous, iron oxide staining.
40											Visual

WATER LEVEL: ▽ "Dry" ▽ ▽ ▽ ▽ ▽
WATER NOTE:
DATE: 8/4/99

JOB: 6405.2

-CONTINUED-

PLATE 5

DRAFT Stage 3 - Not for Construction 09/23/2024

DRAWN MSJ
CHECKED EMK

GEOTECHNICAL EXPLORATION - LANDSLIDE
LAW-7

LAW-7-2.17

189/206

1230
1247

LANDSLIDE BORINGS FROM PREVIOUS SUBSURFACE INVESTIGATIONS

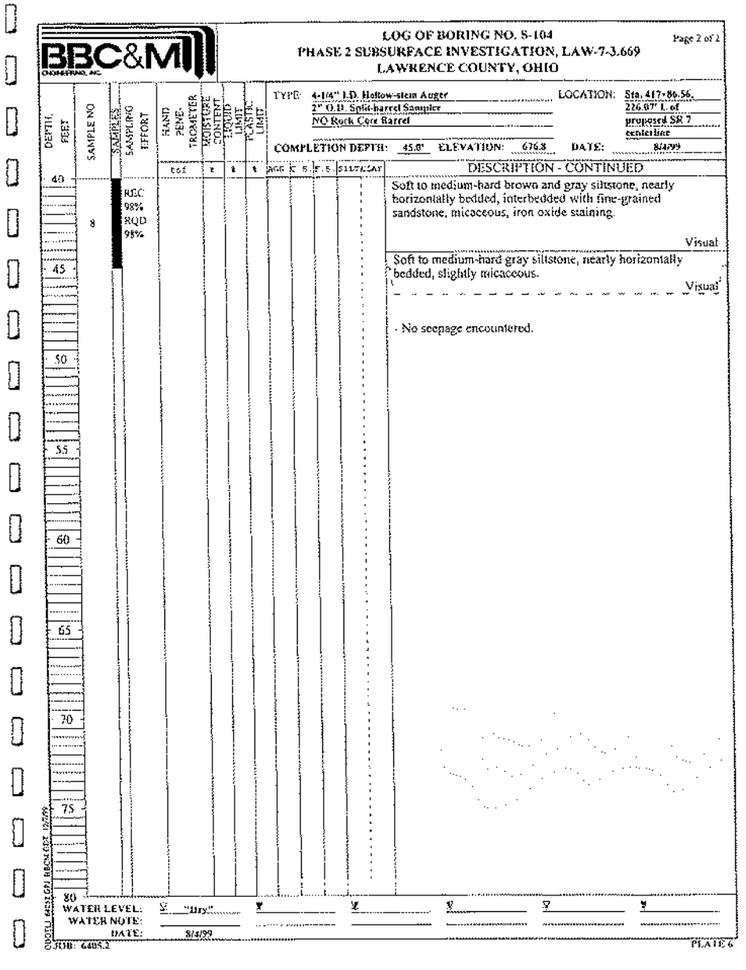

BBC&M ENGINEERING, INC.

LOG OF BORING NO. S-104
PHASE 2 SUBSURFACE INVESTIGATION, LAW-7-3.669
LAWRENCE COUNTY, OHIO

Page 2 of 2

TYPE: 4-1/4" I.D. Hollow-stem Auger; 2" O.D. Split-barrel Sampler; NQ Rock Core Barrel
LOCATION: Sta. 417+86.56, 226.07' L of proposed SR 7 centerline
COMPLETION DEPTH: 45.0' ELEVATION: 676.8 DATE: 8/4/99

DESCRIPTION - CONTINUED

Soft to medium-hard brown and gray siltstone, nearly horizontally bedded, interbedded with fine-grained sandstone, micaceous, iron oxide staining.

Visual

Soft to medium-hard gray siltstone, nearly horizontally bedded, slightly micaceous.

Visual

- No seepage encountered.

WATER LEVEL: "Dry"
WATER NOTE:
DATE: 8/4/99

JOB: 6405.2

PLATE 6

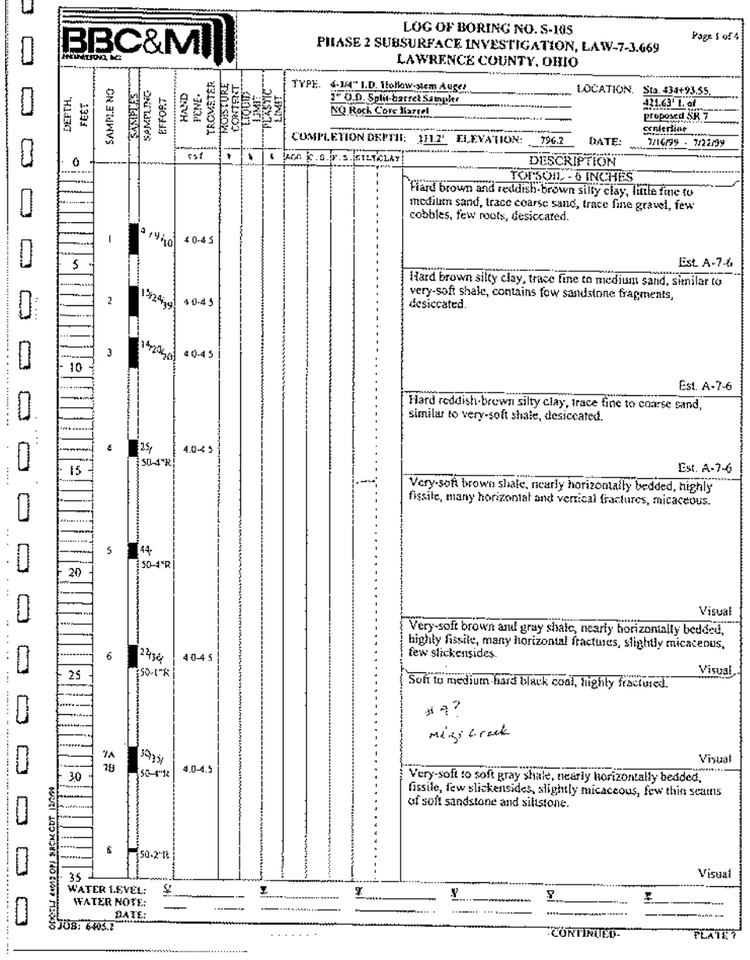

BBC&M ENGINEERING, INC.

LOG OF BORING NO. S-105
PHASE 2 SUBSURFACE INVESTIGATION, LAW-7-3.669
LAWRENCE COUNTY, OHIO

Page 1 of 4

TYPE: 4-1/4" I.D. Hollow-stem Auger; 2" O.D. Split-barrel Sampler; NQ Rock Core Barrel
LOCATION: Sta. 434+93.55, 421.63' L of proposed SR 7 centerline
COMPLETION DEPTH: 311.2' ELEVATION: 796.2 DATE: 7/16/99 - 7/22/99

DESCRIPTION

TOPSOIL - 6 INCHES

Hard brown and reddish-brown silty clay, little fine to medium sand, trace coarse sand, trace fine gravel, few cobbles, few roots, desiccated.

Est. A-7-6

Hard brown silty clay, trace fine to medium sand, similar to very-soft shale, contains few sandstone fragments, desiccated.

Est. A-7-6

Hard reddish-brown silty clay, trace fine to coarse sand, similar to very-soft shale, desiccated.

Est. A-7-6

Very-soft brown shale, nearly horizontally bedded, highly fissile, many horizontal and vertical fractures, micaceous.

Visual

Very-soft brown and gray shale, nearly horizontally bedded, highly fissile, many horizontal fractures, slightly micaceous, few slickensides.

Visual

Soft to medium-hard black coal, highly fractured.

Visual

Very-soft to soft gray shale, nearly horizontally bedded, fissile, few slickensides, slightly micaceous, few thin seams of soft sandstone and siltstone.

Visual

WATER LEVEL:
WATER NOTE:
DATE:

JOB: 6405.2

-CONTINUED-

PLATE 7

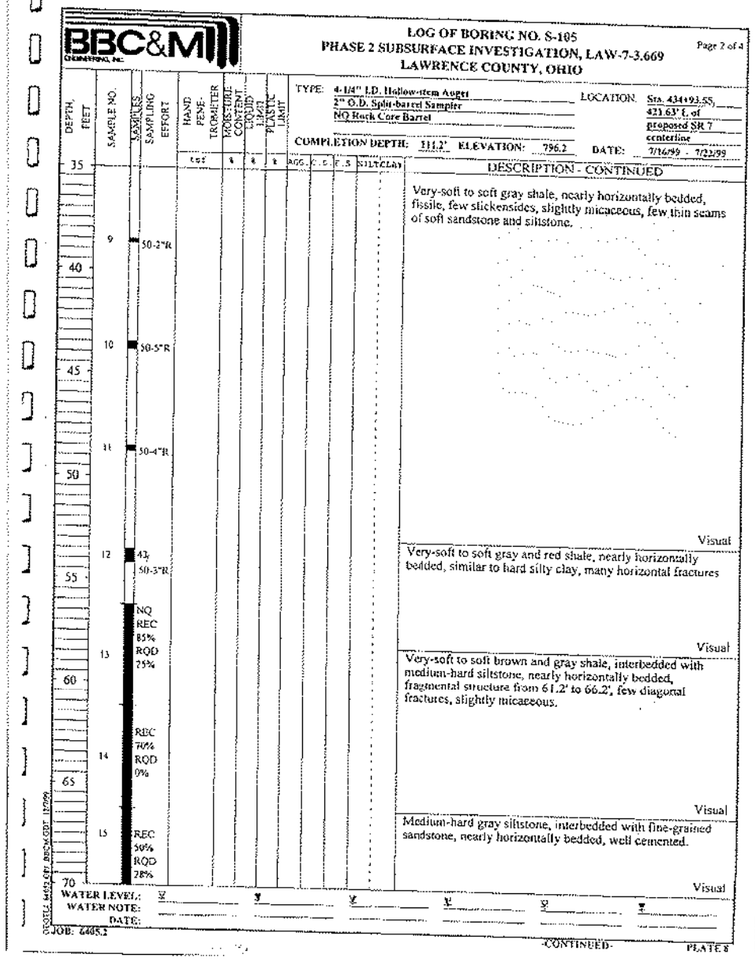

BBC&M ENGINEERING, INC.

LOG OF BORING NO. S-105
PHASE 2 SUBSURFACE INVESTIGATION, LAW-7-3.669
LAWRENCE COUNTY, OHIO

Page 2 of 4

TYPE: 4-1/4" I.D. Hollow-stem Auger; 2" O.D. Split-barrel Sampler; NQ Rock Core Barrel
LOCATION: Sta. 434+93.55, 421.63' L of proposed SR 7 centerline
COMPLETION DEPTH: 311.2' ELEVATION: 796.2 DATE: 7/16/99 - 7/22/99

DESCRIPTION - CONTINUED

Very-soft to soft gray shale, nearly horizontally bedded, fissile, few slickensides, slightly micaceous, few thin seams of soft sandstone and siltstone.

Visual

Very-soft to soft gray and red shale, nearly horizontally bedded, similar to hard silty clay, many horizontal fractures

Visual

Very-soft to soft brown and gray shale, interbedded with medium-hard siltstone, nearly horizontally bedded, fragmental structure from 61.2' to 66.2', few diagonal fractures, slightly micaceous.

Visual

Medium-hard gray siltstone, interbedded with fine-grained sandstone, nearly horizontally bedded, well cemented.

Visual

WATER LEVEL:
WATER NOTE:
DATE:

JOB: 6405.2

-CONTINUED-

PLATE 8

DRAWN MSJ
CHECKED EMK

GEOTECHNICAL EXPLORATION - LANDSLIDE
LAW-7

LAW-7-2.17

190/206

1231/1247

DRAFT Stage 3 - Not for Construction 09/23/2024

LANDSLIDE BORINGS FROM PREVIOUS SUBSURFACE INVESTIGATIONS

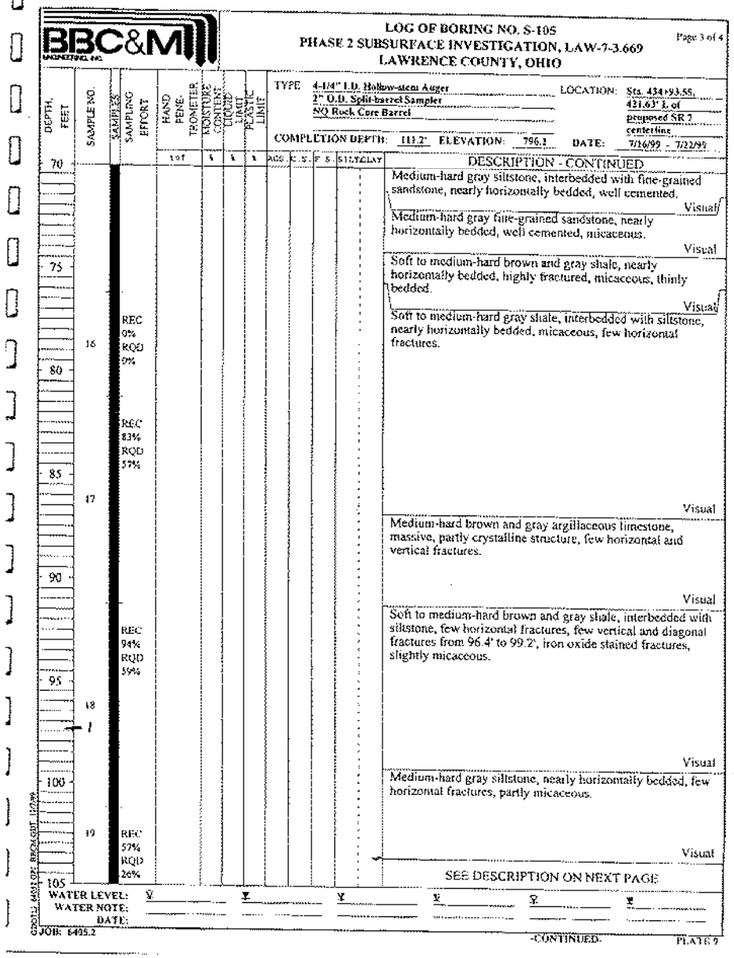

BBC&M ENGINEERING INC

LOG OF BORING NO. S-105
PHASE 2 SUBSURFACE INVESTIGATION, LAW-7-3.669
LAWRENCE COUNTY, OHIO

Page 3 of 4

TYPE: 4-1/4" I.D. Hollow-stem Auger; 2" O.D. Split-barrel Sampler; NQ Rock Core Barrel
LOCATION: Sta. 434+93.55, 421.63' L of proposed SR 7 centerline
COMPLETION DEPTH: 111.2' ELEVATION: 796.2 DATE: 7/16/99 - 7/22/99

DESCRIPTION - CONTINUED

Medium-hard gray siltstone, interbedded with fine-grained sandstone, nearly horizontally bedded, well cemented.
Visual
Medium-hard gray fine-grained sandstone, nearly horizontally bedded, well cemented, micaceous.
Visual
Soft to medium-hard brown and gray shale, nearly horizontally bedded, highly fractured, micaceous, thinly bedded.
Visual
Soft to medium-hard gray shale, interbedded with siltstone, nearly horizontally bedded, micaceous, few horizontal fractures.
Visual
Medium-hard brown and gray argillaceous limestone, massive, partly crystalline structure, few horizontal and vertical fractures.
Visual
Soft to medium-hard brown and gray shale, interbedded with siltstone, few horizontal fractures, few vertical and diagonal fractures from 96.4' to 99.2', iron oxide stained fractures, slightly micaceous.
Visual
Medium-hard gray siltstone, nearly horizontally bedded, few horizontal fractures, partly micaceous.
Visual

SEE DESCRIPTION ON NEXT PAGE

WATER LEVEL:
WATER NOTE:
DATE:

JOB: 6405.2

-CONTINUED-

PLATE 9

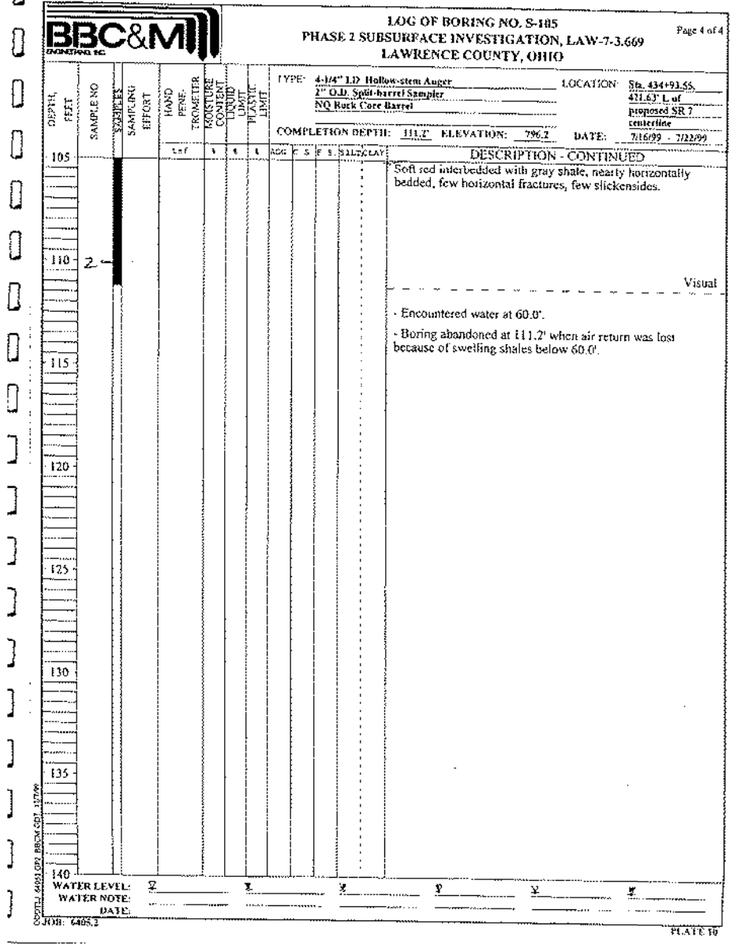

BBC&M ENGINEERING INC

LOG OF BORING NO. S-105
PHASE 2 SUBSURFACE INVESTIGATION, LAW-7-3.669
LAWRENCE COUNTY, OHIO

Page 4 of 4

TYPE: 4-1/4" I.D. Hollow-stem Auger; 2" O.D. Split-barrel Sampler; NQ Rock Core Barrel
LOCATION: Sta. 434+93.55, 421.63' L of proposed SR 7 centerline
COMPLETION DEPTH: 111.2' ELEVATION: 796.2 DATE: 7/16/99 - 7/22/99

DESCRIPTION - CONTINUED

Soft red interbedded with gray shale, nearly horizontally bedded, few horizontal fractures, few slickensides.
Visual

- Encountered water at 60.0'.
- Boring abandoned at 111.2' when air return was lost because of swelling shales below 60.0'.

WATER LEVEL:
WATER NOTE:
DATE:

JOB: 6405.2

PLATE 10

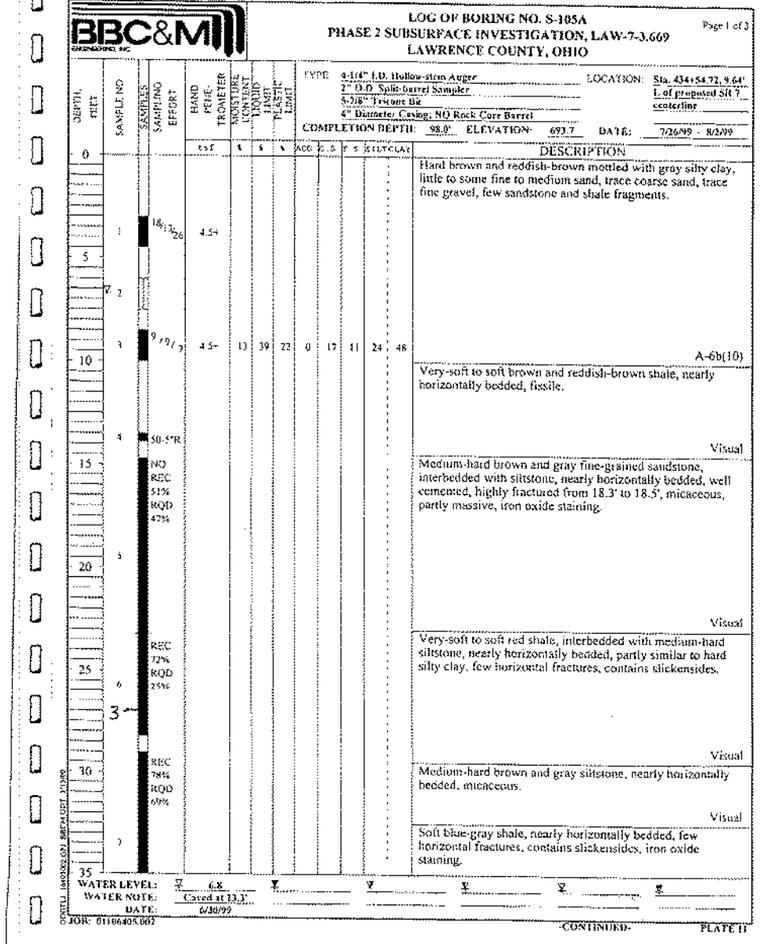

BBC&M ENGINEERING INC

LOG OF BORING NO. S-105A
PHASE 2 SUBSURFACE INVESTIGATION, LAW-7-3.669
LAWRENCE COUNTY, OHIO

Page 1 of 3

TYPE: 4-1/4" I.D. Hollow-stem Auger; 2" O.D. Split-barrel Sampler; 5-7/8" Tricone Bit; 4" Diameter Casing; NQ Rock Core Barrel
LOCATION: Sta. 434+54.72, 9.64' L of proposed SR 7 centerline
COMPLETION DEPTH: 98.0' ELEVATION: 693.7 DATE: 7/26/99 - 8/2/99

DESCRIPTION

Hard brown and reddish-brown mottled with gray silty clay, little to some fine to medium sand, trace coarse sand, trace fine gravel, few sandstone and shale fragments.
A-6b(10)
Very-soft to soft brown and reddish-brown shale, nearly horizontally bedded, fissile.
Visual
Medium-hard brown and gray fine-grained sandstone, interbedded with siltstone, nearly horizontally bedded, well cemented, highly fractured from 18.3' to 18.5', micaceous, partly massive, iron oxide staining.
Visual
Very-soft to soft red shale, interbedded with medium-hard siltstone, nearly horizontally bedded, partly similar to hard silty clay, few horizontal fractures, contains slickensides.
Visual
Medium-hard brown and gray siltstone, nearly horizontally bedded, micaceous.
Visual
Soft blue-gray shale, nearly horizontally bedded, few horizontal fractures, contains slickensides, iron oxide staining.

WATER LEVEL: 6.8
WATER NOTE: Caved at 33.3'
DATE: 6/30/99

JOB: 01106405.002

-CONTINUED-

PLATE 11

DRAFT Stage 3 - Not for Construction 09/23/2024

DRAWN MSJ
CHECKED EMK

GEOTECHNICAL EXPLORATION - LANDSLIDE
LAW-7

LAW-7-2.17

LANDSLIDE BORINGS FROM PREVIOUS SUBSURFACE INVESTIGATIONS

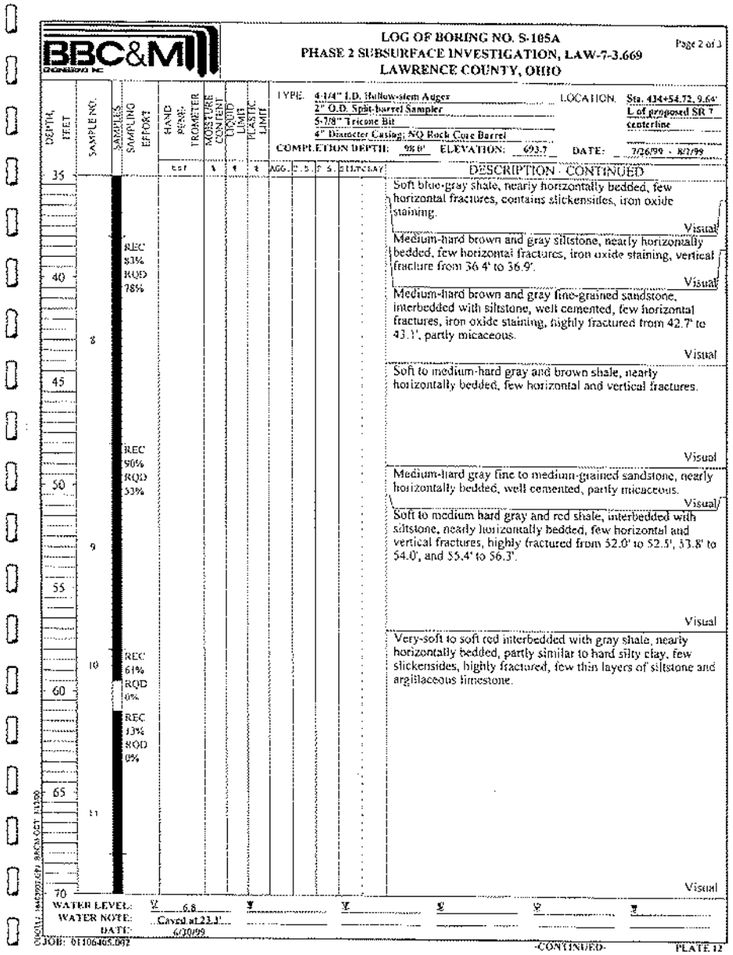

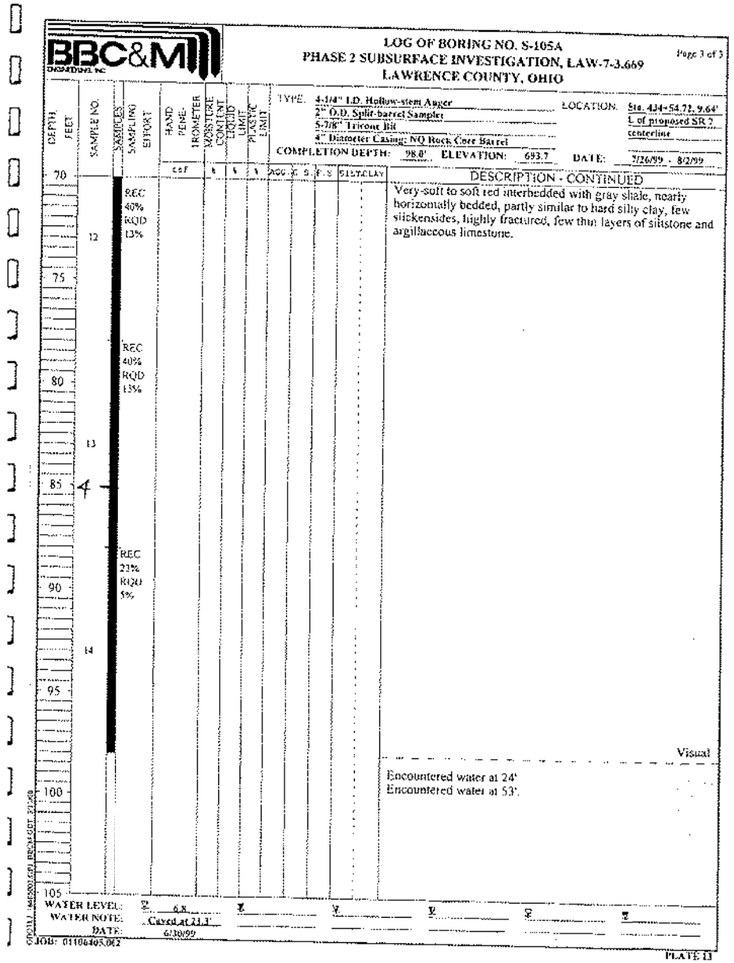

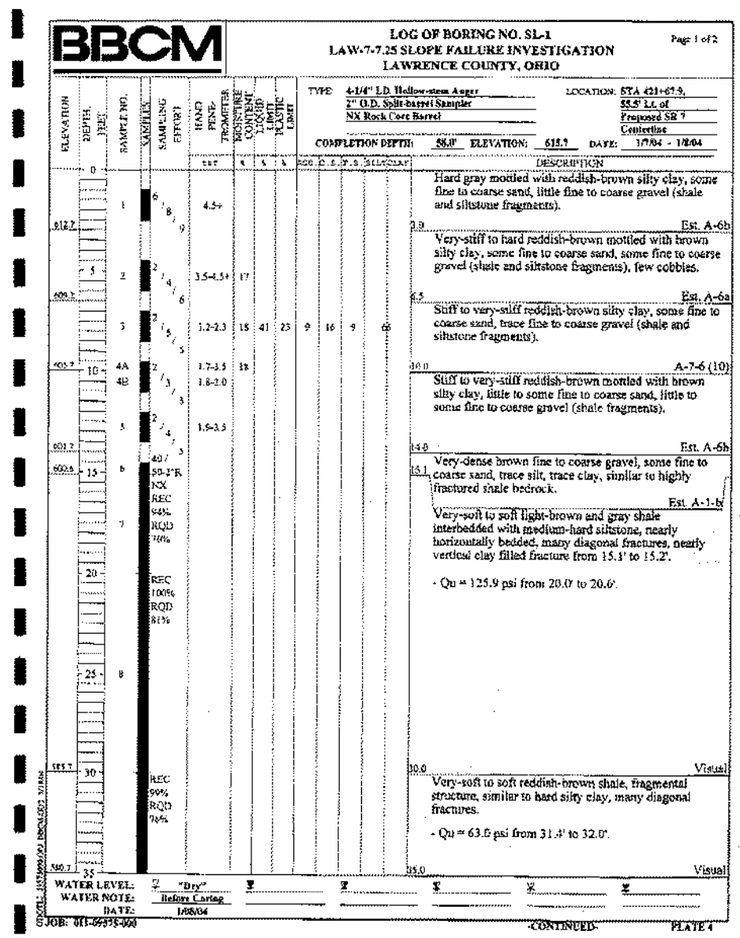

DRAWN MSJ
CHECKED EMK

GEOTECHNICAL EXPLORATION - LANDSLIDE
LAW-7

LAW-7-2.17

192/206

1233/1247

DRAFT Stage 3 - Not for Construction 09/23/2024

LANDSLIDE BORINGS FROM PREVIOUS SUBSURFACE INVESTIGATIONS

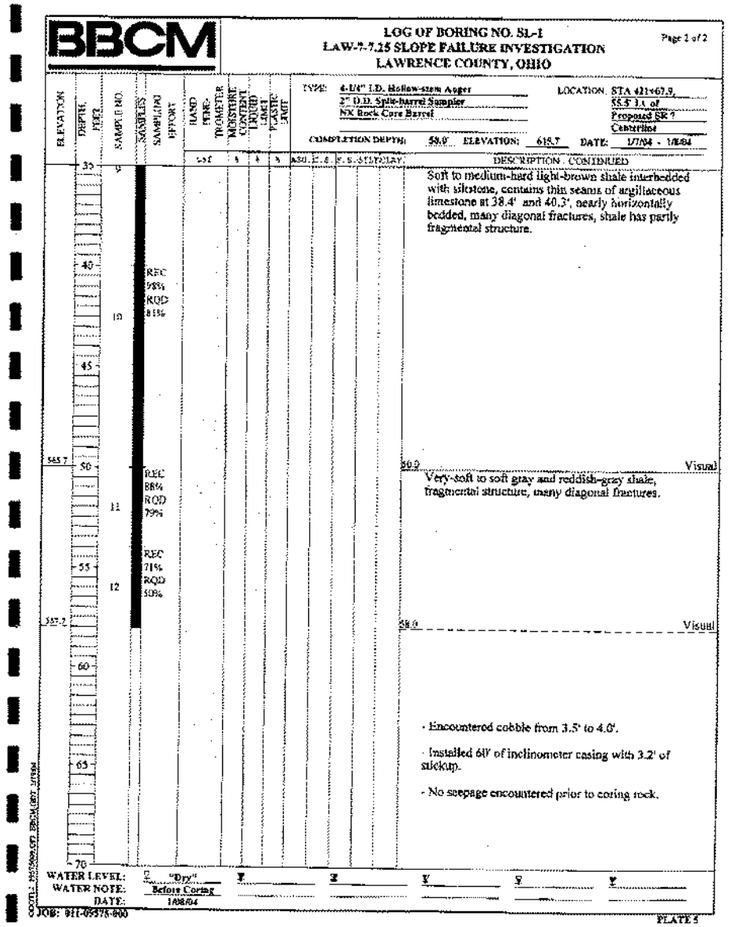

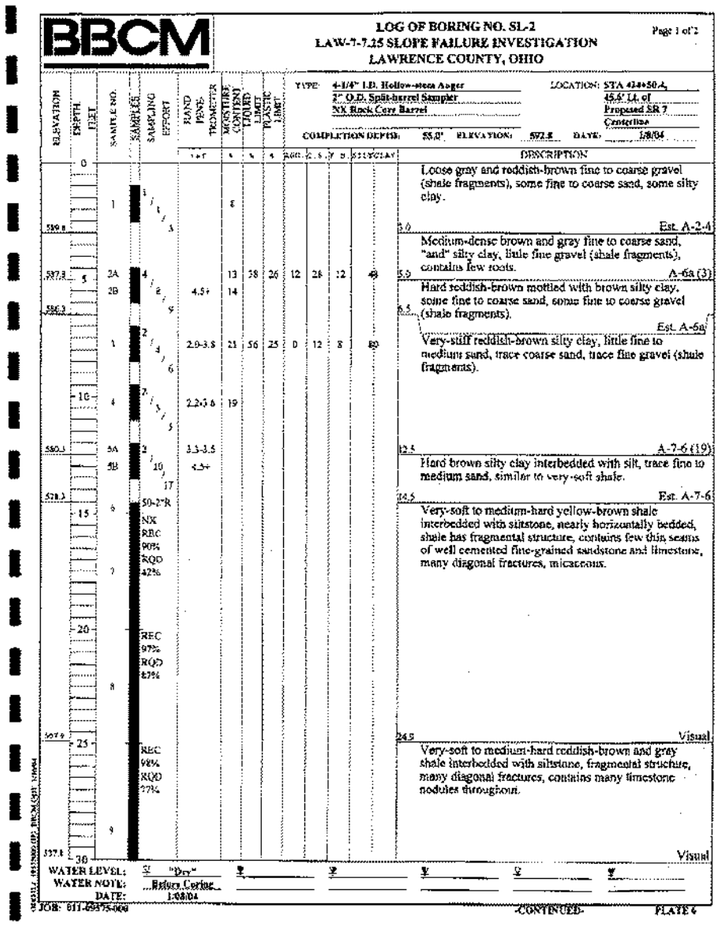

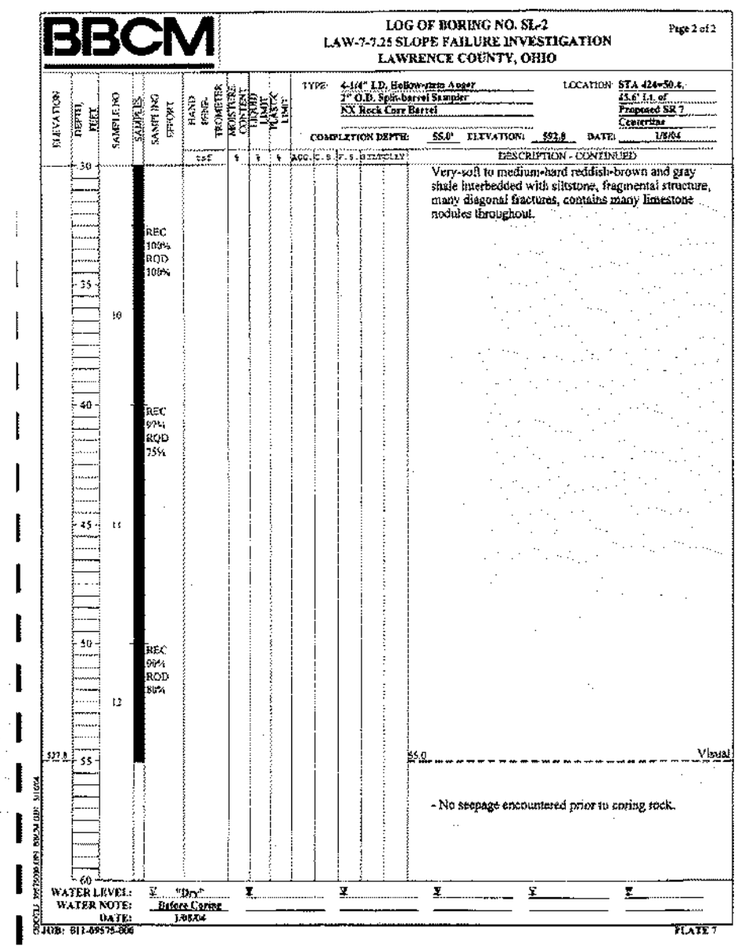

DRAWN MSJ
CHECKED EMK

GEOTECHNICAL EXPLORATION - LANDSLIDE
LAW-7

LAW-7-2.17

193/206

1234/1247

DRAFT Stage 3 - Not for Construction 09/23/2024

LANDSLIDE BORINGS FROM PREVIOUS SUBSURFACE INVESTIGATIONS

LOG OF BORING NO. SL-3
LAW-7-7.25 SLOPE FAILURE INVESTIGATION
LAWRENCE COUNTY, OHIO

Page 1 of 2

TYPE: 4-1/4" I.D. Hollow-stem Auger; 2" O.D. Split-barrel Sampler; NX Rock Core Barrel
LOCATION: STA 421+61.1, 0.3' Rt. of Proposed SR 7 Centerline
COMPLETION DEPTH: 58.0' ELEVATION: 605.3 DATE: 1/5/04 - 1/12/04

ELEVATION	DEPTH, FEET	SAMPLE NO.	SAMPLES	SAMPLING EFFORT	HAND PENE-TROMETER	MOISTURE CONTENT, %	LIQUID LIMIT	PLASTIC LIMIT	GRAD. C.	S.	F. S.	SILT/CLAY	DESCRIPTION
	0				tsf	%							
605.6		1A		3 / 3 / 4 / 4									Loose brown and reddish-brown fine to coarse gravel (shale and siltstone fragments), some fine to coarse sand, some silty clay, contains few roots.
		1B											Est. A-2-4
601.2	5	2		2 / 2 / 3	1.6-2.6	18	48	21	29	9	3	59	Very-stiff reddish-brown mottled with gray silty clay, little fine to coarse sand, little fine to coarse gravel (shale fragments).
													Est. A-6b
		3		2 / 3 / 4	2.5-3.4	18							Stiff to very-stiff reddish-brown mottled with brown silty clay, trace to little fine to coarse sand, some becoming trace fine to coarse gravel (shale and siltstone fragments).
	10	4		2 / 3 / 4	1.9-3.4	19	47	22	9	2	2	67	
		5		2 / 3 / 5	1.3-2.6	19							
	15	6		3 / 4 / 5	2.5-3.3								
587.2		7		4 / 4 / 50	1.2-2.5								
	20												18.0 A-7-6 (13,15)
		8		HX* REC 8% RQD 0%									Probable cobbles and boulders. Shale and siltstone fragments recovered in core barrel.
580.2	25	9		3 / 3 / 5	1.2-3.6	18							23.0 Visual
													Stiff to very-stiff reddish-brown silty clay, little to some fine to coarse sand, little to some fine to coarse gravel (shale and siltstone fragments).
575.7	30	10		2 / 3 / 5	2.2-3.5	15	32	17	26	15	7	52	
		11		7 / 9 / 13		10							
		12		8 / 13 / 9									
570.7													34.5 A-6a (5)
													Medium-dense brown fine to coarse gravel (shale and siltstone fragments), some fine to coarse sand, some clayey silt.
									52	7	14	27	Est. A-7-6

WATER LEVEL: ▽ "Dry"
WATER NOTE: Before Coring
DATE: 1/12/04

JOB: 011-09575-000

-CONTINUED-

PLATE 8

LOG OF BORING NO. SL-3
LAW-7-7.25 SLOPE FAILURE INVESTIGATION
LAWRENCE COUNTY, OHIO

Page 2 of 2

TYPE: 4-1/4" I.D. Hollow-stem Auger; 2" O.D. Split-barrel Sampler; NX Rock Core Barrel
LOCATION: STA 421+61.1, 0.3' Rt. of Proposed SR 7 Centerline
COMPLETION DEPTH: 58.0' ELEVATION: 605.3 DATE: 1/5/04 - 1/12/04

ELEVATION	DEPTH, FEET	SAMPLE NO.	SAMPLES	SAMPLING EFFORT	HAND PENE-TROMETER	MOISTURE CONTENT, %	LIQUID LIMIT	PLASTIC LIMIT	GRAD. C.	S.	F. S.	SILT/CLAY	DESCRIPTION - CONTINUED
569.3	35	13		20/ 50-3"R									35.7 Medium-hard brown siltstone, fragmental structure, partly friable, slightly micaceous. Visual
		14		REC 46% RQD 0%									Very-soft to soft reddish-brown, yellow-brown and gray shale, fragmental structure, similar to hard silty clay, many diagonal fractures.
	40												
		15		REC 100% RQD 88%									
	45												
		16		REC 58% RQD 31%									
	50												
		17		REC 63% RQD 34%									
542.2	55												
	60												
	65												
													58.0 Visual
													* Encountered auger refusal at 20.0': attempted rock core from 20.0' to 25.0' with poor recovery in layer of probable cobbles and boulders. Switched back to hollow-stem auger.
													- Installed 60' of inclinometer casing with 3.5' of stickup.
													- No seepage encountered prior to coring rock.

WATER LEVEL: ▽ "Dry"
WATER NOTE: Before Coring
DATE: 1/12/04

JOB: 011-09575-000

PLATE 9

LOG OF BORING NO. SL-4
LAW-7-7.25 SLOPE FAILURE INVESTIGATION
LAWRENCE COUNTY, OHIO

Page 1 of 2

TYPE: 3-1/4" I.D. Hollow-stem Auger; 2" O.D. Split-barrel Sampler; NX Rock Core Barrel
LOCATION: STA 425+49.6, 52.4' Rt. of Proposed SR 7 Centerline
COMPLETION DEPTH: 50.0' ELEVATION: 584.5 DATE: 1/5/04

ELEVATION	DEPTH, FEET	SAMPLE NO.	SAMPLES	SAMPLING EFFORT	HAND PENE-TROMETER	MOISTURE CONTENT, %	LIQUID LIMIT	PLASTIC LIMIT	GRAD. C.	S.	F. S.	SILT/CLAY	DESCRIPTION
	0				tsf	%							
		1		6 / 9 / 12	3.0-4.5+	11							Very-stiff to hard reddish-brown mottled with brown and gray silty clay, some fine to coarse sand, some fine to coarse gravel (shale and siltstone fragments), contains few roots.
581.9													3.0 Est. A-6a
	5	2		6 / 4 / 7	2.0-3.5	15	45	19	22	7	6	26	19 Very-stiff reddish-brown mottled with gray silty clay, some fine to coarse sand, little fine to coarse gravel (shale and siltstone fragments).
579.4													5.5 A-7-6 (13)
578.2		3		13 / 50-5"R	2.5	20							Very-stiff reddish-brown mottled with brown silty clay, trace fine to coarse sand, trace fine gravel (shale fragments), few roots. 6.7 Est. A-7-6
	10			NX* REC 5% RQD 0%									Probable cobbles and boulders. Shale and siltstone fragments recovered in core barrel.
		4											
569.9	15												15.0 Visual
		5		6 / 8 / 8					1	22	63	9	Loose to medium-dense reddish-brown fine to medium sand, trace coarse sand, trace silt, trace clay.
565.9													19.0 A-3 (0)
	20	6		3 / 4 / 5									Loose to medium-dense brown fine to medium sand, trace coarse sand, trace fine to coarse gravel, trace silt
		7		3 / 4 / 7									
		8		5 / 7 / 8									
		9A		5 / 13 / 15									
560.4	25	9B											24.5 Est. A-3
558.9													Medium-dense brown and dark-gray fine to coarse gravel (shale and siltstone fragments), some fine to coarse sand, little silt, trace clay. 26.0 Est. A-2-4
		10		9 / 9 / 13	3.0-4.0	21							Very-stiff to hard reddish-brown silty clay interbedded with silt, some fine to coarse sand, little fine to coarse gravel (shale and siltstone fragments). 28.0 Est. A-6a
556.9													

WATER LEVEL: ▽ 29.8
WATER NOTE: Before Coring
DATE: 1/06/03

JOB: 011-09575-000

-CONTINUED-

PLATE 10

DRAWN MSJ
CHECKED EMK

GEOTECHNICAL EXPLORATION - LANDSLIDE
LAW-7

LAW-7-2.17

194/206

1235/1247

DRAFT Stage 3 - Not for Construction 09/23/2024

LANDSLIDE BORINGS FROM PREVIOUS SUBSURFACE INVESTIGATIONS

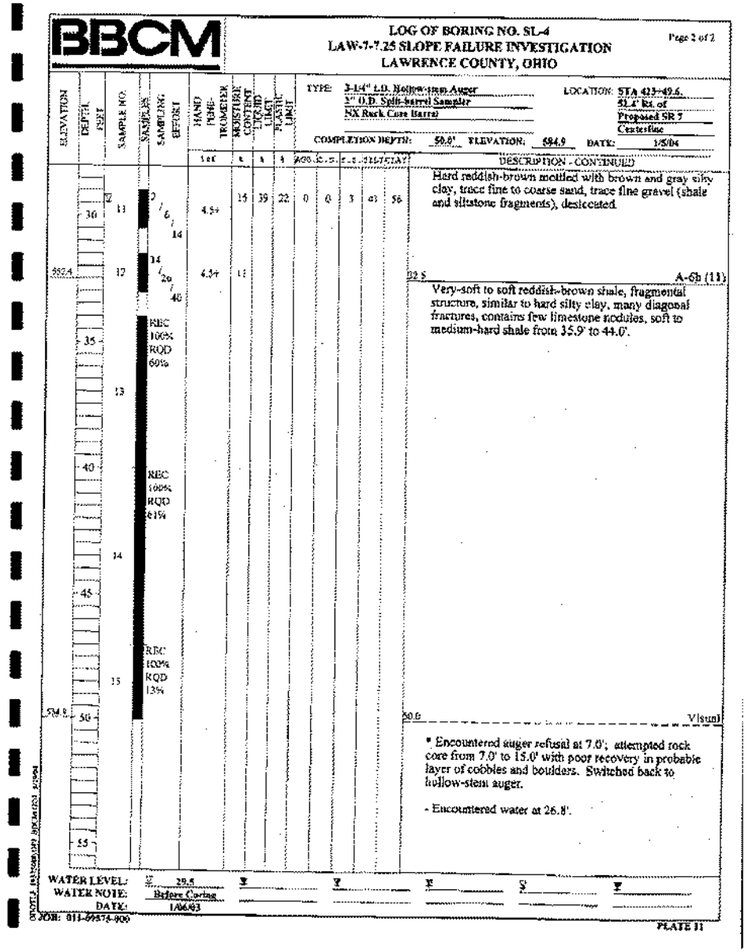

BBCM

LOG OF BORING NO. SL-4
LAW-7-7.25 SLOPE FAILURE INVESTIGATION
LAWRENCE COUNTY, OHIO

Page 2 of 2

TYPE: 3-1/4" I.D. Hollow-stem Auger; 2" O.D. Split-barrel Sampler; NX Rock Core Barrel
LOCATION: STA 423+49.6, 51.4' Rt. of Proposed SR 7 Centerline
COMPLETION DEPTH: 50.0' ELEVATION: 584.9 DATE: 1/5/04

DESCRIPTION - CONTINUED

Hard reddish-brown mottled with brown and gray silty clay, trace fine to coarse sand, trace fine gravel (shale and siltstone fragments), desiccated.

A-6b (11)

Very-soft to soft reddish-brown shale, fragmental structure, similar to hard silty clay, many diagonal fractures, contains few limestone nodules, soft to medium-hard shale from 35.9' to 44.0'.

REC 100% RQD 69%

REC 100% RQD 81%

REC 100% RQD 13%

50.0 Visual

* Encountered auger refusal at 7.0'; attempted rock core from 7.0' to 15.0' with poor recovery in probable layer of cobbles and boulders. Switched back to hollow-stem auger.

- Encountered water at 26.8'.

WATER LEVEL: ▽ 28.8
WATER NOTE: Before Coring
DATE: 1/06/03

JOB: 011-99574-000

PLATE 11

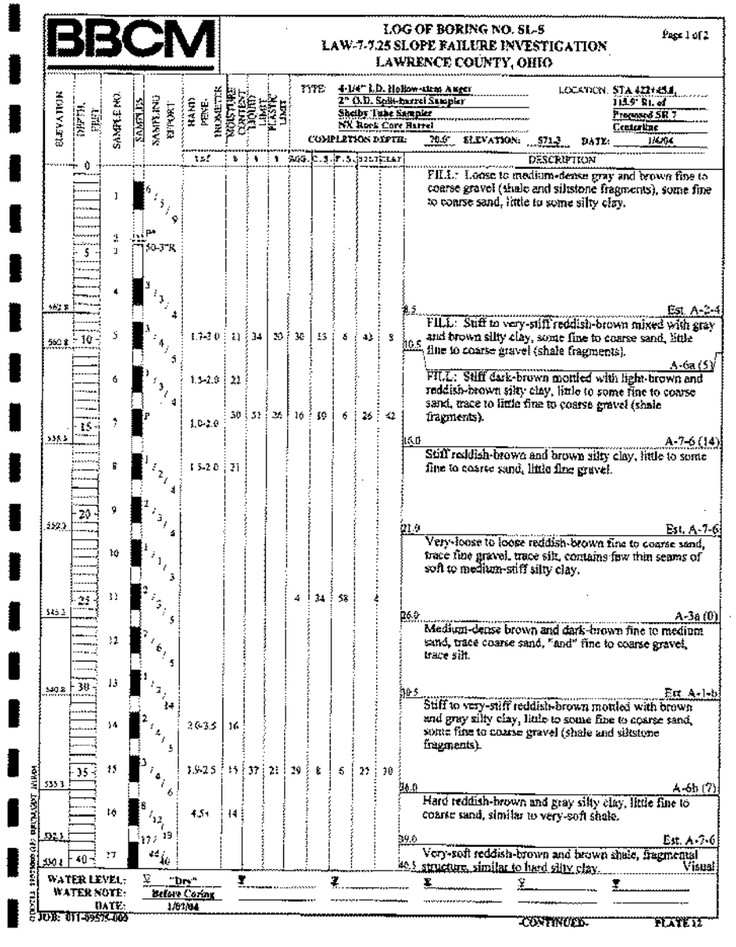

BBCM

LOG OF BORING NO. SL-5
LAW-7-7.25 SLOPE FAILURE INVESTIGATION
LAWRENCE COUNTY, OHIO

Page 1 of 2

TYPE: 4-1/4" I.D. Hollow-stem Auger; 2" O.D. Split-barrel Sampler; Shelby Tube Sampler; NX Rock Core Barrel
LOCATION: STA 422+45.8, 115.9' Rt. of Proposed SR 7 Centerline
COMPLETION DEPTH: 70.0' ELEVATION: 573.3 DATE: 1/6/04

DESCRIPTION

FILL: Loose to medium-dense gray and brown fine to coarse gravel (shale and siltstone fragments), some fine to coarse sand, little to some silty clay.

Est. A-2-4

FILL: Stiff to very-stiff reddish-brown mixed with gray and brown silty clay, some fine to coarse sand, little fine to coarse gravel (shale fragments).

A-6a (5)

FILL: Stiff dark-brown mottled with light-brown and reddish-brown silty clay, little to some fine to coarse sand, trace to little fine to coarse gravel (shale fragments).

A-7-6 (14)

Stiff reddish-brown and brown silty clay, little to some fine to coarse sand, little fine gravel.

Est. A-7-6

Very-loose to loose reddish-brown fine to coarse sand, trace fine gravel, trace silt, contains few thin seams of soft to medium-stiff silty clay.

A-3a (0)

Medium-dense brown and dark-brown fine to medium sand, trace coarse sand, "and" fine to coarse gravel, trace silt.

Est. A-1-b

Stiff to very-stiff reddish-brown mottled with brown and gray silty clay, little to some fine to coarse sand, some fine to coarse gravel (shale and siltstone fragments).

A-6b (7)

Hard reddish-brown and gray silty clay, little fine to coarse sand, similar to very-soft shale.

Est. A-7-6

Very-soft reddish-brown and brown shale, fragmental structure, similar to hard silty clay.

Visual

WATER LEVEL: ▽ "Dry"
WATER NOTE: Before Coring
DATE: 1/07/04

JOB: 011-99575-000

-CONTINUED-

PLATE 12

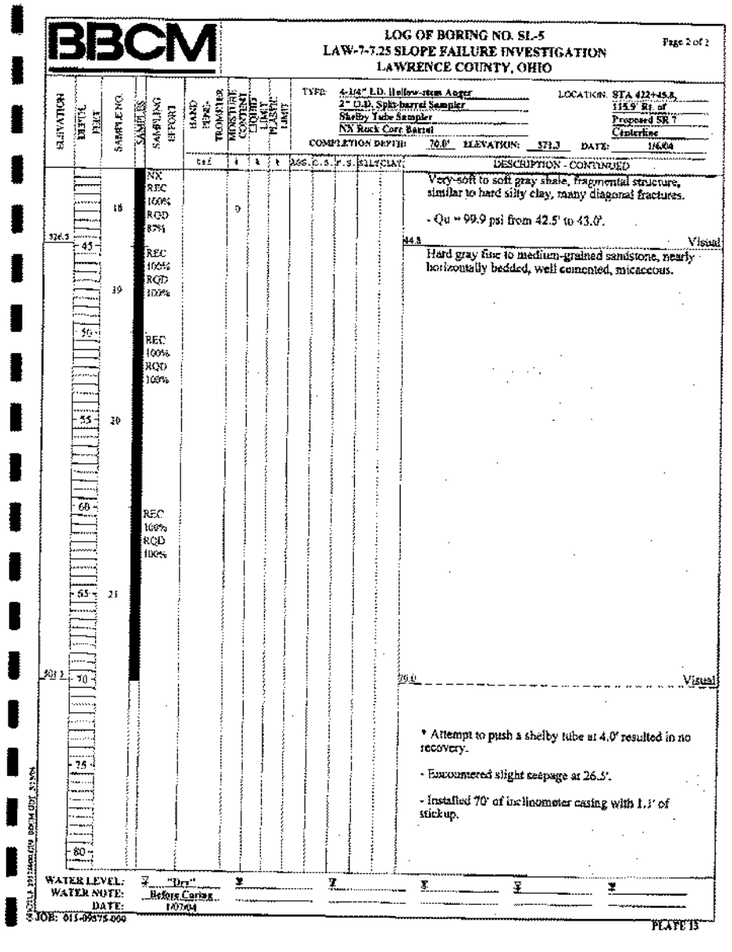

BBCM

LOG OF BORING NO. SL-5
LAW-7-7.25 SLOPE FAILURE INVESTIGATION
LAWRENCE COUNTY, OHIO

Page 2 of 2

TYPE: 4-1/4" I.D. Hollow-stem Auger; 2" O.D. Split-barrel Sampler; Shelby Tube Sampler; NX Rock Core Barrel
LOCATION: STA 422+45.8, 115.9' Rt. of Proposed SR 7 Centerline
COMPLETION DEPTH: 70.0' ELEVATION: 573.3 DATE: 1/6/04

DESCRIPTION - CONTINUED

Very-soft to soft gray shale, fragmental structure, similar to hard silty clay, many diagonal fractures.

- Qu = 99.9 psi from 42.5' to 43.0'.

Visual

Hard gray fine to medium-grained sandstone, nearly horizontally bedded, well cemented, micaceous.

NX REC 100% RQD 85%

REC 100% RQD 100%

REC 100% RQD 100%

70.0 Visual

* Attempt to push a shelby tube at 4.0' resulted in no recovery.

- Encountered slight seepage at 26.5'.

- Installed 70' of inclinometer casing with 1.1' of stick up.

WATER LEVEL: ▽ "Dry"
WATER NOTE: Before Coring
DATE: 1/07/04

JOB: 011-99575-000

PLATE 13

DRAWN MSJ
CHECKED EMK

GEOTECHNICAL EXPLORATION - LANDSLIDE
LAW-7

LAW-7-2.17

DRAFT Stage 3 - Not for Construction 09/23/2024

LANDSLIDE BORINGS FROM PREVIOUS SUBSURFACE INVESTIGATIONS

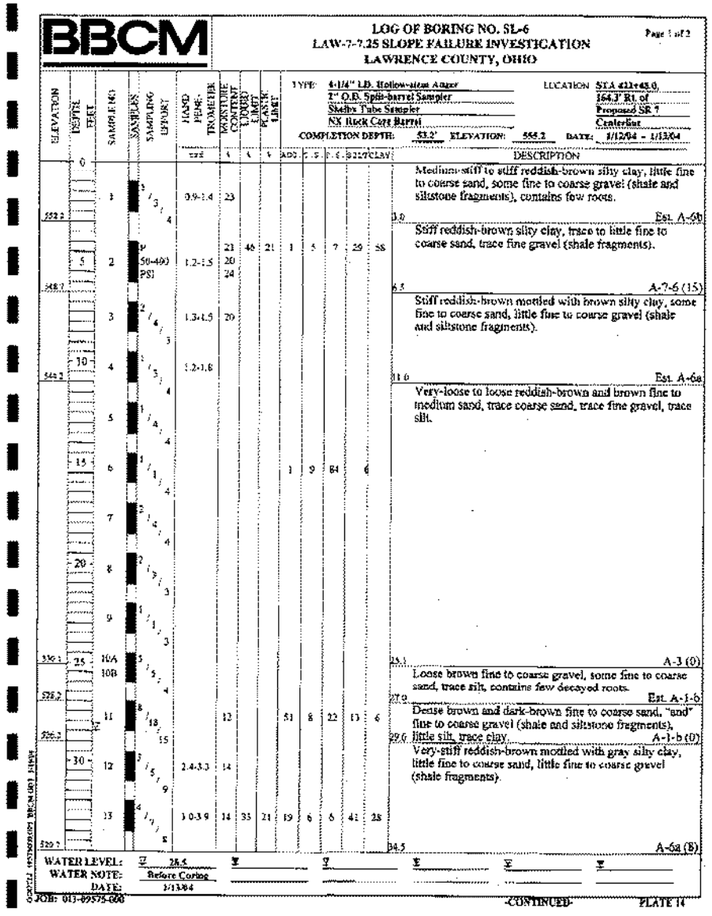

BBCM

LOG OF BORING NO. SL-6
LAW-7-7.25 SLOPE FAILURE INVESTIGATION
LAWRENCE COUNTY, OHIO

Page 1 of 2

TYPE: 4-1/4" I.D. Hollow-stem Auger; 2" O.D. Split-barrel Sampler; Shelby Tube Sampler; NX Rock Core Barrel
LOCATION: STA 423+43.0, 164.3' Rt. of Proposed SR 7 Centerline
COMPLETION DEPTH: 53.2' ELEVATION: 555.2 DATE: 1/12/04 - 1/13/04

ELEVATION	DEPTH, FEET	SAMPLE NO.	SAMPLES	SAMPLING EFFORT	HAND PENE-TROMETER tsf	MOISTURE CONTENT %	LIQUID LIMIT %	PLASTIC LIMIT %	AGG. %	C. S. %	F. S. %	SILT %	CLAY %	DESCRIPTION
	0													Medium-stiff to stiff reddish-brown silty clay, little fine to coarse sand, some fine to coarse gravel (shale and siltstone fragments), contains few roots.
552.2		1	3/4		0.9-1.4	23								
	5	2	50-4(0) PSI		1.2-1.5	23 20 24	46	21	1	5	7	29	58	
548.7														3.0 Est. A-6b Stiff reddish-brown silty clay, trace to little fine to coarse sand, trace fine gravel (shale fragments).
		3	4/5/3		1.3-1.5	20								6.5 A-7-6 (15) Stiff reddish-brown mottled with brown silty clay, some fine to coarse sand, little fine to coarse gravel (shale and siltstone fragments).
	10	4	5/4/4		1.2-1.8									11.0 Est. A-6a Very-loose to loose reddish-brown and brown fine to medium sand, trace coarse sand, trace fine gravel, trace silt.
		5	4/4/4											
	15	6	1/1/4						1	9	84	6		
		7	2/4/4											
	20	8	2/3/3											
		9	1/1/3											
530.1	25	10A 10B	5/4											24.1 A-3 (0) Loose brown fine to coarse gravel, some fine to coarse sand, trace silt, contains few decayed roots.
526.2		11	5/8/18			12			51	8	22	13	6	27.0 Est. A-1-b Dense brown and dark-brown fine to coarse sand, "and" fine to coarse gravel (shale and siltstone fragments), little silt, trace clay.
526.2	30	12	15/5/9		2.4-3.3	14								29.6 A-1-b (0) Very-stiff reddish-brown mottled with gray silty clay, little fine to coarse sand, little fine to coarse gravel (shale fragments).
520.7		13	4/7/8		3.0-3.9	14	33	21	19	6	8	41	28	34.5 A-6a (8)

WATER LEVEL: ▽ 28.5
WATER NOTE: Before Coring
DATE: 1/13/04

JOB: 011-09575-000 -CONTINUED- PLATE 14

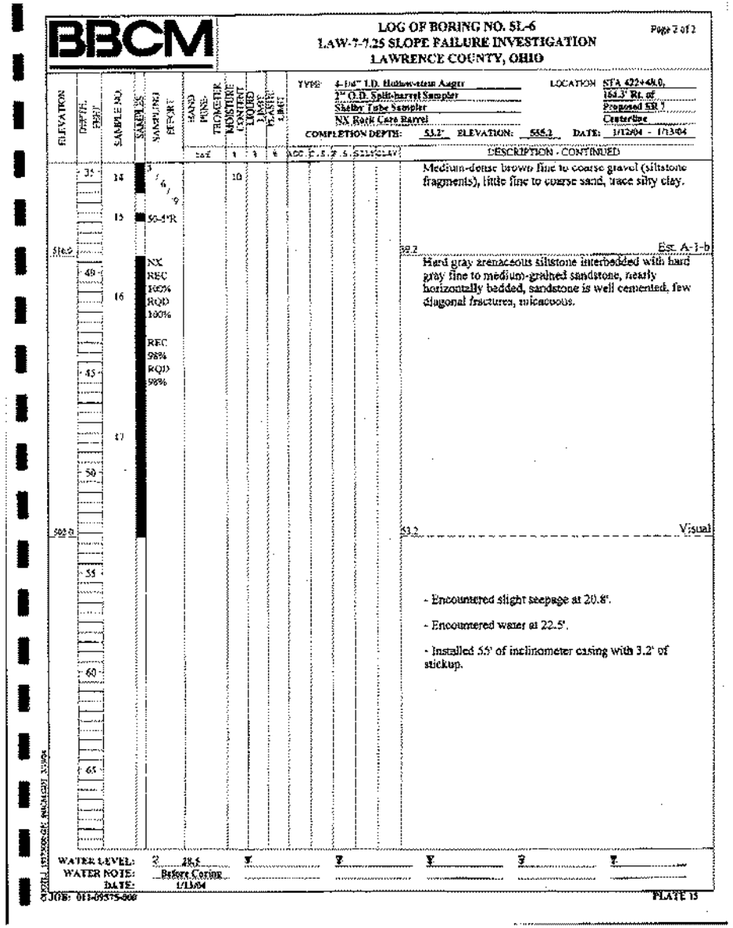

BBCM

LOG OF BORING NO. SL-6
LAW-7-7.25 SLOPE FAILURE INVESTIGATION
LAWRENCE COUNTY, OHIO

Page 2 of 2

TYPE: 4-1/4" I.D. Hollow-stem Auger; 2" O.D. Split-barrel Sampler; Shelby Tube Sampler; NX Rock Core Barrel
LOCATION: STA 422+48.0, 164.3' Rt. of Proposed SR 7 Centerline
COMPLETION DEPTH: 53.2' ELEVATION: 555.2 DATE: 1/12/04 - 1/13/04

ELEVATION	DEPTH, FEET	SAMPLE NO.	SAMPLES	SAMPLING EFFORT	HAND PENE-TROMETER tsf	MOISTURE CONTENT %	LIQUID LIMIT %	PLASTIC LIMIT %	AGG. %	C. S. %	F. S. %	SILT %	CLAY %	DESCRIPTION - CONTINUED
	35	14	3/4/9			10								Medium-dense brown fine to coarse gravel (siltstone fragments), little fine to coarse sand, trace silty clay.
516.2		15	50-5"R											39.2 Est. A-1-b Hard gray arenaceous siltstone interbedded with hard gray fine to medium-grained sandstone, nearly horizontally bedded, sandstone is well cemented, few diagonal fractures, micaceous.
	40	16	NX REC 100% RQD 100%											
			REC 98% RQD 98%											
	45													
		17												
	50													
502.0														53.2 Visual
	55													
	60													
	65													

- Encountered slight seepage at 20.8'.
- Encountered water at 22.5'.
- Installed 55' of inclinometer casing with 3.2' of stickup.

WATER LEVEL: ▽ 28.5
WATER NOTE: Before Coring
DATE: 1/13/04

JOB: 011-09575-000 PLATE 15

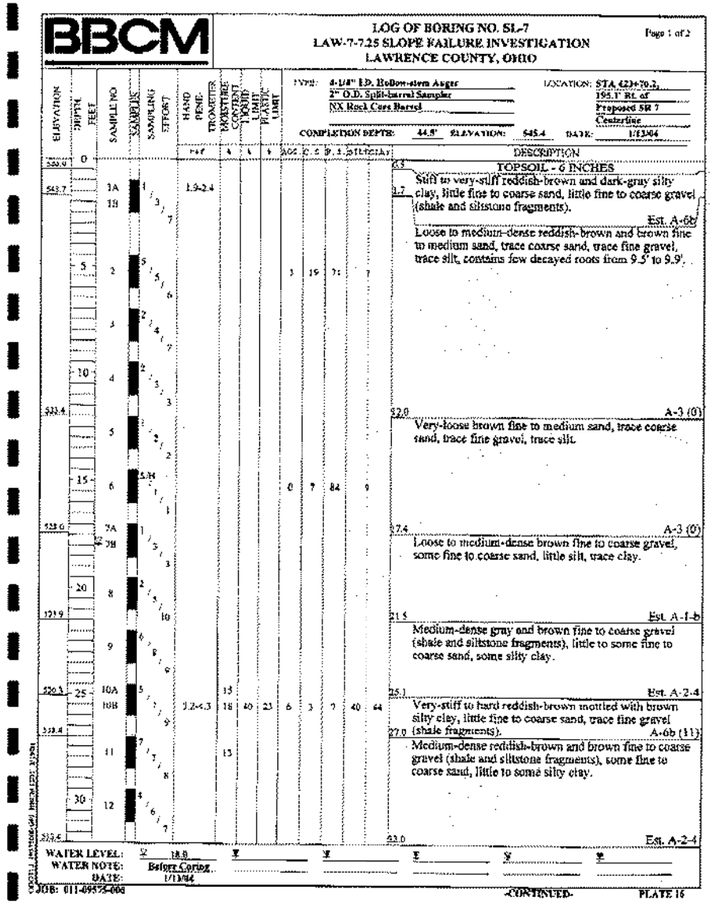

BBCM

LOG OF BORING NO. SL-7
LAW-7-7.25 SLOPE FAILURE INVESTIGATION
LAWRENCE COUNTY, OHIO

Page 1 of 2

TYPE: 4-1/4" I.D. HoDow-stem Auger; 2" O.D. Split-barrel Sampler; NX Rock Core Barrel
LOCATION: STA 423+70.2, 195.1' Rt. of Proposed SR 7 Centerline
COMPLETION DEPTH: 44.8' ELEVATION: 545.4 DATE: 1/13/04

ELEVATION	DEPTH, FEET	SAMPLE NO.	SAMPLES	SAMPLING EFFORT	HAND PENE-TROMETER tsf	MOISTURE CONTENT %	LIQUID LIMIT %	PLASTIC LIMIT %	AGG. %	C. S. %	F. S. %	SILT %	CLAY %	DESCRIPTION
550.0	0													0.3 TOPSOIL - 6 INCHES
543.7		1A	1/3/7		1.9-2.4									9.7 Stiff to very-stiff reddish-brown and dark-gray silty clay, little fine to coarse sand, little fine to coarse gravel (shale and siltstone fragments). Est. A-6b Loose to medium-dense reddish-brown and brown fine to medium sand, trace coarse sand, trace fine gravel, trace silt, contains few decayed roots from 9.5' to 9.9'.
	5	1B	5/5/6											
		2	2/4/7											
		3	2/5/3											
	10	4	2/2/2											
533.4		5	5/4											22.0 A-3 (0) Very-loose brown fine to medium sand, trace coarse sand, trace fine gravel, trace silt.
	15	6	1/1/1						0	7	84	9		
528.0		7A	1/1/1											27.4 A-3 (0) Loose to medium-dense brown fine to coarse gravel, some fine to coarse sand, little silt, trace clay.
		7B	3/5/10											
521.9	20	8	2/5/10											21.5 Est. A-1-b Medium-dense gray and brown fine to coarse gravel (shale and siltstone fragments), little to some fine to coarse sand, some silty clay.
		9	6/8/9											
520.3	25	10A	5/7/9		3.2-4.3	13			18	40	23	6	13	25.1 Est. A-2-4 Very-stiff to hard reddish-brown mottled with brown silty clay, little fine to coarse sand, trace fine gravel (shale fragments).
518.4		10B	7/8/9			13								27.0 A-6b (11) Medium-dense reddish-brown and brown fine to coarse gravel (shale and siltstone fragments), some fine to coarse sand, little to some silty clay.
	30	11	5/6/7											
515.5		12	5/6/7											34.9 Est. A-2-4

WATER LEVEL: ▽ 18.0
WATER NOTE: Before Coring
DATE: 1/13/04

JOB: 011-09575-000 -CONTINUED- PLATE 16

DRAWN MSJ
CHECKED EMK

GEOTECHNICAL EXPLORATION - LANDSLIDE LAW-7

LAW-7-2.17

196/206

1237/1247

DRAFT Stage 3 - Not for Construction 09/23/2024

LANDSLIDE BORINGS FROM PREVIOUS SUBSURFACE INVESTIGATIONS

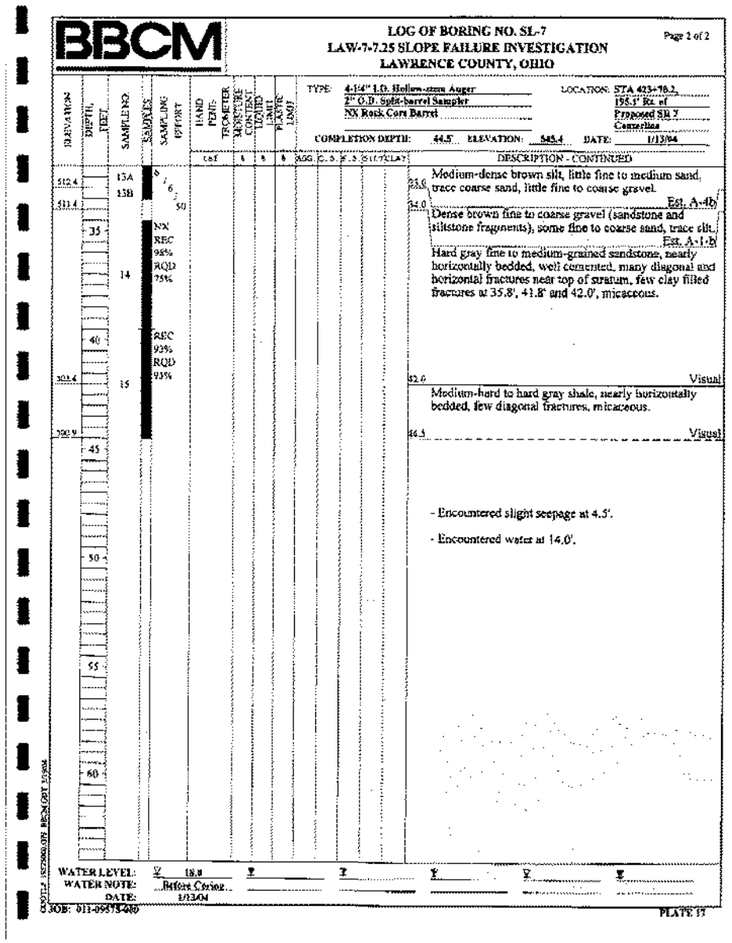

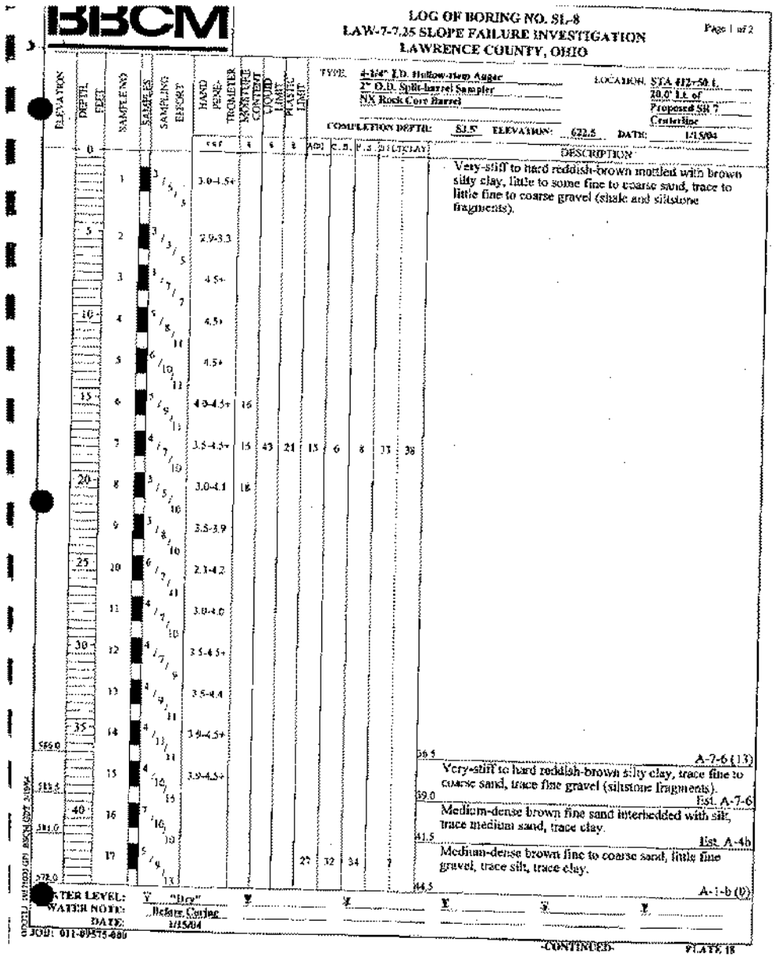

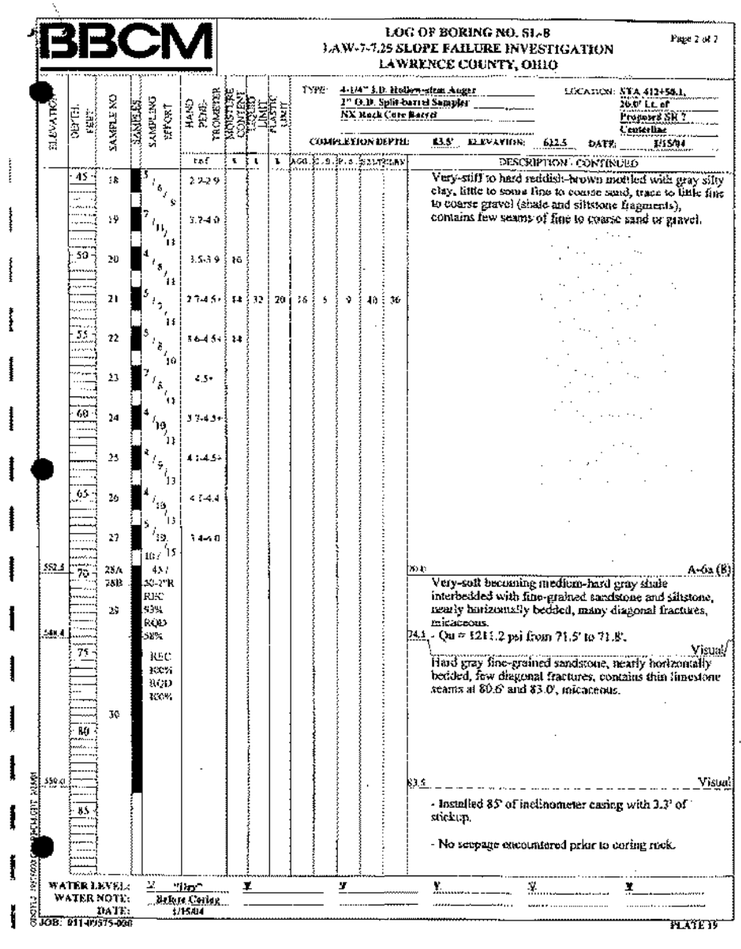

DRAFT Stage 3 - Not for Construction 09/23/2024

LANDSLIDE BORINGS FROM PREVIOUS SUBSURFACE INVESTIGATIONS

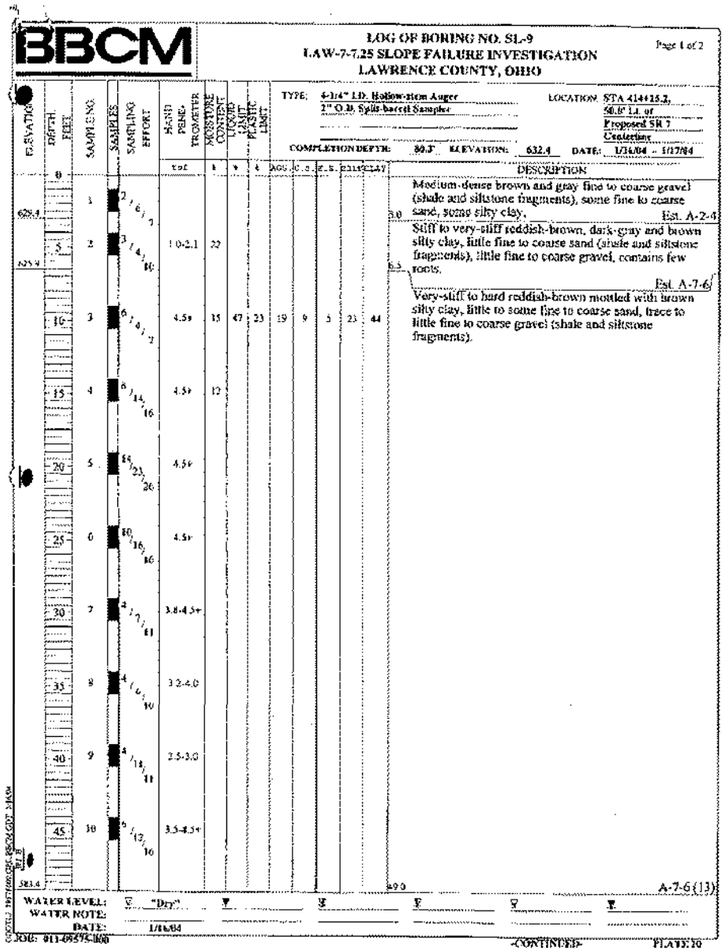

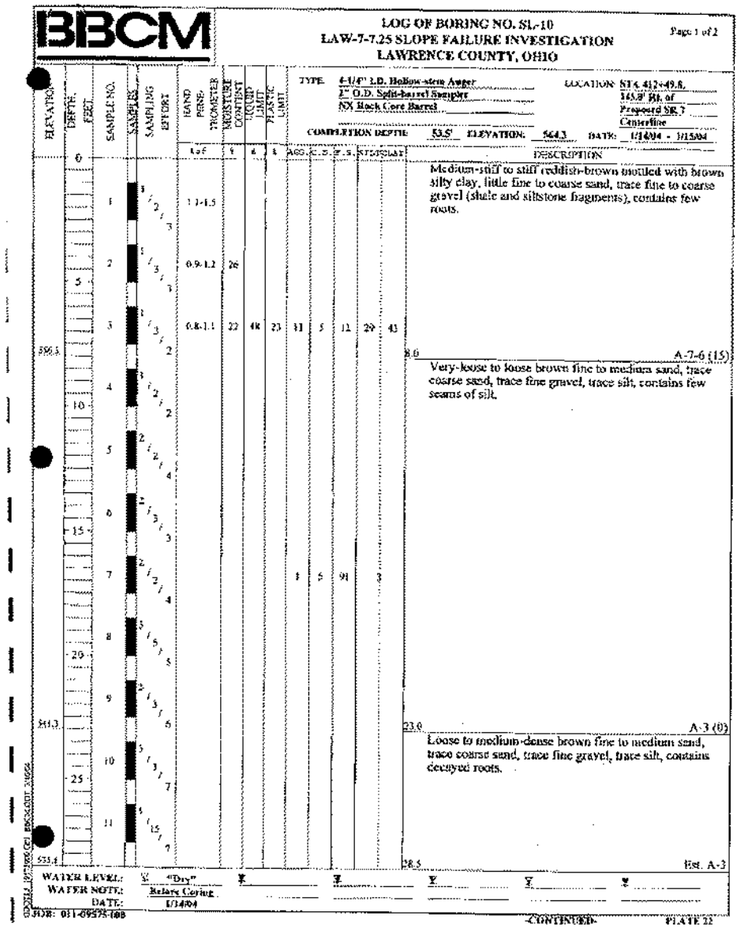

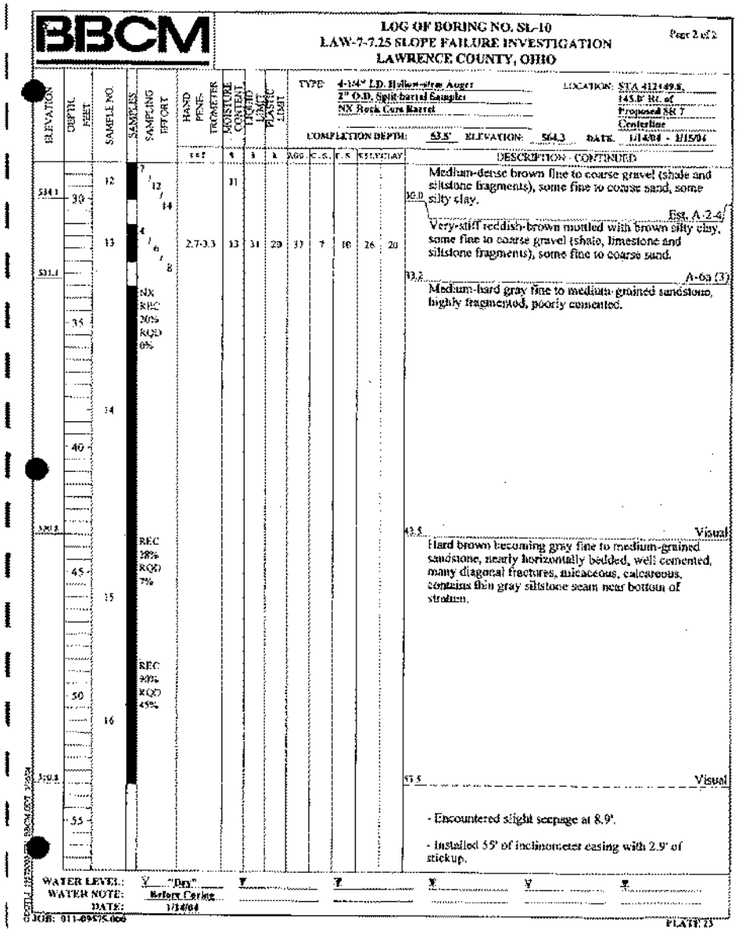

DRAWN MSJ
CHECKED EMK

GEOTECHNICAL EXPLORATION - LANDSLIDE LAW-7

LAW-7-2.17

198/206

1239/1247

DRAFT Stage 3 - Not for Construction 09/23/2024

LANDSLIDE BORINGS FROM PREVIOUS SUBSURFACE INVESTIGATIONS

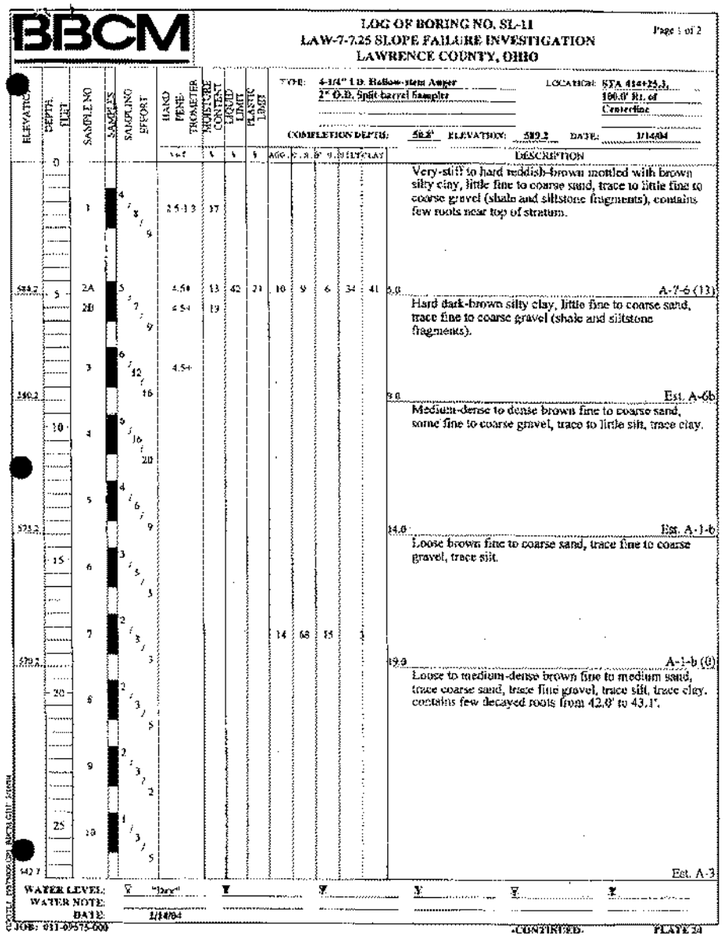

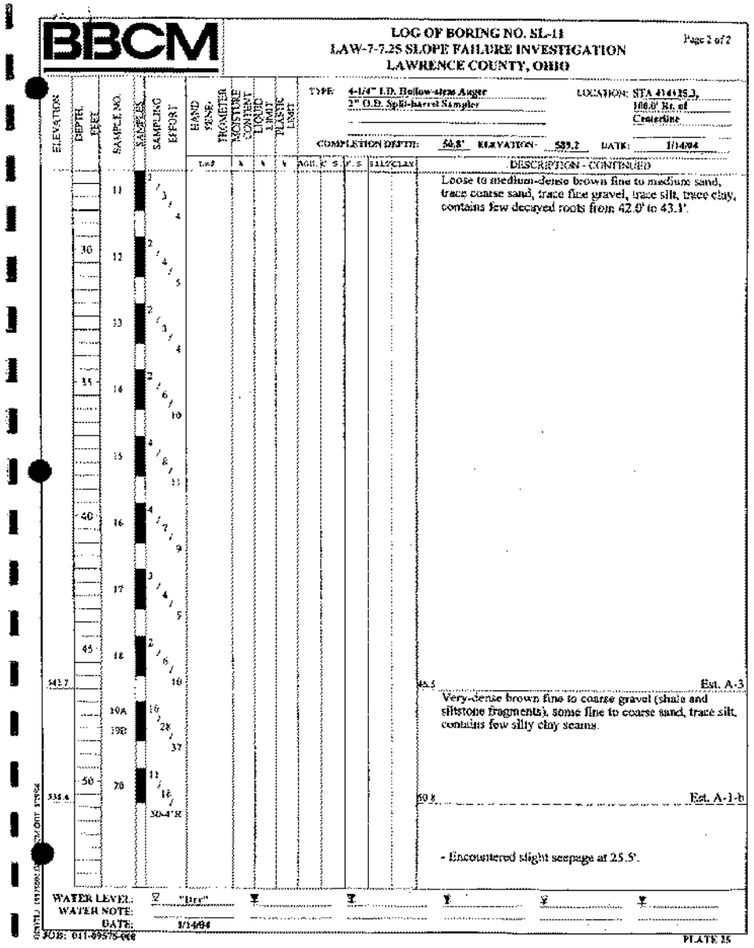

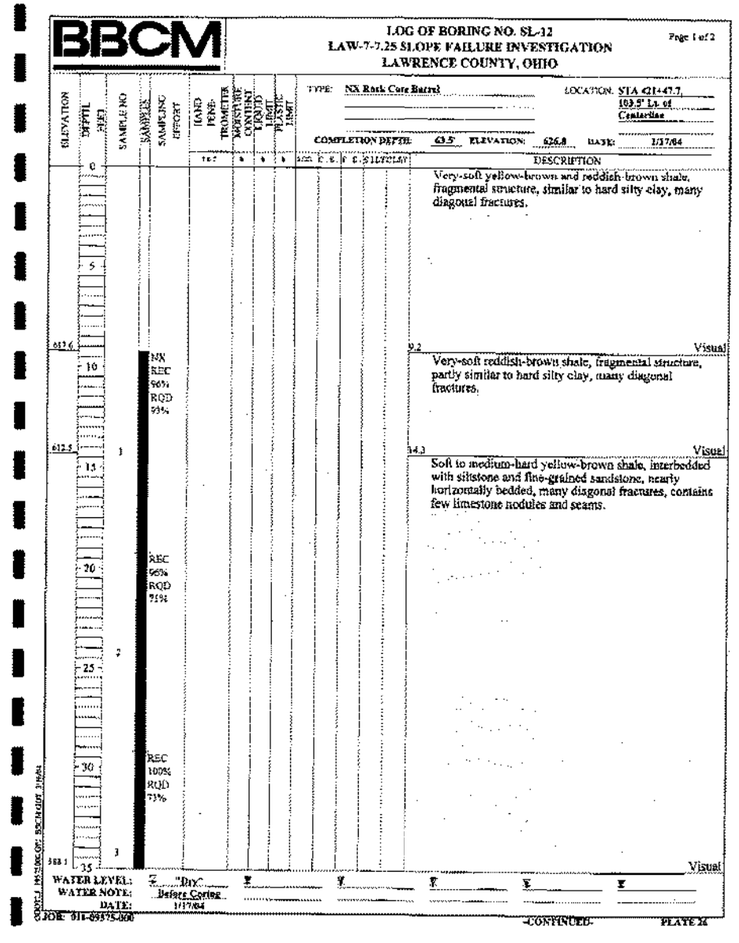

DRAFT Stage 3 - Not for Construction 09/23/2024

DRAWN MSJ
CHECKED EMK

GEOTECHNICAL EXPLORATION - LANDSLIDE
LAW-7

LAW-7-2.17

LANDSLIDE BORINGS FROM PREVIOUS SUBSURFACE INVESTIGATIONS

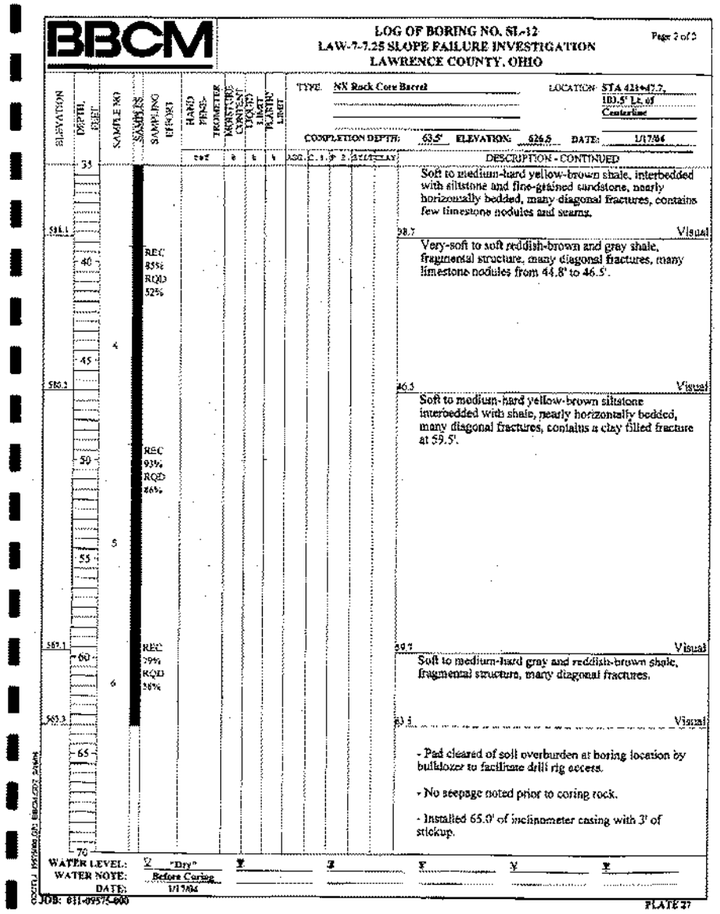

BBCM

LOG OF BORING NO. SL-12
LAW-7-7.25 SLOPE FAILURE INVESTIGATION
LAWRENCE COUNTY, OHIO

Page 2 of 3

TYPE: NX Rock Core Barrel
LOCATION: STA 421+47.7, 103.5' Lt. of Centerline
COMPLETION DEPTH: 63.5' ELEVATION: 626.6 DATE: 1/17/04

DESCRIPTION - CONTINUED

Soft to medium-hard yellow-brown shale, interbedded with siltstone and fine-grained sandstone, nearly horizontally bedded, many diagonal fractures, contains few limestone nodules and seams.

38.7 Visual

Very-soft to soft reddish-brown and gray shale, fragmental structure, many diagonal fractures, many limestone nodules from 44.8' to 46.5'.

46.5 Visual

Soft to medium-hard yellow-brown siltstone interbedded with shale, nearly horizontally bedded, many diagonal fractures, contains a clay filled fracture at 59.5'.

REC 85% RQD 52%

REC 93% RQD 86%

REC 59% RQD 38%

59.7 Visual

Soft to medium-hard gray and reddish-brown shale, fragmental structure, many diagonal fractures.

63.5 Visual

- Pad cleared of soft overburden at boring location by bulldozer to facilitate drill rig access.
- No seepage noted prior to coring rock.
- Installed 65.0' of inclinometer casing with 3' of stickup.

WATER LEVEL: ▽ "Dry"
WATER NOTE: Before Coring
DATE: 1/17/04

JOB: 011-09575-000

PLATE 27

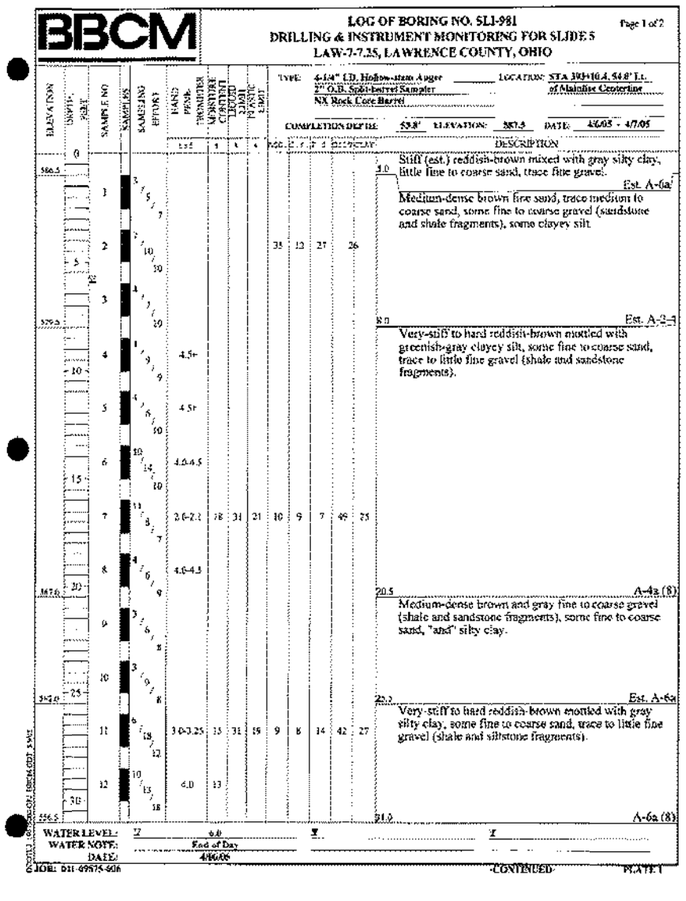

BBCM

LOG OF BORING NO. SLI-9B1
DRILLING & INSTRUMENT MONITORING FOR SLIDE 5
LAW-7-7.25, LAWRENCE COUNTY, OHIO

Page 1 of 2

TYPE: 4-1/4" I.D. Hollow-stem Auger; 3" O.D. Split-barrel Sampler; NX Rock Core Barrel
LOCATION: STA 393+10.4, 54.8' Lt. of Mainline Centerline
COMPLETION DEPTH: 53.8' ELEVATION: 587.5 DATE: 4/6/05 - 4/7/05

DESCRIPTION

3.0 Est. A-6a

Stiff (est.) reddish-brown mixed with gray silty clay, little fine to coarse sand, trace fine gravel.

8.0 Est. A-2-4

Medium-dense brown fine sand, trace medium to coarse sand, some fine to coarse gravel (sandstone and shale fragments), some clayey silt.

Very-stiff to hard reddish-brown mottled with greenish-gray clayey silt, some fine to coarse sand, trace to little fine gravel (shale and sandstone fragments).

20.5 A-4a (8)

Medium-dense brown and gray fine to coarse gravel (shale and sandstone fragments), some fine to coarse sand, "and" silty clay.

22.2 Est. A-6a

Very-stiff to hard reddish-brown mottled with gray silty clay, some fine to coarse sand, trace to little fine gravel (shale and siltstone fragments).

31.0 A-6a (8)

WATER LEVEL: ▽ 6.0
WATER NOTE: End of Day
DATE: 4/06/05

JOB: 011-09575-000

-CONTINUED-

PLATE 1

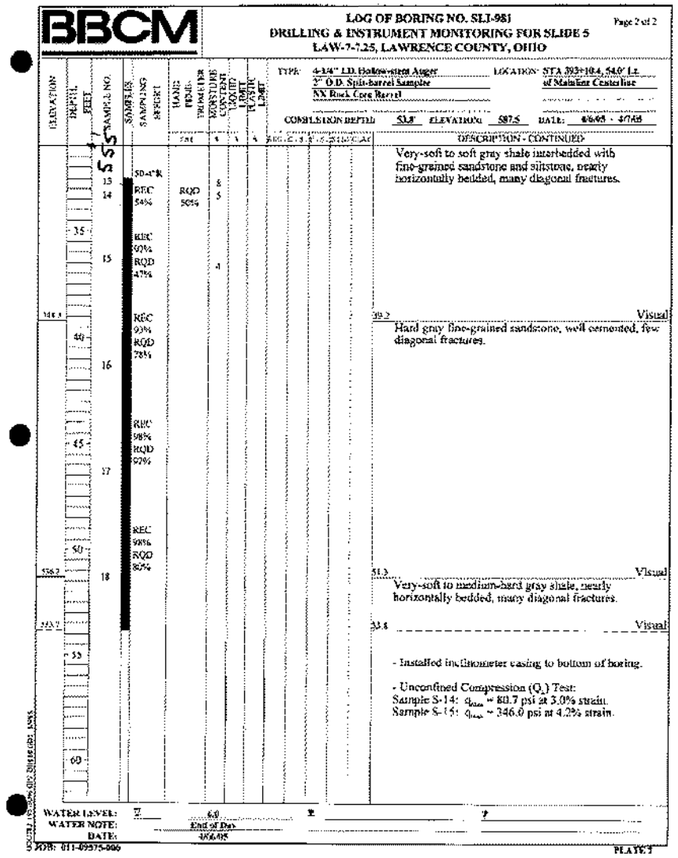

BBCM

LOG OF BORING NO. SLI-9B1
DRILLING & INSTRUMENT MONITORING FOR SLIDE 5
LAW-7-7.25, LAWRENCE COUNTY, OHIO

Page 2 of 2

TYPE: 4-1/4" I.D. Hollow-stem Auger; 3" O.D. Split-barrel Sampler; NX Rock Core Barrel
LOCATION: STA 393+10.4, 54.8' Lt. of Mainline Centerline
COMPLETION DEPTH: 53.8' ELEVATION: 587.5 DATE: 4/6/05 - 4/7/05

DESCRIPTION - CONTINUED

Very-soft to soft gray shale interbedded with fine-grained sandstone and siltstone, nearly horizontally bedded, many diagonal fractures.

39.2 Visual

Hard gray fine-grained sandstone, well cemented, few diagonal fractures.

REC 94% RQD 50%

REC 90% RQD 47%

REC 93% RQD 78%

REC 98% RQD 92%

REC 98% RQD 86%

51.3 Visual

Very-soft to medium-hard gray shale, nearly horizontally bedded, many diagonal fractures.

53.8 Visual

- Installed inclinometer casing to bottom of boring.
- Unconfined Compression (Q_u) Test:
Sample S-14: q_{max} = 80.7 psi at 3.0% strain.
Sample S-15: q_{max} = 346.0 psi at 4.2% strain.

WATER LEVEL: ▽ 6.0
WATER NOTE: End of Day
DATE: 4/06/05

JOB: 011-09575-000

PLATE 2

DRAWN MSJ
CHECKED EMK

GEOTECHNICAL EXPLORATION - LANDSLIDE LAW-7

LAW-7-2.17

DRAFT Stage 3 - Not for Construction 09/23/2024

LANDSLIDE BORINGS FROM PREVIOUS SUBSURFACE INVESTIGATIONS

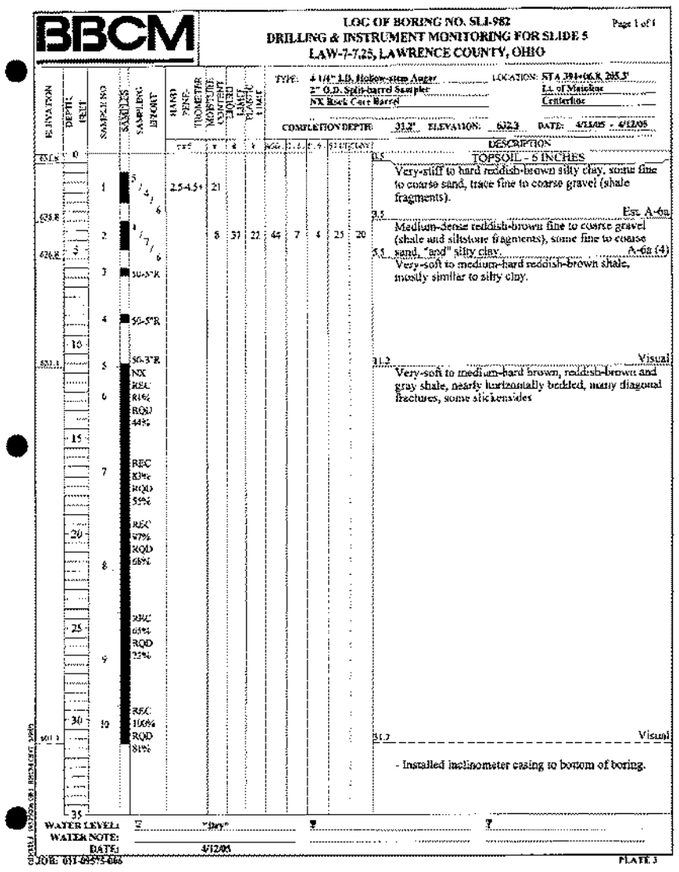

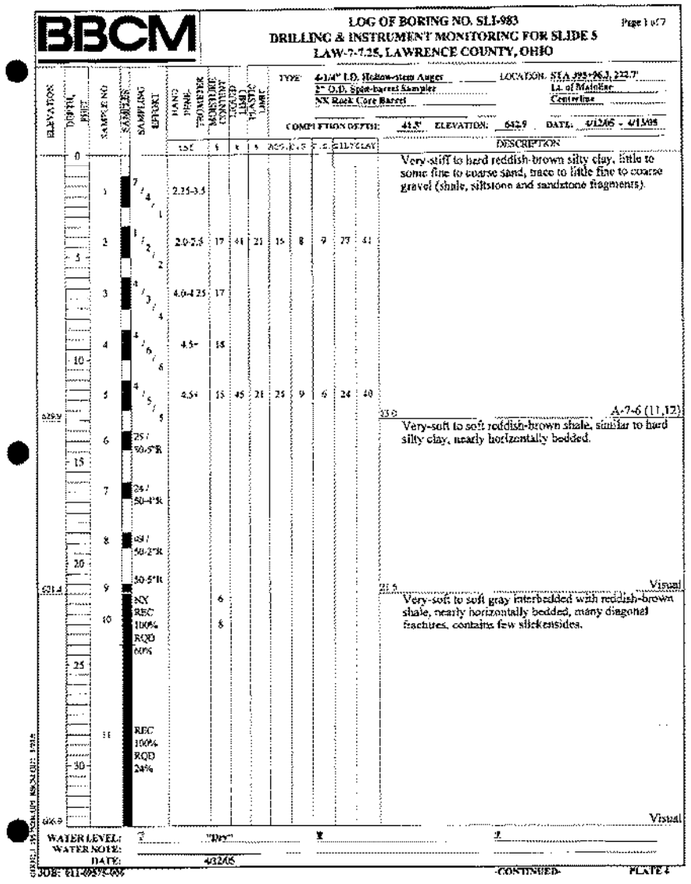

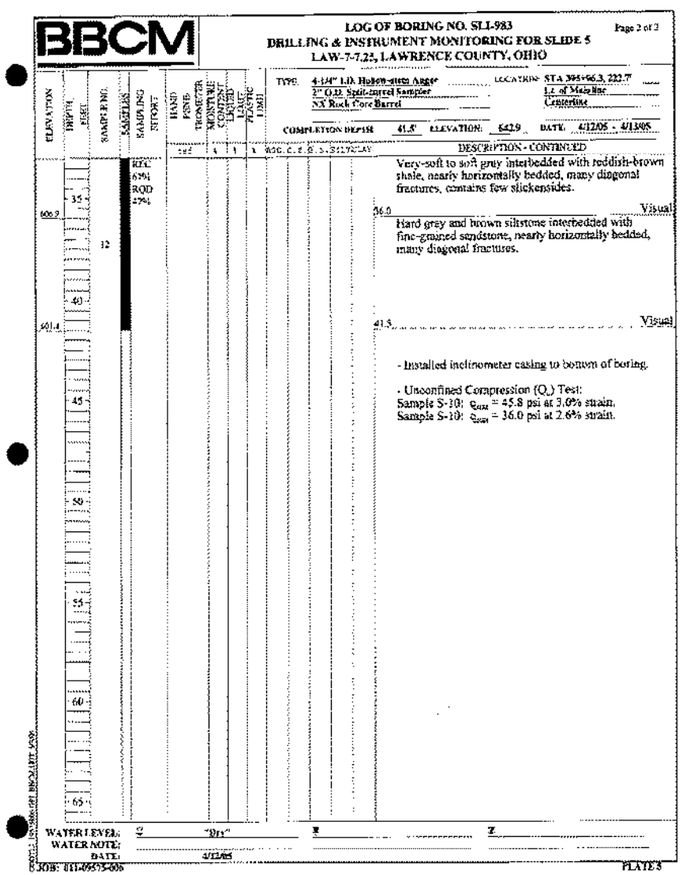

DRAFT Stage 3 - Not for Construction 09/23/2024

DRAWN MSJ
CHECKED EMK

GEOTECHNICAL EXPLORATION - LANDSLIDE LAW-7

LAW-7-2.17

201/206

1242/1247

LANDSLIDE BORINGS FROM PREVIOUS SUBSURFACE INVESTIGATIONS

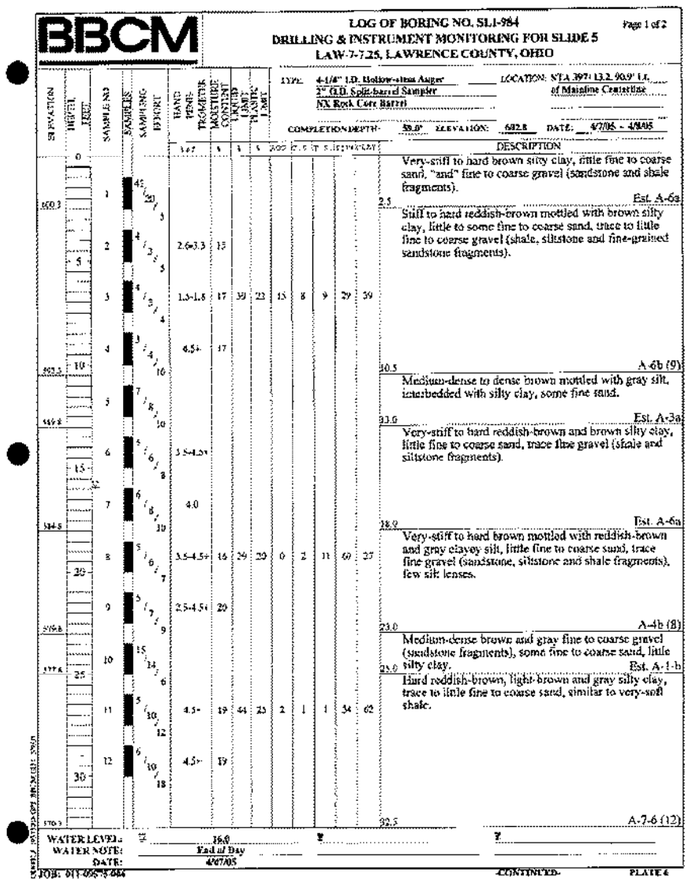

BBCM

LOG OF BORING NO. SLI-984
DRILLING & INSTRUMENT MONITORING FOR SLIDE 5
LAW-7-7.25, LAWRENCE COUNTY, OHIO

Page 1 of 2

TYPE: 4-1/4" I.D. Hollow-stem Auger; 2" O.D. Split-barrel Sampler; NX Rock Core Barrel
LOCATION: STA 397+13.2, 90.9' L.t. of Mainline Centerline
COMPLETION DEPTH: 89.0' ELEVATION: 602.8 DATE: 4/7/05 - 4/8/05

ELEVATION	DEPTH FEET	SAMPLE NO	SAMPLES SAMPLING EFFORT	HAND PENE-TROMETER	MOISTURE CONTENT	LIQUID LIMIT	PLASTIC LIMIT	DESCRIPTION
	0							Very-stiff to hard brown silty clay, little fine to coarse sand, "and" fine to coarse gravel (sandstone and shale fragments). Est. A-6a
600.3	2.5	1	45 (50) 5					Stiff to hard reddish-brown mottled with brown silty clay, little to some fine to coarse sand, trace to little fine to coarse gravel (shale, siltstone and fine-grained sandstone fragments).
	5	2	4 / 3 / 5 / 5	2.6+3.3	15			
		3	4 / 3 / 3 / 4	1.5-1.8	17	39	23	15 8 9 29 39
592.3	10	4	3 / 4 / 12 / 16	6.5+	17			
		5	3 / 7 / 7 / 10					A-6b (9)
584.8	15	6	5 / 6 / 8 / 10	3.5-4.5+				Medium-dense to dense brown mottled with gray silt, interbedded with silty clay, some fine sand. Est. A-3a
		7	6 / 8 / 10 / 10	4.0				Very-stiff to hard reddish-brown and brown silty clay, little fine to coarse sand, trace fine gravel (shale and siltstone fragments). Est. A-6a
577.8	20	8	5 / 6 / 7 / 9	3.5-4.5+	16	29	20	0 2 11 60 27
		9	5 / 7 / 9 / 10	2.5-4.5+	20			Very-stiff to hard brown mottled with reddish-brown and gray clayey silt, little fine to coarse sand, trace fine gravel (sandstone, siltstone and shale fragments), few silt lenses.
569.8	25	10	15 / 14 / 6					A-4b (8)
		11	5 / 10 / 12	4.5+	19	44	25	2 1 1 34 62
559.8	30	12	6 / 10 / 18	4.5+	19			Medium-dense brown and gray fine to coarse gravel (sandstone fragments), some fine to coarse sand, little silty clay. Est. A-1-b
552.5								Hard reddish-brown, light-brown and gray silty clay, trace to little fine to coarse sand, similar to very-soft shale.
547.3	55							A-7-6 (12)

WATER LEVEL: ▽ 16.0
WATER NOTE: End of Day
DATE: 4/07/05

-CONTINUED-

JOB: 031-095*5-004 PLATE 6

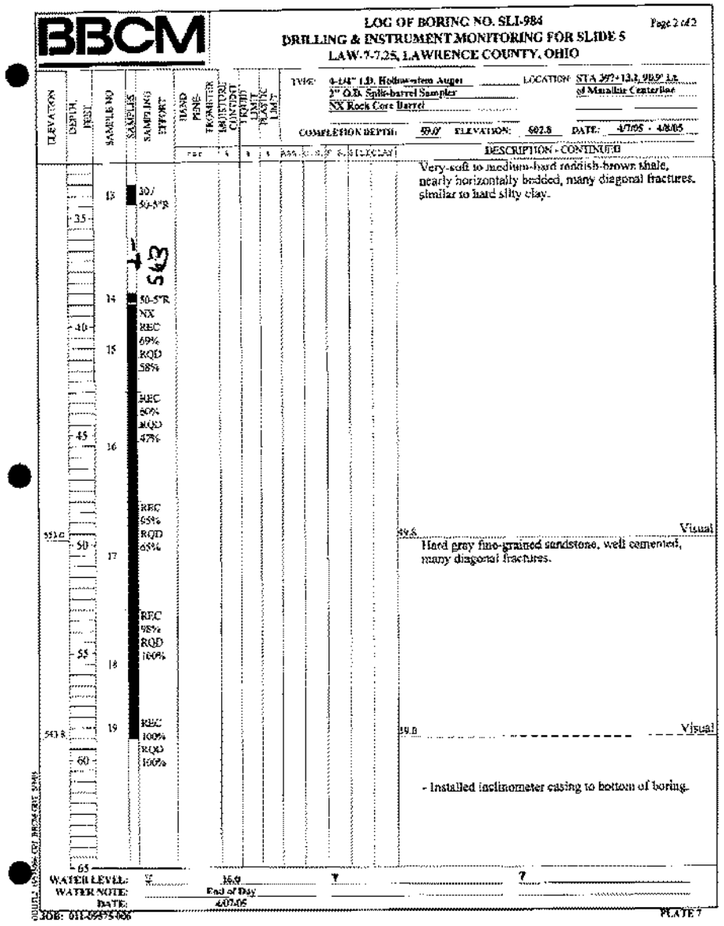

BBCM

LOG OF BORING NO. SLI-984
DRILLING & INSTRUMENT MONITORING FOR SLIDE 5
LAW-7-7.25, LAWRENCE COUNTY, OHIO

Page 2 of 2

TYPE: 4-1/4" I.D. Hollow-stem Auger; 2" O.D. Split-barrel Sampler; NX Rock Core Barrel
LOCATION: STA 397+13.2, 90.9' L.t. of Mainline Centerline
COMPLETION DEPTH: 89.0' ELEVATION: 602.8 DATE: 4/7/05 - 4/8/05

ELEVATION	DEPTH FEET	SAMPLE NO	SAMPLES SAMPLING EFFORT	HAND PENE-TROMETER	MOISTURE CONTENT	LIQUID LIMIT	PLASTIC LIMIT	DESCRIPTION - CONTINUED
	35	13	30/ 50-5"R					Very-soft to medium-hard reddish-brown shale, nearly horizontally bedded, many diagonal fractures, similar to hard silty clay.
		14	50-5"R					
	40		NX REC 69% RQD 58%					
	45	15	REC 86% RQD 47%					
553.0	50	16	REC 95% RQD 68%					
	55	17	REC 98% RQD 100%					
543.8	60	18	REC 100% RQD 100%					
	65	19						Visual
								Hard gray fine-grained sandstone, well cemented, many diagonal fractures.
								Visual
								- Installed inclinometer casing to bottom of boring.

WATER LEVEL: ▽ 16.0
WATER NOTE: End of Day
DATE: 4/07/05

JOB: 031-095*5-004 PLATE 7

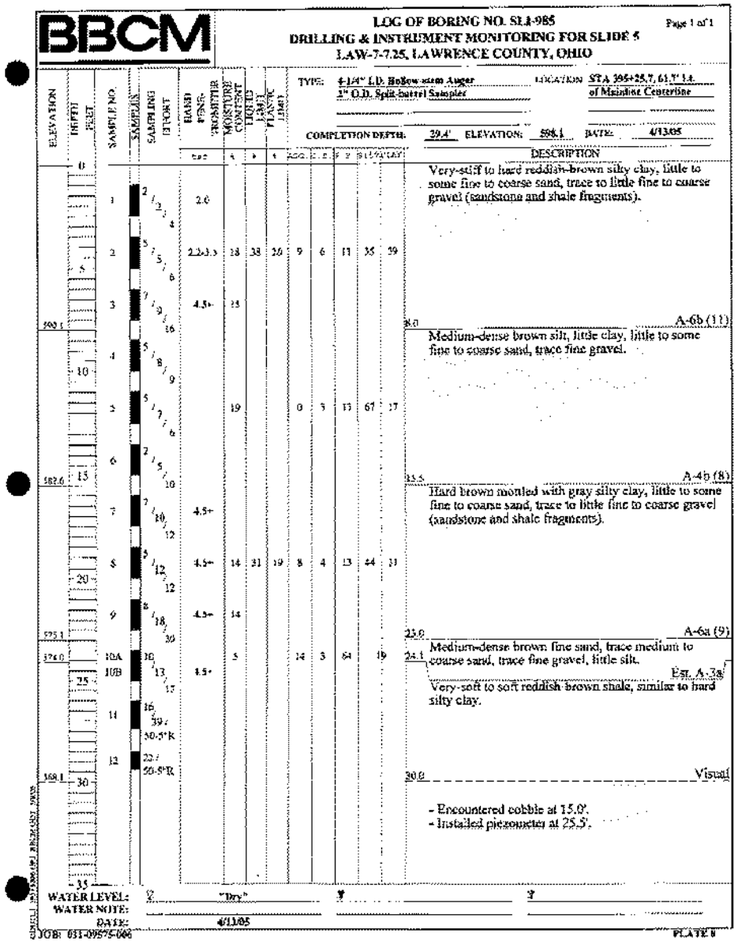

BBCM

LOG OF BORING NO. SLI-985
DRILLING & INSTRUMENT MONITORING FOR SLIDE 5
LAW-7-7.25, LAWRENCE COUNTY, OHIO

Page 1 of 1

TYPE: 4-1/4" I.D. Hollow-stem Auger; 2" O.D. Split-barrel Sampler
LOCATION: STA 395+25.7, 61.7' L.t. of Mainline Centerline
COMPLETION DEPTH: 29.4' ELEVATION: 598.1 DATE: 4/13/05

ELEVATION	DEPTH FEET	SAMPLE NO	SAMPLES SAMPLING EFFORT	HAND PENE-TROMETER	MOISTURE CONTENT	LIQUID LIMIT	PLASTIC LIMIT	DESCRIPTION
	0							Very-stiff to hard reddish-brown silty clay, little to some fine to coarse sand, trace to little fine to coarse gravel (sandstone and shale fragments).
		1	2 / 2 / 3 / 4	2.6				
593.1	5	2	5 / 5 / 6 / 8	2.2+3.3	18	38	20	9 6 11 35 39
		3	7 / 9 / 9 / 16	4.5+	15			
	10	4	5 / 8 / 9 / 12		19			0 3 13 67 17
582.6	15	5	2 / 5 / 6 / 10					A-4b (8)
		6	7 / 10 / 12 / 12	4.5+				Hard brown mottled with gray silty clay, little to some fine to coarse sand, trace to little fine to coarse gravel (sandstone and shale fragments).
		7	5 / 12 / 12 / 18	4.5+	14	31	19	8 4 13 44 31
	20	8	8 / 18 / 30 / 30	4.5+	14			
575.1		9	10A 10B 13 15	4.5+	5			14 3 64 19
574.0	25	10	16 / 39 / 50-5"R					A-6a (9)
		11	22 / 50-5"R					Medium-dense brown fine sand, trace medium to coarse sand, trace fine gravel, little silt. Est. A-3a
568.1	30	12						Very-soft to soft reddish-brown shale, similar to hard silty clay.
	35							Visual
								- Encountered cobble at 15.0'. - Installed piezometer at 25.5'.

WATER LEVEL: ▽ "Dry"
WATER NOTE:
DATE: 4/13/05

JOB: 031-095*5-006 PLATE 8

DRAWN MSJ
CHECKED EMK

GEOTECHNICAL EXPLORATION - LANDSLIDE LAW-7

LAW-7-2.17

202/206

1243
1247

DRAFT Stage 3 - Not for Construction 09/23/2024

Office of Geotechnical Engineering
Geology, Exploration and, Laboratory Section
http://www.dot.state.oh.us/Divisions/Engineering/Geotechnical

Project: LAW-7-2.17
Location: Lawrence County

CPT: C-009-2-21
Total depth: 47.80 ft, Date: 11/8/2021
Surface Elevation: 562.5 ft
Coords: lat 38.447334° lon -82.436009°

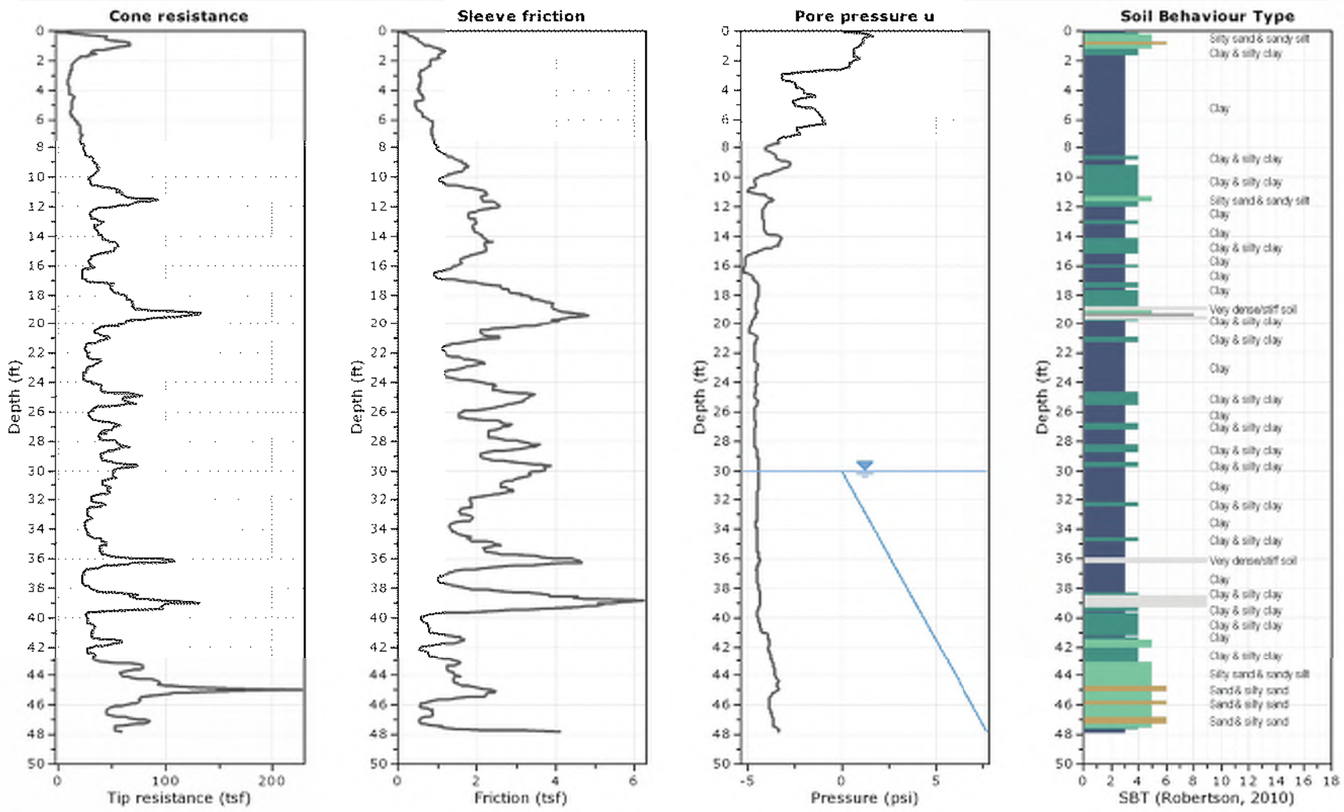

CPeT-IT v.3.6.1.5 - CPTU data presentation & interpretation software - Report created on: 11/16/2021, 6:33:55 AM
Project file: I:\gt\Projects\D09\Lawrence\LAW-7-02.17\geotechnical\explorations\CPT\CPeT-IT\LAW-7-2.17_IM.cpt

1

Office of Geotechnical Engineering
Geology, Exploration and, Laboratory Section
http://www.dot.state.oh.us/Divisions/Engineering/Geotechnical

Project: LAW-7-2.17
Location: Lawrence County

CPT: C-009-3-21
Total depth: 50.36 ft, Date: 11/8/2021
Surface Elevation: 562.0 ft
Coords: lat 38.447604° lon -82.436058°

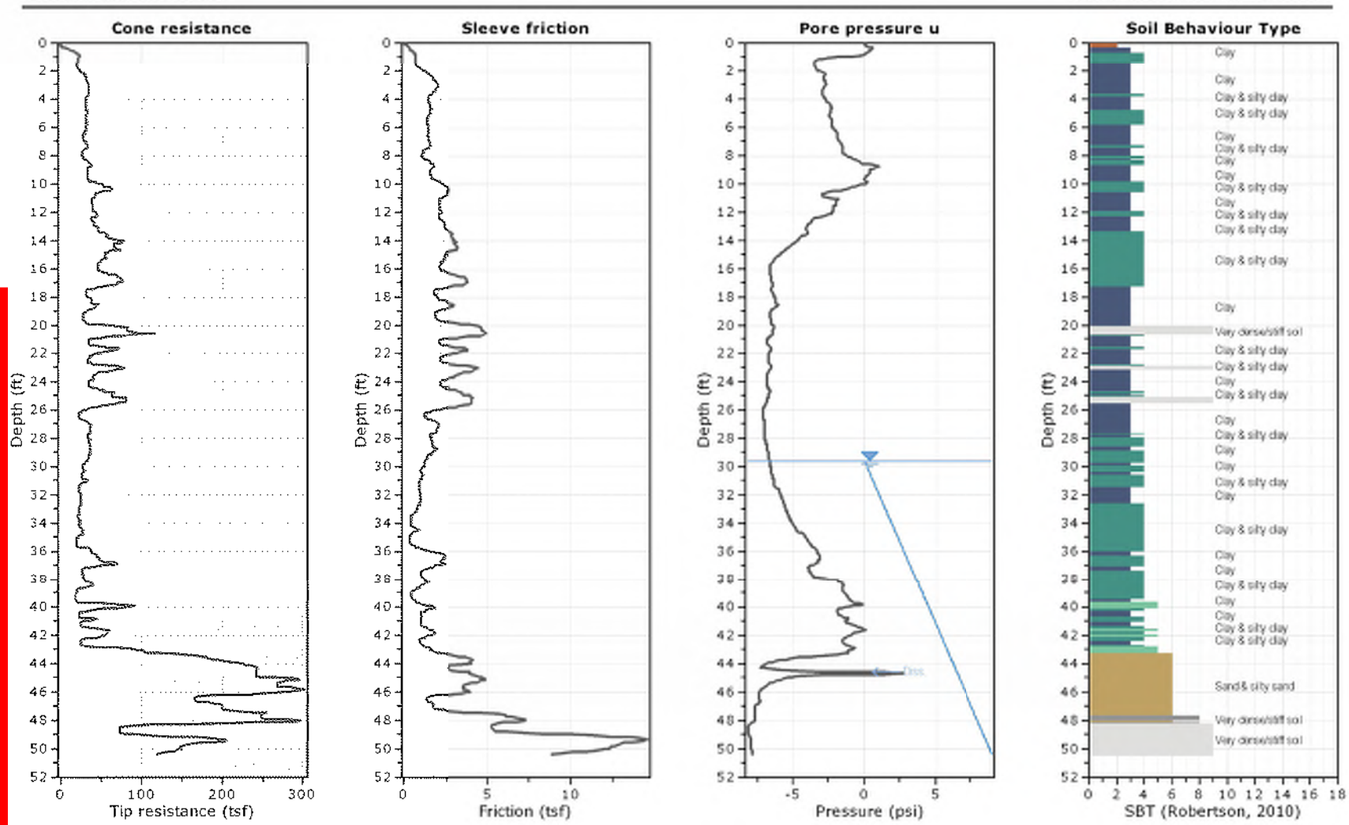

CPeT-IT v.3.6.1.5 - CPTU data presentation & interpretation software - Report created on: 11/16/2021, 6:33:55 AM
Project file: I:\gt\Projects\D09\Lawrence\LAW-7-02.17\geotechnical\explorations\CPT\CPeT-IT\LAW-7-2.17_IM.cpt

2

DRAFT Stage 3 - Not for Construction
09/23/2024

Office of Geotechnical Engineering
Geology, Exploration and, Laboratory Section
http://www.dot.state.oh.us/Divisions/Engineering/Geotechnical

Project: LAW-7-2.17
Location: Lawrence County

CPT: C-009-4-21
Total depth: 24.52 ft, Date: 11/8/2021
Surface Elevation: 562.8 ft
Coords: lat 38.447618° lon -82.436062°

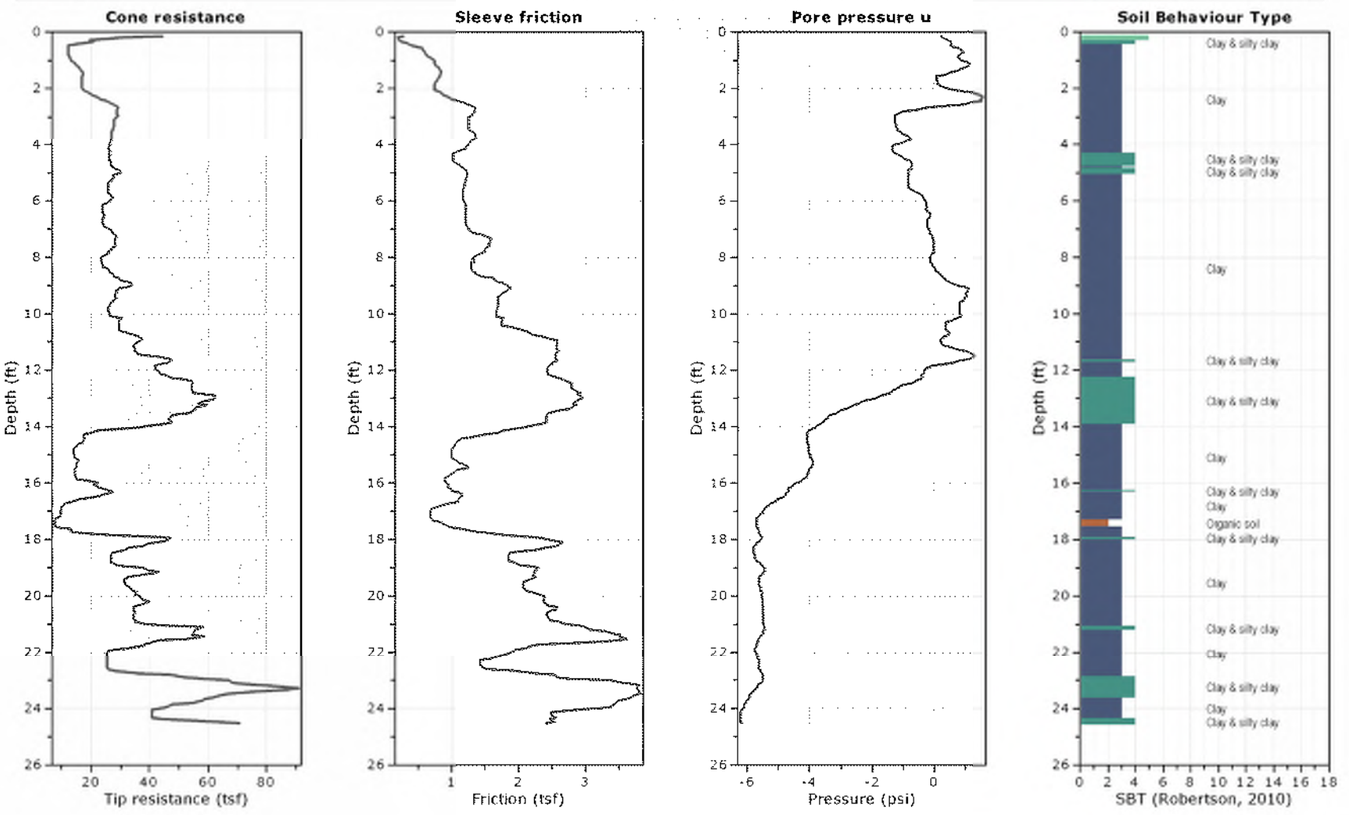

CPeT-IT v.3.6.1.5 - CPTU data presentation & interpretation software - Report created on: 11/16/2021, 6:33:56 AM
Project file: I:\gt\Projects\D09\Lawrence\LAW-7-02.17\geotechnical\explorations\CPT\CPeT-IT\LAW-7-2.17_IM.cpt
5

Office of Geotechnical Engineering
Geology, Exploration and, Laboratory Section
http://www.dot.state.oh.us/Divisions/Engineering/Geotechnical

Project: LAW-7-2.17
Location: Lawrence County

CPT: C-009-5-21
Total depth: 44.51 ft, Date: 11/8/2021
Surface Elevation: 562.5 ft
Coords: lat 38.447588° lon -82.436053°

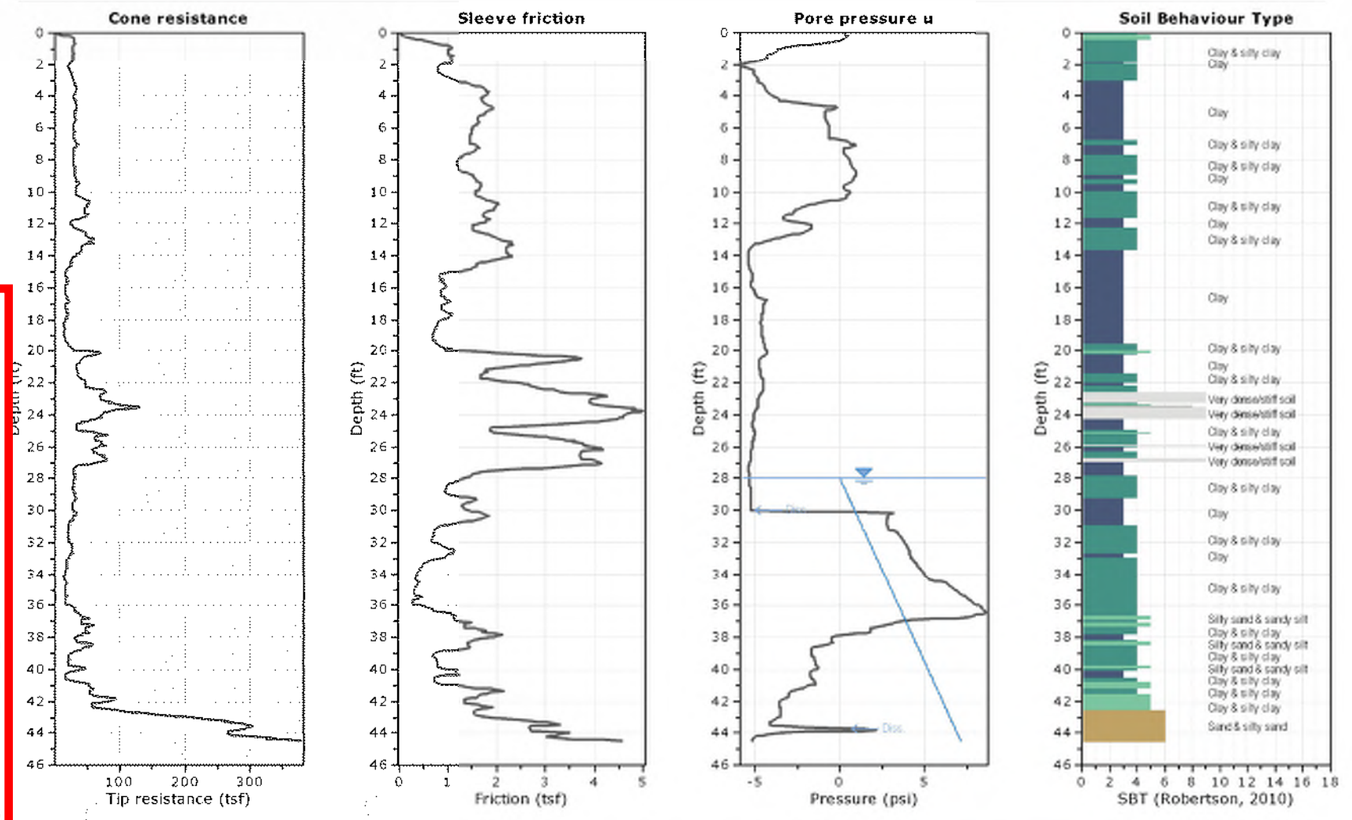

CPeT-IT v.3.6.1.5 - CPTU data presentation & interpretation software - Report created on: 11/16/2021, 6:33:56 AM
Project file: I:\gt\Projects\D09\Lawrence\LAW-7-02.17\geotechnical\explorations\CPT\CPeT-IT\LAW-7-2.17_IM.cpt
6

DRAFT Stage 3 - Not for Construction
09/23/2024

Office of Geotechnical Engineering
Geology, Exploration and, Laboratory Section
http://www.dot.state.oh.us/Divisions/Engineering/Geotechnical

Project: LAW-7-2.17
Location: Lawrence County

CPT: C-013-1-21
Total depth: 65.82 ft, Date: 11/9/2021
Surface Elevation: 561.3 ft
Coords: lat 38.44887° lon -82.433455°

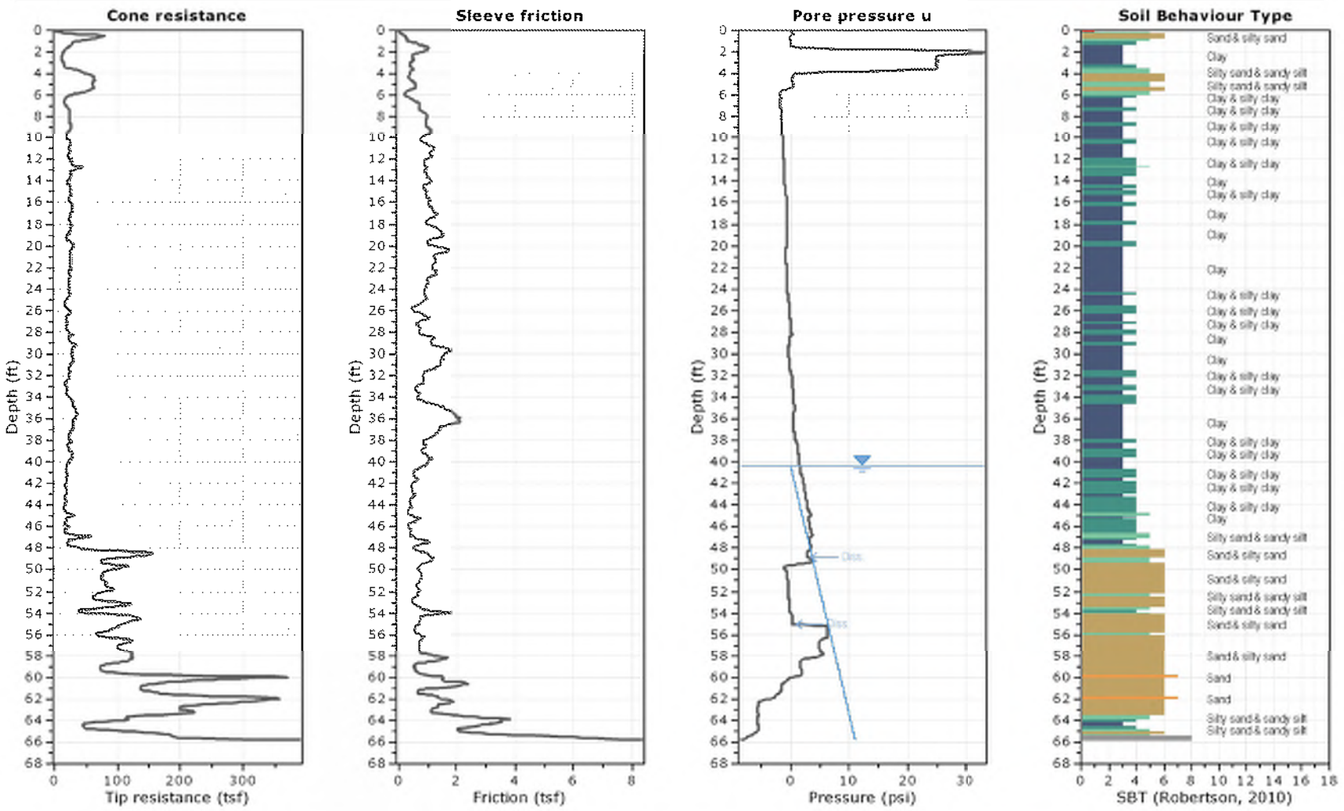

CPeT-IT v.3.6.1.5 - CPTU data presentation & interpretation software - Report created on: 11/16/2021, 6:33:57 AM
Project file: I:\gt\Projects\D09\Lawrence\LAW-7-02.17\geotechnical\explorations\CPT\CPeT-IT\LAW-7-2.17_IM.cpt
10

Office of Geotechnical Engineering
Geology, Exploration and, Laboratory Section
http://www.dot.state.oh.us/Divisions/Engineering/Geotechnical

Project: LAW-7-2.17
Location: Lawrence County

CPT: C-013-2-21
Total depth: 63.87 ft, Date: 11/9/2021
Surface Elevation: 560.7 ft
Coords: lat 38.449142° lon -82.43351°

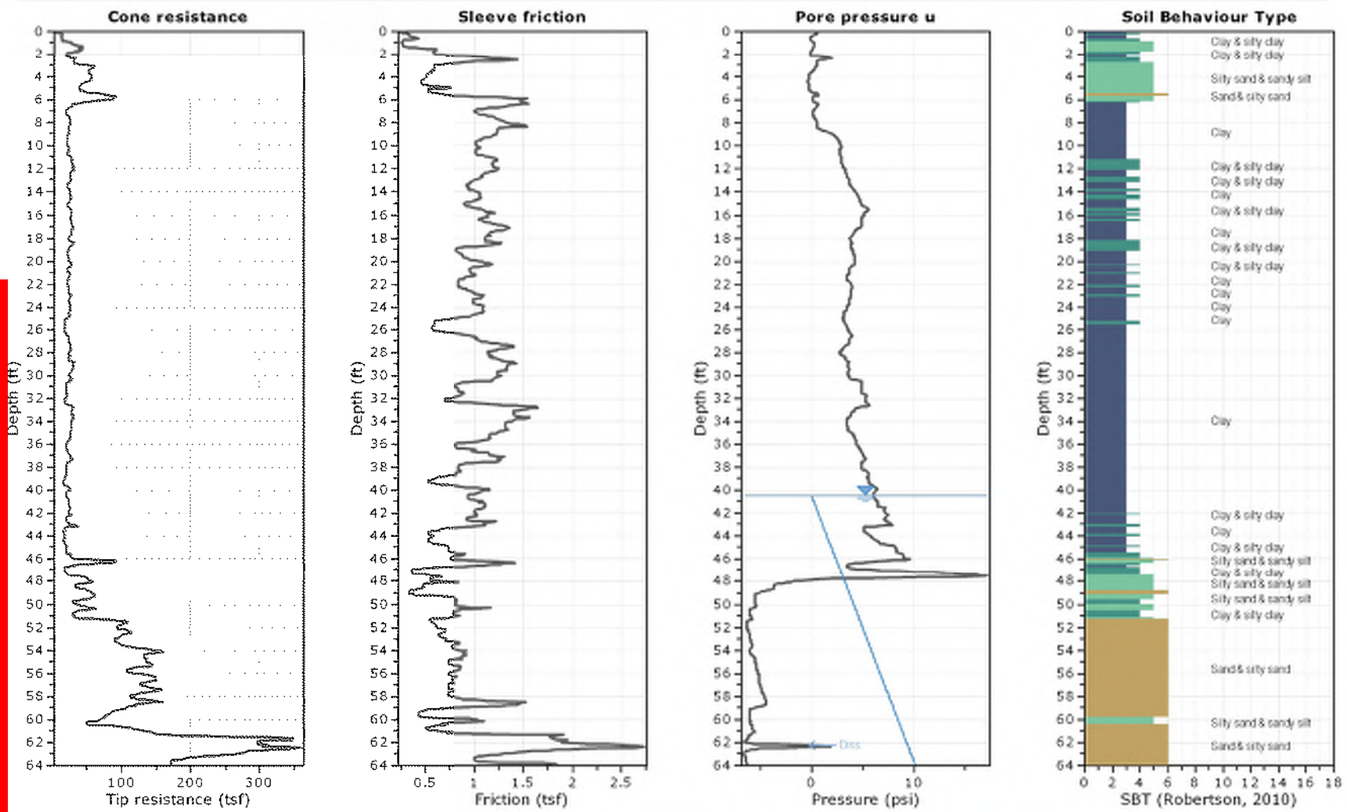

CPeT-IT v.3.6.1.5 - CPTU data presentation & interpretation software - Report created on: 11/16/2021, 6:33:58 AM
Project file: I:\gt\Projects\D09\Lawrence\LAW-7-02.17\geotechnical\explorations\CPT\CPeT-IT\LAW-7-2.17_IM.cpt
14

DRAFT Stage 3 - Not for Construction
09/23/2024

Office of Geotechnical Engineering
Geology, Exploration and, Laboratory Section
http://www.dot.state.oh.us/Divisions/Engineering/Geotechnical

Project: LAW-7-2.17
Location: Lawrence County

CPT: C-013-3-21
Total depth: 28.54 ft, Date: 11/9/2021
Surface Elevation: 560.5 ft
Coords: lat 38.449152° lon -82.433503°

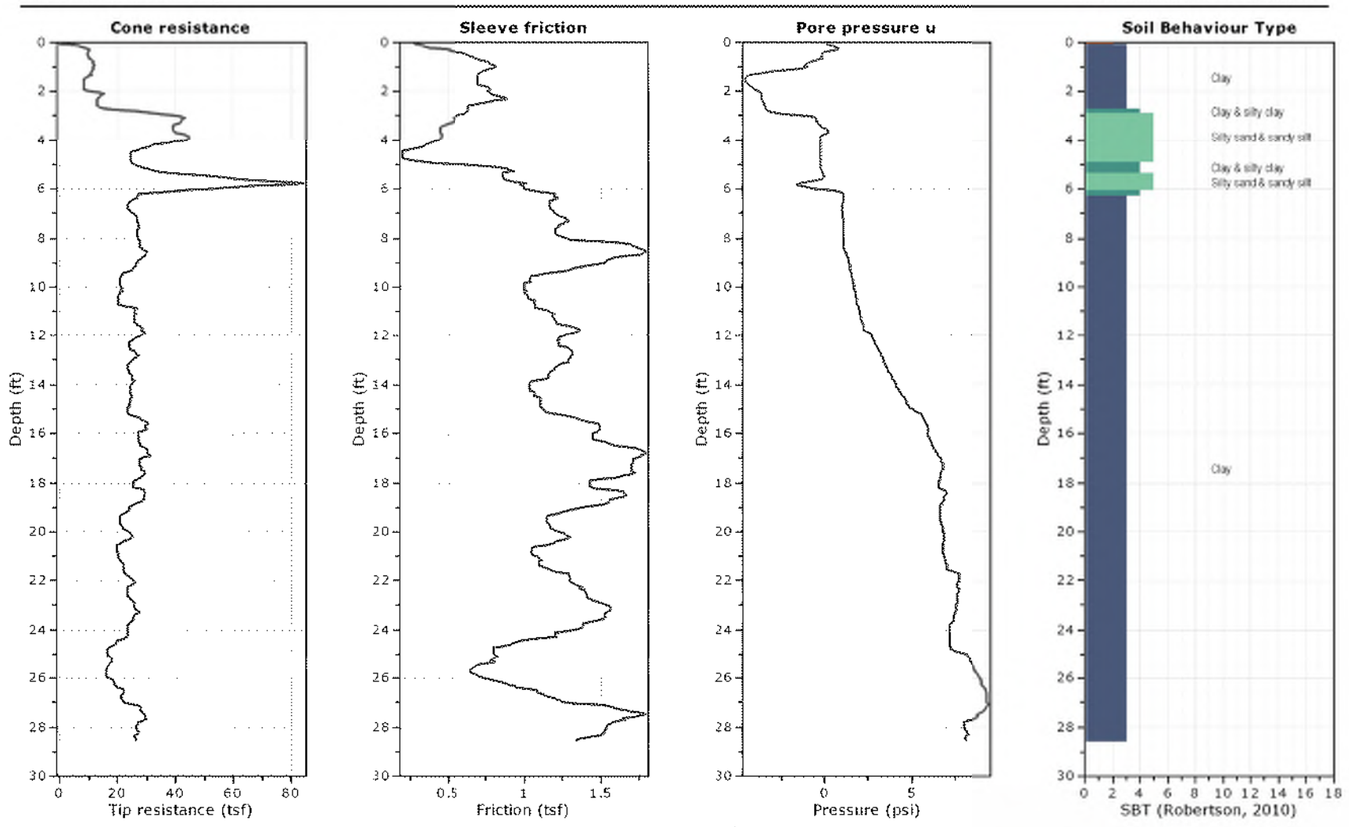

CPeT-IT v.3.6.1.5 - CPTU data presentation & interpretation software - Report created on: 11/16/2021, 6:33:58 AM
Project file: I:\gt\Projects\D09\Lawrence\LAW-7-02.17\geotechnical\explorations\CPT\CPeT-IT\LAW-7-2.17_1M.cpt

17

DRAFT Stage 3 - Not for Construction
09/23/2024

LAW-7-2.17
RIGHT OF WAY

SEC. 13, 14, 15, 21, 22, 23, 24, 28 & 29,

T-1-N, R-16-W, CONGRESS LANDS

SEC. 33 & 34, T-1-N, R-15-W, OHIO COMPANY PURCHASE

UNION AND ROME TOWNSHIPS, LAWRENCE COUNTY, OHIO

INDEX OF SHEETS:

LEGEND SHEET	1
CENTERLINE PLATS	2-9
PROPERTY MAPS	10-17
SUMMARY SHEETS	18-41
BOUNDARY SHEETS	42-77
TOPOGRAPHIC SHEETS	42T-77T
MISCELLANEOUS DETAILS	78-82

UTILITY OWNERS	UTILITY OWNERS
FRONTIER COMMUNICATIONS (FORMERLY VERIZON) 1315 ALBERT STREET PORTSMOUTH, OHIO 45662 PHONE: (740) 354-0512 MR. PAUL MONTAVON	COLUMBIA GAS OF OHIO (KENTUCKY) P.O. BOX 14241 LEXINGTON, KENTUCKY 40512 PHONE: 859-288-0225 MR. GARY SULLIVAN
AMERICAN ELECTRIC POWER (DISTRIBUTION) 850 TECH CENTER DRIVE GAHANNA, OHIO 43230 PHONE: (614) 883-6831 MR. PAUL PAXTON	ARMSTRONG CABLE SERVICES 9651 COUNTY ROAD 1 SOUTH POINT, OHIO 45680 PHONE: (740) 894-6357 MR. LEONARD HARVEY
AMERICAN ELECTRIC POWER (TRANSMISSION) 700 MORRISON ROAD GAHANNA, OHIO 43230 PHONE: (614) 552-1893 MS. BARBARA DUNLAP	TIME WARNER CABLE 225 RUSSELL ROAD ASHLAND, KENTUCKY 41101 PHONE: 606-326-6804 MR. MIKE JONES
BUCKEYE RURAL ELECTRIC CO-OP P.O. BOX 200 RIO GRANDE, OHIO 45674 PHONE: (740) 379-2025 MR. JEFF TACKETT	HECLA WATER ASSOCIATION 3190 SR 141 IRONTON, OHIO 45638 PHONE: (740) 533-0526 MR. TIM DALTON

UNDERGROUND UTILITIES

CONTACT BOTH SERVICES
CALL TWO WORKING DAYS
BEFORE YOU DIG

CALL
1-800-362-2764
(TOLL FREE)
OHIO UTILITIES PROTECTION SERVICE
NON-MEMBERS
MUST BE CALLED DIRECTLY

OIL & GAS PRODUCERS UNDERGROUND PROTECTION SERVICE CALL: 1-800-925-0988

THE LOCATION OF THE UNDERGROUND UTILITIES SHOWN ON THE PLANS ARE OBTAINED FROM THE OWNER OF THE UTILITIES AS REQUIRED BY SECTION 153.64 O.R.C.

LEGEND:
WL = FEE SIMPLE WITH LIMITATION OF ACCESS
WD = WARRANTY DEED
SH = STANDARD HIGHWAY EASEMENT
T = TEMPORARY EASEMENT
SL = SLOPE EASEMENT
S = SEWER EASEMENT
U = UTILITY EASEMENT

STRUCTURE KEY

- COMMERCIAL
- RESIDENTIAL
- OUT-BUILDING

LOCATION MAP

LATITUDE: N 38°27'16" LONGITUDE: W 82°25'19"

SCALE IN MILES

0 1 2 3 4

N

CONVENTIONAL SYMBOLS

County Line
Township Line
Section Line
Corporation Line or
Fence Line (Ex) (Pr)
Center Line
Right of Way (Ex) Ex R/W
Right of Way (Pr) R/W
Limited Access Right of Way (Pr) LA-R/W
Temporary Right of Way TMP
Channel Ease. (Pr) CH
Utility Ease. (Ex) Ex U
Railroad or
Guardrail (Ex) (Pr)
Construction Limits
Edge of Pavement (Ex)
Edge of Pavement (Pr)
Edge of Shoulder (Ex)
Edge of Shoulder (Pr)

Ditch / Creek (Ex)
Ditch / Creek (Pr)
Tree Line (Ex)
Ownership Hook Symbol , Example
Property Line Symbol , Example
Break Line Symbol , Example
Tree (Pr) , Tree (Ex) , Shrub (Ex)
Tree (Remove) , Shrub (Remove)
Evergreen (Ex) , Stump
Evergreen (Remove) , Stump (Remove)
Wetland (Pr) , Grass (Pr) , Aerial Target
Post (Ex) , Mailbox (Ex) , Mailbox (Pr)
Light (Ex) , Telephone Marker (Ex) TEL
Fire Hydrant (Ex) , Water Meter (Ex)
Water Valve (Ex) , Utility Valve Unknown (Ex.)
Telephone Pole (Ex) , Power Pole (Ex)
Light Pole (Ex)

PROJECT CONTROL

TO OBTAIN STATE PLANE COORDINATES
SCALE ABOUT THE ORIGIN COORDINATE,
N = 0.00000, E = 0.00000

FROM PROJECT COORDINATES
TO SPC = 1.000044500000

FROM SPC TO PROJECT
COORDINATES = 0.999955501980

PLANS PREPARED BY:

FIRM NAME: STANTEC CONSULTING SERVICES, INC.

PLANS PREPARED BY: STEVEN E. RADER

FIELD REVIEW BY: DATE

OWNERSHIP VERIFIED BY: DATE

DATE COMPLETED:

PROJECT DESCRIPTION

THIS PROJECT IS THE RELOCATION OF 5.4 MILES OF EXISTING STATE ROUTE 7 TO A RURAL FREEWAY DESIGNED AS THE CHESAPEAKE BYPASS BETWEEN STATE ROUTE 7 AND STATE ROUTE 607/775. THIS PROJECT ALSO INCLUDES GRADE SEPARATED INTERCHANGES AT STATE ROUTE 7 AND STATE ROUTE 607/775. THIS IMPROVEMENT INCLUDES THE RELOCATION OF 2.04 MILES OF STATE ROUTES, COUNTY AND TOWNSHIP ROADS AS WELL AS THE ADDITION OF 0.61 MILES OF RAMP AND EIGHT (8) CUL-DE-SACS. A TOTAL OF EIGHT (8) STRUCTURES WILL BE DEVELOPED WHICH INCLUDE TRAFFIC OVERPASS AND STREAM CROSSING BRIDGES. WORK WILL INCLUDE NEW STORM SEWERS, CULVERTS, TRAFFIC CONTROL, PAVEMENT MARKING AND LIGHTING.

THIS IMPROVEMENT IS ESPECIALLY DESIGNED FOR THROUGH TRAFFIC AND HAS BEEN DECLARED A LIMITED ACCESS HIGHWAY OR FREEWAY BY ACTION OF THE DIRECTOR IN ACCORDANCE WITH THE PROVISIONS OF SECTION 5511.02 OF THE REVISED CODE OF OHIO.

CERTIFICATION

I, Steven E. Rader, have conducted a survey of the existing conditions for the Ohio Department of Transportation from 1998 to 2002, and again from 2011 to 2014. The results of that survey are contained herein. The horizontal coordinates expressed herein are based on the Ohio State Plane Coordinates System, South Zone, NAD 83 (CORS 96), as measured using Static G.P.S. methods on the Project Control Monuments. The Project Adjustment Factor used for this project is 0.999955501980. Further more, I have reestablished the locations of the existing property lines and centerline of existing Right of Way for the property takes contained herein. As a part of this project I have established the proposed property lines, calculated the Gross Take, Present Roadway Occupied (PRO), Net Take and Net Residue; as well as prepared the legal descriptions necessary to acquire the parcels as shown herein. The aforementioned survey work was conducted in accordance with Ohio Administrative Code 4733-37 commonly known as, "A Minimum Standards for Boundary Surveys in the State of Ohio", unless so noted. The words I and my as used herein are to mean that either myself or someone working under my direct supervision.

Steven E Rader 5/19/15

Steven E. Rader, P.S. No. 7191 Date

STATE OF OHIO
STEVEN E. RADER
7191
REGISTERED PROFESSIONAL SURVEYOR

Stantec
1500 Lake Shore Drive, Suite 100
Columbus, Ohio 43204
(614) 486-4383

DRAFT Stage 3 Not for Construction
Reviewed by the Lawrence County Engineer
09/23/2024

INSTRUMENT NO.
RECEIVED AT
RECORDED AT
PLAT BOOK PAGE
LAWRENCE COUNTY RECORDER

FEDERAL PROJECT NO. E(035)921 E(060)482
PID NO. 75923
CALCULATED TB CHECKED SER
RIGHT OF WAY LEGEND SHEET
LAW-7-2.17
1 / 82

U:\1736087\4\LAW\75923\row\sheets\75923RL001.dgn 12/9/2014 11:16:00 AM sjparker

SETTING OF ALL MONUMENTS SHALL BE PERFORMED BY A SURVEYOR REGISTERED IN THE STATE OF OHIO. THE MONUMENT ASSEMBLIES AND REFERENCE MONUMENTS WILL BE INSTALLED BY THE CONTRACTOR AT THE TIME OF CONSTRUCTION. THE IRON PIN AND CAP (WHEN REQUIRED) ARE TO BE INSTALLED BY THE CONTRACTOR'S SURVEYOR.

CHANGES OR ALTERATIONS TO THE LOCATION OF ANY MONUMENTS SHOWN IN THIS TABLE, REQUIRE PRIOR APPROVAL FROM THE DISTRICT REAL ESTATE ADMINISTRATOR OF THE OHIO DEPARTMENT OF TRANSPORTATION. IN THE EVENT THAT CHANGES OR ALTERATIONS ARE APPROVED, A REVISED CENTERLINE PLAT WITH THE NEW LOCATIONS SHALL BE RECORDED IN THE APPLICABLE COUNTY RECORDS AND THE OHIO DEPARTMENT OF TRANSPORTATION. SPECIFICATIONS FOR MONUMENT ASSEMBLIES, REFERENCE MONUMENTS AND RIGHT OF WAY MONUMENTS ARE SHOWN ON STANDARD CONSTRUCTION DRAWING RM-1.1, DATED 7/15/11.

LAW-7-2.17
UNION TOWNSHIP
LAWRENCE COUNTY, OHIO

MONUMENT TABLE

℄ of R/W S.R. 7		PROJECT COORDINATES SEE SURVEY CERTIFCATION		MONUMENTS TO BE SET DURING CONSTRUCTION		R/W MON. EXPECTED TO BE DISTURBED
STATION	OFFSET	NORTH (Y)	EAST (X)	MON. ASSY.	REF. MON.	R/W MON.
113+48.22	493.71' R	157964.0716	1981028.7242			1
117+84.61	65.00' R	158508.3980	1980749.5613		1	
119+59.61	65.00' R	158673.6777	1980802.5062		1	
123+00.62	155.86' L	159074.8178	1980720.7344			1
132+00.00	65.00' R	159750.0203	1981365.9486		1	
144+00.00	0.00'	160628.5181	1982164.5701		1	
154+68.05	0.00'	161130.5929	1983103.5447		1	
156+43.05	0.00'	161189.0641	1983268.4834		1	
163+70.00	188.05' L	161504.5839	1983893.9185			1
164+65.03	206.70' L	161653.2946	1983977.6204			1
164+66.36	203.05' R	161266.5257	1984112.9208			1
165+00.00	0.00'	161469.4104	1984078.2842		1	
167+00.00	120.00' L	161648.2359	1984228.0221			1
167+80.61	95.59' L	161651.5420	1984312.1812			1
168+59.11	76.30' L	161658.9967	1984392.6767			1
169+10.00	70.04' L	161669.7233	1984442.8115			1
171+03.88	171.75' R	161504.6676	1984705.1167			1
172+16.57	217.42' R	161498.3759	1984826.5535			1
172+60.00	195.00' R	161533.7686	1984860.2580			1
173+20.00	210.00' R	161539.2225	1984921.8637			1
173+40.89	207.80' R	161548.1351	1984940.8860			1
175+03.18	65.00' R	161736.1713	1985047.5327		1	
177+78.18	65.00' R	161831.8339	1985308.9431		1	
186+17.26	65.00' R	162275.7472	1986041.0436		1	
188+92.26	65.00' R	162463.3108	1986246.7292		1	
193+57.09	234.14' R	162659.5282	1986700.7898			1
196+19.13	65.00' R	162962.4211	1986775.1496		1	
198+44.13	65.00' R	163113.5220	1986938.8207		1	
204+07.33	200.00' L	163667.0825	1987243.5670			1
204+41.95	130.00' L	163626.0912	1987310.9615			1
206+80.00	200.00' L	163807.9969	1987496.1642			1
210+57.14	155.80' R	163633.3045	1987985.7145			1
211+91.27	65.00' R	163761.3259	1988078.7046		1	
214+16.27	65.00' R	163824.6163	1988292.2791		1	
					1	
TOTAL CARRIED TO GENERAL SUMMARY SHEET					15	18

MONUMENT TABLE

℄ of R/W S.R. 7		PROJECT COORDINATES SEE SURVEY CERTIFCATION		MONUMENTS TO BE SET DURING CONSTRUCTION		R/W MON. EXPECTED TO BE DISTURBED
STATION	OFFSET	NORTH (Y)	EAST (X)	MON. ASSY.	REF. MON.	R/W MON.
218+50.00	260.00' R	163755.5203	1988762.7813			1
226+28.73	65.00' R	164155.8378	1989458.6223		1	
230+28.73	65.00' R	164289.8233	1989846.3999		1	
233+49.08	65.00' R	164472.9714	1990128.8343		1	
237+49.08	65.00' R	164772.3543	1990409.3578		1	
250+20.45	65.00' R	165747.2811	1991225.3863		1	
253+70.45	65.00' R	166006.8187	1991450.8095		1	
255+00.00	120.00' L	166228.5234	1991427.2629			1
257+50.00	110.00' L	166377.27786	1991648.1084			1
260+54.77	98.64' L	166514.0472	1991940.2785			1
268+28.71	65.00' R	166485.3527	1992731.1081		1	
270+10.00 [L]	120.00' R	166415.7181	1992896.9935			1
271+28.44 [L]	119.04' L	166634.1015	1993050.2225			1
271+78.71	65.00' R	166444.5726	1993072.0761		1	
276+66.76	127.63' L	166561.1795	1993583.6461			1
277+37.12	65.00' R	166360.1252	1993624.0649		1	
278+62.12	65.00' R	166341.5678	1993748.3960		1	
280+70.00	127.61' L	166507.3842	1993977.1586			1
283+22.71	65.00' R	166294.7481	1994211.7304		1	
284+47.71	0.00'	166352.9772	1994340.4835		1	
295+00.00	0.00'	166300.7998	1995391.4786		1	
298+00.00	80.00' L	166365.8260	1995695.0764			1
305+00.00	0.00'	166251.2151	1996390.2485		1	
317+06.02	65.00' R	166126.4653	1997592.1605		1	
319+56.62	65.00' R	166110.6428	1997838.7965		1	
332+74.69	65.00' R	165705.0169	1999049.4818		1	
335+24.69	65.00' R	165569.0597	1999255.8681		1	
342+00.00	65.00' R	165189.4427	1999814.3844		1	
348+84.10	65.00' R	164804.8862	2000380.1682		1	
350+09.10	65.00' R	164734.6027	2000484.2851		1	
360+21.83	85.00' R	164217.4368	2001367.4909		1	
361+46.83	85.00' R	164165.3664	2001482.0189		1	
369+00.00	85.00' R	163855.8267	2002168.6448		1	
376+18.38	65.00' R	163578.8188	2002831.7720		1	
387+00.00	65.00' R	163310.1083	2003897.4412		1	
394+68.00	80.00' R	163412.1294	2004679.4814		1	
397+68.00	0.00'	163593.5391	2004935.4955		1	
401+11.17	65.00' R	163660.6903	2005278.2577		1	
406+37.18	0.00'	163910.1147	2005744.9386		1	
TOTAL CARRIED TO GENERAL SUMMARY SHEET					30	9

BASIS OF EXISTING R/W

THE EXISTING RIGHT-OF-WAY WIDTHS AND ℄ LOCATIONS WERE DETERMINED USING

- O.D.O.T. R/W PLAN LAW-52-23.56, LAW-7-0.00
- O.D.O.T. R/W PLAN S.H. 681 SEC. "C"
- O.D.O.T. R/W PLAN LAW-607-0.25
- O.D.O.T. R/W PLAN LAW-7-7.25
- O.D.O.T. R/W PLAN S.H. 869, SEC A (PT)

BASIS OF EXISTING R/W

THE EXISTING RIGHT-OF-WAY WIDTHS AND ℄ LOCATIONS WERE DETERMINED USING

- SECTION NO. 6 BRENTWOOD VILLAGE SUBDIVISION (PB 8, PG 167)
- ROAD RECORDS AND EASEMENT RECORDS ON FILE WITH THE LAWRENCE COUNTY ENGINEER'S OFFICE
- JAMESTOWN PARK SUBDIVSION (PB 9, PG 10)
- JO-MAR SUBDIVSION (PB 7, PG 237)

NOTE:

[L] MEASURED FROM LONG TANGENT
[S] MEASURED FROM SHORT TANGENT

ALTERNATE METHOD OF STATIONING SPIRAL CURVES

ALL ANGLE POINTS IN THE RIGHT OF WAY, PROPERTY LINES, AND PROPERTY CORNERS FALLING WITHIN THE SPIRALED PORTION OF THE CURVE, SHALL BE REFERENCED FROM THE SHORT AND LONG TANGENT LINES IN LIEU OF THE SPIRAL. OBTAIN STATIONING ALONG THE SHORT AND LONG TANGENT LINES AS DELINEATED UPON THE DETAIL HEREON, APPLYING THE STATION EQUATION FOR EACH SPIRAL P.I..

FROM S.C. TO C.S. USE THE NORMAL CENTERLINE STATIONING

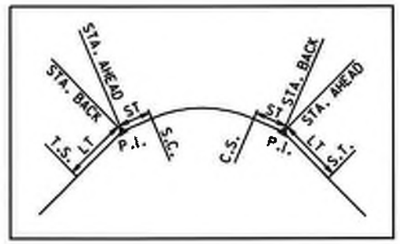

CURVE DETAIL
N.T.S.

BASIS OF BEARINGS

THE BEARINGS SHOWN HEREIN ARE BASED ON THE OHIO STATE PLANE COORDINATES SYSTEM, SOUTH ZONE, NAD 83 (CORS 96), AS MEASURED USING STATIC G.P.S. METHODS ON THE PROJECT CONTROL MONUMENTS.

THE PROPOSED RIGHT-OF-WAY SHALL BE REFERENCED FROM THE CENTERLINE OF R/W AND CONSTRUCTION, UNLESS OTHERWISE SHOWN.

PROJECT CONTROL

TO OBTAIN STATE PLANE COORDINATES
SCALE ABOUT THE ORIGIN COORDINATE,
N = 0.00000, E = 0.00000
FROM PROJECT COORDINATES TO SPC = 1.000044500000
FROM SPC TO PROJECT COORDINATES = 0.999955501980

CERTIFICATION

I, Steven E. Roder, have conducted a survey of the existing conditions for the Ohio Department of Transportation from 1998 to 2002, and again from 2011 to 2014. The results of that survey are contained herein. The horizontal coordinates expressed herein are based on the Ohio State Plane Coordinates System, South Zone, NAD 83 (CORS 96), as measured using Static G.P.S. methods on the Project Control Monuments. The Project Adjustment Factor used for this project is 0.999955501980. Further more, I have reestablished the locations of the existing property lines and centerline of existing Right of Way for the property takes contained herein. As a part of this project I have established the proposed property lines, calculated the Gross Take, Present Roadway Occupied (PRO), Net Take and Net Residue; as well as prepared the legal descriptions necessary to acquire the parcels as shown herein. The aforementioned survey work was conducted in accordance with Ohio Administrative Code 4733-37 commonly known as, "A Minimum Standards for Boundary Surveys in the State of Ohio", unless so noted. The words I and my as used herein are to mean that either myself or someone working under my direct supervision.

Steven E. Roder 5/12/15
Steven E. Roder, P.S. No. 7191 Date
4/24/24 (Rev. Monument Table)

STATE OF OHIO STEVEN E. RODER 7191 REGISTERED SURVEYOR

Stantec
1500 Lake Shore Drive, Suite 100
Columbus, Ohio 43204
(614) 486-4383

DRAFT Stage 3 Not for Construction 09/23/2024

HORIZONTAL SCALE IN FEET
0

PID NO. 75923

R/W DESIGNER TB
R/W REVIEWER SER

CENTERLINE PLAT

LAW-7-2.17

2 / 82

U:\173608714\LAW\75923\row\sheets\75923RC001.dgn 4/24/2024 9:12:29 AM SRoder

LAW-7-2.17

UNION TOWNSHIP

LAWRENCE COUNTY, OHIO

MONUMENT TABLE

℄ of R/W S.R. 243		PROJECT COORDINATES SEE SURVEY CERTIFCATION		MONUMENTS TO BE SET DURING CONSTRUCTION		R/W MON. EXPECTED TO BE DISTURBED
STATION	OFFSET	NORTH (Y)	EAST (X)	MON. ASSY.	REF. MON.	R/W MON.
13+13.39	45.00' R	166226.3147	1991123.2591		2	
	50.00' L	166184.6207	1991037.8974			
14+13.39	45.00' R	166316.5036	1991078.7174		2	
	50.00' L	166273.6959	1990993.9088			
16+88.52	30.00' R	166552.5699	1990931.5775		2	
	30.00' L	166521.7489	1990880.0988			
17+88.52	60.00' R	166653.9974	1990904.7943		2	
	50.00' L	166596.2616	1990811.1643			
20+00.00	100.00' R	166855.0028	1990827.8403			1
21+50.00	30.00' R	166945.9391	1990689.5270		2	
	30.00' L	166914.4469	1990638.4561			
TOTAL CARRIED TO GENERAL SUMMARY SHEET					10	1

MONUMENT TABLE

℄ of R/W C.R. 69		PROJECT COORDINATES SEE SURVEY CERTIFCATION		MONUMENTS TO BE SET DURING CONSTRUCTION		R/W MON. EXPECTED TO BE DISTURBED
STATION	OFFSET	NORTH (Y)	EAST (X)	MON. ASSY.	REF. MON.	R/W MON.
9+68.33	0.00'	166355.4384	1991008.0063	1		
10+75.23	25.00' R	166366.2299	1991110.9993		2	
	20.00' L	166410.9035	1991105.5890			
14+48.85	20.00' R	166416.1132	1991481.3071		2	
	20.00' L	166455.8231	1991476.4980			
17+06.24	20.00' R	166470.5386	1991736.1961		2	
	20.00' L	166508.7495	1991724.3671			
17+89.74	20.00' R	166495.2315	1991815.9614		2	
	20.00' L	166533.4425	1991804.1325			
19+14.74	20.00' R	166531.3264	1991935.2357		2	
	20.00' L	166569.7562	1991924.1383			
25+50.00	20.00' R	166646.7322	1992554.9691		2	
	20.00' L	166686.5806	1992551.4897			
32+14.74	20.00' R	166637.2207	1993214.4479		2	
	20.00' L	166676.9522	1993219.0751			
33+39.74	20.00' R	166621.2300	1993338.0339		2	
	20.00' L	166660.8659	1993343.4186			
38+28.07	20.00' R	166555.4917	1993821.9199		1	
47+34.93	20.00' R	166468.9271	1994725.9882		2	
	20.00' L	166508.8646	1994728.2227			
55+24.35	20.00' R	166424.8295	1995514.1735		2	
	20.00' L	166464.7671	1995516.4080			
56+73.01	20.00' R	166493.6373	1995660.4682		2	
	20.00' L	166517.3848	1995628.2804			
TOTAL CARRIED TO GENERAL SUMMARY SHEET				1	23	

MONUMENT TABLE

℄ of R/W S.R. 775		PROJECT COORDINATES SEE SURVEY CERTIFCATION		MONUMENTS TO BE SET DURING CONSTRUCTION		R/W MON. EXPECTED TO BE DISTURBED
STATION	OFFSET	NORTH (Y)	EAST (X)	MON. ASSY.	REF. MON.	R/W MON.
50+00.00	45.00' R	162862.6357	2003008.7212		2	
	45.00' L	162912.1267	2002933.5504			
60+00.00	45.00' R	163697.8663	2003558.6211		2	
	45.00' L	163747.3573	2003483.4503			
66+00.00	45.00' R	164199.0047	2003888.5610		2	
	45.00' L	164248.4957	2003813.3902			
68+50.00	75.00' L	164473.2692	2003928.3148			1
68+79.23	25.00' R	164441.4346	2004027.5165		2	
	25.00' L	164469.4563	2003986.1065			
69+10.00	16.43' R	164473.1316	2004037.4034			1
TOTAL CARRIED TO GENERAL SUMMARY SHEET					8	2

MONUMENT TABLE

℄ of R/W LYNN LN.		PROJECT COORDINATES SEE SURVEY CERTIFCATION		MONUMENTS TO BE SET DURING CONSTRUCTION		R/W MON. EXPECTED TO BE DISTURBED
STATION	OFFSET	NORTH (Y)	EAST (X)	MON. ASSY.	REF. MON.	R/W MON.
10+87.32	16.00' R	163736.5719	1987345.0234		2	
	16.00' L	163753.5664	1987317.9091			
11+99.12	16.00' R	163810.0935	1987418.2632		2	
	16.00' L	163837.1423	1987401.1646			
TOTAL CARRIED TO GENERAL SUMMARY SHEET					4	

MONUMENT TABLE

℄ of R/W C.R. 118		PROJECT COORDINATES SEE SURVEY CERTIFCATION		MONUMENTS TO BE SET DURING CONSTRUCTION		R/W MON. EXPECTED TO BE DISTURBED
STATION	OFFSET	NORTH (Y)	EAST (X)	MON. ASSY.	REF. MON.	R/W MON.
10+07.30	0.00'	166677.2134	1992727.8893	1		
11+01.28	25.00' R	166760.0591	1992761.3775		2	
	25.00' L	166779.2525	1992715.2081			
11+64.19	25.00' R	166818.1484	1992785.5263		2	
	25.00' L	166837.3419	1992739.3569			
13+12.96	25.00' R	166978.6922	1992800.8865		2	
	30.00' L	166967.5922	1992747.0182			
14+48.44	25.00' R	167112.5202	1992760.3465		2	
	30.00' L	167091.8611	1992709.3740			
TOTAL CARRIED TO GENERAL SUMMARY SHEET				1	8	

MONUMENT TABLE

℄ of R/W C.R. 2		PROJECT COORDINATES SEE SURVEY CERTIFCATION		MONUMENTS TO BE SET DURING CONSTRUCTION		R/W MON. EXPECTED TO BE DISTURBED
STATION	OFFSET	NORTH (Y)	EAST (X)	MON. ASSY.	REF. MON.	R/W MON.
10+07.28	0.00'	166572.3787	1993846.3426	1		
11+38.28	35.00' R	166717.6254	1993852.1083		2	
	20.00' L	166686.1934	1993806.9749			
12+94.79	35.00' R	166823.7723	1993712.3211		2	
	20.00' L	166771.8558	1993694.1642			
14+44.79	35.00' R	166873.2913	1993570.7307		2	
	20.00' L	166821.3748	1993552.5737			
17+58.28	35.00' R	167080.4526	1993426.7492		2	
	20.00' L	167081.5309	1993371.7560			
TOTAL CARRIED TO GENERAL SUMMARY SHEET				1	8	

NOTE:

SEE SHEET 2 OF 82

FOR ALTERNATE METHOD OF STATIONING FROM SPIRAL CURVES

[L] MEASURED FROM LONG TANGENT
[S] MEASURED FROM SHORT TANGENT

DRAFT Stage 3 - Not for Construction 10/23/2024

HORIZONTAL SCALE IN FEET

PID NO. 75923

R/W DESIGNER TB
R/W REVIEWER SER

CENTERLINE PLAT

LAW-7-2.17

3 / 82

U:\17360874\LAW\75923\row\sheets\75923RC008.dgn 4/24/2024 8:41:52 AM SRader

SECTION 20, 21, 28 & 29
T-1-N, R-16-W, CONGRESS LANDS
UNION TOWNSHIP
LAWRENCE COUNTY, OHIO

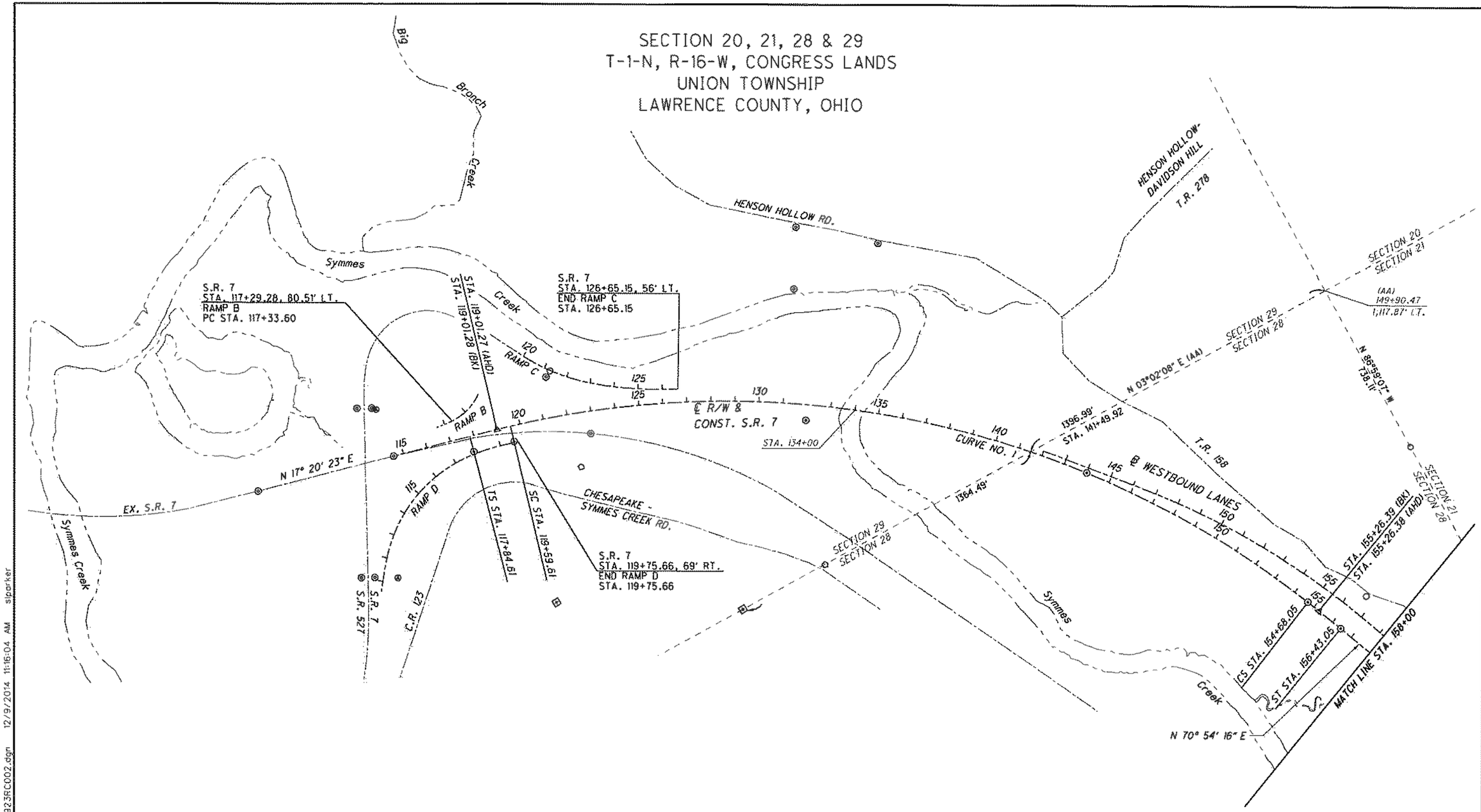

MONUMENT LEGEND
- STONE FOUND
- FENCE POST
- R.R.S. FOUND
- R.R.S. SET
- P.K. NAIL FOUND
- CONC. MONUMENT FD.
- REFER. MONUMENT SET
- REBAR FOUND
- AXLE FOUND
- IRON PIN FOUND
- I.P.F. WITH I.D. CAP
- ¾" BAR SET
- PROJECT CONTROL MON.
- MONUMENT BOX FD.
- MONUMENT BOX SET

(AA)
BASED ON PREVIOUS LOCATION DELINEATED UPON ODOT PLAN, LAW-52-23.56, LAW-7-0.00 (NOT AN ACTUAL FIELD LOCATION)

NOTE:
SEE SHEET 2 OF 82 FOR ALTERNATE METHOD OF STATIONING FROM SPIRAL CURVES

[L] MEASURED FROM LONG TANGENT
[S] MEASURED FROM SHORT TANGENT

EX. MONUMENTS OFF S.R. 7

STATION	OFFSET	DESCRIPTION
108+78.19	0.00' RT.	CONCRETE MONUMENT FOUND
112+02.37	455.60' RT.	CONCRETE MONUMENT FOUND
112+56.91	468.58' RT.	CONCRETE MONUMENT FOUND
113+48.22	493.71' RT.	PROJECT CONTROL MON. #1201
113+61.16	229.71' LT.	CONCRETE MONUMENT FOUND
114+20.59	215.31' LT.	CONCRETE MONUMENT FOUND
114+36.66	205.12' LT.	PROJECT CONTROL MON. #1202
119+82.12	755.28' RT.	STONE FOUND
121+42.28	169.84' LT.	CONCRETE MONUMENT FOUND
121+62.22	191.50' LT.	IRON PIN FOUND

EX. MONUMENTS OFF S.R. 7

STATION	OFFSET	DESCRIPTION
122+22.52	222.88' RT.	REBAR FOUND
122+86.72	92.83' RT.	CONCRETE MONUMENT FOUND
129+49.38	863.12' RT.	STONE FOUND
131+08.29	730.82' LT.	CONCRETE MONUMENT FOUND
131+14.98	473.91' LT.	CONCRETE MONUMENT FOUND
133+56.07	652.60' RT.	REBAR FOUND
134+00.71	697.86' LT.	CONCRETE MONUMENT FOUND
154+16.78	771.09' LT.	POST FOUND
156+39.65 [L]	170.84' LT.	IRON PIN FOUND

CURVE DATA
S.R. 7
CURVE NO. 1

P.I. STA. 138+60.99
Δ = 53° 33' 53" (RT)
Dc = 1° 27' 15"
R = 3,940.00'
T = 1,888.13'
L = 3,749.44'
E = 425.60'
θs = 1° 16' 21"
Ls = 175.00'
Ts = 2,076.38'
LT = 116.67'
CT = 58.34'

DRAFT Stage 3- Not for Construction
09/23/2024

PID NO. 75923
R/W DESIGNER TB
R/W REVIEWER SER
HORIZONTAL SCALE IN FEET 0 100 200 400

CENTERLINE PLAT
LAW-7-2.17
4 / 82

U:\1735087\4\LAW\75923\row\sheets\75923RC002.dgn 12/9/2014 11:16:04 AM slparker

SECTIONS 21, 22 & 28
T-1-N, R-16-W, CONGRESS LANDS
UNION TOWNSHIP
LAWRENCE COUNTY, OHIO

CURVE DATA
S.R. 7
CURVE NO. 2

P.I. STA. 182+06.44
Δ = 24° 16' 14" (LT)
Dc = 2° 10' 43"
R = 2,630.00'
T = 423.13'
L = 839.08'
E = 33.82'

Bs = 2° 59' 44"
Ls = 275.00'
Ts = 703.26'
LT = 183.36'
ST = 91.69'

CURVE DATA
S.R. 7
CURVE NO. 3

P.I. STA. 205+33.31
Δ = 27° 30' 45" (RT)
Dc = 1° 45' 00"
R = 3,274.04'
T = 683.24'
L = 1,347.14'
E = 70.53'

Bs = 1° 58' 07"
Ls = 225.00'
Ts = 914.18'
LT = 150.01'
ST = 75.01'

CURVE DATA
LYNN LANE

P.I. STA. 11+44.17
Δ = 25° 37' 23" (RT)
Dc = 22° 55' 06"
R = 250.00'
T = 56.85'
L = 111.80'
E = 6.38'
PC STA. 10+87.32
PT STA. 11+99.12

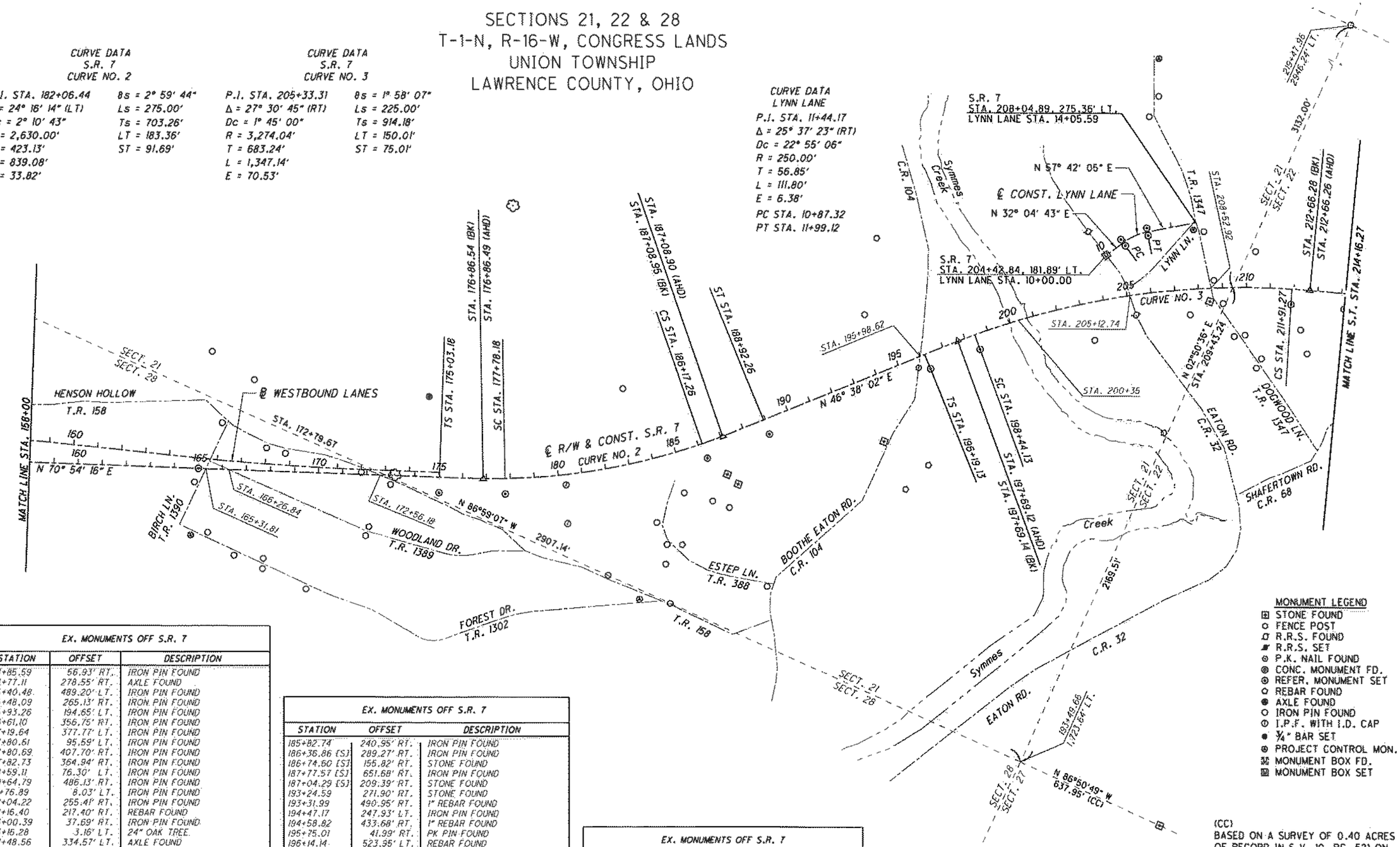

EX. MONUMENTS OFF S.R. 7

STATION	OFFSET	DESCRIPTION
164+85.59	56.93' RT.	IRON PIN FOUND
164+77.11	278.55' RT.	AXLE FOUND
165+40.48	489.20' LT.	IRON PIN FOUND
165+48.09	265.13' RT.	IRON PIN FOUND
165+93.26	194.65' LT.	IRON PIN FOUND
166+61.10	356.75' RT.	IRON PIN FOUND
167+19.64	377.77' LT.	IRON PIN FOUND
167+80.61	95.59' LT.	IRON PIN FOUND
167+80.69	407.70' RT.	IRON PIN FOUND
167+82.73	364.94' RT.	IRON PIN FOUND
168+59.11	76.30' LT.	IRON PIN FOUND
169+64.79	486.13' RT.	IRON PIN FOUND
171+76.89	8.03' LT.	IRON PIN FOUND
172+04.22	255.41' RT.	IRON PIN FOUND
172+16.40	217.40' RT.	REBAR FOUND
173+00.39	37.69' RT.	IRON PIN FOUND
173+16.28	3.16' LT.	24" OAK TREE
174+48.56	334.57' LT.	AXLE FOUND
178+69.53	1134.60' LT.	36" WALNUT TREE
180+28.67	43.23' RT.	I.P.F. CAPPED "EASTHAM"
180+18.68	203.71' RT.	I.P.F. CAPPED "EASTHAM"
181+42.50	439.78' RT.	IRON PIN FOUND
182+35.75	560.76' RT.	PROJECT CONTROL MON. #1203
183+35.38	604.45' RT.	IRON PIN FOUND
183+47.26	312.64' LT.	6" x 6" POST
183+51.41	440.35' RT.	IRON PIN FOUND
183+55.06	262.95' RT.	IRON PIN FOUND
183+73.25	362.20' RT.	IRON PIN FOUND
184+26.69	378.51' RT.	REBAR FOUND
184+86.51	172.74' RT.	IRON PIN FOUND

EX. MONUMENTS OFF S.R. 7

STATION	OFFSET	DESCRIPTION
185+82.74	240.95' RT.	IRON PIN FOUND
186+36.86 [S]	289.27' RT.	IRON PIN FOUND
186+74.60 [S]	155.82' RT.	STONE FOUND
187+77.57 [S]	651.68' RT.	IRON PIN FOUND
187+04.29 [S]	209.39' RT.	STONE FOUND
193+24.59	271.90' RT.	STONE FOUND
193+31.99	490.95' RT.	1" REBAR FOUND
194+47.17	247.93' LT.	IRON PIN FOUND
194+58.82	433.68' RT.	1" REBAR FOUND
195+75.01	41.99' RT.	PK PIN FOUND
196+14.14	523.35' LT.	REBAR FOUND
199+03.02	2184.41' RT.	STONE FOUND
203+29.58	158.28' RT.	IRON PIN FOUND
203+90.00	291.64' LT.	R.R.S. FOUND
205+26.48	82.71' RT.	R.R.S. FOUND
205+81.17	585.39' RT.	3/4" REBAR FOUND
206+65.09	728.92' LT.	IRON PIN FOUND
207+03.79	810.21' LT.	IRON PIN FOUND
207+14.67	966.90' LT.	PROJECT CONTROL MON. #1204
207+57.47	106.81' RT.	IRON PIN FOUND
207+93.71	246.08' LT.	AXLE FOUND
208+33.94	236.61' LT.	IRON PIN FOUND
208+45.06	55.05' RT.	STONE FOUND

EX. MONUMENTS OFF S.R. 7

STATION	OFFSET	DESCRIPTION
208+65.68	32.50' LT.	IRON PIN FOUND
209+00.77	65.89' RT.	IRON PIN FOUND
209+46.93	203.84 RT.	IRON PIN FOUND
209+94.56	198.18' RT.	IRON PIN FOUND
210+35.61	149.11' LT.	IRON PIN FOUND
210+47.44	335.09' RT.	IRON PIN FOUND
210+70.33	295.62' RT.	IRON PIN FOUND
212+37.48 [S]	168.54' RT.	IRON PIN FOUND
212+79.19 [L]	265.87' RT.	IRON PIN FOUND
219+47.96	2946.24' LT.	IRON PIN FOUND

MONUMENT LEGEND

- ⊞ STONE FOUND
- ○ FENCE POST
- ▱ R.R.S. FOUND
- ▰ R.R.S. SET
- ⊙ P.K. NAIL FOUND
- ◉ CONC. MONUMENT FD.
- ⊛ REFER. MONUMENT SET
- ○ REBAR FOUND
- ● AXLE FOUND
- ○ IRON PIN FOUND
- ⊙ I.P.F. WITH I.D. CAP
- ● ¾" BAR SET
- ⊕ PROJECT CONTROL MON.
- ⊠ MONUMENT BOX FD.
- ⊡ MONUMENT BOX SET

(CC)
BASED ON A SURVEY OF 0.40 ACRES OF RECORD IN S.V. 10, PG. 521 ON FILE IN THE LAWRENCE COUNTY ENGINEER'S OFFICE

NOTE:
SEE SHEET 2 OF 82 FOR ALIGNMENT AHEAD OF STATIONING ON SPIRAL CURVES

[L] MEASURED FROM LONG TANGENT
[S] MEASURED FROM SHORT TANGENT

DRAFT Stage 3 - Not for Construction
09/26/2024

HORIZONTAL SCALE IN FEET
0 100 200 400

PID NO. 75923

R/W DESIGNER TB
R/W REVIEWER SER

CENTERLINE PLAT

LAW-7-2.17

5 / 82

U:\1736087\4_LAW\75923\row\sheets\75923RC003.dgn 12/9/2014 11:16:04 AM slparker

SECTIONS 14, 15, 22 & 23
T-1-N, R-16-W, CONGRESS LANDS
UNION TOWNSHIP
LAWRENCE COUNTY, OHIO

CURVE DATA
S.R. 243
CURVE NO. 1

P.I. STA. 11+06.30
Δ = 22° 39' 36" (RT)
Dc = 24° 54' 40"
R = 230.00'
T = 46.08'
L = 90.96'
E = 4.57'
PC STA. 10+60.22
PT STA. 11+51.18

CURVE DATA
S.R. 243
CURVE NO. 2

P.I. STA. 15+51.11
Δ = 5° 37' 36" (LT)
Dc = 1° 30' 00"
R = 3,819.72'
T = 137.62'
L = 275.13'
E = 2.48'
TS STA. 13+13.39
SC STA. 14+13.39

Bs = 00° 45' 00"
Ls = 100.00'
Ts = 237.72'
LT = 66.67'
ST = 33.33'
CS Sta. 16+88.52
ST Sta. 17+88.52

CURVE DATA
C.R. 69
CURVE NO. 1

P.I. STA. 10+33.80
Δ = 20° 52' 36" (RT)
Dc = 24° 54' 40"
R = 230.00'
T = 42.37'
L = 83.80'
E = 3.87'
PC STA. 9+91.43
PT STA. 10+75.23

CURVE DATA
C.R. 69
CURVE NO. 2

P.I. STA. 15+77.89
Δ = 10° 17' 44" (LT)
Dc = 4° 00' 00"
R = 1,432.39'
T = 129.04'
L = 257.39'
E = 5.80'
PC STA. 14+48.85
PT STA. 17+06.24

CURVE DATA
C.R. 69
CURVE NO. 3

P.I. STA. 25+76.25
Δ = 22° 45' 00" (RT)
Dc = 1° 45' 00"
R = 3,274.04'
T = 658.68'
L = 1,300.00'
E = 65.60'
TS STA. 17+89.74
SC STA. 19+14.74

Bs = 1° 05' 37"
Ls = 125.00'
Ts = 786.51'
LT = 83.33'
ST = 41.67'
CS STA. 32+14.74
ST STA. 33+39.74

EX. MONUMENTS OFF S.R. 7

STATION	OFFSET	DESCRIPTION
214+57.21	95.73' RT.	STONE LEANING WITH "X"
214+95.78	496.36' LT.	STONE WITH "X"
216+83.03	424.46 RT.	IRON PIPE FOUND
218+92.24	345.73' RT.	AXLE FOUND
219+47.96	2946.24' LT.	IRON PIN FOUND
229+85.01 [S]	268.39' RT.	STONE FOUND
230+77.08	817.47' RT.	REBAR FOUND
230+83.38	57.93' LT.	IRON PIN FOUND
231+70.15	61.60' RT.	REBAR FOUND.
233+70.67 [L]	670.83' RT.	30" ELM TREE
233+72.68 [L]	669.34' RT.	C.M.F. - SEE NOTE (HH)
235+93.23 [L]	487.08' LT.	24" OAK TREE
236+06.28 [L]	826.59' LT.	VERTICAL "I" BEAM
239+77.23	27.07' LT.	REBAR FOUND
239+88.61	151.54' LT.	REBAR FOUND
244+33.56	30.23' LT.	REBAR FOUND
249+19.09	483.00' LT.	IRON PIN FOUND

EX. MONUMENTS OFF S.R. 7

STATION	OFFSET	DESCRIPTION
258+12.56	394.80' LT.	24" OAK TREE
258+07.52	24.59' LT.	R.R.S. FOUND
259+90.92	29.33' LT.	REBAR FOUND
260+01.51	111.33' LT.	REBAR FOUND
260+66.64	307.06 RT.	REBAR FOUND
261+96.97	174.18' LT.	POST FOUND - SEE NOTE (DD)
262+26.01	202.59' RT.	REBAR FOUND
264+34.85	12.58' RT.	R.R.S. FOUND

EX. MONUMENTS OFF S.R. 243

STATION	OFFSET	DESCRIPTION
15+31.90	180.31' RT.	REBAR FOUND
16+25.09	348.83' RT.	24" HICKORY TREE
17+15.77 [S]	146.47' LT.	IRON PIN FOUND
17+27.28 [L]	4.59' LT.	IRON PIN FOUND
19+01.52	18.33' LT.	CONCRETE MONUMENT FOUND
18+72.52	30.14' RT.	I.P.F. CAPPED "EASTHAM"
20+41.17	0.00' RT.	R.R.S. FOUND
20+46.61	29.40' RT.	IRON PIN FOUND
21+80.71	25.78' RT.	PROJECT CONTROL MON.#1205

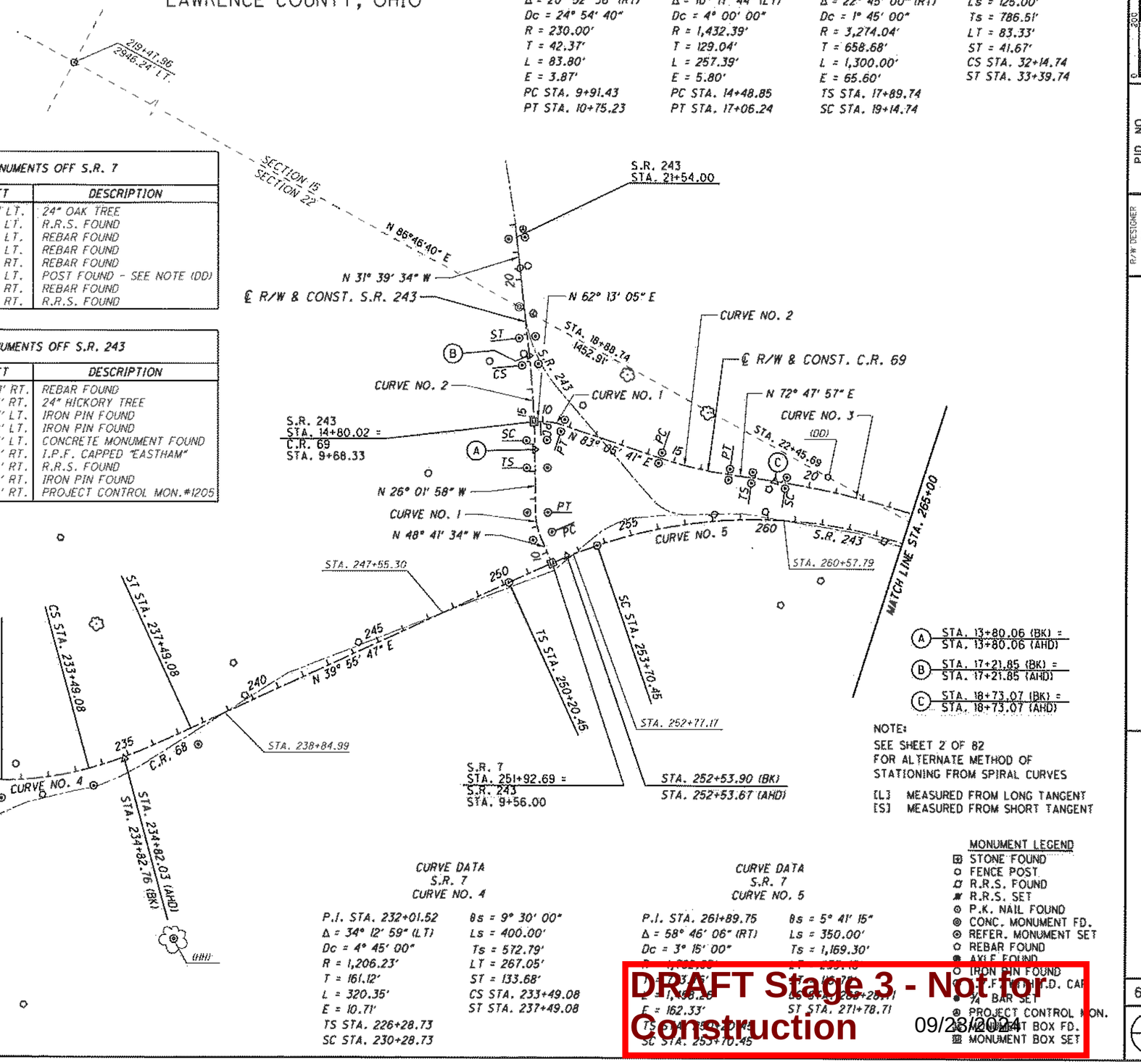

A STA. 13+80.06 (BK) = STA. 13+80.06 (AHD)
B STA. 17+21.85 (BK) = STA. 17+21.85 (AHD)
C STA. 18+73.07 (BK) = STA. 18+73.07 (AHD)

NOTE:
SEE SHEET 2 OF 82
FOR ALTERNATE METHOD OF
STATIONING FROM SPIRAL CURVES

[L] MEASURED FROM LONG TANGENT
[S] MEASURED FROM SHORT TANGENT

CURVE DATA
S.R. 7
CURVE NO. 4

P.I. STA. 232+01.52
Δ = 34° 12' 59" (LT)
Dc = 4° 45' 00"
R = 1,206.23'
T = 161.12'
L = 320.35'
E = 10.71'
TS STA. 226+28.73
SC STA. 230+28.73

Bs = 9° 30' 00"
Ls = 400.00'
Ts = 572.79'
LT = 267.05'
ST = 133.68'
CS STA. 233+49.08
ST STA. 237+49.08

CURVE DATA
S.R. 7
CURVE NO. 5

P.I. STA. 261+89.75
Δ = 58° 46' 06" (RT)
Dc = 3° 15' 00"
R = 1,762.69'
T = 1,000.00'
L = 1,808.26'
E = 162.33'
TS STA. 252+70.45
SC STA. 261+78.71

Bs = 5° 41' 15"
Ls = 350.00'
Ts = 1,169.30'
LT = 233.18'
ST = 116.71'
CS STA. 268+28.71
ST STA. 271+78.71

(DD)
FENCE CORNER LOCATION DELINEATED UPON A SURVEY OF 0.9088 ACRES OF RECORD IN S.V. 10, PG. 761, LAWRENCE COUNTY ENGINEER'S OFFICE

(HH)
CONCRETE MONUMENT LOCATION DELINEATED UPON A SURVEY OF SEVEN HILLS FARM BY J.L. STEPHENS, DATED SEPTEMBER 2, 1998, OF RECORD IN D.B. 639, PG. 371,

MONUMENT LEGEND
- STONE FOUND
- FENCE POST
- R.R.S. FOUND
- R.R.S. SET
- P.K. NAIL FOUND
- CONC. MONUMENT FD.
- REFER. MONUMENT SET
- REBAR FOUND
- AXLE FOUND
- IRON PIN FOUND
- I.P.F. CAPPED
- 3/4" BAR SET
- PROJECT CONTROL MON.
- MONUMENT BOX FD.
- MONUMENT BOX SET

DRAFT Stage 3 - Not for Construction
09/23/2014

HORIZONTAL SCALE IN FEET
0 100 200 400

PID NO. 75923

R/W DESIGNER TB
R/W REVIEWER SER

CENTERLINE PLAT

LAW-7-2.17

6 / 82

U:\1736087.14\LAW\75923\row\sheets\75923RC004.dgn 12/9/2014 11:16:06 AM slparker

NOTE:
SEE SHEET 2 OF 82
FOR ALTERNATE METHOD OF
STATIONING FROM SPIRAL CURVES

[L] MEASURED FROM LONG TANGENT
[S] MEASURED FROM SHORT TANGENT

SECTIONS 13, 14, 23 & 24
T-1-N, R-16-W, CONGRESS LANDS
UNION TOWNSHIP
LAWRENCE COUNTY, OHIO

CURVE DATA C.R. 2 CURVE NO. 1
P.I. STA. 10+85.37
Δ = 42° 28' 52" (LT)
Dc = 38° 11' 49"
R = 150.00'
T = 58.30'
L = 111.21'
E = 10.93'
PC STA. 10+27.07
PCC STA. 11+38.28

CURVE DATA C.R. 2 CURVE NO. 2
P.I. STA. 12+19.19
Δ = 35° 52' 10" (LT)
Dc = 22° 55' 06"
R = 250.00'
T = 80.91'
L = 156.51'
E = 12.77'
PCC STA. 11+38.28
PT STA. 12+94.79

CURVE DATA C.R. 2 CURVE NO. 3
P.I. STA. 16+25.92
Δ = 71° 50' 49" (RT)
Dc = 22° 55' 06"
R = 250.00'
T = 181.13'
L = 313.49'
E = 58.72'
PC STA. 14+44.79
PT STA. 17+58.28

CURVE DATA C.R. 69 CURVE NO. 3
P.I. STA. 25+76.25
Δ = 22° 45' 00" (RT)
Dc = 1° 45' 00"
R = 3,274.04'
T = 658.68'
L = 1,300.00'
E = 65.60'
TS STA. 17+89.74
SC STA. 19+14.74
Bs = 1° 05' 37"
Ls = 125.00'
Ts = 786.51'
LT = 83.33'
ST = 41.67'
CS STA. 32+14.74
ST STA. 33+39.74

CURVE DATA C.R. 69 CURVE NO. 4
P.I. STA. 42+81.74
Δ = 4° 32' 03" (LT)
Dc = 0° 30' 00"
R = 11,459.16'
T = 453.67'
L = 906.86'
E = 8.98'
PC STA. 38+28.07
PT STA. 47+34.93

CURVE DATA C.R. 69 CURVE NO. 5
P.I. STA. 56+05.43
Δ = 56° 46' 59" (RT)
Dc = 38° 11' 50"
R = 150.00'
T = 81.08'
L = 148.66'
E = 20.51'
PC STA. 55+24.35
PT STA. 56+73.01

(A) STA. 269+45.48 (BK) = STA. 269+45.25 (AHD)
(B) STA. 278+20.45 (BK) = STA. 278+20.45 (AHD)
(C) STA. 283+64.38 (BK) = STA. 283+64.38 (AHD)
(D) STA. 32+56.41 (BK) = STA. 32+56.41 (AHD)

CURVE DATA C.R. 118 CURVE NO. 1
P.I. STA. 10+69.71
Δ = 24° 30' 05" (RT)
Dc = 38° 11' 50"
R = 150.00'
T = 32.57'
L = 64.14'
E = 3.49'
PC STA. 10+37.14
PT STA. 11+01.28

CURVE DATA C.R. 118 CURVE NO. 2
P.I. STA. 12+40.87
Δ = 34° 13' 00" (LT)
Dc = 23° 00' 00"
R = 249.11'
T = 76.68'
L = 148.77'
E = 11.53'
PC STA. 11+64.19
PCC STA. 13+12.96

CURVE DATA C.R. 118 CURVE NO. 3
P.I. STA. 13+80.89
Δ = 10° 25' 10" (LT)
Dc = 7° 41' 27"
R = 745.00'
T = 67.93'
L = 135.48'
E = 3.09'
PCC STA. 13+12.96
PT STA. 14+48.44

(E) N 86°46'40" W 1333.38' FROM THE INTERSECTION OF THE ℄ CONST. C.R. 69

CURVE DATA S.R. 7 CURVE NO. 5
P.I. STA. 261+89.75
Δ = 58° 46' 06" (RT)
Dc = 3° 15' 00"
R = 1,762.95'
T = 773.76'
L = 1,458.26'
E = 162.33'
Bs = 5° 41' 15"
Ls = 350.00'
Ts = 1,169.30'
LT = 233.45'
ST = 116.78'

CURVE DATA S.R. 7 CURVE NO. 6
P.I. STA. 280+92.68
Δ = 5° 51' 21" (RT)
Dc = 1° 00' 00"
R = 5,729.58'
T = 230.42'
L = 460.59'
E = 4.63'
Bs = 0° 37' 30"
Ls = 125.00'
Ts = 355.56'
LT = 83.33'
ST = 41.67'

CURVE DATA S.R. 7 CURVE NO. 7
P.I. STA. 326+36.08
Δ = 31° 21' 41" (RT)
Dc = 2° 00' 00"
R = 2,864.79'
T = 670.91'
L = 1,318.07'
E = 77.51'
Bs = 2° 30' 00"
Ls = 250.00'
Ts = 929.46'
LT = 166.68'
ST = 83.35'

S.R. 7
STA. 268+16.30, 126.47' LT.
= C.R. 118 STA. 10+07.30
= C.R. 69 STA. 27+25.00

S.R. 7
STA. 279+28.74, 176.90' LT.
= C.R. 2 STA. 10+07.28
= C.R. 69 STA. 38+50.00

S.R. 7
STA. 298+53.45, 384.23' LT.
= C.R. 69 STA. 58+73.73

EX. MONUMENTS OFF S.R. 7

STATION	OFFSET	DESCRIPTION
270+31.39 [L]	37.61' RT.	REBAR FOUND
273+75.73	3456.62' LT.	STONE FOUND
278+24.65 [S]	356.49' LT.	2" IRON PIPE FOUND
278+70.41	2565.09' RT.	STONE FOUND
279+02.24	538.08' LT.	2" IRON PIPE FOUND
279+82.13	154.58' LT.	IRON PIN FOUND
280+60.71	86.48' LT.	IRON PIN FOUND
281+03.39	167.38' LT.	STONE FOUND WITH "X"
282+79.19	54.89' LT.	STONE FOUND
282+97.58	6.44' RT.	IRON PIN FOUND
285+70.63	191.24' RT.	REBAR FOUND
285+72.95	100.97' RT.	REBAR FOUND
286+97.90	70.42' RT.	2" IRON PIPE FOUND
287+02.18	623.84 RT.	PROJECT CONTROL MON. #1006
290+74.[illegible]	[illegible]	STONE FOUND
312+99.[illegible]	[illegible]	STONE FOUND
314+96.[illegible]	598.79' LT.	30" TREE
315+47.[illegible]	521.23' LT.	FENCE POST FOUND
316+19.[illegible]	165.51' LT.	36" TREE
316+25.[illegible]	[illegible]	[illegible]

MONUMENT LEGEND
- STONE FOUND
- FENCE POST
- R.R.S. FOUND
- R.R.S. SET
- P.K. NAIL FOUND
- CONC. MONUMENT FD.
- REFER. MONUMENT SET
- REBAR FOUND
- AXLE FOUND
- IRON PIN FOUND
- P.K. NAIL I.D. CAP
- P.K. NAIL SET
- PROJECT CONTROL MON.
- MONUMENT BOX FD
- MONUMENT BOX SE

DRAFT Stage 3 - Not for Construction
09/23/2024

HORIZONTAL SCALE IN FEET
0 100 200 400

PID NO. 75923
R/W DESIGNER TB
R/W REVIEWER SER

CENTERLINE PLAT

LAW-7-2.17

7 / 82

U:\1736087\1\LAW\75923\row\sheets\75923RC005.dgn 12/9/2014 11:16:06 AM slparker

NOTE:
SEE SHEET 2 OF 82
FOR ALTERNATE METHOD OF
STATIONING FROM SPIRAL CURVES

[L] MEASURED FROM LONG TANGENT
[S] MEASURED FROM SHORT TANGENT

SECTIONS 13, 23 & 24
T-1-N, R-16-W, CONGRESS LANDS
UNION TOWNSHIP
LAWRENCE COUNTY, OHIO

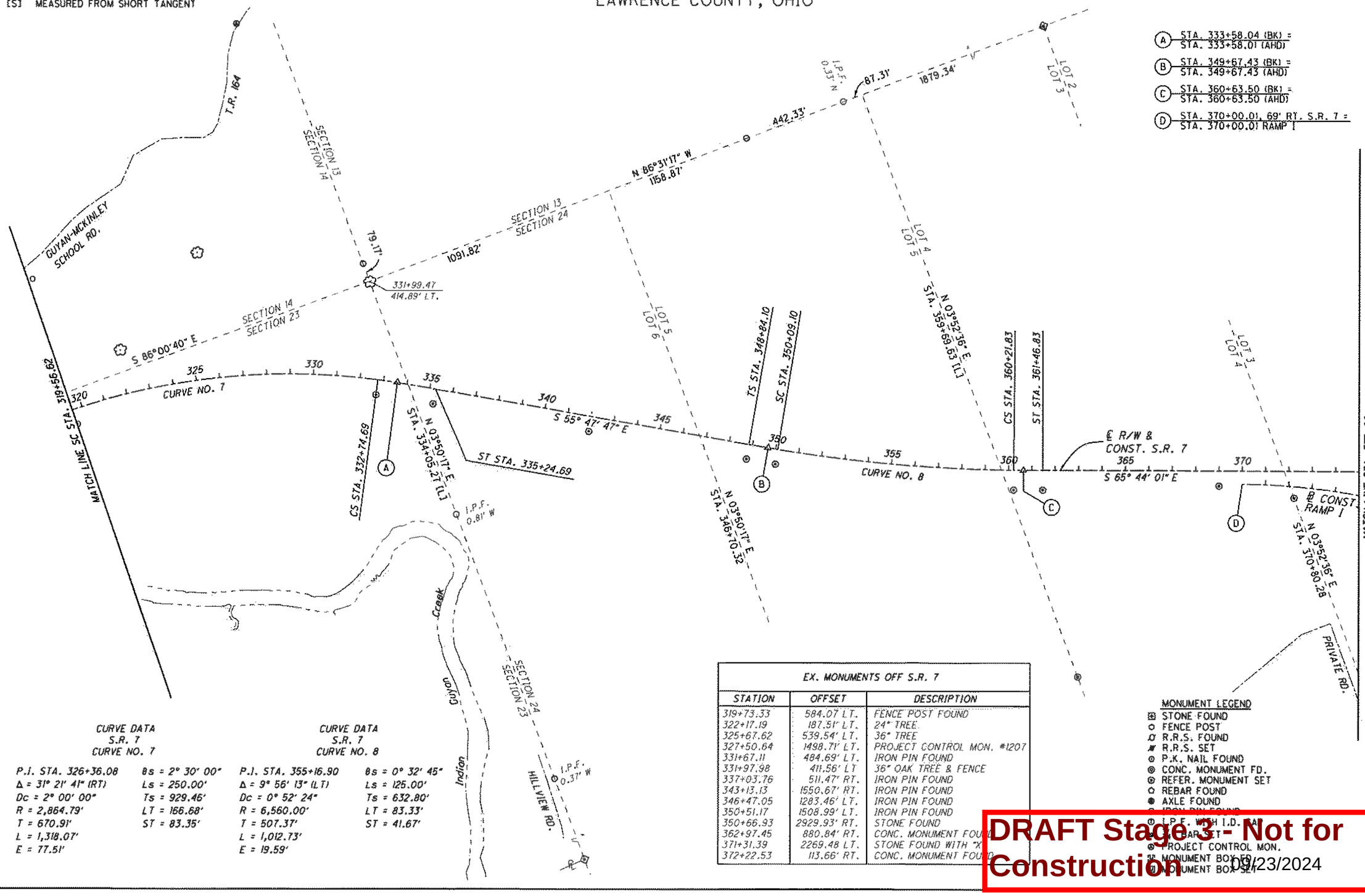

(A) STA. 333+58.04 (BK) = STA. 333+58.01 (AHD)
(B) STA. 349+67.43 (BK) = STA. 349+67.43 (AHD)
(C) STA. 360+63.50 (BK) = STA. 360+63.50 (AHD)
(D) STA. 370+00.01, 69' RT. S.R. 7 = STA. 370+00.01 RAMP 1

CURVE DATA
S.R. 7
CURVE NO. 7

P.I. STA. 326+36.08	Bs = 2° 30' 00"
Δ = 31° 21' 41" (RT)	Ls = 250.00'
Dc = 2° 00' 00"	Ts = 929.46'
R = 2,864.79'	LT = 166.68'
T = 670.91'	ST = 83.35'
L = 1,318.07'	
E = 77.51'	

CURVE DATA
S.R. 7
CURVE NO. 8

P.I. STA. 355+16.90	Bs = 0° 32' 45"
Δ = 9° 56' 13" (LT)	Ls = 125.00'
Dc = 0° 52' 24"	Ts = 632.80'
R = 6,560.00'	LT = 83.33'
T = 507.37'	ST = 41.67'
L = 1,012.73'	
E = 19.59'	

EX. MONUMENTS OFF S.R. 7

STATION	OFFSET	DESCRIPTION
319+73.33	584.07 LT.	FENCE POST FOUND
322+17.19	187.51' LT.	24" TREE
325+67.62	539.54' LT.	36" TREE
327+50.64	1498.71' LT.	PROJECT CONTROL MON. #1207
331+67.11	484.69' LT.	IRON PIN FOUND
331+97.98	411.56' LT	36" OAK TREE & FENCE
337+03.76	511.47' RT.	IRON PIN FOUND
343+13.13	1550.67' RT.	IRON PIN FOUND
346+47.05	1283.46' LT.	IRON PIN FOUND
350+51.17	1508.99' LT.	IRON PIN FOUND
350+66.93	2929.93' RT.	STONE FOUND
362+97.45	880.84' RT.	CONC. MONUMENT FOUND
371+31.39	2269.48 LT.	STONE FOUND WITH "X"
372+22.53	113.66' RT.	CONC. MONUMENT FOUND

MONUMENT LEGEND
- STONE FOUND
- FENCE POST
- R.R.S. FOUND
- R.R.S. SET
- P.K. NAIL FOUND
- CONC. MONUMENT FD.
- REFER. MONUMENT SET
- REBAR FOUND
- AXLE FOUND
- IRON PIN FOUND
- I.P.F. WITH I.D. CAP
- REBAR SET
- PROJECT CONTROL MON.
- MONUMENT BOX FOUND
- MONUMENT BOX SET

DRAFT Stage 3 - Not for Construction 09/23/2024

HORIZONTAL SCALE IN FEET
0 100 200 400

PID NO. 75923

R/W DESIGNER TB
R/W REVIEWER SER

CENTERLINE PLAT

LAW-7-2.17

8 / 82

U:\1736087\14_LAW\75923\rcw\sheets\75923RC006.dgn 12/9/2014 11:16:07 AM slparker

SECTIONS 24, T-1-N, R-16-W,
SECTIONS 33 & 34, T-1-N, R-15-W
UNION & ROME TOWNSHIPS
LAWRENCE COUNTY, OHIO

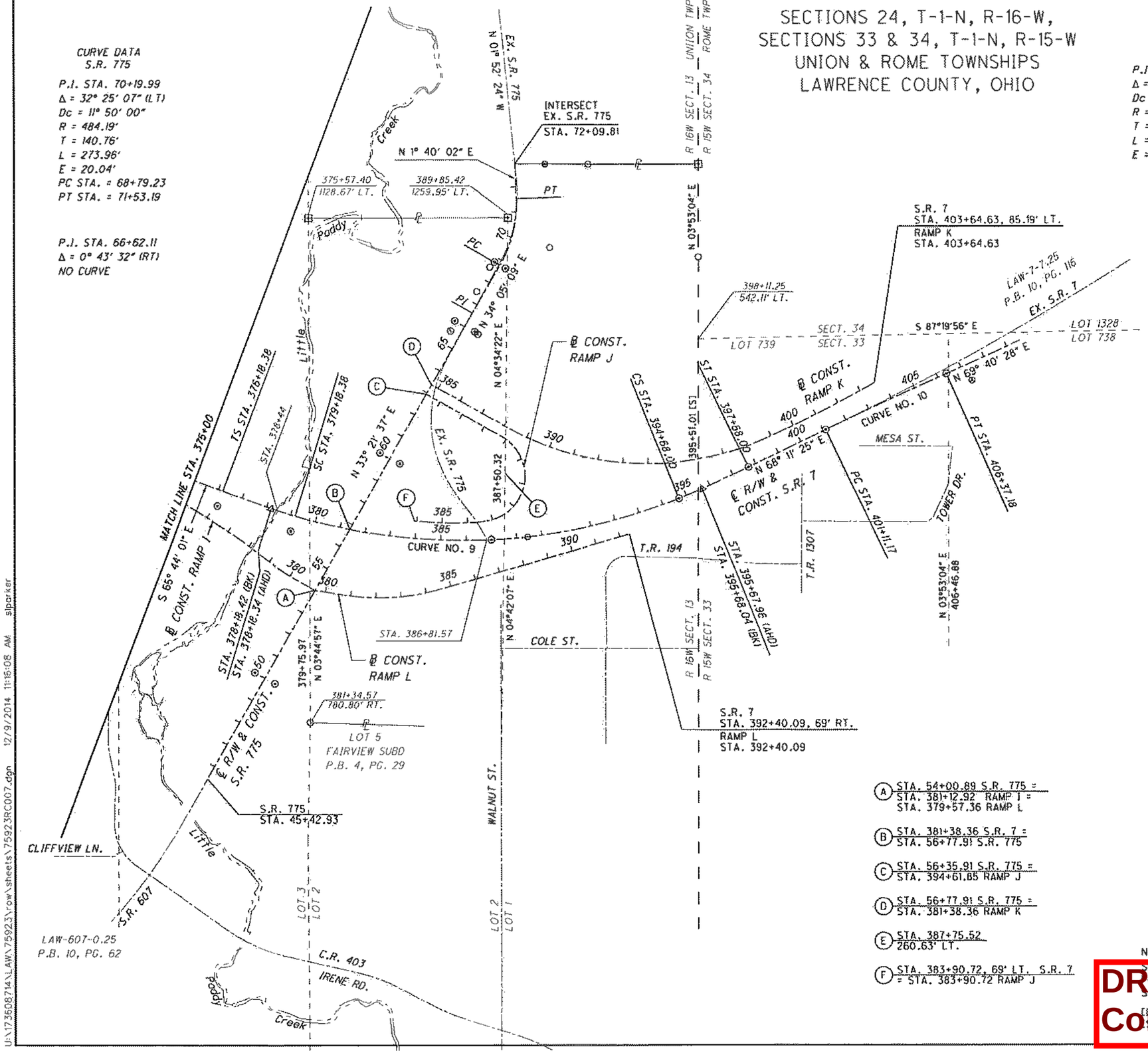

CURVE DATA
S.R. 775

P.I. STA. 70+19.99
Δ = 32° 25' 07" (LT)
Dc = 11° 50' 00"
R = 484.19'
T = 140.76'
L = 273.96'
E = 20.04'
PC STA. = 68+79.23
PT STA. = 71+53.19

P.I. STA. 66+62.11
Δ = 0° 43' 32" (RT)
NO CURVE

CURVE DATA
S.R. 7
CURVE NO. 9

P.I. STA. 387+47.15
Δ = 46° 04' 34" (LT)
Dc = 2° 29' 28"
R = 2,300.00'
T = 805.51'
L = 1,549.62'
E = 136.98'

Ls = 3° 44' 12"
Ls = 300.00'
Ts = 1,128.77'
LT = 200.04'
ST = 100.04'

CURVE DATA
S.R. 7
CURVE NO. 10

P.I. STA. 403+74.19
Δ = 1° 29' 03" (RT)
Dc = 0° 16' 56"
R = 20,306.35'
T = 263.02'
L = 526.00'
E = 1.70'

EX. MONUMENTS OFF S.R. 775

STATION	OFFSET	DESCRIPTION
65+55.97	40.00' LT.	I.P.F. CAPPED "ODOT R/W"
65+97.61	60.64' RT.	I.P.F. CAPPED "ODOT R/W"
67+43.70	27.49' LT.	IRON PIN FOUND
68+53.06	30.70' LT.	IRON PIN FOUND
70+01.04	156.59' RT.	2" IRON PIPE FOUND
70+74.47	30.91' LT.	STONE FOUND
72+85.93	118.37' RT.	AXLE FOUND
72+62.31	728.29' RT.	STONE FOUND WITH "X"
72+78.86	289.92' RT.	2" IRON PIPE FOUND

EX. MONUMENTS OFF S.R. 7

STATION	OFFSET	DESCRIPTION
388+43.14	0.00' RT.	P.K. NAIL FOUND
394+68.05 [S]	0.08' LT.	PROJECT CONTROL MON. #1208
399+49.92	832.41' LT.	2½" IRON PIPE FOUND
401+11.17	0.00' RT.	CONCRETE MONUMENT FOUND
407+19.64	65.06' RT.	PROJECT CONTROL MON. #1209

NOTE:
SEE SHEET 2 OF 82
FOR ALTERNATE STATIONING
STATIONING FROM SPIRAL CURVES
[L] MEASURED FROM LONG TANGENT
[S] MEASURED FROM SHORT TANGENT

MONUMENT LEGEND
- STONE FOUND
- FENCE POST
- R.R.S. FOUND
- R.R.S. SET
- P.K. NAIL FOUND
- CONC. MONUMENT FD.
- REFER. MONUMENT SET
- REBAR FOUND
- IRON PIPE FOUND
- ¾" BAR CAP
- ¾" BAR SET
- PROJECT CONTROL MON.
- MONUMENT BOX FD.
- MONUMENT BOX SET

DRAFT Stage 3 - Not for Construction
09/23/2024

HORIZONTAL SCALE IN FEET
0 100 200

PID NO. 75923
R/W DESIGNER TB
R/W REVIEWER SER

CENTERLINE PLAT
LAW-7-2.17

9 / 82

U:\1736\08714\LAW\75923\row\sheets\75923RC007.dgn 12/9/2014 11:15:08 AM slparker

SECTIONS 15, 21, 22, 27, 28 & 29
T-1-N, R-16-W, CONGRESS LANDS
UNION TOWNSHIP
LAWRENCE COUNTY, OHIO

- (A) CRESENT SUBDIVISION
- (B) NORTH HUNTINGTON HEIGHTS
- (C) BRENTWOOD VILLAGE SUBDIVISION
- (D) NEW HOPE PARK SUBDIVISION
- (E) JAMESTOWN PARK SUBDIVISION
- (F) JO-MAR SUBDIVISION
- (G) WINTER HEIGHTS

- (1) ELDON L. RANDOLPH
- (9) RICHARD J. BOLEN
- (15) JAMES M. & GARRETTA LEWIS
- (16) JEFFREY COMBS
- (65) SKY INVESTMENT PROPERTIES, LLC
- (91) TRACEY & CAROL ELLIS
- (98) L. DALE & CAROLYN C. MANNS
- (120) ERNEST W. AND MILDRED R. BONZO, TRUSTEES
- (124) HARRY L. RADER
- (142) LARRY J. & LINDA K. SITES
- (142A) UNION MISSIONARY BAPTIST CHURCH
- (143) ERNEST W. AND MILDRED R. BONZO, TRUSTEES

BEGIN ACQUISITION
S.R. 7
STA. 123+00.62

SEE SHEET II

PROPERTY MAP

PID NO. 75923

R/W DESIGNER TB
R/W REVIEWER SER

LAW-7-2.17

10/82

DATE COMPLETED	DESCRIPTION
RECEIVED	09/23/2024

DRAFT Stage 3 - Not for Construction

U:\73608714\LAW\75923\row\sheets\75923RM001.dgn 12/9/2014 11:16:12 AM slparker

SECTIONS 13, 14, 23 & 24, T-1-N, R-16-W, CONGRESS LANDS
SECTIONS 33 & 34, T-1-N, R-15-W, OHIO COMPANY PURCHASE
UNION & ROME TOWNSHIPS, LAWRENCE COUNTY, OHIO

- (142) LARRY J. & LINDA K. SITES
- (142A) UNION MISSIONARY BAPTIST CHURCH
- (143) ERNEST W. AND MILDRED R. BONZO, TRUSTEES
- (155) ERNEST W. AND MILDRED R. BONZO, TRUSTEES
- (166) ROBERT E. & SUSAN L. FLETCHER
- (167) ERNEST W. AND MILDRED R. BONZO, TRUSTEES
- (168) RILEY DEVELOPMENT COMPANY, INC.
- (175) M.L. SMITH, TRUSTEE

- (AA) ALICE B. AND JAMES I. EATONS ADDITION
- (BB) JONES SECOND ADDITION
- (CC) SUNNY ACRES ADDITION
- (DD) CLIFF VIEW HEIGHTS SUBDIVISION
- (H) NORTH BRADRICK DEVELOPMENT
- (J) REJON ACRES

- (L) FAIRVIEW SUBDIVISION
- (M) WHITEOAK SQUARE SUBDIVISION
- (N) SMITHFIELD SUBDIVISION
- (O) ELLIS COURT SUBDIVISION
- (P) TOWER ESTATES SUBDIVISION

END ACQUISITION
S.R. 7
STA. 395+40.00

DRAFT Stage 3 - Not for Construction
09/23/2024

HORIZONTAL SCALE IN FEET

PID NO. 75923

R/W DESIGNER TB
R/W REVIEWER SER

PROPERTY MAP

LAW-7-2.17

11 / 82

SECTION 20, 21, 28 & 29
T-1-N, R-16-W, CONGRESS LANDS
UNION TOWNSHIP
LAWRENCE COUNTY, OHIO

1 ELDON L. RANDOLPH (AKA ELDON LEE RANDOLPH) 23-119-1700.000

Big Branch Creek

BEGIN ACQUISITION S.R. 7 STA. 123+00.62

1 ELDON L. RANDOLPH (AKA ELDON LEE RANDOLPH) 23-119-1700.000

HENSON HOLLOW RD.

HENSON HOLLOW-DAVIDSON HILL T.R. 278

23-072-1500.000

9 23-122-0500.000

SECTION 20 / SECTION 21

9 23-077-0200.000

Symmes Creek

EX. R/W

LAW-52-23.56
LAW-7-0.00

1 23-124-1100.002

7 STATE OF OHIO 23-121-0300.000 O.R. 154, PG 35

7 STATE OF OHIO 23-121-0200.000

S 03°02'08" W
SECTION 29
SECTION 28
2372.14'

N 86°59'07" W
SECTION 21
SECTION 28
739.11'

1164.95'

9 RICHARD J. BOLEN 23-113-0200.000

LA-R/W

℄ CONSTRUCTION S.R. 7

451.58'

T.R. 158

EX. LA R/W

1 23-124-1100.002

16.20'

339.41'

S.R. 7

CHESAPEAKE - SYMMES CREEK RD.

EX. R/W

369.35'

R.B.F. N 78°27'59" E. 2.06'

23-113-0100.000

Pond

7 STATE OF OHIO 23-112-1900.000 O.R. 154, PG 35

Symmes Creek

LA-R/W

MATCH LINE STA. 158+00

CRESCENT LAKE

CRESCENT SUBDIVISION

Symmes Creek

S.R. 7
S.R. 527

C.R. 123

PARK DR.

S 03°02'08" W
SECTION 29
SECTION 28

C.R. 123

LAW-52-23.56
LAW-7-0.00

EX. LA R/W

MONUMENT LEGEND
- STONE FOUND
- FENCE POST
- R.R.S. FOUND
- R.R.S. SET
- P.K. NAIL FOUND
- CONC. MONUMENT FD.
- REFER. MONUMENT SET
- REBAR FOUND
- BOLT FOUND
- IRON PIN FOUND
- I.P.F. WITH I.D. CAP
- ¾" BAR SET
- MONUMENT BOX FD.
- MONUMENT BOX SET

STRUCTURE KEY
- RESIDENTIAL
- COMMERCIAL
- OUT-BUILDING

2 PHIL HOLMAN AND SUZANNE STRAIT-HOLMAN (NKA SUZANNE STRAIT)
3 SUZANNE STRAIT (FKA SUZANNE STRAIT-HOLMAN)
4 JEREMY P. & JANE L. MORSE
5 FREDDIE L. HAYES, JR.
8 WILLIAM D. ARTHUR AND AMY L. NORRIS
10 HOWARD W. & RUTH R. PERDUE, AND NANCY P. HAMBURG
11 RONNIE & LYNN M. KINGERY
15 JAMES M. & GARRETTA LEWIS (AKA GRETTA LEWIS)

HORIZONTAL SCALE IN FEET 0 100 200 400

PID NO. 75923

R/W DESIGNER TB
R/W REVIEWER SER

PROPERTY MAP

LAW-7-2.17

12 / 82

REV.	DATE	DESCRIPTION
DATE COMPLETED		09/23/2024

DRAFT Stage 3 - Not for Construction

U:\173508714\LAW\75923\row\sheets\75923RM003.dgn 12/9/2014 11:16:15 AM sjparker

SECTIONS 21, 22 & 28
T-1-N, R-16-W, CONGRESS LANDS
UNION TOWNSHIP
LAWRENCE COUNTY, OHIO

(10) HOWARD W. & RUTH R. PERDUE, AND NANCY P. HAMBURG
(11) RONNIE & LYNN M. KINGERY
(12) HOWARD W. & RUTH R. PERDUE
(13) ROBERT P. & ELIZABETH M. TABER
(17) FRANCESCA KARLE AND DAVID & ANTONETTA KARLE
(19) WILLARD D . SPEARS
(20) PENNY SUE PANNELL
(21) ROSE ANN CYRUS
(22) JOHN M. HILL, II & MANDY J. HILL
(23) BRAD & EMMA MCNEILL
(24) ROBERT & CONCEPCION J. HINTZ
(25) JAMES T. & MELISSA POINTER
(27) RYAN B. & LESLIE R. DAVIS
(28) DANNY HOLSCHUH AND FRED HAYES
(29) GLEN D. & CAROL J. CHAPMAN
(30) NATALIE L. CAMPBELL
(31) JAMES R. & REBECCA MCCOMAS
(33) ROBERT & CONCEPCION HINTZ
(35) STATE OF OHIO
(36) STATE OF OHIO
(37) STEVEN D. & LESLIE R. FLOUHOUSE
(38) DWAYNE E. & SHANNON ALLEN
(39) JERRY D. & ANGELA D. EDDY
(41) RONALD L. & OSIE M. CLEVELAND
(42) CARLOS D. & PATRICIA A. MARCUM
(43) HOWARD W. PERDUE, JR. & RUTH R. PERDUE
(44) PATRICIA R. LEWIS
(45) RICHARD HOUSTON

(15) JAMES M. & GARRETTA LEWIS 23-079-0804.000
(15) JAMES M. & GARRETTA LEWIS 23-079-0800.000
(16) JEFFREY COMBS 23-079-0801.000
(60) AUDREY SCHOCKLEY 23-079-1500.002
(61) GEARLD & VALERIA SHOCKLEY 23-079-1500.000
23-079-1500.001
23-079-1500.003
(46) LILLIAN F. POYNTER AND SUSAN POYNTER DELKER 23-079-0100.000
(52B) SARAH CECIL, JENNIFER CECIL, AND ADAM CECIL 23-079-1400.000

(47) THE TWENTIETH STREET BANK
(48) W.F. McCOY (HEIRS & ASSIGNS)
(49) CAROL R. FIELDS
(50) DONALD RAYMOND WA[illegible]
(51) OTIS M. & CATHRYN J. JUSTICE
(53) JOHNNIE R. SCOTT & SARAH A. GILLESPIE
(54) KERSTEN B. & KINDRA R. HARRIS
(55) BOBBY L. & ROBERTA J. ESTEP
(56) CHARLES & CHARLOTTTE POYNTER
(57) BARBARA SHOCKLEY
(62) STEVEN S. ADKINS
(63) THOMAS E. & SALLY NEWTON
(64) EVERETT D. MARTIN, JR. AND GINA MARTIN
(65) SKY INVESTMENT PROPERTIES, LLC
(66) EVERETT MARTIN, JR.
(67) JERRY L. & PAULA A. NOBLE
(68) WALTER L. PLUMLEY
(69) WALTER L. & BRENDA H. PLUMLEY
(70) EARL D. BRAMMER (HEIRS & ASSIGNS)
(73) STATE OF OHIO
(74) MARY R. SMITH
(75) DONNA M. ADKINS
(76) KAREN EVANS
(78) NANCY MCKENZIE
(79) STATE OF OHIO
(81) RAYMOND R. & ALMA J. MCHONE
(82) STATE OF OHIO
(84) ELWOOD E. & AMBER C. WILSON
(86) WESLEY L. COLLINS

MONUMENT LEGEND
- STONE FOUND
- FENCE POST
- R.R.S. FOUND
- R.R.S. SET
- P.K. NAIL FOUND
- CONC. MONUMENT FD.
- REFER. MONUMENT SET
- REBAR FOUND
- BOLT FOUND
- IRON PIN FOUND
- I.P.F. WITH I.D. CAP
- ¾" BAR SET
- MONUMENT BOX FD.
- MONUMENT BOX SET

STRUCTURE KEY
- RESIDENTIAL
- COMMERCIAL
- OUT-BUILDING

(46A) PATRICIA R. LEWIS IS THE OWNER OF THESE BUILDINGS, WHICH DO NOT LIE WITHIN HER PROPERTY DESCRIBED IN O.R. 607, PG. 618 AND DELINEATED UPON THESE R/W PLANS AS PARCEL 44

REV. BY	DATE	DESCRIPTION
DATE COMPLETED		

DRAFT Stage 3 - Not for Construction 09/23/2024

PROPERTY MAP
LAW-7-2.17
PID NO. 75923
R/W DESIGNER TB
R/W REVIEWER SER
HORIZONTAL SCALE IN FEET
13 / 82

U:\17.3505714\LAW\75923\row\sheets\75923RM004.dgn 12/9/2014 11:16:16 AM slporker

SECTIONS 14, 15, 22 & 23
T-1-N, R-16-W, CONGRESS LANDS
UNION TOWNSHIP
LAWRENCE COUNTY, OHIO

(82) STATE OF OHIO
(86) WESLEY L. COLLINS
(87) JAMES A. MONTGOMERY
(88) JAMES G. SMITH
(89) FRANCIS JAMES BUDD & BRANDY RENAY BUDD
(90) BILL A. BROWN
(90A) W.W. FULLER (HEIRS & ASSIGNS)
(92) JOHNNY E. & JANIE E. SMITH
(93) JAMES H. & ROSA SMITH
(94) CHARLES W. & MAZIE L. RULEN
(95) SHAWN L. STOWERS
(96) JASPER & DELLA M. RIGNEY
(99) ANNICE BERRY
(102) STATE OF OHIO
(103) GEORGE W. & MARILYN BLACK
(103A) STATE OF OHIO
(106) WILLIAM RICHARD HYSELL
(108) DAVID A. PARSONS
(110) JUANITA BLEVINS AND MAXINE LYKINS, AND ALMA M. BLACK (LIFE ESTATE)
(99A) BILL A. BROWN OWNER OF THIS BUILDING, LYING WITHIN PARCEL 99

SECTION 21 – SECTION 22
SECTION 15 – SECTION 22
23-043-1100.000
S.R. 243
END ACQUISITION S.R. 243 STA. 21+70.00
WINTER HEIGHTS
A.E.P. ESMT. REFER UNKNOWN
BENT CREEK C.R. 118
Bent Creek
B.R.E.C.
(143) ERNEST W. AND MILDRED R. BONZO, TRUSTEES 23-044-0900.000
23-043-0803.001
23-043-0803.000
23-043-0802.000
23-043-1401.000
23-043-1402.000
23-043-1400.000
23-080-1100.000
(124) HARRY L. RADER 23-080-0900.000
(124) 23-080-1000.000
(91) 23-080-1200.000
(91) 23-083-0800.000
(91) TRACEY & CAROL ELLIS 23-083-0500.000
(124) HARRY L. RADER 23-080-1000.000
23-080-1000.001
(143) ERNEST W. AND MILDRED R. BONZO, TRUSTEES 23-044-0800.000
BEGIN ACQUISITION C.R. 69 STA. 12+36.83
℄ CONSTRUCTION C.R. 69
23-044-0600.000
23-081-1400.000
R/W
℄ CONST. S.R. 243
B.R.E.C. D.B. 576 PG. 298
(121) GEORGE W. & MARILYN BLACK
(125) LARRY JOE SITES & LINDA KAY SITES
(127) JOSEPH E. GAGNON AND DORIS PRITT
(128) LAWRENCE A. & INEZ M. THOMPSON
(129) J. DOLORES REYNOLDS
(130) HARRY L. RADER
(131) GLORIA J. TOMBLIN
(132) LARRY & LINDA K. SITES
(133) CARL & NANCY DANFORD
(134) DARRELL HARDY
(135) ROGER & HELEN HENSON
(136) CARL & NANCY DANFORD
(137) STATE OF OHIO
(138) STATE OF OHIO
(139) FRED HENSON, JR.
(140) STATE OF OHIO
(141) STATE OF OHIO
(142) LARRY J. & LINDA K. SITES
MATCH LINE STA. 285+00
Pond
(106) 23-082-0900.000
PRIV. DR. #529
B.R.E.C. D.B. 576 PG. 406
23-082-0900.001
23-082-0800.001
23-082-0800.002
23-082-0800.000
(121) 23-082-0600.000
(90) BILL A. BROWN 23-083-1300.000
23-083-1100.000
LA-R/W
(90) 23-083-0600.000
MATCH LINE S.T. STA. 214+16.27
℄ CONSTRUCTION S.R. 7
℄ SHAFERTOWN – C.R. 68
(126) MARANATHA BROADCASTING NETWORK, INC. 23-082-0500.000
(L.L.)
(120) 23-082-0700.000
(142) 23-081-0700.000
Radio Tower
NW QTR. SECT. 22
NE QTR. SECT. 22
(120) ERNEST W. AND MILDRED R. BONZO, TRUSTEES 23-080-1400.000
23-082-1000.000
23-082-1300.000
23-082-1100.000
Pond
Abandoned Rd.
23-080-1800.000
(98) L. DALE & CAROLYN C. MANNS 23-105-1800.017
23-083-1700.001
23-083-1700.002
23-083-1700.000
(111) RICKY BLACK
(112) SHEILA ELLIS, DENNIS BLACK AND RANDY BLACK
(114) PAUL & CAROL BLACK
(118) STATE OF OHIO
(119) CLINTON BEULAH W. JUSTICE (H & W), JIMMIE L. JUSTICE, AND CHARLES MICHAEL JUSTICE

DRAFT Stage 3 - Not for Construction
09/23/2024

DESCRIPTION	DATE COMPLETED

HORIZONTAL SCALE IN FEET
0 100 200 400
PID NO. 75923
R/W DESIGNER TB
R/W REVIEWER SER
PROPERTY MAP
LAW-7-2.17
14/82

U:\17360871\4\LAW\75923\row\sheets\75923RM005.dgn 12/9/2014 11:16:17 AM sparker

SECTIONS 13, 14, 23 & 24
T-1-N, R-16-W, CONGRESS LANDS
UNION TOWNSHIP
LAWRENCE COUNTY, OHIO

(150) MARY MASSIE
(151) ERNEST W. AND MILDRED R. BONZO, TRUSTEES
(152) CHARLES & NORMA MAYENSCHEIN
(153) ROMAINE A. MARTING
(154) DANNY HOLSCHUH
(154A) RHONDA S. SAENZ
(156) CARL & FAYE MAYENSCHEIN
(157) MICHAEL J. RILEY
(158) BARBARA FAYE TAYLOR
(159) JOSEPHINE CLARK (AKA JOSEPHINE MCCORMICK) AND KENNETH E. CLARK
(160) A. JOSEPHINE McCORMICK (AKA JOSEPHINE MCCORMICK)
(161) GARY WHITLEY, JIMMY WHITLEY, RONNIE WHITLEY, AND BRENDA BLACK
(162) KEVIN L. & SHERRI L. SALYER

(142) LARRY J. & LINDA K. SITES
(142A) UNION MISSIONARY BAPTIST CHURCH
(143) ERNEST W. AND MILDRED R. BONZO, TRUSTEES
(145) AMY G. SHAFFER
(146) STATE OF OHIO
(147) ANNA E. SMOOT (HEIRS & ASSIGNS)
(148) WILLIAM W. ELDER, JR. & BETTY T. ELDER
(149) FRED HAYES (AKA FREDDIE L. HAYES)
(147A) CHARLES & NORMA MAYENSCHEIN OWNERS OF THESE BUILDINGS LYING WITHIN PARCEL 147

HORIZONTAL SCALE IN FEET

PID NO. 75923

R/W DESIGNER TB
R/W REVIEWER SER

PROPERTY MAP

LAW-7-2.17

DRAFT Stage 3 - Not for Construction

09/23/2024

15 / 82

U:\1736087\4\LAW\75923\row\sheets\75923RW006.dgn 12/9/2014 11:16:18 AM slparker

SECTIONS 13, 23 & 24
T-1-N, R-16-W, CONGRESS LANDS
UNION TOWNSHIP
LAWRENCE COUNTY, OHIO

(155) ERNEST W. AND MILDRED R. BONZO, TRUSTEES
(161) GARY WHITLEY , JIMMY WHITLEY, RONNIE WHITLEY, AND BRENDA BLACK
(164) ELSIE C. WHITLEY AND SAMMY DEAN WHITLEY
(165A) TONEY RAY & RITA GAIL CAPERTON
(165B) BETSY W. RATCLIFF

(166) ROBERT E. & SUSAN L . FLETCHER
(166A) PAULA S. VANCE
(168) RILEY DEVELOPMENT COMPANY, INC.
(169) THE HECLA WATER ASSOCIATION, INC.
(170) THE HECLA WATER ASSOCIATION
(171) PATRICIA BURD

GUYAN-MCKINLEY SCHOOL RD.
PRIVATE RD.
T.R. 164
SECTION 13 SECTION 14
SECTION 13 SECTION 24
SECTION 14 SECTION 23
SECTION 24 SECTION 23
LA-R/W
(L.L.)
MATCH LINE SC STA. 319+56.62
MATCH LINE STA. 375+00
℄ CONSTRUCTION S.R. 7
325 330 335 340 345 350 355 360 365 370
Guyan Creek
Indian
HILL VIEW RD.
PRIVATE RD.
HARBOR VIEW UNRECORDED SUBDIVISION
LOT 3
LOT 4
LOT 5
LOT 6
50,000 GALLON WATER TANK

23-036-1500.000
23-038-0700.000
23-037-0200.000
23-037-0100.000
23-085-0400.000
25-065-1600.001
25-066-0100.000
25-064-1700.000
25-064-1400.000
25-064-1501.000
25-064-1801.000
25-064-1401.000

ERNEST W. AND MILDRED R. BONZO, TRUSTEES
23-085-0700.000

ERNEST W. AND MILDRED R. BONZO, TRUSTEES
25-051-1400.000

ERNEST W. AND MILDRED R. BONZO, TRUSTEES
25-064-1300.000

ERNEST W. AND MILDRED R. BONZO, TRUSTEES
25-064-1400.000

ERNEST W. AND MILDRED R. BONZO, TRUSTEES
25-066-0100.000

ERNEST W. AND MILDRED R. BONZO, TRUSTEES
25-064-1700.000

RILEY DEVELOPMENT COMPANY, INC.
25-064-1801.000

REV. BY	DATE	DESCRIPTION
DATE COMPLETED		

DRAFT Stage 3 - Not for Construction 09/23/2024

HORIZONTAL SCALE IN FEET
0 100 200 400

PID NO. 75923
R/W DESIGNER TB
R/W REVIEWER SER

PROPERTY MAP
LAW-7-2.17
16 / 82

U:\173608714\LAW\75923\row\sheets\75923RM007.dgn 12/9/2014 11:16:19 AM siparker

SEC. 13, 23 & 24, T-1-N, R-16-W, CONGRESS LANDS
SEC. 33 & 34, T-1-N, R-15-W, OHIO COMPANY PURCHASE
UNION & ROME TOWNSHIPS
LAWRENCE COUNTY, OHIO

(167) ERNEST W. AND MILDRED R. BONZO, TRUSTEES
(252) STATE OF OHIO
(255) STATE OF OHIO
(256) MANFORD KING
(257) STATE OF OHIO
(258) TERRY J. & KAY L. HOLLAND
(258A) HELEN KATHLEEN SPEARS
(258B) BURNIE E. WATSON
(259) GARY L. SOWARDS, SR.
(280) HELENA HAMMONS
(261) GERTRUDE SCARBERRY
(268) STATE OF OHIO
(301) STATE OF OHIO

BEGIN ACQUISITION S.R. 775 STA. 50+80.00
MATCH LINE STA. 375+00
END ACQUISITION S.R. 775 STA. 70+60.00
END ACQUISITION S.R. 7 STA. 395+40.00
UNION TWP. / ROME TWP.
R 16W SECT. 13 / R 15W SECT. 34
R 16W SECT. 13 / R 15W SECT. 33
SECT. 34 / SECT. 33
LOT 1328
LOT 1
LOT 2
LOT 3
LOT 4
LOT 737
LOT 738
LOT 739
LAW-7-7.25 PB 10, PG 116
O.P.C. 100' ESMT. D.B. 299, PG. 109
STATE OF OHIO O.R. 272, PG. 325
Cemetery
ODOT Garage
MT. PISGAH CHURCH
Paddy Creek
Little Paddy Creek
EX. L.A. R/W
L.A. R/W
℄ CONSTRUCTION S.R. 7
℄ CONST. S.R. 775
S.R. 775
S.R. 7
S.R. 243
T.R. 194
T.R. 1307
MESA ST.
COLE ST.
1st ST.
2nd ST.
3rd ST.
TOWER DR.
6th AV
WALNUT ST.
CLIFFVIEW LN.
SHIRKEY ST.
C.R. 403
IRENE RD.

(242) ERNEST B. & CLORINDA G. HALL
(243) ERNEST RALPH ROOD & MYRTLE RUTH ROOD
(244) STATE OF OHIO
(273) DANNY LEE BURCHAM
(277) GLENN EDWARD EARL & NANCY K. EARL
(280) NEW HOPE UNITED METHODIST CHURCH
(283) JOHN T. WILLIAMS II, & JENETTE WILLIAMS
(285) DANNY J. HOLSCHUH
(288) GREGORY A. & ASHLEY M. SULLIVAN
(292) ALMA L. HOLLEY
(293) MICHELLE CHILDERS
(294) ROBERT CECIL
(314) STATE OF OHIO

(DD) CLIFF VIEW HEIGHTS SUBDIVISION
(L) FAIRVIEW SUBDIVISION
(M) WHITEOAK SQUARE SUBDIVISION
(N) SMITHFIELD SUBDIVISION
(O) ELLIS COURT SUBDIVISION
(P) TOWER ESTATES SUBDIVISION

DRAFT Stage 3 - Not for Construction

DESCRIPTION	DATE COMPLETED
RECEIVED	09/23/2024

N

HORIZONTAL SCALE IN FEET
0 100 200 400

PID NO. 75923

R/W DESIGNER TB
R/W REVIEWER SER

PROPERTY MAP

LAW-7-2.17

17 / 82

U:\173608714\LAW\75923\row\sheets\75923RM008.dgn 12/9/2014 11:16:20 AM slparker

TOTAL NUMBER OF :

105 OWNERSHIPS 40 TOTAL TAKES
205 PARCELS 57 OWNERSHIPS W/ STRUCTURES INVOLVED (c) = CALCULATED AREA

NET RESIDUE = RECORD AREA - TOTAL PRO - NET TAKE

ALL AREAS IN ACRES UNLESS OTHERWISE NOTED

GRANTEE:
ALL RIGHT OF WAY ACQUIRED IN THE NAME OF THE STATE OF OHIO UNLESS OTHERWISE SHOWN.

PARCEL NO.	OWNER	SHEET NO.	OWNERS RECORD		AUDITOR'S PARCEL	RECORD AREA	TOTAL P.R.O.	GROSS TAKE	P.R.O. IN TAKE	NET TAKE	STRUCTURE	NET RESIDUE LEFT	NET RESIDUE RIGHT	TYPE FUND	REMARKS	AS ACQUIRED BOOK	AS ACQUIRED PAGE
1-WL	ELDON L. RANDOLPH	43	551	447	23-124-1100.002	11.520	0.000	4.179	0.000	4.179	NO			STATE	LEASE TO MCF RESOURCES, INC. (LV 61, PG 398)		
	(AKA ELDON LEE RANDOLPH)		537	798	23-119-1700.000	59.690	0.000	0.000	0.000	0.000							
	TOTAL 1-WL					71.210	0.000	4.179	0.000	4.179		64.768	2.263				
1-E1		43-44	551	447	23-124-1100.002			5.128	0.000	5.128	NO			STATE	POTENTIAL LANDLOCK (SYMMES CREEK)		
1-E2		43-44	551	447	23-124-1100.002			2.263	0.000	2.263	NO			STATE	LANDLOCKED		
1-CH		43	551	447	23-124-1100.002			0.221	0.000	0.221	NO			STATE			
2	PHIL HOLMAN AND SUZANNE STRAIT-HOLMAN		603	764	23-121-0601.000	0.530									NO R/W REQUIRED		
	(NKA SUZANNE STRAIT)																
3	SUZANNE STRAIT		O.R. 613	61	23-121-0600.000	1.470									NO R/W REQUIRED		
	(FKA SUZANNE STRAIT-HOLMAN)																
4	JEREMY P. & JANE L. MORSE		528	652	23-121-0400.000	1.170									NO R/W REQUIRED		
5	FREDDIE L. HAYES, JR.		O.R. 225	193	23-124-1100.000	3.360									NO R/W REQUIRED		
6	NOT USED																
7	STATE OF OHIO		O.R. 154	35	23-112-1900.000	22.250									ACQUIRED UNDER LAW-7-7.75, PARCEL 6-WL		
			O.R. 154	35	23-121-0200.000	0.430									AS A MITIGATION AREA		
			O.R. 154	35	23-121-0300.000	19.550											
			O.R. 154	35	23-121-0500.000	0.110											
			493	65	23-112-1900.001	2.000									ACQUIRED UNDER LAW-52-23.56 / LAW-7-0.00		
			485	412	23-119-1700.001	6.510											
			485	414	23-119-1700.002	9.730											
			465	407	23-121-1102.000	1.200											
			512	756	23-124-1101.001	0.940											
			463	679	23-124-1101.000	3.280											
			528	82	23-121-1200.001	0.790											
8	WILLIAM D. ARTHUR AND AMY L. NORRIS		O.R. 361	450	23-122-0600.000	0.760									NO R/W REQUIRED		
9	RICHARD J. BOLEN		523	477	23-072-1500.000	1.160									NO R/W REQUIRED		
			523	477	23-077-0200.000	20.120											
			523	477	23-113-0100.000	3.780											
			523	477	23-113-0200.000	19.010											
			523	477	23-122-0500.000	9.640											
10-WL	HOWARD W. & RUTH R. PERDUE,	45-46	O.R. 562	739	23-112-0749.000	8.820	0.332	6.110	0.000	6.110	NO			STATE	LEASE TO DAVID FOX (L.V. 16, PG 141)		
	AND NANCY P. HAMBURG														& (M.R. 3, PG 450)		
10-WDV		45-46	O.R. 562	739	23-112-0749.000			0.772	0.332	0.440	NO			STATE			
	GRAND TOTAL					8.820	0.332	6.882	0.332	6.550			1.475		PARCEL ACREAGE CORRECTION = 8.357 (c)		
						8.357(c)											
10-E		45-46	O.R. 562	739	23-112-0749.000			1.475	0.000	1.475	NO			STATE	LANDLOCKED		

NOTE: ALL TEMPORARY PARCELS TO BE OF 24 MONTH DURATION.

NOTE: UNDER NO CIRCUMSTANCES ARE TEMPORARY EASEMENTS TO BE USED FOR STORAGE OF MATERIAL OR EQUIPMENT BY THE CONTRACTOR UNLESS NOTED OTHERWISE.

LEGEND:
WD = WARRANTY DEED
WL = FEE SIMPLE WITH LIMITATION OF ACCESS
T = TEMPORARY EASEMENT
SL = SLOPE EASEMENT
S = SEWER EASEMENT
CH = CHANNEL EASEMENT
V = IN NAME OF ANOTHER STATE AGENCY, LPA, ETC.

+ DENOTES REMOVAL ITEMS, FOR DESCRIPTION OF REMOVAL ITEMS SEE CORRESPONDING RIGHT OF WAY PLAN SHEET

• DENOTES RIGHT OF WAY ENCROACHMENT

REV. BY	DATE	DESCRIPTION
FIELD REVIEW BY		DATE:
CONSTRUCTED BY		DATE:
DATE COMPLETED		

DRAFT Stage 3 - Not for Construction 09/23/2024

FEDERAL PROJECT NO. E(035)921 E(060)482
PID NO. 75923
STATE JOB NO. 495095
R/W DESIGNER TB
R/W REVIEWER SER

SUMMARY OF ADDITIONAL RIGHT OF WAY

LAW-7-2.17

18/82

12/9/2014 11:16:22 AM slporker
U:\1736087A\LAW\75923\row\sheets\75923RS001.dgn

NET RESIDUE = RECORD AREA - TOTAL PRO - NET TAKE

(D) = DEED AREA
(c) = CALCULATED AREA

ALL AREAS IN ACRES UNLESS OTHERWISE NOTED

GRANTEE:
ALL RIGHT OF WAY ACQUIRED IN THE NAME OF THE STATE OF OHIO UNLESS OTHERWISE SHOWN.

PARCEL NO.	OWNER	SHEET NO.	OWNERS RECORD		AUDITOR'S PARCEL	RECORD AREA	TOTAL P.R.O.	GROSS TAKE	P.R.O. IN TAKE	NET TAKE	STRUCTURE	NET RESIDUE LEFT	NET RESIDUE RIGHT	TYPE FUND	REMARKS	AS ACQUIRED BOOK	AS ACQUIRED PAGE
11-WL	RONNIE & LYNN M. KINGERY	46	O.R. 277	747	23-112-0600.002	7.350	0.000	0.740	0.000	0.740	NO		6.610	STATE	+ REMOVE 142 LF OF BOARD FENCE		
			O.R. 64	712													
12-WL	HOWARD W. & RUTH R. PERDUE	46	628	626	23-112-0749.002	0.194 (D)	0.000							STATE	LOT 214 BRENTWOOD VILLAGE NO. 7 (UNRECORDED PLAT)		
			628	626	23-112-0749.003	0.160 (D)	0.000								PT OF LOT 202 BRENTWOOD VILLAGE NO. 7		
			628	626	23-112-0749.004	0.193 (D)	0.000								LOT 201 BRENTWOOD VILLAGE NO. 7 (UNRECORDED PLAT)		
			628	626	23-112-0749.005	0.208 (D)	0.000								PT OF LOT 202 BRENTWOOD VILLAGE NO. 7		
	TOTAL 12-WL							0.401	0.000	0.401	NO						
12-WDV		46	628	626	23-112-0749.005									STATE			
			628	626	23-112-0749.003												
	TOTAL 12-WDV							0.355	0.000	0.355	NO						
	GRAND TOTAL					0.755 (D)	0.000	0.756 (c)	0.000	0.756 (c)		0.000	0.000		TOTAL TAKE (BY EXISTING DEED - 0.775 AC.)		
						0.756 (c)									PARCEL AREA CORRECTION - 0.756 (c)		
13-WL	ROBERT P. & ELIZABETH M. TABER	46	628	685	23-112-0749.001	0.490 (D)	0.000				YES				HOUSE		
			628	685	23-112-0749.006	0.435 (D)	0.000										
	TOTAL 13-WL							0.799	0.000	0.799							
13-WDV			628	685	23-112-0749.006			0.127	0.000	0.127	NO						
	GRAND TOTAL					0.925 (D)	0.000	0.926 (c)	0.000	0.926 (c)		0.000	0.000		TOTAL TAKE (BY EXISTING DEED - 0.925 AC.)		
						0.926 (c)									PARCEL AREA CORRECTION - 0.926 (c)		
14	NOT USED																
15	JAMES M. & GARRETTA LEWIS		O.R. 623	438	23-079-0800.000	29.590									NO R/W REQUIRED		
	(AKA GRETTA LEWIS)		O.R. 623	435													
			O.R. 623	432													
			437	553													
			437	553	23-112-0508.000	3.380											
			471	73													
			471	73	23-079-0804.000	27.070											
			O.R. 623	438	23-112-0502.000	0.860											
16-WL1	JEFFREY COMBS (AKA JEFFREY T. COMBS)	46-47	O.R. 595	772	23-079-0801.000	57.840	0.000	0.100	0.000	0.100	NO			STATE			
	(AKA JEFFERY COMBS, AKA JEFFERY T.)		624	244	23-112-0503.000	0.840	0.209	0.213	0.123	0.090							
	TOTAL 16-WL1							0.313	0.123	0.190							
16-WL2		48	O.R. 595	772	23-079-0801.000			1.481	0.000	1.481	NO			STATE			
			624	244													
	GRAND TOTAL					58.680	0.209	1.794	0.123	1.671		56.800					
16-T		46	O.R. 595	772	23-112-0503.000			0.045	0.000	0.045	NO			STATE	TO RECONSTRUCT DRIVE		
		81	624	244													
17	FRANCESCA KARLE AND		O.R. 569	506	23-112-0504.000	0.110									NO R/W REQUIRED		
	DAVID & ANTONETTA KARLE		O.R. 569	506	23-079-0803.000	0.810											
18	NOT USED																
19	WILLARD D. SPEARS		O.R. 249	208	23-112-0744.036	2.390									NO R/W REQUIRED		
			O.R. 249	208	23-112-0744.038	0.298											
			O.R. 249	208	23-112-0744.039	0.298											

NOTE: ALL TEMPORARY PARCELS TO BE OF 24 MONTH DURATION.

NOTE: UNDER NO CIRCUMSTANCES ARE TEMPORARY EASEMENTS TO BE USED FOR STORAGE OF MATERIAL OR EQUIPMENT BY THE CONTRACTOR UNLESS NOTED OTHERWISE.

LEGEND:
WD = WARRANTY DEED
WL = FEE SIMPLE WITH LIMITATION OF ACCESS
T = TEMPORARY EASEMENT
SL = SLOPE EASEMENT
S = SEWER EASEMENT
CH = CHANNEL EASEMENT
V = IN NAME OF ANOTHER STATE AGENCY, LPA, ETC.

+ DENOTES REMOVAL ITEMS, FOR DESCRIPTION OF REMOVAL ITEMS SEE CORRESPONDING RIGHT OF WAY PLAN SHEET

* DENOTES RIGHT OF WAY ENCROACHMENT

REV. BY	DATE	DESCRIPTION
FIELD REVIEW BY		DATE:
OWNER NOTIFIED BY		DATE:
DATE COMPLETED		

DRAFT Stage 3 - Not for Construction 09/23/2024

FEDERAL PROJECT NO. E(035)921 E(060)482
PID NO. 75923
STATE JOB NO. 495095
R/W DESIGNER TB
R/W REVIEWER SER

SUMMARY OF ADDITIONAL RIGHT OF WAY

LAW-7-2.17

19/82

U:\1736B714\LAW\75923\row\sheets\75923RS002.dgn 12/9/2014 11:16:22 AM sparker

NET RESIDUE = RECORD AREA - TOTAL PRO - NET TAKE

(c) = CALCULATED AREA

ALL AREAS IN ACRES
UNLESS OTHERWISE NOTED

GRANTEE:
ALL RIGHT OF WAY ACQUIRED IN THE NAME OF THE STATE OF OHIO UNLESS OTHERWISE SHOWN.

PARCEL NO.	OWNER	SHEET NO.	OWNERS RECORD		AUDITOR'S PARCEL	RECORD AREA	TOTAL P.R.O.	GROSS TAKE	P.R.O. IN TAKE	NET TAKE	STRUCTURE	NET RESIDUE LEFT	NET RESIDUE RIGHT	TYPE FUND	REMARKS	AS ACQUIRED BOOK	AS ACQUIRED PAGE
20-WL	PENNY SUE PANNELL	46	567	313	23-112-0744.009	0.275 (c)	0.000	0.028	0.000	0.028				STATE	LOT 135 - BRENTWOOD VILLAGE SEC. 6		
			567	313	23-112-0744.008	0.233 (c)	0.000	0.000	0.000	0.000					LOT 134 - BRENTWOOD VILLAGE SEC. 6		
	TOTAL 20-WL					0.508 (c)	0.000	0.028	0.000	0.028	YES		0.460		SHED		
20-T		46	567	313	23-112-0744.009			0.014	0.000	0.014				STATE	TO REMOVE SHED		
		81															
21-WL	ROSE ANN CYRUS	46	630	737	23-112-0744.010	0.281 (c)	0.000	0.124	0.000	0.124				STATE	LOT 136 - BRENTWOOD VILLAGE SEC. 6		
											YES				HOUSE		
21-WDV		46	630	737	23-112-0744.010			0.157	0.000	0.157				STATE			
	GRAND TOTAL					0.281 (c)		0.281	0.000	0.281			0.000		TOTAL TAKE (BY EXISTING DEED)		
22-WL	JOHN M. HILL, II & MANDY J. HILL	46	O.R. 475	436	23-112-0744.011	0.280 (c)	0.000	0.280	0.000	0.280	YES		0.000	STATE	LOT 137 - BRENTWOOD VILLAGE SEC. 6, HOUSE		
															TOTAL TAKE (BY EXISTING DEED)		
23-WL	BRAD & EMMA MCNEILL	46	O.R. 467	372	23-112-0744.012	0.283 (c)	0.000	0.280	0.000	0.280	YES			STATE	LOT 138 - BRENTWOOD SEC. 6 [AUDITOR = 0.2813 (c)]		
23-WD		46	O.R. 467	372	23-112-0744.012			0.003	0.000	0.003	P			STATE	HOUSE, PLAY CENTER		
	GRAND TOTAL					0.283 (c)	0.000	0.283	0.000	0.283			0.000		TOTAL TAKE (BY EXISTING DEED)		
24-WL	ROBERT & CONCEPCION J. HINTZ	46	631	104	23-112-0744.013	0.239 (c)	0.000	0.221	0.000	0.221				STATE	LOT 139 - BRENTWOOD VILLAGE SEC. 6		
24-WD		46	631	104	23-112-0744.013			0.018	0.000	0.018	YES (3)			STATE	HOUSE, SHOP, SHED		
	GRAND TOTAL					0.239 (c)	0.000	0.239	0.000	0.239			0.000		TOTAL TAKE (BY EXISTING DEED)		
25-WL	JAMES T. & MELISSA POINTER	46	O.R. 470	167	23-112-0744.014	0.242 (c)	0.000				YES (2)			STATE	LOT 140 - BRENTWOOD SEC. 6 [AUDITOR = 0.2406 (c)]		
			O.R. 464	347	23-112-0744.015	0.242 (c)	0.000				P				LOT 141 - BRENTWOOD SEC. 6 [AUDITOR = 0.2406 (c)]		
	TOTAL 25-WL						0.000	0.447	0.000	0.447					VACANT HOUSE, GARAGE, POOL		
25-WD		46	O.R. 470	167	23-112-0744.014									STATE			
			O.R. 464	347	23-112-0744.015												
	TOTAL 25-WD							0.037	0.000	0.037							
	GRAND TOTAL					0.484 (c)	0.000	0.484	0.000	0.484			0.000		TOTAL TAKE (BY EXISTING DEED)		
26	NOT USED																
27-WL	RYAN B. & LESLIE R. DAVIS	46	O.R. 570	635	23-112-0744.016	0.243 (c)	0.000	0.225	0.000	0.225	YES			STATE	LOT 142 - BRENTWOOD SEC. 6 [AUDITOR = 0.2424 (c)]		
											P				HOUSE, SHED		
27-WD		46	O.R. 570	635	23-112-0744.016			0.018	0.000	0.018				STATE			
	GRAND TOTAL					0.243 (c)	0.000	0.243	0.000	0.243			0.000		TOTAL TAKE (BY EXISTING DEED)		
28-WL	DANNY HOLSCHUH AND FRED HAYES	46	567	625	23-112-0744.017	0.291 (c)	0.000	0.027	0.000	0.027	NO		0.264	STATE	LOT 143 - BRENTWOOD SEC. 6 [AUDITOR = 0.2901 (c)]		
29	GLEN D. & CAROL J. CHAPMAN		O.R. 572	722	23-112-0744.018	0.261 (c)									LOT 144 - BRENTWOOD VILLAGE SEC. 6		
															NO R/W REQUIRED		
30	NATALIE L. CAMPBELL		O.R. 486	323	23-112-0744.019	0.248 (c)									LOT 145 - BRENTWOOD VILLAGE SEC. 6		
															NO R/W REQUIRED		

NOTE: ALL TEMPORARY PARCELS TO BE OF 24 MONTH DURATION.

NOTE: UNDER NO CIRCUMSTANCES ARE TEMPORARY EASEMENTS TO BE USED FOR STORAGE OF MATERIAL OR EQUIPMENT BY THE CONTRACTOR UNLESS NOTED OTHERWISE.

LEGEND:
WD = WARRANTY DEED
WL = FEE SIMPLE WITH LIMITATION OF ACCESS
T = TEMPORARY EASEMENT
SL = SLOPE EASEMENT
S = SEWER EASEMENT
CH = CHANNEL EASEMENT
V = IN NAME OF ANOTHER STATE AGENCY, LPA, ETC.

+ DENOTES REMOVAL ITEMS, FOR DESCRIPTION OF REMOVAL ITEMS SEE CORRESPONDING RIGHT OF WAY PLAN SHEET

* DENOTES RIGHT OF WAY ENCROACHMENT

REV. BY	DATE	DESCRIPTION
FIELD REVIEW BY		DATE:
OWNERSHIP VERIFIED BY		DATE:
DATE COMPLETED		

09/23/2024

DRAFT Stage 3 - Not for Construction

FEDERAL PROJECT NO. E(035)921 E(060)482

PID NO. 75923

STATE JOB NO. 495095

R/W DESIGNER TB

R/W REVIEWER SER

SUMMARY OF ADDITIONAL RIGHT OF WAY

LAW-7-2.17

20/82

U:\1736087\14\LAW\75923\row\sheets\75923RS003.dgn 12/9/2014 11:16:23 AM siporker

NET RESIDUE = RECORD AREA - TOTAL PRO - NET TAKE

(c) = CALCULATED AREA

ALL AREAS IN ACRES UNLESS OTHERWISE NOTED

GRANTEE:
ALL RIGHT OF WAY ACQUIRED IN THE NAME OF THE STATE OF OHIO UNLESS OTHERWISE SHOWN.

PARCEL NO.	OWNER	SHEET NO.	OWNERS RECORD		AUDITOR'S PARCEL	RECORD AREA	TOTAL P.R.O.	GROSS TAKE	P.R.O. IN TAKE	NET TAKE	STRUCTURE	NET RESIDUE LEFT	NET RESIDUE RIGHT	TYPE FUND	REMARKS	AS ACQUIRED BOOK	AS ACQUIRED PAGE
31-WL	JAMES R. & REBECCA MCCOMAS	46	571	253	23-112-0744.061	0.288 (c)	0.000				YES (2)			STATE	LOT 199 - BRENTWOOD SEC. 6 [AUDITOR = 0.259 (c)]		
			571	253	23-112-0744.060	0.225 (c)	0.000								LOT 198 - BRENTWOOD SEC. 6 [AUDITOR = 0.2351 (c)]		
	TOTAL 31-WL							0.471	0.000	0.471					HOUSE, GARAGE		
31-WDV		46	571	253	23-112-0744.061									STATE			
			571	253	23-112-0744.060												
	TOTAL 31-WDV							0.042	0.000	0.042							
	GRAND TOTAL					0.513 (c)	0.000	0.513	0.000	0.513		0.000	0.000		TOTAL TAKE (BY EXISTING DEED)		
32	NOT USED																
33-WL	ROBERT & CONCEPCION HINTZ	46	O.R. 423	716	23-112-0744.059	0.242 (c)	0.000	0.242	0.000	0.242	NO			STATE	LOT 197 - BRENTWOOD SEC. 6 [AUDITOR = 0.2424 (c)]		
			O.R. 423	716	23-112-0744.058	0.274 (c)	0.000	0.274	0.000	0.274					LOT 196 - BRENTWOOD SEC. 6 [AUDITOR = 0.2736 (c)]		
	TOTAL 33-WL					0.516 (c)	0.000	0.516	0.000	0.516		0.000	0.000		TOTAL TAKE (BY EXISTING DEED)		
34	NOT USED																
35-WL	STATE OF OHIO	46	O.R. 756	468	23-112-0744.057	0.312 (c)	0.000	0.312	0.000	0.312		0.000	0.000	STATE	LOT 195 - BRENTWOOD VILLAGE SEC. 6		
	DEPARTMENT OF TRANSPORTATION																
36-WL	STATE OF OHIO	46-47	O.R. 756	466	23-112-0744.056	0.339 (c)	0.000	0.339	0.000	0.339		0.000	0.000	STATE	LOT 194 - BRENTWOOD VILLAGE SEC. 6		
	DEPARTMENT OF TRANSPORTATION																
37-WL	STEVEN D. & LESLIE R. FLOUHOUSE	46-47	596	526	23-112-0744.055	0.352 (c)	0.000	0.352	0.000	0.352	NO	0.000	0.000	STATE	LOT 193 - BRENTWOOD SEC. 6 [AUDITOR = 0.3508 (c)]		
															TOTAL TAKE (BY EXISTING DEED)		
38-WL	DWAYNE E. & SHANNON ALLEN	47	O.R. 510	349	23-112-0744.054	0.359 (c)	0.000	0.359	0.000	0.359		0.000	0.000	STATE	LOT 192 - BRENTWOOD SEC. 6 [AUDITOR = 0.3581 (c)]		
											YES				HOUSE		
															TOTAL TAKE (BY EXISTING DEED)		
39-WL	JERRY D. & ANGELA D. EDDY	47	570	438	23-112-0744.053	0.297 (c)	0.000				YES			STATE	LOT 191 - BRENTWOOD SEC. 6 [AUDITOR = 0.3189 (c)]		
			570	438	23-112-0744.052	0.346 (c)	0.000				P				LOT 190 - BRENTWOOD SEC. 6 [AUDITOR = 0.3453 (c)]		
	TOTAL 39-WL							0.568	0.000	0.568					HOUSE, SHED		
39-WDV		47	570	438	23-112-0744.053									STATE			
			570	438	23-112-0744.052												
	TOTAL 39-WDV							0.075	0.000	0.075							
	GRAND TOTAL					0.643 (c)	0.000	0.643	0.000	0.643			0.000		TOTAL TAKE (BY EXISTING DEED)		
40	NOT USED																

NOTE: ALL TEMPORARY PARCELS TO BE OF 24 MONTH DURATION.

NOTE: UNDER NO CIRCUMSTANCES ARE TEMPORARY EASEMENTS TO BE USED FOR STORAGE OF MATERIAL OR EQUIPMENT BY THE CONTRACTOR UNLESS NOTED OTHERWISE.

LEGEND:
- WD = WARRANTY DEED
- WL = FEE SIMPLE WITH LIMITATION OF ACCESS
- T = TEMPORARY EASEMENT
- SL = SLOPE EASEMENT
- S = SEWER EASEMENT
- CH = CHANNEL EASEMENT
- V = IN NAME OF ANOTHER STATE AGENCY, LPA, ETC.

* DENOTES REMOVAL ITEMS, FOR DESCRIPTION OF REMOVAL ITEMS SEE CORRESPONDING RIGHT OF WAY PLAN SHEET

* DENOTES RIGHT OF WAY ENCROACHMENT

REV. BY	DATE	DESCRIPTION
FIELD REVIEW BY		DATE:
OTHER REVIEWED BY		DATE: 09/23/2024
DATE COMPLETED		

DRAFT Stage 3 - Not for Construction

FEDERAL PROJECT NO. E(035)921 E(060)482

PID NO. 75923

STATE JOB NO. 495095

R/W DESIGNER TB
R/W REVIEWER SER

SUMMARY OF ADDITIONAL RIGHT OF WAY

LAW-7-2.17

U:\1736087\14\LAW\75923\row\sheets\75923RS004.dgn 12/9/2014 11:16:24 AM slporker

NET RESIDUE = RECORD AREA - TOTAL PRO - NET TAKE

(c) = CALCULATED AREA

ALL AREAS IN ACRES
UNLESS OTHERWISE NOTED

GRANTEE:
ALL RIGHT OF WAY ACQUIRED IN THE NAME OF THE STATE OF OHIO UNLESS OTHERWISE SHOWN.

PARCEL NO.	OWNER	SHEET NO.	OWNERS RECORD		AUDITOR'S PARCEL	RECORD AREA	TOTAL P.R.O.	GROSS TAKE	P.R.O. IN TAKE	NET TAKE	STRUCTURE	NET RESIDUE LEFT	NET RESIDUE RIGHT	TYPE FUND	REMARKS	AS ACQUIRED BOOK	AS ACQUIRED PAGE
41-WL	RONALD L. & OSIE M. CLEVELAND	47	O.R. 183	341	23-112-0744.051	0.321 (c)	0.000	0.223	0.000	0.223	YES		0.098	STATE	LOT 189 - BRENTWOOD SEC. 6 [AUDITOR = 0.3214 (c)]		
											P				HOUSE, CARPORT		
															TOTAL TAKE (BY EXISTING DEED)		
41-E		47	O.R. 183	341	23-112-0744.051			0.098	0.000	0.098				STATE	POTENTIAL UNECONOMIC REMNANT		
42-WL	CARLOS D. & PATRICIA A. MARCUM	47	O.R. 244	119	23-112-0744.050	0.297 (c)	0.000	0.146	0.000	0.146	NO			STATE	LOT 188 - BRENTWOOD SEC. 6 [AUDITOR = 0.2975 (c)]		
			O.R. 244	119	23-112-0744.049	0.271 (c)	0.000	0.012	0.000	0.012					LOT 187 - BRENTWOOD SEC. 6 [AUDITOR = 0.2733 (c)]		
	TOTAL					0.568 (c)	0.000	0.158	0.000	0.158			0.410				
43	HOWARD W. PERDUE, JR. & RUTH R. PERDUE		567	51	23-112-0744.047	0.255 (c)									LOT 187 - BRENTWOOD VILLAGE SEC. 6		
															NO R/W REQUIRED		
44-E	PATRICIA R. LEWIS	48	O.R. 607	618	23-078-1200.000	1.160	0.000	1.160	0.000	1.160	NO	0.000		STATE	TOTAL TAKE (BY EXISTING DEED)		
	(AKA PATRICIA RUTH LEWIS)		485	653		1.161 (c)									SEE PARCEL 46A FOR STRUCTURES		
45-WL	RICHARD HOUSTON	46-48	489	644	23-079-0802.000	1.310	0.020	1.310	0.020	1.290	P	0.000	0.000	STATE	VACANT MOBILE HOME		
						1.307 (c)									TOTAL TAKE (BY EXISTING DEED)		
46-WL	LILLIAN F. POYNTER	47-49	589	487	23-079-0100.000	13.540	0.064	11.835	0.038	11.797	Y, P(2)	4.291	0.274	STATE	VACANT HOUSE, (2) SHEDS		
	AND SUSAN POYNTER DELKER					16.426 (c)									PARCEL AREA CORRECTION - 16.426 (c)		
															SEE PARCEL 46A FOR ADD. STRUCTURES		
46-E		48-49	589	487	23-079-0100.000			4.291	0.000	4.291	P			STATE	LANDLOCKED, SHED		
		78															
46A	PATRICIA R. LEWIS	47T	NONE	NONE	NONE						YES (2)				(2) HOUSES, SEE PARCEL 44-E		
	(AKA PATRICIA RUTH LEWIS)										P (2)				(2) SHEDS		
47-WL	THE TWENTIETH STREET BANK,	46-47	536	700	23-112-0744.____	ORG 95.78	0.831	0.318	0.241	0.077	NO			STATE	REMAINDER OF LAND NOT PLATTED UNDER		
	A WEST VIRGINIA BANKING CORPORATION														BRENTWOOD VILLAGE SECTION 6		
47-WDV		46	536	700	23-112-0744.____			0.157	0.122	0.035	NO			STATE			
		81															
	GRAND TOTAL						0.831	0.475	0.363	0.112		—	—				
48-WL	W.F. McCOY (AKA DR. W.F. McCOY)	47	303	118	NONE	ORG 100.00	0.397	0.073	0.073	0.000	NO	—	—	STATE			
	(HEIRS & ASSIGNS)																
49-WL	CAROL R. FIELDS	47	O.R. 403	141	23-078-1300.001	0.670	0.000	0.285	0.000	0.285	YES		0.385	STATE	HOUSE, SWIMMING POOL		
											P				+ 158 LF OF WIRE FENCE		
49-T		47						0.169	0.000	0.169				STATE	TO REMOVE STRUCTURE		

NOTE: ALL TEMPORARY PARCELS TO BE OF 24 MONTH DURATION.

NOTE: UNDER NO CIRCUMSTANCES ARE TEMPORARY EASEMENTS TO BE USED FOR STORAGE OF MATERIAL OR EQUIPMENT BY THE CONTRACTOR UNLESS NOTED OTHERWISE.

LEGEND:
- WD = WARRANTY DEED
- WL = FEE SIMPLE WITH LIMITATION OF ACCESS
- T = TEMPORARY EASEMENT
- SL = SLOPE EASEMENT
- S = SEWER EASEMENT
- CH = CHANNEL EASEMENT
- V = IN NAME OF ANOTHER STATE AGENCY, LPA, ETC.

+ DENOTES REMOVAL ITEMS, FOR DESCRIPTION OF REMOVAL ITEMS SEE CORRESPONDING RIGHT OF WAY PLAN SHEET

* DENOTES RIGHT OF WAY ENCROACHMENT

REV. BY	DATE	DESCRIPTION
FIELD REVIEW BY		DATE:
OWNERSHIP VERIFIED BY	09/23/2024	DATE:
DATE COMPLETED		

DRAFT Stage 3 - Not for Construction

FEDERAL PROJECT NO. E(035)921 E(060)482

PID NO. 75923

STATE JOB NO. 495095

R/W DESIGNER TB
R/W REVIEWER SER

SUMMARY OF ADDITIONAL RIGHT OF WAY

LAW-7-2.17

U:\1736087\14\LAW\75923\row\sheets\75923RS005.dgn 12/9/2014 11:16:25 AM siporker

NET RESIDUE = RECORD AREA - TOTAL PRO - NET TAKE

(c) = CALCULATED AREA

ALL AREAS IN ACRES UNLESS OTHERWISE NOTED

GRANTEE:
ALL RIGHT OF WAY ACQUIRED IN THE NAME OF THE STATE OF OHIO UNLESS OTHERWISE SHOWN.

PARCEL NO.	OWNER	SHEET NO.	OWNERS RECORD		AUDITOR'S PARCEL	RECORD AREA	TOTAL P.R.O.	GROSS TAKE	P.R.O. IN TAKE	NET TAKE	STRUCTURE	NET RESIDUE LEFT	NET RESIDUE RIGHT	TYPE FUND	REMARKS	AS ACQUIRED BOOK	AS ACQUIRED PAGE
50-WL	DONALD RAYMOND WAUGH	47-49	O.R. 348	403	23-078-1300.000	4.630	0.000	2.911	0.000	2.911	YES (2)	0.272	1.447	STATE	BARN, WOOD SHED		
	(AKA DONALD WAUGH)		455	851													
50-E		49	O.R. 348	403	23-078-1300.000			0.272	0.000	0.272	NO			STATE	LANDLOCKED		
			455	851													
50-T		49	O.R. 348	403	23-078-1300.000			0.019	0.000	0.019				STATE	TO REMOVE SHED		
		81	455	851													
51	OTIS M. & CATHRYN J. JUSTICE		461	163	23-078-1001.000	0.290									NO R/W REQUIRED		
52B	SARAH CECIL, JENNIFER CECIL,		O.R. 730	290	23-079-1400.000	22.490									NO R/W REQUIRED		
	AND ADAM CECIL																
53-WL	JOHNNIE R. SCOTT & SARAH A. GILLESPIE	49	O.R. 634	18	23-078-1000.002	1.160	0.282	0.367	0.184	0.183	P (2)		0.695	STATE	TWO SHEDS		
			O.R. 647	629											PERPETUAL ESMT & RW FOR T.R. 388		
53-CH		49	O.R. 634	18	23-078-1000.002			0.063	0.015	0.048				STATE			
		81															
53-T		49	O.R. 634	18	23-078-1000.002			0.024	0.000	0.024				STATE	TO REMOVE SHEDS		
		81															
54	KERSTEN B. & KINDRA R. HARRIS		O.R. 622	281	23-078-1000.000	0.520									NO R/W REQUIRED		
55-WL1	BOBBY L. & ROBERTA J. ESTEP	49	533	611	23-080-0700.000	3.040	0.000	1.633	0.000	1.633	YES (4)			STATE	HOUSE, GARAGE, SHED, SWIM DECK		
	(AKA, BOBBY L. ESTEP & ROBERTA BROWN)		513	623	23-078-1000.001	1.400	0.000	0.991	0.000	0.991							
	(AKA, BOBBY L. ESTEP & BOBBIE J. BROWN)		R.R. 10	43											ROAD RECORD THAT ESTB. ESTEP LANE (T.R. 388)		
	TOTAL 55-WL1							2.624	0.000	2.624							
55-WL2		49	O.R. 118	404	23-079-1800.001	0.500	0.000	0.304	0.000	0.304				STATE			
			580	722													
	GRAND TOTAL					4.940	0.000	2.928	0.000	2.928		2.277	0.350		PROPERTY AREA CORRECTION - 5.555 (c)		
						5.555 (c)											
55-E1		49	513	623	23-078-1000.001			0.350	0.000	0.350				STATE	LANDLOCKED		
55-E2		49	533	611	23-080-0700.000			2.066	0.000	2.066	YES (2)			STATE	LANDLOCKED, CABIN, COOP		
		78	O.R. 118	404	23-079-1800.001			0.197	0.000	0.197							
			580	722													
			513	623	23-078-1000.001			0.014	0.000	0.014							
	TOTAL 55-E2							2.277	0.000	2.277							
55-T		49	513	623	23-078-1000.001			0.350	0.000	0.350				STATE	TO REMOVE STRUCTURE		
															SAME AREA AS PARCEL 55E-1		
56	CHARLES & CHARLOTTE POYNTER		279	650	23-078-1100.000	1.170									NO R/W REQUIRED		
57-WL	BARBARA SHOCKLEY	49	502	248	23-080-0400.000	5.040	0.054	2.336	0.000	2.336	NO			STATE	+ REMOVE 50 L.F. OF CHAIN LINK FENCE		
			502	248	23-080-0200.000	0.240	0.039	0.000	0.000	0.000							
	TOTAL 57-WL					5.280	0.093	2.336	0.000	2.336			2.851				
58	NOT USED																

NOTE: ALL TEMPORARY PARCELS TO BE OF 24 MONTH DURATION.

NOTE: UNDER NO CIRCUMSTANCES ARE TEMPORARY EASEMENTS TO BE USED FOR STORAGE OF MATERIAL OR EQUIPMENT BY THE CONTRACTOR UNLESS NOTED OTHERWISE.

LEGEND:
- WD = WARRANTY DEED
- WL = FEE SIMPLE WITH LIMITATION OF ACCESS
- T = TEMPORARY EASEMENT
- SL = SLOPE EASEMENT
- S = SEWER EASEMENT
- CH = CHANNEL EASEMENT
- V = IN NAME OF ANOTHER STATE AGENCY, LPA, ETC.

+ DENOTES REMOVAL ITEMS, FOR DESCRIPTION OF REMOVAL ITEMS SEE CORRESPONDING RIGHT OF WAY PLAN SHEET

* DENOTES RIGHT OF WAY ENCROACHMENT

REV. BY	DATE	DESCRIPTION
FIELD REVIEW BY		DATE:
CONFERENCED BY		DATE: 09/23/2024
DATE COMPLETED		

DRAFT Stage 3 - Not for Construction

FEDERAL PROJECT NO. E(035)921 E060482
PID NO. 75923
STATE JOB NO. 495095
R/W DESIGNER TB
R/W REVIEWER SER

SUMMARY OF ADDITIONAL RIGHT OF WAY

LAW-7-2.17

sparker 12/9/2014 11:16:26 AM U:\1736874\LAW\75923\row\sheets\75923RS006.dgn

NET RESIDUE = RECORD AREA - TOTAL PRO - NET TAKE

(c) = CALCULATED AREA

ALL AREAS IN ACRES UNLESS OTHERWISE NOTED

GRANTEE:
ALL RIGHT OF WAY ACQUIRED IN THE NAME OF THE STATE OF OHIO UNLESS OTHERWISE SHOWN.

PARCEL NO.	OWNER	SHEET NO.	OWNERS RECORD		AUDITOR'S PARCEL	RECORD AREA	TOTAL P.R.O.	GROSS TAKE	P.R.O. IN TAKE	NET TAKE	STRUCTURE	NET RESIDUE LEFT	NET RESIDUE RIGHT	TYPE FUND	REMARKS	AS ACQUIRED BOOK	AS ACQUIRED PAGE
59-WL	THOMAS D. THORNBURGH, SR. &	49-50	O.R. 455	322	23-079-1800.000	3.020	0.194	3.044	0.068	2.976	YES (3)			STATE	HOUSE, (2) SHEDS		
	BARBARA J. HODGE THORNBURGH		O.R. 457	465	23-080-0100.000	0.500	0.037	0.262	0.000	0.262							
			O.R. 457	465	23-080-0300.000	0.010	0.003	0.000	0.000	0.000							
	TOTAL 59-WL							3.306	0.068	3.238							
59-WDV		49-50	O.R. 455	322	23-079-1800.000			0.126	0.126	0.000				STATE			
			O.R. 457	465	23-080-0100.000			0.037	0.037	0.000							
			O.R. 457	465	23-080-0300.000			0.003	0.003	0.000							
	TOTAL 59-WDV							0.166	0.166	0.000							
	GRAND TOTAL					3.530	0.234	3.472	0.234	3.238			0.210		PROPERTY AREA CORRECTION - 3.682 (c)		
						3.682 (c)											
60-WL	AUDREY SCHOCKLEY	49-50	550	141	23-079-1500.002	18.710	0.079	1.576	0.079	1.497	YES (9)			STATE	HOUSE, BARN, (2) PENS, (4) SHEDS, TRAILER PORT		
															GAS & OIL LEASE TO WEBSTER MYERS (LV 40, PG 113)		
60-WD		49-50	550	141	23-079-1500.002		0.000	0.212	0.000	0.212					DRIVEWAY RELOCATION		
	GRAND TOTAL					18.710	0.079	1.788	0.079	1.709		16.922					
61-WL	GEARLD & VALERIA SHOCKLEY	50	O.R. 4	442	23-079-1500.003	7.490	0.377	1.343	0.096	1.247	P			STATE	(2) PRIVATE GAS LINES - EXACT LOCATION UNKNOWN		
			610	82													
61-WD		49-50	O.R. 4	442	23-079-1500.003			0.689	0.281	0.408				STATE			
			610	82													
			O.R. 4	442	23-079-1500.000	7.830	0.000	0.000	0.000	0.000							
			610	82													
			O.R. 4	442	23-079-1500.001	7.830	0.000	0.000	0.000	0.000							
			610	82													
	GRAND TOTAL					23.150	0.377	2.032	0.377	1.655		21.118					
62-WL	STEVEN S. ADKINS	50	O.R. 404	206	23-079-1500.004	1.040	0.075	1.040	0.075	0.965	YES (2)	0.000	0.000	STATE	HOUSE, GARAGE		
						1.126 (c)									TOTAL TAKE (BY EXISTING DEED)		
63-WL	THOMAS E. & SALLY NEWTON	50	O.R. 72	70	23-079-1700.000	3.440	0.178	1.499	0.070	1.429	YES (2)			STATE	GARAGE, BLOCK SHELTER		
63-WDV		49-50	O.R. 72	70	23-079-1700.000			0.181	0.108	0.073				STATE	+ REMOVE 500 LF OF WIRE FENCE		
	GRAND TOTAL					3.440	0.178	1.680	0.178	1.502			1.760				
64-WL	EVERETT D. MARTIN, JR. AND GINA MARTIN	50	O.R. 158	187	23-079-0200.006	0.520	0.066	0.374	0.063	0.311	YES		0.138	STATE	MOBILE HOME		
						0.515 (c)									PROPERTY AREA CORRECTION - 0.515 (c)		
64-E		50	O.R. 158	187	23-079-0200.006			0.141	0.003	0.138	P			STATE	SHED		
64-T		50	O.R. 158	187	23-079-0200.006			0.141	0.003	0.138				STATE	TO REMOVE MOBILE HOME & SHED		
															SAME AREA AS PARCEL 64-E		
65-WL	SKY INVESTMENT PROPERTIES, LLC	50	O.R. 631	474	23-079-0204.000	5.300	0.387	0.650	0.000	0.650				STATE			
			O.R. 351	184	23-078-0200.000	9.270	0.608	0.000	0.000	0.000							
	TOTAL 65-WL					14.570	0.995	0.650	0.000	0.650		12.925					
66-WL	EVERETT MARTIN, JR.	50	547	639	23-079-0200.004	4.300	0.221	3.507	0.123	3.384	YES			STATE	SHELTER		
66-WD		50	547	639	23-079-0200.004			0.217	0.098	0.119				STATE			
	GRAND TOTAL					4.300	0.221	3.724	0.221	3.503			0.570		PROPERTY AREA CORRECTION - 4.294 (c)		
						4.294 (c)											
66-E		50	547	639	23-079-0200.004			0.570	0.000	0.570				STATE	LANDLOCKED		

NOTE: ALL TEMPORARY PARCELS TO BE OF 24 MONTH DURATION.

NOTE: UNDER NO CIRCUMSTANCES ARE TEMPORARY EASEMENTS TO BE USED FOR STORAGE OF MATERIAL OR EQUIPMENT BY THE CONTRACTOR UNLESS NOTED OTHERWISE.

LEGEND:
- WD = WARRANTY DEED
- WL = FEE SIMPLE WITH LIMITATION OF ACCESS
- T = TEMPORARY EASEMENT
- SL = SLOPE EASEMENT
- S = SEWER EASEMENT
- CH = CHANNEL EASEMENT
- V = IN NAME OF ANOTHER STATE AGENCY, LPA, ETC.

+ DENOTES REMOVAL ITEMS, FOR DESCRIPTION OF REMOVAL ITEMS SEE CORRESPONDING RIGHT OF WAY PLAN SHEET

* DENOTES RIGHT OF WAY ENCROACHMENT

REV. BY	DATE	DESCRIPTION
FIELD REVIEW BY		DATE:
OWNERSHIP VERIFIED BY		DATE: 09/23/2024
DATE COMPLETED		

DRAFT Stage 3 - Not for Construction

FEDERAL PROJECT NO. E(035)921 E(060)482
PID NO. 75923
STATE JOB NO. 495095
R/W DESIGNER TB
R/W REVIEWER SER

SUMMARY OF ADDITIONAL RIGHT OF WAY

LAW-7-2.17

U:\1736087A\LAW\75923\row\sheets\75923RS007.dgn 12/9/2014 11:16:27 AM sparker

NET RESIDUE = RECORD AREA - TOTAL PRO - NET TAKE

(c) = CALCULATED AREA

ALL AREAS IN ACRES
UNLESS OTHERWISE NOTED

GRANTEE:
ALL RIGHT OF WAY ACQUIRED IN THE NAME OF THE STATE OF OHIO UNLESS OTHERWISE SHOWN.

PARCEL NO.	OWNER	SHEET NO.	OWNERS RECORD		AUDITOR'S PARCEL	RECORD AREA	TOTAL P.R.O.	GROSS TAKE	P.R.O. IN TAKE	NET TAKE	STRUCTURE	NET RESIDUE LEFT	NET RESIDUE RIGHT	TYPE FUND	REMARKS	AS ACQUIRED BOOK	AS ACQUIRED PAGE
67	JERRY L. & PAULA A. NOBLE		O.R. 145	460	23-079-0205.000	1.060									NO R/W REQUIRED		
			592	68	23-079-0203.000	0.570											
68-WL	WALTER L. PLUMLEY	52	O.R. 170	587	23-079-0200.000	0.740	0.047	0.027	0.000	0.027	NO		0.666	STATE			
69-WL	WALTER L. & BRENDA H. PLUMLEY	50-52	517	201	23-079-0200.002	0.500	0.016	0.001	0.000	0.001	YES (2)			STATE	HOUSE, SWIMMING POOL		
			604	484	23-079-0200.022	0.490	0.000	0.491	0.000	0.491							
			O.R. 30	192	23-079-0200.025	0.290	0.000	0.244	0.000	0.244							
			O.R. 298	371	23-079-0200.026	0.380	0.000	0.378	0.000	0.378							
			O.R. 521	129	23-079-0200.027	0.200	0.052	0.203	0.052	0.151							
			O.R. 521	129	23-079-0200.028	0.450	0.076	0.411	0.058	0.353							
	TOTAL 69-WL					2.310	0.144	1.728	0.110	1.618							
69-WDV		51	O.R. 30	192	23-079-0200.025			0.041	0.000	0.041				STATE			
	GRAND TOTAL	82				2.310	0.144	1.769	0.110	1.659			0.069		PROPERTY AREA CORRECTION - 1.872 (c)		
						1.872 (c)											
69-E		50	517	201	23-079-0200.002			0.051	0.016	0.035				STATE	POTENTIAL UNECONOMIC REMNANT		
		52	O.R. 521	129	23-079-0200.028			0.052	0.018	0.034							
	TOTAL 69-E							0.103	0.034	0.069							
70-WL	EARL D. BRAMMER (HEIRS & ASSIGNS)	50	171	238	23-079-1500.____	ORG. 97.00	0.000	0.586	0.000	0.586		——	——	STATE	WITHIN SYMMES CREEK, EAST OF PARCELS 61 & 62		
71-WL	EVERETT D. MARTIN, JR. AND GINA L. MARTIN	50-51	570	117	23-079-0200.005	0.140					YES (2)			STATE	HOUSE, COMMERCIAL HORSE BARN		
		82	450	383	23-079-0201.000	0.340											
		50-51	450	383	23-079-0300.000	0.940											
	TOTAL 71-WL							0.311	0.052	0.259				STATE			
71-WDV		50-51	450	383	23-079-0300.000												
		82	570	117	23-079-0200.005												
			450	383	23-079-0201.000												
	TOTAL 71-WDV							1.061	0.101	0.960				STATE			
	GRAND TOTAL					1.420	0.153	1.372	0.153	1.219		0.000	0.000		TOTAL TAKE (BY EXISTING DEED)		
						1.372 (c)									PROPERTY AREA CORRECTION - 1.372 (c)		
72-WDV	RONALD KEITH MOORE & KIMBERLY D. MOORE	50-51	O.R. 321	297	23-079-0200.013	0.930	0.000	0.278	0.000	0.278	NO	0.652		STATE	LOT 4 - JAMESTOWN PARK SUBDIVISION		
73-E	STATE OF OHIO	52	O.R. 710	227	23-079-0206.000	0.160	0.000	0.068	0.000	0.068	NO			STATE			
	DEPARTMENT OF TRANSPORTATION				23-083-0920.000	0.070	0.000	0.006	0.000	0.006							
	TOTAL 73-E					0.230	0.000	0.074	0.000	0.074							
74	MARY R. SMITH		483	508	23-083-0912.000	0.263 (c)									LOT 8 - JO MAR SUBDIVISION NO R/W REQUIRED		

NOTE: ALL TEMPORARY PARCELS TO BE OF 24 MONTH DURATION.

NOTE: UNDER NO CIRCUMSTANCES ARE TEMPORARY EASEMENTS TO BE USED FOR STORAGE OF MATERIAL OR EQUIPMENT BY THE CONTRACTOR UNLESS NOTED OTHERWISE.

LEGEND:
WD = WARRANTY DEED
WL = FEE SIMPLE WITH LIMITATION OF ACCESS
T = TEMPORARY EASEMENT
SL = SLOPE EASEMENT
S = SEWER EASEMENT
CH = CHANNEL EASEMENT
V = IN NAME OF ANOTHER STATE AGENCY, LPA, ETC.

+ DENOTES REMOVAL ITEMS, FOR DESCRIPTION OF REMOVAL ITEMS SEE CORRESPONDING RIGHT OF WAY PLAN SHEET

* DENOTES RIGHT OF WAY ENCROACHMENT

REV. BY	DATE	DESCRIPTION
FIELD REVIEW BY		DATE:
CONSTRUCTED BY		DATE:
DATE COMPLETED		

DRAFT Stage 3 - Not for Construction

09/23/2024

FEDERAL PROJECT NO. E(035)921 E(060)482

PID NO. 75923

STATE JOB NO. 495095

R/W DESIGNER TB
R/W REVIEWER SER

SUMMARY OF ADDITIONAL RIGHT OF WAY

LAW-7-2.17

U:\1736087\4\LAW\75923\row\sheets\75923RSD08.dgn 12/9/2014 11:16:28 AM siparker

NET RESIDUE = RECORD AREA - TOTAL PRO - NET TAKE

(c) = CALCULATED AREA

ALL AREAS IN ACRES
UNLESS OTHERWISE NOTED

GRANTEE:
ALL RIGHT OF WAY ACQUIRED IN THE NAME OF THE STATE OF OHIO UNLESS OTHERWISE SHOWN.

PARCEL NO.	OWNER	SHEET NO.	OWNERS RECORD		AUDITOR'S PARCEL	RECORD AREA	TOTAL P.R.O.	GROSS TAKE	P.R.O. IN TAKE	NET TAKE	STRUCTURE	NET RESIDUE LEFT	NET RESIDUE RIGHT	TYPE FUND	REMARKS	AS ACQUIRED BOOK	AS ACQUIRED PAGE
75	DONNA M. ADKINS		O.R. 379	33	23-083-0911.000	0.259 (c)									NO R/W REQUIRED		
					23-083-0910.000	0.252 (c)									LOTS 6 & 7 JO MAR SUBDIVISION		
76	KAREN EVANS		O.R. 607	730	23-083-0901.000	0.310									NO R/W REQUIRED		
77	NOT USED																
78	NANCY MCKENZIE		610	375	23-083-0917.000	0.294 (c)									LOT 12 - JO MAR SUBDIVISION		
			610	375	23-083-0916.000	0.332 (c)									LOT 13 - JO MAR SUBDIVISION		
															NO R/W REQUIRED		
79-E	STATE OF OHIO	52	O.R. 734	666	23-083-0915.000	0.548 (c)	0.000	0.337	0.000	0.337				STATE	LOT 11 - JO MAR SUBDIVISION		
	DEPARTMENT OF TRANSPORTATION																
80	NOT USED																
81-WL	RAYMOND R. & ALMA J. MCHONE	51-52	581	407	23-083-0913.000	0.275 (c)	0.000	0.275	0.000	0.275		0.000	0.000	STATE	LOT 9 - JO MAR SUBDIVISION [AUDITOR - 0.2847 (c)]		
											YES, P				HOUSE, SHED		
															TOTAL TAKE (BY EXISTING DEED)		
82	STATE OF OHIO	51-52	O.R. 742	150	23-083-0914.000	0.285 (c)									LOT 10 - JO MAR SUBDIVISION		
	DEPARTMENT OF TRANSPORTATION		O.R. 742	150	23-079-0200.010	0.060											
			O.R. 742	150	23-083-0900.003	0.300											
			O.R. 742	150	23-083-0900.002	2.810											
83	NOT USED																
84-WL	ELWOOD E. & AMBER C. WILSON	51	593	450	23-079-0200.001	0.820	0.000	0.392	0.000	0.392	YES			STATE	HOUSE		
			593	450	23-083-0900.001	0.180	0.000	0.021	0.000	0.021	P				SHED		
	TOTAL 84-WL					1.000	0.000	0.413	0.000	0.413		0.587					
			486	209											JAMES L. PLUMLEY AND MARY JUANITA PLUMLEY		
															RESERVES ALL GAS, OIL AND MINERALS		
84-T		51	593	450	23-079-0200.001			0.505	0.000	0.505				STATE			
			593	450	23-083-0900.001			0.001	0.000	0.001							
	TOTAL 84-T							0.506	0.000	0.506					TO REMOVE STRUCTURES		
85	BLAIR P. & APRIL D. WRIGHT		O.R. 26	543	23-079-0200.024	0.520									PT. OF LOT 1 JO MAR SUBDIVISION		
															NO R/W REQUIRED		

NOTE: ALL TEMPORARY PARCELS TO BE OF 24 MONTH DURATION.

NOTE: UNDER NO CIRCUMSTANCES ARE TEMPORARY EASEMENTS TO BE USED FOR STORAGE OF MATERIAL OR EQUIPMENT BY THE CONTRACTOR UNLESS NOTED OTHERWISE.

LEGEND:
WD = WARRANTY DEED
WL = FEE SIMPLE WITH LIMITATION OF ACCESS
T = TEMPORARY EASEMENT
SL = SLOPE EASEMENT
S = SEWER EASEMENT
CH = CHANNEL EASEMENT
V = IN NAME OF ANOTHER STATE AGENCY, LPA, ETC.

* DENOTES REMOVAL ITEMS, FOR DESCRIPTION OF REMOVAL ITEMS SEE CORRESPONDING RIGHT OF WAY PLAN SHEET

@ DENOTES RIGHT OF WAY ENCROACHMENT

REV. BY	DATE	DESCRIPTION
FIELD REVIEW BY		DATE:
CHECKED/VERIFIED BY		DATE:
DATE COMPLETED		

DRAFT Stage 3 - Not for Construction
09/23/2024

FEDERAL PROJECT NO. E(035)921 E(060)482
PID NO. 75923
STATE JOB NO. 495095
R/W DESIGNER TB
R/W REVIEWER SER

SUMMARY OF ADDITIONAL R/W

LAW-7-2.17

U:\1736087\1\LAW\75923\row\sheets\75923RS009.dgn 12/9/2014 11:16:28 AM slparker

NET RESIDUE = RECORD AREA - TOTAL PRO - NET TAKE

(D) = DEED AREA
(C) = CALCULATED AREA

ALL AREAS IN ACRES UNLESS OTHERWISE NOTED

GRANTEE:
ALL RIGHT OF WAY ACQUIRED IN THE NAME OF THE STATE OF OHIO UNLESS OTHERWISE SHOWN.

PARCEL NO.	OWNER	SHEET NO.	OWNERS RECORD		AUDITOR'S PARCEL	RECORD AREA	TOTAL P.R.O.	GROSS TAKE	P.R.O. IN TAKE	NET TAKE	STRUCTURE	NET RESIDUE LEFT	NET RESIDUE RIGHT	TYPE FUND	REMARKS	AS ACQUIRED BOOK	AS ACQUIRED PAGE
86-WL1	WESLEY L. COLLINS	51	O.R. 494	414	23-083-0900.000	5.460	0.000	0.037	0.000	0.037	NO			STATE			
			632	233													
			O.R. 494	414	23-079-0200.007	5.620	0.000	0.000	0.000	0.000							
			632	233													
			O.R. 494	414	23-079-0200.020	0.520	0.000	0.000	0.000	0.000							
	TOTAL 86-WL1						0.000	0.037	0.000	0.037							
86-WL2		51	O.R. 494	414	23-083-0900.000			0.518	0.000	0.518	NO			STATE			
			632	233													
	GRAND TOTAL					11.600	0.000	0.555	0.000	0.555		11.045					
87-WL	JAMES A. MONTGOMERY	52	O.R. 146	441	23-083-1501.000	1.500	0.103	0.319	0.000	0.319	NO		1.078	STATE			
88-WL	JAMES G. SMITH	52	O.R. 633	620	23-083-1500.000	1.170	0.047	0.255	0.000	0.255	NO		0.868	STATE			
			418	173													
89-WL	FRANCIS JAMES BUDD	52	O.R. 665	665	23-083-1502.000	1.020	0.056	0.339	0.000	0.339	P		0.625	STATE	WOOD DECK		
	& BRANDY RENAY BUDD																
90-WL	BILL A. BROWN	51-53	O.R. 407	192	23-083-1300.000	9.270	0.000	8.760	0.000	8.760	YES			STATE	METAL BUILDING		
			O.R. 407	192	23-083-1100.000	1.000	0.000	1.692	0.000	1.692							
			O.R. 407	192	23-083-0600.000	8.980	0.000	3.700	0.000	3.700							
	TOTAL 90-WL					19.250	0.000	14.152	0.000	14.152		2.147			PROPERTY AREA CORRECTION - 16.299 (c)		
						16.299 (c)											
90-E		53	O.R. 407	192	23-083-0600.000			2.147	0.000	2.147				STATE	LANDLOCKED		
90A-WL	W.W. FULLER (HEIRS & ASSIGNS)	53	206	419	NONE	19.98 (D)	0.344	1.881	0.344	1.537	NO	0.000	0.000	STATE	TOTAL TAKE, PHYSICAL OCCUPATION AND USAGE		
						1.881 (c)									BY THE OWNER OF PARCEL 90		
91-WL1	TRACEY & CAROL ELLIS	51	563	521	23-083-0800.000	19.000	0.000	3.474	0.000	3.474	NO			STATE	LEASE TO FALCON PARTNERS, O.R. 113, PG. 622		
		79			12-083-0500.000	13.740	0.012	0.093	0.000	0.093							
	TOTAL 91-WL1	53						3.567	0.000	3.567							
91-WL2		79	563	521	23-083-0500.000			0.338	0.012	0.326	NO			STATE	LEASE TO FALCON PARTNERS, O.R. 113, PG. 622		
			563	521	23-077-1400.000	8.720	0.000	0.000	0.000	0.000							
			563	521	23-077-1600.000	1.740	0.169	0.000	0.000	0.000							
			563	521	23-077-1700.000	39.940	0.378	0.000	0.000	0.000							
			563	521	23-080-1200.000	5.000	0.000	0.000	0.000	0.000							
			563	521	23-083-0400.000	0.920	0.104	0.000	0.000	0.000							
			O.R. 62	561	23-077-1400.001	1.660	0.000	0.000	0.000	0.000							
	TOTAL 91-WL2							0.338	0.012	0.326							
	GRAND TOTAL					90.720	0.663	3.905	0.012	3.893		86.164					

NOTE: ALL TEMPORARY PARCELS TO BE OF 24 MONTH DURATION.

NOTE: UNDER NO CIRCUMSTANCES ARE TEMPORARY EASEMENTS TO BE USED FOR STORAGE OF MATERIAL OR EQUIPMENT BY THE CONTRACTOR UNLESS NOTED OTHERWISE.

LEGEND:
WD = WARRANTY DEED
WL = FEE SIMPLE WITH LIMITATION OF ACCESS
T = TEMPORARY EASEMENT
SL = SLOPE EASEMENT
S = SEWER EASEMENT
CH = CHANNEL EASEMENT
V = IN NAME OF ANOTHER STATE AGENCY, LPA, ETC.

+ DENOTES REMOVAL ITEMS, FOR DESCRIPTION OF REMOVAL ITEMS SEE CORRESPONDING RIGHT OF WAY PLAN SHEET

* DENOTES RIGHT OF WAY ENCROACHMENT

REV. BY	DATE	DESCRIPTION
FIELD REVIEW BY		DATE:
CHECKED BY		DATE:
DATE COMPLETED		

DRAFT Stage 3 - Not for Construction 09/23/2024

FEDERAL PROJECT NO. E(035)921 E(060)482
PID NO. 75923
STATE JOB NO. 495095
R/W DESIGNER TB
R/W REVIEWER SER

SUMMARY OF ADDITIONAL RIGHT OF WAY

LAW-7-2.17

U:\1736087\4\LAW\75923\row\sheets\75923RS010.dgn 12/9/2014 11:16:29 AM sjparker

NET RESIDUE = RECORD AREA - TOTAL PRO - NET TAKE

(c) = CALCULATED AREA

ALL AREAS IN ACRES
UNLESS OTHERWISE NOTED

GRANTEE:
ALL RIGHT OF WAY ACQUIRED IN THE NAME OF THE STATE OF OHIO UNLESS OTHERWISE SHOWN.

PARCEL NO.	OWNER	SHEET NO.	OWNERS RECORD		AUDITOR'S PARCEL	RECORD AREA	TOTAL P.R.O.	GROSS TAKE	P.R.O. IN TAKE	NET TAKE	STRUCTURE	NET RESIDUE LEFT	NET RESIDUE RIGHT	TYPE FUND	REMARKS	AS ACQUIRED BOOK	AS ACQUIRED PAGE
92-WL	JOHNNY E. & JANIE E. SMITH	52	O.R. 546	390	23-083-1503.000	0.910	0.141	0.732	0.039	0.693	NO			STATE			
			443	243													
92-WDV		52	O.R. 546	390	23-083-1503.000			0.181	0.102	0.079	NO			STATE			
			443	243													
	GRAND TOTAL					0.910	0.141	0.913	0.141	0.772			0.000		TOTAL TAKE (BY EXISTING DEED)		
						0.913 (c)											
93-WL	JAMES H. & ROSA SMITH	52-53	O.R. 547	85	23-083-1504.000	1.180	0.216	1.177	0.216	0.961	NO		0.000	STATE	TOTAL TAKE (BY EXISTING DEED)		
			443	235		1.177 (c)											
94	CHARLES W. & MAZIE L. RULEN		440	590	23-083-1600.000	2.250									NO R/W REQUIRED		
95-WL	SHAWN L. STOWERS	53	O.R. 444	123	23-083-1504.001	0.470	0.090	0.491	0.090	0.401	NO		0.000	STATE	TOTAL TAKE (BY EXISTING DEED)		
						0.491 (c)											
96-WL	JASPER & DELLA M. RIGNEY	52-53	O.R. 415	486	23-083-1700.000	1.730	0.074	0.566	0.074	0.492	YES (3)			STATE	HOUSE, TWO GARAGES		
			O.R. 415	486	23-083-1700.001	3.320	0.109	0.465	0.109	0.356	P				SHED, WALL		
			O.R. 415	486	23-083-1700.002	1.870	0.075	0.488	0.075	0.413							
	TOTAL 96-WL					6.920	0.258	1.519	0.258	1.261			5.395		PROPERTY AREA CORRECTION - 6.914 (c)		
						6.914 (c)											
96-E		52-53	O.R. 415	486	23-083-1700.000			1.164	0.000	1.164				STATE	LANDLOCKED		
		79	O.R. 415	486	23-083-1700.001			2.846	0.000	2.846							
			O.R. 415	486	23-083-1700.002			1.385	0.000	1.385							
	TOTAL 96-E							5.395	0.000	5.395							
96-T		52-53	O.R. 415	486	23-083-1700.001			0.077	0.000	0.077				STATE	TO REMOVE STRUCTURES & WALL		
97	NOT USED																
98-WL	L. DALE MANNS & CAROLYN C. MANNS	53	639	383	23-105-1800.017	406.930	0.345	2.540	0.345	2.195	NO			STATE			
			588	298													
			639	383	23-101-0400.000	1.580	0.000										
			639	377	23-105-1800.004	17.630	0.000										
			639	373	23-113-1500.000	27.250	0.000										
			639	365	23-083-1800.001	0.100	0.000										
			588	298	23-081-0300.000	0.160	0.000										
			O.R. 73	726	23-098-1100.001	0.500	0.000										
			O.R. 73	726	23-107-1800.002	5.910	0.000										
			O.R. 73	726	23-107-1800.003	1.460	0.000										
			O.R. 73	726	23-107-1800.004	1.340	0.000										
			O.R. 113	132	23-105-1800.023	4.060	0.000										
	TOTAL 98-WL					466.920	0.345	2.540	0.345	2.195			464.38				
99-WL	ANNICE BERRY	53	O.R. 291	282	23-083-1200.000	1.000	0.078	0.570	0.078	0.492	P		0.000	STATE	MOBILE HOME		
						0.570 (c)									TOTAL TAKE (BY EXISTING DEED)		
100-101	NOT USED																
102	STATE OF OHIO	53	O.R. 731	165	23-083-0700.000	1.020											
	DEPARTMENT OF TRANSPORTATION																

NOTE: ALL TEMPORARY PARCELS TO BE OF 24 MONTH DURATION.

NOTE: UNDER NO CIRCUMSTANCES ARE TEMPORARY EASEMENTS TO BE USED FOR STORAGE OF MATERIAL OR EQUIPMENT BY THE CONTRACTOR UNLESS NOTED OTHERWISE.

LEGEND:
WD = WARRANTY DEED
WL = FEE SIMPLE WITH LIMITATION OF ACCESS
T = TEMPORARY EASEMENT
SL = SLOPE EASEMENT
S = SEWER EASEMENT
CH = CHANNEL EASEMENT
V = IN NAME OF ANOTHER STATE AGENCY, LPA, ETC.

+ DENOTES REMOVAL ITEMS, FOR DESCRIPTION OF REMOVAL ITEMS SEE CORRESPONDING RIGHT OF WAY PLAN SHEET

* DENOTES RIGHT OF WAY ENCROACHMENT

REV. BY	DATE	DESCRIPTION
FIELD REVIEW BY		DATE:
OWNERSHIP VERIFIED BY	09/23/2024	DATE:
DATE COMPLETED		

DRAFT Stage 3 - Not for Construction

FEDERAL PROJECT NO. E(035)921 E(060)482
PID NO. 75923
STATE JOB NO. 495095
P/W DESIGNER TB
R/W REVIEWER SER

SUMMARY OF ADDITIONAL RIGHT OF WAY

LAW-7-2.17

U:\1736087\14\LAW\75923\row\sheets\75923RSG11.dgn 12/9/2014 11:16:30 AM slparker

NET RESIDUE = RECORD AREA - TOTAL PRO - NET TAKE

(c) = CALCULATED AREA

ALL AREAS IN ACRES
UNLESS OTHERWISE NOTED

GRANTEE:
ALL RIGHT OF WAY ACQUIRED IN THE NAME OF THE STATE OF OHIO UNLESS OTHERWISE SHOWN.

PARCEL NO.	OWNER	SHEET NO.	OWNERS RECORD		AUDITOR'S PARCEL	RECORD AREA	TOTAL P.R.O.	GROSS TAKE	P.R.O. IN TAKE	NET TAKE	STRUCTURE	NET RESIDUE LEFT	NET RESIDUE RIGHT	TYPE FUND	REMARKS	AS ACQUIRED BOOK	AS ACQUIRED PAGE
103-WL	GEORGE W. & MARILYN BLACK	53-54	359	43	23-083-0101.000	0.240	0.053	0.235	0.053	0.182	YES			STATE	HOUSE, SHED		
			619	618	23-083-0102.001	0.110	0.024	0.112	0.024	0.088	P				LEASE TO UNO OIL CORP., O.R. 114, PG. 90		
	TOTAL 103-WL					0.350	0.077	0.347	0.077	0.270		0.000	0.000		TOTAL TAKE (BY EXISTING DEED - 0.243 & 0.1123 AC.)		
						0.347 (c)											
103A-WL	STATE OF OHIO	53	O.R. 731	169	23-083-0300.000	0.250								STATE			
	DEPARTMENT OF TRANSPORTATION																
104-105	NOT USED																
106-WL	WILLIAM RICHARD HYSELL	53-54	O.R. 748	283	23-083-0100.000	10.300	0.028	1.066	0.028	1.038	YES (3)			STATE	WELL HOUSE, (2) GARAGES		
			O.R. 82	474													
			O.R. 748	288	23-083-0100.002	1.500	0.018	0.811	0.018	0.793	P				FLAG POLE, + 61 LF CHAIN LINK FENCE		
			O.R. 678	690											+ 150 LF BARBED WIRE FENCE		
			O.R. 748	288	23-083-0102.000	0.450	0.110	0.496	0.110	0.386	P				MOBILE HOME		
			O.R. 678	690													
	TOTAL 106-WL					12.250	0.156	2.373	0.156	2.217		9.828	0.000		PROPERTY AREA CORRECTION - 12.201 (c)		
						12.201 (c)											
106-E		53-54	O.R. 748	283	23-083-0100.000			9.132	0.000	9.132	YES (7)			STATE	LANDLOCKED, (4) HOUSES, (3) OUT BUILDINGS		
		79	O.R. 82	474													
			O.R. 748	288	23-083-0100.002			0.696	0.000	0.696							
			O.R. 678	690													
	TOTAL 106-E							9.828	0.000	9.828							
108-WL	DAVID A. PARSONS	54	636	379	23-083-0100.001	0.360	0.082	0.348	0.082	0.266	YES	0.000	0.000	STATE	VACANT MOBILE HOME		
						0.348 (c)									TOTAL TAKE (BY EXISTING DEED - 0.3605 AC.)		
110-WL	JUANITA BLEVINS AND MAXINE LYKINS,	53	625	379	23-082-1200.000	0.500	0.023	0.206	0.023	0.183	YES, P		0.000	STATE	VACANT HOUSE, METAL SHED		
	AND ALMA M. BLACK (LIFE ESTATE)					0.206 (c)									TOTAL TAKE (BY EXISTING DEED)		
111-WL	RICKY BLACK	53-54	O.R. 636	377	23-082-1300.000	3.260	0.131	1.214	0.131	1.083	YES			STATE	MOBILE HOME, HOUSE		
	(AKA RICKEY BLACK)		O.R. 512	243	23-082-1100.000	2.000	0.000	0.000	0.000	0.000	P				SHED		
			O.R. 502	273													
	TOTAL 111-WL					5.260	0.131	1.214	0.131	1.083			6.719		PROPERTY AREA CORRECTION - 7.933 (c)		
						7.933 (c)											
111-E		53-54	O.R. 502	273	23-082-1300.000			4.558	0.000	4.558	YES			STATE	LANDLOCKED, OUT BUILDING		
		79	O.R. 512	243	23-082-1100.000			2.161	0.000	2.161							
	TOTAL 111-E							6.719	0.000	6.719							
112-WL	SHEILA ELLIS, DENNIS BLACK	54	O.R. 414	290	23-082-1800.000	0.230	0.021	0.224	0.021	0.203	YES (4)			STATE	HOUSE, (3) OUT BUILDINGS		
	AND RANDY BLACK		O.R. 406	550	23-083-0200.000	0.400	0.000	0.225	0.000	0.225					LIFE ESTATE RESERVED TO RANDY BLACK		
			O.R. 319	651													
			O.R. 266	713													
	JONATHAN VARNEY & AMY BLACK		O.R. 475	296											LAND CONTRACT		
	TOTAL 112-WL					0.630	0.021	0.449	0.021	0.428			0.111		PROPERTY AREA CORRECTION - 0.560 (c)		
						0.560 (c)											
112-E		54	O.R. 414	290	23-083-0200.000			0.111	0.000	0.111				STATE	LANDLOCKED		
			O.R. 406	550													
			O.R. 319	651													
			O.R. 266	713													

NOTE: ALL TEMPORARY PARCELS TO BE OF 24 MONTH DURATION.

NOTE: UNDER NO CIRCUMSTANCES ARE TEMPORARY EASEMENTS TO BE USED FOR STORAGE OF MATERIAL OR EQUIPMENT BY THE CONTRACTOR UNLESS NOTED OTHERWISE.

LEGEND:
- WD = WARRANTY DEED
- WL = FEE SIMPLE WITH LIMITATION OF ACCESS
- T = TEMPORARY EASEMENT
- SL = SLOPE EASEMENT
- S = SEWER EASEMENT
- CH = CHANNEL EASEMENT
- V = IN NAME OF ANOTHER STATE AGENCY, LPA, ETC.

+ DENOTES REMOVAL ITEMS, FOR DESCRIPTION OF REMOVAL ITEMS SEE CORRESPONDING RIGHT OF WAY PLAN SHEET

* DENOTES RIGHT OF WAY ENCROACHMENT

REV. BY	DATE	DESCRIPTION
FIELD REVIEW BY		DATE:
CONFERENCED/VERIFIED BY		DATE:
DATE COMPLETED		

DRAFT Stage 3 - Not for Construction 09/23/2024

FEDERAL PROJECT NO. E(035)921 E(060)482

PID NO. 75923

STATE JOB NO. 495095

R/W DESIGNER TB

R/W REVIEWER SER

SUMMARY OF ADDITIONAL RIGHT OF WAY

LAW-7-2.17

U:\1736087\4\LAW\75923\row\sheets\75923RS012.dgn 12/9/2014 11:16:31 AM slparker

NET RESIDUE = RECORD AREA - TOTAL PRO - NET TAKE

(c) = CALCULATED AREA

ALL AREAS IN ACRES UNLESS OTHERWISE NOTED

GRANTEE:
ALL RIGHT OF WAY ACQUIRED IN THE NAME OF THE STATE OF OHIO UNLESS OTHERWISE SHOWN.

PARCEL NO.	OWNER	SHEET NO.	OWNERS RECORD		AUDITOR'S PARCEL	RECORD AREA	TOTAL P.R.O.	GROSS TAKE	P.R.O. IN TAKE	NET TAKE	STRUCTURE	NET RESIDUE LEFT	NET RESIDUE RIGHT	TYPE FUND	REMARKS	AS ACQUIRED BOOK	AS ACQUIRED PAGE
113	NOT USED																
114-WL	PAUL & CAROL BLACK	54	393	110	23-082-1600.000	0.880	0.072	0.691	0.072	0.619	YES, P		0.177	STATE	HOUSE, SHED		
						0.868 (c)									PROPERTY AREA CORRECTION - 0.868 (c)		
114-E		54	393	110	23-082-1600.000			0.177	0.000	0.177				STATE	LANDLOCKED		
115-117	NOT USED																
118	STATE OF OHIO	54	O.R. 726	146	23-082-1400.000	0.070											
	DEPARTMENT OF TRANSPORTATION				23-082-1700.000	0.250											
119-WL	CLINTON W. & BEULAH W. JUSTICE (H & W),	54	553	302	23-082-1500.000	0.170	0.060	0.203	0.060	0.143	YES, P		0.000	STATE	HOUSE, SHED		
	JIMMIE L. JUSTICE, AND O. MICHAEL JUSTICE					0.203 (c)									TOTAL TAKE (BY EXISTING DEED)		
120-WL	ERNEST W. BONZO, AS TRUSTEE	54-55	O.R. 530	713	23-082-1000.000	6.000	0.438	3.974	0.438	3.536	NO			STATE	(PREVIOUS DEED - DB 569, PG 421)		
	OF THE ERNEST W. BONZO REVOCABLE TRUST,		O.R. 530	713	23-080-1400.000	56.000	0.124	3.086	0.124	2.962					LEASE TO SUMMIT PETROLEUM, INC. (LV 58, PG 411)		
	AND MILDRED R. BONZO, AS TRUSTEE		O.R. 530	713	23-082-0700.000	1.000	0.191	1.116	0.191	0.925							
	OF THE MILDRED R. BONZO REVOCABLE TRUST		O.R. 530	713	23-080-1800.000	10.000	0.000	0.000	0.000	0.000							
			O.R. 530	713	23-084-1400.003	19.830	0.000	0.000	0.000	0.000							
	TOTAL 120-WL					92.830	0.753	8.176	0.753	7.423			84.654				
121-WL	GEORGE W. & MARILYN BLACK	54-55	O.R. 83	331	23-082-0900.001	4.460	0.150	2.503	0.150	2.353	YES (4)			STATE	HOUSE, VACANT HOUSE, COMMERCIAL SHOP, DUPLEX		
	(AKA, GEORGE WARREN & MARILYN BLACK)		O.R. 83	331	23-082-0900.000	3.800	0.106	0.829	0.106	0.723	P (10)				(10) MOBILE HOMES		
			O.R. 64	669													
			536	735													
			O.R. 87	1	23-082-0800.000	5.540	0.234	1.208	0.234	0.974							
			O.R. 64	669													
			500	601													
			O.R. 87	1	23-082-0800.001	1.370	0.171	1.091	0.171	0.920							
			O.R. 89	147	23-082-0800.002	4.450	0.000	0.000	0.000	0.000							
			O.R. 89	147	23-082-0800.003	0.880	0.092	0.607	0.092	0.515							
			L.V. 114	90											LEASE TO UNO OIL CORP. (O.R. 114, PG 90)		
	TOTAL 121-WL						0.753	6.238	0.753	5.485							
121-WD		56	O.R. 87	1	23-082-0800.000			0.448	0.000	0.448		NO		STATE			
	GRAND TOTAL					20.500	0.753	6.686	0.753	5.933		13.850			PROPERTY AREA CORRECTION - 20.536 (c)		
						20.536 (c)											
121-E		54-55	O.R. 83	331	23-082-0900.001			1.984	0.000	1.984	YES (2)			STATE	(1) METAL COMMERCIAL BUILDING, (1) STORAGE BUILDING		
		79	O.R. 83	331	23-082-0900.000			2.964	0.000	2.964	P (3)				(2) MOBILE HOMES, CONST. TRAILER		
			O.R. 64	669													
			536	735													
			O.R. 87	1	23-082-0800.000			3.908	0.000	3.908							
			O.R. 64	669													
			500	601													
			O.R. 87	1	23-082-0800.001			0.274	0.000	0.274							
			O.R. 89	147	23-082-0800.002			4.453	0.000	4.453							
			O.R. 89	147	23-082-0800.003			0.267	0.000	0.267							
	TOTAL 121-E							13.850	0.000	13.850					LANDLOCKED		

NOTE: ALL TEMPORARY PARCELS TO BE OF 24 MONTH DURATION.

NOTE: UNDER NO CIRCUMSTANCES ARE TEMPORARY EASEMENTS TO BE USED FOR STORAGE OF MATERIAL OR EQUIPMENT BY THE CONTRACTOR UNLESS NOTED OTHERWISE.

LEGEND:
- WD = WARRANTY DEED
- WL = FEE SIMPLE WITH LIMITATION OF ACCESS
- T = TEMPORARY EASEMENT
- SL = SLOPE EASEMENT
- S = SEWER EASEMENT
- CH = CHANNEL EASEMENT
- V = IN NAME OF ANOTHER STATE AGENCY, LPA, ETC.

+ DENOTES REMOVAL ITEMS, FOR DESCRIPTION OF REMOVAL ITEMS SEE CORRESPONDING RIGHT OF WAY PLAN SHEET

* DENOTES RIGHT OF WAY ENCROACHMENT

REV. BY	DATE	DESCRIPTION
FIELD REVIEW BY		DATE:
OWNER'S CERTIFIED BY		DATE:
DATE COMPLETED		

DRAFT Stage 3 - Not for Construction

09/23/2024

FEDERAL PROJECT NO. E(035)921 E(060)482

PID NO. 75923

STATE JOB NO. 495095

R/W DESIGNER TB R/W REVIEWER SER

SUMMARY OF ADDITIONAL RIGHT OF WAY

LAW-7-2.17

30/82

U:\17360874\LAW\75923\row\sheets\75923RSD13.dgn 12/9/2014 11:16:32 AM slparker

NET RESIDUE = RECORD AREA - TOTAL PRO - NET TAKE

(c) = CALCULATED AREA

ALL AREAS IN ACRES
UNLESS OTHERWISE NOTED

GRANTEE:
ALL RIGHT OF WAY ACQUIRED IN THE NAME OF THE STATE OF OHIO UNLESS OTHERWISE SHOWN.

PARCEL NO.	OWNER	SHEET NO.	OWNERS RECORD		AUDITOR'S PARCEL	RECORD AREA	TOTAL P.R.O.	GROSS TAKE	P.R.O. IN TAKE	NET TAKE	STRUCTURE	NET RESIDUE LEFT	NET RESIDUE RIGHT	TYPE FUND	REMARKS	AS ACQUIRED BOOK	AS ACQUIRED PAGE
122-123	NOT USED																
124-WD	HARRY L. RADER	56	581	442	23-080-1000.000	24.150	0.000	1.160	0.000	1.160	NO				DEED AREA = 72.23 AC - 0.55 AC = 71.68 AC		
	(AKA HARRY L. RADER, JR.)	75													DEED OF CORRECTION - COMBINED LANDS IN		
															D.B. 535, PG. 509 & D.B. 571, PG. 361		
			535	509	23-080-1000.000										ORIG DEED AREA = 30 AC (PT OF TRACT ONE)		
			535	507	23-080-1100.000	3.300	0.000	0.022	0.000	0.022					ORIG DEED AREA = 5.12 AC,		
															OF WHICH 3.30 AC. LIES WITHIN SECT. NO. 22		
			581	442	23-081-1600.000	0.070	0.006	0.127	0.006	0.121							
			535	509											ORIG DEED AREA = 0.5 AC (TRACT TWO)		
			535	507	23-043-1400.000	0.960	0.466	0.490	0.348	0.142					ORIG DEED AREA = 5.12 AC,		
															OF WHICH 1.82 AC LIES WITHIN SECT. NO. 15		
			537	327	23-043-1401.000	0.430	0.000	0.269	0.000	0.269							
			535	470	23-043-1402.000	0.430	0.000	0.000	0.000	0.000							
			O.R. 29	450	23-080-1000.001	0.550	0.000	0.000	0.000	0.000							
			581	442	23-043-0802.000	1.200	0.091	0.000	0.000	0.000							
			571	361													
			O.R. 79	478	23-043-0803.000	0.680	0.173	0.000	0.000	0.000							
			581	442	23-043-0803.001	7.720	0.012	0.000	0.000	0.000							
			571	361													
			581	442	23-080-0900.000	38.540	0.000	0.000	0.000	0.000							
			571	361	23-043-1100.000	1.150	0.129	0.000	0.000	0.000							
	TOTAL 124-WD					79.180	0.877	2.068	0.354	1.714		76.589					
125-WD	LARRY JOE SITES & LINDA KAY SITES	75	475	213	23-208-0300.000	0.165	0.000	0.017	0.000	0.017				STATE	LOT 3 - WINTER HEIGHTS SUBD.		
			475	213	23-208-0400.000	0.310	0.000	0.084	0.000	0.084					LOT 4 - WINTER HEIGHTS SUBD.		
			475	213	23-208-0500.000	0.375	0.000	0.000	0.000	0.000					LOT 5 - WINTER HEIGHTS SUBD.		
			475	213	23-208-0600.000	0.354	0.000	0.000	0.000	0.000					LOT 6 - WINTER HEIGHTS SUBD.		
			475	213	23-208-1300.000	0.213	0.000	0.000	0.000	0.000					LOT 13 - WINTER HEIGHTS SUBD.		
			475	213	23-208-1400.000	0.190	0.000	0.000	0.000	0.000					LOT 14 - WINTER HEIGHTS SUBD.		
	TOTAL 125-WD					1.607	0.000	0.101	0.000	0.101		1.506					
126-WL	MARANATHA BROADCASTING NETWORK, INC.	55	629	66	23-082-0500.000	18.230	0.568	11.788	0.568	11.220	YES (4)		5.231	STATE	COMMERCIAL BUILDINGS & RADIO TOWER		
		57				17.019 (c)									PARCEL AREA CORRECTION - 17.019 (c)		
126-E1		55, 79						4.047	0.000	4.047				STATE	LANDLOCKED		
126-E2		57, 79						1.184	0.000	1.184				STATE	LANDLOCKED		
127-WL	JOSEPH E. GAGNON AND DORIS PRITT	55	538	659	23-082-0100.000	11.000	0.503	1.825	0.503	1.322				STATE			
127-WD		55-56	538	659	23-082-0100.000		0.505	8.598	0.505	8.093	YES			STATE	HOUSE		
		75									P				SHED		
	GRAND TOTAL					11.000	1.008	10.423	1.008	9.415		0.000			TOTAL TAKE (BY EXISTING DEED - 12.0 AC.)		
						10.423 (c)									PARCEL AREA CORRECTION - 10.423 (C)		
128-WD	LAWRENCE A. & INEZ M. THOMPSON	75	321	328	23-081-1800.000	0.310	0.023	0.253	0.023	0.230	YES			STATE	HOUSE		
			339	341	23-081-1700.000	0.280	0.009	0.179	0.009	0.170	P				20 - 30 SCRAP VEHICLES, VACANT MOBILE HOME		
			339	341	23-043-1300.000	0.030	0.013	0.070	0.013	0.057							
			339	343	23-081-1500.000	0.340	0.000	0.000	0.000	0.000							
	TOTAL 128-WD					0.960	0.045	0.502	0.045	0.457		0.458					
128-T		75	321	328	23-081-1800.000			0.052	0.000	0.052				STATE	TO REMOVE SCRAP VEHICLES & VACANT MOBILE HOME		
			339	341	23-081-1700.000			0.061	0.000	0.061					FROM THE PROPOSED R/W		
	TOTAL 128-T							0.113	0.000	0.113							

NOTE: ALL TEMPORARY PARCELS TO BE OF 24 MONTH DURATION.

NOTE: UNDER NO CIRCUMSTANCES ARE TEMPORARY EASEMENTS TO BE USED FOR STORAGE OF MATERIAL OR EQUIPMENT BY THE CONTRACTOR UNLESS NOTED OTHERWISE.

LEGEND:
WD = WARRANTY DEED
WL = FEE SIMPLE WITH LIMITATION OF ACCESS
T = TEMPORARY EASEMENT
SL = SLOPE EASEMENT
S = SEWER EASEMENT
CH = CHANNEL EASEMENT
V = IN NAME OF ANOTHER STATE AGENCY, LPA, ETC.

+ DENOTES REMOVAL ITEMS, FOR DESCRIPTION OF REMOVAL ITEMS SEE CORRESPONDING RIGHT OF WAY PLAN SHEET

* DENOTES RIGHT OF WAY ENCROACHMENT

REV. BY	DATE	DESCRIPTION
FIELD REVIEW BY		DATE:
OWNER INFORMED BY		DATE:
DATE COMPLETED		

DRAFT Stage 3 - Not for Construction

09/23/2024

FEDERAL PROJECT NO. E(035)921 E(060)482
PID NO. 75923
STATE JOB NO. 495095
R/W DESIGNER TB
R/W REVIEWER SER

SUMMARY OF ADDITIONAL RIGHT OF WAY

LAW-7-2.17

U:\1736087\4\LAW\75923\rgw\sheets\75923RS014.dgn 12/9/2014 11:16:33 AM sbarker

NET RESIDUE = RECORD AREA - TOTAL PRO - NET TAKE

(c) = CALCULATED AREA

ALL AREAS IN ACRES
UNLESS OTHERWISE NOTED

GRANTEE:
ALL RIGHT OF WAY ACQUIRED IN THE NAME OF THE STATE OF OHIO UNLESS OTHERWISE SHOWN.

PARCEL NO.	OWNER	SHEET NO.	OWNERS RECORD		AUDITOR'S PARCEL	RECORD AREA	TOTAL P.R.O.	GROSS TAKE	P.R.O. IN TAKE	NET TAKE	STRUCTURE	NET RESIDUE LEFT	NET RESIDUE RIGHT	TYPE FUND	REMARKS	AS ACQUIRED BOOK	AS ACQUIRED PAGE
129-WD	J. DOLORES REYNOLDS	75	O.R. 172	175	23-044-0600.002	0.420	0.037	0.112	0.037	0.075	YES			STATE	HOUSE		
	(AKA JUANITA DOLORES REYNOLDS)		O.R. 172	175	23-081-1400.001	0.010	0.007	0.007	0.007	0.000							
	(AKA DOLORES REYNOLDS)		530	709	23-044-0600.001	0.010	0.007	0.021	0.007	0.014					0.10 AC. PER SURVEY IN D.B. 530, PG 709		
			O.R. 156	25	23-044-0100.000	0.410	0.064	0.117	0.064	0.053							
			O.R. 156	25	23-044-0700.000	0.650	0.006	0.102	0.006	0.096							
	TOTAL 129-WD					1.500	0.121	0.359	0.121	0.238		1.141					
129-T		75	O.R. 172	175	23-044-0600.002			0.017	0.000	0.017				STATE	TO REMOVE STRUCTURE		
			530	709	23-044-0600.001			0.006	0.000	0.006							
			O.R. 156	25	23-044-0700.000			0.069	0.000	0.069							
	TOTAL 129-T							0.092	0.000	0.092							
130-WD	HARRY L. RADER	75	O.R. 172	170	23-044-0600.000	2.840	0.000	0.033	0.000	0.033	YES			STATE	AUTO REPAIR SHOP		
			O.R. 172	170	23-081-1400.000	1.340	0.268	0.445	0.268	0.177							
	TOTAL 130-WD							0.478	0.268	0.210							
130-WDV		75	O.R. 172	170	23-081-1400.000			0.057	0.000	0.057				STATE			
	GRAND TOTAL					4.180	0.268	0.535	0.268	0.267		3.645					
131-WDV	GLORIA J. TOMBLIN	75	O.R. 722	376	23-081-1300.000	0.500	0.104	0.600	0.104	0.496	YES (2)	0.000		STATE	HOUSE, GARAGE		
			517	735		0.600 (c)									TOTAL TAKE (BY EXISTING DEED)		
132-WL	LARRY & LINDA K. SITES	55	O.R. 600	238	23-081-1100.000	2.050	0.230	0.040	0.035	0.005				STATE			
132-WDV		55	O.R. 600	238	23-081-1100.000			2.143	0.195	1.948	YES			STATE	HOUSE		
		57									P				SHED		
		75															
	GRAND TOTAL					2.050	0.230	2.183	0.230	1.953		0.000			TOTAL TAKE (BY EXISTING DEED)		
						2.183 (c)									PROPERTY AREA CORRECTION = 2.183 (c)		
133-WL	CARL & NANCY DANFORD	57	O.R. 76	13	23-081-1200.000	1.540	0.058	0.191	0.058	0.133	YES				HOUSE		
133-WDV		57	O.R. 76	13	23-081-1200.000			0.500	0.000	0.500							
	GRAND TOTAL					1.540	0.058	0.691	0.058	0.633		0.000			TOTAL TAKE		
						1.185 (c)									RW PARCELS 133-WL, 133-WDV, 136-WL & 136-WDV ARE OUT OF THE SAME AUDITOR'S PARCEL. PROPERTY AREA CORRECTION = 0.191 + 0.500 + 0.247 + 0.247 = 1.185 (c)		
134-WL	DARRELL HARDY	57	635	233	23-081-1200.001	0.910	0.105	0.388	0.105	0.283	YES				HOUSE		
134-WDV		57	635	233	23-081-1200.001			0.523	0.000	0.523	YES				GARAGE		
	GRAND TOTAL					0.910	0.105	0.911	0.105	0.806		0.000			TOTAL TAKE (BY EXISTING DEED)		
						0.911 (c)											

NOTE: ALL TEMPORARY PARCELS TO BE OF 24 MONTH DURATION.

NOTE: UNDER NO CIRCUMSTANCES ARE TEMPORARY EASEMENTS TO BE USED FOR STORAGE OF MATERIAL OR EQUIPMENT BY THE CONTRACTOR UNLESS NOTED OTHERWISE.

LEGEND:
- WD = WARRANTY DEED
- WL = FEE SIMPLE WITH LIMITATION OF ACCESS
- T = TEMPORARY EASEMENT
- SL = SLOPE EASEMENT
- S = SEWER EASEMENT
- CH = CHANNEL EASEMENT
- V = IN NAME OF ANOTHER STATE AGENCY, LPA, ETC.

+ DENOTES REMOVAL ITEMS, FOR DESCRIPTION OF REMOVAL ITEMS SEE CORRESPONDING RIGHT OF WAY PLAN SHEET

* DENOTES RIGHT OF WAY ENCROACHMENT

REV. BY	DATE	DESCRIPTION
FIELD REVIEW BY		DATE:
OTHER REVIEWS BY		DATE:
DATE COMPLETED		

DRAFT Stage 3 - Not for Construction 09/23/2024

FEDERAL PROJECT NO. E(035)921 E(060)482
PID NO. 75923
STATE JOB NO. 495095
R/W DESIGNER TB
R/W REVIEWER SER

SUMMARY OF ADDITIONAL RIGHT OF WAY

LAW-7-2.17

U:\1736087\4\LAW\75923\row\sheets\75923RS015.dgn 12/9/2014 11:16:34 AM sbarker

NET RESIDUE = RECORD AREA - TOTAL PRO - NET TAKE

(c) = CALCULATED AREA

ALL AREAS IN ACRES
UNLESS OTHERWISE NOTED

GRANTEE:
ALL RIGHT OF WAY ACQUIRED IN THE NAME OF THE STATE OF OHIO UNLESS OTHERWISE SHOWN.

PARCEL NO.	OWNER	SHEET NO.	OWNERS RECORD		AUDITOR'S PARCEL	RECORD AREA	TOTAL P.R.O.	GROSS TAKE	P.R.O. IN TAKE	NET TAKE	STRUCTURE	NET RESIDUE LEFT	NET RESIDUE RIGHT	TYPE FUND	REMARKS	AS ACQUIRED BOOK	AS ACQUIRED PAGE
135-WL	ROGER & HELEN HENSON	55	O.R. 36	541	23-081-1200.002	1.700	0.167	0.455	0.167	0.288				STATE			
		57															
135-WDV		75	O.R. 36	541	23-081-1200.002			1.209	0.000	1.209	YES (2)			STATE	(2) 2 UNIT APARTMENTS		
											P				SHED		
	GRAND TOTAL					1.700	0.167	1.664	0.167	1.497		0.000			TOTAL TAKE (BY EXISTING DEED)		
						1.664 (c)											
136-WL	CARL & NANCY DANFORD	57	O.R. 76	13	23-081-1200.000	1.540	0.056	0.247	0.056	0.191				STATE			
136-WDV		57	O.R. 76	13	23-081-1200.000			0.247	0.000	0.247				STATE			
	GRAND TOTAL					1.540	0.056	0.494	0.056	0.438		0.000			TOTAL TAKE		
						1.185 (c)									R/W PARCELS 133-WL, 133-WDV, 136-WL & 136-WDV		
															ARE OUT OF THE SAME AUDITOR'S PARCEL NUMBER		
															PROPERTY AREA CORRECTION =		
															0.191 + 0.500 + 0.247 + 0.247 = 1.185 (c)		
137	STATE OF OHIO	57	O.R. 742	156	23-082-0600.000	0.790											
	DEPARTMENT OF TRANSPORTATION																
138-E	STATE OF OHIO	57	O.R. 717	304	23-082-0400.000	0.600											
	DEPARTMENT OF TRANSPORTATION																
139-WL	FRED HENSON, JR.	57	532	303	23-082-0300.000	0.830	0.068	0.290	0.068	0.222	YES (3)	0.483		STATE	HOUSE, APARTMENT, OUT BUILDING		
						0.773 (c)									TOTAL TAKE (BY EXISTING DEED)		
139-E		57	532	303	23-082-0300.000			0.483	0.000	0.483	P			STATE	LANDLOCKED, (20 +/-) PENS		
140-E	STATE OF OHIO	57	O.R. 734	661	23-081-0800.000	0.160											
	DEPARTMENT OF TRANSPORTATION				23-082-0200.000	0.550											
	TOTAL 140-E					0.710											
141-E	STATE OF OHIO	57	O.R. 734	670	23-081-0700.001	0.680											
	DEPARTMENT OF TRANSPORTATION																

NOTE: ALL TEMPORARY PARCELS TO BE OF 24 MONTH DURATION.

NOTE: UNDER NO CIRCUMSTANCES ARE TEMPORARY EASEMENTS TO BE USED FOR STORAGE OF MATERIAL OR EQUIPMENT BY THE CONTRACTOR UNLESS NOTED OTHERWISE.

LEGEND:
- WD = WARRANTY DEED
- WL = FEE SIMPLE WITH LIMITATION OF ACCESS
- T = TEMPORARY EASEMENT
- SL = SLOPE EASEMENT
- S = SEWER EASEMENT
- CH = CHANNEL EASEMENT
- V = IN NAME OF ANOTHER STATE AGENCY, LPA, ETC.

+ DENOTES REMOVAL ITEMS, FOR DESCRIPTION OF REMOVAL ITEMS SEE CORRESPONDING RIGHT OF WAY PLAN SHEET

* DENOTES RIGHT OF WAY ENCROACHMENT

REV. BY	DATE	DESCRIPTION
FIELD REVIEW BY		DATE:
OWNER NOTIFIED BY	09/23/2024	DATE:
DATE COMPLETED		

DRAFT Stage 3 - Not for Construction

FEDERAL PROJECT NO. E(035)921 E(060)482
PID NO. 75923
STATE JOB NO. 495095
R/W DESIGNER TB
R/W REVIEWER SER

SUMMARY OF ADDITIONAL RIGHT OF WAY

LAW-7-2.17

U:\1735087\4\LAW\75923\row\sheets\75923RS016.dgn 12/9/2014 11:16:34 AM sparker

NET RESIDUE = RECORD AREA - TOTAL PRO - NET TAKE

(c) = CALCULATED AREA

ALL AREAS IN ACRES
UNLESS OTHERWISE NOTED

GRANTEE:
ALL RIGHT OF WAY ACQUIRED IN THE NAME OF THE STATE OF OHIO UNLESS OTHERWISE SHOWN.

PARCEL NO.	OWNER	SHEET NO.	OWNERS RECORD		AUDITOR'S PARCEL	RECORD AREA	TOTAL P.R.O.	GROSS TAKE	P.R.O. IN TAKE	NET TAKE	STRUCTURE	NET RESIDUE LEFT	NET RESIDUE RIGHT	TYPE FUND	REMARKS	AS ACQUIRED BOOK	AS ACQUIRED PAGE
142-WL1	LARRY J. & LINDA K. SITES	79	443	512	23-081-0700.000	14.160	0.318	0.178	0.000	0.178	NO			STATE			
142-WL2		57	443	512	23-081-0600.000	11.000	0.399	0.000	0.000	0.000	NO			STATE			
		59	443	512	23-081-0700.000			0.844	0.269	0.575							
	TOTAL 142-WL2							0.844	0.269	0.575							
	TOTAL 142-WL							1.022	0.269	0.753							
142-WDV		57	443	512	23-081-0600.000			0.198	0.090	0.108	NO			STATE			
		59	443	512	23-081-0700.000			0.045	0.024	0.021							
	TOTAL 142-WDV							0.243	0.114	0.129							
	GRAND TOTAL					25.160	0.717	1.265	0.383	0.882			23.561				
143-WL1	ERNEST W. BONZO, AS TRUSTEE	57-58	O.R. 530	713	23-044-0800.000	71.550	4.209	0.064	0.026	0.038	NO			STATE			
	OF THE ERNEST W. BONZO REVOCABLE TRUST,		O.R. 530	713	23-044-1600.000	7.750	0.713	0.000	0.000	0.000							
	AND MILDRED R. BONZO, AS TRUSTEE		O.R. 530	713	23-081-1000.000	0.500	0.263	0.766	0.263	0.503							
	OF THE MILDRED R. BONZO REVOCABLE TRUST		O.R. 530	713	23-081-0400.000	3.000	0.000	0.000	0.000	0.000							
			O.R. 530	713	23-084-1700.000	3.000	0.162	0.000	0.000	0.000							
			O.R. 530	713	23-044-0900.000	31.220	0.912	0.000	0.000	0.000							
			O.R. 530	713	23-044-1000.000	1.000	0.245	0.000	0.000	0.000							
			O.R. 530	713	23-044-1100.000	9.200	0.538	0.000	0.000	0.000							
			O.R. 530	713	23-044-1300.000	4.050	0.777	0.000	0.000	0.000							
	TOTAL 143-WL1							0.830	0.289	0.541							
143-WL2		58-61	O.R. 530	713	23-081-1600.000			0.529	0.000	0.529	NO			STATE			
			O.R. 530	713	23-081-0400.000			2.949	0.000	2.949							
			O.R. 530	713	23-084-1700.000			1.193	0.000	1.193							
	TOTAL 143-WL2							4.671	0.000	4.671							
143-WDV		57-58	O.R. 530	713	23-044-0800.000			9.608	0.765	8.843	NO			STATE			
		60	O.R. 530	713	23-044-1600.000			3.086	0.278	2.808							
			O.R. 530	713	23-081-1000.000			0.148	0.000	0.148							
			O.R. 530	713	23-084-1700.000			0.103	0.071	0.052							
	TOTAL 143-WDV							12.945	1.114	11.831							
	GRAND TOTAL					131.270	7.819	18.446	1.403	17.043		104.707	1.701				
144	NOT USED																
145-WL	AMY G. SHAFFER	57-59	O.R. 433	215	23-044-1800.000	0.500	0.102	0.304	0.032	0.272	YES			STATE	HOUSE		
			O.R. 433	215	23-081-0900.000	5.570	0.599	2.362	0.197	2.165	P				SHED		
	TOTAL 145-WL							2.666	0.229	2.437							
145-WDV1		58	O.R. 433	215	23-044-1800.000			0.174	0.070	0.104				STATE			
145-WDV2		59	O.R. 433	215	23-081-0900.000			0.117	0.104	0.013				STATE			
	GRAND TOTAL					6.070	0.701	2.957	0.403	2.554			2.815				

NOTE: ALL TEMPORARY PARCELS TO BE OF 24 MONTH DURATION.

NOTE: UNDER NO CIRCUMSTANCES ARE TEMPORARY EASEMENTS TO BE USED FOR STORAGE OF MATERIAL OR EQUIPMENT BY THE CONTRACTOR UNLESS NOTED OTHERWISE.

LEGEND:
WD = WARRANTY DEED
WL = FEE SIMPLE WITH LIMITATION OF ACCESS
T = TEMPORARY EASEMENT
SL = SLOPE EASEMENT
S = SEWER EASEMENT
CH = CHANNEL EASEMENT
V = IN NAME OF ANOTHER STATE AGENCY, LPA, ETC.

+ DENOTES REMOVAL ITEMS, FOR DESCRIPTION OF REMOVAL ITEMS SEE CORRESPONDING RIGHT OF WAY PLAN SHEET

* DENOTES RIGHT OF WAY ENCROACHMENT

REV. BY	DATE	DESCRIPTION
FIELD REVIEW BY		DATE:
OWNERSHIP VERIFIED BY		DATE: 09/23/2024
DATE COMPLETED		

DRAFT Stage 3 - Not for Construction

FEDERAL PROJECT NO. E(035)921 E(060)482
PID NO. 75923
STATE JOB NO. 495095
R/W DESIGNER TB
R/W REVIEWER SER

SUMMARY OF ADDITIONAL RIGHT OF WAY

LAW-7-2.17

U:\1736087141LAW\75923\row\sheets\75923RSD17.dgn 12/9/2014 11:16:35 AM siparker

NET RESIDUE = RECORD AREA - TOTAL PRO - NET TAKE

(c) = CALCULATED AREA

ALL AREAS IN ACRES
UNLESS OTHERWISE NOTED

GRANTEE:
ALL RIGHT OF WAY ACQUIRED IN THE NAME OF THE STATE OF OHIO UNLESS OTHERWISE SHOWN.

PARCEL NO.	OWNER	SHEET NO.	OWNERS RECORD		AUDITOR'S PARCEL	RECORD AREA	TOTAL P.R.O.	GROSS TAKE	P.R.O. IN TAKE	NET TAKE	STRUCTURE	NET RESIDUE LEFT	NET RESIDUE RIGHT	TYPE FUND	REMARKS	AS ACQUIRED BOOK	AS ACQUIRED PAGE
146	STATE OF OHIO	58-59	O.R. 710	223	23-081-0900.001	0.430											
	DEPARTMENT OF TRANSPORTATION																
147-WL	ANNA E. SMOOT (HEIRS & ASSIGNS)	60	189	491	23-085-0600.000	0.280	0.045	0.202	0.045	0.157				STATE	DOES NOT INCLUDE 0.22 AC TRACT		
147-WDV		60	189	491	23-085-0600.000			0.040	0.000	0.040				STATE			
			189	491	23-037-0300.000	0.040	0.000	0.069	0.000	0.069					AUDITOR SHOWS THIS PARCEL OWNED BY		
	TOTAL 147-WDV							0.109	0.000	0.109					CHARLES & NORMA MAYENSCHEIN (SEE PARCEL 152)		
	GRAND TOTAL					0.280	0.045	0.311	0.045	0.266		0.000			TOTAL TAKE (BY EXISTING DEED - 0.28 & 0.04 AC.)		
						0.311 (c)									PROPERTY AREA CORRECTION - 0.311 (c)		
147A	CHARLES & NORMA MAYENSCHEIN	60T	NONE	NONE	NONE						YES (2)				OWNER OF HOUSE (RES #44) & SHOP		
											P (3)				PLAY CENTER, TREE HOUSE, & SHED - SEE PARCEL 152		
148	WILLIAM W. ELDER, JR. & BETTY T. ELDER		568	16	23-042-0600.000	1.540									NO R/W REQUIRED		
			568	16	23-037-0700.000	2.250											
			O.R. 425	220	23-037-1800.000	2.230											
			O.R. 425	217	23-044-1400.000	1.000											
	TOTAL					7.020											
149-WL	FRED HAYES (AKA FREDDIE L. HAYES)	60	573	131	23-037-0801.000	2.410	0.197	0.096	0.071	0.025	NO			STATE			
149-WDV		58	573	131	23-037-0801.000			1.736	0.126	1.610	NO			STATE			
		60	573	131	23-044-1700.000	2.070	0.327	1.813	0.263	1.550							
	TOTAL 149-WDV							3.549	0.389	3.160							
	GRAND TOTAL					4.480	0.524	3.645	0.460	3.185		0.771					
150	MARY MASSIE		612	550	23-037-0800.000	0.810									NO R/W REQUIRED		
151-WL1	ERNEST W. BONZO, AS TRUSTEE	60	O.R. 530	713	23-089-1100.000	1.560	0.370	0.087	0.013	0.074	NO			STATE			
	OF THE ERNEST W. BONZO REVOCABLE TRUST,																
151-WL2	AND MILDRED R. BONZO, AS TRUSTEE	60	O.R. 530	713	23-089-1000.000	2.040	0.175	1.222	0.156	1.066	NO			STATE			
	OF THE MILDRED R. BONZO REVOCABLE TRUST		O.R. 530	713	23-089-1100.000			1.587	0.357	1.230							
	TOTAL 151-WL2							2.809	0.513	2.296							
151-WDV		60	O.R. 530	713	23-038-1300.000	0.280	0.000	0.325	0.000	0.325	NO			STATE			
			O.R. 530	713	23-037-0400.000	13.340	0.000	3.298	0.000	3.298							
			O.R. 530	713	23-089-1000.000			0.353	0.019	0.334							
			O.R. 530	713	23-089-1100.000			1.622	0.000	1.622							
	TOTAL 151-WDV							5.598	0.019	5.579							
	GRAND TOTAL					17.220	0.545	8.494	0.545	7.949		8.726					
152-WL	CHARLES & NORMA MAYENSCHEIN	60	424	180	23-085-0500.000	0.220	0.034	0.130	0.034	0.096	YES				METAL GARAGE, SEE PARCEL 147A		
			416	639													
152-WDV		60	424	180	23-085-0500.000			0.029	0.000	0.029							
			416	639													
	GRAND TOTAL					0.220	0.034	0.159	0.034	0.125		0.000			TOTAL TAKE (BY EXISTING DEED - 0.22 AC.)		
						0.159 (c)									PROPERTY AREA CORRECTION - 0.159 (c)		

NOTE: ALL TEMPORARY PARCELS TO BE OF 24 MONTH DURATION.

NOTE: UNDER NO CIRCUMSTANCES ARE TEMPORARY EASEMENTS TO BE USED FOR STORAGE OF MATERIAL OR EQUIPMENT BY THE CONTRACTOR UNLESS NOTED OTHERWISE.

LEGEND:
WD = WARRANTY DEED
WL = FEE SIMPLE WITH LIMITATION OF ACCESS
T = TEMPORARY EASEMENT
SL = SLOPE EASEMENT
S = SEWER EASEMENT
CH = CHANNEL EASEMENT
V = IN NAME OF ANOTHER STATE AGENCY, LPA, ETC.

+ DENOTES REMOVAL ITEMS, FOR DESCRIPTION OF REMOVAL ITEMS SEE CORRESPONDING RIGHT OF WAY PLAN SHEET

* DENOTES RIGHT OF WAY ENCROACHMENT

REV. BY	DATE	DESCRIPTION
FIELD REVIEW BY		DATE:
OWNERSHIP VERIFIED BY		DATE:
DATE COMPLETED		

DRAFT Stage 3 - Not for Construction
09/23/2024

FEDERAL PROJECT NO. E(035)921 E060(482)
PID NO. 75923
STATE JOB NO. 495095
R/W DESIGNER TB
R/W REVIEWER SER

SUMMARY OF ADDITIONAL RIGHT OF WAY

LAW-7-2.17

U:\17360871 4\LAW\75923\row\sheets\75923RS018.dgn 12/9/2014 11:16:36 AM slparker

NET RESIDUE = RECORD AREA - TOTAL PRO - NET TAKE

(c) = CALCULATED AREA

ALL AREAS IN ACRES UNLESS OTHERWISE NOTED

GRANTEE:
ALL RIGHT OF WAY ACQUIRED IN THE NAME OF THE STATE OF OHIO UNLESS OTHERWISE SHOWN.

FEDERAL PROJECT NO. E(035)921 E(060)482

PID NO. 75923

STATE JOB NO. 495095

R/W DESIGNER TB

R/W REVIEWER SER

PARCEL NO.	OWNER	SHEET NO.	OWNERS RECORD		AUDITOR'S PARCEL	RECORD AREA	TOTAL P.R.O.	GROSS TAKE	P.R.O. IN TAKE	NET TAKE	STRUCTURE	NET RESIDUE LEFT	NET RESIDUE RIGHT	TYPE FUND	REMARKS	AS ACQUIRED BOOK	AS ACQUIRED PAGE
153-WL	ROMAINE A. MARTING (TOD)	60-61	391	324	23-084-1501.000	6.820	0.608	3.021	0.200	2.821	YES			STATE	OUT BUILDING		
	MARY-JOAN PITRE'		O.R. 154	777											TRANSFER ON DEATH		
153-WDV		60	391	324	23-084-1501.000			0.026	0.026	0.000				STATE			
			O.R. 154	777													
	GRAND TOTAL					6.820	0.608	3.047	0.226	2.821			3.391				
154-WL	DANNY HOLSCHUH	60-61	O.R. 318	595	23-084-1800.000	0.480	0.180	0.433	0.145	0.288	NO		0.048	STATE	TOTAL TAKE		
						0.479 (c)											
154-E		61						0.046	0.035	0.011				STATE	POTENTIAL UNECONOMIC REMNANT		
154A-WL	RHONDA S. SAENZ	61	O.R. 499	45	23-084-1800.001	1.920	0.313	0.874	0.249	0.625	YES			STATE	HOUSE, DECK		
			O.R. 499	45	23-084-1800.002	1.260	0.147	0.653	0.147	0.506	P (2)				(2) SHEDS		
	TOTAL 154A-WL					3.180	0.460	1.527	0.396	1.131			1.589				
155-WL	ERNEST W. BONZO, AS TRUSTEE	60-66	O.R. 530	713	23-085-0200.000	19.500	0.906	8.408	0.536	7.872	NO			STATE	EXISTING RIVER FORD AT GUYAN-MCKINLEY SCHOOL RD.		
	OF THE ERNEST W. BONZO REVOCABLE TRUST,		O.R. 530	713	23-085-0100.000	48.190	3.056	7.854	1.742	6.112					(PREVIOUS DEED D.B. 567, PG. 330)		
	AND MILDRED R. BONZO, AS TRUSTEE		O.R. 530	713	23-037-1400.000	8.000	0.766	1.048	0.344	0.704							
	OF THE MILDRED R. BONZO REVOCABLE TRUST		O.R. 530	713	23-036-1000.000	72.940	0.000	2.168	0.000	2.168							
			O.R. 530	713	23-085-0300.000	12.860	0.084	4.664	0.084	4.580							
			O.R. 530	713	23-085-0400.000	12.760	0.000	17.187	0.000	17.187							
			O.R. 530	713	23-085-0700.000	22.880	0.000	3.747	0.000	3.747							
			O.R. 530	713	23-036-1500.000	11.670	0.481	2.762	0.157	2.605							
			O.R. 530	713	23-037-0200.000	10.000	0.000	3.564	0.000	3.564							
			O.R. 530	713	23-035-1800.000	162.560	3.621	0.000	0.000	0.000							
			O.R. 530	713	23-036-0600.000	42.000	0.000	0.000	0.000	0.000							
			O.R. 530	713	23-036-0700.000	22.160	0.000	0.000	0.000	0.000							
			O.R. 530	713	23-036-0800.000	18.500	0.000	0.000	0.000	0.000							
			O.R. 530	713	23-036-0900.000	39.000	0.000	0.000	0.000	0.000							
			O.R. 530	713	23-037-0600.000	62.000	0.000	0.000	0.000	0.000							
			O.R. 530	713	23-037-1000.001	45.150	2.209	0.000	0.000	0.000							
			O.R. 530	713	23-037-1100.000	4.000	0.218	0.000	0.000	0.000							
			O.R. 530	713	23-037-1200.000	9.000	0.000	0.000	0.000	0.000							
			O.R. 530	713	23-038-1200.000	9.130	0.025	0.000	0.000	0.000							
			O.R. 530	713	23-084-1500.000	1.720	0.000	0.000	0.000	0.000							
			O.R. 530	713	23-084-1600.000	0.500	0.000	0.000	0.000	0.000							
			O.R. 530	713	23-085-1325.000	0.255	0.000	0.000	0.000	0.000							
			O.R. 530	713	23-085-1326.000	0.248	0.000	0.000	0.000	0.000							
			O.R. 530	713	23-086-0500.000	20.200	0.000	0.000	0.000	0.000							
			O.R. 530	713	23-086-0600.000	4.800	0.000	0.000	0.000	0.000							
			O.R. 530	713	23-087-0700.000	0.250	0.000	0.000	0.000	0.000							
			O.R. 530	713	23-087-0900.000	6.030	0.471	0.000	0.000	0.000							
	TOTAL 155-WL							51.402	2.863	48.539							
155-WDV		60	O.R. 530	713	23-085-0200.000			0.569	0.370	0.199	NO			STATE			
		62			23-037-1400.000			0.214	0.148	0.066							
	TOTAL 155-WDV							0.783	0.518	0.265							
	GRAND TOTAL					666.303	11.837	52.185	3.381	48.804		490.971	114.691				
155-CH		64	O.R. 530	713	23-085-0700.000			0.101	0.000	0.101	NO			STATE			

NOTE: ALL TEMPORARY PARCELS TO BE OF 24 MONTH DURATION.

NOTE: UNDER NO CIRCUMSTANCES ARE TEMPORARY EASEMENTS TO BE USED FOR STORAGE OF MATERIAL OR EQUIPMENT BY THE CONTRACTOR UNLESS NOTED OTHERWISE.

LEGEND:
- WD = WARRANTY DEED
- WL = FEE SIMPLE WITH LIMITATION OF ACCESS
- T = TEMPORARY EASEMENT
- SL = SLOPE EASEMENT
- S = SEWER EASEMENT
- CH = CHANNEL EASEMENT
- V = IN NAME OF ANOTHER STATE AGENCY, LPA, ETC.

+ DENOTES REMOVAL ITEMS, FOR DESCRIPTION OF REMOVAL ITEMS SEE CORRESPONDING RIGHT OF WAY PLAN SHEET

* DENOTES RIGHT OF WAY ENCROACHMENT

REV. BY	DATE	DESCRIPTION
FIELD REVIEW BY		DATE:
OFFICE REVIEWED BY		DATE:
DATE COMPLETED		

DRAFT Stage 3 - Not for Construction

09/23/2024

SUMMARY OF ADDITIONAL RIGHT OF WAY

LAW-7-2.17

U:\1736089714\LAW\75923\row\sheets\75923RSD19.dgn 12/9/2014 11:16:37 AM sbarker

NET RESIDUE = RECORD AREA - TOTAL PRO - NET TAKE

(c) = CALCULATED AREA

ALL AREAS IN ACRES
UNLESS OTHERWISE NOTED

GRANTEE:
ALL RIGHT OF WAY ACQUIRED IN THE NAME OF THE STATE OF OHIO UNLESS OTHERWISE SHOWN.

PARCEL NO.	OWNER	SHEET NO.	OWNERS RECORD		AUDITOR'S PARCEL	RECORD AREA	TOTAL P.R.O.	GROSS TAKE	P.R.O. IN TAKE	NET TAKE	STRUCTURE	NET RESIDUE LEFT	NET RESIDUE RIGHT	TYPE FUND	REMARKS	AS ACQUIRED BOOK	AS ACQUIRED PAGE
156	CARL & FAYE MAYENSCHEIN		552	323	23-038-1000.001	3.000									NO R/W REQUIRED		
157-WDV	MICHAEL J. RILEY	60	611	184	23-037-1300.000	17.000	0.497	2.349	0.223	2.126	NO	14.377		STATE			
		62															
158	BARBARA FAYE TAYLOR		O.R. 590	91	23-037-1000.000	12.850									NO R/W REQUIRED		
	(AKA BARBARA F. TAYLOR)																
159-WL	JOSEPHINE CLARK	63	509	238	23-036-1700.000	1.650	0.317	1.576	0.236	1.340	YES (2)	0.580		STATE	HOUSE, GARAGE		
	(AKA JOSEPHINE MCCORMICK)					2.237 (c)					A				LOSS OF ACCESS TO HORSE BARN		
	AND KENNETH E. CLARK														PARCEL AREA CORRECTION - 2.237 (c)		
160	A. JOSEPHINE McCORMICK		O.R. 109	504	23-036-1600.000	0.370									NO R/W REQUIRED		
	(AKA JOSEPHINE McCORMICK)																
161	GARY WHITLEY, JIMMY WHITLEY,		585	346	23-036-1800.000	1.950									NO R/W REQUIRED		
	RONNIE WHITLEY, AND BRENDA BLACK		585	346	23-038-0600.000	16.920											
162	KEVIN L. & SHERRI L. SALYER		O.R. 237	214	23-036-1400.000	0.790									NO R/W REQUIRED		
163	NOT USED																
164-WL	ELSIE C. WHITLEY AND	64	O.R. 580	635	23-037-0100.000	4.630	0.000	0.515	0.000	0.515	NO			STATE	TRANSFER ON DEATH		
	SAMMY DEAN WHITLEY		O.R. 592	338	23-038-0700.000	2.120	0.347	0.000	0.000	0.000							
	TOTAL 164-WL					6.750	0.347	0.515	0.000	0.515		5.888					
165A	TONEY RAY & RITA GAIL CAPERTON		632	381	25-054-0200.001	3.660									NO R/W REQUIRED		
165B	BETSY W. RATCLIFF		O.R. 688	242	25-054-0200.000	9.670									NO R/W REQUIRED		
166-WL	ROBERT E. & SUSAN L. FLETCHER	65-67	639	402	25-065-1600.001	41.990	0.000	14.379	0.000	14.379	NO	0.635	26.976	STATE			
166-E		65						0.635	0.000	0.635	NO			STATE	LANDLOCKED		

NOTE: ALL TEMPORARY PARCELS TO BE OF 24 MONTH DURATION.

NOTE: UNDER NO CIRCUMSTANCES ARE TEMPORARY EASEMENTS TO BE USED FOR STORAGE OF MATERIAL OR EQUIPMENT BY THE CONTRACTOR UNLESS NOTED OTHERWISE.

LEGEND:
- WD = WARRANTY DEED
- WL = FEE SIMPLE WITH LIMITATION OF ACCESS
- T = TEMPORARY EASEMENT
- SL = SLOPE EASEMENT
- S = SEWER EASEMENT
- CH = CHANNEL EASEMENT
- V = IN NAME OF ANOTHER STATE AGENCY, LPA, ETC.

* DENOTES REMOVAL ITEMS, FOR DESCRIPTION OF REMOVAL ITEMS SEE CORRESPONDING RIGHT OF WAY PLAN SHEET

* DENOTES RIGHT OF WAY ENCROACHMENT

REV. BY	DATE	DESCRIPTION
FIELD REVIEW BY		DATE:
OFFICE REVIEWED BY		DATE:
DATE COMPLETED		

DRAFT Stage 3 - Not for Construction

FEDERAL PROJECT NO. E(035)921 E(060)482

PID NO. 75923

STATE JOB NO. 495095

R/W DESIGNER TB

R/W REVIEWER SER

SUMMARY OF ADDITIONAL RIGHT OF WAY

LAW-7-2.17

U:\17\3608714\LAW\75923\row\sheets\75923RS020.dgn 12/9/2014 11:16:38 AM slparker

NET RESIDUE = RECORD AREA - TOTAL PRO - NET TAKE

(c) = CALCULATED AREA

ALL AREAS IN ACRES
UNLESS OTHERWISE NOTED

GRANTEE:
ALL RIGHT OF WAY ACQUIRED IN THE NAME OF THE STATE OF OHIO UNLESS OTHERWISE SHOWN.

PARCEL NO.	OWNER	SHEET NO.	OWNERS RECORD		AUDITOR'S PARCEL	RECORD AREA	TOTAL P.R.O.	GROSS TAKE	P.R.O. IN TAKE	NET TAKE	STRUCTURE	NET RESIDUE LEFT	NET RESIDUE RIGHT	TYPE FUND	REMARKS	AS ACQUIRED BOOK	AS ACQUIRED PAGE
167-WL2	ERNEST W. BONZO, AS TRUSTEE	65	O.R. 530	713	25-051-1400.000	84.000	2.388	0.448	0.000	0.448	NO			STATE	(PREVIOUS DEED D.B. 500, PG. 25)		
	OF THE ERNEST W. BONZO REVOCABLE TRUST,		O.R. 530	713	25-051-0500.000	10.000	0.393	0.000	0.000	0.000					PARCEL 167-WL1 WAS ACQUIRED UNDER PROJECT LAW-7-7.25		
	AND MILDRED R. BONZO, AS TRUSTEE		O.R. 530	713	25-051-0600.000	8.200	0.307	0.000	0.000	0.000							
	OF THE MILDRED R. BONZO REVOCABLE TRUST		O.R. 530	713	25-051-0700.000	1.500	0.368	0.000	0.000	0.000							
			O.R. 530	713	25-051-0800.000	21.310	0.370	0.000	0.000	0.000							
			O.R. 530	713	25-051-0900.000	5.000	0.164	0.000	0.000	0.000							
			O.R. 530	713	25-051-1000.000	3.990	0.000	0.000	0.000	0.000							
			O.R. 530	713	25-051-1100.000	5.580	0.000	0.000	0.000	0.000							
			O.R. 530	713	25-051-1300.000	5.000	0.000	0.000	0.000	0.000							
			O.R. 530	713	25-051-1500.000	6.670	0.000	0.000	0.000	0.000							
			O.R. 530	713	25-052-1400.000	7.450	0.473	0.000	0.000	0.000							
			O.R. 530	713	25-053-1400.000	5.000	0.295	0.000	0.000	0.000							
			O.R. 530	713	25-053-1500.000	1.250	0.070	0.000	0.000	0.000							
			O.R. 530	713	25-054-0300.000	1.330	0.000	0.000	0.000	0.000							
	TOTAL 167-WL2							0.448	0.000	0.448							
167-WL3		65	O.R. 530	713	25-066-0100.000	41.050	0.000	11.773	0.000	11.773				STATE	(PREVIOUS DEED D.B. 532, PG. 570)		
		67-71	O.R. 530	713	25-064-1700.000	78.000	0.000	22.949	0.000	22.949							
			O.R. 530	713	25-064-1400.000	61.910	0.000	15.953	0.000	15.953					(PREVIOUS DEED D.B. 605, PG. 157)		
			O.R. 530	713	25-064-1300.000	51.810	0.000	10.291	0.000	10.291							
	TOTAL 167-WL3							60.966	0.000	60.966							
167-WL4		71	O.R. 530	713	25-064-1300.000			0.010	0.000	0.010	NO			STATE			
		77															
	GRAND TOTAL					399.050	4.828	61.464	0.000	61.464		270.828	61.930		RESIDUE RIGHT INCLUDES 167-E		
167-E		80	O.R. 530	713	25-066-0100.000			21.875	0.000	21.875	NO			STATE			
			O.R. 530	713	25-064-1700.000			27.402	0.000	27.402							
			O.R. 530	713	25-064-1400.000			6.957	0.000	6.957							
															LANDLOCKED		
	TOTAL 167-E							56.234	0.000	56.234					PARCEL 170 (0.23 AC.) IS EXCLUDED FROM THIS AREA		
168-WL	RILEY DEVELOPMENT COMPANY, INC.	70	612	347	25-064-1401.000	1.620	0.000	0.176	0.000	0.176	NO			STATE			
			612	347	25-064-1501.000	4.690	0.000										
			612	331	25-064-1501.001	2.060	0.000										
			613	708	25-064-1501.003	1.930	0.000										
			612	335	25-064-1502.000	0.320	0.000										
			613	708	25-064-1502.001	0.880	0.000										
			O.R. 605	300	25-064-1502.003	0.440	0.000										
			612	339	25-064-1503.000	2.900	0.000										
			613	708	25-064-1503.001	1.290	0.000										
			O.R. 605	300	25-064-1503.003	0.090	0.000										
			612	343	25-064-1601.000	1.290	0.000										
			O.R. 92	18	25-064-1801.000	14.250	0.000										
			612	331	25-064-1801.001	0.080	0.000										
			612	339	25-064-1802.000	5.660	0.000										
			O.R. 92	1	25-066-0101.000	12.900	0.000										
	TOTAL 168-WL					50.400	0.000	0.176	0.000	0.176			50.224				
169	THE HECLA WATER ASSOCIATION, INC.		468	813	25-064-1403.000	0.340									NO R/W REQUIRED, UNKNOWN LEGAL ACCESS		
170	THE HECLA WATER ASSOCIATION	70	464	292	25-064-1402.000	0.230									NO R/W REQUIRED, UNKNOWN LEGAL ACCESS		

NOTE: ALL TEMPORARY PARCELS TO BE OF 24 MONTH DURATION.

NOTE: UNDER NO CIRCUMSTANCES ARE TEMPORARY EASEMENTS TO BE USED FOR STORAGE OF MATERIAL OR EQUIPMENT BY THE CONTRACTOR UNLESS NOTED OTHERWISE.

LEGEND:
WD = WARRANTY DEED
WL = FEE SIMPLE WITH LIMITATION OF ACCESS
T = TEMPORARY EASEMENT
SL = SLOPE EASEMENT
S = SEWER EASEMENT
CH = CHANNEL EASEMENT
V = IN NAME OF ANOTHER STATE AGENCY, LPA, ETC.

+ DENOTES REMOVAL ITEMS, FOR DESCRIPTION OF REMOVAL ITEMS SEE CORRESPONDING RIGHT OF WAY PLAN SHEET

* DENOTES RIGHT OF WAY ENCROACHMENT

REV. BY	DATE	DESCRIPTION
FIELD REVIEW BY		DATE:
PLANS PREPARED BY		DATE:
DATE COMPLETED		

DRAFT Stage 3 - Not for Construction

09/23/2024

FEDERAL PROJECT NO. E(035)921 E(060)482

PID NO. 75923

STATE JOB NO. 495095

R/W DESIGNER TB

R/W REVIEWER SER

SUMMARY OF ADDITIONAL RIGHT OF WAY

LAW-7-2.17

U:\173608714\LAW\75923\row\sheets\75923RS021.dgn 12/9/2014 11:16:39 AM slporker

NET RESIDUE = RECORD AREA - TOTAL PRO - NET TAKE

(c) = CALCULATED AREA

ALL AREAS IN ACRES
UNLESS OTHERWISE NOTED

GRANTEE:
ALL RIGHT OF WAY ACQUIRED IN THE NAME OF THE STATE OF OHIO UNLESS OTHERWISE SHOWN.

PARCEL NO.	OWNER	SHEET NO.	OWNERS RECORD		AUDITOR'S PARCEL	RECORD AREA	TOTAL P.R.O.	GROSS TAKE	P.R.O. IN TAKE	NET TAKE	STRUCTURE	NET RESIDUE LEFT	NET RESIDUE RIGHT	TYPE FUND	REMARKS	AS ACQUIRED BOOK	AS ACQUIRED PAGE
171	PATRICIA BURD		O.R. 256	242	25-064-1505.000	1.760									NO R/W REQUIRED		
172-241	NOT USED																
242	ERNEST B. & CLORINDA G. HALL		455	700	25-061-0500.000	2.470									NO R/W REQUIRED		
243	ERNEST RALPH ROOD & MYRTLE RUTH ROOD		635	04	25-064-0700.000	0.400									NO R/W REQUIRED		
244	STATE OF OHIO DEPARTMENT OF TRANSPORTATION		O.R. 284	691	25-063-0700.003	0.040									NO R/W REQUIRED		
245-267	NOT USED																
252	STATE OF OHIO DEPARTMENT OF TRANSPORTATION		O.R. 171	434	25-061-1001.000	5.800									ACQUIRED AS PARCEL 252-WL, UNDER PROJECT LAW-7-7.25		
253-254	NOT USED																
255	STATE OF OHIO DEPARTMENT OF TRANSPORTATION		O.R. 160	93	25-061-1300.000	0.160									ACQUIRED AS PARCEL 255-WL, UNDER PROJECT LAW-7-7.25		
					25-062-0100.000	1.000											
					25-062-0500.000	1.000											
	TOTAL 255-WL																
256-WL	MANFORD KING	77	480	85	25-062-0200.000	1.000	0.019	0.081	0.019	0.062	YES (2)			STATE	HOUSE, GARAGE		
			480	85	25-062-0600.000	1.000	0.016	0.088	0.016	0.072							
	TOTAL 256-WL					2.000	0.035	0.169	0.035	0.134		1.380					
						1.549 (c)									PROPERTY AREA CORRECTION - 1.549 (c)		
256-E		77	480	85	25-062-0200.000			0.714	0.000	0.714	YES (2)				HOUSE, SHED		
			480	85	25-062-0500.000			0.666	0.000	0.666							
	TOTAL 256-E							1.380	0.000	1.380					LANDLOCKED		
256-T		77	480	85	25-062-0200.000			0.041	0.000	0.041					TO REMOVE STRUCTURE		
			480	85	25-062-0600.000			0.014	0.000	0.014							
	TOTAL 256-T							0.055	0.000	0.055							
257	STATE OF OHIO DEPARTMENT OF TRANSPORTATION	77	O.R. 752	459	25-062-0400.000	1.000											
258-WL	TERRY J. & KAY L. HOLLAND	77	560	738	25-062-0300.000	1.000		NONE	NONE	NONE	NO			STATE	AUDITOR AREA IS INCORRECT (SEE 258A & 258B)		
			560	738	25-061-1800.000	0.200	0.052	0.052	0.052	0.000					SUGGEST ELIMINATING PARCEL 25-062-0300.000		
	TOTAL 258-WL					1.200	0.052	0.052	0.052	0.000		0.000			TOTAL TAKE		
						0.052 (c)									PARCEL REMAINDER - 0.052 (c)		

NOTE: ALL TEMPORARY PARCELS TO BE OF 24 MONTH DURATION.

NOTE: UNDER NO CIRCUMSTANCES ARE TEMPORARY EASEMENTS TO BE USED FOR STORAGE OF MATERIAL OR EQUIPMENT BY THE CONTRACTOR UNLESS NOTED OTHERWISE.

LEGEND:
WD = WARRANTY DEED
WL = FEE SIMPLE WITH LIMITATION OF ACCESS
T = TEMPORARY EASEMENT
SL = SLOPE EASEMENT
S = SEWER EASEMENT
CH = CHANNEL EASEMENT
V = IN NAME OF ANOTHER STATE AGENCY, LPA, ETC.

+ DENOTES REMOVAL ITEMS, FOR DESCRIPTION OF REMOVAL ITEMS SEE CORRESPONDING RIGHT OF WAY PLAN SHEET

* DENOTES RIGHT OF WAY ENCROACHMENT

REV. BY	DATE	DESCRIPTION
FIELD REVIEW BY		DATE:
OFFICE REVIEWED BY		DATE:
DATE COMPLETED		09/23/2024

DRAFT Stage 3 - Not for Construction

FEDERAL PROJECT NO. E(035)921 E(060)482
PID NO. 75923
STATE JOB NO. 495095
R/W DESIGNER TB
R/W REVIEWER SER

SUMMARY OF ADDITIONAL RIGHT OF WAY

LAW-7-2.17

U:\1736087\4\LAW\75923\row\sheets\75923RS022.dgn 12/9/2014 11:16:40 AM siparker

NET RESIDUE = RECORD AREA - TOTAL PRO - NET TAKE

(d) = DEED AREA
(c) = CALCULATED AREA

ALL AREAS IN ACRES UNLESS OTHERWISE NOTED

GRANTEE:
ALL RIGHT OF WAY ACQUIRED IN THE NAME OF THE STATE OF OHIO UNLESS OTHERWISE SHOWN.

PARCEL NO.	OWNER	SHEET NO.	OWNERS RECORD		AUDITOR'S PARCEL	RECORD AREA	TOTAL P.R.O.	GROSS TAKE	P.R.O. IN TAKE	NET TAKE	STRUCTURE	NET RESIDUE LEFT	NET RESIDUE RIGHT	TYPE FUND	REMARKS	AS ACQUIRED BOOK	AS ACQUIRED PAGE
258A-WL	HELEN KATHLEEN SPEARS	77	O.R. 149	452	25-061-1400.002	0.010	0.000	0.000	0.000	0.000	YES, P			STATE	GARAGE, MOBILE HOME		
	(AKA HELEN K. SPEARS)		O.R. 504	94	25-061-1800.002	0.370	0.016	0.087	0.016	0.071					DEED AREA = 0.0156 + 0.3697 = 0.3853 AC., PT. OF		
	TOTAL 258A-WL					0.380	0.016	0.087	0.016	0.071		0.298			ORG. AUD. PARCELS 25-061-1800.000 & 25-062-0300.000		
						0.385 (c)											
258A-E		77	O.R. 149	452	25-061-1400.002			0.016	0.000	0.016				STATE			
			O.R. 504	94	25-061-1800.002			0.282	0.000	0.282					PARCEL AREA CORRECTION 0.087 + 0.282 = 0.369 AC.		
	TOTAL 258A-E							0.298	0.000	0.298					LANDLOCKED		
258B-E	BURNIE E. WATSON	77	O.R. 161	634	25-061-1400.003	0.010	0.000	0.005	0.000	0.005	NO			STATE	PARCEL AREA CORRECTION = 0.005 (c)		
			O.R. 161	634	25-061-1800.003	0.420	0.000	0.420	0.000	0.420					DEED AREA = 0.4257 AC., PART OF ORIGINAL		
															AUD. PARCELS 25-061-1800.000 & 25-062-0300.000		
			O.R. 161	634	NONE	0.689 (d)		0.685	0.000	0.685					DEED AREA = 0.6889 AC., PART OF ORIGINAL		
															AUD. PARCELS 25-061-1800.000 & 25-062-0300.000		
															SUGGESTED NEW AUD. PARCEL 25-061-1800.004		
	TOTAL 258B-E					1.119	0.000	1.110	0.000	1.110					LANDLOCKED		
						1.110 (c)									PROPERTY AREA = 0.005 + 0.420 + 0.685 = 1.110 AC.		
259	GARY L. SOWARDS, SR.		O.R. 717	801	25-061-1700.000	1.000									UNKNOWN LEGAL ACCESS, NO R/W REQUIRED		
260-WL	HELENA HAMMONS	77	O.R. 109	278	25-061-1800.001	0.010	0.002	0.009	0.002	0.007	YES (2)			STATE	(2) HOUSES		
			473	434	25-061-1500.000	0.120	0.069	0.059	0.048	0.011							
			304	379	25-061-1400.000	2.230	0.089	0.085	0.045	0.040							
	TOTAL 260-WL					2.360	0.160	0.153	0.095	0.058		2.142					
260-T		77	O.R. 109	278	25-061-1800.001			0.001	0.000	0.001				STATE			
			473	434	25-061-1500.000			0.034	0.000	0.034							
			304	379	25-061-1400.000			0.052	0.000	0.052							
	TOTAL 260-T							0.087	0.000	0.087					TO REMOVE BUILDINGS AND GRADING		
261	GERTRUDE SCARBERRY		527	81	25-061-1600.000	0.630									NO R/W REQUIRED		
262-267	NOT USED																
268	STATE OF OHIO		O.R. 156	198	25-060-1600.001	12.910									ACQUIRED AS PARCEL 268-WD		
	DEPARTMENT OF TRANSPORTATION														UNDER PROJECT LAW-7-7.25		
269-272	NOT USED																
273	DANNY LEE BURCHAM & HOMER DALE BURCHAM		O.R. 733	247	25-067-1500.000	0.168									NO R/W REQUIRED		
			O.R. 416	452													
274-276	NOT USED																
277	GLENN EDWARD EARL &		411	230	25-068-0200.000	0.234									NO R/W REQUIRED		
	NANCY K. EARL																

NOTE: ALL TEMPORARY PARCELS TO BE OF 24 MONTH DURATION.

NOTE: UNDER NO CIRCUMSTANCES ARE TEMPORARY EASEMENTS TO BE USED FOR STORAGE OF MATERIAL OR EQUIPMENT BY THE CONTRACTOR UNLESS NOTED OTHERWISE.

LEGEND:
WD = WARRANTY DEED
WL = FEE SIMPLE WITH LIMITATION OF ACCESS
T = TEMPORARY EASEMENT
SL = SLOPE EASEMENT
S = SEWER EASEMENT
CH = CHANNEL EASEMENT
V = IN NAME OF ANOTHER STATE AGENCY, LPA, ETC.

+ DENOTES REMOVAL ITEMS, FOR DESCRIPTION OF REMOVAL ITEMS SEE CORRESPONDING RIGHT OF WAY PLAN SHEET

* DENOTES RIGHT OF WAY ENCROACHMENT

REV. BY	DATE	DESCRIPTION
FIELD REVIEW BY		DATE:
OFFICE REVIEWED BY		DATE:
DATE COMPLETED		

09/23/2020

DRAFT Stage 3 - Not for Construction

FEDERAL PROJECT NO. E(035)921 E(060)482
PID NO. 75923
STATE JOB NO. 495095
R/W DESIGNER TB
R/W REVIEWER SER

SUMMARY OF ADDITIONAL RIGHT OF WAY

LAW-7-2.17

U:\1736087141\LAW\75923\row\sheets\75923RS023.dgn 12/9/2014 11:16:41 AM sporker

NET RESIDUE = RECORD AREA - TOTAL PRO - NET TAKE

(c) = CALCULATED AREA

ALL AREAS IN ACRES
UNLESS OTHERWISE NOTED

GRANTEE:
ALL RIGHT OF WAY ACQUIRED IN THE NAME OF THE STATE OF OHIO UNLESS OTHERWISE SHOWN.

PARCEL NO.	OWNER	SHEET NO.	OWNERS RECORD		AUDITOR'S PARCEL	RECORD AREA	TOTAL P.R.O.	GROSS TAKE	P.R.O. IN TAKE	NET TAKE	STRUCTURE	NET RESIDUE		TYPE FUND	REMARKS	AS ACQUIRED	
												LEFT	RIGHT			BOOK	PAGE
280	NEW HOPE UNITED METHODIST CHURCH		468	895	25-060-1606.000	0.258									NO R/W REQUIRED		
281-282	NOT USED																
283	JOHN T. WILLIAMS II, &		O.R. 289	27	18-137-1601.000	0.290									NO R/W REQUIRED		
	JENETTE WILLIAMS		359	107													
284	NOT USED																
285	DANNY J. HOLSCHUH		O.R. 270	495	18-137-1600.005	0.236									NO R/W REQUIRED		
286-287	NOT USED																
288	GREGORY A. & ASHLEY M. SULLIVAN		O.R. 421	06	18-138-0839.000	0.096									NO R/W REQUIRED		
289-291	NOT USED																
292	ALMA L. HOLLEY		O.R. 303	722	18-138-0824.001	0.119									NO R/W REQUIRED		
293	MICHELLE CHILDERS		O.R. 303	725	18-138-0825.001	0.187									NO R/W REQUIRED		
294	ROBERT CECIL		O.R. 285	711	18-138-0826.001	0.237											
295-299	NOT USED																
300-T	TRUSTEES OF THE MT. PISGAH MISSIONARY BAPTIST COLORED CHURCH	77	31	241	25-064-1105.000	0.500	0.122	0.021	0.000	0.021	NO			STATE	TO REGRADE DRIVE		
301-WL	STATE OF OHIO DEPARTMENT OF TRANSPORTATION	72	534	600	25-060-1600.003	2.960									ACQUIRED AS PARCEL 09-1 WD-OP (8/31/1988)		
301-T		77	534	600	25-060-1600.003			NONE	NONE	NONE					TO REGRADE DRIVE		
302-307	NOT USED																
308	STATE OF OHIO		O.R. 547	26	18-138-0800.000	23.770									NO R/W REQUIRED		
			O.R. 547	26	18-161-1400.000	55.000											
309-312	NOT USED																
313	STATE OF OHIO		O.R. 164	698	18-138-0833.000	0.239									ACQUIRED AS PARCEL 313-WDV, UNDER PROJECT LAW-7-7.25		
314	STATE OF OHIO		O.R. 147	126	18-138-0831.000	0.239									ACQUIRED AS PARCEL 314-WD, UNDER PROJECT LAW-7-7.25		
			O.R. 147	126	18-138-0832.000	0.239											

NOTE: ALL TEMPORARY PARCELS TO BE OF 24 MONTH DURATION.

NOTE: UNDER NO CIRCUMSTANCES ARE TEMPORARY EASEMENTS TO BE USED FOR STORAGE OF MATERIAL OR EQUIPMENT BY THE CONTRACTOR UNLESS NOTED OTHERWISE.

LEGEND:
WD = WARRANTY DEED
WL = FEE SIMPLE WITH LIMITATION OF ACCESS
T = TEMPORARY EASEMENT
SL = SLOPE EASEMENT
S = SEWER EASEMENT
CH = CHANNEL EASEMENT
V = IN NAME OF ANOTHER STATE AGENCY, LPA, ETC.

+ DENOTES REMOVAL ITEMS, FOR DESCRIPTION OF REMOVAL ITEMS SEE CORRESPONDING RIGHT OF WAY PLAN SHEET

• DENOTES RIGHT OF WAY ENCROACHMENT

REV. BY	DATE	DESCRIPTION
FIELD REVIEW BY		DATE:
RIGHT OF WAY APPROVED BY		DATE: 09/23/2024
DATE COMPLETED		

DRAFT Stage 3 - Not for Construction

FEDERAL PROJECT NO. E(035)921 E(060)482
PID NO. 75923
STATE JOB NO. 495095
R/W DESIGNER TB
R/W REVIEWER SER

SUMMARY OF ADDITIONAL RIGHT OF WAY

LAW-7-2.17

41 / 82

U:\17360871\4\LAW\75923\row\sheets\75923RS024.dgn 12/9/2014 11:16:41 AM stporker

LAWRENCE COUNTY
UNION TOWNSHIP
SECT. 29, T-1-N, R-16-W

CURVE DATA
S.R. 7
CURVE NO. 1

P.I. STA. 138+60.99
Δ = 53° 33' 53" (RT)
Dc = 1° 27' 15"
R = 3,940.00'
T = 1,880.13'
L = 3,508.44'
E = 425.60'
TS STA. 117+84.61
SC STA. 119+59.61
θs = 1° 16' 21"
Ls = 175.00'
Ts = 2,076.38'
LT = 116.67'
ST = 58.34'
CS STA. 154+68.05
ST STA. 156+43.05

BEGIN WORK
S.R. 7
STA. 114+57.60

MATCH LINE STA. 123+00

Symmes Creek
Ex LA-R/W
Ex LA-R/W
Ex LA-R/W
Symmes Creek
Ex LA-R/W
℄ RAMP C
℄ RAMP B
EX. RAMP B
℄ RAMP D
EX. RAMP
EX. S.R. 7
N17°20'23"E
N 17° 20' 23" E
℄ R/W & CONST. S.R. 7
CURVE NO. 1
TS
SC
C.R. 123
CHESAPEAKE-SYMMES CREEK RD.
Ex R/W
Ex LA-R/W
LA-R/W
Ex LA-R/W
Ex LA-R/W
Ex LA-R/W
Ex LA-R/W
Ex LA-R/W
Ex LA-R/W
Ex R/W
Ex LA-R/W

1414 1415 1416 1417 1412 1413 1414 1415 1411

115 116 117 118 119 120 121 122

113 114 115 116 117 118 119

7 STATE OF OHIO
LAW-52-23.56
LAW-7-0.00

7 STATE OF OHIO

5 FREDDIE L. HAYES, JR.

117+58.24
170.05' RT.

118+47.74 [L]
183.50' RT.

119+37.29 [S]
195.56' RT.

119+31.63 [S]
232.36' RT.

122+22.32
221.77' RT.

115+70.30
309.07' RT.

115+00.45
439.13' RT.

114+57.60
591.21' RT.

MONUMENT LEGEND
- STONE FOUND
- FENCE POST
- R.R.S. FOUND
- R.R.S. SET
- P.K. NAIL FOUND
- CONC. MONUMENT FD.
- REFER. MONUMENT SET
- REBAR FOUND
- AXLE FOUND
- IRON PIN FOUND
- I.P.F. WITH I.D. CAP
- ¾" BAR SET
- PROJECT CONTROL MON.
- MONUMENT BOX FD.
- MONUMENT BOX SET

NOTE:
SEE SHEET 2 OF 82
FOR ALTERNATE METHOD OF
STATIONING FROM SPIRAL CURVES

[L] MEASURED FROM LONG TANGENT
[S] MEASURED FROM SHORT TANGENT

EX. MONUMENTS OFF S.R. 7

STATION	OFFSET	DESCRIPTION
108+78.19	0.00' RT.	CONCRETE MONUMENT FOUND
112+02.37	455.60' RT.	CONCRETE MONUMENT FOUND
112+56.91	468.58' RT.	CONCRETE MONUMENT FOUND
113+48.22	493.71' RT.	PROJECT CONTROL MON. #1201
113+61.16	229.71' LT.	CONCRETE MONUMENT FOUND
114+20.59	215.31' LT.	CONCRETE MONUMENT FOUND
114+36.66	205.12' LT.	PROJECT CONTROL MON. #1202
121+42.28	169.84' LT.	CONCRETE MONUMENT FOUND
121+62.22	191.50' LT.	IRON PIN FOUND
122+22.52	222.88' RT.	REBAR FOUND
122+86.72	92.83' RT.	CONCRETE MONUMENT FOUND

DRAFT Stage 3 - Not for Construction

	DATE	DESCRIPTION
DESIGNED		09/23/2024
DRAWN		
CHECKED		
DATE COMPLETED		

HORIZONTAL SCALE IN FEET
0 25 50 100

R/W DESIGNER TB
R/W REVIEWER SER

PID NO. 75923

RIGHT OF WAY BOUNDARY SHEET
STA. 114+57.60 TO STA. 123+00

LAW-7-2.17

42 / 82

U:\1736087141.AW\75923\row\sheets\75923RB001.dgn 12/9/2014 11:16:44 AM slparker

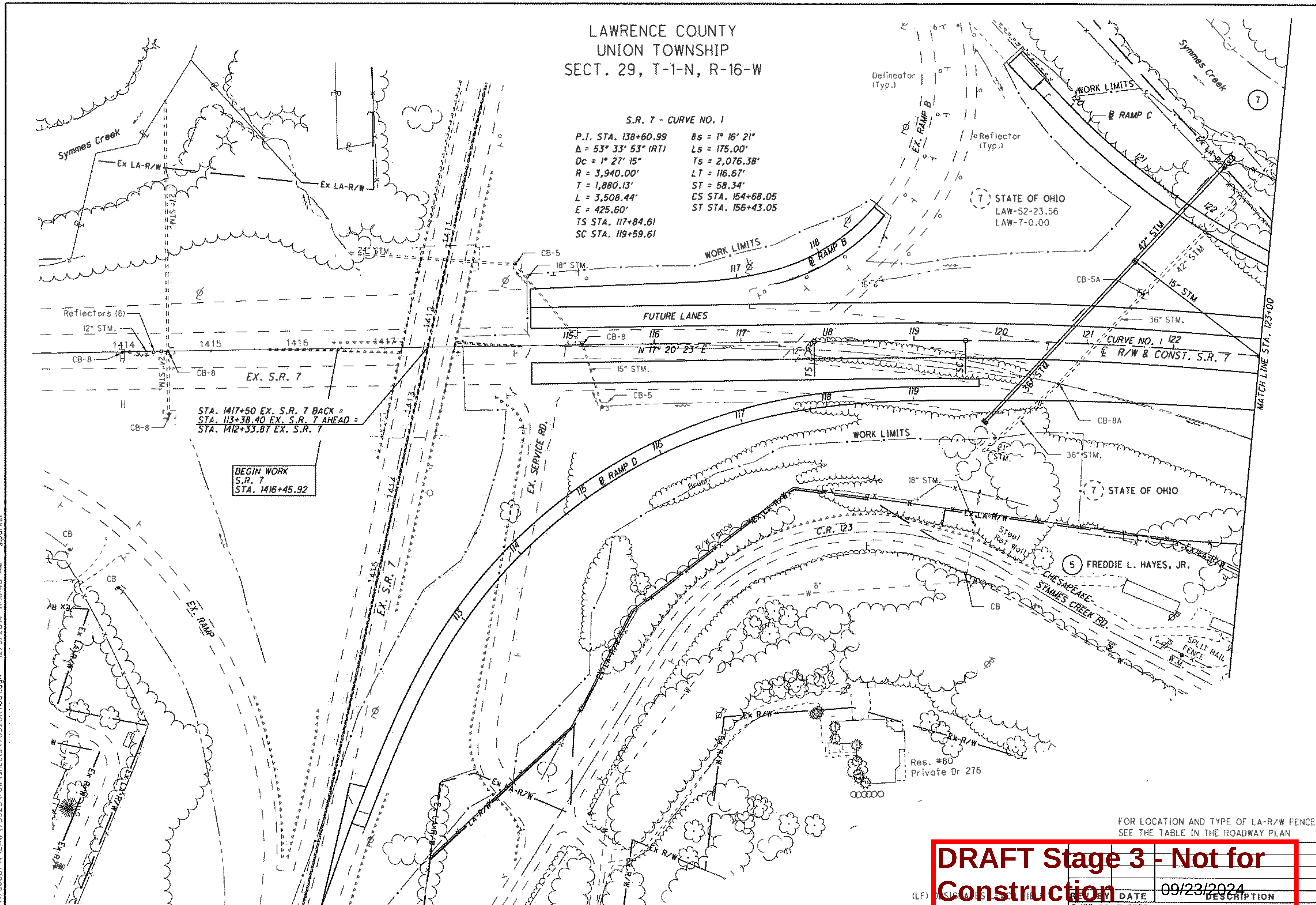

FOR LOCATION AND TYPE OF LA-R/W FENCE SEE THE TABLE IN THE ROADWAY PLAN

(LF) DESIGNATES LA FACILITIES

REV.	BY	DATE	DESCRIPTION

DATE COMPLETED

DRAFT Stage 3 - Not for Construction 09/23/2024

PID NO. 75923

R/W DESIGNER TB
R/W REVIEWER SER

RIGHT OF WAY TOPO SHEET
STA. 114+57.60 TO STA. 123+00

LAW-7-2.17

42T/82

U:\17360871\LAW\75923\row\sheets\75923RT001.dgn 12/9/2014 11:16:46 AM sbarker

LAWRENCE COUNTY
UNION TOWNSHIP
SECT. 29, T-1-N, R-16-W

MONUMENT LEGEND
- STONE FOUND
- FENCE POST
- R.R.S. FOUND
- R.R.S. SET
- P.K. NAIL FOUND
- CONC. MONUMENT FD.
- REFER. MONUMENT SET
- REBAR FOUND
- AXLE FOUND
- IRON PIN FOUND
- I.P.F. WITH I.D. CAP
- ¾" BAR SET
- PROJECT CONTROL MON.
- MONUMENT BOX FD.
- MONUMENT BOX SET

(1) ELDON L. RANDOLPH
23-119-1700.000

(7) STATE OF OHIO
23-121-0300.000

(1) ELDON L. RANDOLPH
23-124-1100.002

(7) STATE OF OHIO
LAW-52-23.56
LAW-7-0.00

(5) FREDDIE L. HAYES, JR.

Symmes Creek

Ex R/W

℄ RAMP C

℄ R/W & CONST. S.R. 7

Ex LA-R/W

LA-R/W

CURVE NO. 1

MATCH LINE STA. 123+00

MATCH LINE STA. 135+00

CHESAPEAKE-SYMMES CREEK RD.

C.R. 123

EX. ℄ R/W

N 11°46'50" E 431.39'

N 35°35'00" E 138.35

N 28°24'00" E 180.77'

N 35°11'00" E 74.63'

131+15.75 425.28' LT.

132+40.59 427.09' LT.

134+00.63 458.50' LT.

134+67.20 464.63' LT.

L905

L901 TOT.

127+42.70 279.12' LT.

127+52.11 250.90' LT.

L925

127+89.00 265.64' LT.

L924

127+59.94 227.75' LT.

S 85°55'43" E 141.07'

N 37°04'59" W 98.97'

127+23.08 136.60' LT.

128+50.00 140.00' LT.

123+00.62 155.86' LT.

131.41'

S 29°09'23" W

S 41°21'05" W 352.91'

131+90.00 95.00' LT.

S 24°26'25" W 315.31'

134+85.69 172.48' LT.

L908

L930

N 37°04'59" W 164.03'

126+58.23 13.63' RT.

S 51°07'13" W 363.04'

130+06.53 136.82' RT.

N 42°28'43" E 411.55'

L929

L914

L915

S 65°08'12" W 680.36'

134+33.34 176.60' RT.

134+56.00 215.18' RT.

S 24°37'00" E 266.91'

133+72.69 68.65' RT.

134+06

S 78°57'31" E 122.90'

125+02.60 315.90' RT.

127+75.92 386.31' RT.

130+16.12 486.36' RT.

NUMBER	DIRECTION	DISTANCE
L901	N 79°31'53" W	45.78'
L905	N 73°04'00" E	96.17'
L908	S 24°37'00" E	155.50'
L914	S 78°57'31" E	44.19'
L915	N 76°09'11" E	120.49'
L924	N 79°31'53" W	24.59'
L925	N 09°50'15" E	41.98'
L929	S 42°28'43" W	159.15'
L930	N 24°26'25" E	158.76'

CURVE DATA
S.R. 7
CURVE NO. 1

P.I. STA. 138+60.99
Δ = 53° 33' 53" (RT)
Dc = 1° 27' 15"
R = 3,940.00'
T = 1,880.13'
L = 3,508.44'
E = 425.60'
TS STA. 117+84.61
SC STA. 119+59.61

θs = 1° 16' 21"
Ls = 175.00'
Ts = 2,076.38'
LT = 116.67'
ST = 58.34'
CS STA. 154+68.05
ST STA. 156+43.05

NOTE:
SEE SHEET 2 OF 82
FOR ALTERNATE METHOD OF
STATIONING FROM SPIRAL CURVES

[L] MEASURED FROM LONG TANGENT
[S] MEASURED FROM SHORT TANGENT

HORIZONTAL SCALE IN FEET
0 25 50 100

PID NO. 75923

R/W DESIGNER TB
R/W REVIEWER SER

RIGHT OF WAY BOUNDARY SHEET
STA. 123+00 TO STA. 135+00

LAW-7-2.17

43 / 82

DRAFT Stage 3 - Not for Construction

DESIGN DATE	09/23/2024
DATE COMPLETED	

DESCRIPTION

U:\17360874\LAW\75923\row\sheets\75923RB002.dgn 12/9/2014 11:16:47 AM sbarker

LAWRENCE COUNTY
UNION TOWNSHIP
SECT. 29, T-1-N, R-16-W

CURVE DATA
S.R. 7
CURVE NO. 1

P.I. STA. 138+60.99	θs = 1° 16' 21"
Δ = 53° 33' 53" (RT)	Ls = 175.00'
Dc = 1° 27' 15"	Ts = 2,076.38'
R = 3,940.00'	LT = 116.67'
T = 1,880.13'	ST = 58.34'
L = 3,508.44'	CS STA. 154+68.05
E = 425.60'	ST STA. 156+43.05
TS STA. 117+84.61	
SC STA. 119+59.61	

(1) ELDON L. RANDOLPH
23-119-1700.000

Ex R/W

Symmes Creek

Ex R/W

(7) STATE OF OHIO

BEGIN ACQUISITION
S.R. 7
STA. 126+58.23

1-CH

CH

Wooded Area

1-E1

(1) ELDON L. RANDOLPH
23-124-1100.002

Wooded Area

LA-R/W

℄ RAMP C

123

124

Ex LA-R/W

125

126

36" TYPE A

Ex R/W

℄

1-WL

WORK LIMITS

LA-R/W

FUTURE LANES

Symmes Creek

(7)

127 ℄ R/W & 128 CURVE NO. 1 129 130 131 132 133 134

CONST. S.R. 7

Ex LA-R/W

Wetland

MATCH LINE STA. 123+00

Brush

Trail

REx LA-R/W

MATCH LINE STA. 135+00

WORK LIMITS

Ex LA-R/W

LA-R/W

24" STM

27" STM

CB

Wooded Area

(1) ELDON L. RANDOLPH
23-124-1100.002

(7) STATE OF OHIO
LAW-52-23.56
LAW-7-0.00

Ex LA-R/W

1-E2

(L.F.)

Ex LA-R/W

CONC. PAD

Ex LA-R/W

W.M.

CHESAPEAKE-SYMMES CREEK RD.
C.R. 123

(5) FREDDIE L. HAYES, JR.

(LF) DESIGNATES LEACH FIELD

FOR LOCATION AND TYPE OF LA-R/W FENCE
SEE THE TABLE IN THE ROADWAY PLAN

DRAFT Stage 3 - Not for Construction

REVISION DATE	DESCRIPTION
DATE COMPLETED	

HORIZONTAL SCALE IN FEET
0 25 50 100

PID NO. 75923

R/W DESIGNER TB
R/W REVIEWER SER

RIGHT OF WAY TOPO SHEET
STA. 123+00 TO STA. 135+00

LAW-7-2.17

43T/82

U:\173608714\LAW\75923\row\sheets\75923RT002.dgn 12/9/2014 11:16:49 AM siparker

LAWRENCE COUNTY
UNION TOWNSHIP
SECT. 28 & 29, T-1-N, R-16-W

MONUMENT LEGEND
- STONE FOUND
- FENCE POST
- R.R.S. FOUND
- R.R.S. SET
- P.K. NAIL FOUND
- CONC. MONUMENT FD.
- REFER. MONUMENT SET
- REBAR FOUND
- AXLE FOUND
- IRON PIN FOUND
- I.P.F. WITH I.D. CAP
- ¾" BAR SET
- PROJECT CONTROL MON.
- MONUMENT BOX FD.
- MONUMENT BOX SET

NUMBER	DIRECTION	DISTANCE
L906	N 73°04'00" E	96.17'
L907	S 51°31'00" E	99.64'
L908	S 24°37'00" E	155.50'
L917	N 79°21'11" E	19.42'
L929	S 42°28'43" W	159.15'
L930	N 24°26'25" E	158.76'

135+40.57 / 413.87' LT.
135+45.59 / 314.38' LT.
Symmes Creek
136+30.00 / 220.00' LT.
141+10.00 / 200.00' LT.
144+21.97 / 330.95' LT.
Ex R/W
HENSON HOLLOW RD.
203.53'
SECTION 29 / SECTION 28
7 STATE OF OHIO
23-112-1900.000
O.R. 154, PG. 35
7 STATE OF OHIO
23-121-0300.000
O.R. 154, PG. 35
LA-R/W
N 48°39'21" E
505.67'
N 58°43'51" E
201.01'
143+00.30 / 173.88' LT.
N 58°43'51" E
833.18'
N 03°02'08" E
451.58'
STA. 141+49.92
℄ WESTBOUND LANES
MATCH LINE STA. 135+00
MATCH LINE STA. 147+00
℄ R/W & CONST. S.R. 7
CURVE NO. 1
136 137 138 139 140 141 142 143 144 145 146 147
136+00.00 / 180.00' RT.
137+25.00 / 160.00' RT.
139+95.12 / 158.75' RT.
S 33°53'01" W
121.26'
S 45°58'23" W
259.15'
S 45°58'23" W
149.06'
141+50.00 / 150.00' RT.
S 52°50'45" W
529.89'
147+00.00 / 135.00' RT.
STATE OF OHIO
23-121-0300.000
O.R. 154, PG. 35
135+61.36 / 284.33' RT.
N 76°09'11" E
120.49'
N 62°10'20" E
408.15'
416.20'
139+88.94 / 404.91' RT.
140+07.50 / 414.94' RT.
1 ELDON L. RANDOLPH
23-124-1100.002
Ex LA-R/W
S 65°08'12" W
680.36'
136+64.31 / 441.64' RT.
S 07°35'57" E
131.88'
S 65°08'12" W
240.79'
LAW-52-23.56
LAW-7-0.00
359.41'
133+54.17 / 651.29' RT.
R.B.F.
N 78°27'59" E, 2.06'
C.R. 123
139+22.43 / 523.47' RT.

CURVE DATA
S.R. 7
CURVE NO. 1

P.I. STA. 138+60.99
Δ = 53° 33' 53" (RT)
Dc = 1° 27' 15"
R = 3,940.00'
T = 1,880.13'
L = 3,508.44'
E = 425.60'
TS STA. 117+84.61
SC STA. 119+59.61
θs = 1° 16' 21"
Ls = 175.00'
Ts = 2,076.38'
LT = 116.67'
ST = 58.34'
CS STA. 154+63.05
ST STA. 156+43.05

NOTE:
SEE SHEET 2 OF 82
FOR ALTERNATE METHOD OF
STATIONING FROM SPIRAL CURVES
[L] MEASURED FROM LONG TANGENT
[S] MEASURED FROM SHORT TANGENT

DRAFT Stage 3 - Not for Construction

REVISED DATE	DESCRIPTION
DATE COMPLETED	

HORIZONTAL SCALE IN FEET
0 25 50 100
PID NO. 75923
R/W DESIGNER TB
R/W REVIEWER SER
RIGHT OF WAY BOUNDARY SHEET
STA. 135+00 TO STA. 147+00
LAW-7-2.17
44 / 82

U:\1736087\4\LAW\75923\row\sheets\75923RB003.dgn 12/9/2014 11:16:50 AM slparker

LAWRENCE COUNTY
UNION TOWNSHIP
SECT. 28 & 29, T-1-N, R-16-W

CURVE DATA
S.R. 7
CURVE NO. 1

P.I. STA. 138+60.99
Δ = 53° 33' 53" (RT)
Dc = 1° 27' 15"
R = 3,940.00'
T = 1,880.13'
L = 3,508.44'
E = 425.60'
TS STA. 117+84.61
SC STA. 119+59.61

θs = 1° 16' 21"
Ls = 175.00'
Ts = 2,076.38'
LT = 116.67'
ST = 58.34'
CS STA. 154+68.05
ST STA. 156+43.05

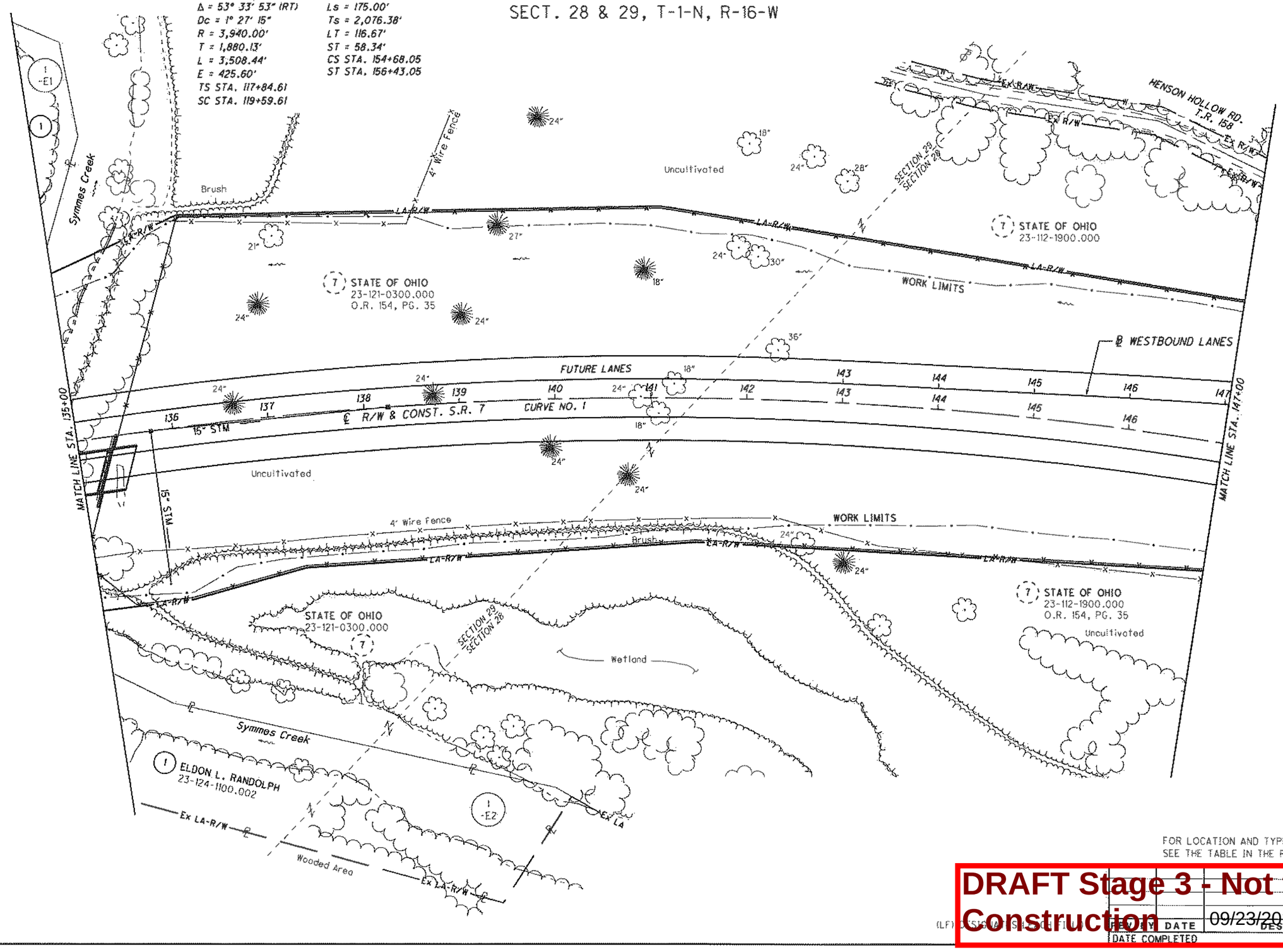

FOR LOCATION AND TYPE OF LA-R/W FENCE
SEE THE TABLE IN THE ROADWAY PLAN

DRAFT Stage 3 - Not for Construction

DESIGN DATE	DESCRIPTION
DATE COMPLETED	

(LF) DESIGNATES SHEET FILE

HORIZONTAL SCALE IN FEET
0 25 50 100

R/W DESIGNER TB
R/W REVIEWER SER

PID NO. 75923

RIGHT OF WAY TOPO SHEET
STA. 135+00 TO STA. 147+00

LAW-7-2.17

44T/82

U:\1736087\14\LAW\75923\row\sheets\75923RT003.dgn 12/9/2014 11:16:52 AM siparker

NUMBER	DIRECTION	DISTANCE
L3	S 87°15'11" W	81.03'
L4	S 52°04'11" W	64.52'
L5	S 66°56'11" W	61.85'
L6	S 27°18'11" W	81.73'
L7	S 37°18'11" W	126.76'
L8	S 11°26'11" W	64.33'
L9	N 83°47'49" W	71.45'
L21	S 64°23'05" W	352.28'

NUMBER	DIRECTION	DISTANCE
L22	S 62°27'41" W	212.95'
L23	N 11°11'41" W	18.66'
L24	N 11°11'41" W	6.50'
L25	N 50°35'31" E	71.80'
L26	N 63°15'18" E	115.78'
L27	N 62°14'48" E	94.84'
L28	N 63°09'48" E	46.76'
L29	N 63°09'48" E	91.00'

NUMBER	DIRECTION	DISTANCE
L940	N 25°43'12" W	20.32'
L941	N 72°46'11" E	78.15'
L942	N 61°16'09" E	138.05'
L943	N 80°58'57" E	140.00'
L944	N 56°52'19" E	117.70'
L945	N 70°47'19" E	96.63'

LAWRENCE COUNTY
UNION TOWNSHIP
SECT. 28, T-1-N, R-16-W

MONUMENT LEGEND
- STONE FOUND
- FENCE POST
- R.R.S. FOUND
- R.R.S. SET
- P.K. NAIL FOUND
- CONC. MONUMENT FD.
- REFER. MONUMENT SET
- REBAR FOUND
- AXLE FOUND
- IRON PIN FOUND
- I.P.F. WITH I.D. CAP
- ¾" BAR SET
- PROJECT CONTROL MON.
- MONUMENT BOX FD.
- MONUMENT BOX SET

(9) RICHARD J. BOLEN
23-113-0200.000

(9) RICHARD J. BOLEN
23-113-0100.000

(15) JAMES M. & GARRETTA LEWIS
23-112-0508.000

(A) STA. 159+07.56, 206.58' LT. = POINT OF PERMISSABLE ACCESS 10' EACH SIDE OF ℄

(7) STATE OF OHIO
23-112-1900.000
O.R. 154, PG. 35

(10) HOWARD W. & RUTH R. PERDUE, AND NANCY P. HAMBURG

(11) RONNIE & LYNN M. KINGERY

HENSON HOLLOW RD.
T.R. 158
Ex R/W
℄ R/W
L940
L941
L942
L943
L944
L945
L21
L22
L23
L24
L25
L26
L27
L28
L29
LA-R/W

151+00.00
190.32' LT.

151+73.93
179.51' LT.

153+05.27
191.64' LT.

154+35.97
160.70' LT.

155+45.30 [L]
187.03' LT.

157+10.15
218.58' LT.

N 58°43'51" E
833.18'

349.36'
N 71°38'15" E

210.91'
N 62°27'41" E

151+00.00
170.00' LT.

154+35.00
140.00' LT.

156+39.37 [L]
168.73' LT.

I.P.F.
2.12' N

158+50.00
200.00' LT.

HENSON HOLLOW EMERGENCY ACCESS

℄ WESTBOUND LANES

℄ R/W & CONST. S.R. 7

CURVE NO. 1

CS

ST

MATCH LINE STA. 147+00

MATCH LINE STA. 160+00

N 11°11'41" W
329.27'

N 70° 54' 16" E

ALLISON DR.

BRENTWOOD VILLAGE
SECTION 7
(UNRECORDED PLAT)

10 -WDV

10 -WL

10 -E

11

(L.L.)

Ex. Drain

Pond

Symmes Creek

S 60°51'29" W
580.75'

147+00.00
135.00' RT.

153+00.00
115.00' RT.

S 77°40'57" W
288.48'

N 77°40'57" E
106.64'

155+94.11 [L]
157.41' RT.

157+00.00
170.00' RT.

160+00.00
190.00' RT.

N 74°43'07" E
300.67'

N 11°11'41" W
261.17'

STA/OFF FROM ℄ R/W S.R. 7		
(A)	156+41.93 [L]	187.22' LT.
(B)	156+42.82 [L]	193.66' LT.
(C)	158+24.90	233.99' LT.
(D)	159+18.66	248.27' LT.
(E)	159+65.00	254.57' LT.
(F)	159+43.01	239.60' RT.
(G)	158+81.94	260.43' RT.
(H)	158+20.24	264.71' RT.
(J)	157+61.06	321.07' RT.
(K)	156+55.48	391.22' RT.
(L)	156+22.80	446.63' RT
(M)	155+58.20	416.10' RT.

CURVE DATA
S.R. 7
CURVE NO. 1

P.I. STA. 138+60.99
Δ = 53° 33' 53" (RT)
Dc = 1° 27' 15"
R = 3,940.00'
T = 1,880.13'
L = 3,508.44'
E = 425.60'
TS STA. 117+84.61
SC STA. 119+59.61
θs = 1° 16' 21"
Ls = 175.00'
Ts = 2,076.38'
LT = 116.67'
ST = 58.34'
CS STA. 154+68.05
ST STA. 156+43.05

EX. MONUMENTS OFF S.R. 7		
STATION	OFFSET	DESCRIPTION
156+39.65 [L]	170.84' LT.	IRON PIN FOUND

NOTE:
SEE SHEET 2 OF 82
FOR ALTERNATE METHOD OF
STATIONING FROM SPIRAL CURVES

[L] MEASURED FROM LONG TANGENT
[S] MEASURED FROM SHORT TANGENT

HORIZONTAL SCALE IN FEET
0 25 50 100

PID NO. 75923

R/W DESIGNER TB
R/W REVIEWER SER

RIGHT OF WAY BOUNDARY SHEET
STA. 147+00 TO STA. 160+00

LAW-7-2.17

45 / 82

REVISED DATE	DESCRIPTION
DATE COMPLETED	

DRAFT Stage 3 - Not for Construction 09/23/2024

U:\1360874\LAW\75923\row\sheets\75923RB004.dgn 12/9/2014 11:16:53 AM sparker

LAWRENCE COUNTY
UNION TOWNSHIP
SECT. 28, T-1-N, R-16-W

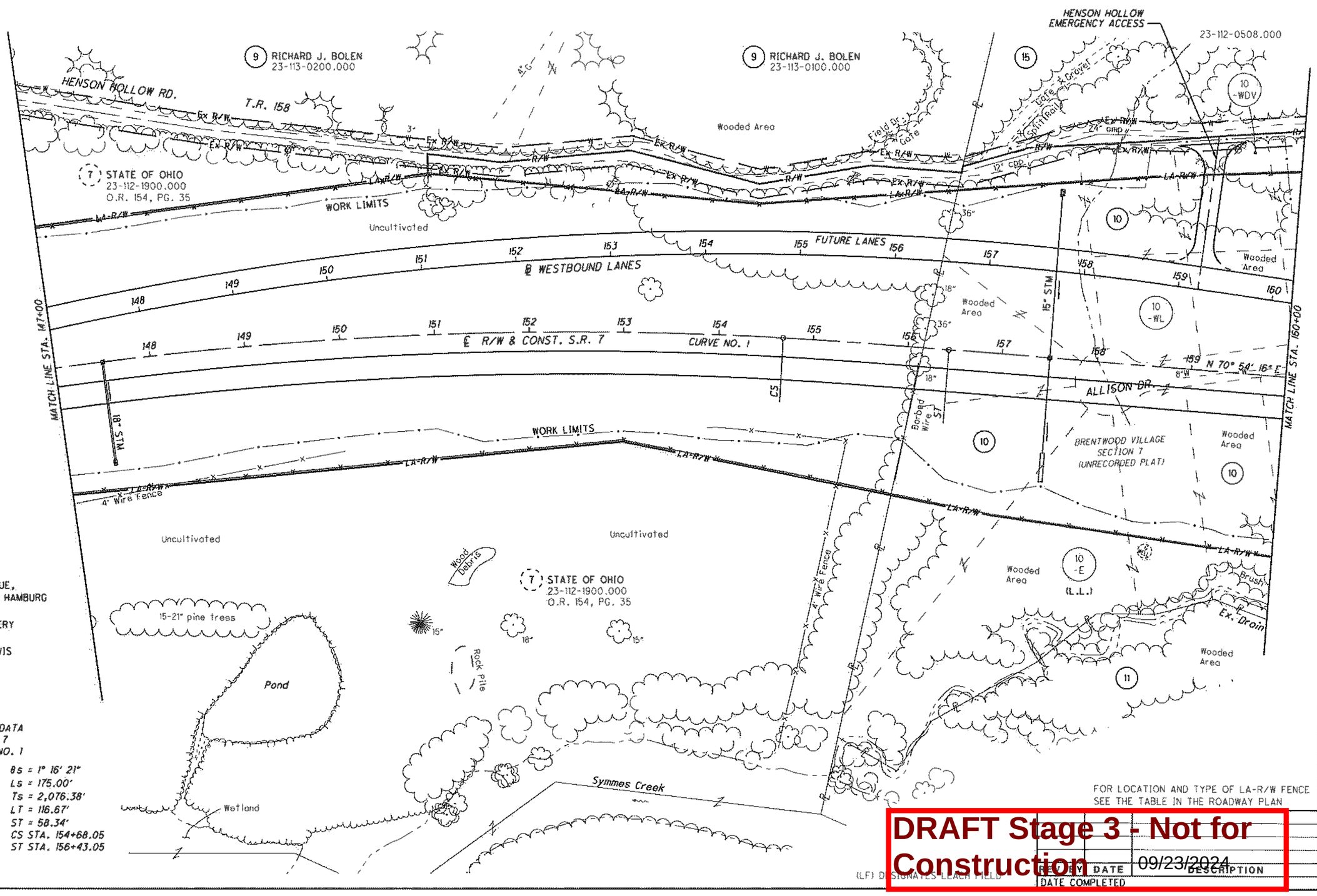

10 HOWARD W. & RUTH R. PERDUE, AND NANCY P. HAMBURG
11 RONNIE & LYNN M. KINGERY
15 JAMES M. & GARRETTA LEWIS

CURVE DATA
S.R. 7
CURVE NO. 1

P.I. STA. 138+60.99	θs = 1° 16' 21"
Δ = 53° 33' 53" (RT)	Ls = 175.00'
Dc = 1° 27' 15"	Ts = 2,076.38'
R = 3,940.00'	LT = 116.67'
T = 1,880.13'	ST = 58.34'
L = 3,508.44'	CS STA. 154+68.05
E = 425.60'	ST STA. 156+43.05
TS STA. 117+84.61	
SC STA. 119+59.61	

FOR LOCATION AND TYPE OF LA-R/W FENCE SEE THE TABLE IN THE ROADWAY PLAN

(LF) DESIGNATES LEACH FIELD

DRAFT Stage 3 - Not for Construction

REVISION DATE	DESCRIPTION
DATE COMPLETED	

HORIZONTAL SCALE IN FEET

PID NO. 75923

R/W DESIGNER TB
R/W REVIEWER SER

RIGHT OF WAY TOPO SHEET
STA. 147+00 TO STA. 160+00

LAW-7-2.17

45T/82

U:\17360874\LAW\75923\row\sheets\75923RT004.dgn 12/9/2014 11:15:55 AM slparker

LAWRENCE COUNTY
UNION TOWNSHIP
SECT. 21 & 28, T-1-N, R-16-W

MONUMENT LEGEND
- STONE FOUND
- FENCE POST
- R.R.S. FOUND
- R.R.S. SET
- P.K. NAIL FOUND
- CONC. MONUMENT FD.
- REFER. MONUMENT SET
- REBAR FOUND
- AXLE FOUND
- IRON PIN FOUND
- I.P.F. WITH I.D. CAP
- ¾" BAR SET
- PROJECT CONTROL MON.
- MONUMENT BOX FD.
- MONUMENT BOX SET

NO.	RADIUS	DELTA ANG.	ARC LEN	CHORD DIRECT.	CHORD
C1	117.15'	52°09'45"	106.65'	N 85°02'38" E	103.01'
C2	95.91'	39°39'38"	66.39'	S 88°42'19" E	65.07'
C3	15.00'	67°18'56"	17.62'	N 37°48'24" E	16.63'
C4	25.00'	90°10'06"	39.34'	N 40°56'07" W	35.41'
C5	25.09'	88°49'01"	38.90'	N 48°46'09" E	35.12'
C6	25.00'	91°10'59"	39.79'	N 41°26'33" W	35.72'

NUMBER	DIRECTION	DISTANCE
L1	S 22°48'11" W	20.71'
L2	S 63°12'11" W	55.90'
L3	S 87°15'11" W	81.03'
L13	S 80°16'52" E	102.70'
L14	S 04°08'56" W	21.00'
L15	N 68°03'49" W	76.01'
L16	S 88°58'28" W	72.06'
L17	S 67°07'32" W	202.73'
L18	S 31°02'15" E	77.94'
L19	S 64°50'39" W	82.72'
L20	N 19°05'44" W	70.00'
L21	S 64°23'05" W	352.28'
L29	N 63°09'48" E	91.00'
L30	N 81°34'48" E	34.27'
L31	N 68°08'48"	164.66'

NUMBER	DIRECTION	DISTANCE
L32	N 62°52'48" E	75.63'
L33	N 70°33'47" E	174.85'
L34	S 88°54'58" E	46.60'
L35	S 68°03'49" E	73.93'
L36	S 04°08'56" W	73.76'
L37	N 85°51'04" W	38.00'
L38	S 58°12'11" W	75.73'
L39	S 38°39'11" W	119.47'
L40	S 45°17'11" W	156.98'
L41	S 22°48'11" W	66.22'
L43	S 31°02'15" E	9.33'
L44	S 64°04'43" W	100.40'
L45	S 31°02'15" E	82.65'
L46	N 58°57'45" E	26.04'
L47	S 68°52'30" E	49.34'
L48	N 71°27'52" E	75.14'

SEE SHEET 81/82 FOR DETAILS "A", "B", & "C"

SEE SHEET 82/82 FOR COURSES L49 - L212, & COURSES X01 - X02

STA/OFF FROM ℄ R/W S.R. 7		
(A)	164+85.59	56.93' RT.
(B)	164+50.67	41.93' RT.
(C)	160+89.99	239.50' RT.
(D)	160+76.16	254.92' RT.
(E)	160+20.76	262.41' RT.
(F)	166+02.56	215.39' LT.
(G)	165+94.27	196.09' LT.
(H)	165+36.93	245.99' LT.
(I)	165+12.81	253.86' LT.
(J)	164+68.42	268.35' LT.
(K)	162+66.13	254.98' LT.
(L)	162+82.26	178.73' LT.
(M)	162+84.19	169.61' LT.
(N)	161+84.50	157.68' LT.
(O)	162+01.60	76.81' LT.
(P)	165+14.70	10.85' LT.
(Q)	165+00.77	1.77' LT.
(R)	164+25.64	2.50' LT.
(S)	163+77.61	156.20' LT.
(T)	163+85.43	168.94' LT.
(U)	163+70.00	188.05' LT.
(V)	164+33.34	200.48' LT.
(W)	165+01.58	232.73' LT.
(X)	165+12.01	246.04' LT.
(Y)	166+23.00	171.09' LT.
(Z)	166+26.34	169.41' LT.
(AA)	167+10.62	126.85' LT.
(BB)	167+33.15	21.50' RT.
(CC)	165+95.98	34.09' LT.
(DD)	165+82.40	67.12' LT.
(EE)	166+18.10	150.22' LT.
(FF)	169+41.33	66.18' LT.
(GG)	170+23.36	55.58' LT.
(HH)	169+55.59	111.65' RT.
(II)	168+81.44	81.60' RT.
(JJ)	164+66.36	203.05' RT.
(KK)	165+83.05	178.88' RT.
(LL)	166+15.85	178.82' RT.
(MM)	166+05.59	203.13' RT.
(NN)	165+77.84	191.73' RT.
(OO)	166+83.15	184.77' RT.
(PP)	167+56.99	215.52' RT.
(QQ)	169+04.67	277.01' RT.
(RR)	170+28.69	184.44' RT.
(SS)	170+79.65	205.09' RT.
(TT)	170+29.73	141.70' RT.
(UU)	167+19.21	144.91' LT.
(VV)	169+43.84	86.02' LT.
(WW)	170+27.43	75.22' LT.
(XX)	165+46.88	15.59' RT.
(YY)	160+00.00	190.00' RT

EX. MONUMENTS OFF S.R. 7		
STATION	OFFSET	DESCRIPTION
164+85.59	56.93' RT.	IRON PIN FOUND
164+77.11	278.55' RT.	AXLE FOUND
165+40.48	489.20' LT.	IRON PIN FOUND
165+48.09	265.13' RT.	IRON PIN FOUND
165+93.26	194.65' LT.	IRON PIN FOUND
166+61.10	356.75' RT.	IRON PIN FOUND
167+19.64	377.77' LT.	IRON PIN FOUND
167+80.61	95.59' LT.	IRON PIN FOUND
167+80.69	407.70' RT.	IRON PIN FOUND
167+82.73	364.94' RT.	IRON PIN FOUND
168+59.11	76.30' LT.	IRON PIN FOUND
169+64.79	486.13' RT.	IRON PIN FOUND

(10) PENNY SUE PANNELL; (20) ROSE ANN CYRUS; (21) JOHN M. HILL, II & MANDY J. HILL

(13) ROBERT P. & ELIZABETH M. TABER; (17) FRANCESCA KARLE AND DAVID & ANTONETTA KARLE; (19) WILLARD D. SPEARS

(10) HOWARD W. & RUTH R. PERDUE, AND NANCY P. HAMBURG; (11) RONNIE & LYNN M. KINGERY; (12) HOWARD W. & RUTH R. PERDUE

(23) BRAD & EMMA MCNEILL; (24) ROBERT & CONCEPCION J. HINTZ; (25) JAMES T. & MELISSA POINTER; (27) RYAN B. & LESLIE R. DAVIS; (28) DANNY HOLSCHUH AND FRED HAYES; (31) JAMES R. & REBECCA MCCOMAS; (33) ROBERT & CONCEPCION HINTZ

(35) STATE OF OHIO; (36) STATE OF OHIO; (37) STEVEN D. & LESLIE R. FLOUHOUSE; (45) RICHARD HOUSTON

(16) JEFFREY COMBS 23-079-0801.000

NOTE:
SEE SHEET 2 OF 82 FOR ALTERNATE METHOD OF STATIONING FROM SPIRAL CURVES

[L] MEASURED FROM LONG TANGENT
[S] MEASURED FROM SHORT TANGENT

DRAFT Stage 3 - Not for Construction

REVISED BY	DATE	DESCRIPTION
DATE COMPLETED		

HORIZONTAL SCALE IN FEET (0, 25, 50, 100)

PID NO. 75923

R/W DESIGNER TB
R/W REVIEWER SER

RIGHT OF WAY BOUNDARY SHEET
STA. 160+00 TO STA. 170+80

LAW-7-2.17

46/82

U:\1736087\4\LAW\75923\r-ow\sheets\75923RB005.dgn 12/9/2014 11:16:56 AM slperker

LAWRENCE COUNTY
UNION TOWNSHIP
SECT. 21 & 28, T-1-N, R-16-W

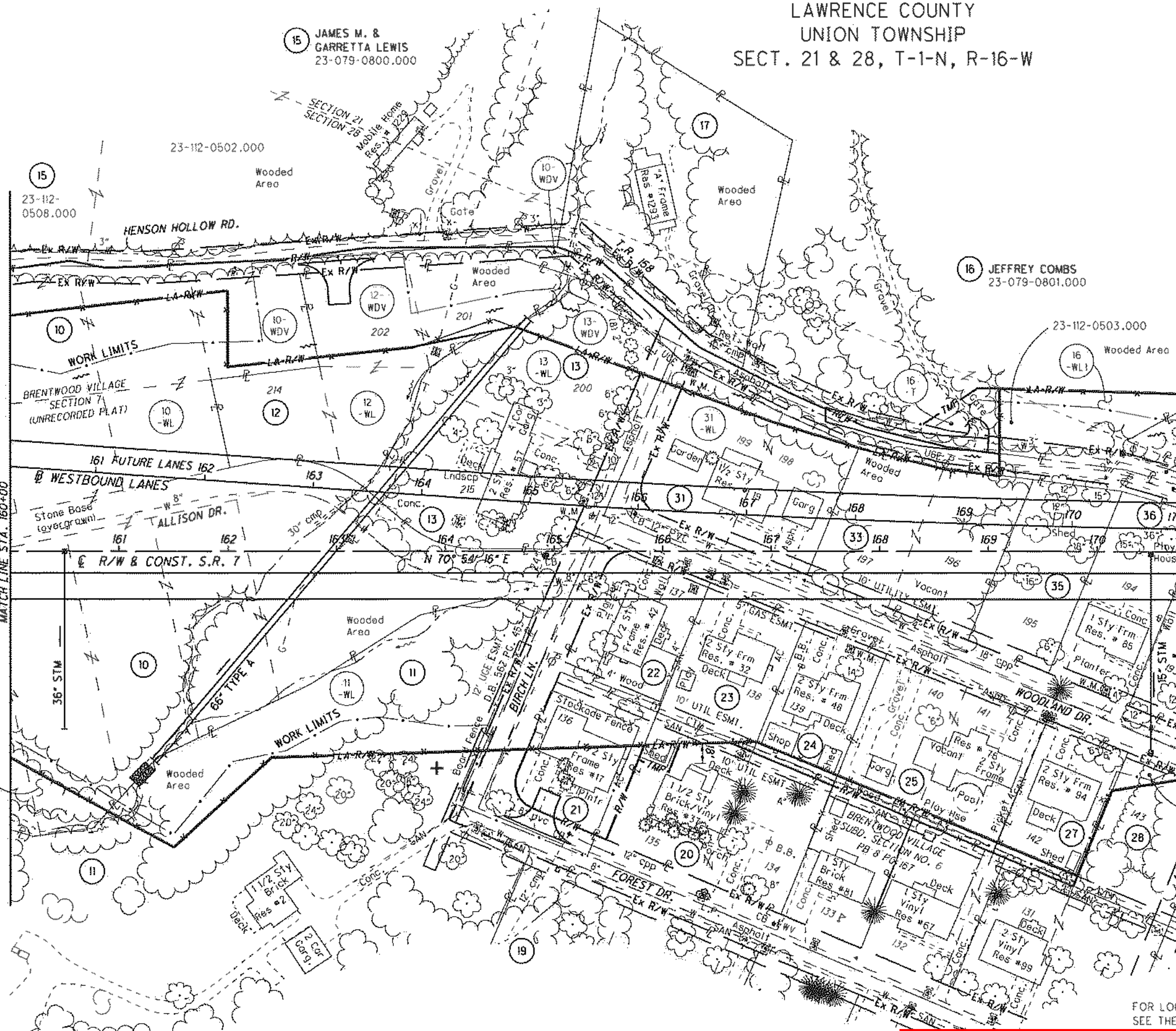

10	HOWARD W. & RUTH R. PERDUE, AND NANCY P. HAMBURG
11	RONNIE & LYNN M. KINGERY
12	HOWARD W. & RUTH R. PERDUE
13	ROBERT P. & ELIZABETH M. TABER
17	FRANCESCA KARLE AND DAVID & ANTONETTA KARLE
19	WILLARD D. SPEARS
20	PENNY SUE PANNELL
21	ROSE ANN CYRUS
22	JOHN M. HILL, II & MANDY J. HILL
23	BRAD & EMMA MCNEILL
24	ROBERT & CONCEPCION J. HINTZ
25	JAMES T. & MELISSA POINTER
27	RYAN B. & LESLIE R. DAVIS
28	DANNY HOLSCHUH AND FRED HAYES
31	JAMES R. & REBECCA MCCOMAS
33	ROBERT & CONCEPCION HINTZ
35	STATE OF OHIO
36	STATE OF OHIO
37	STEVEN D. & LESLIE R. FLOUHOUSE
45	RICHARD HOUSTON

FOR LOCATION AND TYPE OF LA-R/W FENCE SEE THE TABLE IN THE ROADWAY PLAN

SEE SHEET 46/82 FOR R/W IDENTIFIERS NOT SHOWN HEREON

+ DENOTES REMOVAL ITEM

(LF) DESIGNATES LEACH FIELD

DRAFT Stage 3 - Not for Construction 09/23/2024

REV. BY | DATE | DESCRIPTION
DATE COMPLETED

HORIZONTAL SCALE IN FEET 0 25 50 100

PID NO. 75923

R/W DESIGNER TB
R/W REVIEWER SER

RIGHT OF WAY TOPO SHEET
STA. 160+00 TO STA. 170+80

LAW-7-2.17

U:\73508714\LAW\75923\row\sheets\75923RT005.dgn 12/9/2014 11:16:58 AM slparker

NUMBER	DIRECTION	DISTANCE
L76	S 02°39'50" W	7.12'
L77	N 88°47'19" W	132.29'
L78	S 89°16'55" W	80.91'
L79	S 86°56'50" W	82.36'
L83	N 72°25'39" E	195.00'
L84	S 42°01'13" W	88.24'
L85	S 86°59'07" E	304.83'
L147	N 86°56'50" E	80.44'
L148	S 02°57'57" W	188.87'
L151	N 89°16'55" E	80.17'

NUMBER	DIRECTION	DISTANCE
L152	S 02°57'57" W	194.02'
L153	N 87°02'03" W	80.00'
L154	N 87°02'03" W	80.00'
L155	S 88°47'19" E	80.04'
L156	S 02°57'57" W	196.47'
L157	S 88°47'19" E	51.55'
L158	S 86°40'51" E	81.16'
L159	S 05°15'33" E	143.42'
L160	S 64°53'44" W	21.01'
L161	S 84°56'27" W	61.85'

NUMBER	DIRECTION	DISTANCE
L162	S 43°36'02" W	48.87'
L163	N 87°02'03" W	41.60'
L164	S 84°44'27" W	118.41'
L165	S 05°15'33" E	39.07'
L166	S 84°44'27" W	79.99'
L167	N 64°53'44" E	85.04'
L168	S 05°15'33" E	67.94'
L171	S 84°56'09" E	81.30'
L172	S 05°15'33" E	99.98'
L173	S 86°39'22" E	80.91'

LAWRENCE COUNTY
UNION TOWNSHIP
SECT. 21 & 28, T-1-N, R-16-W

SEE SHEET 82/82
FOR DETAIL "F"

NUMBER	DIRECTION	DISTANCE
L174	S 83°53'17" E	17.51'
L175	S 11°57'00" W	58.17'
L176	S 64°53'44" W	85.00'
L181	N 42°01'13" E	480.69'
L192	N 86°59'07" W	338.05'
L215	S 86°40'51" E	81.64'
L216	S 84°56'09" E	81.31'
L217	S 86°39'22" E	81.09'
L218	S 83°53'17" E	59.74'
L219	S 70°30'51" W	46.29'

NUMBER	DIRECTION	DISTANCE
L224	S 70°30'51" W	36.99'
L225	S 70°30'51" W	145.45'
L226	S 57°20'04" W	3.09'
L227	S 09°45'47" W	42.74'
L228	S 58°23'44" W	118.68'
L229	N 66°42'17" W	50.24'
L230	N 23°17'43" E	37.30'
L233	S 09°45'47" W	70.60'

MATCH LINE - SEE SHEET 48/82

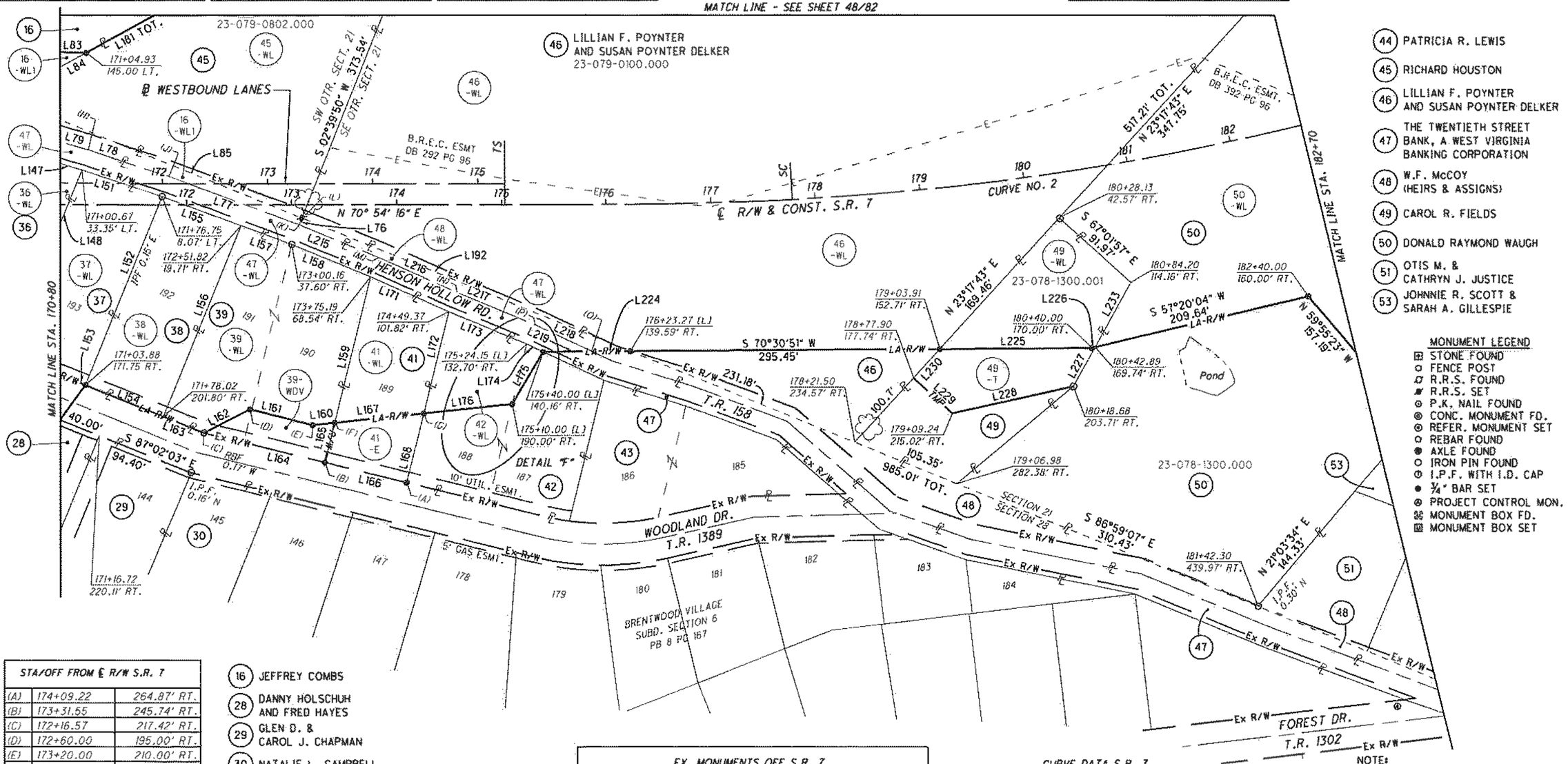

STA/OFF FROM ℄ R/W S.R. 7		
(A)	174+09.22	264.87' RT.
(B)	173+31.55	245.74' RT.
(C)	172+16.57	217.42' RT.
(D)	172+60.00	195.00' RT.
(E)	173+20.00	210.00' RT.
(F)	173+40.89	207.80' RT.
(G)	174+25.46	198.90' RT.
(H)	171+06.59	52.46' LT.
(J)	171+83.38	26.94' LT.
(K)	173+07.44	18.97' RT.
(L)	173+10.08	12.36' RT.
(M)	173+83.10	50.17' RT.
(N)	174+57.28	83.45' RT.
(P)	175+32.23 (L)	114.40' RT.
(O)	175+86.29 (L)	139.85' RT.

16 JEFFREY COMBS
28 DANNY HOLSCHUH AND FRED HAYES
29 GLEN D. & CAROL J. CHAPMAN
30 NATALIE L. CAMPBELL
36 STATE OF OHIO
37 STEVEN D. & LESLIE R. FLOUHOUSE
38 DWAYNE E. & SHANNON ALLEN
39 JERRY D. & ANGELA D. EDDY
41 RONALD L. & OSIE M. CLEVELAND
42 CARLOS D. & PATRICIA A. MARCUM
43 HOWARD W. PERDUE, JR. & RUTH R. PERDUE
44 PATRICIA R. LEWIS
45 RICHARD HOUSTON
46 LILLIAN F. POYNTER AND SUSAN POYNTER DELKER
47 THE TWENTIETH STREET BANK, A WEST VIRGINIA BANKING CORPORATION
48 W.F. McCOY (HEIRS & ASSIGNS)
49 CAROL R. FIELDS
50 DONALD RAYMOND WAUGH
51 OTIS M. & CATHRYN J. JUSTICE
53 JOHNNIE R. SCOTT & SARAH A. GILLESPIE

MONUMENT LEGEND
- ⊞ STONE FOUND
- ○ FENCE POST
- ⌀ R.R.S. FOUND
- ▰ R.R.S. SET
- ⊙ P.K. NAIL FOUND
- ◉ CONC. MONUMENT FD.
- ⊙ REFER. MONUMENT SET
- ○ REBAR FOUND
- ● AXLE FOUND
- ○ IRON PIN FOUND
- ⌀ I.P.F. WITH I.D. CAP
- ● ¾" BAR SET
- ⊕ PROJECT CONTROL MON.
- ⌘ MONUMENT BOX FD.
- ⌘ MONUMENT BOX SET

EX. MONUMENTS OFF S.R. 7		
STATION	OFFSET	DESCRIPTION
171+76.89	8.03' LT.	IRON PIN FOUND
172+04.22	255.41' RT.	IRON PIN FOUND
172+16.40	217.40' RT.	REBAR FOUND
173+00.39	37.69' RT.	IRON PIN FOUND
173+16.28	3.16' LT.	36" OAK TREE
178+34.69	220.94' RT.	36" OAK TREE DESTROYED
180+28.67	43.23' RT.	I.P.F. CAPPED "EASTHAM"
180+18.68	203.71' RT.	I.P.F. CAPPED "EASTHAM"
181+42.50	439.78' RT.	IRON PIN FOUND
182+35.75	560.76' RT.	PROJECT CONTROL MON. #1203

CURVE DATA S.R. 7
CURVE NO. 2

P.I. STA. 182+06.44
Δ = 24° 16' 14" (LT)
Dc = 2° 10' 43"
R = 2,630.00'
T = 423.13'
L = 839.08'
E = 33.82'
TS STA. 175+03.18
SC STA. 177+78.18
θs = 2° 59' 44"
Ls = 275.00'
Ts = 703.26'
LT = 183.36'
ST STA. 188+92.26

NOTE:
SEE SHEET 2 OF 82
FOR ALTERNATE METHOD OF
STATIONING FROM SPIRAL CURVES
[L] MEASURED FROM LONG TANGENT
[S] MEASURED FROM SHORT TANGENT

DRAFT Stage 3 - Not for Construction

DESIGNED	DATE	DESCRIPTION
DRAWN		
CHECKED		
DATE COMPLETED	09/23/2024	

HORIZONTAL SCALE IN FEET
0 25 50 100

PID NO. 75923
R/W DESIGNER TB
R/W REVIEWER SER

RIGHT OF WAY BOUNDARY SHEET
STA. 170+80 TO STA. 182+70 (SOUTH)
LAW-7-2.17

47 / 82

U:\1736\08714\LAW\75923\row\sheets\75923RB006.dgn 12/9/2014 11:16:59 AM slparker

LAWRENCE COUNTY
UNION TOWNSHIP
SECT. 21 & 28, T-1-N, R-16-W

+ DENOTES REMOVAL ITEM
(LF) DESIGNATES LEACH FIELD

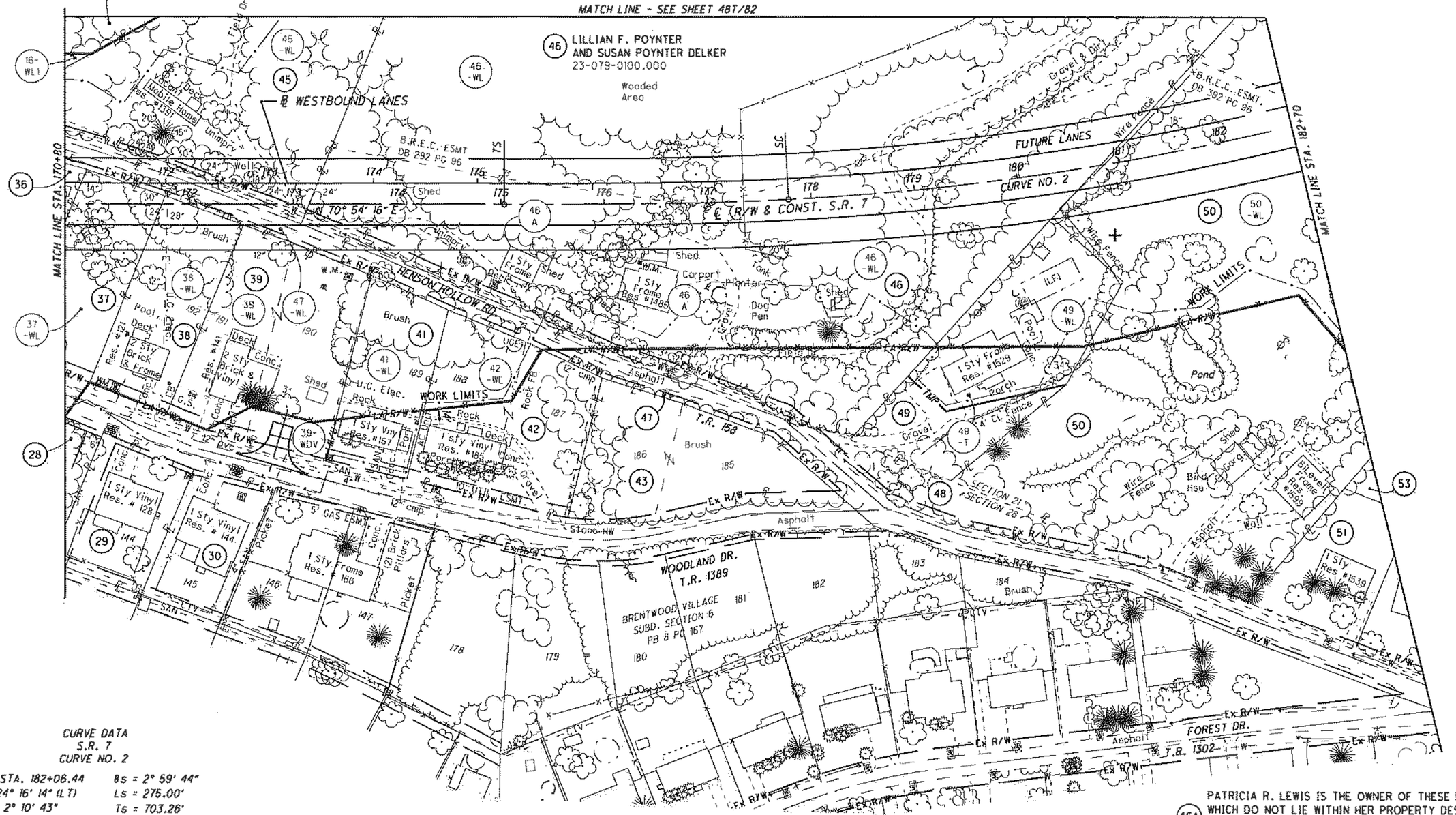

CURVE DATA
S.R. 7
CURVE NO. 2

P.I. STA. 182+06.44
Δ = 24° 16' 14" (LT)
Dc = 2° 10' 43"
R = 2,630.00'
T = 423.13'
L = 839.08'
E = 33.82'
TS STA. 175+03.18
SC STA. 177+78.18

θs = 2° 59' 44"
Ls = 275.00'
Ts = 703.26'
LT = 183.36'
ST = 91.69'
CS STA. 186+17.26
ST STA. 188+92.26

SEE SHEET 47/82 FOR R/W IDENTIFIERS NOT SHOWN HEREON

28 DANNY HOLSCHUH AND FRED HAYES
29 GLEN D. & CAROL J. CHAPMAN
30 NATALIE L. CAMPBELL
36 STATE OF OHIO
37 STEVEN D. & LESLIE R. FLOUHOUSE
38 DWAYNE E. & SHANNON ALLEN
39 JERRY D. & ANGELA D. EDDY
41 RONALD L. & OSIE M. CLEVELAND
42 CARLOS D. & PATRICIA A. MARCUM
43 HOWARD W. PERDUE, JR. & RUTH R. PERDUE
44 PATRICIA R. LEWIS
45 RICHARD HOUSTON
46 LILLIAN F. POYNTER AND SUSAN POYNTER DELKER
47 THE TWENTIETH STREET BANK, A WEST VIRGINIA BANKING CORPORATION
48 W.F. McCOY (HEIRS & ASSIGNS)
49 CAROL R. FIELDS
50 DONALD RAYMOND WALCH
51 OTIS M. & CATHRYN J. JUSTICE
53 JOHNNIE R. SCOTT & SARAH A. GILLESPIE

46A PATRICIA R. LEWIS IS THE OWNER OF THESE BUILDINGS, WHICH DO NOT LIE WITHIN HER PROPERTY DESCRIBED IN O.R. 607, PG. 618 AND DELINEATED UPON THESE R/W PLANS AS PARCEL 44

FOR LOCATION AND TYPE OF LA-R/W FENCE SEE THE TABLE IN THE ROADWAY PLAN

DRAFT Stage 3 - Not for Construction

REVISION DATE	DESCRIPTION
DATE COMPLETED	09/23/2024

HORIZONTAL SCALE IN FEET
50 25 0 100

PID NO. 75923

R/W DESIGNER TB
R/W REVIEWER SER

RIGHT OF WAY TOPO SHEET
STA. 170+80 TO STA. 182+70 (SOUTH)

LAW-7-2.17

47T/82

U:\17360871A\LAW\75923\row\sheets\75923RT006.dgn 12/9/2014 11:17:02 AM slparker

LAWRENCE COUNTY
UNION TOWNSHIP
SECT. 21, T-1-N, R-16-W

N 02°39'50" E
155.00'

177+65.21 [S]
994.75' LT.

S 87°20'10" E
219.00'

180+60.21
893.07' LT.

N 02°39'50" E
231.00'

(44) PATRICIA R. LEWIS
23-078-1200.000
TOTAL TAKE
SEE PARCEL 46A FOR
STRUCTURE LOCATIONS

S 02°39'50" W
231.00'

176+27.53 [L]
782.96 LT.

175+00.00
760.00 LT.

N 60°41'53" E
129.58'

44
-E

N 87°20'10" W
LA-R/W
219.00'

N 19°59'54" E
LA-R/W
103.06'

174+35.00
680.00 LT.

178+99.19
691.22 LT.

(46) LILLIAN F. POYNTER
AND SUSAN POYNTER DELKER
23-079-0100.000

46
-E
(L.L.)

SEE SHEET 114/118
FOR DETAIL

(16) JEFFREY COMBS
23-079-0801.000

16
-WL2

SW QTR. SECT. 21
SE QTR. SECT. 21

N 01°33'56" W
448.20'
LA-R/W

N 02°39'50" E
482.79'

LA-R/W
S 57°40'58" E
572.00'

MATCH LINE STA. 170+80

MATCH LINE STA. 182+70

181+35.00
370.00 LT.

S 69°55'28" E
LA-R/W
263.74'

46
-WL

(46) LILLIAN F. POYNTER
AND SUSAN POYNTER DELKER
23-079-0100.000

173+00.00
252.61' LT.

169.56'

174+48.56
334.57' LT.

N 42°01'13" E
480.69'
LA-R/W

45
-WL

N 02°39'50" E
373.54'

45

S 23°17'43" W
517.21' (46-WL)
347.75' (50-WL)

50
50
-WL

MATCH LINE - SEE SHEET 47/82

MONUMENT LEGEND
- STONE FOUND
- FENCE POST
- R.R.S. FOUND
- R.R.S. SET
- P.K. NAIL FOUND
- CONC. MONUMENT FD.
- REFER. MONUMENT SET
- REBAR FOUND
- AXLE FOUND
- IRON PIN FOUND
- I.P.F. WITH I.D. CAP
- ¾" BAR SET
- PROJECT CONTROL MON.
- MONUMENT BOX FD.
- MONUMENT BOX SET

(45) RICHARD HOUSTON
(50) DONALD RAYMOND WAUGH

EX. MONUMENTS OFF S.R. 7		
STATION	OFFSET	DESCRIPTION
174+48.56	334.57' LT.	AXLE FOUND

NOTE:
SEE SHEET 2 OF 82
FOR ALTERNATE METHOD OF
STATIONING FROM SPIRAL CURVES

[L] MEASURED FROM LONG TANGENT
[S] MEASURED FROM SHORT TANGENT

REVISION DATE	DESCRIPTION
DATE COMPLETED	

DRAFT Stage 3 - Not for Construction 09/23/2024

HORIZONTAL SCALE IN FEET
0 50 75 100

PID NO. 75923

R/W DESIGNER TB
R/W REVIEWER SER

RIGHT OF WAY BOUNDARY SHEET
STA. 170+80 TO STA. 182+70 (NORTH)

LAW-7-2.17

48 / 82

U:\173608714\LAW\75923\row\sheets\75923RB007.dgn 12/9/2014 11:17:03 AM slparker

LAWRENCE COUNTY
UNION TOWNSHIP
SECT. 21, T-1-N, R-16-W

(44) PATRICIA R. LEWIS
23-078-1200.000
TOTAL TAKE
SEE PARCEL 46A FOR
STRUCTURE LOCATIONS

44
-E

(46) LILLIAN F. POYNTER
AND SUSAN POYNTER DELKER
23-079-0100.000

(16) JEFFREY COMBS
23-079-0801.000

16-
WL2

LA-R/W

WORK LIMITS

46
-E
(L.L.)

MATCH LINE STA. 170+80

trail

Wooded
Area

45
-WL

45

(46) LILLIAN F. POYNTER
AND SUSAN POYNTER DELKER
23-079-0100.000

Wooded
Area

MATCH LINE STA. 182+70

Shed

Debris

46
-WL

Silv Fir
Abovel

Field

MATCH LINE - SEE SHEET 47T/82

50

50
-WL

FOR LOCATION AND TYPE OF LA-R/W FENCE
SEE THE TABLE IN THE ROADWAY PLAN

DRAFT Stage 3 - Not for Construction

DESIGN DATE	09/23/2024
DESCRIPTION	
DATE COMPLETED	

RIGHT OF WAY TOPO SHEET
STA. 170+80 TO STA. 182+70 (NORTH)

LAW-7-2.17

PID NO. 75923

R/W DESIGNER TB
R/W REVIEWER SER

HORIZONTAL SCALE IN FEET
0 50 100

48T/82

U:\173608714\LAW\75923\row\sheets\75923RT007.dgn 12/9/2014 11:17:05 AM slparker

LAWRENCE COUNTY
UNION TOWNSHIP
SECT. 21,
T-1-N, R-16-W

MONUMENT LEGEND
- STONE FOUND
- FENCE POST
- R.R.S. FOUND
- R.R.S. SET
- P.K. NAIL FOUND
- CONC. MONUMENT FD.
- REFER. MONUMENT SET
- REBAR FOUND
- AXLE FOUND
- IRON PIN FOUND
- I.P.F. WITH I.D. CAP
- ¾" BAR SET
- PROJECT CONTROL MON.
- MONUMENT BOX FD.
- MONUMENT BOX SET

NUMBER	DIRECTION	DISTANCE
L200	N 71°09'15" E	67.79'
L240	S 21°42'45" W	65.97'
L251	S 44°02'22" W	101.14'
L255	S 31°00'03" W	77.53'
L259	S 84°30'24" W	40.00'
L260	N 05°29'36" W	40.00'
L261	S 85°57'09" W	36.62'
L262	S 83°29'55" W	42.32'
L263	S 12°12'58" W	85.57'

CURVE DATA S.R. 7
CURVE NO. 2

P.I. STA. 182+06.44
Δ = 24° 16' 14" (LT)
Dc = 2° 10' 43"
R = 2,630.00'
T = 423.13'
L = 839.08'
E = 33.82'
TS STA. 175+03.18
SC STA. 177+78.18

Ds = 2° 59' 44"
Ls = 275.00'
Ts = 703.26'
LT = 183.36'
ST = 91.69'
CS STA. 186+17.26
ST STA. 188+92.26

NUMBER	DIRECTION	DISTANCE
L265	S 83°29'55" W	57.02'
L266	N 12°12'58" E	54.64'
L268	S 69°21'51" E	61.24'
L269	S 08°55'45" W	59.60'
L270	S 52°55'15" E	74.64'
L291	N 03°22'26" E	50.24'
L292	N 11°27'43" E	164.54'
L293	N 62°24'17" E	25.72'
L295	S 11°27'43" W	168.42'

NUMBER	DIRECTION	DISTANCE
L296	S 03°22'26" W	45.12'
L297	S 03°22'26" W	69.53'
L298	S 84°35'17" W	25.30'
L299	N 03°22'26" E	70.04'
L314	N 76°33'25" W	19.74'
L315	S 88°03'38" W	123.04'
L321	N 63°28'46" E	217.15'
L340	N 03°22'26" E	8.65'
L342	S 30°02'42" W	166.04'
L343	S 11°27'43" W	77.52'
L344	S 61°29'23" W	31.03'

STA/OFF FROM ℄ R/W S.R. 7		
(A)	183+05.75	300.00' RT.
(B)	182+92.51	310.29' RT.
(C)	182+71.76	277.61' RT.
(D)	182+89.45	263.82' RT.
(E)	183+95.05	280.00' RT.
(F)	183+55.06	335.00' RT.
(G)	183+25.00	330.00' RT.
(H)	184+60.00	250.00' RT.
(I)	184+60.00	265.00' RT.
(J)	183+97.57	293.94' RT.
(K)	185+20.28	194.79' RT.
(L)	184+86.51	172.74' RT.
(M)	184+57.64	152.71' RT.
(N)	184+77.58	118.65' RT.
(P)	183+55.06	262.95' RT.
(Q)	185+65.01	225.25' RT.
(R)	186+59.10 [S]	248.25' RT.
(S)	193+40.07	284.48' RT.
(T)	193+20.50	268.57' RT.
(U)	192+78.84	234.71' RT.
(V)	193+57.09	234.14' RT.
(W)	194+91.59	139.36' RT.
(X)	194+60.00	222.78' RT.
(Y)	193+96.63	267.44' RT.
(Z)	193+66.64	259.48' RT.
(AA)	193+72.93	253.56' RT.
(BB)	192+89.44	332.13' RT.
(CC)	192+69.49	316.57' RT.
(DD)	194+47.17	247.93' LT.
(EE)	194+57.97	231.41' LT.

EX. MONUMENTS OFF S.R. 7		
STATION	OFFSET	DESCRIPTION
183+47.26	312.64' LT.	6" X 6" POST FOUND
183+51.41	440.35' RT.	IRON PIN FOUND
183+55.06	262.95' RT.	IRON PIN FOUND
183+73.25	362.20' RT.	IRON PIN FOUND
184+15.36	294.90' LT.	42" OAK TREE
184+26.69	378.51' RT.	REBAR FOUND
184+86.51	172.74' RT.	IRON PIN FOUND

EX. MONUMENTS OFF S.R. 7		
STATION	OFFSET	DESCRIPTION
185+82.74	240.95' RT.	IRON PIN FOUND
186+36.86 [S]	287.27' RT.	IRON PIN FOUND
186+59.10 [L]	248.25' RT.	"T" BAR FOUND
186+75.32 [L]	321.11' RT.	5/8" REBAR FOUND
186+74.60 [S]	155.82' RT.	STONE FOUND
187+04.29 [S]	209.39' RT.	STONE FOUND
187+69.64 [L]	414.83' LT.	RBF AT 48" OAK TREE
193+24.59	271.90' RT.	STONE FOUND
193+31.99	490.95' RT.	1" REBAR FOUND
194+47.17	247.93' LT.	IRON PIN FOUND
194+58.82	433.68' RT.	1" REBAR FOUND

(53) JOHNNIE R. SCOTT & SARAH A. GILLESPIE
(54) KERSTEN B. & KINDRA R. HARRIS
(54A) MCQUIRE PROPERTIES, LLC
(56) CHARLES & CHARLOTTE POYNTER
(57) BARBARA SHOCKLEY
(59) THOMAS D. THORNBURGH, SR. & BARBARA J. HODGE THORNBURGH
(61) GEARLD & VALERIA SHOCKLEY
(63) THOMAS E. & SALLY NEWTON

NOTE:
SEE SHEET 2 OF 82 FOR ALTERNATE METHOD OF STATIONING FROM SPIRAL CURVES
[L] MEASURED FROM LONG TANGENT
[S] MEASURED FROM SHORT TANGENT

HORIZONTAL SCALE IN FEET

PID NO. 75923

R/W DESIGNER TB
R/W REVIEWER SER

RIGHT OF WAY BOUNDARY SHEET
STA. 182+70 TO STA. 195+00

LAW-7-2.17

49 / 82

DRAFT Stage 3 - Not for Construction

DATE COMPLETED	DESCRIPTION
	09/23/2024

U:\1736087.14\LAW\75923\row\sheets\75923RB008.dgn 12/9/2014 11:17:06 AM siporkel

LAWRENCE COUNTY
UNION TOWNSHIP
SECT. 21, T-1-N, R-16-W

(50) DONALD RAYMOND WAUGH
(53) JOHNNIE R. SCOTT & SARAH A. GILLESPIE
(54) KERSTEN B. & KINDRA R. HARRIS
(55) BOBBY L. & ROBERTA J. ESTEP
(56) CHARLES & CHARLOTTE POYNTER
(57) BARBARA SHOCKLEY
(59) THOMAS D. THORNBURGH, SR. & BARBARA J. HODGE THORNBURGH
(61) GEARLD & VALERIA SHOCKLEY
(63) THOMAS E. & SALLY NEWTON

(55) BOBBY L. & ROBERTA J. ESTEP
23-080-0700.000

(60) AUDREY SCHOCKLEY
23-079-1500.002

(57) BARBARA SHOCKLEY
23-080-0400.000

23-079-1800.001

23-079-1800.000

23-078-1000.001

23-080-0100.000

23-080-0200.000

MATCH LINE STA. 182+70

MATCH LINE STA. 195+00

CURVE NO. 2

FUTURE LANES

℄ R/W & CONST. S.R. 7

N 46° 38' 02" E

WORK LIMITS

LA-R/W

Ex R/W

48" TYPE A

15" STM

5' W.L. ESMT.
DB 537 PG 758
DB 462 PG 103

PRIVATE GAS LINE
EXACT LOCATION UNKNOWN

BOOTH-EATON RD.
Ex R/W C.R. 104

FOR LOCATION AND TYPE OF LA-R/W FENCE
SEE THE TABLE IN THE ROADWAY PLAN

CURVE DATA
S.R. 7
CURVE NO. 2

P.I. STA. 182+06.44
Δ = 24° 16' 14" (LT)
Dc = 2° 10' 43"
R = 2,630.00'
T = 423.13'
L = 839.08'
E = 33.82'
TS STA. 175+03.18
SC STA. 177+78.18

Bs = 2° 59' 44"
Ls = 275.00'
Ts = 703.26'
LT = 183.36'
ST = 91.69'
CS STA. 186+17.26
ST STA. 188+92.26

+ DENOTES REMOVAL ITEM
(LF) DESIGNATES LEACH FIELD

DRAFT Stage 3 - Not for Construction

REVISION DATE	DESCRIPTION
DATE COMPLETED	

HORIZONTAL SCALE IN FEET
0 25 50 100

PID NO. 75923
R/W DESIGNER YB
R/W REVIEWER SER

RIGHT OF WAY TOPO SHEET
STA. 182+70 TO STA. 195+00

LAW-7-2.17

49T/82

U:\1736087\4\LAW\75923\row\sheets\75923RT008.dgn 12/9/2014 11:17:08 AM slparker

LAWRENCE COUNTY
UNION TOWNSHIP
SECT. 21,
T-1-N, R-16-W

MONUMENT LEGEND

- STONE FOUND
- FENCE POST
- R.R.S. FOUND
- R.R.S. SET
- P.K. NAIL FOUND
- CONC. MONUMENT FD.
- REFER. MONUMENT SET
- REBAR FOUND
- AXLE FOUND
- IRON PIN FOUND
- I.P.F. WITH I.D. CAP
- ¾" BAR SET
- PROJECT CONTROL MON.
- MONUMENT BOX FD.
- MONUMENT BOX SET

NUMBER	DIRECTION	DISTANCE
L293	N 62°24'17" E	25.72'
L294	S 14°01'12" E	11.69'
L295	S 11°27'43" W	168.42'
L304	N 57°16'37" E	201.00'
L305	S 14°01'12" E	119.72'
L309	N 67°02'38" E	229.40'
L310	N 46°38'02" E	35.23'
L311	N 88°03'38" E	118.31'
L312	S 14°01'12" E	130.45'
L315	N 88°03'38" E	123.04'
L323	N 67°25'58" E	25.02'

CURVE DATA LYNN LANE
P.I. STA. 11+44.17
Δ = 25° 37' 23" (RT)
Dc = 22° 55' 06"
R = 250.00'
T = 56.85'
L = 111.80'
E = 6.38'
PC STA. 10+87.32
PT STA. 11+99.12

59 THOMAS D. THORNBURGH, SR. & BARBARA J. HODGE THORNBURGH
60 AUDREY SCHOCKLEY
61 GEARLD & VALERIA SHOCKLEY
61A HARRY L. HAMLIN AND SANDRA K. HAMLIN
62 STEVEN S. ADKINS
63 THOMAS E. & SALLY NEWTON
64 EVERETT D. MARTIN, JR. AND GINA MARTIN
65 SKY INVESTMENT PROPERTIES, LLC
66 EVERETT MARTIN, JR.
67 JERRY L. & PAULA A. NOBLE
68 WALTER L. PLUMLEY
69 WALTER L. & BRENDA H. PLUMLEY
70 EARL D. BRAMMER (HEIRS & ASSIGNS)
71 EVERETT D. MARTIN, JR. AND GINA L. MARTIN
72 RONALD KEITH & KIMBERLY D. MOORE
71A WILLIAM J. & LAURAETTE J. KNAPP

65 SKY INVESTMENT PROPERTIES, LLC
23-079-0204.000

66 EVERETT MARTIN, JR.
23-079-0200.004

23-079-1500.003
23-079-1500.002
23-079-1500.004
23-079-1700.000
23-079-0200.006
23-079-0300.000
23-079-0201.000
23-079-0200.005
23-079-0200.026
23-079-0200.027
23-079-0200.028
23-079-0200.022

BOOTHE-EATON RD Ex R/W C.R. 104
EATON RD. C.R. 32
℄ DRIVE
℄ CONST. LYNN LANE
LYNN LANE STA. 10+00.00 = S.R. 7 STA 204+42.84, 181.89' LT.
LYNN LN. T.R. 1489
Symmes Creek
Dry Pond
Pond
CURVE NO. 3
℄ R/W & CONST. S.R. 7
MATCH LINE STA. 195+00
MATCH LINE STA. 206+80
B.R.E.C. ESMT. DB 576 PG 407
B.R.E.C. ESMT. DB 435 PG 501
10' ESMT.

NUMBER	DIRECTION	DISTANCE
L324	S 88°24'02" E	35.65'
L326	S 46°38'02" W	219.77'
L327	S 88°24'02" E	77.87'
L328	N 73°01'29" E	106.14'
L331	S 38°46'15" E	119.00'
L332	S 29°22'04" W	92.00'
L334	S 52°22'04" W	105.00'
L335	N 29°22'04" E	92.00'
L341	N 62°24'17" E	106.81'
L342	S 30°02'42" W	166.04'

SEE SHEET 82/82 FOR COURSES L345 - L408 & COURSES X13 - X30

STA/OFF FROM ℄ R/W S.R. 7		
(A)	195+16.34	146.35' RT.
(B)	195+10.61	156.54' RT.
(C)	195+15.00	150.00' LT.
(D)	195+50.23	150.00' LT.
(E)	196+38.94 [L]	71.72' LT.
(F)	195+75.01	41.99' RT.
(G)	200+31.90	48.79' LT.
(J)	205+91.58	228.80' RT.
(K)	205+59.27	175.61' RT.
(L)	205+57.92	171.90' RT.
(M)	205+26.48	82.71' RT.
(N)	205+11.07	10.40' LT.
(P)	205+74.75	43.27' LT.
(Q)	206+31.25	83.49' LT.
(R)	206+07.04	114.84' LT.
(S)	205+54.57	77.66' LT.
(T)	205+01.03	50.03' LT.
(U)	204+83.91	101.76' LT.

CURVE DATA S.R. 7 CURVE NO. 3

P.I. STA. 205+33.31
Δ = 27° 30' 45" (RT)
Dc = 1° 45' 00"
R = 3,274.04'
T = 683.24'
L = 1,347.14'
E = 70.53'
TS STA. 196+19.13
SC STA. 198+44.13
Bs = 1° 58' 07"
Ls = 225.00'
Ts = 914.18'
LT = 150.01'
ST = 75.01'
CS STA. 211+91.27
ST STA. 214+16.27

EX. MONUMENTS OFF S.R. 7		
STATION	OFFSET	DESCRIPTION
195+75.01	41.99' RT.	P.K. NAIL FOUND
196+14.14	523.95' LT.	REBAR FOUND
203+29.58	158.28' RT.	IRON PIN FOUND
203+90.00	291.64' LT.	R.R.S. FOUND
205+26.48	82.71' RT.	R.R.S. FOUND

(A) STA. 196+19.47, 150.00' LT. POINT OF PERMISSABLE ACCESS 12' EACH SIDE OF ℄

NOTE:
SEE SHEET [illegible] FOR ALTERNATE METHOD OF STATIONING FROM SPIRAL CURVES
[L] MEASURED FROM LONG TANGENT
[S] MEASURED FROM SHORT TANGENT

REVISION	DATE
DESCRIPTION	DATE COMPLETED

DRAFT Stage 3 - Not for Construction

HORIZONTAL SCALE IN FEET
0 25 50 100

PID NO. 75923
R/W DESIGNER TB
R/W REVIEWER SER

RIGHT OF WAY BOUNDARY SHEET
STA. 195+00 TO STA. 206+80

LAW-7-2.17

50/82

U:\1736\8714\LAW\75923\row\sheets\75923RB009.dgn 12/9/2014 11:17:09 AM slparker

LAWRENCE COUNTY
UNION TOWNSHIP
SECT. 21, T-1-N, R-16-W

59 THOMAS D. THORNBURGH, SR. & BARBARA J. HODGE THORNBURGH
60 AUDREY SCHOCKLEY
61 GEARLD & VALERIA SHOCKLEY
62 STEVEN S. ADKINS
63 THOMAS E. & SALLY NEWTON
64 EVERETT D. MARTIN, JR. AND GINA MARTIN
65 SKY INVESTMENT PROPERTIES, LLC
66 EVERETT MARTIN, JR.
67 JERRY L. & PAULA A. NOBLE
68 WALTER L. PLUMLEY
69 WALTER L. & BRENDA H. PLUMLEY
70 EARL D. BRAMMER (HEIRS & ASSIGNS)
71 EVERETT D. MARTIN, JR. AND GINA L. MARTIN
71A WILLIAM J. & LAURAETTE J. KNAPP
72 RONALD KEITH & KIMBERLY D. MOORE

65 SKY INVESTMENT PROPERTIES, LLC
23-079-0204.000

66 EVERETT MARTIN, JR.
23-079-0200.004

BOOTHE-EATON RD. C.R. 104
EATON RD. C.R. 32
Ex R/W
LA-R/W
54' TYPE A
60' TYPE A
WORK LIMITS
FUTURE LANES
CURVE NO. 3
℄ R/W & CONST. S.R. 7
℄ CONST. LYNN LANE
N 57° 42' 05" E
N 32° 04' 43" E
MATCH LINE STA. 195+00
MATCH LINE STA. 206+80
15" STM
B.R.E.C. ESMT. DB 576 PG 401
B.R.E.C. ESMT. DB 435 PG 501
Sty Frame Res #475 Porch
Prv. Dog Lines Exact Location Unknown
Dry Pond
Dog Run
Gate
Wire Fence
Garage
Shelter
Concr. Block Shed
Dog Hse
Pen
Deck
1 Sty Brick Res # 422
Res. #1596
1 Sty Brick
Patio
Patio Deck
Garden
Drive
Horse Barn
Gravel
Dirt
Asphalt
Res. #1322
1 1/2 Sty Vinyl
Mobile Home
Shed
Picket Fence
Low Fence
Wetland
Field Dr.
Symmes Creek
T.R. #809
(LF)
(L.L.)
(3) 12"

CURVE DATA
LYNN LANE
P.I. STA. 11+44.17
Δ = 25° 37' 23" (RT)
Dc = 22° 55' 06"
R = 250.00'
T = 56.85'
L = 111.80'
E = 6.38'
PC STA. 10+87.32
PT STA. 11+99.12

CURVE DATA
S.R. 7
CURVE NO. 3

P.I. STA. 205+33.31
Δ = 27° 30' 45" (RT)
Dc = 1° 45' 00"
R = 3,274.04'
T = 683.24'
L = 1,347.14'
E = 70.53'
TS STA. 196+19.13
SC STA. 198+44.13
Bs = 1° 58' 07"
Ls = 225.00'
Ts = 914.18'
LT = 150.01'
ST = 75.01'
CS STA. 211+91.27
ST STA. 214+16.27

Ⓐ = N 46° 38' 02" E

+ DENOTES REMOVAL ITEM
(LF) DENOTES LIGHTS TO BE REMOVED

FOR LOCATION AND TYPE OF LA-R/W FENCE SEE THE TABLE IN THE ROADWAY PLAN

DRAFT Stage 3 - Not for Construction

REVISION DATE	DESCRIPTION
DATE COMPLETED	

HORIZONTAL SCALE IN FEET
0 25 50 100

PID NO. 75923
R/W DESIGNER TB
R/W REVIEWER SER

RIGHT OF WAY TOPO SHEET
STA. 195+00 TO STA. 206+80

LAW-7-2.17

501/82

U:\1736087.14\LAW\75923\row\sheets\75923RT009.dgn 12/9/2014 11:17:12 AM slparker

LAWRENCE COUNTY
UNION TOWNSHIP
SECT. 21 & 22, T-1-N, R-16-W

STA/OFF FROM ℄ RW S.R. 7		
(A)	207+44.09	193.18' LT.
(B)	207+94.96	246.20' LT.
(C)	208+03.21	188.09' LT.
(D)	206+93.97	241.85' LT.
(E)	207+08.53	212.43' LT.
(F)	206+94.44	198.35' LT.

STA/OFF FROM ℄ RW S.R. 7		
(G)	207+79.52	330.00' LT.
(H)	207+83.50	290.45' LT.
(I)	208+67.71	31.36' LT.
(J)	208+41.99	185.37' LT.
(K)	208+33.94	236.61' LT.
(L)	210+25.28	19.09' LT.
(M)	206+80.00	200.00' LT.

SEE SHEET 82/82 FOR COURSES X13 - X37

SEE SHEET 79/82 FOR DETAIL OF PARCEL 91-WL1

(A) S.R. 7 STA. 208+04.89, 275.36' LT. = LYNN LANE STA. 14+05.59

CURVE DATA
S.R. 7
CURVE NO. 3

P.I. STA. 205+33.31
Δ = 27° 30' 45" (RT)
Dc = 1° 45' 00"
R = 3,274.04'
T = 683.24'
L = 1,347.14'
E = 70.53'
TS STA. 196+19.13
SC STA. 198+44.13
θs = 1° 58' 07"
Ls = 225.00'
Ts = 914.18'
LT = 150.01'
ST = 75.01'
CS STA. 211+91.27
ST STA. 214+16.27

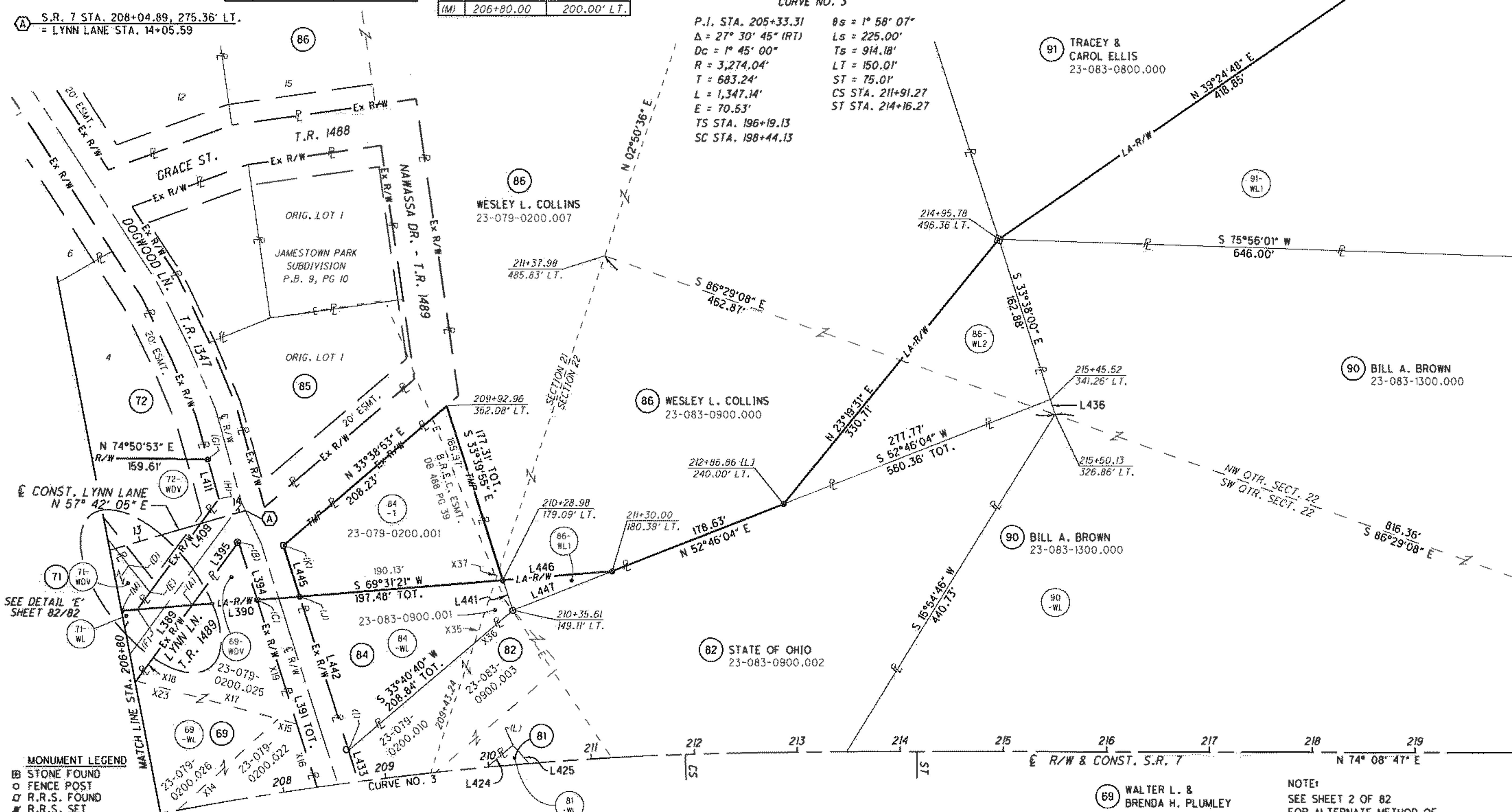

MONUMENT LEGEND
- STONE FOUND
- FENCE POST
- R.R.S. FOUND
- R.R.S. SET
- P.K. NAIL FOUND
- CONC. MONUMENT FD.
- REFER. MONUMENT SET
- REBAR FOUND
- AXLE FOUND
- IRON PIN FOUND
- I.P.F. WITH I.D. CAP
- ¾" BAR SET
- PROJECT CONTROL MON.
- MONUMENT BOX FD.
- MONUMENT BOX SET

EX. MONUMENTS OFF S.R. 7

STATION	OFFSET	DESCRIPTION
207+93.71	246.08' LT.	AXLE FOUND
208+33.94	236.61' LT.	IRON PIN FOUND
208+65.68	32.50' LT.	IRON PIN FOUND
210+35.61	149.11' LT.	IRON PIN FOUND
214+95.78	496.36' LT.	STONE WITH "X"

NUMBER	DIRECTION	DISTANCE
L389	N 20°21'42" E	160.81'
L390	N 69°31'21" E	62.77'
L391	S 33°29'55" E	239.56'
L394	S 33°29'55" E	58.80'
L395	N 20°21'42" E	75.73'
L409	S 20°21'42" W	112.26'
L411	S 31°16'53" E	39.79'
L424	N 33°40'52" E	149.99'

NUMBER	DIRECTION	DISTANCE
L425	S 56°19'08" E	80.00'
L433	N 33°29'55" W	66.00'
L436	S 33°38'00" E	15.12'
L441	S 33°39'55" E	30.78'
L442	N 33°29'55" W	156.28'
L445	N 33°29'55" W	51.95'
L446	N 69°31'21" E	106.57'
L447	S 52°46'04" W	103.96'

69 WALTER L. & BRENDA H. PLUMLEY
71 EVERETT D. MARTIN, JR. AND GINA L. MARTIN
72 RONALD KEITH & KIMBERLY D. MOORE
RAYMOND R. & ... HAMILTON
84 ELWOOD L. & AMBER C. WILSON
... APRIL D. WRIGHT

NOTE:
SEE SHEET 2 OF 82 FOR ALTERNATE METHOD OF STATIONING FROM SPIRAL CURVES
[L] MEASURED FROM LONG TANGENT
[S] MEASURED FROM SHORT TANGENT

DRAFT Stage 3 - Not for Construction 09/23/2024

REV.	BY	DATE	DESCRIPTION

DATE COMPLETED

HORIZONTAL SCALE IN FEET 0 25 50 100

PID NO. 75923

R/W DESIGNER TB
R/W REVIEWER SER

RIGHT OF WAY BOUNDARY SHEET
STA. 206+80 TO STA. 220+00 (NORTH)

LAW-7-2.17

U:\17360871\LAW\75923\row\sheets\75923RB010.dgn 12/9/2014 11:17:13 AM slparker

LAWRENCE COUNTY
UNION TOWNSHIP
SECT. 21 & 22, T-1-N, R-16-W

86 WESLEY L. COLLINS
23-079-0200.007

86 WESLEY L. COLLINS
23-083-0900.000

91 TRACEY & CAROL ELLIS
23-083-0800.000

90 BILL A. BROWN
23-083-1300.000

82 STATE OF OHIO
23-083-0900.002

72 Vacant

1 Sty Frm Res. #256

2 Sty Frm Res. #208

2 Sty Frm Res. #

1 Sty Frame Res. #58

JAMESTOWN PARK SUBDIVISION
P.B. 9, PG. 10

GRACE ST.

DOGWOOD LN.

NAHASSA DR. T.R. 1489

T.R. 1488

T.R. 1347

T.R. 1489 LYNN LN.

20' ESMT.

Ex R/W

LA R/W

WORK LIMITS

Wooded Area

Trail

Conc.

Pool

Play Center

Shed

Tank

Grass

Asphalt

Car Garg.

Porch

4" CLF

DB 468 PG 19

R.E.C. ESMT.

Picket Fence

SECTION 21
SECTION 22

℄ CONST. LYNN LANE
N 57° 42' 05" E

MATCH LINE STA. 205+80

MATCH LINE STA. 220+00

℄ R/W & CONST. S.R. 7
N 74° 08' 47" E

FUTURE LANES

CURVE NO. 3

208 209 210 211 212 213 214 215 216 217 218 219

CS ST

CURVE DATA
S.R. 7
CURVE NO. 3

P.I. STA. 205+33.31
Δ = 27° 30' 45" (RT)
Dc = 1° 45' 00"
R = 3,274.04'
T = 683.24'
L = 1,347.14'
E = 70.53'
TS STA. 196+19.13
SC STA. 198+44.13

θs = 1° 58' 07"
Ls = 225.00'
Ts = 914.18'
LT = 150.01'
ST = 75.01'
CS STA. 211+91.27
ST STA. 214+16.27

69 WALTER L. & BRENDA H. PLUMLEY
71 EVERETT D. MARTIN, JR. AND GINA L. MARTIN
72 RONALD KEITH & KIMBERLY D. MOORE
81 RAYMOND R. & ALMA J. MCHONE
84 ELWOOD E. & AMBER C. WILSON
85 BLAIR P. & APRIL D. WRIGHT

(LF) DESIGNATES LEACH FIELD

FOR LOCATION AND TYPE OF LA-R/W FENCE SEE THE TABLE IN THE ROADWAY PLAN

DRAFT Stage 3 - Not for Construction

BY	DATE	DESCRIPTION
	09/23/2024	

DATE COMPLETED

HORIZONTAL SCALE IN FEET
0 25 50 100

R/W DESIGNER TB
R/W REVIEWER SER

PID NO. 75923

RIGHT OF WAY TOPO SHEET
STA. 206+80 TO STA. 220+00 (NORTH)

LAW-7-2.17

SHT 82

U:\173608714\LAW\75923\row\sheets\75923RT010.dgn 12/9/2014 11:17:15 AM slparker

(68) WALTER L. PLUMLEY
(69) WALTER L. & BRENDA H. PLUMLEY
(73) STATE OF OHIO
(74) MARY R. SMITH
(75) DONNA M. ADKINS
(76) KAREN EVANS
(78) NANCY MCKENZIE
(79) STATE OF OHIO
(81) RAYMOND R. & ALMA J. MCHONE
(82) STATE OF OHIO
(87) JAMES A. MONTGOMERY
(88) JAMES G. SMITH
(89) FRANCIS JAMES BUDD & BRANDY RENAY BUDD
(90) BILL A. BROWN
(92) JOHNNY E. & JANIE E. SMITH
(93) JAMES H. & ROSA SMITH
(94) CHARLES W. & MAZIE L. RULEN
(96) JASPER & DELLA M. RIGNEY

MONUMENT LEGEND
- STONE FOUND
- FENCE POST
- R.R.S. FOUND
- R.R.S. SET
- P.K. NAIL FOUND
- CONC. MONUMENT FD.
- REFER. MONUMENT SET
- REBAR FOUND
- AXLE FOUND
- IRON PIN FOUND
- I.P.F. WITH I.D. CAP
- ¾" BAR SET
- PROJECT CONTROL MON.
- MONUMENT BOX FD.
- MONUMENT BOX SET

LAWRENCE COUNTY
UNION TOWNSHIP
SECT. 21 &22, T-1-N, R-16-W

(A) S.R. 7 STA. = 209+71.50, 202.08' RT.
(B) S.R. 7 STA. = 218+36.12, 335.55' RT.

EX. MONUMENTS OFF S.R. 7		
STATION	OFFSET	DESCRIPTION
207+57.47	106.81' RT.	IRON PIN FOUND
208+45.06	55.05' RT.	STONE FOUND
209+00.77	65.89' RT.	IRON PIN FOUND
209+46.93	203.84 RT.	IRON PIN FOUND
209+94.56	198.18' RT.	IRON PIN FOUND
210+47.44	335.09' RT.	IRON PIN FOUND
210+70.33	295.62' RT.	IRON PIN FOUND
211+67.49	75.24' RT.	IRON PIN FOUND
212+30.67 [S]	178.60' RT.	IRON PIN FOUND
212+37.48 [S]	168.54' RT.	IRON PIN FOUND
212+79.19 [L]	265.87' RT.	IRON PIN FOUND
214+57.21	95.73' RT.	STONE WITH "X" LEANING
216+83.03	424.46 RT.	2" IRON PIPE FOUND
218+92.24	345.73' RT.	AXLE FOUND
219+10.84	408.30' RT.	AXLE FOUND
219+69.30	553.25' RT.	REBAR FOUND

CURVE DATA
S.R. 7
CURVE NO. 3

P.I. STA. 205+33.31
Δ = 27° 30' 45" (RT)
Dc = 1° 45' 00"
R = 3,274.04'
T = 683.24'
L = 1,347.14'
E = 70.53'
TS STA. 196+19.13
SC STA. 198+44.13
θs = 1° 58' 07"
Ls = 225.00'
Ts = 914.18'
Lt = 150.01'
ST = 75.01'
CS STA. 211+91.27
ST STA. 214+16.27

STA/OFF FROM ℄ R/W S.R. 7		
(A)	208+40.77	48.39' RT.
(B)	208+45.06	55.05' RT.
(C)	207+57.33	106.89' RT.
(D)	207+14.45	130.82' RT.
(E)	207+77.73	139.46' RT.
(F)	207+05.00	138.74' RT.
(G)	208+99.85	137.20' RT.
(H)	208+13.07	195.04' RT.
(J)	212+30.72 [S]	178.72' RT.
(K)	210+70.33	295.62' RT.
(L)	210+19.28	230.84' RT.
(M)	210+45.41	213.33' RT.
(N)	210+57.14	155.80' RT.
(Q)	209+94.56	198.18' RT.
(R)	209+55.41	144.62' RT.
(S)	209+46.68	132.36' RT.
(T)	209+00.77	65.89' RT.
(U)	210+72.50	45.63' RT.
(V)	208+79.30	33.61' RT.
(W)	219+22.04	322.07' RT.
(X)	218+89.39	336.47' RT.
(Y)	218+82.17	312.28' RT.

NUMBER	DIRECTION	DISTANCE
L380	S 56°19'05" E	38.03'
L381	S 64°54'06" W	69.64'
L382	N 22°36'15" E	12.04'
L383	N 34°08'11" E	47.74'
L384	N 49°03'59" E	143.96'
L385	S 22°36'15" W	139.88'
L391	S 33°29'55" E	239.56'
L392	S 56°19'05" E	7.88'
L393	S 34°08'11" W	100.04'
L412	S 31°42'55" W	100.10'
L413	N 56°19'05" W	64.07'
L414	N 64°54'06" E	116.98'
L415	S 56°19'05" E	97.87'
L416	N 33°40'52" E	72.80'

NUMBER	DIRECTION	DISTANCE
L417	S 09°22'48" E	58.58'
L418	S 33°40'52" W	30.00'
L419	N 56°19'01" W	40.00'
L420	N 33°40'52" E	133.49'
L421	S 54°30'37" E	116.24'
L422	S 75°30'34" W	174.22'
L423	N 56°19'05" W	80.00'
L424	N 33°40'52" E	149.99'
L425	S 56°19'08" E	80.00'
L426	S 33°40'52" W	150.00'
L427	N 56°19'08" W	80.00'
L428	S 15°45'31" W	12.22'
L430	N 56°19'05" W	65.16'
L431	N 75°30'34" E	97.70'

NUMBER	DIRECTION	DISTANCE
L432	N 56°19'05" W	38.58'
L433	N 33°29'55" W	66.00'
L437	S 15°54'46" W	440.73'
L438	S 15°45'31" W	142.77'
L439	N 56°19'05" W	14.84'
L451	S 86°51'34" E	71.09'
L454	S 86°51'34" E	76.02'
L455	N 68°36'01" E	77.90'
L504	S 50°20'34" W	94.32'
L505	N 39°38'59" W	81.47'
L506	N 47°31'02" E	89.24'
L507	S 47°27'30" E	61.39'
L508	S 32°28'51" E	25.24'
L509	N 39°38'59" W	43.72'

NUMBER	DIRECTION	DISTANCE
L511	S 50°20'34" W	35.68'
L514	S 50°20'34" W	157.62'
L517	S 70°52'40" W	397.24'
L518	N 32°28'51" W	66.30'
L519	N 50°21'05" E	191.78'
L523	N 70°52'46" E	121.83'
L525	S 63°41'30" W	110.22'
L526	N 37°48'55" W	28.79'
L527	N 32°28'51" W	8.66'
L540	N 37°48'55" W	156.30'

SEE SHEET 82/82 FOR COURSES X13 - X45

SEE SHEET 79/82 FOR DETAIL

NOTE:
SEE SHEET 2 OF 82 FOR ALTERNATE METHOD OF STATIONING FROM SPIRAL CURVES
[L] MEASURED FROM LONG TANGENT
[S] MEASURED FROM SHORT TANGENT

DRAFT Stage 3 - Not for Construction

DATE COMPLETED	DESCRIPTION
09/23/2024	

RIGHT OF WAY BOUNDARY SHEET
STA. 206+80 TO STA. 220+00 (SOUTH)
LAW-7-2.17
PID NO. 75923
R/W DESIGNER TB
R/W REVIEWER SER
HORIZONTAL SCALE IN FEET
52 / 82

U:\1736087\4\LAW\75923\row\sheets\75923RB011.dgn 12/9/2014 11:17:16 AM siparker

LAWRENCE COUNTY
UNION TOWNSHIP
SECT. 21 & 22, T-1-N, R-16-W

FOR LOCATION AND TYPE OF LA-R/W FENCE
SEE THE TABLE IN THE ROADWAY PLAN

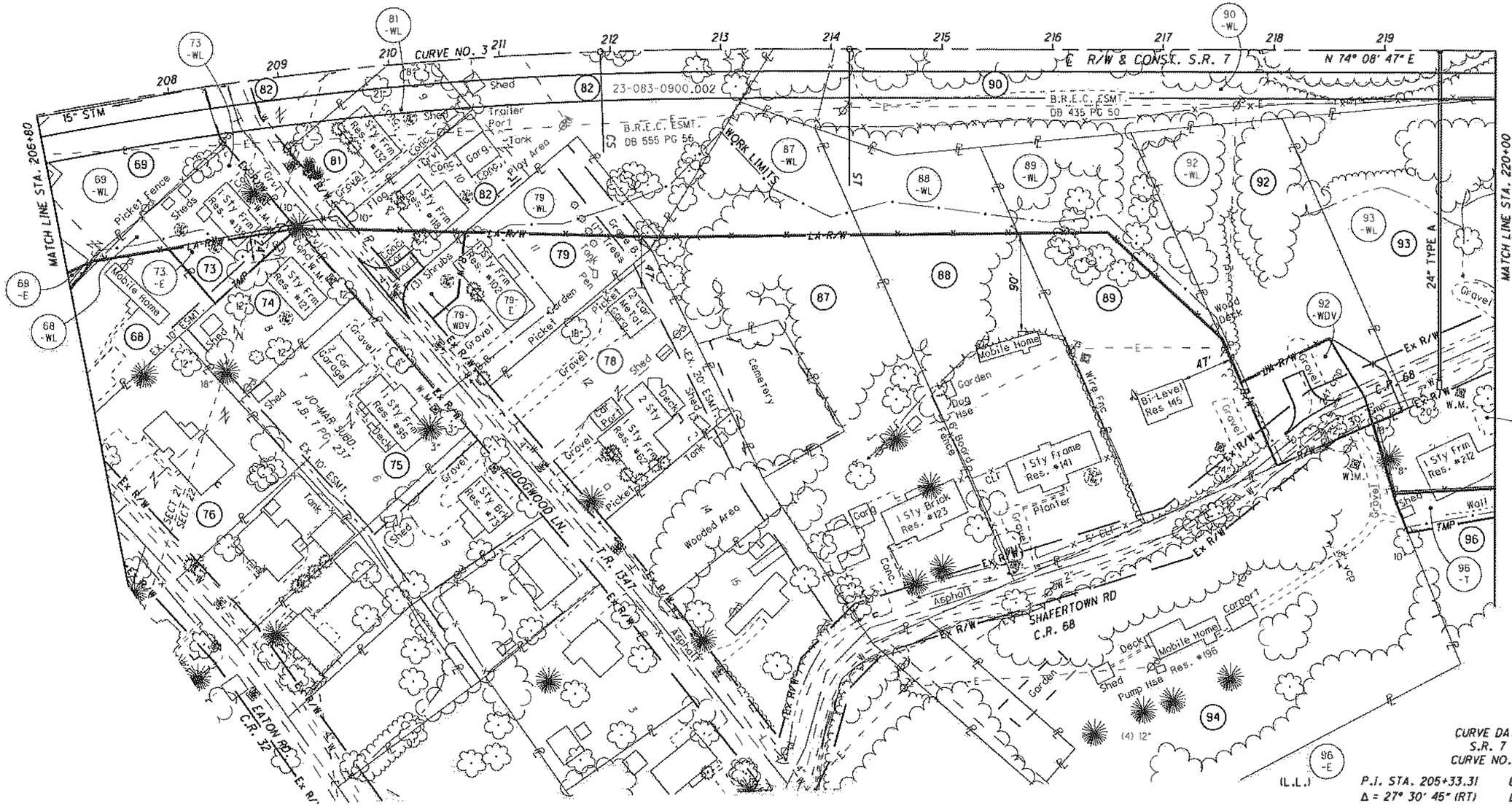

68 WALTER L. PLUMLEY	76 KAREN EVANS	87 JAMES A. MONTGOMERY	93 JAMES H. & ROSA SMITH
69 WALTER L. & BRENDA H. PLUMLEY	78 NANCY MCKENZIE	88 JAMES G. SMITH	94 CHARLES W. & MAZIE L. RULEN
73 STATE OF OHIO	79 STATE OF OHIO	89 FRANCIS JAMES BUDD & BRANDY RENAY BUDD	96 JASPER & DELLA M. RIGNEY
74 MARY R. SMITH	81 RAYMOND R. & ALMA J. MCHONE	90 BILL A. BROWN	
75 DONNA M. ADKINS	82 STATE OF OHIO	92 JOHNNY E. & JANIE E. SMITH	

(LF) DENOTES LAND TAKE

CURVE DATA
S.R. 7
CURVE NO. 3

P.I. STA. 205+33.31	θs = 1° 58' 07"
Δ = 27° 30' 45" (RT)	Ls = 225.00'
Dc = 1° 45' 00"	Ts = 914.18'
R = 3,274.04'	LT = 150.01'
T = 683.24'	ST = 75.01'
L = 1,347.14'	CS STA. 211+91.27
E = 70.53'	ST STA. 214+16.27
TS STA. 196+19.13	
SC STA. 198+44.13	

DRAFT Stage 3 - Not for Construction

	DATE	DESCRIPTION
DATE COMPLETED	09/23/2024	

HORIZONTAL SCALE IN FEET
50 0 50 100

PID NO. 75923

R/W DESIGNER TB
R/W REVIEWER SER

RIGHT OF WAY TOPO SHEET
STA. 206+80 TO STA. 220+00 (SOUTH)

LAW-7-2.17

52 / 82

U:\1736087\4\LAW\75923\row\sheets\75923RT011.dgn 12/9/2014 11:17:18 AM slparker

LAWRENCE COUNTY
UNION TOWNSHIP
SECT. 22, T-1-N, R-16-W

NUMBER	DIRECTION	DISTANCE
L469	S 68°36'01" W	235.06'
L472	N 75°56'01" E	135.50'
L473	N 84°48'06" E	69.32'
L476	S 19°12'23" E	109.49'
L477	N 81°55'36" E	72.60'
L478	S 27°06'59" E	30.92'
L484	N 86°29'08" W	35.40'
L485	N 61°33'56" E	68.30'
L488	S 62°17'20" W	24.82'
L492	S 54°09'33" E	459.83'
L493	N 27°06'59" W	244.08'
L494	N 39°53'00" E	25.84'
L495	S 84°06'26" E	46.26'
L496	S 32°28'46" E	117.55'
L497	S 27°06'59" E	106.64'
L498	S 27°06'59" E	163.00'
L499	S 47°54'26" W	20.70'
L500	N 47°54'26" E	106.87'
L513	S 50°20'34" W	27.32'
L514	S 50°20'34" W	157.62'
L516	S 50°20'34" W	100.00'
L519	N 50°21'05" E	191.78'
L520	N 58°26'21" E	129.03'
L521	N 62°17'20" E	133.18'
L523	N 70°52'46" E	121.83'
L524	S 15°51'13" E	21.95'
L525	S 63°41'30" W	110.22'
L531	S 13°49'36" E	45.97'
L542	S 37°40'20" E	122.96'
L543	S 46°51'06" E	71.50'

SEE SHEET 82/82 FOR COURSES L544 - L614 & COURSES X41 - X56

STA/OFF FROM ℄ R/W S.R. 7		
(A)	220+41.20	39.02' RT.
(B)	221+60.64	27.43' RT.
(C)	221+82.74	207.07' RT.
(D)	220+91.24	247.43' RT.
(E)	220+30.00	393.05' RT.
(F)	220+30.00	415.00' RT.
(G)	220+57.65	234.91' RT.
(H)	221+81.86	199.98' RT.
(I)	223+12.20	172.61' RT.
(J)	229+00.25 [S]	160.34' RT.
(K)	229+01.04 [L]	163.16' RT.
(L)	228+99.53 [S]	281.92' RT.
(P)	228+93.98 [L]	145.54' RT.
(O)	229+69.79 [S]	198.67' RT.
(R)	229+85.01 [S]	268.39' RT.
(S)	230+02.60 [S]	129.56' RT.
(T)	229+94.14 [S]	145.30' LT.
(U)	229+60.00 [S]	286.55' LT.
(V)	229+99.55 [S]	262.56' LT.
(W)	230+14.13 [S]	145.92' LT.
(X)	230+17.41 [S]	39.33' LT.
(Y)	230+22.42 [S]	123.60' RT.
(AA)	230+83.38	57.93' LT.
(BB)	230+81.20	105.06' RT.
(DD)	229+90.21 [S]	337.28' LT.
(EE)	220+66.25	258.46' RT.

EX. MONUMENTS OFF S.R. 7		
STATION	OFFSET	DESCRIPTION
223+11.70	186.81' RT.	IRON PIN FOUND
228+99.53 [S]	281.92' RT.	IRON PIN FD. (SEE NOTE GG)
229+62.37 [S]	435.22' RT.	I.P.F. "J.L. STEPHENS"
229+85.01 [S]	268.39' RT.	STONE FOUND
230+83.38	57.93' LT.	IRON PIN FOUND

MONUMENT LEGEND
- STONE FOUND
- FENCE POST
- R.R.S. FOUND
- R.R.S. SET
- P.K. NAIL FOUND
- CONC. MONUMENT FD.
- REFER. MONUMENT SET
- REBAR FOUND
- AXLE FOUND
- IRON PIN FOUND
- I.P.F. WITH I.D. CAP
- ¾" BAR SET
- PROJECT CONTROL MON.
- MONUMENT BOX FD.
- MONUMENT BOX SET

(GG) I.P.F. LOCATION AS DELINEATED UPON A SURVEY OF "SEVEN HILLS FARM" BY J.L. STEPHENS, DATED 9/2/1998 OF RECORD IN D.B. 639, PG. 371

CURVE DATA
S.R. 7
CURVE NO. 4
P.I. STA. 232+01.52
Δ = 34° 12' 59" (LT)
Dc = 4° 45' 00"
R = 1,206.23'
T = 161.12'
L = 320.35'
E = 10.71'
TS STA. 226+28.73
SC STA. 230+28.73
Bs = 9° 30' 00"
Ls = 400.00'
Ts = 572.79'
LT = 267.05'
ST = 133.68'
CS STA. 233+49.08
ST STA. 237+49.08

NOTE:
SEE SHEET 2 OF 82 FOR ALTERNATE STATIONING FROM SPIRAL CURVES
[L] MEASURED FROM LONG TANGENT
[S] MEASURED FROM SHORT TANGENT

(91) TRACEY & CAROL ELLIS
(93) JAMES H. & ROSA SMITH
(95) SHAWN L. STOWERS
(96) JASPER & DELLA M. RIGNEY
(102) STATE OF OHIO
(103A) STATE OF OHIO
(103) GEORGE W. & MARILYN BLACK
(106) WILLIAM RICHARD HYSELL

DRAFT Stage 3 - Not for Construction

REVISION DATE	DESCRIPTION
DATE COMPLETED	09/23/2024

RIGHT OF WAY BOUNDARY SHEET
STA. 220+00 TO STA. 231+00
LAW-7-2.17
PID NO. 75923
R/W DESIGNER TB
R/W REVIEWER SER
HORIZONTAL SCALE IN FEET
53/82

U:\1736087\1_LAW\1_75923\row\sheets\75923RB012.dgn 12/9/2014 11:17:20 AM slparker

LAWRENCE COUNTY
UNION TOWNSHIP
SECT. 22, T-1-N, R-16-W

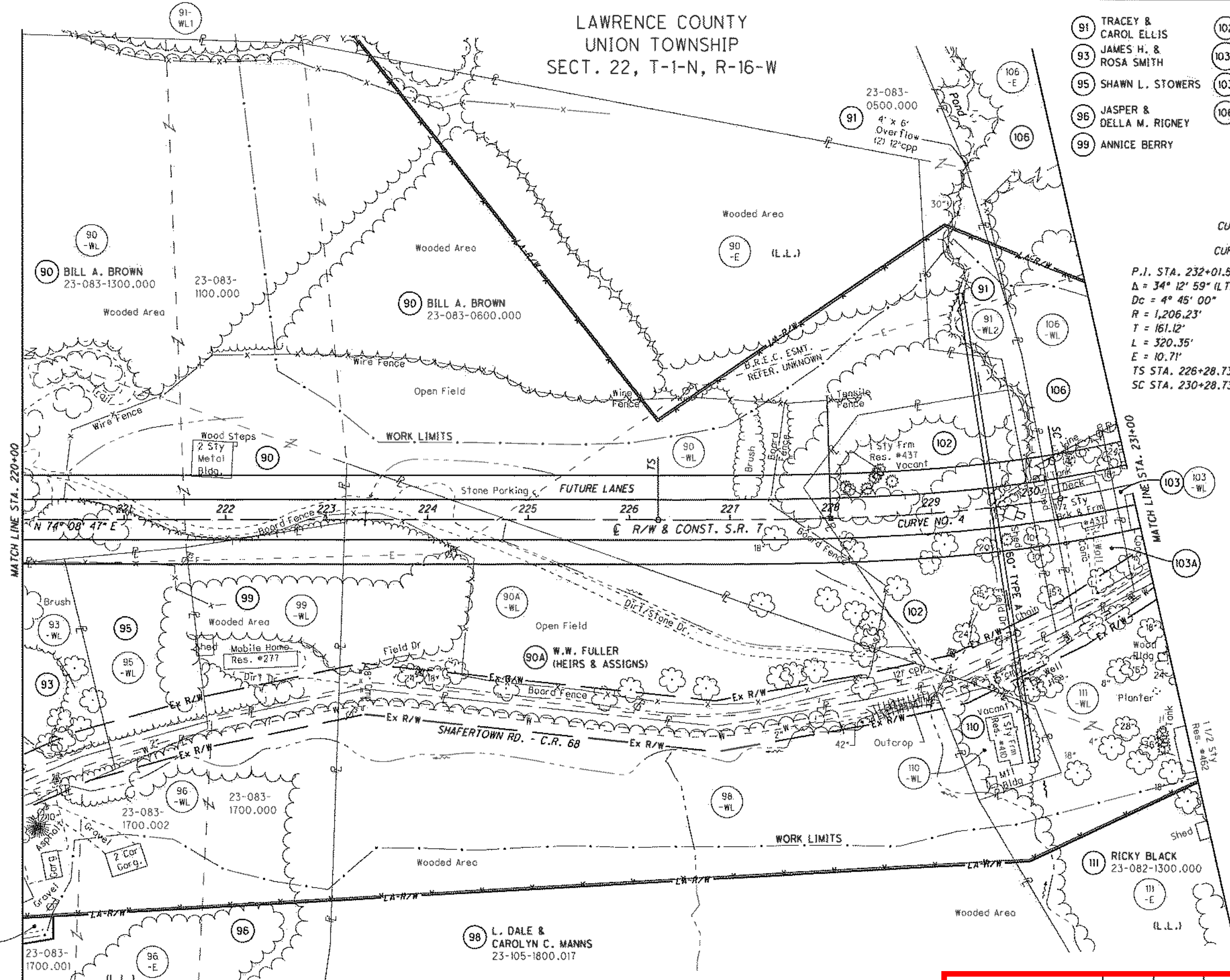

(91) TRACEY & CAROL ELLIS	(102) STATE OF OHIO
(93) JAMES H. & ROSA SMITH	(103A) STATE OF OHIO
(95) SHAWN L. STOWERS	(103) GEORGE W. & MARILYN BLACK
(96) JASPER & DELLA M. RIGNEY	(106) WILLIAM RICHARD HYSELL
(99) ANNICE BERRY	

CURVE DATA
S.R. 7
CURVE NO. 4

P.I. STA. 232+01.52	θs = 9° 30' 00"
Δ = 34° 12' 59" (LT)	Ls = 400.00'
Dc = 4° 45' 00"	Ts = 572.79'
R = 1,206.23'	LT = 267.05'
T = 161.12'	ST = 133.68'
L = 320.35'	CS STA. 233+49.08
E = 10.71'	ST STA. 237+49.08
TS STA. 226+28.73	
SC STA. 230+28.73	

FOR LOCATION AND TYPE OF LA-R/W FENCE
SEE THE TABLE IN THE ROADWAY PLAN

HORIZONTAL SCALE IN FEET 0 25 50 100

PID NO. 75923

R/W DESIGNER TB
R/W REVIEWER SER

RIGHT OF WAY TOPO SHEET
STA. 220+00 TO STA. 231+00

LAW-7-2.17

53T/82

DRAFT Stage 3 - Not for Construction 09/23/2024

REV. | BY | DATE | DESCRIPTION
DATE COMPLETED

U:\1736087\LAW\75923\row\sheets\75923RT012.dgn 12/9/2014 11:17:22 AM slparker

NUMBER	DIRECTION	DISTANCE
L548	N 47°18'01" E	96.34'
L549	S 27°06'59" E	163.24'
L550	S 51°41'58" W	3.08'
L551	S 47°18'01" W	28.02'
L552	S 47°18'01" W	65.19'
L555	S 51°41'58" W	104.50'
L556	S 51°41'58" W	46.92'
L572	S 36°28'24" E	169.35'
L574	N 45°19'45" W	8.12'
L575	N 86°27'26" W	112.19'
L576	S 85°53'44" W	91.77'
L578	S 40°51'56" E	68.01'
L590	N 36°38'35" W	167.75'
L591	S 39°09'27" W	62.11'
L592	S 41°02'17" W	106.54'
L596	S 41°02'17" W	18.77'
L600	S 48°49'15" W	208.87'
L608	S 28°18'02" E	50.00'
L609	S 28°18'02" E	75.00'
L617	N 48°49'15" E	81.55
L618	S 66°48'02" E	131.44'
L619	S 66°48'02" E	218.56'

NUMBER	DIRECTION	DISTANCE
L620	N 48°49'15" E	130.26'
L621	S 09°24'05" E	139.41'
L622	N 41°02'17" E	41.73'
L623	S 61°43'54" E	198.00'
L624	S 09°24'05" E	17.19'
L625	N 41°02'17" E	64.81'
L626	N 39°09'27" E	12.19'
L627	S 68°44'31" E	132.96'
L628	S 03°13'03" W	32.00'
L629	S 01°36'21" E	71.98'
L630	N 39°09'27" E	49.92'
L631	N 39°09'27" E	48.85'
L632	S 53°22'41" E	82.00'
L633	S 03°13'03" W	76.00'
L634	S 32°12'29" W	38.75'
L638	N 43°17'51" E	537.54'

STA/OFF FROM ℄ R/W S.R. 7		
(A)	231+83.16	78.60' LT.
(E)	231+68.34	83.97' RT.
(F)	231+39.87	89.88' RT.
(G)	233+10.23	76.17' RT.
(H)	233+27.65	72.97' RT.
(I)	233+36.88	94.53' LT.
(J)	234+11.64 [S]	40.04' LT.
(K)	234+85.05 [L]	39.08' RT.
(L)	234+84.38 [L]	47.18' RT.
(M)	234+43.75 [S]	55.05' RT.
(N)	234+31.75 [S]	57.22' RT.
(P)	233+67.64 [S]	66.68' RT.
(Q)	232+12.10	79.65' RT.

LAWRENCE COUNTY
UNION TOWNSHIP
SECT. 22, T-1-N, R-16-W

EX. MONUMENTS OFF S.R. 7		
STATION	OFFSET	DESCRIPTION
231+70.15	61.60' RT.	REBAR FOUND
235+93.23 [L]	487.08' LT.	42" OAK TREE
239+77.23	27.07' LT.	REBAR FOUND
239+88.61	151.54' LT.	REBAR FOUND

MONUMENT LEGEND
- STONE FOUND
- FENCE POST
- R.R.S. FOUND
- R.R.S. SET
- P.K. NAIL FOUND
- CONC. MONUMENT FD.
- REFER. MONUMENT SET
- REBAR FOUND
- AXLE FOUND
- IRON PIN FOUND
- I.P.F. WITH I.D. CAP
- ¾" BAR SET
- PROJECT CONTROL MON.
- MONUMENT BOX FD.
- MONUMENT BOX SET

SEE SHEET 82/82 FOR COURSES X56 - X95

(103) GEORGE W. & MARILYN BLACK
(106) WILLIAM RICHARD HYSELL
(108) DAVID A. PARSONS
(111) RICKY BLACK
(112) SHEILA ELLIS, DENNIS BLACK AND RANDY BLACK
(114) PAUL & CAROL BLACK
(118) STATE OF OHIO

CLINTON W. & BEULAH W. JUSTICE (H & W), JIMMIE L. JUSTICE, AND O. MICHAEL JUSTICE (119) 23-082-1300.000

(106) 23-083-0100.002
(106) 23-083-0100.000
(106) 23-083-0102.000
(103) 23-083-0102.001
(108) 23-083-0100.001
(112) 23-083-0200.000
(114) 23-082-1600.000
(118) 23-082-1700.000
(121) 23-082-0900.000
(121) 23-082-0900.001
(121) GEORGE W. & MARILYN BLACK 23-082-0800.002
(121) 23-082-0800.003
(121) 23-082-0800.001
(120) ERNEST W. AND MILDRED R. BONZO, TRUSTEES 23-082-1000.000
(120) 23-080-1400.000

SEE SHEET 79/82 FOR DETAIL

MATCH LINE STA. 231+00

231+65.48 84.31' RT.
231+62.70 134.22' RT.
231+58.89 209.09' RT.
231+18.85 297.23' RT.
231+90.00 150.00' LT.
233+49.08 150.00' LT.
233+08.89 268.24' RT.
232+42.47 274.07' RT.
234+39.11 [S] 251.33' RT.
234+30.21 [S] 266.04' RT.
233+58.06 [S] 385.33' RT.
234+51.38 [L] 192.95' RT.
234+77.03 [L] 173.82' RT.
235+37.96 [L] 128.38' RT.
235+33.22 [L] 46.62' RT.
235+74.68 [L] 372.60' LT.
235+63.80 [L] 305.47' LT.
235+55.75 [L] 233.53' LT.
235+93.23 [L] 487.08' LT.
237+20.00 [L] 520.00' LT.
238+50.00 150.00' LT.
238+10.00 320.00' RT.
238+48.40 314.79' RT.
239+75.85 12.06' LT.
241+52.98 35.44' LT.
242+70.00 210.00' LT.
243+06.23 26.42' LT.
244+00.00 240.00' RT.

L548 N 47°18'01" E 96.34'
L549 S 27°06'59" E 163.24'
L550 S 51°41'58" W 3.08'
L551 S 47°18'01" W 28.02'
L552 S 47°18'01" W 65.19'
L555 S 51°41'58" W 104.50'
L556 S 51°41'58" W 46.92'
L572 S 36°28'24" E 169.35'
L574 N 45°19'45" W 8.12'
L575 N 86°27'26" W 112.19'
L576 S 85°53'44" W 91.77'
L578 S 40°51'56" E 68.01'
L590 N 36°38'35" W 167.75'
L591 S 39°09'27" W 62.11'
L592 S 41°02'17" W 106.54'
L596 S 41°02'17" W 18.77'
L600 S 48°49'15" W 208.87'
L608 S 28°18'02" E 50.00'
L609 S 28°18'02" E 75.00'
L617 N 48°49'15" E 81.55
L618 S 66°48'02" E 131.44'
L619 S 66°48'02" E 218.56'
L620 N 48°49'15" E 130.26'
L621 S 09°24'05" E 139.41'
L622 N 41°02'17" E 41.73'
L623 S 61°43'54" E 198.00'
L624 S 09°24'05" E 17.19'
L625 N 41°02'17" E 64.81'
L626 N 39°09'27" E 12.19'
L627 S 68°44'31" E 132.96'
L628 S 03°13'03" W 32.00'
L629 S 01°36'21" E 71.98'
L630 N 39°09'27" E 49.92'
L631 N 39°09'27" E 48.85'
L632 S 53°22'41" E 82.00'
L633 S 03°13'03" W 76.00'
L634 S 32°12'29" W 38.75'
L638 N 43°17'51" E 537.54'

N 84°06'26" W 198.82'
S 53°12'29" W 139.20'
110.29'
S 05°28'35" E 284.50'
S 40°51'56" E 115.97'
N 05°28'35" W 206.98'
S 69°25'45" E 224.02'
S 43°41'20" E 72.38'
S 45°28'14" E 280.96'
392.17' 168.15'
155.40'
506.10' N 44°42'03" W
N 44°50'45" W 545.32'
81.57'
N 55°33'42" W 166.50'
158.69' N 44°50'45" W 124.89'
N 89°23'51" E 119.49'
S 48°49'15" W 154.57'
N 86°29'08" W 586.84'
N 89°23'51" E 182.20'
S 48°49'15" W 428.86'
N 31°47'59" E 424.26' 180.29'
141.72'
N 03°13'59" E 526.78'
S 32°12'29" W 556.65'
225.38' N 51°45'05" E 439.32'
S 45°28'14" E 280.96'
N 39° 55' 47" E 625.16'
264.71' N 32°23'47" E
S 43°17'51" W 153.51'
159.63'
181.77'
15.07'
239.94'

B.R.E.C. ESMT. DB 576 PG 406

L.A.-R/W

EX. ℄ R/W C.R. 68 SHAFERTOWN RD.

℄ R/W & CONST. S.R. 7

Ex R/W

ST

Aband. Rd.

CURVE NO. 4

CURVE DATA
S.R. 7
CURVE NO. 4

P.I. STA. 232+01.52
Δ = 34° 12' 59" (LT)
Dc = 4° 45' 00"
R = 1,206.23'
T = 161.12'
L = 320.35'
E = 10.71'
TS STA. 226+28.73
SC STA. 230+28.73

θs = 9° 30' 00"
Ls = 400.00'
Ts = 572.79'
LT = 267.05'
ST = 133.68'
CS STA. 233+49.08
ST STA. 237+49.08

571.00' NW QTR. SECT. 22 NE QTR. SECT. 22

242+70.78

MATCH LINE STA. 244+00

NOTE:
SEE SHEET 2 OF 82 FOR ALTERNATE METHOD OF STATIONING FROM SPIRAL CURVES

[L] MEASURED FROM LONG TANGENT
[S] MEASURED FROM SHORT TANGENT

(HH) C.M.F. AT THE CORNER OF THE NW [illegible] SHEET 6/82

DRAFT Stage 3 - Not for Construction

DATE	DESCRIPTION
DATE COMPLETED	

RIGHT OF WAY BOUNDARY SHEET
STA. 231+00 TO STA. 244+00

LAW-7-2.17

PID NO. 75923

R/W DESIGNER TB
R/W REVIEWER SER

HORIZONTAL SCALE IN FEET 0 50 100

54/82

U:\173608714\LAW\75923\row\sheets\75923RB013.dgn 12/9/2014 11:17:23 AM slparker

(103) GEORGE W. & MARILYN BLACK
(106) WILLIAM RICHARD HYSELL
(108) DAVID A. PARSONS
(111) RICKY BLACK
(112) SHEILA ELLIS, DENNIS BLACK AND RANDY BLACK
(114) PAUL & CAROL BLACK
(118) STATE OF OHIO
(119) CLINTON W. & BEULAH W. JUSTICE (H & W), JIMMIE L. JUSTICE, AND O. MICHAEL JUSTICE

LAWRENCE COUNTY
UNION TOWNSHIP
SECT. 22, T-1-N, R-16-W

FOR LOCATION AND TYPE OF LA-R/W FENCE SEE THE TABLE IN THE ROADWAY PLAN

CURVE DATA
S.R. 7
CURVE NO. 4

P.I. STA. 232+01.52	θs = 9° 30′ 00″
Δ = 34° 12′ 59″ (LT)	Ls = 400.00′
Dc = 4° 45′ 00″	Ts = 572.79′
R = 1,206.23′	LT = 267.05′
T = 161.12′	ST = 133.68′
L = 320.35′	CS STA. 233+49.08
E = 10.71′	ST STA. 237+49.08
TS STA. 226+28.73	
SC STA. 230+28.73	

(A) Rock Garden & Wood Ret. Wall

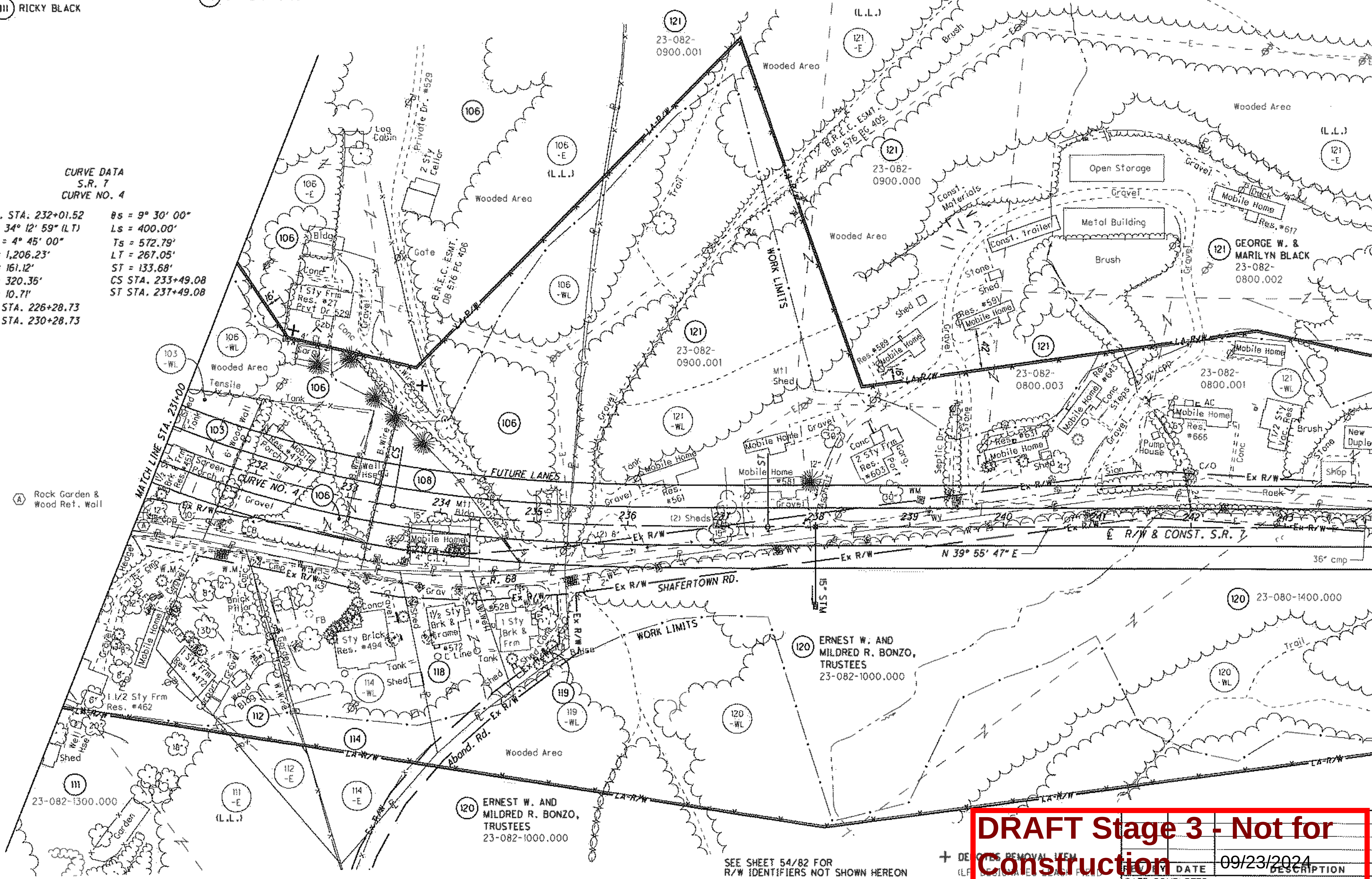

SEE SHEET 54/82 FOR R/W IDENTIFIERS NOT SHOWN HEREON

+ DENOTES REMOVAL ITEM
(LF) DESIGNATES LEACH FIELD

DRAFT Stage 3 - Not for Construction 09/23/2024

REV.	BY	DATE	DESCRIPTION

DATE COMPLETED

HORIZONTAL SCALE IN FEET 0 25 50 100

PID NO. 75923

R/W DESIGNER TB
R/W REVIEWER SER

RIGHT OF WAY TOPO SHEET
STA. 231+00 TO STA. 244+00

LAW-7-2.17

U:\73608714\LAW\75923\row\sheets\75923RT013.dgn 12/9/2014 11:17:24 AM slparker

LAWRENCE COUNTY
UNION TOWNSHIP
SECT. 22, T-1-N, R-16-W

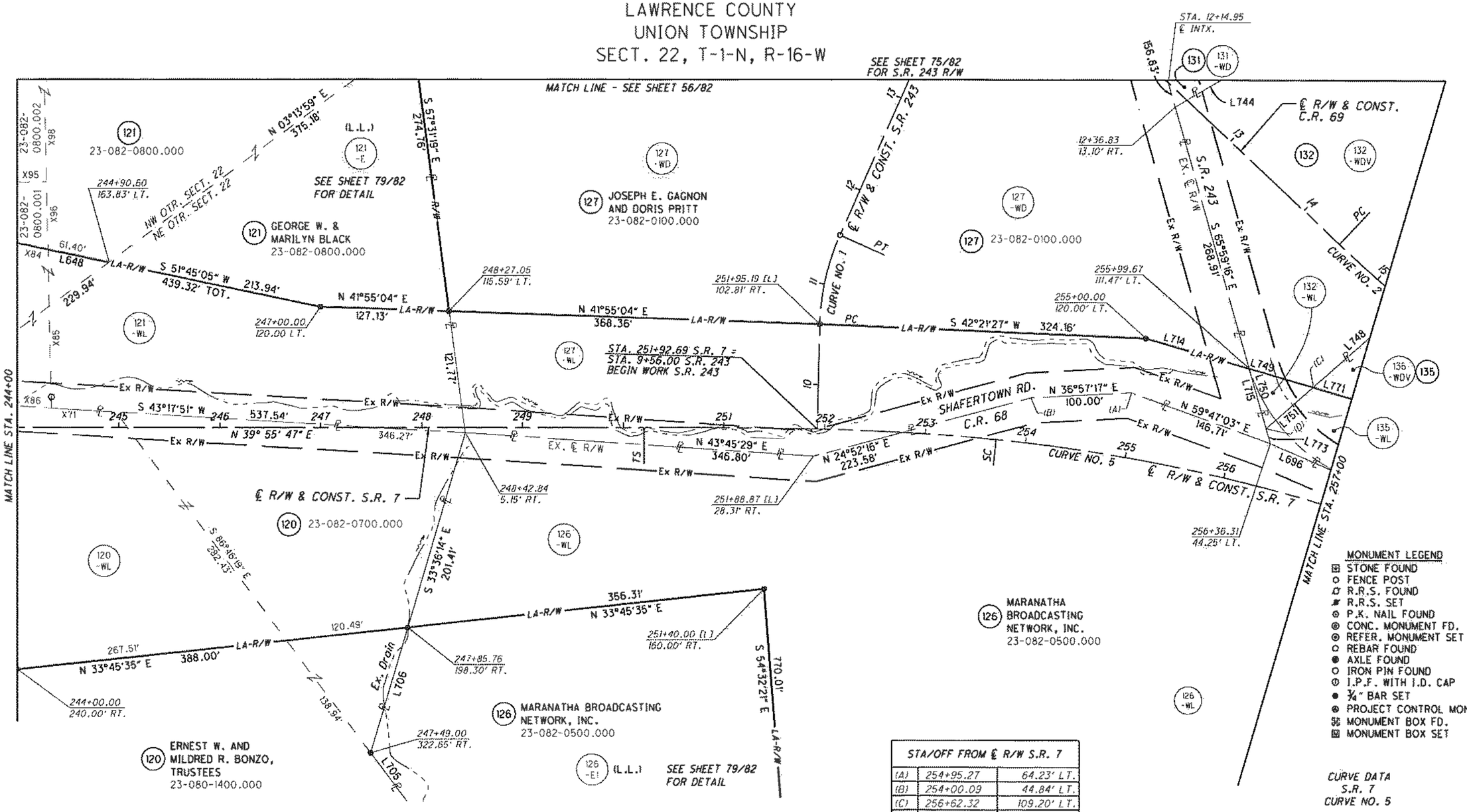

NUMBER	DIRECTION	DISTANCE
L648	S 51°45'05" W	225.38'
L696	N 63°15'58" E	175.66'
L705	N 86°46'19" W	754.62'
L706	N 33°36'14" W	129.67'
L714	S 56°02'13" W	106.54'
L715	S 65°59'16" E	77.34'
L744	S 09°20'43" W	238.59'
L748	S 01°24'21" E	339.79'
L749	S 56°02'13" W	66.61'
L750	N 65°59'16" W	62.16'
L751	S 01°24'21" E	62.52'
L771	N 56°02'13" E	93.12'
L773	N 65°59'16" W	15.18'

EX. MONUMENTS OFF S.R. 7		
STATION	OFFSET	DESCRIPTION
244+33.56	30.23' LT.	REBAR FOUND

NOTE:
SEE SHEET 2 OF 82
FOR ALTERNATE METHOD OF
STATIONING FROM SPIRAL CURVES

[L] MEASURED FROM LONG TANGENT
[S] MEASURED FROM SHORT TANGENT

SEE SHEET 82/82 FOR COURSES X71 - X96

STA/OFF FROM ℄ R/W S.R. 7		
(A)	254+95.27	64.23' LT.
(B)	254+00.09	44.84' LT.
(C)	256+62.32	109.20' LT.
(D)	256+28.91	57.39' LT.

MONUMENT LEGEND
- STONE FOUND
- FENCE POST
- R.R.S. FOUND
- R.R.S. SET
- P.K. NAIL FOUND
- CONC. MONUMENT FD.
- REFER. MONUMENT SET
- REBAR FOUND
- AXLE FOUND
- IRON PIN FOUND
- I.P.F. WITH I.D. CAP
- ¾" BAR SET
- PROJECT CONTROL MON.
- MONUMENT BOX FD.
- MONUMENT BOX SET

CURVE DATA
S.R. 7
CURVE NO. 5

P.I. STA. 261+89.75
Δ = 58° 46' 06" (RT)
Dc = 3° 15' 00"
R = 1,762.95'
T = 773.76'
L = 1,458.26'
E = 162.33'
TS STA. 250+20.45
SC STA. 253+70.45
θs = 5° 41' 15"
Ls = 350.00'
Ts = 1,169.30'
LT = 233.45'
ST = 116.78'
CS STA. 268+28.71
ST STA. 271+78.71

CURVE DATA
S.R. 243
CURVE NO. 1

P.I. Sta. 11+06.30
Δ = 22° 39' 36" (RT)
Dc = 24° 54' 40"
R = 230.00'
T = 46.08'
L = 90.96'
E = 4.57'
PC STA. 10+60.22
PT STA. 11+51.18

CURVE DATA
C.R. 69
CURVE NO. 2

P.I. Sta. 15+77.89
Δ = 10° 17' 44" (LT)
Dc = 4° 00' 00"
R = 1,432.39'
T = 129.04'
L = [illegible]
E = [illegible]
PC STA. 14+48.85
PT STA. 17+06.24

127 JOSEPH E. GAGNON AND DORIS PRITT
131 ROGER F. & GLORIA J. TOMBLIN
132 LARRY & LINDA K. SITES
135 ROGER & HELEN HENSON

DRAFT Stage 3 - Not for Construction

REVISION DATE	DESCRIPTION
DATE COMPLETED	09/23/2024

RIGHT OF WAY BOUNDARY SHEET
STA. 244+00 TO STA. 257+00

HORIZONTAL SCALE IN FEET
0 25 50 100

PID NO. 75923
R/W DESIGNER TB
R/W REVIEWER SER

LAW-7-2.17

55 / 82

U:\1736874\LAW\75923\row\sheets\75923RB014.dgn 12/9/2014 11:17:26 AM slparker

LAWRENCE COUNTY
UNION TOWNSHIP
SECT. 22, T-1-N, R-16-W

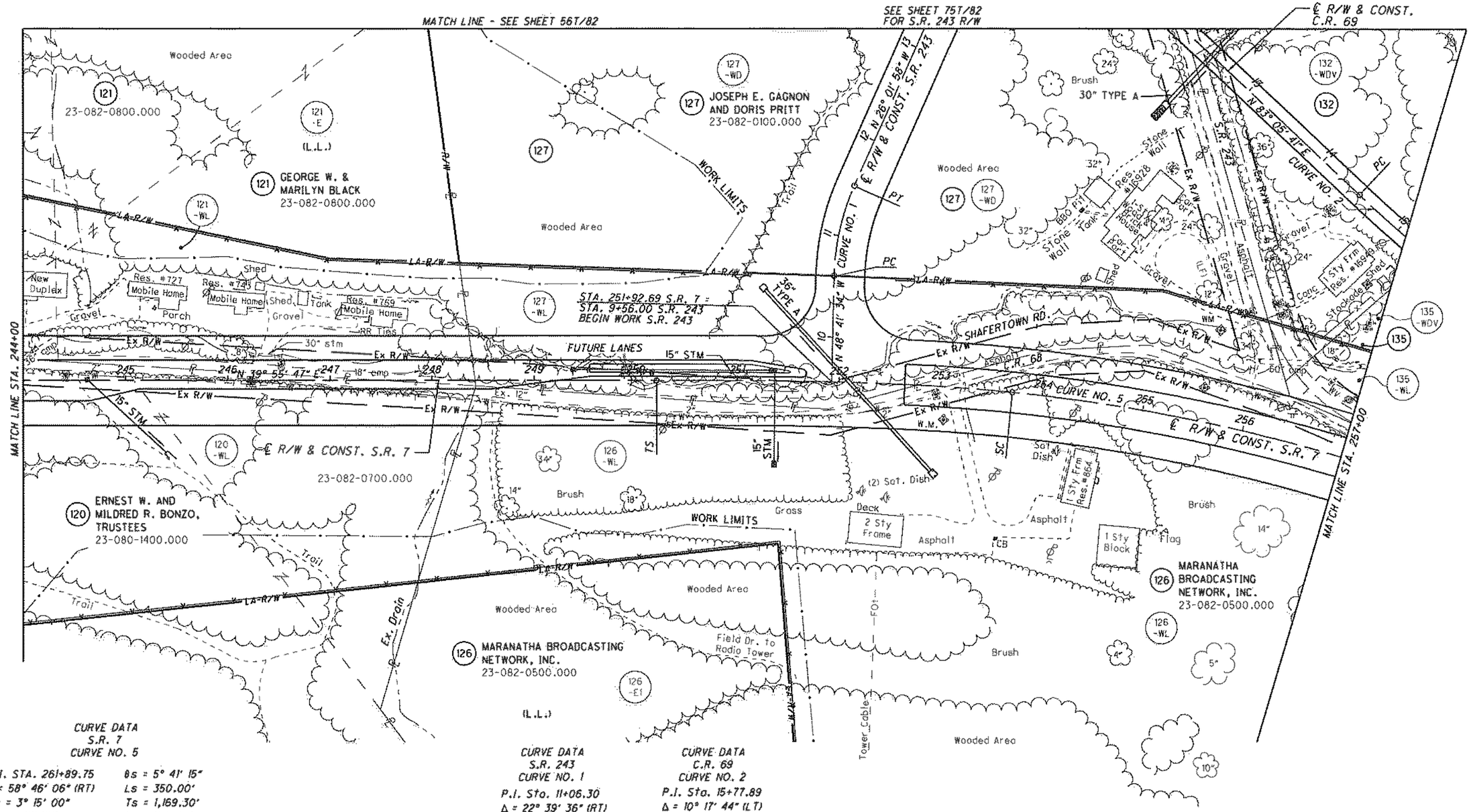

CURVE DATA
S.R. 7
CURVE NO. 5

P.I. STA. 261+89.75
Δ = 58° 46' 06" (RT)
Dc = 3° 15' 00"
R = 1,762.95'
T = 773.76'
L = 1,458.26'
E = 162.33'
TS STA. 250+20.45
SC STA. 253+70.45

θs = 5° 41' 15"
Ls = 350.00'
Ts = 1,169.30'
LT = 233.45'
ST = 116.78'
CS STA. 268+28.71
ST STA. 271+78.71

127 JOSEPH E. GAGNON AND DORIS PRITT
132 LARRY & LINDA K. SITES
135 ROGER & HELEN HENSON

CURVE DATA
S.R. 243
CURVE NO. 1

P.I. Sta. 11+06.30
Δ = 22° 39' 36" (RT)
Dc = 24° 54' 40"
R = 230.00'
T = 46.08'
L = 90.96'
E = 4.57'
PC STA. 10+60.22
PT STA. 11+51.18

CURVE DATA
C.R. 69
CURVE NO. 2

P.I. Sta. 15+77.89
Δ = 10° 17' 44" (LT)
Dc = 4° 00' 00"
R = 1,432.39'
T = 129.04'
L = 257.39'
E = 5.80'
PC STA. 14+48.85
PT STA. 17+06.24

FOR LOCATION AND TYPE OF LA-R/W FENCE SEE THE TABLE IN THE ROADWAY PLAN

(LF) DENOTES LENGTH FEET

DRAFT Stage 3 - Not for Construction

REVISION DATE	DESCRIPTION
DATE COMPLETED	

HORIZONTAL SCALE IN FEET
0 25 50 100

PID NO. 75923
R/W DESIGNER TB
R/W REVIEWER SER

RIGHT OF WAY TOPO SHEET
STA. 244+00 TO STA. 257+00

LAW-7-2.17

55T/82

U:\17360871A\LAW\75923\row\sheets\75923RT014.dgn 12/9/2014 11:17:28 AM slporker

LAWRENCE COUNTY
UNION TOWNSHIP
SECT. 22, T-1-N, R-16-W

NUMBER	DIRECTION	DISTANCE
L654	N 44°31'10" E	33.50'
L655	N 45°01'40" E	36.24'
L656	N 48°12'29" E	87.75'
L657	N 58°11'17" E	98.73'
L658	N 65°33'58" E	48.32'
L659	S 26°44'59" W	7.79'
L661	S 57°31'19" E	274.76'
L675	N 03°11'50" E	124.66'

EX. MONUMENTS OFF S.R. 7		
STATION	OFFSET	DESCRIPTION
249+19.09	483.00' LT.	IRON PIN FOUND

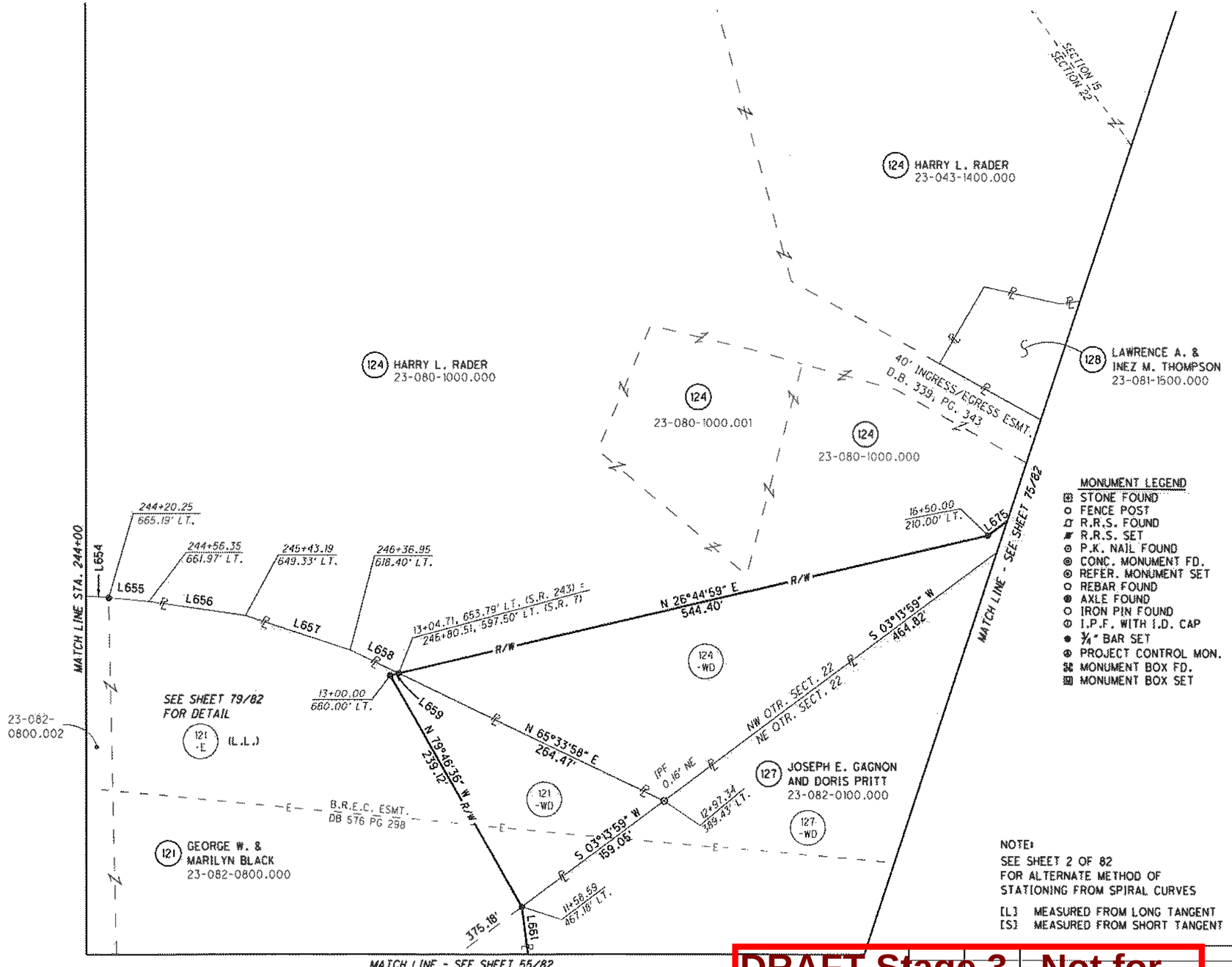

MONUMENT LEGEND
- STONE FOUND
- FENCE POST
- R.R.S. FOUND
- R.R.S. SET
- P.K. NAIL FOUND
- CONC. MONUMENT FD.
- REFER. MONUMENT SET
- REBAR FOUND
- AXLE FOUND
- IRON PIN FOUND
- I.P.F. WITH I.D. CAP
- ¾" BAR SET
- PROJECT CONTROL MON.
- MONUMENT BOX FD.
- MONUMENT BOX SET

NOTE:
SEE SHEET 2 OF 82
FOR ALTERNATE METHOD OF
STATIONING FROM SPIRAL CURVES

[L] MEASURED FROM LONG TANGENT
[S] MEASURED FROM SHORT TANGENT

HORIZONTAL SCALE IN FEET
0 25 50 100

PID NO. 75923

R/W DESIGNER TB
R/W REVIEWER SER

RIGHT OF WAY BOUNDARY SHEET
STA. 244+00 (NORTH)

LAW-7-2.17

56/82

REVISED DATE	DESCRIPTION
DATE COMPLETED	

DRAFT Stage 3 - Not for Construction

09/23/2024

U:\1736087\4\LAW\75923\row\sheets\75923RB015.dgn 12/9/2014 11:17:29 AM sparker

LAWRENCE COUNTY
UNION TOWNSHIP
SECT. 22, T-1-N, R-16-W

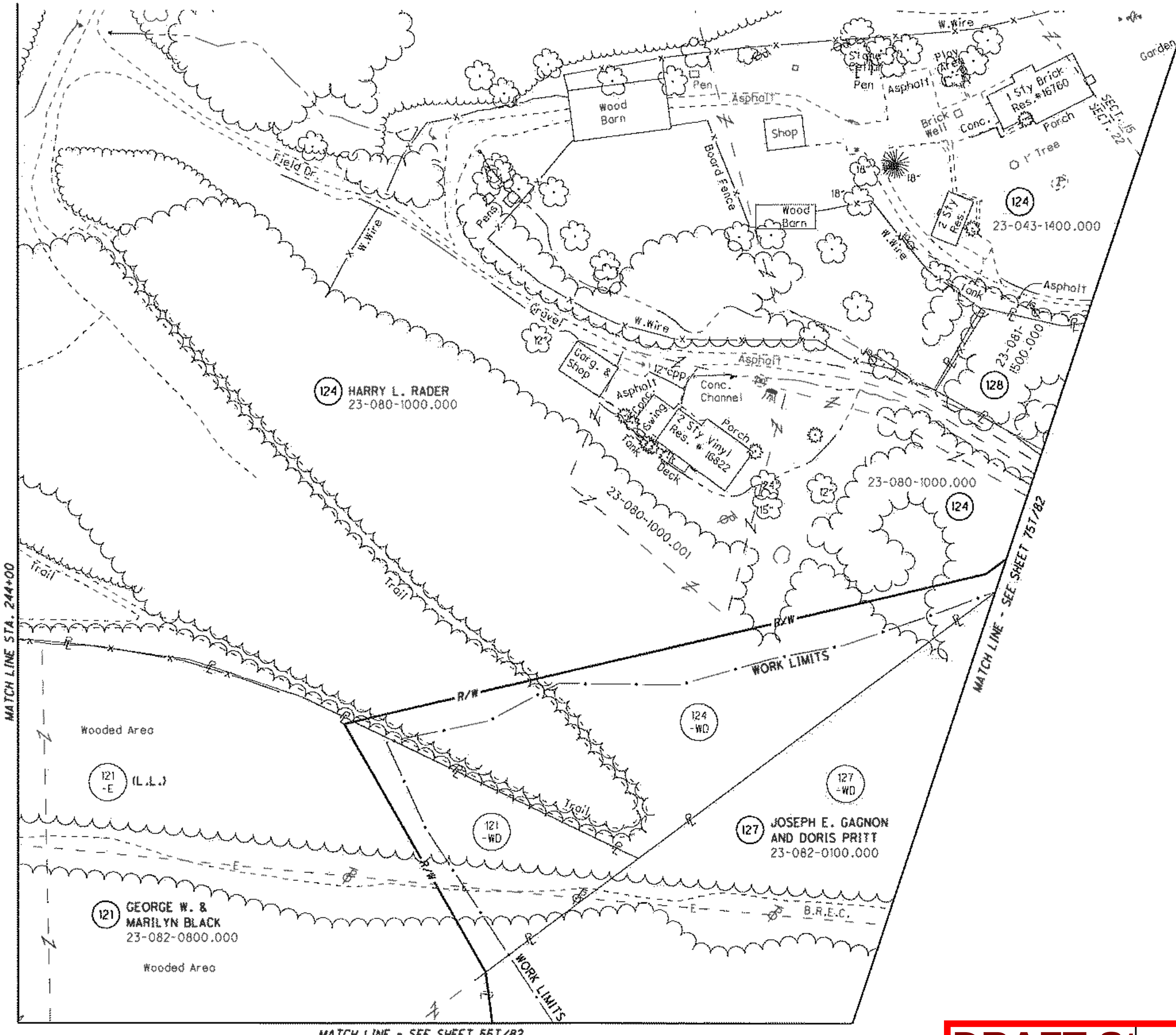

FOR LOCATION AND TYPE OF LA-R/W FENCE
SEE THE TABLE IN THE ROADWAY PLAN

(LF) DESIGNATES LEACH FIELD

DRAFT Stage 3 - Not for Construction

REV.	BY	DATE	DESCRIPTION
		09/23/2024	

DATE COMPLETED

HORIZONTAL SCALE IN FEET 0 25 50 100

PID NO. 75923

R/W DESIGNER TB
R/W REVIEWER SER

RIGHT OF WAY TOPO SHEET
STA. 244+00 (NORTH)

LAW-7-2.17

56T/82

U:\173608714\LAW\75923\row\sheets\75923RT015.dgn 12/9/2014 11:17:30 AM slparker

NOTE:
SEE SHEET 2 OF 82
FOR ALTERNATE METHOD OF
STATIONING FROM SPIRAL CURVES

[L] MEASURED FROM LONG TANGENT
[S] MEASURED FROM SHORT TANGENT

LAWRENCE COUNTY
UNION TOWNSHIP
SECT. 15 & 22, T-1-N, R-16-W

NO.	RADIUS	DELTA ANG.	ARC LEN	CHORD DIRECT.	CHORD
C15	3236.04'	01°56'24"	109.56'	S 74°51'49" W	109.56'
C16	3236.04'	02°30'10"	141.35'	S 77°05'06" W	141.34'
C17	3236.04'	08°05'07"	456.66'	N 82°22'44" E	456.28'

EX. MONUMENTS OFF S.R. 7

STATION	OFFSET	DESCRIPTION
258+12.56	394.80' LT.	24" OAK TREE
258+07.52	24.59' LT.	R.R.S. FOUND
259+90.92	29.33' LT.	REBAR FOUND
260+01.51	111.33' LT.	REBAR FOUND
260+66.64	307.06 RT.	REBAR FOUND
262+26.01	202.59' RT.	REBAR FOUND
264+34.85	12.58' RT.	R.R.S. FOUND

MONUMENT LEGEND
- STONE FOUND
- FENCE POST
- R.R.S. FOUND
- R.R.S. SET
- P.K. NAIL FOUND
- CONC. MONUMENT FD.
- REFER. MONUMENT SET
- REBAR FOUND
- AXLE FOUND
- IRON PIN FOUND
- I.P.F. WITH I.D. CAP
- ¾" BAR SET
- PROJECT CONTROL MON.
- MONUMENT BOX FD.
- MONUMENT BOX SET

(126) MARANATHA BROADCASTING NETWORK, INC.
(132) LARRY & LINDA K. SITES
(133) CARL & NANCY DANFORD
(134) DARRELL HARDY
(135) ROGER & HELEN HENSON
(136) CARL & NANCY DANFORD
(137) STATE OF OHIO
(138) STATE OF OHIO
(139) FRED HENSON, JR.
(140) STATE OF OHIO
(141) STATE OF OHIO
(142) LARRY J. & LINDA K. SITES

(143) ERNEST W. AND MILDRED R. BONZO, TRUSTEES
23-044-0800.000

(143) ERNEST W. AND MILDRED R. BONZO, TRUSTEES
23-044-0800.000

23-081-1000.000

STA/OFF FROM ℄ R/W C.R. 69

(H)	19+14.79	38.00' RT.
(I)	21+68.65	38.00' RT.
(L)	20+25.64	38.00' RT.
(M)	20+17.79	3.99' RT.

STA/OFF FROM ℄ R/W S.R. 7

(A)	258+07.63	25.19' LT.
(B)	259+09.74	21.97' LT.
(C)	259+21.37	19.76' LT.
(D)	258+89.27	22.13' LT.
(E)	258+98.54	97.46' LT.
(F)	259+99.67	96.57' LT.
(G)	259+88.10	8.71' LT.
(H)	260+54.77	98.64' LT.
(I)	262+93.04	79.42' LT.
(J)	262+63.76	9.45' RT.
(L)	261+58.37	88.48' LT.
(K)	261+72.70	8.24' RT.
(N)	260+43.57	1.55' LT.
(P)	261+62.93	7.83' RT.
(Q)	260+71.56	294.38' RT.
(R)	260+66.39	307.71' RT.
(S)	259+45.70	304.53' RT.
(T)	258+73.49	299.33' RT.
(U)	261+93.01	167.49' RT.
(V)	261+43.60	295.43' RT.
(W)	262+84.25	9.07' RT.
(X)	263+33.25	7.22' RT.
(Y)	263+95.68	209.20' RT.
(Z)	262+26.01	202.59' RT.
(AA)	262+37.20	169.92' RT.

CURVE DATA
C.R. 69
CURVE NO. 2
P.I. Sta. 15+77.89
Δ = 10° 17' 44" (LT)
Dc = 4° 00' 00"
R = 1,432.39'
T = 129.04'
L = 257.39'
E = 5.80'
PC Sta. 14+48.85
PT Sta. 17+06.24

CURVE DATA
C.R. 69
CURVE NO. 3
P.I. Sta. 25+76.25
Δ = 22° 45' 00" (RT)
Dc = 1° 45' 00"
R = 3,274.04'
T = 658.68'
L = 1,300.00'
E = 65.60'
TS STA. 17+89.74
SC STA. 19+14.74
Bs = 1° 05' 37"
Ls = 125.00'
Ts = 786.51'
LT = 83.33'
ST = 41.67'
CS Sta. 32+14.74
ST Sta. 33+39.74

CURVE DATA
S.R. 7
CURVE NO. 5
P.I. STA. 261+89.75
Δ = 58° 46' 06" (RT)
Dc = 3° 15' 00"
R = 1,762.95'
T = 773.76'
L = 1,458.26'
E = 162.33'
TS STA. 250+20.45
SC STA. 253+70.45
Bs = 5° 41' 15"
Ls = 350.00'
Ts = 1,169.30'
LT = 233.45'
ST = 116.78'
CS STA. 268+28.71
ST STA. 271+78.71

NUMBER	DIRECTION	DISTANCE
L699	S 19°23'25" E	19.00'
L700	S 21°27'28" E	464.49'
L707	N 68°05'58" E	159.83'
L708	N 03°51'15" W	14.00'
L709	N 70°34'40" E	60.00'
L746	S 86°46'40" E	84.71'
L752	N 19°48'07" W	75.99'
L754	S 16°23'39" E	88.65'
L755	S 73°55'58" W	68.17'
L756	S 73°55'58" W	11.97'
L757	S 63°15'58" W	20.72'

NUMBER	DIRECTION	DISTANCE
L762	S 24°20'38" W	69.49'
L763	S 27°09'28" E	34.89'
L764	S 64°54'54" W	58.18'
L765	S 27°09'28" E	97.82'
L766	S 73°55'58" W	9.73'
L767	S 73°55'58" W	119.50'
L768	S 73°55'58" W	56.08'
L771	S 56°	
L772	S 63°	
L775	S 03°	
L776	S 03°	93.75'
L777	S 73°	
L779	N 69°	101.04'

SEE SHEET 75/82
SEE SHEET 79/82 FOR DETAIL
SEE SHEET 82/82 FOR COURSES L781 - L816

℄ R/W & CONST. C.R. 69
℄ R/W & CONST. S.R. 7
SECTION 15 / SECTION 22
FENCE CORNER AS DELINEATED UPON A SURVEY OF 0.9088 ACRES OF RECORD IN S.V. 10, PG. 761
MATCH LINE STA. 257+00
MATCH LINE STA. 266+99.95
C.R. 118 BENT CREEK RD.
S.R. 243

DRAFT Stage 3 - Not for Construction

REVISION DATE	DESCRIPTION
DATE COMPLETED	09/23/2024

R/W DESIGNER TB
R/W REVIEWER SER
PID NO. 75923
HORIZONTAL SCALE IN FEET
RIGHT OF WAY BOUNDARY SHEET
STA. 257+00 TO STA. 266+99.95
LAW-7-2.17
57/82

U:\1736087A\LAW\75923vrow\sheets\75923RB015.dgn 12/9/2014 11:17:31 AM slparker

LAWRENCE COUNTY
UNION TOWNSHIP
SECT. 15 & 22, T-1-N, R-16-W

132	LARRY & LINDA K. SITES	137	STATE OF OHIO
133	CARL & NANCY DANFORD	138	STATE OF OHIO
134	DARRELL HARDY	139	FRED HENSON, JR.
135	ROGER & HELEN HENSON	140	STATE OF OHIO
136	CARL & NANCY DANFORD	141	STATE OF OHIO

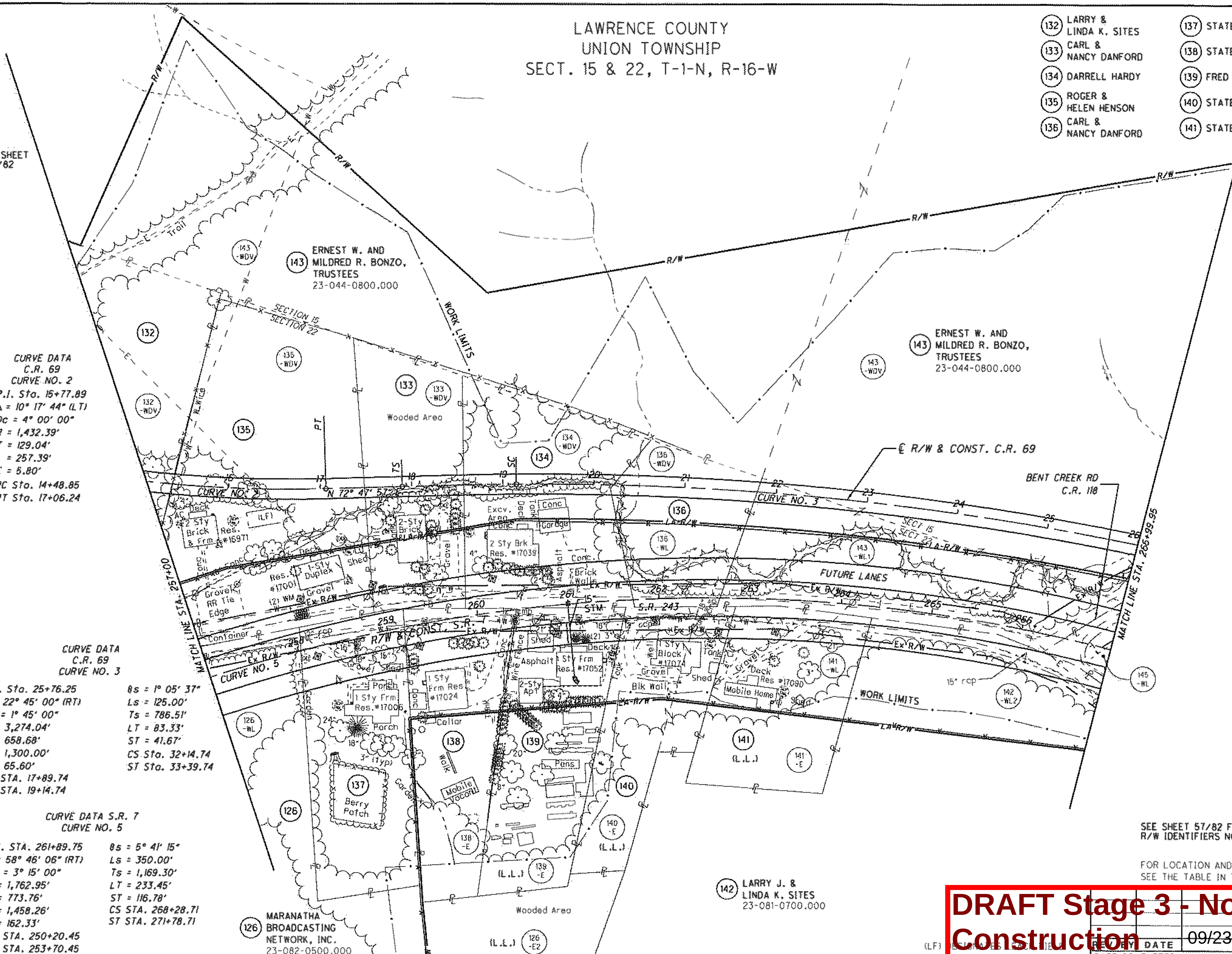

CURVE DATA
C.R. 69
CURVE NO. 2
P.I. Sta. 15+77.89
Δ = 10° 17' 44" (LT)
Dc = 4° 00' 00"
R = 1,432.39'
T = 129.04'
L = 257.39'
E = 5.80'
PC Sta. 14+48.85
PT Sta. 17+06.24

CURVE DATA
C.R. 69
CURVE NO. 3
P.I. Sta. 25+76.25
Δ = 22° 45' 00" (RT)
Dc = 1° 45' 00"
R = 3,274.04'
T = 658.68'
L = 1,300.00'
E = 65.60'
TS STA. 17+89.74
SC STA. 19+14.74
θs = 1° 05' 37"
Ls = 125.00'
Ts = 786.51'
LT = 83.33'
ST = 41.67'
CS Sta. 32+14.74
ST Sta. 33+39.74

CURVE DATA S.R. 7
CURVE NO. 5
P.I. STA. 261+89.75
Δ = 58° 46' 06" (RT)
Dc = 3° 15' 00"
R = 1,762.95'
T = 773.76'
L = 1,458.26'
E = 162.33'
TS STA. 250+20.45
SC STA. 253+70.45
θs = 5° 41' 15"
Ls = 350.00'
Ts = 1,169.30'
LT = 233.45'
ST = 116.78'
CS STA. 268+28.71
ST STA. 271+78.71

SEE SHEET 57/82 FOR R/W IDENTIFIERS NOT SHOWN HEREON

FOR LOCATION AND TYPE OF LA-R/W FENCE SEE THE TABLE IN THE ROADWAY PLAN

(LF) = LIMITS OF ...

DRAFT Stage 3 - Not for Construction
09/23/2024

REV. BY | DATE | DESCRIPTION
DATE COMPLETED

HORIZONTAL SCALE IN FEET 0 25 50 100
PID NO. 75923
R/W DESIGNER TB
R/W REVIEWER SER
RIGHT OF WAY TOPO SHEET
STA. 257+00 TO STA. 266+99.95
LAW-7-2.17
57T/82

U:\73608714\LAW\75923\row\sheets\75923RT016.dgn 12/9/2014 11:17:33 AM slparker

LAWRENCE COUNTY
UNION TOWNSHIP
SECT. 14, 15, 22
T-1-N, R-16-W

NO.	RADIUS	DELTA ANG.	ARC LEN	CHORD DIRECT.	CHORD
C17	3236.04'	08°05'07"	456.66'	N 82°22'44" E	456.28'
C18	3236.04'	04°21'40"	246.32'	S 88°36'08" W	246.26'
C19	3236.04'	02°58'37"	168.14'	N 87°43'43" W	168.12'

STA/OFF FROM ℄ R/W S.R. 7		
(A)	266+99.95	53.96' LT.
(G)	270+37.73 [L]	78.87' LT.
(H)	270+31.93 [L]	44.85' LT.
(I)	270+59.35 [L]	18.69' LT.
(J)	271+20.06 [L]	17.55' LT.
(K)	272+56.31	24.38' LT.
(L)	273+04.89	6.74' LT.
(M)	270+38.64 [L]	12.90' LT.
(N)	269+75.43 [L]	25.56' LT.
(P)	269+25.54 [S]	49.71' LT.

STA/OFF FROM ℄ R/W C.R. 69		
(B)	26+30.68	38.00' RT.
(C)	26+60.19	14.33' RT.
(D)	27+23.94	18.65' LT.
(E)	28+23.16	12.90' RT.
(F)	28+79.89	38.00' RT.

NUMBER	DIRECTION	DISTANCE
L817	S 47°43'59" W	42.35'
L818	S 82°12'56" E	151.11'
L828	N 14°08'02" W	160.49'
L829	N 61°20'32" W	51.68'
L830	S 59°18'59" W	41.48'
L834	N 08°19'19" W	72.41'
L835	N 80°13'50" W	60.72'
L836	N 37°38'28" W	37.90'
L837	N 18°22'42" E	34.51'
L838	N 65°40'37" W	79.28'
L839	N 03°42'07" E	10.00'
L840	N 65°40'37" W	61.63'
L841	N 73°27'38" W	104.19'
L842	S 60°09'40" W	71.81'
L843	S 47°43'59" W	37.65'
L845	N 64°14'22"E	60.00'
L846	S 27°02'18" E	114.88'
L852	S 88°52'36" E	25.00'
L853	S 01°07'24" W	99.13'
L854	S 02°36'05" W	165.27'
L855	S 07°59'55" E	59.73'
L856	S 32°33'55" E	72.75'
L857	S 49°02'19" E	98.09'
L858	S 61°09'25" E	93.70'
L859	S 74°49'30" E	153.85'
L869	S 16°52'00" W	51.03'
L870	S 69°58'46" E	64.47'
L871	S 57°07'34" E	60.26'
L872	N 20°27'05" E	157.61'
L881	S 88°52'36" E	65.00'
L882	S 32°53'08" E	79.12'
L883	S 57°26'51" E	336.26'

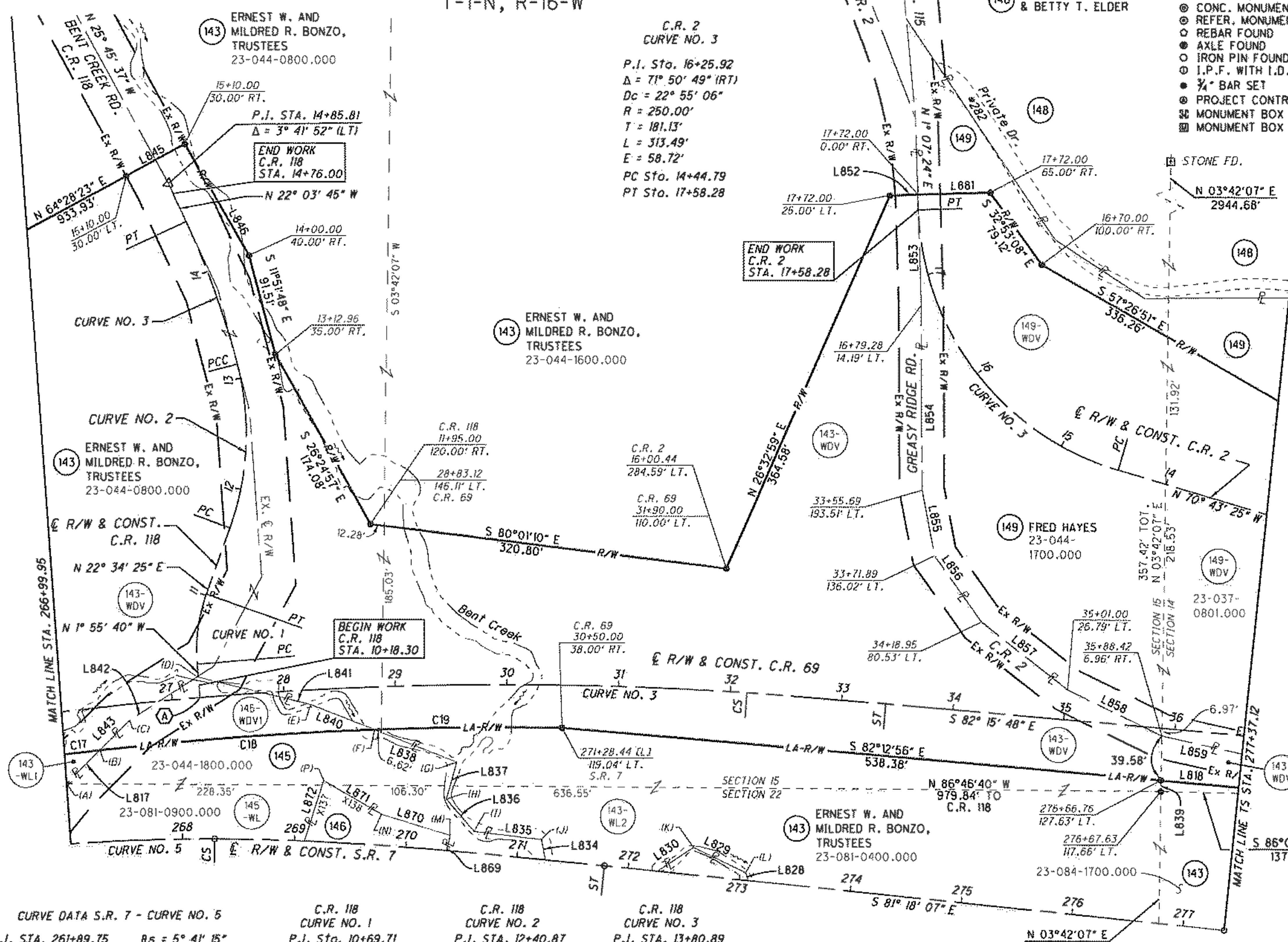

MONUMENT LEGEND
- STONE FOUND
- FENCE POST
- R.R.S. FOUND
- R.R.S. SET
- P.K. NAIL FOUND
- CONC. MONUMENT FD.
- REFER. MONUMENT SET
- REBAR FOUND
- AXLE FOUND
- IRON PIN FOUND
- I.P.F. WITH I.D. CAP
- ¾" BAR SET
- PROJECT CONTROL MON.
- MONUMENT BOX FD.
- MONUMENT BOX SET

(145) AMY G. SHAFFER
(146) STATE OF OHIO
(148) WILLIAM W. ELDER, JR. & BETTY T. ELDER

(A) S.R. 7 STA. 268+16.30, 126.47' LT. = C.R. 118 STA. 10+07.30 = C.R. 69 STA 27+25.00

CURVE DATA C.R. 69 - CURVE NO. 3
P.I. Sta. 25+76.25
Δ = 22° 45' 00" (RT)
Dc = 1° 45' 00"
R = 3,274.04'
T = 658.68'
L = 1,300.00'
E = 65.60'
TS STA. 17+89.74
SC STA. 19+14.74
θs = 1° 05' 37"
Ls = 125.00'
Ts = 786.51'
LT = 83.33'
ST = 41.67'
CS Sta. 32+14.74
ST Sta. 33+39.74

CURVE DATA S.R. 7 - CURVE NO. 5
P.I. STA. 261+89.75
Δ = 58° 46' 06" (RT)
Dc = 3° 15' 00"
R = 1,762.95'
T = 773.76'
L = 1,458.26'
E = 162.33'
TS STA. 250+20.45
SC STA. 253+70.45
θs = 5° 41' 15"
Ls = 350.00'
Ts = 1,169.30'
LT = 233.45'
ST = 116.78'
CS STA. 268+28.71
ST STA. 271+78.71

C.R. 118 CURVE NO. 1
P.I. STA. 10+69.71
Δ = 24° 30' 05" (RT)
Dc = 38° 11' 50"
R = 150.00'
T = 32.57'
L = 64.14'
E = 3.49'
PC STA. 10+37.14
PT STA. 11+01.28

C.R. 118 CURVE NO. 2
P.I. STA. 12+40.87
Δ = 34° 13' 00" (LT)
Dc = 23° 00' 00"
R = 249.11'
T = 76.68'
L = 148.77'
E = 11.53'
PC STA. 11+64.19
PCC STA. 13+12.96

C.R. 118 CURVE NO. 3
P.I. STA. 13+80.89
Δ = 10° 25' 10" (LT)
Dc = 7° 41' 27"
R = 745.00'
T = 67.93'
L = 135.48'
E = 3.09'
PCC STA. 13+12.96
PT STA. 14+48.44

NOTE:
SEE SHEET ... FOR ALTERNATE METHOD OF STATIONING FROM SPIRAL CURVES
[L] MEASURED FROM LONG TANGENT
[S] MEASURED FROM SHORT TANGENT

DRAFT Stage 3 - Not for Construction 09/23/2024

REV. BY | DATE | DESCRIPTION
DATE COMPLETED

HORIZONTAL SCALE IN FEET 0 25 50 100

PID NO. 75923

R/W DESIGNER TB
R/W REVIEWER SER

RIGHT OF WAY BOUNDARY SHEET
266+99.95 TO STA. 277+37.12 (NORTH)

LAW-7-2.17

U:\73608714\LAW\75923\row\sheets\75923RB018.dgn 12/9/2014 11:17:34 AM stparker

LAWRENCE COUNTY
UNION TOWNSHIP
SECT. 14, 15 & 22 T-1-N, R-16-W

FOR LOCATION AND TYPE OF LA-R/W FENCE SEE THE TABLE IN THE ROADWAY PLAN

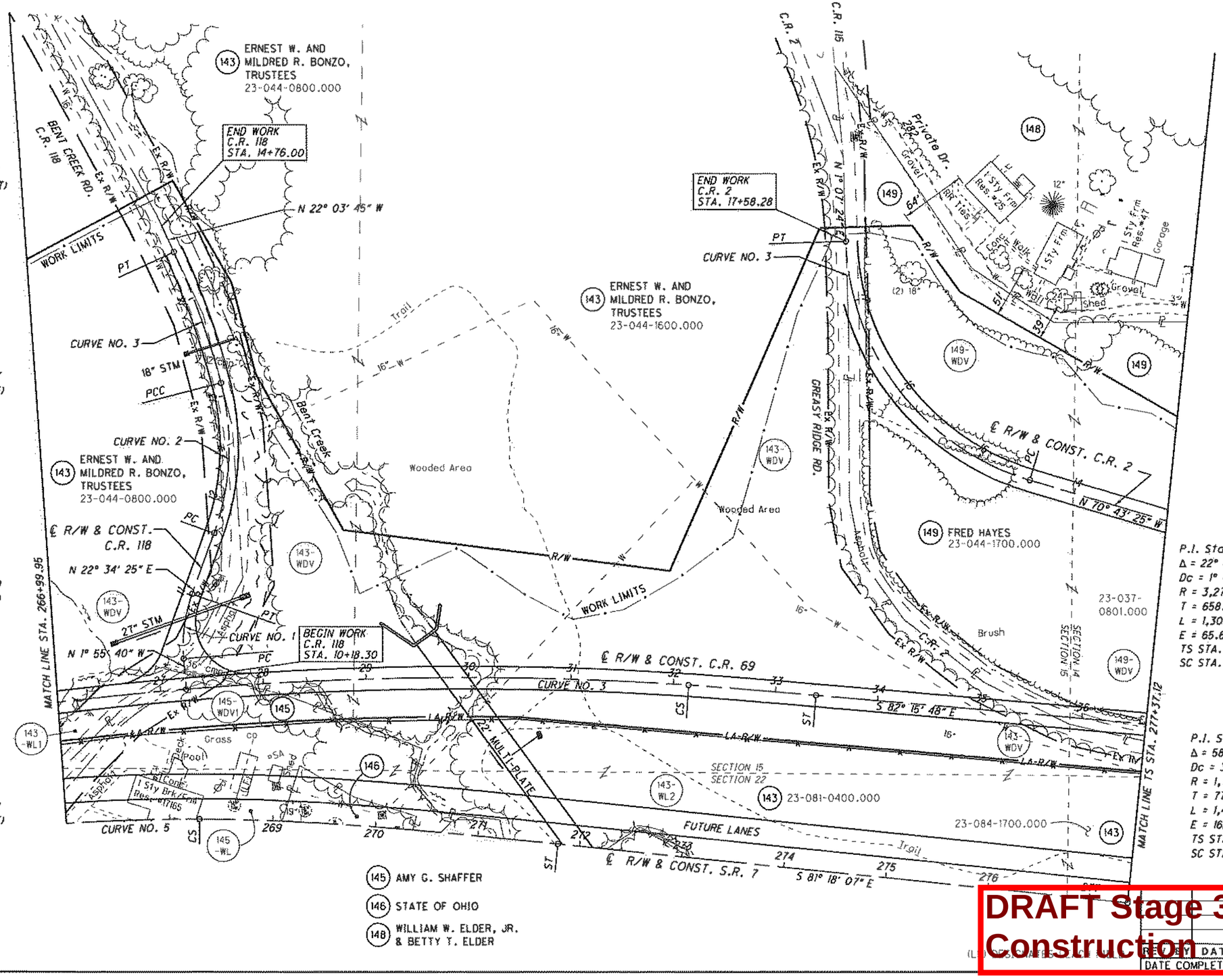

CURVE DATA
C.R. 118
CURVE NO. 1
P.I. Sta. 10+69.71
Δ = 24° 30' 05" (RT)
Dc = 38° 11' 50"
R = 150.00'
T = 32.57'
L = 64.14'
E = 3.49'
PC STA. 10+37.14
PT STA. 11+01.28

CURVE DATA
C.R. 118
CURVE NO. 2
P.I. STA. 12+40.87
Δ = 34° 13' 00" (LT)
Dc = 23° 00' 00"
R = 249.11'
T = 76.68'
L = 148.77'
E = 11.53'
PC STA. 11+64.19
PCC STA. 13+12.96

CURVE DATA
C.R. 118
CURVE NO. 3
P.I. STA. 13+80.89
Δ = 10° 25' 10" (LT)
Dc = 7° 41' 27"
R = 745.00'
T = 67.93'
L = 135.48'
E = 3.09'
PCC STA. 13+12.96
PT STA. 14+48.44

CURVE DATA
C.R. 2
CURVE NO. 3
P.I. Sta. 16+25.92
Δ = 71° 50' 49" (RT)
Dc = 22° 55' 06"
R = 250.00'
T = 181.13'
L = 313.49'
E = 58.72'
PC Sta. 14+44.79
PT Sta. 17+58.28

CURVE DATA
C.R. 69
CURVE NO. 3
P.I. Sta. 25+76.25
Δ = 22° 45' 00" (RT)
Dc = 1° 45' 00"
R = 3,274.04'
T = 658.68'
L = 1,300.00'
E = 65.60'
TS STA. 17+89.74
SC STA. 19+14.74
δs = 1° 05' 37"
Ls = 125.00'
Ts = 786.51'
LT = 83.33'
ST = 41.67'
CS Sta. 32+14.74
ST Sta. 33+39.74

CURVE DATA
S.R. 7
CURVE NO. 5
P.I. STA. 261+89.75
Δ = 58° 46' 06" (RT)
Dc = 3° 15' 00"
R = 1,762.95'
T = 773.76'
L = 1,458.26'
E = 162.33'
TS STA. 250+20.45
SC STA. 253+70.45
δs = 5° 41' 15"
Ls = 350.00'
Ts = 1,169.30'
LT = 233.45'
ST = 116.78'
CS STA. 268+28.71
ST STA. 271+78.71

HORIZONTAL SCALE IN FEET
0 25 50 100

PID NO. 75923

R/W DESIGNER TB
R/W REVIEWER SER

TOPO SHEET
RIGHT OF WAY TO STA. 266+99.95 TO STA. 277+37.12 (NORTH)

LAW-7-2.17

58T/82

DRAFT Stage 3 - Not for Construction

REVISION DATE	DESCRIPTION
DATE COMPLETED	

U:\173608714\LAW\75923\row\sheets\75923RT015.dgn 12/9/2014 11:17:37 AM slparker

LAWRENCE COUNTY
UNION TOWNSHIP
SECT. 22 & 23, T-1-N, R-16-W

STA/OFF FROM ℄ R/W S.R. 7		
(A)	268+78.55 [S]	97.92' RT.
(B)	271+39.04 [L]	221.42' RT.
(C)	270+57.47 [L]	169.11' RT.
(D)	269+86.08 [L]	141.65' RT.
(E)	269+95.19 [L]	120.72' RT.
(F)	270+31.39 [L]	37.61' RT.
(G)	271+41.26 [L]	51.69' RT.
(H)	272+46.72	73.08' RT.
(I)	272+65.13	37.86' RT.
(J)	272+24.26	1.93' RT.
(K)	273+67.16	141.17' RT.
(L)	274+70.92	129.14' RT.
(M)	274+67.09	176.85' RT.
(N)	274+19.70	200.65' RT.
(P)	274+19.59	232.42' RT.
(Q)	274+82.43	243.50' RT.
(R)	275+12.21	276.15' RT.

NUMBER	DIRECTION	DISTANCE
L805	S 60°16'02" E	54.06'
L807	S 81°11'25" W	295.72'
L810	S 60°16'02" E	50.65'
L811	S 60°16'02" E	76.49'
L812	S 48°37'48" E	96.90'
L813	S 76°12'37" W	74.73'
L814	N 60°44'45" W	85.44'
L815	N 19°14'29" W	109.26'
L821	S 22°44'04" W	73.34'
L822	N 33°40'12" W	44.20'
L823	N 71°18'07" W	63.81'
L824	N 08°53'34" E	31.77'
L825	N 72°02'42" E	53.03'
L826	N 13°16'51" E	47.87'
L827	N 87°55'10" W	104.45'
L828	N 14°08'02" W	160.49'
L830	S 59°18'59" W	41.48'
L831	S 39°59'01" E	54.42'
L832	S 36°17'14" W	39.73'
L833	N 69°50'19" W	107.61'
L834	N 08°19'19" W	72.41'
L862	N 32°14'00" E	22.83'
L863	S 84°05'43" E	14.82'
L864	S 54°33'40" E	188.91'
L865	S 76°12'37" W	42.93'
L866	S 22°44'04" W	9.12'
L868	N 32°14'00" E	90.66'
L869	N 16°52'00" E	51.03'
L872	S 20°27'05" W	157.61'
L873	N 84°05'43" W	56.45'

EX. MONUMENTS OFF S.R. 7		
STATION	OFFSET	DESCRIPTION
270+31.39 [L]	37.61' RT.	REBAR FOUND

(A) S.R. 7 STA. = 270+45.34, 164.44' RT.

MONUMENT LEGEND
- STONE FOUND
- FENCE POST
- R.R.S. FOUND
- R.R.S. SET
- P.K. NAIL FOUND
- CONC. MONUMENT FD.
- REFER. MONUMENT SET
- REBAR FOUND
- AXLE FOUND
- IRON PIN FOUND
- I.P.F. WITH I.D. CAP
- ¾" BAR SET
- PROJECT CONTROL MON.
- MONUMENT BOX FD.
- MONUMENT BOX SET

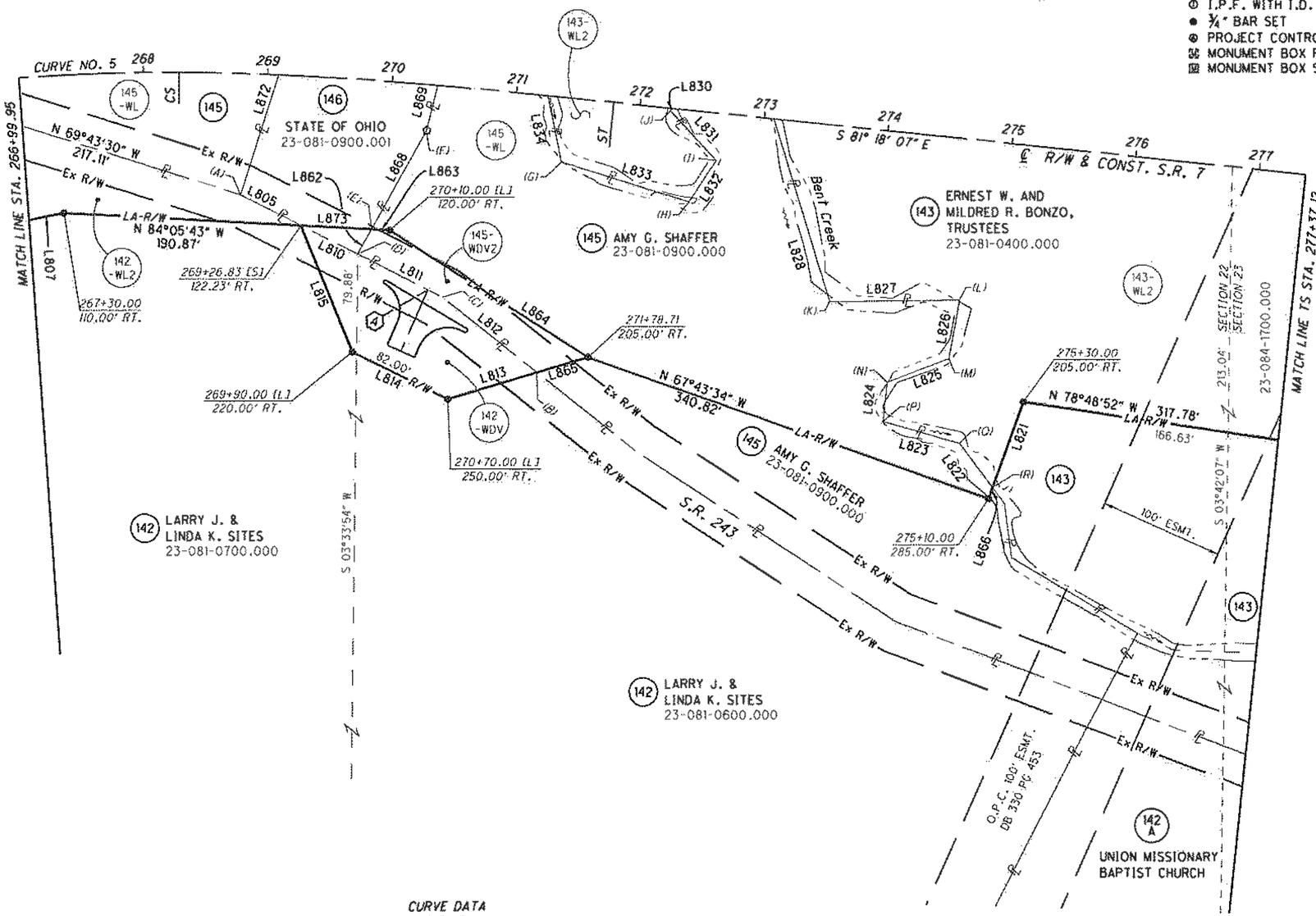

CURVE DATA
S.R. 7
CURVE NO. 5

P.I. STA. 261+89.75
Δ = 58° 46' 06" (RT)
Dc = 3° 15' 00"
R = 1,762.95'
T = 773.76'
L = 1,458.26'
E = 162.33'
TS STA. 250+20.45
SC STA. 253+70.45

Bs = 5° 41' 15"
Ls = 350.00'
Ts = 1,169.30'
LT = 233.45'
ST = 116.78'
CS STA. 268+28.71
ST STA. 271+78.71

NOTE:
SEE SHEET 2 OF 82 FOR ALTERNATE METHOD OF STATIONING FROM SPIRAL CURVES

[L] MEASURED FROM LONG TANGENT
[S] MEASURED FROM SHORT TANGENT

DRAFT Stage 3 - Not for Construction

REVISION DATE	DESCRIPTION
DATE COMPLETED	09/23/2024

HORIZONTAL SCALE IN FEET
0 25 50 100

PID NO. 75923
R/W DESIGNER TB
R/W REVIEWER SER

BOUNDARY SHEET
RIGHT OF WAY BOUNDARY
STA. 266+99.95 TO STA. 277+37.12 (SOUTH)
LAW-7-2.17

59/82

U:\1736087\4\LAW\75923\row\sheets\75923RB019.dgn 12/9/2014 11:17:38 AM siporker

LAWRENCE COUNTY
UNION TOWNSHIP
SECT. 22 & 23, T-1-N, R-16-W

CURVE DATA
S.R. 7
CURVE NO. 5

P.I. STA. 261+89.75
Δ = 58° 46' 06" (RT)
Dc = 3° 15' 00"
R = 1,762.95'
T = 773.76'
L = 1,458.26'
E = 162.33'
TS STA. 250+20.45
SC STA. 253+70.45

θs = 5° 41' 15"
Ls = 350.00'
Ts = 1,169.30'
LT = 233.45'
ST = 116.78'
CS STA. 268+28.71
ST STA. 271+78.71

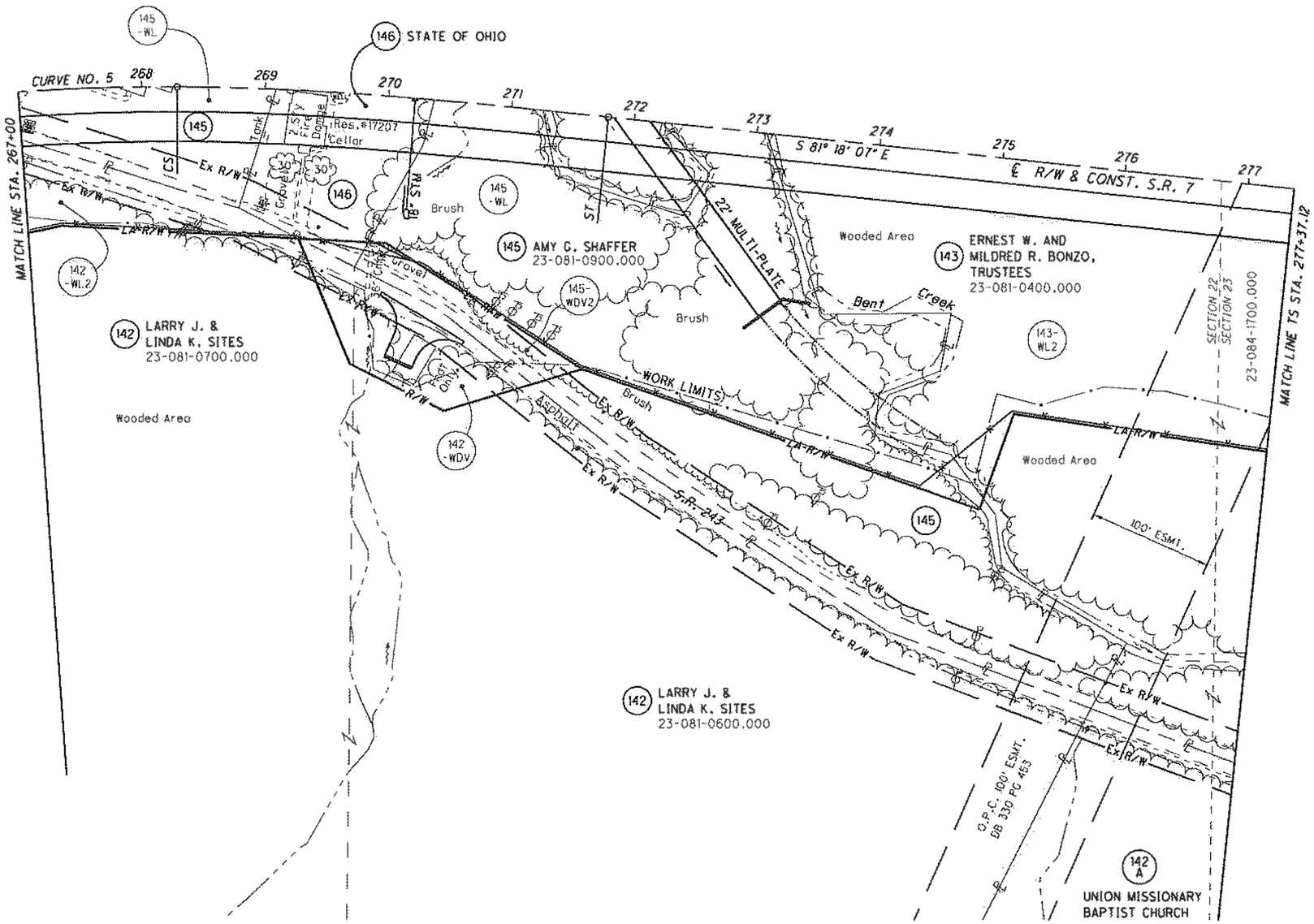

(LF) DESIGNATES LEACH FIELD

FOR LOCATION AND TYPE OF LA-R/W FENCE
SEE THE TABLE IN THE ROADWAY PLAN

DRAFT Stage 3 - Not for Construction

REVISED DATE	DESCRIPTION
DATE COMPLETED	

HORIZONTAL SCALE IN FEET
0 25 50 100

PID NO. 75923

R/W DESIGNER TB
R/W REVIEWER SER

RIGHT OF WAY TOPO SHEET
STA. 267+00 TO STA. 277+37.12 (SOUTH)

LAW-7-2.17

59T/82

U:\1736087\14\LAW\75923\row\sheets\75923RT109.dgn 12/9/2014 11:17:40 AM slparker

LAWRENCE COUNTY
UNION TOWNSHIP
SECT. 14 & 23, T-1-N, R-16-W

S.R. 7
(A) STA. 279+28.74, 176.90' LT.
= C.R. 2 STA. 10+07.28
= C.R. 69 STA. 38+50.00

STA/OFF FROM ℄ R/W C.R. 69		
(A)	37+40.98	26.87' RT.
(B)	38+03.96	35.10' RT.
(C)	38+30.34	46.64' RT.
(K)	39+12.87	36.64' RT.
(L)	39+26.24	47.14' RT.
(N)	40+22.02	46.60' RT.
(O)	40+19.45	7.54' RT.
(R)	40+94.15	26.58' RT.
(S)	41+89.30	9.89' RT.
(T)	41+90.70	41.77' RT.
(U)	49+63.45	45.75' RT.
(V)	49+58.43	49.06' RT.
(W)	40+20.92	29.91' RT.

STA/OFF FROM ℄ R/W S.R. 7		
(C)	279+08.35	130.22' LT.
(D)	278+17.85 [S]	130.04' LT.
(E)	280+53.66	65.29' LT.
(F)	280+94.05	59.43' LT.
(G)	281+08.57	57.26' LT.
(H)	281+82.49	45.58' LT.
(I)	282+79.41	28.76' LT.
(J)	282+97.94	16.65' LT.
(L)	280+06.87	129.20' LT.
(M)	280+70.00	127.61' LT.
(N)	281+05.25	128.28' LT.
(P)	281+80.32	128.99' LT.
(T)	282+78.54	128.47' LT.
(V)	290+50.30	104.46' LT.

NUMBER	DIRECTION	DISTANCE
L818	S 82°12'56" E	151.11'
L819	S 03°50'37" W	350.09'
L859	S 74°49'30" E	153.85'
L860	S 03°50'37" W	19.74'
L874	N 02°59'51" E	16.73'
L875	N 86°00'40" W	73.49'
L876	S 03°24'42" W	17.65'
L877	N 85°17'22" W	73.38'
L878	S 03°24'42" W	83.44'
L879	N 75°42'18" W	74.18'
L880	N 02°59'51" E	71.10'
L884	N 76°34'19" E	41.56'
L886	S 29°28'18" E	271.40'
L887	S 44°40'36" E	17.04'
L888	N 82°12'56" W	96.29'
L889	N 58°38'11" W	28.80'
L890	N 74°49'30" W	63.52'
L891	S 44°40'36" E	110.54'
L892	N 75°42'18" W	40.38'
L893	N 58°38'11" W	156.93'
L895	N 76°34'19" E	58.76'
L899	S 01°47'56" E	23.49'
L901	S 09°48'25" W	25.31'
L902	S 59°46'13" W	6.01'
L903	N 03°24'42" E	31.91'
L904	N 82°51'21" W	170.00'
L905	S 02°59'51" W	22.41'
L906	N 85°17'22" W	34.47'
L907	N 82°12'56" W	61.73'
L908	N 75°42'18" W	14.53'
L909	N 52°55'32" W	140.07'
L910	N 03°24'42" E	99.72'
L911	S 59°46'13" W	130.90'

NUMBER	DIRECTION	DISTANCE
L912	S 48°08'03" W	166.71'
L916	N 85°17'22" W	96.02'
L917	N 75°42'18" W	97.75'
L918	N 82°12'56" W	88.03'
L919	S 52°55'32" E	22.07'
L920	S 04°36'45" W	232.29'
L927	S 63°50'55" E	139.43'
L938	S 86°00'40" E	581.65'
L941	N 85°17'22" W	750.09'
L949	S 82°49'25" E	567.34'

SEE SHEET 82/82 FOR
COURSES X140 - X144

DETAIL PARCEL 151-WDV

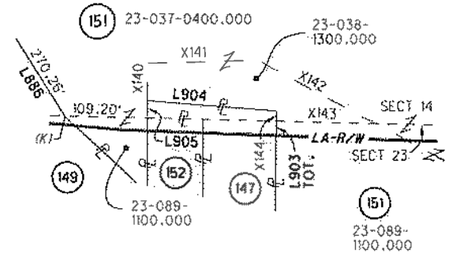

(151) ERNEST W. AND MILDRED R. BONZO, TRUSTEES
23-037-0400.000

CURVE DATA C.R. 2 CURVE NO. 1
P.I. Sta. 10+85.37
Δ = 42° 28' 52" (LT)
Dc = 38° 11' 49"
R = 150.00'
T = 58.30'
L = 111.21'
E = 10.93'
PC Sta. 10+27.07
PCC Sta. 11+38.28

CURVE DATA C.R. 2 CURVE NO. 2
P.I. Sta. 12+19.19
Δ = 35° 52' 10" (LT)
Dc = 22° 55' 06"
R = 250.00'
T = 80.91'
L = 156.51'
E = 12.77'
PCC Sta. 11+38.28
PT Sta. 12+94.79

CURVE DATA C.R. 69 CURVE NO. 4
P.I. STA. 42+81.74
Δ = 4° 32' 03" (LT)
Dc = 0° 30' 00"
R = 11,469.16'
T = 453.67'
L = 906.86'
E = 8.98'
PC STA. 38+28.07
PT STA. 47+34.93

CURVE DATA S.R. 7 CURVE NO. 6
P.I. STA. 280+92.68
Δ = 5° 51' 21" (RT)
Dc = 1° 00' 00"
R = 5,729.58'
T = 230.42'
L = 460.59'
E = 4.63'
TS STA. 277+37.12
SC STA. 278+62.12
θs = 0° 37' 30"
Ls = 125.00'
Ts = 355.56'
LT = 83.33'
ST = 41.67'
CS STA. 283+22.71
ST STA. 284+47.71

EX. MONUMENTS OFF S.R. 7		
STATION	OFFSET	DESCRIPTION
278+24.65 [S]	356.49' LT.	2" IRON PIPE FOUND
279+02.24	538.08' LT.	2" IRON PIPE FOUND
279+82.13	154.58' LT.	IRON PIN FOUND
280+60.71	86.48' LT.	IRON PIN FOUND
281+03.39	167.38' LT.	STONE FOUND WITH "X"
282+79.19	54.89' LT.	STONE FOUND
290+74.74	266.59' LT.	STONE FOUND

MONUMENT LEGEND
- ⊞ STONE FOUND
- ○ FENCE POST
- ⌂ R.R.S. FOUND
- ✱ R.R.S. SET
- ⊙ P.K. NAIL FOUND
- ◎ CONC. MONUMENT FD.
- ⊛ REFER. MONUMENT SET
- ⌂ REBAR FOUND
- ● AXLE FOUND
- ○ IRON PIN FOUND
- ⊕ I.P.F. WITH I.D. CAP
- • ¾" BAR SET
- Ⓐ PROJECT CONTROL MON.
- ⌘ MONUMENT BOX FD.
- ▣ MONUMENT BOX SET

(143) ERNEST W. AND MILDRED R. BONZO, TRUSTEES
(147) ANNA E. SMOOT (HEIRS & ASSIGNS)
(148) WILLIAM W. ELDER, JR. & BETTY T. ELDER
(149) FRED HAYES
(150) MARY MASSIE
(152) CHARLES & NORMA MAYENSCHEIN
(153) ROMAINE A. MARTING
(154) DANNY NICHOLSON
(155) ERNEST W. AND MILDRED R. BONZO, TRUSTEES
(157) MICHAEL [illegible]

NOTE:
SEE SHEET 2 OF 82
FOR ALTERNATE METHOD OF
STATIONING FROM SPIRAL CURVES
[L] MEASURED FROM LONG TANGENT
[S] MEASURED FROM SHORT TANGENT

DRAFT Stage 3 - Not for Construction

REVISION DATE	DESCRIPTION
DATE COMPLETED	

HORIZONTAL SCALE IN FEET
0 25 50 100

PID NO. 75923
R/W DESIGNER TB
R/W REVIEWER SER

RIGHT OF WAY BOUNDARY SHEET
STA. 277+37.12 TO STA. 291+00 (NORTH)
LAW-7-2.17

60 / 82

U:\1736087\14\LAW\75923\row\sheets\75923RB020.dgn 12/9/2014 11:17:41 AM slparker

LAWRENCE COUNTY
UNION TOWNSHIP
SECT. 14 & 23, T-1-N, R-16-W

CURVE DATA
C.R. 69
CURVE NO. 4

P.I. STA. 42+81.74
Δ = 4° 32' 03" (LT)
Dc = 0° 30' 00"
R = 11,459.16'
T = 453.67'
L = 906.86'
E = 8.98'
e_{max} = 1.60%
PC STA. 38+28.07
PT STA. 47+34.93

CURVE DATA
C.R. 2
CURVE NO. 1

P.I. Sta. 10+85.37
Δ = 42° 28' 52" (LT)
Dc = 38° 11' 49"
R = 150.00'
T = 58.30'
L = 111.21'
E = 10.93'
PC Sta. 10+27.07
PCC Sta. 11+38.28

CURVE DATA
C.R. 2
CURVE NO. 2

P.I. Sta. 12+19.19
Δ = 35° 52' 10" (LT)
Dc = 22° 55' 06"
R = 250.00'
T = 80.91'
L = 156.51'
E = 12.77'
PCC Sta. 11+38.28
PT Sta. 12+94.79

CURVE DATA
C.R. 69
CURVE NO. 4

P.I. STA. 42+81.74
Δ = 4° 32' 03" (LT)
Dc = 0° 30' 00"
R = 11,459.16'
T = 453.67'
L = 906.86'
E = 8.98'
PC STA. 38+28.07
PT STA. 47+34.93

(143) ERNEST W. AND MILDRED R. BONZO, TRUSTEES
(147) ANNA E. SMOOT (HEIRS & ASSIGNS)
(147A) CHARLES & NORMA MAYENSCHEIN OWNERS OF THESE BUILDINGS, LYING WITHIN PARCEL 147
(148) WILLIAM W. ELDER, JR. & BETTY T. ELDER
(149) FRED HAYES
(150) MARY MASSIE
(152) CHARLES & NORMA MAYENSCHEIN
(153) ROMAINE A. MARTING
(155) ERNEST W. AND MILDRED R. BONZO, TRUSTEES
(157) MICHAEL J. RILEY

(151) ERNEST W. AND MILDRED R. BONZO, TRUSTEES
23-037-0400.000

(156) CARL & FAYE MAYENSCHEIN
23-038-1000.001

CURVE DATA
S.R. 7
CURVE NO. 6

P.I. STA. 280+92.68
Δ = 5° 51' 21" (RT)
Dc = 1° 00' 00"
R = 5,729.58'
T = 230.42'
L = 460.59'
E = 4.63'
TS STA. 277+37.12
SC STA. 278+62.12
Bs = 0° 37' 30"
Ls = 125.00'
Ts = 355.56'
LT = 83.33'
ST = 41.67'
CS STA. 283+22.71
ST STA. 284+47.71

Bear Creek
282 Private Dr.
1 Sty Frm Res. a/t
Pool
Garg
Shed
Gravel
100' ESMT. O.R.C. 100' ESMT. DB 330 PG 457
3" W
(3) 8" pipe
8" STL
6" Drain
W
WM
Brush
Wooded Area
Bldg. Foundation
Mowed Area
18"
24"
12"
Field Dr.
N 70° 43' 25" W
R/W
(LF)
23-037-0400.000
CURVE NO. 2
CURVE NO. 1
BEGIN WORK C.R. 2 STA. 10+18.42
23-037-0801.000
Mowed Area
Wooded Area
N 7° 37' 37" E
23-038-1300.000
WORK LIMITS
ERNEST W. AND MILDRED R. BONZO, TRUSTEES
23-089-1100.000
23-089-1000.000
23-085-0200.000
FUTURE LANES
MATCH LINE STA. 277+37.12
MATCH LINE STA. 291+00
S 82° 15' 48" E
S 86° 47' 52" E
S 87° 09' 28" E
℄ R/W & CONST. C.R. 69 CURVE NO. 4
℄ R/W & CONST. C.R. 2
℄ R/W & CONST. S.R. 7
SECTION 14
SECTION 23
Tree Hse
Shop
Play Center
Deck
Mill Bldg.
Garg
Walk
Arbor
Tank
Gravel
Container
Brush
Trail
Ex R/W
LA-R/W
C.R. 2
16" W
3" W
42"
48"
PT
PC
PCC
SC
CS
ST
Ⓐ S.R. 7 STA. 279+28.74, 176.90' LT.
= C.R. 2 STA. 10+07.28
= C.R. 69 STA. 38+50.00
20' INGRESS/EGRESS ESMT. DB. 391, PG. 324
SEE SHEET 60/82 FOR R/W IDENTIFIERS NOT SHOWN HEREON
(LF) DESIGNATES LEACH FIELD
FOR LOCATION AND DESCRIPTION OF EASEMENT SEE THE TABLE IN THE R/W PLAT

HORIZONTAL SCALE IN FEET
0 50 100

PID NO. 75923
R/W DESIGNER TB
R/W REVIEWER SER

RIGHT OF WAY TOPO SHEET
STA. 277+37.12 TO STA. 291+00 (NORTH)
LAW-7-2.17

60T/82

DRAFT Stage 3 - Not for Construction

REVISION DATE	DESCRIPTION
DATE COMPLETED	

09/23/2024

U:\173608714\LAW\75923\row\sheets\75923RT020.dgn 12/9/2014 11:17:50 AM slparker

LAWRENCE COUNTY
UNION TOWNSHIP
SECT. 23, T-1-N, R-16-W

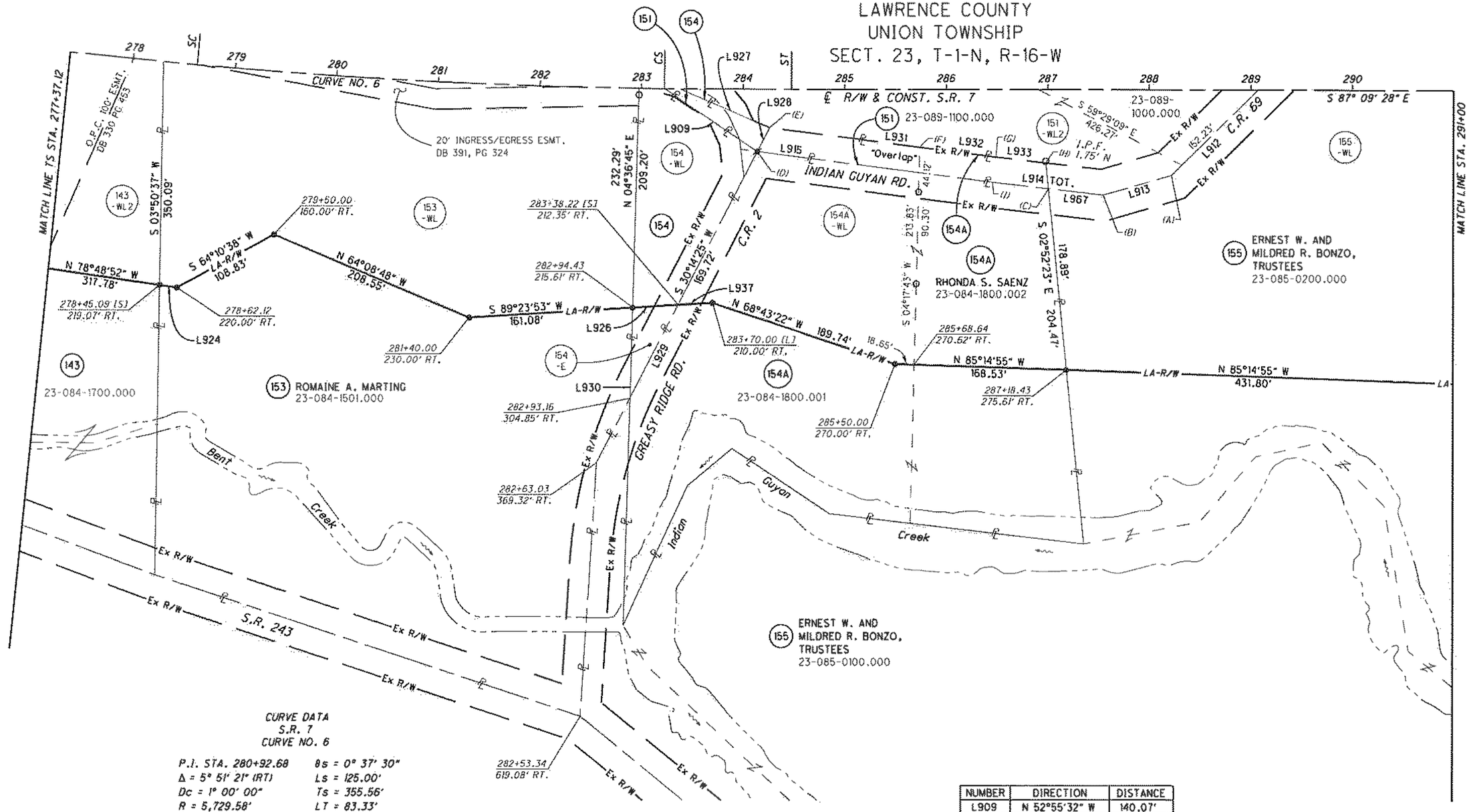

ERNEST W. AND MILDRED R. BONZO, TRUSTEES 23-085-0100.000

ERNEST W. AND MILDRED R. BONZO, TRUSTEES 23-085-0100.000

ERNEST W. AND MILDRED R. BONZO, TRUSTEES

DANNY HOLSCHUH

CURVE DATA
S.R. 7
CURVE NO. 6

P.I. STA. 280+92.68
Δ = 5° 51' 21" (RT)
Dc = 1° 00' 00"
R = 5,729.58'
T = 230.42'
L = 460.59'
E = 4.63'
TS STA. 277+37.12
SC STA. 278+62.12

θs = 0° 37' 30"
Ls = 125.00'
Ts = 355.56'
LT = 83.33'
ST = 41.67'
CS STA. 283+22.71
ST STA. 284+47.71

MONUMENT LEGEND
- STONE FOUND
- FENCE POST
- R.R.S. FOUND
- R.R.S. SET
- P.K. NAIL FOUND
- CONC. MONUMENT FD.
- REFER. MONUMENT SET
- REBAR FOUND
- AXLE FOUND
- IRON PIN FOUND
- I.P.F. WITH I.D. CAP
- ¾" BAR SET
- PROJECT CONTROL MON.
- MONUMENT BOX FD.
- MONUMENT BOX SET

EX. MONUMENTS OFF S.R. 7

STATION	OFFSET	DESCRIPTION
282+97.58	6.44' RT.	IRON PIN FOUND
285+70.63	191.24' RT.	REBAR FOUND
285+72.95	100.97' RT.	REBAR FOUND
286+97.90	70.42' RT.	2" IRON PIPE FOUND

STA/OFF FROM ℄ R/W S.R. 7

(A)	288+22.13	84.25' RT.
(B)	287+54.93	103.82' RT.
(C)	287+00.62	97.61' RT.
(D)	284+14.00 [L]	61.37' RT.
(E)	284+26.24 [L]	37.75' RT.
(F)	285+74.07	56.86' RT.
(G)	286+48.66	66.51' RT.
(H)	286+98.07	72.16' RT.
(I)	286+45.64	91.33' RT.

NUMBER	DIRECTION	DISTANCE
L909	N 52°55'32" W	140.07'
L912	S 48°08'03" W	166.71'
L913	S 76°36'19" W	70.00'
L914	N 80°38'06" W	110.00'
L915	N 79°47'19" W	233.57'
L924	N 78°48'52" W	17.05'
L926	S 89°23'53" W	44.96'
L927	S 63°50'55" E	139.43'
L928	S 30°14'25" W	26.61'
L929	S 30°14'25" W	103.52'
L930	N 04°36'45" E	89.25'
L931	S 79°47'19" E	149.06'
L932	S 79°4[illegible] E	[illegible]
L933	S 80°3[illegible] E	[illegible]
L937	S 89°2[illegible]'53" W	34.16'
L967	S 80°3[illegible]06" E	[illegible]

NOTE:
SEE SHEET 2 OF 82
FOR ALTERNATE METHOD OF
STATIONING FROM SPIRAL CURVES

[L] MEASURED FROM LONG TANGENT
[S] MEASURED FROM SHORT TANGENT

DRAFT Stage 3 - Not for Construction

REVISION DATE	DESCRIPTION
DATE COMPLETED	

HORIZONTAL SCALE IN FEET
0 25 50 100

PID NO. 75923

R/W DESIGNER TB
R/W REVIEWER SER

RIGHT OF WAY BOUNDARY SHEET
STA. 277+37.12 TO STA. 291+00 (SOUTH)

LAW-7-2.17

61 / 82

J:\17360874\LAW\75923\row\sheets\75923RB021.dgn 12/9/2014 11:17:51 AM slparker

LAWRENCE COUNTY
UNION TOWNSHIP
SECT. 23, T-1-N, R-16-W

MATCH LINE TS STA. 277+37.12

MATCH LINE STA. 291+00

143 -WL2

278 SC 279 280 CURVE NO. 6 281 282 283 CS 284 ST 285 286 287 151 -WL2 288 289 290

S 87° 09' 28" E

O.P.C. 100' ESMT. DB 536 PG 453

15" STM

20' INGRESS/EGRESS ESMT. DB 391, PG 324

Trail

Guard Rail

C R/W & CONST. S.R. 7

23-037-0400.000

151 23-089-1100.000

Ex R/W

C.R. 59

Wire Fence

Gravel

154 -WL

Lattice Fence

Asphalt

INDIAN GUYAN RD.

154A -WL

155 -WL

Wooded Area

153 -WL

154

Planter

Brush

154A

155 ERNEST W. AND MILDRED R. BONZO, TRUSTEES
23-085-0200.000

Shed

LA-R/W

1 Sty Add 2 Sty Frm Res. #15

Tank

Gravel

2 Sty Frm Res. #52

Shed

Lattice

C.R. 2

WORK LIMITS

Wooded Area

Brush

143

154 -E

23-084-1800.001

154A

Open Field

153 ROMAINE A. MARTING
23-084-1501.000

Asphalt

GREASY RIDGE RD.

154A RHONDA S. SAENZ
23-084-1800.002

Bent

Creek

Guyan

Indian

Wooded Area

Wooded Area

Creek

155 ERNEST W. AND MILDRED R. BONZO, TRUSTEES
23-085-0100.000

S.R. 243

Ex R/W

CURVE DATA
S.R. 7
CURVE NO. 6

P.I. STA. 280+92.68
Δ = 5° 51' 21" (RT)
Dc = 1° 00' 00"
R = 5,729.58'
T = 230.42'
L = 460.59'
E = 4.63'
TS STA. 277+37.12
SC STA. 278+62.12

θs = 0° 37' 30"
Ls = 125.00'
Ts = 355.56'
LT = 83.33'
ST = 41.67'
CS STA. 283+22.71
ST STA. 284+47.71

143 ERNEST W. AND MILDRED R. BONZO, TRUSTEES

151 ERNEST W. AND MILDRED R. BONZO, TRUSTEES

154 DANNY HOLSCHUH

FOR LOCATION AND TYPE OF LA-R/W FENCE SEE THE TABLE IN THE ROADWAY PLAN

(LF) ALONG ES LINE

DRAFT Stage 3 - Not for Construction

REVISED DATE	DESCRIPTION
DATE COMPLETED	

HORIZONTAL SCALE IN FEET
0 50 100

PID NO. 75923

R/W DESIGNER TB
R/W REVIEWER SER

RIGHT OF WAY TOPO SHEET
STA. 277+37.12 TO STA. 291+00 (SOUTH)

LAW-7-2.17

61T / 82

U:\1736087\4\LAW\75923\row\sheets\75923RT021.dgn 12/9/2014 11:17:53 AM slparker

LAWRENCE COUNTY
UNION TOWNSHIP
SECT. 14 & 23, T-1-N, R-16-W

STA/OFF FROM ℄ R/W C.R. 69		
(A)	56+85.00	25.00' LT.
(B)	56+85.00	0.00' RT.
(C)	56+56.50	0.91' RT.
(D)	55+93.46	17.46' RT.
(E)	55+44.05	30.15' RT.
(G)	56+43.35	107.73' RT.
(H)	56+85.00	61.13' RT.

STA/OFF FROM ℄ R/W S.R. 7		
(C)	298+00.00	118.01' LT.
(H)	298+00.00	193.18' LT.

NUMBER	DIRECTION	DISTANCE
L938	S 86°00'40" E	581.65'
L939	S 86°00'40" E	160.10'
L940	S 02°50'32" W	38.01'
L941	N 85°17'22" W	750.09'
L944	N 63°51'08" E	58.35'
L945	N 41°04'07" E	68.35'
L946	N 36°25'09" E	28.57'
L947	S 53°34'51" E	61.13'
L948	S 02°50'32" W	75.17'
L950	S 70°02'10" E	91.21'
L951	S 53°34'51" E	25.00'
L965	N 85°14'55" W	431.80'

(157) MICHAEL J. RILEY
23-037-1300.000

(157) MICHAEL J. RILEY
23-037-1300.000

Bear Creek

END WORK
C.R. 69
STA. 56+73.01

56+20.00
110.00' LT.

R/W S 82°49'25" E 567.34' R/W

L950

(A)

L951

58

N 36° 25' 09" E

INDIAN GUYAN RD.

Ex R/W

(155) 23-037-1400.000

(157) -WDV

PT

CURVE NO. 5

Ex R/W

℄ R/W & CONST. C.R. 69
S 86° 47' 52" E

PC

L947

(H)

L946

(155) -WL

51 52 53 54 55 56 57

L945 (C)

L944 (D) (E)

(155) -WDV

Ex R/W

L938

SECTION 14
SECTION 23

C.R. 69

L939

109.24'

L940 (C)

298+00.00
80.00' LT.

(155) ERNEST W. AND MILDRED R. BONZO, TRUSTEES
23-037-1400.000

(A) FROM LA-R/W LINE TO ℄ OF T.R. 164

LA-R/W 696.51' S 84°26'38" E 700.79' LA-R/W

Ex R/W

GUYAN-MCKINLEY SCHOOL RD.

585.66'
(A) S 86°00'40" E 1558.52'

Ex R/W

L941

Ex R/W

LA-R/W

(155) -WDV

(155) -WL

MATCH LINE STA. 291+00

292 293 294 295 296 297 298 299 300 301 302 303

℄ R/W & CONST. S.R. 7

MATCH LINE STA. 304+00

S 87° 09' 28" E

N 06°32'10" W
171.47'

(155) ERNEST W. AND MILDRED R. BONZO, TRUSTEES
23-085-0200.000

(155) -WL

N 42°25'58" E
132.46'

Creek

300+90.00
110.00' RT.

241.57'

N 38°20'38" W
106.30'

301+60.00
190.00' RT.

Ex R/W

T.R. 164

S 83°22'47" W
304.14'

LA-R/W

S 82°00'07" W
957.08'

Guyan Indian Creek

L965 R/W

291+50.00
290.00' RT.

(155) ERNEST W. AND MILDRED R. BONZO, TRUSTEES
23-085-0100.000

CURVE DATA
C.R. 69
CURVE NO. 5

P.I. STA. 56+05.43
Δ = 56° 46' 59" (RT)
Dc = 38° 11' 50"
R = 150.00'
T = 81.08'
L = 148.66'
E = 20.51'
PC STA. 55+24.35
PT STA. 56+73.01

MONUMENT LEGEND
- STONE FOUND
- FENCE POST
- R.R.S. FOUND
- R.R.S. SET
- P.K. NAIL FOUND
- CONC. MONUMENT FD.
- REFER. MONUMENT SET
- REBAR FOUND
- AXLE FOUND
- IRON PIN FOUND
- I.P.F. WITH I.D. CAP
- ¾" BAR SET
- PROJECT CONTROL MON.
- MONUMENT BOX FD.
- MONUMENT BOX SET

NOTE:
SEE SHEET [illegible] FOR ALTERNATE METHOD OF STATIONING FROM SPIRAL CURVES
[L] MEASURED FROM LONG TANGENT
[S] MEASURED FROM SHORT TANGENT

REVISION DATE	DESCRIPTION
DATE COMPLETED	

DRAFT Stage 3 - Not for Construction

09/23/2024

HORIZONTAL SCALE IN FEET
0 25 50 100

PID NO. 75923

R/W DESIGNER TB
R/W REVIEWER SER

RIGHT OF WAY BOUNDARY SHEET
STA. 291+00 TO STA. 304+00

LAW-7-2.17

62 / 82

U:\17360871\4\LAW\75923\row\sheets\75923RB022.dgn 12/9/2014 11:17:54 AM slporker

LAWRENCE COUNTY
UNION TOWNSHIP
SECT. 14 & 23, T-1-N, R-16-W

CURVE DATA
C.R. 69
CURVE NO. 5

P.I. STA. 56+05.43
Δ = 56° 46' 59" (RT)
Dc = 38° 11' 50"
R = 150.00'
T = 81.08'
L = 148.66'
E = 20.51'
PC STA. 55+24.35
PT STA. 56+73.01

157 MICHAEL J. RILEY
23-037-1300.000

Bear Creek

Wooded Area

R/W

WORK LIMITS

S 86° 47' 52" E

CURVE NO. 5

PC

PT

℄ R/W & CONST. C.R. 69

SECTION 14
SECTION 23

C.R. 69

Ex R/W

LA-R/W

157 -WDV

155 -WDV

155 -WL

INDIAN GUYAN RD.

N 36° 25' 09" E

155 23-037-1400.000

8' x 14'

END WORK
C.R. 69
STA. 56+73.01

155 ERNEST W. AND MILDRED R. BONZO, TRUSTEES
23-037-1400.000

Overgrown Gravel Dr.

Brush

Gravel

Wetland

Dirt & Gravel

River Ford

GUYAN-MCKINLEY SCHOOL RD.

MATCH LINE STA. 291+00

MATCH LINE STA. 304+00

23-085-0200.000

FUTURE LANES

15" STM

℄ R/W & CONST. S.R. 7

S 87° 09' 28" E

Open Field

Wooded Area

155 ERNEST W. AND MILDRED R. BONZO, TRUSTEES
23-085-0200.000

Creek

T.R. 164

Field Dr.

Guyan

Indian

155 ERNEST W. AND MILDRED R. BONZO, TRUSTEES
23-085-0100.000

(155) DESIGNATES LEACH FIELD

FOR LOCATION AND TYPE OF LA-R/W FENCE SEE THE TABLE IN THE ROADWAY PLAN

DRAFT Stage 3 - Not for Construction

REVISION DATE	DESCRIPTION
DATE COMPLETED	09/23/2024

HORIZONTAL SCALE IN FEET
0 25 50 100

PID NO. 75923

R/W DESIGNER TB
R/W REVIEWER SER

RIGHT OF WAY TOPO SHEET
STA. 291+00 TO STA. 304+00

LAW-7-2.17

621/82

U:\17360814\LAW\75923\row\sheets\75923RT022.dgn 12/9/2014 11:17:56 AM slparker

(159) JOSEPHINE CLARK (AKA JOSEPHINE MCCORMICK) AND KENNETH E. CLARK

(160) A. JOSEPHINE McCORMICK

(161) GARY WHITLEY, JIMMY WHITLEY, RONNIE WHITLEY, AND BRENDA BLACK

LAWRENCE COUNTY
UNION TOWNSHIP
SECT. 14 & 23, T-1-N, R-16-W

NUMBER	DIRECTION	DISTANCE
L959	N 49°27'49" W	278.03'
L962	S 83°22'47" W	304.14'
L973	S 44°16'44" E	14.53'
L974	S 41°19'50" W	22.63'
L978	N 32°19'26" E	130.38'
L979	N 32°19'26" E	194.17'
L980	N 46°51'26" E	92.18'
L981	S 29°03'57" E	202.78'
L994	S 44°16'44" E	81.00'
L995	S 29°03'57" E	109.39'

(A) FROM LA-R/W LINE TO ℄ OF T.R. 164

(B) FROM ℄ OF T.R. 164 TO SECTION CORNER

HORIZONTAL SCALE IN FEET

MATCH LINE STA. 304+00

MATCH LINE STA. 316+00

℄ R/W & CONST. S.R. 7

S 87° 09' 28" E

GUYAN-MCKINLEY SCHOOL RD.

T.R. 164

Ex R/W

LA-R/W

SECTION 14 / SECTION 23

155 ERNEST W. AND MILDRED R. BONZO, TRUSTEES 23-036-1000.000

155 23-036-1500.000

155 ERNEST W. AND MILDRED R. BONZO, TRUSTEES 23-085-0100.000

155 23-085-0300.000

23-037-1400.000

159 JOSEPHINE CLARK (AKA JOSEPHINE MCCORMICK) AND KENNETH E. CLARK

160 A. JOSEPHINE McCORMICK

161 GARY WHITLEY, JIMMY WHITLEY, RONNIE WHITLEY, AND BRENDA BLACK

155 -WL

159 -WL

S 03°50'17" W

696.51'

S 84°26'38" E 700.79'

305+00.00 160.00' LT.

307+00.00 130.00' LT.

S 78°37'37" E LA-R/W 202.24'

56.10'

585.66'

763.35'

N 86°00'40" W (A) 1558.52"

310+80.00 270.00' LT.

N 72°37'02" E LA-R/W 404.97'

N 56°43'40" E LA-R/W 374.43'

314+93.79 594.83' LT.

30" OAK 4.8' NE

314+55.57 539.19' LT.

313+90.00 480.00' LT.

L973

314+00.64 470.12' LT.

N 33°05'17" W 90.91'

T. POST

314+60.00 415.00' LT.

L994

L974

S 41°19'50" W 182.82'

313+86.56 452.40' LT.

312+72.78 309.30' LT.

315+17.82 322.14' LT.

L995

Ex R/W

S 43°19'50" W 94.38'

312+11.60 237.52' LT.

314+53.77 255.85' LT.

L980

LA-R/W

L981

S 14°30'29" E 276.79'

313+58.21 86.82' LT.

L979

121.01'

L978

777.07' (B) 1980.92'

313+08.16 71.87' RT.

41.35'

61.51'

315+05.59 133.33' RT.

312+94.04 26.67' RT.

L962

N 86°05'49" W 540.09'

304+60.00 140.00' RT.

306.04'

S 89°43'12" W 550.82'

310+00.00 150.00' RT.

244.78'

190.64'

L959

315+50.00 120.00' RT.

N 05°14'35" E 145.67'

MONUMENT LEGEND
- STONE FOUND
- FENCE POST
- R.R.S. FOUND
- R.R.S. SET
- P.K. NAIL FOUND
- CONC. MONUMENT FD.
- REFER. MONUMENT SET
- REBAR FOUND
- AXLE FOUND
- IRON PIN FOUND
- I.P.F. WITH I.D. CAP
- ¾" BAR SET
- PROJECT CONTROL MON.
- MONUMENT BOX FD.
- MONUMENT BOX SET

EX. MONUMENTS OFF S.R. 7

STATION	OFFSET	DESCRIPTION
312+99.48	278.88' RT.	STONE FOUND
314+96.51	598.79' LT.	30" OAK TREE
315+47.15	521.23' LT.	FENCE POST FOUND

NOTE:
SEE SHEET 2 OF 82
FOR ALTERNATE METHOD OF
STATIONING FROM SPIRAL CURVES

[L] MEASURED FROM LONG TANGENT
[S] MEASURED FROM SHORT TANGENT

DRAFT Stage 3 - Not for Construction

DESCRIPTION	DATE
DATE COMPLETED	

RIGHT OF WAY BOUNDARY SHEET
STA. 304+00 TO STA. 316+00

PID NO. 75923

R/W DESIGNER TB
R/W REVIEWER SER

LAW-7-2.17

63 / 82

U:\173608714\LAW\75923\row\sheets\75923RB023.dgn 12/9/2014 11:17:57 AM siparker

LAWRENCE COUNTY
UNION TOWNSHIP
SECT. 14 & 23, T-1-N, R-16-W

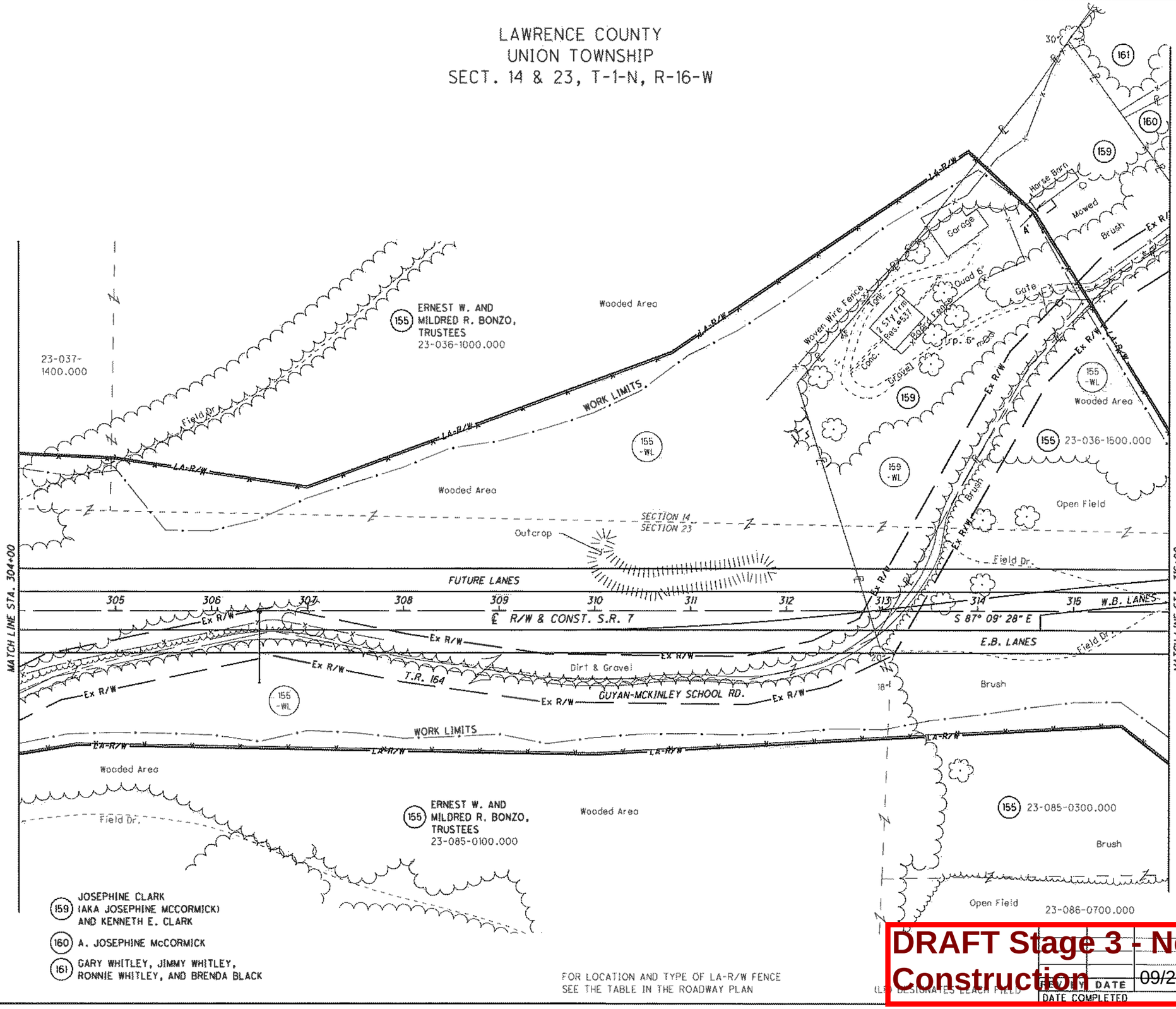

HORIZONTAL SCALE IN FEET
0 25 50 100

PID NO. 75923

R/W DESIGNER TB
R/W REVIEWER SER

RIGHT OF WAY TOPO SHEET
STA. 304+00 TO STA. 316+00

LAW-7-2.17

63T/82

DRAFT Stage 3 - Not for Construction

REVISION DATE	DESCRIPTION
DATE COMPLETED	

09/23/2024

U:\173608714\LAW\75923\row\sheets\75923RT023.dgn 12/9/2014 11:17:58 AM siparker

LAWRENCE COUNTY
UNION TOWNSHIP
SECT. 14 & 23, T-1-N, R-16-W

EX. MONUMENTS OFF S.R. 7		
STATION	OFFSET	DESCRIPTION
316+19.34	421.57' LT.	FENCE POST FOUND
322+17.19	187.51' LT.	24" TREE

(160) A. JOSEPHINE McCORMICK

(161) KEVIN L. & SHERRI L. SALYER

(164) ELSIE C. WHITLEY AND SAMMY DEAN WHITLEY
23-037-0100.000

(155) ERNEST W. AND MILDRED R. BONZO, TRUSTEES
23-036-1500.000

(155) ERNEST W. AND MILDRED R. BONZO, TRUSTEES
23-037-0200.000

(155) ERNEST W. AND MILDRED R. BONZO, TRUSTEES
23-085-0400.000

(155) ERNEST W. AND MILDRED R. BONZO, TRUSTEES
23-085-0700.000

23-085-0300.000

23-085-0400.000

T.R. 164 GUYAN-MCKINLEY SCHOOL RD.

Ex R/W

Ex R/W

N 33° 05' 17" W
20.2'

316+31.22
405.19' LT.

LA-R/W
N 79°27'01" E
562.46'

316+25.00
150.00' LT.

L981

777.07'

N 86°00'40" W
(B) 1980.92'

MATCH LINE STA. 316+00

S 87° 09' 28" E

321+40.53
299.56' LT.

N 79°27'01" E
142.25'

322+60.00
350.00' LT.

S 74°24'32" E
121.25'

323+68.00
343.44' LT.

LA-R/W

S 74°24'32" E
542.02'

L986

323+50.21
290.06' LT.

S 26°48'28" E
160.14'

N 69°57'37" E
107.00'

322+67.44
232.68' LT.

164 -WL

155 -WL

S 44°57'37" W
29.00'

N 44°57'37" E
74.00'

322+28.99
171.17' LT.

S 78°42'37" W
92.00'

S 19°12'37" W
26.95'

S 19°12'37" W
65.05'

1200.85'

SECTION 14
SECTION 23

321 322 323 324 325 326

CURVE NO. 7

℄ R/W & CONST. S.R. 7

MATCH LINE STA. 327+00

S 04°57'37" W
100.00'

S 21°27'37" W
117.00'

S 85°49'19" W
56.00'

S 46°04'19" W
54.86'

N 84°40'41" W
282.00'

N 82°55'41" W
300.00'

S 85°04'19" W
117.00'

N 58°10'41" W
81.00'

S 86°24'19" W
47.00'

N 73°10'41" W
119.00'

N 74°55'41" W
140.00'

N 61°25'41" W
341.00'

190.64'
LA-R/W
N 49°27'49" W
278.03'

63.00'

317+70.00 [L]
290.00' RT.

320+40.00
340.40' RT.

321+50.00
354.06' RT.

97.62'

LA-R/W

414.80'
N 73°50'46" W
764.26' TOT.

LA-R/W

326+25.00
370.00' RT.

L957

L952

L991

L960

CH

155 -CH

320+50.00
390.00' RT.

321+30.00
410.00' RT.

155 -WL

NUMBER	DIRECTION	DISTANCE
L957	N 54°06'47" W	457.74'
L981	S 29°03'57" E	202.78'
L986	N 33°42'37" E	56.93'
L990	S 26°13'36" W	58.56'
L991	N 65°47'20" W	71.67'
L992	N 02°52'03" W	50.36'

(B) FROM ℄ OF T.R. 164 TO SECTION CORNER

CURVE DATA
S.R. 7
CURVE NO. 7

P.I. STA. 326+36.08
Δ = 31° 21' 41" (RT)
Dc = 2° 00' 00"
R = 2,864.79'
T = 670.91'
L = 1,318.07'
E = 77.51'
TS STA. 317+06.62
SC STA. 319+56.62

Bs = 2° 30' 00"
Ls = 250.00'
Ts = 929.46'
LT = 166.68'
ST = 83.35'
CS STA. 332+74.69
ST STA. 335+24.69

MONUMENT LEGEND
- STONE FOUND
- FENCE POST
- R.R.S. FOUND
- R.R.S. SET
- P.K. NAIL FOUND
- CONC. MONUMENT FD.
- REFER. MONUMENT SET
- REBAR FOUND
- AXLE FOUND
- IRON PIN FOUND
- I.P.F. WITH I.D. CAP
- ¾" BAR SET
- PROJECT CONTROL MON.
- MONUMENT BOX FD.
- MONUMENT BOX SET

NOTE:
SEE SHEET [illegible] FOR ALTERNATE METHOD OF STATIONING FROM SPIRAL CURVES
[L] MEASURED FROM LONG TANGENT
[S] MEASURED FROM SHORT TANGENT

DRAFT Stage 3 - Not for Construction

NO.	DESCRIPTION	DATE
	DATE COMPLETED	09/23/2024

HORIZONTAL SCALE IN FEET
0 25 50 100

PID NO. 75923

R/W DESIGNER TB
R/W REVIEWER SER

RIGHT OF WAY BOUNDARY SHEET
STA. 316+00 TO STA. 327+00

LAW-7-2.17

64 / 82

U:\1736087\14\LAW\75923\row\sheets\75923RB024.dgn 12/9/2014 11:17:59 AM siparker

LAWRENCE COUNTY
UNION TOWNSHIP
SECT. 14 & 23, T-1-N, R-16-W

(160) A. JOSEPHINE McCORMICK
(161) KEVIN L. & SHERRI L. SALYER

(162) T.R. 164 GUTAN-MCKINLEY SCHOOL RD.
Ex R/W
Ex R/W
Ex R/W

(160)

(155) ERNEST W. AND MILDRED R. BONZO, TRUSTEES
23-036-1500.000

Wooded Area

(164) ELSIE C. WHITLEY AND SAMMY DEAN WHITLEY
23-037-0100.000

LA-R/W
LA-R/W
LA-R/W

(155) ERNEST W. AND MILDRED R. BONZO, TRUSTEES
23-037-0200.000

(164 -WL)
(155 -WL)
(155 -WL)
(155 -WL)

WORK LIMITS
Trail
Wooded Area
Wooded Area

SECTION 14
SECTION 23

23-085-0400.000

MATCH LINE STA. 316+00
MATCH LINE STA. 327+00

W.B. LANES
FUTURE LANES
E.B. LANES
℄ R/W & CONST. S.R. 7

316 317 318 319 320 321 322 323 324 CURVE NO. 7 325 326

S 87° 09' 28" E
TS
SC

60' TYPE A

Field Dr.
Field Dr.
Trail

Open Field
Brush
Wooded Area
Brush
Open Field
Open Field
Open Field

23-085-0300.000
23-085-0400.000
23-085-0400.000

WORK LIMITS
LA-R/W
LA-R/W
LA-R/W

(155 -WL)
(155 -WL)
(155 -CH)

(155) ERNEST W. AND MILDRED R. BONZO, TRUSTEES
23-085-0700.000

(155) ERNEST W. AND MILDRED R. BONZO, TRUSTEES
23-085-0700.000

CURVE DATA
S.R. 7
CURVE NO. 7

P.I. STA. 326+36.08
Δ = 31° 21' 41" (RT)
Dc = 2° 00' 00"
R = 2,864.79'
T = 670.91'
L = 1,318.07'
E = 77.51'
TS STA. 317+06.62
SC STA. 319+56.62

θs = 2° 30' 00"
Ls = 250.00'
Ts = 929.46'
LT = 166.68'
ST = 83.35'
CS STA. 332+74.69
ST STA. 335+24.69

FOR LOCATION AND TYPE OF LA-R/W FENCE SEE THE TABLE IN THE ROADWAY PLAN

(LF) DENOTES LEFT

	DATE	DESCRIPTION
	DATE COMPLETED	

DRAFT Stage 3 - Not for Construction

HORIZONTAL SCALE IN FEET
0 25 50 100

PID NO. 75923

R/W DESIGNER TB
R/W REVIEWER SER

RIGHT OF WAY TOPO SHEET
STA. 316+00 TO STA. 327+00

LAW-7-2.17

64T/82

U:\173608714\LAW\75923\row\sheets\75923RT024.dgn 12/9/2014 11:18:01 AM slparker

MONUMENT LEGEND
- STONE FOUND
- FENCE POST
- R.R.S. FOUND
- R.R.S. SET
- P.K. NAIL FOUND
- CONC. MONUMENT FD.
- REFER. MONUMENT SET
- REBAR FOUND
- AXLE FOUND
- IRON PIN FOUND
- I.P.F. WITH I.D. CAP
- ¾" BAR SET
- PROJECT CONTROL MON.
- MONUMENT BOX FD.
- MONUMENT BOX SET

CURVE DATA
S.R. 7
CURVE NO. 7

P.I. STA. 326+36.08
Δ = 31° 21' 41" (RT)
Dc = 2° 00' 00"
R = 2,864.79'
T = 670.91'
L = 1,318.07'
E = 77.51'
TS STA. 317+06.62
SC STA. 319+56.62

Bs = 2° 30' 00"
Ls = 250.00'
Ts = 929.46'
LT = 166.68'
ST = 83.35'
CS STA. 332+74.69
ST STA. 335+24.69

LAWRENCE COUNTY
UNION TOWNSHIP
SECT. 13, 14, 23, & 24
T-1-N, R-16-W

PRIVATE ROAD R/W
D.B. 632, PG. 381

I.P.F.
346+47.05
1283.46' LT.

Ex A
Ex A

S 86°31'17" E
1167.04'

336+43.83
687.20' LT.

334+31.65 (L)
561.09' LT.

246.83'
SECTION 13
SECTION 24

333+40.00 (L)
580.00' LT.

S 44°08'14" E
93.58'

166
-E
(L.L.)

S 03°50'17" W
223.98'

337+57.05
493.94' LT.

S 59°27'51" E
781.60'

339+70.00
450.00' LT.

S 44°08'14" E
LA-R/W
217.44'

LA-R/W
N 44°08'14" W
332.26'

306.60'
S 86°31'17" E

S 03°50'17" W
1026.75'

(B) FROM ℄ OF T.R. 164 TO SECTION CORNER

(155) ERNEST W. AND MILDRED R. BONZO, TRUSTEES
23-037-0200.000

(167) ERNEST W. AND MILDRED R. BONZO, TRUSTEES
25-051-1400.000

(167) ERNEST W. AND MILDRED R. BONZO, TRUSTEES
25-066-0100.000

(166) ROBERT E. & SUSAN L. FLETCHER
25-065-1600.001

S 03°50'17" W
SECTION 13
SECTION 14

331+65.62
488.31' LT.

S 81°40'23" E
237.81'

LA-R/W

79.17'
85.18'

167
-WL2

331+97.12
413.54' LT.

36" OAK TREE
2.2' S

328+50.00
370.00' LT.

S 81°40'23" E
381.46'

S 74°24'32" E
542.02'

156
-WL

166
-WL

1200.85'
N 86°00'40" W
(B) 1980.32'

SECTION 14
SECTION 23

SECTION 24
SECTION 23

S 03°50'17" W
1008.58'
1175.73'

167-
WL3

166
-WL

23-085-0400.000

155
-WL

MATCH LINE STA. 327+00

MATCH LINE STA. 340+00

328 329 330 CURVE NO. 7 331 332 333 CS ℄ R/W & CONST. S.R. 7 334 335 ST 336 337 S 55° 47' 47" E 338 339

EX. MONUMENTS OFF S.R. 7		
STATION	OFFSET	DESCRIPTION
331+67.11	484.69' LT.	IRON PIN FOUND
331+97.98	411.56' LT	36" OAK TREE & FENCE

NOTE:
SEE SHEET [illegible] FOR ALTERNATE METHOD OF STATIONING FROM SPIRAL CURVES
[L] MEASURED FROM LONG TANGENT
[S] MEASURED FROM SHORT TANGENT

REVISION DATE	DESCRIPTION
DATE COMPLETED	

DRAFT Stage 3 - Not for Construction

HORIZONTAL SCALE IN FEET
0 25 50 100

PID NO. 75923

R/W DESIGNER TB
R/W REVIEWER SER

RIGHT OF WAY BOUNDARY SHEET
STA. 327+00 TO STA. 340+00

LAW-7-2.17

65 / 82

U:\1736087.14\LAW\75923\row\sheets\75923RB025.dgn 12/9/2014 11:18:02 AM slparker

CURVE DATA
S.R. 7
CURVE NO. 7

P.I. STA. 326+36.08
Δ = 31° 21' 41" (RT)
Dc = 2° 00' 00"
R = 2,864.79'
T = 670.91'
L = 1,318.07'
E = 77.51'
TS STA. 317+06.62
SC STA. 319+56.62

θs = 2° 30' 00"
Ls = 250.00'
Ts = 929.46'
LT = 166.68'
ST = 83.35'
CS STA. 332+74.69
ST STA. 335+24.69

LAWRENCE COUNTY
UNION TOWNSHIP
SECT. 13, 14, 23, & 24
T-1-N, R-16-W

(167) ERNEST W. AND MILDRED R. BONZO, TRUSTEES
25-051-1400.000

(167) ERNEST W. AND MILDRED R. BONZO, TRUSTEES
25-066-0100.000

(155) ERNEST W. AND MILDRED R. BONZO, TRUSTEES
23-037-0200.000

(166) ROBERT E. & SUSAN L. FLETCHER
25-065-1600.001

23-085-0400.000

SECTION 13
SECTION 14
SECTION 23
SECTION 24

(L.L.) 165 -℄

167 -WL2
166 -WL
155 -WL
167-WL3
166 -WL
155 -WL

LA-R/W

WORK LIMITS

Trail

Wooded Area

Outcrop (Typ.)

60" TYPE A

30"
24"
60"
36"
24"
20"

MATCH LINE STA. 327+00

MATCH LINE STA. 340+00

W.B. LANES

℄ R/W & CONST. S.R. 7

S 55° 47' 47" E

CURVE NO. 7

328 329 330 331 332 333 334 335 336 337 338 339

CS

ST

FOR LOCATION AND TYPE OF LA-R/W FENCE
SEE THE TABLE IN THE ROADWAY PLAN

(LF DESIGNATES LENGTH FIELD)

DRAFT Stage 3 - Not for Construction

DATE COMPLETED	DESCRIPTION
	09/23/2024

HORIZONTAL SCALE IN FEET
0 25 50 100

PID NO. 75923

R/W DESIGNER TB
R/W REVIEWER SER

RIGHT OF WAY TOPO SHEET
STA. 327+00 TO STA. 340+00 (NORTH)

LAW-7-2.17

65T/82

U:\173608714\LAW\75923\row\sheets\75923RT025.dgn 12/9/2014 11:18:04 AM slparker

LAWRENCE COUNTY
UNION TOWNSHIP
SECT. 23 & 24, T-1-N, R-16-W

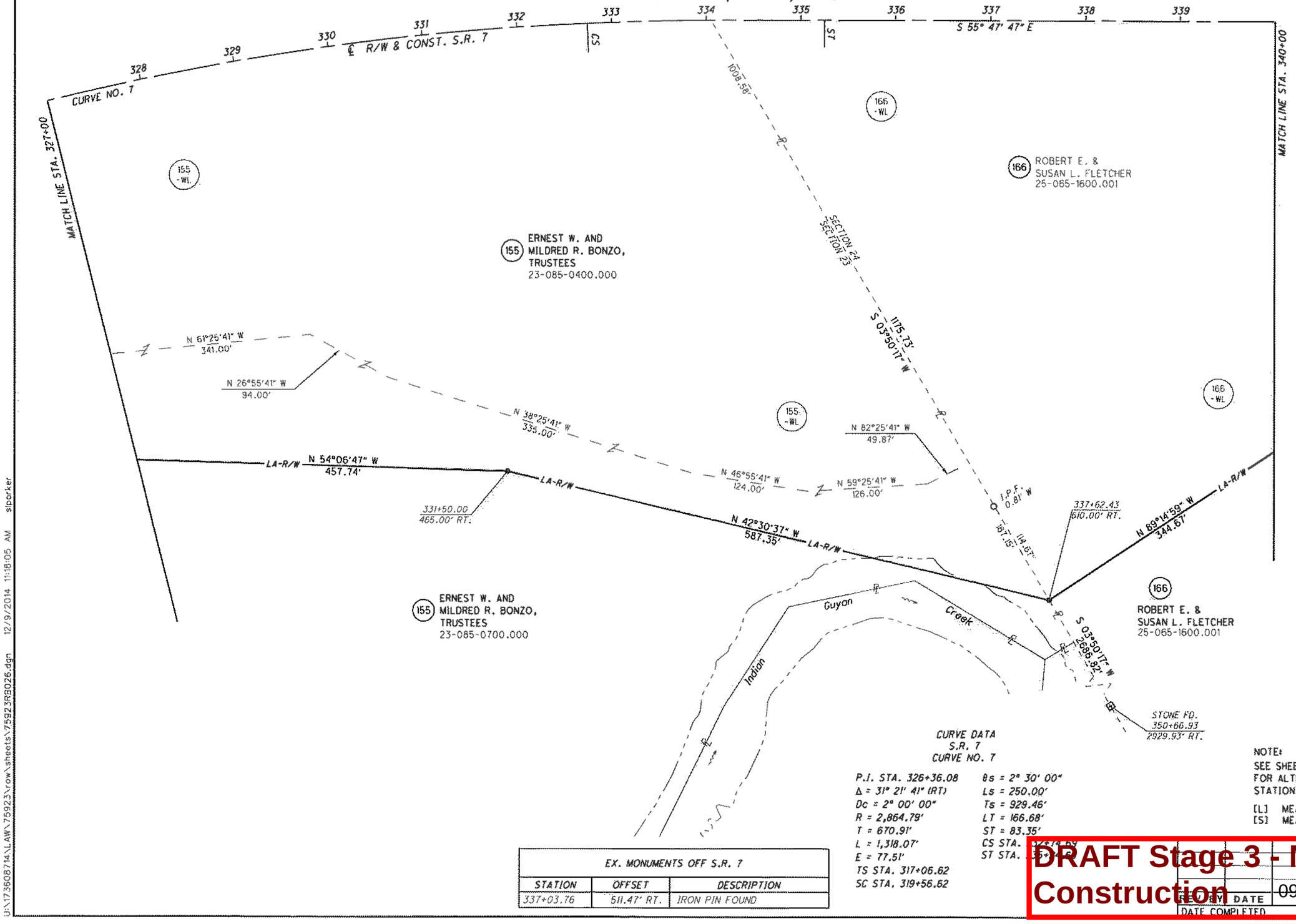

MONUMENT LEGEND
- STONE FOUND
- FENCE POST
- R.R.S. FOUND
- R.R.S. SET
- P.K. NAIL FOUND
- CONC. MONUMENT FD.
- REFER. MONUMENT SET
- REBAR FOUND
- AXLE FOUND
- IRON PIN FOUND
- I.P.F. WITH I.D. CAP
- ¾" BAR SET
- PROJECT CONTROL MON.
- MONUMENT BOX FD.
- MONUMENT BOX SET

HORIZONTAL SCALE IN FEET: 0, 25, 50, 100

EX. MONUMENTS OFF S.R. 7		
STATION	OFFSET	DESCRIPTION
337+03.76	511.47' RT.	IRON PIN FOUND

CURVE DATA
S.R. 7
CURVE NO. 7

P.I. STA. 326+36.08
Δ = 31° 21' 41" (RT)
Dc = 2° 00' 00"
R = 2,864.79'
T = 670.91'
L = 1,318.07'
E = 77.51'
TS STA. 317+06.62
SC STA. 319+56.62

θs = 2° 30' 00"
Ls = 250.00'
Ts = 929.46'
LT = 166.68'
ST = 83.35'
CS STA. 324+14.69
ST STA. 330+81.37

NOTE:
SEE SHEET 2 OF 82
FOR ALTERNATE METHOD OF
STATIONING FROM SPIRAL CURVES

[L] MEASURED FROM LONG TANGENT
[S] MEASURED FROM SHORT TANGENT

DRAFT Stage 3 - Not for Construction

NO.	DATE	DESCRIPTION
	DATE COMPLETED	09/23/2024

RIGHT OF WAY BOUNDARY SHEET
STA. 327+00 TO STA. 340+00 (SOUTH)

R/W DESIGNER TB
R/W REVIEWER SER

PID NO. 75923

LAW-7-2.17

66 / 82

U:\173608714\LAW\75923\row\sheets\75923RB026.dgn 12/9/2014 11:18:05 AM sbarker

LAWRENCE COUNTY
UNION TOWNSHIP
SECT. 23 & 24, T-1-N, R-16-W

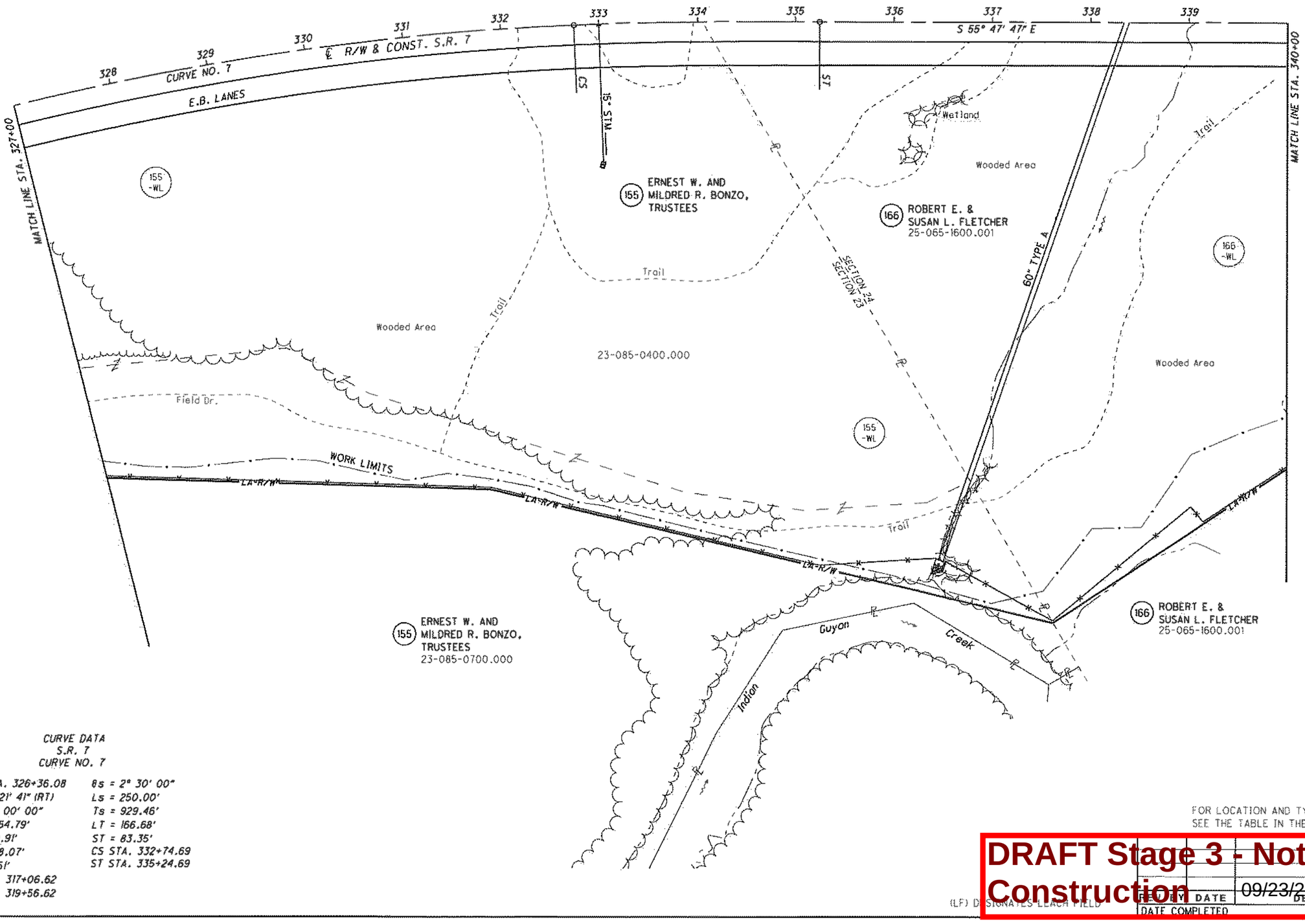

CURVE DATA
S.R. 7
CURVE NO. 7

P.I. STA. 326+36.08	θs = 2° 30' 00"
Δ = 31° 21' 41" (RT)	Ls = 250.00'
Dc = 2° 00' 00"	Ts = 929.46'
R = 2,864.79'	LT = 166.68'
T = 670.91'	ST = 83.35'
L = 1,318.07'	CS STA. 332+74.69
E = 77.51'	ST STA. 335+24.69
TS STA. 317+06.62	
SC STA. 319+56.62	

FOR LOCATION AND TYPE OF LA-R/W FENCE SEE THE TABLE IN THE ROADWAY PLAN

(LF) DESIGNATES LEACH FIELD

DRAFT Stage 3 - Not for Construction

REVISED DATE	DESCRIPTION
DATE COMPLETED	

09/23/2024

HORIZONTAL SCALE IN FEET
0 25 50 100

PID NO. 75923

R/W DESIGNER TB
R/W REVIEWER SER

RIGHT OF WAY TOPO SHEET
STA. 327+00 TO STA. 340+00 (SOUTH)

LAW-7-2.17

66T/82

U:\173608714\LAW\75923\row\sheets\75923RT026.dgn 12/9/2014 11:18:06 AM slparker

LAWRENCE COUNTY
UNION TOWNSHIP
SECT. 24, T-1-N, R-16-W

CURVE DATA
S.R. 7
CURVE NO. 8

P.I. STA. 355+16.90
Δ = 9° 56' 13" (LT)
Dc = 0° 52' 24"
R = 6,560.00'
T = 507.37'
L = 1,012.73'
E = 19.59'
TS STA. 348+84.10
SC STA. 350+09.10

θs = 0° 32' 45"
Ls = 125.00'
Ts = 632.80'
LT = 83.33'
ST = 41.67'
CS STA. 360+21.83
ST STA. 361+46.83

(167) 25-066-0100.000
(167) 25-064-1700.000
LA-R/W
S 59°27'51" E
781.60' TOT.
359.77'
S 45°13'10" E
782.13'
343+90.96
476.98' LT.
347+50.00
500.00' LT.
S 03°50'17" W
552.82'
LOT 5
LOT 6
(167-WL.3)
(167) ERNEST W. AND MILDRED R. BONZO, TRUSTEES
25-064-1700.000
(167) 25-066-0100.000
MATCH LINE STA. 340+00
341 342 343 344 345 346 347 348 TS 349 SC 350 351
S 55° 47' 47" E
℄ R/W & CONST. S.R. 7
CURVE NO. 8
MATCH LINE STA. 352+00
(166-WL.)
(166) ROBERT E. & SUSAN L. FLETCHER
25-065-1600.001
S 03°50'17" W
1026.75'
(167) ERNEST W. AND MILDRED R. BONZO, TRUSTEES
25-066-0100.000
S 03°50'17" W
370.64'
348+57.79
319.80' RT.
342+76.09
391.95' RT.
340+50.00
420.00' RT.
227.82'
N 62°52'04" W
586.16'
S 62°52'04" E
1306.89' TOT.
N 89°14'59" W
344.67'
(167) 25-064-1700.000
(167-E) (L.L.)
(167) 25-066-0100.000
(166) 25-065-1600.001
SEE SHEET 2 OF 82 FOR DETAIL

MONUMENT LEGEND
- STONE FOUND
- FENCE POST
- R.R.S. FOUND
- R.R.S. SET
- P.K. NAIL FOUND
- CONC. MONUMENT FD.
- REFER. MONUMENT SET
- REBAR FOUND
- AXLE FOUND
- IRON PIN FOUND
- I.P.F. WITH I.D. CAP
- ¾" BAR SET
- PROJECT CONTROL MON.
- MONUMENT BOX FD.
- MONUMENT BOX SET

NOTE:
SEE SHEET 2 OF 82
FOR ALTERNATE METHOD OF
STATIONING FROM SPIRAL CURVES

[L] MEASURED FROM LONG TANGENT
[S] MEASURED FROM SHORT TANGENT

HORIZONTAL SCALE IN FEET
0 25 50 100

PID NO. 75923

R/W DESIGNER TB
R/W REVIEWER SER

RIGHT OF WAY BOUNDARY SHEET
STA. 340+00 TO STA. 352+00

LAW-7-2.17

67 / 82

REVISION DATE	DESCRIPTION
DATE COMPLETED	

DRAFT Stage 3 - Not for Construction

09/23/2024

U:\173608714\LAW\75923\row\sheets\75923RB027.dgn 12/9/2014 11:18:07 AM sfparker

LAWRENCE COUNTY
UNION TOWNSHIP
SECT. 24, T-1-N, R-16-W

CURVE DATA
S.R. 7
CURVE NO. 8

P.I. STA. 355+16.90
Δ = 9° 56' 13" (LT)
Dc = 0° 52' 24"
R = 6,560.00'
T = 507.37'
L = 1,012.73'
E = 19.59'
TS STA. 348+84.10
SC STA. 350+09.10

θs = 0° 32' 45"
Ls = 125.00'
Ts = 632.80'
LT = 83.33'
ST = 41.67'
CS STA. 360+21.83
ST STA. 361+46.83

HORIZONTAL SCALE IN FEET
0 25 50 100

PID NO. 75923

R/W DESIGNER TB
R/W REVIEWER SER

RIGHT OF WAY TOPO SHEET
STA. 340+00 TO STA. 352+00

LAW-7-2.17

67T/82

MATCH LINE STA. 340+00

MATCH LINE STA. 352+00

LA-R/W

WORK LIMITS

Wooded Area

(167) 25-066-0100.000

(167-WL3)

(167) ERNEST W. AND MILDRED R. BONZO, TRUSTEES
25-064-1700.000

Wooded Area

LOT 5
LOT 6

Field Dr.

W.B. LANES

341 342 343 344 345 346 347 348 TS 349 SC 350 351

S 55° 47' 47" E

℄ R/W & CONST. S.R. 7

CURVE NO. 8

E.B. LANES

21" STM

(166-WL)

(166) ROBERT E. & SUSAN L. FLETCHER
25-065-1600.001

Wooded Area

(167) ERNEST W. AND MILDRED R. BONZO, TRUSTEES
25-066-0100.000

Trail

Trail

Wooded Area

(167) 25-064-1700.000

(167-E) (L.L.)

Outcrop

(167-E) (L.L.)

FOR LOCATION AND TYPE OF LA-R/W FENCE SEE THE TABLE IN THE ROADWAY PLAN

(L.L.) DESIGNATES LIMITED LIABILITY

DRAFT Stage 3 - Not for Construction

REVISION DATE	DESCRIPTION
DATE COMPLETED	

09/23/2024

U:\173608714\LAW\75923\row\sheets\75923RT027.dgn 12/9/2014 11:18:09 AM siparker

LAWRENCE COUNTY
UNION TOWNSHIP
SECT. 24, T-1-N, R-16-W

MONUMENT LEGEND
- STONE FOUND
- FENCE POST
- R.R.S. FOUND
- R.R.S. SET
- P.K. NAIL FOUND
- CONC. MONUMENT FD.
- REFER. MONUMENT SET
- REBAR FOUND
- AXLE FOUND
- IRON PIN FOUND
- I.P.F. WITH I.D. CAP
- ¾" BAR SET
- PROJECT CONTROL MON.
- MONUMENT BOX FD.
- MONUMENT BOX SET

LA-R/W S 45°13'10" E 782.13'

LA-R/W 257.21'

358+19.63
360.23' LT.

LA-R/W S 68°59'36" E 1745.38' TOT.

355+50.00
330.00' LT.

(167) 25-064-1700.000

(167) ERNEST W. AND MILDRED R. BONZO, TRUSTEES 25-064-1400.000

S 03°52'36" W 388.63'

LOT 4
LOT 5

(167-WL3)

MATCH LINE STA. 352+00

353 — CURVE NO. 8 — 354 — 355 — 356 — ℄ R/W & CONST. S.R. 7 — 357 — 358 — 359 — 360 — CS — 361 — ST — 362 — 363 — S 65° 44' 01" E

MATCH LINE STA. 364+00

S 62°52'04" E LA-R/W 1306.89' TOT.

355+50.00
260.00' RT.

LA-R/W S 10°04'21" E 255.01'

(167) ERNEST W. AND MILDRED R. BONZO, TRUSTEES 25-064-1700.000

(167-E) (L.L.)

SEE SHEET 80/82 FOR DETAIL

357+00.00
460.00' RT.

LA-R/W S 50°08'48" E 220.52'

359+00.00
510.00' RT.

N 66°02'13" E

LA-R/W 411.78' TOT.

360+78.36 [L]
291.41' RT.

122.56'

LA-R/W S 70°04'36" E 792.28'

361+60.00
200.00' RT.

(167) 25-064-1700.000

S 03°52'36" W 626.84'

(167-WL3)

(167) 25-064-1400.000

(167-E) (L.L.)

CONC. MON. FD. 362+37.04' RT.

CURVE DATA
S.R. 7
CURVE NO. 8

P.I. STA. 355+16.90
Δ = 9° 56' 13" (LT)
Dc = 0° 52' 24"
R = 6,560.00'
T = 507.37'
L = 1,012.73'
E = 19.59'
TS STA. 348+84.10
SC STA. 350+09.10

θs = 0° 32' 45"
Ls = 125.00'
Ts = 632.80'
LT = 83.33'
ST = 41.67'
CS STA. 360+21.83
ST STA. 361+46.83

NOTE:
SEE SHEET 2 OF 82
FOR ALTERNATE METHOD OF
STATIONING FROM SPIRAL CURVES

[L] MEASURED FROM LONG TANGENT
[S] MEASURED FROM SHORT TANGENT

DRAFT Stage 3 - Not for Construction

REVISED DATE	DESCRIPTION
DATE COMPLETED	

09/23/2024

HORIZONTAL SCALE IN FEET
0 25 50 100

PID NO. 75923

R/W DESIGNER TB
R/W REVIEWER SER

RIGHT OF WAY BOUNDARY SHEET
STA. 352+00 TO STA. 364+00

LAW-7-2.17

68 / 82

U:\1736087\4\LAW\75923\row\sheets\75923REB028.dgn 12/9/2014 11:18:10 AM slparker

LAWRENCE COUNTY
UNION TOWNSHIP
SECT. 24, T-1-N, R-16-W

LA-R/W

LA-R/W

LA-R/W

(167) ERNEST W. AND MILDRED R. BONZO, TRUSTEES 25-064-1400.000

WORK LIMITS

(167) 25-064-1700.000

Wooded Area

Field Dr.

(167-WL3)

LOT 4
LOT 5

(167-WL3)

MATCH LINE STA. 352+00

W.B. LANES

353 354 355 356 357 358 359 360 361 362 363

℄ R/W & CONST. S.R. 7

CURVE NO. 8

S 65° 44' 01" E

CS

ST

15" STM

E.B. LANES

MATCH LINE STA. 364+00

(167) 25-064-1700.000

Wooded Area

WORK LIMITS

LA-R/W

LA-R/W

LA-R/W

(167-WL3)

(167) 25-064-1400.000

(167-E) (L.L.)

(167) ERNEST W. AND MILDRED R. BONZO, TRUSTEES 25-064-1700.000

(167-E) (L.L.)

CURVE DATA
S.R. 7
CURVE NO. 8

P.I. STA. 355+16.90
Δ = 9° 56' 13" (LT)
Dc = 0° 52' 24"
R = 6,560.00'
T = 507.37'
L = 1,012.73'
E = 19.59'
TS STA. 348+84.10
SC STA. 350+09.10

Bs = 0° 32' 45"
Ls = 125.00'
Ts = 632.80'
LT = 83.33'
ST = 41.67'
CS STA. 360+21.83
ST STA. 361+46.83

FOR LOCATION AND TYPE OF LA-R/W FENCE SEE THE TABLE IN THE ROADWAY PLAN

(L.F. DESIGNATES LEACH FIELD)

DRAFT Stage 3 - Not for Construction

DESCRIPTION	DATE
DATE COMPLETED	09/23/2024

HORIZONTAL SCALE IN FEET
0 25 50 100

R/W DESIGNER TB
R/W REVIEWER SER

PID NO. 75923

RIGHT OF WAY TOPO SHEET
STA. 352+00 TO STA. 364+00

LAW-7-2.17

68T/82

U:\173608714\LAW\75923\row\sheets\75923RT025.dgn 12/9/2014 11:18:12 AM slparker

MONUMENT LEGEND
- STONE FOUND
- FENCE POST
- R.R.S. FOUND
- R.R.S. SET
- P.K. NAIL FOUND
- CONC. MONUMENT FD.
- REFER. MONUMENT SET
- REBAR FOUND
- AXLE FOUND
- IRON PIN FOUND
- I.P.F. WITH I.D. CAP
- ¾" BAR SET
- PROJECT CONTROL MON.
- MONUMENT BOX FD.
- MONUMENT BOX SET

LAWRENCE COUNTY
UNION TOWNSHIP
SECT. 24, T-1-N, R-16-W

364+34.99
2005.11' LT.

SECT. 13 / SECT. 24

167 ERNEST W. AND MILDRED R. BONZO, TRUSTEES
25-064-1400.000

167.33' N

LOT 3 / LOT 4

370+19.38
432.88' LT.

373+20.00
450.00' LT.

167 ERNEST W. AND MILDRED R. BONZO, TRUSTEES
25-064-1300.000

LA-R/W — S 68°59'36" E 1745.38' TOT. — LA-R/W — LA-R/W — 301.10' — LA-R/W — S 46°36'42" E 402.19'

MATCH LINE STA. 364+00

167-WL3

167 ERNEST W. AND MILDRED R. BONZO, TRUSTEES
25-064-1400.000

N S 03°52'36" W 461.81'

167-WL3

167 ERNEST W. AND MILDRED R. BONZO, TRUSTEES
25-064-1300.000

MATCH LINE TS STA. 376+18.38

℄ R/W & CONST. S.R. 7

365 366 367 368 369 370 371 372 373 374 375 376

S 65° 44' 01" E

NOTE:
SEE SHEET 82 FOR ALTERNATE METHOD OF STATIONING FROM SPIRAL CURVES
[L] MEASURED FROM LONG TANGENT
[S] MEASURED FROM SHORT TANGENT

NO.	DESCRIPTION	DATE
	DATE COMPLETED	09/23/2024

DRAFT Stage 3 - Not for Construction

HORIZONTAL SCALE IN FEET
0 25 50 100

PID NO. 75923

R/W DESIGNER TB
R/W REVIEWER SER

RIGHT OF WAY BOUNDARY SHEET
STA. 364+00 TO STA. 376+18.38 (NORTH)

LAW-7-2.17

69 / 82

U:\1736087f4\LAW\75923\row\sheets\75923RB029.dgn 12/9/2014 11:18:13 AM slparker

LAWRENCE COUNTY
UNION TOWNSHIP
SECT. 24, T-1-N, R-16-W

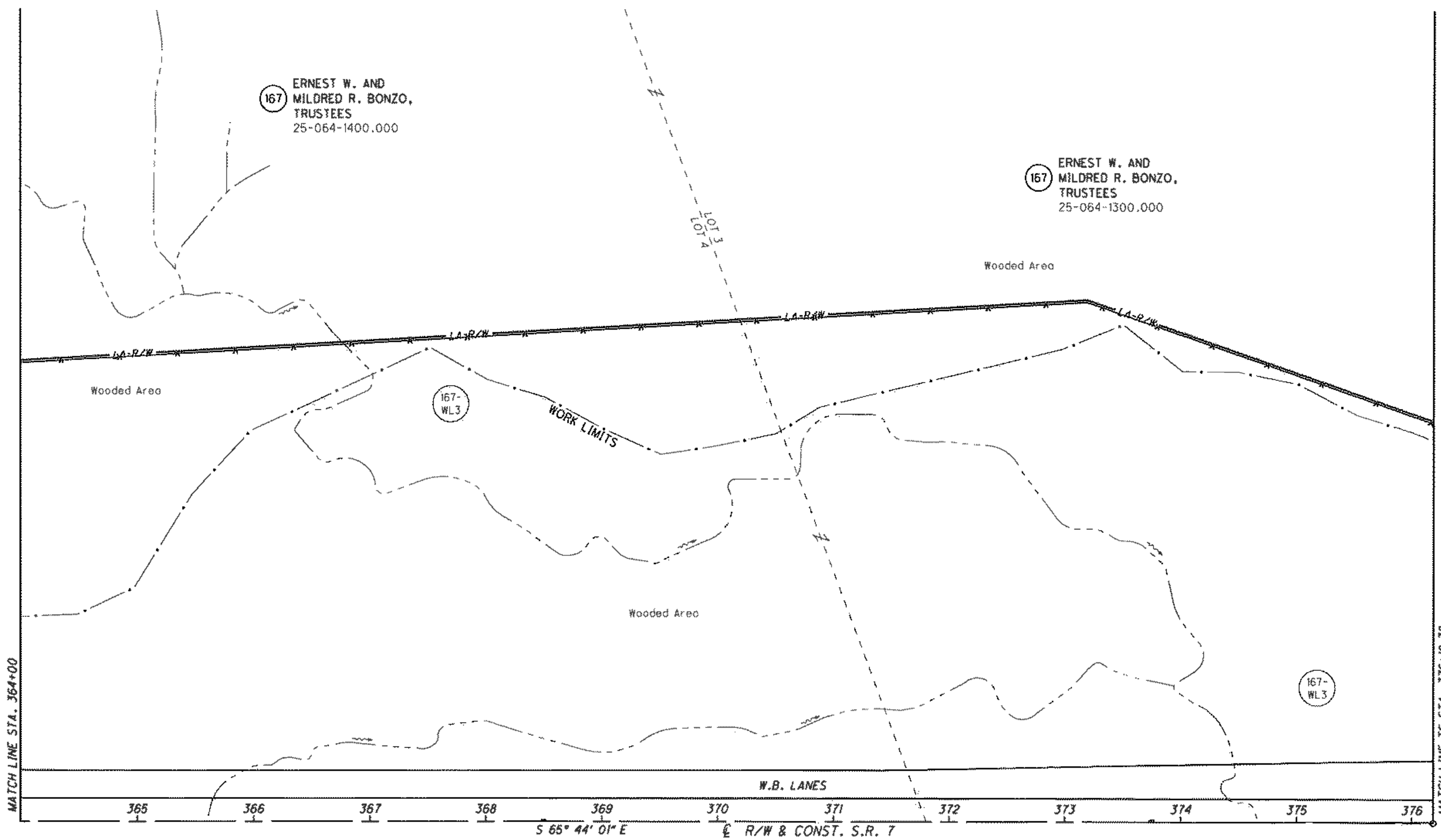

FOR LOCATION AND TYPE OF LA-R/W FENCE
SEE THE TABLE IN THE ROADWAY PLAN

(LF) DESIGNATES LEACH FIELD

DRAFT Stage 3 - Not for Construction 09/23/2024

REV	BY	DATE	DESCRIPTION
DATE COMPLETED			

HORIZONTAL SCALE IN FEET 0 25 50 100

PID NO. 75923

R/W DESIGNER TB

R/W REVIEWER SER

RIGHT OF WAY TOPO SHEET
STA. 364+00 TO STA. 376+18.38 (NORTH)

LAW-7-2.17

U:\17360871\4\LAW\75923\row\sheets\75923RT029.dgn 12/9/2014 11:18:14 AM sjparker

NUMBER	DIRECTION	DISTANCE
L137	N 77°41'16" W	100.00'
L138	N 12°18'44" E	100.00'
L139	S 77°41'16" E	100.00'
L140	S 12°18'44" W	100.00'

LAWRENCE COUNTY
UNION TOWNSHIP
SECT. 24, T-1-N, R-16-W

EX. MONUMENTS OFF S.R. 7		
STATION	OFFSET	DESCRIPTION
372+22.53	113.66' RT.	CONC. MONUMENT FOUND

365 366 367 368 369 370 371 372 373 374 375 376

℄ R/W & CONST. S.R. 7

S 65° 44' 01" E

MATCH LINE STA. 364+00

MATCH LINE TS STA. 376+18.38

S 03°52'36" W
121.26'

LOT 3
LOT 4

167-WL3

369+50.00
140.00' RT.

371+26.60
193.22' RT.

372+22.53
113.66' RT.

792.28'
N 70°04'36" W

LA-R/W

184.44'

124.63'

N 03°52'36" E
130.32'

168-WL

372+67.94
235.82' RT.

147.62'
N 48°57'44" W

430.37'

167-E (L.L.)

SEE SHEET 116/118
FOR DETAIL

167 ERNEST W. AND MILDRED R. BONZO, TRUSTEES
25-064-1400.000

168 RILEY DEVELOPMENT COMPANY, INC.
25-064-1401.000

167 ERNEST W. AND MILDRED R. BONZO, TRUSTEES
25-064-1300.000

S 74°35'50" W
484.93'

366+72.27
352.02' RT.

365+74.44
372.74' RT.

L139

EXCEPTION TO PARCEL 167-E

L138

170

L140

25-064-1402.000

366+92.98
449.85' RT.

L137

365+95.15
470.57' RT.

N 78°03'02" W
564.63'

367+53.33
502.78' RT.

169

25-064-1403.000

LOT 1

168

171 PATRICIA BURD

168 RILEY DEVELOPMENT COMPANY, INC.
25-064-1501.000

S 74°35'50" W
592.25'

LOT 4
LOT 5

CONC. MON.
362+97.45
880.84'

LOT 5

LOT 3

LOT 7

LOT 9

LOT 11

LOT 13

HARBOR VIEW SUBDIVISION (UNRECORDED PLAT)

HARBOR VIEW DR.
PRIVATE DR. 574

LOT 2

LOT 4

MONUMENT LEGEND
- STONE FOUND
- FENCE POST
- R.R.S. FOUND
- R.R.S. SET
- P.K. NAIL FOUND
- CONC. MONUMENT FD.
- REFER. MONUMENT SET
- REBAR FOUND
- AXLE FOUND
- IRON PIN FOUND
- I.P.F. WITH I.D. CAP
- ¾" BAR SET
- PROJECT CONTROL MON.
- MONUMENT BOX FD.
- MONUMENT BOX SET

NOTE:
SEE SHEET 2 OF 82
FOR ALTERNATE METHOD OF
STATIONING FROM SPIRAL CURVES

[L] MEASURED FROM LONG TANGENT
[S] MEASURED FROM SHORT TANGENT

169 THE PECAN WATER ASSOCIATION, INC.

DRAFT Stage 3 - Not for Construction

REVISION DATE	DESCRIPTION
DATE COMPLETED	

HORIZONTAL SCALE IN FEET
0 25 50 100

PID NO. 75923

R/W DESIGNER TB
R/W REVIEWER SER

RIGHT OF WAY BOUNDARY SHEET
STA. 364+00 TO STA. 376+18.38 (SOUTH)

LAW-7-2.17

70/82

U:\1736087\4\LAW\75923\row\sheets\75923RB030.dgn 12/9/2014 11:18:15 AM slparker

LAWRENCE COUNTY
UNION TOWNSHIP
SECT. 24, T-1-N, R-16-W

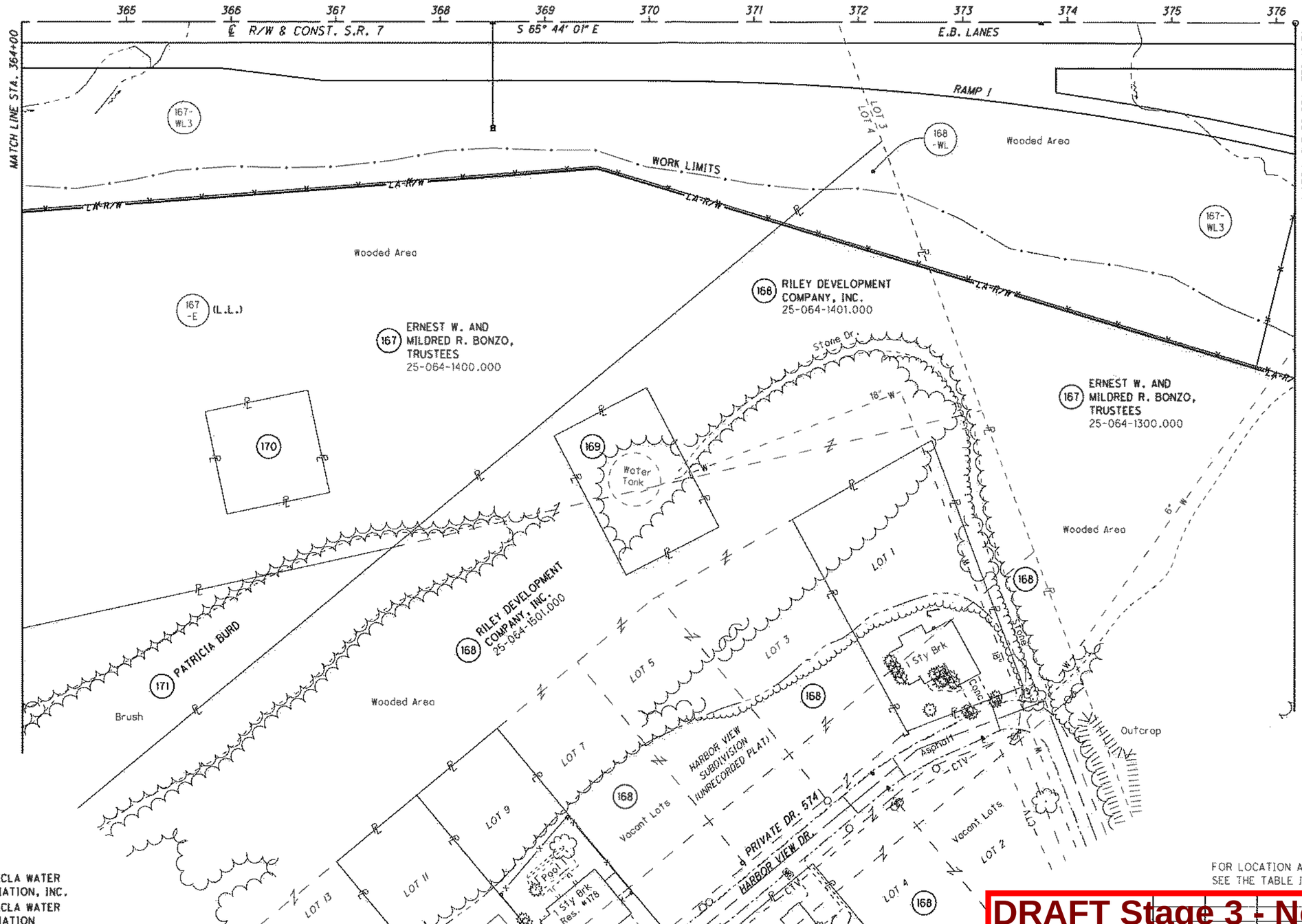

DRAFT Stage 3 - Not for Construction

NO.	DATE	DESCRIPTION
	DATE COMPLETED	

HORIZONTAL SCALE IN FEET
0 25 50 100

PID NO. 75923

R/W DESIGNER TB
R/W REVIEWER SER

RIGHT OF WAY TOPO SHEET
STA. 364+00 TO STA. 376+18.38 (SOUTH)

LAW-7-2.17

70T/82

U:\173608714\LAW\75923\row\sheets\75923RTC30.dgn 12/9/2014 11:18:17 AM slparker

LAWRENCE COUNTY
UNION TOWNSHIP
SECT. 24, T-1-N, R-16-W

SEE SHEET 77/82

MONUMENT LEGEND
- STONE FOUND
- FENCE POST
- R.R.S. FOUND
- R.R.S. SET
- P.K. NAIL FOUND
- CONC. MONUMENT FD.
- REFER. MONUMENT SET
- REBAR FOUND
- AXLE FOUND
- IRON PIN FOUND
- I.P.F. WITH I.D. CAP
- ¾" BAR SET
- PROJECT CONTROL MON.
- MONUMENT BOX FD.
- MONUMENT BOX SET

(243) ERNEST RALPH ROOD & MYRTLE RUTH ROOD
25-064-0700.000

(252) STATE OF OHIO
25-061-1001.000

(167) ERNEST W. AND MILDRED R. BONZO, TRUSTEES
25-064-1300.000

(167) ERNEST W. AND MILDRED R. BONZO, TRUSTEES
25-064-1300.000

STATE OF OHIO
LAW-7-7.25
PB 10, PG 116

STATE OF OHIO
LAW-7-7.25
O.R. 272, PG 325

STATE OF OHIO
LAW-7-7.25
PB 10, PG 116

(242) ERNEST B. & CLORINDA G. HALL

LOT 5 FAIRVIEW SUBD.
P.B. 4, PG. 29

Little Paddy Creek

MATCH LINE STA. 376+18.38

MATCH LINE STA. 386+00

SEE SHEET 76/82

CURVE DATA
S.R. 7
CURVE NO. 9

P.I. STA. 387+47.15
Δ = 46° 04' 34" (LT)
Dc = 2° 29' 28"
R = 2,300.00'
T = 805.51'
L = 1,549.62'
E = 136.98'
TS STA. 376+18.38
SC STA. 379+18.38
Bs = 3° 44' 12"
Ls = 300.00'
Ts = 1,128.77'
LT = 200.04'
ST = 100.04'
CS STA. 394+68.00
ST STA. 397+68.00

NUMBER	DIRECTION	DISTANCE
L1	N 69°44'58" E	377.25'
L4	N 85°38'59" W	170.34'
L124	S 46°36'42" E	402.19'
L125	N 69°44'58" E	116.60'
L128	S 06°47'42" W	201.25'
L129	N 07°10'44" W	183.32'
L130	N 48°57'44" W	430.37'
L133	S 03°44'57" W	20.04'
L134	N 85°38'59" W	43.98'
L135	N 69°44'58" E	48.14'

NOTE:
SEE SHEET 2 OF 82
FOR ALTERNATE METHOD OF
STATIONING FROM SPIRAL CURVES

[L] MEASURED FROM LONG TANGENT
[S] MEASURED FROM SHORT TANGENT

DRAFT Stage 3 - Not for Construction

REVISION DATE	DESCRIPTION
DATE COMPLETED	

HORIZONTAL SCALE IN FEET
0 50 100

PID NO. 75923

R/W DESIGNER TB
R/W REVIEWER SER

RIGHT OF WAY BOUNDARY SHEET
STA. 376+18.38 TO STA. 386+00

LAW-7-2.17

71 / 82

U:\1736087714\LAW\75923\row\sheets\75923RB031.dgn 12/9/2014 11:18:18 AM slporker

LAWRENCE COUNTY
UNION TOWNSHIP
SECT. 24, T-1-N, R-16-W

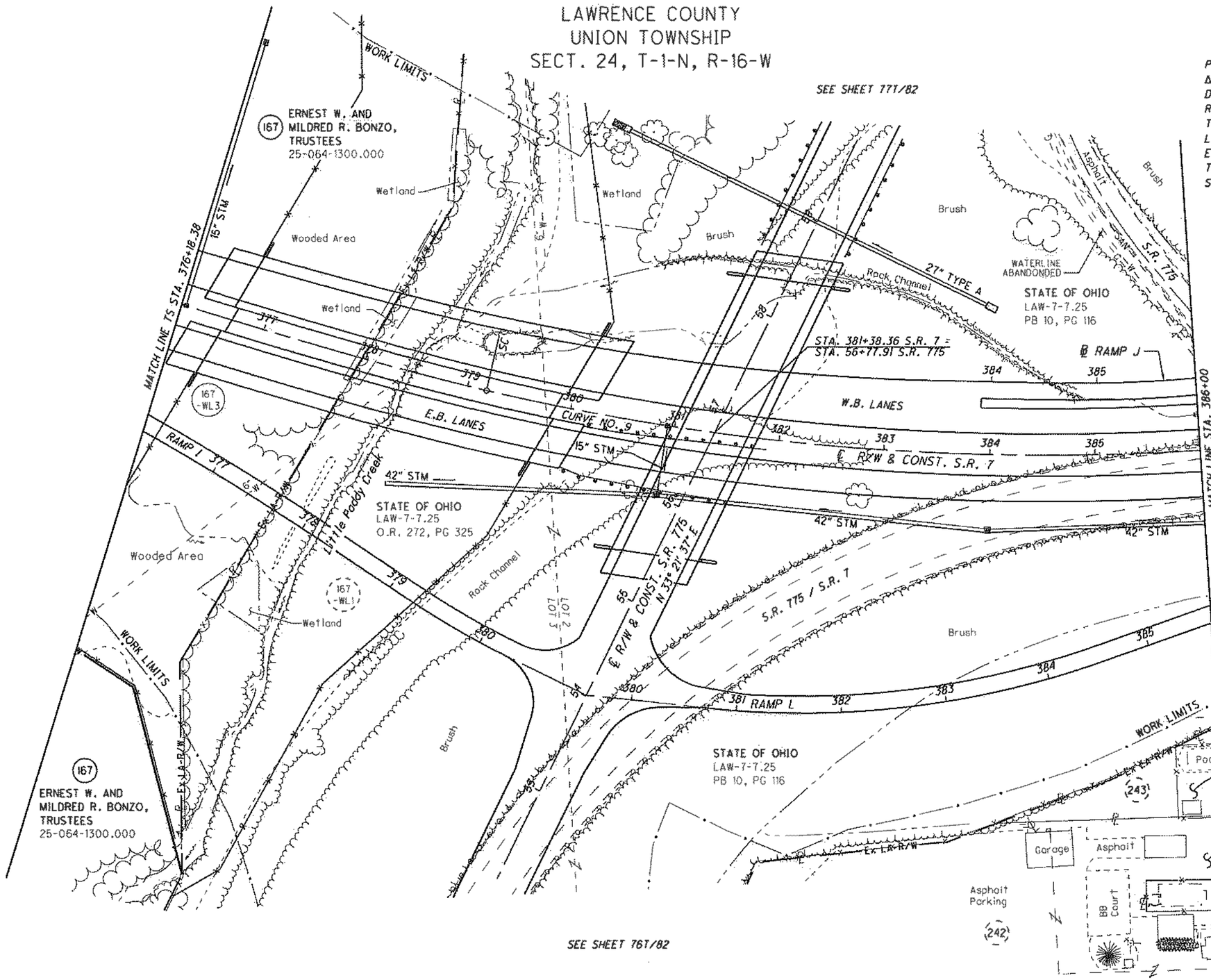

CURVE DATA
S.R. 7
CURVE NO. 9

P.I. STA. 387+47.15
Δ = 46° 04' 34" (LT)
Dc = 2° 29' 28"
R = 2,300.00'
T = 805.51'
L = 1,549.62'
E = 136.98'
TS STA. 376+18.38
SC STA. 379+18.38

θs = 3° 44' 12"
Ls = 300.00'
Ts = 1,128.77'
LT = 200.04'
ST = 100.04'
CS STA. 394+68.00
ST STA. 397+68.00

FOR LOCATION AND TYPE OF LA-R/W FENCE SEE THE TABLE IN THE ROADWAY PLAN

DRAFT Stage 3 - Not for Construction

NO.	DATE	DESCRIPTION
	DATE COMPLETED	

HORIZONTAL SCALE IN FEET
0 25 50 100

PID NO. 75923

P/W DESIGNER TB
P/W REVIEWER SER

RIGHT OF WAY TOPO SHEET
STA. 376+18.38 TO STA. 386+00

LAW-7-2.17

711/82

U:\1736087\4\LAW\75923\row\sheets\75923RT031.dgn 12/9/2014 11:18:19 AM siparker

CURVE DATA
S.R. 7
CURVE NO. 9

P.I. STA. 387+47.15
Δ = 46° 04' 34" (LT)
Dc = 2° 29' 28"
R = 2,300.00'
T = 805.51'
L = 1,549.62'
E = 136.98'
TS STA. 376+18.38
SC STA. 379+18.38

Ls = 3° 44' 12"
Ls = 300.00'
Ts = 1,128.77'
LT = 200.04'
ST = 100.04'
CS STA. 394+68.00
ST STA. 397+68.00

MONUMENT LEGEND
- STONE FOUND
- FENCE POST
- R.R.S. FOUND
- R.R.S. SET
- P.K. NAIL FOUND
- CONC. MONUMENT FD.
- REFER. MONUMENT SET
- REBAR FOUND
- AXLE FOUND
- IRON PIN FOUND
- I.P.F. WITH I.D. CAP
- ¾" BAR SET
- PROJECT CONTROL MON.
- MONUMENT BOX FD.
- MONUMENT BOX SET

NOTE:
SEE SHEET 2 OF 82
FOR ALTERNATE METHOD OF
STATIONING FROM SPIRAL CURVES

[L] MEASURED FROM LONG TANGENT
[S] MEASURED FROM SHORT TANGENT

LAWRENCE COUNTY
UNION & ROME TOWNSHIP
SECT. 24, T-1-N, R-16-W
SECT. 34, T-1-N, R-15-W

EX. MONUMENTS OFF S.R. 7		
STATION	OFFSET	DESCRIPTION
388+43.14	0.00' RT.	P.K. NAIL FOUND
394+68.05 [S]	0.08' LT.	PROJECT CONTROL MON. #1208

SEE SHEET 77/82

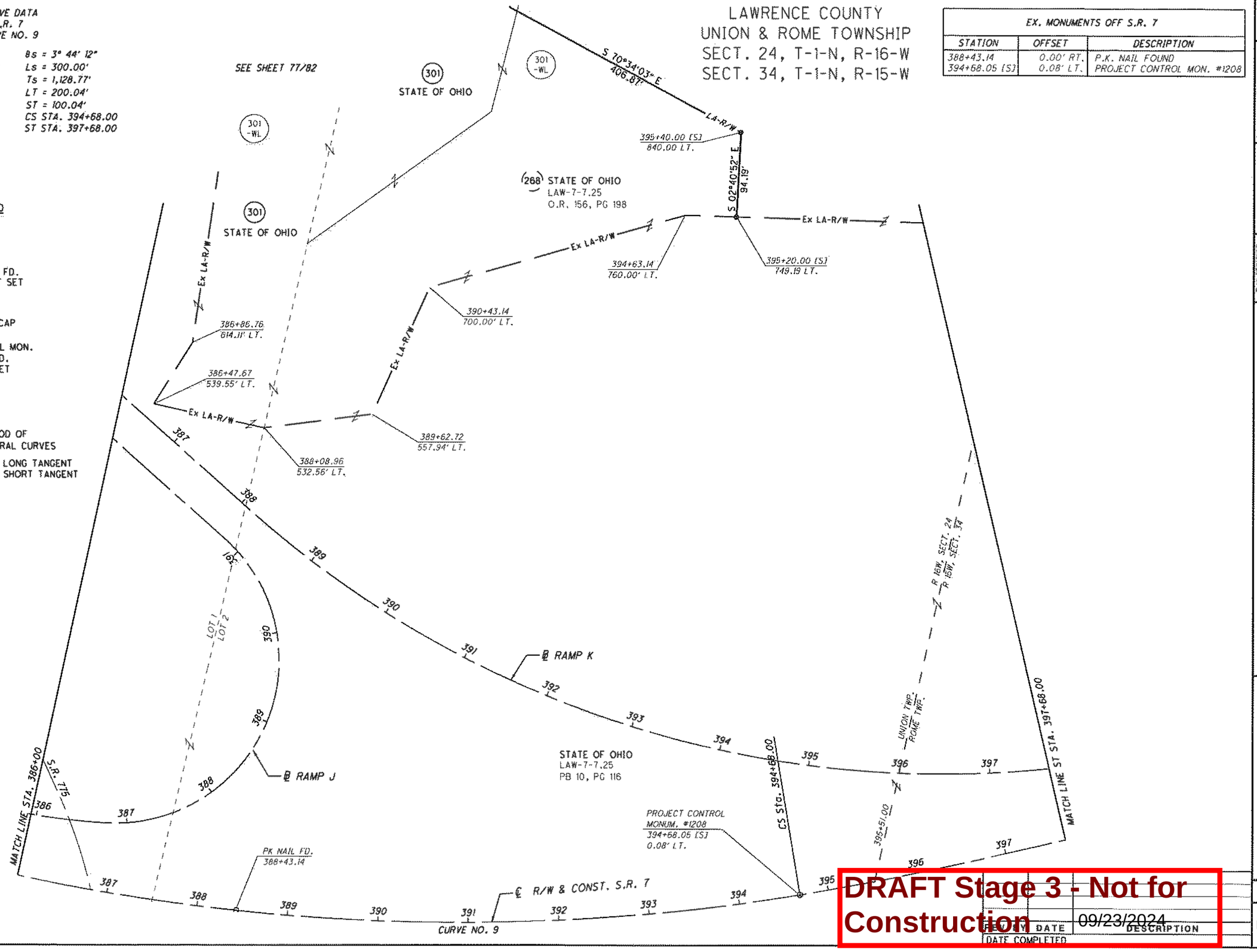

RIGHT OF WAY BOUNDARY SHEET
STA. 386+00 TO STA. 397+68 (NORTH)

LAW-7-2.17

PID NO. 75923

R/W DESIGNER TB
R/W REVIEWER SER

HORIZONTAL SCALE IN FEET
0 25 50 100

72/82

DRAFT Stage 3 - Not for Construction

DESIGN DATE	DESCRIPTION
DATE COMPLETED	09/23/2024

U:\1736B714\LAW\75923\row\sheets\75923RB032.dgn 12/9/2014 11:18:20 AM slparker

LAWRENCE COUNTY
UNION & ROME TOWNSHIP
SECT. 24, T-1-N, R-16-W
SECT. 34, T-1-N, R-15-W

FOR LOCATION AND TYPE OF LA-R/W FENCE
SEE THE TABLE IN THE ROADWAY PLAN

SEE SHEET 771/82

CURVE DATA
S.R. 7
CURVE NO. 9

P.I. STA. 387+47.15
Δ = 46° 04' 34" (LT)
Dc = 2° 29' 28"
R = 2,300.00'
T = 805.51'
L = 1,549.62'
E = 136.98'
TS STA. 376+18.38
SC STA. 379+18.38

θs = 3° 44' 12"
Ls = 300.00'
Ts = 1,128.77'
LT = 200.04'
ST = 100.04'
CS STA. 394+68.00
ST STA. 397+68.00

301 STATE OF OHIO
301 -WL
301 STATE OF OHIO
268 STATE OF OHIO
LAW-7-7.25
O.R. 156, PG 198
STATE OF OHIO
LAW-7-7.25
PB 10, PG 116
Ex LA-R/W
Wooded Area
Brush
Flogs
Field Dr.
Trail
END ACQUISITION
S.R. 7
STA. 395+40.00
℄ RAMP K
℄ RAMP J
WORK LIMITS
Rock Channel
UNION TWP. POWE TWP.
R 16W, SECT. 24
R 15W, SECT. 34
MATCH LINE STA. 386+00
MATCH LINE ST STA. 397+68.00
℄ R/W & CONST. S.R. 7
W.B. LANES
CURVE NO. 9
WATERLINE ABANDONDED
15" STM
36" STM
Rock
Wetland
CS
LOT 1
LOT 2

HORIZONTAL SCALE IN FEET
0 25 50 100

R/W DESIGNER TB
R/W REVIEWER SER
PID NO. 75923

RIGHT OF WAY TOPO SHEET
STA. 386+00 TO STA. 397+68 (NORTH)
LAW-7-2.17
721/82

DRAFT Stage 3 - Not for Construction

DESIGN DATE	09/23/2024
DATE COMPLETED	
DESCRIPTION	

(LF) DENOTES LEFT OF CENTERLINE

U:\173608714\LAW\75923\row\sheets\75923RT032.dgn 12/9/2014 11:18:22 AM slparker

LAWRENCE COUNTY
UNION & ROME TOWNSHIP
SECT. 24, T-1-N, R-16-W
SECT. 34, T-1-N, R-15-W

MONUMENT LEGEND
- STONE FOUND
- FENCE POST
- R.R.S. FOUND
- R.R.S. SET
- P.K. NAIL FOUND
- CONC. MONUMENT FD.
- REFER. MONUMENT SET
- REBAR FOUND
- AXLE FOUND
- IRON PIN FOUND
- I.P.F. WITH I.D. CAP
- ¾" BAR SET
- PROJECT CONTROL MON.
- MONUMENT BOX FD.
- MONUMENT BOX SET

CURVE DATA
S.R. 7
CURVE NO. 9

P.I. STA. 387+47.15
Δ = 46° 04' 34" (LT)
Dc = 2° 29' 28"
R = 2,300.00'
T = 805.51'
L = 1,549.62'
E = 136.98'
TS STA. 376+18.38
SC STA. 379+18.38
Bs = 3° 44' 12"
Ls = 300.00'
Ts = 1,128.77'
LT = 200.04'
ST = 100.04'
CS STA. 394+68.00
ST STA. 397+68.00

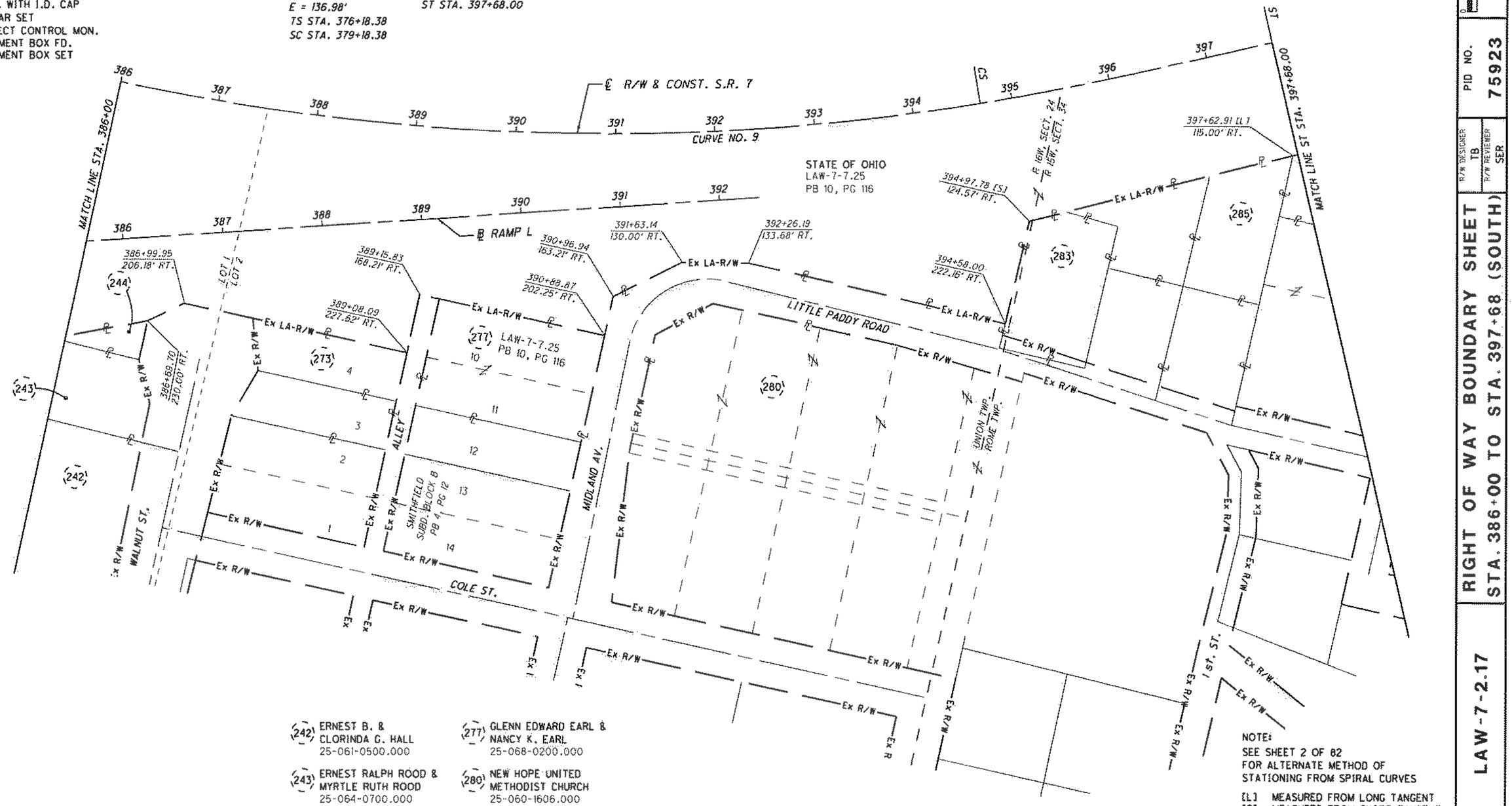

NOTE:
SEE SHEET 2 OF 82
FOR ALTERNATE METHOD OF
STATIONING FROM SPIRAL CURVES
[L] MEASURED FROM LONG TANGENT
[S] MEASURED FROM SHORT TANGENT

DRAFT Stage 3 - Not for Construction

REVISION DATE	DESCRIPTION
DATE COMPLETED	

HORIZONTAL SCALE IN FEET
0 25 50 100

PID NO. 75923
R/W DESIGNER TB
R/W REVIEWER SER

RIGHT OF WAY BOUNDARY SHEET
STA. 386+00 TO STA. 397+68 (SOUTH)

LAW-7-2.17

73 / 82

U:\173608714\LAW\75923\row\sheets\75923RB033.dgn 12/9/2014 11:18:23 AM slparker

LAWRENCE COUNTY
UNION & ROME TOWNSHIP
SECT. 24, T-1-N, R-16-W
SECT. 34, T-1-N, R-15-W

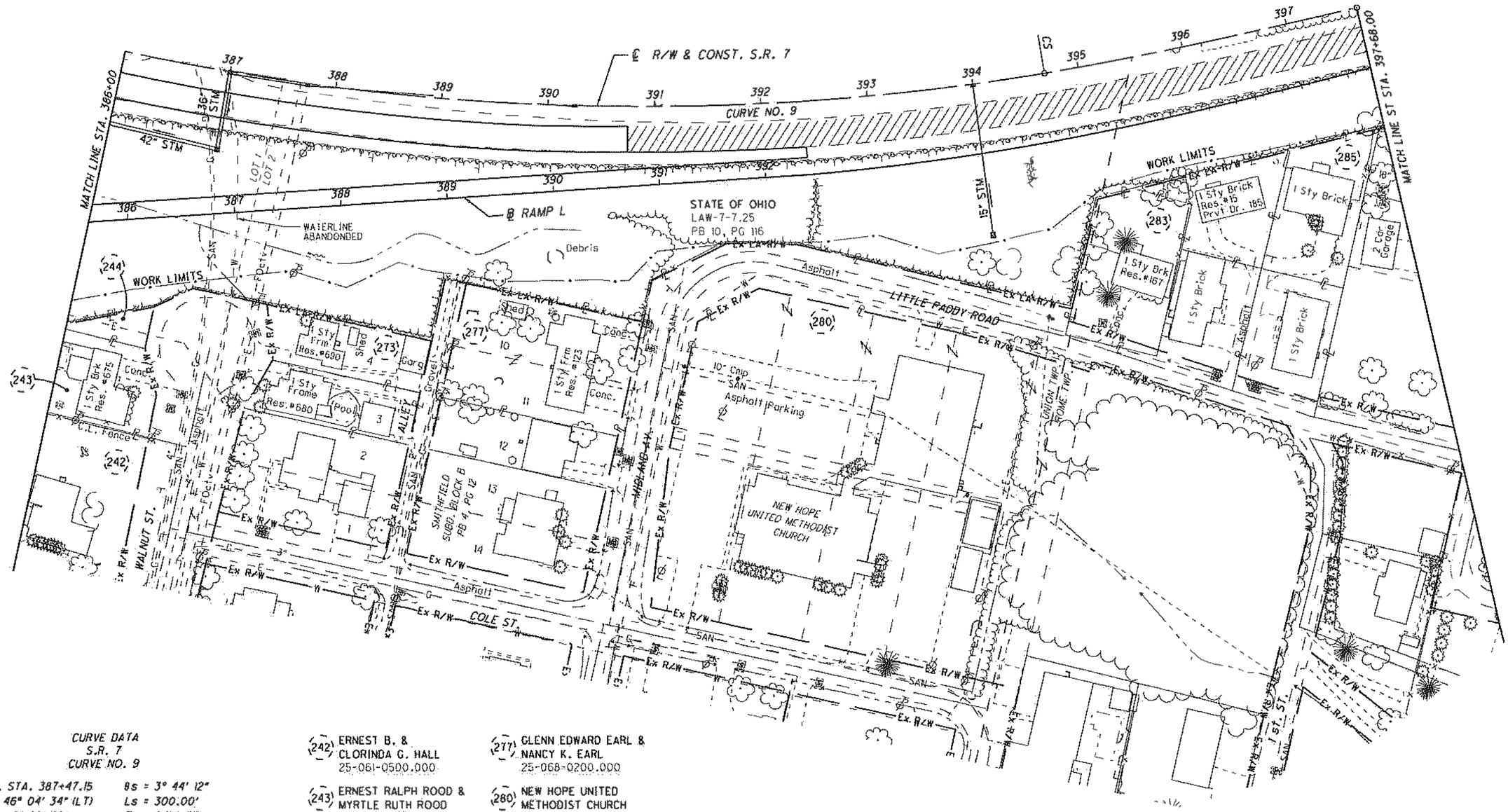

CURVE DATA
S.R. 7
CURVE NO. 9

P.I. STA. 387+47.15
Δ = 46° 04' 34" (LT)
Dc = 2° 29' 28"
R = 2,300.00'
T = 805.51'
L = 1,549.62'
E = 136.98'
TS STA. 376+18.38
SC STA. 379+18.38

θs = 3° 44' 12"
Ls = 300.00'
Ts = 1,128.77'
LT = 200.04'
ST = 100.04'
CS STA. 394+68.00
ST STA. 397+68.00

(242) ERNEST B. & CLORINDA G. HALL
25-061-0500.000

(243) ERNEST RALPH ROOD & MYRTLE RUTH ROOD
25-064-0700.000

(244) STATE OF OHIO
25-063-0700.003

(273) DANNY LEE BURCHAM
25-067-1500.000

(277) GLENN EDWARD EARL & NANCY K. EARL
25-068-0200.000

(280) NEW HOPE UNITED METHODIST CHURCH
25-060-1606.000

(283) JOHN T. WILLIAMS II, & JENETTE WILLIAMS
18-137-1601.000

(285) DANNY J. HOLSCHUH
18-137-1600.005

FOR LOCATION AND TYPE OF LA-R/W FENCE SEE THE TABLE IN THE ROADWAY PLAN

DRAFT Stage 3 - Not for Construction

REVISION DATE	DESCRIPTION
DATE COMPLETED	

HORIZONTAL SCALE IN FEET
0 25 50 100

PID NO. 75923
P/W DESIGNER TB
R/W REVIEWER SER

RIGHT OF WAY TOPO SHEET
STA. 386+00 TO STA. 397+68 (SOUTH)

LAW-7-2.17

73T/82

U:\1736087\14\LAW\75923\row\sheets\75923RTQ33.dgn 12/9/2014 11:18:25 AM slporker

LAWRENCE COUNTY
ROME TOWNSHIP
SECT. 34, T-1-N, R-15-W

SECTION 34 - LOT 1328
SECTION 33 - LOT 739

(308) STATE OF OHIO
LAW-7-7.25
O.R. 547, PG 26

STATE OF OHIO
LAW-7-7.25
PB 10, PG 116

℄ RAMP K

Ex LA-R/W

402+58.33
148.80' LT.

404+06.70
161.09' LT.

407+24.43
246.21' LT.

409+39.92
210.51' LT.

100' O.P.C. ESMT.
DB 289 PG 109

CONCRETE
MONUM. FD.
401+11.17

398 399 400 401 402 403 404 405 406 407 408

N 68° 11' 25" E

PC

CURVE NO. 10

℄ R/W & CONST. S.R. 7

N 69° 40' 28" E

EX. S.R. 7

PT

EXIT

EMERGENCY

PROJECT CONTROL
MONUM. # 1209
407+19.64
65.06' RT.

405+87.84
128.26' RT.

405+43.40
305.70' RT.

406+60.10
380.49' RT.

END WORK
END PROJECT
STA. 408+12.36
S.R. 7
S.L.M. = 7.73
E(035)921
E(060)482

MATCH LINE ST STA. 397+68.00

401+47.11
119.91' RT.

403+31.75
106.73' RT.

405+32.57
103.07' RT.

Ex LA-R/W

Ex R/W

HILL VIEW DR.

MESA ST.

TOWER DR.

TOWER ESTATES
SUBDIVISION
PB 7, PG 211

LAW-7-7.25
PB 10, PG 116

(288) (292) (293) (294) (313) (314)

CURVE DATA
S.R. 7
CURVE NO. 10

P.I. STA. 403+74.19
Δ = 1° 29' 03" (RT)
Dc = 0° 16' 56"
R = 20,306.35'
T = 263.02'
L = 526.00'
E = 1.70'
PC STA. 401+11.17
PT STA. 406+37.18

MONUMENT LEGEND
- STONE FOUND
- FENCE POST
- R.R.S. FOUND
- R.R.S. SET
- P.K. NAIL FOUND
- CONC. MONUMENT FD.
- REFER. MONUMENT SET
- REBAR FOUND
- AXLE FOUND
- IRON PIN FOUND
- I.P.F. WITH I.D. CAP
- ¾" BAR SET
- PROJECT CONTROL MON.
- MONUMENT BOX FD.
- MONUMENT BOX SET

(288) GREGORY A. & ASHLEY M. SULLIVAN
(292) ALMA L. HOLLEY
(293) MICHELLE CHILDERS
(294) ROBERT CECIL
(313) THE COUNTY OF LAWRENCE
(314) STATE OF OHIO

NOTE:
SEE SHEET 2 OF 82
FOR ALTERNATE METHOD OF
STATIONING FROM SPIRAL CURVES
[L] MEASURED FROM LONG TANGENT
[S] MEASURED FROM SHORT TANGENT

DRAFT Stage 3 - Not for Construction

REVISION DATE	DESCRIPTION
DATE COMPLETED	

HORIZONTAL SCALE IN FEET
0 25 50 100

PID NO. 75923

R/W DESIGNER TB
R/W REVIEWER SER

RIGHT OF WAY BOUNDARY SHEET
STA. 397+68 TO 408+12.36

LAW-7-2.17

74/82

U:\1736087\4\LAW\75923\row\sheets\75923RB034.dgn 12/9/2014 11:18:26 AM siporker

LAWRENCE COUNTY
ROME TOWNSHIP
SECT. 34, T-1-N, R-15-W

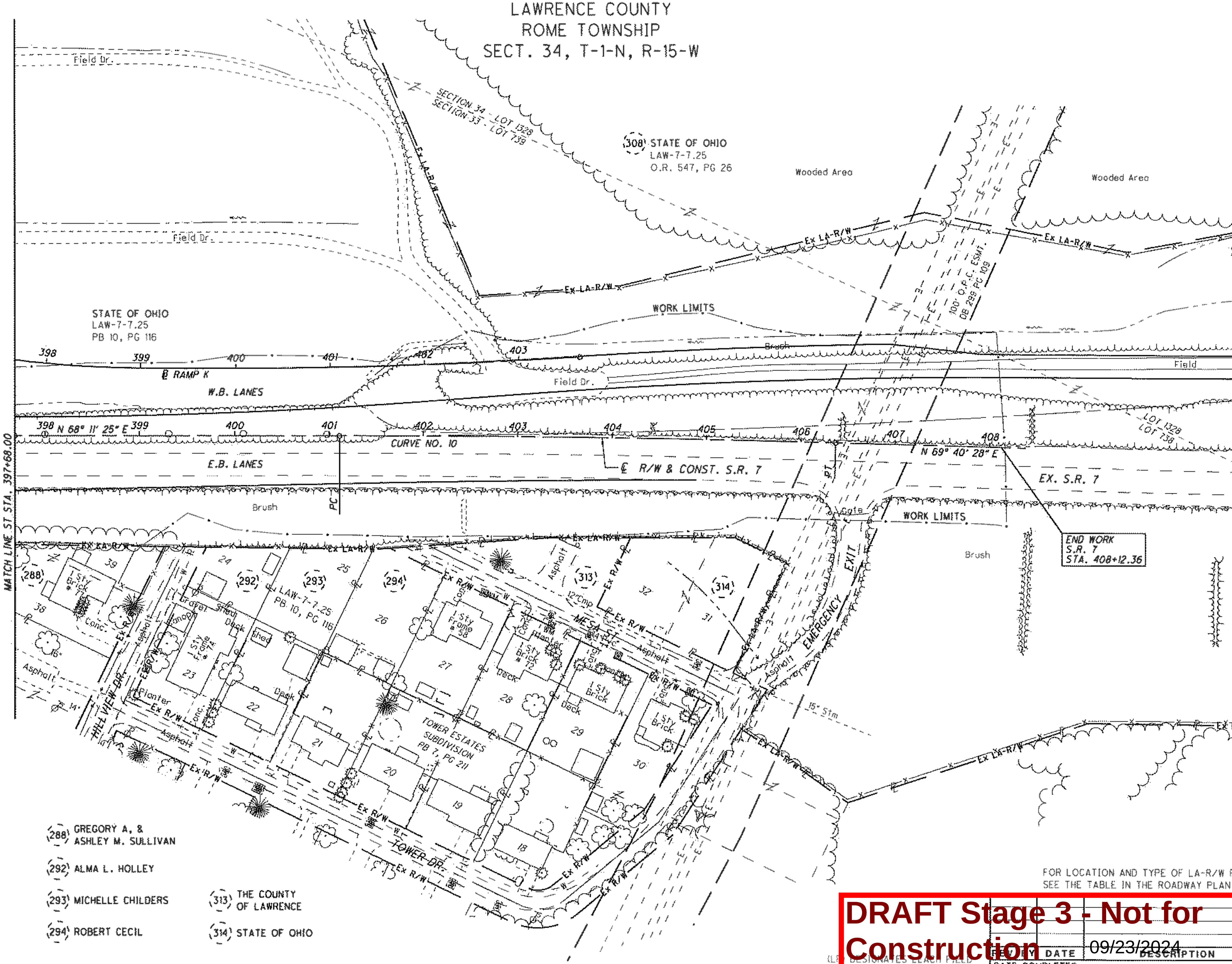

CURVE DATA
S.R. 7
CURVE NO. 10

P.I. STA. 403+74.19
Δ = 1° 29' 03" (RT)
Dc = 0° 16' 56"
R = 20,306.35'
T = 263.02'
L = 526.00'
E = 1.70'
PC STA. 401+11.17
PT STA. 406+37.18

(288) GREGORY A. & ASHLEY M. SULLIVAN
(292) ALMA L. HOLLEY
(293) MICHELLE CHILDERS
(294) ROBERT CECIL
(313) THE COUNTY OF LAWRENCE
(314) STATE OF OHIO

FOR LOCATION AND TYPE OF LA-R/W FENCE
SEE THE TABLE IN THE ROADWAY PLAN

(LF) DESIGNATES LEACH FIELD

DRAFT Stage 3 - Not for Construction 09/23/2024

REV	BY	DATE	DESCRIPTION

DATE COMPLETED

HORIZONTAL SCALE IN FEET 0 25 50 100

PID NO. 75923

R/W DESIGNER TB
R/W REVIEWER SER

RIGHT OF WAY TOPO SHEET
STA. 397+68 TO 408+12.36

LAW-7-2.17

U:\173608714\LAW\75923\row\sheets\75923RT034.dgn 12/9/2014 11:18:27 AM slparker

LAWRENCE COUNTY
UNION TOWNSHIP
SECT. 15 & 22,
T-1-N, R-16-W

STA/OFF FROM ℄ R/W S.R. 243		
(A)	16+76.29	44.70' RT.
(B)	15+95.01	93.60' RT.
(C)	15+16.84	154.56' RT.
(F)	17+57.17 [L]	139.83' LT.
(J)	17+58.98 [L]	148.03' LT.
(K)	19+03.50	152.29' LT.
(L)	19+26.00	125.13' LT.
(M)	18+00.00	110.00' LT.
(N)	20+04.82	30.38' LT.
(P)	19+08.00	27.64' LT.
(Q)	18+62.88	26.36' LT.
(R)	18+12.90	24.94' LT.

STA/OFF FROM ℄ R/W S.R. 243		
(S)	17+27.28 [L]	4.59' LT.
(U)	16+88.52	80.00' RT.
(Y)	18+63.99	0.43' RT.
(Z)	18+85.26	0.00' RT.
(AA)	20+41.17	0.00' RT.

STA/OFF FROM ℄ R/W S.R. 243		
(BB)	20+46.78	30.00' RT.
(CC)	21+70.00	30.00' RT.
(DD)	19+01.52	18.33' LT.
(EE)	21+70.00	0.00' RT.
(FF)	20+00.00	100.00' RT.

STA/OFF FROM ℄ R/W C.R. 69		
(C)	11+02.28	67.48' LT.
(D)	12+36.83	13.10' RT.
(E)	14+65.74	151.38' RT.

NO.	RADIUS	DELTA ANG.	ARC LEN	CHORD DIRECT.	CHORD
C11	520.87'	23°44'24"	215.82'	S 43°31'46" E	214.28'
C12	520.87'	10°35'18"	96.26'	S 60°41'37" E	96.12'
C13	520.87'	02°20'25"	21.28'	N 32°49'47" W	21.27'
C14	520.87'	31°59'16"	290.80'	N 49°59'38" W	287.04'

CURVE DATA
C.R. 69
CURVE NO. 1

P.I. Sta. 10+33.80
Δ = 20° 52' 36" (RT)
Dc = 24° 54' 40"
R = 230.00'
T = 42.37'
L = 83.80'
E = 3.87'
PC STA. 9+91.43
PT STA. 10+75.23

CURVE DATA
C.R. 69
CURVE NO. 2

P.I. Sta. 15+77.89
Δ = 10° 17' 44" (LT)
Dc = 4° 00' 00"
R = 1,432.39'
T = 129.04'
L = 257.39'
E = 5.80'
PC STA. 14+48.85
PT STA. 17+06.24

CURVE DATA
S.R. 243
CURVE NO. 1

P.I. Sta. 11+06.30
Δ = 22° 39' 36" (RT)
Dc = 24° 54' 40"
R = 230.00'
T = 46.08'
L = 90.96'
E = 4.57'
PC STA. 10+60.22
PT STA. 11+51.18

MONUMENT LEGEND
- STONE FOUND
- FENCE POST
- R.R.S. FOUND
- R.R.S. SET
- P.K. NAIL FOUND
- CONC. MONUMENT FD.
- REFER. MONUMENT SET
- REBAR FOUND
- AXLE FOUND
- IRON PIN FOUND
- I.P.F. WITH I.D. CAP
- ¾" BAR SET
- PROJECT CONTROL MON.
- MONUMENT BOX FD.
- MONUMENT BOX SET

HORIZONTAL SCALE IN FEET
0 25 50 100

PID NO. 75923

R/W DESIGNER TB
R/W REVIEWER SER

RIGHT OF WAY BOUNDARY SHEET
S.R. 243

LAW-7-2.17

75/82

MATCH LINE SEE SHEET 55/82

MATCH LINE SEE SHEET 56/82

(124) HARRY L. RADER
23-080-1000.000

(127) JOSEPH E. GAGNON AND DORIS PRITT
23-082-0100.000

(125) LARRY JOE & LINDA KAY SITES
(128) LAWRENCE A. & INEZ M. THOMPSON
(129) J. DOLORES REYNOLDS
(131) GLORIA J. TOMBLIN
(132) LARRY & LINDA K. SITES
(133) CARL & NANCY DANFORD
(135) ROGER & HELEN HENSON

(143) ERNEST W. & MILDRED R. BONZO, TRUSTEES

HARRY L. RADER

23-043-1400.000
23-043-1401.000
23-043-0802.000
23-043-1402.000
23-080-1100.000
23-081-1500.000
23-081-1600.000
23-081-1700.000
23-081-1800.000
23-043-1300.000
23-044-0100.000
23-044-0600.000
23-044-0600.001
23-044-0600.002
23-044-0700.000

INGRESS/EGRESS EASEMENT D.B. 399, PG 343

A.E.P. ESMT. REFER. UNKNOWN

WINTER HEIGHTS PB 6C PG 285

SITES DR.

(UNIMPROVED)

S.R. 243

℄ R/W & CONST. S.R. 243

℄ R/W & CONST. C.R. 69

CURVE NO. 1

CURVE NO. 2

STA. 14+80.03 S.R. 243 =
STA. 9+68.37 C.R. 69
BEGIN WORK C.R. 69

END WORK
S.R. 243
STA. 21+54.00

NUMBER	DIRECTION	DISTANCE
L665	S 33°16'59" E	96.85'
L666	N 18°36'40" E	123.20'
L667	N 38°30'08" W	124.81'
L669	N 13°13'29" W	126.49'
L670	N 58°20'26" E	100.00'
L672	S 70°48'01" W	195.21'
L673	N 03°13'59" W	464.82'
L675	N 03°11'50" E	124.66'
L676	N 70°48'01" E	138.51'
L677	N 45°01'59" W	88.00'
L678	N 33°16'59" W	50.00'
L679	N 33°16'59" W	45.15'
L684	N 70°48'01" E	8.39'
L685	N 58°20'26" E	20.00'
L686	S 48°02'57" E	118.05'
L688	N 31°39'34" W	123.22'
L719	S 03°11'50" W	52.20'
L720	S 38°30'08" E	126.98'
L721	N 33°21'06" W	144.58'
L722	N 18°36'40" E	35.33'
L723	S 42°19'45" W	82.78'
L726	S 48°02'57" E	59.15'
L727	S 21°38'17" E	114.93'
L736	S 31°31'56" E	145.58'
L738	S 30°08'43" W	41.50'
L739	S 31°31'56" E	53.77'
L740	S 86°46'40" E	61.34'
L741	S 09°20'43" W	46.53'
L742	N 70°52'17" W	72.55'
L743	N 30°08'43" E	29.59'
L746	S 86°46'40" E	84.71'
L748	S 01°24'21" E	339.79'

SEE SHEET 82/82 FOR COURSES X101 - X136

EX. MONUMENTS OFF S.R. 243		
STATION	OFFSET	DESCRIPTION
15+31.90	180.31' RT.	REBAR FOUND
16+25.09	348.83' RT.	24" HICKORY TREE
17+15.77 [S]	146.47' LT.	IRON PIN FOUND
17+27.28 [L]	4.59' LT.	IRON PIN FOUND

EX. MONUMENTS OFF S.R. 243		
STATION	OFFSET	DESCRIPTION
18+72.52	30.14' RT.	I.P.F. CAPPED "EASTHAM"
19+01.52	18.33' LT.	CONCRETE MONUMENT FOUND
20+41.17	0.00' RT.	R.R.S. FOUND
20+46.61	29.40' RT.	IRON PIN FOUND
21+80.71	25.78' RT.	PROJECT CONTROL MON. #1205

NOTE:
SEE SHEET 2 OF 82
FOR ALTERNATE METHOD OF
STATIONING FROM SPIRAL CURVES

[L] MEASURED FROM LONG TANGENT
[S] MEASURED FROM SHORT TANGENT

CURVE DATA S.R. 243 - CURVE NO. 2

P.I. STA. 15+51.11
Δ = 5° 37' 36" (LT)
Dc = 1° 30' 00"
R = 3,819.72'
T = 137.62'
L = 275.13'
E = 2.48'
TS STA. 13+13.9
SC STA. 14+13.9
Δs = 00° 45' 00"
Ls = 100.00'
Ts = 237.72'
ST Sta. 16+88.52
ST Sta. 17+88.52

MATCH LINE SEE SHEET 57/82

DETAIL PARCEL 129-WD

DRAFT Stage 3 - Not for Construction

REVISION	DATE	DESCRIPTION
DATE COMPLETED	09/23/2024	

U:\13608714\LAW\75923\row\sheets\75923RB035.dgn 12/9/2014 11:18:28 AM slparker

125 LARRY JOE & LINDA KAY SITES
126 MARANATHA BROADCASTING NETWORK, INC.
128 LAWRENCE A. & INEZ M. THOMPSON
131 GLORIA J. TOMBLIN
132 LARRY & LINDA K. SITES
133 CARL & NANCY DANFORD
135 ROGER & HELEN HENSON

LAWRENCE COUNTY
UNION TOWNSHIP
SECT. 15 & 22, T-1-N, R-16-W

CURVE DATA C.R. 69 CURVE NO. 1
P.I. Sta. 10+33.80
Δ = 20° 52′ 36″ (RT)
Dc = 24° 54′ 40″
R = 230.00′
T = 42.37′
L = 83.80′
E = 3.87′
PC STA. 9+91.43
PT STA. 10+75.23

CURVE DATA C.R. 69 CURVE NO. 2
P.I. Sta. 15+77.89
Δ = 10° 17′ 44″ (LT)
Dc = 4° 00′ 00″
R = 1,432.39′
T = 129.04′
L = 257.39′
E = 5.80′
PC STA. 14+48.85
PT STA. 17+06.24

CURVE DATA S.R. 243 CURVE NO. 1
P.I. Sta. 11+06.30
Δ = 22° 39′ 36″ (RT)
Dc = 24° 54′ 40″
R = 230.00′
T = 46.08′
L = 90.96′
E = 4.57′
PC STA. 10+60.22
PT STA. 11+51.18

CURVE DATA S.R. 243 CURVE NO. 2
P.I. STA. 15+51.11
Δ = 5° 37′ 36″ (LT)
Dc = 1° 30′ 00″
R = 3,819.72′
T = 137.62′
L = 275.13′
E = 2.48′
TS STA. 13+13.39
SC STA. 14+13.39
θs = 00° 45′ 00″
Ls = 100.00′
Ts = 237.72′
LT = 66.67′
ST = 33.33′
CS Sta. 16+88.52
ST Sta. 17+88.52

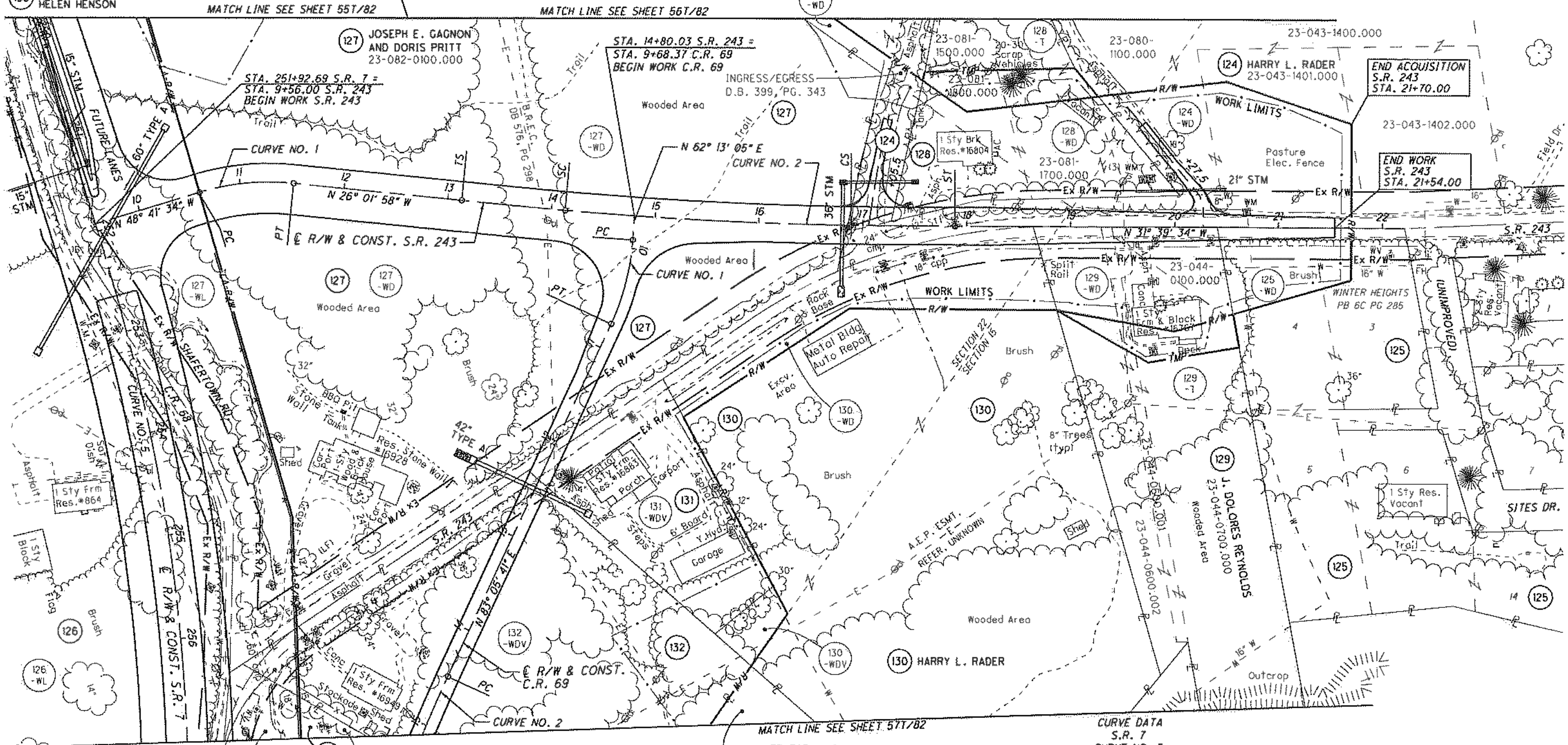

MATCH LINE SEE SHEET 57T/82

143 ERNEST W. & MILDRED R. BONZO, TRUSTEES

CURVE DATA S.R. 7 CURVE NO. 5
P.I. STA. 261+89.75
Δ = 58° 45′ 06″ (RT)
Dc = 3° 15′ 00″
R = 1,762.95′
T = 773.76′
L = 1,458.26′
E = 162.33′
TS STA. 250+20.45
SC STA. 253+70.45
θs = 5° 41′ 15″
Ls = 350.00′
Ts = 1,169.30′
CS STA. 268+28.71
ST STA. 271+78.71

(LF) DESIGNATES LEACH FIELD

FOR LOCATION AND TYPE OF LA-R/W FENCE SEE THE TABLE IN THE ROADWAY PLAN

DRAFT Stage 3 - Not for Construction
09/23/2024

REV.	BY	DATE	DESCRIPTION

DATE COMPLETED

RIGHT OF WAY TOPO SHEET S.R. 243
LAW-7-2.17
PID NO. 75923
R/W DESIGNER TB
R/W REVIEWER SER
HORIZONTAL SCALE IN FEET 0 25 50 100

75T/82

U:\73608714\LAW\75923\row\sheets\75923RT035.dgn 12/9/2014 11:18:30 AM slporker

MONUMENT LEGEND
- STONE FOUND
- FENCE POST
- R.R.S. FOUND
- R.R.S. SET
- P.K. NAIL FOUND
- CONC. MONUMENT FD.
- REFER. MONUMENT SET
- REBAR FOUND
- AXLE FOUND
- IRON PIN FOUND
- I.P.F. WITH I.D. CAP
- ¾" BAR SET
- PROJECT CONTROL MON.
- MONUMENT BOX FD.
- MONUMENT BOX SET

EX. MONUMENTS OFF S.R. 775		
STATION	OFFSET	DESCRIPTION
47+29.32	505.13' LT.	IRON PIN FOUND

LAWRENCE COUNTY
UNION TOWNSHIP
SECT. 24, T-1-N, R-16-W

MATCH LINE STA. 376+18.38

(167) ERNEST W. AND MILDRED R. BONZO, TRUSTEES 25-064-1300.000

376+80.00 [L] 360.00 RT. (S.R. 7)

N 48°57'44" W 430.37'

N 07°10'44" W 183.32'

52+60.00 360.00' LT. (S.R. 775)

Ex LA-R/W S 06°47'42" W 201.25'

Ex LA-R/W S 38°15'49" W 503.18'

57+61.34 316.99' LT.

Ex LA-R/W S 11°26'20" W 242.74'

(167) ERNEST W. AND MILDRED R. BONZO, TRUSTEES 25-064-1300.000

45+20.00 230.00' LT.

Ex LA-R/W

Little Paddy Creek

48+00.00 270.00' LT.

377+75.64 [L] 516.40 RT. (S.R. 7)

50+80.00 270.00' LT. (S.R. 775)

Little Paddy Creek

(167-WL3)

B RAMP L

377

378

379

380

381

382

383

384

(167-WL1) STATE OF OHIO LAW-7-7.25 O.R. 272, PG 325

STATE OF OHIO LAW-7-7.25 PB 10, PG 116

431.35' 379+75.97

380 CURVE NO. 9

LOT 3 LOT 2

℄ R/W & CONST. S.R. 775

46 47 48 49 50 51 52 53 54 55 56 57 58

N 33° 21' 37" E

STA. 381+38.36 S.R. 7 = STA. 56+77.91 S.R. 775

MATCH LINE STA. 59+00.00

(167-WL1) STATE OF OHIO LAW-7-7.25 O.R. 272, PG 325

802.07' N 03°44'57" E

STATE OF OHIO LAW-7-7.25 PB 10, PG 116

BEGIN WORK S.R. 775 STA. 45+30.85

48+80.00 200.00' RT.

51+50.00 215.00' RT.

53+30.00 215.00' RT.

Ex LA-R/W

45+40.00 250.00' RT.

(242) ERNEST B. & CLORINDA G. HALL

FAIRVIEW SUBDIVISION PB 4 PG 29

1 5 6 7 8 9

381 ℄ RAMP L 382

EX. S.R. 775 / S.R. 7

℄ R/W & CONST. S.R. 7

CURVE DATA
S.R. 7
CURVE NO. 9

P.I. STA. 387+47.15
Δ = 46° 04' 34" (LT)
Dc = 2° 29' 28"
R = 2,300.00'
T = 805.51'
L = 1,549.62'
E = 136.98'
TS STA. 376+18.38
SC STA. 379+18.38

θs = 3° 44' 12"
Ls = 300.00'
Ts = 1,128.77'
LT = 200.04'
ST = 100.04'
CS STA. 394+68.00
ST STA. 397+68.00

SEE SHEET 71/82

NOTE:
SEE SHEET 2 OF 82 FOR ALTERNATE METHOD OF STATIONING FROM SPIRAL CURVES

[L] MEASURED FROM LONG TANGENT
[S] MEASURED FROM SHORT TANGENT

DRAFT Stage 3 - Not for Construction

REVISED DATE	DESCRIPTION
DATE COMPLETED	

HORIZONTAL SCALE IN FEET 0 25 50 100

PID NO. 75923

R/W DESIGNER TB
R/W REVIEWER SER

RIGHT OF WAY BOUNDARY SHEET
S.R. 775 - STA. 45+30.85 TO STA. 59+00

LAW-7-2.17

G:\17360871\4\LAW\75923\row\sheets\75923RB036.dgn 12/9/2014 11:18:31 AM slparker

CURVE DATA
S.R. 7
CURVE NO. 9

P.I. STA. 387+47.15
Δ = 46° 04' 34" (LT)
Dc = 2° 29' 28"
R = 2,300.00'
T = 805.51'
L = 1,549.62'
E = 136.98'
TS STA. 376+18.38
SC STA. 379+18.38

θs = 3° 44' 12"
Ls = 300.00'
Ts = 1,128.77'
LT = 200.04'
ST = 100.04'
CS STA. 394+68.00
ST STA. 397+68.00

LAWRENCE COUNTY
UNION TOWNSHIP
SECT. 24, T-1-N, R-16-W

MATCH LINE STA. 376+18.38

(167) ERNEST W. AND MILDRED R. BONZO, TRUSTEES
25-064-1300.000

(167) ERNEST W. AND MILDRED R. BONZO, TRUSTEES
25-064-1300.000

(167-WL3)

(167-WL1) STATE OF OHIO
LAW-7-7.25
O.R. 272, PG 325

BEGIN ACQUISITION
S.R. 775
STA. 508+80.00

(167-WL1) STATE OF OHIO
LAW-7-7.25
O.R. 272, PG 325

BEGIN WORK
S.R. 775
STA. 45+30.85

STATE OF OHIO
LAW-7-7.25
PB 10, PG 116

(242) ERNEST B. & CLORINDA G. HALL

Ⓐ STA. 381+38.36 S.R. 7 =
STA. 56+77.91 S.R. 775

SEE SHEET 71T/82

FOR LOCATION AND TYPE OF LA-R/W FENCE
SEE THE TABLE IN THE ROADWAY PLAN

Wetland
Wooded Area
Brush
Rock Channel
Rock Protection
Asphalt Parking
Little Paddy Creek
WORK LIMITS
℄ R/W & CONST. S.R. 775
Ex LA-R/W
℄ FAIRVIEW SUBDIVISION PB 4 PG 29
℄ RAMP I
℄ RAMP J
℄ RAMP L
℄ E.B. LANES
℄ W.B. LANES
℄ R/W & CONST. S.R. 7
EX. S.R. 775 / S.R. 7
15" STM
24" stm
36" STM
42" STM
22" TYPE A
380' CURVE NO. 9
LOT LINE
N 33° 21' 37" E
MATCH LINE STA. 59+00.00

HORIZONTAL SCALE IN FEET
0 25 50 100

PID NO. 75923

R/W DESIGNER TB
R/W REVIEWER SER

RIGHT OF WAY TOPO SHEET
S.R. 775 - STA. 45+30.85 TO STA. 59+00

LAW-7-2.17

76T/82

DRAFT Stage 3 - Not for Construction

REVISION DATE	DESCRIPTION
DATE COMPLETED	

(LP DESIGNATES LEADER POLE)

U:\1736087\4\LAW\75923\row\sheets\75923RT036.dgn 12/9/2014 11:18:32 AM stparker

LAWRENCE COUNTY
UNION TOWNSHIP
SECT. 24, T-1-N, R-16-W

NUMBER	DIRECTION	DISTANCE
L6	S 85°06'31" E	48.82'
L12	S 38°58'57" W	132.80'
L15	N 20°44'46" E	114.33'
L16	S 85°06'31" E	43.20'
L17	S 85°06'31" E	61.28'
L18	S 34°43'39" W	126.78'
L19	N 85°06'31" W	23.82'
L23	S 83°41'55" E	101.69'
L24	S 38°58'57" W	60.30'
L28	S 83°41'55" E	42.16'
L29	S 34°43'39" W	56.00'
L30	S 84°37'22" E	40.05'

CURVE DATA
S.R. 775

P.I. STA. 70+19.99
Δ = 32° 25' 07" (LT)
Dc = 11° 50' 00"
R = 484.19'
T = 140.76'
L = 273.96'
E = 20.04'
PC STA. = 68+79.23
PT STA. = 71+53.19

P.I. STA. 66+62.11
Δ = 0° 43' 32" (RT)
NO CURVE

NUMBER	DIRECTION	DISTANCE
L31	S 43°28'23" W	124.10'
L32	N 83°41'55" W	13.20'
L33	N 36°00'31" E	98.75'
L34	N 02°39'03" E	12.50'
L35	N 38°58'57" E	56.15'
L36	N 21°59'28" E	47.80'
L37	S 74°46'29" E	48.44'
L38	S 74°46'29" E	24.56'
L39	N 05°59'30" E	106.36'
L40	S 79°19'51" E	121.60'
L41	S 84°37'22" E	229.53'
L44	N 78°33'58" E	38.78'
L46	N 21°59'28" E	23.79'
L47	N 45°14'10" E	84.52'
L48	S 63°06'19" E	58.03'
L49	S 04°34'22" W	26.29'
L50	S 43°28'23" W	45.61'
L51	N 23°41'17" E	109.06'
L52	S 63°06'19" E	54.72'
L54	S 03°06'25" E	32.06'
L55	N 36°25'24" W	32.35'
L56	S 03°06'25" E	26.31'
L58	S 04°34'22" W	7.22'
L59	N 59°33'19" W	53.57'
L70	N 85°06'31" W	8.86'
L71	S 03°44'57" W	180.15'

STA/OFF FROM ℄ R/W S.R. 775		
(A)	66+63.97	69.94' LT.
(B)	66+93.86	16.44' LT.
(C)	65+67.32	19.06' LT.
(D)	65+55.97	40.00' LT.
(E)	65+32.69	82.92' LT.
(F)	66+44.26	107.89' LT.
(H)	67+24.05	64.79' LT.
(I)	67+49.86	15.81' LT.
(J)	67+43.70	27.49' LT.
(K)	68+42.40	24.18' LT.
(L)	68+53.06	30.70' LT.
(M)	68+72.30	4.43' RT.
(N)	68+26.74	70.02' LT.
(P)	68+18.80	93.26' LT.
(O)	69+40.00	110.00' LT.
(R)	69+40.00	55.28' LT.
(S)	68+50.00	75.00' LT.
(T)	69+40.00	2.75' RT.
(U)	69+16.32	13.33' RT.
(V)	69+10.00	16.43' RT.
(W)	70+60.00	27.61' RT.
(X)	69+55.00	40.00' RT.
(Y)	69+29.67	55.90' RT.
(Z)	69+10.00	70.00' RT.
(AA)	69+42.84	26.88' RT.

NO.	RADIUS	DELTA ANG.	ARC LEN	CHORD DIRECT.	CHORD
C21	650.36'	10°53'32"	123.64'	N 19°57'39" E	123.45'

SEE SHEET 82/82 FOR
COURSES X190 - X197

MONUMENT LEGEND
- ⊞ STONE FOUND
- ○ FENCE POST
- R.R.S. FOUND
- R.R.S. SET
- P.K. NAIL FOUND
- CONC. MONUMENT FD.
- REFER. MONUMENT SET
- REBAR FOUND
- AXLE FOUND
- IRON PIN FOUND
- I.P.F. WITH I.D. CAP
- ¾" BAR SET
- PROJECT CONTROL MON.
- MONUMENT BOX FD.
- MONUMENT BOX SET

EX. MONUMENTS OFF S.R. 775		
STATION	OFFSET	DESCRIPTION
65+55.97	40.00' LT.	I.P.F. CAPPED "ODOT R/W"
65+97.61	60.64' RT.	I.P.F. CAPPED "ODOT R/W"
67+43.70	27.49' LT.	IRON PIN FOUND
68+53.06	30.70' LT.	IRON PIN FOUND
70+01.04	156.59' RT.	2" IRON PIPE FOUND
70+74.47	30.91' LT.	STONE FOUND
72+85.93	118.37' RT.	AXLE FOUND

(167) ERNEST W. AND MILDRED R. BONZO, TRUSTEES
(252) STATE OF OHIO
(255) STATE OF OHIO
(256) MANFORD KING
(257) STATE OF OHIO
(258) TERRY J. & KAY L. HOLLAND
(258A) HELEN KATHLEEN SPEARS
(258B) BURNIE E. WATSON
(259) GARY L. SOWARDS, SR.
(260) HELENA HAMMONS
(261) GERTRUDE SCARBERRY
(300) MT. PISGAH CHURCH

NOTE:
SEE SHEET 82/82 FOR ALTERNATE MONUMENTATION AND STATIONING FROM SPIRAL CURVES
[L] MEASURED FROM LONG CHORD
[S] MEASURED FROM SHORT CHORD

DRAFT Stage 3 - Not for Construction

REVISION DATE	DESCRIPTION
DATE COMPLETED	

RIGHT OF WAY BOUNDARY SHEET
S.R. 775 - STA. 59+00 TO STA. 70+45.38
LAW-7-2.17
PID NO. 75923
P/W DESIGNER: TB
P/W REVIEWER: SER
HORIZONTAL SCALE IN FEET
77 / 82

U:\173608714\LAW\75923\row\sheets\75923RB037.dgn 12/9/2014 11:18:33 AM slparker

LAWRENCE COUNTY
UNION TOWNSHIP
SECT. 24, T-1-N, R-16-W

(B) NEAREST BUILDING CORNER DIMENSION TO LA-R/W LINE. MOBILE HOME = 2.7', GARAGE = 9.6'

STATE OF OHIO
LAW-7-7.25
PB 10, PG 116

STATE OF OHIO
LAW-7-7.25
PB 10, PG 116

STATE OF OHIO
LAW-7-7.25
O.R. 156, PG 198

STA. 56+77.91 S.R. 775 = STA. 381+38.36 RAMP K

MATCH LINE STA. 53+00.00

END WORK
S.R. 775
STA. 70+45.38

END ACQUISITION
S.R. 775
STA. 70+60.00

CURVE DATA
S.R. 775

P.I. STA. 70+19.99
Δ = 32° 25' 07" (LT)
Dc = 11° 50' 00"
R = 484.19'
T = 140.76'
L = 273.96'
E = 20.04'
PC STA. = 68+79.23
PT STA. = 71+53.19

P.I. STA. 66+62.11
Δ = 0° 43' 32" (RT)
NO CURVE

SEE SHEET 72T/82

(167) ERNEST W. AND MILDRED R. BONZO, TRUSTEES
(252) STATE OF OHIO
(255) STATE OF OHIO
(256) MANFORD KING
(257) STATE OF OHIO
(258) TERRY J. & KAY L. HOLLAND
(258A) HELEN KATHLEEN SPEARS
(258B) BURNIE E. WATSON
(260) HELENA HAMMONS
(261) GERTRUDE SCARBERRY
(300) MT. PISGAH CHURCH

(A) Conc. Walk & Pipe Handrails

(LF) DESIGNATES LEACH FIELD

FOR LOCATION AND TYPE OF LA-R/W FENCE SEE THE TABLE IN THE ROADWAY PLAN

DRAFT Stage 3 - Not for Construction

REVISED DATE	DESCRIPTION
DATE COMPLETED	09/23/2024

HORIZONTAL SCALE IN FEET
0 25 50 100

PID NO. 75923

R/W DESIGNER TB
R/W REVIEWER SER

RIGHT OF WAY TOPO SHEET
S.R. 775 - STA. 59+00 TO STA. 70+45.38

LAW-7-2.17

77T/82

U:\173608714\LAW\75923\row\sheets\75923RT037.dgn 12/9/2014 11:18:35 AM siparker

16 JEFFREY COMBS
44 PATRICIA R. LEWIS
45 RICHARD HOUSTON
49 CAROL R. FIELDS
50 DONALD RAYMOND WAUGH
51 OTIS M. & CATHRYN J. JUSTICE
53 JOHNNIE R. SCOTT & SARAH A. GILLESPIE
54B HAROLD FINLEY, JR. & MARION E. FINLEY
55 BOBBY L. & ROBERTA J. ESTEP
56 CHARLES & CHARLOTTE POYNTER
57 BARBARA SHOCKLEY
61 GEARLD & VALERIA SHOCKLEY

MONUMENT LEGEND
- STONE FOUND
- FENCE POST
- R.R.S. FOUND
- R.R.S. SET
- P.K. NAIL FOUND
- CONC. MONUMENT FD.
- REFER. MONUMENT SET
- REBAR FOUND
- AXLE FOUND
- IRON PIN FOUND
- I.P.F. WITH I.D. CAP
- ¾" BAR SET
- PROJECT CONTROL MON.
- MONUMENT BOX FD.
- MONUMENT BOX SET

LAWRENCE COUNTY, UNION TOWNSHIP SECT. 21, T-1-N, R-16-W

NUMBER	DIRECTION	DISTANCE
L197	S 51°17'33" E	82.63'
L198	S 34°21'37" E	180.00'
L199	S 56°39'12" E	62.91'
L200	S 71°09'15" W	67.79'
L201	S 23°27'09" E	153.00'
L235	N 36°23'11" E	142.54'
L243	S 59°42'04" E	94.16'
L268	N 69°21'51" W	61.24'
L269	N 08°55'45" E	59.60'
L270	N 52°55'15" W	74.64'
L271	N 68°55'25" E	30.58'
L272	N 11°40'10" W	39.07'
L277	S 58°27'48" W	158.11'

STA/OFF FROM ℄ R/W S.R. 7		
(A)	186+75.32 [S]	321.11' RT.
(B)	186+59.10 [S]	248.25' RT.
(C)	187+04.29 [S]	209.39' RT.
(D)	186+74.60 [S]	155.82' RT.
(E)	191+47.61	465.60' RT.
(F)	193+40.07	284.48' RT.
(G)	193+72.93	253.56' RT.
(H)	195+10.61	156.54' RT.
(I)	195+16.34	146.36' RT.
(J)	195+75.01	41.99' RT.
(K)	196+38.94	71.72' LT.
(L)	184+20.74	293.45' LT.
(M)	182+41.39	351.42' RT.
(N)	183+05.75	300.00' RT.
(P)	191+85.31	430.12' RT.
(Q)	192+80.23	340.80' RT.

60 AUDREY SCHOCKLEY
23-079-1500.002

46 LILLIAN F. POYNTER AND SUSAN POYNTER DELKER
23-079-0100.000

THOMAS D. THORNBURGH, SR. & BARBARA J. HODGE THORNBURGH
23-079-1800.000

23-079-1800.001

23-080-0700.000

23-080-0400.000

23-078-1000.001

23-078-1300.000

ESTEP LN. T.R. 388 R.R. 10, PG. 43

HENSON HOLLOW T.R. 158

WOODLAND DR. T.R. 1389

SECT. 21 / SECT. 28

SCALE 1"=100'

NUMBER	DIRECTION	DISTANCE
L298	S 84°35'17" W	25.30'
X08	N 03°22'26" E	4.37'
X09	N 83°11'53" E	25.40'
X10	S 03°22'26" W	5.00'

61 S 46°38'02" W 128.60'
62 STEVEN S. ADKINS
60 AUDREY SCHOCKLEY
63 THOMAS E. & SALLY NEWTON
BOOTHE-EATON RD. C.R. 104
59 THORNBURGH
52B SARAH CECIL, JENNIFER CECIL, AND ADAM CECIL
52A THE BLOCK TRUST
23-080-0100.000
23-080-0300.000
PRIVATE DR.

DETAIL 59-WDV N.T.S.

SCALE 1"=50'

NOTE:
SEE SHEET 2 OF 2 FOR ALTERNATE METHOD OF STATIONING FROM SPIRAL CURVES
[L] MEASURED FROM LONG TANGENT
[S] MEASURED FROM SHORT TANGENT

DRAFT Stage 3 - Not for Construction

DESIGNED	DRAWN	CHECKED	DATE	DESCRIPTION
			09/23/2024	

DATE COMPLETED

HORIZONTAL SCALE IN FEET

R/W DESIGNER TB
R/W REVIEWER SER

PID NO. 75923

RIGHT OF WAY BOUNDARY SHEET
MISCELLANEOUS DETAILS

LAW-7-2.17

78 / 82

U:\1735087\4\LAW\75923\row\sheets\75923RB040.dgn 12/9/2014 11:18:36 AM sparker

NUMBER	DIRECTION	DISTANCE
L471	S 75°56'01" W	646.00'
L472	S 75°56'01" W	135.50'
L473	S 84°48'06" W	69.32'
L490	N 39°24'48" E	418.85'
L491	N 53°01'18" E	235.85'
L492	S 54°09'33" E	459.83'
L517	N 70°52'40" E	397.24'
L527	N 32°28'51" W	8.66'
L531	S 13°49'36" E	45.97'
L532	S 07°30'36" E	397.17'
L533	S 46°15'30" W	105.49'
L534	S 46°05'24" W	133.00'
L535	S 45°49'56" W	136.41'
L536	N 65°05'12" W	239.33'
L537	N 08°53'46" W	48.62'
L538	N 64°37'46" W	107.81'
L539	N 46°19'14" E	351.38'
L540	N 37°48'55" W	156.30'

(86) WESLEY L. COLLINS

(94) CHARLES W. & MAZIE L. RULEN

(96) JASPER & DELLA M. RIGNEY

(106) WILLIAM RICHARD HYSELL

(111) RICKEY BLACK

(112) SHEILA ELLIS, DENNIS BLACK AND RANDY BLACK

LAWRENCE COUNTY
UNION TOWNSHIP
SECT. 22, T-1-N, R-16-W

(114) PAUL & CAROL BLACK

(121) GEORGE W. & MARILYN BLACK

(127) JOSEPH E. GAGNON AND DORIS PRITT

(137) STATE OF OHIO

(138) STATE OF OHIO

(139) FRED HENSON, JR.

(140) STATE OF OHIO

(142) LARRY J. & LINDA K. SITES

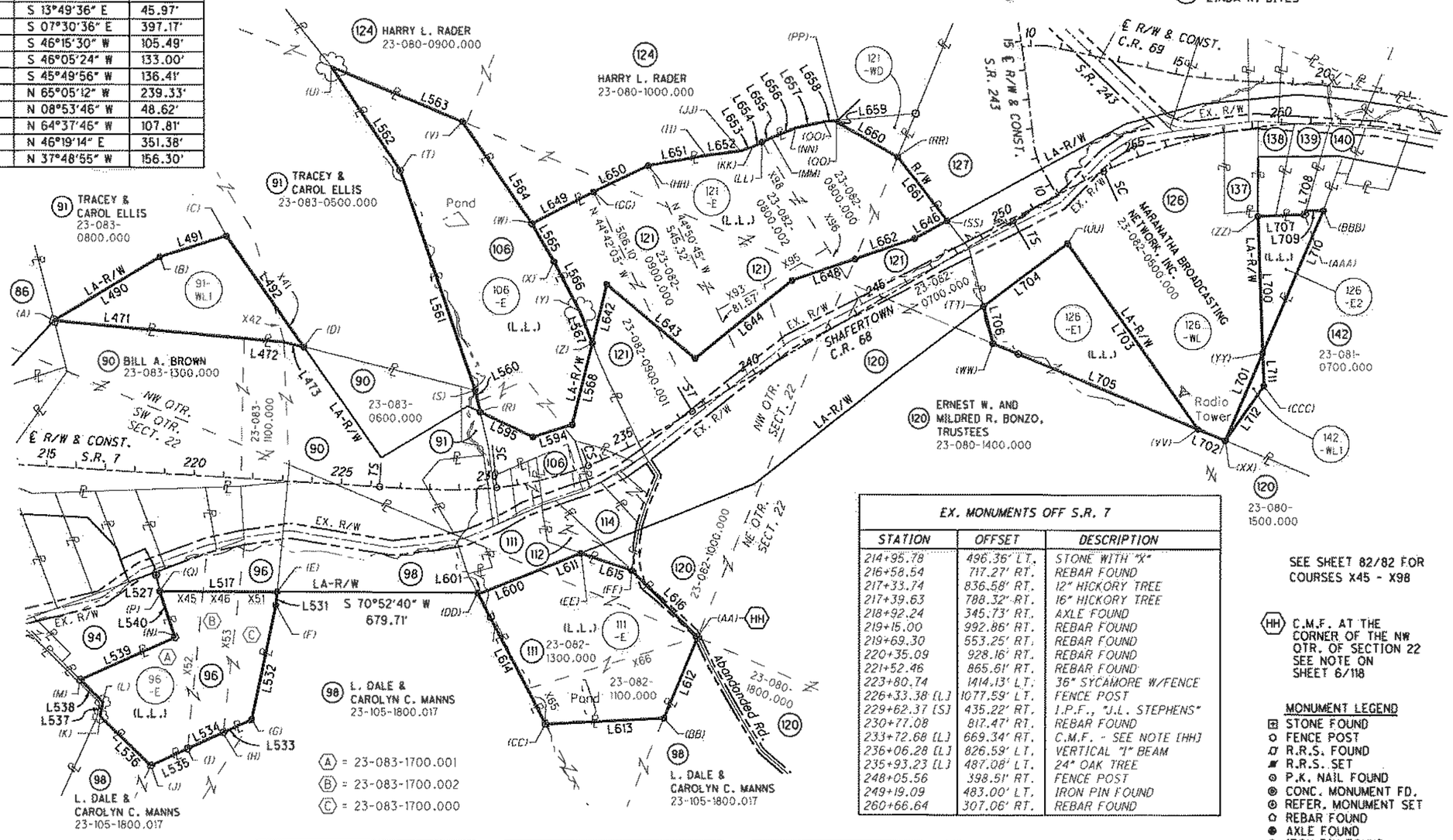

EX. MONUMENTS OFF S.R. 7

STATION	OFFSET	DESCRIPTION
214+95.78	496.36' LT.	STONE WITH "X"
216+58.54	717.27' RT.	REBAR FOUND
217+33.74	836.58' RT.	12" HICKORY TREE
217+39.63	788.32' RT.	16" HICKORY TREE
218+92.24	345.73' RT.	AXLE FOUND
219+15.00	992.86' RT.	REBAR FOUND
219+69.30	553.25' RT.	REBAR FOUND
220+35.09	928.16' RT.	REBAR FOUND
221+52.46	865.61' RT.	REBAR FOUND
223+80.74	1414.13' LT.	36" SYCAMORE W/FENCE
226+33.38 [L]	1077.59' LT.	FENCE POST
229+62.37 [S]	435.22' RT.	I.P.F., "J.L. STEPHENS"
230+77.08	817.47' RT.	REBAR FOUND
233+72.68 [L]	669.34' RT.	C.M.F. - SEE NOTE (HH)
236+06.28 [L]	826.59' LT.	VERTICAL "I" BEAM
235+93.23 [L]	487.08' LT.	24" OAK TREE
248+05.56	398.51' RT.	FENCE POST
249+19.09	483.00' LT.	IRON PIN FOUND
260+66.64	307.06' RT.	REBAR FOUND

SEE SHEET 82/82 FOR COURSES X45 - X98

(HH) C.M.F. AT THE CORNER OF THE NW QTR. OF SECTION 22 SEE NOTE ON SHEET 6/118

MONUMENT LEGEND
- STONE FOUND
- FENCE POST
- R.R.S. FOUND
- R.R.S. SET
- P.K. NAIL FOUND
- CONC. MONUMENT FD.
- REFER. MONUMENT SET
- REBAR FOUND
- AXLE FOUND
- IRON PIN FOUND
- I.P.F. WITH I.D. CAP
- ¾" BAR SET
- PROJECT CONTROL MON.
- MONUMENT BOX FD.
- MONUMENT BOX SET

NOTE:

SEE BOUNDARY DETAIL SHEETS 51 - 57 FOR ADDITIONAL BOUNDARY INFORMATION NOT SHOWN HEREON

NOTE:

SEE SHEET 2 OF 82 FOR ALTERNATE METHOD OF STATIONING FROM SPIRAL CURVES

[L] MEASURED FROM LONG TANGENT
[S] MEASURED FROM SHORT TANGENT

NUMBER	DIRECTION	DISTANCE
L560	N 32°28'46" W	75.30'
L561	N 38°15'19" W	788.76'
L562	N 52°44'55" W	420.81'
L563	S 86°46'19" E	481.80'
L564	S 53°34'11" E	418.82'
L565	S 49°44'59" E	148.95'
L566	S 46°24'04" E	190.96'
L567	S 40°51'56" E	115.97'
L568	S 05°28'35" E	284.50'
L594	S 53°12'29" W	139.20'
L595	N 84°06'26" W	198.82'
L600	N 48°49'16" E	208.87'
L601	N 70°52'40" E	14.35'
L611	N 48°49'15" E	154.57'
L612	S 03°18'47" W	298.32'
L613	S 67°49'04" W	402.54'
L614	N 46°51'06" W	502.35'
L615	N 89°23'51" E	182.20'
L616	S 64°04'04" E	319.36'
L642	S 05°28'35" E	206.99'
L643	N 69°25'45" W	392.17'
L644	S 31°47'59" W	424.26'
L646	S 41°55'04" W	127.13'
L648	S 51°45'05" W	225.38'
L649	N 43°21'08" E	235.76'
L650	N 44°58'51" E	206.56'
L651	N 50°32'40" E	198.11'
L652	N 63°14'06" E	118.91'
L653	N 52°05'24" E	45.88'
L654	N 44°31'10" E	33.50'
L655	N 45°01'40" E	36.24'
L656	N 48°12'29" E	87.75'
L657	N 58°11'17" E	98.73'
L658	N 65°33'58" E	48.32'
L659	S 26°44'59" W	7.79'
L660	S 79°46'36" E	239.12'
L661	S 57°31'19" E	274.76'
L662	S 51°45'05" W	213.94'
L700	N 21°27'28" W	464.49'
L701	S 03°42'07" W	324.44'
L702	N 86°46'19" W	101.02'
L703	S 54°32'21" E	770.01'
L704	N 33°45'35" E	356.31'
L705	N 86°46'19" W	754.62'
L706	N 33°36'14" W	129.67'
L707	N 68°05'58" E	159.83'
L708	N 03°51'15" W	14.00'
L709	N 70°34'40" E	60.00'
L710	S 03°42'07" W	526.93'
L711	S 21°27'28" E	112.42'
L712	S 15°48'53" W	227.76'

STA/OFF FROM ℄ R/W S.R. 7

(A)	214+95.78	496.36' LT.
(B)	218+40.00	735.00' LT.
(C)	220+60.00	820.00' LT.
(D)	223+45.03	459.17' LT.
(E)	223+04.96	377.35' RT.
(F)	223+03.33	423.30' RT.
(G)	222+45.70	816.26' RT.
(H)	221+52.46	865.61' RT.
(I)	220+35.09	928.16' RT.
(J)	219+15.00	992.86' RT.

STA/OFF FROM ℄ R/W S.R. 7

(K)	217+33.74	836.58' RT.
(L)	217+39.63	788.32' RT.
(M)	216+58.54	717.27' RT.
(N)	219+69.30	553.25' RT.
(P)	219+10.84	408.30' RT.
(Q)	219+08.37	400.00' RT.
(R)	229+99.55 [S]	262.56' LT.
(S)	229+90.21 [S]	337.28' LT.
(T)	226+33.38 [L]	1077.59' LT.
(U)	223+80.74	1414.13' LT.
(V)	233+74.68 [S]	1243.84' LT.

STA/OFF FROM ℄ R/W S.R. 7

(W)	236+06.28 [L]	826.59' LT.
(X)	236+05.45 [L]	677.64' LT.
(Y)	235+93.23 [L]	487.08' LT.
(Z)	235+74.68 [L]	372.60' LT.
(AA)	233+72.68 [L]	669.34' RT.
(BB)	233+08.60	894.40' RT.
(CC)	230+77.08	817.47' RT.
(DD)	229+25.73 [S]	348.44' RT.
(EE)	232+42.47	274.07' RT.
(FF)	233+58.06 [S]	385.33' RT.
(GG)	238+41.62	812.52' LT.

STA/OFF FROM ℄ R/W S.R. 7

(HH)	240+47.38	794.33' LT.
(II)	242+32.80	724.58' LT.
(JJ)	243+42.01	677.53' LT.
(KK)	243+86.86	667.87' LT.
(LL)	244+20.25	665.19' LT.
(MM)	244+56.35	661.97' LT.
(NN)	245+43.19	649.33' LT.
(OO)	246+36.95	618.40' LT.
(PP)	246+80.51	597.50' LT.
(QQ)	246+72.92	595.72' LT.
(RR)	247+91.42	388.03' LT.

STA/OFF FROM ℄ R/W S.R. 7

(SS)	248+27.05	115.59' LT.
(TT)	247+85.76	198.30' RT.
(UU)	251+40.00 [L]	160.00' RT.
(VV)	252+00.00	927.67' RT.
(WW)	247+49.00	322.65' RT.
(XX)	253+60.08	1003.06' RT.
(YY)	257+80.00	759.[illegible] RT.
(ZZ)	258+73.49	299.[illegible] RT.
(AAA)	260+66.39	307.[illegible] RT.
(BBB)	261+43.61	295.[illegible] RT.
(CCC)	257+42.93	870.[illegible] RT.

DRAFT Stage 3 - Not for Construction

09/23/2024

DATE COMPLETED	DESCRIPTION

RIGHT OF WAY BOUNDARY SHEET
MISCELLANEOUS DETAILS

PID NO. 75923

R/W DESIGNER TB
R/W REVIEWER SER

LAW-7-2.17

79 / 82

HORIZONTAL SCALE IN FEET
0 100 200 400

U:\73608714\LAW\75923\row\sheets\75923RB041.dgn 12/9/2014 11:18:37 AM slparker

LAWRENCE COUNTY
UNION TOWNSHIP
SECT. 24, T-1-N, R-16-W

(165A) TONEY RAY & RITA GAIL CAPERTON
(165B) BETSY W. RATCLIFF
(169) THE HECLA WATER ASSOCIATION, INC.
(170) THE HECLA WATER ASSOCIATION
(171) PATRICIA BURD
(175) M.L. SMITH, TRUSTEE
(252) STATE OF OHIO
(255) STATE OF OHIO
(256) MANFORD KING
(257) STATE OF OHIO
(258B) BURNIE E. WATSON
(259) GARY L. SOWARDS , SR.

NUMBER	DIRECTION	DISTANCE
L71	S 03°44'57" W	180.15'
L103	S 44°08'14" E	332.26'
L110	S 50°08'48" E	220.52'
L113	S 48°57'44" E	184.44'
L114	S 74°35'50" W	484.93'
L115	N 78°03'02" W	564.63'
L116	S 03°52'36" W	274.84'
L132	S 74°35'50" W	124.63'

(167) 25-051-1400.000

334+31.65 [L] 561.09' LT.
336+43.83 687.20' LT.
79.17'
246.83'
306.60'
(L.L.)
331+97.12 413.54' LT.
337+57.05 493.94' LT.
223.98'
L103
1167.04' TOT.
165A
165B
PRIV. DR.
442.33' S 86°31'17" E
2831.70'
SECTION 13
SECTION 24
364+34.99 2005.11' LT.
744.90'
371+31.39 2269.48' LT.

(167) ERNEST W. AND MILDRED R. BONZO, TRUSTEES 25-064-1700.000

LA-R/W
335 ST
340
345
℄ R/W & CONST. S.R. 7
350
356
360
365
370
375
380
385
390
S 03°50'17" W 1175.73'
S 03°50'17" W
S 03°52'36" W
S 03°47'22" W
1026.75'
LOT 6
LOT 5
LOT 4
LOT 3
LOT 2
LOT 1
337+62.43 610.00' RT.
340+50.00 420.00' RT.
342+76.09 391.95' RT.
S 62°52'04" E 586.16'
1306.89' 720.13'
355+50.00 260.00' RT.
357+00.00 460.00' RT.
359+00.00 510.00' RT.
361+60.00 200.00' RT.
371+26.60 193.22' RT.
369+50.00 140.00' RT.
372+22.53 113.66' RT.
370+19.38 432.88' LT.
375+57.40 1128.67' LT.
376+20.54 959.95' LT.
S 10°04'21" E 255.01'
289.22' N 66°02'13" E 411.78'
S 70°04'36" E 792.28'
121.26'
583.07' 461.81'
561.84'
1253.46'
1217.76'
1677.33'
S 03°52'36" W
S 03°44'57" W
S 03°47'22" W
L110
L113
L114
L115
L116
L132
L71
S.R. 775
EX. R/W
℄ R/W & CONST. S.R. 775
60
EX. LA R/W
EX. LA R/W
LA-R/W
ODOT GARAGE
STATE OF OHIO LAW-7-1.25 P.B. 10, PG. 116
LOT I
HARBOR VIEW UNRECORDED SUBDIVISION
PRIVATE RD.
HILL VIEW RD.
SECTION 23
SECTION 24
N 03°50'17" E 1979.73'
1560.02'
1225.52' 1795.75'
S 74°35'50" W
570.23'
S 03°50'17" W 2656.82'
351+96.65 2106.49' RT.
STONE FD. 350+66.93 2929.93' RT.

(166) ROBERT E. & SUSAN L. FLETCHER 25-065-1600.001
(167) ERNEST W. AND MILDRED R. BONZO, TRUSTEES 25-066-0100.000
(167) 25-064-1400.000
(167) ERNEST W. AND MILDRED R. BONZO, TRUSTEES 25-064-1300.000
(167) ERNEST W. AND MILDRED R. BONZO, TRUSTEES 25-064-1400.000
(167) 25-064-1700.000
(168) 25-064-1401.000
(168) 25-064-1501.000
(168) RILEY DEVELOPMENT COMPANY, INC. 25-064-1801.000
(168) 25-066-0101.000
(175) 25-065-1600.000

EX. MONUMENTS OFF S.R. 7		
STATION	OFFSET	DESCRIPTION
331+67.11	484.69' LT.	IRON PIN FOUND
331+97.98	411.56' LT.	36" OAK TREE & FENCE
337+03.76	511.47' RT.	IRON PIN FOUND
346+47.05	1283.46' LT.	IRON PIN FOUND
350+51.17	1508.99' LT.	IRON PIN FOUND
350+66.93	2929.93' RT.	STONE FOUND
362+97.45	880.84' RT.	CONC. MONUMENT FD.
371+31.39	2269.48' LT.	STONE FD. WITH "X"
372+22.53	113.66' RT.	CONC. MONUMENT FD.
374+88.04	825.51' RT.	IRON PIN FOUND
375+57.40	1128.67' LT.	STONE FD. WITH "X"
381+34.57	780.80' RT.	IRON PIN FOUND

NOTE:
SEE SHEET 2 OF 82 FOR ALTERNATE METHOD OF STATIONING FROM SPIRAL CURVES

[L] MEASURED FROM LONG TANGENT
[S] MEASURED FROM SHORT TANGENT

MONUMENT LEGEND
- STONE FOUND
- FENCE POST
- R.R.S. FOUND
- R.R.S. SET
- P.K. NAIL FOUND
- CONC. MONUMENT FD.
- REFER. MONUMENT SET
- REBAR FOUND
- AXLE FOUND
- IRON PIN FOUND
- I.P.F. WITH I.D. CAP
- ¾" BAR SET
- PROJECT CONTROL MON.
- MONUMENT BOX FD.
- MONUMENT BOX SET

DRAFT Stage 3 - Not for Construction 09/23/2024

DATE COMPLETED	DESCRIPTION

HORIZONTAL SCALE IN FEET
0 100 200 400

PID NO. 75923
R/W DESIGNER TB
R/W REVIEWER SER

RIGHT OF WAY BOUNDARY SHEET
MISCELLANEOUS DETAILS
LAW-7-2.17

80 / 82

U:\173608714\LAW\75923\row\sheets\75923RB042.dgn 12/9/2014 11:18:38 AM siparker

LAWRENCE COUNTY
UNION TOWNSHIP
SECT. 21 & 28, T-1-N, R-16-W

NUMBER	DIRECTION	DISTANCE
L71	S 19°05'44" E	44.88'
L72	S 77°55'24" W	44.89'
L73	S 84°42'32" W	26.21'
L74	N 37°30'44" E	59.89'
L75	N 70°22'50" E	20.00'
L211	S 19°05'44" E	20.15'

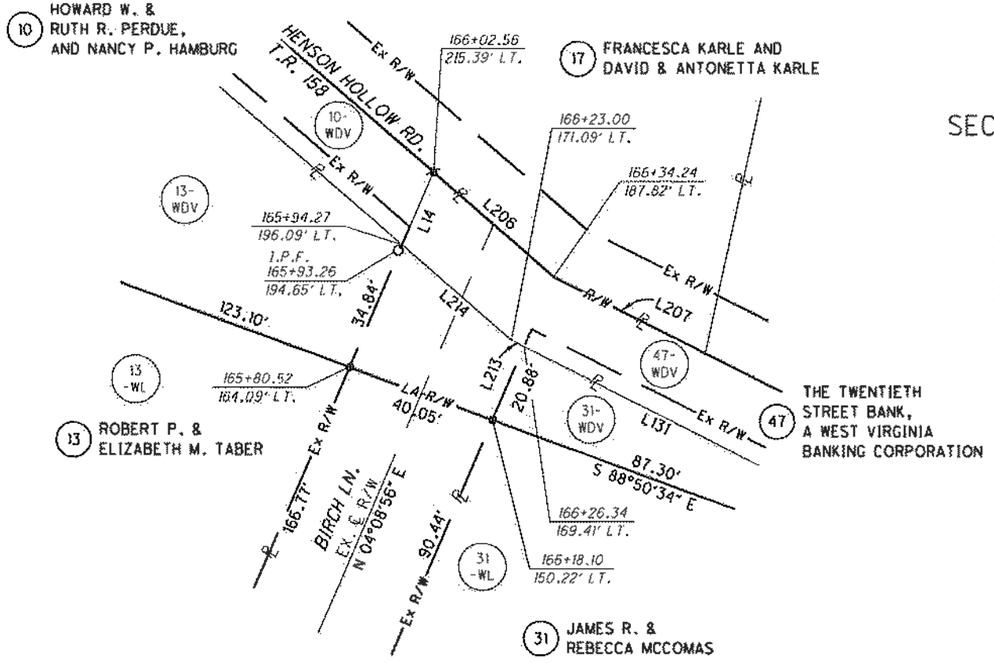

DETAIL 'A'

NUMBER	DIRECTION	DISTANCE
L14	N 04°08'56" E	21.00'
L131	N 82°18'18" W	94.42'
L206	S 68°03'49" E	42.01'
L207	S 82°18'18" E	95.18'
L213	N 82°18'18" W	3.74'
L214	N 68°03'49" W	38.09'

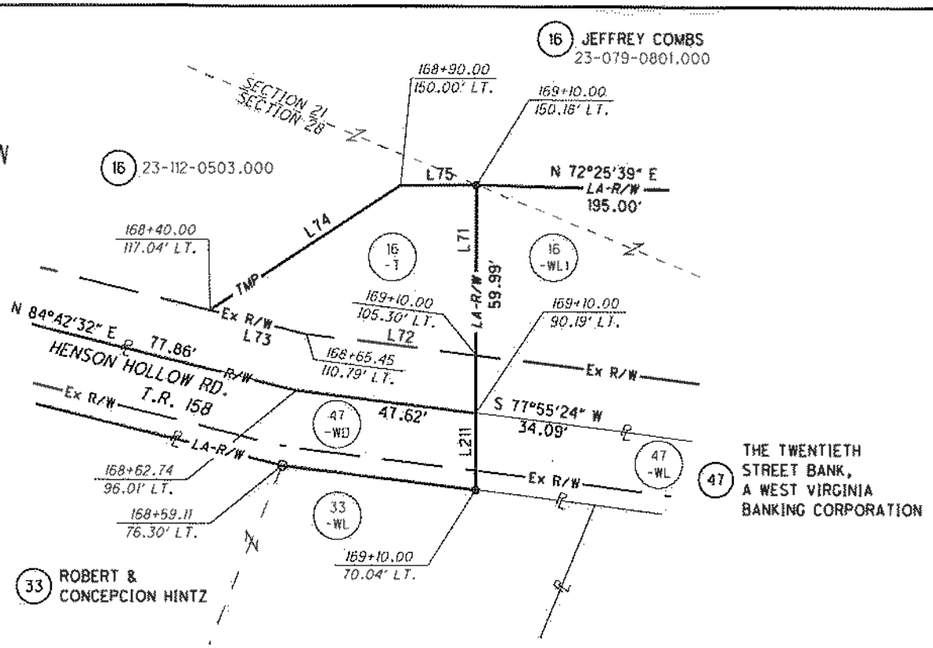

DETAIL 'B'

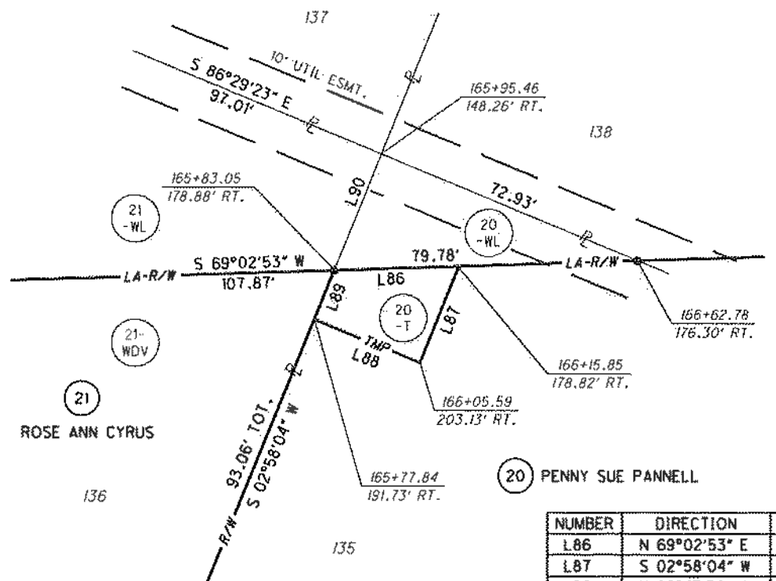

DETAIL 'C'

NUMBER	DIRECTION	DISTANCE
L86	N 69°02'53" E	32.82'
L87	S 02°58'04" W	27.32'
L88	N 86°45'50" W	30.00'
L89	N 02°58'04" E	13.87'
L90	N 02°58'04" E	33.04'

STA/OFF FROM CENTERLINE R/W & CONST. S.R. 7		
(A)	183+05.75	300.00' RT.
(B)	182+92.51	310.29' RT.
(D)	182+89.45	263.82' RT.
(E)	183+95.05	280.00' RT.
(H)	184+60.00	250.00' RT.
(P)	183+55.06	262.95' RT.

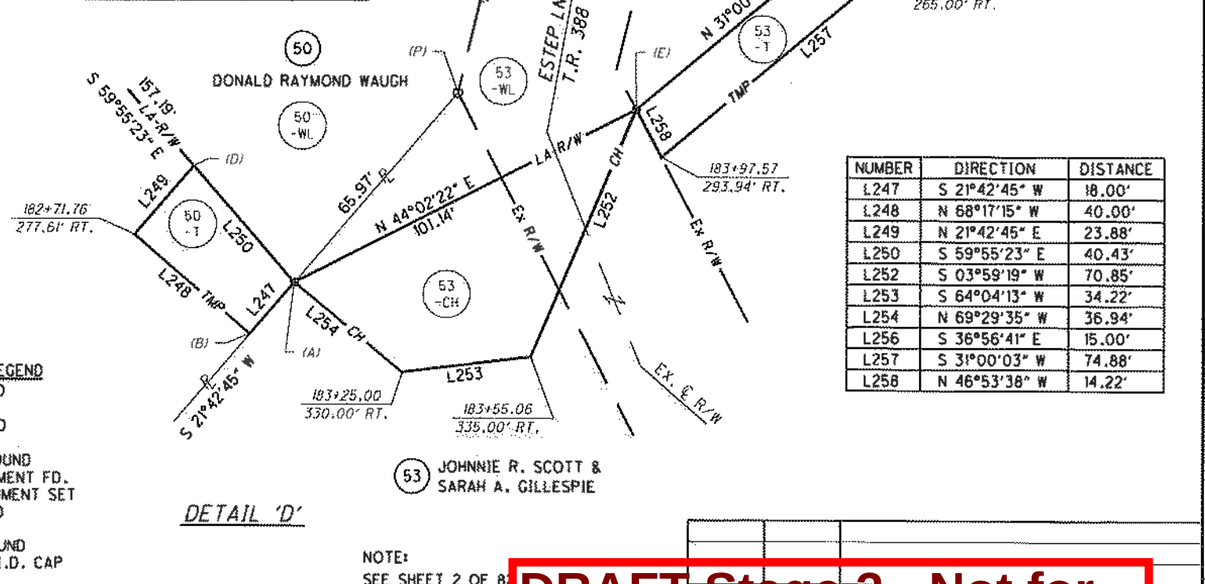

DETAIL 'D'

NUMBER	DIRECTION	DISTANCE
L247	S 21°42'45" W	18.00'
L248	N 68°17'15" W	40.00'
L249	N 21°42'45" E	23.88'
L250	S 59°55'23" E	40.43'
L252	S 03°59'19" W	70.85'
L253	S 64°04'13" W	34.22'
L254	N 69°29'35" W	36.94'
L256	S 36°56'41" E	15.00'
L257	S 31°00'03" W	74.88'
L258	N 46°53'38" W	14.22'

MONUMENT LEGEND
- STONE FOUND
- FENCE POST
- R.R.S. FOUND
- R.R.S. SET
- P.K. NAIL FOUND
- CONC. MONUMENT FD.
- REFER. MONUMENT SET
- REBAR FOUND
- AXLE FOUND
- IRON PIN FOUND
- I.P.F. WITH I.D. CAP
- ¾" BAR SET
- PROJECT CONTROL MON.
- MONUMENT BOX FD.
- MONUMENT BOX SET

NOTE:
SEE SHEET 2 OF 8 FOR ALTERNATE METHOD OF STATIONING FROM SPIRAL CURVES
[L] MEASURED FROM LONG TANGENT
[S] MEASURED FROM SHORT TANGENT

DRAFT Stage 3 - Not for Construction

09/23/2024

REV'D	DESCRIPTION
DATE COMPLETED	

RIGHT OF WAY BOUNDARY SHEET
MISCELLANEOUS DETAILS

HORIZONTAL SCALE IN FEET
0 10 20 40

PID NO. 75923

R/W DESIGNER TB
R/W REVIEWER SER

LAW-7-2.17

81 / 82

U:\17360871A\LAW\75923\row\sheets\75923RB045.dgn 12/9/2014 11:18:39 AM siparker

NUMBER	DIRECTION	DISTANCE
L49	S 04°08'56" W	138.08'
L50	S 69°02'53" W	191.19'
L51	S 28°23'24" W	122.10'
L52	N 80°16'52" W	68.49'
L53	S 59°48'09" W	32.30'
L54	S 59°48'09" W	64.54'
L55	S 64°50'39" W	88.24'
L56	N 88°58'28" E	46.69'
L57	S 13°16'41" E	7.87'
L58	S 19°00'10" W	16.91'
L59	S 35°26'22" W	44.87'
L60	S 37°32'55" W	57.36'
L61	S 12°26'44" W	14.95'
L62	S 03°51'30" E	38.91'
L63	S 14°09'45" W	73.69'
L64	S 04°08'56" W	34.84'
L65	N 88°50'34" W	123.10'
L66	N 88°58'28" E	25.37'
L67	S 04°08'56" W	166.77'
L74	N 37°30'44" E	59.89'
L75	N 70°22'50" E	20.00'
L79	S 86°56'50" W	82.36'
L80	S 78°16'14" W	84.29'
L81	S 77°55'24" W	34.09'
L82	N 19°05'44" W	59.99'
L83	N 72°25'39" E	195.00'
L84	S 42°01'13" W	88.24'
L85	S 86°59'07" E	304.83'
L87	S 02°58'04" W	27.32'
L88	N 86°45'50" W	30.00'
L90	N 02°58'04" E	33.04'
L91	S 86°29'23" E	72.93'
L92	S 69°02'53" W	79.78'
L93	N 86°01'10" W	74.53'
L94	N 04°08'56" E	22.50'
L95	N 69°02'53" E	107.87'
L96	S 02°58'04" W	93.06'
L97	S 86°29'23" E	97.01'
L98	N 04°08'56" E	77.71'
L101	S 03°02'33" W	129.20'
L102	N 04°08'56" E	103.81'
L103	S 87°02'03" E	69.85'
L105	N 86°29'23" W	22.06'
L107	S 03°02'38" W	120.10'
L108	S 69°02'53" W	24.14'
L109	S 87°02'03" E	94.99'
L110	S 86°29'23" E	79.99'
L112	N 86°29'23" W	79.99'
L113	S 87°02'03" E	79.99'
L114	S 03°02'41" W	120.86'
L116	N 86°29'23" W	159.97'
L117	S 86°29'23" E	159.97'
L118	S 03°02'45" W	122.38'
L119	S 87°02'03" E	159.97'
L120	N 86°29'23" W	79.99'
L121	S 03°02'47" W	10.00'
L122	N 86°29'23" W	79.99'
L123	S 87°02'03" E	79.99'
L124	S 03°02'47" W	38.39'
L125	S 03°02'47" W	84.75'
L126	S 87°02'03" E	54.99'
L127	S 16°54'00" W	6.07'
L128	S 61°43'21" W	62.67'
L131	S 82°18'18" E	94.42'
L132	S 85°01'52" E	76.65'
L133	S 87°45'01" W	84.22'
L134	N 88°50'34" W	87.30'
L135	N 04°08'56" E	20.88'
L136	S 02°57'57" W	126.35'

COURSES ARE DELINEATED UPON SHEET 46

NUMBER	DIRECTION	DISTANCE
L137	N 87°02'03" W	148.01'
L138	N 04°08'56" E	90.44'
L139	N 87°02'03" W	160.00'
L140	N 84°42'32" E	80.84'
L141	N 77°55'24" E	31.57'
L142	S 02°57'57" W	159.46'
L143	N 78°16'14" E	82.71'
L144	S 02°57'57" W	180.44'
L145	N 87°02'03" W	80.00'
L146	N 87°02'03" W	80.00'
L147	N 86°56'50" E	80.44'
L148	S 02°57'57" W	188.87'
L153	N 87°02'03" W	80.00'
L207	S 82°18'18" E	95.18'
L208	S 85°01'52" E	74.38'
L209	N 84°42'32" E	77.86'
L210	N 77°55'24" E	47.62'
L211	S 19°05'44" E	20.15'
L212	S 77°55'24" W	51.27'

COURSES ARE DELINEATED UPON SHEET 46

NUMBER	DIRECTION	DISTANCE
L345	S 47°54'00" E	3.93'
L347	N 58°52'19" W	40.21'
L348	N 58°13'23" W	22.16'
L350	S 38°53'11" E	17.32'
L351	S 47°54'00" E	94.17'
L352	N 58°13'23" W	53.58'
L365	S 45°30'52" W	25.79'
L370	S 44°09'29" E	20.46'
L371	S 38°53'11" E	77.03'
L373	S 58°41'27" E	39.06'
L374	S 48°45'37" E	54.61'
L375	S 44°09'29" E	20.45'
L377	N 73°01'29" E	49.68'
L378	S 60°04'35" E	18.70'
L379	S 49°03'59" W	40.04'
L384	N 49°03'59" E	143.96'
L385	S 22°36'15" W	139.88'
L386	N 58°17'05" W	61.22'
L387	N 33°43'30" E	72.13'
L388	N 26°57'09" E	70.24
L389	N 20°21'42" E	160.81'
L402	S 45°30'52" W	233.81'
L406	S 20°21'39" W	123.93'
L407	S 26°57'09" W	65.57'
L408	S 33°43'30" W	61.18'
L410	N 74°50'53" E	159.61'

COURSES ARE DELINEATED UPON SHEET 50

NUMBER	DIRECTION	DISTANCE
L545	N 47°18'01" E	66.35'
L546	S 27°06'59" E	163.00'
L547	S 47°18'01" W	66.35'
L548	N 47°18'01" E	96.34'
L552	S 47°18'01" W	65.19'
L560	N 32°28'46" W	75.30'
L561	N 38°15'19" W	788.76'
L595	N 84°06'26" W	198.82'
L600	S 48°49'15" W	208.87'
L601	S 70°52'40" W	14.35'
L602	S 55°39'17" W	86.54'
L603	S 37°40'20" E	71.36'
L604	S 86°29'08" E	79.40'
L605	N 61°33'56" E	26.99'
L614	N 46°51'06" W	502.35'

COURSES ARE DELINEATED UPON SHEET 53

NUMBER	DIRECTION	DISTANCE
L781	S 68°05'58" W	60.07'
L785	N 69°51'24" E	113.46'
L787	S 68°05'58" W	99.76'
L789	S 69°51'24" W	62.25'
L790	S 81°11'25" W	50.60'
L791	S 00°09'55" W	54.24'
L792	S 75°07'33" W	40.00'
L794	N 73°55'58" E	20.39'
L796	N 73°55'58" E	48.81'
L797	N 81°35'58" E	101.16'
L800	S 00°08'58" W	82.77'
L801	S 78°42'08" W	149.94'
L802	N 00°09'55" E	35.13'
L803	S 84°03'46" E	41.11'
L804	S 69°43'30" E	217.11'
L809	S 84°03'46" E	53.45'
L816	S 42°20'31" W	104.08'

COURSES ARE DELINEATED UPON SHEET 57

NUMBER	DIRECTION	DISTANCE
X01	N 86°59'07" W	237.90'
X02	N 86°59'07" W	127.01'
X03	S 05°16'33" E	58.88'
X04	S 11°57'00" W	0.15'
X05	S 11°57'00" W	58.02'
X13	N 58°11'58" W	120.34'
X14	N 31°37'08" E	185.22'
X15	N 89°14'21" E	18.88'
X16	S 33°29'55" E	113.56'
X17	S 89°14'21" W	160.00'
X18	N 20°21'42" E	90.92'
X19	S 33°29'55" E	126.01'
X20	N 58°11'57" W	102.21'
X21	N 26°57'09" E	40.91'
X22	N 20°21'42" E	69.89'
X23	N 89°14'21" E	141.12'
X24	S 22°25'57" W	134.31'
X25	N 26°57'09" E	29.33'
X26	S 58°11'57" E	67.24'
X27	S 49°03'59" W	134.62'
X28	S 58°11'57" E	155.31'
X29	S 34°08'11" W	20.82'
X30	S 34°08'11" W	129.32'
X31	S 31°42'55" W	42.35'
X32	N 02°50'36" E	26.24'
X33	N 64°54'06" E	23.15'
X34	S 69°31'21" E	7.35'
X35	S 02°50'36" W	63.81'
X36	N 33°40'40" E	48.89'
X37	N 02°50'36" E	12.02'
X38	S 33°39'55" E	11.34'
X41	N 54°09'33" W	178.35'
X42	S 34°18'25" E	134.03'
X43	N 58°26'21" E	2.14'
X44	S 13°49'17" E	157.45'
X45	S 70°52'40" W	146.00'
X46	S 70°52'40" W	122.94'
X47	N 58°26'21" E	126.89'
X48	N 62°17'20" E	4.52'
X49	S 12°56'54" E	185.86'
X50	N 62°17'20" E	128.66'
X51	S 70°52'40" W	128.30'
X52	S 13°49'17" E	536.82'
X53	S 12°56'54" E	481.56'
X54	S 53°12'29" W	110.29'
X55	N 32°28'46" W	35.84'
X56	N 46°24'01" E	181.87'

INTERIOR PARCEL COURSE INFORMATION

NUMBER	DIRECTION	DISTANCE
X57	S 57°38'29" E	205.55'
X58	S 57°38'29" E	59.96'
X59	S 51°41'58" W	6.66'
X60	N 36°28'24" W	169.35'
X61	S 47°18'01" W	118.85'
X62	S 51°41'58" W	28.07'
X63	N 27°06'59" W	172.54'
X64	S 51°41'58" W	69.77'
X65	N 46°45'11" W	134.34'
X66	N 53°44'43" E	604.97'
X67	N 48°49'15" E	77.10'
X68	N 86°14'14" W	12.05'
X69	S 66°48'02" E	122.00'
X70	N 86°14'14" W	213.53'
X71	N 43°17'51" E	191.27'
X82	N 38°01'53" W	166.25'
X83	N 31°47'59" E	102.25'
X84	N 51°45'05" E	163.98'
X85	S 51°16'15" E	157.52'
X86	S 43°17'51" W	127.79'
X87	S 32°23'47" W	19.04'
X93	N 42°07'57" E	181.59'
X94	S 38°01'53" E	49.85'
X95	N 40°16'21" E	249.94'
X96	S 51°16'15" E	66.41'
X97	S 51°45'05" W	61.40'
X98	N 51°16'15" W	422.48'
X101	S 70°48'01" W	155.90'
X102	N 03°13'59" E	43.27'
X103	N 70°48'01" E	120.02'
X104	S 45°01'59" E	44.44'
X106	N 38°30'08" W	54.84'
X107	S 86°46'40" E	47.76'
X108	S 18°36'40" W	42.45'
X110	S 18°36'40" W	80.75'
X111	N 38°30'08" W	46.60'
X112	N 48°41'40" E	103.68'
X113	N 31°39'34" W	125.84'
X120	S 42°53'01" W	91.57'
X121	N 38°30'08" W	88.23'
X122	S 86°46'40" E	79.05'
X123	N 31°39'34" W	90.26'
X124	N 47°38'54" E	28.63'
X125	S 48°02'57" E	89.23'
X126	N 03°13'59" E	132.82'
X127	S 48°02'57" E	52.19'
X128	S 21°38'17" E	43.95'
X129	S 47°42'38" W	84.50'
X130	S 21°38'17" E	10.82'
X131	S 47°47'32" W	92.02'
X132	N 31°39'34" W	10.17'
X133	S 21°38'17" E	60.15'
X134	S 42°19'45" W	56.94'
X136	N 31°39'34" W	40.47'
X137	N 20°27'05" E	153.24'
X138	S 57°07'34" E	51.81'
X140	N 02°59'51" E	50.00'
X141	S 88°42'24" E	144.33'
X142	S 59°29'09" E	177.32'
X143	N 86°00'40" W	132.09'
X144	N 03°24'42" E	13.05'
X190	N 38°58'57" E	66.40'
X191	S 85°06'31" E	66.98'
X192	S 34°43'39" W	63.39'
X193	N 05°59'30" E	95.14'
X194	S 64°37'22" E	121.20'
X195	N 05°59'31" E	93.04'
X196	N 21°59'28" E	4.38'
X197	S 84°37'22" E	45.88'

INTERIOR PARCEL COURSE INFORMATION

DETAIL "E"

NUMBER	DIRECTION	DISTANCE
L396	N 59°17'46" E	1.14'

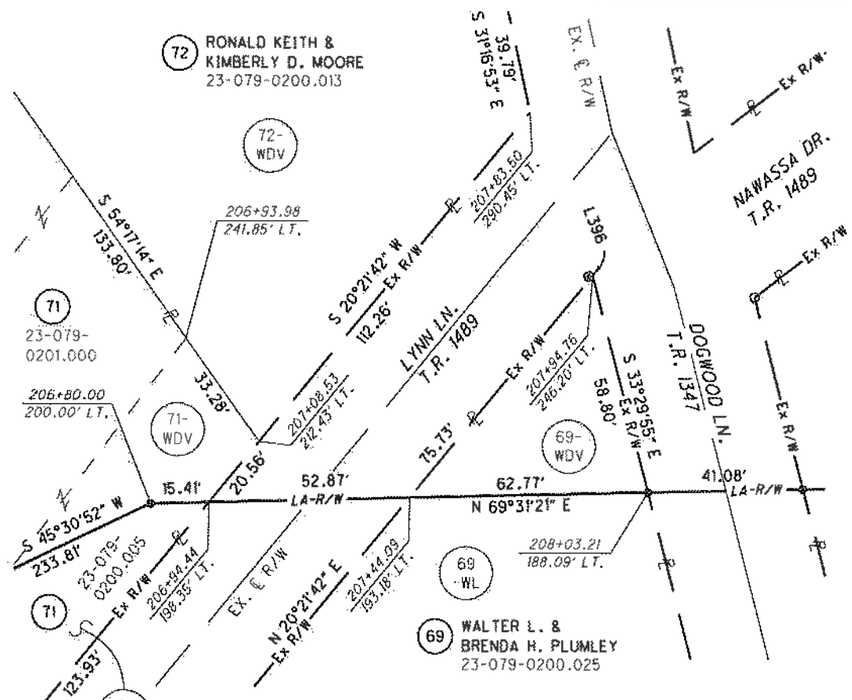

NUMBER	DIRECTION	DISTANCE
L173	S 86°39'22" E	80.91'
L174	S 83°53'17" E	17.51'
L175	S 11°57'00" W	58.17'
L176	S 64°53'44" W	85.00'

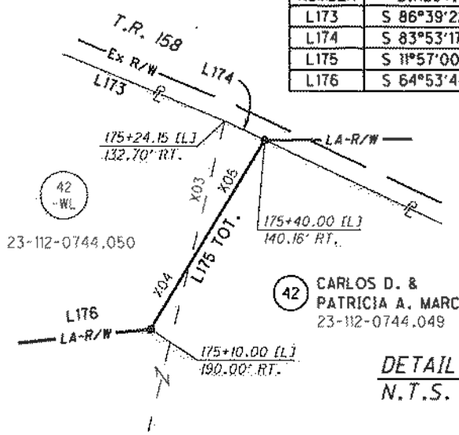

DETAIL "F"
N.T.S.

MONUMENT LEGEND
- STONE FOUND
- FENCE POST
- R.R.S. FOUND
- R.R.S. SET
- P.K. NAIL FOUND
- CONC. MONUMENT FD.
- REFER. MONUMENT SET
- REBAR FOUND
- AXLE FOUND
- IRON PIN FOUND
- I.P.F. WITH I.D. CAP
- ¾" BAR SET
- PROJECT CONTROL MON.
- MONUMENT BOX FD.
- MONUMENT BOX SET

NOTE:
SEE SHEET 2 OF 8 FOR ALTERNATE METHOD OF STATIONING FROM SPIRAL CURVES

[L] MEASURED FROM LONG TANGENT
[S] MEASURED FROM SHORT TANGENT

NO.	DESCRIPTION	DATE COMPLETED

DRAFT Stage 3 - Not for Construction
09/23/2024

HORIZONTAL SCALE IN FEET

PID NO. 75923

R/W DESIGNER TB
R/W REVIEWER SER

RIGHT OF WAY BOUNDARY SHEET
MISCELLANEOUS DETAILS

LAW-7-2.17

82/82

U:\173608714\LAW\75923\row\sheets\75923RB046.dgn 12/9/2014 11:18:40 AM sparker