STATE OF OHIO
DEPARTMENT OF TRANSPORTATION
D08-BM-FY2026

CITY OF CINCINNATI
CITY OF MOUNT HEALTHY
CITY OF NORWOOD
COLERAIN TOWNSHIP
SYCAMORE TOWNSHIP
HAMILTON COUNTY
COLUMBIA TOWNSHIP
CITY OF NORTH COLLEGE HILL
CITY OF SHARONVILLE

LOCATION MAP
SEE SHEET 2

LOCATION MAP

LATITUDE: 39°25'52" N LONGITUDE: 84°17'03" W

N

PORTION TO BE IMPROVED
INTERSTATE HIGHWAY
FEDERAL ROUTES
STATE ROUTES
COUNTY & TOWNSHIP ROADS
OTHER ROADS

DESIGN DESIGNATION

SEE NOTE 1 ON SEE SHEET 2

DESIGN EXCEPTIONS

NONE

ADA DESIGN WAIVERS

NONE

UNDERGROUND UTILITIES
Contact Two Working Days Before You Dig
OHIO811.org Before You Dig
OHIO811, 8-1-1, or 1-800-362-2764
(Non members must be called directly)

PLAN PREPARED BY:

fishbeck
FISHBECK, THOMPSON, CARR & HUBER, INC.
10856 REED HARTMAN HIGHWAY, SUITE 175
CINCINNATI, OH 45242

INDEX OF SHEETS:

FEDERAL PROJECT NUMBER

E250 (025)

RAILROAD INVOLVEMENT

IORY TRACKS WITHIN CSX RIGHT-OF-WAY

PROJECT DESCRIPTION

BRIDGE MAINTENANCE PROJECT INCLUDING VANDAL PROTECTION FENCE REPLACEMENT AND REPAIR, BRIDGE RAILING REPAIR, PEDESTRIAN RAILING PAINTING, CONCRETE OVERLAY WITH SCARIFICATION, CONCRETE PATCHING AND REPAIR, SEALING OF CONCRETE BRIDGE DECKS, SEALING OF CONCRETE SURFACES, AND BEAM COLLISION IMPACT REPAIR.

EARTH DISTURBED AREAS

PROJECT EARTH DISTURBED AREA:	0.0 ACRES
ESTIMATED CONTRACTOR EARTH DISTURBED AREA:	0.0 ACRES
NOTICE OF INTENT EARTH DISTURBED AREA:	N/A (NOI NOT REQUIRED)

LIMITED ACCESS

THIS IMPROVEMENT IS ESPECIALLY DESIGNED FOR THROUGH TRAFFIC AND HAS BEEN DECLARED A LIMITED ACCESS HIGHWAY OR FREEWAY BY ACTION OF THE DIRECTOR IN ACCORDANCE WITH THE PROVISIONS OF SECTION 5511.02 OF THE OHIO REVISED CODE.

2023 SPECIFICATIONS

THE STANDARD SPECIFICATIONS OF THE STATE OF OHIO, DEPARTMENT OF TRANSPORTATION, INCLUDING SUPPLEMENTAL SPECIFICATIONS LISTED IN THE PLANS AND CHANGES LISTED IN THE PROPOSAL SHALL GOVERN THIS IMPROVEMENT.

I HEREBY APPROVE THESE PLANS AND DECLARE THAT THE MAKING OF THIS IMPROVEMENT WILL REQUIRE THE CLOSING TO TRAFFIC OF THE ROADWAY AND THAT DETOURS WILL BE PROVIDED AS INDICATED ON SHEETS P.8 THRU P.11.

Douglas A. Gruver, P.E.
District 08 Deputy Director

Pamela Boratyn
Director, Department of Transportation

ENGINEER'S SEAL
FOR SHEETS
P.5 - P.11 & P.37 - P.42
STATE OF OHIO
GARRET THOMAS FREEMAN
E-83489
REGISTERED
PROFESSIONAL ENGINEER

ENGINEER'S SEAL
FOR SHEETS
P.1 - P.4 & P.12 - P.36
STATE OF OHIO
BRADLEY MAURICE GARRISON
E-79104
REGISTERED
PROFESSIONAL ENGINEER

STANDARD CONSTRUCTION DRAWINGS										SUPPLEMENTAL SPECIFICATIONS		SPECIAL PROVISIONS
BP-2.4	7-19-13	RM-4.2	7-19-24	PCB-91	7-17-20					SS800	1-17-25	
BP-5.1	1-17-25			VPF-1-90	7-21-23					SS809	1-17-25	
										SS832	7-19-24	
MT-95.31	7-19-19									SS843	1-19-24	
MT-95.32	4-19-19									SS844	1-17-25	
MT-95.45	7-21-23									SS847	7-19-24	
MT-95.50	7-21-17									SS849	1-18-13	
MT-97.10	4-19-19									SS896	7-21-17	
MT-101.60	1-17-25											
MT-101.70	7-19-24											
MT-101.75	7-21-23											
MT-110.10	7-19-13											

TITLE SHEET

DESIGN AGENCY
fishbeck

DESIGNER
JPC

REVIEWER
BMV 02/04/25

PROJECT ID
113006

SHEET P.01 TOTAL 42

D08-BM-FY2026

MODEL: Sheet PAPERSIZE: 34x22 (in.) DATE: 6/23/2025 TIME: 8:30:33 AM USER: gfreeman
pw:\\ohiodot-pw.bentley.com:ohiodot-pw-02\Documents\01 Active Projects\District 08_D08\113006\400-Engineering\Roadway\Sheets\113006_GT001.dgn

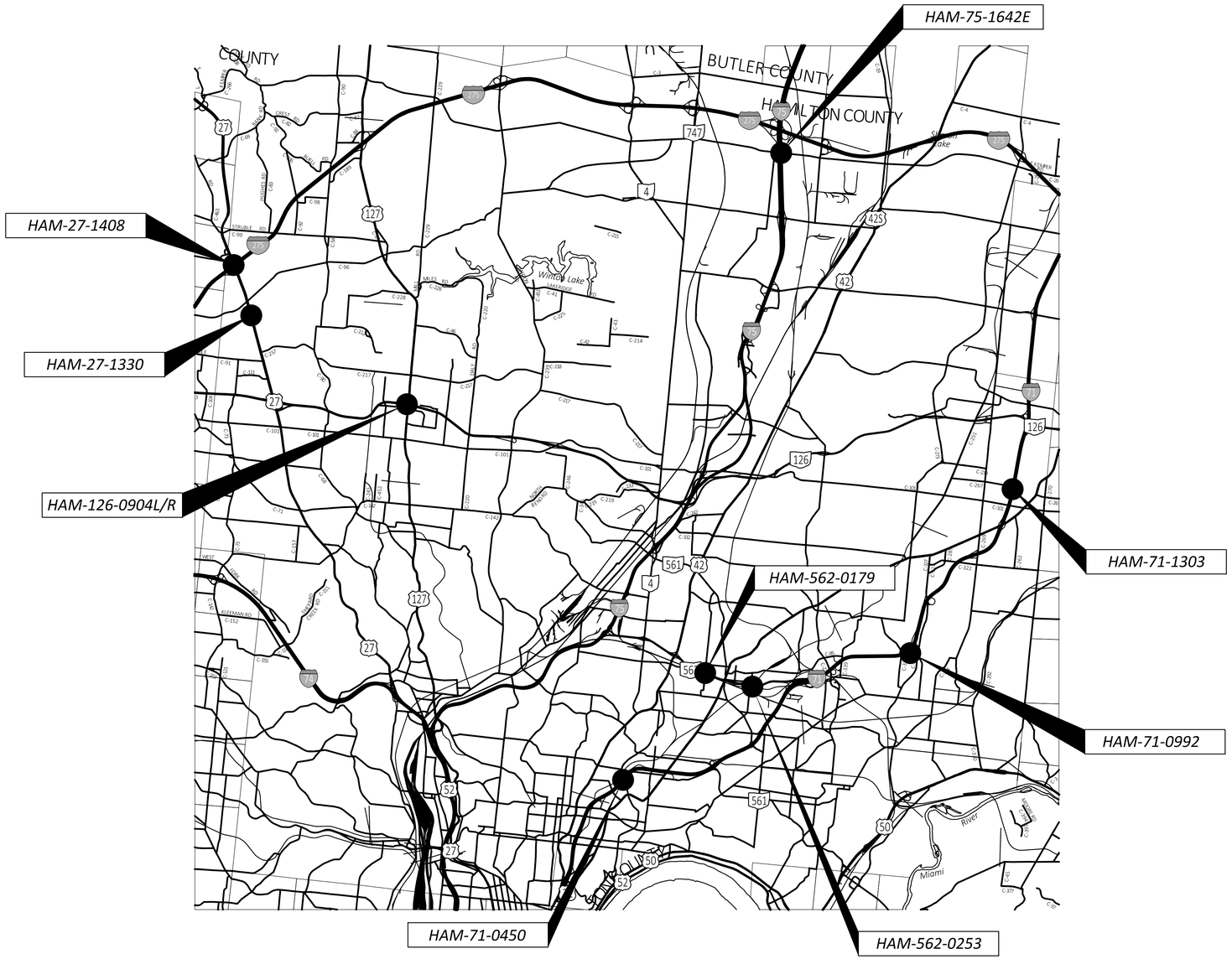

LOCATION MAP

HORIZONTAL SCALE IN MILES

0 1 0.5 2

NOTES:

1. SEE SITE PLANS FOR DESIGN DESIGNATIONS AND TRAFFIC DATA.

LOCATION MAP

DESIGN AGENCY
fishbeck

DESIGNER
JPC

REVIEWER
BMV 02/04/25

PROJECT ID
113006

SHEET P.02 TOTAL 42

D08-BM-FY2026

MODEL: Schematic Plan - Sheet PAPERSIZE: 34x22 (in.) DATE: 6/13/2025 TIME: 2:19:39 PM USER: bgarrison
Z:\2023\231473\CAD\ODOT\HAM\113006\400-Engineering\Roadway\Sheets\113006_GB001.dgn

UTILITIES

LISTED BELOW ARE UTILITIES LOCATED WITHIN THE PROJECT CONSTRUCTION LIMITS TOGETHER WITH THEIR RESPECTIVE OWNERS. THE LOCATION OF THE UTILITIES SHOWN ON THESE PLANS ARE AS OBTAINED FROM THE INFORMATION PROVIDED FROM EACH OWNER THROUGH THE REQUEST OF PLAN DRAWINGS. FIELD MARKINGS ARE NOT INCORPORATED INTO THESE PLANS.

HAM-27-1330

ALTAFIBER
221 E. 4TH ST. BLDG. 121-900
CINCINNATI, OH 45201
ROADSPROJECTS@ALTAFIBER.COM

CINCINNATI STORMWATER MANAGEMENT UTILITY
4747 SPRING GROVE AVENUE
CINCINNATI, OH 45232
SMUPLANREVIEW@CINCINNATI-OH.GOV

GREATER CINCINNATI WATER WORKS
DAN LOUIS (513) 352-3723
4747 SPRING GROVE AVENUE
CINCINNATI, OH 45232
DANIEL.LOUIS@GCWW.CINCINNATI-OH.GOV

CINCINNATI METROPOLITAN SEWER DISTRICT
1600 GEST STREET
CINCINNATI, OH 45204
MSDUTILITYREVIEW@CINCINNATI-OH.GOV

DUKE ENERGY ELECTRIC
SHANE ERHART (513) 508-9609
2010 DANA AVE.
CINCINNATI, OH 45207
SHANE.ERHART@DUKE-ENERGY.COM

DUKE ENERGY GAS
139 EAST 4TH ST., ROOM 460A
CINCINNATI, OH 45202
OH/KYHOUSEBILL@DUKE-ENERGY.COM

BRIGHTSPEED
RICHARD PATTERSON
RICHARD.T.PATTERSON@BRIGHTSPEED.COM

MCI/VERIZON
BOB DILLOW (614) 816-0361
8800 GOVERNOR HILL DR.
CINCINNATI, OH 45249
ROBERT.DILLOW@VERIZON.COM

HAM-27-1408

ALTAFIBER
221 E. 4TH ST. BLDG. 121-900
CINCINNATI, OH 45201
ROADSPROJECTS@ALTAFIBER.COM

CINCINNATI STORMWATER MANAGEMENT UTILITY
4747 SPRING GROVE AVENUE
CINCINNATI, OH 45232
SMUPLANREVIEW@CINCINNATI-OH.GOV

GREATER CINCINNATI WATER WORKS
DAN LOUIS (513) 352-3723
4747 SPRING GROVE AVENUE
CINCINNATI, OH 45232
DANIEL.LOUIS@GCWW.CINCINNATI-OH.GOV

CINCINNATI METROPOLITAN SEWER DISTRICT
1600 GEST STREET
CINCINNATI, OH 45204
MSDUTILITYREVIEW@CINCINNATI-OH.GOV

DUKE ENERGY ELECTRIC
SHANE ERHART (513) 508-9609
2010 DANA AVE.
CINCINNATI, OH 45207
SHANE.ERHART@DUKE-ENERGY.COM

CHARTER COMMUNICATIONS (SPECTRUM)
10920 KENWOOD ROAD
BLUE ASH, OH 45242
DL-SOUTHERN-OHIO-OUTSIDE-PLANT@CHARTER.COM

DUKE ENERGY GAS
139 EAST 4TH ST., ROOM 460A
CINCINNATI, OH 45202
OH/KYHOUSEBILL@DUKE-ENERGY.COM

MCI/VERIZON
BOB DILLOW (614) 816-0361
8800 GOVERNOR HILL DR.
CINCINNATI, OH 45249
ROBERT.DILLOW@VERIZON.COM

ODOT ITS LAB
1606 WEST BROAD STREET
COLUMBUS, OH 43223
(614)-387-4113
CEN.ITS.LAB@DOT.OHIO.GOV

HAM-71-0450

ALTAFIBER
221 E. 4TH ST. BLDG. 121-900
CINCINNATI, OH 45201
ROADSPROJECTS@ALTAFIBER.COM

CINCINNATI STORMWATER MANAGEMENT UTILITY
4747 SPRING GROVE AVENUE
CINCINNATI, OH 45232
SMUPLANREVIEW@CINCINNATI-OH.GOV

GREATER CINCINNATI WATER WORKS
DAN LOUIS (513) 352-3723
4747 SPRING GROVE AVENUE
CINCINNATI, OH 45232
DANIEL.LOUIS@GCWW.CINCINNATI-OH.GOV

CINCINNATI METROPOLITAN SEWER DISTRICT
1600 GEST STREET
CINCINNATI, OH 45204
MSDUTILITYREVIEW@CINCINNATI-OH.GOV

CITY OF CINCINNATI TRAFFIC
ANDREW CARTER (513) 378-6190
801 PLUM ST., ROOM 320
CINCINNATI, OH 45202
ANDREW.CARTER@CINCINNATI-OH.GOV

DUKE ENERGY ELECTRIC
SHANE ERHART (513) 508-9609
2010 DANA AVE.
CINCINNATI, OH 45207
SHANE.ERHART@DUKE-ENERGY.COM

ODOT ITS LAB
1606 WEST BROAD STREET
COLUMBUS, OH 43223
(614)-387-4113
CEN.ITS.LAB@DOT.OHIO.GOV

HAM-71-1303

ALTAFIBER
221 E. 4TH ST. BLDG. 121-900
CINCINNATI, OH 45201
ROADSPROJECTS@ALTAFIBER.COM

CINCINNATI STORMWATER MANAGEMENT UTILITY
4747 SPRING GROVE AVENUE
CINCINNATI, OH 45232
SMUPLANREVIEW@CINCINNATI-OH.GOV

GREATER CINCINNATI WATER WORKS
DAN LOUIS (513) 352-3723
4747 SPRING GROVE AVENUE
CINCINNATI, OH 45232
DANIEL.LOUIS@GCWW.CINCINNATI-OH.GOV

CINCINNATI METROPOLITAN SEWER DISTRICT
1600 GEST STREET
CINCINNATI, OH 45204
MSDUTILITYREVIEW@CINCINNATI-OH.GOV

DUKE ENERGY ELECTRIC
SHANE ERHART (513) 508-9609
2010 DANA AVE.
CINCINNATI, OH 45207
SHANE.ERHART@DUKE-ENERGY.COM

DUKE ENERGY GAS
139 EAST 4TH ST., ROOM 460A
CINCINNATI, OH 45202
OH/KYHOUSEBILL@DUKE-ENERGY.COM

ODOT ITS LAB
1606 WEST BROAD STREET
COLUMBUS, OH 43223
(614)-387-4113
CEN.ITS.LAB@DOT.OHIO.GOV

HAM-126-0904L/R

ALTAFIBER
221 E. 4TH ST. BLDG. 121-900
CINCINNATI, OH 45201
ROADSPROJECTS@ALTAFIBER.COM

CINCINNATI STORMWATER MANAGEMENT UTILITY
4747 SPRING GROVE AVENUE
CINCINNATI, OH 45232
SMUPLANREVIEW@CINCINNATI-OH.GOV

GREATER CINCINNATI WATER WORKS
DAN LOUIS (513) 352-3723
4747 SPRING GROVE AVENUE
CINCINNATI, OH 45232
DANIEL.LOUIS@GCWW.CINCINNATI-OH.GOV

CINCINNATI METROPOLITAN SEWER DISTRICT
1600 GEST STREET
CINCINNATI, OH 45204
MSDUTILITYREVIEW@CINCINNATI-OH.GOV

DUKE ENERGY ELECTRIC
SHANE ERHART (513) 508-9609
2010 DANA AVE.
CINCINNATI, OH 45207
SHANE.ERHART@DUKE-ENERGY.COM

DUKE ENERGY GAS
139 EAST 4TH ST., ROOM 460A
CINCINNATI, OH 45202
OH/KYHOUSEBILL@DUKE-ENERGY.COM

MCI/VERIZON
BOB DILLOW (614) 816-0361
8800 GOVERNOR HILL DR.
CINCINNATI, OH 45249
ROBERT.DILLOW@VERIZON.COM

ZAYO BANDWIDTH
WAYLON HIGGINS (765) 341-1199
9209 CASTLEGATE DR.
INDIANAPOLIS, IN 46256
WAYLON.HIGGINS@ZAYO.COM

CITY OF MT HEALTHY STORM SEWER
JUSTIN WESTRICH (513) 930-0194
JWESTRICH@MTHEALTHY.ORG
PUBLIC WORKS
7700 PERRY STREET
CINCINNATI, OH 45231

CITY OF MT HEALTHY TRAFFIC
JUSTIN WESTRICH (513) 930-0194
JWESTRICH@MTHEALTHY.ORG
PUBLIC WORKS
7700 PERRY STREET
CINCINNATI, OH 45231

HAM-562-0179

ALTAFIBER
221 E. 4TH ST. BLDG. 121-900
CINCINNATI, OH 45201
ROADSPROJECTS@ALTAFIBER.COM

CINCINNATI STORMWATER MANAGEMENT UTILITY
4747 SPRING GROVE AVENUE
CINCINNATI, OH 45232
SMUPLANREVIEW@CINCINNATI-OH.GOV

GREATER CINCINNATI WATER WORKS
DAN LOUIS (513) 352-3723
4747 SPRING GROVE AVENUE
CINCINNATI, OH 45232
DANIEL.LOUIS@GCWW.CINCINNATI-OH.GOV

CINCINNATI METROPOLITAN SEWER DISTRICT
1600 GEST STREET
CINCINNATI, OH 45204
MSDUTILITYREVIEW@CINCINNATI-OH.GOV

DUKE ENERGY ELECTRIC
SHANE ERHART (513) 508-9609
2010 DANA AVE.
CINCINNATI, OH 45207
SHANE.ERHART@DUKE-ENERGY.COM

DUKE ENERGY GAS
139 EAST 4TH ST., ROOM 460A
CINCINNATI, OH 45202
OH/KYHOUSEBILL@DUKE-ENERGY.COM

CITY OF NORWOOD
CLINT ZIMMERMAN (513) 458-4615
3001 HARRIS AVE, CINCINNATI, OH 45212
CZIMMERMAN@NORWOODOHIO.GOV

BRIGHTSPEED
RICHARD PATTERSON
RICHARD.T.PATTERSON@BRIGHTSPEED.COM

HAM-562-0253

ALTAFIBER
221 E. 4TH ST. BLDG. 121-900
CINCINNATI, OH 45201
ROADSPROJECTS@ALTAFIBER.COM

CINCINNATI STORMWATER MANAGEMENT UTILITY
4747 SPRING GROVE AVENUE
CINCINNATI, OH 45232
SMUPLANREVIEW@CINCINNATI-OH.GOV

GREATER CINCINNATI WATER WORKS
DAN LOUIS (513) 352-3723
4747 SPRING GROVE AVENUE
CINCINNATI, OH 45232
DANIEL.LOUIS@GCWW.CINCINNATI-OH.GOV

CINCINNATI METROPOLITAN SEWER DISTRICT
1600 GEST STREET
CINCINNATI, OH 45204
MSDUTILITYREVIEW@CINCINNATI-OH.GOV

DUKE ENERGY ELECTRIC
SHANE ERHART (513) 508-9609
2010 DANA AVE.
CINCINNATI, OH 45207
SHANE.ERHART@DUKE-ENERGY.COM

DUKE ENERGY GAS
139 EAST 4TH ST., ROOM 460A
CINCINNATI, OH 45202
OH/KYHOUSEBILL@DUKE-ENERGY.COM

CITY OF NORWOOD
CLINT ZIMMERMAN (513) 458-4615
3001 HARRIS AVE, CINCINNATI, OH 45212
CZIMMERMAN@NORWOODOHIO.GOV

MCI/VERIZON
BOB DILLOW (614) 816-0361
8800 GOVERNOR HILL DR.
CINCINNATI, OH 45249
ROBERT.DILLOW@VERIZON.COM

CHARTER COMMUNICATIONS (SPECTRUM)
10920 KENWOOD ROAD
BLUE ASH, OH 45242
DL-SOUTHERN-OHIO-OUTSIDE-PLANT@CHARTER.COM

HAM-71-0992

ALTAFIBER
221 E. 4TH ST. BLDG. 121-900
CINCINNATI, OH 45201
DERRICK.BROWN@ALTAFIBER.COM

GREATER CINCINNATI WATER WORKS
DAN LOUIS (513) 352-3723
4747 SPRING GROVE AVENUE
CINCINNATI, OH 45232
DANIEL.LOUIS@GCWW.CINCINNATI-OH.GOV

CINCINNATI METROPOLITAN SEWER DISTRICT
1600 GEST STREET
CINCINNATI, OH 45204
MSDUTILITYREVIEW@CINCINNATI-OH.GOV

DUKE ENERGY ELECTRIC
SHANE ERHART (513) 508-9609
2010 DANA AVE.
CINCINNATI, OH 45207
SHANE.ERHART@DUKE-ENERGY.COM

DUKE ENERGY GAS
139 EAST 4TH ST., ROOM 460A
CINCINNATI, OH 45202
OH/KYHOUSEBILL@DUKE-ENERGY.COM

GENERAL NOTES (1 OF 2)

DESIGN AGENCY
fishbeck

DESIGNER
JPC

REVIEWER
BMV 02/04/25

PROJECT ID
113006

SHEET P.03 TOTAL 42

D08-BM-FY2026

MODEL: Sheet PAPERSIZE: 34x22 (in.) DATE: 6/13/2025 TIME: 2:19:39 PM USER: bgarrison
Z:\2023\231473\CAD\ODOT\HAM\113006\400-Engineering\Roadway\Sheets\113006_GN001.dgn

UTILITIES (CONTINUED)

HAM-71-0992 (CONTINUED)

MCI/VERIZON
STEPHEN HOWELL (513) 839-3486
8800 GOVERNOR HILL DR.
CINCINNATI, OH 45249
STEPHEN.HOWELL@VERIZON.COM

ODOT D8 TRAFFIC
JIM JUDD (513) 933-6692
505 SOUTH SR741
LEBANON, OH 45036
JIM.JUDD@DOT.OHIO.GOV

ITS (FORMERLY ARTIMIS)
ODOT CENTRAL OFFICE OF TRAFFIC ENGINEERING
JASON YERAY (614) 466-2168
ITS LOCATE LINE: (614) 387-4113
1980 WEST BROAD STREET
COLUMBUS, OH 43223

HAM-75-1642E

ALTAFIBER
221 E. 4TH ST. BLDG. 121-900
CINCINNATI, OH 45201
DERRICK.BROWN@ALTAFIBER.COM

GREATER CINCINNATI WATER WORKS
DAN LOUIS (513) 352-3723
4747 SPRING GROVE AVENUE
CINCINNATI, OH 45232
DANIEL.LOUIS@GCWW.CINCINNATI-OH.GOV

CINCINNATI METROPOLITAN SEWER DISTRICT
1600 GEST STREET
CINCINNATI, OH 45204
MSDUTILITYREVIEW@CINCINNATI-OH.GOV

DUKE ENERGY ELECTRIC
SHANE ERHART (513) 508-9609
2010 DANA AVE.
CINCINNATI, OH 45207
SHANE.ERHART@DUKE-ENERGY.COM

DUKE ENERGY GAS
139 EAST 4TH ST., ROOM 460A
CINCINNATI, OH 45202
OH/KYHOUSEBILL@DUKE-ENERGY.COM

MCI/VERIZON
STEPHEN HOWELL (513) 839-3486
8800 GOVERNOR HILL DR.
CINCINNATI, OH 45249
STEPHEN.HOWELL@VERIZON.COM

ODOT D8 TRAFFIC
JIM JUDD (513) 933-6692
505 SOUTH SR741
LEBANON, OH 45036
JIM.JUDD@DOT.OHIO.GOV

CHARTER COMMUNICATIONS (SPECTRUM)
10920 KENWOOD ROAD
BLUE ASH, OH 45242
DL-SOUTHERN-OHIO-OUTSIDE-PLANT@CHARTER.COM

CROWN CASTLE FIBER
CRAIG SNELL (513) 898-1595
10188 INTERNATIONAL BOULEVARD
CINCINNATI, OH 45246
CRAIG.SNELL@CROWNCASTLE.COM

WORK LIMITS

THE WORK LIMITS SHOWN ON THESE PLANS ARE FOR PHYSICAL CONSTRUCTION ONLY. PROVIDE THE INSTALLATION AND OPERATION OF ALL WORK ZONE TRAFFIC CONTROL AND WORK ZONE TRAFFIC CONTROL DEVICES REQUIRED BY THESE PLANS WHETHER INSIDE OR OUTSIDE THESE WORK LIMITS.

CITY OF CINCINNATI NOTES

CONSTRUCTION NOTIFICATION:
TEN (10) BUSINESS DAYS PRIOR TO THE PRE-CONSTRUCTION MEETING THE PROJECT ENGINEER WILL NOTIFY THE CITY OF CINCINNATI LPA COORDINATOR OF THE PRECONSTRUCTION MEETING'S DATE, TIME, AND LOCATION. CONTACT CITY OF CINCINNATI, DEPARTMENT OF TRANSPORTATION AND ENGINEERING, DIRECTOR'S OFFICE , AT (513) 352-2366, ATTENTION: CHRIS KELLY AT (513) 352-3721 OR BY EMAIL AT CHRIS.KELLY@CINCINNATI-OH.GOV.

PERMITS:
A CITY OF CINCINNATI DEPARTMENT OF TRANSPORTATION AND ENGINEERING (DOTE) PERMIT IS REQUIRED PRIOR TO THE ODOT CONTRACTOR COMMENCING WORK IN THE CITY OF CINCINNATI'S PUBLIC RIGHT-OF-WAY. PERMIT APPLICATIONS FOR STREET USE, STREET BARRICADE, STREET OPENING, ETC. MAY BE MADE AT ROOM 425, CITY HALL, 801 PLUM STREET, CINCINNATI, OHIO 45202. CITY ISSUED PERMITS MAY REQUIRE MAJOR EVENT WORK RESTRICTIONS ON THE CONTRACTOR'S ACTIVITIES. THE CITY MAINTAINS A LIST OF KNOWN MAJOR EVENTS AT THE FOLLOWING WEBSITE:
HTTP://CINCINNATI-OH.GOV/POLICE/SPECIAL-EVENTS-REGULATIONS-AUCTIONS/EVENTPERMITS/.

THE CITY OF CINCINNATI RESTRICTS NIGHTTIME CONSTRUCTION WORK BETWEEN THE HOURS OF 11:00 P.M. AND 7:00 A.M. CITY ISSUED PERMITS WILL REQUIRE THE CONTRACTOR TO SECURE THE CITY ENGINEER'S APPROVAL FOR NIGHTTIME WORK.

DEMOLITION DEBRIS

THE CONTRACTOR SHALL TAKE PRECAUTIONS TO AVOID AND/OR LIMIT DEMOLITION DEBRIS FROM ENTERING WATERWAYS OR FALLING ONTO TRAFFIC LANES. ANY MATERIAL THAT DOES FALL INTO A WATERWAY OR ONTO TRAFFIC LANES SHALL BE IMMEDIATELY REMOVED AT THE CONTRACTOR'S EXPENSE. DAMAGE TO PROPERTY AS A RESULT OF FALLING DEMOLITION DEBRIS SHALL BE REPAIRED AT THE CONTRACTOR'S EXPENSE.

WHILE SEALING ANY PORTION OF THE BRIDGE STRUCTURES, AN APPROPRAITE APRON WILL BE UTILIZED TO PREVENT DEBRIS, OVER SPRAY, AND SEALANTS FROM ENTERING THE WATERWAYS OR AFFECTING VEHICULAR/PEDESTRIAN TRAFFIC AND/OR PROTECTED AREAS.

CONSTRUCTION NOISE

ACTIVITIES AND LAND USE ADJACENT TO THIS PROJECT MAY BE AFFECTED BY CONSTRUCTION NOISE. THIS PROJECT WILL COMPLY WITH ALL LOCAL NOISE ORDINANCES.

GENERAL NOTES (2 OF 2)

ITEM 614, MAINTAINING TRAFFIC

MAINTAIN ALL THE EXISTING LANES OF TRAFFIC AT ALL TIMES, EXCEPT LANE CLOSURES ARE PERMITTED IN ACCORDANCE WITH
THE LANE VALUE TABLE, BY USE OF THE EXISTING PAVEMENT.

LENGTH AND DURATION OF LANE CLOSURES AND RESTRICTIONS SHALL BE AT THE APPROVAL OF THE ENGINEER. IT IS THE INTENT TO MINIMIZE THE IMPACT TO THE TRAVELING PUBLIC. LANE CLOSURES OR RESTRICTIONS OVER SEGMENTS OF THE PROJECT IN WHICH NO WORK IS ANTICIPATED WITHIN A REASONABLE TIME FRAME, AS DETERMINED BY THE ENGINEER, SHALL NOT BE PERMITTED. THE LEVEL OF UTILIZATION OF MAINTENANCE OF TRAFFIC DEVICES SHALL BE COMMENSURATE WITH THE WORK IN PROGRESS.

NOTICE OF CLOSURE SIGNS (W20-H13), SHALL BE ERECTED BY THE CONTRACTOR PRIOR TO THE SCHEDULED ROAD OR RAMP CLOSURE IN ACCORDANCE WITH THE NOTICE OF CLOSURE TIME TABLE BELOW. (AT THE APPROVAL OF THE ENGINEER, PORTABLE CHANGABLE MESSAGE SIGNS MAY BE USED IN LIEU OF THE STANDARD FLATSHEET SIGN FOR CLOSURE DURATIONS OF LESS THAN 1 WEEK.)

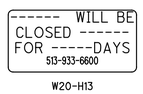

THE SIGNS SHALL BE ERECTED ON THE RIGHT-HAND SIDE OF THE ROAD FACING TRAFFIC. THEY SHALL BE PLACED SO AS NOT TO INTERFERE WITH THE VISIBILITY OF ANY OTHER TRAFFIC CONTROL SIGNS. ON ROADWAYS, THEY SHOULD BE ERECTED AT OR NEAR THE POINT OF CLOSURE.

THE SIGN SHALL DISPLAY THE DATE OF THE CLOSURE IN MMM-DD FORMAT AND THE NUMBER OF DAYS OF THE CLOSURE. THE LASTLINE OF THE W20-H13 SIGN LISTS A PHONE NUMBER WHICH AMOTORIST MAY CALL FOR ADDITIONAL INFORMATION. THIS IS TOBE A SPECIFIC OFFICE WITHIN THE DISTRIC RATHER THAN THE GENERAL SWITCHBOARD NUMBER.

THE CONTRACTOR SHALL PROVIDE, ERECT AND MAINTAIN SIGNS AND SIGN SUPPORTS, AS DETAILED IN THE OHIO MANUAL OF UNIFORM TRAFFIC CONTROL DEVICES, AND TYPE III BARRICADES, PER SCD MT-101.60 AT THE LOCATIONS SHOWN IN THE "PROJECT LOCATIONS WITH DETOURS TABLE"

ALL WORK AND TRAFFIC CONTROL DEVICES SHALL BE IN ACCORDANCE WITH CMS 614 AND OTHER APPLICABLE PORTIONS OF THE SPECIFICATIONS, AS WELL AS THE OHIO MANUAL OF UNIFORM TRAFFIC CONTROL DEVICES. PAYMENT FOR ALL LABOR, EQUIPMENT AND MATERIALS SHALL BE INCLUDED IN THE LUMP SUM CONTRACT PRICE FOR ITEM 614, MAINTAINING TRAFFIC, UNLESS SEPARATELY ITEMIZED IN THE PLAN.

PROJECT LOCATIONS WITH DETOURS TABLE

PROJECT WORK LOCATION	DETOUR PLAN SHEET
HAM-71-1303	10
HAM-562-0253	11

ITEM 614 - DETOUR SIGNING

THE CONTRACTOR SHALL PROVIDE, MAINTAIN, AND SUBSEQUENTLY REMOVE ALL DETOUR SIGNING AND SUPPORTS AS SHOWN ON SHEETS 10-11 AND ON STANDARD CONSTRUCTION DRAWING MT-101.60. ALL WORK SHALL BE PAID FOR UNDER ITEM 614, DETOUR SIGNING.

ITEM 614, MAINTAINING TRAFFIC (CONT'D)

DAY OF HOLIDAY TIME ALL LANES
OR EVENT MUST BE OPEN TO TRAFFIC

SUNDAY 12:00N FRIDAY THROUGH 6:00AM MONDAY
MONDAY 12:00N FRIDAY THROUGH 6:00AM TUESDAY
TUESDAY 12:00N MONDAY THROUGH 6:00AM WEDNESDAY
WEDNESDAY 12:00N TUESDAY THROUGH 6:00AM THURSDAY
THURSDAY 12:00N WEDNESDAY THROUGH 6:00AM FRIDAY
THURSDAY (THANKSGIVING ONLY)
6:00AM WEDNESDAY THROUGH 6:00AM MONDAY
FRIDAY 12:00N THURSDAY THROUGH 6:00AM MONDAY
SATURDAY 12:00N FRIDAY THROUGH 6:00AM MONDAY

SHOULD THE CONTRACTOR FAIL TO MEET ANY OF THESE REQUIREMENTS, THE CONTRACTOR SHALL BE ASSESSED A DISINCENTIVE PER THE LANE VALUE CONTRACT (PN 127).

ALL WORK AND TRAFFIC CONTROL DEVICES SHALL BE IN ACCORDANCE WITH C&MS 614 AND OTHER APPLICABLE PORTIONS OF THE SPECIFICATIONS, AS WELL AS THE OHIO MANUAL OF UNIFORM TRAFFIC CONTROL DEVICES. PAYMENT FOR ALL LABOR, EQUIPMENT AND MATERIALS SHALL BE INCLUDED IN THE LUMP SUM CONTRACT PRICE FOR ITEM 614, MAINTAINING TRAFFIC, UNLESS SEPARATELY ITEMIZED IN THE PLAN.

FLOODLIGHTING

FLOODLIGHTING OF THE WORK SITE FOR OPERATIONS CONDUCTED DURING NIGHTTIME PERIODS SHALL BE ACCOMPLISHED SO THAT THE LIGHTS DO NOT CAUSE GLARE TO THE DRIVERS ON THE ROADWAY. TO ENSURE THE ADEQUACY OF THE FLOODLIGHT PLACEMENT, THE CONTRACTOR AND THE ENGINEER SHALL DRIVE THROUGH THE WORK SITE EACH NIGHT WHEN THE LIGHTING IS IN PLACE AND OPERATIVE PRIOR TO COMMENCING ANY WORK. IF GLARE IS DETECTED, THE LIGHT PLACEMENT AND SHIELDING SHALL BE ADJUSTED TO THE SATISFACTION OF THE ENGINEER BEFORE WORK PROCEEDS.

PAYMENT FOR ALL LABOR, EQUIPMENT AND MATERIALS SHALL BE INCLUDED IN THE LUMP SUM CONTRACT PRICE FOR ITEM 614, MAINTAINING TRAFFIC.

WINDOW CONTRACT TABLE

USE THE FOLLOWING TABLE AS REFERRED TO IN THE PROPOSAL:

DESCRIPTION OR LOCATION OF CRITICAL WORK	CALENDER DAYS TO COMPLETE	DISINCENTIVE $ PER DAY	WORK WINDOW	
			START	END
ALL WORK REQUIRING ROAD CLOSURE AND DETOUR AT HAM-71-1303	21	$ 650	6/1/2026	8/1/2026
			6/1/2027	PROJECT COMPLETION DATE

CITY OF CINCINNATI DOTE

- IF PROJECT ACTIVITIES ARE PERFORMED IN CITY OF CINCINNATI RIGHT OF WAY, OR WILL IMPACT LOCAL ROADS, THEN THE CONTRACTORS MUST APPLY FOR A CITY PERMIT.

- PERMITS: A CITY OF CINCINNATI DOTE PERMIT IS REQUIRED PRIOR TO THE ODOT CONTRACTOR COMMENCING WORK INSIDE THE CITY'S RIGHT OF WAY. PERMITS WILL BE AT "NO COST"AND REQUIRE DOTE'S GENERAL PERMIT TO BE APPLIED FOR.

- THE CITY OF CINCINNATI'S CITIZENS AND BUSINESSES HOST MANY MAJOR EVENTS THAT MAY AFFECT TRANSPORTATION ASSETS WITHIN THE PROJECT LIMITS. CITY ISSUED PERMITS MAY REQUIRE MAJOR EVENT WORK RESTRICTIONS ON THE CONTRACTOR'S ACTIVITIES. THE CITY MAINTAINS A LIST OF KNOWN MAJOR EVENTS AT THE FOLLOWING WEBSITE:

  HTTP://CINCINNATI-OH.GOV/POLICE/SPECIAL-EVENTS-REGULATIONS-AUCTIONS/EVENT-PERMITS/ .

LANE VALUE CONTRACT

NOTE:

1. THE PERMITTED LANE CLOSURE SCHEDULE IS LOCATED ON THE ODOT WEBSITE http://plcm.dot.state.oh.us/ THE LATEST REVISION, 14 DAYS PRIOR TO THE BID, SHALL BE IN EFFECT FOR THIS PROJECT.

2. (I-71 MAINLINE AND I-71 RAMP LOCATIONS) NO CLOSURES 2 HOURS BEFORE THE EVENT START TIME NOR 2 HOURS AFTER THE EVENT END TIME FOR EVENTS AT GREAT AMERICAN BALL PARK, PAUL BROWN STADIUM, OR HERITAGE BANK CENTER. THIS RESTRICTION ALSO APPLIES TO ANY OTHER LOCAL VENUE GENERATING AN EVENT ATTENDANCE OF 10,000+.

NOTIFICATION OF TRAFFIC RESTRICTIONS

THROUGHOUT THE DURATION OF THE PROJECT, THE CONTRACTOR SHALL NOTIFY THE PROJECT ENGINEER IN WRITING OF ALL TRAFFIC RESTRICTIONS AND UPCOMING MAINTENANCE OF TRAFFIC CHANGES. THE CONTRACTOR SHALL ENSURE THE WRITTEN NOTIFICATION IS SUBMITTED IN A TIMELY MANNER TO ALLOW THE PROJECT ENGINEER TO MEET THE REQUIRED TIME FRAMES SET FORTH IN THE TABLE BELOW TO INFORM THE LISTED CONTACTS.
THIS NOTIFICATION SHALL BE RECEIVED BY THE PROJECT ENGINEER PRIOR TO THE PHYSICAL SETUP OF ANY APPLICABLE SIGNS OR MESSAGE BOARDS. INFORMATION SHOULD INCLUDE, BUT IS NOT LIMITED TO, ALL CONSTRUCTION ACTIVITIES THAT IMPACT OR INTERFERE WITH TRAFFIC AND SHALL LIST THE SPECIFIC LOCATION, TYPE OF WORK, ROAD STATUS, DATE AND TIME OF RESTRICTION, DURATION OF RESTRICTION, NUMBER OF LANES MAINTAINED, NUMBER OF LANES CLOSED, MINIMUM VERTICAL CLEARANCE, MINIMUM WIDTH OF DRIVABLE PAVEMENT, DETOUR ROUTES, IF APPLICABLE, AND ANY OTHER INFORMATION REQUESTED BY THE PROJECT ENGINEER.

NOTIFICATION TIME TABLE		
ITEM	DURATION OF CLOSURE	NOTICE DUE TO LISTED CONTACTS
RAMP & ROAD CLOSURES	>= 2 WEEKS	21 CALENDAR DAYS PRIOR TO CLOSURE
	> 12 HOURS & < 2 WEEKS	14 CALENDAR DAYS PRIOR TO CLOSURE
	< 12 HOURS	4 BUSINESS DAYS PRIOR TO CLOSURE
LANE CLOSURES & RESTRICTIONS	>= 2 WEEKS	14 CALENDAR DAYS PRIOR TO CLOSURE
	< 2 WEEKS	5 BUSINESS DAYS PRIOR TO CLOSURE
START OF CONSTRUCTION & TRAFFIC PATTERN CHANGES	N/A	14 CALENDAR DAYS PRIOR TO IMPLEMENTATION

ANY UNFORESEEN CONDITIONS NOT SPECIFIED IN THE PLANS REQUIRING TRAFFIC RESTRICTIONS SHALL ALSO BE REPORTED TO THE PROJECT ENGINEER USING THE NOTIFICATION TIME TABLE.

CONTACT THE FOLLOWING:
-DISTRICT PUBLIC INFORMATION OFFICER BY EMAIL AT DOT.D08.PIO@DOT.OHIO.GOV
-DISTRICT PERMIT SECTION BY EMAIL AT D08.PERMITS@DOT.OHIO.GOV
-CENTRAL OFFICE SPECIAL HAUL PERMITS SECTION BY EMAIL AT HAULING.PERMITS@DOT.OHIO.GOV

LANE VALUE CONTRACT TABLE

DESCRIPTION OF CRITICAL LANE/RAMP TO BE MAINTAINED	RESTRICTED TIME PERIOD	TIME UNIT	DISINCENTIVE $ PER TIME UNIT PER LANE
ALL LANES ON US-27 OPEN TO TRAFFIC	6:00 AM TO 8:00 PM	1 MINUTE	$200
ALL LANES ALL LANES ON US-27 OPEN TO TRAFFIC THE WEEKEND LANE CLOSURE MAY OCCUR A MAXIMUM OF 2 TIMES	6:00 AM MONDAY TO 8:00 PM FRIDAY	1 MINUTE	$230
ALL LANES ON SR-126 OPEN TO TRAFFIC	6:00 AM TO 10:00 AM & 1:30 PM TO 6:30 PM	1 MINUTE	$265
ALL LANES ON US-127 OPEN TO TRAFFIC	6:00 AM TO 8:00 AM & 3:00 PM TO 7:00 PM	1 MINUTE	$115
ALL LANES ON SR-562 OPEN TO TRAFFIC	6:30 AM TO 7:30 PM	1 MINUTE	$355
ALL LANES ON NB & SB I-71 OPEN TO TRAFFIC (HAM-71-0450)	4:3 5:00 AM TO 11:30 PM 4:2 6:00 AM TO 8:00 PM 4:1 6:30 AM TO 6:30 PM	1 MINUTE	$280
ALL LANES ON SOUTHBOUND I-71 OPEN TO TRAFFIC (HAM-71-0992)	3:2 6:00 AM TO 8:00 PM 3:1 5:00 AM TO 10:30 PM	1 MINUTE	$530
ALL LANES ON NORTHBOUND I-71 OPEN TO TRAFFIC (HAM-71-1303)	3:2 5:30 AM TO 12:00 PM 3:1 6:30 AM TO 8:30 PM	1 MINUTE	$430
ALL LANES ON SOUTHBOUND I-71 OPEN TO TRAFFIC (HAM-71-1303)	3:2 5:30 AM TO 10:30 PM 3:1 6:30 AM TO 10:00 PM	1 MINUTE	$430
ALL LANES ON KEMPER RD. EB & WB OPEN TO TRAFFIC	2:1 11:00 AM TO 6:00 PM	1 MINUTE	$70

MAINTENANCE OF TRAFFIC GENERAL NOTES - 1

DESIGN AGENCY

DESIGNER GTF
REVIEWER SRK 6-05-25
PROJECT ID 113006
SHEET P.5 TOTAL 42

D08-BM-FY2026

ITEM 614, LAW ENFORCEMENT OFFICER (WITH PATROL CAR) FOR ASSISTANCE DURING CONSTRUCTION OPERATIONS

USE OF LAW ENFORCEMENT OFFICERS (LEOS) BY CONTRACTORS OTHER THAN THE USES SPECIFIED BELOW WILL NOT BE PERMITTED AT PROJECT COST. LEOS SHOULD NOT BE USED WHERE THE OMUTCD INTENDS THAT FLAGGERS BE USED.

IN ADDITION TO THE REQUIREMENTS OF C&MS 614 AND THE OMUTCD, A UNIFORMED LEO WITH AN OFFICIAL PATROL CAR (CAR WITH TOP-MOUNTED EMERGENCY FLASHING LIGHTS AND COMPLETE MARKINGS OF THE APPROPRIATE LAW ENFORCEMENT AGENCY) SHALL BE PROVIDED FOR THE FOLLOWING TRAFFIC CONTROL TASKS:

DURING THE ENTIRE ADVANCE PREPARATION AND CLOSURE SEQUENCE WHERE COMPLETE BLOCKAGE OF TRAFFIC IS REQUIRED.

DURING A TRAFFIC SIGNAL INSTALLATION WHEN IMPACTING THE NORMAL FUNCTION OF THE SIGNAL OR THE FLOW OF TRAFFIC, OR WHEN TRAFFIC NEEDS TO BE DIRECTED THROUGH AN ENERGIZED TRAFFIC SIGNAL CONTRARY TO THE SIGNAL DISPLAY (E.G., DIRECTING MOTORISTS THROUGH A RED LIGHT).

IN ADDITION TO THE REQUIREMENT OF C&MS 614 AND THE OMUTCD, A UNIFORMED LEO WITH AN OFFICIAL PATROL CAR (CAR WITH TOP-MOUNTED EMERGENCY FLASHING LIGHTS AND COMPLETE MARKINGS OF THE APPROPRIATE LAW ENFORCEMENT AGENCY) SHOULD BE PROVIDED FOR THE FOLLOWING TRAFFIC CONTROL TASKS AS APPROVED BY THE ENGINEER:

FOR LANE CLOSURES: DURING INITIAL SET-UP PERIODS, TEAR DOWN PERIODS, SUBSTANTIAL SHIFTS OF A CLOSURE POINT OR WHEN NEW LANE CLOSURE ARRANGEMENTS ARE INITIATED FOR LONG-TERM LANE CLOSURES/SHIFTS (FOR THE FIRST AND LAST DAY OF MAJOR CHANGES IN TRAFFIC CONTROL SETUP).

FOR OPERATIONS WITHOUT POSITIVE PROTECTION OCCURRING WITHIN 10 FEET OF AN OPEN TRAVELED LANE THAT MEET ALL OF THE FOLLOWING CRITERIA:
ON A MULTI-LANE DIVIDED INTERSTATE, OTHER FREEWAY OR EXPRESSWAY; AND
AN AUTHORIZED SPEED LIMIT OF 45 MPH OR GREATER THAT IS IN EFFECT AT THE TIME OF THE OPERATION; AND,
AADT OF 50,000 (OR AADT OF 30,000 WITH 25% OR HIGHER PERCENT TRUCKS)

"WITHOUT POSITIVE PROTECTION" MEANS USE OF DRUMS, CONES, SHADOW VEHICLE, ETC, WITHOUT PROTECTION FROM PORTABLE BARRIER OR OTHER RIGID BARRIER ALONG THE WORK AREA. THIS PHRASE DOES NOT APPLY TO CASES WHERE POSITIVE PROTECTION IS REQUIRED. MOBILE OPERATIONS ARE REGARDED AS "WITHOUT POSITIVE PROTECTION". FOR WORK ZONES USING A COMBINATION OF BARRIER AND TEMPORARY TRAFFIC CONTROL DEVICES (CONES, DRUMS, ETC), THE DESIGNATION SHALL BE BASED UPON THE TYPE OF DEVICES USED IN THE AREA THAT WORKERS ARE LOCATED.

IF MULTIPLE ACTIVE LOCALIZED QUALIFYING WORK AREAS OCCUR WITHOUT POSITIVE PROTECTION, PER MAINLINE TRAFFIC DIRECTION, PROVIDE A UNIFORMED LEO AND OFFICIAL PATROL CAR IN ADVANCE OF:
THE FIRST ACTIVE WORK AREA THAT DRIVERS WILL ENCOUNTER; OR THE ACTIVE WORK AREA LATERALLY CLOSEST TO THE OPEN TRAVELED LANE; OR OTHER LOCATION AS APPROVED BY THE ENGINEER.
THE UNIFORMED LEO AND OFFICIAL PATROL CAR MAY RELOCATE AMONG THE LISTED LOCATIONS AS APPROPRIATE AS THE OPERATIONS PROCEED IN THE LOCALIZED QUALIFYING WORK AREAS.

ITEM 614, LAW ENFORCEMENT OFFICER (WITH PATROL CAR) FOR ASSISTANCE DURING CONSTRUCTION OPERATIONS (CONTINUED)

IN GENERAL, LEOS SHOULD BE POSITIONED IN ADVANCE OF AND ON THE SAME SIDE AS THE LANE RESTRICTION (OR AT THE POINT OF ROAD CLOSURE), AND TO MANUALLY CONTROL TRAFFIC MOVEMENTS THROUGH SIGNALIZED INTERSECTIONS IN WORK ZONES.

LEOS SHOULD NOT FORGO THEIR TRAFFIC CONTROL RESPONSIBILITIES TO APPREHEND MOTORISTS FOR ROUTINE TRAFFIC VIOLATIONS. HOWEVER, IF A MOTORIST'S ACTIONS ARE CONSIDERED TO BE RECKLESS, THEN PURSUIT OF THE MOTORIST IS APPROPRIATE.

THE LEOS WORK AT THE DIRECTION OF THE CONTRACTOR. THE CONTRACTOR IS RESPONSIBLE FOR SECURING THE SERVICES OF THE LEOS WITH THE APPROPRIATE AGENCIES AND COMMUNICATING THE INTENTIONS OF THE PLANS WITH RESPECT TO DUTIES OF THE LEOS. THE ENGINEER SHALL HAVE FINAL CONTROL OVER THE LEOS' DUTIES AND PLACEMENT, AND WILL RESOLVE ANY ISSUES THAT MAY ARISE BETWEEN THE TWO PARTIES.

ENSURE PROVIDED LEOS HAVE BEEN TRAINED APPROPRIATE TO THE JOB DECISIONS THEY ARE REQUIRED TO MAKE WHILE ON THE PROJECT, IN ACCORDANCE WITH C&MS 614.03.

THE LEO SHALL REPORT IN TO THE CONTRACTOR PRIOR TO THE START OF THE SHIFT, IN ORDER TO RECEIVE INSTRUCTIONS REGARDING SPECIFIC WORK ASSIGNMENTS DURING HIS/HER SHIFT. THE LEO IS EXPECTED TO STAY AT THE PROJECT SITE FOR THE ENTIRE DURATION OF HIS/HER SHIFT. THE LEO SHALL REPORT TO THE CONTRACTOR AT THE END OF HIS/HER SHIFT. SHOULD IT BE NECESSARY TO LEAVE THE PROJECT SITE, THE LEO SHALL NOTIFY THE ENGINEER. THE CONTRACTOR SHALL PROVIDE THE LEO WITH A TWO-WAY COMMUNICATION DEVICE THAT SHALL BE RETURNED TO THE CONTRACTOR AT THE END OF HIS/HER SHIFT.

LEOS (WITH PATROL CAR) REQUIRED BY THE TRAFFIC MAINTENANCE TASKS ABOVE SHALL BE PAID FOR ON A UNIT PRICE (HOURLY) BASIS UNDER ITEM 614, LAW ENFORCEMENT OFFICER (WITH PATROL CAR) FOR ASSISTANCE. THE FOLLOWING ESTIMATED QUANTITIES HAVE BEEN CARRIED TO THE GENERAL SUMMARY.

ITEM 614, LAW ENFORCEMENT OFFICER WITH PATROL CAR
FOR ASSISTANCE 800 HOURS

THE HOURS PAID SHALL INCLUDE ANY MINIMUM SHOW-UP TIME REQUIRED BY THE LAW ENFORCEMENT AGENCY INVOLVED.

ANY ADDITIONAL COSTS (ADMINISTRATIVE OR OTHERWISE) INCURRED BY THE CONTRACTOR TO OBTAIN THE SERVICES OF A LEO ARE INCLUDED WITH THE BID UNIT PRICE FOR ITEM 614, LAW ENFORCEMENT OFFICER WITH PATROL CAR FOR ASSISTANCE.

ITEM 614, PORTABLE CHANGEABLE MESSAGE SIGNS, AS PER PLAN

THE CONTRACTOR SHALL FURNISH, INSTALL, MAINTAIN AND REMOVE, WHEN NO LONGER NEEDED, A CHANGEABLE MESSAGE SIGN. THE SIGN SHALL BE OF A TYPE SHOWN ON A LIST OF APPROVED PCMS UNITS AVAILABLE ON THE OFFICE OF MATERIALS MANAGEMENT WEB PAGE. THE LIST CONTAINS CLASS A AND B UNITS WITH MINIMUM LEGIBILITY DISTANCES OF 800 FEET AND 650 FEET, RESPECTIVELY.

ITEM 614, PORTABLE CHANGEABLE MESSAGE SIGNS, AS PER PLAN (CONTINUED)

EACH SIGN SHALL BE TRAILER-MOUNTED AND EQUIPPED WITH A FUNCTIONAL DIMMING MECHANISM, TO DIM THE SIGN DURING DARKNESS, AND A TAMPER AND VANDAL PROOF ENCLOSURE. EACH SIGN SHALL BE PROVIDED WITH APPROPRIATE TRAINING AND OPERATION INSTRUCTIONS TO ENABLE ON-SITE PERSONNEL TO OPERATE AND TROUBLESHOOT THE UNIT. THE SIGN SHALL ALSO BE CAPABLE OF BEING POWERED BY AN ELECTRICAL SERVICE DROP FROM A LOCAL UTILITY COMPANY. THE PCMS SHALL BE DELINEATED IN ACCORDANCE WITH C&MS 614.03.

PLACEMENT, OPERATION, MAINTENANCE AND ALL ACTIVATION OF THE SIGNS BY THE CONTRACTOR SHALL BE AS DIRECTED BY THE ENGINEER. THE PCMS SHALL BE LOCATED IN A HIGHLY VISIBLE POSITION YET PROTECTED FROM TRAFFIC. THE CONTRACTOR SHALL, AT THE DIRECTION OF THE ENGINEER, RELOCATE THE PCMS TO IMPROVE VISIBILITY OR ACCOMMODATE CHANGED CONDITIONS. WHEN NOT IN USE, THE PCMS SHALL BE TURNED OFF. ADDITIONALLY, WHEN NOT IN USE FOR EXTENDED PERIODS OF TIME, THE PCMS SHALL BE TURNED AWAY FROM ALL TRAFFIC.

THE ENGINEER SHALL BE PROVIDED ACCESS TO EACH SIGN UNIT AND SHALL BE PROVIDED WITH APPROPRIATE TRAINING AND OPERATION INSTRUCTIONS TO ENABLE ODOT PERSONNEL TO OPERATE AND TROUBLESHOOT THE UNIT, AND TO REVISE SIGN MESSAGES, IF NECESSARY.

ALL MESSAGES TO BE DISPLAYED ON THE SIGN WILL BE PROVIDED BY THE ENGINEER. A LIST OF ALL REQUIRED PRE-PROGRAMMED MESSAGES WILL BE GIVEN TO THE CONTRACTOR AT THE PROJECT PRECONSTRUCTION CONFERENCE. THE SIGN SHALL HAVE THE CAPABILITY TO STORE UP TO 99 MESSAGES. MESSAGE MEMORY OR PRE-PROGRAMMED DISPLAYS SHALL NOT BE LOST AS A RESULT OF POWER FAILURES TO THE ON-BOARD COMPUTER. THE SIGN LEGEND SHALL BE CAPABLE OF BEING CHANGED IN THE FIELD. THREE-LINE PRESENTATION FORMATS WITH UP TO SIX MESSAGE PHASES SHALL BE SUPPORTED. PCMS FORMAT SHALL PERMIT THE COMPLETE MESSAGE FOR EACH PHASE TO BE READ AT LEAST TWICE.

THE PCMS SHALL CONTAIN AN ACCURATE CLOCK AND PROGRAMMING LOGIC WHICH WILL ALLOW THE SIGN TO BE ACTIVATED, DEACTIVATED OR MESSAGES CHANGED AUTOMATICALLY AT DIFFERENT TIMES OF THE DAY FOR DIFFERENT DAYS OF THE WEEK.

(THE PCMS SHALL CONTAIN A CELLULAR TELEPHONE DATA LINK WHICH WILL (IN ACTIVE CELLULAR PHONE AREAS) ALLOW REMOTE SIGN ACTIVATION, MESSAGE CHANGES, MESSAGE ADDITIONS AND REVISIONS TO TIME OF DAY PROGRAMS. THE SYSTEM SHALL ALSO PERMIT VERIFICATION OF CURRENT AND PROGRAMMED MESSAGES. ONE REMOTE DATA INPUT DEVICE (LAPTOP COMPUTER PLUS MODEM OR EQUIVALENT) SHALL BE FURNISHED FOR USE BY THE DISTRICT TRAFFIC ENGINEER, OR EQUIVALENT, AND SHALL BE INSURED AGAINST THEFT.) THE PCMS UNIT SHALL BE MAINTAINED IN GOOD WORKING ORDER BY THE CONTRACTOR IN ACCORDANCE WITH THE PROVISIONS OF C&MS 614.07. THE CONTRACTOR SHALL, PRIOR TO ACTIVATING THE UNIT, MAKE ARRANGEMENTS, WITH AN AUTHORIZED SERVICE AGENT FOR THE PCMS, TO ASSURE PROMPT SERVICE IN THE EVENT OF FAILURE. ANY FAILURE SHALL NOT RESULT IN THE SIGN BEING OUT OF SERVICE FOR MORE THAN 12 HOURS, INCLUDING WEEKENDS. FAILURE TO COMPLY MAY RESULT IN AN ORDER TO STOP WORK AND OPEN ALL TRAFFIC LANES AND/OR IN THE DEPARTMENT TAKING APPROPRIATE ACTION TO SAFELY CONTROL TRAFFIC. THE ENTIRE COST TO CONTROL TRAFFIC, ACCRUED BY THE DEPARTMENT DUE TO THE CONTRACTOR'S NONCOMPLIANCE, WILL BE DEDUCTED FROM MONEYS DUE, OR TO BECOME DUE THE CONTRACTOR ON HIS CONTRACT.

ITEM 614, PORTABLE CHANGEABLE MESSAGE SIGNS, AS PER PLAN (CONTINUED)

THE CONTRACTOR SHALL BE RESPONSIBLE FOR 24-HOUR-PER-DAY OPERATION AND MAINTENANCE OF THESE SIGNS ON THE PROJECT FOR THE DURATION OF THE PHASES WHEN THE PLAN REQUIRES THEIR USE.

PAYMENT FOR THE ABOVE DESCRIBED ITEM SHALL BE AT THE CONTRACT UNIT PRICE. PAYMENT SHALL INCLUDE ALL LABOR, MATERIALS, EQUIPMENT, FUELS, LUBRICATING OILS, SOFTWARE, HARDWARE AND INCIDENTALS TO PERFORM THE ABOVE DESCRIBED WORK.

ITEM 614, PORTABLE CHANGEABLE MESSAGE SIGN, AS PER
PLAN __2__ SIGN MONTHS
ASSUMING __2__ PCMS SIGN(S) FOR __1__ MONTH(S) AT HAM-27-1408

ITEM 614, WORK ZONE IMPACT ATTENUATOR FOR 24" WIDE HAZARDS (BIDIRECTIONAL)

THIS ITEM SHALL CONSIST OF FURNISHING AND INSTALLING A NON-GATING IMPACT ATTENUATOR. FURNISH AN IMPACT ATTENUATOR FROM THE OFFICE OF ROADWAY ENGINEERING'S APPROVED LIST FOR WORK ZONE IMPACT ATTENUATORS, FROM THE ROADWAY STANDARDS APPROVED PRODUCTS WEB PAGE.

INSTALLATION SHALL BE AT THE LOCATIONS SPECIFIED IN THE PLANS IN ACCORDANCE WITH THE MANUFACTURER'S SPECIFICATIONS.

THE CONTRACTOR SHALL REPAIR OR REPLACE A DAMAGED UNIT WITHIN 24 HOURS OF A DAMAGING IMPACT.

WHEN BIDIRECTIONAL DESIGNS ARE SPECIFIED, THE CONTRACTOR SHALL SUPPLY APPROPRIATE TRANSITIONS.

WHEN GATING IMPACT ATTENUATORS ARE DESIRED, THE CONTRACTOR SHALL SUBMIT DOCUMENTATION TO THE ENGINEER FOR ACCEPTANCE.

THE COST FOR THE ADDITIONAL BARRIER REQUIRED FOR A GATING IMPACT ATTENUATOR SHALL BE INCLUDED IN THE COST OF THE GATING IMPACT ATTENUATOR.

PAYMENT FOR THE ABOVE WORK SHALL BE MADE AT THE UNIT PRICE BID AND SHALL INCLUDE ALL LABOR, TOOLS, EQUIPMENT AND MATERIALS NECESSARY TO CONSTRUCT AND MAINTAIN A COMPLETE AND FUNCTIONAL IMPACT ATTENUATOR SYSTEM, INCLUDING ALL RELATED BACKUPS, TRANSITIONS, LEVELING PADS, HARDWARE AND GRADING, NOT SEPARATELY SPECIFIED, AS REQUIRED BY THE MANUFACTURER.

DELINEATION OF PORTABLE AND PERMANENT BARRIER

BARRIER REFLECTORS AND OBJECT MARKERS SHALL BE INSTALLED ON ALL PORTABLE BARRIER (PB) USED FOR TRAFFIC CONTROL; AND, ON PERMANENT CONCRETE BARRIER (INCLUDING BRIDGE PARAPETS) LOCATED WITHIN 5 FEET OF THE EDGE OF THE ADJACENT TRAVEL LANE.

BARRIER REFLECTORS SHALL CONFORM TO C&MS 626, EXCEPT THAT THE SPACING SHALL BE AS PER TRAFFIC SCD MT-101.70. OBJECT MARKERS AND THEIR INSTALLATION SHALL CONFORM TO C&MS 614.03 AND SCD MT-101.70. WHEN THE PB CONTAINS GLARE SCREEN, ONE SET OF THREE VERTICAL STRIPES OF SHEETING SHALL BE CONSIDERED EQUIVALENT TO AN OBJECT MARKER, ONE-WAY.

PAYMENT SHALL BE FULL COMPENSATION FOR ALL MATERIAL, LABOR, INCIDENTALS AND EQUIPMENT NECESSARY FOR FURNISHING, INSTALLING, MAINTAINING AND REMOVING EACH OF THE ABOVE ITEMS.

SEQUENCE OF CONSTRUCTION

HAM-71-13.03:
CLOSE KUGLER MILL RD. AT THE BRIDGE LOCATION. MAINTAIN ACCESS TO THE ADJACENT DRIVES AT ALL TIMES. DETOUR TRAFFIC AS SHOWN ON SHEET 10. COMPLETE CRITICAL WORK ACCORDING TO THE WINDOW CONTRACT TABLE.

HAM-27-14.08:
CLOSE THE RIGHT LANE OF NORTHBOUND US-27 FOR A WEEKEND IN ACCORDANCE WITH THE LVCT AS SHOWN ON SHEETS 8-9 AND PROVIDE EXTRA ADVANCED WARNING SIGNS PER MT-95.50. MAINTAIN A 10' MIN. THRU LANE AND MAINTAIN THE NORTHBOUND US 27 LEFT TURN TO WESTBOUND I-275 DURING THE LANE CLOSURE. THE MAXIMUM NUMBER RIGHT LANE CLOSURES OVER A WEEKEND, AS DEFINED BY THE LVCT, IS TWO (2).

CLOSE THE RIGHT LANE OF SOUTHBOUND US-27 FOR A WEEKEND IN ACCORDANCE WITH THE LVCT AS SHOWN ON SHEETS 8-9 AND PROVIDE EXTRA ADVANCED WARNING SIGNS PER MT-95.50. MAINTAIN A 10' MIN. THRU LANE AND MAINTAIN THE NORTHBOUND US 27 LEFT TURN TO WESTBOUND I-275 DURING THE LANE CLOSURE. THE MAXIMUM NUMBER RIGHT LANE CLOSURES OVER A WEEKEND, AS DEFINED BY THE LVCT, IS TWO (2).

HAM-27-13.30:
MAINTAIN ALL LANES ON US-27, EXCEPT SHORT-TERM LANE CLOSURES ARE PERMITTED IN ACCORDANCE WITH THE LVCT. CLOSE BRIDGE TO PEDESTRIAN TRAFFIC AS NECESSARY TO COMPLETE WORK AND DURING CURING PERIODS. DETOUR PEDESTRIAN TRAFFIC TO THE CROSS WALK 0.05 MILES NORTH OF BRIDGE No.: HAM-27-13.30 PER MT-110.10.

HAM-126-09.04 L/R:
MAINTAIN ALL LANES ON SR-126, EXCEPT SHORT-TERM LANE CLOSURES ARE PERMITTED IN ACCORDANCE WITH THE LVCT. CLOSE THE SHOULDER PER MT-95.45 DURING THE REMOVAL AND REPAIR OF THE CONCRETE BRIDGE RAILING. LANE CLOSURES ON US-127 ARE PERMITTED IN ACCORDANCE WITH THE LVCT.

HAM-562-01.79:
MAINTAIN ALL LANES ON SR-562, EXCEPT SHORT-TERM LANE CLOSURES ARE PERMITTED IN ACCORDANCE WITH THE LVCT.

HAM-562-02.53:
MAINTAIN A MINIMUM OF ONE LANE OF TWO-WAY TRAFFIC USING FLAGGERS DURING WORKING HOURS. CLOSE THE SIDEWALK ON THE BRIDGE DURING WORKING HOURS AND DURING CURING PERIODS. DETOUR PEDESTRIAN TRAFFIC FROM HARRIS AVE. TO BEECH ST. TO NORWOOD AVE. PER MT-110.10.

HAM-71-04.50:
MAINTAIN ALL LANES ON IR-71, EXCEPT SHORT-TERM LANE CLOSURES ARE PERMITTED IN ACCORDANCE WITH THE LVCT.

HAM-71-09.92:
MAINTAIN ALL LANES ON IR-71, EXCEPT SHORT-TERM LANE CLOSURES ARE PERMITTED IN ACCORDANCE WITH THE LVCT.

HAM-75-16.52:
MAINTAIN ALL LANES ON IR-75. MAINTAIN ALL LANES OF TRAFFIC ON KEMPER ROAD EXCEPT SHORT-TERM LANE CLOSURES ARE PERMITTED IN ACCORDANCE WITH THE LVCT.

APPROVED MAINTENANCE OF TRAFFIC (MOT) POLICY EXCEPTIONS

PORTIONS OF THE MOT PLANS AS DESCRIBED BELOW HAVE APPROVED MOT EXCEPTIONS PER TRAFFIC MANAGEMENT IN WORK ZONES POLICY (21-008(P)) AND STANDARD PROCEDURE (123-001(SP)).

APPROVED MOT EXCEPTIONS INCLUDE:

- THE CONTRACTOR IS PERMITTED TO CLOSE ONE LANE IN EACH DIRECTION AT BRIDGE No.: HAM-27-1408 THAT CARRIES US-27 OVER I-275 TO PERFORM CONCRETE OVERLAY ON A WEEKEND. A WEEKEND IS DEFINED AS BEGINNING FRIDAY NIGHT AT 8 PM AND ENDING MONDAY MORNING AT 6 AM. THIS WEEKEND LANE CLOSURE IS PERMITTED TO OCCUR A MAXIMUM OF 2 TIMES. A DISINCENTIVE SHALL BE ASSESSED IN THE AMOUNT SPECIFIED IN THE LANE VALUE CONTRACT TABLE FOR EACH TIME PERIOD THE ROADWAY REMAINS CLOSED TO TRAFFIC BEYOND THE SPECIFIED LIMIT.
  PROVIDE WZQDWS DURING EACH CLOSURE. THIS CLOSURE IS NOT PERMITTED TO OCCUR 2 HOURS BEFORE TO 2 HOURS AFTER EVENTS AT GREAT AMERICAN BALL PARK, PAYCOR STADIUM, OR HERITAGE BANK AREA. THIS RESTRICTION ALSO APPLIES TO ANY OTHER DOWNTOWN VENUE GENERATING AN EVENT ATTENDANCE OF 10,000+.

2 PCMS SHALL BE USED TO PROVIDE NOTICE OF CLOSURE AND DETOUR INFORMATION BEFORE AND DURING THE CLOSURE. A DISINCENTIVE IN THE AMOUNT OF $300 PER MINUTE SHALL BE ASSESSED FOR FAILING TO REOPEN THE RAMP BY THE TIME DESCRIBED ABOVE.

A MAINTENANCE OF TRAFFIC MEETING SHALL BE HELD A MINIMUM OF 30 CALENDAR DAYS PRIOR TO IMPLEMENTATION OF EACH APPROVED MOT EXCEPTION. THIS MEETING SHALL INCLUDE THE DISTRICT WORK ZONE TRAFFIC MANAGER & HAMILTON COUNTY ADMINISTRATOR, AS WELL AS THE CONTRACTOR, AND ANY SUBCONTRACTORS INVOLVED WITHTEMPORARY TRAFFIC CONTROL.

IN ADDITION TO ANY NOTIFICATIONS REQUIRED IN OTHER NOTES, THE CONTRACTOR SHALL NOTIFY THE PROJECT ENGINEER AT LEAST 3 BUSINESS DAYS IN ADVANCE OF IMPLEMENTATION OF THE APPROVED MOT EXCEPTIONS REFERENCED ABOVE SO THAT THE PROJECT ENGINEER CAN SEND EMAIL NOTIFICATION TO THE OFFICE OF ROADWAY ENGINEERING, STATEWIDE TMC, DWZTM AND SPECIAL HAULING PERMITS AT LEAST 2 BUSINESS DAYS IN ADVANCE OF THE IMPLEMENTATION OF THE APPROVED MOT EXCEPTION(S) REFERENCED ABOVE. REFERENCE "EXCEPTION REQUEST APPROVAL DATED 05/11/2023 FOR PID 113006" IN THE NOTIFICATION AND OTHER CORRESPONDENCE.

ANY CHANGES TO THE MOT THAT IMPACT THE PREVIOUSLY APPROVED MOT EXCEPTIONS LISTED ABOVE SHALL BE APPROVED IN WRITING BY THE MOT EXCEPTION COMMITTEE (MOTEC). IN THE EVENT THAT SUCH CHANGES ARE PROPOSED, THE REQUEST SHALL BE COORDINATED THROUGH THE DISTRICT WORK ZONE TRAFFIC MANAGER (DWZTM) A MINIMUM OF 30 CALENDAR DAYS PRIOR TO THE DESIRED IMPLEMENTATION DATE. IF THE DISTRICT AGREES WITH THE PROPOSED CHANGES THE DWZTM SHALL SEEK APPROVAL FROM THE MOTEC. IN THE EVENT THE PROPOSED CHANGES ARE APPROVED IN WRITING, THE CLOSURES ARE STILL SUBJECT TO NOTIFICATION REQUIREMENTS WITHIN THIS NOTE PRIOR TO IMPLEMENTATION.

WORK ZONE QUEUE DETECTION WARNING SYSTEM

THE CONTRACTOR SHALL FURNISH, INSTALL, AND MAINTAIN AN APPROVED WORK ZONE QUEUE DETECTION WARNING SYSTEM (WZQDWS) AS PER SUPPLEMENTAL SPECIFICATION 896.

THE PROBABLE INITIAL LOCATIONS OF THE WZQDWS DEVICES ARE TO BE PROVIDED AT THE MOTPE MEETING. IT IS EXPECTED THAT THESE LOCATIONS WILL VARY BASED ON PLANNED OR UNPLANNED PHASE AND TRAFFIC PATTERN CHANGES. PLACEMENT, OPERATION, MAINTENANCE AND ALL ACTIVATION OF THE DEVICES BY THE CONTRACTOR SHALL BE DIRECTED BY THE ENGINEER.

THE FOLLOWING TRAFFIC SENSOR THRESHOLDS AND PORTABLE CHANGEABLE MESSAGE SIGNS (PCMS) MESSAGES SHALL BE USED:

GREATER THAN OR EQUAL TO 50 MPH - USE FOUR CORNER FLASHING CAUTION MODE BETWEEN 50 MPH AND 25 MPH - TRAFFIC AHEAD XX MPH / SLOW DOWN BELOW OR EQUAL TO 25 MPH - TRAFFIC AHEAD XX MPH / PREPARE TO STOP

FOUR CORNER FLASHING CAUTION MODE SHALL CONSIST OF THE USE OF ONE ASTERISK IN EACH CORNER OF THE PCMS DISPLAY (4 TOTAL ASTERISKS).

XX SHALL BE ROUNDED UP TO THE NEAREST MULTIPLE OF 5 MPH MINUS 1. OCCUPANCY MAY BE DIRECTED TO BE USED BASED ON CERTAIN TRAFFIC CONDITIONS AND SCENARIOS. ODOT WILL DIRECT THE CONTRACTOR OF THE THRESHOLDS TO BE USED FOR THOSE AREAS WHERE OCCUPANCY IS DIRECTED TO BE USED.

THE FOLLOWING ESTIMATED QUANTITY HAS BEEN CARRIED TO THE GENERAL SUMMARY.

ITEM 896, PORTABLE NON-INTRUSIVE TRAFFIC SENSOR,
CLASS II _4_ SIGN MONTH ASSUMING
_4_ SENSOR(S) FOR _1_ MONTH

ITEM 896, PORTABLE CHANGEABLE MESSAGE SIGN, AS
PER PLAN _1_ SIGN MONTH ASSUMING
_1_ PCMS SIGN(S) FOR _1_ MONTH

MAINTENANCE OF TRAFFIC GENERAL NOTES

DESIGN AGENCY

DESIGNER
GTF

REVIEWER
SRK 6-05-25

PROJECT ID
113006

SHEET P.7 TOTAL 42

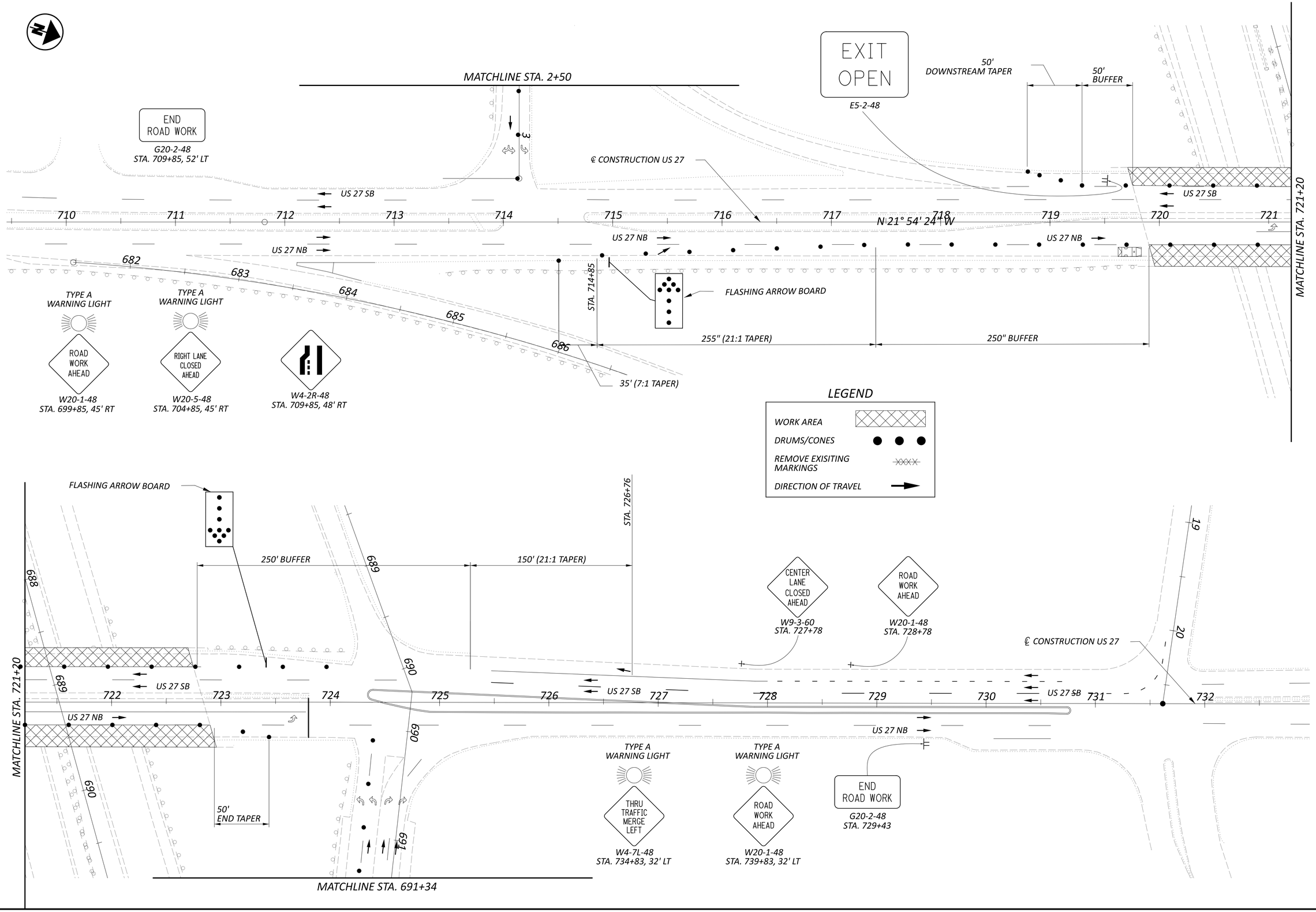

MAINTENANCE OF TRAFFIC
BRIDGE No.: HAM-27-1408

DESIGN AGENCY

DESIGNER
GTF

REVIEWER
SRK 6-05-25

PROJECT ID
113006

SHEET P.8 TOTAL 42

D08-BM-FY2026

MODEL: Sheet PAPERSIZE: 34x22 (in.) DATE: 6/23/2025 TIME: 7:45:48 AM USER: gfreeman
pw:\\ohiodot-pw.bentley.com:ohiodot-pw-02\Documents\01Active Projects\District 08_D08\113006\400-Engineering\MOT\Sheets\113006_MP001.dgn

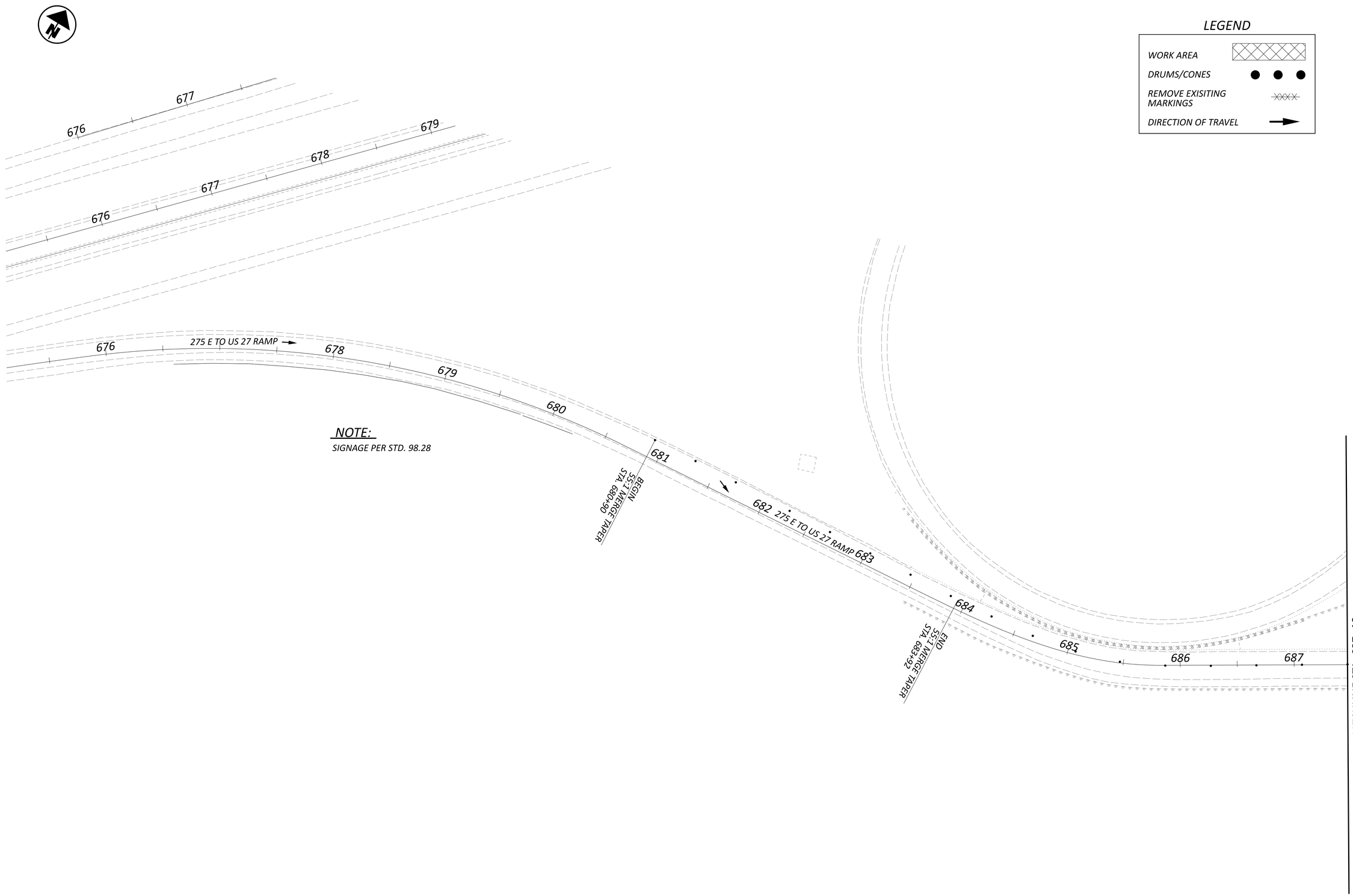

NOTE:

SIGNAGE PER STD. 98.28

LEGEND

WORK AREA	
DRUMS/CONES	● ● ●
REMOVE EXISITING MARKINGS	
DIRECTION OF TRAVEL	→

HORIZONTAL SCALE IN FEET
0 20 40 80

MAINTENANCE OF TRAFFIC PLAN
BRIDGE No.: HAM-27-1408

DESIGN AGENCY

DESIGNER
GTF

REVIEWER
SRK 6-05-25

PROJECT ID
113006

SHEET P.9 TOTAL 42

D08-BM-FY2026

MODEL: Sheet PAPERSIZE: 34x22 (in.) DATE: 6/23/2025 TIME: 7:47:34 AM USER: gtfreeman
pw:\\ohiodot-pw.bentley.com:ohiodot-pw-02\Documents\01 Active Projects\District 08_D08\113006\400-Engineering\MOT\Sheets\113006_MP002.dgn

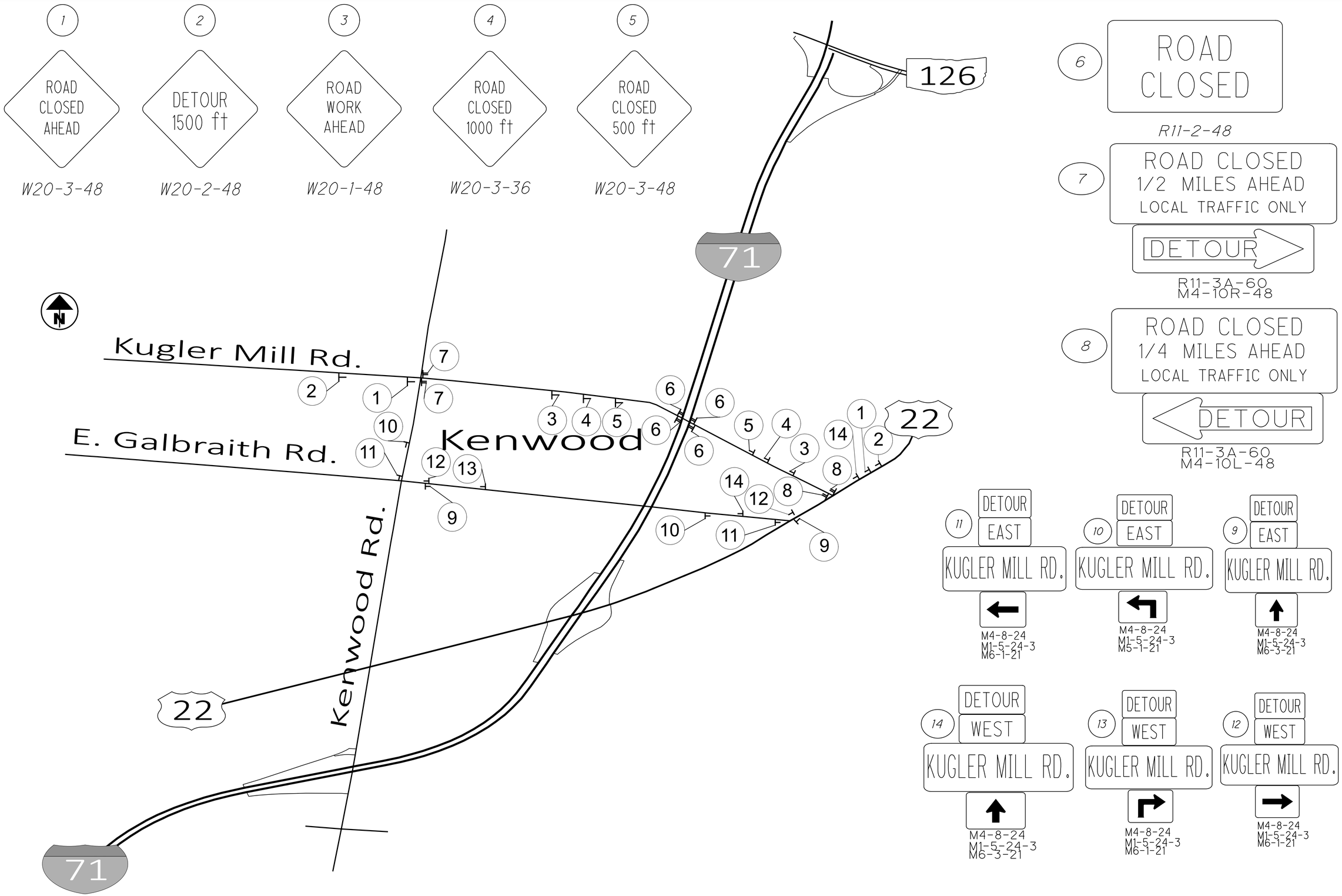

DETOUR PLAN - HAM-71-1303

DESIGN AGENCY

DESIGNER
WWH

REVIEWER
PMM 6-05-25

PROJECT ID
113006

SHEET P.10 TOTAL 42

D08-BM-FY2026

MODEL: Sheet PAPERSIZE: 34x22 (in.) DATE: 6/23/2025 TIME: 7:50:36 AM USER: gfreeman
pw:\\ohiodot-pw.bentley.com:ohiodot-pw-02\Documents\01 Active Projects\District 08_D08\113006\400-Engineering\MOT\Sheets\113006_MD001.dgn

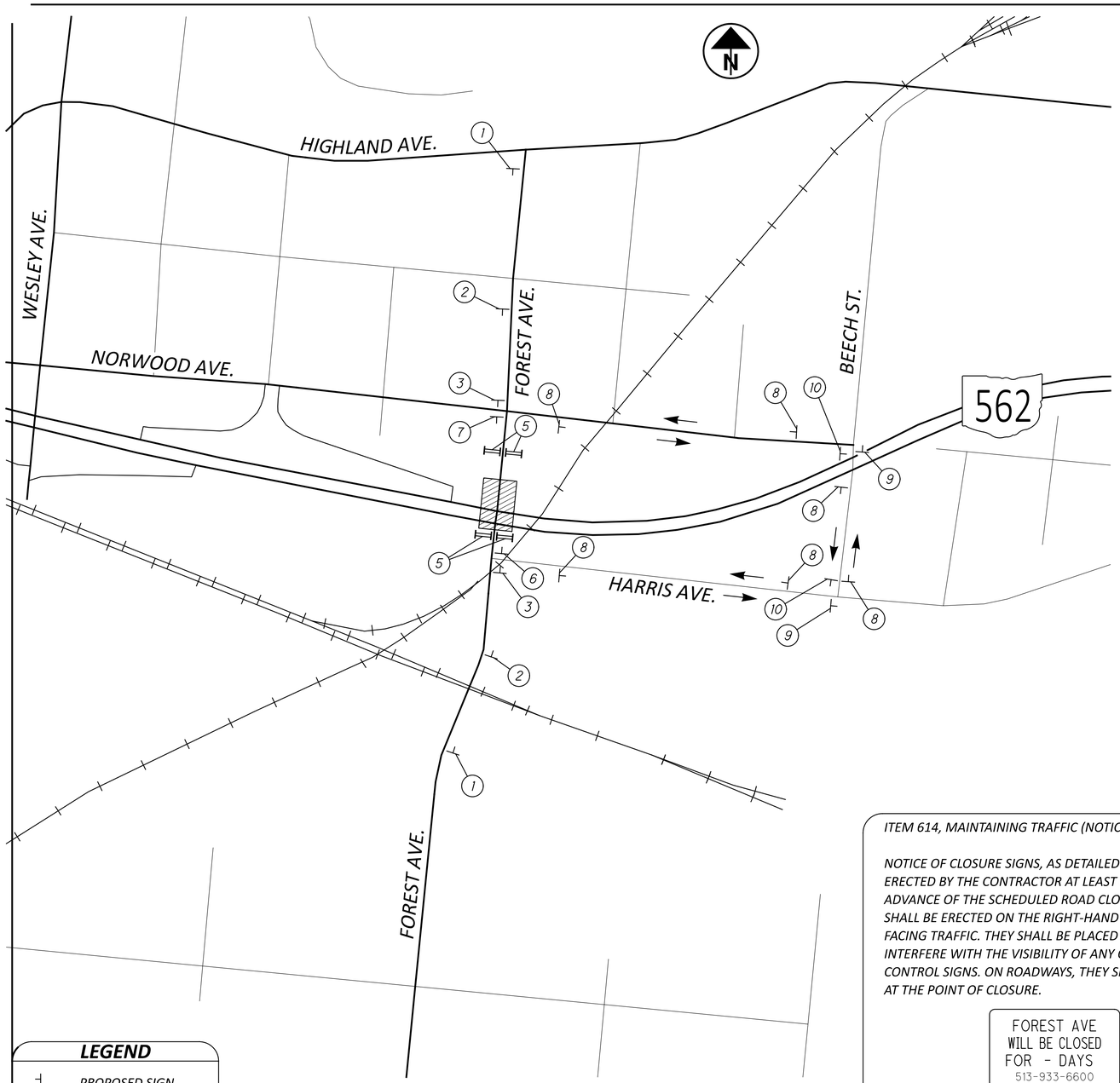

LEGEND

- PROPOSED SIGN
- TYPE III BARRICADE
- SIGN NUMBER
- 562 STATE ROUTE
- RAILROAD
- WORK AREA
- OFFICIAL SIGNED DETOUR ROUTE

NOT TO SCALE

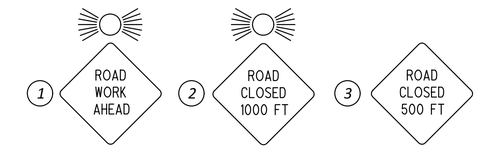

W20-1-48 WITH TYPE A WARNING LIGHT

W20-3-48 WITH TYPE A WARNING LIGHT

W20-3-48

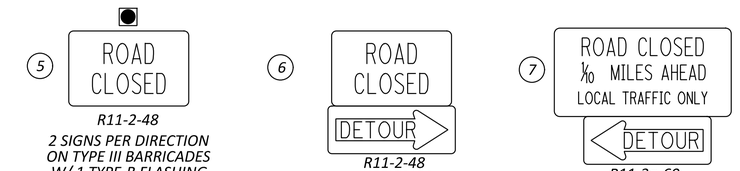

R11-2-48
2 SIGNS PER DIRECTION ON TYPE III BARRICADES W/ 1 TYPE-B FLASHING WARNING LIGHT (PER SIGN)

R11-2-48
M4-10R-48
ON TYPE III BARRICADES

R11-3a-60
M4-10L-48
ON TYPE III BARRICADES

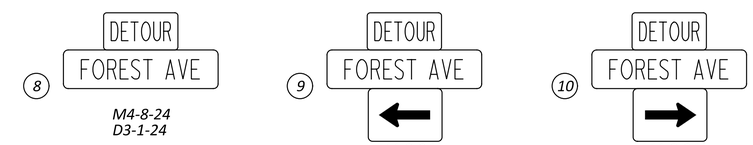

M4-8-24
D3-1-24

M4-8-24
D3-1-24
M6-1L-24

M4-8-24
D3-1-24
M6-1R-24

ITEM 614, MAINTAINING TRAFFIC (NOTICE OF CLOSURE SIGN)

NOTICE OF CLOSURE SIGNS, AS DETAILED BELOW, SHALL BE ERECTED BY THE CONTRACTOR AT LEAST ONE WEEK IN ADVANCE OF THE SCHEDULED ROAD CLOSURE. THE SIGNS SHALL BE ERECTED ON THE RIGHT-HAND SIDE OF THE ROAD FACING TRAFFIC. THEY SHALL BE PLACED SO AS NOT TO INTERFERE WITH THE VISIBILITY OF ANY OTHER TRAFFIC CONTROL SIGNS. ON ROADWAYS, THEY SHOULD BE ERECTED AT THE POINT OF CLOSURE.

FOREST AVE
WILL BE CLOSED
FOR - DAYS
513-933-6600

W20-H13-60

ITEM 614, MAINTAINING TRAFFIC (ROAD CLOSED SIGN)

THE CONTRACTOR SHALL PROVIDE, ERECT AND MAINTAIN STANDARD 48 X 30 INCH ROAD CLOSED SIGNS, SIGN SUPPORTS, BARRICADES AND LIGHTS, AS DETAILED IN SCD MT-101.60 AT THE LOCATIONS SHOWN IN THE PLANS DURING PERIODS IN WHICH THE AFFECTED ROADS ARE CLOSED TO TRAFFIC.

HORIZONTAL SCALE IN FEET
0 100 200 400

DETOUR PLAN - HAM-562-0253

DESIGN AGENCY

DESIGNER GTF

REVIEWER SRK 6-05-25

PROJECT ID 113006

SHEET P.11 TOTAL 42

D08-BM-FY2024

MODEL: Sheet PAPERSIZE: 34x22 (in.) DATE: 6/23/2025 TIME: 7:51:38 AM USER: gfreeman
pw:\\ohiodot-pw.bentley.com:ohiodot-pw-02\Documents\01 Active Projects\District 08_D08\113006\400-Engineering\MOT\Sheets\113006_MD002.dgn

SHEET NUM.												PART.		ITEM	ITEM EXT	GRAND TOTAL	UNIT	DESCRIPTION	SEE SHEET NO.
P.13												01/IMS	02/NHS						
																		STRUCTURES OVER 20 FOOT SPAN	
																		FOR HAM-00071-13.030 ESTIMATED QUANTITIES	P.16
																		FOR HAM-00027-14.080 ESTIMATED QUANTITIES	P.16
																		FOR HAM-00027-13.300 ESTIMATED QUANTITIES	P.16
																		FOR HAM-00126-09.040L/R ESTIMATED QUANTITIES	P.16
																		FOR HAM-00562-01.790 ESTIMATED QUANTITIES	P.17
																		FOR HAM-00562-02.530 ESTIMATED QUANTITIES	P.17
																		FOR HAM-00071-04.500 ESTIMATED QUANTITIES	P.17
																		FOR HAM-00071-09.920 ESTIMATED QUANTITIES	P.17
																		FOR HAM-00075-16.420E ESTIMATED QUANTITIES	P.17
																		MAINTENANCE OF TRAFFIC	
												400	400	614	11110	800	HOUR	LAW ENFORCEMENT OFFICER WITH PATROL CAR FOR ASSISTANCE	P.6
4													4	614	12384	4	EACH	WORK ZONE IMPACT ATTENUATOR, 24" WIDE HAZARDS, (BIDIRECTIONAL)	
26													26	614	13310	26	EACH	BARRIER REFLECTOR, TYPE 1 (BIDIRECTIONAL)	
26													26	614	13360	26	EACH	OBJECT MARKER, TWO WAY	
2													2	614	18601	2	SNMT	PORTABLE CHANGEABLE MESSAGE SIGN, AS PER PLAN	P.6
LS												LS	LS	614	12420	LS		DETOUR SIGNING	
1,120													1,120	622	41100	1,120	FT	PORTABLE BARRIER, UNANCHORED	
4													4	896	00012	4	SNMT	PORTABLE NON-INTRUSIVE TRAFFIC SENSOR, CLASS II	P.7
1													1	896	00021	1	SNMT	PORTABLE CHANGEABLE MESSAGE SIGN, AS PER PLAN	P.7
																		INCIDENTALS	
												LS	LS	108	10000	LS		CPM PROGRESS SCHEDULE	
												LS	LS	614	11000	LS		MAINTAINING TRAFFIC	
												LS	LS	623	10000	LS		CONSTRUCTION LAYOUT STAKES AND SURVEYING	
												LS	LS	624	10000	LS		MOBILIZATION	

GENERAL SUMMARY

D08-BM-FY2026

MODEL: Sheet PAPERSIZE: 34x22 (in.) DATE: 6/13/2025 TIME: 2:19:41 PM USER: bgarrison
Z:\2023\231473\CAD\OOOT\HAM\113006\400-Engineering\Roadway\Sheets\113006_GG001.dgn

DESIGN AGENCY
fishbeck

DESIGNER
BMG

REVIEWER
BMV 02/04/25

PROJECT ID
113006

SHEET P.12 TOTAL 42

BRIDGE NO.	PHASE NO.	SHEET NO.	LENGTH (FEET)		614	614	614	614	614		622		896	896	
					WORK ZONE IMPACT ATTENUATOR, 24" WIDE HAZARDS (BI-DIR.)	BARRIER REFLECTOR, TYPE 1 (BI-DIR.)	OBJECT MARKER, TWO-WAY	PORTABLE CHANGEABLE MESSAGE SIGN, AS PER PLAN	DETOUR SIGNING		PORTABLE BARRIER, UNANCHORED		PORTABLE NON-INTRUSIVE TRAFFIC SENSOR, CLASS II	PORTABLE CHANGEABLE MESSAGE SIGN, AS PER PLAN	
					EACH	EACH	EACH	SNMT	LS		FT		SNMT	SNMT	
HAM-71-1303	-	P.05							LUMP						
HAM-27-1330	-	P.05							LUMP						
HAM-27-1408	-	P.06-P.07						2					4	1	
HAM-126-0904L	1	P.06	300		1	7	7				300				
HAM-126-0904L	2	P.06	260		1	6	6				260				
HAM-126-0904R	1	P.06	300		1	7	7				300				
HAM-126-0904R	2	P.06	260		1	6	6				260				
HAM-562-0253	-	P.05							LUMP						
TOTALS CARRIED TO GENERAL SUMMARY					4	26	26	2	LUMP		1120		4	1	

MAINTENANCE OF TRAFFIC SUBSUMMARY

DESIGN AGENCY
fishbeck

DESIGNER
BMG

REVIEWER
BMV 02/04/25

PROJECT ID
113006

SHEET P.13 TOTAL 42

D08-BM-FY2026

MODEL: Sheet PAPERSIZE: 34x22 (in.) DATE: 6/13/2025 TIME: 2:19:41 PM USER: bgarrison
Z:\2023\231473\CAD\ODOT\HAM\113006\400-Engineering\MOT\Sheets\113006_MS001.dgn

STANDARD DRAWINGS AND SUPPLEMENTAL SPECIFICATIONS
REFER TO THE FOLLOWING STANDARD BRIDGE DRAWING(S):

VPF-1-90 REVISED 7-21-23

AND TO THE FOLLOWING SUPPLEMENTAL SPECIFICATION(S):

843 DATED 1-19-24
844 DATED 1-17-25
847 DATED 7-19-24
849 DATED 1-18-13

DESIGN SPECIFICATIONS
THIS STRUCTURE CONFORMS TO THE 10th EDITION OF THE "LRFD BRIDGE DESIGN SPECIFICATIONS" ADOPTED BY THE AMERICAN ASSOCIATION OF STATE HIGHWAY AND TRANSPORTATION OFFICIALS, 2020 AND THE ODOT BRIDGE DESIGN MANUAL, 2020.

DESIGN DATA
CONCRETE CLASS QC2 - COMPRESSIVE STRENGTH 4.5 KSI (SUPERSTRUCTURE)

CONCRETE REINFORCEMENT:
UNCOATED STEEL REINFORCEMENT - MINIMUM YIELD STRENGTH 60 KSI (BRIDGE RAILING)

PLANS OF EXISTING BRIDGES
CONSTRUCTION PLANS FOR THE EXISTING BRIDGES ARE AVAILABLE FOR REFERENCE BY CONTACTING THE OHIO DEPARTMENT OF TRANSPORTATION, DISTRICT 8 OFFICE.

IT IS THE RESPONSIBILITY OF THE CONTRACTOR TO BECOME FAMILIAR WITH ALL PERTINENT EXISTING DRAWINGS AND DETAILS RELEVANT TO THIS PROJECT.

EXISTING STRUCTURE VERIFICATION
DETAILS AND DIMENSIONS SHOWN ON THESE PLANS PERTAINING TO THE EXISTING STRUCTURE HAVE BEEN OBTAINED FROM PLANS OF THE EXISTING STRUCTURE AND FROM FIELD OBSERVATIONS AND MEASUREMENTS. CONSEQUENTLY, THEY ARE INDICATIVE OF THE EXISTING STRUCTURE AND THE PROPOSED WORK BUT THEY SHALL BE CONSIDERED TENTATIVE AND APPROXIMATE. THE CONTRACTOR IS REFERRED TO C&MS SECTIONS 102.05, 105.02 AND 513.04. BASE CONTRACT BID PRICES UPON A RECOGNITION OF THE UNCERTAINTIES DESCRIBED ABOVE AND UPON A PREBID EXAMINATION OF THE EXISTING STRUCTURE. HOWEVER, THE DEPARTMENT WILL PAY FOR ALL PROJECT WORK BASED UPON ACTUAL DETAILS AND DIMENSIONS THAT HAVE BEEN VERIFIED IN THE FIELD.

ITEM 202, PORTIONS OF STRUCTURE REMOVED, AS PER PLAN
THIS ITEM SHALL INCLUDE THE ELEMENTS INDICATED IN THE PLANS AND GENERAL NOTES AND THAT ARE NOT SEPARATELY LISTED FOR PAYMENT, EXCEPT FOR WEARING COURSE REMOVAL. ITEMS TO BE REMOVED INCLUDE ALL EXISTING MATERIALS BEING REPLACED BY NEW CONSTRUCTION AND MISCELLANEOUS ITEMS THAT ARE NOT SHOWN TO BE INCORPORATED INTO THE FINAL CONSTRUCTION AND ARE DIRECTED TO BE REMOVED BY THE ENGINEER. THE USE OF EXPLOSIVES, HEADACHE BALLS AND/OR HOE-RAMS WILL NOT BE PERMITTED. THE METHOD OF REMOVAL AND THE WEIGHT OF HAMMER SHALL BE APPROVED BY THE ENGINEER. PERFORM ALL WORK IN A MANNER THAT WILL NOT CUT, ELONGATE OR DAMAGE THE EXISTING REINFORCING STEEL TO BE PRESERVED CHIPPING HAMMERS SHALL NOT BE HEAVIER THAN THE NOMINAL 90-POUND CLASS. PNEUMATIC HAMMERS SHALL NOT BE PLACED IN DIRECT CONTACT WITH REINFORCING STEEL THAT IS TO BE RETAINED IN THE REBUILT STRUCTURE. SUBMIT CONSTRUCTION PLANS ACCORDING TO C&MS 501.05.

ITEM 509, CONCRETE REINFORCEMENT, REPLACEMENT OF EXISTING CONCRETE REINFORCEMENT, AS PER PLAN
REPLACE ALL EXISTING REINFORCING BARS DEEMED BY THE ENGINEER TO BE UNUSABLE BECAUSE OF CORROSION. THE DEPARTMENT WILL MEASURE THE REPLACEMENT CONCRETE REINFORCEMENT BY THE NUMBER OF POUNDS ACCEPTED IN PLACE. REPLACE ALL EXISTING STEEL REINFORCEMENT BARS WHICH ARE TO BE INCORPORATED INTO THE NEW WORK AND ARE DEEMED BY THE ENGINEER TO BE MADE UNUSABLE BY CONCRETE REMOVAL OPERATIONS WITH NEW CONCRETE REINFORCEMENT OF THE SAME SIZE, COATING, AND MATERIAL AT NO COST TO THE DEPARTMENT.

ADDITIONAL QUANTITIES HAVE BEEN PROVIDED FOR DOWEL HOLES, IF NEEDED, TO EMBED THE REPLACEMENT REINFORCING INTO THE EXISTING STRUCTURE. PAYMENT FOR DOWEL HOLES SHALL BE MADE AT THE BID UNIT PRICE FOR ITEM 510, DOWEL HOLES WITH NONSHRINK, NONMETALLIC GROUT, AS PER PLAN.

ITEM 510, DOWEL HOLES WITH NONSHRINK, NONMETALLIC GROUT, AS PER PLAN
INSTALL DOWEL BARS ACCORDING TO THE MANUFACTURER'S INSTALLATION INSTRUCTIONS FOR BLACK REBAR PUBLISHED IN THE ICC-ES REPORTS LISTED BELOW.

THE HOLES FOR THE DOWEL BARS SHALL BE DRILLED WITH A HAMMER DRILL AND CARBIDE BIT. PRIOR TO THE INSTALLATION OF THE ANCHORS, THE HOLES SHALL BE CLEANED AND DRIED IN A MANNER CONSISTENT WITH THE MANUFACTURER'S REQUIREMENTS FOR DRY CONCRETE.

SELECT FROM ONE OF THE FOLLOWING APPROVED PRODUCTS:

HILTI HIT-HY 200 ADHESIVE ANCHORS
(ICC-ES REPORT ESR-3187)

DEWALT PURE110+ EPOXY ADHESIVE ANCHOR SYSTEM
(ICC-ES REPORT ESR-3298)

SIMPSON STRONG-TIE SET-3G EPOXY ADHESIVE ANCHORS
(ICC-ES REPORT ESR-4057)

ATC ULTRABOND HS-1CC ADHESIVE ANCHOR SYSTEM
(ICC-ES REPORT ESR-4094)

THE MANUFACTURER'S INSTALLATION INSTRUCTIONS PUBLISHED IN THE ICC-ES REPORTS FOR ACCEPTABLE PRODUCTS ARE AVAILABLE AT: WWW.ICC-ES.ORG/EVALUATION-REPORT-PROGRAM/REPORTS-DIRECTORY

PRIOR TO DRILLING HOLES, LOCATE EXISTING REINFORCING STEEL BARS IN THE AREA OF THE HOLE WITH THE AID OF A REINFORCING STEEL BAR LOCATOR (PACHOMETER). IF AN EXISTING BAR IS ENCOUNTERED AT THE SAME LOCATION AS A PROPOSED DOWEL HOLE, MOVE THE DOWEL TO EITHER SIDE OF THE EXISTING BAR. THE DEPARTMENT WILL PAY FOR DOWEL HOLES AND GROUTING WITH ITEM 510 - DOWEL HOLES WITH NONSHRINK, NONMETALLIC GROUT, AS PER PLAN.

ITEM 512, SEALING OF CONCRETE BRIDGE DECKS WITH HMWM RESIN, AS PER PLAN
ALL SURFACES SHALL BE SWEPT AFTER APPLICATION OF THE HMWM RESIN TO REMOVE ANY LOOSE GRANULAR MATERIAL. MANUAL BROOMS SHALL BE USED. SWEEPING OF THE SURFACE SHALL NOT BE DONE UNTIL A MINIMUM OF 6 HOURS AFTER THE APPLICATION OF THE HMWM RESIN. COMPLETE WORK WILL BE CLEAN AND FREE OF ALL LOOSE GRANULAR MATERIAL IMMEDIATELY AFTER SWEEPING, AS DETERMINED BY THE ENGINEER. AREAS DETERMINED UNSATISFACTORY BY THE ENGINEER WILL BE RE-SWEPT TO THE SATISFACTION OF THE ENGINEER WITHIN THE TIME SPECIFIED, AT NO ADDITIONAL COST TO THE DEPARTMENT.

ITEM 512, CONCRETE REPAIR BY EPOXY INJECTION, AS PER PLAN
NARROW CRACKS THAT ARE NOT NOTED IN THE PLANS TO BE EPOXY INJECTED SHALL BE GROUND SMOOTH BEFORE APPLYING EPOXY-URETHANE SEALER OR HMWM RESIN. BEFORE PERFORMING WORK, THE LOCATIONS OF CRACKS TO BE GROUND SMOOTH SHALL BE APPROVED BY THE ENGINEER.

ITEM 514, FIELD PAINTING OF DAMAGED STRUCTURAL STEEL, AS PER PLAN
1.0 DESCRIPTION: THIS ITEM CONSISTS OF FIELD PAINTING STRUCTURAL STEEL PREVIOUSLY COATED WITH AN OLDER EXISTING OZEU OR IZEU PAINT SYSTEM TO CORRECT DAMAGE BY COLLISION OR CORROSION. THIS WORK CONSISTS OF PERFORMING SURFACE PREPARATION AND APPLYING A TWO-COAT PAINT SYSTEM TO THE PREPARED STEEL AND FEATHERED REMOVAL AREAS OF EXISTING OZEU OR IZEU PAINT SYSTEMS.

2.0 GENERAL: C&MS 514.05 THROUGH 514.10 AND 514.13D APPLY UNLESS MODIFIED BY THESE NOTES.

3.0 WASHING EXISTING OZEU OR IZEU PAINTED SURFACES: CLEAN SURFACES TO BE COATED WITH LOW PRESSURE WATER CLEANING TO REMOVE ALL DIRT, DEBRIS, ANIMAL EXCREMENT, SALT CONTAMINANTS AND OTHER ACCUMULATED FOREIGN MATERIAL IN ACCORDANCE WITH SSPC-SP12 (LP WC), LOW PRESSURE WATER CLEANING. THE PRESSURE WASHER SHALL BE CAPABLE OF ACHIEVING AT LEAST 2000 POUNDS PER SQUARE INCH AT THE NOZZLE. WHEN USING THE POWER WASHING EQUIPMENT, THE NOZZLE SHALL BE MAINTAINED NO MORE THAN 10 INCHES FROM THE SURFACE. SUPPLY AND USE POTABLE WATER. PROVIDE TO THE ENGINEER A LETTER OF WRITTEN ACCEPTANCE FOR ANY BIODEGRADABLE DETERGENTS OR CLEANERS USED IN CONJUCTION WITH THIS METHOD.

COLLECT AND CONTAIN WATER AND DEBRIS REMOVED DURING WASHING OPERATIONS ABOVE WATER FEATURES IN CONFORMANCE WITH C&MS 514.08 AND C&MS 514.13D FOR ANY DEBRIS. CREATE SETTLEMENT COLLECTION BASINS AND STRAIN ALL WASH WATER ABOVE LAND FEATURES AS NECESSARY TO PRODUCE VISIBLY CLEAR WATER AND COMPLY WITH C&MS 514.08 AND C&MS 514.13D FOR ANY DEBRIS.

4.0 SURFACE PREPARATION: AFTER THE PRESSURE WASHED SURFACE HAS DRIED, REMOVE EXISTING PAINT COATING TO CONTRACT LIMITS OR AS DIRECTED BY THE ENGINEER ACCORDING TO: SSPC-SP-11, POWER TOOL CLEANING TO BARE METAL, AS SHOWN ON THE PICTORIAL SURFACE PREPARATION STANDARDS FOR PAINTING STEEL SURFACES SHOWN IN SSPC-VIS 3; SSPC SP6, COMMERCIAL BLAST CLEANING, AS SHOWN ON THE PICTORIAL SURFACE PREPARATION STANDARDS FOR PAINTING STEEL SURFACES SHOWN IN SSPC-VIS 1; OR SSPC SP12 UHP WJ-4, ULTRAHIGH-PRESSURE WATER JETTING, AS SHOWN ON THE PICTORIAL SURFACE PREPARATION STANDARDS FOR PAINTING STEEL SURFACES SHOWN IN SSPC-VIS 4. SUPPLY BLAST WATER CONTAINING A COMMERCIALLY AVAILABLE RUST INHIBITOR AT A DOSAGE THAT PREVENTS FLASH RUSTING FOR 12 HOURS AND DOCUMENTED AS ACCEPTABLE TO THE COATINGS MANUFACTURER. THE ENGINEER WILL USE THE SSPC-VIS 1, SSPC-VIS 3 OR SSPC-VIS 4 TO DETERMINE THE ACCEPTANCE OF THE SURFACE PREPARATION. FEATHER THE EXISTING PAINT TO EXPOSE A MINIMUM OF ½ INCH OF EACH COAT. CONTAIN AND DISPOSE OF WASTE GENERATE BY THE CLEANING ACCORDING TO C&MS 514.13.D.

ROUND ALL EXPOSED CORNERS OF MAIN MATERIAL TO BE PAINTED AS NECESSARY TO ACHIEVE A 1 INCH RADIUS OR EQUIVALENT FLAT SURFACE AT A 45 DEGREE ANGLE.

5.0 FIELD PAINTING: APPLY THE PRIME AND INTERMEDIATE COATS OF THE THREE-COAT PAINT SYSTEM SPECIFIED IN C&MS 708.02, ACCORIDING TO C&MS 514.15, 514.16, 514.17, 514.19 AND 514.20 TO CONTRACT LIMITS OR AS DIRECTED BY THE ENGINEER. TINT THE INTERMEDIATE COAT TO APPROXIMATELY THE SAME COLOR AS THE EXISTING FINISH COLOR. MATCH THE COLOR TO THE ENGINEERS SATISFACTION. THE ENGINEER WILL DETERMINE THE PRIME AND INTERMEDIATE COAT THICKNESS USING A TYPE 2 MAGNETIC GAGE AT SPOT LOCATIONS. DO NOT APPLY THE FINISH COAT. THE PRIME AND INTERMEDIATE COAT OF PAINT SHALL MEET THE MINIMUM DRY FILM THICKNESS REQUIREMENTS OF C&MS 514.20. APPLY PAINT AS FOLLOWS:

ITEM 514, FIELD PAINTING OF DAMAGED STRUCTURAL STEEL, AS PER PLAN CONTINUED

A. APPLY THE PRIME COAT ONLY TO THE PREPARED SURFACE OF THE BARE STEEL AND THE EXISTING PRIME COAT EXPOSED BY FEATHERING. DO NOT APPLY THE PRIME COAT TO THE ADJACENT INTERMEDIATE COAT.

B. APPLY CAULK AFTER PRIMING.

C. APPLY THE INTERMEDIATE COAT TO THE NEW PRIME COAT AND TO THE EXISTING INTERMEDIATE AND FINISH COAT THAT ARE EXPOSED BY FEATHERING.

AT THE PERIMETER OF THE REPAIR AREA, APPLY THE PRIME AND INTERMEDIATE COATS USING A BRUSH. IN LIEU OF BRUSHING, THE CONTRACTOR MAY DOUBLE MASK THE AREAS NOT TO BE COATED AND SPRAY TO FEATHERED REMOVAL LINES.

BLEND REPAIR AREAS WITH THE ADJACENT COATING TO PROVIDE A FINISHED SURFACE IN THE PATCHED AREAS THAT IS SMOOTH AND HAS AN EVEN PROFILE WITH THE ADJACENT SURFACE.

6.0 MEASUREMENT: THE DEPARTMENT WILL MEASURE FIELD PAINTING OF DAMAGED STRUCTURAL STEEL, AS PER PLAN BY THE NUMBER OF SQUARE FEET OF STRUCTURAL STEEL PAINTED.

THE DEPARTMENT WILL DETERMINE THE SURFACE AREA BY TAKING EXACT FIELD MEASUREMENTS OF ALL PAINTED SURFACES AND CALCULATIONS.

7.0 BASIS OF PAYMENT: THE DEPARTMENT WILL PAY FOR ACCEPTED QUANTITIES AT THE CONTRACT PRICES AS FOLLOWS:

THE DEPARTMENT MAY CONSIDER PAINT AS ELIGIBLE FOR PAYMENT FOR MATERIAL ON-HAND AS SPECIFIED IN 109.10. HOWEVER, ONLY PAINT THAT THE CONTRACTOR CAN PROVE TO THE ENGINEER WILL BE USED DURING THE CONSTRUCTION SEASON IS ELIGIBLE FOR PAYMENT. THE CONTRACTOR SHALL PROVIDE THE ENGINEER CALCULATIONS INDICATING THE TOTAL SQUARE FEET OF STEEL TO BE PAINTED DURING THE CONSTRUCTION SEASON. THE CONTRACTOR SHALL ALSO PROVIDE CALCULATIONS SHOWING THE TOTAL NUMBER OF GALLONS REQUIRED.

IF THE CONTRACTOR CAUSES DAMAGE OR INJURY TO PUBLIC OR PRIVATE PROPERTY, THE DEPARTMENT WILL NOT PAY FOR RESTORING THE PROPERTY TO ITS ORGINAL CONDITION.

THE DEPARTMENT WILL NOT PAY FOR REPAIRING ADJACENT COATINGS DAMAGED DURING THE WASHING, POWER TOOL CLEANING OR BLAST CLEANING OPERATION.

THE DEPARTMENT WILL NOT PAY FOR REMOVING AND REPLACING AN AREA OF COATING BECAUSE A SPOT OR MAXIMUM AVERAGE THICKNESS EXCEEDS THE MAXIMUM SPOT THICKNESS.

THE DEPARTMENT WILL NOT PAY FOR ADDITIONAL TESTING REQUIRED BY ANY HAULER, TREATMENT FACILITY, DISPOSAL FACILITY OR LANDFILL.

THE DEPARTMENT WILL NOT PAY FOR ACCESSING, INSPECTING, AND REPAIRING AREAS THAT ARE NOT FOUND TO BE IN CONFORMANCE WITH THE SPECIFICATIONS AND PERTINENT CONTRACT DOCUMENTS.

ALL OTHER REQUIREMENTS OF THE FIELD PAINTING SPECIFICATION ARE CONSIDERED INCIDENTAL TO THE WORK.

BRIDGE GENERAL NOTES (1 OF 2)

DESIGN AGENCY
fishbeck

DESIGNER
BMG

REVIEWER
BMV 02/04/25

PROJECT ID
113006

SHEET P.14 TOTAL 42

ITEM 514, FIELD PAINTING, MISC.: PAINTING OF EXISTING RAILING, AS PER PLAN
THIS WORK CONSISTS OF CLEANING THE EXISTING RAMP RAILINGS OF ANY DIRT AND DEBRIS AND APPLYING A NEW THREE COAT OZEU PAINT SYSTEM, MATCHING THE EXISTING PAINT COLOR, PER ITEM 514 OVER THE EXISTING PAINTED RAILING. RAMP RAILING SHALL BE CLEANED PER C&MS 514.13(A).

ITEM 516, JACKING AND TEMPORARY SUPPORT OF SUPERSTRUCTURE, AS PER PLAN
JACKING AND TEMPORARY SUPPORT OF THE SUPERSTRUCTURE MAY BE NEEDED TO PERFORM THE PROPOSED PATCHING WORK DEPENDING ON THE EXTENT OF DETERIORATION AT ABUTMENT NO. 1 ON BRIDGE HAM-00562-01.790. PRIOR TO SUBMITTING CONSTRUCTION PLANS THE NEED FOR TEMPORARY SUPPORT SHALL BE APPROVED BY THE ENGINEER. SEE PLANS FOR ADDITIONAL DETAILS.

TEMPORARY SUPPORT OF THE PIER CAP IS NEEDED TO PERFORM A PORTION OF THE PROPOSED PATCHING WORK AT PIER NO. 1 ON BRIDGE HAM-00562-01.790. CONSTRUCTION PLANS SHALL BE SUBMITTED AND APPROVED BY THE ENGINEER PRIOR TO PERFORMING THE PATCHING WORK INDICATED IN THE PLANS. SEE PLANS FOR ADDITIONAL DETAILS.

THIS WORK CONSISTS OF RAISING OR RE-POSITIONING EXISTING STRUCTURES TO THE DIMENSIONS AND REQUIREMENTS DEFINED IN THE PROJECT PLANS. SUBMIT CONSTRUCTION PLANS IN ACCORDANCE WITH C&MS 501.05. IF, DURING THE JACKING OPERATIONS, CRACKING OF THE CONCRETE SUPERSTRUCTURE, SEPARATION OF THE CONCRETE DECK FROM THE PRESTRESED BEAMS, OR OTHER DAMAGE TO THE STRUCTURE IS VISUALLY OBSERVED, IMMEDIATELY CEASE THE JACKING OPERATION AND INSTALL SUPPORTS TO THE SATISFACTION OF THE ENGINEER. ANALYZE THE DAMAGE AND SUBMIT A METHOD OF CORRECTION TO THE ENGINEER FOR APPROVAL. EPOXY INJECT ALL BEAMS THAT SEPARATE FROM THE DECK FOR THE DISTANCE OF THE SEPARATION IN ACCORDANCE WITH C&MS 512.07. THE DEPARTMENT WILL NOT PAY FOR THE COST OF THIS EPOXY INJECTION OR OTHER REQUIRED REPAIRS. THE BRIDGE BEARINGS SHALL BE FULLY SEATED AT ALL CONTACT AREAS. IF FULL SEATING IS NOT ATTAINED, SUBMIT A REPAIR PLAN TO THE ENGINEER. THE DEPARTMENT WILL NOT PAY FOR THE REPAIR COSTS TO ENSURE FULL SEATING ON BEARINGS. THE DEPARTMENT WILL MEASURE THIS WORK ON A LUMP SUM BASIS. THE DEPARTMENT WILL PAY FOR THE ACCEPTED QUANTITIES AT THE CONTRACT PRICE FOR ITEM 516, JACKING AND TEMPORARY SUPPORT OF SUPERSTRUCTURE, AS PER PLAN.

ITEM 517, BRIDGE RAILING REBUILT, AS PER PLAN
THIS WORK CONSISTS OF REMOVING SECTIONS OF THE EXISTING RAILING AS INDICATED IN THE PLANS TO FACILITATE SURFACE PREPARATION AND SEALING OF CONCRETE SURFACES ALONG THE RAMP. SECTIONS OF RAILING REMOVED SHALL BE REBUILT AFTER CONCRETE TREATMENT AS SHOWN IN THE PLANS.

REMOVE EXISTING RAILING PER C&MS 202. PAYMENT FOR ALL WORK ASSOCIATED WITH THE REMOVAL OF EXISTING RAILING ELEMENTS TO BE INCLUDED IN ITEM 202, PORTIONS OF STRUCTURE REMOVED, AS PER PLAN.

PERFORM WELDING PER C&MS 513. DUE TO ACCESS LIMITATIONS NEAR CONCRETE WALLS, WELDING OF THE RAILING SLEEVES ON ONLY THREE SIDES IS PERMISSIBLE. WELDING OF THE HORIZONTAL HANDRAIL SHALL BE THE FULL PERIMETER.

CUT SECTIONS OF HORIZONTAL HANDRAILING SHALL BE GROUND SMOOTH AFTER WELDING.

PAYMENT FOR FURNISHING AND INSTALLING NEW RAMP RAILING SLEEVES AND ALL ASSOCIATED WORK TO REBUILD THE EXISITING RAILING AS INDICATED IN THE PLAN DETAILS AND NOTES TO BE INCLUDED IN ITEM 517, BRIDGE RAILING REBUILT, AS PER PLAN.

ITEM 519, PATCHING CONCRETE STRUCTURES, AS PER PLAN
THE QUANTITY GIVEN IN THE ESTIMATE QUANTITY TABLE HAS BEEN ESTIMATED FROM FIELD INSPECTION AND ORIGINAL PLANS. IT IS POSSIBLE THAT ADDITIONAL AREAS REQUIRING PATCHING MAY HAVE DEVELOPED SINCE THE MOST RECENT INSPECTION OF THE STURCUTRE. THEREFORE, THE CONTRACTOR SHALL SOUND THE SURROUNDING PERIMETER OF THE AREA TO BE PATCHED AND PATCH NEW AREAS APPROVED BY THE ENGINEER THAT HAVE NOT BEEN DETAILED IN THE PLANS. PAYMENT SHALL BE MADE PER SQ. FT. AT THE PRICE BID FOR THE ACTUAL AREA PATCHED AND SHALL INCLUDE ALL COST FOR LABOR, MATERIALS AND EQUIPMENT.

PRIOR TO THE SURFACE CLEANING SPECIFIED IN C&MS 519.04 AND WITHIN 24 HOURS OF PLACING PATCHING MATERIAL, BLAST CLEAN ALL SURFACES TO BE PATCHED INCLUDING THE EXPOSED STEEL REINFORCEMENT. ACCEPTABLE METHODS INCLUDE HIGH-PRESSURE WATER BLASTING WITH OR WITHOUT ABRASIVES IN THE WATER, ABRASIVE BLASTING WITH CONTAINMENT, OR VACUUM ABRASIVE BLASTING.

REMOVE THE FORMS WITHIN 24 HOURS AFTER PLACING CONCRETE AND FINISH ALL EXPOSED SURFACES BY RUBBING TO MATCH THE SURROUNDING SURFACE. APPLY MEMBRANE CURING ACCORDING TO C&MS 511.14, METHOD B, IMMEDIATELY AFTER RUBBING THE SURFACES.

ITEM 519 SPECIAL, PATCHING CONCRETE STRUCTURE (GALVANIC ANODE PROTECTION)
FOLLOW ALL PROVISIONS OF C&MS 519 EXCEPT AS REQUIRED BY THIS NOTE.

REPAIR CONCRETE SHALL BE HYDRAULIC CEMENT-BASED MATERIAL WITH A ELECTRICAL RESISTIVITY LESS THAN 50,000 OHM-CM ACCORDING TO ASTM C 1760. DO NOT USE NON- CONDUCTIVE REPAIR MATERIALS SUCH AS MAGNESIUM AMMONIUM PHOSPHATE CONCRETE AND EPOXY MORTARS OR BONDING AGENTS. CONCRETE MIXES CONTAINING HIGH LEVELS OF SUPPLEMENTARY CEMENTITIOUS MATERIALS SUCH AS SILICA FUME, GROUND-GRANULATED BLAST FURNACE SLAG, LATEX, FLY ASH OR METAKAOLIN MAY NOT MEET THE RESISTIVITY REQUIREMENT.

THE GALVANIC ANODE SIZE AND SPACING IS BASED ON ACHIEVING A CURRENT DENSITY FOR THE EXTREMELY HIGH CORROSION RISK CATEGORY WITH A 20 YEAR INSTALLATION. SUPPLY ANODES WITH A MINIMUM CORE OF 160 GRAMS OF ZINC. SEE SHEETS P.32 & P.33 FOR DISTRIBUTION.

ITEM 607, FENCE MISC.: VANDAL PROTECTION FENCE REBUILT
BRIDGE NO.: HAM-00071-13.030
REMOVE EXISTING HORIZONTAL RAIL ELEMENTS, FENCE WIRE MESH AND ALL ASSOCIATED HARDWARE AS INDICATED IN THE PLANS. EXISTING BASE PLATES, ANCHORS, VERTICAL POSTS AND POST SLEEVES SHALL REMAIN AND BE REUSED. TWO VERTICAL POSTS ARE TO BE REPLACED AS DIRECTED BY THE ENGINEER. CARE SHALL BE TAKEN AS TO NOT DAMAGE PORTIONS OF THE EXISTING FENCE THAT ARE TO REMAIN AND BE REUSED. SEE ODOT STANDARD CONSTRUCTION DRAWING VPF-1-90 FOR ADDITIONAL VANDAL PROTECTION FENCE DETAILS.

PAYMENT FOR FURNISHING AND INSTALLING NEW VANDAL FENCING HARDWARE AS INDICATED IN THE PLAN DETAILS AND NOTES TO BE INCLUDED IN ITEM 607, FENCE MISC.: VANDAL PROTECTION FENCE REBUILT. REPAIR GALVINIZATION ACCORDING TO C&MS 711.02.

REMOVE EXISTING FENCE ELEMENTS PER C&MS 202. PAYMENT FOR ALL WORK ASSOCIATED WITH REMOVING THE RAIL AND POST ELEMENTS TO BE INCLUDED IN ITEM 202, PORTIONS OF STRUCTURE REMOVED, AS PER PLAN.

BRIDGE NO.: HAM-00562-02.530
REMOVE EXISTING HORIZONTAL RAIL ELEMENTS, FENCE WIRE MESH AND ALL ASSOCIATED HARDWARE AS INDICATED IN THE PLANS. REMOVE EXISTING HORIZONTAL RAIL AND VERTICAL POST ELEMENTS INCLUDING POSTS SLEEVES AS INDICATED IN THE PLANS. SEE ODOT STANDARD CONSTRUCTION DRAWING VPF-1-90 FOR ADDITIONAL VANDAL PROTECTION FENCE DETAILS.

PAYMENT FOR FURNISHING AND INSTALLING NEW VANDAL FENCING HARDWARE AS INDICATED IN THE PLAN DETAILS AND NOTES TO BE INCLUDED IN ITEM 607, FENCE MISC.: VANDAL PROTECTION FENCE REBUILT. PERFORM WELDING PER C&MS 513. REPAIR GALVINIZATION ACCORDING TO C&MS 711.02.

REMOVE EXISTING FENCE ELEMENTS PER C&MS 202. PAYMENT FOR ALL WORK ASSOCIATED WITH REMOVING THE RAIL AND POST ELEMENTS TO BE INCLUDED IN ITEM 202, PORTIONS OF STRUCTURE REMOVED, AS PER PLAN.

ITEM 843, PATCHING CONCRETE STRUCTURES WITH TROWELABLE MORTAR, AS PER PLAN
REMOVE ALL HONEYCOMBED CONCRETE OF THE WEST PIER WITHIN THE AREAS INDICATED TO BE REPAIRED PER SUPPLEMENTAL SPECIFICATION ITEM 843 TO A DEPTH OF 1/4 INCH. ALL UNCHIPPED SURFACES THAT WILL RECIEVE NEW MATERIAL SHALL BE MECHANICALLY ROUGHENED. FOR ESTIMATING PURPOSES, 10% OF THE WEST PIER SURFACE AREA HAS BEEN INCLUDED WITH ITEM 843 FOR PAYMENT AS SHOWN IN THE PLANS.

BRIDGE GENERAL NOTES (2 OF 2)

DESIGN AGENCY
fishbeck

DESIGNER
BMG

REVIEWER
BMV 02/04/25

PROJECT ID
113006

SHEET P.15 TOTAL 42

MADE BY: BMG DATE: 7/2/2024
CHECKED BY: BMV DATE: 7/3/2024

HAM-00071-13.030 ESTIMATED QUANTITIES (01/IMS)

STRUCTURAL FILE NUMBER: 3107086

ITEM	EXTENSION	TOTAL	UNIT	DESCRIPTION	ABUT.	PIER	SUPER.	GEN.	REFERENCE SHEET NO.
202	11201	LUMP		PORTIONS OF STRUCTURE REMOVED, AS PER PLAN				LUMP	P.14/42
509	20001	68	LB	CONCRETE REINFORCEMENT, REPLACEMENT OF EXISTING CONCRETE REINFORCEMENT, AS PER PLAN			68		P.14/42
510	10001	38	EACH	DOWEL HOLES WITH NONSHRINK, NONMETALLIC GROUT, AS PER PLAN			38		P.14/42
511	34410	4	CY	CLASS QC2 CONCRETE, SUPERSTRUCTURE			4		
512	10100	689	SY	SEALING OF CONCRETE SURFACES (EPOXY-URETHANE)			689		
512	10600	21	FT	CONCRETE REPAIR BY EPOXY INJECTION			21		
512	74000	668	SY	REMOVAL OF EXISTING COATINGS FROM CONCRETE SURFACES			668		
514	21001	LUMP		FIELD PAINTING OF DAMAGED STRUCTURAL STEEL, AS PER PLAN			LUMP		P.14/42
519	11101	275	SF	PATCHING CONCRETE STRUCTURE, AS PER PLAN			275		P.15/42
607	98200	LUMP		FENCE, MISC.: VANDAL PROTECTION FENCE REBUILT			LUMP		P.15/42
849	10000	LUMP		DAMAGE ASSESSMENT			LUMP		
849	10500	LUMP		SURFACE PREPARATION			LUMP		
849	10600	20	HOUR	REPAIRING DAMAGED MEMBERS BY GRINDING			20		

MADE BY: BMG DATE: 7/2/2024
CHECKED BY: BMV DATE: 7/3/2024

HAM-00027-14.080 ESTIMATED QUANTITIES (01/IMS)

STRUCTURAL FILE NUMBER: 3101738

ITEM	EXTENSION	TOTAL	UNIT	DESCRIPTION	ABUT.	PIER	SUPER.	GEN.	REFERENCE SHEET NO.
646	10010	0.11	MILE	EDGE LINE, 6"			0.11		
646	10110	0.11	MILE	LANE LINE, 6"			0.11		
								LUMP	
847	10200	1,029	SY	SUPERPLASTICIZED DENSE CONCRETE OVERLAY (T = 2.75")			1,029		
847	20200	5	CY	SUPERPLASTICIZED DENSE CONCRETE OVERLAY (VARIABLE THICKNESS), MATERIAL ONLY			5		
847	30000	LUMP		TEST SLAB					
847	30400	1,029	SY	EXISTING CONCRETE OVERLAY REMOVED (T = 2.5")			1,029		
847	50000	79	SY	HAND CHIPPING			79		

MADE BY: BMG DATE: 7/2/2024
CHECKED BY: BMV DATE: 7/3/2024

HAM-00027-13.300 ESTIMATED QUANTITIES (02/NHS)

STRUCTURAL FILE NUMBER: 3101703

ITEM	EXTENSION	TOTAL	UNIT	DESCRIPTION	ABUT.	PIER	SUPER.	GEN.	REFERENCE SHEET NO.
202	11201	LUMP		PORTIONS OF STRUCTURE REMOVED, AS PER PLAN				LUMP	P.14/42
512	10100	826	SY	SEALING OF CONCRETE SURFACES (EPOXY-URETHANE)		799	27		
512	10301	446	SY	SEALING CONCRETE BRIDGE DECKS WITH HMWM RESIN, AS PER PLAN		371	75		P.14/42
512	10601	249	FT	CONCRETE REPAIR BY EPOXY INJECTION, AS PER PLAN		249			P.14/42
512	74000	826	SY	REMOVAL OF EXISTING COATINGS FROM CONCRETE SURFACES		799	27		
514	27710	929	FT	FIELD PAINTING, MISC.: PAINTING OF EXISTING RAILING, AS PER PLAN			929		P.15/42
517	75501	90	FT	BRIDGE RAILING REBUILT, AS PER PLAN			90		P.15/42
519	11101	24	SF	PATCHING CONCRETE STRUCTURE, AS PER PLAN		24			P.15/42
843	50001	557	SF	PATCHING CONCRETE STRUCTURES WITH TROWELABLE MORTAR, AS PER PLAN		557			P.15/42

MADE BY: BMG DATE: 7/2/2024
CHECKED BY: BMV DATE: 7/3/2024

HAM-00126-09.040L/R ESTIMATED QUANTITIES (02/NHS)

STRUCTURAL FILE NUMBER: 3104664 & 3104680

ITEM	EXTENSION	TOTAL	UNIT	DESCRIPTION	ABUT.	PIER	SUPER.	GEN.	REFERENCE SHEET NO.
202	11201	LUMP		PORTIONS OF STRUCTURE REMOVED, AS PER PLAN				LUMP	P.14/42
451	32000	41	FT	SPECIAL - PRESSURE RELIEF JOINT, TYPE C				41	
509	20001	404	LB	CONCRETE REINFORCEMENT, REPLACEMENT OF EXISTING CONCRETE REINFORCEMENT, AS PER PLAN			404		P.14/42
510	10001	130	EACH	DOWEL HOLES WITH NONSHRINK, NONMETALLIC GROUT, AS PER PLAN			130		P.14/42
511	34410	24	CY	CLASS QC2 CONCRETE, SUPERSTRUCTURE			24		
511	34411	1	CY	CLASS QC2 CONCRETE, SUPERSTRUCTURE, AS PER PLAN			1		P.30/42
605	31100	32	FT	AGGREGATE DRAINS				32	

BRIDGE ESTIMATED QUANTITIES (1 OF 2)

DESIGN AGENCY
fishbeck

DESIGNER
NCS

REVIEWER
BMV 02/04/25

PROJECT ID
113006

SHEET P.16 TOTAL 42

D08-BM-FY2026

MODEL: Sheet PAPERSIZE: 34x22 (in.) DATE: 6/13/2025 TIME: 2:19:44 PM USER: bgarrison
Z:\2023\23473\CAD\ODOT\HAM\113006\400-Engineering\Structures\SFN_3107086\Sheets\113006_SFN_3107086_SQ001.dgn

MADE BY: BMG DATE: 7/2/2024
CHECKED BY: BMV DATE: 7/3/2024

HAM-00562-01.790 ESTIMATED QUANTITIES (02/NHS)

STRUCTURAL FILE NUMBER: 3113949

ITEM	EXTENSION	TOTAL	UNIT	DESCRIPTION	ABUT.	PIER	SUPER.	GEN.	REFERENCE SHEET NO.
512	10100	54	SY	SEALING OF CONCRETE SURFACES (EPOXY-URETHANE)	5	49			
516	47001	LUMP		JACKING AND TEMPORARY SUPPORT OF SUPERSTRUCTURE, AS PER PLAN				LUMP	P.15/42
519	11101	42	SF	PATCHING CONCRETE STRUCTURE, AS PER PLAN	26	16			P.15/42
SPECIAL	51911600	435	SF	SPECIAL - PATCHING CONCRETE STRUCTURE (GALVANIC ANODE PROTECTION)	131	304			P.15/42
844	20000	443	EACH	GALVANIC ANODE PROTECTION	69	374			

MADE BY: BMG DATE: 7/2/2024
CHECKED BY: BMV DATE: 7/3/2024

HAM-00562-02.530 ESTIMATED QUANTITIES (02/NHS)

STRUCTURAL FILE NUMBER: 3114023

ITEM	EXTENSION	TOTAL	UNIT	DESCRIPTION	ABUT.	PIER	SUPER.	GEN.	REFERENCE SHEET NO.
202	11201	LUMP		PORTIONS OF STRUCTURE REMOVED, AS PER PLAN				LUMP	P.14/42
512	73500	694	SY	TREATING CONCRETE BRIDGE DECKS WITH GRAVITY FED RESIN			694		
516	12310	408	LB	SIDEWALK COVER PLATE			408		
519	11101	416	SF	PATCHING CONCRETE STRUCTURE, AS PER PLAN			416		P.15/42
607	98200	LUMP		FENCE, MISC.: VANDAL PROTECTION FENCE REBUILT			LUMP		P.15/42
609	24510	20	FT	CURB, TYPE 4-C				20	
642	00300	0.04	MILE	CENTER LINE, TYPE 1			0.04		

MADE BY: BMG DATE: 5/20/2024
CHECKED BY: NCS DATE: 5/24/2024

HAM-00071-04.500 ESTIMATED QUANTITIES (01/IMS)

STRUCTURAL FILE NUMBER: 3114562

ITEM	EXTENSION	TOTAL	UNIT	DESCRIPTION	ABUT.	PIER	SUPER.	GEN.	REFERENCE SHEET NO.
519	12300	68	SY	PATCHING CONCRETE BRIDGE DECK - TYPE B (SEE PROPOSAL NOTE)			68		

MADE BY: D8 DATE: 1/30/2025
CHECKED BY: D8 DATE: 1/30/2025

HAM-00071-09.920 ESTIMATED QUANTITIES (01/IMS)

STRUCTURAL FILE NUMBER: 3115372

ITEM	EXTENSION	TOTAL	UNIT	DESCRIPTION	ABUT.	PIER	SUPER.	GEN.	REFERENCE SHEET NO.
202	11501	4	EACH	PORTIONS OF STRUCTURE REMOVED, AS PER PLAN (SECONDARY MEMBERS)			4		P.38/42
513	10201	217	LB	STRUCTURAL STEEL MEMBERS, LEVEL UF, AS PER PLAN			217		P.38/42
513	95000	5	FT	STRUCTURAL STEEL, MISC.: REPAIR OF DAMAGED SECONDARY MEMBER, FILLET WELDING			5		
514	20001	60	SF	FIELD PAINTING OF DAMAGED STRUCTURAL STEEL, AS PER PLAN (TWO COAT)			60		P.38/42
849	10000	LUMP		DAMAGE ASSESSMENT			LUMP		
849	10500	LUMP		SURFACE PREPARATION			LUMP		
849	10600	9	HOUR	REPAIRING DAMAGED MEMBERS BY GRINDING			9		
849	10700	LUMP		STRAIGHTENING DAMAGED MEMBERS			LUMP		

MADE BY: D8 DATE: 1/30/2025
CHECKED BY: D8 DATE: 1/30/2025

HAM-00075-16.420E ESTIMATED QUANTITIES (01/IMS) (03/IMS)

STRUCTURAL FILE NUMBER: 3111083

ITEM	EXTENSION	TOTAL	UNIT	DESCRIPTION	ABUT.	SUPER. (01/IMS)	SUPER. (03/IMS)	GEN.	REFERENCE SHEET NO.
202	11501	9	EACH	PORTIONS OF STRUCTURE REMOVED, AS PER PLAN (SECONDARY MEMBERS)		3	6		P.41/42
513	10201	444	LB	STRUCTURAL STEEL MEMBERS, LEVEL UF, AS PER PLAN		148	296		P.41/42
513	95000	18	FT	STRUCTURAL STEEL, MISC.: REPAIR OF DAMAGED SECONDARY MEMBER, FILLET WELDING		6	12		
514	21001	LUMP		FIELD PAINTING OF DAMAGED STRUCTURAL STEEL, AS PER PLAN		LUMP	LUMP		P.41/42
849	10000	LUMP		DAMAGE ASSESSMENT		LUMP	LUMP		
849	10500	LUMP		SURFACE PREPARATION		LUMP	LUMP		
849	10600	37	HOUR	REPAIRING DAMAGED MEMBERS BY GRINDING		18.5	18.5		
849	10700	LUMP		STRAIGHTENING DAMAGED MEMBERS		LUMP	LUMP		

BRIDGE ESTIMATED QUANTITIES (2 OF 2)

DESIGN AGENCY
fishbeck

DESIGNER
NCS

REVIEWER
BMV 02/04/25

PROJECT ID
113006

SHEET P.17 TOTAL 42

D08-BM-FY2026

MODEL: Sheet PAPERSIZE: 34x22 (in.) DATE: 6/23/2025 TIME: 8:11:47 AM USER: gfreeman
pw:\\ohiodot-pw.bentley.com:ohiodot-pw-02\Documents\01 Active Projects\District 08_D08\113006\400-Engineering\Structures\SFN_3107086\Sheets\113006_SFN_3107086_SQ002_Revised.dgn

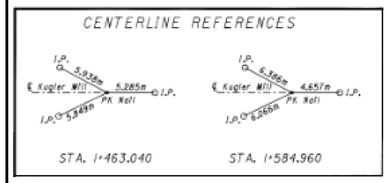

VERTICAL CURVE DATA:
P.V.C. = 1+455.420, Elev. = 249.686
P.V.I. = 1+501.140, Elev. = 249.960
P.V.T. = 1+546.860, Elev. = 249.558
L.C. = 91.440m
G(1) = +0.60%
G(2) = -0.88%

TRAFFIC DATA:
Current ADT = 3800
ADT (2018) = 4900
ADT (2018) = 49

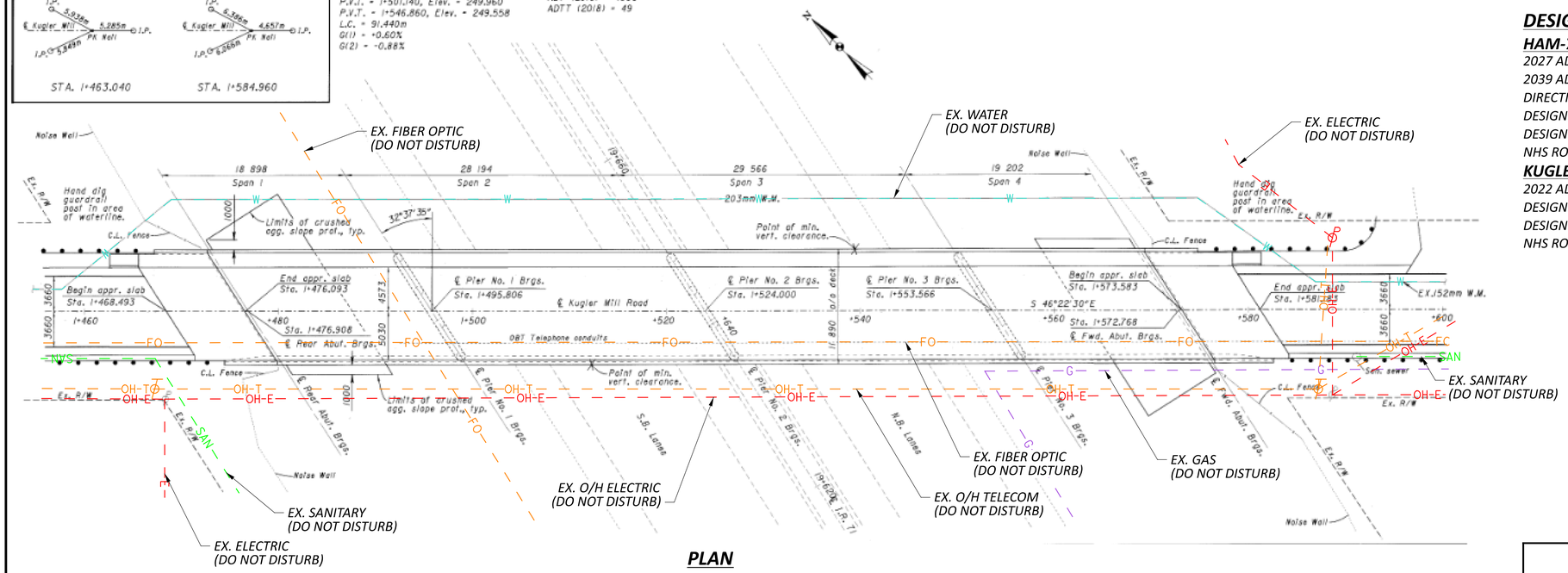

PLAN

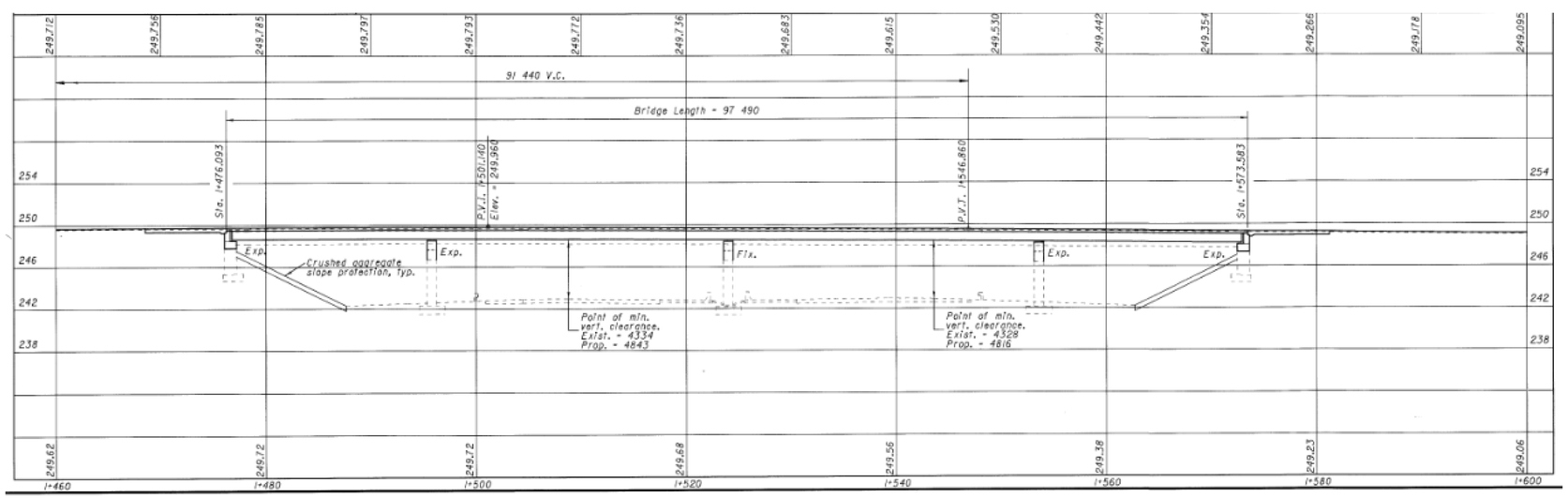

PROFILE ALONG ℄ KUGLER MILL RD.

NOTES

DETAILS ON THIS SITE PLAN SHEET ARE FROM ARCHIVED PLANS AND SHOULD BE USED FOR REFERENCE ONLY.

DESIGN TRAFFIC:

HAM-71-13.03

2027 ADT = 107,000 2027 ADTT = 9,630
2039 ADT = 107,000 2039 ADTT = 9,630
DIRECTIONAL DISTRIBUTION = 0.70
DESIGN SPEED = 65 MPH LEGAL SPEED = 65 MPH
DESIGN FUNCTIONAL CLASSIFICATION: 01 - PRINCIPAL ARTERIAL INTERSTATE (URBAN)
NHS ROUTE: YES

KUGLER MILL ROAD

2022 ADT = 2,680 2022 ADTT = 87
DESIGN SPEED = 35 MPH LEGAL SPEED = 35 MPH
DESIGN FUNCTIONAL CLASSIFICATION: 07 - LOCAL ROADS
NHS ROUTE: NO

EXISTING STRUCTURE

TYPE: CONTINUOUS STEEL BEAMS WITH COMPOSITE REINFORCED CONCRETE DECK ON EXISTING AND RECONSTRUCTED CONCRETE SUBSTRUCTURE

SPANS: 62'-0"±, 92'-6"±, 97'-0"±, 63'-0"± C/C BEARINGS
ROADWAY: 31'-6"± F/F CURB
LOADING: HS20 (CASE II) AND THE ALTERNATE MILITARY
SKEW: 32°37'35"± RF
WEARING SURFACE: 1"± MONOLITHIC CONCRETE
APPROACH SLABS: AS-1-81 (25'-0"± LONG)
ALIGNMENT: TANGENT
CROWN: 0.016± FT/FT
STRUCTURE FILE NUMBER: 3107086
DATE BUILT: 1968, REHABILITATED 2000
DISPOSITION: SEE PROPOSED WORK

PROPOSED WORK

1. REMOVE DESIGNATED PORTIONS OF EXISTING FENCE AND REPLACE WITH NEW 6' TALL OR 12' TALL VANDAL PROTECTION FENCE.
2. REPAIR BRIDGE RAILING SPALLS AND DELAMINATIONS PER ITEM 519 PATCHING AND HORIZONTAL CRACKS WITH EPOXY INJECTION.
3. REMOVE EXISTING SEALER FROM THE BRIDGE RAILING. SEAL THE BRIDGE RAILING WITH EPOXY-URETHANE SEALER, FEDERAL COLOR 17778.
4. REPAIR BOTTOM FLANGE GOUGES TO BEAMS C AND F AND REPAIR PAINT WITH A TWO COAT SYSTEM.

HORIZONTAL SCALE IN FEET 0 10 20 40

SITE PLAN
BRIDGE NO. HAM-00071-13.030
KUGLER MILL ROAD OVER IR-71

SFN 3107086
DESIGN AGENCY fishbeck
DESIGNER BMG CHECKER NCS
REVIEWER JPC 02/04/25
PROJECT ID 113006
SUBSET S.1 TOTAL 3
SHEET P.18 TOTAL 42

D08-BM-FY2026

MODEL: Sheet PAPERSIZE: 34x22 (in.) DATE: 6/13/2025 TIME: 2:19:45 PM USER: bgarrison
Z:\2023\231473\CAD\ODOT\HAM\113006\400-Engineering\Structures\SFN_3107086\Sheets\113006_SFN_3107086_SP001.dgn

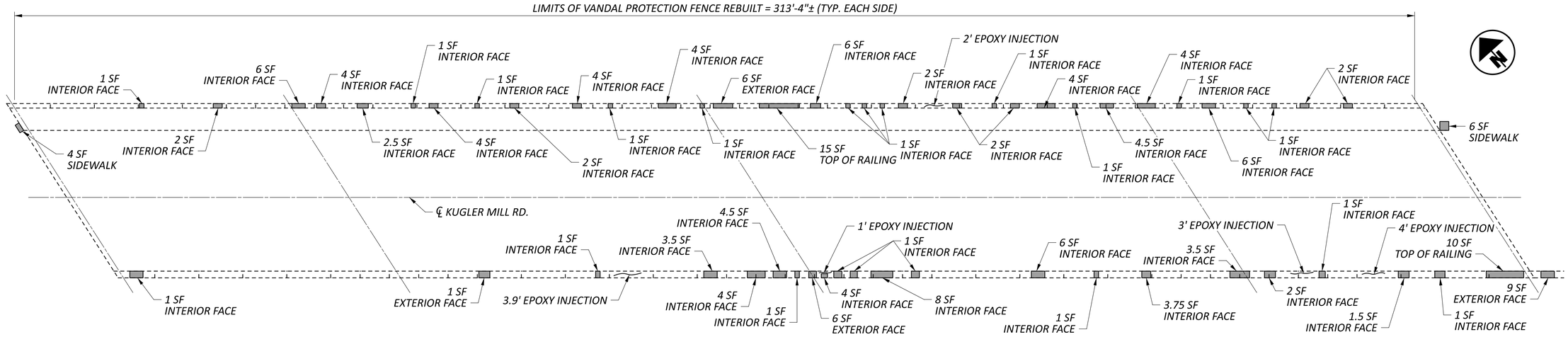

DECK PLAN

SUMMARY OF REPAIRS			
TYPE	MEASURED QUANTITIES	CONTINGENCY	TOTAL
ITEM 519 PATCHING	182.75 SF	1.5	275 SF
ITEM 512 EPOXY INJECTION	13.9 FT	1.5	21 FT
FULL THICKNESS REPAIR	2.5 CY	1.5	4 CY

LEGEND:

- INDICATES AREA TO BE REPAIRED WITH ITEM 519 - PATCHING CONCRETE STRUCTURE, AS PER PLAN
- ITEM 202, PORTIONS OF STRUCTURE REMOVED, AS PER PLAN (APPLIES TO FULL THICKNESS REPAIR LOCATIONS ONLY)
- ITEM 511, CLASS QC2 CONCRETE, SUPERSTRUCTURE

NOTES:

1. AN ADDITIONAL 50% CONTINGENCY HAS BEEN ADDED TO THE FIELD MEASURED CRACKS AND PATCHING AREAS TO ALLOW FOR ADDITIONAL AREAS OF DETERIORATION. THE FINAL DIMENSIONS AND LOCATION OF THE DETERIORATED AREAS TO BE PATCHED SHALL BE DETERMINED BY THE CONTRACTOR AND APPROVED BY THE ENGINEER IN THE FIELD FOR FINAL PAYMENT.
2. WHEN VERIFYING AREAS OF DETERIORATION IN THE FIELD, IF ANY LOCATIONS ARE UNSOUND ON THE INTERIOR AND EXTERIOR FACE THEY SHALL BE REPAIRED FULL THICKNESS PER THE DETAILS SHOWN ON THIS SHEET. A CONTINGENCY ESTIMATED QUANTITY HAS BEEN ADDED TO THIS SHEET FOR ANY POTENTIAL FULL DEPTH REPAIRS.
3. EXISTING ANCHORS, BASE PLATES AND VERTICAL POSTS SHALL REMAIN AND BE REUSED. EXISTING FENCE MESH, HORIZONTAL RAILING AND ALL ASSOCIATED HARDWARE SHALL BE REMOVED AND REPLACED. TWO VERTICAL POSTS ARE TO BE REPLACED AS DIRECTED BY THE ENGINEER.
4. IF A FULL THICKNESS REPAIR OCCURS AT A BASE PLATE LOCATION THE EXISTING BASE PLATE AND SLEEVE SHALL BE REUSED AND NEW 1/2" DIA. ANCHORS SHALL BE INSTALLED PER NOTE 5 ON SHEET 1 OF ODOT STANDARD DRAWING VPF-1-90.
5. REMOVE RUST AND DETERIORATION FROM EXISTING BASE PLATES AND POST SLEEVES AND REPAIR GALVANIZATION ACCORDING TO C&MS 711.02.
6. FOR ADDITIONAL VANDAL PROTECTION FENCE DETAILS, SEE ODOT STANDARD DRAWING VPF-1-90
7. REMOVE ALL EXISTING SEALER FROM BRIDGE RAILING, INCLUDING APPROACH SLABS AND APPLY NEW EPOXY URETHANE SEALER, FEDERAL COLOR NO.17778.

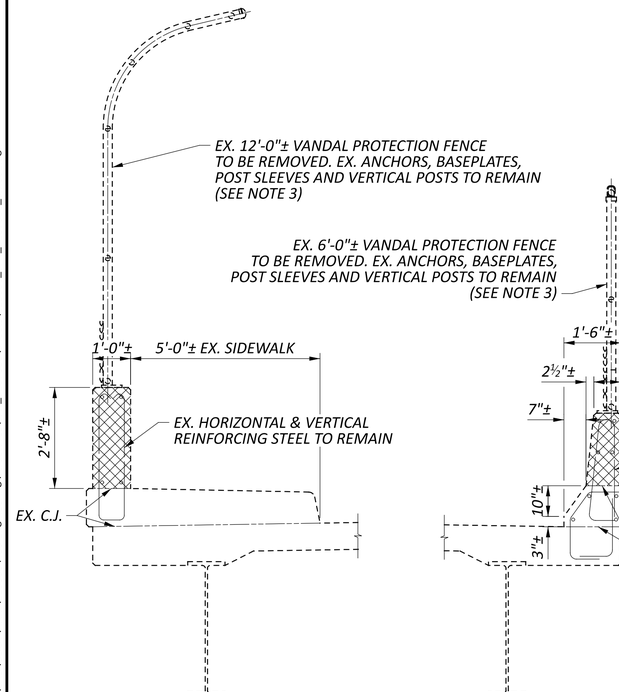

REMOVAL DETAILS

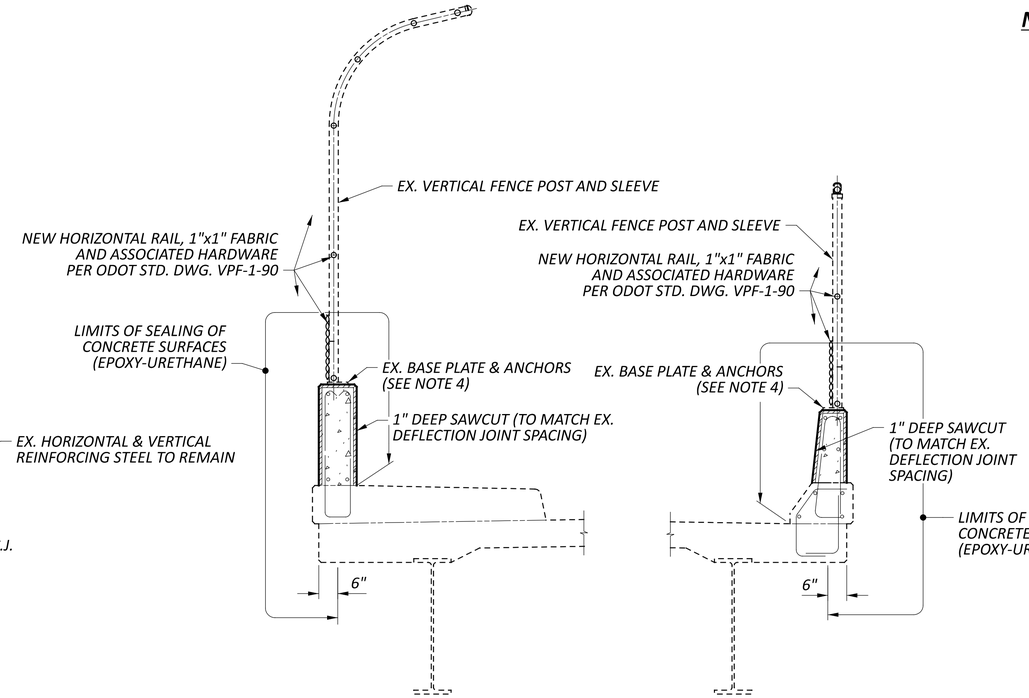

PROPOSED DETAILS

SUPERSTRUCTURE REPAIR DETAILS
BRIDGE NO. HAM-00071-13.030
KUGLER MILL ROAD OVER IR-71

SFN	3107086
DESIGN AGENCY	fishbeck
DESIGNER	BMG
CHECKER	NCS
REVIEWER	JPC 02/04/25
PROJECT ID	113006
SUBSET	S.2
TOTAL	3
SHEET	P.19
TOTAL	42

D08-BM-FY2026

MODEL: Sheet PAPERSIZE: 34x22 (in.) DATE: 6/13/2025 TIME: 2:20:00 PM USER: bgarrison
Z:\2023\231473\CAD\ODOT\HAM\113006\400-Engineering\Structures\SFN_3107086\Sheets\113006_SFN_3107086_SM001.dgn

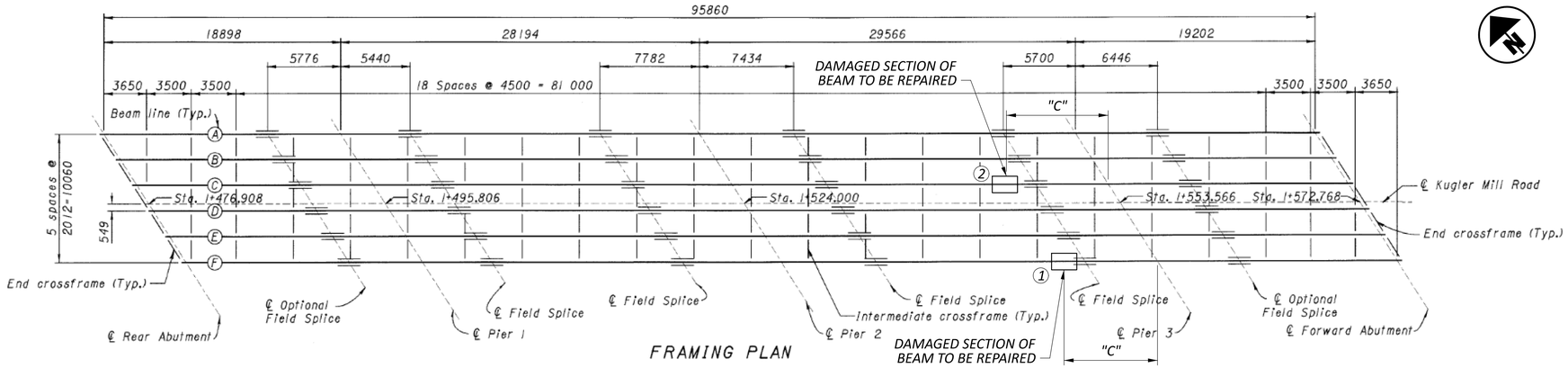

FRAMING PLAN

ITEM 849 REPAIRS									
DAMAGED AREA NO.	MEMBER LINE NO.	PIER	DIM. "C"	REPAIR DETAIL TYPE	DRILLING HOLES (EACH)	COPE HOLES (EACH)	STEEL MEMBER LEVEL UF (POUNDS)	CP WELD (FEET)	FILLET WELD (FEET)
1	BEAM F	3	45'±	FC2	0	0	0	0	0
2	BEAM C	3	45'±	FC2	0	0	0	0	0

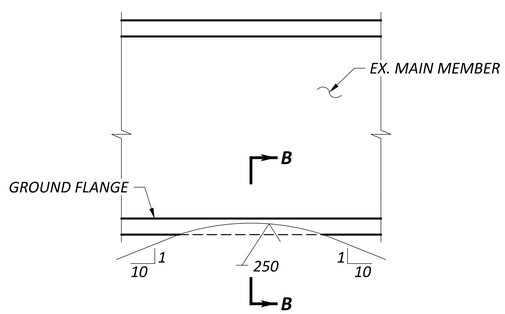

COLLISION REPAIR FC2-2

IF AREA (tn, bn) AFTER GRINDING < 98% OF AREA (tf, bf) NOTE 1 APPLIES

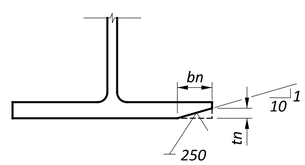

SECTION B-B

(SEE NOTE 1)

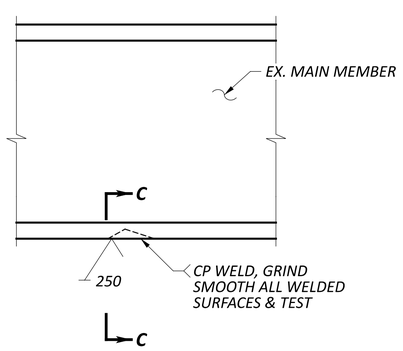

COLLISION REPAIR FC2-3

IF AREA (tn, bn) AFTER GRINDING > 98% OF AREA (tf, bf) NOTES 2 & 3 APPLY

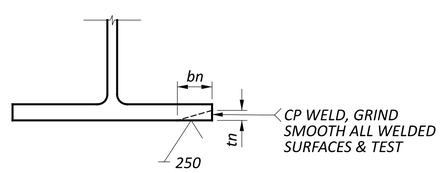

SECTION C-C

(SEE NOTES 2 & 3)

NOTES:

1. IF NOTCH OR PARTIAL DEPTH CRACK CAN BE REMOVED BY GRINDING ACCORDING TO SUPPLEMENTAL SPECIFICATION 849, REPAIR DAMAGED MEMBERS. PERFORM GRINDING ACCORDING TO SUPPLEMENTAL SPECIFICATION 849 AND AS ILLUSTRATED IN DETAIL FC2-2.
2. IF NOTCH OR PARTIAL DEPTH CRACK MUST BE REPAIRED BY WELDING ACCORDING TO SUPPLEMENTAL SPECIFICATION 849 REPAIRING DAMAGED MEMBERS, AS ILLUSTRATED IN DETAIL FC2-3. PERFORM COMPLETE PENETRATION WELDING ACCORDING TO C&MS 513.21 BY ATTACHING RUN OFF TABS AND GRIND ALL WELDED SURFACES SMOOTH ACCORDING TO ANSI B46.1 OF 250 MIL.
3. PERFORM NDT TESTING ACCORDING TO C&MS 513.25A.
4. REPAIR DAMAGED PAINT WITH A TWO COAT SYSTEM PER ITEM 514. COLOR TO MATCH EXISTING (IZEU APRIL 2000).

FLANGE REPAIR DETAILS
BRIDGE NO. HAM-00071-13.030
KUGLER MILL ROAD OVER IR-71

SFN 3107086
DESIGN AGENCY fishbeck
DESIGNER BMG | CHECKER NCS
REVIEWER JPC 02/04/25
PROJECT ID 113006
SUBSET S.3 | TOTAL 3
SHEET P.20 | TOTAL 42

D08-BM-FY2026

MODEL: Sheet PAPERSIZE: 34x22 (in.) DATE: 6/13/2025 TIME: 2:20:01 PM USER: bgarrison
Z:\2023\231473\CAD\ODOT\HAM\113006\400-Engineering\Structures\SFN_3107086\Sheets\113006_SFN_3107086_SM002.dgn

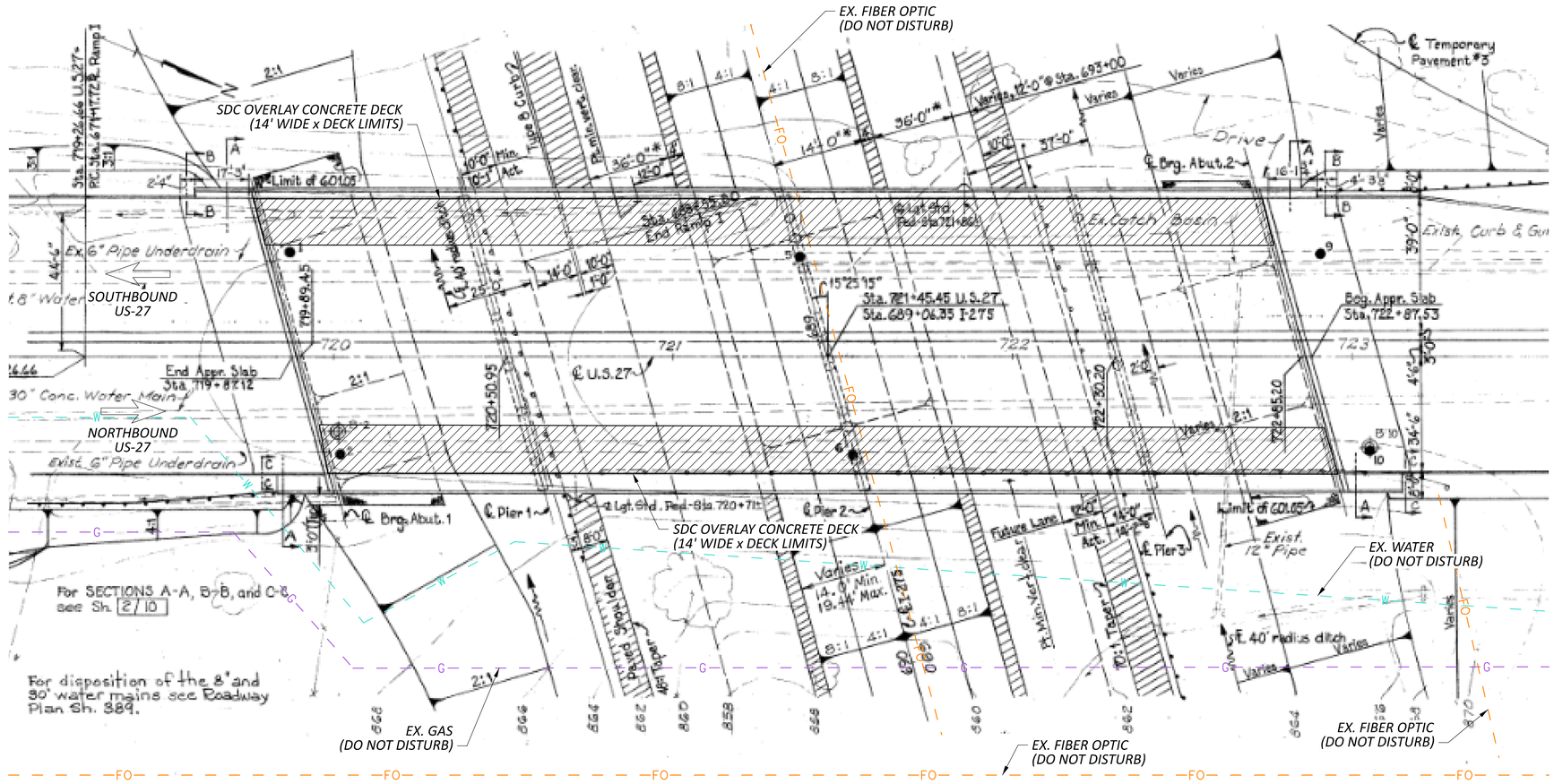

PLAN

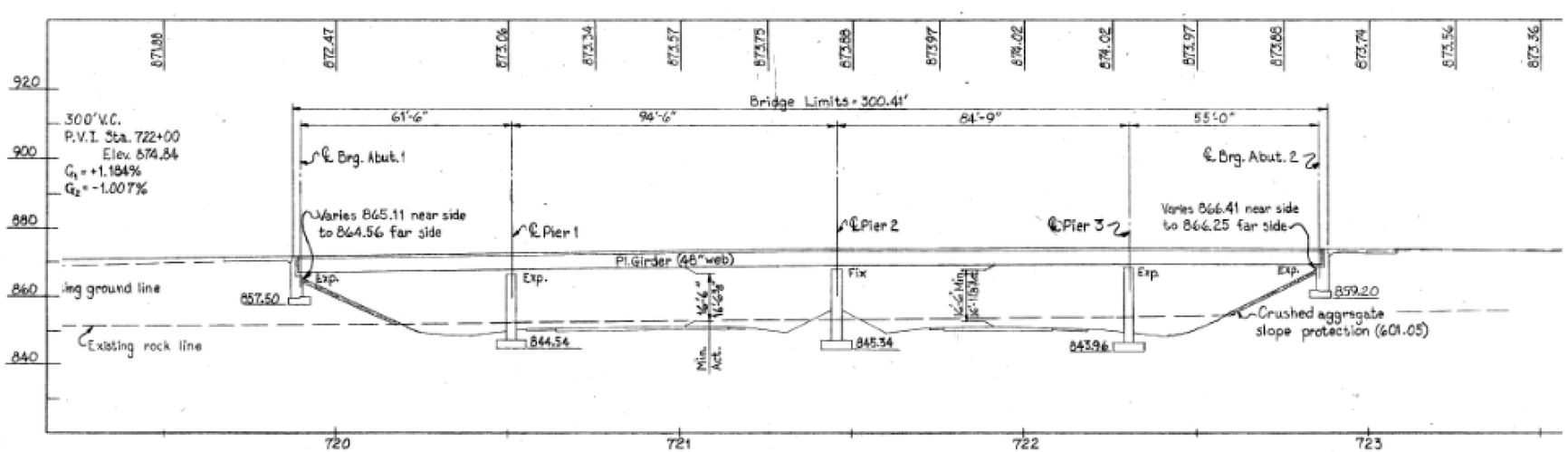

PROFILE ALONG ℄ US-27

NOTES:

DETAILS ON THIS SITE PLAN SHEET ARE FROM ARCHIVED PLANS AND SHOULD BE USED FOR REFERENCE ONLY.

LEGEND:

- LIMITS OF CONCRETE OVERLAY REPAIR PER ITEM 847, SDC OVERLAY USING SCARIFICATION

DESIGN TRAFFIC:

HAM-US27-14.08

2027 ADT = 40,000 2027 ADTT = 4,000
2039 ADT = 40,500 2039 ADTT = 4,050
DIRECTIONAL DISTRIBUTION = 0.56
DESIGN SPEED: 35 MPH LEGAL SPEED: 35 MPH
DESIGN FUNCTIONAL CLASSIFICATION: 03-PRINCIPAL ARTERIAL OTHER (URBAN)
NHS ROUTE: YES

IR-275-16.02

2024 ADT = 84,915 2024 ADTT = 11,039
DESIGN SPEED: 65 MPH LEGAL SPEED: 65 MPH
DESIGN FUNCTIONAL CLASSIFICATION: 01-PRINCIPAL ARTERIAL INTERSTATE (URBAN)
NHS ROUTE: YES

EXISTING STRUCTURE

TYPE: CONTINUOUS PLATE GIRDER REINFORCED CONCRETE DECK AND SUBSTRUCTURE
SPANS: 61'-6"±, 94'-6"±, 84'-9"±, 55'-0"± C/C BEARINGS
ROADWAY: 39'-0"± T/T CURB (BOTH DIRECTIONS) WITH 3'-0"± MEDIAN CURB, 2'-0"± SAFETY CURB AND 5'-0"± SIDEWALK
LOADING: HS20-44
SKEW: 15°25'15"± RF
WEARING SURFACE: 2½"± SUPERPLASTICIZED DENSE CONCRETE OVERLAY OR 2¼"± POLYESTER POLYMER CONCRETE OVERLAY
APPROACH SLABS: AS-1-72 (20'-0"± LONG)
ALIGNMENT: TANGENT
CROWN: 0.016± FT/FT
STRUCTURE FILE NUMBER: 3101738
DATE BUILT: 1977, REHABILITATED 1999 AND 2019
DISPOSITION: SEE PROPOSED WORK

PROPOSED WORK

1. REMOVE THE EXISTING 2.5" SDC OVERLAY AND 0.25" OF THE EXISTING DECK USING SCARIFICATION IN THE LOCATIONS SPECIFIED.
2. REPAIR WEARING SURFACE WITH SDC OVERLAY PER SUPPLEMNTAL SPECIFICATION 847.

HORIZONTAL SCALE IN FEET 0 10 20 40

SITE PLAN
BRIDGE NO. HAM-00027-14.080
US-27 OVER IR-275

SFN 3101738
DESIGN AGENCY fishbeck
DESIGNER BMG CHECKER NCS
REVIEWER JPC 02/04/25
PROJECT ID 113006
SUBSET S.1 TOTAL 1
SHEET P.21 TOTAL 42

D08-BM-FY2026

MODEL: Sheet PAPERSIZE: 34x22 (in.) DATE: 6/13/2025 TIME: 2:20:08 PM USER: bgarrison
Z:\2023\231473\CAD\ODOT\HAM\113006\400-Engineering\Structures\SFN_3101738\Sheets\113006_SFN_3101738_SP001.dgn

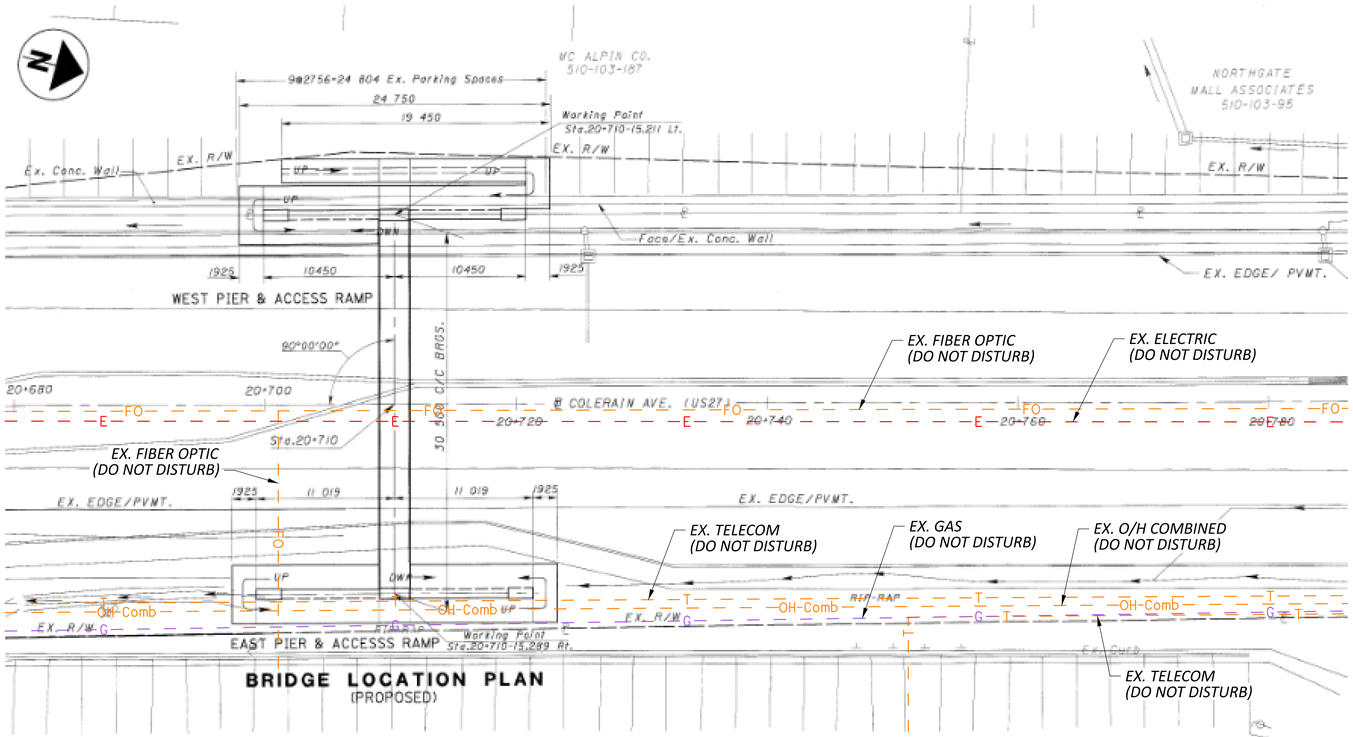

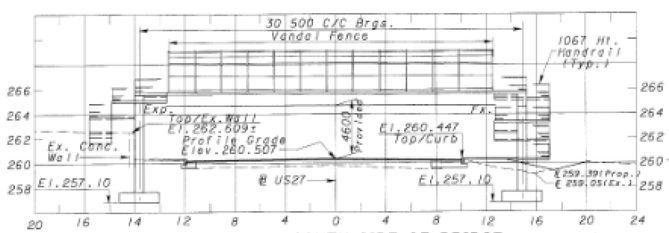

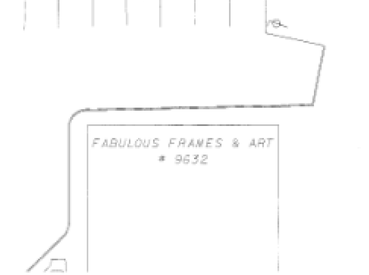

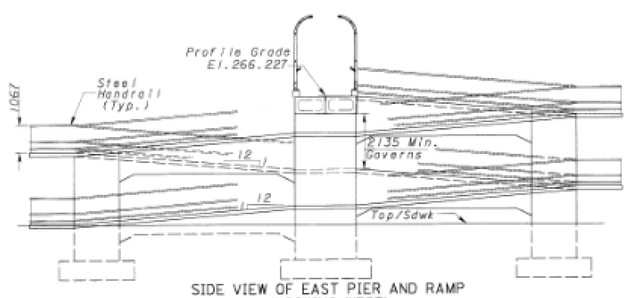

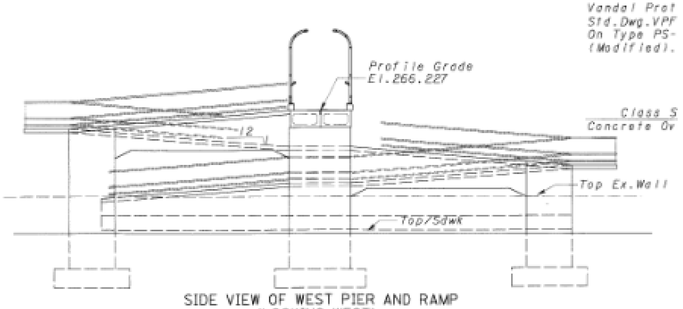

NOTES:

DETAILS ON THIS SITE PLAN SHEET ARE FROM ARCHIVED PLANS AND SHOULD BE USED FOR REFERENCE ONLY.

DESIGN TRAFFIC:

HAM-US27-13.30

2027 ADT = 39,000 2027 ADTT = 1,170
2039 ADT = 39,000 2039 ADTT = 1,170
DIRECTIONAL DISTRIBUTION = 0.53
DESIGN SPEED: 35 MPH LEGAL SPEED: 35 MPH
DESIGN FUNCTIONAL CLASSIFICATION: 03-PRINCIPAL ARTERIAL OTHER (URBAN)
NHS ROUTE: YES

EXISTING STRUCTURE

TYPE: SIMPLE SPAN NON-COMPOSITE PRESTRESSED CONCRETE BOX BEAMS AND REINFORCED CONCRETE SUBSTRUCTURE

SPANS: 100'-1"± C/C BEARINGS
WALKWAY: 6'-8"± T/T CURB
LOADING: PEDESTRIAN LOAD 90 PSF
SKEW: NONE
WEARING SURFACE: 1.25"± CLASS S CONCRETE OVERLAY
APPROACH SLABS: NONE
ALIGNMENT: TANGENT
CROWN: 0.016± FT/FT
STRUCTURE FILE NUMBER: 3101703
DATE BUILT: 2002
DISPOSITION: SEE PROPOSED WORK

PROPOSED WORK

1. *PATCH UNSOUND AND SPALLED SUBSTRUCTURE, RAMPS AND CURBS WITH TROWELABLE MORTAR PER SUPPLEMENTAL SPECIFICATION 843.*
2. *EPOXY INJECT CRACKED AREAS OF THE SUBSTRUCTURE AND RAMPS.*
3. *REMOVE EXISTING CONCRETE SEALER ON THE SUBSTRUCTURE AND RAMPS. SEAL THE SUBSTRUCTURE AND RAMPS, EXCLUDING WALKING SURFACE, WITH EPOXY-URETHANE SEALER, FEDERAL COLOR 17778.*
4. *SEAL THE RAMP AND BRIDGE WALKING SURFACES WITH HMWM RESIN.*
5. *SWEEP RAMP AND BRIDGE WALKING SURFACES.*
6. *REMOVE AND REINSTALL SECTIONS OF RAILING.*
7. *PAINT RAILING.*

HORIZONTAL SCALE IN FEET 0 10 20 40

SITE PLAN
BRIDGE NO. HAM-00027-13.300
PEDESTRIAN BRIDGE OVER US-27

SFN	3101703
DESIGN AGENCY	fishbeck
DESIGNER	BMG
CHECKER	NCS
REVIEWER	JPC 02/04/25
PROJECT ID	113006
SUBSET	S.1
TOTAL	6
SHEET	P.22
TOTAL	42

D08-BM-FY2026

MODEL: Sheet PAPERSIZE: 34x22 (in.) DATE: 6/13/2025 TIME: 2:20:28 PM USER: bgarrison
Z:\2023\231473\CAD\ODOT\HAM\113006\400-Engineering\Structures\SFN_3101703\Sheets\113006_SFN_3101703_SP001.dgn

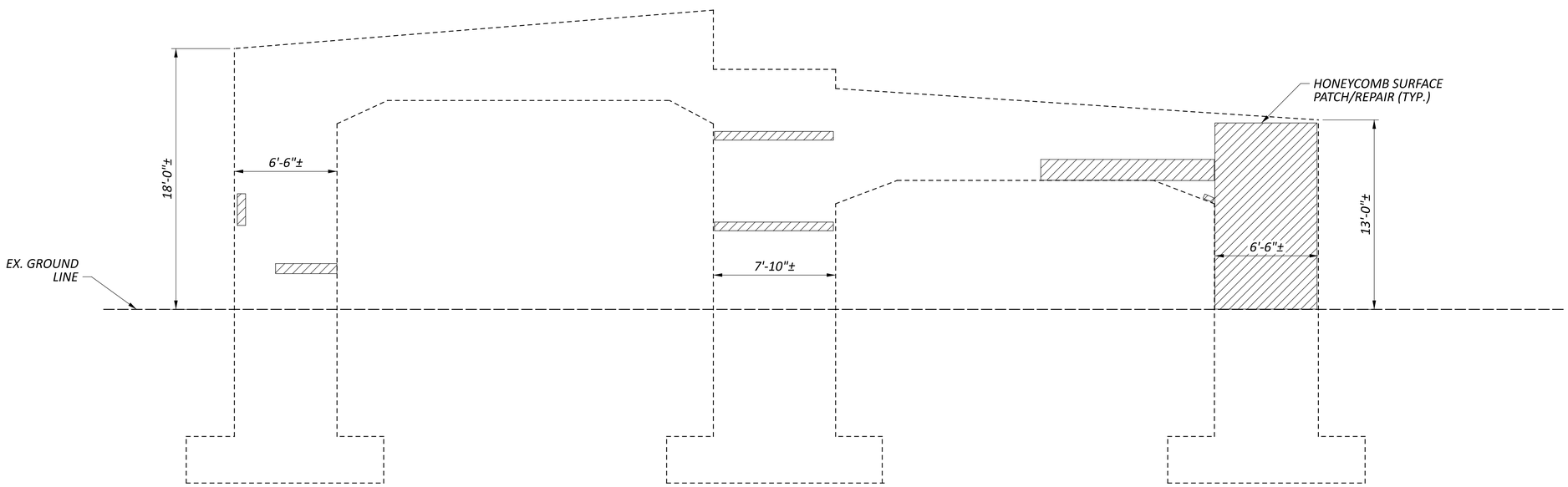

WEST PIER ELEVATION
(LOOKING WEST)

SUMMARY OF PATCHING AREAS ITEM 843			
LOCATION	MEASURED (SF)*	CONTINGENCY	TOTAL (SF)
WEST PIER	140	1.5	210

* - SEE NOTE 1 FOR MEASURED AREA

LEGEND:

- INDICATES AREAS TO BE REPAIRED PER SUPPLEMENTAL SPECIFICATION ITEM 843

NOTES:

1. FOR ESTIMATING PURPOSES, 10% OF THE WEST PIER SURFACE AREA HAS BEEN INCLUDED WITH ITEM 843 FOR PAYMENT. FOR ADDITIONAL DETAILS, SEE GENERAL NOTES SHEET P.15 / 42.
2. APPLY EPOXY-URETHANE SEALER TO ALL EXPOSED SURFACES OF THE WEST AND EAST PIERS AFTER PATCHING HAS BEEN COMPLETED. USE FEDERAL COLOR NO. 17778.

WEST PIER REPAIR DETAIL
BRIDGE NO. HAM-00027-13.300
PEDESTRIAN BRIDGE OVER US-27

SFN 3101703
DESIGN AGENCY fishbeck
DESIGNER NCS | CHECKER BMG
REVIEWER JPC 02/04/25
PROJECT ID 113006
SUBSET S.2 | TOTAL 6
SHEET P.23 | TOTAL 42

D08-BM-FY2026
MODEL: Sheet PAPERSIZE: 34x22 (in.) DATE: 6/13/2025 TIME: 2:20:40 PM USER: bgarrison
Z:\2023\231473\CAD\ODOT\HAM\113006\400-Engineering\Structures\SFN_3101703\Sheets\113006_SFN_3101703_S1001.dgn

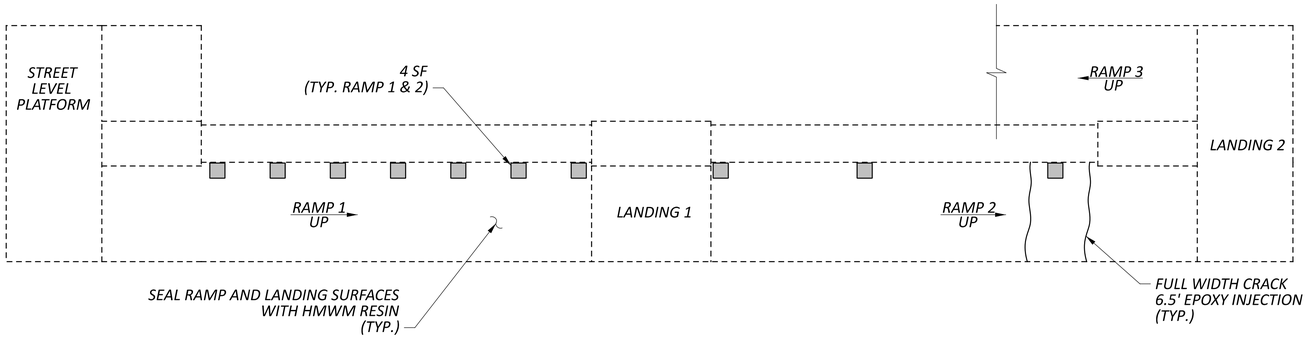

EAST ACCESS RAMP PLAN
(RAMPS 1 & 2)

SUMMARY OF REPAIRS			
TYPE	MEASURED QUANTITIES	CONTINGENCY	TOTAL
ITEM 519 PATCHING	7.8 SF	1.5	12 SF
ITEM 512 EPOXY INJECTION	104.5 FT	1.5	157 FT
ITEM 843 MORTAR PATCH	173.8 SF	1.5	261 SF

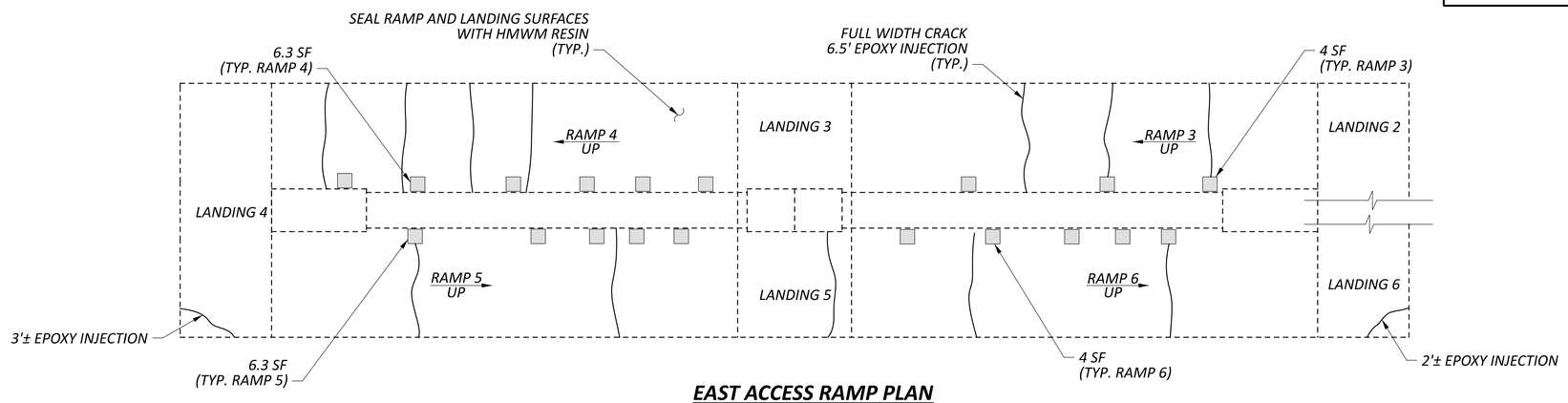

EAST ACCESS RAMP PLAN
(RAMPS 3,4,5, & 6)

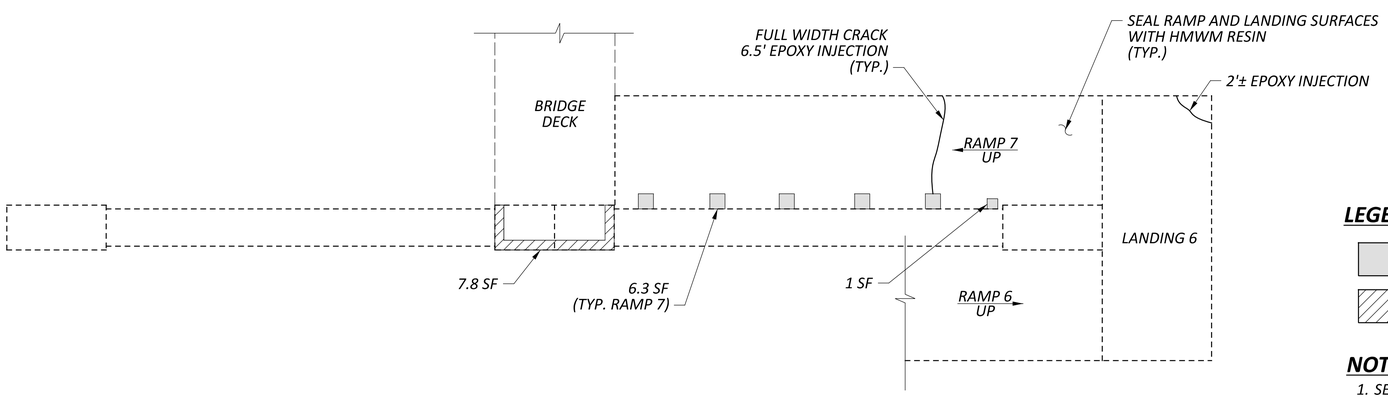

EAST ACCESS RAMP PLAN
(RAMP 7)

LEGEND:

- INDICATES AREA ON UNDERSIDE OF RAMP TO BE REPAIRED PER SUPPLEMENTAL SPECIFICATION ITEM 843
- INDICATES AREA TO BE REPAIRED PER ITEM 519, CONCRETE PATCHING, AS PER PLAN

NOTES:

1. SEE GENERAL NOTES SHEET P.14 / 42 FOR ADDITIONAL HMWM AND EPOXY INJECTION NOTES.
2. AN ADDITIONAL 50% CONTINGENCY HAS BEEN ADDED TO THE FIELD MEASURED CRACKS AND PATCHING AREAS TO ALLOW FOR ADDITIONAL AREAS OF DETERIORATION. THE FINAL DIMENSIONS AND LOCATION OF THE DETERIORATED AREAS TO BE PATCHED SHALL BE DETERMINED BY THE CONTRACTOR AND APPROVED BY THE ENGINEER IN THE FIELD FOR FINAL PAYMENT.

EAST ACCESS RAMP REPAIR DETAILS
BRIDGE NO. HAM-00027-13.300
PEDESTRIAN BRIDGE OVER US-27

SFN 3101703
DESIGN AGENCY fishbeck
DESIGNER NCS | CHECKER BMG
REVIEWER JPC 02/04/25
PROJECT ID 113006
SUBSET S.3 | TOTAL 6
SHEET P.24 | TOTAL 42

D08-BM-FY2026
MODEL: Sheet PAPERSIZE: 34x22 (in.) DATE: 6/13/2025 TIME: 2:20:41 PM USER: bgarrison
Z:\2023\231473\CAD\ODOT\HAM\113006\400-Engineering\Structures\SFN_3101703\Sheets\113006_SFN_3101703_SM001.dgn

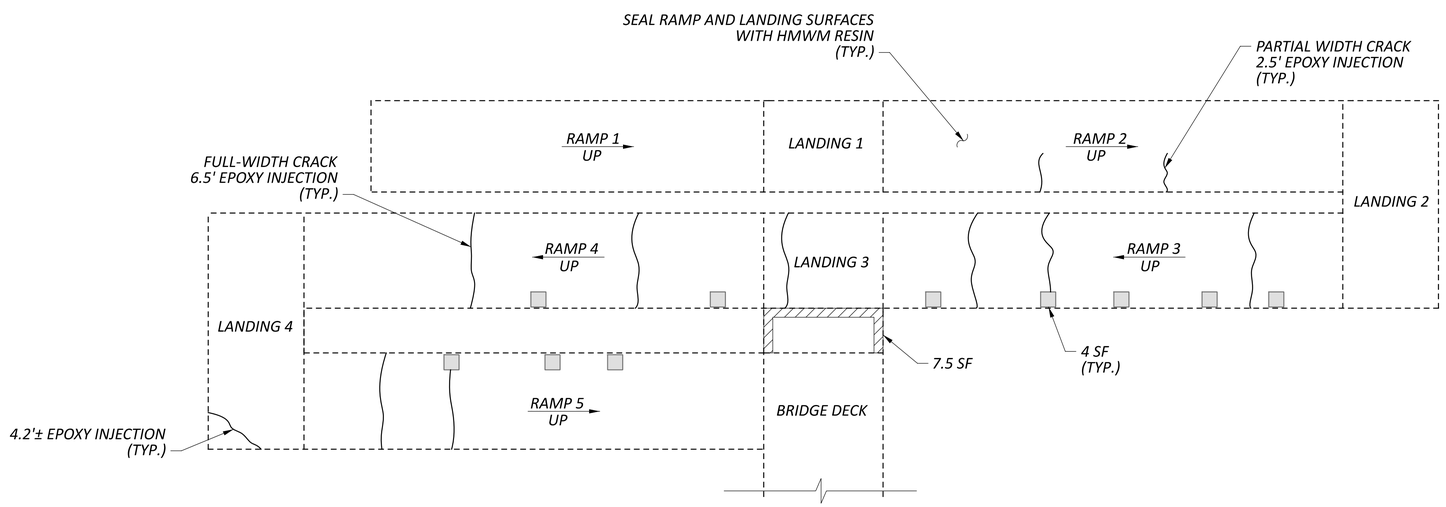

WEST ACCESS RAMP PLAN

(RAMPS 1,2,3,4, & 5)

SUMMARY OF REPAIRS			
TYPE	MEASURED QUANTITIES	CONTINGENCY	TOTAL
ITEM 519 PATCHING	7.5 SF	1.5	12 SF
ITEM 512 EPOXY INJECTION	61.2 FT	1.5	92 FT
ITEM 843 MORTAR PATCH	40 SF	1.5	60 SF

LEGEND:

- INDICATES AREA ON UNDERSIDE OF RAMP TO BE REPAIRED PER SUPPLEMENTAL SPECIFICATION ITEM 843
- INDICATES AREA TO BE REPAIRED PER ITEM 519, CONCRETE PATCHING, AS PER PLAN

NOTES:

1. SEE GENERAL NOTES SHEET P.14 / 42 FOR ADDITIONAL HMWM AND EPOXY INJECTION NOTES.
2. AN ADDITIONAL 50% CONTINGENCY HAS BEEN ADDED TO THE FIELD MEASURED CRACKS AND PATCHING AREAS TO ALLOW FOR ADDITIONAL AREAS OF DETERIORATION. THE FINAL DIMENSIONS AND LOCATION OF THE DETERIORATED AREAS TO BE PATCHED SHALL BE DETERMINED BY THE CONTRACTOR AND APPROVBED BY THE ENGINEER IN THE FIELD FOR FINAL PAYMENT.

WEST ACCESS RAMP REPAIR DETAILS
BRIDGE NO. HAM-00027-13.300
PEDESTRIAN BRIDGE OVER US-27

SFN 3101703
DESIGN AGENCY fishbeck
DESIGNER NCS | CHECKER BMG
REVIEWER JPC 02/04/25
PROJECT ID 113006
SUBSET S.4 | TOTAL 6
SHEET P.25 | TOTAL 42

D08-BM-FY2026

MODEL: Sheet PAPERSIZE: 34x22 (in.) DATE: 6/13/2025 TIME: 2:20:41 PM USER: bgarrison
Z:\2023\231473\CAD\ODOT\HAM\113006\400-Engineering\Structures\SFN_3101703\Sheets\113006_SFN_3101703_SM002.dgn

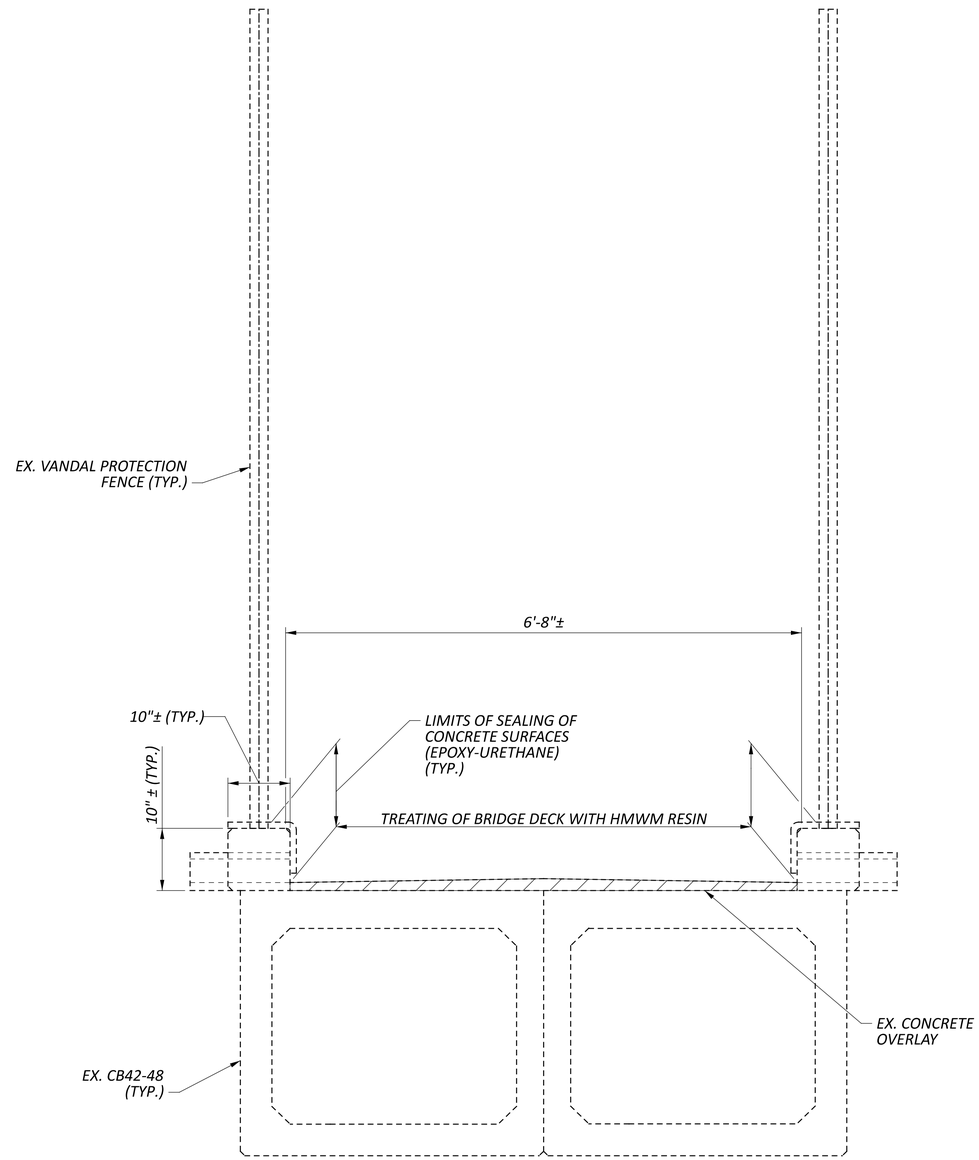

PEDESTRIAN BRIDGE TYPICAL SECTION

NOTES:

1. SEE GENERAL NOTES SHEET P.14 / 42 FOR ADDITIONAL HMWM NOTES.
2. EPOXY URETHANE SEALER SHALL BE FEDERAL COLOR NO. 17778.

PEDESTRIAN BRIDGE TYPICAL SECTION REPAIRS
BRIDGE NO. HAM-00027-13.300
PEDESTRIAN BRIDGE OVER US-27

SFN	3101703
DESIGN AGENCY	fishbeck
DESIGNER	NCS
CHECKER	BMG
REVIEWER	JPC 02/04/25
PROJECT ID	113006
SUBSET	S.5
TOTAL	6
SHEET	P.26
TOTAL	42

D08-BM-FY2026

MODEL: Sheet PAPERSIZE: 34x22 (in.) DATE: 6/13/2025 TIME: 2:20:42 PM USER: bgarrison
Z:\2023\231473\CAD\ODOT\HAM\113006\400-Engineering\Structures\SFN_3101703\Sheets\113006_SFN_3101703_ST001.dgn

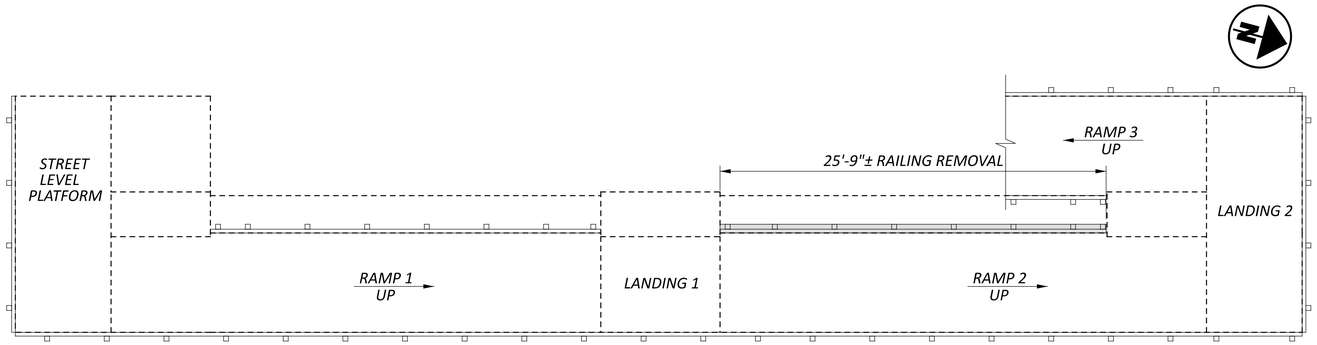

EAST ACCESS RAMP RAILING PLAN
(RAMPS 1 & 2)

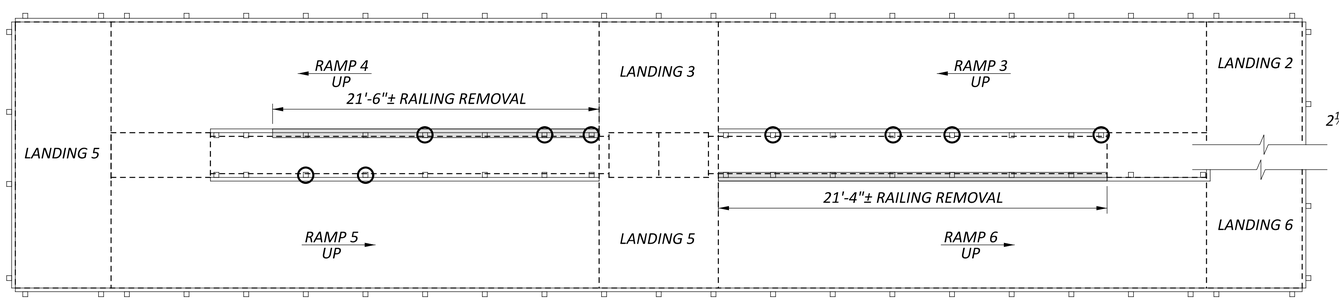

EAST ACCESS RAMP RAILING PLAN
(RAMPS 3,4,5, & 6)

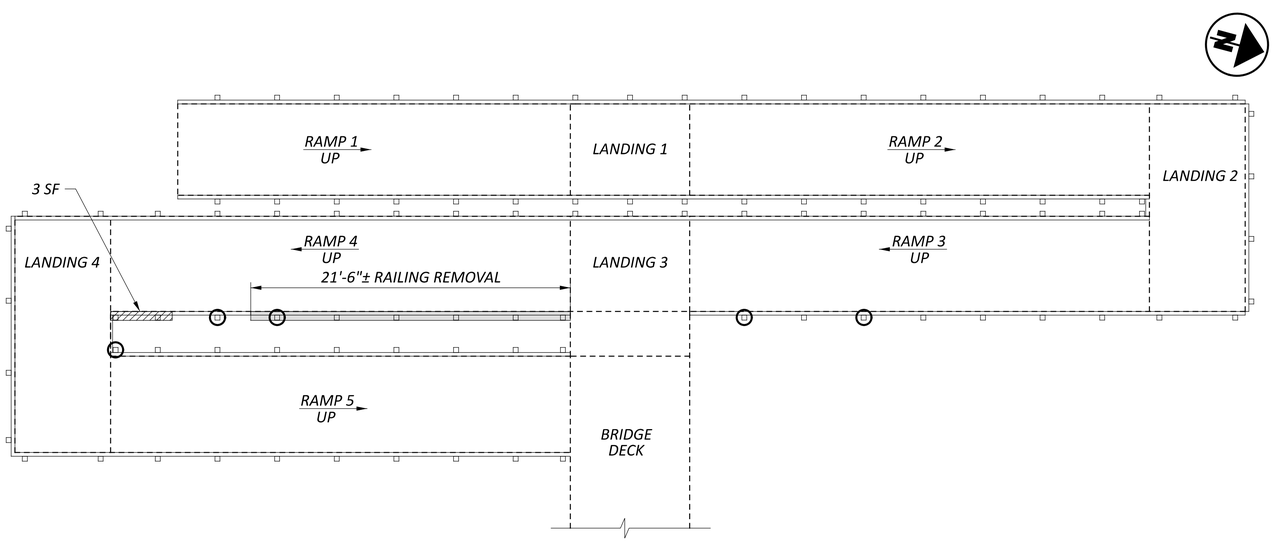

WEST ACCESS RAMP RAILING PLAN
(RAMPS 1,2,3,4, & 5)

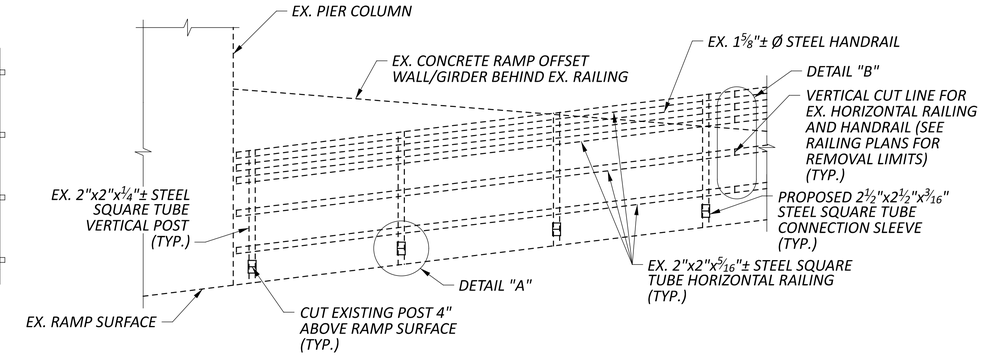

TYPICAL RAILING REMOVAL ELEVATION
(1"x1"± PICKETS NOT SHOWN FOR CLARITY)

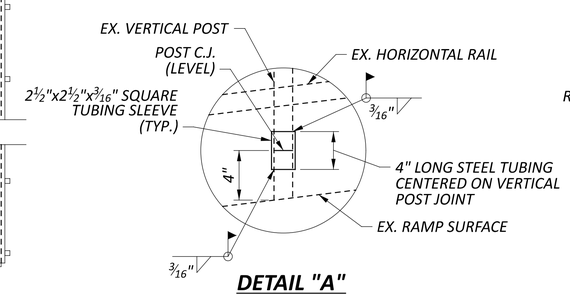

DETAIL "A"

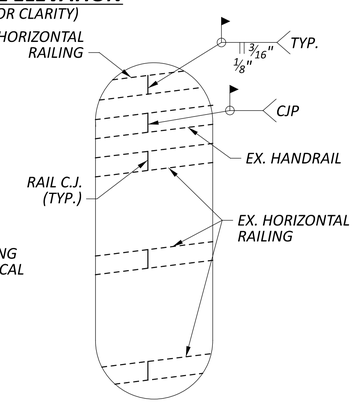

DETAIL "B"

SUMMARY OF PATCHING AREAS ITEM 843			
LOCATION	MEASURED (SF)	CONTINGENCY	TOTAL (SF)
WEST ACCESS RAMP	8	1.5	12
EAST ACCESS RAMP	9	1.5	14
TOTAL			26

LEGEND:

- INDICATES EXISTING BRIDGE RAILING TO BE REMOVED AND REBUILT PER ITEM 517 BRIDGE RAILING REBUILT, AS PER PLAN
- INDICATES AREA ON RAMP SURFACE AROUND EX. POST (1'x1'±) TO BE REPAIRED PER SUPPLEMENTAL SPECIFICATION ITEM 843
- INDICATES AREA TO BE REPAIRED PER SUPPLEMENTAL SPECIFICATION ITEM 843

NOTES:

1. PAINT THE ENTIRE SURFACE AREA OF ALL EXISTING STEEL RAILING PER ITEM 514, FIELD PAINTING, MISC.: PAINTING OF EXISTING RAILINGS, AS PER PLAN.
2. APPLY EPOXY-URETHANE SEALER TO ALL EXPOSED SURFACES OF THE WEST AND EAST ACCESS RAMPS, EXCLUDING THE RAMP WALKWAY SURFACE. USE FEDERAL COLOR NO. 17778.
3. FOR ADDITIONAL BRIDGE RAILING PAINTING AND REMOVAL NOTES, SEE GENERAL NOTES SHEET P.15 / 42 .
4. STEEL TUBING SLEEVES SHALL BE GALVANIZED ASTM A709 GRADE 36 - YIELD STRENGTH 36 KSI.
5. AN ADDITIONAL 50% CONTINGENCY HAS BEEN ADDED TO THE FIELD MEASURED PATCHING AREAS TO ALLOW FOR ADDITIONAL AREAS OF DETERIORATION. THE FINAL DIMENSIONS AND LOCATION OF THE DETERIORATED AREAS TO BE PATCHED SHALL BE DETERMINED BY THE CONTRACTOR AND APPROVED BY THE ENGINEER IN THE FIELD FOR FINAL PAYMENT.
6. ADDITIONAL BRIDGE RAILING SHALL BE REMOVED, IN ADDITION TO WHAT IS SHOWN IN THE PLANS, AS NEEDED TO COMPLETE THE SURFACE PREPARATION AND SEALING OF THE EXISTING CONCRETE SURFACES. REMOVAL OF EXISTING BRIDGE RAILING IS INCLUDED WITH ITEM 202, PORTIONS OF STRUCTURE REMOVED, AS PER PLAN FOR PAYMENT.

RAILING REPAIR DETAILS
BRIDGE NO. HAM-00027-13.300
PEDESTRIAN BRIDGE OVER US-27

SFN 3101703
DESIGN AGENCY fishbeck
DESIGNER NCS | CHECKER BMV
REVIEWER JPC 02/04/25
PROJECT ID 113006
SUBSET S.6 | TOTAL 6
SHEET P.27 | TOTAL 42

D08-BM-FY2026
MODEL: Sheet PAPERSIZE: 34x22 (in.) DATE: 6/13/2025 TIME: 2:20:42 PM USER: bgarrison
Z:\2023\231473\CAD\ODOT\HAM\113006\400-Engineering\Structures\SFN_3101703\Sheets\113006_SFN_3101703_SA001.dgn

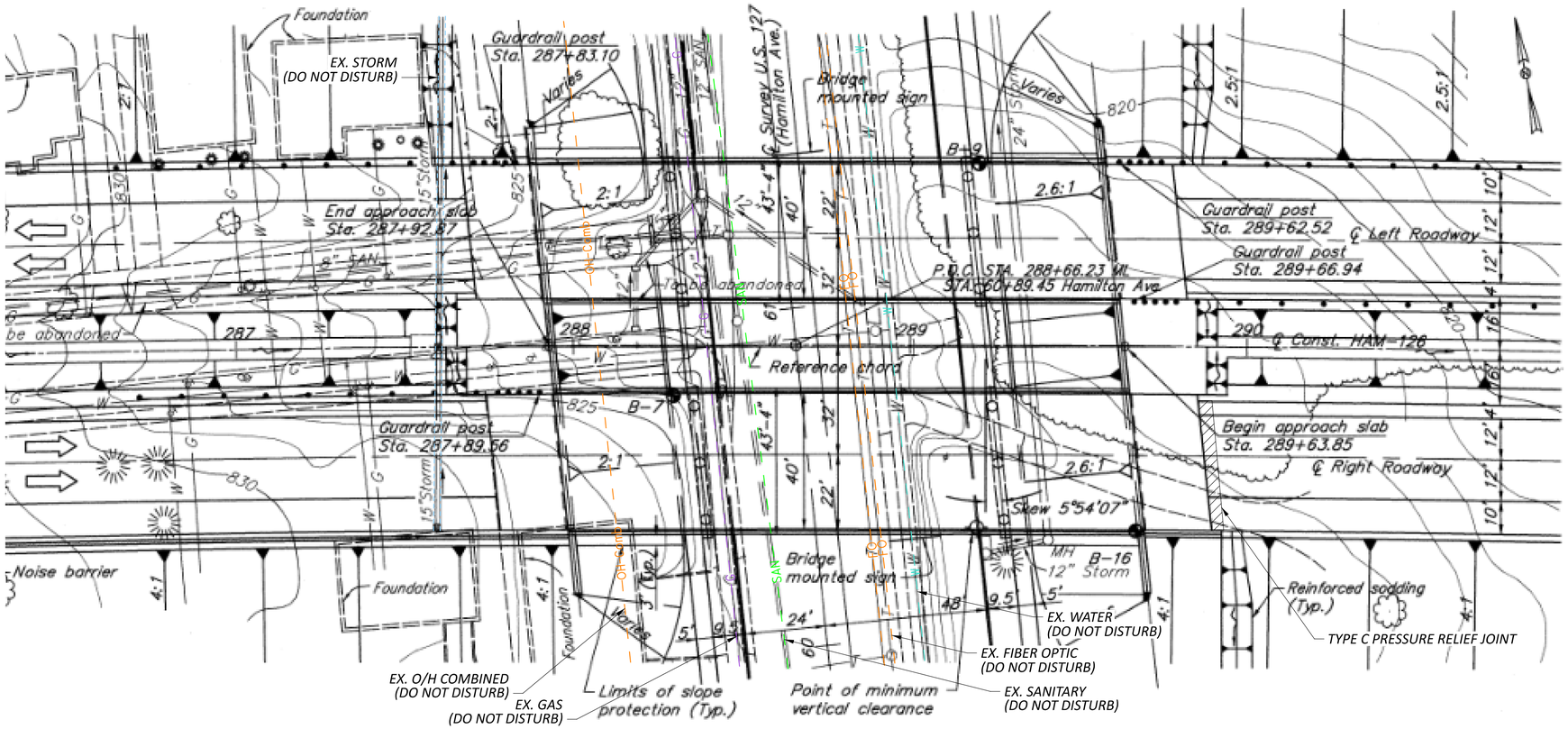

PLAN

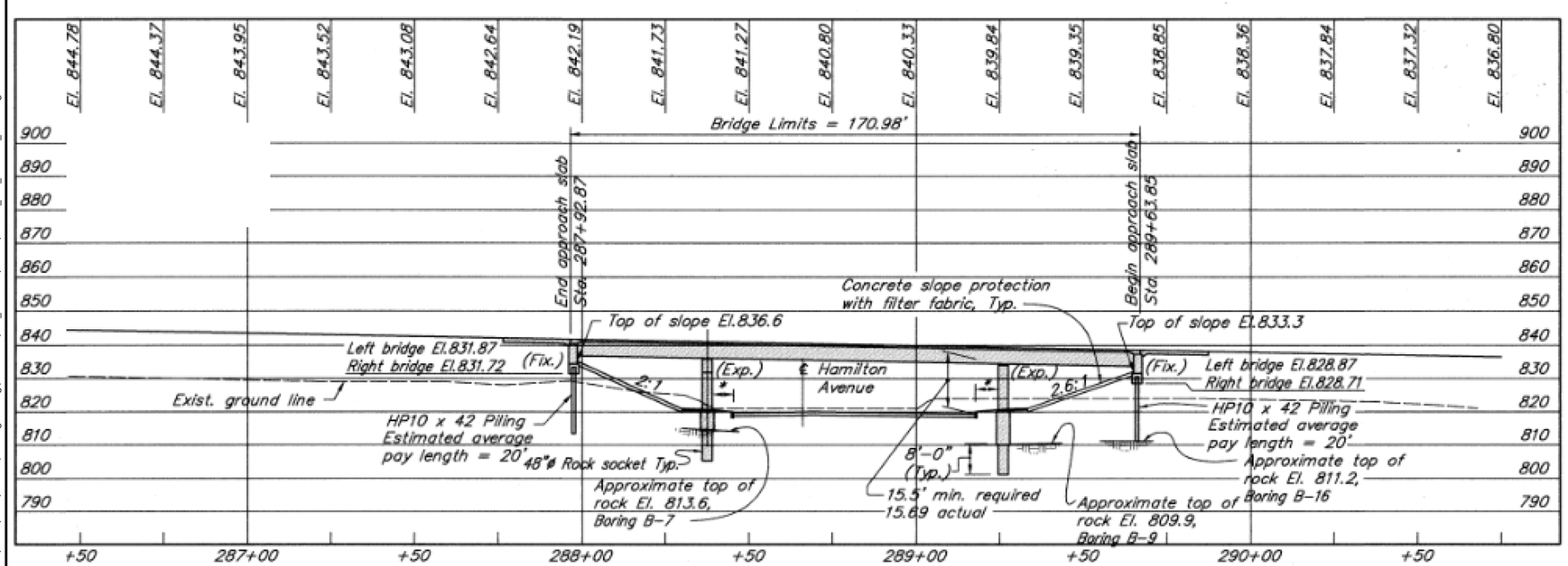

PROFILE
(Along ℄ right bridge)

* 5'-6" Required clearance
6'-6" Actual clearance

NOTES:

DETAILS ON THIS SITE PLAN SHEET ARE FROM ARCHIVED PLANS AND SHOULD BE USED FOR REFERENCE ONLY.

LEGEND:

- DENOTES LIMITS OF PAVEMENT REMOVAL FOR TYPE C PRESSURE RELIEF JOINT PER STD. DWG. BP-2.4. USE TYPE 442, ASPHALT CONCRETE INTERMEDIATE COURSE, 12.5MM (448).

DESIGN TRAFFIC:

HAM-SR126-09.04

2027 ADT = 56,500 2027 ADTT = 2,825
2039 ADT = 70,500 2039 ADTT = 3,525
DIRECTIONAL DISTRIBUTION = 0.65
DESIGN SPEED = 60 MPH LEGAL SPEED = 60 MPH
DESIGN FUNCTIONAL CLASSIFICATION: 02-PRINCIPAL ARTERIAL FREEWAY (URBAN)
NHS ROUTE: YES

US-127

2023 ADT = 23,305 2023 ADTT = 791
DESIGN SPEED = 25 MPH LEGAL SPEED = 25 MPH
DESIGN FUNCTIONAL CLASSIFICATION: 03-PRINCIPAL ARTERIAL OTHER (URBAN)
NHS ROUTE: NO

EXISTING STRUCTURE

TYPE: CONTINUOUS ROLLED STEEL BEAM WITH COMPOSITE CONCRETE DECK ON INTEGRAL ABUTMENTS AND CAP AND COLUMN PIERS

SPANS: 40'-2¼"±, 88'-5⅝"±, 40'-3¾"± C/C BEARINGS
ROADWAY: 40'-0"± T/T CURB
LOADING: HS20-44 CASE II & ALTERNATE MILITARY
SKEW: 5°54'07"± RF
WEARING SURFACE: 1"± MONOLITHIC CONCRETE
APPROACH SLABS: AS-1-81 (20'-0"± LONG)
ALIGNMENT: TANGENT
SUPERELEVATION: 0.016± FT/FT
STRUCTURE FILE NUMBER: 3104664 & 3104680
DATE BUILT: 1996
DISPOSITION: SEE PROPOSED WORK

PROPOSED WORK

1. REMOVE ALL EXISTING WIRING, CONDUITS, ATTACHMENTS AND OTHER ITEMS FROM PREVIOUS RESEARCH PROJECT.
2. REMOVE EXISTING ITEMS PENETRATING THE DECK BY REMOVING THE FRAME, INSTALLING STAINLESS STEEL PINS WITHIN THE HOLE AND FILL WITH CONCRETE.
3. REPAIR DETERIORATED PORTIONS OF THE CONCRETE BRIDGE RAILING FULL THICKNESS.
4. REMOVE AND REPLACE THE DETERIORATED CONCRETE AT THE JUNCTION OF THE EASTBOUND, EAST APPROACH SLAB AND PAVEMENT WITH A FULL THICKNESS TYPE C PRESSURE RELIEF JOINT.

HORIZONTAL SCALE IN FEET 0 10 20 40

SITE PLAN
BRIDGE NO. HAM-00126-09.040L/R
SR-126 OVER US-127/HAMILTON AVENUE

SFN 3104664
SFN 3104680
DESIGN AGENCY fishbeck
DESIGNER BMG CHECKER NCS
REVIEWER JPC 02/04/25
PROJECT ID 113006
SUBSET S.1 TOTAL 3
SHEET P.28 TOTAL 42

D08-BM-FY2026

MODEL: Sheet PAPERSIZE: 34x22 (in.) DATE: 6/13/2025 TIME: 2:20:43 PM USER: bgarrison
Z:\2023\231473\CAD\ODOT\HAM\113006\400-Engineering\Structures\SFN_3104664\Sheets\113006_SFN_3104664_SP001.dgn

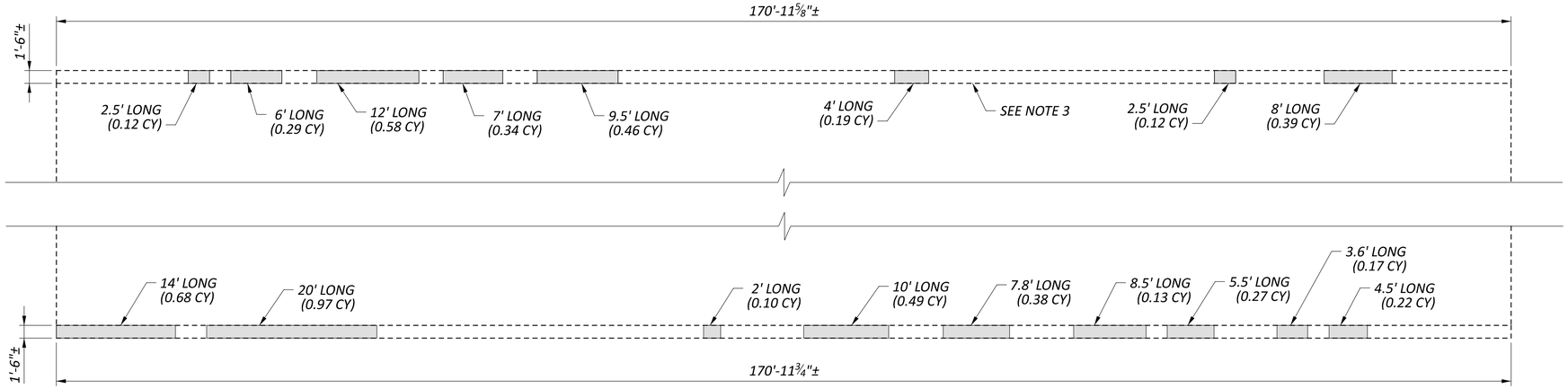

BRIDGE RAILING PLAN - LEFT BRIDGE

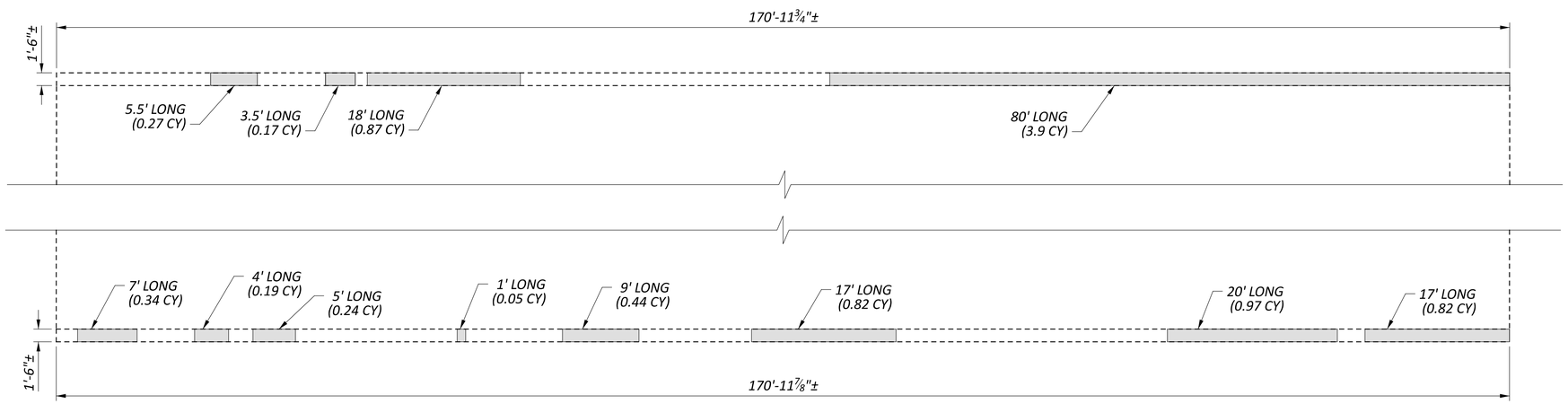

BRIDGE RAILING PLAN - RIGHT BRIDGE

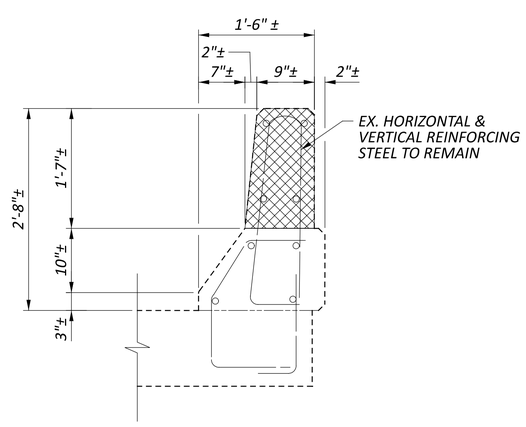

PARTIAL HEIGHT BRIDGE RAILING REMOVAL DETAIL

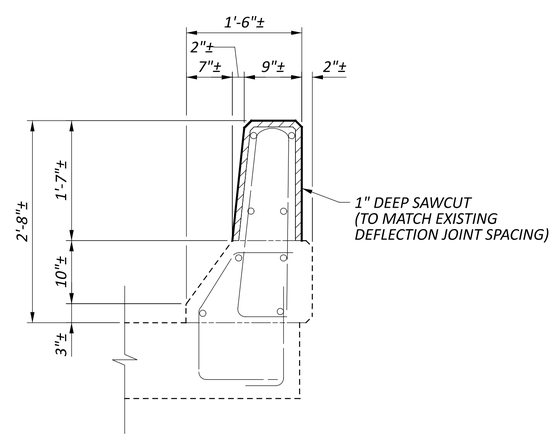

PARTIAL HEIGHT BRIDGE RAILING REPAIR DETAIL

SUMMARY OF PARTIAL HEIGHT REPAIR			
LOCATION	MEASURED (CY)	CONTINGENCY	TOTAL (CY)
LEFT BRIDGE, NORTH BRIDGE RAILING	2.5	1.5	4
LEFT BRIDGE, SOUTH BRIDGE RAILING	3.4	1.5	6
RIGHT BRIDGE, NORTH BRIDGE RAILING	5.2	1.5	8
RIGHT BRIDGE, SOUTH BRIDGE RAILING	3.9	1.5	6
TOTAL			24

LEGEND:

- AREA TO BE REPAIRED PARTIAL HEIGHT OF BRIDGE RAILING
- ITEM 202, PORTIONS OF STRUCTURE REMOVED, AS PER PLAN

NOTES:

1. AN ADDITIONAL 50% CONTINGENCY HAS BEEN ADDED TO THE FIELD MEASURED AREAS TO ALLOW FOR ADDITIONAL AREAS OF DETERIORATION. THE FINAL DIMENSIONS AND LOCATION OF THE DETERIORATED AREAS TO BE REPAIRED SHALL BE DETERMINED BY THE CONTRACTOR AND APPROVED BY THE ENGINEER IN THE FIELD FOR FINAL PAYMENT.
2. EXISTING REINFORCING STEEL SHALL BE CLEANED AND PRESERVED WITHOUT DAMAGE TO THE SATISFACTION OF THE ENGINEER. DAMAGED REINFORCEMENT SHALL BE REPLACED IN KIND AS DIRECTED BY THE ENGINEER.
3. THE EXISTING NORTH BRIDGE RAILING ON THE LEFT BRIDGE HAS JUNCTION BOXES FROM A PREVIOUS RESEARCH PROJECT. IF AN EXISTING JUNCTION BOX EXISTS IN AN AREA TO BE REPAIRED, THE CONTRACTOR SHALL COMPELETLY REMOVE THE JUNCTION BOX AND REPAIR SECTION WITH SOLID CONCRETE. DO NOT DISTURB JUNCTION BOXES LOCATED OUTSIDE OF REPAIR AREAS. PAYMENT FOR JUNCTION BOX REMOVAL SHALL BE INCLUDED IN ITEM 202, PORTIONS OF STRUCTURE REMOVED, AS PER PLAN.

BRIDGE RAILING REPAIR DETAILS
BRIDGE NO. HAM-00126-09.040L/R
SR-126 OVER US-127/HAMILTON AVENUE

SFN 3104664
SFN 3104680
DESIGN AGENCY fishbeck
DESIGNER NCS | CHECKER BMG
REVIEWER JPC 02/04/25
PROJECT ID 113006
SUBSET S.2 | TOTAL 3
SHEET P.29 | TOTAL 42

D08-BM-FY2026

MODEL: Sheet PAPERSIZE: 34x22 (in.) DATE: 6/13/2025 TIME: 2:21:07 PM USER: bgarrison
Z:\2023\231473\CAD\ODOT\HAM\113006\400-Engineering\Structures\SFN_3104664\Sheets\113006_SFN_3104664_SA001.dgn

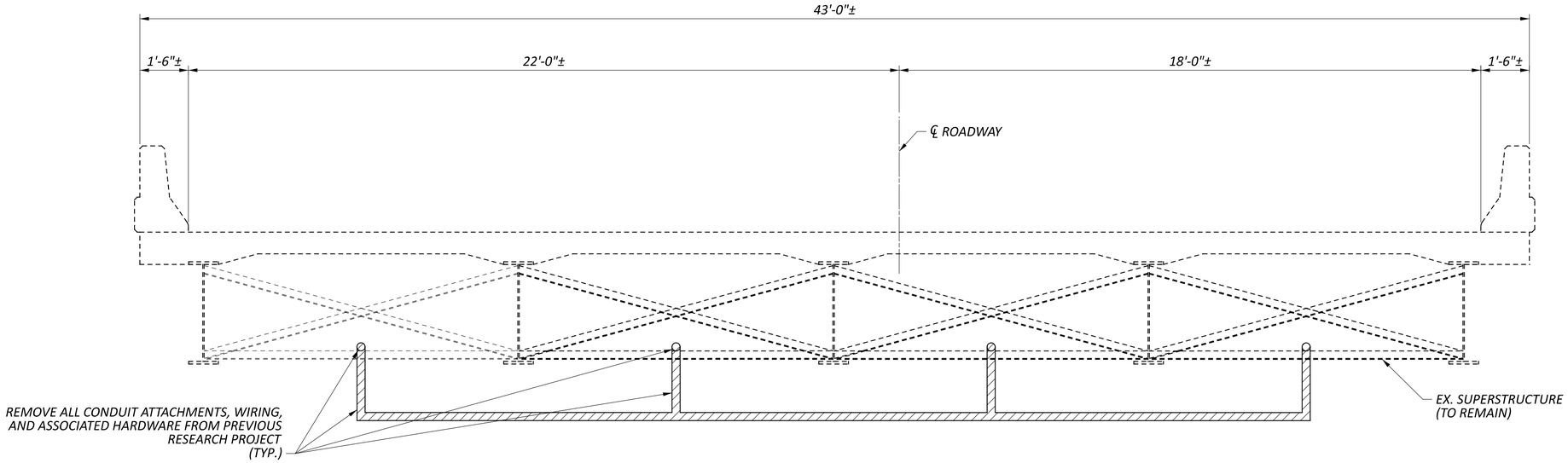

LEFT BRIDGE TYPICAL SECTION AT ABUTMENTS

(CONDUIT AND WIRING LOCATED ON LEFT BRIDGE ONLY)

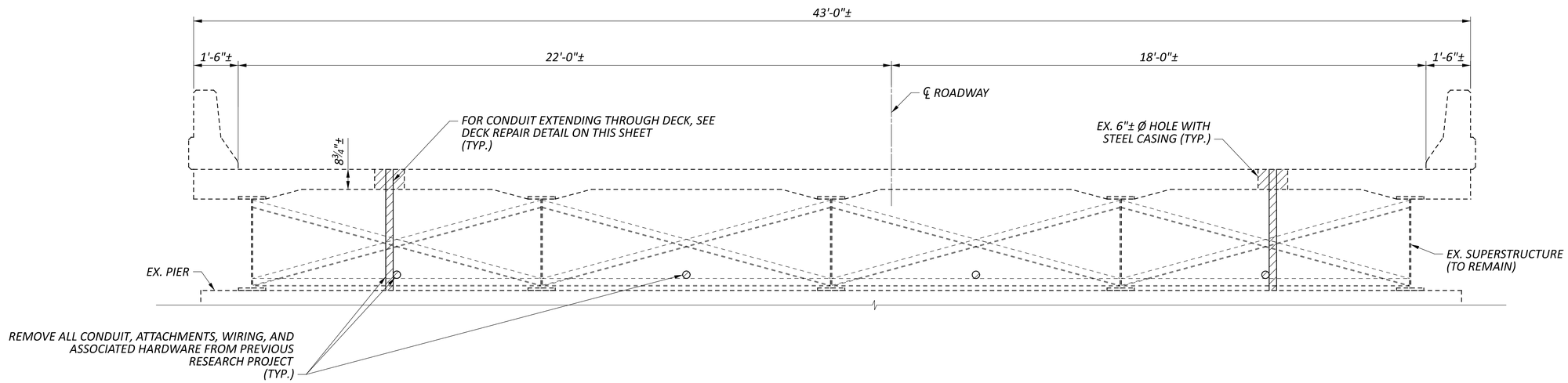

LEFT BRIDGE TYPICAL SECTION OVER PIER

(CONDUIT AND WIRING LOCATED ON LEFT BRIDGE ONLY)

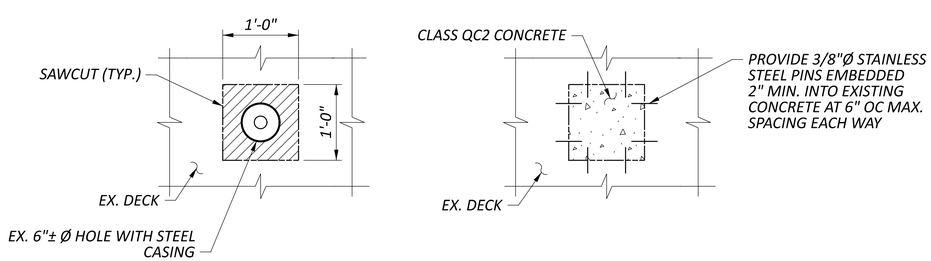

DECK REPAIR

LEGEND:

- ITEM 202, PORTIONS OF STRUCTURE REMOVED, AS PER PLAN

NOTES:

1. REMOVAL OF ALL CONDUIT, ATTACHMENTS, WIRES AND ASSOCIATED HARDWARE FROM PREVIOUS RESEARCH PROJECT SHALL BE INCLUDED WITH ITEM 202, PORTIONS OF STRUCTURE REMOVED, AS PER PLAN.
2. STAINLESS STEEL PINS SHALL BE INCLUDED WITH ITEM 511, CLASS QC2 CONCRETE, SUPERSTRUCTURE, AS PER PLAN.

REMOVAL DETAILS
BRIDGE NO. HAM-00126-09.040L/R
SR-126 OVER US-127/HAMILTON AVENUE

SFN	3104664
SFN	3104680
DESIGN AGENCY	fishbeck
DESIGNER	NCS
CHECKER	BMG
REVIEWER	JPC 02/04/25
PROJECT ID	113006
SUBSET	S.3
TOTAL	3
SHEET	P.30
TOTAL	42

D08-BM-FY2026

MODEL: Sheet PAPERSIZE: 34x22 (in.) DATE: 6/13/2025 TIME: 2:21:08 PM USER: bgarrison
Z:\2023\231473\CAD\ODOT\HAM\113006\400-Engineering\Structures\SFN_3104664\Sheets\113006_SFN_3104664_SV001.dgn

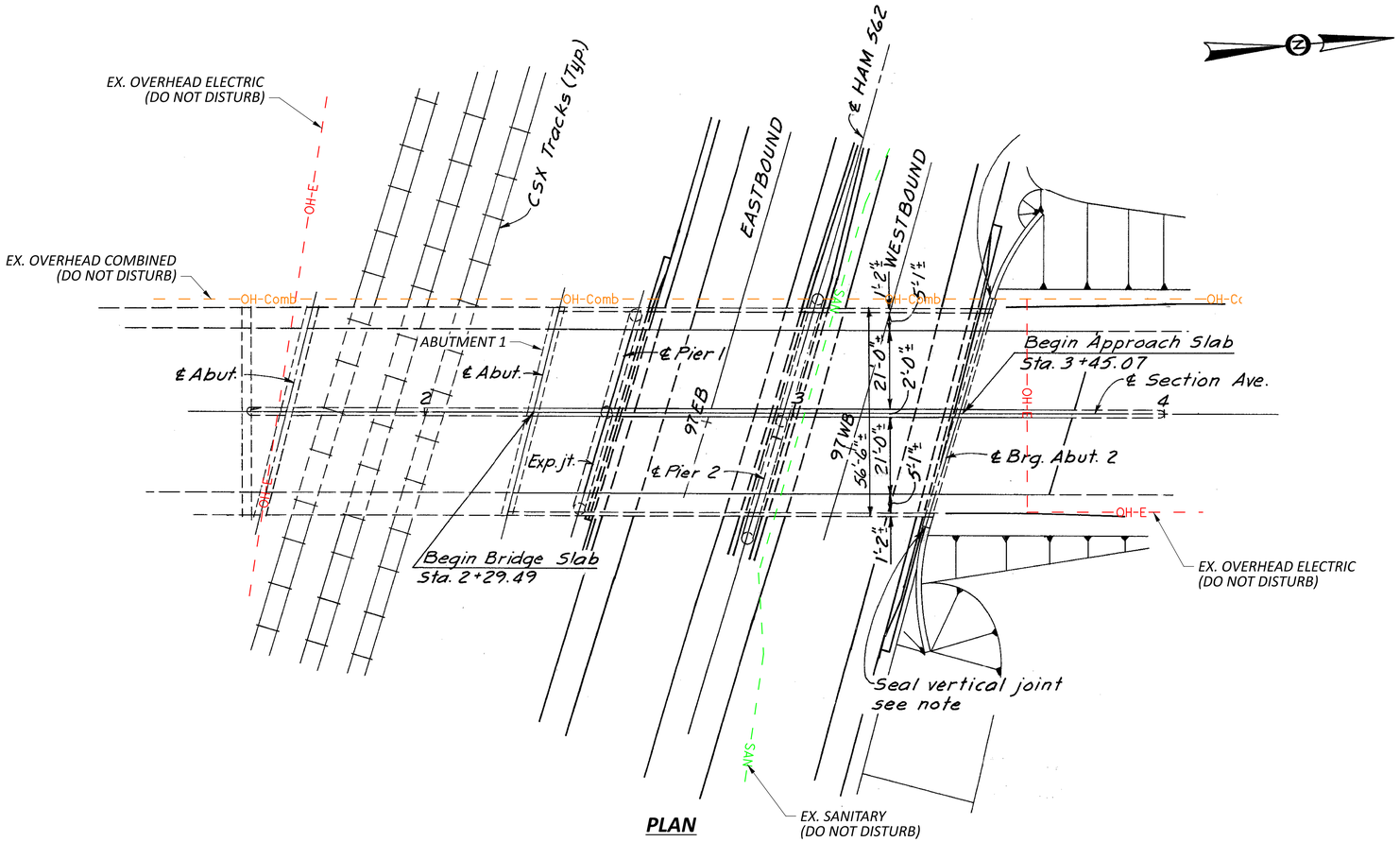

PLAN

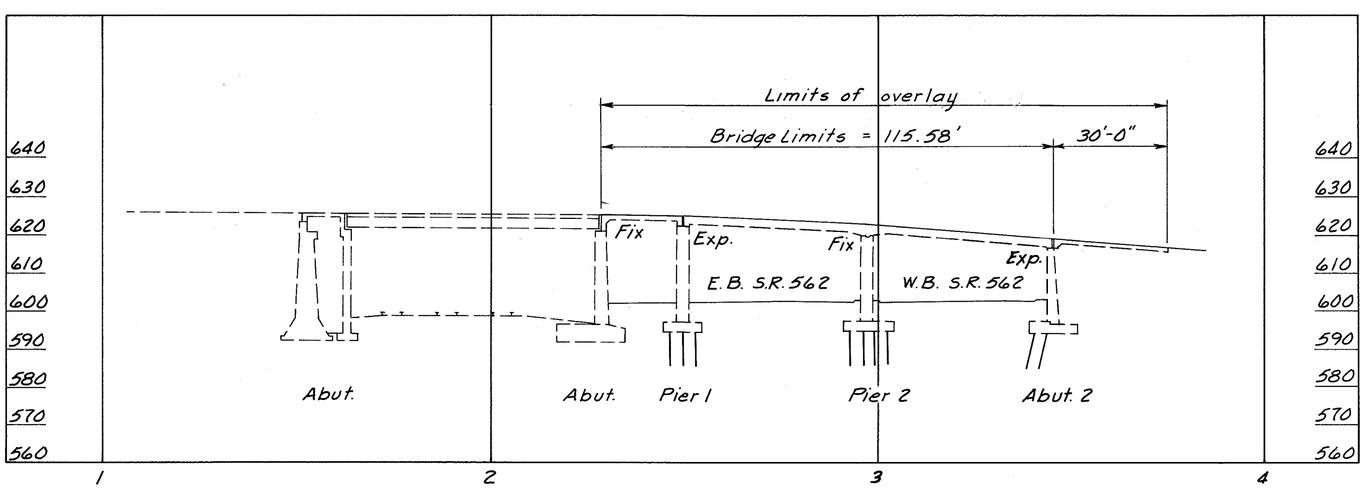

PROFILE

NOTES

DETAILS ON THIS SITE PLAN SHEET ARE FROM ARCHIVED PLANS AND SHOULD BE USED FOR REFERENCE ONLY.

DESIGN TRAFFIC:

HAM-562-1.79

2027 ADT = 66,500 2027 ADTT = 3,325
2039 ADT = 66,500 2039 ADTT = 3,325
DIRECTIONAL DISTRIBUTION = 0.55
DESIGN SPEED = 55 MPH LEGAL SPEED = 55 MPH
DESIGN FUNCTIONAL CLASSIFICATION: 02 - PRINCIPAL ARTERIAL - FREEWAYS (URBAN)
NHS ROUTE: YES

SECTION AVENUE

2024 ADT = N/A 2024 ADTT = N/A
DESIGN SPEED = 35 LEGAL SPEED = 35
DESIGN FUNCTIONAL CLASSIFICATION: 05 - MAJOR COLLECTOR (URBAN)
NHS ROUTE: NO

EXISTING STRUCTURE

TYPE: SIMPLE SPAN AND TWO SPAN CONTINUOUS REINFORCED CONCRETE SLAB WITH REINFORCED CONCRETE SUBSTRUCTURE
SPANS: 20-0½"±, 47'-9¼"±, 47'-9¼"±
ROADWAY: 44'-0"±, T/T CURB WITH 5'-1"± SIDEWALK INCLUDES 2'-0"± MEDIAN
LOADING: C.F. = 2000 (57)
SKEW: 16°17'05"± LF
WEARING SURFACE: 1¼"± MICRO-SILICA MODIFIED CONCRETE OVERLAY
APPROACH SLABS: AS-1-67 (30'-0"± LONG)
ALIGNMENT: TANGENT
CROWN: 0.016± FT/FT
STRUCTURE FILE NUMBER: 3113949
DATE BUILT: 1972, REHABILITATED 1993
DISPOSITION: SEE PROPOSED WORK

PROPOSED WORK

1. PATCH THE SUBSTRUCTURE PER ITEM 519 PATCHING FOR SMALL AREAS AND USE SUPPLEMENTAL SPECIFICATION 844 WITH ANODES FOR AREAS 5 SF OR MORE.
2. SEAL PATCHED AREAS WITH EPOXY URETHANE SEALER, FEDERAL COLOR 17778.

HORIZONTAL SCALE IN FEET 0 10 20 40

BRIDGE NO. HAM-00562-01.790
SECTION AVENUE OVER SR-562

SITE PLAN

SFN 3113949
DESIGN AGENCY fishbeck
DESIGNER NCS CHECKER BMG
REVIEWER JPC 02/04/25
PROJECT ID 113006
SUBSET S.1 TOTAL 3
SHEET P.31 TOTAL 42

D08-BM-FY2026

MODEL: Sheet PAPERSIZE: 34x22 (in.) DATE: 6/13/2025 TIME: 2:21:09 PM USER: bgarrison
Z:\2023\231473\CAD\ODOT\HAM\113006\400-Engineering\Structures\SFN_3113949\Sheets\113006_SFN_3113949_SP001.dgn

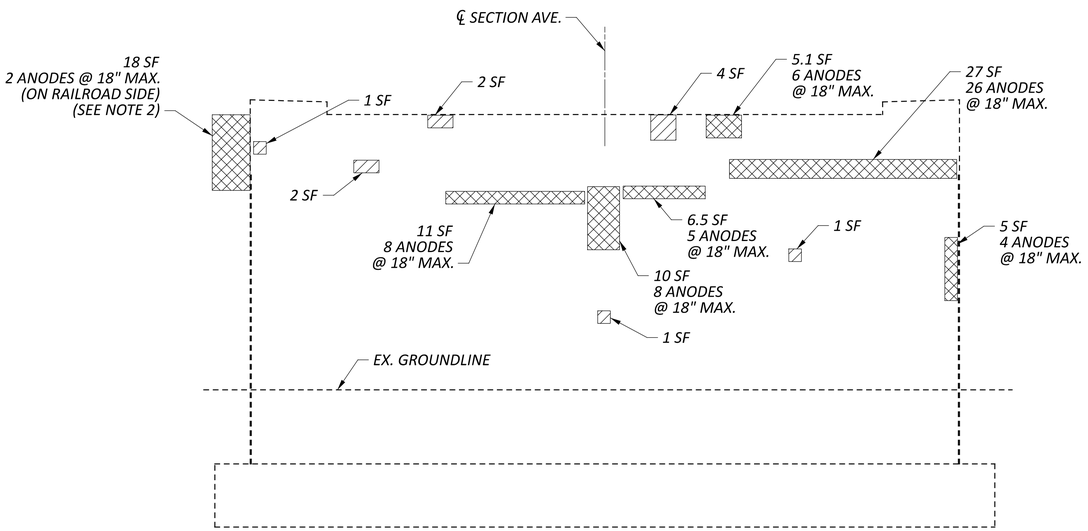

ABUTMENT 1 ELEVATION

(LOOKING DOWNSTATION)

SUMMARY OF PATCHING AREAS ITEM 519			
LOCATION	MEASURED (SF)	CONTINGENCY	TOTAL (SF)
ABUTMENT 1	11	1.5	17
ABUTMENT 2	6	1.5	9
TOTAL			26

SUMMARY OF PATCHING AREAS ITEM 519 SPECIAL			
LOCATION	MEASURED (SF)	CONTINGENCY	TOTAL (SF)
ABUTMENT 1	87	1.5	131
ABUTMENT 2	0	1.5	0
TOTAL			131

LEGEND:

- INDICATES AREA TO BE REPAIRED PER ITEM 519 - PATCHING CONCRETE STRUCTURE, AS PER PLAN
- INDICATES AREA TO BE REPAIRED PER ITEM 519 - SPECIAL - PATCHING CONCRETE STRUCTURE (GALVANIC ANODE PROTECTION)

NOTES:

1. AN ADDITIONAL 50% CONTINGENCY HAS BEEN ADDED TO THE FIELD MEASURED PATCHING AREAS TO ALLOW FOR ADDITIONAL AREAS OF DETERIORATION. THE FINAL DIMENSIONS AND LOCATION OF THE DETERIORATED AREAS TO BE PATCHED SHALL BE DETERMINED BY THE CONTRACTOR AND APPROVED BY THE ENGINEER IN THE FIELD FOR FINAL PAYMENT
2. IF THE AREA TO BE REPAIRED EXTENDS UNDER THE EXISTING BEAM SEAT THEN THE EXISTING SUPERSTRUCTURE OVER THE RAILROAD SHALL BE TEMPORARILY JACKED AND SUPPORTED. THE CONCRETE REPAIRS IN THIS AREA SHALL BE PERFORMED DURING THE JACKING OPERATION.
3. APPLY EPOXY URETHANE SEALER TO ALL AREAS THAT HAVE BEEN PATCHED ONLY. USE FEDERAL COLOR NO. 17778.

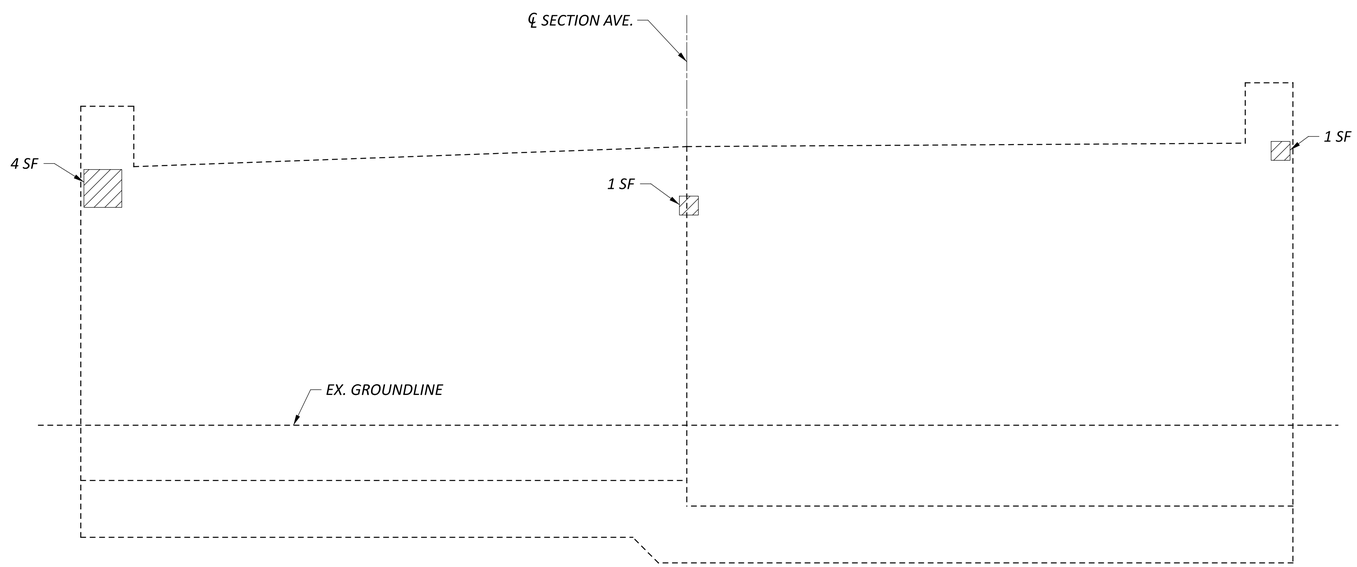

ABUTMENT 2 ELEVATION

(LOOKING UPSTATION)

ABUTMENT REPAIR DETAILS
BRIDGE NO. HAM-00562-01.790
SECTION AVENUE OVER SR-562

SFN 3113949
DESIGN AGENCY fishbeck
DESIGNER NCS | CHECKER BMG
REVIEWER JPC 02/04/25
PROJECT ID 113006
SUBSET S.2 | TOTAL 3
SHEET P.32 | TOTAL 42

D08-BM-FY2026

MODEL: Sheet PAPERSIZE: 34x22 (in.) DATE: 6/13/2025 TIME: 2:21:16 PM USER: bgarrison
Z:\2023\231473\CAD\ODOT\HAM\113006\400-Engineering\Structures\SFN_3113949\Sheets\113006_SFN_3113949_SR001.dgn

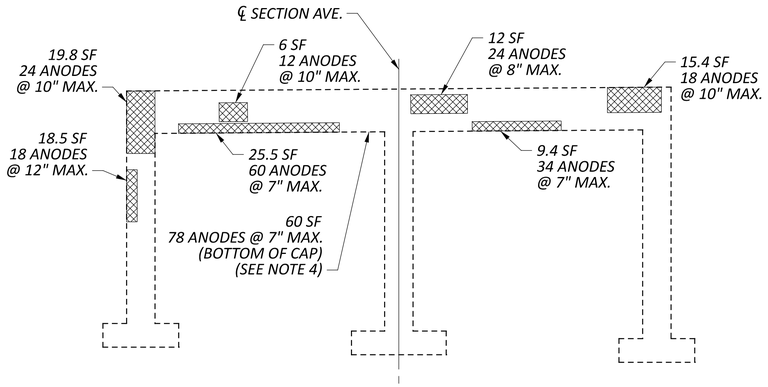

PIER 1 ELEVATION
(LOOKING UPSTATION)
(SEE NOTE 1)

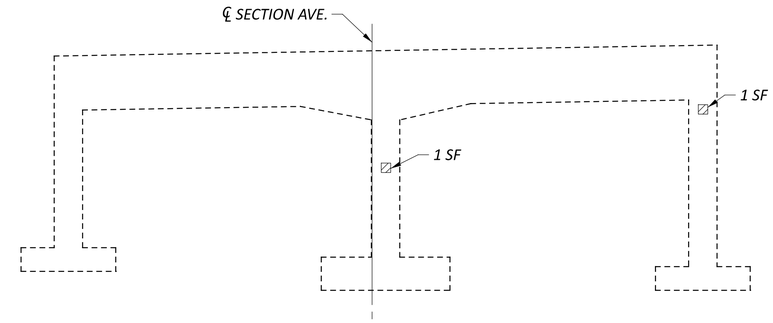

PIER 2 ELEVATION
(LOOKING UPSTATION)

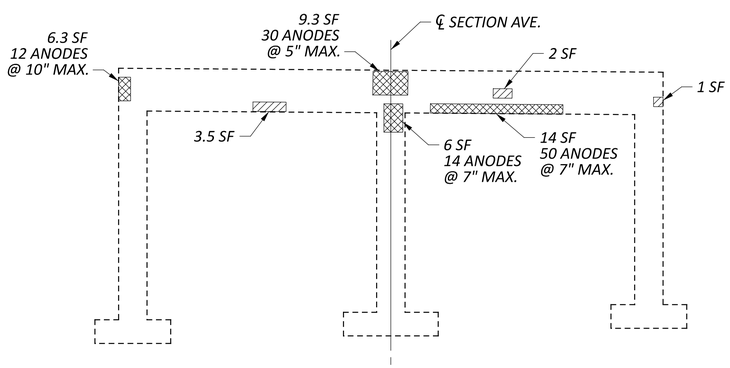

PIER 1 ELEVATION
(LOOKING DOWNSTATION)
(SEE NOTE 1)

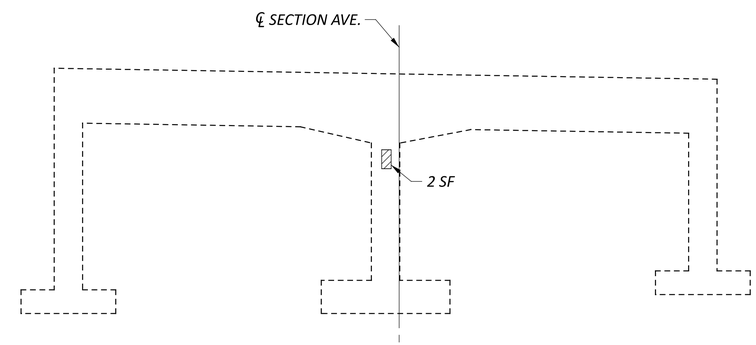

PIER 2 ELEVATION
(LOOKING DOWNSTATION)

SUMMARY OF PATCHING AREAS ITEM 519			
LOCATION	**MEASURED (SF)**	**CONTINGENCY**	**TOTAL (SF)**
PIER 1	6.5	1.5	10
PIER 2	4	1.5	6
TOTAL			16

SUMMARY OF PATCHING AREAS ITEM 519 SPECIAL			
LOCATION	**MEASURED (SF)**	**CONTINGENCY**	**TOTAL (SF)**
PIER 1	202.2	1.5	304
PIER 2	0	1.5	0
TOTAL			304

LEGEND:

- INDICATES AREA TO BE REPAIRED PER ITEM 519 - PATCHING CONCRETE STRUCTURE, AS PER PLAN
- INDICATES AREA TO BE REPAIRED PER ITEM 519 - SPECIAL - PATCHING CONCRETE STRUCTURE (GALVANIC ANODE PROTECTION)

NOTES:

1. THE REMOVAL LIMITS ON PIER 1 AT ANY GIVEN TIME SHALL BE LIMITED TO A SINGLE FACE AND ADJACENT CORNER OF ONE COLUMN. THE PATCHING MATERIAL SHALL REACH 3000 PSI STRENGTH BEFORE ANOTHER SIDE OR ADJACENT CORNER REMOVAL CAN COMMENCE.
2. AN ADDITIONAL 50% CONTINGENCY HAS BEEN ADDED TO THE FIELD MEASURED PATCHING AREAS TO ALLOW FOR ADDITIONAL AREAS OF DETERIORATION. THE FINAL DIMENSIONS AND LOCATION OF THE DETERIORATED AREAS TO BE PATCHED SHALL BE DETERMINED BY THE CONTRACTOR AND APPROVED BY THE ENGINEER IN THE FIELD FOR FINAL PAYMENT.
3. APPLY EPOXY URETHANE SEALER TO ALL AREAS THAT HAVE BEEN PATCHED ONLY. USE FEDERAL COLOR NO. 17778.
4. THE PIER CAP IN THIS SPAN SHALL BE TEMPORARILY SUPPORTED DURING THE PATCHING WORK OF THE BOTTOM OF THE PIER CAP. COST SHALL BE INCLUDED WITH ITEM 516, JACKING AND TEMPORARY SUPPORT OF SUPERSTRUCTURE, AS PER PLAN.

PIER REPAIR DETAILS
BRIDGE NO. HAM-00562-01.790
SECTION AVENUE OVER SR-562

SFN 3113949
DESIGN AGENCY fishbeck
DESIGNER NCS | CHECKER BMG
REVIEWER JPC 02/04/25
PROJECT ID 113006
SUBSET S.3 | TOTAL 3
SHEET P.33 | TOTAL 42

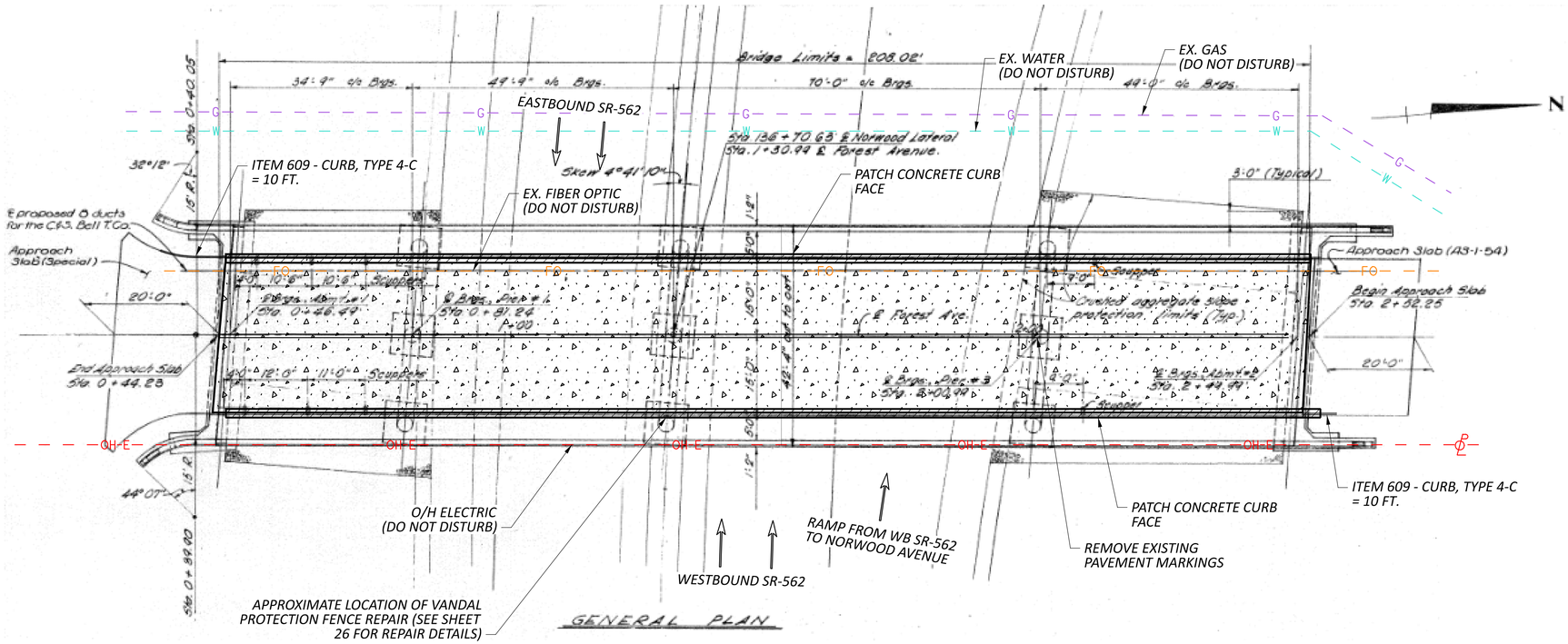

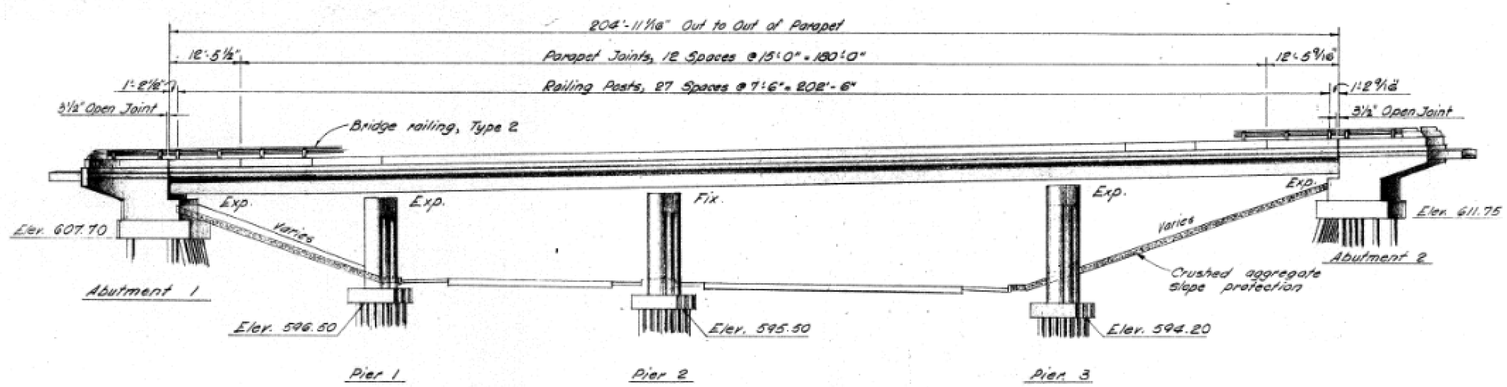

NOTES:

DETAILS ON THIS SITE PLAN SHEET ARE FROM ARCHIVED PLANS AND SHOULD BE USED FOR REFERENCE ONLY

DESIGN TRAFFIC:

FOREST AVENUE

2023 ADT = 2,144 2023 ADTT = 107
DESIGN SPEED = 25 MPH LEGAL SPEED = 25 MPH
DESIGN FUNCTIONAL CLASSIFICATION: 05-MAJOR COLLECTOR (URBAN)
NHS ROUTE: NO

HAM-SR562-2.53

2027 ADT = 72,500 2027 ADTT = 2,900
2039 ADT = 80,500 2039 ADTT = 3,220
DIRECTIONAL DISTRIBUTION = 0.55
DESIGN SPEED = 55 MPH LEGAL SPEED = 55 MPH
DESIGN FUNCTIONAL CLASSIFICATION: 02-PRINCIPAL ARTERIAL FREEWAY
NHS ROUTE: YES

LEGEND:

- ITEM 519, PATCHING CONCRETE STRUCTURE, AS PER PLAN
- ITEM 512, TREATING CONCRETE BRIDGE DECKS WITH GRAVITY FED RESIN
- ITEM 609, CURB, TYPE 4-C

EXISTING STRUCTURE

TYPE: CONTINUOUS ROLLED STEEL BEAM AND WITH REINFORCED CONCRETE DECK AND SUBSTRUCTURE
SPANS: 34'-9"±, 49'-9"±, 70'-0"±, 49'-0"±
ROADWAY: 30'-0"± F/F CURB WITH 5'-0"± SIDEWALKS
LOADING: C.F. = 2000 (57)
SKEW: 4°41'10"± LF
WEARING SURFACE: 1 1/4"± MICRO-SILICA MODIFIED CONCRETE OVERLAY
APPROACH SLABS: AS-1-67 (20-0"± LONG)
ALIGNMENT: TANGENT
CROWN: 0.016± FT/FT
STRUCTURE FILE NUMBER: 3114023
DATE BUILT: 1969, REHABILITATED 1990 & 1993
DISPOSITION: SEE PROPOSED WORK

PROPOSED WORK

1. REPAIR THE DETERIORATED CURB FACE OF THE SIDEWALK ON THE BRIDGE PER 519 PATCHING.
2. REMOVE AND REPLACE EXISTING SIDEWALK EXPANSION JOINT COVER PLATES.
3. REPLACE THE DETERIORATED PORTIONS OF THE CURB ON THE APPROACH SLABS.
4. SEAL THE WEARING SURFACE WITH GRAVITY FED RESIN.
5. REPLACE DAMAGED PORTIONS OF THE VANDAL PROTECTION FENCE.

HORIZONTAL SCALE IN FEET 0 10 20 40

SITE PLAN
BRIDGE NO. HAM-00562-02.530
FOREST AVENUE OVER SR-562

SFN 3114023
DESIGN AGENCY fishbeck
DESIGNER NCS | CHECKER BMG
REVIEWER JPC 02/04/25
PROJECT ID 113006
SUBSET S.1 | TOTAL 2
SHEET P.34 | TOTAL 42

D08-BM-FY2026

MODEL: Sheet PAPERSIZE: 34x22 (in.) DATE: 6/13/2025 TIME: 2:21:17 PM USER: bgarrison
Z:\2023\231473\CAD\ODOT\HAM\113006\400-Engineering\Structures\SFN_3114023\Sheets\113006_SFN_3114023_SP001.dgn

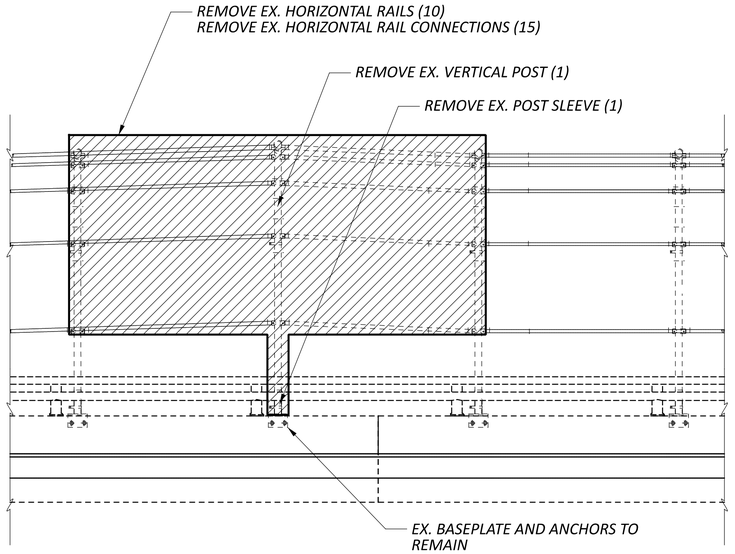

VANDAL PROTECTION FENCE REMOVAL DETAIL

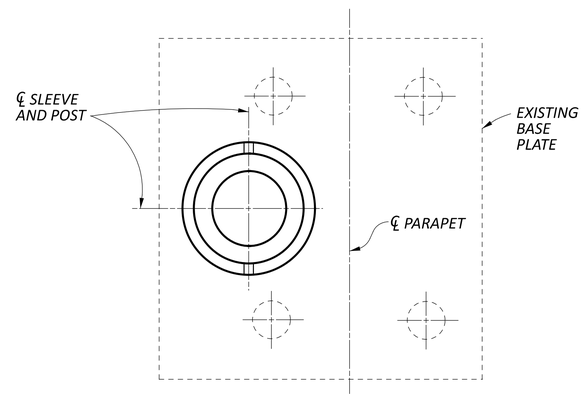

POST SLEEVE PLAN

POST AND SET SCREWS NOT SHOWN

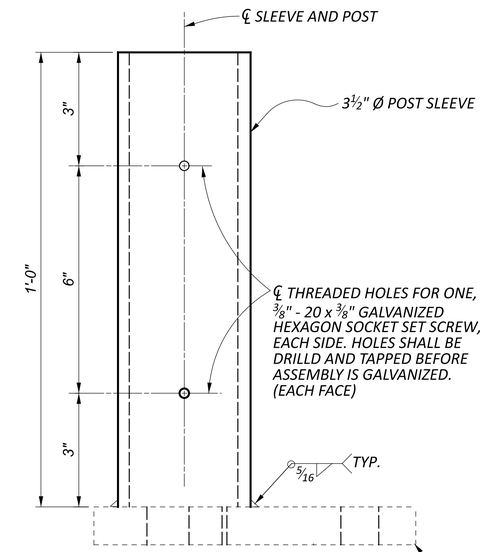

POST SLEEVE ELEVATION

POST AND SET SCREWS NOT SHOWN

EX. BASEPLATE AND ANCHORS TO REMAIN.
REMOVE RUST AND DETERIORATION FROM EXISTING BASEPLATE.
REPAIR GALVANIZATION ACCORDING TO CMS 711.02

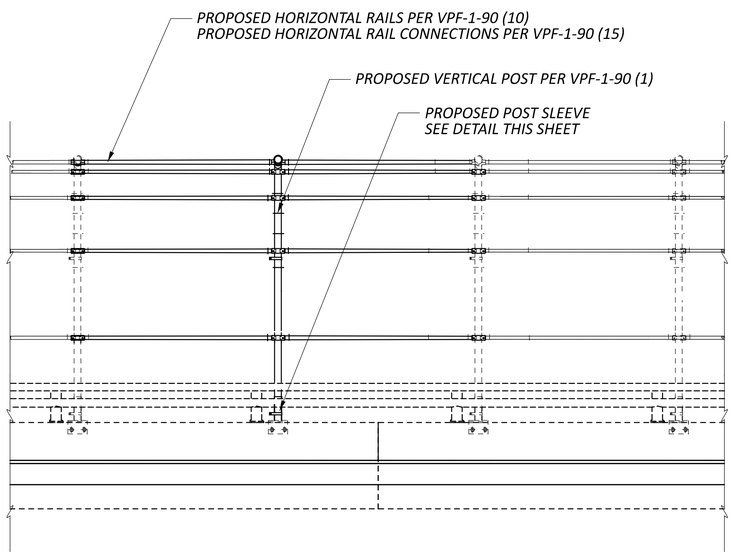

VANDAL PROTECTION FENCE CONSTRUCTION DETAIL

NOTES:

1. FOR ADDITIONAL VANDAL PROTECTION FENCE DETAILS, SEE ODOT STANDARD DRAWING VPF-1-90
2. FENCE REMOVAL AND REPLACEMENT WORK SHALL OCCUR DURING THE SAME WORKING SHIFT.

LEGEND:

- ITEM 202, PORTIONS OF STRUCTURE REMOVED, AS PER PLAN

STRUCTURE REPAIR DETAILS
BRIDGE NO. HAM-00562-02.530
FOREST AVENUE OVER SR-562

SFN 3114023	
DESIGN AGENCY fishbeck	
DESIGNER NCS	CHECKER BMG
REVIEWER JPC 02/04/25	
PROJECT ID 113006	
SUBSET S.2	TOTAL 2
SHEET P.35	TOTAL 42

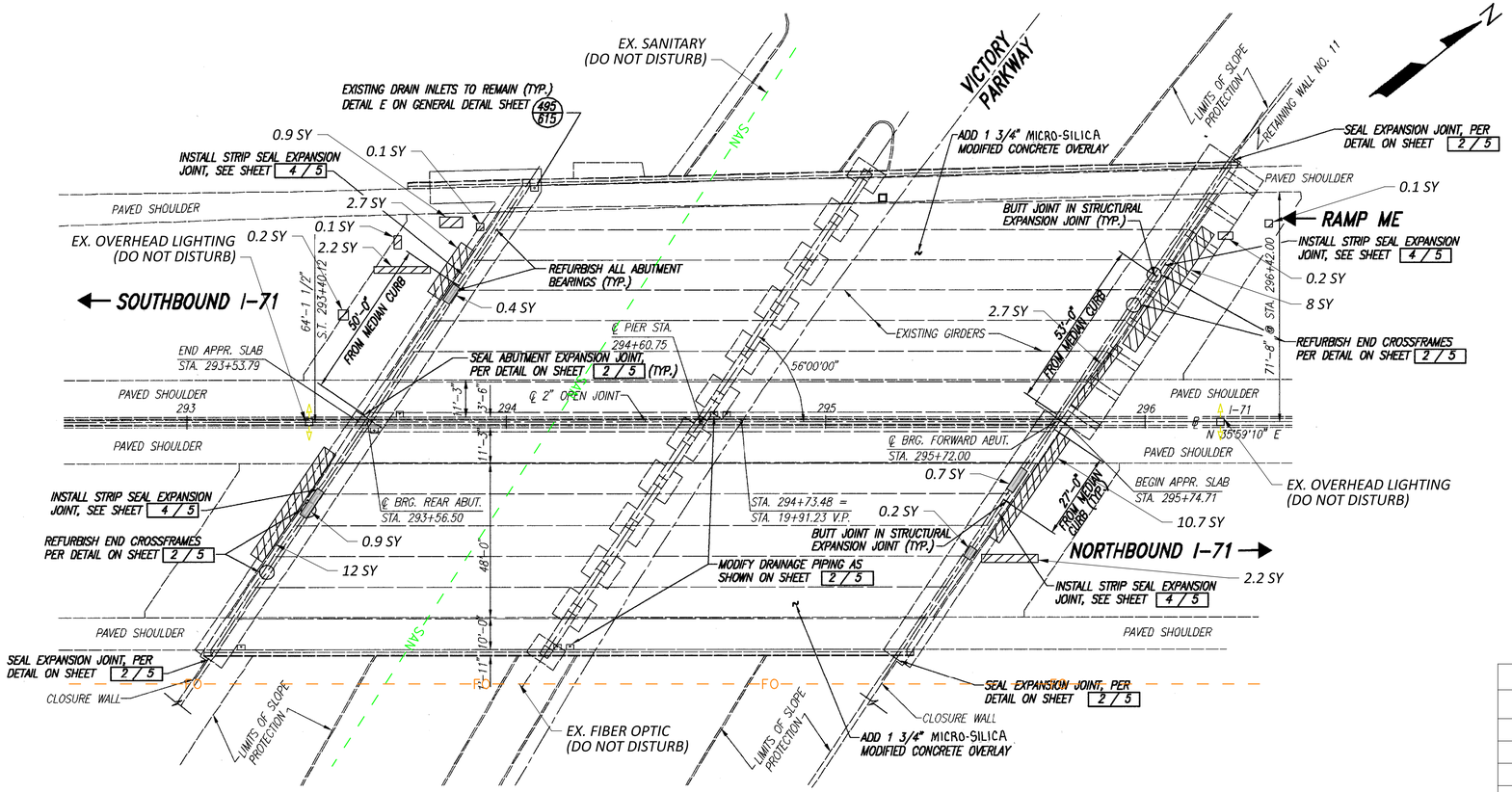

PLAN

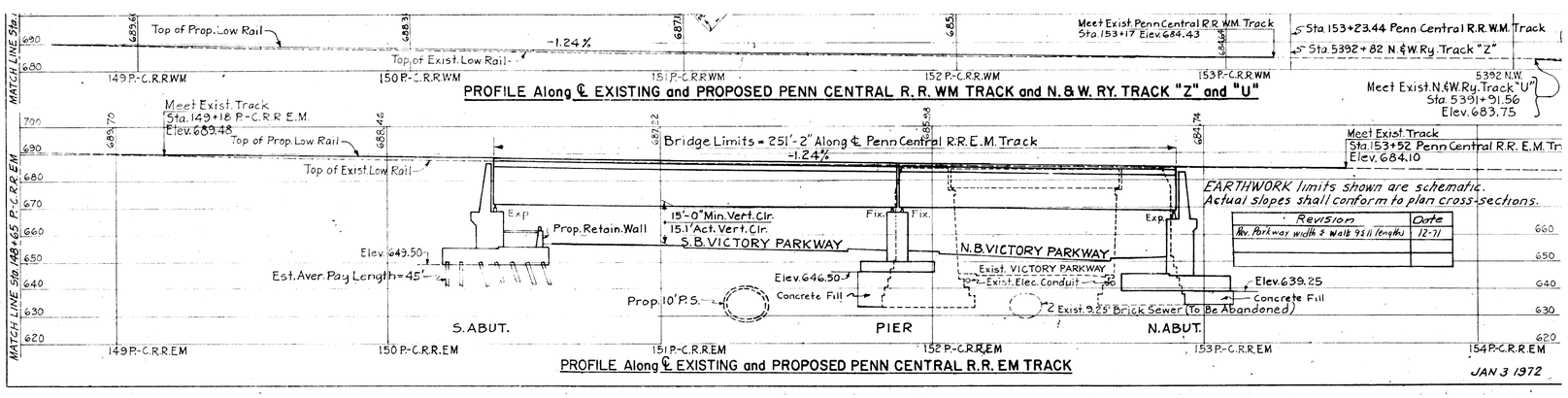

PROFILE

NOTES:

1. AN ADDITIONAL 50% CONTINGENCY HAS BEEN ADDED TO THE FIELD MEASURED PATCHING AREAS TO ALLOW FOR ADDITIONAL AREAS OF DETERIORATION. THE FINAL DIMENSIONS AND LOCATION OF THE DETERIORATED AREAS TO BE PATCHED SHALL BE DETERMIEND BY THE CONTRACTOR AND APPROVED BY THE ENGINEER IN THE FIELD FOR FINAL PAYMENT.
2. DETAILS ON THIS SITE PLAN SHEET ARE FROM ARCHIVED PLANS AND SHOULD BE USED FOR REFERENCE ONLY.

DESIGN TRAFFIC:

HAM-71-0450

2027 ADT = 149,000 2027 ADTT = 16,390
2039 ADT = 163,000 2039 ADTT = 17,930
DIRECTIONAL DISTRIBUTION = 0.70
DESIGN SPEED = 55 MPH LEGAL SPEED = 55 MPH
DESIGN FUNCTIONAL CLASSIFICATION: 01-PRINCIPAL ARTERIAL INTERSTATE (URBAN)
NHS ROUTE: YES

VICTORY PARKWAY

2023 ADT = 12,156 2023 ADTT = 197
DESIGN SPEED = 35 MPH LEGAL SPEED = 35 MPH
DESIGN FUNCTIONAL CLASSIFICATION: 04-MINOR ARTERIAL (URBAN)
NHS ROUTE: NO

LEGEND:

- INDICATES APPROACH SLAB AREA TO BE REPAIRED PER ITEM 519 - PATCHING CONCRETE BRIDGE DECK - TYPE B (PER PN 512)

- INDICATES BACKWALL AREA TO BE REPAIRED PER ITEM 519 - PATCHING CONCRETE BRIDGE DECK - TYPE B (PER PN 512)

SUMMARY OF PATCHING AREAS ITEM 519			
LOCATION	MEASURED (SY)	CONTINGENCY	TOTAL (SY)
NORTHERN APPROACH SLAB	23.9	1.5	36
SOUTHERN APPROACH SLAB	18.2	1.5	28
NORTHERN BACKWALL	0.9	1.5	2
SOUTHERN BACKWALL	1.3	1.5	2
TOTAL			68

EXISTING STRUCTURE

TYPE: CONTINUOUS STEEL PLATE GIRDERS WITH REINFORCED CONCRETE DECK AND SUBSTRUCTURE
SPANS: 104'-3"± AND 111'-3"± C/C BEARINGS
ROADWAY: VARIES; 148'-3"± AVERAGE WIDTH FACE TO FACE OF PARAPET
LOADING: HS 20-44 AND THE INTERSTATE ALTERNATE LOADING
SKEW: 34°00'00"± LF
WEARING SURFACE: 1¾"± MICRO-SILICA MODIFIED CONCRETE OVERLAY
APPROACH SLABS: AS-1-67 (30'-0"± LONG)
ALIGNMENT: 1°45'00"± CURVE LEFT & 4°00'00"± CURVE LEFT
SUPERELEVATION: VARIES
STRUCTURE FILE NUMBER: 3114562
DATE BUILT: 1972, REHABILITATED 1995 & 2008
DISPOSITION: SEE PROPOSED WORK

PROPOSED WORK

1. PATCH SPALLED AREAS ON TOP OF BACKWALLS ALONG EXPANSION JOINTS, AND APPROACH SLABS WITH CONCRETE PER PROPOSAL NOTE 512 (TYPE B)

HORIZONTAL SCALE IN FEET 0 10 20 40

SITE PLAN
BRIDGE NO. HAM-00071-04.500
IR-71 OVER VICTORY PKWY

SFN 3114562
DESIGN AGENCY fishbeck
DESIGNER NCS CHECKER BMG
REVIEWER JPC 02/04/25
PROJECT ID 113006
SUBSET S.1 TOTAL 1
SHEET P.36 TOTAL 42

D08-BM-FY2026
MODEL: Sheet PAPERSIZE: 34x22 (in.) DATE: 6/13/2025 TIME: 2:21:33 PM USER: bgarrison
Z:\2023\231473\CAD\ODOT\HAM\113006\400-Engineering\Structures\SFN_3114562\Sheets\113006_SFN_3114562_SP001.dgn

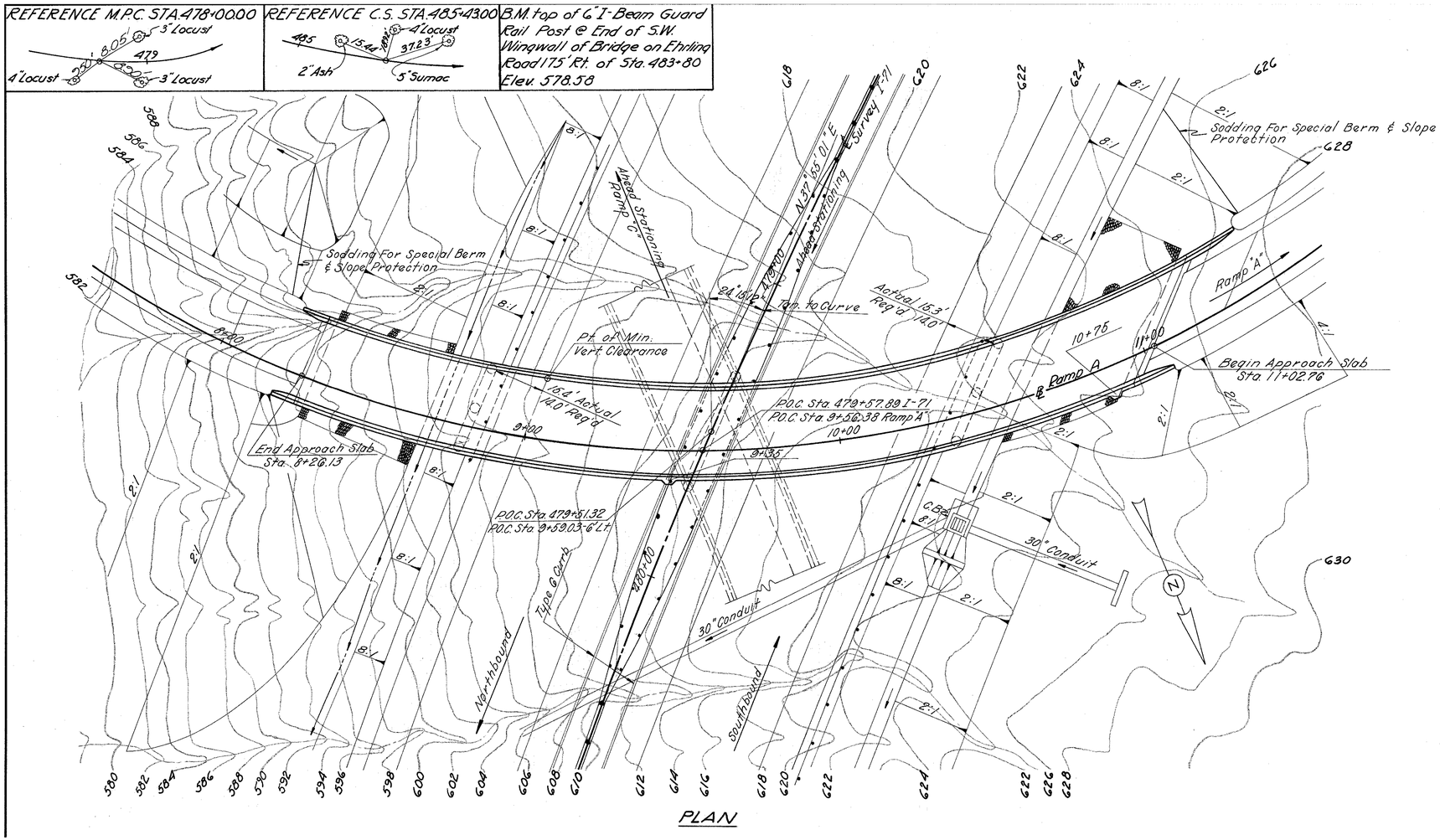

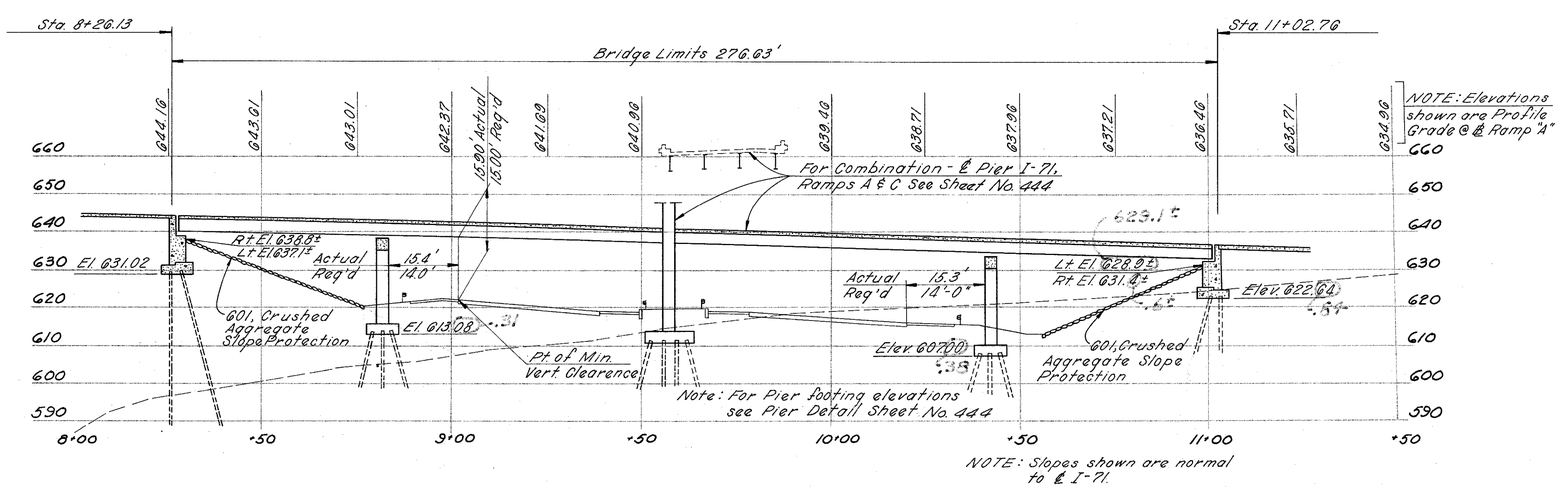

NOTES

DETAILS FROM THIS SITE PLAN SHEET ARE FROM ARCHIVED PLANS AND SHOULD BE USED FOR REFERENCE ONLY.

DESIGN TRAFFIC:

HAM-71-0992

2023 ADT = 9,995 2023 ADTT = 310
DESIGN SPEED = 60 MPH LEGAL SPEED = 55 MPH
DESIGN FUNCTIONAL CLASSIFICATION: 01 - PRINCIPAL ARTERIAL INTERSTATE (URBAN)
NHS ROUTE: YES

IR-71

2023 ADT = 124,050 2023 ADTT = 11,535
DESIGN SPEED = 60 MPH LEGAL SPEED = 55 MPH
DESIGN FUNCTIONAL CLASSIFICATION: 01 - PRINCIPAL ARTERIAL INTERSTATE (URBAN)
NHS ROUTE: YES

EXISTING STRUCTURE

TYPE: CONTINUOUS STEEL BEAM WITH REINFORCED CONCRETE DECK AND SUBFRAME
SPANS: 53'-0", 75'-0", 84'-0", 59'-0"
ROADWAY: 27'-0" T/T OF PARAPET
LOADING: CF 400(57)
SKEW: 22°15'12" LEFT FOWARD
WEARING SURFACE: 1" MONOLITHIC CONCRETE
APPROACH SLABS: 25'-0" LONG AS-1 54
ALIGNMENT: 17° CURVE LEFT
SUPERELEVATION: 0.08 FT/FT
STRUCTURE FILE NUMBER: 3115372
DATE BUILT: 1969
DISPOSITION: MINOR MAINTENANCE REQUIRED

PROPOSED WORK

1. HEAT STRAIGHTEN THE BOTTOM FLANGE OF THE SOUTH FASCIA BEAM.
2. GRIND SMOOTH THE GOUGE AND SCRAPES.
3. REPLACE ALL FOUR CROSSFRAME ANGLES IN THE SOUTHERN BAY.
4. PAINT THE DAMAGED AREAS, REPAIRS, AND SCRAPES.

HORIZONTAL SCALE IN FEET 0 10 20 40

BRIDGE SITE PLAN
BRIDGE NO. HAM-71-0992
RAMP A FROM REDBANK EXPRESSWAY TO I-71 SOUTHBOUND

SFN 3115372
DESIGN AGENCY
DESIGNER GTF | CHECKER JAB
REVIEWER CAH 6-05-25
PROJECT ID 113006
SUBSET 1 | TOTAL 3
SHEET P.37 | TOTAL 42

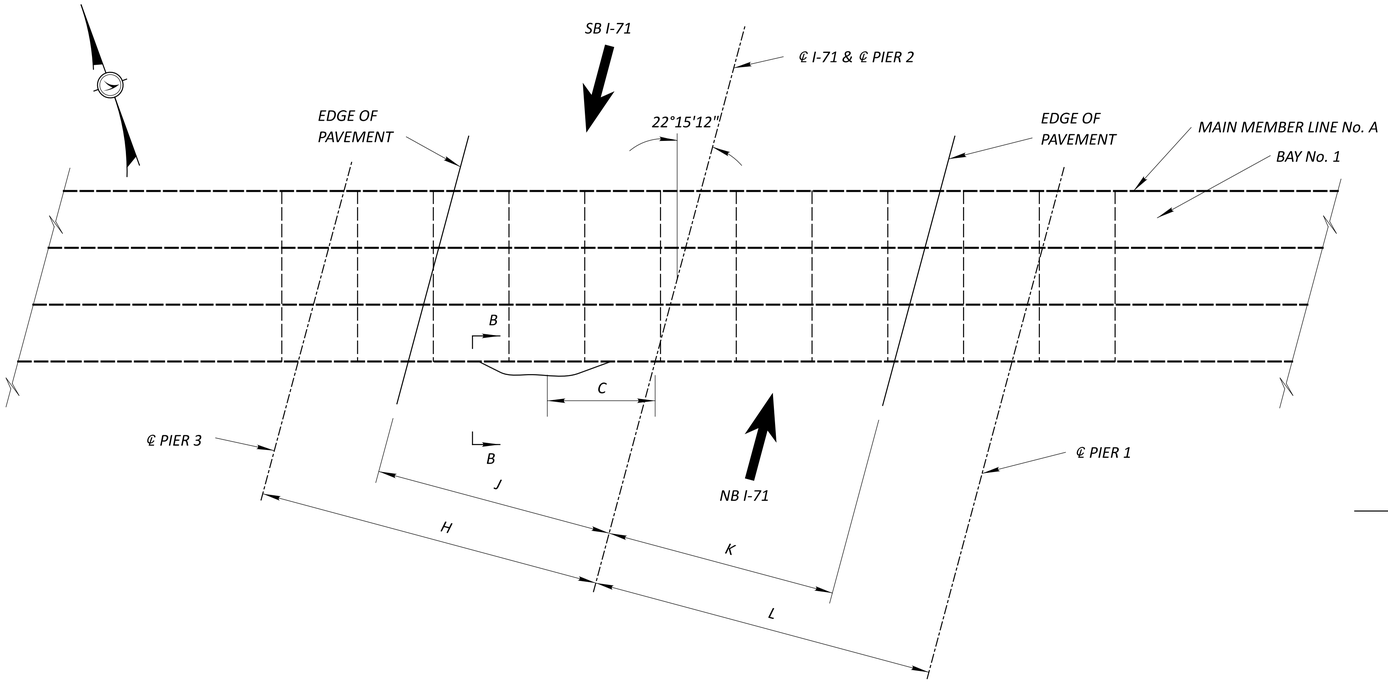

PARTIAL SCHEMATIC FRAMING PLAN

ORIENTATION NOTE
ABUTMENTS AND PIERS ARE NUMBERED IN THE CARDINAL DIRECTION (FROM SOUTH TO NORTH OR WEST TO EAST).
BEAMS ARE NUMBERED FROM LEFT TO RIGHT WHEN FACING IN THE CARDINAL DIRECTION.
BAYS ARE NUMBERED TO MATCH THE MAIN MEMBERLINE NUMBER TO THE LEFT OF THE CROSSFRAME BAY WHEN FACING IN THE CARDINAL DIRECTION.

CROSSFRAME NOTE
REMOVAL AND REPLACEMENT OF PORTIONS OF THE CROSSFRAME IS PERMITTED IN KIND WITH APPROVAL OF THE ENGINEER, BUT AT NO ADDITIONAL COST TO THE PROJECT.

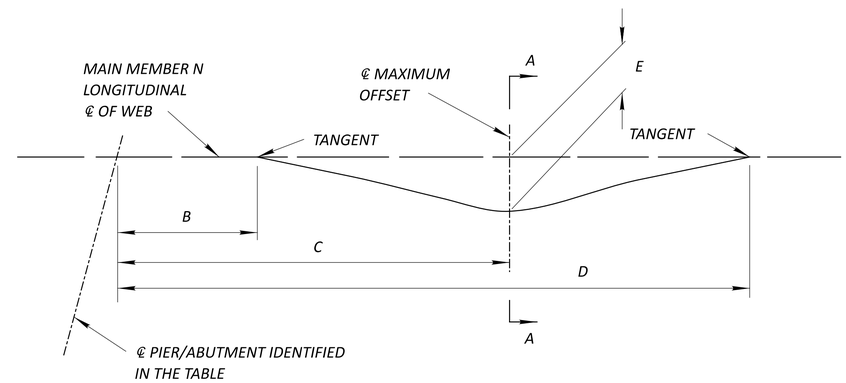

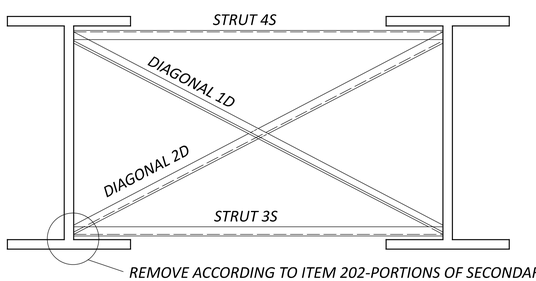

REMOVE ACCORDING TO ITEM 202-PORTIONS OF SECONDARY MEMBERS REMOVED, AS PER PLAN. REPLACE BY MATCHING EXISTING DETAIL. SEE GSD-1-96 FOR ADDITIONAL CLARIFICATION.

MAIN AND SECONDARY MEMBER DAMAGE IS NOT SHOWN. FOR CLARITY SEE SECTION A-A
SEE SHEET XX FOR ADDITIONAL COLLISION REPAIR NOTES

SECTION B-B

SECONDARY MEMBER BAY No. M

N- NUMBER OF CROSSFRAME BRACES COUNTED FROM THE PIER OR ABUTMENT IDENTIFIED IN TABLE

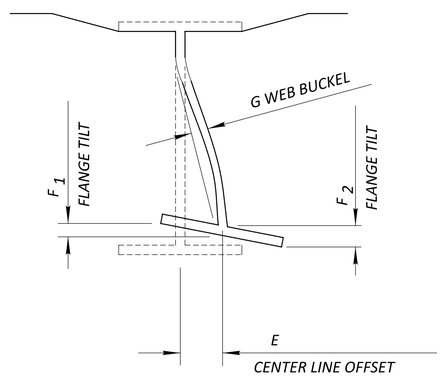

SECTION A-A

NEGATIVE E VALUES ARE BENT LEFT
NEGATIVE F VALUES ARE BENT DOWN
NEGATIVE G VALUES ARE BENT LEFT

EXISTING STRUCTURE: HAM-71-0992
ROUTE ON STRUCTURE: RAMP A, RED BANK RD. TO SB I-71
ROUTE BELOW STRUCTURE: I-71
TYPE: CONTINOUS STEEL BEAM WITH REINFORCED CONCRETE DECK & SUBSTRUCTURE
SPANS: 53'-0", 75'-0", 84'-0", 59'-0"
ROADWAY WIDTH: 27'-0" TOE/TOE OF PARAPET
SKEW: 22°-15'-12" LT. FORWARD
ALIGNMENT: 17° HORIZONTAL CURVE TO THE LEFT
SUPERELEVATION: 0.083 FT/FT
YEAR BUILT: 1969
NUMBER OF BEAMS: 4
STEEL TYPE: ASTM-A36
PAINT TYPE: OZEU
PAINT DATE: 1996

TABLE #2 DAMAGED SECONDARY MEMBER TO BE REPLACED (LBS)

CROSSFRAME BAY M	PIER/ABUT.	N	1D	2D	3S	4S
3	2	5	55	NA	NA	NA
3	2	6	55	55	53	53

TABLE # 1 DAMAGED MAIN MEMBERS TO BE HEAT STRAIGHTENED

DAMAGE AREA No.	MEMBER LINE No. A	PIER OR ABUT.	B	C	D	E	F_1	F_2	G	H	J	K	L
1	SPAN 3 BEAM 1	PIER 2	56'-0⅝"	57'	57'-11⅜"	0"	1.5"	0"	0"	75'	64'	64'	84'

COLLISION REPAIR AND HEAT STRAIGHTENING PLAN
BRIDGE NO. HAM-71-0992
RAMP A FROM REDBANK EXPRESSWAY TO I-71 SOUTHBOUND

SFN 3115372
DESIGN AGENCY
DESIGNER GTF
CHECKER JAB
REVIEWER CAH 6-05-25
PROJECT ID 113006
SUBSET 2 TOTAL 3
SHEET P.38 TOTAL 42

D08-BM-FY2026

MODEL: Sheet PAPERSIZE: 34x22 (in.) DATE: 4/29/2025 TIME: 8:22:40 AM USER: gfreeman
pw:\\ohiodot-pw.bentley.com:ohiodot-pw-02\Documents\01 Active Projects\District 08_D08\113006\400-Engineering\Structures\SFN_3115372\Sheets\113006_SFN_3115372_SM001.dgn

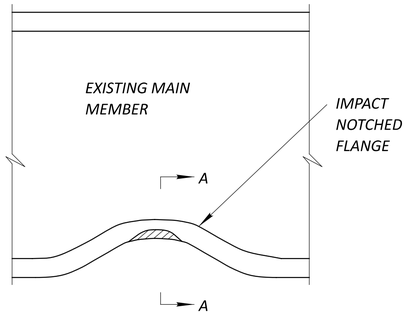

COLLISION REPAIR FC2-1

SEE NOTE 1

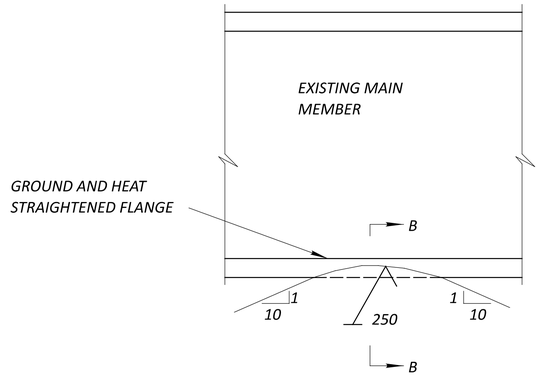

COLLISION REPAIR FC2-2

IF AREA (t_n, b_n) AFTER GRINDING < 98% OF AREA (t_f, b_f) NOTE #3 APPLIES

1. DETERMINE IF IMPACT NOTCH IS CRACKED USING MAGNETIC PARTICLE INSPECTION
2. IF CRACK DOES NOT EXTEND THROUGH THE FLANGE. DETERMINE DEPTH OF CRACK BY GRINDING
3. IF NOTCH OR PARTIAL DEPTH CRACK CAN BE REMOVED BY GRINDING ACCORDING TO SUPPLEMENTAL SPECIFICATION 849, REPAIR DAMAGED MEMBERS. PERFORM GRINDING ACCORDING TO SUPPLEMENTAL SPECIFICATION 849 AND AS ILLUSTRATED IN DETAIL FC2-2. IF THE CRACK SHALL GROW TO ⅜" OR MORE ON EITHER SURFACE DUE TO HEAT STRAIGHTENING, THE CRACK SHALL BE WELDED.
4. IF NOTCH OR PARTIAL DEPTH CRACK MUST BE REPAIRED BY WELDING ACCORDING TO SUPPLEMENTAL SPECIFICATION 849 REPAIRING DAMAGED MEMBERS, AS ILLUSTRATED IN DETAIL FC2-3. PERFORM COMPLETE PENETRATION WELDING ACCORDING TO C&MS 513.21 BY ATTACHING RUN OFF TABS AND GRIND ALL WELDED SURFACES SMOOTH ACCORDING TO ANSI B46.1 OF 250 mil
5. AN INDEPENDENT TESTING AGENCY SHALL PERFORM NDT TESTING ACCORDING TO C&MS 513.25A. THIS WORK SHALL BE INCLUDED WITH THE PAYMENT FOR COMPLETE PENETRATION WELDING.

TABLE #3 513 REPAIRS

DAMAGED AREA No.	MEMBER LINE No. A	PIER OR ABUTMENT	DIM. C	REPAIR DETAIL TYPE	DRILLING HOLES (EACH)	COPE HOLES (EACH)	STEEL MEMBER LEVEL UF (POUNDS)	CP WELD (FEET)	FILLET WELD (FEET)
1	SPAN 3 BEAM 1	PIER 2	36'-0"	FC2					10

SEE PARTIAL FRAMING PLAN FOR DIMENSION C

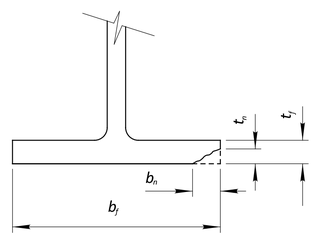

SECTION A-A

SEE NOTE 1 THROUGH 4

FLANGE NOT SHOWN WITH BEND FOR CLARITY

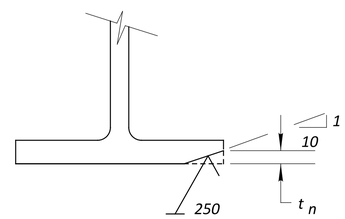

SECTION B-B

SEE NOTE 3

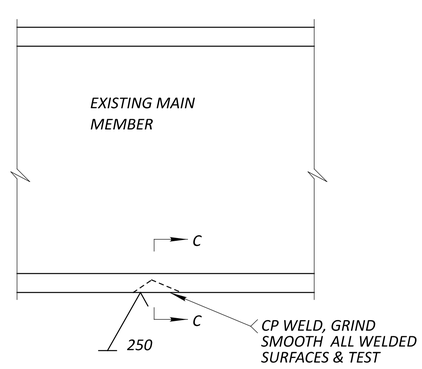

COLLISION REPAIR FC2-3

IF AREA (t_n, b_n) AFTER GRINDING > 98% OF AREA (t_f, b_f) NOTE 4 & 5 APPLIES

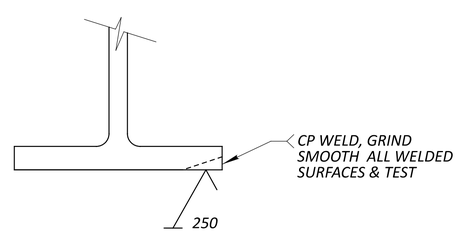

SECTION C-C

SEE NOTE 4 & 5

ITEM 202 - PORTIONS OF STRUCTURE REMOVED, AS PER PLAN (SECONDARY MEMBERS):
AN ESTIMATED QUANTITY FOR EACH LOCATION IS PROVIDED IN TABLE 2, FOR REMOVAL OF SECONDARY MEMBERS AS DETERMINED BY FIELD INSPECTION ACCORDING TO ITEM 849, DAMAGE ASSESSMENT OR AS DIRECTED BY THE ENGINEER. SUPPORT THE EXISTING SECONDARY MEMBERS ACCORDING TO ITEM 849, STRAIGHTENING WORK PLAN. FLAME OR SAW CUT THE EXISTING MEMBERS TO WITHIN ⅛ INCH OF THE EXISTING MAIN MATERIAL USING A MECHANICAL GUIDE ACCORDING TO C&MS 513.12 PROVIDE SHIELDING AS NECESSARY TO PREVENT DAMAGE TO MAIN OR SECONDARY MATERIALS THAT REMAIN. GRIND THE EXISTING MAIN OR SECONDARY MEMBER SMOOTH IN PREPARATION FOR COMPLETE PENETRATION OR FILLET WELDING. PROVIDE A SURFACE FINISH ACCORDING TO ANSI B46.1 OF 250 MIL (TO ACCOMMODATE THE PROPOSED REPLACEMENT MATERIALS). DETERMINE FINAL QUANTITIES BY FIELD MEASUREMENTS. THE DEPARTMENT WILL INCLUDE ALL MATERIALS, TOOLS, LABOR, EQUIPMENT AND INCIDENTALS NECESSARY TO COMPLETE THE ABOVE WORK FOR PAYMENT WITH ITEM 202 - PORTIONS OF STRUCTURE REMOVED, AS PER PLAN (SECONDARY MEMBERS): POUND.

ITEM 513 - STRUCTURAL STEEL MISC.: REPAIR OF DAMAGED SECONDARY MEMBER, FILLET WELDING:
AFTER DAMAGED AREAS HAVE BEEN INSPECTED ACCORDING TO ITEM 849 DAMAGE ASSESSMENT. PREPARE THE DAMAGED MATERIAL FOR WELDING, PERFORMING 5/16 INCH FILLET WELDS ACCORDING TO ITEM 513 USING APPROVED ELECTRODES, PROCEDURES AND WELDERS. WELD EACH SECONDARY MEMBER ACCORDING TO PLAN DETAILS. MAGNETIC PARTICLE INSPECT ALL FILLET WELDS ACCORDING TO C&MS 513.25B. THE ENGINEER MAY OBTAIN TECHNICAL ASSISTANCE FROM THE OFFICE OF MATERIALS MANAGEMENT. THE DEPARTMENT WILL INCLUDE ALL MATERIALS; TOOLS; LABOR; EQUIPMENT; AND INCIDENTALS NECESSARY TO COMPLETE THE ABOVE WORK FOR PAYMENT WITH ITEM 513 - STRUCTURAL STEEL MISC.: REPAIR OF DAMAGED MAIN OR SECONDARY MEMBERS, FILLET WELDING: FOOT.

ITEM 513 - STRUCTURAL STEEL MEMBERS LEVEL UF, AS PER PLAN:
ALL REQUIREMENTS OF 513 APPLY TO SHOP FABRICATED MEMBERS. PERFORM WORK FOR FIELD FABRICATED MEMBERS ACCORDING TO ITEM 513, EXCEPT AS MODIFIED HEREIN. THE DEPARTMENT WILL NOT REQUIRE THE CONTRACTOR PERFORMING FIELD FABRICATION TO BE PRE-QUALIFIED AS SPECIFIED IN SUPPLEMENT 1078. SUBMIT A WRITTEN LETTER OF MATERIAL ACCEPTANCE, 501.06, TO THE ENGINEER. PROVIDE SHOP DRAWINGS ACCORDING TO 513.06 OR SUPPLY THE ENGINEER WITH "AS BUILT" DRAWINGS MEETING 513.06 AFTER COMPLETION OF FIELD FABRICATION. THE ENGINEER WILL REVIEW THE SUBMITTED DRAWINGS FOR CONCURRENCE WITH THE FINAL AS-BUILT CONDITION. THE ENGINEER MAY CONTACT THE OFFICE OF STRUCTURAL ENGINEERING FOR TECHNICAL ASSISTANCE. IF THE ENGINEER IS SATISFIED WITH THE "AS-BUILT" DRAWINGS AND THE DELIVERED MATERIALS. SUPPLY A COPY OF THE DRAWINGS STAMPED, SEALED, AND DATED, ACCORDING TO SUPPLEMENT 1002, TO THE STRUCTURAL WELDING AND METALS SECTION OF THE OFFICE OF MATERIAL MANAGEMENT FOR RECORD PURPOSES. THE MEMBERS INCLUDED IN THIS ITEM ARE PROVIDED IN TABLE 2 AND 3. THE DEPARTMENT WILL INCLUDE ALL MATERIALS, TOOLS, LABOR, EQUIPMENT AND INCIDENTALS NECESSARY TO COMPLETE THE ABOVE WORK FOR PAYMENT WITH ITEM 513 - STRUCTURAL STEEL MEMBERS LEVEL UF, AS PER PLAN: POUND.

COLLISION REPAIR OF FLANGE FC2
BRIDGE NO. HAM-71-0992
RAMP A FROM REDBANK EXPRESSWAY TO I-71 SOUTHBOUND

SFN 3115372
DESIGN AGENCY
DESIGNER GTF | CHECKER JAB
REVIEWER CAH 6-05-25
PROJECT ID 113006
SUBSET 3 | TOTAL 3
SHEET P.39 | TOTAL 42

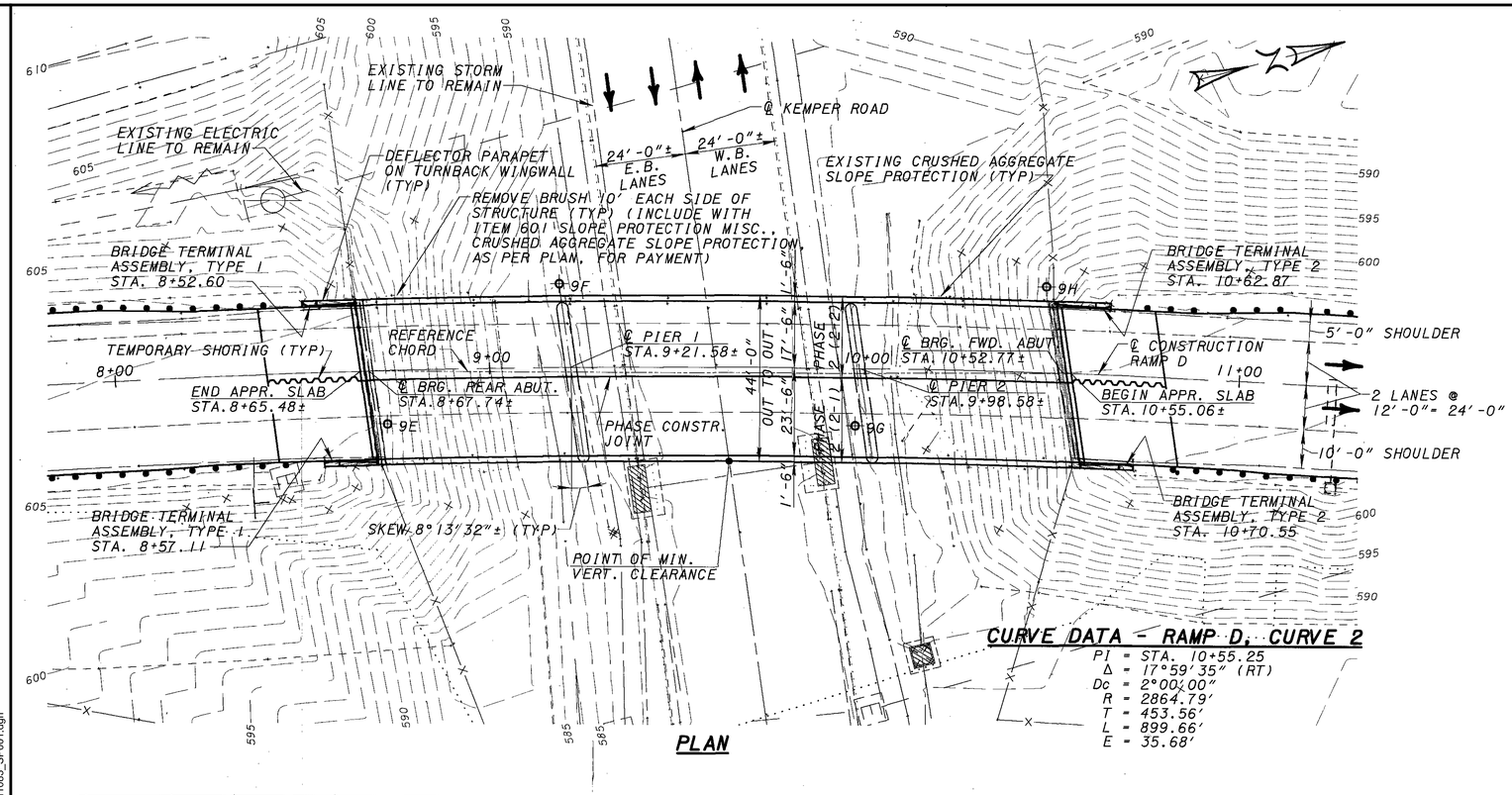

PLAN

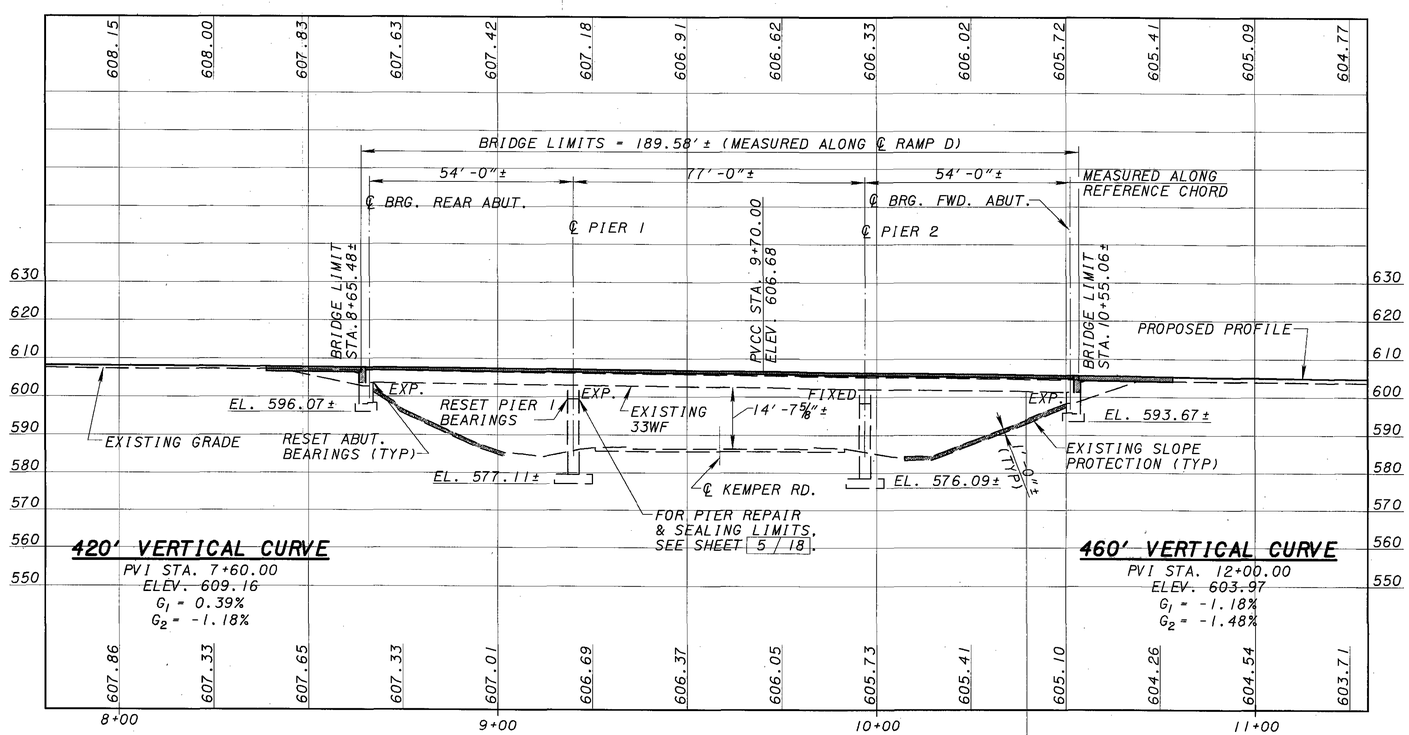

PROFILE ALONG CENTERLINE SURVEY AND CONSTRUCTION

NOTES

DETAILS FROM THIS SITE PLAN SHEET ARE FROM ARCHIVED PLANS AND SHOULD BE USED FOR REFERENCE ONLY.

DESIGN TRAFFIC:

HAM-75-1642E

2023 ADT = 8,309 2023 ADTT = 1,108
DESIGN SPEED = 70 MPH LEGAL SPEED = 65 MPH
DESIGN FUNCTIONAL CLASSIFICATION: 01 - PRINCIPAL ARTERIAL INTERSTATE (URBAN)
NHS ROUTE: YES

KEMPER ROAD

2023 ADT = 12,710 2023 ADTT = 508
DESIGN SPEED = 40 MPH LEGAL SPEED = 35 MPH
DESIGN FUNCTIONAL CLASSIFICATION: 04 - MINOR ARTERIAL (URBAN)
NHS ROUTE: NO

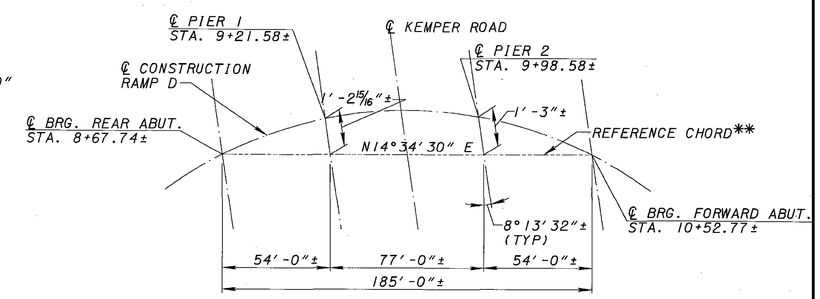

REFERENCE CHORD LAYOUT

** THE REFERENCE CHORD EXTENDS FROM CENTERLINE ABUTMENT BEARING TO CENTERLINE ABUTMENT BEARING.

EXISTING STRUCTURE

TYPE: THREE SPAN NON-COMPOSITE CONTINUOUS STEEL BEAM WITH REINFORCED CONCRETE DECK AND SUBSTRUCTURE
SPANS: 54'-0"±, 77'-0"±, AND 54'-0"± c/c BEARINGS
ROADWAY: 41'-0" FACE TO FACE OF PARAPETS
LOADING: HS20 CASE I, THE ALTERNATE MILITARY LOADING, 50 psf FUTURE WEARING SURFACE, AND 15 psf STAY-IN-PLACE FORMS
SKEW: 8°13'32"± RIGHT FOWARD (TO REFERENCE CHORD)
WEARING SURFACE: MONOLITHIC CONCRETE
APPROACH SLABS: 25'-0" LONG AS-1-81
ALIGNMENT: 2° CURVE RIGHT
SUPERELEVATION: 0.033 FT/FT
STRUCTURE FILE NUMBER: 3111083
DATE BUILT: 1960
DISPOSITION: MINOR MAINTENANCE REQUIRED

PROPOSED WORK

1. HEAT STRAIGHTEN THE BOTTOM FLANGE OF BEAM B5 AND B6 OVER WESTBOUND KEMPER ROAD.
2. GRIND SMOOTH THE THREE IMPACT GOUGES AND SCRAPES.
3. REPLACE THE CROSSFRAMES AT THE LOCATIONS SPECIFIED.
4. PAINT THE DAMAGED AREAS, REPAIRS, AND SCRAPES.

HORIZONTAL SCALE IN FEET 0 10 20 40

BRIDGE SITE PLAN
BRIDGE NO. HAM-75-1642E
I-75 NORTHBOUND RAMP OVER KEMPER ROAD

SFN 3111083
DESIGN AGENCY

DESIGNER	CHECKER
GTF	JAB

REVIEWER CAH 6-05-25
PROJECT ID 113006
SUBSET 1 TOTAL 3
SHEET P.40 TOTAL 42

D08-BM-FY2026

MODEL: Sheet PAPERSIZE: 34x22 (in.) DATE: 4/29/2025 TIME: 8:22:54 AM USER: gfreeman
pw:\\ohiodot-pw.bentley.com:ohiodot-pw-02\Documents\01 Active Projects\District 08_D08\113006\400-Engineering\Structures\SFN_3111083\Sheets\113006_SFN_3111083_SP001.dgn

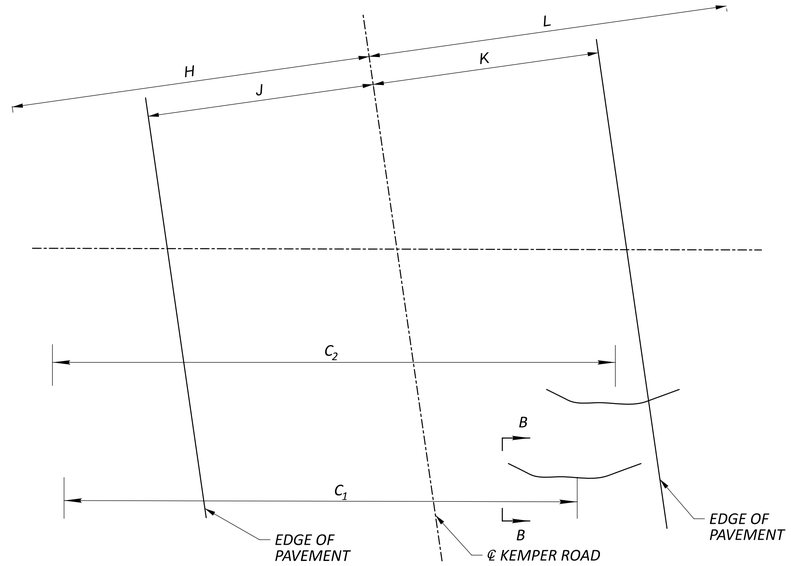

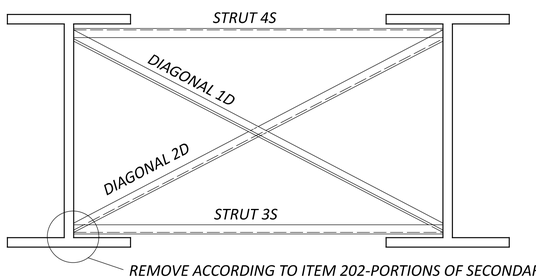

REMOVE ACCORDING TO ITEM 202-PORTIONS OF SECONDARY MEMBERS REMOVED, AS PER PLAN. REPLACE BY MATCHING EXISTING DETAIL. SEE GSD-1-96 FOR ADDITIONAL CLARIFICATION.

MAIN AND SECONDARY MEMBER DAMAGE IS NOT SHOWN. FOR CLARITY SEE SECTION A-A
SEE SHEET XX FOR ADDITIONAL COLLISION REPAIR NOTES

SECTION B-B

SECONDARY MEMBER BAY No. M

N- NUMBER OF CROSSFRAME BRACES COUNTED FROM THE PIER OR ABUTMENT IDENTIFIED IN TABLE

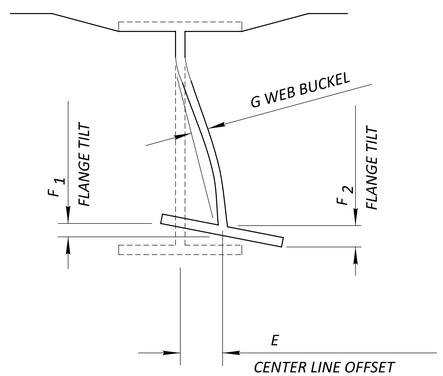

SECTION A-A

NEGATIVE E VALUES ARE BENT LEFT
NEGATIVE F VALUES ARE BENT DOWN
NEGATIVE G VALUES ARE BENT LEFT

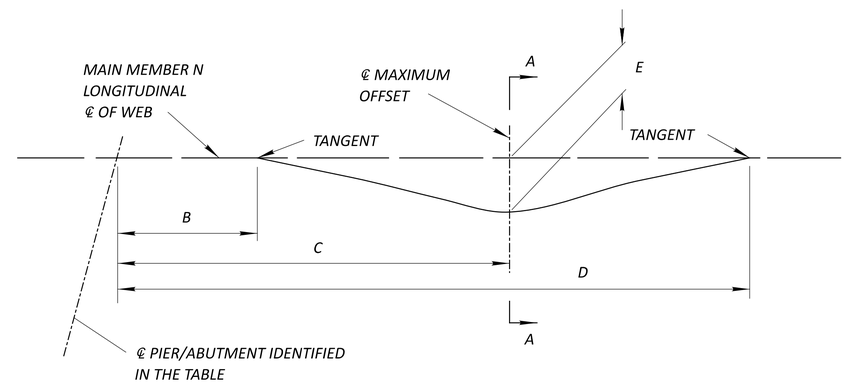

ORIENTATION NOTE
ABUTMENTS AND PIERS ARE NUMBERED IN THE CARDINAL DIRECTION (FROM SOUTH TO NORTH OR WEST TO EAST).
BEAMS ARE NUMBERED FROM LEFT TO RIGHT WHEN FACING IN THE CARDINAL DIRECTION.
BAYS ARE NUMBERED TO MATCH THE MAIN MEMBERLINE NUMBER TO THE LEFT OF THE CROSSFRAME BAY WHEN FACING IN THE CARDINAL DIRECTION.

CROSSFRAME NOTE
REMOVAL AND REPLACEMENT OF PORTIONS OF THE CROSSFRAME IS PERMITTED IN KIND WITH APPROVAL OF THE ENGINEER, BUT AT NO ADDITIONAL COST TO THE PROJECT.

EXISTING STRUCTURE: HAM-75-1642E
ROUTE ON STRUCTURE: I-75 NORTHBOUND RAMP TO I-275
ROUTE BELOW STRUCTURE: KEMPER ROAD
TYPE: CONTINOUS STEEL BEAM WITH REINFORCED CONCRETE DECK & SUBSTRUCTURE
SPANS: 54'-0", 77'-0", AND 54'-0" c/c BEARINGS
ROADWAY WIDTH: 41'-0" FACE TO FACE OF PARAPETS
SKEW: 8°-13'-32" RIGHT FORWARD (TO REFERENCE CHORD)
ALIGNMENT: 2° HORIZONTAL CURVE TO THE RIGHT
SUPERELEVATION: 0.033 FT/FT
YEAR BUILT: 1960
NUMBER OF BEAMS: 6
STEEL TYPE: ASTM-A36
PAINT TYPE: OZEU
PAINT DATE: 1993

TABLE #2 DAMAGED SECONDARY MEMBER TO BE REPLACED (LBS)

CROSSFRAME BAY M	PIER/ABUT.	N	1D	2D	3S	4S
4	1	4	50	50	48	N/A
5	1	4	50	50	48	N/A
5	1	5	50	50	48	N/A

TABLE # 1 DAMAGED MAIN MEMBERS TO BE HEAT STRAIGHTENED

DAMAGE AREA No.	MEMBER LINE No. A	PIER OR ABUT.	B	C_1	C_2	D	E	F_1	F_2	G	H	J	K	L
1	SPAN 2 BEAM 5	PIER 1	49'-9"	N/A	60'	70'-3"	0"	0"	5/8"	0"	38'±	24'	24'	38'±
2	SPAN 2 BEAM 6	PIER 1	41'	53'-6"	N/A	66'	-7/16"	7/16"	7/16"	0"	38'±	24'	24'	38'±

COLLISION REPAIR AND HEAT STRAIGHTENING PLAN
BRIDGE NO. HAM-75-1642E
I-75 NORTHBOUND RAMP OVER KEMPER ROAD

SFN 3111083
DESIGN AGENCY
DESIGNER GTF
CHECKER JAB
REVIEWER CAH 6-05-25
PROJECT ID 113006
SUBSET 2 TOTAL 3
SHEET P.41 TOTAL 42

D08-BM-FY2026

MODEL: Sheet PAPERSIZE: 34x22 (in.) DATE: 4/29/2025 TIME: 8:23:35 AM USER: gfreeman
pw:\\ohiodot-pw.bentley.com:ohiodot-pw-02\Documents\01 Active Projects\District 08_D08\113006\400-Engineering\Structures\SFN_3111083\Sheets\113006_SFN_3111083_SM001.dgn

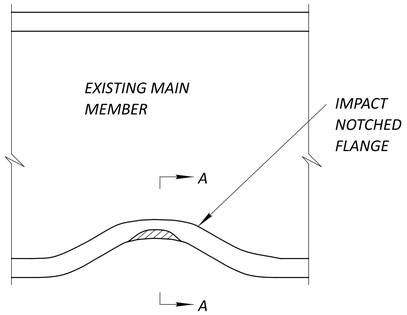

COLLISION REPAIR FC2-1

SEE NOTE 1

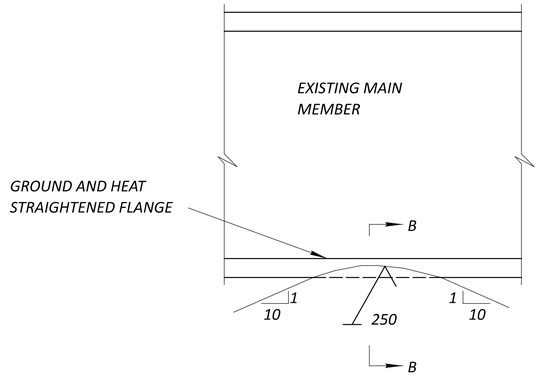

COLLISION REPAIR FC2-2

IF AREA (t_n, b_n) AFTER GRINDING < 98% OF AREA (t_f, b_f) NOTE #3 APPLIES

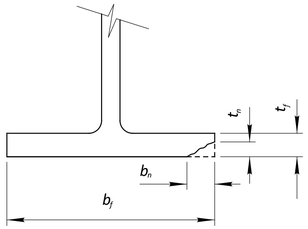

SECTION A-A

SEE NOTE 1 THROUGH 4

FLANGE NOT SHOWN WITH BEND FOR CLARITY

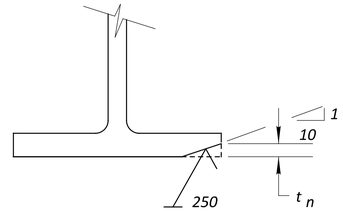

SECTION B-B

SEE NOTE 3

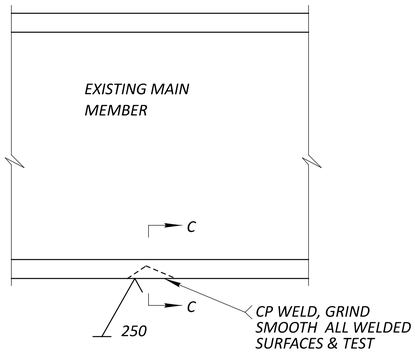

COLLISION REPAIR FC2-3

IF AREA (t_n, b_n) AFTER GRINDING > 98% OF AREA (t_f, b_f) NOTE 4 & 5 APPLIES

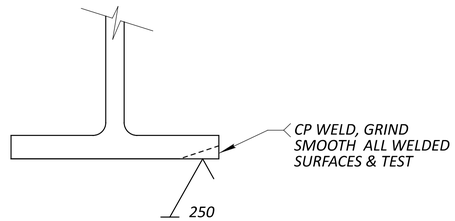

SECTION C-C

SEE NOTE 4 & 5

1. DETERMINE IF IMPACT NOTCH IS CRACKED USING MAGNETIC PARTICLE INSPECTION
2. IF CRACK DOES NOT EXTEND THROUGH THE FLANGE. DETERMINE DEPTH OF CRACK BY GRINDING
3. IF NOTCH OR PARTIAL DEPTH CRACK CAN BE REMOVED BY GRINDING ACCORDING TO SUPPLEMENTAL SPECIFICATION 849, REPAIR DAMAGED MEMBERS. PERFORM GRINDING ACCORDING TO SUPPLEMENTAL SPECIFICATION 849 AND AS ILLUSTRATED IN DETAIL FC2-2. IF THE CRACK SHALL GROW TO ⅜" OR MORE ON EITHER SURFACE DUE TO HEAT STRAIGHTENING, THE CRACK SHALL BE WELDED.
4. IF NOTCH OR PARTIAL DEPTH CRACK MUST BE REPAIRED BY WELDING ACCORDING TO SUPPLEMENTAL SPECIFICATION 849 REPAIRING DAMAGED MEMBERS, AS ILLUSTRATED IN DETAIL FC2-3. PERFORM COMPLETE PENETRATION WELDING ACCORDING TO C&MS 513.21 BY ATTACHING RUN OFF TABS AND GRIND ALL WELDED SURFACES SMOOTH ACCORDING TO ANSI B46.1 OF 250 mil
5. AN INDEPENDENT TESTING AGENCY SHALL PERFORM NDT TESTING ACCORDING TO C&MS 513.25A. THIS WORK SHALL BE INCLUDED WITH THE PAYMENT FOR COMPLETE PENETRATION WELDING.

TABLE #3 513 REPAIRS

DAMAGED AREA No.	MEMBER LINE No. A	PIER OR ABUTMENT	DIM. C	REPAIR DETAIL TYPE	DRILLING HOLES (EACH)	COPE HOLES (EACH)	STEEL MEMBER LEVEL UF (POUNDS)	CP WELD (FEET)	FILLET WELD (FEET)
1	SPAN 2 BEAM 5	PIER 1	60'	FC2				6	
2	SPAN 2 BEAM 6	PIER 1	53'-6"	FC2				6	
3	SPAN 2 BEAM 6	PIER 1	54'	FC2				6	

SEE PARTIAL FRAMING PLAN FOR DIMENSION C

ITEM 202 - PORTIONS OF STRUCTURE REMOVED, AS PER PLAN (SECONDARY MEMBERS):
AN ESTIMATED QUANTITY FOR EACH LOCATION IS PROVIDED IN TABLE 2, FOR REMOVAL OF SECONDARY MEMBERS AS DETERMINED BY FIELD INSPECTION ACCORDING TO ITEM 849, DAMAGE ASSESSMENT OR AS DIRECTED BY THE ENGINEER. SUPPORT THE EXISTING SECONDARY MEMBERS ACCORDING TO ITEM 849, STRAIGHTENING WORK PLAN. FLAME OR SAW CUT THE EXISTING MEMBERS TO WITHIN ⅛ INCH OF THE EXISTING MAIN MATERIAL USING A MECHANICAL GUIDE ACCORDING TO C&MS 513.12 PROVIDE SHIELDING AS NECESSARY TO PREVENT DAMAGE TO MAIN OR SECONDARY MATERIALS THAT REMAIN. GRIND THE EXISTING MAIN OR SECONDARY MEMBER SMOOTH IN PREPARATION FOR COMPLETE PENETRATION OR FILLET WELDING. PROVIDE A SURFACE FINISH ACCORDING TO ANSI B46.1 OF 250 MIL (TO ACCOMMODATE THE PROPOSED REPLACEMENT MATERIALS). DETERMINE FINAL QUANTITIES BY FIELD MEASUREMENTS. THE DEPARTMENT WILL INCLUDE ALL MATERIALS, TOOLS, LABOR, EQUIPMENT AND INCIDENTALS NECESSARY TO COMPLETE THE ABOVE WORK FOR PAYMENT WITH ITEM 202 - PORTIONS OF STRUCTURE REMOVED, AS PER PLAN (SECONDARY MEMBERS): POUND.

ITEM 513 - STRUCTURAL STEEL MISC.: REPAIR OF DAMAGED SECONDARY MEMBER, FILLET WELDING:
AFTER DAMAGED AREAS HAVE BEEN INSPECTED ACCORDING TO ITEM 849 DAMAGE ASSESSMENT. PREPARE THE DAMAGED MATERIAL FOR WELDING, PERFORMING 5/16 INCH FILLET WELDS ACCORDING TO ITEM 513 USING APPROVED ELECTRODES, PROCEDURES AND WELDERS. WELD EACH SECONDARY MEMBER ACCORDING TO PLAN DETAILS. MAGNETIC PARTICLE INSPECT ALL FILLET WELDS ACCORDING TO C&MS 513.25B. THE ENGINEER MAY OBTAIN TECHNICAL ASSISTANCE FROM THE OFFICE OF MATERIALS MANAGEMENT. THE DEPARTMENT WILL INCLUDE ALL MATERIALS; TOOLS; LABOR; EQUIPMENT; AND INCIDENTALS NECESSARY TO COMPLETE THE ABOVE WORK FOR PAYMENT WITH ITEM 513 - STRUCTURAL STEEL MISC.: REPAIR OF DAMAGED MAIN OR SECONDARY MEMBERS, FILLET WELDING: FOOT.

ITEM 513 - STRUCTURAL STEEL MEMBERS LEVEL UF, AS PER PLAN:
ALL REQUIREMENTS OF 513 APPLY TO SHOP FABRICATED MEMBERS. PERFORM WORK FOR FIELD FABRICATED MEMBERS ACCORDING TO ITEM 513, EXCEPT AS MODIFIED HEREIN. THE DEPARTMENT WILL NOT REQUIRE THE CONTRACTOR PERFORMING FIELD FABRICATION TO BE PRE-QUALIFIED AS SPECIFIED IN SUPPLEMENT 1078. SUBMIT A WRITTEN LETTER OF MATERIAL ACCEPTANCE, 501.06, TO THE ENGINEER. PROVIDE SHOP DRAWINGS ACCORDING TO 513.06 OR SUPPLY THE ENGINEER WITH "AS BUILT" DRAWINGS MEETING 513.06 AFTER COMPLETION OF FIELD FABRICATION. THE ENGINEER WILL REVIEW THE SUBMITTED DRAWINGS FOR CONCURRENCE WITH THE FINAL AS-BUILT CONDITION. THE ENGINEER MAY CONTACT THE OFFICE OF STRUCTURAL ENGINEERING FOR TECHNICAL ASSISTANCE. IF THE ENGINEER IS SATISFIED WITH THE "AS-BUILT" DRAWINGS AND THE DELIVERED MATERIALS. SUPPLY A COPY OF THE DRAWINGS STAMPED, SEALED, AND DATED, ACCORDING TO SUPPLEMENT 1002, TO THE STRUCTURAL WELDING AND METALS SECTION OF THE OFFICE OF MATERIAL MANAGEMENT FOR RECORD PURPOSES. THE MEMBERS INCLUDED IN THIS ITEM ARE PROVIDED IN TABLE 2 AND 3. THE DEPARTMENT WILL INCLUDE ALL MATERIALS, TOOLS, LABOR, EQUIPMENT AND INCIDENTALS NECESSARY TO COMPLETE THE ABOVE WORK FOR PAYMENT WITH ITEM 513 - STRUCTURAL STEEL MEMBERS LEVEL UF, AS PER PLAN: POUND.

COLLISION REPAIR OF FLANGES
BRIDGE NO. HAM-75-1642E
I-75 NORTHBOUND RAMP OVER KEMPER ROAD

SFN 3111083
DESIGN AGENCY
DESIGNER GTF
CHECKER JAB
REVIEWER CAH 6-05-25
PROJECT ID 113006
SUBSET 3
TOTAL 3
SHEET P.42
TOTAL 42

D08-BM-FY2026

MODEL: Sheet PAPERSIZE: 34x22 (in.) DATE: 4/29/2025 TIME: 8:24:14 AM USER: gfreeman
pw:\\ohiodot-pw.bentley.com:ohiodot-pw-02\Documents\01 Active Projects\District 08_D08\113006\400-Engineering\Structures\SFN_3111083\Sheets\113006_SFN_3111083_SM002.dgn