CITY OF CINCINNATI
DEPARTMENT OF TRANSPORTATION AND ENGINEERING

CINCINNATI STREETCAR

FIRST SEGMENT - DOWNTOWN LOOP

CENTRAL BUSINESS DISTRICT (CBD) - OVER THE RHINE (OTR)

2010 SPECIFICATIONS :

THE STANDARD SPECIFICATIONS OF THE STATE OF OHIO DEPARTMENT OF TRANSPORTATION AND THE CITY OF CINCINNATI SUPPLEMENT THERETO, INCLUDING THE SPECIAL PROVISIONS LISTED IN THE BID DOCUMENT SHALL GOVERN THIS IMPROVEMENT.

NOTES :

THE LOCATION OF THE UNDERGROUND UTILITIES SHOWN ON THESE PLANS HAS BEEN OBTAINED BY DILIGENT FIELD CHECKS AND SEARCHES OF AVAILABLE RECORDS. THE CITY OF CINCINNATI DOES NOT GUARANTEE THE ACCURACY OF THE AFOREMENTIONED LOCATIONS AND ACCEPTS NO RESPONSIBILITY FOR ANY EXPENSE RESULTING FROM ERRORS OR OMISSIONS OF UTILITY LOCATIONS. CONTRACTOR(S) SHALL BE RESPONSIBLE FOR VERIFYING THE LOCATIONS OF ALL UTILITIES IN THE FIELD PRIOR TO THE START OF ANY WORK. NOTIFY PROJECT ENGINEER OF ANY DISCREPANCIES OR CONFLICTS PRIOR TO BEGINNING WORK IN AFFECTED AREA.

NOTICE OF CONFIDENTIALITY -
PUBLIC INFRASTRUCTURE RECORD:

THIS DOCUMENT IS A PUBLIC INFRASTRUCTURE RECORD OF THE CITY OF CINCINNATI AND THE DEPARTMENT OF TRANSPORTATION AND ENGINEERING AND IS NOT SUBJECT TO THE PUBLIC DISCLOSURE REQUIREMENTS OF THE PUBLIC RECORDS LAWS OF THE STATE OF OHIO AND FEDERAL GOVERNMENT. THIS DOCUMENT IS BEING PROVIDED ON THE BASIS OF YOUR REPORTED NEED, AND SHALL BE CONSIDERED CONFIDENTIAL. BY ACCEPTING THIS DOCUMENT, YOU AGREE THAT IT WILL NOT BE SHARED OR OTHERWISE DISCLOSED TO ANYONE OTHER THAN PERSONS WHO HAVE A DIRECT NEED TO KNOW FOR THE SOLE PURPOSE OF CARRYING OUT THE PROJECT FOR WHICH THIS DOCUMENT WAS OBTAINED. ANYONE RECEIVING THIS DOCUMENT IS BOUND BY THE SAME CONFIDENTIALITY REQUIREMENTS AND MUST TAKE PRECAUTIONS TO PROTECT AGAINST ITS DISSEMINATION.

THE FAILURE TO OBSERVE THE CONFIDENTIALITY REQUIREMENTS OF THIS NOTICE SHALL SERVE AS THE BASIS FOR THE CITY OF CINCINNATI TO IMMEDIATELY SEEK LEGAL RECOURSE, INCLUDING THE RECOVERY OF ACTUAL DAMAGES RESULTING FROM UNAUTHORIZED ACCESS OR DISCLOSURE OF THIS DOCUMENT.

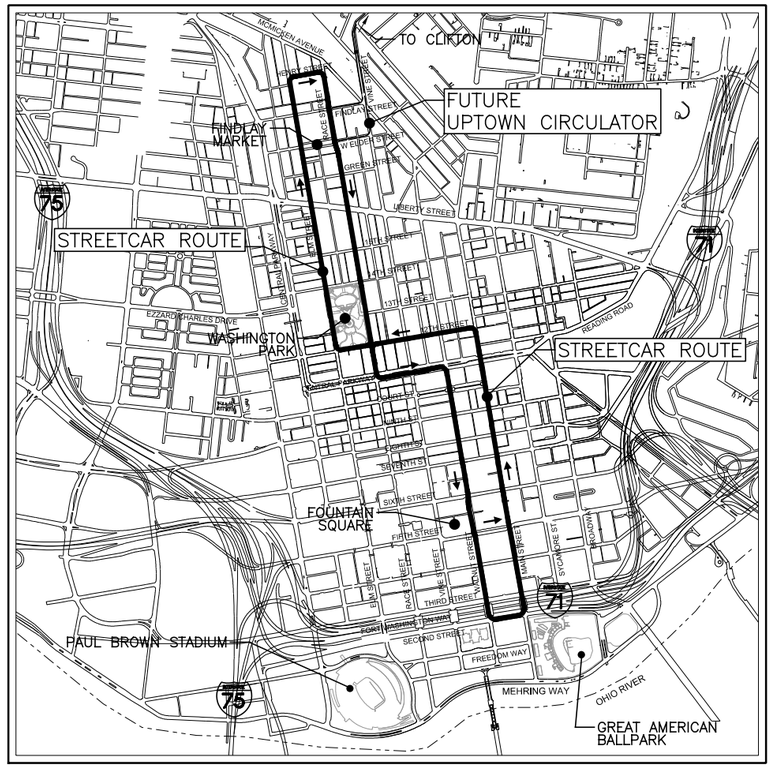

VICINITY PLAN

Scale: NOT TO SCALE

RECOMMENDED: _____ PRINCIPAL TRANSPORTATION DESIGN ENGINEER _____ DATE

RECOMMENDED: _____ PRINCIPAL CONSTRUCTION ENGINEER _____ DATE

APPROVED : _____ CITY TRAFFIC ENGINEER _____ DATE

APPROVED : _____ CITY ARCHITECT _____ DATE

APPROVED : _____ CITY ENGINEER _____ DATE

APPROVED : _____ DIRECTOR OF TRANSPORTATION AND ENGINEERING _____ DATE

APPROVED : _____ SOUTHWEST OHIO REGIONAL TRANSIT AUTHORITY _____ DATE

CAUTION UNDERGROUND UTILITIES
2 WORKING DAYS
BEFORE YOU DIG
CALL 1-800-362-2764
OHIO UTILITY PROTECTION SERVICE
CALL NON-SERVICE FACILITY
OWNERS DIRECT

CIVIL (CBD)	CIVIL (OTR) POLE FOUNDATIONS	TRAFFIC ELECTRICAL (AT STOPS)	TRACTION POWER SYSTEMS SIGNAL SYSTEMS COMMUNICATION SYSTEMS	SHELTERS (STOPS)	LANDSCAPE ARCHITECT (STOPS)	STRUCTURAL (SUBSTATIONS)	CORROSION CONTROL OCS	TOPOGRAPHIC SURVEY
PROFESSIONAL STAMP	PROFESSIONAL STAMP	PROFESSIONAL STAMP	PROFESSIONAL STAMP	PROFESSIONAL STAMP	PROFESSIONAL STAMP	PROFESSIONAL STAMP	PROFESSIONAL STAMP	PROFESSIONAL STAMP
SIGN:	SIGN:	SIGN:	SIGN:	SIGN:	SIGN:	SIGN:	SIGN:	SIGN:
DATE:	DATE:	DATE:	DATE:	DATE:	DATE:	DATE:	DATE:	DATE:

DOTE_Mono_PDF_Half.pltcfg
T:\29014A-Streetcar\CAD\General\G-GP-1001.dgn
7/10/2012 3:13:59 PM

CONTRACT DRAWING

PRINTS NOT BEARING THIS STAMP WERE MADE PRIOR TO ADVERTISING FOR BIDS AND ARE TO BE CONSIDERED OBSOLETE FOR CONTRACT PURPOSES.

Department of Transportation and Engineering
City of Cincinnati
City Hall
801 Plum Street
Cincinnati, Ohio 45202

CINCINNATI STREETCAR
CENTRAL BUSINESS DISTRICT
AND
OVER THE RHINE
TITLE SHEET

Revisions
No.

	Date
Drawn by JFL	7/02/12
Designed by JFL	7/02/12
Checked by SAJ	7/02/12
Reviewed by JTB	7/12/12

Consultant

PB HDR

File Number

ACC No. 23126

G-GP-1001

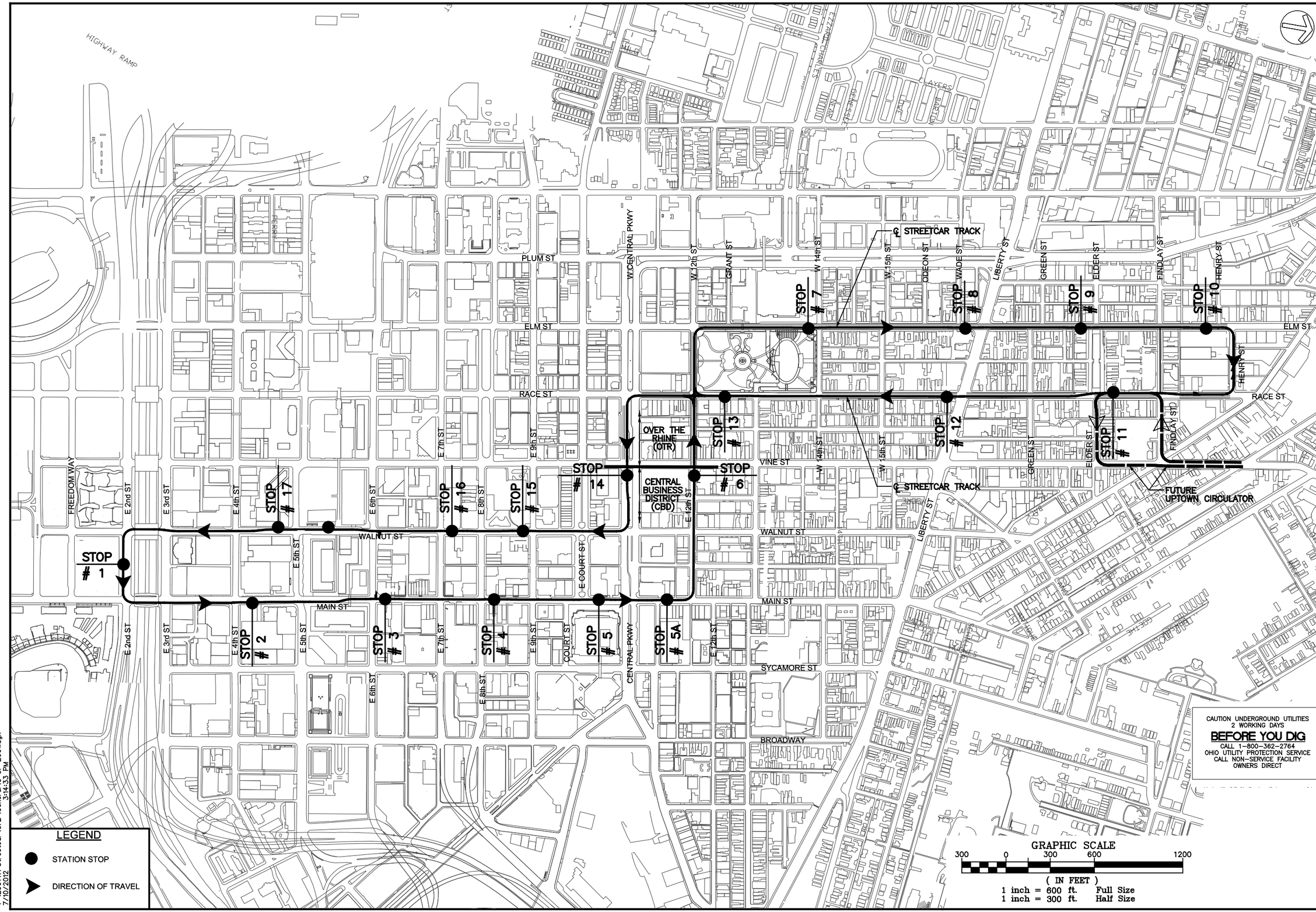

DOTE_Mono_PDF_Half.pltcfg
T:\29014A-Streetcar\CAD\General\G-GP-2001.dgn
7/10/2012 3:14:33 PM

CINCINNATI STREETCAR
CENTRAL BUSINESS DISTRICT AND OVER THE RHINE

CONTRACT DRAWING

PRINTS NOT BEARING THIS STAMP WERE MADE PRIOR TO ADVERTISING FOR BIDS AND ARE TO BE CONSIDERED OBSOLETE FOR CONTRACT PURPOSES.

Department of Transportation and Engineering

City of Cincinnati
City Hall
801 Plum Street
Cincinnati, Ohio 45202

Revisions
No.

Date 7/02/12	Drawn by SAB
Date 7/02/12	Designed by SAB
Date 7/02/12	Checked by KVL
Date 7/12/12	Reviewed by JTB

Consultant

PB HDR

File Number

ACC No. 23126

G-GP-2001

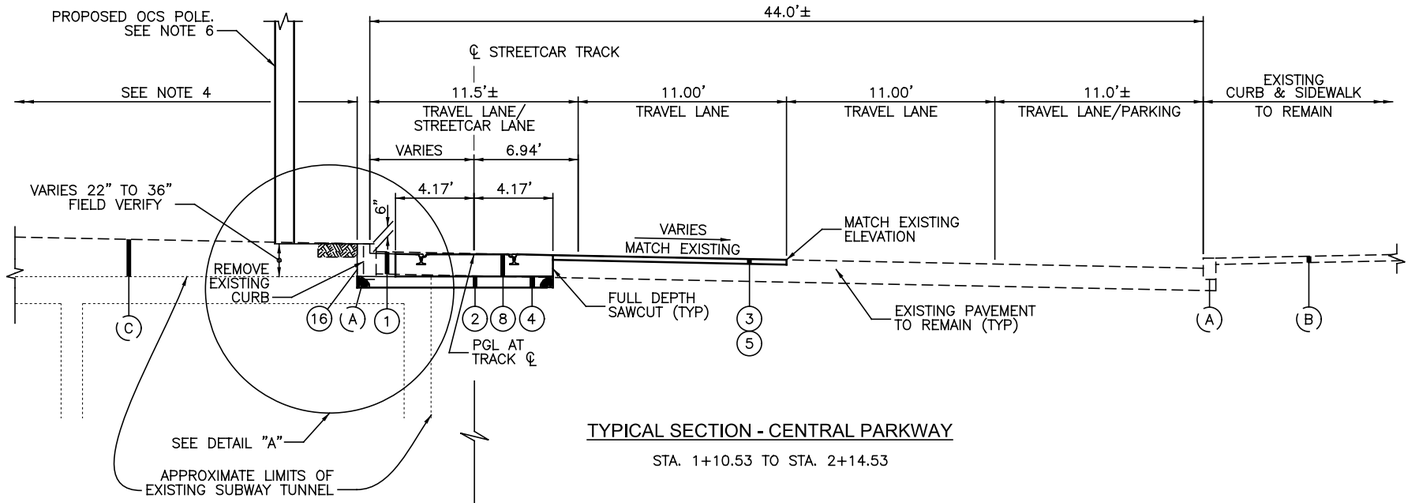

TYPICAL SECTION - CENTRAL PARKWAY

STA. 1+10.53 TO STA. 2+14.53

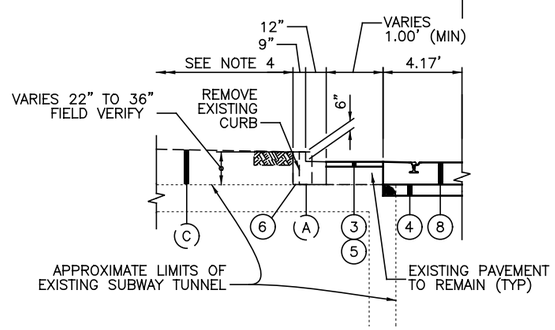

PARTIAL SECTION - CENTRAL PARKWAY

STA. 1+00.00 TO STA. 1+10.53

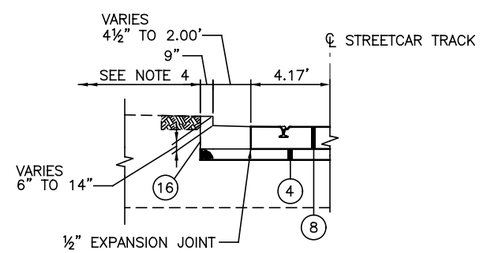

DETAIL "A"

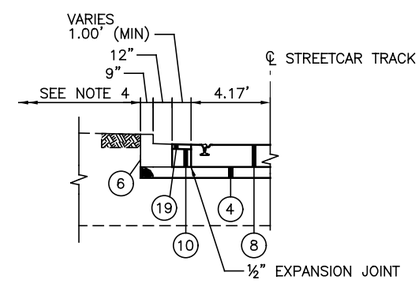

DETAIL "B"

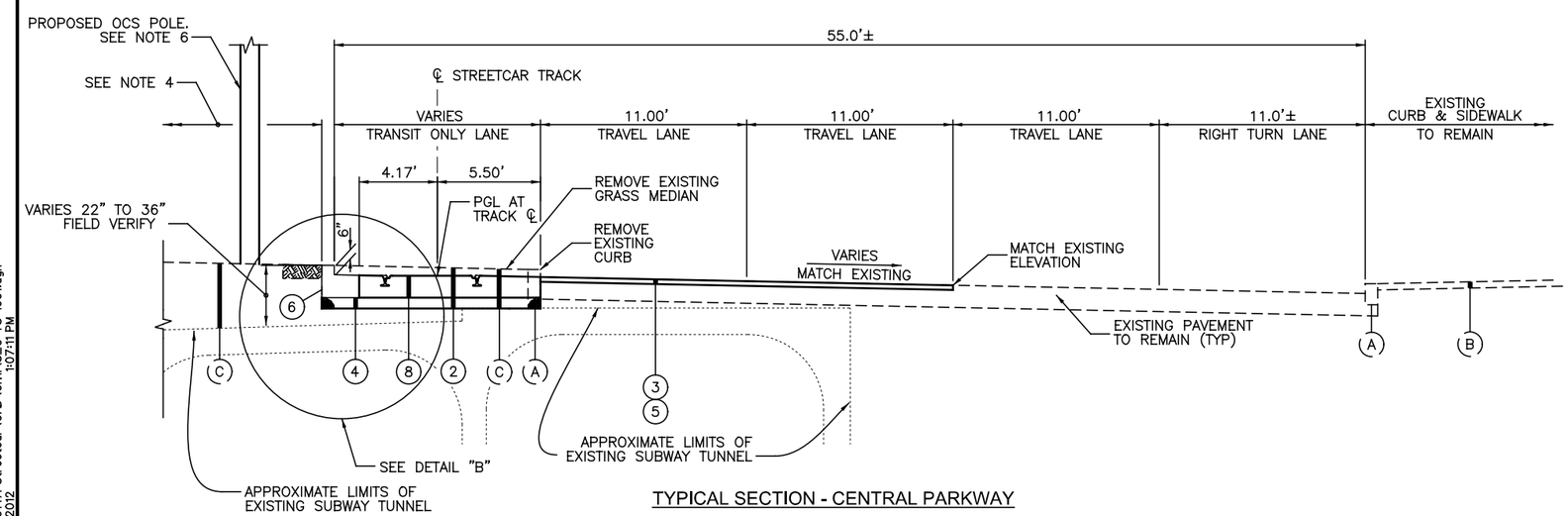

TYPICAL SECTION - CENTRAL PARKWAY

STA. 3+88.57 TO STA. 4+57.05

LEGEND

1. ITEM 202 – PAVEMENT REMOVED
2. ITEM 203 – EXCAVATION
3. ITEM 254 – PAVEMENT PLANING, VARIABLE DEPTH
4. ITEM 304 – 6" AGGREGATE BASE
5. ITEM 448 – ASPHALT CONCRETE SURFACE COURSE, TYPE 1H PG70–22M, 1½" (TYP)
6. ITEM 609 – CURB, TYPE P–5
7. ITEM 452 – 7" NON–REINFORCED CONCRETE PAVEMENT, CLASS C
8. ITEM SPECIAL – TRACK SLAB, REFER TO "TD" SERIES DRAWINGS
9. ITEM SPECIAL – GRANITE PAVER RESTORATION
10. ITEM 305 – 10" CONCRETE BASE
11. ITEM 608 – 5" CONCRETE WALK
12. ITEM SPECIAL – GRANITE CURB
13. ITEM SPECIAL – GRANITE CURB RESET
14. ITEM 452 – 12" NON–REINFORCED CONCRETE PAVEMENT
15. ITEM 609 – CURB, TYPE P–2
16. ITEM 609 – CURB, TYPE P–3
17. ITEM 305 – 8" CONCRETE BASE
18. ITEM 605 – 6" BASE PIPE UNDERDRAINS
19. ITEM 448 – ASPHALT CONCRETE SURFACE COURSE, TYPE 1H PG70–22M, 2"
20. ITEM 202 – WALK REMOVED
21. ITEM 304 – AGGREGATE BASE, VARIABLE DEPTH

(A) EXISTING CURB

(B) EXISTING SIDEWALK

(C) EXISTING GRASS MEDIAN

CAUTION UNDERGROUND UTILITIES
2 WORKING DAYS
BEFORE YOU DIG
CALL 1–800–362–2764
OHIO UTILITY PROTECTION SERVICE
CALL NON–SERVICE FACILITY OWNERS DIRECT

NOTES:

1. ROADWAY AND TRACK SLAB TRANSITION BETWEEN STA. 2+14.53 & STA. 3+88.57. SEE SHEET G–PP–1001.
2. ROADWAY AND TRACK SLAB TRANSITION BETWEEN STA. 4+57.05 & STA. 5+89.93. SEE SHEET G–PP–1002.
3. WIDTH OF PROPOSED CURB TYPE P–5 ON CENTRAL PARKWAY TO BE 9" TO MATCH EXISTING.
4. REFER TO PLANS PREPARED BY THE CITY OF CINCINNATI.
5. CONTRACTOR TO FIELD VERIFY THE ELEVATION OF THE ROOF OF THE EXISTING SUBWAY BEFORE PLACING THE TRACK SLAB. IN LOCATIONS WHERE THE ELEVATION OF THE ROOF WILL NOT ALLOW FOR THE 6" AGGREGATE BASE TO BE PLACED, THE CONTRACTOR SHALL PLACE A 1" PREFORMED EXPANSION JOINT FILLER WITHIN THE LIMITS OF THE TRACK SLAB AND THEN PLACE A THICKENED TRACK SLAB TO THE ELEVATIONS SHOWN ON THE PLANS.
6. PROVIDE GROUNDING STRAP TO TRACK SLAB REBAR PER SHEET G–OD–0129 AND DETAIL 2 ON SHEET G–PS–0101.

DOTE_Mono_PDF_Half.pltcfg
T:\29014A-Streetcar\CAD\Civil\S_G-TS-1001.dgn
7/15/2012 1:07:11 PM

DEPARTMENT OF TRANSPORTATION & ENGINEERING
CITY OF CINCINNATI
OHIO

CONTRACT DRAWING

PRINTS NOT BEARING THIS STAMP WERE MADE PRIOR TO ADVERTISING FOR BIDS AND ARE TO BE CONSIDERED OBSOLETE FOR CONTRACT PURPOSES.

Department of Transportation and Engineering

City of Cincinnati
City Hall
801 Plum Street
Cincinnati, Ohio 45202

CINCINNATI STREETCAR
CENTRAL BUSINESS DISTRICT
TYPICAL SECTIONS

Revisions
No.

Drawn by CJC	Date 7/02/12
Designed by CJC	Date 7/02/12
Checked by SAJ	Date 7/02/12
Reviewed by JTB	Date 7/12/12

Consultant

PB HDR

File Number

ACC No. 23126

G-TS-1001

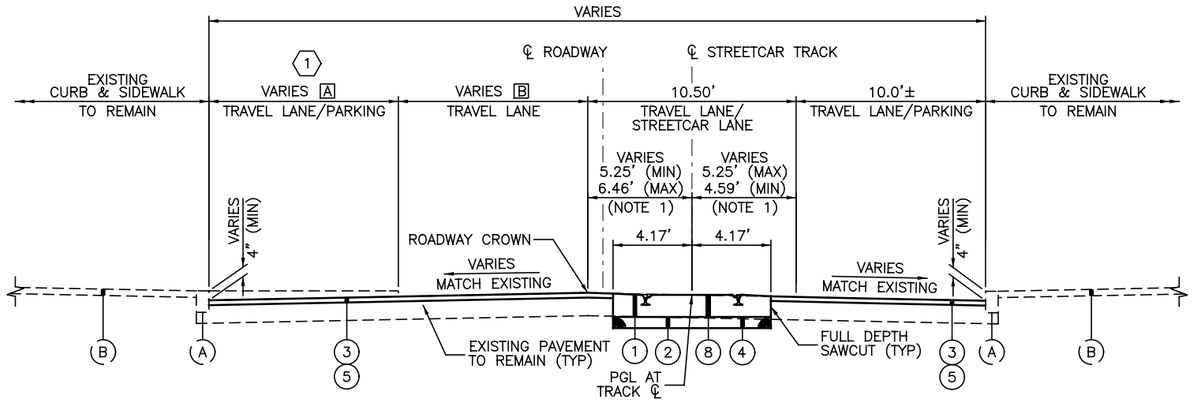

(1) EXISTING SIDEWALK BUMP-OUT TO REMAIN
STA. 17+92.57 TO STA. 20+03.30

TYPICAL SECTION - WALNUT STREET

STA. 5+89.93 TO STA. 22+01.57

STA. 22+01.57 BK = STA. 800+00.00 AH

STA. 800+00.00 TO STA. 800+15.01

VARIES A

5+89.93 TO 11+54.45	9.5'±
11+54.45 TO 15+05.38	9.5'±
15+05.38 TO 800+15.01	9.5'±
800+15.01 TO 801+85.07	SEE NOTE 2
801+85.07 TO 805+50.00	SEE TYPICAL SECTION BELOW

VARIES B

5+89.93 TO 11+54.45	9.50'
11+54.45 TO 15+05.38	10.00'
15+05.38 TO 800+15.01	9.50'
800+15.01 TO 801+85.07	SEE NOTE 2
801+85.07 TO 805+50.00	SEE TYPICAL SECTION BELOW

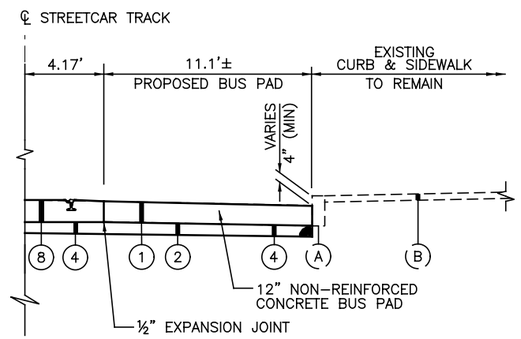

PARTIAL SECTION - WALNUT STREET

STA. 804+33.32 TO STA. 805+17.12

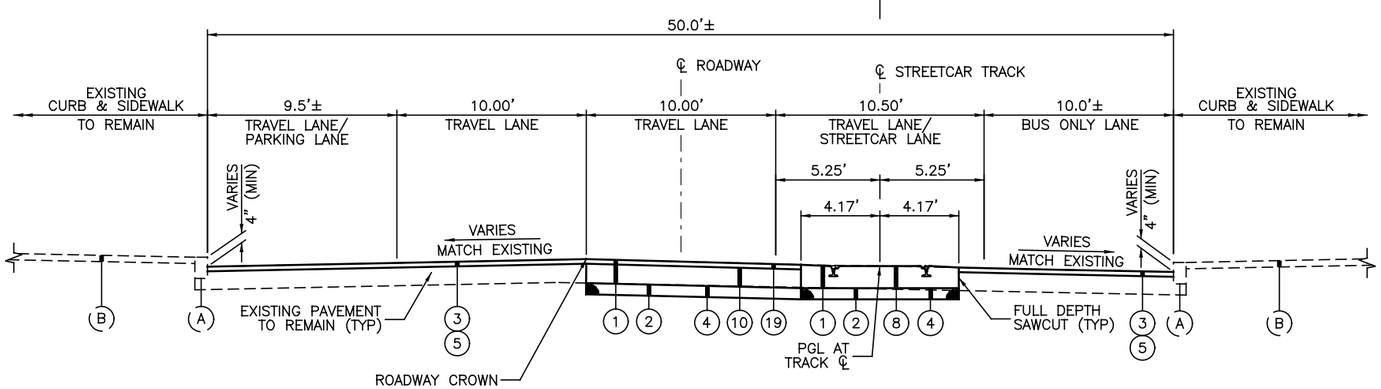

TYPICAL SECTION - WALNUT STREET

STA. 801+85.07 TO STA. 805+50.00

LEGEND

(1) ITEM 202 – PAVEMENT REMOVED

(2) ITEM 203 – EXCAVATION

(3) ITEM 254 – PAVEMENT PLANING, VARIABLE DEPTH

(4) ITEM 304 – 6" AGGREGATE BASE

(5) ITEM 448 – ASPHALT CONCRETE SURFACE COURSE, TYPE 1H PG70-22M, 1½" (TYP)

(6) ITEM 609 – CURB, TYPE P-5

(7) ITEM 452 – 7" NON-REINFORCED CONCRETE PAVEMENT, CLASS C

(8) ITEM SPECIAL – TRACK SLAB, REFER TO "TD" SERIES DRAWINGS

(9) ITEM SPECIAL – GRANITE PAVER RESTORATION

(10) ITEM 305 – 10" CONCRETE BASE

(11) ITEM 608 – 5" CONCRETE WALK

(12) ITEM SPECIAL – GRANITE CURB

(13) ITEM SPECIAL – GRANITE CURB RESET

(14) ITEM 452 – 12" NON-REINFORCED CONCRETE PAVEMENT

(15) ITEM 609 – CURB, TYPE P-2

(16) ITEM 609 – CURB, TYPE P-3

(17) ITEM 305 – 8" CONCRETE BASE

(18) ITEM 605 – 6" BASE PIPE UNDERDRAINS

(19) ITEM 448 – ASPHALT CONCRETE SURFACE COURSE, TYPE 1H PG70-22M, 2"

(20) ITEM 202 – WALK REMOVED

(21) ITEM 304 – AGGREGATE BASE, VARIABLE DEPTH

(A) EXISTING CURB

(B) EXISTING SIDEWALK

(C) EXISTING GRASS MEDIAN

NOTES:

1. TRACK SLAB TRANSITIONS BETWEEN STA. 11+10.38 & STA. 13+89.10 AND STA. 15+42.10 & STA. 18+49.02 TO ACCOMMODATE STATION STOP. SEE SHEETS G-PP-1003 AND G-PP-1004.

2. ROADWAY AND TRACK SLAB TRANSITION BETWEEN STA. 800+15.01 & STA. 801+85.07 SEE SHEET G-PP-1005.

CAUTION UNDERGROUND UTILITIES
2 WORKING DAYS
BEFORE YOU DIG
CALL 1-800-362-2764
OHIO UTILITY PROTECTION SERVICE
CALL NON-SERVICE FACILITY OWNERS DIRECT

DEPARTMENT OF TRANSPORTATION & ENGINEERING CITY OF CINCINNATI OHIO

CONTRACT DRAWING

PRINTS NOT BEARING THIS STAMP WERE MADE PRIOR TO ADVERTISING FOR BIDS AND ARE TO BE CONSIDERED OBSOLETE FOR CONTRACT PURPOSES.

Department of Transportation and Engineering

City of Cincinnati
City Hall
801 Plum Street
Cincinnati, Ohio 45202

CINCINNATI STREETCAR
CENTRAL BUSINESS DISTRICT

TYPICAL SECTIONS

Revisions
No.

Date 7/02/12	Drawn by CJC
Date 7/02/12	Designed by CJC
Date 7/02/12	Checked by SAJ
Date 7/12/12	Reviewed by JTB

Consultant

PB HDR

File Number

ACC No. 23126

G-TS-1002

DOTE_Mono_PDF_Half.pltcfg
T:\29014A-Streetcar\CAD\Civil\S_G-TS-1002.dgn
7/15/2012 1:07:12 PM

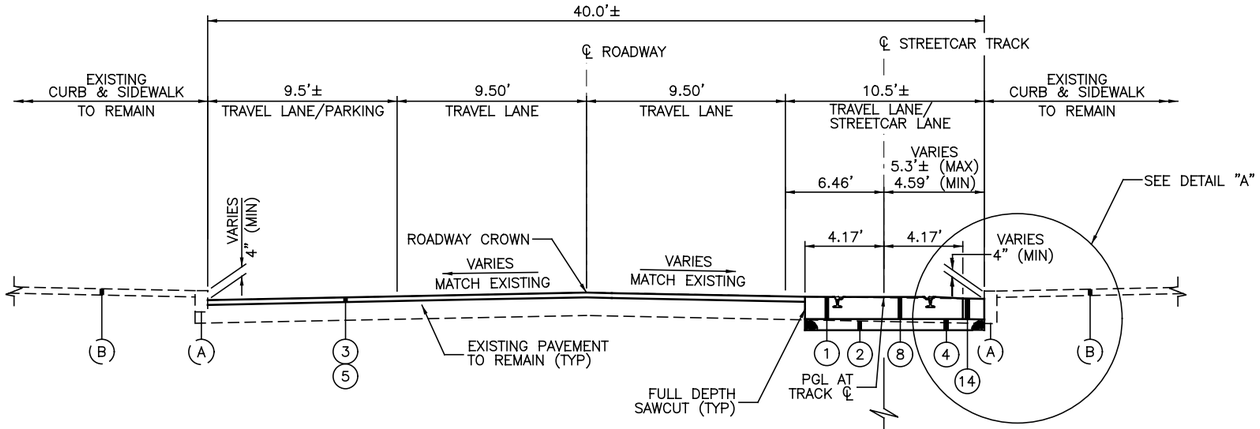

TYPICAL SECTION - WALNUT STREET

STA. 806+07.53 TO STA. 807+26.58

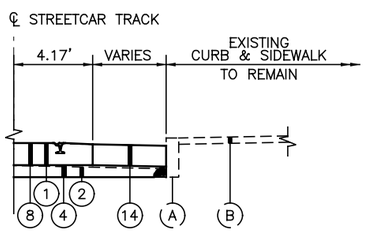

DETAIL "A"

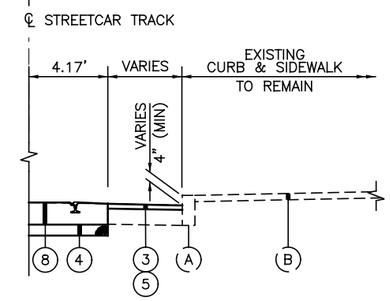

PARTIAL SECTION - WALNUT STREET

STA. 805+50.00 TO STA. 806+07.53

(1) EXISTING SIDEWALK BUMP-OUT TO REMAIN
STA. 809+84.50 TO STA. 810+33.19

VARIES (A)

808+91.49 TO 809+75.05	9.5'±
809+75.05 TO 812+22.51	10.5'±
812+22.51 TO 813+57.58	11.0'±

VARIES (B)

808+91.49 TO 809+75.05	10.00'
809+75.05 TO 812+22.51	11.00'
812+22.51 TO 813+57.58	11.00'

VARIES (C)

808+91.49 TO 809+75.05	10.50'
809+75.05 TO 812+22.51	10.50'
812+22.51 TO 813+57.58	11.50'

VARIES (D)

808+91.49 TO 809+75.05	10.0'±
809+75.05 TO 812+22.51	11.5'±
812+22.51 TO 813+57.58	10.0'±

VARIES (E)

808+91.49 TO 809+75.05	5.25'
809+75.05 TO 812+22.51	5.25'
812+22.51 TO 813+57.58	6.33'

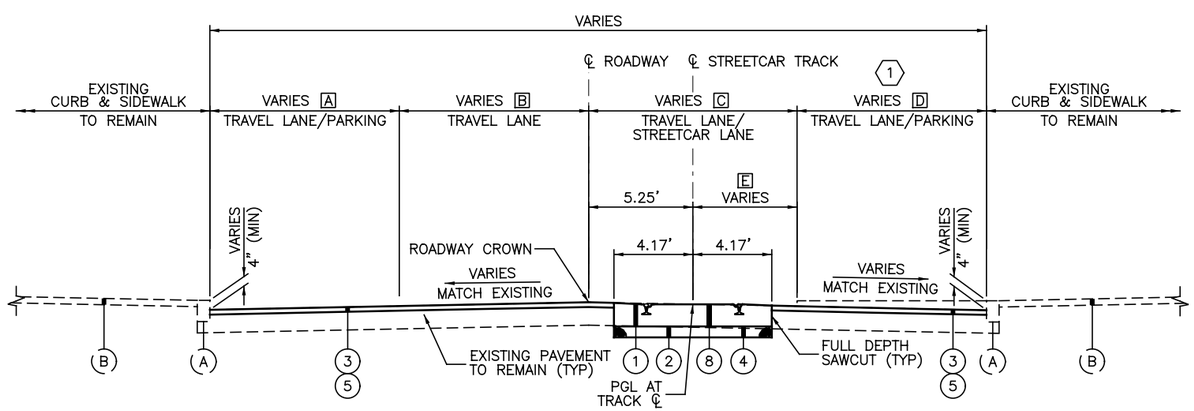

TYPICAL SECTION - WALNUT STREET

STA. 808+91.49 TO STA. 813+57.58

LEGEND

1. ITEM 202 – PAVEMENT REMOVED
2. ITEM 203 – EXCAVATION
3. ITEM 254 – PAVEMENT PLANING, VARIABLE DEPTH
4. ITEM 304 – 6" AGGREGATE BASE
5. ITEM 448 – ASPHALT CONCRETE SURFACE COURSE, TYPE 1H PG70-22M, 1½" (TYP)
6. ITEM 609 – CURB, TYPE P-5
7. ITEM 452 – 7" NON-REINFORCED CONCRETE PAVEMENT, CLASS C
8. ITEM SPECIAL – TRACK SLAB, REFER TO "TD" SERIES DRAWINGS
9. ITEM SPECIAL – GRANITE PAVER RESTORATION
10. ITEM 305 – 10" CONCRETE BASE
11. ITEM 608 – 5" CONCRETE WALK
12. ITEM SPECIAL – GRANITE CURB
13. ITEM SPECIAL – GRANITE CURB RESET
14. ITEM 452 – 12" NON-REINFORCED CONCRETE PAVEMENT
15. ITEM 609 – CURB, TYPE P-2
16. ITEM 609 – CURB, TYPE P-3
17. ITEM 305 – 8" CONCRETE BASE
18. ITEM 605 – 6" BASE PIPE UNDERDRAINS
19. ITEM 448 – ASPHALT CONCRETE SURFACE COURSE, TYPE 1H PG70-22M, 2"
20. ITEM 202 – WALK REMOVED
21. ITEM 304 – AGGREGATE BASE, VARIABLE DEPTH

(A) EXISTING CURB
(B) EXISTING SIDEWALK
(C) EXISTING GRASS MEDIAN

CAUTION UNDERGROUND UTILITIES
2 WORKING DAYS
BEFORE YOU DIG
CALL 1-800-362-2764
OHIO UTILITY PROTECTION SERVICE
CALL NON-SERVICE FACILITY OWNERS DIRECT

NOTES:

1. ROADWAY AND TRACK SLAB TRANSITION BETWEEN STA. 807+26.58 & STA. 808+91.49. SEE SHEET G-PP-1007.
2. ROADWAY AND TRACK SLAB TRANSITION BETWEEN STA. 813+57.58 TO STA. 814+13.59. SEE SHEET G-PP-1008.
3. REMOVE EXISTING PAVER CROSSWALK AND SETTING BED BETWEEN STA. 809+29.52 & STA. 809+50.94, STA. 809+94.85 & STA. 810+16.25, AND STA. 813+94.52 & STA. 814+13.59. REFER TO "MD" SERIES DRAWINGS FOR CONCRETE INFILL DETAIL.

DEPARTMENT OF TRANSPORTATION & ENGINEERING CITY OF CINCINNATI OHIO

CONTRACT DRAWING

PRINTS NOT BEARING THIS STAMP WERE MADE PRIOR TO ADVERTISING FOR BIDS AND ARE TO BE CONSIDERED OBSOLETE FOR CONTRACT PURPOSES.

Department of Transportation and Engineering

City of Cincinnati
City Hall
801 Plum Street
Cincinnati, Ohio 45202

CINCINNATI STREETCAR
CENTRAL BUSINESS DISTRICT

TYPICAL SECTIONS

Revisions
No.

	Date
Drawn by CJC	7/02/12
Designed by CJC	7/02/12
Checked by SAJ	7/02/12
Reviewed by JTB	7/12/12

Consultant

PB HDR

File Number

ACC No. 23126

G-TS-1003

DOTE_Mono_PDF_Half.pltcfg
T:\29014A-Streetcar\CAD\Civil\S_G-TS-1003.dgn
7/15/2012 1:07:13 PM

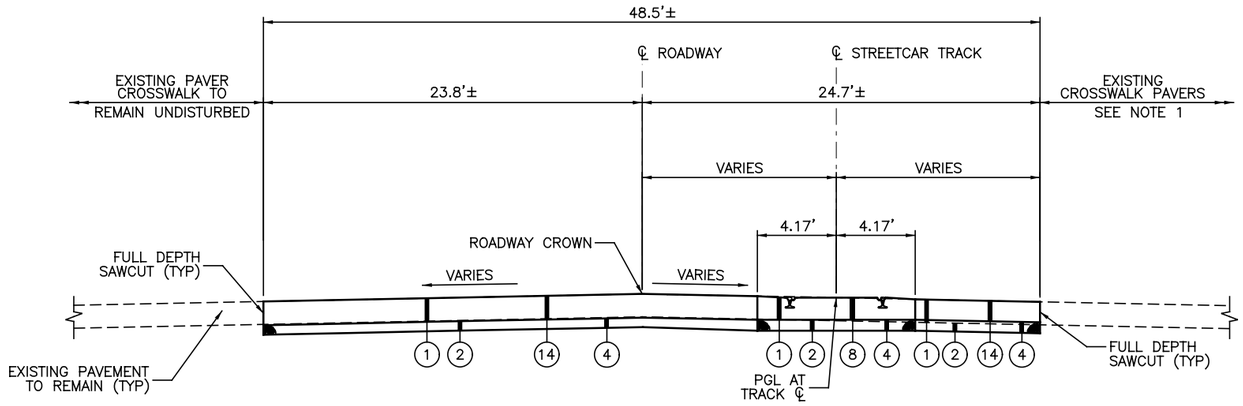

TYPICAL SECTION - WALNUT STREET

STA. 814+13.59 TO STA. 814+78.84

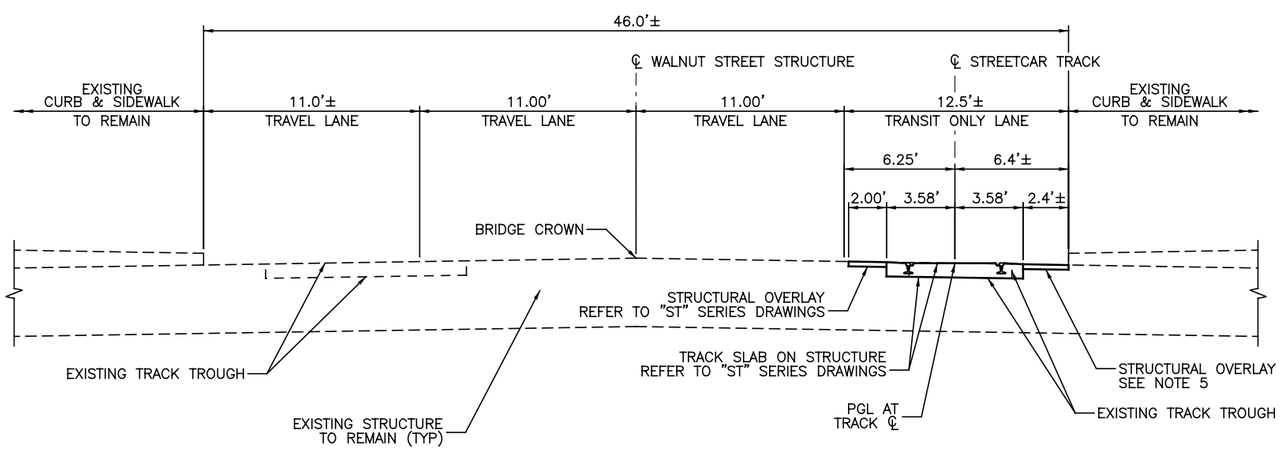

TYPICAL SECTION - WALNUT STREET

STA. 815+28.46 TO STA. 816+56.76

LEGEND

1. ITEM 202 – PAVEMENT REMOVED
2. ITEM 203 – EXCAVATION
3. ITEM 254 – PAVEMENT PLANING, VARIABLE DEPTH
4. ITEM 304 – 6" AGGREGATE BASE
5. ITEM 448 – ASPHALT CONCRETE SURFACE COURSE, TYPE 1H PG70–22M, 1½" (TYP)
6. ITEM 609 – CURB, TYPE P–5
7. ITEM 452 – 7" NON–REINFORCED CONCRETE PAVEMENT, CLASS C
8. ITEM SPECIAL – TRACK SLAB, REFER TO "TD" SERIES DRAWINGS
9. ITEM SPECIAL – GRANITE PAVER RESTORATION
10. ITEM 305 – 10" CONCRETE BASE
11. ITEM 608 – 5" CONCRETE WALK
12. ITEM SPECIAL – GRANITE CURB
13. ITEM SPECIAL – GRANITE CURB RESET
14. ITEM 452 – 12" NON–REINFORCED CONCRETE PAVEMENT
15. ITEM 609 – CURB, TYPE P–2
16. ITEM 609 – CURB, TYPE P–3
17. ITEM 305 – 8" CONCRETE BASE
18. ITEM 605 – 6" BASE PIPE UNDERDRAINS
19. ITEM 448 – ASPHALT CONCRETE SURFACE COURSE, TYPE 1H PG70–22M, 2"
20. ITEM 202 – WALK REMOVED
21. ITEM 304 – AGGREGATE BASE, VARIABLE DEPTH

(A) EXISTING CURB

(B) EXISTING SIDEWALK

(C) EXISTING GRASS MEDIAN

NOTES:

1. REMOVE EXISTING PAVER CROSSWALK AND SETTING BED. REFER TO "MD" SERIES DRAWINGS FOR CONCRETE INFILL DETAIL.

2. PROPOSED APPROACH SLAB BETWEEN STA. 814+78.84 & STA. 814+95.45. REFER TO "ST" SERIES DRAWINGS.

3. ROADWAY AND TRACK SLAB TRANSITION BETWEEN STA. 814+95.45 & STA. 815+28.46. SEE SHEET G–PP–1008.

4. REFER TO "ST" SERIES DRAWINGS FOR WORK DONE ON STRUCTURE.

5. STRUCTURAL OVERLAY BETWEEN STA. 816+50.00 & STA. 816+65.81. REFER TO "GD" & "ST" SERIES DRAWINGS.

6. ROADWAY AND TRACK SLAB TRANSITION BETWEEN STA. 816+56.76 & STA. 817+89.69. SEE SHEET G–PP–1009.

CAUTION UNDERGROUND UTILITIES
2 WORKING DAYS
BEFORE YOU DIG
CALL 1–800–362–2764
OHIO UTILITY PROTECTION SERVICE
CALL NON–SERVICE FACILITY OWNERS DIRECT

CONTRACT DRAWING

PRINTS NOT BEARING THIS STAMP WERE MADE PRIOR TO ADVERTISING FOR BIDS AND ARE TO BE CONSIDERED OBSOLETE FOR CONTRACT PURPOSES.

Department of Transportation and Engineering

City of Cincinnati
City Hall
801 Plum Street
Cincinnati, Ohio 45202

CINCINNATI STREETCAR
CENTRAL BUSINESS DISTRICT

TYPICAL SECTIONS

Revisions

No.				

Drawn by CJC	Date 7/02/12
Designed by CJC	Date 7/02/12
Checked by SAJ	Date 7/02/12
Reviewed by JTB	Date 7/12/12

Consultant

PB HDR

File Number

ACC No. 23126

G-TS-1004

DOTE_Mono_PDF_Half.pltcfg
T:\29014A-Streetcar\CAD\Civil\S_G-TS-1004.dgn
7/15/2012 1:07:14 PM

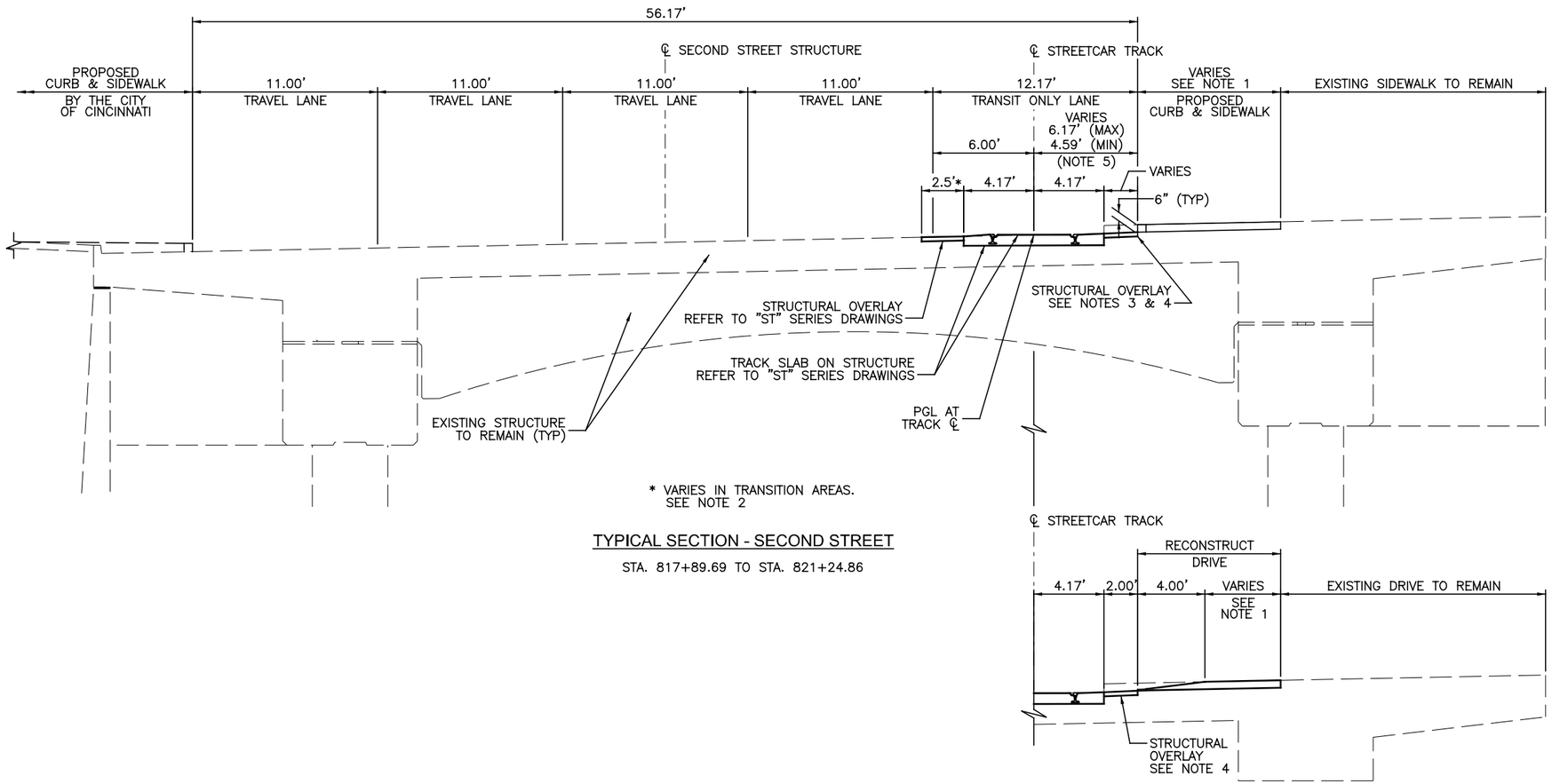

TYPICAL SECTION - SECOND STREET

STA. 817+89.69 TO STA. 821+24.86

PARTIAL SECTION - SECOND STREET

STA. 820+48.39 TO STA. 820+72.80

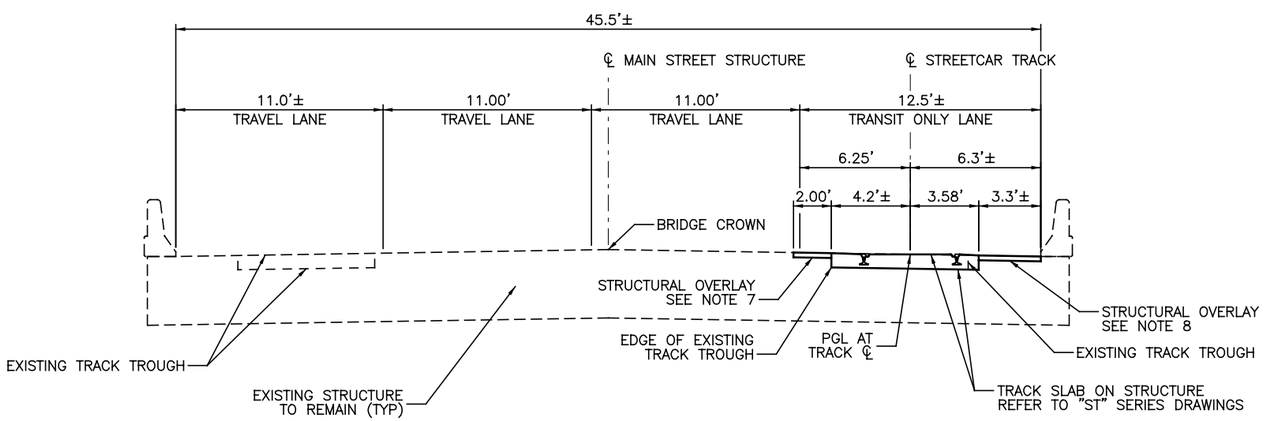

TYPICAL SECTION - MAIN STREET

STA. 822+57.95 TO STA. 824+19.34

LEGEND

1. ITEM 202 – PAVEMENT REMOVED
2. ITEM 203 – EXCAVATION
3. ITEM 254 – PAVEMENT PLANING, VARIABLE DEPTH
4. ITEM 304 – 6" AGGREGATE BASE
5. ITEM 448 – ASPHALT CONCRETE SURFACE COURSE, TYPE 1H PG70–22M, 1½" (TYP)
6. ITEM 609 – CURB, TYPE P–5
7. ITEM 452 – 7" NON–REINFORCED CONCRETE PAVEMENT, CLASS C
8. ITEM SPECIAL – TRACK SLAB, REFER TO "TD" SERIES DRAWINGS
9. ITEM SPECIAL – GRANITE PAVER RESTORATION
10. ITEM 305 – 10" CONCRETE BASE
11. ITEM 608 – 5" CONCRETE WALK
12. ITEM SPECIAL – GRANITE CURB
13. ITEM SPECIAL – GRANITE CURB RESET
14. ITEM 452 – 12" NON–REINFORCED CONCRETE PAVEMENT
15. ITEM 609 – CURB, TYPE P–2
16. ITEM 609 – CURB, TYPE P–3
17. ITEM 305 – 8" CONCRETE BASE
18. ITEM 605 – 6" BASE PIPE UNDERDRAINS
19. ITEM 448 – ASPHALT CONCRETE SURFACE COURSE, TYPE 1H PG70–22M, 2"
20. ITEM 202 – WALK REMOVED
21. ITEM 304 – AGGREGATE BASE, VARIABLE DEPTH

(A) EXISTING CURB

(B) EXISTING SIDEWALK

(C) EXISTING GRASS MEDIAN

CAUTION UNDERGROUND UTILITIES
2 WORKING DAYS
BEFORE YOU DIG
CALL 1–800–362–2764
OHIO UTILITY PROTECTION SERVICE
CALL NON–SERVICE FACILITY OWNERS DIRECT

NOTES:

1. REFER TO "ST" SERIES DRAWINGS FOR WORK DONE ON STRUCTURE.
2. STRUCTURAL OVERLAY VARIES BETWEEN STA. 816+83.16 & STA. 817+72.45 AND STA. 821+42.11 & 822+31.13. REFER TO "GD" & "ST" SERIES DRAWINGS.
3. 2' STRUCTURAL OVERLAY IN TRANSITION AREA BETWEEN STA. 816+79.61 & STA. 817+51.64. REFER TO "GD" & "ST" SERIES DRAWINGS.
4. STRUCTURAL OVERLY BETWEEN EDGE OF TRACK SLAB AND PROPOSED CURB. REFER TO "GD" & "ST" SERIES DRAWINGS.
5. PROPOSED CURB TRANSITIONS BETWEEN STA. 818+66.78 TO STA. 819+73.45 TO ACCOMODATE STATION STOP. SEE SHEET G–PP–1009.
6. ROADWAY AND TRACK SLAB TRANSITION BETWEEN STA. 821+24.86 & STA. 822+57.95. SEE SHEET G–PP–1010.
7. STRUCTURAL OVERLAY BETWEEN STA. 822+49.6 & STA. 822+59.28 AND STA. 824+00.00 & STA. 824+19.34. REFER TO "GD" & "ST" SERIES DRAWINGS.
8. STRUCTURAL OVERLAY BETWEEN STA. 822+49.34 & STA. 822+59.27. REFER TO "GD" & "ST" SERIES DRAWINGS.
9. PROPOSED APPROACH SLAB BETWEEN STA. 824+19.34 & STA. 824+35.80. REFER TO "ST" SERIES DRAWINGS.

DEPARTMENT OF TRANSPORTATION & ENGINEERING CITY OF CINCINNATI OHIO

CONTRACT DRAWING

PRINTS NOT BEARING THIS STAMP WERE MADE PRIOR TO ADVERTISING FOR BIDS AND ARE TO BE CONSIDERED OBSOLETE FOR CONTRACT PURPOSES.

Department of Transportation and Engineering

City of Cincinnati
City Hall
801 Plum Street
Cincinnati, Ohio 45202

CINCINNATI STREETCAR
CENTRAL BUSINESS DISTRICT

TYPICAL SECTIONS

Revisions

No.	Date
	7/02/12
	7/02/12
	7/02/12
	7/12/12

Drawn by CJC
Designed by CJC
Checked by SAJ
Reviewed by JTB

Consultant

PB HDR

File Number

ACC No. 23126

G-TS-1005

DOTE_Mono_PDF_Half.pltcfg
T:\29014A-Streetcar\CAD\Civil\S_G-TS-1005.dgn
7/15/2012 1:07:15 PM

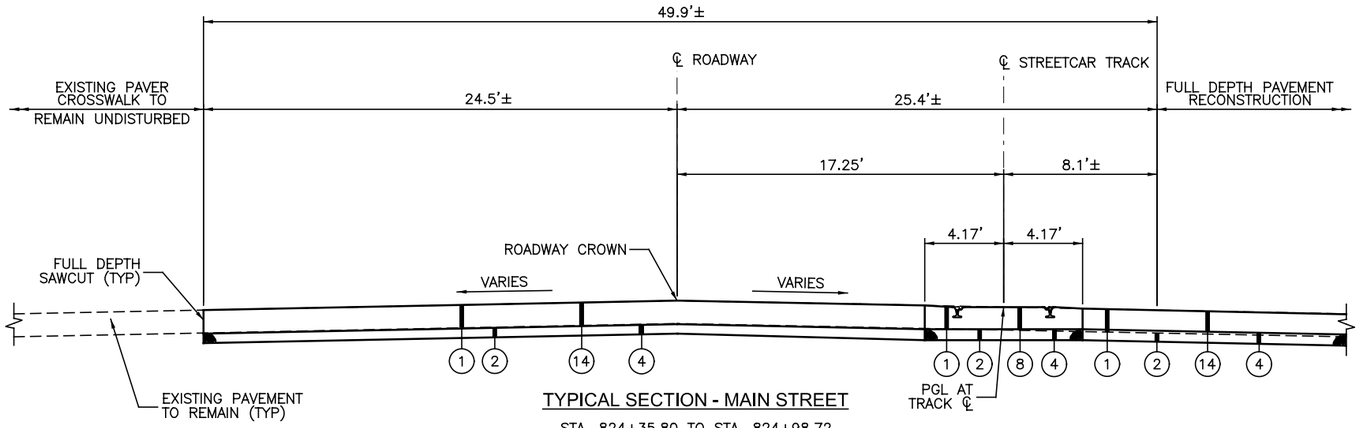

TYPICAL SECTION - MAIN STREET

STA. 824+35.80 TO STA. 824+98.72

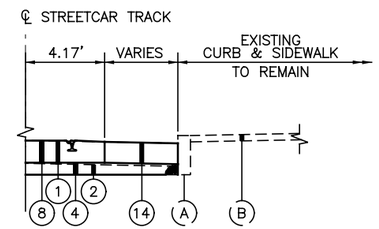

DETAIL "A"

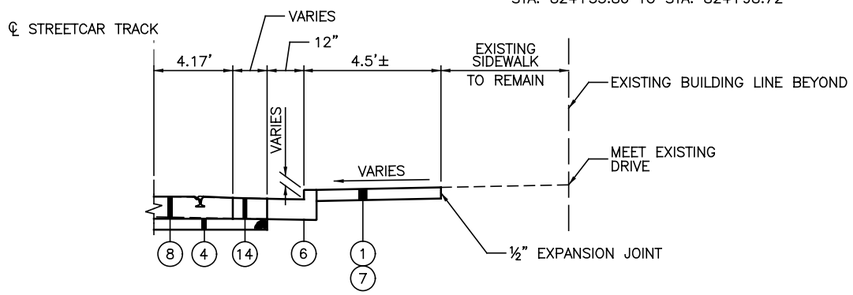

PARTIAL SECTION - MAIN STREET

STA. 826+90.21 TO STA. 827+14.80

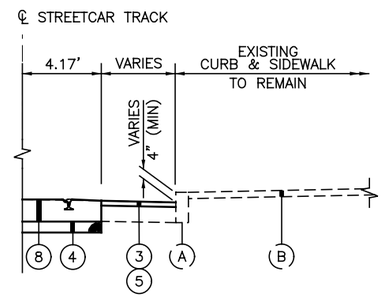

PARTIAL SECTION - MAIN STREET

STA. 826+47.58 TO STA. 826+84.63

VARIES [A]

824+98.72 TO 827+14.85	8.5'±
827+14.85 TO 828+83.22	9.0'±

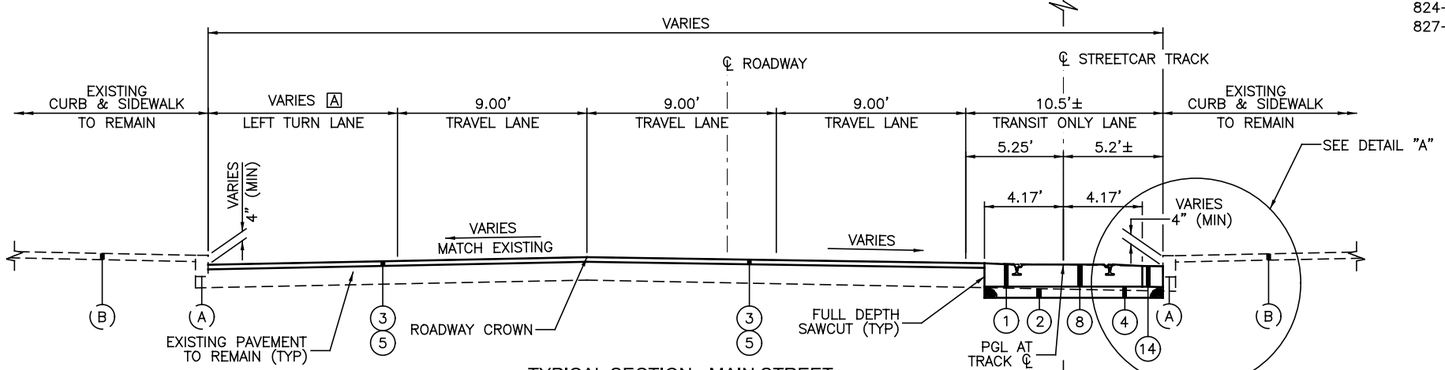

TYPICAL SECTION - MAIN STREET

STA. 824+98.72 TO STA. 828+83.22

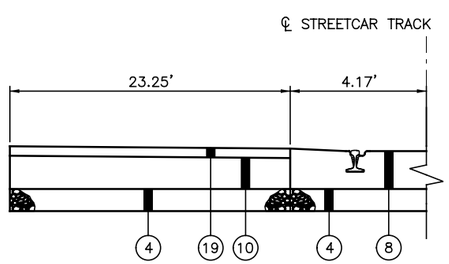

FULL DEPTH PAVEMENT DETAIL - MAIN STREET

STA. 825+62.50 TO STA. 826+50.00
STA. 827+25.00 TO STA. 828+50.00
STA. 829+12.50 TO STA. 829+37.50

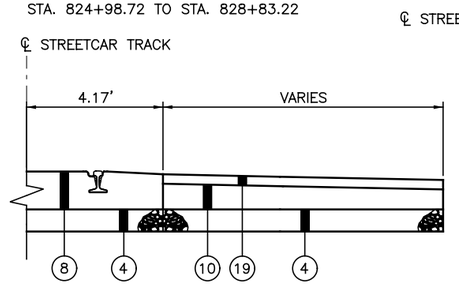

FULL DEPTH PAVEMENT DETAIL - MAIN STREET

STA. 829+12.50 TO STA. 829+37.50

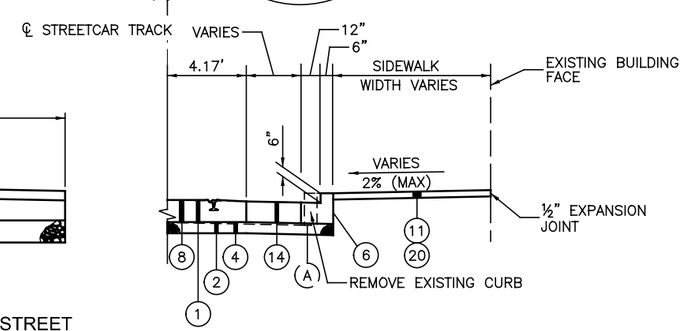

PARTIAL SECTION

STA. 824+97.18 TO STA. 825+50.00

LEGEND

1. ITEM 202 – PAVEMENT REMOVED
2. ITEM 203 – EXCAVATION
3. ITEM 254 – PAVEMENT PLANING, VARIABLE DEPTH
4. ITEM 304 – 6" AGGREGATE BASE
5. ITEM 448 – ASPHALT CONCRETE SURFACE COURSE, TYPE 1H PG70–22M, 1½" (TYP)
6. ITEM 609 – CURB, TYPE P–5
7. ITEM 452 – 7" NON–REINFORCED CONCRETE PAVEMENT, CLASS C
8. ITEM SPECIAL – TRACK SLAB, REFER TO "TD" SERIES DRAWINGS
9. ITEM SPECIAL – GRANITE PAVER RESTORATION
10. ITEM 305 – 10" CONCRETE BASE
11. ITEM 608 – 5" CONCRETE WALK
12. ITEM SPECIAL – GRANITE CURB
13. ITEM SPECIAL – GRANITE CURB RESET
14. ITEM 452 – 12" NON–REINFORCED CONCRETE PAVEMENT
15. ITEM 609 – CURB, TYPE P–2
16. ITEM 609 – CURB, TYPE P–3
17. ITEM 305 – 8" CONCRETE BASE
18. ITEM 605 – 6" BASE PIPE UNDERDRAINS
19. ITEM 448 – ASPHALT CONCRETE SURFACE COURSE, TYPE 1H PG70–22M, 2"
20. ITEM 202 – WALK REMOVED
21. ITEM 304 – AGGREGATE BASE, VARIABLE DEPTH

(A) EXISTING CURB
(B) EXISTING SIDEWALK
(C) EXISTING GRASS MEDIAN

CAUTION UNDERGROUND UTILITIES
2 WORKING DAYS
BEFORE YOU DIG
CALL 1–800–362–2764
OHIO UTILITY PROTECTION SERVICE
CALL NON–SERVICE FACILITY OWNERS DIRECT

NOTES:

1. REMOVE EXISTING PAVER CROSSWALK AND SETTING BED BETWEEN STA. 824+98.72 & STA. 825+14.80. REFER TO "MD" SERIES DRAWINGS FOR CONCRETE INFILL DETAIL.

DOTE_Mono_PDF_Half.pltcfg
T:\29014A-Streetcar\CAD\Civil\S_G-TS-1006.dgn
7/15/2012 1:07:15 PM

CONTRACT DRAWING

PRINTS NOT BEARING THIS STAMP WERE MADE PRIOR TO ADVERTISING FOR BIDS AND ARE TO BE CONSIDERED OBSOLETE FOR CONTRACT PURPOSES.

Department of Transportation and Engineering

City of Cincinnati
City Hall
801 Plum Street
Cincinnati, Ohio 45202

CINCINNATI STREETCAR
CENTRAL BUSINESS DISTRICT

TYPICAL SECTIONS

Revisions

No.				

Drawn by	Date	Designed by	Date	Checked by	Date	Reviewed by	Date
CJC	7/02/12	CJC	7/02/12	CJC	7/02/12	SAJ	7/12/12

Consultant

PB HDR

File Number

ACC No. 23126

G-TS-1006

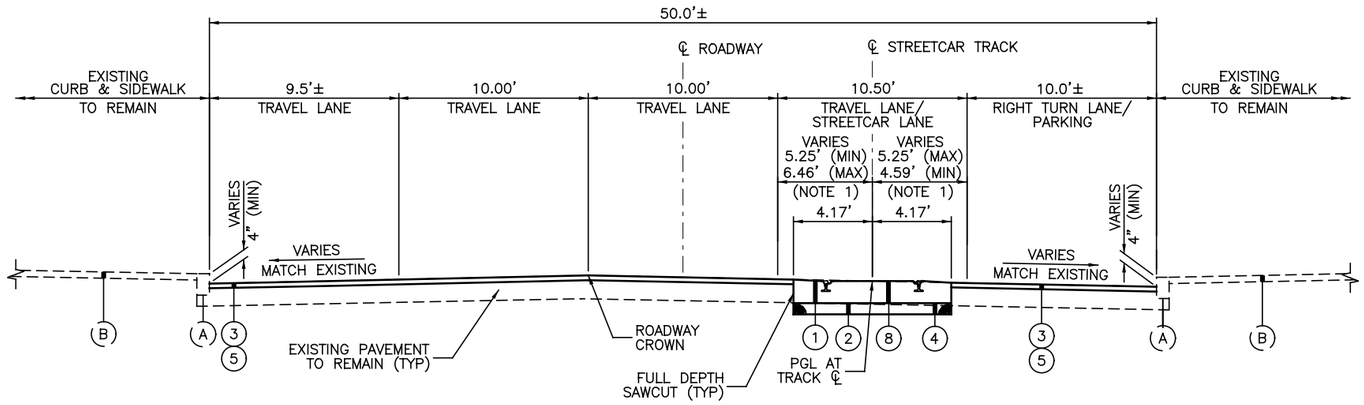

TYPICAL SECTION - MAIN STREET

STA. 829+75.53 TO STA. 833+65.33

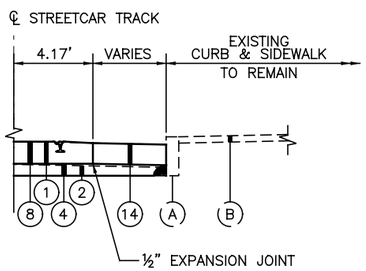

DETAIL "A"

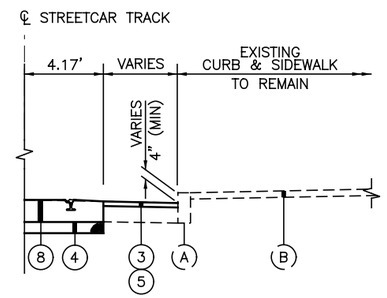

PARTIAL SECTION - MAIN STREET

STA. 833+65.33 TO STA. 833+95.68

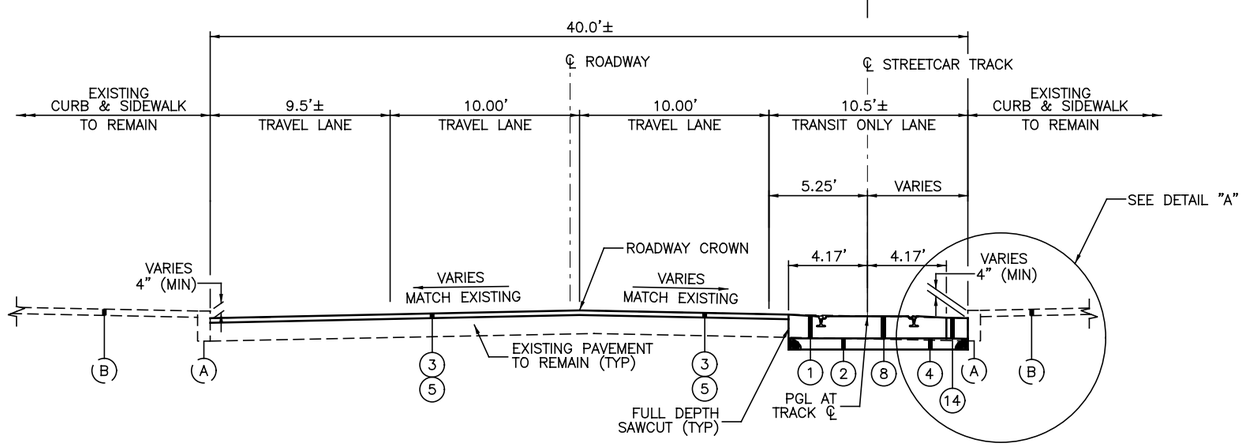

TYPICAL SECTION - MAIN STREET

STA. 833+95.68 TO STA. 835+95.90

LEGEND

1. ITEM 202 – PAVEMENT REMOVED
2. ITEM 203 – EXCAVATION
3. ITEM 254 – PAVEMENT PLANING, VARIABLE DEPTH
4. ITEM 304 – 6" AGGREGATE BASE
5. ITEM 448 – ASPHALT CONCRETE SURFACE COURSE, TYPE 1H PG70–22M, 1½" (TYP)
6. ITEM 609 – CURB, TYPE P–5
7. ITEM 452 – 7" NON–REINFORCED CONCRETE PAVEMENT, CLASS C
8. ITEM SPECIAL – TRACK SLAB, REFER TO "TD" SERIES DRAWINGS
9. ITEM SPECIAL – GRANITE PAVER RESTORATION
10. ITEM 305 – 10" CONCRETE BASE
11. ITEM 608 – 5" CONCRETE WALK
12. ITEM SPECIAL – GRANITE CURB
13. ITEM SPECIAL – GRANITE CURB RESET
14. ITEM 452 – 12" NON–REINFORCED CONCRETE PAVEMENT
15. ITEM 609 – CURB, TYPE P–2
16. ITEM 609 – CURB, TYPE P–3
17. ITEM 305 – 8" CONCRETE BASE
18. ITEM 605 – 6" BASE PIPE UNDERDRAINS
19. ITEM 448 – ASPHALT CONCRETE SURFACE COURSE, TYPE 1H PG70–22M, 2"
20. ITEM 202 – WALK REMOVED
21. ITEM 304 – AGGREGATE BASE, VARIABLE DEPTH

(A) EXISTING CURB

(B) EXISTING SIDEWALK

(C) EXISTING GRASS MEDIAN

NOTES:

1. TRACK SLAB TRANSITIONS BETWEEN STA. 828+83.22 & STA. 831+82.85 TO ACCOMMODATE STATION STOP. SEE SHEET G–PP–1012.

2. ROADWAY AND TRACK SLAB TRANSITION BETWEEN STA. 835+95.90 & STA. 837+51.36. SEE SHEET G–PP–1014.

CAUTION UNDERGROUND UTILITIES
2 WORKING DAYS
BEFORE YOU DIG
CALL 1–800–362–2764
OHIO UTILITY PROTECTION SERVICE
CALL NON–SERVICE FACILITY OWNERS DIRECT

DEPARTMENT OF TRANSPORTATION & ENGINEERING CITY OF CINCINNATI OHIO

CONTRACT DRAWING

PRINTS NOT BEARING THIS STAMP WERE MADE PRIOR TO ADVERTISING FOR BIDS AND ARE TO BE CONSIDERED OBSOLETE FOR CONTRACT PURPOSES.

Department of Transportation and Engineering

City of Cincinnati
City Hall
801 Plum Street
Cincinnati, Ohio 45202

CINCINNATI STREETCAR
CENTRAL BUSINESS DISTRICT
TYPICAL SECTIONS

Revisions

No.				

Date 7/02/12	Date 7/02/12	Date 7/02/12	Date 7/12/12
Drawn by CJC	Designed by CJC	Checked by SAJ	Reviewed by JTB

Consultant

PB HDR

File Number

ACC No. 23126

G-TS-1007

DOTE_Mono_PDF_Half.pltcfg
T:\29014A-Streetcar\CAD\Civil\S_G-TS-1007.dgn
7/15/2012 1:07:17 PM

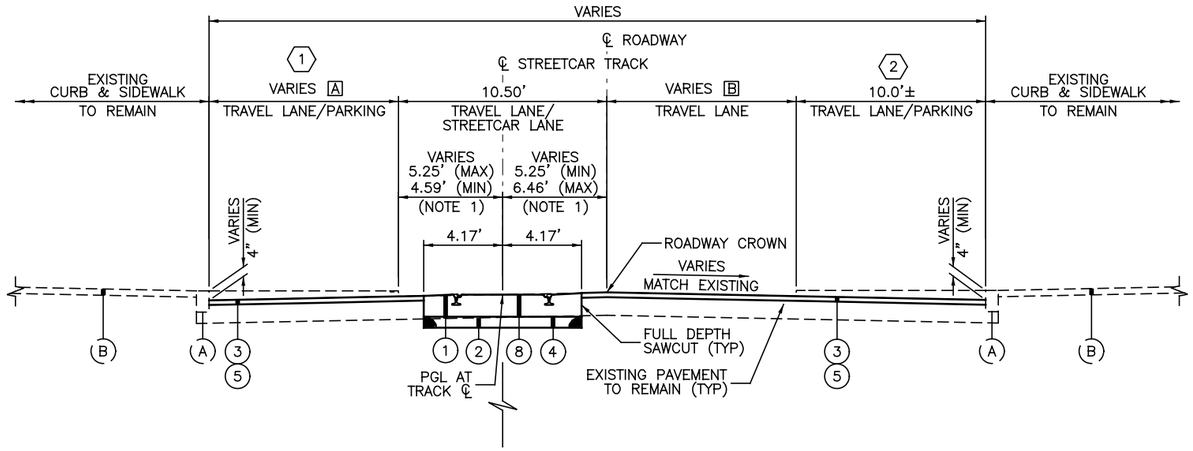

TYPICAL SECTION - MAIN STREET

STA. 837+51.36 TO STA. STA. 838+98.63

STA. 838+98.63 BK = STA. 68+09.90 AH

STA. 68+09.90 TO STA. 82+07.69
STA. 85+34.60 TO STA. 88+81.21

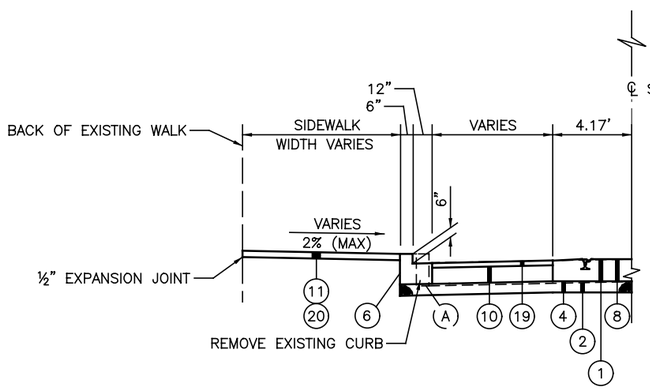

PARTIAL SECTION

STA. 89+12.17 TO STA. 89+59.31

1 EXISTING SIDEWALK BUMP-OUT TO REMAIN
STA. 75+36.27 TO STA. 76+41.29

EXISTING SIDEWALK BUMP-OUT TO REMAIN
STA. 78+86.38 TO STA. 79+88.39

2 EXISTING SIDEWALK BUMP-OUT TO REMAIN
STA. 72+59.57 TO STA. 73+16.49

VARIES A

837+51.36 TO 838+98.63	9.5'±
68+09.90 TO 78+70.41	9.5'±
78+70.41 TO 82+07.69	9.5'±
82+07.69 TO 85+34.60	SEE TYPICAL SECTION BELOW
85+34.60 TO 88+81.21	9.5'±

VARIES B

837+51.36 TO 838+98.63	10.00'
68+09.90 TO 78+70.41	9.50'
78+70.41 TO 82+07.69	9.50'
82+07.69 TO 85+34.60	SEE TYPICAL SECTION BELOW
85+34.60 TO 88+81.21	9.50'

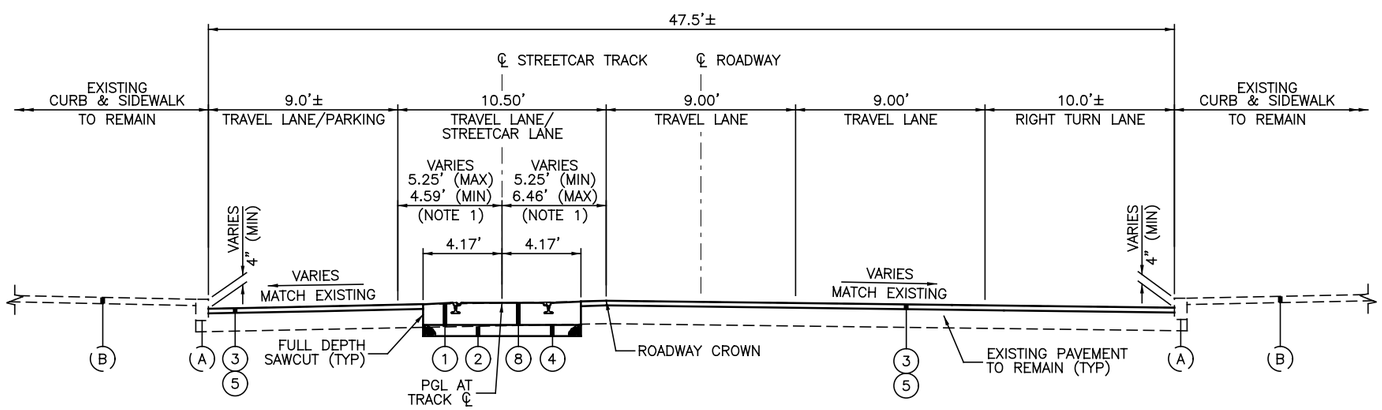

TYPICAL SECTION - MAIN STREET

STA. 82+07.69 TO STA. 85+34.60

LEGEND

1. ITEM 202 – PAVEMENT REMOVED
2. ITEM 203 – EXCAVATION
3. ITEM 254 – PAVEMENT PLANING, VARIABLE DEPTH
4. ITEM 304 – 6" AGGREGATE BASE
5. ITEM 448 – ASPHALT CONCRETE SURFACE COURSE, TYPE 1H PG70–22M, 1½" (TYP)
6. ITEM 609 – CURB, TYPE P–5
7. ITEM 452 – 7" NON–REINFORCED CONCRETE PAVEMENT, CLASS C
8. ITEM SPECIAL – TRACK SLAB, REFER TO "TD" SERIES DRAWINGS
9. ITEM SPECIAL – GRANITE PAVER RESTORATION
10. ITEM 305 – 10" CONCRETE BASE
11. ITEM 608 – 5" CONCRETE WALK
12. ITEM SPECIAL – GRANITE CURB
13. ITEM SPECIAL – GRANITE CURB RESET
14. ITEM 452 – 12" NON–REINFORCED CONCRETE PAVEMENT
15. ITEM 609 – CURB, TYPE P–2
16. ITEM 609 – CURB, TYPE P–3
17. ITEM 305 – 8" CONCRETE BASE
18. ITEM 605 – 6" BASE PIPE UNDERDRAINS
19. ITEM 448 – ASPHALT CONCRETE SURFACE COURSE, TYPE 1H PG70–22M, 2"
20. ITEM 202 – WALK REMOVED
21. ITEM 304 – AGGREGATE BASE, VARIABLE DEPTH

(A) EXISTING CURB

(B) EXISTING SIDEWALK

(C) EXISTING GRASS MEDIAN

CAUTION UNDERGROUND UTILITIES
2 WORKING DAYS
BEFORE YOU DIG
CALL 1–800–362–2764
OHIO UTILITY PROTECTION SERVICE
CALL NON–SERVICE FACILITY
OWNERS DIRECT

NOTES:

1. TRACK SLAB TRANSITIONS BETWEEN STA. 838+28.18 & STA. 70+25.22, STA. 74+77.74 & STA. 77+87.73, STA. 81+49.99 & STA. 84+32.09, AND STA. 86+50.89 & STA. 88+81.21 TO ACCOMMODATE STATION STOP. SEE SHEETS G–PP–1014, G–PP–1015, G–PP–1016, G–PP–1017, G–PP–1018, AND G–PP–1019.

2. ROADWAY AND TRACK SLAB TRANSITION BETWEEN STA. 88+81.21 & STA. 90+14.01. SEE SHEET G–PP–1019.

DEPARTMENT OF TRANSPORTATION & ENGINEERING CITY OF CINCINNATI OHIO

CONTRACT DRAWING

PRINTS NOT BEARING THIS STAMP WERE MADE PRIOR TO ADVERTISING FOR BIDS AND ARE TO BE CONSIDERED OBSOLETE FOR CONTRACT PURPOSES.

Department of Transportation and Engineering

City of Cincinnati
City Hall
801 Plum Street
Cincinnati, Ohio 45202

CINCINNATI STREETCAR
CENTRAL BUSINESS DISTRICT

TYPICAL SECTIONS

Revisions

No.				

Drawn by CJC	Date 7/02/12
Designed by CJC	Date 7/02/12
Checked by SAJ	Date 7/02/12
Reviewed by JTB	Date 7/12/12

Consultant

PB HDR

File Number

ACC No. 23126

G-TS-1008

DOTE_Mono_PDF_Half.pltcfg
T:\29014A-Streetcar\CAD\Civil\S_G-TS-1008.dgn
7/15/2012 1:07:17 PM

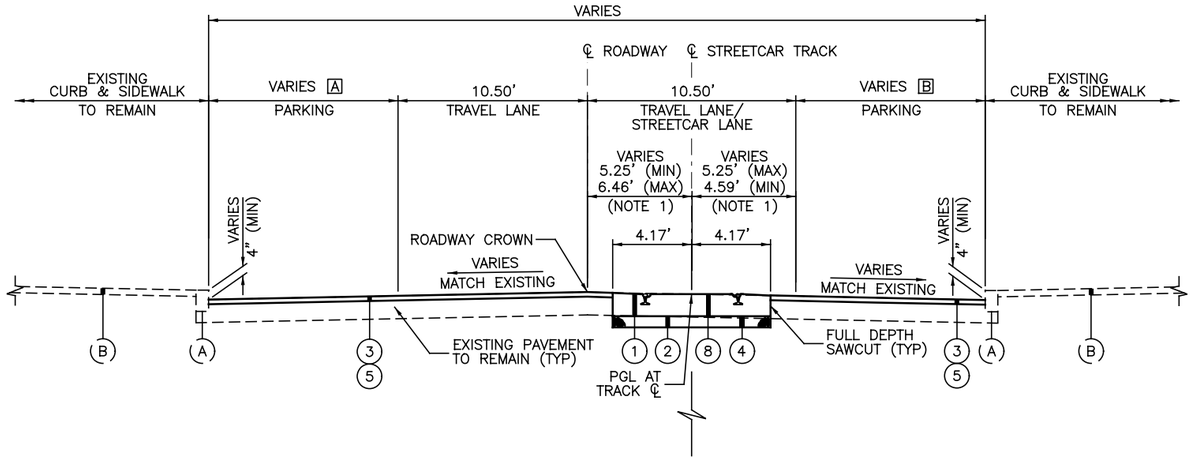

VARIES A

90+14.01 TO 96+26.42 9.5'±
96+26.42 TO 98+37.45 9.0'±

VARIES B

90+14.01 TO 96+26.42 9.5'±
96+26.42 TO 98+37.45 8.0'±

TYPICAL SECTION - TWELFTH STREET

STA. 90+14.01 TO STA. 98+37.46

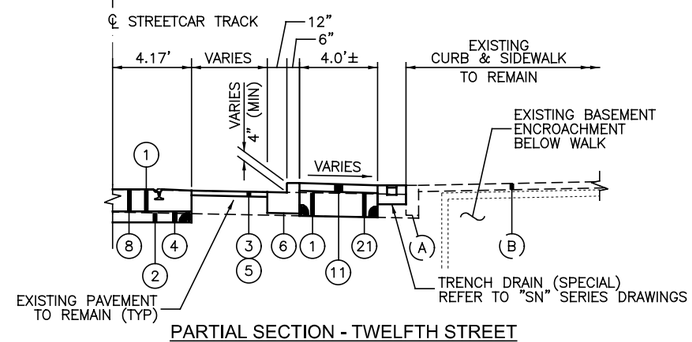

PARTIAL SECTION - TWELFTH STREET

STA. 89+64.99 TO STA. 90+59.29

LEGEND

1. ITEM 202 – PAVEMENT REMOVED
2. ITEM 203 – EXCAVATION
3. ITEM 254 – PAVEMENT PLANING, VARIABLE DEPTH
4. ITEM 304 – 6" AGGREGATE BASE
5. ITEM 448 – ASPHALT CONCRETE SURFACE COURSE, TYPE 1H PG70–22M, 1½" (TYP)
6. ITEM 609 – CURB, TYPE P–5
7. ITEM 452 – 7" NON–REINFORCED CONCRETE PAVEMENT, CLASS C
8. ITEM SPECIAL – TRACK SLAB, REFER TO "TD" SERIES DRAWINGS
9. ITEM SPECIAL – GRANITE PAVER RESTORATION
10. ITEM 305 – 10" CONCRETE BASE
11. ITEM 608 – 5" CONCRETE WALK
12. ITEM SPECIAL – GRANITE CURB
13. ITEM SPECIAL – GRANITE CURB RESET
14. ITEM 452 – 12" NON–REINFORCED CONCRETE PAVEMENT
15. ITEM 609 – CURB, TYPE P–2
16. ITEM 609 – CURB, TYPE P–3
17. ITEM 305 – 8" CONCRETE BASE
18. ITEM 605 – 6" BASE PIPE UNDERDRAINS
19. ITEM 448 – ASPHALT CONCRETE SURFACE COURSE, TYPE 1H PG70–22M, 2"
20. ITEM 202 – WALK REMOVED
21. ITEM 304 – AGGREGATE BASE, VARIABLE DEPTH

(A) EXISTING CURB
(B) EXISTING SIDEWALK
(C) EXISTING GRASS MEDIAN

CAUTION UNDERGROUND UTILITIES
2 WORKING DAYS
BEFORE YOU DIG
CALL 1–800–362–2764
OHIO UTILITY PROTECTION SERVICE
CALL NON–SERVICE FACILITY OWNERS DIRECT

NOTES:

1. TRACK SLAB TRANSITIONS BETWEEN STA. 96+22.99 & STA. 98+37.46 TO ACCOMMODATE STATION STOP. SEE SHEETS G–PP–1020 AND G–PP–1021.

DEPARTMENT OF TRANSPORTATION & ENGINEERING CITY OF CINCINNATI OHIO

CONTRACT DRAWING

PRINTS NOT BEARING THIS STAMP WERE MADE PRIOR TO ADVERTISING FOR BID AND ARE TO BE CONSIDERED OBSOLETE FOR CONTRACT PURPOSES.

Department of Transportation and Engineering

City of Cincinnati
City Hall
801 Plum Street
Cincinnati, Ohio 45202

CINCINNATI STREETCAR
CENTRAL BUSINESS DISTRICT

TYPICAL SECTIONS

Revisions
No.

Date 7/02/12	Drawn by CJC
Date 7/02/12	Designed by CJC
Date 7/02/12	Checked by SAJ
Date 7/12/12	Reviewed by JTB

Consultant

PB HDR

File Number

ACC No. 23126

G-TS-1009

DOTE_Mono_PDF_Half.pltcfg
T:\29014A-Streetcar\CAD\Civil\S_G-TS-1009.dgn
7/15/2012 1:07:18 PM

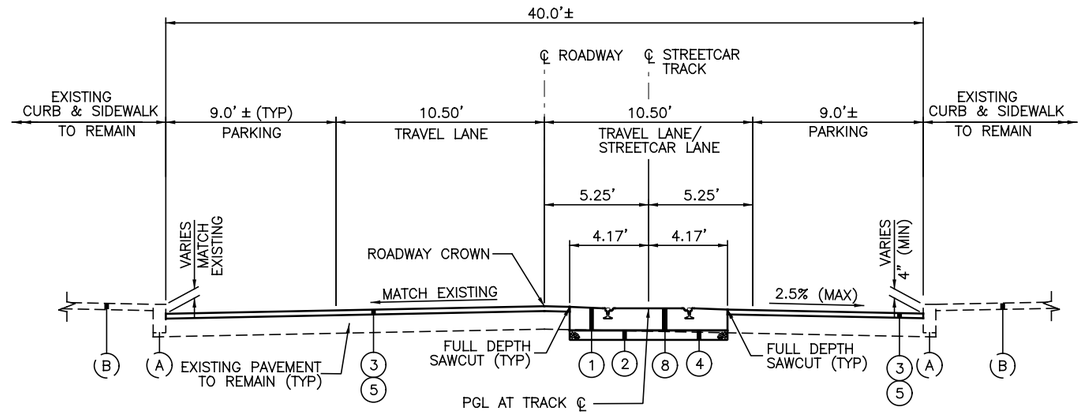

TYPICAL SECTION - TWELFTH STREET

STA. 200+00 TO STA. 204+11.32
STA. 205+54.56 TO STA. 208+80.63

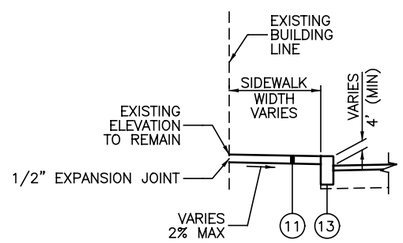

PARTIAL SECTION-TWELFTH STREET

STA. 204+11.32 TO STA. 204+48.28
STA. 205+18.28 TO STA. 205+54.56

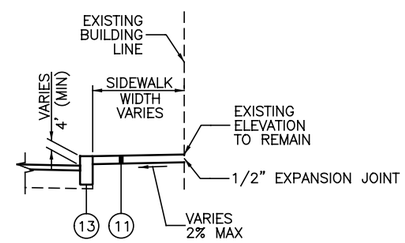

PARTIAL SECTION-TWELFTH STREET

STA. 204+11.32 TO STA. 204+57.01

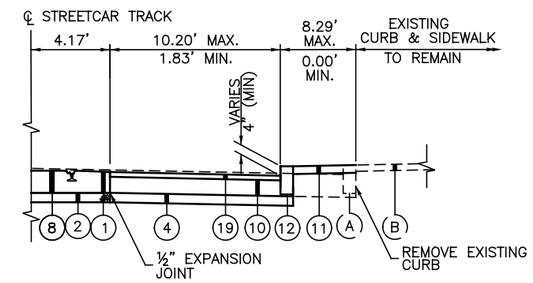

PARTIAL SECTION - TWELFTH STREET

STA. 208+63.95 TO STA. 209+55.12

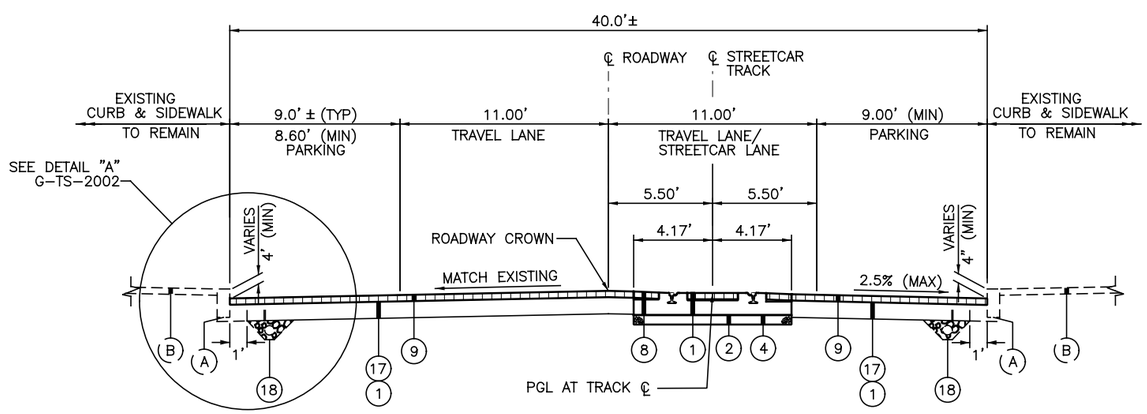

TYPICAL SECTION - ELM STREET

STA. 209+98.55 TO STA. 213+50.00
STA. 217+17.14 TO STA. 217+54.03

LEGEND

1. ITEM 202 – PAVEMENT REMOVED
2. ITEM 203 – EXCAVATION
3. ITEM 254 – PAVEMENT PLANING, VARIABLE DEPTH
4. ITEM 304 – 6" AGGREGATE BASE
5. ITEM 448 – ASPHALT CONCRETE SURFACE COURSE, TYPE 1H PG70–22M, 1½" (TYP)
6. ITEM 609 – CURB, TYPE P–5
7. ITEM 452 – 7" NON–REINFORCED CONCRETE PAVEMENT, CLASS C
8. ITEM SPECIAL – TRACK SLAB REFER TO "TD" SERIES DRAWINGS
9. ITEM SPECIAL – GRANITE PAVER RESTORATION
10. ITEM 305 – 10" CONCRETE BASE
11. ITEM 608 – 5" CONCRETE WALK
12. ITEM SPECIAL – GRANITE CURB
13. ITEM SPECIAL – GRANITE CURB RESET
14. ITEM 452 – 12" NON–REINFORCED CONCRETE PAVEMENT
15. ITEM 609 – CURB, TYPE P–2
16. ITEM 609 – CURB, TYPE P–3
17. ITEM 305 – 8" CONCRETE BASE
18. ITEM 605 – 6" BASE PIPE UNDERDRAINS
19. ITEM 448 – ASPHALT CONCRETE SURFACE COURSE, TYPE 1H PG70–22M, 2"
20. ITEM 202 – WALK REMOVED
21. ITEM 304 – AGGREGATE BASE, VARIABLE DEPTH

(A) EXISTING CURB
(B) EXISTING SIDEWALK
(C) EXISTING GRASS MEDIAN

CAUTION UNDERGROUND UTILITIES
2 WORKING DAYS
BEFORE YOU DIG
CALL 1–800–362–2764
OHIO UTILITY PROTECTION SERVICE
CALL NON–SERVICE FACILITY OWNERS DIRECT

NOTE:

1. SEE SPECIAL TRACKWORK AND SHEET G–PP–2002 FOR DETAILS FOR ROADWAY WORK BETWEEN STA. 204+11.32 AND STA. 205+54.56.

2. ROADWAY AND TRACK SLAB TRANSITIONS BETWEEN STA. 208+80.63 AND STA. 209+98.55. SEE SHEET G–PP–2003.

DEPARTMENT OF TRANSPORTATION & ENGINEERING CITY OF CINCINNATI OHIO

CONTRACT DRAWING

PRINTS NOT BEARING THIS STAMP WERE MADE PRIOR TO ADVERTISING FOR BIDS AND ARE TO BE CONSIDERED OBSOLETE FOR CONTRACT PURPOSES.

Department of Transportation and Engineering

City of Cincinnati
801 Plum Street
Cincinnati, Ohio 45202

CINCINNATI STREETCAR OVER THE RHINE

TYPICAL SECTIONS

Revisions

No.				

Drawn by RWB	Date 07/02/12	Designed by RWB	Date 07/02/12
Checked by KVL	Date 07/02/12	Reviewed by JTB	Date 07/12/12

Consultant

PB HDR

File Number

ACC No. 23126

G-TS-2001

DOTE_Mono_PDF_Half.pltcfg
c:\pwworking\pitt\d0309031\S_G-TS-2001.dgn
Wednesday, July 11, 2012 09:53:46 AM

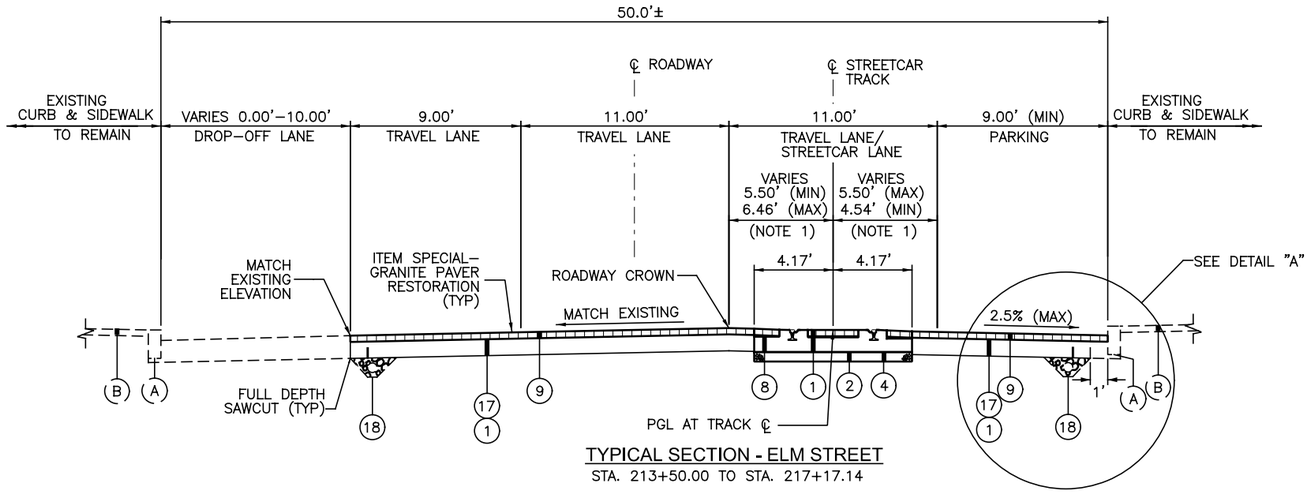

TYPICAL SECTION - ELM STREET

STA. 213+50.00 TO STA. 217+17.14

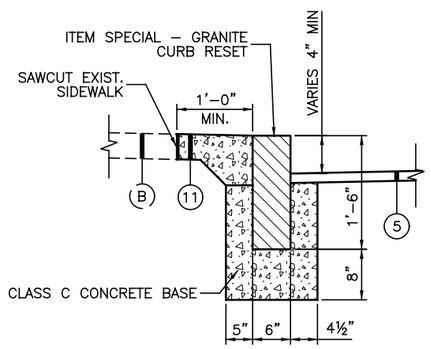

GRANITE CURB RESET DETAIL

ADJACENT TO ASPHALT PAVEMENT

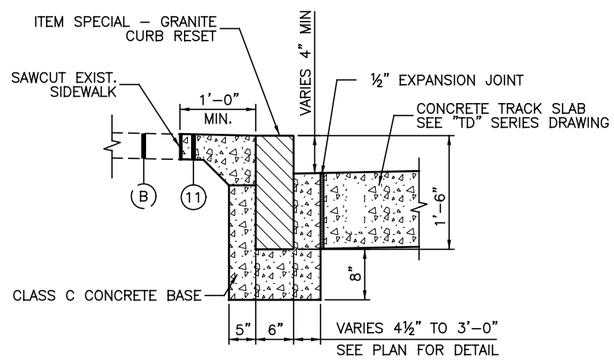

GRANITE CURB RESET DETAIL

ADJACENT TO CONCRETE TRACK SLAB

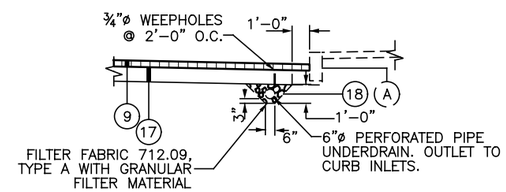

DETAIL "A"

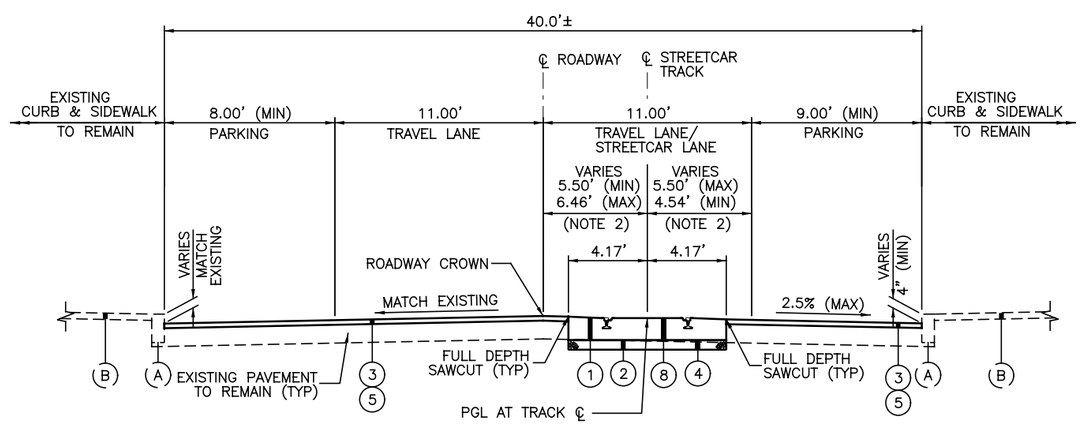

TYPICAL SECTION - ELM STREET

STA. 217+54.03 TO STA. 244+98.81

LEGEND

1. ITEM 202 – PAVEMENT REMOVED
2. ITEM 203 – EXCAVATION
3. ITEM 254 – PAVEMENT PLANING, VARIABLE DEPTH
4. ITEM 304 – 6" AGGREGATE BASE
5. ITEM 448 – ASPHALT CONCRETE SURFACE COURSE, TYPE 1H PG70–22M, 1½" (TYP)
6. ITEM 609 – CURB, TYPE P–5
7. ITEM 452 – 7" NON–REINFORCED CONCRETE PAVEMENT, CLASS C
8. ITEM SPECIAL – TRACK SLAB REFER TO "TD" SERIES DRAWINGS
9. ITEM SPECIAL – GRANITE PAVER RESTORATION
10. ITEM 305 – 10" CONCRETE BASE
11. ITEM 608 – 5" CONCRETE WALK
12. ITEM SPECIAL – GRANITE CURB
13. ITEM SPECIAL – GRANITE CURB RESET
14. ITEM 452 – 12" NON–REINFORCED CONCRETE PAVEMENT
15. ITEM 609 – CURB, TYPE P–2
16. ITEM 609 – CURB, TYPE P–3
17. ITEM 305 – 8" CONCRETE BASE
18. ITEM 605 – 6" BASE PIPE UNDERDRAINS
19. ITEM 448 – ASPHALT CONCRETE SURFACE COURSE, TYPE 1H PG70–22M, 2"
20. ITEM 202 – WALK REMOVED
21. ITEM 304 – AGGREGATE BASE, VARIABLE DEPTH

(A) EXISTING CURB

(B) EXISTING SIDEWALK

(C) EXISTING GRASS MEDIAN

NOTES:

1. TRACK SLAB TRANSITIONS BETWEEN STA. 215+47.87 AND STA. 218+37.39 TO ACCOMMODATE STATION STOP. SEE SHEET G–PP–2004.

2. TRACK SLAB TRANSITIONS BETWEEN STA. 226+12.43 AND STA. 229+01.95, STA. 233+95.65 AND STA. 236+85.16, AND STA. 242+15.82 AND STA. 244+98.81 TO ACCOMMODATE STATION STOP. SEE SHEETS G–PP–2006, G–PP–2007, G–PP–2008, G–PP–2009, AND G–PP–2010.

3. ROADWAY AND TRACK SLAB TRANSITIONS BETWEEN STA. 244+98.81 AND STA. 246+31.80. SEE SHEET G–PP–2010.

CAUTION UNDERGROUND UTILITIES
2 WORKING DAYS
BEFORE YOU DIG
CALL 1–800–362–2764
OHIO UTILITY PROTECTION SERVICE
CALL NON–SERVICE FACILITY OWNERS DIRECT

DEPARTMENT OF TRANSPORTATION & ENGINEERING CITY OF CINCINNATI OHIO

CONTRACT DRAWING

PRINTS NOT BEARING THIS STAMP WERE MADE PRIOR TO ADVERTISING FOR BIDS AND ARE TO BE CONSIDERED OBSOLETE FOR CONTRACT PURPOSES.

Department of Transportation and Engineering

City of Cincinnati
City Hall
801 Plum Street
Cincinnati, Ohio 45202

CINCINNATI STREETCAR OVER THE RHINE

TYPICAL SECTIONS

Revisions

No.				

Drawn by RWB	Date 07/02/12
Designed by RWB	Date 07/02/12
Checked by KVL	Date 07/02/12
Reviewed by JTB	Date 07/12/12

Consultant

PB HDR

File Number

ACC No. 23126

G-TS-2002

DOTE_Mono_PDF_Half.pltcfg
c:\pwworking\pitt\d0309031\S_G-TS-2002.dgn
Wednesday, July 11, 2012 09:56:03 AM

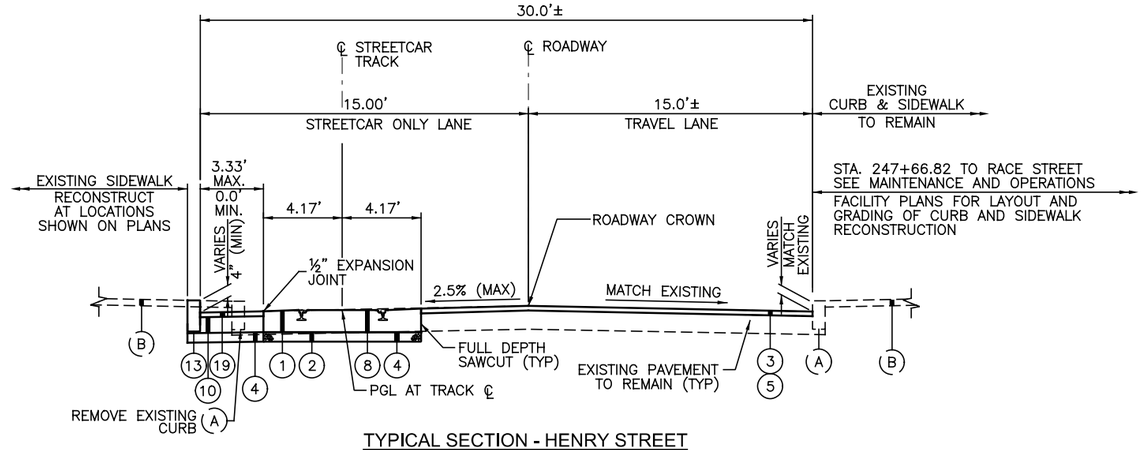

TYPICAL SECTION - HENRY STREET

STA. 246+31.80 TO STA. 249+24.64

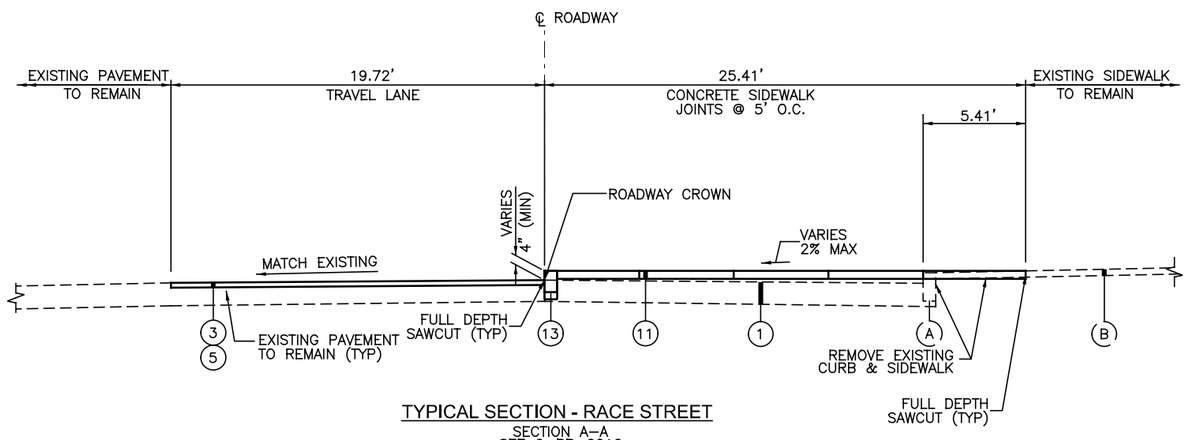

TYPICAL SECTION - RACE STREET

SECTION A–A
SEE G–PP–2012
FOR LOCATIONS

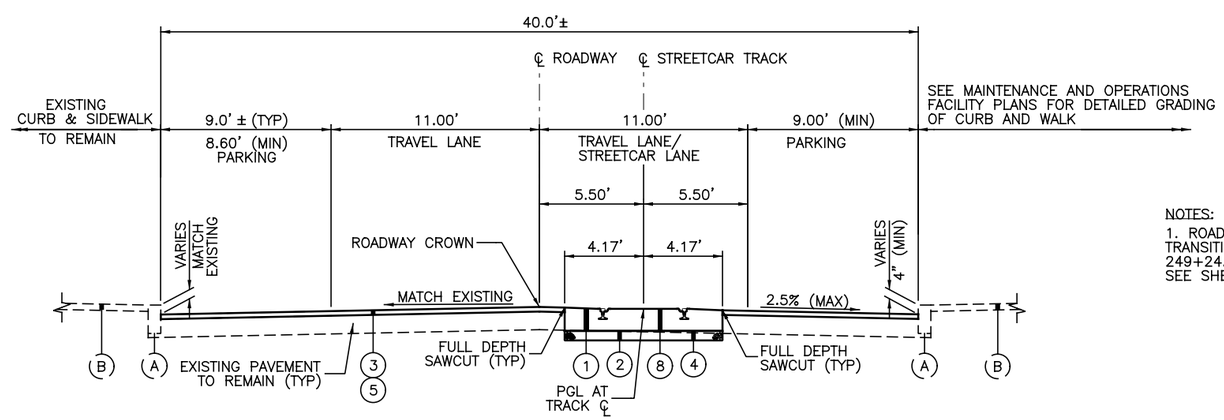

TYPICAL SECTION - RACE STREET

STA. 250+57.70 TO STA. 252+92.47

LEGEND

1. ITEM 202 – PAVEMENT REMOVED
2. ITEM 203 – EXCAVATION
3. ITEM 254 – PAVEMENT PLANING, VARIABLE DEPTH
4. ITEM 304 – 6" AGGREGATE BASE
5. ITEM 448 – ASPHALT CONCRETE SURFACE COURSE, TYPE 1H PG70–22M, 1½" (TYP)
6. ITEM 609 – CURB, TYPE P–5
7. ITEM 452 – 7" NON–REINFORCED CONCRETE PAVEMENT, CLASS C
8. ITEM SPECIAL – TRACK SLAB REFER TO "TD" SERIES DRAWINGS
9. ITEM SPECIAL – GRANITE PAVER RESTORATION
10. ITEM 305 – 10" CONCRETE BASE
11. ITEM 608 – 5" CONCRETE WALK
12. ITEM SPECIAL – GRANITE CURB
13. ITEM SPECIAL – GRANITE CURB RESET
14. ITEM 452 – 12" NON–REINFORCED CONCRETE PAVEMENT
15. ITEM 609 – CURB, TYPE P–2
16. ITEM 609 – CURB, TYPE P–3
17. ITEM 305 – 8" CONCRETE BASE
18. ITEM 605 – 6" BASE PIPE UNDERDRAINS
19. ITEM 448 – ASPHALT CONCRETE SURFACE COURSE, TYPE 1H PG70–22M, 2"
20. ITEM 202 – WALK REMOVED
21. ITEM 304 – AGGREGATE BASE, VARIABLE DEPTH

(A) EXISTING CURB

(B) EXISTING SIDEWALK

(C) EXISTING GRASS MEDIAN

NOTES:

1. ROADWAY AND TRACK SLAB TRANSITIONS BETWEEN STA. 249+24.64 AND STA. 250+57.70 SEE SHEET G–PP–2012

CAUTION UNDERGROUND UTILITIES
2 WORKING DAYS
BEFORE YOU DIG
CALL 1–800–362–2764
OHIO UTILITY PROTECTION SERVICE
CALL NON–SERVICE FACILITY OWNERS DIRECT

DEPARTMENT OF TRANSPORTATION & ENGINEERING CITY OF CINCINNATI OHIO

CONTRACT DRAWING

PRINTS NOT BEARING THIS STAMP WERE MADE PRIOR TO ADVERTISING FOR BIDS AND ARE TO BE CONSIDERED OBSOLETE FOR CONTRACT PURPOSES.

Department of Transportation and Engineering

City of Cincinnati
City Hall
801 Plum Street
Cincinnati, Ohio 45202

CINCINNATI STREETCAR OVER THE RHINE

TYPICAL SECTIONS

Revisions

No.				

Drawn by RWB	Date 07/02/12	Designed by RWB	Date 07/02/12
Checked by KVL	Date 07/02/12	Reviewed by JTB	Date 07/12/12

Consultant

PB HDR

File Number

ACC No. 23126

G-TS-2003

DOTE_Mono_PDF_Half.pltcfg
c:\pwworking\pitt\d0309031\S_G-TS-2003.dgn
Thursday, July 12, 2012 03:08:34 PM

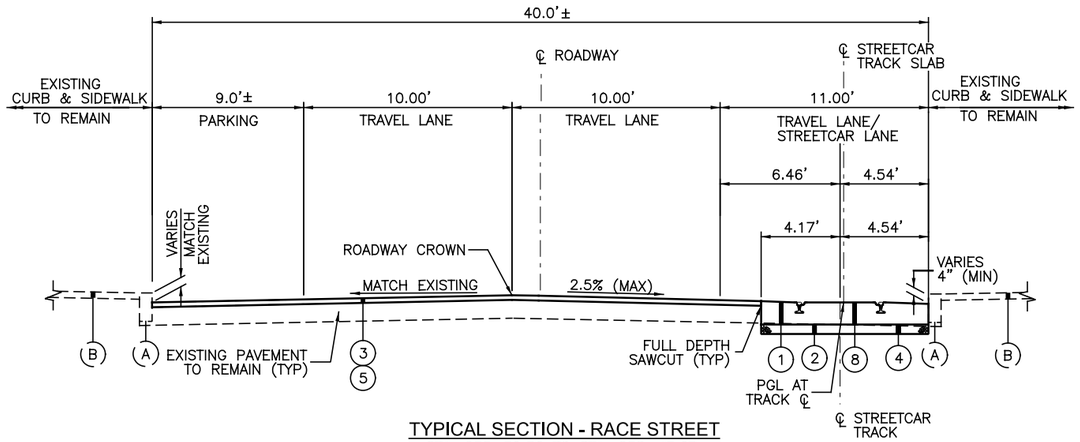

TYPICAL SECTION - RACE STREET
STA. 255+39.36 TO STA. 258+43.67

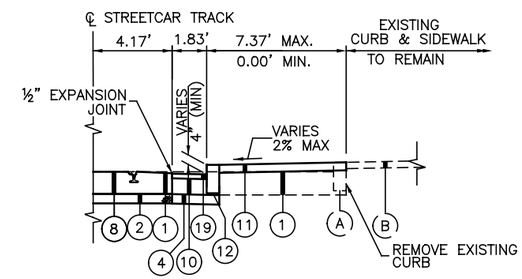

PARTIAL SECTION - RACE STREET
STA. 253+52.63 TO STA. 254+63.18

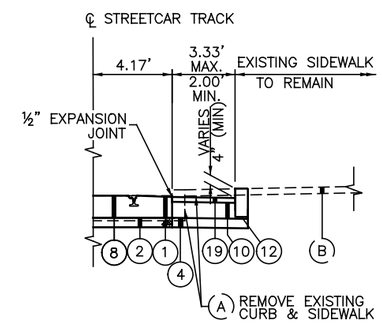

PARTIAL SECTION - RACE STREET
STA. 258+14.69 TO STA. 259+50.55

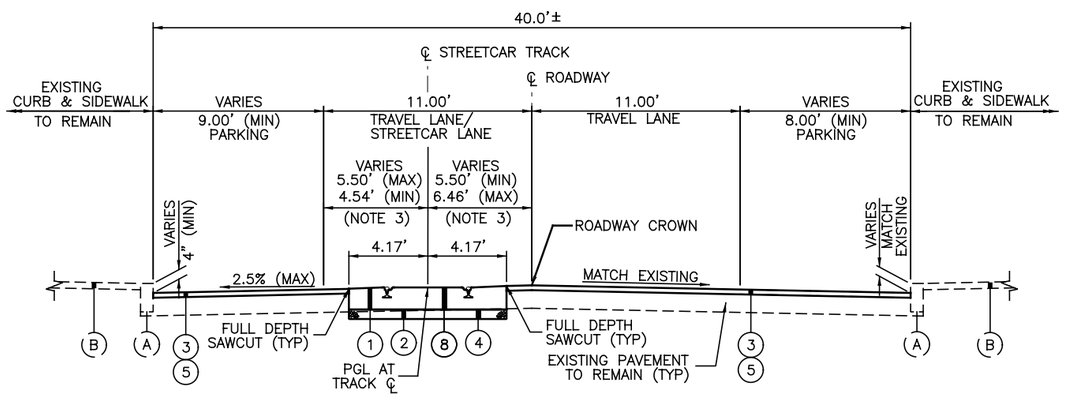

TYPICAL SECTION - RACE STREET
STA. 261+08.44 TO STA. 278+14.00

LEGEND

1. ITEM 202 – PAVEMENT REMOVED
2. ITEM 203 – EXCAVATION
3. ITEM 254 – PAVEMENT PLANING, VARIABLE DEPTH
4. ITEM 304 – 6" AGGREGATE BASE
5. ITEM 448 – ASPHALT CONCRETE SURFACE COURSE, TYPE 1H PG70–22M, 1½" (TYP)
6. ITEM 609 – CURB, TYPE P–5
7. ITEM 452 – 7" NON–REINFORCED CONCRETE PAVEMENT, CLASS C
8. ITEM SPECIAL – TRACK SLAB REFER TO "TD" SERIES DRAWINGS
9. ITEM SPECIAL – GRANITE PAVER RESTORATION
10. ITEM 305 – 10" CONCRETE BASE
11. ITEM 608 – 5" CONCRETE WALK
12. ITEM SPECIAL – GRANITE CURB
13. ITEM SPECIAL – GRANITE CURB RESET
14. ITEM 452 – 12" NON–REINFORCED CONCRETE PAVEMENT
15. ITEM 609 – CURB, TYPE P–2
16. ITEM 609 – CURB, TYPE P–3
17. ITEM 305 – 8" CONCRETE BASE
18. ITEM 605 – 6" BASE PIPE UNDERDRAINS
19. ITEM 448 – ASPHALT CONCRETE SURFACE COURSE, TYPE 1H PG70–22M, 2"
20. ITEM 202 – WALK REMOVED
21. ITEM 304 – AGGREGATE BASE, VARIABLE DEPTH

(A) EXISTING CURB
(B) EXISTING SIDEWALK
(C) EXISTING GRASS MEDIAN

CAUTION UNDERGROUND UTILITIES
2 WORKING DAYS
BEFORE YOU DIG
CALL 1–800–362–2764
OHIO UTILITY PROTECTION SERVICE
CALL NON–SERVICE FACILITY
OWNERS DIRECT

NOTES:

1. ROADWAY AND TRACK SLAB TRANSITIONS BETWEEN STA. 252+92.47 AND STA. 255+39.36. SEE SHEET G–PP–2013.

2. ROADWAY AND TRACK SLAB TRANSITIONS BETWEEN STA. 258+43.67 AND STA. 261+08.44. SEE SHEET G–PP–2014.

3. TRACK SLAB TRANSITIONS BETWEEN STA. 267+82.43 AND STA. 270+71.95 TO ACCOMMODATE STATION STOP. SEE SHEET G–PP–2016.

DEPARTMENT OF TRANSPORTATION & ENGINEERING CITY OF CINCINNATI OHIO

CONTRACT DRAWING

PRINTS NOT BEARING THIS STAMP WERE MADE PRIOR TO ADVERTISING FOR BIDS AND ARE TO BE CONSIDERED OBSOLETE FOR CONTRACT PURPOSES.

Department of Transportation and Engineering
City of Cincinnati
City Hall
801 Plum Street
Cincinnati, Ohio 45202

CINCINNATI STREETCAR OVER THE RHINE

TYPICAL SECTIONS

Revisions
No.

Drawn by RWB	Date 07/02/12
Designed by RWB	Date 07/02/12
Checked by KVL	Date 07/02/12
Reviewed by JTB	Date 07/12/12

Consultant

PB HDR

File Number

ACC No.
23126

G-TS-2004

DOTE_Mono_PDF_Half.pltcfg
c:\pwworking\pitt\d0309031\S_G-TS-2004.dgn
Wednesday, July 11, 2012 09:59:55 AM

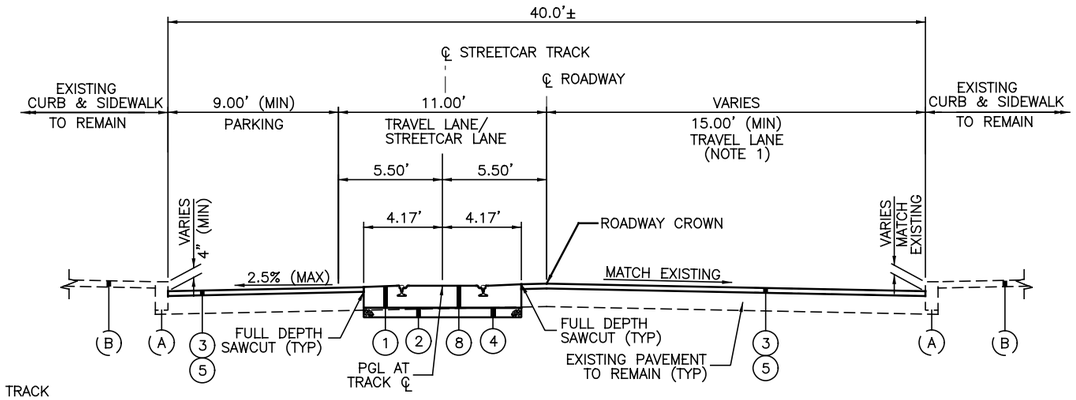

TYPICAL SECTION - RACE STREET

STA. 278+14.00 TO STA. 285+69.97

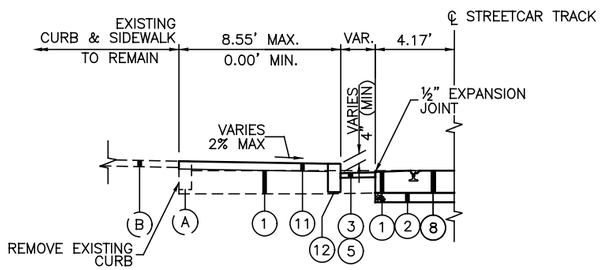

PARTIAL SECTION - RACE STREET

STA. 289+77.30 TO STA. 290+14.09

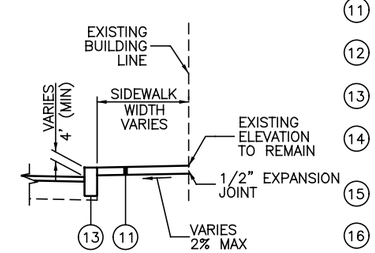

PARTIAL SECTION-RACE STREET

STA. 286+67.16 TO STA. 287+13.21

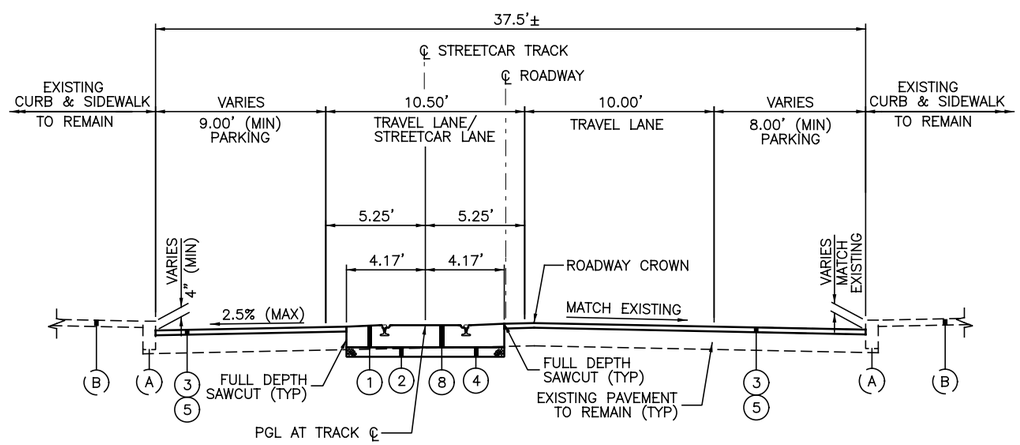

TYPICAL SECTION - RACE STREET

STA. 287+13.21 TO STA. 290+16.77

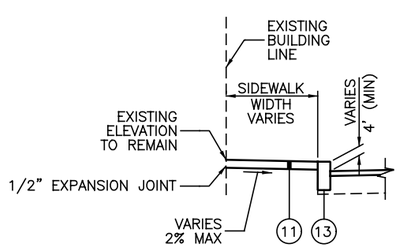

PARTIAL SECTION-RACE STREET

STA. 253+52.63 TO STA. 254+63.18
STA. 285+69.97 TO STA. 286+27.15
STA. 286+67.16 TO STA. 287+13.21

LEGEND

1. ITEM 202 – PAVEMENT REMOVED
2. ITEM 203 – EXCAVATION
3. ITEM 254 – PAVEMENT PLANING, VARIABLE DEPTH
4. ITEM 304 – 6" AGGREGATE BASE
5. ITEM 448 – ASPHALT CONCRETE SURFACE COURSE, TYPE 1H PG70–22M, 1½" (TYP)
6. ITEM 609 – CURB, TYPE P–5
7. ITEM 452 – 7" NON–REINFORCED CONCRETE PAVEMENT, CLASS C
8. ITEM SPECIAL – TRACK SLAB REFER TO "TD" SERIES DRAWINGS
9. ITEM SPECIAL – GRANITE PAVER RESTORATION
10. ITEM 305 – 10" CONCRETE BASE
11. ITEM 608 – 5" CONCRETE WALK
12. ITEM SPECIAL – GRANITE CURB
13. ITEM SPECIAL – GRANITE CURB RESET
14. ITEM 452 – 12" NON–REINFORCED CONCRETE PAVEMENT
15. ITEM 609 – CURB, TYPE P–2
16. ITEM 609 – CURB, TYPE P–3
17. ITEM 305 – 8" CONCRETE BASE
18. ITEM 605 – 6" BASE PIPE UNDERDRAINS
19. ITEM 448 – ASPHALT CONCRETE SURFACE COURSE, TYPE 1H PG70–22M, 2"
20. ITEM 202 – WALK REMOVED
21. ITEM 304 – AGGREGATE BASE, VARIABLE DEPTH

(A) EXISTING CURB

(B) EXISTING SIDEWALK

(C) EXISTING GRASS MEDIAN

NOTES:

1. PARKING TO BE ELIMINATED BETWEEN FOURTEENTH STREET AND THIRTEENTH STREET FOR THE WASHINGTON PARK IMPROVEMENT PROJECT BY OTHERS.

2. SEE SPECIAL TRACKWORK DETAILS FOR ROADWAY WORK BETWEEN STA. 285+69.97 AND STA. 287+13.21.

3. ROADWAY AND TRACK SLAB TRANSITIONS BETWEEN STA. 290+16.77 AND STA. 291+34.86. SEE SHEET G–PP–2020.

CAUTION UNDERGROUND UTILITIES
2 WORKING DAYS
BEFORE YOU DIG
CALL 1–800–362–2764
OHIO UTILITY PROTECTION SERVICE
CALL NON–SERVICE FACILITY OWNERS DIRECT

CONTRACT DRAWING

PRINTS NOT BEARING THIS STAMP WERE MADE PRIOR TO ADVERTISING BID. PRINTS MAY BE CONSIDERED OBSOLETE FOR CONTRACT PURPOSES.

Department of Transportation and Engineering

City of Cincinnati
801 Plum Street
Cincinnati, Ohio 45202

CINCINNATI STREETCAR OVER THE RHINE

TYPICAL SECTIONS

Revisions

No.				

Drawn by RWB	Date 07/02/12
Designed by RWB	Date 07/02/12
Checked by KVL	Date 07/02/12
Reviewed by JTB	Date 07/12/12

Consultant

PB HDR

File Number

ACC No. 23126

G-TS-2005

DOTE_Mono_PDF_Half.pltcfg
c:\pwworking\pitt\d0309031\S_G-TS-2005.dgn
Wednesday, July 11, 2012 09:59:46 AM

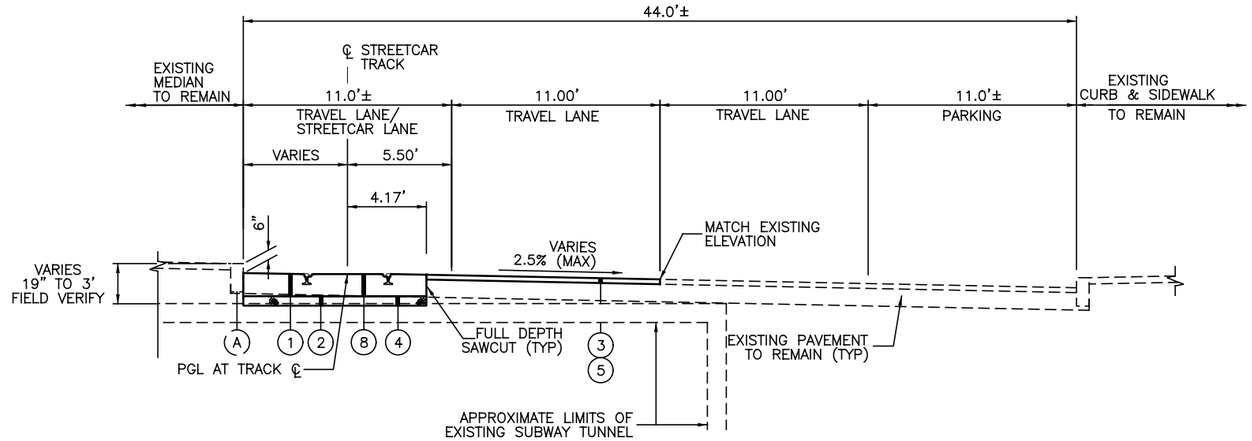

NOTES:

1. CONTRACTOR TO FIELD VERIFY THE ELEVATION OF THE ROOF OF THE EXISTING SUBWAY BEFORE PLACING THE TRACK SLAB. IN LOCATIONS WHERE THE ELEVATION OF THE ROOF WILL NOT ALLOW FOR THE 6" AGGREGATE BASE TO BE PLACED, THE CONTRACTOR SHALL PLACE A 1" PREFORMED EXPANSION JOINT FILLER WITHIN THE LIMITS OF THE TRACK SLAB AND THEN PLACE A THICKENED TRACK SLAB TO THE ELEVATIONS SHOWN ON THE PLANS.

2. PROVIDE GROUNDING STRAP TO TRACK SLAB REBAR PER SHEET G-OD-0129 AND DETAIL 2 ON SHEET GPS-0101.

TYPICAL SECTION - CENTRAL PARKWAY

STA. 291+34.86 TO STA. 292+98.00

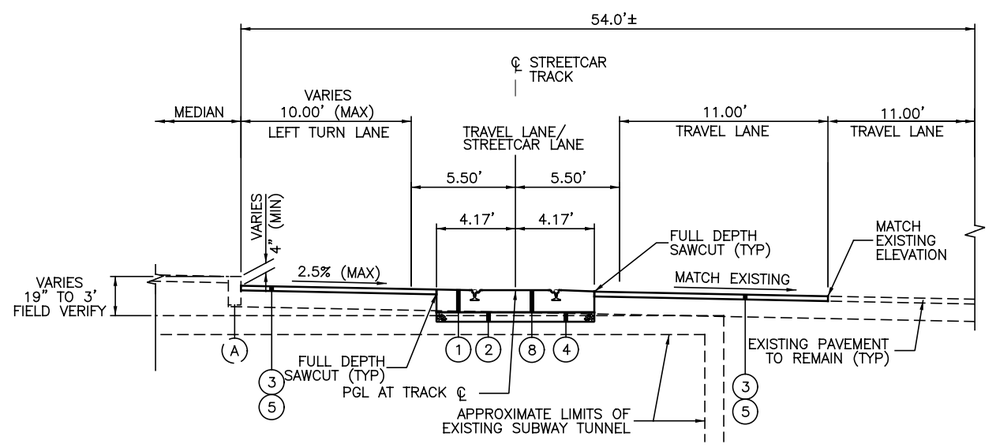

TYPICAL SECTION - CENTRAL PARKWAY

STA. 292+98.00 TO STA. 295+51.22

LEGEND

1. ITEM 202 – PAVEMENT REMOVED
2. ITEM 203 – EXCAVATION
3. ITEM 254 – PAVEMENT PLANING, VARIABLE DEPTH
4. ITEM 304 – 6" AGGREGATE BASE
5. ITEM 448 – ASPHALT CONCRETE SURFACE COURSE, TYPE 1H PG70-22M, 1½" (TYP)
6. ITEM 609 – CURB, TYPE P-5
7. ITEM 452 – 7" NON-REINFORCED CONCRETE PAVEMENT, CLASS C
8. ITEM SPECIAL – TRACK SLAB REFER TO "TD" SERIES DRAWINGS
9. ITEM SPECIAL – GRANITE PAVER RESTORATION
10. ITEM 305 – 10" CONCRETE BASE
11. ITEM 608 – 5" CONCRETE WALK
12. ITEM SPECIAL – GRANITE CURB
13. ITEM SPECIAL – GRANITE CURB RESET
14. ITEM 452 – 12" NON-REINFORCED CONCRETE PAVEMENT
15. ITEM 609 – CURB, TYPE P-2
16. ITEM 609 – CURB, TYPE P-3
17. ITEM 305 – 8" CONCRETE BASE
18. ITEM 605 – 6" BASE PIPE UNDERDRAINS
19. ITEM 448 – ASPHALT CONCRETE SURFACE COURSE, TYPE 1H PG70-22M, 2"
20. ITEM 202 – WALK REMOVED
21. ITEM 304 – AGGREGATE BASE, VARIABLE DEPTH

(A) EXISTING CURB

(B) EXISTING SIDEWALK

(C) EXISTING GRASS MEDIAN

CAUTION UNDERGROUND UTILITIES
2 WORKING DAYS
BEFORE YOU DIG
CALL 1-800-362-2764
OHIO UTILITY PROTECTION SERVICE
CALL NON-SERVICE FACILITY OWNERS DIRECT

CONTRACT DRAWING

PRINTS NOT BEARING THIS STAMP WERE MADE PRIOR TO ADVERTISING FOR BIDS AND ARE TO BE CONSIDERED OBSOLETE FOR CONTRACT PURPOSES.

Department of Transportation and Engineering

City of Cincinnati
801 Plum Street
Cincinnati, Ohio 45202

CINCINNATI STREETCAR OVER THE RHINE

TYPICAL SECTIONS

Revisions

No.				

Drawn by	Date	Designed by	Date	Checked by	Date	Reviewed by	Date
RWB	07/02/12	RWB	07/02/12	RWB	07/02/12	KVL	07/12/12
						JTB	

Consultant

PB HDR

File Number

ACC No.
23126

G-TS-2006

DOTE_Mono_PDF_Half.pltcfg
c:\pwworking\pitt\d0309031\S_G-TS-2006.dgn
Wednesday, July 11, 2012 09:57:07 AM

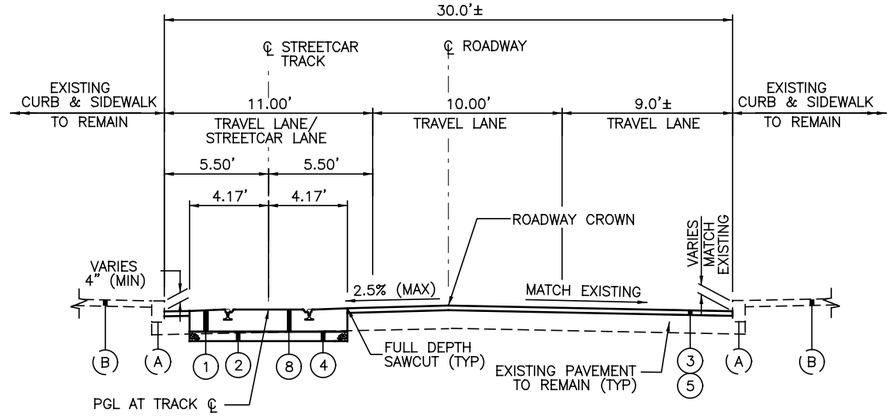

TYPICAL SECTION - FINDLAY STREET
STA. 2005+50.69 TO STA. 2009+13.81

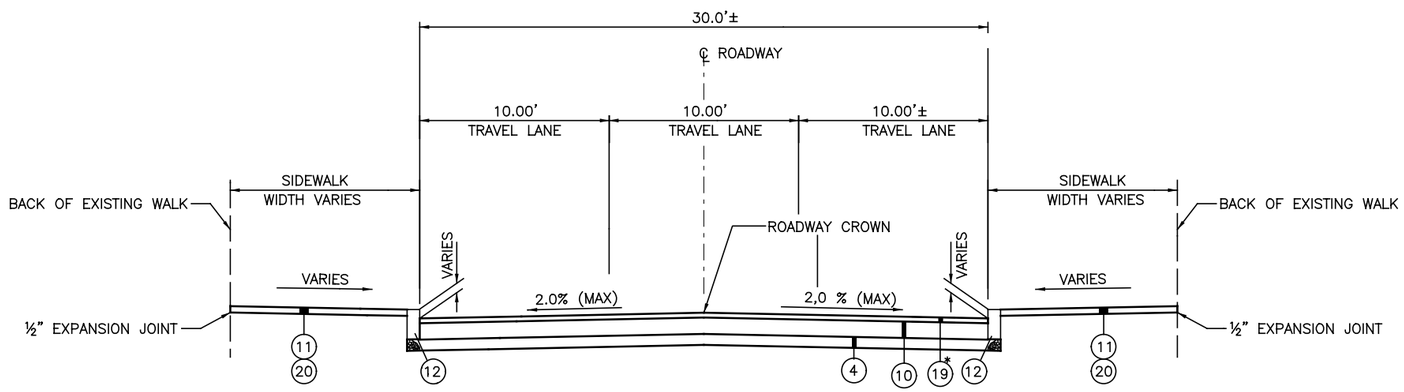

TYPICAL SECTION - FINDLAY STREET
STA. 10+07.50 TO STA. 11+50.00
* STA. 11+50.00 TO 12+00.00 MILL AND OVERLAY SEE PLANS *

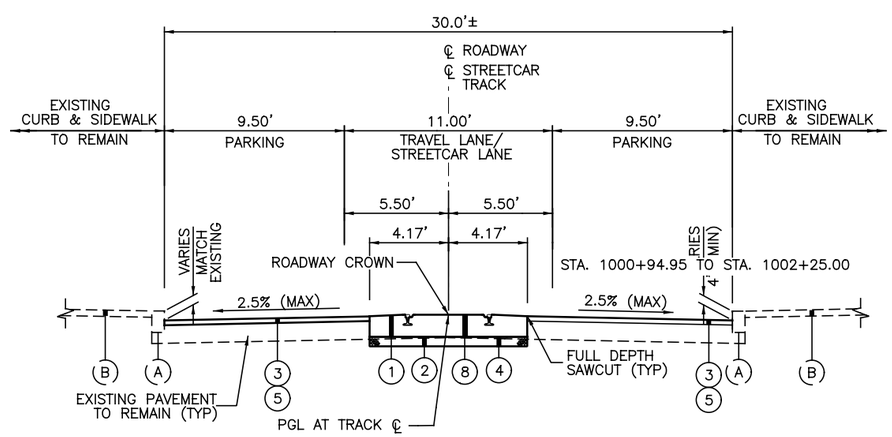

TYPICAL SECTION - ELDER STREET
STA. 1000+94.95 TO STA. 1004+74.57

LEGEND

1. ITEM 202 – PAVEMENT REMOVED
2. ITEM 203 – EXCAVATION
3. ITEM 254 – PAVEMENT PLANING, VARIABLE DEPTH
4. ITEM 304 – 6" AGGREGATE BASE
5. ITEM 448 – ASPHALT CONCRETE SURFACE COURSE, TYPE 1H PG70–22M, 1½" (TYP)
6. ITEM 609 – CURB, TYPE P–5
7. ITEM 452 – 7" NON–REINFORCED CONCRETE PAVEMENT, CLASS C
8. ITEM SPECIAL – TRACK SLAB REFER TO "TD" SERIES DRAWINGS
9. ITEM SPECIAL – GRANITE PAVER RESTORATION
10. ITEM 305 – 10" CONCRETE BASE
11. ITEM 608 – 5" CONCRETE WALK
12. ITEM SPECIAL – GRANITE CURB
13. ITEM SPECIAL – GRANITE CURB RESET
14. ITEM 452 – 12" NON–REINFORCED CONCRETE PAVEMENT
15. ITEM 609 – CURB, TYPE P–2
16. ITEM 609 – CURB, TYPE P–3
17. ITEM 305 – 8" CONCRETE BASE
18. ITEM 605 – 6" BASE PIPE UNDERDRAINS
19. ITEM 448 – ASPHALT CONCRETE SURFACE COURSE, TYPE 1H PG70–22M, 2"
20. ITEM 202 – WALK REMOVED
21. ITEM 304 – AGGREGATE BASE, VARIABLE DEPTH

(A) EXISTING CURB
(B) EXISTING SIDEWALK
(C) EXISTING GRASS MEDIAN

CAUTION UNDERGROUND UTILITIES
2 WORKING DAYS
BEFORE YOU DIG
CALL 1–800–362–2764
OHIO UTILITY PROTECTION SERVICE
CALL NON–SERVICE FACILITY OWNERS DIRECT

NOTES:

1. ROADWAY AND TRACKSLAB TRANSITIONS BETWEEN STA. 2005+50.69 TO STA. 2005+00.00 SEE SHEET G–PP–2013
2. ROADWAY AND TRACKSLAB TRANSITIONS BETWEEN STA. 1000+00.00 TO STA. 1001+94.95 SEE SHEET G–PP–2014

DOTE_Mono_PDF_Half.pltcfg
c:\pwworking\pitt\d0309031\S_G-TS-2007.dgn
Wednesday, July 11, 2012 09:59:27 AM

CITY OF CINCINNATI DEPARTMENT OF TRANSPORTATION & ENGINEERING OHIO

CONTRACT DRAWING

PRINTS NOT BEARING THIS STAMP WERE MADE PRIOR TO ADVERTISING FOR BIDS AND ARE TO BE CONSIDERED OBSOLETE FOR CONTRACT PURPOSES.

Department of Transportation and Engineering
City of Cincinnati
801 Plum Street
Cincinnati, Ohio 45202

CINCINNATI STREETCAR OVER THE RHINE

TYPICAL SECTIONS

Revisions
No.

Drawn by SAB	Date 07/02/12
Designed by SAB	Date 07/02/12
Checked by KVL	Date 07/02/12
Reviewed by JTB	Date 07/12/12

Consultant
PB HDR

File Number

ACC No.
23126

G-TS-2007

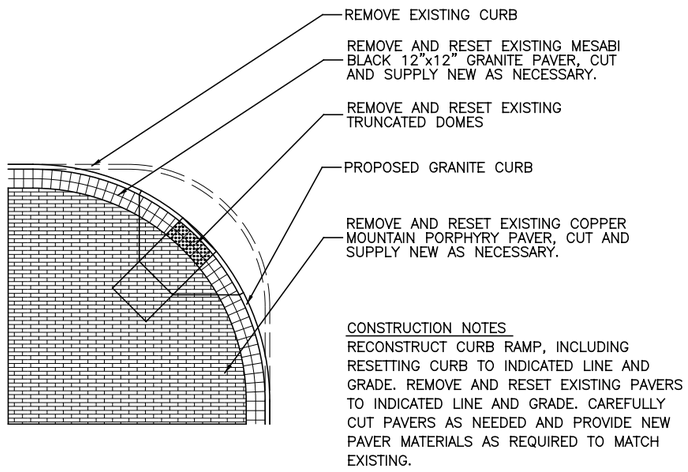

ORNAMENTAL PAVER RESTORATION
NORTHWEST CORNER 12TH AND RACE

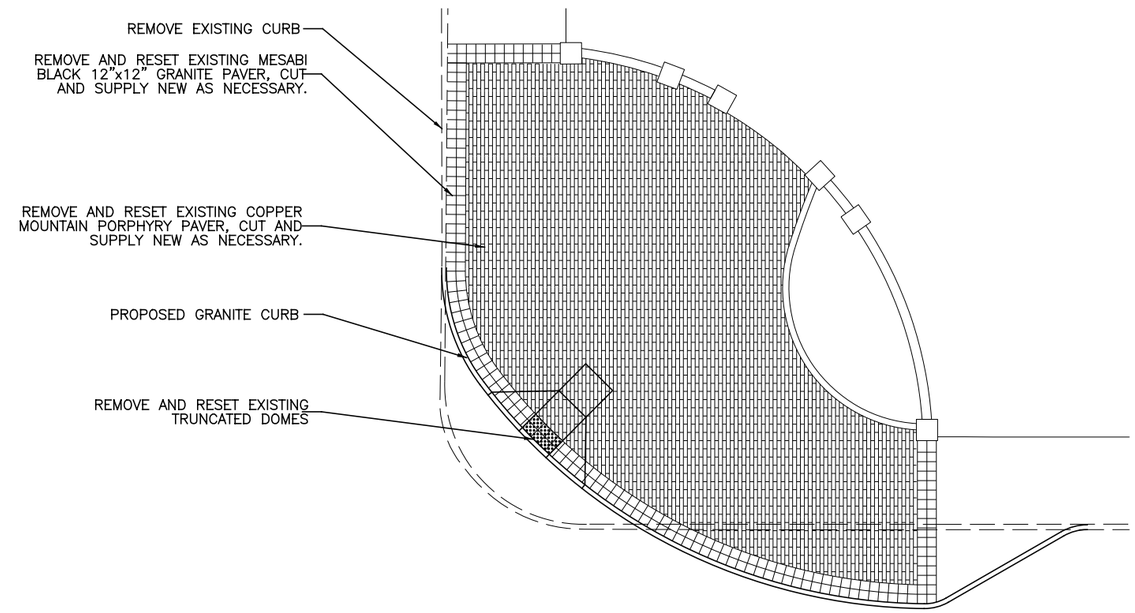

ORNAMENTAL PAVER RESTORATION
NORTHEAST CORNER 12TH AND ELM

CAUTION UNDERGROUND UTILITIES
2 WORKING DAYS
BEFORE YOU DIG
CALL 1-800-362-2764
OHIO UTILITY PROTECTION SERVICE
CALL NON-SERVICE FACILITY
OWNERS DIRECT

DOTE_Mono_PDF_Half.pltcfg
c:\pwworking\pitt\d0309031\S_G-TS-2008.dgn
Wednesday, July 11, 2012 09:57:57 AM

CITY OF CINCINNATI DEPARTMENT OF TRANSPORTATION & ENGINEERING OHIO

CONTRACT DRAWING

PRINTS NOT BEARING THIS STAMP WERE MADE PRIOR TO ADVERTISING FOR BIDS AND ARE TO BE CONSIDERED OBSOLETE FOR CONTRACT PURPOSES.

Department of Transportation and Engineering

City of Cincinnati
801 Plum Street
Cincinnati, Ohio 45202

CINCINNATI STREETCAR
OVER THE RHINE

ORNAMENTAL PAVER RESTORATION DETAILS

Revisions

No.			

Drawn by SAB	Date 07/02/12
Designed by SAB	Date 07/02/12
Checked by KVL	Date 07/02/12
Reviewed by JTB	Date 07/12/12

Consultant

PB HDR

File Number

ACC No.
23126

G-TS-2008

TRACK

CURVE	POINT	NORTHING	EASTING	STATION	Δ	R	L	Ls1	Ls2	I	T	Ea	Eu	V	BEARING	TANGENT LENGTH
POB	POB	409,601.23	1,396,934.89	1+00.00												
															N 80° 12' 21.16" E	114.53'
CURVE CBD-100	TS	409,620.71	1,397,047.74	2+14.53	1° 59' 41.62" (LT)	475.00'	16.54'	30.00'	30.00'	5° 36' 48.87" (LT)	38.29'	0.00"	1.88"	15 MPH		
	SC	409,626.13	1,397,077.25	2+44.53												
	PI	409,627.23	1,397,085.48	2+52.82												
	CS	409,629.73	1,397,093.39	2+61.07												
	ST	409,637.40	1,397,122.39	2+91.07												
															N 74° 35' 32.29" E	20.96'
CURVE CBD-105	TS	409,642.97	1,397,142.60	3+12.03	1° 59' 41.62" (RT)	475.00'	16.54'	30.00'	30.00'	5° 36' 48.87" (RT)	38.29'	0.00"	1.88"	15 MPH		
	SC	409,650.63	1,397,171.60	3+42.03												
	PI	409,653.14	1,397,179.52	3+50.32												
	CS	409,654.24	1,397,187.74	3+58.57												
	ST	409,659.66	1,397,217.25	3+88.57												
															N 80° 12' 21.16" E	68.49'
CURVE CBD-110	TS	409,671.31	1,397,284.74	4+57.05	63° 37' 38.44" (RT)	65.62'	72.87'	30.00'	30.00'	89° 49' 18.11" (RT)	80.96'	0.00"	3.86"	8 MPH		
	SC	409,674.14	1,397,314.53	4+87.05												
	PI	409,685.08	1,397,364.52	5+38.01												
	CS	409,634.34	1,397,371.13	5+59.93												
	ST	409,605.34	1,397,378.54	5+89.93												
															S 9° 58' 20.73" E	185.18'
CURVE CBD-115	PC	409,422.96	1,397,410.60	7+75.10	0° 30' 42.32" (RT)	5,000.00'	44.66'			0° 30' 42.32" (RT)	22.33'	0.00"	0.18"	15 MPH		
	PI	409,400.97	1,397,414.47	7+97.43												
	PT	409,378.94	1,397,418.14	8+19.76												
															S 9° 27' 38.42" E	33.00'
CURVE CBD-120	PC	409,346.39	1,397,423.57	8+52.76	0° 21' 05.80" (LT)	5,000.00'	30.68'			0° 21' 05.80" (LT)	15.34'	0.00"	0.18"	15 MPH		
	PI	409,331.26	1,397,426.09	8+68.10												
	PT	409,316.14	1,397,428.70	8+83.45												
															S 9° 48' 44.22" E	226.93'
CURVE CBD-125	PC	409,092.53	1,397,467.38	11+10.38	2° 10' 20.36" (RT)	825.00'	31.28'			2° 10' 20.36" (RT)	15.64'	0.00"	0.48"	10 MPH		
	PI	409,077.11	1,397,470.04	11+26.02												
	PRC	409,061.61	1,397,472.12	11+41.66												
															S 7° 38' 23.86" E	0.00'
CURVE CBD-130	PRC	409,061.61	1,397,472.12	11+41.66	2° 13' 51.44" (LT)	825.00'	32.12'			2° 13' 51.44" (LT)	16.06'	0.00"	0.48"	10 MPH		
	PI	409,045.69	1,397,474.26	11+57.72												
	PT	409,029.86	1,397,477.01	11+73.78												
															S 9° 52' 15.30" E	124.00'
CURVE CBD-135	PC	408,907.70	1,397,498.27	12+97.78	1° 06' 49.79" (LT)	1,500.00'	29.16'			1° 06' 49.79" (LT)	14.58'	0.00"	0.59"	15 MPH		
	PI	408,893.34	1,397,500.77	13+12.36												
	PT	408,879.02	1,397,503.55	13+26.94												
															S 10° 59' 05.09" E	33.00'
CURVE CBD-140	PC	408,846.63	1,397,509.83	13+59.94	1° 06' 49.79" (RT)	1,500.00'	29.16'			1° 06' 49.79" (RT)	14.58'	0.00"	0.59"	15 MPH		
	PI	408,832.31	1,397,512.61	13+74.52												
	PT	408,817.95	1,397,515.11	13+89.10												
															S 9° 52' 15.30" E	153.00'
CURVE CBD-145	PC	408,667.22	1,397,541.34	15+42.10	1° 06' 49.79" (RT)	1,500.00'	29.16'			1° 06' 49.79" (RT)	14.58'	0.00"	0.59"	15 MPH		
	PI	408,652.85	1,397,543.84	15+56.68												
	PT	408,638.44	1,397,546.06	15+71.26												
															S 8° 45' 25.51" E	33.00'
CURVE CBD-150	PC	408,605.83	1,397,551.08	16+04.26	1° 06' 49.79" (LT)	1,500.00'	29.16'			1° 06' 49.79" (LT)	14.58'	0.00"	0.59"	15 MPH		
	PI	408,591.42	1,397,553.30	16+18.84												
	PT	408,577.05	1,397,555.80	16+33.42												
															S 9° 52' 15.30" E	124.00'
CURVE CBD-155	PC	408,454.89	1,397,577.06	17+57.42	1° 07' 50.52" (LT)	1,500.00'	29.60'			1° 07' 50.52" (LT)	14.80'	0.00"	0.59"	15 MPH		
	PI	408,440.31	1,397,579.60	17+72.22												
	PT	408,425.78	1,397,582.42	17+87.02												
															S 11° 00' 05.83" E	33.00'
CURVE CBD-160	PC	408,393.38	1,397,588.72	18+20.02	1° 06' 27.08" (RT)	1,500.00'	28.99'			1° 06' 27.08" (RT)	14.50'	0.00"	0.59"	15 MPH		
	PI	408,379.15	1,397,591.49	18+34.52												
	PT	408,364.87	1,397,593.98	18+49.02												
															S 9° 53' 38.74" E	352.55'

CAUTION UNDERGROUND UTILITIES
2 WORKING DAYS
BEFORE YOU DIG
CALL 1-800-362-2764
OHIO UTILITY PROTECTION SERVICE
CALL NON-SERVICE FACILITY
OWNERS DIRECT

DOTE_Mono_PDF_Half.pltcfg
T:\29014A-Streetcar\CAD\Civil\S_G-AL-1001.dgn
7/15/2012 1:10:11 PM

CONTRACT DRAWING

PRINTS NOT BEARING THIS STAMP WERE MADE PRIOR TO ADVERTISING FOR BIDS AND ARE TO BE CONSIDERED OBSOLETE FOR CONTRACT PURPOSES.

Department of Transportation and Engineering

City of Cincinnati
City Hall
801 Plum Street
Cincinnati, Ohio 45202

CINCINNATI STREETCAR
CENTRAL BUSINESS DISTRICT

ALIGNMENT DATA

Revisions
No.

Date	Date	Date	Date
7/02/12	7/02/12	7/02/12	7/12/12

Drawn by	Designed by	Checked by	Reviewed by
JFL	CJC	SAJ	JTB

Consultant

PB HDR

File Number

ACC No.
23126

G-AL-1001

TRACK

CURVE	POINT	NORTHING	EASTING	STATION	Δ	R	L	Ls1	Ls2	I	T	Ea	Eu	V	BEARING	TANGENT LENGTH
	STA. 22+01.57 BK = STA. 800+00.00 AH															
															S 9° 53' 38.74" E	15.01'
CURVE CBD-165	TS	408,002.78	1,397,657.13	800+15.01	1° 07' 41.69" (RT)	375.00'	7.38'	30.00'	30.00'	5° 42' 42.87" (RT)	33.71'	0.00"	2.38"	15 MPH		
	SC	407,973.16	1,397,661.89	800+45.01												
	PI	407,969.57	1,397,662.93	800+48.72												
	CS	407,965.83	1,397,662.80	800+52.39												
	ST	407,935.94	1,397,665.39	800+82.39												
															S 4° 10' 55.87" E	35.31'
CURVE CBD-170	TS	407,900.73	1,397,667.96	801+17.69	1° 07' 36.27" (LT)	375.00'	7.37'	30.00'	30.00'	5° 42' 37.45" (LT)	33.71'	0.00"	2.38"	15 MPH		
	SC	407,870.85	1,397,670.55	801+47.69												
	PI	407,867.12	1,397,670.42	801+51.40												
	CS	407,863.53	1,397,671.45	801+55.07												
	ST	407,833.91	1,397,676.21	801+85.07												
															S 9° 53' 33.33" E	541.51'
CURVE CBD-175	TS	407,300.45	1,397,769.24	807+26.58	1° 43' 07.47" (LT)	400.00'	12.00'	30.00'	30.00'	6° 00' 57.33" (LT)	36.02'	0.00"	2.23"	15 MPH		
	SC	407,270.96	1,397,774.77	807+56.58												
	PI	407,264.96	1,397,775.43	807+62.61												
	CS	407,259.27	1,397,777.44	807+68.58												
	ST	407,230.32	1,397,785.31	807+98.58												
															S 15° 54' 30.66" E	20.62'
CURVE CBD-180	TS	407,210.48	1,397,790.96	808+19.21	1° 45' 34.24" (RT)	400.00'	12.28'	30.00'	30.00'	6° 03' 24.10" (RT)	36.17'	0.00"	2.23"	15 MPH		
	SC	407,181.53	1,397,798.82	808+49.21												
	PI	407,175.70	1,397,800.87	808+55.37												
	CS	407,169.56	1,397,801.56	808+61.49												
	ST	407,140.07	1,397,807.06	808+91.49												
															S 9° 51' 06.56" E	66.03'
CURVE CBD-185	PC	407,075.01	1,397,818.36	809+57.52	0° 09' 38.57" (LT)	12,500.00'	35.06'			0° 09' 38.57" (LT)	17.53'	0.00"	0.07"	15 MPH		
	PI	407,057.74	1,397,821.36	809+75.05												
	PT	407,040.47	1,397,824.41	809+92.58												
															S 10° 00' 45.13" E	365.00'
CURVE CBD-190	TS	406,681.03	1,397,887.87	813+57.58	2° 03' 00.97" (RT)	350.00'	12.52'	30.00'	30.00'	6° 57' 40.81" (RT)	36.29'	0.00"	1.13"	10 MPH		
	SC	406,651.42	1,397,892.66	813+87.58												
	PI	406,645.29	1,397,894.18	813+93.88												
	CS	406,638.98	1,397,894.08	814+00.11												
	ST	406,609.05	1,397,896.11	814+30.11												
															S 3° 03' 04.32" E	27.68'
CURVE CBD-195	TS	406,581.41	1,397,897.58	814+57.79	1° 44' 50.27" (LT)	350.00'	10.67'	30.00'	30.00'	6° 39' 30.11" (LT)	35.37'	0.00"	1.13"	10 MPH		
	SC	406,551.48	1,397,899.61	814+87.79												
	PI	406,546.10	1,397,899.46	814+93.15												
	CS	406,540.88	1,397,900.79	814+98.46												
	ST	406,511.24	1,397,905.43	815+28.46												
															S 9° 42' 34.43" E	128.30'
CURVE CBD-200	TS	406,384.78	1,397,927.07	816+56.76	63° 40' 49.42" (LT)	65.62'	72.93'	30.00'	30.00'	89° 52' 29.09" (LT)	81.02'	0.00"	3.86"	8 MPH		
	SC	406,355.75	1,397,934.34	816+86.76												
	PI	406,304.92	1,397,940.73	817+37.78												
	CS	406,315.69	1,397,990.81	817+59.69												
	ST	406,318.41	1,398,020.62	817+89.69												
															N 80° 24' 56.48" E	335.17'
CURVE CBD-205	TS	406,374.22	1,398,351.11	821+24.86	63° 49' 19.85" (LT)	65.62'	73.09'	30.00'	30.00'	90° 00' 59.52" (LT)	81.18'	0.00"	3.86"	8 MPH		
	SC	406,381.43	1,398,380.16	821+54.86												
	PI	406,387.73	1,398,431.16	822+06.04												
	CS	406,437.97	1,398,420.35	822+27.95												
	ST	406,467.78	1,398,417.62	822+57.95												
															N 9° 36' 03.04" W	259.27'
CURVE CBD-215	PC	406,723.42	1,398,374.38	825+17.22	0° 33' 35.12" (LT)	5,000.00'	48.85'			0° 33' 35.12" (LT)	24.42'	0.00"	0.32"	20 MPH		
	PI	406,747.50	1,398,370.30	825+41.65												
	PT	406,771.54	1,398,366.00	825+66.07												
															N 10° 09' 38.17" W	124.98'
CURVE CBD-220	PC	406,894.56	1,398,343.95	826+91.05	0° 31' 58.81" (RT)	3,500.00'	32.56'			0° 31' 58.81" (RT)	16.28'	0.00"	0.71"	25 MPH		
	PI	406,910.59	1,398,341.08	827+07.33												
	PT	406,926.64	1,398,338.35	827+23.61												
															N 9° 37' 39.35" W	159.61'

CAUTION UNDERGROUND UTILITIES
2 WORKING DAYS
BEFORE YOU DIG
CALL 1-800-362-2764
OHIO UTILITY PROTECTION SERVICE
CALL NON-SERVICE FACILITY
OWNERS DIRECT

DOTE_Mono_PDF_Half.pltcfg
T:\29014A-Streetcar\CAD\Civil\S_G-AL-1002.dgn
7/15/2012 1:10:12 PM

CONTRACT DRAWING

PRINTS NOT BEARING THIS STAMP WERE MADE PRIOR TO ADVERTISING FOR BIDS AND ARE TO BE CONSIDERED OBSOLETE FOR CONTRACT PURPOSES.

Department of Transportation and Engineering

City of Cincinnati
City Hall
801 Plum Street
Cincinnati, Ohio 45202

CINCINNATI STREETCAR
CENTRAL BUSINESS DISTRICT

ALIGNMENT DATA

Revisions

No.				

Date 7/02/12 | Date 7/02/12 | Date 7/02/12 | Date 7/12/12

Drawn by JFL | Designed by CJC | Checked by SAJ | Reviewed by JTB

Consultant

PB HDR

File Number

ACC No. 23126

G-AL-1002

TRACK

CURVE	POINT	NORTHING	EASTING	STATION	Δ	R	L	Ls1	Ls2	I	T	Ea	Eu	V	BEARING	TANGENT LENGTH
CURVE CBD-225	PC	407,084.00	1,398,311.66	828+83.22	4° 19' 53.86" (LT)	650.00'	49.14'			4° 19' 53.86" (LT)	24.58'	0.00"	0.61"	10 MPH		
	PI	407,108.23	1,398,307.55	829+07.80												
	PRC	407,132.09	1,398,301.62	829+32.36												
															N 13° 57' 33.22" W	0.00'
CURVE CBD-230	PRC	407,132.09	1,398,301.62	829+32.36	3° 48' 18.33" (RT)	650.00'	43.17'			3° 48' 18.33" (RT)	21.59'	0.00"	0.61"	10 MPH		
	PI	407,153.04	1,398,296.41	829+53.95												
	PT	407,174.30	1,398,292.60	829+75.53												
															N 10° 09' 14.89" W	124.00'
CURVE CBD-235	PC	407,296.35	1,398,270.74	830+99.53	1° 37' 31.79" (LT)	1,500.00'	42.56'			1° 37' 31.79" (LT)	21.28'	0.00"	0.59"	15 MPH		
	PI	407,317.30	1,398,266.99	831+20.81												
	PRC	407,338.13	1,398,262.65	831+42.08												
															N 11° 46' 46.67" W	0.00'
CURVE CBD-240	PRC	407,338.13	1,398,262.65	831+42.08	1° 33' 26.48" (RT)	1,500.00'	40.77'			1° 33' 26.48" (RT)	20.39'	0.00"	0.59"	15 MPH		
	PI	407,358.09	1,398,258.48	831+62.47												
	PT	407,378.15	1,398,254.87	831+82.85												
															N 10° 13' 20.20" W	160.07'
CURVE CBD-245	PC	407,535.68	1,398,226.46	833+42.92	0° 24' 09.27" (RT)	5,000.00'	35.13'			0° 24' 09.27" (RT)	17.57'	0.00"	0.18"	15 MPH		
	PI	407,552.96	1,398,223.34	833+60.49												
	PT	407,570.27	1,398,220.35	833+78.05												
															N 9° 49' 10.93" W	217.85'
CURVE CBD-250	TS	407,784.93	1,398,183.19	835+95.90	4° 10' 37.73" (LT)	175.00'	12.76'	30.00'	30.00'	13° 59' 57.41" (LT)	36.51'	0.00"	2.26"	10 MPH		
	SC	407,814.32	1,398,177.24	836+25.90												
	PI	407,820.90	1,398,176.97	836+32.41												
	CS	407,826.53	1,398,173.55	836+38.66												
	ST	407,854.30	1,398,162.22	836+68.66												
															N 23° 49' 08.34" W	9.84'
CURVE CBD-255	TS	407,863.31	1,398,158.25	836+78.50	4° 12' 37.75" (RT)	175.00'	12.86'	30.00'	30.00'	14° 01' 57.43" (RT)	36.56'	0.00"	2.26"	10 MPH		
	SC	407,891.08	1,398,146.93	837+08.50												
	PI	407,896.75	1,398,143.48	837+15.06												
	CS	407,903.39	1,398,143.21	837+21.36												
	ST	407,932.78	1,398,137.27	837+51.36												
															N 9° 47' 10.90" W	76.82'
CURVE CBD-260	PC	408,008.49	1,398,124.21	838+28.18	1° 16' 17.79" (LT)	1,500.00'	33.29'			1° 16' 17.79" (LT)	16.65'	0.00"	0.59"	15 MPH		
	PI	408,024.89	1,398,121.38	838+44.83												
	PRC	408,041.23	1,398,118.19	838+61.47												
															N 11° 03' 28.69" W	0.00'
CURVE CBD-265	PRC	408,041.23	1,398,118.19	838+61.47	1° 25' 10.13" (RT)	1,500.00'	37.16'			1° 25' 10.13" (RT)	18.58'	0.00"	0.59"	15 MPH		
	PI	408,059.46	1,398,114.63	838+80.05												
	PT	408,077.78	1,398,111.51	838+98.63												
	STA. 838+98.63 BK = STA. 68+09.90 AH															
															N 9° 38' 18.56" W	124.00'
CURVE CBD-290	PC	408,200.03	1,398,090.75	69+33.90	1° 06' 49.79" (RT)	1,500.00'	29.16'			1° 06' 49.79" (RT)	14.58'	0.00"	0.59"	15 MPH		
	PI	408,214.41	1,398,088.31	69+48.48												
	PT	408,228.83	1,398,086.15	69+63.06												
															N 8° 31' 28.78" W	33.00'
CURVE CBD-295	PC	408,261.46	1,398,081.26	69+96.06	1° 06' 49.79" (LT)	1,500.00'	29.16'			1° 06' 49.79" (LT)	14.58'	0.00"	0.59"	15 MPH		
	PI	408,275.88	1,398,079.10	70+10.64												
	PT	408,290.26	1,398,076.66	70+25.22												
															N 9° 38' 18.56" W	204.40'
CURVE CBD-300	PC	408,491.77	1,398,042.43	72+29.62	0° 03' 37.60" (LT)	30,000.00'	31.65'			0° 03' 37.60" (LT)	15.82'	0.00"	0.08"	25 MPH		
	PI	408,507.37	1,398,039.78	72+45.45												
	PT	408,522.97	1,398,037.12	72+61.27												
															N 9° 41' 56.16" W	216.47
CURVE CBD-305	PC	408,736.35	1,398,000.65	74+77.74	1° 11' 07.69" (LT)	1,500.00'	31.04'			1° 11' 07.69" (LT)	15.52'	0.00"	0.59"	15 MPH		
	PI	408,751.64	1,397,998.03	74+93.26												
	PT	408,766.88	1,397,995.10	75+08.78												
															N 10° 53' 03.85" W	33.00'
CURVE CBD-310	PC	408,799.29	1,397,988.87	75+41.78	1° 10' 12.06" (RT)	1,500.00'	30.63'			1° 10' 12.06" (RT)	15.32'	0.00"	0.59"	15 MPH		
	PI	408,814.33	1,397,985.98	75+57.09												
	PT	408,829.43	1,397,983.40	75+72.41												
															N 9° 42' 51.79" W	124.00'

CAUTION UNDERGROUND UTILITIES
2 WORKING DAYS
BEFORE YOU DIG
CALL 1-800-362-2764
OHIO UTILITY PROTECTION SERVICE
CALL NON-SERVICE FACILITY
OWNERS DIRECT

DOTE_Mono_PDF_Half.pltcfg
T:\29014A-Streetcar\CAD\Civil\S_G-AL-1003.dgn
7/15/2012 1:10:13 PM

CONTRACT DRAWING

PRINTS NOT BEARING THIS STAMP WERE MADE PRIOR TO ADVERTISING FOR BIDS AND ARE TO BE CONSIDERED OBSOLETE FOR CONTRACT PURPOSES.

Department of Transportation and Engineering

City of Cincinnati
City Hall
801 Plum Street
Cincinnati, Ohio 45202

CINCINNATI STREETCAR
CENTRAL BUSINESS DISTRICT

ALIGNMENT DATA

Revisions
No.

Drawn by	Designed by	Checked by	Reviewed by
JFL	CJC	SAJ	JTB
Date 7/02/12	Date 7/02/12	Date 7/02/12	Date 7/12/12

Consultant

PB HDR

File Number

ACC No.
23126

G-AL-1003

TRACK

CURVE	POINT	NORTHING	EASTING	STATION	Δ	R	L	Ls1	Ls2	I	T	Ea	Eu	V	BEARING	TANGENT LENGTH
CURVE CBD-315	PC	408,951.65	1,397,962.47	76+96.41	1° 06' 49.79" (RT)	1,500.00'	29.16'			1° 06' 49.79" (RT)	14.58'	0.00"	0.59"	15 MPH		
	PI	408,966.02	1,397,960.01	77+10.99												
	PT	408,980.44	1,397,957.83	77+25.57												
															N 8° 36' 02.00" W	33.00'
CURVE CBD-320	PC	409,013.07	1,397,952.90	77+58.57	1° 06' 49.79" (LT)	1,500.00'	29.16'			1° 06' 49.79" (LT)	14.58'	0.00"	0.59"	15 MPH		
	PI	409,027.48	1,397,950.72	77+73.15												
	PT	409,041.85	1,397,948.26	77+87.73												
															N 9° 42' 51.79" W	41.31'
CURVE CBD-325	PC	409,082.57	1,397,941.29	78+29.04	0° 14' 23.11" (LT)	5,000.00'	20.92'			0° 14' 23.11" (LT)	10.46'	0.00"	0.50"	25 MPH		
	PI	409,092.88	1,397,939.52	78+39.50												
	PT	409,103.19	1,397,937.71	78+49.96												
															N 9° 57' 14.90" W	33.00'
CURVE CBD-330	PC	409,135.69	1,397,932.01	78+82.96	0° 18' 46.58" (RT)	5,000.00'	27.31'			0° 18' 46.58" (RT)	13.65'	0.00"	0.50"	25 MPH		
	PI	409,149.14	1,397,929.65	78+96.61												
	PT	409,162.60	1,397,927.36	79+10.27												
															N 9° 38' 28.32" W	239.72
CURVE CBD-335	PC	409,398.93	1,397,887.21	81+49.99	1° 21' 36.74" (LT)	1,500.00'	35.61'			1° 21' 36.74" (LT)	17.81'	0.00"	0.59"	15 MPH		
	PI	409,416.49	1,397,884.23	81+67.79												
	PT	409,433.97	1,397,880.83	81+85.60												
															N 11° 00' 05.06" W	33.00'
CURVE CBD-340	PC	409,466.36	1,397,874.54	82+18.60	1° 07' 06.61" (RT)	1,500.00'	29.28'			1° 07' 06.61" (RT)	14.64'	0.00"	0.59"	15 MPH		
	PI	409,480.73	1,397,871.74	82+33.24												
	PT	409,495.16	1,397,869.23	82+47.88												
															N 9° 52' 58.45" W	124.00'
CURVE CBD-345	PC	409,617.32	1,397,847.95	83+71.88	2° 17' 59.75" (RT)	750.00'	30.11'			2° 17' 59.75" (RT)	15.06'	0.00"	0.53"	10 MPH		
	PI	409,632.15	1,397,845.36	83+86.93												
	PRC	409,647.07	1,397,843.37	84+01.99												
															N 7° 34' 58.71" W	0.00'
CURVE CBD-350	PRC	409,647.07	1,397,843.37	84+01.99	2° 17' 59.75" (LT)	750.00'	30.11'			2° 17' 59.75" (LT)	15.06'	0.00"	0.53"	10 MPH		
	PI	409,661.99	1,397,841.39	84+17.04												
	PT	409,676.83	1,397,838.80	84+32.09												
															N 9° 52' 58.45" W	44.23'
CURVE CBD-355	PC	409,720.40	1,397,831.21	84+76.33	2° 08' 01.65" (RT)	1,100.00'	40.97'			2° 08' 01.65" (RT)	20.49'	0.00"	0.81"	15 MPH		
	PI	409,740.58	1,397,827.70	84+96.81												
	PT	409,760.88	1,397,824.93	85+17.29												
															N 7° 44' 56.81" W	33.00'
CURVE CBD-360	PC	409,793.58	1,397,820.48	85+50.29	2° 03' 15.68" (LT)	1,100.00'	39.44'			2° 03' 15.68" (LT)	19.72'	0.00"	0.81"	15 MPH		
	PI	409,813.12	1,397,817.82	85+70.01												
	PT	409,832.56	1,397,814.47	85+89.73												
															N 9° 48' 12.48" W	61.16'
CURVE CBD-365	PC	409,892.82	1,397,804.05	86+50.89	1° 06' 49.79" (LT)	1,500.00'	29.16'			1° 06' 49.79" (LT)	14.58'	0.00"	0.59"	15 MPH		
	PI	409,907.19	1,397,801.57	86+65.47												
	PT	409,921.50	1,397,798.81	86+80.05												
															N 10° 55' 02.27" W	33.00'
CURVE CBD-370	PC	409,953.91	1,397,792.56	87+13.05	1° 06' 49.79" (RT)	1,500.00'	29.16'			1° 06' 49.79" (RT)	14.58'	0.00"	0.59"	15 MPH		
	PI	409,968.22	1,397,789.80	87+27.63												
	PT	409,982.59	1,397,787.32	87+42.21												
															N 9° 48' 12.48" W	139.00'
CURVE CBD-375	TS	410,119.56	1,397,763.65	88+81.21	63° 34' 18.73" (LT)	65.62'	72.81'	30.00'	30.00'	89° 45' 58.39" (LT)	80.89'	0.00"	3.86"	8 MPH		
	SC	410,148.58	1,397,756.32	89+11.21												
	PI	410,199.27	1,397,749.87	89+62.10												
	CS	410,188.54	1,397,699.91	89+84.02												
	ST	410,185.83	1,397,670.11	90+14.02												
															S 80° 25' 49.12" W	608.97'
CURVE CBD-380	PC	410,084.59	1,397,069.61	96+22.99	1° 05' 37.89" (RT)	1,500.00'	28.64'			1° 05' 37.89" (RT)	14.32'	0.00"	0.59"	15 MPH		
	PI	410,082.21	1,397,055.49	96+37.31												
	PT	410,080.10	1,397,041.32	96+51.63												
															S 81° 31' 27.01" W	33.00'
CURVE CBD-385	PC	410,075.23	1,397,008.68	96+84.63	1° 12' 13.62" (LT)	1,500.00'	31.52'			1° 12' 13.62" (LT)	15.76'	0.00"	0.59"	15 MPH		
	PI	410,072.91	1,396,993.10	97+00.38												
	PT	410,070.26	1,396,977.56	97+16.14												
															S 80° 19' 13.39" W	121.31'
POE	POE	410,049.86	1,396,857.98	98+37.46												

CAUTION UNDERGROUND UTILITIES
2 WORKING DAYS
BEFORE YOU DIG
CALL 1-800-362-2764
OHIO UTILITY PROTECTION SERVICE
CALL NON-SERVICE FACILITY
OWNERS DIRECT

DOTE_Mono_PDF_Half.pltcfg
T:\29014A-Streetcar\CAD\Civil\S_G-AL-1004.dgn
1:10:13 PM
7/15/2012

CONTRACT DRAWING

PRINTS NOT BEARING THIS STAMP WERE MADE PRIOR TO ADVERTISING FOR BID AND ARE TO BE CONSIDERED OBSOLETE FOR CONTRACT PURPOSES.

Department of Transportation and Engineering

City of Cincinnati
City Hall
801 Plum Street
Cincinnati, Ohio 45202

CINCINNATI STREETCAR
CENTRAL BUSINESS DISTRICT

ALIGNMENT DATA

Revisions
No.

Drawn by	Designed by	Checked by	Reviewed by
JFL	CJC	SAJ	JTB
Date 7/02/12	Date 7/02/12	Date 7/02/12	Date 7/12/12

Consultant

PB HDR

File Number

ACC No.
23126

G-AL-1004

NOTES:

1. STORM & SANITARY SEWERS. REFER TO "SA" SERIES DRAWINGS.
2. REFER TO "TS" SERIES DRAWINGS FOR DISPOSITION OF TRACK SLAB OVER EXISTING SUBWAY TUNNEL.
3. INSTALL EMPTY CONDUIT CROSSING FOR FUTURE UTILITY USE. SEE DETAIL SHEET G-MD-1001.
4. OCS POLE FOUNDATION. PROVIDE GROUNDING STRAP TO TRACK SLAB REBAR PER SHEET G-OD-0129 AND DETAIL 2 ON SHEET G-PS-0101. REFER TO "OL" SERIES DRAWINGS FOR LOCATION.

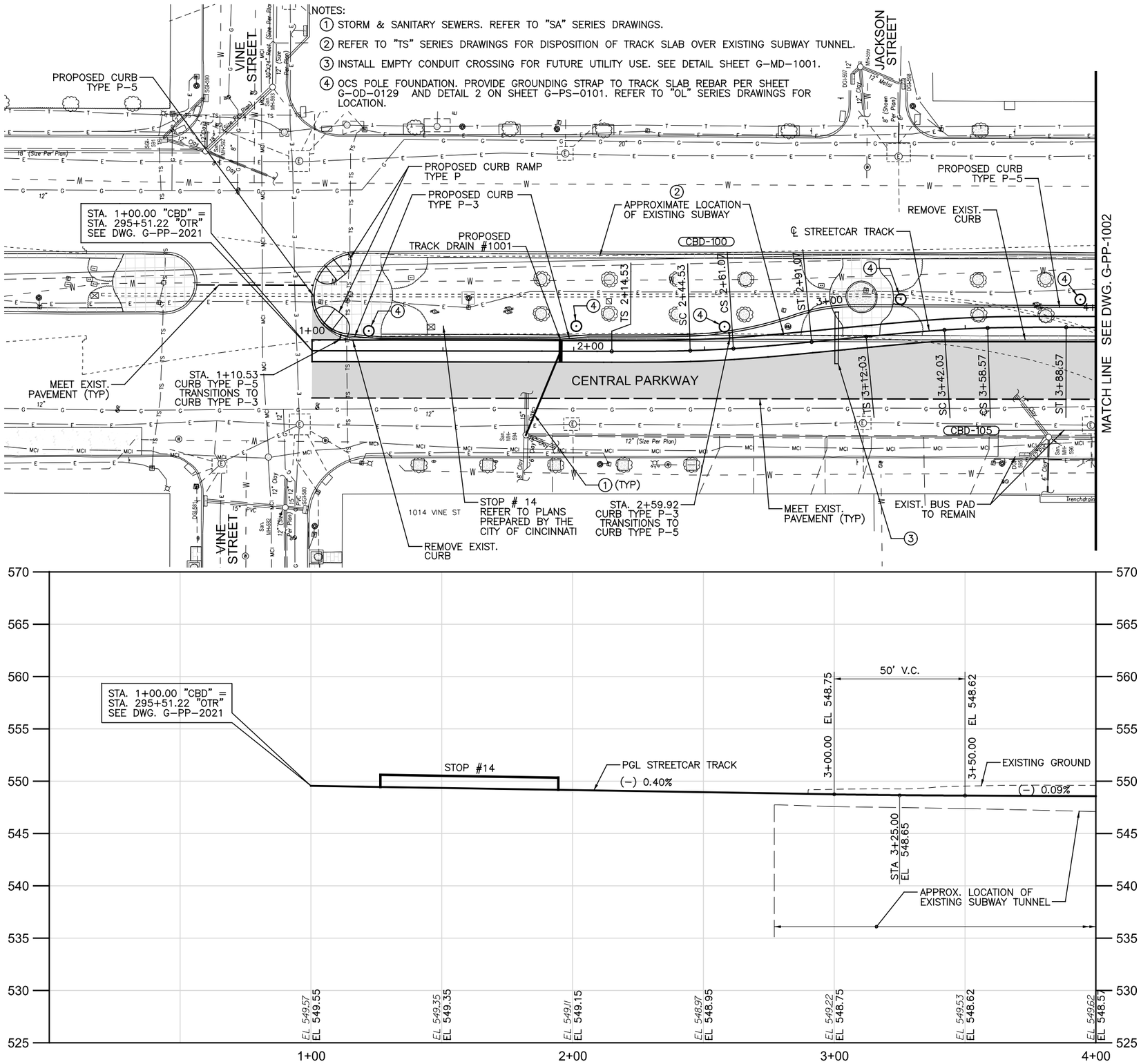

LEGEND:

- PAVEMENT RECONSTRUCTION
- PAVEMENT MILL & OVERLAY
- STRUCTURAL OVERLAY
- REMOVE AND REPLACE APPROACH SLAB
- REMOVE PAVER CROSSWALK
- SIDEWALK RECONSTRUCTION
- EXISTING BASEMENT ENCROACHMENT
- CBD-100 CURVE IDENTIFICATION SYMBOL
- EXISTING RAILS

CENTRAL PARKWAY SPECIFIC NOTES

1. AT LEAST 6 MONTHS PRIOR TO COMMENCING TRACK SLAB INSTALLATION, CONTRACTOR SHALL POTHOLE TO FIELD LOCATE HORIZONTAL AND VERTICAL LOCATION OF ALL NORTH, SOUTH EXISTING UTILITIES CROSSING CENTRAL PARKWAY AS WELL AS ALL PARALLEL EXISTING UTILITIES WITHIN 20 FEET OF THE TRACK SLAB. CONTRACTOR SHALL PROVIDE THE ENGINEER WITH THE RESULTS OF THE POTHOLING INVESTIGATION AND THE DATA COLLECTED WILL BE USED TO EVALUATE THE NEED FOR ADDITIONAL UTILITY RELOCATIONS.

2. FOR REWORK OF EXISTING CENTRAL PARKWAY MEDIAN, INCLUDING CROSS WALKS, REFER TO PLANS PREPARED BY THE CITY OF CINCINNATI.

PAVEMENT WEDGING & GRINDING – THROUGHOUT THE PROJECT PROVIDE WEDGING OR GRINDING ADJACENT TO AND ABUTTING THE TRACK SLAB WHERE THE TRACK SLAB IS OPENED TO VEHICULAR TRAFFIC PRIOR TO THE ESTABLISHMENT OF FINAL PAVEMENT ELEVATIONS. CONFORM TO THE WEDGING REQUIREMENTS SET FORTH UNDER CIVIL AND TRACKWAY – GENERAL PROVISIONS. PROVIDE GRINDING WHERE NECESSARY TO CREATE A TEMPORARY TRANSITION WHERE TRACK SLAB IS INSTALLED BELOW EXISTING PAVEMENT.

CAUTION UNDERGROUND UTILITIES
2 WORKING DAYS
BEFORE YOU DIG
CALL 1-800-362-2764
OHIO UTILITY PROTECTION SERVICE
CALL NON-SERVICE FACILITY OWNERS DIRECT

GRAPHIC SCALE
20 0 20 40 80
(IN FEET)
1 inch = 20 ft. Full Size
1 inch = 40 ft. Half Size

CONTRACT DRAWING

PRINTS NOT BEARING THIS STAMP WERE MADE PRIOR TO ADVERTISING BID PRINTS MUST BE CONSIDERED OBSOLETE FOR CONTRACT PURPOSES.

Department of Transportation and Engineering

City of Cincinnati
City Hall
801 Plum Street
Cincinnati, Ohio 45202

CINCINNATI STREETCAR
CENTRAL BUSINESS DISTRICT
PLAN AND TRACK PROFILE - CENTRAL PARKWAY
STA 1+00.00 TO STA 4+00.00

Revisions
No.

	Date
Drawn by CJC	7/02/12
Designed by CJC	7/02/12
Checked by SAJ	7/02/12
Reviewed by JTB	7/12/12

Consultant
PB HDR

File Number

ACC No. 23126

G-PP-1001

DOTE_Mono_PDF_Half.pltcfg
T:\29014A-Streetcar\CAD\Civil\S_G-PP-1001.dgn
7/15/2012 1:13:46 PM

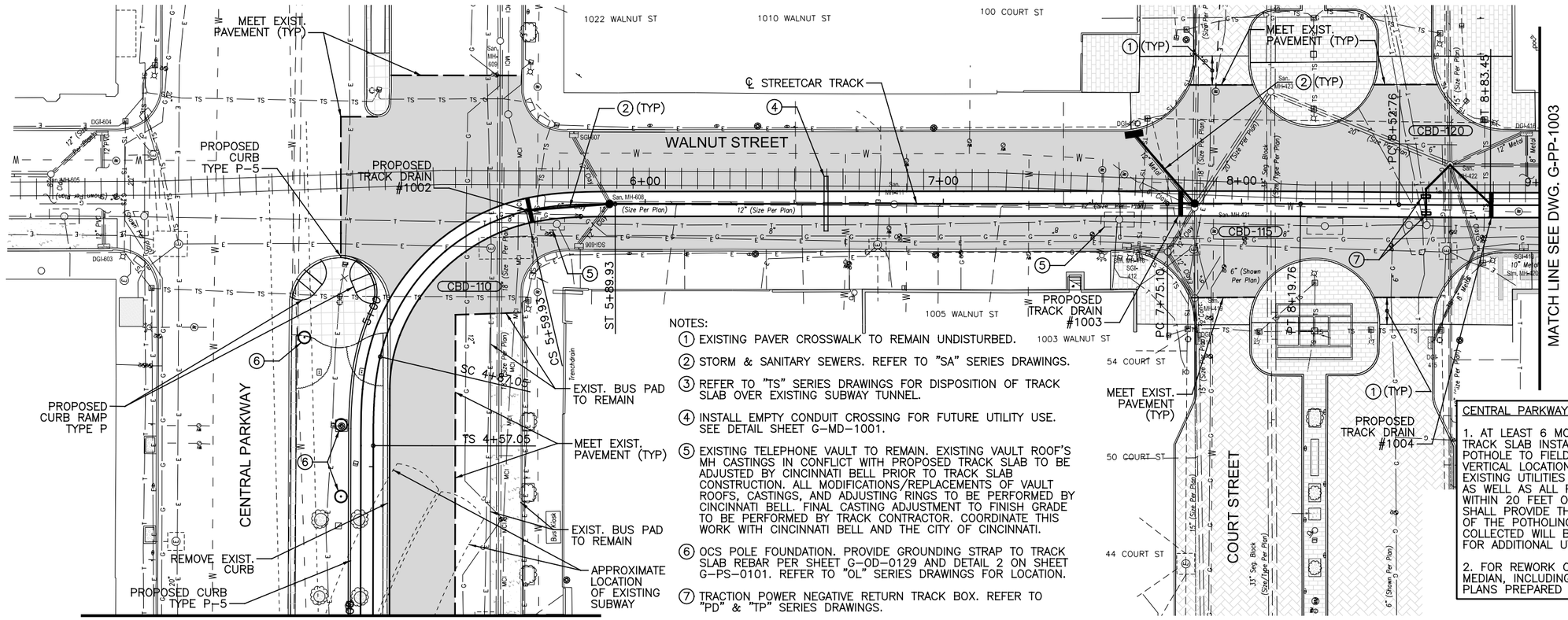

NOTES:

1. EXISTING PAVER CROSSWALK TO REMAIN UNDISTURBED.
2. STORM & SANITARY SEWERS. REFER TO "SA" SERIES DRAWINGS.
3. REFER TO "TS" SERIES DRAWINGS FOR DISPOSITION OF TRACK SLAB OVER EXISTING SUBWAY TUNNEL.
4. INSTALL EMPTY CONDUIT CROSSING FOR FUTURE UTILITY USE. SEE DETAIL SHEET G-MD-1001.
5. EXISTING TELEPHONE VAULT TO REMAIN. EXISTING VAULT ROOF'S MH CASTINGS IN CONFLICT WITH PROPOSED TRACK SLAB TO BE ADJUSTED BY CINCINNATI BELL PRIOR TO TRACK SLAB CONSTRUCTION. ALL MODIFICATIONS/REPLACEMENTS OF VAULT ROOFS, CASTINGS, AND ADJUSTING RINGS TO BE PERFORMED BY CINCINNATI BELL. FINAL CASTING ADJUSTMENT TO FINISH GRADE TO BE PERFORMED BY TRACK CONTRACTOR. COORDINATE THIS WORK WITH CINCINNATI BELL AND THE CITY OF CINCINNATI.
6. OCS POLE FOUNDATION. PROVIDE GROUNDING STRAP TO TRACK SLAB REBAR PER SHEET G-OD-0129 AND DETAIL 2 ON SHEET G-PS-0101. REFER TO "OL" SERIES DRAWINGS FOR LOCATION.
7. TRACTION POWER NEGATIVE RETURN TRACK BOX. REFER TO "PD" & "TP" SERIES DRAWINGS.

CENTRAL PARKWAY SPECIFIC NOTES

1. AT LEAST 6 MONTHS PRIOR TO COMMENCING TRACK SLAB INSTALLATION, CONTRACTOR SHALL POTHOLE TO FIELD LOCATE HORIZONTAL AND VERTICAL LOCATION OF ALL NORTH, SOUTH EXISTING UTILITIES CROSSING CENTRAL PARKWAY AS WELL AS ALL PARALLEL EXISTING UTILITIES WITHIN 20 FEET OF THE TRACK SLAB. CONTRACTOR SHALL PROVIDE THE ENGINEER WITH THE RESULTS OF THE POTHOLING INVESTIGATION AND THE DATA COLLECTED WILL BE USED TO EVALUATE THE NEED FOR ADDITIONAL UTILITY RELOCATIONS.

2. FOR REWORK OF EXISTING CENTRAL PARKWAY MEDIAN, INCLUDING CROSS WALKS, REFER TO PLANS PREPARED BY THE CITY OF CINCINNATI.

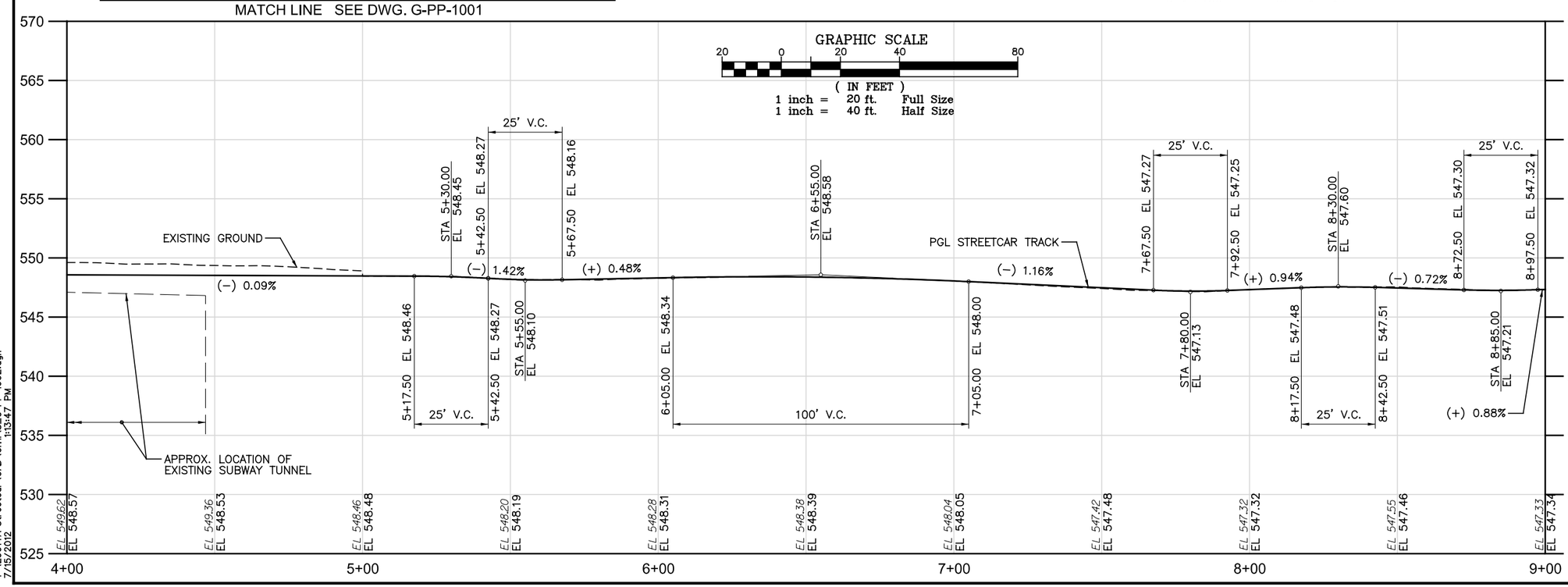

CAUTION UNDERGROUND UTILITIES
2 WORKING DAYS
BEFORE YOU DIG
CALL 1-800-362-2764
OHIO UTILITY PROTECTION SERVICE
CALL NON-SERVICE FACILITY OWNERS DIRECT

DOTE_Mono_PDF_Half.pltcfg
T:\29014A-Streetcar\CAD\Civil\S_G-PP-1002.dgn
7/15/2012 1:3:47 PM

CITY OF CINCINNATI DEPARTMENT OF TRANSPORTATION & ENGINEERING

CONTRACT DRAWING

PRINTS NOT BEARING THIS STAMP WERE MADE PRIOR TO ADVERTISING FOR BIDS AND ARE TO BE CONSIDERED OBSOLETE FOR CONTRACT PURPOSES.

Department of Transportation and Engineering

City of Cincinnati
City Hall
801 Plum Street
Cincinnati, Ohio 45202

CINCINNATI STREETCAR
CENTRAL BUSINESS DISTRICT
PLAN AND TRACK PROFILE - WALNUT STREET
STA 4+00 TO STA 9+00

Revisions

No.		Date
		7/02/12
		7/02/12
		7/02/12
		7/12/12

Drawn by CJC
Designed by CJC
Checked by SAJ
Reviewed by JTB

Consultant

PB HDR

File Number

ACC No. 23126

G-PP-1002

NOTES:

1. STORM & SANITARY SEWERS. REFER TO "SA" SERIES DRAWINGS.
2. TAPER TRACK SLAB TO EDGE OF EXISTING BUS PAD.
3. INSTALL EMPTY CONDUIT CROSSING FOR FUTURE UTILITY USE. SEE DETAIL SHEET G-MD-1001.
4. EXISTING TELEPHONE VAULT TO REMAIN. EXISTING VAULT ROOF'S MH CASTINGS IN CONFLICT WITH PROPOSED TRACK SLAB TO BE ADJUSTED BY CINCINNATI BELL PRIOR TO TRACK SLAB CONSTRUCTION. ALL MODIFICATIONS/REPLACEMENTS OF VAULT ROOFS, CASTINGS, AND ADJUSTING RINGS TO BE PERFORMED BY CINCINNATI BELL. FINAL CASTING ADJUSTMENT TO FINISH GRADE TO BE PERFORMED BY TRACK CONTRACTOR. COORDINATE THIS WORK WITH CINCINNATI BELL AND THE CITY OF CINCINNATI.

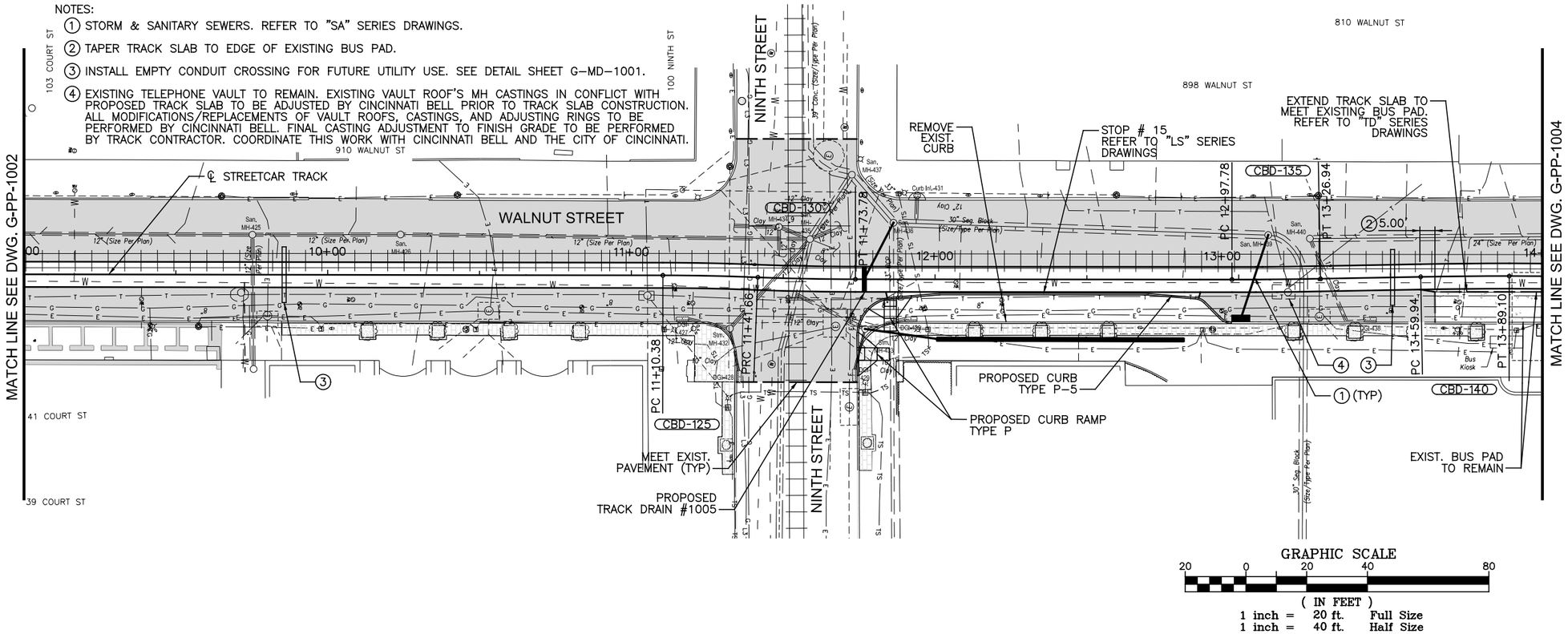

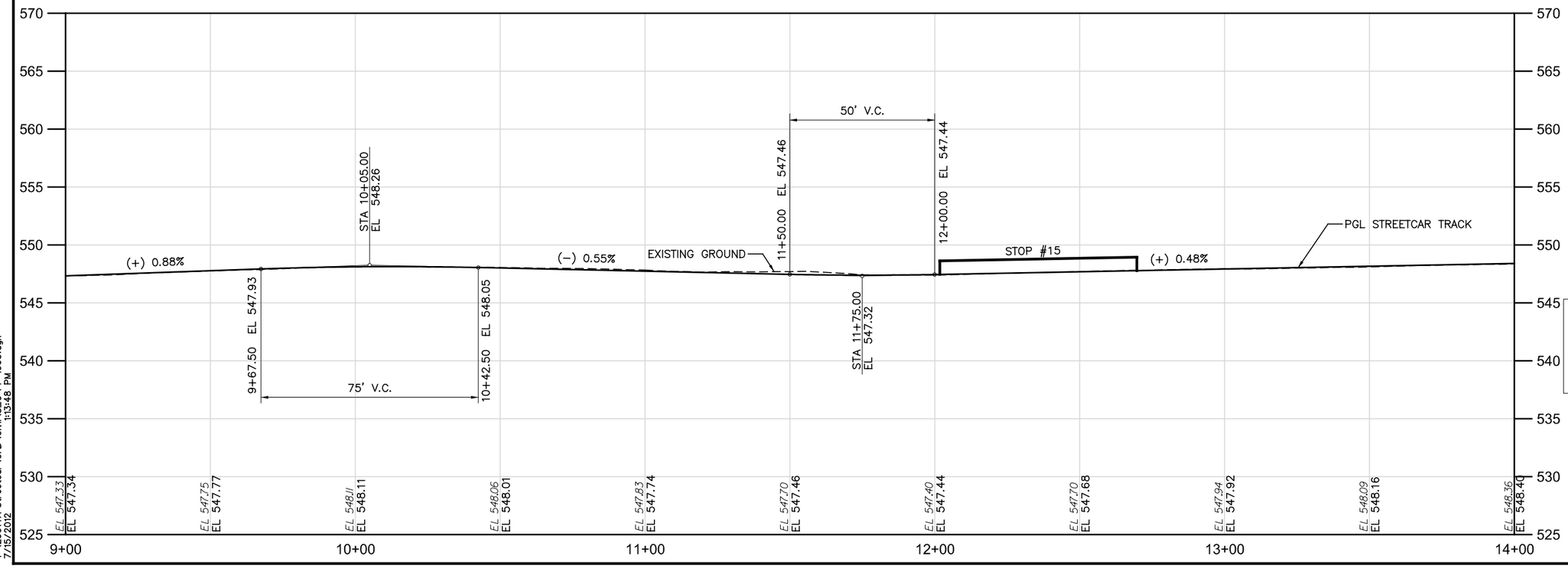

CAUTION UNDERGROUND UTILITIES
2 WORKING DAYS
BEFORE YOU DIG
CALL 1-800-362-2764
OHIO UTILITY PROTECTION SERVICE
CALL NON-SERVICE FACILITY
OWNERS DIRECT

DOTE_Mono_PDF_Half.pltcfg
T:\29014A-Streetcar\CAD\Civil\S_G-PP-1003.dgn
7/15/2012 1:13:48 PM

DEPARTMENT OF TRANSPORTATION & ENGINEERING CITY OF CINCINNATI OHIO

CONTRACT DRAWING

PRINTS NOT BEARING THIS STAMP WERE MADE PRIOR TO ADVERTISING FOR BIDS AND ARE CONSIDERED OBSOLETE FOR CONTRACT PURPOSES.

Department of Transportation and Engineering

City of Cincinnati
City Hall
801 Plum Street
Cincinnati, Ohio 45202

CINCINNATI STREETCAR
CENTRAL BUSINESS DISTRICT
PLAN AND TRACK PROFILE - WALNUT STREET
STA 9+00 TO STA 14+00

Revisions
No.

Drawn by CJC	Date 7/02/12	
Designed by CJC	Date 7/02/12	
Checked by SAJ	Date 7/02/12	
Reviewed by JTB	Date 7/12/12	

Consultant

PB HDR

File Number

ACC No. 23126

G-PP-1003

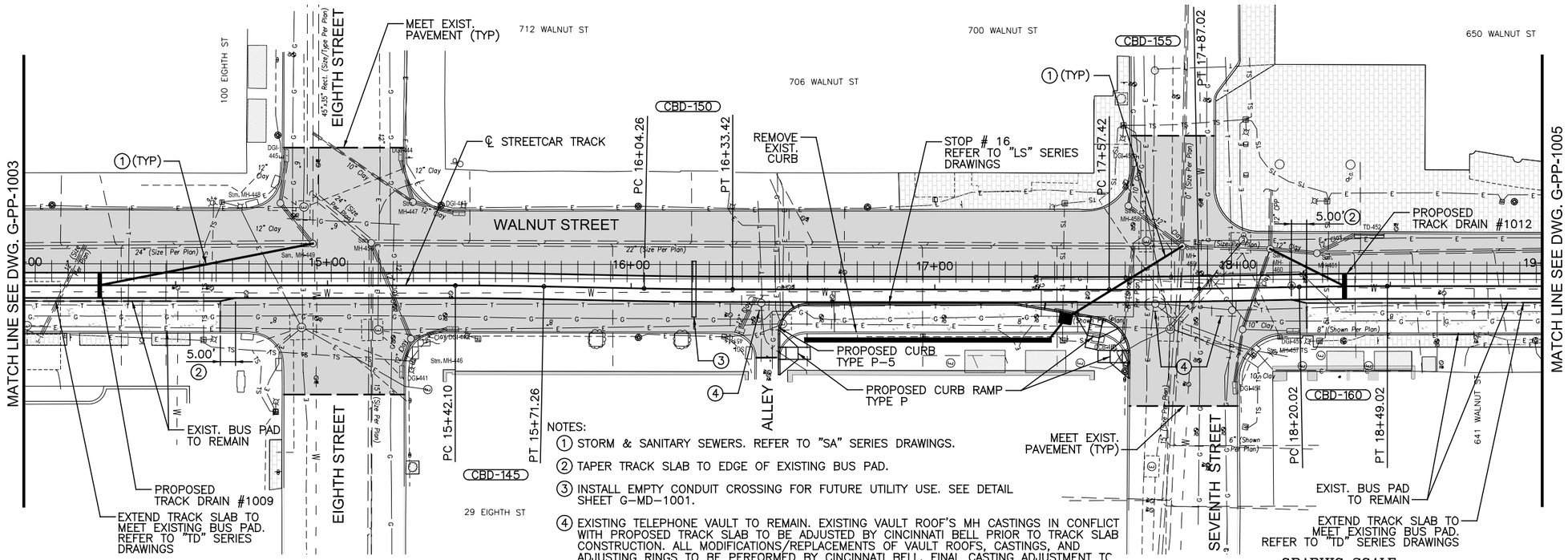

NOTES:

1. STORM & SANITARY SEWERS. REFER TO "SA" SERIES DRAWINGS.
2. TAPER TRACK SLAB TO EDGE OF EXISTING BUS PAD.
3. INSTALL EMPTY CONDUIT CROSSING FOR FUTURE UTILITY USE. SEE DETAIL SHEET G-MD-1001.
4. EXISTING TELEPHONE VAULT TO REMAIN. EXISTING VAULT ROOF'S MH CASTINGS IN CONFLICT WITH PROPOSED TRACK SLAB TO BE ADJUSTED BY CINCINNATI BELL PRIOR TO TRACK SLAB CONSTRUCTION. ALL MODIFICATIONS/REPLACEMENTS OF VAULT ROOFS, CASTINGS, AND ADJUSTING RINGS TO BE PERFORMED BY CINCINNATI BELL. FINAL CASTING ADJUSTMENT TO FINISH GRADE TO BE PERFORMED BY TRACK CONTRACTOR. COORDINATE THIS WORK WITH CINCINNATI BELL AND THE CITY OF CINCINNATI.

GRAPHIC SCALE

20 0 20 40 80

(IN FEET)
1 inch = 20 ft. Full Size
1 inch = 40 ft. Half Size

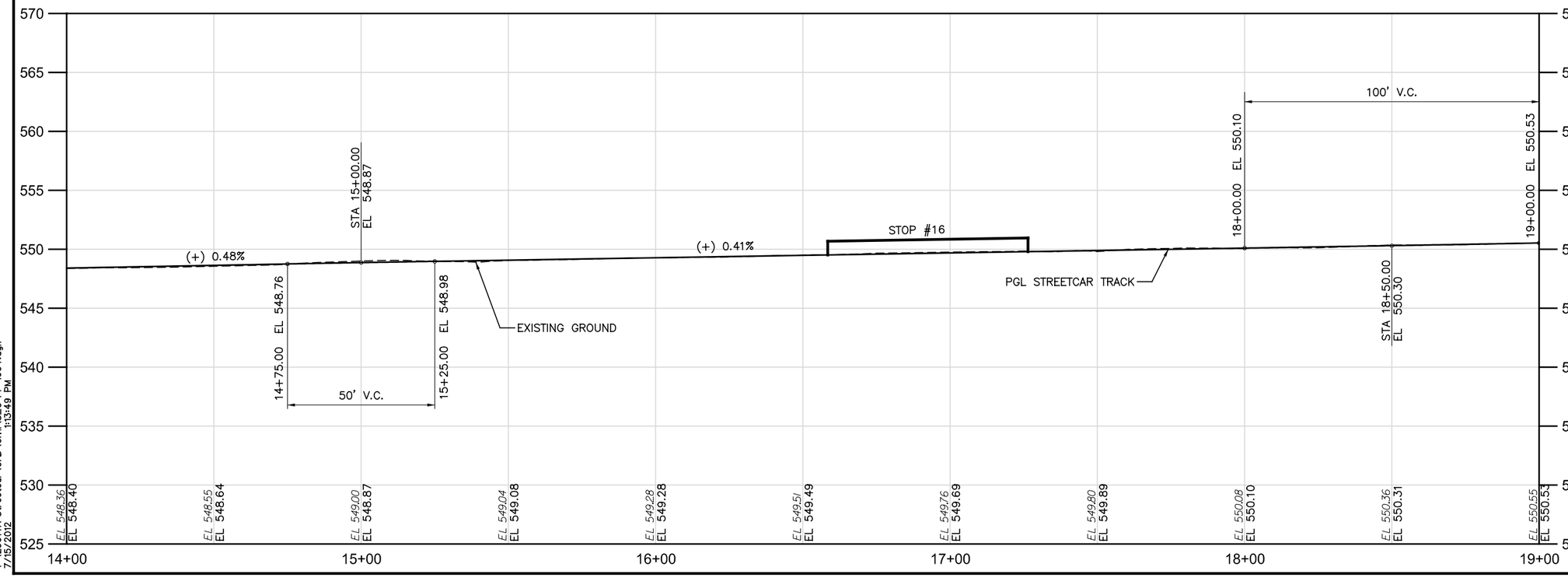

CAUTION UNDERGROUND UTILITIES
2 WORKING DAYS
BEFORE YOU DIG
CALL 1-800-362-2764
OHIO UTILITY PROTECTION SERVICE
CALL NON-SERVICE FACILITY
OWNERS DIRECT

DOTE_Mono_PDF_Half.pltcfg
T:\29014A-Streetcar\CAD\Civil\S_G-PP-1004.dgn
7/15/2012 1:13:49 PM

DEPARTMENT OF TRANSPORTATION & ENGINEERING
CITY OF CINCINNATI OHIO

CONTRACT DRAWING

PRINTS NOT BEARING THIS STAMP WERE MADE PRIOR TO ADVERTISING FOR BIDS AND ARE TO BE CONSIDERED OBSOLETE FOR CONTRACT PURPOSES.

Department of Transportation and Engineering

City of Cincinnati
City Hall
801 Plum Street
Cincinnati, Ohio 45202

CINCINNATI STREETCAR
CENTRAL BUSINESS DISTRICT
PLAN AND TRACK PROFILE - WALNUT STREET
STA 14+00 TO STA 19+00

Revisions
No.

Drawn by CJC	Date 7/02/12
Designed by CJC	Date 7/02/12
Checked by SAJ	Date 7/02/12
Reviewed by JTB	Date 7/12/12

Consultant

PB HDR

File Number

ACC No. 23126

G-PP-1004

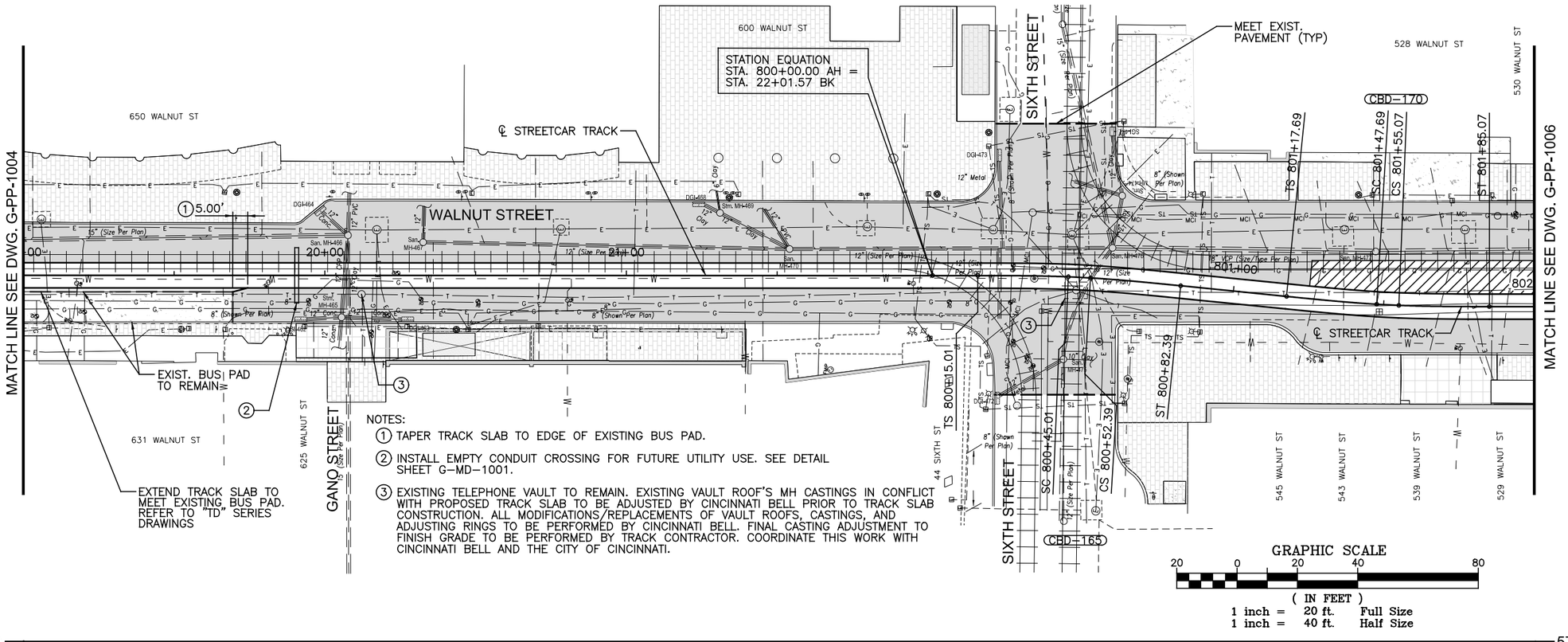

NOTES:

1. TAPER TRACK SLAB TO EDGE OF EXISTING BUS PAD.
2. INSTALL EMPTY CONDUIT CROSSING FOR FUTURE UTILITY USE. SEE DETAIL SHEET G-MD-1001.
3. EXISTING TELEPHONE VAULT TO REMAIN. EXISTING VAULT ROOF'S MH CASTINGS IN CONFLICT WITH PROPOSED TRACK SLAB TO BE ADJUSTED BY CINCINNATI BELL PRIOR TO TRACK SLAB CONSTRUCTION. ALL MODIFICATIONS/REPLACEMENTS OF VAULT ROOFS, CASTINGS, AND ADJUSTING RINGS TO BE PERFORMED BY CINCINNATI BELL. FINAL CASTING ADJUSTMENT TO FINISH GRADE TO BE PERFORMED BY TRACK CONTRACTOR. COORDINATE THIS WORK WITH CINCINNATI BELL AND THE CITY OF CINCINNATI.

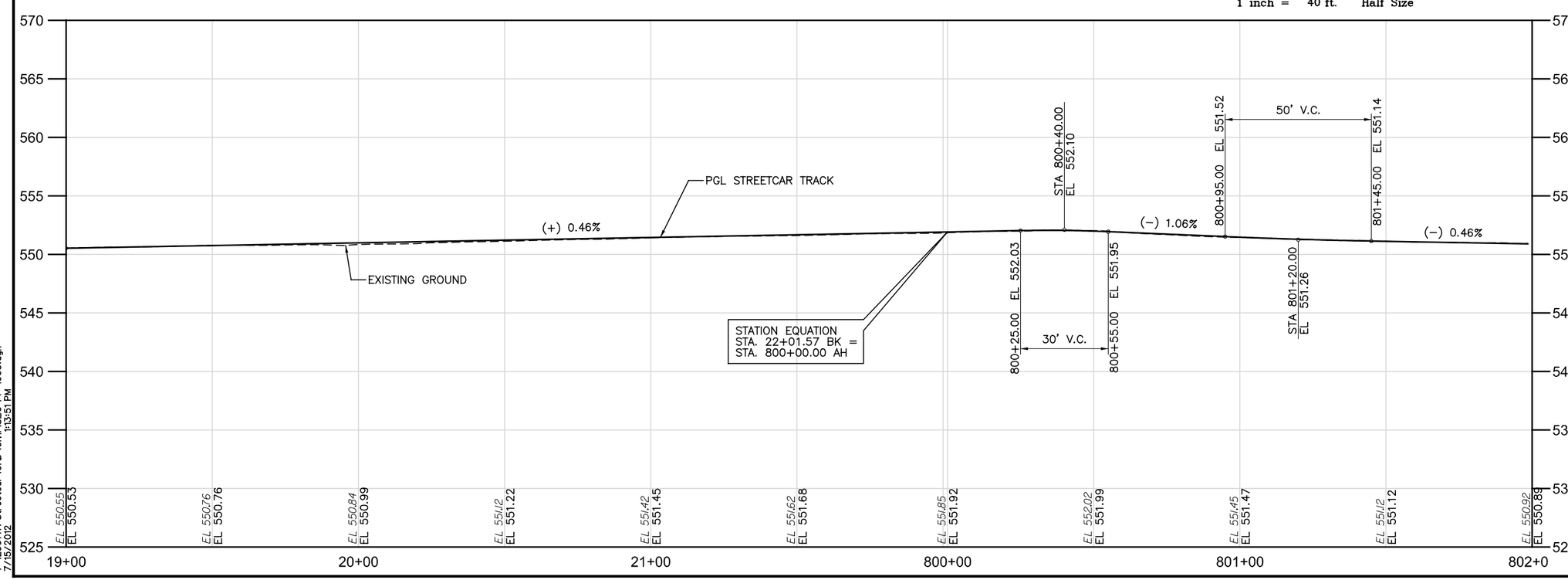

CAUTION UNDERGROUND UTILITIES
2 WORKING DAYS
BEFORE YOU DIG
CALL 1-800-362-2764
OHIO UTILITY PROTECTION SERVICE
CALL NON-SERVICE FACILITY
OWNERS DIRECT

DOTE_Mono_PDF_Half.pltcfg
T:\29014A-Streetcar\CAD\Civil\S_G-PP-1005.dgn
1:13:51 PM
7/15/2012

CONTRACT DRAWING

PRINTS NOT BEARING THIS STAMP WERE MADE PRIOR TO ADVERTISING FOR BIDS AND ARE TO BE CONSIDERED OBSOLETE FOR CONTRACT PURPOSES.

Department of Transportation and Engineering

City of Cincinnati
City Hall
801 Plum Street
Cincinnati, Ohio 45202

CINCINNATI STREETCAR
CENTRAL BUSINESS DISTRICT
PLAN AND TRACK PROFILE - WALNUT STREET
STA 19+00 TO STA 802+00

Revisions
No.

Drawn by CJC	Date 7/02/12
Designed by CJC	Date 7/02/12
Checked by SAJ	Date 7/02/12
Reviewed by JTB	Date 7/12/12

Consultant

PB HDR

File Number

ACC No. 23126

G-PP-1005

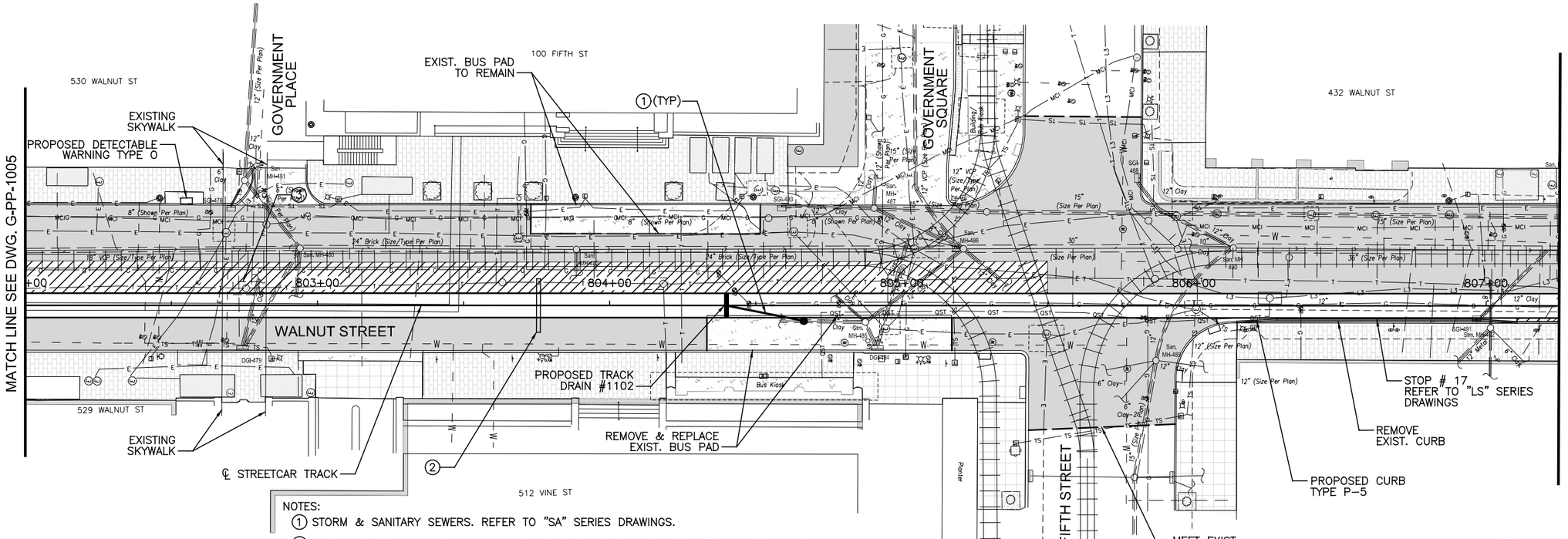

NOTES:

1. STORM & SANITARY SEWERS. REFER TO "SA" SERIES DRAWINGS.
2. INSTALL EMPTY CONDUIT CROSSING FOR FUTURE UTILITY USE. SEE DETAIL SHEET G-MD-1001.
3. EXISTING TELEPHONE VAULT TO REMAIN. EXISTING VAULT ROOF'S MH CASTINGS IN CONFLICT WITH PROPOSED TRACK SLAB TO BE ADJUSTED BY CINCINNATI BELL PRIOR TO TRACK SLAB CONSTRUCTION. ALL MODIFICATIONS/REPLACEMENTS OF VAULT ROOFS, CASTINGS, AND ADJUSTING RINGS TO BE PERFORMED BY CINCINNATI BELL. FINAL CASTING ADJUSTMENT TO FINISH GRADE TO BE PERFORMED BY TRACK CONTRACTO COORDINATE THIS WORK WITH CINCINNATI BELL AND THE CITY OF CINCINNATI.

GRAPHIC SCALE

20 0 20 40 80

(IN FEET)
1 inch = 20 ft. Full Size
1 inch = 40 ft. Half Size

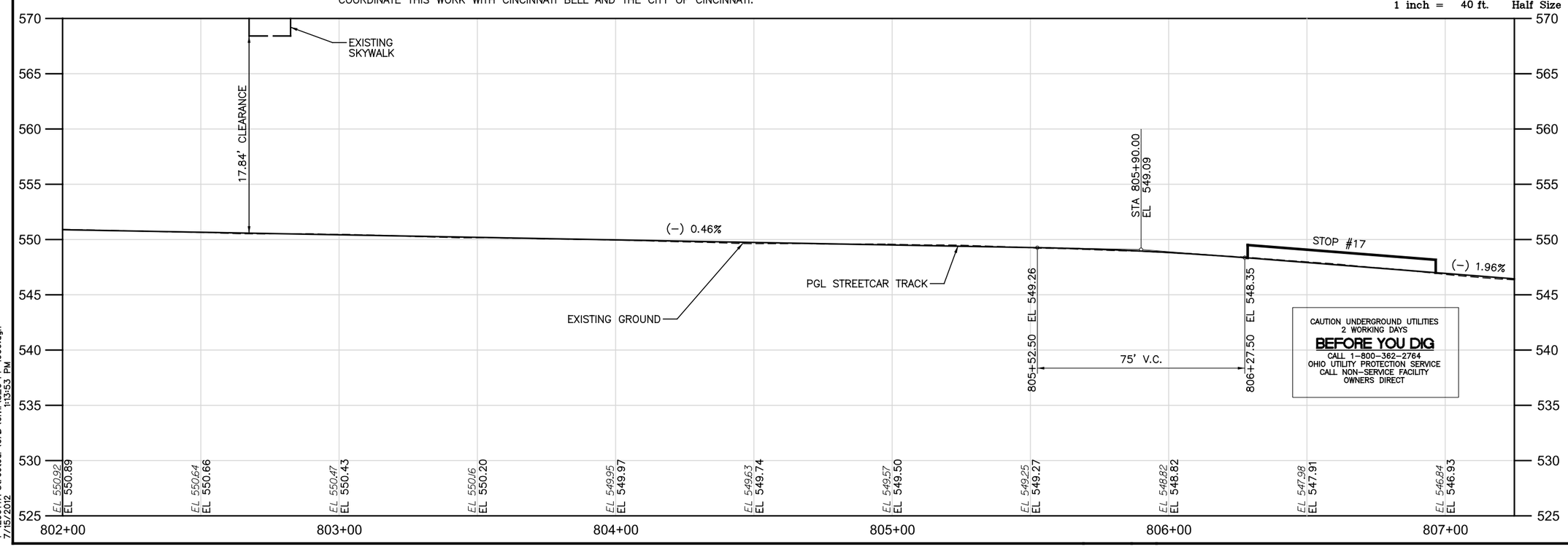

DOTE_Mono_PDF_Half.pltcfg
T:\29014A-Streetcar\CAD\Civil\S_G-PP-1006.dgn
7/15/2012 1:13:53 PM

CONTRACT DRAWING

PRINTS NOT BEARING THIS STAMP WERE MADE PRIOR TO ADVERTISING FOR BIDS AND ARE TO BE CONSIDERED OBSOLETE FOR CONTRACT PURPOSES.

Department of Transportation and Engineering

City of Cincinnati
City Hall
801 Plum Street
Cincinnati, Ohio 45202

CINCINNATI STREETCAR
CENTRAL BUSINESS DISTRICT
PLAN AND TRACK PROFILE - WALNUT STREET
STA 802+00 TO STA 807+25

Revisions

No.				

Drawn by CJC	Date 7/02/12	Designed by CJC	Date 7/02/12
Checked by CJC	Date 7/02/12	Reviewed by SAJ	Date 7/12/12
Reviewed by JTB			

Consultant

PB HDR

File Number

ACC No. 23126

G-PP-1006

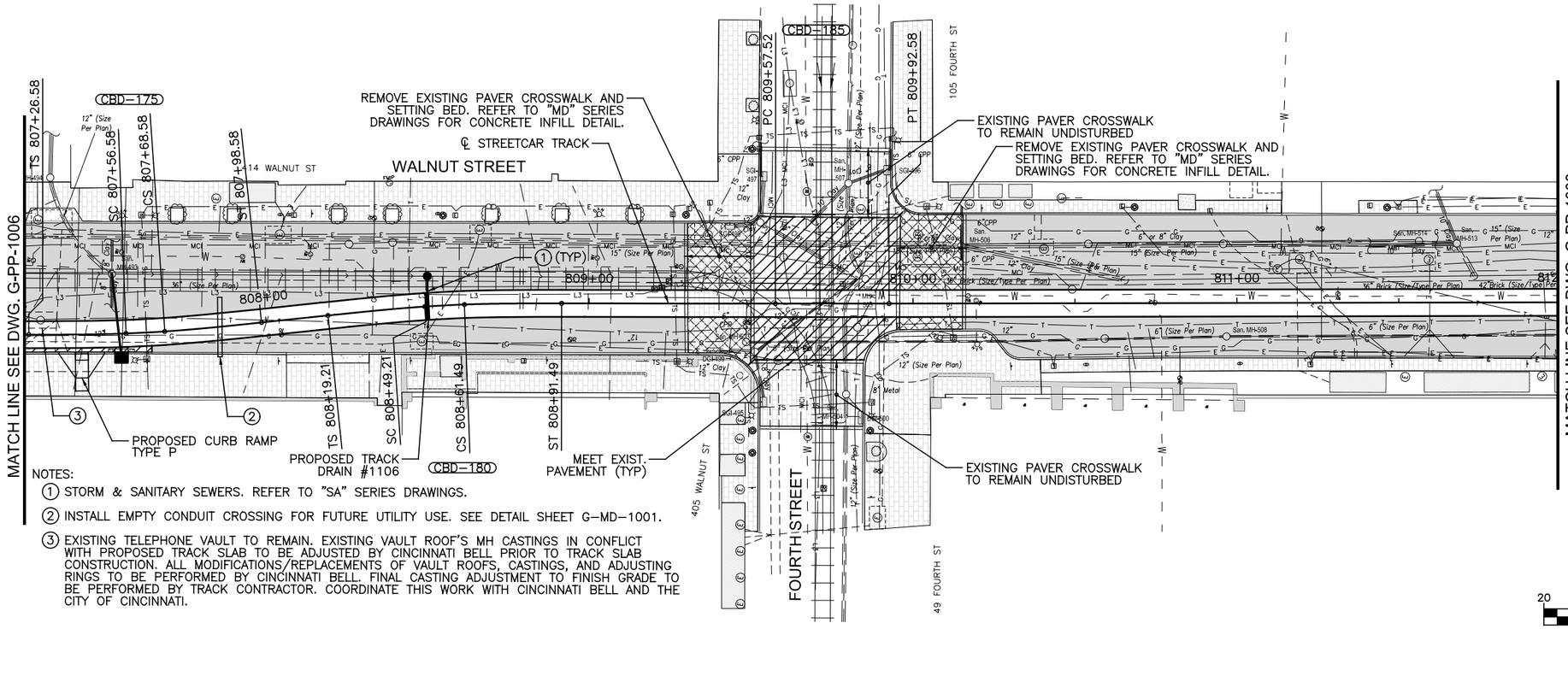

NOTES:

1. STORM & SANITARY SEWERS. REFER TO "SA" SERIES DRAWINGS.
2. INSTALL EMPTY CONDUIT CROSSING FOR FUTURE UTILITY USE. SEE DETAIL SHEET G-MD-1001.
3. EXISTING TELEPHONE VAULT TO REMAIN. EXISTING VAULT ROOF'S MH CASTINGS IN CONFLICT WITH PROPOSED TRACK SLAB TO BE ADJUSTED BY CINCINNATI BELL PRIOR TO TRACK SLAB CONSTRUCTION. ALL MODIFICATIONS/REPLACEMENTS OF VAULT ROOFS, CASTINGS, AND ADJUSTING RINGS TO BE PERFORMED BY CINCINNATI BELL. FINAL CASTING ADJUSTMENT TO FINISH GRADE TO BE PERFORMED BY TRACK CONTRACTOR. COORDINATE THIS WORK WITH CINCINNATI BELL AND THE CITY OF CINCINNATI.

GRAPHIC SCALE

20 0 20 40 80

(IN FEET)
1 inch = 20 ft. Full Size
1 inch = 40 ft. Half Size

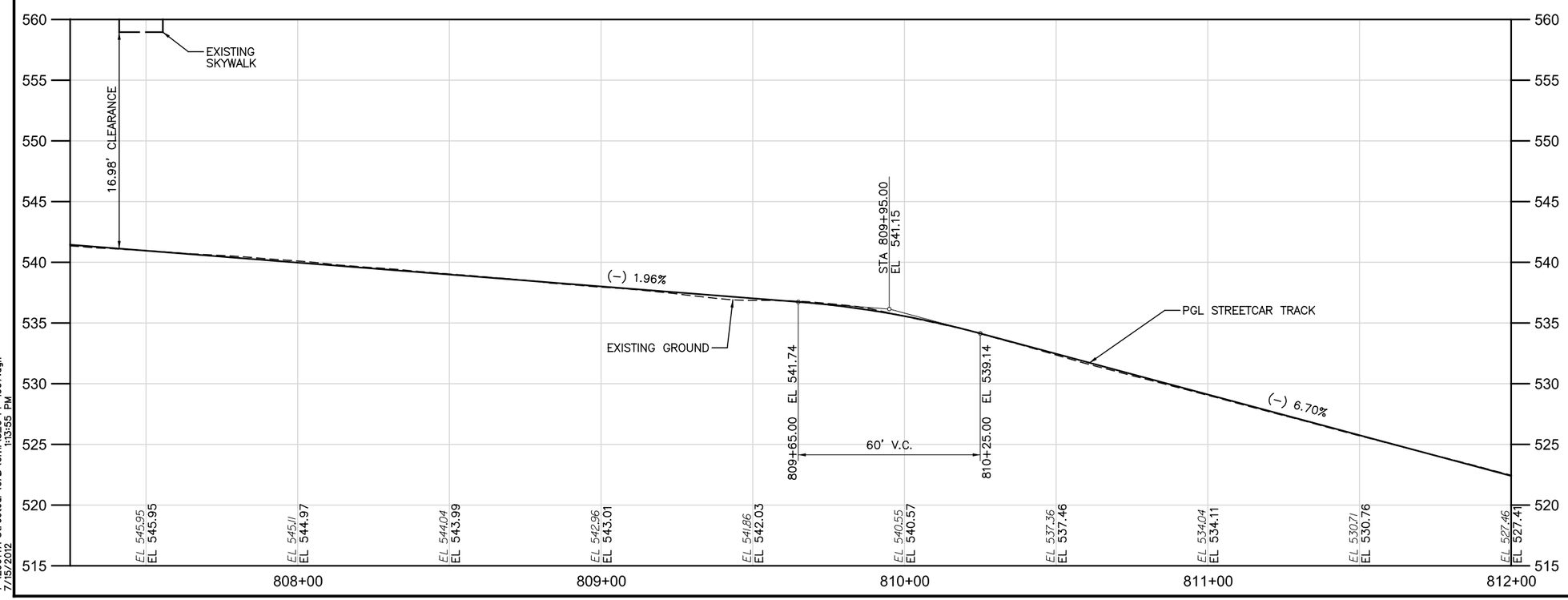

CAUTION UNDERGROUND UTILITIES
2 WORKING DAYS
BEFORE YOU DIG
CALL 1-800-362-2764
OHIO UTILITY PROTECTION SERVICE
CALL NON-SERVICE FACILITY
OWNERS DIRECT

DOTE_Mono_PDF_Half.pltcfg
T:\29014A-Streetcar\CAD\Civil\S_G-PP-1007.dgn
1:13:55 PM
7/15/2012

DEPARTMENT OF TRANSPORTATION & ENGINEERING
CITY OF CINCINNATI
OHIO

CONTRACT DRAWING

PRINTS NOT BEARING THIS STAMP WERE MADE PRIOR TO ADVERTISING FOR BIDS AND ARE TO BE CONSIDERED OBSOLETE FOR CONTRACT PURPOSES.

Department of Transportation and Engineering

City of Cincinnati
City Hall
801 Plum Street
Cincinnati, Ohio 45202

CINCINNATI STREETCAR
CENTRAL BUSINESS DISTRICT
PLAN AND TRACK PROFILE - WALNUT STREET
STA 807+25 TO STA 812+00

Revisions
No.

Drawn by CJC	Date 7/02/12
Designed by CJC	Date 7/02/12
Checked by SAJ	Date 7/02/12
Reviewed by JTB	Date 7/12/12

Consultant

PB HDR

File Number

ACC No. 23126

G-PP-1007

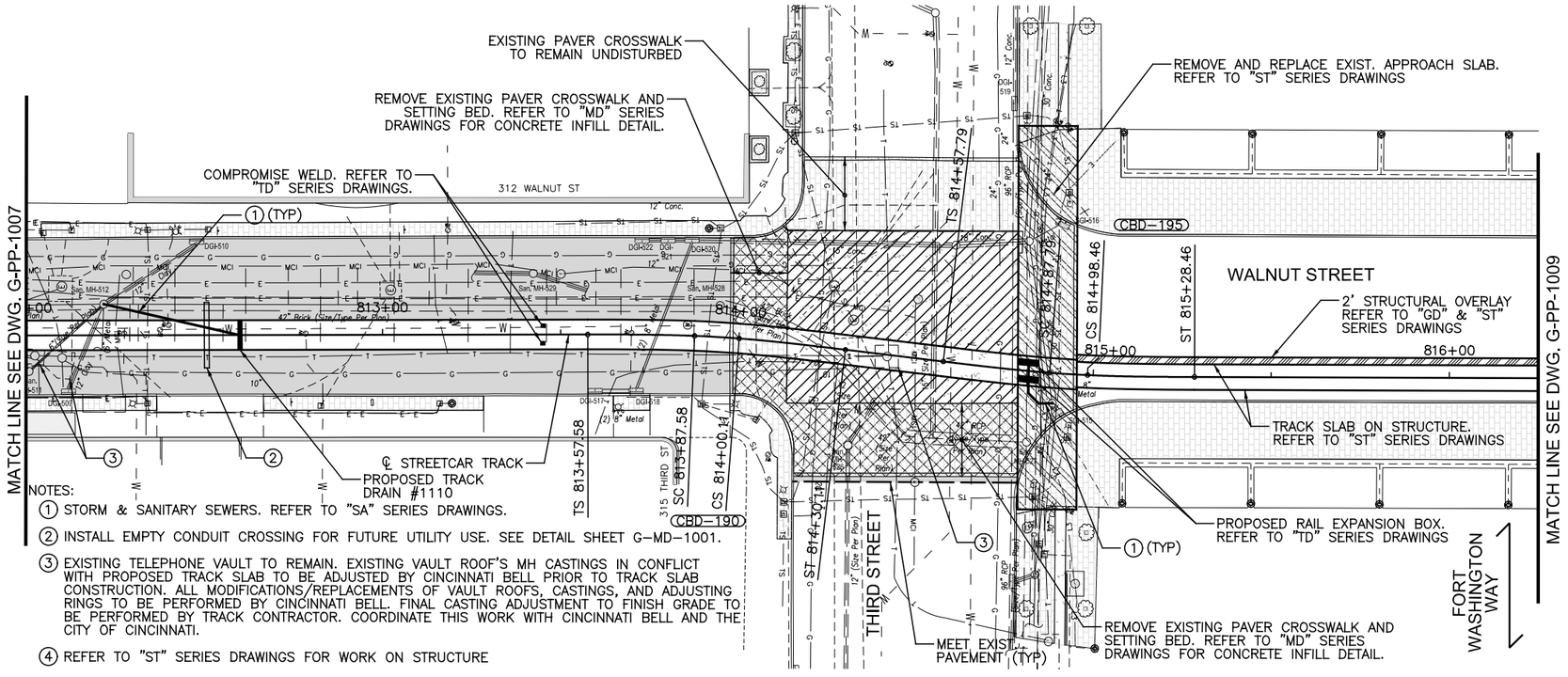

NOTES:

1. STORM & SANITARY SEWERS. REFER TO "SA" SERIES DRAWINGS.
2. INSTALL EMPTY CONDUIT CROSSING FOR FUTURE UTILITY USE. SEE DETAIL SHEET G-MD-1001.
3. EXISTING TELEPHONE VAULT TO REMAIN. EXISTING VAULT ROOF'S MH CASTINGS IN CONFLICT WITH PROPOSED TRACK SLAB TO BE ADJUSTED BY CINCINNATI BELL PRIOR TO TRACK SLAB CONSTRUCTION. ALL MODIFICATIONS/REPLACEMENTS OF VAULT ROOFS, CASTINGS, AND ADJUSTING RINGS TO BE PERFORMED BY CINCINNATI BELL. FINAL CASTING ADJUSTMENT TO FINISH GRADE TO BE PERFORMED BY TRACK CONTRACTOR. COORDINATE THIS WORK WITH CINCINNATI BELL AND THE CITY OF CINCINNATI.
4. REFER TO "ST" SERIES DRAWINGS FOR WORK ON STRUCTURE

GRAPHIC SCALE

20 0 20 40 80

(IN FEET)
1 inch = 20 ft. Full Size
1 inch = 40 ft. Half Size

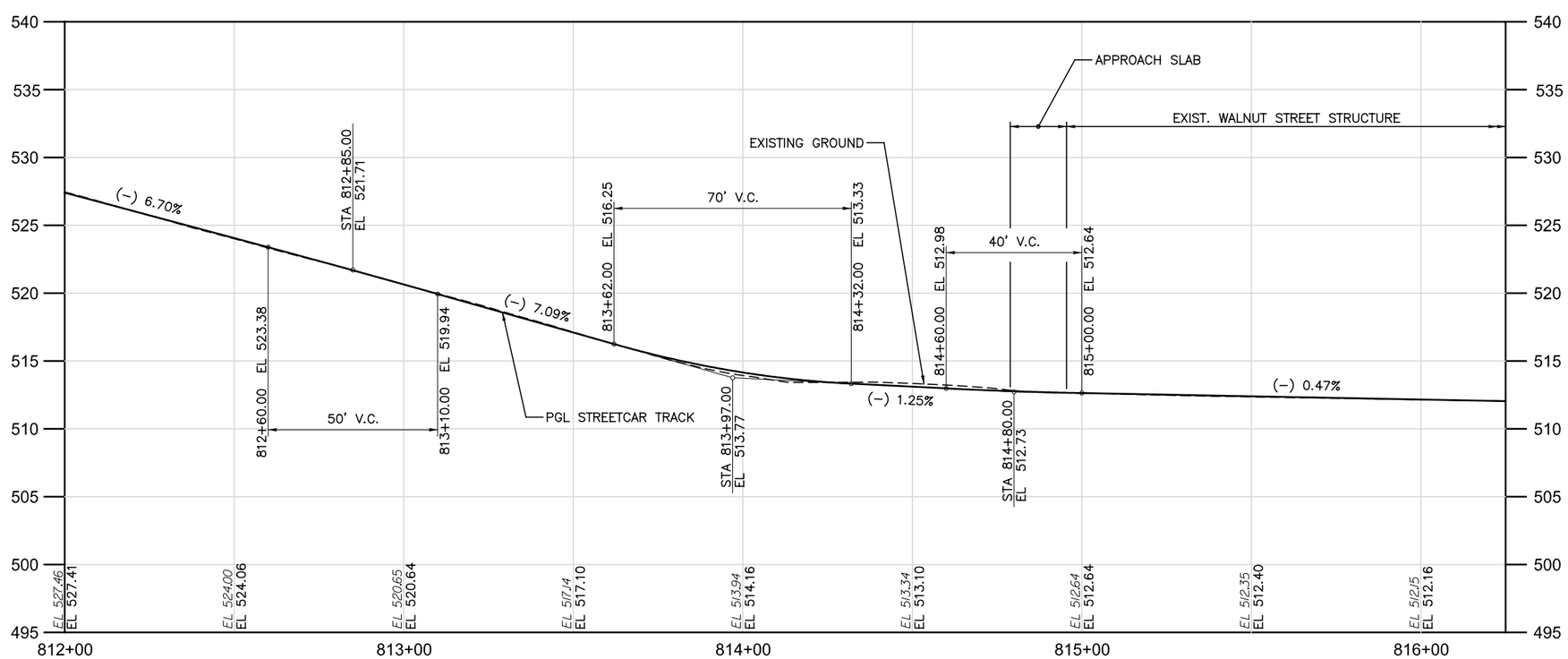

CAUTION UNDERGROUND UTILITIES
2 WORKING DAYS
BEFORE YOU DIG
CALL 1-800-362-2764
OHIO UTILITY PROTECTION SERVICE
CALL NON-SERVICE FACILITY
OWNERS DIRECT

DOTE_Mono_PDF_Half.pltcfg
T:\29014A-Streetcar\CAD\Civil\S_G-PP-1008.dgn
7/15/2012 1:13:57 PM

CONTRACT DRAWING

PRINTS NOT BEARING THIS STAMP WERE MADE PRIOR TO ADVERTISING FOR BIDS AND ARE TO BE CONSIDERED OBSOLETE FOR CONTRACT PURPOSES.

Department of Transportation and Engineering

City of Cincinnati
City Hall
801 Plum Street
Cincinnati, Ohio 45202

CINCINNATI STREETCAR
CENTRAL BUSINESS DISTRICT
PLAN AND TRACK PROFILE - WALNUT STREET
STA 812+00 TO STA 816+25

Revisions
No.

Drawn by CJC	Date 7/02/12	Designed by CJC	Date 7/02/12
Checked by SAJ	Date 7/02/12	Reviewed by JTB	Date 7/12/12

Consultant

PB HDR

File Number

ACC No. 23126

G-PP-1008

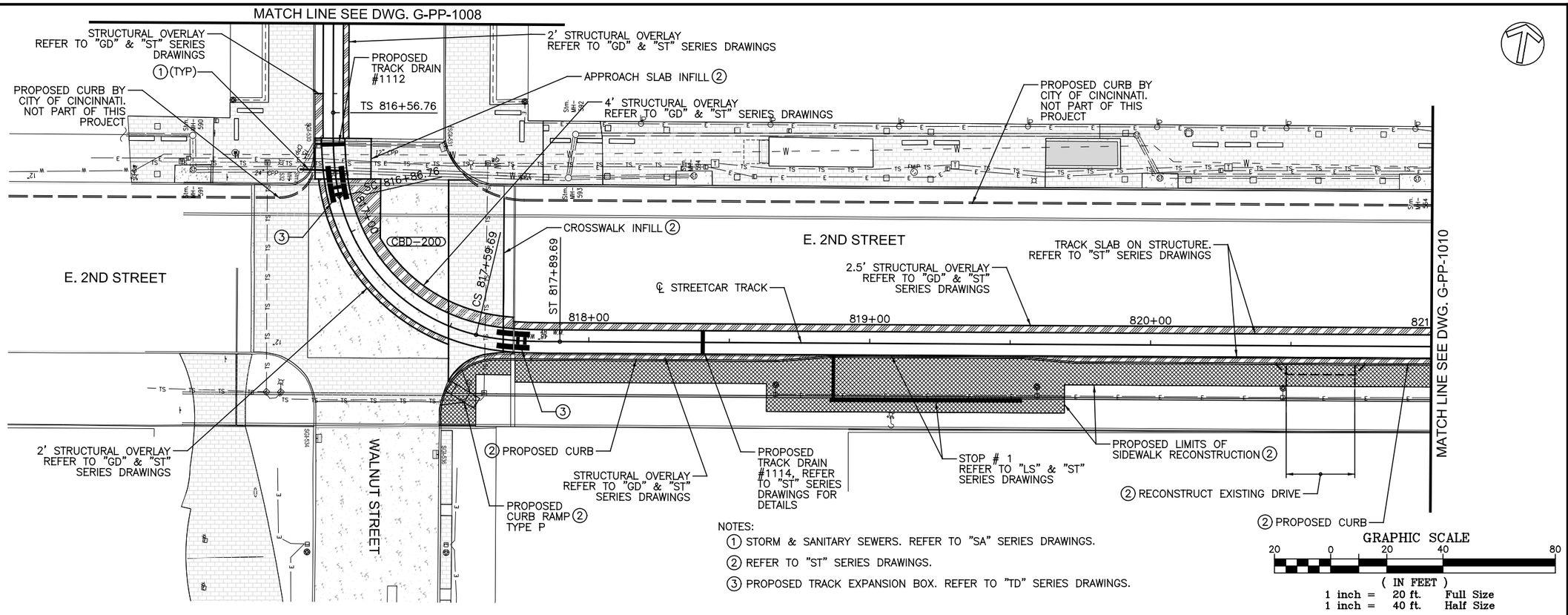

NOTES:

(1) STORM & SANITARY SEWERS. REFER TO "SA" SERIES DRAWINGS.

(2) REFER TO "ST" SERIES DRAWINGS.

(3) PROPOSED TRACK EXPANSION BOX. REFER TO "TD" SERIES DRAWINGS.

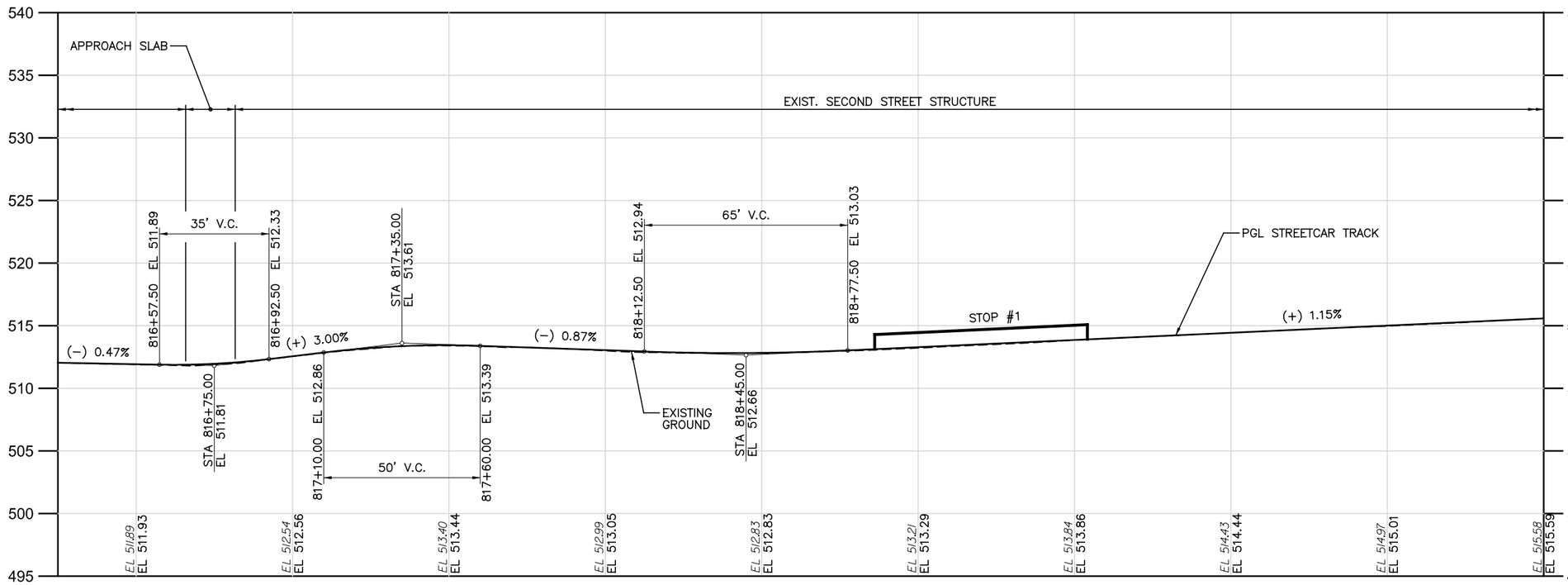

CAUTION UNDERGROUND UTILITIES
2 WORKING DAYS
BEFORE YOU DIG
CALL 1-800-362-2764
OHIO UTILITY PROTECTION SERVICE
CALL NON-SERVICE FACILITY OWNERS DIRECT

DOTE_Mono_PDF_Half.pltcfg
T:\29014A-Streetcar\CAD\Civil\S_G-PP-1009.dgn
1:13:58 PM
7/15/2012

CONTRACT DRAWING

PRINTS NOT BEARING THIS STAMP WERE MADE PRIOR TO ADVERTISING FOR BIDS AND ARE TO BE CONSIDERED OBSOLETE FOR CONTRACT PURPOSES.

Department of Transportation and Engineering

City of Cincinnati
City Hall
801 Plum Street
Cincinnati, Ohio 45202

CINCINNATI STREETCAR
CENTRAL BUSINESS DISTRICT
PLAN AND TRACK PROFILE - E. 2ND STREET
STA 816+25 TO STA 821+00

Revisions
No.

Drawn by CJC	Date 7/02/12
Designed by CJC	Date 7/02/12
Checked by SAJ	Date 7/02/12
Reviewed by JTB	Date 7/12/12

Consultant

PB HDR

File Number

ACC No. 23126

G-PP-1009

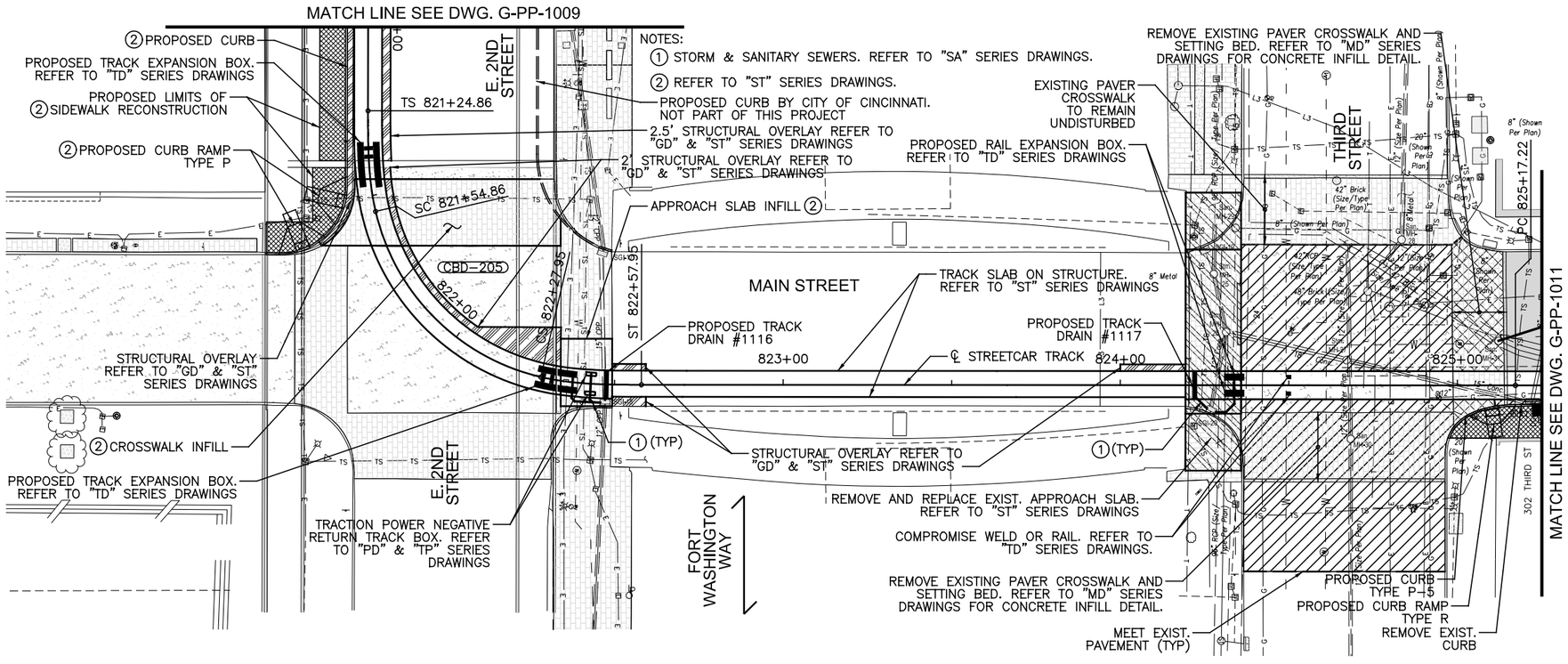

GRAPHIC SCALE

20 0 20 40 80

(IN FEET)
1 inch = 20 ft. Full Size
1 inch = 40 ft. Half Size

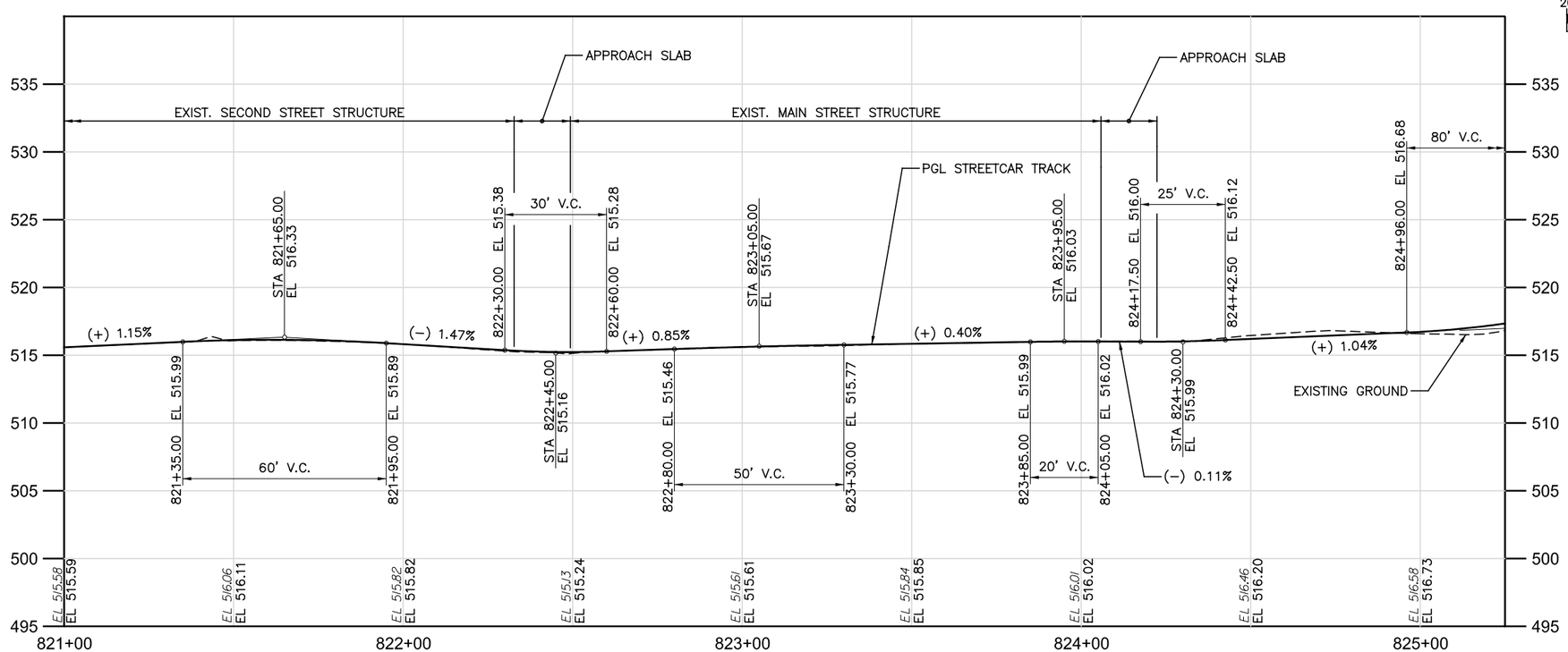

CAUTION UNDERGROUND UTILITIES
2 WORKING DAYS
BEFORE YOU DIG
CALL 1-800-362-2764
OHIO UTILITY PROTECTION SERVICE
CALL NON-SERVICE FACILITY OWNERS DIRECT

DOTE_Mono_PDF_Half.pltcfg
T:\29014A-Streetcar\CAD\Civil\S_G-PP-1010.dgn
7/15/2012 1:13:59 PM

CONTRACT DRAWING

PRINTS NOT BEARING THIS STAMP WERE MADE PRIOR TO ADVERTISING FOR BIDS AND ARE TO BE CONSIDERED OBSOLETE FOR CONTRACT PURPOSES.

Department of Transportation and Engineering

City of Cincinnati
City Hall
801 Plum Street
Cincinnati, Ohio 45202

CINCINNATI STREETCAR
CENTRAL BUSINESS DISTRICT
PLAN AND TRACK PROFILE - MAIN STREET
STA 821+00 TO STA 825+25

Revisions

No.		

Drawn by CJC	Date 7/02/12
Designed by CJC	Date 7/02/12
Checked by SAJ	Date 7/02/12
Reviewed by JTB	Date 7/12/12

Consultant

PB HDR

File Number

ACC No. 23126

G-PP-1010

NOTES:

1. STORM & SANITARY SEWERS. REFER TO "SA" SERIES DRAWINGS.
2. INSTALL EMPTY CONDUIT CROSSING FOR FUTURE UTILITY USE. SEE DETAIL SHEET G–MD–1001.
3. EXISTING INLET TO REMAIN. REFER TO "TD" SERIES DRAWINGS FOR MODIFICATIONS TO TRACK SLAB AT THIS LOCATION.

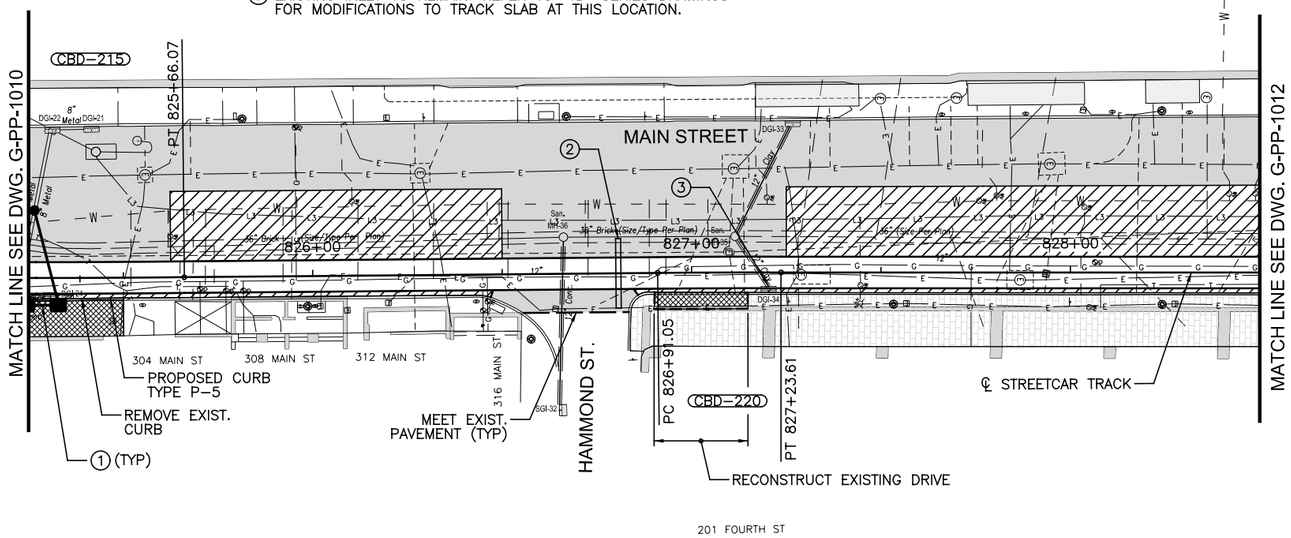

GRAPHIC SCALE

20 0 20 40 80

(IN FEET)
1 inch = 20 ft. Full Size
1 inch = 40 ft. Half Size

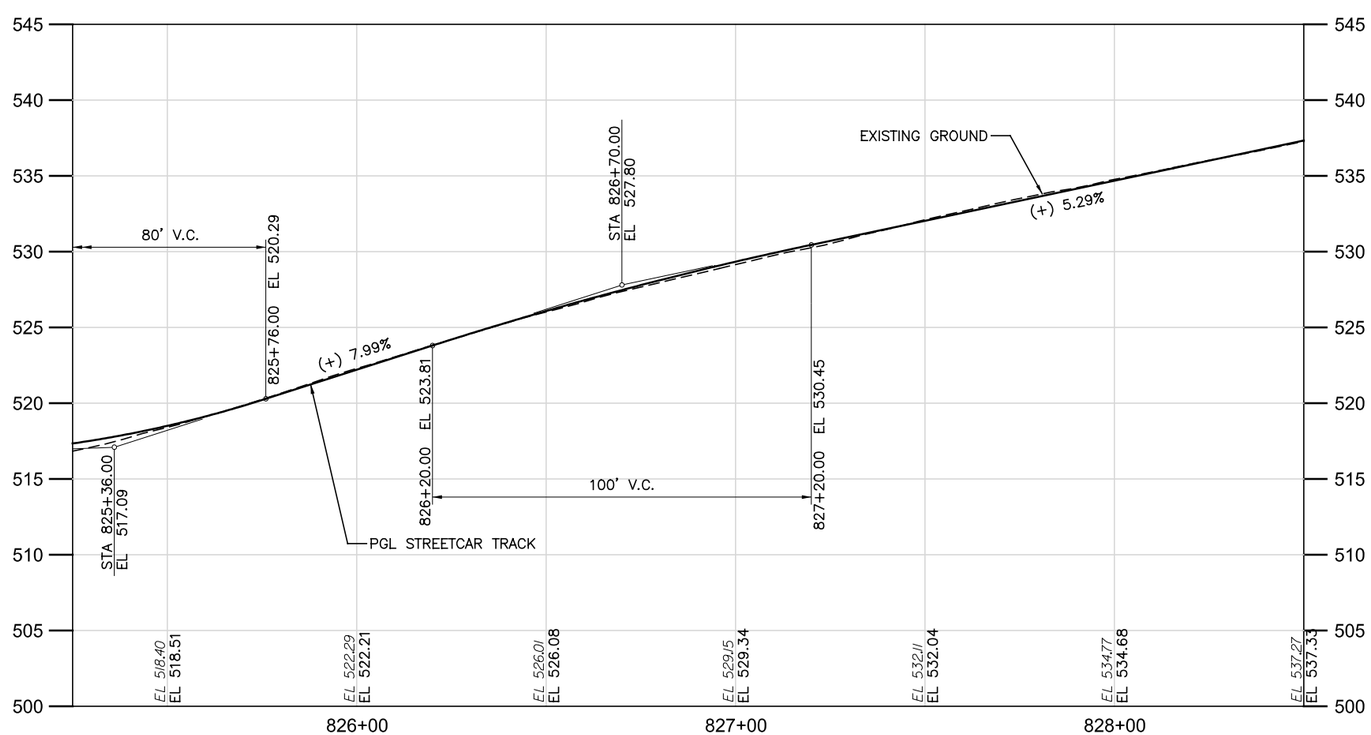

CAUTION UNDERGROUND UTILITIES
2 WORKING DAYS
BEFORE YOU DIG
CALL 1–800–362–2764
OHIO UTILITY PROTECTION SERVICE
CALL NON–SERVICE FACILITY
OWNERS DIRECT

CONTRACT DRAWING

PRINTS NOT BEARING THIS STAMP WERE MADE PRIOR TO ADVERTISING FOR BIDS AND ARE TO BE CONSIDERED OBSOLETE FOR CONTRACT PURPOSES.

Department of Transportation and Engineering

City of Cincinnati
City Hall
801 Plum Street
Cincinnati, Ohio 45202

CINCINNATI STREETCAR
CENTRAL BUSINESS DISTRICT
PLAN AND TRACK PROFILE - MAIN STREET
STA 825+25 TO STA 828+50

Revisions
No.

Drawn by CJC	Date 7/02/12	
Designed by CJC	Date 7/02/12	
Checked by CJC	Date 7/02/12	
Reviewed by SAJ / JTB	Date 7/12/12	

Consultant

PB HDR

File Number

ACC No. 23126

G-PP-1011

DOTE_Mono_PDF_Half.pltcfg
T:\29014A-Streetcar\CAD\Civil\S_G-PP-1011.dgn
7/15/2012 1:14:01 PM

NOTES:

1. STORM & SANITARY SEWERS. REFER TO "SA" SERIES DRAWINGS.
2. INSTALL EMPTY CONDUIT CROSSING FOR FUTURE UTILITY USE. SEE DETAIL SHEET G-MD-1001.

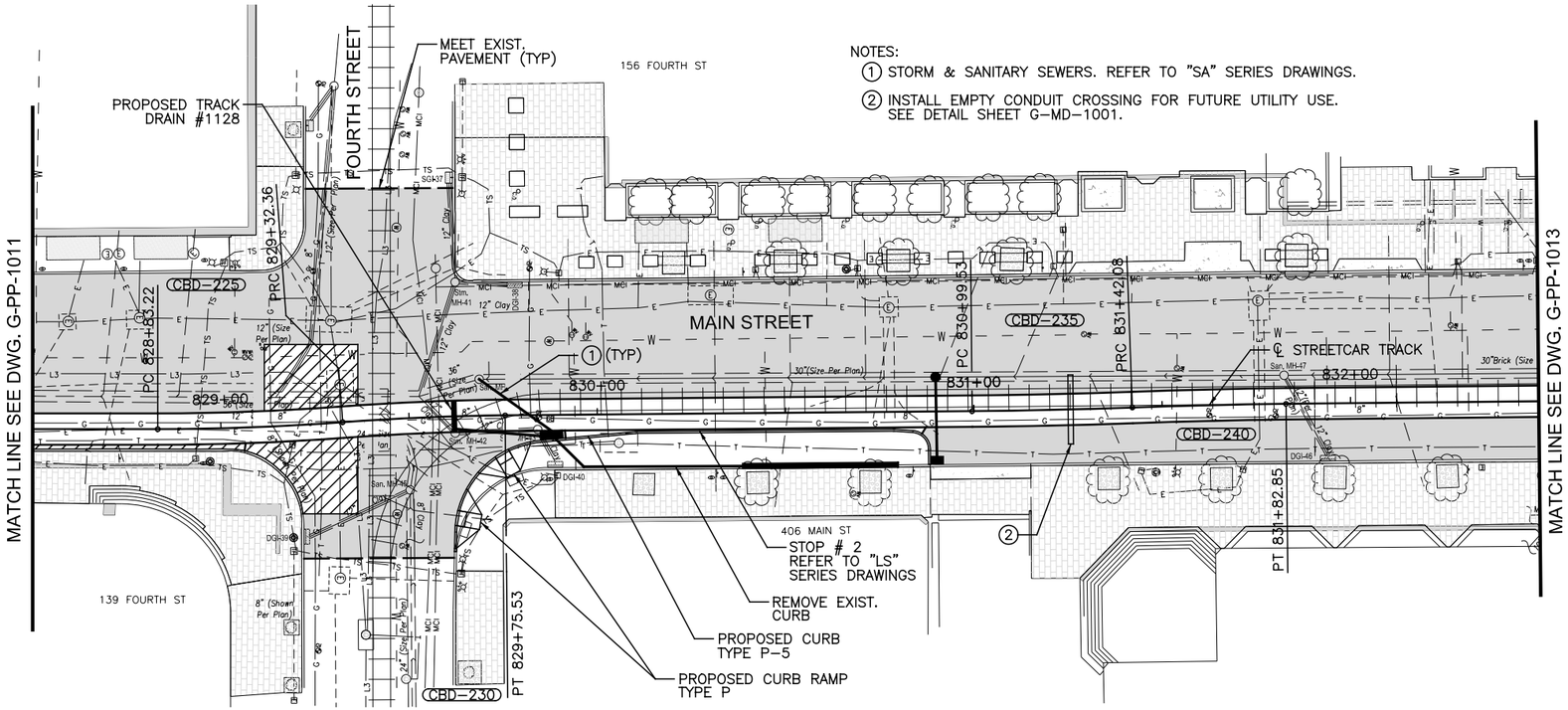

GRAPHIC SCALE

20 0 20 40 80

(IN FEET)
1 inch = 20 ft. Full Size
1 inch = 40 ft. Half Size

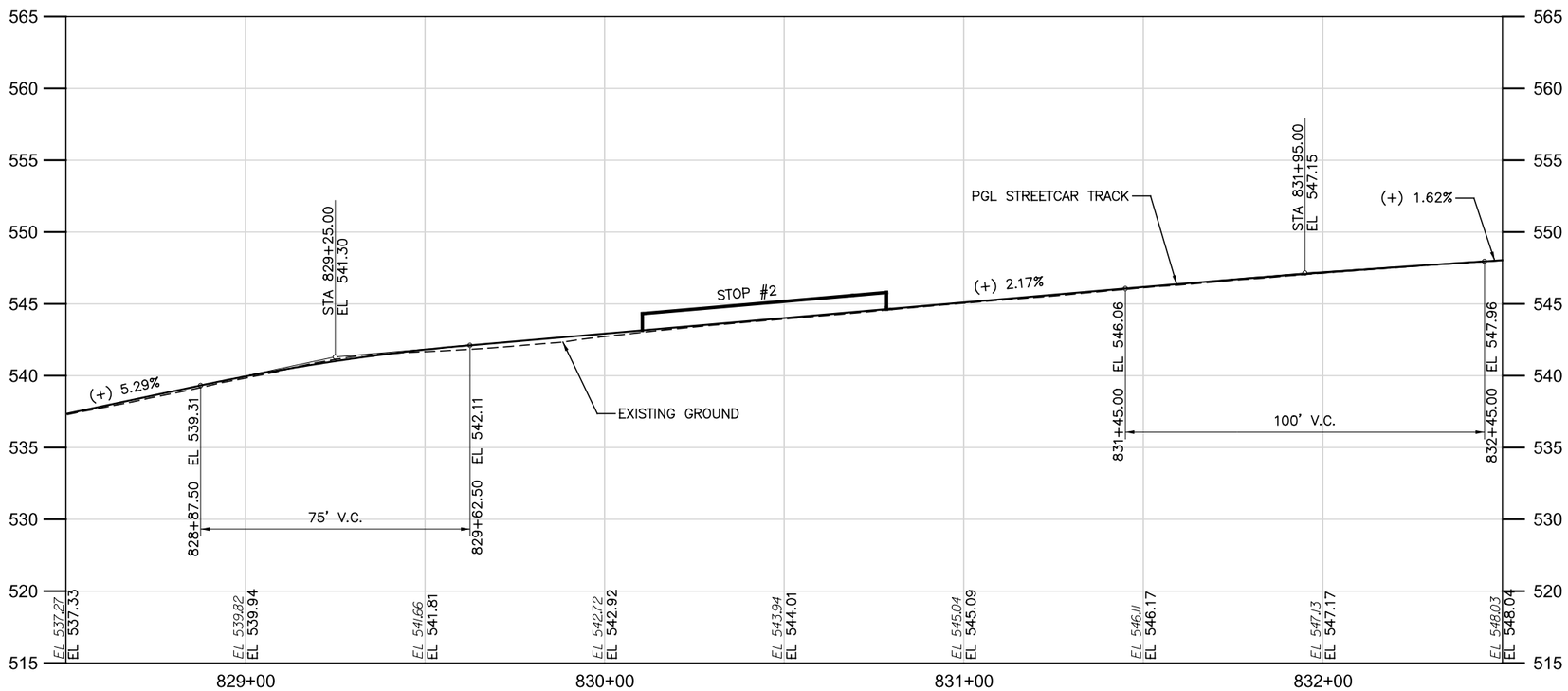

CAUTION UNDERGROUND UTILITIES
2 WORKING DAYS
BEFORE YOU DIG
CALL 1-800-362-2764
OHIO UTILITY PROTECTION SERVICE
CALL NON-SERVICE FACILITY
OWNERS DIRECT

DEPARTMENT OF TRANSPORTATION & ENGINEERING — CITY OF CINCINNATI — OHIO

CONTRACT DRAWING

PRINTS NOT BEARING THIS STAMP WERE MADE PRIOR TO ADVERTISING FOR BIDS AND ARE TO BE CONSIDERED OBSOLETE FOR CONTRACT PURPOSES.

Department of Transportation and Engineering

City of Cincinnati
City Hall
801 Plum Street
Cincinnati, Ohio 45202

CINCINNATI STREETCAR
CENTRAL BUSINESS DISTRICT
PLAN AND TRACK PROFILE - MAIN STREET
STA 828+50 TO STA 832+50

Revisions
No.

Date 7/02/12	Drawn by CJC
Date 7/02/12	Designed by CJC
Date 7/02/12	Checked by SAJ
Date 7/12/12	Reviewed by JTB

Consultant

PB HDR

File Number

ACC No. 23126

G-PP-1012

DOTE_Mono_PDF_Half.pltcfg
T:\29014A-Streetcar\CAD\Civil\S_G-PP-1012.dgn
7/15/2012 1:14:02 PM

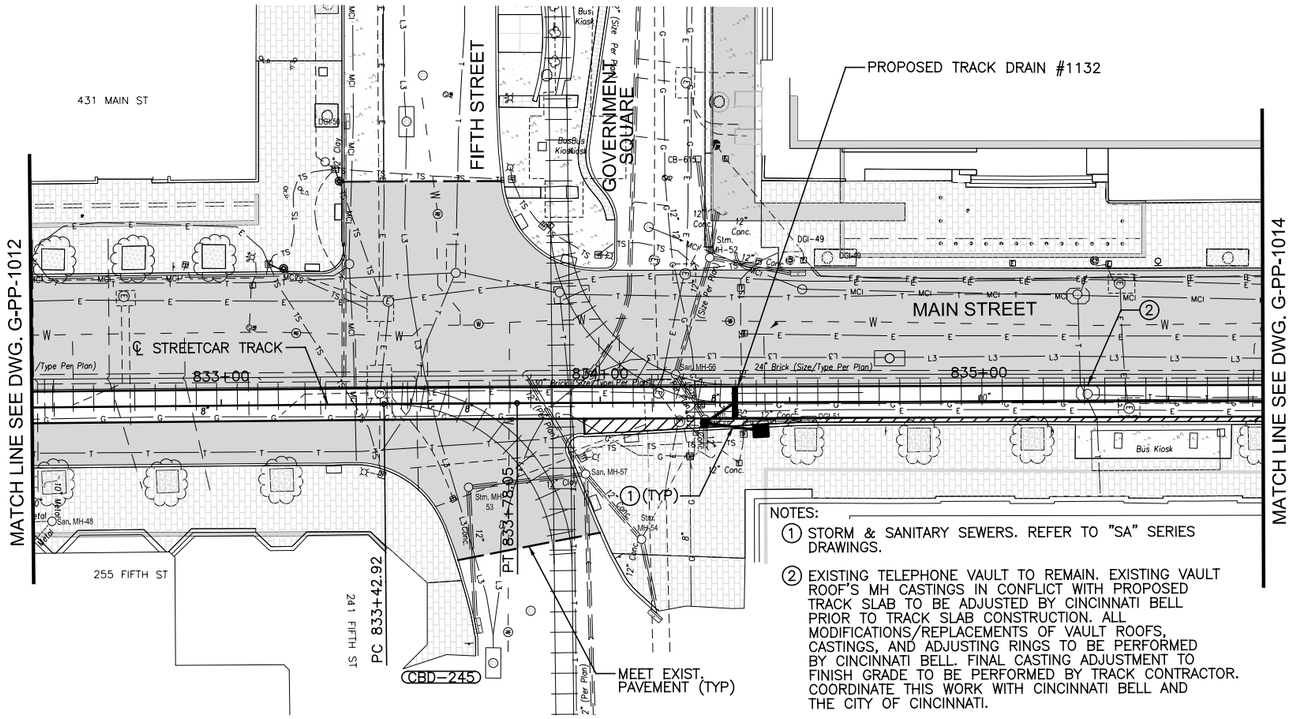

NOTES:

1. STORM & SANITARY SEWERS. REFER TO "SA" SERIES DRAWINGS.
2. EXISTING TELEPHONE VAULT TO REMAIN. EXISTING VAULT ROOF'S MH CASTINGS IN CONFLICT WITH PROPOSED TRACK SLAB TO BE ADJUSTED BY CINCINNATI BELL PRIOR TO TRACK SLAB CONSTRUCTION. ALL MODIFICATIONS/REPLACEMENTS OF VAULT ROOFS, CASTINGS, AND ADJUSTING RINGS TO BE PERFORMED BY CINCINNATI BELL. FINAL CASTING ADJUSTMENT TO FINISH GRADE TO BE PERFORMED BY TRACK CONTRACTOR. COORDINATE THIS WORK WITH CINCINNATI BELL AND THE CITY OF CINCINNATI.

GRAPHIC SCALE

20 0 20 40 80

(IN FEET)
1 inch = 20 ft. Full Size
1 inch = 40 ft. Half Size

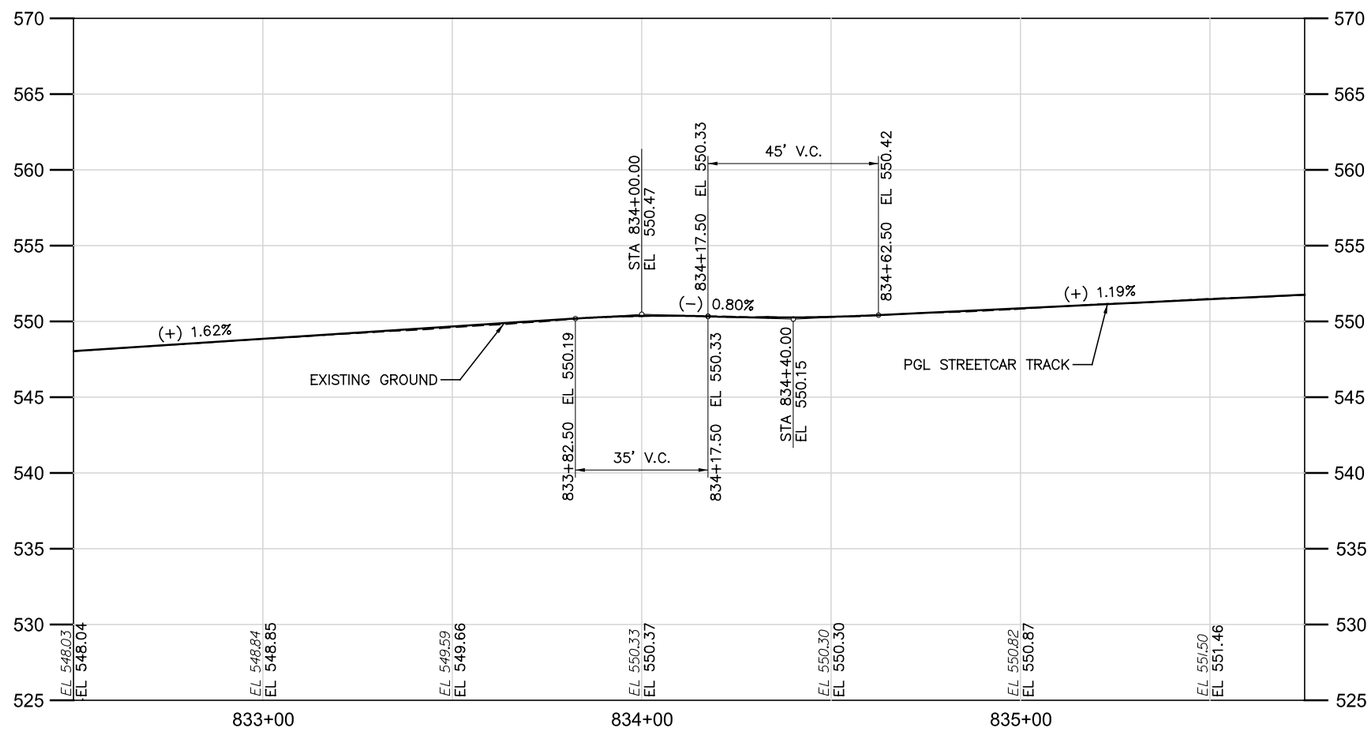

CAUTION UNDERGROUND UTILITIES
2 WORKING DAYS
BEFORE YOU DIG
CALL 1-800-362-2764
OHIO UTILITY PROTECTION SERVICE
CALL NON-SERVICE FACILITY
OWNERS DIRECT

CONTRACT DRAWING

PRINTS NOT BEARING THIS STAMP WERE MADE PRIOR TO ADVERTISING FOR BIDS AND ARE TO BE CONSIDERED OBSOLETE FOR CONTRACT PURPOSES.

Department of Transportation and Engineering

City of Cincinnati
City Hall
801 Plum Street
Cincinnati, Ohio 45202

CINCINNATI STREETCAR
CENTRAL BUSINESS DISTRICT
PLAN AND TRACK PROFILE - MAIN STREET
STA 832+50 TO STA 835+75

Revisions

No.				

Date 7/02/12	Drawn by CJC
Date 7/02/12	Designed by CJC
Date 7/02/12	Checked by SAJ
Date 7/12/12	Reviewed by JTB

Consultant

PB HDR

File Number

ACC No. 23126

G-PP-1013

DOTE_Mono_PDF_Half.pltcfg
T:\29014A-Streetcar\CAD\Civil\S_G-PP-1013.dgn
7/15/2012 1:14:03 PM

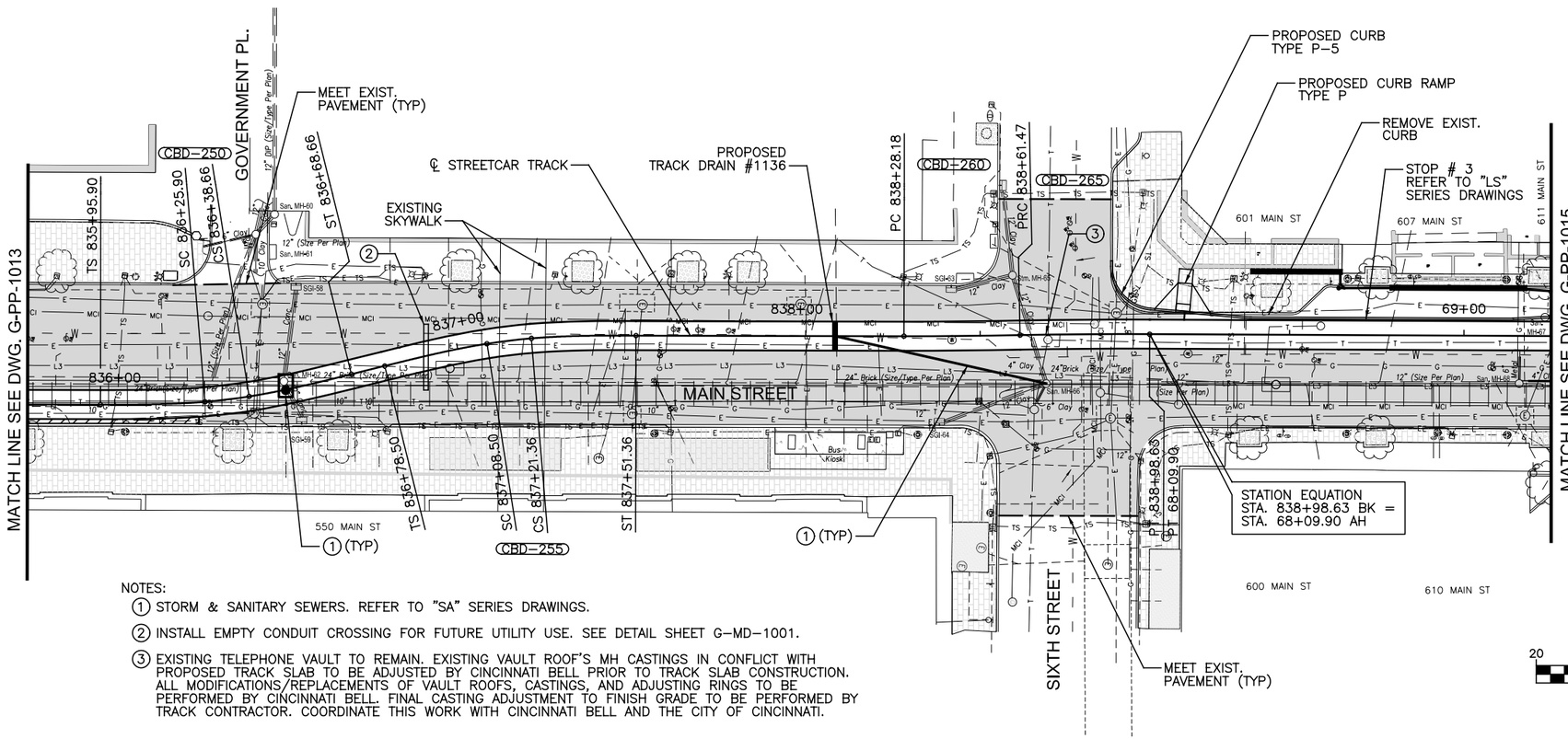

NOTES:

1. STORM & SANITARY SEWERS. REFER TO "SA" SERIES DRAWINGS.
2. INSTALL EMPTY CONDUIT CROSSING FOR FUTURE UTILITY USE. SEE DETAIL SHEET G-MD-1001.
3. EXISTING TELEPHONE VAULT TO REMAIN. EXISTING VAULT ROOF'S MH CASTINGS IN CONFLICT WITH PROPOSED TRACK SLAB TO BE ADJUSTED BY CINCINNATI BELL PRIOR TO TRACK SLAB CONSTRUCTION. ALL MODIFICATIONS/REPLACEMENTS OF VAULT ROOFS, CASTINGS, AND ADJUSTING RINGS TO BE PERFORMED BY CINCINNATI BELL. FINAL CASTING ADJUSTMENT TO FINISH GRADE TO BE PERFORMED BY TRACK CONTRACTOR. COORDINATE THIS WORK WITH CINCINNATI BELL AND THE CITY OF CINCINNATI.

GRAPHIC SCALE

20 0 20 40 80

(IN FEET)
1 inch = 20 ft. Full Size
1 inch = 40 ft. Half Size

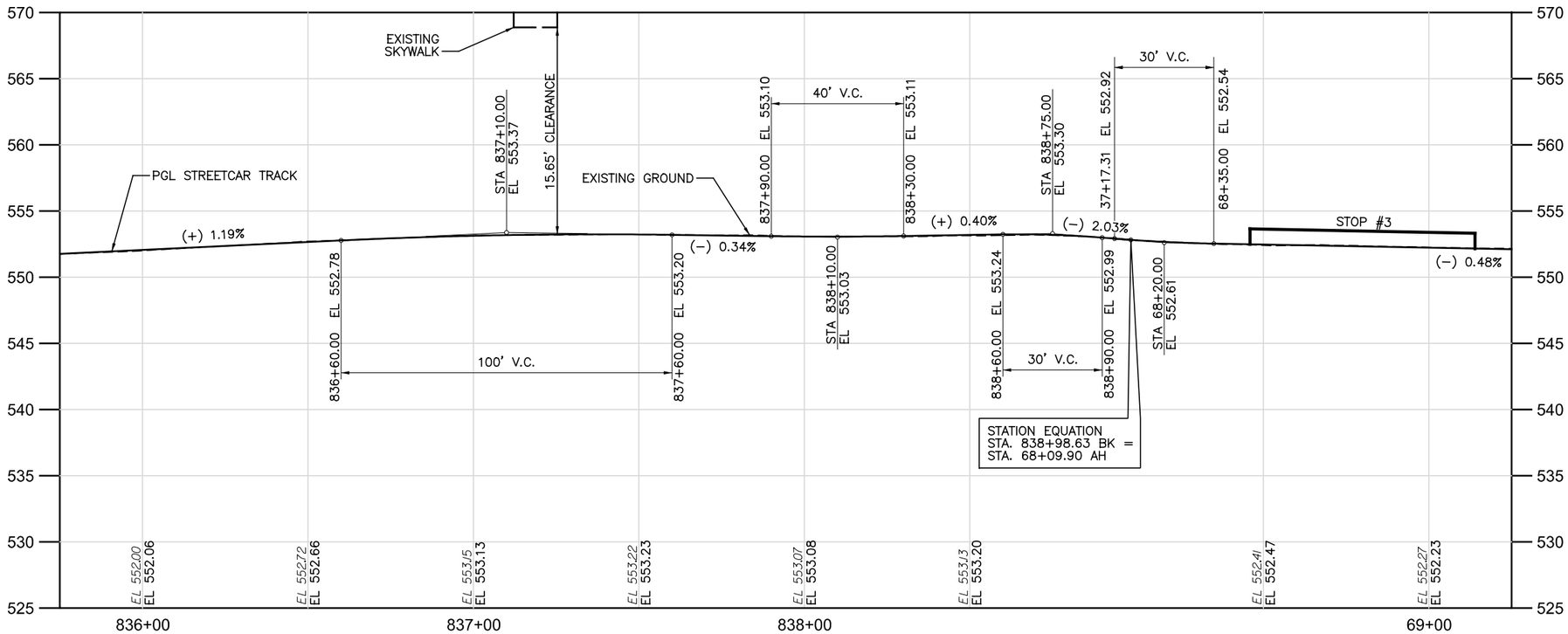

CAUTION UNDERGROUND UTILITIES
2 WORKING DAYS
BEFORE YOU DIG
CALL 1-800-362-2764
OHIO UTILITY PROTECTION SERVICE
CALL NON-SERVICE FACILITY
OWNERS DIRECT

DEPARTMENT OF TRANSPORTATION & ENGINEERING — CITY OF CINCINNATI — OHIO

CONTRACT DRAWING

PRINTS NOT BEARING THIS STAMP WERE MADE PRIOR TO ADVERTISING FOR BIDS AND ARE TO BE CONSIDERED OBSOLETE FOR CONTRACT PURPOSES.

Department of Transportation and Engineering

City of Cincinnati
City Hall
801 Plum Street
Cincinnati, Ohio 45202

CINCINNATI STREETCAR
CENTRAL BUSINESS DISTRICT
PLAN AND TRACK PROFILE - MAIN STREET
STA 835+75 TO STA 69+25

Revisions
No.

Date 7/02/12	Drawn by CJC
Date 7/02/12	Designed by CJC
Date 7/02/12	Checked by SAJ
Date 7/12/12	Reviewed by JTB

Consultant

PB HDR

File Number

ACC No. 23126

G-PP-1014

DOTE_Mono_PDF_Half.pltcfg
T:\29014A-Streetcar\CAD\Civil\S_G-PP-1014.dgn
7/15/2012 1:14:05 PM

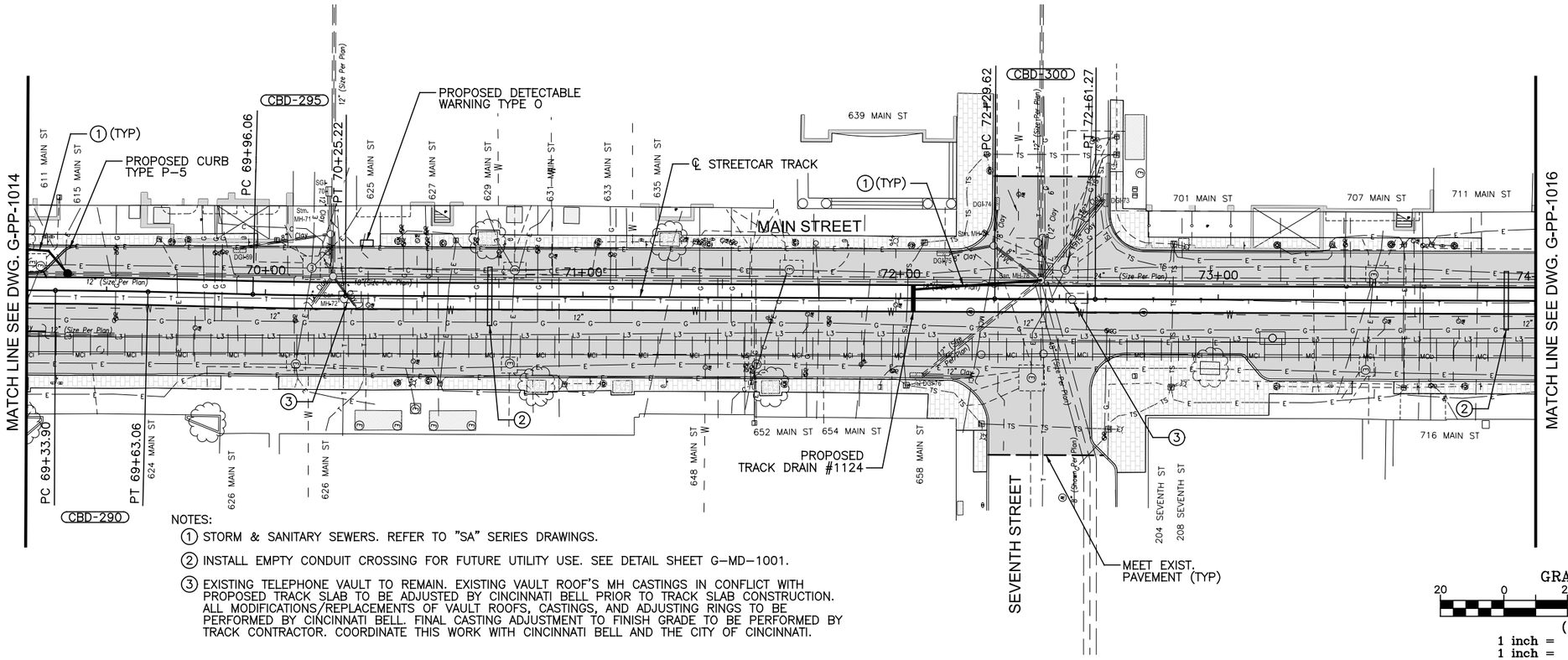

NOTES:

1. STORM & SANITARY SEWERS. REFER TO "SA" SERIES DRAWINGS.
2. INSTALL EMPTY CONDUIT CROSSING FOR FUTURE UTILITY USE. SEE DETAIL SHEET G–MD–1001.
3. EXISTING TELEPHONE VAULT TO REMAIN. EXISTING VAULT ROOF'S MH CASTINGS IN CONFLICT WITH PROPOSED TRACK SLAB TO BE ADJUSTED BY CINCINNATI BELL PRIOR TO TRACK SLAB CONSTRUCTION. ALL MODIFICATIONS/REPLACEMENTS OF VAULT ROOFS, CASTINGS, AND ADJUSTING RINGS TO BE PERFORMED BY CINCINNATI BELL. FINAL CASTING ADJUSTMENT TO FINISH GRADE TO BE PERFORMED BY TRACK CONTRACTOR. COORDINATE THIS WORK WITH CINCINNATI BELL AND THE CITY OF CINCINNATI.

GRAPHIC SCALE

20 0 20 40 80

(IN FEET)
1 inch = 20 ft. Full Size
1 inch = 40 ft. Half Size

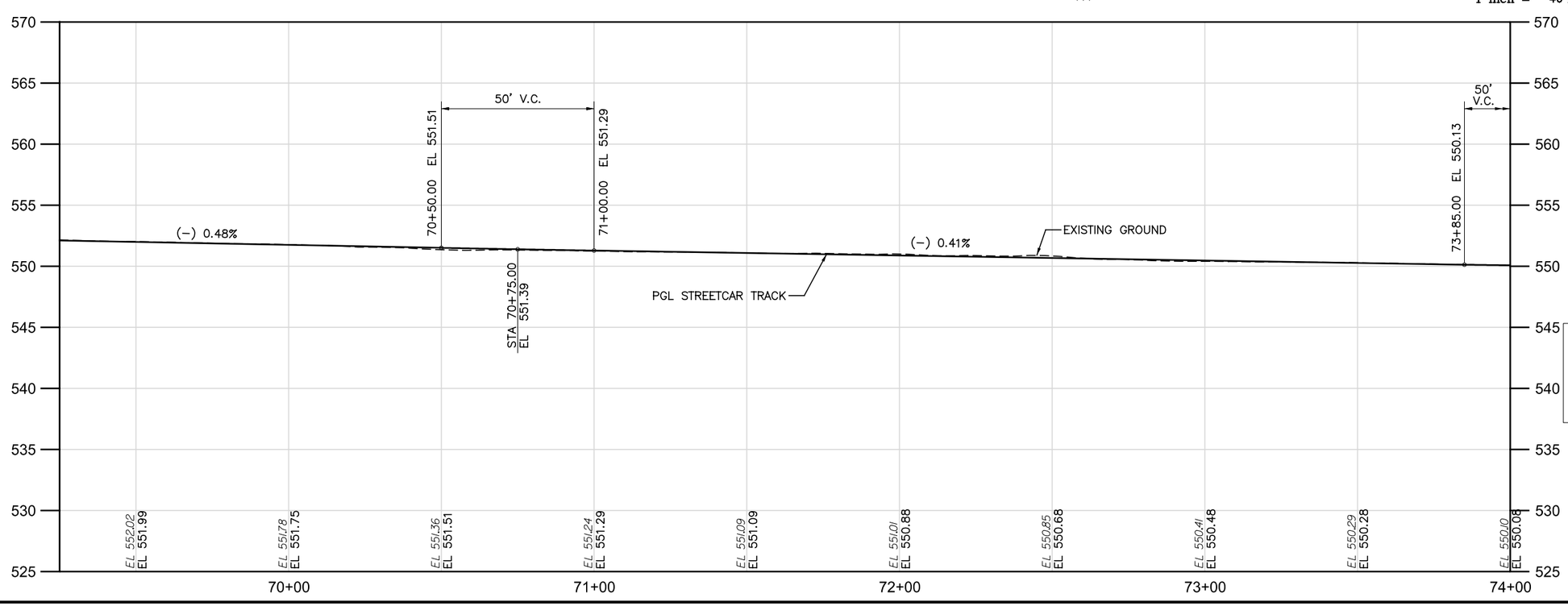

CAUTION UNDERGROUND UTILITIES
2 WORKING DAYS
BEFORE YOU DIG
CALL 1–800–362–2764
OHIO UTILITY PROTECTION SERVICE
CALL NON–SERVICE FACILITY
OWNERS DIRECT

DOTE_Mono_PDF_Half.pltcfg
T:\29014A-Streetcar\CAD\Civil\S_G-PP-1015.dgn
7/15/2012 1:14:07 PM

CONTRACT DRAWING

PRINTS NOT BEARING THIS STAMP WERE MADE PRIOR TO ADVERTISING FOR BID AND ARE TO BE CONSIDERED OBSOLETE FOR CONTRACT PURPOSES.

Department of Transportation and Engineering

City of Cincinnati
City Hall
801 Plum Street
Cincinnati, Ohio 45202

CINCINNATI STREETCAR
CENTRAL BUSINESS DISTRICT
PLAN AND TRACK PROFILE – MAIN STREET
STA 69+25 TO STA 74+00

Revisions
No.

Drawn by CJC	Date 7/02/12
Designed by CJC	Date 7/02/12
Checked by SAJ	Date 7/02/12
Reviewed by JTB	Date 7/12/12

Consultant

PB HDR

File Number

ACC No. 23126

G-PP-1015

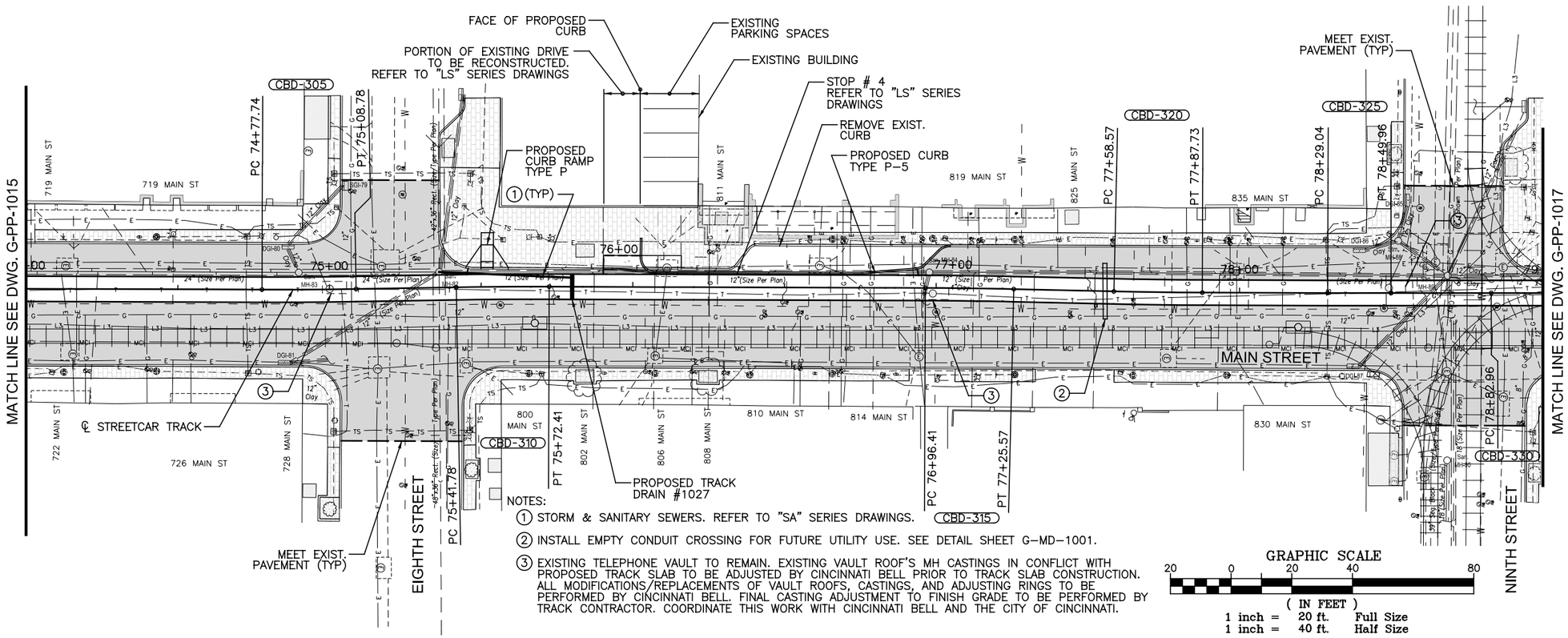

NOTES:

(1) STORM & SANITARY SEWERS. REFER TO "SA" SERIES DRAWINGS.

(2) INSTALL EMPTY CONDUIT CROSSING FOR FUTURE UTILITY USE. SEE DETAIL SHEET G-MD-1001.

(3) EXISTING TELEPHONE VAULT TO REMAIN. EXISTING VAULT ROOF'S MH CASTINGS IN CONFLICT WITH PROPOSED TRACK SLAB TO BE ADJUSTED BY CINCINNATI BELL PRIOR TO TRACK SLAB CONSTRUCTION. ALL MODIFICATIONS/REPLACEMENTS OF VAULT ROOFS, CASTINGS, AND ADJUSTING RINGS TO BE PERFORMED BY CINCINNATI BELL. FINAL CASTING ADJUSTMENT TO FINISH GRADE TO BE PERFORMED BY TRACK CONTRACTOR. COORDINATE THIS WORK WITH CINCINNATI BELL AND THE CITY OF CINCINNATI.

GRAPHIC SCALE

20 0 20 40 80

(IN FEET)
1 inch = 20 ft. Full Size
1 inch = 40 ft. Half Size

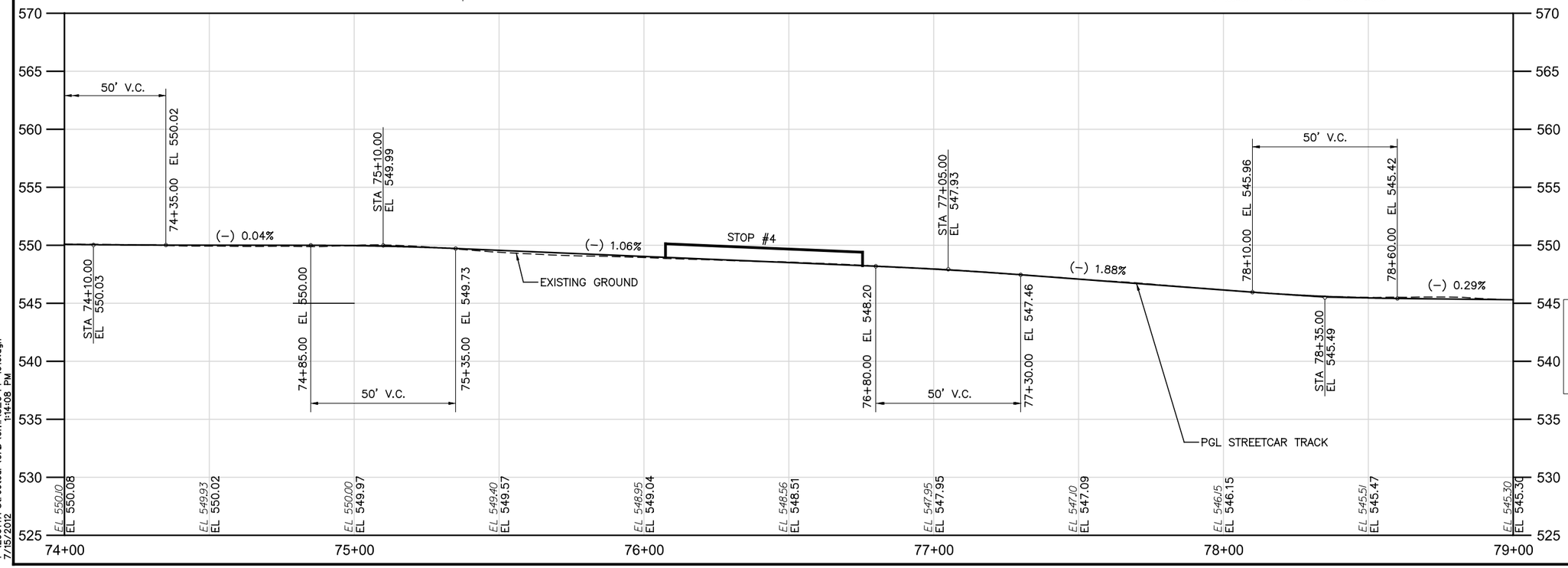

CAUTION UNDERGROUND UTILITIES
2 WORKING DAYS
BEFORE YOU DIG
CALL 1-800-362-2764
OHIO UTILITY PROTECTION SERVICE
CALL NON-SERVICE FACILITY OWNERS DIRECT

DOTE_Mono_PDF_Half.pltcfg
T:\29014A-Streetcar\CAD\Civil\S_G-PP-1016.dgn
7/15/2012 1:14:08 PM

DEPARTMENT OF TRANSPORTATION & ENGINEERING CITY OF CINCINNATI OHIO

CONTRACT DRAWING

PRINTS NOT BEARING THIS STAMP WERE MADE PRIOR TO ADVERTISING FOR BIDS AND ARE TO BE CONSIDERED OBSOLETE FOR CONTRACT PURPOSES.

Department of Transportation and Engineering

City of Cincinnati
City Hall
801 Plum Street
Cincinnati, Ohio 45202

CINCINNATI STREETCAR
CENTRAL BUSINESS DISTRICT

PLAN AND PROFILE - MAIN STREET
STA 74+00 TO STA 79+00

Revisions

No.		

Date	7/02/12
Date	7/02/12
Date	7/02/12
Date	7/12/12

Drawn by	CJC
Designed by	CJC
Checked by	SAJ
Reviewed by	JTB

Consultant

PB HDR

File Number

ACC No. 23126

G-PP-1016

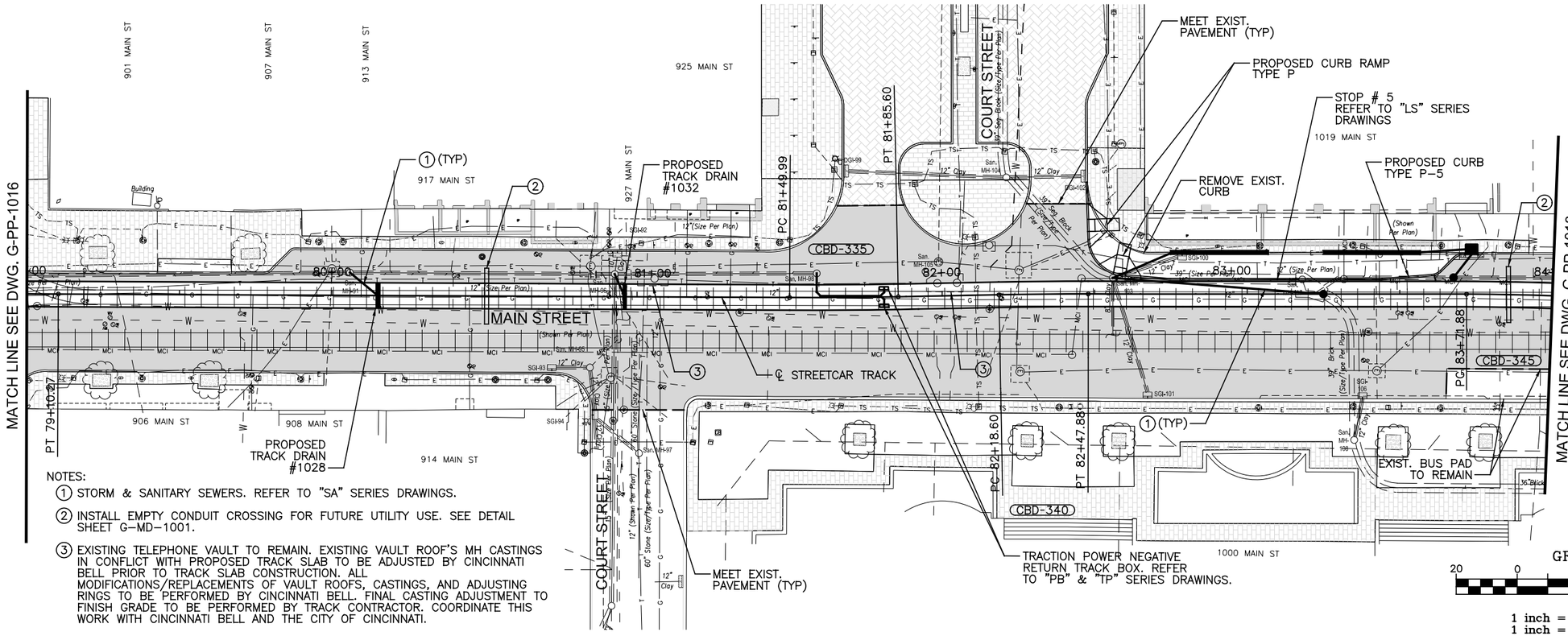

NOTES:

1. STORM & SANITARY SEWERS. REFER TO "SA" SERIES DRAWINGS.
2. INSTALL EMPTY CONDUIT CROSSING FOR FUTURE UTILITY USE. SEE DETAIL SHEET G-MD-1001.
3. EXISTING TELEPHONE VAULT TO REMAIN. EXISTING VAULT ROOF'S MH CASTINGS IN CONFLICT WITH PROPOSED TRACK SLAB TO BE ADJUSTED BY CINCINNATI BELL PRIOR TO TRACK SLAB CONSTRUCTION. ALL MODIFICATIONS/REPLACEMENTS OF VAULT ROOFS, CASTINGS, AND ADJUSTING RINGS TO BE PERFORMED BY CINCINNATI BELL. FINAL CASTING ADJUSTMENT TO FINISH GRADE TO BE PERFORMED BY TRACK CONTRACTOR. COORDINATE THIS WORK WITH CINCINNATI BELL AND THE CITY OF CINCINNATI.

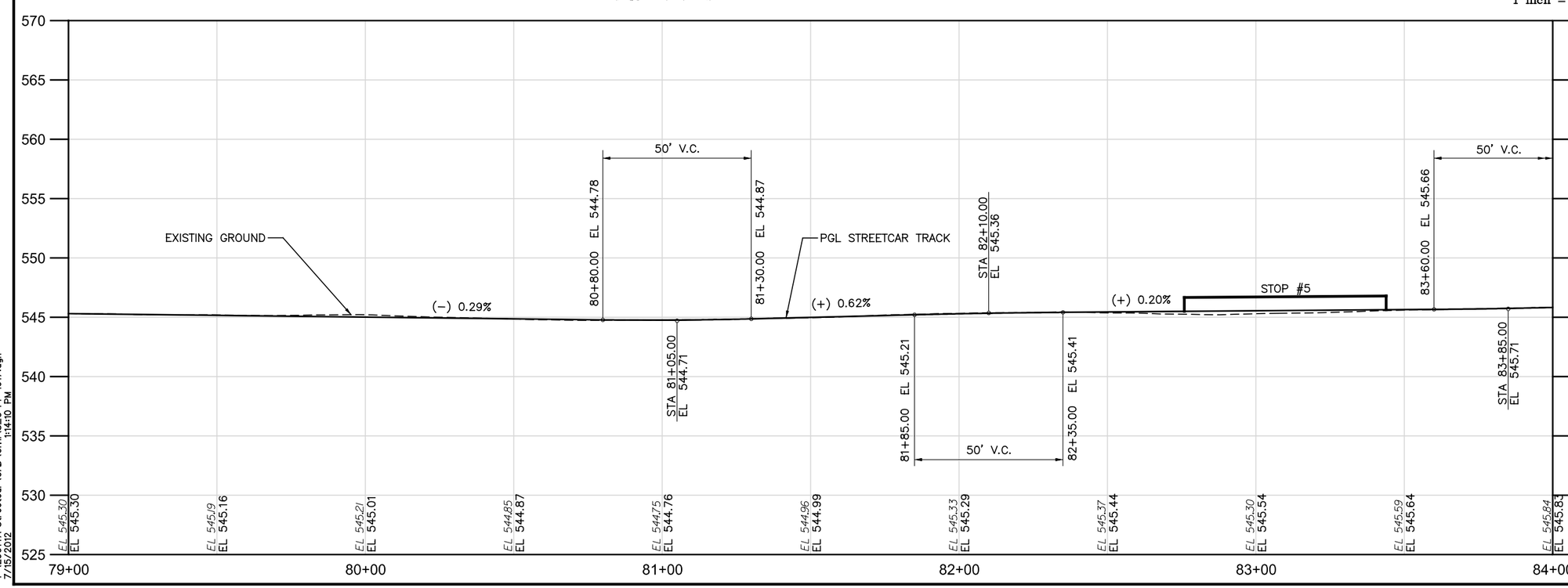

CAUTION UNDERGROUND UTILITIES
2 WORKING DAYS
BEFORE YOU DIG
CALL 1-800-362-2764
OHIO UTILITY PROTECTION SERVICE
CALL NON-SERVICE FACILITY
OWNERS DIRECT

DOTE_Mono_PDF_Half.pltcfg
T:\29014A-Streetcar\CAD\Civil\S_G-PP-1017.dgn
7/15/2012 1:14:10 PM

CONTRACT DRAWING

PRINTS NOT BEARING THIS STAMP WERE MADE PRIOR TO ADVERTISING FOR BID AND ARE TO BE CONSIDERED OBSOLETE FOR CONTRACT PURPOSES.

Department of Transportation and Engineering

City of Cincinnati
City Hall
801 Plum Street
Cincinnati, Ohio 45202

CINCINNATI STREETCAR
CENTRAL BUSINESS DISTRICT
PLAN AND PROFILE - MAIN STREET
STA 79+00 TO STA 84+00

Revisions
No.

Drawn by CJC	Date 7/02/12
Designed by CJC	Date 7/02/12
Checked by SAJ	Date 7/02/12
Reviewed by JTB	Date 7/12/12

Consultant

PB HDR

File Number

ACC No. 23126

G-PP-1017

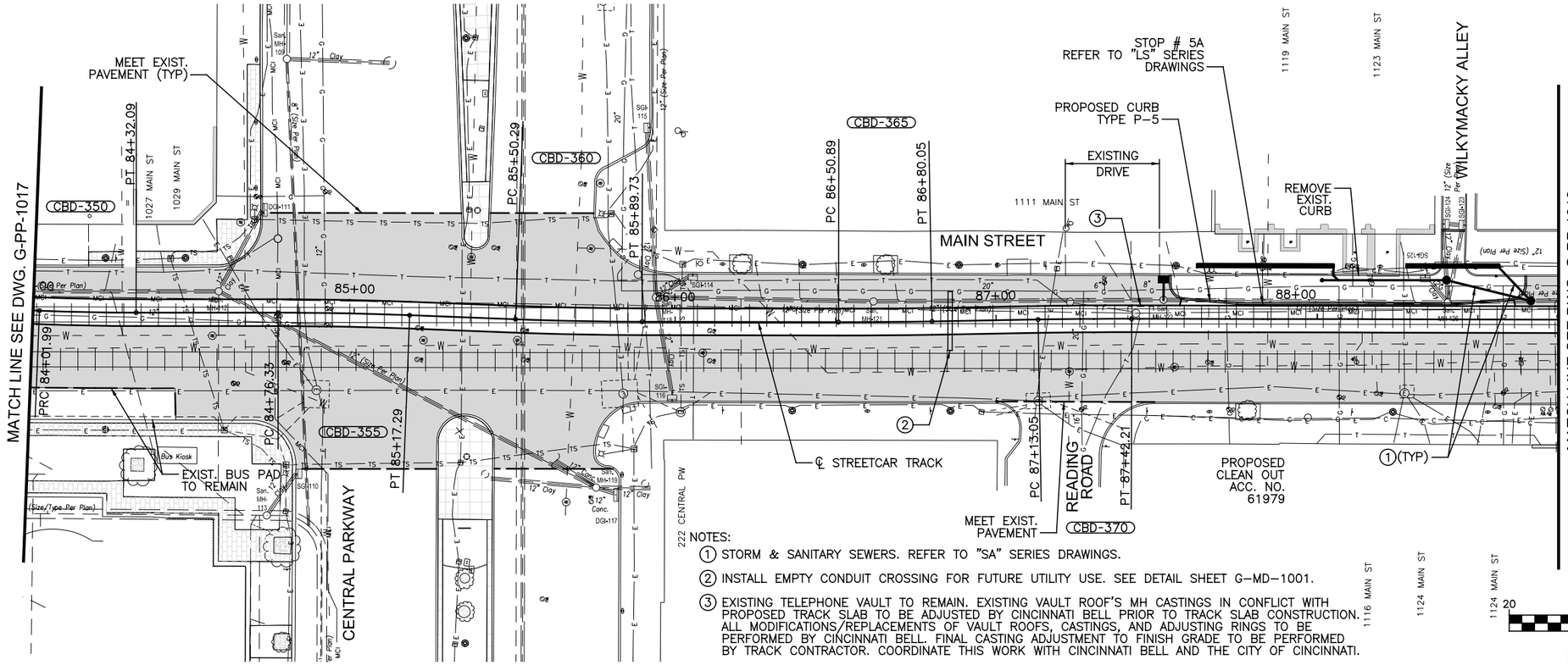

NOTES:

1. STORM & SANITARY SEWERS. REFER TO "SA" SERIES DRAWINGS.
2. INSTALL EMPTY CONDUIT CROSSING FOR FUTURE UTILITY USE. SEE DETAIL SHEET G-MD-1001.
3. EXISTING TELEPHONE VAULT TO REMAIN. EXISTING VAULT ROOF'S MH CASTINGS IN CONFLICT WITH PROPOSED TRACK SLAB TO BE ADJUSTED BY CINCINNATI BELL PRIOR TO TRACK SLAB CONSTRUCTION. ALL MODIFICATIONS/REPLACEMENTS OF VAULT ROOFS, CASTINGS, AND ADJUSTING RINGS TO BE PERFORMED BY CINCINNATI BELL. FINAL CASTING ADJUSTMENT TO FINISH GRADE TO BE PERFORMED BY TRACK CONTRACTOR. COORDINATE THIS WORK WITH CINCINNATI BELL AND THE CITY OF CINCINNATI.

GRAPHIC SCALE

20 0 20 40 80

(IN FEET)
1 inch = 20 ft. Full Size
1 inch = 40 ft. Half Size

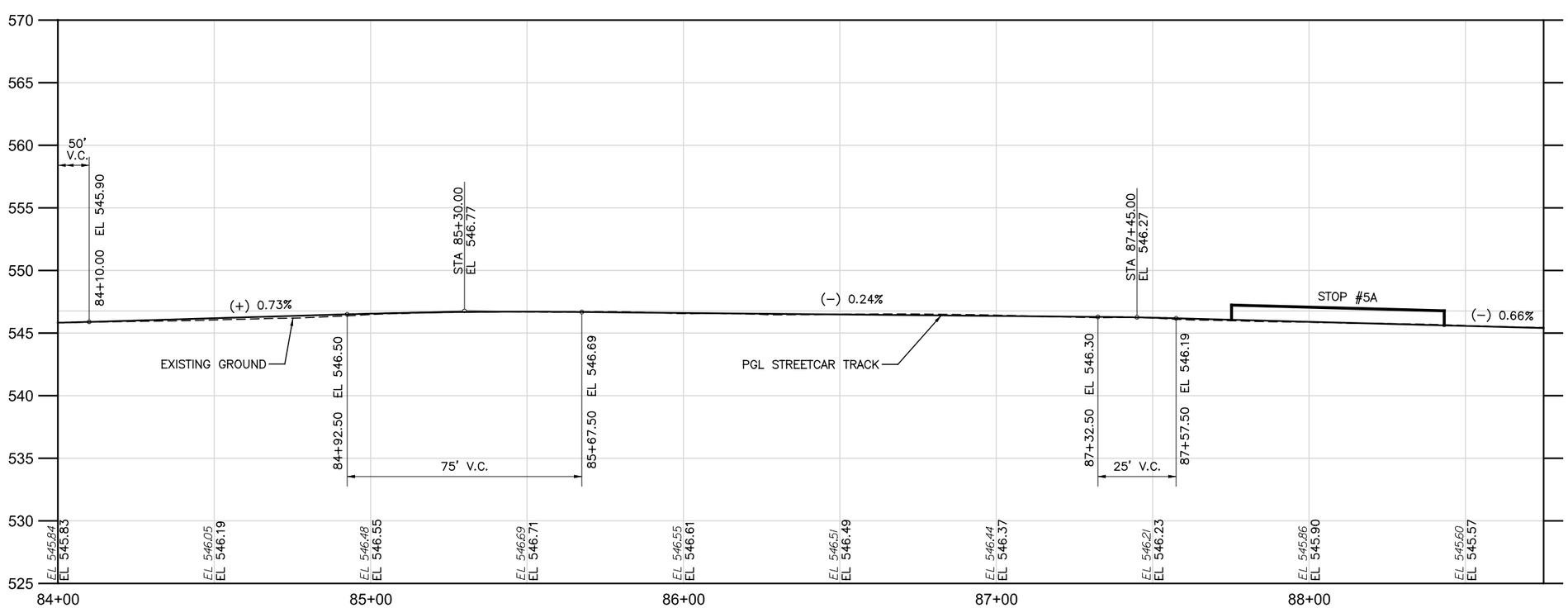

CAUTION UNDERGROUND UTILITIES
2 WORKING DAYS
BEFORE YOU DIG
CALL 1-800-362-2764
OHIO UTILITY PROTECTION SERVICE
CALL NON-SERVICE FACILITY OWNERS DIRECT

DOTE_Mono_PDF_Half.pltcfg
T:\29014A-Streetcar\CAD\Civil\S_G-PP-1018.dgn
7/15/2012 1:14:11 PM

CONTRACT DRAWING

PRINTS NOT BEARING THIS STAMP WERE MADE PRIOR TO ADVERTISING FOR BID AND ARE TO BE CONSIDERED OBSOLETE FOR CONTRACT PURPOSES.

Department of Transportation and Engineering

City of Cincinnati
City Hall
801 Plum Street
Cincinnati, Ohio 45202

CINCINNATI STREETCAR
CENTRAL BUSINESS DISTRICT
PLAN AND PROFILE - MAIN STREET
STA 84+00 TO STA 88+75

Revisions
No.

Drawn by CJC	Date 7/02/12
Designed by CJC	Date 7/02/12
Checked by SAJ	Date 7/02/12
Reviewed by JTB	Date 7/12/12

Consultant

PB HDR

File Number

ACC No. 23126

G-PP-1018

NOTES:

1. STORM & SANITARY SEWERS. REFER TO "SA" SERIES DRAWINGS.
2. INSTALL EMPTY CONDUIT CROSSING FOR FUTURE UTILITY USE. SEE DETAIL SHEET G-MD-1001.
3. EXISTING TELEPHONE VAULT TO REMAIN. EXISTING VAULT ROOF'S MH CASTINGS IN CONFLICT WITH PROPOSED TRACK SLAB TO BE ADJUSTED BY CINCINNATI BELL PRIOR TO TRACK SLAB CONSTRUCTION. ALL MODIFICATIONS/REPLACEMENTS OF VAULT ROOFS, CASTINGS, AND ADJUSTING RINGS TO BE PERFORMED BY CINCINNATI BELL. FINAL CASTING ADJUSTMENT TO FINISH GRADE TO BE PERFORMED BY TRACK CONTRACTOR. COORDINATE THIS WORK WITH CINCINNATI BELL AND THE CITY OF CINCINNATI.

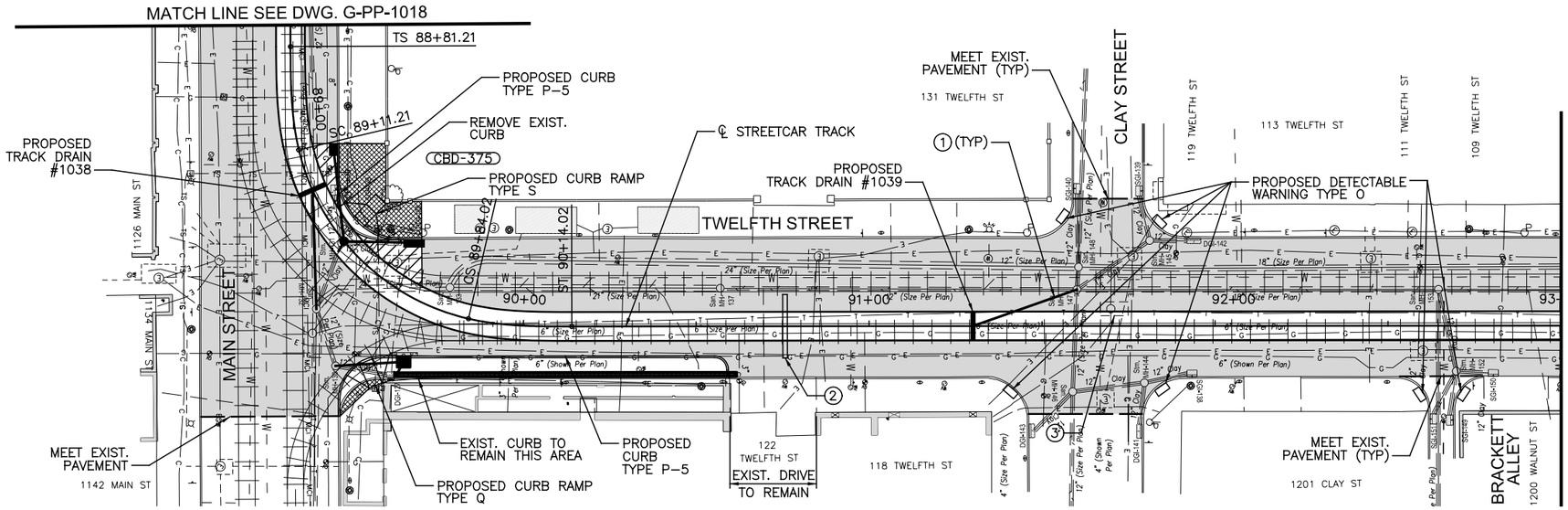

GRAPHIC SCALE

20 0 20 40 80

(IN FEET)
1 inch = 20 ft. Full Size
1 inch = 40 ft. Half Size

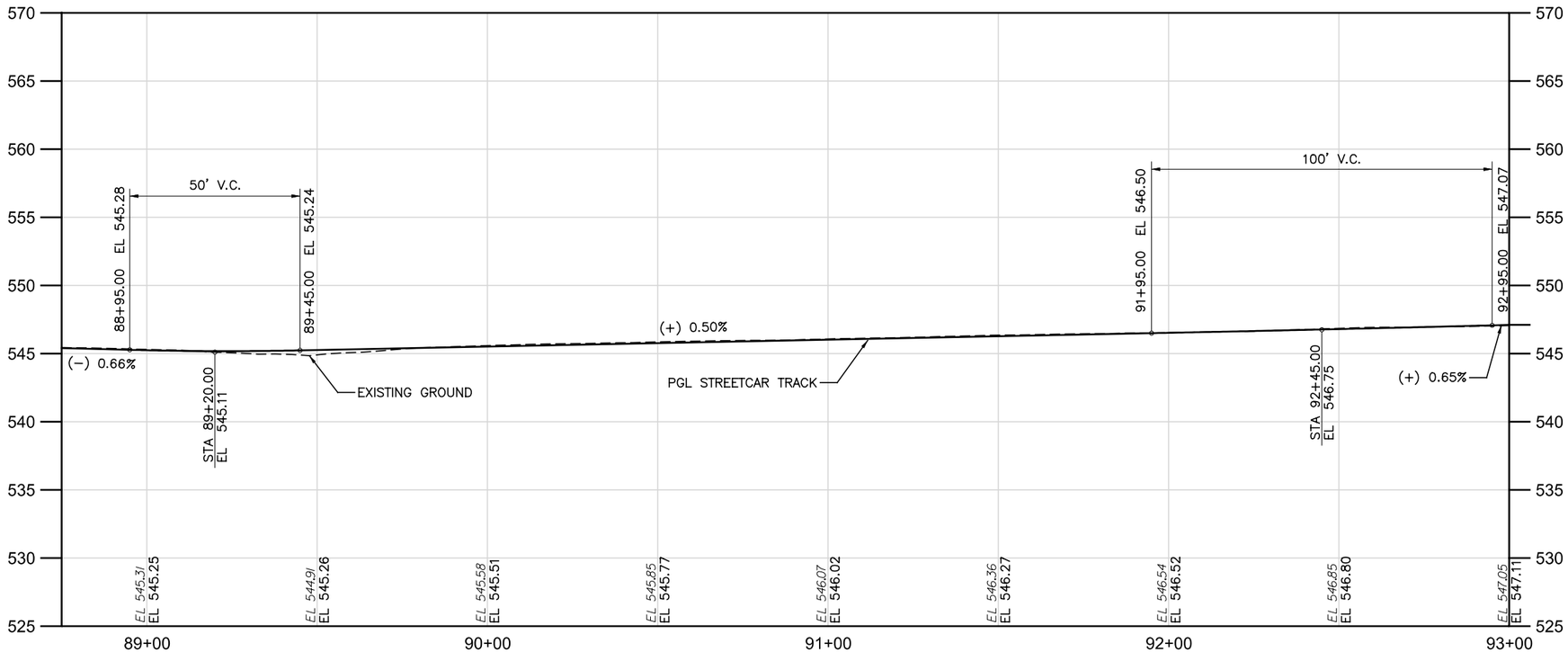

CAUTION UNDERGROUND UTILITIES
2 WORKING DAYS
BEFORE YOU DIG
CALL 1-800-362-2764
OHIO UTILITY PROTECTION SERVICE
CALL NON-SERVICE FACILITY
OWNERS DIRECT

DOTE_Mono_PDF_Half.pltcfg
T:\29014A-Streetcar\CAD\Civil\S_G-PP-1019.dgn
7/16/2012 10:34:02 AM

CONTRACT DRAWING

PRINTS NOT BEARING THIS STAMP WERE MADE PRIOR TO ADVERTISING FOR BIDS AND ARE TO BE CONSIDERED OBSOLETE FOR CONTRACT PURPOSES.

Department of Transportation and Engineering

City of Cincinnati
City Hall
801 Plum Street
Cincinnati, Ohio 45202

CINCINNATI STREETCAR
CENTRAL BUSINESS DISTRICT
PLAN AND PROFILE - TWELFTH STREET
STA 88+75 TO STA 93+00

Revisions
No.

	Date
Drawn by CJC	7/02/12
Designed by CJC	7/02/12
Checked by SAJ	7/02/12
Reviewed by JTB	7/12/12

Consultant

PB HDR

File Number

ACC No. 23126

G-PP-1019

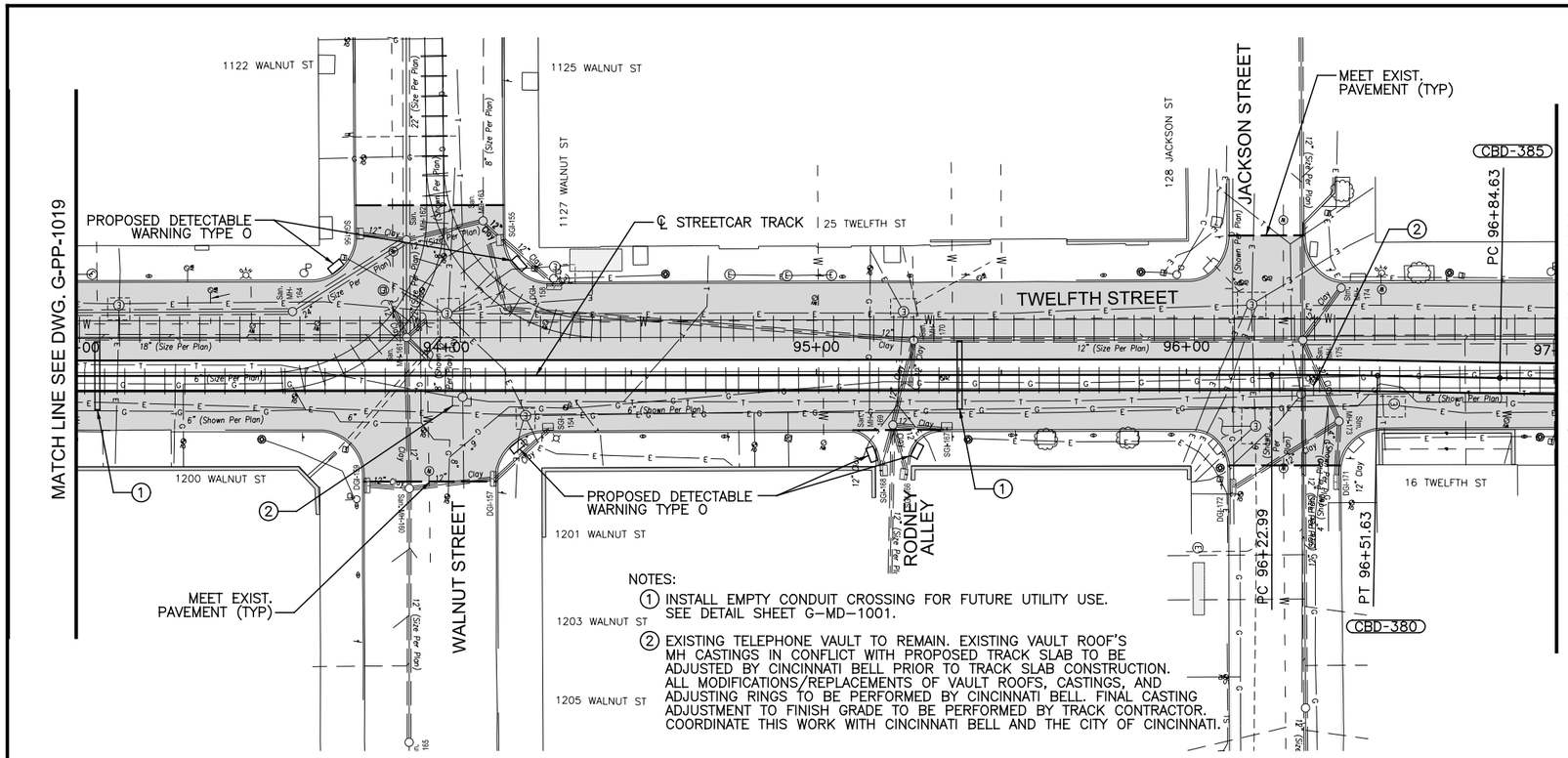

NOTES:

1. INSTALL EMPTY CONDUIT CROSSING FOR FUTURE UTILITY USE. SEE DETAIL SHEET G-MD-1001.
2. EXISTING TELEPHONE VAULT TO REMAIN. EXISTING VAULT ROOF'S MH CASTINGS IN CONFLICT WITH PROPOSED TRACK SLAB TO BE ADJUSTED BY CINCINNATI BELL PRIOR TO TRACK SLAB CONSTRUCTION. ALL MODIFICATIONS/REPLACEMENTS OF VAULT ROOFS, CASTINGS, AND ADJUSTING RINGS TO BE PERFORMED BY CINCINNATI BELL. FINAL CASTING ADJUSTMENT TO FINISH GRADE TO BE PERFORMED BY TRACK CONTRACTOR. COORDINATE THIS WORK WITH CINCINNATI BELL AND THE CITY OF CINCINNATI.

GRAPHIC SCALE

20 0 20 40 80

(IN FEET)
1 inch = 20 ft. Full Size
1 inch = 40 ft. Half Size

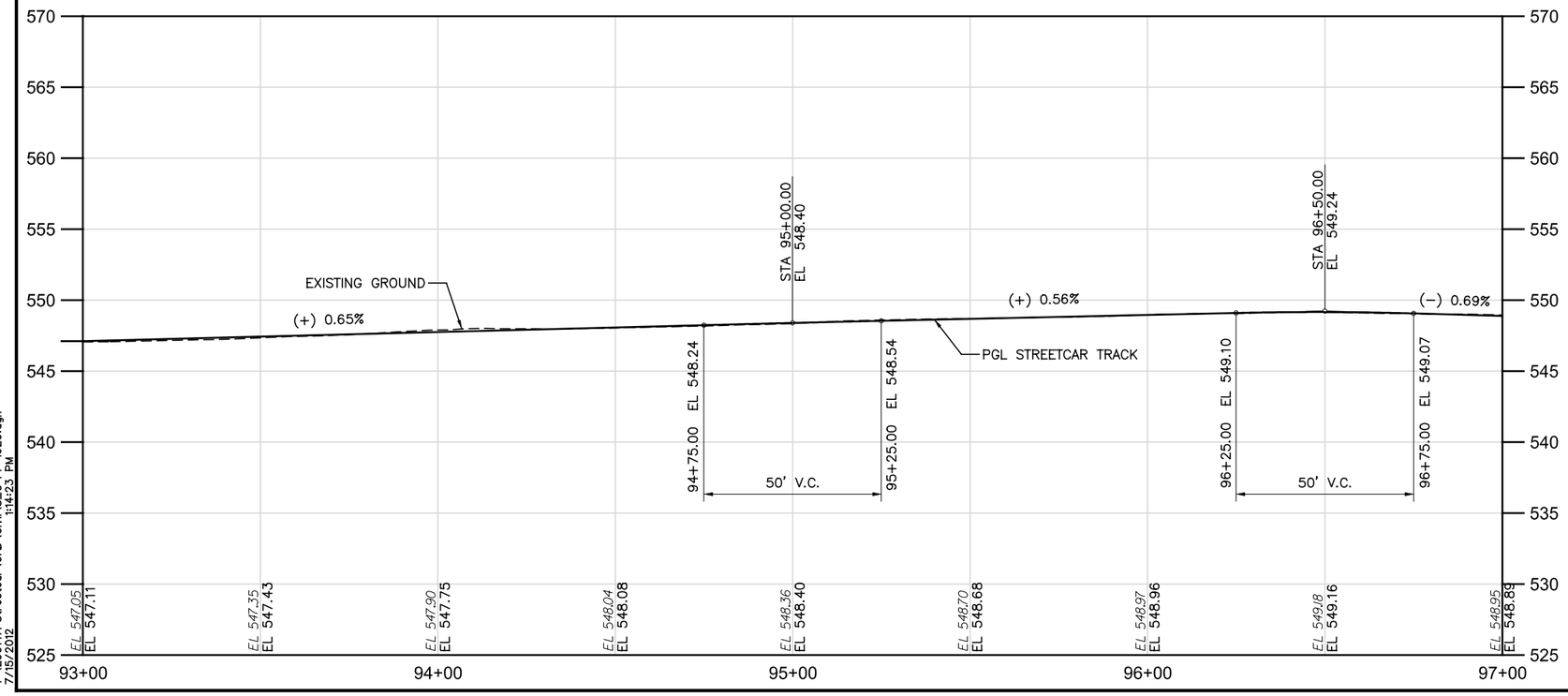

CAUTION UNDERGROUND UTILITIES
2 WORKING DAYS
BEFORE YOU DIG
CALL 1-800-362-2764
OHIO UTILITY PROTECTION SERVICE
CALL NON-SERVICE FACILITY
OWNERS DIRECT

DOTE_Mono_PDF_Half.pltcfg
T:\29014A-Streetcar\CAD\Civil\S_G-PP-1020.dgn
7/15/2012 1:14:23 PM

DEPARTMENT OF TRANSPORTATION & ENGINEERING CITY OF CINCINNATI OHIO

CONTRACT DRAWING

PRINTS NOT BEARING THIS STAMP WERE MADE PRIOR TO ADVERTISING FOR BIDS AND ARE TO BE CONSIDERED OBSOLETE FOR CONTRACT PURPOSES.

Department of Transportation and Engineering

City of Cincinnati
City Hall
801 Plum Street
Cincinnati, Ohio 45202

CINCINNATI STREETCAR
CENTRAL BUSINESS DISTRICT
PLAN AND PROFILE - TWELFTH STREET
STA 93+00 TO STA 97+00

Revisions
No.

Drawn by CJC	Date 7/02/12	
Designed by CJC	Date 7/02/12	
Checked by SAJ	Date 7/02/12	
Reviewed by JTB	Date 7/12/12	

Consultant

PB HDR

File Number

ACC No. 23126

G-PP-1020

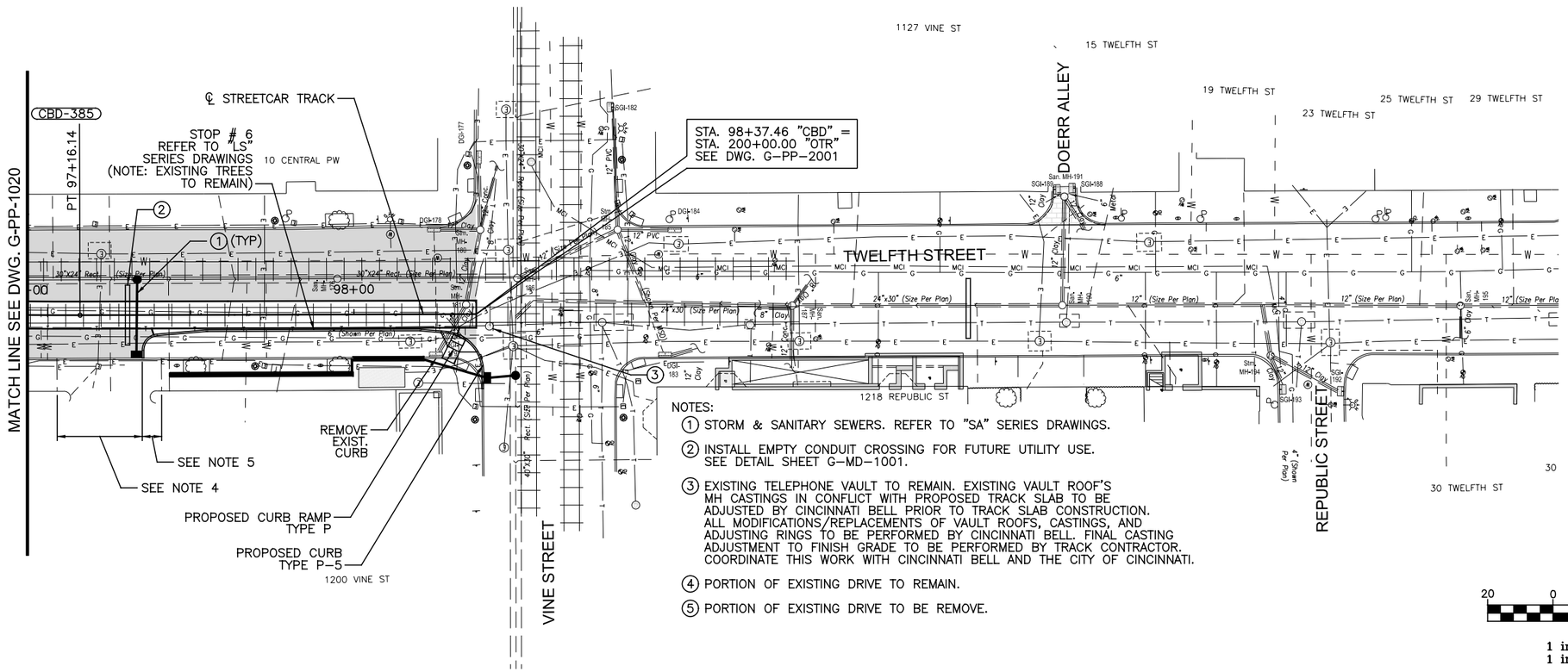

NOTES:

1. STORM & SANITARY SEWERS. REFER TO "SA" SERIES DRAWINGS.
2. INSTALL EMPTY CONDUIT CROSSING FOR FUTURE UTILITY USE. SEE DETAIL SHEET G-MD-1001.
3. EXISTING TELEPHONE VAULT TO REMAIN. EXISTING VAULT ROOF'S MH CASTINGS IN CONFLICT WITH PROPOSED TRACK SLAB TO BE ADJUSTED BY CINCINNATI BELL PRIOR TO TRACK SLAB CONSTRUCTION. ALL MODIFICATIONS/REPLACEMENTS OF VAULT ROOFS, CASTINGS, AND ADJUSTING RINGS TO BE PERFORMED BY CINCINNATI BELL. FINAL CASTING ADJUSTMENT TO FINISH GRADE TO BE PERFORMED BY TRACK CONTRACTOR. COORDINATE THIS WORK WITH CINCINNATI BELL AND THE CITY OF CINCINNATI.
4. PORTION OF EXISTING DRIVE TO REMAIN.
5. PORTION OF EXISTING DRIVE TO BE REMOVE.

GRAPHIC SCALE

20 0 20 40 80

(IN FEET)
1 inch = 20 ft. Full Size
1 inch = 40 ft. Half Size

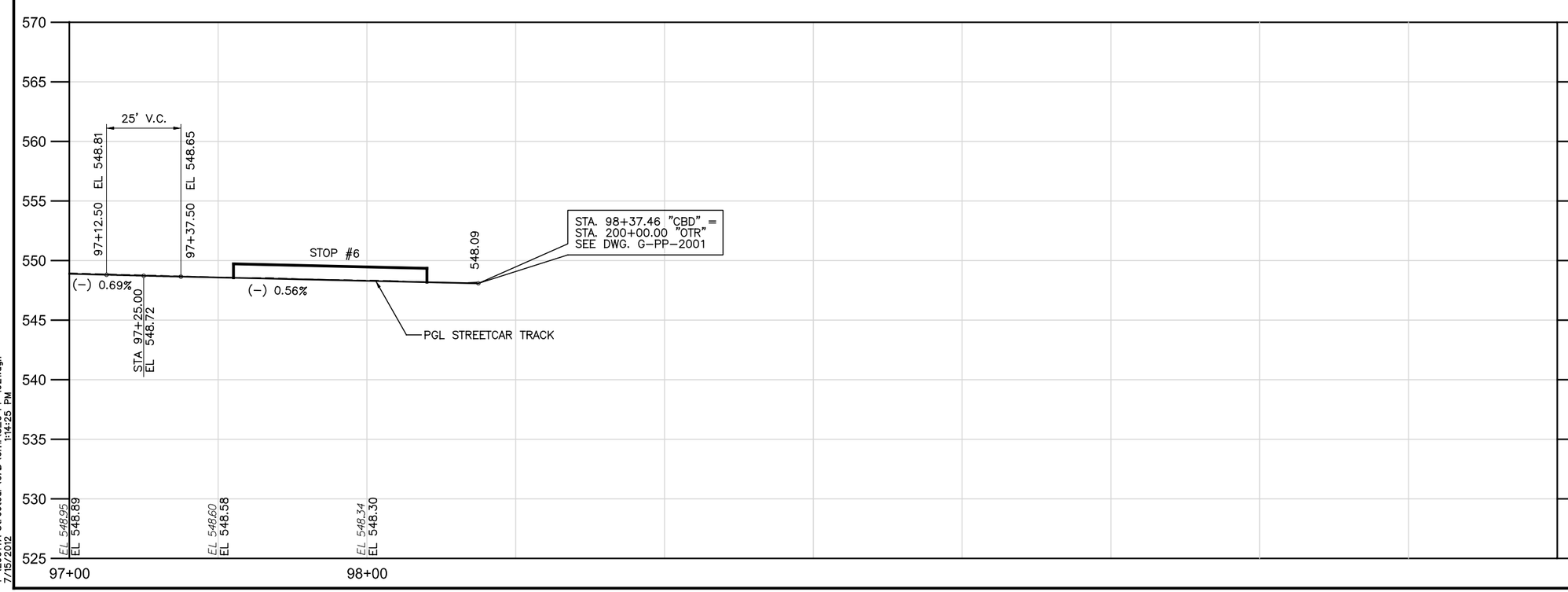

CAUTION UNDERGROUND UTILITIES
2 WORKING DAYS
BEFORE YOU DIG
CALL 1-800-362-2764
OHIO UTILITY PROTECTION SERVICE
CALL NON-SERVICE FACILITY
OWNERS DIRECT

DOTE_Mono_PDF_Half.pltcfg
T:\29014A-Streetcar\CAD\Civil\S_G-PP-1021.dgn
7/15/2012 1:14:25 PM

CONTRACT DRAWING

PRINTS NOT BEARING THIS STAMP WERE MADE PRIOR TO ADVERTISING FOR BIDS AND ARE TO BE CONSIDERED OBSOLETE FOR CONTRACT PURPOSES.

Department of Transportation and Engineering

City of Cincinnati
City Hall
801 Plum Street
Cincinnati, Ohio 45202

CINCINNATI STREETCAR
CENTRAL BUSINESS DISTRICT
PLAN AND PROFILE - TWELFTH STREET
STA 97+00 TO STA 98+37.46

Revisions

No.				

Drawn by CJC	Date 7/02/12
Designed by CJC	Date 7/02/12
Checked by SAJ	Date 7/02/12
Reviewed by JTB	Date 7/12/12

Consultant

PB HDR

File Number

ACC No. 23126

G-PP-1021

TRACK

CURVE	POINT	NORTHING	EASTING	STATION	Δ	R	L	Ls1	Ls2	I	T	Ea	Eu	V	BEARING	TANGENT LENGTH
POB	POB	410,049.86	1,396,857.98	200+00.00												
															S 80° 19' 13.39" W	2.78'
CURVE OTR-2100	PC	410,049.39	1,396,855.24	200+02.78	1°05' 10.07" (LT)	1,500.00'	28.43'			1°05' 10.07" (LT)	14.22'	0.00"	0.59"	15 MPH		
	PI	410,047.00	1,396,841.22	200+17.00												
	PT	410,044.35	1,396,827.26	200+31.21												
															S 79° 14' 03.32" W	33.00'
CURVE OTR-2101	PC	410,038.18	1,396,794.84	200+64.21	0°59' 27.88" (RT)	1,500.00'	25.95'			0°59' 27.88" (RT)	12.97'	0.00"	0.59"	15 MPH		
	PI	410,035.76	1,396,782.09	200+77.18												
	PT	410,033.56	1,396,769.31	200+90.16												
															S 80° 13' 31.20" W	790.47'
CURVE OTR-3100	PC	409,899.36	1,395,990.31	208+80.63	76°45' 59.16" (RT)	65.62'	87.92'		30.00'	89°51'48.99" (RT)	66.03'	0.00"	3.86"	8 MPH		
	PI	409,888.15	1,395,925.24	209+46.66												
	CS	409,938.38	1,395,918.77	209+68.55												
	ST	409,967.38	1,395,911.39	209+98.55												
															N 9° 54' 39.80" W	549.32'
CURVE OTR-3101	PC	410,481.56	1,395,821.55	215+20.52	0°57' 01.29" (RT)	1,500.00'	24.88'			0°57' 01.29" (RT)	12.44'	0.00"	0.59"	15 MPH		
	PI	410,493.82	1,395,819.41	215+32.96												
	PT	410,506.10	1,395,817.47	215+45.40												
															N 8° 57' 38.51" W	33.00'
CURVE OTR-3102	PC	410,538.70	1,395,812.33	215+78.40	0°57' 01.29" (LT)	1,500.00'	24.88'			0°57' 01.29" (LT)	12.44'	0.00"	0.59"	15 MPH		
	PI	410,550.99	1,395,810.39	215+90.84												
	PT	410,563.24	1,395,808.25	216+03.28												
															N 9° 54' 39.80" W	124.00'
CURVE OTR-3103	PC	410,712.34	1,395,782.20	217+54.63	0°57' 01.29" (LT)	1,500.00'	24.88'			0°57' 01.29" (LT)	12.44'	0.00"	0.59"	15 MPH		
	PI	410,724.59	1,395,780.06	217+67.07												
	PT	410,736.81	1,395,777.72	217+79.51												
															N 10° 51' 41.10" W	33.00'
CURVE OTR-3104	PC	410,769.22	1,395,771.50	218+12.51	0°57' 01.29" (RT)	1,500.00'	24.88'			0°57' 01.29" (RT)	12.44'	0.00"	0.59"	15 MPH		
	PI	410,781.43	1,395,769.15	218+24.95												
	PT	410,793.69	1,395,767.01	218+37.39												
															N 9° 54' 39.80" W	775.05'
CURVE OTR-3105	PC	411,557.17	1,395,633.61	226+12.43	0°57' 01.29" (RT)	1,500.00'	24.88'			0°57' 01.29" (RT)	12.44'	0.00"	0.59"	15 MPH		
	PI	411,569.42	1,395,631.47	226+24.87												
	PT	411,581.71	1,395,629.53	226+37.31												
															N 8° 57' 38.51" W	33.00'
CURVE OTR-3106	PC	411,614.31	1,395,624.39	226+70.31	0°57' 01.29" (LT)	1,500.00'	24.88'			0°57' 01.29" (LT)	12.44'	0.00"	0.59"	15 MPH		
	PI	411,626.60	1,395,622.46	226+82.75												
	PT	411,638.85	1,395,620.32	226+95.19												
															N 9° 54' 39.80" W	124.00'
CURVE OTR-3107	PC	411,761.00	1,395,598.97	228+19.19	0°57' 01.29" (LT)	1,500.00'	24.88'			0°57' 01.29" (LT)	12.44'	0.00"	0.59"	15 MPH		
	PI	411,773.25	1,395,596.83	228+31.63												
	PT	411,785.47	1,395,594.49	228+44.07												
															N 10° 51' 41.10" W	33.00'

CAUTION UNDERGROUND UTILITIES
2 WORKING DAYS
BEFORE YOU DIG
CALL 1-800-362-2764
OHIO UTILITY PROTECTION SERVICE
CALL NON-SERVICE FACILITY
OWNERS DIRECT

CONTRACT DRAWING

PRINTS NOT BEARING THIS STAMP WERE MADE PRIOR TO ADVERTISING FOR BIDS AND ARE TO BE CONSIDERED OBSOLETE FOR CONTRACT PURPOSES.

Department of Transportation and Engineering

City of Cincinnati
City Hall
801 Plum Street
Cincinnati, Ohio 45202

CINCINNATI STREETCAR
OVER THE RHINE

ALIGNMENT DATA

Revisions

No.				

Drawn by RAB	Designed by RAB	Checked by KVL	Reviewed by JTB
Date 07/02/12	Date 07/02/12	Date 07/02/12	Date 07/12/12

Consultant

PB HDR

File Number

ACC No.
23126

G-AL-2001

DOTE_Mono_PDF_Half.pltcfg
c:\pwworking\pitt\d0309031\S_G-AL-2001.dgn
Wednesday, July 11, 2012 09:59:52 AM

TRACK

CURVE	POINT	NORTHING	EASTING	STATION	Δ	R	L	Ls1	Ls2	I	T	Ea	Eu	V	BEARING	TANGENT LENGTH
CURVE OTR-3108	PC	411,817.88	1,395,588.27	228+77.07	0°57' 01.29" (RT)	1,500.00'	24.88'			0°57' 01.29" (RT)	12.44'	0.00"	0.59"	15 MPH		
	PI	411,830.10	1,395,585.92	228+89.51												
	PT	411,842.35	1,395,583.78	229+01.95												
															N 9° 54' 39.80" W	493.69'
CURVE OTR-3109	PC	412,328.68	1,395,498.81	233+95.65	0°57' 01.29" (RT)	1,500.00'	24.88'			0°57' 01.29" (RT)	12.44'	0.00"	0.59"	15 MPH		
	PI	412,340.93	1,395,496.67	234+08.09												
	PT	412,353.22	1,395,494.73	234+20.53												
															N 8° 57' 38.51" W	33.00'
CURVE OTR-3110	PC	412,385.82	1,395,489.59	234+53.52	0°57' 01.29" (LT)	1,500.00'	24.88'			0°57' 01.29" (LT)	12.44'	0.00"	0.59"	15 MPH		
	PI	412,398.11	1,395,487.65	234+65.97												
	PT	412,410.36	1,395,485.51	234+78.41												
															N 9° 54' 39.80" W	124.00'
CURVE OTR-3111	PC	412,532.51	1,395,464.17	236+02.41	0°57' 01.29" (LT)	1,500.00'	24.88'			0°57' 01.29" (LT)	12.44'	0.00"	0.59"	15 MPH		
	PI	412,544.77	1,395,462.03	236+14.85												
	PT	412,556.98	1,395,459.68	236+27.29												
															N 10° 51' 41.10" W	33.00'
CURVE OTR-3112	PC	412,589.39	1,395,453.47	236+60.28	0°57' 01.29" (RT)	1,500.00'	24.88'			0°57' 01.29" (RT)	12.44'	0.00"	0.59"	15 MPH		
	PI	412,601.61	1,395,451.12	236+72.72												
	PT	412,613.86	1,395,448.98	236+85.16												
															N 9° 54' 39.80" W	530.65'
CURVE OTR-3113	PC	413,136.59	1,395,357.64	242+15.82	0°57' 01.29" (RT)	1,500.00'	24.88'			0°57' 01.29" (RT)	12.44'	0.00"	0.59"	15 MPH		
	PI	413,148.85	1,395,355.50	242+28.26												
	PT	413,161.14	1,395,353.57	242+40.70												
															N 8° 57' 38.51" W	33.00'
CURVE OTR-3114	PC	413,193.73	1,395,348.43	242+73.69	0°57' 01.29" (LT)	1,500.00'	24.88'			0°57' 01.29" (LT)	12.44'	0.00"	0.59"	15 MPH		
	PI	413,206.02	1,395,346.49	242+86.14												
	PT	413,218.28	1,395,344.35	242+98.58												
															N 9° 54' 39.80" W	200.23'
CURVE OTR-3115	TS	413,415.52	1,395,309.88	244+98.81	63°44' 03.05" (RT)	65.62'	72.99'	30.00'	30.00'	89°55'42.72"(RT)	81.08'	0.00"	3.86"	8 MPH		
	SC	413,445.31	1,395,306.99	245+28.81												
	PI	413,495.39	1,395,295.93	245+79.89												
	CS	413,502.03	1,395,346.78	246+01.80												
	ST	413,509.45	1,395,375.78	246+31.80												
															N 80° 01' 02.92" E	292.84'
CURVE OTR-3116	TS	413,560.21	1,395,664.19	249+24.64	63°47' 35.00" (RT)	65.62'	73.06'	30.00'	30.00'	89°59'14.66"(RT)	81.15'	0.00"	3.86"	8 MPH		
	SC	413,563.14	1,395,693.98	249+54.64												
	PI	413,574.28	1,395,744.11	250+05.79												
	CS	413,523.36	1,395,750.77	250+27.70												
	ST	413,494.36	1,395,758.19	250+57.70												
															S 9° 59' 42.42" E	234.77'

CAUTION UNDERGROUND UTILITIES
2 WORKING DAYS
BEFORE YOU DIG
CALL 1-800-362-2764
OHIO UTILITY PROTECTION SERVICE
CALL NON-SERVICE FACILITY
OWNERS DIRECT

DOTE_Mono_PDF_Half.pltcfg
c:\pwworking\pitt\d0309031\S_G-AL-2002.dgn
Wednesday, July 11, 2012 09:58:38 AM

CONTRACT DRAWING

PRINTS NOT BEARING THIS STAMP WERE MADE PRIOR TO ADVERTISING FOR BID AND ARE TO BE CONSIDERED OBSOLETE FOR CONTRACT PURPOSES.

Department of Transportation and Engineering

City of Cincinnati
City Hall
801 Plum Street
Cincinnati, Ohio 45202

CINCINNATI STREETCAR
OVER THE RHINE

ALIGNMENT DATA

Revisions

No.				

Drawn by RAB Date 07/02/12
Designed by RAB Date 07/02/12
Checked by KVL Date 07/02/12
Reviewed by JTB Date 07/12/12

Consultant

PB HDR

File Number

ACC No.
23126

G-AL-2002

TRACK

CURVE	POINT	NORTHING	EASTING	STATION	Δ	R	L	Ls1	Ls2	I	T	Ea	Eu	V	BEARING	TANGENT LENGTH
CURVE OTR-3117	TS	413,263.16	1,395,798.94	252+92.47	1°44' 29.09" (RT)	600.00'	18.24'	30.00'	30.00'	04°36'22.33"(RT)	39.13'	0.00"	1.91"	17 MPH		
	SC	413,233.57	1,395,803.90	253+22.47												
	PI	413,224.62	1,395,805.73	253+31.60												
	CS	413,215.50	1,395,806.34	253+40.71												
	ST	413,185.66	1,395,809.41	253+70.71												
															S 5° 23' 20.09" E	45.80'
CURVE OTR-3118	TS	413,140.06	1,395,813.71	254+16.51	1°44' 29.09" (LT)	600.00'	18.24'	30.00'	30.00'	04°36'22.33"(LT)	39.13'	0.00"	1.91"	17 MPH		
	SC	413,110.21	1,395,816.78	254+46.51												
	PI	413,101.09	1,395,817.39	254+55.64												
	CS	413,092.14	1,395,819.22	254+64.75												
	ST	413,062.56	1,395,824.18	254+94.75												
															S 9° 59' 42.42" E	391.53
CURVE OTR-3119	TS	412,676.97	1,395,892.13	258+86.28	4°25' 56.37" (LT)	400.00'	30.94'	30.00'	30.00'	08°43'46.23"(LT)	45.54'	0.00"	2.23"	15 MPH		
	SC	412,647.49	1,395,897.71	259+16.28												
	PI	412,632.12	1,395,900.04	259+31.82												
	CS	412,617.52	1,395,905.38	259+47.22												
	ST	412,588.99	1,395,914.66	259+77.22												
															S 18° 43' 28.65" E	40.31'
CURVE OTR-3120	TS	412,550.82	1,395,927.60	260+17.53	4°25' 37.59" (RT)	400.00'	30.91'	30.00'	30.00'	08°43'27.45"(RT)	45.42'	0.00"	2.23"	15 MPH		
	SC	412,522.29	1,395,936.87	260+47.53												
	PI	412,507.71	1,395,942.21	260+62.95												
	CS	412,492.36	1,395,944.53	260+78.44												
	ST	412,462.88	1,395,950.11	261+08.44												
															S 10° 00' 01.20" E	418.12'
CURVE OTR-3121	PC	412,051.11	1,396,022.72	265+26.56	0°09' 03.36" (RT)	10,000.00'	26.34'			0°09' 03.36" (RT)	13.17'	0.00"	0.25"	25 MPH		
	PI	412,038.14	1,396,025.01	265+39.73												
	PT	412,025.16	1,396,027.26	265+52.90												
															S 9° 50' 57.85" E	229.53'
CURVE OTR-3122	PC	411,799.02	1,396,066.52	267+82.43	0°57' 01.29" (LT)	1,500.00'	24.88'			0°57' 01.29" (LT)	12.44'	0.00"	0.59"	15 MPH		
	PI	411,786.76	1,396,068.65	267+94.87												
	PT	411,774.54	1,396,070.98	268+07.31												
															S 10° 47' 59.14" E	33.00'
CURVE OTR-3123	PC	411,742.13	1,396,077.17	268+40.31	0°57' 01.29" (RT)	1,500.00'	24.88'			0°57' 01.29" (RT)	12.44'	0.00"	0.59"	15 MPH		
	PI	411,729.91	1,396,079.50	268+52.75												
	PT	411,717.65	1,396,081.63	268+65.19												
															S 9° 50' 57.85" E	124.00'
CURVE OTR-3124	PC	411,595.48	1,396,102.84	269+89.19	0°57' 01.29" (RT)	1,500.00'	24.88'			0°57' 01.29" (RT)	12.44'	0.00"	0.59"	15 MPH		
	PI	411,583.22	1,396,104.97	270+01.63												
	PT	411,570.93	1,396,106.89	270+14.07												
															S 8° 53' 56.55" E	33.00'
CURVE OTR-3125	PC	411,538.33	1,396,111.99	270+47.07	0°57' 01.28" (LT)	1,500.00'	24.88'			0°57' 01.28" (LT)	12.44'	0.00"	0.59"	15 MPH		
	PI	411,526.04	1,396,113.92	270+59.51												
	PT	411,513.78	1,396,116.05	270+71.95												
															S 9° 50' 57.83" E	124.83'
CURVE OTR-3126	PC	411,390.79	1,396,137.40	271+96.78	0°06' 18.69" (RT)	10,000.00'	18.36'			0°06' 18.69" (RT)	9.18'	0.00"	0.25"	25 MPH		
	PI	411,381.75	1,396,138.97	272+05.96												
	PT	411,372.70	1,396,140.52	272+15.14												
															S 9° 44' 39.15" E	520.87'

CAUTION UNDERGROUND UTILITIES
2 WORKING DAYS
BEFORE YOU DIG
CALL 1-800-362-2764
OHIO UTILITY PROTECTION SERVICE
CALL NON-SERVICE FACILITY
OWNERS DIRECT

DOTE_Mono_PDF_Half.pltcfg
c:\pwworking\pitt\d0309031\S_G-AL-2003.dgn
Wednesday, July 11, 2012 09:58:48 AM

CONTRACT DRAWING

PRINTS NOT BEARING THIS STAMP WERE MADE PRIOR TO ADVERTISING FOR BIDS AND ARE NOT TO BE CONSIDERED OBSOLETE FOR CONTRACT PURPOSES.

Department of Transportation and Engineering

City of Cincinnati
801 Plum Street
Cincinnati, Ohio 45202

CINCINNATI STREETCAR OVER THE RHINE

ALIGNMENT DATA

Revisions

No.				

Drawn by RAB	Date 07/02/12	Designed by RAB	Date 07/02/12
Checked by KVL	Date 07/02/12	Reviewed by JTB	Date 07/12/12

Consultant

PB HDR

File Number

ACC No.
23126

G-AL-2003

TRACK

CURVE	POINT	NORTHING	EASTING	STATION	Δ	R	L	Ls1	Ls2	I	T	Ea	Eu	V	BEARING	TANGENT LENGTH
CURVE OTR-3127	PC	410,859.34	1,396,228.68	277+36.01	0°34' 33.54" (LT)	4,000.00'	40.21'			0°34' 33.54" (LT)	20.11'	0.00"	0.62"	25 MPH		
	PI	410,839.53	1,396,232.08	277+56.12												
	PT	410,819.74	1,396,235.69	277+76.22												
															S 10° 19' 12.69" E	36.22'
CURVE OTR-3128	PC	410,784.11	1,396,242.18	278+12.44	0°31' 15.96" (RT)	4,000.00'	36.38'			0°31' 15.96" (RT)	18.19'	0.00"	0.62"	25 MPH		
	PI	410,766.22	1,396,245.43	278+30.63												
	PT	410,748.29	1,396,248.53	278+48.82												
															S 9° 47' 56.73" E	316.40'
CURVE OTR-3129	PC	410,436.51	1,396,302.38	281+65.22	0°49' 17.53" (RT)	3,000.00'	43.02'			0°49' 17.53" (RT)	21.51'	0.00"	0.83"	25 MPH		
	PI	410,415.32	1,396,306.04	281+86.72												
	PT	410,394.07	1,396,309.40	282+08.23												
															S 8° 58' 39.20" E	33.24'
CURVE OTR-3130	PC	410,361.24	1,396,314.58	282+41.47	0°47' 49.60" (LT)	3,000.00'	41.74'			0°47' 49.60" (LT)	20.87'	0.00"	0.53"	20 MPH		
	PI	410,340.63	1,396,317.84	282+62.34												
	PT	410,320.06	1,396,321.38	282+83.21												
															S 9 °46' 28.80" E	733.56'
CURVE OTR-3131	TS	409,597.15	1,396,445.92	290+16.77	76°55' 20.21" (LT)	65.62'	88.10'	30.00'		90°01'10.04" (LT)	80.62'	0.00"	3.86"	8 MPH		
	SC	409,568.13	1,396,453.23	290+46.77												
	PI	409,517.71	1,396,459.61	290+97.39												
	PT	409,528.97	1,396,524.86	291+34.86												
															N 80° 12' 21.16" E	313.60'
CURVE OTR-3132	PC	409,582.31	1,396,833.88	294+48.46	1°15' 51.06" (LT)	1,500.00'	33.10'			1°15' 51.06" (LT)	16.55'	0.00"	0.59"	15 MPH		
	PI	409,585.13	1,396,850.19	294+65.01												
	PT	409,588.30	1,396,866.43	294+81.56												
															N 78° 56' 30.10" E	33.00'
CURVE OTR-3133	PC	409,594.63	1,396,898.82	295+14.56	1°15' 51.06" (RT)	1,500.00'	33.10'			1°15' 51.06" (RT)	16.55'	0.00"	0.59"	15 MPH		
	PI	409,597.81	1,396,915.06	295+31.11												
	PT	409,600.62	1,396,931.37	295+47.66												
															N 80° 12' 21.16" E	3.57'
POE	POE	409,601.23	1,396,934.89	295+51.22												
CURVE UTC-2100	PC/PS	413,023.97	1,395,830.98	2004+62.51	76°59' 18.95" (RT)	65.62'	88.17'		30.00'	90°05' 8.78" (RT)	82.36'	0.00"	3.86"	8 MPH		
	PI	413,089.25	1,395,819.47	2005+44.87												
	CS	413,095.76	1,395,869.96	2005+50.69												
	ST	413,103.14	1,395,898.96	2005+80.69												
															N 80° 05' 26.37" E	19.31'
POE	POE	413,106.46	1,395,917.99	2006+00.00												
CURVE UTC-1100	PC/PS	412,713.01	1,395,885.78	1000+00.00	82°54' 10.17" (LT)	65.62'	94.95'		30.00'	96°00' 0.00" (LT)	73.45'	0.00"	3.86"	8 MPH		
	PI	412,640.68	1,395,898.53	1000+73.45												
	CS	412,658.87	1,395,953.72	1000+94.95												
	ST	412,664.90	1,395,983.04	1001+24.95												
															N 74° 00' 17.58" E	39.40'
CURVE UTC-1101	PC	412,675.76	1,396,020.92	1001+64.35	5°53' 9.88" (RT)	250.00'	25.68'			5°53' 9.88" (RT)	12.85'	0.00"	0.40"	5 MPH		
	PI	412,679.30	1,396,033.27	1001+77.20												
	PT	412,681.56	1,396,045.93	1001+90.03												
															N 79° 53' 27.47" E	34.97'
POE	POE	412,687.70	1,396,080.35	1002+25.00												
LOOP TRACK 1 OTR-S100	PC/PS	409,978.01	1,396,446.89	700+06.00	90°0' 0.00" (LT)	65.62'	103.08'			90°0' 0.00" (LT)	65.62'	0.00"	3.86	8 MPH		
	PI	409,966.87	1,396,382.23	700+71.62												
	PT/PS	409,902.21	1,396,393.37	701+09.08												
LOOP TRACK 2 OTR-S200	PC/PS	410,031.54	1,396,371.09	800+06.00	90°0' 0.00" (RT)	65.62'	103.08'			90°0' 0.00" (RT)	65.62'	0.00"	3.86"	8 MPH		
	PI	409,966.87	1,396,382.23	800+71.62												
	PT/PS	409,955.73	1,396,317.56	801+09.08												

CAUTION UNDERGROUND UTILITIES
2 WORKING DAYS
BEFORE YOU DIG
CALL 1-800-362-2764
OHIO UTILITY PROTECTION SERVICE
CALL NON-SERVICE FACILITY
OWNERS DIRECT

DOTE_Mono_PDF_Half.pltcfg
c:\pwworking\pitt\d0309031\S_G-AL-2004.dgn
Wednesday, July 11, 2012 09:59:09:00 AM

CITY OF CINCINNATI DEPARTMENT OF TRANSPORTATION & ENGINEERING OHIO

CONTRACT DRAWING

PRINTS NOT BEARING THIS STAMP WERE MADE PRIOR TO ADVERTISING FOR BIDS AND ARE TO BE CONSIDERED OBSOLETE FOR CONTRACT PURPOSES.

Department of Transportation and Engineering

City of Cincinnati
801 Plum Street
Cincinnati, Ohio 45202

CINCINNATI STREETCAR OVER THE RHINE

ALIGNMENT DATA

Revisions
No.

Drawn by	Designed by	Checked by	Reviewed by
RAB	RAB	KVL	JTB
Date 07/02/12	Date 07/02/12	Date 07/02/12	Date 07/12/12

Consultant

PB HDR

File Number

ACC No.
23126

G-AL-2004

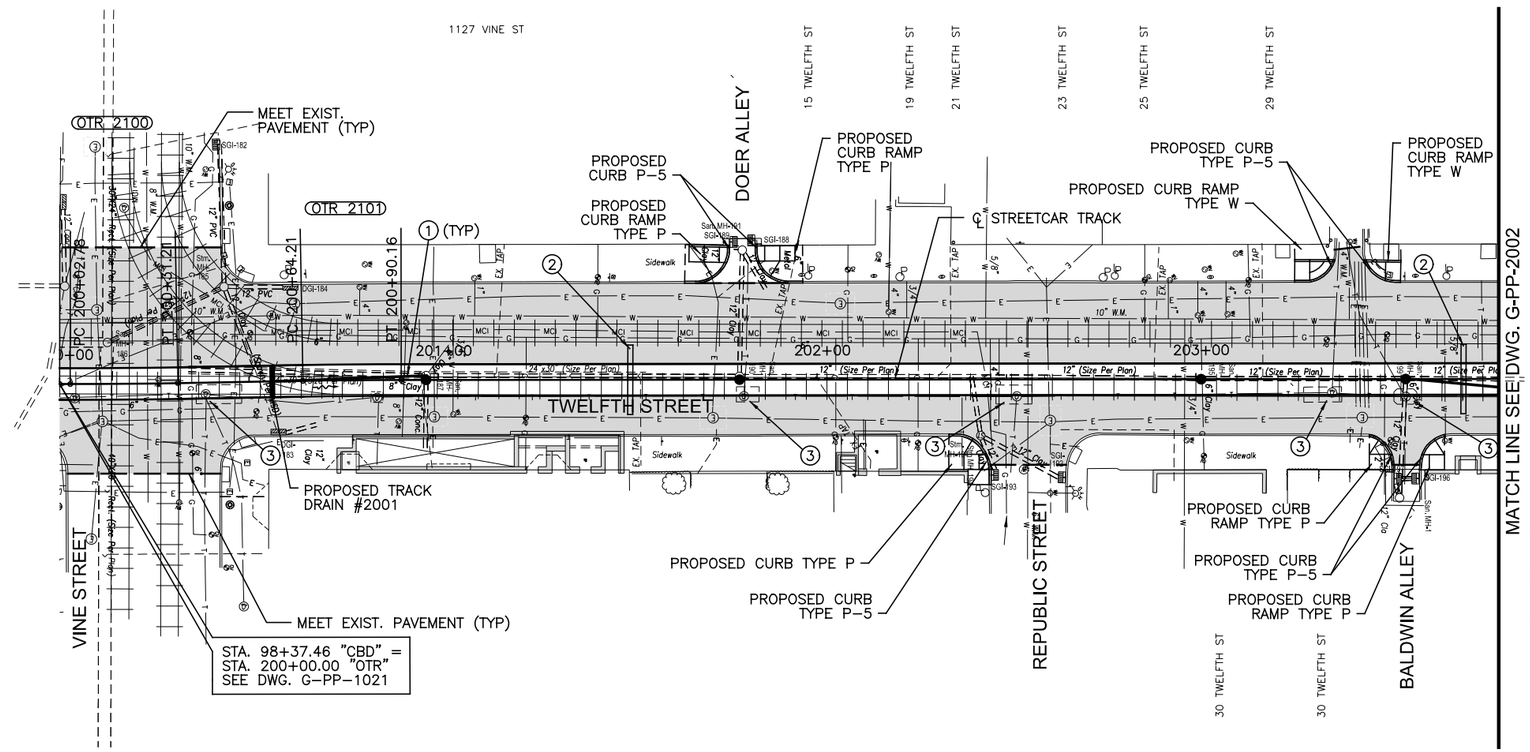

LEGEND:

- PAVEMENT RECONSTRUCTION
- PAVEMENT MILL & OVERLAY
- SIDEWALK RECONSTRUCTION
- RESET GRANITE PAVERS
- EXISTING BASEMENT ENCROACHMENT
- 200 — TURNOUT IDENTIFICATION SYMBOL
- OTR 3001 — CURVE IDENTIFICATION SYMBOL
- EXISTING RAILS

NOTES:

1. STORM & SANITARY SEWERS. REFER TO "SA" SERIES DRAWINGS
2. INSTALL EMPTY CONDUIT CROSSING FOR FUTURE UTILITY USE. SEE DETAIL SHEET G-MD-1001.
3. EXISTING TELEPHONE VAULT TO REMAIN. EXISTING VAULT ROOF'S MH CASTINGS IN CONFLICT WITH PROPOSED TRACK SLAB TO BE ADJUSTED BY CINCINNATI BELL PRIOR TO TRACK SLAB CONSTRUCTION. ALL MODIFICATIONS/ REPLACEMENTS OF VAULT ROOFS, CASTINGS, AND ADJUSTING RINGS TO BE PERFORMED BY CINCINNATI BELL. FINAL CASTING ADJUSTMENT TO FINISH GRADE TO BE PERFORMED BY TRACK CONTRACTOR. COORDINATE THIS WORK WITH CINCINNATI BELL AND THE CITY OF CINCINNATI.

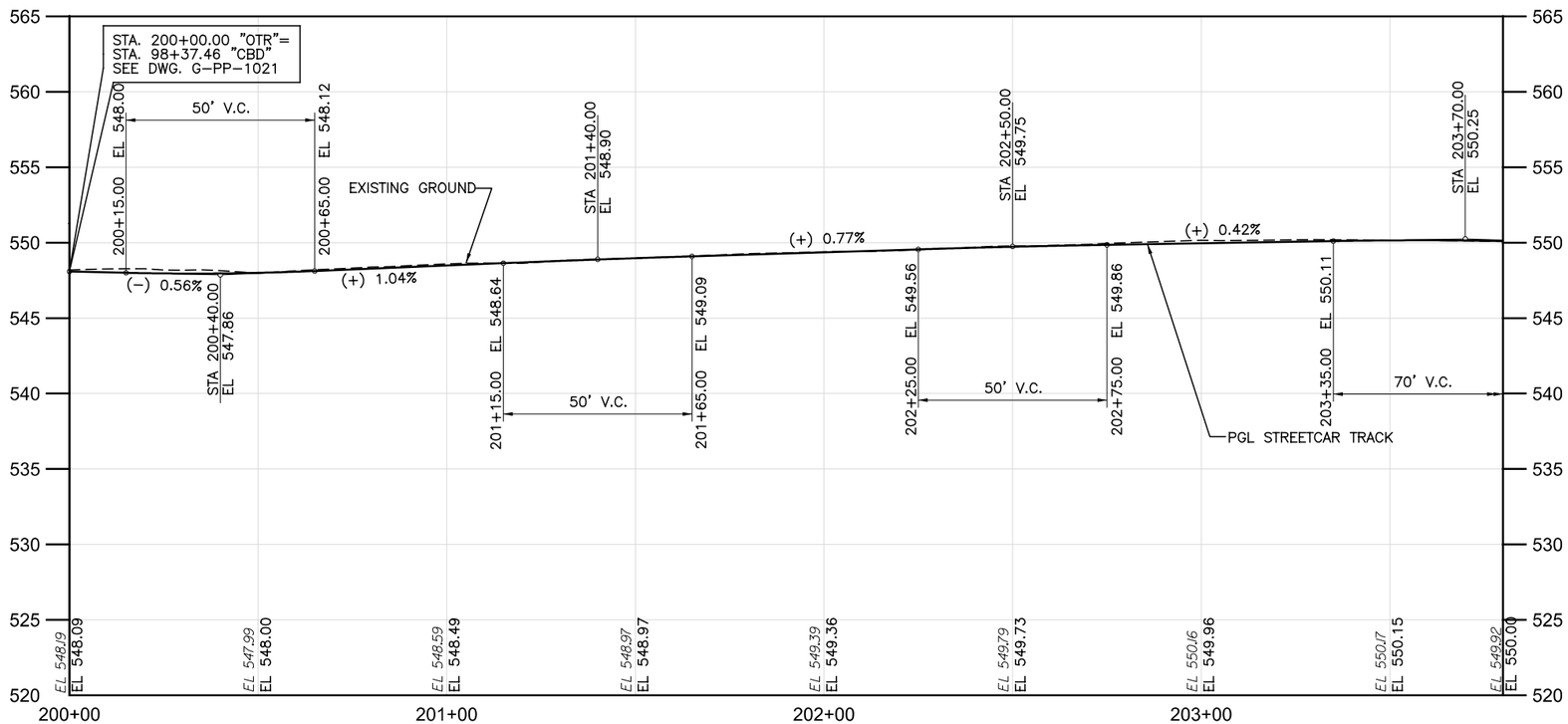

CAUTION UNDERGROUND UTILITIES
2 WORKING DAYS
BEFORE YOU DIG
CALL 1-800-362-2764
OHIO UTILITY PROTECTION SERVICE
CALL NON-SERVICE FACILITY
OWNERS DIRECT

GRAPHIC SCALE
20 0 20 40 80
(IN FEET)
1 inch = 20 ft. Full Size
1 inch = 40 ft. Half Size

DEPARTMENT OF TRANSPORTATION & ENGINEERING — CITY OF CINCINNATI — OHIO

CONTRACT DRAWING

PRINTS NOT BEARING THIS STAMP WERE MADE PRIOR TO ADVERTISING AND MAY BE CONSIDERED OBSOLETE FOR CONTRACT PURPOSES.

Department of Transportation and Engineering
City of Cincinnati
City Hall
801 Plum Street
Cincinnati, Ohio 45202

CINCINNATI STREETCAR OVER THE RHINE

PLAN AND TRACK PROFILE - TWELFTH STREET
STA 200+00.00 TO STA 203+80

Revisions

No.		Date
		07/02/12
		07/02/12
		07/02/12
		07/12/12

Drawn by RWB	Date 07/02/12
Designed by RWB	Date 07/02/12
Checked by KVL	Date 07/02/12
Reviewed by JTB	Date 07/12/12

Consultant

PB HDR

File Number

ACC No. 23126

G-PP-2001

DOTE_Mono_PDF_Half.pltcfg
c:\pwworking\pitt\d0309031\S_G-PP-2001.dgn
Friday, July 13, 2012 11:56:07 AM RWB 6:07 AM

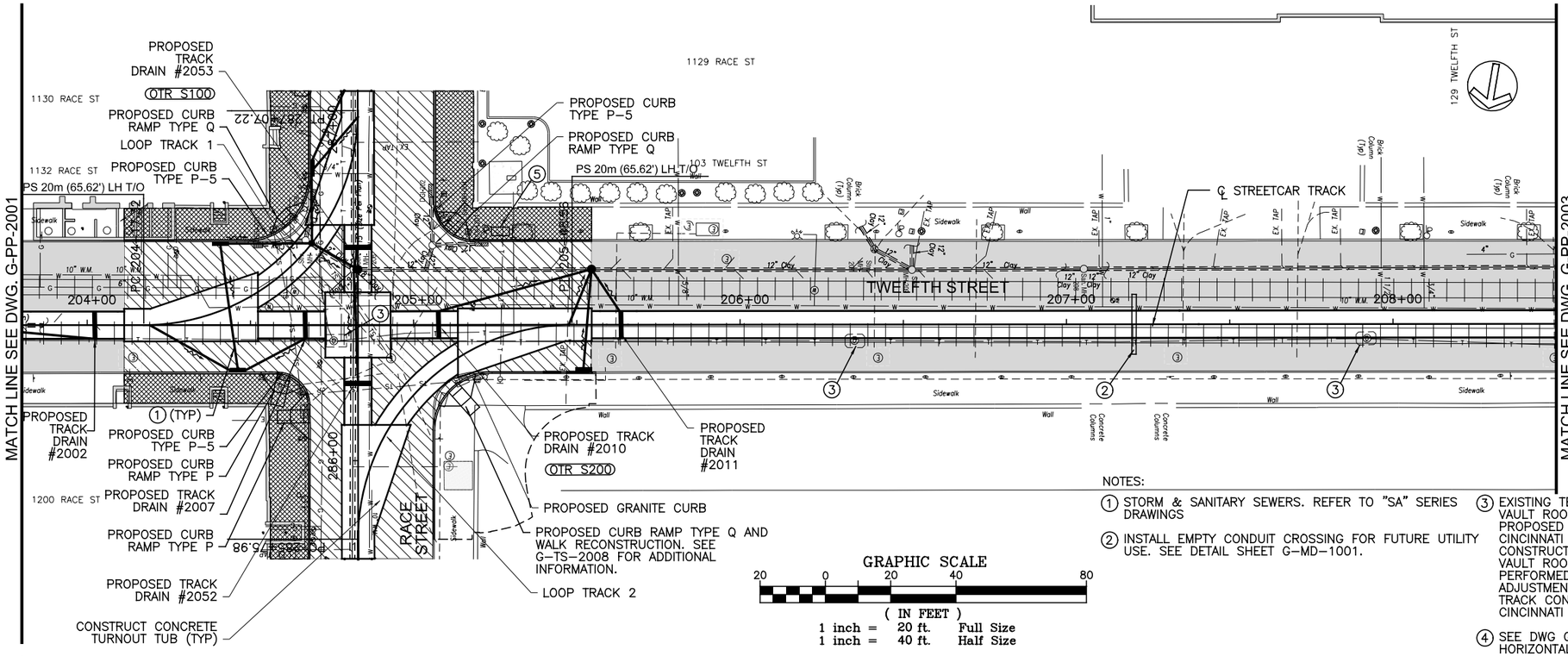

CAUTION UNDERGROUND UTILITIES
2 WORKING DAYS
BEFORE YOU DIG
CALL 1-800-362-2764
OHIO UTILITY PROTECTION SERVICE
CALL NON-SERVICE FACILITY
OWNERS DIRECT

NOTES:

1. STORM & SANITARY SEWERS. REFER TO "SA" SERIES DRAWINGS
2. INSTALL EMPTY CONDUIT CROSSING FOR FUTURE UTILITY USE. SEE DETAIL SHEET G-MD-1001.
3. EXISTING TELEPHONE VAULT TO REMAIN. EXISTING VAULT ROOF'S MH CASTINGS IN CONFLICT WITH PROPOSED TRACK SLAB TO BE ADJUSTED BY CINCINNATI BELL PRIOR TO TRACK SLAB CONSTRUCTION. ALL MODIFICATIONS/REPLACEMENTS OF VAULT ROOFS, CASTINGS, AND ADJUSTING RINGS TO BE PERFORMED BY CINCINNATI BELL. FINAL CASTING ADJUSTMENT TO FINISH GRADE TO BE PERFORMED BY TRACK CONTRACTOR. COORDINATE THIS WORK WITH CINCINNATI BELL AND THE CITY OF CINCINNATI.
4. SEE DWG G-TK-2101 FOR LOOP TRACKS 1 AND 2 HORIZONTAL GEOMETRY
5. SIGNAL CABINET. REFER TO "SD" SERIES DRAWINGS FOR NUMBER OF CABINETS AND REQUIRED CONDUIT ROUTING. CONTRACTOR TO ESTABLISH LOCATION(S) IN FIELD.

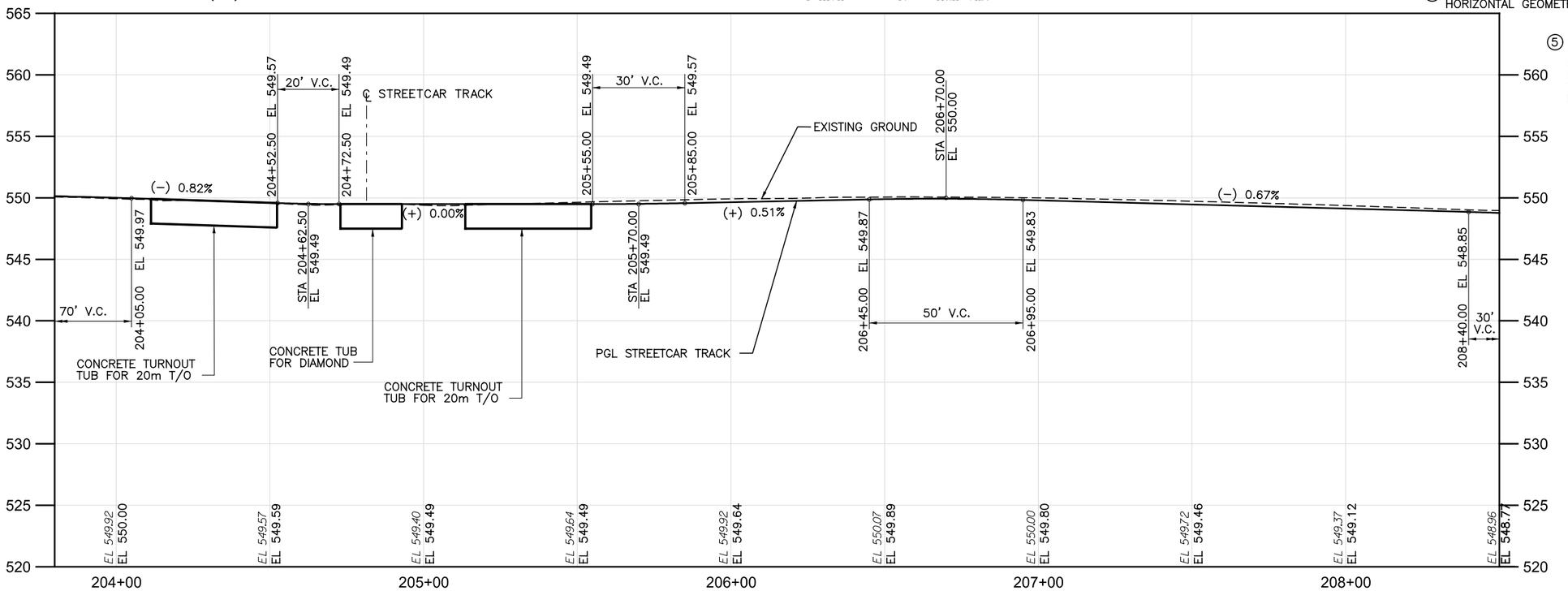

DOTE_Mono_PDF_Half.pltcfg
c:\pwworking\pitt\d0309031\S_G-PP-2002.dgn
Friday, July 13, 2012 11:56:20 AM

CONTRACT DRAWING

PRINTS NOT BEARING THIS STAMP WERE MADE PRIOR TO ADVERTISING AND SHOULD BE CONSIDERED OBSOLETE FOR CONTRACT PURPOSES.

Department of Transportation and Engineering
City of Cincinnati
City Hall
801 Plum Street
Cincinnati, Ohio 45202

CINCINNATI STREETCAR OVER THE RHINE

PLAN AND TRACK PROFILE - TWELFTH STREET
STA 203+80 TO STA 208+50

Revisions
No.

Drawn by RWB	Date 07/02/12
Designed by RWB	Date 07/02/12
Checked by KVL	Date 07/02/12
Reviewed by JTB	Date 07/12/12

Consultant

PB HDR

File Number

ACC No. 23126

G-PP-2002

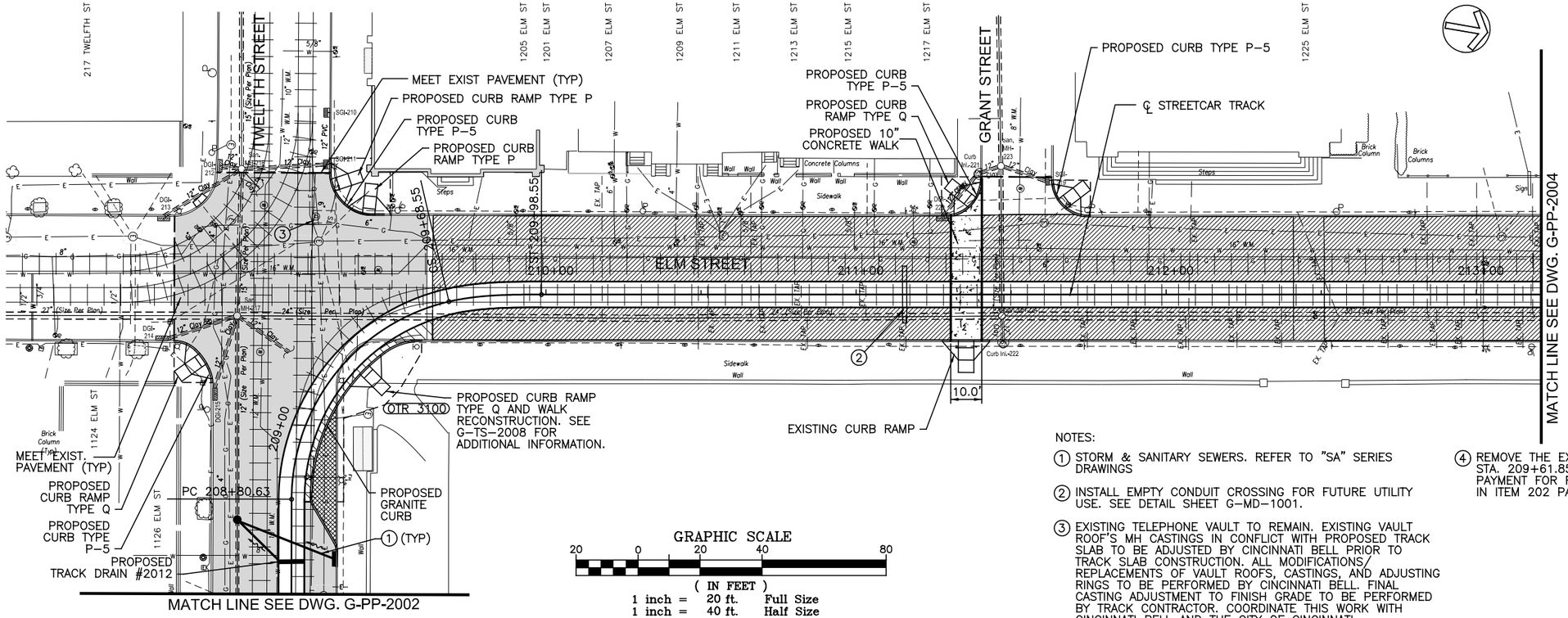

CAUTION UNDERGROUND UTILITIES
2 WORKING DAYS
BEFORE YOU DIG
CALL 1-800-362-2764
OHIO UTILITY PROTECTION SERVICE
CALL NON-SERVICE FACILITY
OWNERS DIRECT

GRAPHIC SCALE
20 0 20 40 80
(IN FEET)
1 inch = 20 ft. Full Size
1 inch = 40 ft. Half Size

NOTES:

1. STORM & SANITARY SEWERS. REFER TO "SA" SERIES DRAWINGS
2. INSTALL EMPTY CONDUIT CROSSING FOR FUTURE UTILITY USE. SEE DETAIL SHEET G-MD-1001.
3. EXISTING TELEPHONE VAULT TO REMAIN. EXISTING VAULT ROOF'S MH CASTINGS IN CONFLICT WITH PROPOSED TRACK SLAB TO BE ADJUSTED BY CINCINNATI BELL PRIOR TO TRACK SLAB CONSTRUCTION. ALL MODIFICATIONS/ REPLACEMENTS OF VAULT ROOFS, CASTINGS, AND ADJUSTING RINGS TO BE PERFORMED BY CINCINNATI BELL. FINAL CASTING ADJUSTMENT TO FINISH GRADE TO BE PERFORMED BY TRACK CONTRACTOR. COORDINATE THIS WORK WITH CINCINNATI BELL AND THE CITY OF CINCINNATI.
4. REMOVE THE EXISTING TRACK FROM STA. 209+61.85 TO STA. 217+36.19, PAYMENT FOR REMOVAL IS INCLUDED IN ITEM 202 PAVEMENT REMOVED.

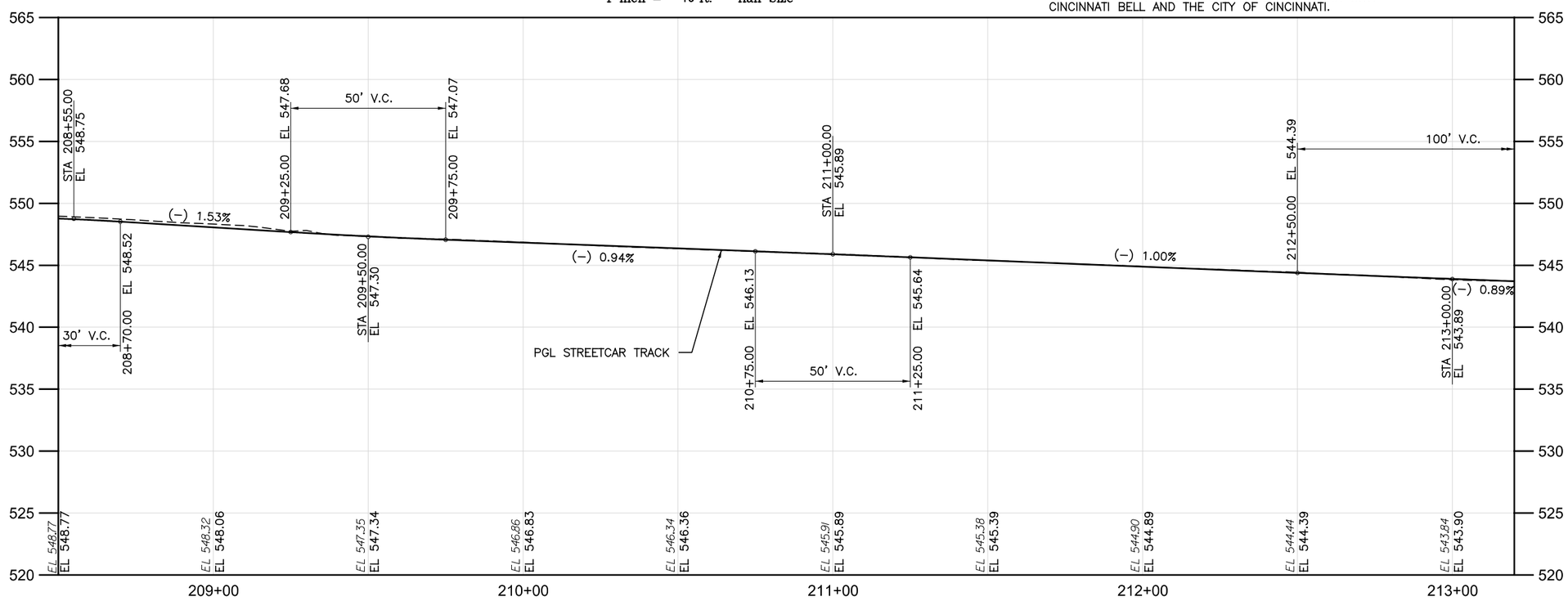

CONTRACT DRAWING

PRINTS NOT BEARING THIS STAMP WERE MADE PRIOR TO ADVERTISING BID AND ARE NOT TO BE CONSIDERED OBSOLETE FOR CONTRACT PURPOSES.

Department of Transportation and Engineering

City of Cincinnati
801 Plum Street
Cincinnati, Ohio 45202

CINCINNATI STREETCAR
OVER THE RHINE

PLAN AND TRACK PROFILE - ELM STREET
STA 208+50 TO STA 213+20

Revisions

No.		

Date 07/02/12
Date 07/02/12
Date 07/02/12
Date 07/12/12

Drawn by RVB
Designed by RWB
Checked by KVL
Reviewed by JTB

Consultant

PB HDR

File Number

ACC No. 23126

G-PP-2003

DOTE_Mono_PDF_Half.pltcfg
c:\pwworking\pitt\d0309031\S_G-PP-2003.dgn
Friday, July 13, 2012 11:56:34 AM PM 6:34 AM

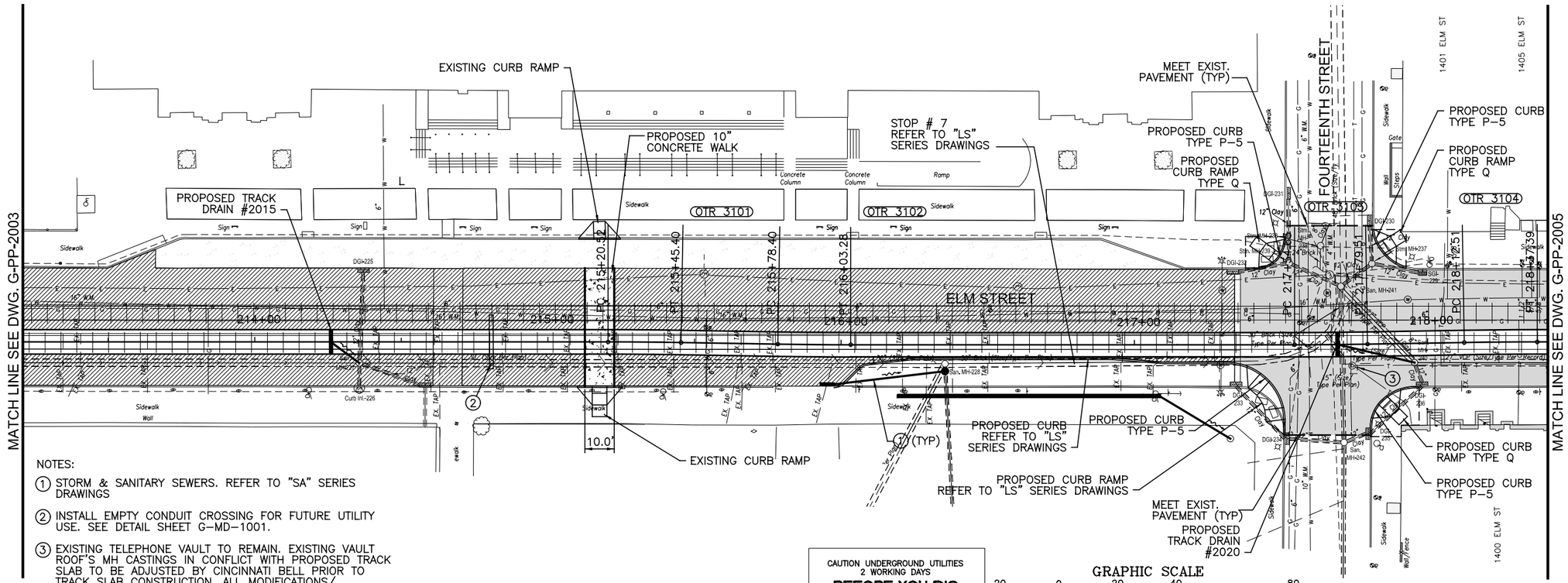

NOTES:

1. STORM & SANITARY SEWERS. REFER TO "SA" SERIES DRAWINGS
2. INSTALL EMPTY CONDUIT CROSSING FOR FUTURE UTILITY USE. SEE DETAIL SHEET G-MD-1001.
3. EXISTING TELEPHONE VAULT TO REMAIN. EXISTING VAULT ROOF'S MH CASTINGS IN CONFLICT WITH PROPOSED TRACK SLAB TO BE ADJUSTED BY CINCINNATI BELL PRIOR TO TRACK SLAB CONSTRUCTION. ALL MODIFICATIONS/ REPLACEMENTS OF VAULT ROOFS, CASTINGS, AND ADJUSTING RINGS TO BE PERFORMED BY CINCINNATI BELL. FINAL CASTING ADJUSTMENT TO FINISH GRADE TO BE PERFORMED BY TRACK CONTRACTOR. COORDINATE THIS WORK WITH CINCINNATI BELL AND THE CITY OF CINCINNATI.
4. REMOVE THE EXISTING TRACK FROM STA. 209+61.85 TO STA. 217+36.19, PAYMENT FOR REMOVAL IS INCLUDED IN ITEM 202 PAVEMENT REMOVED.

CAUTION UNDERGROUND UTILITIES
2 WORKING DAYS
BEFORE YOU DIG
CALL 1-800-362-2764
OHIO UTILITY PROTECTION SERVICE
CALL NON-SERVICE FACILITY OWNERS DIRECT

GRAPHIC SCALE
20 0 20 40 80
(IN FEET)
1 inch = 20 ft. Full Size
1 inch = 40 ft. Half Size

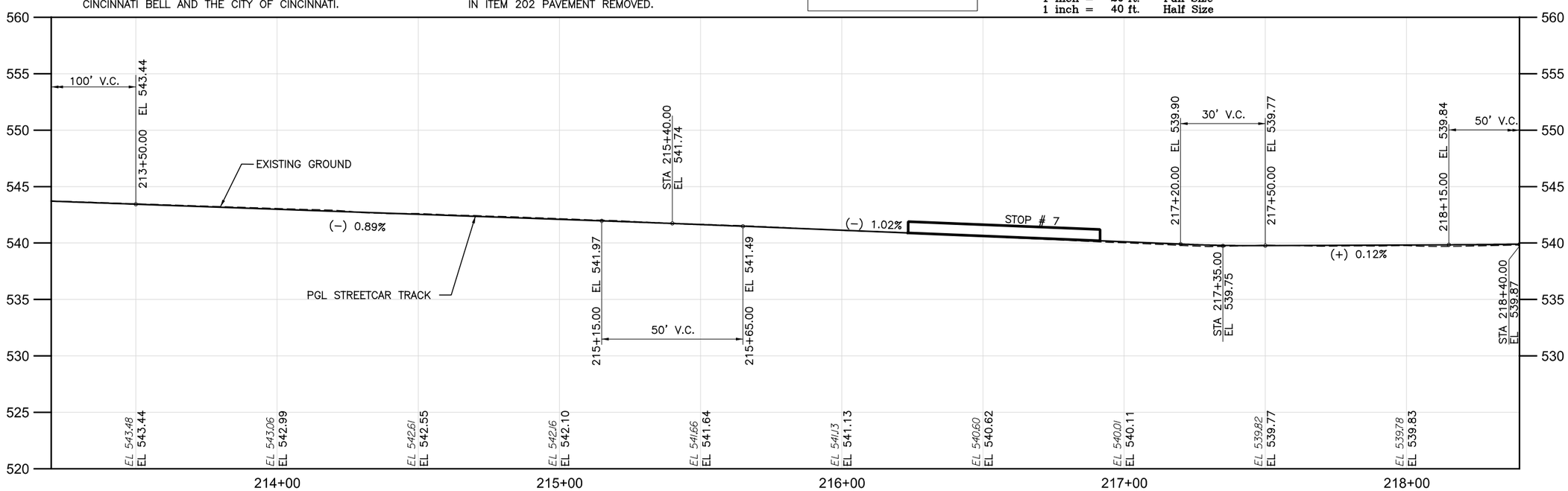

DOTE_Mono_PDF_Half.pltcfg
c:\pwworking\pitt\d0309031\S_G-PP-2004.dgn
Friday, July 13, 2012 11:56:47 AM

CONTRACT DRAWING

PRINTS NOT BEARING THIS STAMP WERE MADE PRIOR TO ADVERTISING BID. THEY MAY BE TO BE CONSIDERED OBSOLETE FOR CONTRACT PURPOSES.

Department of Transportation and Engineering
City of Cincinnati
City Hall
801 Plum Street
Cincinnati, Ohio 45202

CINCINNATI STREETCAR
OVER THE RHINE

PLAN AND TRACK PROFILE - ELM STREET
STA 213+20 TO STA 218+40

Revisions
No.

Drawn by RWB	Date 07/02/12	Date 07/02/12	Date 07/12/12
Designed by RWB	Date 07/02/12		
Checked by KVL	Date 07/02/12		
Reviewed by JTB			

Consultant
PB HDR

File Number
ACC No. 23126

G-PP-2004

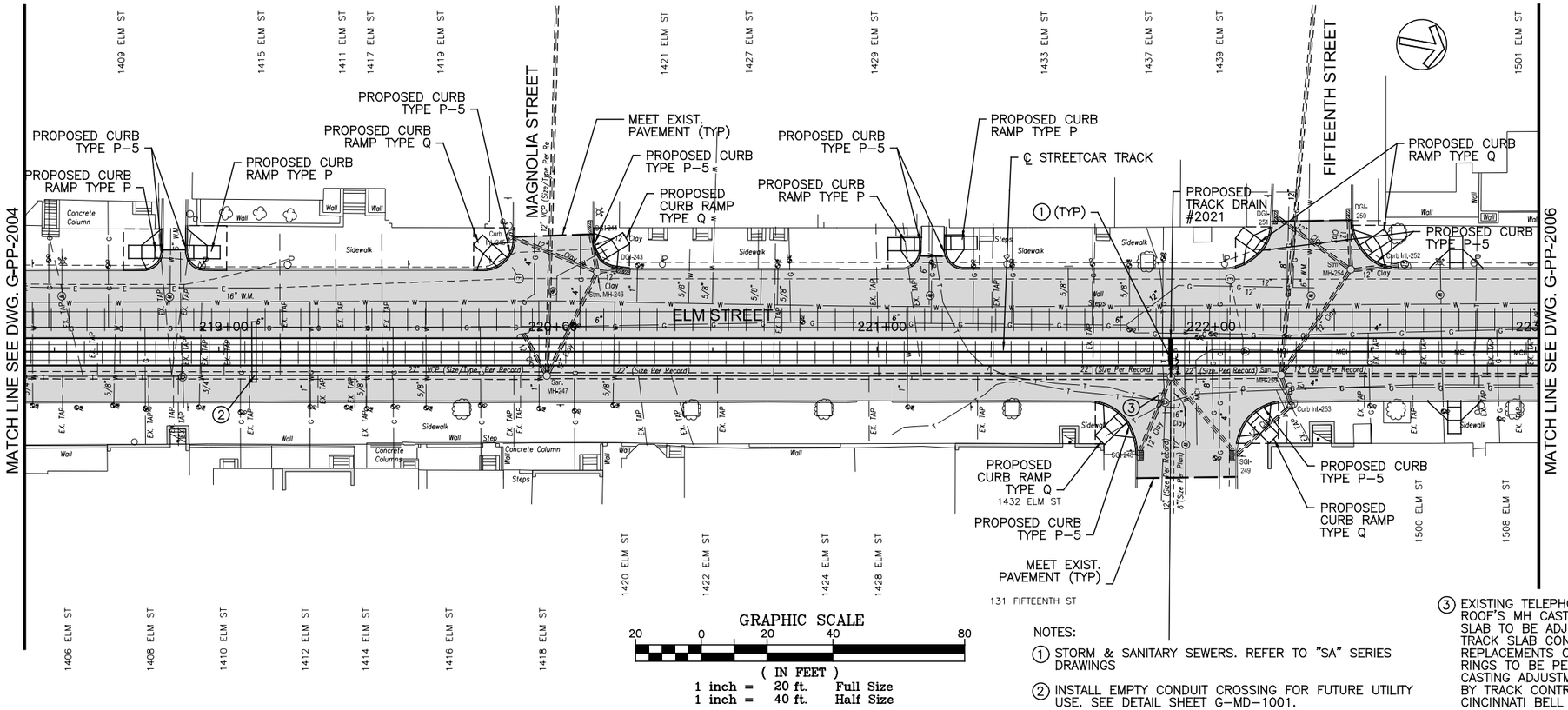

NOTES:

(1) STORM & SANITARY SEWERS. REFER TO "SA" SERIES DRAWINGS

(2) INSTALL EMPTY CONDUIT CROSSING FOR FUTURE UTILITY USE. SEE DETAIL SHEET G-MD-1001.

(3) EXISTING TELEPHONE VAULT TO REMAIN. EXISTING VAULT ROOF'S MH CASTINGS IN CONFLICT WITH PROPOSED TRACK SLAB TO BE ADJUSTED BY CINCINNATI BELL PRIOR TO TRACK SLAB CONSTRUCTION. ALL MODIFICATIONS/ REPLACEMENTS OF VAULT ROOFS, CASTINGS, AND ADJUSTING RINGS TO BE PERFORMED BY CINCINNATI BELL. FINAL CASTING ADJUSTMENT TO FINISH GRADE TO BE PERFORMED BY TRACK CONTRACTOR. COORDINATE THIS WORK WITH CINCINNATI BELL AND THE CITY OF CINCINNATI.

CAUTION UNDERGROUND UTILITIES
2 WORKING DAYS
BEFORE YOU DIG
CALL 1-800-362-2764
OHIO UTILITY PROTECTION SERVICE
CALL NON-SERVICE FACILITY
OWNERS DIRECT

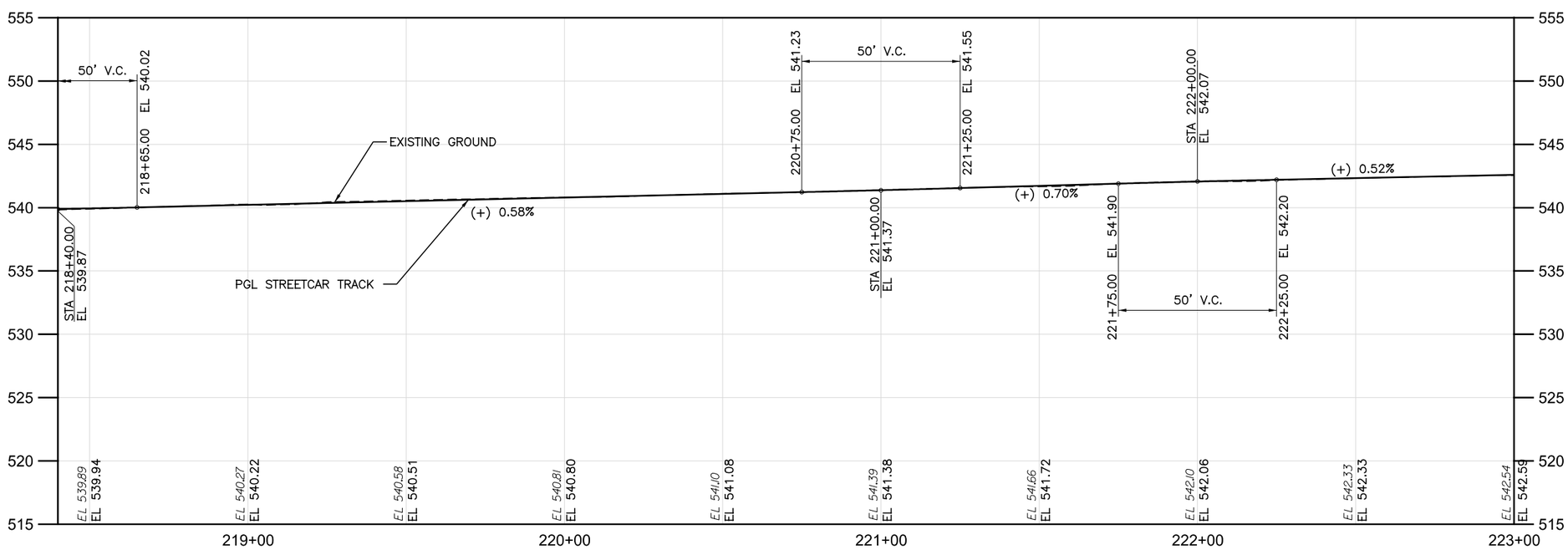

DOTE_Mono_PDF_Half.pltcfg
c:\pwworking\pitt\d0309031\S_G-PP-2005.dgn
Friday, July 13, 2012 11:57:00 AM 7:00 AM

CITY OF CINCINNATI DEPARTMENT OF TRANSPORTATION & ENGINEERING

CONTRACT DRAWING

PRINTS NOT BEARING THIS STAMP WERE MADE PRIOR TO ADVERTISING FOR BIDS AND ARE TO BE CONSIDERED OBSOLETE FOR CONTRACT PURPOSES.

Department of Transportation and Engineering

City of Cincinnati
City Hall
801 Plum Street
Cincinnati, Ohio 45202

CINCINNATI STREETCAR OVER THE RHINE

PLAN AND TRACK PROFILE - ELM STREET
STA 218+40 TO STA 223+00

Revisions

No.		

Drawn by RWB	Date 07/02/12
Designed by RWB	Date 07/02/12
Checked by KVL	Date 07/02/12
Reviewed by JTB	Date 07/12/12

Consultant

PB HDR

File Number

ACC No.
23126

G-PP-2005

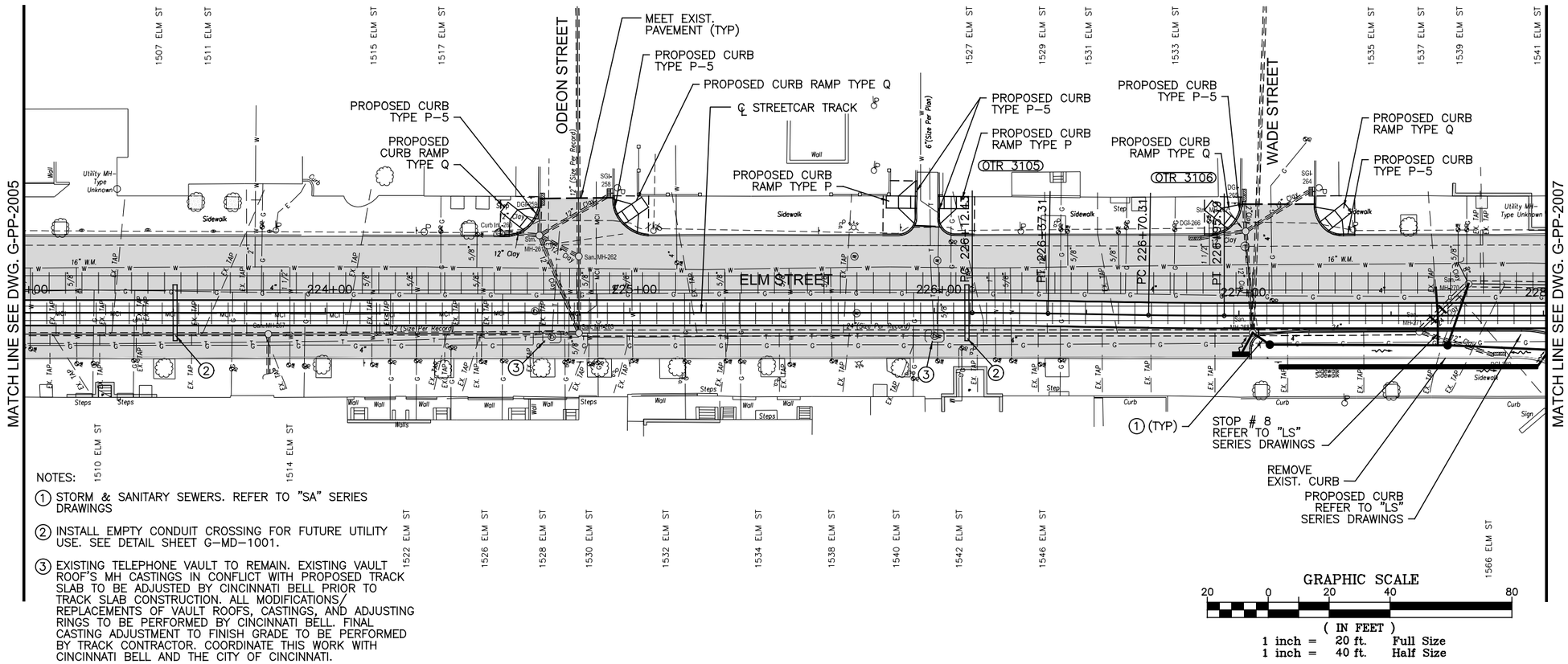

NOTES:

(1) STORM & SANITARY SEWERS. REFER TO "SA" SERIES DRAWINGS

(2) INSTALL EMPTY CONDUIT CROSSING FOR FUTURE UTILITY USE. SEE DETAIL SHEET G-MD-1001.

(3) EXISTING TELEPHONE VAULT TO REMAIN. EXISTING VAULT ROOF'S MH CASTINGS IN CONFLICT WITH PROPOSED TRACK SLAB TO BE ADJUSTED BY CINCINNATI BELL PRIOR TO TRACK SLAB CONSTRUCTION. ALL MODIFICATIONS/ REPLACEMENTS OF VAULT ROOFS, CASTINGS, AND ADJUSTING RINGS TO BE PERFORMED BY CINCINNATI BELL. FINAL CASTING ADJUSTMENT TO FINISH GRADE TO BE PERFORMED BY TRACK CONTRACTOR. COORDINATE THIS WORK WITH CINCINNATI BELL AND THE CITY OF CINCINNATI.

CAUTION UNDERGROUND UTILITIES
2 WORKING DAYS
BEFORE YOU DIG
CALL 1-800-362-2764
OHIO UTILITY PROTECTION SERVICE
CALL NON-SERVICE FACILITY OWNERS DIRECT

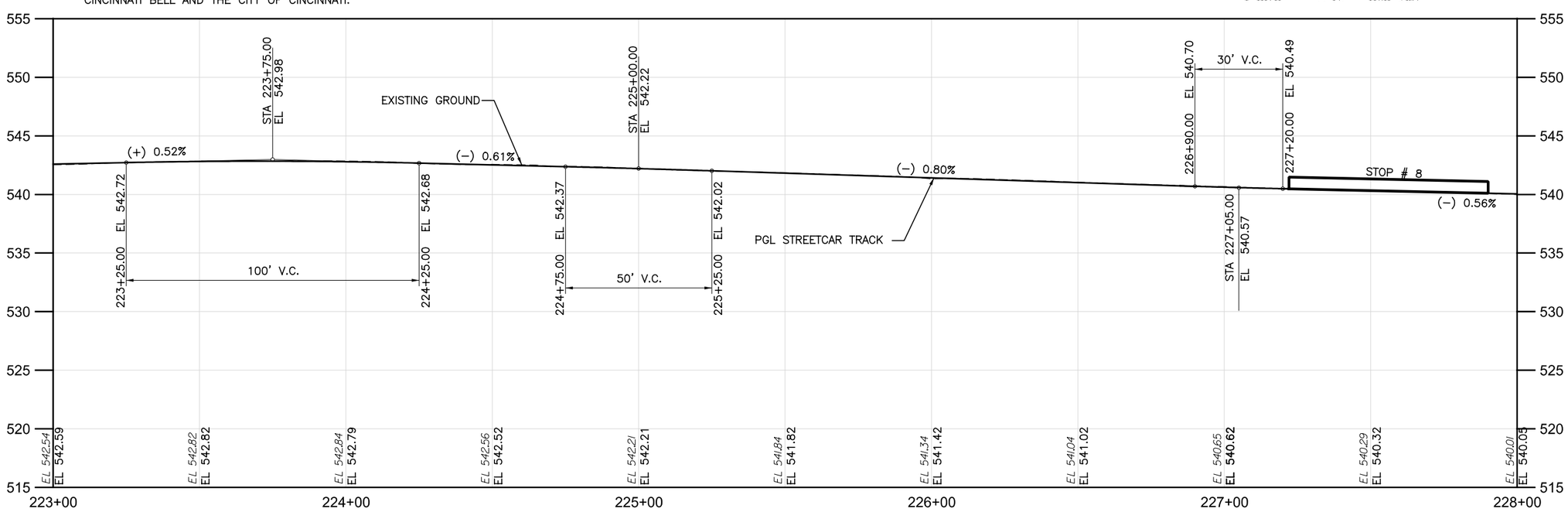

DOTE_Mono_PDF_Half.pltcfg
c:\pwworking\pitt\d0309031\S_G-PP-2006.dgn
Friday, July 13, 2012 11:57:13 AM

CONTRACT DRAWING

PRINTS NOT BEARING THIS STAMP WERE MADE PRIOR TO ADVERTISING FOR BID AND ARE TO BE CONSIDERED OBSOLETE FOR CONTRACT PURPOSES.

Department of Transportation and Engineering

City of Cincinnati
City Hall
801 Plum Street
Cincinnati, Ohio 45202

CINCINNATI STREETCAR OVER THE RHINE

PLAN AND TRACK PROFILE - ELM STREET
STA 223+00 TO STA 228+00

Revisions

No.			

Drawn by RWB	Date 07/02/12	Designed by RWB	Date 07/02/12
Checked by KVL	Date 07/02/12	Reviewed by JTB	Date 07/12/12

Consultant

PB HDR

File Number

ACC No. 23126

G-PP-2006

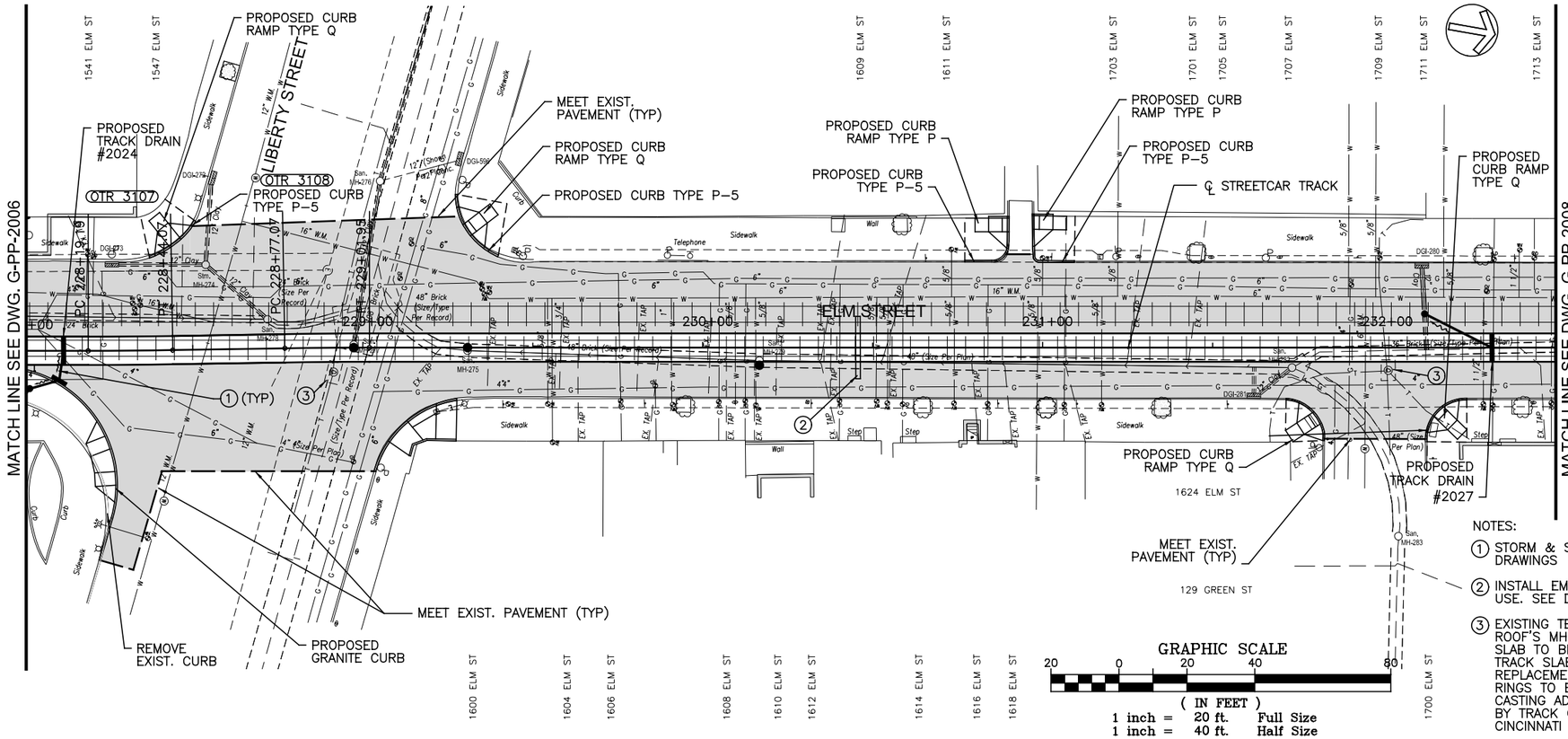

CAUTION UNDERGROUND UTILITIES
2 WORKING DAYS
BEFORE YOU DIG
CALL 1-800-362-2764
OHIO UTILITY PROTECTION SERVICE
CALL NON-SERVICE FACILITY
OWNERS DIRECT

NOTES:

1. STORM & SANITARY SEWERS. REFER TO "SA" SERIES DRAWINGS
2. INSTALL EMPTY CONDUIT CROSSING FOR FUTURE UTILITY USE. SEE DETAIL SHEET G-MD-1001.
3. EXISTING TELEPHONE VAULT TO REMAIN. EXISTING VAULT ROOF'S MH CASTINGS IN CONFLICT WITH PROPOSED TRACK SLAB TO BE ADJUSTED BY CINCINNATI BELL PRIOR TO TRACK SLAB CONSTRUCTION. ALL MODIFICATIONS/ REPLACEMENTS OF VAULT ROOFS, CASTINGS, AND ADJUSTING RINGS TO BE PERFORMED BY CINCINNATI BELL. FINAL CASTING ADJUSTMENT TO FINISH GRADE TO BE PERFORMED BY TRACK CONTRACTOR. COORDINATE THIS WORK WITH CINCINNATI BELL AND THE CITY OF CINCINNATI.

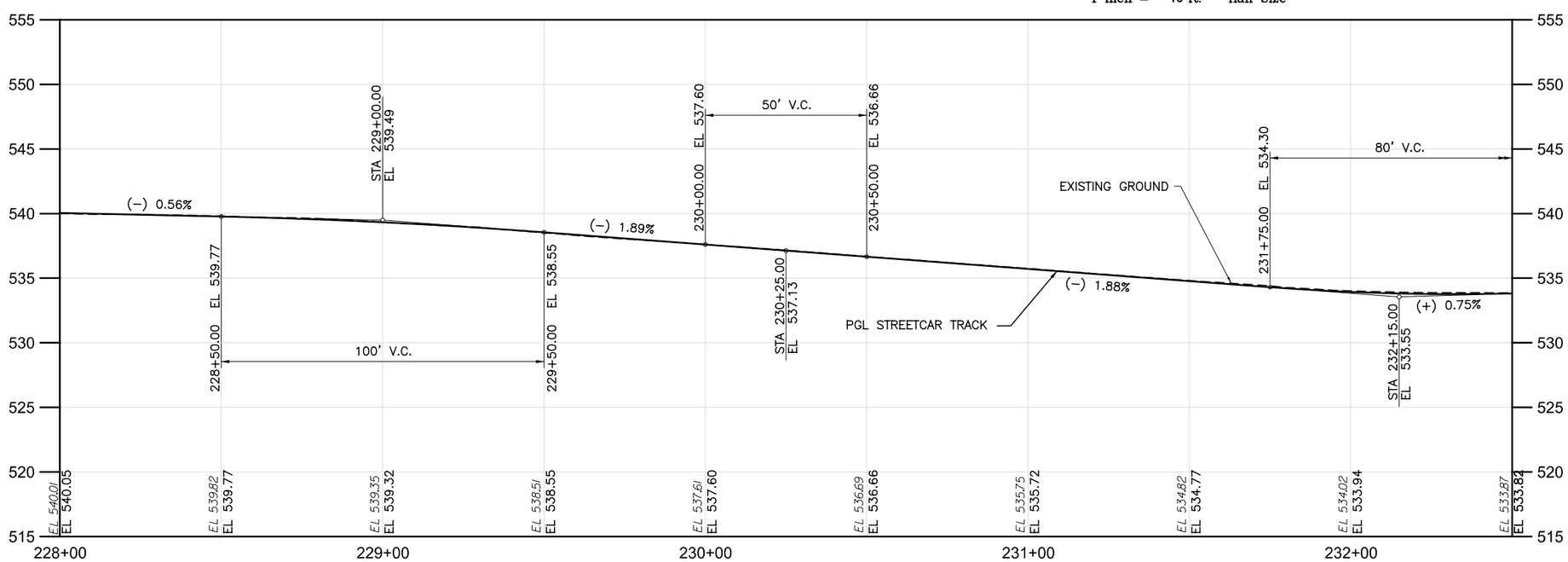

CONTRACT DRAWING

PRINTS NOT BEARING THIS STAMP WERE MADE PRIOR TO ADVERTISING FOR BIDS AND ARE TO BE CONSIDERED OBSOLETE FOR CONTRACT PURPOSES.

Department of Transportation and Engineering

City of Cincinnati
801 Plum Street
Cincinnati, Ohio 45202

CINCINNATI STREETCAR
OVER THE RHINE

PLAN AND TRACK PROFILE - ELM STREET
STA 228+00 TO STA 232+50

Revisions

No.				

Date 07/02/12	Date 07/02/12	Date 07/02/12	Date 07/12/12
Drawn by RWB	Designed by RWB	Checked by KVL	Reviewed by JTB

Consultant

PB HDR

File Number

ACC No. 23126

G-PP-2007

DOTE_Mono_PDF_Half.pltcfg
c:\pwworking\pitt\d0309031\S_G-PP-2007.dgn
Friday, July 13, 2012 11:57:26 AM

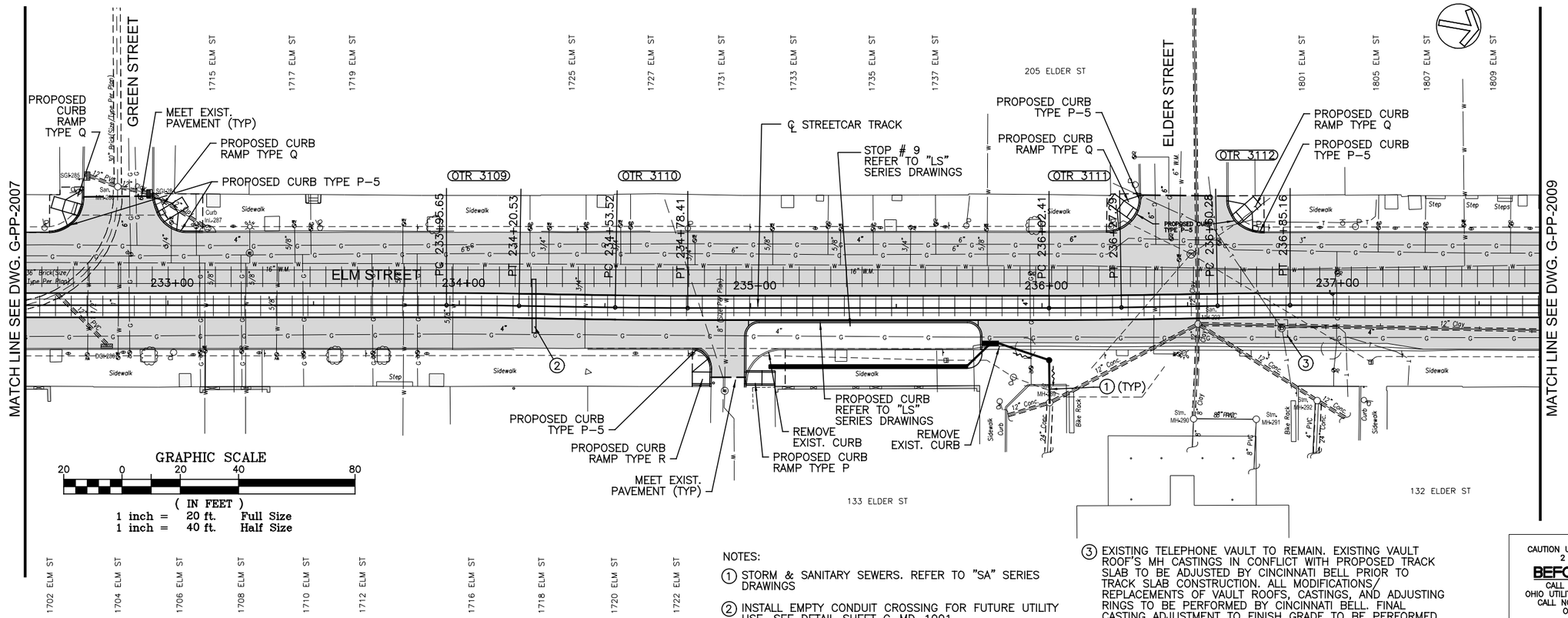

NOTES:

(1) STORM & SANITARY SEWERS. REFER TO "SA" SERIES DRAWINGS

(2) INSTALL EMPTY CONDUIT CROSSING FOR FUTURE UTILITY USE. SEE DETAIL SHEET G-MD-1001.

(3) EXISTING TELEPHONE VAULT TO REMAIN. EXISTING VAULT ROOF'S MH CASTINGS IN CONFLICT WITH PROPOSED TRACK SLAB TO BE ADJUSTED BY CINCINNATI BELL PRIOR TO TRACK SLAB CONSTRUCTION. ALL MODIFICATIONS/ REPLACEMENTS OF VAULT ROOFS, CASTINGS, AND ADJUSTING RINGS TO BE PERFORMED BY CINCINNATI BELL. FINAL CASTING ADJUSTMENT TO FINISH GRADE TO BE PERFORMED BY TRACK CONTRACTOR. COORDINATE THIS WORK WITH CINCINNATI BELL AND THE CITY OF CINCINNATI.

CAUTION UNDERGROUND UTILITIES
2 WORKING DAYS
BEFORE YOU DIG
CALL 1-800-362-2764
OHIO UTILITY PROTECTION SERVICE
CALL NON-SERVICE FACILITY OWNERS DIRECT

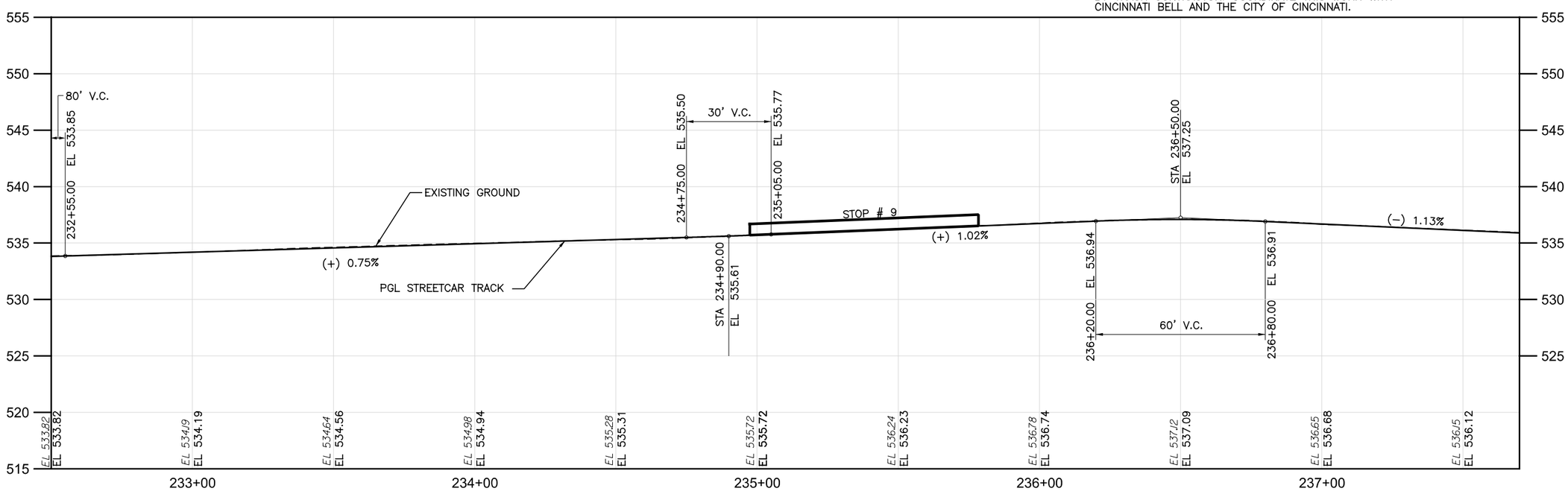

DOTE_Mono_PDF_Half.pltcfg
c:\pwworking\pitt\d0309031\S_G-PP-2008.dgn
Friday, July 13, 2012 11:57:39 AM

CONTRACT DRAWING

PRINTS NOT BEARING THIS STAMP WERE MADE PRIOR TO ADVERTISING AND ARE TO BE CONSIDERED OBSOLETE FOR CONTRACT PURPOSES.

Department of Transportation and Engineering

City of Cincinnati
City Hall
801 Plum Street
Cincinnati, Ohio 45202

CINCINNATI STREETCAR OVER THE RHINE

PLAN AND TRACK PROFILE - ELM STREET
STA 232+50 TO STA 237+70

Revisions

No.				

Drawn by RWB	Date 07/02/12	Designed by RWB	Date 07/02/12
Checked by KVL	Date 07/02/12	Reviewed by JTB	Date 07/12/12

Consultant

PB HDR

File Number

ACC No. 23126

G-PP-2008

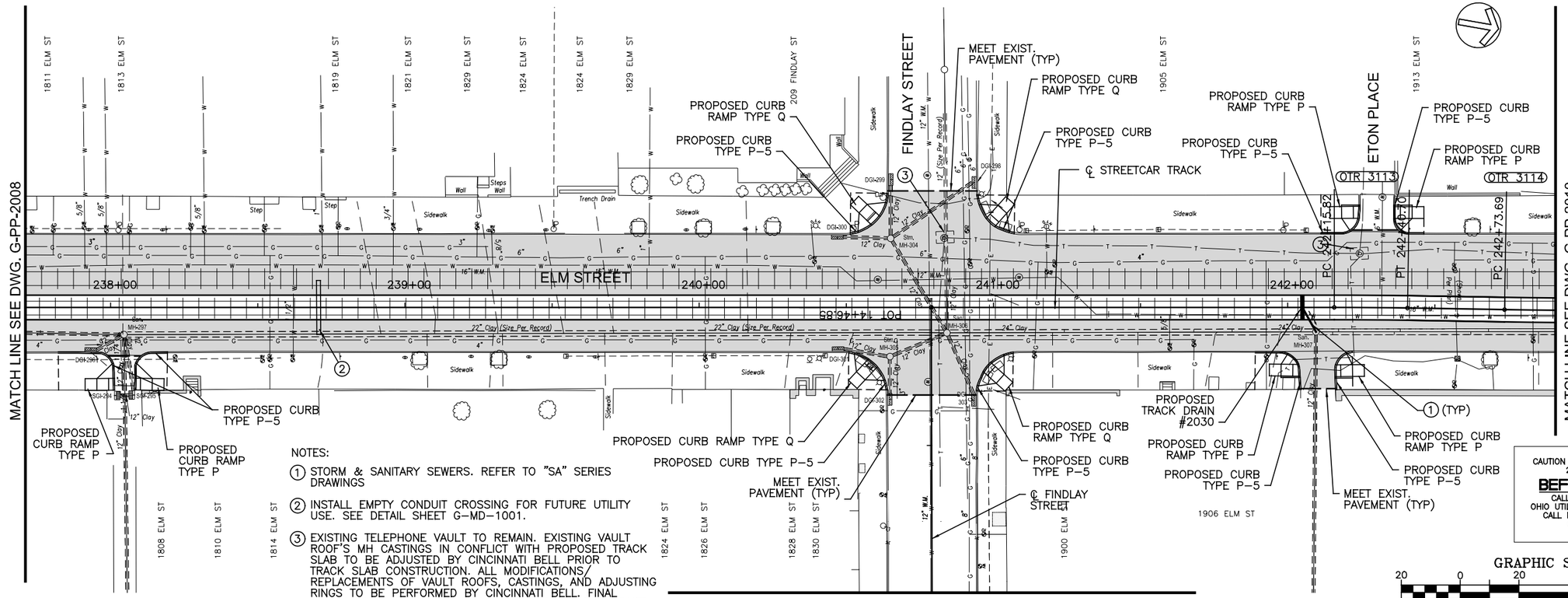

NOTES:

1. STORM & SANITARY SEWERS. REFER TO "SA" SERIES DRAWINGS
2. INSTALL EMPTY CONDUIT CROSSING FOR FUTURE UTILITY USE. SEE DETAIL SHEET G-MD-1001.
3. EXISTING TELEPHONE VAULT TO REMAIN. EXISTING VAULT ROOF'S MH CASTINGS IN CONFLICT WITH PROPOSED TRACK SLAB TO BE ADJUSTED BY CINCINNATI BELL PRIOR TO TRACK SLAB CONSTRUCTION. ALL MODIFICATIONS/ REPLACEMENTS OF VAULT ROOFS, CASTINGS, AND ADJUSTING RINGS TO BE PERFORMED BY CINCINNATI BELL. FINAL CASTING ADJUSTMENT TO FINISH GRADE TO BE PERFORMED BY TRACK CONTRACTOR. COORDINATE THIS WORK WITH CINCINNATI BELL AND THE CITY OF CINCINNATI.

CAUTION UNDERGROUND UTILITIES
2 WORKING DAYS
BEFORE YOU DIG
CALL 1-800-362-2764
OHIO UTILITY PROTECTION SERVICE
CALL NON-SERVICE FACILITY OWNERS DIRECT

GRAPHIC SCALE
20 0 20 40 80
(IN FEET)
1 inch = 20 ft. Full Size
1 inch = 40 ft. Half Size

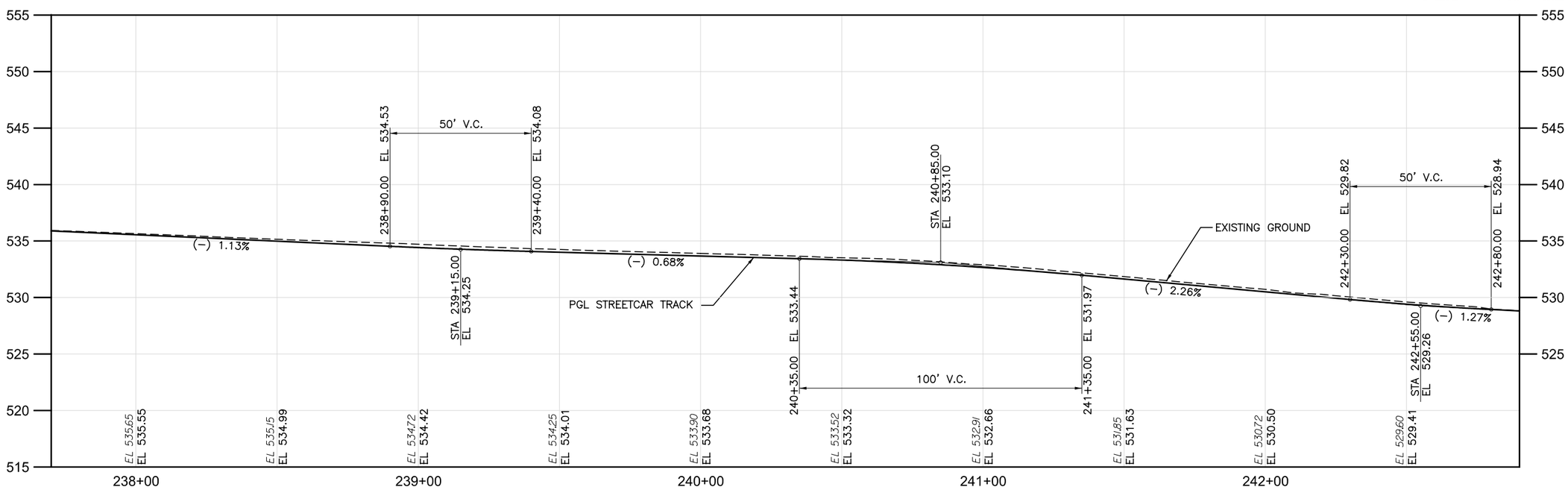

DOTE_Mono_PDF_Half.pltcfg
c:\pwworking\pitt\d0309031\S_G-PP-2009.dgn
Friday, July 13, 2012 11:57:52 AM PW 7:52 AM

CONTRACT DRAWING

PRINTS NOT BEARING THIS STAMP WERE MADE PRIOR TO ADVERTISING BID AND ARE TO BE CONSIDERED OBSOLETE FOR CONTRACT PURPOSES.

Department of Transportation and Engineering

City of Cincinnati
City Hall
801 Plum Street
Cincinnati, Ohio 45202

CINCINNATI STREETCAR
OVER THE RHINE

PLAN AND TRACK PROFILE - ELM STREET
STA 237+70 TO STA 242+90

Revisions

No.				

Drawn by RWB	Date 07/02/12	Designed by RWB	Date 07/02/12
Checked by KVL	Date 07/02/12	Reviewed by JTB	Date 07/12/12

Consultant

PB HDR

File Number

ACC No. 23126

G-PP-2009

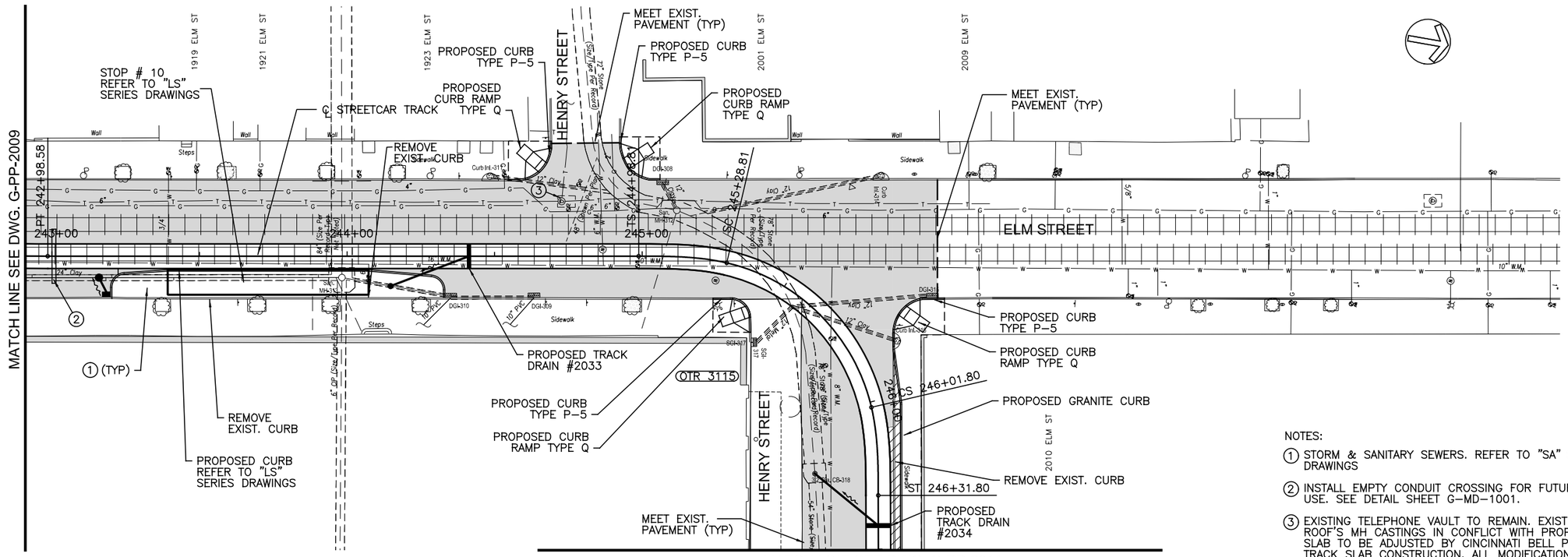

NOTES:

① STORM & SANITARY SEWERS. REFER TO "SA" SERIES DRAWINGS

② INSTALL EMPTY CONDUIT CROSSING FOR FUTURE UTILITY USE. SEE DETAIL SHEET G-MD-1001.

③ EXISTING TELEPHONE VAULT TO REMAIN. EXISTING VAULT ROOF'S MH CASTINGS IN CONFLICT WITH PROPOSED TRACK SLAB TO BE ADJUSTED BY CINCINNATI BELL PRIOR TO TRACK SLAB CONSTRUCTION. ALL MODIFICATIONS/ REPLACEMENTS OF VAULT ROOFS, CASTINGS, AND ADJUSTING RINGS TO BE PERFORMED BY CINCINNATI BELL. FINAL CASTING ADJUSTMENT TO FINISH GRADE TO BE PERFORMED BY TRACK CONTRACTOR. COORDINATE THIS WORK WITH CINCINNATI BELL AND THE CITY OF CINCINNATI.

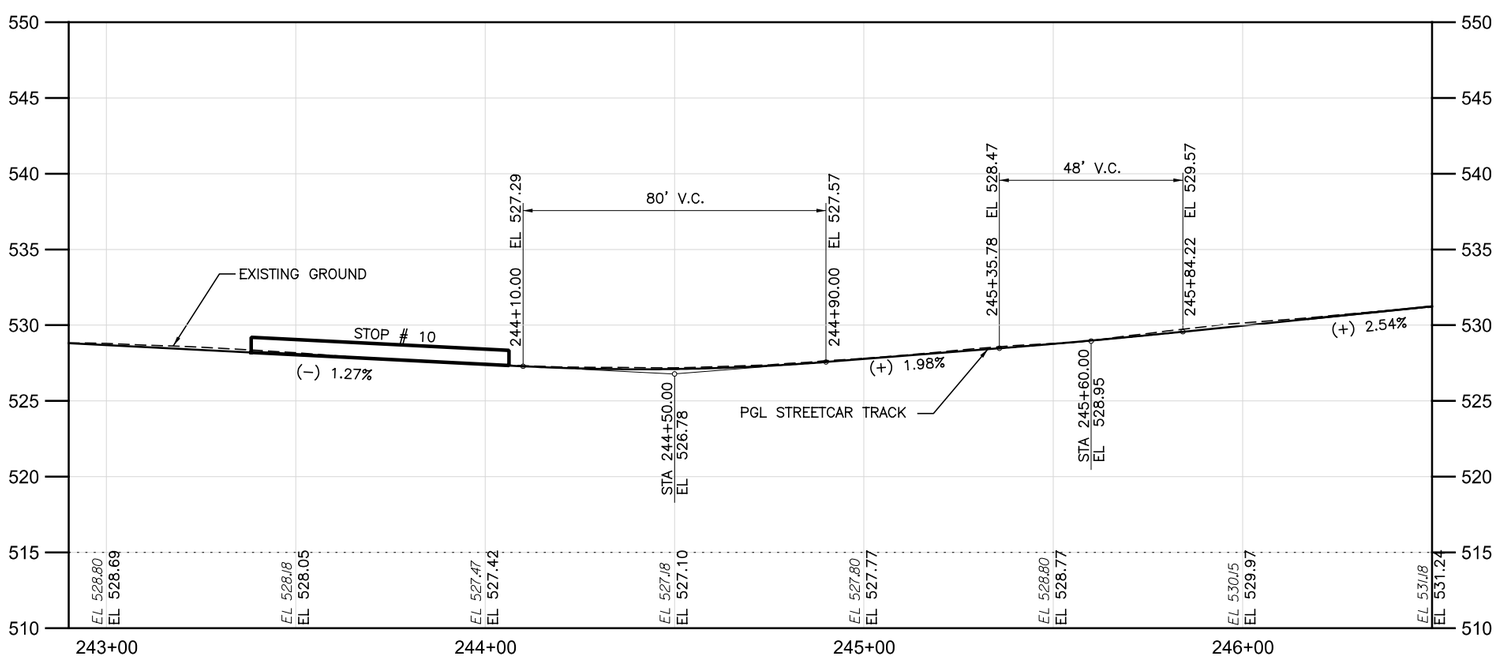

GRAPHIC SCALE

20 0 20 40 80

(IN FEET)
1 inch = 20 ft. Full Size
1 inch = 40 ft. Half Size

CAUTION UNDERGROUND UTILITIES
2 WORKING DAYS
BEFORE YOU DIG
CALL 1-800-362-2764
OHIO UTILITY PROTECTION SERVICE
CALL NON-SERVICE FACILITY
OWNERS DIRECT

DOTE_Mono_PDF_Half.pltcfg
c:\pwworking\pitt\d0309031\S_G-PP-2010.dgn
Friday, July 13, 2012 11:58:05 AM

CONTRACT DRAWING

PRINTS NOT BEARING THIS STAMP WERE MADE PRIOR TO ADVERTISING FOR BID AND ARE TO BE CONSIDERED OBSOLETE FOR CONTRACT PURPOSES.

Department of Transportation and Engineering

City of Cincinnati
801 Plum Street
Cincinnati, Ohio 45202

CINCINNATI STREETCAR
OVER THE RHINE

PLAN AND TRACK PROFILE - ELM STREET
STA 242+90 TO STA 246+50

Revisions

No.	Date	Date	Date	Date
	07/02/12	07/02/12	07/02/12	07/12/12

Drawn by	Designed by	Checked by	Reviewed by
RWB	RWB	RWB	KVL

Consultant

PB HDR

File Number

ACC No.
23126

G-PP-2010

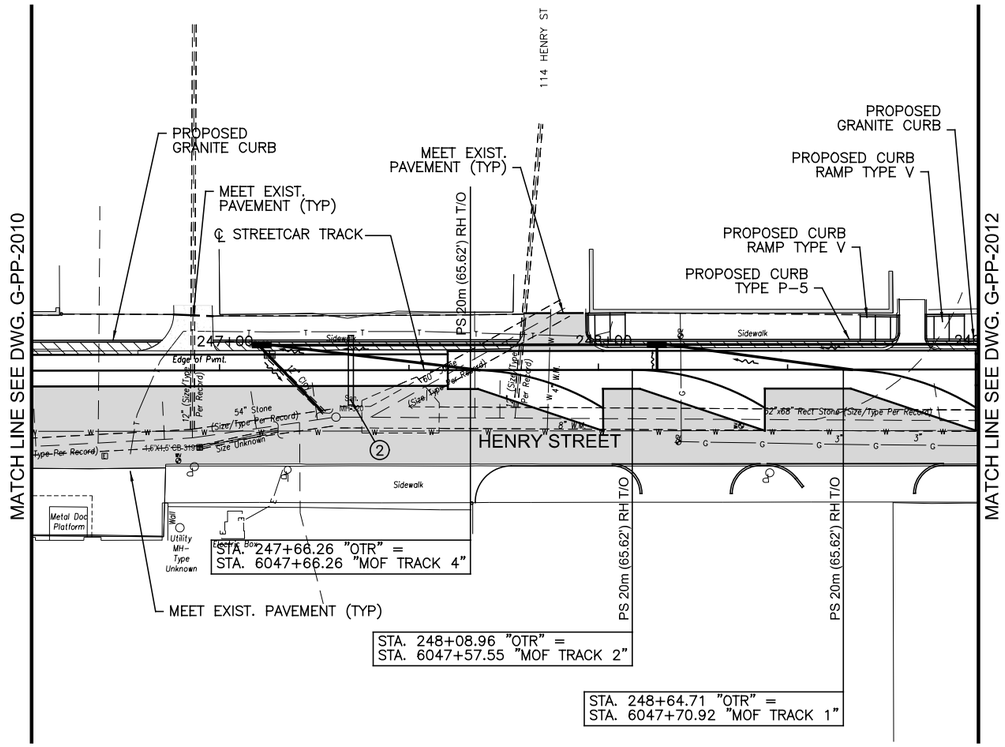

NOTES:

1. STORM & SANITARY SEWERS. REFER TO "SA" SERIES DRAWINGS
2. INSTALL EMPTY CONDUIT CROSSING FOR FUTURE UTILITY USE. SEE DETAIL SHEET G-MD-1001.
3. EXISTING TELEPHONE VAULT TO REMAIN. EXISTING VAULT ROOF'S MH CASTINGS IN CONFLICT WITH PROPOSED TRACK SLAB TO BE ADJUSTED BY CINCINNATI BELL PRIOR TO TRACK SLAB CONSTRUCTION. ALL MODIFICATIONS/ REPLACEMENTS OF VAULT ROOFS, CASTINGS, AND ADJUSTING RINGS TO BE PERFORMED BY CINCINNATI BELL. FINAL CASTING ADJUSTMENT TO FINISH GRADE TO BE PERFORMED BY TRACK CONTRACTOR. COORDINATE THIS WORK WITH CINCINNATI BELL AND THE CITY OF CINCINNATI.
4. SEE DWG. G-TK-2103 FOR MAINTENANCE AND OPERATIONS FACILITY MOF TRACKS HORIZONTAL GEOMETRY.
5. REFER TO "SD" SERIES DRAWINGS FOR SIGNAL CABINET(S) AND CONDUITS REQUIRED AT THESE SWITCH LOCATIONS. CONTRACTOR TO ESTABLISH LOCATION(S) IN FIELD.

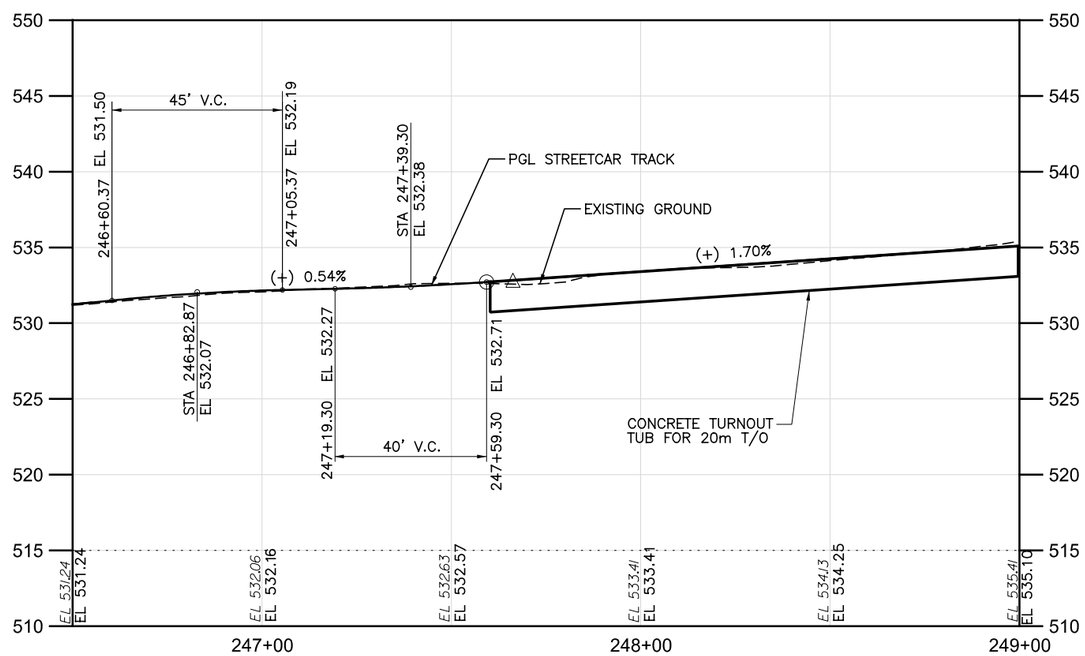

GRAPHIC SCALE

20 0 20 40 80

(IN FEET)
1 inch = 20 ft. Full Size
1 inch = 40 ft. Half Size

CAUTION UNDERGROUND UTILITIES
2 WORKING DAYS
BEFORE YOU DIG
CALL 1-800-362-2764
OHIO UTILITY PROTECTION SERVICE
CALL NON-SERVICE FACILITY
OWNERS DIRECT

CONTRACT DRAWING

PRINTS NOT BEARING THIS STAMP WERE MADE PRIOR TO ADVERTISING FOR BIDS AND ARE TO BE CONSIDERED OBSOLETE FOR CONTRACT PURPOSES.

Department of Transportation and Engineering

City of Cincinnati
801 Plum Street
Cincinnati, Ohio 45202

CINCINNATI STREETCAR
OVER THE RHINE

PLAN AND TRACK PROFILE - HENRY STREET
STA 246+50 TO STA 249+00

Revisions

No.				

Drawn by RWB	Date 07/02/12	Designed by RWB	Date 07/02/12
Checked by KVL	Date 07/02/12	Reviewed by JTB	Date 07/12/12

Consultant

PB HDR

File Number

ACC No. 23126

G-PP-2011

DOTE_Mono_PDF_Half.pltcfg
c:\pwworking\pitt\d0309031\S_G-PP-2011.dgn
Friday, July 13, 2012 11:58:18 AM

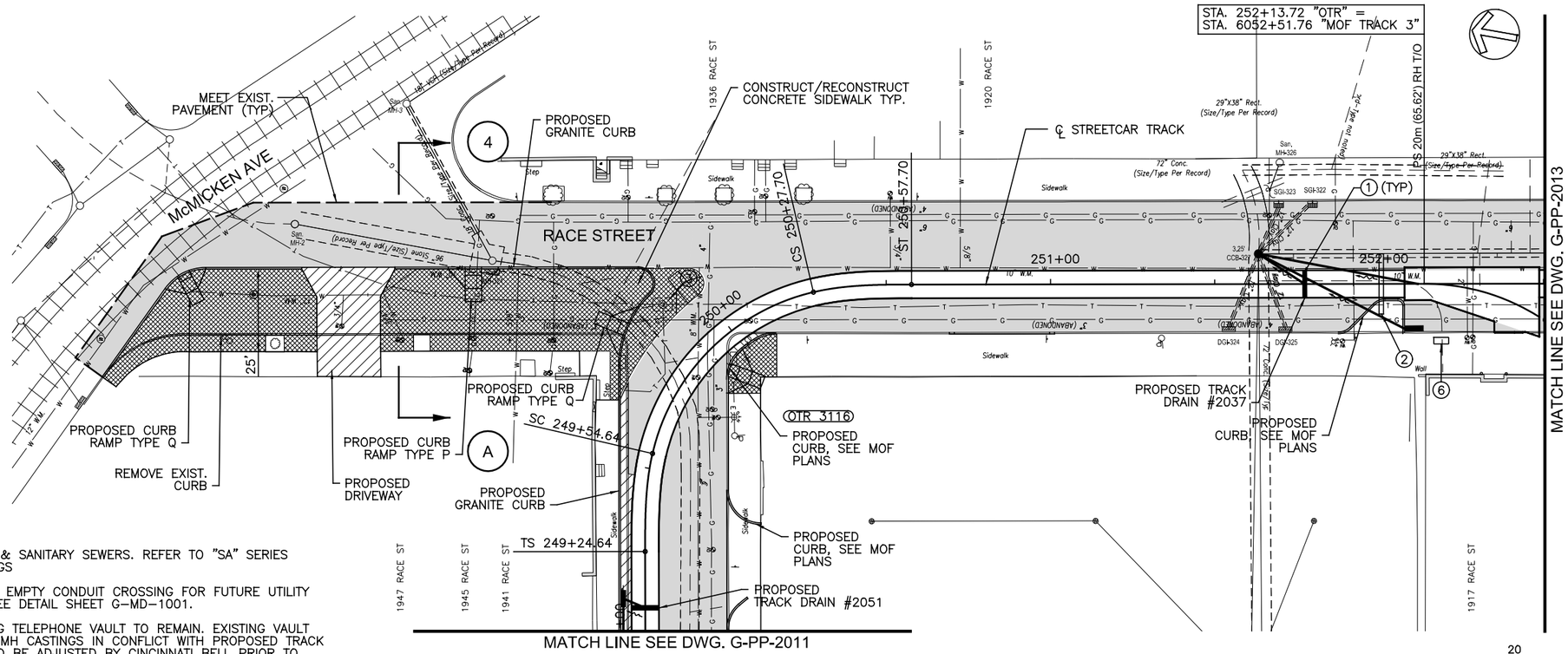

NOTES:

1. STORM & SANITARY SEWERS. REFER TO "SA" SERIES DRAWINGS
2. INSTALL EMPTY CONDUIT CROSSING FOR FUTURE UTILITY USE. SEE DETAIL SHEET G-MD-1001.
3. EXISTING TELEPHONE VAULT TO REMAIN. EXISTING VAULT ROOFS MH CASTINGS IN CONFLICT WITH PROPOSED TRACK SLAB TO BE ADJUSTED BY CINCINNATI BELL PRIOR TO TRACK SLAB CONSTRUCTION. ALL MODIFICATIONS/ REPLACEMENTS OF VAULT ROOFS,CASTINGS, AND ADJUSTING RINGS TO BE PREFORMED BY CINCINNATI BELL. FINAL CASTING ADJUSTMENT TO FINISH GRADE TO BE PREFORMED BY TRACK CONTRACTOR. COORDINATE THIS WORK WITH CINCINNATI BELL AND THE CITY OF CINCINNATI.
4. FOR SECTION A-A SEE SHEET G-TS-2003
5. SEE DWG. G-TK-2103 FOR MOF TRACK HORIZONTAL GEOMETRY.
6. SIGNAL CABINET. REFER TO "SD" SERIES DRAWINGS FOR CONDUIT ROUTING. CONTRACTOR TO ESTABLISH LOCATION IN FIELD.

GRAPHIC SCALE

20 0 20 40 80

(IN FEET)
1 inch = 20 ft. Full Size
1 inch = 40 ft. Half Size

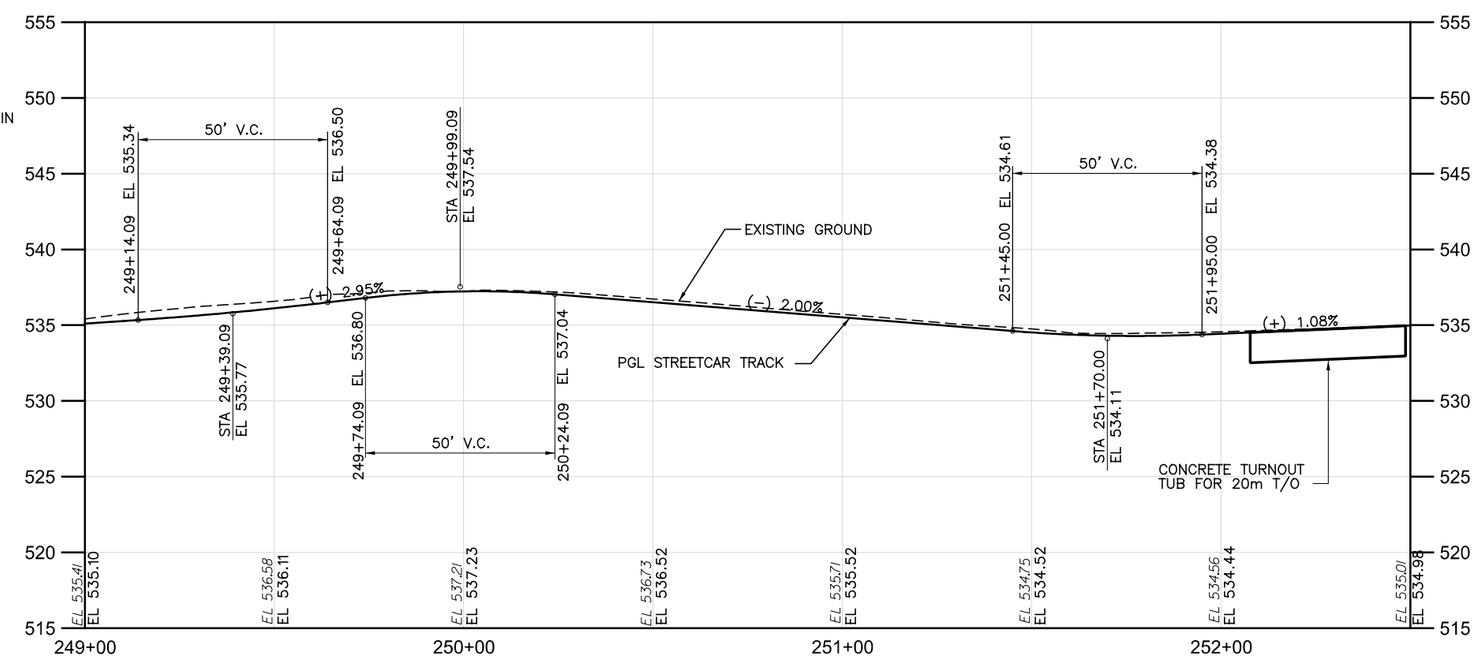

CAUTION UNDERGROUND UTILITIES
2 WORKING DAYS
BEFORE YOU DIG
CALL 1-800-362-2764
OHIO UTILITY PROTECTION SERVICE
CALL NON-SERVICE FACILITY
OWNERS DIRECT

CITY OF CINCINNATI DEPARTMENT OF TRANSPORTATION & ENGINEERING

CONTRACT DRAWING

PRINTS NOT BEARING THIS STAMP WERE MADE PRIOR TO ADVERTISING FOR BIDS AND ARE TO BE CONSIDERED OBSOLETE FOR CONTRACT PURPOSES.

Department of Transportation and Engineering

City of Cincinnati
City Hall
801 Plum Street
Cincinnati, Ohio 45202

CINCINNATI STREETCAR
OVER THE RHINE

PLAN AND TRACK PROFILE - RACE STREET
STA 249+00 TO STA 252+50

Revisions

No.				

Date 07/02/12	Date 07/02/12	Date 07/02/12	Date 07/12/12
Drawn by RWB	Designed by RWB	Checked by KVL	Reviewed by JTB

Consultant

PB HDR

File Number

ACC No. 23126

G-PP-2012

DOTE_Mono_PDF_Half.pltcfg
c:\pwworking\pitt\d0309031\S_G-PP-2012.dgn
Friday, July 13, 2012 11:58:31 AM

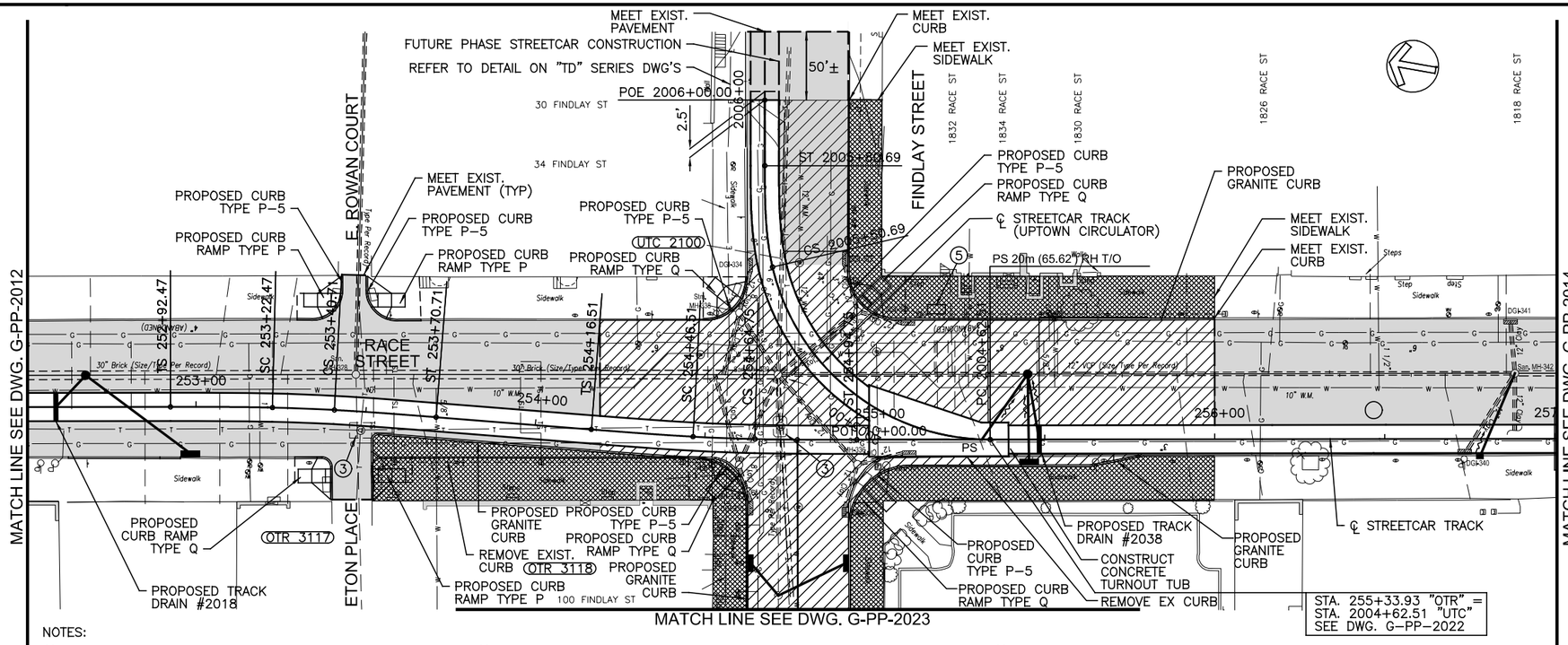

NOTES:

1. STORM & SANITARY SEWERS. REFER TO "SA" SERIES DRAWINGS
2. INSTALL EMPTY CONDUIT CROSSING FOR FUTURE UTILITY USE. SEE DETAIL SHEET G-MD-1001.
3. EXISTING TELEPHONE VAULT TO REMAIN. EXISTING VAULT ROOF'S MH CASTINGS IN CONFLICT WITH PROPOSED TRACK SLAB TO BE ADJUSTED BY CINCINNATI BELL PRIOR TO TRACK SLAB CONSTRUCTION. ALL MODIFICATIONS/ REPLACEMENTS OF VAULT ROOFS, CASTINGS, AND ADJUSTING RINGS TO BE PERFORMED BY CINCINNATI BELL. FINAL CASTING ADJUSTMENT TO FINISH GRADE TO BE PERFORMED BY TRACK CONTRACTOR. COORDINATE THIS WORK WITH CINCINNATI BELL AND THE CITY OF CINCINNATI.
4. SEE DWG. G-TK-2102 FOR FINDLAY TRACK HORIZONTAL GEOMETRY
5. SIGNAL CABINET. REFER TO "SD" SERIES DRAWINGS FOR CONDUIT ROUTING. CONTRACTOR TO ESTABLISH LOCATION IN FIELD.

CAUTION UNDERGROUND UTILITIES
2 WORKING DAYS
BEFORE YOU DIG
CALL 1-800-362-2764
OHIO UTILITY PROTECTION SERVICE
CALL NON-SERVICE FACILITY OWNERS DIRECT

GRAPHIC SCALE
20 0 20 40 80
(IN FEET)
1 inch = 20 ft. Full Size
1 inch = 40 ft. Half Size

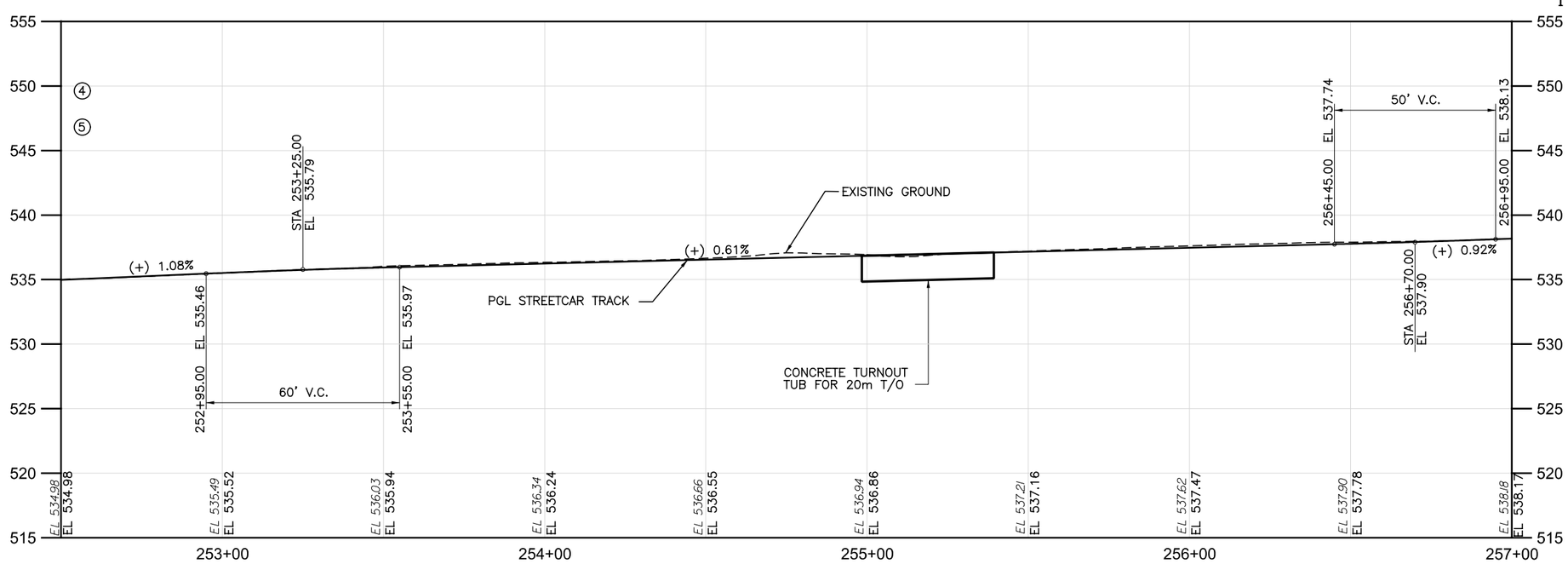

CONTRACT DRAWING

PRINTS NOT BEARING THIS STAMP WERE MADE PRIOR TO ADVERTISING FOR BIDS AND ARE TO BE CONSIDERED OBSOLETE FOR CONTRACT PURPOSES.

Department of Transportation and Engineering
City of Cincinnati
801 Plum Street
Cincinnati, Ohio 45202

CINCINNATI STREETCAR OVER THE RHINE

PLAN AND TRACK PROFILE - RACE STREET
STA 252+50 TO STA 257+00

Revisions
No.

	Date
Drawn by RWB	07/02/12
Designed by RWB	07/02/12
Checked by KVL	07/02/12
Reviewed by JTB	07/12/12

Consultant
PB HDR

File Number
ACC No. 23126

G-PP-2013

DOTE_Mono_PDF_Half.pltcfg
c:\pwworking\pitt\d0309031\S_G-PP-2013.dgn
Friday, July 13, 2012 11:58:44 AM PAGE 44 AM

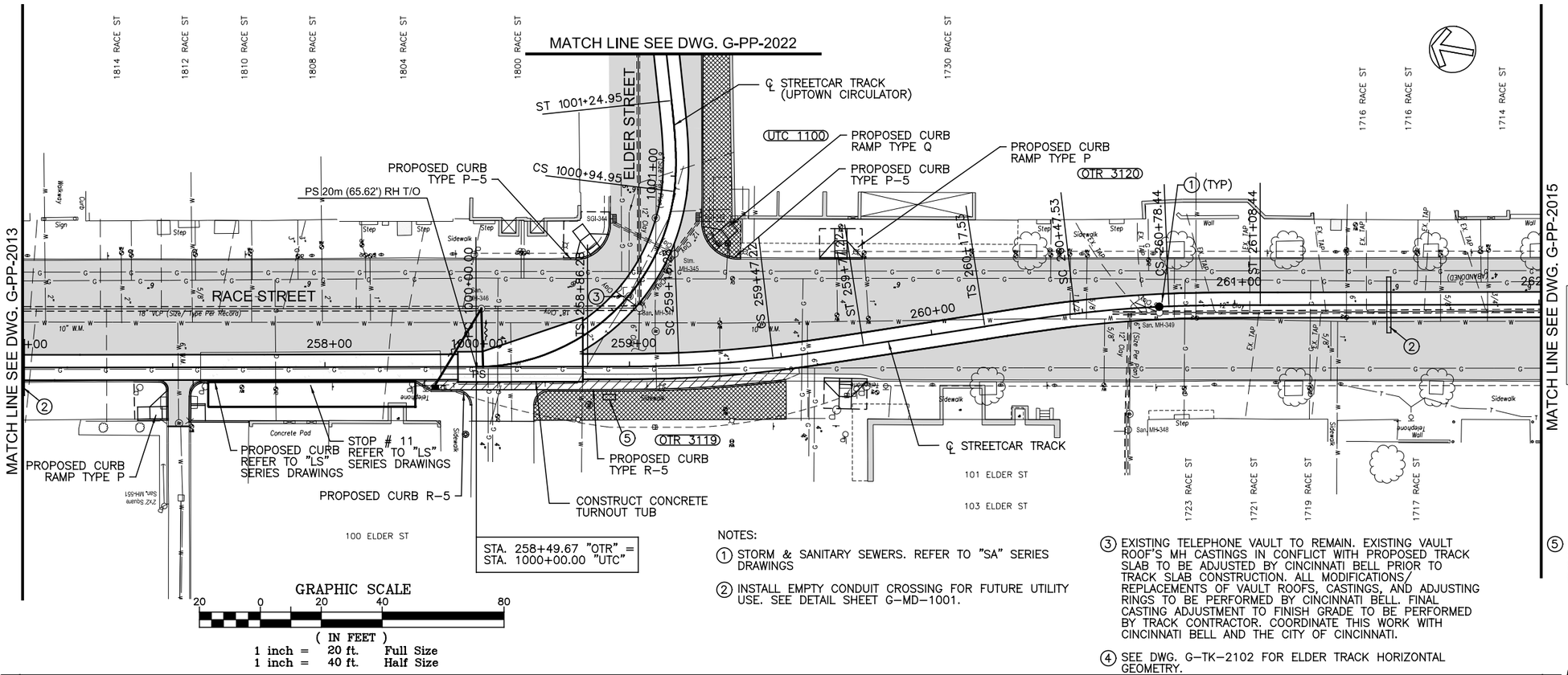

CAUTION UNDERGROUND UTILITIES
2 WORKING DAYS
BEFORE YOU DIG
CALL 1-800-362-2764
OHIO UTILITY PROTECTION SERVICE
CALL NON-SERVICE FACILITY
OWNERS DIRECT

NOTES:

(1) STORM & SANITARY SEWERS. REFER TO "SA" SERIES DRAWINGS

(2) INSTALL EMPTY CONDUIT CROSSING FOR FUTURE UTILITY USE. SEE DETAIL SHEET G-MD-1001.

(3) EXISTING TELEPHONE VAULT TO REMAIN. EXISTING VAULT ROOF'S MH CASTINGS IN CONFLICT WITH PROPOSED TRACK SLAB TO BE ADJUSTED BY CINCINNATI BELL PRIOR TO TRACK SLAB CONSTRUCTION. ALL MODIFICATIONS/ REPLACEMENTS OF VAULT ROOFS, CASTINGS, AND ADJUSTING RINGS TO BE PERFORMED BY CINCINNATI BELL. FINAL CASTING ADJUSTMENT TO FINISH GRADE TO BE PERFORMED BY TRACK CONTRACTOR. COORDINATE THIS WORK WITH CINCINNATI BELL AND THE CITY OF CINCINNATI.

(4) SEE DWG. G-TK-2102 FOR ELDER TRACK HORIZONTAL GEOMETRY.

(5) SIGNAL CABINET. REFER TO "SD" SERIES DRAWINGS FOR CONDUIT ROUTING. CONTRACTOR TO ESTABLISH LOCATION IN FIELD.

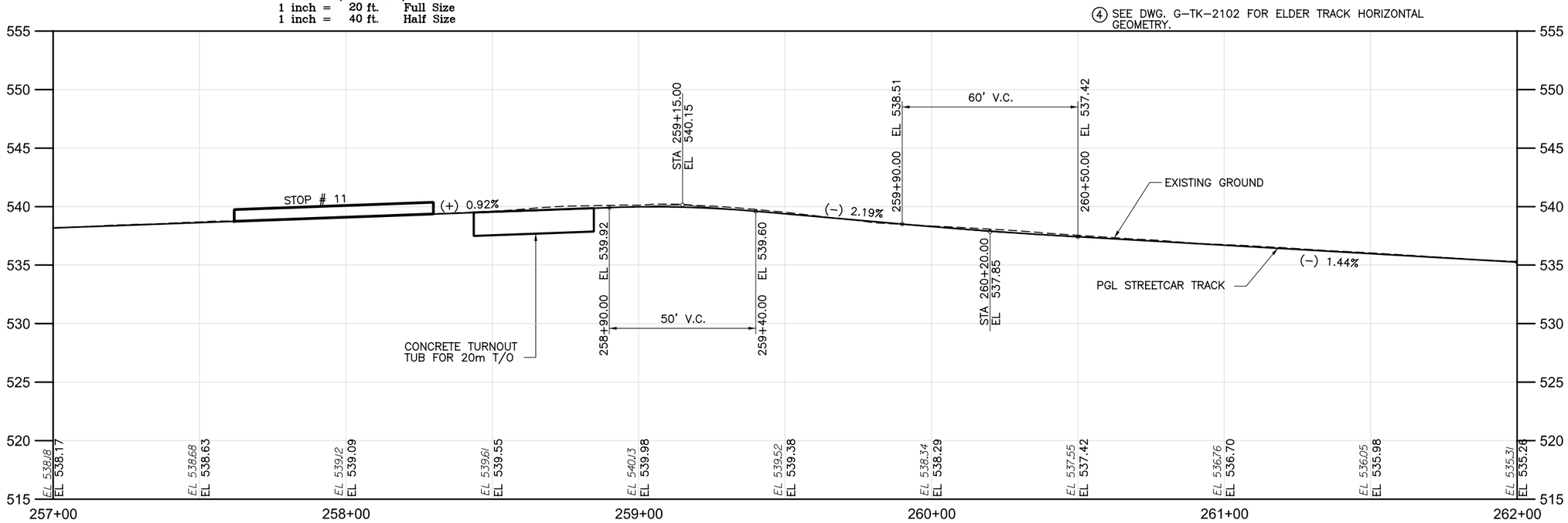

DOTE_Mono_PDF_Half.pltcfg
c:\pwworking\pitt\d0309031\S_G-PP-2014.dgn
Friday, July 13, 2012 11:58:57 AM

CONTRACT DRAWING

PRINTS NOT BEARING THIS STAMP WERE MADE PRIOR TO ADVERTISING FOR BIDS AND ARE TO BE CONSIDERED OBSOLETE FOR CONTRACT PURPOSES.

Department of Transportation and Engineering

City of Cincinnati
City Hall
801 Plum Street
Cincinnati, Ohio 45202

CINCINNATI STREETCAR OVER THE RHINE

PLAN AND TRACK PROFILE - RACE STREET
STA 257+00 TO STA 262+00

Revisions

No.	Date	
1	1/13/11	PRE-BID REVISION

Drawn by RWB	Date 07/02/12
Designed by RWB	Date 07/02/12
Checked by KVL	Date 07/02/12
Reviewed by JTB	Date 07/12/12

Consultant

PB HDR

File Number

ACC No. 23126

G-PP-2014

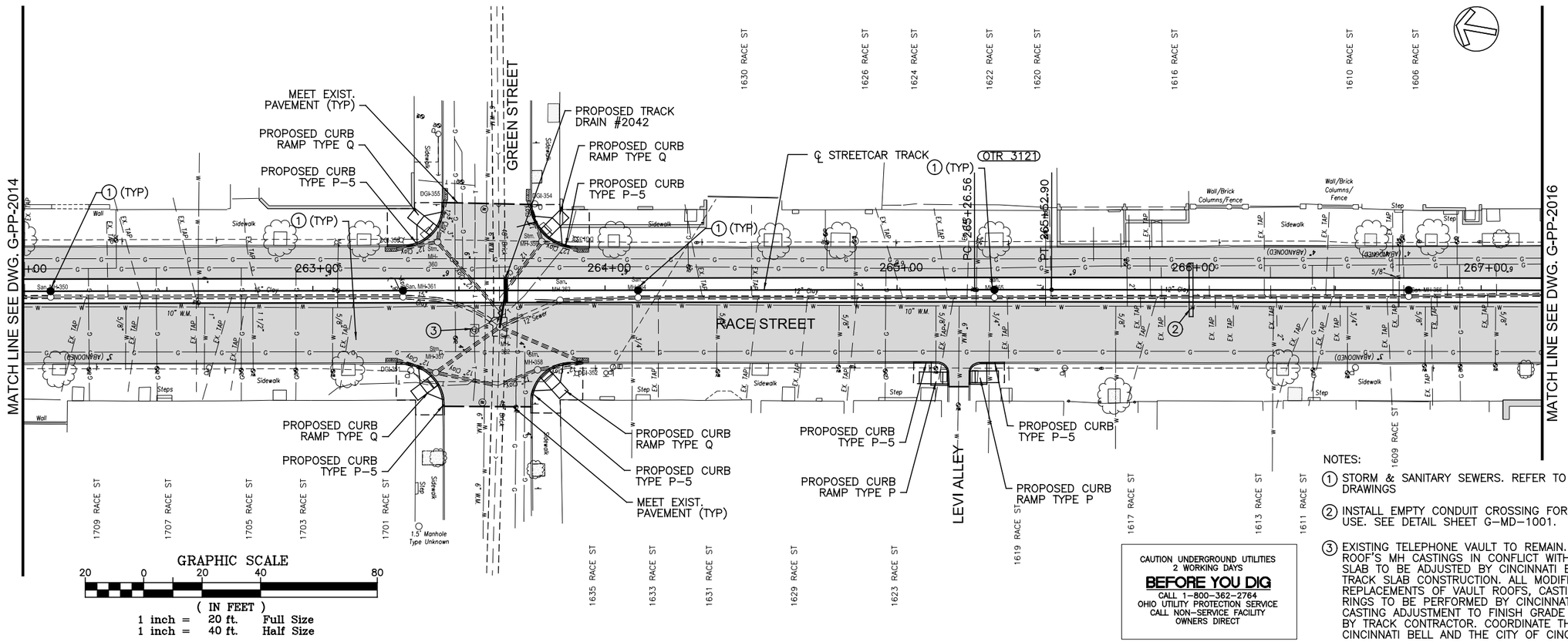

CAUTION UNDERGROUND UTILITIES
2 WORKING DAYS
BEFORE YOU DIG
CALL 1-800-362-2764
OHIO UTILITY PROTECTION SERVICE
CALL NON-SERVICE FACILITY OWNERS DIRECT

NOTES:

1. STORM & SANITARY SEWERS. REFER TO "SA" SERIES DRAWINGS
2. INSTALL EMPTY CONDUIT CROSSING FOR FUTURE UTILITY USE. SEE DETAIL SHEET G-MD-1001.
3. EXISTING TELEPHONE VAULT TO REMAIN. EXISTING VAULT ROOF'S MH CASTINGS IN CONFLICT WITH PROPOSED TRACK SLAB TO BE ADJUSTED BY CINCINNATI BELL PRIOR TO TRACK SLAB CONSTRUCTION. ALL MODIFICATIONS/ REPLACEMENTS OF VAULT ROOFS, CASTINGS, AND ADJUSTING RINGS TO BE PERFORMED BY CINCINNATI BELL. FINAL CASTING ADJUSTMENT TO FINISH GRADE TO BE PERFORMED BY TRACK CONTRACTOR. COORDINATE THIS WORK WITH CINCINNATI BELL AND THE CITY OF CINCINNATI.

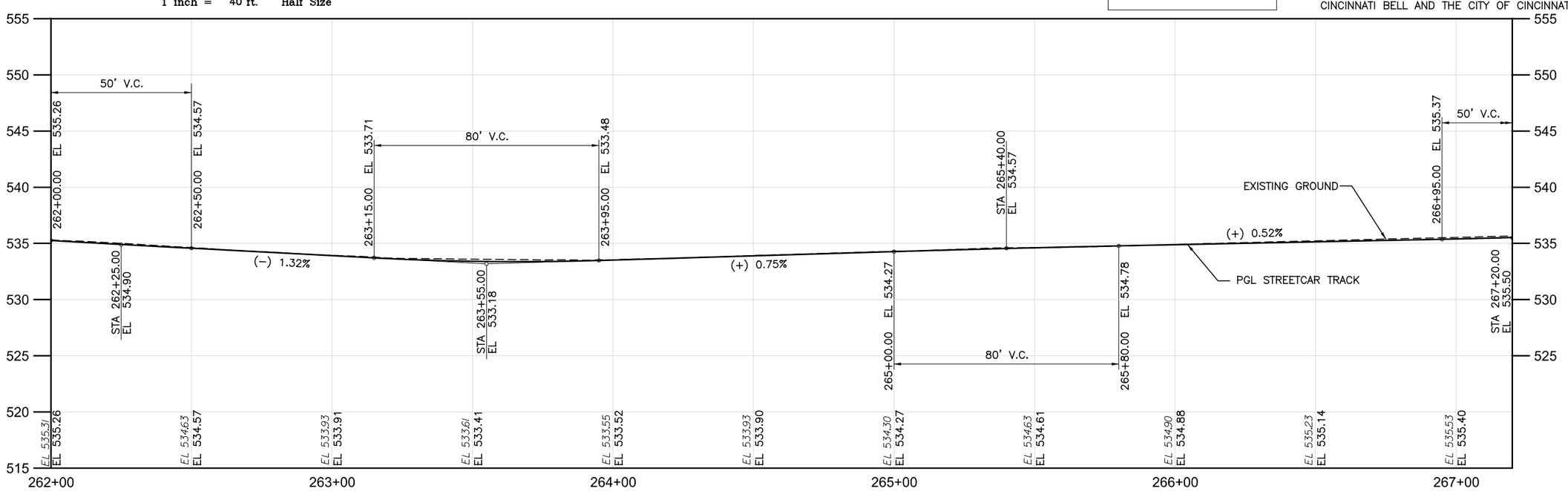

DOTE_Mono_PDF_Half.pltcfg
c:\pwworking\pitt\d0309031\S_G-PP-2015.dgn
Friday, July 13, 2012 11:59:10 AM

CONTRACT DRAWING

PRINTS NOT BEARING THIS STAMP WERE MADE PRIOR TO ADVERTISING FOR BIDS AND ARE TO BE CONSIDERED OBSOLETE FOR CONTRACT PURPOSES.

Department of Transportation and Engineering

City of Cincinnati
City Hall
801 Plum Street
Cincinnati, Ohio 45202

CINCINNATI STREETCAR OVER THE RHINE

PLAN AND TRACK PROFILE - RACE STREET
STA 262+00 TO STA 267+20

Revisions

No.				

Drawn by RWB	Date 07/02/12	Designed by RWB	Date 07/02/12
Checked by KVL	Date 07/02/12	Reviewed by JTB	Date 07/12/12

Consultant

PB HDR

File Number

ACC No. 23126

G-PP-2015

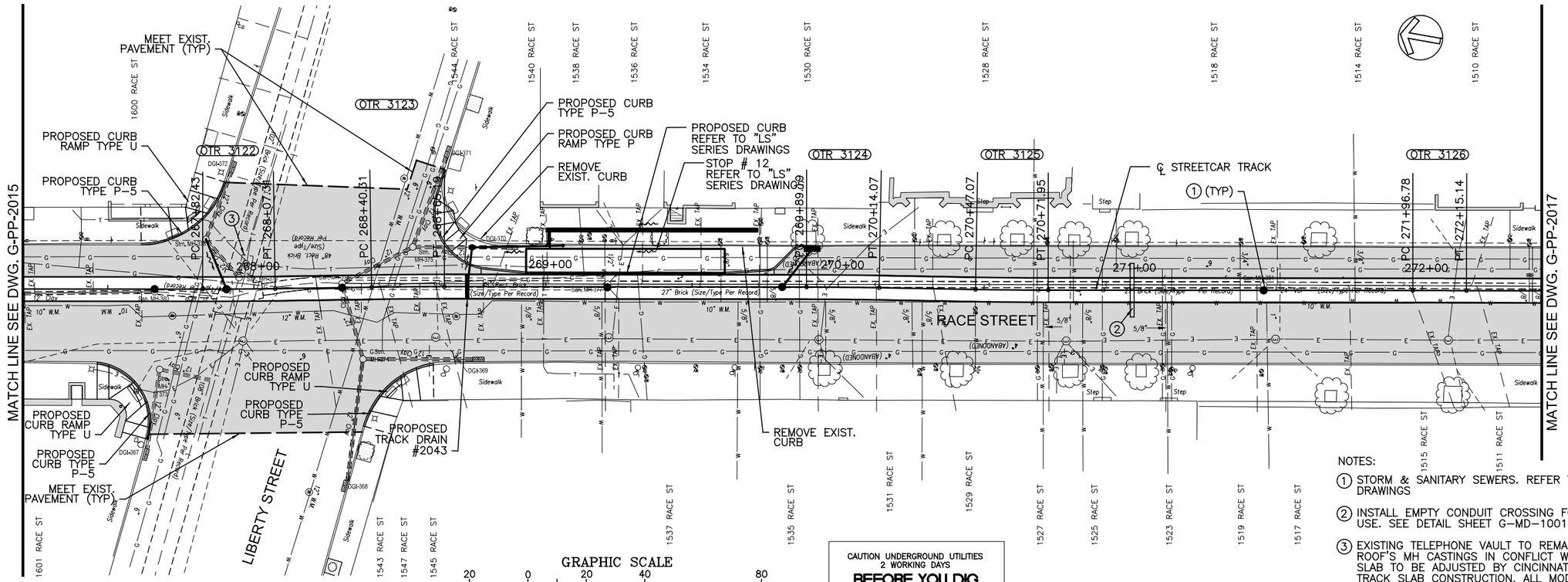

GRAPHIC SCALE

20 0 20 40 80

(IN FEET)
1 inch = 20 ft. Full Size
1 inch = 40 ft. Half Size

CAUTION UNDERGROUND UTILITIES
2 WORKING DAYS
BEFORE YOU DIG
CALL 1-800-362-2764
OHIO UTILITY PROTECTION SERVICE
CALL NON-SERVICE FACILITY
OWNERS DIRECT

NOTES:

1. STORM & SANITARY SEWERS. REFER TO "SA" SERIES DRAWINGS
2. INSTALL EMPTY CONDUIT CROSSING FOR FUTURE UTILITY USE. SEE DETAIL SHEET G-MD-1001.
3. EXISTING TELEPHONE VAULT TO REMAIN. EXISTING VAULT ROOF'S MH CASTINGS IN CONFLICT WITH PROPOSED TRACK SLAB TO BE ADJUSTED BY CINCINNATI BELL PRIOR TO TRACK SLAB CONSTRUCTION. ALL MODIFICATIONS/ REPLACEMENTS OF VAULT ROOFS, CASTINGS, AND ADJUSTING RINGS TO BE PERFORMED BY CINCINNATI BELL. FINAL CASTING ADJUSTMENT TO FINISH GRADE TO BE PERFORMED BY TRACK CONTRACTOR. COORDINATE THIS WORK WITH CINCINNATI BELL AND THE CITY OF CINCINNATI.

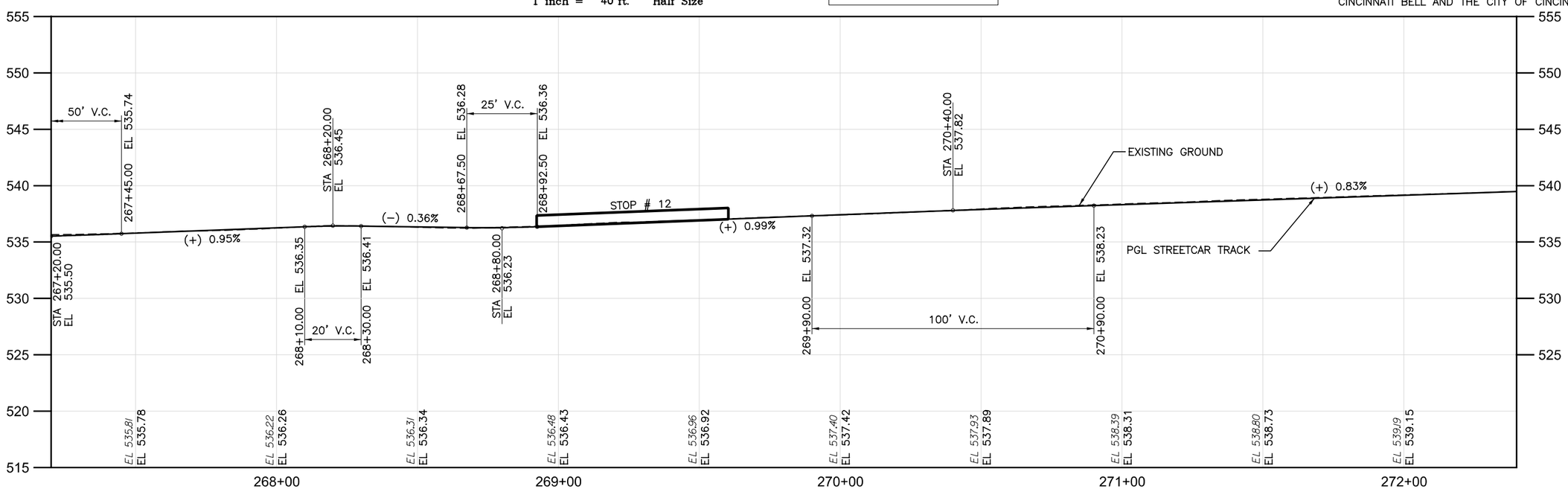

DOTE_Mono_PDF_Half.pltcfg
c:\pwworking\pitt\d0309031\S_G-PP-2016.dgn
Friday, July 13, 2012 11:59:24 AM PW59:24 AM

CONTRACT DRAWING

PRINTS NOT BEARING THIS STAMP WERE MADE PRIOR TO ADVERTISING AND ARE TO BE CONSIDERED OBSOLETE FOR CONTRACT PURPOSES.

Department of Transportation and Engineering

City of Cincinnati
City Hall
801 Plum Street
Cincinnati, Ohio 45202

CINCINNATI STREETCAR
OVER THE RHINE

PLAN AND TRACK PROFILE - RACE STREET
STA 267+20 TO STA 272+40

Revisions

No.				

Drawn by RWB	Date 07/02/12	Designed by RWB	Date 07/02/12
Checked by KVL	Date 07/02/12	Reviewed by JTB	Date 07/12/12

Consultant

PB HDR

File Number

ACC No.
23126

G-PP-2016

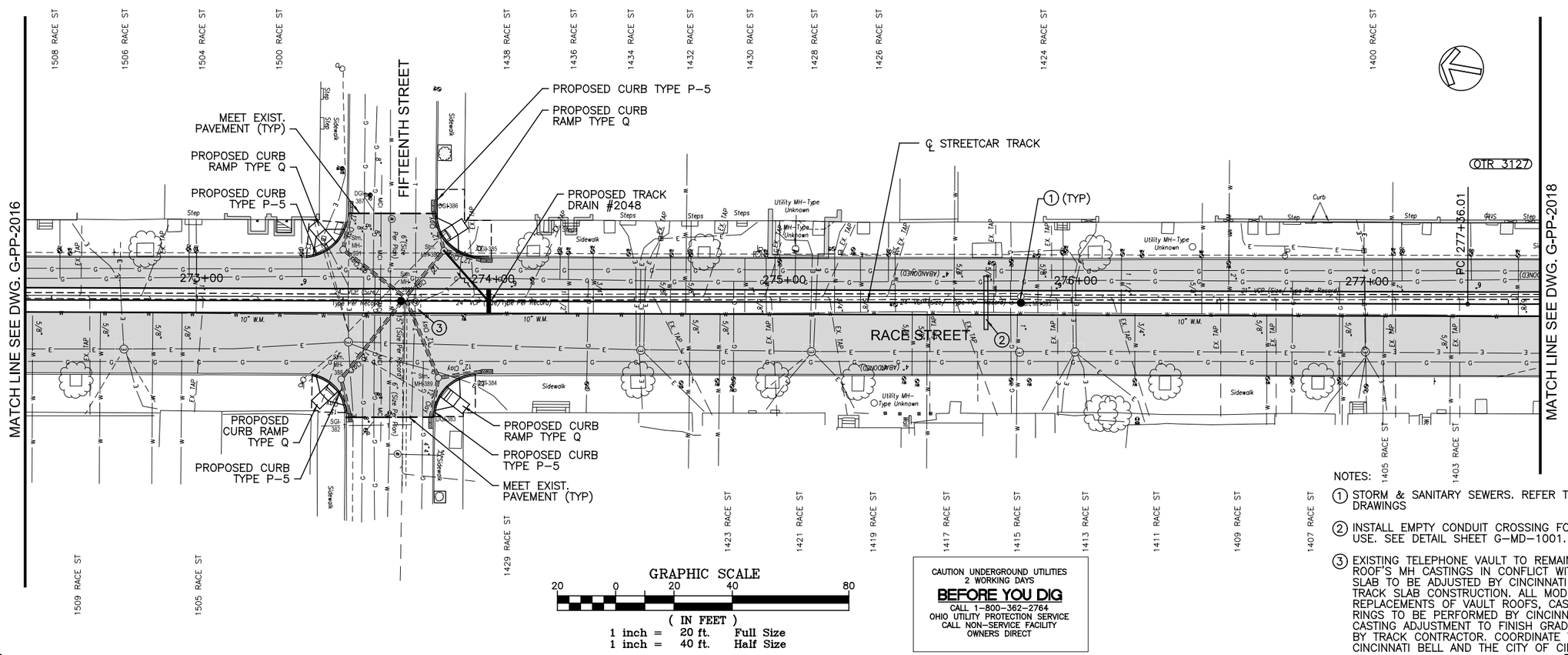

CAUTION UNDERGROUND UTILITIES
2 WORKING DAYS
BEFORE YOU DIG
CALL 1-800-362-2764
OHIO UTILITY PROTECTION SERVICE
CALL NON-SERVICE FACILITY
OWNERS DIRECT

NOTES:

1. STORM & SANITARY SEWERS. REFER TO "SA" SERIES DRAWINGS
2. INSTALL EMPTY CONDUIT CROSSING FOR FUTURE UTILITY USE. SEE DETAIL SHEET G-MD-1001.
3. EXISTING TELEPHONE VAULT TO REMAIN. EXISTING VAULT ROOF'S MH CASTINGS IN CONFLICT WITH PROPOSED TRACK SLAB TO BE ADJUSTED BY CINCINNATI BELL PRIOR TO TRACK SLAB CONSTRUCTION. ALL MODIFICATIONS/ REPLACEMENTS OF VAULT ROOFS, CASTINGS, AND ADJUSTING RINGS TO BE PERFORMED BY CINCINNATI BELL. FINAL CASTING ADJUSTMENT TO FINISH GRADE TO BE PERFORMED BY TRACK CONTRACTOR. COORDINATE THIS WORK WITH CINCINNATI BELL AND THE CITY OF CINCINNATI.

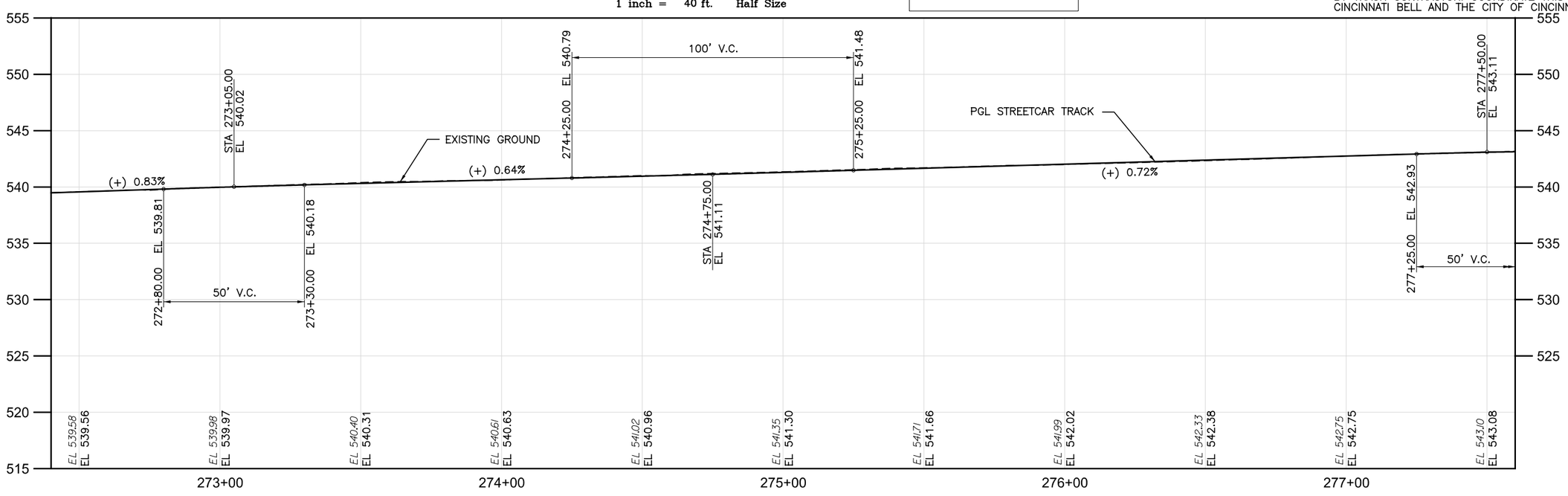

DOTE_Mono_PDF_Half.pltcfg
c:\pwworking\pitt\d0309031\S_G-PP-2017.dgn
Friday, July 13, 2012 11:59:37 AM

CONTRACT DRAWING

PRINTS NOT BEARING THIS STAMP WERE MADE PRIOR TO ADVERTISING AND ARE TO BE CONSIDERED OBSOLETE FOR CONTRACT PURPOSES.

Department of Transportation and Engineering

City of Cincinnati
City Hall
801 Plum Street
Cincinnati, Ohio 45202

CINCINNATI STREETCAR OVER THE RHINE

PLAN AND TRACK PROFILE - RACE STREET
STA 272+40 TO STA 277+60

Revisions

No.		

Drawn by RWB	Date 07/02/12
Designed by RWB	Date 07/02/12
Checked by KVL	Date 07/02/12
Reviewed by JTB	Date 07/12/12

Consultant

PB HDR

File Number

ACC No. 23126

G-PP-2017

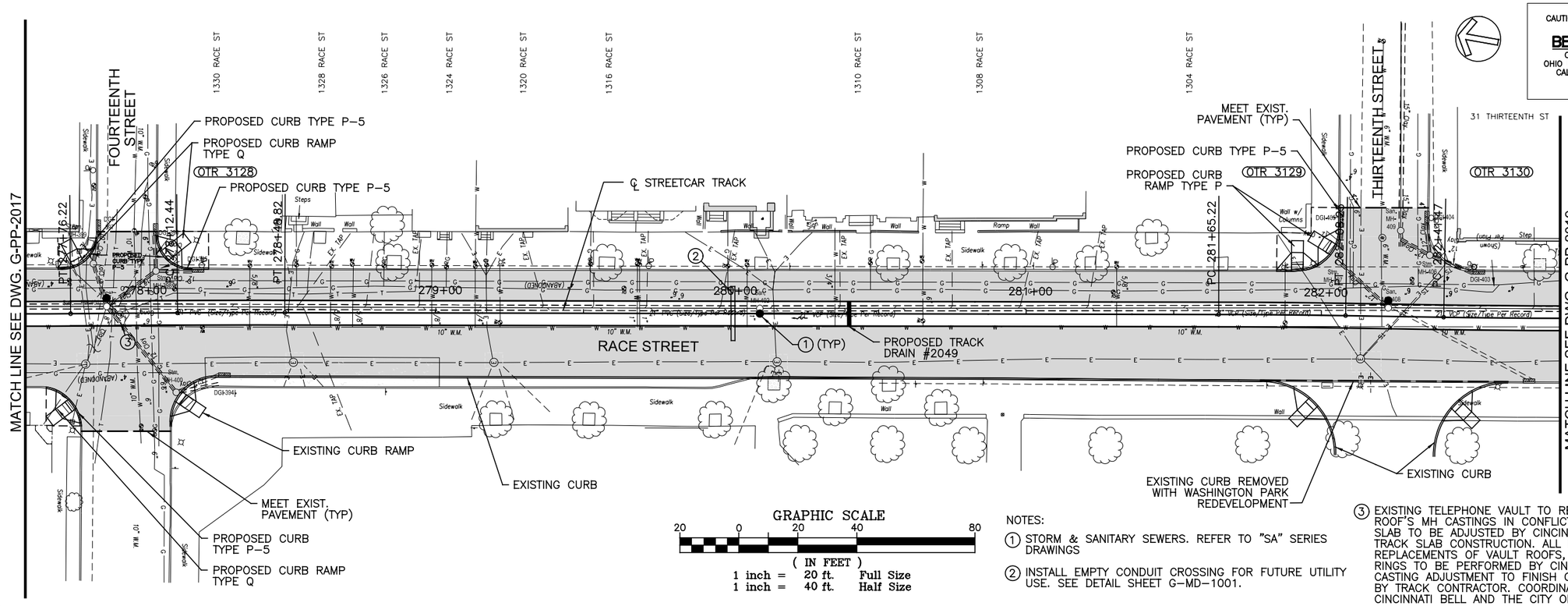

CAUTION UNDERGROUND UTILITIES
2 WORKING DAYS
BEFORE YOU DIG
CALL 1-800-362-2764
OHIO UTILITY PROTECTION SERVICE
CALL NON-SERVICE FACILITY
OWNERS DIRECT

GRAPHIC SCALE
20 0 20 40 80
(IN FEET)
1 inch = 20 ft. Full Size
1 inch = 40 ft. Half Size

NOTES:

1. STORM & SANITARY SEWERS. REFER TO "SA" SERIES DRAWINGS
2. INSTALL EMPTY CONDUIT CROSSING FOR FUTURE UTILITY USE. SEE DETAIL SHEET G-MD-1001.
3. EXISTING TELEPHONE VAULT TO REMAIN. EXISTING VAULT ROOF'S MH CASTINGS IN CONFLICT WITH PROPOSED TRACK SLAB TO BE ADJUSTED BY CINCINNATI BELL PRIOR TO TRACK SLAB CONSTRUCTION. ALL MODIFICATIONS/ REPLACEMENTS OF VAULT ROOFS, CASTINGS, AND ADJUSTING RINGS TO BE PERFORMED BY CINCINNATI BELL. FINAL CASTING ADJUSTMENT TO FINISH GRADE TO BE PERFORMED BY TRACK CONTRACTOR. COORDINATE THIS WORK WITH CINCINNATI BELL AND THE CITY OF CINCINNATI.

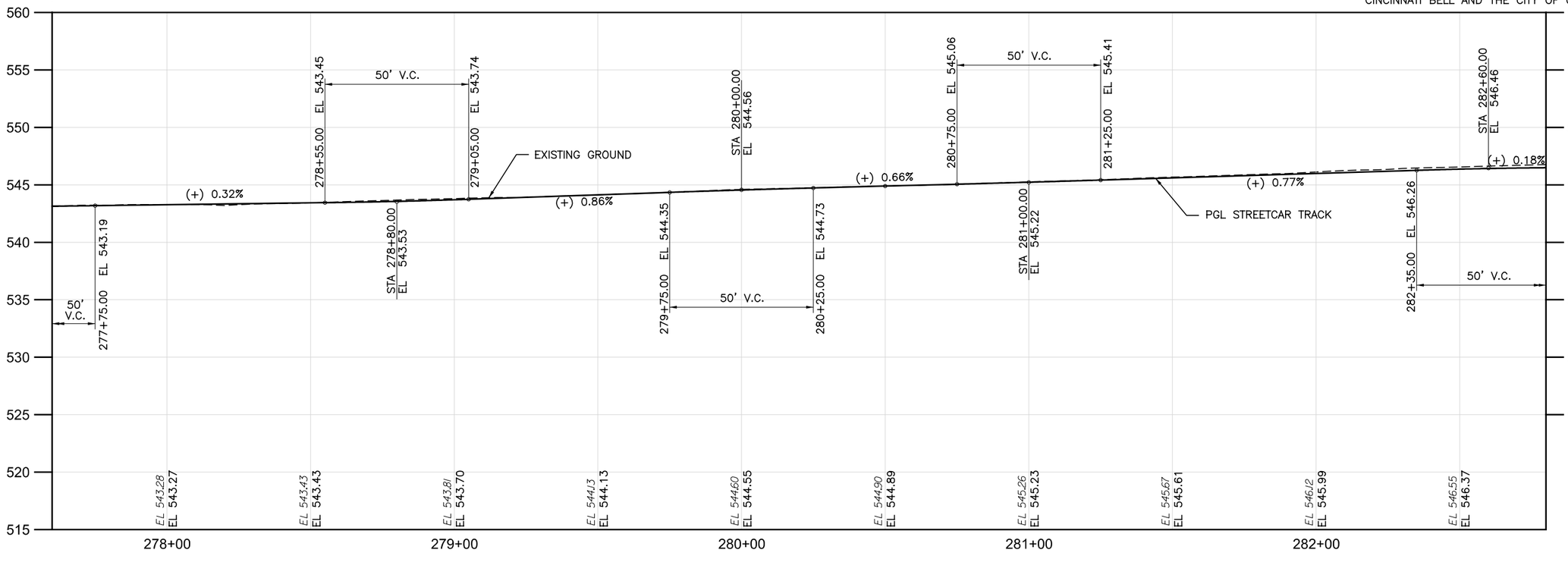

CONTRACT DRAWING

PRINTS NOT BEARING THIS STAMP WERE MADE PRIOR TO ADVERTISING FOR BIDS AND ARE TO BE CONSIDERED OBSOLETE FOR CONTRACT PURPOSES.

Department of Transportation and Engineering

City of Cincinnati
City Hall
801 Plum Street
Cincinnati, Ohio 45202

CINCINNATI STREETCAR OVER THE RHINE

PLAN AND TRACK PROFILE - RACE STREET
STA 277+60 TO STA 282+80

Revisions
No.

Drawn by RWB	Date 07/02/12	
Designed by RWB	Date 07/02/12	
Checked by KVL	Date 07/02/12	
Reviewed by JTB	Date 07/12/12	

Consultant

PB HDR

File Number

ACC No.
23126

G-PP-2018

DOTE_Mono_PDF_Half.pltcfg
c:\pwworking\pitt\d0309031\S_G-PP-2018.dgn
Friday, July 13, 2012 11:59:52 AM

NOTES:

1. STORM & SANITARY SEWERS. REFER TO "SA" SERIES DRAWINGS
2. INSTALL EMPTY CONDUIT CROSSING FOR FUTURE UTILITY USE. SEE DETAIL SHEET G-MD-1001.
3. EXISTING TELEPHONE VAULT TO REMAIN. EXISTING VAULT ROOF'S MH CASTINGS IN CONFLICT WITH PROPOSED TRACK SLAB TO BE ADJUSTED BY CINCINNATI BELL PRIOR TO TRACK SLAB CONSTRUCTION. ALL MODIFICATIONS/ REPLACEMENTS OF VAULT ROOFS, CASTINGS, AND ADJUSTING RINGS TO BE PERFORMED BY CINCINNATI BELL. FINAL CASTING ADJUSTMENT TO FINISH GRADE TO BE PERFORMED BY TRACK CONTRACTOR. COORDINATE THIS WORK WITH CINCINNATI BELL AND THE CITY OF CINCINNATI.

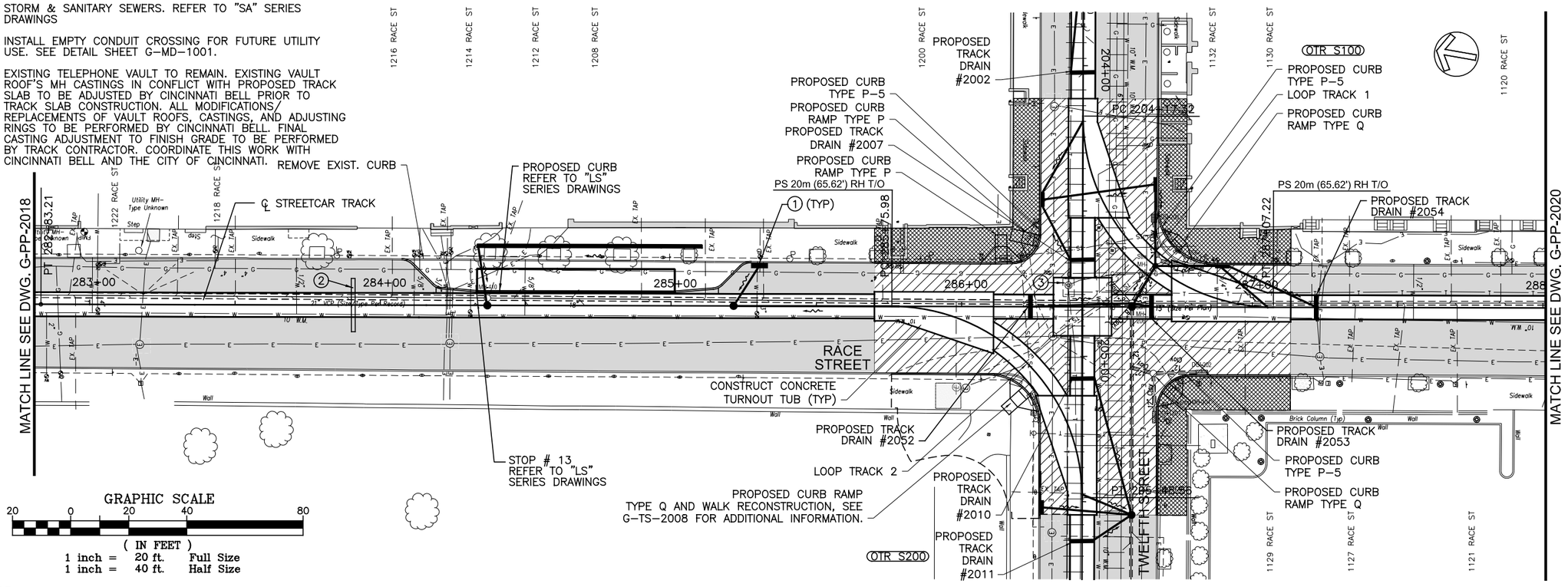

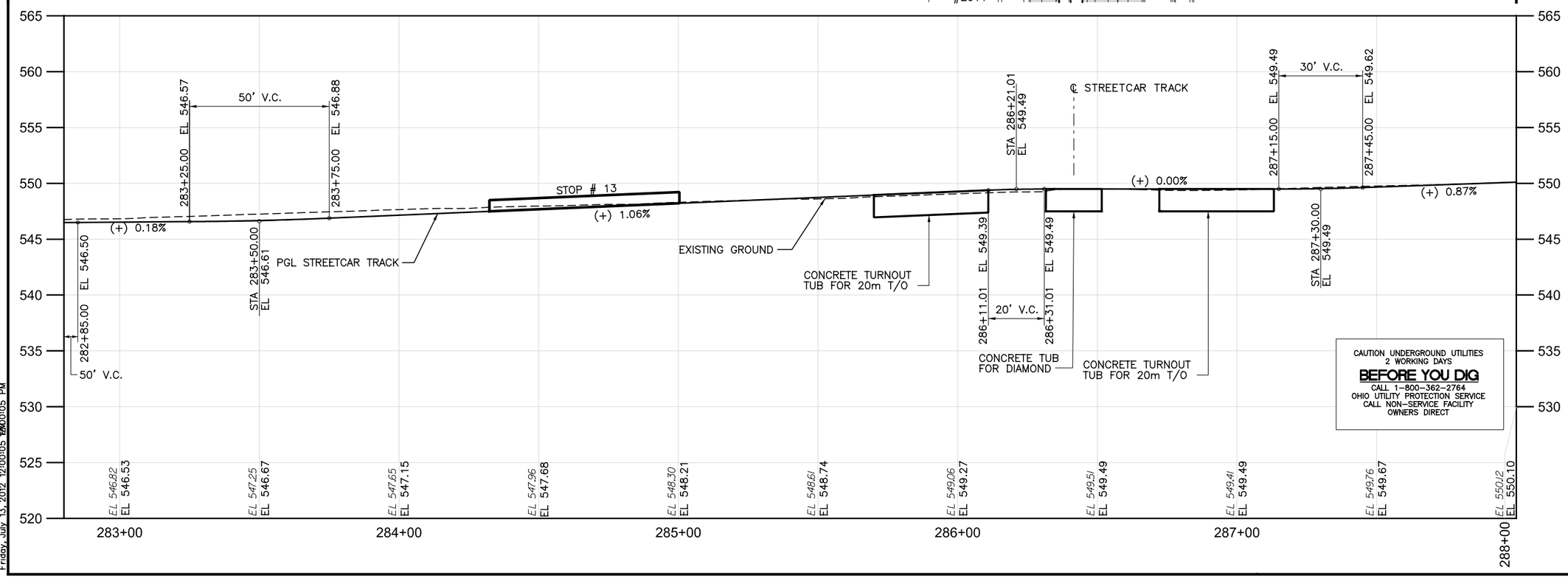

CAUTION UNDERGROUND UTILITIES
2 WORKING DAYS
BEFORE YOU DIG
CALL 1-800-362-2764
OHIO UTILITY PROTECTION SERVICE
CALL NON-SERVICE FACILITY OWNERS DIRECT

DOTE_Mono_PDF_Half.pltcfg
c:\pwworking\pitt\d0309031\S_G-PP-2019.dgn
Friday, July 13, 2012 12:00:05 PM

CITY OF CINCINNATI DEPARTMENT OF TRANSPORTATION & ENGINEERING

CONTRACT DRAWING

PRINTS NOT BEARING THIS STAMP WERE MADE PRIOR TO ADVERTISING FOR BIDS AND ARE TO BE CONSIDERED OBSOLETE FOR CONTRACT PURPOSES.

Department of Transportation and Engineering

City of Cincinnati
City Hall
801 Plum Street
Cincinnati, Ohio 45202

CINCINNATI STREETCAR
OVER THE RHINE

PLAN AND TRACK PROFILE - RACE STREET
STA 282+80 TO STA 288+00

Revisions
No.

Drawn by RWB	Date 07/02/12	
Designed by RWB	Date 07/02/12	
Checked by KVL	Date 07/02/12	
Reviewed by JTB	Date 07/12/12	

Consultant

PB HDR

File Number

ACC No.
23126

G-PP-2019

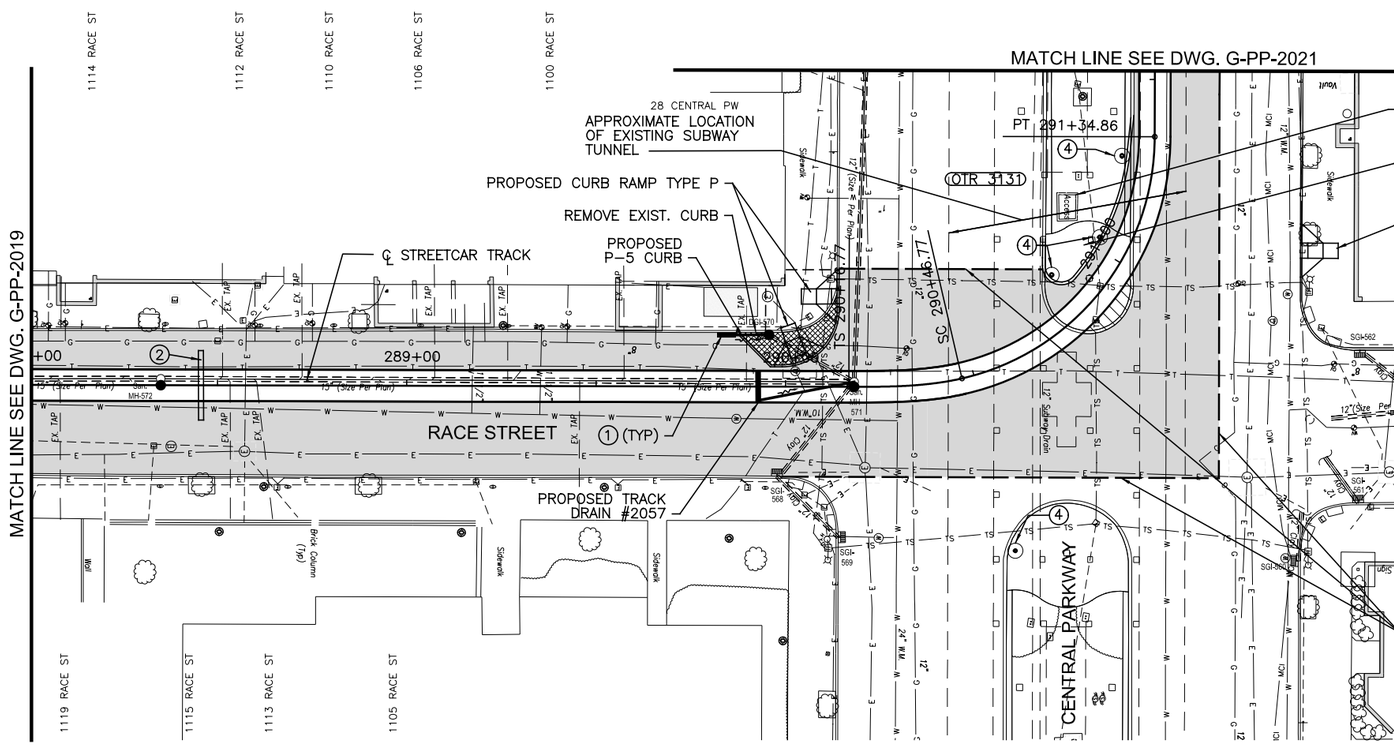

CENTRAL PARKWAY SPECIFIC NOTES

1. AT LEAST 6 MONTHS PRIOR TO COMMENCING TRACK SLAB INSTALLATION, CONTRACTOR SHALL POTHOLE TO FIELD LOCATE HORIZONTAL AND VERTICAL LOCATION OF ALL NORTH, SOUTH EXISTING UTILITIES CROSSING CENTRAL PARKWAY AS WELL AS ALL PARALLEL EXISTING UTILITIES WITHIN 20 FEET OF THE THE TRACK SLAB. CONTRACTOR SHALL PROVIDE THE ENGINEER WITH THE RESULTS OF THE POTHOLING INVESTIGATION AND THE DATA COLLECTED WILL BE USED TO EVALUATE THE NEED FOR ADDITIONAL UTILITY RELOCATIONS.

2. FOR REWORK OF EXISTING CENTRAL PARKWAY MEDIAN, INCLUDING CROSS WALKS, REFER TO PLANS PREPARED BY THE CITY OF CINCINNATI.

NOTES:

(1) STORM & SANITARY SEWERS. REFER TO "SA" SERIES DRAWINGS

(2) INSTALL EMPTY CONDUIT CROSSING FOR FUTURE UTILITY USE. SEE DETAIL SHEET G-MD-1001.

(3) EXISTING TELEPHONE VAULT TO REMAIN. EXISTING VAULT ROOF'S MH CASTINGS IN CONFLICT WITH PROPOSED TRACK SLAB TO BE ADJUSTED BY CINCINNATI BELL PRIOR TO TRACK SLAB CONSTRUCTION. ALL MODIFICATIONS/ REPLACEMENTS OF VAULT ROOFS, CASTINGS, AND ADJUSTING RINGS TO BE PERFORMED BY CINCINNATI BELL. FINAL CASTING ADJUSTMENT TO FINISH GRADE TO BE PERFORMED BY TRACK CONTRACTOR. COORDINATE THIS WORK WITH CINCINNATI BELL AND THE CITY OF CINCINNATI.

(4) OCS POLE FOUNDATION. PROVIDE GROUNDING STRAP TO TRACK SLAB REBAR PER SHEET G-OD-0129 AND DETAIL 2 ON SHEET G-PS-0101. REFER TO "OL" SERIES DRAWINGS FOR LOCATION.

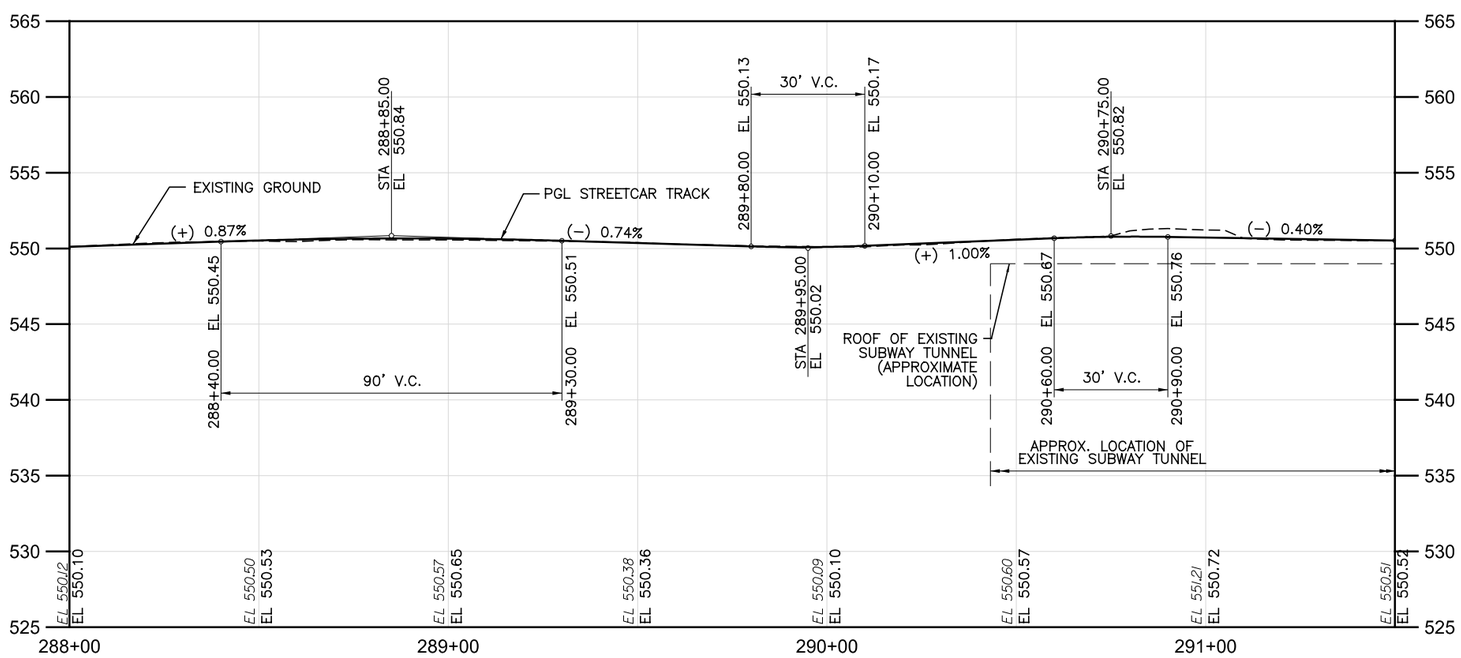

CAUTION UNDERGROUND UTILITIES
2 WORKING DAYS
BEFORE YOU DIG
CALL 1-800-362-2764
OHIO UTILITY PROTECTION SERVICE
CALL NON-SERVICE FACILITY OWNERS DIRECT

GRAPHIC SCALE
20 0 20 40 80
(IN FEET)
1 inch = 20 ft. Full Size
1 inch = 40 ft. Half Size

DEPARTMENT OF TRANSPORTATION & ENGINEERING CITY OF CINCINNATI OHIO

CONTRACT DRAWING

PRINTS NOT BEARING THIS STAMP WERE MADE PRIOR TO ADVERTISING FOR BIDS AND ARE TO BE CONSIDERED OBSOLETE FOR CONTRACT PURPOSES.

Department of Transportation and Engineering

City of Cincinnati
City Hall
801 Plum Street
Cincinnati, Ohio 45202

CINCINNATI STREETCAR
OVER THE RHINE
PLAN AND TRACK PROFILE - RACE STREET
STA 288+00 TO STA 291+50

Revisions

No.				

Drawn by RWB	Date 07/02/12	Designed by RWB	Date 07/02/12
Checked by KVL	Date 07/02/12	Reviewed by JTB	Date 07/12/12

Consultant

PB HDR

File Number

ACC No. 23126

G-PP-2020

DOTE_Mono_PDF_Half.pltcfg
c:\pwworking\pitt\d0309031\S_G-PP-2020.dgn
Friday, July 13, 2012 12:00:19 PM PM12:00:19 PM

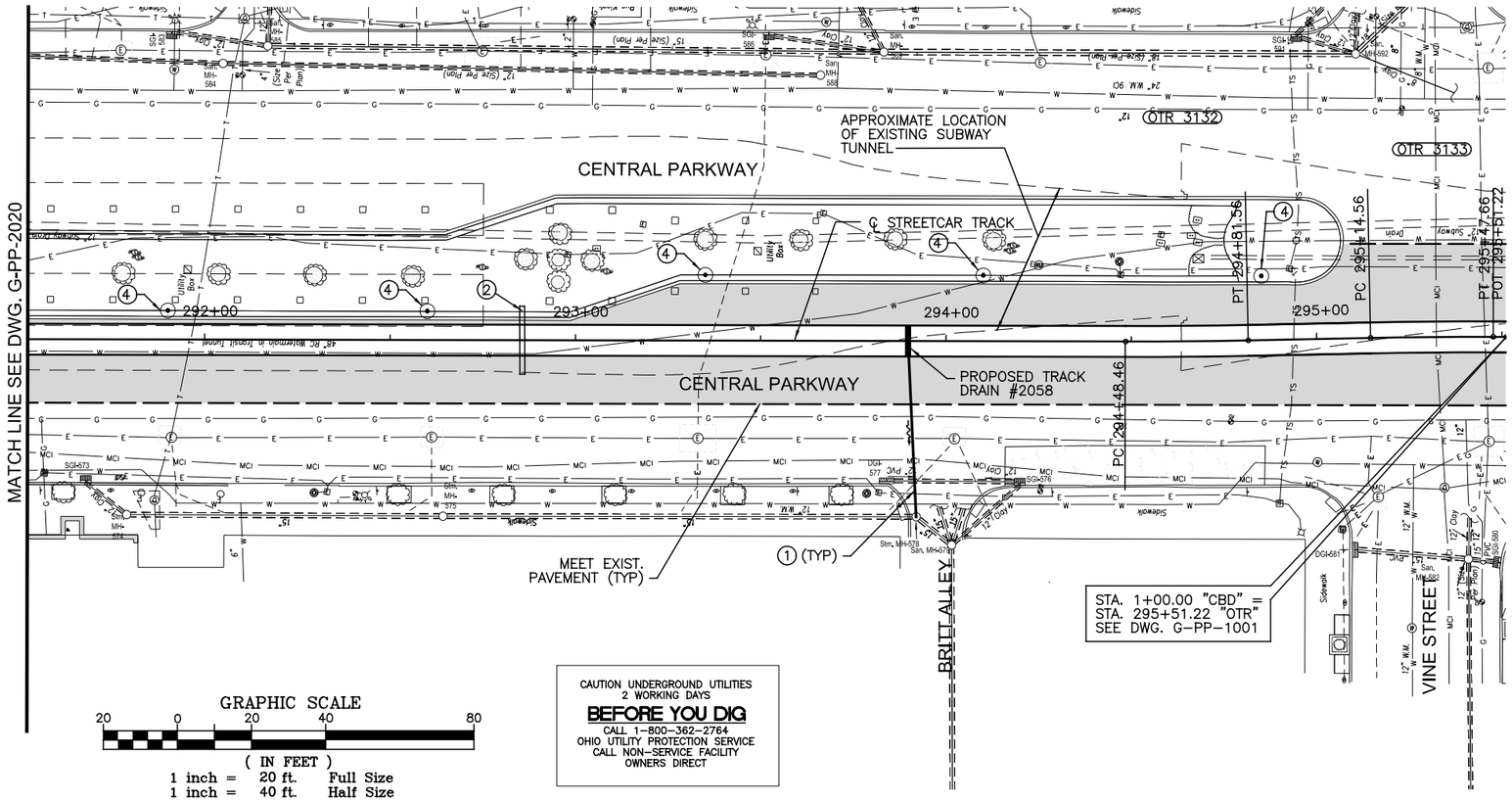

GRAPHIC SCALE

20 0 20 40 80

(IN FEET)
1 inch = 20 ft. Full Size
1 inch = 40 ft. Half Size

CAUTION UNDERGROUND UTILITIES
2 WORKING DAYS
BEFORE YOU DIG
CALL 1-800-362-2764
OHIO UTILITY PROTECTION SERVICE
CALL NON-SERVICE FACILITY
OWNERS DIRECT

CENTRAL PARKWAY SPECIFIC NOTES

1. AT LEAST 6 MONTHS PRIOR TO COMMENCING TRACK SLAB INSTALLATION, CONTRACTOR SHALL POTHOLE TO FIELD LOCATE HORIZONTAL AND VERTICAL LOCATION OF ALL NORTH, SOUTH EXISTING UTILITIES CROSSING CENTRAL PARKWAY AS WELL AS ALL PARALLEL EXISTING UTILITIES WITHIN 20 FEET OF THE THE TRACK SLAB. CONTRACTOR SHALL PROVIDE THE ENGINEER WITH THE RESULTS OF THE POTHOLING INVESTIGATION AND THE DATA COLLECTED WILL BE USED TO EVALUATE THE NEED FOR ADDITIONAL UTILITY RELOCATIONS.

2. FOR REWORK OF EXISTING CENTRAL PARKWAY MEDIAN, INCLUDING CROSS WALKS, REFER TO PLANS PREPARED BY THE CITY OF CINCINNATI.

NOTES:

(1) STORM & SANITARY SEWERS. REFER TO "SA" SERIES DRAWINGS

(2) INSTALL EMPTY CONDUIT CROSSING FOR FUTURE UTILITY USE. SEE DETAIL SHEET G-MD-1001.

(3) EXISTING TELEPHONE VAULT TO REMAIN. EXISTING VAULT ROOF'S MH CASTINGS IN CONFLICT WITH PROPOSED TRACK SLAB TO BE ADJUSTED BY CINCINNATI BELL PRIOR TO TRACK SLAB CONSTRUCTION. ALL MODIFICATIONS/ REPLACEMENTS OF VAULT ROOFS, CASTINGS, AND ADJUSTING RINGS TO BE PERFORMED BY CINCINNATI BELL. FINAL CASTING ADJUSTMENT TO FINISH GRADE TO BE PERFORMED BY TRACK CONTRACTOR. COORDINATE THIS WORK WITH CINCINNATI BELL AND THE CITY OF CINCINNATI.

(4) OCS POLE FOUNDATION. PROVIDE GROUNDING STRAP TO TRACK SLAB REBAR PER SHEET G-QD-0129 AND DETAIL 2 ON SHEET G-PS-0101. REFER TO "OL" SERIES DRAWINGS FOR LOCATION.

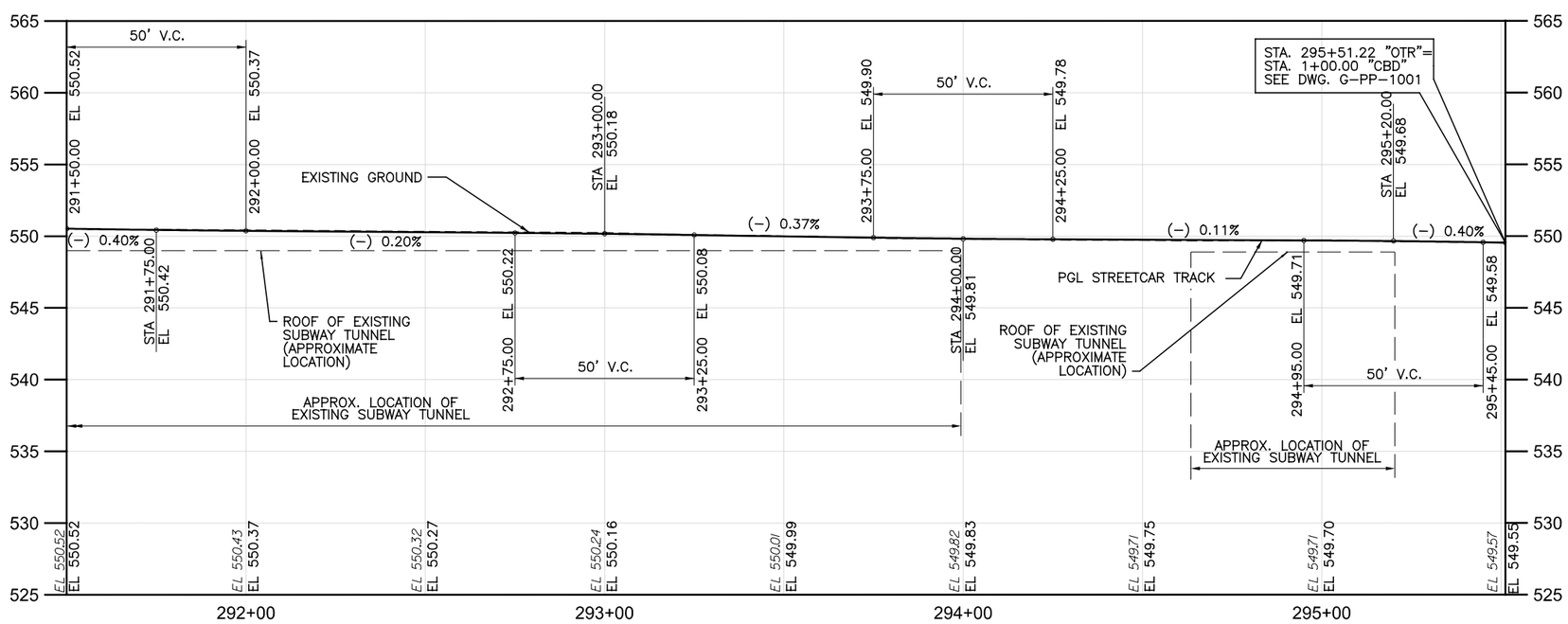

CONTRACT DRAWING

PRINTS NOT BEARING THIS STAMP WERE MADE PRIOR TO ADVERTISING FOR BIDS AND ARE TO BE CONSIDERED OBSOLETE FOR CONTRACT PURPOSES.

Department of Transportation and Engineering

City of Cincinnati
City Hall
801 Plum Street
Cincinnati, Ohio 45202

CINCINNATI STREETCAR
OVER THE RHINE

PLAN AND TRACK PROFILE - CENTRAL PARKWAY
STA 291+50 TO STA 295+51.22

Revisions

No.			

Drawn by RWB	Date 07/02/12	Designed by RWB	Date 07/02/12
Checked by KVL	Date 07/02/12	Reviewed by JTB	Date 07/12/12

Consultant

PB HDR

File Number

ACC No. 23126

G-PP-2021

DOTE_Mono_PDF_Half.pltcfg
c:\pwworking\pitt\d0309031\S_G-PP-2021.dgn
Friday, July 13, 2012 12:00:32 PM

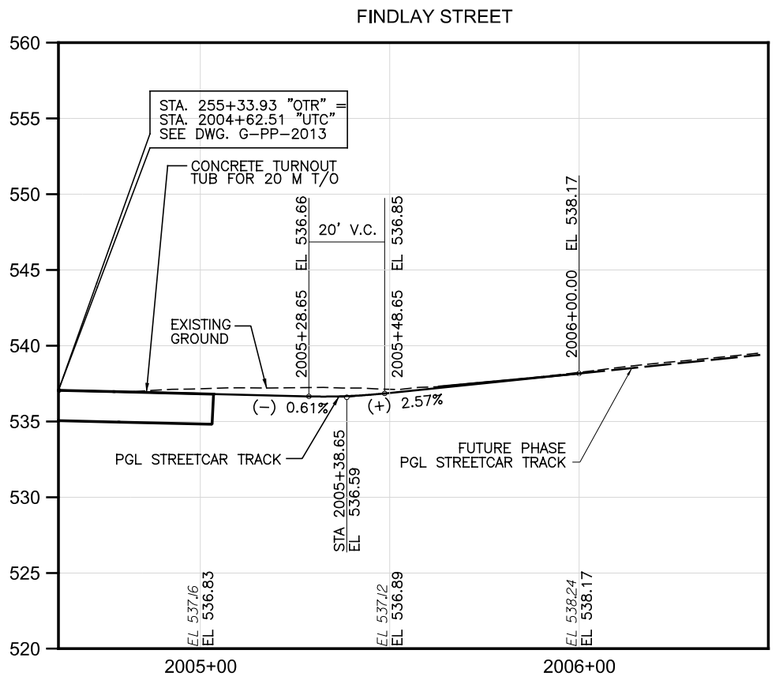

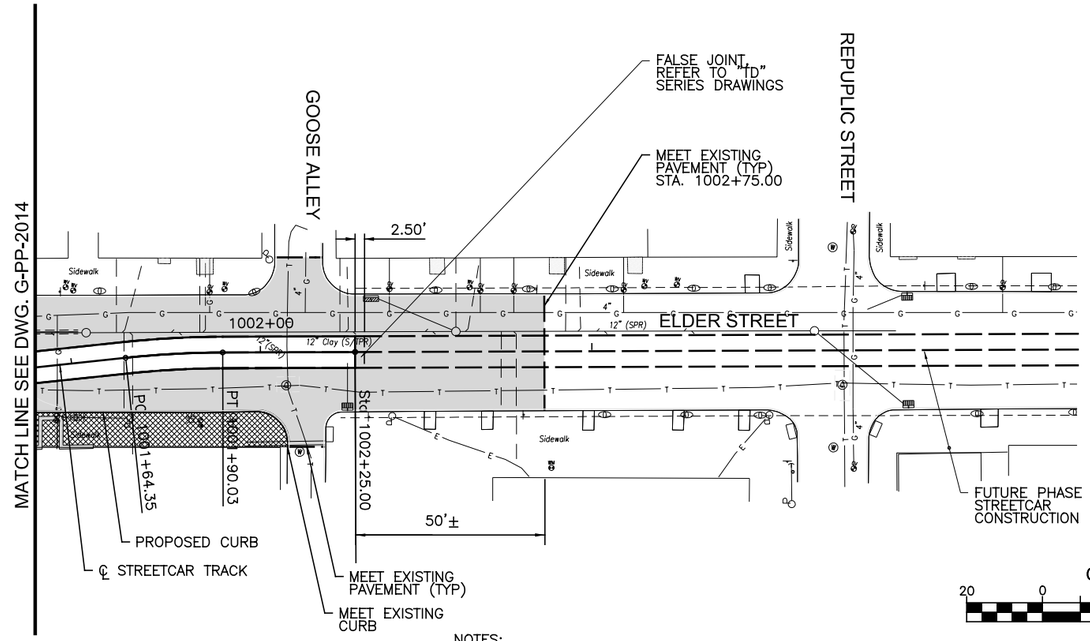

NOTES:

1. SEE DWG G-TK-2102 FOR ELDER STREET TRACK HORIZONTAL GEOMETRY.

GRAPHIC SCALE

20 0 20 40 80

(IN FEET)
1 inch = 20 ft. Full Size
1 inch = 40 ft. Half Size

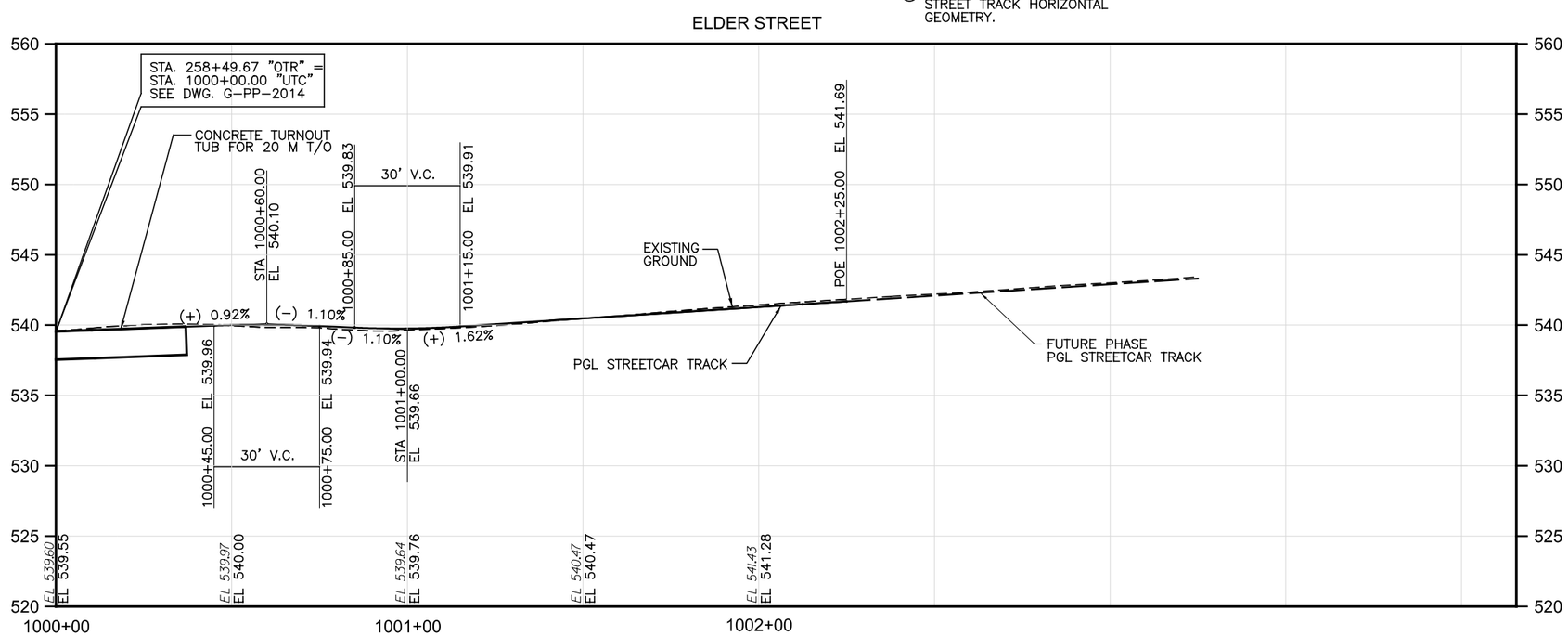

CAUTION UNDERGROUND UTILITIES
2 WORKING DAYS
BEFORE YOU DIG
CALL 1-800-362-2764
OHIO UTILITY PROTECTION SERVICE
CALL NON-SERVICE FACILITY
OWNERS DIRECT

CONTRACT DRAWING

PRINTS NOT BEARING THIS STAMP WERE MADE PRIOR TO ADVERTISING FOR BIDS AND ARE TO BE CONSIDERED OBSOLETE FOR CONTRACT PURPOSES.

Department of Transportation and Engineering

City of Cincinnati
City Hall
801 Plum Street
Cincinnati, Ohio 45202

CINCINNATI STREETCAR OVER THE RHINE

PLAN AND TRACK PROFILE - WEST ELDER STREET
UPTOWN CIRCULATOR EXTENSION
STA 1000+00 TO STA 1002+25

Revisions

No.				

Date 07/02/12	Date 07/02/12	Date 07/02/12	Date 07/12/12
Drawn by DK	Designed by DK	Checked by KVL	Reviewed by JTB

Consultant

PB HDR

File Number

ACC No. 23126

G-PP-2022

DOTE_Mono_PDF_Half.pltcfg
c:\pwworking\pitt\d0309031\S_G-PP-2022.dgn
Friday, July 13, 2012 12:00:49 PM

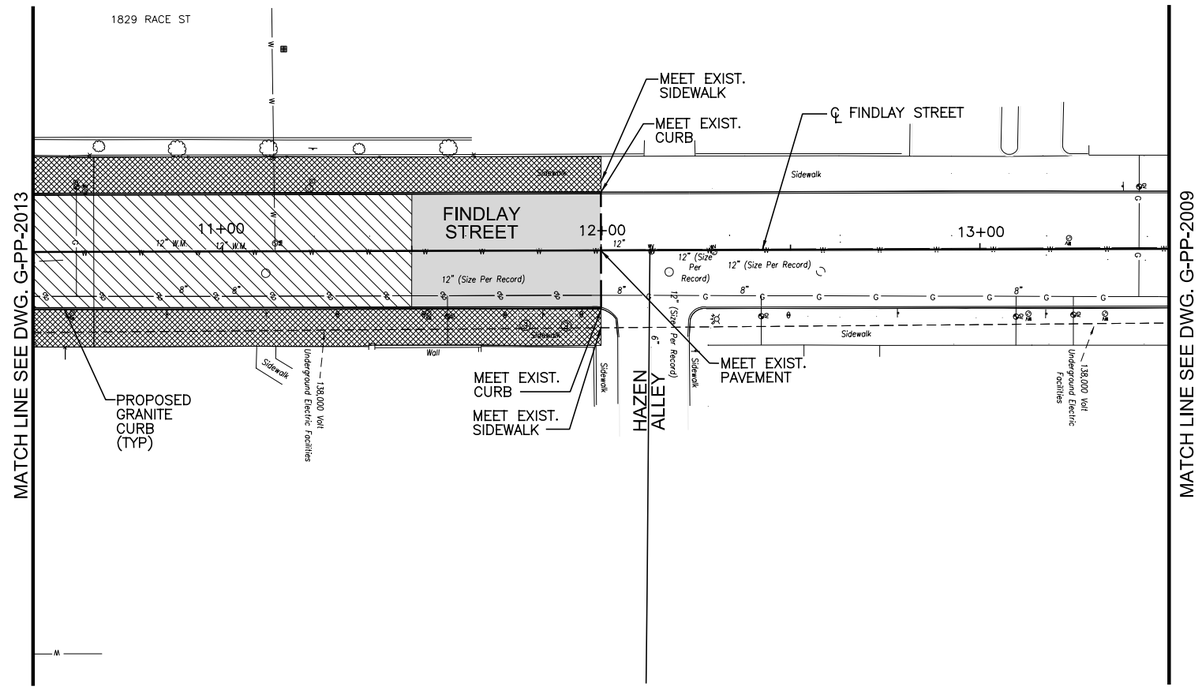

CAUTION UNDERGROUND UTILITIES
2 WORKING DAYS
BEFORE YOU DIG
CALL 1-800-362-2764
OHIO UTILITY PROTECTION SERVICE
CALL NON-SERVICE FACILITY
OWNERS DIRECT

GRAPHIC SCALE

20 0 20 40 80

(IN FEET)
1 inch = 20 ft. Full Size
1 inch = ft. Half Size

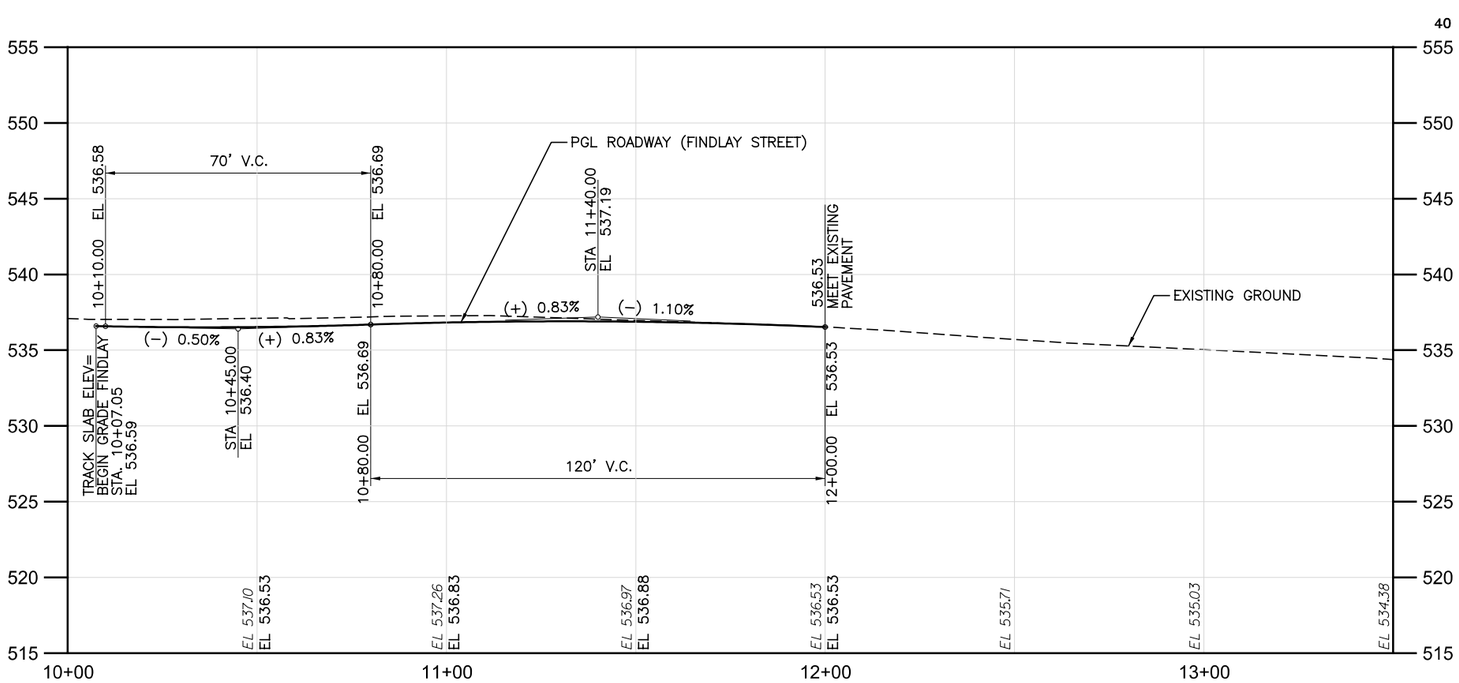

CONTRACT DRAWING

PRINTS NOT BEARING THIS STAMP WERE MADE PRIOR TO ADVERTISING AND ARE TO BE CONSIDERED OBSOLETE FOR CONTRACT PURPOSES.

Department of Transportation and Engineering

City of Cincinnati
City Hall
801 Plum Street
Cincinnati, Ohio 45202

CINCINNATI STREETCAR
OVER THE RHINE
PLAN AND ROAD PROFILE - FINDLAY STREET
UPTOWN CIRCULATOR EXTENSION
STA 10+50 TO STA 13+50

Revisions

No.		

Drawn by RVB	Date 07/02/12
Designed by RWB	Date 07/02/12
Checked by KVL	Date 07/02/12
Reviewed by JTB	Date 07/12/12

Consultant

PB HDR

File Number

ACC No. 23126

G-PP-2023

DOTE_Mono_PDF_Half.pltcfg
c:\pwworking\pitt\d0309031\S_G-PP-2023.dgn
Friday, July 13, 2012 12:01:03 PM PM01:03

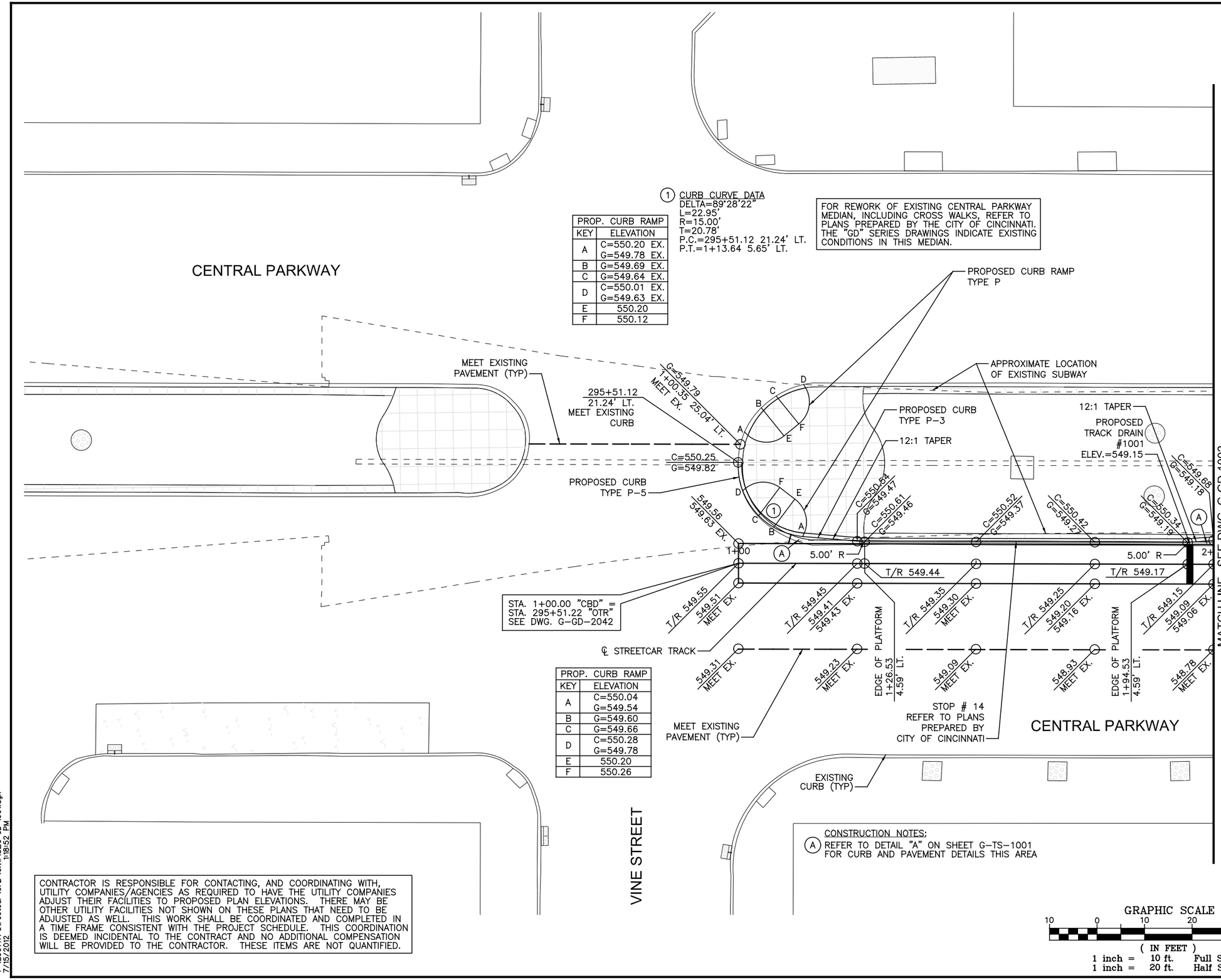

1 CURB CURVE DATA
DELTA=89°28'22"
L=22.95'
R=15.00'
T=20.78'
P.C.=295+51.12 21.24' LT.
P.T.=1+13.64 5.65' LT.

PROP. CURB RAMP	
KEY	ELEVATION
A	C=550.20 EX. G=549.78 EX.
B	G=549.69 EX.
C	G=549.64 EX.
D	C=550.01 EX. G=549.63 EX.
E	550.20
F	550.12

PROP. CURB RAMP	
KEY	ELEVATION
A	C=550.04 G=549.54
B	G=549.60
C	G=549.66
D	C=550.28 G=549.78
E	550.20
F	550.26

FOR REWORK OF EXISTING CENTRAL PARKWAY MEDIAN, INCLUDING CROSS WALKS, REFER TO PLANS PREPARED BY THE CITY OF CINCINNATI. THE "GD" SERIES DRAWINGS INDICATE EXISTING CONDITIONS IN THIS MEDIAN.

LEGEND:

B/W	BACK OF WALK
C	TOP OF CURB
EP	EDGE OF PAVEMENT
CR	CROWN POINT
EX.	EXISTING
G	GUTTER
T/R	TOP OF RAIL
T/S	TOP OF SLAB
— —	LIMITS OF CONSTRUCTION

CONTRACTOR IS RESPONSIBLE FOR CONTACTING, AND COORDINATING WITH, UTILITY COMPANIES/AGENCIES AS REQUIRED TO HAVE THE UTILITY COMPANIES ADJUST THEIR FACILITIES TO PROPOSED PLAN ELEVATIONS. THERE MAY BE OTHER UTILITY FACILITIES NOT SHOWN ON THESE PLANS THAT NEED TO BE ADJUSTED AS WELL. THIS WORK SHALL BE COORDINATED AND COMPLETED IN A TIME FRAME CONSISTENT WITH THE PROJECT SCHEDULE. THIS COORDINATION IS DEEMED INCIDENTAL TO THE CONTRACT AND NO ADDITIONAL COMPENSATION WILL BE PROVIDED TO THE CONTRACTOR. THESE ITEMS ARE NOT QUANTIFIED.

CONSTRUCTION NOTES:
(A) REFER TO DETAIL "A" ON SHEET G-TS-1001 FOR CURB AND PAVEMENT DETAILS THIS AREA

CAUTION UNDERGROUND UTILITIES
2 WORKING DAYS
BEFORE YOU DIG
CALL 1-800-362-2764
OHIO UTILITY PROTECTION SERVICE
CALL NON-SERVICE FACILITY OWNERS DIRECT

DOTE_Mono_PDF_Half.pltcfg
T:\29014A-Streetcar\CAD\Civil\S_G-GD-1001.dgn
7/15/2012 1:18:52 PM

CONTRACT DRAWING
PRINTS NOT BEARING THIS STAMP WERE MADE PRIOR TO ADVERTISING FOR BIDS AND ARE TO BE CONSIDERED OBSOLETE FOR CONTRACT PURPOSES.

Department of Transportation and Engineering
City of Cincinnati
City Hall
801 Plum Street
Cincinnati, Ohio 45202

CINCINNATI STREETCAR
CENTRAL BUSINESS DISTRICT
GRADING PLANS - CENTRAL PARKWAY
STA 1+00 TO STA 2+00

Revisions
No.

	Date
Drawn by CJC	7/02/12
Designed by CJC	7/02/12
Checked by SAJ	7/02/12
Reviewed by JTB	7/12/12

Consultant
PB HDR

File Number
ACC No. 23126

G-GD-1001

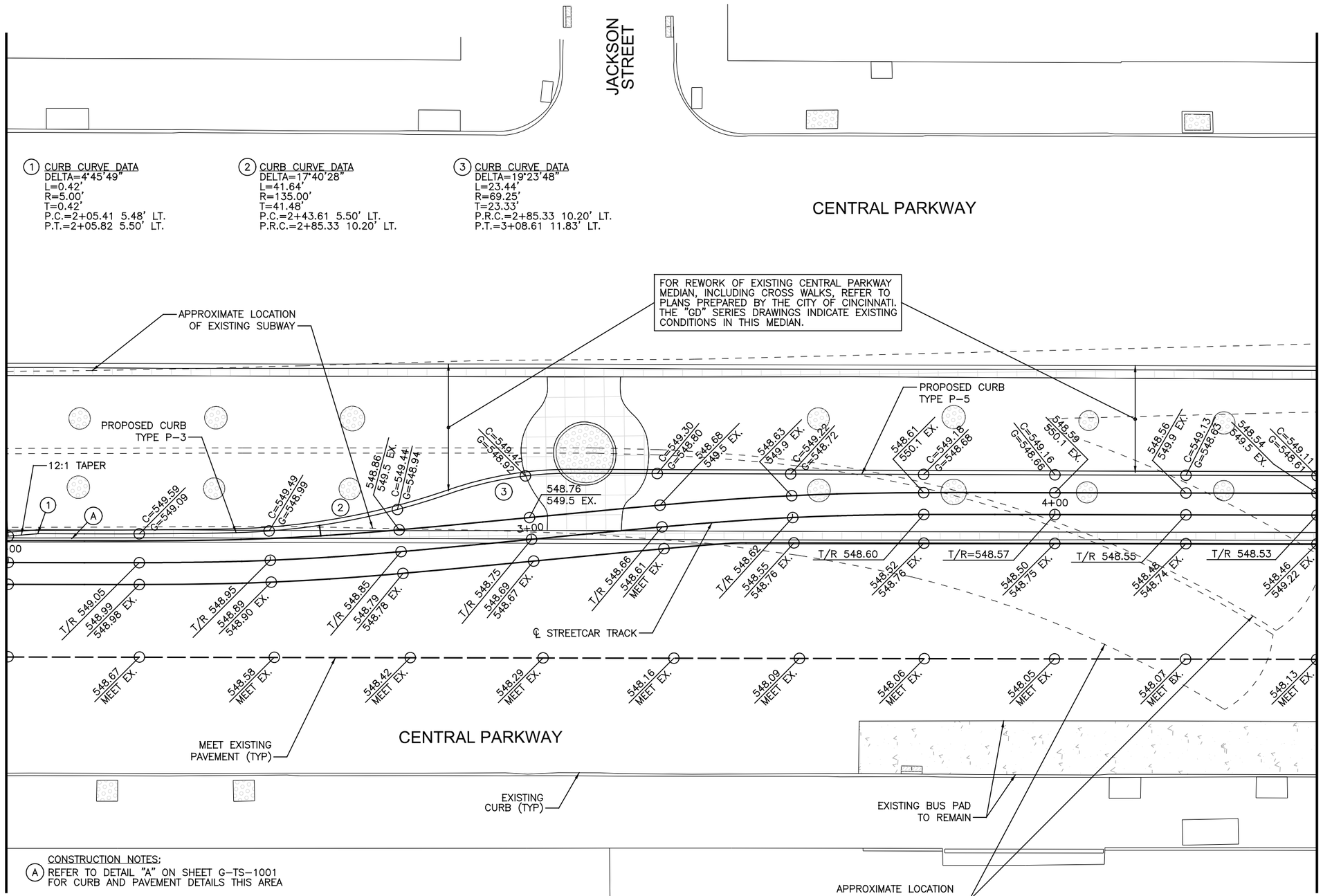

CONSTRUCTION NOTES:

(A) REFER TO DETAIL "A" ON SHEET G-TS-1001 FOR CURB AND PAVEMENT DETAILS THIS AREA

CONTRACTOR IS RESPONSIBLE FOR CONTACTING, AND COORDINATING WITH, UTILITY COMPANIES/AGENCIES AS REQUIRED TO HAVE THE UTILITY COMPANIES ADJUST THEIR FACILITIES TO PROPOSED PLAN ELEVATIONS. THERE MAY BE OTHER UTILITY FACILITIES NOT SHOWN ON THESE PLANS THAT NEED TO BE ADJUSTED AS WELL. THIS WORK SHALL BE COORDINATED AND COMPLETED IN A TIME FRAME CONSISTENT WITH THE PROJECT SCHEDULE. THIS COORDINATION IS DEEMED INCIDENTAL TO THE CONTRACT AND NO ADDITIONAL COMPENSATION WILL BE PROVIDED TO THE CONTRACTOR. THESE ITEMS ARE NOT QUANTIFIED.

CAUTION UNDERGROUND UTILITIES
2 WORKING DAYS
BEFORE YOU DIG
CALL 1-800-362-2764
OHIO UTILITY PROTECTION SERVICE
CALL NON-SERVICE FACILITY OWNERS DIRECT

GRAPHIC SCALE
10 0 10 20 40
(IN FEET)
1 inch = 10 ft. Full Size
1 inch = 20 ft. Half Size

DOTE_Mono_PDF_Half.pltcfg
T:\29014A-Streetcar\CAD\Civil\S_G-GD-1002.dgn
7/15/2012 1:18:53 PM

CONTRACT DRAWING

PRINTS NOT BEARING THIS STAMP WERE MADE PRIOR TO ADVERTISING FOR BIDS AND ARE TO BE CONSIDERED OBSOLETE FOR CONTRACT PURPOSES.

Department of Transportation and Engineering

City of Cincinnati
City Hall
801 Plum Street
Cincinnati, Ohio 45202

CINCINNATI STREETCAR
CENTRAL BUSINESS DISTRICT
GRADING PLANS - CENTRAL PARKWAY
STA 2+00 TO STA 4+50

Revisions
No.

Drawn by CJC	Date 7/02/12
Designed by CJC	Date 7/02/12
Checked by SAJ	Date 7/02/12
Reviewed by JTB	Date 7/12/12

Consultant

PB HDR

File Number

ACC No. 23126

G-GD-1002

FOR REWORK OF EXISTING CENTRAL PARKWAY MEDIAN, INCLUDING CROSS WALKS, REFER TO PLANS PREPARED BY THE CITY OF CINCINNATI. THE "GD" SERIES DRAWINGS INDICATE EXISTING CONDITIONS IN THIS MEDIAN.

CONTRACTOR IS RESPONSIBLE FOR CONTACTING, AND COORDINATING WITH, UTILITY COMPANIES/AGENCIES AS REQUIRED TO HAVE THE UTILITY COMPANIES ADJUST THEIR FACILITIES TO PROPOSED PLAN ELEVATIONS. THERE MAY BE OTHER UTILITY FACILITIES NOT SHOWN ON THESE PLANS THAT NEED TO BE ADJUSTED AS WELL. THIS WORK SHALL BE COORDINATED AND COMPLETED IN A TIME FRAME CONSISTENT WITH THE PROJECT SCHEDULE. THIS COORDINATION IS DEEMED INCIDENTAL TO THE CONTRACT AND NO ADDITIONAL COMPENSATION WILL BE PROVIDED TO THE CONTRACTOR. THESE ITEMS ARE NOT QUANTIFIED.

(1) CURB CURVE DATA
DELTA=6°44'34"
L=17.65'
R=150.00'
T=17.64'
P.C.=4+62.73 7.52' LT.
P.C.C.=4+79.49 7.46' LT.

(2) CURB CURVE DATA
DELTA=18°07'00"
L=23.71'
R=75.00'
T=23.62'
P.C.C.=4+79.49 7.46' LT.
P.R.C.=5+00.87 7.50' LT.

(3) CURB CURVE DATA
DELTA=113°28'11"
L=24.76'
R=12.50'
T=20.90'
P.R.C.=5+00.87 7.50' LT.
P.C.C.=5+09.08 25.74' LT.

PROP. CURB RAMP	
KEY	ELEVATION
A	C=549.06 G=548.56
B	G=548.61
C	G=548.68
D	C=549.23 G=548.73
E	549.19
F	549.22

PROP. CURB RAMP	
KEY	ELEVATION
A	C=549.34 EX. G=548.84 EX.
B	G=548.81 EX.
C	G=548.78 EX.
D	C=549.23 EX. G=548.77 EX.
E	549.45
F	549.39

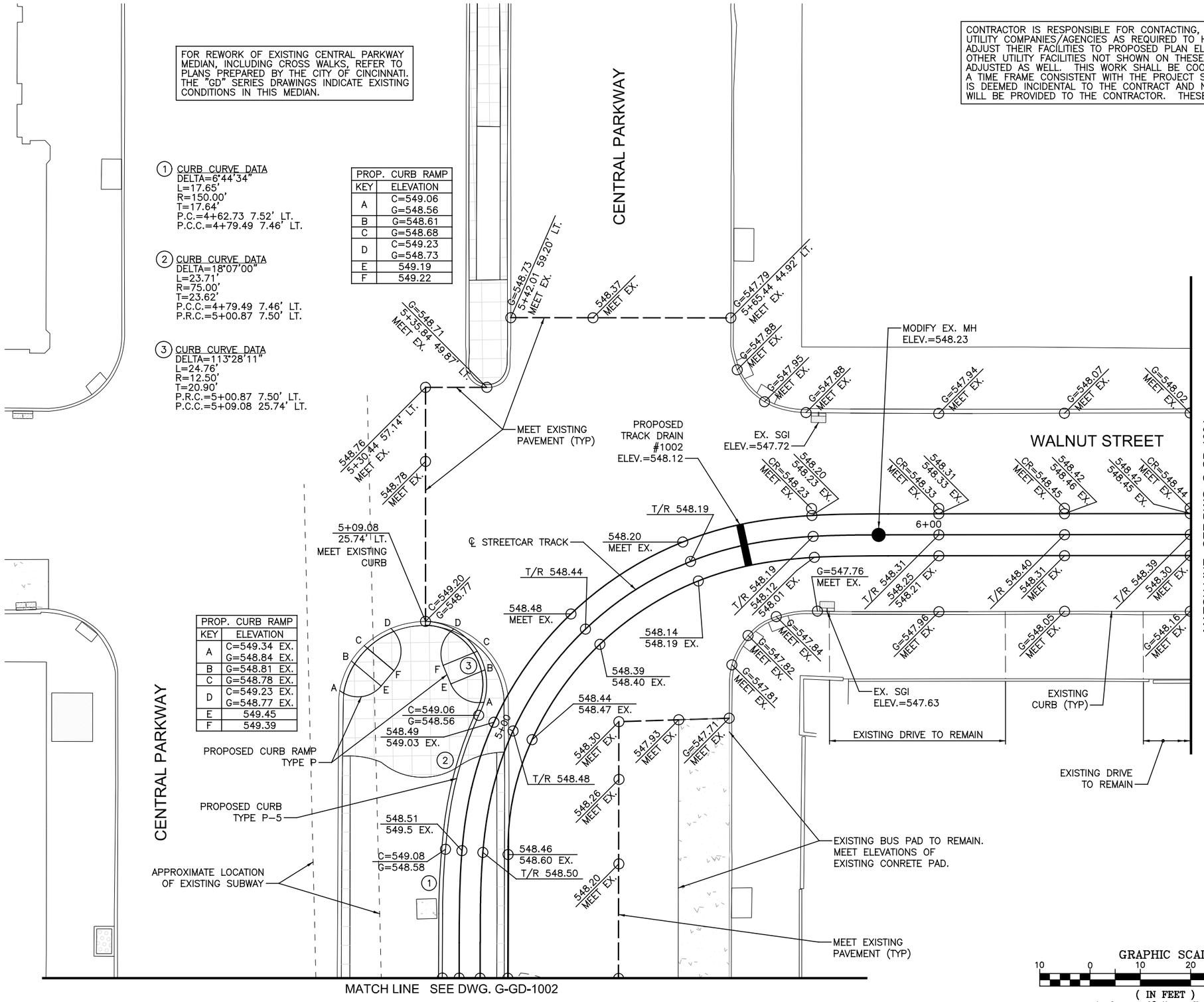

GRAPHIC SCALE
10 0 10 20 40
(IN FEET)
1 inch = 10 ft. Full Size
1 inch = 20 ft. Half Size

CAUTION UNDERGROUND UTILITIES
2 WORKING DAYS
BEFORE YOU DIG
CALL 1-800-362-2764
OHIO UTILITY PROTECTION SERVICE
CALL NON-SERVICE FACILITY OWNERS DIRECT

CONTRACT DRAWING

PRINTS NOT BEARING THIS STAMP WERE MADE PRIOR TO ADVERTISING FOR BIDS AND ARE TO BE CONSIDERED OBSOLETE FOR CONTRACT PURPOSES.

Department of Transportation and Engineering

City of Cincinnati
City Hall
801 Plum Street
Cincinnati, Ohio 45202

CINCINNATI STREETCAR
CENTRAL BUSINESS DISTRICT
GRADING PLANS - WALNUT STREET
STA 4+50 TO STA 6+50

Revisions
No.

Date 7/02/12	Drawn by CJC
Date 7/02/12	Designed by CJC
Date 7/02/12	Checked by SAJ
Date 7/12/12	Reviewed by JTB

Consultant

File Number

ACC No. 23126

G-GD-1003

DOTE_Mono_PDF_Half.pltcfg
T:\29014A-Streetcar\CAD\Civil\S_G-GD-1003.dgn
1:18:54 PM
7/15/2012

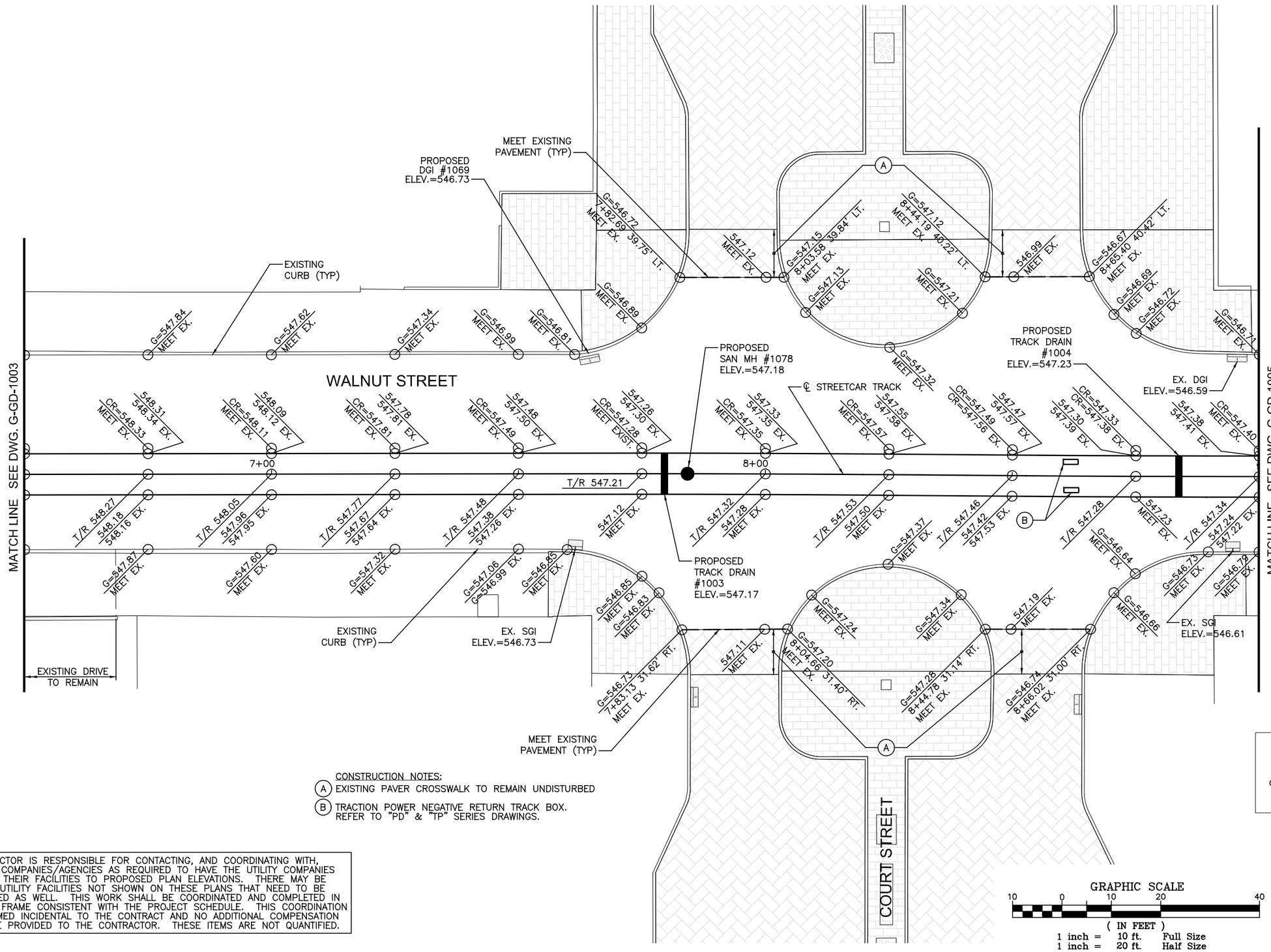

CONSTRUCTION NOTES:

(A) EXISTING PAVER CROSSWALK TO REMAIN UNDISTURBED

(B) TRACTION POWER NEGATIVE RETURN TRACK BOX. REFER TO "PD" & "TP" SERIES DRAWINGS.

CONTRACTOR IS RESPONSIBLE FOR CONTACTING, AND COORDINATING WITH, UTILITY COMPANIES/AGENCIES AS REQUIRED TO HAVE THE UTILITY COMPANIES ADJUST THEIR FACILITIES TO PROPOSED PLAN ELEVATIONS. THERE MAY BE OTHER UTILITY FACILITIES NOT SHOWN ON THESE PLANS THAT NEED TO BE ADJUSTED AS WELL. THIS WORK SHALL BE COORDINATED AND COMPLETED IN A TIME FRAME CONSISTENT WITH THE PROJECT SCHEDULE. THIS COORDINATION IS DEEMED INCIDENTAL TO THE CONTRACT AND NO ADDITIONAL COMPENSATION WILL BE PROVIDED TO THE CONTRACTOR. THESE ITEMS ARE NOT QUANTIFIED.

CAUTION UNDERGROUND UTILITIES
2 WORKING DAYS
BEFORE YOU DIG
CALL 1-800-362-2764
OHIO UTILITY PROTECTION SERVICE
CALL NON-SERVICE FACILITY OWNERS DIRECT

GRAPHIC SCALE
10 0 10 20 40
(IN FEET)
1 inch = 10 ft. Full Size
1 inch = 20 ft. Half Size

DOTE_Mono_PDF_Half.pltcfg
T:\29014A-Streetcar\CAD\Civil\S_G-GD-1004.dgn
7/15/2012 1:18:55 PM

CONTRACT DRAWING

PRINTS NOT BEARING THIS STAMP WERE MADE PRIOR TO ADVERTISING FOR BID AND ARE TO BE CONSIDERED OBSOLETE FOR CONTRACT PURPOSES.

Department of Transportation and Engineering

City of Cincinnati
City Hall
801 Plum Street
Cincinnati, Ohio 45202

CINCINNATI STREETCAR
CENTRAL BUSINESS DISTRICT
GRADING PLANS - WALNUT STREET
STA 6+50 TO STA 9+00

Revisions
No.

Drawn by CJC	Date 7/02/12
Designed by CJC	Date 7/02/12
Checked by SAJ	Date 7/02/12
Reviewed by JTB	Date 7/12/12

Consultant

PB HDR

File Number

ACC No. 23126

G-GD-1004

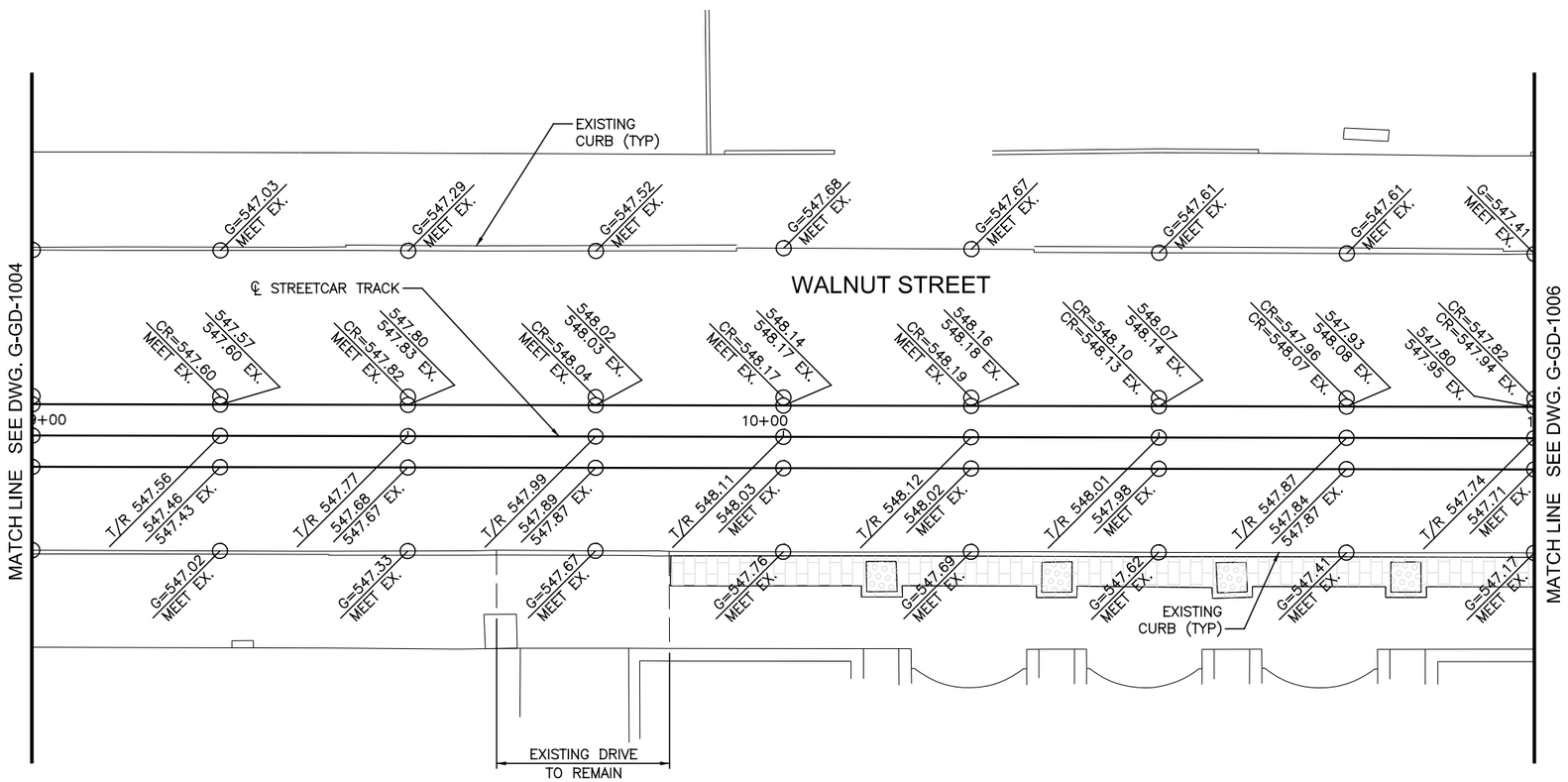

CONTRACTOR IS RESPONSIBLE FOR CONTACTING, AND COORDINATING WITH, UTILITY COMPANIES/AGENCIES AS REQUIRED TO HAVE THE UTILITY COMPANIES ADJUST THEIR FACILITIES TO PROPOSED PLAN ELEVATIONS. THERE MAY BE OTHER UTILITY FACILITIES NOT SHOWN ON THESE PLANS THAT NEED TO BE ADJUSTED AS WELL. THIS WORK SHALL BE COORDINATED AND COMPLETED IN A TIME FRAME CONSISTENT WITH THE PROJECT SCHEDULE. THIS COORDINATION IS DEEMED INCIDENTAL TO THE CONTRACT AND NO ADDITIONAL COMPENSATION WILL BE PROVIDED TO THE CONTRACTOR. THESE ITEMS ARE NOT QUANTIFIED.

CAUTION UNDERGROUND UTILITIES
2 WORKING DAYS
BEFORE YOU DIG
CALL 1-800-362-2764
OHIO UTILITY PROTECTION SERVICE
CALL NON-SERVICE FACILITY
OWNERS DIRECT

GRAPHIC SCALE
10 0 10 20 40
(IN FEET)
1 inch = 10 ft. Full Size
1 inch = 20 ft. Half Size

DOTE_Mono_PDF_Half.pltcfg
T:\29014A-Streetcar\CAD\Civil\S_G-GD-1005.dgn
7/15/2012 1:18:56 PM

CONTRACT DRAWING

PRINTS NOT BEARING THIS STAMP WERE MADE PRIOR TO ADVERTISING FOR BIDS AND ARE TO BE CONSIDERED OBSOLETE FOR CONTRACT PURPOSES.

Department of Transportation and Engineering

City of Cincinnati
City Hall
801 Plum Street
Cincinnati, Ohio 45202

CINCINNATI STREETCAR
CENTRAL BUSINESS DISTRICT
GRADING PLANS - WALNUT STREET
STA 9+00 TO STA 11+00

Revisions
No.

	Date
Drawn by CJC	7/02/12
Designed by CJC	7/02/12
Checked by SAJ	7/02/12
Reviewed by JTB	7/12/12

Consultant

PB HDR

File Number

ACC No. 23126

G-GD-1005

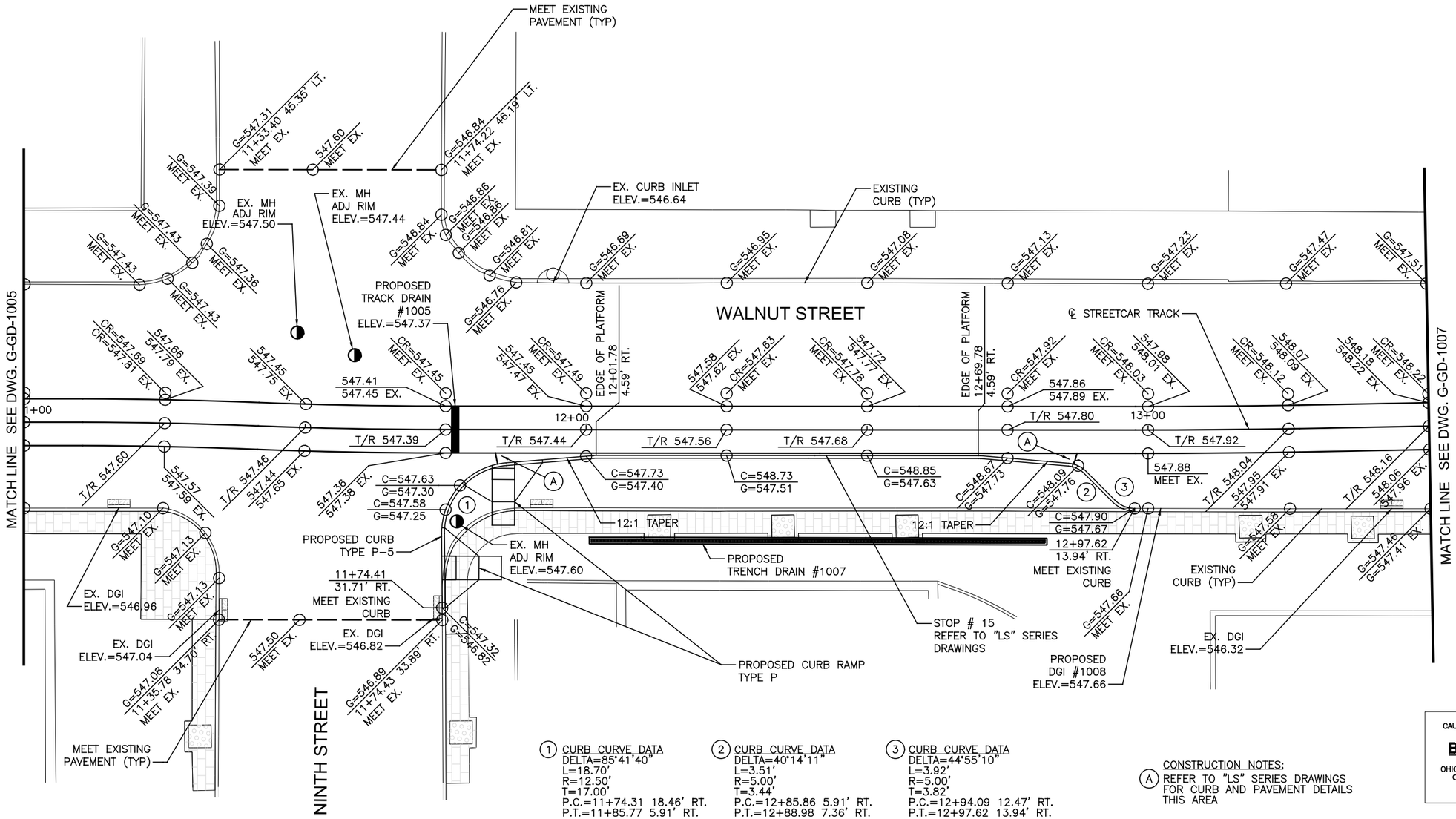

(1) CURB CURVE DATA
DELTA=85°41'40"
L=18.70'
R=12.50'
T=17.00'
P.C.=11+74.31 18.46' RT.
P.T.=11+85.77 5.91' RT.

(2) CURB CURVE DATA
DELTA=40°14'11"
L=3.51'
R=5.00'
T=3.44'
P.C.=12+85.86 5.91' RT.
P.T.=12+88.98 7.36' RT.

(3) CURB CURVE DATA
DELTA=44°55'10"
L=3.92'
R=5.00'
T=3.82'
P.C.=12+94.09 12.47' RT.
P.T.=12+97.62 13.94' RT.

CONSTRUCTION NOTES:
(A) REFER TO "LS" SERIES DRAWINGS FOR CURB AND PAVEMENT DETAILS THIS AREA

CAUTION UNDERGROUND UTILITIES
2 WORKING DAYS
BEFORE YOU DIG
CALL 1-800-362-2764
OHIO UTILITY PROTECTION SERVICE
CALL NON-SERVICE FACILITY
OWNERS DIRECT

CONTRACTOR IS RESPONSIBLE FOR CONTACTING, AND COORDINATING WITH, UTILITY COMPANIES/AGENCIES AS REQUIRED TO HAVE THE UTILITY COMPANIES ADJUST THEIR FACILITIES TO PROPOSED PLAN ELEVATIONS. THERE MAY BE OTHER UTILITY FACILITIES NOT SHOWN ON THESE PLANS THAT NEED TO BE ADJUSTED AS WELL. THIS WORK SHALL BE COORDINATED AND COMPLETED IN A TIME FRAME CONSISTENT WITH THE PROJECT SCHEDULE. THIS COORDINATION IS DEEMED INCIDENTAL TO THE CONTRACT AND NO ADDITIONAL COMPENSATION WILL BE PROVIDED TO THE CONTRACTOR. THESE ITEMS ARE NOT QUANTIFIED.

GRAPHIC SCALE
10 0 10 20 40
(IN FEET)
1 inch = 10 ft. Full Size
1 inch = 20 ft. Half Size

DOTE_Mono_PDF_Half.pltcfg
T:\29014A-Streetcar\CAD\Civil\S_G-GD-1006.dgn
7/15/2012 1:18:57 PM

CONTRACT DRAWING
PRINTS NOT BEARING THIS STAMP WERE MADE PRIOR TO ADVERTISING FOR BID AND ARE TO BE CONSIDERED OBSOLETE FOR CONTRACT PURPOSES.

Department of Transportation and Engineering
City of Cincinnati
City Hall
801 Plum Street
Cincinnati, Ohio 45202

CINCINNATI STREETCAR
CENTRAL BUSINESS DISTRICT
GRADING PLANS - WALNUT STREET
STA 11+00.00 TO STA 13+50.00

Revisions
No.

Date 7/02/12	Drawn by CJC
Date 7/02/12	Designed by CJC
Date 7/02/12	Checked by SAJ
Date 7/12/12	Reviewed by JTB

Consultant
PB HDR

File Number
ACC No. 23126

G-GD-1006

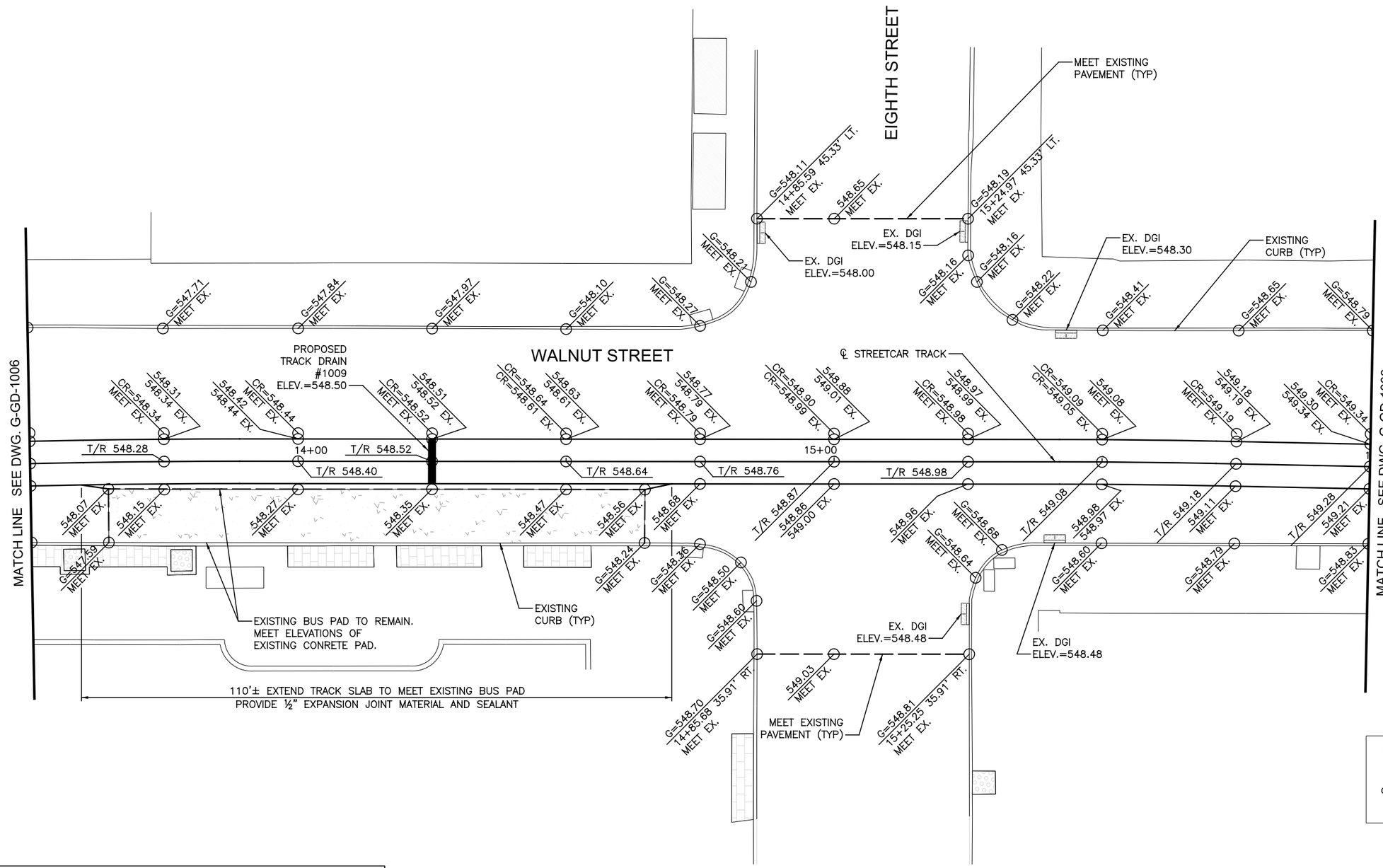

CONTRACTOR IS RESPONSIBLE FOR CONTACTING, AND COORDINATING WITH, UTILITY COMPANIES/AGENCIES AS REQUIRED TO HAVE THE UTILITY COMPANIES ADJUST THEIR FACILITIES TO PROPOSED PLAN ELEVATIONS. THERE MAY BE OTHER UTILITY FACILITIES NOT SHOWN ON THESE PLANS THAT NEED TO BE ADJUSTED AS WELL. THIS WORK SHALL BE COORDINATED AND COMPLETED IN A TIME FRAME CONSISTENT WITH THE PROJECT SCHEDULE. THIS COORDINATION IS DEEMED INCIDENTAL TO THE CONTRACT AND NO ADDITIONAL COMPENSATION WILL BE PROVIDED TO THE CONTRACTOR. THESE ITEMS ARE NOT QUANTIFIED.

CAUTION UNDERGROUND UTILITIES
2 WORKING DAYS
BEFORE YOU DIG
CALL 1-800-362-2764
OHIO UTILITY PROTECTION SERVICE
CALL NON-SERVICE FACILITY
OWNERS DIRECT

GRAPHIC SCALE
10 0 10 20 40
(IN FEET)
1 inch = 10 ft. Full Size
1 inch = 20 ft. Half Size

DOTE_Mono_PDF_Half.pltcfg
T:\29014A-Streetcar\CAD\Civil\S_G-GD-1007.dgn
7/15/2012 1:18:58 PM

CONTRACT DRAWING

PRINTS NOT BEARING THIS STAMP WERE MADE PRIOR TO ADVERTISING FOR BIDS AND ARE TO BE CONSIDERED OBSOLETE FOR CONTRACT PURPOSES.

Department of Transportation and Engineering

City of Cincinnati
City Hall
801 Plum Street
Cincinnati, Ohio 45202

CINCINNATI STREETCAR
CENTRAL BUSINESS DISTRICT
GRADING PLANS - WALNUT STREET
STA 13+50 TO STA 16+00

Revisions

No.		Date
		7/02/12
		7/02/12
		7/02/12
		7/12/12

Drawn by CJC	Date 7/02/12
Designed by CJC	Date 7/02/12
Checked by SAJ	Date 7/02/12
Reviewed by JTB	Date 7/12/12

Consultant

PB HDR

File Number

ACC No. 23126

G-GD-1007

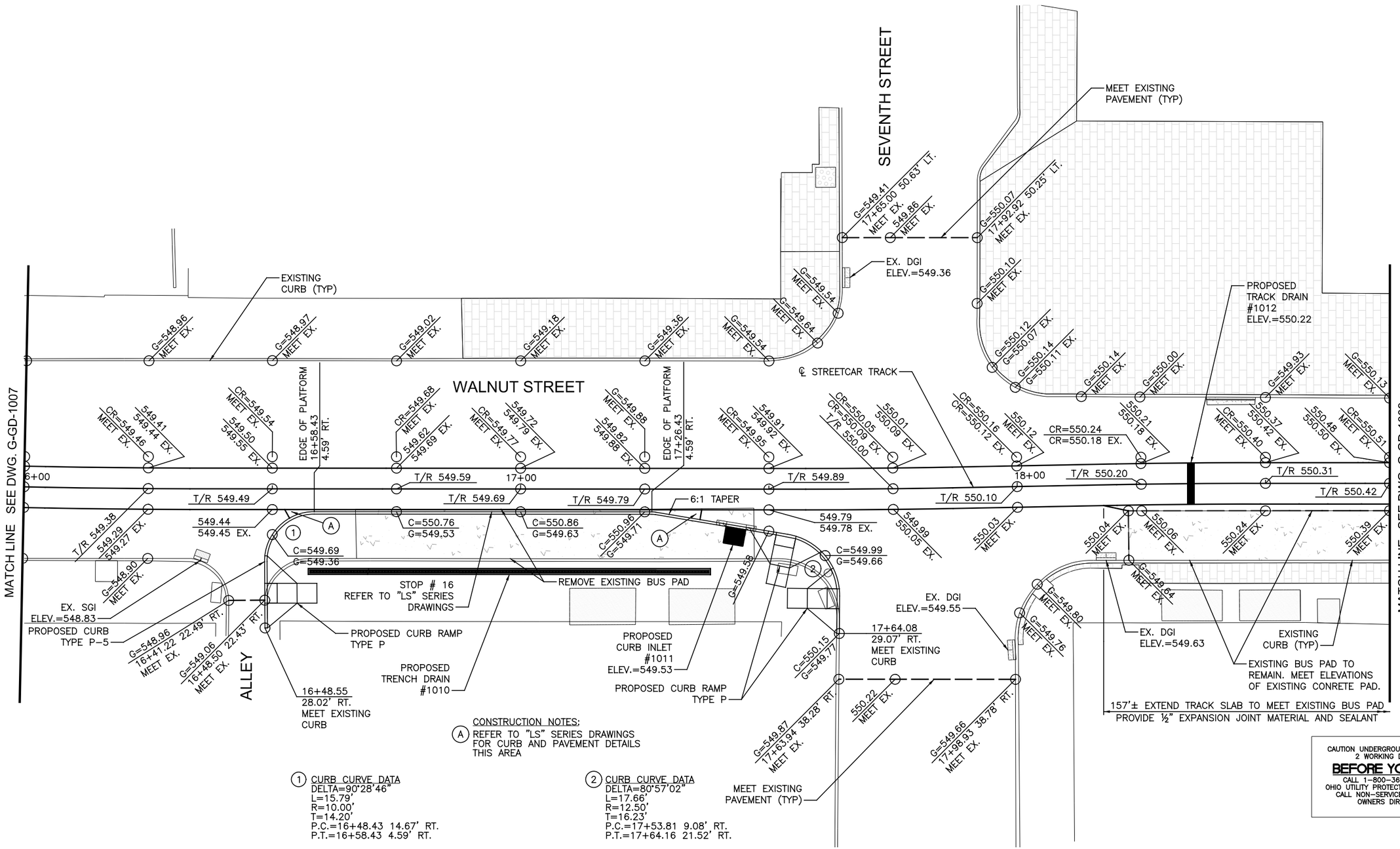

CONSTRUCTION NOTES:

(A) REFER TO "LS" SERIES DRAWINGS FOR CURB AND PAVEMENT DETAILS THIS AREA

(1) CURB CURVE DATA
DELTA=90°28'46"
L=15.79'
R=10.00'
T=14.20'
P.C.=16+48.43 14.67' RT.
P.T.=16+58.43 4.59' RT.

(2) CURB CURVE DATA
DELTA=80°57'02"
L=17.66'
R=12.50'
T=16.23'
P.C.=17+53.81 9.08' RT.
P.T.=17+64.16 21.52' RT.

CONTRACTOR IS RESPONSIBLE FOR CONTACTING, AND COORDINATING WITH, UTILITY COMPANIES/AGENCIES AS REQUIRED TO HAVE THE UTILITY COMPANIES ADJUST THEIR FACILITIES TO PROPOSED PLAN ELEVATIONS. THERE MAY BE OTHER UTILITY FACILITIES NOT SHOWN ON THESE PLANS THAT NEED TO BE ADJUSTED AS WELL. THIS WORK SHALL BE COORDINATED AND COMPLETED IN A TIME FRAME CONSISTENT WITH THE PROJECT SCHEDULE. THIS COORDINATION IS DEEMED INCIDENTAL TO THE CONTRACT AND NO ADDITIONAL COMPENSATION WILL BE PROVIDED TO THE CONTRACTOR. THESE ITEMS ARE NOT QUANTIFIED.

CAUTION UNDERGROUND UTILITIES
2 WORKING DAYS
BEFORE YOU DIG
CALL 1-800-362-2764
OHIO UTILITY PROTECTION SERVICE
CALL NON-SERVICE FACILITY
OWNERS DIRECT

GRAPHIC SCALE
10 0 10 20 40
(IN FEET)
1 inch = 10 ft. Full Size
1 inch = 20 ft. Half Size

DOTE_Mono_PDF_Half.pltcfg
T:\29014A-Streetcar\CAD\Civil\S_G-GD-1008.dgn
1:18:59 PM
7/15/2012

CONTRACT DRAWING

PRINTS NOT BEARING THIS STAMP WERE MADE PRIOR TO ADVERTISING FOR BIDS AND ARE TO BE CONSIDERED OBSOLETE FOR CONTRACT PURPOSES.

Department of Transportation and Engineering

City of Cincinnati
City Hall
801 Plum Street
Cincinnati, Ohio 45202

CINCINNATI STREETCAR
CENTRAL BUSINESS DISTRICT

GRADING PLANS - WALNUT STREET
STA 16+00 TO STA 18+75

Revisions
No.

Date 7/02/12
Date 7/02/12
Date 7/02/12
Date 7/12/12

Drawn by CJC
Designed by CJC
Checked by SAJ
Reviewed by JTB

Consultant

PB HDR

File Number

ACC No. 23126

G-GD-1008

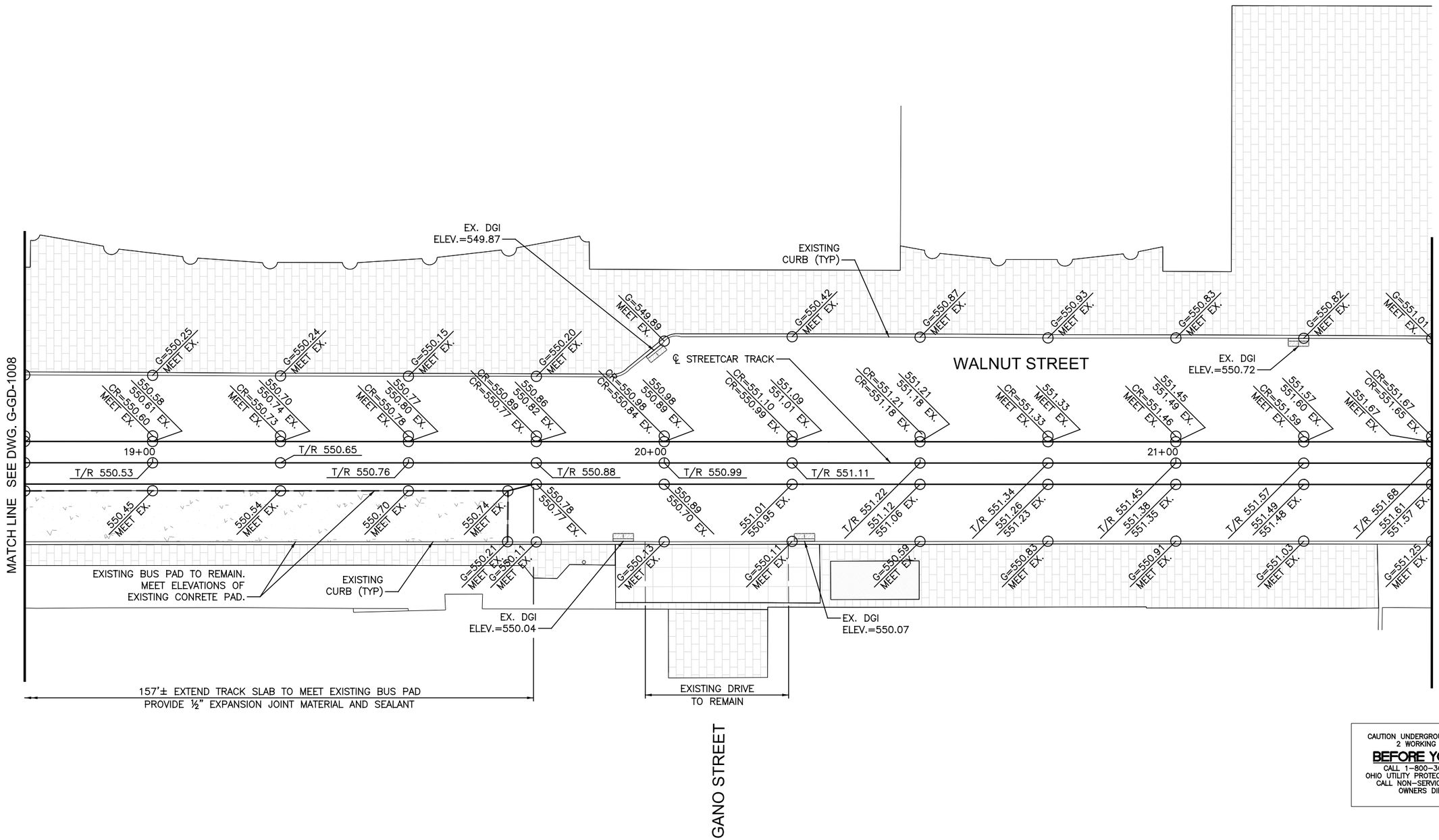

CONTRACTOR IS RESPONSIBLE FOR CONTACTING, AND COORDINATING WITH, UTILITY COMPANIES/AGENCIES AS REQUIRED TO HAVE THE UTILITY COMPANIES ADJUST THEIR FACILITIES TO PROPOSED PLAN ELEVATIONS. THERE MAY BE OTHER UTILITY FACILITIES NOT SHOWN ON THESE PLANS THAT NEED TO BE ADJUSTED AS WELL. THIS WORK SHALL BE COORDINATED AND COMPLETED IN A TIME FRAME CONSISTENT WITH THE PROJECT SCHEDULE. THIS COORDINATION IS DEEMED INCIDENTAL TO THE CONTRACT AND NO ADDITIONAL COMPENSATION WILL BE PROVIDED TO THE CONTRACTOR. THESE ITEMS ARE NOT QUANTIFIED.

CAUTION UNDERGROUND UTILITIES
2 WORKING DAYS
BEFORE YOU DIG
CALL 1-800-362-2764
OHIO UTILITY PROTECTION SERVICE
CALL NON-SERVICE FACILITY
OWNERS DIRECT

GRAPHIC SCALE
10 0 10 20 40
(IN FEET)
1 inch = 10 ft. Full Size
1 inch = 20 ft. Half Size

DOTE_Mono_PDF_Half.pltcfg
T:\29014A-Streetcar\CAD\Civil\S_-G-GD-1009.dgn
7/15/2012 1:19:00 PM

CONTRACT DRAWING
PRINTS NOT BEARING THIS STAMP WERE MADE PRIOR TO ADVERTISING FOR BID AND ARE TO BE CONSIDERED OBSOLETE FOR CONTRACT PURPOSES.

Department of Transportation and Engineering
City of Cincinnati
City Hall
801 Plum Street
Cincinnati, Ohio 45202

CINCINNATI STREETCAR
CENTRAL BUSINESS DISTRICT
GRADING PLANS - WALNUT STREET
STA 18+75 TO STA 21+50

Revisions
No.

Drawn by CJC	Date 7/02/12
Designed by CJC	Date 7/02/12
Checked by SAJ	Date 7/02/12
Reviewed by JTB	Date 7/12/12

Consultant
PB HDR

File Number

ACC No.
23126

G-GD-1009

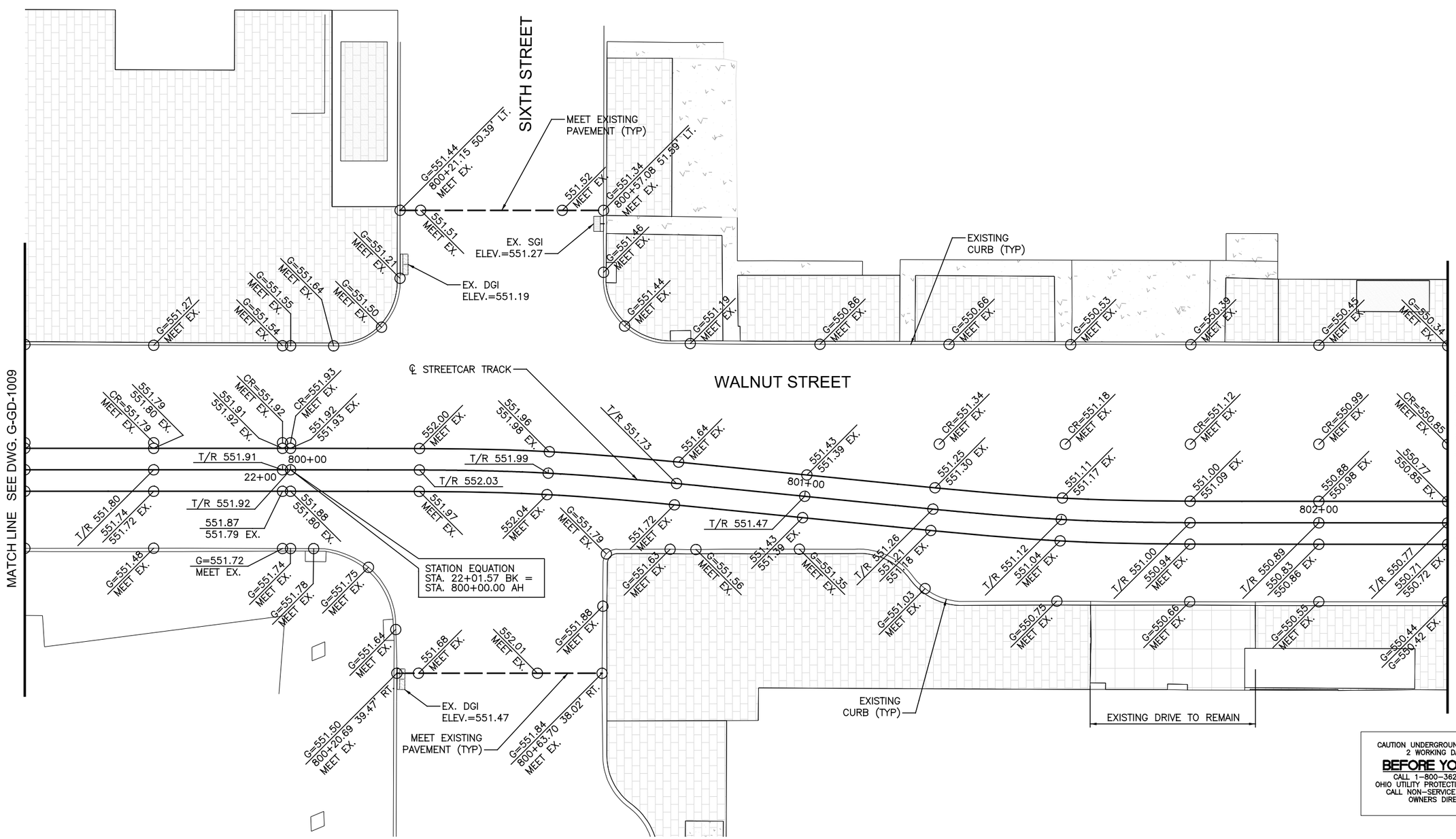

CONTRACTOR IS RESPONSIBLE FOR CONTACTING, AND COORDINATING WITH, UTILITY COMPANIES/AGENCIES AS REQUIRED TO HAVE THE UTILITY COMPANIES ADJUST THEIR FACILITIES TO PROPOSED PLAN ELEVATIONS. THERE MAY BE OTHER UTILITY FACILITIES NOT SHOWN ON THESE PLANS THAT NEED TO BE ADJUSTED AS WELL. THIS WORK SHALL BE COORDINATED AND COMPLETED IN A TIME FRAME CONSISTENT WITH THE PROJECT SCHEDULE. THIS COORDINATION IS DEEMED INCIDENTAL TO THE CONTRACT AND NO ADDITIONAL COMPENSATION WILL BE PROVIDED TO THE CONTRACTOR. THESE ITEMS ARE NOT QUANTIFIED.

CAUTION UNDERGROUND UTILITIES
2 WORKING DAYS
BEFORE YOU DIG
CALL 1-800-362-2764
OHIO UTILITY PROTECTION SERVICE
CALL NON-SERVICE FACILITY
OWNERS DIRECT

GRAPHIC SCALE
10 0 10 20 40
(IN FEET)
1 inch = 10 ft. Full Size
1 inch = 20 ft. Half Size

DOTE_Mono_PDF_Half.pltcfg
T:\29014A-Streetcar\CAD\Civil\S_G-GD-1010.dgn
7/15/2012 1:19:02 PM

CONTRACT DRAWING
PRINTS NOT BEARING THIS STAMP WERE MADE PRIOR TO ADVERTISING FOR BIDS AND ARE TO BE CONSIDERED OBSOLETE FOR CONTRACT PURPOSES.

Department of Transportation and Engineering
City of Cincinnati
City Hall
801 Plum Street
Cincinnati, Ohio 45202

CINCINNATI STREETCAR
CENTRAL BUSINESS DISTRICT
GRADING PLANS - WALNUT STREET
STA 21+50 TO STA 802+25

Revisions
No.

Date 7/02/12	Drawn by CJC
Date 7/02/12	Designed by CJC
Date 7/02/12	Checked by SAJ
Date 7/12/12	Reviewed by JTB

Consultant
PB HDR

File Number
ACC No. 23126
G-GD-1010

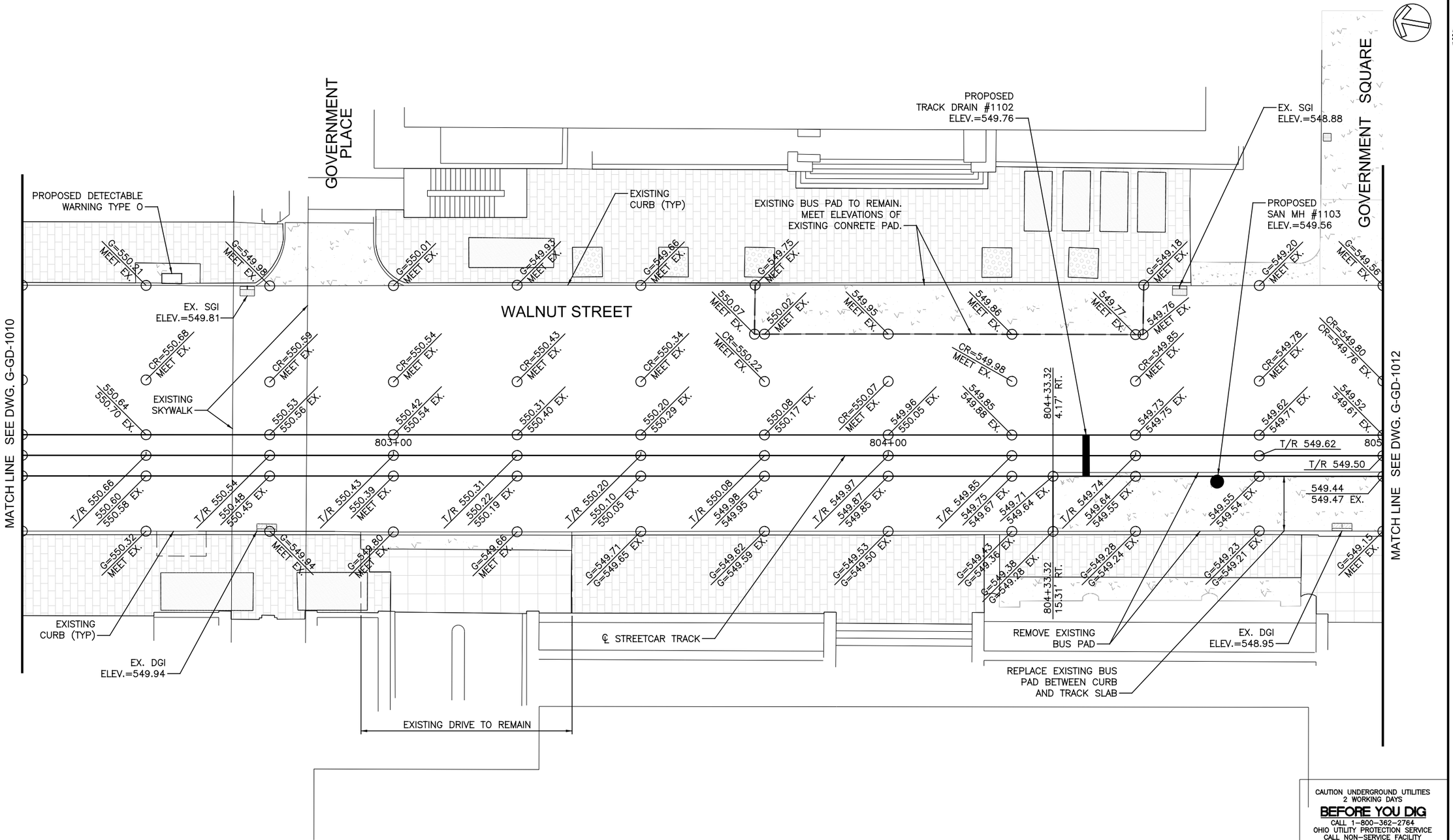

CONTRACTOR IS RESPONSIBLE FOR CONTACTING, AND COORDINATING WITH, UTILITY COMPANIES/AGENCIES AS REQUIRED TO HAVE THE UTILITY COMPANIES ADJUST THEIR FACILITIES TO PROPOSED PLAN ELEVATIONS. THERE MAY BE OTHER UTILITY FACILITIES NOT SHOWN ON THESE PLANS THAT NEED TO BE ADJUSTED AS WELL. THIS WORK SHALL BE COORDINATED AND COMPLETED IN A TIME FRAME CONSISTENT WITH THE PROJECT SCHEDULE. THIS COORDINATION IS DEEMED INCIDENTAL TO THE CONTRACT AND NO ADDITIONAL COMPENSATION WILL BE PROVIDED TO THE CONTRACTOR. THESE ITEMS ARE NOT QUANTIFIED.

CAUTION UNDERGROUND UTILITIES
2 WORKING DAYS
BEFORE YOU DIG
CALL 1-800-362-2764
OHIO UTILITY PROTECTION SERVICE
CALL NON-SERVICE FACILITY OWNERS DIRECT

GRAPHIC SCALE
10 0 10 20 40
(IN FEET)
1 inch = 10 ft. Full Size
1 inch = 20 ft. Half Size

DOTE_Mono_PDF_Half.pltcfg
T:\29014A-Streetcar\CAD\Civil\S_G-GD-1011.dgn
7/15/2012 1:19:03 PM

CONTRACT DRAWING
PRINTS NOT BEARING THIS STAMP WERE MADE PRIOR TO ADVERTISING FOR BIDS AND ARE TO BE CONSIDERED OBSOLETE FOR CONTRACT PURPOSES.

Department of Transportation and Engineering
City of Cincinnati
City Hall
801 Plum Street
Cincinnati, Ohio 45202

CINCINNATI STREETCAR
CENTRAL BUSINESS DISTRICT
GRADING PLANS - WALNUT STREET
STA 802+25 TO STA 805+00

Revisions
No.

Date 7/02/12	Drawn by CJC
Date 7/02/12	Designed by CJC
Date 7/02/12	Checked by SAJ
Date 7/12/12	Reviewed by JTB

Consultant
PB HDR

File Number

ACC No. 23126

G-GD-1011

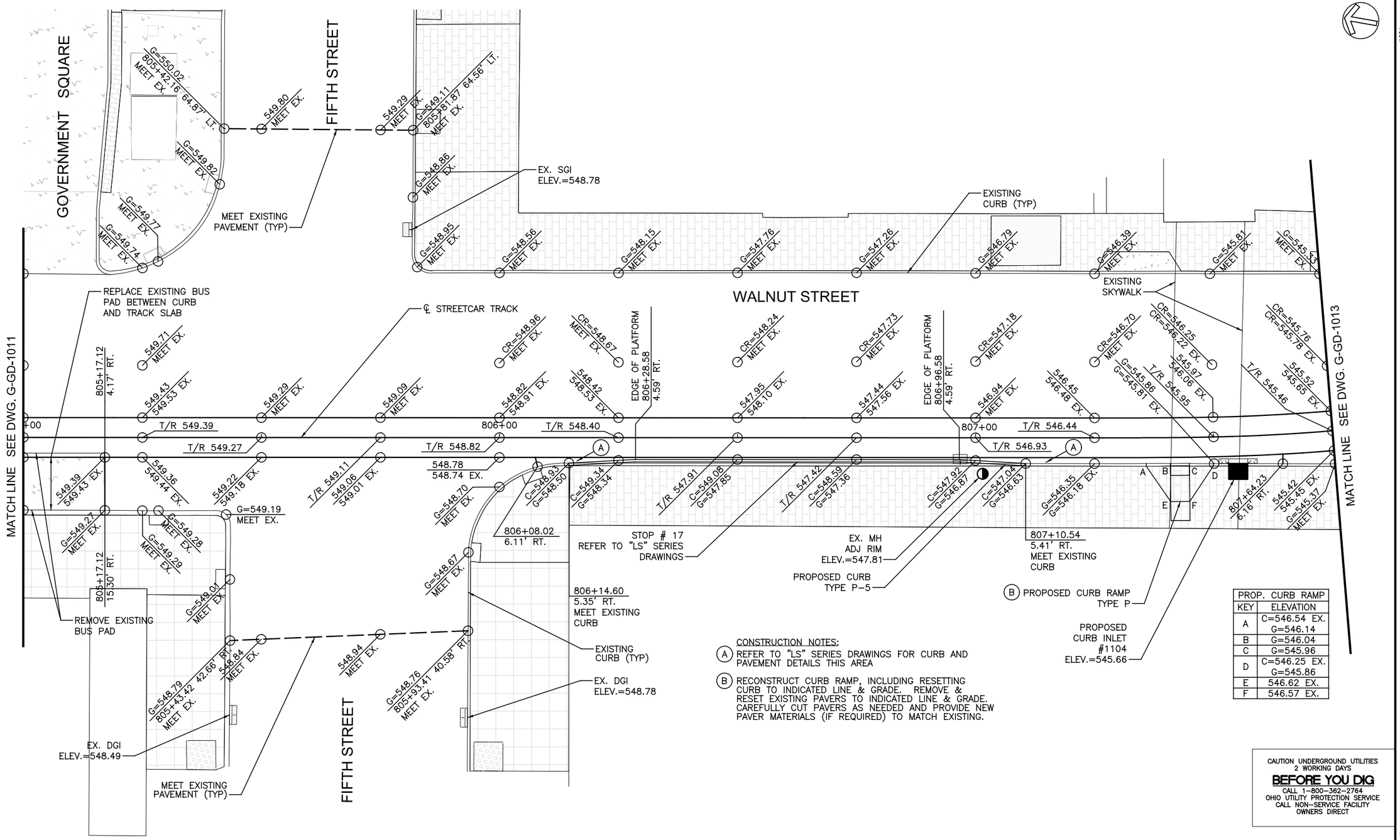

PROP. CURB RAMP	
KEY	ELEVATION
A	C=546.54 EX. G=546.14
B	G=546.04
C	G=545.96
D	C=546.25 EX. G=545.86
E	546.62 EX.
F	546.57 EX.

CONSTRUCTION NOTES:

(A) REFER TO "LS" SERIES DRAWINGS FOR CURB AND PAVEMENT DETAILS THIS AREA

(B) RECONSTRUCT CURB RAMP, INCLUDING RESETTING CURB TO INDICATED LINE & GRADE. REMOVE & RESET EXISTING PAVERS TO INDICATED LINE & GRADE. CAREFULLY CUT PAVERS AS NEEDED AND PROVIDE NEW PAVER MATERIALS (IF REQUIRED) TO MATCH EXISTING.

CONTRACTOR IS RESPONSIBLE FOR CONTACTING, AND COORDINATING WITH, UTILITY COMPANIES/AGENCIES AS REQUIRED TO HAVE THE UTILITY COMPANIES ADJUST THEIR FACILITIES TO PROPOSED PLAN ELEVATIONS. THERE MAY BE OTHER UTILITY FACILITIES NOT SHOWN ON THESE PLANS THAT NEED TO BE ADJUSTED AS WELL. THIS WORK SHALL BE COORDINATED AND COMPLETED IN A TIME FRAME CONSISTENT WITH THE PROJECT SCHEDULE. THIS COORDINATION IS DEEMED INCIDENTAL TO THE CONTRACT AND NO ADDITIONAL COMPENSATION WILL BE PROVIDED TO THE CONTRACTOR. THESE ITEMS ARE NOT QUANTIFIED.

CAUTION UNDERGROUND UTILITIES
2 WORKING DAYS
BEFORE YOU DIG
CALL 1-800-362-2764
OHIO UTILITY PROTECTION SERVICE
CALL NON-SERVICE FACILITY OWNERS DIRECT

GRAPHIC SCALE
10 0 10 20 40
(IN FEET)
1 inch = 10 ft. Full Size
1 inch = 20 ft. Half Size

DOTE_Mono_PDF_Half.pltcfg
T:\29014A-Streetcar\CAD\Civil\S_G-GD-1012.dgn
7/15/2012 1:19:04 PM

CONTRACT DRAWING
PRINTS NOT BEARING THIS STAMP WERE MADE PRIOR TO ADVERTISING FOR BIDS AND ARE TO BE CONSIDERED OBSOLETE FOR CONTRACT PURPOSES.

Department of Transportation and Engineering
City of Cincinnati
City Hall
801 Plum Street
Cincinnati, Ohio 45202

CINCINNATI STREETCAR
CENTRAL BUSINESS DISTRICT
GRADING PLANS - WALNUT STREET
STA 805+00 TO STA 807+75

Revisions
No.

Date 7/02/12
Date 7/02/12
Date 7/02/12
Date 7/12/12

Drawn by CJC
Designed by CJC
Checked by SAJ
Reviewed by JTB

Consultant
PB HDR

File Number

ACC No.
23126

G-GD-1012

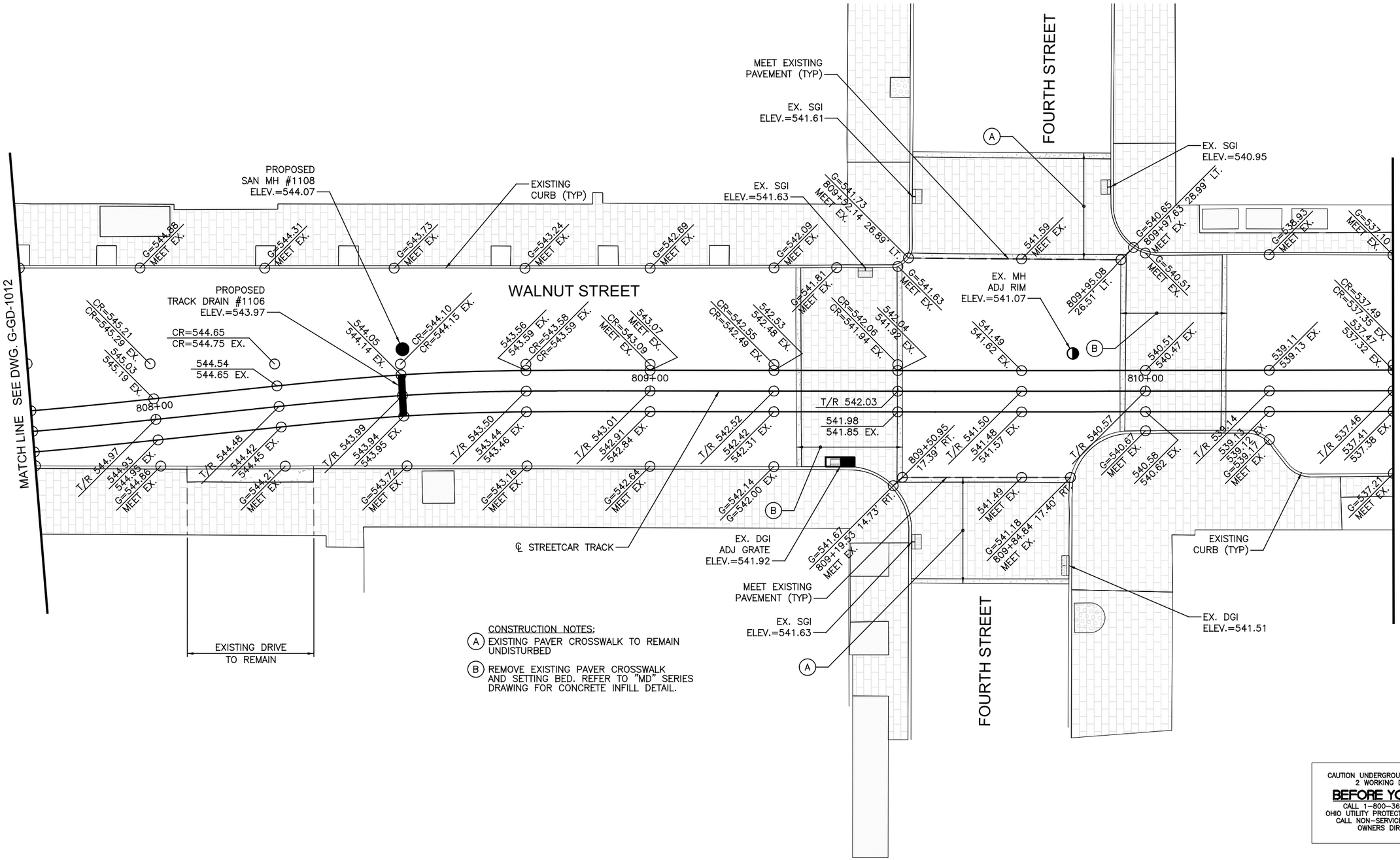

CONSTRUCTION NOTES:

(A) EXISTING PAVER CROSSWALK TO REMAIN UNDISTURBED

(B) REMOVE EXISTING PAVER CROSSWALK AND SETTING BED. REFER TO "MD" SERIES DRAWING FOR CONCRETE INFILL DETAIL.

CONTRACTOR IS RESPONSIBLE FOR CONTACTING, AND COORDINATING WITH, UTILITY COMPANIES/AGENCIES AS REQUIRED TO HAVE THE UTILITY COMPANIES ADJUST THEIR FACILITIES TO PROPOSED PLAN ELEVATIONS. THERE MAY BE OTHER UTILITY FACILITIES NOT SHOWN ON THESE PLANS THAT NEED TO BE ADJUSTED AS WELL. THIS WORK SHALL BE COORDINATED AND COMPLETED IN A TIME FRAME CONSISTENT WITH THE PROJECT SCHEDULE. THIS COORDINATION IS DEEMED INCIDENTAL TO THE CONTRACT AND NO ADDITIONAL COMPENSATION WILL BE PROVIDED TO THE CONTRACTOR. THESE ITEMS ARE NOT QUANTIFIED.

GRAPHIC SCALE

10 0 10 20 40

(IN FEET)
1 inch = 10 ft. Full Size
1 inch = 20 ft. Half Size

CAUTION UNDERGROUND UTILITIES
2 WORKING DAYS
BEFORE YOU DIG
CALL 1-800-362-2764
OHIO UTILITY PROTECTION SERVICE
CALL NON-SERVICE FACILITY OWNERS DIRECT

DOTE_Mono_PDF_Half.pltcfg
T:\29014A-Streetcar\CAD\Civil\S_G-GD-1013.dgn
7/15/2012 1:19:06 PM

CONTRACT DRAWING

PRINTS NOT BEARING THIS STAMP WERE MADE PRIOR TO ADVERTISING FOR BIDS AND ARE TO BE CONSIDERED OBSOLETE FOR CONTRACT PURPOSES.

Department of Transportation and Engineering

City of Cincinnati
City Hall
801 Plum Street
Cincinnati, Ohio 45202

CINCINNATI STREETCAR
CENTRAL BUSINESS DISTRICT

GRADING PLANS - WALNUT STREET
STA 807+75 TO STA 810+50

Revisions

No.		

Drawn by CJC	Date 7/02/12
Designed by CJC	Date 7/02/12
Checked by SAJ	Date 7/02/12
Reviewed by JTB	Date 7/12/12

Consultant

PB HDR

File Number

ACC No. 23126

G-GD-1013

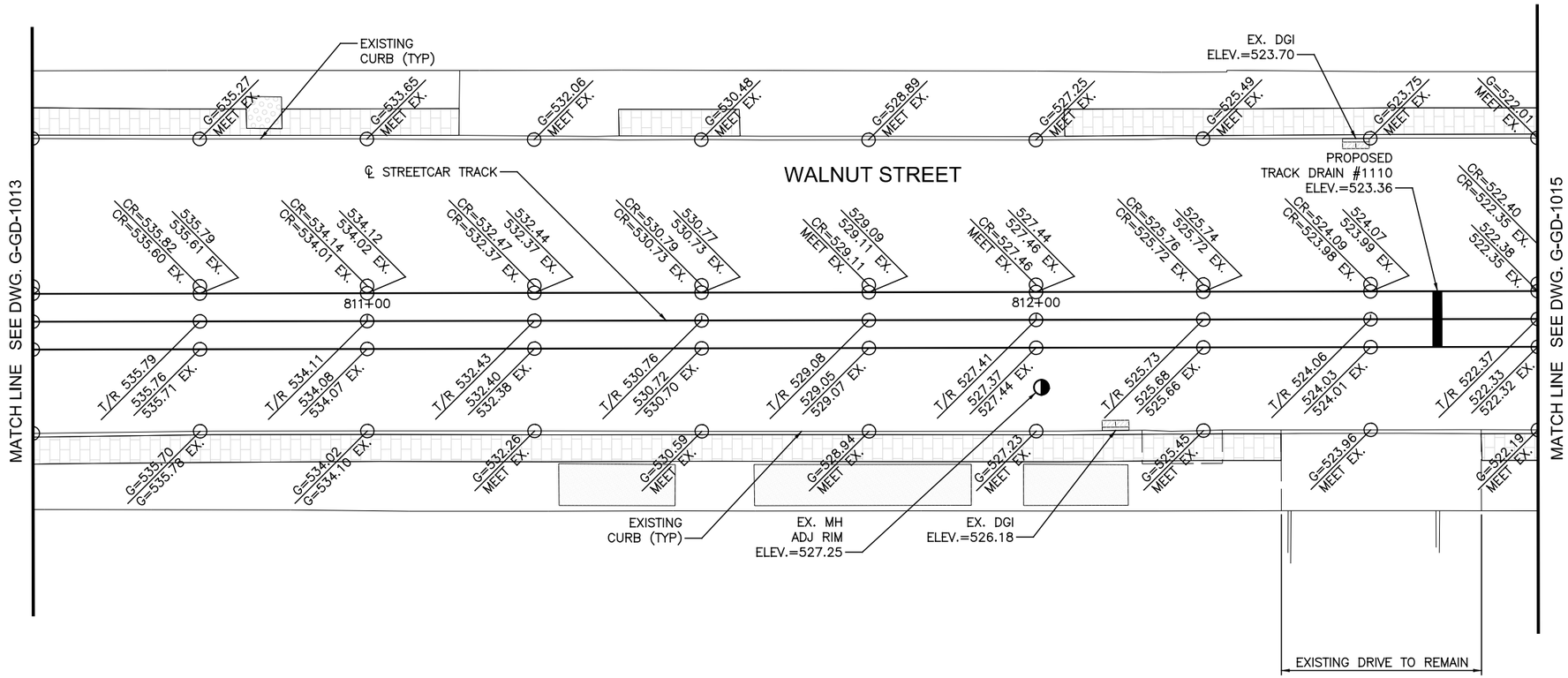

CONTRACTOR IS RESPONSIBLE FOR CONTACTING, AND COORDINATING WITH, UTILITY COMPANIES/AGENCIES AS REQUIRED TO HAVE THE UTILITY COMPANIES ADJUST THEIR FACILITIES TO PROPOSED PLAN ELEVATIONS. THERE MAY BE OTHER UTILITY FACILITIES NOT SHOWN ON THESE PLANS THAT NEED TO BE ADJUSTED AS WELL. THIS WORK SHALL BE COORDINATED AND COMPLETED IN A TIME FRAME CONSISTENT WITH THE PROJECT SCHEDULE. THIS COORDINATION IS DEEMED INCIDENTAL TO THE CONTRACT AND NO ADDITIONAL COMPENSATION WILL BE PROVIDED TO THE CONTRACTOR. THESE ITEMS ARE NOT QUANTIFIED.

CAUTION UNDERGROUND UTILITIES
2 WORKING DAYS
BEFORE YOU DIG
CALL 1-800-362-2764
OHIO UTILITY PROTECTION SERVICE
CALL NON-SERVICE FACILITY
OWNERS DIRECT

GRAPHIC SCALE
10 0 10 20 40
(IN FEET)
1 inch = 10 ft. Full Size
1 inch = 20 ft. Half Size

DOTE_Mono_PDF_Half.pltcfg
T:\29014A-Streetcar\CAD\Civil\S_G-GD-1014.dgn
7/15/2012 1:19:07 PM

CONTRACT DRAWING

PRINTS NOT BEARING THIS STAMP WERE MADE PRIOR TO ADVERTISING FOR BIDS AND ARE TO BE CONSIDERED OBSOLETE FOR CONTRACT PURPOSES.

Department of Transportation and Engineering

City of Cincinnati
City Hall
801 Plum Street
Cincinnati, Ohio 45202

CINCINNATI STREETCAR
CENTRAL BUSINESS DISTRICT

GRADING PLANS - WALNUT STREET
STA 810+50 TO STA 812+75

Revisions
No.

Drawn by CJC	Date 7/02/12
Designed by CJC	Date 7/02/12
Checked by SAJ	Date 7/02/12
Reviewed by JTB	Date 7/12/12

Consultant

PB HDR

File Number

ACC No. 23126

G-GD-1014

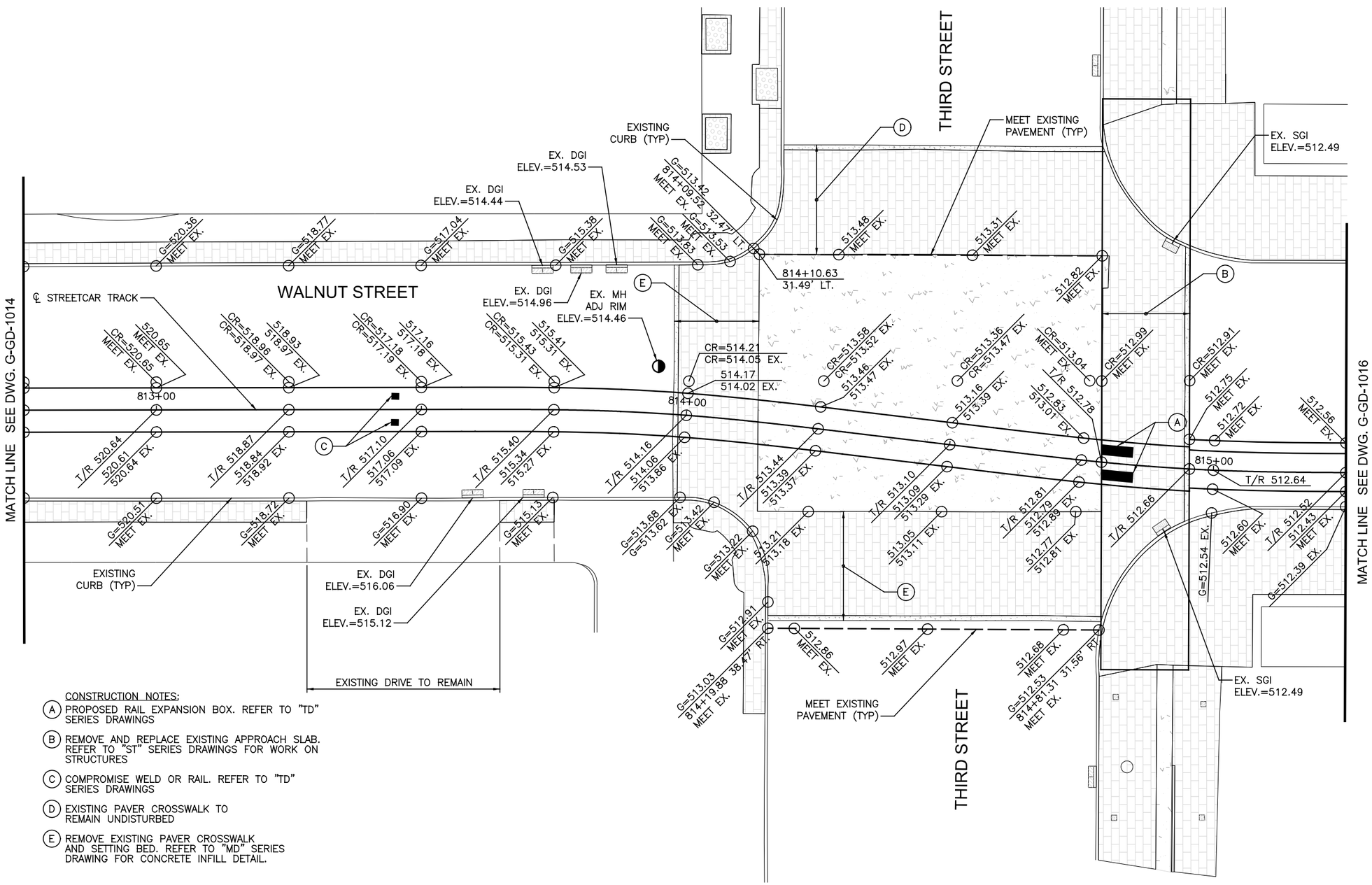

CONSTRUCTION NOTES:

(A) PROPOSED RAIL EXPANSION BOX. REFER TO "TD" SERIES DRAWINGS

(B) REMOVE AND REPLACE EXISTING APPROACH SLAB. REFER TO "ST" SERIES DRAWINGS FOR WORK ON STRUCTURES

(C) COMPROMISE WELD OR RAIL. REFER TO "TD" SERIES DRAWINGS

(D) EXISTING PAVER CROSSWALK TO REMAIN UNDISTURBED

(E) REMOVE EXISTING PAVER CROSSWALK AND SETTING BED. REFER TO "MD" SERIES DRAWING FOR CONCRETE INFILL DETAIL.

CONTRACTOR IS RESPONSIBLE FOR CONTACTING, AND COORDINATING WITH, UTILITY COMPANIES/AGENCIES AS REQUIRED TO HAVE THE UTILITY COMPANIES ADJUST THEIR FACILITIES TO PROPOSED PLAN ELEVATIONS. THERE MAY BE OTHER UTILITY FACILITIES NOT SHOWN ON THESE PLANS THAT NEED TO BE ADJUSTED AS WELL. THIS WORK SHALL BE COORDINATED AND COMPLETED IN A TIME FRAME CONSISTENT WITH THE PROJECT SCHEDULE. THIS COORDINATION IS DEEMED INCIDENTAL TO THE CONTRACT AND NO ADDITIONAL COMPENSATION WILL BE PROVIDED TO THE CONTRACTOR. THESE ITEMS ARE NOT QUANTIFIED.

GRAPHIC SCALE

10 0 10 20 40

(IN FEET)
1 inch = 10 ft. Full Size
1 inch = 20 ft. Half Size

CAUTION UNDERGROUND UTILITIES
2 WORKING DAYS
BEFORE YOU DIG
CALL 1-800-362-2764
OHIO UTILITY PROTECTION SERVICE
CALL NON-SERVICE FACILITY
OWNERS DIRECT

DOTE_Mono_PDF_Half.pltcfg
T:\29014A-Streetcar\CAD\Civil\S_G-GD-1015.dgn
7/15/2012 1:19:08 PM

CONTRACT DRAWING

PRINTS NOT BEARING THIS STAMP WERE MADE PRIOR TO ADVERTISING FOR BID AND ARE TO BE CONSIDERED OBSOLETE FOR CONTRACT PURPOSES.

Department of Transportation and Engineering

City of Cincinnati
City Hall
801 Plum Street
Cincinnati, Ohio 45202

CINCINNATI STREETCAR
CENTRAL BUSINESS DISTRICT

GRADING PLANS - WALNUT STREET
STA 812+75 TO STA 815+25

Revisions

No.		

Drawn by CJC	Date 7/02/12
Designed by CJC	Date 7/02/12
Checked by SAJ	Date 7/02/12
Reviewed by JTB	Date 7/12/12

Consultant

PB HDR

File Number

ACC No. 23126

G-GD-1015

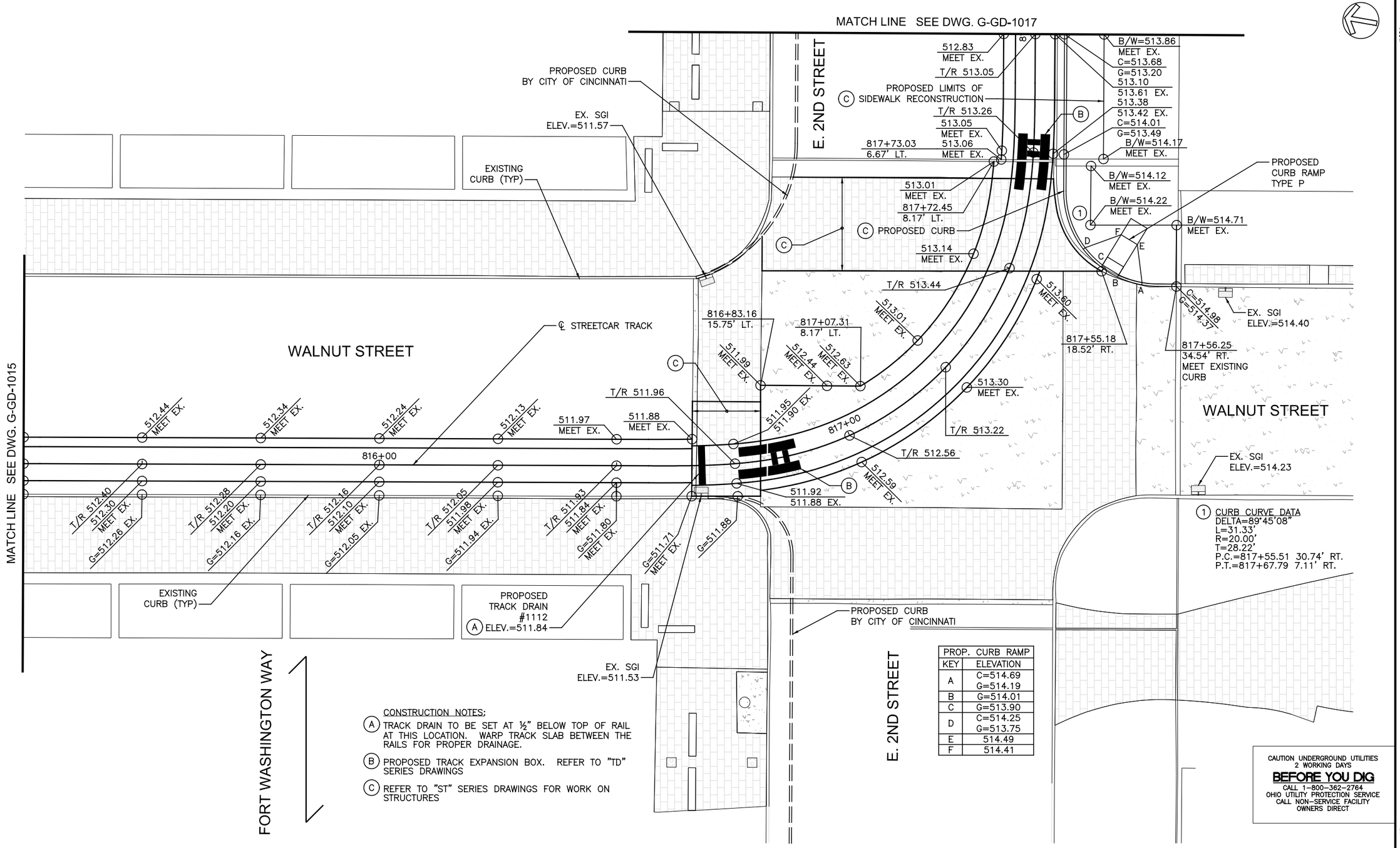

PROP. CURB RAMP	
KEY	ELEVATION
A	C=514.69 G=514.19
B	G=514.01
C	G=513.90
D	C=514.25 G=513.75
E	514.49
F	514.41

CONSTRUCTION NOTES:

(A) TRACK DRAIN TO BE SET AT ½" BELOW TOP OF RAIL AT THIS LOCATION. WARP TRACK SLAB BETWEEN THE RAILS FOR PROPER DRAINAGE.

(B) PROPOSED TRACK EXPANSION BOX. REFER TO "TD" SERIES DRAWINGS

(C) REFER TO "ST" SERIES DRAWINGS FOR WORK ON STRUCTURES

CONTRACTOR IS RESPONSIBLE FOR CONTACTING, AND COORDINATING WITH, UTILITY COMPANIES/AGENCIES AS REQUIRED TO HAVE THE UTILITY COMPANIES ADJUST THEIR FACILITIES TO PROPOSED PLAN ELEVATIONS. THERE MAY BE OTHER UTILITY FACILITIES NOT SHOWN ON THESE PLANS THAT NEED TO BE ADJUSTED AS WELL. THIS WORK SHALL BE COORDINATED AND COMPLETED IN A TIME FRAME CONSISTENT WITH THE PROJECT SCHEDULE. THIS COORDINATION IS DEEMED INCIDENTAL TO THE CONTRACT AND NO ADDITIONAL COMPENSATION WILL BE PROVIDED TO THE CONTRACTOR. THESE ITEMS ARE NOT QUANTIFIED.

GRAPHIC SCALE

10 0 10 20 40

(IN FEET)
1 inch = 10 ft. Full Size
1 inch = 20 ft. Half Size

DOTE_Mono_PDF_Half.pltcfg
T:\29014A-Streetcar\CAD\Civil\S_G-GD-1016.dgn
7/15/2012 1:19:09 PM

CONTRACT DRAWING

PRINTS NOT BEARING THIS STAMP WERE MADE PRIOR TO ADVERTISING FOR BID AND ARE TO BE CONSIDERED OBSOLETE FOR CONTRACT PURPOSES.

Department of Transportation and Engineering

City of Cincinnati
City Hall
801 Plum Street
Cincinnati, Ohio 45202

CINCINNATI STREETCAR
CENTRAL BUSINESS DISTRICT

GRADING PLANS - WALNUT STREET
STA 815+25 TO STA 818+00

Revisions

No.		

Date	7/02/12
Date	7/02/12
Date	7/02/12
Date	7/12/12
Drawn by	CJC
Designed by	CJC
Checked by	SAJ
Reviewed by	JTB

Consultant

PB HDR

File Number

ACC No. 23126

G-GD-1016

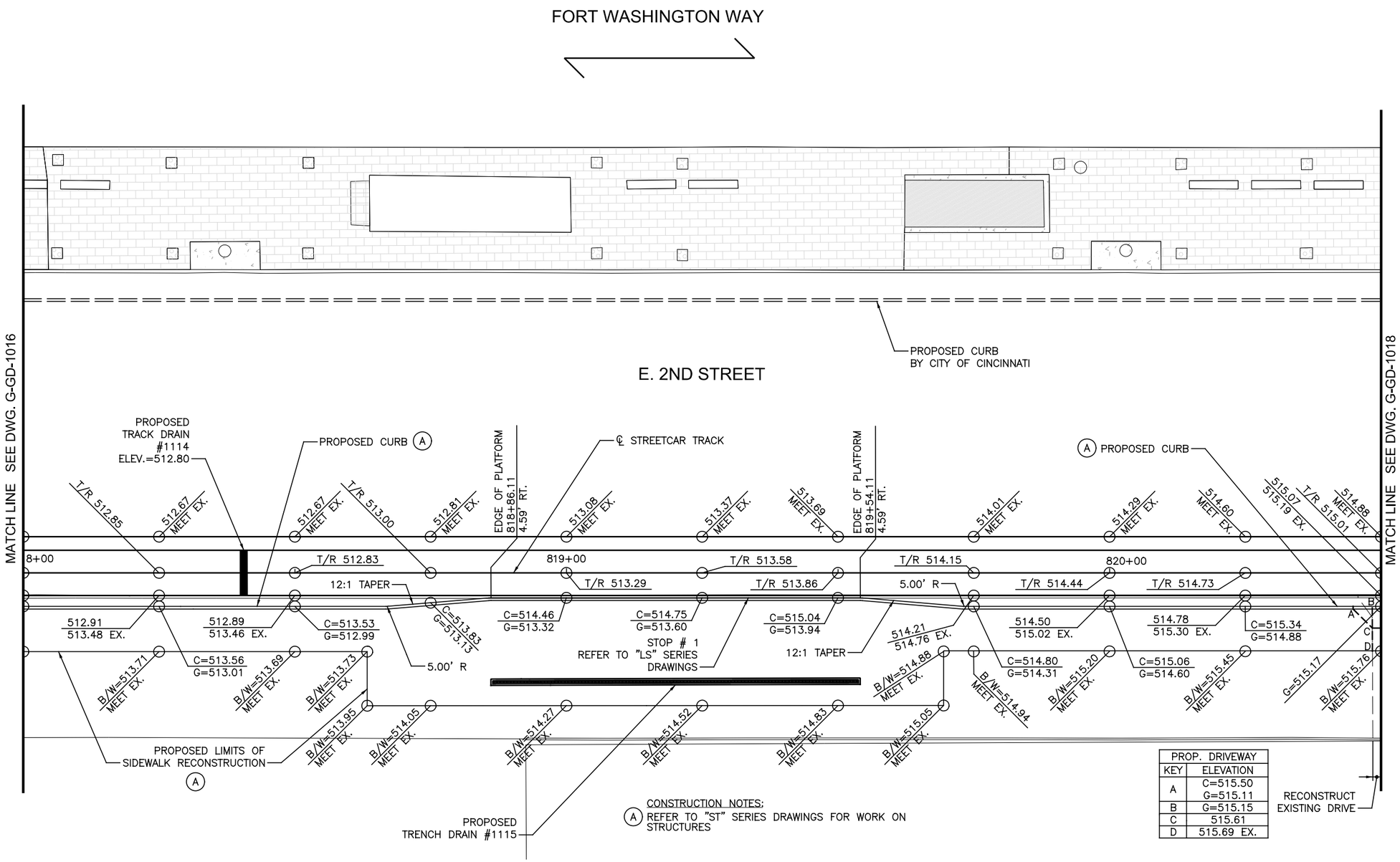

PROP. DRIVEWAY	
KEY	ELEVATION
A	C=515.50 G=515.11
B	G=515.15
C	515.61
D	515.69 EX.

CONSTRUCTION NOTES:

(A) REFER TO "ST" SERIES DRAWINGS FOR WORK ON STRUCTURES

CAUTION UNDERGROUND UTILITIES
2 WORKING DAYS
BEFORE YOU DIG
CALL 1-800-362-2764
OHIO UTILITY PROTECTION SERVICE
CALL NON-SERVICE FACILITY
OWNERS DIRECT

CONTRACTOR IS RESPONSIBLE FOR CONTACTING, AND COORDINATING WITH, UTILITY COMPANIES/AGENCIES AS REQUIRED TO HAVE THE UTILITY COMPANIES ADJUST THEIR FACILITIES TO PROPOSED PLAN ELEVATIONS. THERE MAY BE OTHER UTILITY FACILITIES NOT SHOWN ON THESE PLANS THAT NEED TO BE ADJUSTED AS WELL. THIS WORK SHALL BE COORDINATED AND COMPLETED IN A TIME FRAME CONSISTENT WITH THE PROJECT SCHEDULE. THIS COORDINATION IS DEEMED INCIDENTAL TO THE CONTRACT AND NO ADDITIONAL COMPENSATION WILL BE PROVIDED TO THE CONTRACTOR. THESE ITEMS ARE NOT QUANTIFIED.

GRAPHIC SCALE
10 0 10 20 40
(IN FEET)
1 inch = 10 ft. Full Size
1 inch = 20 ft. Half Size

DOTE_Mono_PDF_Half.pltcfg
T:\29014A-Streetcar\CAD\Civil\S_G-GD-1017.dgn
7/15/2012 1:19:10 PM

CONTRACT DRAWING

PRINTS NOT BEARING THIS STAMP WERE MADE PRIOR TO ADVERTISING FOR BID, AND ARE TO BE CONSIDERED OBSOLETE FOR CONTRACT PURPOSES.

Department of Transportation and Engineering

City of Cincinnati
City Hall
801 Plum Street
Cincinnati, Ohio 45202

CINCINNATI STREETCAR
CENTRAL BUSINESS DISTRICT
GRADING PLANS - E. 2ND STREET
STA 818+00 STA 820+50

Revisions

No.				

Drawn by CJC Date 7/02/12
Designed by CJC Date 7/02/12
Checked by SAJ Date 7/02/12
Reviewed by JTB Date 7/12/12

Consultant

PB HDR

File Number

ACC No. 23126

G-GD-1017

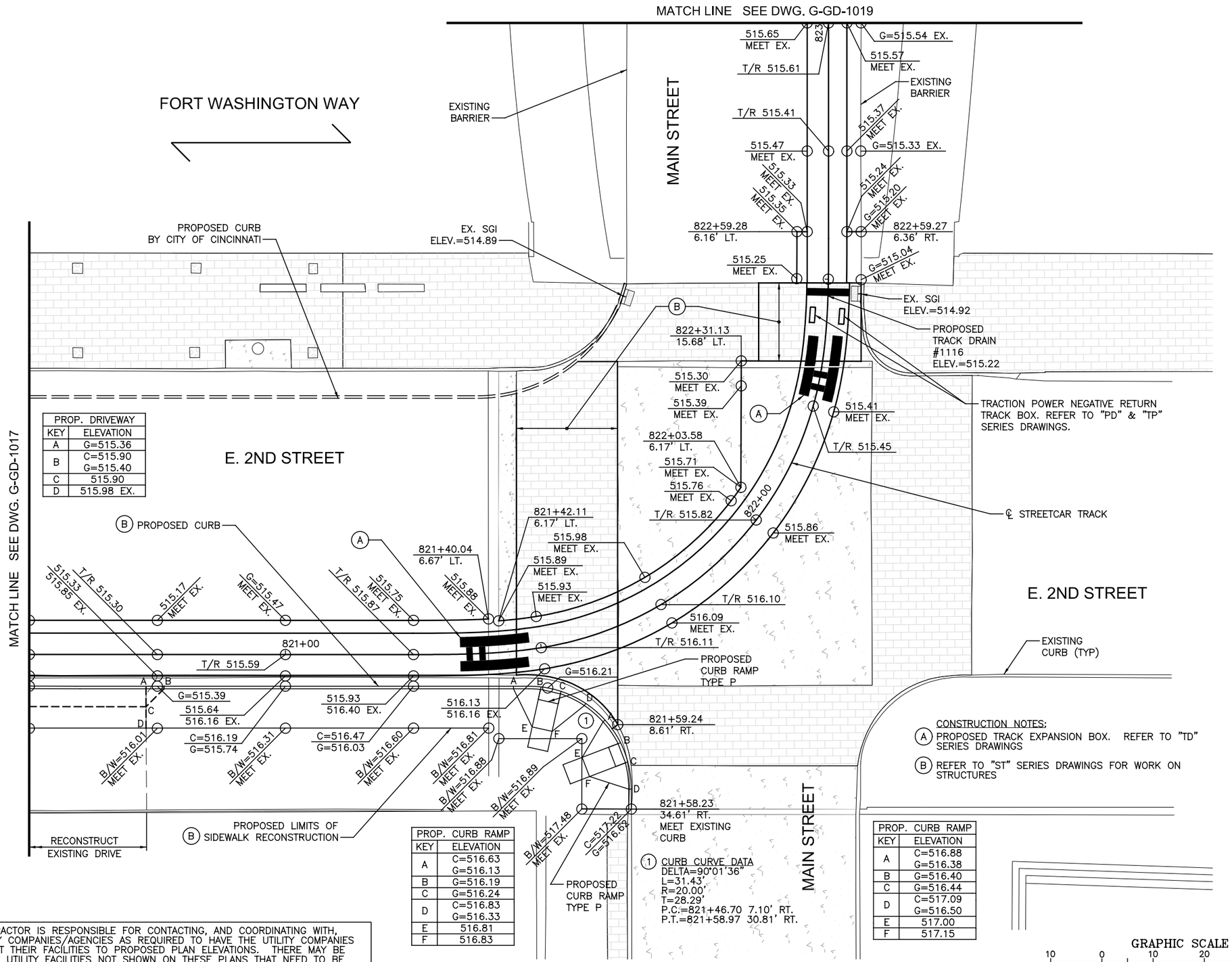

PROP. DRIVEWAY	
KEY	ELEVATION
A	G=515.36
B	C=515.90 G=515.40
C	515.90
D	515.98 EX.

PROP. CURB RAMP	
KEY	ELEVATION
A	C=516.63 G=516.13
B	G=516.19
C	G=516.24
D	C=516.83 G=516.33
E	516.81
F	516.83

PROP. CURB RAMP	
KEY	ELEVATION
A	C=516.88 G=516.38
B	G=516.40
C	G=516.44
D	C=517.09 G=516.50
E	517.00
F	517.15

CONSTRUCTION NOTES:

(A) PROPOSED TRACK EXPANSION BOX. REFER TO "TD" SERIES DRAWINGS

(B) REFER TO "ST" SERIES DRAWINGS FOR WORK ON STRUCTURES

CONTRACTOR IS RESPONSIBLE FOR CONTACTING, AND COORDINATING WITH, UTILITY COMPANIES/AGENCIES AS REQUIRED TO HAVE THE UTILITY COMPANIES ADJUST THEIR FACILITIES TO PROPOSED PLAN ELEVATIONS. THERE MAY BE OTHER UTILITY FACILITIES NOT SHOWN ON THESE PLANS THAT NEED TO BE ADJUSTED AS WELL. THIS WORK SHALL BE COORDINATED AND COMPLETED IN A TIME FRAME CONSISTENT WITH THE PROJECT SCHEDULE. THIS COORDINATION IS DEEMED INCIDENTAL TO THE CONTRACT AND NO ADDITIONAL COMPENSATION WILL BE PROVIDED TO THE CONTRACTOR. THESE ITEMS ARE NOT QUANTIFIED.

CAUTION UNDERGROUND UTILITIES
2 WORKING DAYS
BEFORE YOU DIG
CALL 1-800-362-2764
OHIO UTILITY PROTECTION SERVICE
CALL NON-SERVICE FACILITY OWNERS DIRECT

DOTE_Mono_PDF_Half.pltcfg
T:\29014A-Streetcar\CAD\Civil\S_G-GD-1018.dgn
7/15/2012 1:19:12 PM

CONTRACT DRAWING

PRINTS NOT BEARING THIS STAMP WERE MADE PRIOR TO ADVERTISING FOR BIDS AND ARE TO BE CONSIDERED OBSOLETE FOR CONTRACT PURPOSES.

Department of Transportation and Engineering

City of Cincinnati
City Hall
801 Plum Street
Cincinnati, Ohio 45202

CINCINNATI STREETCAR
CENTRAL BUSINESS DISTRICT
GRADING PLANS - E. 2ND STREET
STA 820+50 STA 823+00

Revisions
No.

Drawn by CJC	Date 7/02/12
Designed by CJC	Date 7/02/12
Checked by SAJ	Date 7/02/12
Reviewed by JTB	Date 7/12/12

Consultant

PB HDR

File Number

ACC No. 23126

G-GD-1018

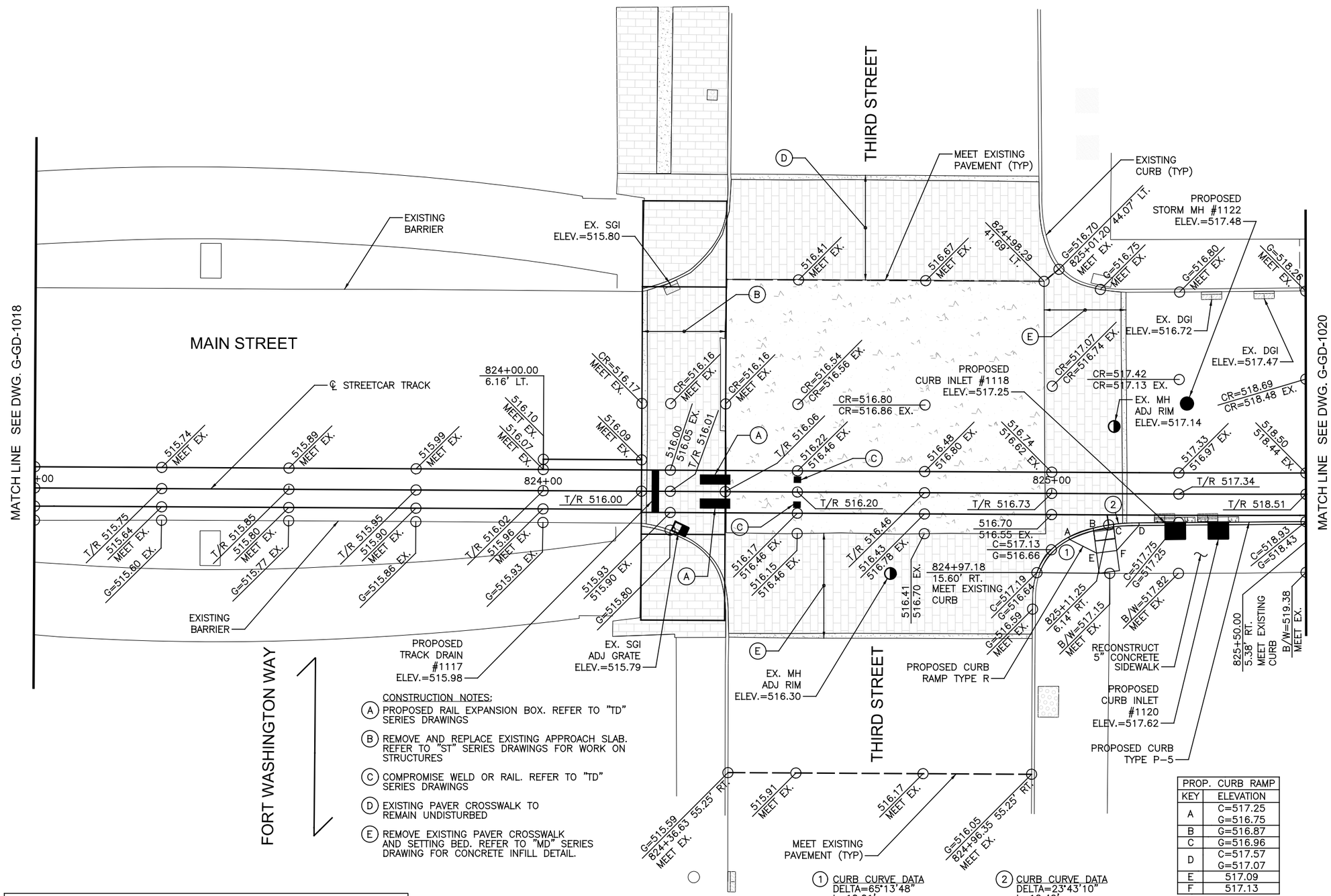

CONSTRUCTION NOTES:

(A) PROPOSED RAIL EXPANSION BOX. REFER TO "TD" SERIES DRAWINGS

(B) REMOVE AND REPLACE EXISTING APPROACH SLAB. REFER TO "ST" SERIES DRAWINGS FOR WORK ON STRUCTURES

(C) COMPROMISE WELD OR RAIL. REFER TO "TD" SERIES DRAWINGS

(D) EXISTING PAVER CROSSWALK TO REMAIN UNDISTURBED

(E) REMOVE EXISTING PAVER CROSSWALK AND SETTING BED. REFER TO "MD" SERIES DRAWING FOR CONCRETE INFILL DETAIL.

(1) CURB CURVE DATA
DELTA=65°13'48"
L=10.01'
R=12.50'
T=9.74'
P.C.=824+97.18 15.60' RT.
P.C.C.=825+03.78 8.42' RT.

(2) CURB CURVE DATA
DELTA=23°43'10"
L=12.42'
R=30.00'
T=12.33'
P.C.C.=825+03.78 8.42' RT.
P.T.=825+15.81 5.73' RT.

PROP. CURB RAMP	
KEY	ELEVATION
A	C=517.25 G=516.75
B	G=516.87
C	G=516.96
D	C=517.57 G=517.07
E	517.09
F	517.13

CONTRACTOR IS RESPONSIBLE FOR CONTACTING, AND COORDINATING WITH, UTILITY COMPANIES/AGENCIES AS REQUIRED TO HAVE THE UTILITY COMPANIES ADJUST THEIR FACILITIES TO PROPOSED PLAN ELEVATIONS. THERE MAY BE OTHER UTILITY FACILITIES NOT SHOWN ON THESE PLANS THAT NEED TO BE ADJUSTED AS WELL. THIS WORK SHALL BE COORDINATED AND COMPLETED IN A TIME FRAME CONSISTENT WITH THE PROJECT SCHEDULE. THIS COORDINATION IS DEEMED INCIDENTAL TO THE CONTRACT AND NO ADDITIONAL COMPENSATION WILL BE PROVIDED TO THE CONTRACTOR. THESE ITEMS ARE NOT QUANTIFIED.

CAUTION UNDERGROUND UTILITIES
2 WORKING DAYS
BEFORE YOU DIG
CALL 1-800-362-2764
OHIO UTILITY PROTECTION SERVICE
CALL NON-SERVICE FACILITY OWNERS DIRECT

GRAPHIC SCALE
10 0 10 20 40
(IN FEET)
1 inch = 10 ft. Full Size
1 inch = 20 ft. Half Size

DOTE_Mono_PDF_Half.pltcfg
T:\29014A-Streetcar\CAD\Civil\S_G-GD-1019.dgn
7/15/2012 1:19:13 PM

CONTRACT DRAWING

PRINTS NOT BEARING THIS STAMP WERE MADE PRIOR TO ADVERTISING FOR BIDS AND ARE TO BE CONSIDERED OBSOLETE FOR CONTRACT PURPOSES.

Department of Transportation and Engineering
City of Cincinnati
City Hall
801 Plum Street
Cincinnati, Ohio 45202

CINCINNATI STREETCAR
CENTRAL BUSINESS DISTRICT
GRADING PLANS - MAIN STREET
STA 823+00 TO 825+50

Revisions
No.

Drawn by CJC Date 7/02/12
Designed by CJC Date 7/02/12
Checked by SAJ Date 7/02/12
Reviewed by JTB Date 7/12/12

Consultant
PB HDR

File Number

ACC No. 23126

G-GD-1019

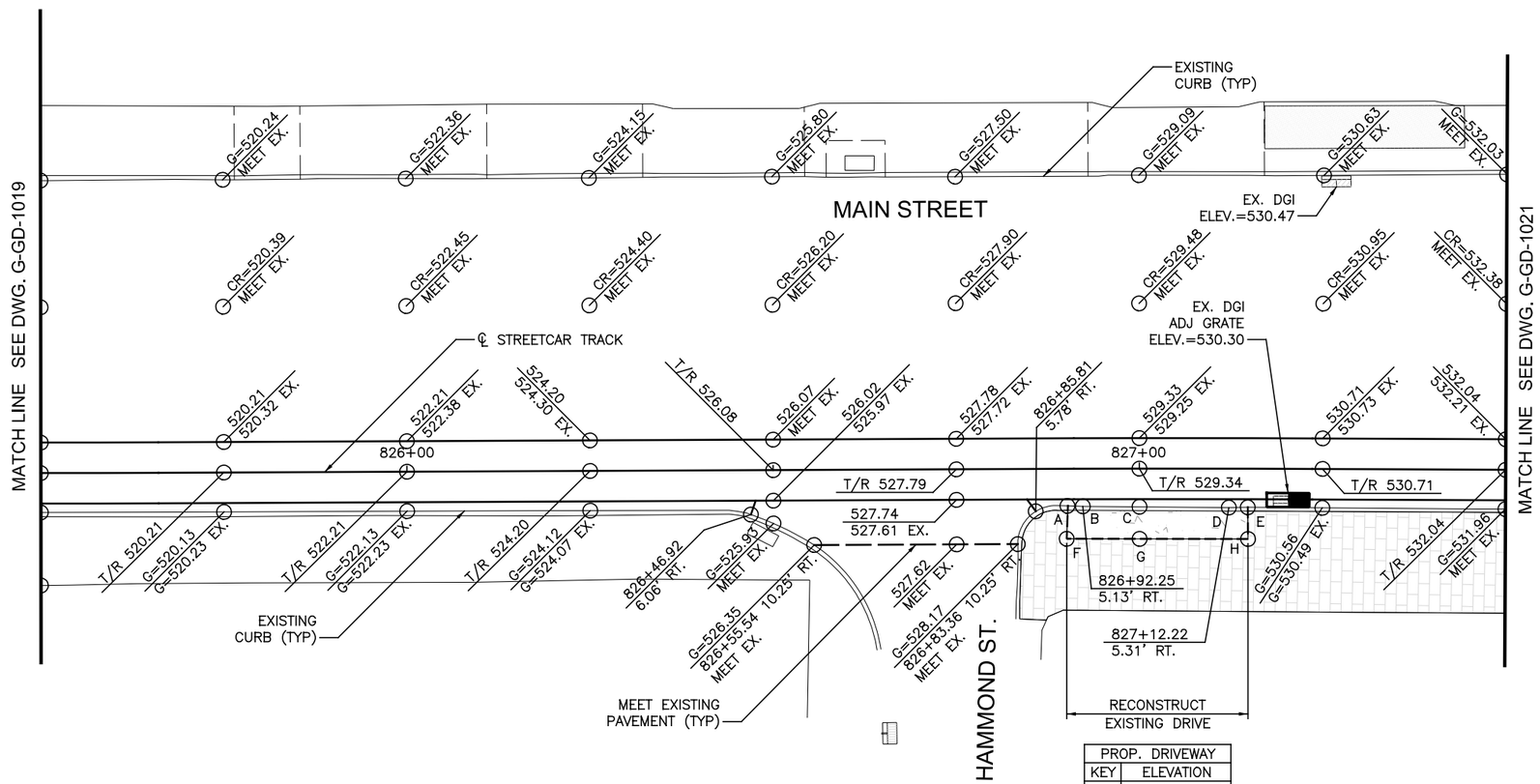

PROP. DRIVEWAY	
KEY	ELEVATION
A	C=528.90 EX. G=528.57
B	G=528.71
C	G=529.18
D	G=529.85
E	C=530.32 EX. G=529.99
F	528.61 EX.
G	529.25 EX.
H	530.20 EX.

CONTRACTOR IS RESPONSIBLE FOR CONTACTING, AND COORDINATING WITH, UTILITY COMPANIES/AGENCIES AS REQUIRED TO HAVE THE UTILITY COMPANIES ADJUST THEIR FACILITIES TO PROPOSED PLAN ELEVATIONS. THERE MAY BE OTHER UTILITY FACILITIES NOT SHOWN ON THESE PLANS THAT NEED TO BE ADJUSTED AS WELL. THIS WORK SHALL BE COORDINATED AND COMPLETED IN A TIME FRAME CONSISTENT WITH THE PROJECT SCHEDULE. THIS COORDINATION IS DEEMED INCIDENTAL TO THE CONTRACT AND NO ADDITIONAL COMPENSATION WILL BE PROVIDED TO THE CONTRACTOR. THESE ITEMS ARE NOT QUANTIFIED.

GRAPHIC SCALE

10 0 10 20 40

(IN FEET)
1 inch = 10 ft. Full Size
1 inch = 20 ft. Half Size

CAUTION UNDERGROUND UTILITIES
2 WORKING DAYS
BEFORE YOU DIG
CALL 1-800-362-2764
OHIO UTILITY PROTECTION SERVICE
CALL NON-SERVICE FACILITY
OWNERS DIRECT

DOTE_Mono_PDF_Half.pltcfg
T:\29014A-Streetcar\CAD\Civil\S_G-GD-1020.dgn
7/15/2012 1:19:14 PM

CONTRACT DRAWING

PRINTS NOT BEARING THIS STAMP WERE MADE PRIOR TO ADVERTISING FOR BID AND ARE TO BE CONSIDERED OBSOLETE FOR CONTRACT PURPOSES.

Department of Transportation and Engineering

City of Cincinnati
City Hall
801 Plum Street
Cincinnati, Ohio 45202

CINCINNATI STREETCAR
CENTRAL BUSINESS DISTRICT
GRADING PLANS - MAIN STREET
STA 825+50 TO 827+50

Revisions

No.		Date

Drawn by CJC	Date 7/02/12	
Designed by CJC	Date 7/02/12	
Checked by SAJ	Date 7/02/12	
Reviewed by JTB	Date 7/12/12	

Consultant

PB HDR

File Number

ACC No. 23126

G-GD-1020

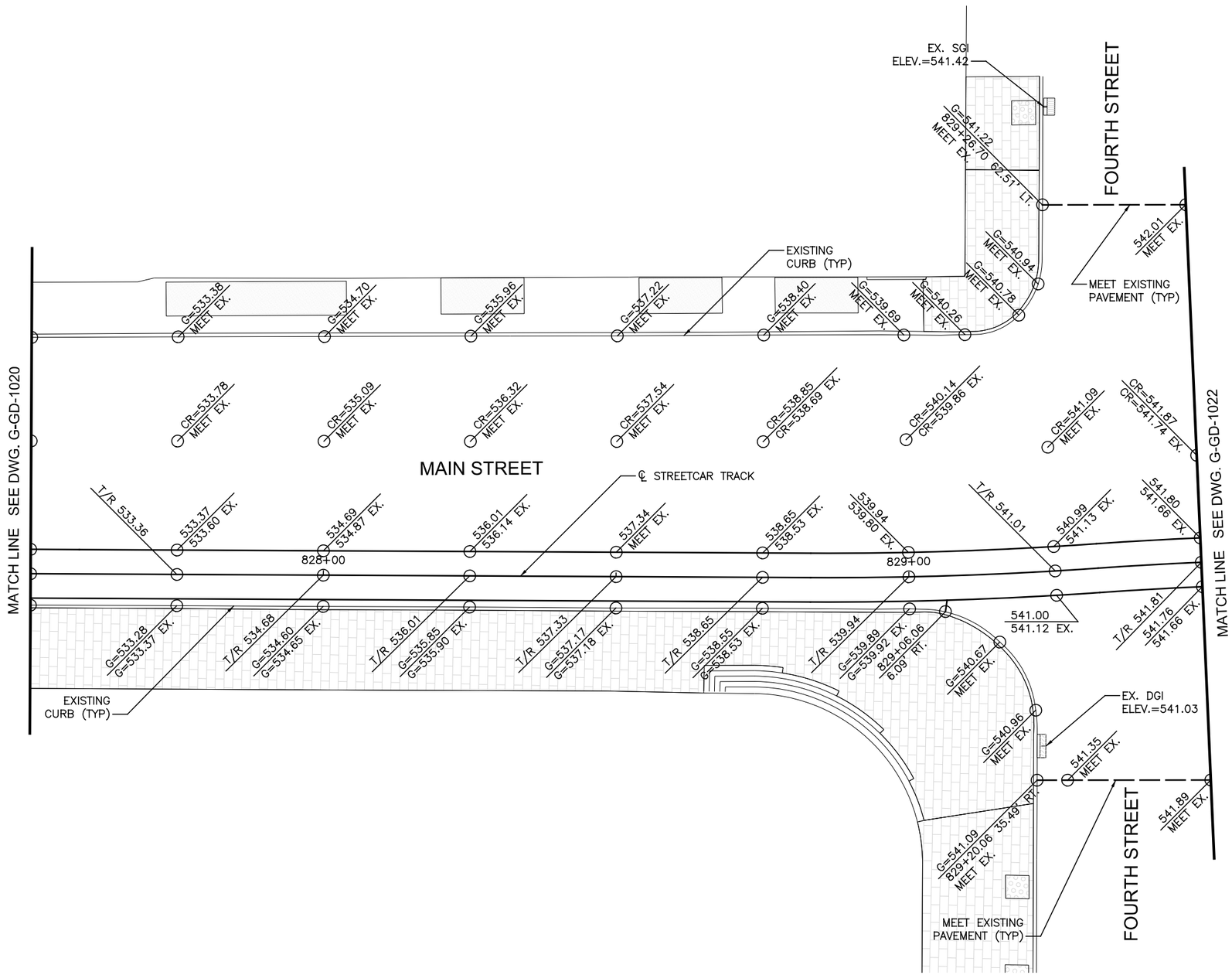

CONTRACTOR IS RESPONSIBLE FOR CONTACTING, AND COORDINATING WITH, UTILITY COMPANIES/AGENCIES AS REQUIRED TO HAVE THE UTILITY COMPANIES ADJUST THEIR FACILITIES TO PROPOSED PLAN ELEVATIONS. THERE MAY BE OTHER UTILITY FACILITIES NOT SHOWN ON THESE PLANS THAT NEED TO BE ADJUSTED AS WELL. THIS WORK SHALL BE COORDINATED AND COMPLETED IN A TIME FRAME CONSISTENT WITH THE PROJECT SCHEDULE. THIS COORDINATION IS DEEMED INCIDENTAL TO THE CONTRACT AND NO ADDITIONAL COMPENSATION WILL BE PROVIDED TO THE CONTRACTOR. THESE ITEMS ARE NOT QUANTIFIED.

GRAPHIC SCALE

10 0 10 20 40

(IN FEET)
1 inch = 10 ft. Full Size
1 inch = 20 ft. Half Size

CAUTION UNDERGROUND UTILITIES
2 WORKING DAYS
BEFORE YOU DIG
CALL 1-800-362-2764
OHIO UTILITY PROTECTION SERVICE
CALL NON-SERVICE FACILITY
OWNERS DIRECT

DEPARTMENT OF TRANSPORTATION & ENGINEERING
CITY OF CINCINNATI
OHIO

CONTRACT DRAWING

PRINTS NOT BEARING THIS STAMP WERE MADE PRIOR TO ADVERTISING FOR BIDS AND ARE TO BE CONSIDERED OBSOLETE FOR CONTRACT PURPOSES.

Department of Transportation and Engineering

City of Cincinnati
City Hall
801 Plum Street
Cincinnati, Ohio 45202

CINCINNATI STREETCAR
CENTRAL BUSINESS DISTRICT

GRADING PLANS - MAIN STREET
STA 827+50 TO 829+50

Revisions

No.				

Drawn by CJC	Date 7/02/12
Designed by CJC	Date 7/02/12
Checked by SAJ	Date 7/02/12
Reviewed by JTB	Date 7/12/12

Consultant

PB HDR

File Number

ACC No. 23126

G-GD-1021

DOTE_Mono_PDF_Half.pltcfg
T:\29014A-Streetcar\CAD\Civil\S_G-GD-1021.dgn
7/15/2012 1:19:15 PM

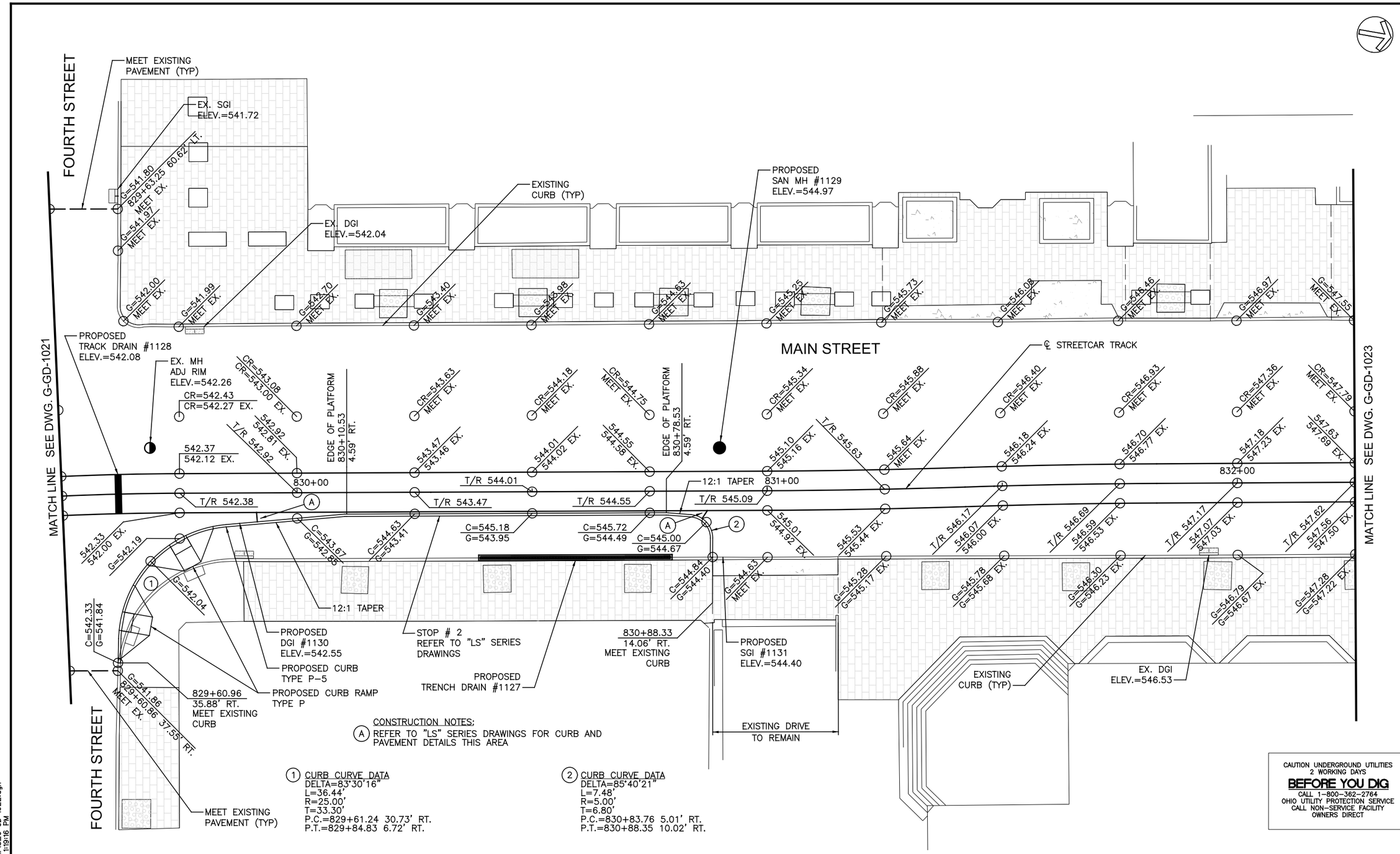

CONTRACTOR IS RESPONSIBLE FOR CONTACTING, AND COORDINATING WITH, UTILITY COMPANIES/AGENCIES AS REQUIRED TO HAVE THE UTILITY COMPANIES ADJUST THEIR FACILITIES TO PROPOSED PLAN ELEVATIONS. THERE MAY BE OTHER UTILITY FACILITIES NOT SHOWN ON THESE PLANS THAT NEED TO BE ADJUSTED AS WELL. THIS WORK SHALL BE COORDINATED AND COMPLETED IN A TIME FRAME CONSISTENT WITH THE PROJECT SCHEDULE. THIS COORDINATION IS DEEMED INCIDENTAL TO THE CONTRACT AND NO ADDITIONAL COMPENSATION WILL BE PROVIDED TO THE CONTRACTOR. THESE ITEMS ARE NOT QUANTIFIED.

DOTE_Mono_PDF_Half.pltcfg
T:\29014A-Streetcar\CAD\Civil\S_G-GD-1022.dgn
1:19:16 PM
7/15/2012

CONTRACT DRAWING

PRINTS NOT BEARING THIS STAMP WERE MADE PRIOR TO ADVERTISING FOR BIDS AND ARE TO BE CONSIDERED OBSOLETE FOR CONTRACT PURPOSES.

Department of Transportation and Engineering

City of Cincinnati
City Hall
801 Plum Street
Cincinnati, Ohio 45202

CINCINNATI STREETCAR
CENTRAL BUSINESS DISTRICT
GRADING PLANS - MAIN STREET
STA 829+50 TO STA 832+25

Revisions
No.

Date 7/02/12	Drawn by CJC
Date 7/02/12	Designed by CJC
Date 7/02/12	Checked by SAJ
Date 7/12/12	Reviewed by JTB

Consultant

PB HDR

File Number

ACC No. 23126

G-GD-1022

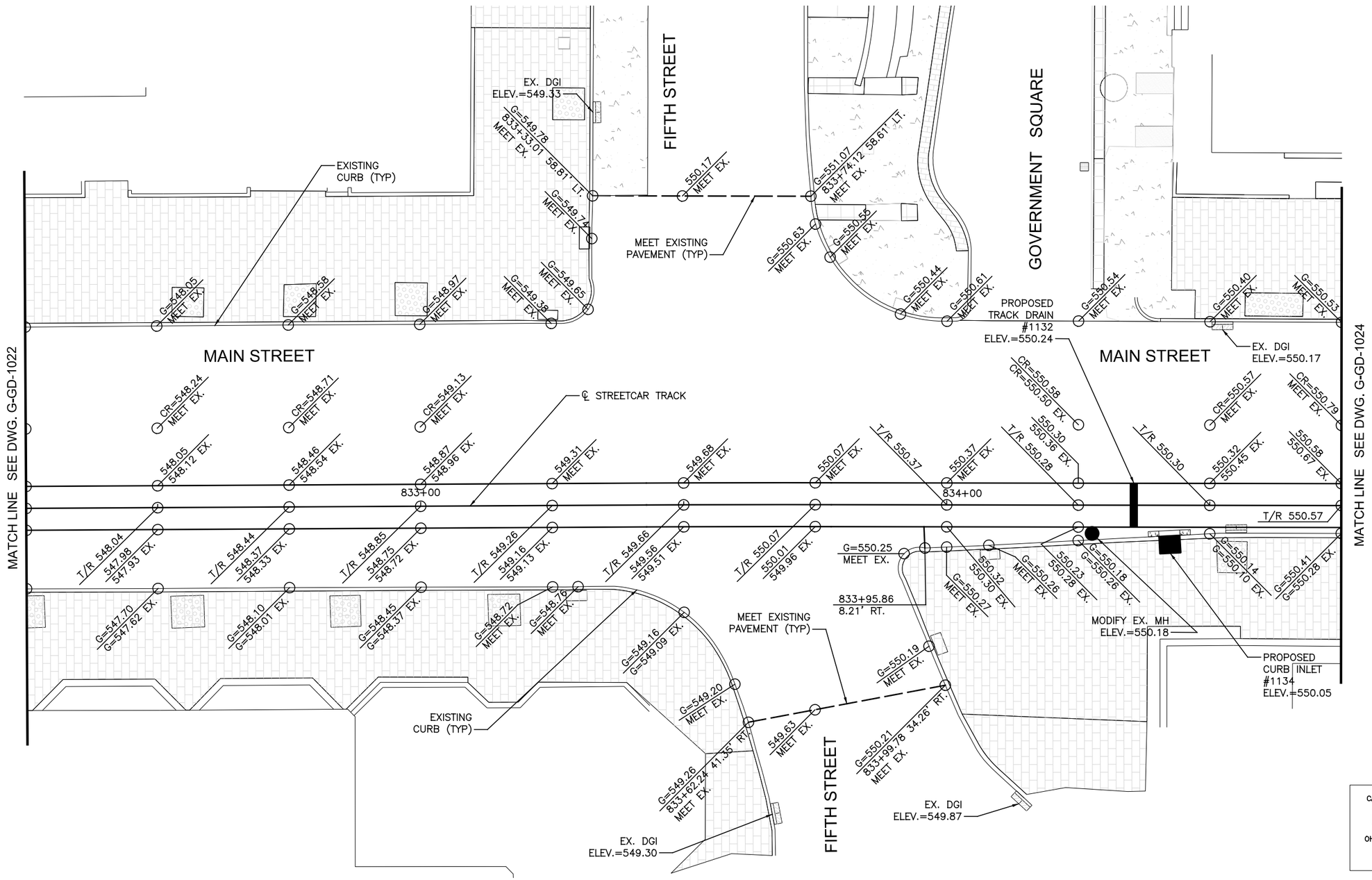

CONTRACTOR IS RESPONSIBLE FOR CONTACTING, AND COORDINATING WITH, UTILITY COMPANIES/AGENCIES AS REQUIRED TO HAVE THE UTILITY COMPANIES ADJUST THEIR FACILITIES TO PROPOSED PLAN ELEVATIONS. THERE MAY BE OTHER UTILITY FACILITIES NOT SHOWN ON THESE PLANS THAT NEED TO BE ADJUSTED AS WELL. THIS WORK SHALL BE COORDINATED AND COMPLETED IN A TIME FRAME CONSISTENT WITH THE PROJECT SCHEDULE. THIS COORDINATION IS DEEMED INCIDENTAL TO THE CONTRACT AND NO ADDITIONAL COMPENSATION WILL BE PROVIDED TO THE CONTRACTOR. THESE ITEMS ARE NOT QUANTIFIED.

GRAPHIC SCALE

10 0 10 20 40

(IN FEET)
1 inch = 10 ft. Full Size
1 inch = 20 ft. Half Size

CAUTION UNDERGROUND UTILITIES
2 WORKING DAYS
BEFORE YOU DIG
CALL 1-800-362-2764
OHIO UTILITY PROTECTION SERVICE
CALL NON-SERVICE FACILITY OWNERS DIRECT

DOTE_Mono_PDF_Half.pltcfg
T:\29014A-Streetcar\CAD\Civil\S_G-GD-1023.dgn
7/15/2012 1:19:17 PM

CONTRACT DRAWING

PRINTS NOT BEARING THIS STAMP WERE MADE PRIOR TO ADVERTISING FOR BIDS AND ARE TO BE CONSIDERED OBSOLETE FOR CONTRACT PURPOSES.

Department of Transportation and Engineering

City of Cincinnati
City Hall
801 Plum Street
Cincinnati, Ohio 45202

CINCINNATI STREETCAR
CENTRAL BUSINESS DISTRICT

GRADING PLANS - MAIN STREET
STA 832+25 TO STA 834+75

Revisions

No.		

Date 7/02/12	Drawn by CJC
Date 7/02/12	Designed by CJC
Date 7/02/12	Checked by SAJ
Date 7/12/12	Reviewed by JTB

Consultant

PB HDR

File Number

ACC No. 23126

G-GD-1023

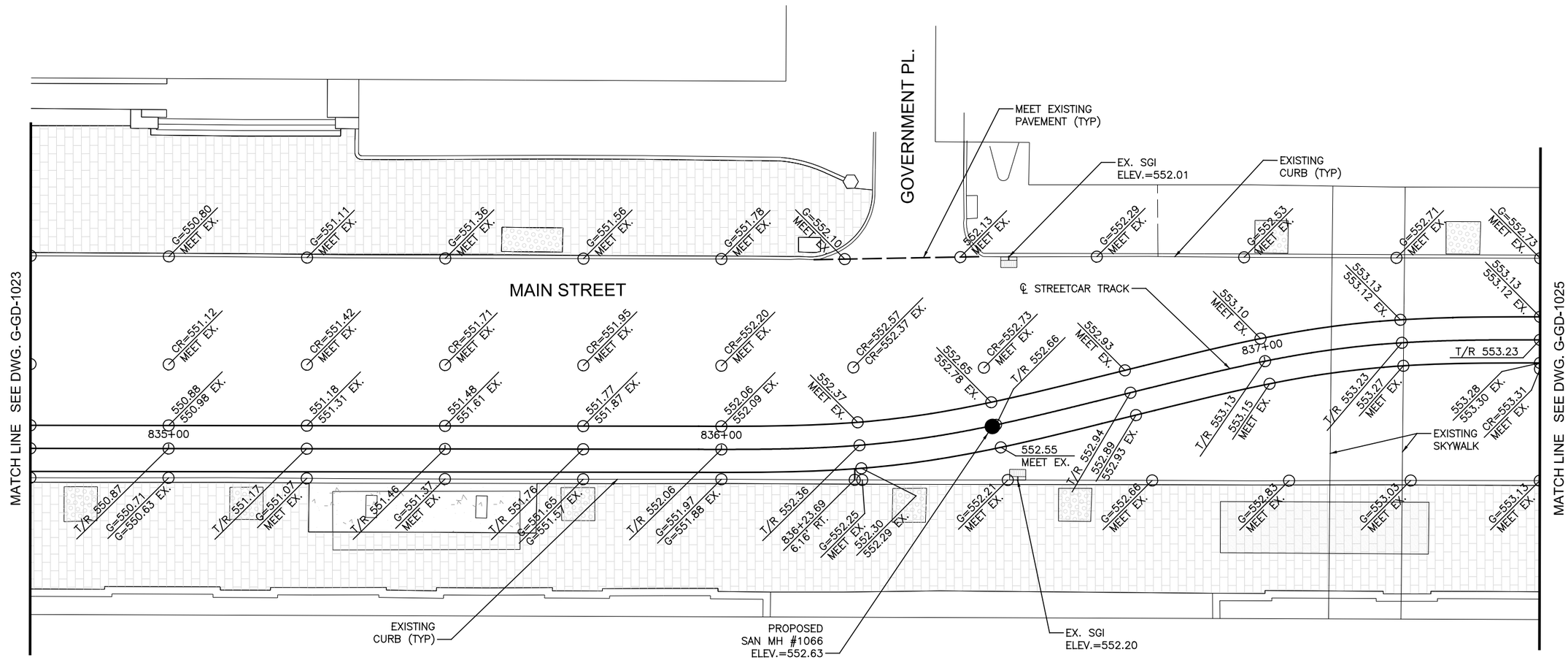

CONTRACTOR IS RESPONSIBLE FOR CONTACTING, AND COORDINATING WITH, UTILITY COMPANIES/AGENCIES AS REQUIRED TO HAVE THE UTILITY COMPANIES ADJUST THEIR FACILITIES TO PROPOSED PLAN ELEVATIONS. THERE MAY BE OTHER UTILITY FACILITIES NOT SHOWN ON THESE PLANS THAT NEED TO BE ADJUSTED AS WELL. THIS WORK SHALL BE COORDINATED AND COMPLETED IN A TIME FRAME CONSISTENT WITH THE PROJECT SCHEDULE. THIS COORDINATION IS DEEMED INCIDENTAL TO THE CONTRACT AND NO ADDITIONAL COMPENSATION WILL BE PROVIDED TO THE CONTRACTOR. THESE ITEMS ARE NOT QUANTIFIED.

CAUTION UNDERGROUND UTILITIES
2 WORKING DAYS
BEFORE YOU DIG
CALL 1-800-362-2764
OHIO UTILITY PROTECTION SERVICE
CALL NON-SERVICE FACILITY
OWNERS DIRECT

GRAPHIC SCALE
10 0 10 20 40
(IN FEET)
1 inch = 10 ft. Full Size
1 inch = 20 ft. Half Size

DOTE_Mono_PDF_Half.pltcfg
T:\29014A-Streetcar\CAD\Civil\S_G-GD-1024.dgn
7/15/2012 1:19:28 PM

CONTRACT DRAWING

PRINTS NOT BEARING THIS STAMP WERE MADE PRIOR TO ADVERTISING FOR BIDS AND ARE TO BE CONSIDERED OBSOLETE FOR CONTRACT PURPOSES.

Department of Transportation and Engineering
City of Cincinnati
City Hall
801 Plum Street
Cincinnati, Ohio 45202

CINCINNATI STREETCAR
CENTRAL BUSINESS DISTRICT
GRADING PLANS - MAIN STREET
STA 834+75 TO STA 837+50

Revisions
No.

Drawn by CJC	Date 7/02/12
Designed by CJC	Date 7/02/12
Checked by SAJ	Date 7/02/12
Reviewed by JTB	Date 7/12/12

Consultant

PB HDR

File Number

ACC No. 23126

G-GD-1024

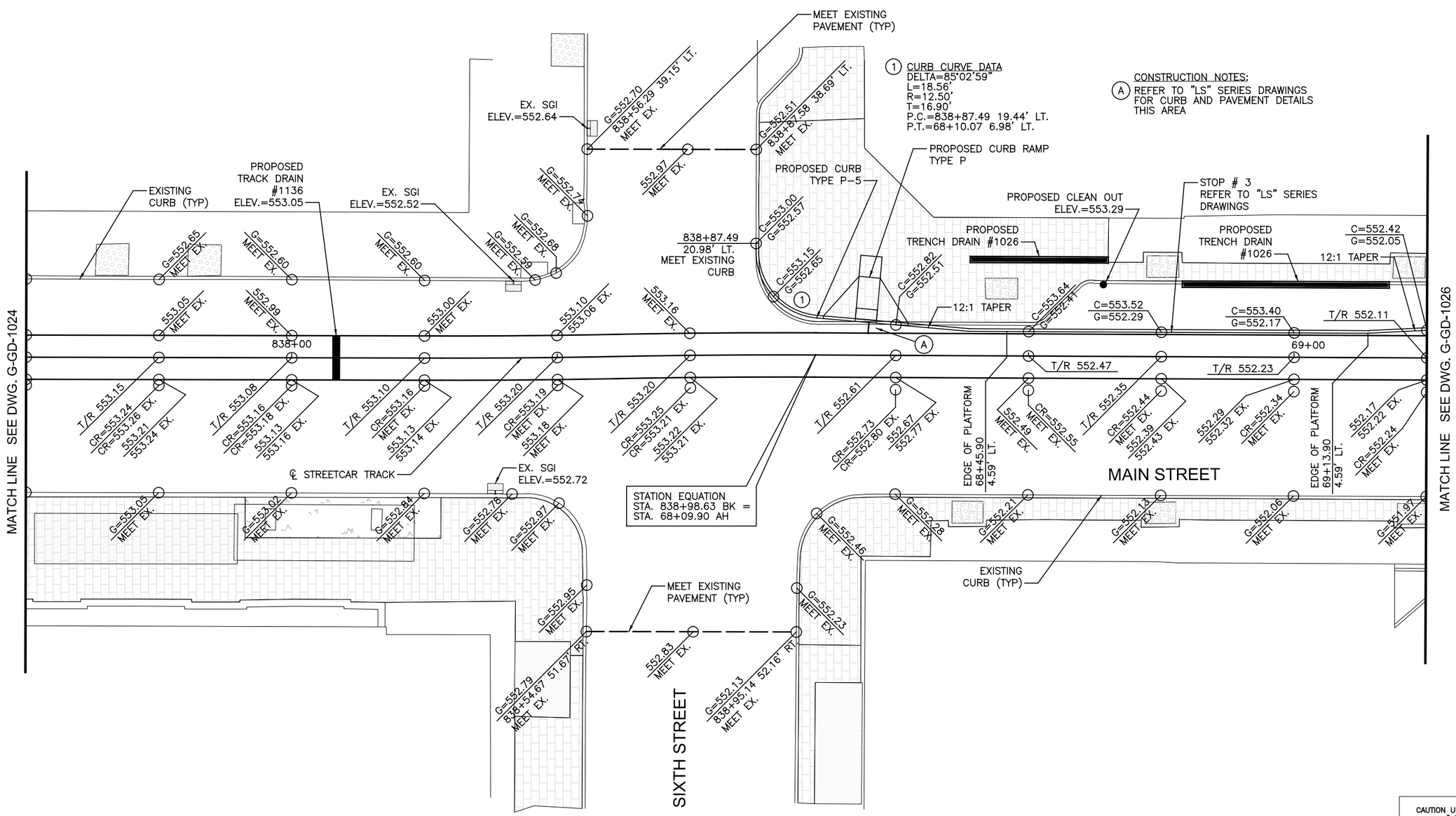

CONTRACTOR IS RESPONSIBLE FOR CONTACTING, AND COORDINATING WITH, UTILITY COMPANIES/AGENCIES AS REQUIRED TO HAVE THE UTILITY COMPANIES ADJUST THEIR FACILITIES TO PROPOSED PLAN ELEVATIONS. THERE MAY BE OTHER UTILITY FACILITIES NOT SHOWN ON THESE PLANS THAT NEED TO BE ADJUSTED AS WELL. THIS WORK SHALL BE COORDINATED AND COMPLETED IN A TIME FRAME CONSISTENT WITH THE PROJECT SCHEDULE. THIS COORDINATION IS DEEMED INCIDENTAL TO THE CONTRACT AND NO ADDITIONAL COMPENSATION WILL BE PROVIDED TO THE CONTRACTOR. THESE ITEMS ARE NOT QUANTIFIED.

CAUTION UNDERGROUND UTILITIES
2 WORKING DAYS
BEFORE YOU DIG
CALL 1-800-362-2764
OHIO UTILITY PROTECTION SERVICE
CALL NON-SERVICE FACILITY
OWNERS DIRECT

GRAPHIC SCALE
10 0 10 20 40
(IN FEET)
1 inch = 10 ft. Full Size
1 inch = 20 ft. Half Size

DOTE_Mono_PDF_Half.pltcfg
T:\29014A-Streetcar\CAD\Civil\S_G-GD-1025.dgn
7/15/2012 1:19:29 PM

CONTRACT DRAWING

PRINTS NOT BEARING THIS STAMP WERE MADE PRIOR TO ADVERTISING FOR BIDS AND ARE TO BE CONSIDERED OBSOLETE FOR CONTRACT PURPOSES.

Department of Transportation and Engineering

City of Cincinnati
City Hall
801 Plum Street
Cincinnati, Ohio 45202

CINCINNATI STREETCAR
CENTRAL BUSINESS DISTRICT
GRADING PLANS - MAIN STREET
STA 837+50 TO STA 69+25

Revisions
No.

Drawn by CJC	Date 7/02/12
Designed by CJC	Date 7/02/12
Checked by SAJ	Date 7/02/12
Reviewed by JTB	Date 7/12/12

Consultant

PB HDR

File Number

ACC No. 23126

G-GD-1025

CONSTRUCTION NOTES:

(A) REFER TO "LS" SERIES DRAWINGS FOR CURB AND PAVEMENT DETAILS THIS AREA

(1) CURB CURVE DATA
DELTA=41°57'09"
L=3.66'
R=5.00'
T=3.58'
P.C.=69+28.06 5.37' LT.
P.T.=69+31.32 6.83' LT.

(2) CURB CURVE DATA
DELTA=45°13'30"
L=3.95'
R=5.00'
T=3.85'
P.C.=69+36.68 12.25' LT.
P.T.=69+40.20 13.73' LT.

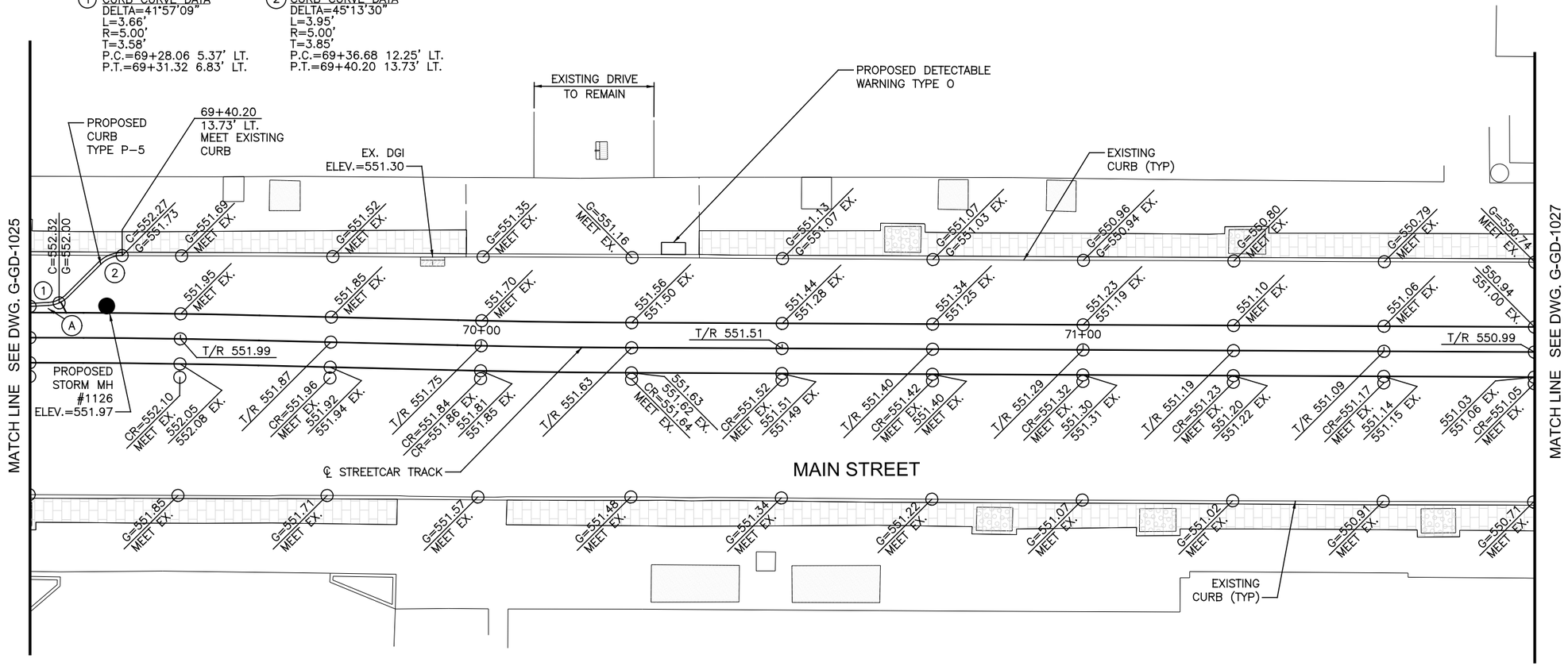

CONTRACTOR IS RESPONSIBLE FOR CONTACTING, AND COORDINATING WITH, UTILITY COMPANIES/AGENCIES AS REQUIRED TO HAVE THE UTILITY COMPANIES ADJUST THEIR FACILITIES TO PROPOSED PLAN ELEVATIONS. THERE MAY BE OTHER UTILITY FACILITIES NOT SHOWN ON THESE PLANS THAT NEED TO BE ADJUSTED AS WELL. THIS WORK SHALL BE COORDINATED AND COMPLETED IN A TIME FRAME CONSISTENT WITH THE PROJECT SCHEDULE. THIS COORDINATION IS DEEMED INCIDENTAL TO THE CONTRACT AND NO ADDITIONAL COMPENSATION WILL BE PROVIDED TO THE CONTRACTOR. THESE ITEMS ARE NOT QUANTIFIED.

CAUTION UNDERGROUND UTILITIES
2 WORKING DAYS
BEFORE YOU DIG
CALL 1-800-362-2764
OHIO UTILITY PROTECTION SERVICE
CALL NON-SERVICE FACILITY OWNERS DIRECT

GRAPHIC SCALE
10 0 10 20 40
(IN FEET)
1 inch = 10 ft. Full Size
1 inch = 20 ft. Half Size

DOTE_Mono_PDF_Half.pltcfg
T:\29014A-Streetcar\CAD\Civil\S_G-GD-1026.dgn
7/15/2012 1:19:31 PM

CONTRACT DRAWING

PRINTS NOT BEARING THIS STAMP WERE MADE PRIOR TO ADVERTISING FOR BID AND ARE TO BE CONSIDERED OBSOLETE FOR CONTRACT PURPOSES.

Department of Transportation and Engineering

City of Cincinnati
City Hall
801 Plum Street
Cincinnati, Ohio 45202

CINCINNATI STREETCAR
CENTRAL BUSINESS DISTRICT

GRADING PLANS - MAIN STREET
STA 69+25 TO STA 71+75

Revisions

No.		

Drawn by CJC	Date 7/02/12
Designed by CJC	Date 7/02/12
Checked by SAJ	Date 7/02/12
Reviewed by JTB	Date 7/12/12

Consultant

PB HDR

File Number

ACC No. 23126

G-GD-1026

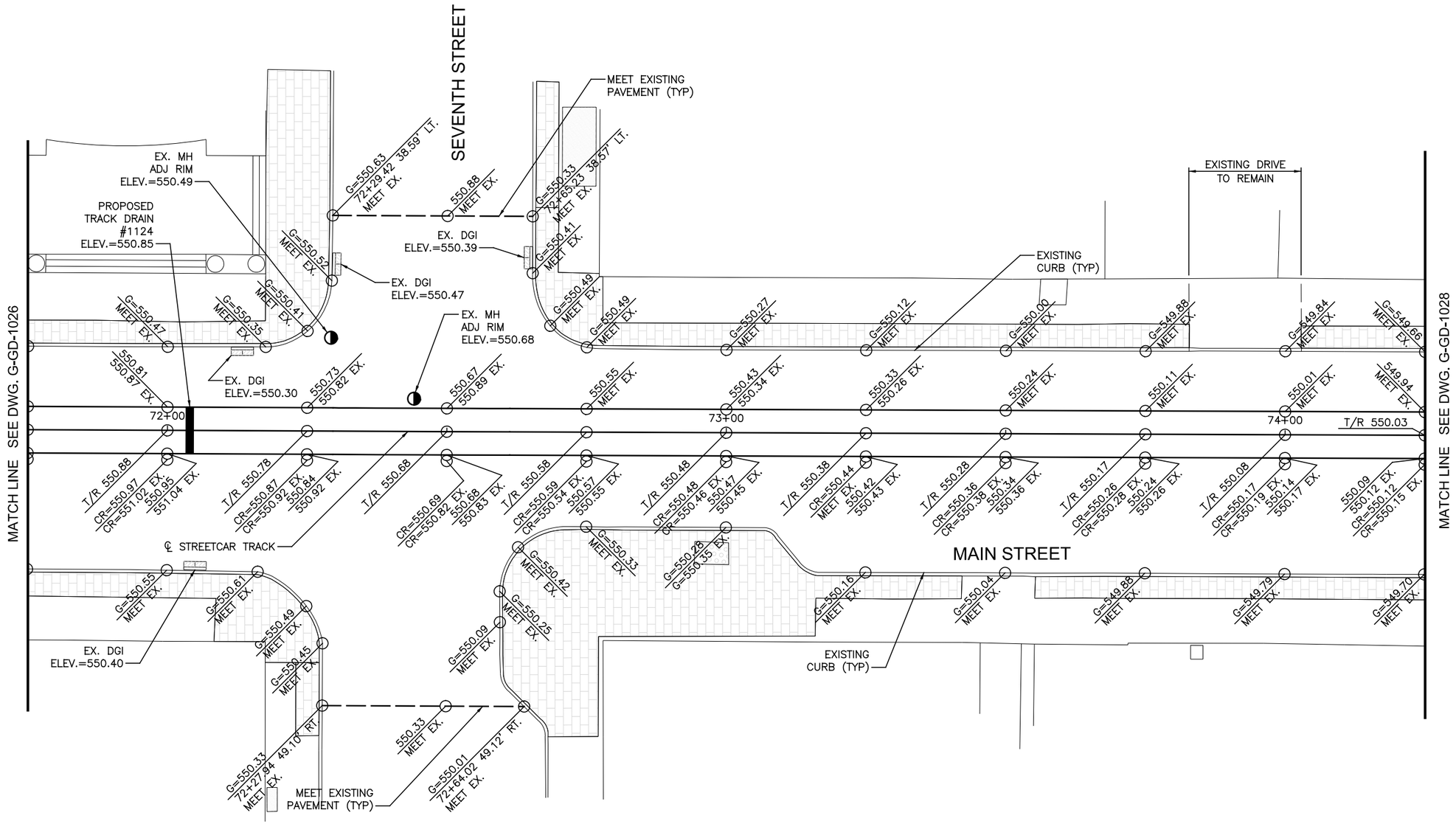

CONTRACTOR IS RESPONSIBLE FOR CONTACTING, AND COORDINATING WITH, UTILITY COMPANIES/AGENCIES AS REQUIRED TO HAVE THE UTILITY COMPANIES ADJUST THEIR FACILITIES TO PROPOSED PLAN ELEVATIONS. THERE MAY BE OTHER UTILITY FACILITIES NOT SHOWN ON THESE PLANS THAT NEED TO BE ADJUSTED AS WELL. THIS WORK SHALL BE COORDINATED AND COMPLETED IN A TIME FRAME CONSISTENT WITH THE PROJECT SCHEDULE. THIS COORDINATION IS DEEMED INCIDENTAL TO THE CONTRACT AND NO ADDITIONAL COMPENSATION WILL BE PROVIDED TO THE CONTRACTOR. THESE ITEMS ARE NOT QUANTIFIED.

CAUTION UNDERGROUND UTILITIES
2 WORKING DAYS
BEFORE YOU DIG
CALL 1-800-362-2764
OHIO UTILITY PROTECTION SERVICE
CALL NON-SERVICE FACILITY
OWNERS DIRECT

GRAPHIC SCALE
10 0 10 20 40
(IN FEET)
1 inch = 10 ft. Full Size
1 inch = 20 ft. Half Size

DOTE_Mono_PDF_Half.pltcfg
T:\29014A-Streetcar\CAD\Civil\S_G-GD-1027.dgn
7/15/2012 1:19:32 PM

CONTRACT DRAWING
PRINTS NOT BEARING THIS STAMP WERE MADE PRIOR TO ADVERTISING FOR BIDS AND ARE TO BE CONSIDERED OBSOLETE FOR CONTRACT PURPOSES.

Department of Transportation and Engineering
City of Cincinnati
City Hall
801 Plum Street
Cincinnati, Ohio 45202

CINCINNATI STREETCAR
CENTRAL BUSINESS DISTRICT
GRADING PLANS - MAIN STREET
STA 71+75 TO STA 74+25

Revisions
No.

Drawn by CJC	Date 7/02/12
Designed by CJC	Date 7/02/12
Checked by SAJ	Date 7/02/12
Reviewed by JTB	Date 7/12/12

Consultant
PB HDR

File Number
ACC No. 23126
G-GD-1027

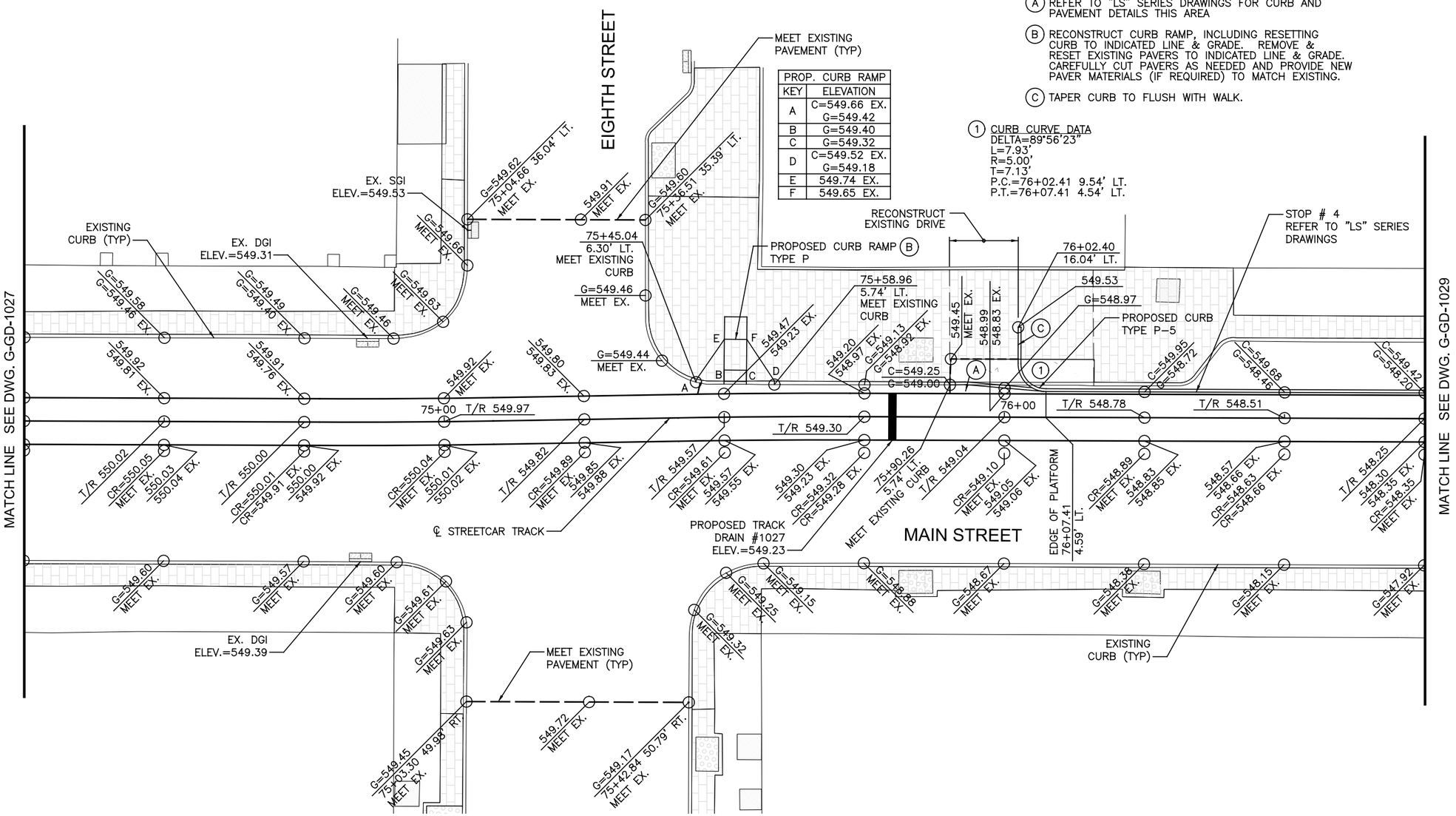

PROP. CURB RAMP	
KEY	ELEVATION
A	C=549.66 EX. G=549.42
B	G=549.40
C	G=549.32
D	C=549.52 EX. G=549.18
E	549.74 EX.
F	549.65 EX.

CONSTRUCTION NOTES:

(A) REFER TO "LS" SERIES DRAWINGS FOR CURB AND PAVEMENT DETAILS THIS AREA

(B) RECONSTRUCT CURB RAMP, INCLUDING RESETTING CURB TO INDICATED LINE & GRADE. REMOVE & RESET EXISTING PAVERS TO INDICATED LINE & GRADE. CAREFULLY CUT PAVERS AS NEEDED AND PROVIDE NEW PAVER MATERIALS (IF REQUIRED) TO MATCH EXISTING.

(C) TAPER CURB TO FLUSH WITH WALK.

(1) CURB CURVE DATA
DELTA=89°56'23"
L=7.93'
R=5.00'
T=7.13'
P.C.=76+02.41 9.54' LT.
P.T.=76+07.41 4.54' LT.

CONTRACTOR IS RESPONSIBLE FOR CONTACTING, AND COORDINATING WITH, UTILITY COMPANIES/AGENCIES AS REQUIRED TO HAVE THE UTILITY COMPANIES ADJUST THEIR FACILITIES TO PROPOSED PLAN ELEVATIONS. THERE MAY BE OTHER UTILITY FACILITIES NOT SHOWN ON THESE PLANS THAT NEED TO BE ADJUSTED AS WELL. THIS WORK SHALL BE COORDINATED AND COMPLETED IN A TIME FRAME CONSISTENT WITH THE PROJECT SCHEDULE. THIS COORDINATION IS DEEMED INCIDENTAL TO THE CONTRACT AND NO ADDITIONAL COMPENSATION WILL BE PROVIDED TO THE CONTRACTOR. THESE ITEMS ARE NOT QUANTIFIED.

CAUTION UNDERGROUND UTILITIES
2 WORKING DAYS
BEFORE YOU DIG
CALL 1-800-362-2764
OHIO UTILITY PROTECTION SERVICE
CALL NON-SERVICE FACILITY
OWNERS DIRECT

GRAPHIC SCALE
10 0 10 20 40
(IN FEET)
1 inch = 10 ft. Full Size
1 inch = 20 ft. Half Size

DOTE_Mono_PDF_Half.pltcfg
T:\29014A-Streetcar\CAD\Civil\S_G-GD-1028.dgn
7/15/2012 1:19:33 PM

CONTRACT DRAWING
PRINTS NOT BEARING THIS STAMP WERE MADE PRIOR TO ADVERTISING FOR BID AND ARE TO BE CONSIDERED OBSOLETE FOR CONTRACT PURPOSES.

Department of Transportation and Engineering
City of Cincinnati
City Hall
801 Plum Street
Cincinnati, Ohio 45202

CINCINNATI STREETCAR
CENTRAL BUSINESS DISTRICT
GRADING PLANS - MAIN STREET
STA 74+25 TO STA 76+75

Revisions
No.

Drawn by CJC	Date 7/02/12
Designed by CJC	Date 7/02/12
Checked by SAJ	Date 7/02/12
Reviewed by JTB	Date 7/12/12

Consultant
PB HDR

File Number
ACC No. 23126

G-GD-1028

CONSTRUCTION NOTES:

(A) REFER TO "LS" SERIES DRAWINGS FOR CURB AND PAVEMENT DETAILS THIS AREA

(1) CURB CURVE DATA
DELTA=40°17'48"
L=3.52'
R=5.00'
T=3.44'
P.C.=76+93.22 6.06' LT.
P.T.=76+96.34 7.51' LT.

(2) CURB CURVE DATA
DELTA=45°04'59"
L=3.93'
R=5.00'
T=3.83'
P.C.=77+00.96 12.18' LT.
P.T.=77+04.46 13.66' LT.

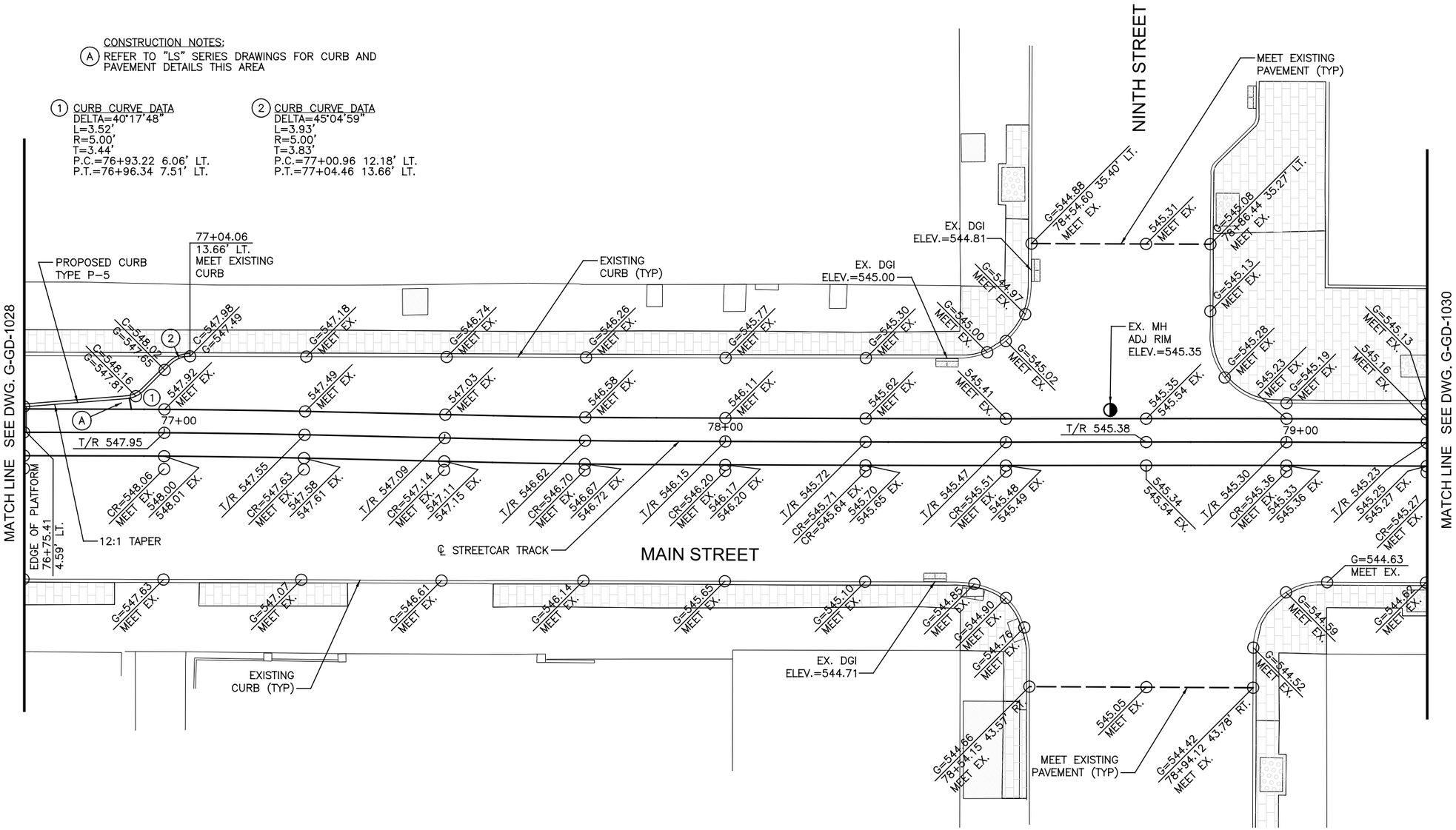

CAUTION UNDERGROUND UTILITIES
2 WORKING DAYS
BEFORE YOU DIG
CALL 1-800-362-2764
OHIO UTILITY PROTECTION SERVICE
CALL NON-SERVICE FACILITY
OWNERS DIRECT

CONTRACTOR IS RESPONSIBLE FOR CONTACTING, AND COORDINATING WITH, UTILITY COMPANIES/AGENCIES AS REQUIRED TO HAVE THE UTILITY COMPANIES ADJUST THEIR FACILITIES TO PROPOSED PLAN ELEVATIONS. THERE MAY BE OTHER UTILITY FACILITIES NOT SHOWN ON THESE PLANS THAT NEED TO BE ADJUSTED AS WELL. THIS WORK SHALL BE COORDINATED AND COMPLETED IN A TIME FRAME CONSISTENT WITH THE PROJECT SCHEDULE. THIS COORDINATION IS DEEMED INCIDENTAL TO THE CONTRACT AND NO ADDITIONAL COMPENSATION WILL BE PROVIDED TO THE CONTRACTOR. THESE ITEMS ARE NOT QUANTIFIED.

GRAPHIC SCALE
10 0 10 20 40
(IN FEET)
1 inch = 10 ft. Full Size
1 inch = 20 ft. Half Size

DOTE_Mono_PDF_Half.pltcfg
T:\29014A-Streetcar\CAD\Civil\S_G-GD-1029.dgn
7/15/2012 1:19:34 PM

CONTRACT DRAWING
PRINTS NOT BEARING THIS STAMP WERE MADE PRIOR TO ADVERTISING FOR BIDS AND ARE TO BE CONSIDERED OBSOLETE FOR CONTRACT PURPOSES.

Department of Transportation and Engineering
City of Cincinnati
City Hall
801 Plum Street
Cincinnati, Ohio 45202

CINCINNATI STREETCAR
CENTRAL BUSINESS DISTRICT
GRADING PLANS - MAIN STREET
STA 76+75 TO STA 79+25

Revisions
No.

Drawn by CJC	Date 7/02/12
Designed by CJC	Date 7/02/12
Checked by SAJ	Date 7/02/12
Reviewed by JTB	Date 7/12/12

Consultant
PB HDR

File Number

ACC No. 23126

G-GD-1029

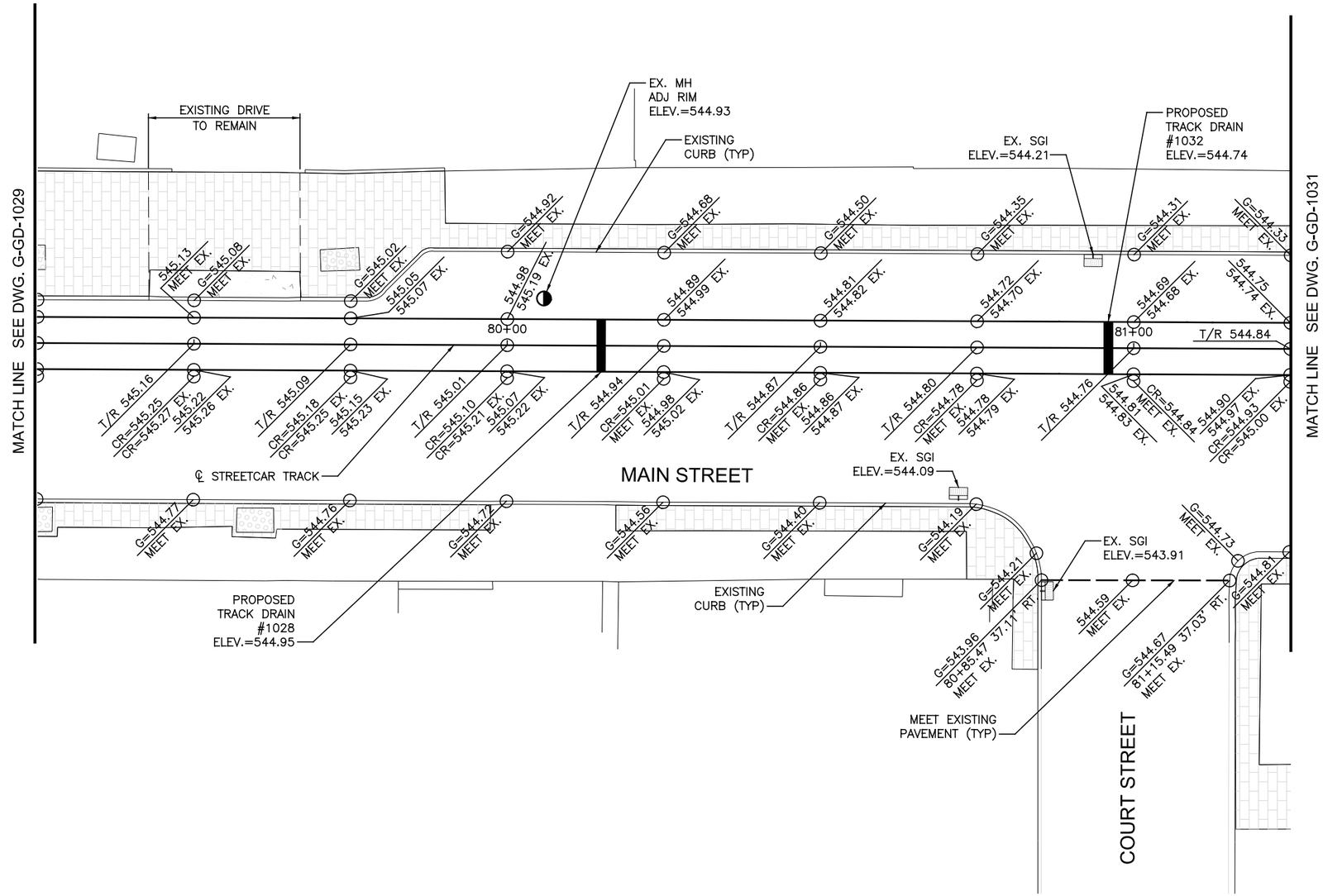

CONTRACTOR IS RESPONSIBLE FOR CONTACTING, AND COORDINATING WITH, UTILITY COMPANIES/AGENCIES AS REQUIRED TO HAVE THE UTILITY COMPANIES ADJUST THEIR FACILITIES TO PROPOSED PLAN ELEVATIONS. THERE MAY BE OTHER UTILITY FACILITIES NOT SHOWN ON THESE PLANS THAT NEED TO BE ADJUSTED AS WELL. THIS WORK SHALL BE COORDINATED AND COMPLETED IN A TIME FRAME CONSISTENT WITH THE PROJECT SCHEDULE. THIS COORDINATION IS DEEMED INCIDENTAL TO THE CONTRACT AND NO ADDITIONAL COMPENSATION WILL BE PROVIDED TO THE CONTRACTOR. THESE ITEMS ARE NOT QUANTIFIED.

CAUTION UNDERGROUND UTILITIES
2 WORKING DAYS
BEFORE YOU DIG
CALL 1-800-362-2764
OHIO UTILITY PROTECTION SERVICE
CALL NON-SERVICE FACILITY OWNERS DIRECT

GRAPHIC SCALE
10 0 10 20 40
(IN FEET)
1 inch = 10 ft. Full Size
1 inch = 20 ft. Half Size

DOTE_Mono_PDF_Half.pltcfg
T:\29014A-Streetcar\CAD\Civil\S_G-GD-1030.dgn
7/15/2012 1:19:35 PM

CONTRACT DRAWING
PRINTS NOT BEARING THIS STAMP WERE MADE PRIOR TO ADVERTISING FOR BID AND ARE TO BE CONSIDERED OBSOLETE FOR CONTRACT PURPOSES.

Department of Transportation and Engineering
City of Cincinnati
City Hall
801 Plum Street
Cincinnati, Ohio 45202

CINCINNATI STREETCAR
CENTRAL BUSINESS DISTRICT
GRADING PLANS - MAIN STREET
STA 79+25 TO STA 81+25

Revisions
No.

Drawn by CJC	Date 7/02/12
Designed by CJC	Date 7/02/12
Checked by SAJ	Date 7/02/12
Reviewed by JTB	Date 7/12/12

Consultant
PB HDR

File Number

ACC No. 23126

G-GD-1030

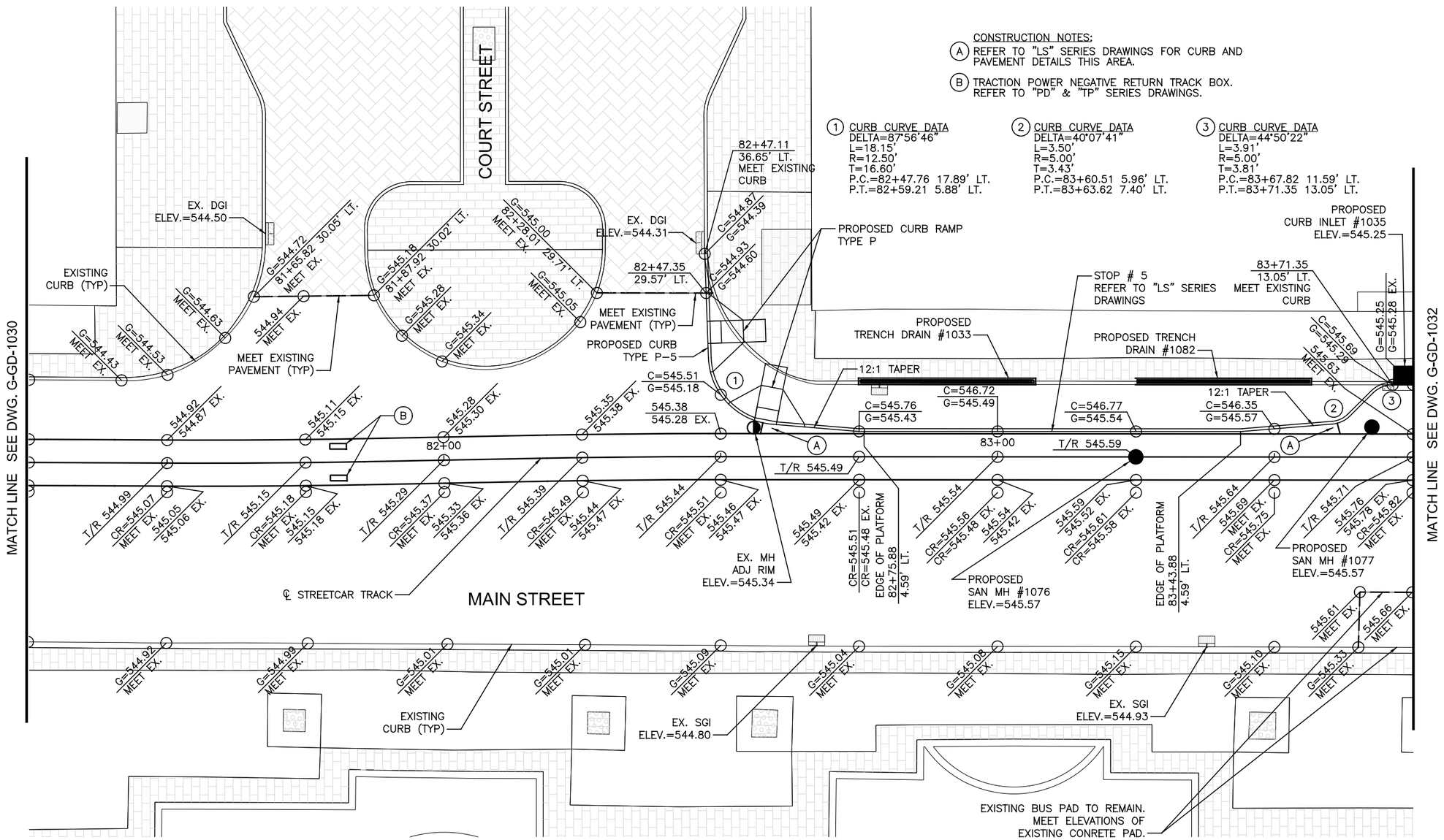

CONSTRUCTION NOTES:

(A) REFER TO "LS" SERIES DRAWINGS FOR CURB AND PAVEMENT DETAILS THIS AREA.

(B) TRACTION POWER NEGATIVE RETURN TRACK BOX. REFER TO "PD" & "TP" SERIES DRAWINGS.

(1) CURB CURVE DATA
DELTA=87°56'46"
L=18.15'
R=12.50'
T=16.60'
P.C.=82+47.76 17.89' LT.
P.T.=82+59.21 5.88' LT.

(2) CURB CURVE DATA
DELTA=40°07'41"
L=3.50'
R=5.00'
T=3.43'
P.C.=83+60.51 5.96' LT.
P.T.=83+63.62 7.40' LT.

(3) CURB CURVE DATA
DELTA=44°50'22"
L=3.91'
R=5.00'
T=3.81'
P.C.=83+67.82 11.59' LT.
P.T.=83+71.35 13.05' LT.

CONTRACTOR IS RESPONSIBLE FOR CONTACTING, AND COORDINATING WITH, UTILITY COMPANIES/AGENCIES AS REQUIRED TO HAVE THE UTILITY COMPANIES ADJUST THEIR FACILITIES TO PROPOSED PLAN ELEVATIONS. THERE MAY BE OTHER UTILITY FACILITIES NOT SHOWN ON THESE PLANS THAT NEED TO BE ADJUSTED AS WELL. THIS WORK SHALL BE COORDINATED AND COMPLETED IN A TIME FRAME CONSISTENT WITH THE PROJECT SCHEDULE. THIS COORDINATION IS DEEMED INCIDENTAL TO THE CONTRACT AND NO ADDITIONAL COMPENSATION WILL BE PROVIDED TO THE CONTRACTOR. THESE ITEMS ARE NOT QUANTIFIED.

CAUTION UNDERGROUND UTILITIES
2 WORKING DAYS
BEFORE YOU DIG
CALL 1-800-362-2764
OHIO UTILITY PROTECTION SERVICE
CALL NON-SERVICE FACILITY OWNERS DIRECT

GRAPHIC SCALE
10 0 10 20 40
(IN FEET)
1 inch = 10 ft. Full Size
1 inch = 20 ft. Half Size

DOTE_Mono_PDF_Half.pltcfg
T:\29014A-Streetcar\CAD\Civil\S_G-GD-1031.dgn
7/15/2012 1:19:36 PM

CONTRACT DRAWING

PRINTS NOT BEARING THIS STAMP WERE MADE PRIOR TO ADVERTISING FOR BIDS AND ARE TO BE CONSIDERED OBSOLETE FOR CONTRACT PURPOSES.

Department of Transportation and Engineering
City of Cincinnati
City Hall
801 Plum Street
Cincinnati, Ohio 45202

CINCINNATI STREETCAR
CENTRAL BUSINESS DISTRICT
GRADING PLANS - MAIN STREET
STA 81+25 TO STA 83+75

Revisions
No.

Drawn by CJC	Date 7/02/12
Designed by CJC	Date 7/02/12
Checked by SAJ	Date 7/02/12
Reviewed by JTB	Date 7/12/12

Consultant
PB HDR

File Number

ACC No. 23126

G-GD-1031

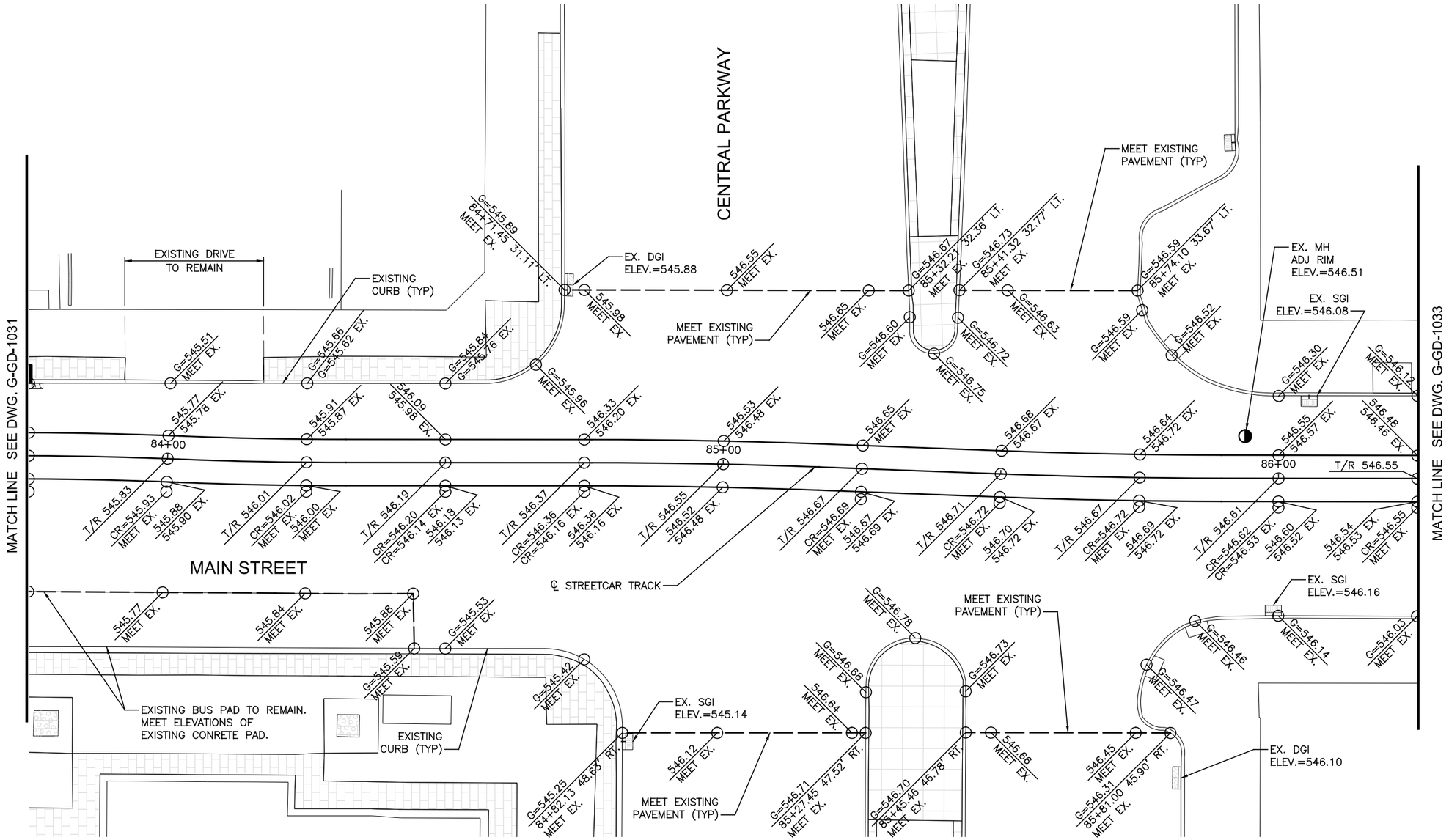

CONTRACTOR IS RESPONSIBLE FOR CONTACTING, AND COORDINATING WITH, UTILITY COMPANIES/AGENCIES AS REQUIRED TO HAVE THE UTILITY COMPANIES ADJUST THEIR FACILITIES TO PROPOSED PLAN ELEVATIONS. THERE MAY BE OTHER UTILITY FACILITIES NOT SHOWN ON THESE PLANS THAT NEED TO BE ADJUSTED AS WELL. THIS WORK SHALL BE COORDINATED AND COMPLETED IN A TIME FRAME CONSISTENT WITH THE PROJECT SCHEDULE. THIS COORDINATION IS DEEMED INCIDENTAL TO THE CONTRACT AND NO ADDITIONAL COMPENSATION WILL BE PROVIDED TO THE CONTRACTOR. THESE ITEMS ARE NOT QUANTIFIED.

CAUTION UNDERGROUND UTILITIES
2 WORKING DAYS
BEFORE YOU DIG
CALL 1-800-362-2764
OHIO UTILITY PROTECTION SERVICE
CALL NON-SERVICE FACILITY
OWNERS DIRECT

GRAPHIC SCALE
10 0 10 20 40
(IN FEET)
1 inch = 10 ft. Full Size
1 inch = 20 ft. Half Size

DOTE_Mono_PDF_Half.pltcfg
T:\29014A-Streetcar\CAD\Civil\S_G-GD-1032.dgn
7/15/2012 1:19:37 PM

CONTRACT DRAWING

PRINTS NOT BEARING THIS STAMP WERE MADE PRIOR TO ADVERTISING FOR BIDS AND ARE TO BE CONSIDERED OBSOLETE FOR CONTRACT PURPOSES.

Department of Transportation and Engineering
City of Cincinnati
City Hall
801 Plum Street
Cincinnati, Ohio 45202

CINCINNATI STREETCAR
CENTRAL BUSINESS DISTRICT
GRADING PLANS - MAIN STREET
STA 83+75 TO STA 86+25

Revisions
No.

Drawn by CJC	Date 7/02/12
Designed by CJC	Date 7/02/12
Checked by SAJ	Date 7/02/12
Reviewed by JTB	Date 7/12/12

Consultant
PB HDR

File Number

ACC No. 23126

G-GD-1032

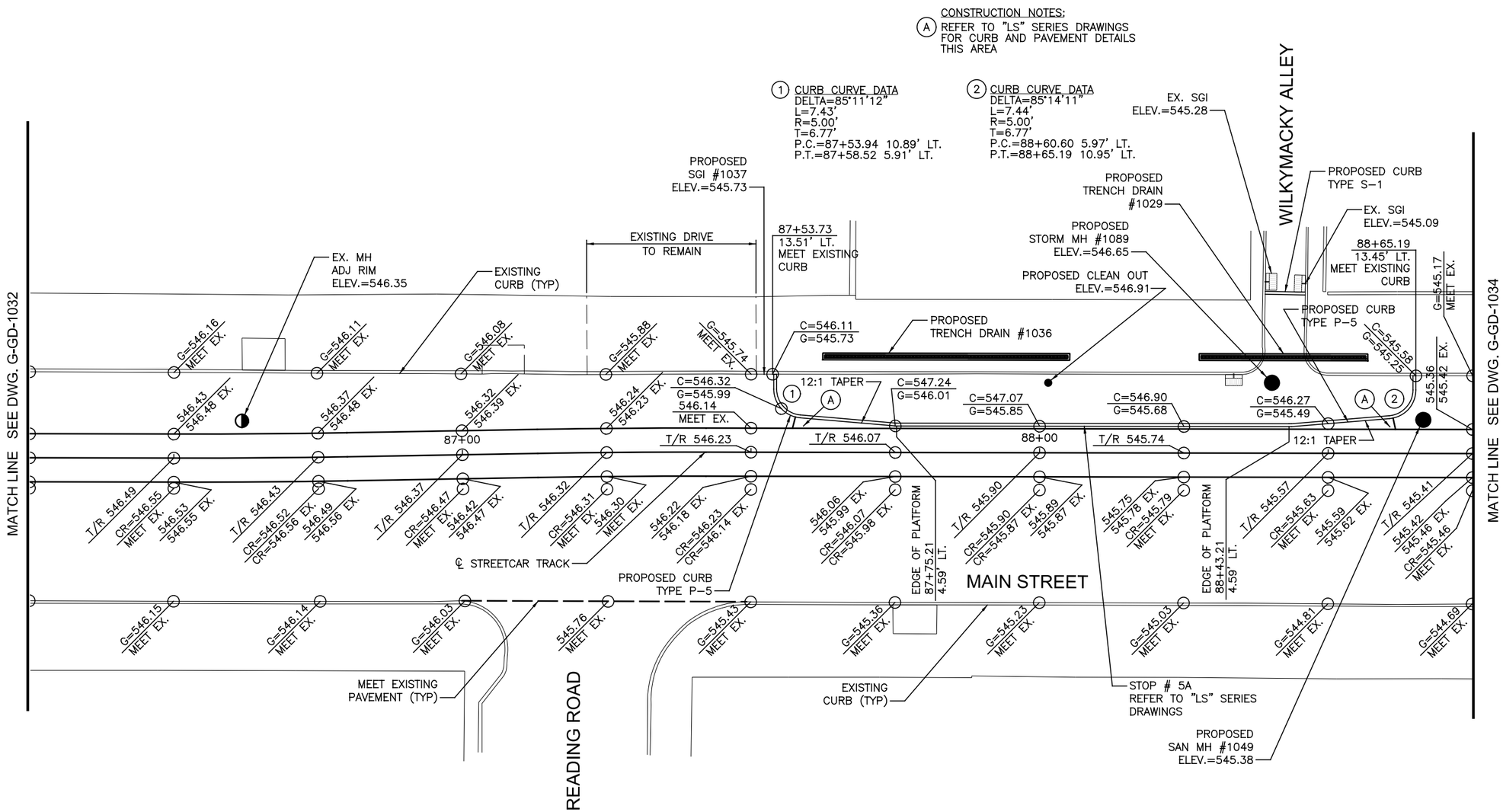

CONTRACTOR IS RESPONSIBLE FOR CONTACTING, AND COORDINATING WITH, UTILITY COMPANIES/AGENCIES AS REQUIRED TO HAVE THE UTILITY COMPANIES ADJUST THEIR FACILITIES TO PROPOSED PLAN ELEVATIONS. THERE MAY BE OTHER UTILITY FACILITIES NOT SHOWN ON THESE PLANS THAT NEED TO BE ADJUSTED AS WELL. THIS WORK SHALL BE COORDINATED AND COMPLETED IN A TIME FRAME CONSISTENT WITH THE PROJECT SCHEDULE. THIS COORDINATION IS DEEMED INCIDENTAL TO THE CONTRACT AND NO ADDITIONAL COMPENSATION WILL BE PROVIDED TO THE CONTRACTOR. THESE ITEMS ARE NOT QUANTIFIED.

CAUTION UNDERGROUND UTILITIES
2 WORKING DAYS
BEFORE YOU DIG
CALL 1-800-362-2764
OHIO UTILITY PROTECTION SERVICE
CALL NON-SERVICE FACILITY OWNERS DIRECT

GRAPHIC SCALE
10 0 10 20 40
(IN FEET)
1 inch = 10 ft. Full Size
1 inch = 20 ft. Half Size

DOTE_Mono_PDF_Half.pltcfg
T:\29014A-Streetcar\CAD\Civil\S_G-GD-1033.dgn
7/15/2012 1:19:38 PM

CONTRACT DRAWING

PRINTS NOT BEARING THIS STAMP WERE MADE PRIOR TO ADVERTISING FOR BIDS AND ARE TO BE CONSIDERED OBSOLETE FOR CONTRACT PURPOSES.

Department of Transportation and Engineering
City of Cincinnati
City Hall
801 Plum Street
Cincinnati, Ohio 45202

CINCINNATI STREETCAR
CENTRAL BUSINESS DISTRICT
GRADING PLANS - MAIN STREET
STA 86+25 TO STA 88+75

Revisions
No.

Drawn by CJC Date 7/02/12
Designed by CJC Date 7/02/12
Checked by SAJ Date 7/02/12
Reviewed by JTB Date 7/12/12

Consultant
PB HDR

File Number

ACC No. 23126

G-GD-1033

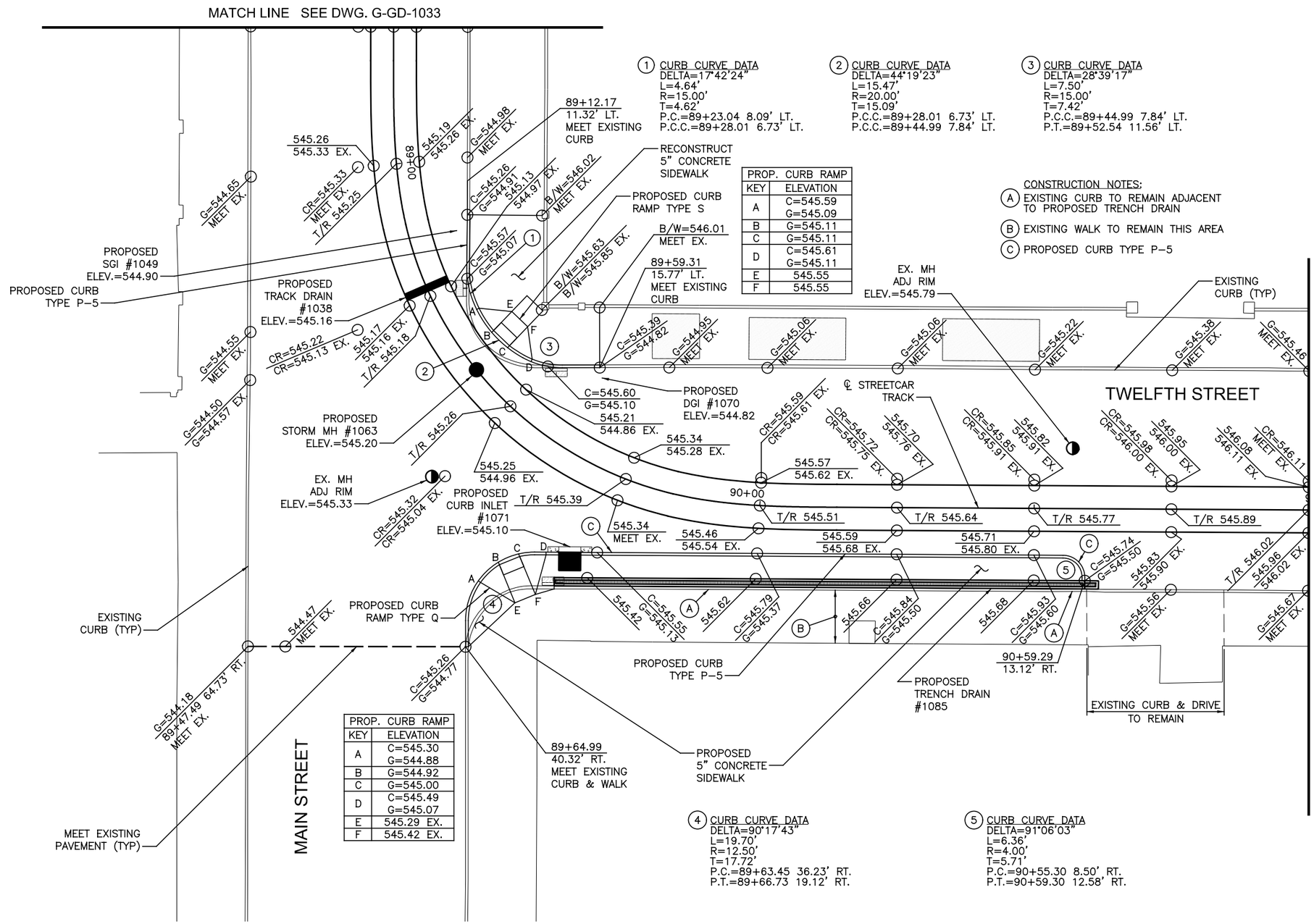

(1) CURB CURVE DATA
DELTA=17°42'24"
L=4.64'
R=15.00'
T=4.62'
P.C.=89+23.04 8.09' LT.
P.C.C.=89+28.01 6.73' LT.

(2) CURB CURVE DATA
DELTA=44°19'23"
L=15.47'
R=20.00'
T=15.09'
P.C.C.=89+28.01 6.73' LT.
P.C.C.=89+44.99 7.84' LT.

(3) CURB CURVE DATA
DELTA=28°39'17"
L=7.50'
R=15.00'
T=7.42'
P.C.C.=89+44.99 7.84' LT.
P.T.=89+52.54 11.56' LT.

PROP. CURB RAMP	
KEY	ELEVATION
A	C=545.59 G=545.09
B	G=545.11
C	G=545.11
D	C=545.61 G=545.11
E	545.55
F	545.55

CONSTRUCTION NOTES:
(A) EXISTING CURB TO REMAIN ADJACENT TO PROPOSED TRENCH DRAIN
(B) EXISTING WALK TO REMAIN THIS AREA
(C) PROPOSED CURB TYPE P-5

PROP. CURB RAMP	
KEY	ELEVATION
A	C=545.30 G=544.88
B	G=544.92
C	G=545.00
D	C=545.49 G=545.07
E	545.29 EX.
F	545.42 EX.

(4) CURB CURVE DATA
DELTA=90°17'43"
L=19.70'
R=12.50'
T=17.72'
P.C.=89+63.45 36.23' RT.
P.T.=89+66.73 19.12' RT.

(5) CURB CURVE DATA
DELTA=91°06'03"
L=6.36'
R=4.00'
T=5.71'
P.C.=90+55.30 8.50' RT.
P.T.=90+59.30 12.58' RT.

CONTRACTOR IS RESPONSIBLE FOR CONTACTING, AND COORDINATING WITH, UTILITY COMPANIES/AGENCIES AS REQUIRED TO HAVE THE UTILITY COMPANIES ADJUST THEIR FACILITIES TO PROPOSED PLAN ELEVATIONS. THERE MAY BE OTHER UTILITY FACILITIES NOT SHOWN ON THESE PLANS THAT NEED TO BE ADJUSTED AS WELL. THIS WORK SHALL BE COORDINATED AND COMPLETED IN A TIME FRAME CONSISTENT WITH THE PROJECT SCHEDULE. THIS COORDINATION IS DEEMED INCIDENTAL TO THE CONTRACT AND NO ADDITIONAL COMPENSATION WILL BE PROVIDED TO THE CONTRACTOR. THESE ITEMS ARE NOT QUANTIFIED.

CAUTION UNDERGROUND UTILITIES
2 WORKING DAYS
BEFORE YOU DIG
CALL 1-800-362-2764
OHIO UTILITY PROTECTION SERVICE
CALL NON-SERVICE FACILITY OWNERS DIRECT

GRAPHIC SCALE
10 0 10 20 40
(IN FEET)
1 inch = 10 ft. Full Size
1 inch = 20 ft. Half Size

DOTE_Mono_PDF_Half.pltcfg
T:\29014A-Streetcar\CAD\Civil\S_G-GD-1034.dgn
7/15/2012 1:19:39 PM

CONTRACT DRAWING
PRINTS NOT BEARING THIS STAMP WERE MADE PRIOR TO ADVERTISING FOR BIDS AND ARE TO BE CONSIDERED OBSOLETE FOR CONTRACT PURPOSES.

Department of Transportation and Engineering
City of Cincinnati
City Hall
801 Plum Street
Cincinnati, Ohio 45202

CINCINNATI STREETCAR
CENTRAL BUSINESS DISTRICT
GRADING PLANS - TWELFTH STREET
STA 88+75 TO STA 91+00

Revisions
No.

Date 7/02/12	Drawn by CJC
Date 7/02/12	Designed by CJC
Date 7/02/12	Checked by SAJ
Date 7/12/12	Reviewed by JTB

Consultant
PB HDR

File Number
ACC No. 23126

G-GD-1034

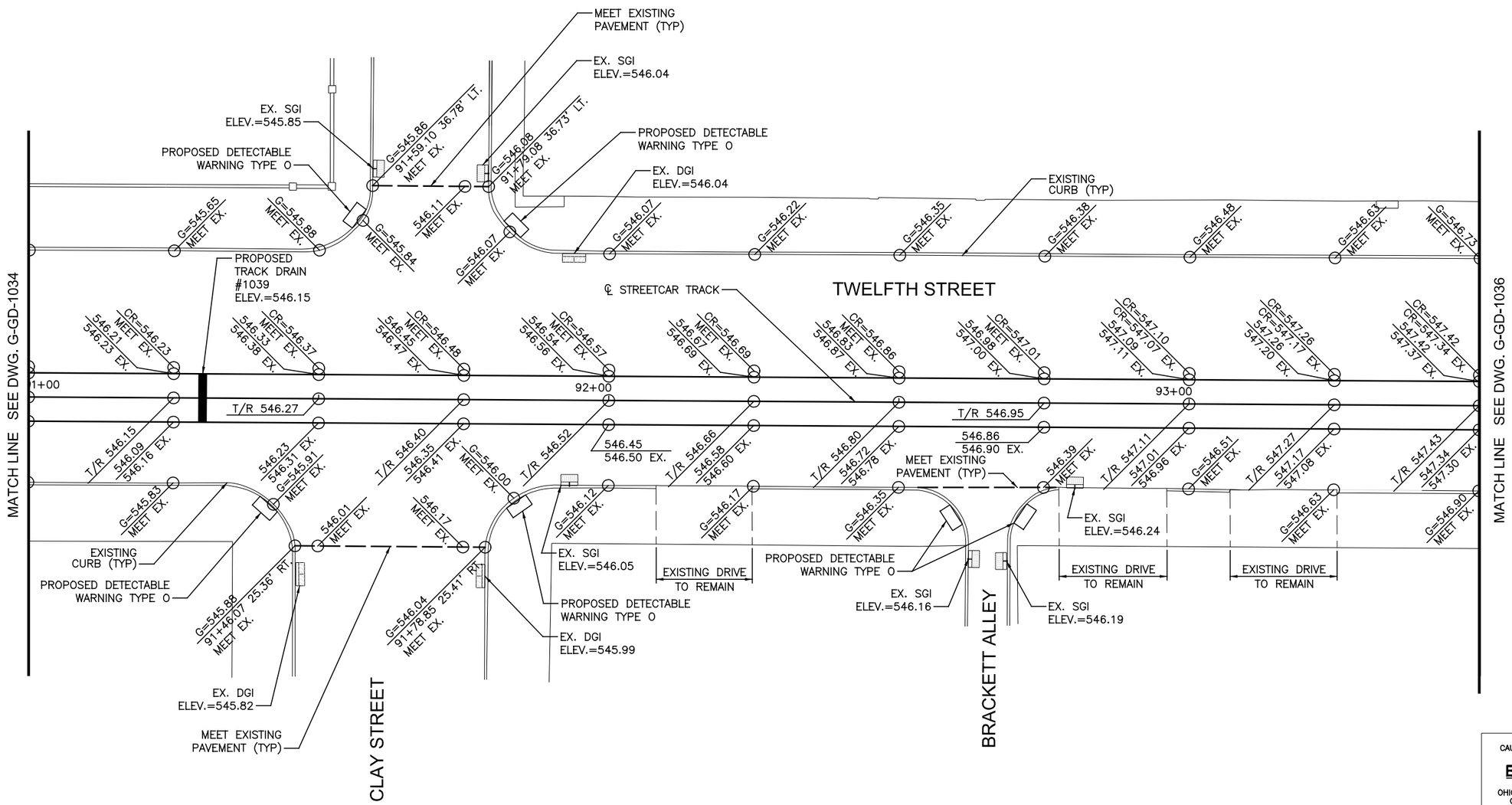

CONTRACTOR IS RESPONSIBLE FOR CONTACTING, AND COORDINATING WITH, UTILITY COMPANIES/AGENCIES AS REQUIRED TO HAVE THE UTILITY COMPANIES ADJUST THEIR FACILITIES TO PROPOSED PLAN ELEVATIONS. THERE MAY BE OTHER UTILITY FACILITIES NOT SHOWN ON THESE PLANS THAT NEED TO BE ADJUSTED AS WELL. THIS WORK SHALL BE COORDINATED AND COMPLETED IN A TIME FRAME CONSISTENT WITH THE PROJECT SCHEDULE. THIS COORDINATION IS DEEMED INCIDENTAL TO THE CONTRACT AND NO ADDITIONAL COMPENSATION WILL BE PROVIDED TO THE CONTRACTOR. THESE ITEMS ARE NOT QUANTIFIED.

CAUTION UNDERGROUND UTILITIES
2 WORKING DAYS
BEFORE YOU DIG
CALL 1-800-362-2764
OHIO UTILITY PROTECTION SERVICE
CALL NON-SERVICE FACILITY
OWNERS DIRECT

GRAPHIC SCALE
10 0 10 20 40
(IN FEET)
1 inch = 10 ft. Full Size
1 inch = 20 ft. Half Size

DOTE_Mono_PDF_Half.pltcfg
T:\29014A-Streetcar\CAD\Civil\S_G-GD-1035.dgn
7/15/2012 1:19:41 PM

CONTRACT DRAWING

PRINTS NOT BEARING THIS STAMP WERE MADE PRIOR TO ADVERTISING FOR BIDS AND ARE TO BE CONSIDERED OBSOLETE FOR CONTRACT PURPOSES.

Department of Transportation and Engineering

City of Cincinnati
City Hall
801 Plum Street
Cincinnati, Ohio 45202

CINCINNATI STREETCAR
CENTRAL BUSINESS DISTRICT
GRADING PLANS - TWELFTH STREET
STA 91+00 TO STA 93+50

Revisions
No.

Drawn by CJC	Date 7/02/12
Designed by CJC	Date 7/02/12
Checked by SAJ	Date 7/02/12
Reviewed by JTB	Date 7/12/12

Consultant

PB HDR

File Number

ACC No. 23126

G-GD-1035

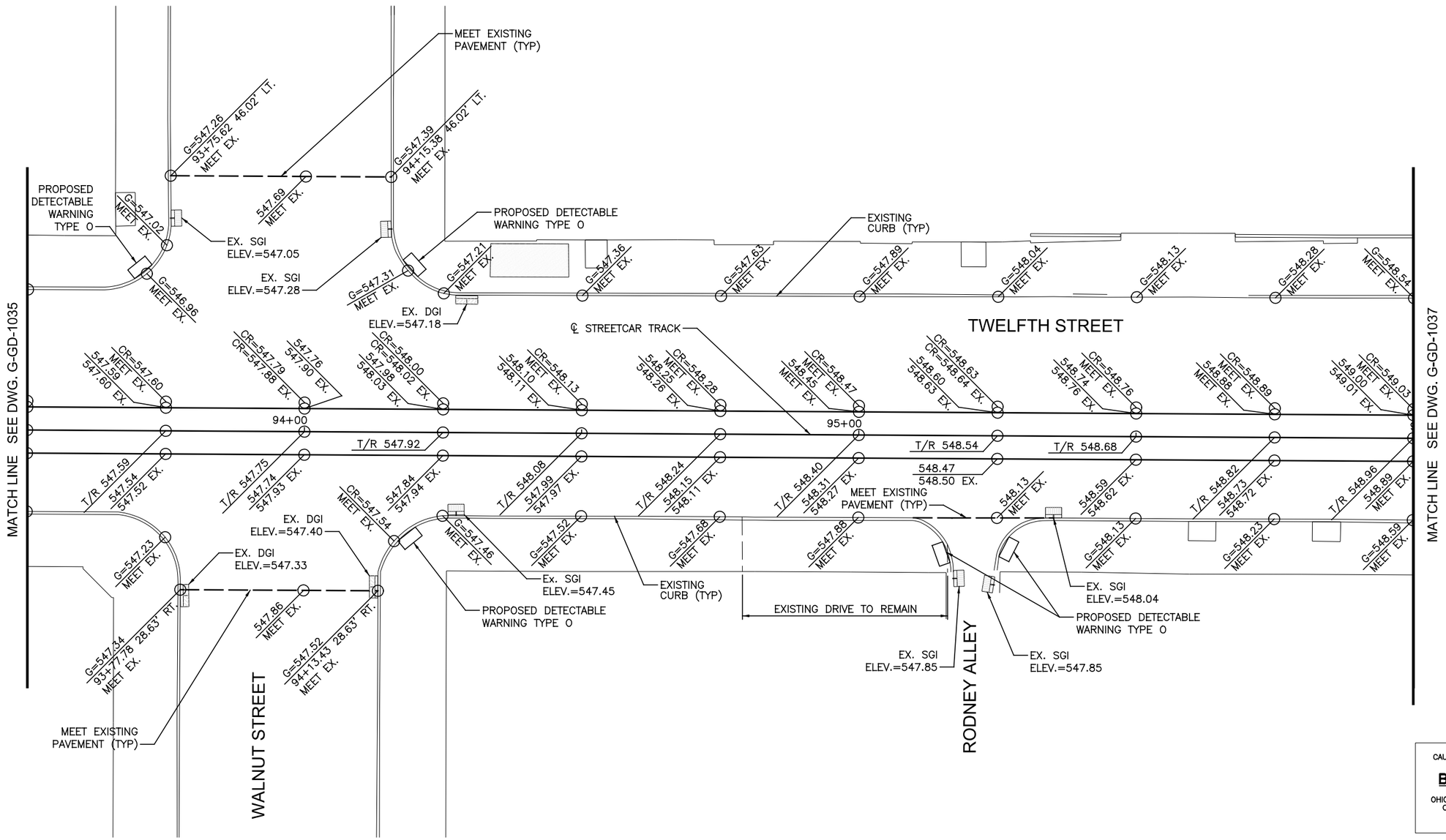

CONTRACTOR IS RESPONSIBLE FOR CONTACTING, AND COORDINATING WITH, UTILITY COMPANIES/AGENCIES AS REQUIRED TO HAVE THE UTILITY COMPANIES ADJUST THEIR FACILITIES TO PROPOSED PLAN ELEVATIONS. THERE MAY BE OTHER UTILITY FACILITIES NOT SHOWN ON THESE PLANS THAT NEED TO BE ADJUSTED AS WELL. THIS WORK SHALL BE COORDINATED AND COMPLETED IN A TIME FRAME CONSISTENT WITH THE PROJECT SCHEDULE. THIS COORDINATION IS DEEMED INCIDENTAL TO THE CONTRACT AND NO ADDITIONAL COMPENSATION WILL BE PROVIDED TO THE CONTRACTOR. THESE ITEMS ARE NOT QUANTIFIED.

CAUTION UNDERGROUND UTILITIES
2 WORKING DAYS
BEFORE YOU DIG
CALL 1-800-362-2764
OHIO UTILITY PROTECTION SERVICE
CALL NON-SERVICE FACILITY OWNERS DIRECT

GRAPHIC SCALE
10 0 10 20 40
(IN FEET)
1 inch = 10 ft. Full Size
1 inch = 20 ft. Half Size

DOTE_Mono_PDF_Half.pltcfg
T:\29014A-Streetcar\CAD\Civil\S_G-GD-1036.dgn
7/15/2012 1:19:42 PM

CONTRACT DRAWING
PRINTS NOT BEARING THIS STAMP WERE MADE PRIOR TO ADVERTISING FOR BIDS AND ARE TO BE CONSIDERED OBSOLETE FOR CONTRACT PURPOSES.

Department of Transportation and Engineering
City of Cincinnati
City Hall
801 Plum Street
Cincinnati, Ohio 45202

CINCINNATI STREETCAR
CENTRAL BUSINESS DISTRICT
GRADING PLANS - TWELFTH STREET
STA 93+50 TO STA 96+00

Revisions
No.

Date 7/02/12	Drawn by CJC
Date 7/02/12	Designed by CJC
Date 7/02/12	Checked by SAJ
Date 7/12/12	Reviewed by JTB

Consultant
PB HDR

File Number
ACC No. 23126

G-GD-1036

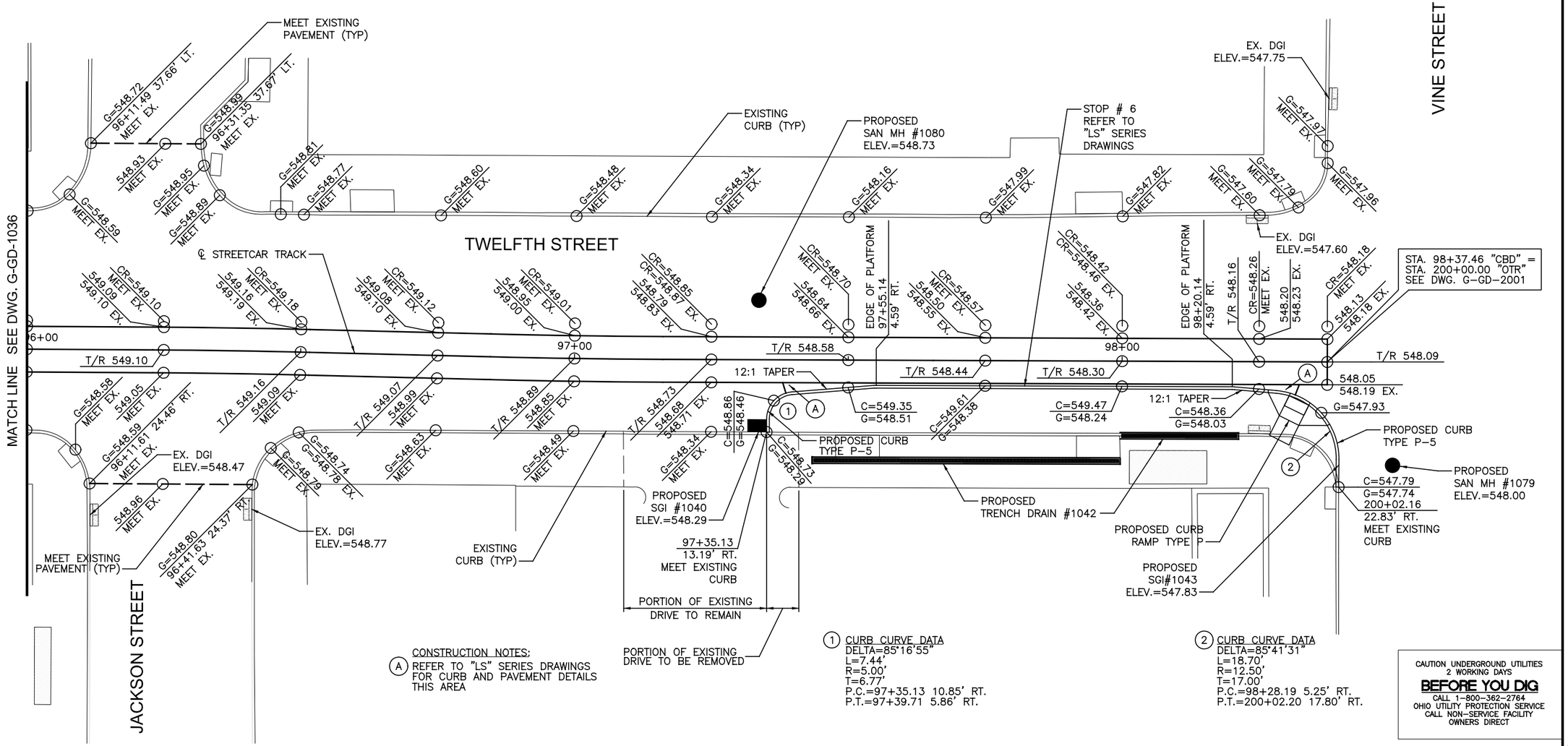

CONSTRUCTION NOTES:

(A) REFER TO "LS" SERIES DRAWINGS FOR CURB AND PAVEMENT DETAILS THIS AREA

(1) CURB CURVE DATA
DELTA=85°16'55"
L=7.44'
R=5.00'
T=6.77'
P.C.=97+35.13 10.85' RT.
P.T.=97+39.71 5.86' RT.

(2) CURB CURVE DATA
DELTA=85°41'31"
L=18.70'
R=12.50'
T=17.00'
P.C.=98+28.19 5.25' RT.
P.T.=200+02.20 17.80' RT.

CAUTION UNDERGROUND UTILITIES
2 WORKING DAYS
BEFORE YOU DIG
CALL 1-800-362-2764
OHIO UTILITY PROTECTION SERVICE
CALL NON-SERVICE FACILITY OWNERS DIRECT

CONTRACTOR IS RESPONSIBLE FOR CONTACTING, AND COORDINATING WITH, UTILITY COMPANIES/AGENCIES AS REQUIRED TO HAVE THE UTILITY COMPANIES ADJUST THEIR FACILITIES TO PROPOSED PLAN ELEVATIONS. THERE MAY BE OTHER UTILITY FACILITIES NOT SHOWN ON THESE PLANS THAT NEED TO BE ADJUSTED AS WELL. THIS WORK SHALL BE COORDINATED AND COMPLETED IN A TIME FRAME CONSISTENT WITH THE PROJECT SCHEDULE. THIS COORDINATION IS DEEMED INCIDENTAL TO THE CONTRACT AND NO ADDITIONAL COMPENSATION WILL BE PROVIDED TO THE CONTRACTOR. THESE ITEMS ARE NOT QUANTIFIED.

GRAPHIC SCALE
10 0 10 20 40
(IN FEET)
1 inch = 10 ft. Full Size
1 inch = 20 ft. Half Size

DOTE_Mono_PDF_Half.pltcfg
T:\29014A-Streetcar\CAD\Civil\S_G-GD-1037.dgn
7/15/2012 1:19:43 PM

DEPARTMENT OF TRANSPORTATION & ENGINEERING CITY OF CINCINNATI OHIO

CONTRACT DRAWING

PRINTS NOT BEARING THIS STAMP WERE MADE PRIOR TO ADVERTISING FOR BIDS AND ARE TO BE CONSIDERED OBSOLETE FOR CONTRACT PURPOSES.

Department of Transportation and Engineering
City of Cincinnati
City Hall
801 Plum Street
Cincinnati, Ohio 45202

CINCINNATI STREETCAR
CENTRAL BUSINESS DISTRICT
GRADING PLANS - TWELFTH STREET
STA 96+00 TO STA 98+37.46

Revisions
No.

Date 7/02/12	Drawn by CJC
Date 7/02/12	Designed by CJC
Date 7/02/12	Checked by SAJ
Date 7/12/12	Reviewed by JTB

Consultant
PB HDR

File Number

ACC No. 23126

G-GD-1037

CONSTRUCTION NOTES:

(A) RECONSTRUCT CURB RAMPS, INCLUDING RESETTING CURBS TO INDICATED LINE AND GRADE. REMOVE EXISTING CONCRETE WALK AS REQUIRED TO NEAREST JOINT AND REPLACE TO MEET INDICATED LINE AND GRADE.

LEGEND:

B/W	BACK OF WALK
C	TOP OF CURB
EP	EDGE OF PAVEMENT
CR	CROWN POINT
EX.	EXISTING
G	GUTTER
T/R	TOP OF RAIL
T/S	TOP OF SLAB
— — —	LIMITS OF CONSTRUCTION

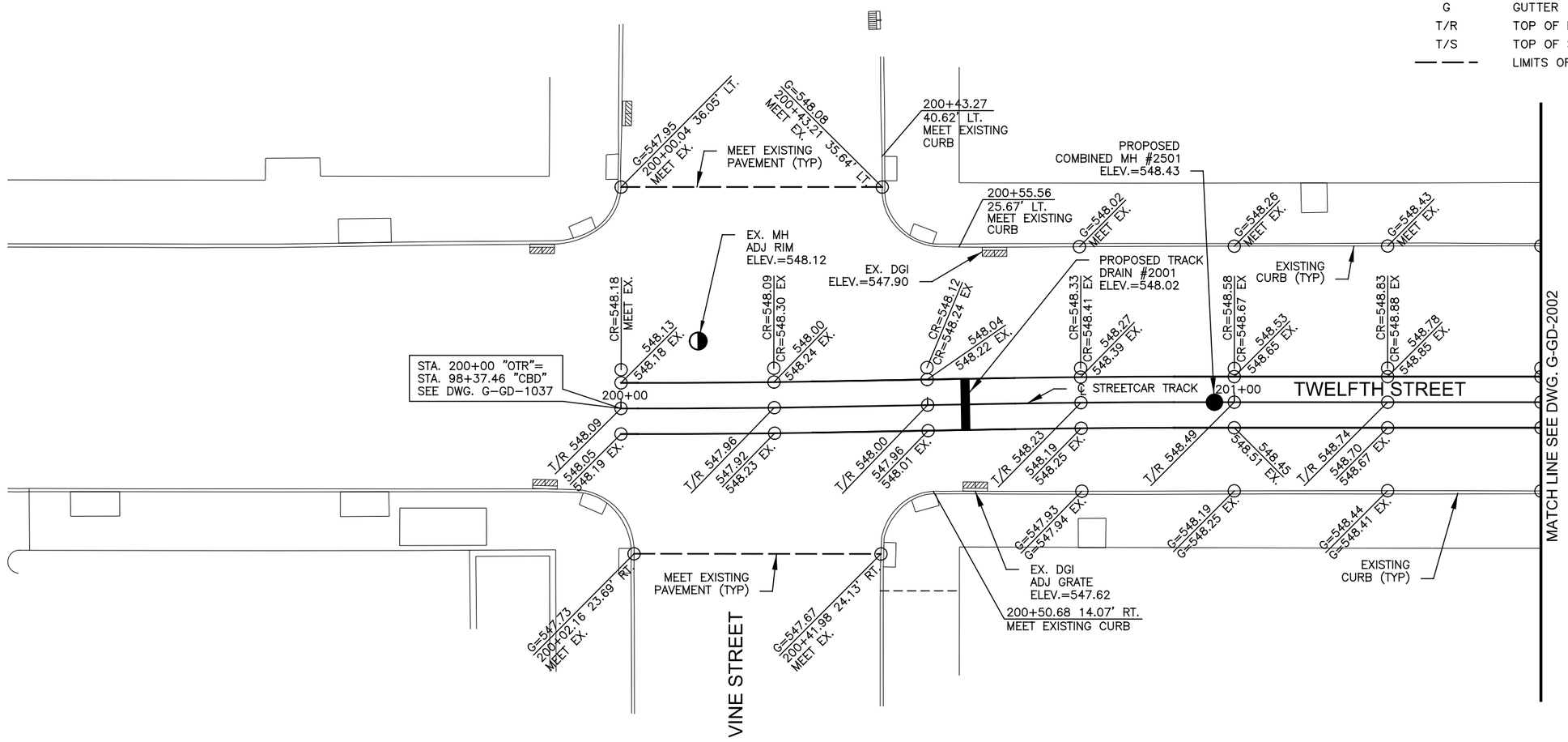

CAUTION UNDERGROUND UTILITIES
2 WORKING DAYS
BEFORE YOU DIG
CALL 1-800-362-2764
OHIO UTILITY PROTECTION SERVICE
CALL NON-SERVICE FACILITY
OWNERS DIRECT

CONTRACTOR IS RESPONSIBLE FOR CONTACTING, AND COORDINATING WITH, UTILITY COMPANIES/AGENCIES AS REQUIRED TO HAVE THE UTILITY COMPANIES ADJUST THEIR FACILITIES TO PROPOSED PLAN ELEVATIONS. THERE MAY BE OTHER UTILITY FACILITIES NOT SHOWN ON THESE PLANS THAT NEED TO BE ADJUSTED AS WELL. THIS WORK SHALL BE COORDINATED AND COMPLETED IN A TIME FRAME CONSISTENT WITH PROJECT SCHEDULE. THIS COORDINATION IS DEEMED INCIDENTAL TO THE CONTRACT AND NO ADDITIONAL COMPENSATION WILL BE PROVIDED TO THE CONTRACTOR. THESE ITEMS ARE NOT QUANTIFIED.

GRAPHIC SCALE

10 0 10 20 40

(IN FEET)
1 inch = 10 ft. Full Size
1 inch = 20 ft. Half Size

DOTE_Mono_PDF_Half.pltcfg
c:\pwworking\pitt\d0309031\S_G-GD-2001.dgn
Wednesday, July 11, 2012 11:57:04 AM

CONTRACT DRAWING

PRINTS NOT BEARING THIS STAMP WERE MADE PRIOR TO ADVERTISING FOR BIDS AND ARE TO BE CONSIDERED OBSOLETE FOR CONTRACT PURPOSES.

Department of Transportation and Engineering

City of Cincinnati
City Hall
801 Plum Street
Cincinnati, Ohio 45202

CINCINNATI STREETCAR
OVER THE RHINE
GRADING PLAN - TWELFTH STREET
STA 200+00 TO STA 201+50

Revisions

No.		

Drawn by SAB	Date 07/02/12
Designed by SAB	Date 07/02/12
Checked by KVL	Date 07/02/12
Reviewed by JTB	Date 07/12/12

Consultant

PB HDR

File Number

ACC No.
23126

G-GD-2001

CONSTRUCTION NOTES:

(A) RECONSTRUCT CURB RAMPS, INCLUDING RESETTING CURBS TO INDICATED LINE AND GRADE. REMOVE EXISTING CONCRETE WALK AS REQUIRED TO NEAREST JOINT AND REPLACE TO MEET INDICATED LINE AND GRADE.

PROP. CURB RAMP	
KEY	ELEVATION
A	C=548.62
B	548.67
C	C=548.71
D	549.17
E	549.25
F	549.20
G	549.12

PROP. CURB RAMP	
KEY	ELEVATION
A	C=548.97
B	548.78
C	C=549.20
D	549.22
E	549.30
F	549.36
G	549.28

PROP. CURB RAMP	
KEY	ELEVATION
A	549.66
B	C=550.08
C	C=550.16
D	550.24
E	550.16

PROP. CURB RAMP	
KEY	ELEVATION
A	C=549.99
B	549.62
C	550.09
D	550.15
E	C=550.07

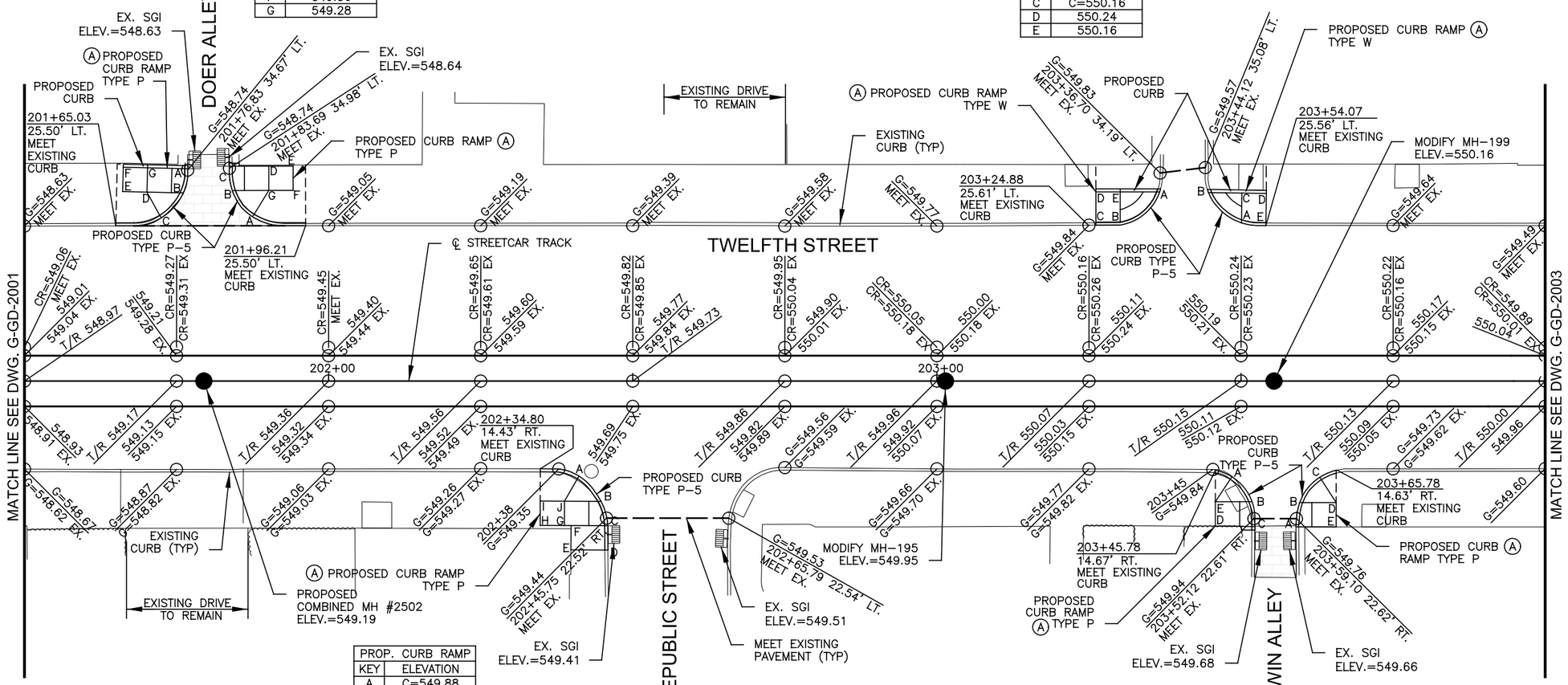

PROP. CURB RAMP	
KEY	ELEVATION
A	C=549.88
B	549.45
C	549.44
D	C=549.75
E	549.98
F	549.78
G	549.84
H	549.86
I	549.80
J	549.76

PROP. CURB RAMP	
KEY	ELEVATION
A	C=550.32
B	549.72
C	C=550.14
D	550.24
E	550.14

PROP. CURB RAMP	
KEY	ELEVATION
A	549.76
B	549.76
C	C=550.24
D	550.24
E	550.24

CAUTION UNDERGROUND UTILITIES
2 WORKING DAYS
BEFORE YOU DIG
CALL 1-800-362-2764
OHIO UTILITY PROTECTION SERVICE
CALL NON-SERVICE FACILITY
OWNERS DIRECT

CONTRACTOR IS RESPONSIBLE FOR CONTACTING, AND COORDINATING WITH, UTILITY COMPANIES/AGENCIES AS REQUIRED TO HAVE THE UTILITY COMPANIES ADJUST THEIR FACILITIES TO PROPOSED PLAN ELEVATIONS. THERE MAY BE OTHER UTILITY FACILITIES NOT SHOWN ON THESE PLANS THAT NEED TO BE ADJUSTED AS WELL. THIS WORK SHALL BE COORDINATED AND COMPLETED IN A TIME FRAME CONSISTENT WITH PROJECT SCHEDULE. THIS COORDINATION IS DEEMED INCIDENTAL TO THE CONTRACT AND NO ADDITIONAL COMPENSATION WILL BE PROVIDED TO THE CONTRACTOR. THESE ITEMS ARE NOT QUANTIFIED.

GRAPHIC SCALE
10 0 10 20 40
(IN FEET)
1 inch = 10 ft. Full Size
1 inch = 20 ft. Half Size

DOTE_Mono_PDF_Half.pltcfg
c:\pwworking\pitt\d0509031\S_G-GD-2002.dgn
Wednesday, July 11, 2012 11:57:45 AM MO AM

CONTRACT DRAWING

PRINTS NOT BEARING THIS STAMP WERE MADE PRIOR TO ADVERTISING FOR BIDS AND ARE TO BE CONSIDERED OBSOLETE FOR CONTRACT PURPOSES.

Department of Transportation and Engineering

City of Cincinnati
City Hall
801 Plum Street
Cincinnati, Ohio 45202

CINCINNATI STREETCAR
OVER THE RHINE
GRADING PLAN - TWELFTH STREET
STA 201+50 TO STA 204+00

Revisions
No.

Drawn by SAB	Date 07/02/12
Designed by SAB	Date 07/02/12
Checked by KVL	Date 07/02/12
Reviewed by JTB	Date 07/12/12

Consultant

PB HDR

File Number

ACC No. 23126

G-GD-2002

CONSTRUCTION NOTES:

(A) RECONSTRUCT CURB RAMPS, INCLUDING RESETTING CURBS TO INDICATED LINE AND GRADE. REMOVE EXISTING CONCRETE WALK AS REQUIRED TO NEAREST JOINT AND REPLACE TO MEET INDICATED LINE AND GRADE.

(B) REMOVE, SALVAGE AND RESET EXISTING GRANITE CURBS TO INDICATED LINE AND GRADE. REMOVE EXISTING CONCRETE WALK AS REQUIRED AND REPLACE TO MEET INDICATED LINE AND GRADE. PROVIDE NEW CURB AS REQUIRED TO MATCH EXISTING.

CONTRACTOR IS RESPONSIBLE FOR CONTACTING, AND COORDINATING WITH, UTILITY COMPANIES/AGENCIES AS REQUIRED TO HAVE THE UTILITY COMPANIES ADJUST THEIR FACILITIES TO PROPOSED PLAN ELEVATIONS. THERE MAY BE OTHER UTILITY FACILITIES NOT SHOWN ON THESE PLANS THAT NEED TO BE ADJUSTED AS WELL. THIS WORK SHALL BE COORDINATED AND COMPLETED IN A TIME FRAME CONSISTENT WITH PROJECT SCHEDULE. THIS COORDINATION IS DEEMED INCIDENTAL TO THE CONTRACT AND NO ADDITIONAL COMPENSATION WILL BE PROVIDED TO THE CONTRACTOR. THESE ITEMS ARE NOT QUANTIFIED.

(1) CURB CURVE DATA
DELTA=90° 00'00"
L=31.42'
R=20.00'
T=14.62'
P.C.=204+48.30 25.56' LT.
P.T.=286+87.14 14.62' LT.

PROP. CURB RAMP	
KEY	ELEVATION
A	C=549.87
B	549.36
C	549.36
D	C=549.85
E	549.58
F	549.58

PROP. CURB RAMP	
KEY	ELEVATION
A	C=549.30
B	549.05
C	549.10
D	C=549.50
E	549.60
F	549.68
G	549.63
H	549.55

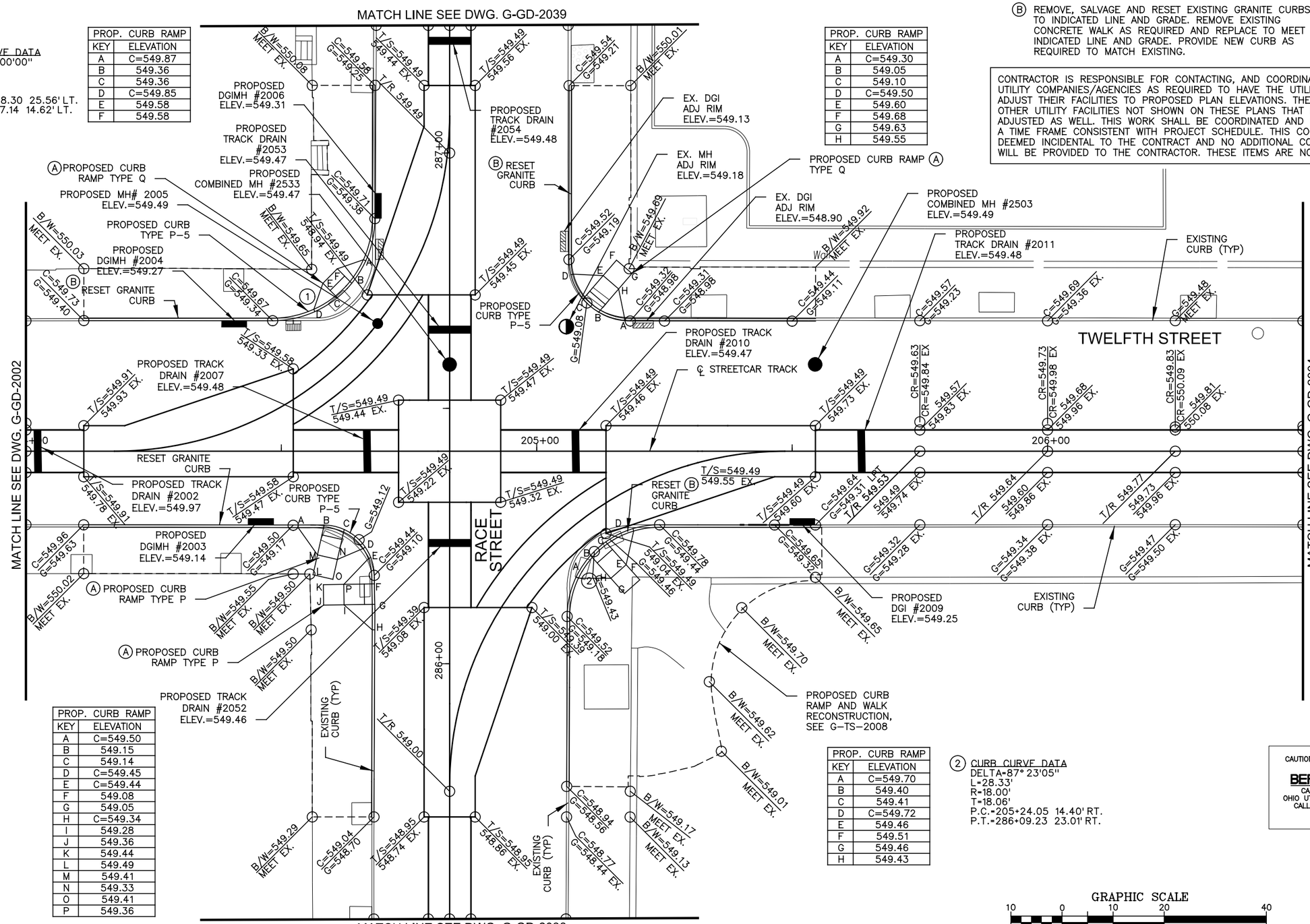

PROP. CURB RAMP	
KEY	ELEVATION
A	C=549.50
B	549.15
C	549.14
D	C=549.45
E	C=549.44
F	549.08
G	549.05
H	C=549.34
I	549.28
J	549.36
K	549.44
L	549.49
M	549.41
N	549.33
O	549.41
P	549.36

PROP. CURB RAMP	
KEY	ELEVATION
A	C=549.70
B	549.40
C	549.41
D	C=549.72
E	549.46
F	549.51
G	549.46
H	549.43

(2) CURB CURVE DATA
DELTA=87° 23'05"
L=28.33'
R=18.00'
T=18.06'
P.C.=205+24.05 14.40' RT.
P.T.=286+09.23 23.01' RT.

GRAPHIC SCALE
10 0 10 20 40
(IN FEET)
1 inch = 10 ft. Full Size
1 inch = 20 ft. Half Size

CAUTION UNDERGROUND UTILITIES
2 WORKING DAYS
BEFORE YOU DIG
CALL 1-800-362-2764
OHIO UTILITY PROTECTION SERVICE
CALL NON-SERVICE FACILITY OWNERS DIRECT

CONTRACT DRAWING

PRINTS NOT BEARING THIS STAMP WERE MADE PRIOR TO ADVERTISING BID. THESE PRINTS TO BE CONSIDERED OBSOLETE FOR CONTRACT PURPOSES.

Department of Transportation and Engineering

City of Cincinnati
City Hall
801 Plum Street
Cincinnati, Ohio 45202

CINCINNATI STREETCAR OVER THE RHINE

GRADING PLAN - TWELFTH STREET
STA 204+00 TO STA 206+50
STA 285+50 TO STA 287+25

Revisions
No.

Date 07/02/12	Date 07/02/12
Date 07/02/12	Date 07/12/12
Drawn by SAB	Designed by SAB
Checked by KVL	Reviewed by JTB

Consultant
PB HDR

File Number

ACC No. 23126

G-GD-2003

DOTE_Mono_PDF_Half.pltcfg
c:\pwworking\pitt\d0309031\S_G-GD-2003.dgn
Wednesday, July 11, 2012 12:24:12 PM

CONTRACTOR IS RESPONSIBLE FOR CONTACTING, AND COORDINATING WITH, UTILITY COMPANIES/AGENCIES AS REQUIRED TO HAVE THE UTILITY COMPANIES ADJUST THEIR FACILITIES TO PROPOSED PLAN ELEVATIONS. THERE MAY BE OTHER UTILITY FACILITIES NOT SHOWN ON THESE PLANS THAT NEED TO BE ADJUSTED AS WELL. THIS WORK SHALL BE COORDINATED AND COMPLETED IN A TIME FRAME CONSISTENT WITH PROJECT SCHEDULE. THIS COORDINATION IS DEEMED INCIDENTAL TO THE CONTRACT AND NO ADDITIONAL COMPENSATION WILL BE PROVIDED TO THE CONTRACTOR. THESE ITEMS ARE NOT QUANTIFIED.

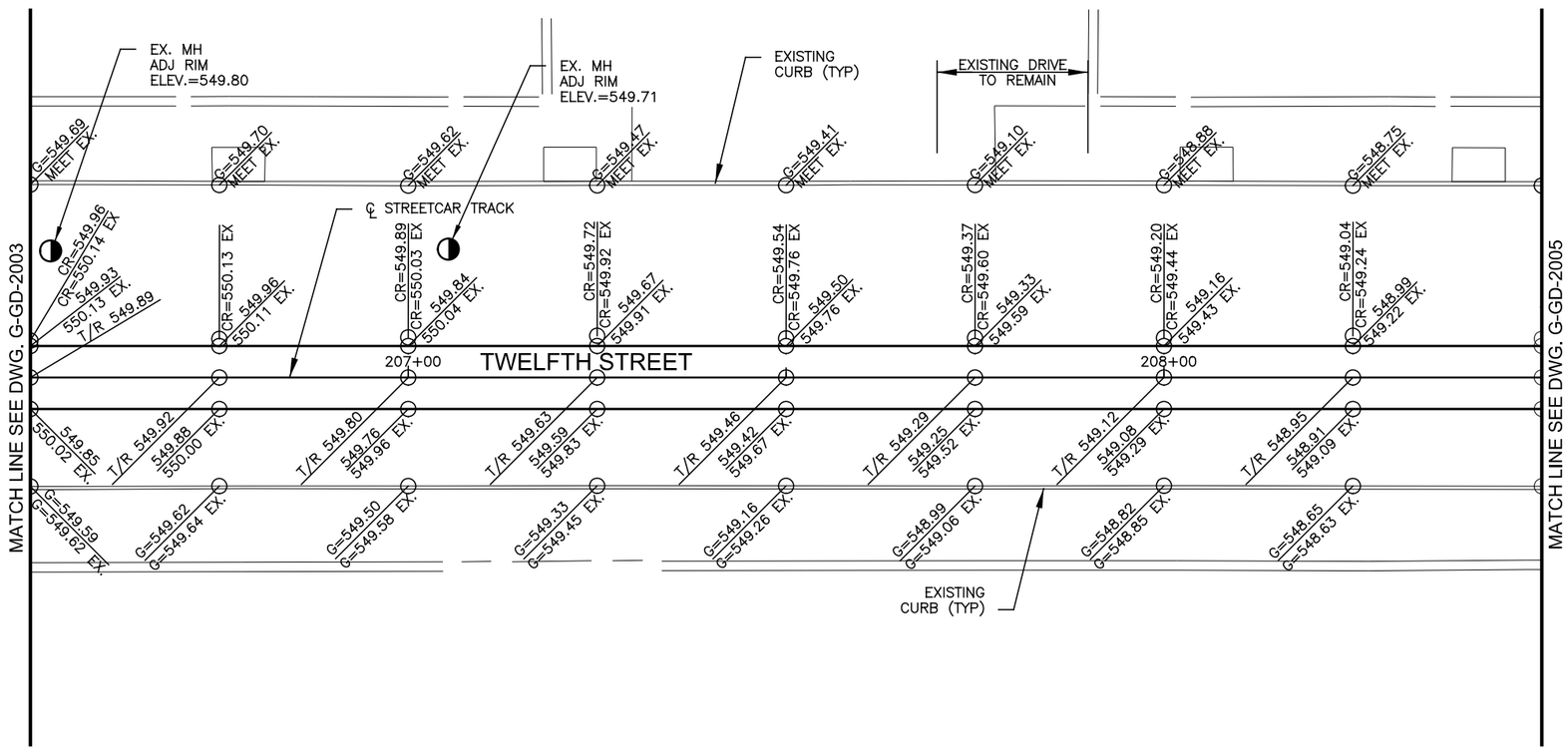

CAUTION UNDERGROUND UTILITIES
2 WORKING DAYS
BEFORE YOU DIG
CALL 1-800-362-2764
OHIO UTILITY PROTECTION SERVICE
CALL NON-SERVICE FACILITY
OWNERS DIRECT

GRAPHIC SCALE
10 0 10 20 40
(IN FEET)
1 inch = 10 ft. Full Size
1 inch = 20 ft. Half Size

DOTE_Mono_PDF_Half.pltcfg
c:\pwworking\pitt\d0309031\S_G-GD-2004.dgn
Wednesday, July 11, 2012 11:58:10:58:07 AM

CONTRACT DRAWING

PRINTS NOT BEARING THIS STAMP WERE MADE PRIOR TO ADVERTISING FOR BIDS AND ARE TO BE CONSIDERED OBSOLETE FOR CONTRACT PURPOSES.

Department of Transportation and Engineering

City of Cincinnati
City Hall
801 Plum Street
Cincinnati, Ohio 45202

CINCINNATI STREETCAR
OVER THE RHINE
GRADING PLAN - TWELFTH STREET
STA 206+50 TO STA 208+50

Revisions
No.

Drawn by SAB	Date 07/02/12
Designed by SAB	Date 07/02/12
Checked by KVL	Date 07/02/12
Reviewed by JTB	Date 07/12/12

Consultant

PB HDR

File Number

ACC No.
23126

G-GD-2004

CONSTRUCTION NOTES:

(A) RECONSTRUCT CURB RAMPS, INCLUDING RESETTING CURBS TO INDICATED LINE AND GRADE. REMOVE EXISTING CONCRETE WALK AS REQUIRED TO NEAREST JOINT AND REPLACE TO MEET INDICATED LINE AND GRADE.

CONTRACTOR IS RESPONSIBLE FOR CONTACTING, AND COORDINATING WITH, UTILITY COMPANIES/AGENCIES AS REQUIRED TO HAVE THE UTILITY COMPANIES ADJUST THEIR FACILITIES TO PROPOSED PLAN ELEVATIONS. THERE MAY BE OTHER UTILITY FACILITIES NOT SHOWN ON THESE PLANS THAT NEED TO BE ADJUSTED AS WELL. THIS WORK SHALL BE COORDINATED AND COMPLETED IN A TIME FRAME CONSISTENT WITH PROJECT SCHEDULE. THIS COORDINATION IS DEEMED INCIDENTAL TO THE CONTRACT AND NO ADDITIONAL COMPENSATION WILL BE PROVIDED TO THE CONTRACTOR. THESE ITEMS ARE NOT QUANTIFIED.

PROP. CURB RAMP	
KEY	ELEVATION
A	C=547.36
B	547.30
C	547.38
D	C=547.44
E	547.60
F	547.68
G	547.64
H	547.60
I	C=547.45
J	547.49
K	547.52
L	C=547.68
M	547.74
N	547.75
O	547.70
P	547.70

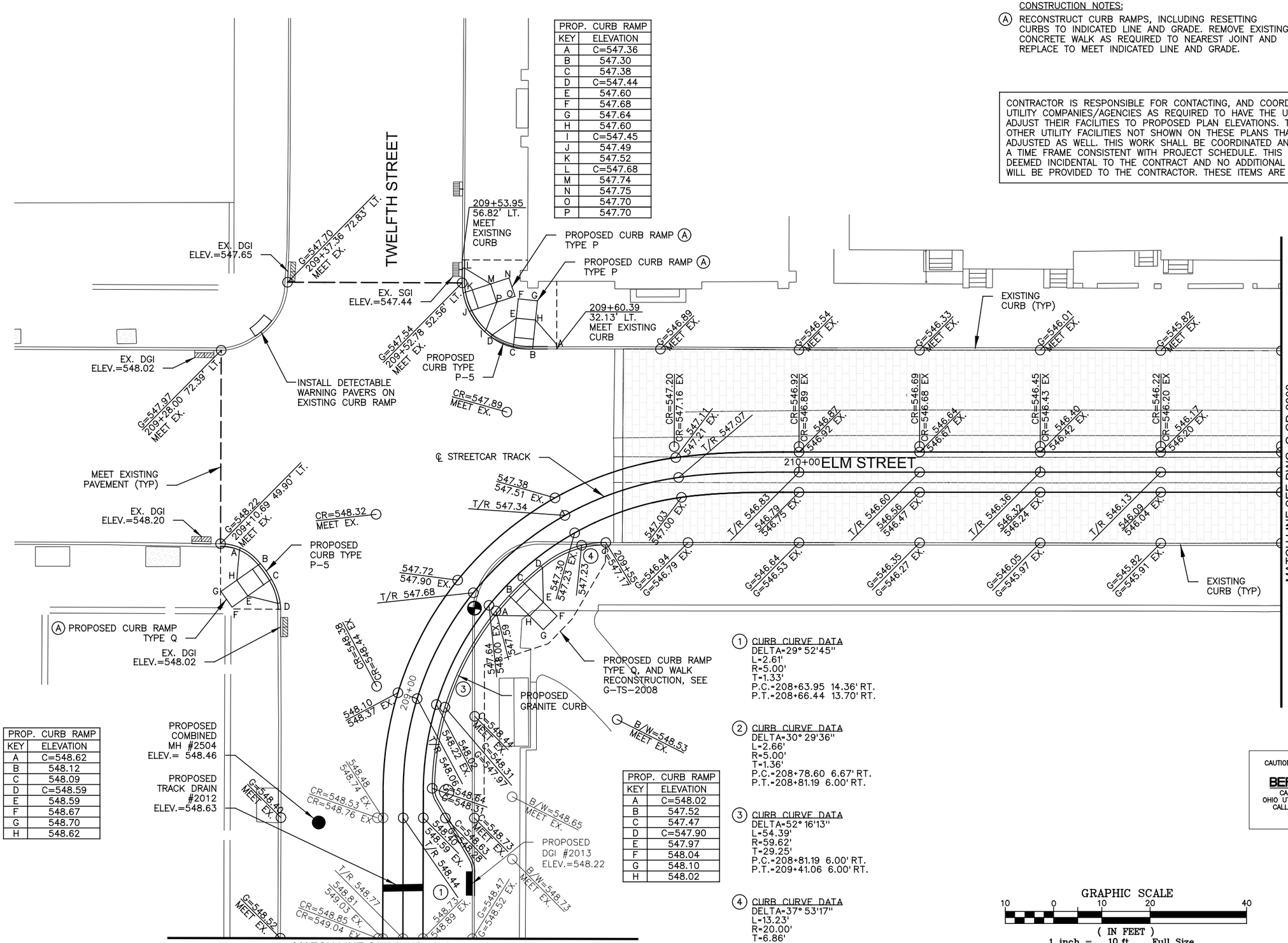

PROP. CURB RAMP	
KEY	ELEVATION
A	548.62
B	548.12
C	548.09
D	C=548.59
E	548.59
F	548.67
G	548.70
H	548.62

PROP. CURB RAMP	
KEY	ELEVATION
A	C=548.02
B	547.52
C	547.47
D	C=547.90
E	547.97
F	548.04
G	548.10
H	548.02

(1) CURB CURVE DATA
DELTA=29° 52'45"
L=2.61'
R=5.00'
T=1.33'
P.C.=208+63.95 14.36' RT.
P.T.=208+66.44 13.70' RT.

(2) CURB CURVE DATA
DELTA=30° 29'36"
L=2.66'
R=5.00'
T=1.36'
P.C.=208+78.60 6.67' RT.
P.T.=208+81.19 6.00' RT.

(3) CURB CURVE DATA
DELTA=52° 16'13"
L=54.39'
R=59.62'
T=29.25'
P.C.=208+81.19 6.00' RT.
P.T.=209+41.06 6.00' RT.

(4) CURB CURVE DATA
DELTA=37° 53'17"
L=13.23'
R=20.00'
T=6.86'
P.C.=209+41.06 6.00' RT.
P.T.=209+55.37 8.87' RT.

GRAPHIC SCALE
10 0 10 20 40
(IN FEET)
1 inch = 10 ft. Full Size
1 inch = 20 ft. Half Size

CAUTION UNDERGROUND UTILITIES
2 WORKING DAYS
BEFORE YOU DIG
CALL 1-800-362-2764
OHIO UTILITY PROTECTION SERVICE
CALL NON-SERVICE FACILITY OWNERS DIRECT

DOTE_Mono_PDF_Half.pltcfg
c:\pwworking\pitt\d0309031\S_G-GD-2005.dgn
Wednesday, July 11, 2012 11:58:12 AM

CONTRACT DRAWING
PRINTS NOT BEARING THIS STAMP WERE MADE PRIOR TO ADVERTISING FOR BIDS AND ARE TO BE CONSIDERED OBSOLETE FOR CONTRACT PURPOSES.

Department of Transportation and Engineering
City of Cincinnati
City Hall
801 Plum Street
Cincinnati, Ohio 45202

CINCINNATI STREETCAR OVER THE RHINE
GRADING PLAN - ELM STREET
STA 208+50 TO STA 211+00

Revisions
No.

Drawn by SAB	Date 07/02/12	
Designed by SAB	Date 07/02/12	
Checked by KVL	Date 07/02/12	
Reviewed by JTB	Date 07/12/12	

Consultant
PB HDR

File Number

ACC No.
23126

G-GD-2005

CONSTRUCTION NOTES:

(A) RECONSTRUCT CURB RAMPS, INCLUDING RESETTING CURBS TO INDICATED LINE AND GRADE. REMOVE EXISTING CONCRETE WALK AS REQUIRED TO NEAREST JOINT AND REPLACE TO MEET INDICATED LINE AND GRADE.

PROP. CURB RAMP	
KEY	ELEVATION
A	C=545.28
B	545.38
C	545.40
D	C=545.32
E	545.80
F	545.88
G	545.96
H	545.88

PROP. CURB RAMP	
KEY	ELEVATION
A	C=544.88
B	545.01
C	544.97
D	C=544.91
E	545.30
F	545.38
G	545.32
H	545.28

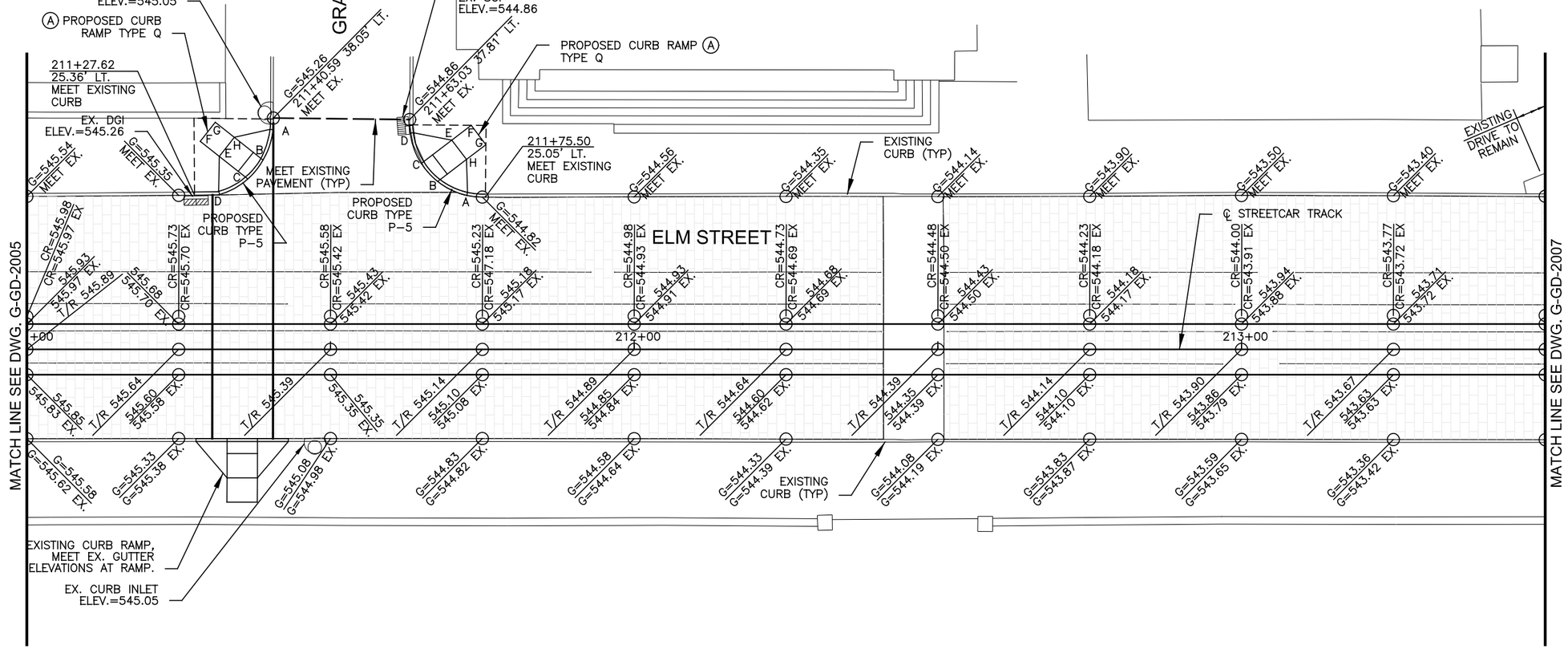

CONTRACTOR IS RESPONSIBLE FOR CONTACTING, AND COORDINATING WITH, UTILITY COMPANIES/AGENCIES AS REQUIRED TO HAVE THE UTILITY COMPANIES ADJUST THEIR FACILITIES TO PROPOSED PLAN ELEVATIONS. THERE MAY BE OTHER UTILITY FACILITIES NOT SHOWN ON THESE PLANS THAT NEED TO BE ADJUSTED AS WELL. THIS WORK SHALL BE COORDINATED AND COMPLETED IN A TIME FRAME CONSISTENT WITH PROJECT SCHEDULE. THIS COORDINATION IS DEEMED INCIDENTAL TO THE CONTRACT AND NO ADDITIONAL COMPENSATION WILL BE PROVIDED TO THE CONTRACTOR. THESE ITEMS ARE NOT QUANTIFIED.

CAUTION UNDERGROUND UTILITIES
2 WORKING DAYS
BEFORE YOU DIG
CALL 1-800-362-2764
OHIO UTILITY PROTECTION SERVICE
CALL NON-SERVICE FACILITY
OWNERS DIRECT

GRAPHIC SCALE
10 0 10 20 40
(IN FEET)
1 inch = 10 ft. Full Size
1 inch = 20 ft. Half Size

DOTE_Mono_PDF_Half.pltcfg
c:\pwworking\pitt\d0309031\S_G-GD-2006.dgn
Wednesday, July 11, 2012 11:58:15 AM

CONTRACT DRAWING

PRINTS NOT BEARING THIS STAMP WERE MADE PRIOR TO ADVERTISING FOR BID AND ARE TO BE CONSIDERED OBSOLETE FOR CONTRACT PURPOSES.

Department of Transportation and Engineering

City of Cincinnati
City Hall
801 Plum Street
Cincinnati, Ohio 45202

CINCINNATI STREETCAR OVER THE RHINE

GRADING PLAN - ELM STREET
STA 211+00 TO STA 213+50

Revisions
No.

Drawn by SAB	Date 07/02/12
Designed by SAB	Date 07/02/12
Checked by KVL	Date 07/02/12
Reviewed by JTB	Date 07/12/12

Consultant

PB HDR

File Number

ACC No.
23126

G-GD-2006

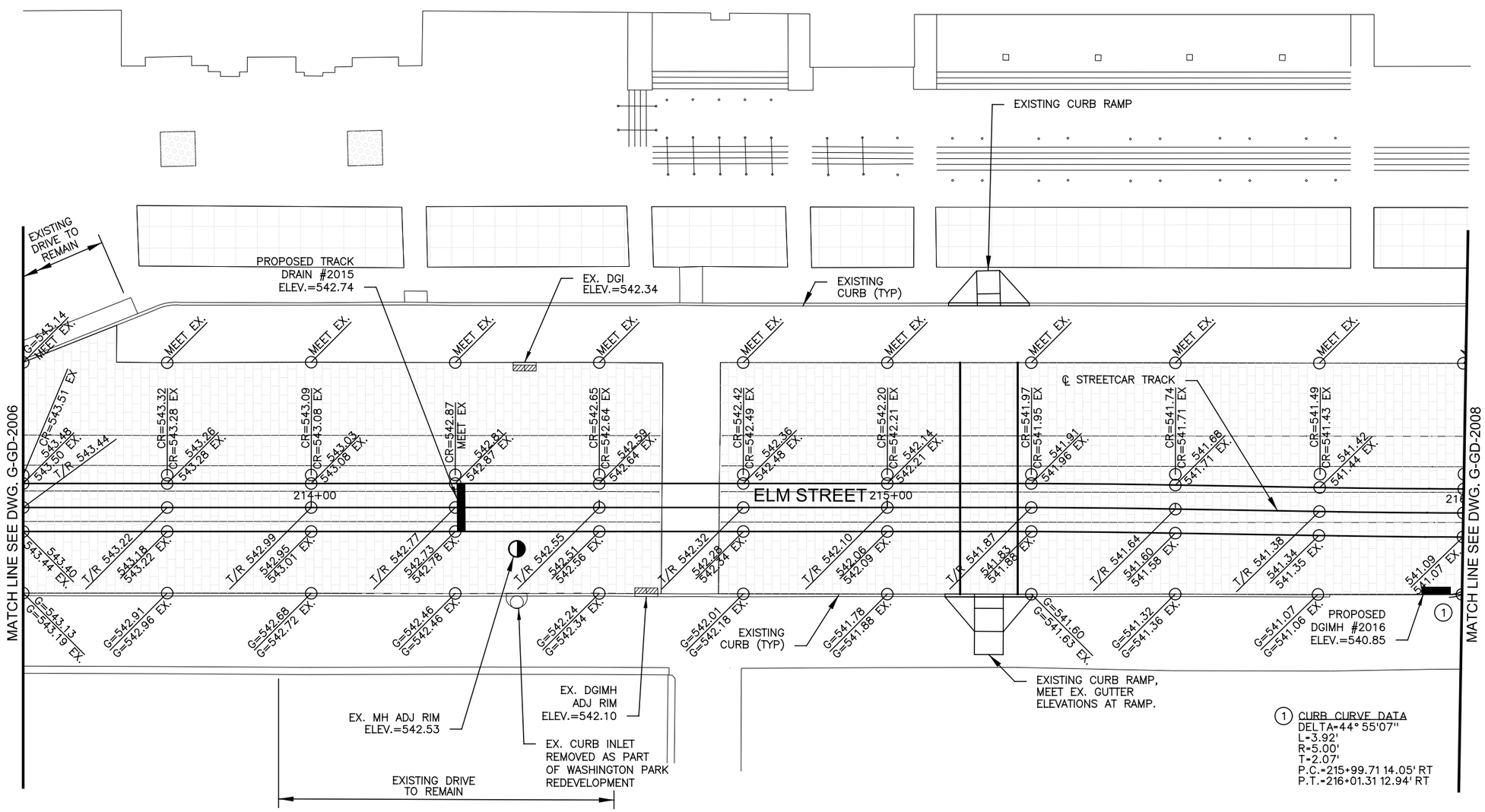

1 CURB CURVE DATA
DELTA=44° 55'07"
L=3.92'
R=5.00'
T=2.07'
P.C.=215+99.71 14.05' RT
P.T.=216+01.31 12.94' RT

CAUTION UNDERGROUND UTILITIES
2 WORKING DAYS
BEFORE YOU DIG
CALL 1-800-362-2764
OHIO UTILITY PROTECTION SERVICE
CALL NON-SERVICE FACILITY
OWNERS DIRECT

CONTRACTOR IS RESPONSIBLE FOR CONTACTING, AND COORDINATING WITH, UTILITY COMPANIES/AGENCIES AS REQUIRED TO HAVE THE UTILITY COMPANIES ADJUST THEIR FACILITIES TO PROPOSED PLAN ELEVATIONS. THERE MAY BE OTHER UTILITY FACILITIES NOT SHOWN ON THESE PLANS THAT NEED TO BE ADJUSTED AS WELL. THIS WORK SHALL BE COORDINATED AND COMPLETED IN A TIME FRAME CONSISTENT WITH PROJECT SCHEDULE. THIS COORDINATION IS DEEMED INCIDENTAL TO THE CONTRACT AND NO ADDITIONAL COMPENSATION WILL BE PROVIDED TO THE CONTRACTOR. THESE ITEMS ARE NOT QUANTIFIED.

GRAPHIC SCALE
10 0 10 20 40
(IN FEET)
1 inch = 10 ft. Full Size
1 inch = 20 ft. Half Size

DOTE_Mono_PDF_Half.pltcfg
c:\pwworking\pitt\d0309031\S_G-GD-2007.dgn
Wednesday, July 11, 2012 11:58:15 AM

CONTRACT DRAWING
PRINTS NOT BEARING THIS STAMP WERE MADE PRIOR TO ADVERTISING FOR BIDS AND ARE TO BE CONSIDERED OBSOLETE FOR CONTRACT PURPOSES.

Department of Transportation and Engineering
City of Cincinnati
City Hall
801 Plum Street
Cincinnati, Ohio 45202

CINCINNATI STREETCAR
OVER THE RHINE
GRADING PLAN - ELM STREET
STA 213+50 TO STA 216+00

Revisions
No.

Date 07/02/12
Date 07/02/12
Date 07/02/12
Date 07/12/12

Drawn by SAB
Designed by SAB
Checked by KVL
Reviewed by JTB

Consultant
PB HDR

File Number

ACC No.
23126

G-GD-2007

CONSTRUCTION NOTES:

(A) RECONSTRUCT CURB RAMPS, INCLUDING RESETTING CURBS TO INDICATED LINE AND GRADE. REMOVE EXISTING CONCRETE WALK AS REQUIRED TO NEAREST JOINT AND REPLACE TO MEET INDICATED LINE AND GRADE.

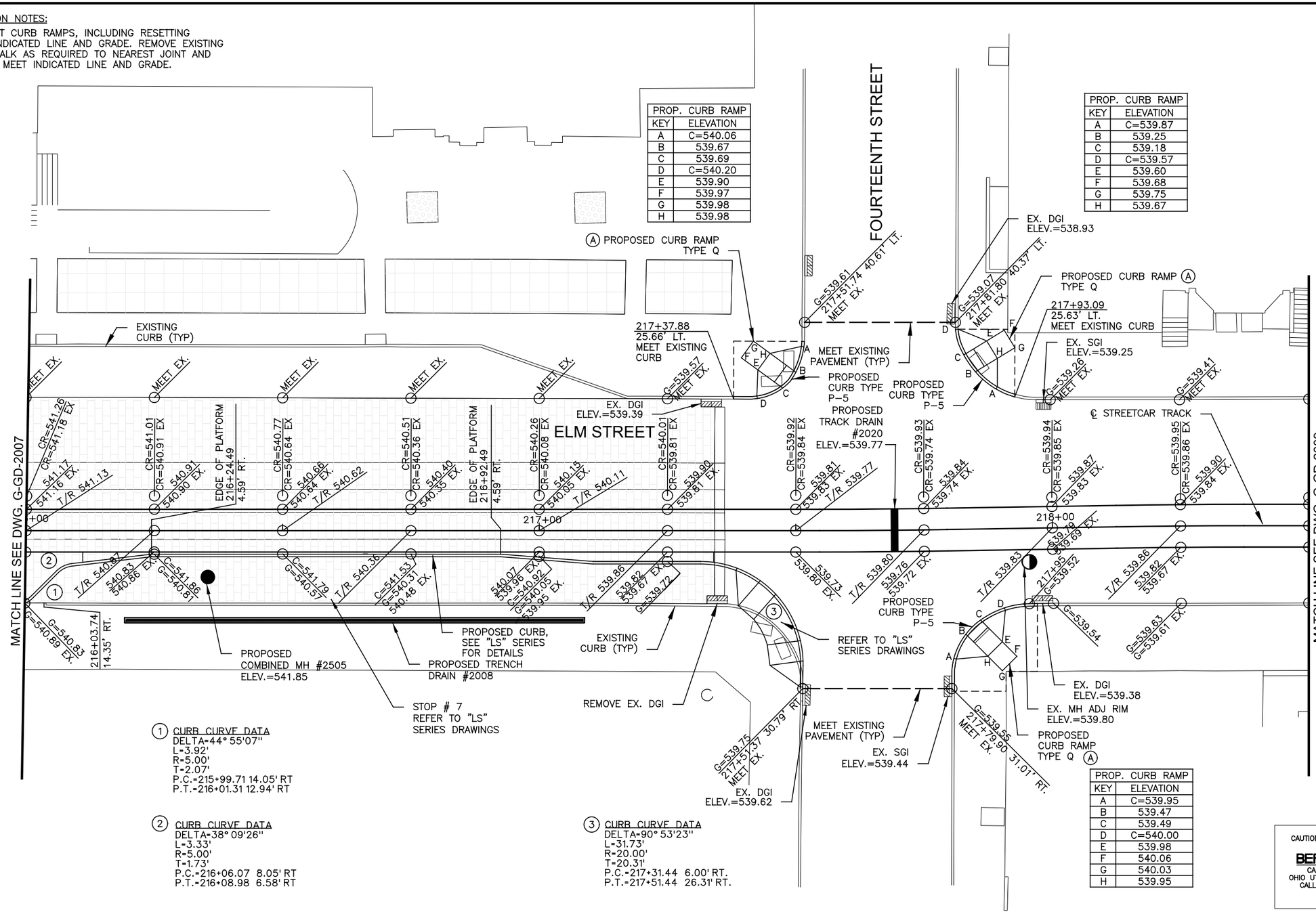

PROP. CURB RAMP	
KEY	ELEVATION
A	C=540.06
B	539.67
C	539.69
D	C=540.20
E	539.90
F	539.97
G	539.98
H	539.98

PROP. CURB RAMP	
KEY	ELEVATION
A	C=539.87
B	539.25
C	539.18
D	C=539.57
E	539.60
F	539.68
G	539.75
H	539.67

PROP. CURB RAMP	
KEY	ELEVATION
A	C=539.95
B	539.47
C	539.49
D	C=540.00
E	539.98
F	540.06
G	540.03
H	539.95

(1) CURB CURVE DATA
DELTA=44° 55'07"
L=3.92'
R=5.00'
T=2.07'
P.C.=215+99.71 14.05' RT
P.T.=216+01.31 12.94' RT

(2) CURB CURVE DATA
DELTA=38° 09'26"
L=3.33'
R=5.00'
T=1.73'
P.C.=216+06.07 8.05' RT
P.T.=216+08.98 6.58' RT

(3) CURB CURVE DATA
DELTA=90° 53'23"
L=31.73'
R=20.00'
T=20.31'
P.C.=217+31.44 6.00' RT.
P.T.=217+51.44 26.31' RT.

CONTRACTOR IS RESPONSIBLE FOR CONTACTING, AND COORDINATING WITH, UTILITY COMPANIES/AGENCIES AS REQUIRED TO HAVE THE UTILITY COMPANIES ADJUST THEIR FACILITIES TO PROPOSED PLAN ELEVATIONS. THERE MAY BE OTHER UTILITY FACILITIES NOT SHOWN ON THESE PLANS THAT NEED TO BE ADJUSTED AS WELL. THIS WORK SHALL BE COORDINATED AND COMPLETED IN A TIME FRAME CONSISTENT WITH PROJECT SCHEDULE. THIS COORDINATION IS DEEMED INCIDENTAL TO THE CONTRACT AND NO ADDITIONAL COMPENSATION WILL BE PROVIDED TO THE CONTRACTOR. THESE ITEMS ARE NOT QUANTIFIED.

CAUTION UNDERGROUND UTILITIES
2 WORKING DAYS
BEFORE YOU DIG
CALL 1-800-362-2764
OHIO UTILITY PROTECTION SERVICE
CALL NON-SERVICE FACILITY OWNERS DIRECT

GRAPHIC SCALE
10 0 10 20 40
(IN FEET)
1 inch = 10 ft. Full Size
1 inch = 20 ft. Half Size

DOTE_Mono_PDF_Half.pltcfg
c:\pwworking\pitt\d0309031\S_G-GD-2008.dgn
Wednesday, July 11, 2012 11:59:05 AM

CONTRACT DRAWING

PRINTS NOT BEARING THIS STAMP WERE MADE PRIOR TO ADVERTISING FOR BIDS AND ARE TO BE CONSIDERED OBSOLETE FOR CONTRACT PURPOSES.

Department of Transportation and Engineering
City of Cincinnati
City Hall
801 Plum Street
Cincinnati, Ohio 45202

CINCINNATI STREETCAR OVER THE RHINE

GRADING PLAN - ELM STREET
STA 216+00 TO STA 218+50

Revisions
No.

	Date
Drawn by SAB	07/02/12
Designed by SAB	07/02/12
Checked by KVL	07/02/12
Reviewed by JTB	07/12/12

Consultant

PB HDR

File Number

ACC No. 23126

G-GD-2008

PROP. CURB RAMP	
KEY	ELEVATION
A	G=540.35
B	539.85
C	539.84
D	G=540.34
E	540.34
F	540.31
G	540.39
H	540.35

PROP. CURB RAMP	
KEY	ELEVATION
A	C=540.38
B	539.88
C	539.89
D	C=540.39
E	540.39
F	540.47
G	540.46
H	540.38

PROP. CURB RAMP	
KEY	ELEVATION
A	C=541.13
B	540.72
C	540.69
D	C=541.08
E	541.19
F	541.27
G	541.30
H	541.22

PROP. CURB RAMP	
KEY	ELEVATION
A	C=541.16
B	540.73
C	540.81
D	C=541.16
E	541.31
F	541.35
G	541.31
H	541.23

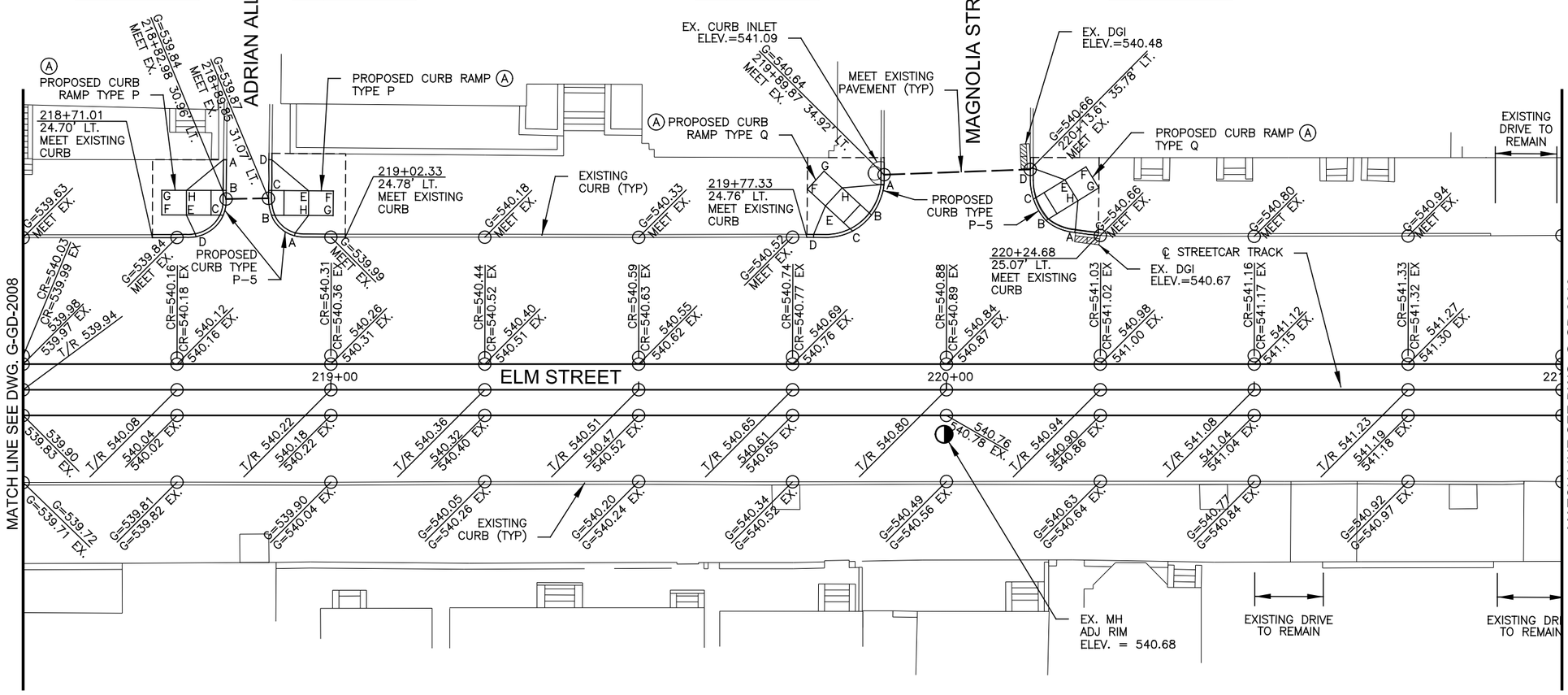

CONSTRUCTION NOTES:

Ⓐ RECONSTRUCT CURB RAMPS, INCLUDING RESETTING CURBS TO INDICATED LINE AND GRADE. REMOVE EXISTING CONCRETE WALK AS REQUIRED TO NEAREST JOINT AND REPLACE TO MEET INDICATED LINE AND GRADE.

CONTRACTOR IS RESPONSIBLE FOR CONTACTING, AND COORDINATING WITH, UTILITY COMPANIES/AGENCIES AS REQUIRED TO HAVE THE UTILITY COMPANIES ADJUST THEIR FACILITIES TO PROPOSED PLAN ELEVATIONS. THERE MAY BE OTHER UTILITY FACILITIES NOT SHOWN ON THESE PLANS THAT NEED TO BE ADJUSTED AS WELL. THIS WORK SHALL BE COORDINATED AND COMPLETED IN A TIME FRAME CONSISTENT WITH PROJECT SCHEDULE. THIS COORDINATION IS DEEMED INCIDENTAL TO THE CONTRACT AND NO ADDITIONAL COMPENSATION WILL BE PROVIDED TO THE CONTRACTOR. THESE ITEMS ARE NOT QUANTIFIED.

CAUTION UNDERGROUND UTILITIES
2 WORKING DAYS
BEFORE YOU DIG
CALL 1-800-362-2764
OHIO UTILITY PROTECTION SERVICE
CALL NON-SERVICE FACILITY OWNERS DIRECT

GRAPHIC SCALE
10 0 10 20 40
(IN FEET)
1 inch = 10 ft. Full Size
1 inch = 20 ft. Half Size

DOTE_Mono_PDF_Half.pltcfg
c:\pwworking\pitt\d0309031\S_G-GD-2009.dgn
Wednesday, July 11, 2012 11:59:18 AM

CONTRACT DRAWING

PRINTS NOT BEARING THIS STAMP WERE MADE PRIOR TO ADVERTISING FOR BIDS AND ARE TO BE CONSIDERED OBSOLETE FOR CONTRACT PURPOSES.

Department of Transportation and Engineering

City of Cincinnati
City Hall
801 Plum Street
Cincinnati, Ohio 45202

CINCINNATI STREETCAR OVER THE RHINE

GRADING PLAN - ELM STREET
STA 218+50 TO STA 221+00

Revisions

No.		

Drawn by SAB	Date 07/02/12
Designed by SAB	Date 07/02/12
Checked by KVL	Date 07/02/12
Reviewed by JTB	Date 07/12/12

Consultant

PB HDR

File Number

ACC No. 23126

G-GD-2009

PROP. CURB RAMP	
KEY	ELEVATION
A	541.14
B	541.13
C	541.18
D	541.60
E	541.56
F	541.63
G	541.63

PROP. CURB RAMP	
KEY	ELEVATION
A	541.25
B	541.20
C	C=541.72
D	541.72
E	541.80
F	541.76
G	541.70

PROP. CURB RAMP	
KEY	ELEVATION
A	541.85
B	541.85
C	541.85
D	541.84
E	541.22
F	541.30
G	541.30
H	541.22

PROP. CURB RAMP	
KEY	ELEVATION
A	542.00
B	542.05
C	542.05
D	542.05
E	542.47
F	542.55
G	542.55
H	542.47

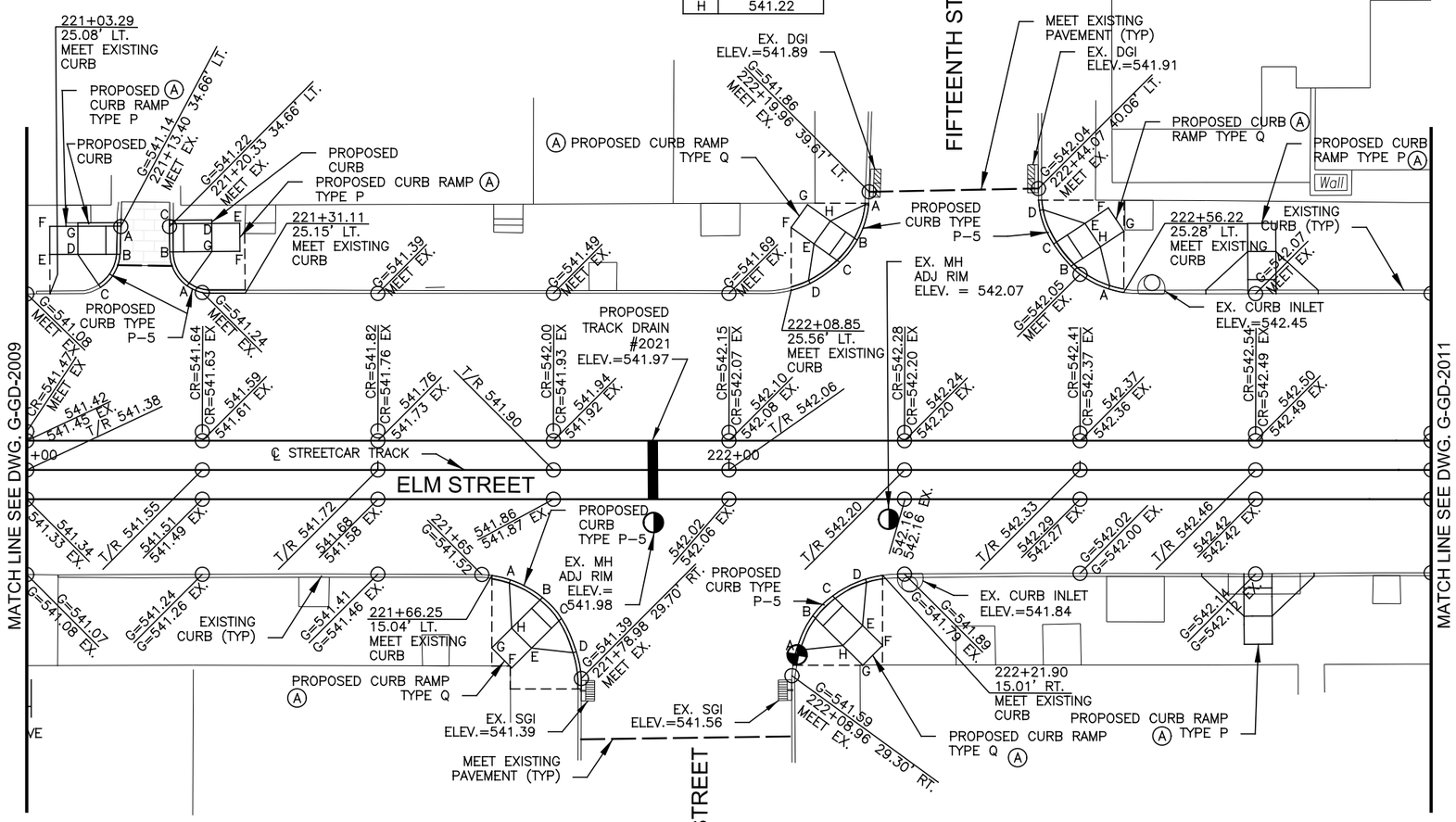

PROP. CURB RAMP	
KEY	ELEVATION
A	C=542.03
B	541.53
C	541.50
D	C=541.95
E	542.00
F	542.08
G	542.11
H	542.03

PROP. CURB RAMP	
KEY	ELEVATION
A	C=542.20
B	541.76
C	541.80
D	C=542.30
E	542.24
F	542.32
G	542.34
H	542.26

CONSTRUCTION NOTES:

(A) RECONSTRUCT CURB RAMPS, INCLUDING RESETTING CURBS TO INDICATED LINE AND GRADE. REMOVE EXISTING CONCRETE WALK AS REQUIRED TO NEAREST JOINT AND REPLACE TO MEET INDICATED LINE AND GRADE.

CONTRACTOR IS RESPONSIBLE FOR CONTACTING, AND COORDINATING WITH, UTILITY COMPANIES/AGENCIES AS REQUIRED TO HAVE THE UTILITY COMPANIES ADJUST THEIR FACILITIES TO PROPOSED PLAN ELEVATIONS. THERE MAY BE OTHER UTILITY FACILITIES NOT SHOWN ON THESE PLANS THAT NEED TO BE ADJUSTED AS WELL. THIS WORK SHALL BE COORDINATED AND COMPLETED IN A TIME FRAME CONSISTENT WITH PROJECT SCHEDULE. THIS COORDINATION IS DEEMED INCIDENTAL TO THE CONTRACT AND NO ADDITIONAL COMPENSATION WILL BE PROVIDED TO THE CONTRACTOR. THESE ITEMS ARE NOT QUANTIFIED.

CAUTION UNDERGROUND UTILITIES
2 WORKING DAYS
BEFORE YOU DIG
CALL 1-800-362-2764
OHIO UTILITY PROTECTION SERVICE
CALL NON-SERVICE FACILITY OWNERS DIRECT

GRAPHIC SCALE
10 0 10 20 40
(IN FEET)
1 inch = 10 ft. Full Size
1 inch = 20 ft. Half Size

DOTE_Mono_PDF_Half.pltcfg
c:\pwworking\pitt\d0309031\S_G-GD-2010.dgn
Wednesday, July 11, 2012 11:59:16 AM

CONTRACT DRAWING

PRINTS NOT BEARING THIS STAMP WERE MADE PRIOR TO ADVERTISING FOR BIDS AND ARE TO BE CONSIDERED OBSOLETE FOR CONTRACT PURPOSES.

Department of Transportation and Engineering

City of Cincinnati
City Hall
801 Plum Street
Cincinnati, Ohio 45202

CINCINNATI STREETCAR OVER THE RHINE

GRADING PLAN - ELM STREET
STA 221+00 TO STA 223+00

Revisions
No.

	Date
Drawn by SAB	07/02/12
Designed by SAB	07/02/12
Checked by KVL	07/02/12
Reviewed by JTB	07/12/12

Consultant

PB HDR

File Number

ACC No. 23126

G-GD-2010

CONSTRUCTION NOTES:

(A) RECONSTRUCT CURB RAMPS, INCLUDING RESETTING CURBS TO INDICATED LINE AND GRADE. REMOVE EXISTING CONCRETE WALK AS REQUIRED TO NEAREST JOINT AND REPLACE TO MEET INDICATED LINE AND GRADE.

PROP. CURB RAMP	
KEY	ELEVATION
A	C=542.62
B	542.25
C	542.23
D	C=542.62
E	542.73
F	542.81
G	542.83
H	542.75

PROP. CURB RAMP	
KEY	ELEVATION
A	C=542.43
B	541.95
C	541.92
D	C=542.22
E	542.27
F	542.33
G	542.27
H	542.22

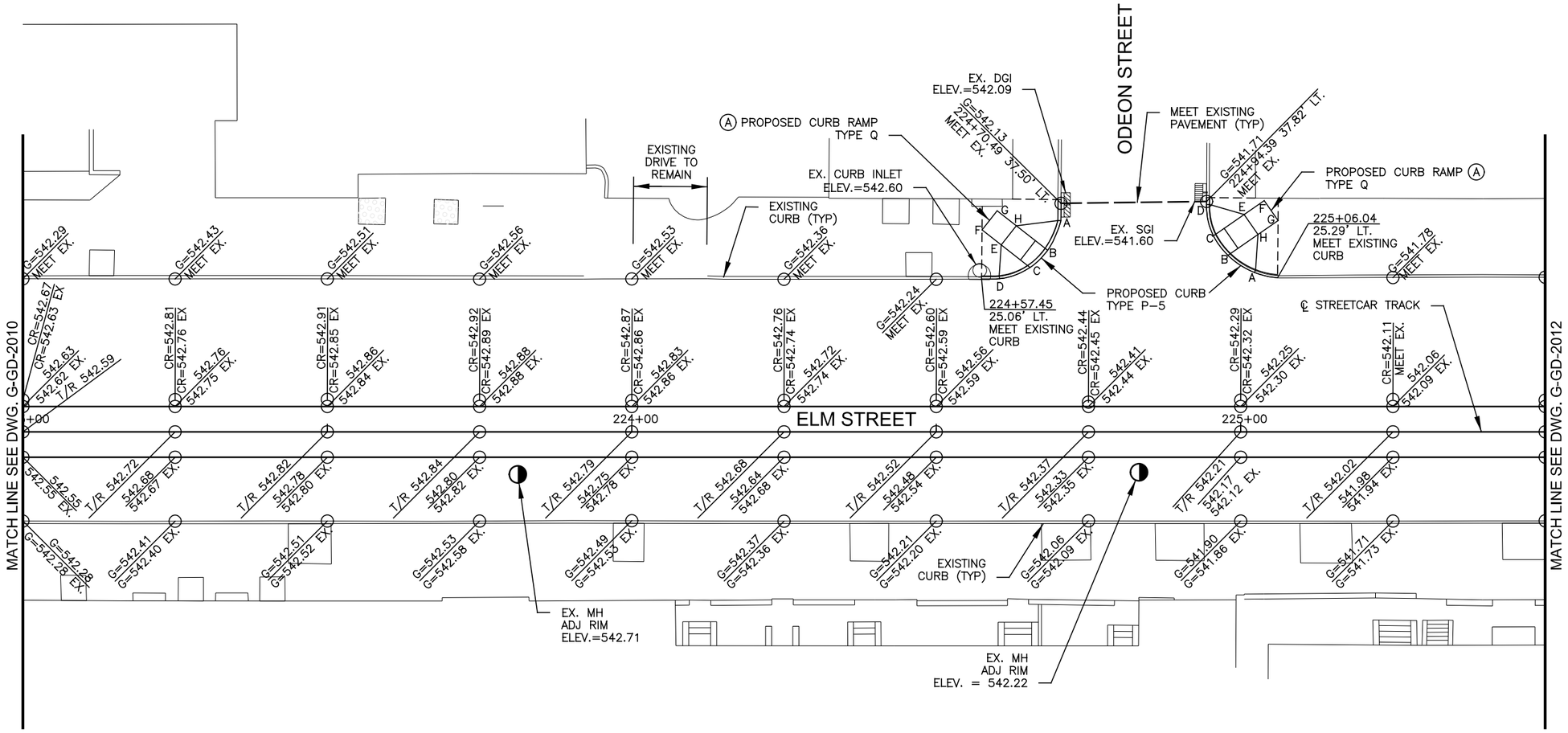

CONTRACTOR IS RESPONSIBLE FOR CONTACTING, AND COORDINATING WITH, UTILITY COMPANIES/AGENCIES AS REQUIRED TO HAVE THE UTILITY COMPANIES ADJUST THEIR FACILITIES TO PROPOSED PLAN ELEVATIONS. THERE MAY BE OTHER UTILITY FACILITIES NOT SHOWN ON THESE PLANS THAT NEED TO BE ADJUSTED AS WELL. THIS WORK SHALL BE COORDINATED AND COMPLETED IN A TIME FRAME CONSISTENT WITH PROJECT SCHEDULE. THIS COORDINATION IS DEEMED INCIDENTAL TO THE CONTRACT AND NO ADDITIONAL COMPENSATION WILL BE PROVIDED TO THE CONTRACTOR. THESE ITEMS ARE NOT QUANTIFIED.

GRAPHIC SCALE

10 0 10 20 40

(IN FEET)
1 inch = 10 ft. Full Size
1 inch = 20 ft. Half Size

CAUTION UNDERGROUND UTILITIES
2 WORKING DAYS
BEFORE YOU DIG
CALL 1-800-362-2764
OHIO UTILITY PROTECTION SERVICE
CALL NON-SERVICE FACILITY OWNERS DIRECT

DEPARTMENT OF TRANSPORTATION & ENGINEERING CITY OF CINCINNATI OHIO

CONTRACT DRAWING

PRINTS NOT BEARING THIS STAMP WERE MADE PRIOR TO ADVERTISING FOR BIDS AND ARE TO BE CONSIDERED OBSOLETE FOR CONTRACT PURPOSES.

Department of Transportation and Engineering

City of Cincinnati
City Hall
801 Plum Street
Cincinnati, Ohio 45202

CINCINNATI STREETCAR
OVER THE RHINE
GRADING PLAN - ELM STREET
STA 223+00 TO STA 225+50

Revisions

No.				

Drawn by SAB	Date 07/02/12	Designed by SAB	Date 07/02/12
Checked by KVL	Date 07/02/12	Reviewed by JTB	Date 07/12/12

Consultant

PB HDR

File Number

ACC No. 23126

G-GD-2011

DOTE_Mono_PDF_Half.pltcfg
c:\pwworking\pitt\d0309031\S_G-GD-2011.dgn
Wednesday, July 11, 2012 12:01:20 PM

CONSTRUCTION NOTES:

(A) RECONSTRUCT CURB RAMPS, INCLUDING RESETTING CURBS TO INDICATED LINE AND GRADE. REMOVE EXISTING CONCRETE WALK AS REQUIRED TO NEAREST JOINT AND REPLACE TO MEET INDICATED LINE AND GRADE.

PROP. CURB RAMP	
KEY	ELEVATION
A	C=541.89
B	541.38
C	541.34
D	C=541.79
E	541.73
F	541.75
G	541.83
H	541.81

PROP. CURB RAMP	
KEY	ELEVATION
A	C=541.68
B	541.23
C	C=541.70
D	541.77
E	541.85
F	541.81
G	541.73

PROP. CURB RAMP	
KEY	ELEVATION
A	C=540.78
B	540.50
C	540.58
D	540.46
E	540.92
F	541.00
G	541.08
H	541.00

PROP. CURB RAMP	
KEY	ELEVATION
A	540.23
B	540.28
C	540.29
D	540.30
E	540.66
F	540.67
G	540.59
H	540.58

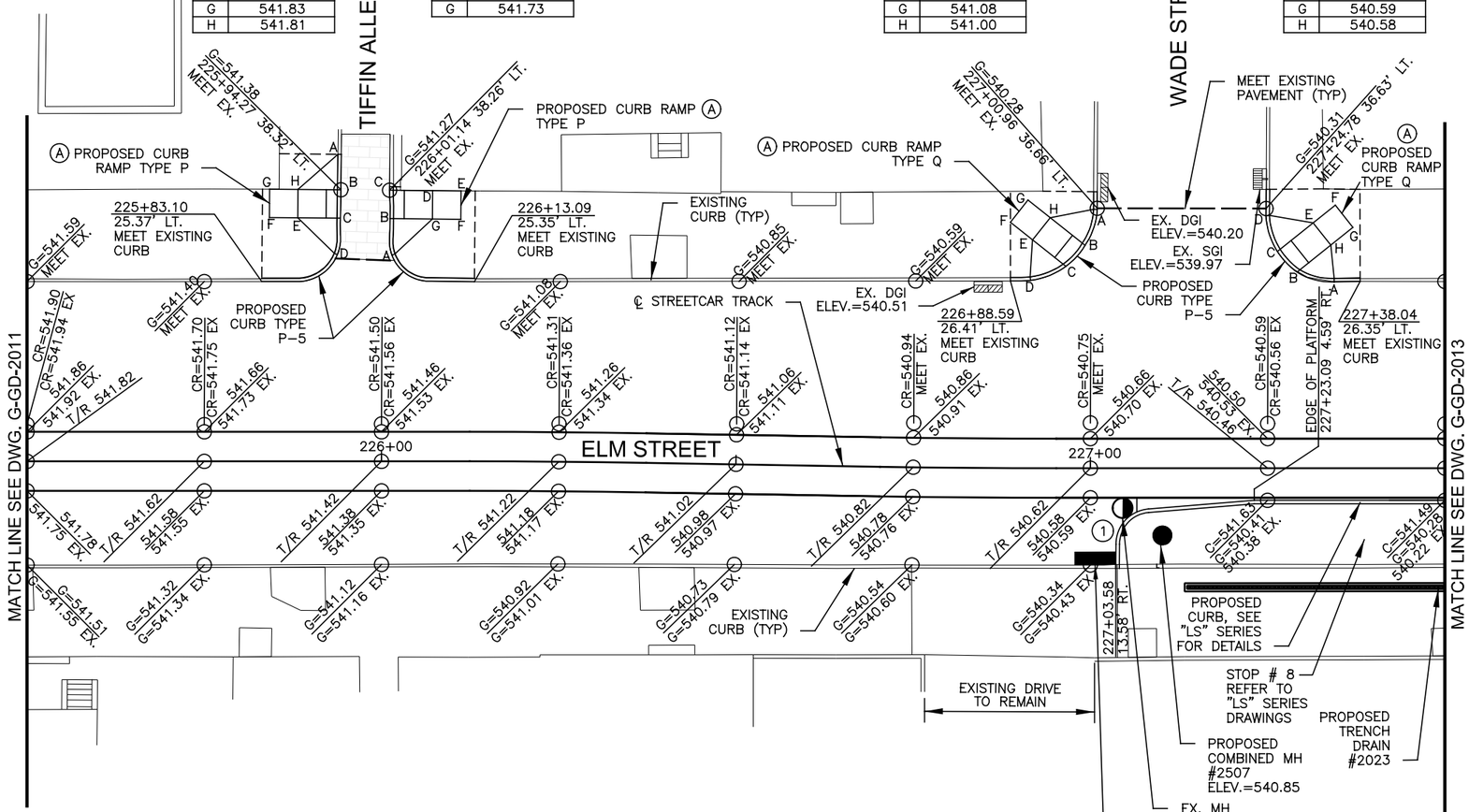

(1) CURB CURVE DATA
DELTA=85° 14'13"
L=7.44'
R=5.00'
T=4.60'
P.C.=227+03.59 10.72' RT
P.T.=227+08.19 5.75' RT

CONTRACTOR IS RESPONSIBLE FOR CONTACTING, AND COORDINATING WITH, UTILITY COMPANIES/AGENCIES AS REQUIRED TO HAVE THE UTILITY COMPANIES ADJUST THEIR FACILITIES TO PROPOSED PLAN ELEVATIONS. THERE MAY BE OTHER UTILITY FACILITIES NOT SHOWN ON THESE PLANS THAT NEED TO BE ADJUSTED AS WELL. THIS WORK SHALL BE COORDINATED AND COMPLETED IN A TIME FRAME CONSISTENT WITH PROJECT SCHEDULE. THIS COORDINATION IS DEEMED INCIDENTAL TO THE CONTRACT AND NO ADDITIONAL COMPENSATION WILL BE PROVIDED TO THE CONTRACTOR. THESE ITEMS ARE NOT QUANTIFIED.

GRAPHIC SCALE
10 0 10 20 40
(IN FEET)
1 inch = 10 ft. Full Size
1 inch = 20 ft. Half Size

CAUTION UNDERGROUND UTILITIES
2 WORKING DAYS
BEFORE YOU DIG
CALL 1-800-362-2764
OHIO UTILITY PROTECTION SERVICE
CALL NON-SERVICE FACILITY OWNERS DIRECT

DOTE_Mono_PDF_Half.pltcfg
c:\pwworking\pitt\d0309031\S_G-GD-2012.dgn
Wednesday, July 11, 2012 12:00:12PM PM

CONTRACT DRAWING

PRINTS NOT BEARING THIS STAMP WERE MADE PRIOR TO ADVERTISING FOR BIDS AND ARE TO BE CONSIDERED OBSOLETE FOR CONTRACT PURPOSES.

Department of Transportation and Engineering

City of Cincinnati
City Hall
801 Plum Street
Cincinnati, Ohio 45202

CINCINNATI STREETCAR
OVER THE RHINE
GRADING PLAN - ELM STREET
STA 225+50 TO STA 227+50

Revisions
No.

Drawn by SAB	Date 07/02/12
Designed by SAB	Date 07/02/12
Checked by KVL	Date 07/02/12
Reviewed by JTB	Date 07/12/12

Consultant

PB HDR

File Number

ACC No.
23126

G-GD-2012

CONSTRUCTION NOTES:

(A) RECONSTRUCT CURB RAMPS, INCLUDING RESETTING CURBS TO INDICATED LINE AND GRADE. REMOVE EXISTING CONCRETE WALK AS REQUIRED TO NEAREST JOINT AND REPLACE TO MEET INDICATED LINE AND GRADE.

CONTRACTOR IS RESPONSIBLE FOR CONTACTING, AND COORDINATING WITH, UTILITY COMPANIES/AGENCIES AS REQUIRED TO HAVE THE UTILITY COMPANIES ADJUST THEIR FACILITIES TO PROPOSED PLAN ELEVATIONS. THERE MAY BE OTHER UTILITY FACILITIES NOT SHOWN ON THESE PLANS THAT NEED TO BE ADJUSTED AS WELL. THIS WORK SHALL BE COORDINATED AND COMPLETED IN A TIME FRAME CONSISTENT WITH PROJECT SCHEDULE. THIS COORDINATION IS DEEMED INCIDENTAL TO THE CONTRACT AND NO ADDITIONAL COMPENSATION WILL BE PROVIDED TO THE CONTRACTOR. THESE ITEMS ARE NOT QUANTIFIED.

PROP. CURB RAMP	
KEY	ELEVATION
A	C=540.01
B	539.73
C	539.68
D	C=540.01
E	540.18
F	540.26
G	540.34
H	540.26

PROP. CURB RAMP	
KEY	ELEVATION
A	C=539.56
B	539.34
C	539.42
D	C=540.03
E	539.92
F	540.00
G	539.92
H	539.84

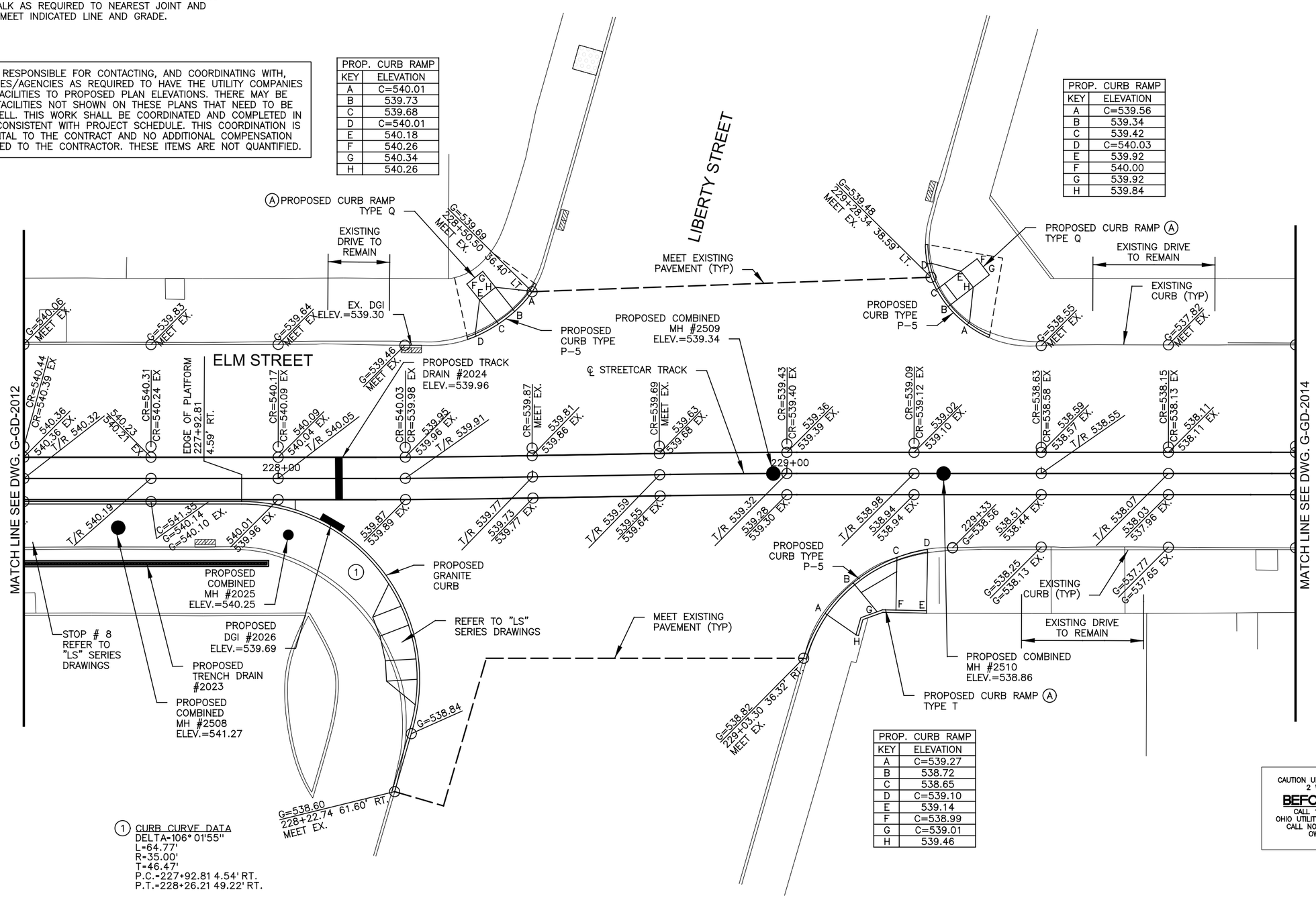

PROP. CURB RAMP	
KEY	ELEVATION
A	C=539.27
B	538.72
C	538.65
D	C=539.10
E	539.14
F	C=538.99
G	C=539.01
H	539.46

(1) CURB CURVE DATA
DELTA=106° 01'55"
L=64.77'
R=35.00'
T=46.47'
P.C.=227+92.81 4.54' RT.
P.T.=228+26.21 49.22' RT.

CAUTION UNDERGROUND UTILITIES
2 WORKING DAYS
BEFORE YOU DIG
CALL 1-800-362-2764
OHIO UTILITY PROTECTION SERVICE
CALL NON-SERVICE FACILITY OWNERS DIRECT

GRAPHIC SCALE
10 0 10 20 40
(IN FEET)
1 inch = 10 ft. Full Size
1 inch = 20 ft. Half Size

CONTRACT DRAWING

PRINTS NOT BEARING THIS STAMP WERE MADE PRIOR TO ADVERTISING FOR BID AND ARE TO BE CONSIDERED OBSOLETE FOR CONTRACT PURPOSES.

Department of Transportation and Engineering

City of Cincinnati
City Hall
801 Plum Street
Cincinnati, Ohio 45202

CINCINNATI STREETCAR
OVER THE RHINE
GRADING PLAN - ELM STREET
STA 227+50 TO STA 230+00

Revisions
No.

Date 07/02/12
Date 07/02/12
Date 07/02/12
Date 07/12/12

Drawn by SAB
Designed by SAB
Checked by KVL
Reviewed by JTB

Consultant

PB HDR

File Number

ACC No.
23126

G-GD-2013

DOTE_Mono_PDF_Half.pltcfg
c:\pwworking\pitt\d0309031\S_G-GD-2013.dgn
Wednesday, July 11, 2012 12:00:12 PM

CONSTRUCTION NOTES:

(A) RECONSTRUCT CURB RAMPS, INCLUDING RESETTING CURBS TO INDICATED LINE AND GRADE. REMOVE EXISTING CONCRETE WALK AS REQUIRED TO NEAREST JOINT AND REPLACE TO MEET INDICATED LINE AND GRADE.

PROP. CURB RAMP	
KEY	ELEVATION
A	C=536.38
B	535.80
C	C=536.21
D	536.30
E	536.38
F	536.45
G	536.38

PROP. CURB RAMP	
KEY	ELEVATION
A	C=536.06
B	535.72
C	C=536.30
D	536.30
E	536.37
F	536.30
G	536.22

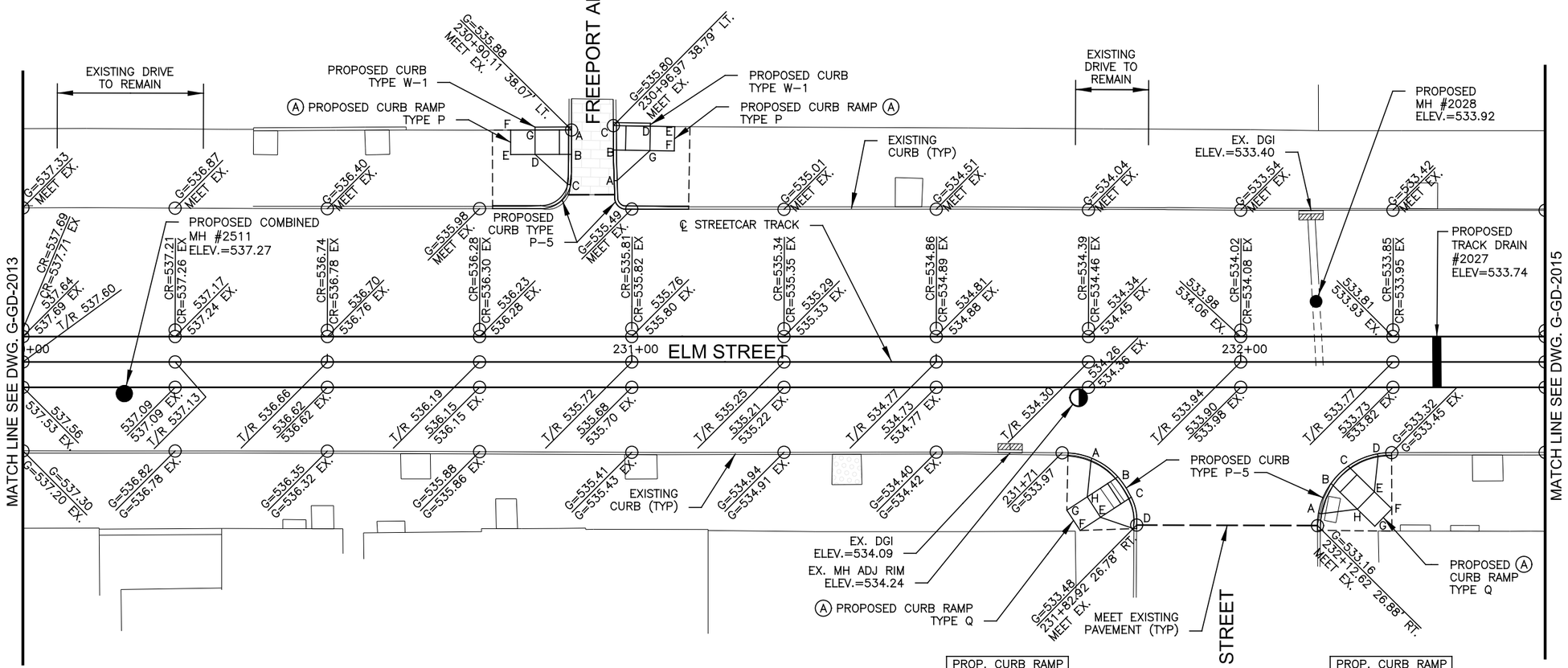

PROP. CURB RAMP	
KEY	ELEVATION
A	C=534.36
B	533.74
C	533.66
D	C=533.98
E	534.08
F	534.15
G	534.23
H	534.15

PROP. CURB RAMP	
KEY	ELEVATION
A	C=533.68
B	533.23
C	533.26
D	C-533.80
E	533.76
F	533.84
G	533.81
H	533.73

CAUTION UNDERGROUND UTILITIES
2 WORKING DAYS
BEFORE YOU DIG
CALL 1-800-362-2764
OHIO UTILITY PROTECTION SERVICE
CALL NON-SERVICE FACILITY OWNERS DIRECT

CONTRACTOR IS RESPONSIBLE FOR CONTACTING, AND COORDINATING WITH, UTILITY COMPANIES/AGENCIES AS REQUIRED TO HAVE THE UTILITY COMPANIES ADJUST THEIR FACILITIES TO PROPOSED PLAN ELEVATIONS. THERE MAY BE OTHER UTILITY FACILITIES NOT SHOWN ON THESE PLANS THAT NEED TO BE ADJUSTED AS WELL. THIS WORK SHALL BE COORDINATED AND COMPLETED IN A TIME FRAME CONSISTENT WITH PROJECT SCHEDULE. THIS COORDINATION IS DEEMED INCIDENTAL TO THE CONTRACT AND NO ADDITIONAL COMPENSATION WILL BE PROVIDED TO THE CONTRACTOR. THESE ITEMS ARE NOT QUANTIFIED.

GRAPHIC SCALE
10 0 10 20 40
(IN FEET)
1 inch = 10 ft. Full Size
1 inch = 20 ft. Half Size

DOTE_Mono_PDF_Half.pltcfg
c:\pwworking\pitt\d0309031\S_G-GD-2014.dgn
Wednesday, July 11, 2012 12:00:18 PM GMT-2 PM

CONTRACT DRAWING

PRINTS NOT BEARING THIS STAMP WERE MADE PRIOR TO ADVERTISING FOR BIDS AND ARE TO BE CONSIDERED OBSOLETE FOR CONTRACT PURPOSES.

Department of Transportation and Engineering

City of Cincinnati
City Hall
801 Plum Street
Cincinnati, Ohio 45202

CINCINNATI STREETCAR OVER THE RHINE

GRADING PLAN - ELM STREET
STA 230+00 TO STA 232+50

Revisions
No.

Drawn by SAB	Date 07/02/12
Designed by SAB	Date 07/02/12
Checked by KVL	Date 07/02/12
Reviewed by JTB	Date 07/12/12

Consultant

PB HDR

File Number

ACC No.
23126

G-GD-2014

PROP. CURB RAMP	
KEY	ELEVATION
A	C=533.95
B	533.53
C	533.54
D	C=534.10
E	534.04
F	534.12
G	534.04
H	534.00

PROP. CURB RAMP	
KEY	ELEVATION
A	C=534.45
B	533.89
C	533.82
D	C=534.10
E	534.32
F	534.40
G	534.47
H	534.39

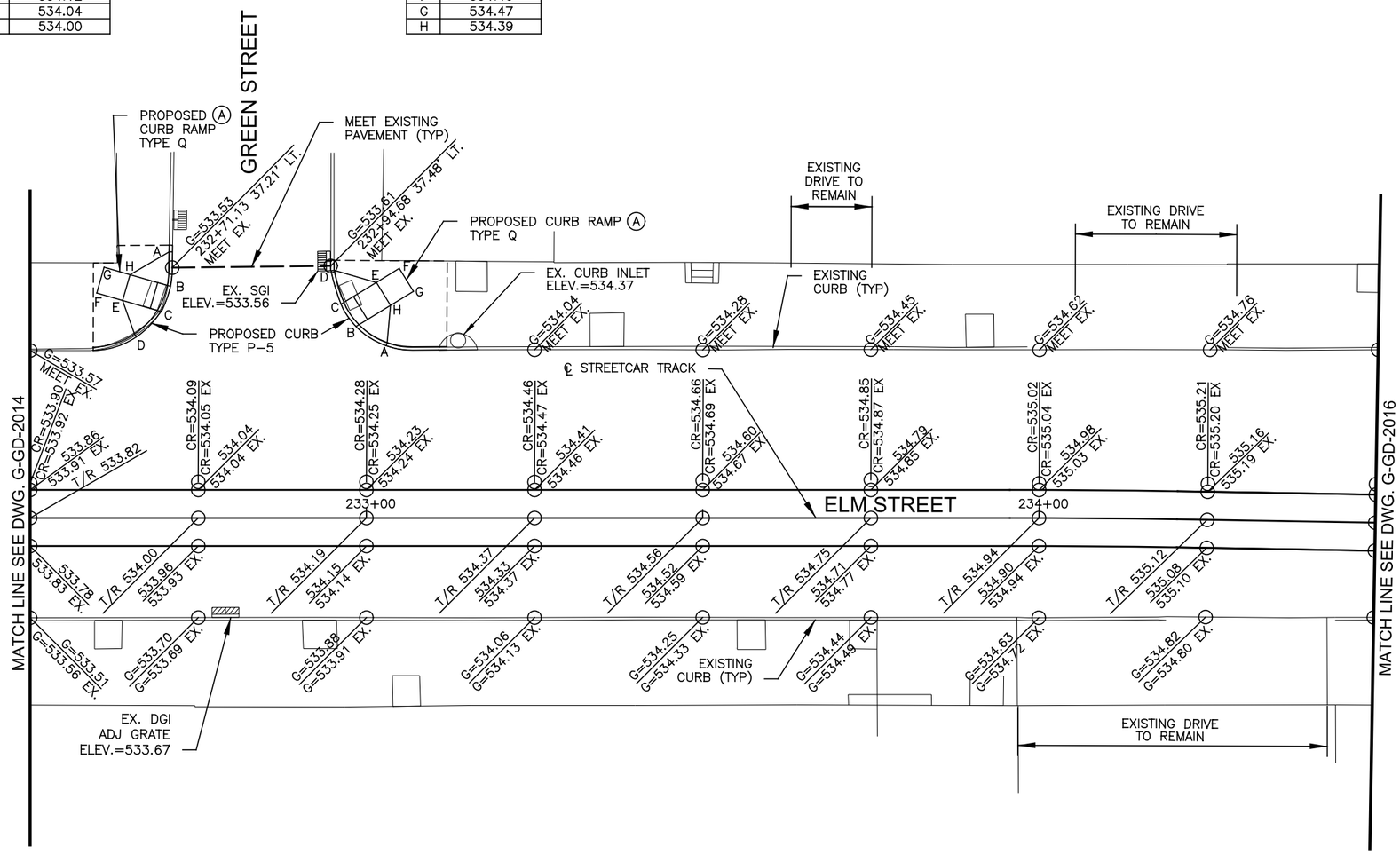

CONSTRUCTION NOTES:

(A) RECONSTRUCT CURB RAMPS, INCLUDING RESETTING CURBS TO INDICATED LINE AND GRADE. REMOVE EXISTING CONCRETE WALK AS REQUIRED TO NEAREST JOINT AND REPLACE TO MEET INDICATED LINE AND GRADE.

CONTRACTOR IS RESPONSIBLE FOR CONTACTING, AND COORDINATING WITH, UTILITY COMPANIES/AGENCIES AS REQUIRED TO HAVE THE UTILITY COMPANIES ADJUST THEIR FACILITIES TO PROPOSED PLAN ELEVATIONS. THERE MAY BE OTHER UTILITY FACILITIES NOT SHOWN ON THESE PLANS THAT NEED TO BE ADJUSTED AS WELL. THIS WORK SHALL BE COORDINATED AND COMPLETED IN A TIME FRAME CONSISTENT WITH PROJECT SCHEDULE. THIS COORDINATION IS DEEMED INCIDENTAL TO THE CONTRACT AND NO ADDITIONAL COMPENSATION WILL BE PROVIDED TO THE CONTRACTOR. THESE ITEMS ARE NOT QUANTIFIED.

CAUTION UNDERGROUND UTILITIES
2 WORKING DAYS
BEFORE YOU DIG
CALL 1-800-362-2764
OHIO UTILITY PROTECTION SERVICE
CALL NON-SERVICE FACILITY
OWNERS DIRECT

GRAPHIC SCALE
10 0 10 20 40
(IN FEET)
1 inch = 10 ft. Full Size
1 inch = 20 ft. Half Size

DOTE_Mono_PDF_Half.pltcfg
c:\pwworking\pitt\d0309031\S_G-GD-2015.dgn
Wednesday, July 11, 2012 12:00:40 PM

CONTRACT DRAWING
PRINTS NOT BEARING THIS STAMP WERE MADE PRIOR TO ADVERTISING FOR BIDS AND ARE TO BE CONSIDERED OBSOLETE FOR CONTRACT PURPOSES.

Department of Transportation and Engineering
City of Cincinnati
City Hall
801 Plum Street
Cincinnati, Ohio 45202

CINCINNATI STREETCAR
OVER THE RHINE
GRADING PLAN - ELM STREET
STA 232+50 TO STA 234+50

Revisions
No.

Drawn by SAB	Date 07/02/12
Designed by SAB	Date 07/02/12
Checked by KVL	Date 07/02/12
Reviewed by JTB	Date 07/12/12

Consultant
PB HDR

File Number

ACC No.
23126

G-GD-2015

CONSTRUCTION NOTES:

(A) RECONSTRUCT CURB RAMPS, INCLUDING RESETTING CURBS TO INDICATED LINE AND GRADE. REMOVE EXISTING CONCRETE WALK AS REQUIRED TO NEAREST JOINT AND REPLACE TO MEET INDICATED LINE AND GRADE.

PROP. CURB RAMP	
KEY	ELEVATION
A	C=536.98
B	536.50
C	536.54
D	C=537.07
E	536.88
F	536.95
G	537.03
H	536.96

PROP. CURB RAMP	
KEY	ELEVATION
A	C=537.15
B	536.67
C	536.67
D	C=537.13
E	537.16
F	537.24
G	537.16
H	537.08

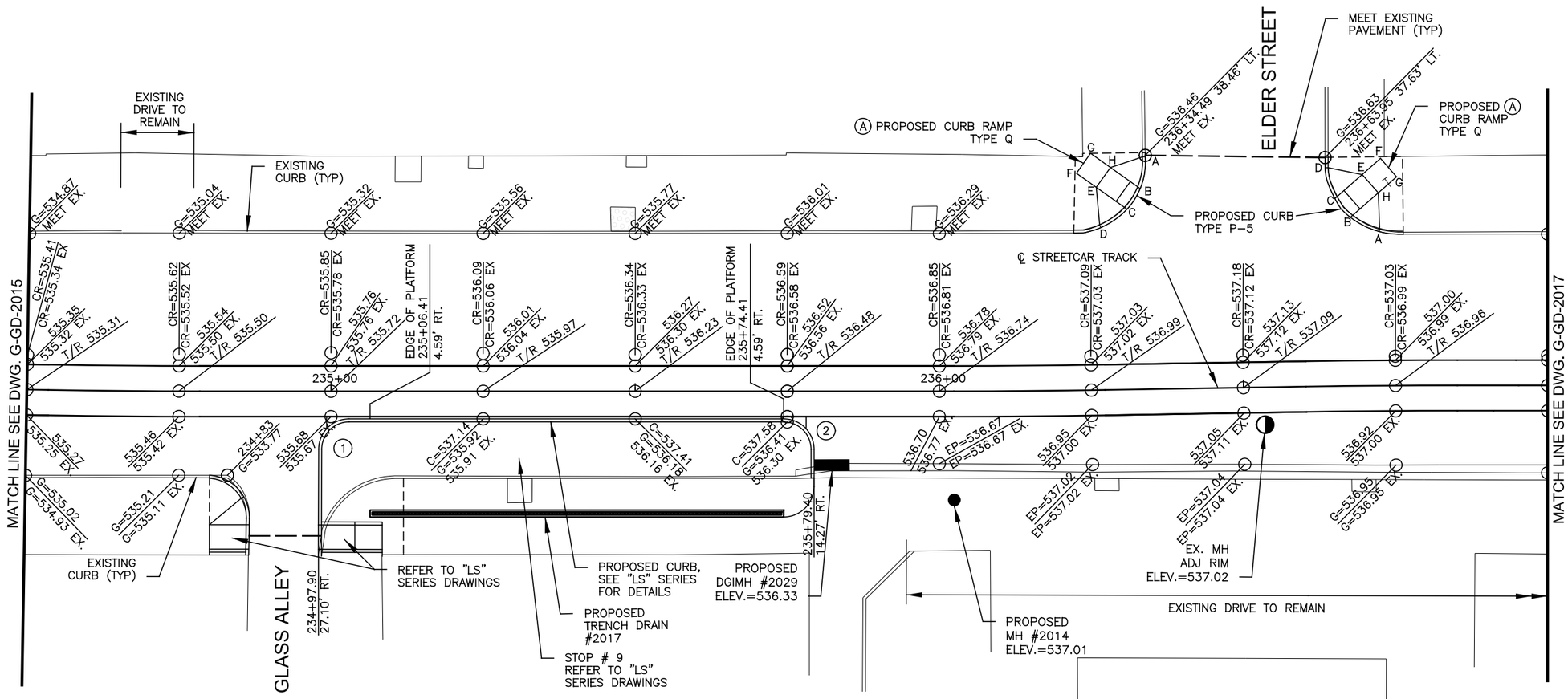

(1) CURB CURVE DATA
DELTA=89° 49'25"
L=7.84'
R=5.00'
T=4.98'
P.C.=234+97.95 9.52' RT.
P.T.=235+02.95 4.54' RT.

(2) CURB CURVE DATA
DELTA=90° 08'47"
L=7.87'
R=5.00'
T=5.01'
P.C.=235+74.41 4.55' RT.
P.T.=235+79.41 9.56' RT.

CAUTION UNDERGROUND UTILITIES
2 WORKING DAYS
BEFORE YOU DIG
CALL 1-800-362-2764
OHIO UTILITY PROTECTION SERVICE
CALL NON-SERVICE FACILITY
OWNERS DIRECT

CONTRACTOR IS RESPONSIBLE FOR CONTACTING, AND COORDINATING WITH, UTILITY COMPANIES/AGENCIES AS REQUIRED TO HAVE THE UTILITY COMPANIES ADJUST THEIR FACILITIES TO PROPOSED PLAN ELEVATIONS. THERE MAY BE OTHER UTILITY FACILITIES NOT SHOWN ON THESE PLANS THAT NEED TO BE ADJUSTED AS WELL. THIS WORK SHALL BE COORDINATED AND COMPLETED IN A TIME FRAME CONSISTENT WITH PROJECT SCHEDULE. THIS COORDINATION IS DEEMED INCIDENTAL TO THE CONTRACT AND NO ADDITIONAL COMPENSATION WILL BE PROVIDED TO THE CONTRACTOR. THESE ITEMS ARE NOT QUANTIFIED.

GRAPHIC SCALE
10 0 10 20 40
(IN FEET)
1 inch = 10 ft. Full Size
1 inch = 20 ft. Half Size

DOTE_Mono_PDF_Half.pltcfg
c:\pwworking\pitt\d0309031\S_G-GD-2016.dgn
Wednesday, July 11, 2012 12:01:28 PM

CONTRACT DRAWING

PRINTS NOT BEARING THIS STAMP WERE MADE PRIOR TO ADVERTISING FOR BIDS AND ARE TO BE CONSIDERED OBSOLETE FOR CONTRACT PURPOSES.

Department of Transportation and Engineering

City of Cincinnati
City Hall
801 Plum Street
Cincinnati, Ohio 45202

CINCINNATI STREETCAR OVER THE RHINE

GRADING PLAN - ELM STREET
STA 234+50 TO STA 237+00

Revisions

No.		

Drawn by SAB	Date 07/02/12
Designed by SAB	Date 07/02/12
Checked by KVL	Date 07/02/12
Reviewed by JTB	Date 07/12/12

Consultant

PB HDR

File Number

ACC No. 23126

G-GD-2016

CONSTRUCTION NOTES:

(A) RECONSTRUCT CURB RAMPS, INCLUDING RESETTING CURBS TO INDICATED LINE AND GRADE. REMOVE EXISTING CONCRETE WALK AS REQUIRED TO NEAREST JOINT AND REPLACE TO MEET INDICATED LINE AND GRADE.

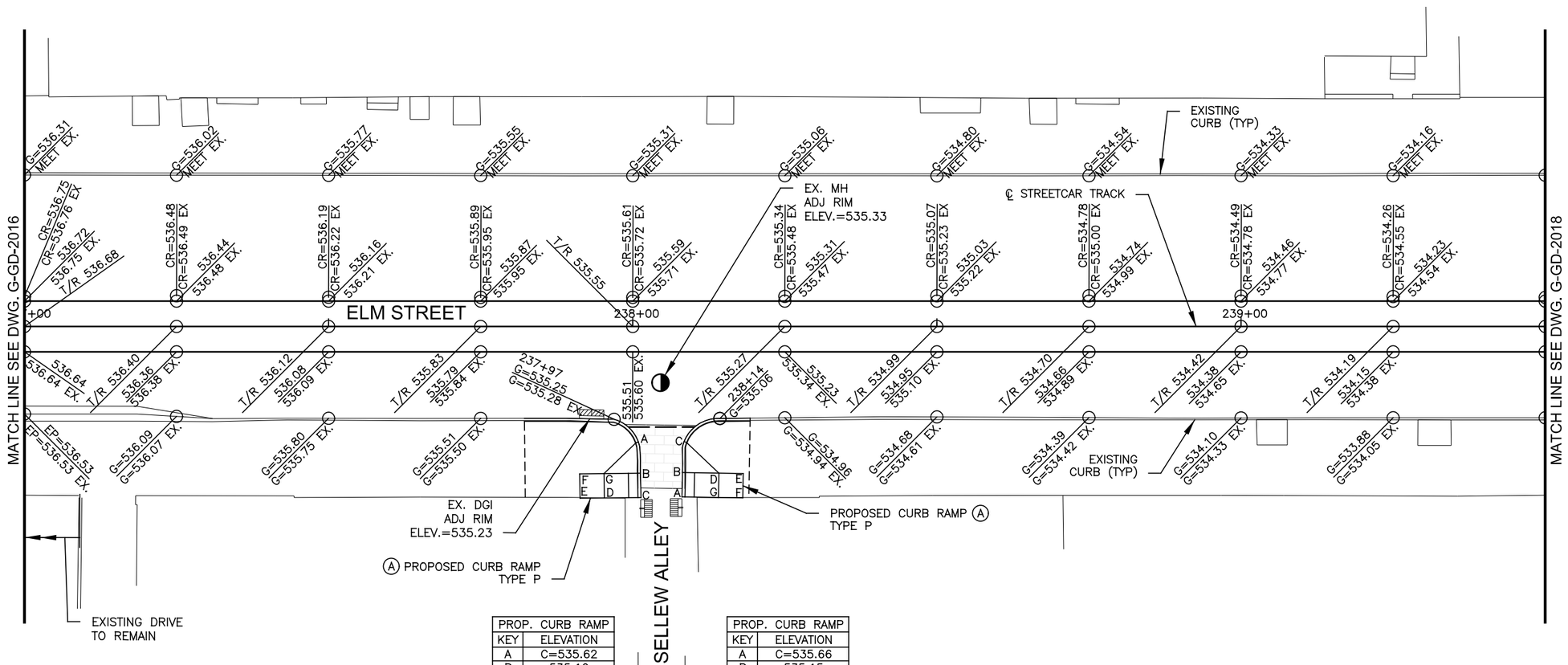

PROP. CURB RAMP	
KEY	ELEVATION
A	C=535.62
B	535.12
C	C=535.57
D	535.56
E	535.64
F	535.72
G	535.64

PROP. CURB RAMP	
KEY	ELEVATION
A	C=535.66
B	535.15
C	C=535.62
D	535.65
E	535.73
F	535.68
G	535.60

CONTRACTOR IS RESPONSIBLE FOR CONTACTING, AND COORDINATING WITH, UTILITY COMPANIES/AGENCIES AS REQUIRED TO HAVE THE UTILITY COMPANIES ADJUST THEIR FACILITIES TO PROPOSED PLAN ELEVATIONS. THERE MAY BE OTHER UTILITY FACILITIES NOT SHOWN ON THESE PLANS THAT NEED TO BE ADJUSTED AS WELL. THIS WORK SHALL BE COORDINATED AND COMPLETED IN A TIME FRAME CONSISTENT WITH PROJECT SCHEDULE. THIS COORDINATION IS DEEMED INCIDENTAL TO THE CONTRACT AND NO ADDITIONAL COMPENSATION WILL BE PROVIDED TO THE CONTRACTOR. THESE ITEMS ARE NOT QUANTIFIED.

CAUTION UNDERGROUND UTILITIES
2 WORKING DAYS
BEFORE YOU DIG
CALL 1-800-362-2764
OHIO UTILITY PROTECTION SERVICE
CALL NON-SERVICE FACILITY
OWNERS DIRECT

GRAPHIC SCALE
10 0 10 20 40
(IN FEET)
1 inch = 10 ft. Full Size
1 inch = 20 ft. Half Size

DOTE_Mono_PDF_Half.pltcfg
c:\pwworking\pitt\d0309031\S_G-GD-2017.dgn
Wednesday, July 11, 2012 12:01:28 PM GRM8 PM

CONTRACT DRAWING

PRINTS NOT BEARING THIS STAMP WERE MADE PRIOR TO ADVERTISING FOR BIDS AND ARE TO BE CONSIDERED OBSOLETE FOR CONTRACT PURPOSES.

Department of Transportation and Engineering

City of Cincinnati
City Hall
801 Plum Street
Cincinnati, Ohio 45202

CINCINNATI STREETCAR
OVER THE RHINE
GRADING PLAN - ELM STREET
STA 237+00 TO STA 239+50

Revisions
No.

Drawn by SAB	Date 07/02/12
Designed by SAB	Date 07/02/12
Checked by KVL	Date 07/02/12
Reviewed by JTB	Date 07/12/12

Consultant

PB HDR

File Number

ACC No.
23126

G-GD-2017

CONSTRUCTION NOTES:

(A) RECONSTRUCT CURB RAMPS, INCLUDING RESETTING CURBS TO INDICATED LINE AND GRADE. REMOVE EXISTING CONCRETE WALK AS REQUIRED TO NEAREST JOINT AND REPLACE TO MEET INDICATED LINE AND GRADE.

PROP. CURB RAMP	
KEY	ELEVATION
A	C=533.88
B	533.32
C	533.27
D	C=533.69
E	533.77
F	533.85
G	533.90
H	533.82

PROP. CURB RAMP	
KEY	ELEVATION
A	C=532.91
B	532.63
C	532.72
D	C=533.32
E	533.22
F	533.30
G	533.22
H	533.14

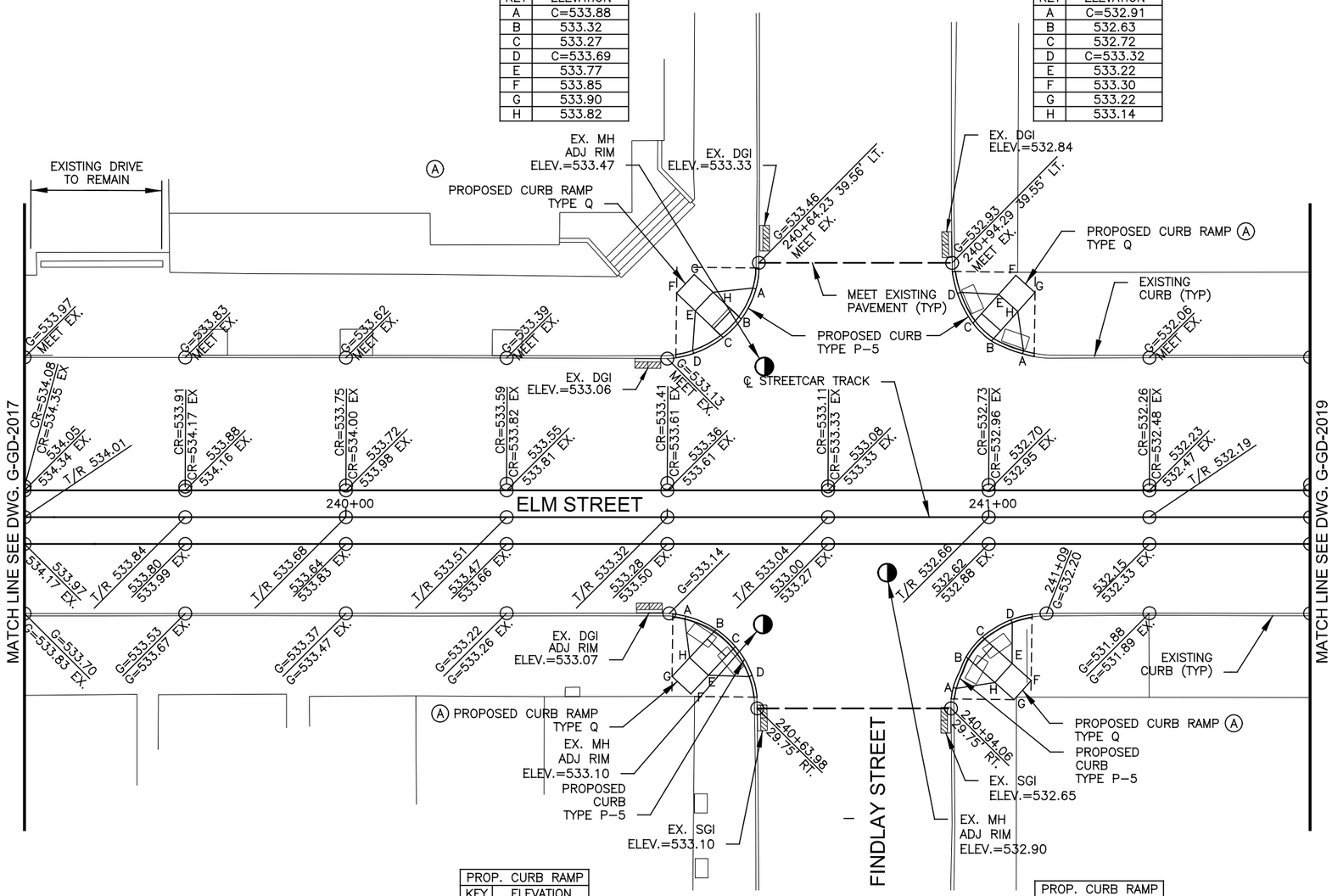

PROP. CURB RAMP	
KEY	ELEVATION
A	C=533.63
B	533.12
C	533.12
D	C=533.61
E	533.62
F	533.70
G	533.70
H	533.62

PROP. CURB RAMP	
KEY	ELEVATION
A	C=532.97
B	532.47
C	532.40
D	C=532.80
E	532.90
F	532.98
G	533.05
H	532.97

CONTRACTOR IS RESPONSIBLE FOR CONTACTING, AND COORDINATING WITH, UTILITY COMPANIES/AGENCIES AS REQUIRED TO HAVE THE UTILITY COMPANIES ADJUST THEIR FACILITIES TO PROPOSED PLAN ELEVATIONS. THERE MAY BE OTHER UTILITY FACILITIES NOT SHOWN ON THESE PLANS THAT NEED TO BE ADJUSTED AS WELL. THIS WORK SHALL BE COORDINATED AND COMPLETED IN A TIME FRAME CONSISTENT WITH PROJECT SCHEDULE. THIS COORDINATION IS DEEMED INCIDENTAL TO THE CONTRACT AND NO ADDITIONAL COMPENSATION WILL BE PROVIDED TO THE CONTRACTOR. THESE ITEMS ARE NOT QUANTIFIED.

GRAPHIC SCALE

10 0 10 20 40

(IN FEET)
1 inch = 10 ft. Full Size
1 inch = 20 ft. Half Size

CAUTION UNDERGROUND UTILITIES
2 WORKING DAYS
BEFORE YOU DIG
CALL 1-800-362-2764
OHIO UTILITY PROTECTION SERVICE
CALL NON-SERVICE FACILITY OWNERS DIRECT

DOTE_Mono_PDF_Half.pltcfg
c:\pwworking\pitt\d0309031\S_G-GD-2018.dgn
Wednesday, July 11, 2012 12:01:23:00 PM

CONTRACT DRAWING

PRINTS NOT BEARING THIS STAMP WERE MADE PRIOR TO ADVERTISING FOR BIDS AND ARE TO BE CONSIDERED OBSOLETE FOR CONTRACT PURPOSES.

Department of Transportation and Engineering

City of Cincinnati
City Hall
801 Plum Street
Cincinnati, Ohio 45202

CINCINNATI STREETCAR OVER THE RHINE

GRADING PLAN - ELM STREET
STA 239+50 TO STA 241+50

Revisions

No.	Date	Drawn by	Designed by	Checked by	Reviewed by
	07/02/12	SAB	SAB	KVL	JTB
	07/02/12				
	07/02/12				
	07/12/12				

Consultant

PB HDR

File Number

ACC No.
23126

G-GD-2018

CONSTRUCTION NOTES:

(A) RECONSTRUCT CURB RAMPS, INCLUDING RESETTING CURBS TO INDICATED LINE AND GRADE. REMOVE EXISTING CONCRETE WALK AS REQUIRED TO NEAREST JOINT AND REPLACE TO MEET INDICATED LINE AND GRADE.

PROP. CURB RAMP	
KEY	ELEVATION
A	C=530.60
B	529.85
C	C=530.02
D	530.66
E	530.74
F	530.82
G	530.74

PROP. CURB RAMP	
KEY	ELEVATION
A	C=529.66
B	529.64
C	C=530.14
D	530.10
E	530.02
F	529.85
G	529.96

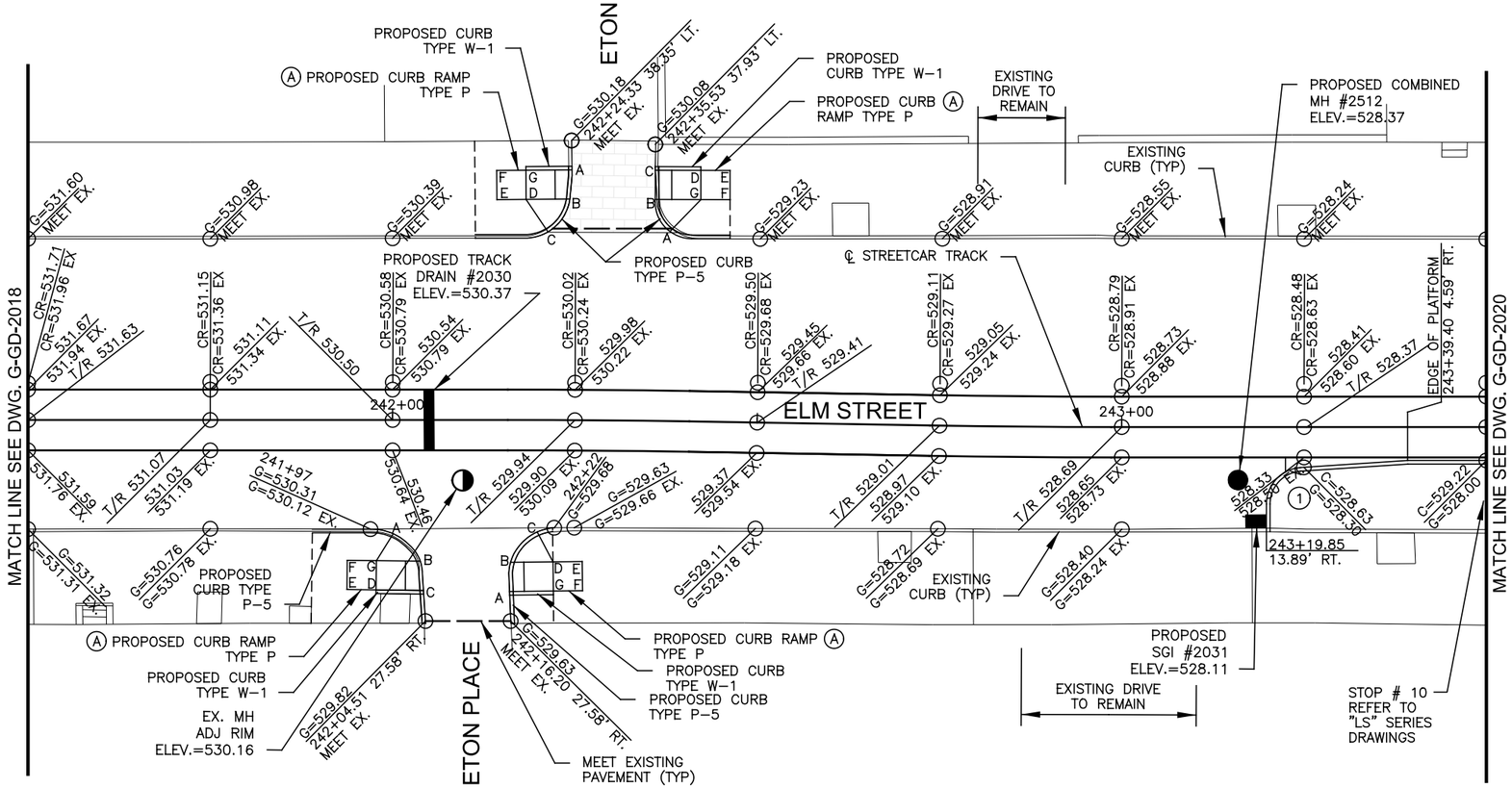

PROP. CURB RAMP	
KEY	ELEVATION
A	C=530.81
B	530.32
C	C=530.83
D	530.65
E	530.73
F	530.65
G	530.57

PROP. CURB RAMP	
KEY	ELEVATION
A	C=530.15
B	529.68
C	C=530.18
D	530.05
E	530.03
F	530.09
G	530.13

(1) CURB CURVE DATA
DELTA=86° 12'24"
L=7.52'
R=5.00'
T=4.68'
P.C.=243+19.85 10.56' RT.
P.T.=243+24.52 5.57' RT.

CONTRACTOR IS RESPONSIBLE FOR CONTACTING, AND COORDINATING WITH, UTILITY COMPANIES/AGENCIES AS REQUIRED TO HAVE THE UTILITY COMPANIES ADJUST THEIR FACILITIES TO PROPOSED PLAN ELEVATIONS. THERE MAY BE OTHER UTILITY FACILITIES NOT SHOWN ON THESE PLANS THAT NEED TO BE ADJUSTED AS WELL. THIS WORK SHALL BE COORDINATED AND COMPLETED IN A TIME FRAME CONSISTENT WITH PROJECT SCHEDULE. THIS COORDINATION IS DEEMED INCIDENTAL TO THE CONTRACT AND NO ADDITIONAL COMPENSATION WILL BE PROVIDED TO THE CONTRACTOR. THESE ITEMS ARE NOT QUANTIFIED.

CAUTION UNDERGROUND UTILITIES
2 WORKING DAYS
BEFORE YOU DIG
CALL 1-800-362-2764
OHIO UTILITY PROTECTION SERVICE
CALL NON-SERVICE FACILITY OWNERS DIRECT

GRAPHIC SCALE
10 0 10 20 40
(IN FEET)
1 inch = 10 ft. Full Size
1 inch = 20 ft. Half Size

DOTE_Mono_PDF_Half.pltcfg
c:\pwworking\pitt\d0309031\S_G-GD-2019.dgn
Wednesday, July 11, 2012 12:01:20 PM PM

CONTRACT DRAWING

PRINTS NOT BEARING THIS STAMP WERE MADE PRIOR TO ADVERTISING FOR BIDS AND ARE TO BE CONSIDERED OBSOLETE FOR CONTRACT PURPOSES.

Department of Transportation and Engineering
City of Cincinnati
City Hall
801 Plum Street
Cincinnati, Ohio 45202

CINCINNATI STREETCAR
OVER THE RHINE
GRADING PLAN - ELM STREET
STA 241+50 TO STA 243+50

Revisions
No.

Drawn by SAB	Date 07/02/12
Designed by SAB	Date 07/02/12
Checked by KVL	Date 07/02/12
Reviewed by JTB	Date 07/12/12

Consultant
PB HDR

File Number

ACC No.
23126

G-GD-2019

CONSTRUCTION NOTES:

(A) RECONSTRUCT CURB RAMPS, INCLUDING RESETTING CURBS TO INDICATED LINE AND GRADE. REMOVE EXISTING CONCRETE WALK AS REQUIRED TO NEAREST JOINT AND REPLACE TO MEET INDICATED LINE AND GRADE.

(B) REMOVE, SALVAGE AND RESET EXISTING GRANITE CURBS TO INDICATED LINE AND GRADE. REMOVE EXISTING CONCRETE WALK AS REQUIRED AND REPLACE TO MEET INDICATED LINE AND GRADE. PROVIDE NEW CURB AS REQUIRED TO MATCH EXISTING.

PROP. CURB RAMP	
KEY	ELEVATION
A	C=527.09
B	526.59
C	526.60
D	C=527.07
E	526.79
F	526.87
G	526.93
H	526.85

PROP. CURB RAMP	
KEY	ELEVATION
A	C=527.64
B	527.01
C	526.92
D	C=527.32
E	527.42
F	527.50
G	527.58
H	527.50

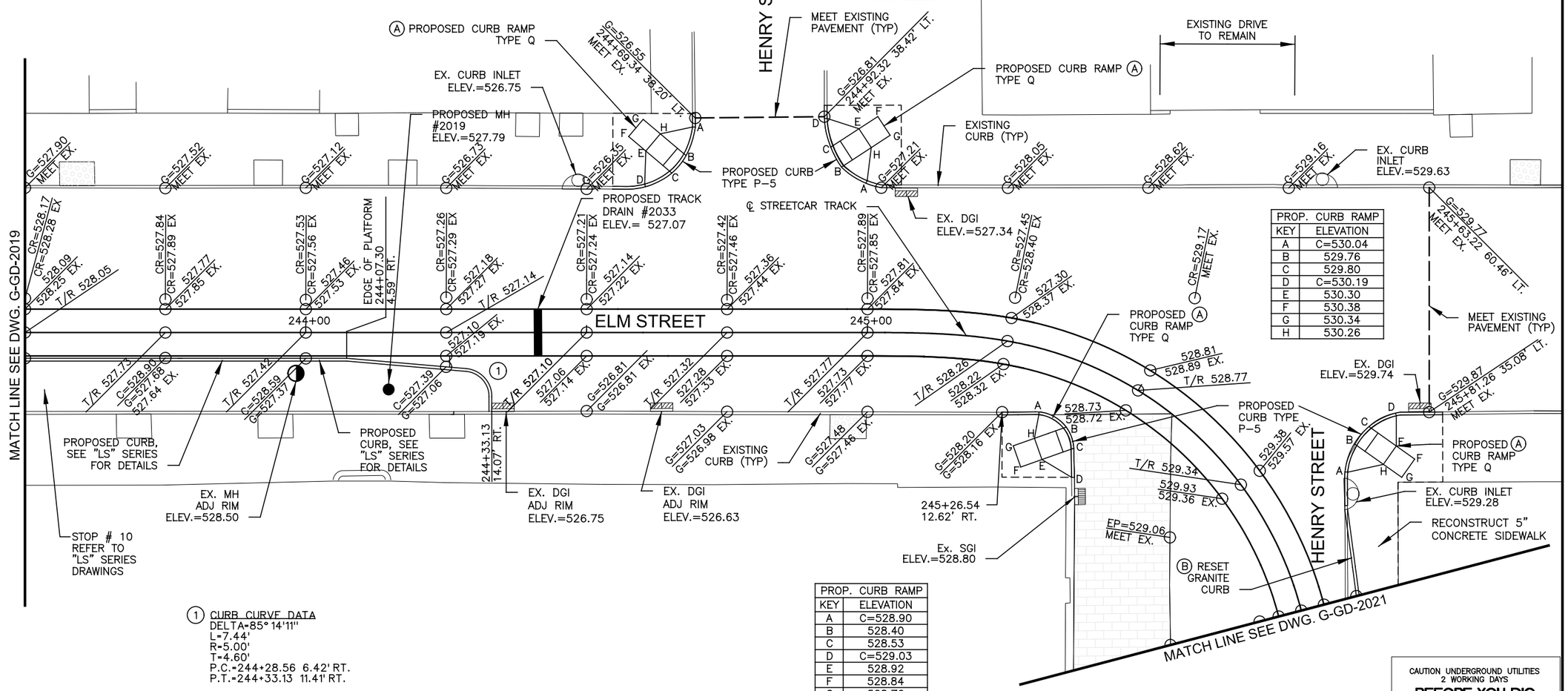

PROP. CURB RAMP	
KEY	ELEVATION
A	C=530.04
B	529.76
C	529.80
D	C=530.19
E	530.30
F	530.38
G	530.34
H	530.26

PROP. CURB RAMP	
KEY	ELEVATION
A	C=528.90
B	528.40
C	528.53
D	C=529.03
E	528.92
F	528.84
G	528.76
H	528.84

(1) CURB CURVE DATA
DELTA=85° 14'11"
L=7.44'
R=5.00'
T=4.60'
P.C.=244+28.56 6.42' RT.
P.T.=244+33.13 11.41' RT.

CONTRACTOR IS RESPONSIBLE FOR CONTACTING, AND COORDINATING WITH, UTILITY COMPANIES/AGENCIES AS REQUIRED TO HAVE THE UTILITY COMPANIES ADJUST THEIR FACILITIES TO PROPOSED PLAN ELEVATIONS. THERE MAY BE OTHER UTILITY FACILITIES NOT SHOWN ON THESE PLANS THAT NEED TO BE ADJUSTED AS WELL. THIS WORK SHALL BE COORDINATED AND COMPLETED IN A TIME FRAME CONSISTENT WITH PROJECT SCHEDULE. THIS COORDINATION IS DEEMED INCIDENTAL TO THE CONTRACT AND NO ADDITIONAL COMPENSATION WILL BE PROVIDED TO THE CONTRACTOR. THESE ITEMS ARE NOT QUANTIFIED.

GRAPHIC SCALE
10 0 10 20 40
(IN FEET)
1 inch = 10 ft. Full Size
1 inch = 20 ft. Half Size

CAUTION UNDERGROUND UTILITIES
2 WORKING DAYS
BEFORE YOU DIG
CALL 1-800-362-2764
OHIO UTILITY PROTECTION SERVICE
CALL NON-SERVICE FACILITY OWNERS DIRECT

CONTRACT DRAWING

PRINTS NOT BEARING THIS STAMP WERE MADE PRIOR TO ADVERTISING FOR BIDS AND ARE TO BE CONSIDERED OBSOLETE FOR CONTRACT PURPOSES.

Department of Transportation and Engineering

City of Cincinnati
City Hall
801 Plum Street
Cincinnati, Ohio 45202

CINCINNATI STREETCAR OVER THE RHINE

GRADING PLAN - ELM STREET
STA 243+50 TO STA 246+00

Revisions
No.

Drawn by SAB	Date 07/02/12	
Designed by SAB	Date 07/02/12	
Checked by KVL	Date 07/02/12	
Reviewed by JTB	Date 07/12/12	

Consultant

PB HDR

File Number

ACC No. 23126

G-GD-2020

DOTE_Mono_PDF_Half.pltcfg
c:\pwworking\pitt\d0309031\S_G-GD-2020.dgn
Wednesday, July 11, 2012 12:24:26 PM

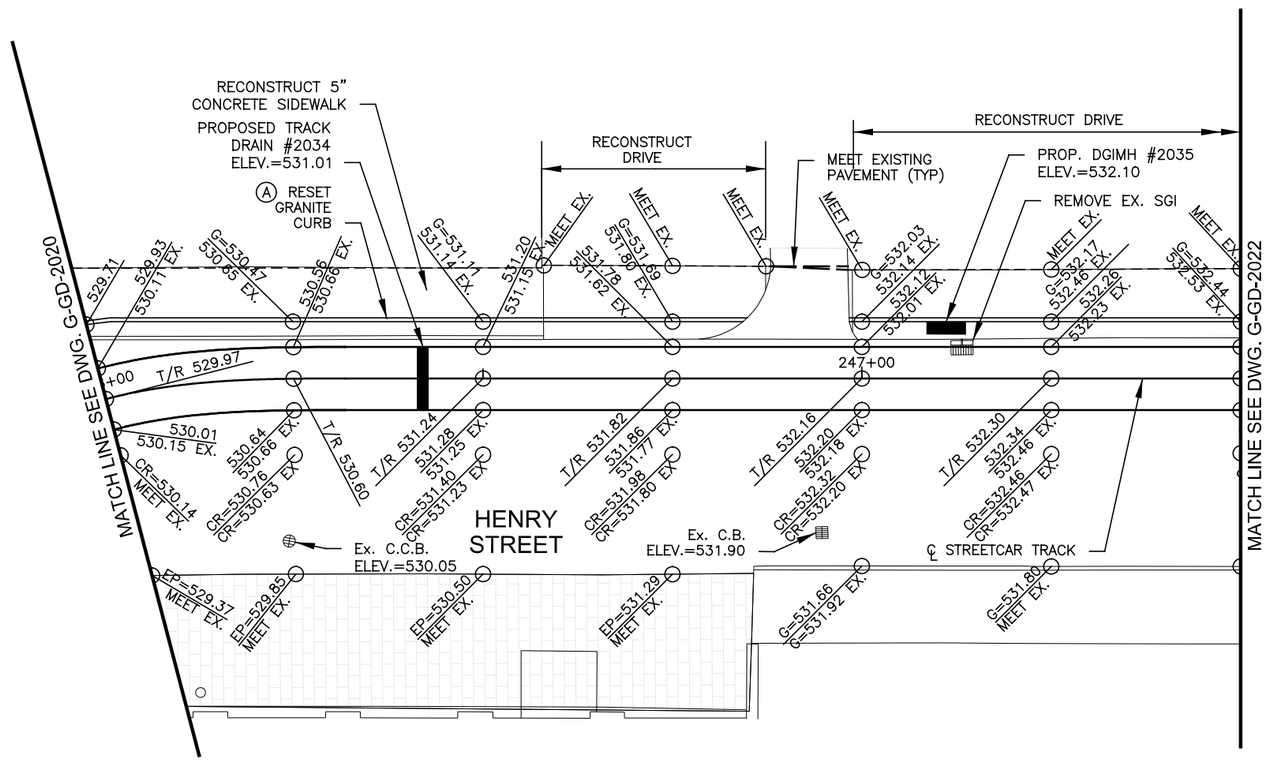

CONSTRUCTION NOTES:

(A) REMOVE, SALVAGE AND RESET EXISTING GRANITE CURBS TO INDICATED LINE AND GRADE. REMOVE EXISTING CONCRETE WALK AS REQUIRED AND REPLACE TO MEET INDICATED LINE AND GRADE. PROVIDE NEW CURB AS REQUIRED TO MATCH EXISTING.

CONTRACTOR IS RESPONSIBLE FOR CONTACTING, AND COORDINATING WITH, UTILITY COMPANIES/AGENCIES AS REQUIRED TO HAVE THE UTILITY COMPANIES ADJUST THEIR FACILITIES TO PROPOSED PLAN ELEVATIONS. THERE MAY BE OTHER UTILITY FACILITIES NOT SHOWN ON THESE PLANS THAT NEED TO BE ADJUSTED AS WELL. THIS WORK SHALL BE COORDINATED AND COMPLETED IN A TIME FRAME CONSISTENT WITH PROJECT SCHEDULE. THIS COORDINATION IS DEEMED INCIDENTAL TO THE CONTRACT AND NO ADDITIONAL COMPENSATION WILL BE PROVIDED TO THE CONTRACTOR. THESE ITEMS ARE NOT QUANTIFIED.

CAUTION UNDERGROUND UTILITIES
2 WORKING DAYS
BEFORE YOU DIG
CALL 1-800-362-2764
OHIO UTILITY PROTECTION SERVICE
CALL NON-SERVICE FACILITY OWNERS DIRECT

GRAPHIC SCALE
10 0 10 20 40
(IN FEET)
1 inch = 10 ft. Full Size
1 inch = 20 ft. Half Size

DOTE_Mono_PDF_Half.pltcfg
c:\pwworking\pitt\d0309031\S_G-GD-2021.dgn
Wednesday, July 11, 2012 12:02:06 PM

CONTRACT DRAWING

PRINTS NOT BEARING THIS STAMP WERE MADE PRIOR TO ADVERTISING FOR BIDS AND ARE TO BE CONSIDERED OBSOLETE FOR CONTRACT PURPOSES.

Department of Transportation and Engineering

City of Cincinnati
City Hall
801 Plum Street
Cincinnati, Ohio 45202

CINCINNATI STREETCAR OVER THE RHINE

GRADING PLAN - HENRY STREET
STA 246+00 TO STA 247+50

Revisions
No.

Drawn by SAB	Date 07/02/12
Designed by SAB	Date 07/02/12
Checked by KVL	Date 07/02/12
Reviewed by JTB	Date 07/12/12

Consultant

PB HDR

File Number

ACC No.
23126

G-GD-2021

CONSTRUCTION NOTES:

(A) RECONSTRUCT CURB RAMPS, INCLUDING RESETTING CURBS TO INDICATED LINE AND GRADE. REMOVE EXISTING CONCRETE WALK AS REQUIRED TO NEAREST JOINT AND REPLACE TO MEET INDICATED LINE AND GRADE.

(B) REMOVE, SALVAGE AND RESET EXISTING GRANITE CURBS TO INDICATED LINE AND GRADE. REMOVE EXISTING CONCRETE WALK AS REQUIRED AND REPLACE TO MEET INDICATED LINE AND GRADE. PROVIDE NEW CURB AS REQUIRED TO MATCH EXISTING.

PROP. CURB RAMP	
KEY	ELEVATION
A	C=533.75
B	533.49
C	533.57
D	534.07
E	534.15
F	534.07
G	533.99

PROP. CURB RAMP	
KEY	ELEVATION
A	G=534.95
B	G=534.74
C	C=535.07
D	535.00
E	534.93
F	535.01
G	535.08

PROP. CURB RAMP	
KEY	ELEVATION
A	G=534.71
B	G=535.00
C	535.46
D	535.53
E	C=535.40
F	C=535.33

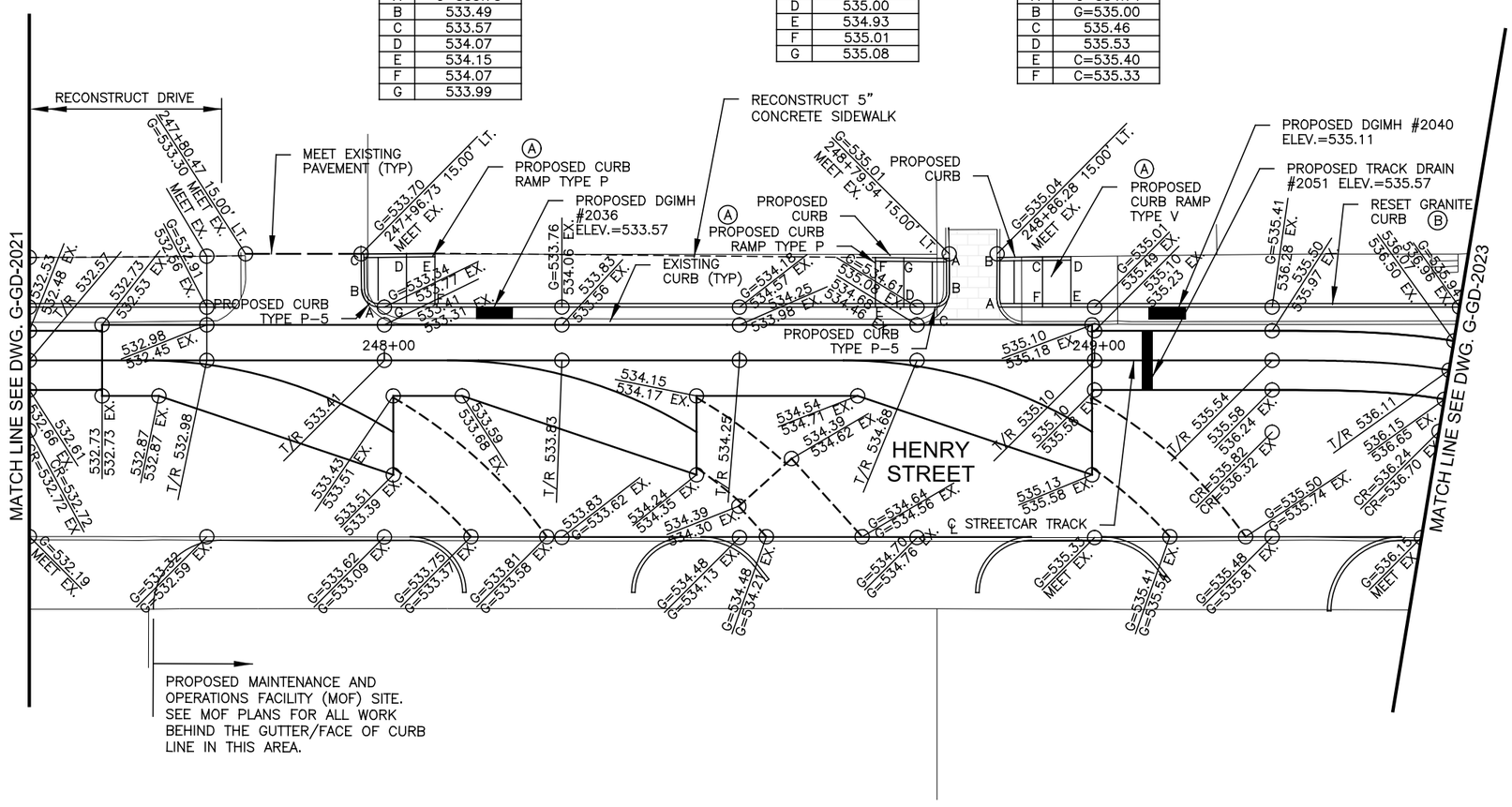

CONTRACTOR IS RESPONSIBLE FOR CONTACTING, AND COORDINATING WITH, UTILITY COMPANIES/AGENCIES AS REQUIRED TO HAVE THE UTILITY COMPANIES ADJUST THEIR FACILITIES TO PROPOSED PLAN ELEVATIONS. THERE MAY BE OTHER UTILITY FACILITIES NOT SHOWN ON THESE PLANS THAT NEED TO BE ADJUSTED AS WELL. THIS WORK SHALL BE COORDINATED AND COMPLETED IN A TIME FRAME CONSISTENT WITH PROJECT SCHEDULE. THIS COORDINATION IS DEEMED INCIDENTAL TO THE CONTRACT AND NO ADDITIONAL COMPENSATION WILL BE PROVIDED TO THE CONTRACTOR. THESE ITEMS ARE NOT QUANTIFIED.

CAUTION UNDERGROUND UTILITIES
2 WORKING DAYS
BEFORE YOU DIG
CALL 1-800-362-2764
OHIO UTILITY PROTECTION SERVICE
CALL NON-SERVICE FACILITY OWNERS DIRECT

GRAPHIC SCALE
10 0 10 20 40
(IN FEET)
1 inch = 10 ft. Full Size
1 inch = 20 ft. Half Size

DOTE_Mono_PDF_Half.pltcfg
c:\pwworking\pitt\d0309031\S_G-GD-2022.dgn
Wednesday, July 11, 2012 12:02:17:02 PM

CONTRACT DRAWING
PRINTS NOT BEARING THIS STAMP WERE MADE PRIOR TO ADVERTISING FOR BIDS AND ARE TO BE CONSIDERED OBSOLETE FOR CONTRACT PURPOSES.

Department of Transportation and Engineering
City of Cincinnati
City Hall
801 Plum Street
Cincinnati, Ohio 45202

CINCINNATI STREETCAR OVER THE RHINE

GRADING PLAN - HENRY STREET
STA 247+50 TO STA 249+50

Revisions
No.

Drawn by SAB	Date 07/02/12
Designed by SAB	Date 07/02/12
Checked by KVL	Date 07/02/12
Reviewed by JTB	Date 07/12/12

Consultant

File Number

ACC No. 23126

G-GD-2022

CONSTRUCTION NOTES:

(A) RECONSTRUCT CURB RAMPS, INCLUDING RESETTING CURBS TO INDICATED LINE AND GRADE. REMOVE EXISTING CONCRETE WALK AS REQUIRED TO NEAREST JOINT AND REPLACE TO MEET INDICATED LINE AND GRADE.

PROP. CURB RAMP	
KEY	ELEVATION
A	C=540.07
B	539.45
C	539.33
D	C=539.71
E	539.75
F	539.83
G	539.95
H	539.87

PROP. CURB RAMP	
KEY	ELEVATION
A	C=537.72
B	537.22
C	537.20
D	C=537.70
E	537.60
F	537.68
G	537.72
H	537.64

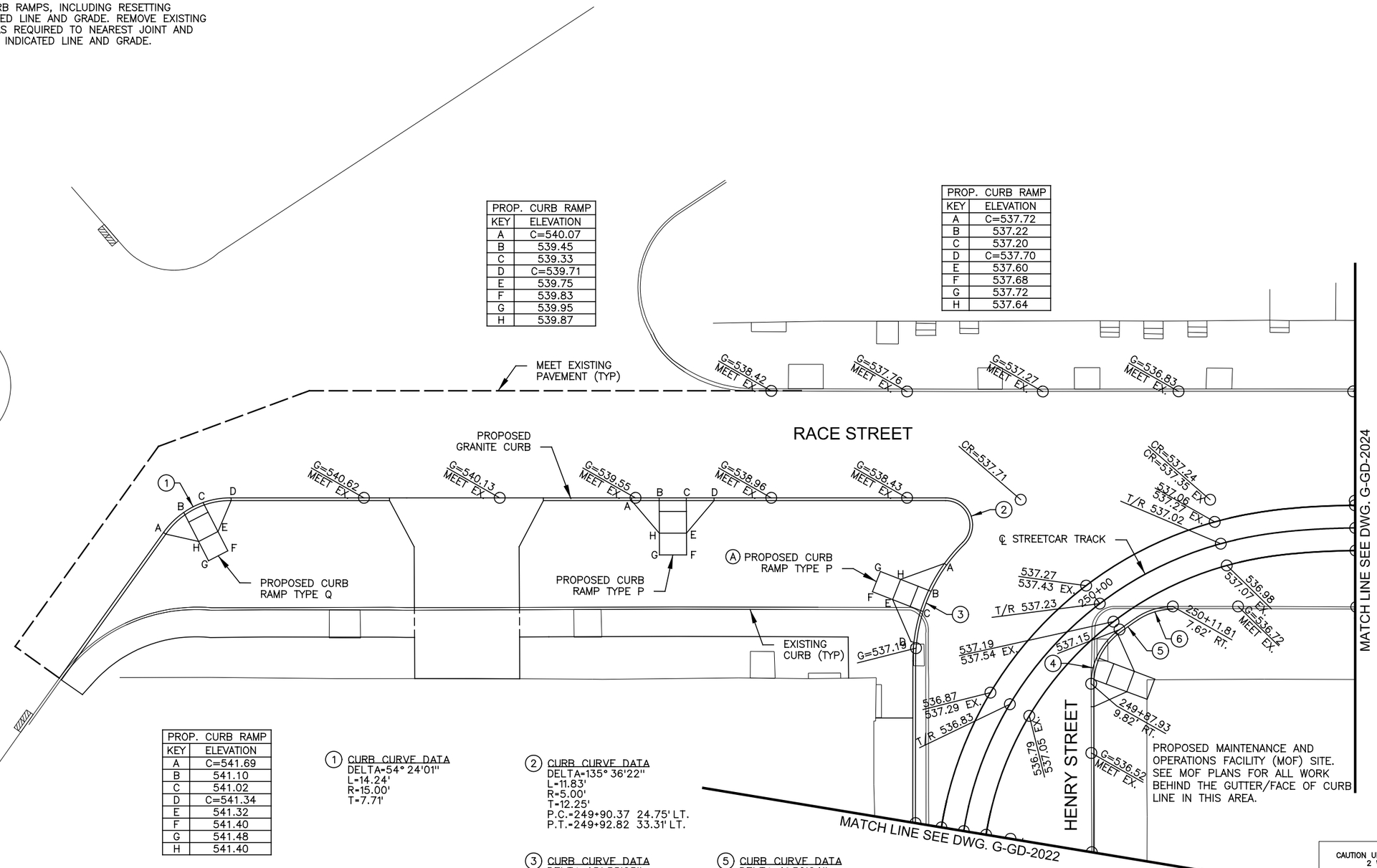

PROPOSED MAINTENANCE AND OPERATIONS FACILITY (MOF) SITE. SEE MOF PLANS FOR ALL WORK BEHIND THE GUTTER/FACE OF CURB LINE IN THIS AREA.

PROP. CURB RAMP	
KEY	ELEVATION
A	C=541.69
B	541.10
C	541.02
D	C=541.34
E	541.32
F	541.40
G	541.48
H	541.40

(1) CURB CURVE DATA
DELTA=54° 24'01"
L=14.24'
R=15.00'
T=7.71'

(2) CURB CURVE DATA
DELTA=135° 36'22"
L=11.83'
R=5.00'
T=12.25'
P.C.=249+90.37 24.75' LT.
P.T.=249+92.82 33.31' LT.

(3) CURB CURVE DATA
DELTA=45° 35'23"
L=23.87'
R=30.00'
T=12.61'
P.C.=249+73.42 19.04' LT.
P.T.=249+90.37 24.75' LT.

(4) CURB CURVE DATA
DELTA=52° 08'00"
L=10.92'
R=12.00'
T=5.87'
P.C.=249+87.93 9.82' RT.
P.T.=249+99.13 6.00' RT.

(5) CURB CURVE DATA
DELTA=4° 30'24"
L=4.69'
R=59.62'
T=2.35'
P.C.=249+99.13 6.00' RT.
P.T.=250+04.29 6.00' RT.

(6) CURB CURVE DATA
DELTA=33° 32'35"
L=7.03'
R=12.00'
T=3.62'
P.C.=250+04.29 6.00' RT.
P.T.=250+11.81 7.62' RT.

CONTRACTOR IS RESPONSIBLE FOR CONTACTING, AND COORDINATING WITH, UTILITY COMPANIES/AGENCIES AS REQUIRED TO HAVE THE UTILITY COMPANIES ADJUST THEIR FACILITIES TO PROPOSED PLAN ELEVATIONS. THERE MAY BE OTHER UTILITY FACILITIES NOT SHOWN ON THESE PLANS THAT NEED TO BE ADJUSTED AS WELL. THIS WORK SHALL BE COORDINATED AND COMPLETED IN A TIME FRAME CONSISTENT WITH PROJECT SCHEDULE. THIS COORDINATION IS DEEMED INCIDENTAL TO THE CONTRACT AND NO ADDITIONAL COMPENSATION WILL BE PROVIDED TO THE CONTRACTOR. THESE ITEMS ARE NOT QUANTIFIED.

GRAPHIC SCALE
10 0 10 20 40
(IN FEET)
1 inch = 10 ft. Full Size
1 inch = 20 ft. Half Size

CAUTION UNDERGROUND UTILITIES
2 WORKING DAYS
BEFORE YOU DIG
CALL 1-800-362-2764
OHIO UTILITY PROTECTION SERVICE
CALL NON-SERVICE FACILITY OWNERS DIRECT

DOTE_Mono_PDF_Half.pltcfg
c:\pwworking\pitt\d0309031\S_G-GD-2023.dgn
Wednesday, July 11, 2012 12:02:07 PM

CONTRACT DRAWING

PRINTS NOT BEARING THIS STAMP WERE MADE PRIOR TO ADVERTISING FOR BIDS AND ARE TO BE CONSIDERED OBSOLETE FOR CONTRACT PURPOSES.

Department of Transportation and Engineering

City of Cincinnati
City Hall
801 Plum Street
Cincinnati, Ohio 45202

CINCINNATI STREETCAR
OVER THE RHINE
GRADING PLAN - RACE STREET
STA 249+50 TO STA 250+50

Revisions
No.

	Date
Drawn by SAB	07/02/12
Designed by SAB	07/02/12
Checked by KVL	07/02/12
Reviewed by JTB	07/12/12

Consultant

PB HDR

File Number

ACC No.
23126

G-GD-2023

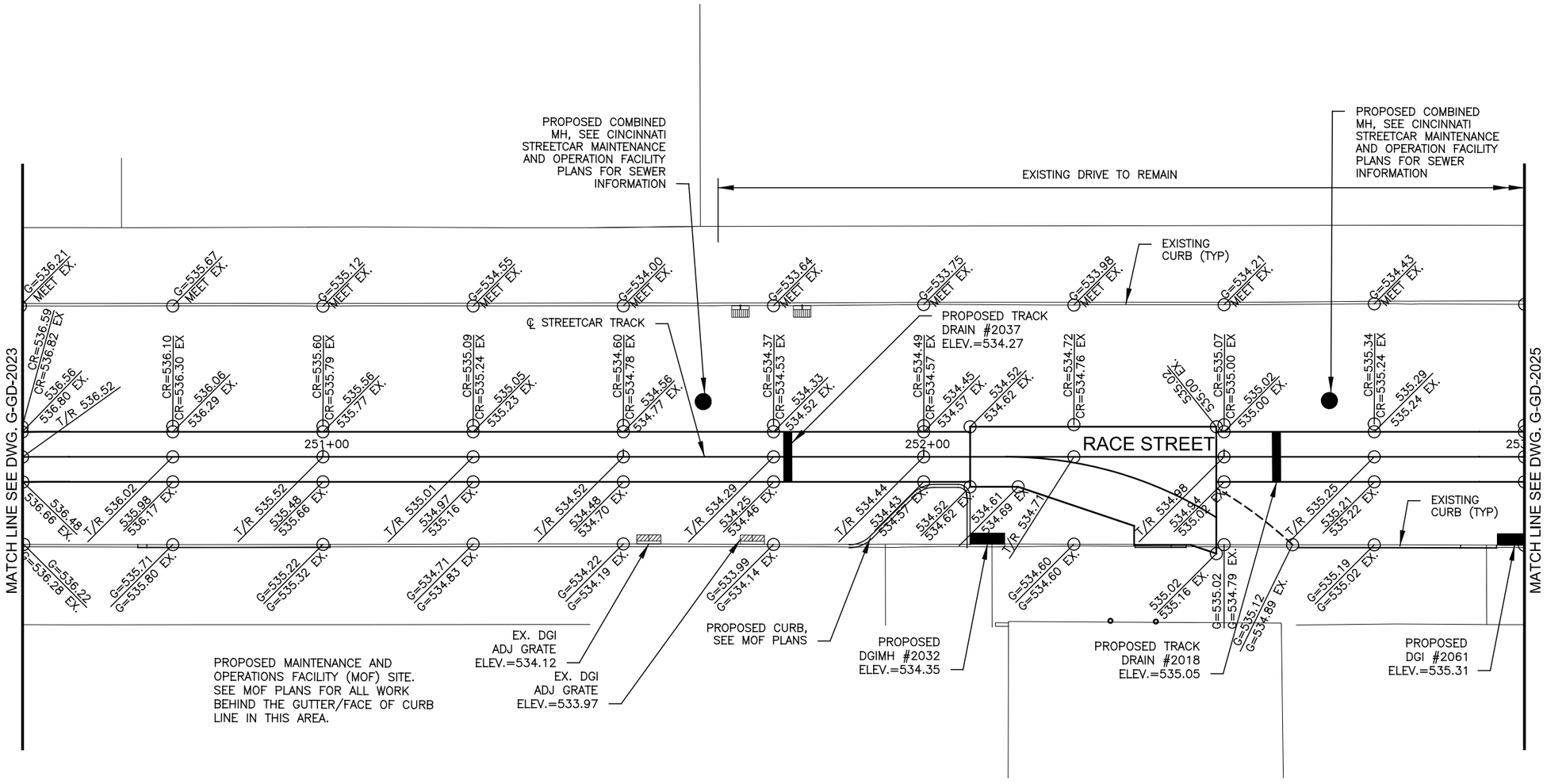

CONTRACTOR IS RESPONSIBLE FOR CONTACTING, AND COORDINATING WITH, UTILITY COMPANIES/AGENCIES AS REQUIRED TO HAVE THE UTILITY COMPANIES ADJUST THEIR FACILITIES TO PROPOSED PLAN ELEVATIONS. THERE MAY BE OTHER UTILITY FACILITIES NOT SHOWN ON THESE PLANS THAT NEED TO BE ADJUSTED AS WELL. THIS WORK SHALL BE COORDINATED AND COMPLETED IN A TIME FRAME CONSISTENT WITH PROJECT SCHEDULE. THIS COORDINATION IS DEEMED INCIDENTAL TO THE CONTRACT AND NO ADDITIONAL COMPENSATION WILL BE PROVIDED TO THE CONTRACTOR. THESE ITEMS ARE NOT QUANTIFIED.

CAUTION UNDERGROUND UTILITIES
2 WORKING DAYS
BEFORE YOU DIG
CALL 1-800-362-2764
OHIO UTILITY PROTECTION SERVICE
CALL NON-SERVICE FACILITY OWNERS DIRECT

GRAPHIC SCALE
10 0 10 20 40
(IN FEET)
1 inch = 10 ft. Full Size
1 inch = 20 ft. Half Size

DOTE_Mono_PDF_Half.pltcfg
c:\pwworking\pitt\d0309031\S_G-GD-2024.dgn
Wednesday, July 11, 2012 12:02:46 PM

CONTRACT DRAWING

PRINTS NOT BEARING THIS STAMP WERE MADE PRIOR TO ADVERTISING FOR BIDS AND ARE TO BE CONSIDERED OBSOLETE FOR CONTRACT PURPOSES.

Department of Transportation and Engineering

City of Cincinnati
City Hall
801 Plum Street
Cincinnati, Ohio 45202

CINCINNATI STREETCAR OVER THE RHINE

GRADING PLAN - RACE STREET
STA 250+50 TO STA 253+00

Revisions
No.

Drawn by SAB	Date 07/02/12
Designed by SAB	Date 07/02/12
Checked by KVL	Date 07/02/12
Reviewed by JTB	Date 07/12/12

Consultant

PB HDR

File Number

ACC No.
23126

G-GD-2024

CONSTRUCTION NOTES:

(A) RECONSTRUCT CURB RAMPS, INCLUDING RESETTING CURBS TO INDICATED LINE AND GRADE. REMOVE EXISTING CONCRETE WALK AS REQUIRED TO NEAREST JOINT AND REPLACE TO MEET INDICATED LINE AND GRADE.

(B) REMOVE, SALVAGE AND RESET EXISTING GRANITE CURBS TO INDICATED LINE AND GRADE. REMOVE EXISTING CONCRETE WALK AS REQUIRED AND REPLACE TO MEET INDICATED LINE AND GRADE. PROVIDE NEW CURB AS REQUIRED TO MATCH EXISTING.

PROPOSED CROWN POINT	CROWN POINT STATION	CROWN POINT ELEVATION	CROWN POINT OFFSET
CR–1	253+75	536.28	9.96
CR–2	254+00	536.51	12.83
CR–3	254+25	536.70	14.59
CR–4	254+50	536.95	18.17
CR–5	254+75	536.84	12.69
CR–6	255+25	536.87	20.00
CR–10	2005+50	537.08	8.20
CR–11	2005+75	537.70	9.40
CR–12	2006+00	538.38	9.56

CONTRACTOR IS RESPONSIBLE FOR CONTACTING, AND COORDINATING WITH, UTILITY COMPANIES/AGENCIES AS REQUIRED TO HAVE THE UTILITY COMPANIES ADJUST THEIR FACILITIES TO PROPOSED PLAN ELEVATIONS. THERE MAY BE OTHER UTILITY FACILITIES NOT SHOWN ON THESE PLANS THAT NEED TO BE ADJUSTED AS WELL. THIS WORK SHALL BE COORDINATED AND COMPLETED IN A TIME FRAME CONSISTENT WITH PROJECT SCHEDULE. THIS COORDINATION IS DEEMED INCIDENTAL TO THE CONTRACT AND NO ADDITIONAL COMPENSATION WILL BE PROVIDED TO THE CONTRACTOR. THESE ITEMS ARE NOT QUANTIFIED.

PROP. CURB RAMP	
KEY	ELEVATION
A	C=535.68
B	535.20
C	535.21
D	C=535.35
E	535.35
F	535.43
G	535.51
H	535.43

PROP. CURB RAMP	
KEY	ELEVATION
A	C=535.77
B	535.31
C	535.23
D	C=535.61
E	535.85
F	535.93
G	535.89
H	C=535.77

PROP. CURB RAMP	
KEY	ELEVATION
A	C=537.09
B	536.79
C	536.73
D	C=536.86
E	537.06
F	537.14
G	537.22
H	537.14

PROP. CURB RAMP	
KEY	ELEVATION
A	C=537.30
B	537.05
C	537.11
D	C=537.58
E	537.61
F	537.69
G	537.63
H	537.55

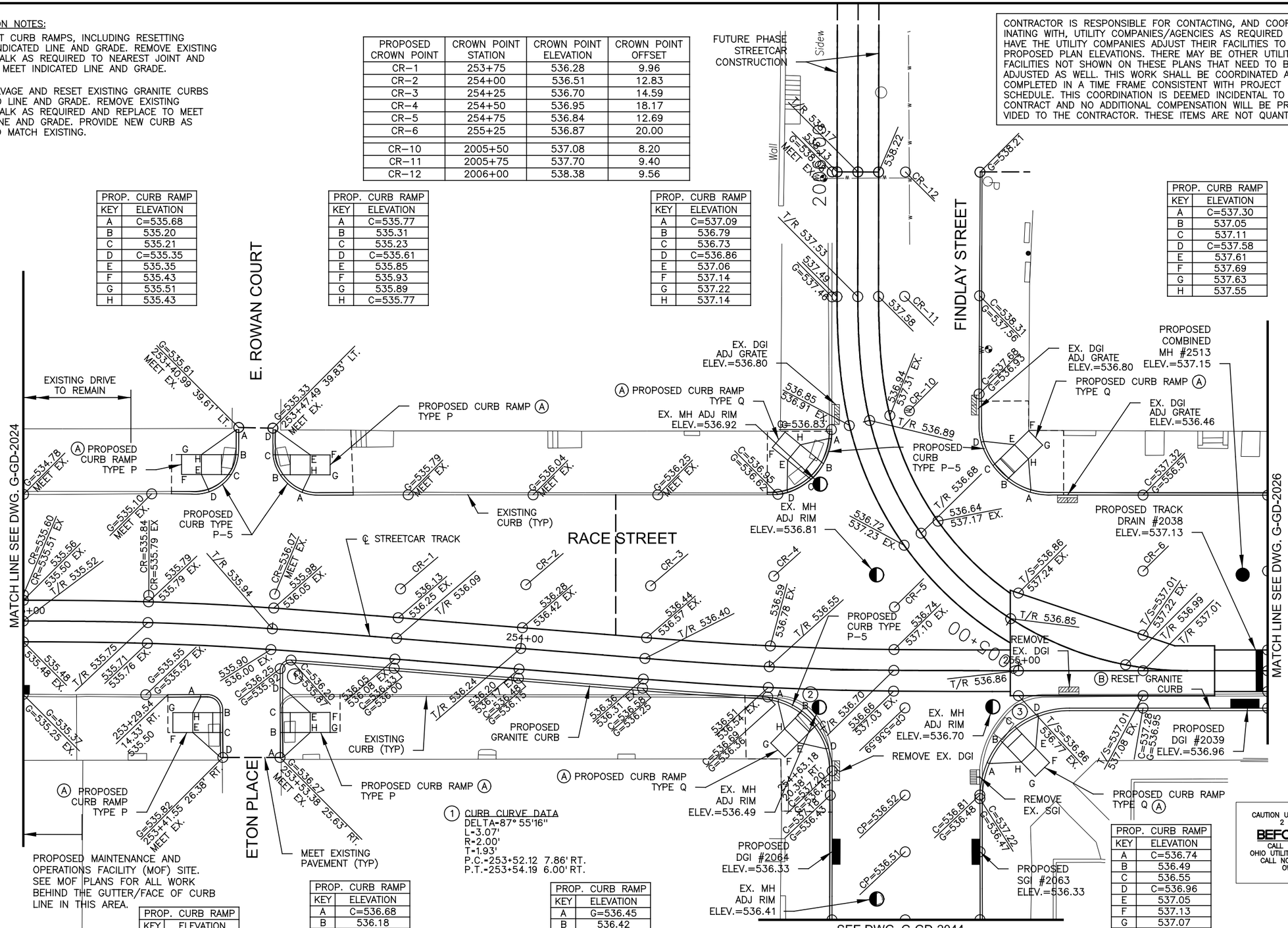

PROPOSED MAINTENANCE AND OPERATIONS FACILITY (MOF) SITE. SEE MOF PLANS FOR ALL WORK BEHIND THE GUTTER/FACE OF CURB LINE IN THIS AREA.

PROP. CURB RAMP	
KEY	ELEVATION
A	C=536.09
B	535.68
C	535.75
D	C=536.25
E	535.97
F	536.05
G	535.97
H	535.89

PROP. CURB RAMP	
KEY	ELEVATION
A	C=536.68
B	536.18
C	536.11
D	536.51
E	536.26
F	536.34
G	536.42
H	536.34

PROP. CURB RAMP	
KEY	ELEVATION
A	G=536.45
B	536.42
C	536.40
D	G=536.38
E	536.81
F	536.89
G	536.91
H	536.83

PROP. CURB RAMP	
KEY	ELEVATION
A	C=536.74
B	536.49
C	536.55
D	C=536.96
E	537.05
F	537.13
G	537.07
H	536.99

(1) CURB CURVE DATA
DELTA=87° 55'16"
L=3.07'
R=2.00'
T=1.93'
P.C.=253+52.12 7.86' RT.
P.T.=253+54.19 6.00' RT.

(2) CURB CURVE DATA
DELTA=86° 34'40"
L=22.67'
R=15.00'
T=14.13'
P.C.=254+48.79 6.01' RT.
P.T.=254+63.18 20.38' RT.

(3) CURB CURVE DATA
DELTA=90° 24'37"
L=28.40'
R=18.00'
T=18.13'
P.C.=254+92.27 25.63' RT.
P.T.=255+10.27 7.50' RT.

GRAPHIC SCALE
10 0 10 20 40
(IN FEET)
1 inch = 10 ft. Full Size
1 inch = 20 ft. Half Size

CAUTION UNDERGROUND UTILITIES
2 WORKING DAYS
BEFORE YOU DIG
CALL 1–800–362–2764
OHIO UTILITY PROTECTION SERVICE
CALL NON–SERVICE FACILITY OWNERS DIRECT

CONTRACT DRAWING

PRINTS NOT BEARING THIS STAMP WERE MADE PRIOR TO ADVERTISING FOR BIDS AND ARE TO BE CONSIDERED OBSOLETE FOR CONTRACT PURPOSES.

Department of Transportation and Engineering

City of Cincinnati
City Hall
801 Plum Street
Cincinnati, Ohio 45202

CINCINNATI STREETCAR OVER THE RHINE

GRADING PLAN - RACE STREET
STA 253+00 TO STA 255+50

Revisions
No.

Drawn by SAB	Date 07/02/12	
Designed by SAB	Date 07/02/12	
Checked by KVL	Date 07/02/12	
Reviewed by JTB	Date 07/12/12	

Consultant

PB HDR

File Number

ACC No. 23126

G-GD-2025

DOTE_Mono_PDF_Half.pltcfg
c:\pwworking\pitt\d0309031\S_G-GD-2025.dgn
Wednesday, July 11, 2012 12:03:20 PM

PROPOSED CROWN POINT	CROWN POINT STATION	CROWN POINT ELEVATION	CROWN POINT OFFSET
CR-7	255+50	537.22	20.00
CR-8	255+75	537.56	20.00
CR-9	256+00	537.90	19.75

CONSTRUCTION NOTES:

(A) RECONSTRUCT CURB RAMPS, INCLUDING RESETTING CURBS TO INDICATED LINE AND GRADE. REMOVE EXISTING CONCRETE WALK AS REQUIRED TO NEAREST JOINT AND REPLACE TO MEET INDICATED LINE AND GRADE.

(B) REMOVE, SALVAGE AND RESET EXISTING GRANITE CURBS TO INDICATED LINE AND GRADE. REMOVE EXISTING CONCRETE WALK AS REQUIRED AND REPLACE TO MEET INDICATED LINE AND GRADE. PROVIDE NEW CURB AS REQUIRED TO MATCH EXISTING.

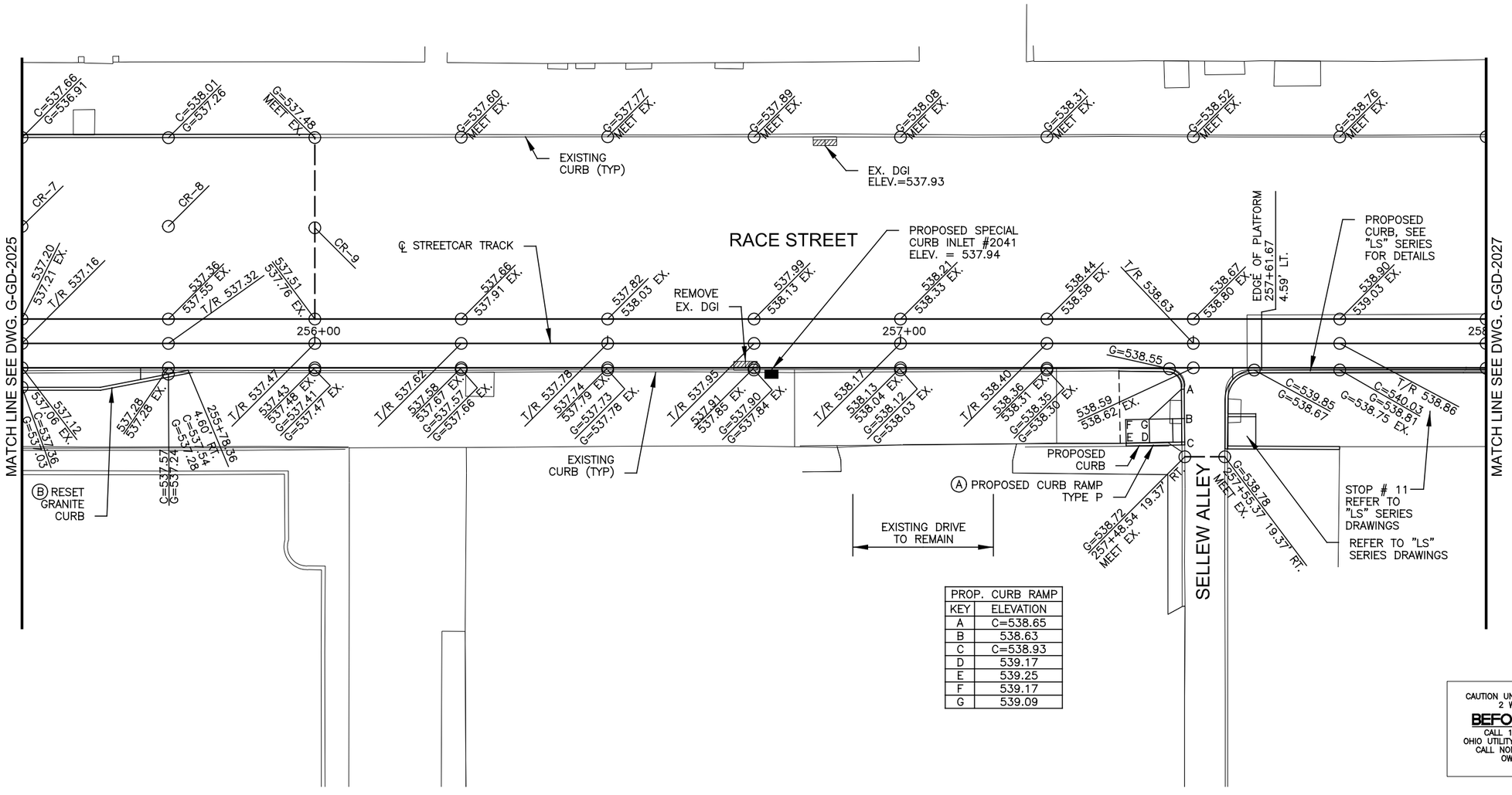

PROP. CURB RAMP	
KEY	ELEVATION
A	C=538.65
B	538.63
C	C=538.93
D	539.17
E	539.25
F	539.17
G	539.09

CONTRACTOR IS RESPONSIBLE FOR CONTACTING, AND COORDINATING WITH, UTILITY COMPANIES/AGENCIES AS REQUIRED TO HAVE THE UTILITY COMPANIES ADJUST THEIR FACILITIES TO PROPOSED PLAN ELEVATIONS. THERE MAY BE OTHER UTILITY FACILITIES NOT SHOWN ON THESE PLANS THAT NEED TO BE ADJUSTED AS WELL. THIS WORK SHALL BE COORDINATED AND COMPLETED IN A TIME FRAME CONSISTENT WITH PROJECT SCHEDULE. THIS COORDINATION IS DEEMED INCIDENTAL TO THE CONTRACT AND NO ADDITIONAL COMPENSATION WILL BE PROVIDED TO THE CONTRACTOR. THESE ITEMS ARE NOT QUANTIFIED.

CAUTION UNDERGROUND UTILITIES
2 WORKING DAYS
BEFORE YOU DIG
CALL 1-800-362-2764
OHIO UTILITY PROTECTION SERVICE
CALL NON-SERVICE FACILITY
OWNERS DIRECT

GRAPHIC SCALE
10 0 10 20 40
(IN FEET)
1 inch = 10 ft. Full Size
1 inch = 20 ft. Half Size

DOTE_Mono_PDF_Half.pltcfg
c:\pwworking\pitt\d0309031\S_G-GD-2026.dgn
Wednesday, July 11, 2012 12:03:23 PM

CONTRACT DRAWING

PRINTS NOT BEARING THIS STAMP WERE MADE PRIOR TO ADVERTISING FOR BIDS AND ARE TO BE CONSIDERED OBSOLETE FOR CONTRACT PURPOSES.

Department of Transportation and Engineering

City of Cincinnati
City Hall
801 Plum Street
Cincinnati, Ohio 45202

CINCINNATI STREETCAR OVER THE RHINE

GRADING PLAN - RACE STREET
STA 255+50 TO STA 258+00

Revisions

No.		

Drawn by SAB	Date 07/02/12
Designed by SAB	Date 07/02/12
Checked by KVL	Date 07/02/12
Reviewed by JTB	Date 07/12/12

Consultant

PB HDR

File Number

ACC No. 23126

G-GD-2026

CONSTRUCTION NOTES:

(A) RECONSTRUCT CURB RAMPS, INCLUDING RESETTING CURBS TO INDICATED LINE AND GRADE. REMOVE EXISTING CONCRETE WALK AS REQUIRED TO NEAREST JOINT AND REPLACE TO MEET INDICATED LINE AND GRADE.

(B) REMOVE, SALVAGE AND RESET EXISTING GRANITE CURBS TO INDICATED LINE AND GRADE. REMOVE EXISTING CONCRETE WALK AS REQUIRED AND REPLACE TO MEET INDICATED LINE AND GRADE. PROVIDE NEW CURB AS REQUIRED TO MATCH EXISTING.

PROP. CURB RAMP	
KEY	ELEVATION
A	C=539.92
B	539.53
C	539.51
D	C=539.73
E	540.01
F	540.09
G	540.11
H	540.03

PROP. CURB RAMP	
KEY	ELEVATION
A	C=538.97
B	538.87
C	538.92
D	C=539.06
E	539.28
F	539.36
G	539.28
H	539.20

PROPOSED CROWN POINT	CROWN POINT STATION	CROWN POINT ELEVATION	CROWN POINT OFFSET
CR-13	258+25	539.6	13.44
CR-14	258+50	539.72	11.86
CR-15	258+75	539.91	17.91
CR-16	259+00	540.11	7.59
CR-17	259+25	540.01	8.29
CR-18	259+50	539.45	5.31
CR-19	259+75	538.88	4.17
CR-20	260+00	538.37	5.50
CR-25	1001+00	539.91	8.04

PROP. CURB RAMP	
KEY	ELEVATION
A	C=538.30
B	538.11
C	538.20
D	C=538.51
E	538.70
F	538.78
G	538.69
H	538.61

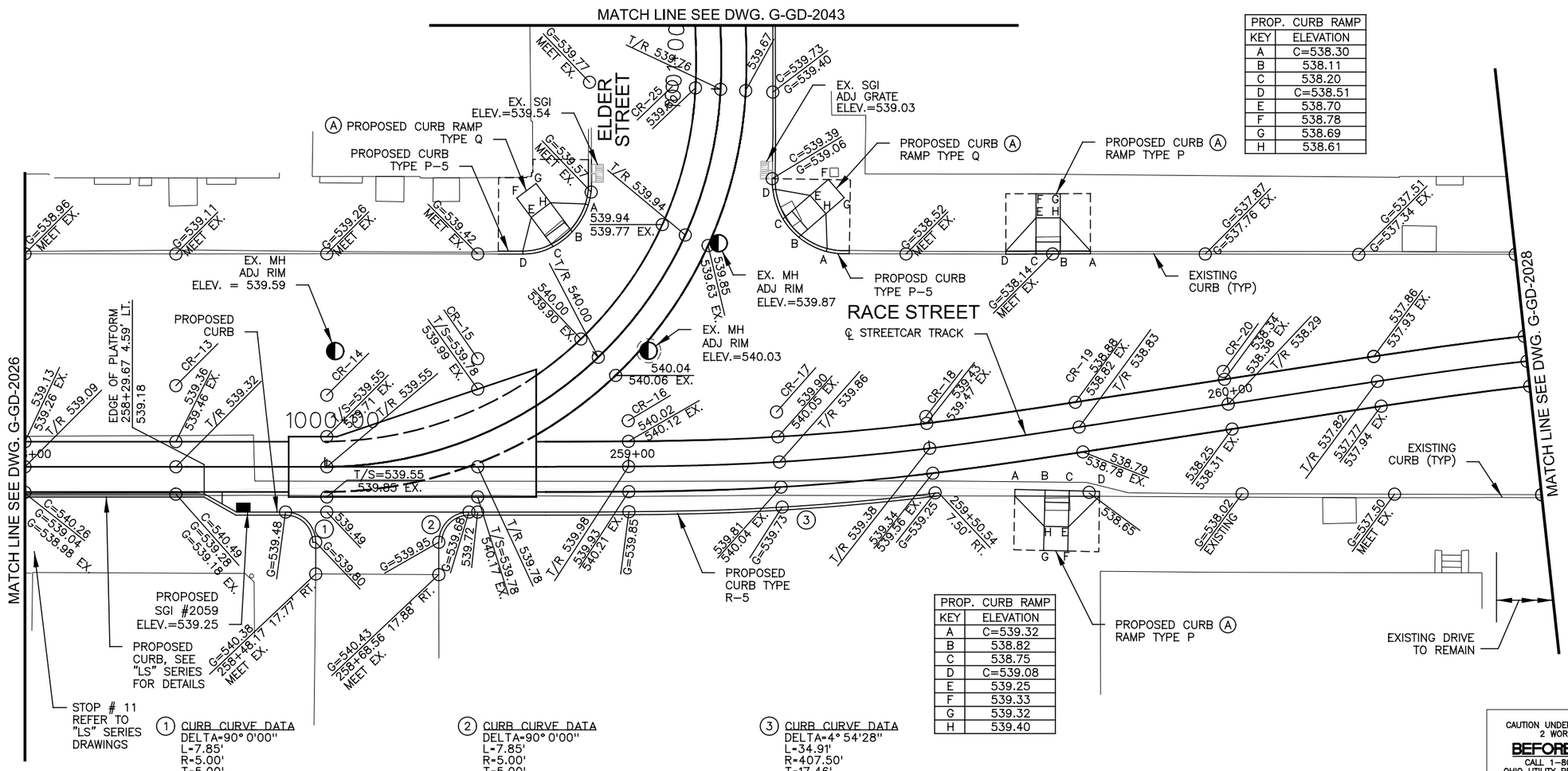

PROP. CURB RAMP	
KEY	ELEVATION
A	C=539.32
B	538.82
C	538.75
D	C=539.08
E	539.25
F	539.33
G	539.32
H	539.40

(1) CURB CURVE DATA
DELTA=90° 0'00"
L=7.85'
R=5.00'
T=5.00'
P.C.=258+43.17 7.50' RT.
P.T.=258+48.17 12.50' RT.

(2) CURB CURVE DATA
DELTA=90° 0'00"
L=7.85'
R=5.00'
T=5.00'
P.C.=258+68.56 12.50' RT.
P.T.=258+73.56 7.50' RT.

(3) CURB CURVE DATA
DELTA=4° 54'28"
L=34.91'
R=407.50'
T=17.46'
P.C.=259+16.28 7.50' RT.
P.T.=259+50.54 7.50' RT.

CONTRACTOR IS RESPONSIBLE FOR CONTACTING, AND COORDINATING WITH, UTILITY COMPANIES/AGENCIES AS REQUIRED TO HAVE THE UTILITY COMPANIES ADJUST THEIR FACILITIES TO PROPOSED PLAN ELEVATIONS. THERE MAY BE OTHER UTILITY FACILITIES NOT SHOWN ON THESE PLANS THAT NEED TO BE ADJUSTED AS WELL. THIS WORK SHALL BE COORDINATED AND COMPLETED IN A TIME FRAME CONSISTENT WITH PROJECT SCHEDULE. THIS COORDINATION IS DEEMED INCIDENTAL TO THE CONTRACT AND NO ADDITIONAL COMPENSATION WILL BE PROVIDED TO THE CONTRACTOR. THESE ITEMS ARE NOT QUANTIFIED.

GRAPHIC SCALE
10 0 10 20 40
(IN FEET)
1 inch = 10 ft. Full Size
1 inch = 20 ft. Half Size

CAUTION UNDERGROUND UTILITIES
2 WORKING DAYS
BEFORE YOU DIG
CALL 1-800-362-2764
OHIO UTILITY PROTECTION SERVICE
CALL NON-SERVICE FACILITY OWNERS DIRECT

CONTRACT DRAWING
PRINTS NOT BEARING THIS STAMP WERE MADE PRIOR TO ADVERTISING FOR BIDS AND ARE TO BE CONSIDERED OBSOLETE FOR CONTRACT PURPOSES.

Department of Transportation and Engineering
City of Cincinnati
City Hall
801 Plum Street
Cincinnati, Ohio 45202

CINCINNATI STREETCAR OVER THE RHINE

GRADING PLAN - RACE STREET
STA 258+00 TO STA 260+50

Revisions
No.

Date 07/02/12 Drawn by SAB
Date 07/02/12 Designed by SAB
Date 07/02/12 Checked by KVL
Date 07/12/12 Reviewed by JTB

Consultant
PB HDR

File Number
ACC No. 23126

G-GD-2027

DOTE_Mono_PDF_Half.pltcfg
c:\pwworking\pitt\d0309031\S_G-GD-2027.dgn
Wednesday, July 11, 2012 12:03:41 PM

PROPOSED CROWN POINT	CROWN POINT STATION	CROWN POINT ELEVATION	CROWN POINT OFFSET
CR–21	260+75	537.14	5.65
CR–22	261+00	536.81	6.92
CR–23	261+25	536.44	6.38
CR–24	261+50	536.09	6.59

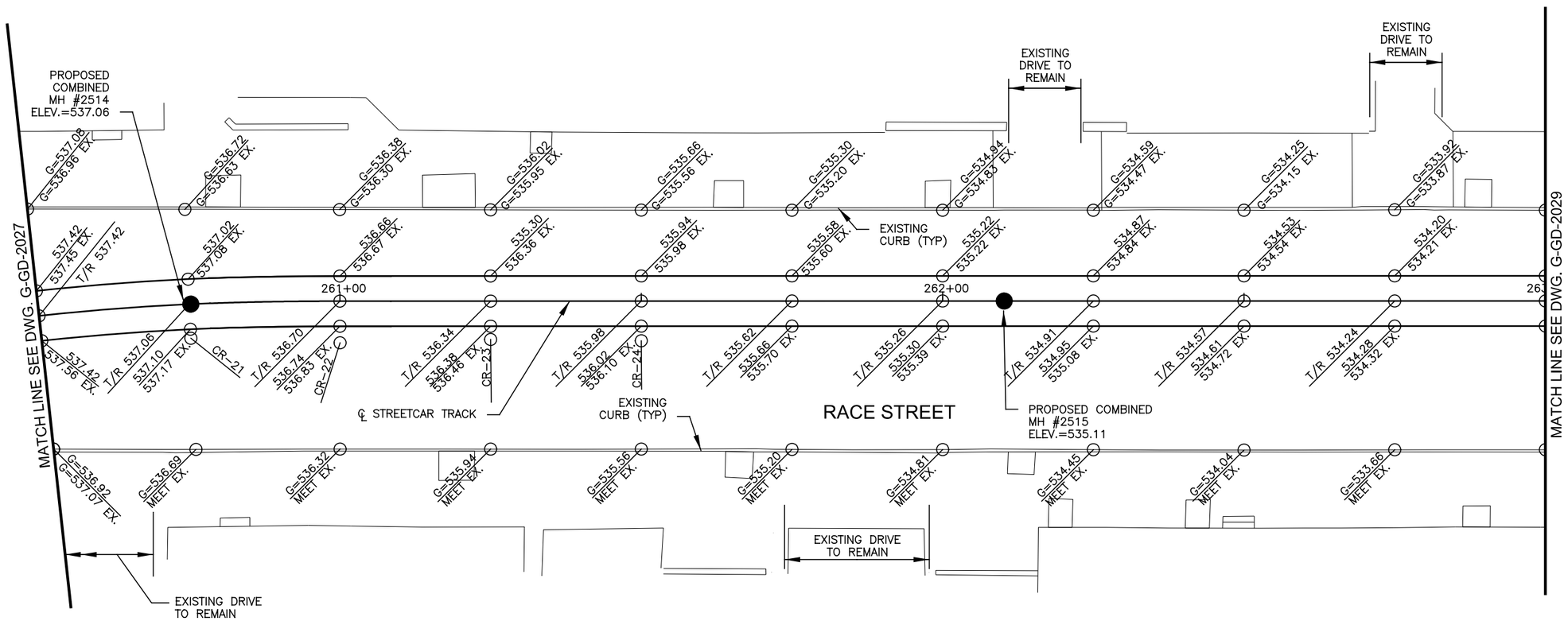

CAUTION UNDERGROUND UTILITIES
2 WORKING DAYS
BEFORE YOU DIG
CALL 1–800–362–2764
OHIO UTILITY PROTECTION SERVICE
CALL NON–SERVICE FACILITY
OWNERS DIRECT

CONTRACTOR IS RESPONSIBLE FOR CONTACTING, AND COORDINATING WITH, UTILITY COMPANIES/AGENCIES AS REQUIRED TO HAVE THE UTILITY COMPANIES ADJUST THEIR FACILITIES TO PROPOSED PLAN ELEVATIONS. THERE MAY BE OTHER UTILITY FACILITIES NOT SHOWN ON THESE PLANS THAT NEED TO BE ADJUSTED AS WELL. THIS WORK SHALL BE COORDINATED AND COMPLETED IN A TIME FRAME CONSISTENT WITH PROJECT SCHEDULE. THIS COORDINATION IS DEEMED INCIDENTAL TO THE CONTRACT AND NO ADDITIONAL COMPENSATION WILL BE PROVIDED TO THE CONTRACTOR. THESE ITEMS ARE NOT QUANTIFIED.

GRAPHIC SCALE
10 0 10 20 40
(IN FEET)
1 inch = 10 ft. Full Size
1 inch = 20 ft. Half Size

DOTE_Mono_PDF_Half.pltcfg
c:\pwworking\pitt\d0390311\S_G-GD-2028.dgn
Wednesday, July 11, 2012 12:03:10:PM

CONTRACT DRAWING
PRINTS NOT BEARING THIS STAMP WERE MADE PRIOR TO ADVERTISING FOR BIDS AND ARE TO BE CONSIDERED OBSOLETE FOR CONTRACT PURPOSES.

Department of Transportation and Engineering
City of Cincinnati
City Hall
801 Plum Street
Cincinnati, Ohio 45202

CINCINNATI STREETCAR
OVER THE RHINE
GRADING PLAN - RACE STREET
STA 260+50 TO STA 263+00

Revisions
No.

Drawn by SAB Date 07/02/12
Designed by SAB Date 07/02/12
Checked by KVL Date 07/02/12
Reviewed by JTB Date 07/12/12

Consultant
PB HDR

File Number

ACC No.
23126

G-GD-2028

CONSTRUCTION NOTES:

(A) RECONSTRUCT CURB RAMPS, INCLUDING RESETTING CURBS TO INDICATED LINE AND GRADE. REMOVE EXISTING CONCRETE WALK AS REQUIRED TO NEAREST JOINT AND REPLACE TO MEET INDICATED LINE AND GRADE.

CONTRACTOR IS RESPONSIBLE FOR CONTACTING, AND COORDINATING WITH, UTILITY COMPANIES/AGENCIES AS REQUIRED TO HAVE THE UTILITY COMPANIES ADJUST THEIR FACILITIES TO PROPOSED PLAN ELEVATIONS. THERE MAY BE OTHER UTILITY FACILITIES NOT SHOWN ON THESE PLANS THAT NEED TO BE ADJUSTED AS WELL. THIS WORK SHALL BE COORDINATED AND COMPLETED IN A TIME FRAME CONSISTENT WITH PROJECT SCHEDULE. THIS COORDINATION IS DEEMED INCIDENTAL TO THE CONTRACT AND NO ADDITIONAL COMPENSATION WILL BE PROVIDED TO THE CONTRACTOR. THESE ITEMS ARE NOT QUANTIFIED.

PROP. CURB RAMP	
KEY	ELEVATION
A	C=533.75
B	533.26
C	533.27
D	C=533.77
E	533.69
F	533.77
G	533.84
H	533.76

PROP. CURB RAMP	
KEY	ELEVATION
A	C=533.69
B	533.20
C	533.21
D	C=533.71
E	533.68
F	533.76
G	533.68
H	533.60

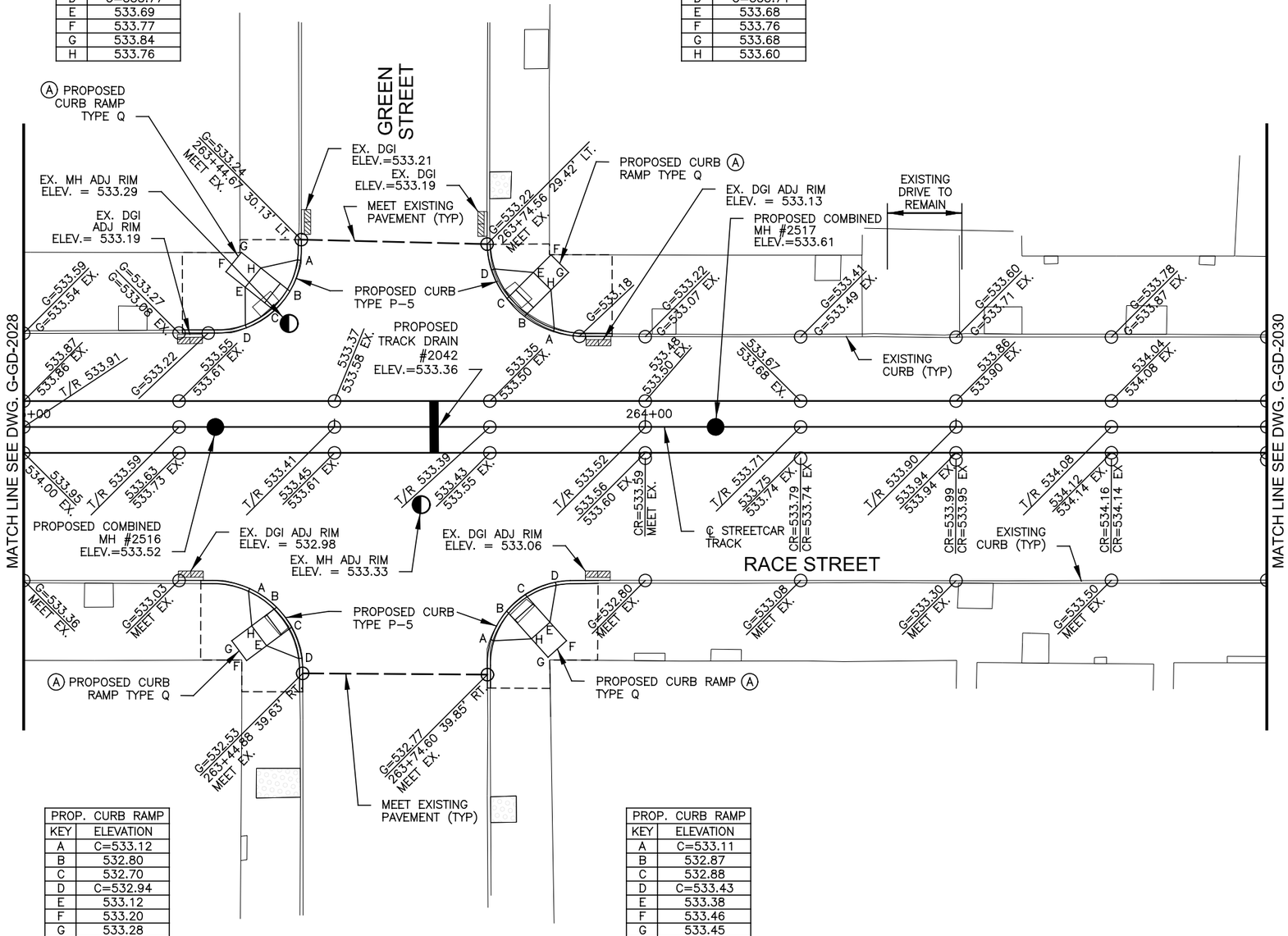

PROP. CURB RAMP	
KEY	ELEVATION
A	C=533.12
B	532.80
C	532.70
D	C=532.94
E	533.12
F	533.20
G	533.28
H	533.20

PROP. CURB RAMP	
KEY	ELEVATION
A	C=533.11
B	532.87
C	532.88
D	C=533.43
E	533.38
F	533.46
G	533.45
H	533.37

GRAPHIC SCALE

10 0 10 20 40

(IN FEET)

1 inch = 10 ft. Full Size

1 inch = 20 ft. Half Size

CAUTION UNDERGROUND UTILITIES
2 WORKING DAYS
BEFORE YOU DIG
CALL 1-800-362-2764
OHIO UTILITY PROTECTION SERVICE
CALL NON-SERVICE FACILITY
OWNERS DIRECT

DEPARTMENT OF TRANSPORTATION & ENGINEERING · CITY OF CINCINNATI · OHIO

CONTRACT DRAWING

PRINTS NOT BEARING THIS STAMP WERE MADE PRIOR TO ADVERTISING FOR BIDS AND ARE TO BE CONSIDERED OBSOLETE FOR CONTRACT PURPOSES.

Department of Transportation and Engineering

City of Cincinnati
City Hall
801 Plum Street
Cincinnati, Ohio 45202

CINCINNATI STREETCAR OVER THE RHINE

GRADING PLAN - RACE STREET
STA 263+00 TO STA 265+00

Revisions

No.			

Drawn by SAB	Date 07/02/12
Designed by SAB	Date 07/02/12
Checked by KVL	Date 07/02/12
Reviewed by JTB	Date 07/12/12

Consultant

PB HDR

File Number

ACC No. 23126

G-GD-2029

DOTE_Mono_PDF_Half.pltcfg
c:\pwworking\pitt\d0309031\S_G-GD-2029.dgn
Wednesday, July 11, 2012 12:04:05 PM

CONSTRUCTION NOTES:

(A) RECONSTRUCT CURB RAMPS, INCLUDING RESETTING CURBS TO INDICATED LINE AND GRADE. REMOVE EXISTING CONCRETE WALK AS REQUIRED TO NEAREST JOINT AND REPLACE TO MEET INDICATED LINE AND GRADE.

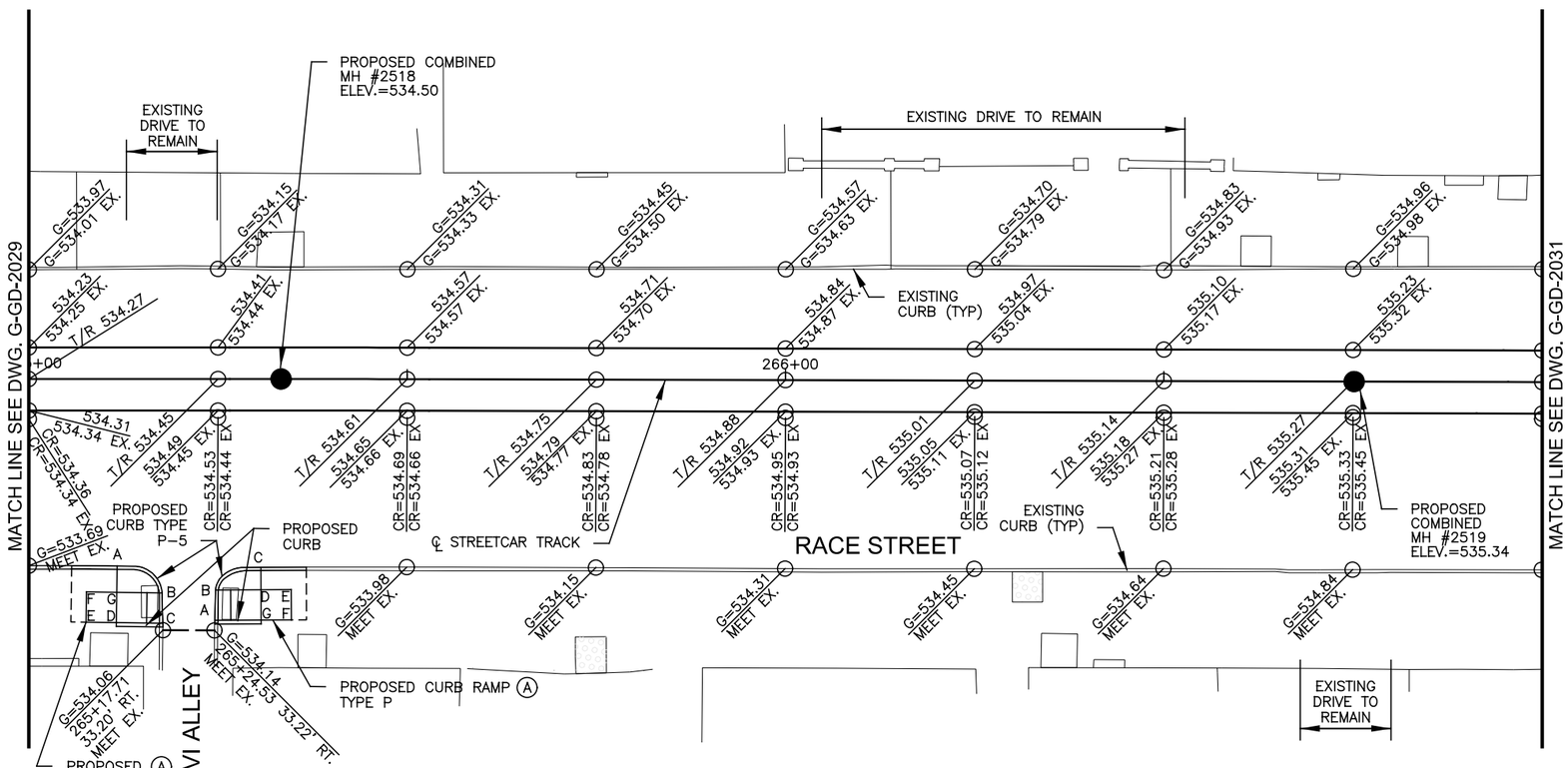

PROP. CURB RAMP	
KEY	ELEVATION
A	C=534.30
B	533.91
C	C=534.47
D	534.48
E	534.56
F	534.48
G	534.40

PROP. CURB RAMP	
KEY	ELEVATION
A	C=534.24
B	533.92
C	C=534.27
D	534.41
E	534.49
F	534.57
G	534.49

CONTRACTOR IS RESPONSIBLE FOR CONTACTING, AND COORDINATING WITH, UTILITY COMPANIES/AGENCIES AS REQUIRED TO HAVE THE UTILITY COMPANIES ADJUST THEIR FACILITIES TO PROPOSED PLAN ELEVATIONS. THERE MAY BE OTHER UTILITY FACILITIES NOT SHOWN ON THESE PLANS THAT NEED TO BE ADJUSTED AS WELL. THIS WORK SHALL BE COORDINATED AND COMPLETED IN A TIME FRAME CONSISTENT WITH PROJECT SCHEDULE. THIS COORDINATION IS DEEMED INCIDENTAL TO THE CONTRACT AND NO ADDITIONAL COMPENSATION WILL BE PROVIDED TO THE CONTRACTOR. THESE ITEMS ARE NOT QUANTIFIED.

CAUTION UNDERGROUND UTILITIES
2 WORKING DAYS
BEFORE YOU DIG
CALL 1-800-362-2764
OHIO UTILITY PROTECTION SERVICE
CALL NON-SERVICE FACILITY OWNERS DIRECT

GRAPHIC SCALE
10 0 10 20 40
(IN FEET)
1 inch = 10 ft. Full Size
1 inch = 20 ft. Half Size

DOTE_Mono_PDF_Half.pltcfg
c:\pwworking\pitt\d0309031\S_G-GD-2030.dgn
Wednesday, July 11, 2012 12:04:28 PM

CONTRACT DRAWING

PRINTS NOT BEARING THIS STAMP WERE MADE PRIOR TO ADVERTISING FOR BIDS AND ARE TO BE CONSIDERED OBSOLETE FOR CONTRACT PURPOSES.

Department of Transportation and Engineering

City of Cincinnati
City Hall
801 Plum Street
Cincinnati, Ohio 45202

CINCINNATI STREETCAR
OVER THE RHINE
GRADING PLAN - RACE STREET
STA 265+00 TO STA 267+00

Revisions
No.

Drawn by SAB	Date 07/02/12
Designed by SAB	Date 07/02/12
Checked by KVL	Date 07/02/12
Reviewed by JTB	Date 07/12/12

Consultant

PB HDR

File Number

ACC No. 23126

G-GD-2030

CONTRACTOR IS RESPONSIBLE FOR CONTACTING, AND COORDINATING WITH, UTILITY COMPANIES/AGENCIES AS REQUIRED TO HAVE THE UTILITY COMPANIES ADJUST THEIR FACILITIES TO PROPOSED PLAN ELEVATIONS. THERE MAY BE OTHER UTILITY FACILITIES NOT SHOWN ON THESE PLANS THAT NEED TO BE ADJUSTED AS WELL. THIS WORK SHALL BE COORDINATED AND COMPLETED IN A TIME FRAME CONSISTENT WITH PROJECT SCHEDULE. THIS COORDINATION IS DEEMED INCIDENTAL TO THE CONTRACT AND NO ADDITIONAL COMPENSATION WILL BE PROVIDED TO THE CONTRACTOR. THESE ITEMS ARE NOT QUANTIFIED.

CONSTRUCTION NOTES:

(A) RECONSTRUCT CURB RAMPS, INCLUDING RESETTING CURBS TO INDICATED LINE AND GRADE. REMOVE EXISTING CONCRETE WALK AS REQUIRED TO NEAREST JOINT AND REPLACE TO MEET INDICATED LINE AND GRADE.

(1) CURB CURVE DATA
DELTA=102° 20'20"
L=35.72'
R=20.00'
T=24.85'
P.C.=268+79.77 6.85' LT.
P.T.=268+62.80 32.70' LT.

PROP. CURB RAMP	
KEY	ELEVATION
A	C=536.02
B	535.54
C	535.54
D	C=536.02
E	536.34
F	536.36
G	536.35

PROP. CURB RAMP	
KEY	ELEVATION
A	C=536.58
B	536.04
C	536.02
D	535.99
E	535.97
F	C=536.44

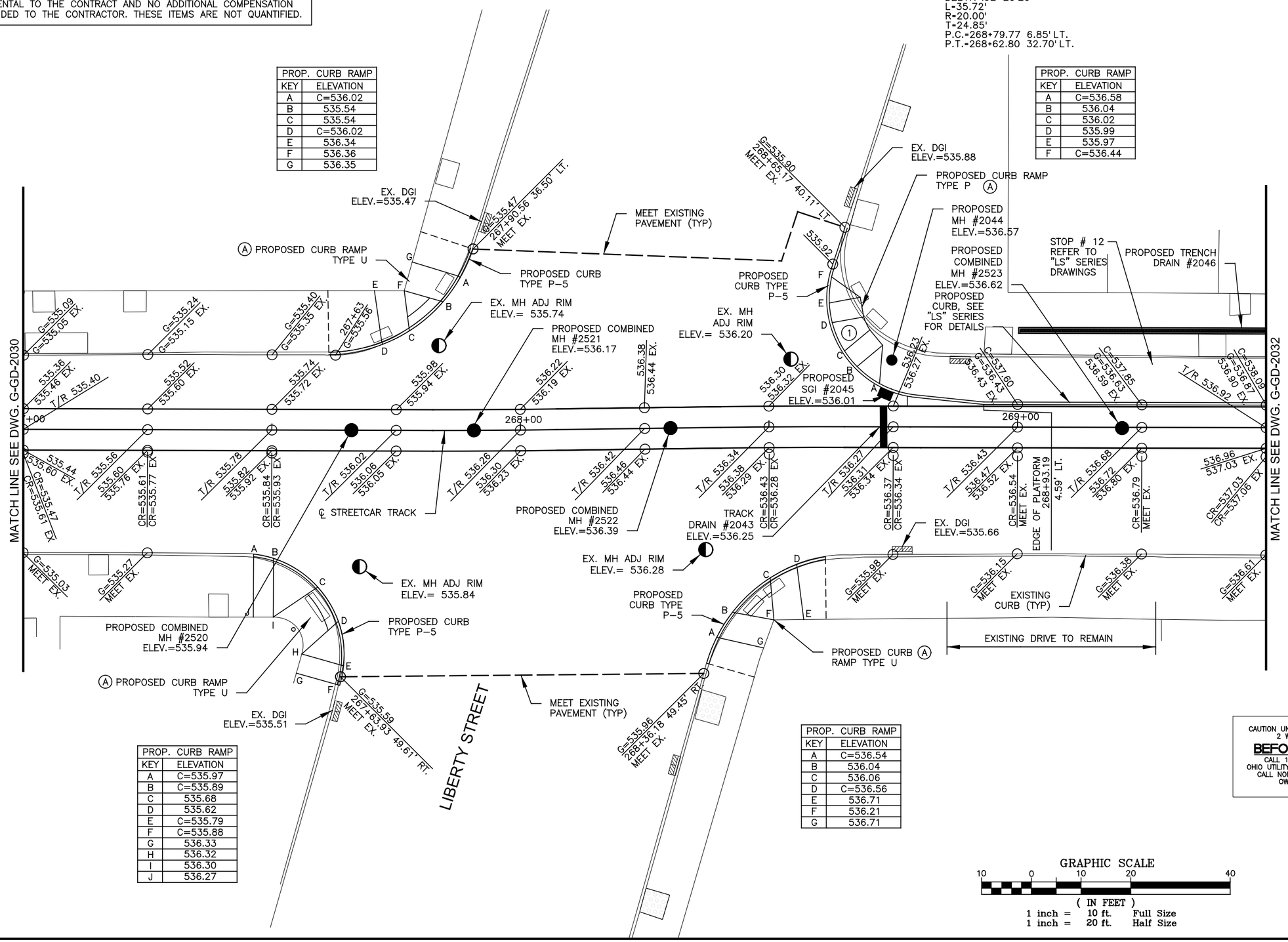

PROP. CURB RAMP	
KEY	ELEVATION
A	C=535.97
B	C=535.89
C	535.68
D	535.62
E	C=535.79
F	C=535.88
G	536.33
H	536.32
I	536.30
J	536.27

PROP. CURB RAMP	
KEY	ELEVATION
A	C=536.54
B	536.04
C	536.06
D	C=536.56
E	536.71
F	536.21
G	536.71

CAUTION UNDERGROUND UTILITIES 2 WORKING DAYS
BEFORE YOU DIG
CALL 1-800-362-2764
OHIO UTILITY PROTECTION SERVICE
CALL NON-SERVICE FACILITY OWNERS DIRECT

GRAPHIC SCALE
10 0 10 20 40
(IN FEET)
1 inch = 10 ft. Full Size
1 inch = 20 ft. Half Size

DOTE_Mono_PDF_Half.pltcfg
c:\pwworking\pitt\d0309031\S_G-GD-2031.dgn
Wednesday, July 11, 2012 12:04:20 PM

CONTRACT DRAWING
PRINTS NOT BEARING THIS STAMP WERE MADE PRIOR TO ADVERTISING FOR BIDS AND ARE TO BE CONSIDERED OBSOLETE FOR CONTRACT PURPOSES.

Department of Transportation and Engineering
City of Cincinnati
City Hall
801 Plum Street
Cincinnati, Ohio 45202

CINCINNATI STREETCAR OVER THE RHINE

GRADING PLAN - RACE STREET
STA 267+00 TO STA 269+50

Revisions
No.

Drawn by SAB	Date 07/02/12	
Designed by SAB	Date 07/02/12	
Checked by KVL	Date 07/02/12	
Reviewed by JTB	Date 07/12/12	

Consultant
PB HDR

File Number

ACC No.
23126

G-GD-2031

① CURB CURVE DATA
DELTA=41° 35'42"
L=3.63'
R=5.00'
T=1.90'
P.C.=269+76.03 5.54' LT.
P.T.=269+79.25 7.02' LT.

② CURB CURVE DATA
DELTA=45° 26'34"
L=3.97'
R=5.00'
T=2.09'
P.C.=269+84.62 12.47' LT.
P.T.=269+88.18 13.97' LT.

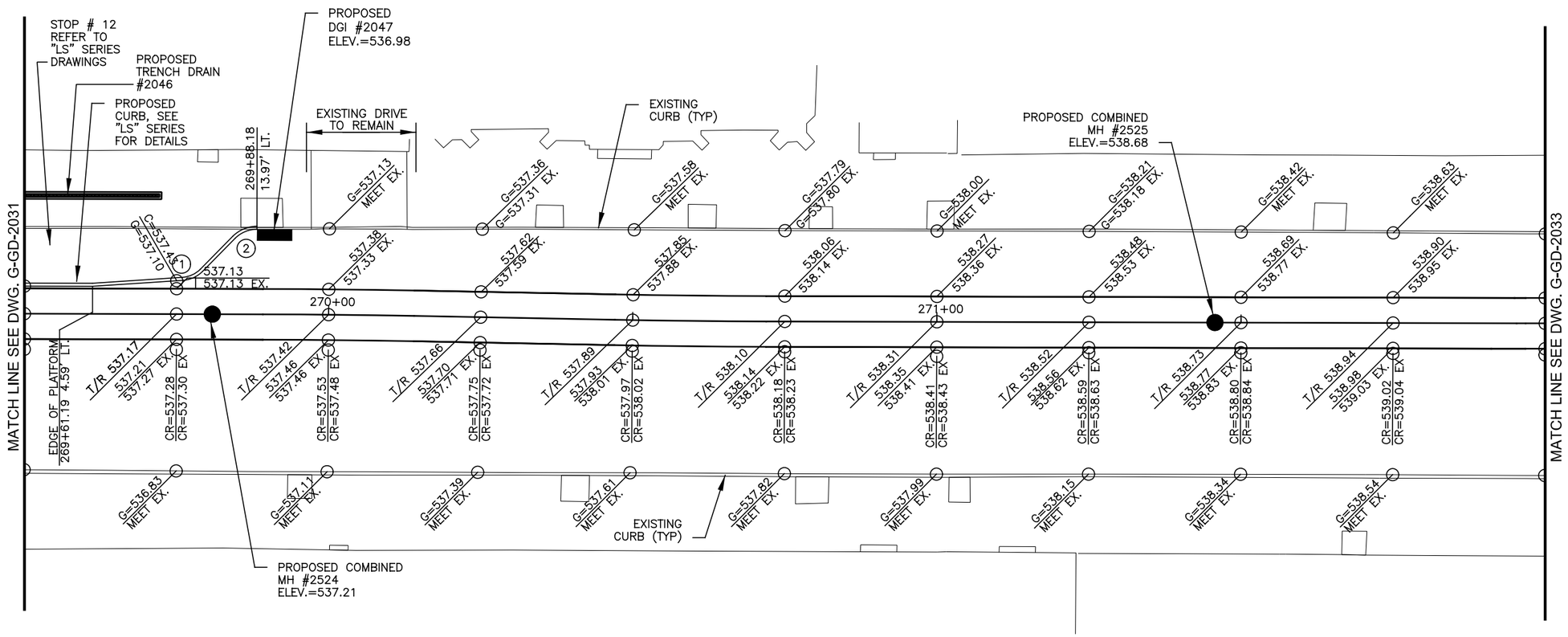

CONTRACTOR IS RESPONSIBLE FOR CONTACTING, AND COORDINATING WITH, UTILITY COMPANIES/AGENCIES AS REQUIRED TO HAVE THE UTILITY COMPANIES ADJUST THEIR FACILITIES TO PROPOSED PLAN ELEVATIONS. THERE MAY BE OTHER UTILITY FACILITIES NOT SHOWN ON THESE PLANS THAT NEED TO BE ADJUSTED AS WELL. THIS WORK SHALL BE COORDINATED AND COMPLETED IN A TIME FRAME CONSISTENT WITH PROJECT SCHEDULE. THIS COORDINATION IS DEEMED INCIDENTAL TO THE CONTRACT AND NO ADDITIONAL COMPENSATION WILL BE PROVIDED TO THE CONTRACTOR. THESE ITEMS ARE NOT QUANTIFIED.

CAUTION UNDERGROUND UTILITIES
2 WORKING DAYS
BEFORE YOU DIG
CALL 1-800-362-2764
OHIO UTILITY PROTECTION SERVICE
CALL NON-SERVICE FACILITY
OWNERS DIRECT

GRAPHIC SCALE
10 0 10 20 40
(IN FEET)
1 inch = 10 ft. Full Size
1 inch = 20 ft. Half Size

DOTE_Mono_PDF_Half.pltcfg
c:\pwworking\pitt\d0509031\S_G-GD-2032.dgn
Wednesday, July 11, 2012 12:04:13:04 PM3 PM

CONTRACT DRAWING

PRINTS NOT BEARING THIS STAMP WERE MADE PRIOR TO ADVERTISING FOR BID AND ARE TO BE CONSIDERED OBSOLETE FOR CONTRACT PURPOSES.

Department of Transportation and Engineering

City of Cincinnati
City Hall
801 Plum Street
Cincinnati, Ohio 45202

CINCINNATI STREETCAR
OVER THE RHINE
GRADING PLAN - RACE STREET
STA 269+50 TO STA 272+00

Revisions
No.

Drawn by SAB	Date 07/02/12
Designed by SAB	Date 07/02/12
Checked by KVL	Date 07/02/12
Reviewed by JTB	Date 07/12/12

Consultant

PB HDR

File Number

ACC No.
23126

G-GD-2032

CONSTRUCTION NOTES:

(A) RECONSTRUCT CURB RAMPS, INCLUDING RESETTING CURBS TO INDICATED LINE AND GRADE. REMOVE EXISTING CONCRETE WALK AS REQUIRED TO NEAREST JOINT AND REPLACE TO MEET INDICATED LINE AND GRADE.

PROP. CURB RAMP	
KEY	ELEVATION
A	C=540.40
B	539.90
C	539.89
D	C=540.37
E	540.39
F	540.47
G	540.48
H	540.40

PROP. CURB RAMP	
KEY	ELEVATION
A	C=540.70
B	540.20
C	540.17
D	C=540.67
E	540.67
F	540.75
G	540.78
H	540.70

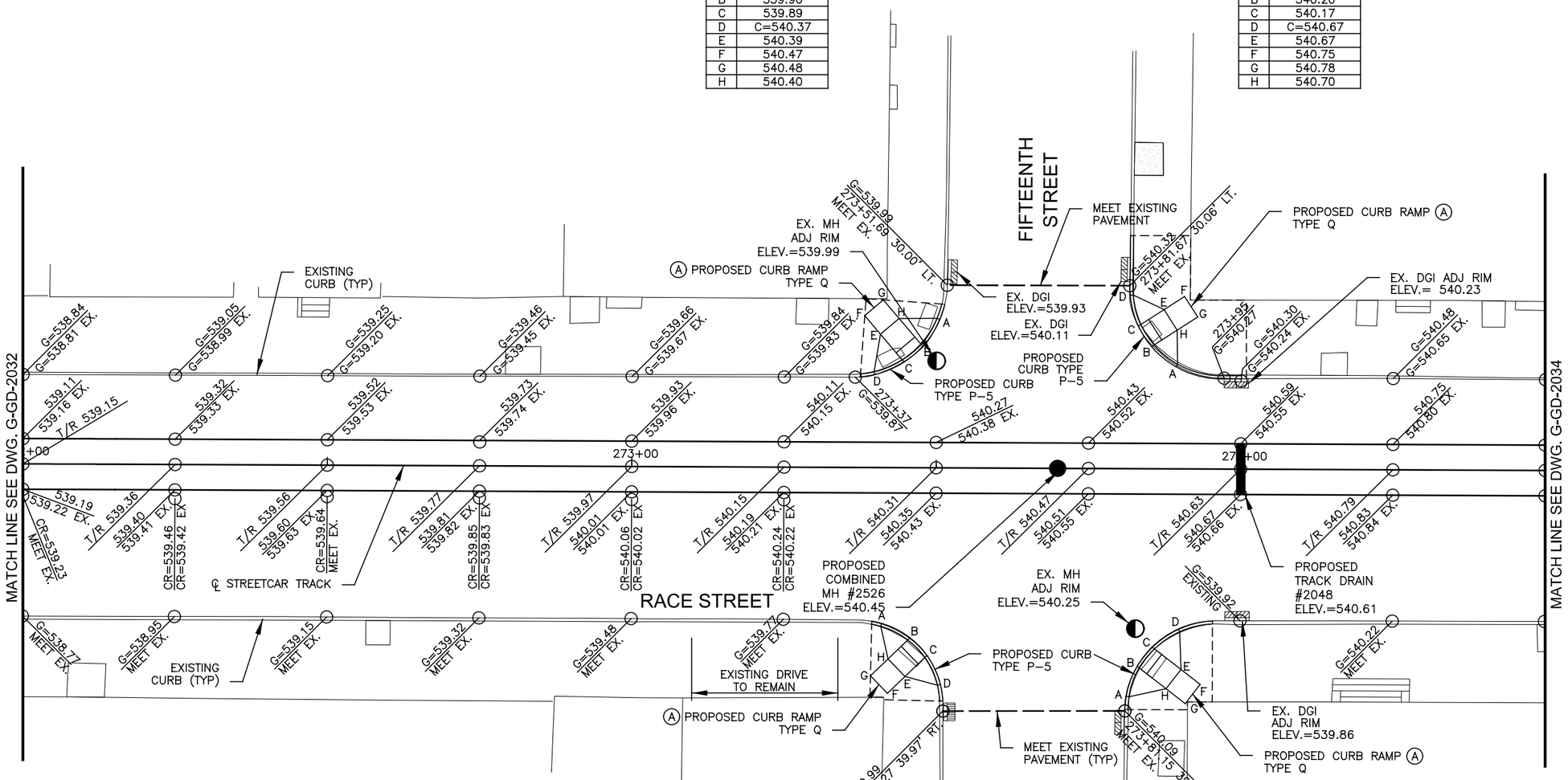

PROP. CURB RAMP	
KEY	ELEVATION
A	C=539.95
B	539.92
C	539.94
D	C=540.15
E	540.29
F	540.37
G	540.29
H	540.21

PROP. CURB RAMP	
KEY	ELEVATION
A	C=540.52
B	540.15
C	540.13
D	C=540.29
E	540.62
F	540.70
G	540.73
H	540.65

CONTRACTOR IS RESPONSIBLE FOR CONTACTING, AND COORDINATING WITH, UTILITY COMPANIES/AGENCIES AS REQUIRED TO HAVE THE UTILITY COMPANIES ADJUST THEIR FACILITIES TO PROPOSED PLAN ELEVATIONS. THERE MAY BE OTHER UTILITY FACILITIES NOT SHOWN ON THESE PLANS THAT NEED TO BE ADJUSTED AS WELL. THIS WORK SHALL BE COORDINATED AND COMPLETED IN A TIME FRAME CONSISTENT WITH PROJECT SCHEDULE. THIS COORDINATION IS DEEMED INCIDENTAL TO THE CONTRACT AND NO ADDITIONAL COMPENSATION WILL BE PROVIDED TO THE CONTRACTOR. THESE ITEMS ARE NOT QUANTIFIED.

GRAPHIC SCALE

10 0 10 20 40

(IN FEET)
1 inch = 10 ft. Full Size
1 inch = 20 ft. Half Size

CAUTION UNDERGROUND UTILITIES
2 WORKING DAYS
BEFORE YOU DIG
CALL 1-800-362-2764
OHIO UTILITY PROTECTION SERVICE
CALL NON-SERVICE FACILITY OWNERS DIRECT

DOTE_Mono_PDF_Half.pltcfg
c:\pwworking\pitt\d0309031\S_G-GD-2033.dgn
Wednesday, July 11, 2012 12:04:15:04:25 PM

CONTRACT DRAWING

PRINTS NOT BEARING THIS STAMP WERE MADE PRIOR TO ADVERTISING FOR BIDS AND ARE TO BE CONSIDERED OBSOLETE FOR CONTRACT PURPOSES.

Department of Transportation and Engineering

City of Cincinnati
City Hall
801 Plum Street
Cincinnati, Ohio 45202

CINCINNATI STREETCAR
OVER THE RHINE
GRADING PLAN - RACE STREET
STA 272+00 TO STA 274+50

Revisions

No.	Date	Date	Date	Date
	07/02/12	07/02/12	07/02/12	07/12/12

Drawn by	Designed by	Checked by	Reviewed by
SAB	SAB	KVL	JTB

Consultant

PB HDR

File Number

ACC No.
23126

G-GD-2033

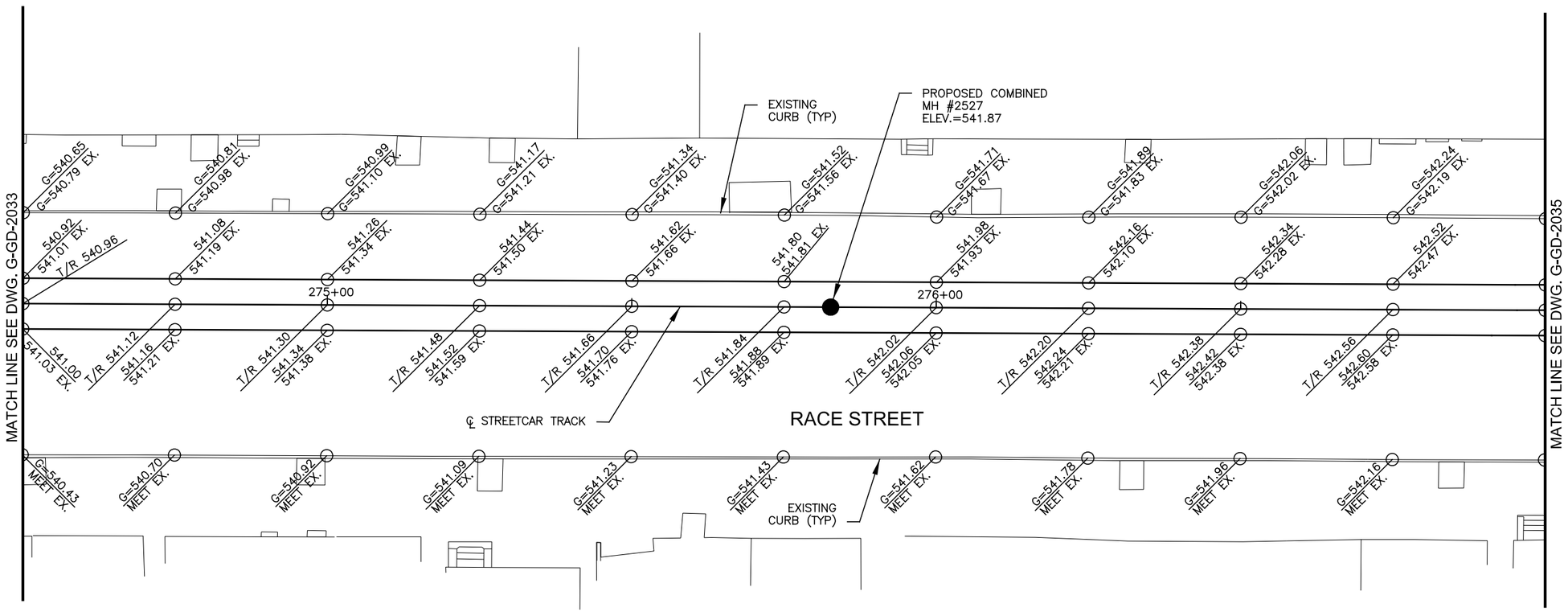

CONTRACTOR IS RESPONSIBLE FOR CONTACTING, AND COORDINATING WITH, UTILITY COMPANIES/AGENCIES AS REQUIRED TO HAVE THE UTILITY COMPANIES ADJUST THEIR FACILITIES TO PROPOSED PLAN ELEVATIONS. THERE MAY BE OTHER UTILITY FACILITIES NOT SHOWN ON THESE PLANS THAT NEED TO BE ADJUSTED AS WELL. THIS WORK SHALL BE COORDINATED AND COMPLETED IN A TIME FRAME CONSISTENT WITH PROJECT SCHEDULE. THIS COORDINATION IS DEEMED INCIDENTAL TO THE CONTRACT AND NO ADDITIONAL COMPENSATION WILL BE PROVIDED TO THE CONTRACTOR. THESE ITEMS ARE NOT QUANTIFIED.

CAUTION UNDERGROUND UTILITIES
2 WORKING DAYS
BEFORE YOU DIG
CALL 1-800-362-2764
OHIO UTILITY PROTECTION SERVICE
CALL NON-SERVICE FACILITY
OWNERS DIRECT

GRAPHIC SCALE
10 0 10 20 40
(IN FEET)
1 inch = 10 ft. Full Size
1 inch = 20 ft. Half Size

DOTE_Mono_PDF_Half.pltcfg
c:\pwworking\pitt\d0309031\S_G-GD-2034.dgn
Wednesday, July 11, 2012 12:05:30 PM3 PM

CONTRACT DRAWING

PRINTS NOT BEARING THIS STAMP WERE MADE PRIOR TO ADVERTISING FOR BIDS AND ARE TO BE CONSIDERED OBSOLETE FOR CONTRACT PURPOSES.

Department of Transportation and Engineering

City of Cincinnati
City Hall
801 Plum Street
Cincinnati, Ohio 45202

CINCINNATI STREETCAR
OVER THE RHINE
GRADING PLAN - RACE STREET
STA 274+50 TO STA 277+00

Revisions

No.		Date
		07/02/12
		07/02/12
		07/02/12
		07/12/12

Drawn by SAB	Date 07/02/12
Designed by SAB	Date 07/02/12
Checked by KVL	Date 07/02/12
Reviewed by JTB	Date 07/12/12

Consultant

PB HDR

File Number

ACC No.
23126

G-GD-2034

CONSTRUCTION NOTES:

(A) RECONSTRUCT CURB RAMPS, INCLUDING RESETTING CURBS TO INDICATED LINE AND GRADE. REMOVE EXISTING CONCRETE WALK AS REQUIRED TO NEAREST JOINT AND REPLACE TO MEET INDICATED LINE AND GRADE.

CONTRACTOR IS RESPONSIBLE FOR CONTACTING, AND COORDINATING WITH, UTILITY COMPANIES/AGENCIES AS REQUIRED TO HAVE THE UTILITY COMPANIES ADJUST THEIR FACILITIES TO PROPOSED PLAN ELEVATIONS. THERE MAY BE OTHER UTILITY FACILITIES NOT SHOWN ON THESE PLANS THAT NEED TO BE ADJUSTED AS WELL. THIS WORK SHALL BE COORDINATED AND COMPLETED IN A TIME FRAME CONSISTENT WITH PROJECT SCHEDULE. THIS COORDINATION IS DEEMED INCIDENTAL TO THE CONTRACT AND NO ADDITIONAL COMPENSATION WILL BE PROVIDED TO THE CONTRACTOR. THESE ITEMS ARE NOT QUANTIFIED.

PROP. CURB RAMP	
KEY	ELEVATION
A	C=543.27
B	542.80
C	542.81
D	C=543.31
E	543.31
F	543.39
G	543.38
H	543.30

PROP. CURB RAMP	
KEY	ELEVATION
A	C=543.29
B	542.79
C	542.77
D	C=543.24
E	543.27
F	543.35
G	543.37
H	543.29

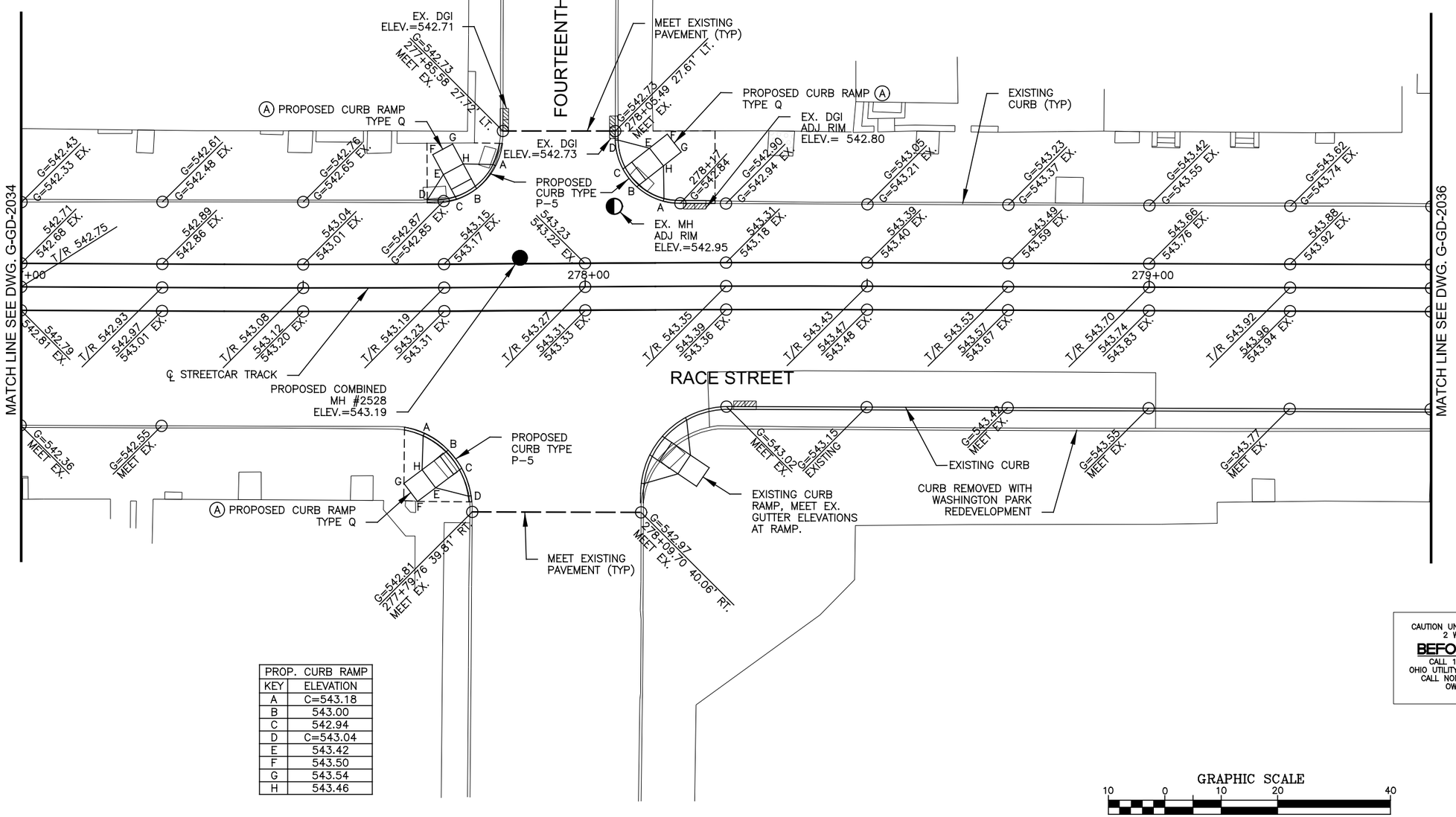

PROP. CURB RAMP	
KEY	ELEVATION
A	C=543.18
B	543.00
C	542.94
D	C=543.04
E	543.42
F	543.50
G	543.54
H	543.46

CAUTION UNDERGROUND UTILITIES
2 WORKING DAYS
BEFORE YOU DIG
CALL 1-800-362-2764
OHIO UTILITY PROTECTION SERVICE
CALL NON-SERVICE FACILITY OWNERS DIRECT

GRAPHIC SCALE
10 0 10 20 40
(IN FEET)
1 inch = 10 ft. Full Size
1 inch = 20 ft. Half Size

DOTE_Mono_PDF_Half.pltcfg
c:\pwworking\pitt\d0309031\S_G-GD-2035.dgn
Wednesday, July 11, 2012 12:05:12:59:44 PM

CONTRACT DRAWING

PRINTS NOT BEARING THIS STAMP WERE MADE PRIOR TO ADVERTISING FOR BIDS AND ARE TO BE CONSIDERED OBSOLETE FOR CONTRACT PURPOSES.

Department of Transportation and Engineering

City of Cincinnati
City Hall
801 Plum Street
Cincinnati, Ohio 45202

CINCINNATI STREETCAR OVER THE RHINE

GRADING PLAN - RACE STREET
STA 277+00 TO STA 279+50

Revisions
No.

	Date
Drawn by SAB	07/02/12
Designed by SAB	07/02/12
Checked by KVL	07/02/12
Reviewed by JTB	07/12/12

Consultant

PB HDR

File Number

ACC No. 23126

G-GD-2035

CONTRACTOR IS RESPONSIBLE FOR CONTACTING, AND COORDINATING WITH, UTILITY COMPANIES/AGENCIES AS REQUIRED TO HAVE THE UTILITY COMPANIES ADJUST THEIR FACILITIES TO PROPOSED PLAN ELEVATIONS. THERE MAY BE OTHER UTILITY FACILITIES NOT SHOWN ON THESE PLANS THAT NEED TO BE ADJUSTED AS WELL. THIS WORK SHALL BE COORDINATED AND COMPLETED IN A TIME FRAME CONSISTENT WITH PROJECT SCHEDULE. THIS COORDINATION IS DEEMED INCIDENTAL TO THE CONTRACT AND NO ADDITIONAL COMPENSATION WILL BE PROVIDED TO THE CONTRACTOR. THESE ITEMS ARE NOT QUANTIFIED.

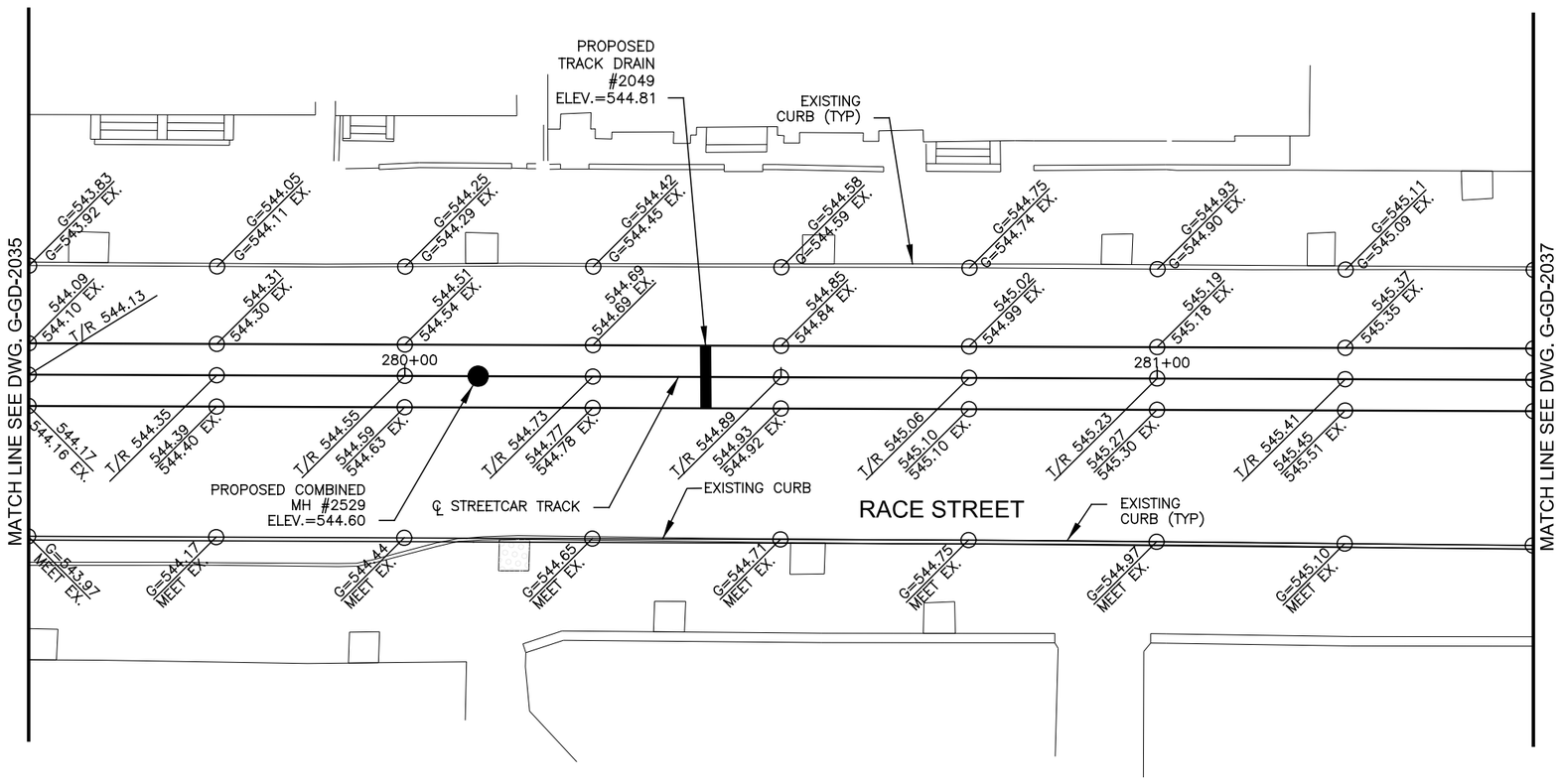

CAUTION UNDERGROUND UTILITIES
2 WORKING DAYS
BEFORE YOU DIG
CALL 1-800-362-2764
OHIO UTILITY PROTECTION SERVICE
CALL NON-SERVICE FACILITY
OWNERS DIRECT

GRAPHIC SCALE

10 0 10 20 40

(IN FEET)
1 inch = 10 ft. Full Size
1 inch = 20 ft. Half Size

DOTE_Mono_PDF_Half.pltcfg
c:\pwworking\pitt\d0309031\S_G-GD-2036.dgn
Wednesday, July 11, 2012 12:05:20:987 PM

CONTRACT DRAWING

PRINTS NOT BEARING THIS STAMP WERE MADE PRIOR TO ADVERTISING FOR BIDS AND ARE TO BE CONSIDERED OBSOLETE FOR CONTRACT PURPOSES.

Department of Transportation and Engineering

City of Cincinnati
City Hall
801 Plum Street
Cincinnati, Ohio 45202

CINCINNATI STREETCAR
OVER THE RHINE
GRADING PLAN - RACE STREET
STA 279+50 TO STA 281+50

Revisions
No.

Drawn by SAB Date 07/02/12
Designed by SAB Date 07/02/12
Checked by KVL Date 07/02/12
Reviewed by JTB Date 07/12/12

Consultant

PB HDR

File Number

ACC No.
23126

G-GD-2036

CONSTRUCTION NOTES:

(A) RECONSTRUCT CURB RAMPS, INCLUDING RESETTING CURBS TO INDICATED LINE AND GRADE. REMOVE EXISTING CONCRETE WALK AS REQUIRED TO NEAREST JOINT AND REPLACE TO MEET INDICATED LINE AND GRADE.

CONTRACTOR IS RESPONSIBLE FOR CONTACTING, AND COORDINATING WITH, UTILITY COMPANIES/AGENCIES AS REQUIRED TO HAVE THE UTILITY COMPANIES ADJUST THEIR FACILITIES TO PROPOSED PLAN ELEVATIONS. THERE MAY BE OTHER UTILITY FACILITIES NOT SHOWN ON THESE PLANS THAT NEED TO BE ADJUSTED AS WELL. THIS WORK SHALL BE COORDINATED AND COMPLETED IN A TIME FRAME CONSISTENT WITH PROJECT SCHEDULE. THIS COORDINATION IS DEEMED INCIDENTAL TO THE CONTRACT AND NO ADDITIONAL COMPENSATION WILL BE PROVIDED TO THE CONTRACTOR. THESE ITEMS ARE NOT QUANTIFIED.

PROP. CURB RAMP	
KEY	ELEVATION
A	C=546.28
B	545.78
C	545.74
D	C=546.19
E	546.24
F	546.32
G	546.36
H	546.28
I	C=546.14
J	545.64
K	545.61
L	C=546.07
M	546.11
N	546.19
O	546.22
P	546.14

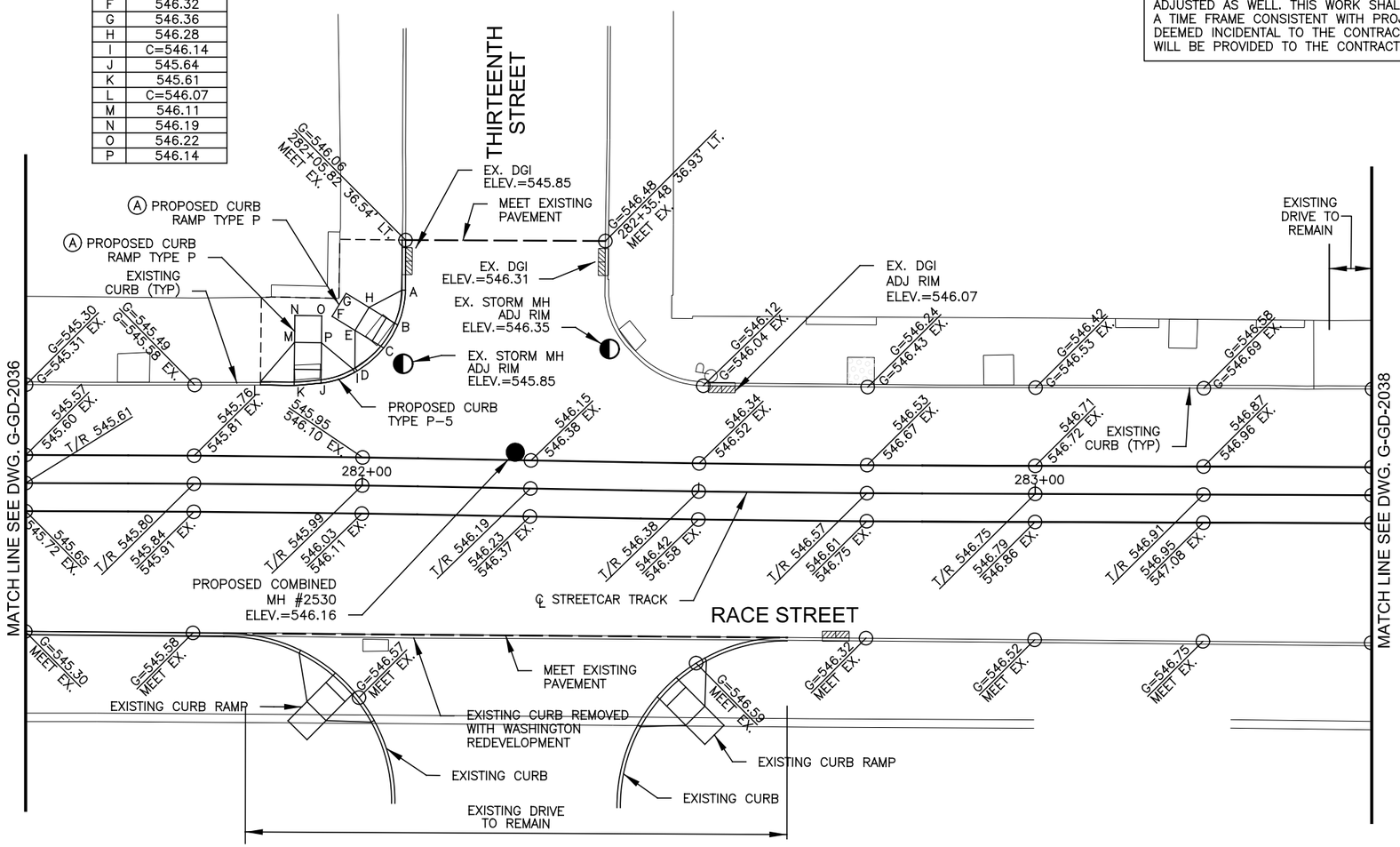

CAUTION UNDERGROUND UTILITIES
2 WORKING DAYS
BEFORE YOU DIG
CALL 1-800-362-2764
OHIO UTILITY PROTECTION SERVICE
CALL NON-SERVICE FACILITY
OWNERS DIRECT

GRAPHIC SCALE
10 0 10 20 40
(IN FEET)
1 inch = 10 ft. Full Size
1 inch = 20 ft. Half Size

DOTE_Mono_PDF_Half.pltcfg
c:\pwworking\pitt\d0309031\S_G-GD-2037.dgn
Wednesday, July 11, 2012 12:05:18 PM

CONTRACT DRAWING

PRINTS NOT BEARING THIS STAMP WERE MADE PRIOR TO ADVERTISING FOR BIDS AND ARE TO BE CONSIDERED OBSOLETE FOR CONTRACT PURPOSES.

Department of Transportation and Engineering

City of Cincinnati
City Hall
801 Plum Street
Cincinnati, Ohio 45202

CINCINNATI STREETCAR OVER THE RHINE

GRADING PLAN - RACE STREET
STA 281+50 TO STA 283+50

Revisions

No.	Date	Drawn by	Designed by	Checked by	Reviewed by
	07/02/12	SAB	SAB	KVL	JTB
	07/02/12				
	07/02/12				
	07/12/12				

Consultant

PB HDR

File Number

ACC No.
23126

G-GD-2037

① CURB CURVE DATA
DELTA=44° 42'34"
L=3.90'
R=5.00'
T=2.06'
P.C.=284+07.40 15.54' LT.
P.T.=284+10.91 14.08' LT.

② CURB CURVE DATA
DELTA=40° 14'11"
L=3.51'
R=5.00'
T=1.83'
P.C.=284+17.93 7.05' LT.
P.T.=284+21.05 5.61' LT.

③ CURB CURVE DATA
DELTA=40° 14'11"
L=3.51'
R=5.00'
T=1.83'
P.C.=285+14.56 5.70' LT.
P.T.=285+17.68 7.15' LT.

④ CURB CURVE DATA
DELTA=45° 12'13"
L=3.94'
R=5.00'
T=2.08'
P.C.=285+23.96 13.43' LT.
P.T.=285+27.51 14.89' LT.

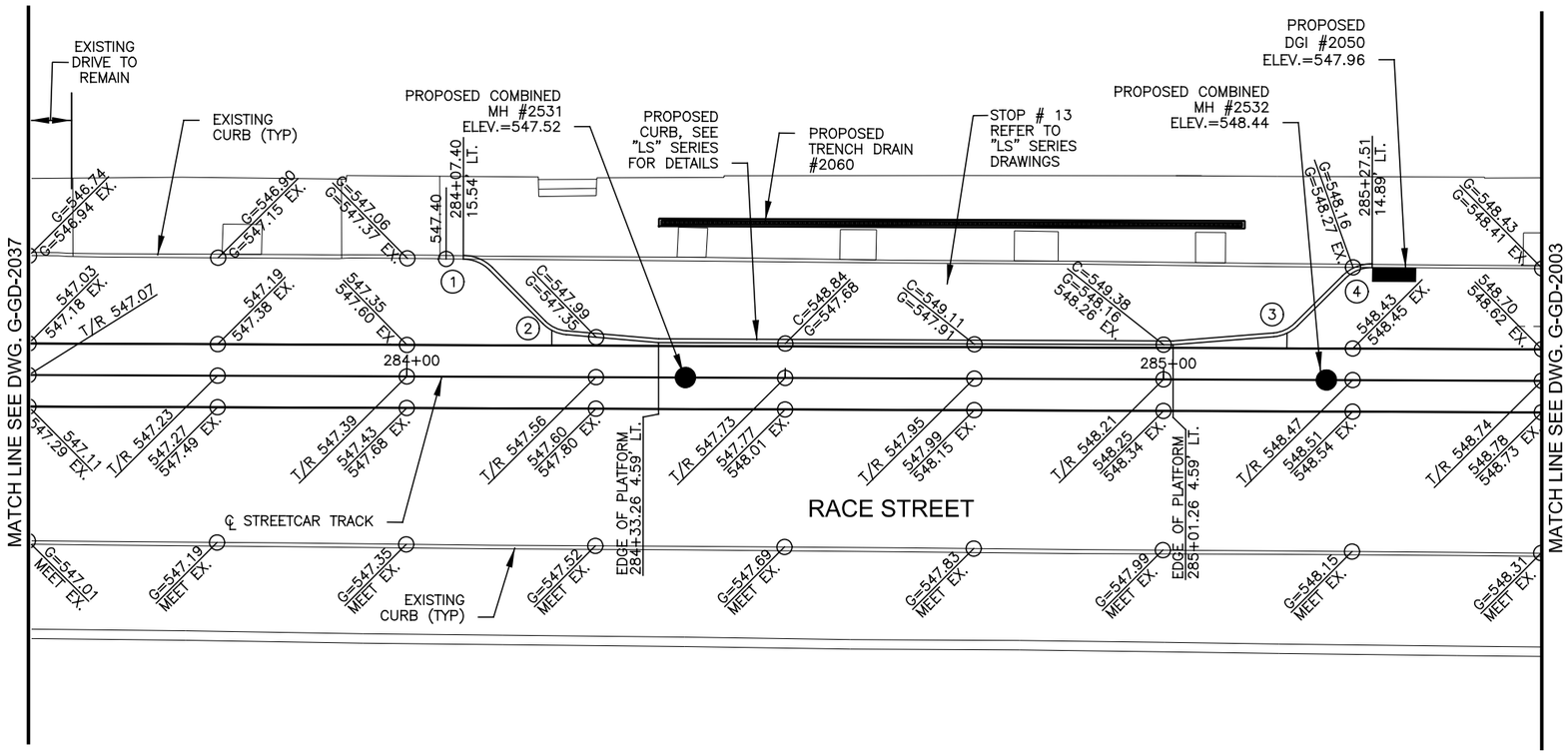

CONTRACTOR IS RESPONSIBLE FOR CONTACTING, AND COORDINATING WITH, UTILITY COMPANIES/AGENCIES AS REQUIRED TO HAVE THE UTILITY COMPANIES ADJUST THEIR FACILITIES TO PROPOSED PLAN ELEVATIONS. THERE MAY BE OTHER UTILITY FACILITIES NOT SHOWN ON THESE PLANS THAT NEED TO BE ADJUSTED AS WELL. THIS WORK SHALL BE COORDINATED AND COMPLETED IN A TIME FRAME CONSISTENT WITH PROJECT SCHEDULE. THIS COORDINATION IS DEEMED INCIDENTAL TO THE CONTRACT AND NO ADDITIONAL COMPENSATION WILL BE PROVIDED TO THE CONTRACTOR. THESE ITEMS ARE NOT QUANTIFIED.

CAUTION UNDERGROUND UTILITIES
2 WORKING DAYS
BEFORE YOU DIG
CALL 1-800-362-2764
OHIO UTILITY PROTECTION SERVICE
CALL NON-SERVICE FACILITY
OWNERS DIRECT

GRAPHIC SCALE
10 0 10 20 40
(IN FEET)
1 inch = 10 ft. Full Size
1 inch = 20 ft. Half Size

DOTE_Mono_PDF_Half.pltcfg
c:\pwworking\pitt\d0309031\S_G-GD-2038.dgn
Thursday, July 12, 2012 02:37:00 PM

CONTRACT DRAWING
PRINTS NOT BEARING THIS STAMP WERE MADE PRIOR TO ADVERTISING FOR BIDS AND ARE TO BE CONSIDERED OBSOLETE FOR CONTRACT PURPOSES.

Department of Transportation and Engineering
City of Cincinnati
City Hall
801 Plum Street
Cincinnati, Ohio 45202

CINCINNATI STREETCAR
OVER THE RHINE
GRADING PLAN - RACE STREET
STA 283+50 TO STA 285+50

Revisions
No.

Drawn by SAB	Date 07/02/12
Designed by SAB	Date 07/02/12
Checked by KVL	Date 07/02/12
Reviewed by JTB	Date 07/12/12

Consultant
PB HDR

File Number

ACC No.
23126

G-GD-2038

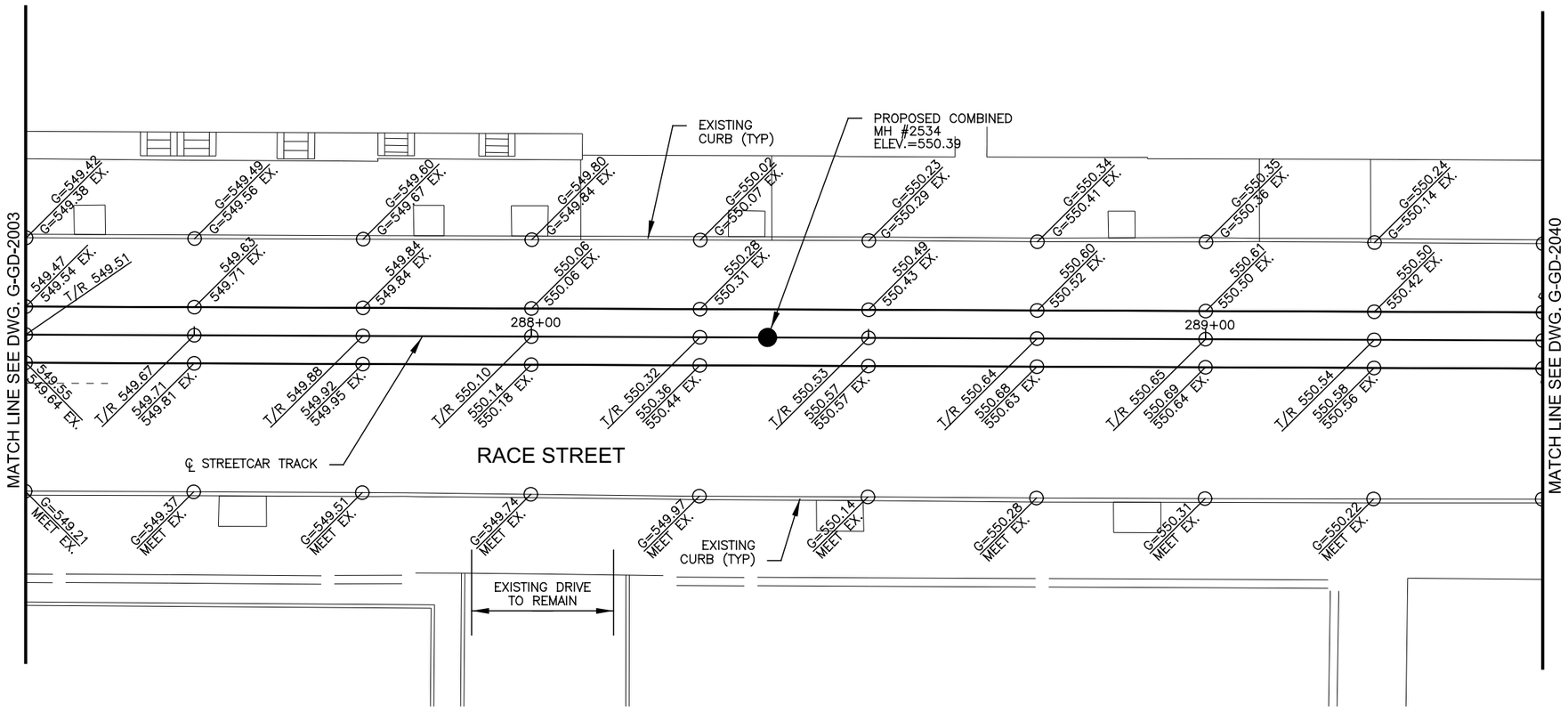

CAUTION UNDERGROUND UTILITIES
2 WORKING DAYS
BEFORE YOU DIG
CALL 1-800-362-2764
OHIO UTILITY PROTECTION SERVICE
CALL NON-SERVICE FACILITY
OWNERS DIRECT

CONTRACTOR IS RESPONSIBLE FOR CONTACTING, AND COORDINATING WITH, UTILITY COMPANIES/AGENCIES AS REQUIRED TO HAVE THE UTILITY COMPANIES ADJUST THEIR FACILITIES TO PROPOSED PLAN ELEVATIONS. THERE MAY BE OTHER UTILITY FACILITIES NOT SHOWN ON THESE PLANS THAT NEED TO BE ADJUSTED AS WELL. THIS WORK SHALL BE COORDINATED AND COMPLETED IN A TIME FRAME CONSISTENT WITH PROJECT SCHEDULE. THIS COORDINATION IS DEEMED INCIDENTAL TO THE CONTRACT AND NO ADDITIONAL COMPENSATION WILL BE PROVIDED TO THE CONTRACTOR. THESE ITEMS ARE NOT QUANTIFIED.

GRAPHIC SCALE
10 0 10 20 40
(IN FEET)
1 inch = 10 ft. Full Size
1 inch = 20 ft. Half Size

DOTE_Mono_PDF_Half.pltcfg
c:\pwworking\pitt\d0309031\S_G-GD-2039.dgn
Wednesday, July 11, 2012 12:06:20 PM BAS PM

CONTRACT DRAWING

PRINTS NOT BEARING THIS STAMP WERE MADE PRIOR TO ADVERTISING FOR BIDS AND ARE TO BE CONSIDERED OBSOLETE FOR CONTRACT PURPOSES.

Department of Transportation and Engineering

City of Cincinnati
City Hall
801 Plum Street
Cincinnati, Ohio 45202

CINCINNATI STREETCAR
OVER THE RHINE
GRADING PLAN - RACE STREET
STA 287+25 TO STA 289+50

Revisions
No.

Drawn by SAB	Date 07/02/12
Designed by SAB	Date 07/02/12
Checked by KVL	Date 07/02/12
Reviewed by JTB	Date 07/12/12

Consultant

PB HDR

File Number

ACC No.
23126

G-GD-2039

(1) CURB CURVE DATA
DELTA=90° 13'14"
L=23.62'
R=15.00'
T=15.06'
P.C.=289+99.12 5.25' LT.
P.T.=290+14.12 20.31' LT.

(2) CURB CURVE DATA
DELTA=140° 28'39"
L=12.26'
R=5.00'
T=13.92'
P.C.=290+85.11 16.01' LT.
P.T.=290+89.30 7.25' LT.

(3) CURB CURVE DATA
DELTA=34° 6' 47"
L=37.51'
R=63.00'
T=19.33'
P.C.=290+89.30 7.25' LT.
P.T.=291+31.22 6.33' LT.

CONSTRUCTION NOTES:

(A) RECONSTRUCT CURB RAMPS, INCLUDING RESETTING CURBS TO INDICATED LINE AND GRADE. REMOVE EXISTING CONCRETE WALK AS REQUIRED TO NEAREST JOINT AND REPLACE TO MEET INDICATED LINE AND GRADE.

PROP. CURB RAMP	
KEY	ELEVATION
A	C=550.11
B	549.89
C	549.92
D	C=550.42
E	550.10
F	550.18
G	550.10
H	550.02
I	C=550.48
J	550.00
K	550.02
L	C=550.52
M	550.29
N	550.37
O	550.29
P	550.21

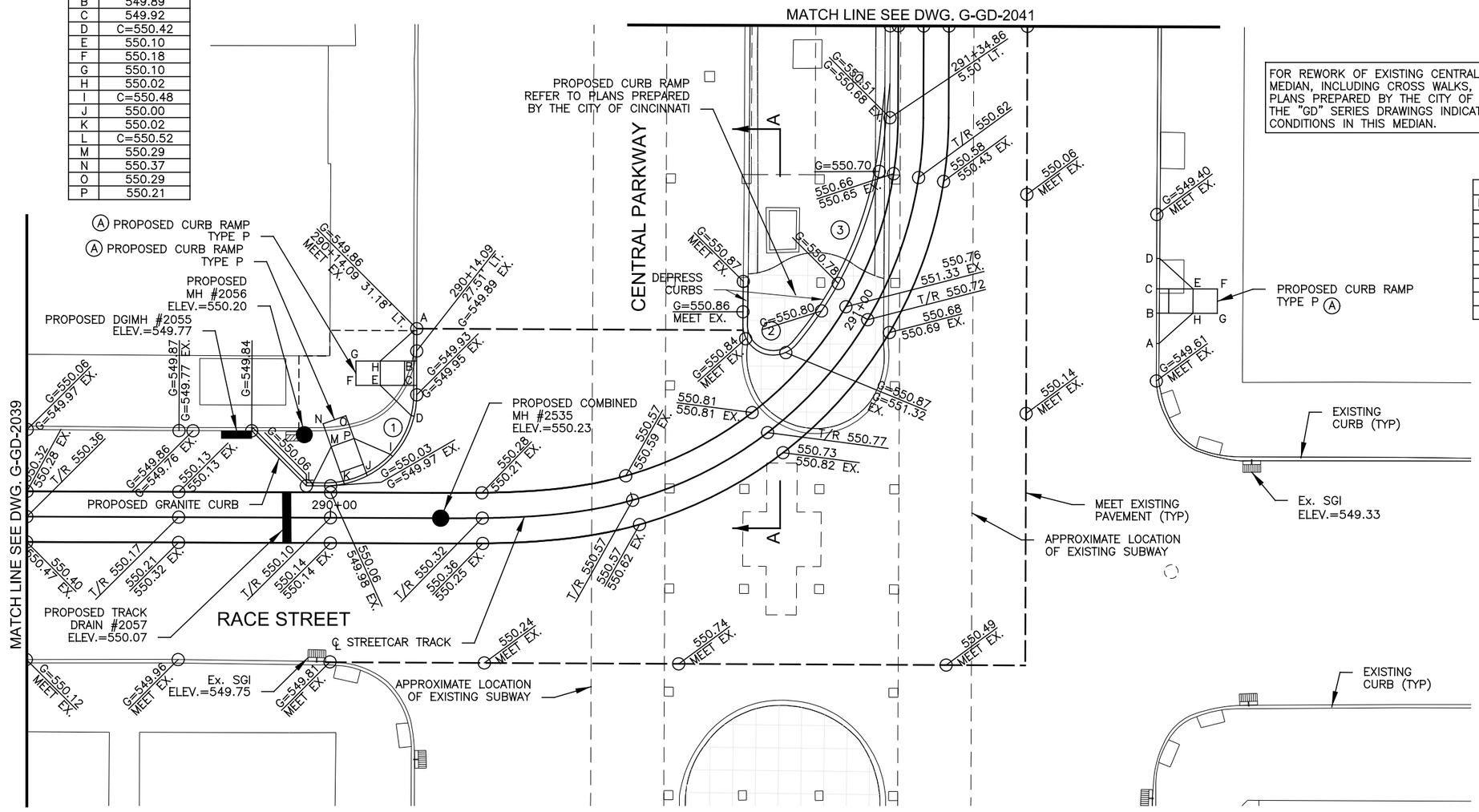

FOR REWORK OF EXISTING CENTRAL PARKWAY MEDIAN, INCLUDING CROSS WALKS, REFER TO PLANS PREPARED BY THE CITY OF CINCINNATI. THE "GD" SERIES DRAWINGS INDICATE EXISTING CONDITIONS IN THIS MEDIAN.

PROP. CURB RAMP	
KEY	ELEVATION
A	C=549.81
B	549.53
C	549.50
D	C=549.71
E	549.79
F	549.87
G	549.88
H	549.80

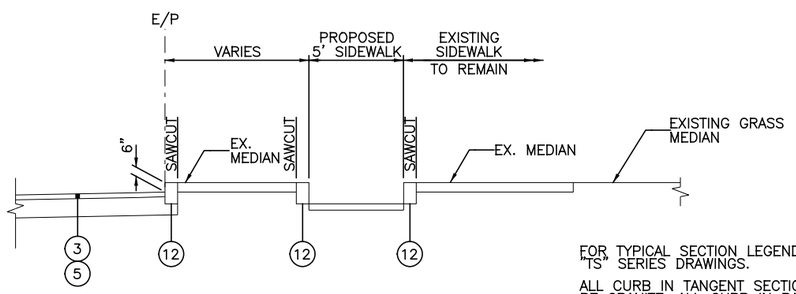

TYPICAL SECTION A-A MEDIAN WALKWAY
CONCRETE MEDIAN (N.T.S.)

FOR TYPICAL SECTION LEGEND SEE "TS" SERIES DRAWINGS.

ALL CURB IN TANGENT SECTIONS SHALL BE GRANITE. ALL CURB IN RADIUS RETURNS SHALL BE CONCRETE.

CONTRACTOR IS RESPONSIBLE FOR CONTACTING, AND COORDINATING WITH, UTILITY COMPANIES/AGENCIES AS REQUIRED TO HAVE THE UTILITY COMPANIES ADJUST THEIR FACILITIES TO PROPOSED PLAN ELEVATIONS. THERE MAY BE OTHER UTILITY FACILITIES NOT SHOWN ON THESE PLANS THAT NEED TO BE ADJUSTED AS WELL. THIS WORK SHALL BE COORDINATED AND COMPLETED IN A TIME FRAME CONSISTENT WITH PROJECT SCHEDULE. THIS COORDINATION IS DEEMED INCIDENTAL TO THE CONTRACT AND NO ADDITIONAL COMPENSATION WILL BE PROVIDED TO THE CONTRACTOR. THESE ITEMS ARE NOT QUANTIFIED.

CAUTION UNDERGROUND UTILITIES
2 WORKING DAYS
BEFORE YOU DIG
CALL 1-800-362-2764
OHIO UTILITY PROTECTION SERVICE
CALL NON-SERVICE FACILITY OWNERS DIRECT

GRAPHIC SCALE
10 0 10 20 40
(IN FEET)
1 inch = 10 ft. Full Size
1 inch = 20 ft. Half Size

DEPARTMENT OF TRANSPORTATION & ENGINEERING CITY OF CINCINNATI OHIO

CONTRACT DRAWING

PRINTS NOT BEARING THIS STAMP WERE MADE PRIOR TO ADVERTISING BID PRINTS WHICH MAY BE CONSIDERED OBSOLETE FOR CONTRACT PURPOSES.

Department of Transportation and Engineering

City of Cincinnati
City Hall
801 Plum Street
Cincinnati, Ohio 45202

CINCINNATI STREETCAR OVER THE RHINE

GRADING PLAN - RACE STREET
STA 289+50 TO STA 291+50

Revisions

No.				

Drawn by SAB	Date 07/02/12
Designed by SAB	Date 07/02/12
Checked by KVL	Date 07/02/12
Reviewed by JTB	Date 07/12/12

Consultant

PB HDR

File Number

ACC No. 23126

G-GD-2040

DOTE_Mono_PDF_Half.pltcfg
c:\pwworking\pitt\d0309031\S_G-GD-2040.dgn
Wednesday, July 11, 2012 12:06:12 PM

FOR REWORK OF EXISTING CENTRAL PARKWAY MEDIAN, INCLUDING CROSS WALKS, REFER TO PLANS PREPARED BY THE CITY OF CINCINNATI. THE "GD" SERIES DRAWINGS INDICATE EXISTING CONDITIONS IN THIS MEDIAN.

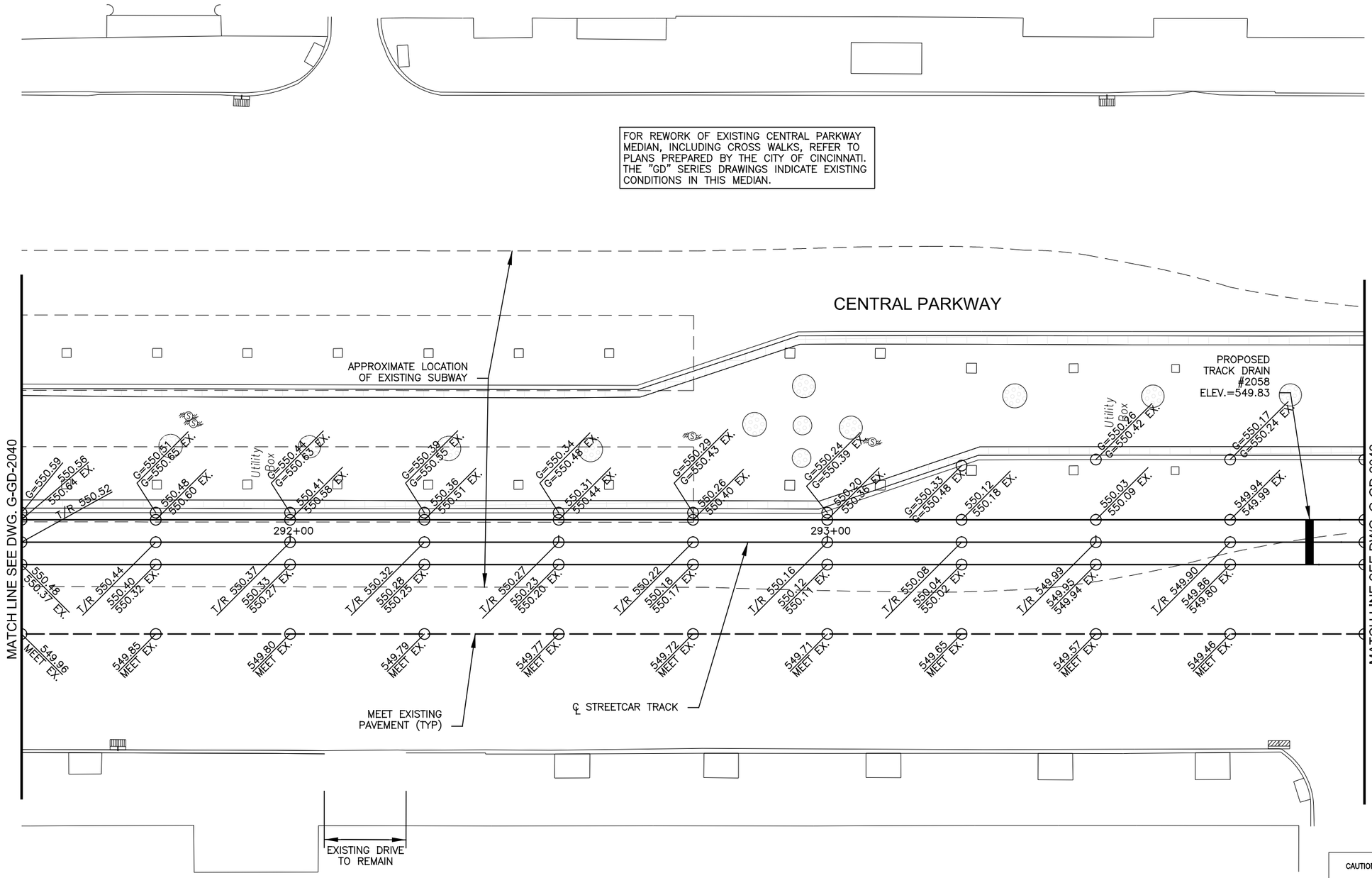

CAUTION UNDERGROUND UTILITIES
2 WORKING DAYS
BEFORE YOU DIG
CALL 1-800-362-2764
OHIO UTILITY PROTECTION SERVICE
CALL NON-SERVICE FACILITY OWNERS DIRECT

CONTRACTOR IS RESPONSIBLE FOR CONTACTING, AND COORDINATING WITH, UTILITY COMPANIES/AGENCIES AS REQUIRED TO HAVE THE UTILITY COMPANIES ADJUST THEIR FACILITIES TO PROPOSED PLAN ELEVATIONS. THERE MAY BE OTHER UTILITY FACILITIES NOT SHOWN ON THESE PLANS THAT NEED TO BE ADJUSTED AS WELL. THIS WORK SHALL BE COORDINATED AND COMPLETED IN A TIME FRAME CONSISTENT WITH PROJECT SCHEDULE. THIS COORDINATION IS DEEMED INCIDENTAL TO THE CONTRACT AND NO ADDITIONAL COMPENSATION WILL BE PROVIDED TO THE CONTRACTOR. THESE ITEMS ARE NOT QUANTIFIED.

GRAPHIC SCALE
10 0 10 20 40
(IN FEET)
1 inch = 10 ft. Full Size
1 inch = 20 ft. Half Size

DOTE_Mono_PDF_Half.pltcfg
c:\pwworking\pitt\d0309031\S_G-GD-2041.dgn
Wednesday, July 11, 2012 12:06:13:06:37 PM

CONTRACT DRAWING
PRINTS NOT BEARING THIS STAMP WERE MADE PRIOR TO ADVERTISING FOR BIDS AND ARE TO BE CONSIDERED OBSOLETE FOR CONTRACT PURPOSES.

Department of Transportation and Engineering
City of Cincinnati
City Hall
801 Plum Street
Cincinnati, Ohio 45202

CINCINNATI STREETCAR OVER THE RHINE

GRADING PLAN - CENTRAL PARKWAY
STA 291+50 TO STA 294+00

Revisions
No.

	Date
Drawn by SAB	07/02/12
Designed by SAB	07/02/12
Checked by KVL	07/02/12
Reviewed by JTB	07/12/12

Consultant
PB HDR

File Number

ACC No.
23126

G-GD-2041

FOR REWORK OF EXISTING CENTRAL PARKWAY MEDIAN, INCLUDING CROSS WALKS, REFER TO PLANS PREPARED BY THE CITY OF CINCINNATI. THE "GD" SERIES DRAWINGS INDICATE EXISTING CONDITIONS IN THIS MEDIAN.

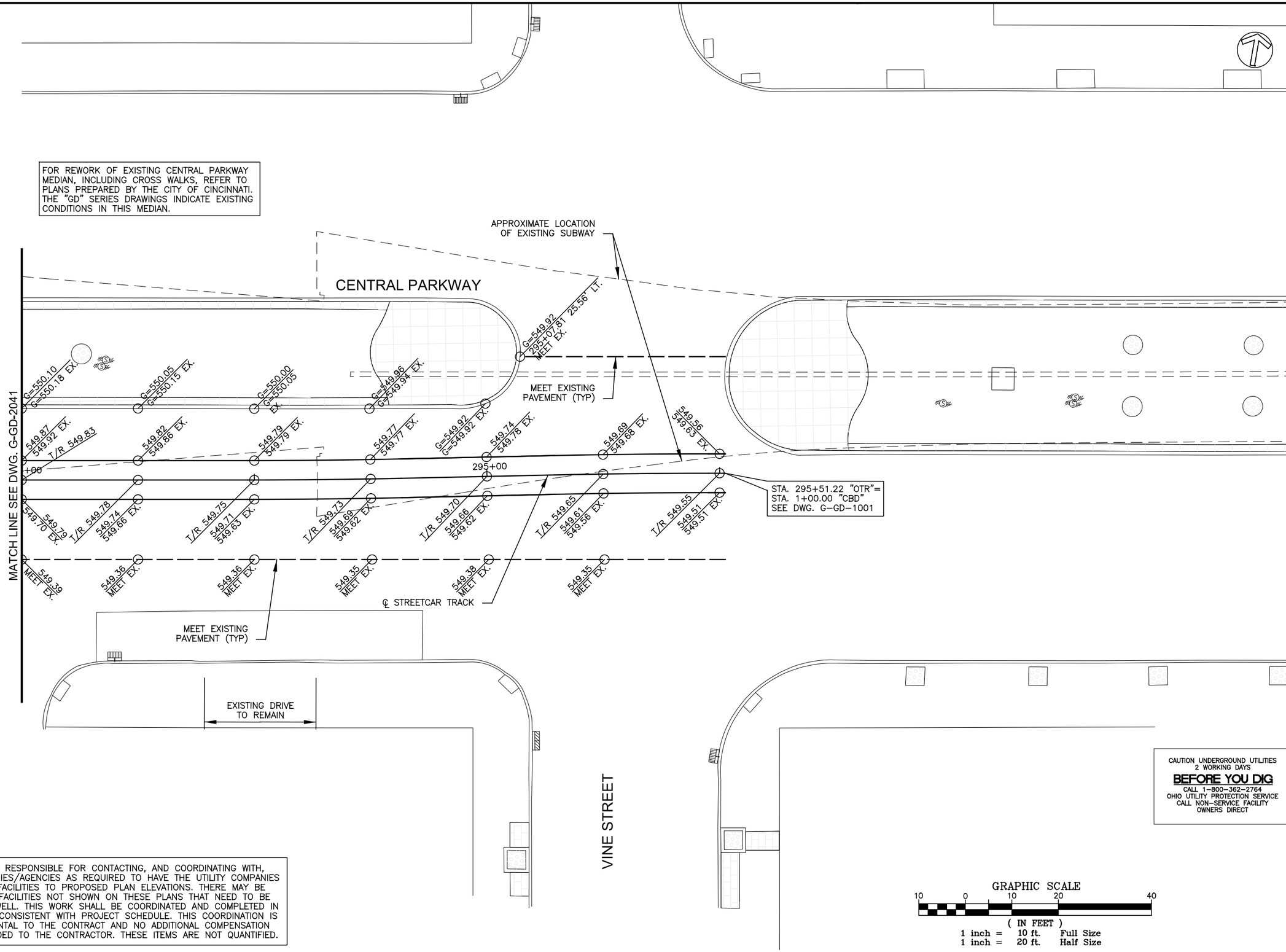

CONTRACTOR IS RESPONSIBLE FOR CONTACTING, AND COORDINATING WITH, UTILITY COMPANIES/AGENCIES AS REQUIRED TO HAVE THE UTILITY COMPANIES ADJUST THEIR FACILITIES TO PROPOSED PLAN ELEVATIONS. THERE MAY BE OTHER UTILITY FACILITIES NOT SHOWN ON THESE PLANS THAT NEED TO BE ADJUSTED AS WELL. THIS WORK SHALL BE COORDINATED AND COMPLETED IN A TIME FRAME CONSISTENT WITH PROJECT SCHEDULE. THIS COORDINATION IS DEEMED INCIDENTAL TO THE CONTRACT AND NO ADDITIONAL COMPENSATION WILL BE PROVIDED TO THE CONTRACTOR. THESE ITEMS ARE NOT QUANTIFIED.

CAUTION UNDERGROUND UTILITIES
2 WORKING DAYS
BEFORE YOU DIG
CALL 1-800-362-2764
OHIO UTILITY PROTECTION SERVICE
CALL NON-SERVICE FACILITY
OWNERS DIRECT

GRAPHIC SCALE
10 0 10 20 40
(IN FEET)
1 inch = 10 ft. Full Size
1 inch = 20 ft. Half Size

DOTE_Mono_PDF_Half.pltcfg
c:\pwworking\pitt\d0309031\S_G-GD-2042.dgn
Wednesday, July 11, 2012 12:06:18 PM

CONTRACT DRAWING

PRINTS NOT BEARING THIS STAMP WERE MADE PRIOR TO ADVERTISING FOR BIDS AND ARE TO BE CONSIDERED OBSOLETE FOR CONTRACT PURPOSES.

Department of Transportation and Engineering

City of Cincinnati
City Hall
801 Plum Street
Cincinnati, Ohio 45202

CINCINNATI STREETCAR
OVER THE RHINE

GRADING PLAN - CENTRAL PARKWAY
STA 294+00 TO STA 295+51.22

Revisions
No.

	Date
Drawn by SAB	07/02/12
Designed by SAB	07/02/12
Checked by KVL	07/02/12
Reviewed by JTB	07/12/12

Consultant

PB HDR

File Number

ACC No.
23126

G-GD-2042

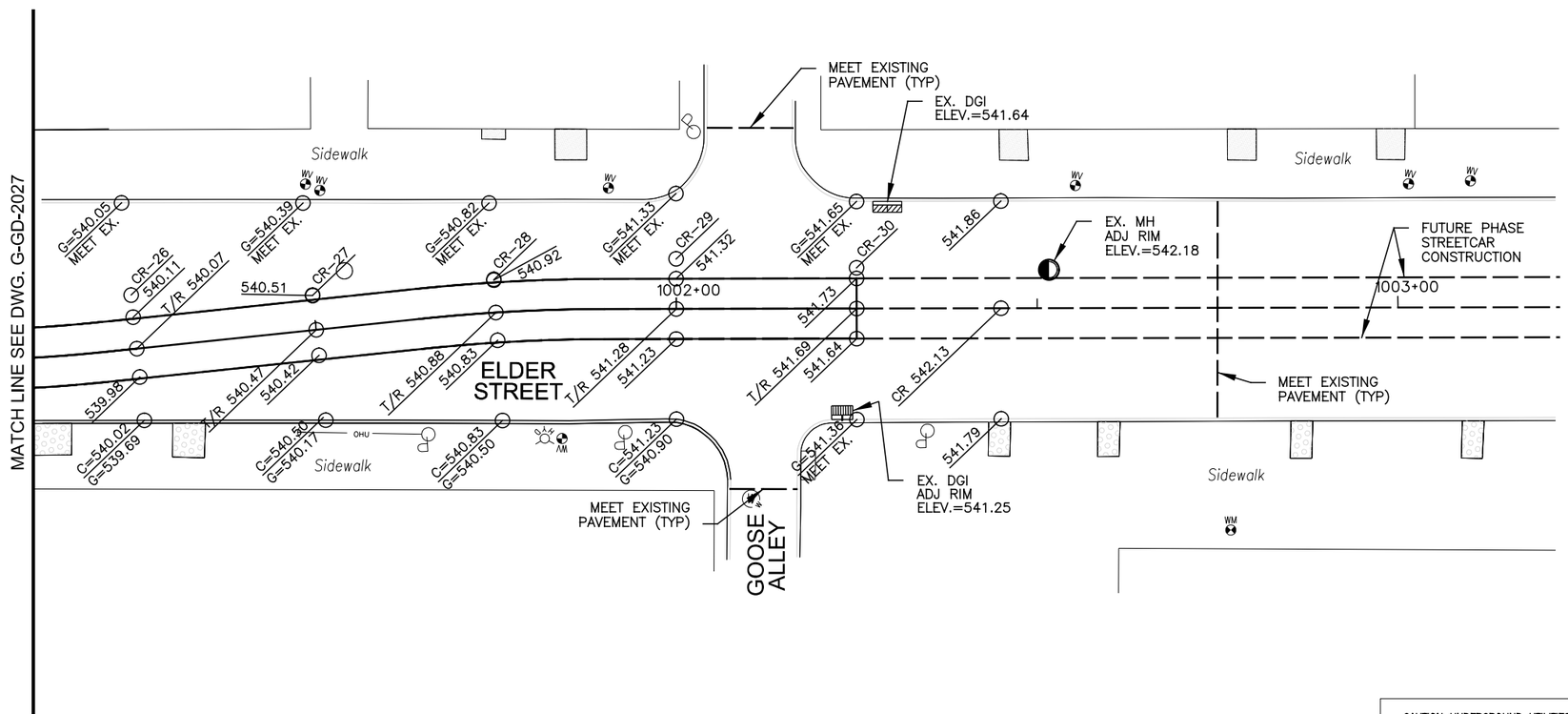

CONTRACTOR IS RESPONSIBLE FOR CONTACTING, AND COORDINATING WITH, UTILITY COMPANIES/AGENCIES AS REQUIRED TO HAVE THE UTILITY COMPANIES ADJUST THEIR FACILITIES TO PROPOSED PLAN ELEVATIONS. THERE MAY BE OTHER UTILITY FACILITIES NOT SHOWN ON THESE PLANS THAT NEED TO BE ADJUSTED AS WELL. THIS WORK SHALL BE COORDINATED AND COMPLETED IN A TIME FRAME CONSISTENT WITH PROJECT SCHEDULE. THIS COORDINATION IS DEEMED INCIDENTAL TO THE CONTRACT AND NO ADDITIONAL COMPENSATION WILL BE PROVIDED TO THE CONTRACTOR. THESE ITEMS ARE NOT QUANTIFIED.

CAUTION UNDERGROUND UTILITIES
2 WORKING DAYS
BEFORE YOU DIG
CALL 1-800-362-2764
OHIO UTILITY PROTECTION SERVICE
CALL NON-SERVICE FACILITY
OWNERS DIRECT

GRAPHIC SCALE
10 0 10 20 40
(IN FEET)
1 inch = 10 ft. Full Size
1 inch = 20 ft. Half Size

DOTE_Mono_PDF_Half.pltcfg
c:\pwworking\pitt\d0309031\S_G-GD-2043.dgn
Wednesday, July 11, 2012 12:07:04 PM

CONTRACT DRAWING
PRINTS NOT BEARING THIS STAMP WERE MADE PRIOR TO ADVERTISING FOR BIDS AND ARE TO BE CONSIDERED OBSOLETE FOR CONTRACT PURPOSES.

Department of Transportation and Engineering
City of Cincinnati
City Hall
801 Plum Street
Cincinnati, Ohio 45202

CINCINNATI STREETCAR OVER THE RHINE

GRADING PLAN - ELDER STREET

Revisions
No.

Drawn by SAB	Date 07/02/12
Designed by SAB	Date 07/02/12
Checked by KVL	Date 07/02/12
Reviewed by JTB	Date 07/12/12

Consultant
PB HDR

File Number

ACC No. 23126

G-GD-2043

CONTRACTOR IS RESPONSIBLE FOR CONTACTING, AND COORDINATING WITH, UTILITY COMPANIES/AGENCIES AS REQUIRED TO HAVE THE UTILITY COMPANIES ADJUST THEIR FACILITIES TO PROPOSED PLAN ELEVATIONS. THERE MAY BE OTHER UTILITY FACILITIES NOT SHOWN ON THESE PLANS THAT NEED TO BE ADJUSTED AS WELL. THIS WORK SHALL BE COORDINATED AND COMPLETED IN A TIME FRAME CONSISTENT WITH PROJECT SCHEDULE. THIS COORDINATION IS DEEMED INCIDENTAL TO THE CONTRACT AND NO ADDITIONAL COMPENSATION WILL BE PROVIDED TO THE CONTRACTOR. THESE ITEMS ARE NOT QUANTIFIED.

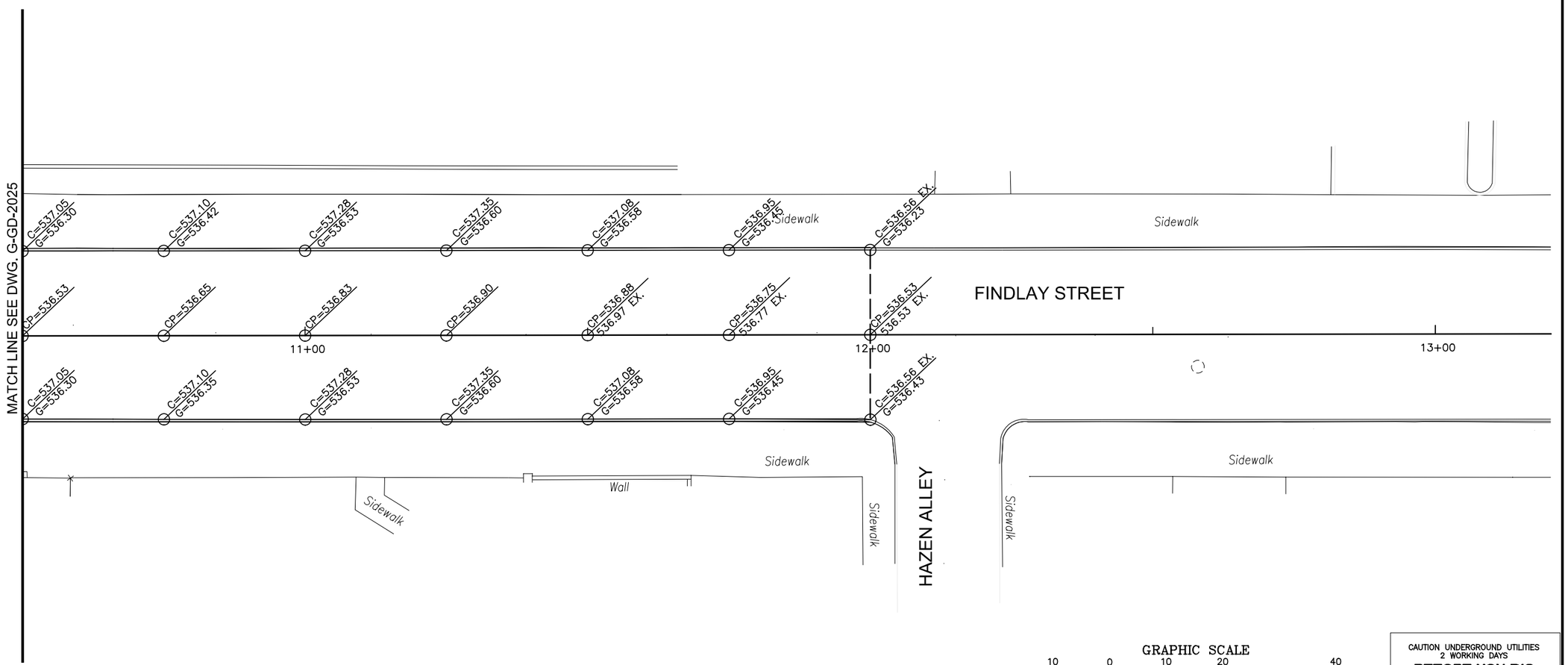

GRAPHIC SCALE

10 0 10 20 40

(IN FEET)
1 inch = 10 ft. Full Size
1 inch = 20 ft. Half Size

CAUTION UNDERGROUND UTILITIES
2 WORKING DAYS
BEFORE YOU DIG
CALL 1-800-362-2764
OHIO UTILITY PROTECTION SERVICE
CALL NON-SERVICE FACILITY
OWNERS DIRECT

CONTRACT DRAWING

PRINTS NOT BEARING THIS STAMP WERE MADE PRIOR TO ADVERTISING FOR BIDS AND ARE TO BE CONSIDERED OBSOLETE FOR CONTRACT PURPOSES.

Department of Transportation and Engineering

City of Cincinnati
City Hall
801 Plum Street
Cincinnati, Ohio 45202

CINCINNATI STREETCAR
OVER THE RHINE
GRADING PLAN - FINDLAY STREET
STA 10+50 TO 13+44

Revisions

No.				

Drawn by SAB	Date 07/02/12
Designed by SAB	Date 07/02/12
Checked by KVL	Date 07/02/12
Reviewed by JTB	Date 07/12/12

Consultant

PB HDR

File Number

ACC No.
23126

G-GD-2044

DOTE_Mono_PDF_Half.pltcfg
c:\pwworking\pitt\d0309031\S_G-GD-2044.dgn
Wednesday, July 11, 2012 12:07:12:80 PM

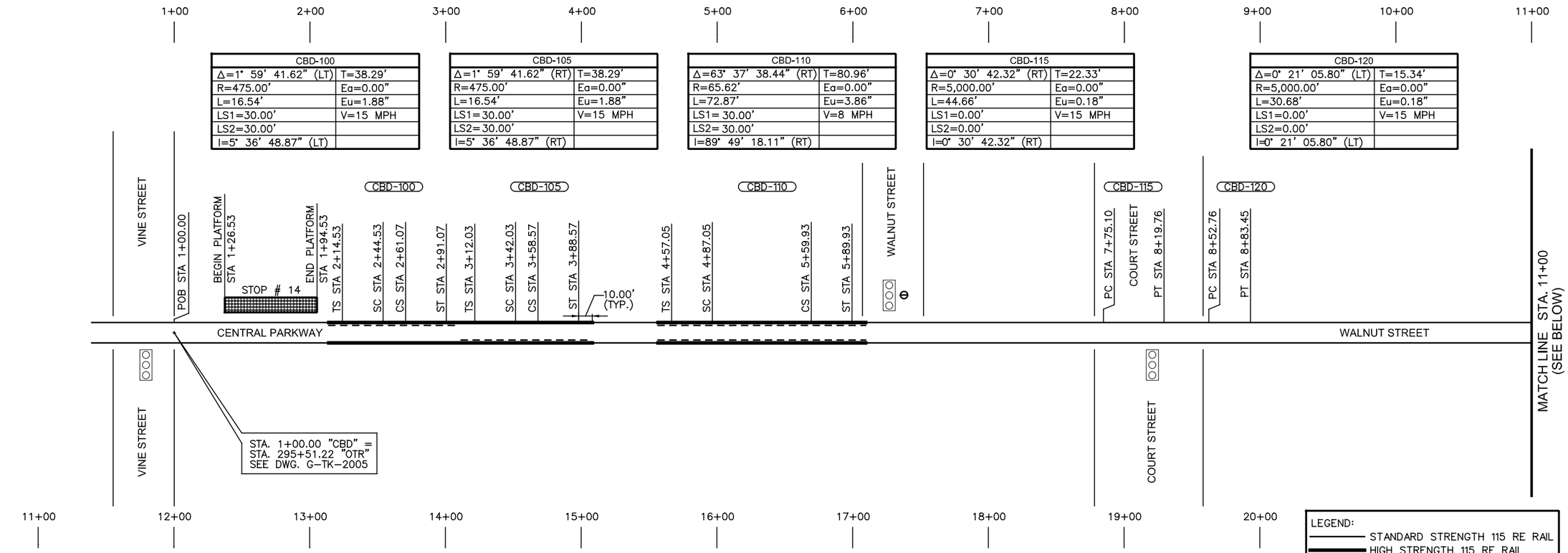

CBD-100	
Δ=1° 59' 41.62" (LT)	T=38.29'
R=475.00'	Ea=0.00"
L=16.54'	Eu=1.88"
LS1=30.00'	V=15 MPH
LS2=30.00'	
I=5° 36' 48.87" (LT)	

CBD-105	
Δ=1° 59' 41.62" (RT)	T=38.29'
R=475.00'	Ea=0.00"
L=16.54'	Eu=1.88"
LS1=30.00'	V=15 MPH
LS2=30.00'	
I=5° 36' 48.87" (RT)	

CBD-110	
Δ=63° 37' 38.44" (RT)	T=80.96'
R=65.62'	Ea=0.00"
L=72.87'	Eu=3.86"
LS1= 30.00'	V=8 MPH
LS2= 30.00'	
I=89° 49' 18.11" (RT)	

CBD-115	
Δ=0° 30' 42.32" (RT)	T=22.33'
R=5,000.00'	Ea=0.00"
L=44.66'	Eu=0.18"
LS1=0.00'	V=15 MPH
LS2=0.00'	
I=0° 30' 42.32" (RT)	

CBD-120	
Δ=0° 21' 05.80" (LT)	T=15.34'
R=5,000.00'	Ea=0.00"
L=30.68'	Eu=0.18"
LS1=0.00'	V=15 MPH
LS2=0.00'	
I=0° 21' 05.80" (LT)	

CBD-125	
Δ=2° 10' 20.36" (RT)	T=15.64'
R=825.00'	Ea=0.00"
L=31.28'	Eu=0.48"
LS1=0.00'	V=10 MPH
LS2=0.00'	
I=2° 10' 20.36" (RT)	

CBD-130	
Δ=2° 13' 51.44" (LT)	T=16.06'
R=825.00'	Ea=0.00"
L=32.12'	Eu=0.48"
LS1=0.00'	V=10 MPH
LS2=0.00'	
I=2° 13' 51.44" (LT)	

CBD-140	
Δ=1° 06' 49.79" (RT)	T=14.58'
R=1,500.00'	Ea=0.00"
L=29.16'	Eu=0.59"
LS1=0.00'	V=15 MPH
LS2=0.00'	
I=1° 06' 49.79" (RT)	

CBD-150	
Δ=1° 06' 49.79" (LT)	T=14.58'
R=1,500.00'	Ea=0.00"
L=29.16'	Eu=0.59"
LS1=0.00'	V=15 MPH
LS2=0.00'	
I=1° 06' 49.79" (LT)	

CBD-155	
Δ=1° 07' 50.52" (LT)	T=14.80'
R=1,500.00'	Ea=0.00"
L=29.60'	Eu=0.59"
LS1=0.00'	V=15 MPH
LS2=0.00'	
I=1° 07' 50.52" (LT)	

CBD-135	
Δ=1° 06' 49.79" (LT)	T=14.58'
R=1,500.00'	Ea=0.00"
L=29.16'	Eu=0.59"
LS1=0.00'	V=15 MPH
LS2=0.00'	
I= 1° 06' 49.79" (LT)	

CBD-145	
Δ=1° 06' 49.79" (RT)	T=14.58'
R=1,500.00'	Ea=0.00"
L=29.16'	Eu=0.59"
LS1=0.00'	V=15 MPH
LS2=0.00'	
I= 1° 06' 49.79" (RT)	

CBD-160	
Δ=1° 06' 27.08" (RT)	T=14.50'
R=1,500.00'	Ea=0.00"
L=28.99'	Eu=0.59"
LS1=0.00'	V=15 MPH
LS2=0.00'	
I=1° 06' 27.08" (RT)	

LEGEND:
- STANDARD STRENGTH 115 RE RAIL
- HIGH STRENGTH 115 RE RAIL
- RESTRAINING RAIL
- 100-8 RAIL
- EXISTING RAIL
- CBD-100 CURVE IDENTIFICATION SYMBOL
- PLATFORM SYMBOL
- EXISTING TRAFFIC SIGNAL
- NEW SIGNAL PHASE
- NEW TRAFFIC SIGNAL

CAUTION UNDERGROUND UTILITIES
2 WORKING DAYS
BEFORE YOU DIG
CALL 1-800-362-2764
OHIO UTILITY PROTECTION SERVICE
CALL NON-SERVICE FACILITY
OWNERS DIRECT

GRAPHIC SCALE
40 0 40 80 160
(IN FEET)
1 inch = 40 ft. Full Size
1 inch = 80 ft. Half Size

CONTRACT DRAWING

PRINTS NOT BEARING THIS STAMP WERE MADE PRIOR TO ADVERTISING FOR BIDS AND ARE TO BE CONSIDERED OBSOLETE FOR CONTRACT PURPOSES.

Department of Transportation and Engineering

City of Cincinnati
City Hall
801 Plum Street
Cincinnati, Ohio 45202

CINCINNATI STREETCAR
CENTRAL BUSINESS DISTRICT

TRACK CHART
STA 1+00 TO STA 20+00

Revisions

No.				

Drawn by JFL	Date 7/02/12	Designed by CJC	Date 7/02/12
Checked by SAJ	Date 7/02/12	Reviewed by JTB	Date 7/12/12

Consultant

PB HDR

File Number

ACC No. 23126

G-TK-1001

DOTE_Mono_PDF_Half.pltcfg
T:\29014A-Streetcar\CAD\Trackwork\S_G-TK-1001.dgn
7/15/2012 1:21:38 PM

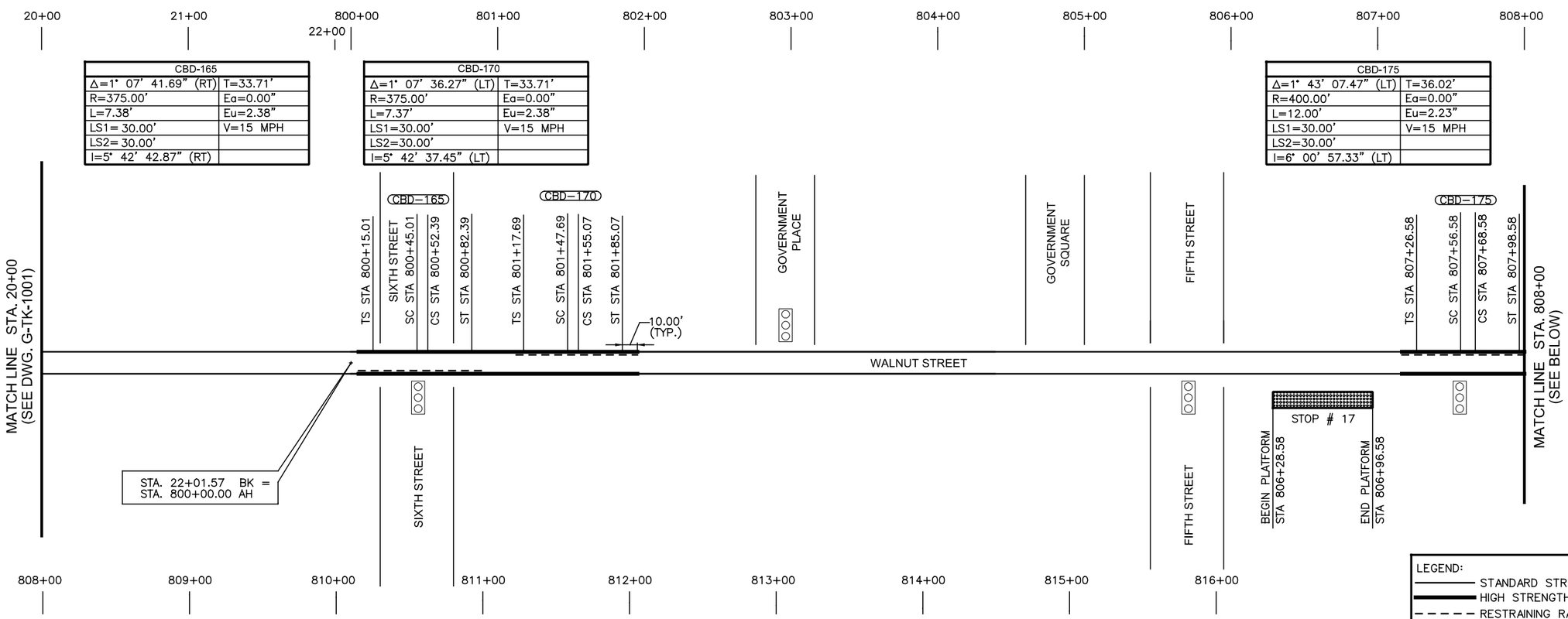

CBD-165	
Δ=1° 07' 41.69" (RT)	T=33.71'
R=375.00'	Ea=0.00"
L=7.38'	Eu=2.38"
LS1= 30.00'	V=15 MPH
LS2= 30.00'	
I=5° 42' 42.87" (RT)	

CBD-170	
Δ=1° 07' 36.27" (LT)	T=33.71'
R=375.00'	Ea=0.00"
L=7.37'	Eu=2.38"
LS1=30.00'	V=15 MPH
LS2=30.00'	
I=5° 42' 37.45" (LT)	

CBD-175	
Δ=1° 43' 07.47" (LT)	T=36.02'
R=400.00'	Ea=0.00"
L=12.00'	Eu=2.23"
LS1=30.00'	V=15 MPH
LS2=30.00'	
I=6° 00' 57.33" (LT)	

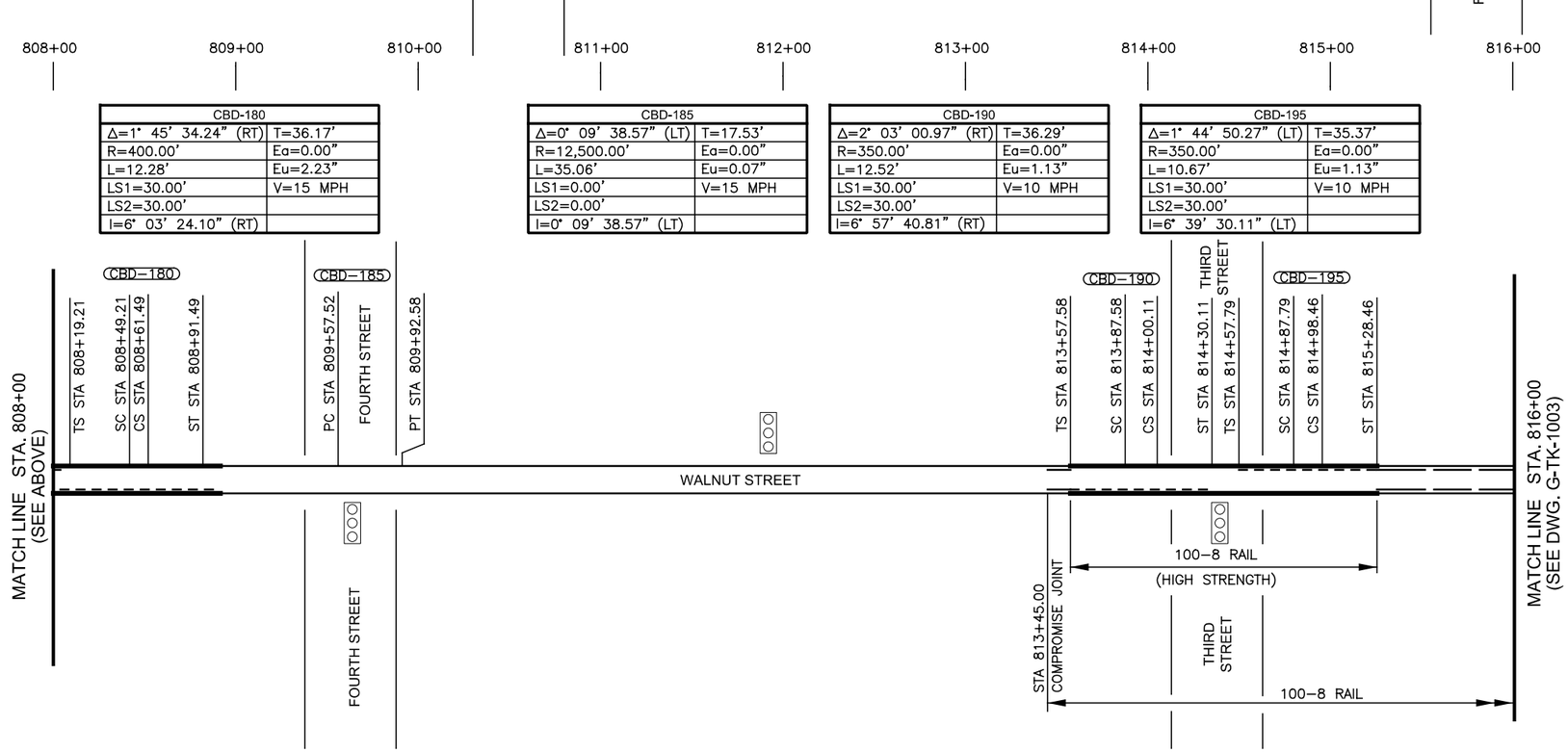

CBD-180	
Δ=1° 45' 34.24" (RT)	T=36.17'
R=400.00'	Ea=0.00"
L=12.28'	Eu=2.23"
LS1=30.00'	V=15 MPH
LS2=30.00'	
I=6° 03' 24.10" (RT)	

CBD-185	
Δ=0° 09' 38.57" (LT)	T=17.53'
R=12,500.00'	Ea=0.00"
L=35.06'	Eu=0.07"
LS1=0.00'	V=15 MPH
LS2=0.00'	
I=0° 09' 38.57" (LT)	

CBD-190	
Δ=2° 03' 00.97" (RT)	T=36.29'
R=350.00'	Ea=0.00"
L=12.52'	Eu=1.13"
LS1=30.00'	V=10 MPH
LS2=30.00'	
I=6° 57' 40.81" (RT)	

CBD-195	
Δ=1° 44' 50.27" (LT)	T=35.37'
R=350.00'	Ea=0.00"
L=10.67'	Eu=1.13"
LS1=30.00'	V=10 MPH
LS2=30.00'	
I=6° 39' 30.11" (LT)	

LEGEND:

- STANDARD STRENGTH 115 RE RAIL
- HIGH STRENGTH 115 RE RAIL
- RESTRAINING RAIL
- 100-8 RAIL
- EXISTING RAIL
- CBD-100 CURVE IDENTIFICATION SYMBOL
- PLATFORM SYMBOL
- EXISTING TRAFFIC SIGNAL
- NEW SIGNAL PHASE
- NEW TRAFFIC SIGNAL

CAUTION UNDERGROUND UTILITIES
2 WORKING DAYS
BEFORE YOU DIG
CALL 1-800-362-2764
OHIO UTILITY PROTECTION SERVICE
CALL NON-SERVICE FACILITY
OWNERS DIRECT

GRAPHIC SCALE
40 0 40 80 160
(IN FEET)
1 inch = 40 ft. Full Size
1 inch = 80 ft. Half Size

DOTE_Mono_PDF_Half.pltcfg
T:\29014A-Streetcar\CAD\Trackwork\S_G-TK-1002.dgn
7/15/2012 1:21:39 PM

CONTRACT DRAWING

PRINTS NOT BEARING THIS STAMP WERE MADE PRIOR TO ADVERTISING FOR BIDS AND ARE TO BE CONSIDERED OBSOLETE FOR CONTRACT PURPOSES.

Department of Transportation and Engineering

City of Cincinnati
City Hall
801 Plum Street
Cincinnati, Ohio 45202

CINCINNATI STREETCAR
CENTRAL BUSINESS DISTRICT

TRACK CHART
STA 20+00 TO STA 816+00

Revisions
No.

Drawn by JFL	Date 7/02/12
Designed by CJC	Date 7/02/12
Checked by SAJ	Date 7/02/12
Reviewed by JTB	Date 7/12/12

Consultant

PB HDR

File Number

ACC No. 23126

G-TK-1002

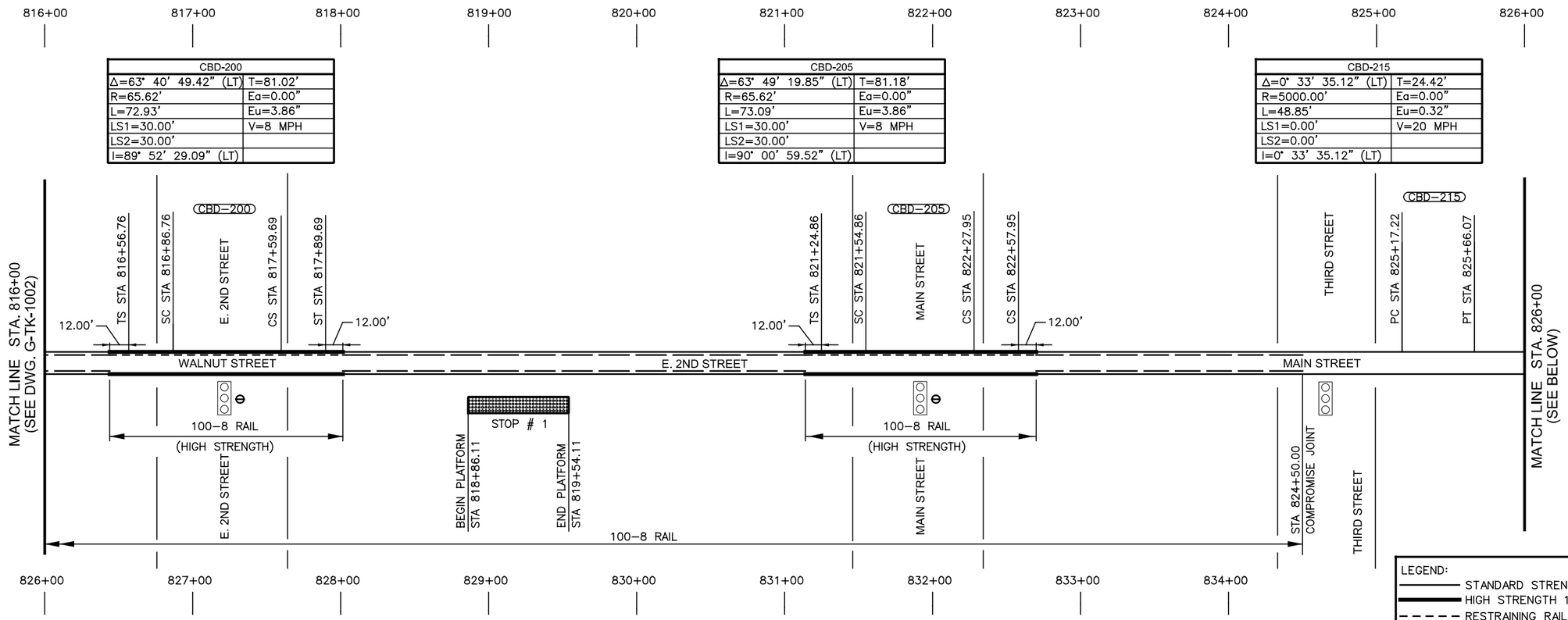

CBD-200	
Δ=63° 40' 49.42" (LT)	T=81.02'
R=65.62'	Ea=0.00"
L=72.93'	Eu=3.86"
LS1=30.00'	V=8 MPH
LS2=30.00'	
I=89° 52' 29.09" (LT)	

CBD-205	
Δ=63° 49' 19.85" (LT)	T=81.18'
R=65.62'	Ea=0.00"
L=73.09'	Eu=3.86"
LS1=30.00'	V=8 MPH
LS2=30.00'	
I=90° 00' 59.52" (LT)	

CBD-215	
Δ=0° 33' 35.12" (LT)	T=24.42'
R=5000.00'	Ea=0.00"
L=48.85'	Eu=0.32"
LS1=0.00'	V=20 MPH
LS2=0.00'	
I=0° 33' 35.12" (LT)	

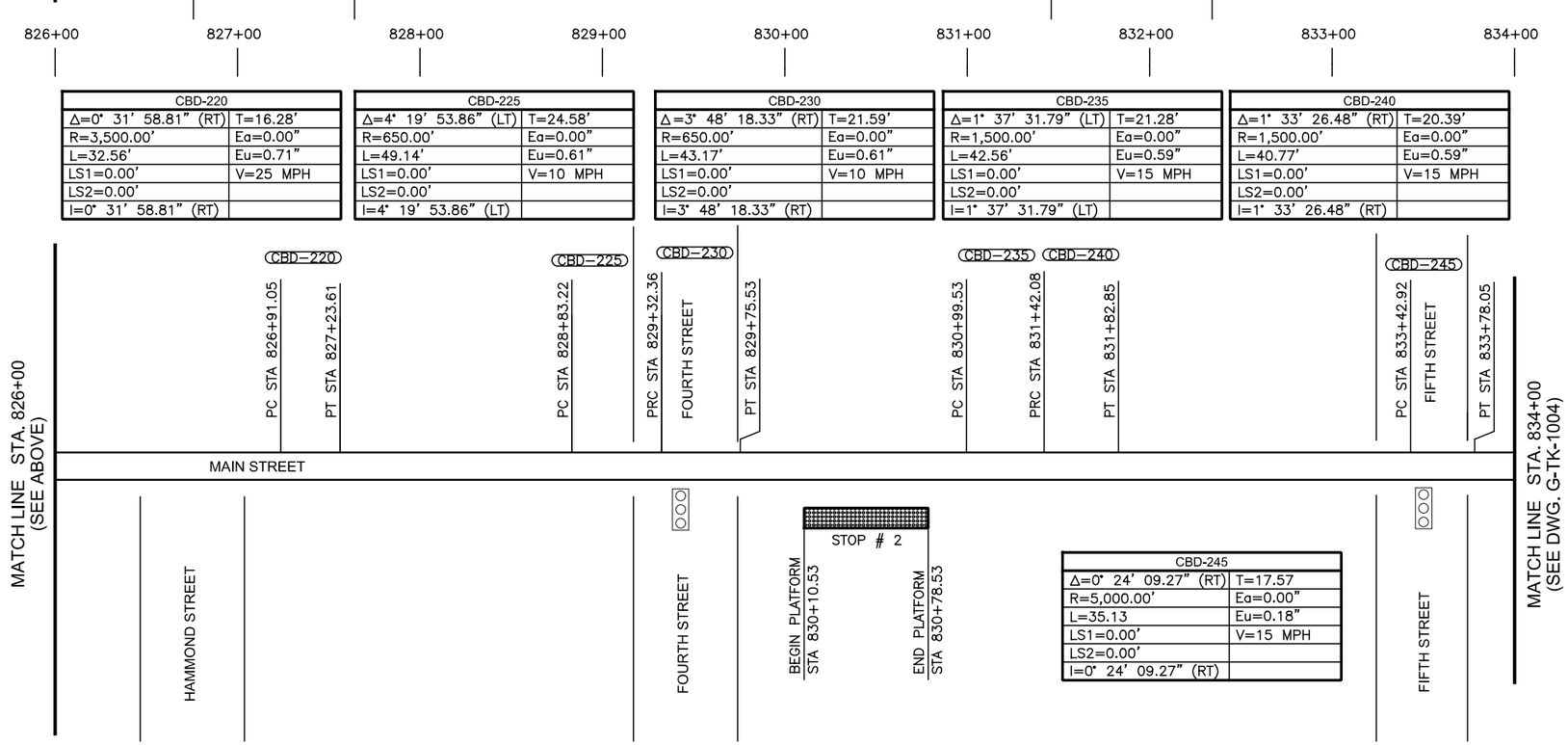

CBD-220	
Δ=0° 31' 58.81" (RT)	T=16.28'
R=3,500.00'	Ea=0.00"
L=32.56'	Eu=0.71"
LS1=0.00'	V=25 MPH
LS2=0.00'	
I=0° 31' 58.81" (RT)	

CBD-225	
Δ=4° 19' 53.86" (LT)	T=24.58'
R=650.00'	Ea=0.00"
L=49.14'	Eu=0.61"
LS1=0.00'	V=10 MPH
LS2=0.00'	
I=4° 19' 53.86" (LT)	

CBD-230	
Δ=3° 48' 18.33" (RT)	T=21.59'
R=650.00'	Ea=0.00"
L=43.17'	Eu=0.61"
LS1=0.00'	V=10 MPH
LS2=0.00'	
I=3° 48' 18.33" (RT)	

CBD-235	
Δ=1° 37' 31.79" (LT)	T=21.28'
R=1,500.00'	Ea=0.00"
L=42.56'	Eu=0.59"
LS1=0.00'	V=15 MPH
LS2=0.00'	
I=1° 37' 31.79" (LT)	

CBD-240	
Δ=1° 33' 26.48" (RT)	T=20.39'
R=1,500.00'	Ea=0.00"
L=40.77'	Eu=0.59"
LS1=0.00'	V=15 MPH
LS2=0.00'	
I=1° 33' 26.48" (RT)	

CBD-245	
Δ=0° 24' 09.27" (RT)	T=17.57
R=5,000.00'	Ea=0.00"
L=35.13	Eu=0.18"
LS1=0.00'	V=15 MPH
LS2=0.00'	
I=0° 24' 09.27" (RT)	

LEGEND:

- STANDARD STRENGTH 115 RE RAIL
- HIGH STRENGTH 115 RE RAIL
- RESTRAINING RAIL
- 100-8 RAIL
- EXISTING RAIL
- (CBD-100) CURVE IDENTIFICATION SYMBOL
- PLATFORM SYMBOL
- EXISTING TRAFFIC SIGNAL
- NEW SIGNAL PHASE
- NEW TRAFFIC SIGNAL

CAUTION UNDERGROUND UTILITIES
2 WORKING DAYS
BEFORE YOU DIG
CALL 1-800-362-2764
OHIO UTILITY PROTECTION SERVICE
CALL NON-SERVICE FACILITY
OWNERS DIRECT

GRAPHIC SCALE
40 0 40 80 160
(IN FEET)
1 inch = 40 ft. Full Size
1 inch = 80 ft. Half Size

DOTE_Mono_PDF_Half.pltcfg
T:\29014A-Streetcar\CAD\Trackwork\S_G-TK-1003.dgn
7/15/2012 1:21:39 PM

CONTRACT DRAWING

PRINTS NOT BEARING THIS STAMP WERE MADE PRIOR TO ADVERTISING FOR BIDS AND ARE TO BE CONSIDERED OBSOLETE FOR CONTRACT PURPOSES.

Department of Transportation and Engineering

City of Cincinnati
City Hall
801 Plum Street
Cincinnati, Ohio 45202

CINCINNATI STREETCAR
CENTRAL BUSINESS DISTRICT

TRACK CHART
STA 816+00 TO STA 834+00

Revisions
No.

Date 7/02/12	Drawn by JFL
Date 7/02/12	Designed by CJC
Date 7/02/12	Checked by SAJ
Date 7/12/12	Reviewed by JTB

Consultant

PB HDR

File Number

ACC No. 23126

G-TK-1003

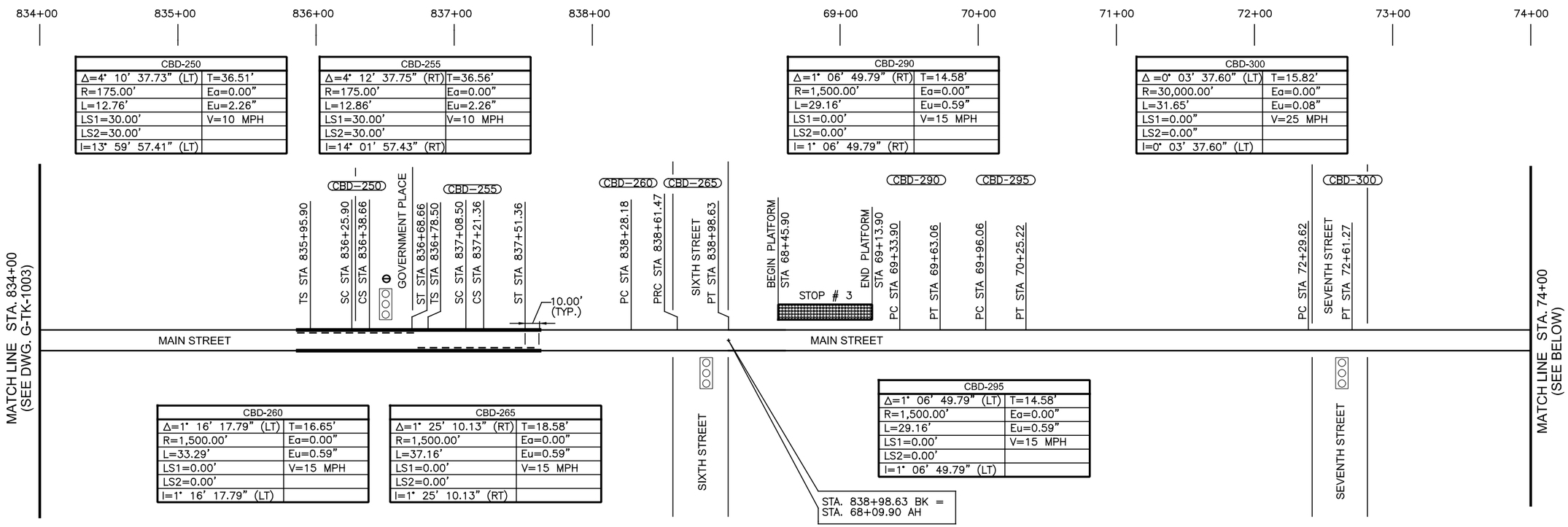

CBD-250	
Δ=4° 10' 37.73" (LT)	T=36.51'
R=175.00'	Ea=0.00"
L=12.76'	Eu=2.26"
LS1=30.00'	V=10 MPH
LS2=30.00'	
I=13° 59' 57.41" (LT)	

CBD-255	
Δ=4° 12' 37.75" (RT)	T=36.56'
R=175.00'	Ea=0.00"
L=12.86'	Eu=2.26"
LS1=30.00'	V=10 MPH
LS2=30.00'	
I=14° 01' 57.43" (RT)	

CBD-290	
Δ=1° 06' 49.79" (RT)	T=14.58'
R=1,500.00'	Ea=0.00"
L=29.16'	Eu=0.59"
LS1=0.00'	V=15 MPH
LS2=0.00'	
I=1° 06' 49.79" (RT)	

CBD-300	
Δ =0° 03' 37.60" (LT)	T=15.82'
R=30,000.00'	Ea=0.00"
L=31.65'	Eu=0.08"
LS1=0.00"	V=25 MPH
LS2=0.00"	
I=0° 03' 37.60" (LT)	

CBD-260	
Δ=1° 16' 17.79" (LT)	T=16.65'
R=1,500.00'	Ea=0.00"
L=33.29'	Eu=0.59"
LS1=0.00'	V=15 MPH
LS2=0.00'	
I=1° 16' 17.79" (LT)	

CBD-265	
Δ=1° 25' 10.13" (RT)	T=18.58'
R=1,500.00'	Ea=0.00"
L=37.16'	Eu=0.59"
LS1=0.00'	V=15 MPH
LS2=0.00'	
I=1° 25' 10.13" (RT)	

CBD-295	
Δ=1° 06' 49.79" (LT)	T=14.58'
R=1,500.00'	Ea=0.00"
L=29.16'	Eu=0.59"
LS1=0.00'	V=15 MPH
LS2=0.00'	
I=1° 06' 49.79" (LT)	

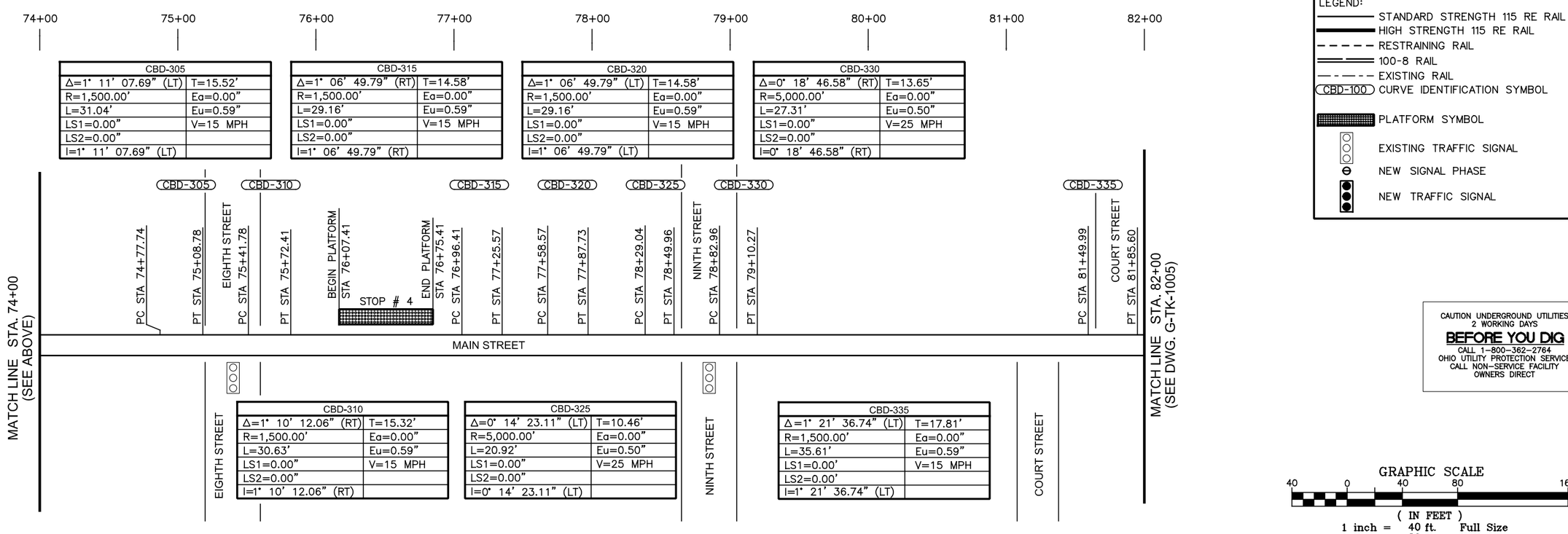

CBD-305	
Δ=1° 11' 07.69" (LT)	T=15.52'
R=1,500.00'	Ea=0.00"
L=31.04'	Eu=0.59"
LS1=0.00"	V=15 MPH
LS2=0.00"	
I=1° 11' 07.69" (LT)	

CBD-315	
Δ=1° 06' 49.79" (RT)	T=14.58'
R=1,500.00'	Ea=0.00"
L=29.16'	Eu=0.59"
LS1=0.00"	V=15 MPH
LS2=0.00"	
I=1° 06' 49.79" (RT)	

CBD-320	
Δ=1° 06' 49.79" (LT)	T=14.58'
R=1,500.00'	Ea=0.00"
L=29.16'	Eu=0.59"
LS1=0.00"	V=15 MPH
LS2=0.00"	
I=1° 06' 49.79" (LT)	

CBD-330	
Δ=0° 18' 46.58" (RT)	T=13.65'
R=5,000.00'	Ea=0.00"
L=27.31'	Eu=0.50"
LS1=0.00"	V=25 MPH
LS2=0.00"	
I=0° 18' 46.58" (RT)	

CBD-310	
Δ=1° 10' 12.06" (RT)	T=15.32'
R=1,500.00'	Ea=0.00"
L=30.63'	Eu=0.59"
LS1=0.00"	V=15 MPH
LS2=0.00"	
I=1° 10' 12.06" (RT)	

CBD-325	
Δ=0° 14' 23.11" (LT)	T=10.46'
R=5,000.00'	Ea=0.00"
L=20.92'	Eu=0.50"
LS1=0.00"	V=25 MPH
LS2=0.00"	
I=0° 14' 23.11" (LT)	

CBD-335	
Δ=1° 21' 36.74" (LT)	T=17.81'
R=1,500.00'	Ea=0.00"
L=35.61'	Eu=0.59"
LS1=0.00'	V=15 MPH
LS2=0.00'	
I=1° 21' 36.74" (LT)	

LEGEND:

- STANDARD STRENGTH 115 RE RAIL
- HIGH STRENGTH 115 RE RAIL
- RESTRAINING RAIL
- 100-8 RAIL
- EXISTING RAIL
- (CBD-100) CURVE IDENTIFICATION SYMBOL
- PLATFORM SYMBOL
- EXISTING TRAFFIC SIGNAL
- NEW SIGNAL PHASE
- NEW TRAFFIC SIGNAL

CAUTION UNDERGROUND UTILITIES
2 WORKING DAYS
BEFORE YOU DIG
CALL 1-800-362-2764
OHIO UTILITY PROTECTION SERVICE
CALL NON-SERVICE FACILITY
OWNERS DIRECT

GRAPHIC SCALE
40 0 40 80 160
(IN FEET)
1 inch = 40 ft. Full Size
1 inch = 80 ft. Half Size

DOTE_Mono_PDF_Half.pltcfg
T:\29014A-Streetcar\CAD\Trackwork\S_G-TK-1004.dgn
7/15/2012 1:21:40 PM

CITY OF CINCINNATI DEPARTMENT OF TRANSPORTATION & ENGINEERING OHIO

CONTRACT DRAWING

PRINTS NOT BEARING THIS STAMP WERE MADE PRIOR TO ADVERTISING FOR BIDS AND ARE TO BE CONSIDERED OBSOLETE FOR CONTRACT PURPOSES.

Department of Transportation and Engineering

City of Cincinnati
City Hall
801 Plum Street
Cincinnati, Ohio 45202

CINCINNATI STREETCAR
CENTRAL BUSINESS DISTRICT

TRACK CHART
STA 834+00 TO STA 82+00

Revisions

No.				

Date 7/02/12	Drawn by JFL
Date 7/02/12	Designed by CJC
Date 7/02/12	Checked by SAJ
Date 7/12/12	Reviewed by JTB

Consultant

PB HDR

File Number

ACC No. 23126

G-TK-1004

82+00 | 83+00 | 84+00 | 85+00 | 86+00 | 87+00 | 88+00 | 89+00 | 90+00 | 91+00 | 92+00 | 93+00

CBD-345	
Δ=2° 17' 59.75" (RT)	T=15.06'
R=750.00'	Ea=0.00"
L=30.11'	Eu=0.53"
LS1=0.00'	V=10 MPH
LS2=0.00'	
I=2° 17' 59.75" (RT)	

CBD-350	
Δ=2° 17' 59.75" (LT)	T=15.06'
R=750.00'	Ea=0.00"
L=30.11'	Eu=0.53"
LS1=0.00'	V=10 MPH
LS2=0.00'	
I=2° 17' 59.75" (LT)	

CBD-355	
Δ=2° 08' 01.65" (RT)	T=20.49'
R=1,100.00'	Ea=0.00"
L=40.97'	Eu=0.81"
LS1=0.00'	V=15 MPH
LS2=0.00'	
I=2° 08' 01.65" (RT)	

CBD-365	
Δ=1° 06' 49.79" (LT)	T=14.58'
R=1,500.00'	Ea=0.00"
L=29.16'	Eu=0.59"
LS1=0.00'	V=15 MPH
LS2=0.00'	
I=1° 06' 49.79" (LT)	

CBD-370	
Δ=1° 06' 49.79" (RT)	T=14.58'
R=1,500.00'	Ea=0.00"
L=29.16'	Eu=0.59"
LS1=0.00'	V=15 MPH
LS2=0.00'	
I=1° 06' 49.79" (RT)	

MATCH LINE STA. 82+00
(SEE DWG. G-TK-1004)

CBD-340 | CBD-345 | CBD-350 | CBD-355 | CBD-360 | CBD-365 | CBD-370 | CBD-375

COURT STREET
PC STA 82+18.60
PT STA 82+47.88
BEGIN PLATFORM STA 82+75.88
STOP # 5
END PLATFORM STA 83+43.88
PC STA 83+71.88
PRC STA 84+01.99
PT STA 84+32.09
PC STA 84+76.33
PT STA 85+17.29
CENTRAL PARKWAY
PC STA 85+50.29
PT STA 85+89.73
PC STA 86+50.89
PT STA 86+80.05
PC STA 87+13.05
PT STA 87+42.21
BEGIN PLATFORM STA 87+75.21
STOP # 5A
END PLATFORM STA 88+43.21
TS STA 88+81.21
SC STA 89+11.21
TWELFTH STREET
CS STA 89+84.02
ST STA 90+14.02
10.00' (TYP.)
CLAY STREET

MAIN STREET
TWELFTH STREET

CBD-340	
Δ=1° 07' 06.61" (RT)	T=14.64'
R=1,500.00'	Ea=0.00"
L=29.28'	Eu=0.59"
LS1=0.00'	V=15 MPH
LS2=0.00'	
I=1° 07' 06.61" (RT)	

CBD-360	
Δ =2° 03'15.68" (LT)	T=19.72'
R=1,100.00'	Ea=0.00"
L=39.44'	Eu=0.81"
LS1=0.00'	V=15 MPH
LS2=0.00'	
I=2° 03' 15.68" (LT)	

CBD-375	
Δ =63° 34'18.73" (LT)	T=80.89'
R=65.62'	Ea=0.00"
L=72.81'	Eu=3.86"
LS1=30.00'	V=8 MPH
LS2=30.00'	
I=89° 45' 58.39" (LT)	

CENTRAL PARKWAY
CLAY STREET
BRACKETT ALLEY

MATCH LINE STA. 93+00
(SEE BELOW)

93+00 | 94+00 | 95+00 | 96+00 | 97+00 | 98+00

CBD-380	
Δ=1° 05' 37.89" (RT)	T=14.32'
R=1,500.00'	Ea=0.00"
L=28.64'	Eu=0.59"
LS1=0.00'	V=15 MPH
LS2=0.00'	
I=1° 05' 37.89" (RT)	

CBD-385	
Δ=1° 12' 13.62" (LT)	T=15.76'
R=1,500.00'	Ea=0.00"
L=31.52'	Eu=0.59"
LS1=0.00'	V=15 MPH
LS2=0.00'	
I=1° 12' 13.62" (LT)	

MATCH LINE STA. 93+00
(SEE ABOVE)

WALNUT STREET
JACKSON STREET
CBD-380 | CBD-385
PC STA 96+22.99
PT STA 96+51.63
PC STA 96+84.63
PT STA 97+16.14
VINE STREET

STA. 98+37.46 "CBD" =
STA. 200+00.00 "OTR"
SEE DWG. G-TK-2001

TWELFTH STREET

WALNUT STREET
RODNEY ALLEY
JACKSON STREET
STOP # 6
BEGIN PLATFORM STA 97+55.14
END PLATFORM STA 98+20.14
VINE STREET
POE STA 98+37.46

LEGEND:
- STANDARD STRENGTH 115 RE RAIL
- HIGH STRENGTH 115 RE RAIL
- RESTRAINING RAIL
- 100-8 RAIL
- EXISTING RAIL
- (CBD-100) CURVE IDENTIFICATION SYMBOL
- PLATFORM SYMBOL
- EXISTING TRAFFIC SIGNAL
- NEW SIGNAL PHASE
- NEW TRAFFIC SIGNAL

CAUTION UNDERGROUND UTILITIES
2 WORKING DAYS
BEFORE YOU DIG
CALL 1-800-362-2764
OHIO UTILITY PROTECTION SERVICE
CALL NON-SERVICE FACILITY
OWNERS DIRECT

GRAPHIC SCALE
40 0 40 80 160
(IN FEET)
1 inch = 40 ft. Full Size
1 inch = 80 ft. Half Size

DOTE_Mono_PDF_Half.pltcfg
T:\29014A-Streetcar\CAD\Trackwork\S_G-TK-1005.dgn
7/15/2012 1:21:41 PM

CONTRACT DRAWING

PRINTS NOT BEARING THIS STAMP WERE MADE PRIOR TO ADVERTISING FOR BIDS AND ARE TO BE CONSIDERED OBSOLETE FOR CONTRACT PURPOSES.

Department of Transportation and Engineering
City of Cincinnati
City Hall
801 Plum Street
Cincinnati, Ohio 45202

CINCINNATI STREETCAR
CENTRAL BUSINESS DISTRICT
TRACK CHART
STA 82+00 TO STA 98+37.46

Revisions
No.

Drawn by JFL	Date 7/02/12	
Designed by CJC	Date 7/02/12	
Checked by SAJ	Date 7/02/12	
Reviewed by JTB	Date 7/12/12	

Consultant
PB HDR

File Number
ACC No. 23126

G-TK-1005

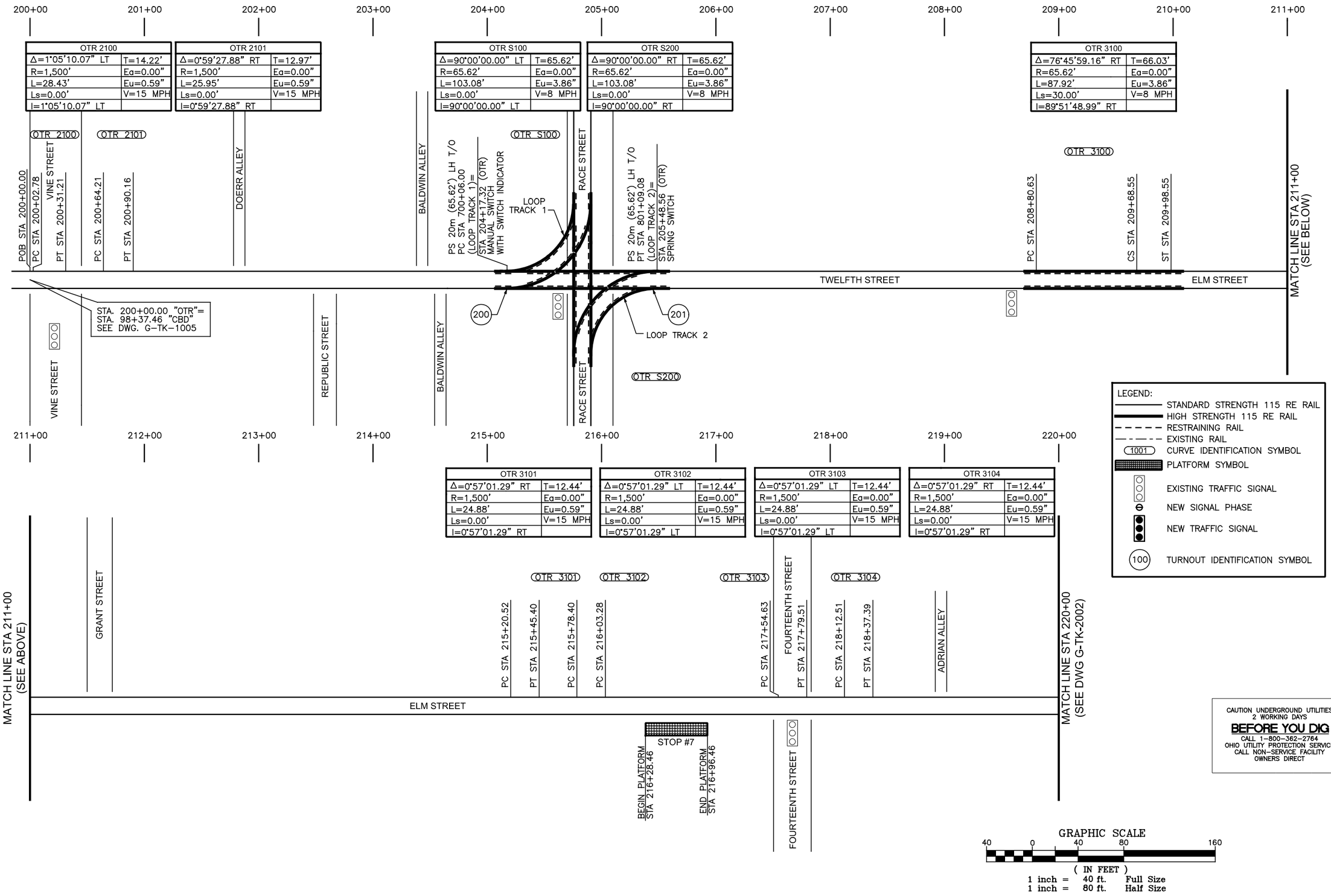

DOTE_Mono_PDF_Half.pltcfg
c:\pwworking\pitt\d0309043\G-TK-2001.dgn
Friday, July 13, 2012 10:33:41 AM

CONTRACT DRAWING

PRINTS NOT BEARING THIS STAMP WERE MADE PRIOR TO ADVERTISING FOR BIDS AND ARE TO BE CONSIDERED OBSOLETE FOR CONTRACT PURPOSES.

Department of Transportation and Engineering

City of Cincinnati
City Hall
801 Plum Street
Cincinnati, Ohio 45202

CINCINNATI STREETCAR
OVER THE RHINE

TRACK CHART
STA 200+00 TO STA 220+00

Revisions

No.				

Drawn by RAB	Date 07/02/12	Designed by RAB	Date 07/02/12
Checked by KVL	Date 07/02/12	Reviewed by JTB	Date 07/12/12

Consultant

PB HDR

File Number

ACC No.
23126

G-TK-2001

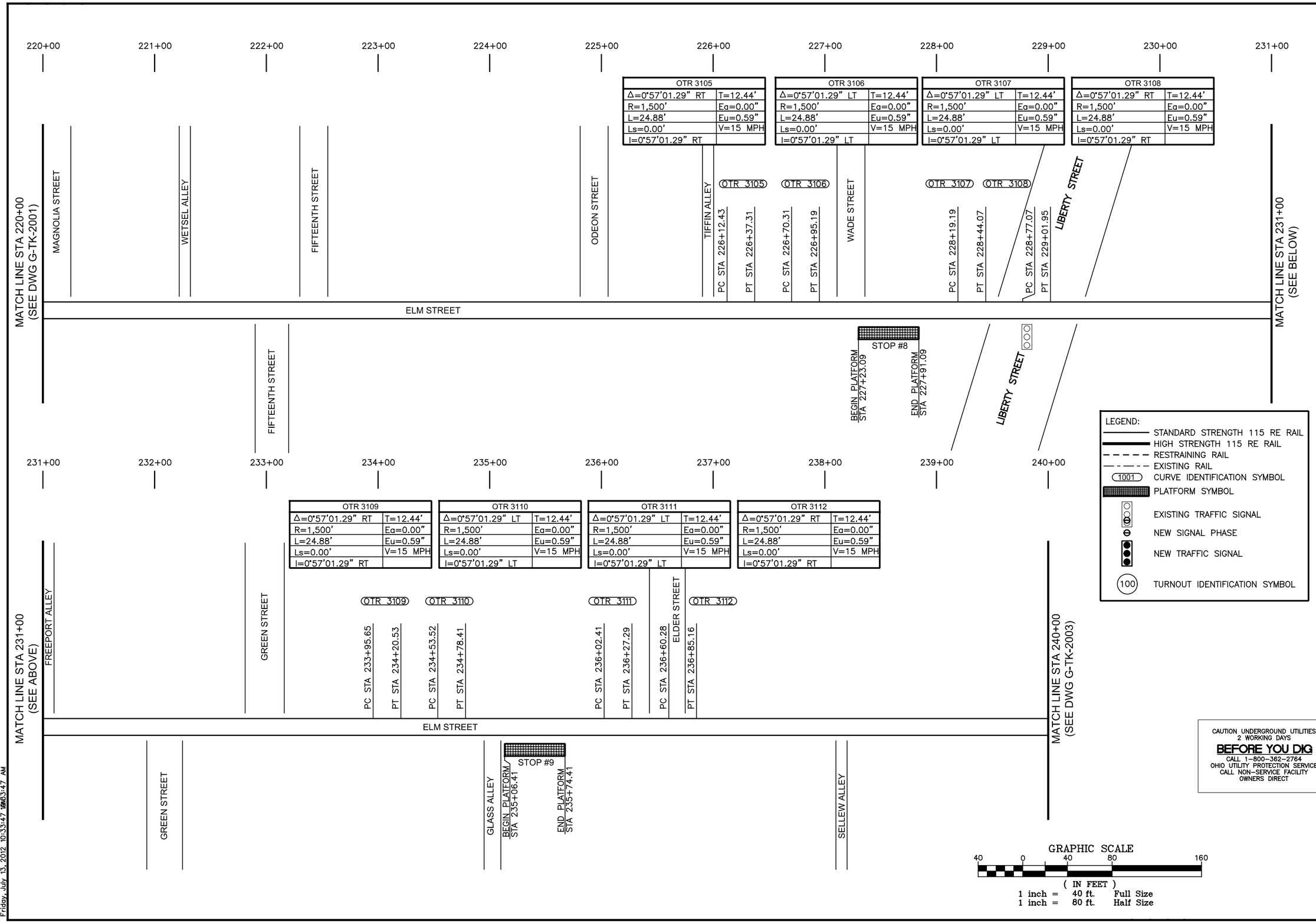

CAUTION UNDERGROUND UTILITIES
2 WORKING DAYS
BEFORE YOU DIG
CALL 1-800-362-2764
OHIO UTILITY PROTECTION SERVICE
CALL NON-SERVICE FACILITY
OWNERS DIRECT

DOTE_Mono_PDF_Half.pltcfg
c:\pwworking\pitt\d0309043\G-TK-2002.dgn
Friday, July 13, 2012 10:33:47 AM

CITY OF CINCINNATI DEPARTMENT OF TRANSPORTATION & ENGINEERING

CONTRACT DRAWING

PRINTS NOT BEARING THIS STAMP WERE MADE PRIOR TO ADVERTISING FOR BID AND ARE TO BE CONSIDERED OBSOLETE FOR CONTRACT PURPOSES.

Department of Transportation and Engineering

City of Cincinnati
City Hall
801 Plum Street
Cincinnati, Ohio 45202

CINCINNATI STREETCAR OVER THE RHINE

TRACK CHART
STA 220+00 TO STA 240+00

Revisions
No.

Drawn by RAB	Date 07/02/12
Designed by RAB	Date 07/02/12
Checked by KVL	Date 07/02/12
Reviewed by JTB	Date 07/12/12

Consultant

PB HDR

File Number

ACC No.
23126

G-TK-2002

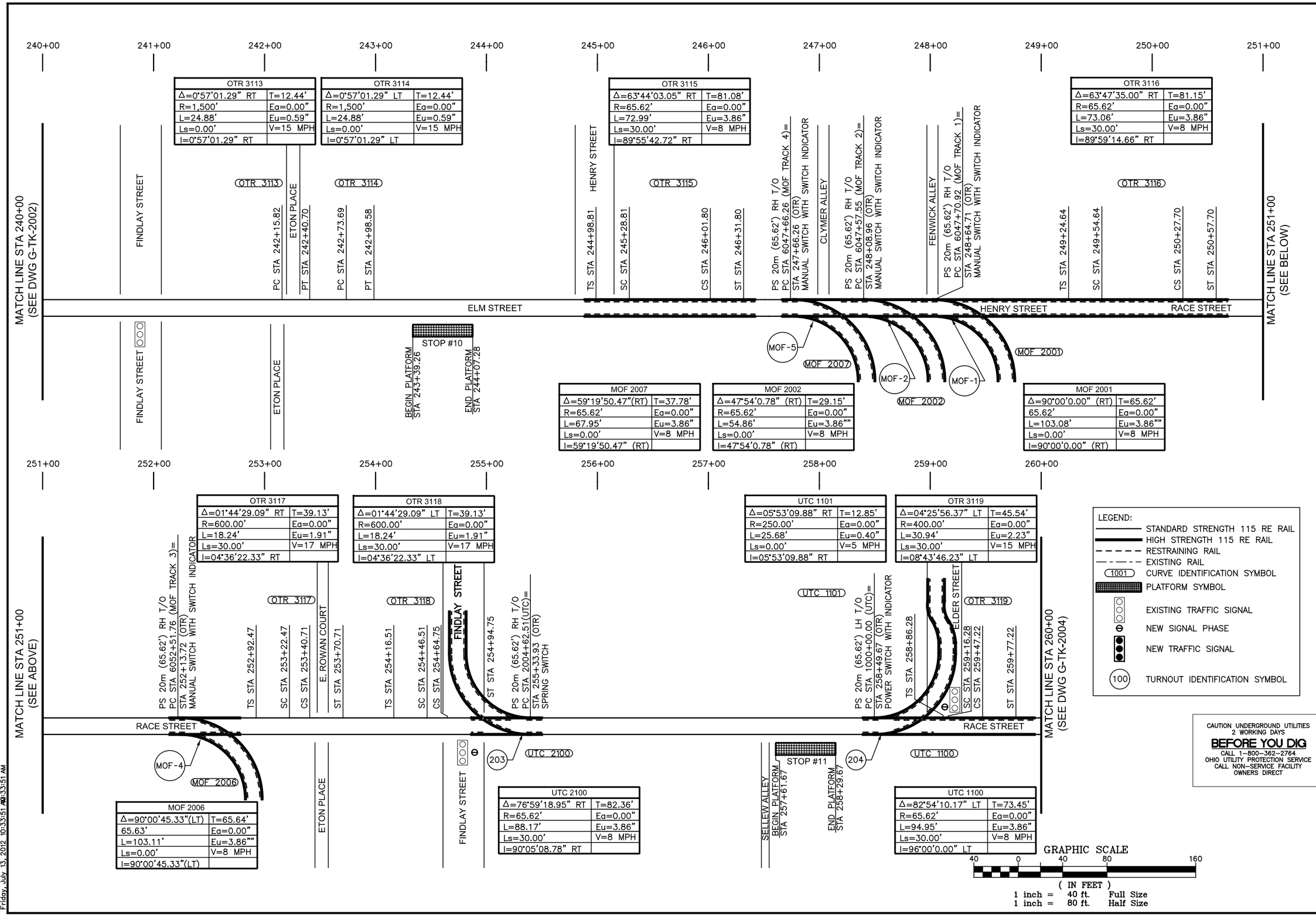

OTR 3113	
Δ=0°57'01.29" RT	T=12.44'
R=1,500'	Ea=0.00"
L=24.88'	Eu=0.59"
Ls=0.00'	V=15 MPH
I=0°57'01.29" RT	

OTR 3114	
Δ=0°57'01.29" LT	T=12.44'
R=1,500'	Ea=0.00"
L=24.88'	Eu=0.59"
Ls=0.00'	V=15 MPH
I=0°57'01.29" LT	

OTR 3115	
Δ=63°44'03.05" RT	T=81.08'
R=65.62'	Ea=0.00"
L=72.99'	Eu=3.86"
Ls=30.00'	V=8 MPH
I=89°55'42.72" RT	

OTR 3116	
Δ=63°47'35.00" RT	T=81.15'
R=65.62'	Ea=0.00"
L=73.06'	Eu=3.86"
Ls=30.00'	V=8 MPH
I=89°59'14.66" RT	

MOF 2007	
Δ=59°19'50.47"(RT)	T=37.78'
R=65.62'	Ea=0.00"
L=67.95'	Eu=3.86"
Ls=0.00'	V=8 MPH
I=59°19'50.47" (RT)	

MOF 2002	
Δ=47°54'0.78" (RT)	T=29.15'
R=65.62'	Ea=0.00"
L=54.86'	Eu=3.86""
Ls=0.00'	V=8 MPH
I=47°54'0.78" (RT)	

MOF 2001	
Δ=90°00'0.00" (RT)	T=65.62'
65.62'	Ea=0.00"
L=103.08'	Eu=3.86""
Ls=0.00'	V=8 MPH
I=90°00'0.00" (RT)	

OTR 3117	
Δ=01°44'29.09" RT	T=39.13'
R=600.00'	Ea=0.00"
L=18.24'	Eu=1.91"
Ls=30.00'	V=17 MPH
I=04°36'22.33" RT	

OTR 3118	
Δ=01°44'29.09" LT	T=39.13'
R=600.00'	Ea=0.00"
L=18.24'	Eu=1.91"
Ls=30.00'	V=17 MPH
I=04°36'22.33" LT	

UTC 1101	
Δ=05°53'09.88" RT	T=12.85'
R=250.00'	Ea=0.00"
L=25.68'	Eu=0.40"
Ls=0.00'	V=5 MPH
I=05°53'09.88" RT	

OTR 3119	
Δ=04°25'56.37" LT	T=45.54'
R=400.00'	Ea=0.00"
L=30.94'	Eu=2.23"
Ls=30.00'	V=15 MPH
I=08°43'46.23" LT	

MOF 2006	
Δ=90°00'45.33"(LT)	T=65.64'
65.63'	Ea=0.00"
L=103.11'	Eu=3.86""
Ls=0.00'	V=8 MPH
I=90°00'45.33"(LT)	

UTC 2100	
Δ=76°59'18.95" RT	T=82.36'
R=65.62'	Ea=0.00"
L=88.17'	Eu=3.86"
Ls=30.00'	V=8 MPH
I=90°05'08.78" RT	

UTC 1100	
Δ=82°54'10.17" LT	T=73.45'
R=65.62'	Ea=0.00"
L=94.95'	Eu=3.86"
Ls=30.00'	V=8 MPH
I=96°00'0.00" LT	

LEGEND:

- STANDARD STRENGTH 115 RE RAIL
- HIGH STRENGTH 115 RE RAIL
- RESTRAINING RAIL
- EXISTING RAIL
- (1001) CURVE IDENTIFICATION SYMBOL
- PLATFORM SYMBOL
- EXISTING TRAFFIC SIGNAL
- NEW SIGNAL PHASE
- NEW TRAFFIC SIGNAL
- (100) TURNOUT IDENTIFICATION SYMBOL

CAUTION UNDERGROUND UTILITIES
2 WORKING DAYS
BEFORE YOU DIG
CALL 1-800-362-2764
OHIO UTILITY PROTECTION SERVICE
CALL NON-SERVICE FACILITY
OWNERS DIRECT

DOTE_Mono_PDF_Half.pltcfg
c:\pwworking\pitt\d0309043\G-TK-2003.dgn
Friday, July 13, 2012 10:33:51 AM

CITY OF CINCINNATI DEPARTMENT OF TRANSPORTATION & ENGINEERING

CONTRACT DRAWING

PRINTS NOT BEARING THIS STAMP WERE MADE PRIOR TO ADVERTISING FOR BIDS AND ARE TO BE CONSIDERED OBSOLETE FOR CONTRACT PURPOSES.

Department of Transportation and Engineering

City of Cincinnati
City Hall
801 Plum Street
Cincinnati, Ohio 45202

CINCINNATI STREETCAR OVER THE RHINE

TRACK CHART
STA 240+00 TO STA 260+00

Revisions

No.	Date	Date	Date	Date
	07/02/12	07/02/12	07/02/12	07/12/12

Drawn by	Designed by	Checked by	Reviewed by
RAB	RAB	KVL	JTB

Consultant

PB HDR

File Number

ACC No.
23126

G-TK-2003

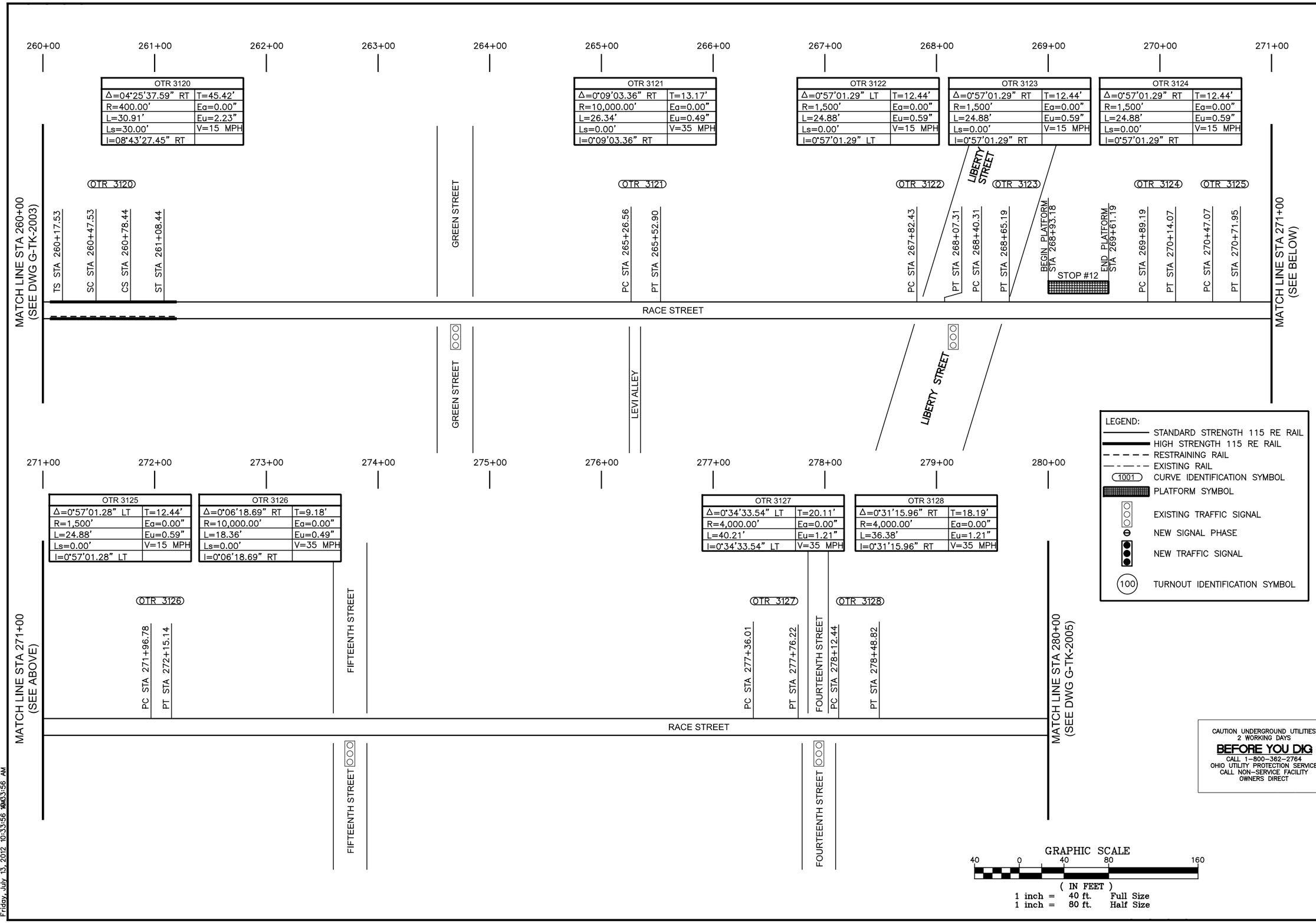

DOTE_Mono_PDF_Half.pltcfg
c:\pwworking\pitt\d0309043\G-TK-2004.dgn
Friday, July 13, 2012 10:33:56 AM

CONTRACT DRAWING

PRINTS NOT BEARING THIS STAMP WERE MADE PRIOR TO ADVERTISING FOR BIDS AND ARE TO BE CONSIDERED OBSOLETE FOR CONTRACT PURPOSES.

Department of Transportation and Engineering

City of Cincinnati
City Hall
801 Plum Street
Cincinnati, Ohio 45202

CINCINNATI STREETCAR OVER THE RHINE

TRACK CHART
STA 260+00 TO STA 280+00

Revisions

No.				

Drawn by RAB	Date 07/02/12
Designed by RAB	Date 07/02/12
Checked by KVL	Date 07/02/12
Reviewed by JTB	Date 07/12/12

Consultant

PB HDR

File Number

ACC No.
23126

G-TK-2004

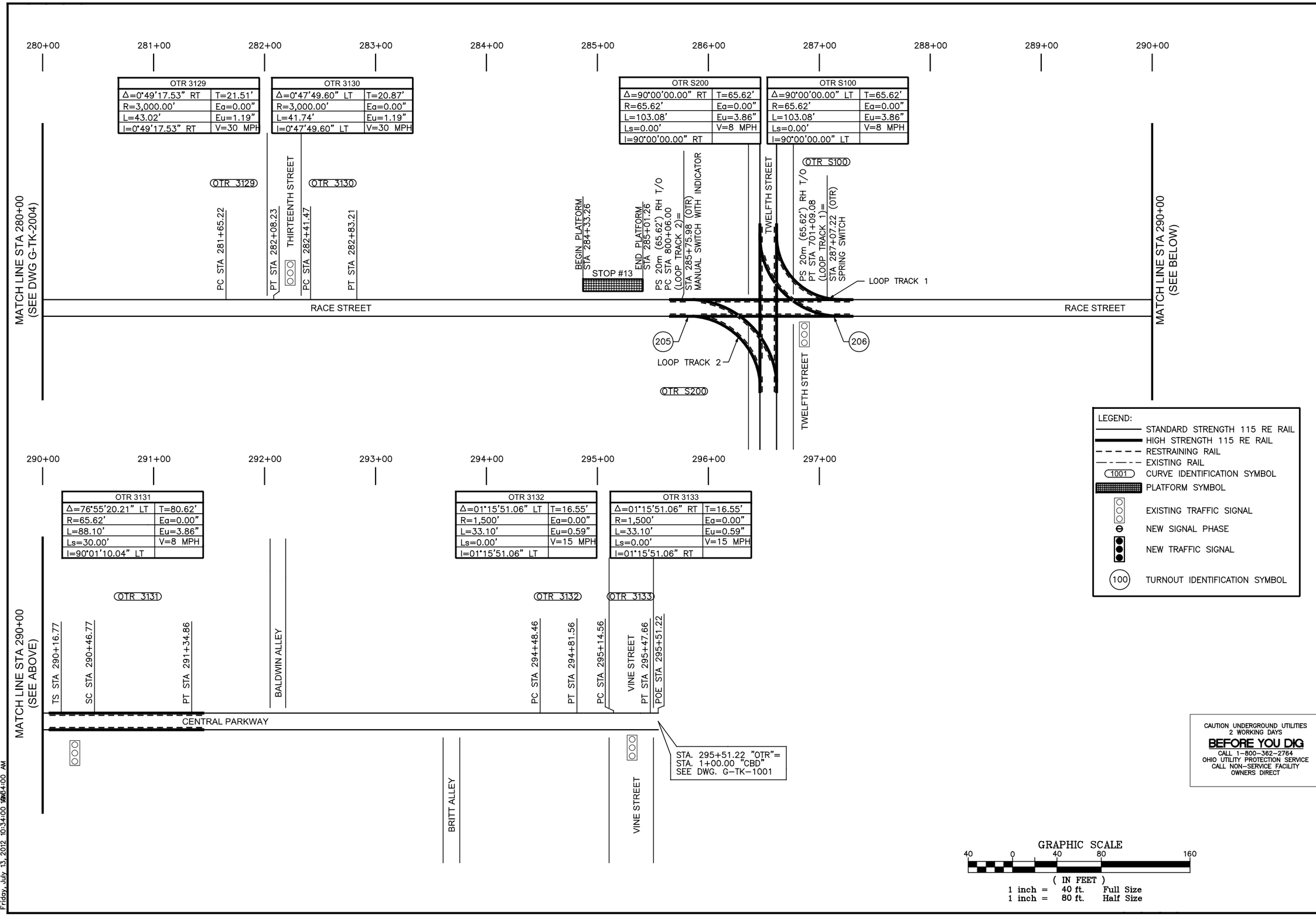

CAUTION UNDERGROUND UTILITIES
2 WORKING DAYS
BEFORE YOU DIG
CALL 1-800-362-2764
OHIO UTILITY PROTECTION SERVICE
CALL NON-SERVICE FACILITY
OWNERS DIRECT

DOTE_Mono_PDF_Half.pltcfg
c:\pwworking\pitt\d0309043\G-TK-2005.dgn
Friday, July 13, 2012 10:34:00 AM

CITY OF CINCINNATI DEPARTMENT OF TRANSPORTATION & ENGINEERING OHIO

CONTRACT DRAWING

PRINTS NOT BEARING THIS STAMP WERE MADE PRIOR TO ADVERTISING FOR BIDS AND ARE TO BE CONSIDERED OBSOLETE FOR CONTRACT PURPOSES.

Department of Transportation and Engineering

City of Cincinnati
801 Plum Street
Cincinnati, Ohio 45202

CINCINNATI STREETCAR OVER THE RHINE

TRACK CHART
STA 280+00 TO STA 295+51.22

Revisions
No.

Drawn by RAB	Date 07/02/12
Designed by RAB	Date 07/02/12
Checked by KVL	Date 07/02/12
Reviewed by JTB	Date 07/12/12

Consultant

PB HDR

File Number

ACC No.
23126

G-TK-2005

LEGEND:

- TRACK CENTERLINE
- HIGH STRENGTH 115 RE RAIL
- STANDARD STRENGTH 115 RE RAIL
- RESTRAINING RAIL
- (OTR 3011) CURVE IDENTIFICATION SYMBOL, SEE CURVE DATA TABLES
- (OTR-1) TURNOUT IDENTIFICATION SYMBOL
- [OTR-1] FROG IDENTIFICATION SYMBOL

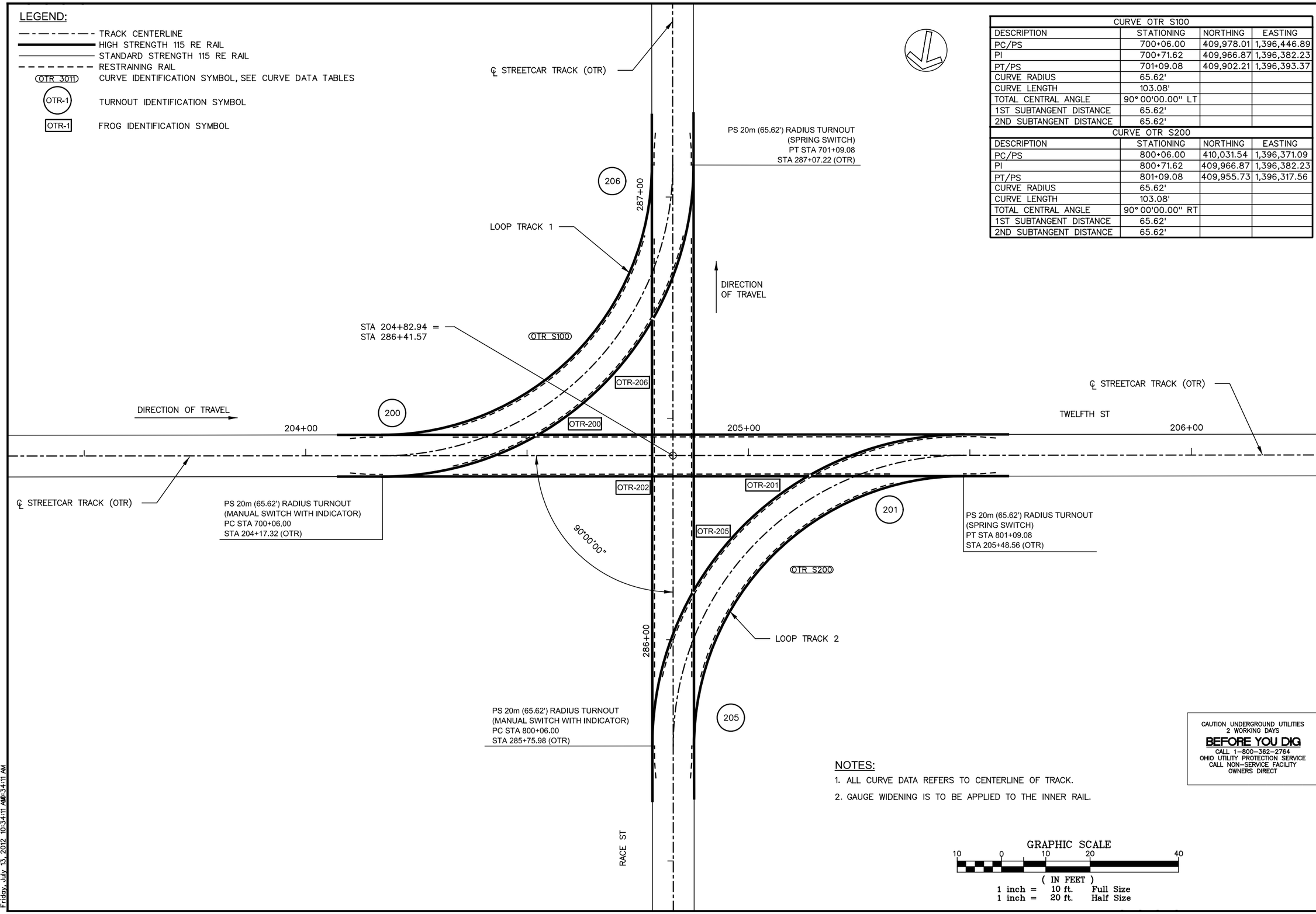

CURVE OTR S100			
DESCRIPTION	STATIONING	NORTHING	EASTING
PC/PS	700+06.00	409,978.01	1,396,446.89
PI	700+71.62	409,966.87	1,396,382.23
PT/PS	701+09.08	409,902.21	1,396,393.37
CURVE RADIUS	65.62'		
CURVE LENGTH	103.08'		
TOTAL CENTRAL ANGLE	90° 00'00.00" LT		
1ST SUBTANGENT DISTANCE	65.62'		
2ND SUBTANGENT DISTANCE	65.62'		

CURVE OTR S200			
DESCRIPTION	STATIONING	NORTHING	EASTING
PC/PS	800+06.00	410,031.54	1,396,371.09
PI	800+71.62	409,966.87	1,396,382.23
PT/PS	801+09.08	409,955.73	1,396,317.56
CURVE RADIUS	65.62'		
CURVE LENGTH	103.08'		
TOTAL CENTRAL ANGLE	90° 00'00.00" RT		
1ST SUBTANGENT DISTANCE	65.62'		
2ND SUBTANGENT DISTANCE	65.62'		

CAUTION UNDERGROUND UTILITIES
2 WORKING DAYS
BEFORE YOU DIG
CALL 1-800-362-2764
OHIO UTILITY PROTECTION SERVICE
CALL NON-SERVICE FACILITY
OWNERS DIRECT

NOTES:

1. ALL CURVE DATA REFERS TO CENTERLINE OF TRACK.
2. GAUGE WIDENING IS TO BE APPLIED TO THE INNER RAIL.

GRAPHIC SCALE
10 0 10 20 40
(IN FEET)
1 inch = 10 ft. Full Size
1 inch = 20 ft. Half Size

DOTE_Mono_PDF_Half.pltcfg
c:\pwworking\pitt\d0309043\G-TK-2101.dgn
Friday, July 13, 2012 10:34:11 AM 10:34:11 AM

CITY OF CINCINNATI DEPARTMENT OF TRANSPORTATION & ENGINEERING OHIO

CONTRACT DRAWING

PRINTS NOT BEARING THIS STAMP WERE MADE PRIOR TO ADVERTISING FOR BIDS AND ARE TO BE CONSIDERED OBSOLETE FOR CONTRACT PURPOSES.

Department of Transportation and Engineering

City of Cincinnati
City Hall
801 Plum Street
Cincinnati, Ohio 45202

CINCINNATI STREETCAR
OVER THE RHINE
SPECIAL TRACKWORK DETAIL SHEET
TWELFTH STREET AND RACE STREET

Revisions
No.

Drawn by SAB	Date 07/02/12	
Designed by SAB	Date 07/02/12	
Checked by KVL	Date 07/02/12	
Reviewed by JTB	Date 07/12/12	

Consultant

PB HDR

File Number

ACC No.
23126

G-TK-2101

CURVE UTC-2100			
DESCRIPTION	STATION	NORTHING	EASTING
PC/PS	2004+62.51	413,023.97	1,395,830.98
PI	2005+44.87	413,089.25	1,395,819.47
CS	2005+50.69	413,095.76	1,395,869.96
ST	2005+80.69	413,103.14	1,395,898.96
CURVE RADIUS	65.62'		
CURVE LENGTH	88.17'		
TOTAL CENTRAL ANGLE	90° 05'8.78" (RT)		
1ST SUBTANGENT DISTANCE	66.29'		
2ND SUBTANGENT DISTANCE	80.69'		
CURVE UTC-1100			
DESCRIPTION	STATION	NORTHING	EASTING
PC/PS	1000+00.00	412,713.01	1,395,885.78
PI	1000+73.45	412,640.68	1,395,898.53
CS	1000+94.95	412,658.87	1,395,953.72
ST	1001+24.95	412,664.90	1,395,983.04
CURVE RADIUS	65.62'		
CURVE LENGTH	94.95'		
TOTAL CENTRAL ANGLE	96° 00'0.00" (LT)		
1ST SUBTANGENT DISTANCE	73.45'		
2ND SUBTANGENT DISTANCE	87.91'		
CURVE UTC-1101			
DESCRIPTION	STATION	NORTHING	EASTING
PC	1001+64.35	412,675.76	1,396,020.92
PI	1001+77.20	412,679.30	1,396,033.27
PT	1001+90.03	412,681.56	1,396,045.93
CURVE RADIUS	250.00'		
CURVE LENGTH	25.68'		
TOTAL CENTRAL ANGLE	5° 53'9.88" (RT)		
1ST SUBTANGENT DISTANCE	12.85'		
2ND SUBTANGENT DISTANCE	12.85'		

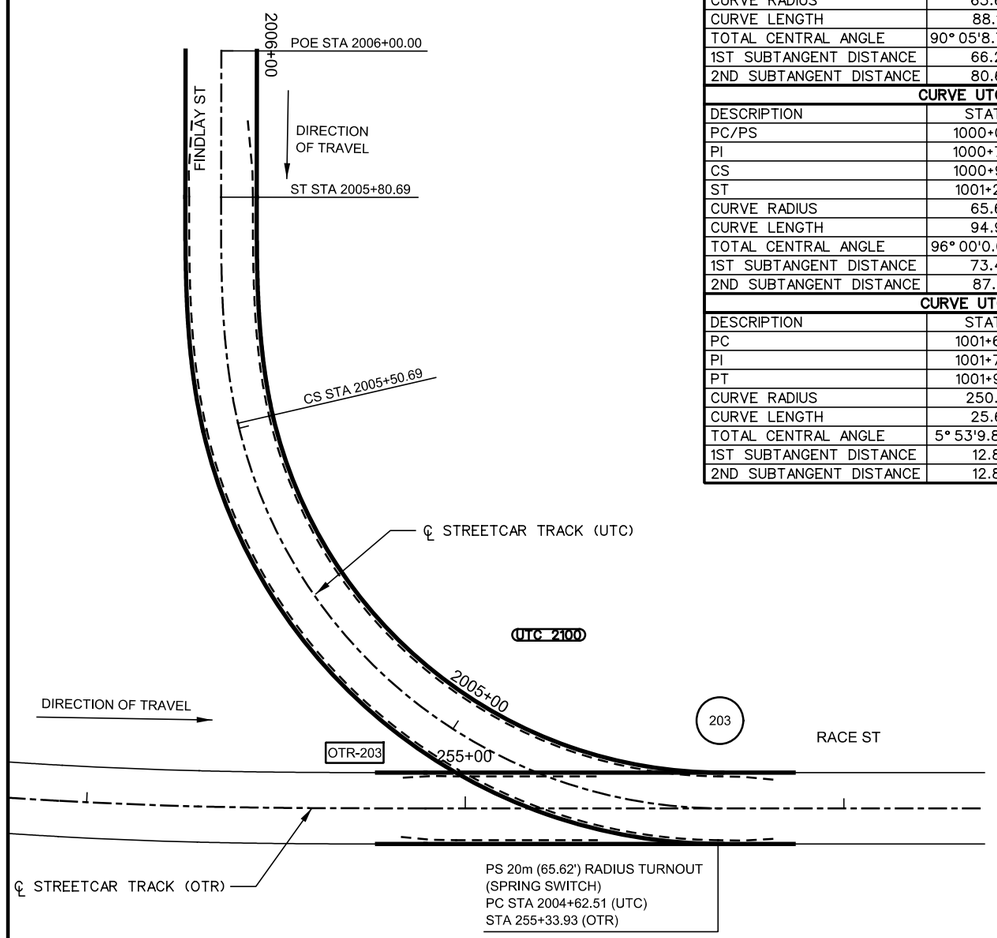

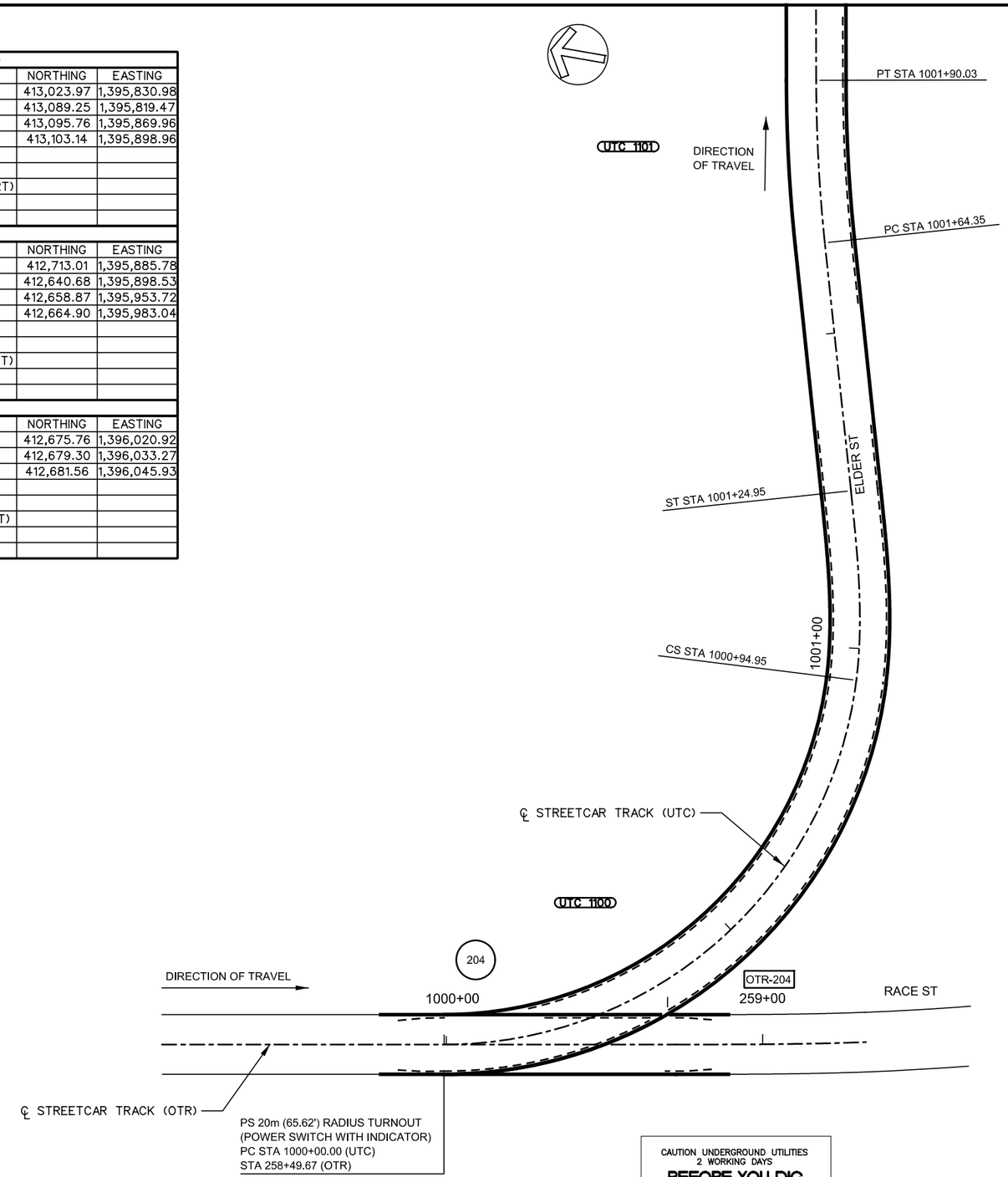

LEGEND:

- TRACK CENTERLINE
- HIGH STRENGTH 115 RE RAIL
- STANDARD STRENGTH 115 RE RAIL
- RESTRAINING RAIL
- OTR 3011 — CURVE IDENTIFICATION SYMBOL, SEE CURVE DATA TABLES
- OTR-1 — TURNOUT IDENTIFICATION SYMBOL
- OTR-1 — FROG IDENTIFICATION SYMBOL

NOTES:

1. ALL CURVE DATA REFERS TO CENTERLINE OF TRACK.
2. GAUGE WIDENING IS TO BE APPLIED TO THE INNER RAIL.

GRAPHIC SCALE

10 0 10 20 40

(IN FEET)
1 inch = 10 ft. Full Size
1 inch = 20 ft. Half Size

CAUTION UNDERGROUND UTILITIES
2 WORKING DAYS
BEFORE YOU DIG
CALL 1-800-362-2764
OHIO UTILITY PROTECTION SERVICE
CALL NON-SERVICE FACILITY
OWNERS DIRECT

DOTE_Mono_PDF_Half.pltcfg
c:\pwworking\pitt\d0309043\G-TK-2102.dgn
Friday, July 13, 2012 10:34:22 AM

CITY OF CINCINNATI DEPARTMENT OF TRANSPORTATION & ENGINEERING OHIO

CONTRACT DRAWING

PRINTS NOT BEARING THIS STAMP WERE MADE PRIOR TO ADVERTISING FOR BIDS AND ARE TO BE CONSIDERED OBSOLETE FOR CONTRACT PURPOSES.

Department of Transportation and Engineering

City of Cincinnati
City Hall
801 Plum Street
Cincinnati, Ohio 45202

CINCINNATI STREETCAR
OVER THE RHINE

SPECIAL TRACKWORK DETAIL SHEET
RACE STREET AND FINDLAY STREET,
RACE STREET AND ELDER STREET

Revisions

No.				

Drawn by	Date	Designed by	Date	Checked by	Date	Reviewed by	Date
SAB	07/02/12	SAB	07/02/12	KVL	07/02/12	JTB	07/12/12

Consultant

PB HDR

File Number

ACC No.
23126

G-TK-2102

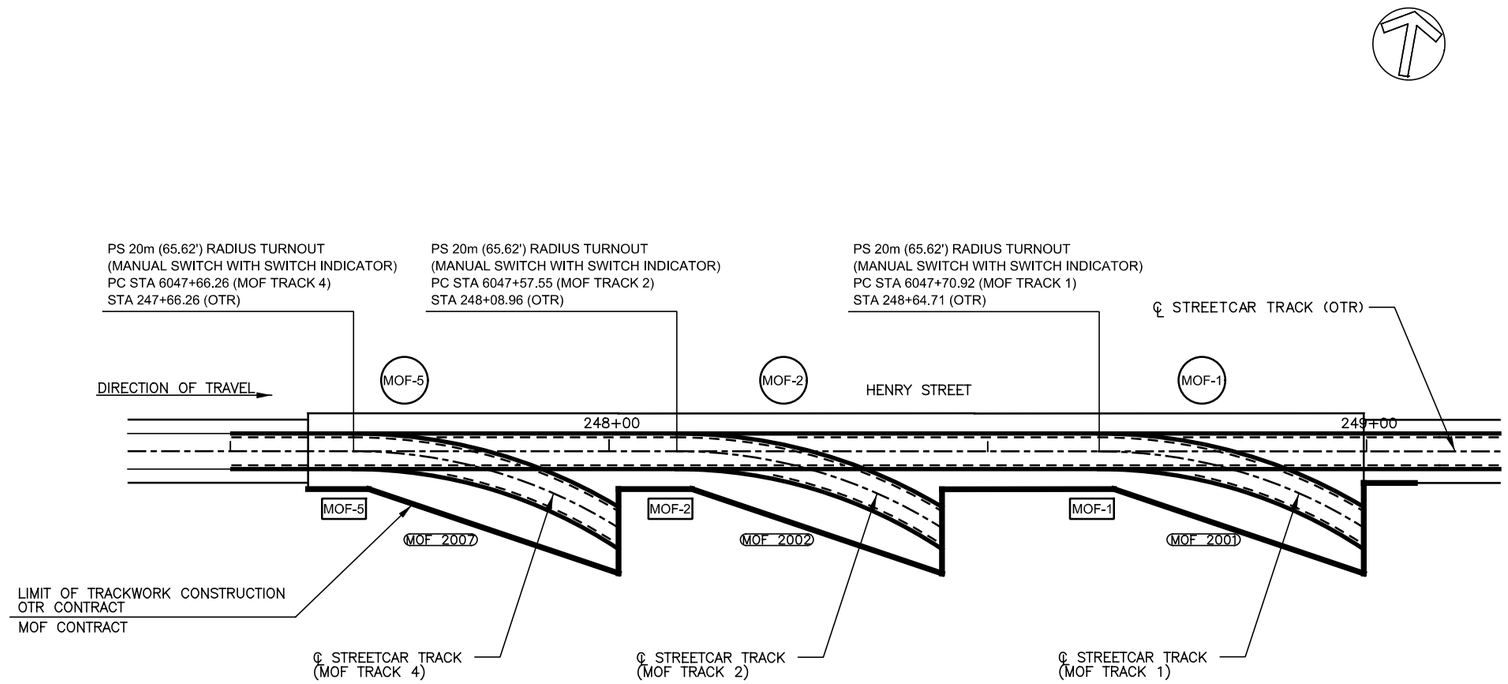

CURVE MOF 2001			
DESCRIPTION	STATION	NORTHING	EASTING
PC/PS	6047+70.92	413,549.82	1,395,605.17
PI	6048+36.54	413,561.20	1,395,669.79
PT	6048+74.00	413,496.57	1,395,681.17
CURVE RADIUS	65.62'		
CURVE LENGTH	103.08'		
TOTAL CENTRAL ANGLE	90° 00'0.00" (RT)		
1ST SUBTANGENT DISTANCE			
2ND SUBTANGENT DISTANCE			

CURVE MOF 2002			
DESCRIPTION	STATION	NORTHING	EASTING
PC/PS	6047+57.55	413,540.16	1,395,550.26
PI	6047+86.70	413,545.21	1,395,578.96
PT	6048+12.41	413,527.30	1,395,601.96
CURVE RADIUS	65.62'		
CURVE LENGTH	54.86'		
TOTAL CENTRAL ANGLE	47° 54'0.78" (RT)		
1ST SUBTANGENT DISTANCE			
2ND SUBTANGENT DISTANCE			

CURVE MOF 2007			
DESCRIPTION	STATION	NORTHING	EASTING
PC/PS	6047+66.26	413,532.76	1,395,508.20
PI	6048+03.64	413,539.23	1,395,545.01
PT	6048+34.21	413,510.88	1,395,569.36
CURVE RADIUS	65.62'		
CURVE LENGTH	67.95'		
TOTAL CENTRAL ANGLE	59° 19'50.47" (RT)		
1ST SUBTANGENT DISTANCE			
2ND SUBTANGENT DISTANCE			

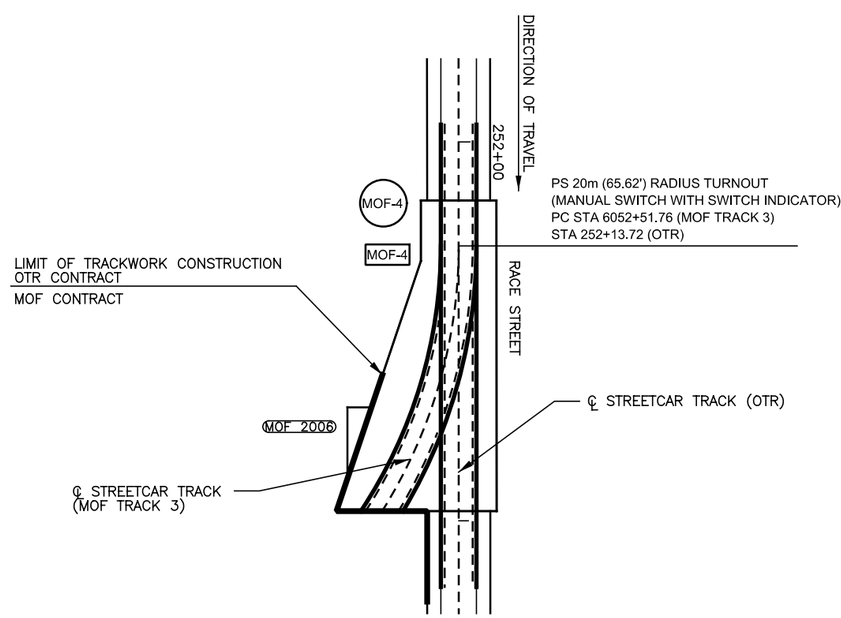

CURVE MOF 2006			
DESCRIPTION	STATION	NORTHING	EASTING
PC	6051+48.65	413,264.68	1,395,732.01
PI	6052+14.30	413,276.06	1,395,796.67
PT/PS	6052+51.76	413,340.71	1,395,785.27
CURVE RADIUS	65.63'		
CURVE LENGTH	103.11'		
TOTAL CENTRAL ANGLE	90° 00'45.33"(LT)		
1ST SUBTANGENT DISTANCE			
2ND SUBTANGENT DISTANCE			

LEGEND:

- TRACK CENTERLINE
- HIGH STRENGTH 115 RE RAIL
- STANDARD STRENGTH 115 RE RAIL
- RESTRAINING RAIL
- (MOF 2001) CURVE IDENTIFICATION SYMBOL, SEE CURVE DATA TABLES
- (MOF-1) TURNOUT IDENTIFICATION SYMBOL
- [MOF-1] FROG IDENTIFICATION SYMBOL

NOTES:

1. ALL CURVE DATA REFERS TO CENTERLINE OF TRACK.
2. GAUGE WIDENING IS TO BE APPLIED TO THE INNER RAIL.

GRAPHIC SCALE

10 0 10 20 40

(IN FEET)
1 inch = 10 ft. Full Size
1 inch = 20 ft. Half Size

CAUTION UNDERGROUND UTILITIES
2 WORKING DAYS
BEFORE YOU DIG
CALL 1-800-362-2764
OHIO UTILITY PROTECTION SERVICE
CALL NON-SERVICE FACILITY
OWNERS DIRECT

PROFESSIONAL STAMP

SIGN:
DATE:

DOTE_Mono_PDF_Half.pltcfg
c:\pwworking\pitt\d0309043\G-TK-2103.dgn
Friday, July 13, 2012 10:34:33 AM

CONTRACT DRAWING

PRINTS NOT BEARING THIS STAMP WERE MADE PRIOR TO ADVERTISING FOR BIDS AND ARE TO BE CONSIDERED OBSOLETE FOR CONTRACT PURPOSES.

Department of Transportation and Engineering

City of Cincinnati
City Hall
801 Plum Street
Cincinnati, Ohio 45202

CINCINNATI STREETCAR
OVER THE RHINE
SPECIAL TRACKWORK DETAIL SHEET
HENRY STREET AT
MAINTENANCE AND OPERATIONS FACILITY

Revisions
No.

Drawn by BDD	Date 07/02/12
Designed by BDD	Date 07/02/12
Checked by KVL	Date 07/02/12
Reviewed by JTB	Date 07/12/12

Consultant

PB HDR

File Number

ACC No. 23126

G-TK-2103

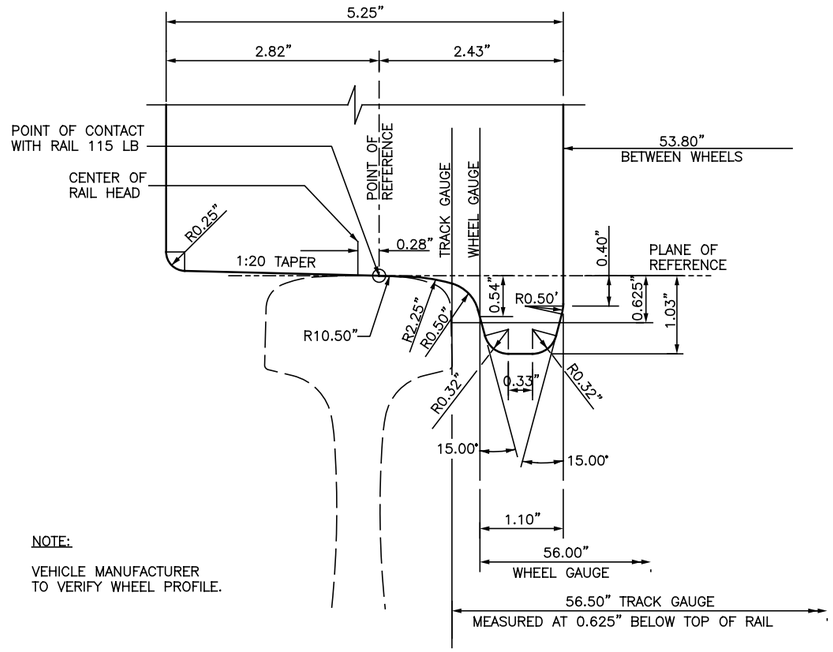

NOTE:

VEHICLE MANUFACTURER TO VERIFY WHEEL PROFILE.

FLANGE WHEEL PROFILE - 115 RE

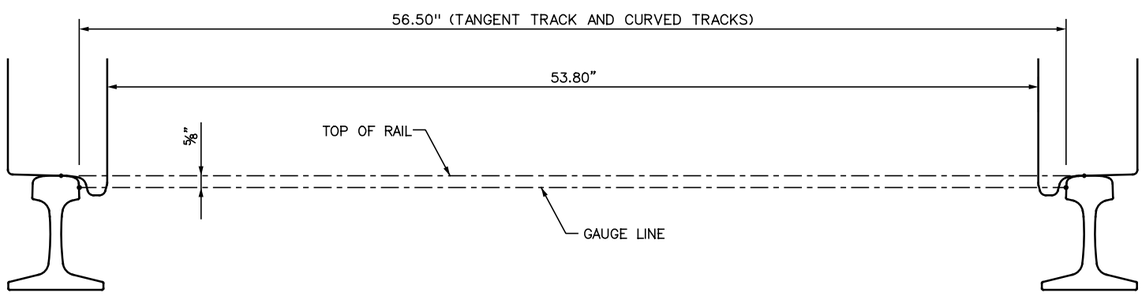

WHEEL POSITION - 115 RE
NTS

GENERAL NOTES:

1. TRACK GAUGE SHALL BE 4'–8½" EXCEPT FOR CURVES WITH GAUGE WIDENING. GAUGE WIDENING SHALL BE AT A CONSTANT TRANSITION RATE AND NOT MORE THAN ¼ INCH IN A DISTANCE OF 31 FEET, TO A MAXIMUM OF ½ INCH IN 62 FEET. FULL GAUGE WIDENING SHALL BE ACCOMPLISHED ON THE TANGENT IN APPROACH TO THE POINT OF CURVE AND REMOVED FOLLOWING THE POINT OF TANGENT IN THE SIMPLE CURVE. IN SPIRALS, GAUGE WIDENING SHALL BE APPLIED AND REMOVED WITHIN THE SPIRALS. IF THE SPIRAL IS TOO SHORT FOR FULL GAUGE WIDENING TO BE ACCOMPLISHED BEYOND THE RATE EXCEEDING ¼ INCH IN 31 FEET, SUFFICIENT GAUGE WIDENING SHALL BE PLACED IN THE APPROACH TANGENTS TO MEET THE RATE OF ¼ INCH IN 31 FEET. IF ADJACENT CURVES WITH BOTH REQUIRING WIDENING ARE TOO CLOSE TOGETHER TO ALLOW RUN OUT OF GAUGE WIDENING, THE WIDENED GAUGE SHALL BE MAINTAINED BETWEEN THE CURVES. THE ALIGNMENTS SHOWN ON THE CONTRACT DRAWINGS ARE BASED ON GAUGE.
2. THE TRACK PLANS SHOW ONLY SOME OF THE RAIL JOINTS. LOCATE ADDITIONAL RAIL JOINTS IN ACCORDANCE WITH THE SHOP DRAWINGS.
3. THE ARM LENGTHS OF FROGS ARE NOT ALWAYS DRAWN TO SCALE. THE CONTRACTOR WILL DETERMINE THE EXACT ARM LENGTHS.
4. CONSTRUCT NEW SPECIAL TRACKWORK AS SHOWN ON THE APPROVED SHOP DRAWINGS.
5. THE PROFILE GRADE LINE (PGL) REFERS TO THE TOP OF RAIL ELEVATION.
6. RAILS SHALL HAVE ZERO CANT.
7. DESIGN IS BASED ON A CURRENTLY MANUFACTURED MODERN ARTICULATED STREETCAR/LIGHT RAIL VEHICLE.

ABBREVIATIONS

AREMA	AMERICAN RAILWAY ENGINEERING & MAINTENANCE OF WAY ASSOCIATION
AVE	AVENUE
CBD	CENTRAL BUSINESS DISTRICT
℄	CENTER LINE
DWG	DRAWING
EXT	SECOND STREET EXTENSION
HSTR	HIGH STRENGTH RAIL
ODOT	OHIO DEPARTMENT OF TRANSPORTATION
MIN.	MINIMUM
MAX.	MAXIMUM
N.I.C.	NOT IN CONTRACT
NO.	NUMBER
NTS	NOT TO SCALE
O.C.	ON CENTERS
OTR	OVER THE RHINE
PGL	PROFILE GRADE LINE
PITO	POINT OF INTERSECTION OF TURNOUT
R, RAD.	RADIUS
ST	STREET
TRK	TRACK
UTC	UPTOWN CIRCULATOR
WWF	WELDED WIRE FABRIC

CAUTION UNDERGROUND UTILITIES
2 WORKING DAYS
BEFORE YOU DIG
CALL 1–800–362–2764
OHIO UTILITY PROTECTION SERVICE
CALL NON–SERVICE FACILITY OWNERS DIRECT

PROFESSIONAL STAMP

SIGN:
DATE:

CONTRACT DRAWING

PRINTS NOT BEARING THIS STAMP WERE MADE PRIOR TO ADVERTISING FOR BIDS AND ARE TO BE CONSIDERED OBSOLETE FOR CONTRACT PURPOSES.

Department of Transportation and Engineering

City of Cincinnati
City Hall
801 Plum Street
Cincinnati, Ohio 45202

CINCINNATI STREETCAR
TRACKWORK DETAILS
TRACKWORK SYMBOLS, ABBREVIATIONS, & GENERAL NOTES AND VEHICLE WHEEL FACTORS

Revisions
No.

Drawn by SAB	Date 07/02/12
Designed by RWB	Date 07/02/12
Checked by KVL	Date 07/02/12
Reviewed by JTB	Date 07/12/12

Consultant

PB HDR

File Number

ACC No.
23126

G-TD-1001

c:\pwworking\pitt\d0309447\S_G-TD-1001.dgn
Friday, July 13, 2012 10:28:03 AM

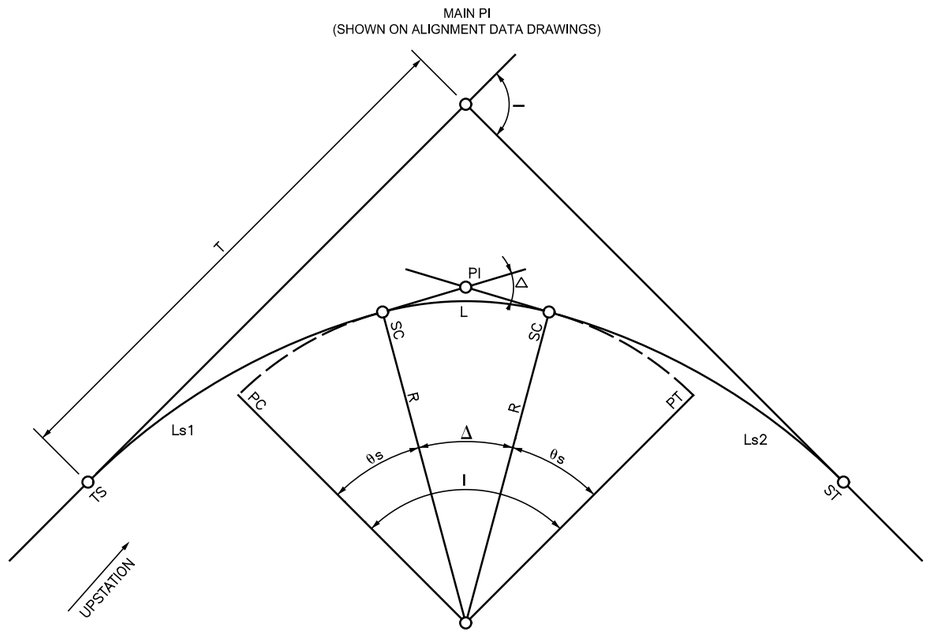

CIRCULAR CURVES

CIRCULAR CURVES ARE DEFINED AND SPECIFIED BY THEIR RADII.

I	TOTAL INTERSECTION ANGLE
θs	SPIRAL ANGLE
Δ	CENTRAL ANGLE OF CIRCULAR CURVE
R	RADIUS OF CIRCULAR CURVE
T	TANGENT LENGTH OF CIRCULAR CURVE
L	LENGTH OF CIRCULAR CURVE
Ls1	LENGTH OF FIRST SPIRAL
Ls2	LENGTH OF SECOND SPIRAL
E	EXTERNAL DISTANCE
PC	POINT OF CURVE
PT	POINT OF TANGENCY
TS	TANGENT SPIRAL
SC	SPIRAL CURVE
CS	CURVE SPIRAL
ST	SPIRAL TANGENT
PI	POINT OF INTERSECTION
PS	POINT OF SWITCH
Ea	ACTUAL SUPERELEVATION
Eu	UNBALANCED SUPERELEVATION
V	VELOCITY (SPEED)

ACTUAL SUPERELEVATION (Ea) WILL BE ATTAINED AND REMOVED LINEARLY THROUGHOUT THE FULL LENGTH OF THE SPIRAL TRANSITION CURVE.

θs, Δ & I ARE IN DEGREES

δs = θs EXPRESSED IN RADIANS

ALL OTHER DIMENSIONS ARE IN FEET

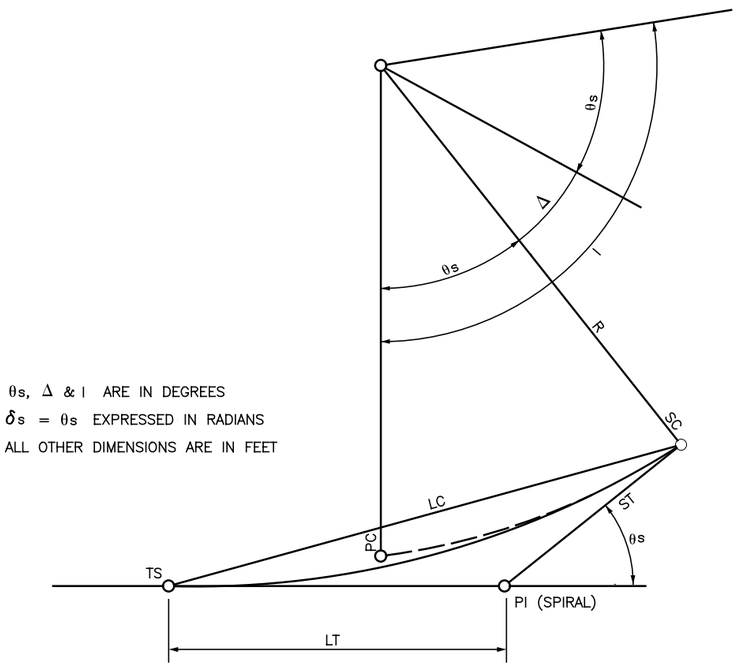

SPIRAL CURVES

CAUTION UNDERGROUND UTILITIES
2 WORKING DAYS
BEFORE YOU DIG
CALL 1-800-362-2764
OHIO UTILITY PROTECTION SERVICE
CALL NON-SERVICE FACILITY
OWNERS DIRECT

PROFESSIONAL STAMP

SIGN:

DATE:

CONTRACT DRAWING

PRINTS NOT BEARING THIS STAMP WERE MADE PRIOR TO ADVERTISING FOR BIDS AND ARE TO BE CONSIDERED OBSOLETE FOR CONTRACT PURPOSES.

Department of Transportation and Engineering

City of Cincinnati
City Hall
801 Plum Street
Cincinnati, Ohio 45202

CINCINNATI STREETCAR
TRACKWORK DETAILS

HORIZONTAL CURVES

Revisions

No.				

Drawn by	Designed by	Checked by	Reviewed by
RWB	RWB	KVL	JTB
Date 07/02/12	Date 07/02/12	Date 07/02/12	Date 07/12/12

Consultant

PB HDR

File Number

ACC No.
23126

G-TD-1002

c:\pwworking\pitt\d0309447\S_G-TD-1002.dgn
Friday, July 13, 2012 10:28:09 AM

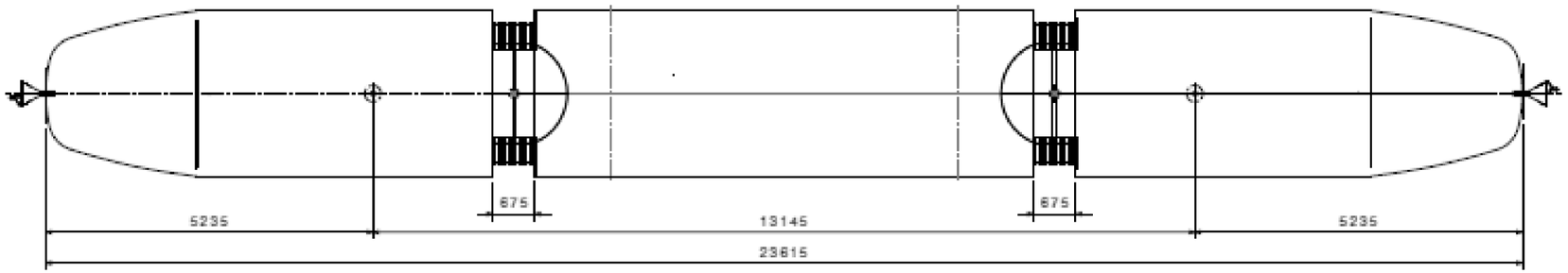

PLAN VIEW 1
ON TANGENT
NTS

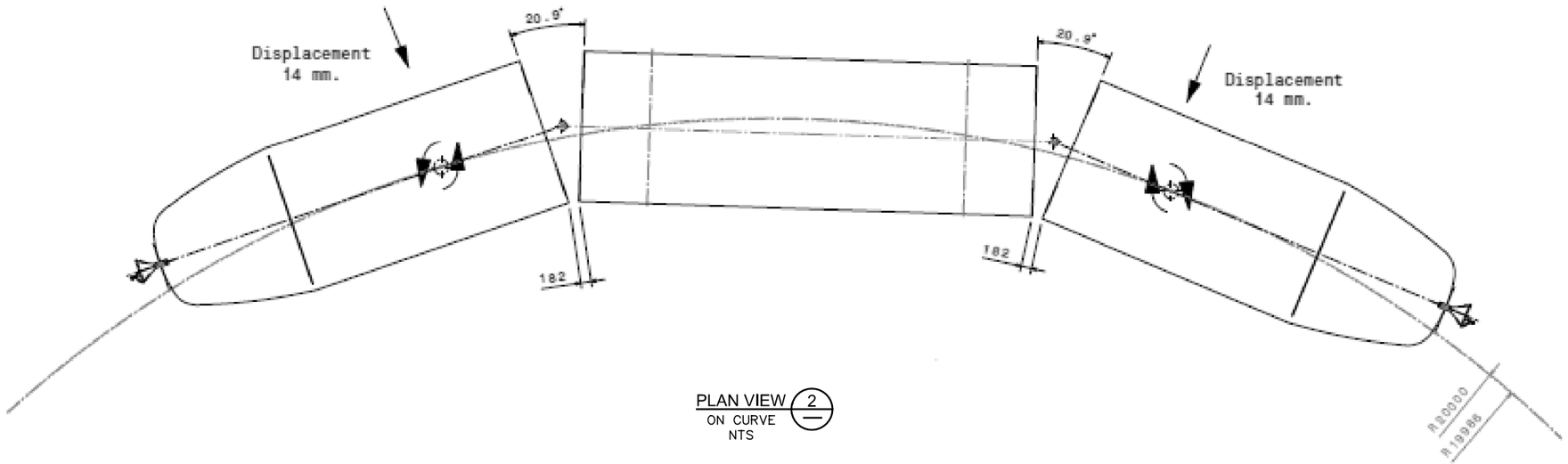

PLAN VIEW 2
ON CURVE
NTS

NOTES:

ALL DIMENSIONS ARE IN MM.

CAUTION UNDERGROUND UTILITIES
2 WORKING DAYS
BEFORE YOU DIG
CALL 1-800-362-2764
OHIO UTILITY PROTECTION SERVICE
CALL NON-SERVICE FACILITY
OWNERS DIRECT

PROFESSIONAL STAMP

SIGN:

DATE:

CITY OF CINCINNATI DEPARTMENT OF TRANSPORTATION & ENGINEERING OHIO

CONTRACT DRAWING

PRINTS NOT BEARING THIS STAMP WERE MADE PRIOR TO ADVERTISING FOR BIDS AND ARE TO BE CONSIDERED OBSOLETE FOR CONTRACT PURPOSES.

Department of Transportation and Engineering

City of Cincinnati
City Hall
801 Plum Street
Cincinnati, Ohio 45202

CINCINNATI STREETCAR
TRACKWORK DETAILS

DYNAMIC ENVELOPE IN CURVES

Revisions

No.				

Drawn by SAB	Date 07/02/12
Designed by SAB	Date 07/02/12
Checked by KVL	Date 07/02/12
Reviewed by JTB	Date 07/12/12

Consultant

PB HDR

File Number

ACC No.
23126

G-TD-1003

c:\pwworking\pitt\d0309447\S_G-TD-1003.dgn
Friday, July 13, 2012 10:28:14 AM

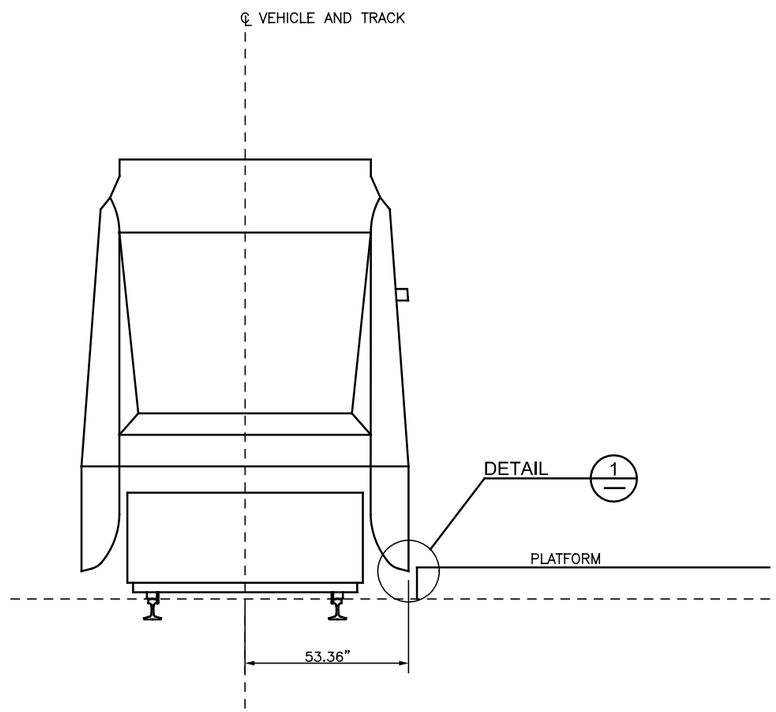

CONDITION ON TANGENT TRACK WITH NO SUPER-ELEVATION AT STOPS

NTS

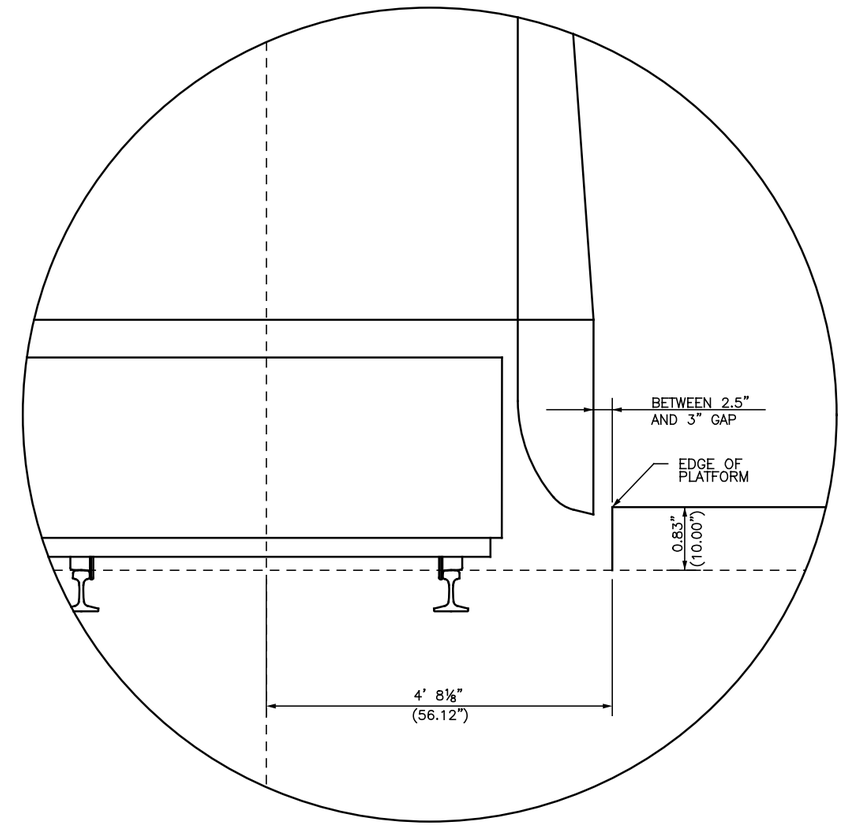

DETAIL 1

NTS

CAUTION UNDERGROUND UTILITIES
2 WORKING DAYS
BEFORE YOU DIG
CALL 1-800-362-2764
OHIO UTILITY PROTECTION SERVICE
CALL NON-SERVICE FACILITY
OWNERS DIRECT

PROFESSIONAL STAMP

SIGN:

DATE:

CONTRACT DRAWING

PRINTS NOT BEARING THIS STAMP WERE MADE PRIOR TO ADVERTISING FOR BIDS AND ARE TO BE CONSIDERED OBSOLETE FOR CONTRACT PURPOSES.

Department of Transportation and Engineering

City of Cincinnati
City Hall
801 Plum Street
Cincinnati, Ohio 45202

CINCINNATI STREETCAR
TRACKWORK DETAILS

CLEARANCE AT STATIONS

Revisions

No.		

Drawn by SAB	Date 07/02/12
Designed by SAB	Date 07/02/12
Checked by KVL	Date 07/02/12
Reviewed by JTB	Date 07/12/12

Consultant

PB HDR

File Number

ACC No.
23126

G-TD-1004

c:\pwworking\pitt\d0309447\S_G-TD-1004.dgn
Friday, July 13, 2012 10:28:23 AM

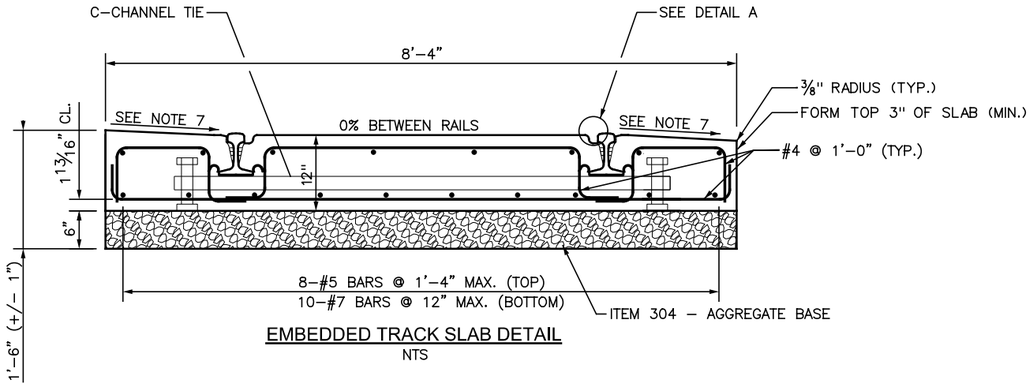

EMBEDDED TRACK SLAB DETAIL

NTS

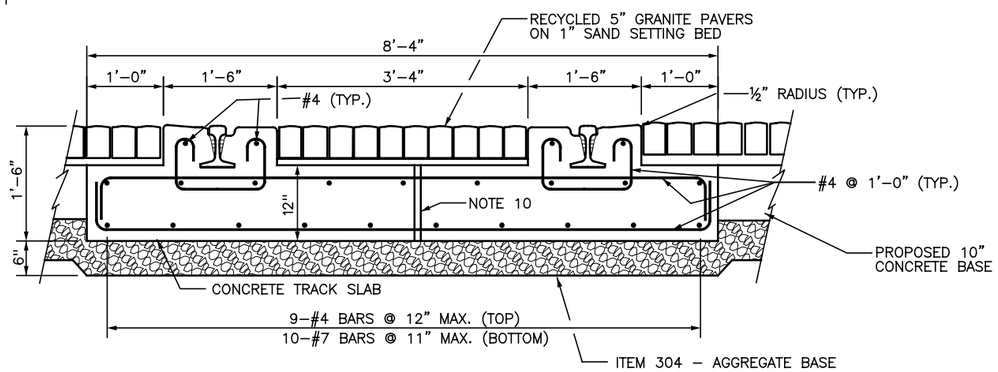

EMBEDDED TRACK SLAB DETAIL WITH GRANITE PAVERS

NTS

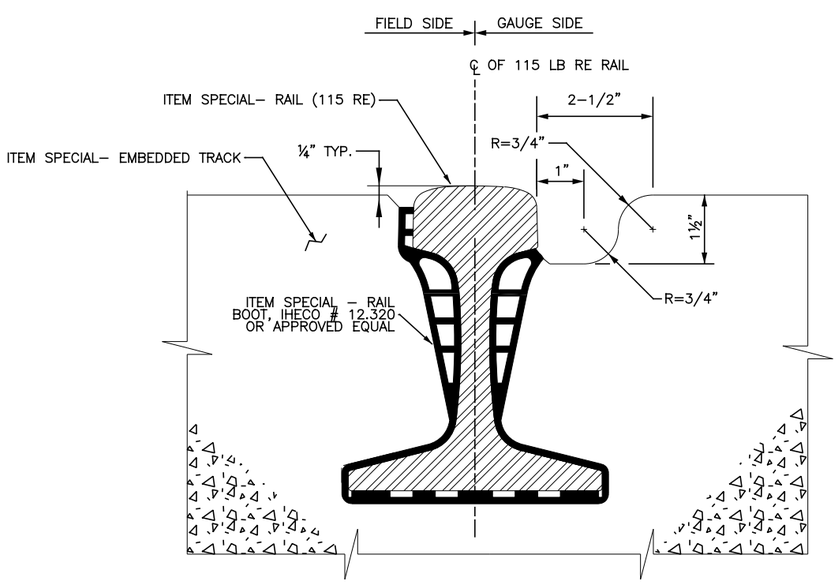

DETAIL A - EMBEDDED SECTION OF RAIL

NTS

NOTES:

1. REINFORCING SHALL BE UNCOATED, 60KSI STEEL PER ODOT ITEM 509. LONGITUDINAL BARS SHALL BE CONTINUOUSLY LAPPED WITH NEXT BAR FOR TENSION SPLICE IN ACCORDANCE WITH ITEM 509. MINIMUM CONCRETE COVER ON ALL BARS SHALL BE 2" EXCEPT AS NOTED. ALL CONTACT AREAS BETWEEN BARS SHALL BE TACK WELDED FOR ELECTRICAL CONTINUITY.
2. TRACK SLAB CONCRETE AND REINFORCING STEEL SHALL BE FURNISHED AND INSTALLED IN ACCORDANCE WITH ITEM SPECIAL – EMBEDDED TRACK.
3. TRACK GAUGE SHALL BE 4'–8½"
4. C–CHANNEL TIES SHALL BE PLACED EVERY 10 FEET COINCIDING WITH JOINT GROOVES INSTALLED TRANSVERSELY ACROSS TRACK SLAB. GROOVE DEPTH SHALL BE 1/2".
5. PROPOSED PROFILE IS TOP OF RAIL. NOTE THAT TOP OF CONCRETE BETWEEN RAILS IS ¼" BELOW TOP OF RAIL.
6. AVOID DAMAGING THE RAIL BOOT DURING STORAGE AND INSTALLATION. REPAIR ALL PUNCTURES, RIPS, TEARS AND GOUGES IN ACCORDANCE WITH MANUFACTURER'S INSTRUCTIONS TO PREVENT STRAY CURRENT LEAKAGE.
7. CROSS SLOPE VARIES (UP OR DOWN), 5% MAX. REFER TO GRADING PLAN SHEETS.
8. EMBEDDED RAIL IS TO BE INSTALLED WITH ZERO CANT UNLESS SPECIFICALLY SHOWN OTHERWISE.
9. CONTRACTOR SHALL SUBMIT C–CHANNEL TIE ASSEMBLY DESIGN FOR APPROVAL.
10. PROVIDE 1"ø PVC DRAIN AT 2'–0" O/C WITH 1'X1' FILTER CLOTH ON TOP OF PIPE BELOW SAND BEDDING.
11. SEE SHEET G–TD–1013 FOR TRACK SALB SPECIAL DETAILS FOR EXPANSION JOINTS AND PENETRATIONS.

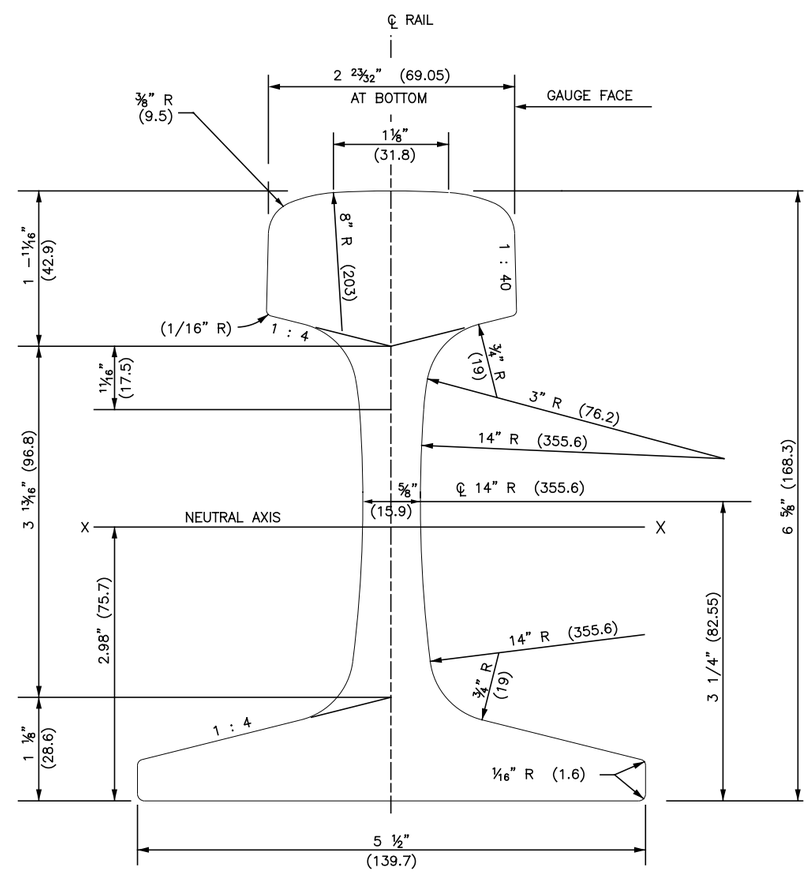

DETAIL B - RAIL SECTION (115 RE)

( ) DIMS ARE IN MM

AREA= 11.2171 SQ. IN.

WEIGHT= 114.3757 LB./YD.

CAUTION UNDERGROUND UTILITIES
2 WORKING DAYS
BEFORE YOU DIG
CALL 1–800–362–2764
OHIO UTILITY PROTECTION SERVICE
CALL NON–SERVICE FACILITY
OWNERS DIRECT

PROFESSIONAL STAMP

SIGN:

DATE:

CONTRACT DRAWING

PRINTS NOT BEARING THIS STAMP WERE MADE PRIOR TO ADVERTISING FOR BIDS AND ARE TO BE CONSIDERED OBSOLETE FOR CONTRACT PURPOSES.

Department of Transportation and Engineering

City of Cincinnati
801 Plum Street
Cincinnati, Ohio 45202

CINCINNATI STREETCAR
TRACKWORK DETAILS
EMBEDDED TRACK SLAB DETAILS

Revisions

No.				

Drawn by	Date	Designed by	Date	Checked by	Date	Reviewed by	Date
CHN	07/02/12	CHN	07/02/12	CHN	07/02/12	KVL	07/12/12
						JTB	

Consultant

PB HDR

File Number

ACC No.
23126

G-TD-1005

c:\pwworking\pitt\d0309447\S_G-TD-1005.dgn
Friday, July 13, 2012 10:28:29 AM KKZ8:29 AM

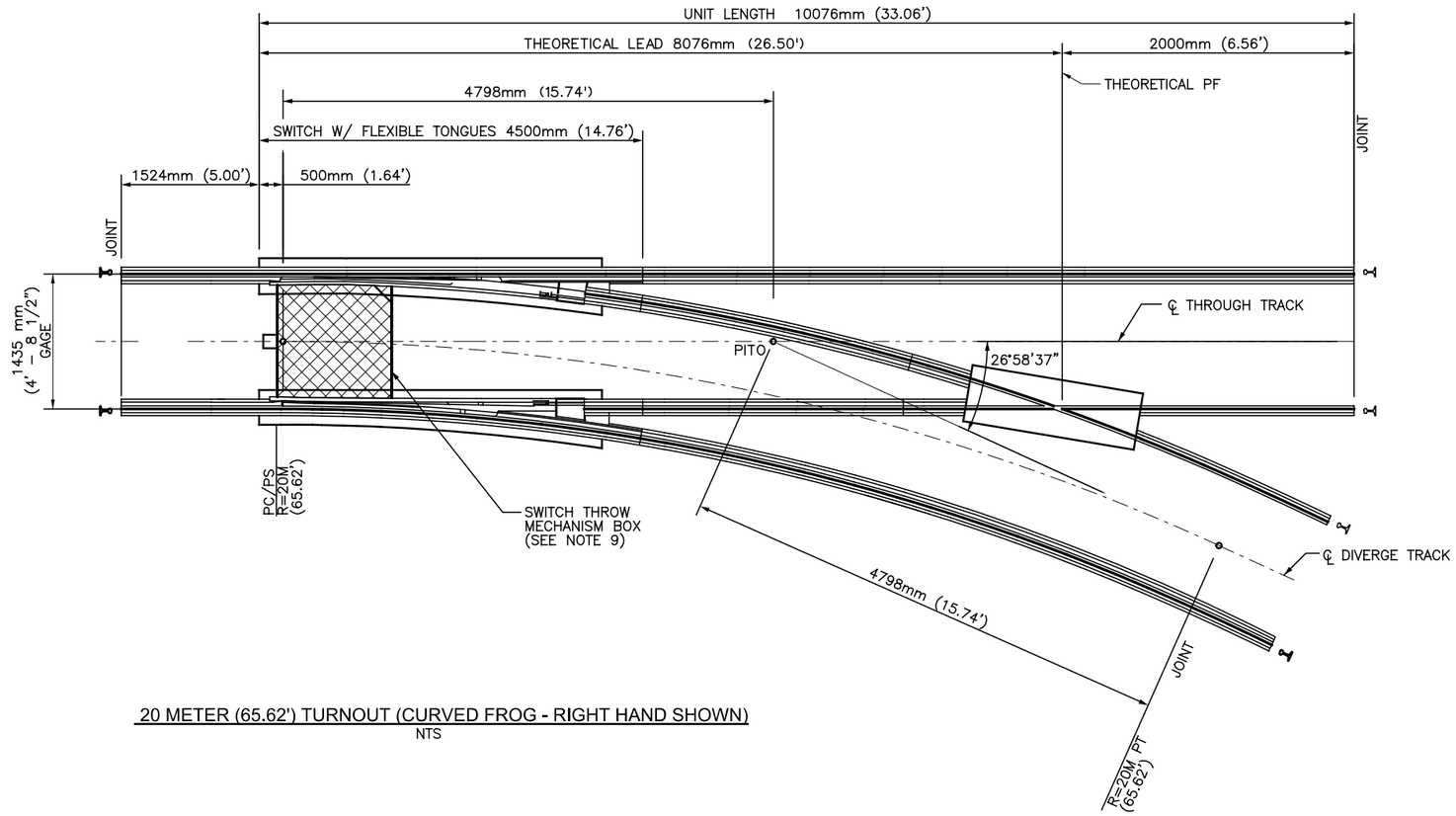

20 METER (65.62') TURNOUT (CURVED FROG - RIGHT HAND SHOWN)
NTS

NOTES:

1. THIS DRAWING PROVIDES THE BASIS OF DESIGN FOR BIDDING PURPOSES ONLY. FINAL TURNOUT DESIGN SHALL BE ACCORDING TO SHOP DRAWINGS SUBMITTED BY SUPPLIER AND REVIEWED BY THE ENGINEER.
2. THE SWITCH CONSISTS OF DOUBLE TONGUE FLEXIBLE SWITCH POINTS WITH KEY FASTENED HEELS TO BE INSTALLED IN PAVED TURNOUT CONSTRUCTION.
3. THE RAIL AND COMPONENTS SHALL CONFORM TO 115RE RAIL.
4. SWITCH MACHINES WILL BE EITHER POWER, MANUAL, OR SPRING TYPES. SEE TRACK CHARTS FOR LOCATIONS. POWER AND MANUAL SWITCHES SHALL INCLUDE A SWITCH INDICATOR. SPRING SWITCHES MUST BE TRAILABLE WITH A SPRING AND RETURN MECHANISM (OR OTHER APPROVED MECHANISM).
5. ALL NOTED JOINTS ARE TO BE FIELD WELDED.
6. ALL DIMENSIONS ARE IN MILLIMETERS (FEET).
7. ACTUAL LENGTHS MAY VARY PER TURNOUT SUPPLIER. SEE SHOP DRAWINGS.
8. INSTALL DRAINS FROM SWITCH THROW MECHANISM BOX AND SWITCH HEATER BOX TO STORM SEWER AS SHOWN ON "SA" SERIES DRAWINGS.
9. MANUAL SWITCH MACHINE SHALL BE CONTEC MODEL CSV 34 OR APPROVED EQUAL. POWER SWITCH MACHINE SHALL BE CONTEC MODEL CSV 24 OR APPROVED EQUAL.
10. LEFT HAND TURNOUT SHALL BE OPPOSITE TO THAT SHOWN.

CAUTION UNDERGROUND UTILITIES
2 WORKING DAYS
BEFORE YOU DIG
CALL 1-800-362-2764
OHIO UTILITY PROTECTION SERVICE
CALL NON-SERVICE FACILITY
OWNERS DIRECT

PROFESSIONAL STAMP

SIGN:
DATE:

CONTRACT DRAWING

PRINTS NOT BEARING THIS STAMP WERE MADE PRIOR TO ADVERTISING FOR BIDS AND ARE TO BE CONSIDERED OBSOLETE FOR CONTRACT PURPOSES.

Department of Transportation and Engineering

City of Cincinnati
City Hall
801 Plum Street
Cincinnati, Ohio 45202

CINCINNATI STREETCAR
TRACKWORK DETAILS
20 METER (65.62') CURVED TURNOUT DETAIL

Revisions

No.				

Drawn by RWB	Date 07/02/12
Designed by RWB	Date 07/02/12
Checked by KVL	Date 07/02/12
Reviewed by JTB	Date 07/12/12

Consultant

PB HDR

File Number

ACC No.
23126

G-TD-1006

c:\pwworking\pitt\d0309447\S_G-TD-1006.dgn
Friday, July 13, 2012 10:28:34 AM

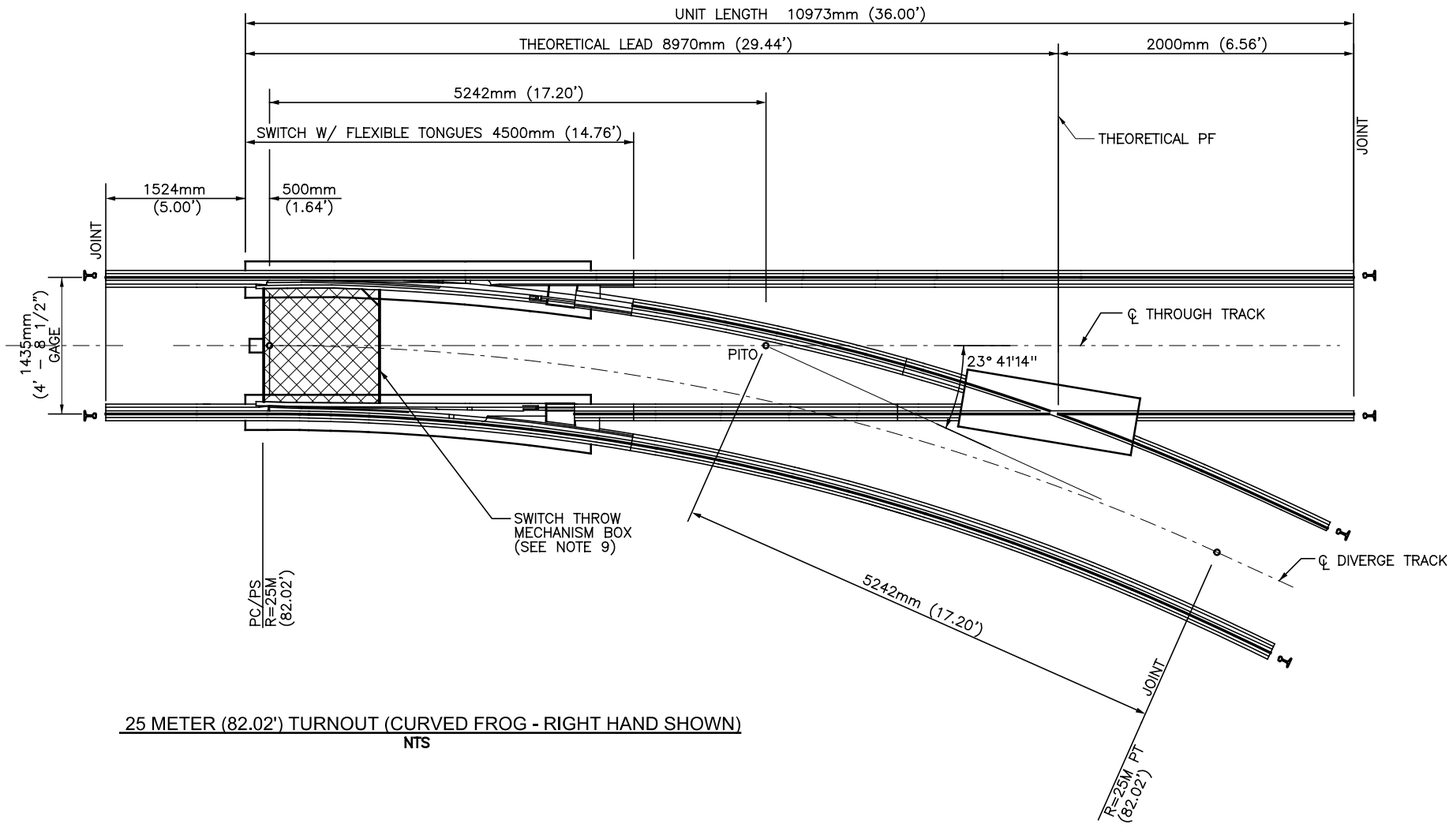

25 METER (82.02') TURNOUT (CURVED FROG - RIGHT HAND SHOWN)
NTS

NOTES:

1. THIS DRAWING PROVIDES THE BASIS OF DESIGN FOR BIDDING PURPOSES ONLY. FINAL TURNOUT DESIGN SHALL BE ACCORDING TO SHOP DRAWINGS SUBMITTED BY SUPPLIER AND REVIEWED BY THE ENGINEER.
2. THE SWITCH CONSISTS OF DOUBLE TONGUE FLEXIBLE SWITCH POINTS WITH KEY FASTENED HEELS TO BE INSTALLED IN PAVED TURNOUT CONSTRUCTION.
3. THE RAIL AND COMPONENTS SHALL CONFORM TO 115RE RAIL.
4. SWITCH MACHINES WILL BE EITHER POWER, MANUAL, OR SPRING TYPES. SEE TRACK CHARTS FOR LOCATIONS. POWER AND MANUAL SWITCHES SHALL INCLUDE A SWITCH INDICATOR. SPRING SWITCHES MUST BE TRAILABLE WITH A SPRING AND RETURN MECHANISM (OR OTHER APPROVED MECHANISM).
5. ALL NOTED JOINTS ARE TO BE FIELD WELDED.
6. ALL DIMENSIONS ARE IN MILLIMETERS (FEET).
7. ACTUAL LENGTHS MAY VARY PER TURNOUT SUPPLIER. SEE SHOP DRAWINGS.
8. INSTALL DRAINS FROM SWITCH THROW MECHANISM BOX AND SWITCH HEATER BOX TO STORM SEWER AS SHOWN ON "SA" SERIES DRAWINGS
9. MANUAL SWITCH MACHINE SHALL BE CONTEC MODEL CSV 34 OR APPROVED EQUAL. POWER SWITCH MACHINE SHALL BE CONTEC MODEL CSV 24 OR APPROVED EQUAL.
10. LEFT HAND TURNOUT SHALL BE OPPOSITE TO THAT SHOWN.

CAUTION UNDERGROUND UTILITIES
2 WORKING DAYS
BEFORE YOU DIG
CALL 1-800-362-2764
OHIO UTILITY PROTECTION SERVICE
CALL NON-SERVICE FACILITY
OWNERS DIRECT

PROFESSIONAL STAMP

SIGN:
DATE:

CONTRACT DRAWING

PRINTS NOT BEARING THIS STAMP WERE MADE PRIOR TO ADVERTISING FOR BIDS AND ARE TO BE CONSIDERED OBSOLETE FOR CONTRACT PURPOSES.

Department of Transportation and Engineering

City of Cincinnati
City Hall
801 Plum Street
Cincinnati, Ohio 45202

CINCINNATI STREETCAR
TRACKWORK DETAILS
25 METER (82.02') CURVED EMBEDDED TURNOUT DETAIL

Revisions
No.

	Date
Drawn by RWB	07/02/12
Designed by RWB	07/02/12
Checked by KVL	07/02/12
Reviewed by JTB	07/12/12

Consultant

PB HDR

File Number

ACC No.
23126

G-TD-1007

c:\pwworking\pitt\d0309447\S_G-TD-1007.dgn
Friday, July 13, 2012 10:28:40 AM

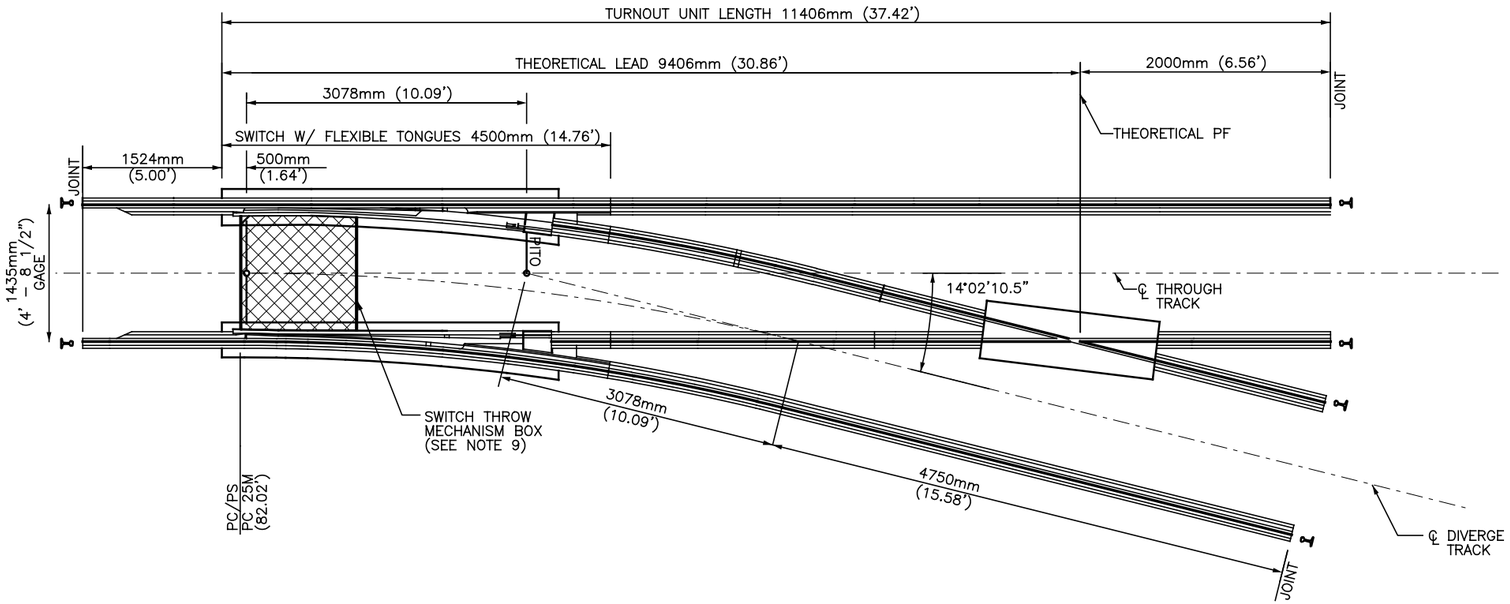

25 METER (82.02') TURNOUT (STRAIGHT FROG - RIGHT HAND SHOWN)
NTS

NOTES:

1. THIS DRAWING PROVIDES THE BASIS OF DESIGN FOR BIDDING PURPOSES ONLY. FINAL TURNOUT DESIGN SHALL BE ACCORDING TO SHOP DRAWINGS SUBMITTED BY SUPPLIER AND REVIEWED BY THE ENGINEER.
2. THE SWITCH CONSISTS OF DOUBLE TONGUE FLEXIBLE SWITCH POINTS WITH KEY FASTENED HEELS TO BE INSTALLED IN PAVED TURNOUT CONSTRUCTION.
3. THE RAIL AND COMPONENTS SHALL CONFORM TO 115RE RAIL.
4. SWITCH MACHINES WILL BE EITHER POWER, MANUAL, OR SPRING TYPES. SEE TRACK CHARTS FOR LOCATIONS. POWER AND MANUAL SWITCHES SHALL INCLUDE A SWITCH INDICATOR. SPRING SWITCHES MUST BE TRAILABLE WITH A SPRING AND RETURN MECHANISM (OR OTHER APPROVED MECHANISM).
5. ALL NOTED JOINTS ARE TO BE FIELD WELDED.
6. ALL DIMENSIONS ARE IN MILLIMETERS (FEET).
7. ACTUAL LENGTHS MAY VARY PER TURNOUT SUPPLIER. SEE SHOP DRAWINGS.
8. INSTALL DRAINS FROM SWITCH THROW MECHANISM BOX AND SWITCH HEATER BOX TO STORM SEWER AS SHOWN ON "SA" SERIES DRAWINGS.
9. MANUAL SWITCH MACHINE SHALL BE CONTEC MODEL CSV 34 OR APPROVED EQUAL. POWER SWITCH MACHINE SHALL BE CONTEC MODEL CSV 24 OR APPROVED EQUAL.
10. LEFT HAND TURNOUT SHALL BE OPPOSITE TO THAT SHOWN.

CAUTION UNDERGROUND UTILITIES
2 WORKING DAYS
BEFORE YOU DIG
CALL 1-800-362-2764
OHIO UTILITY PROTECTION SERVICE
CALL NON-SERVICE FACILITY
OWNERS DIRECT

PROFESSIONAL STAMP

SIGN:
DATE:

CONTRACT DRAWING

PRINTS NOT BEARING THIS STAMP WERE MADE PRIOR TO ADVERTISING FOR BIDS AND ARE TO BE CONSIDERED OBSOLETE FOR CONTRACT PURPOSES.

Department of Transportation and Engineering

City of Cincinnati
801 Plum Street
Cincinnati, Ohio 45202

CINCINNATI STREETCAR
TRACKWORK DETAILS

25 METER (82.02') STRAIGHT
EMBEDDED TURNOUT DETAIL

Revisions

No.				

Drawn by	Date
RWB	07/02/12
Designed by	Date
RWB	07/02/12
Checked by	Date
KVL	07/02/12
Reviewed by	Date
JTB	07/12/12

Consultant

PB HDR

File Number

ACC No.
23126

G-TD-1008

c:\pwworking\pitt\d0309447\S_G-TD-1008.dgn
Friday, July 13, 2012 10:28:45 AM

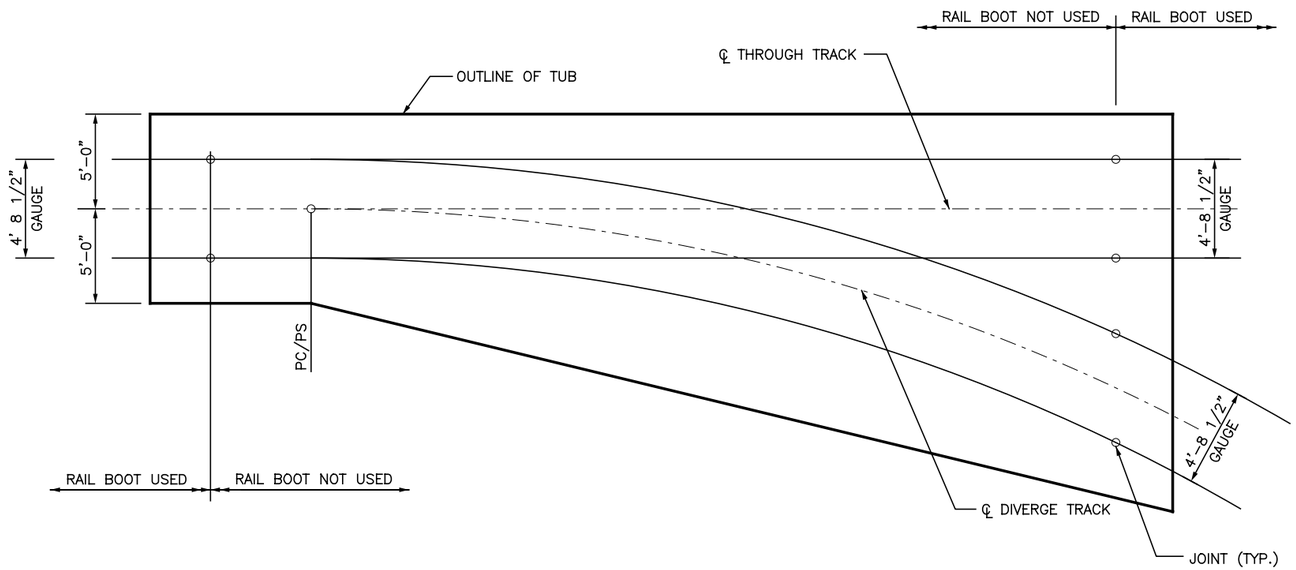

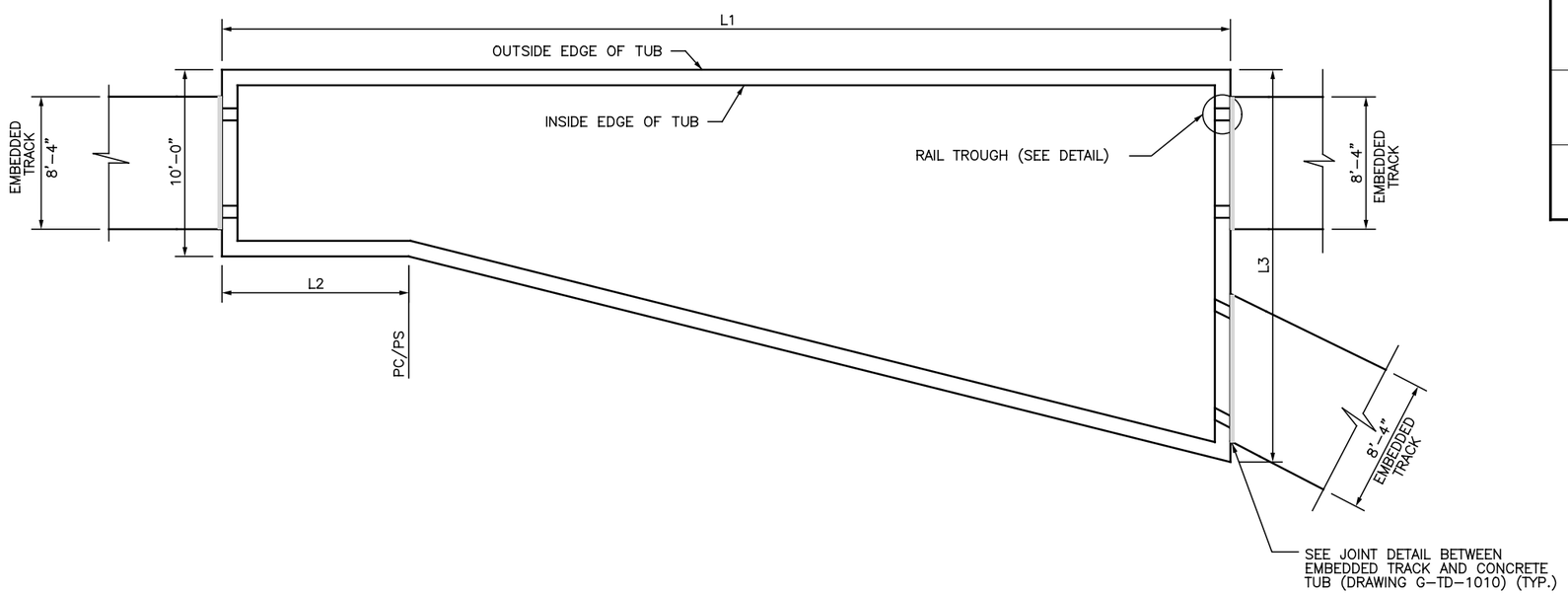

CONCRETE TURNOUT TUB PLAN
NTS

NOTES:

1. USE CLASS 30 (5000 PSI) CONCRETE FOR CONCRETE TUB.
2. VOIDS UNDER BASE OF RAIL BETWEEN SUPPORT PLATES SHALL BE SEALED WITH A COMPRESSIBLE MATERIAL THAT WILL PREVENT CONCRETE INFILL FROM ENTERING THE VOID UNDER THE RAIL BASE.
3. CHAMFER OR GROUT CORNERS AS REQUIRED BY INSULATING MEMBRANE MANUFACTURER.
4. CONDUITS AND DRAINS THAT MUST PENETRATE THROUGH THE INSULATING MEMBRANE SHALL BE PROTECTED BY ADDITIONAL MEMBRANE "BOOTS" OR OTHER METHODS AS REQUIRED BY THE MEMBRANE MANUFACTURER.
5. ALL DRAINAGE CONDUITS FROM HEATER BOXES, TEMPERATURE SENSOR BOXES, SWITCH MACHINES, AND SWITCH INDICATOR BOXES SHALL BE JOINED TOGETHER PRIOR TO EXITING THE CONCRETE TURNOUT TUB. CONTRACTOR TO PROVIDE ALL BENDS, FITTINGS AND INSTALLATIONS NEEDED FOR CONNECTIONS. CONTRACTOR SHALL INSTALL ONE 6" CONDUIT OUTLET PIPE FROM CONCRETE TURNOUT TUB THAT DRAINS ALL MECHANISMS WITHIN THE TUB. SEE "SA" SERIES DRAWINGS FOR CONNECTION TO COMBINED SANITARY AND STORM SYSTEM.
6. REFER TO DRAWING G-TD-1010 FOR TURNOUT TUB SECTIONS AND DETAILS.
7. ACTUAL LENGTHS MAY VARY PER TURNOUT SUPPLIER. SEE TURNOUT SHOP DRAWINGS AND ADJUST TURNOUT TUB LENGTHS IN FIELD.
8. CONTRACTOR IS RESPONSIBLE FOR DETERMINING THE NUMBER OF CONDUITS, THEIR LENGTH, AND LOCATION FOR THE VARIOUS COMPONENTS FOR THE SWITCHES SUCH AS SWITCH INDICATORS, SNOWMELTER SENSOR, SWITCH HEATER, SIGNAL CABINET, POWER, ETC. THIS INCLUDES ANY ADDITIONAL CONDUITS NEEDED TO ALLOW A FUTURE CONVERSION FROM A MANUAL TO A POWER SWITCH. REFER TO THE "SD" SERIES DRAWINGS FOR ADDITIONAL DETAILS. THESE CONDUITS ARE INCIDENTAL TO THE PRICE OF SWITCHES.

TURNOUT	L1	L2	L3
20M (65.62') CURVED	41'	8'	21'
25M (82.02') CURVED	44'	8'	20'
25M (82.02') STRAIGHT	46'	8'	18'

CAUTION UNDERGROUND UTILITIES
2 WORKING DAYS
BEFORE YOU DIG
CALL 1-800-362-2764
OHIO UTILITY PROTECTION SERVICE
CALL NON-SERVICE FACILITY OWNERS DIRECT

PROFESSIONAL STAMP

SIGN:
DATE:

CONTRACT DRAWING
PRINTS NOT BEARING THIS STAMP WERE MADE PRIOR TO ADVERTISING FOR BIDS AND ARE TO BE CONSIDERED OBSOLETE FOR CONTRACT PURPOSES.

Department of Transportation and Engineering
City of Cincinnati
City Hall
801 Plum Street
Cincinnati, Ohio 45202

CINCINNATI STREETCAR
TRACKWORK DETAILS
TURNOUT TUB DETAILS
(SHEET 1 OF 2)

Revisions
No.

Drawn by	Designed by	Checked by	Reviewed by
RWB	RWB	KVL	JTB
Date 07/02/12	Date 07/02/12	Date 07/02/12	Date 07/12/12

Consultant
PB HDR

File Number
ACC No.
23126

G-TD-1009

c:\pwworking\pitt\d0309447\S_G-TD-1009.dgn
Friday, July 13, 2012 10:28:50 AM

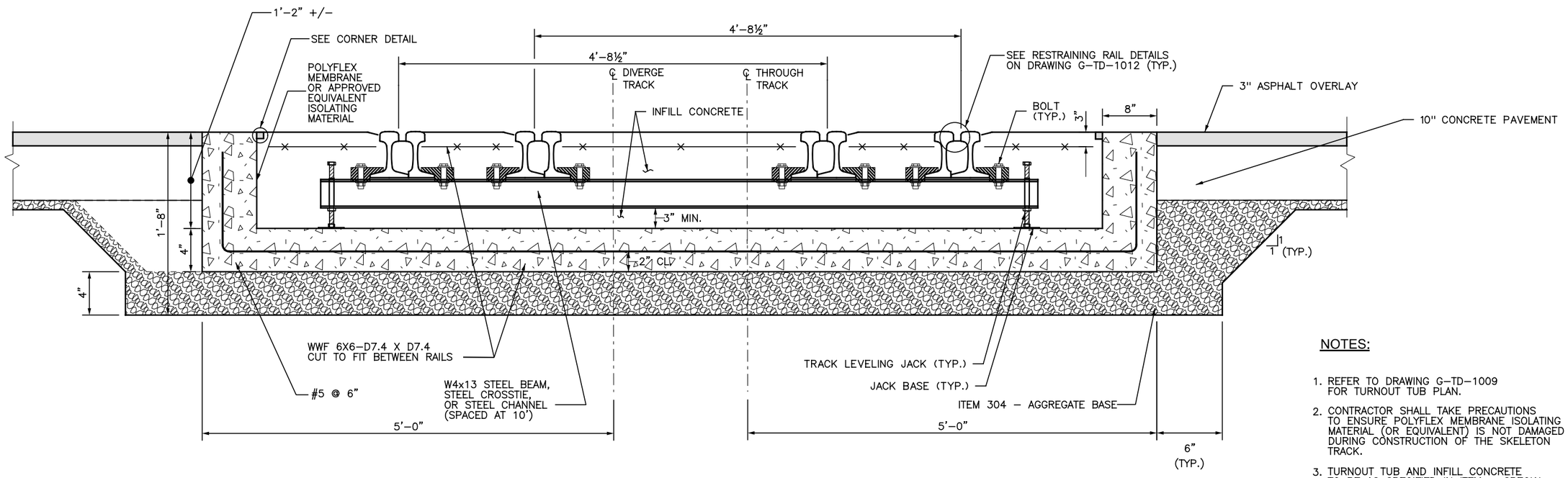

TYPICAL SECTION - CONCRETE TURNOUT TUB

NTS

NOTES:

1. REFER TO DRAWING G-TD-1009 FOR TURNOUT TUB PLAN.
2. CONTRACTOR SHALL TAKE PRECAUTIONS TO ENSURE POLYFLEX MEMBRANE ISOLATING MATERIAL (OR EQUIVALENT) IS NOT DAMAGED DURING CONSTRUCTION OF THE SKELETON TRACK.
3. TURNOUT TUB AND INFILL CONCRETE TO BE AS SPECIFIED IN ITEM - SPECIAL EMBEDDED TRACK

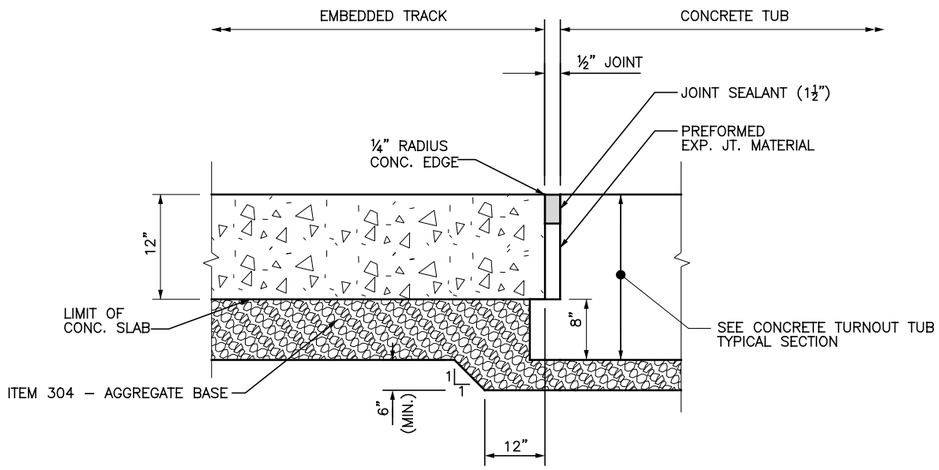

JOINT DETAIL

NTS

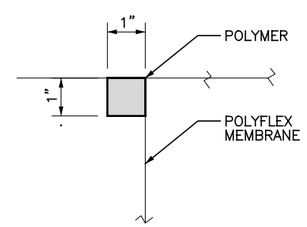

CORNER DETAIL

NTS

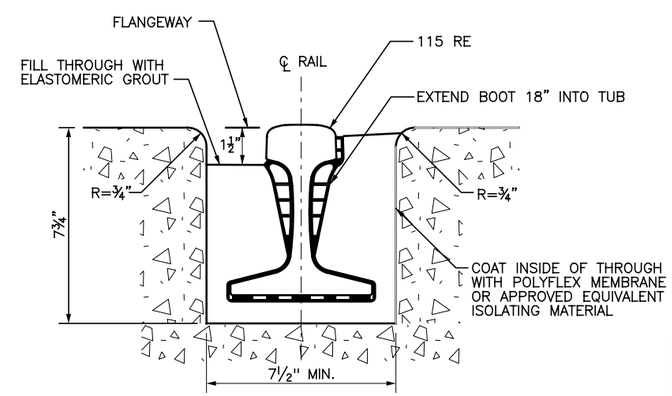

RAIL TROUGH DETAIL AT TUB WALL

NTS

CAUTION UNDERGROUND UTILITIES
2 WORKING DAYS
BEFORE YOU DIG
CALL 1-800-362-2764
OHIO UTILITY PROTECTION SERVICE
CALL NON-SERVICE FACILITY OWNERS DIRECT

PROFESSIONAL STAMP

SIGN:

DATE:

CONTRACT DRAWING

PRINTS NOT BEARING THIS STAMP WERE MADE PRIOR TO ADVERTISING FOR BIDS AND ARE TO BE CONSIDERED OBSOLETE FOR CONTRACT PURPOSES.

Department of Transportation and Engineering

City of Cincinnati
City Hall
801 Plum Street
Cincinnati, Ohio 45202

CINCINNATI STREETCAR
TRACKWORK DETAILS
CONCRETE TURNOUT TUB DETAILS (SHEET 2 OF 2)

Revisions

No.		

Date 07/02/12	Date 07/02/12	Date 07/02/12	Date 07/12/12
Drawn by RWB	Designed by RWB	Checked by KVL	Reviewed by JTB

Consultant

PB HDR

File Number

ACC No. 23126

G-TD-1010

c:\pwworking\pitt\d0309447\S_G-TD-1010.dgn
Friday, July 13, 2012 10:28:57 AM

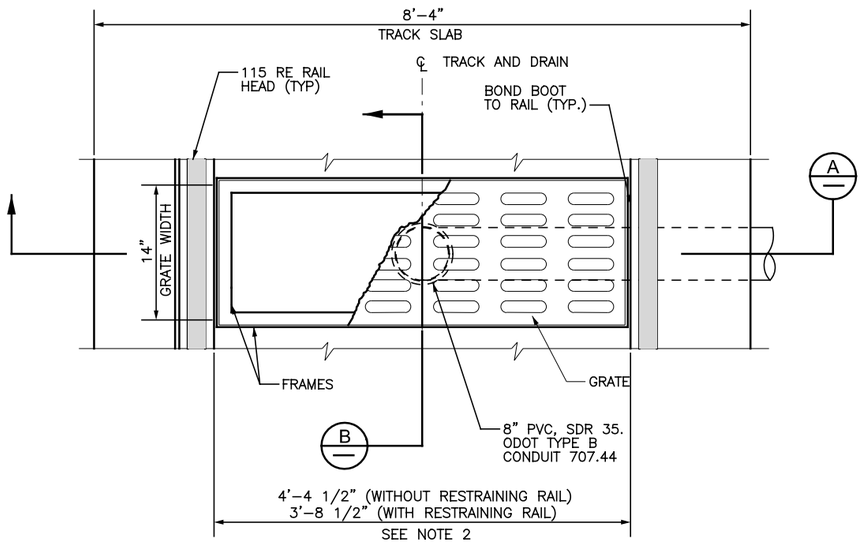

TRACK DRAIN DETAIL
NTS

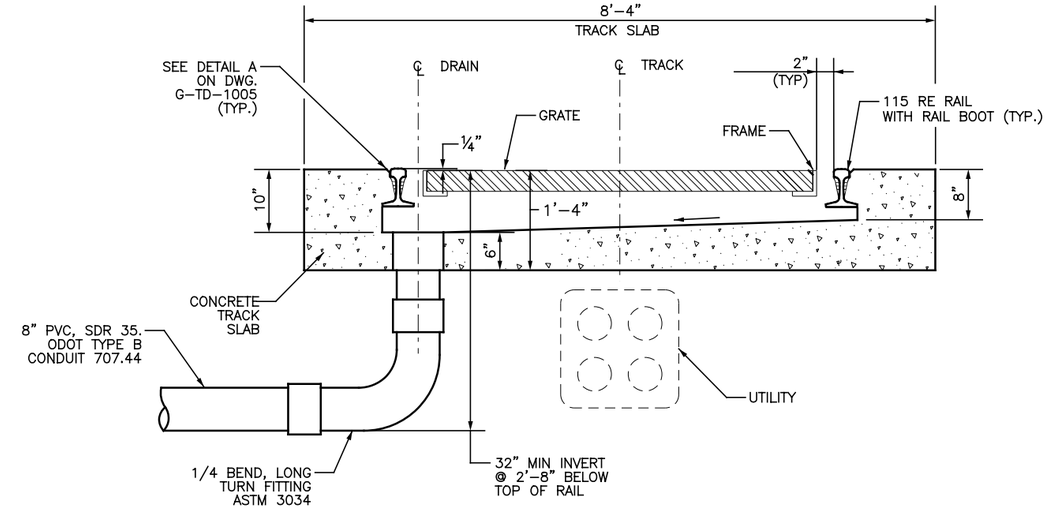

ALTERNATE TRACK DRAIN
NTS

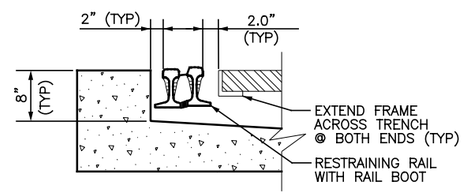

PARTIAL SECTION SHOWING RESTRAINING RAIL
NTS

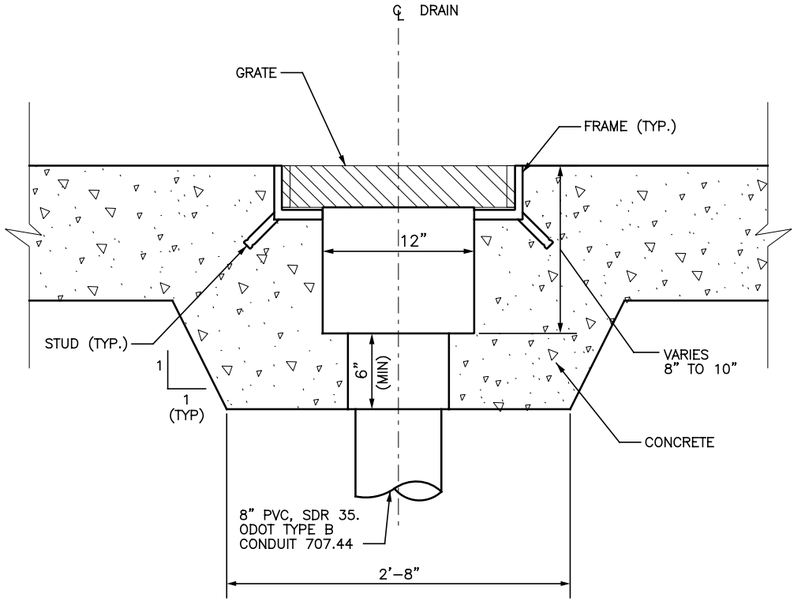

SECTION B
NTS

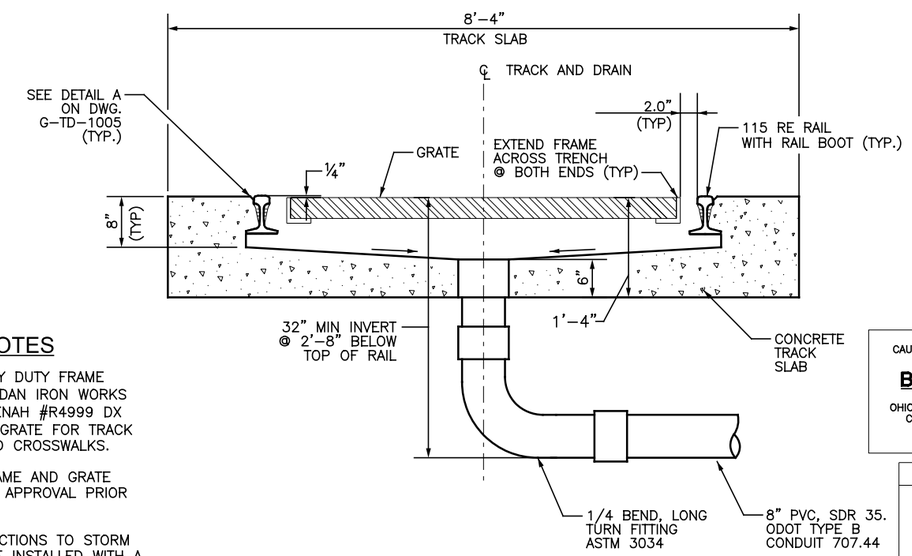

SECTION A
NTS

TRACK DRAIN GENERAL NOTES

1. PROVIDE NEENAH #R4999 DX HEAVY DUTY FRAME AND TYPE "C" GRATE OR EAST JORDAN IRON WORKS OR APPROVED EQUAL. PROVIDE NEENAH #R4999 DX HEAVY DUTY FRAME AND TYPE "P" GRATE FOR TRACK DRAINS WITHIN AND 5 FEET BEYOND CROSSWALKS.
2. CONTRACTOR TO SUBMIT ANGLE FRAME AND GRATE SHOP DRAWINGS TO ENGINEER FOR APPROVAL PRIOR TO FABRICATION.
3. ALL TRACK DRAIN PVC PIPE CONNECTIONS TO STORM OR SANITARY STRUCTURES MUST BE INSTALLED WITH A WATERTIGHT BOOT CONNECTION. PROVIDE THE G3 BOOT SYSTEM AS MANUFACTURED BY A.LOK PRODUCTS, INC., OR APPROVED EQUAL. THE CONNECTION SHALL PROVIDE A WATERTIGHT SEAL BETWEEN THE PIPE AND THE STRUCTURE.
4. REFER TO "PP" AND "SA" SERIES DWGS FOR LOCATIONS.

CAUTION UNDERGROUND UTILITIES
2 WORKING DAYS
BEFORE YOU DIG
CALL 1–800–362–2764
OHIO UTILITY PROTECTION SERVICE
CALL NON–SERVICE FACILITY OWNERS DIRECT

PROFESSIONAL STAMP

SIGN:
DATE:

c:\pwworking\pitt\d0309447\S_G-TD-1011.dgn
Friday, July 13, 2012 10:29:03 AM

CONTRACT DRAWING
PRINTS NOT BEARING THIS STAMP WERE MADE PRIOR TO ADVERTISING FOR BIDS AND ARE TO BE CONSIDERED OBSOLETE FOR CONTRACT PURPOSES.

Department of Transportation and Engineering
City of Cincinnati
City Hall
801 Plum Street
Cincinnati, Ohio 45202

CINCINNATI STREETCAR
TRACKWORK DETAILS

TRACK DRAIN DETAIL

Revisions
No.

Date 07/02/12 | Date 07/02/12 | Date 07/02/12 | Date 07/12/12
Drawn by RWB | Designed by RWB | Checked by KVL | Reviewed by JTB

Consultant
PB HDR

File Number
ACC No. 23126

G-TD-1011

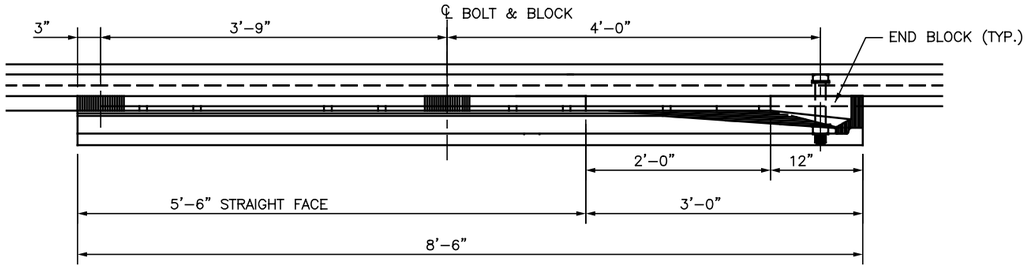

RESTRAINING RAIL END SECTION
NTS

NOTE:

RESTRAINING RAIL SHALL END 10' BEYOND THE PC, PT, TS, ST.

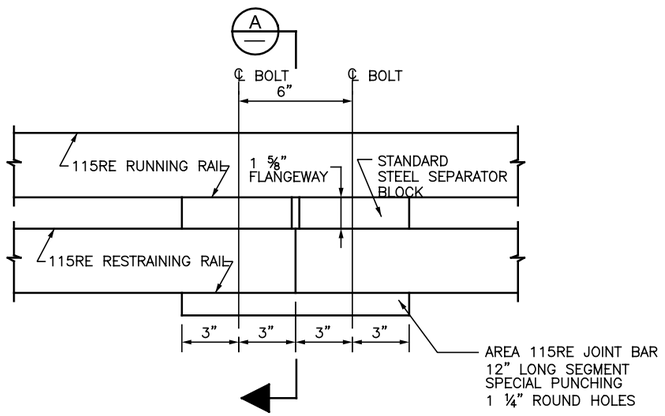

RESTRAINING RAIL JOINT
NTS

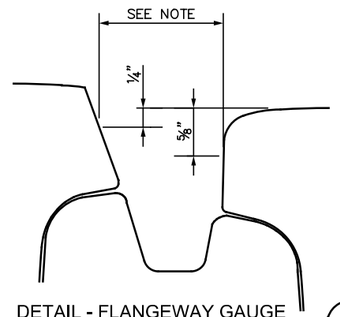

DETAIL - FLANGEWAY GAUGE
1

NTS

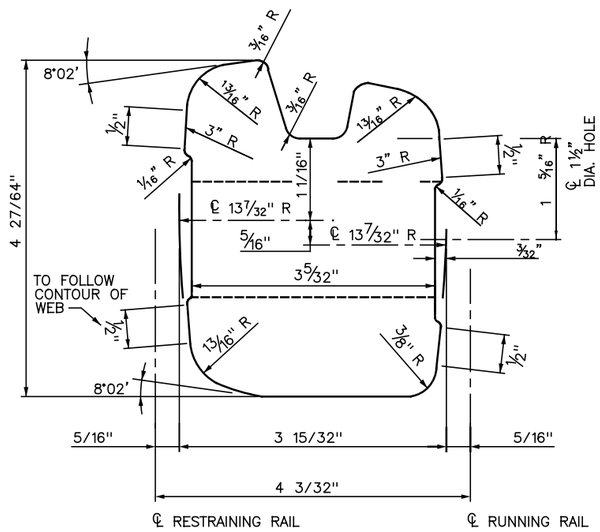

SEPARATOR BLOCK DETAIL
NTS

NOTE:

INCREASE FLANGEWAY FROM 1⅝" TO 1 ¾" FOR FLANGEWAY ON OUTER RAIL OF CURVED TRACK. PROVIDE DETAILS OF EITHER SPECIAL SPACER BLOCKS OR SHIMS ON SHOP DRAWINGS.

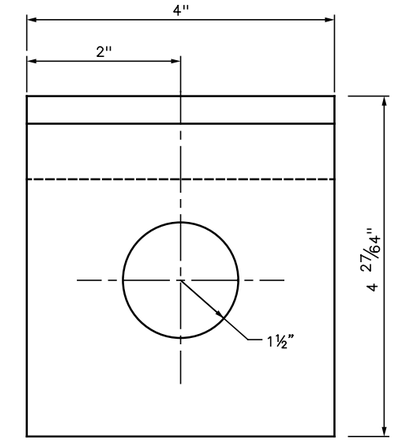

SEPARATOR BLOCK
NTS

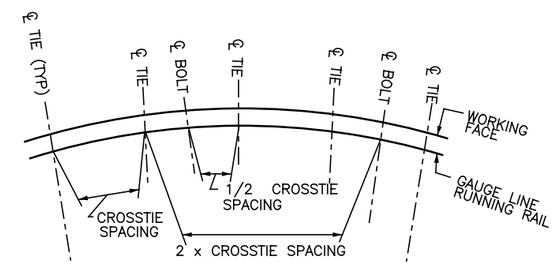

BLOCK & CROSSTIE SPACING
NTS

TABLE 1	
RESTRAINING RAIL SEPARATOR BLOCK LONGITUDINAL SPACING	
CURVE ℄ RADIUS	SPACING
TANGENT	48"
152 ≥ R > 76m	42"
R < 76m	36"

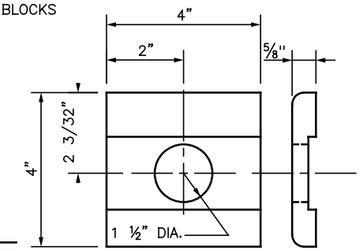

INNER HEADLOCK
NTS

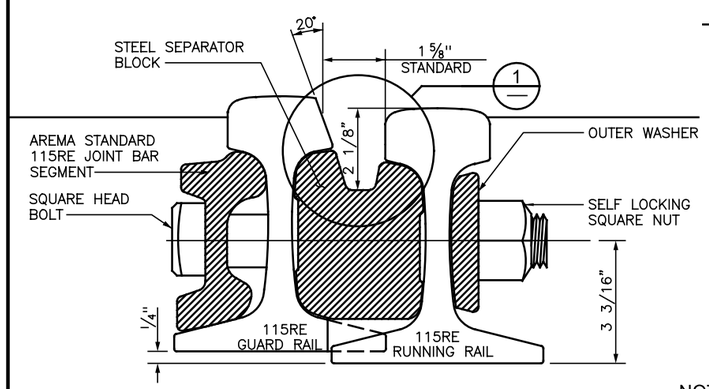

SECTION
A

RAISED AND BEVELED RESTRAINING RAIL SHOWN
NTS

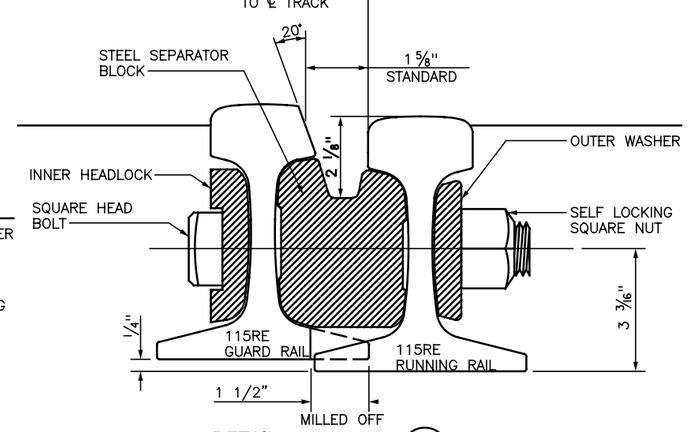

DETAIL
2

RAISED AND BEVELED RESTRAINING RAIL SHOWN
NTS

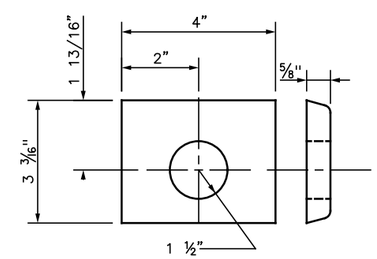

OUTER WASHER
NTS

NOTES:

1. LOCATION OF SEPARATOR BLOCKS SHALL BE COORDINATED WITH THE LOCATION OF TRACK DRAINS.
2. SPACE BETWEEN RUNNING RAIL AND RESTRAINING RAIL SHALL BE FILLED WITH ELASTOMERIC GROUT MAINTAINING A FLANGEWAY DEPTH OF 2⅛" BELOW THE TOP OF RAIL.
3. TRACK GAUGE SHALL BE WIDENED UP TO ½" FOR ANY CURVE RADIUS OF 150' OR LESS. TRACK GAUGE FOR CURVE RADIUS LARGER THAN 500' AND LESS OR EQUAL TO 150' SHALL BE INCREMENTALLY WIDENED FROM ¼" TO ½". NO GAUGE WIDENING SHALL OCCUR IN TANGENT TRACK, OR CURVED TRACK WITH A RADIUS GREATER THAN 150'.
4. RESTRAINING RAIL SHALL EXTEND ALONG TANGENT 10' BEYOND CURVE.

NOTE:

THIS DRAWING PROVIDES THE BASIS OF DESIGN FOR BIDDING PURPOSES ONLY. FINAL TURNOUT DESIGN SHALL BE ACCORDING TO SHOP DRAWINGS SUBMITTED BY SUPPLIER AND REVIEWED BY THE ENGINEER.

RESTRAINING RAIL CONDITIONS				
	ADJACENT TO INSIDE RUNNING RAIL	ADJACENT TO OUTSIDE RUNNING RAIL	RAISED GUARD	20° BEVEL ON RESTRAINING RAIL ADJACENT TO INSIDE RUNNING RAIL
100' < ℄ RADIUS < 600'	YES	NO	YES	NO
℄ RADIUS ≤ 100'	YES	YES	YES	YES
BEYOND TURNOUTS ON TANGENT TRACK	YES	YES	NO	NO

CAUTION UNDERGROUND UTILITIES
2 WORKING DAYS
BEFORE YOU DIG
CALL 1–800–362–2764
OHIO UTILITY PROTECTION SERVICE
CALL NON–SERVICE FACILITY OWNERS DIRECT

PROFESSIONAL STAMP

SIGN:

DATE:

CONTRACT DRAWING

PRINTS NOT BEARING THIS STAMP WERE MADE PRIOR TO ADVERTISING FOR BIDS AND ARE TO BE CONSIDERED OBSOLETE FOR CONTRACT PURPOSES.

Department of Transportation and Engineering

City of Cincinnati
City Hall
801 Plum Street
Cincinnati, Ohio 45202

CINCINNATI STREETCAR
TRACKWORK DETAILS

RESTRAINING RAIL DETAILS

Revisions

No.				

Drawn by RWB Date 07/02/12
Designed by RWB Date 07/02/12
Checked by KVL Date 07/02/12
Reviewed by JTB Date 07/12/12

Consultant

PB HDR

File Number

ACC No. 23126

G-TD-1012

c:\pwworking\pitt\d0309447\S_G-TD-1012.dgn
Friday, July 13, 2012 10:29:08 AM

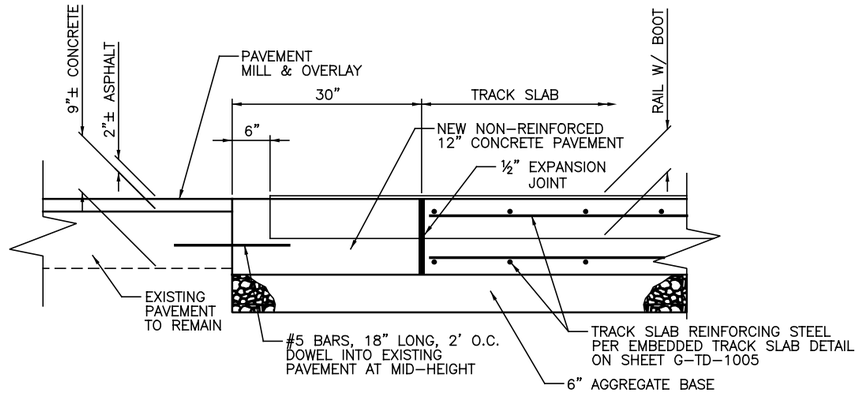

TRACK SLAB TERMINATION DETAIL
NTS

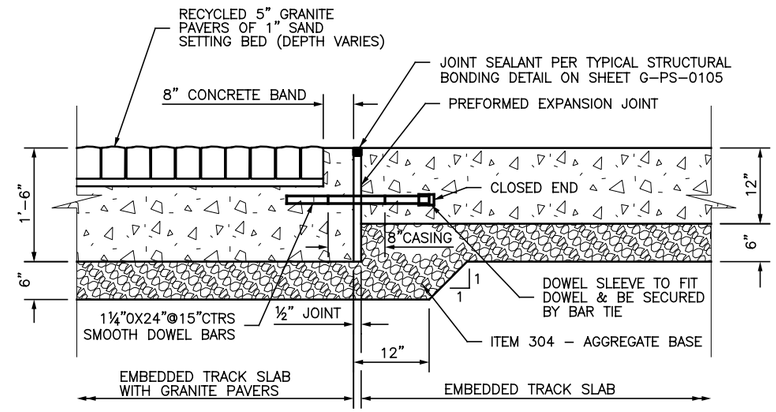

TRANSITION DETAIL BETWEEN EMBEDDED TRACK SLAB TYPES
NTS

NOTES:

1. REFER TO ODOT SCD NUMBER BO-2.2, SECTION 452 (NO DOWEL) FOR DETAILS OF TRANSVERSE PAVEMENT JOINTS.
2. CONTRACTION JOINTS SHALL BE PLACED EVERY 20 FEET ON EMBEDDED TRACK SLAB, ABOVE C-CHANNEL TIES.
3. REFER TO "PS" SERIES FOR TYPICAL STRUCTURAL BONDING DETAIL.

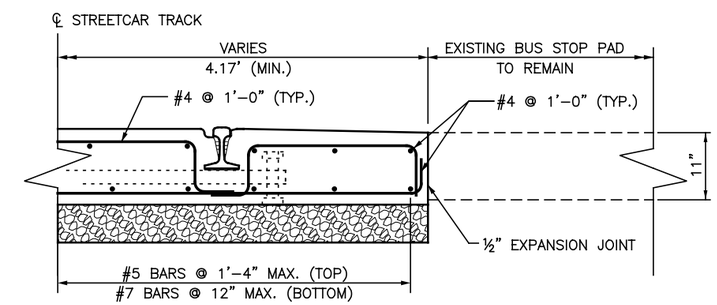

EXTENDED TRACK SLAB DETAIL
NTS

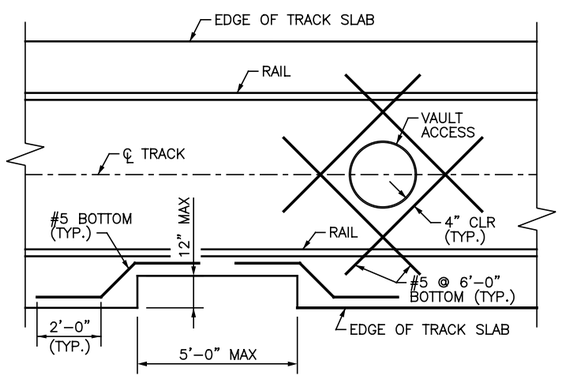

TYPICAL TRACK PENETRATION DETAIL
NTS

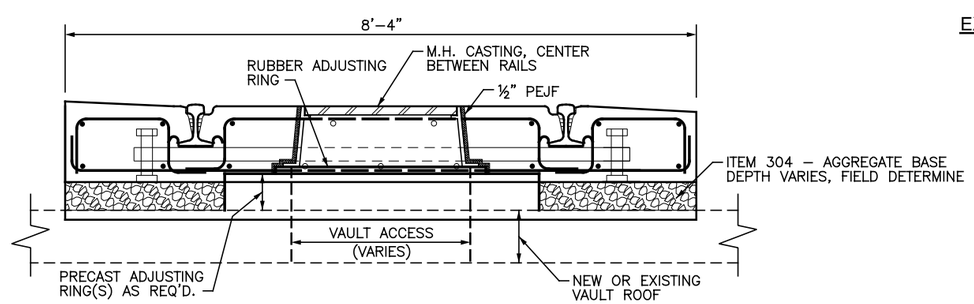

EMBEDDED TRACK SLAB DETAIL @ EXISTING/NEW VAULT
NTS

CAUTION UNDERGROUND UTILITIES
2 WORKING DAYS
BEFORE YOU DIG
CALL 1-800-362-2764
OHIO UTILITY PROTECTION SERVICE
CALL NON-SERVICE FACILITY
OWNERS DIRECT

PROFESSIONAL STAMP

SIGN:
DATE:

CONTRACT DRAWING

PRINTS NOT BEARING THIS STAMP WERE MADE PRIOR TO ADVERTISING FOR BIDS AND ARE TO BE CONSIDERED OBSOLETE FOR CONTRACT PURPOSES.

Department of Transportation and Engineering

City of Cincinnati
801 Plum Street
Cincinnati, Ohio 45202

CINCINNATI STREETCAR
TRACKWORK DETAILS

TRACK MISCELLANEOUS DETAILS

Revisions

No.	Date

	Date
Drawn by JW	07/02/12
Designed by JW	07/02/12
Checked by KVL	07/02/12
Reviewed by JTB	07/12/12

Consultant

PB HDR

File Number

ACC No.
23126

G-TD-1013

c:\pwworking\pitt\d0309447\S_G-TD-1013.dgn
Friday, July 13, 2012 10:29:14 AM

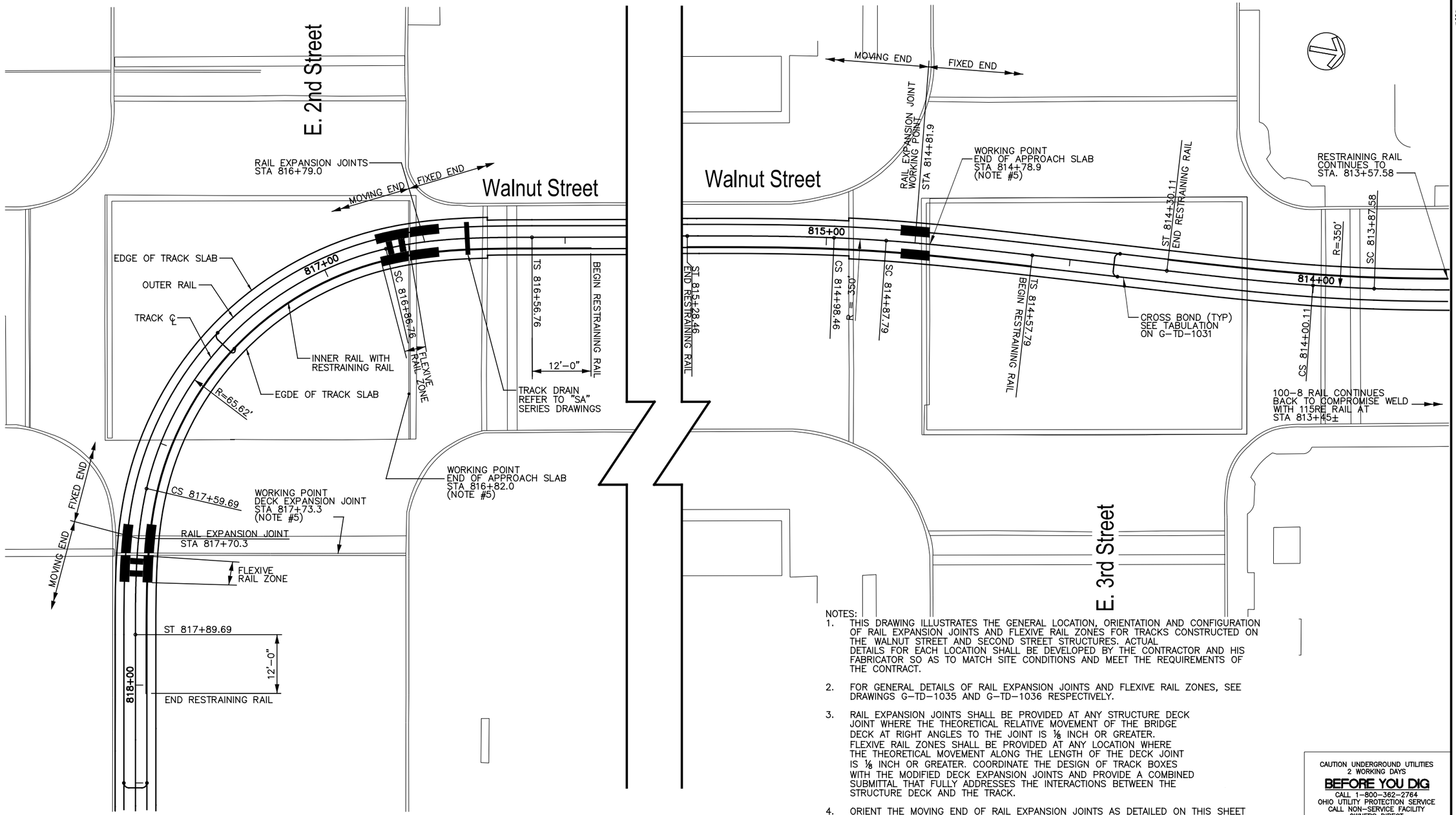

NOTES:

1. THIS DRAWING ILLUSTRATES THE GENERAL LOCATION, ORIENTATION AND CONFIGURATION OF RAIL EXPANSION JOINTS AND FLEXIVE RAIL ZONES FOR TRACKS CONSTRUCTED ON THE WALNUT STREET AND SECOND STREET STRUCTURES. ACTUAL DETAILS FOR EACH LOCATION SHALL BE DEVELOPED BY THE CONTRACTOR AND HIS FABRICATOR SO AS TO MATCH SITE CONDITIONS AND MEET THE REQUIREMENTS OF THE CONTRACT.
2. FOR GENERAL DETAILS OF RAIL EXPANSION JOINTS AND FLEXIVE RAIL ZONES, SEE DRAWINGS G-TD-1035 AND G-TD-1036 RESPECTIVELY.
3. RAIL EXPANSION JOINTS SHALL BE PROVIDED AT ANY STRUCTURE DECK JOINT WHERE THE THEORETICAL RELATIVE MOVEMENT OF THE BRIDGE DECK AT RIGHT ANGLES TO THE JOINT IS ⅛ INCH OR GREATER. FLEXIVE RAIL ZONES SHALL BE PROVIDED AT ANY LOCATION WHERE THE THEORETICAL MOVEMENT ALONG THE LENGTH OF THE DECK JOINT IS ⅛ INCH OR GREATER. COORDINATE THE DESIGN OF TRACK BOXES WITH THE MODIFIED DECK EXPANSION JOINTS AND PROVIDE A COMBINED SUBMITTAL THAT FULLY ADDRESSES THE INTERACTIONS BETWEEN THE STRUCTURE DECK AND THE TRACK.
4. ORIENT THE MOVING END OF RAIL EXPANSION JOINTS AS DETAILED ON THIS SHEET SO AS TO MINIMIZE FORCES TRANFERRED TO THE UNDERLYING STRUCTURE(S).
5. THE LOCATIONS GIVEN ON THE DRAWINGS FOR DECK EXPANSION JOINTS AND ENDS OF APPROACH SLABS ARE APPROXIMATIONS BASED ON FIELD SURVEY OF EXISTING CONDITIONS. VERIFY THE ACTUAL LOCATIONS WHERE SUCH STRUCTURAL FEATURES WILL BE LOCATED AT THE COMPLETION OF THE CONSTRUCTION OF THIS PROJECT AND FABRICATE THE TRACK BOXES, RAIL EXPANSION JOINTS AND FLEXIVE RAIL ZONES TO MATCH THOSE AS-BUILT CONDITIONS.
6. SEE DRAWINGS G-PP-1008 AND 1009 FOR TRACK PROFILE INFORMATION.
7. FOR ROUTING OF DRAINAGE PIPING REFER TO "SA" SERIES DRAWINGS. FOR ROUTING OF DRAINAGE PIPING SPECIFIC TO THE TWO TRACK BOXES LOCATED AT THIRD STREET REFER TO "ST" SERIES DRAWINGS.
8. SEE NOTE #3, DRAWING G-TD-1031.

GRAPHIC SCALE

10 0 10 20 40

(IN FEET)
1 inch = 10 ft. Full Size
1 inch = 20 ft. Half Size

CAUTION UNDERGROUND UTILITIES
2 WORKING DAYS
BEFORE YOU DIG
CALL 1-800-362-2764
OHIO UTILITY PROTECTION SERVICE
CALL NON-SERVICE FACILITY
OWNERS DIRECT

PROFESSIONAL STAMP

STATE OF OHIO
LAWRENCE GEORGE LOVEDY
E-58724
REGISTERED PROFESSIONAL ENGINEER

SIGN:

DATE: 07/02/12

DEPARTMENT OF TRANSPORTATION & ENGINEERING
CITY OF CINCINNATI OHIO

CONTRACT DRAWING

PRINTS NOT BEARING THIS STAMP WERE MADE PRIOR TO ADVERTISING FOR BIDS AND ARE TO BE CONSIDERED OBSOLETE FOR CONTRACT PURPOSES.

Department of Transportation and Engineering

City of Cincinnati
City Hall
801 Plum Street
Cincinnati, Ohio 45202

CINCINNATI STREETCAR
CENTRAL BUSINESS DISTRICT
TRACKWORK PLAN, 2ND & WALNUT

Revisions

No.		

Drawn by KB/KLS	Date 07/02/12
Designed by LGL	Date 07/02/12
Checked by WGT	Date 07/02/12
Reviewed by JTB	Date 07/12/12

Consultant

PB HDR

File Number

ACC No. 23126

G-TD-1030

$PLTDRV$$
T:\29014g_Cincinnati.Street.Car\TRACK\G-TD-1030.dgn
7/16/2012 10:16:51 AM

NOTES:

1. SEE DRAWING G–TD–1030 FOR ADDITIONAL NOTES APPLICABLE TO THIS DRAWING.
2. SEE DRAWING G–PP–1010 FOR TRACK PROFILE INFORMATION.
3. BOTH RAIL EXPANSION JOINTS AT 824+33.8, 814+81.9, AND THE OUTER RAILS AT 816+79.0, 817+70.3, 821+40.7, AND 822+35.7 ARE WITHOUT RESTRAINING RAIL AND SHALL INCLUDE A FLARE ON BOTH ENDS OF GUARD BAR.

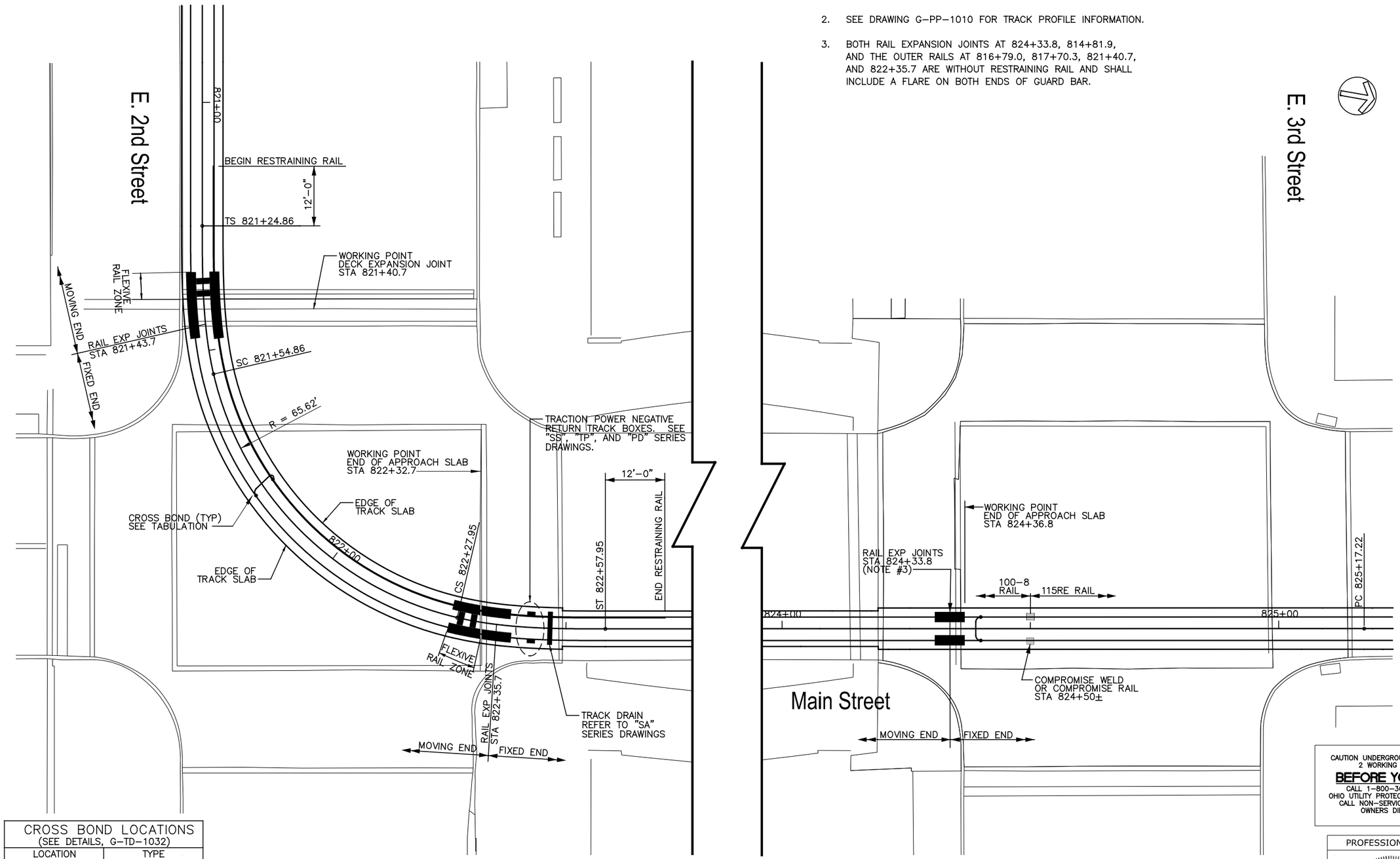

CROSS BOND LOCATIONS (SEE DETAILS, G–TD–1032)	
LOCATION	TYPE
814+40	1
816+00	1
817+25	2
818+20	1
820+80	1
821+80	2
823+50	1
824+40	1

GRAPHIC SCALE

10 0 10 20 40

(IN FEET)

1 inch = 10 ft. Full Size

1 inch = 20 ft. Half Size

CAUTION UNDERGROUND UTILITIES
2 WORKING DAYS
BEFORE YOU DIG
CALL 1–800–362–2764
OHIO UTILITY PROTECTION SERVICE
CALL NON–SERVICE FACILITY
OWNERS DIRECT

PROFESSIONAL STAMP

STATE OF OHIO
LAWRENCE GEORGE LOVEJOY
E-58724
REGISTERED PROFESSIONAL ENGINEER

SIGN:

DATE: 07/02/12

CONTRACT DRAWING

PRINTS NOT BEARING THIS STAMP WERE MADE PRIOR TO ADVERTISING FOR BIDS AND ARE TO BE CONSIDERED OBSOLETE FOR CONTRACT PURPOSES.

Department of Transportation and Engineering

City of Cincinnati
City Hall
801 Plum Street
Cincinnati, Ohio 45202

CINCINNATI STREETCAR
CENTRAL BUSINESS DISTRICT
TRACKWORK PLAN, 2ND & MAIN

Revisions

No.		Date
		07/02/12
		07/02/12
		07/02/12
		07/12/12

Drawn by KB/KLS — Date 07/02/12
Designed by LGL — Date 07/02/12
Checked by WGT — Date 07/02/12
Reviewed by JTB — Date 07/12/12

Consultant

PB HDR

File Number

ACC No. 23126

G-TD-1031

$PLTDRV$$
T:\29014a_Cincinnati.Street.Car\TRACK\G-TD-1031.dgn
7/16/2012 10:46:29 AM

STEEL CROSSTIE SPACING (SEE NOTE #2)	
TANGENT TRACK	6'–0"
R > 500'	5'–0"
R > 100'	4'–0"
R ≤ 100'	3'–0"

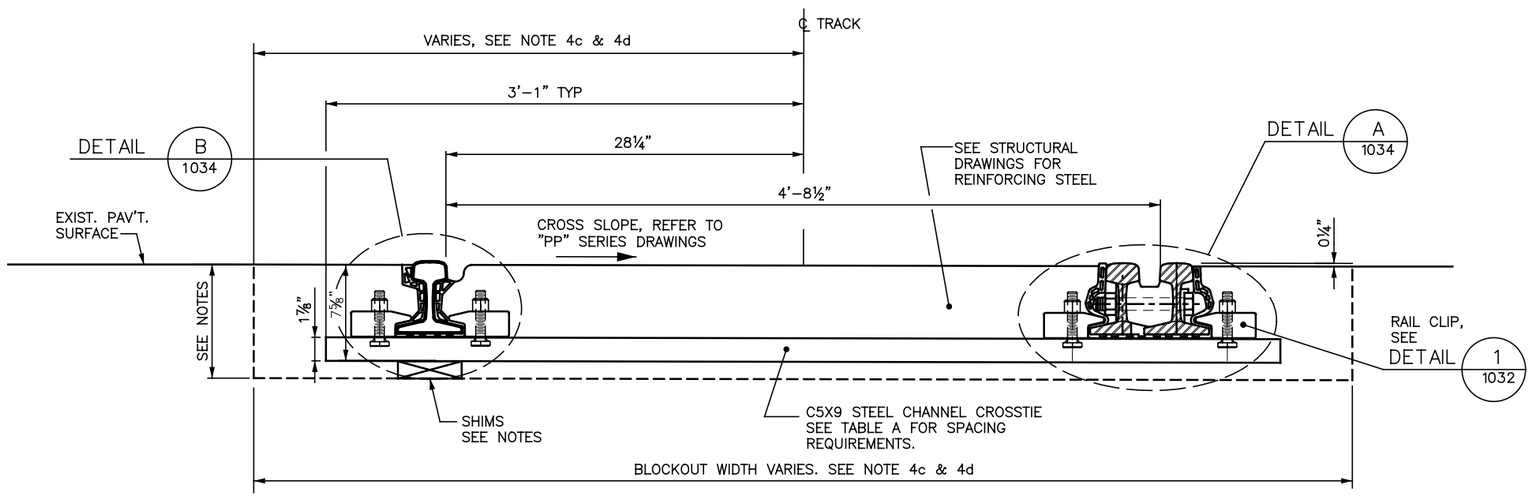

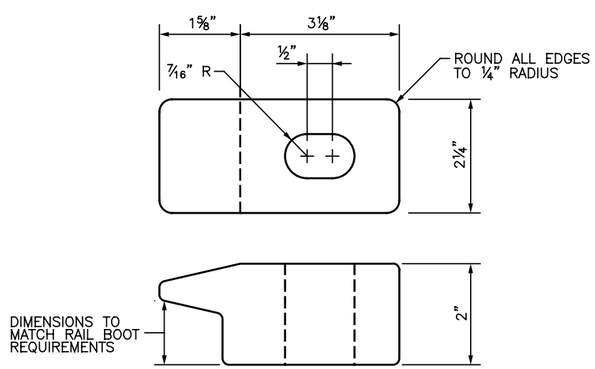

MATERIAL: SEE SPECIFICATIONS

DETAIL 1 1032 RAIL CLIP

NOTES:

1. EXCEPT AS NOTED, INFORMATION SHOWN ON THIS DRAWING IS APPLICABLE ONLY TO EMBEDDED TRACKWORK ON THE STRUCTURES SOUTH OF THIRD STREET, GENERALLY THE BRIDGES CARRYING WALNUT STREET AND MAIN STREET OVER FOR WASHINGTON WAY (I–71) AND SECOND STREET BETWEEN WALNUT AND MAIN.

2. REFER TO DRAWINGS G–TD–1035 THROUGH 1037 FOR SECTIONS AND DETAILS AT LOCATIONS WHERE THE TRACK CROSSES EXPANSION JOINTS IN THE BRIDGE STRUCTURES.

3. REFER TO STRUCTURAL DRAWINGS FOR THE FOLLOWING DETAILS:

   a. DEMOLITION REQUIREMENTS TO CREATE THE TROUGHS IN THE EXISTING BRIDGE DECKS FOR THE TRACK SLABS.

   b. WATERPROOFING AND DRAINAGE BOARD MATERIALS TO BE APPLIED TO THE BOTTOM OF THE COMPLETED TRACK SLAB.

   c. REINFORCING STEEL IN THE TRACK SLABS

   d. INFORMATION CONCERNING CONCRETE IN THE TRACK AREA INCLUDING THE USE OF SPECIAL CONCRETE MIX DESIGN.

4. DIMENSIONS OF THE BLOCKOUT / TRACK TROUGH IN THE BRIDGE DECKS WILL VARY BY LOCATION. THE FOLLOWING SHALL APPLY.

   a. DEPTH: EXISTING BLOCKOUT DIMENSIONS FOR THE TRACK SLAB ON THE WALNUT STREET AND MAIN STREET BRIDGES IS RESTRICTED TO NO MORE THAN 9 INCHES. ADDITIONAL DEPTH IS AVAILABLE THROUGH THE APPROACH SLABS ON THE NORTH AND SOUTH ENDS OF THESE STRUCTURES. SEE STRUCTURAL DRAWINGS.

   b. TRACK SLAB DEPTH ON THE SECOND STREET BRIDGE, INCLUDING THE INTERSECTIONS WITH WALNUT AND MAIN, IS LIMITED TO NO MORE THAN 10 INCHES DEPTH. SEE STRUCTURAL DRAWINGS.

   c. OVERALL TRACK SLAB WIDTH ON THE WALNUT AND MAIN STREET BRIDGES IS RESTRICTED TO NO MORE THAN 7'–3" DUE TO THE ANTICIPATED LOCATION OF POST–TENSIONING STEEL IN THE EXISTING BRIDGE DECK. THE TRACK MIGHT NOT NECESSARILY BE CENTERED IN THE TROUGH. DUE TO TRACK POSITION AND CURVATURE AND THE POSSIBILITY THAT THE POST–TENSIONING REINFORCEMENT MAY BE IN A DIFFERENT LOCATION THAN ANTICIPATED, THERE MAY BE AS LITTLE AS 3'–3" +/– FROM THE CENTERLINE OF TRACK TO ONE EDGE OF THE TRACK TROUGH. IN THE CURVED TRACK AT THE NORTH AND SOUTH ENDS OF THE STRUCTURES IT MAY BE NECESSARY TO ADJUST STEEL TIE LOCATIONS / SPACINGS TO AVOID PINCH POINTS. SEE STRUCTURAL DRAWINGS.

   d. TRACK SLAB WIDTH ON THE SECOND STREET STRUCTURE WILL BE 8'–4". SEE STRUCTURAL DRAWINGS.

   e. SEE STRUCTURAL DRAWINGS FOR TRACK SLAB DIMENSIONS THROUGH NEWLY CONSTRUCTED APPROACH SLABS ON THE SOUTH END OF THE BRIDGES OVER FORT WASHINGTON WAY.

5. STEEL CROSSTIES AND HARDWARE SHALL BE EPOXY COATED. SEE SPECIFICATIONS.

6. TRACK CONSTRUCTION USING 100–8 RAIL CONTINUES ALONG WALNUT AND MAIN NORTH OF FORT WASHINGTON WAY TO POINTS INDICATED ON DRAWINGS G–TD–1030 AND 1031. EXCEPT FOR RAIL SECTION, TRACK CONSTRUCTION DETAILS IN THE ZONE NORTH OF THE SOUTH CURBLINE OF THIRD STREET SHALL GENERALLY MATCH DRAWING G–TD–1005.

CAUTION UNDERGROUND UTILITIES
2 WORKING DAYS
BEFORE YOU DIG
CALL 1–800–362–2764
OHIO UTILITY PROTECTION SERVICE
CALL NON–SERVICE FACILITY OWNERS DIRECT

PROFESSIONAL STAMP

STATE OF OHIO
LAWRENCE GEORGE LOVELOY
E-58724
REGISTERED PROFESSIONAL ENGINEER

SIGN:

DATE: 07/02/12

CONTRACT DRAWING

PRINTS NOT BEARING THIS STAMP WERE MADE PRIOR TO ADVERTISING FOR BID AND ARE TO BE CONSIDERED OBSOLETE FOR CONTRACT PURPOSES.

Department of Transportation and Engineering

City of Cincinnati
City Hall
801 Plum Street
Cincinnati, Ohio 45202

CINCINNATI STREETCAR
CENTRAL BUSINESS DISTRICT
EMBEDDED TRACK ON BRIDGES MISCELLANEOUS DETAILS

Revisions

No.				

Drawn by KLS	Date 07/02/12
Designed by LGL	Date 07/02/12
Checked by WGT	Date 07/02/12
Reviewed by JTB	Date 07/12/12

Consultant

PB HDR

File Number

ACC No. 23126

G-TD-1032

$PLTDRVS$
T:\290144_Cincinnati.Street.Car\TRACK\G-TD-1032.dgn
7/16/2012 10:16:53 AM

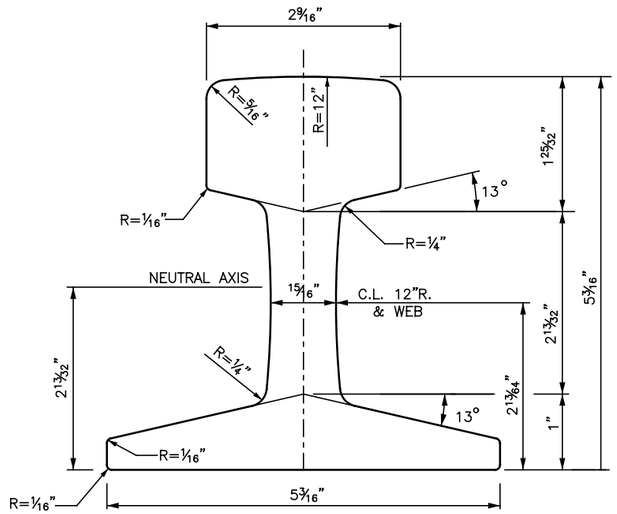

105CR CRANE RAIL SECTION

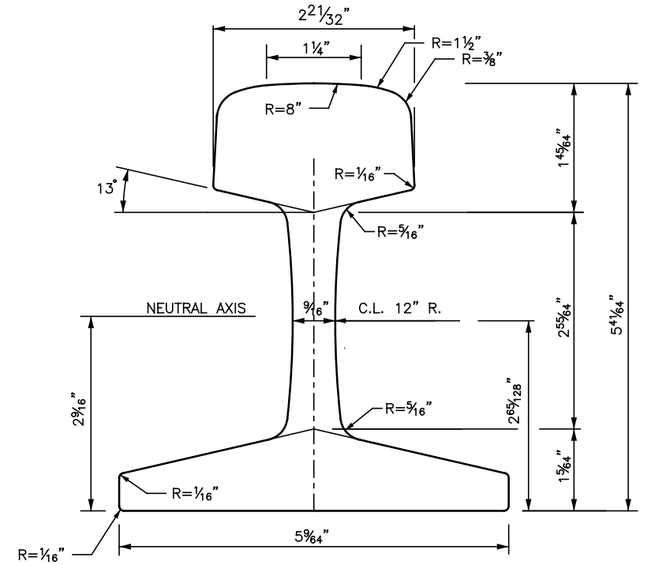

100-8 RAIL SECTION

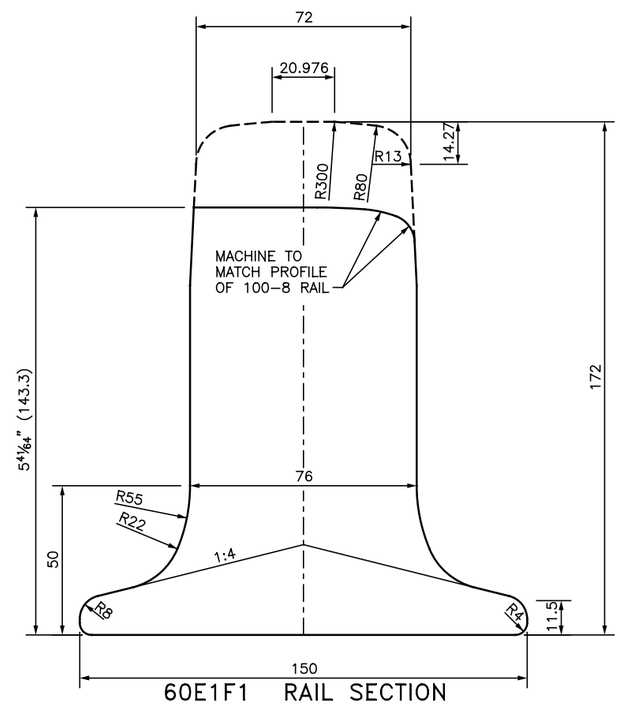

60E1F1 RAIL SECTION
(ALTERNATIVE TO 105CR)

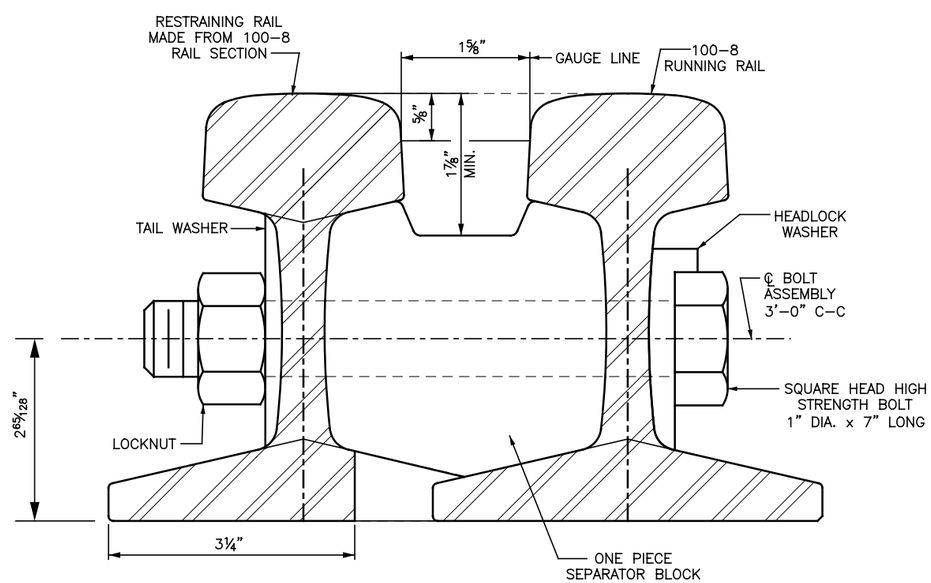

RESTRAINING RAIL ASSEMBLY

NOTES:

1. DETAILS ON THIS SHEET APPLY ONLY TO TRACKWORK CONSTRUCTED ON THE WALNUT STREET, 2nd STREET AND MAIN STREET STRUCTURES.
2. SO AS TO MINIMIZE THE OVERALL DEPTH OF THE TRACK STRUCTURES, ALL TRACK CONSTRUCTED SOUTH OF 3RD STREET SHALL BE CONSTRUCTED USING 100–8 TEE RAIL INSTEAD OF THE 115RE TEE RAIL USED ELSEWHERE ON THE PROJECT. THE ONLY EXCEPTION IS THAT THE RAIL EXPANSION JOINTS SHALL BE FABRICATED FROM EITHER THICK–WEB 105CR CRANE RAIL OR CEN 60E1F1 RAIL. PROVIDE COMPROMISE RAILS OR COMPROMISE WELDS BETWEEN 115RE RAIL AND 100–8 RAIL AT LOCATIONS SHOWN ON THE DRAWINGS. SEE SPECIFICATIONS.
3. RESTRAINING RAIL ASSEMBLY SHALL BE FABRICATED USING SHOP CURVED 100–8 RAIL IN ACCORDANCE WITH THE SPECIFICATIONS.

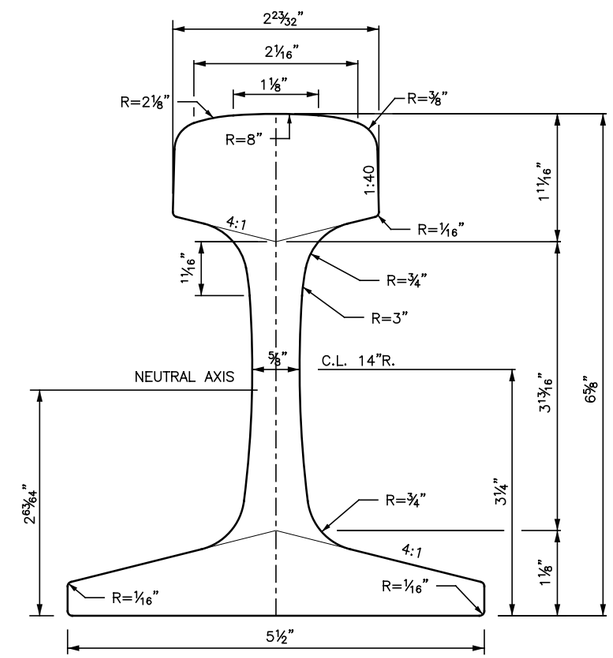

115 RE RAIL SECTION
(FOR REFERENCE ONLY)

CAUTION UNDERGROUND UTILITIES
2 WORKING DAYS
BEFORE YOU DIG
CALL 1–800–362–2764
OHIO UTILITY PROTECTION SERVICE
CALL NON–SERVICE FACILITY
OWNERS DIRECT

PROFESSIONAL STAMP

STATE OF OHIO
LAWRENCE GEORGE LOVEDAY
E-58724
REGISTERED
PROFESSIONAL ENGINEER

SIGN:

DATE: 07/02/12

CONTRACT DRAWING

PRINTS NOT BEARING THIS STAMP WERE MADE PRIOR TO ADVERTISING FOR BIDS AND ARE TO BE CONSIDERED OBSOLETE FOR CONTRACT PURPOSES.

Department of Transportation and Engineering

City of Cincinnati
City Hall
801 Plum Street
Cincinnati, Ohio 45202

CINCINNATI STREETCAR
CENTRAL BUSINESS DISTRICT
RAIL SECTIONS FOR BRIDGE TRACKWORK

Revisions

No.				

Date	07/02/12	Date	07/02/12	Date	07/02/12
Drawn by	KB/KLS	Designed by	LGL	Checked by	WGT
Reviewed by	JTB				

Consultant

PB HDR

File Number

ACC No.
23126

G-TD-1033

$PLTDRV$
T:\29014g_Cincinnati.Street.Car\TRACK\G-TD-1033.dgn
7/16/2012 10:16:54 AM

NOTES:

1. DETAILS ON THIS SHEET APPLY ONLY TO TRACKWORK CONSTRUCTED ON THE WALNUT STREET, 2ND STREET AND MAIN STREET STRUCTURES.

2. RAIL BOOT CONFIGURATION SHOWN IS NOT EXACT AND MAY BE MODIFIED TO MEET THE MANUFACTURER'S STANDARD DESIGNS AND TOOLING. COORDINATE THE DESIGN OF THE RAIL BOOT WITH THE DESIGN OF THE RESTRAINING RAIL ASSEMBLY SO THE BOOT FITS SNUGLY OVER THE RESTRAINING RAIL BOLTS WITHOUT STRETCHING. PROVIDE MODULAR FILLERS TO MAINTAIN THE BOOT SHAPE BETWEEN RESTRAINING RAIL BOLTS.

3. RAIL CLIPS SHALL BE CONFIGURED APPROXIMATELY AS SHOWN AND DESIGNED TO MATCH THE SHAPE OF THE RAIL BOOT. PROVIDE RADII ON ALL EDGES THAT INTERFACE WITH THE RAIL BOOT SO AS TO AVOID DAMAGING THE RUBBER BOOT. RAIL CLIP SHALL BE CAST OR MACHINED STEEL OR DUCTILE IRON. PLASTIC RAIL CLIPS ARE NOT ACCEPTABLE. A PAIR OF RAIL CLIP ASSEMBLIES SHALL, WHEN TESTED IN ACCORDANCE WITH AREMA CHAPTER 30, SECTION 2.6.1 "TEST 5A FASTENER UPLIFT", RESIST A LOAD P OF 2000 POUNDS WITHOUT FAILURE.

4. PRIOR TO PLACING CONCRETE PAVEMENT, EITHER PLACE A FORM–FITTING PROTECTIVE CAP OVER THE RAIL CLIP ASSEMBLY OR COAT THE EXPOSED SURFACES OF THE RAIL CLIP ASSEMBLY WITH A BOND BREAKER SO THAT CONCRETE WILL NOT ADHERE TO THEM.

5. FLANGEWAYS ADJACENT TO SINGLE RUNNING RAILS SHALL BE SHAPED AS SHOWN. PROVIDE A CONCRETE FINISHING TOOL TO ACHIEVE THE SPECIFIED SHAPE. COMPLETE A DEMONSTRATION SECTION NOT LESS THAN 10 FEET IN LENGTH TO SHOW COMPLIANCE WITH THIS REQUIREMENT.

6. FLANGEWAYS BETWEEN RUNNING RAILS AND RESTRAINING RAILS SHALL BE FILLED WITH AN ELASTOMERIC GROUT MATERIAL UP TO THE ELEVATION OF THE TOP OF THE SEPARATOR BLOCKS. CLEAN FLANGEWAYS OF LOOSE DEBRIS PRIOR TO PLACING GROUT. ELASTOMERIC GROUT USED IN FLANGEWAYS MAY BE MIXED WITH A FILLER MATERIAL SUCH AS CRUMB RUBBER. FILLER MATERIALS SHALL NOT BE USED FOR ANY OTHER ELASTOMERIC GROUT APPLICATIONS EXCEPT AS MAY BE SPECIFICALLY NOTED ON THE DRAWINGS.

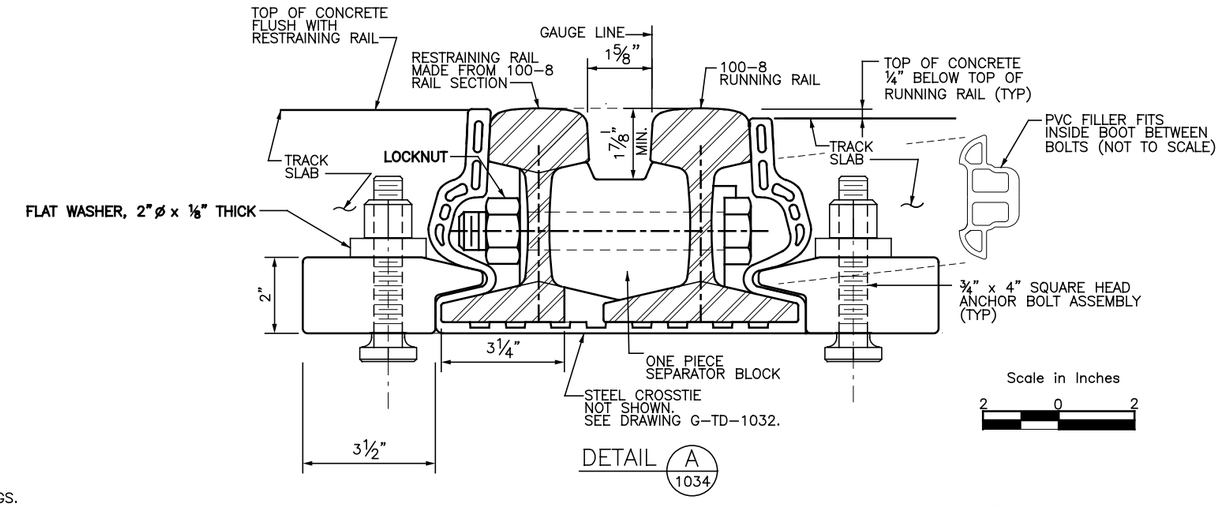

DETAIL A 1034

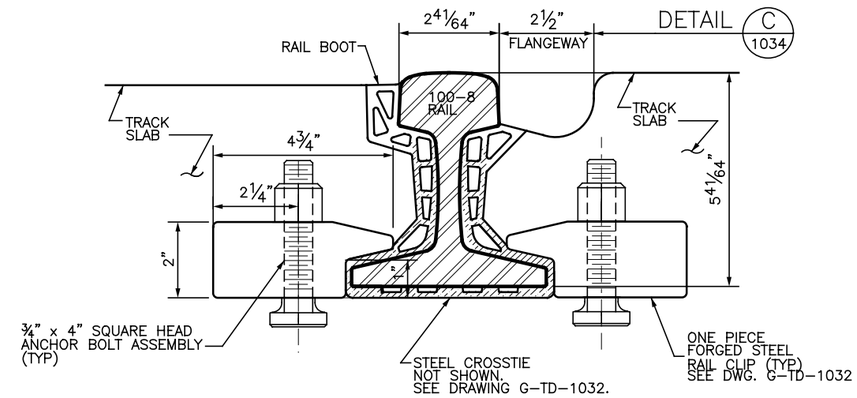

DETAIL B 1034

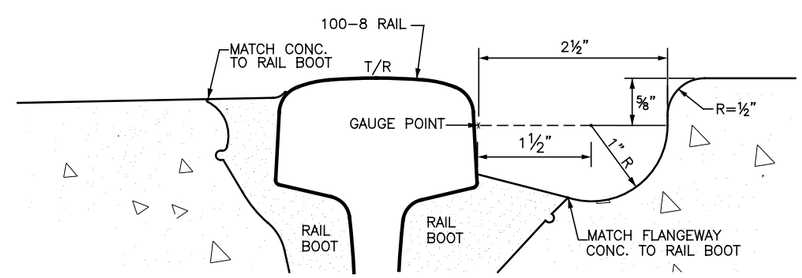

DETAIL C 1034

FLANGEWAY DETAIL

Scale in Inches
1 0 1

CAUTION UNDERGROUND UTILITIES
2 WORKING DAYS
BEFORE YOU DIG
CALL 1–800–362–2764
OHIO UTILITY PROTECTION SERVICE
CALL NON–SERVICE FACILITY OWNERS DIRECT

PROFESSIONAL STAMP

STATE OF OHIO
LAWRENCE GEORGE LOVEDAY
E-58724
REGISTERED PROFESSIONAL ENGINEER

SIGN:

DATE: 07/02/12

CONTRACT DRAWING

PRINTS NOT BEARING THIS STAMP WERE MADE PRIOR TO ADVERTISING FOR BIDS AND ARE TO BE CONSIDERED OBSOLETE FOR CONTRACT PURPOSES.

Department of Transportation and Engineering

City of Cincinnati
City Hall
801 Plum Street
Cincinnati, Ohio 45202

CINCINNATI STREETCAR
CENTRAL BUSINESS DISTRICT
RAIL FASTENING DETAILS

Revisions

No.		

Drawn by KB/KLS	Date 07/02/12	
Designed by LGL	Date 07/02/12	
Checked by WGT	Date 07/02/12	
Reviewed by JTB	Date 07/12/12	

Consultant

PB HDR

File Number

ACC No. 23126

G-TD-1034

$PLTDRV$$
T:\29014a_Cincinnati.Street.Car\TRACK\G-TD-1034.dgn
7/16/2012 10:16:55 AM

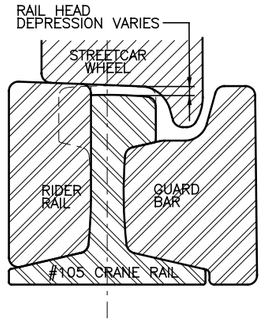

SECTION A 1035

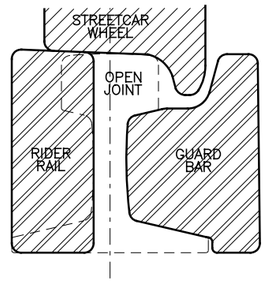

SECTION B 1035

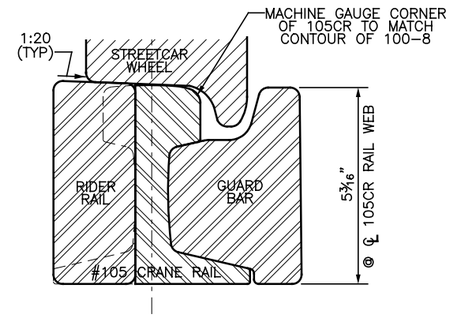

SECTION C 1035

NOTES:

1. DETAILS ON THIS SHEET APPLY ONLY TO TRACKWORK CONSTRUCTED ON THE WALNUT STREET, 2ND STREET AND MAIN STREET STRUCTURES.
2. RAIL EXPANSION JOINTS SHALL BE FABRICATED IN ACCORDANCE WITH CONTRACT SPECIFICATIONS AND THE AREMA SPECIFICATIONS FOR SPECIAL TRACKWORK.
3. THE COMPONENT PARTS FOR RAIL EXPANSION JOINTS IN CURVED TRACK SHALL MATCH THE RADIUS OF THE CURVE OR SPIRAL THROUGHOUT THEIR FULL LENGTH.
4. RAIL EXPANSION JOINT IS SHOWN FABRICATED FROM THICK WEB 105CR CRANE RAIL SO AS TO PROVIDE MAXIMUM STRENGTH. OTHER THICK WEB SECTIONS, SUCH AS CEN FULL WEB SECTION 60E1F1, MAY BE CONSIDERED, BUT SHALL BE MACHINED SO AS TO BE BOTH NOT TALLER THAN THE 100-8 RAIL SECTION AND MATCH THE HEAD AND GAUGE CORNER RADII OF THE 100-8 RAIL. RAIL SECTION USED SHALL BE METALLURGICALLY COMPATIBLE WITH HEAD HARDENED 100-8 TEE RAIL SO AS TO FACILITATE A FLASH BUTT WELD BETWEEN THE TWO RAIL SECTIONS.
5. RAIL EXPANSION JOINT AND THE TRACK BOX CONTAINING IT SHALL BE ENTIRELY ON ONE SIDE OF THE BRIDGE DECK EXPANSION DAM. THE MOVING END OF RAIL EXPANSION JOINT SHALL BE ADJACENT TO THE BRIDGE DECK EXPANSION DAM.
6. SEE DRAWING G-TD-1037 FOR ADDITIONAL TRACK BOX DETAILS.

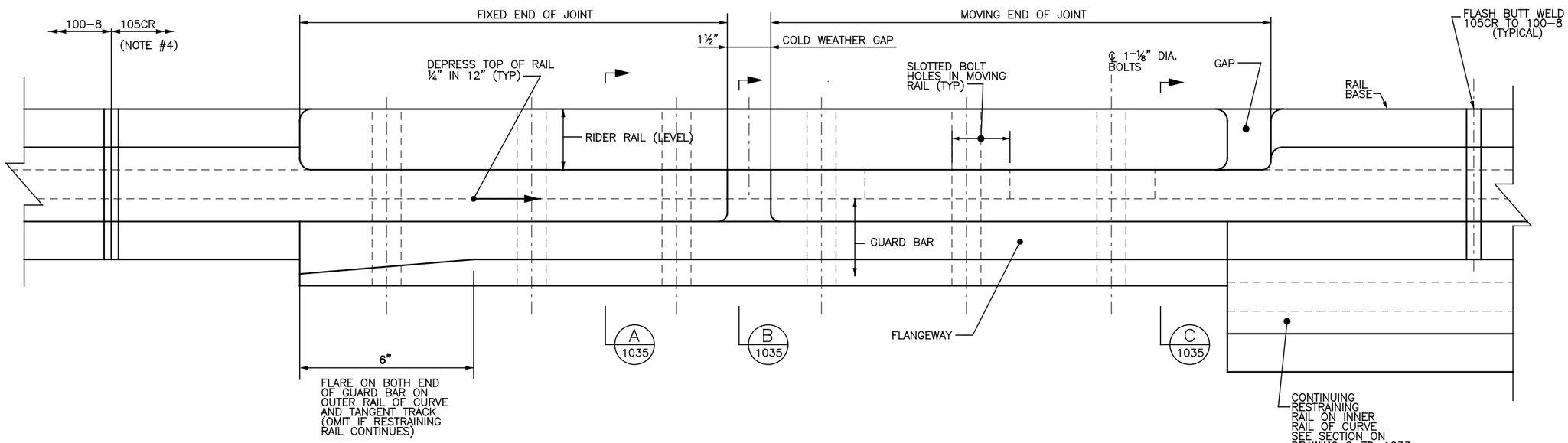

RAIL EXPANSION JOINT

Scale In Inches

1.5 0 1.5

CAUTION UNDERGROUND UTILITIES
2 WORKING DAYS

BEFORE YOU DIG

CALL 1-800-362-2764
OHIO UTILITY PROTECTION SERVICE
CALL NON-SERVICE FACILITY
OWNERS DIRECT

PROFESSIONAL STAMP

STATE OF OHIO
LAWRENCE GEORGE LOVEJOY
E-58724
REGISTERED PROFESSIONAL ENGINEER

SIGN:

DATE: 07/02/12

CITY OF CINCINNATI
DEPARTMENT OF TRANSPORTATION & ENGINEERING
OHIO

CONTRACT DRAWING

PRINTS NOT BEARING THIS STAMP WERE MADE PRIOR TO ADVERTISING FOR BIDS AND ARE TO BE CONSIDERED OBSOLETE FOR CONTRACT PURPOSES.

Department of Transportation and Engineering

City of Cincinnati
City Hall
801 Plum Street
Cincinnati, Ohio 45202

CINCINNATI STREETCAR
CENTRAL BUSINESS DISTRICT

RAIL EXPANSION JOINTS-TYPICAL ARRANGEMENT

Revisions

No.		

Date 07/02/12	Drawn by KB/KLS
Date 07/02/12	Designed by LGL
Date 07/02/12	Checked by WGT
Date 07/12/12	Reviewed by JTB

Consultant

PB HDR

File Number

ACC No. 23126

G-TD-1035

$PLTDRVS$
T:\290144_Cincinnati.Street.Car\TRACK\G-TD-1035.dgn
10:16:55 AM
7/16/2012

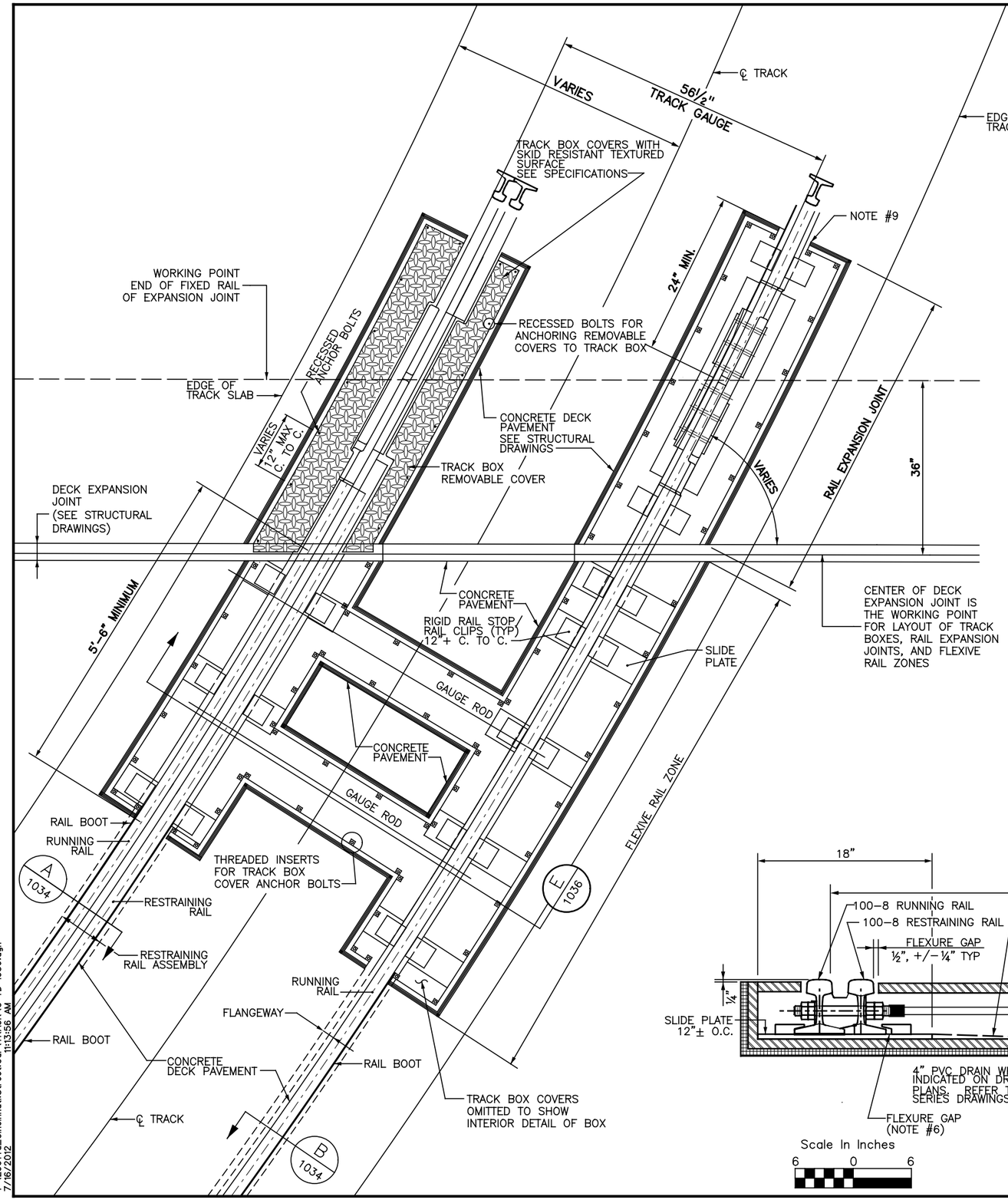

NOTES:

1. THIS DRAWING ILLUSTRATES THE GENERAL CONFIGURATION OF RAIL EXPANSION JOINTS AND FLEXIVE RAIL ZONES FOR TRACKS CONSTRUCTED ON THE WALNUT STREET, SECOND STREET AND MAIN STREET STRUCTURES IN THE BANKS. SEE DRAWING G–TD–1030 & 1031 FOR THE LOCATIONS AND GENERAL CONFIGURATION OF THESE APPLIANCES ON THOSE STRUCTURES. THE ACTUAL DETAILS FOR EACH LOCATION SHALL BE DEVELOPED BY THE CONTRACTOR AND THE FABRICATOR SO AS TO MATCH SITE CONDITIONS AND MEET THE REQUIREMENTS OF THE CONTRACT.

2. FOR GENERAL DETAILS OF RAIL EXPANSION JOINTS SEE DRAWING G–TD–1035. ALL FABRICATIONS SHALL BE IN ACCORDANCE WITH THE CONTRACT SPECIFICATIONS AND THE AREMA "SPECIFICATIONS FOR SPECIAL TRACKWORK".

3. RAIL EXPANSION JOINTS SHALL BE PROVIDED AT ANY STRUCTURE DECK JOINT WHERE THE THEORETCAL RELATIVE MOVEMENT OF THE BRIDGE DECK AT RIGHT ANGLES TO THE JOINT IS 1/8 INCH OR GREATER. FLEXIVE RAIL ZONES SHALL BE PROVIDED AT ANY LOCATION WHERE THE THEORETICAL MOVEMENT ALONG THE LENGTH OF THE DECK JOINT IS 1/8 INCH OR GREATER. COORDINATE THE DESIGN OF TRACK BOXES WITH THE MODIFIED DECK EXPANSION JOINTS AND PROVIDE A COMBINED SUBMITTAL THAT FULLY ADDRESSES THE INTERACTIONS BETWEEN THE STRUCTURE DECK AND THE TRACK.

4. ORIENT THE MOVING END OF RAIL EXPANSION JOINTS AS DETAILED ON DRAWINGS G–TD–1030 AND 1031 SO AS TO MINIMIZE FORCES TRANSFERRED TO THE UNDERLYING STRUCTURE(S).

5. FLEXIVE RAIL ZONES SHALL BE CONFIGURED WITH DEVICES TO HOLD TRACK GAUGE AS THE RAILS SHIFT LATERALLY. THE GAUGE ROD DETAIL SHOWN MAY BE MODIFIED PROVIDED IT DOES NOT REQUIRE THE TRACK BOXES TO BE ANY DEEPER THAN SHOWN AND IS RESISTANT TO METAL FATIGUE.

6. POSITION RIGID RAIL STOPS IN FLEXIVE RAIL ZONES TO BE IN CONTACT WITH THE SIDES OF THE RAIL BASE AT THE POINT OF MAXIMUM STRUCTURAL LATERAL DEFLECTION. SEE STRUCTURAL DRAWINGS FOR THE AMOUNT OF MOVEMENT EXPECTED AT THE DECK EXPANSION JOINT AND APPLY PROPORTIONALLY ALONG THE LENGTH OF THE FLEXIVE RAIL ZONE.

7. TRACK BOXES SHALL BE EQUIPPED WITH REMOVABLE COVERS TO PROVIDE ACCESS TO RAIL EXPANSION JOINTS AND FLEXIVE RAIL ZONES FOR INSPECTION, CLEANING AND MAINTENANCE. COVERS SHALL HAVE A SKID RESISTANT SURFACE SUITABLE FOR PEDESTRIAN TRAFFIC AND SHALL HANDLE HS–25 TRUCK LOADING WITHOUT MEASURABLE DEFLECTION. COVERS SHALL BE SEGMENTAL WITH EACH PIECE NOT HEAVIER THAN 250 POUNDS AND INCLUDE LIFTING POINTS. FURNISH COVERS WITH CORROSION–RESISTANT THREADED FASTENING HARDWARE TO SECURELY HOLD EACH COVER TO THE UNDERLYING TRACK BOX.

8. PROVIDE TRACK BOXES WITH DRAIN HOLE(S) FOR CONNECTION TO A DRAINAGE SYSTEM. COORDINATE DRAIN LOCATIONS WITH "SA" AND "ST" SERIES DRAWINGS.

9. WHERE RAILS PASS THROUGH THE ENDS OF TRACK BOXES, CONFIGURE THE ENDS OF THE BOX TO MATCH THE CONTOUR OF THE RAIL BOOT USED IN THE ADJACENT EMBEDDED RAIL. THE RESIDUAL SPACE BETWEEN THE TRACK BOX AND THE RAIL BOOT SHALL BE COMPLETELY SEALED BY THE ELASTOMERIC GROUT MATERIAL.

10. THE EXTERIOR SURFACES OF THE STEEL TRACK BOXES SHALL BE CLEANED TO SSPC–10 SO AS TO ASSURE A GOOD BOND BETWEEN THE BOX AND THE ELASTOMERIC GROUT. PROVIDE HOLES IN THE BOTTOM OF THE TRACK BOXES ON A GRID OF ABOUT ONE–FOOT SQUARE TO ACT AS INJECTION PORTS FOR MAKING CERTAIN THE SPACE BENEATH THE BOX IS COMPLETELY FILLED WITH THE ELASTOMERIC GROUT.

11. SEE "ST" SERIES DRAWINGS FOR INTERFACE DETAILS BETWEEN THE ELASTOMERIC GROUT AND THE UNDERLYING DRAINAGE BOARD, WATERPROOFING LAYER, AND BRIDGE DECK.

12. TRACK BOXES SHALL BE FABRICATED TO MATCH TRACK PROFILE. TO AVOID PONDING OF WATER IN LOW CORNERS, THE FLOOR OF THE BOX SHALL BE COATED WITH A LAYER OF ELASTOMERIC GROUT THAT IS SLOPED TO PROMOTE DRAINAGE. SEE SPECIFICATIONS.

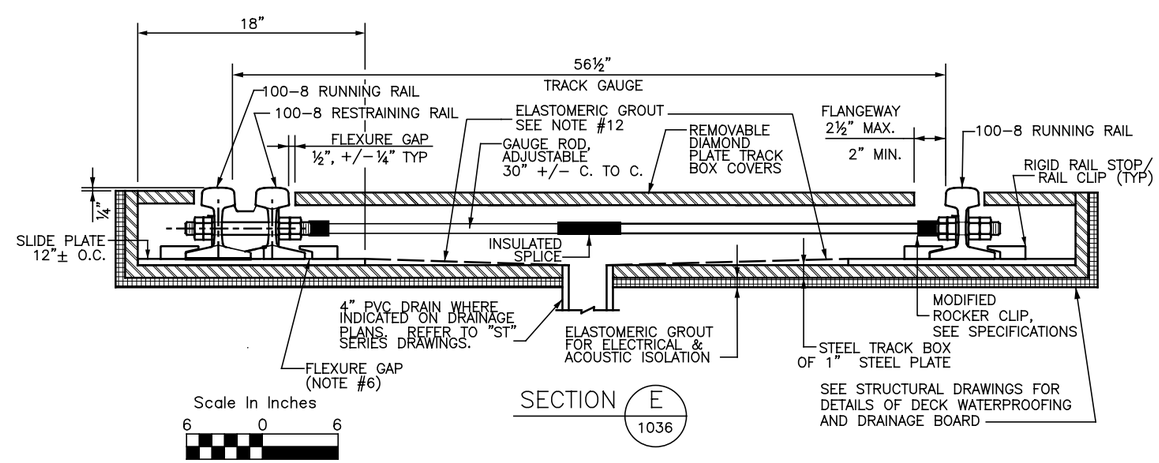

SECTION E 1036

CAUTION UNDERGROUND UTILITIES
2 WORKING DAYS
BEFORE YOU DIG
CALL 1–800–362–2764
OHIO UTILITY PROTECTION SERVICE
CALL NON–SERVICE FACILITY OWNERS DIRECT

PROFESSIONAL STAMP

STATE OF OHIO
LAWRENCE GEORGE LOVEDAY
E-58724
REGISTERED PROFESSIONAL ENGINEER

SIGN:

DATE: 07/02/12

CONTRACT DRAWING

PRINTS NOT BEARING THIS STAMP WERE MADE PRIOR TO ADVERTISING FOR BIDS AND ARE TO BE CONSIDERED OBSOLETE FOR CONTRACT PURPOSES.

Department of Transportation and Engineering

City of Cincinnati
City Hall
801 Plum Street
Cincinnati, Ohio 45202

CINCINNATI STREETCAR
CENTRAL BUSINESS DISTRICT
FLEXIVE RAIL ASSEMBLIES

Revisions

No.		

Date 07/02/12	Date 07/02/12	Date 07/02/12	Date 07/12/12
Drawn by KB/KLS	Designed by LGL	Checked by WGT	Reviewed by JTB

Consultant

PB HDR

File Number

ACC No. 23126

G-TD-1036

$PLTDRV$
T:\29014a_Cincinnati.Street.Car\TRACK\G-TD-1036.dgn
7/16/2012 11:13:56 AM

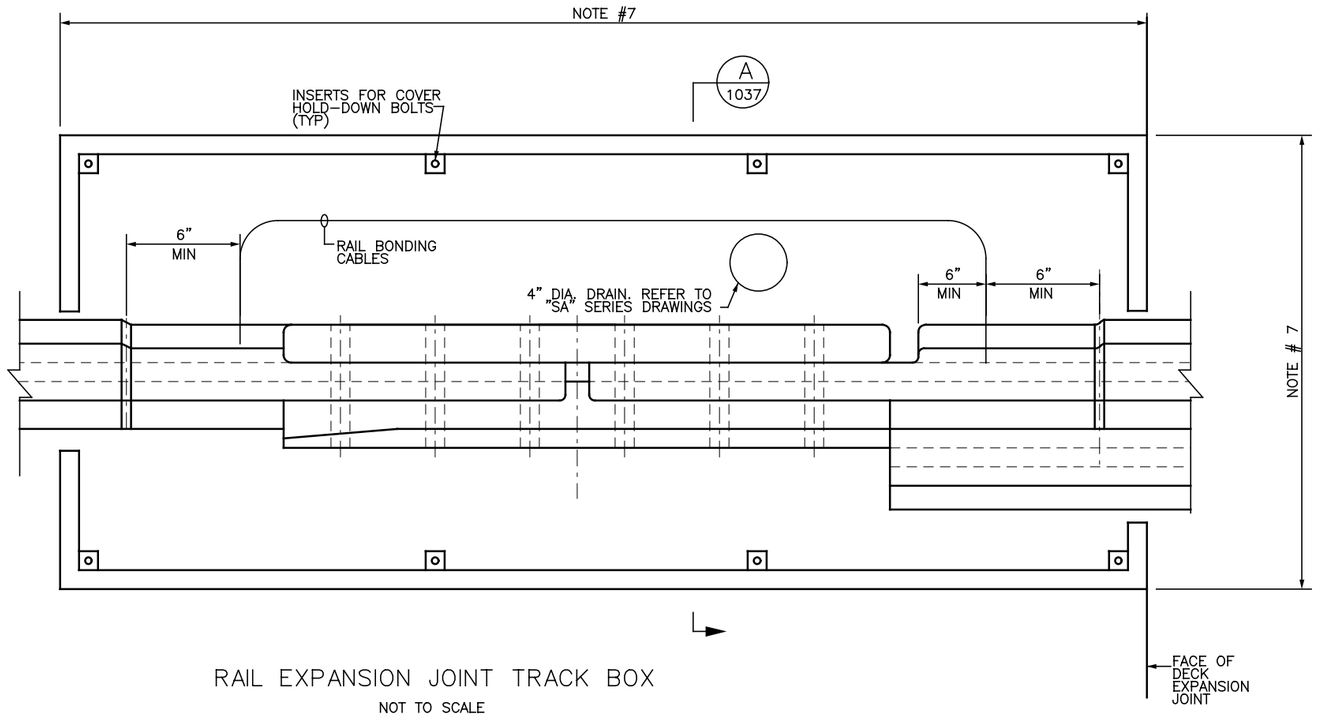

RAIL EXPANSION JOINT TRACK BOX

NOT TO SCALE

ENTIRE ASSEMBLY SITS ON ONE SPAN.
IT DOES NOT STRADDLE EXPANSION DAM.

NOTES:

1. TRACK BOXES FOR CONTAINING RAIL EXPANSION JOINTS SHALL BE MADE FROM WELDED STRUCTURAL STEEL PLATE NOT LESS THAN 1–INCH THICK. PROVIDE REMOVABLE LOCKING LIDS, CAPABLE OF HANDLING HS–25 HIGHWAY LOADING, FOR ACCESSING TRACK APPLIANCES IN THE TRACK BOXES. SIZE TRACK BOXES SO THAT THE FLASH BUTT WELD BETWEEN THE CRANE RAIL AND 100–8 RAIL SECTIONS IS NO LESS THAN 6 INCHES INSIDE OF THE BOX.

2. FLOOR OF TRACK BOXES SHALL INCLUDE HOLES FOR BOTH DRAINAGE AND FOR INJECTION OF ELASTOMERIC GROUT INTO THE SPACE BENEATH THE BOXES. SEE SPECIFICATIONS FOR DETAILED REQUIREMENTS.

3. RECTANGULAR TRACK BOXES ON TANGENT TRACK AS SHOWN ARE ILLUSTRATIVE OF THE GENERAL REQUIREMENTS BUT ARE THE EXCEPTION. MOST TRACK BOXES WILL BE IN CURVED TRACK AND ABUT STRUCTURE DECK EXPANSION DAMS AT A SEVERELY SKEWED ANGLE. SEE DRAWINGS G–TD–1030, 1031 AND 1036 FOR GENERAL LAYOUT OF TRACK BOXES IN THOSE APPLICATIONS. CONTRACTOR SHALL DEVELOP FULL DETAILS FOR EACH TRACK BOX, INCLUDING THE INTERFACE WITH STRUCTURE DECK EXPANSION DAMS, AS PART OF THE SHOP DRAWING SUBMITTALS.

4. PROVIDE TWO 500 MCM INSULATED COPPER RAIL BONDING CABLES AROUND EACH RAIL EXPANSION JOINT. ATTACH TO RAIL USING A COMPRESSION CABLE FITTING, CEMBRE OR EQUAL. DRILL AND STRESS RELIEVE HOLES FOR BOND ATTACHMENT SUBSEQUENT TO PROVIDING THE FLASH BUTT WELD BETWEEN THE 100–8 AND 105CR RAIL SECTIONS. BOND ATTACHMENT HOLE SHALL BE NOT LESS THAN 6 INCHES FROM THE FLASH BUTT WELD. SEE SPECIFICATIONS.

5. SEE "ST" SERIES DRAWINGS FOR INFORMATION ON THE DRAINAGE BOARD AND WATERPROOFING LAYERS THAT ARE BENEATH THE TRACK BOXES.

6. TRACK BOXES FOLLOW THE PROFILE OF THE RAIL WHICH IN TURN IS DICTATED BY THE ROADWAY PAVEMENT SURFACE. SO THAT STORMWATER FLOWS TOWARD THE DRAIN HOLES IN THE BOTTOM OF EACH BOX, WHICH MAY REQUIRE ROUTING STORMWATER IN A DIRECTION COUNTER TO THE TRACK PROFILE, THE FLOOR OF EACH BOX SHALL BE FILLED WITH A LAYER OF ELASTOMERIC GROUT, SLOPED TO DRAIN. THE REQUISITE DEPTH OF EACH BOX MAY VARY DEPENDING ON THE PLAN VIEW DIMENSIONS OF THE BOX AND THE LOCATION OF THE DRAIN.

7. LENGTH AND WIDTH OF EACH TRACK BOX SHALL BE DETERMINED BY THE CONTRACTOR SO AS TO COMFORTABLY CONTAIN THE TRACK APPLIANCES, INCLUDING RAIL BONDING CABLES AND RESTRAINING RAILS (WHEN PRESENT) WITHOUT CROWDING SO AS TO FACILITATE INSPECTION AND MAINTENANCE. MINIMUM DIMENSIONS ARE EXPECTED TO BE NOT SMALLER THAN 48 INCHES LONG BY 24 INCHES WIDE.

8. COORDINATE THE DESIGN OF EACH TRACK BOX BETWEEN TRADES SO AS TO RESULT IN A FULLY INTEGRATED SYSTEM.

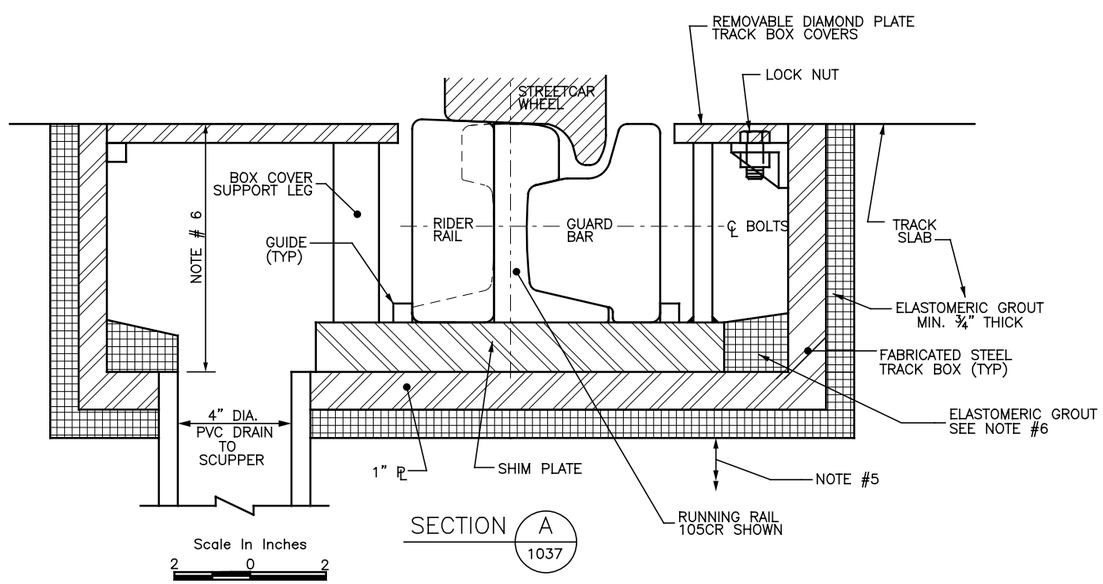

SECTION A 1037

REFER TO "SA" SERIES DRAWINGS FOR DRAIN HOLE LOCATION AND DRAIN PIPE ROUTING.

CAUTION UNDERGROUND UTILITIES
2 WORKING DAYS
BEFORE YOU DIG
CALL 1–800–362–2764
OHIO UTILITY PROTECTION SERVICE
CALL NON–SERVICE FACILITY OWNERS DIRECT

PROFESSIONAL STAMP

STATE OF OHIO
LAWRENCE GEORGE LOVEJOY
E-58724
REGISTERED PROFESSIONAL ENGINEER

SIGN:

DATE: 07/02/12

CONTRACT DRAWING

PRINTS NOT BEARING THIS STAMP WERE MADE PRIOR TO ADVERTISING FOR BIDS AND ARE TO BE CONSIDERED OBSOLETE FOR CONTRACT PURPOSES.

Department of Transportation and Engineering

City of Cincinnati
City Hall
801 Plum Street
Cincinnati, Ohio 45202

CINCINNATI STREETCAR
CENTRAL BUSINESS DISTRICT

RAIL EXPANSION JOINTS TRACK BOXES

Revisions

No.			

Date 07/02/12	Date 07/02/12	Date 07/02/12	Date 07/12/12
Drawn by KB/KLS	Designed by LGL	Checked by WGT	Reviewed by JTB

Consultant

PB HDR

File Number

ACC No. 23126

G-TD-1037

$PLTDRV$$
T:\29014a_Cincinnati:Street.Car\TRACK\G-TD-1037.dgn
7/16/2012 10:16:57 AM

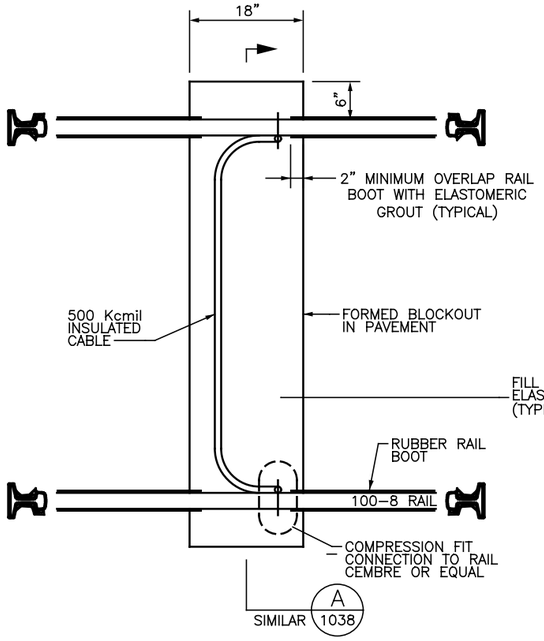

CROSS BONDS – TYPE 1

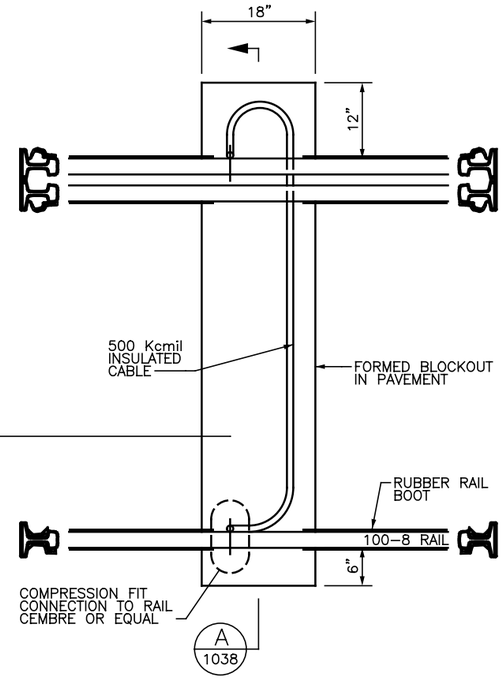

CROSS BONDS – TYPE 2

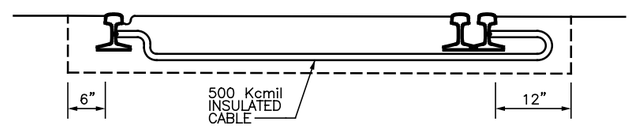

SECTION A 1038 TYPE 2 SHOWN, TYPE 1 SIMILAR

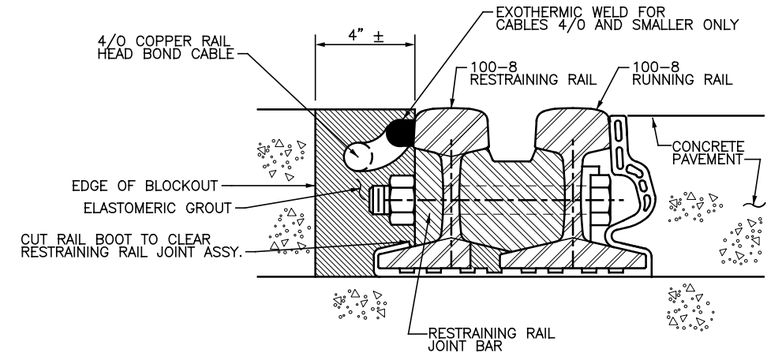

SECTION B 1038

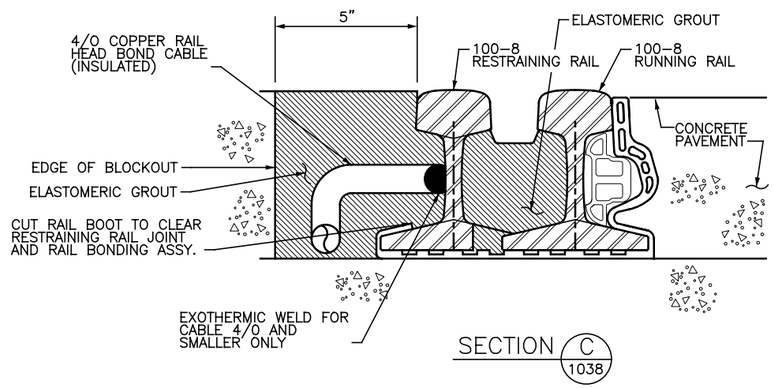

SECTION C 1038

NOTES:

1. APPLY ARRANGEMENT SHOWN FOR CROSS-BONDING BETWEEN RAILS AT THE LOCATIONS STIPULATED ON DRAWING G-TD-1030 AND 1031. TRACTION POWER NEGATIVE RETURN CONNECTIONS TO THE RAIL SHALL CONFORM TO DETAILS SHOWN ON "PD" SERIES DRAWINGS.

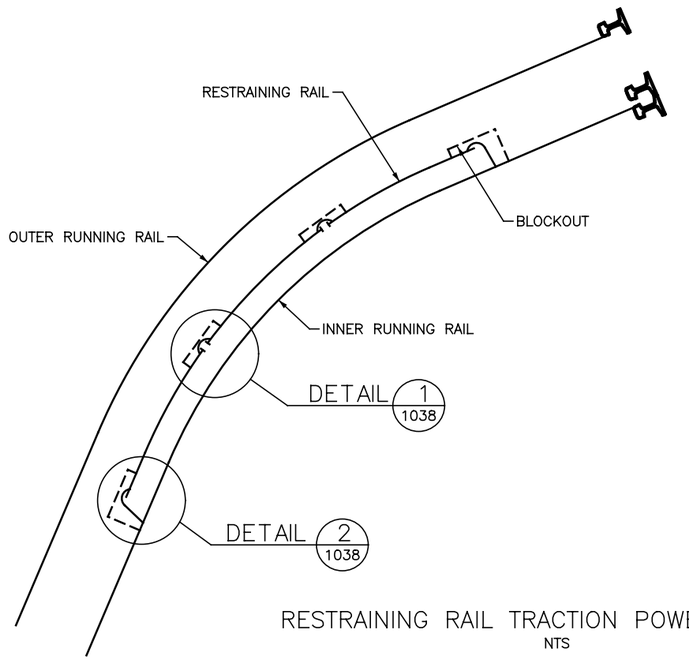

RESTRAINING RAIL TRACTION POWER BONDING

NTS

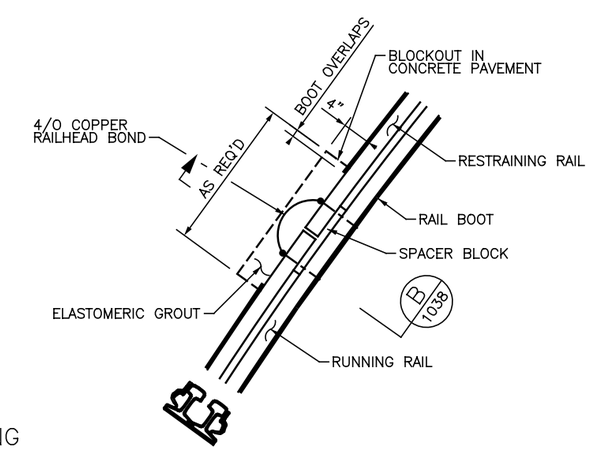

DETAIL 1 1038

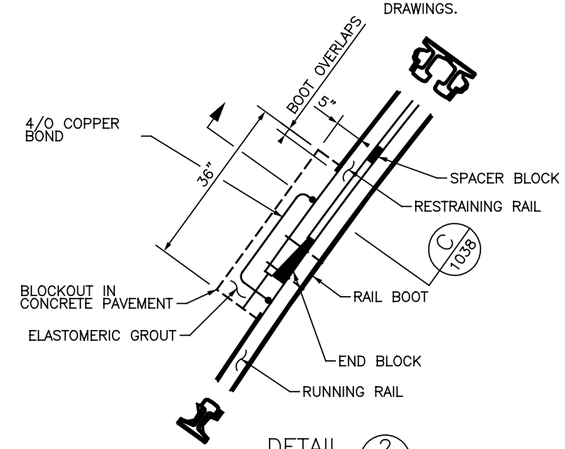

DETAIL 2 1038

CAUTION UNDERGROUND UTILITIES 2 WORKING DAYS
BEFORE YOU DIG
CALL 1-800-362-2764
OHIO UTILITY PROTECTION SERVICE
CALL NON-SERVICE FACILITY OWNERS DIRECT

PROFESSIONAL STAMP

STATE OF OHIO
LAWRENCE GEORGE LOVEDAY
E-56724
REGISTERED PROFESSIONAL ENGINEER

SIGN:

DATE: 07/02/12

CITY OF CINCINNATI DEPARTMENT OF TRANSPORTATION & ENGINEERING OHIO

CONTRACT DRAWING

PRINTS NOT BEARING THIS STAMP WERE MADE PRIOR TO ADVERTISING FOR BIDS AND ARE TO BE CONSIDERED OBSOLETE FOR CONTRACT PURPOSES.

Department of Transportation and Engineering

City of Cincinnati
City Hall
801 Plum Street
Cincinnati, Ohio 45202

CINCINNATI STREETCAR
CENTRAL BUSINESS DISTRICT
CROSS-BONDING AND RESTRAINING RAIL BONDING DETAILS

Revisions

No.	Date
	07/02/12
	07/02/12
	07/02/12
	07/12/12

Drawn by	NAL/KLS
Designed by	LGL
Checked by	WGT
Reviewed by	JTB

Consultant

PB HDR

File Number

ACC No. 23126

G-TD-1038

$PLTDRV$$
T:\29014a_Cincinnati.Street.Car\TRACK\G-TD-1038.dgn
10:16:58 AM
7/16/2012

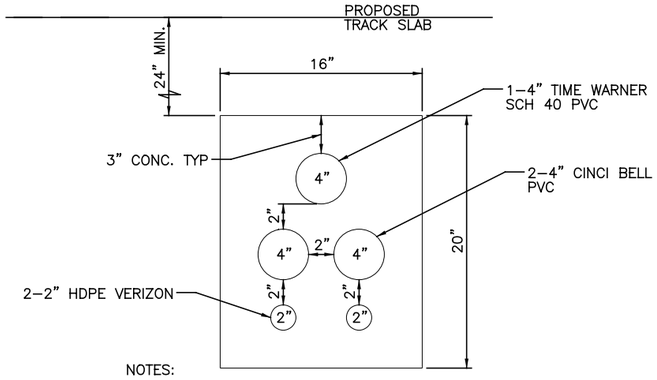

NOTES:

1 PROVIDE 2' MINIMUM COVER OVER EMPTY CONDUIT DUCT BANK. INCREASE DEPTH OF DUCT BANK AS NEEDED TO AVOID ADJACENT UTILITY CONFLICTS.

2 EXTEND DUCT BANK TO A MINIMUM OF 5' OUTSIDE OF TRACK SLAB FOR FUTURE ACCESS.

3 INSTALL MARKER IN TRACK SLAB PER CITY OF CINCINNATI STANDARD DETAIL SHOWN ON THIS SHEET.

4 THE COST OF EMPTY CONDUIT CROSSINGS ARE INCIDENTAL TO THE COST OF THE TRACK SLAB CONSTRUCTION.

FUTURE CONDUIT CROSSING

N.T.S.

FUTURE CONDUIT CROSSING STATIONS		
3+00.00	80+50.00	230+45.00
6+60.00	83+85.00	234+25.00
9+85.00	86+85.00	238+70.00
13+50.00	90+75.00	243+00.00
16+20.00	93+05.00	247+34.00
19+90.00	95+38.00	252+00.00
803+75.00	97+30.00	257+00.00
807+85.00	201+50.00	261+50.00
812+50.00	203+70.00	266+00.00
826+80.00	207+20.00	271+00.00
831+25.00	211+15.00	275+70.00
836+90.00	214+80.00	280+00.00
70+70.00	219+10.00	283+90.00
73+90.00	223+50.00	288+45.00
77+55.00	226+10.00	292+85.00

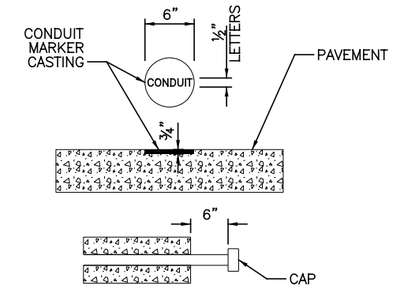

NOTES:

1. CONDUIT MARKER SHALL BE FLUSH WITH CONCRETE TRACK SLAB. PLACE MARKER OVER PROPOSED EMPTY CONDUIT CROSSINGS.

2. MARKER SHALL BE PLACED ON BOTH SIDES OF THE TRACK SLAB A MAXIMUM OF 6" FROM EDGE OF TRACK SLAB.

CONDUIT MARKER

(USE WHERE CONDUIT TERMINATES UNDERGROUND)

N.T.S.

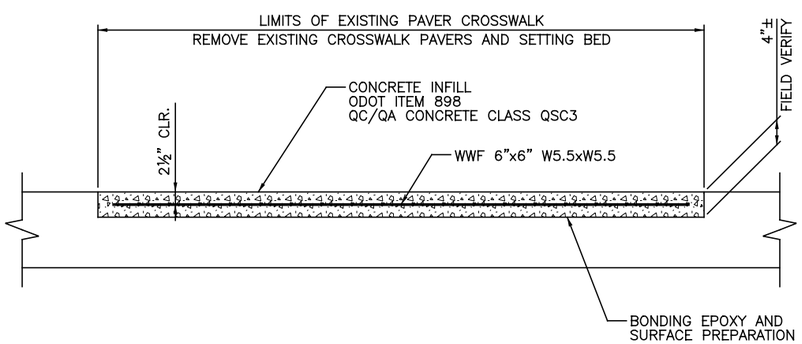

CROSSWALK CONCRETE INFILL DETAIL

N.T.S.

CAUTION UNDERGROUND UTILITIES
2 WORKING DAYS
BEFORE YOU DIG
CALL 1-800-362-2764
OHIO UTILITY PROTECTION SERVICE
CALL NON-SERVICE FACILITY
OWNERS DIRECT

CONTRACT DRAWING

PRINTS NOT BEARING THIS STAMP WERE MADE PRIOR TO ADVERTISING FOR BIDS AND ARE TO BE CONSIDERED OBSOLETE FOR CONTRACT PURPOSES.

Department of Transportation and Engineering

City of Cincinnati
City Hall
801 Plum Street
Cincinnati, Ohio 45202

CINCINNATI STREETCAR
CENTRAL BUSINESS DISTRICT

MISCELLANEOUS DETAILS

Revisions

No.				

Drawn by MKM	Date 7/02/12	
Designed by MKM	Date 7/02/12	
Checked by SAJ	Date 7/02/12	
Reviewed by JTB	Date 7/12/12	

Consultant

PB HDR

File Number

ACC No. 23126

G-MD-1001

DOTE_Mono_PDF_Half.pltcfg
T:\29014A-Streetcar\CAD\Miscellaneous Details\S_G-MD-1001.dgn
7/10/2012 9:09:11 AM

HAMILTON COUNTY

PROPOSED COMBINED SANITARY AND STORM SEWERS

CINCINNATI STREETCAR

COMBINED SANITARY AND STORM MODIFICATIONS

CENTRAL BUSINESS DISTRICT (CBD) - OVER THE RHINE (OTR)

2010 SPECIFICATIONS :

THE METROPOLITAN SEWER DISTRICT'S STANDARDS AND REGULATIONS, THE STORMWATER MANAGEMENT UTILITY'S STANDARDS AND REGULATIONS, THE STANDARD SPECIFICATIONS OF THE STATE OF OHIO DEPARTMENT OF TRANSPORTATION, AND THE CITY OF CINCINNATI SUPPLEMENT THERETO, INCLUDING THE SPECIAL PROVISIONS LISTED IN THE BID DOCUMENTS SHALL GOVERN THIS IMPROVEMENT.

NOTES :

THE LOCATION OF THE UNDERGROUND UTILITIES SHOWN ON THESE PLANS HAS BEEN OBTAINED BY DILIGENT FIELD CHECKS AND SEARCHES OF AVAILABLE RECORDS. THE CITY OF CINCINNATI DOES NOT GUARANTEE THE ACCURACY OF THE AFOREMENTIONED LOCATIONS AND ACCEPTS NO RESPONSIBILITY FOR ANY EXPENSE RESULTING FROM ERRORS OR OMISSIONS OF UTILITY LOCATIONS. CONTRACTOR(S) SHALL BE RESPONSIBLE FOR VERIFYING THE LOCATIONS OF ALL UTILITIES IN THE FIELD PRIOR TO THE START OF ANY WORK. NOTIFY PROJECT ENGINEER OF ANY DISCREPANCIES OR CONFLICTS PRIOR TO BEGINNING WORK IN AFFECTED AREA.

UNDERGROUND STRUCTURES: LOCATION OF UNDERGROUND STRUCTURES ARE NOT GUARANTEED.

THE CONTRACTOR SHALL FURNISH ALL MANHOLE FRAMES AND COVERS.

ALL DAMAGE INCURRED BY COMBINED SEWER OR STORM CONSTRUCTION SHALL BE REPLACED IN KIND BY THE CONTRACTOR AND ALL ASSOCIATED COSTS SHOULD BE INCLUDED WITH ITEM 603.

BENCHMARKS :

T.B.M. #1 – ELM AND 15TH STREET INTERSECTION. MARK IS IN THE CURB IN THE NORTHEAST CORNER AND IN THE APPROXIMATE CENTER OF THE CURB RETURN.
NORTHING 411164.983 EASTING 1395728.858 ELEVATION 542.11

T.B.M. #2 – ELM AND 12TH STREET INTERSECTION. MARK IS IN THE CURB IN THE NORTHEAST CORNER AT THE EAST END OF THE CURB RETURN.
NORTHING 409907.387 EASTING 1395950.498 ELEVATION 547.97

T.B.M. #3 – MAIN AND 5TH STREET INTERSECTION. MARK IS IN THE SIDEWALK AREA ON THE NORTHEAST CORNER AND IN THE APPROXIMATE CENTER OF THE CURB RETURN.
NORTHING 407589.016 EASTING 1398229.322 ELEVATION 550.57

T.B.M. #4 – WALNUT AND 5TH STREET INTERSECTION. MARK IS IN THE SIDEWALK AREA ON THE SOUTHEAST CORNER AND APPROXIMATELY 8 FEET SOUTH OF THE EAST END OF THE CURB RETURN.
NORTHING 407443.486 EASTING 1397787.810 ELEVATION 549.09

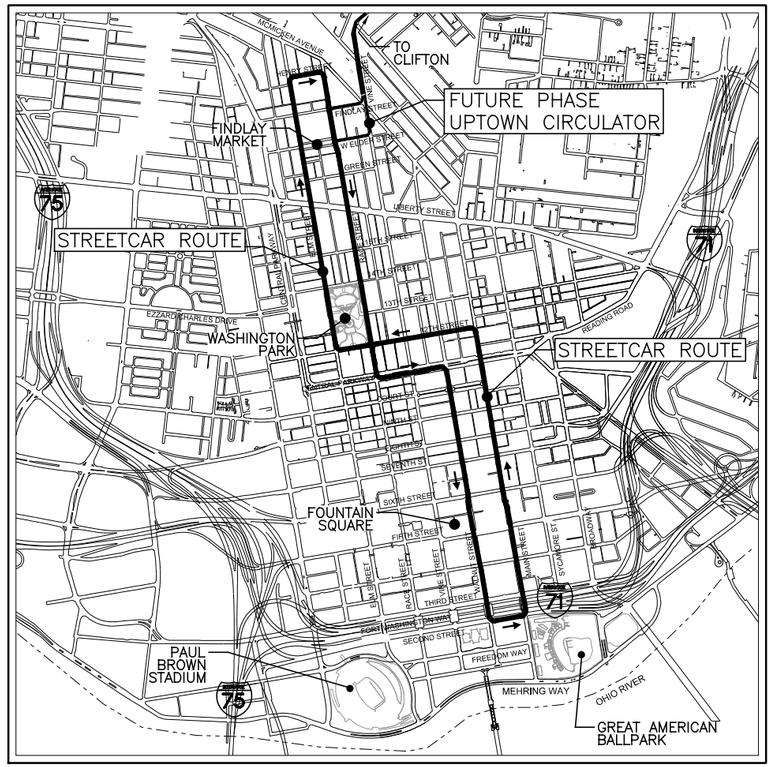

VICINITY PLAN

Scale: NOT TO SCALE

STANDARDS:

DESCRIPTION	ACCESSION NO.
TYPICAL INVERTS	49004
STANDARD CONCRETE COLLARS ON CONDUITS	49031
CONTROL DIMENSIONS FOR TYPICAL TRENCHES FOR CONDUITS	49032
STANDARD, (TYPE "S") MANHOLE	49037
STANDARD CONCRETE CRADLE AND ENCASEMENT	49044
STANDARD PRECAST CONCRETE MANHOLE BASE	49056
STANDARD CASTINGS FOR MANHOLES	49005
STANDARD SINGLE GUTTER INLET	49011
STANDARD CASTINGS SINGLE GUTTER INLET	49012
STANDARD DOUBLE GUTTER INLET	49013
STANDARD CASTINGS DOUBLE GUTTER INLET	49014
STANDARD PAVEMENT DETAIL FOR SINGLE OR DOUBLE GUTTER INLET	49015
STANDARD TWO WAY CLEANOUT	49047
STANDARD CASTING FOR MANHOLE	120282
STANDARD DOUBLE GUTTER INLET M.H.	49010
STANDARD DROP MANHOLE	49003
STANDARD, (TYPE"T") MANHOLE	49040
STANDARD CONNECTION TO EX. BRICK SEWER	49053
STANDARD SINGLE VALLEY INLET	49019
STANDARD CASTINGS SINGLE VALLEY INLET	49020

CONTENTS:

SHEET NO.	DESCRIPTION
G–SA–1000	TITLE SHEET
G–SA–1000A	LEGEND
G–SA–1001 TO G–SA–1021	PLAN AND PROFILE (CENTRAL BUSINESS DISTRICT)
G–SA–2001 TO G–SA–2022	PLAN AND PROFILE (OVER THE RHINE)
G–SA–1022 TO G–SA–1030	STORM PROFILES (CENTRAL BUSINESS DISTRICT)
G–SA–2023 TO G–SA–2031	STORM PROFILES (OVER THE RHINE)
G–SN–1001 TO G–SN–1013	COMBINED SANITARY AND STORM DETAILS AND NOTES

NOTICE OF CONFIDENTIALITY -
PUBLIC INFRASTRUCTURE RECORD:

THIS DOCUMENT IS A PUBLIC INFRASTRUCTURE RECORD OF THE CITY OF CINCINNATI AND THE DEPARTMENT OF TRANSPORTATION AND ENGINEERING AND IS NOT SUBJECT TO THE PUBLIC DISCLOSURE REQUIREMENTS OF THE PUBLIC RECORDS LAWS OF THE STATE OF OHIO AND FEDERAL GOVERNMENT. THIS DOCUMENT IS BEING PROVIDED ON THE BASIS OF YOUR REPORTED NEED, AND SHALL BE CONSIDERED CONFIDENTIAL. BY ACCEPTING THIS DOCUMENT, YOU AGREE THAT IT WILL NOT BE SHARED OR OTHERWISE DISCLOSED TO ANYONE OTHER THAN PERSONS WHO HAVE A DIRECT NEED TO KNOW FOR THE SOLE PURPOSE OF CARRYING OUT THE PROJECT FOR WHICH THIS DOCUMENT WAS OBTAINED. ANYONE RECEIVING THIS DOCUMENT IS BOUND BY THE SAME CONFIDENTIALITY REQUIREMENTS AND MUST TAKE PRECAUTIONS TO PROTECT AGAINST ITS DISSEMINATION.

THE FAILURE TO OBSERVE THE CONFIDENTIALITY REQUIREMENTS OF THIS NOTICE SHALL SERVE AS THE BASIS FOR THE CITY OF CINCINNATI TO IMMEDIATELY SEEK LEGAL RECOURSE, INCLUDING THE RECOVERY OF ACTUAL DAMAGES RESULTING FROM UNAUTHORIZED ACCESS OR DISCLOSURE OF THIS DOCUMENT.

OWNER:
CITY OF CINCINNATI
DEPARTMENT OF TRANSPORTATION
AND ENGINEERING
CONTACT: JOHN BRAZINA
801 PLUM STREET,
CINCINNATI, OH 45202
PHONE: 513–352–6249
E–MAIL: John.Brazina@cincinnati–oh.gov

DESIGN ENGINEER:
PARSONS BRINCKERHOFF
CONTACT: JIM BRANNON
312 ELM STREET, SUITE 2500
CINCINNATI, OH 45202
PHONE: 513–639–2164
E–MAIL: Brannon@pbworld.com

MSD WASTEWATER ENGINEERING

SUBMITTED: _____ SEWERS CHIEF ENGINEER

APPROVED: _____ DIRECTOR OF SEWERS

DATE: _____

CAUTION UNDERGROUND UTILITIES
2 WORKING DAYS
BEFORE YOU DIG
CALL 1–800–362–2764
OHIO UTILITY PROTECTION SERVICE
CALL NON–SERVICE FACILITY
OWNERS DIRECT

CONTRACT DRAWING

PRINTS NOT BEARING THIS STAMP WERE MADE PRIOR TO ADVERTISING FOR BIDS AND ARE TO BE CONSIDERED OBSOLETE FOR CONTRACT PURPOSES.

Department of Transportation and Engineering
City of Cincinnati
City Hall
801 Plum Street
Cincinnati, Ohio 45202

CINCINNATI STREETCAR
CENTRAL BUSINESS DISTRICT
AND
OVER THE RHINE
TITLE SHEET

Revisions
No.

Date 7/02/12
Date 7/02/12
Date 7/02/12
Date 7/12/12

Drawn by MKM
Designed by MKM
Checked by SAJ
Reviewed by JTB

Consultant

PB HDR

File Number

ACC No. 23126

G-SA-1000

DOTE_Mono_PDF_Half.pltcfg
T:\29014A-Streetcar\CAD\Sanitary_and_Storm\S_G-SA-1000.dgn
7/12/2012 5:16:25 PM

6200

EXISTING FEATURES LEGEND:

- TRAFFIC BOX
- TRAFFIC SIGNAL POLE
- YARD LIGHT
- DECORATIVE LIGHT POLE
- LIGHT POLE
- UTILITY BOX
- UTILITY BOX–TYPE UNKNOWN
- UTILITY MANHOLE–TYPE UNKNOWN
- POWER POLE
- CROSSWALK SIGNAL
- ELECTRIC OUTLET
- ELECTRIC MANHOLE
- ELECTRIC MANHOLE–PER RECORD
- ELECTRIC BOX
- ELECTRIC BOX–PER RECORD
- ELECTRIC VAULT–PER RECORD
- CATCH BASIN – SQUARE
- CATCH BASIN – CIRCULAR
- STORM MANHOLE
- DOUBLE GRATE INLET
- STORM SEWER MANHOLE
- SINGLE GRATE INLET
- GAS BOX
- GAS VALVE
- TELEPHONE BOX
- TELEPHONE
- TELEPHONE MANHOLE
- TELEPHONE VAULT–PER RECORD
- XO VAULT–PER RECORD

- WATER METER MANHOLE
- WATER VALVE MANHOLE
- WATER METER
- WATER VALVE
- FMIP — FIRE MAIN INDICATOR POST
- FIRE HYDRANT
- FIRE MAIN INDICATOR POST
- SPRINKLER HEAD
- SANITARY CLEANOUT
- COMBINED SANITARY MANHOLE
- CABLE BOX
- MANHOLE–TYPE UNKNOWN
- VALVE–TYPE UNKNOWN
- FLAG POLE
- POLE ANCHOR
- POST
- BOLLARD
- HAND RAIL
- PAY LOT SIGN
- PARKING METERS
- SIGN
- BUSH
- TREE
- PLANTER
- ORIGIN OR OUTLET UNDETERMINED
- Building / Steps — STEPS TO BUILDING
- Building / Steps/Walls — STEPS W/WALLS TO BUILDING
- TEST STATION
- ISOLATION JOINT

- C — CABLE LINE–UNDERGROUND
- T — TELEPHONE LINE–UNDERGROUND–SHOWN APPROXIMATE LOCATION PER FIELD LOCATE AND PER RECORD
- T — TELEPHONE LINE–SUNESYS
- QST — QWEST COMMUNICATIONS LINE
- MCI — MCI COMMUNICATIONS LINE
- L3 — LEVEL 3 COMMUNICATIONS LINE
- L3 — LEVEL 3 COMMUNICATIONS LINE–SHOWN APPROXIMATE LOCATION PER RECORD
- STORM LINE
- STORM LINE–SHOWN APPROXIMATE LOCATION PER RECORD
- COMBINED SANITARY LINE
- COMBINED SANITARY LINE–SHOWN APPROXIMATE LOCATION PER RECORD
- COMBINED SANITARY LINE–PRIVATE–SHOWN APPROXIMATE LOCATION PER RECORD
- SEWER LINE–TYPE UNKNOWN
- SANITARY LATERAL–SHOWN PER MSD AND RECORD
- TS — TRAFFIC SIGNAL LINE
- TS — TRAFFIC SIGNAL LINE–SHOWN APPROXIMATE LOCATION PER RECORD
- G — GAS LINE
- 6" or 6" (Shown Per Plan) G — GAS LINE–SHOWN APPROXIMATE LOCATION PER RECORD
- E — ELECTRIC LINE–UNDERGROUND
- ELECTRIC LINE–UNDERGROUND–SHOWN APPROXIMATE LOCATION PER RECORD
- 3/4" W — WATER LINE PER GREATER CINCINNATI WATER WORKS
- 8"(Size Per Plan) W — WATER LINE
- OVERHANG
- FENCE
- XO LINE–SHOWN APPROXIMATE LOCATION PER RECORD

ABBREVIATIONS

PS	PIPE SEWER
PROP.	PROPOSED
EX.	EXISTING
STM MH	STORM MANHOLE
SAN MH	COMBINED SANITARY MANHOLE
CBB	CIRCLE CATCH BASIN
DGI	DOUBLE GUTTER INLET
SGI	SINGLE GUTTER INLET
SGI	SINGLE GUTTER INLET
DIP	DUCTILE IRON PIPE
DGIMH	DOUBLE GUTTER INLET MANHOLE

CAUTION UNDERGROUND UTILITIES
2 WORKING DAYS
BEFORE YOU DIG
CALL 1–800–362–2764
OHIO UTILITY PROTECTION SERVICE
CALL NON–SERVICE FACILITY
OWNERS DIRECT

DOTE_Mono_PDF_Half.pltcfg
T:\29014A-Streetcar\CAD\Sanitary_and_Storm\S_G-SA-1000A.dgn
7/12/2012 5:19:01 PM

CONTRACT DRAWING

PRINTS NOT BEARING THIS STAMP WERE MADE PRIOR TO ADVERTISING FOR BIDS AND ARE TO BE CONSIDERED OBSOLETE FOR CONTRACT PURPOSES.

Department of Transportation and Engineering

City of Cincinnati
City Hall
801 Plum Street
Cincinnati, Ohio 45202

CINCINNATI STREETCAR
CENTRAL BUSINESS DISTRICT
AND
OVER THE RHINE
LEGEND

Revisions
No.

	Date
Drawn by MKM	7/02/12
Designed by MKM	7/02/12
Checked by SAJ	7/02/12
Reviewed by JTB	7/12/12

Consultant

PB HDR

File Number

ACC No.
23126

G-SA-1000A

6200

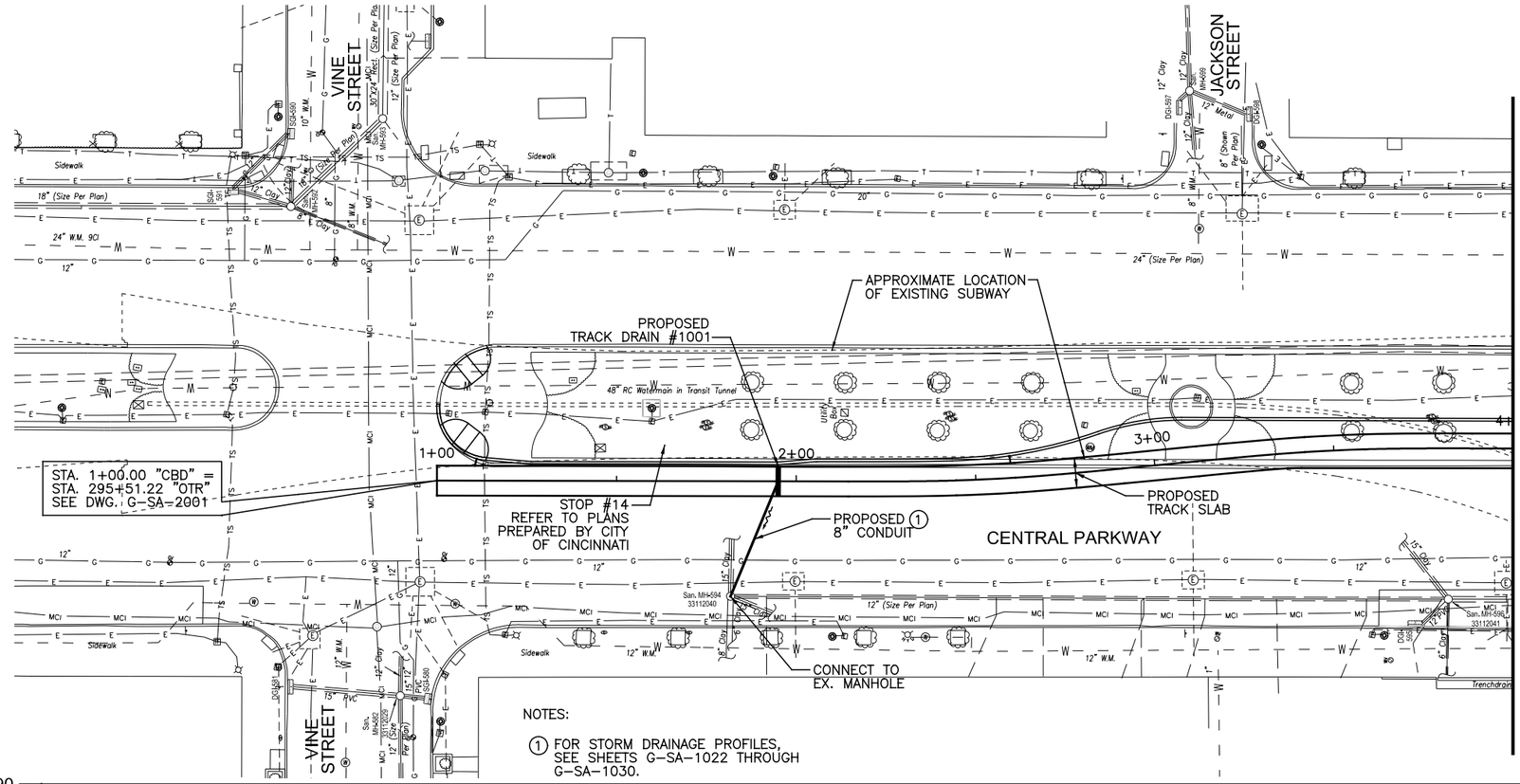

NOTES:

(1) FOR STORM DRAINAGE PROFILES, SEE SHEETS G-SA-1022 THROUGH G-SA-1030.

GRAPHIC SCALE

20 0 20 40 80

(IN FEET)
1 inch = 20 ft. Full Size
1 inch = 40 ft. Half Size

590 580 570 560 550 540 530 520 510 500

INTENTIONALLY LEFT BLANK

CAUTION UNDERGROUND UTILITIES
2 WORKING DAYS
BEFORE YOU DIG
CALL 1-800-362-2764
OHIO UTILITY PROTECTION SERVICE
CALL NON-SERVICE FACILITY OWNERS DIRECT

DOTE_Mono_PDF_Half.pltcfg
T:\29014A-Streetcar\CAD\Sanitary_and_Storm\S_G-SA-1001.dgn
5:15:30 PM
7/12/2012

CONTRACT DRAWING

PRINTS NOT BEARING THIS STAMP WERE MADE PRIOR TO ADVERTISING FOR BIDS AND ARE TO BE CONSIDERED OBSOLETE FOR CONTRACT PURPOSES.

Department of Transportation and Engineering

City of Cincinnati
City Hall
801 Plum Street
Cincinnati, Ohio 45202

CINCINNATI STREETCAR
CENTRAL BUSINESS DISTRICT
COMBINED SANITARY AND STORM MODIFICATIONS
CENTRAL PARKWAY
STA 1+00.00 TO STA 4+00.00

Revisions
No.

Drawn by MKM	Date 7/02/12
Designed by MKM	Date 7/02/12
Checked by SAJ	Date 7/02/12
Reviewed by JTB	Date 7/12/12

Consultant

PB HDR

File Number

ACC No. 23126

G-SA-1001

6200

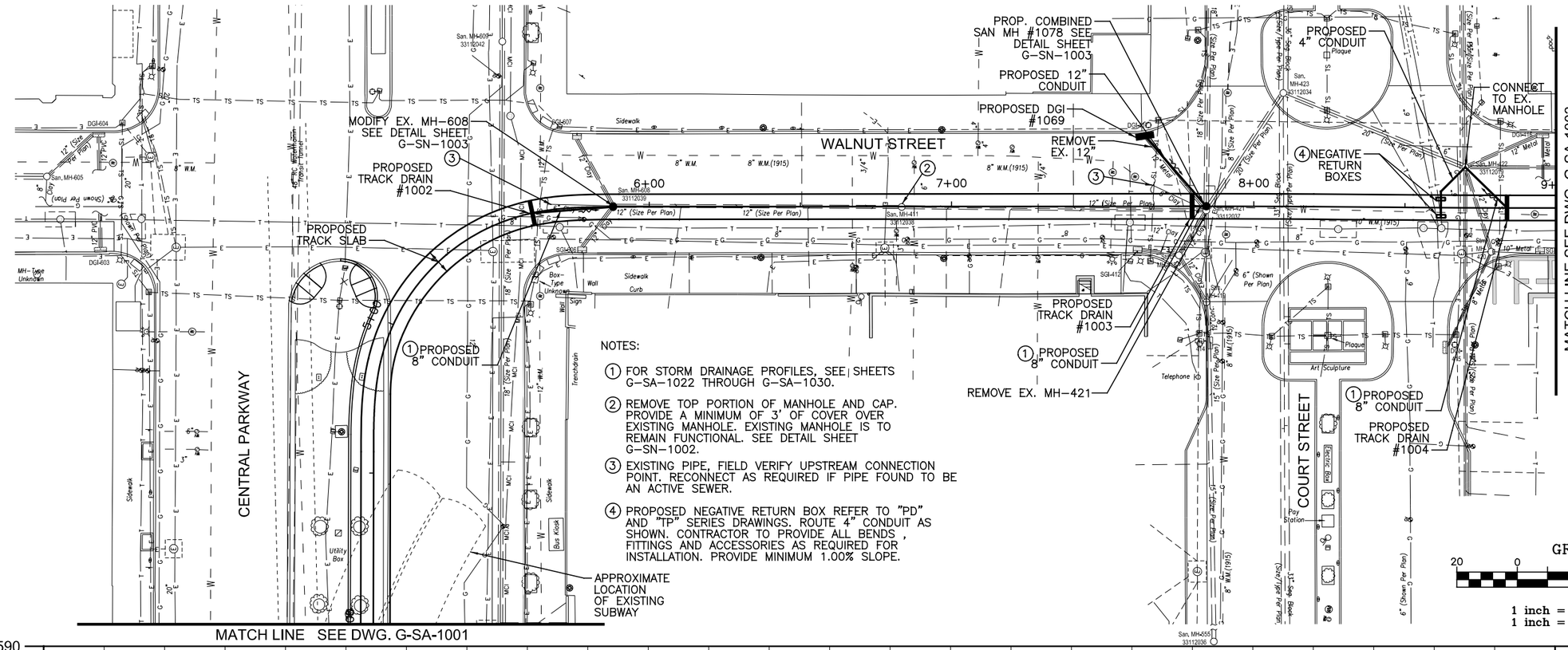

NOTES:

1. FOR STORM DRAINAGE PROFILES, SEE SHEETS G-SA-1022 THROUGH G-SA-1030.
2. REMOVE TOP PORTION OF MANHOLE AND CAP. PROVIDE A MINIMUM OF 3' OF COVER OVER EXISTING MANHOLE. EXISTING MANHOLE IS TO REMAIN FUNCTIONAL. SEE DETAIL SHEET G-SN-1002.
3. EXISTING PIPE, FIELD VERIFY UPSTREAM CONNECTION POINT. RECONNECT AS REQUIRED IF PIPE FOUND TO BE AN ACTIVE SEWER.
4. PROPOSED NEGATIVE RETURN BOX REFER TO "PD" AND "TP" SERIES DRAWINGS. ROUTE 4" CONDUIT AS SHOWN. CONTRACTOR TO PROVIDE ALL BENDS , FITTINGS AND ACCESSORIES AS REQUIRED FOR INSTALLATION. PROVIDE MINIMUM 1.00% SLOPE.

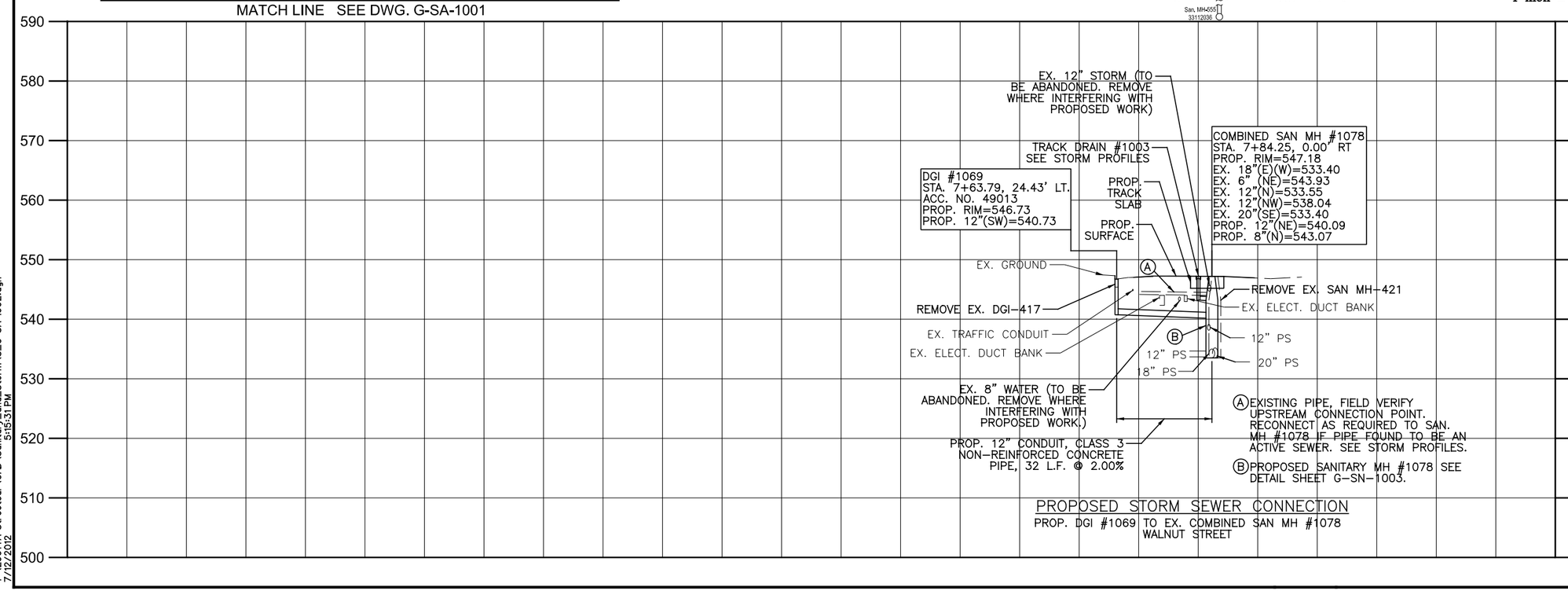

PROPOSED STORM SEWER CONNECTION

PROP. DGI #1069 TO EX. COMBINED SAN MH #1078 WALNUT STREET

CAUTION UNDERGROUND UTILITIES 2 WORKING DAYS

BEFORE YOU DIG

CALL 1-800-362-2764
OHIO UTILITY PROTECTION SERVICE
CALL NON-SERVICE FACILITY OWNERS DIRECT

DOTE_Mono_PDF_Half.pltcfg
T:\29014A-Streetcar\CAD\Sanitary_and_Storm\S_G-SA-1002.dgn
7/12/2012 5:15:31 PM

CITY OF CINCINNATI DEPARTMENT OF TRANSPORTATION & ENGINEERING

CONTRACT DRAWING

PRINTS NOT BEARING THIS STAMP WERE MADE PRIOR TO ADVERTISING FOR BIDS AND ARE TO BE CONSIDERED OBSOLETE FOR CONTRACT PURPOSES.

Department of Transportation and Engineering

City of Cincinnati
City Hall
801 Plum Street
Cincinnati, Ohio 45202

CINCINNATI STREETCAR
CENTRAL BUSINESS DISTRICT
COMBINED SANITARY AND STORM MODIFICATIONS
WALNUT STREET
STA 4+00 TO STA 9+00

Revisions

No.		

Drawn by MKM	Date 7/02/12
Designed by MKM	Date 7/02/12
Checked by SAJ	Date 7/02/12
Reviewed by JTB	Date 7/12/12

Consultant

PB HDR

File Number

ACC No. 23126

G-SA-1002

6200

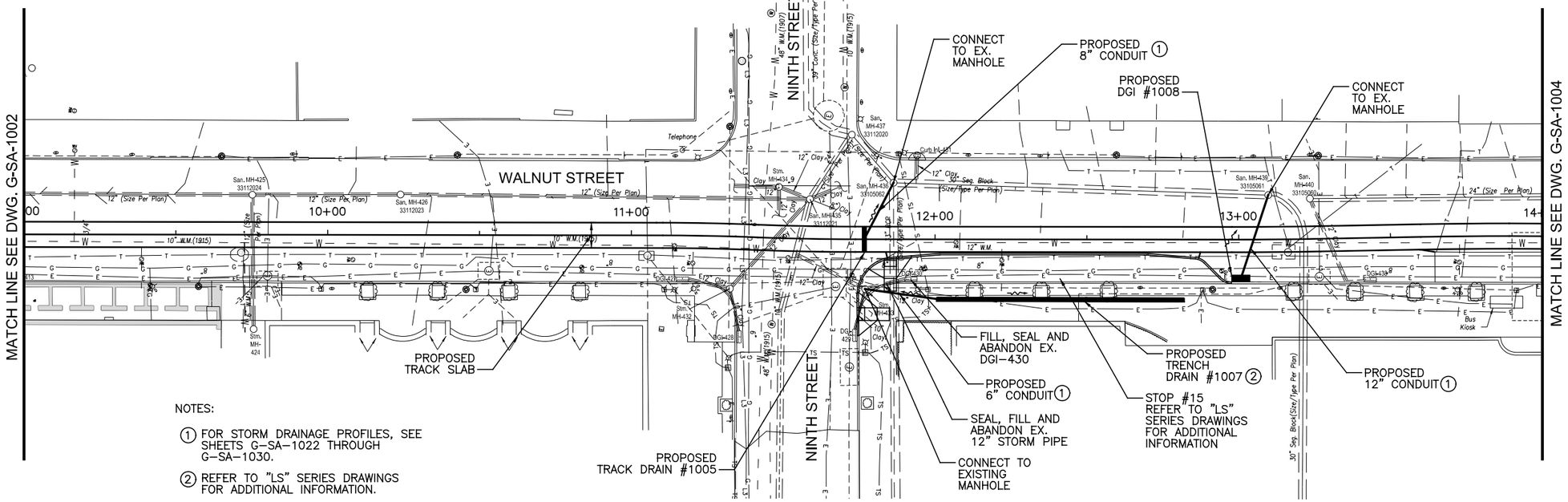

NOTES:

1. FOR STORM DRAINAGE PROFILES, SEE SHEETS G-SA-1022 THROUGH G-SA-1030.
2. REFER TO "LS" SERIES DRAWINGS FOR ADDITIONAL INFORMATION.

GRAPHIC SCALE

20 0 20 40 80

(IN FEET)
1 inch = 20 ft. Full Size
1 inch = 40 ft. Half Size

590 580 570 560 550 540 530 520 510 500

INTENTIONALLY LEFT BLANK

CAUTION UNDERGROUND UTILITIES
2 WORKING DAYS
BEFORE YOU DIG
CALL 1-800-362-2764
OHIO UTILITY PROTECTION SERVICE
CALL NON-SERVICE FACILITY OWNERS DIRECT

DOTE_Mono_PDF_Half.pltcfg
T:\29014A-Streetcar\CAD\Sanitary_and_Storm\S_G-SA-1003.dgn
5:15:32 PM
7/12/2012

CITY OF CINCINNATI DEPARTMENT OF TRANSPORTATION & ENGINEERING OHIO

CONTRACT DRAWING

PRINTS NOT BEARING THIS STAMP WERE MADE PRIOR TO ADVERTISING FOR BIDS AND ARE TO BE CONSIDERED OBSOLETE FOR CONTRACT PURPOSES.

Department of Transportation and Engineering

City of Cincinnati
City Hall
801 Plum Street
Cincinnati, Ohio 45202

CINCINNATI STREETCAR
CENTRAL BUSINESS DISTRICT
COMBINED SANITARY AND STORM MODIFICATIONS
WALNUT STREET
STA 9+00 TO STA 14+00

Revisions

No.				

Date 7/02/12
Date 7/02/12
Date 7/02/12
Date 7/12/12

Drawn by MKM
Designed by MKM
Checked by SAJ
Reviewed by JTB

Consultant

PB HDR

File Number

ACC No. 23126

G-SA-1003

6200

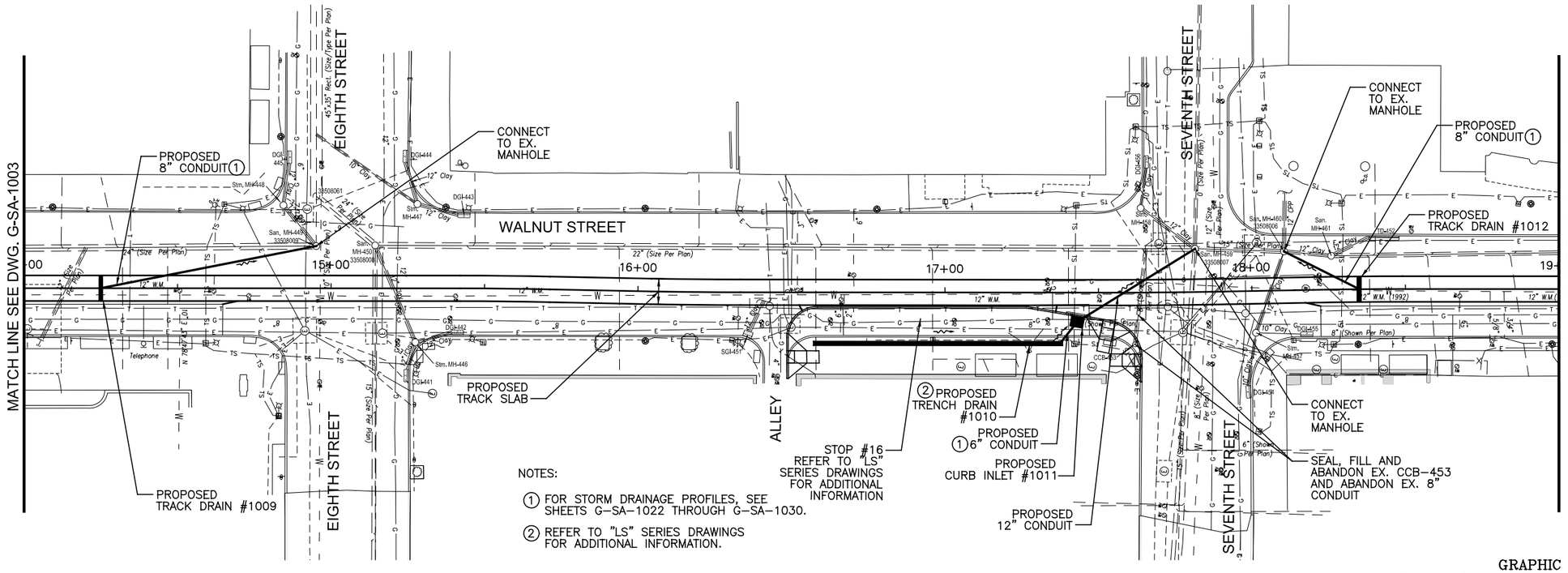

NOTES:

(1) FOR STORM DRAINAGE PROFILES, SEE SHEETS G-SA-1022 THROUGH G-SA-1030.

(2) REFER TO "LS" SERIES DRAWINGS FOR ADDITIONAL INFORMATION.

GRAPHIC SCALE

20 0 20 40 80

(IN FEET)
1 inch = 20 ft. Full Size
1 inch = 40 ft. Half Size

INTENTIONALLY LEFT BLANK

590 580 570 560 550 540 530 520 510 500

CAUTION UNDERGROUND UTILITIES
2 WORKING DAYS
BEFORE YOU DIG
CALL 1-800-362-2764
OHIO UTILITY PROTECTION SERVICE
CALL NON-SERVICE FACILITY OWNERS DIRECT

DOTE_Mono_PDF_Half.pltcfg
T:\29014A-Streetcar\CAD\Sanitary_and_Storm\S_G-SA-1004.dgn
5:15:33 PM
7/12/2012

CONTRACT DRAWING

PRINTS NOT BEARING THIS STAMP WERE MADE PRIOR TO ADVERTISING FOR BIDS AND ARE TO BE CONSIDERED OBSOLETE FOR CONTRACT PURPOSES.

Department of Transportation and Engineering

City of Cincinnati
City Hall
801 Plum Street
Cincinnati, Ohio 45202

CINCINNATI STREETCAR
CENTRAL BUSINESS DISTRICT
COMBINED SANITARY AND STORM MODIFICATIONS
WALNUT STREET
STA 14+00 TO STA 19+00

Revisions
No.

Drawn by MKM	Date 7/02/12
Designed by MKM	Date 7/02/12
Checked by SAJ	Date 7/02/12
Reviewed by JTB	Date 7/12/12

Consultant

PB HDR

File Number

ACC No. 23126

G-SA-1004

6200

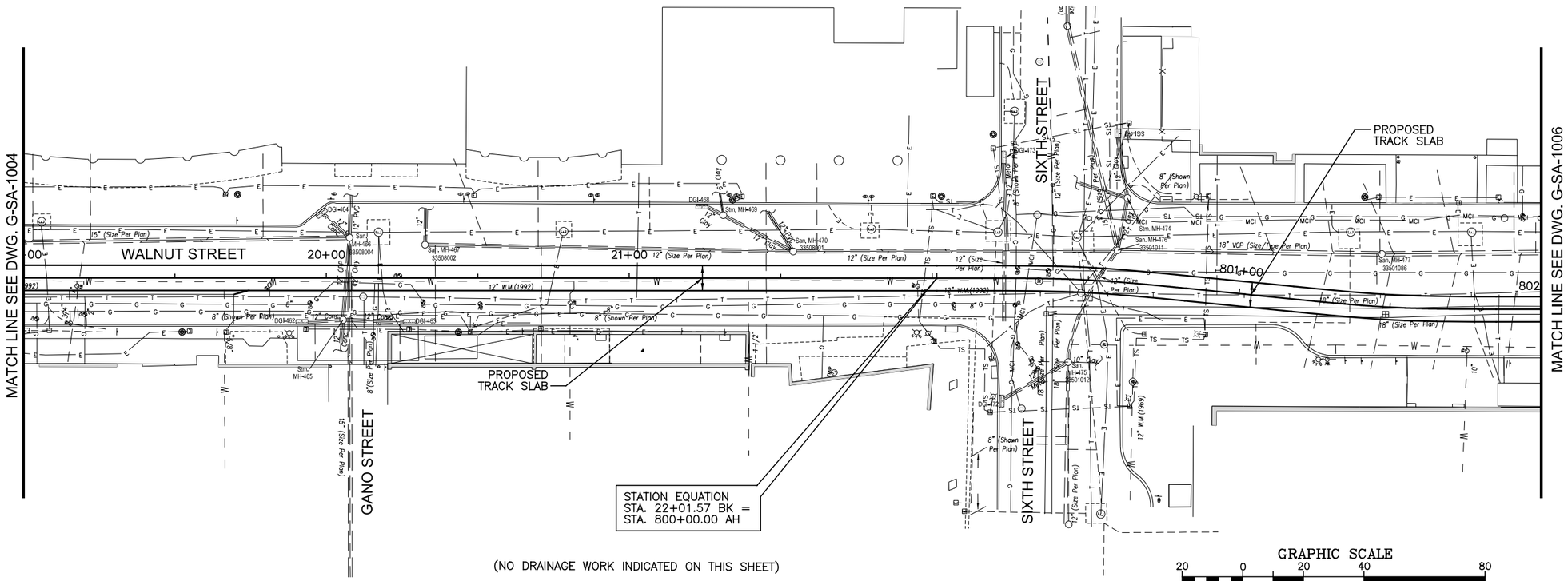

(NO DRAINAGE WORK INDICATED ON THIS SHEET)

GRAPHIC SCALE

20 0 20 40 80

(IN FEET)
1 inch = 20 ft. Full Size
1 inch = 40 ft. Half Size

590
580
570
560
550
540
530
520
510
500

INTENTIONALLY LEFT BLANK

CAUTION UNDERGROUND UTILITIES
2 WORKING DAYS
BEFORE YOU DIG
CALL 1-800-362-2764
OHIO UTILITY PROTECTION SERVICE
CALL NON-SERVICE FACILITY
OWNERS DIRECT

DOTE_Mono_PDF_Half.pltcfg
T:\29014A-Streetcar\CAD\Sanitary_and_Storm\S_G-SA-1005.dgn
7/12/2012 5:15:34 PM

CITY OF CINCINNATI DEPARTMENT OF TRANSPORTATION & ENGINEERING

CONTRACT DRAWING

PRINTS NOT BEARING THIS STAMP WERE MADE PRIOR TO ADVERTISING FOR BIDS AND ARE TO BE CONSIDERED OBSOLETE FOR CONTRACT PURPOSES.

Department of Transportation and Engineering

City of Cincinnati
City Hall
801 Plum Street
Cincinnati, Ohio 45202

CINCINNATI STREETCAR
CENTRAL BUSINESS DISTRICT
COMBINED SANITARY AND STORM MODIFICATIONS
WALNUT STREET
STA 19+00 TO STA 802+00

Revisions
No.

	Date
Drawn by MKM	7/02/12
Designed by MKM	7/02/12
Checked by SAJ	7/02/12
Reviewed by JTB	7/12/12

Consultant

PB HDR

File Number

ACC No.
23126

G-SA-1005

6200

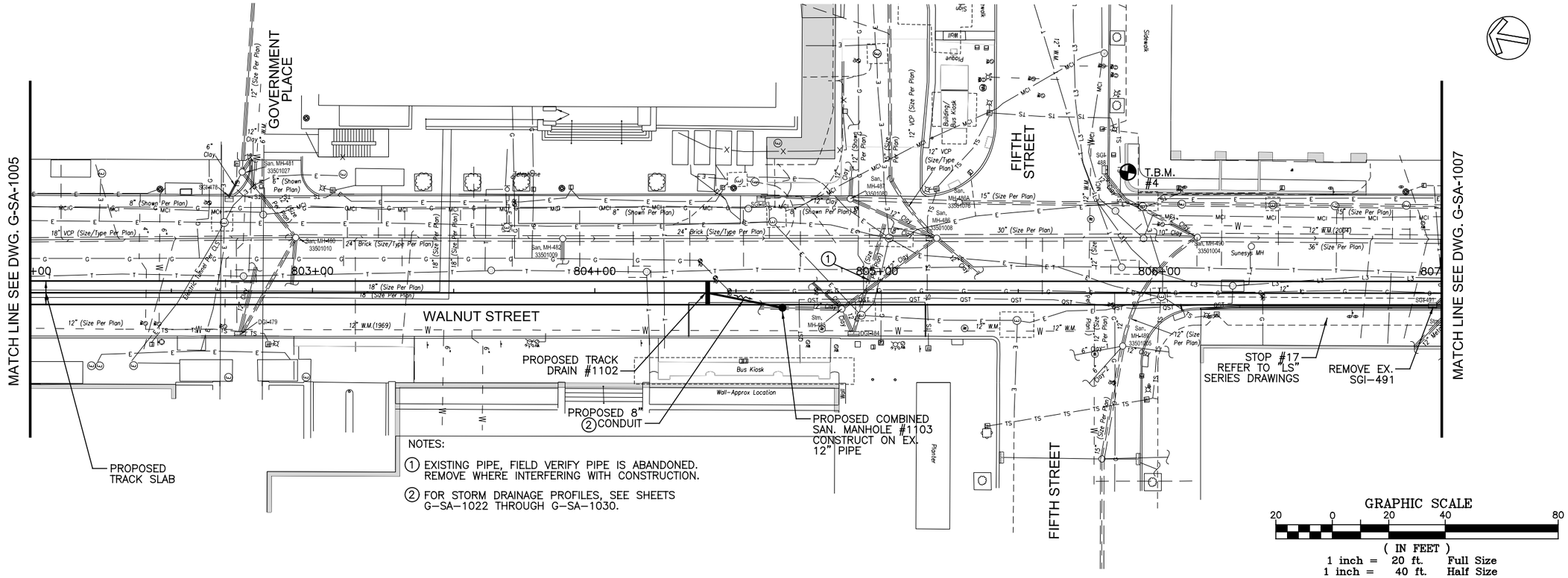

NOTES:

1. EXISTING PIPE, FIELD VERIFY PIPE IS ABANDONED. REMOVE WHERE INTERFERING WITH CONSTRUCTION.
2. FOR STORM DRAINAGE PROFILES, SEE SHEETS G-SA-1022 THROUGH G-SA-1030.

590 580 570 560 550 540 530 520 510 500

INTENTIONALLY LEFT BLANK

CAUTION UNDERGROUND UTILITIES
2 WORKING DAYS
BEFORE YOU DIG
CALL 1-800-362-2764
OHIO UTILITY PROTECTION SERVICE
CALL NON-SERVICE FACILITY
OWNERS DIRECT

DOTE_Mono_PDF_Half.pltcfg
T:\29014A-Streetcar\CAD\Sanitary_and_Storm\S_G-SA-1006.dgn
5:15:35 PM
7/12/2012

DEPARTMENT OF TRANSPORTATION & ENGINEERING
CITY OF CINCINNATI OHIO

CONTRACT DRAWING

PRINTS NOT BEARING THIS STAMP WERE MADE PRIOR TO ADVERTISING FOR BIDS AND ARE TO BE CONSIDERED OBSOLETE FOR CONTRACT PURPOSES.

Department of Transportation and Engineering

City of Cincinnati
City Hall
801 Plum Street
Cincinnati, Ohio 45202

CINCINNATI STREETCAR
CENTRAL BUSINESS DISTRICT
COMBINED SANITARY AND STORM MODIFICATIONS
WALNUT STREET
STA 802+00.00 TO STA 807+00.00

Revisions
No.

	Date
Drawn by MKM	7/02/12
Designed by MKM	7/02/12
Checked by SAJ	7/02/12
Reviewed by JTB	7/12/12

Consultant

PB HDR

File Number

ACC No. 23126

G-SA-1006

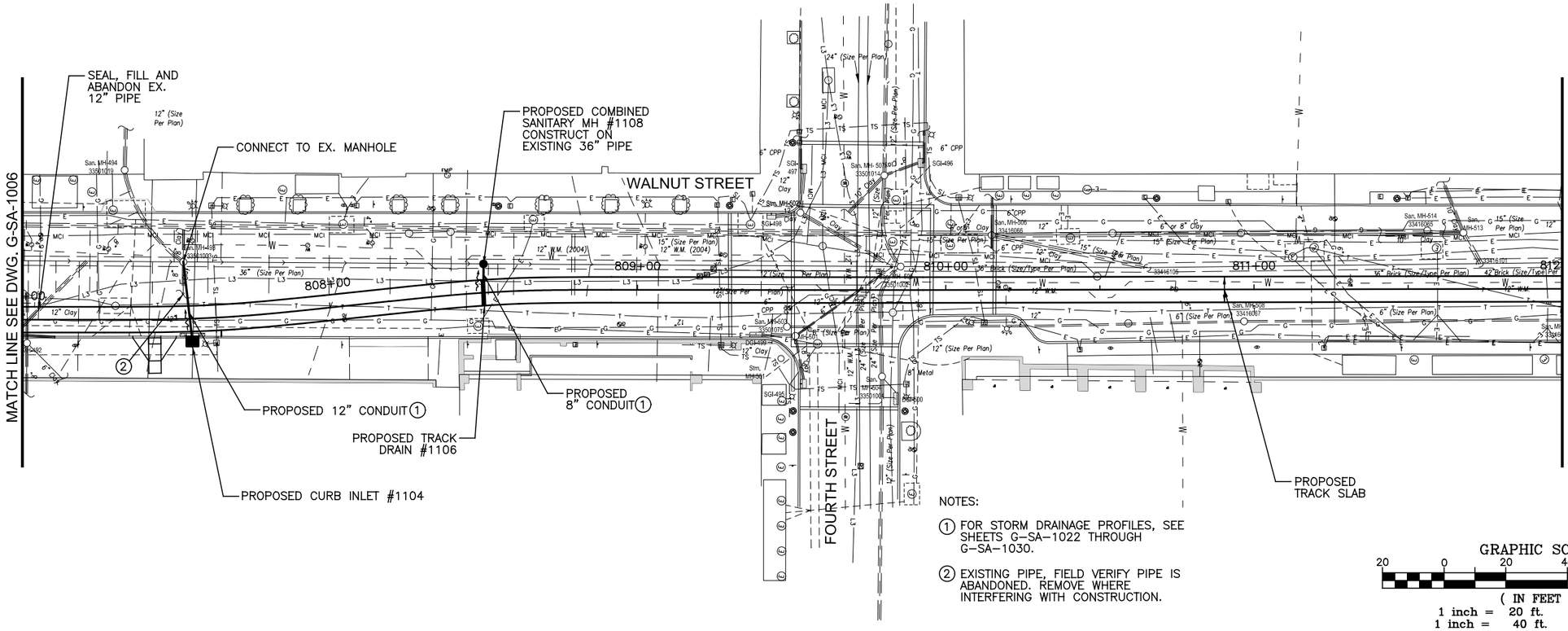

NOTES:

1. FOR STORM DRAINAGE PROFILES, SEE SHEETS G-SA-1022 THROUGH G-SA-1030.
2. EXISTING PIPE, FIELD VERIFY PIPE IS ABANDONED. REMOVE WHERE INTERFERING WITH CONSTRUCTION.

GRAPHIC SCALE

20 0 20 40 80

(IN FEET)
1 inch = 20 ft. Full Size
1 inch = 40 ft. Half Size

590 580 570 560 550 540 530 520 510 500

INTENTIONALLY LEFT BLANK

CAUTION UNDERGROUND UTILITIES
2 WORKING DAYS
BEFORE YOU DIG
CALL 1-800-362-2764
OHIO UTILITY PROTECTION SERVICE
CALL NON-SERVICE FACILITY
OWNERS DIRECT

DOTE_Mono_PDF_Half.pltcfg
T:\29014A-Streetcar\CAD\Sanitary_and_Storm\S_G-SA-1007.dgn
5:15:36 PM
7/12/2012

CONTRACT DRAWING

PRINTS NOT BEARING THIS STAMP WERE MADE PRIOR TO ADVERTISING FOR BIDS AND ARE TO BE CONSIDERED OBSOLETE FOR CONTRACT PURPOSES.

Department of Transportation and Engineering

City of Cincinnati
City Hall
801 Plum Street
Cincinnati, Ohio 45202

CINCINNATI STREETCAR
CENTRAL BUSINESS DISTRICT
COMBINED SANITARY AND STORM MODIFICATIONS
WALNUT STREET
STA 807+00.00 TO STA 812+00.00

Revisions
No.

Drawn by MKM	Date 7/02/12
Designed by MKM	Date 7/02/12
Checked by SAJ	Date 7/02/12
Reviewed by JTB	Date 7/12/12

Consultant

PB HDR

File Number

ACC No. 23126

G-SA-1007

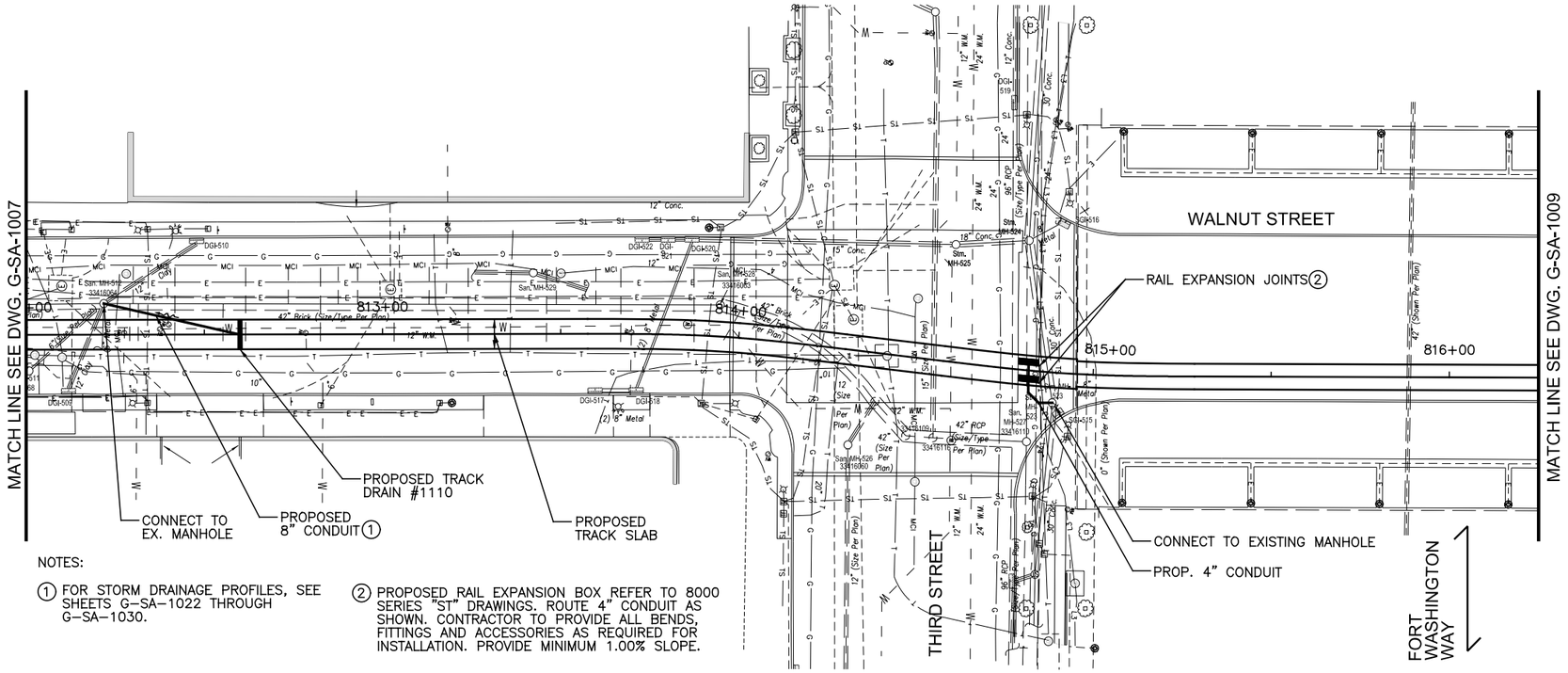

NOTES:

① FOR STORM DRAINAGE PROFILES, SEE SHEETS G-SA-1022 THROUGH G-SA-1030.

② PROPOSED RAIL EXPANSION BOX REFER TO 8000 SERIES "ST" DRAWINGS. ROUTE 4" CONDUIT AS SHOWN. CONTRACTOR TO PROVIDE ALL BENDS, FITTINGS AND ACCESSORIES AS REQUIRED FOR INSTALLATION. PROVIDE MINIMUM 1.00% SLOPE.

GRAPHIC SCALE

20 0 20 40 80

(IN FEET)
1 inch = 20 ft. Full Size
1 inch = 40 ft. Half Size

590 580 570 560 550 540 530 520 510 500

INTENTIONALLY LEFT BLANK

CAUTION UNDERGROUND UTILITIES
2 WORKING DAYS
BEFORE YOU DIG
CALL 1-800-362-2764
OHIO UTILITY PROTECTION SERVICE
CALL NON-SERVICE FACILITY
OWNERS DIRECT

DOTE_Mono_PDF_Half.pltcfg
T:\29014A-Streetcar\CAD\Sanitary_and_Storm\S_G-SA-1008.dgn
5:15:37 PM
7/12/2012

CONTRACT DRAWING

PRINTS NOT BEARING THIS STAMP WERE MADE PRIOR TO ADVERTISING FOR BIDS AND ARE TO BE CONSIDERED OBSOLETE FOR CONTRACT PURPOSES.

Department of Transportation and Engineering

City of Cincinnati
City Hall
801 Plum Street
Cincinnati, Ohio 45202

CINCINNATI STREETCAR
CENTRAL BUSINESS DISTRICT
COMBINED SANITARY AND STORM MODIFICATIONS
WALNUT STREET
STA 812+00.00 TO STA 816+25.00

Revisions
No.

	Date
Drawn by MKM	7/02/12
Designed by MKM	7/02/12
Checked by SAJ	7/02/12
Reviewed by JTB	7/12/12

Consultant

PB HDR

File Number

ACC No. 23126

G-SA-1008

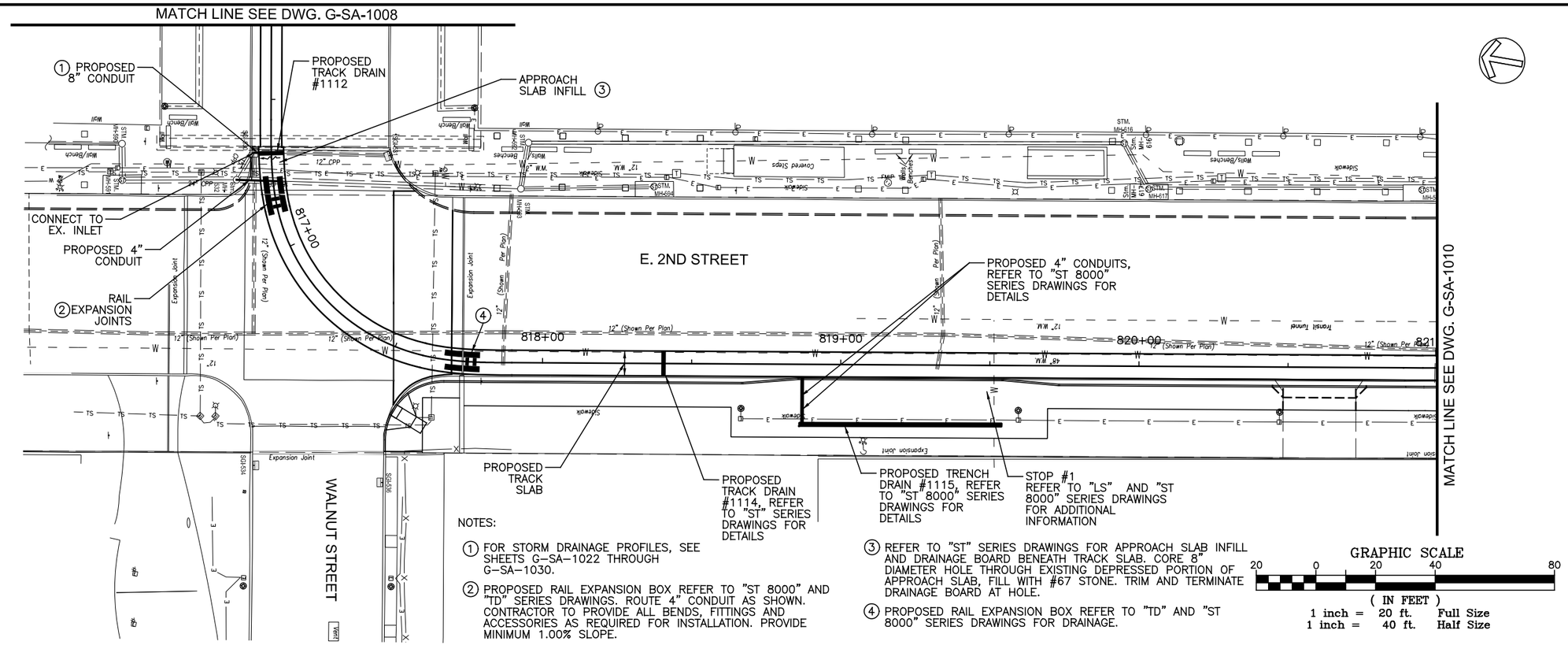

NOTES:

① FOR STORM DRAINAGE PROFILES, SEE SHEETS G–SA–1022 THROUGH G–SA–1030.

② PROPOSED RAIL EXPANSION BOX REFER TO "ST 8000" AND "TD" SERIES DRAWINGS. ROUTE 4" CONDUIT AS SHOWN. CONTRACTOR TO PROVIDE ALL BENDS, FITTINGS AND ACCESSORIES AS REQUIRED FOR INSTALLATION. PROVIDE MINIMUM 1.00% SLOPE.

③ REFER TO "ST" SERIES DRAWINGS FOR APPROACH SLAB INFILL AND DRAINAGE BOARD BENEATH TRACK SLAB. CORE 8" DIAMETER HOLE THROUGH EXISTING DEPRESSED PORTION OF APPROACH SLAB, FILL WITH #67 STONE. TRIM AND TERMINATE DRAINAGE BOARD AT HOLE.

④ PROPOSED RAIL EXPANSION BOX REFER TO "TD" AND "ST 8000" SERIES DRAWINGS FOR DRAINAGE.

GRAPHIC SCALE

20 0 20 40 80

(IN FEET)
1 inch = 20 ft. Full Size
1 inch = 40 ft. Half Size

590 580 570 560 550 540 530 520 510 500

INTENTIONALLY LEFT BLANK

CAUTION UNDERGROUND UTILITIES
2 WORKING DAYS
BEFORE YOU DIG
CALL 1–800–362–2764
OHIO UTILITY PROTECTION SERVICE
CALL NON–SERVICE FACILITY
OWNERS DIRECT

DOTE_Mono_PDF_Half.pltcfg
T:\29014A-Streetcar\CAD\Sanitary_and_Storm\S_G-SA-1009.dgn
5:15:38 PM
7/12/2012

CONTRACT DRAWING

PRINTS NOT BEARING THIS STAMP WERE MADE PRIOR TO ADVERTISING FOR BIDS AND ARE TO BE CONSIDERED OBSOLETE FOR CONTRACT PURPOSES.

Department of Transportation and Engineering

City of Cincinnati
City Hall
801 Plum Street
Cincinnati, Ohio 45202

CINCINNATI STREETCAR
CENTRAL BUSINESS DISTRICT
COMBINED SANITARY AND STORM MODIFICATIONS
E. 2ND STREET
STA 816+25.00 TO STA 821+00.00

Revisions
No.

Drawn by MKM	Date 7/02/12
Designed by MKM	Date 7/02/12
Checked by SAJ	Date 7/02/12
Reviewed by JTB	Date 7/12/12

Consultant

PB HDR

File Number

ACC No. 23126

G-SA-1009

NOTES:

1. FOR STORM DRAINAGE PROFILES, SEE SHEETS G–SA–1022 THROUGH G–SA–1030.
2. PROPOSED 12" CONDUIT.
3. PROPOSED 15" CONDUIT.
4. REMOVE EXISTING DGI–23.
5. REMOVE EXISTING DGI–24.
6. REMOVE TWO EX. 8" CONDUITS TO PROPOSED MH #1122.
7. CONNECT TWO EXISTING 8" METAL CONDUITS TO PROP. MH #1122.
8. PROPOSED RAIL EXPANSION BOX REFER TO "ST 8000" AND "TD" SERIES DRAWINGS. ROUTE 4" CONDUIT AS SHOWN. CONTRACTOR TO PROVIDE ALL BENDS , FITTINGS AND ACCESSORIES AS REQUIRED FOR INSTALLATION. PROVIDE MINIMUM 1.00% SLOPE.
9. PROPOSED NEGATIVE RETURN BOX REFER TO SERIES "PD" AND "TP" DRAWINGS. ROUTE 4" CONDUIT AS SHOWN. CONTRACTOR TO PROVIDE ALL BENDS , FITTINGS AND ACCESSORIES AS REQUIRED FOR INSTALLATION. PROVIDE MINIMUM 1.00% SLOPE.
10. PROPOSED RAIL EXPANSION BOX REFER TO "ST 8000" AND "TD" SERIES DRAWINGS FOR DRAINAGE.
11. REFER TO "ST" SERIES DRAWINGS FOR APPROACH SLAB INFILL AND DRAINAGE BOARD BENEATH TRACK SLAB. CORE 8" DIAMETER HOLE THROUGH EXISTING DEPRESSED PORTION OF APPROACH SLAB, FILL WITH #67 STONE. TRIM AND TERMINATE DRAINAGE BOARD AT HOLE.

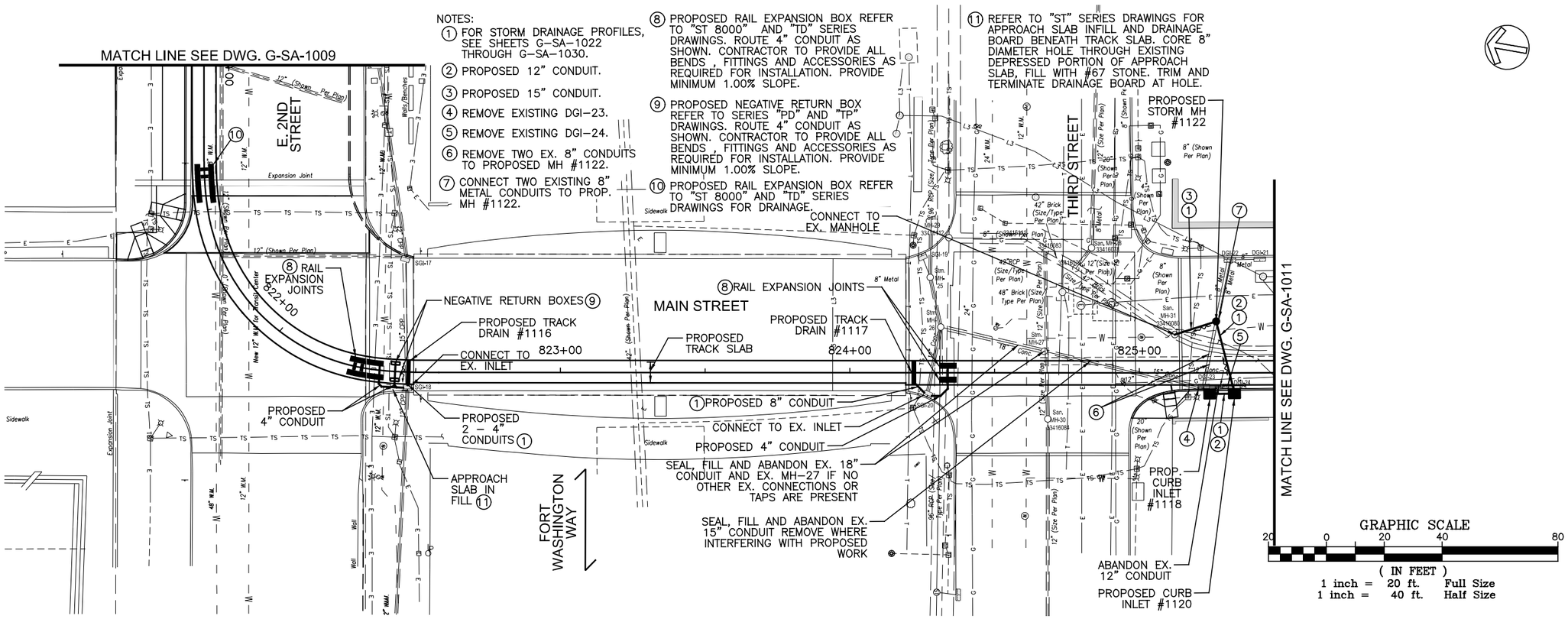

INTENTIONALLY LEFT BLANK

CAUTION UNDERGROUND UTILITIES
2 WORKING DAYS
BEFORE YOU DIG
CALL 1–800–362–2764
OHIO UTILITY PROTECTION SERVICE
CALL NON–SERVICE FACILITY OWNERS DIRECT

DOTE_Mono_PDF_Half.pltcfg
T:\29014A-Streetcar\CAD\Sanitary_and_Storm\S_G-SA-1010.dgn
5:15:39 PM
7/12/2012

CONTRACT DRAWING

PRINTS NOT BEARING THIS STAMP WERE MADE PRIOR TO ADVERTISING FOR BIDS AND ARE TO BE CONSIDERED OBSOLETE FOR CONTRACT PURPOSES.

Department of Transportation and Engineering

City of Cincinnati
City Hall
801 Plum Street
Cincinnati, Ohio 45202

CINCINNATI STREETCAR
CENTRAL BUSINESS DISTRICT
COMBINED SANITARY AND STORM MODIFICATIONS
MAIN STREET
STA 821+00.00 TO STA 825+40.00

Revisions
No.

Drawn by MKM	Date 7/02/12
Designed by MKM	Date 7/02/12
Checked by SAJ	Date 7/02/12
Reviewed by JTB	Date 7/12/12

Consultant

PB HDR

File Number

ACC No. 23126

G-SA-1010

(NO DRAINAGE WORK INDICATED ON THIS SHEET)

GRAPHIC SCALE

20 0 20 40 80

(IN FEET)
1 inch = 20 ft. Full Size
1 inch = 40 ft. Half Size

590 580 570 560 550 540 530 520 510 500

INTENTIONALLY LEFT BLANK

CAUTION UNDERGROUND UTILITIES
2 WORKING DAYS
BEFORE YOU DIG
CALL 1-800-362-2764
OHIO UTILITY PROTECTION SERVICE
CALL NON-SERVICE FACILITY
OWNERS DIRECT

DOTE_Mono_PDF_Half.pltcfg
T:\29014A-Streetcar\CAD\Sanitary_and_Storm\S_G-SA-1011.dgn
5:15:40 PM
7/12/2012

CONTRACT DRAWING

PRINTS NOT BEARING THIS STAMP WERE MADE PRIOR TO ADVERTISING FOR BID AND ARE TO BE CONSIDERED OBSOLETE FOR CONTRACT PURPOSES.

Department of Transportation and Engineering

City of Cincinnati
City Hall
801 Plum Street
Cincinnati, Ohio 45202

CINCINNATI STREETCAR
CENTRAL BUSINESS DISTRICT
COMBINED SANITARY AND STORM MODIFICATIONS
MAIN STREET
STA 825+40.00 TO STA 828+50.00

Revisions
No.

Drawn by MKM Date 7/02/12
Designed by MKM Date 7/02/12
Checked by SAJ Date 7/02/12
Reviewed by JTB Date 7/12/12

Consultant

PB HDR

File Number

ACC No. 23126

G-SA-1011

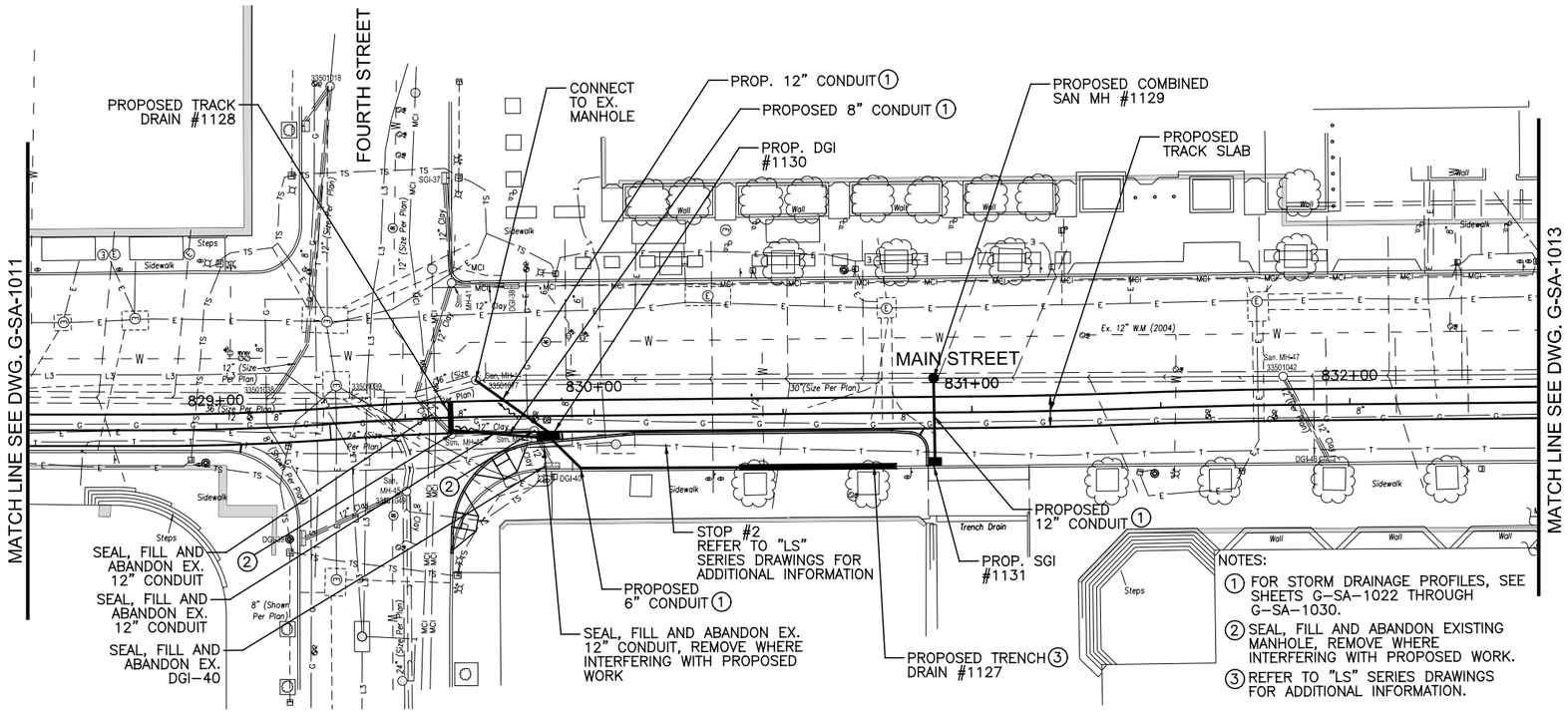

NOTES:

① FOR STORM DRAINAGE PROFILES, SEE SHEETS G-SA-1022 THROUGH G-SA-1030.

② SEAL, FILL AND ABANDON EXISTING MANHOLE, REMOVE WHERE INTERFERING WITH PROPOSED WORK.

③ REFER TO "LS" SERIES DRAWINGS FOR ADDITIONAL INFORMATION.

GRAPHIC SCALE

20 0 20 40 80

(IN FEET)
1 inch = 20 ft. Full Size
1 inch = 40 ft. Half Size

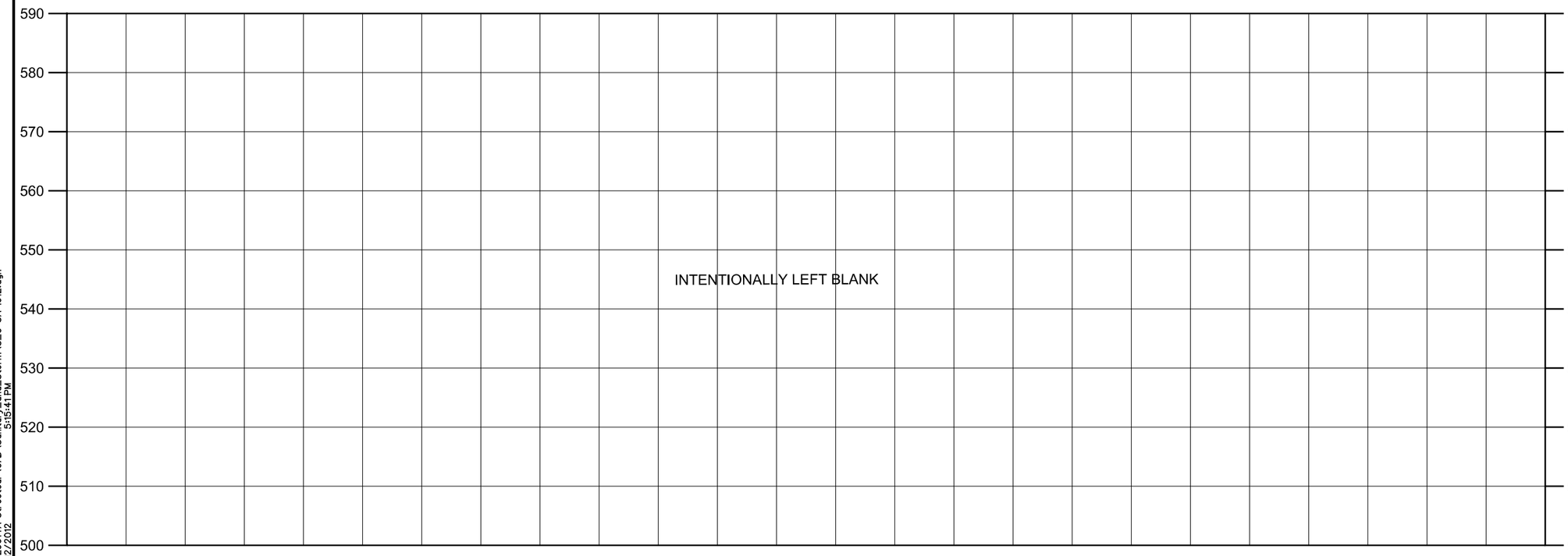

INTENTIONALLY LEFT BLANK

CAUTION UNDERGROUND UTILITIES
2 WORKING DAYS
BEFORE YOU DIG
CALL 1-800-362-2764
OHIO UTILITY PROTECTION SERVICE
CALL NON-SERVICE FACILITY
OWNERS DIRECT

DOTE_Mono_PDF_Half.pltcfg
T:\29014A-Streetcar\CAD\Sanitary_and_Storm\S_G-SA-1012.dgn
5:15:41 PM
7/12/2012

CITY OF CINCINNATI DEPARTMENT OF TRANSPORTATION & ENGINEERING OHIO

CONTRACT DRAWING

PRINTS NOT BEARING THIS STAMP WERE MADE PRIOR TO ADVERTISING FOR BIDS AND ARE TO BE CONSIDERED OBSOLETE FOR CONTRACT PURPOSES.

Department of Transportation and Engineering

City of Cincinnati
City Hall
801 Plum Street
Cincinnati, Ohio 45202

CINCINNATI STREETCAR
CENTRAL BUSINESS DISTRICT
COMBINED SANITARY AND STORM MODIFICATIONS
MAIN STREET
STA 828+50.00 TO STA 832+50.00

Revisions
No.

Drawn by MKM	Date 7/02/12
Designed by MKM	Date 7/02/12
Checked by SAJ	Date 7/02/12
Reviewed by JTB	Date 7/12/12

Consultant

PB HDR

File Number

ACC No. 23126

G-SA-1012

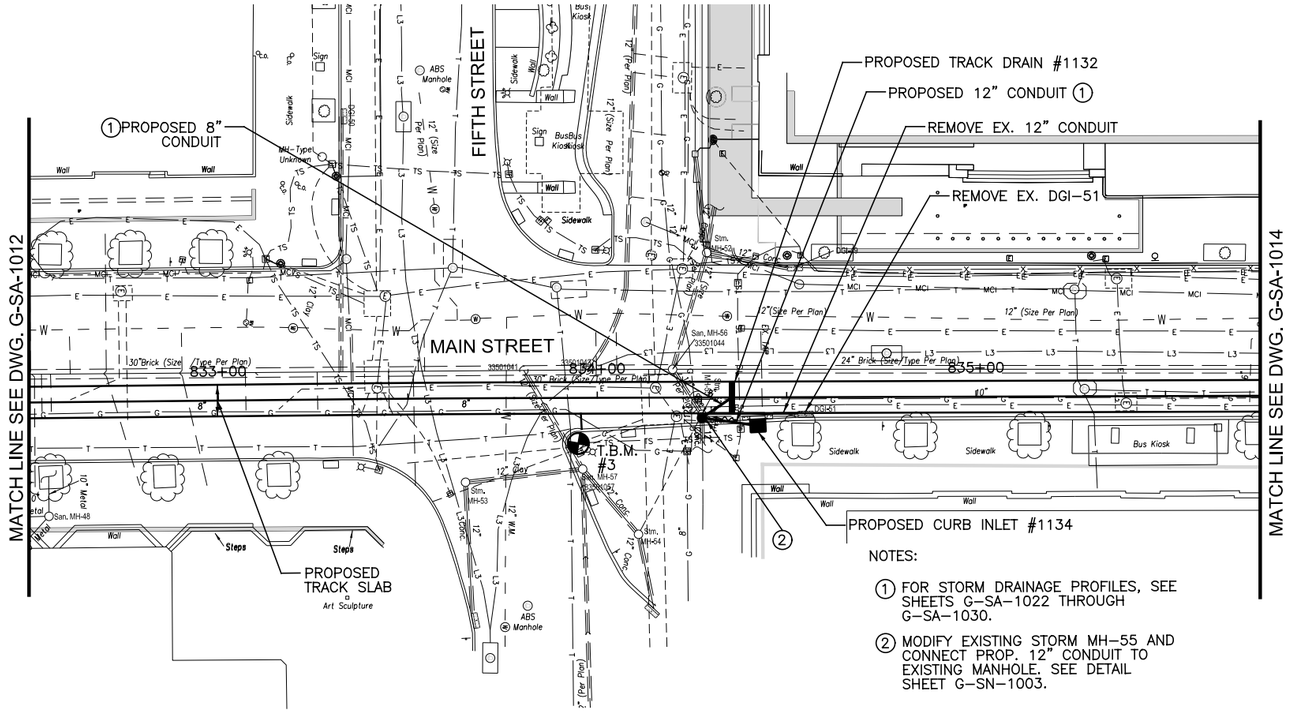

NOTES:

① FOR STORM DRAINAGE PROFILES, SEE SHEETS G-SA-1022 THROUGH G-SA-1030.

② MODIFY EXISTING STORM MH-55 AND CONNECT PROP. 12" CONDUIT TO EXISTING MANHOLE. SEE DETAIL SHEET G-SN-1003.

GRAPHIC SCALE

20 0 20 40 80

(IN FEET)
1 inch = 20 ft. Full Size
1 inch = 40 ft. Half Size

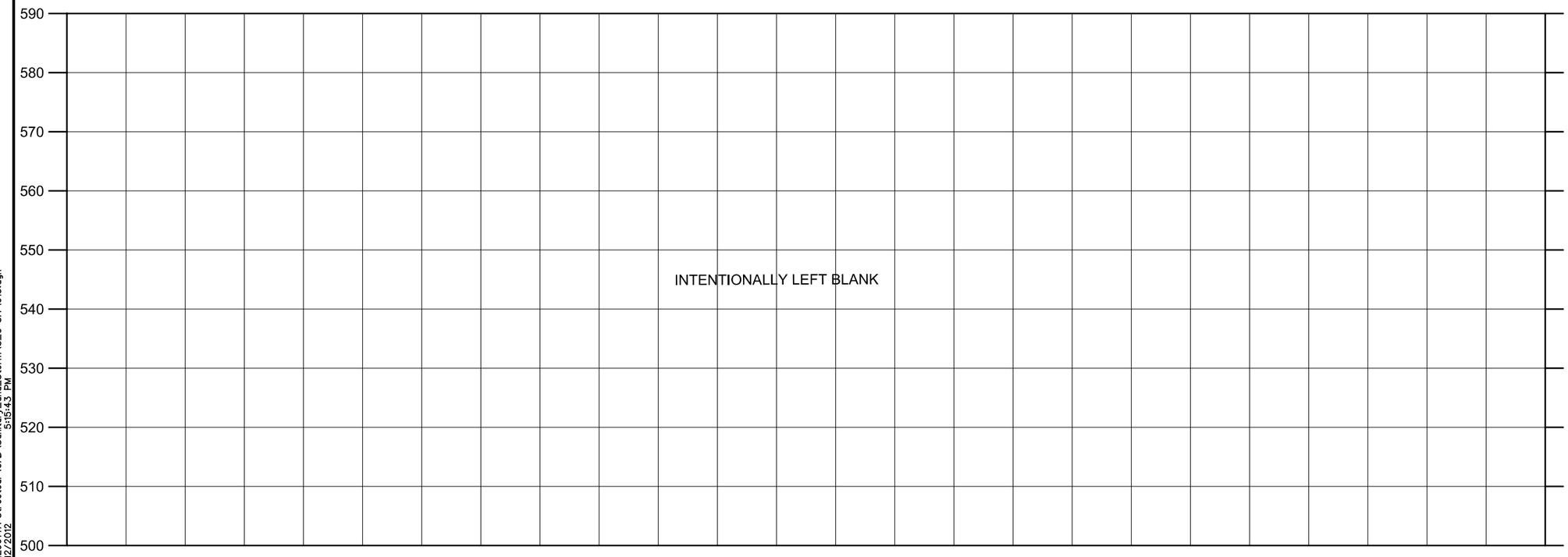

INTENTIONALLY LEFT BLANK

CAUTION UNDERGROUND UTILITIES
2 WORKING DAYS
BEFORE YOU DIG
CALL 1-800-362-2764
OHIO UTILITY PROTECTION SERVICE
CALL NON-SERVICE FACILITY
OWNERS DIRECT

DOTE_Mono_PDF_Half.pltcfg
T:\29014A-Streetcar\CAD\Sanitary_and_Storm\S_G-SA-1013.dgn
5:15:43 PM
7/12/2012

CONTRACT DRAWING

PRINTS NOT BEARING THIS STAMP WERE MADE PRIOR TO ADVERTISING FOR BIDS AND ARE TO BE CONSIDERED OBSOLETE FOR CONTRACT PURPOSES.

Department of Transportation and Engineering

City of Cincinnati
City Hall
801 Plum Street
Cincinnati, Ohio 45202

CINCINNATI STREETCAR
CENTRAL BUSINESS DISTRICT
COMBINED SANITARY AND STORM MODIFICATIONS
MAIN STREET
STA 832+50.00 TO STA 835+75.00

Revisions
No.

Drawn by MKM	Date 7/02/12
Designed by MKM	Date 7/02/12
Checked by SAJ	Date 7/02/12
Reviewed by JTB	Date 7/12/12

Consultant

PB HDR

File Number

ACC No. 23126

G-SA-1013

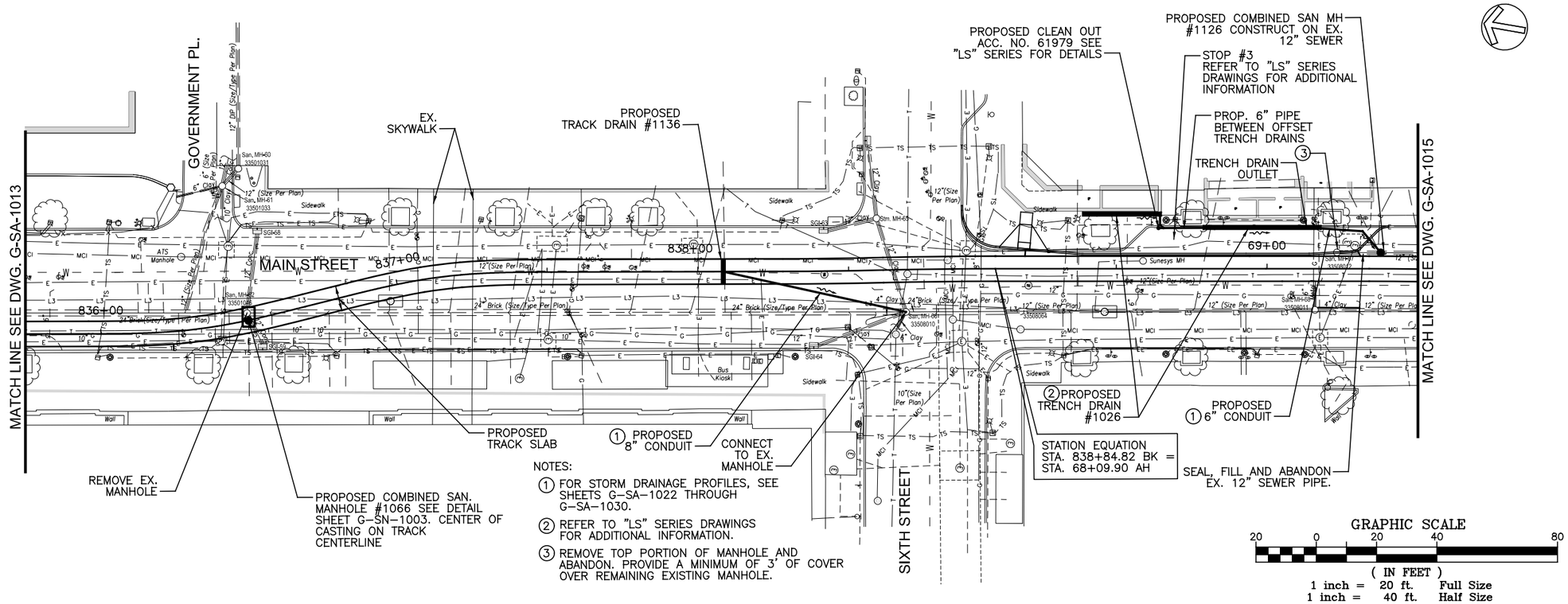

NOTES:

1. FOR STORM DRAINAGE PROFILES, SEE SHEETS G-SA-1022 THROUGH G-SA-1030.
2. REFER TO "LS" SERIES DRAWINGS FOR ADDITIONAL INFORMATION.
3. REMOVE TOP PORTION OF MANHOLE AND ABANDON. PROVIDE A MINIMUM OF 3' OF COVER OVER REMAINING EXISTING MANHOLE.

GRAPHIC SCALE

20 0 20 40 80

(IN FEET)
1 inch = 20 ft. Full Size
1 inch = 40 ft. Half Size

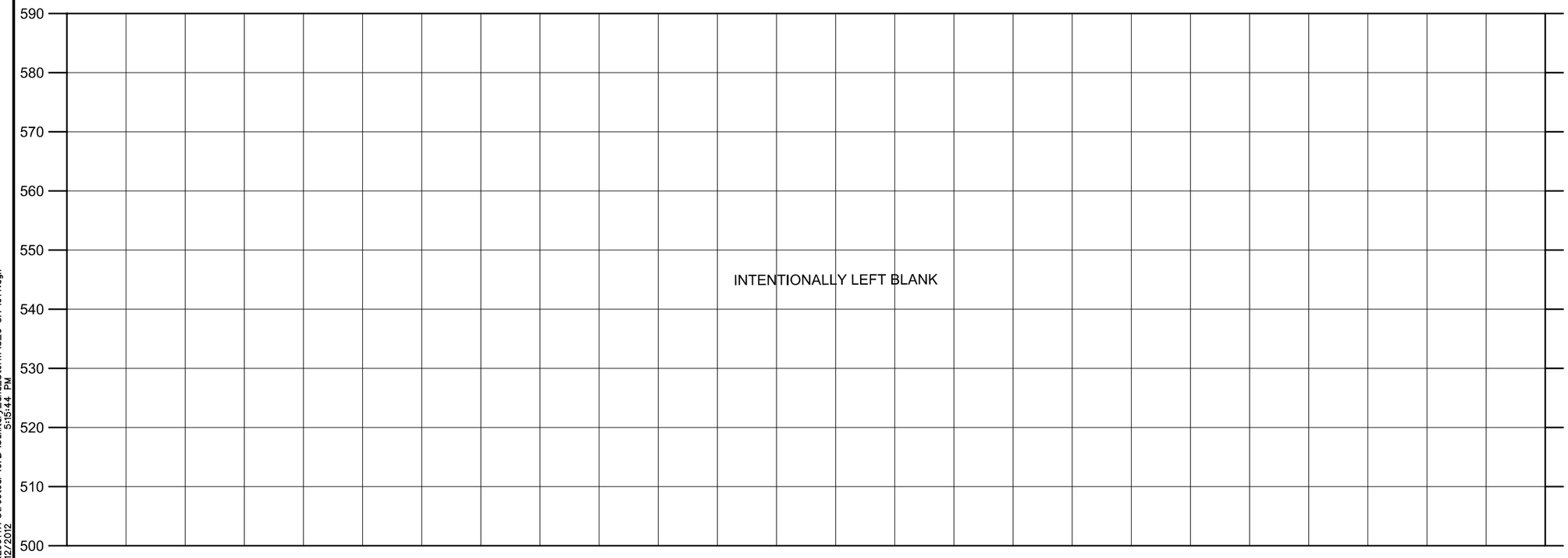

INTENTIONALLY LEFT BLANK

CAUTION UNDERGROUND UTILITIES
2 WORKING DAYS
BEFORE YOU DIG
CALL 1-800-362-2764
OHIO UTILITY PROTECTION SERVICE
CALL NON-SERVICE FACILITY OWNERS DIRECT

DOTE_Mono_PDF_Half.pltcfg
T:\29014A-Streetcar\CAD\Sanitary_and_Storm\S_G-SA-1014.dgn
7/12/2012 5:15:44 PM

CONTRACT DRAWING

PRINTS NOT BEARING THIS STAMP WERE MADE PRIOR TO ADVERTISING FOR BID AND ARE TO BE CONSIDERED OBSOLETE FOR CONTRACT PURPOSES.

Department of Transportation and Engineering

City of Cincinnati
City Hall
801 Plum Street
Cincinnati, Ohio 45202

CINCINNATI STREETCAR
CENTRAL BUSINESS DISTRICT
COMBINED SANITARY AND STORM MODIFICATIONS
MAIN STREET
STA 835+75.00 TO STA 69+50.00

Revisions
No.

Drawn by MKM	Date 7/02/12
Designed by MKM	Date 7/02/12
Checked by SAJ	Date 7/02/12
Reviewed by JTB	Date 7/12/12

Consultant

PB HDR

File Number

ACC No. 23126

G-SA-1014

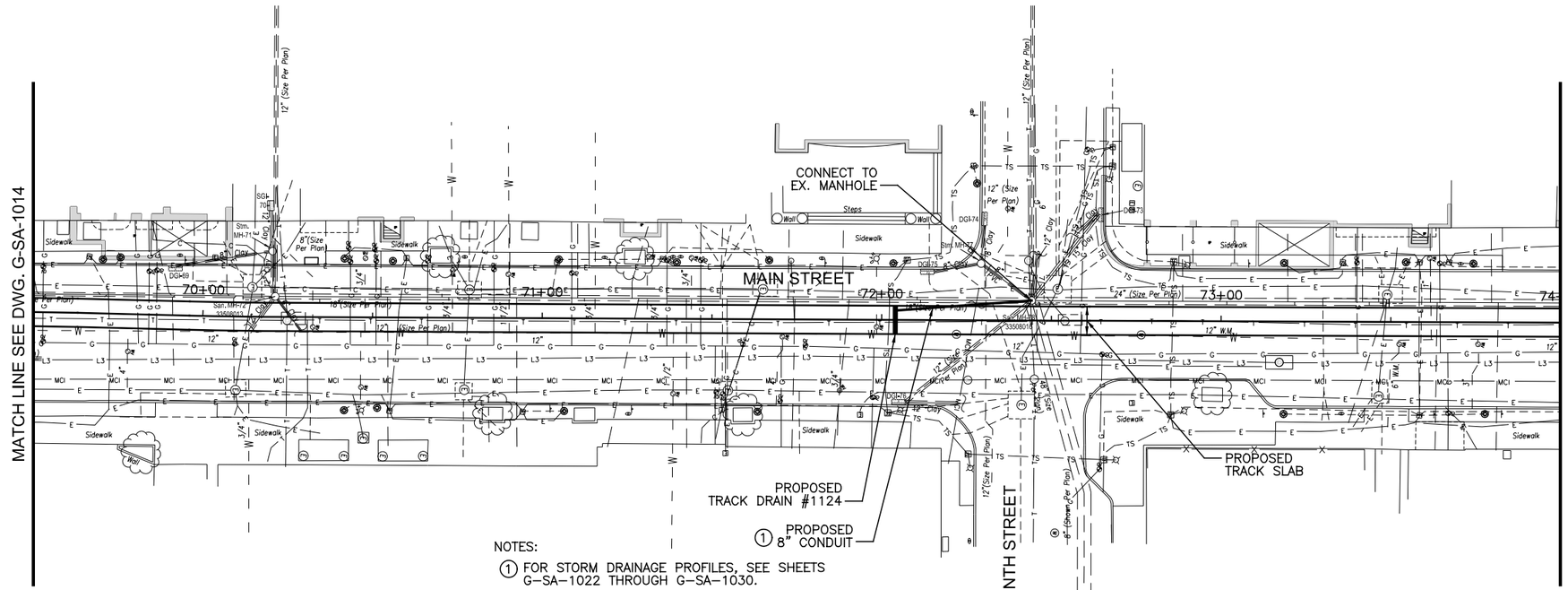

NOTES:

1. FOR STORM DRAINAGE PROFILES, SEE SHEETS G-SA-1022 THROUGH G-SA-1030.

GRAPHIC SCALE

20 0 20 40 80

(IN FEET)
1 inch = 20 ft. Full Size
1 inch = 40 ft. Half Size

590 580 570 560 550 540 530 520 510 500

INTENTIONALLY LEFT BLANK

CAUTION UNDERGROUND UTILITIES
2 WORKING DAYS
BEFORE YOU DIG
CALL 1-800-362-2764
OHIO UTILITY PROTECTION SERVICE
CALL NON-SERVICE FACILITY
OWNERS DIRECT

DOTE_Mono_PDF_Half.pltcfg
T:\29014A-Streetcar\CAD\Sanitary_and_Storm\S_G-SA-1015.dgn
5:15:45 PM
7/12/2012

DEPARTMENT OF TRANSPORTATION & ENGINEERING
CITY OF CINCINNATI
OHIO

CONTRACT DRAWING

PRINTS NOT BEARING THIS STAMP WERE MADE PRIOR TO ADVERTISING FOR BIDS AND ARE TO BE CONSIDERED OBSOLETE FOR CONTRACT PURPOSES.

Department of Transportation and Engineering

City of Cincinnati
City Hall
801 Plum Street
Cincinnati, Ohio 45202

CINCINNATI STREETCAR
CENTRAL BUSINESS DISTRICT
COMBINED SANITARY AND STORM MODIFICATIONS
MAIN STREET
STA 69+50 TO STA 74+00

Revisions
No.

Drawn by MKM	Date 7/02/12
Designed by MKM	Date 7/02/12
Checked by SAJ	Date 7/02/12
Reviewed by JTB	Date 7/12/12

Consultant

PB HDR

File Number

ACC No. 23126

G-SA-1015

6200

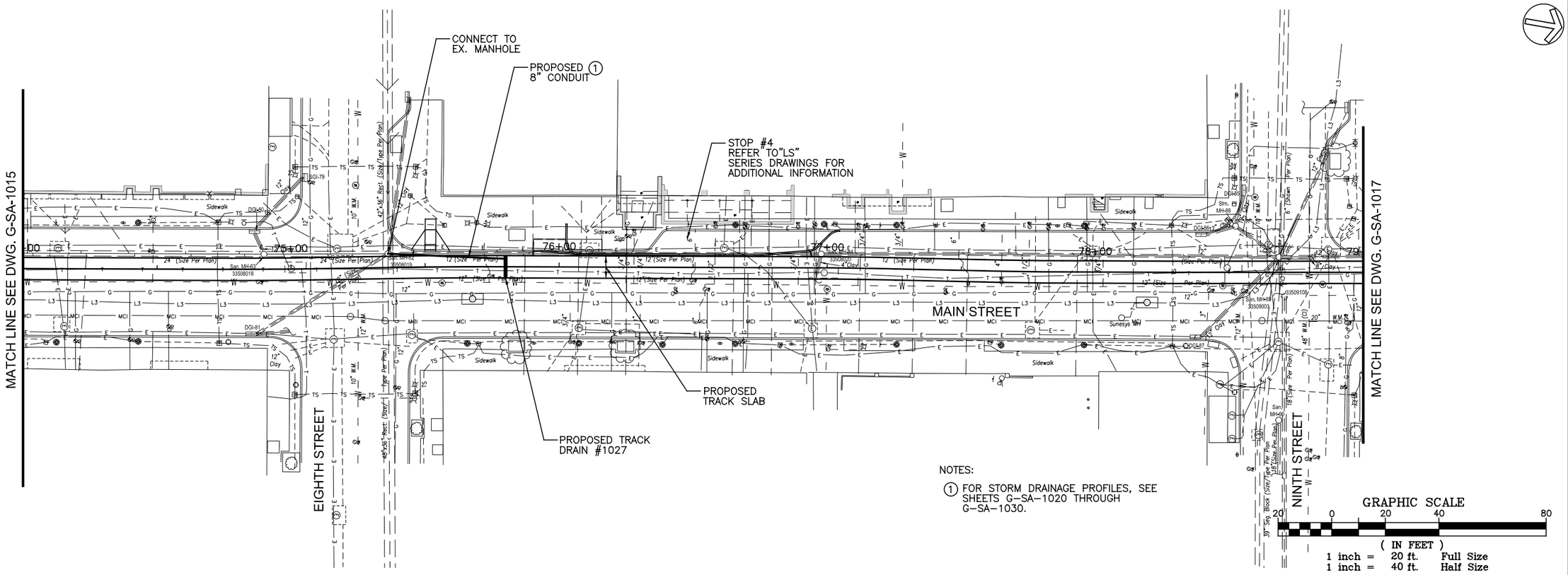

NOTES:

1. FOR STORM DRAINAGE PROFILES, SEE SHEETS G-SA-1020 THROUGH G-SA-1030.

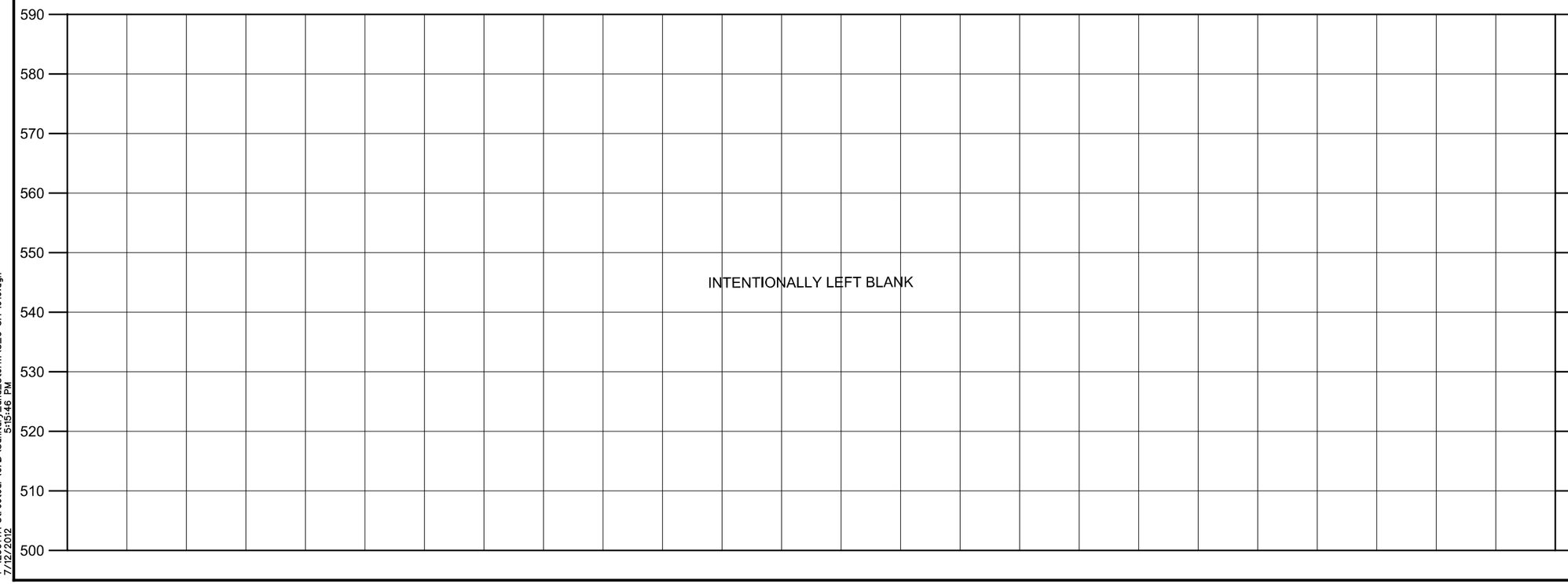

INTENTIONALLY LEFT BLANK

CAUTION UNDERGROUND UTILITIES
2 WORKING DAYS
BEFORE YOU DIG
CALL 1-800-362-2764
OHIO UTILITY PROTECTION SERVICE
CALL NON-SERVICE FACILITY
OWNERS DIRECT

DOTE_Mono_PDF_Half.pltcfg
T:\29014A-Streetcar\CAD\Sanitary_and_Storm\S_G-SA-1016.dgn
7/12/2012 5:15:46 PM

CONTRACT DRAWING

PRINTS NOT BEARING THIS STAMP WERE MADE PRIOR TO ADVERTISING FOR BID AND ARE TO BE CONSIDERED OBSOLETE FOR CONTRACT PURPOSES.

Department of Transportation and Engineering

City of Cincinnati
City Hall
801 Plum Street
Cincinnati, Ohio 45202

CINCINNATI STREETCAR
CENTRAL BUSINESS DISTRICT
COMBINED SANITARY AND STORM MODIFICATIONS
MAIN STREET
STA 74+00 TO STA 79+00

Revisions
No.

Drawn by MKM	Date 7/02/12
Designed by MKM	Date 7/02/12
Checked by SAJ	Date 7/02/12
Reviewed by JTB	Date 7/12/12

Consultant

PB HDR

File Number

ACC No. 23126

G-SA-1016

6200

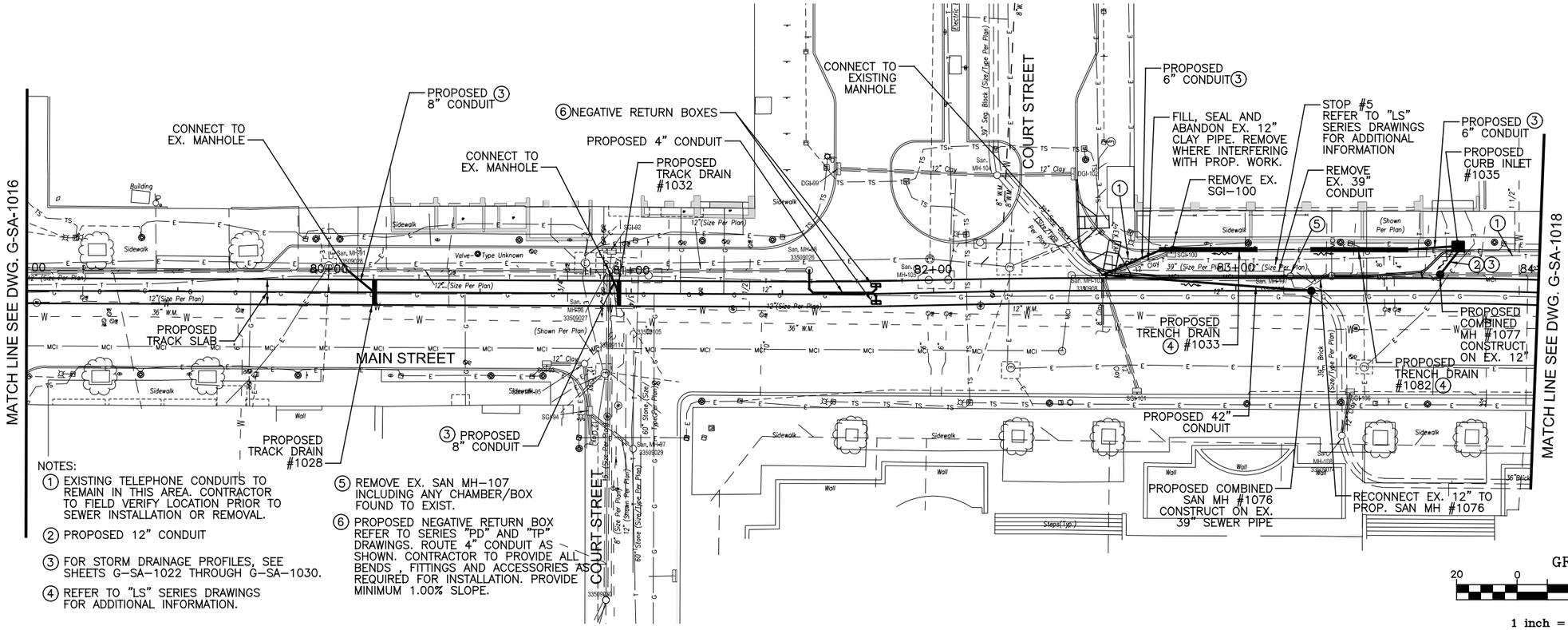

NOTES:

① EXISTING TELEPHONE CONDUITS TO REMAIN IN THIS AREA. CONTRACTOR TO FIELD VERIFY LOCATION PRIOR TO SEWER INSTALLATION OR REMOVAL.

② PROPOSED 12" CONDUIT

③ FOR STORM DRAINAGE PROFILES, SEE SHEETS G-SA-1022 THROUGH G-SA-1030.

④ REFER TO "LS" SERIES DRAWINGS FOR ADDITIONAL INFORMATION.

⑤ REMOVE EX. SAN MH-107 INCLUDING ANY CHAMBER/BOX FOUND TO EXIST.

⑥ PROPOSED NEGATIVE RETURN BOX REFER TO SERIES "PD" AND "TP" DRAWINGS. ROUTE 4" CONDUIT AS SHOWN. CONTRACTOR TO PROVIDE ALL BENDS , FITTINGS AND ACCESSORIES AS REQUIRED FOR INSTALLATION. PROVIDE MINIMUM 1.00% SLOPE.

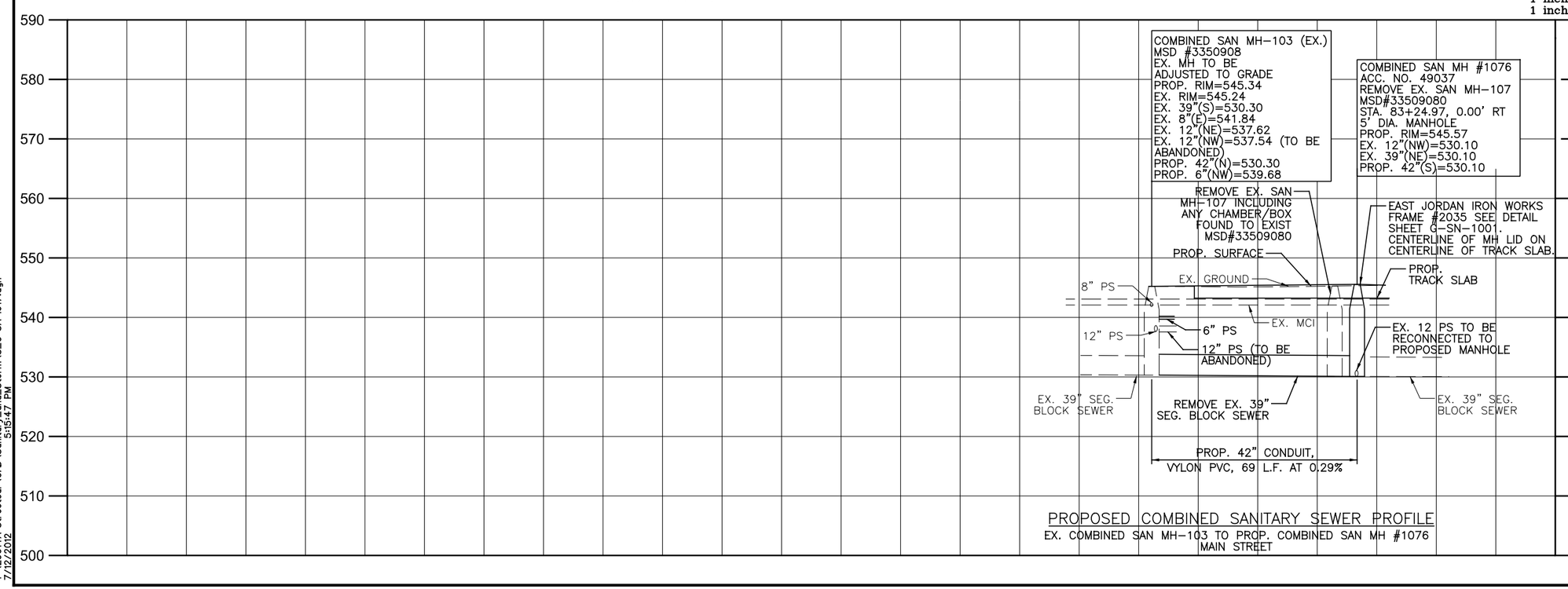

PROPOSED COMBINED SANITARY SEWER PROFILE

EX. COMBINED SAN MH-103 TO PROP. COMBINED SAN MH #1076
MAIN STREET

CAUTION UNDERGROUND UTILITIES
2 WORKING DAYS
BEFORE YOU DIG
CALL 1-800-362-2764
OHIO UTILITY PROTECTION SERVICE
CALL NON-SERVICE FACILITY OWNERS DIRECT

DEPARTMENT OF TRANSPORTATION & ENGINEERING — CITY OF CINCINNATI — OHIO

CONTRACT DRAWING

PRINTS NOT BEARING THIS STAMP WERE MADE PRIOR TO ADVERTISING FOR BID AND MAY BE CONSIDERED OBSOLETE FOR CONTRACT PURPOSES.

Department of Transportation and Engineering

City of Cincinnati
City Hall
801 Plum Street
Cincinnati, Ohio 45202

CINCINNATI STREETCAR
CENTRAL BUSINESS DISTRICT
COMBINED SANITARY AND STORM MODIFICATIONS
MAIN STREET
STA 79+00 TO STA 84+00

Revisions

No.	Date
	7/02/12
	7/02/12
	7/02/12
	7/12/12

Drawn by	Designed by	Checked by	Reviewed by
MKM	MKM	SAJ	JTB

Consultant

PB HDR

File Number

ACC No. 23126

G-SA-1017

DOTE_Mono_PDF_Half.pltcfg
T:\29014A-Streetcar\CAD\Sanitary_and_Storm\S_G-SA-1017.dgn
5:15:47 PM
7/12/2012

6200

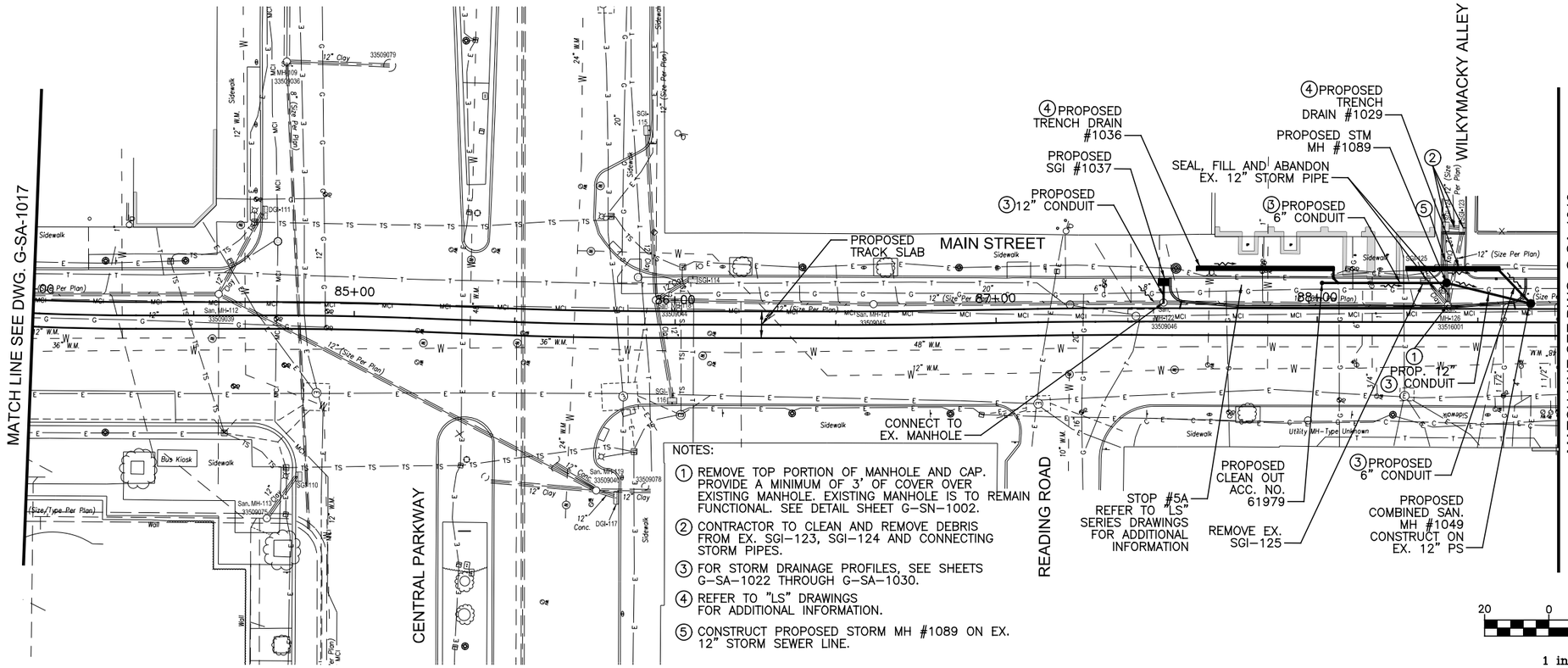

NOTES:

1. REMOVE TOP PORTION OF MANHOLE AND CAP. PROVIDE A MINIMUM OF 3' OF COVER OVER EXISTING MANHOLE. EXISTING MANHOLE IS TO REMAIN FUNCTIONAL. SEE DETAIL SHEET G-SN-1002.
2. CONTRACTOR TO CLEAN AND REMOVE DEBRIS FROM EX. SGI-123, SGI-124 AND CONNECTING STORM PIPES.
3. FOR STORM DRAINAGE PROFILES, SEE SHEETS G-SA-1022 THROUGH G-SA-1030.
4. REFER TO "LS" DRAWINGS FOR ADDITIONAL INFORMATION.
5. CONSTRUCT PROPOSED STORM MH #1089 ON EX. 12" STORM SEWER LINE.

GRAPHIC SCALE

20 0 20 40 80

(IN FEET)
1 inch = 20 ft. Full Size
1 inch = 40 ft. Half Size

590 580 570 560 550 540 530 520 510 500

INTENTIONALLY LEFT BLANK

CAUTION UNDERGROUND UTILITIES
2 WORKING DAYS
BEFORE YOU DIG
CALL 1-800-362-2764
OHIO UTILITY PROTECTION SERVICE
CALL NON-SERVICE FACILITY
OWNERS DIRECT

DOTE_Mono_PDF_Half.pltcfg
T:\29014A-Streetcar\CAD\Sanitary_and_Storm\S_G-SA-1018.dgn
7/12/2012 5:15:48 PM

CONTRACT DRAWING

PRINTS NOT BEARING THIS STAMP WERE MADE PRIOR TO ADVERTISING FOR BIDS AND ARE TO BE CONSIDERED OBSOLETE FOR CONTRACT PURPOSES.

Department of Transportation and Engineering

City of Cincinnati
City Hall
801 Plum Street
Cincinnati, Ohio 45202

CINCINNATI STREETCAR
CENTRAL BUSINESS DISTRICT
COMBINED SANITARY AND STORM MODIFICATIONS
MAIN STREET
STA 84+00 TO STA 88+75

Revisions
No.

	Date
Drawn by MKM	7/02/12
Designed by MKM	7/02/12
Checked by SAJ	7/02/12
Reviewed by JTB	7/12/12

Consultant

PB HDR

File Number

ACC No. 23126

G-SA-1018

6200

NOTES:

1. FOR STORM DRAINAGE PROFILES, SEE SHEETS G-SA-1022 THROUGH G-SA-1030.
2. PROPOSED 12" CONDUIT.

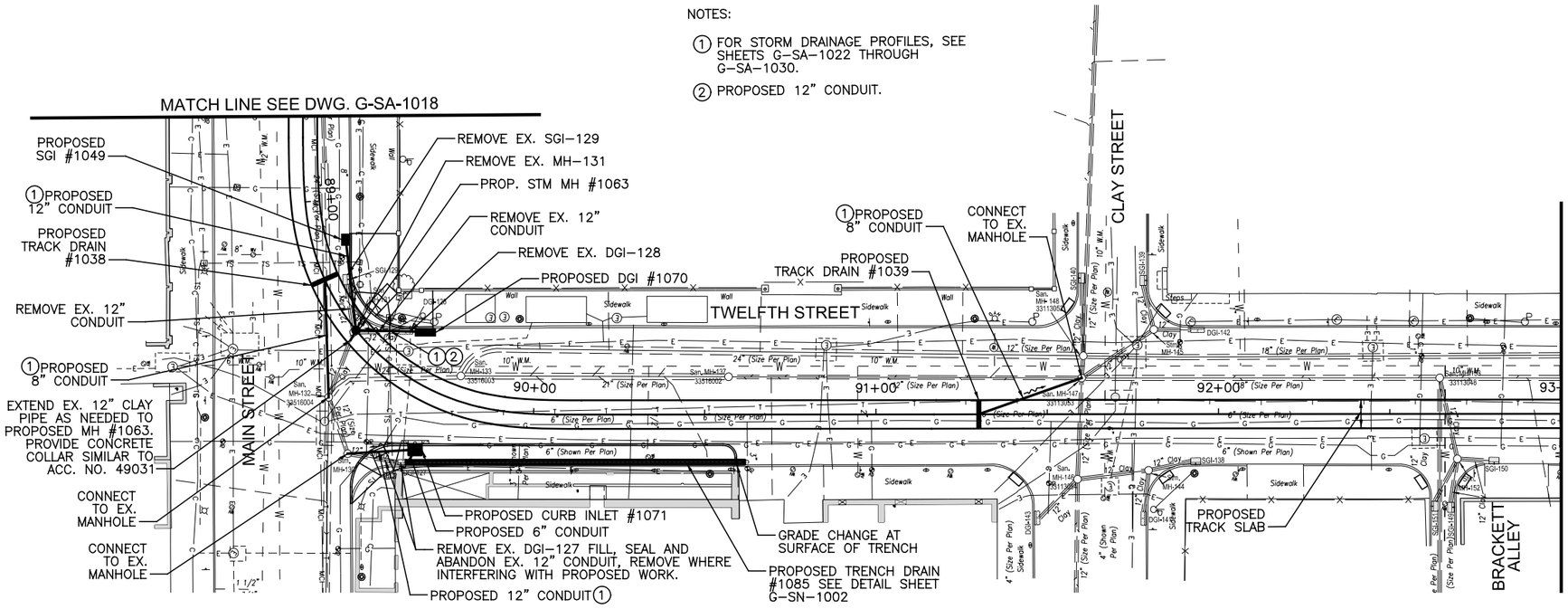

GRAPHIC SCALE

20 0 20 40 80

(IN FEET)
1 inch = 20 ft. Full Size
1 inch = 40 ft. Half Size

590 580 570 560 550 540 530 520 510 500

INTENTIONALLY LEFT BLANK

CAUTION UNDERGROUND UTILITIES
2 WORKING DAYS
BEFORE YOU DIG
CALL 1-800-362-2764
OHIO UTILITY PROTECTION SERVICE
CALL NON-SERVICE FACILITY OWNERS DIRECT

DOTE_Mono_PDF_Half.pltcfg
T:\29014A-Streetcar\CAD\Sanitary_and_Storm\S_G-SA-1019.dgn
5:15:49 PM
7/12/2012

CONTRACT DRAWING

PRINTS NOT BEARING THIS STAMP WERE MADE PRIOR TO ADVERTISING FOR BIDS AND ARE TO BE CONSIDERED OBSOLETE FOR CONTRACT PURPOSES.

Department of Transportation and Engineering

City of Cincinnati
City Hall
801 Plum Street
Cincinnati, Ohio 45202

CINCINNATI STREETCAR
CENTRAL BUSINESS DISTRICT
COMBINED SANITARY AND STORM MODIFICATIONS
TWELFTH STREET
STA 88+75 TO STA 93+00

Revisions
No.

	Date
Drawn by MKM	7/02/12
Designed by MKM	7/02/12
Checked by SAJ	7/02/12
Reviewed by JTB	7/12/12

Consultant

PB HDR

File Number

ACC No. 23126

G-SA-1019

6200

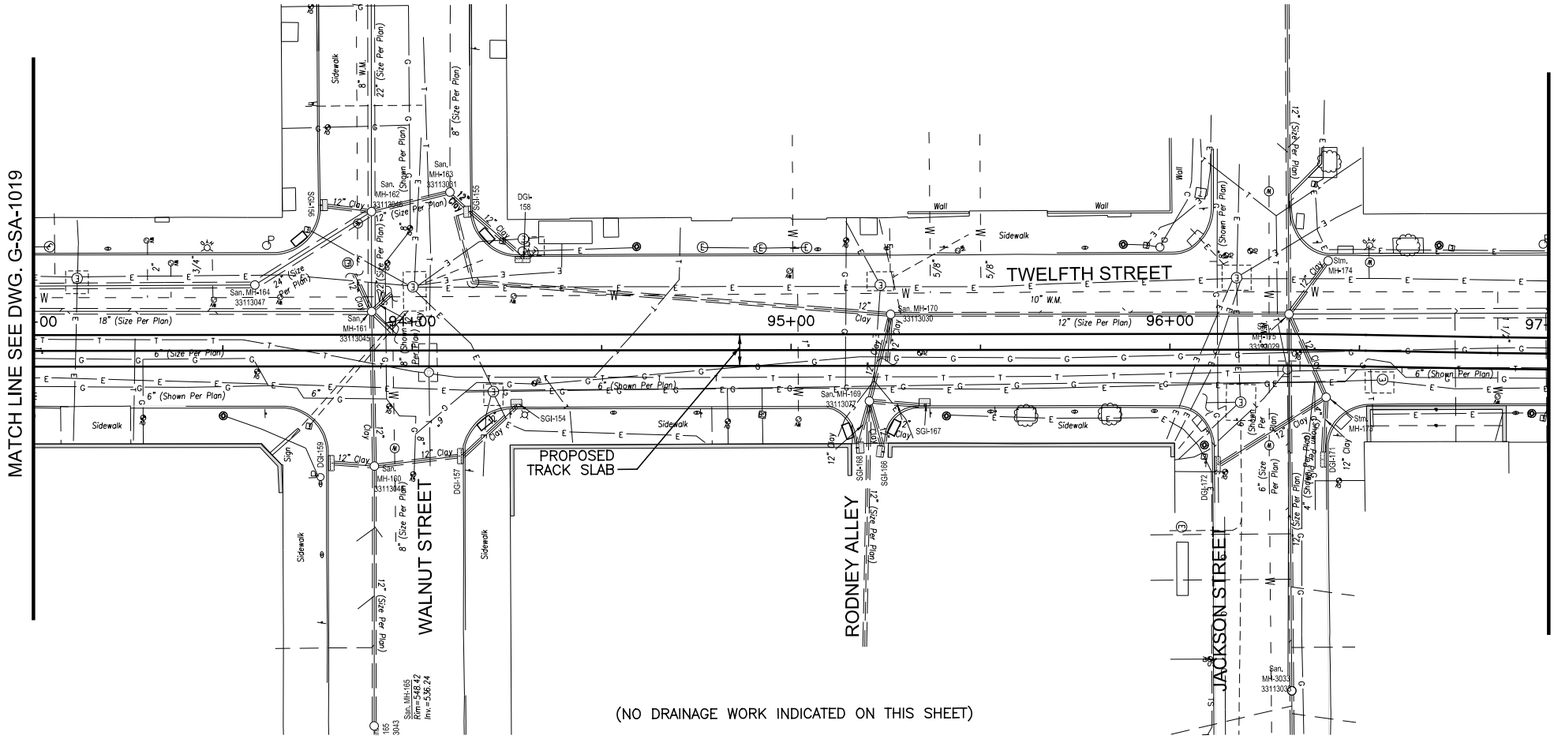

(NO DRAINAGE WORK INDICATED ON THIS SHEET)

GRAPHIC SCALE

20 0 20 40 80

(IN FEET)

1 inch = 20 ft. Full Size

1 inch = 40 ft. Half Size

590 580 570 560 550 540 530 520 510 500

INTENTIONALLY LEFT BLANK

CAUTION UNDERGROUND UTILITIES
2 WORKING DAYS

BEFORE YOU DIG

CALL 1-800-362-2764
OHIO UTILITY PROTECTION SERVICE
CALL NON-SERVICE FACILITY
OWNERS DIRECT

DOTE_Mono_PDF_Half.pltcfg
T:\29014A-Streetcar\CAD\Sanitary_and_Storm\S_G-SA-1020.dgn
5:15:50 PM
7/12/2012

DEPARTMENT OF TRANSPORTATION & ENGINEERING
CITY OF CINCINNATI OHIO

CONTRACT DRAWING

PRINTS NOT BEARING THIS STAMP WERE MADE PRIOR TO ADVERTISING FOR BIDS AND ARE TO BE CONSIDERED OBSOLETE FOR CONTRACT PURPOSES.

Department of Transportation and Engineering

City of Cincinnati
City Hall
801 Plum Street
Cincinnati, Ohio 45202

CINCINNATI STREETCAR
CENTRAL BUSINESS DISTRICT
COMBINED SANITARY AND STORM MODIFICATIONS
TWELFTH STREET
STA 93+00 TO STA 97+00

Revisions

No.				

Drawn by MKM	Date 7/02/12
Designed by MKM	Date 7/02/12
Checked by SAJ	Date 7/02/12
Reviewed by JTB	Date 7/12/12

Consultant

PB HDR

File Number

ACC No. 23126

G-SA-1020

6200

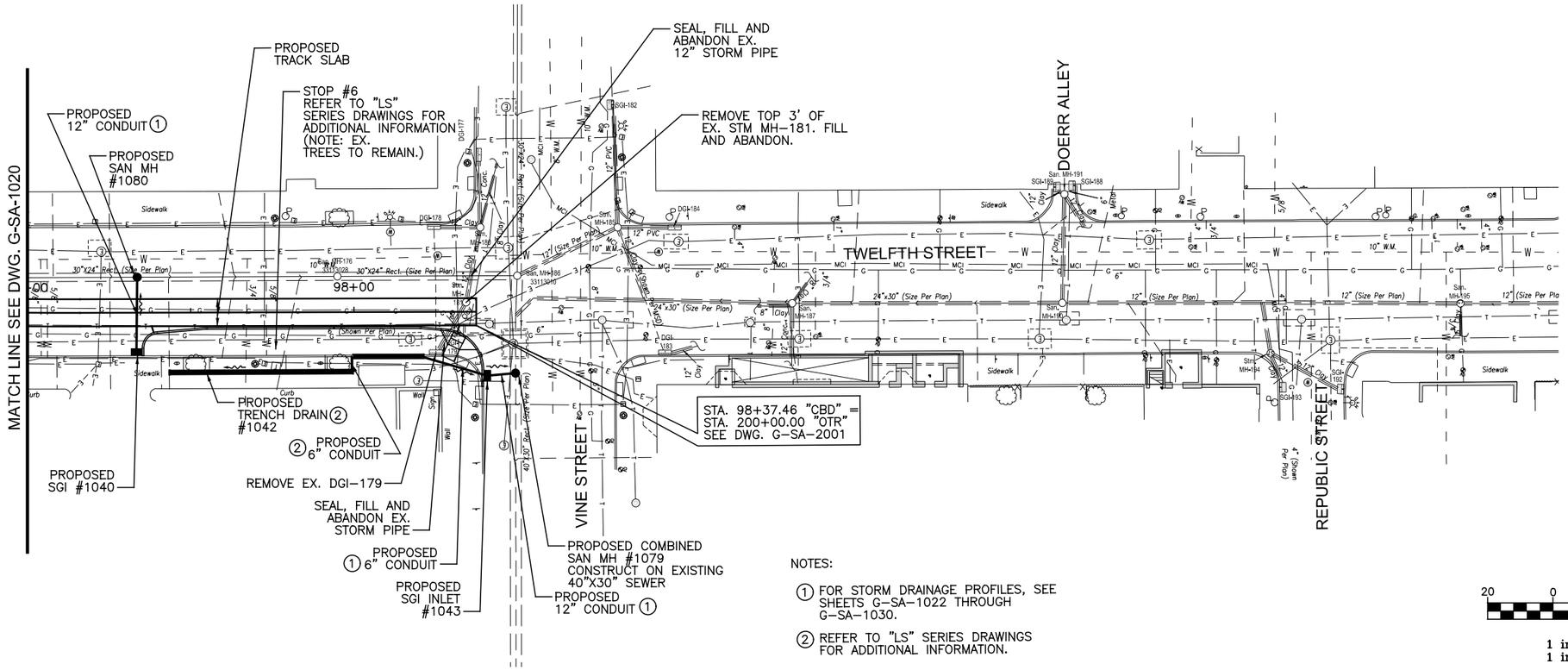

NOTES:

① FOR STORM DRAINAGE PROFILES, SEE SHEETS G-SA-1022 THROUGH G-SA-1030.

② REFER TO "LS" SERIES DRAWINGS FOR ADDITIONAL INFORMATION.

GRAPHIC SCALE

20 0 20 40 80

(IN FEET)
1 inch = 20 ft. Full Size
1 inch = 40 ft. Half Size

INTENTIONALLY LEFT BLANK

CAUTION UNDERGROUND UTILITIES
2 WORKING DAYS
BEFORE YOU DIG
CALL 1-800-362-2764
OHIO UTILITY PROTECTION SERVICE
CALL NON-SERVICE FACILITY OWNERS DIRECT

DOTE_Mono_PDF_Half.pltcfg
T:\29014A-Streetcar\CAD\Sanitary_and_Storm\S_G-SA-1021.dgn
7/12/2012 5:15:51 PM

CONTRACT DRAWING

PRINTS NOT BEARING THIS STAMP WERE MADE PRIOR TO ADVERTISING FOR BIDS AND ARE TO BE CONSIDERED OBSOLETE FOR CONTRACT PURPOSES.

Department of Transportation and Engineering

City of Cincinnati
City Hall
801 Plum Street
Cincinnati, Ohio 45202

CINCINNATI STREETCAR
CENTRAL BUSINESS DISTRICT
COMBINED SANITARY AND STORM MODIFICATIONS
TWELFTH STREET
STA 97+00 TO STA 98+37.46

Revisions
No.

Drawn by MKM	Date 7/02/12
Designed by MKM	Date 7/02/12
Checked by SAJ	Date 7/02/12
Reviewed by JTB	Date 7/12/12

Consultant

PB HDR

File Number

ACC No. 23126

G-SA-1021

6200

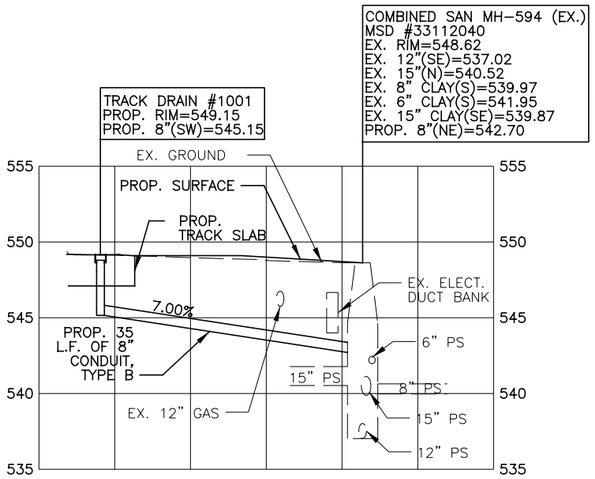

TRACK DRAIN #1001
STA. 1+95.00

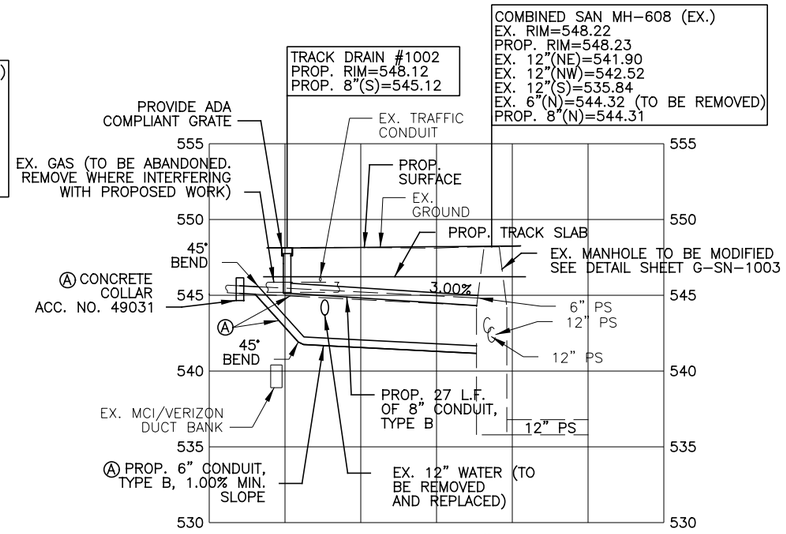

TRACK DRAIN #1002
STA. 5+61.18

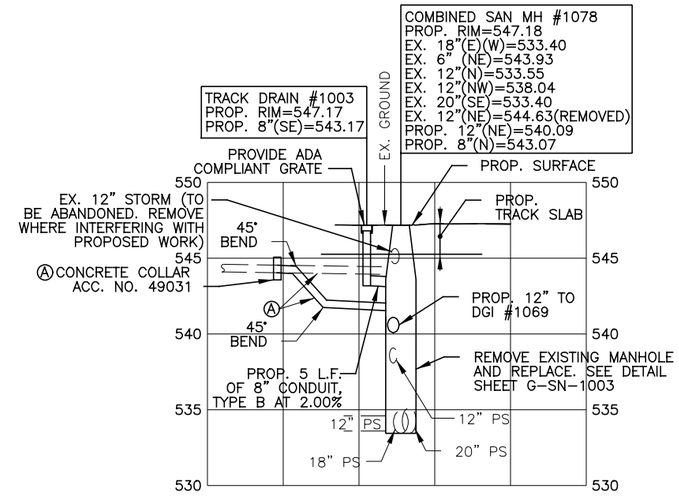

TRACK DRAIN #1003
STA. 7+79.57
COMBINED SAN MH #1078
STA. 7+84.25

Ⓐ REMOVE EX. 6" PIPE WHERE CONFLICTING WITH CONSTRUCTION. IF EXISTING PIPE IS FOUND TO BE ACTIVE REROUTE AND RECONNECT EX. 6" PIPE AS SHOWN.

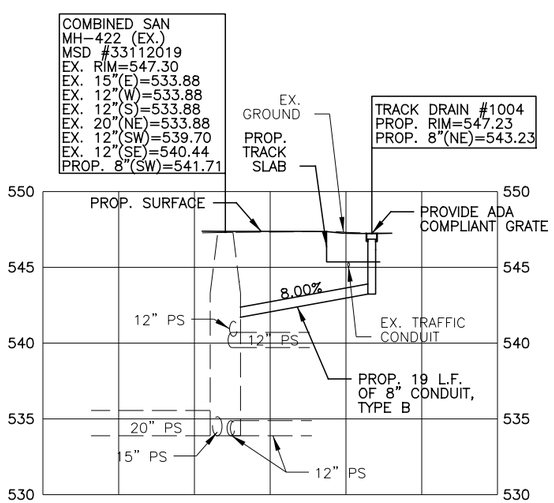

TRACK DRAIN #1004
STA. 8+83.75

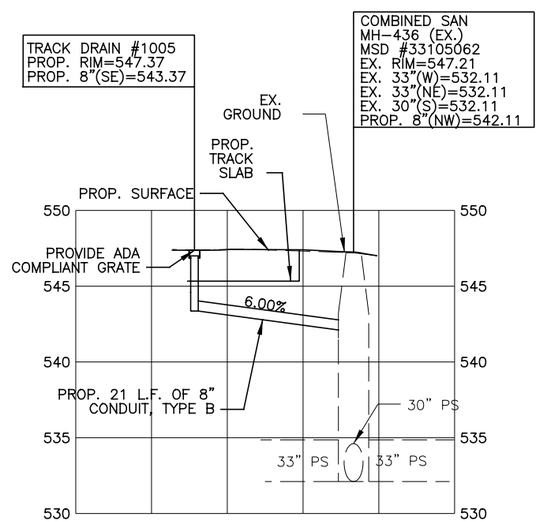

TRACK DRAIN #1005
STA. 11+76.70

STORM DRAINAGE NOTES:

1. TRENCH DRAIN STATIONING INDICATES LONGITUDINAL CENTER OF TRENCH DRAIN. REFER TO "LS" SERIES DRAWINGS FOR LOCATION AND ELEVATIONS.
2. APPROXIMATE LOCATION AND ELEVATION OF UNDERGROUND UTILITIES HAS BEEN PROVIDED FOR CONVENIENCE. THE CONTRACTOR IS RESPONSIBLE FOR VERIFICATION OF EXISTING AND/OR PROPOSED UTILITY LOCATIONS AND ELEVATIONS WHETHER OR NOT THESE UTILITIES ARE SHOWN ON THE PLANS.
3. REFER TO SHEETS G-SN-1001 AND G-SN-1013 FOR STORM DRAINAGE AND SANITARY SEWER DETAILS AND NOTES.
4. PROVIDE DURA SLOPE PRE-SLOPED TRENCH DRAIN SYSTEM AS MANUFACTURED BY NDS INC. OR APPROVED EQUAL. PROVIDE STANDARD PRE-MANUFACTURED SLOPED TRENCH SECTIONS BASED ON INDICATED OUTLET INVERT ELEVATIONS. PROVIDE DS-232, ADA COMPLIANT, DUCTILE IRON GRATE. PROVIDE "BULKHEAD" END SECTION WITH 4" OUTLET AND 4" TO 6" ADAPTOR. INSTALL SYSTEM IN STRICT ACCORDANCE WITH MANUFACTURER'S RECOMMENDATIONS.
5. REFER TO "TD" SERIES DRAWINGS FOR TRACK DRAIN DETAILS.

CAUTION UNDERGROUND UTILITIES
2 WORKING DAYS
BEFORE YOU DIG
CALL 1-800-362-2764
OHIO UTILITY PROTECTION SERVICE
CALL NON-SERVICE FACILITY OWNERS DIRECT

GRAPHIC SCALE
10 0 10 20 40
(IN FEET)
1 inch = 10 ft. Full Size
1 inch = 20 ft. Half Size

CONTRACT DRAWING
PRINTS NOT BEARING THIS STAMP WERE MADE PRIOR TO ADVERTISING FOR BIDS AND ARE TO BE CONSIDERED OBSOLETE FOR CONTRACT PURPOSES.

Department of Transportation and Engineering
City of Cincinnati
City Hall
801 Plum Street
Cincinnati, Ohio 45202

CINCINNATI STREETCAR
CENTRAL BUSINESS DISTRICT
DRAINAGE PROFILES

Revisions
No.

Date 7/02/12	Drawn by MKM
Date 7/02/12	Designed by MKM
Date 7/02/12	Checked by SAJ
Date 7/12/12	Reviewed by JTB

Consultant
PB HDR

File Number

ACC No. 23126

G-SA-1022

DOTE_Mono_PDF_Half.pltcfg
T:\29014A-Streetcar\CAD\Sanitary_and_Storm\S_G-SA-1022.dgn
7/12/2012 5:15:52 PM

6200

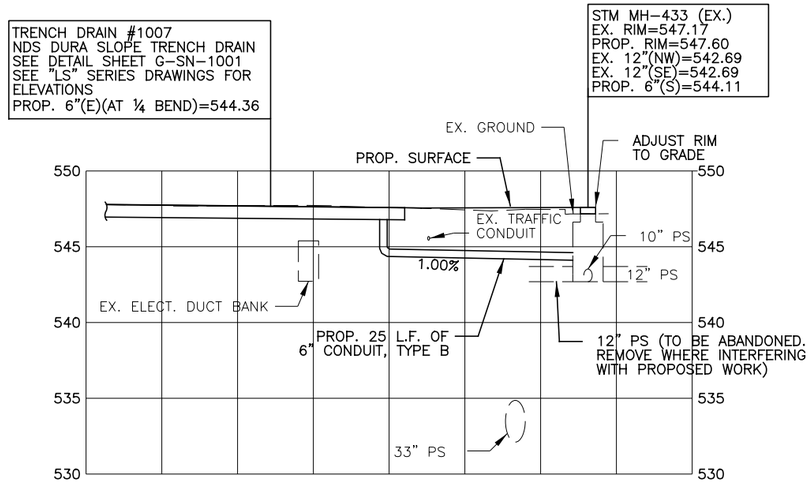

TRENCH DRAIN #1007
STA. 12+41.31, 19.79' RT

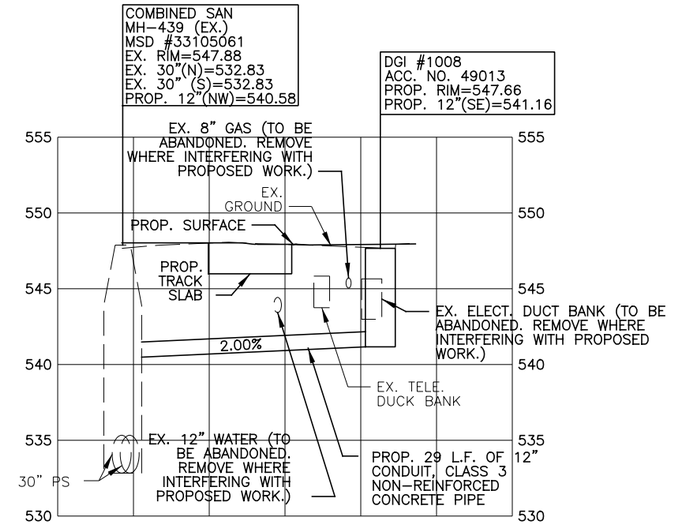

DGI #1008
STA. 13+00.70, 13.94' RT.

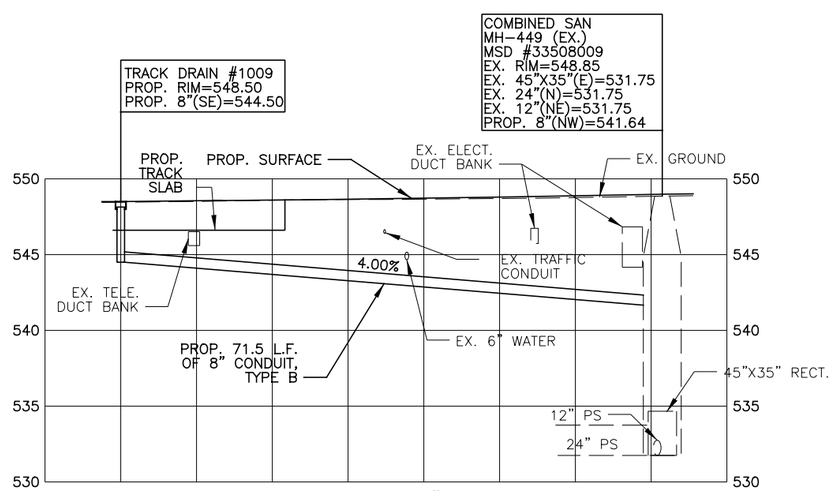

TRACK DRAIN #1009
STA. 14+25.00

STORM DRAINAGE NOTES:

1. TRENCH DRAIN STATIONING INDICATES LONGITUDINAL CENTER OF TRENCH DRAIN. REFER TO "LS" SERIES DRAWINGS FOR LOCATION AND ELEVATIONS.
2. APPROXIMATE LOCATION AND ELEVATION OF UNDERGROUND UTILITIES HAS BEEN PROVIDED FOR CONVENIENCE. THE CONTRACTOR IS RESPONSIBLE FOR VERIFICATION OF EXISTING AND/OR PROPOSED UTILITY LOCATIONS AND ELEVATIONS WHETHER OR NOT THESE UTILITIES ARE SHOWN ON THE PLANS.
3. REFER TO SHEETS G-SN-1001 AND G-SN-1013 FOR STORM DRAINAGE AND SANITARY SEWER DETAILS AND NOTES.
4. PROVIDE DURA SLOPE PRE-SLOPED TRENCH DRAIN SYSTEM AS MANUFACTURED BY NDS INC. OR APPROVED EQUAL. PROVIDE STANDARD PRE-MANUFACTURED SLOPED TRENCH SECTIONS BASED ON INDICATED OUTLET INVERT ELEVATIONS. PROVIDE DS-232, ADA COMPLIANT, DUCTILE IRON GRATE. PROVIDE "BULKHEAD" END SECTION WITH 4" OUTLET AND 4" TO 6" ADAPTOR. INSTALL SYSTEM IN STRICT ACCORDANCE WITH MANUFACTURER'S RECOMMENDATIONS.
5. REFER TO "TD" SERIES DRAWINGS FOR TRACK DRAIN DETAILS.

CAUTION UNDERGROUND UTILITIES
2 WORKING DAYS
BEFORE YOU DIG
CALL 1-800-362-2764
OHIO UTILITY PROTECTION SERVICE
CALL NON-SERVICE FACILITY OWNERS DIRECT

GRAPHIC SCALE
10 0 10 20 40
(IN FEET)
1 inch = 10 ft. Full Size
1 inch = 20 ft. Half Size

DOTE_Mono_PDF_Half.pltcfg
T:\29014A-Streetcar\CAD\Sanitary_and_Storm\S_G-SA-1023.dgn
7/12/2012 5:15:53 PM

CONTRACT DRAWING
PRINTS NOT BEARING THIS STAMP WERE MADE PRIOR TO ADVERTISING FOR BIDS AND ARE TO BE CONSIDERED OBSOLETE FOR CONTRACT PURPOSES.

Department of Transportation and Engineering
City of Cincinnati
City Hall
801 Plum Street
Cincinnati, Ohio 45202

CINCINNATI STREETCAR
CENTRAL BUSINESS DISTRICT
DRAINAGE PROFILES

Revisions
No.

Date 7/02/12	Drawn by MKM
Date 7/02/12	Designed by MKM
Date 7/02/12	Checked by SAJ
Date 7/12/12	Reviewed by JTB

Consultant
PB HDR

File Number

ACC No. 23126

G-SA-1023

6200

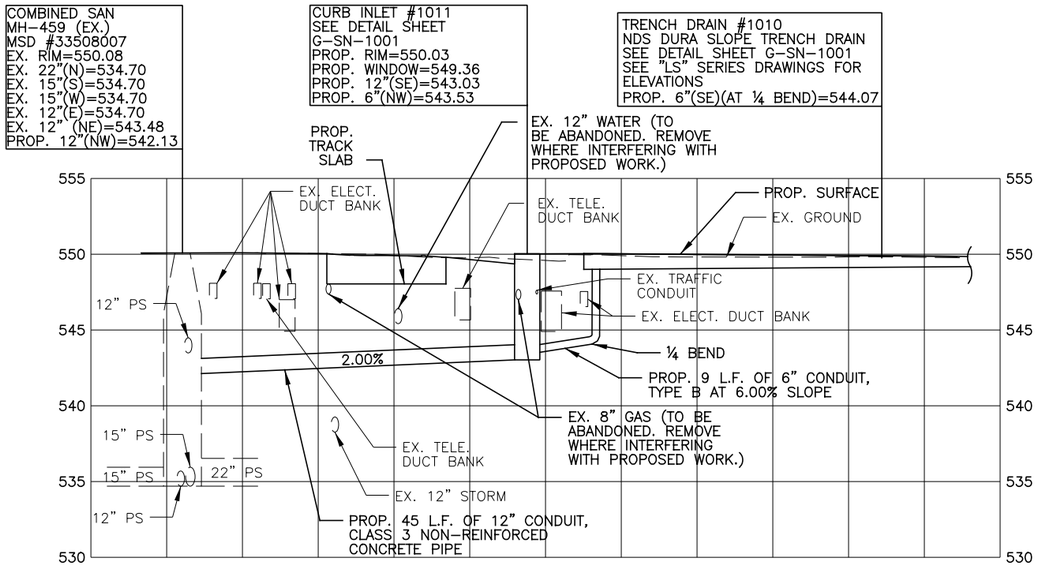

TRENCH DRAIN #1010
STA. 16+97.75, 16.62' RT
CURB INLET #1011
STA. 17+43.07, 9.51' RT

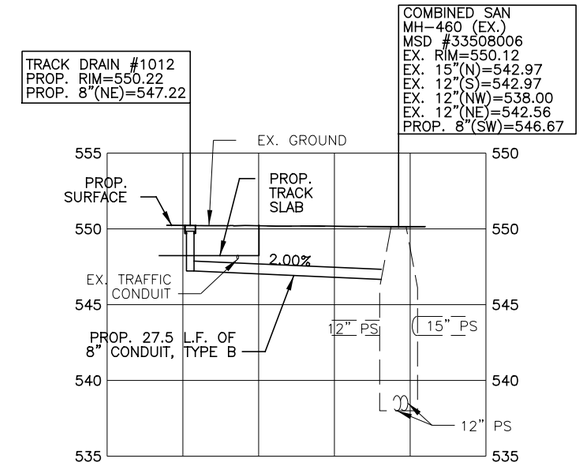

TRACK DRAIN #1012
STA. 18+35.00

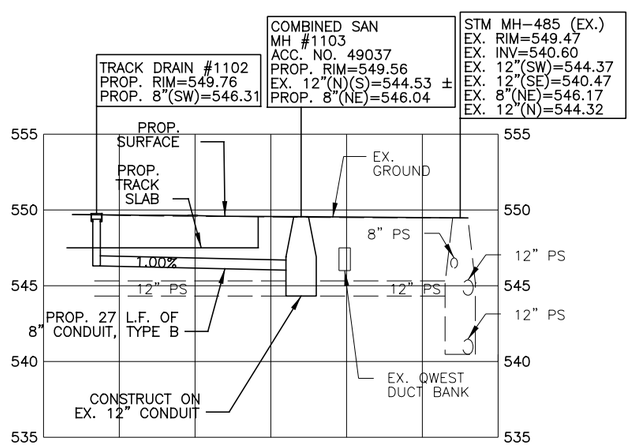

TRACK DRAIN #1102
STA. 804+40.00
COMBINED SANITARY MH #1103
STA. 804+66.48, 5.25' RT

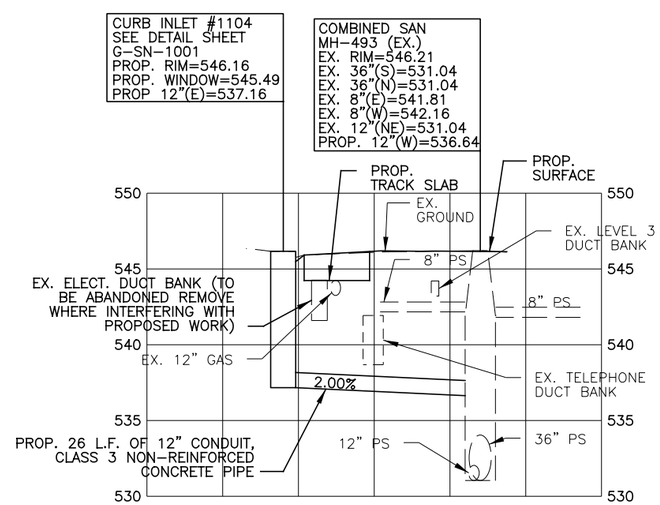

CURB INLET #1104
STA. 807+54.94, 7.38' RT

STORM DRAINAGE NOTES:

1. TRENCH DRAIN STATIONING INDICATES LONGITUDINAL CENTER OF TRENCH DRAIN. REFER TO "LS" SERIES DRAWINGS FOR LOCATION AND ELEVATIONS.
2. APPROXIMATE LOCATION AND ELEVATION OF UNDERGROUND UTILITIES HAS BEEN PROVIDED FOR CONVENIENCE. THE CONTRACTOR IS RESPONSIBLE FOR VERIFICATION OF EXISTING AND/OR PROPOSED UTILITY LOCATIONS AND ELEVATIONS WHETHER OR NOT THESE UTILITIES ARE SHOWN ON THE PLANS.
3. REFER TO SHEETS G-SN-1001 AND G-SN-1013 FOR STORM DRAINAGE AND SANITARY SEWER DETAILS AND NOTES.
4. PROVIDE DURA SLOPE PRE-SLOPED TRENCH DRAIN SYSTEM AS MANUFACTURED BY NDS INC. OR APPROVED EQUAL. PROVIDE STANDARD PRE-MANUFACTURED SLOPED TRENCH SECTIONS BASED ON INDICATED OUTLET INVERT ELEVATIONS. PROVIDE DS-232, ADA COMPLIANT, DUCTILE IRON GRATE. PROVIDE "BULKHEAD" END SECTION WITH 4" OUTLET AND 4" TO 6" ADAPTOR. INSTALL SYSTEM IN STRICT ACCORDANCE WITH MANUFACTURER'S RECOMMENDATIONS.
5. REFER TO "TD" SERIES DRAWINGS FOR TRACK DRAIN DETAILS.

CAUTION UNDERGROUND UTILITIES
2 WORKING DAYS
BEFORE YOU DIG
CALL 1-800-362-2764
OHIO UTILITY PROTECTION SERVICE
CALL NON-SERVICE FACILITY
OWNERS DIRECT

GRAPHIC SCALE
10 0 10 20 40
(IN FEET)
1 inch = 10 ft. Full Size
1 inch = 20 ft. Half Size

DEPARTMENT OF TRANSPORTATION & ENGINEERING
CITY OF CINCINNATI OHIO

CONTRACT DRAWING

PRINTS NOT BEARING THIS STAMP WERE MADE PRIOR TO ADVERTISING FOR BIDS AND ARE TO BE CONSIDERED OBSOLETE FOR CONTRACT PURPOSES.

Department of Transportation and Engineering

City of Cincinnati
City Hall
801 Plum Street
Cincinnati, Ohio 45202

CINCINNATI STREETCAR
CENTRAL BUSINESS DISTRICT

DRAINAGE PROFILES

Revisions
No.

Date 7/02/12
Date 7/02/12
Date 7/02/12
Date 7/12/12

Drawn by MKM
Designed by MKM
Checked by SAJ
Reviewed by JTB

Consultant
PB HDR

File Number

ACC No.
23126

G-SN-1024

DOTE_Mono_PDF_Half.pltcfg
T:\29014A-Streetcar\CAD\Sanitary_and_Storm\S_G-SA-1024.dgn
7/12/2012 5:15:54 PM

6200

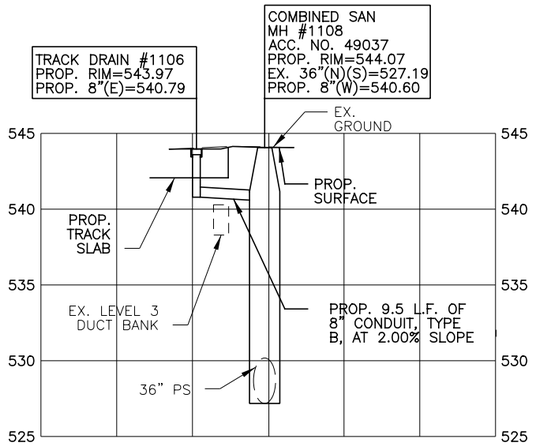

TRACK DRAIN #1106
STA. 808+50.00
COMBINED SANITARY MH #1108
STA. 808+50.61, 9.33' LT.

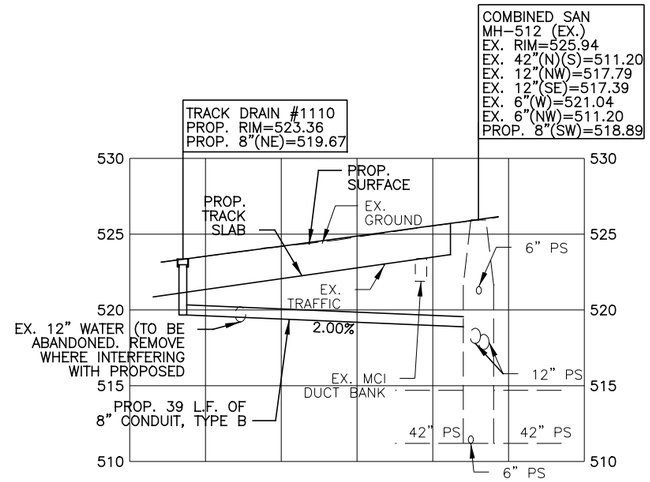

TRACK DRAIN #1110
STA. 812+60.00

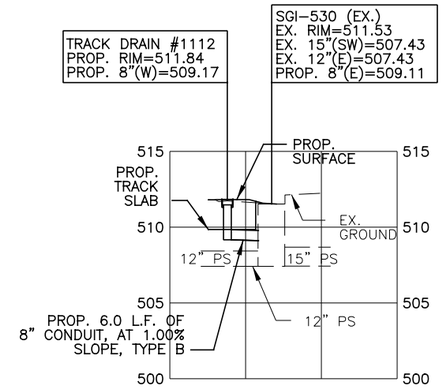

TRACK DRAIN #1112
STA. 816+68.00

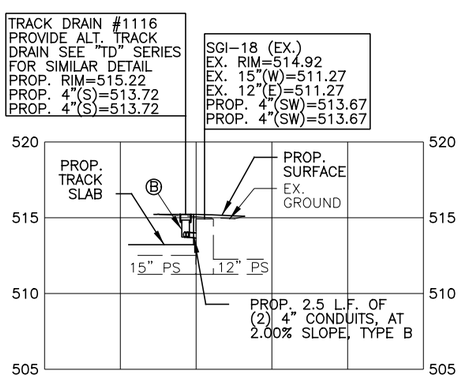

TRACK DRAIN #1116
STA. 822+47.48

Ⓑ TRACK DRAIN SIMILAR TO DETAILS ON SHEET G-TD-1011. MODIFY TO HAVE TWO - 4" SIDE OUTLET PIPES. THICKEN OUTLET SIDE OF TRACK DRAIN/TRACK SLAB TO PROVIDE A 1' MIN. COVER OVER 4" PIPES.

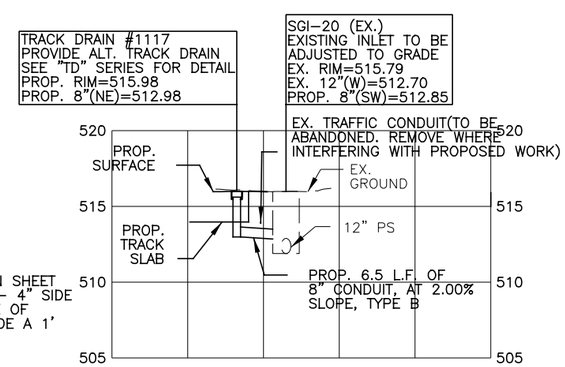

TRACK DRAIN #1117
STA. 824+22.06

STORM DRAINAGE NOTES:

1. TRENCH DRAIN STATIONING INDICATES LONGITUDINAL CENTER OF TRENCH DRAIN. REFER TO "LS" SERIES DRAWINGS FOR LOCATION AND ELEVATIONS.
2. APPROXIMATE LOCATION AND ELEVATION OF UNDERGROUND UTILITIES HAS BEEN PROVIDED FOR CONVENIENCE. THE CONTRACTOR IS RESPONSIBLE FOR VERIFICATION OF EXISTING AND/OR PROPOSED UTILITY LOCATIONS AND ELEVATIONS WHETHER OR NOT THESE UTILITIES ARE SHOWN ON THE PLANS.
3. REFER TO SHEETS G-SN-1001 AND G-SN-1013 FOR STORM DRAINAGE AND SANITARY SEWER DETAILS AND NOTES.
4. PROVIDE DURA SLOPE PRE-SLOPED TRENCH DRAIN SYSTEM AS MANUFACTURED BY NDS INC. OR APPROVED EQUAL. PROVIDE STANDARD PRE-MANUFACTURED SLOPED TRENCH SECTIONS BASED ON INDICATED OUTLET INVERT ELEVATIONS. PROVIDE DS-232, ADA COMPLIANT, DUCTILE IRON GRATE. PROVIDE "BULKHEAD" END SECTION WITH 4" OUTLET AND 4" TO 6" ADAPTOR. INSTALL SYSTEM IN STRICT ACCORDANCE WITH MANUFACTURER'S RECOMMENDATIONS.
5. REFER TO "TD" SERIES DRAWINGS FOR TRACK DRAIN DETAILS.

CAUTION UNDERGROUND UTILITIES
2 WORKING DAYS
BEFORE YOU DIG
CALL 1-800-362-2764
OHIO UTILITY PROTECTION SERVICE
CALL NON-SERVICE FACILITY OWNERS DIRECT

GRAPHIC SCALE
10 0 10 20 40
(IN FEET)
1 inch = 10 ft. Full Size
1 inch = 20 ft. Half Size

DOTE_Mono_PDF_Half.pltcfg
T:\29014A-Streetcar\CAD\Sanitary_and_Storm\S_G-SA-1025.dgn
7/12/2012 5:15:55 PM

CONTRACT DRAWING
PRINTS NOT BEARING THIS STAMP WERE MADE PRIOR TO ADVERTISING FOR BIDS AND ARE TO BE CONSIDERED OBSOLETE FOR CONTRACT PURPOSES.

Department of Transportation and Engineering
City of Cincinnati
City Hall
801 Plum Street
Cincinnati, Ohio 45202

CINCINNATI STREETCAR
CENTRAL BUSINESS DISTRICT
DRAINAGE PROFILES

Revisions
No.

Date 7/02/12	Drawn by MKM
Date 7/02/12	Designed by MKM
Date 7/02/12	Checked by SAJ
Date 7/12/12	Reviewed by JTB

Consultant
PB HDR

File Number

ACC No. 23126

G-SA-1025

6200

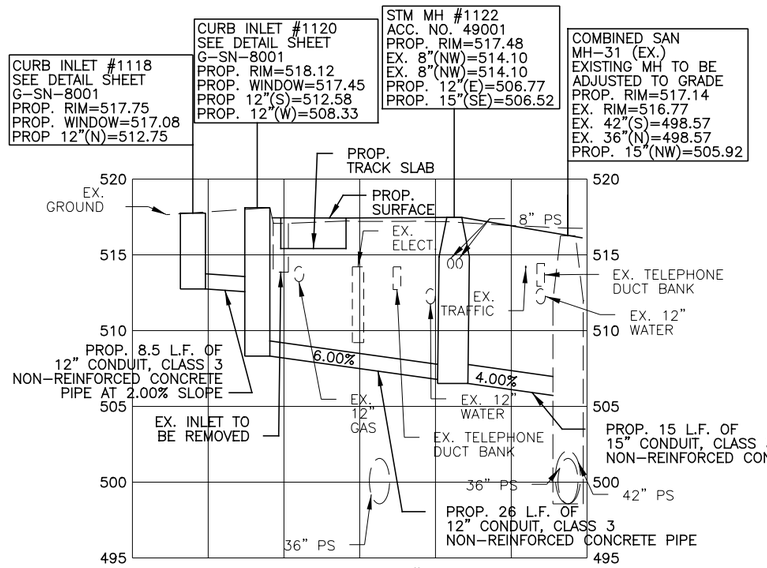

CURB INLET #1118
STA. 825+24.34, 7.25' RT
CURB INLET #1120
STA. 825+32.80, 7.15' RT
STORM MH #1122
STA. 825+26.55, 17.80' LT

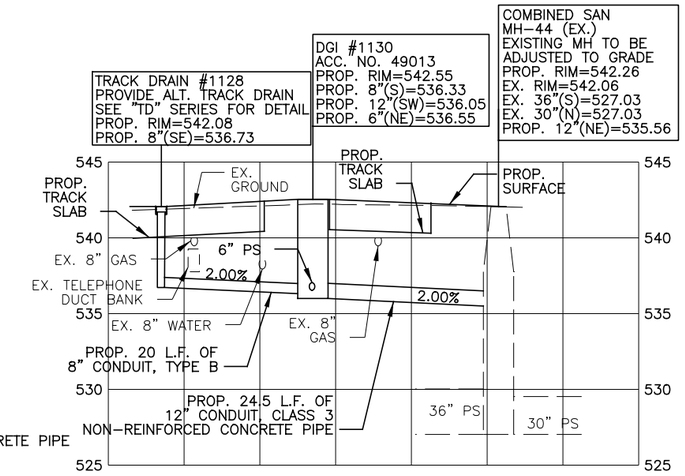

TRACK DRAIN #1128
STA. 829+62.00
DGI #1130
STA. 829+87.92, 6.46' RT

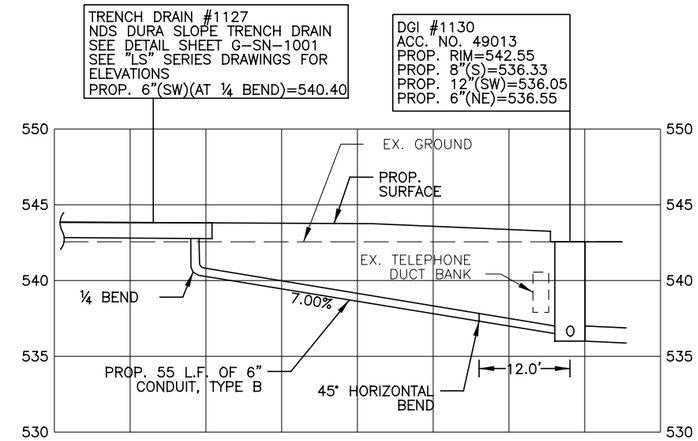

TRENCH DRAIN #1127
STA. 830+59.13, 14.05' RT
DGI #1130
STA. 829+87.92, 6.46' RT

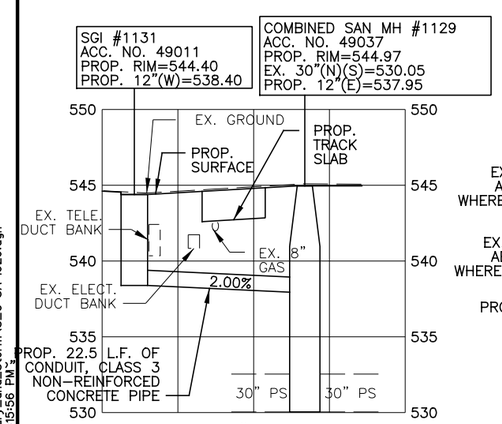

SGI #1131
STA. 830+90.08, 14.07' RT
COMBINED SAN MH #1129
STA. 830+89.89, 9.16' LT

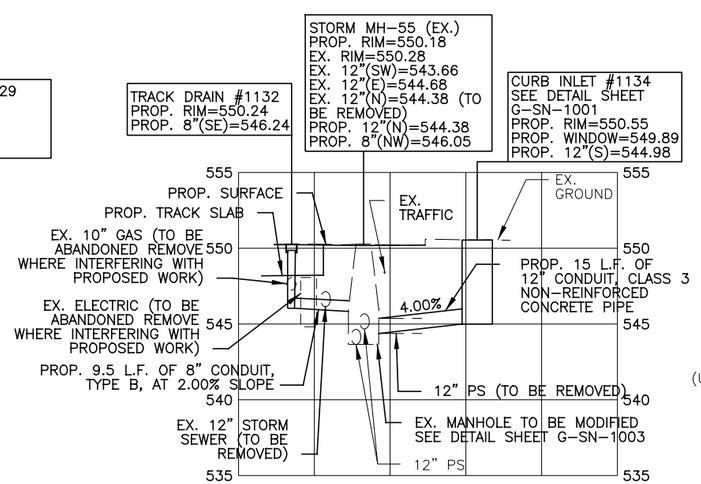

TRACK DRAIN #1132
STA. 834+35.59
CURB INLET #1134
STA. 834+42.42, 7.48' RT

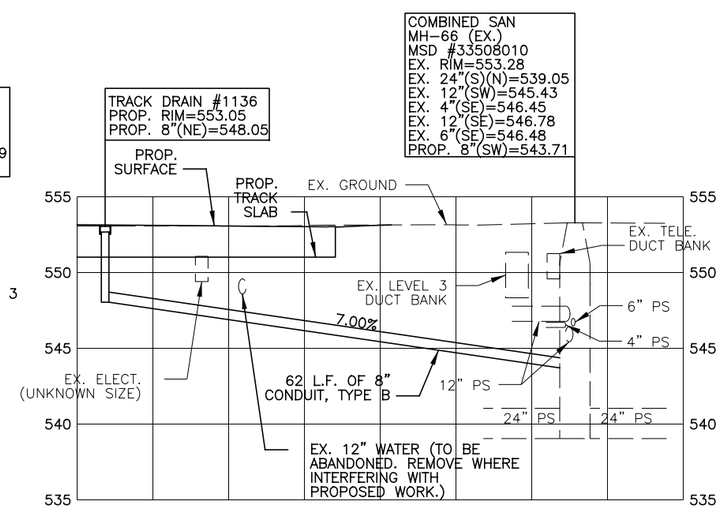

TRACK DRAIN #1136
STA 838+08.38

STORM DRAINAGE NOTES:

1. TRENCH DRAIN STATIONING INDICATES LONGITUDINAL CENTER OF TRENCH DRAIN. REFER TO "LS" SERIES DRAWINGS FOR LOCATION AND ELEVATIONS.
2. APPROXIMATE LOCATION AND ELEVATION OF UNDERGROUND UTILITIES HAS BEEN PROVIDED FOR CONVENIENCE. THE CONTRACTOR IS RESPONSIBLE FOR VERIFICATION OF EXISTING AND/OR PROPOSED UTILITY LOCATIONS AND ELEVATIONS WHETHER OR NOT THESE UTILITIES ARE SHOWN ON THE PLANS.
3. REFER TO SHEETS G-SN-1001 AND G-SN-1013 FOR STORM DRAINAGE AND SANITARY SEWER DETAILS AND NOTES.
4. PROVIDE DURA SLOPE PRE-SLOPED TRENCH DRAIN SYSTEM AS MANUFACTURED BY NDS INC. OR APPROVED EQUAL. PROVIDE STANDARD PRE-MANUFACTURED SLOPED TRENCH SECTIONS BASED ON INDICATED OUTLET INVERT ELEVATIONS. PROVIDE DS-232, ADA COMPLIANT, DUCTILE IRON GRATE. PROVIDE "BULKHEAD" END SECTION WITH 4" OUTLET AND 4" TO 6" ADAPTOR. INSTALL SYSTEM IN STRICT ACCORDANCE WITH MANUFACTURER'S RECOMMENDATIONS.
5. REFER TO "TD" SERIES DRAWINGS FOR TRACK DRAIN DETAILS.

CAUTION UNDERGROUND UTILITIES
2 WORKING DAYS
BEFORE YOU DIG
CALL 1-800-362-2764
OHIO UTILITY PROTECTION SERVICE
CALL NON-SERVICE FACILITY
OWNERS DIRECT

GRAPHIC SCALE
10 0 10 20 40
(IN FEET)
1 inch = 10 ft. Full Size
1 inch = 20 ft. Half Size

DEPARTMENT OF TRANSPORTATION & ENGINEERING CITY OF CINCINNATI OHIO

CONTRACT DRAWING

PRINTS NOT BEARING THIS STAMP WERE MADE PRIOR TO ADVERTISING FOR BIDS AND ARE CONSIDERED OBSOLETE FOR CONTRACT PURPOSES.

Department of Transportation and Engineering
City of Cincinnati
City Hall
801 Plum Street
Cincinnati, Ohio 45202

CINCINNATI STREETCAR
CENTRAL BUSINESS DISTRICT

DRAINAGE PROFILES

Revisions
No.

Date 7/02/12
Date 7/02/12
Date 7/02/12
Date 7/12/12

Drawn by MKM
Designed by MKM
Checked by SAJ
Reviewed by JTB

Consultant
PB HDR

File Number

ACC No. 23126

G-SA-1026

DOTE_Mono_PDF_Half.pltcfg
T:\29014A-Streetcar\CAD\Sanitary_and_Storm\S_G-SA-1026.dgn
7/12/2012 5:15:56 PM

6200

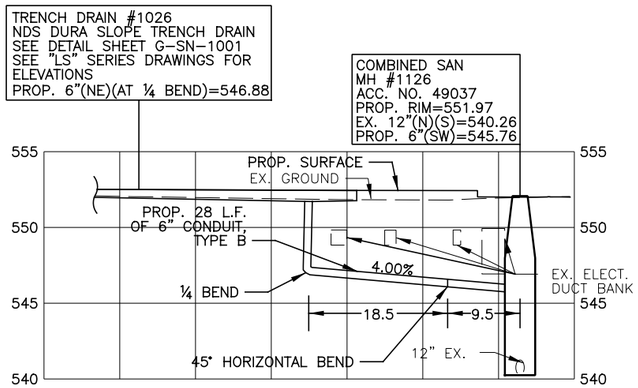

TRENCH DRAIN #1026
(OFFSET TRENCH DRAINS
SEE PLAN SHEET G-SA-1014)
STA. 68+98.37, 13.69' LT
STA. 68+51.94, 18.13' LT
COMBINED SAN MH #1126
STA. 69+37.72, 5.33' LT

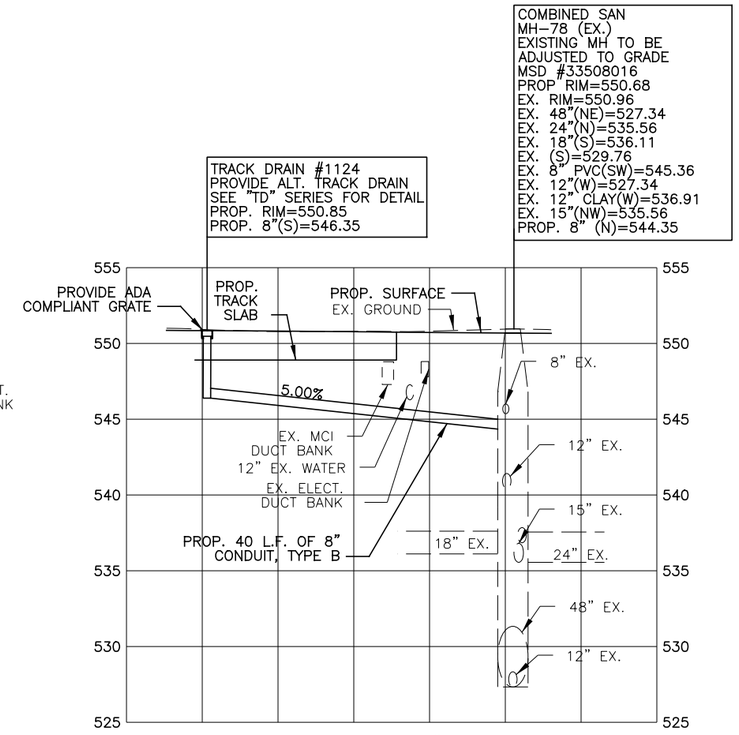

TRACK DRAIN #1124
STA. 72+04.00

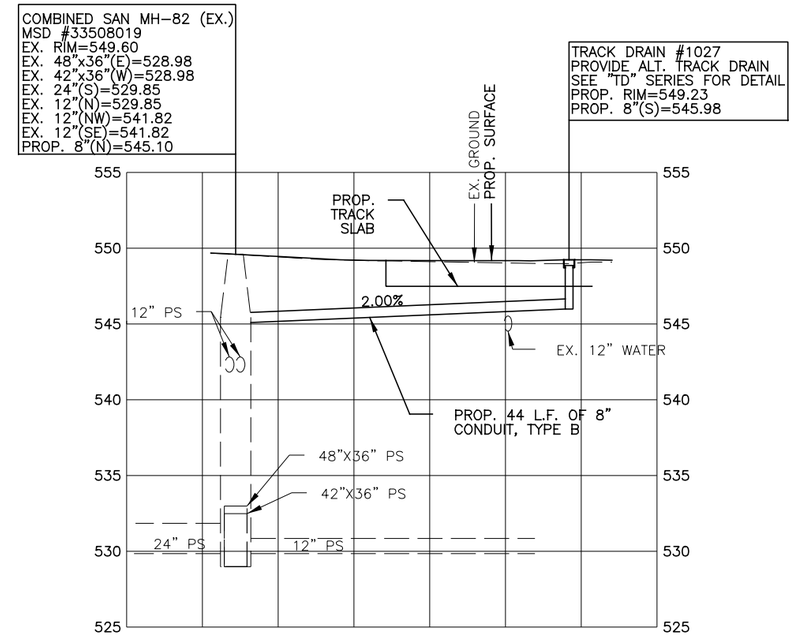

TRACK DRAIN #1027
STA. 75+80.00

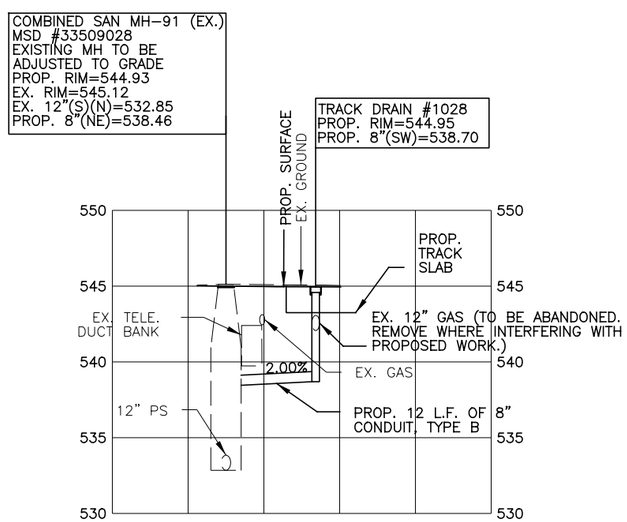

TRACK DRAIN #1028
STA. 80+15.00

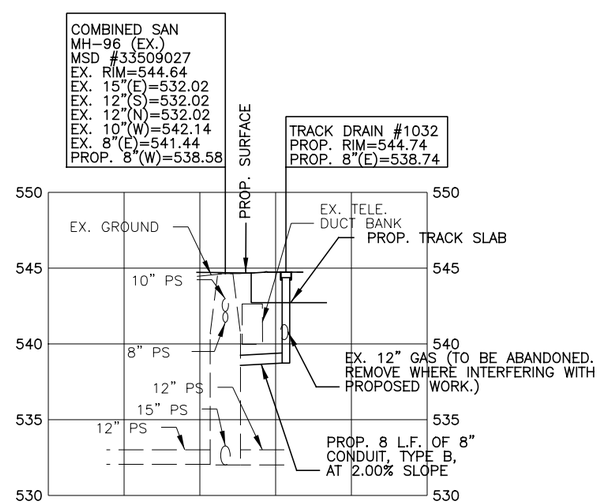

TRACK DRAIN #1032
STA. 80+95.93

STORM DRAINAGE NOTES:

1. TRENCH DRAIN STATIONING INDICATES LONGITUDINAL CENTER OF TRENCH DRAIN. REFER TO "LS" SERIES DRAWINGS FOR LOCATION AND ELEVATIONS.
2. APPROXIMATE LOCATION AND ELEVATION OF UNDERGROUND UTILITIES HAS BEEN PROVIDED FOR CONVENIENCE. THE CONTRACTOR IS RESPONSIBLE FOR VERIFICATION OF EXISTING AND/OR PROPOSED UTILITY LOCATIONS AND ELEVATIONS WHETHER OR NOT THESE UTILITIES ARE SHOWN ON THE PLANS.
3. REFER TO SHEETS G-SN-1001 AND G-SN-1013 FOR STORM DRAINAGE AND SANITARY SEWER DETAILS AND NOTES.
4. PROVIDE DURA SLOPE PRE-SLOPED TRENCH DRAIN SYSTEM AS MANUFACTURED BY NDS INC. OR APPROVED EQUAL. PROVIDE STANDARD PRE-MANUFACTURED SLOPED TRENCH SECTIONS BASED ON INDICATED OUTLET INVERT ELEVATIONS. PROVIDE DS-232, ADA COMPLIANT, DUCTILE IRON GRATE. PROVIDE "BULKHEAD" END SECTION WITH 4" OUTLET AND 4" TO 6" ADAPTOR. INSTALL SYSTEM IN STRICT ACCORDANCE WITH MANUFACTURER'S RECOMMENDATIONS.
5. REFER TO "TD" SERIES DRAWINGS FOR TRACK DRAIN DETAILS.

CAUTION UNDERGROUND UTILITIES
2 WORKING DAYS
BEFORE YOU DIG
CALL 1-800-362-2764
OHIO UTILITY PROTECTION SERVICE
CALL NON-SERVICE FACILITY OWNERS DIRECT

GRAPHIC SCALE
10 0 10 20 40
(IN FEET)
1 inch = 10 ft. Full Size
1 inch = 20 ft. Half Size

DOTE_Mono_PDF_Half.pltcfg
T:\29014A-Streetcar\CAD\Sanitary_and_Storm\S_G-SA-1027.dgn
7/12/2012 5:15:56 PM

CONTRACT DRAWING
PRINTS NOT BEARING THIS STAMP WERE MADE PRIOR TO ADVERTISING FOR BIDS AND SHOULD BE CONSIDERED OBSOLETE FOR CONTRACT PURPOSES.

Department of Transportation and Engineering
City of Cincinnati
City Hall
801 Plum Street
Cincinnati, Ohio 45202

CINCINNATI STREETCAR
CENTRAL BUSINESS DISTRICT
DRAINAGE PROFILES

Revisions
No.

Date 7/02/12	Drawn by MKM
Date 7/02/12	Designed by MKM
Date 7/02/12	Checked by SAJ
Date 7/12/12	Reviewed by JTB

Consultant
PB HDR

File Number

ACC No. 23126

G-SA-1027

6200

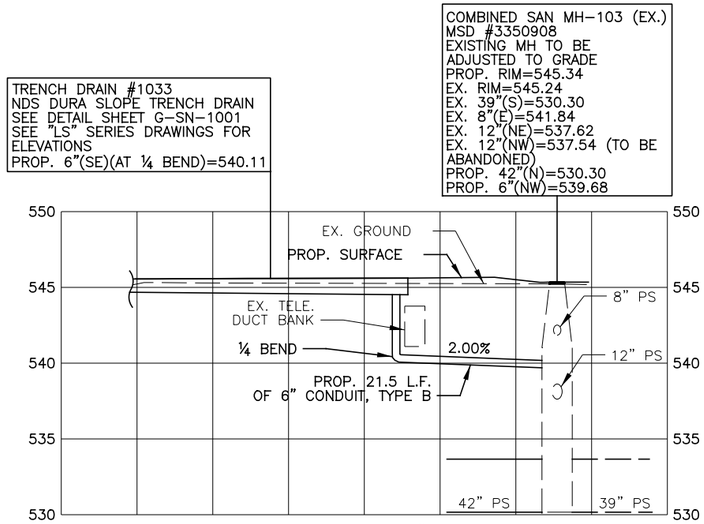

TRENCH DRAIN #1033
STA. 82+90.88, 13.63' LT

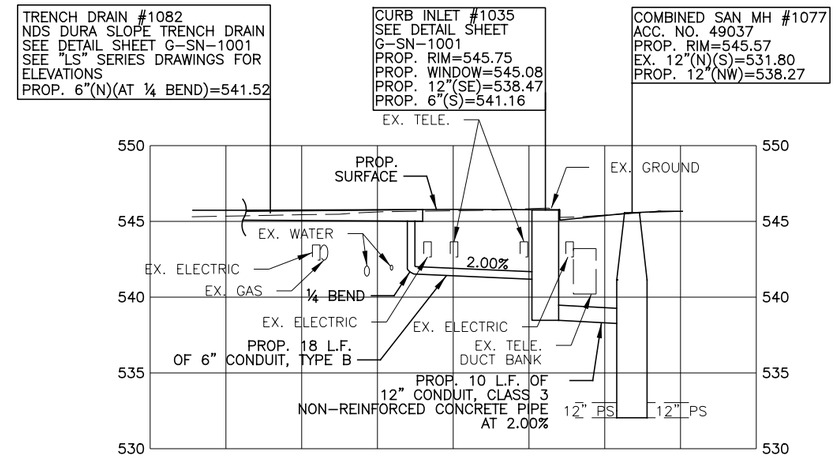

TRENCH DRAIN #1082
STA. 83+40.79, 13.62' LT
CURB INLET #1035
STA. 83+73.52, 14.71' LT
COMBINED SAN MH #1077
STA. 83+67.60, 5.41' LT

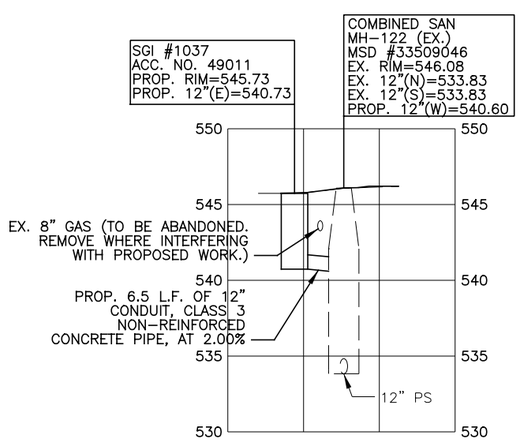

SGI #1037
STA. 87+52.18, 13.51' LT

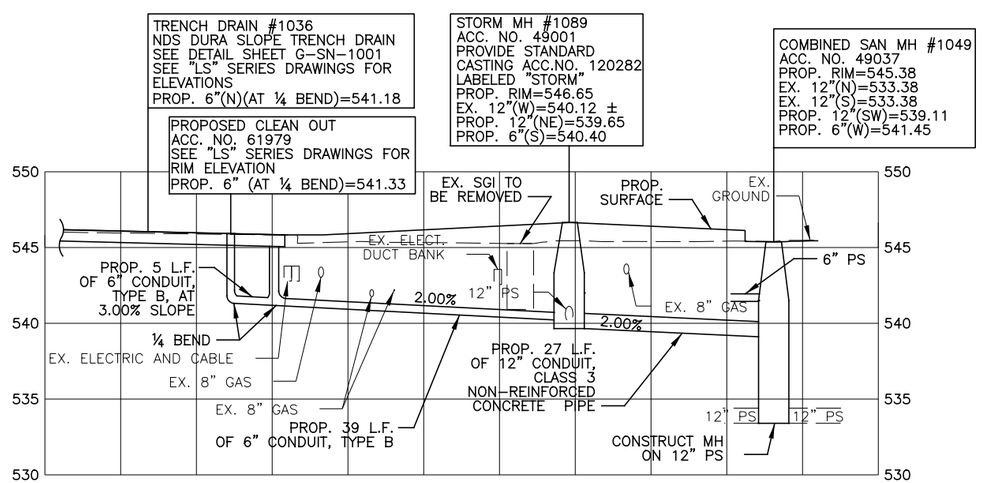

TRENCH DRAIN #1036
STA. 87+83.82, 16.62' LT
STORM MH #1089
STA. 88+40.25, 12.20' LT
COMBINED SAN MH #1049
STA. 88+66.49, 5.82' LT

STORM DRAINAGE NOTES:

1. TRENCH DRAIN STATIONING INDICATES LONGITUDINAL CENTER OF TRENCH DRAIN. REFER TO "LS" SERIES DRAWINGS FOR LOCATION AND ELEVATIONS.
2. APPROXIMATE LOCATION AND ELEVATION OF UNDERGROUND UTILITIES HAS BEEN PROVIDED FOR CONVENIENCE. THE CONTRACTOR IS RESPONSIBLE FOR VERIFICATION OF EXISTING AND/OR PROPOSED UTILITY LOCATIONS AND ELEVATIONS WHETHER OR NOT THESE UTILITIES ARE SHOWN ON THE PLANS.
3. REFER TO SHEETS G-SN-1001 AND G-SN-1013 FOR STORM DRAINAGE AND SANITARY SEWER DETAILS AND NOTES.
4. PROVIDE DURA SLOPE PRE-SLOPED TRENCH DRAIN SYSTEM AS MANUFACTURED BY NDS INC. OR APPROVED EQUAL. PROVIDE STANDARD PRE-MANUFACTURED SLOPED TRENCH SECTIONS BASED ON INDICATED OUTLET INVERT ELEVATIONS. PROVIDE DS-232, ADA COMPLIANT, DUCTILE IRON GRATE. PROVIDE "BULKHEAD" END SECTION WITH 4" OUTLET AND 4" TO 6" ADAPTOR. INSTALL SYSTEM IN STRICT ACCORDANCE WITH MANUFACTURER'S RECOMMENDATIONS.
5. REFER TO "TD" SERIES DRAWINGS FOR TRACK DRAIN DETAILS.

CAUTION UNDERGROUND UTILITIES
2 WORKING DAYS
BEFORE YOU DIG
CALL 1-800-362-2764
OHIO UTILITY PROTECTION SERVICE
CALL NON-SERVICE FACILITY OWNERS DIRECT

GRAPHIC SCALE
10 0 10 20 40
(IN FEET)
1 inch = 10 ft. Full Size
1 inch = 20 ft. Half Size

DOTE_Mono_PDF_Half.pltcfg
T:\29014A-Streetcar\CAD\Sanitary_and_Storm\S_G-SA-1028.dgn
7/12/2012 5:15:57 PM

CONTRACT DRAWING
PRINTS NOT BEARING THIS STAMP WERE MADE PRIOR TO ADVERTISING FOR BIDS AND ARE TO BE CONSIDERED OBSOLETE FOR CONTRACT PURPOSES.

Department of Transportation and Engineering
City of Cincinnati
City Hall
801 Plum Street
Cincinnati, Ohio 45202

CINCINNATI STREETCAR
CENTRAL BUSINESS DISTRICT
DRAINAGE PROFILES

Revisions
No.

Date 7/02/12	Drawn by MKM
Date 7/02/12	Designed by MKM
Date 7/02/12	Checked by SAJ
Date 7/12/12	Reviewed by JTB

Consultant
PB HDR

File Number
ACC No. 23126

G-SA-1028

6200

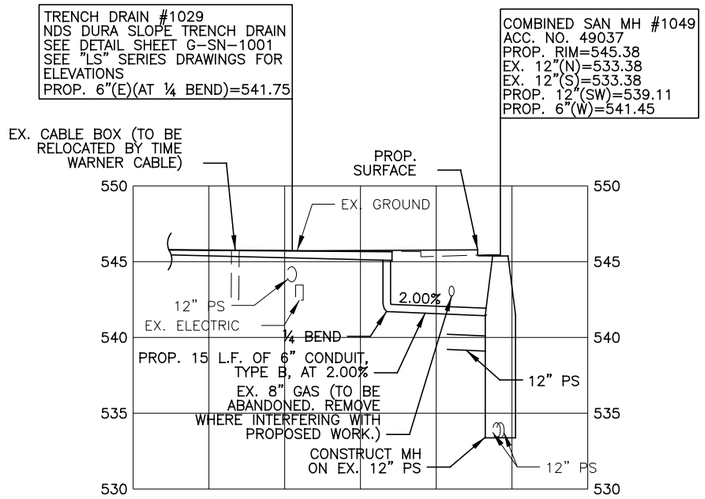

TRENCH DRAIN #1029
STA. 88+42.24, 16.63' LT
COMBINED SAN MH #1049
STA. 88+66.49, 5.82' LT

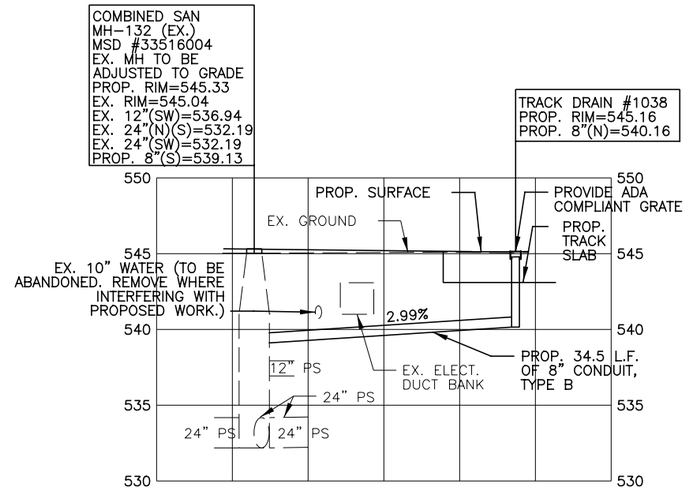

TRACK DRAIN #1038
STA. 89+23.45

STORM DRAINAGE NOTES:

1. TRENCH DRAIN STATIONING INDICATES LONGITUDINAL CENTER OF TRENCH DRAIN. REFER TO "LS" SERIES DRAWINGS FOR LOCATION AND ELEVATIONS.
2. APPROXIMATE LOCATION AND ELEVATION OF UNDERGROUND UTILITIES HAS BEEN PROVIDED FOR CONVENIENCE. THE CONTRACTOR IS RESPONSIBLE FOR VERIFICATION OF EXISTING AND/OR PROPOSED UTILITY LOCATIONS AND ELEVATIONS WHETHER OR NOT THESE UTILITIES ARE SHOWN ON THE PLANS.
3. REFER TO SHEETS G-SN-1001 AND G-SN-1013 FOR STORM DRAINAGE AND SANITARY SEWER DETAILS AND NOTES.
4. PROVIDE DURA SLOPE PRE-SLOPED TRENCH DRAIN SYSTEM AS MANUFACTURED BY NDS INC. OR APPROVED EQUAL. PROVIDE STANDARD PRE-MANUFACTURED SLOPED TRENCH SECTIONS BASED ON INDICATED OUTLET INVERT ELEVATIONS. PROVIDE DS-232, ADA COMPLIANT, DUCTILE IRON GRATE. PROVIDE "BULKHEAD" END SECTION WITH 4" OUTLET AND 4" TO 6" ADAPTOR. INSTALL SYSTEM IN STRICT ACCORDANCE WITH MANUFACTURER'S RECOMMENDATIONS.
5. REFER TO "TD" SERIES DRAWINGS FOR TRACK DRAIN DETAILS.

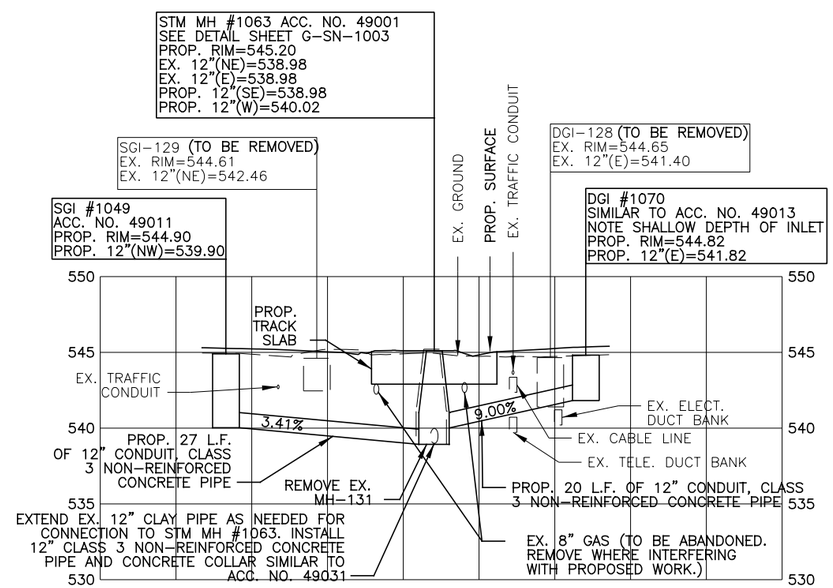

SGI #1049
STA. 89+14.21, 10.86' LT
STORM MANHOLE #1063
STA. 89+40.90
DGI #1070
STA. 89+56.91, 14.44' LT

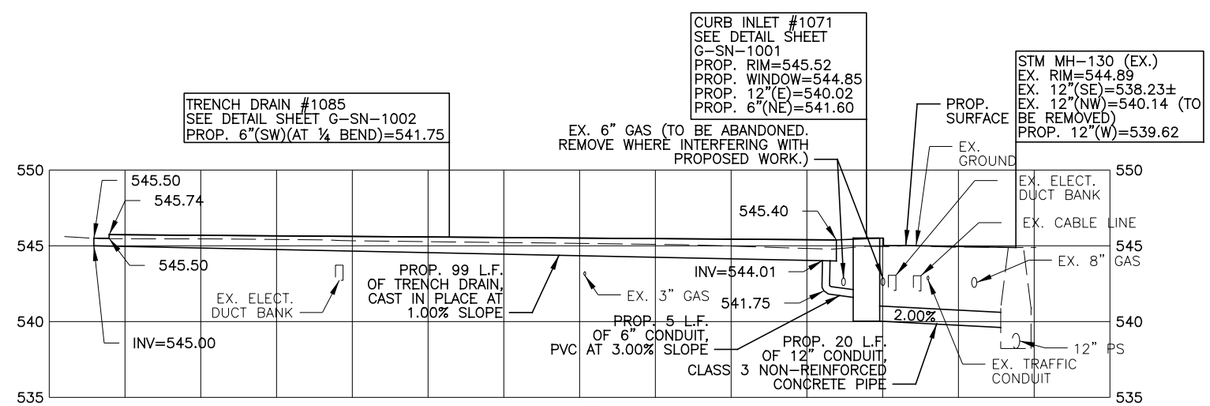

CURB INLET #1071
STA. 89+71.81, 17.80' RT
TRENCH DRAIN #1085
STA. 90+12.22, 13.88' RT

CAUTION UNDERGROUND UTILITIES
2 WORKING DAYS
BEFORE YOU DIG
CALL 1-800-362-2764
OHIO UTILITY PROTECTION SERVICE
CALL NON-SERVICE FACILITY OWNERS DIRECT

GRAPHIC SCALE
10 0 10 20 40
(IN FEET)
1 inch = 10 ft. Full Size
1 inch = 20 ft. Half Size

DOTE_Mono_PDF_Half.pltcfg
T:\29014A-Streetcar\CAD\Sanitary_and_Storm\S_G-SA-1029.dgn
7/12/2012 5:15:58 PM

CONTRACT DRAWING
PRINTS NOT BEARING THIS STAMP WERE MADE PRIOR TO ADVERTISING FOR BIDS AND ARE TO BE CONSIDERED OBSOLETE FOR CONTRACT PURPOSES.

Department of Transportation and Engineering
City of Cincinnati
City Hall
801 Plum Street
Cincinnati, Ohio 45202

CINCINNATI STREETCAR
CENTRAL BUSINESS DISTRICT
DRAINAGE PROFILES

Revisions
No.

Date 7/02/12
Date 7/02/12
Date 7/02/12
Date 7/12/12

Drawn by MKM
Designed by MKM
Checked by SAJ
Reviewed by JTB

Consultant
PB HDR

File Number

ACC No. 23126

G-SA-1029

6200

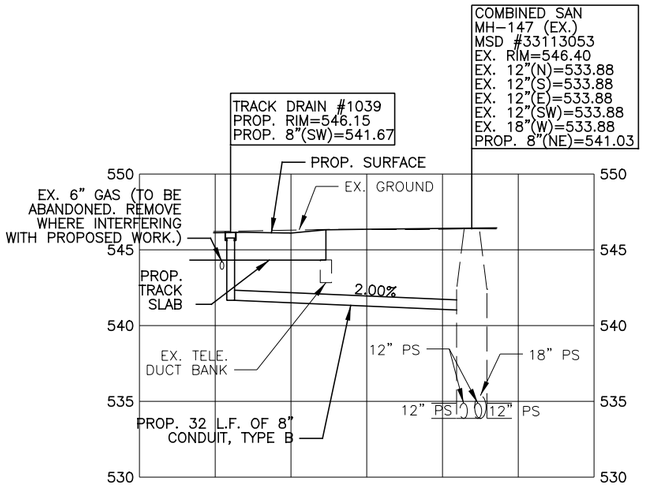

TRACK DRAIN #1039
STA. 91+30.00

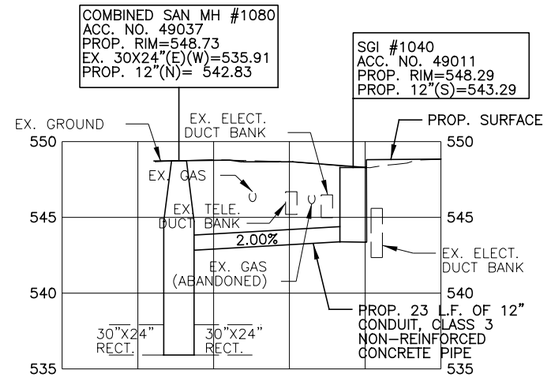

SGI #1040
STA. 97+33.38, 13.19' RT
COMBINED SAN MH #1080
STA. 97+33.64, 10.86' LT

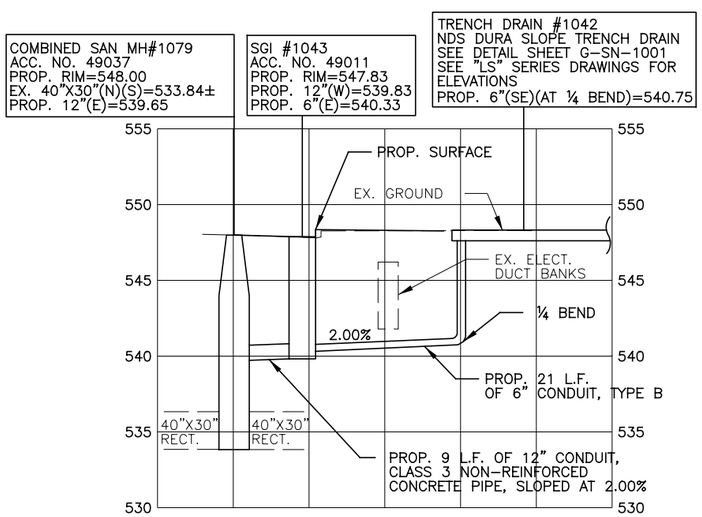

SGI #1043
STA. 200+02.19, 19.56' RT
COMBINED SAN MH #1079
STA. 200+11.87, 18.84' RT
TRENCH DRAIN #1042
STA. 97+71.59, 18.27' RT
STA. 98+10.50, 13.61' RT

STORM DRAINAGE NOTES:

1. TRENCH DRAIN STATIONING INDICATES LONGITUDINAL CENTER OF TRENCH DRAIN. REFER TO "LS" SERIES DRAWINGS FOR LOCATION AND ELEVATIONS.
2. APPROXIMATE LOCATION AND ELEVATION OF UNDERGROUND UTILITIES HAS BEEN PROVIDED FOR CONVENIENCE. THE CONTRACTOR IS RESPONSIBLE FOR VERIFICATION OF EXISTING AND/OR PROPOSED UTILITY LOCATIONS AND ELEVATIONS WHETHER OR NOT THESE UTILITIES ARE SHOWN ON THE PLANS.
3. REFER TO SHEETS G-SN-1001 AND G-SN-1013 FOR STORM DRAINAGE AND SANITARY SEWER DETAILS AND NOTES.
4. PROVIDE DURA SLOPE PRE-SLOPED TRENCH DRAIN SYSTEM AS MANUFACTURED BY NDS INC. OR APPROVED EQUAL. PROVIDE STANDARD PRE-MANUFACTURED SLOPED TRENCH SECTIONS BASED ON INDICATED OUTLET INVERT ELEVATIONS. PROVIDE DS-232, ADA COMPLIANT, DUCTILE IRON GRATE. PROVIDE "BULKHEAD" END SECTION WITH 4" OUTLET AND 4" TO 6" ADAPTOR. INSTALL SYSTEM IN STRICT ACCORDANCE WITH MANUFACTURER'S RECOMMENDATIONS.
5. REFER TO "TD" SERIES DRAWINGS FOR TRACK DRAIN DETAILS.

CAUTION UNDERGROUND UTILITIES
2 WORKING DAYS
BEFORE YOU DIG
CALL 1-800-362-2764
OHIO UTILITY PROTECTION SERVICE
CALL NON-SERVICE FACILITY OWNERS DIRECT

GRAPHIC SCALE
10 0 10 20 40
(IN FEET)
1 inch = 10 ft. Full Size
1 inch = 20 ft. Half Size

DEPARTMENT OF TRANSPORTATION & ENGINEERING
CITY OF CINCINNATI OHIO

CONTRACT DRAWING

PRINTS NOT BEARING THIS STAMP WERE MADE PRIOR TO ADVERTISING FOR BIDS AND ARE TO BE CONSIDERED OBSOLETE FOR CONTRACT PURPOSES.

Department of Transportation and Engineering
City of Cincinnati
City Hall
801 Plum Street
Cincinnati, Ohio 45202

CINCINNATI STREETCAR
CENTRAL BUSINESS DISTRICT
DRAINAGE PROFILES

Revisions
No.

Date 7/02/12	Drawn by MKM
Date 7/02/12	Designed by MKM
Date 7/02/12	Checked by SAJ
Date 7/12/12	Reviewed by JTB

Consultant
PB HDR

File Number

ACC No.
23126

G-SA-1030

DOTE_Mono_PDF_Half.pltcfg
T:\29014A-Streetcar\CAD\Sanitary_and_Storm\S_G-SA-1030.dgn
7/12/2012 5:15:59 PM

6200

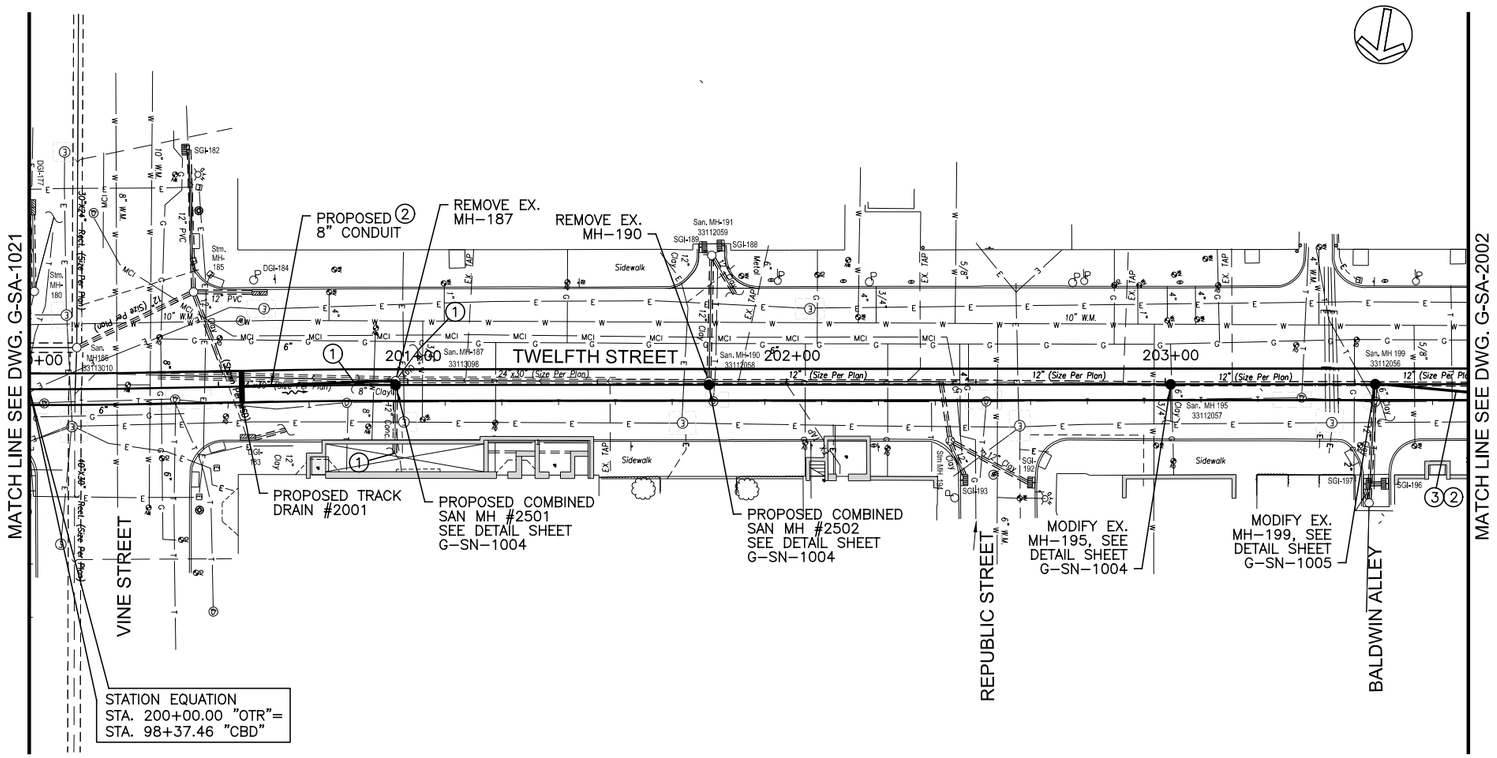

NOTES:

1. EXISTING PIPE FIELD VERIFY UPSTREAM CONNECTION POINT. RECONNECT AS REQUIRED IF FOUND TO BE AN ACTIVE SEWER.
2. FOR STORM DRAINAGE PROFILES, SEE SHEETS G-SA-2023 THROUGH G-SA-2031.
3. PROPOSED 8" CONDUIT.

GRAPHIC SCALE

20 0 20 40 80

(IN FEET)
1 inch = 20 ft. Full Size
1 inch = 40 ft. Half Size

INTENTIONALLY LEFT BLANK

CAUTION UNDERGROUND UTILITIES
2 WORKING DAYS
BEFORE YOU DIG
CALL 1-800-362-2764
OHIO UTILITY PROTECTION SERVICE
CALL NON-SERVICE FACILITY
OWNERS DIRECT

CONTRACT DRAWING

PRINTS NOT BEARING THIS STAMP WERE MADE PRIOR TO ADVERTISING FOR BIDS AND ARE TO BE CONSIDERED OBSOLETE FOR CONTRACT PURPOSES.

Department of Transportation and Engineering

City of Cincinnati
City Hall
801 Plum Street
Cincinnati, Ohio 45202

CINCINNATI STREETCAR
OVER THE RHINE
COMBINED SANITARY AND STORM MODIFICATIONS
TWELFTH STREET
STA 200+00 TO STA 203+80

Revisions
No.

Drawn by DJB	Date 07/02/12	
Designed by SKR	Date 07/02/12	
Checked by DCJ	Date 07/02/12	
Reviewed by JTB	Date 07/12/12	

Consultant

PB HDR

File Number

ACC No.
23126

G-SA-2001

DOTE_Mono_PDF_Half.pltcfg
c:\pwworking\pitt\d0309045\S_G-SA-2001.dgn
Wednesday, July 11, 2012 11:13:48:2MS AM

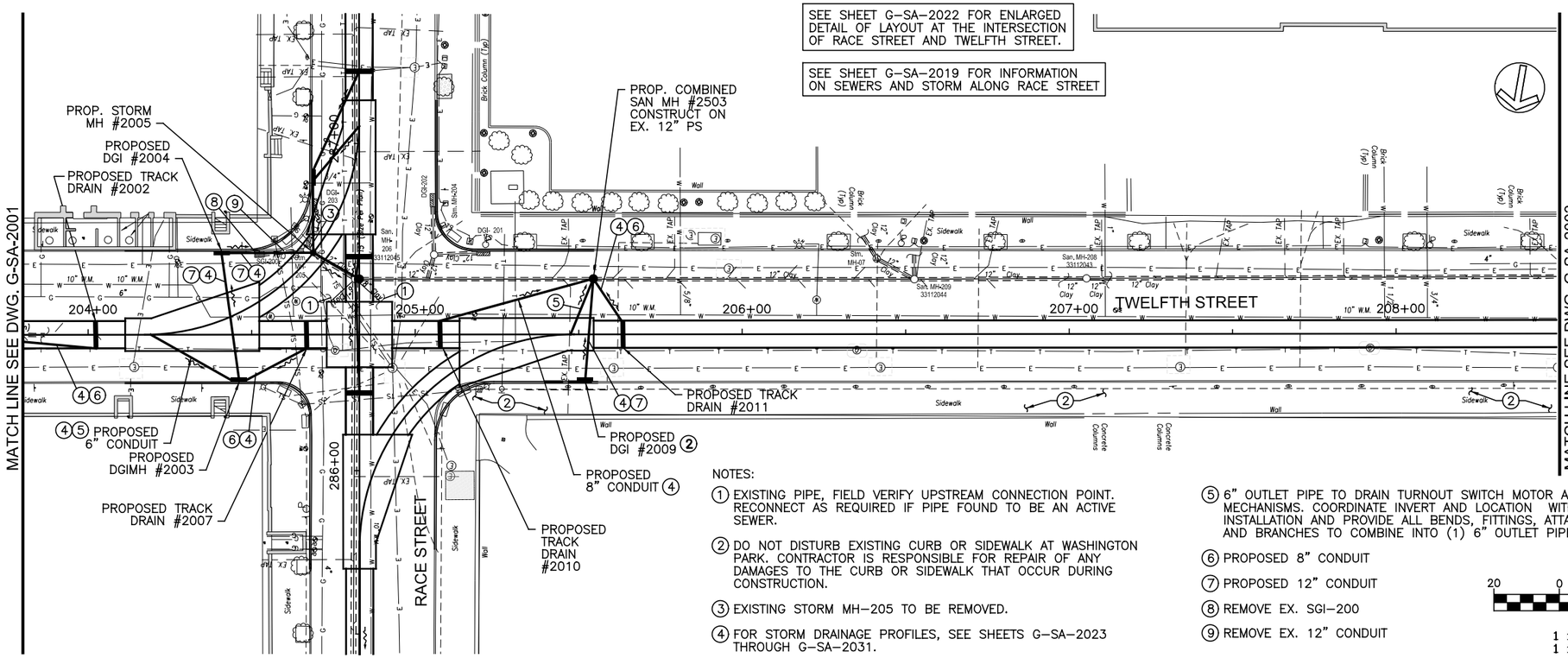

NOTES:

1. EXISTING PIPE, FIELD VERIFY UPSTREAM CONNECTION POINT. RECONNECT AS REQUIRED IF PIPE FOUND TO BE AN ACTIVE SEWER.
2. DO NOT DISTURB EXISTING CURB OR SIDEWALK AT WASHINGTON PARK. CONTRACTOR IS RESPONSIBLE FOR REPAIR OF ANY DAMAGES TO THE CURB OR SIDEWALK THAT OCCUR DURING CONSTRUCTION.
3. EXISTING STORM MH-205 TO BE REMOVED.
4. FOR STORM DRAINAGE PROFILES, SEE SHEETS G-SA-2023 THROUGH G-SA-2031.
5. 6" OUTLET PIPE TO DRAIN TURNOUT SWITCH MOTOR AND OTHER MECHANISMS. COORDINATE INVERT AND LOCATION WITH TURNOUT INSTALLATION AND PROVIDE ALL BENDS, FITTINGS, ATTACHMENTS AND BRANCHES TO COMBINE INTO (1) 6" OUTLET PIPE.
6. PROPOSED 8" CONDUIT
7. PROPOSED 12" CONDUIT
8. REMOVE EX. SGI-200
9. REMOVE EX. 12" CONDUIT

GRAPHIC SCALE

20 0 20 40 80

(IN FEET)
1 inch = 20 ft. Full Size
1 inch = 40 ft. Half Size

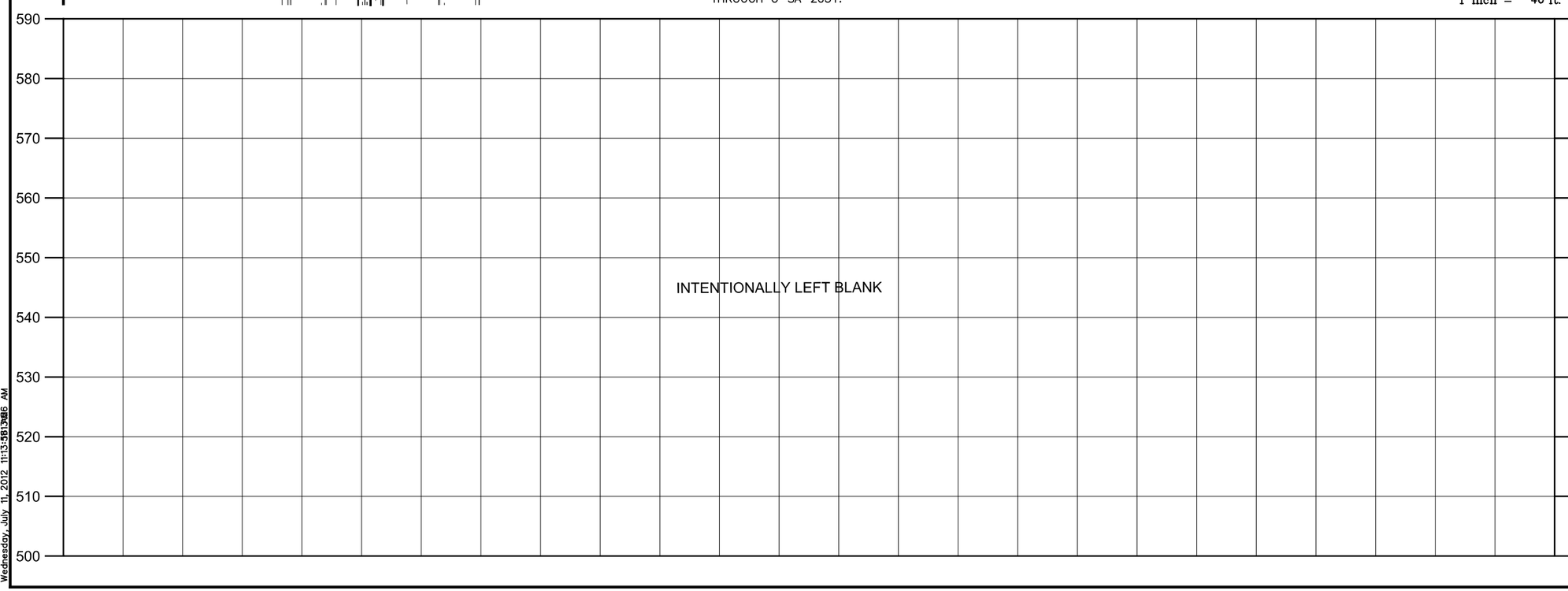

CAUTION UNDERGROUND UTILITIES
2 WORKING DAYS
BEFORE YOU DIG
CALL 1-800-362-2764
OHIO UTILITY PROTECTION SERVICE
CALL NON-SERVICE FACILITY OWNERS DIRECT

DEPARTMENT OF TRANSPORTATION & ENGINEERING CITY OF CINCINNATI OHIO

CONTRACT DRAWING

PRINTS NOT BEARING THIS STAMP WERE MADE PRIOR TO ADVERTISING FOR BIDS AND ARE TO BE CONSIDERED OBSOLETE FOR CONTRACT PURPOSES.

Department of Transportation and Engineering

City of Cincinnati
City Hall
801 Plum Street
Cincinnati, Ohio 45202

CINCINNATI STREETCAR
OVER THE RHINE
COMBINED SANITARY AND STORM MODIFICATIONS
TWELFTH STREET
STA 203+80 TO STA 208+50

Revisions
No.

Drawn by DLB	Date 07/02/12
Designed by SKR	Date 07/02/12
Checked by DCJ	Date 07/02/12
Reviewed by JTB	Date 07/12/12

Consultant

PB HDR

File Number

ACC No.
23126

G-SA-2002

DOTE_Mono_PDF_Half.pltcfg
c:\pwworking\pitt\d0309045\S_G-SA-2002.dgn
Wednesday, July 11, 2012 11:13:56 AM

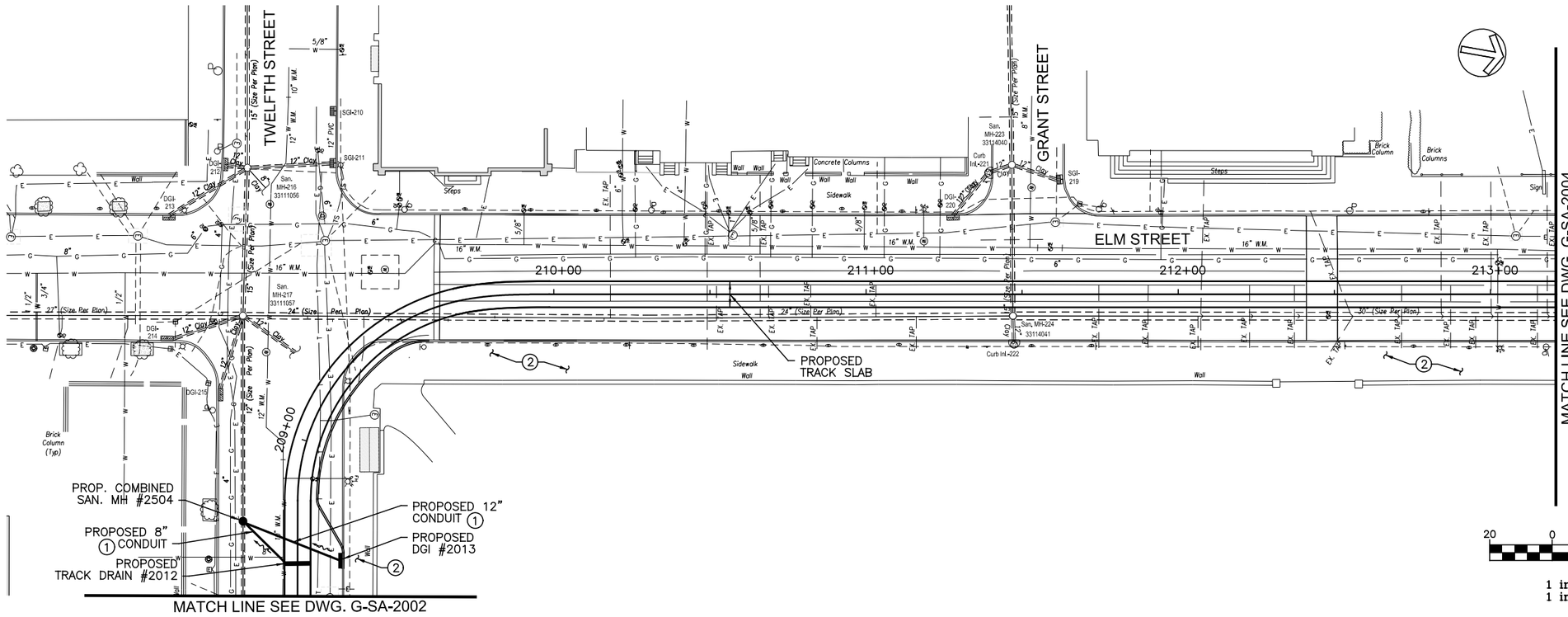

NOTES:

1. FOR STORM SEWER PROFILES, SEE SHEETS G–SA–2023 THROUGH G–SA–2031.
2. DO NOT DISTURB EXISTING CURB OR SIDEWALK AT WASHINGTON PARK. CONTRACTOR IS RESPONSIBLE FOR REPAIR OF ANY DAMAGES TO THE CURB OR SIDEWALK THAT OCCUR DURING CONSTRUCTION.

GRAPHIC SCALE

20 0 20 40 80

(IN FEET)
1 inch = 20 ft. Full Size
1 inch = 40 ft. Half Size

590 580 570 560 550 540 530 520 510 500

INTENTIONALLY LEFT BLANK

CAUTION UNDERGROUND UTILITIES
2 WORKING DAYS
BEFORE YOU DIG
CALL 1–800–362–2764
OHIO UTILITY PROTECTION SERVICE
CALL NON–SERVICE FACILITY
OWNERS DIRECT

DOTE_Mono_PDF_Half.pltcfg
c:\pwworking\pitt\d0309045\S_G-SA-2003.dgn
Wednesday, July 11, 2012 11:14:08 AM

CONTRACT DRAWING

PRINTS NOT BEARING THIS STAMP WERE MADE PRIOR TO ADVERTISING BID AND ARE TO BE CONSIDERED OBSOLETE FOR CONTRACT PURPOSES.

Department of Transportation and Engineering

City of Cincinnati
City Hall
801 Plum Street
Cincinnati, Ohio 45202

CINCINNATI STREETCAR
OVER THE RHINE
COMBINED SANITARY AND STORM MODIFICATIONS
ELM STREET
STA 208+50 TO STA 213+20

Revisions

No.				

Drawn by DLB	Date 07/02/12
Designed by SKR	Date 07/02/12
Checked by DCJ	Date 07/02/12
Reviewed by JTB	Date 07/12/12

Consultant

PB HDR

File Number

ACC No. 23126

G-SA-2003

6200

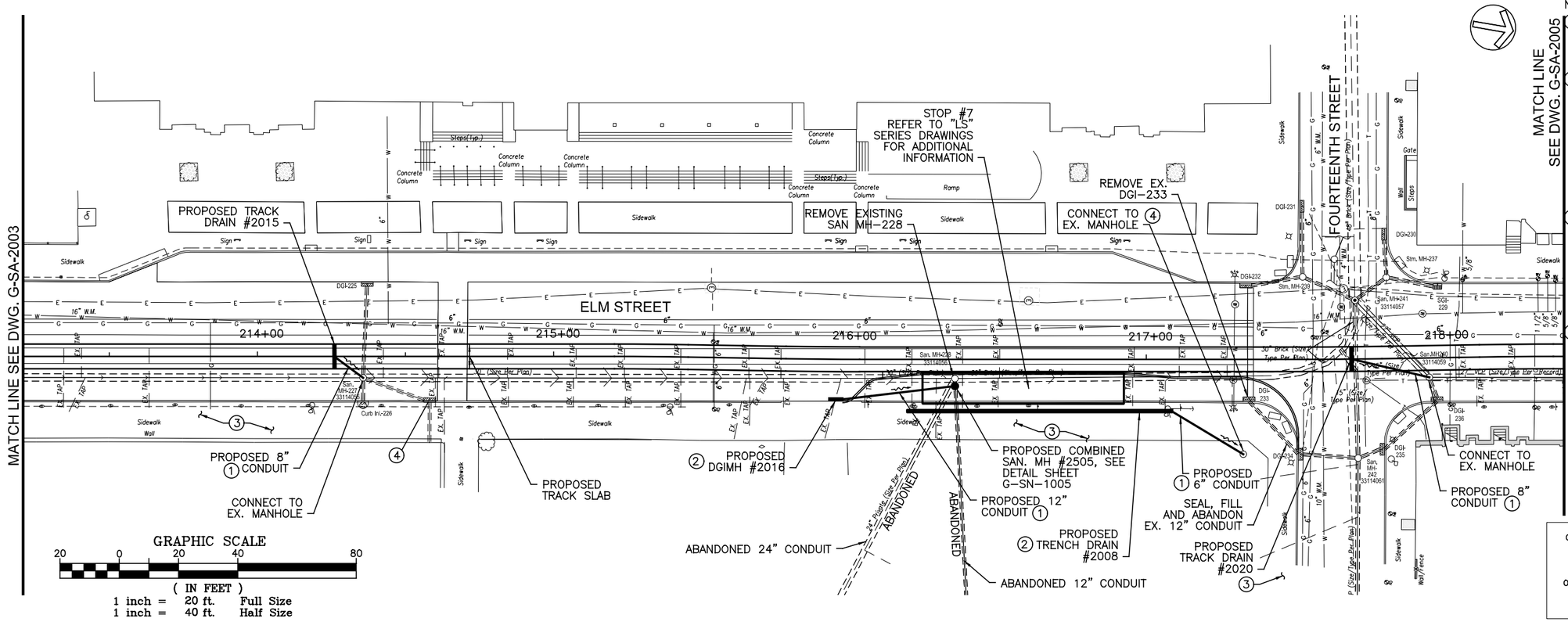

NOTES:

1. FOR STORM SEWER PROFILES, SEE SHEETS G-SA-2023 THROUGH G-SA-2031.
2. DO NOT DISTURB EXISTING CURB OR SIDEWALK AT WASHINGTON PARK. CONTRACTOR IS RESPONSIBLE FOR REPAIR OF ANY DAMAGES TO THE CURB OR SIDEWALK THAT OCCUR DURING CONSTRUCTION.
3. CONTRACTOR TO REPAIR OR REPLACE ANY DAMAGED PORTION OF THE SIDEWALK DISTURVED BY INSTALLATION OF PROPOSED DGIMH #2016 AND PROPOSED TRENCH DRAIN #2008.
4. APPROXIMATE LOCATION OF EX. STORM STRUCTURE, LOCATION BASED ON WASHINGTON PARK REDEVLOPMENT PLANS DATED 9/20/2010.

CAUTION UNDERGROUND UTILITIES
2 WORKING DAYS
BEFORE YOU DIG
CALL 1-800-362-2764
OHIO UTILITY PROTECTION SERVICE
CALL NON-SERVICE FACILITY OWNERS DIRECT

590 580 570 560 550 540 530 520 510 500

INTENTIONALLY LEFT BLANK

CONTRACT DRAWING

PRINTS NOT BEARING THIS STAMP WERE MADE PRIOR TO ADVERTISING BID DATE AND ARE TO BE CONSIDERED OBSOLETE FOR CONTRACT PURPOSES.

Department of Transportation and Engineering

City of Cincinnati
City Hall
801 Plum Street
Cincinnati, Ohio 45202

CINCINNATI STREETCAR
OVER THE RHINE
COMBINED SANITARY AND STORM MODIFICATIONS
ELM STREET
STA 213+20 TO STA 218+40

Revisions
No.

Drawn by DLB	Date 07/02/12	
Designed by SKR	Date 07/02/12	
Checked by DCJ	Date 07/02/12	
Reviewed by JTB	Date 07/12/12	

Consultant

PB HDR

File Number

ACC No. 23126

G-SA-2004

DOTE_Mono_PDF_Half.pltcfg
c:\pwworking\pitt\d0309045\S_G-SA-2004.dgn
Wednesday, July 11, 2012 11:14:20 AM

6200

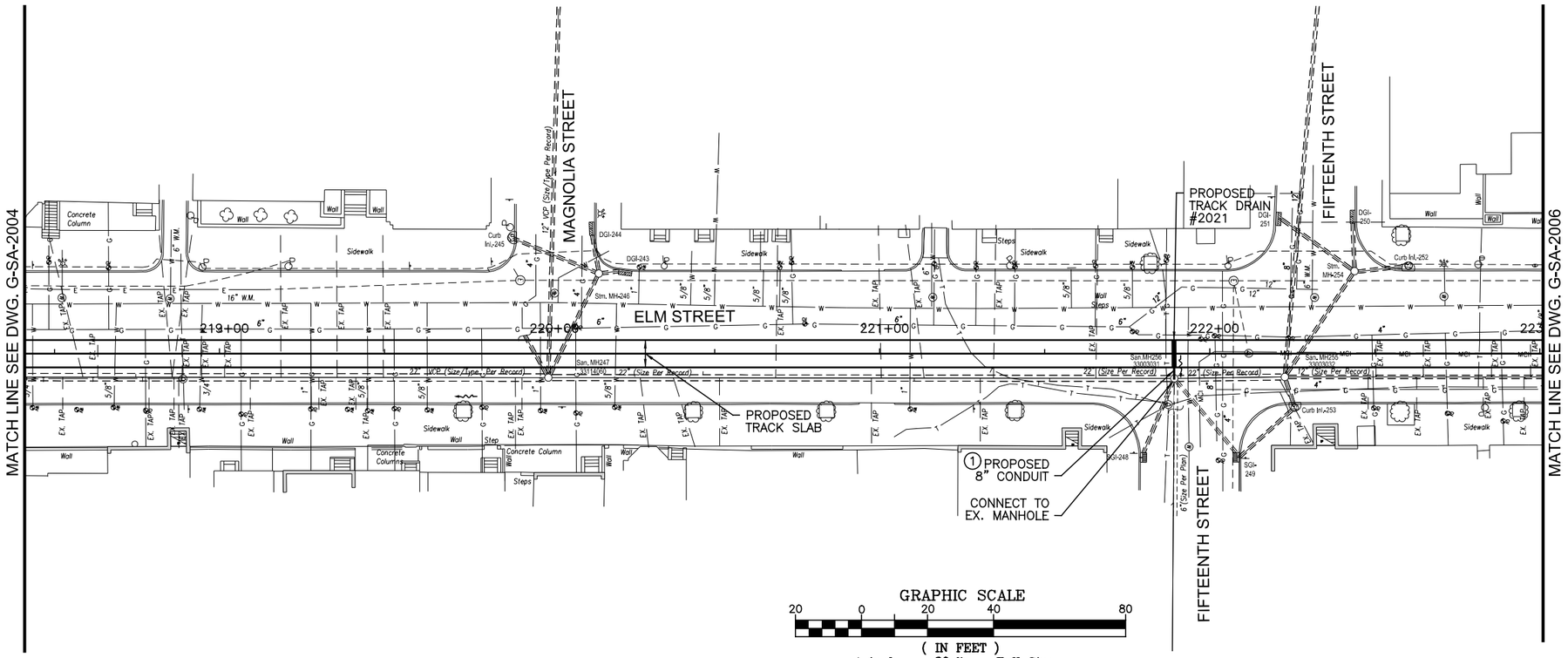

NOTES:

1. FOR STORM SEWER PROFILES, SEE SHEETS G–SA–2023 THROUGH G–SA–2031.

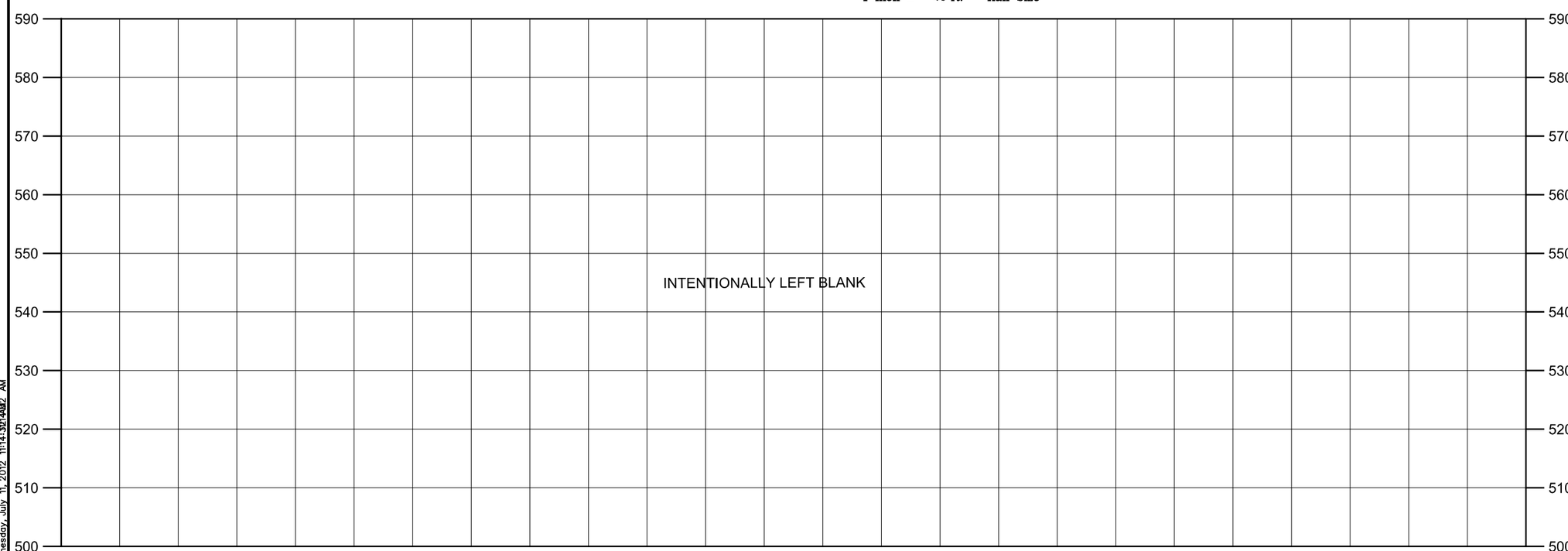

CAUTION UNDERGROUND UTILITIES
2 WORKING DAYS
BEFORE YOU DIG
CALL 1–800–362–2764
OHIO UTILITY PROTECTION SERVICE
CALL NON–SERVICE FACILITY
OWNERS DIRECT

DOTE_Mono_PDF_Half.pltcfg
c:\pwworking\pitt\d0309045\S_G-SA-2005.dgn
Wednesday, July 11, 2012 11:14:37:14AM AM

CITY OF CINCINNATI DEPARTMENT OF TRANSPORTATION & ENGINEERING OHIO

CONTRACT DRAWING

PRINTS NOT BEARING THIS STAMP WERE MADE PRIOR TO ADVERTISING BID AND ARE TO BE CONSIDERED OBSOLETE FOR CONTRACT PURPOSES.

Department of Transportation and Engineering

City of Cincinnati
City Hall
801 Plum Street
Cincinnati, Ohio 45202

CINCINNATI STREETCAR
OVER THE RHINE
COMBINED SANITARY AND STORM MODIFICATIONS
ELM STREET
STA 218+40 TO STA 223+00

Revisions

No.				

Drawn by DLB	Date 07/02/12
Designed by SKR	Date 07/02/12
Checked by DCJ	Date 07/02/12
Reviewed by JTB	Date 07/12/12

Consultant

PB HDR

File Number

ACC No.
23126

G-SA-2005

6200

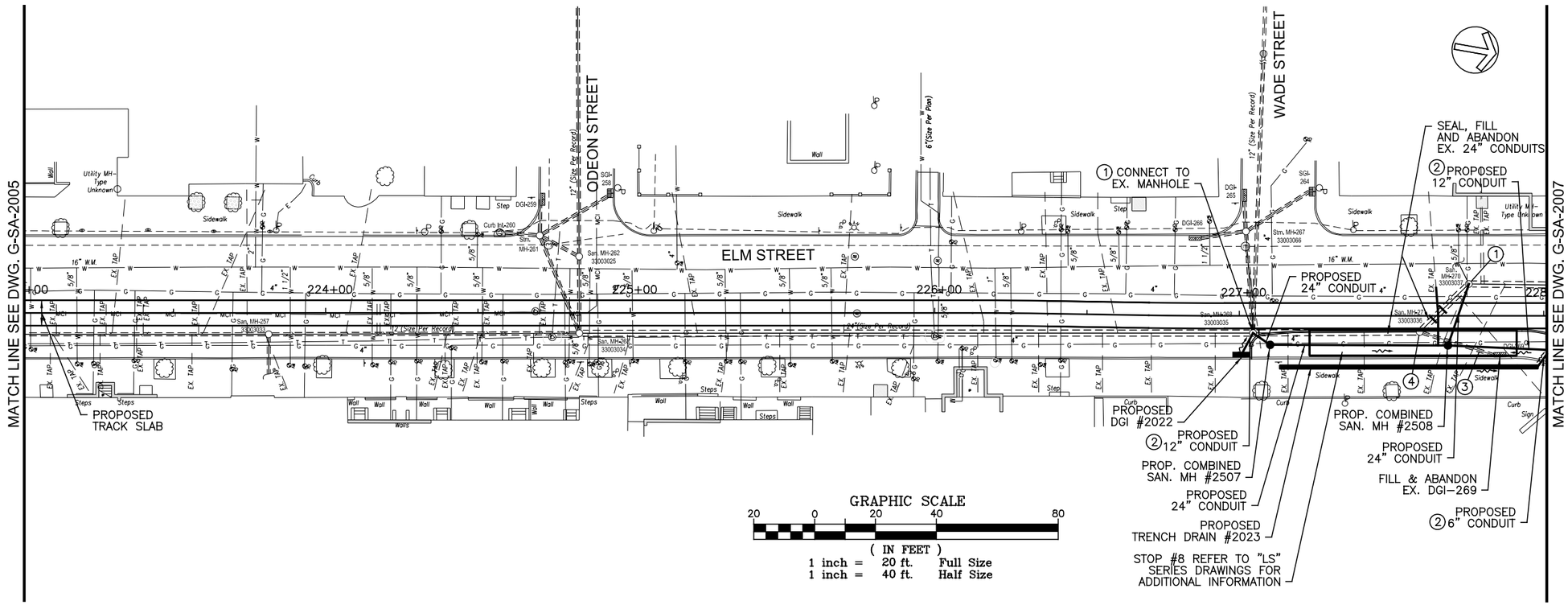

NOTES:

1. CONNECT TO EXISTING COMBINED MANHOLE. RECONSTRUCT EX. MANHOLE BASE AS NEEDED TO ACCOMMODATE PROPOSED CONDUIT.
2. FOR STORM SEWER PROFILES, SEE SHEETS G-SA-2023 THROUGH G-SA-2031.
3. SEAL, FILL, AND ABANDON EX. 12" CONDUIT, REMOVE WHERE INTERFERING WITH PROPOSED WORK.
4. REMOVE TOP 3' OF EX. COMBINED SAN. MANHOLE. FILL AND ABANDON.

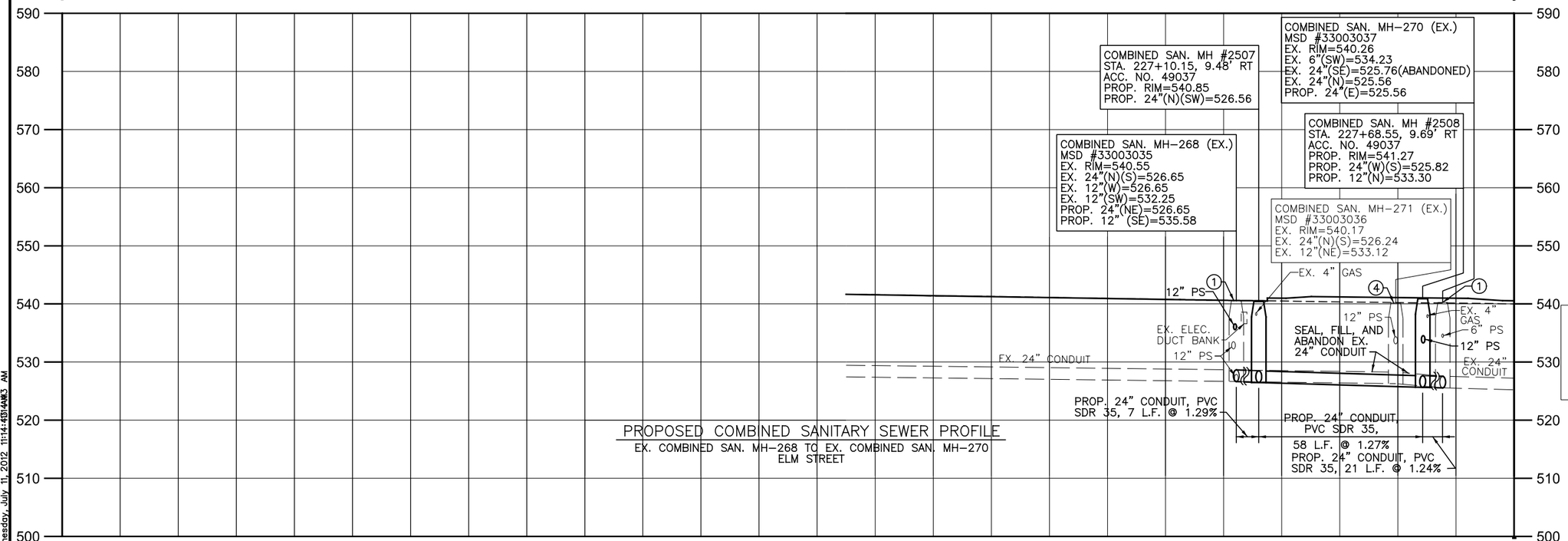

PROPOSED COMBINED SANITARY SEWER PROFILE

EX. COMBINED SAN. MH-268 TO EX. COMBINED SAN. MH-270
ELM STREET

CAUTION UNDERGROUND UTILITIES
2 WORKING DAYS
BEFORE YOU DIG
CALL 1-800-362-2764
OHIO UTILITY PROTECTION SERVICE
CALL NON-SERVICE FACILITY OWNERS DIRECT

DOTE_Mono_PDF_Half.pltcfg
c:\pwworking\pitt\d0309045\S_G-SA-2006.dgn
Wednesday, July 11, 2012 11:14:41:44AM AM

CONTRACT DRAWING

PRINTS NOT BEARING THIS STAMP WERE MADE PRIOR TO ADVERTISING FOR BIDS AND ARE TO BE CONSIDERED OBSOLETE FOR CONTRACT PURPOSES.

Department of Transportation and Engineering

City of Cincinnati
City Hall
801 Plum Street
Cincinnati, Ohio 45202

CINCINNATI STREETCAR
OVER THE RHINE
COMBINED SANITARY AND STORM MODIFICATIONS
ELM STREET
STA 223+00 TO STA 228+00

Revisions

No.				

Drawn by	Designed by	Checked by	Reviewed by
DLB	SKR	DCJ	JTB
Date 07/02/12	Date 07/02/12	Date 07/02/12	Date 07/12/12

Consultant

PB HDR

File Number

ACC No. 23126

G-SA-2006

6200

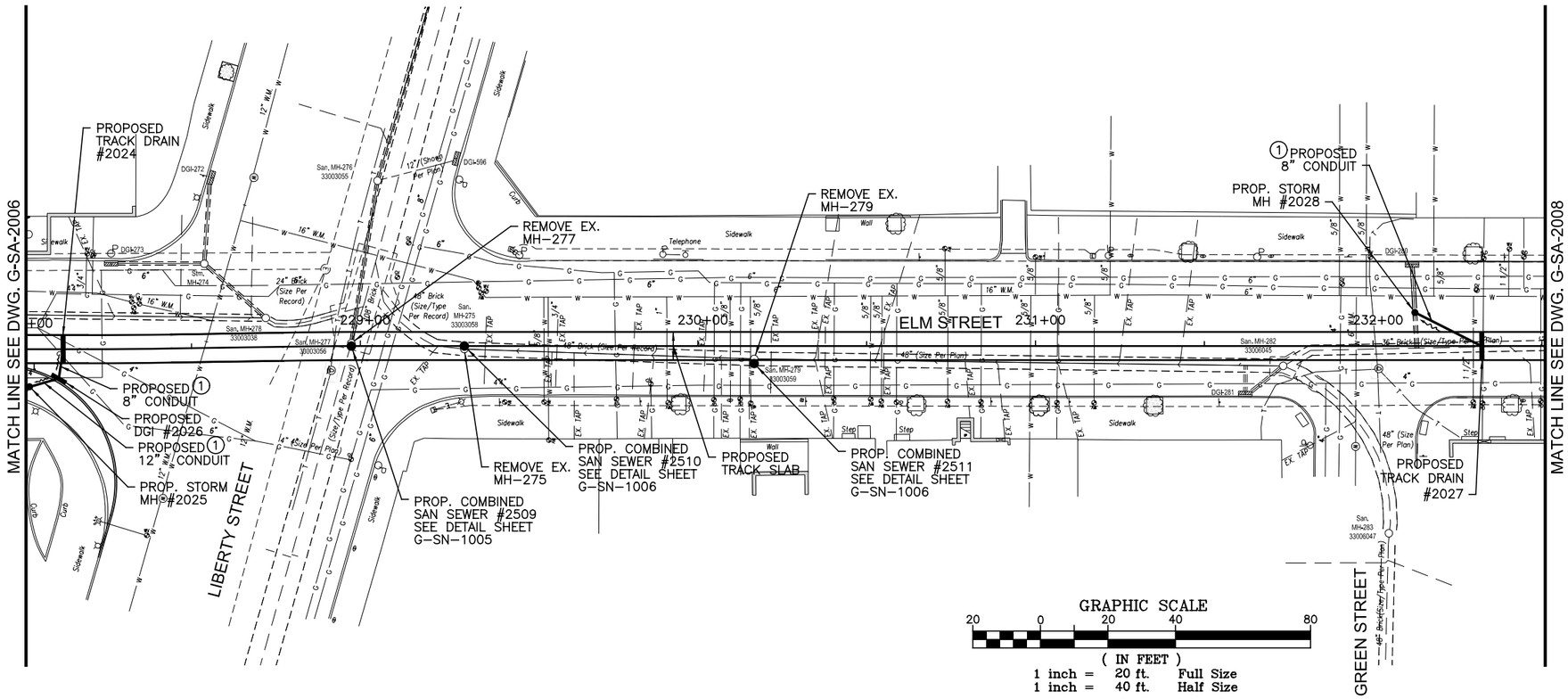

NOTES:

1. FOR STORM SEWER PROFILES, SEE SHEETS G-SA-2023 THROUGH G-SA-2031.

INTENTIONALLY LEFT BLANK

CAUTION UNDERGROUND UTILITIES
2 WORKING DAYS
BEFORE YOU DIG
CALL 1-800-362-2764
OHIO UTILITY PROTECTION SERVICE
CALL NON-SERVICE FACILITY OWNERS DIRECT

CONTRACT DRAWING

PRINTS NOT BEARING THIS STAMP WERE MADE PRIOR TO ADVERTISING FOR BIDS AND ARE TO BE CONSIDERED OBSOLETE FOR CONTRACT PURPOSES.

Department of Transportation and Engineering

City of Cincinnati
City Hall
801 Plum Street
Cincinnati, Ohio 45202

CINCINNATI STREETCAR
OVER THE RHINE
COMBINED SANITARY AND STORM MODIFICATIONS
ELM STREET
STA 228+00 TO STA 232+50

Revisions
No.

	Date
Drawn by DLB	07/02/12
Designed by SKR	07/02/12
Checked by DCJ	07/02/12
Reviewed by JTB	07/12/12

Consultant

PB HDR

File Number

ACC No.
23126

G-SA-2007

DOTE_Mono_PDF_Half.pltcfg
c:\pwworking\pitt\d0309045\S_G-SA-2007.dgn
Wednesday, July 11, 2012 11:14:15:85 AM

6200

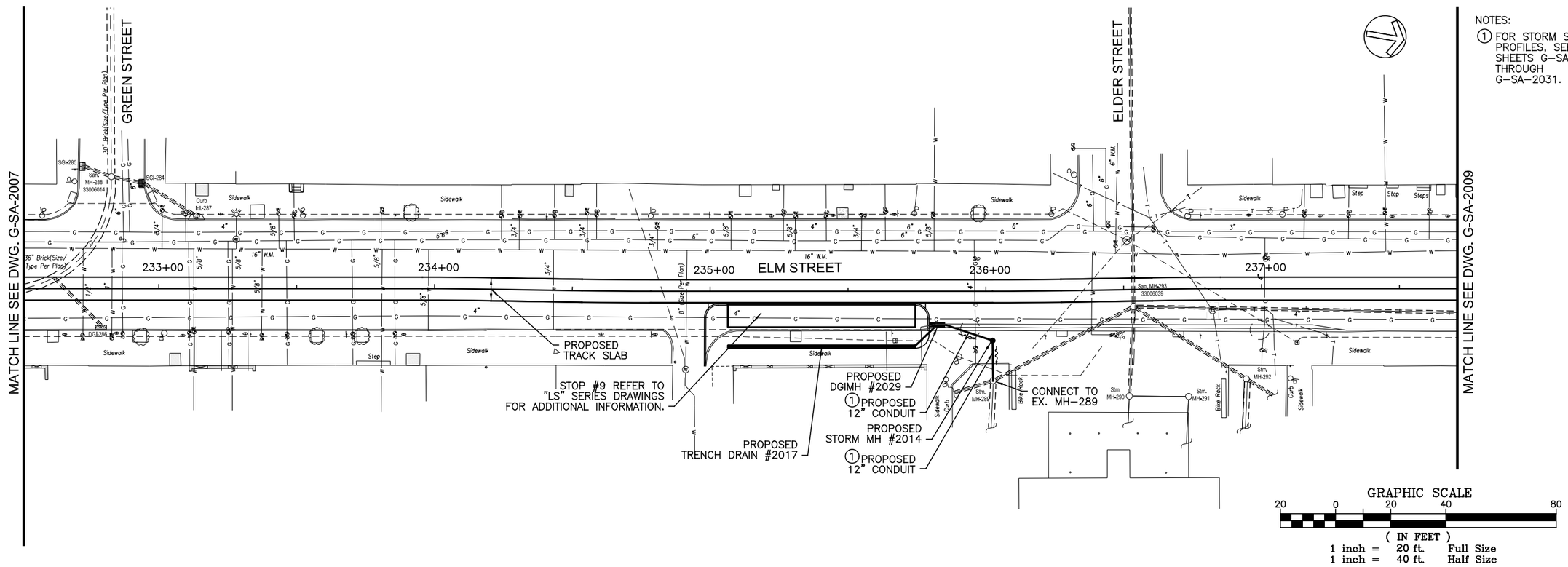

NOTES:

1. FOR STORM SEWER PROFILES, SEE SHEETS G-SA-2023 THROUGH G-SA-2031.

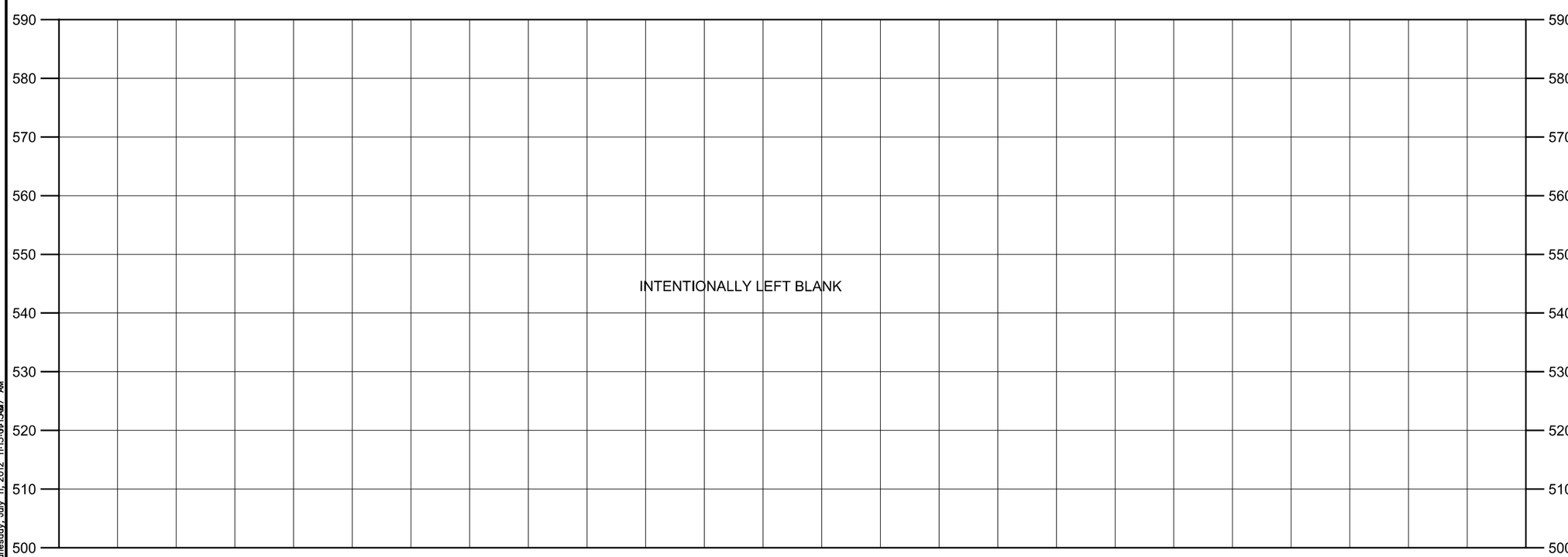

CAUTION UNDERGROUND UTILITIES
2 WORKING DAYS
BEFORE YOU DIG
CALL 1-800-362-2764
OHIO UTILITY PROTECTION SERVICE
CALL NON-SERVICE FACILITY OWNERS DIRECT

DOTE_Mono_PDF_Half.pltcfg
c:\pwworking\pitt\d0309045\S_G-SA-2008.dgn
Wednesday, July 11, 2012 11:15:07:917 AM

CONTRACT DRAWING

PRINTS NOT BEARING THIS STAMP WERE MADE PRIOR TO ADVERTISING FOR BIDS AND ARE TO BE CONSIDERED OBSOLETE FOR CONTRACT PURPOSES.

Department of Transportation and Engineering

City of Cincinnati
City Hall
801 Plum Street
Cincinnati, Ohio 45202

CINCINNATI STREETCAR
OVER THE RHINE
COMBINED SANITARY AND STORM MODIFICATIONS
ELM STREET
STA 232+50 TO STA 237+70

Revisions

No.				

Drawn by DLB	Date 07/02/12
Designed by SKR	Date 07/02/12
Checked by DCJ	Date 07/02/12
Reviewed by JTB	Date 07/12/12

Consultant

PB HDR

File Number

ACC No.
23126

G-SA-2008

6200

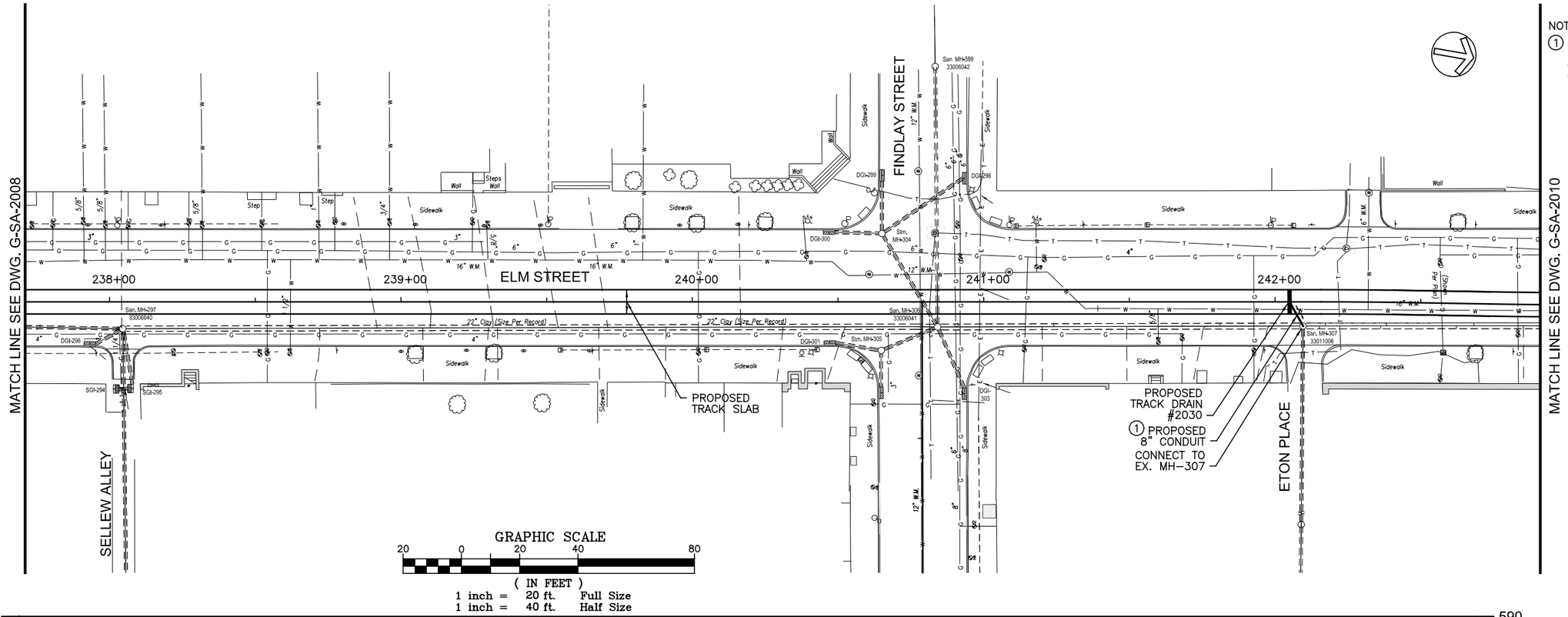

NOTES:

1. FOR STORM SEWER PROFILES, SEE SHEETS G-SA-2023 THROUGH G-SA-2031.

590 580 570 560 550 540 530 520 510 500

INTENTIONALLY LEFT BLANK

CAUTION UNDERGROUND UTILITIES
2 WORKING DAYS
BEFORE YOU DIG
CALL 1-800-362-2764
OHIO UTILITY PROTECTION SERVICE
CALL NON-SERVICE FACILITY
OWNERS DIRECT

DEPARTMENT OF TRANSPORTATION & ENGINEERING — CITY OF CINCINNATI — OHIO

CONTRACT DRAWING

PRINTS NOT BEARING THIS STAMP WERE MADE PRIOR TO ADVERTISING FOR BIDS AND ARE TO BE CONSIDERED OBSOLETE FOR CONTRACT PURPOSES.

Department of Transportation and Engineering
City of Cincinnati
City Hall
801 Plum Street
Cincinnati, Ohio 45202

CINCINNATI STREETCAR
OVER THE RHINE
COMBINED SANITARY AND STORM MODIFICATIONS
ELM STREET
STA 237+70 TO STA 242+90

Revisions
No.

Drawn by DLB	Date 07/02/12
Designed by SKR	Date 07/02/12
Checked by DCJ	Date 07/02/12
Reviewed by JTB	Date 07/12/12

Consultant

PB HDR

File Number

ACC No. 23126

G-SA-2009

DOTE_Mono_PDF_Half.pltcfg
c:\pwworking\pitt\d0309045\S_G-SA-2009.dgn
Wednesday, July 11, 2012 11:15:18AM9 AM

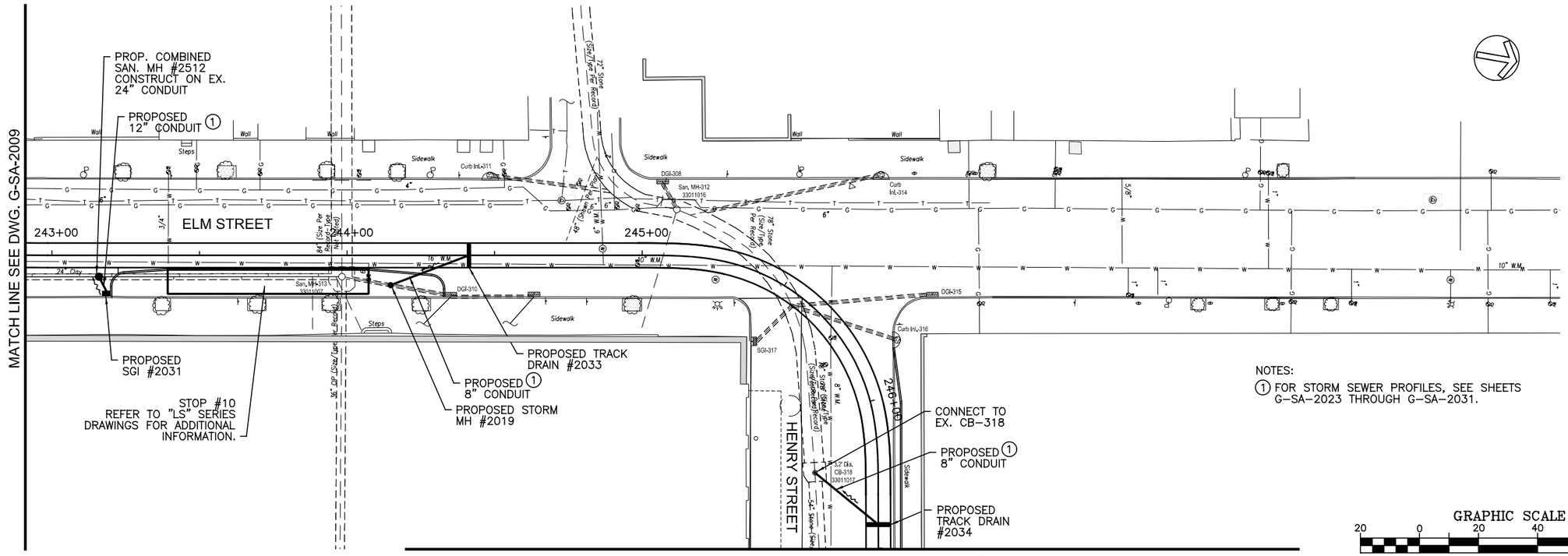

NOTES:

1 FOR STORM SEWER PROFILES, SEE SHEETS G-SA-2023 THROUGH G-SA-2031.

GRAPHIC SCALE

20 0 20 40 80

(IN FEET)
1 inch = 20 ft. Full Size
1 inch = 40 ft. Half Size

INTENTIONALLY LEFT BLANK

CAUTION UNDERGROUND UTILITIES
2 WORKING DAYS
BEFORE YOU DIG
CALL 1-800-362-2764
OHIO UTILITY PROTECTION SERVICE
CALL NON-SERVICE FACILITY
OWNERS DIRECT

DEPARTMENT OF TRANSPORTATION & ENGINEERING CITY OF CINCINNATI OHIO

CONTRACT DRAWING

PRINTS NOT BEARING THIS STAMP WERE MADE PRIOR TO ADVERTISING FOR BIDS AND ARE TO BE CONSIDERED OBSOLETE FOR CONTRACT PURPOSES.

Department of Transportation and Engineering

City of Cincinnati
801 Plum Street
Cincinnati, Ohio 45202

CINCINNATI STREETCAR
OVER THE RHINE
COMBINED SANITARY AND STORM MODIFICATIONS
ELM STREET
STA 242+90 TO STA 246+50

Revisions
No.

Drawn by DLB	Date 07/02/12
Designed by SKR	Date 07/02/12
Checked by DCJ	Date 07/02/12
Reviewed by JTB	Date 07/12/12

Consultant

PB HDR

File Number

ACC No.
23126

G-SA-2010

DOTE_Mono_PDF_Half.pltcfg
c:\pwworking\pitt\d0309045\S_G-SA-2010.dgn
Wednesday, July 11, 2012 11:15:39:15:02 AM

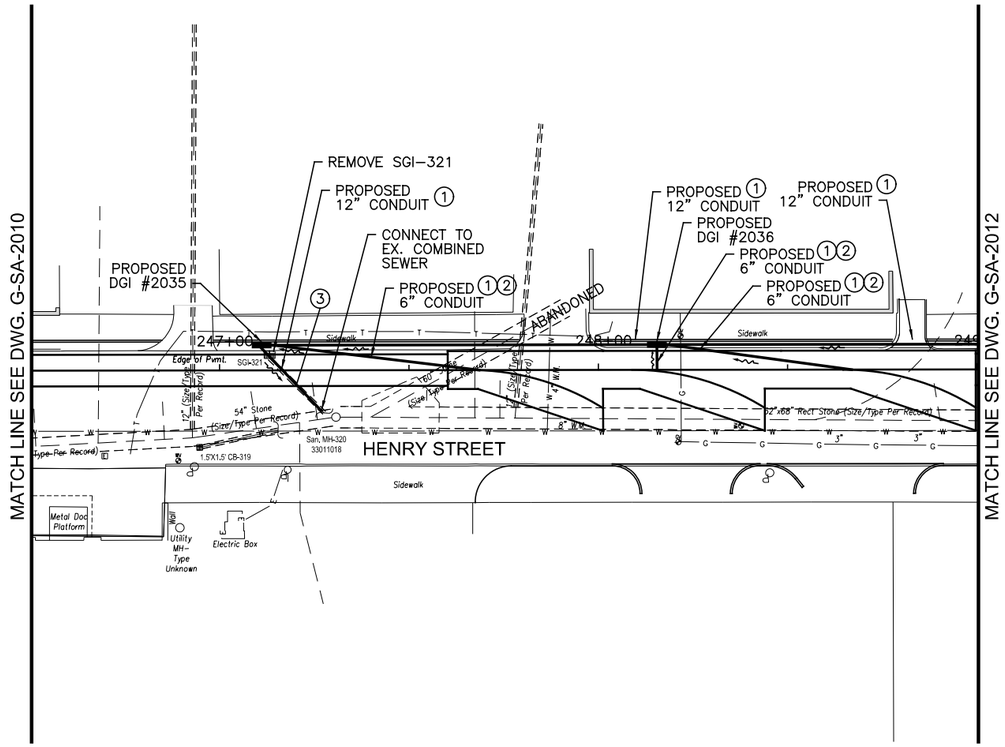

NOTES:

1. FOR STORM SEWER PROFILES, SEE SHEETS G–SA–2023 THROUGH G–SA–2031.
2. 6" OUTLET PIPE TO DRAIN TURNOUT SWITCH MOTOR AND OTHER MECHANISMS. COORDINATE INVERT AND LOCATION WITH TURNOUT INSTALLATION AND PROVIDE ALL BENDS, FITTINGS, ATTACHMENTS AND BRANCHES TO COMBINE INTO (1) 6" OUTLET PIPE.
3. REMOVE EXISTING 12" CONDUIT.

GRAPHIC SCALE

20 0 20 40 80

(IN FEET)
1 inch = 20 ft. Full Size
1 inch = 40 ft. Half Size

590 580 570 560 550 540 530 520 510 500

INTENTIONALLY LEFT BLANK

CAUTION UNDERGROUND UTILITIES
2 WORKING DAYS
BEFORE YOU DIG
CALL 1–800–362–2764
OHIO UTILITY PROTECTION SERVICE
CALL NON–SERVICE FACILITY
OWNERS DIRECT

DEPARTMENT OF TRANSPORTATION & ENGINEERING CITY OF CINCINNATI OHIO

CONTRACT DRAWING

PRINTS NOT BEARING THIS STAMP WERE MADE PRIOR TO ADVERTISING FOR BIDS AND ARE TO BE CONSIDERED OBSOLETE FOR CONTRACT PURPOSES.

Department of Transportation and Engineering

City of Cincinnati
City Hall
801 Plum Street
Cincinnati, Ohio 45202

CINCINNATI STREETCAR
OVER THE RHINE
COMBINED SANITARY AND STORM MODIFICATIONS
HENRY STREET
STA 246+50 TO STA 249+00

Revisions
No.

Drawn by DLB	Date 07/02/12	
Designed by SKR	Date 07/02/12	
Checked by DCJ	Date 07/02/12	
Reviewed by JTB	Date 07/12/12	

Consultant

PB HDR

File Number

ACC No. 23126

G-SA-2011

DOTE_Mono_PDF_Half.pltcfg
c:\pwworking\pitt\d0309045\S_G-SA-2011.dgn
Wednesday, July 11, 2012 11:15:46 AM

6200

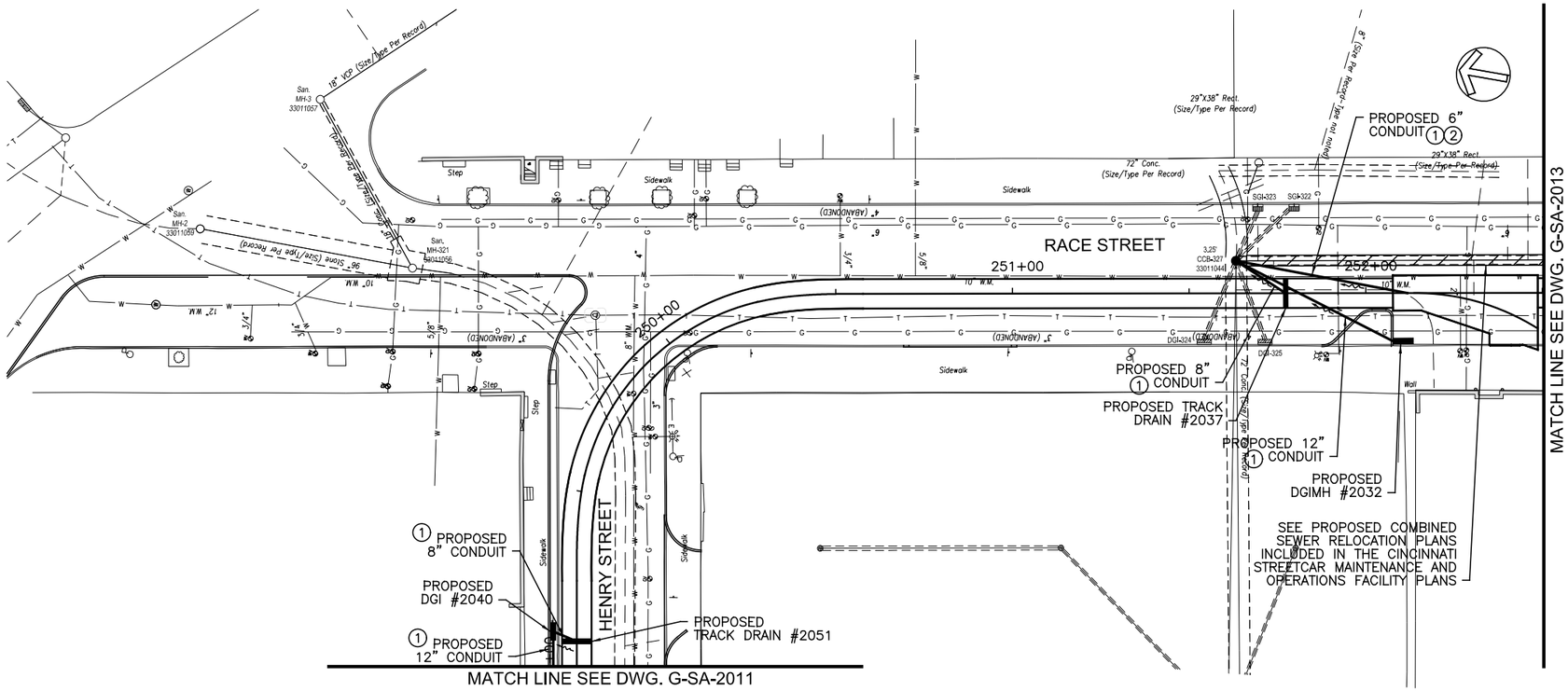

NOTES:

(1) FOR STORM SEWER PROFILES, SEE SHEETS G-SA-2023 THROUGH G-SA-2031.

(2) 6" OUTLET PIPE TO DRAIN TURNOUT SWITCH MOTOR AND OTHER MECHANISMS. COORDINATE INVERT AND LOCATION WITH TURNOUT INSTALLATION AND PROVIDE ALL BENDS, FITTINGS, ATTACHMENTS AND BRANCHES TO COMBINE INTO (1) 6" OUTLET PIPE.

GRAPHIC SCALE

20 0 20 40 80

(IN FEET)
1 inch = 20 ft. Full Size
1 inch = 40 ft. Half Size

590 580 570 560 550 540 530 520 510 500

INTENTIONALLY LEFT BLANK

CAUTION UNDERGROUND UTILITIES
2 WORKING DAYS
BEFORE YOU DIG
CALL 1-800-362-2764
OHIO UTILITY PROTECTION SERVICE
CALL NON-SERVICE FACILITY OWNERS DIRECT

DEPARTMENT OF TRANSPORTATION & ENGINEERING CITY OF CINCINNATI OHIO

CONTRACT DRAWING

PRINTS NOT BEARING THIS STAMP WERE MADE PRIOR TO ADVERTISING FOR BIDS AND ARE TO BE CONSIDERED OBSOLETE FOR CONTRACT PURPOSES.

Department of Transportation and Engineering

City of Cincinnati
City Hall
801 Plum Street
Cincinnati, Ohio 45202

CINCINNATI STREETCAR OVER THE RHINE

COMBINED SANITARY AND STORM MODIFICATIONS
RACE STREET
STA 249+00 TO STA 252+50

Revisions
No.

	Date
Drawn by DLB	07/02/12
Designed by SKR	07/02/12
Checked by DCJ	07/02/12
Reviewed by JTB	07/12/12

Consultant

PB HDR

File Number

ACC No.
23126

G-SA-2012

6200

DOTE_Mono_PDF_Half.pltcfg
c:\pwworking\pitt\d0309045\S_G-SA-2012.dgn
Wednesday, July 11, 2012 11:15:19:49 AM

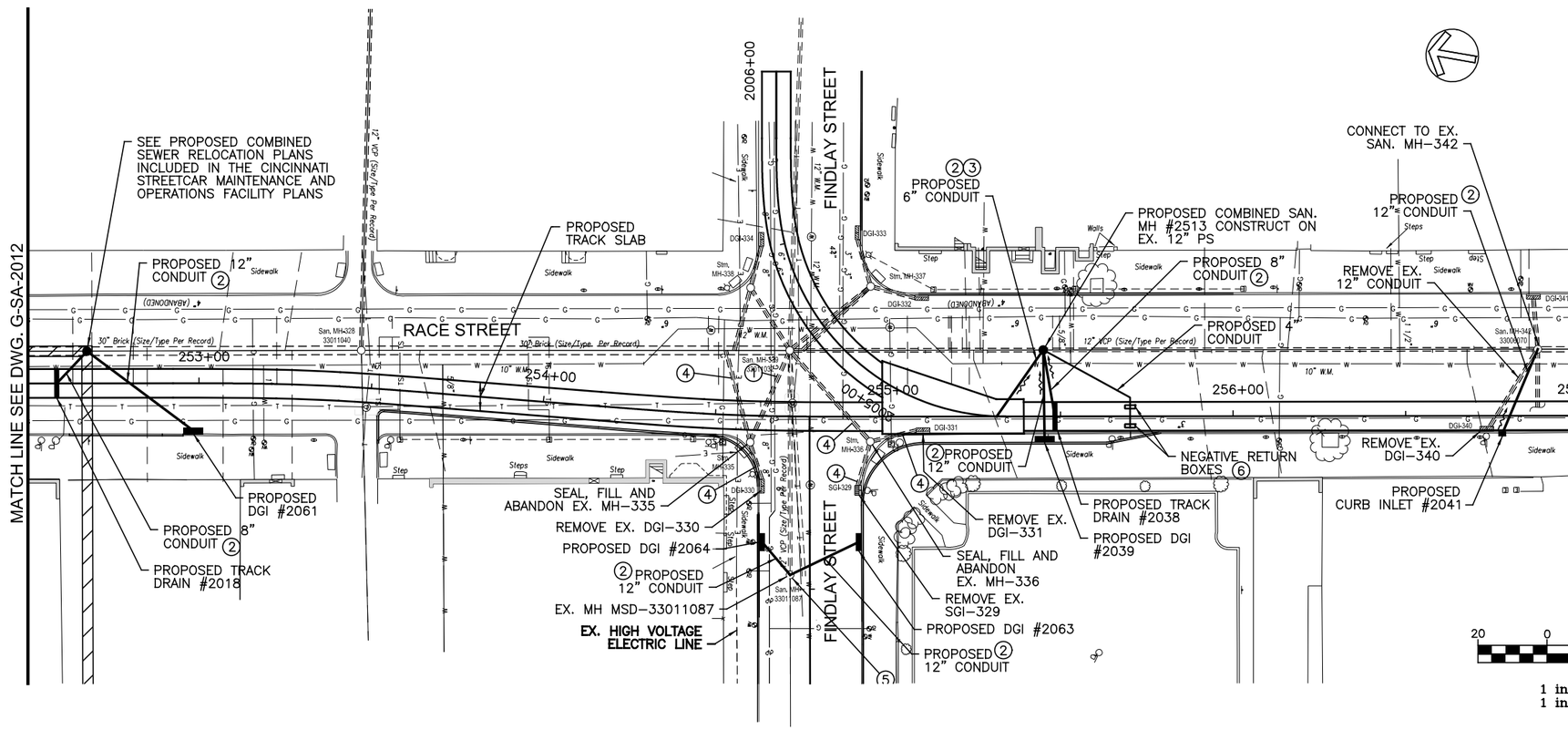

NOTES:

1. EXISTING PIPE PER RECORD, FIELD VERIFY UPSTREAM CONNECTIONS UPSTREAM AND DOWNSTREAM. SEAL, FILL AND ABANDON PIPE IF FOUND TO BE AN INACTIVE STORM/SEWER LINE.
2. FOR STORM DRAINAGE PROFILES, SEE SHEETS G-SA-2023 THROUGH G-SA-2031.
3. 6" OUTLET PIPE TO DRAIN TURNOUT SWITCH MOTOR AND OTHER MECHANISMS. COORDINATE INVERT AND LOCATION WITH TURNOUT INSTALLATION AND PROVIDE ALL BENDS, FITTINGS, ATTACHMENTS AND BRANCHES TO COMBINE INTO (1) 6" OUTLET PIPE.
4. SEAL, FILL AND ABANDON EX. 12" CONDUIT
5. MANHOLE SHOWN PER RECORD DRAWINGS. CONTRACTOR TO FIELD VERIFY EXISTING MANHOLE PRIOR TO INSTALLATION OF ADJOINING PROPOSED PIPES AND INLETS.
6. PROPOSED NEGATIVE RETURN BOX REFER TO "PD" SERIES DRAWINGS. ROUTE 4" CONDUIT AS SHOWN. CONTRACTOR TO PROVIDE ALL BENDS, FITTINGS AND ACCESSORIES AS REQUIRED FOR INSTALLATION. PROVIDE MINIMUM 1.00% SLOPE.

GRAPHIC SCALE

20 0 20 40 80

(IN FEET)
1 inch = 20 ft. Full Size
1 inch = 40 ft. Half Size

590 580 570 560 550 540 530 520 510 500

INTENTIONALLY LEFT BLANK

CAUTION UNDERGROUND UTILITIES
2 WORKING DAYS
BEFORE YOU DIG
CALL 1-800-362-2764
OHIO UTILITY PROTECTION SERVICE
CALL NON-SERVICE FACILITY OWNERS DIRECT

CONTRACT DRAWING

PRINTS NOT BEARING THIS STAMP WERE MADE PRIOR TO ADVERTISING BID AND ARE TO BE CONSIDERED OBSOLETE FOR CONTRACT PURPOSES.

Department of Transportation and Engineering

City of Cincinnati
City Hall
801 Plum Street
Cincinnati, Ohio 45202

CINCINNATI STREETCAR OVER THE RHINE

COMBINED SANITARY AND STORM MODIFICATIONS
RACE STREET
STA 252+50 TO STA 257+00

Revisions

No.		

Drawn by DLB	Date 07/02/12
Designed by SKR	Date 07/02/12
Checked by DCI	Date 07/02/12
Reviewed by JTB	Date 07/12/12

Consultant

PB HDR

File Number

ACC No. 23126

G-SA-2013

DOTE_Mono_PDF_Half.pltcfg
c:\pwworking\pitt\d0309045\S_G-SA-2013.dgn
Wednesday, July 11, 2012 11:16:11 AM

6200

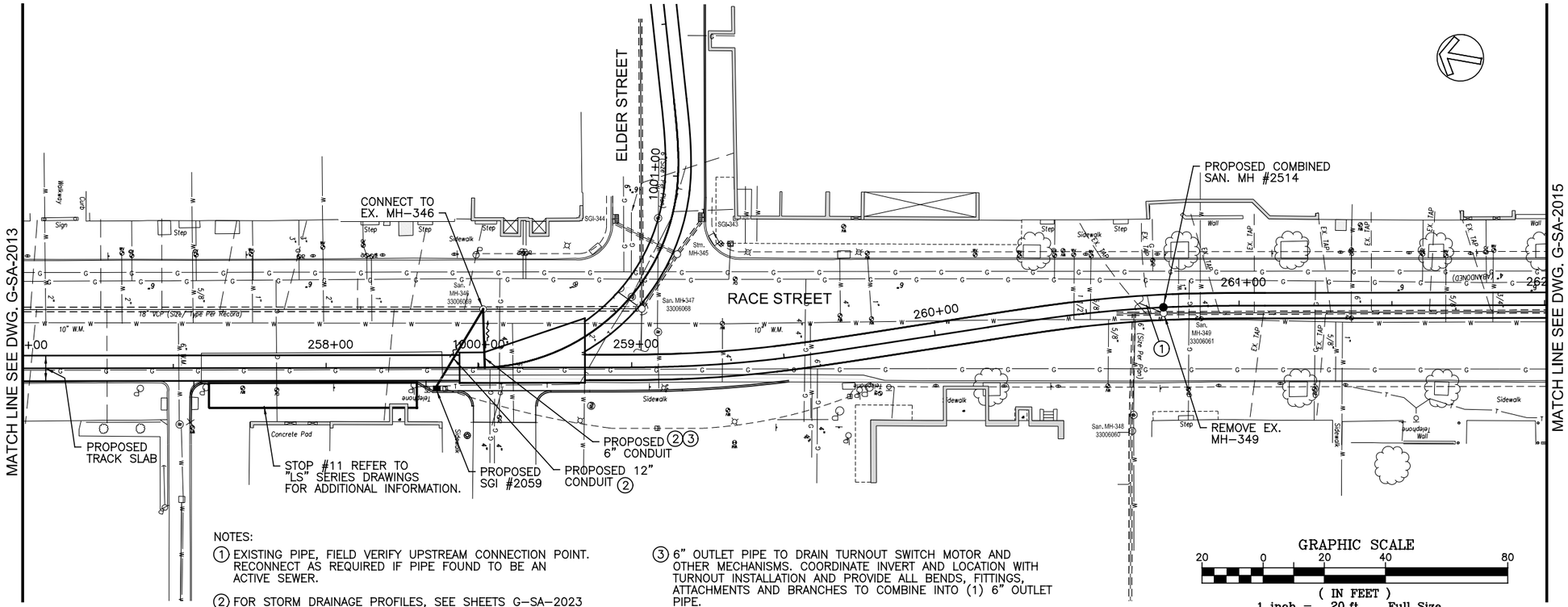

NOTES:

① EXISTING PIPE, FIELD VERIFY UPSTREAM CONNECTION POINT. RECONNECT AS REQUIRED IF PIPE FOUND TO BE AN ACTIVE SEWER.

② FOR STORM DRAINAGE PROFILES, SEE SHEETS G-SA-2023 THROUGH G-SA-2031.

③ 6" OUTLET PIPE TO DRAIN TURNOUT SWITCH MOTOR AND OTHER MECHANISMS. COORDINATE INVERT AND LOCATION WITH TURNOUT INSTALLATION AND PROVIDE ALL BENDS, FITTINGS, ATTACHMENTS AND BRANCHES TO COMBINE INTO (1) 6" OUTLET PIPE.

590 580 570 560 550 540 530 520 510 500

INTENTIONALLY LEFT BLANK

CAUTION UNDERGROUND UTILITIES
2 WORKING DAYS
BEFORE YOU DIG
CALL 1-800-362-2764
OHIO UTILITY PROTECTION SERVICE
CALL NON-SERVICE FACILITY
OWNERS DIRECT

DOTE_Mono_PDF_Half.pltcfg
c:\pwworking\pitt\d0309045\S_G-SA-2014.dgn
Wednesday, July 11, 2012 11:18:48 AM

CITY OF CINCINNATI DEPARTMENT OF TRANSPORTATION & ENGINEERING OHIO

CONTRACT DRAWING

PRINTS NOT BEARING THIS STAMP WERE MADE PRIOR TO ADVERTISING FOR BIDS AND ARE TO BE CONSIDERED OBSOLETE FOR CONTRACT PURPOSES.

Department of Transportation and Engineering

City of Cincinnati
City Hall
801 Plum Street
Cincinnati, Ohio 45202

CINCINNATI STREETCAR
OVER THE RHINE
COMBINED SANITARY AND STORM MODIFICATIONS
RACE STREET
STA 257+00 TO STA 262+00

Revisions

No.				

Drawn by DLB	Date 07/02/12	Designed by SKR	Date 07/02/12
Checked by DCI	Date 07/02/12	Reviewed by JTB	Date 07/12/12

Consultant

PB HDR

File Number

ACC No. 23126

G-SA-2014

6200

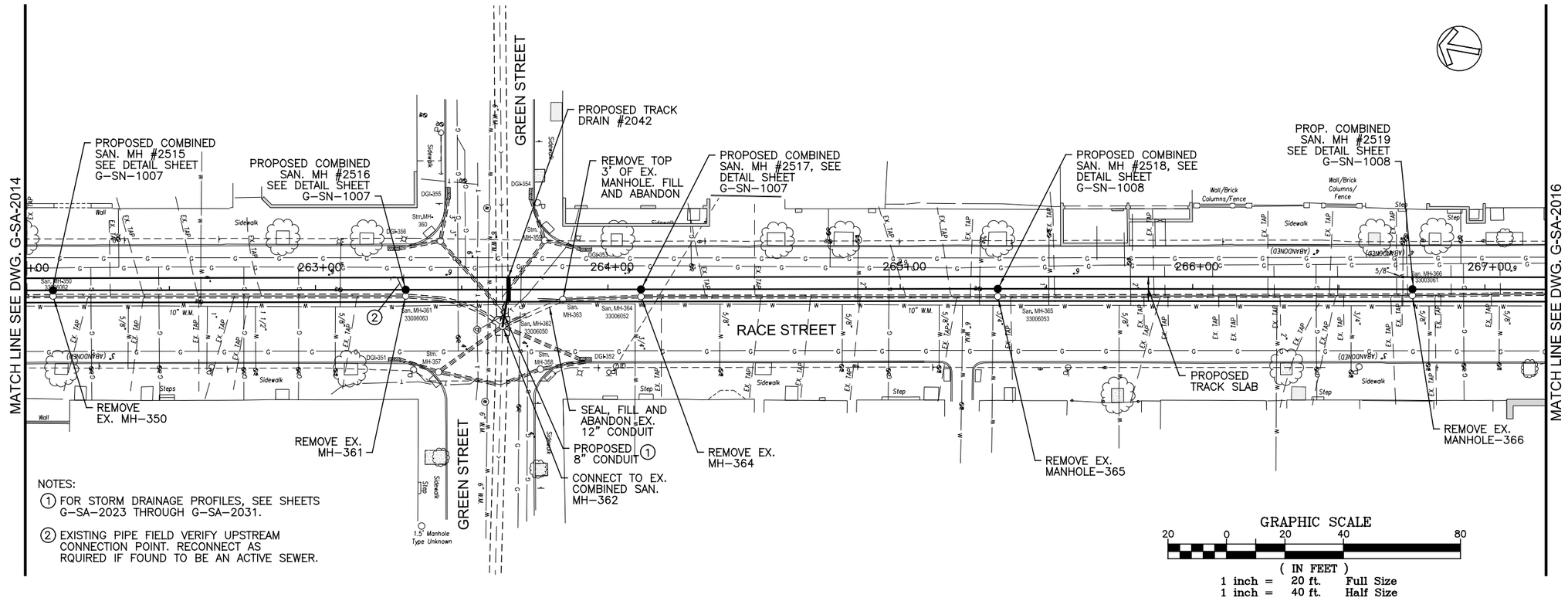

INTENTIONALLY LEFT BLANK

CAUTION UNDERGROUND UTILITIES
2 WORKING DAYS
BEFORE YOU DIG
CALL 1-800-362-2764
OHIO UTILITY PROTECTION SERVICE
CALL NON-SERVICE FACILITY OWNERS DIRECT

DOTE_Mono_PDF_Half.pltcfg
c:\pwworking\pitt\d0309045\S_G-SA-2015.dgn
Wednesday, July 11, 2012 11:19:01 AM

CITY OF CINCINNATI DEPARTMENT OF TRANSPORTATION & ENGINEERING OHIO

CONTRACT DRAWING

PRINTS NOT BEARING THIS STAMP WERE MADE PRIOR TO ADVERTISING FOR BIDS AND ARE TO BE CONSIDERED OBSOLETE FOR CONTRACT PURPOSES.

Department of Transportation and Engineering

City of Cincinnati
801 Plum Street
Cincinnati, Ohio 45202

CINCINNATI STREETCAR
OVER THE RHINE

COMBINED SANITARY AND STORM MODIFICATIONS
RACE STREET
STA 262+00 TO STA 267+20

Revisions
No.

Drawn by DLB	Date 07/02/12
Designed by SKR	Date 07/02/12
Checked by DCI	Date 07/02/12
Reviewed by JTB	Date 07/12/12

Consultant

PB HDR

File Number

ACC No.
23126

G-SA-2015

6200

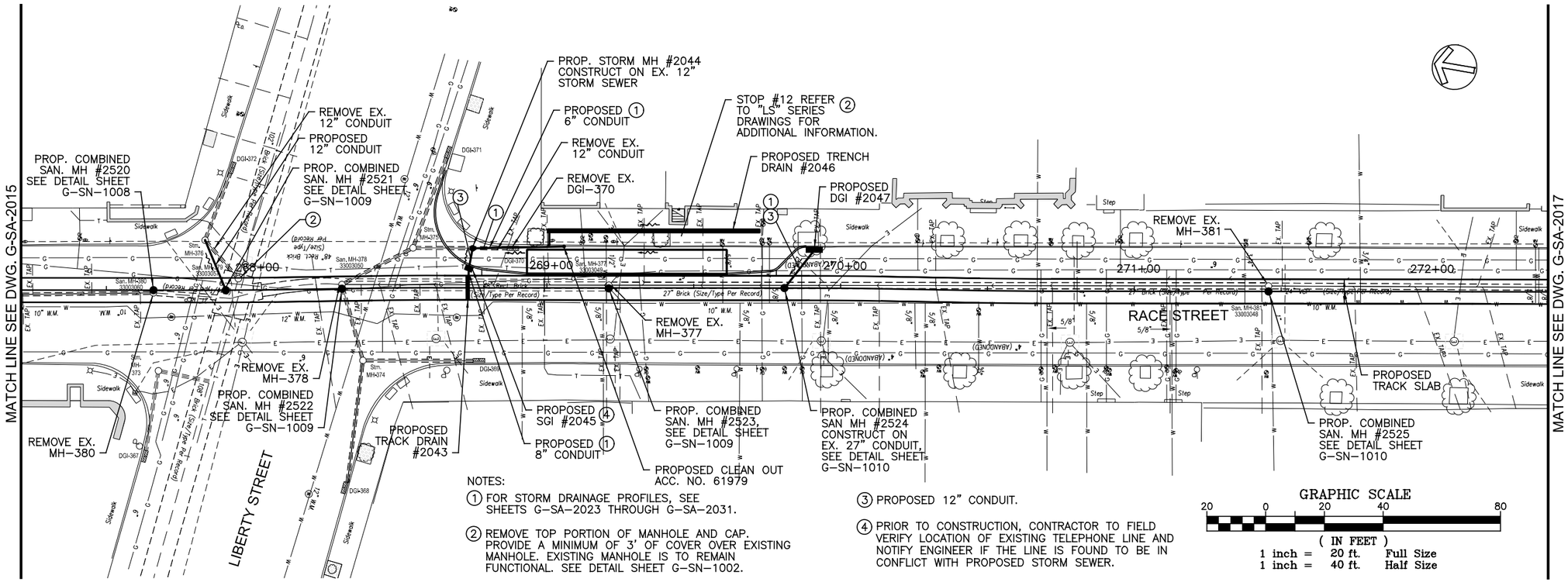

NOTES:

1. FOR STORM DRAINAGE PROFILES, SEE SHEETS G-SA-2023 THROUGH G-SA-2031.
2. REMOVE TOP PORTION OF MANHOLE AND CAP. PROVIDE A MINIMUM OF 3' OF COVER OVER EXISTING MANHOLE. EXISTING MANHOLE IS TO REMAIN FUNCTIONAL. SEE DETAIL SHEET G-SN-1002.
3. PROPOSED 12" CONDUIT.
4. PRIOR TO CONSTRUCTION, CONTRACTOR TO FIELD VERIFY LOCATION OF EXISTING TELEPHONE LINE AND NOTIFY ENGINEER IF THE LINE IS FOUND TO BE IN CONFLICT WITH PROPOSED STORM SEWER.

GRAPHIC SCALE

20 0 20 40 80

(IN FEET)
1 inch = 20 ft. Full Size
1 inch = 40 ft. Half Size

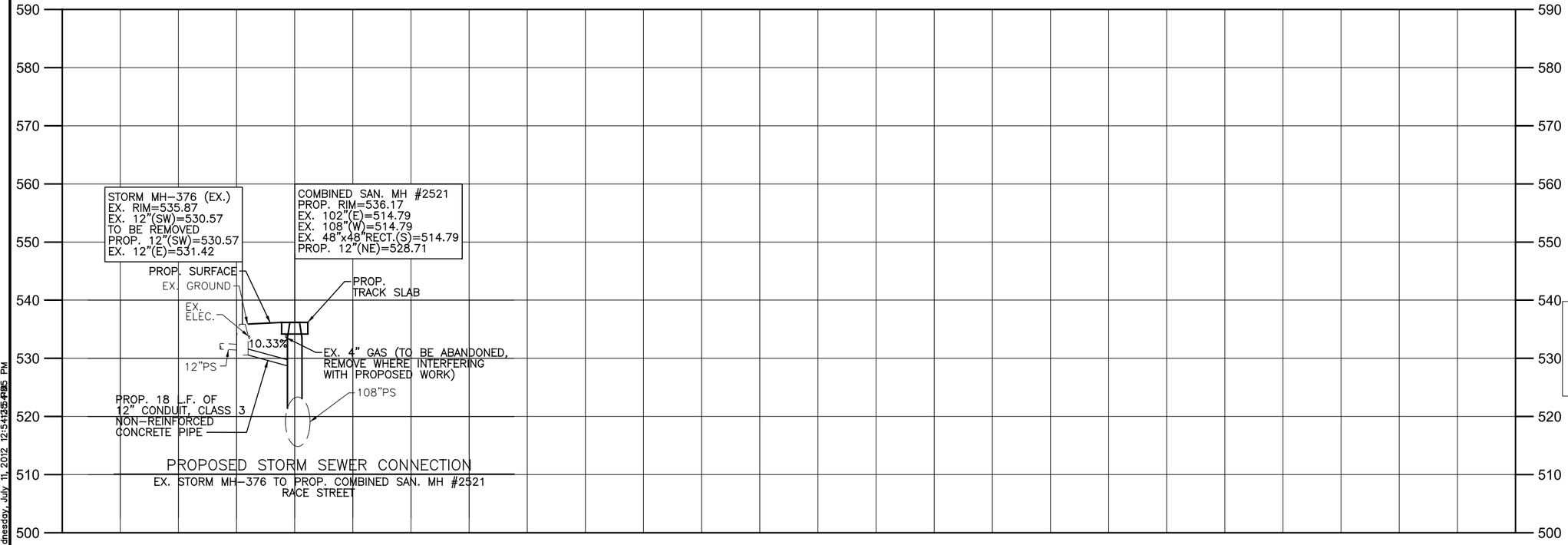

PROPOSED STORM SEWER CONNECTION

EX. STORM MH-376 TO PROP. COMBINED SAN. MH #2521
RACE STREET

CAUTION UNDERGROUND UTILITIES
2 WORKING DAYS
BEFORE YOU DIG
CALL 1-800-362-2764
OHIO UTILITY PROTECTION SERVICE
CALL NON-SERVICE FACILITY OWNERS DIRECT

DOTE_Mono_PDF_Half.pltcfg
c:\pwworking\pitt\d0309045\S_G-SA-2016.dgn
Wednesday, July 11, 2012 12:54:25 PM

CITY OF CINCINNATI DEPARTMENT OF TRANSPORTATION & ENGINEERING

CONTRACT DRAWING

PRINTS NOT BEARING THIS STAMP WERE MADE PRIOR TO ADVERTISING BID AND ARE TO BE CONSIDERED OBSOLETE FOR CONTRACT PURPOSES.

Department of Transportation and Engineering

City of Cincinnati
801 Plum Street
Cincinnati, Ohio 45202

CINCINNATI STREETCAR
OVER THE RHINE

COMBINED SANITARY AND STORM MODIFICATIONS
RACE STREET
STA 267+20 TO STA 272+40

Revisions

No.	Date	Drawn by	Designed by	Checked by	Reviewed by
	07/02/12	DLB	SKR	DCI	JTB
	07/02/12				
	07/02/12				
	07/12/12				

Consultant

PB HDR

File Number

ACC No.
23126

G-SA-2016

6200

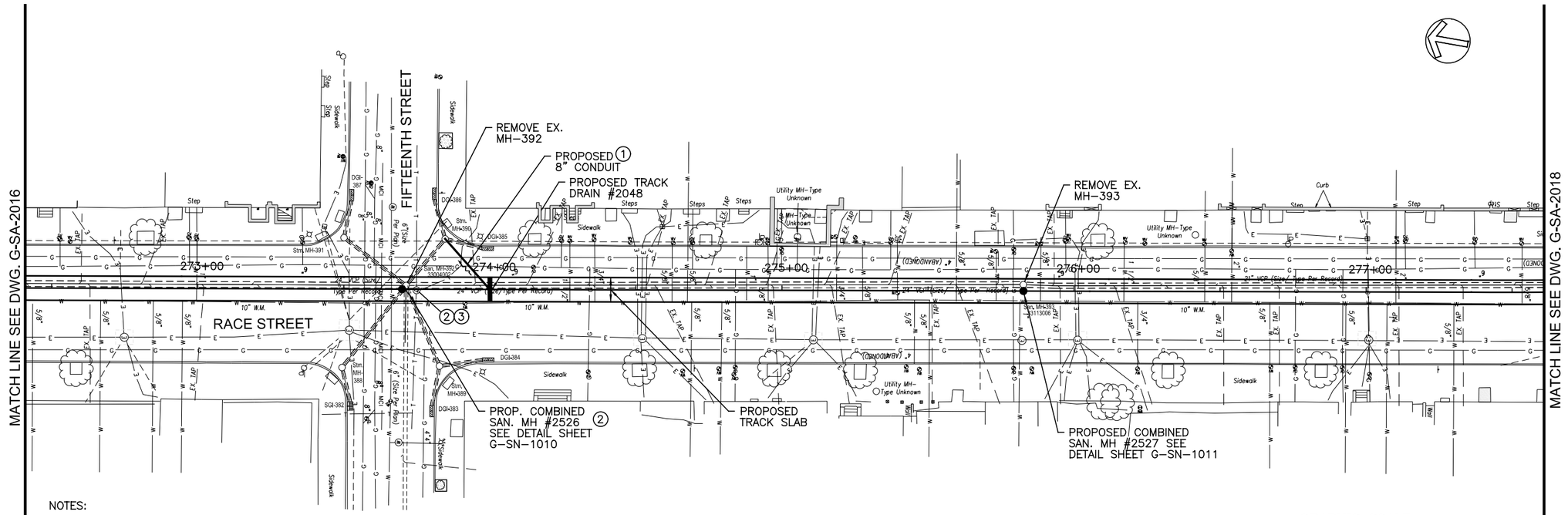

NOTES:

① FOR STORM DRAINAGE PROFILES, SEE SHEETS G-SA-2023 THROUGH G-SA-2031.

② CONTRACTOR SHALL COORDINATE WITH CINCINNATI BELL TO MAINTAIN EXISTING TELEPHONE VAULT AND FACILITIES THROUGHOUT CONSTRUCTION.

③ PRIOR TO CONSTRUCTION, CONTRACTOR TO FIELD VERIFY LIMITS OF EXISTING TELEPHONE VAULT AND NOTIFY ENGINEER IF THE VAULT IS FOUND TO BE IN CONFLICT WITH PROPOSED COMBINED SANITARY MANHOLE.

GRAPHIC SCALE

20 0 20 40 80

(IN FEET)
1 inch = 20 ft. Full Size
1 inch = 40 ft. Half Size

590 580 570 560 550 540 530 520 510 500

INTENTIONALLY LEFT BLANK

CAUTION UNDERGROUND UTILITIES
2 WORKING DAYS
BEFORE YOU DIG
CALL 1-800-362-2764
OHIO UTILITY PROTECTION SERVICE
CALL NON-SERVICE FACILITY OWNERS DIRECT

DEPARTMENT OF TRANSPORTATION & ENGINEERING CITY OF CINCINNATI OHIO

CONTRACT DRAWING

PRINTS NOT BEARING THIS STAMP WERE MADE PRIOR TO ADVERTISING AND ARE TO BE CONSIDERED OBSOLETE FOR CONTRACT PURPOSES.

Department of Transportation and Engineering

City of Cincinnati
801 Plum Street
Cincinnati, Ohio 45202

CINCINNATI STREETCAR OVER THE RHINE

COMBINED SANITARY AND STORM MODIFICATIONS
RACE STREET
STA 272+40 TO STA 277+60

Revisions

No.				

Drawn by DLB	Date 07/02/12	Designed by SKR	Date 07/02/12
Checked by DCJ	Date 07/02/12	Reviewed by JTB	Date 07/12/12

Consultant

PB HDR

File Number

ACC No. 23126

G-SA-2017

DOTE_Mono_PDF_Half.pltcfg
c:\pwworking\pitt\d0309045\S_G-SA-2017.dgn
Wednesday, July 11, 2012 11:19:27 AM

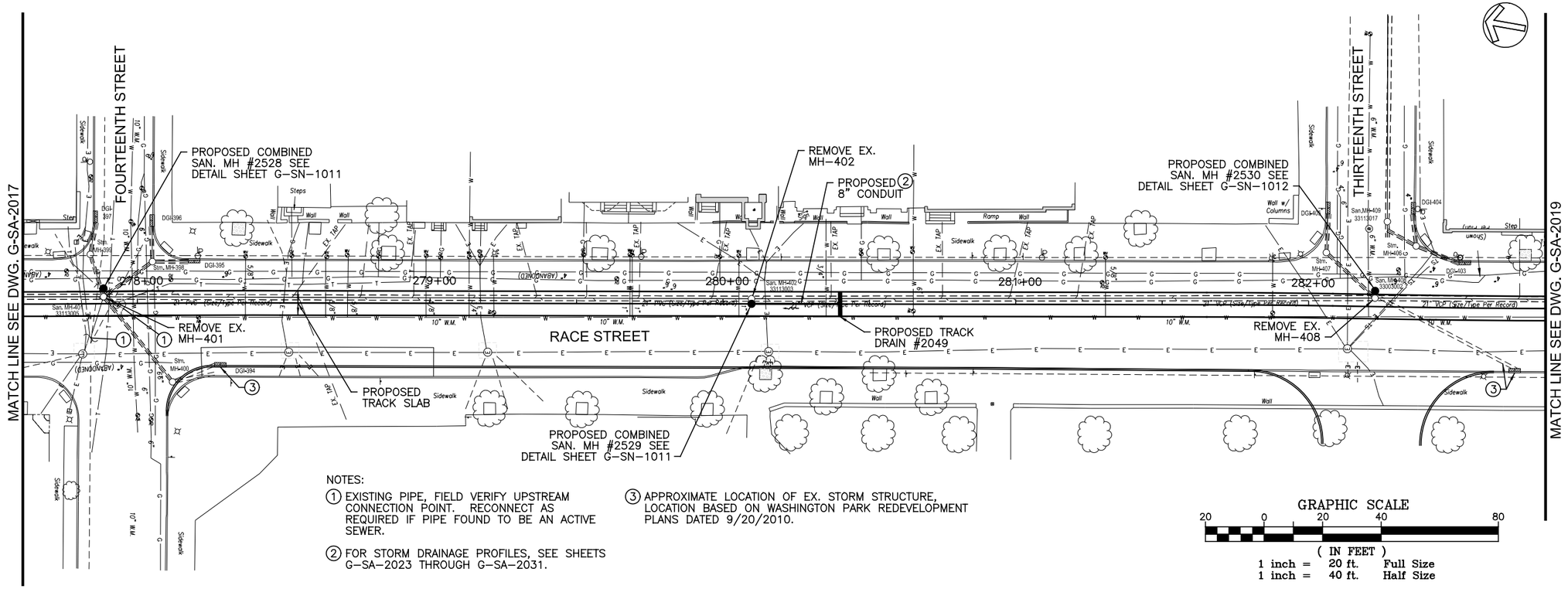

NOTES:

1. EXISTING PIPE, FIELD VERIFY UPSTREAM CONNECTION POINT. RECONNECT AS REQUIRED IF PIPE FOUND TO BE AN ACTIVE SEWER.
2. FOR STORM DRAINAGE PROFILES, SEE SHEETS G-SA-2023 THROUGH G-SA-2031.
3. APPROXIMATE LOCATION OF EX. STORM STRUCTURE, LOCATION BASED ON WASHINGTON PARK REDEVELOPMENT PLANS DATED 9/20/2010.

590 580 570 560 550 540 530 520 510 500

INTENTIONALLY LEFT BLANK

CAUTION UNDERGROUND UTILITIES
2 WORKING DAYS
BEFORE YOU DIG
CALL 1-800-362-2764
OHIO UTILITY PROTECTION SERVICE
CALL NON-SERVICE FACILITY
OWNERS DIRECT

DOTE_Mono_PDF_Half.pltcfg
c:\pwworking\pitt\d0309045\S_G-SA-2018.dgn
Wednesday, July 11, 2012 11:19:39 AM

CONTRACT DRAWING

PRINTS NOT BEARING THIS STAMP WERE MADE PRIOR TO ADVERTISING FOR BIDS AND ARE TO BE CONSIDERED OBSOLETE FOR CONTRACT PURPOSES.

Department of Transportation and Engineering

City of Cincinnati
801 Plum Street
Cincinnati, Ohio 45202

CINCINNATI STREETCAR
OVER THE RHINE

COMBINED SANITARY AND STORM MODIFICATIONS
RACE STREET
STA 277+60 TO STA 282+80

Revisions

No.				

Drawn by DLB	Date 07/02/12
Designed by SKR	Date 07/02/12
Checked by DCJ	Date 07/02/12
Reviewed by JTB	Date 07/12/12

Consultant

PB HDR

File Number

ACC No.
23126

G-SA-2018

6200

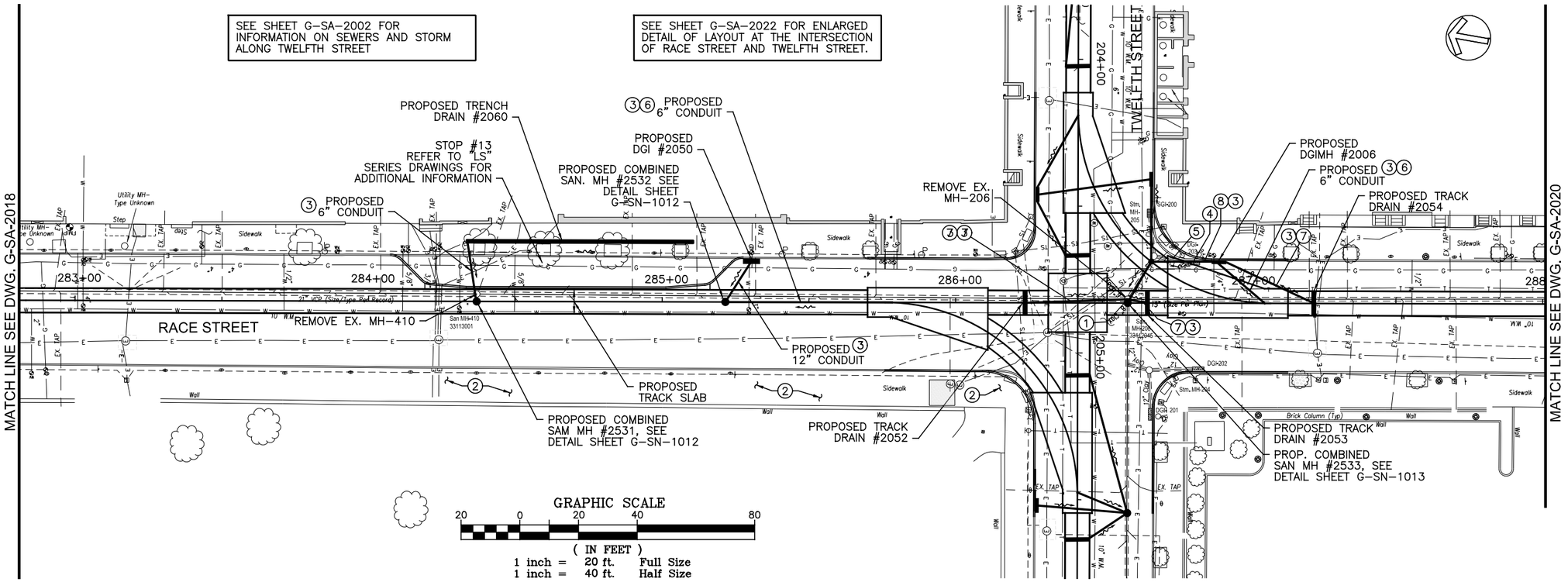

NOTES:

1. EXISTING PIPE, FIELD VERIFY UPSTREAM CONNECTION POINT. RECONNECT AS REQUIRED IF PIPE FOUND TO BE AN ACTIVE SEWER.
2. DO NOT DISTURB EXISTING CURB OR SIDEWALK AT WASHINGTON PARK. CONTRACTOR IS RESPONSIBLE FOR REPAIR OF ANY DAMAGES TO THE CURB OR SIDEWALK THAT OCCUR DURING CONSTRUCTION.
3. FOR STORM DRAINAGE PROFILES, SEE SHEETS G-SA-2023 THROUGH G-SA-2031.
4. REMOVE EXISTING STORM INLET
5. REMOVE EXISTING CONDUIT
6. 6" OUTLET PIPE TO DRAIN TURNOUT SWITCH MOTOR AND OTHER MECHANISMS. COORDINATE INVERT AND LOCATION WITH TURNOUT INSTALLATION AND PROVIDE ALL BENDS, FITTINGS, ATTACHMENTS AND BRANCHES TO COMBINE INTO (1) 6" OUTLET PIPE.
7. PROPOSED 8" CONDUIT
8. PROPOSED 12" CONDUIT

590 580 570 560 550 540 530 520 510 500

INTENTIONALLY LEFT BLANK

CAUTION UNDERGROUND UTILITIES
2 WORKING DAYS
BEFORE YOU DIG
CALL 1-800-362-2764
OHIO UTILITY PROTECTION SERVICE
CALL NON-SERVICE FACILITY OWNERS DIRECT

DOTE_Mono_PDF_Half.pltcfg
c:\pwworking\pitt\d0309045\S_G-SA-2019.dgn
Wednesday, July 11, 2012 11:19:51 AM

CITY OF CINCINNATI DEPARTMENT OF TRANSPORTATION & ENGINEERING OHIO

CONTRACT DRAWING

PRINTS NOT BEARING THIS STAMP WERE MADE PRIOR TO ADVERTISING AND ARE TO BE CONSIDERED OBSOLETE FOR CONTRACT PURPOSES.

Department of Transportation and Engineering

City of Cincinnati
801 Plum Street
Cincinnati, Ohio 45202

CINCINNATI STREETCAR
OVER THE RHINE
COMBINED SANITARY AND STORM MODIFICATIONS
RACE STREET
STA 282+80 TO STA 288+00

Revisions

No.				

Drawn by DJB	Date 07/02/12
Designed by SKR	Date 07/02/12
Checked by DCJ	Date 07/02/12
Reviewed by JTB	Date 07/12/12

Consultant

PB HDR

File Number

ACC No.
23126

G-SA-2019

6200

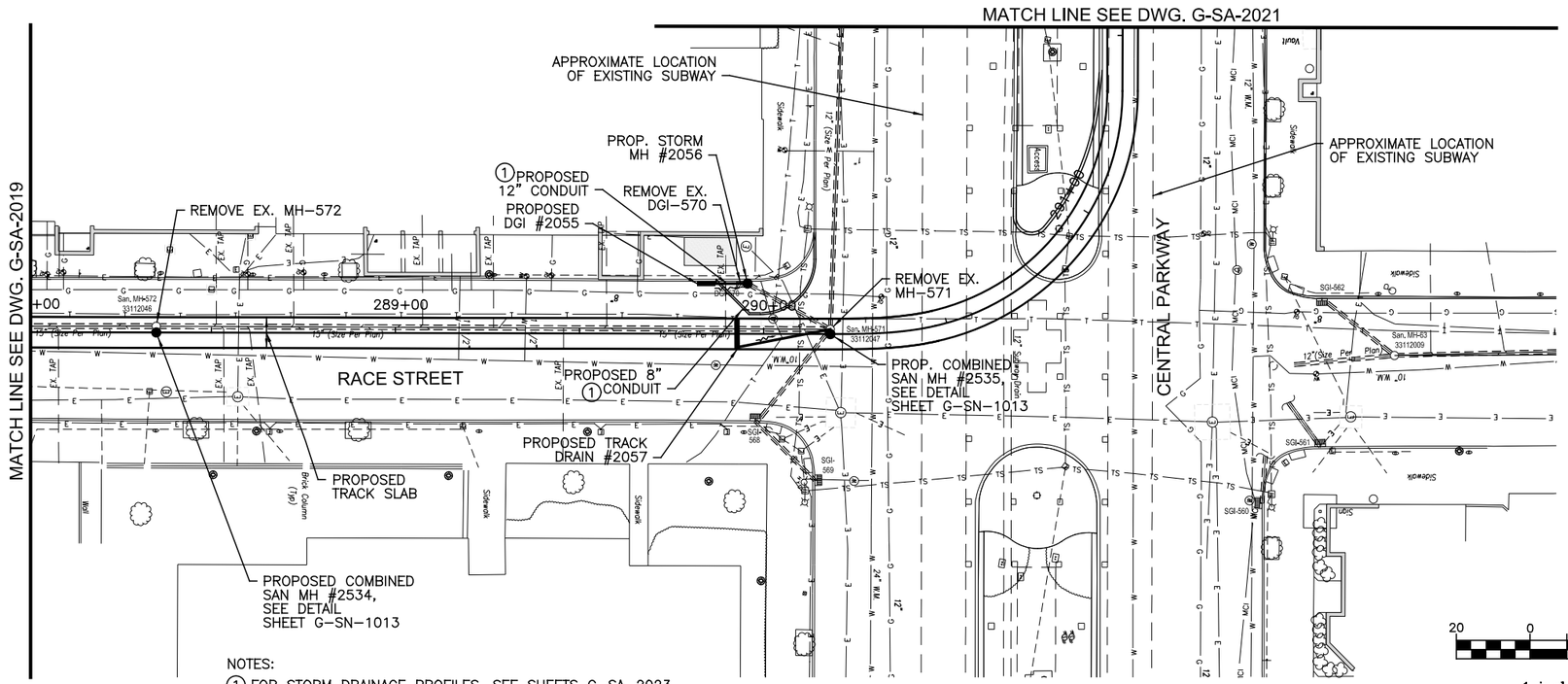

NOTES:

1 FOR STORM DRAINAGE PROFILES, SEE SHEETS G-SA-2023 THROUGH G-SA-2031.

GRAPHIC SCALE

20 0 20 40 80

(IN FEET)
1 inch = 20 ft. Full Size
1 inch = 40 ft. Half Size

590 580 570 560 550 540 530 520 510 500

INTENTIONALLY LEFT BLANK

CAUTION UNDERGROUND UTILITIES
2 WORKING DAYS
BEFORE YOU DIG
CALL 1-800-362-2764
OHIO UTILITY PROTECTION SERVICE
CALL NON-SERVICE FACILITY OWNERS DIRECT

DOTE_Mono_PDF_Half.pltcfg
c:\pwworking\pitt\d0309045\S_G-SA-2020.dgn
Wednesday, July 11, 2012 11:20:18:20:43 AM

CONTRACT DRAWING

PRINTS NOT BEARING THIS STAMP WERE MADE PRIOR TO ADVERTISING BID AND ARE TO BE CONSIDERED OBSOLETE FOR CONTRACT PURPOSES.

Department of Transportation and Engineering

City of Cincinnati
City Hall
801 Plum Street
Cincinnati, Ohio 45202

CINCINNATI STREETCAR OVER THE RHINE

COMBINED SANITARY AND STORM MODIFICATIONS
RACE STREET
STA 288+00 TO STA 291+50

Revisions
No.

	Date
Drawn by DLB	07/02/12
Designed by SKR	07/02/12
Checked by DCJ	07/02/12
Reviewed by JTB	07/12/12

Consultant

PB HDR

File Number

ACC No.
23126

G-SA-2020

6200

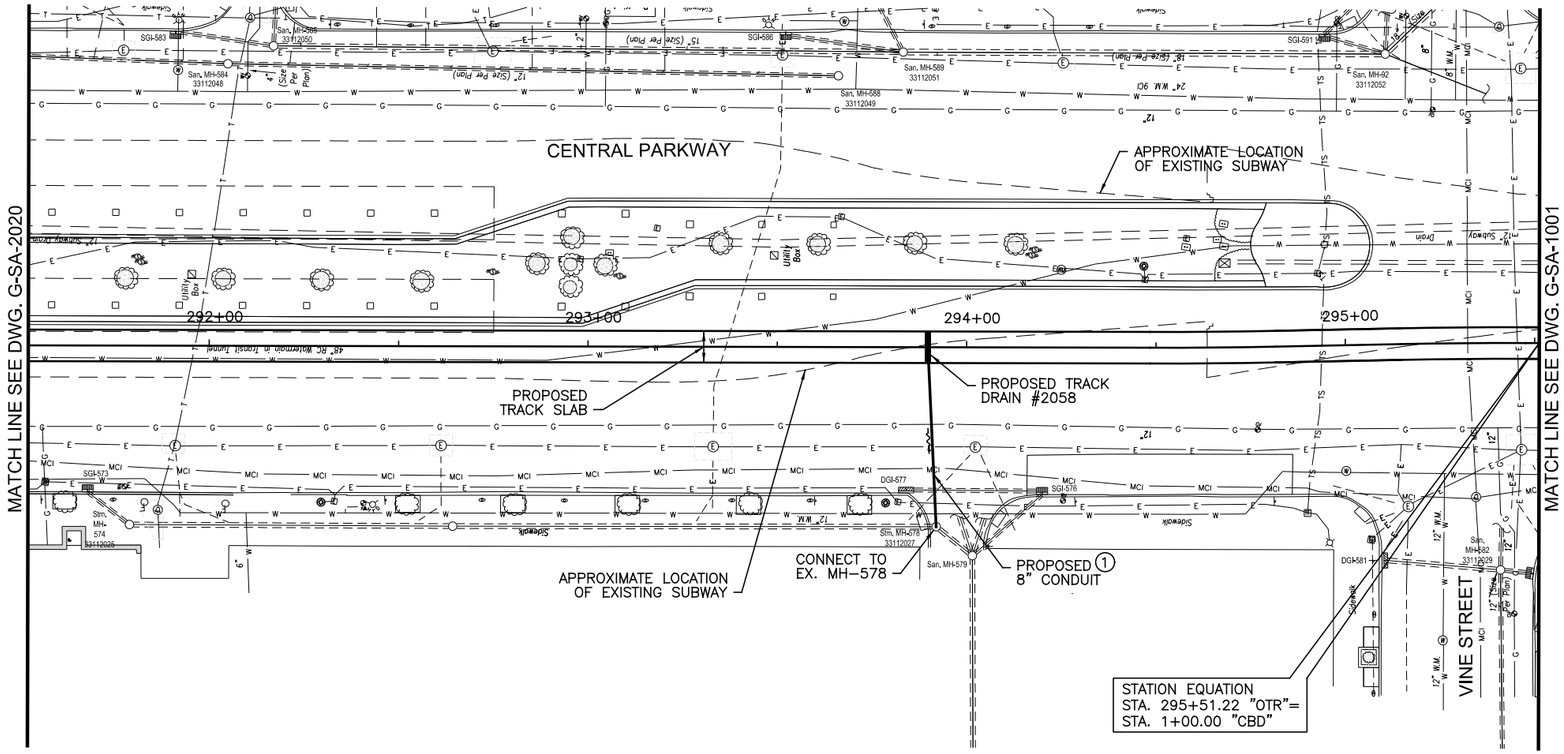

NOTES:

1. FOR STORM DRAINAGE PROFILES, SEE SHEETS G-SA-2023 THROUGH G-SA-2031.

GRAPHIC SCALE

20 0 20 40 80

(IN FEET)
1 inch = 20 ft. Full Size
1 inch = 40 ft. Half Size

590 580 570 560 550 540 530 520 510 500

INTENTIONALLY LEFT BLANK

CAUTION UNDERGROUND UTILITIES
2 WORKING DAYS
BEFORE YOU DIG
CALL 1-800-362-2764
OHIO UTILITY PROTECTION SERVICE
CALL NON-SERVICE FACILITY
OWNERS DIRECT

CITY OF CINCINNATI DEPARTMENT OF TRANSPORTATION & ENGINEERING OHIO

CONTRACT DRAWING

PRINTS NOT BEARING THIS STAMP WERE MADE PRIOR TO ADVERTISING FOR BIDS AND ARE TO BE CONSIDERED OBSOLETE FOR CONTRACT PURPOSES.

Department of Transportation and Engineering

City of Cincinnati
City Hall
801 Plum Street
Cincinnati, Ohio 45202

CINCINNATI STREETCAR OVER THE RHINE

COMBINED SANITARY AND STORM MODIFICATIONS
CENTRAL PARKWAY
STA 291+50 TO STA 295+51.22

Revisions

No.			

Drawn by DLB	Date 07/02/12	Designed by SKR	Date 07/02/12
Checked by DCJ	Date 07/02/12	Reviewed by JTB	Date 07/12/12

Consultant

PB HDR

File Number

ACC No. 23126

G-SA-2021

DOTE_Mono_PDF_Half.pltcfg
c:\pwworking\pitt\d0309045\S_G-SA-2021.dgn
Thursday, July 12, 2012 07:13:12 PM

NOTES:

1. EXISTING PIPE, FIELD VERIFY UPSTREAM CONNECTION POINT. RECONNECT AS REQUIRED IF PIPE FOUND TO BE AN ACTIVE SEWER.
2. FOR STORM DRAINAGE PROFILES, SEE SHEETS G–SA–2023 THROUGH G–SA–2031.
3. DO NOT DISTURB EXISTING CURB OR SIDEWALK AT WASHINGTON PARK. CONTRACTOR IS RESPONSIBLE FOR REPAIR OF ANY DAMAGES TO THE CURB OR SIDEWALK THAT OCCUR DURING CONSTRUCTION.
4. 6" OUTLET PIPE TO DRAIN TURNOUT SWITCH MOTOR AND OTHER MECHANISMS. COORDINATE INVERT AND LOCATION WITH TURNOUT INSTALLATION AND PROVIDE ALL BENDS, FITTINGS, ATTACHMENTS AND BRANCHES TO COMBINE INTO (1) 6" OUTLET PIPE.
5. PROPOSED 8" CONDUIT
6. PROPOSED 12" CONDUIT
7. REMOVE EX. STORM INLET
8. REMOVE EX. 12" CONDUIT
9. EXISTING MANHOLE TO BE REMOVED.

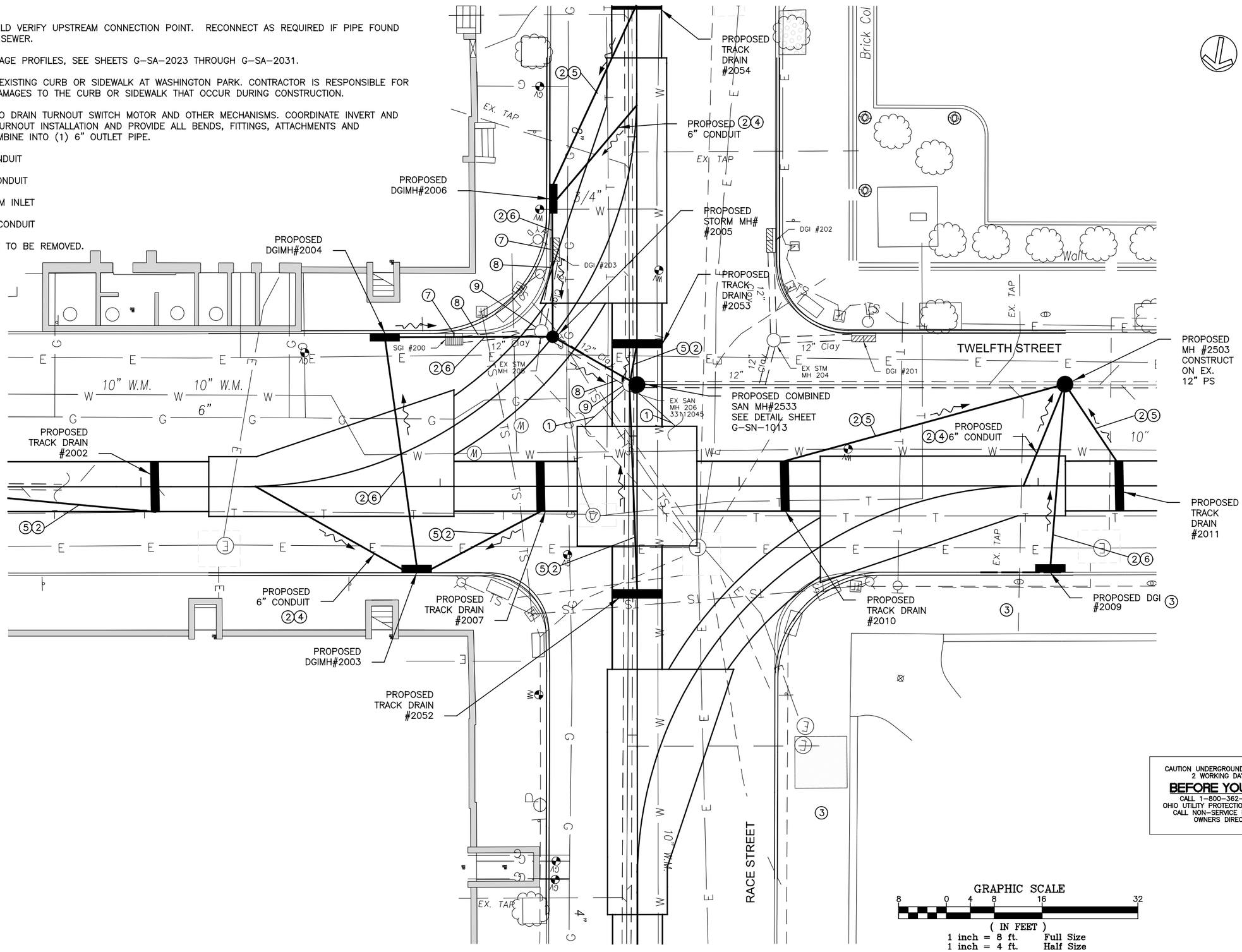

CAUTION UNDERGROUND UTILITIES
2 WORKING DAYS
BEFORE YOU DIG
CALL 1–800–362–2764
OHIO UTILITY PROTECTION SERVICE
CALL NON–SERVICE FACILITY OWNERS DIRECT

DOTE_Mono_PDF_Half.pltcfg
c:\pwworking\pitt\d0309045\S_G-SA-2022.dgn
Wednesday, July 11, 2012 11:20:18 AM

CITY OF CINCINNATI DEPARTMENT OF TRANSPORTATION & ENGINEERING

CONTRACT DRAWING

PRINTS NOT BEARING THIS STAMP WERE MADE PRIOR TO ADVERTISING FOR BIDS AND ARE TO BE CONSIDERED OBSOLETE FOR CONTRACT PURPOSES.

Department of Transportation and Engineering

City of Cincinnati
City Hall
801 Plum Street
Cincinnati, Ohio 45202

CINCINNATI STREETCAR OVER THE RHINE

SANITARY AND STORM MODIFICATIONS
TWELFTH STREET/RACE STREET

Revisions

No.		

Drawn by DLB	Date 07/02/12
Designed by SKR	Date 07/02/12
Checked by DCJ	Date 07/02/12
Reviewed by JTB	Date 07/12/12

Consultant

PB HDR

File Number

ACC No. 23126

G-SA-2022

6200

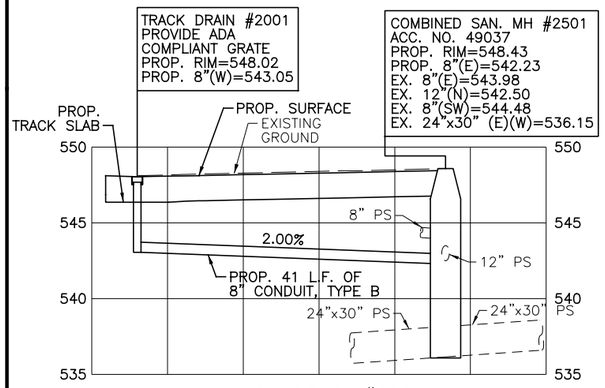

TRACK DRAIN #2001
STA. 200+56.14

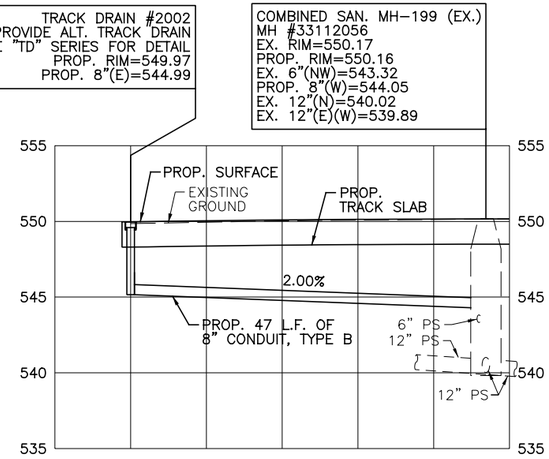

TRACK DRAIN #2002
STA. 204+02.32

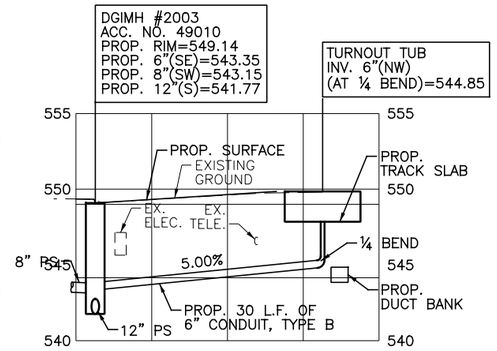

SWITCH THROW MECHANISM
(RACE AND TWELFTH STREET)
STA. 204+19.15

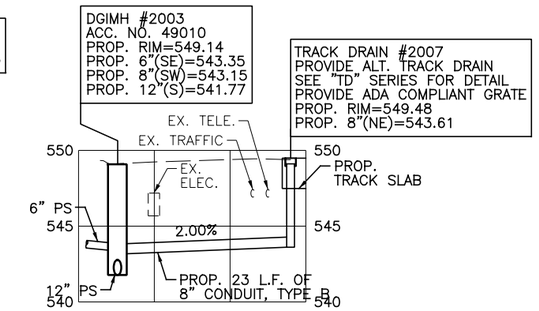

TRACK DRAIN #2007
STA. 204+66.79

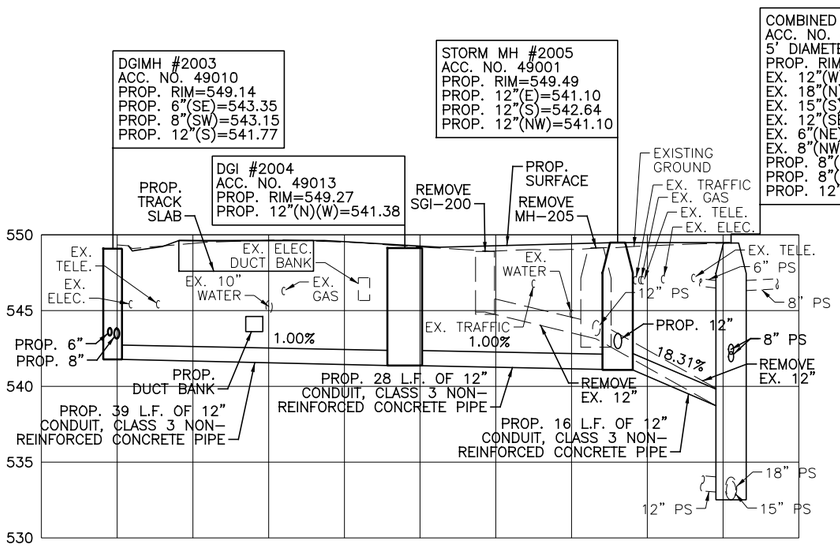

DGIMH #2003 STA. 204+46.05, 14.45' RT
DGI #2004 STA. 204+40.78, 25.56' LT
STORM MH #2005 STA. 286+66.60, 14.08' LT

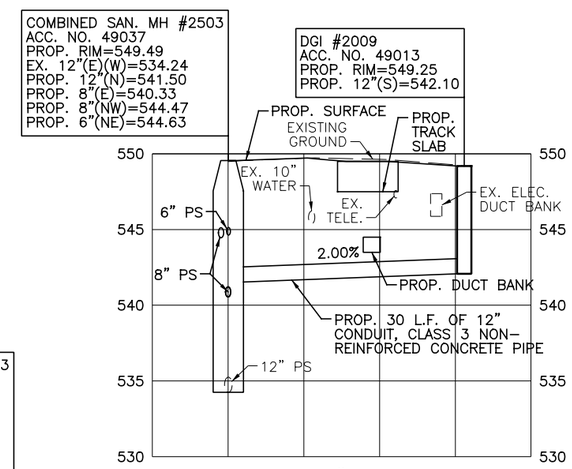

DGI #2009
STA. 205+52.00, 14.44' RT

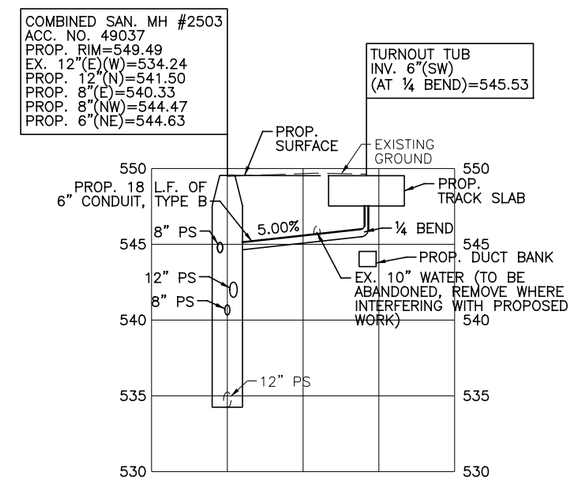

SWITCH THROW MECHANISM
(RACE STREET AND TWELFTH STREET)
STA. 205+47.55
COMBINED SAN. MH #2503
STA. 205+54.50, 17.00' LT

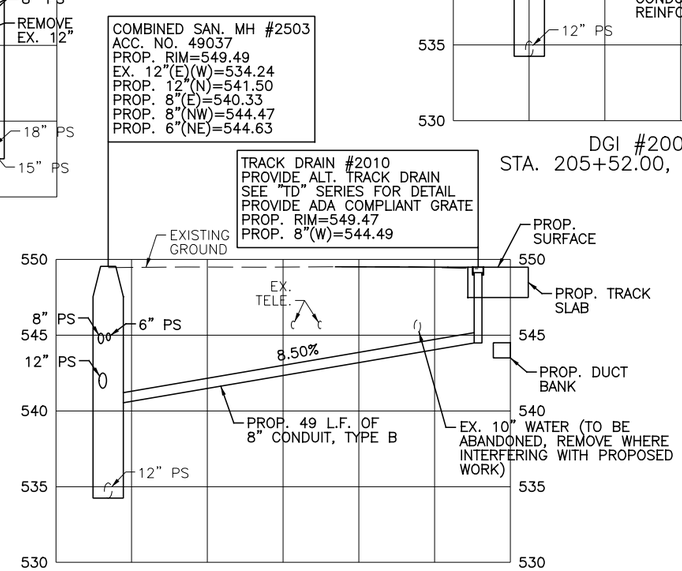

TRACK DRAIN #2010
STA. 205+07.64

STORM DRAINAGE NOTES:

1. TRENCH DRAIN STATIONING INDICATES LONGITUDINAL CENTER OF TRENCH DRAIN. REFER TO "LS" SERIES DRAWINGS FOR LOCATION AND TOP ELEVATION.
2. APPROXIMATE LOCATION AND ELEVATION OF UNDERGROUND UTILITIES HAS BEEN PROVIDED FOR CONVENIENCE. THE CONTRACTOR IS RESPONSIBLE FOR VERIFICATION OF EXISTING AND/OR PROPOSED UTILITY LOCATIONS WHETHER OR NOT THESE UTILITIES ARE SHOWN ON THE PLANS.
3. REFER TO SHEETS G-SN-1001 THROUGH G-SN-1013 FOR STORM DRAINAGE AND COMBINED SEWER DETAILS AND NOTES.
4. PROVIDE DURA SLOPE PRE-SLOPED TRENCH DRAIN SYSTEM AS MANUFACTURED BY NDS INC. OR APPROVED EQUAL. PROVIDE STANDARD MANUFACTURERS SLOPED TRENCH SECTIONS BASED ON INDICATED OUTLET INVERT ELEVATIONS. PROVIDE DS-232, ADA COMPLIANT, DUCTILE IRON GRATE. PROVIDE "BULKHEAD" END SECTION WITH 4" OUTLET AND 4" TO 6" ADAPTOR. INSTALL SYSTEM IN STRICT ACCORDANCE WITH MANUFACTURER'S RECOMMENDATIONS.
5. REFEER TO "TD" SERIES DRAWINGS FOR TRACK DRAIN DETAILS.

GRAPHIC SCALE
10 0 10 20 40
(IN FEET)
1 inch = 10 ft. Full Size
1 inch = 20 ft. Half Size

CAUTION UNDERGROUND UTILITIES
2 WORKING DAYS
BEFORE YOU DIG
CALL 1-800-362-2764
OHIO UTILITY PROTECTION SERVICE
CALL NON-SERVICE FACILITY
OWNERS DIRECT

CONTRACT DRAWING
PRINTS NOT BEARING THIS STAMP WERE MADE PRIOR TO ADVERTISING FOR BIDS AND ARE TO BE CONSIDERED OBSOLETE FOR CONTRACT PURPOSES.

Department of Transportation and Engineering
City of Cincinnati
City Hall
801 Plum Street
Cincinnati, Ohio 45202

CINCINNATI STREETCAR OVER THE RHINE

DRAINAGE PROFILES

Revisions
No.

	Date
Drawn by WMG	07/02/12
Designed by RGD	07/02/12
Checked by RGD	07/02/12
Reviewed by JTB	07/12/12

Consultant
PB HDR

File Number
ACC No.
23126

G-SA-2023

DOTE_Mono_PDF_Half.pltcfg
c:\pwworking\pitt\d0309045\S_G-SA-2023.dgn
Wednesday, July 11, 2012 12:14:29 PM

6200

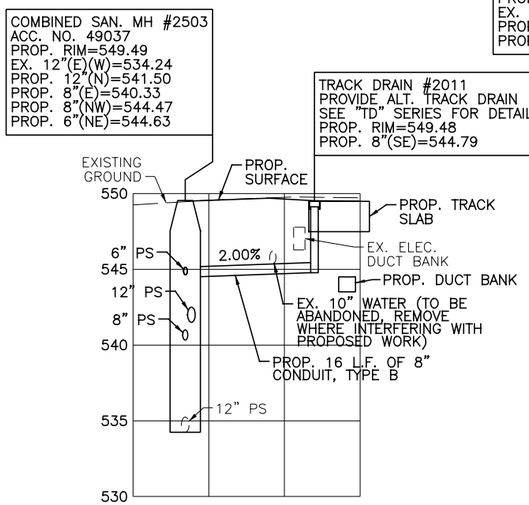

TRACK DRAIN #2011
STA. 205+63.56

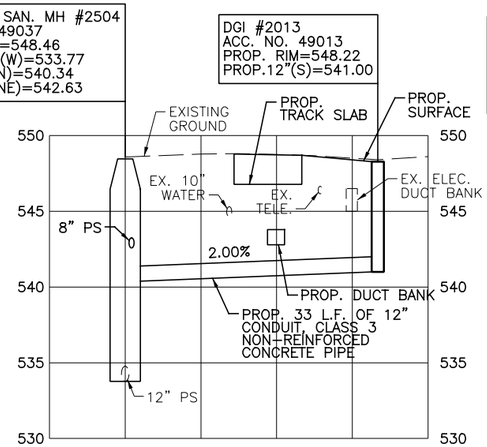

DGI #2013
STA. 208+61.44, 14.36' RT
COMBINED SAN. MH #2504
STA. 208+74.00, 17.50' LT

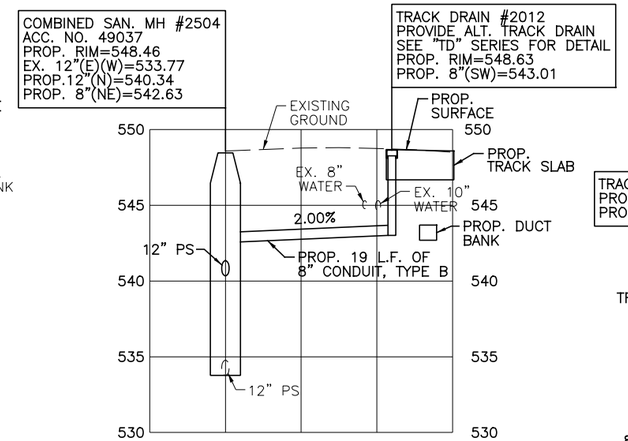

TRACK DRAIN #2012
STA. 208+60.51

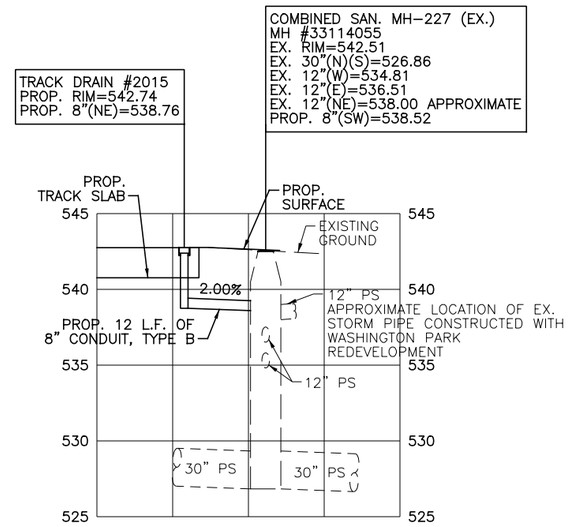

TRACK DRAIN #2015
STA. 214+26.02

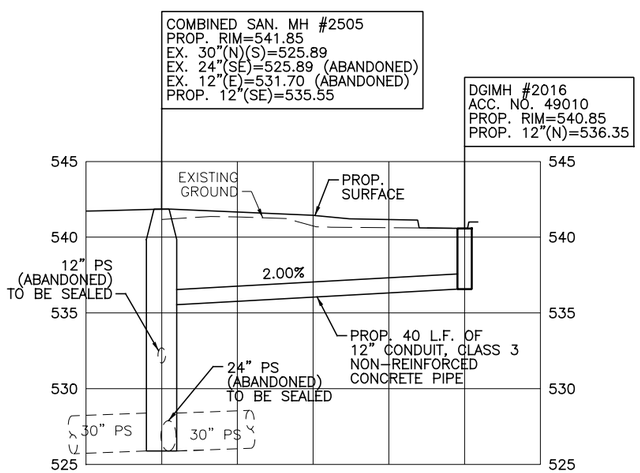

DGIMH #2016
STA. 215+95.50, 13.85' RT

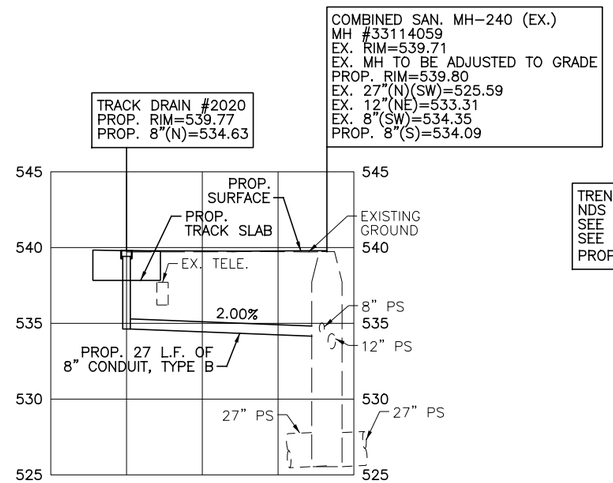

TRACK DRAIN #2020
STA. 217+69.26

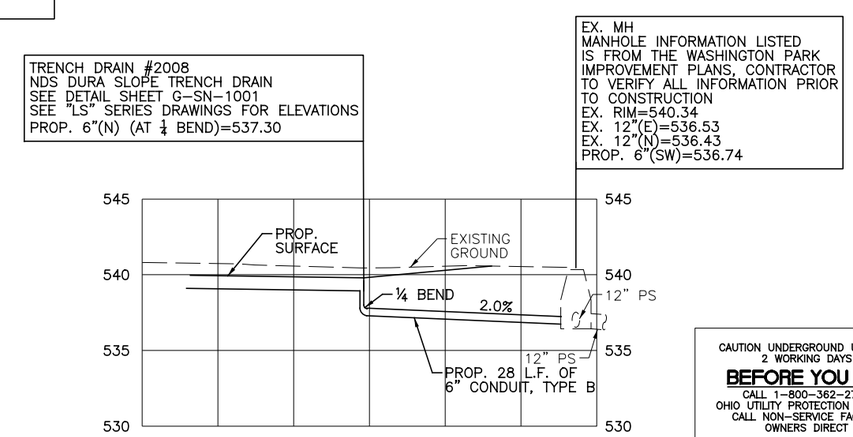

TRENCH DRAIN #2008
STA. 216+64.01, 17.47' RT

STORM DRAINAGE NOTES:

1. TRENCH DRAIN STATIONING INDICATES LONGITUDINAL CENTER OF TRENCH DRAIN. REFER TO "LS" SERIES DRAWINGS FOR LOCATION AND TOP ELEVATION.
2. APPROXIMATE LOCATION AND ELEVATION OF UNDERGROUND UTILITIES HAS BEEN PROVIDED FOR CONVENIENCE. THE CONTRACTOR IS RESPONSIBLE FOR VERIFICATION OF EXISTING AND/OR PROPOSED UTILITY LOCATIONS WHETHER OR NOT THESE UTILITIES ARE SHOWN ON THE PLANS.
3. REFER TO SHEETS G-SN-1001 THROUGH G-SN-1013 FOR STORM DRAINAGE AND COMBINED SEWER DETAILS AND NOTES.
4. PROVIDE DURA SLOPE PRE-SLOPED TRENCH DRAIN SYSTEM AS MANUFACTURED BY NDS INC. OR APPROVED EQUAL. PROVIDE STANDARD MANUFACTURERS SLOPED TRENCH SECTIONS BASED ON INDICATED OUTLET INVERT ELEVATIONS. PROVIDE DS-232, ADA COMPLIANT, DUCTILE IRON GRATE. PROVIDE "BULKHEAD" END SECTION WITH 4" OUTLET AND 4" TO 6" ADAPTOR. INSTALL SYSTEM IN STRICT ACCORDANCE WITH MANUFACTURER'S RECOMMENDATIONS.
5. REFEER TO "TD" SERIES DRAWINGS FOR TRACK DRAIN DETAILS.

GRAPHIC SCALE
10 0 10 20 40
(IN FEET)
1 inch = 10 ft. Full Size
1 inch = 20 ft. Half Size

CAUTION UNDERGROUND UTILITIES
2 WORKING DAYS
BEFORE YOU DIG
CALL 1-800-362-2764
OHIO UTILITY PROTECTION SERVICE
CALL NON-SERVICE FACILITY OWNERS DIRECT

CONTRACT DRAWING
PRINTS NOT BEARING THIS STAMP WERE MADE PRIOR TO ADVERTISING BID AND ARE TO BE CONSIDERED OBSOLETE FOR CONTRACT PURPOSES.

Department of Transportation and Engineering
City of Cincinnati
City Hall
801 Plum Street
Cincinnati, Ohio 45202

CINCINNATI STREETCAR OVER THE RHINE

DRAINAGE PROFILES

Revisions
No.

Drawn by WMG	Date 07/02/12	
Designed by RGD	Date 07/02/12	
Checked by RGD	Date 07/02/12	
Reviewed by JTB	Date 07/12/12	

Consultant
PB HDR

File Number
ACC No.
23126

G-SA-2024

DOTE_Mono_PDF_Half.pltcfg
c:\pwworking\pitt\d0309045\S_G-SA-2024.dgn
Thursday, July 12, 2012 07:13:27 PM

6200

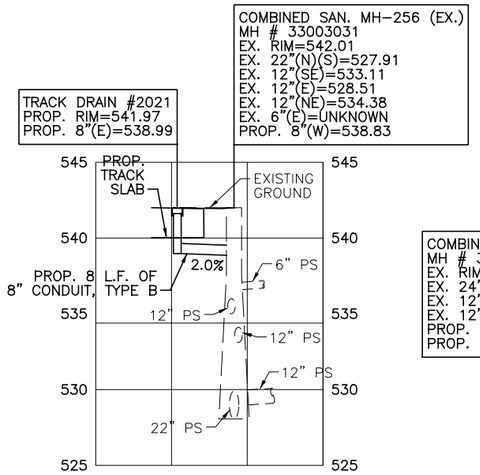

TRACK DRAIN #2021
STA. 221+89.16

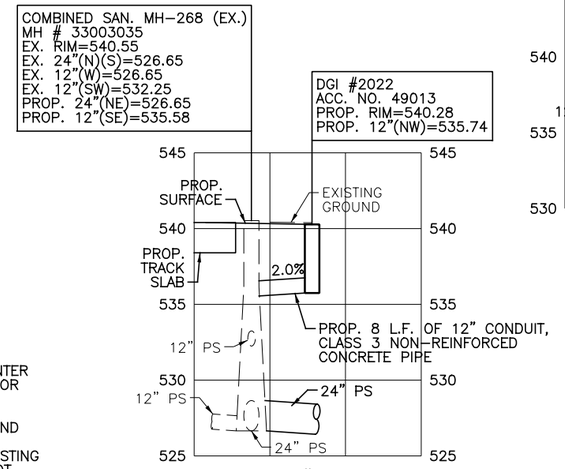

DGI #2022
STA. 227+00.67, 13.66' RT

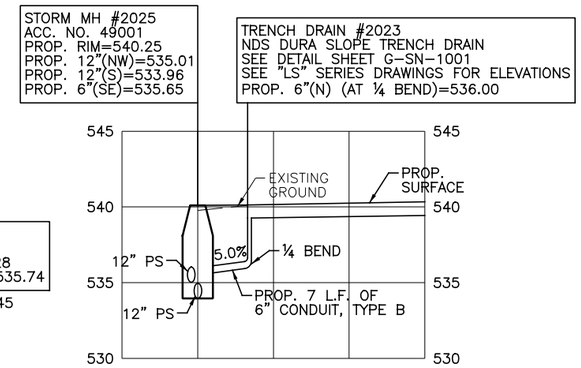

TRENCH DRAIN #2023
STA. 227+53.74, 16.77' RT
STORM MH #2025
STA. 288+02.00, 11.11' RT

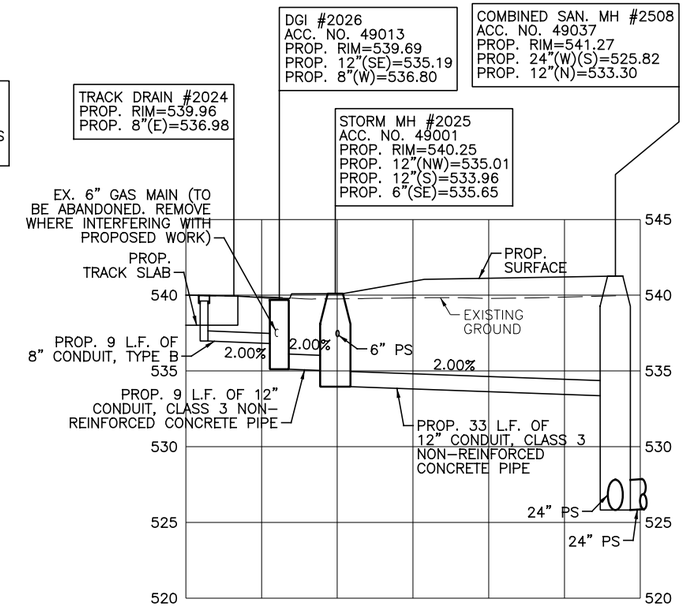

TRACK DRAIN #2024
STA. 228+11.95
DGI #2026
STA. 228+10.35, 9.25' RT

STORM DRAINAGE NOTES:

1. TRENCH DRAIN STATIONING INDICATES LONGITUDINAL CENTER OF TRENCH DRAIN. REFER TO "LS" SERIES DRAWINGS FOR LOCATION AND TOP ELEVATION.
2. APPROXIMATE LOCATION AND ELEVATION OF UNDERGROUND UTILITIES HAS BEEN PROVIDED FOR CONVENIENCE. THE CONTRACTOR IS RESPONSIBLE FOR VERIFICATION OF EXISTING AND/OR PROPOSED UTILITY LOCATIONS WHETHER OR NOT THESE UTILITIES ARE SHOWN ON THE PLANS.
3. REFER TO SHEETS G-SN-1001 THROUGH G-SN-1013 FOR STORM DRAINAGE AND COMBINED SEWER DETAILS AND NOTES.
4. PROVIDE DURA SLOPE PRE-SLOPED TRENCH DRAIN SYSTEM AS MANUFACTURED BY NDS INC. OR APPROVED EQUAL. PROVIDE STANDARD MANUFACTURERS SLOPED TRENCH SECTIONS BASED ON INDICATED OUTLET INVERT ELEVATIONS. PROVIDE DS-232, ADA COMPLIANT, DUCTILE IRON GRATE. PROVIDE "BULKHEAD" END SECTION WITH 4" OUTLET AND 4" TO 6" ADAPTOR. INSTALL SYSTEM IN STRICT ACCORDANCE WITH MANUFACTURER'S RECOMMENDATIONS.
5. REFEER TO "TD" SERIES DRAWINGS FOR TRACK DRAIN DETAILS.

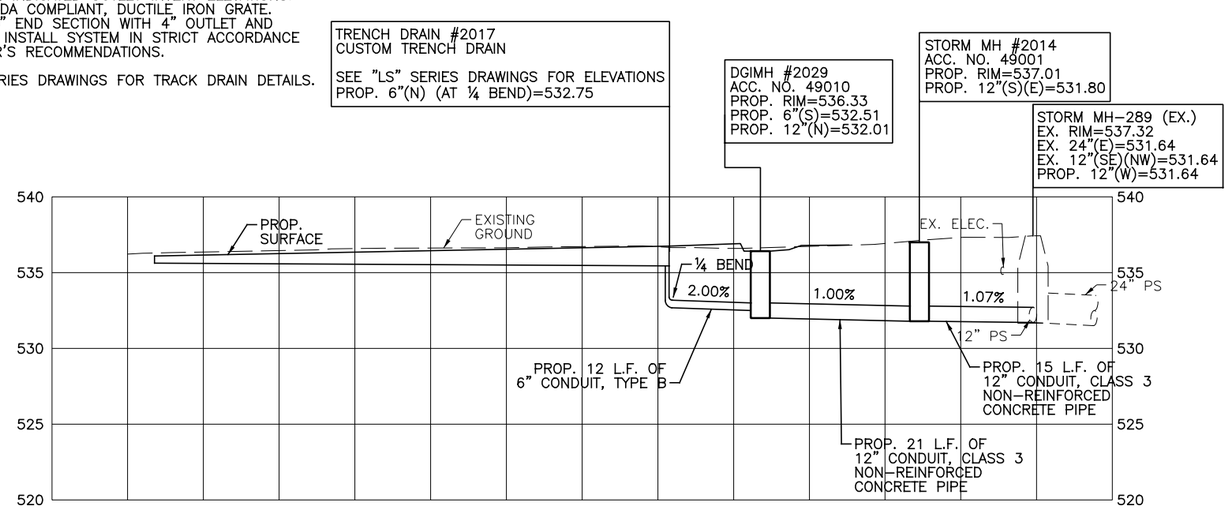

TRENCH DRAIN #2017
STA. 235+40.41, 20.11' RT
DGIMH #2029
STA. 235+82.35, 13.10' RT
STORM MH #2014
STA. 236+02.46, 17.89' RT

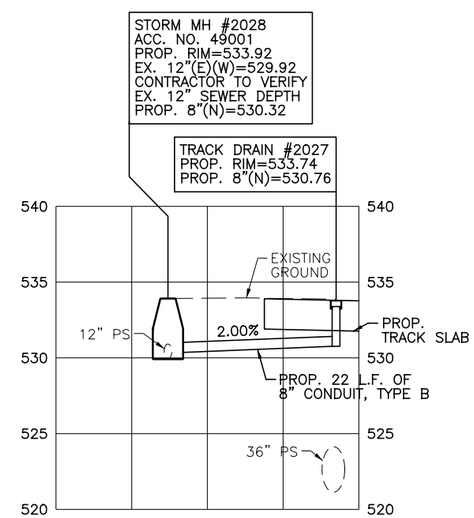

STORM MH #2028
STA. 232+12.38, 9.93' LT
TRACK DRAIN #2027
STA. 232+32.23

GRAPHIC SCALE
10 0 10 20 40
(IN FEET)
1 inch = 10 ft. Full Size
1 inch = 20 ft. Half Size

CAUTION UNDERGROUND UTILITIES
2 WORKING DAYS
BEFORE YOU DIG
CALL 1-800-362-2764
OHIO UTILITY PROTECTION SERVICE
CALL NON-SERVICE FACILITY OWNERS DIRECT

DEPARTMENT OF TRANSPORTATION & ENGINEERING CITY OF CINCINNATI OHIO

CONTRACT DRAWING

PRINTS NOT BEARING THIS STAMP WERE MADE PRIOR TO ADVERTISING FOR BIDS AND ARE CONSIDERED OBSOLETE FOR CONTRACT PURPOSES.

Department of Transportation and Engineering

City of Cincinnati
City Hall
801 Plum Street
Cincinnati, Ohio 45202

CINCINNATI STREETCAR OVER THE RHINE

DRAINAGE PROFILES

Revisions
No.

Date 07/02/12
Date 07/02/12
Date 07/02/12
Date 07/12/12

Drawn by WMG
Designed by RGD
Checked by RGD
Reviewed by JTB

Consultant

PB HDR

File Number

ACC No.
23126

G-SA-2025

DOTE_Mono_PDF_Half.pltcfg
c:\pwworking\pitt\d0309045\S_G-SA-2025.dgn
Thursday, July 12, 2012 07:13:49 PM WO PM

6200

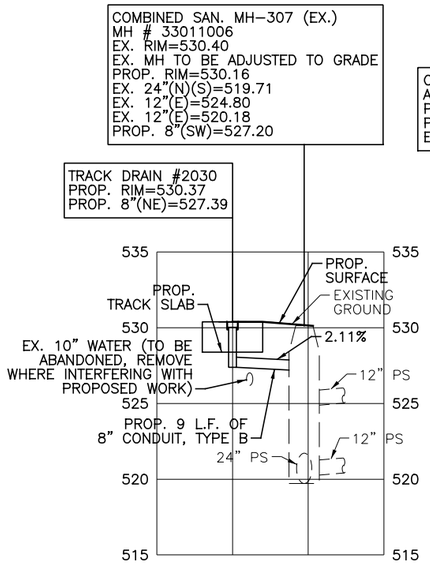

TRACK DRAIN #2030
STA. 242+05.00

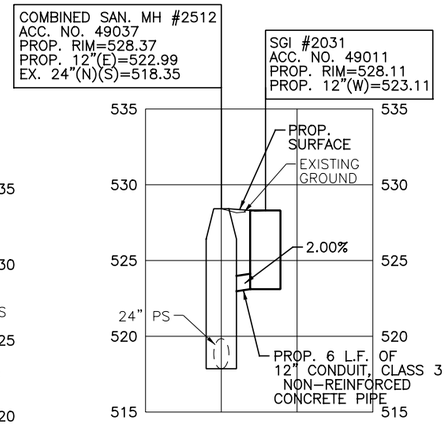

SGI #2031
STA. 243+18.40, 13.90' RT
COMBINED SAN. MH #2512
STA. 243+15.94, 7.28' RT

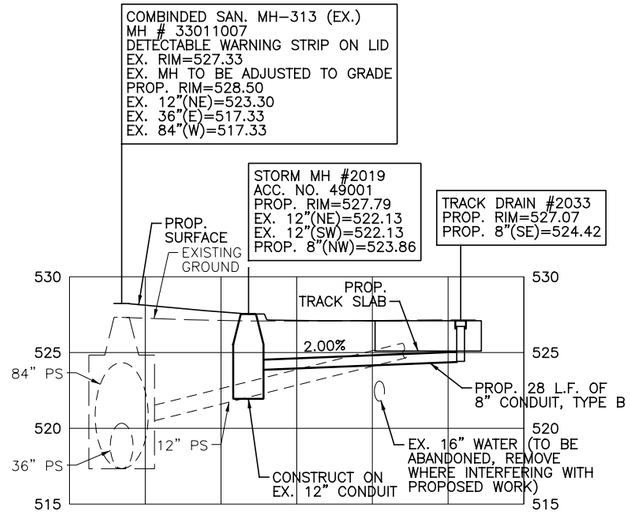

TRACK DRAIN #2033
STA. 244+41.33
STORM MH #2019
STA. 244+14.75, 10.14' RT

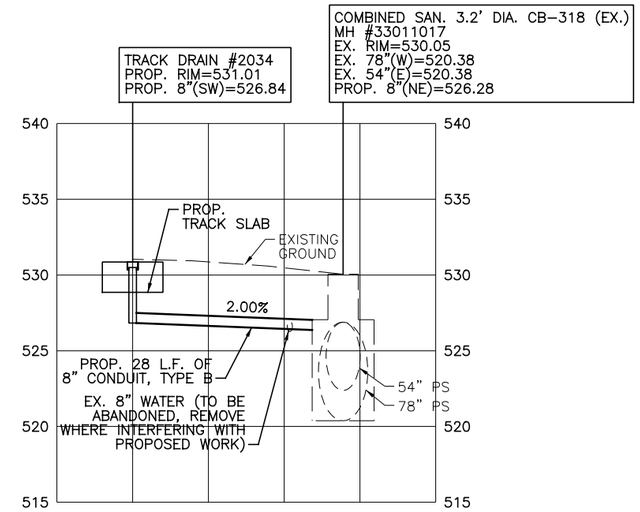

TRACK DRAIN #2034
STA. 246+42.07

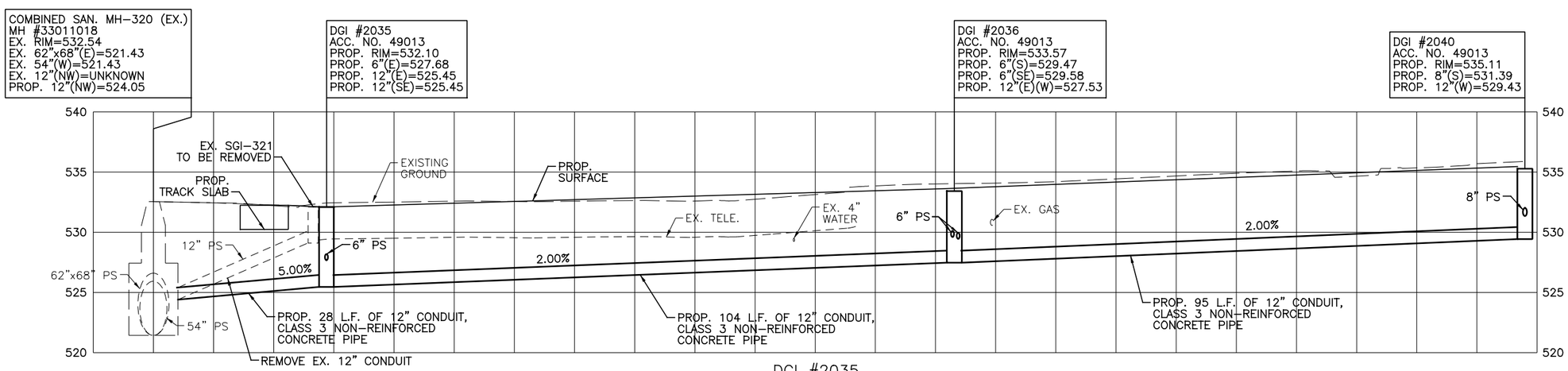

DGI #2035
STA. 247+11.13, 7.49' LT
DGI #2036
STA. 248+15.51, 7.50' LT
DGI #2040
STA. 249+10.30, 7.50' LT

STORM DRAINAGE NOTES:

1. TRENCH DRAIN STATIONING INDICATES LONGITUDINAL CENTER OF TRENCH DRAIN. REFER TO "LS" SERIES DRAWINGS FOR LOCATION AND TOP ELEVATION.
2. APPROXIMATE LOCATION AND ELEVATION OF UNDERGROUND UTILITIES HAS BEEN PROVIDED FOR CONVENIENCE. THE CONTRACTOR IS RESPONSIBLE FOR VERIFICATION OF EXISTING AND/OR PROPOSED UTILITY LOCATIONS WHETHER OR NOT THESE UTILITIES ARE SHOWN ON THE PLANS.
3. REFER TO SHEETS G-SN-1001 THROUGH G-SN-1013 FOR STORM DRAINAGE AND COMBINED SEWER DETAILS AND NOTES.
4. PROVIDE DURA SLOPE PRE-SLOPED TRENCH DRAIN SYSTEM AS MANUFACTURED BY NDS INC. OR APPROVED EQUAL. PROVIDE STANDARD MANUFACTURERS SLOPED TRENCH SECTIONS BASED ON INDICATED OUTLET INVERT ELEVATIONS. PROVIDE DS-232, ADA COMPLIANT, DUCTILE IRON GRATE. PROVIDE "BULKHEAD" END SECTION WITH 4" OUTLET AND 4" TO 6" ADAPTOR. INSTALL SYSTEM IN STRICT ACCORDANCE WITH MANUFACTURER'S RECOMMENDATIONS.
5. REFEER TO "TD" SERIES DRAWINGS FOR TRACK DRAIN DETAILS.

GRAPHIC SCALE
10 0 10 20 40
(IN FEET)
1 inch = 10 ft. Full Size
1 inch = 20 ft. Half Size

CAUTION UNDERGROUND UTILITIES
2 WORKING DAYS
BEFORE YOU DIG
CALL 1-800-362-2764
OHIO UTILITY PROTECTION SERVICE
CALL NON-SERVICE FACILITY OWNERS DIRECT

DOTE_Mono_PDF_Half.pltcfg
c:\pwworking\pitt\d0309045\S_G-SA-2026.dgn
Wednesday, July 11, 2012 12:15:29 PM21 PM

CITY OF CINCINNATI DEPARTMENT OF TRANSPORTATION & ENGINEERING OHIO

CONTRACT DRAWING
PRINTS NOT BEARING THIS STAMP WERE MADE PRIOR TO ADVERTISING FOR BIDS AND ARE NOT CONSIDERED OBSOLETE FOR CONTRACT PURPOSES.

Department of Transportation and Engineering
City of Cincinnati
801 Plum Street
Cincinnati, Ohio 45202

CINCINNATI STREETCAR
OVER THE RHINE
DRAINAGE PROFILES

Revisions
No.

Date 07/02/12
Date 07/02/12
Date 07/02/12
Date 07/12/12

Drawn by CDR
Designed by SKR
Checked by SKR
Reviewed by JTB

Consultant
PB HDR

File Number

ACC No.
23126

G-SA-2026

6200

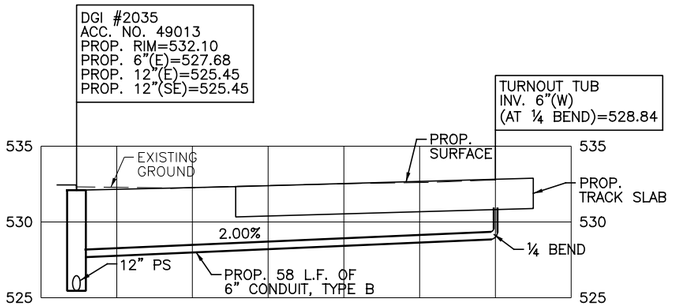

SWITCH THROW MECHANISM
(HENRY STREET)
STA. 247+68.50

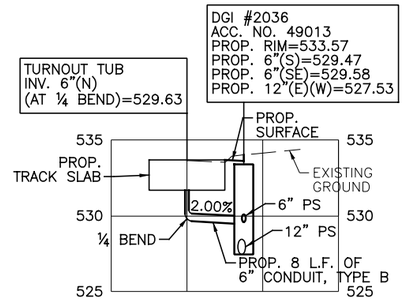

SWITCH THROW MECHANISM
(HENRY STREET)
STA. 248+15.51

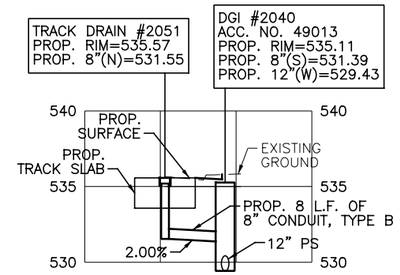

TRACK DRAIN #2051
STA. 249+07.46

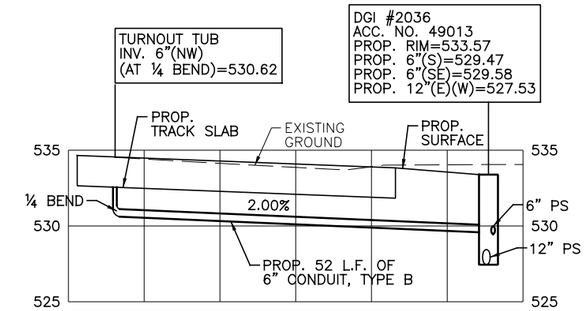

SWITCH THROW MECHANISM
(HENRY STREET)
STA. 248+66.89

STORM DRAINAGE NOTES:

1. TRENCH DRAIN STATIONING INDICATES LONGITUDINAL CENTER OF TRENCH DRAIN. REFER TO "LS" SERIES DRAWINGS FOR LOCATION AND TOP ELEVATION.
2. APPROXIMATE LOCATION AND ELEVATION OF UNDERGROUND UTILITIES HAS BEEN PROVIDED FOR CONVENIENCE. THE CONTRACTOR IS RESPONSIBLE FOR VERIFICATION OF EXISTING AND/OR PROPOSED UTILITY LOCATIONS WHETHER OR NOT THESE UTILITIES ARE SHOWN ON THE PLANS.
3. REFER TO SHEETS G-SN-1001 THROUGH G-SN-1013 FOR STORM DRAINAGE AND COMBINED SEWER DETAILS AND NOTES.
4. PROVIDE DURA SLOPE PRE-SLOPED TRENCH DRAIN SYSTEM AS MANUFACTURED BY NDS INC. OR APPROVED EQUAL. PROVIDE STANDARD MANUFACTURERS SLOPED TRENCH SECTIONS BASED ON INDICATED OUTLET INVERT ELEVATIONS. PROVIDE DS-232, ADA COMPLIANT, DUCTILE IRON GRATE. PROVIDE "BULKHEAD" END SECTION WITH 4" OUTLET AND 4" TO 6" ADAPTOR. INSTALL SYSTEM IN STRICT ACCORDANCE WITH MANUFACTURER'S RECOMMENDATIONS.
5. REFEER TO "TD" SERIES DRAWINGS FOR TRACK DRAIN DETAILS.

*SEE PROPOSED COMBINED SEWER RELOCATION PLANS INCLUDED IN THE CINCINNATI STREETCAR MAINTENANCE AND OPERATIONS FACILITY PLANS FOR PROPOSED SEWER MODIFICATIONS.

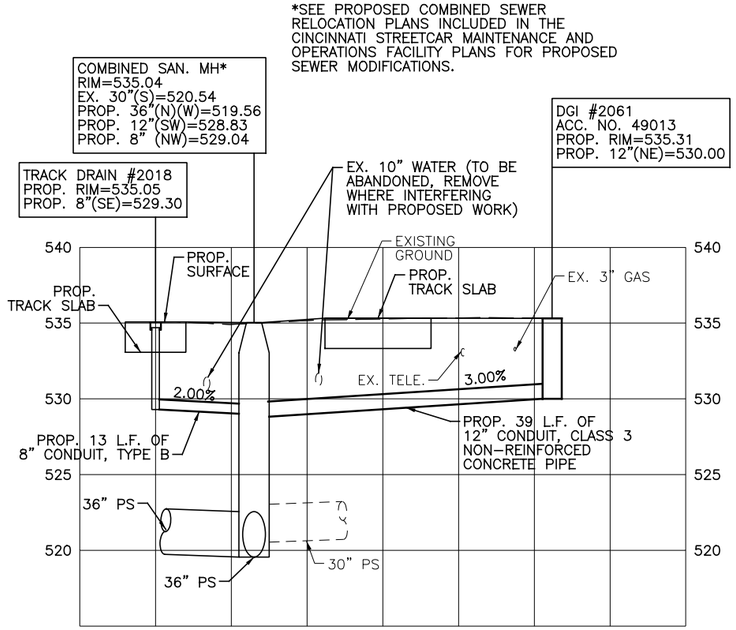

TRACK DRAIN #2018
STA. 252+58.72
DGI #2061
STA. 252+98.39, 14.73' RT

*SEE PROPOSED COMBINED SEWER RELOCATION PLANS INCLUDED IN THE CINCINNATI STREETCAR MAINTENANCE AND OPERATIONS FACILITY PLANS FOR PROPOSED SEWER MODIFICATIONS.

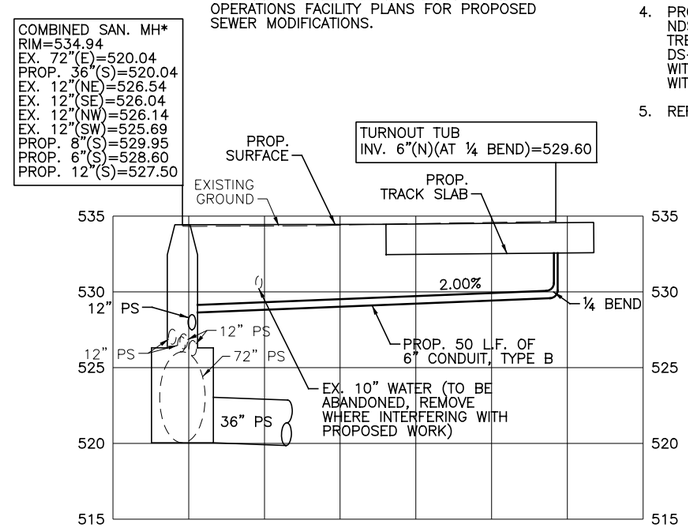

SWITCH THROW MECHANISM
(RACE STREET)
STA. 252+11.73

GRAPHIC SCALE
10 0 10 20 40
(IN FEET)
1 inch = 10 ft. Full Size
1 inch = 20 ft. Half Size

CAUTION UNDERGROUND UTILITIES
2 WORKING DAYS
BEFORE YOU DIG
CALL 1-800-362-2764
OHIO UTILITY PROTECTION SERVICE
CALL NON-SERVICE FACILITY
OWNERS DIRECT

CONTRACT DRAWING
PRINTS NOT BEARING THIS STAMP WERE MADE PRIOR TO ADVERTISING FOR BIDS AND ARE TO BE CONSIDERED OBSOLETE FOR CONTRACT PURPOSES.

Department of Transportation and Engineering
City of Cincinnati
City Hall
801 Plum Street
Cincinnati, Ohio 45202

CINCINNATI STREETCAR OVER THE RHINE

DRAINAGE PROFILES

Revisions
No.

Drawn by	Designed by	Checked by	Reviewed by
CDR	SKR	SKR	JTB
Date 07/02/12	Date 07/02/12	Date 07/02/12	Date 07/12/12

Consultant
PB HDR

File Number
ACC No.
23126

G-SA-2027

DOTE_Mono_PDF_Half.pltcfg
c:\pwworking\pitt\d0309045\S_G-SA-2027.dgn
Wednesday, July 11, 2012 12:15:02 PM51 PM

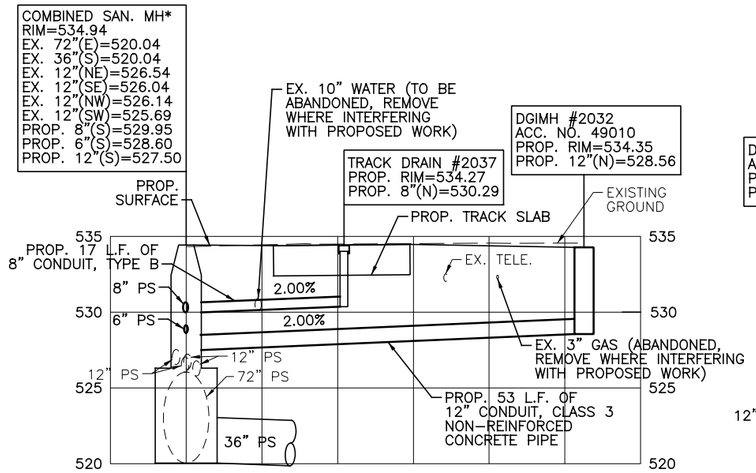

DGIMH #2032
STA. 252+10.63, 14.56' RT
TRACK DRAIN #2037
STA. 251+77.37

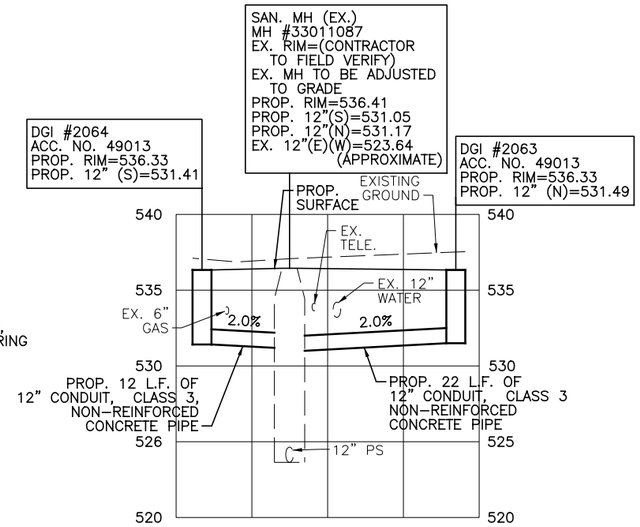

DGI #2063
STA. 254+92.31, 36.31' RT
DGI #2064
STA. 254+63.59, 36.59' RT

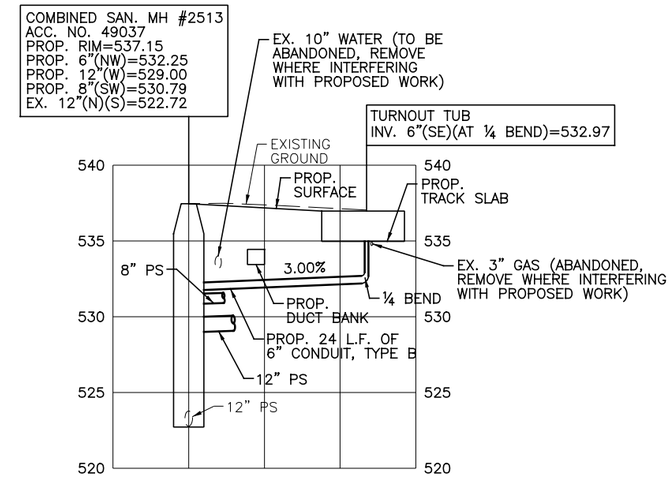

SWITCH THROW MECHANISM
(RACE STREET AND FINDLAY STREET)
STA. 255+31.51

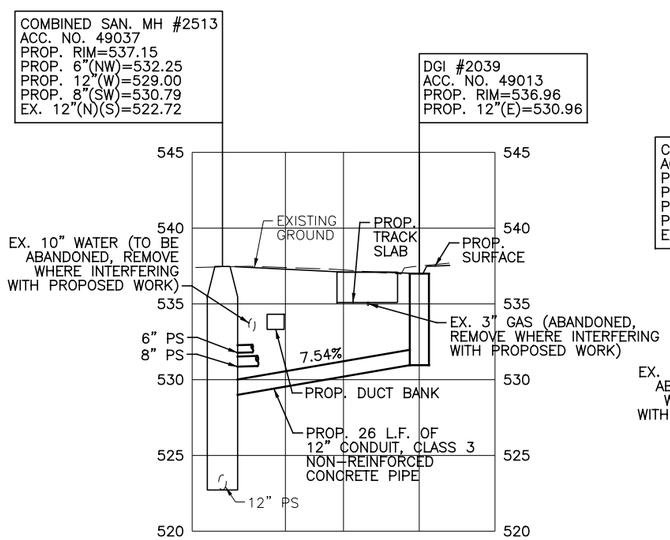

DGI #2039
STA. 255+45.40, 7.55' RT
COMBINED SAN. MH #2513
STA. 255+45.00, 19.24' LT

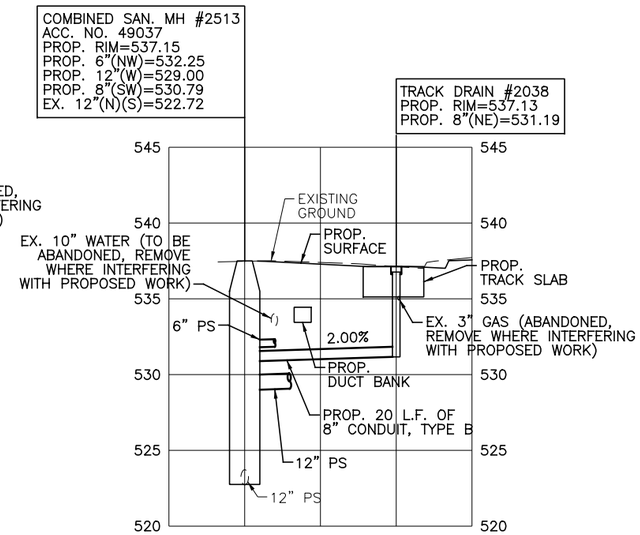

TRACK DRAIN #2038
STA. 255+48.36

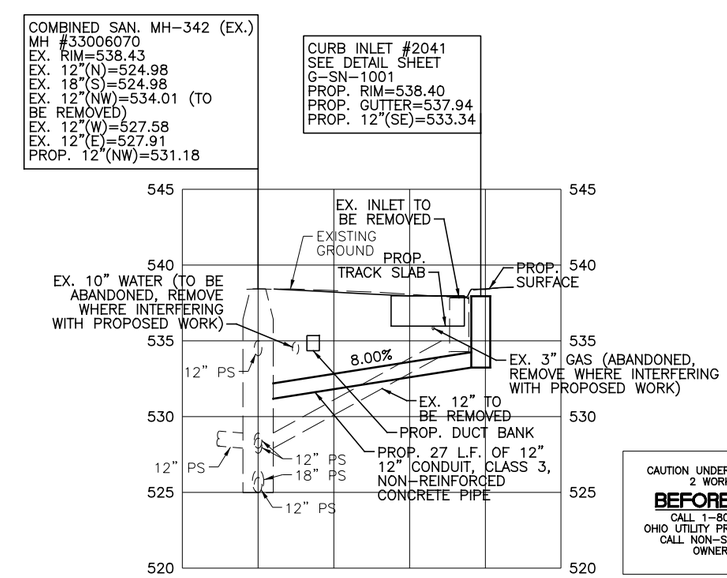

CURB INLET #2041
STA. 256+78.00, 4.48' RT

STORM DRAINAGE NOTES:

1. TRENCH DRAIN STATIONING INDICATES LONGITUDINAL CENTER OF TRENCH DRAIN. REFER TO "LS" SERIES DRAWINGS FOR LOCATION AND TOP ELEVATION.
2. APPROXIMATE LOCATION AND ELEVATION OF UNDERGROUND UTILITIES HAS BEEN PROVIDED FOR CONVENIENCE. THE CONTRACTOR IS RESPONSIBLE FOR VERIFICATION OF EXISTING AND/OR PROPOSED UTILITY LOCATIONS WHETHER OR NOT THESE UTILITIES ARE SHOWN ON THE PLANS.
3. REFER TO SHEETS G-SN-1001 THROUGH G-SN-1013 FOR STORM DRAINAGE AND COMBINED SEWER DETAILS AND NOTES.
4. PROVIDE DURA SLOPE PRE-SLOPED TRENCH DRAIN SYSTEM AS MANUFACTURED BY NDS INC. OR APPROVED EQUAL. PROVIDE STANDARD MANUFACTURERS SLOPED TRENCH SECTIONS BASED ON INDICATED OUTLET INVERT ELEVATIONS. PROVIDE DS-232, ADA COMPLIANT, DUCTILE IRON GRATE. PROVIDE "BULKHEAD" END SECTION WITH 4" OUTLET AND 4" TO 6" ADAPTOR. INSTALL SYSTEM IN STRICT ACCORDANCE WITH MANUFACTURER'S RECOMMENDATIONS.
5. REFEER TO "TD" SERIES DRAWINGS FOR TRACK DRAIN DETAILS.

GRAPHIC SCALE
10 0 10 20 40
(IN FEET)
1 inch = 10 ft. Full Size
1 inch = 20 ft. Half Size

CAUTION UNDERGROUND UTILITIES
2 WORKING DAYS
BEFORE YOU DIG
CALL 1-800-362-2764
OHIO UTILITY PROTECTION SERVICE
CALL NON-SERVICE FACILITY OWNERS DIRECT

DEPARTMENT OF TRANSPORTATION & ENGINEERING CITY OF CINCINNATI OHIO

CONTRACT DRAWING

PRINTS NOT BEARING THIS STAMP WERE MADE PRIOR TO ADVERTISING FOR BIDS AND ARE TO BE CONSIDERED OBSOLETE FOR CONTRACT PURPOSES.

Department of Transportation and Engineering

City of Cincinnati
City Hall
801 Plum Street
Cincinnati, Ohio 45202

CINCINNATI STREETCAR
OVER THE RHINE

DRAINAGE PROFILES

Revisions
No.

Drawn by	Designed by	Checked by	Reviewed by
CDR	SKR	SKR	JTB
Date 07/02/12	Date 07/02/12	Date 07/02/12	Date 07/12/12

Consultant

PB HDR

File Number

ACC No.
23126

G-SA-2028

DOTE_Mono_PDF_Half.pltcfg
c:\pwworking\pitt\d0309045\S_G-SA-2028.dgn
Thursday, July 12, 2012 07:36:23 PM

6200

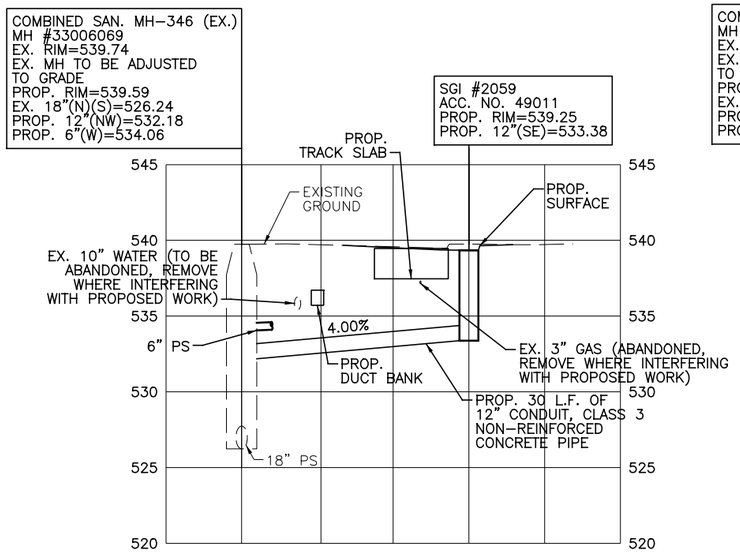

SGI #2059
STA. 258+36.18, 7.50' RT

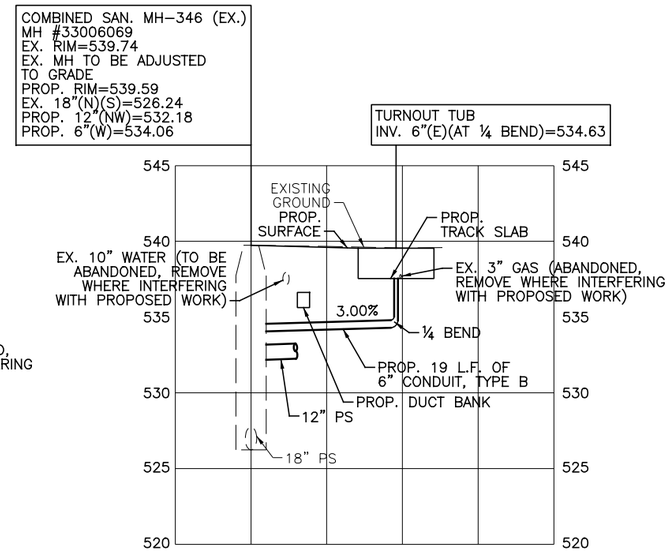

SWITCH THROW MECHANISM
(RACE STREET AND ELDER STREET)
STA. 258+51.91

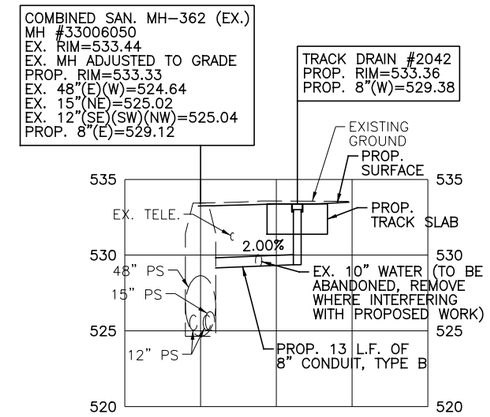

TRACK DRAIN #2042
STA. 263+66.03

STORM DRAINAGE NOTES:

1. TRENCH DRAIN STATIONING INDICATES LONGITUDINAL CENTER OF TRENCH DRAIN. REFER TO "LS" SERIES DRAWINGS FOR LOCATION AND TOP ELEVATION.
2. APPROXIMATE LOCATION AND ELEVATION OF UNDERGROUND UTILITIES HAS BEEN PROVIDED FOR CONVENIENCE. THE CONTRACTOR IS RESPONSIBLE FOR VERIFICATION OF EXISTING AND/OR PROPOSED UTILITY LOCATIONS WHETHER OR NOT THESE UTILITIES ARE SHOWN ON THE PLANS.
3. REFER TO SHEETS G-SN-1001 THROUGH G-SN-1013 FOR STORM DRAINAGE AND COMBINED SEWER DETAILS AND NOTES.
4. PROVIDE DURA SLOPE PRE-SLOPED TRENCH DRAIN SYSTEM AS MANUFACTURED BY NDS INC. OR APPROVED EQUAL. PROVIDE STANDARD MANUFACTURERS SLOPED TRENCH SECTIONS BASED ON INDICATED OUTLET INVERT ELEVATIONS. PROVIDE DS-232, ADA COMPLIANT, DUCTILE IRON GRATE. PROVIDE "BULKHEAD" END SECTION WITH 4" OUTLET AND 4" TO 6" ADAPTOR. INSTALL SYSTEM IN STRICT ACCORDANCE WITH MANUFACTURER'S RECOMMENDATIONS.
5. REFEER TO "TD" SERIES DRAWINGS FOR TRACK DRAIN DETAILS.

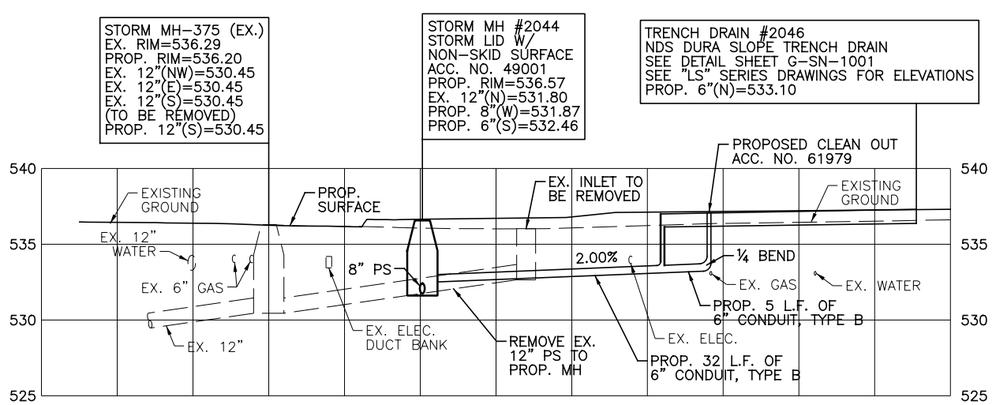

STORM MH #2044
STA. 268+74.67, 13.42' LT
TRENCH DRAIN #2046
STA. 269+36.35, 19.45' LT

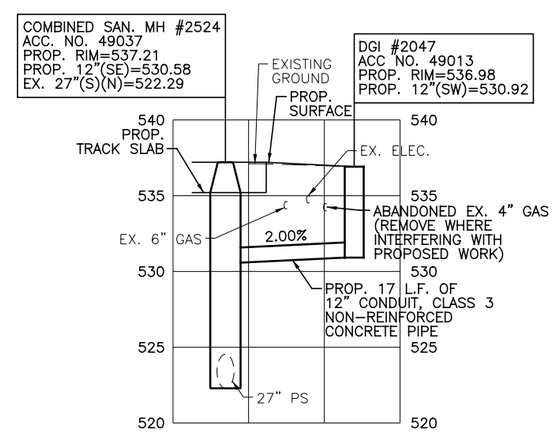

DGI #2047
STA. 269+91.07, 13.97' LT

CAUTION UNDERGROUND UTILITIES
2 WORKING DAYS
BEFORE YOU DIG
CALL 1-800-362-2764
OHIO UTILITY PROTECTION SERVICE
CALL NON-SERVICE FACILITY OWNERS DIRECT

GRAPHIC SCALE
10 0 10 20 40
(IN FEET)
1 inch = 10 ft. Full Size
1 inch = 20 ft. Half Size

CONTRACT DRAWING
PRINTS NOT BEARING THIS STAMP WERE MADE PRIOR TO ADVERTISING FOR BIDS AND ARE NOT CONSIDERED OBSOLETE FOR CONTRACT PURPOSES.

Department of Transportation and Engineering
City of Cincinnati
801 Plum Street
Cincinnati, Ohio 45202

CINCINNATI STREETCAR OVER THE RHINE

DRAINAGE PROFILES

Revisions
No.

Date 07/02/12	Date 07/02/12	Date 07/02/12	Date 07/12/12
Drawn by CDR	Designed by SKR	Checked by SKR	Reviewed by JTB

Consultant
PB HDR

File Number
ACC No. 23126

G-SA-2029

DOTE_Mono_PDF_Half.pltcfg
c:\pwworking\pitt\d0309045\S_G-SA-2029.dgn
Thursday, July 12, 2012 07:44:10 AM

6200

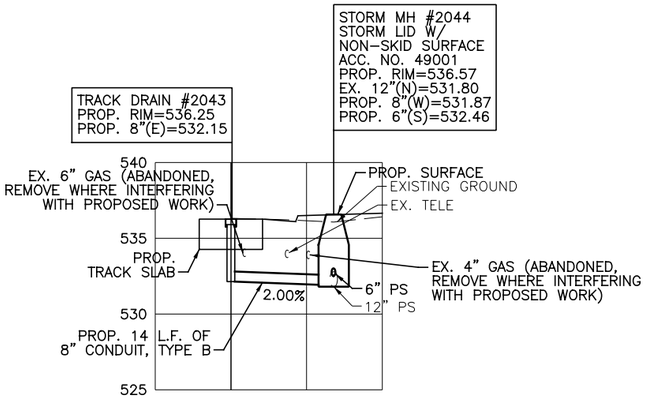

TRACK DRAIN #2043
STA. 268+73.05

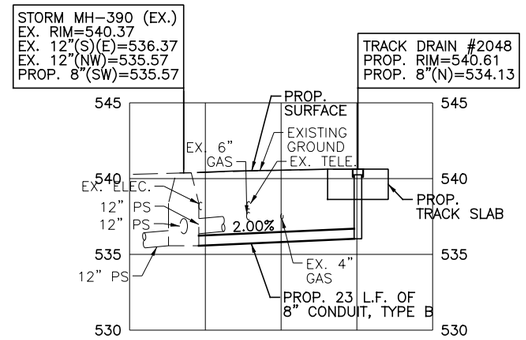

TRACK DRAIN #2048
STA. 274+00.00

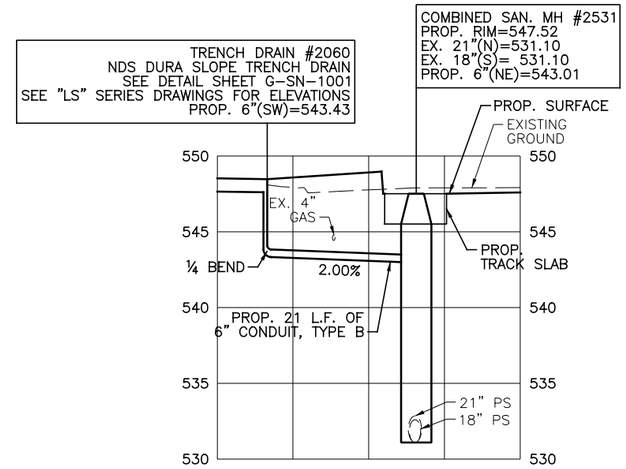

TRENCH DRAIN #2060
STA. 284+71.96, 20.5 LT

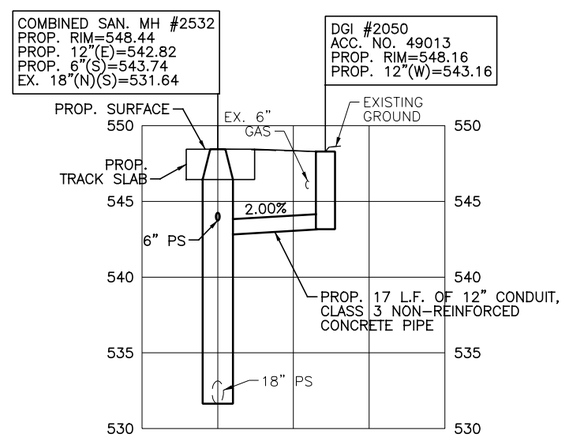

DGI #2050
STA. 285+30.42, 14.88' LT

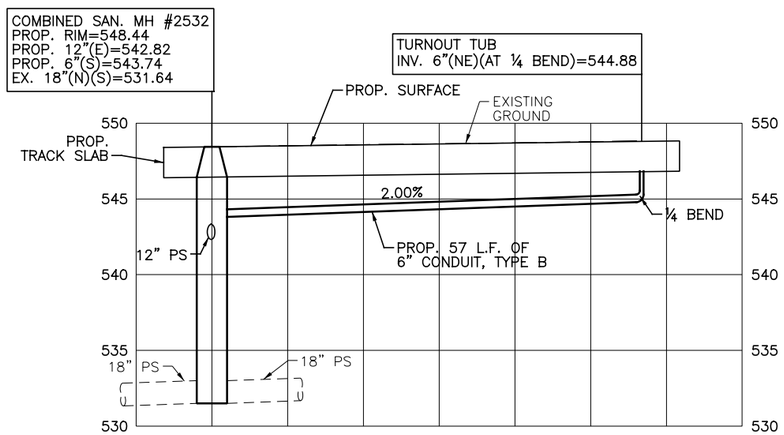

SWITCH THROW MECHANISM
(RACE STREET AND TWELFTH STREET)
STA. 285+78.28

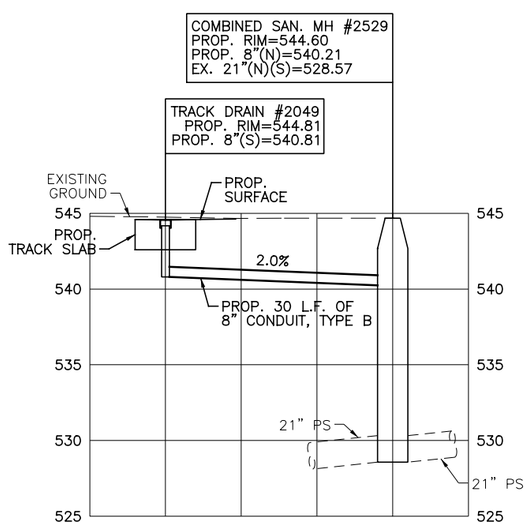

TRACK DRAIN #2049
STA. 280+40.00

GRAPHIC SCALE

10 0 10 20 40

(IN FEET)
1 inch = 10 ft. Full Size
1 inch = 20 ft. Half Size

CAUTION UNDERGROUND UTILITIES
2 WORKING DAYS
BEFORE YOU DIG
CALL 1-800-362-2764
OHIO UTILITY PROTECTION SERVICE
CALL NON-SERVICE FACILITY
OWNERS DIRECT

STORM DRAINAGE NOTES:

1. TRENCH DRAIN STATIONING INDICATES LONGITUDINAL CENTER OF TRENCH DRAIN. REFER TO "LS" SERIES DRAWINGS FOR LOCATION AND TOP ELEVATION.
2. APPROXIMATE LOCATION AND ELEVATION OF UNDERGROUND UTILITIES HAS BEEN PROVIDED FOR CONVENIENCE. THE CONTRACTOR IS RESPONSIBLE FOR VERIFICATION OF EXISTING AND/OR PROPOSED UTILITY LOCATIONS WHETHER OR NOT THESE UTILITIES ARE SHOWN ON THE PLANS.
3. REFER TO SHEETS G-SN-1001 THROUGH G-SN-1013 FOR STORM DRAINAGE AND COMBINED SEWER DETAILS AND NOTES.
4. PROVIDE DURA SLOPE PRE-SLOPED TRENCH DRAIN SYSTEM AS MANUFACTURED BY NDS INC. OR APPROVED EQUAL. PROVIDE STANDARD MANUFACTURERS SLOPED TRENCH SECTIONS BASED ON INDICATED OUTLET INVERT ELEVATIONS. PROVIDE DS-232, ADA COMPLIANT, DUCTILE IRON GRATE. PROVIDE "BULKHEAD" END SECTION WITH 4" OUTLET AND 4" TO 6" ADAPTOR. INSTALL SYSTEM IN STRICT ACCORDANCE WITH MANUFACTURER'S RECOMMENDATIONS.
5. REFEER TO "TD" SERIES DRAWINGS FOR TRACK DRAIN DETAILS.

DOTE_Mono_PDF_Half.pltcfg
c:\pwworking\pitt\d0309045\S_G-SA-2030.dgn
Thursday, July 12, 2012 07:36:56 PM

DEPARTMENT OF TRANSPORTATION & ENGINEERING
CITY OF CINCINNATI OHIO

CONTRACT DRAWING

PRINTS NOT BEARING THIS STAMP WERE MADE PRIOR TO ADVERTISING FOR BIDS AND ARE CONSIDERED OBSOLETE FOR CONTRACT PURPOSES.

Department of Transportation and Engineering

City of Cincinnati
City Hall
801 Plum Street
Cincinnati, Ohio 45202

CINCINNATI STREETCAR
OVER THE RHINE

DRAINAGE PROFILES

Revisions
No.

Drawn by CDR	Date 07/02/12
Designed by SKR	Date 07/02/12
Checked by SKR	Date 07/02/12
Reviewed by JTB	Date 07/12/12

Consultant

PB HDR

File Number

ACC No.
23126

G-SA-2030

6200

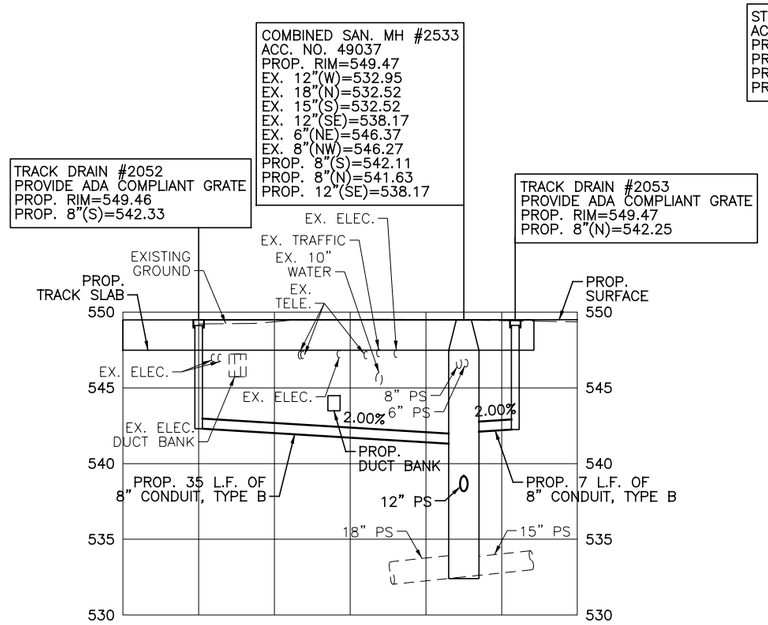

TRACK DRAIN #2052
STA. 286+23.63
TRACK DRAIN #2053
STA. 286+65.41

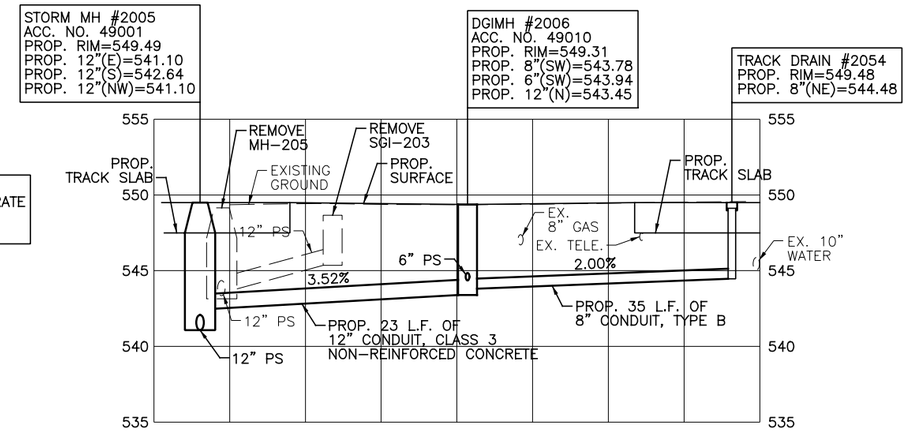

DGIMH #2006
STA. 286+89.64, 14.62' LT
TRACK DRAIN #2054
STA. 287+22.00

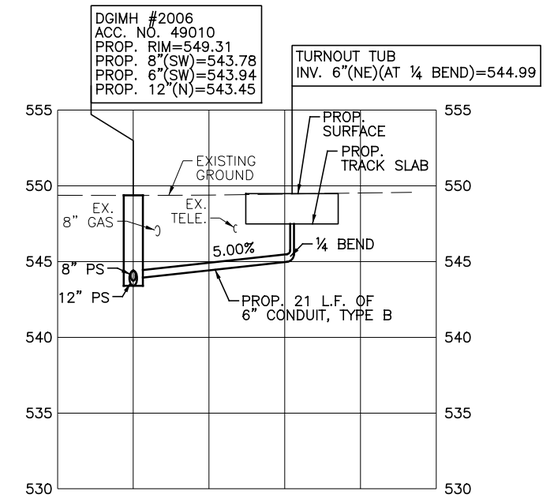

SWITCH THROW MECHANISM
(RACE STREET AND TWELFTH STREET)
STA. 287+05.29

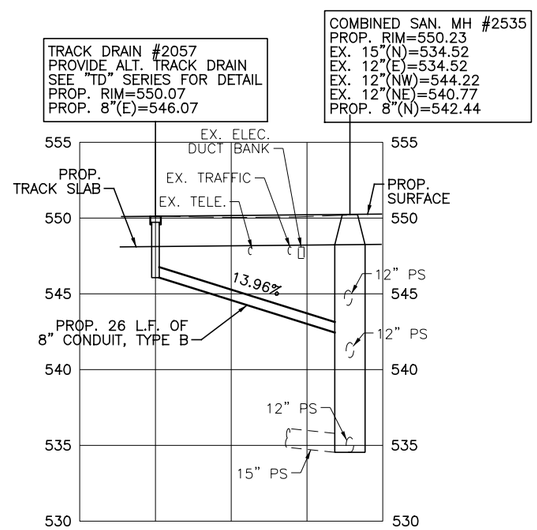

TRACK DRAIN #2057
STA. 289+92.80

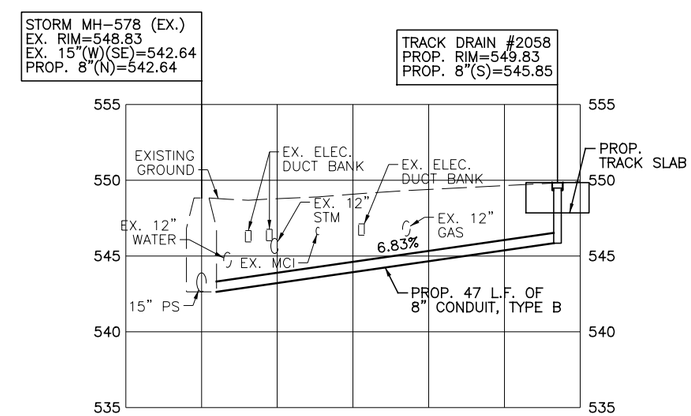

TRACK DRAIN #2058
STA. 293+89.80

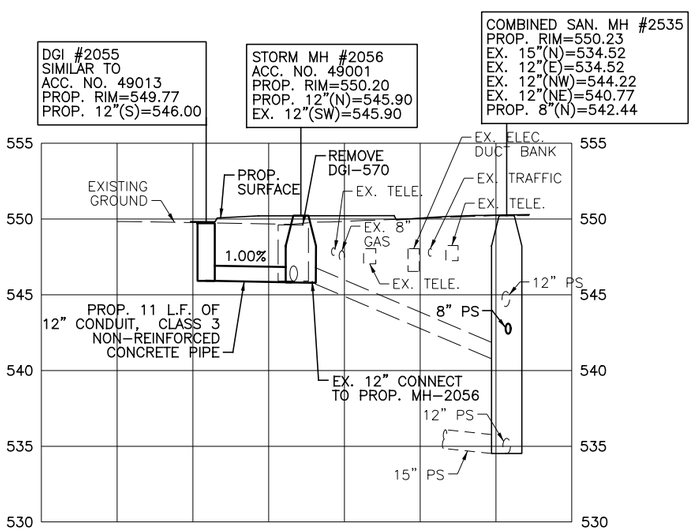

DGI #2055
STA. 289+84.46, 14.27' LT
STORM MH #2056
STA. 289+95.63, 13.67' LT

STORM DRAINAGE NOTES:

1. TRENCH DRAIN STATIONING INDICATES LONGITUDINAL CENTER OF TRENCH DRAIN. REFER TO "LS" SERIES DRAWINGS FOR LOCATION AND TOP ELEVATION.
2. APPROXIMATE LOCATION AND ELEVATION OF UNDERGROUND UTILITIES HAS BEEN PROVIDED FOR CONVENIENCE. THE CONTRACTOR IS RESPONSIBLE FOR VERIFICATION OF EXISTING AND/OR PROPOSED UTILITY LOCATIONS WHETHER OR NOT THESE UTILITIES ARE SHOWN ON THE PLANS.
3. REFER TO SHEETS G-SN-1001 THROUGH G-SN-1013 FOR STORM DRAINAGE AND COMBINED SEWER DETAILS AND NOTES.
4. PROVIDE DURA SLOPE PRE-SLOPED TRENCH DRAIN SYSTEM AS MANUFACTURED BY NDS INC. OR APPROVED EQUAL. PROVIDE STANDARD MANUFACTURERS SLOPED TRENCH SECTIONS BASED ON INDICATED OUTLET INVERT ELEVATIONS. PROVIDE DS-232, ADA COMPLIANT, DUCTILE IRON GRATE. PROVIDE "BULKHEAD" END SECTION WITH 4" OUTLET AND 4" TO 6" ADAPTOR. INSTALL SYSTEM IN STRICT ACCORDANCE WITH MANUFACTURER'S RECOMMENDATIONS.
5. REFEER TO "TD" SERIES DRAWINGS FOR TRACK DRAIN DETAILS.

CAUTION UNDERGROUND UTILITIES
2 WORKING DAYS
BEFORE YOU DIG
CALL 1-800-362-2764
OHIO UTILITY PROTECTION SERVICE
CALL NON-SERVICE FACILITY
OWNERS DIRECT

GRAPHIC SCALE
10 0 10 20 40
(IN FEET)
1 inch = 10 ft. Full Size
1 inch = 20 ft. Half Size

DEPARTMENT OF TRANSPORTATION & ENGINEERING
CITY OF CINCINNATI OHIO

CONTRACT DRAWING

PRINTS NOT BEARING THIS STAMP WERE MADE PRIOR TO ADVERTISING BID. THEY ARE TO BE CONSIDERED OBSOLETE FOR CONTRACT PURPOSES.

Department of Transportation and Engineering
City of Cincinnati
City Hall
801 Plum Street
Cincinnati, Ohio 45202

CINCINNATI STREETCAR
OVER THE RHINE

DRAINAGE PROFILES

Revisions
No.

Date 07/02/12	Date 07/02/12
Date 07/02/12	Date 07/12/12
Drawn by CDR	Designed by SKR
Checked by SKR	Reviewed by JTB

Consultant
PB HDR

File Number

ACC No.
23126

G-SA-2031

DOTE_Mono_PDF_Half.pltcfg
c:\pwworking\pitt\d0309045\S_G-SA-2031.dgn
Wednesday, July 11, 2012 12:16:12 PM

6200

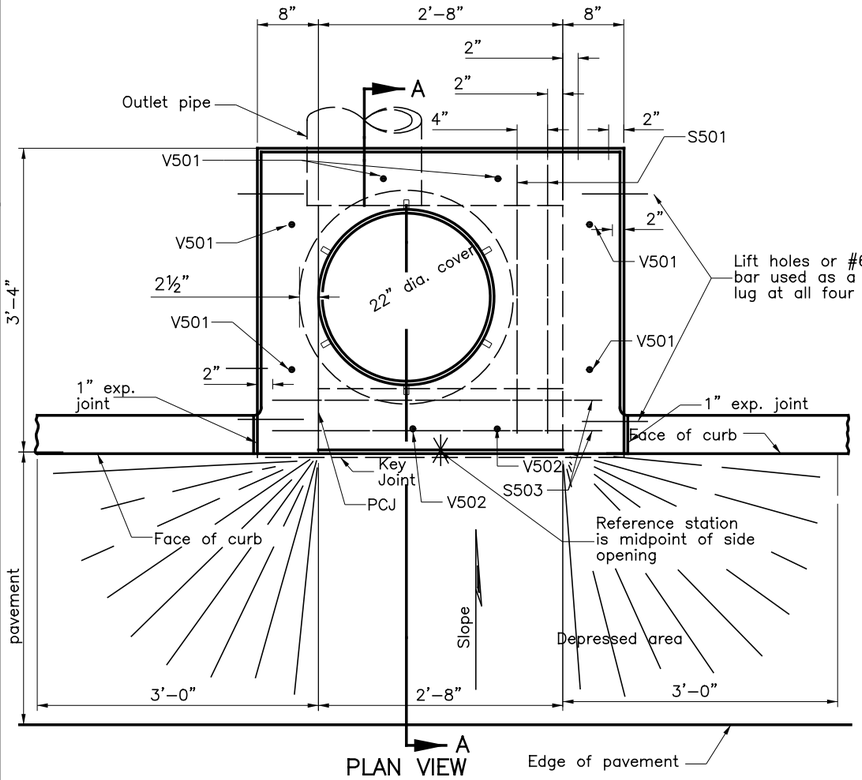

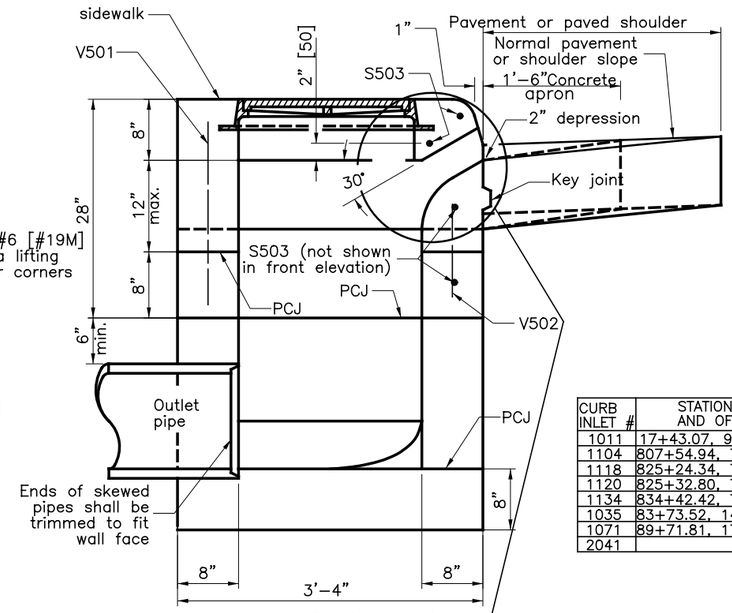

SECTION A–A

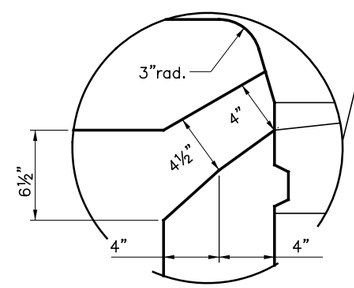

ALTERNATE OPENING

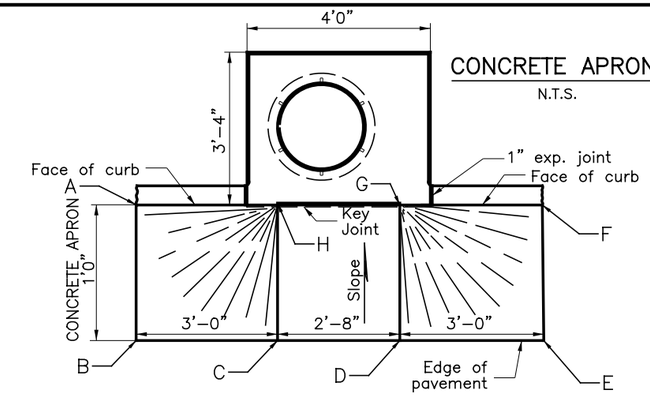

CONCRETE APRON

N.T.S.

GRADING OF CONCRETE APRON

CURB INLET #	STATION AND OFFSET	TOP OF CURB	GUTTER ELEV.	A	B	C	D	E	F	G	H
1011	17+43.07, 9.51' RT	550.03	549.53	549.56	549.61	549.63	549.63	549.66	549.61	549.36	549.36
1104	807+54.94, 7.38' RT	546.16	545.66	545.68	545.71	545.73	545.73	545.88	545.85	545.49	545.49
1118	825+24.34, 7.25' RT	517.75	517.25	517.33	517.36	517.28	517.28	517.16	517.13	517.08	517.08
1120	825+32.80, 7.15' RT	518.12	517.62	517.82	517.85	517.65	517.65	517.45	517.42	517.45	517.45
1134	834+42.42, 7.48' RT	550.55	550.05	550.13	550.18	550.17	550.17	550.18	550.13	549.89	549.89
1035	83+73.52, 14.71' LT	545.75	545.25	545.32	545.36	545.29	545.29	545.32	545.28	545.08	545.08
1071	89+71.81, 17.80' RT	545.52	545.02	545.12	545.14	545.04	545.04	545.09	545.07	544.85	544.85
2041											

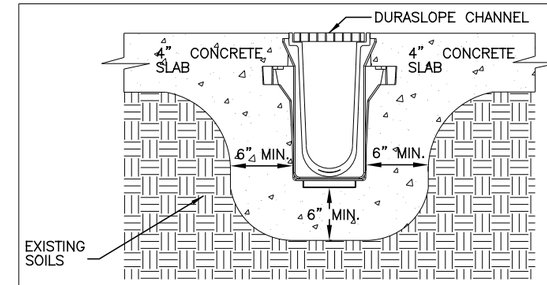

NOTES:

TRENCH DRAINS SHALL BE A DURA SLOPE TRENCH DRAIN SYSTEM AS MANUFACTURED BY NDS INC. OR AN APPROVED EQUAL. INSTALL A DURA SLOPE GRATE DS–670 OR APPROVED EQUAL, ADA COMPLIANT, HEEL–PROOF GRATE. INSTALLATION PER MANUFACTURER'S RECOMMENDATIONS. SET TRENCH DRAIN IN CHANNEL SURROUNDED BY 6" OF CLASS C CONCRETE.

ALL TRENCH DRAIN PVC PIPE CONNECTIONS TO STORM OR SANITARY STRUCTURES MUST BE INSTALLED WITH A WATERTIGHT BOOT CONNECTION. PROVIDE THE G3 BOOT SYSTEM AS MANUFACTURED BY A.LOK PRODUCTS, INC., OR APPROVED EQUAL. THE CONNECTION SHALL PROVIDED A WATERTIGHT SEAL BETWEEN THE PIPE AND THE STRUCTURE.

TRENCH DRAIN

N.T.S.

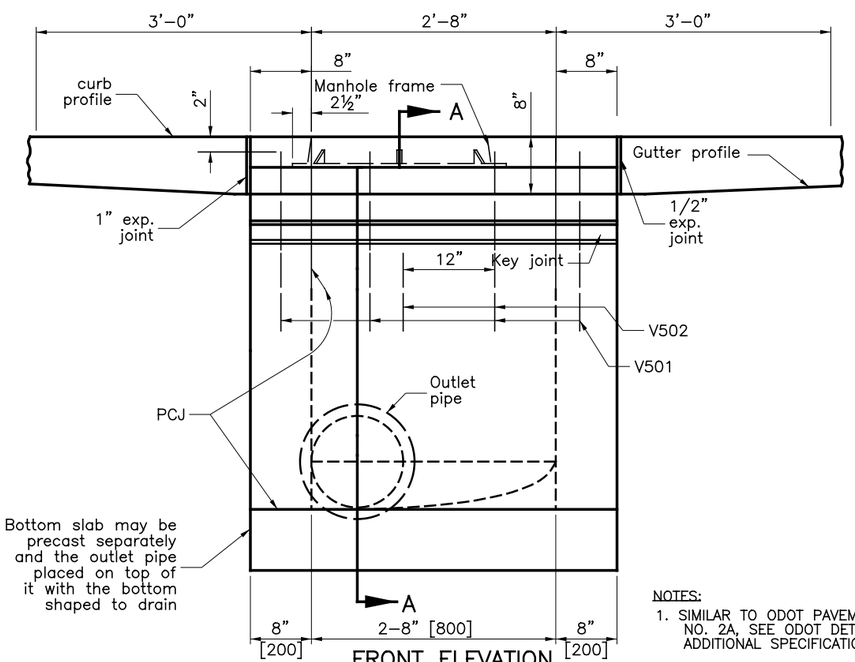

FRONT ELEVATION

CURB INLET

N.T.S.

NOTES:

1. SIMILAR TO ODOT PAVEMENT INLET NO. 2A, SEE ODOT DETAIL FOR ADDITIONAL SPECIFICATIONS.
2. HEAVY DUTY LID, REQUIRED TO BE SKID RESISTANT AND LABELED WITH THE WORD "STORM"

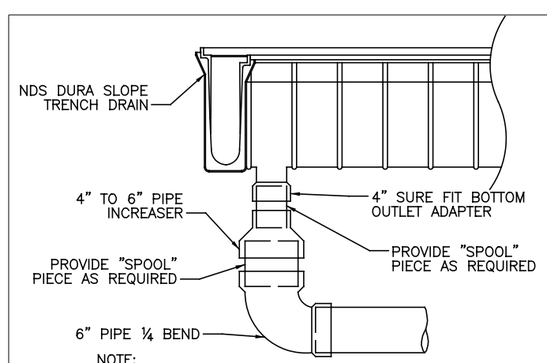

NOTE:

ALL TRENCH DRAIN PVC PIPE CONNECTIONS TO STORM OR SANITARY STRUCTURES MUST BE INSTALLED WITH A WATERTIGHT BOOT CONNECTION. PROVIDE THE G3 BOOT SYSTEM AS MANUFACTURED BY A.LOK PRODUCTS, INC., OR APPROVED EQUAL. THE CONNECTION SHALL PROVIDE A WATERTIGHT SEAL BETWEEN THE PIPE AND THE STRUCTURE.

TRENCH DRAIN WITH BOTTOM OUTLET

N.T.S.

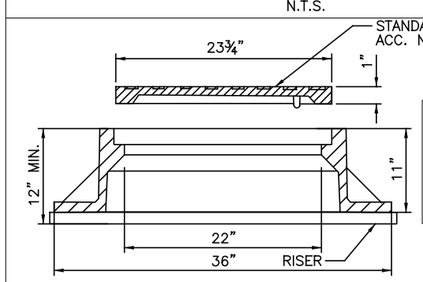

CAUTION UNDERGROUND UTILITIES
2 WORKING DAYS
BEFORE YOU DIG
CALL 1–800–362–2764
OHIO UTILITY PROTECTION SERVICE
CALL NON–SERVICE FACILITY OWNERS DIRECT

NOTES:

1. EAST JORDAN IRON WORKS FRAME #2035 OR APPROVED EQUAL TO BE INSTALLED AS NOTED IN THE PLANS.
2. CONTRACTOR TO PROVIDE STANDARD MSDGC LID FOR ALL PROPOSED SANITARY MANHOLES. SEE DETAIL THIS SHEET.

EAST JORDAN IRON WORKS FRAME #2035

N.T.S.

DOTE_Mono_PDF_Half.pltcfg
T:\29014A-Streetcar\CAD\Sanitary_and_Storm\G-SN-1001.dgn
7/12/2012 5:12:26 PM

CONTRACT DRAWING

PRINTS NOT BEARING THIS STAMP WERE MADE PRIOR TO ADVERTISING BIDDING AND ARE TO BE CONSIDERED OBSOLETE FOR CONTRACT PURPOSES.

Department of Transportation and Engineering

City of Cincinnati
City Hall
801 Plum Street
Cincinnati, Ohio 45202

CINCINNATI STREETCAR

COMBINED SANITARY SEWER AND STORM DRAINAGE DETAILS AND NOTES

Revisions

No.		Date
		7/02/12
		7/02/12
		7/02/12
		7/12/12

Drawn by MKM Date 7/02/12
Designed by MKM Date 7/02/12
Checked by SAJ Date 7/02/12
Reviewed by JTB Date 7/12/12

Consultant

PB HDR

File Number

ACC No. 23126

G–SN–1001

6200

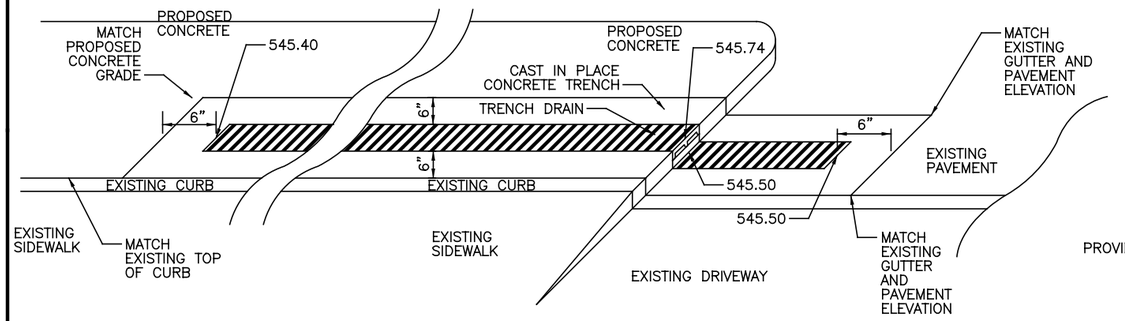

ISOMETRIC VIEW

N.T.S.

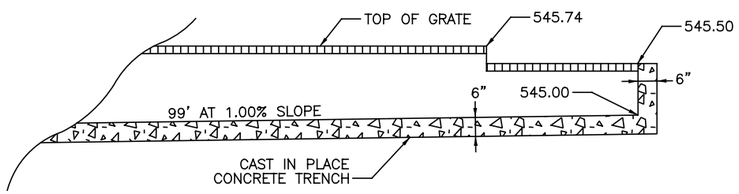

SECTION VIEW

N.T.S.

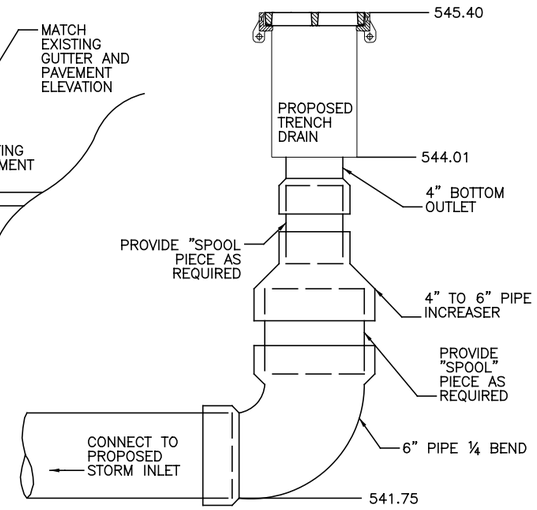

(SEE PLAN FOR LOCATION)

OUTLET PIPE

N.T.S.

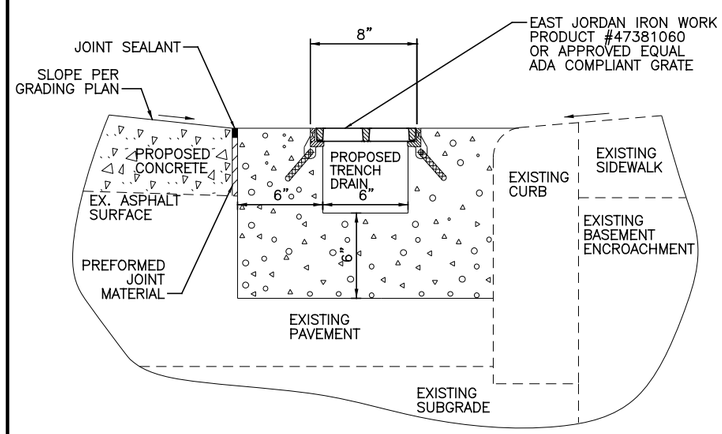

NOTES:

INSTALL GRATE IN STRICT ACCORDANCE WITH THE MANUFACTURES RECOMMENDATIONS.

BASEMENT ENCROACHMENT AND EXISTING CURB ARE TO REMAIN IN PLACE AND UNDISTURBED.

SEE SHEET G-SA-1019 FOR PLAN VIEW AND SHEET G-SA-1029 FOR PROFILE.

TRENCH DRAIN (SPECIAL)

(12TH STREET NEAR MAIN STREET)
(PROPOSED TRENCH DRAIN #1085)
N.T.S.

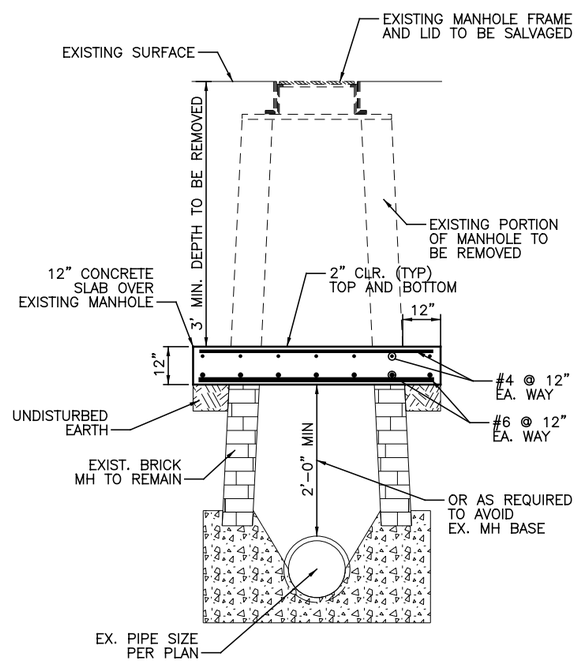

EXISTING MANHOLE CAP

N.T.S.

PIPE ALTERNATIVES:

NO PIPE ALTERNATES ARE ALLOWED UNLESS SPECIFICALLY APPROVED BY THE ENGINEER.

GENERAL NOTES:

1) THE CONTRACTOR SHALL EXERCISE ALL CARE TO AVOID DAMAGE TO ANY UTILITY. IF CONFLICTS WITH EXISTING UTILITIES ARISE DURING CONSTRUCTION, THE CONTRACTOR SHALL NOTIFY THE CITY INSPECTOR AND ANY CHANGES ARE TO BE APPROVED BY THE DEVELOPMENT ENGINEER PRIOR TO THE COMMENCEMENT OF CONSTRUCTION ON RELATED PORTIONS OF THE PROJECT.

2) TRACK DRAIN DETAILS CAN BE FOUND IN THE "TD" SERIES DRAWINGS. ANY TRACK DRAIN LOCATED WITHIN A CROSSWALK SHALL HAVE AN ADA COMPLIANT, DUCTILE IRON GRATE. NEENAH R-4999-DX, TYPE Q STYLE GRATE OR APPROVED EQUAL.

3) TRENCH DRAINS AT STREETCAR STOPS SHALL BE A DURA SLOPE TRENCH DRAIN SYSTEM AS MANUFACTURED BY NDS INC. OR AN APPROVED EQUAL. A DS-232, ADA COMPLIANT, DUCTILE IRON GRATE OR APPROVED EQUAL SHALL BE PROVIDED. INSTALL SYSTEM IN STRICT ACCORDANCE WITH MANUFACTURER'S RECOMMENDATIONS. CONTRACTOR IS RESPONSIBLE FOR ALL FITTINGS, ACCESSORIES, GRATES NECESSARY FOR INSTALLATION IN ACCORDANCE WITH MANUFACTURER'S RECOMMENDATIONS.

4) MSD WILL TAKE OWNERSHIP OF MANHOLE CASTINGS AND LIDS WHERE NOTED IN THE PLANS FOR STRUCTURES TO BE REMOVED AND ABANDONED. CONTRACTOR SHALL REMOVE CLEAN AND DELIVER EXISTING MANHOLE FRAME AND LIDS TO THE MSD WASTEWATER COLLECTIONS ON GALBRAITH ROAD.

5) MAINTAIN ACCESSIBILITY TO SEWER MANHOLES, WATER VALVES AND METERS, FIRE HYDRANTS, AND UTILITY VAULTS AND KEEP FREE OF ANY BLOCKAGE BY CONSTRUCTION EQUIPMENT, MATERIALS, AND DEBRIS.

6) ANY STREET OR SIDEWALK OPENING FOR UTILITY INSTALLATION OR OTHERWISE SHALL FOLLOW IN STRICT ACCORDANCE WITH THE CITY OF CINCINNATI STANDARD SPECIFICATIONS FOR RESTORATION OF STREET AND SIDEWALK PAVEMENT OPENING.

7) EXISTING UTILITY SERVICES SHALL BE MAINTAINED TO RESIDENTS AND BUSINESSES.

8) ALL NEW OR RECONSTRUCTED CONDUITS, INLETS, CATCH BASINS AND MANHOLES BUILT AS A PART OF THE PROJECT SHALL BE FREE OF ALL FOREIGN MATTER AND IN A CLEAN CONDITION AT THE COMPLETION OF CONSTRUCTION.

9) ANY OPEN TRENCH SHALL BE ADEQUATELY MAINTAINED AND PROTECTED WITH APPROVED TRAFFIC CONTROL DEVICES AT ALL TIMES. THE LENGTH OF TRENCH WHICH IS OPEN AT ANY ONE TIME SHALL BE HELD TO A MINIMUM AND SHALL AT ALL TIMES BE SUBJECT TO APPROVAL OF THE ENGINEER.

10) ALL MANHOLES NOTED AS ABANDON ARE TO BE LEFT IN PLACE. CONTRACTOR IS TO BREAK UP BASE OF MANHOLE TO PREVENT ACCUMULATION OF WATER. TOP 3' OF EXISTING MANHOLE IS TO BE REMOVED AND STRUCTURAL BACKFILL IS TO BE PROVIDED IN ACCORDANCE WITH CITY OF CINCINNATI CONSTRUCTION AND MATERIAL SPECIFICATIONS.

11) ALL SEWER PIPES 12" OR LARGER NOTED AS ABANDON SHALL BE SEALED AND FILLED WITH STRUCTURAL BACKFILL IN ACCORDANCE WITH THE CITY OF CINCINNATI CONSTRUCTION AND MATERIAL SPECIFICATIONS. ALL SEWERS SMALLER THAN 12" MAY BE SEALED AND ABANDONED IN PLACE.

12) IT IS THE CONTRACTORS RESPONSIBILITY TO COORDINATE WITH UTILITY COMPANIES FOR PROPOSED UTILITY INFORMATION.

13) THE CONTRACTOR SHALL PLAN ACCORDINGLY TO BUILD STRUCTURES TO MATCH EXISTING PAVEMENT ELEVATION WITH ABILITY TO ADJUST TO PROPOSED GRADES FOLLOWING TRACK SLAB AND STOP LOCATION CONSTRUCTION. THE CONTRACTOR SHOULD NOTE THAT PROPOSED ELEVATIONS MAY BE LOWER THAN EXISTING PAVEMENT ELEVATIONS.

14) ALL SHEETING AND BRACING SHALL BE THE RESPONSIBILITY OF THE CONTRACTOR. CONTRACTOR SHOULD RETAIN QUALIFIED DESIGN SERVICES FOR THESE SYSTEMS. INSTALLATION SHOULD BE CONDUCTED WITH STRICT ADHERENCE TO OSHA REGULATIONS. SUBMIT COMPLETE DESIGN CALCULATIONS AND WORKING DRAWINGS OF PROPOSED SHORING, SHEETING AND BRACING WHICH HAVE BEEN PREPARED, SIGNED AND SEALED BY A LICENSED PROFESSIONAL ENGINEER EXPERIENCED IN STRUCTURAL ENGINEERING AND REGISTERED IN THE STATE OF OHIO, BEFORE STARTING EXCAVATIONS. CONSULTANT'S REVIEW OF CALCULATIONS AND WORKING DRAWINGS WILL BE LIMITED TO CONFIRMING THAT THE DESIGN WAS PREPARED BY A LICENSED PROFESSIONAL ENGINEER.

15) DOUBLE GUTTER INLETS AND SINGLE GUTTER INLETS ARE STATIONED AT FACE OF CURB. ALL OTHER STRUCTURES ARE STATIONED FROM CENTER OF STRUCTURE. TRACK DRAINS AND TRENCH DRAINS ARE STATIONED AT LONGITUDINAL CENTER OF DRAIN.

16) IT IS THE CONTRACTOR'S RESPONSIBILITY TO VERIFY THAT EXISTING UTILITIES LABELED AS "TO BE ABANDONED. REMOVE WHERE INTERFERING WITH PROPOSED WORK" HAVE ACTUALLY BEEN ABANDONED PRIOR TO THE CONTRACTOR'S WORK.

17) ONCE THE CONTRACTOR FINISHES HIS WORK, CONTRACTOR IS TO CLEAN AND VERIFY FUNCTION OF ALL PROPOSED STORM AND SANITARY SEWER STRUCTURES AND PIPES AS WELL AS ANY EXISTING STRUCTURE THAT CONNECTS PROPOSED ITEMS WITH THE EXISTING STORM AND SANITARY SYSTEMS.

18) PROPOSED STORM SEWERS INDICATED AS "TYPE B" REFERENCE THE 2010 CITY SUPPLEMENT TO ODOT CONSTRUCTION AND MATERIAL SPECIFICATIONS.

19) THE TRACK DRAINAGE SYSTEM IS OWNED BY THE CITY OF CINCINNATI AND WILL BE OPERATED AND MAINTAINED BY A SUBCONSULTANT OF THE CITY'S CHOICE. THE TRACK DRAIN SYSTEM IS NOT UNDER THE MAINTENANCE AND OPERATION OF SMU/MSD FROM THE POINT OF CONNECTION AT AN SMU/MSD STRUCTURE TO THE TRACK DRAINS.

20) STANDARD MSDGC SEWER LID AS SHOWN ON ACC. NO. 49005 SHOULD BE PROVIDED ON ALL PROPOSED SANITARY SEWER MANHOLES UNLESS NOTED OTHERWISE.

CAUTION UNDERGROUND UTILITIES
2 WORKING DAYS
BEFORE YOU DIG
CALL 1-800-362-2764
OHIO UTILITY PROTECTION SERVICE
CALL NON-SERVICE FACILITY OWNERS DIRECT

DEPARTMENT OF TRANSPORTATION & ENGINEERING CITY OF CINCINNATI OHIO

CONTRACT DRAWING

PRINTS NOT BEARING THIS STAMP WERE MADE PRIOR TO ADVERTISING FOR BIDS AND ARE TO BE CONSIDERED OBSOLETE FOR CONTRACT PURPOSES.

Department of Transportation and Engineering

City of Cincinnati
City Hall
801 Plum Street
Cincinnati, Ohio 45202

CINCINNATI STREETCAR

COMBINED SANITARY SEWER AND STORM DRAINAGE DETAILS AND NOTES

Revisions

No.				

Date 7/02/12
Date 7/02/12
Date 7/02/12
Date 7/12/12

Drawn by MKM
Designed by MKM
Checked by SAJ
Reviewed by JTB

Consultant

PB HDR

File Number

ACC No. 23126

G-SN-1002

6200

DOTE_Mono_PDF_Half.pltcfg
T:\29014A-Streetcar\CAD\Sanitary_and_Storm\G-SN-1002.dgn
7/12/2012 5:13:25 PM

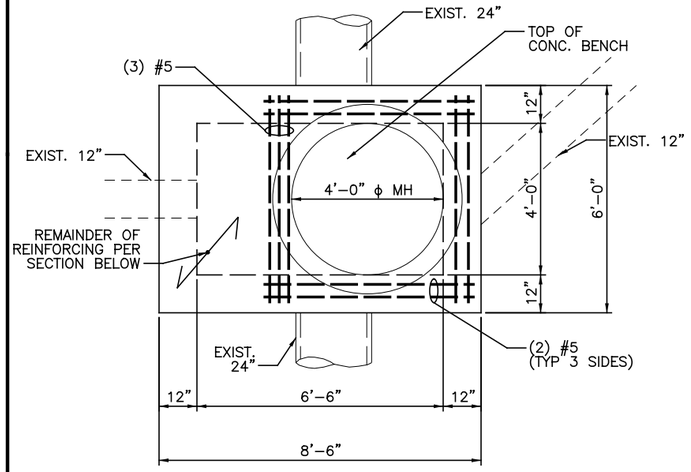

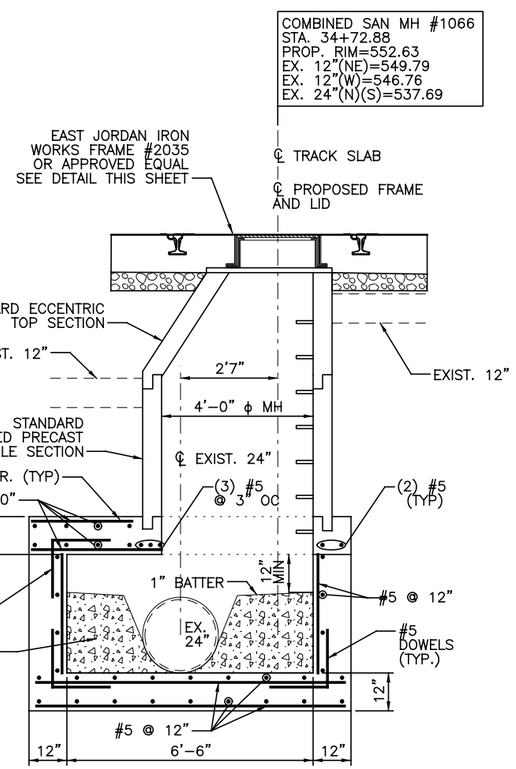

NOTES:

1. PROPOSED ECCENTRIC CONE SECTION AND STANDARD PRECAST MANHOLE SECTIONS ARE TO BE COMPLIANT WITH MSDGC STANDARD DETAIL ACC. NO. 49037.
2. STEPS CONSTRUCTED OF RUBBER COATED CAST IRON, STAINLESS STEEL, OR FIBER REINFORCED PLASTIC SHALL BE PROVIDED ON ALL PROPOSED MANHOLES.
3. MANHOLE DETAIL IS SHOWN FACING NORTH.

SANITARY MANHOLE #1066

N.T.S.

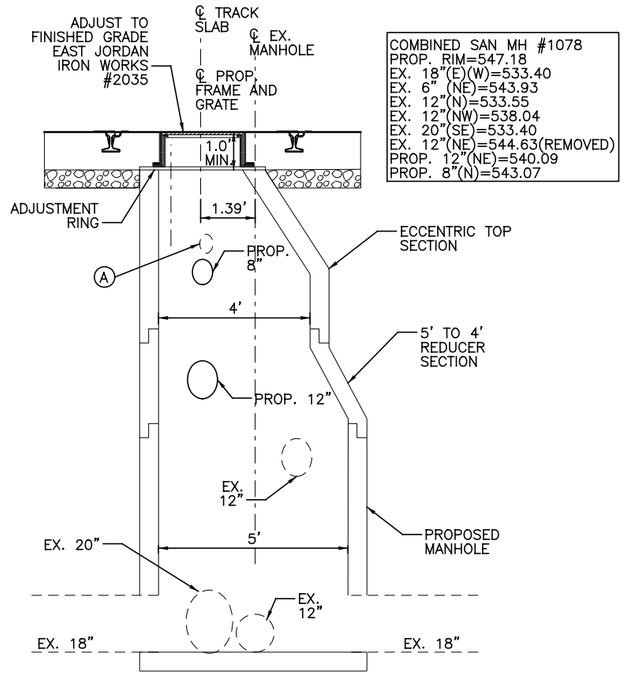

(A) EXISTING PIPE, FIELD VERIFY UPSTREAM CONNECTION POINT. RECONNECT AS REQUIRED TO SAN. MH-421 IF PIPE FOUND TO BE AN ACTIVE SEWER. SEE STORM PROFILES.

NOTES:

1. MANHOLE DETAIL IS SHOWN FACING UP-STATION.
2. THE EXISTING MANHOLE IS TO BE REMOVED AND RECONSTRUCTED AS SHOWN ABOVE.

COMBINED SAN MH #1078

N.T.S.

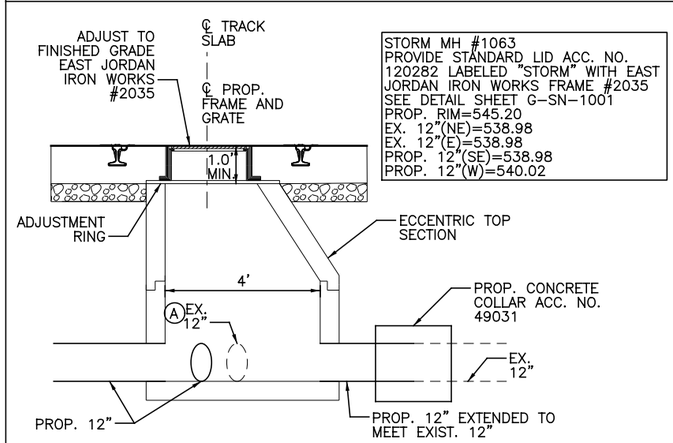

(A) EXISTING PIPE, FIELD VERIFY UPSTREAM CONNECTION POINT. RECONNECT AS REQUIRED TO STM. MH #1063 IF PIPE FOUND TO BE AN ACTIVE SEWER. SEE STORM PROFILES.

NOTES:

1. MANHOLE DETAIL IS SHOWN FACING UP-STATION.
2. THE EXISTING MH-131 IS TO BE REMOVED.

STORM MH #1063

N.T.S.

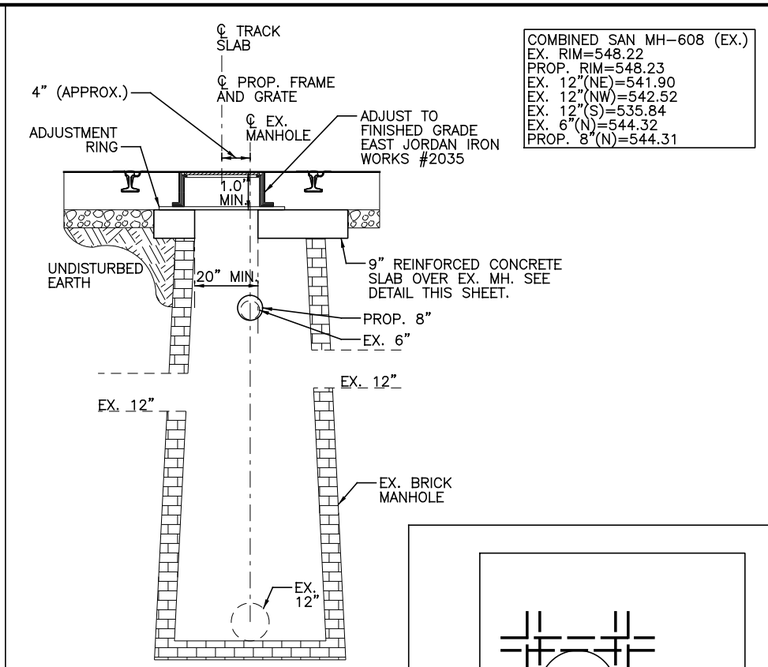

COMBINED SAN MH-608 (EX.)

N.T.S.

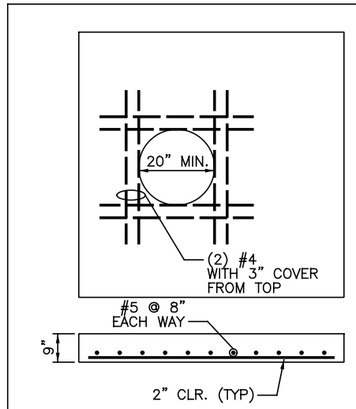

REINFORCED CONCRETE SLAB

N.T.S.

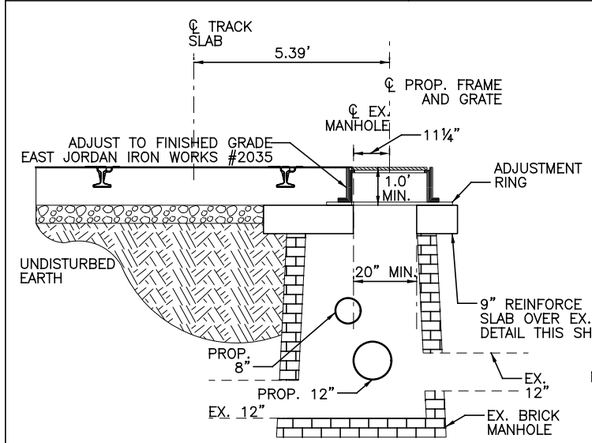

CAUTION UNDERGROUND UTILITIES
2 WORKING DAYS
BEFORE YOU DIG
CALL 1-800-362-2764
OHIO UTILITY PROTECTION SERVICE
CALL NON-SERVICE FACILITY OWNERS DIRECT

NOTES:

1. MANHOLE DETAIL IS SHOWN FACING UP-STATION.

STORM MH-55 (EX.)

N.T.S.

CITY OF CINCINNATI DEPARTMENT OF TRANSPORTATION & ENGINEERING

CONTRACT DRAWING

PRINTS NOT BEARING THIS STAMP WERE MADE PRIOR TO ADVERTISING FOR BIDS AND ARE TO BE CONSIDERED OBSOLETE FOR CONTRACT PURPOSES.

Department of Transportation and Engineering

City of Cincinnati
City Hall
801 Plum Street
Cincinnati, Ohio 45202

CINCINNATI STREETCAR

COMBINED SANITARY SEWER AND STORM DRAINAGE DETAILS AND NOTES

Revisions

No.	Date
	7/02/12
	7/02/12
	7/02/12
	7/12/12

Drawn by MKM
Designed by MKM
Checked by SAJ
Reviewed by JTB

Consultant

PB HDR

File Number

ACC No. 23126

G-SN-1003

DOTE_Mono_PDF_Half.pltcfg
T:\29014A-Streetcar\CAD\Sanitary_and_Storm\G-SN-1003.dgn
7/12/2012 5:14:13 PM

6200

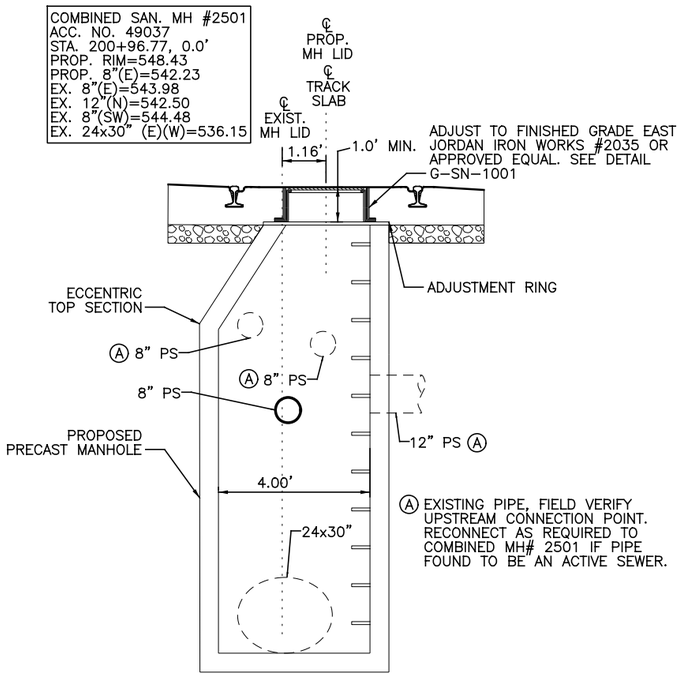

COMBINED SAN. MH# 2501

N.T.S.

NOTES:

1. MANHOLE DETAIL IS SHOWN FACING UP–STATION.

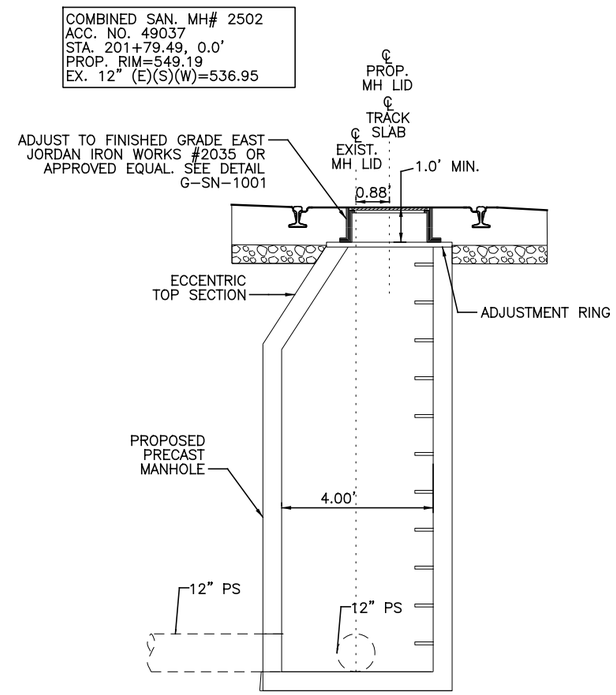

COMBINED SAN. MH# 2502

N.T.S.

NOTES:

1. MANHOLE DETAIL IS SHOWN FACING UP–STATION.

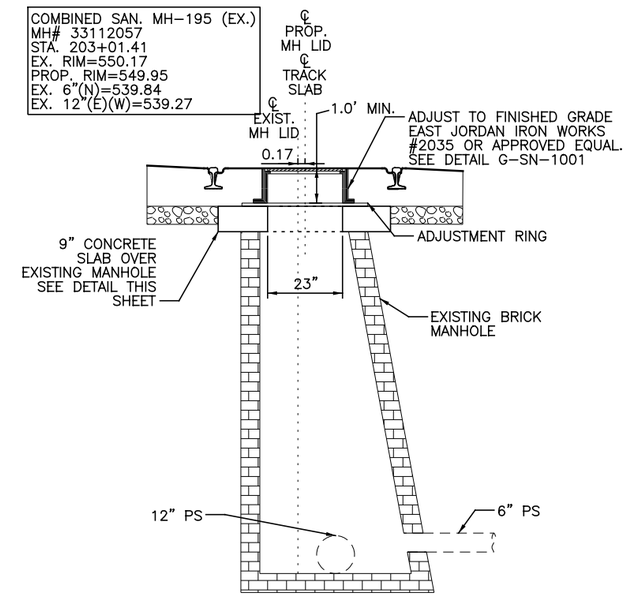

COMBINED SAN MH–195 (EX.)

N.T.S.

NOTES:

1. MANHOLE DETAIL IS SHOWN FACING UP–STATION.

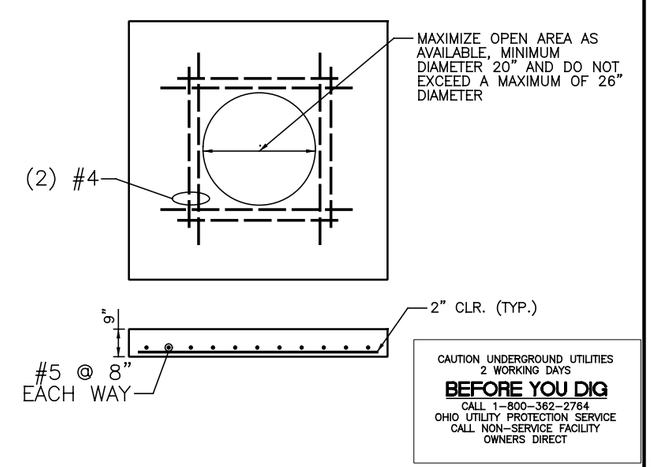

REINFORCED CONCRETE SLAB

N.T.S.

CONTRACT DRAWING

PRINTS NOT BEARING THIS STAMP WERE MADE PRIOR TO ADVERTISING FOR BIDS AND ARE TO BE CONSIDERED OBSOLETE FOR CONTRACT PURPOSES.

Department of Transportation and Engineering

City of Cincinnati
City Hall
801 Plum Street
Cincinnati, Ohio 45202

CINCINNATI STREETCAR OVER THE RHINE

COMBINED SANITARY SEWER AND STORM DRAINAGE DETAILS AND NOTES

Revisions

No.		

Drawn by CLW	Date 07/02/12
Designed by KAG	Date 07/02/12
Checked by DCJ	Date 07/02/12
Reviewed by JTB	Date 07/12/12

Consultant

PB HDR

File Number

ACC No. 23126

G-SN-1004

DOTE_Mono_PDF_Half.pltcfg
c:\pwworking\pitt\d0309045\S_G-SN-1004.dgn
Wednesday, July 11, 2012 11:22:18 AM

6200

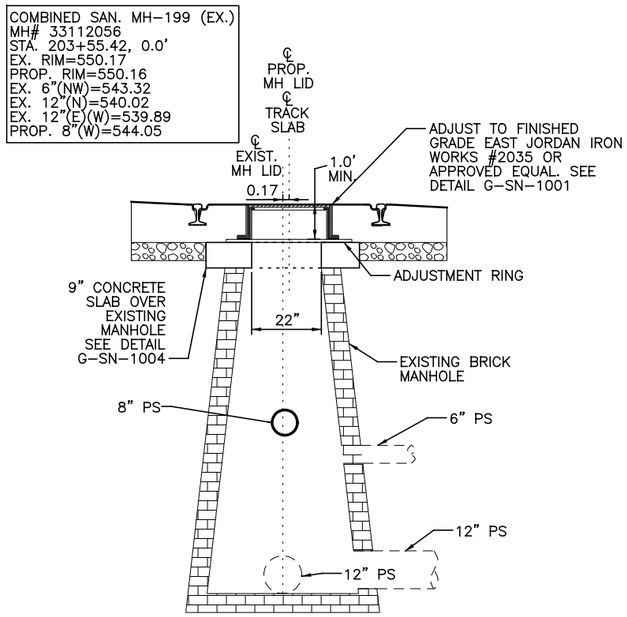

COMBINED SAN MH-199 (EX.)

N.T.S.

NOTES:

1. MANHOLE DETAIL IS SHOWN FACING UP-STATION.

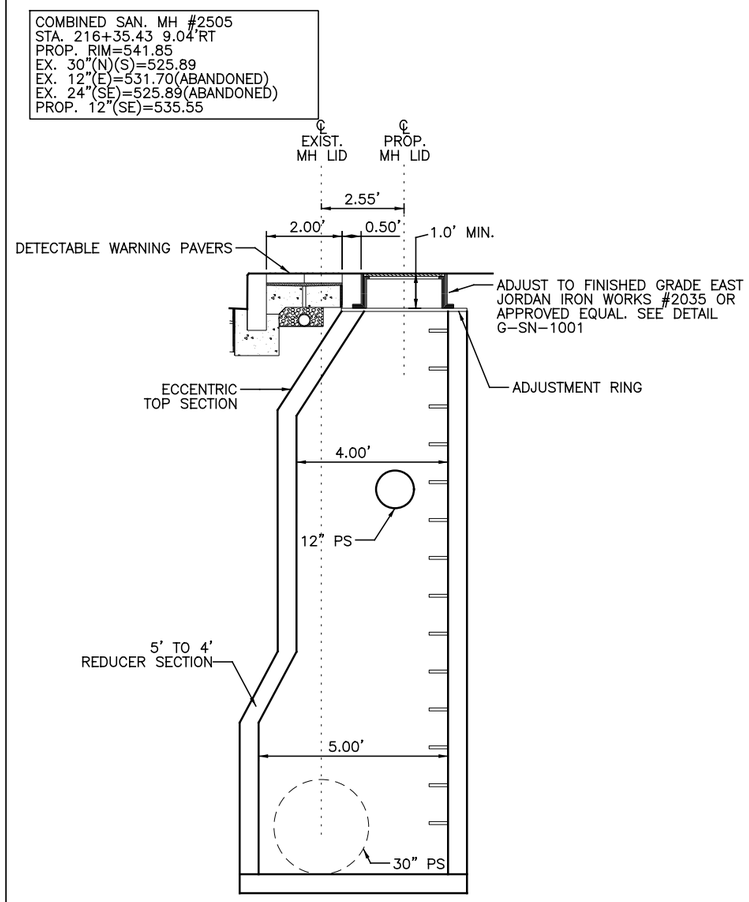

COMBINED SAN. MH# 2505

N.T.S.

NOTES:

1. PROPOSED ECCENTRIC CONE SECTION AND STANDARD PRECAST MANHOLE SECTIONS ARE TO BE COMPLIANT WITH MSDGC STANDARD DETAIL ACC. NO. 49037.
2. STEPS CONSTRUCTED OF RUBBER COATED CAST IRON, STAINLESS STEEL, OR FIBER REINFORCED PLASTIC SHALL BE PROVIDED ON ALL PROPOSED MANHOLES.
3. MANHOLE DETAIL IS SHOWN FACING UP-STATION.

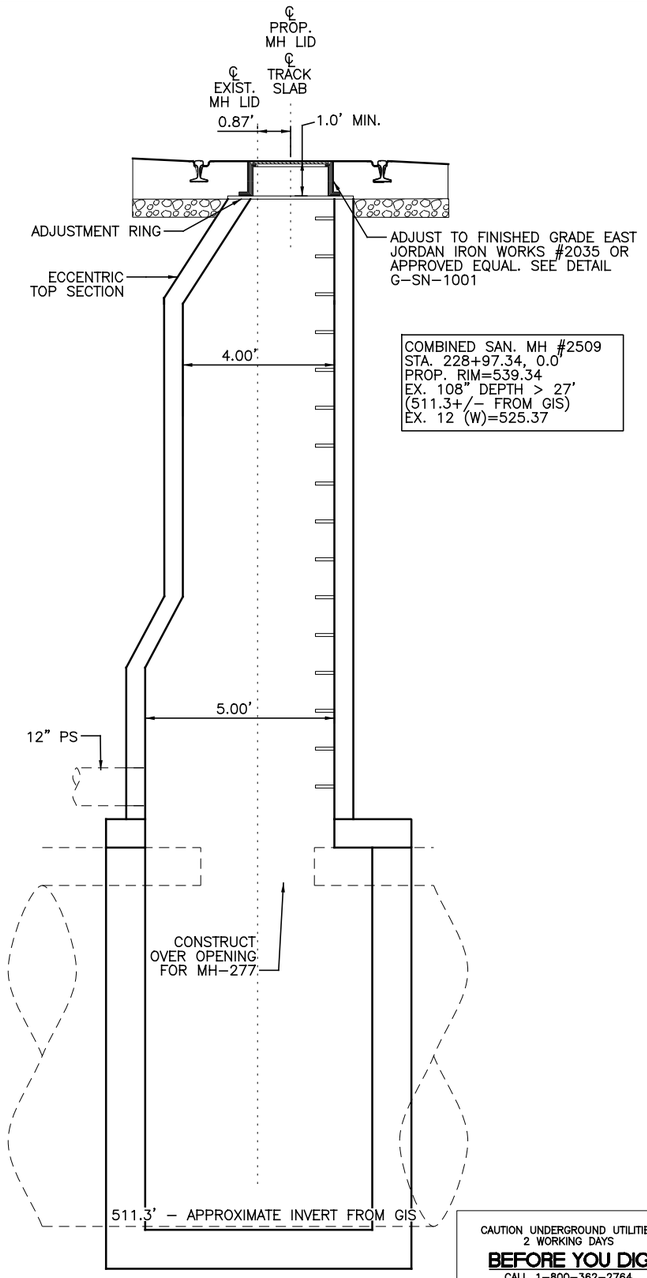

COMBINED SAN. MH# 2509

N.T.S.

NOTES:

1. PROPOSED ECCENTRIC CONE SECTION AND STANDARD PRECAST MANHOLE SECTIONS ARE TO BE COMPLIANT WITH MSDGC STANDARD DETAIL ACC. NO. 49037.
2. STEPS CONSTRUCTED OF RUBBER COATED CAST IRON, STAINLESS STEEL, OR FIBER REINFORCED PLASTIC SHALL BE PROVIDED ON ALL PROPOSED MANHOLES.
3. MANHOLE DETAIL IS SHOWN FACING UP-STATION.
4. CONTRACTOR SHALL VERIFY EXISTING 108" COMBINED SEWER INVERT AND TOP OF PIPE ELEVATION AND CONDITION. PROPOSED MANHOLE SHALL BE CONSTRUCTED ON THE EXISTING SEWER IN ACCORDANCE WITH ACC. NO. 49040.

CAUTION UNDERGROUND UTILITIES
2 WORKING DAYS
BEFORE YOU DIG
CALL 1-800-362-2764
OHIO UTILITY PROTECTION SERVICE
CALL NON-SERVICE FACILITY OWNERS DIRECT

CONTRACT DRAWING

PRINTS NOT BEARING THIS STAMP WERE MADE PRIOR TO ADVERTISING FOR BIDS AND ARE TO BE CONSIDERED OBSOLETE FOR CONTRACT PURPOSES.

Department of Transportation and Engineering

City of Cincinnati
City Hall
801 Plum Street
Cincinnati, Ohio 45202

CINCINNATI STREETCAR
OVER THE RHINE
COMBINED SANITARY SEWER AND STORM DRAINAGE DETAILS AND NOTES

Revisions

No.	Date
	07/02/12
	07/02/12
	07/02/12
	07/12/12

Drawn by CLW	Date 07/02/12
Designed by KAG	Date 07/02/12
Checked by DCJ	Date 07/02/12
Reviewed by JTB	Date 07/12/12

Consultant

PB HDR

File Number

ACC No. 23126

G-SN-1005

DOTE_Mono_PDF_Half.pltcfg
c:\pwworking\pitt\d0309045\S_G-SN-1005.dgn
Thursday, July 12, 2012 07:37:26 PM

6200

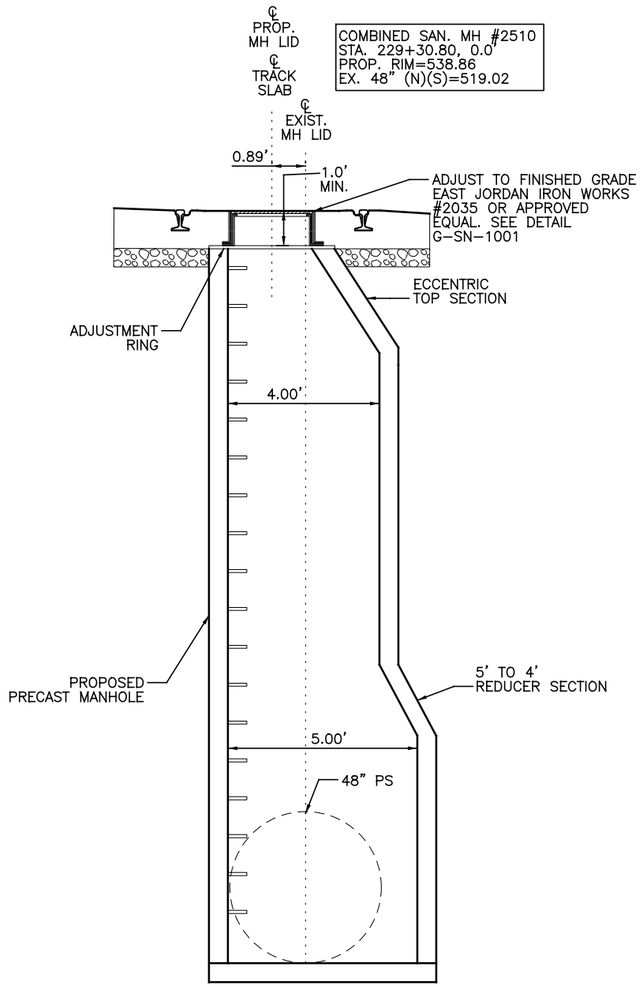

COMBINED SAN. MH# 2510

N.T.S.

NOTES:

1. PROPOSED ECCENTRIC CONE SECTION AND STANDARD PRECAST MANHOLE SECTIONS ARE TO BE COMPLIANT WITH MSDGC STANDARD DETAIL ACC. NO. 49037.
2. STEPS CONSTRUCTED OF RUBBER COATED CAST IRON, STAINLESS STEEL, OR FIBER REINFORCED PLASTIC SHALL BE PROVIDED ON ALL PROPOSED MANHOLES.
3. MANHOLE DETAIL IS SHOWN FACING UP–STATION.

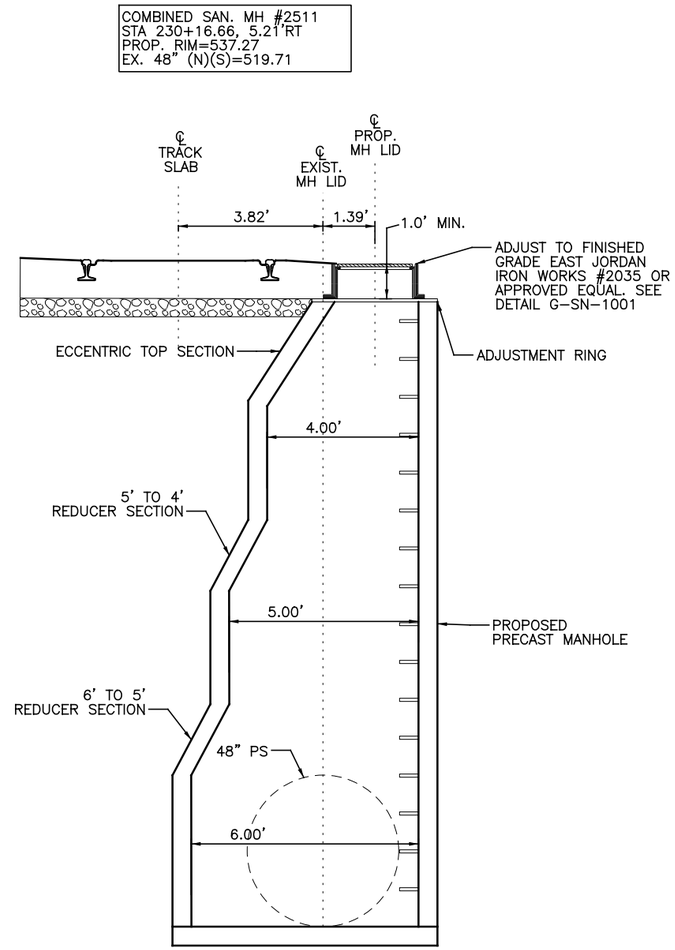

COMBINED SAN. MH# 2511

N.T.S.

NOTES:

1. PROPOSED ECCENTRIC CONE SECTION AND STANDARD PRECAST MANHOLE SECTIONS ARE TO BE COMPLIANT WITH MSDGC STANDARD DETAIL ACC. NO. 49037.
2. STEPS CONSTRUCTED OF RUBBER COATED CAST IRON, STAINLESS STEEL, OR FIBER REINFORCED PLASTIC SHALL BE PROVIDED ON ALL PROPOSED MANHOLES.
3. MANHOLE DETAIL IS SHOWN FACING UP–STATION.

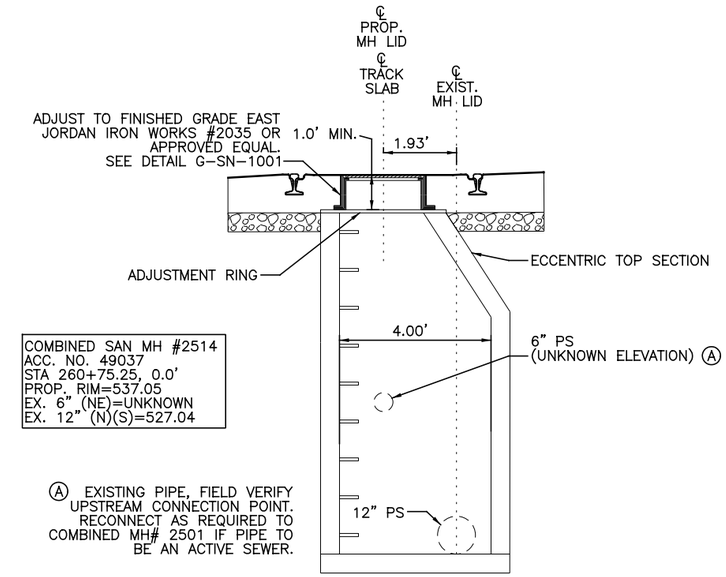

COMBINED SAN. MH# 2514

N.T.S.

NOTES:

1. MANHOLE DETAIL IS SHOWN FACING UP–STATION.

CAUTION UNDERGROUND UTILITIES
2 WORKING DAYS
BEFORE YOU DIG
CALL 1–800–362–2764
OHIO UTILITY PROTECTION SERVICE
CALL NON–SERVICE FACILITY
OWNERS DIRECT

CONTRACT DRAWING

PRINTS NOT BEARING THIS STAMP WERE MADE PRIOR TO ADVERTISING FOR BIDS AND ARE TO BE CONSIDERED OBSOLETE FOR CONTRACT PURPOSES.

Department of Transportation and Engineering

City of Cincinnati
City Hall
801 Plum Street
Cincinnati, Ohio 45202

CINCINNATI STREETCAR
OVER THE RHINE
COMBINED SANITARY SEWER AND STORM DRAINAGE DETAILS AND NOTES

Revisions
No.

	Date
Drawn by CLW	07/02/12
Designed by KAG	07/02/12
Checked by DCJ	07/02/12
Reviewed by JTB	07/12/12

Consultant

PB HDR

File Number

ACC No.
23126

G-SN-1006

DOTE_Mono_PDF_Half.pltcfg
c:\pwworking\pitt\d0309045\S_G-SN-1006.dgn
Wednesday, July 11, 2012 11:23:12 AM

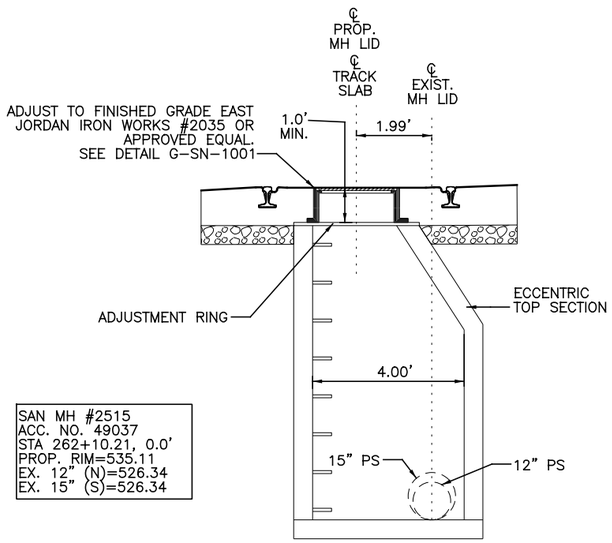

COMBINED SAN. MH# 2515

N.T.S.

NOTES:

1. MANHOLE DETAIL IS SHOWN FACING UP-STATION.

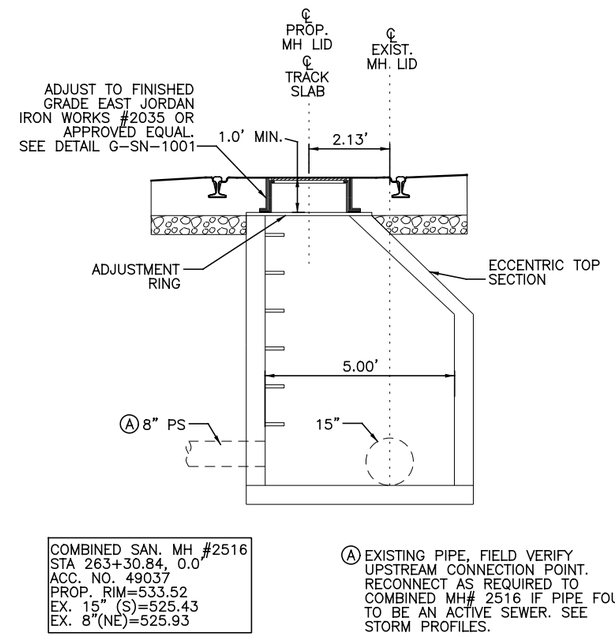

Ⓐ EXISTING PIPE, FIELD VERIFY UPSTREAM CONNECTION POINT. RECONNECT AS REQUIRED TO COMBINED MH# 2516 IF PIPE FOUND TO BE AN ACTIVE SEWER. SEE STORM PROFILES.

COMBINED SAN. MH# 2516

N.T.S.

NOTES:

1. MANHOLE DETAIL IS SHOWN FACING UP-STATION.

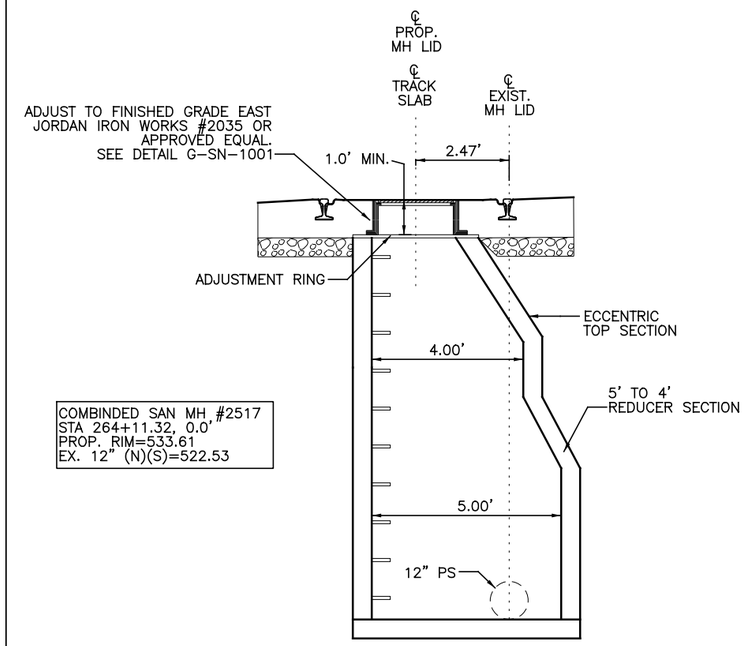

COMBINED SAN. MH# 2517

N.T.S.

NOTES:

1. PROPOSED ECCENTRIC CONE SECTION AND STANDARD PRECAST MANHOLE SECTIONS ARE TO BE COMPLIANT WITH MSDGC STANDARD DETAIL ACC. NO. 49037.
2. STEPS CONSTRUCTED OF RUBBER COATED CAST IRON, STAINLESS STEEL, OR FIBER REINFORCED PLASTIC SHALL BE PROVIDED ON ALL PROPOSED MANHOLES.
3. MANHOLE DETAIL IS SHOWN FACING UP-STATION.

CAUTION UNDERGROUND UTILITIES
2 WORKING DAYS
BEFORE YOU DIG
CALL 1-800-362-2764
OHIO UTILITY PROTECTION SERVICE
CALL NON-SERVICE FACILITY
OWNERS DIRECT

CONTRACT DRAWING

PRINTS NOT BEARING THIS STAMP WERE MADE PRIOR TO ADVERTISING FOR BIDS AND ARE TO BE CONSIDERED OBSOLETE FOR CONTRACT PURPOSES.

Department of Transportation and Engineering

City of Cincinnati
City Hall
801 Plum Street
Cincinnati, Ohio 45202

CINCINNATI STREETCAR OVER THE RHINE

COMBINED SANITARY SEWER AND STORM DRAINAGE DETAILS AND NOTES

Revisions

No.			

Drawn by CLW	Date 07/02/12	Designed by KAG	Date 07/02/12
Checked by DCJ	Date 07/02/12	Reviewed by JTB	Date 07/12/12

Consultant

PB HDR

File Number

ACC No.
23126

G-SN-1007

DOTE_Mono_PDF_Half.pltcfg
c:\pwworking\pitt\d0309045\S_G-SN-1007.dgn
Wednesday, July 11, 2012 11:23:02 AM

6200

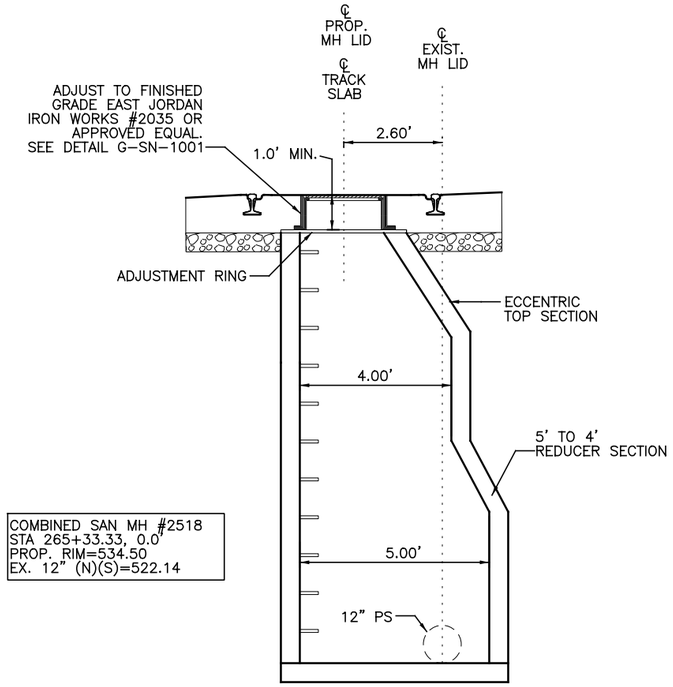

COMBINED SAN. MH# 2518

N.T.S.

NOTES:

1. PROPOSED ECCENTRIC CONE SECTION AND STANDARD PRECAST MANHOLE SECTIONS ARE TO BE COMPLIANT WITH MSDGC STANDARD DETAIL ACC. NO. 49037.
2. STEPS CONSTRUCTED OF RUBBER COATED CAST IRON, STAINLESS STEEL, OR FIBER REINFORCED PLASTIC SHALL BE PROVIDED ON ALL PROPOSED MANHOLES.
3. MANHOLE DETAIL IS SHOWN FACING UP-STATION.

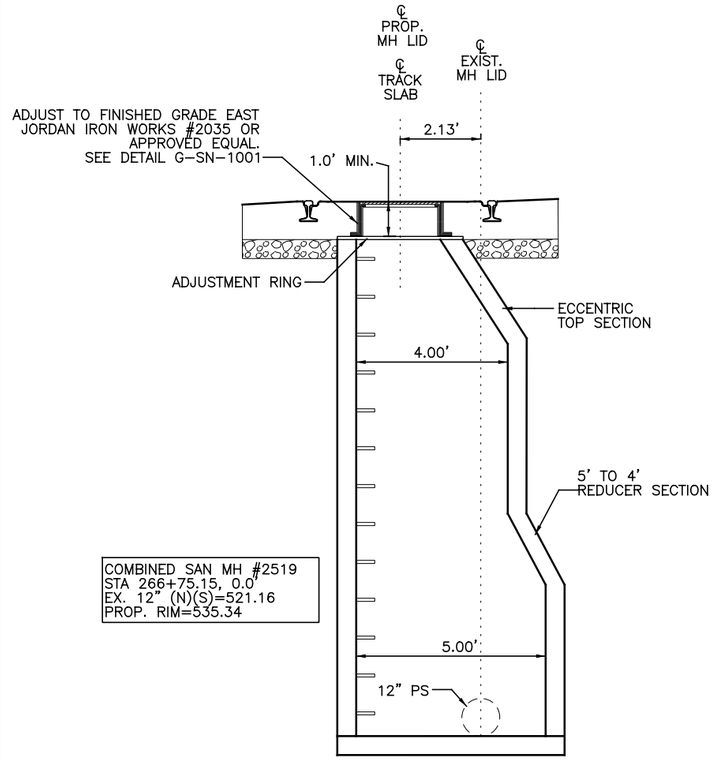

COMBINED SAN. MH# 2519

N.T.S.

NOTES:

1. PROPOSED ECCENTRIC CONE SECTION AND STANDARD PRECAST MANHOLE SECTIONS ARE TO BE COMPLIANT WITH MSDGC STANDARD DETAIL ACC. NO. 49037.
2. STEPS CONSTRUCTED OF RUBBER COATED CAST IRON, STAINLESS STEEL, OR FIBER REINFORCED PLASTIC SHALL BE PROVIDED ON ALL PROPOSED MANHOLES.
3. MANHOLE DETAIL IS SHOWN FACING UP-STATION.

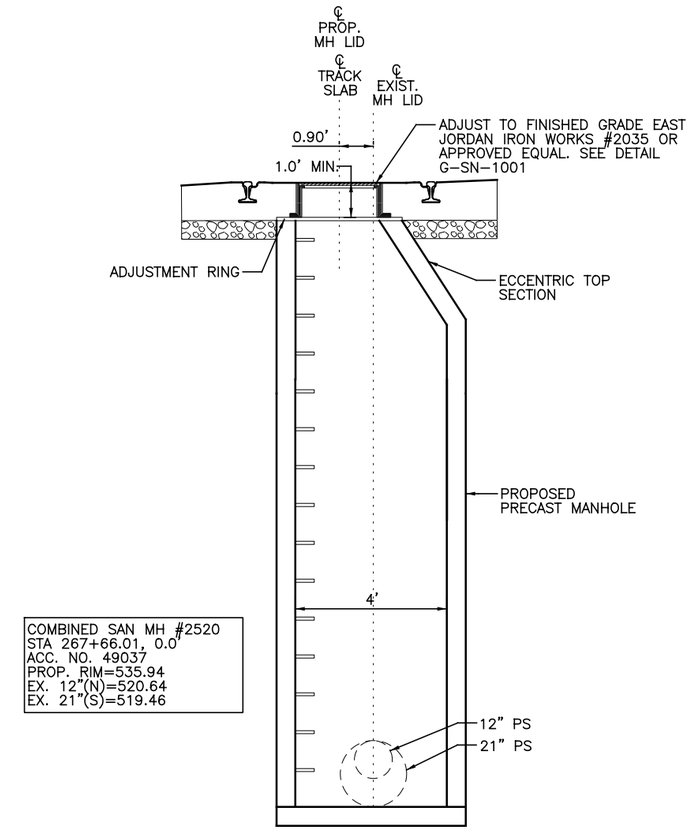

COMBINED SAN. MH# 2520

N.T.S.

NOTES:

1. MANHOLE DETAIL IS SHOWN FACING UP-STATION.

CAUTION UNDERGROUND UTILITIES
2 WORKING DAYS
BEFORE YOU DIG
CALL 1-800-362-2764
OHIO UTILITY PROTECTION SERVICE
CALL NON-SERVICE FACILITY
OWNERS DIRECT

CONTRACT DRAWING

PRINTS NOT BEARING THIS STAMP WERE MADE PRIOR TO ADVERTISING FOR BIDS AND ARE TO BE CONSIDERED OBSOLETE FOR CONTRACT PURPOSES.

Department of Transportation and Engineering

City of Cincinnati
City Hall
801 Plum Street
Cincinnati, Ohio 45202

CINCINNATI STREETCAR
OVER THE RHINE

COMBINED SANITARY SEWER AND STORM DRAINAGE DETAILS AND NOTES

Revisions

No.				

Drawn by CLW	Date 07/02/12
Designed by KAG	Date 07/02/12
Checked by DCJ	Date 07/02/12
Reviewed by JTB	Date 07/12/12

Consultant

PB HDR

File Number

ACC No.
23126

G-SN-1008

DOTE_Mono_PDF_Half.pltcfg
c:\pwworking\pitt\d0309045\S_G-SN-1008.dgn
Wednesday, July 11, 2012 11:23:42 AM

6200

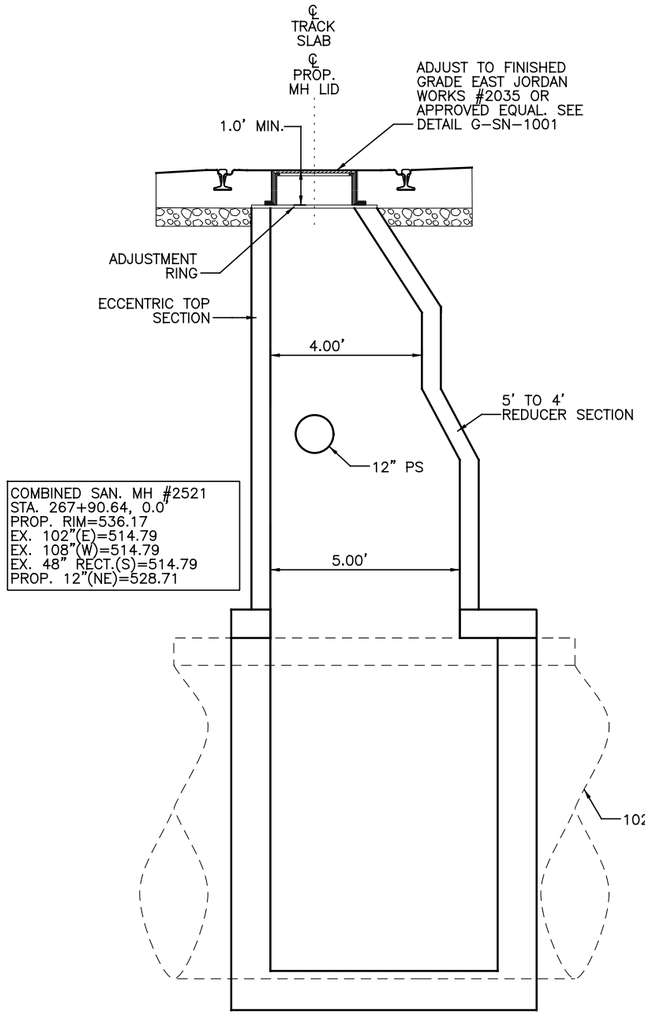

COMBINED SAN. MH# 2521

N.T.S.

NOTES:

1. PROPOSED ECCENTRIC CONE SECTION AND STANDARD PRECAST MANHOLE SECTIONS ARE TO BE COMPLIANT WITH MSDGC STANDARD DETAIL ACC. NO. 49037.
2. STEPS CONSTRUCTED OF RUBBER COATED CAST IRON, STAINLESS STEEL, OR FIBER REINFORCED PLASTIC SHALL BE PROVIDED ON ALL PROPOSED MANHOLES.
3. MANHOLE DETAIL IS SHOWN FACING UP-STATION.
4. CONTRACTOR SHALL VERIFY EXISTING 102" COMBINED SEWER INVERT AND TOP OF PIPE ELEVATION AND CONDITION. PROPOSED MANHOLE SHALL BE CONSTRUCTED ON THE EXISTING SEWER IN ACCORDANCE WITH ACC. NO. 49040.

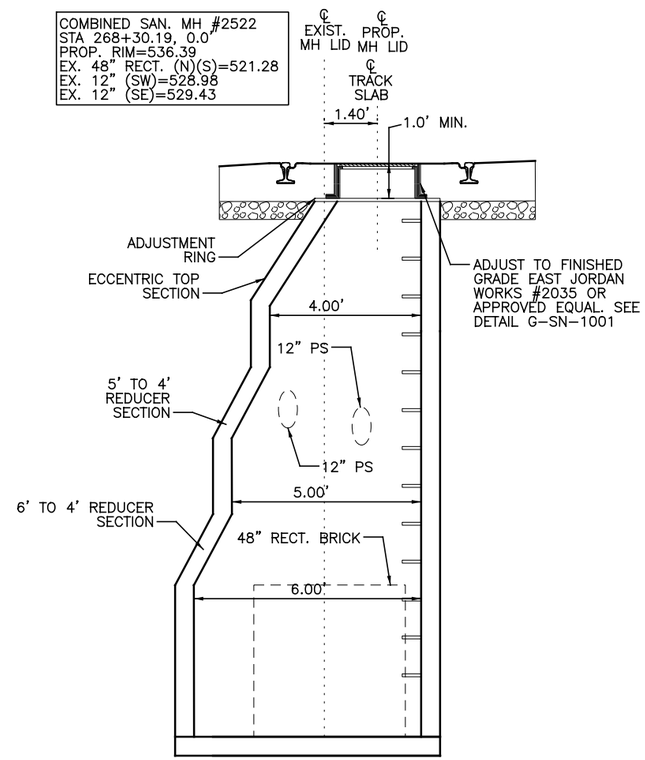

COMBINED SAN MH #2522

N.T.S.

NOTES:

1. PROPOSED ECCENTRIC CONE SECTION AND STANDARD PRECAST MANHOLE SECTIONS ARE TO BE COMPLIANT WITH MSDGC STANDARD DETAIL ACC. NO. 49037.
2. STEPS CONSTRUCTED OF RUBBER COATED CAST IRON, STAINLESS STEEL, OR FIBER REINFORCED PLASTIC SHALL BE PROVIDED ON ALL PROPOSED MANHOLES.
3. MANHOLE DETAIL IS SHOWN FACING UP-STATION.

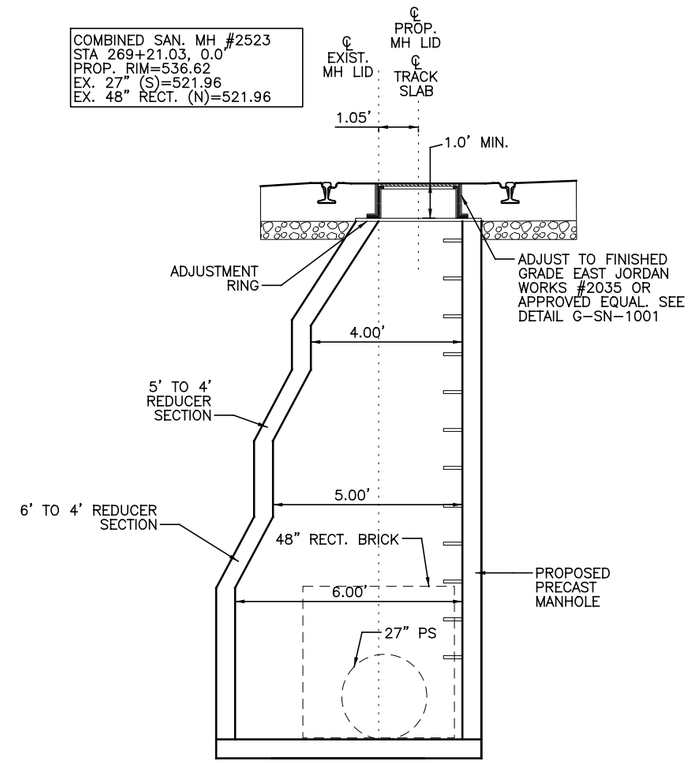

COMBINED SAN MH #2523

N.T.S.

NOTES:

1. PROPOSED ECCENTRIC CONE SECTION AND STANDARD PRECAST MANHOLE SECTIONS ARE TO BE COMPLIANT WITH MSDGC STANDARD DETAIL ACC. NO. 49037.
2. STEPS CONSTRUCTED OF RUBBER COATED CAST IRON, STAINLESS STEEL, OR FIBER REINFORCED PLASTIC SHALL BE PROVIDED ON ALL PROPOSED MANHOLES.
3. MANHOLE DETAIL IS SHOWN FACING UP-STATION.

CAUTION UNDERGROUND UTILITIES
2 WORKING DAYS
BEFORE YOU DIG
CALL 1-800-362-2764
OHIO UTILITY PROTECTION SERVICE
CALL NON-SERVICE FACILITY
OWNERS DIRECT

CONTRACT DRAWING

PRINTS NOT BEARING THIS STAMP WERE MADE PRIOR TO ADVERTISING FOR BIDS AND ARE TO BE CONSIDERED OBSOLETE FOR CONTRACT PURPOSES.

Department of Transportation and Engineering

City of Cincinnati
City Hall
801 Plum Street
Cincinnati, Ohio 45202

CINCINNATI STREETCAR
OVER THE RHINE
COMBINED SANITARY SEWER AND STORM DRAINAGE DETAILS AND NOTES

Revisions

No.				

Drawn by	Date	Designed by	Date	Checked by	Date	Reviewed by	Date
CLW	07/02/12	KAG	07/02/12	DCJ	07/02/12	JTB	07/12/12

Consultant

PB HDR

File Number

ACC No.
23126

G-SN-1009

DOTE_Mono_PDF_Half.pltcfg
c:\pwworking\pitt\d0309045\S_G-SN-1009.dgn
Thursday, July 12, 2012 07:37:25 PM

6200

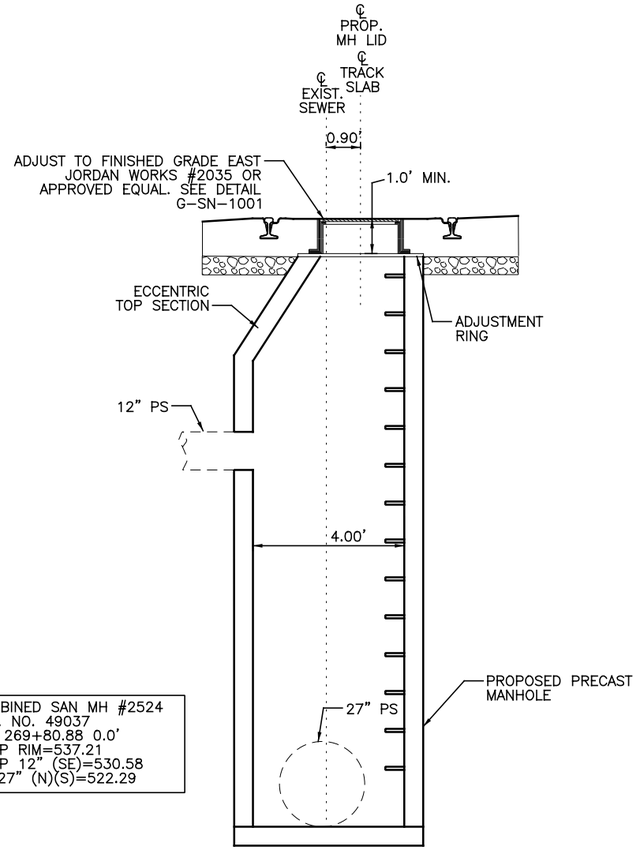

COMBINED SAN MH #2524
ACC. NO. 49037
STA 269+80.88 0.0'
PROP RIM=537.21
PROP 12" (SE)=530.58
EX 27" (N)(S)=522.29

COMBINED SAN MH #2524

N.T.S.

NOTES:

1. MANHOLE DETAIL IS SHOWN FACING UP-STATION.

COMBINED SAN. MH #2525
STA 271+45.72, 0.0'
PROP. RIM=538.68
EX. 24" (S)=523.26
EX. 27" (N)=523.26

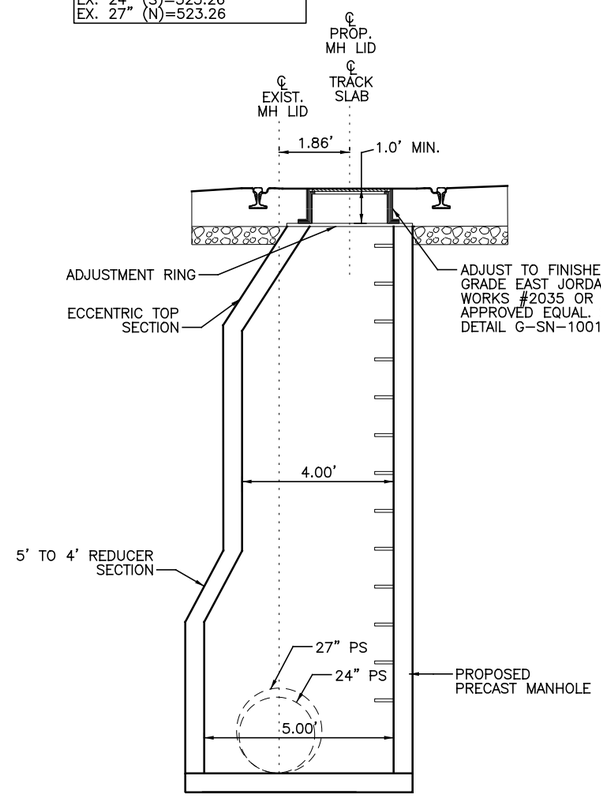

COMBINED SAN. MH #2525

N.T.S.

NOTES:

1. PROPOSED ECCENTRIC CONE SECTION AND STANDARD PRECAST MANHOLE SECTIONS ARE TO BE COMPLIANT WITH MSDGC STANDARD DETAIL ACC. NO. 49037.
2. STEPS CONSTRUCTED OF RUBBER COATED CAST IRON, STAINLESS STEEL, OR FIBER REINFORCED PLASTIC SHALL BE PROVIDED ON ALL PROPOSED MANHOLES.
3. MANHOLE DETAIL IS SHOWN FACING UP-STATION.

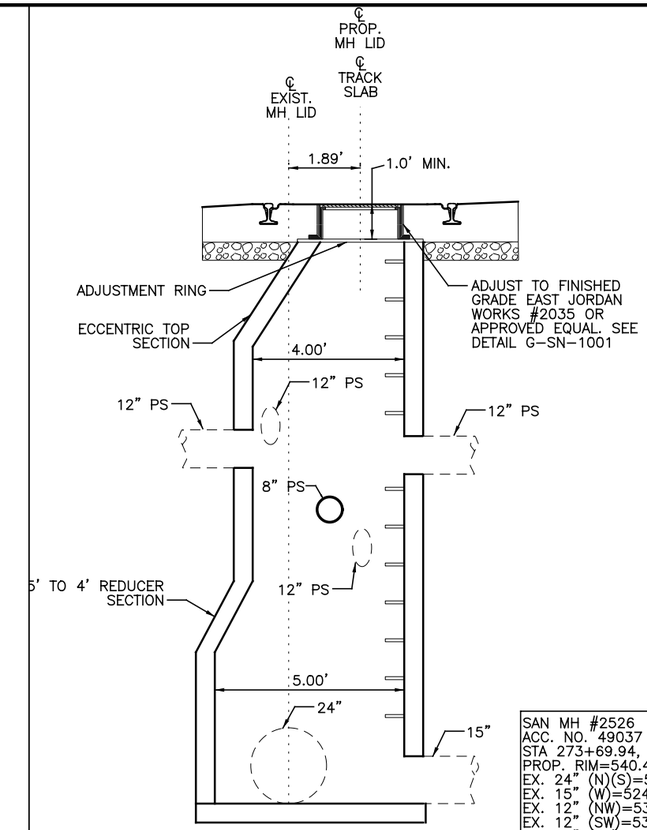

SAN MH #2526
ACC. NO. 49037
STA 273+69.94, 0.0'
PROP. RIM=540.43
EX. 24" (N)(S)=524.63
EX. 15" (W)=524.63
EX. 12" (NW)=533.33
EX. 12" (SW)=530.89
EX. 12" (SE)=534.11
EX. 12" (NE)=533.49
PROP 8" (S)=532.10

COMBINED SAN. MH #2526

N.T.S.

NOTES:

1. MANHOLE DETAIL IS SHOWN FACING UP-STATION.

CAUTION UNDERGROUND UTILITIES
2 WORKING DAYS
BEFORE YOU DIG
CALL 1-800-362-2764
OHIO UTILITY PROTECTION SERVICE
CALL NON-SERVICE FACILITY
OWNERS DIRECT

CONTRACT DRAWING

PRINTS NOT BEARING THIS STAMP WERE MADE PRIOR TO ADVERTISING FOR BIDS AND ARE TO BE CONSIDERED OBSOLETE FOR CONTRACT PURPOSES.

Department of Transportation and Engineering

City of Cincinnati
City Hall
801 Plum Street
Cincinnati, Ohio 45202

CINCINNATI STREETCAR OVER THE RHINE

COMBINED SANITARY SEWER AND STORM DRAINAGE DETAILS AND NOTES

Revisions

No.		

Drawn by CLW	Date 07/02/12
Designed by KAG	Date 07/02/12
Checked by DCJ	Date 07/02/12
Reviewed by JTB	Date 07/12/12

Consultant

PB HDR

File Number

ACC No.
23126

G-SN-1010

DOTE_Mono_PDF_Half.pltcfg
c:\pwworking\pitt\d0309045\S_G-SN-1010.dgn
Wednesday, July 11, 2012 11:24:08 AM

6200

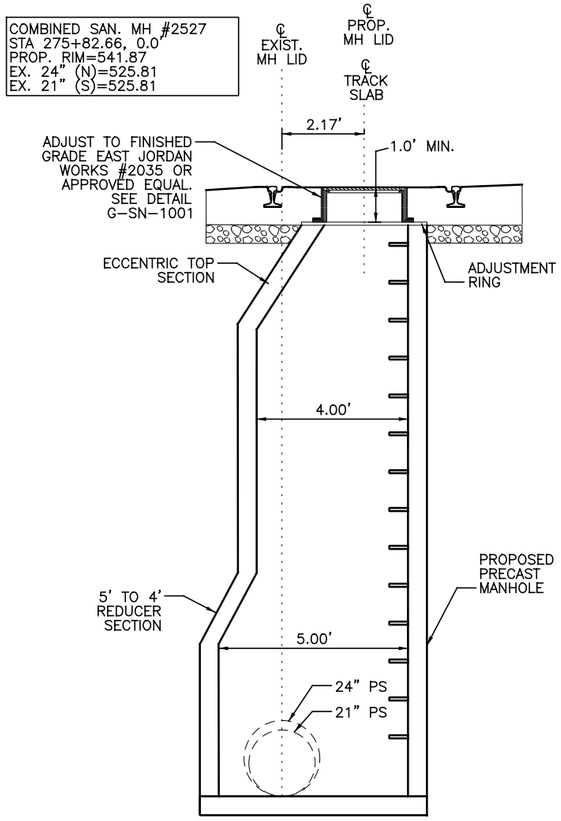

COMBINED SAN MH #2527

N.T.S.

NOTES:

1. PROPOSED ECCENTRIC CONE SECTION AND STANDARD PRECAST MANHOLE SECTIONS ARE TO BE COMPLIANT WITH MSDGC STANDARD DETAIL ACC. NO. 49037.
2. STEPS CONSTRUCTED OF RUBBER COATED CAST IRON, STAINLESS STEEL, OR FIBER REINFORCED PLASTIC SHALL BE PROVIDED ON ALL PROPOSED MANHOLES.
3. MANHOLE DETAIL IS SHOWN FACING UP–STATION.

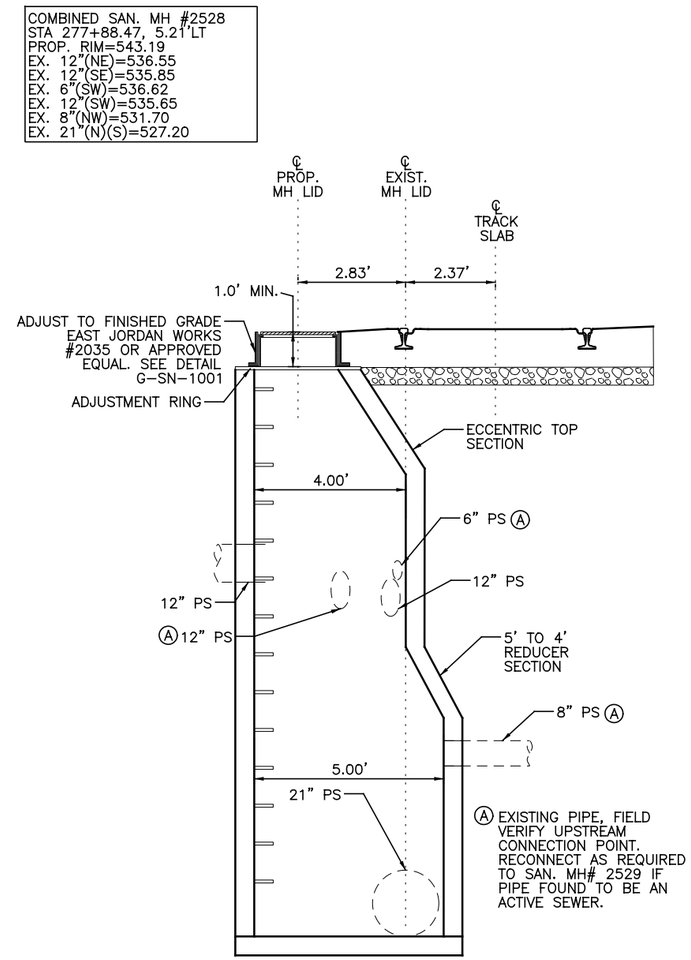

COMBINED SAN MH #2528

N.T.S.

NOTES:

1. PROPOSED ECCENTRIC CONE SECTION AND STANDARD PRECAST MANHOLE SECTIONS ARE TO BE COMPLIANT WITH MSDGC STANDARD DETAIL ACC. NO. 49037.
2. STEPS CONSTRUCTED OF RUBBER COATED CAST IRON, STAINLESS STEEL, OR FIBER REINFORCED PLASTIC SHALL BE PROVIDED ON ALL PROPOSED MANHOLES.
3. MANHOLE DETAIL IS SHOWN FACING UP–STATION.

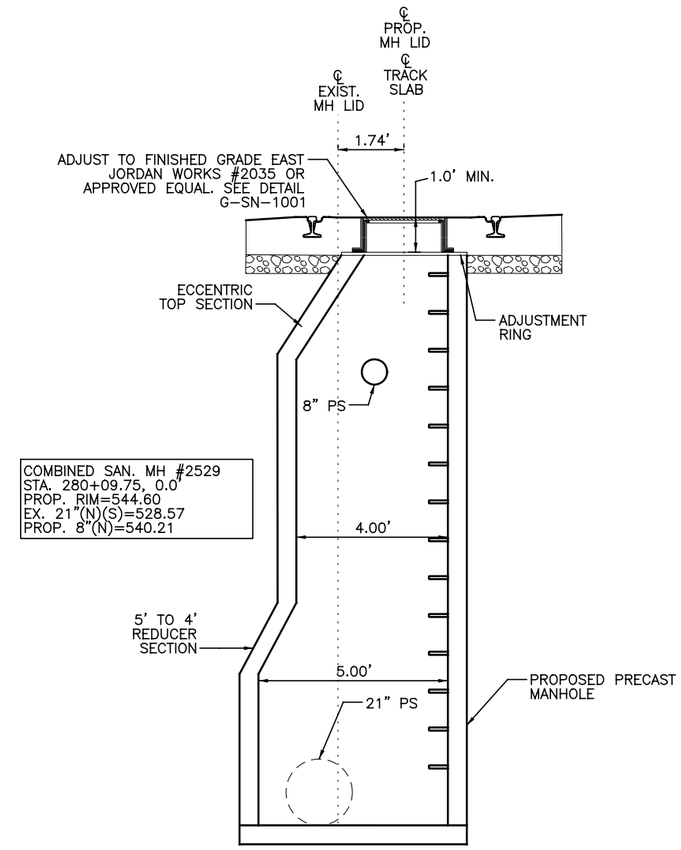

COMBINED SAN MH #2529

N.T.S.

NOTES:

1. PROPOSED ECCENTRIC CONE SECTION AND STANDARD PRECAST MANHOLE SECTIONS ARE TO BE COMPLIANT WITH MSDGC STANDARD DETAIL ACC. NO. 49037.
2. STEPS CONSTRUCTED OF RUBBER COATED CAST IRON, STAINLESS STEEL, OR FIBER REINFORCED PLASTIC SHALL BE PROVIDED ON ALL PROPOSED MANHOLES.
3. MANHOLE DETAIL IS SHOWN FACING UP–STATION.

CAUTION UNDERGROUND UTILITIES
2 WORKING DAYS
BEFORE YOU DIG
CALL 1–800–362–2764
OHIO UTILITY PROTECTION SERVICE
CALL NON–SERVICE FACILITY
OWNERS DIRECT

CONTRACT DRAWING

PRINTS NOT BEARING THIS STAMP WERE MADE PRIOR TO ADVERTISING FOR BIDS AND ARE TO BE CONSIDERED OBSOLETE FOR CONTRACT PURPOSES.

Department of Transportation and Engineering

City of Cincinnati
801 Plum Street
Cincinnati, Ohio 45202

CINCINNATI STREETCAR OVER THE RHINE

COMBINED SANITARY SEWER AND STORM DRAINAGE DETAILS AND NOTES

Revisions

No.				

Drawn by	Designed by	Checked by	Reviewed by
CLW	KAG	DCJ	JTB
Date 07/02/12	Date 07/02/12	Date 07/02/12	Date 07/12/12

Consultant

PB HDR

File Number

ACC No.
23126

G-SN-1011

6200

DOTE_Mono_PDF_Half.pltcfg
c:\pwworking\pitt\d0309045\S_G-SN-1011.dgn
Wednesday, July 11, 2012 11:24:12 AM

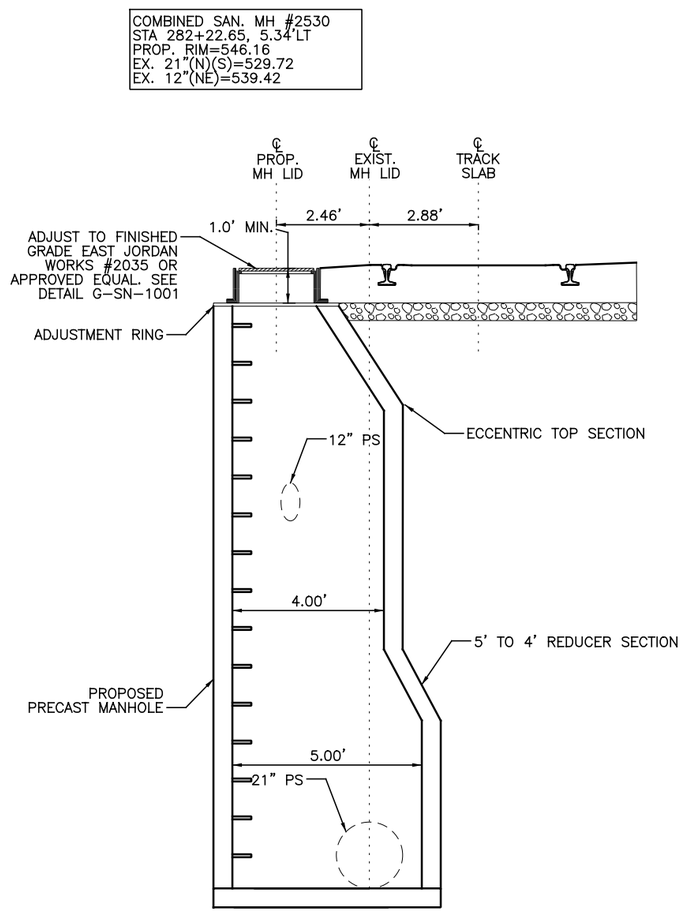

COMBINED SAN MH #2530

N.T.S.

NOTES:

1. PROPOSED ECCENTRIC CONE SECTION AND STANDARD PRECAST MANHOLE SECTIONS ARE TO BE COMPLIANT WITH MSDGC STANDARD DETAIL ACC. NO. 49037.
2. STEPS CONSTRUCTED OF RUBBER COATED CAST IRON, STAINLESS STEEL, OR FIBER REINFORCED PLASTIC SHALL BE PROVIDED ON ALL PROPOSED MANHOLES.
3. MANHOLE DETAIL IS SHOWN FACING UP–STATION.

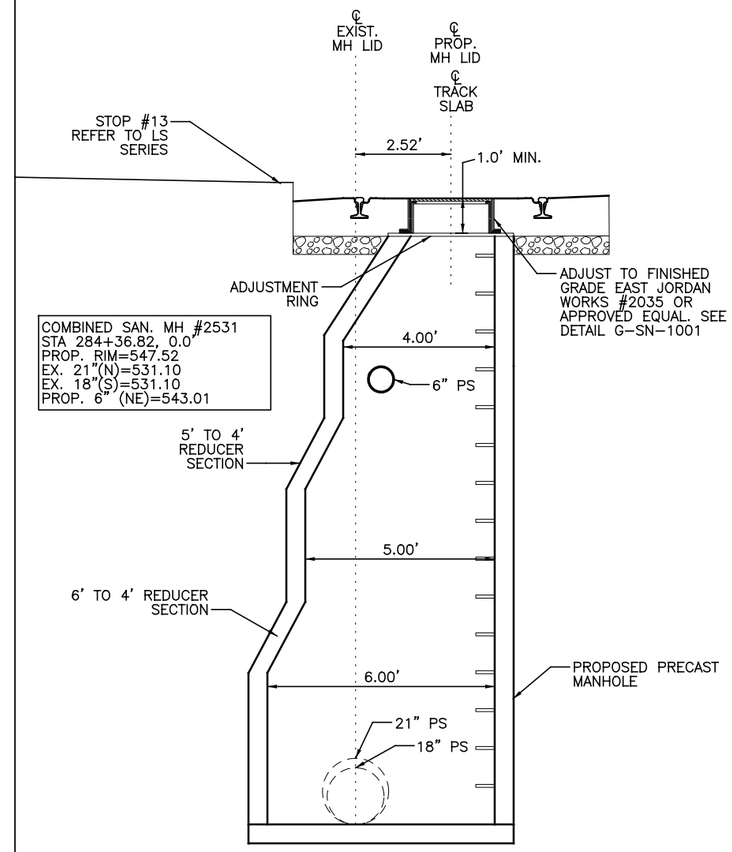

COMBINED SAN MH #2531

N.T.S.

NOTES:

1. PROPOSED ECCENTRIC CONE SECTION AND STANDARD PRECAST MANHOLE SECTIONS ARE TO BE COMPLIANT WITH MSDGC STANDARD DETAIL ACC. NO. 49037.
2. STEPS CONSTRUCTED OF RUBBER COATED CAST IRON, STAINLESS STEEL, OR FIBER REINFORCED PLASTIC SHALL BE PROVIDED ON ALL PROPOSED MANHOLES.
3. MANHOLE DETAIL IS SHOWN FACING UP–STATION.

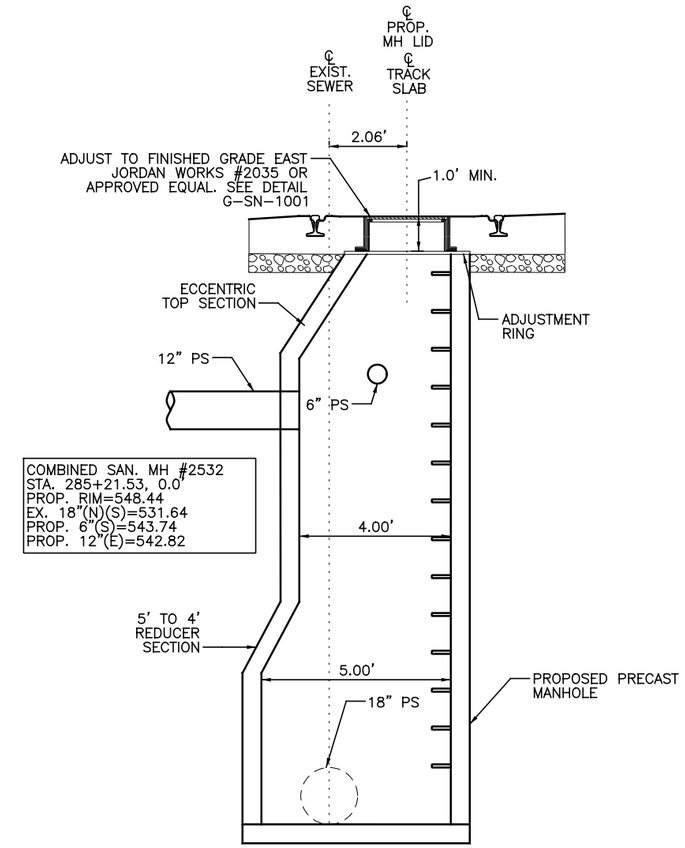

COMBINED SAN MH #2532

N.T.S.

NOTES:

1. PROPOSED ECCENTRIC CONE SECTION AND STANDARD PRECAST MANHOLE SECTIONS ARE TO BE COMPLIANT WITH MSDGC STANDARD DETAIL ACC. NO. 49037.
2. STEPS CONSTRUCTED OF RUBBER COATED CAST IRON, STAINLESS STEEL, OR FIBER REINFORCED PLASTIC SHALL BE PROVIDED ON ALL PROPOSED MANHOLES.
3. MANHOLE DETAIL IS SHOWN FACING UP–STATION.

CAUTION UNDERGROUND UTILITIES
2 WORKING DAYS
BEFORE YOU DIG
CALL 1–800–362–2764
OHIO UTILITY PROTECTION SERVICE
CALL NON–SERVICE FACILITY OWNERS DIRECT

CONTRACT DRAWING

PRINTS NOT BEARING THIS STAMP WERE MADE PRIOR TO ADVERTISING FOR BIDS AND ARE TO BE CONSIDERED OBSOLETE FOR CONTRACT PURPOSES.

Department of Transportation and Engineering

City of Cincinnati
City Hall
801 Plum Street
Cincinnati, Ohio 45202

CINCINNATI STREETCAR OVER THE RHINE

COMBINED SANITARY SEWER AND STORM DRAINAGE DETAILS AND NOTES

Revisions

No.				

Drawn by	Designed by	Checked by	Reviewed by
CLW	KAG	DCJ	JTB
Date 07/02/12	Date 07/02/12	Date 07/02/12	Date 07/12/12

Consultant

PB HDR

File Number

ACC No.
23126

G-SN-1012

DOTE_Mono_PDF_Half.pltcfg
c:\pwworking\pitt\d0309045\S_G-SN-1012.dgn
Wednesday, July 11, 2012 11:24:15 AM

6200

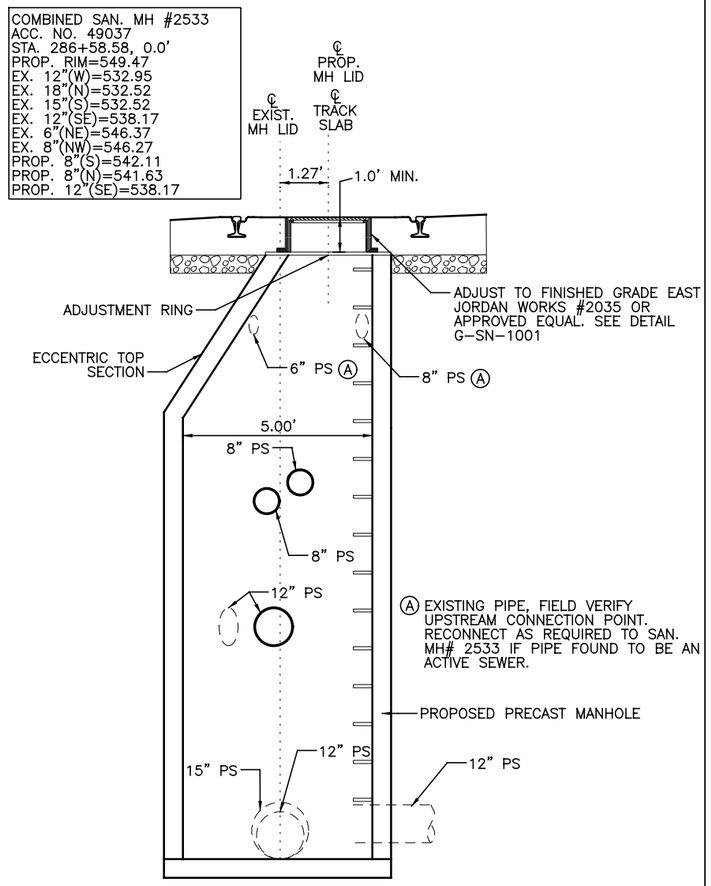

COMBINED SAN MH #2533

N.T.S.

NOTES:

1. MANHOLE DETAIL IS SHOWN FACING UP–STATION, ALONG RACE STREET ALIGNMENT.

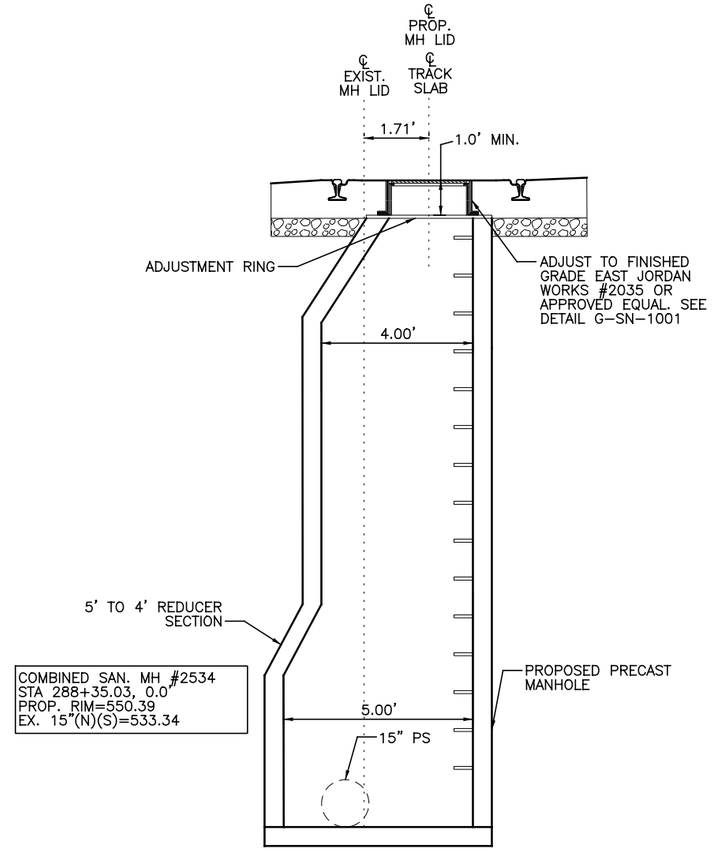

COMBINED SAN MH #2534

N.T.S.

NOTES:

1. PROPOSED ECCENTRIC CONE SECTION AND STANDARD PRECAST MANHOLE SECTIONS ARE TO BE COMPLIANT WITH MSDGC STANDARD DETAIL ACC. NO. 49037.
2. STEPS CONSTRUCTED OF RUBBER COATED CAST IRON, STAINLESS STEEL, OR FIBER REINFORCED PLASTIC SHALL BE PROVIDED ON ALL PROPOSED MANHOLES.
3. MANHOLE DETAIL IS SHOWN FACING UP–STATION.

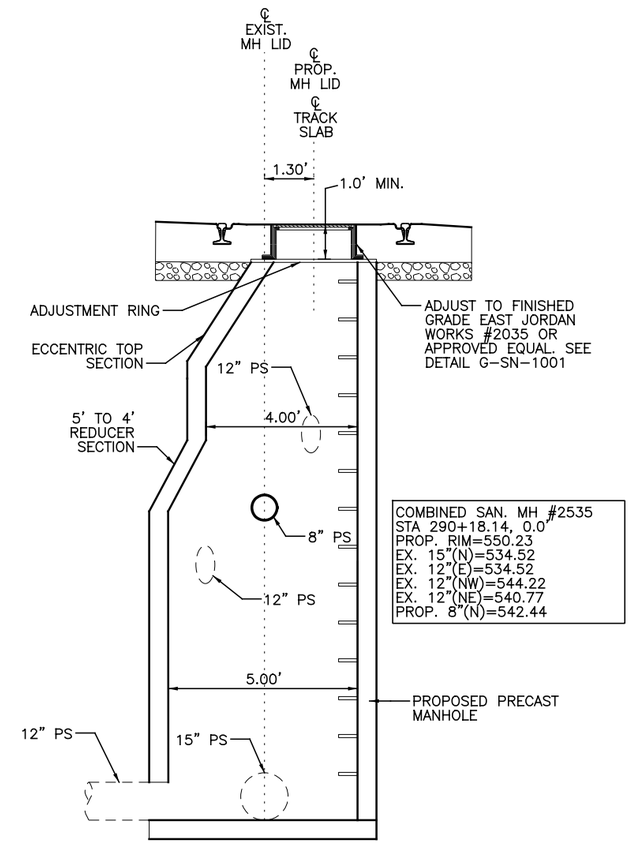

COMBINED SAN MH #2535

N.T.S.

NOTES:

1. PROPOSED ECCENTRIC CONE SECTION AND STANDARD PRECAST MANHOLE SECTIONS ARE TO BE COMPLIANT WITH MSDGC STANDARD DETAIL ACC. NO. 49037.
2. STEPS CONSTRUCTED OF RUBBER COATED CAST IRON, STAINLESS STEEL, OR FIBER REINFORCED PLASTIC SHALL BE PROVIDED ON ALL PROPOSED MANHOLES.
3. MANHOLE DETAIL IS SHOWN FACING UP–STATION.

CAUTION UNDERGROUND UTILITIES
2 WORKING DAYS
BEFORE YOU DIG
CALL 1–800–362–2764
OHIO UTILITY PROTECTION SERVICE
CALL NON–SERVICE FACILITY OWNERS DIRECT

CONTRACT DRAWING

PRINTS NOT BEARING THIS STAMP WERE MADE PRIOR TO ADVERTISING FOR BIDS AND ARE TO BE CONSIDERED OBSOLETE FOR CONTRACT PURPOSES.

Department of Transportation and Engineering

City of Cincinnati
801 Plum Street
Cincinnati, Ohio 45202

CINCINNATI STREETCAR
OVER THE RHINE
COMBINED SANITARY SEWER AND STORM DRAINAGE DETAILS AND NOTES

Revisions

No.		

Drawn by CLW	Date 07/02/12
Designed by KAG	Date 07/02/12
Checked by DCJ	Date 07/02/12
Reviewed by JTB	Date 07/12/12

Consultant

PB HDR

File Number

ACC No.
23126

G-SN-1013

DOTE_Mono_PDF_Half.pltcfg
c:\pwworking\pitt\d0309045\S_G-SN-1013.dgn
Wednesday, July 11, 2012 11:24:18 AM

6200

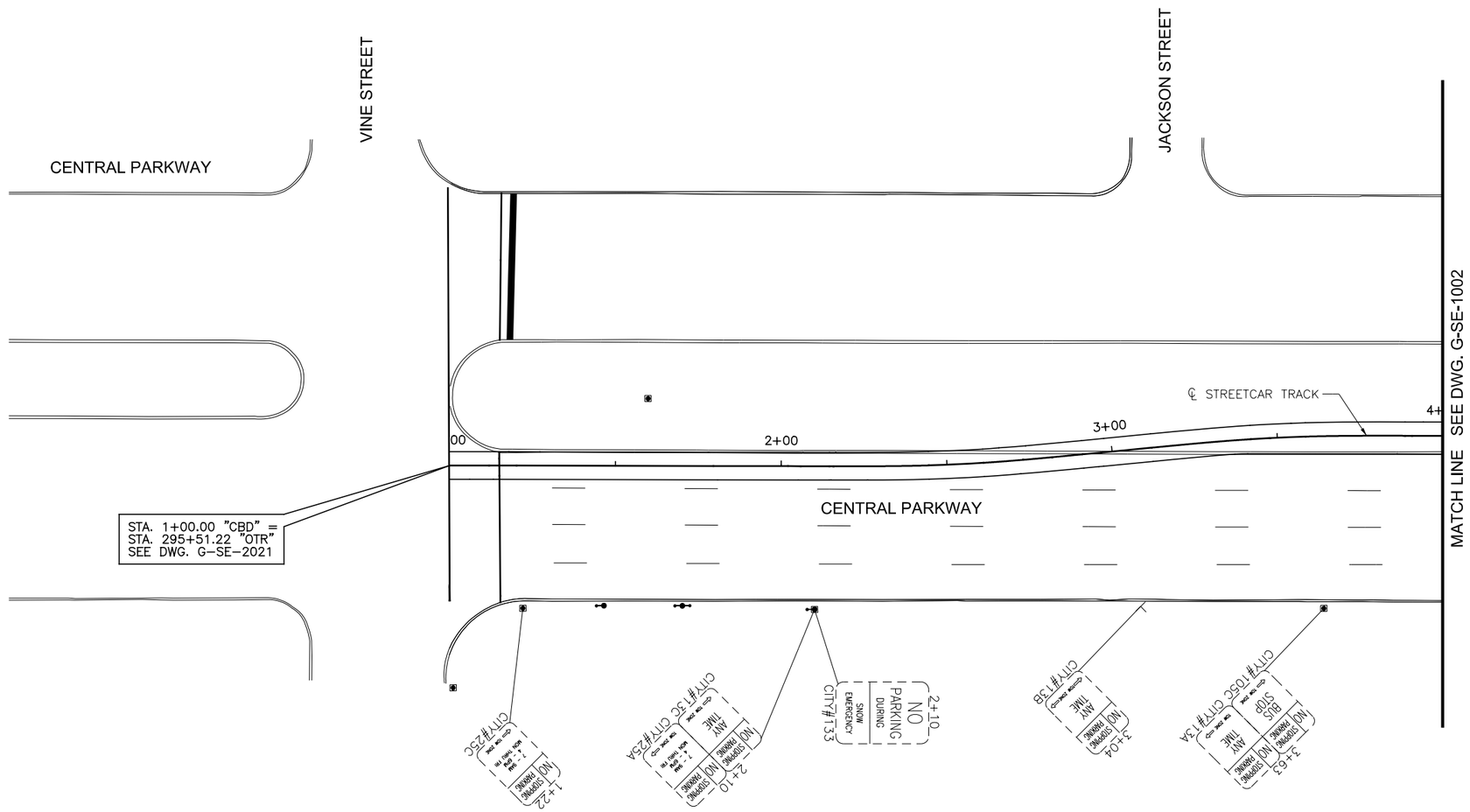

LEGEND

- EXISTING LIGHT POLE
- EXISTING POLE
- EXISTING SIGN POST
- SINGLE PARKING METER
- DOUBLE PARKING METER

CAUTION UNDERGROUND UTILITIES
2 WORKING DAYS
BEFORE YOU DIG
CALL 1-800-362-2764
OHIO UTILITY PROTECTION SERVICE
CALL NON-SERVICE FACILITY
OWNERS DIRECT

GRAPHIC SCALE

20 0 20 40 80

(IN FEET)
1 inch = 20 ft. Full Size
1 inch = 40 ft. Half Size

DOTE_Mono_PDF_Half.pltcfg
T:\29014A-Streetcar\CAD\Traffic_Control\Signing and Marking\S_G-SE-1001.dgn
7/11/2012 11:52:03 AM

CONTRACT DRAWING

PRINTS NOT BEARING THIS STAMP WERE MADE PRIOR TO ADVERTISING FOR BID, AND ARE TO BE CONSIDERED OBSOLETE FOR CONTRACT PURPOSES.

Department of Transportation and Engineering

City of Cincinnati
City Hall
801 Plum Street
Cincinnati, Ohio 45202

CINCINNATI STREETCAR
CENTRAL BUSINESS DISTRICT
EXISTING SIGNING PLAN - CENTRAL PARKWAY
STA 1+00 TO STA 4+00

Revisions

No.		

Date	7/02/12
Drawn by	AAG
Date	7/02/12
Designed by	AAG
Date	7/02/12
Checked by	JTB
Date	7/12/12
Reviewed by	JTB

Consultant

PB HDR

File Number

ACC No.
23126

G-SE-1001

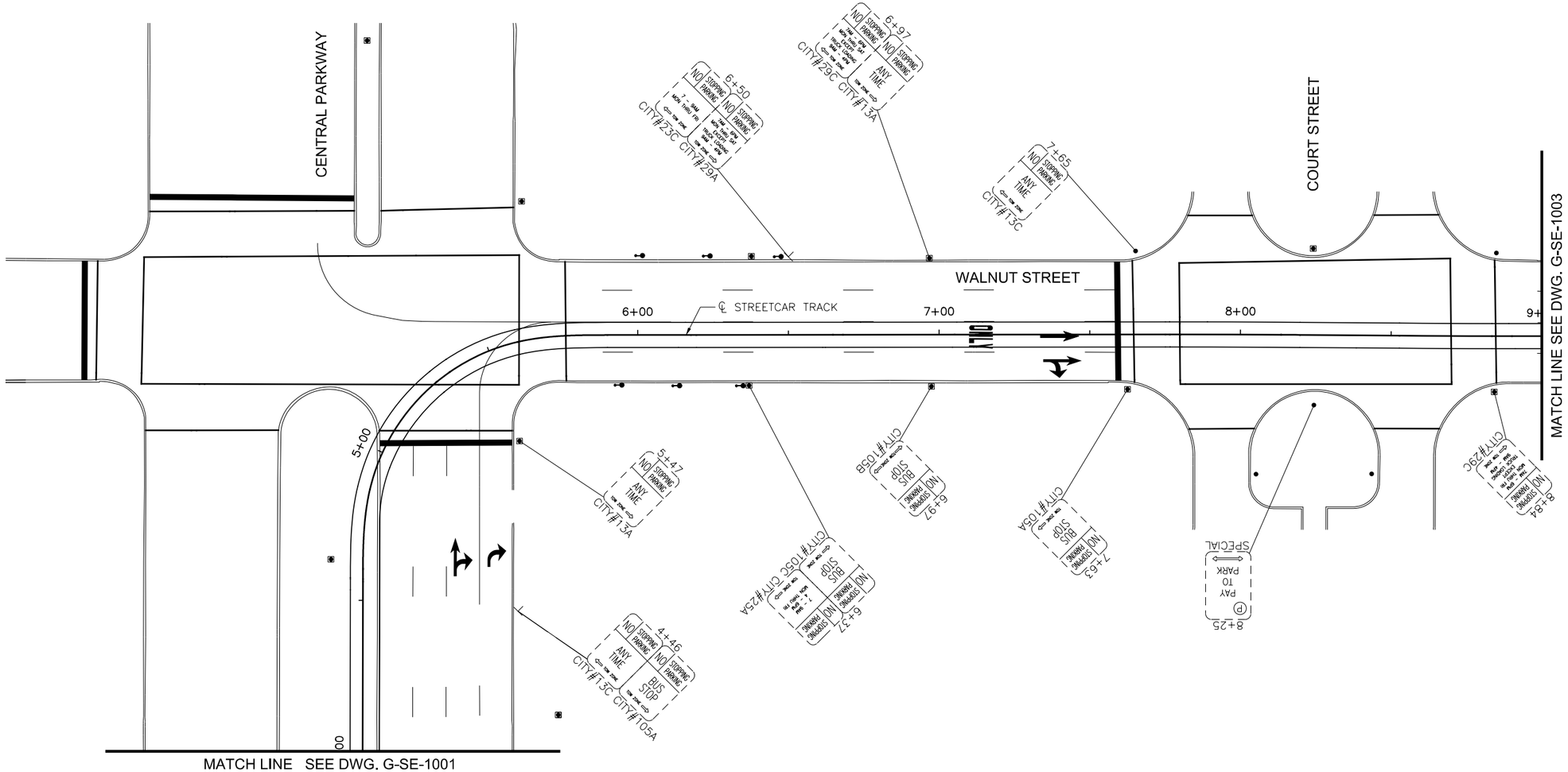

LEGEND

- EXISTING LIGHT POLE
- EXISTING POLE
- EXISTING SIGN POST
- SINGLE PARKING METER
- DOUBLE PARKING METER

CAUTION UNDERGROUND UTILITIES
2 WORKING DAYS
BEFORE YOU DIG
CALL 1-800-362-2764
OHIO UTILITY PROTECTION SERVICE
CALL NON-SERVICE FACILITY
OWNERS DIRECT

GRAPHIC SCALE

20 0 20 40 80

(IN FEET)
1 inch = 20 ft. Full Size
1 inch = 40 ft. Half Size

DOTE_Mono_PDF_Half.pltcfg
T:\29014A-Streetcar\CAD\Traffic_Control\Signing and Marking\S_G-SE-1002.dgn
7/11/2012 11:52:04 AM

CONTRACT DRAWING

PRINTS NOT BEARING THIS STAMP WERE MADE PRIOR TO ADVERTISING FOR BID AND ARE TO BE CONSIDERED OBSOLETE FOR CONTRACT PURPOSES.

Department of Transportation and Engineering

City of Cincinnati
City Hall
801 Plum Street
Cincinnati, Ohio 45202

CINCINNATI STREETCAR
CENTRAL BUSINESS DISTRICT
EXISTING SIGNING PLAN - WALNUT STREET STA 4+00 TO STA 9+00

Revisions

No.		Date

	Date
Drawn by AAG	7/02/12
Designed by AAG	7/02/12
Checked by JTB	7/02/12
Reviewed by JTB	7/12/12

Consultant

PB HDR

File Number

ACC No. 23126

G-SE-1002

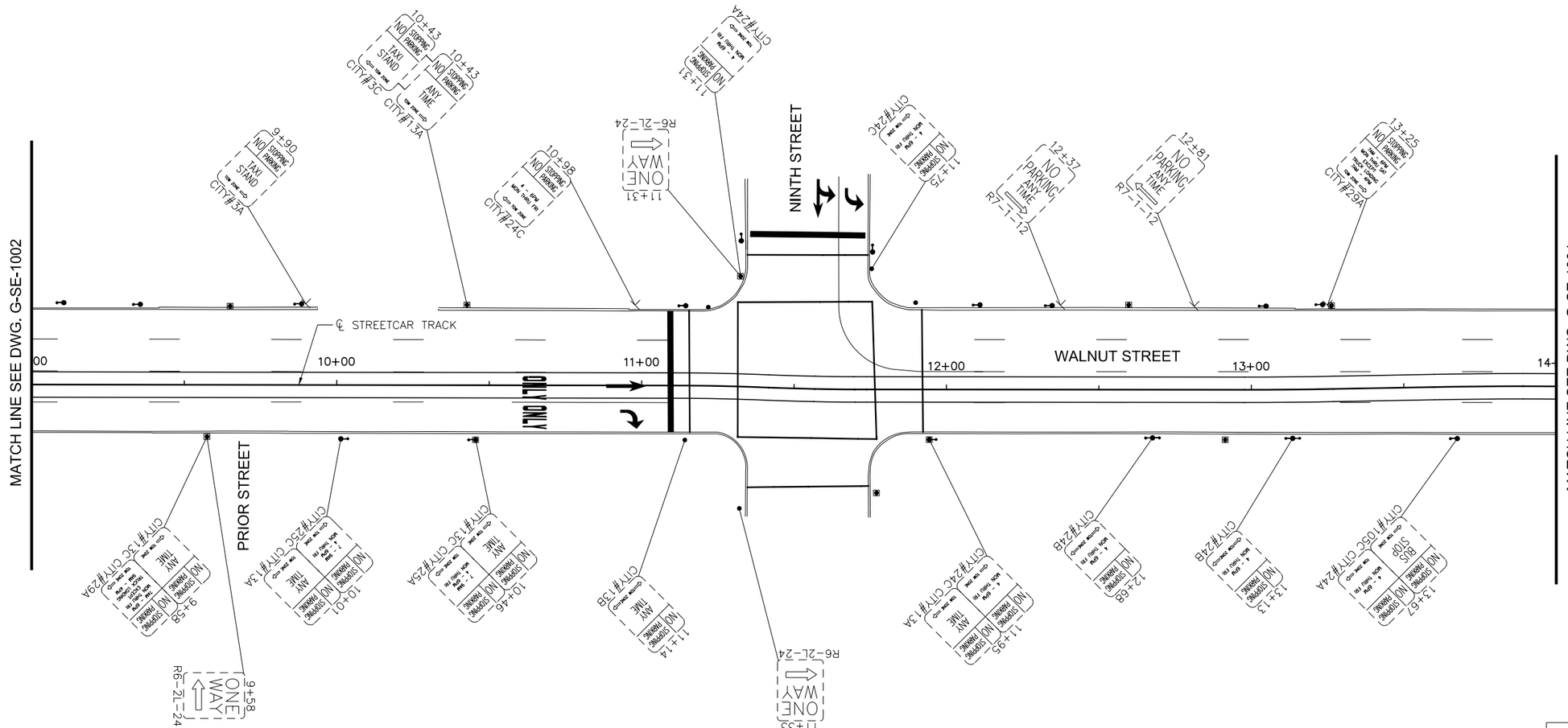

LEGEND

- EXISTING LIGHT POLE
- EXISTING POLE
- EXISTING SIGN POST
- SINGLE PARKING METER
- DOUBLE PARKING METER

CAUTION UNDERGROUND UTILITIES
2 WORKING DAYS
BEFORE YOU DIG
CALL 1-800-362-2764
OHIO UTILITY PROTECTION SERVICE
CALL NON-SERVICE FACILITY
OWNERS DIRECT

GRAPHIC SCALE
20 0 20 40 80
(IN FEET)
1 inch = 20 ft. Full Size
1 inch = 40 ft. Half Size

DOTE_Mono_PDF_Half.pltcfg
T:\29014A-Streetcar\CAD\Traffic_Control\Signing and Marking\S_G-SE-1003.dgn
7/11/2012 11:52:05 AM

DEPARTMENT OF TRANSPORTATION & ENGINEERING CITY OF CINCINNATI OHIO

CONTRACT DRAWING

PRINTS NOT BEARING THIS STAMP WERE MADE PRIOR TO ADVERTISING FOR BIDS AND ARE TO BE CONSIDERED OBSOLETE FOR CONTRACT PURPOSES.

Department of Transportation and Engineering

City of Cincinnati
City Hall
801 Plum Street
Cincinnati, Ohio 45202

CINCINNATI STREETCAR
CENTRAL BUSINESS DISTRICT
EXISTING SIGNING PLAN - WALNUT STREET
STA 9+00 TO STA 14+00

Revisions

No.		

Date 7/02/12
Date 7/02/12
Date 7/02/12
Date 7/12/12

Drawn by AAG
Designed by AAG
Checked by JTB
Reviewed by JTB

Consultant

PB HDR

File Number

ACC No. 23126

G-SE-1003

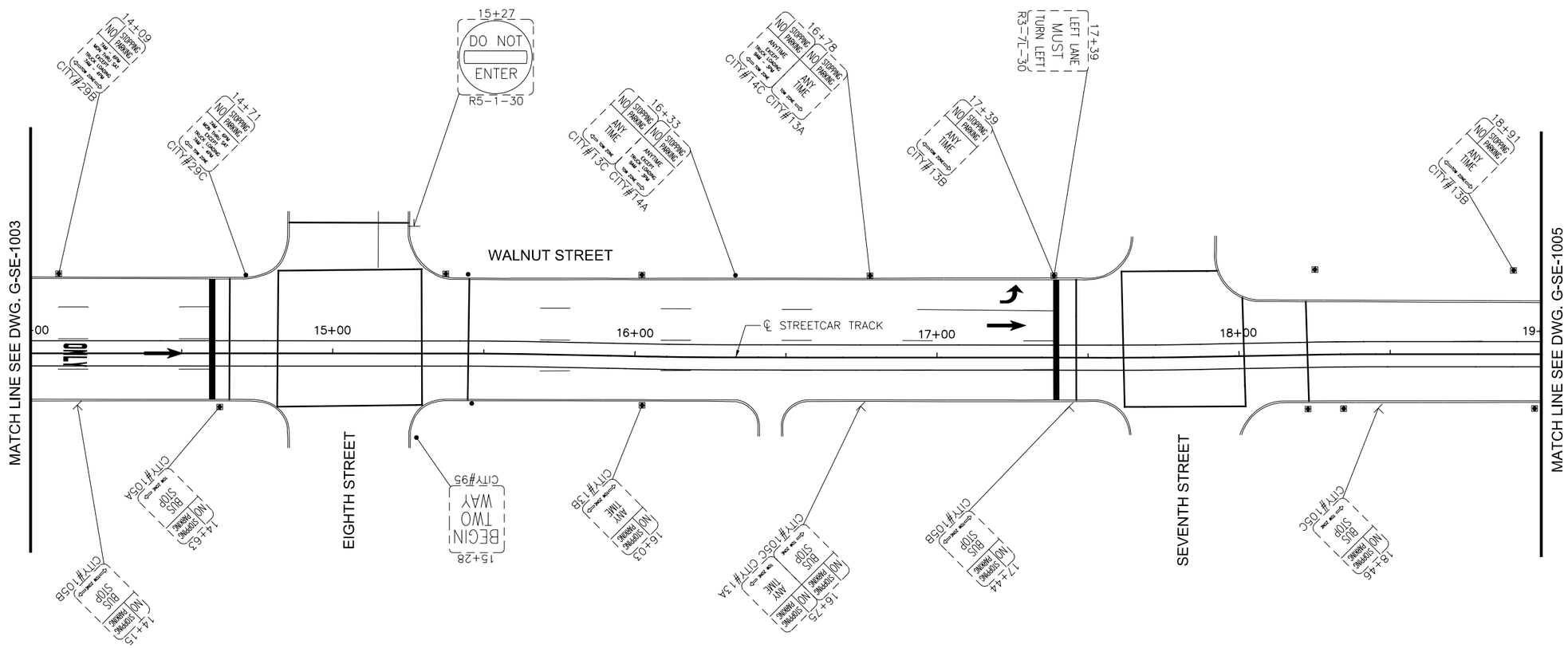

LEGEND

- EXISTING LIGHT POLE
- EXISTING POLE
- EXISTING SIGN POST
- SINGLE PARKING METER
- DOUBLE PARKING METER

CAUTION UNDERGROUND UTILITIES
2 WORKING DAYS
BEFORE YOU DIG
CALL 1-800-362-2764
OHIO UTILITY PROTECTION SERVICE
CALL NON-SERVICE FACILITY
OWNERS DIRECT

GRAPHIC SCALE

20 0 20 40 80

(IN FEET)
1 inch = 20 ft. Full Size
1 inch = 40 ft. Half Size

DOTE_Mono_PDF_Half.pltcfg
T:\29014A-Streetcar\CAD\Traffic_Control\Signing and Marking\S_G-SE-1004.dgn
7/11/2012 11:52:06 AM

CONTRACT DRAWING

PRINTS NOT BEARING THIS STAMP WERE MADE PRIOR TO ADVERTISING FOR BIDS AND ARE TO BE CONSIDERED OBSOLETE FOR CONTRACT PURPOSES.

Department of Transportation and Engineering

City of Cincinnati
City Hall
801 Plum Street
Cincinnati, Ohio 45202

CINCINNATI STREETCAR
CENTRAL BUSINESS DISTRICT
EXISTING SIGNING PLAN - WALNUT STREET
STA 14+00 TO STA 19+00

Revisions

No.		Date
		7/02/12
		7/02/12
		7/02/12
		7/12/12

Drawn by AAG	Date 7/02/12
Designed by AAG	Date 7/02/12
Checked by JTB	Date 7/02/12
Reviewed by JTB	Date 7/12/12

Consultant

PB HDR

File Number

ACC No. 23126

G-SE-1004

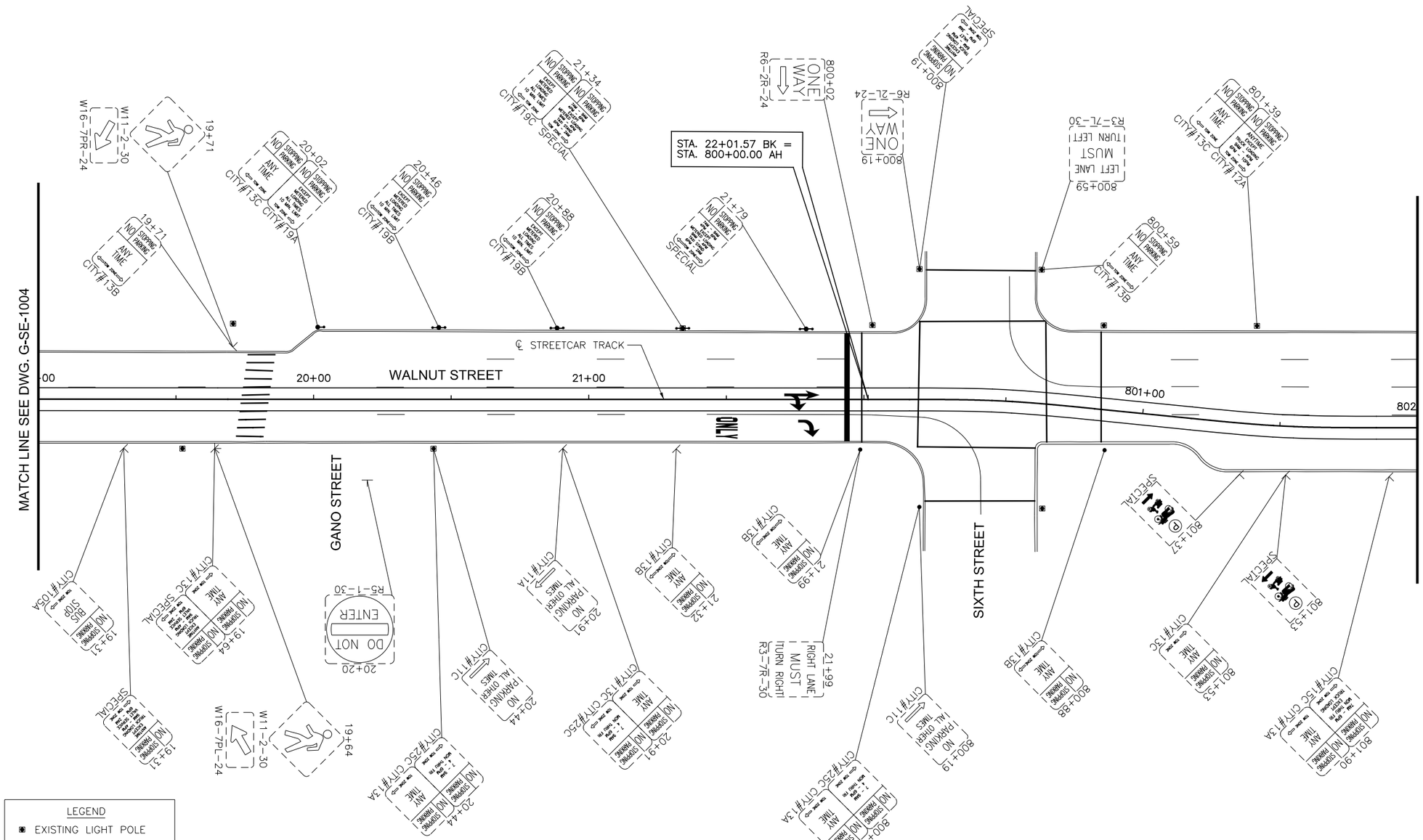

LEGEND

- EXISTING LIGHT POLE
- EXISTING POLE
- EXISTING SIGN POST
- SINGLE PARKING METER
- DOUBLE PARKING METER
- REMOVAL
- PROPOSED POLE
- PROPOSED SIGN POST

NOTE:
ALL EXISTING SIGNS WILL BE REPLACED UNLESS OTHERWISE NOTED BY REMOVAL SYMBOL.

GRAPHIC SCALE

20 0 20 40 80

(IN FEET)
1 inch = 20 ft. Full Size
1 inch = 40 ft. Half Size

CAUTION UNDERGROUND UTILITIES
2 WORKING DAYS
BEFORE YOU DIG
CALL 1-800-362-2764
OHIO UTILITY PROTECTION SERVICE
CALL NON-SERVICE FACILITY
OWNERS DIRECT

DEPARTMENT OF TRANSPORTATION & ENGINEERING
CITY OF CINCINNATI
OHIO

CONTRACT DRAWING

PRINTS NOT BEARING THIS STAMP WERE MADE PRIOR TO ADVERTISING FOR BIDS AND ARE TO BE CONSIDERED OBSOLETE FOR CONTRACT PURPOSES.

Department of Transportation and Engineering

City of Cincinnati
City Hall
801 Plum Street
Cincinnati, Ohio 45202

CINCINNATI STREETCAR
CENTRAL BUSINESS DISTRICT
EXISTING SIGNING AND MARKING PLAN
WALNUT STREET
STA 19+00 TO STA 802+00

Revisions

No.	Date	Drawn by	Date	Designed by	Date	Checked by	Date	Reviewed by

Consultant

PB HDR

File Number

ACC No.
23126

G-SE-1005

DOTE_Mono_PDF_Half.pltcfg
T:\29014A-Streetcar\CAD\Traffic_Control\Signing and Marking\S_G-SE-1005.dgn
7/11/2012 11:52:07 AM

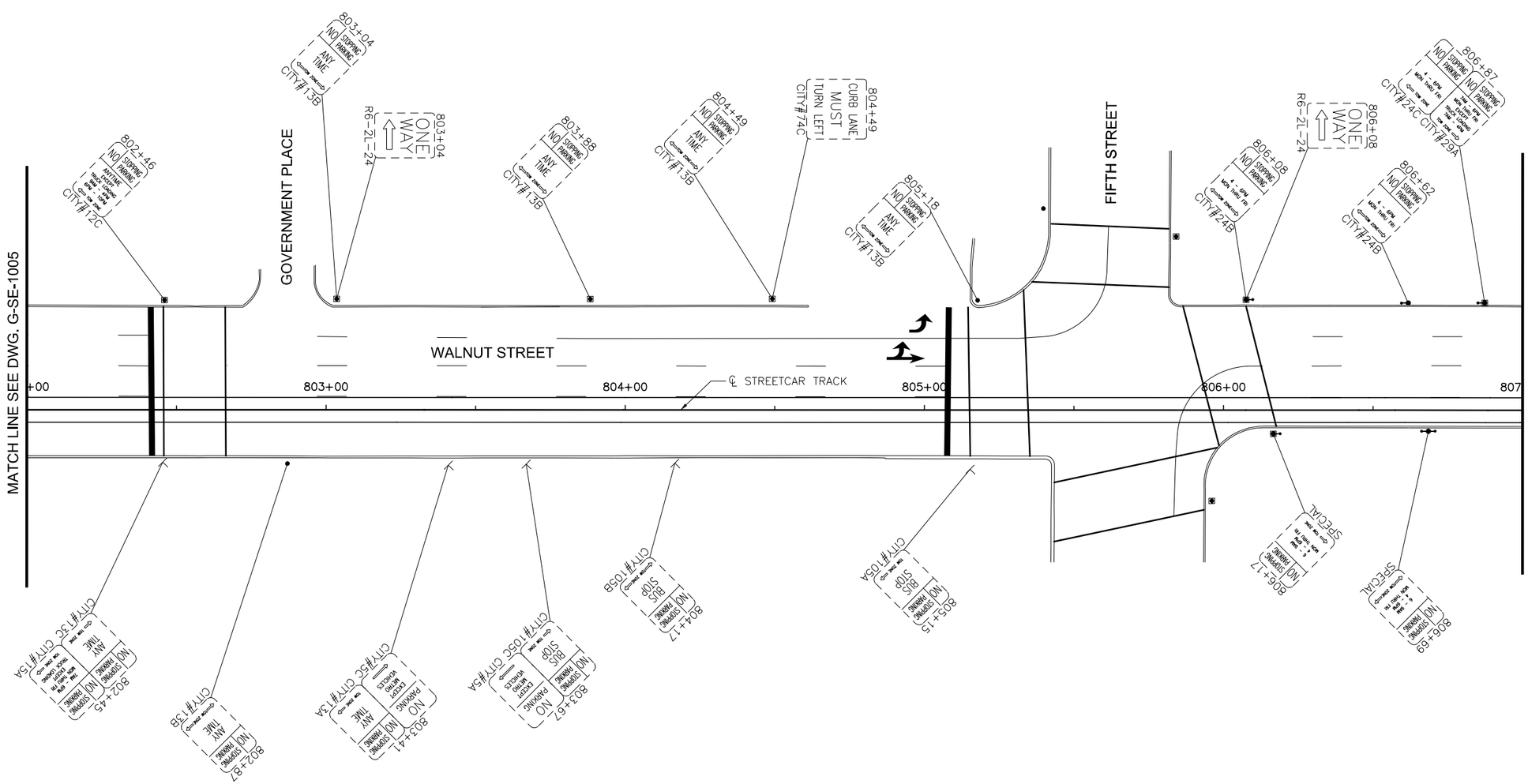

LEGEND

- EXISTING LIGHT POLE
- EXISTING POLE
- EXISTING SIGN POST
- SINGLE PARKING METER
- DOUBLE PARKING METER
- REMOVAL
- PROPOSED POLE
- PROPOSED SIGN POST

NOTE:
ALL EXISTING SIGNS WILL BE REPLACED UNLESS OTHERWISE NOTED BY REMOVAL SYMBOL.

CAUTION UNDERGROUND UTILITIES
2 WORKING DAYS
BEFORE YOU DIG
CALL 1-800-362-2764
OHIO UTILITY PROTECTION SERVICE
CALL NON-SERVICE FACILITY
OWNERS DIRECT

GRAPHIC SCALE
20 0 20 40 80
(IN FEET)
1 inch = 20 ft. Full Size
1 inch = 40 ft. Half Size

DOTE_Mono_PDF_Half.pltcfg
T:\29014A-Streetcar\CAD\Traffic_Control\Signing and Marking\S_G-SE-1006.dgn
7/11/2012 11:52:08 AM

CONTRACT DRAWING

PRINTS NOT BEARING THIS STAMP WERE MADE PRIOR TO ADVERTISING FOR BIDS AND ARE TO BE CONSIDERED OBSOLETE FOR CONTRACT PURPOSES.

Department of Transportation and Engineering

City of Cincinnati
City Hall
801 Plum Street
Cincinnati, Ohio 45202

CINCINNATI STREETCAR
CENTRAL BUSINESS DISTRICT
EXISTING SIGNING AND MARKING PLAN
WALNUT STREET
STA 802+00 TO STA 807+00

Revisions
No.

Date
Drawn by
Date
Designed by
Date
Checked by
Date
Reviewed by

Consultant
PB HDR

File Number

ACC No.
23126

G-SE-1006

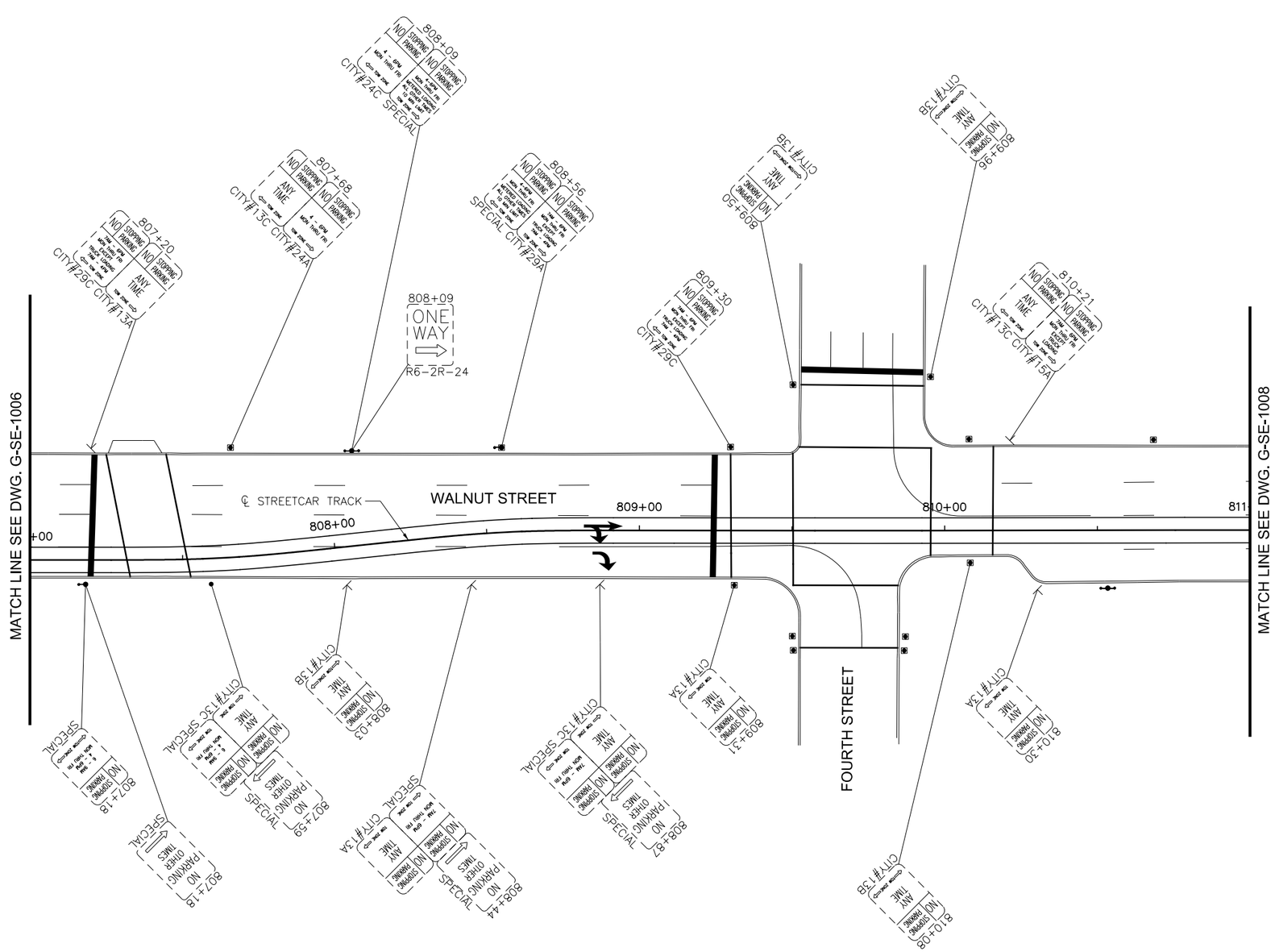

LEGEND

- EXISTING LIGHT POLE
- EXISTING POLE
- EXISTING SIGN POST
- SINGLE PARKING METER
- DOUBLE PARKING METER
- REMOVAL
- PROPOSED POLE
- PROPOSED SIGN POST

NOTE:
ALL EXISTING SIGNS WILL BE REPLACED UNLESS OTHERWISE NOTED BY REMOVAL SYMBOL.

CAUTION UNDERGROUND UTILITIES
2 WORKING DAYS
BEFORE YOU DIG
CALL 1-800-362-2764
OHIO UTILITY PROTECTION SERVICE
CALL NON-SERVICE FACILITY OWNERS DIRECT

GRAPHIC SCALE
20 0 20 40 80
(IN FEET)
1 inch = 20 ft. Full Size
1 inch = 40 ft. Half Size

DOTE_Mono_PDF_Half.pltcfg
T:\29014A-Streetcar\CAD\Traffic_Control\Signing and Marking\S_G-SE-1007.dgn
7/11/2012 11:52:09 AM

CONTRACT DRAWING

PRINTS NOT BEARING THIS STAMP WERE MADE PRIOR TO ADVERTISING FOR BIDS AND ARE TO BE CONSIDERED OBSOLETE FOR CONTRACT PURPOSES.

Department of Transportation and Engineering

City of Cincinnati
City Hall
801 Plum Street
Cincinnati, Ohio 45202

CINCINNATI STREETCAR
CENTRAL BUSINESS DISTRICT
EXISTING SIGNING AND MARKING PLAN
WALNUT STREET
STA 807+00 TO STA 811+00

Revisions
No.

Date
Drawn by
Date
Designed by
Date
Checked by
Date
Reviewed by

Consultant

File Number

ACC No.
23126

G-SE-1007

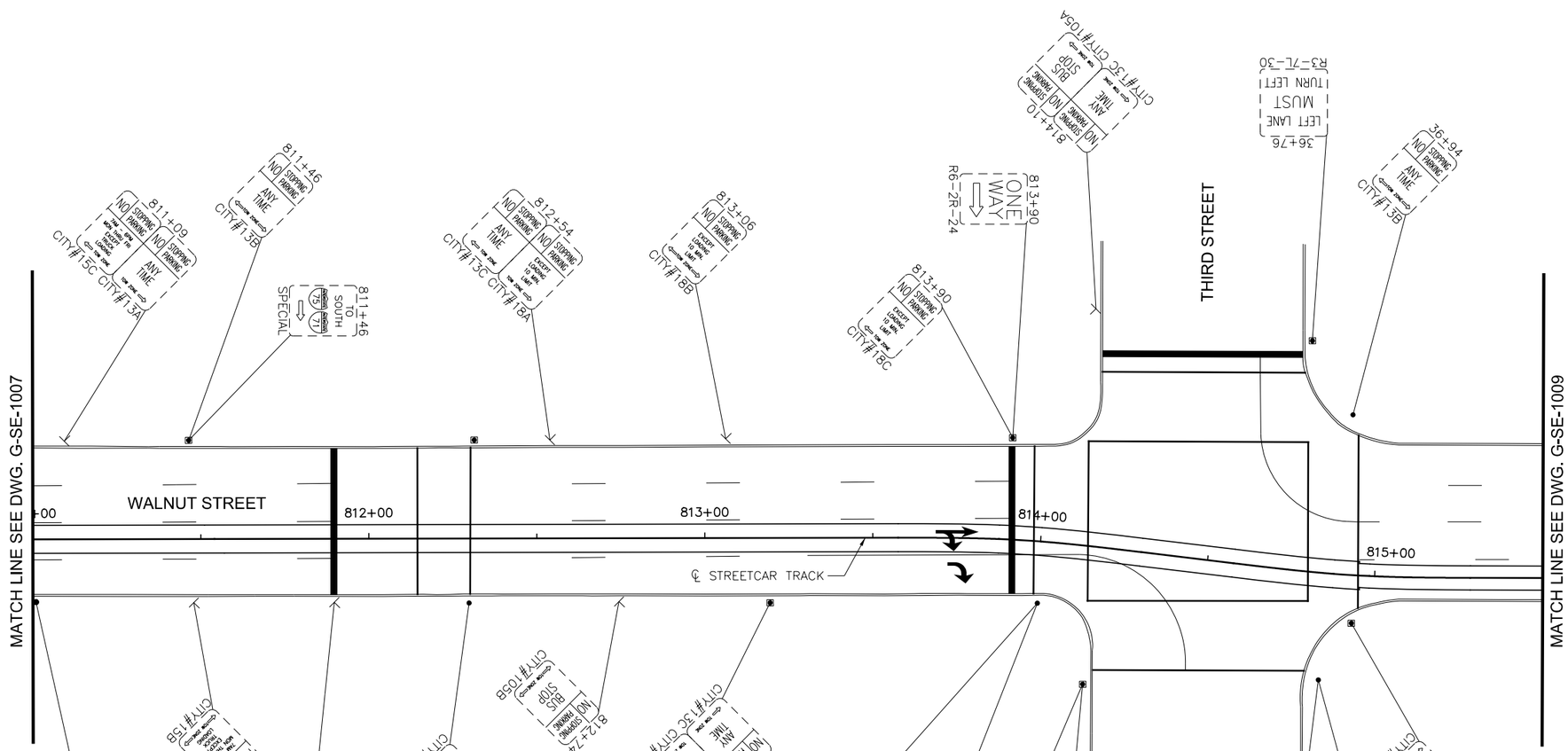

LEGEND

- EXISTING LIGHT POLE
- EXISTING POLE
- EXISTING SIGN POST
- SINGLE PARKING METER
- DOUBLE PARKING METER
- REMOVAL
- PROPOSED POLE
- PROPOSED SIGN POST

NOTE:
ALL EXISTING SIGNS WILL BE REPLACED UNLESS OTHERWISE NOTED BY REMOVAL SYMBOL.

GRAPHIC SCALE

20 0 20 40 80

(IN FEET)
1 inch = 20 ft. Full Size
1 inch = 40 ft. Half Size

CAUTION UNDERGROUND UTILITIES
2 WORKING DAYS
BEFORE YOU DIG
CALL 1-800-362-2764
OHIO UTILITY PROTECTION SERVICE
CALL NON-SERVICE FACILITY
OWNERS DIRECT

DEPARTMENT OF TRANSPORTATION & ENGINEERING
CITY OF CINCINNATI
OHIO

CONTRACT DRAWING

PRINTS NOT BEARING THIS STAMP WERE MADE PRIOR TO ADVERTISING FOR BIDS AND ARE TO BE CONSIDERED OBSOLETE FOR CONTRACT PURPOSES.

Department of Transportation and Engineering

City of Cincinnati
City Hall
801 Plum Street
Cincinnati, Ohio 45202

CINCINNATI STREETCAR
CENTRAL BUSINESS DISTRICT
EXISTING SIGNING AND MARKING PLAN
WALNUT STREET
STA 811+00 TO STA 815+50

Revisions

No.				

Date 7/02/12 Drawn by
Date 7/02/12 Designed by
Date 7/02/12 Checked by
Date 7/12/12 Reviewed by JTB

Consultant

PB HDR

File Number

ACC No. 23126

G-SE-1008

DOTE_Mono_PDF_Half.pltcfg
T:\29014A-Streetcar\CAD\Traffic_Control\Signing and Marking\S_G-SE-1008.dgn
7/11/2012 11:52:10 AM

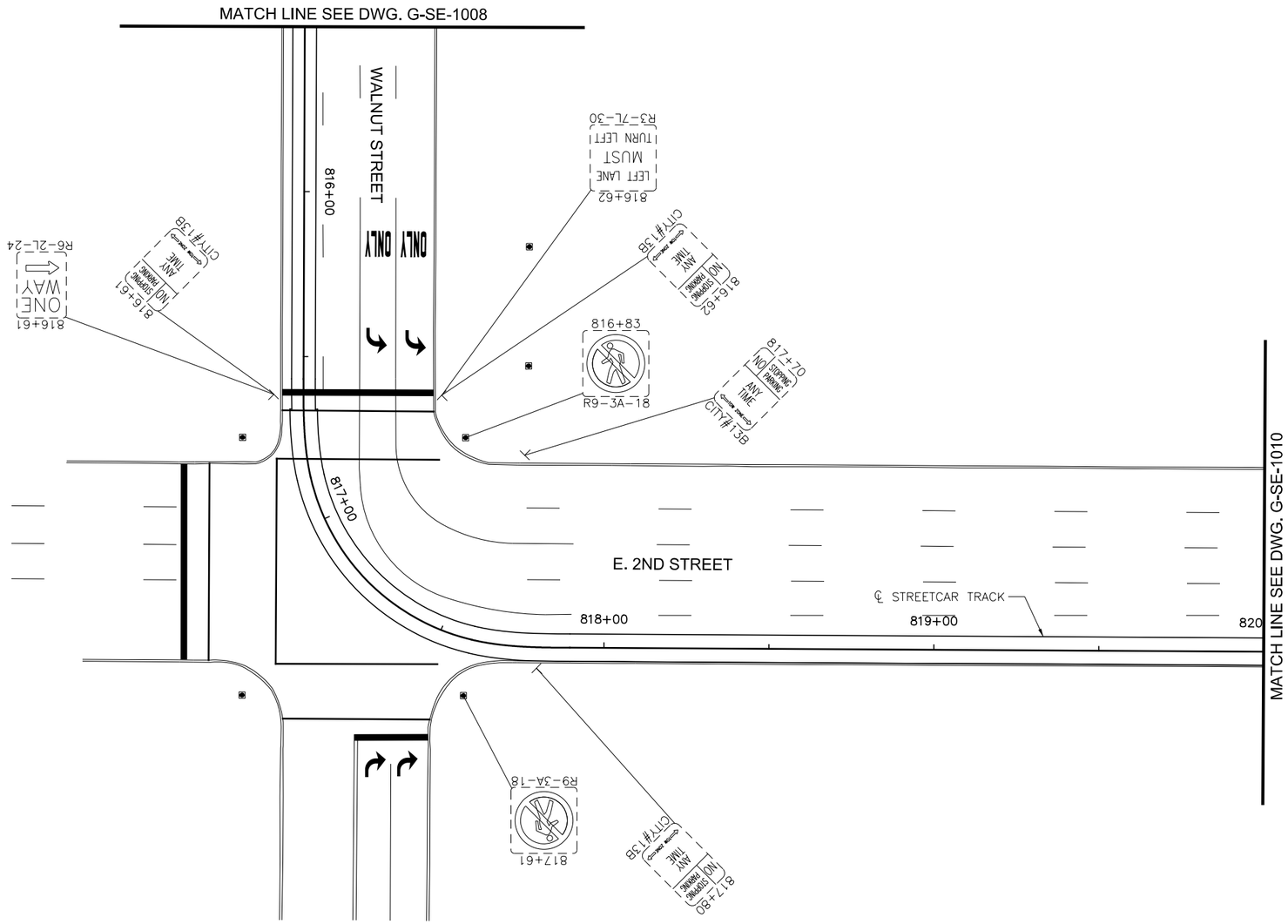

LEGEND

- EXISTING LIGHT POLE
- EXISTING POLE
- EXISTING SIGN POST
- SINGLE PARKING METER
- DOUBLE PARKING METER
- REMOVAL
- PROPOSED POLE
- PROPOSED SIGN POST

NOTE:
ALL EXISTING SIGNS WILL BE REPLACED UNLESS OTHERWISE NOTED BY REMOVAL SYMBOL.

CAUTION UNDERGROUND UTILITIES
2 WORKING DAYS
BEFORE YOU DIG
CALL 1-800-362-2764
OHIO UTILITY PROTECTION SERVICE
CALL NON-SERVICE FACILITY
OWNERS DIRECT

GRAPHIC SCALE
20 0 20 40 80
(IN FEET)
1 inch = 20 ft. Full Size
1 inch = 40 ft. Half Size

DOTE_Mono_PDF_Half.pltcfg
T:\29014A-Streetcar\CAD\Traffic_Control\Signing and Marking\S_G-SE-1009.dgn
7/11/2012 11:52:11 AM

CONTRACT DRAWING

PRINTS NOT BEARING THIS STAMP WERE MADE PRIOR TO ADVERTISING FOR BIDS AND ARE TO BE CONSIDERED OBSOLETE FOR CONTRACT PURPOSES.

Department of Transportation and Engineering

City of Cincinnati
City Hall
801 Plum Street
Cincinnati, Ohio 45202

CINCINNATI STREETCAR
CENTRAL BUSINESS DISTRICT
EXISTING SIGNING AND MARKING PLAN
SECOND STREET
STA 815+50 TO STA 820+00

Revisions
No.

	Date
Drawn by	7/02/12
Designed by	7/02/12
Checked by	7/02/12
Reviewed by JTB	7/12/12

Consultant

File Number

ACC No. 23126

G-SE-1009

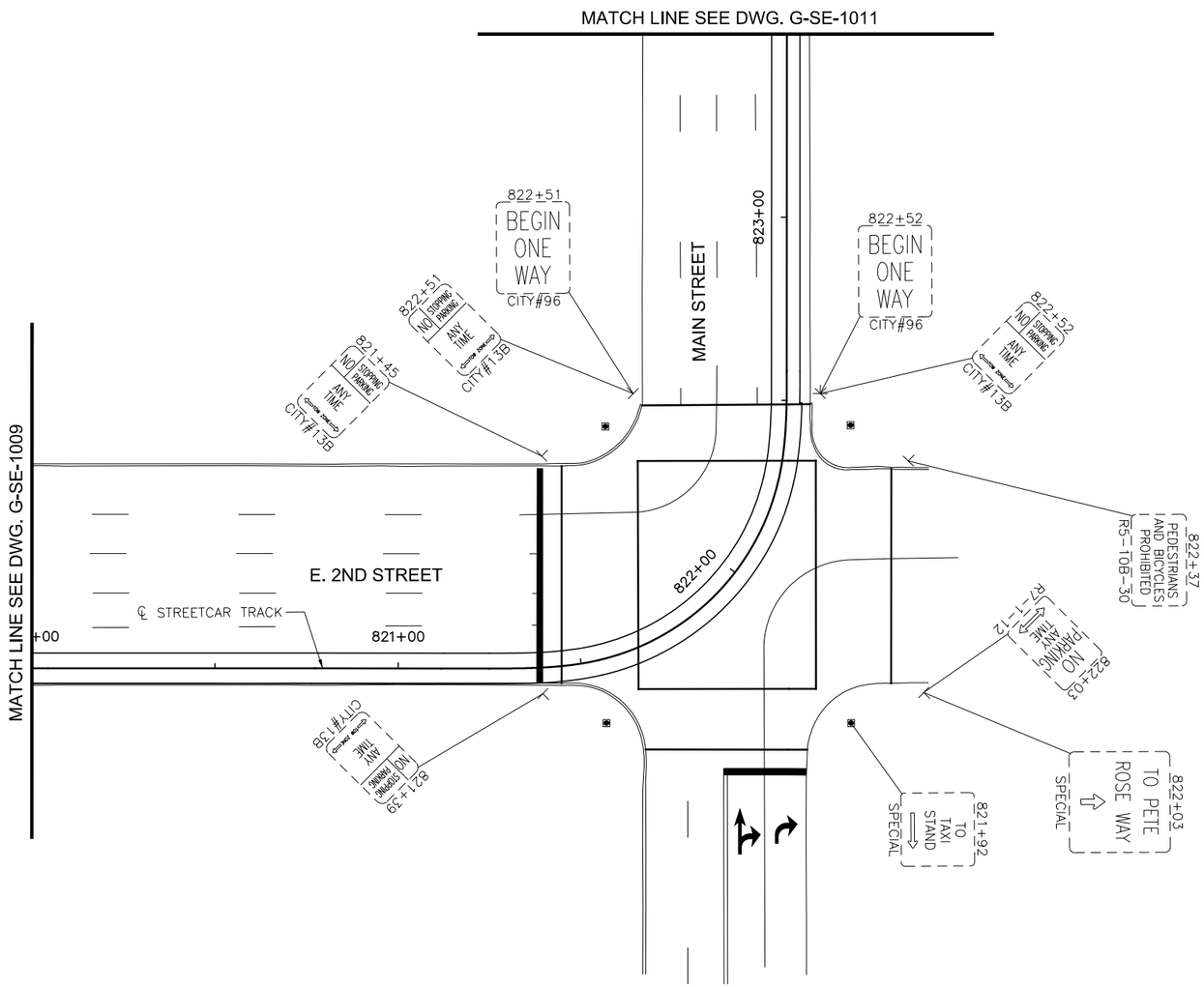

LEGEND

- EXISTING LIGHT POLE
- EXISTING POLE
- EXISTING SIGN POST
- SINGLE PARKING METER
- DOUBLE PARKING METER
- REMOVAL
- PROPOSED POLE
- PROPOSED SIGN POST

NOTE:
ALL EXISTING SIGNS WILL BE REPLACED UNLESS OTHERWISE NOTED BY REMOVAL SYMBOL.

GRAPHIC SCALE

20 0 20 40 80

(IN FEET)
1 inch = 20 ft. Full Size
1 inch = 40 ft. Half Size

CAUTION UNDERGROUND UTILITIES
2 WORKING DAYS
BEFORE YOU DIG
CALL 1-800-362-2764
OHIO UTILITY PROTECTION SERVICE
CALL NON-SERVICE FACILITY
OWNERS DIRECT

DOTE_Mono_PDF_Half.pltcfg
T:\29014A-Streetcar\CAD\Traffic_Control\Signing and Marking\S_G-SE-1010.dgn
7/11/2012 11:52:12 AM

CONTRACT DRAWING

PRINTS NOT BEARING THIS STAMP WERE MADE PRIOR TO ADVERTISING FOR BIDS AND ARE TO BE CONSIDERED OBSOLETE FOR CONTRACT PURPOSES.

Department of Transportation and Engineering

City of Cincinnati
City Hall
801 Plum Street
Cincinnati, Ohio 45202

CINCINNATI STREETCAR
CENTRAL BUSINESS DISTRICT
EXISTING SIGNING AND MARKING PLAN
SECOND STREET
STA 820+00 TO STA 823+50

Revisions
No.

Drawn by	Date 7/02/12
Designed by	Date 7/02/12
Checked by	Date 7/02/12
Reviewed by JTB	Date 7/12/12

Consultant

File Number

ACC No. 23126

G-SE-1010

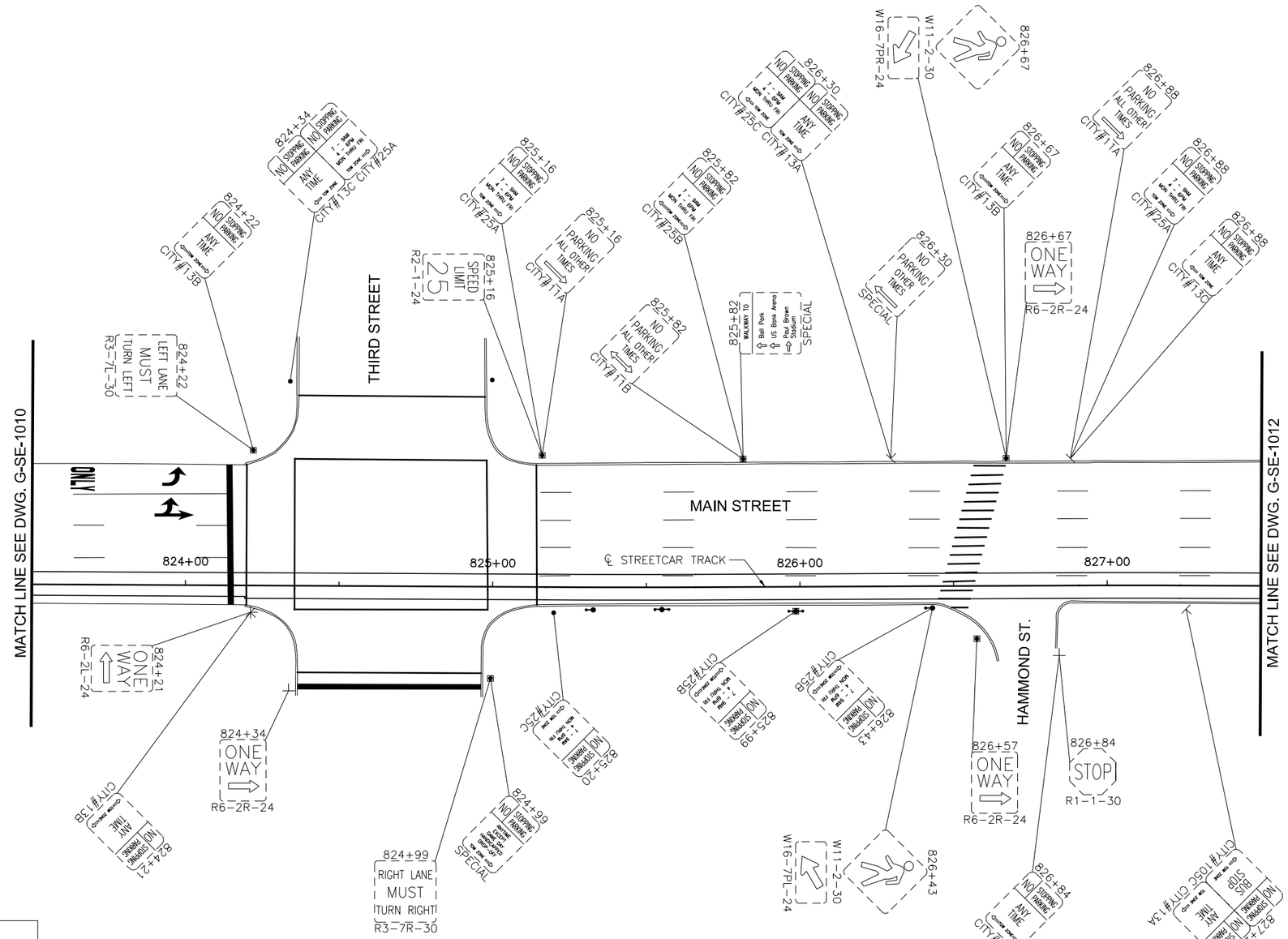

LEGEND

- EXISTING LIGHT POLE
- EXISTING POLE
- EXISTING SIGN POST
- SINGLE PARKING METER
- DOUBLE PARKING METER
- REMOVAL
- PROPOSED POLE
- PROPOSED SIGN POST

NOTE:
ALL EXISTING SIGNS WILL BE REPLACED UNLESS OTHERWISE NOTED BY REMOVAL SYMBOL.

GRAPHIC SCALE

20 0 20 40 80

(IN FEET)
1 inch = 20 ft. Full Size
1 inch = 40 ft. Half Size

CAUTION UNDERGROUND UTILITIES
2 WORKING DAYS
BEFORE YOU DIG
CALL 1-800-362-2764
OHIO UTILITY PROTECTION SERVICE
CALL NON-SERVICE FACILITY
OWNERS DIRECT

DOTE_Mono_PDF_Half.pltcfg
T:\29014A-Streetcar\CAD\Traffic_Control\Signing and Marking\S_G-SE-1011.dgn
7/11/2012 11:52:13 AM

CONTRACT DRAWING

PRINTS NOT BEARING THIS STAMP WERE MADE PRIOR TO ADVERTISING FOR BIDS AND ARE TO BE CONSIDERED OBSOLETE FOR CONTRACT PURPOSES.

Department of Transportation and Engineering
City of Cincinnati
City Hall
801 Plum Street
Cincinnati, Ohio 45202

CINCINNATI STREETCAR
CENTRAL BUSINESS DISTRICT
EXISTING SIGNING AND MARKING PLAN
MAIN STREET
STA 823+50 TO STA 827+50

Revisions
No.

Drawn by	Date 7/02/12
Designed by	Date 7/02/12
Checked by	Date 7/02/12
Reviewed by JTB	Date 7/12/12

Consultant

PB HDR

File Number

ACC No. 23126

G-SE-1011

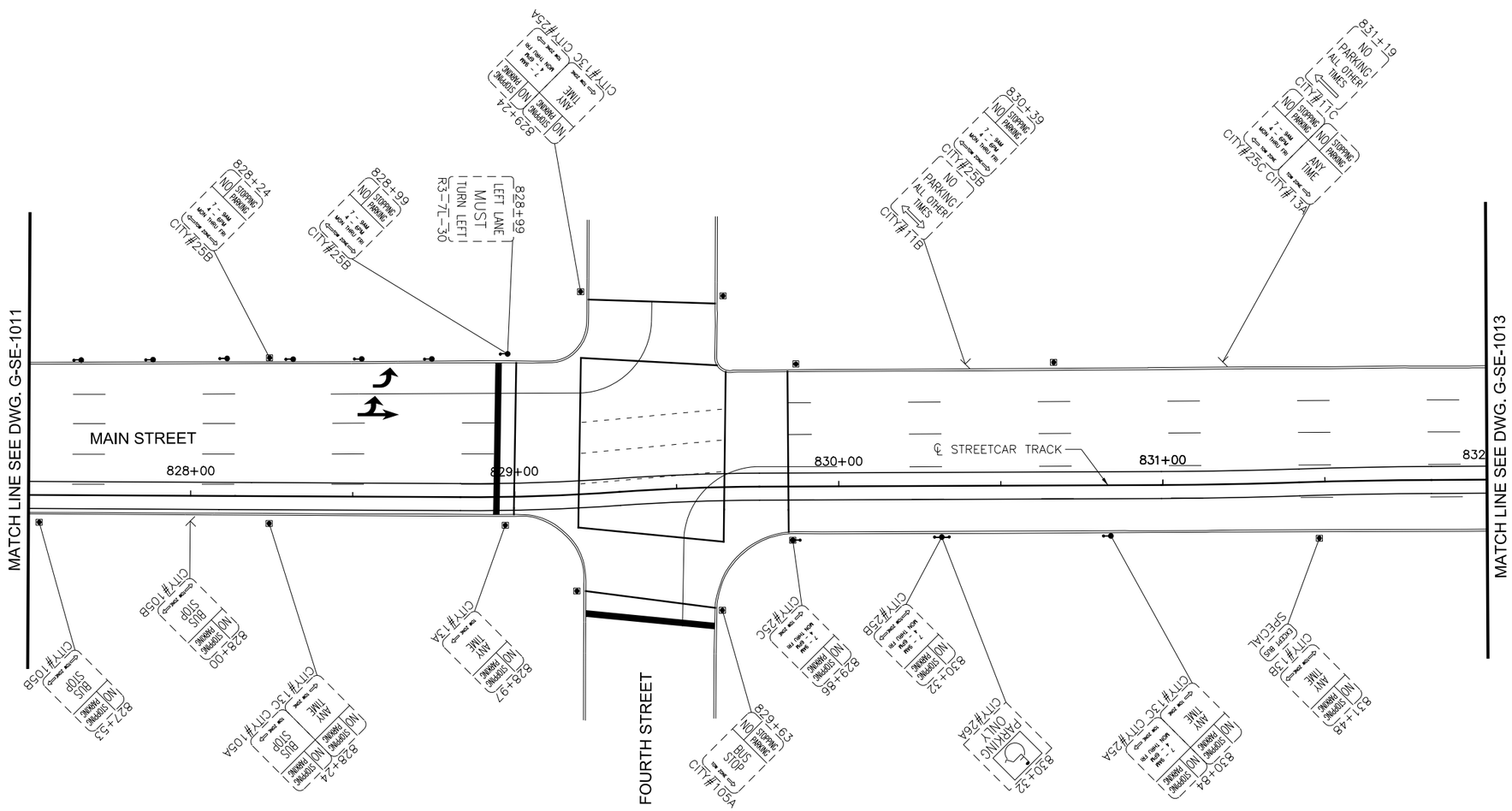

LEGEND

- EXISTING LIGHT POLE
- EXISTING POLE
- EXISTING SIGN POST
- SINGLE PARKING METER
- DOUBLE PARKING METER
- REMOVAL
- PROPOSED POLE
- PROPOSED SIGN POST

NOTE:
ALL EXISTING SIGNS WILL BE REPLACED UNLESS OTHERWISE NOTED BY REMOVAL SYMBOL.

GRAPHIC SCALE

20 0 20 40 80

(IN FEET)
1 inch = 20 ft. Full Size
1 inch = 40 ft. Half Size

CAUTION UNDERGROUND UTILITIES
2 WORKING DAYS
BEFORE YOU DIG
CALL 1-800-362-2764
OHIO UTILITY PROTECTION SERVICE
CALL NON-SERVICE FACILITY
OWNERS DIRECT

DEPARTMENT OF TRANSPORTATION & ENGINEERING CITY OF CINCINNATI OHIO

CONTRACT DRAWING

PRINTS NOT BEARING THIS STAMP WERE MADE PRIOR TO ADVERTISING FOR BIDS AND ARE TO BE CONSIDERED OBSOLETE FOR CONTRACT PURPOSES.

Department of Transportation and Engineering

City of Cincinnati
City Hall
801 Plum Street
Cincinnati, Ohio 45202

CINCINNATI STREETCAR
CENTRAL BUSINESS DISTRICT
EXISTING SIGNING AND MARKING PLAN
MAIN STREET
STA 827+50 TO STA 832+00

Revisions

No.		

Drawn by	Date 7/02/12
Designed by	Date 7/02/12
Checked by	Date 7/02/12
Reviewed by JTB	Date 7/12/12

Consultant

PB HDR

File Number

ACC No. 23126

G-SE-1012

DOTE_Mono_PDF_Half.pltcfg
T:\29014A-Streetcar\CAD\Traffic_Control\Signing and Marking\S_G-SE-1012.dgn
7/11/2012 11:52:14 AM

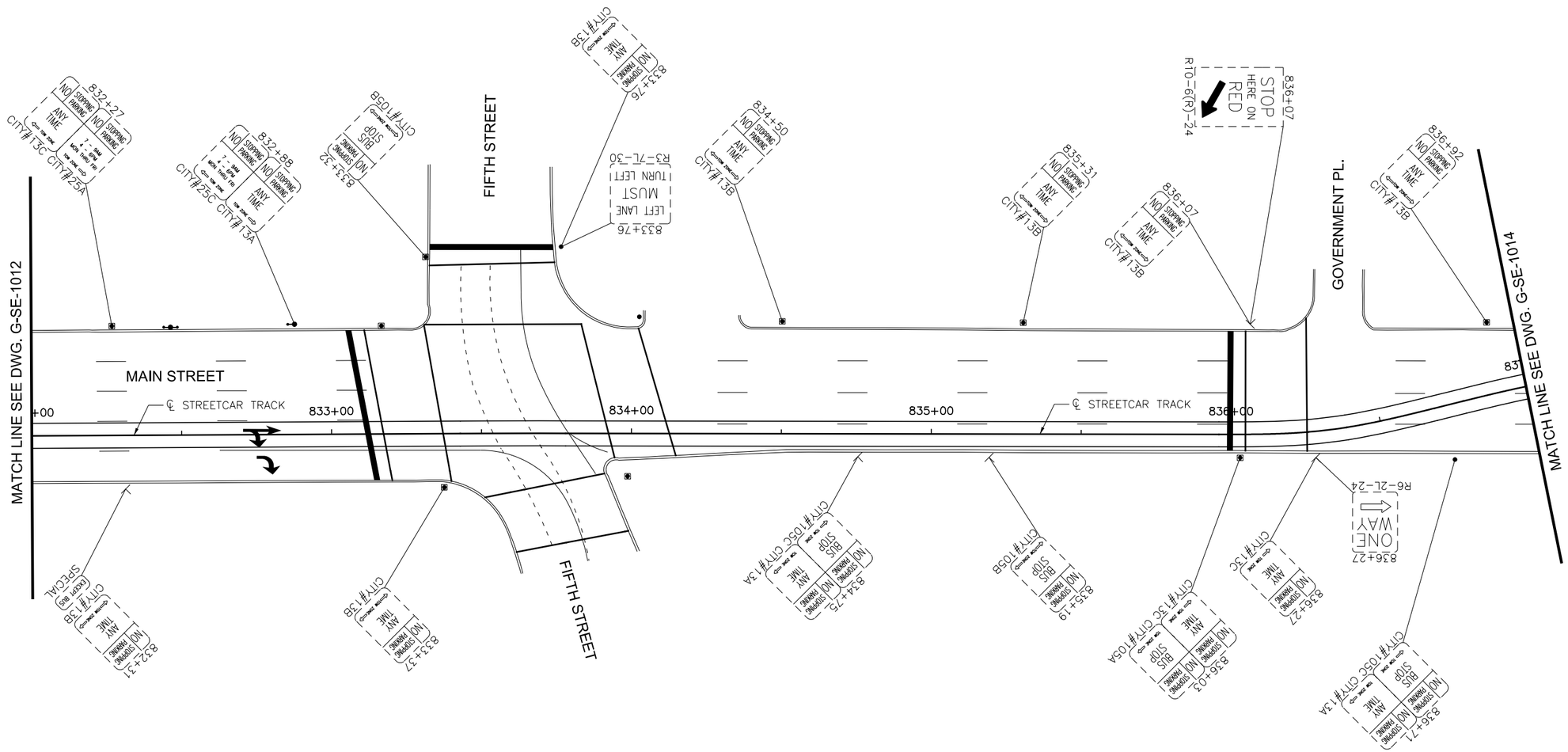

LEGEND

- EXISTING LIGHT POLE
- EXISTING POLE
- EXISTING SIGN POST
- SINGLE PARKING METER
- DOUBLE PARKING METER
- REMOVAL
- PROPOSED POLE
- PROPOSED SIGN POST

NOTE:
ALL EXISTING SIGNS WILL BE REPLACED UNLESS OTHERWISE NOTED BY REMOVAL SYMBOL.

GRAPHIC SCALE

20 0 20 40 80

(IN FEET)
1 inch = 20 ft. Full Size
1 inch = 40 ft. Half Size

CAUTION UNDERGROUND UTILITIES
2 WORKING DAYS
BEFORE YOU DIG
CALL 1-800-362-2764
OHIO UTILITY PROTECTION SERVICE
CALL NON-SERVICE FACILITY
OWNERS DIRECT

DEPARTMENT OF TRANSPORTATION & ENGINEERING
CITY OF CINCINNATI
OHIO

CONTRACT DRAWING

PRINTS NOT BEARING THIS STAMP WERE MADE PRIOR TO ADVERTISING FOR BIDS AND ARE TO BE CONSIDERED OBSOLETE FOR CONTRACT PURPOSES.

Department of Transportation and Engineering
City of Cincinnati
City Hall
801 Plum Street
Cincinnati, Ohio 45202

CINCINNATI STREETCAR
CENTRAL BUSINESS DISTRICT
EXISTING SIGNING AND MARKING PLAN
MAIN STREET
STA 832+00 TO STA 837+00

Revisions

No.		

		Date
Drawn by		7/02/12
Designed by		7/02/12
Checked by		7/02/12
Reviewed by	JTB	7/12/12

Consultant

PB HDR

File Number

ACC No. 23126

G-SE-1013

DOTE_Mono_PDF_Half.pltcfg
T:\29014A-Streetcar\CAD\Traffic_Control\Signing and Marking\S_G-SE-1013.dgn
7/11/2012 11:52:15 AM

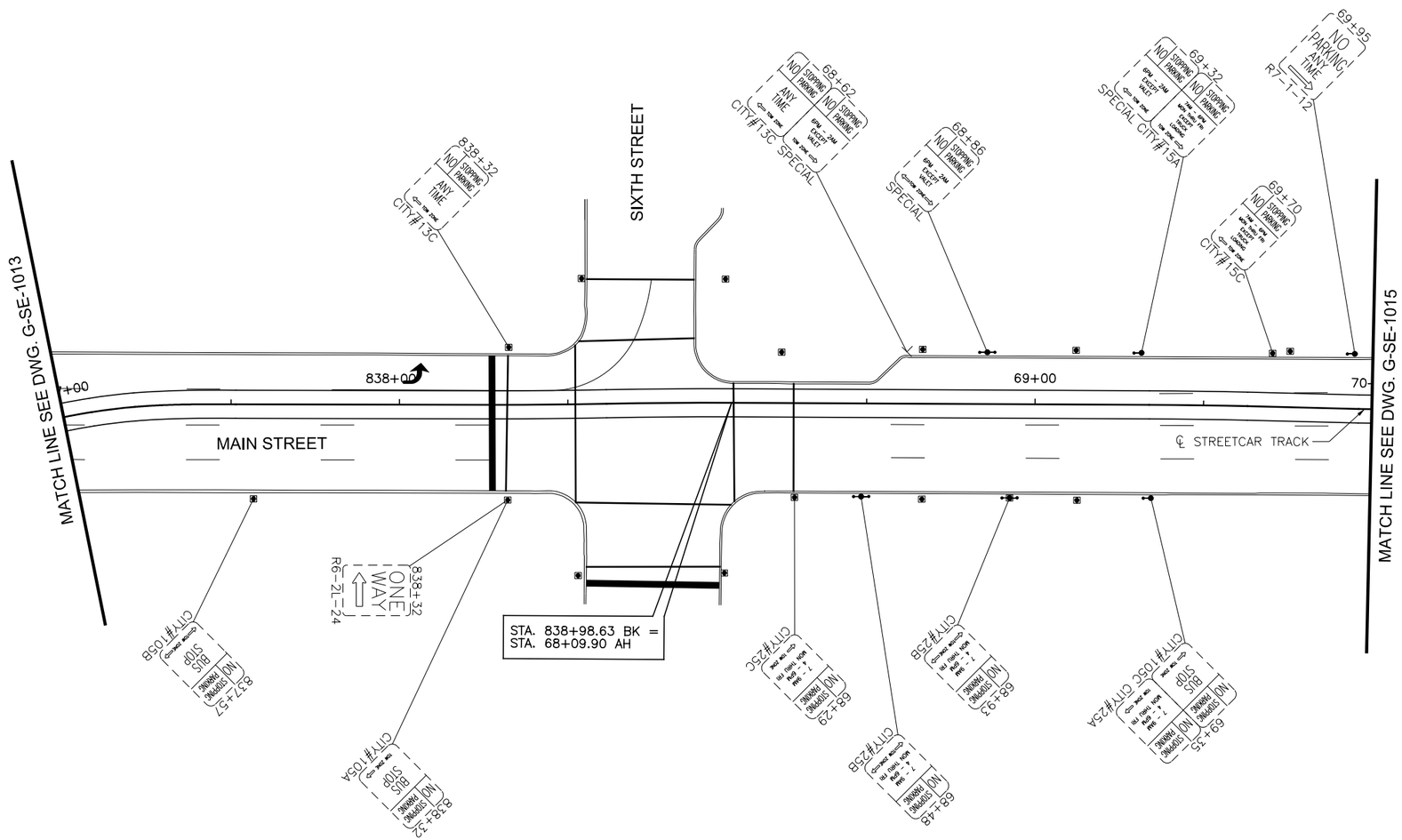

LEGEND

- EXISTING LIGHT POLE
- EXISTING POLE
- EXISTING SIGN POST
- SINGLE PARKING METER
- DOUBLE PARKING METER
- REMOVAL
- PROPOSED POLE
- PROPOSED SIGN POST

NOTE:
ALL EXISTING SIGNS WILL BE REPLACED UNLESS OTHERWISE NOTED BY REMOVAL SYMBOL.

CAUTION UNDERGROUND UTILITIES
2 WORKING DAYS
BEFORE YOU DIG
CALL 1-800-362-2764
OHIO UTILITY PROTECTION SERVICE
CALL NON-SERVICE FACILITY
OWNERS DIRECT

GRAPHIC SCALE
20 0 20 40 80
(IN FEET)
1 inch = 20 ft. Full Size
1 inch = 40 ft. Half Size

DOTE_Mono_PDF_Half.pltcfg
T:\29014A-Streetcar\CAD\Traffic_Control\Signing and Marking\S_G-SE-1014.dgn
7/11/2012 11:52:16 AM

DEPARTMENT OF TRANSPORTATION & ENGINEERING
CITY OF CINCINNATI OHIO

CONTRACT DRAWING

PRINTS NOT BEARING THIS STAMP WERE MADE PRIOR TO ADVERTISING FOR BIDS AND ARE TO BE CONSIDERED OBSOLETE FOR CONTRACT PURPOSES.

Department of Transportation and Engineering
City of Cincinnati
City Hall
801 Plum Street
Cincinnati, Ohio 45202

CINCINNATI STREETCAR
CENTRAL BUSINESS DISTRICT
EXISTING SIGNING AND MARKING PLAN
MAIN STREET
STA 837+00 TO STA 70+00

Revisions
No.

	Date
Drawn by	7/02/12
Designed by	7/02/12
Checked by	7/02/12
Reviewed by JTB	7/12/12

Consultant
PB HDR

File Number

ACC No.
23126

G-SE-1014

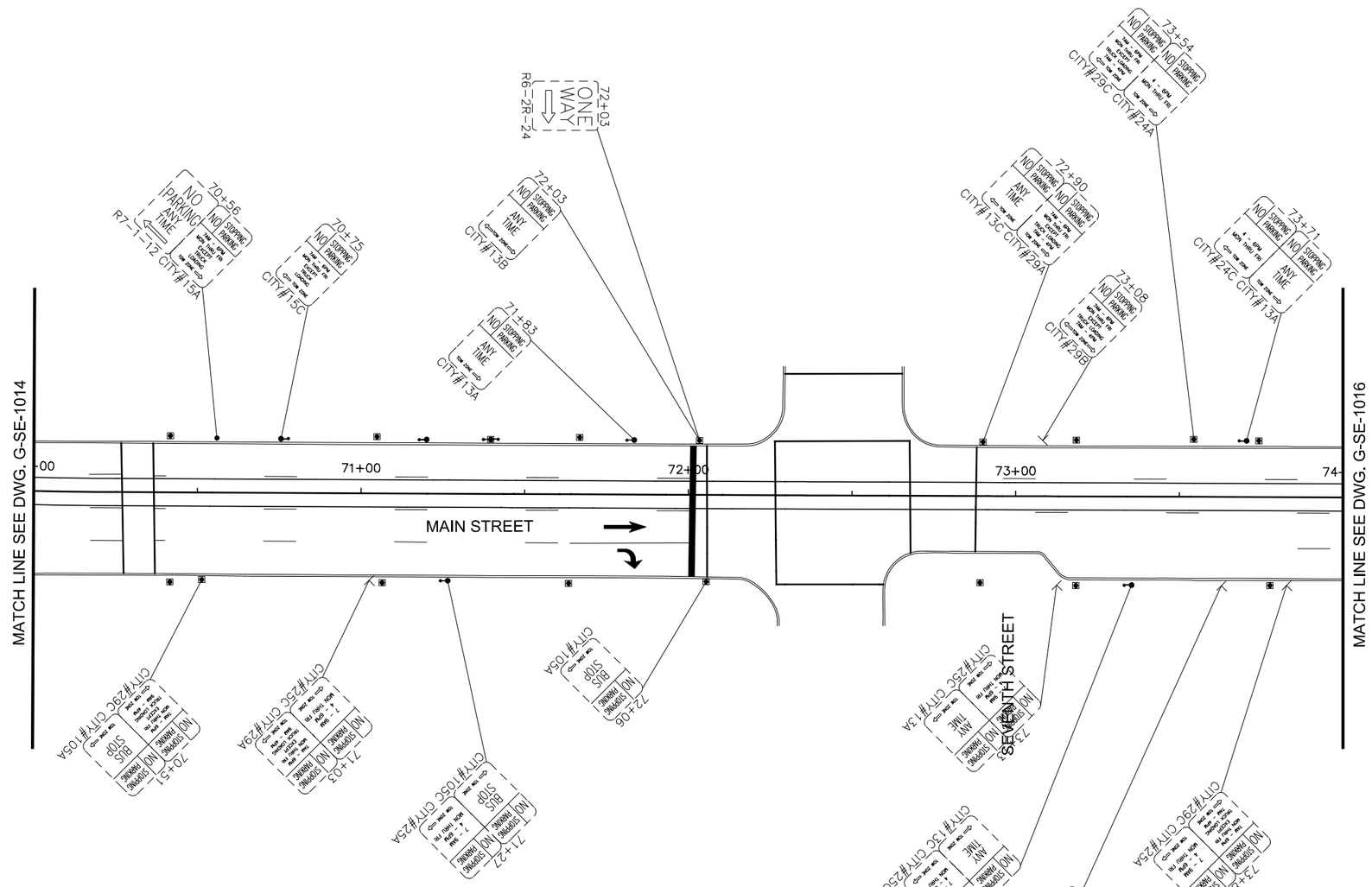

LEGEND

- EXISTING LIGHT POLE
- EXISTING POLE
- EXISTING SIGN POST
- SINGLE PARKING METER
- DOUBLE PARKING METER

CAUTION UNDERGROUND UTILITIES
2 WORKING DAYS
BEFORE YOU DIG
CALL 1-800-362-2764
OHIO UTILITY PROTECTION SERVICE
CALL NON-SERVICE FACILITY
OWNERS DIRECT

GRAPHIC SCALE

20 0 20 40 80

(IN FEET)
1 inch = 20 ft. Full Size
1 inch = 40 ft. Half Size

DEPARTMENT OF TRANSPORTATION & ENGINEERING
CITY OF CINCINNATI OHIO

CONTRACT DRAWING

PRINTS NOT BEARING THIS STAMP WERE MADE PRIOR TO ADVERTISING FOR BIDS AND ARE TO BE CONSIDERED OBSOLETE FOR CONTRACT PURPOSES.

Department of Transportation and Engineering

City of Cincinnati
City Hall
801 Plum Street
Cincinnati, Ohio 45202

CINCINNATI STREETCAR
CENTRAL BUSINESS DISTRICT
EXISTING SIGNING PLAN - MAIN STREET
STA 70+00 TO STA 74+00

Revisions

No.		

Drawn by AAG	Date 7/02/12
Designed by AAG	Date 7/02/12
Checked by JTB	Date 7/02/12
Reviewed by JTB	Date 7/12/12

Consultant

PB HDR

File Number

ACC No. 23126

G-SE-1015

DOTE_Mono_PDF_Half.pltcfg
T:\29014A-Streetcar\CAD\Traffic_Control\Signing and Marking\S_G-SE-1015.dgn
7/11/2012 11:52:17 AM

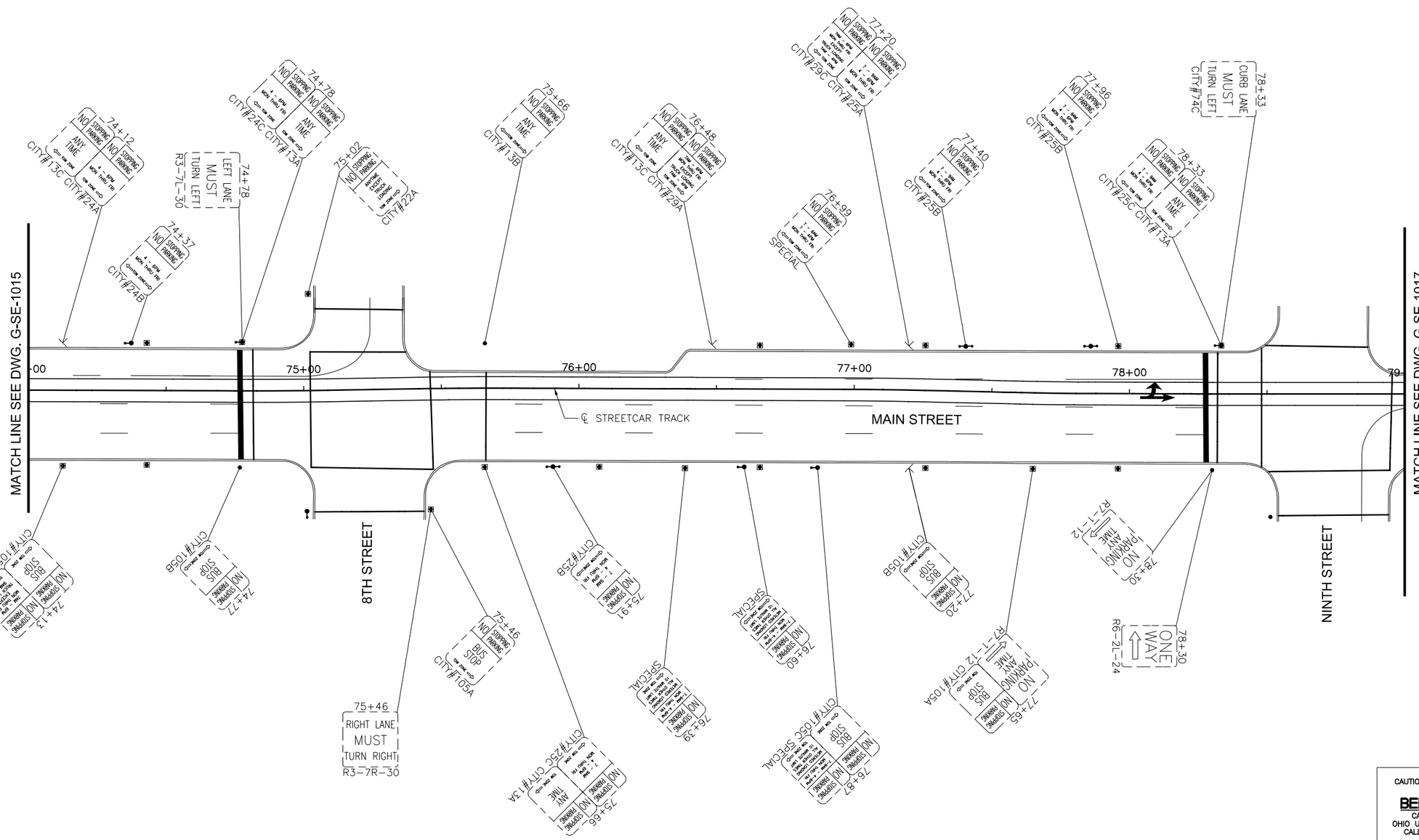

LEGEND

- EXISTING LIGHT POLE
- EXISTING POLE
- EXISTING SIGN POST
- SINGLE PARKING METER
- DOUBLE PARKING METER

GRAPHIC SCALE

20 0 20 40 80

(IN FEET)
1 inch = 20 ft. Full Size
1 inch = 40 ft. Half Size

CAUTION UNDERGROUND UTILITIES
2 WORKING DAYS
BEFORE YOU DIG
CALL 1-800-362-2764
OHIO UTILITY PROTECTION SERVICE
CALL NON-SERVICE FACILITY
OWNERS DIRECT

DOTE_Mono_PDF_Half.pltcfg
T:\29014A-Streetcar\CAD\Traffic_Control\Signing and Marking\S_G-SE-1016.dgn
7/11/2012 11:52:18 AM

CONTRACT DRAWING

PRINTS NOT BEARING THIS STAMP WERE MADE PRIOR TO ADVERTISING FOR BIDS AND ARE TO BE CONSIDERED OBSOLETE FOR CONTRACT PURPOSES.

Department of Transportation and Engineering

City of Cincinnati
City Hall
801 Plum Street
Cincinnati, Ohio 45202

CINCINNATI STREETCAR
CENTRAL BUSINESS DISTRICT

EXISTING SIGNING PLAN - MAIN STREET
STA 74+00 TO STA 79+00

Revisions

No.		Date
		7/02/12
		7/02/12
		7/02/12
		7/12/12

Drawn by AAG	Date 7/02/12
Designed by AAG	Date 7/02/12
Checked by JTB	Date 7/02/12
Reviewed by JTB	Date 7/12/12

Consultant

PB HDR

File Number

ACC No. 23126

G-SE-1016

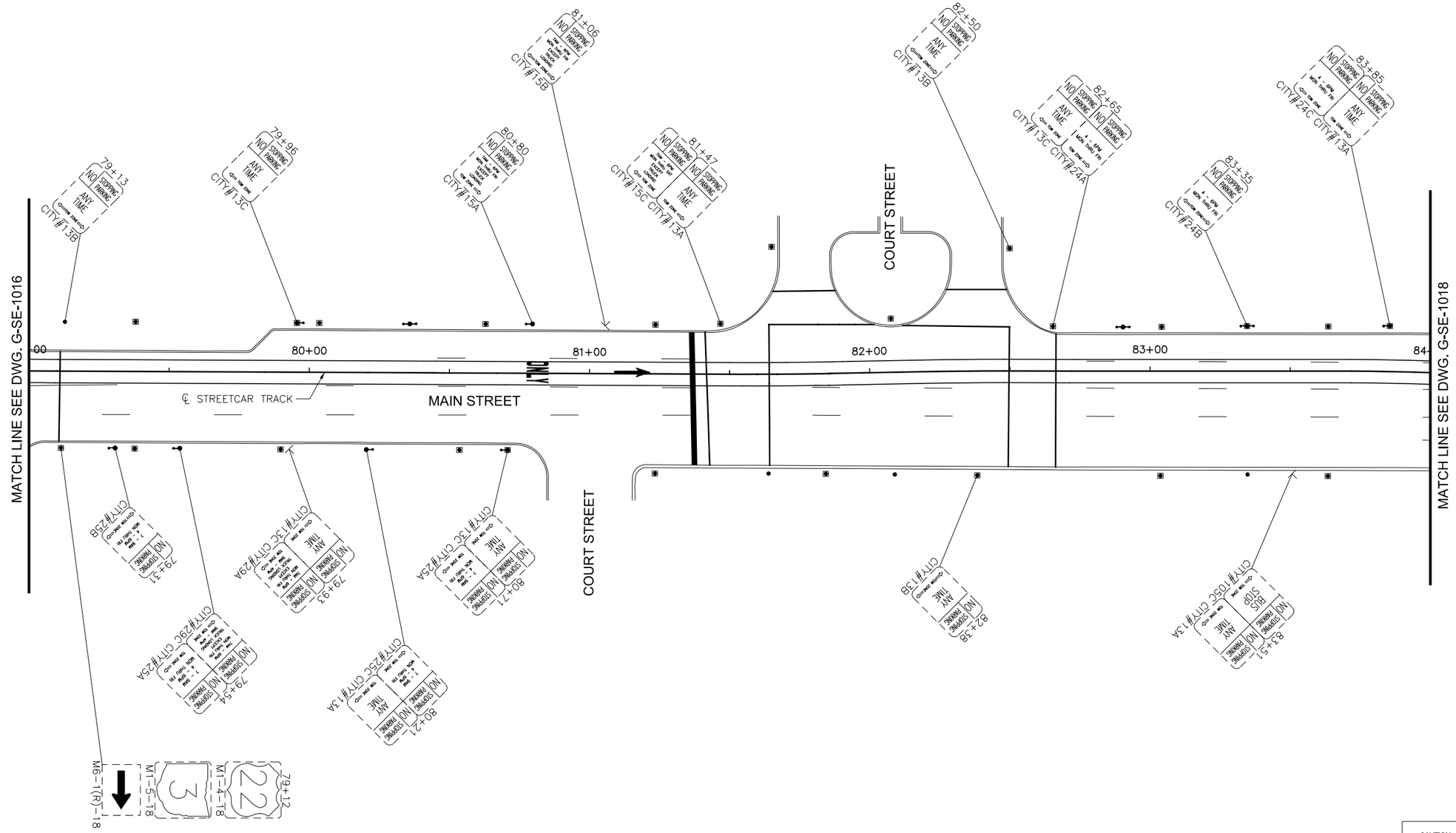

LEGEND

- EXISTING LIGHT POLE
- EXISTING POLE
- EXISTING SIGN POST
- SINGLE PARKING METER
- DOUBLE PARKING METER

CAUTION UNDERGROUND UTILITIES
2 WORKING DAYS
BEFORE YOU DIG
CALL 1-800-362-2764
OHIO UTILITY PROTECTION SERVICE
CALL NON-SERVICE FACILITY
OWNERS DIRECT

GRAPHIC SCALE

20 0 20 40 80

(IN FEET)
1 inch = 20 ft. Full Size
1 inch = 40 ft. Half Size

DOTE_Mono_PDF_Half.pltcfg
T:\29014A-Streetcar\CAD\Traffic_Control\Signing and Marking\S_G-SE-1017.dgn
7/11/2012 11:52:19 AM

CONTRACT DRAWING

PRINTS NOT BEARING THIS STAMP WERE MADE PRIOR TO ADVERTISING FOR BIDS AND ARE TO BE CONSIDERED OBSOLETE FOR CONTRACT PURPOSES.

Department of Transportation and Engineering

City of Cincinnati
City Hall
801 Plum Street
Cincinnati, Ohio 45202

CINCINNATI STREETCAR
CENTRAL BUSINESS DISTRICT
EXISTING SIGNING PLAN - MAIN STREET STA 79+00 TO STA 84+00

Revisions

No.				

Drawn by AAG	Date 7/02/12
Designed by AAG	Date 7/02/12
Checked by JTB	Date 7/02/12
Reviewed by JTB	Date 7/12/12

Consultant

PB HDR

File Number

ACC No. 23126

G-SE-1017

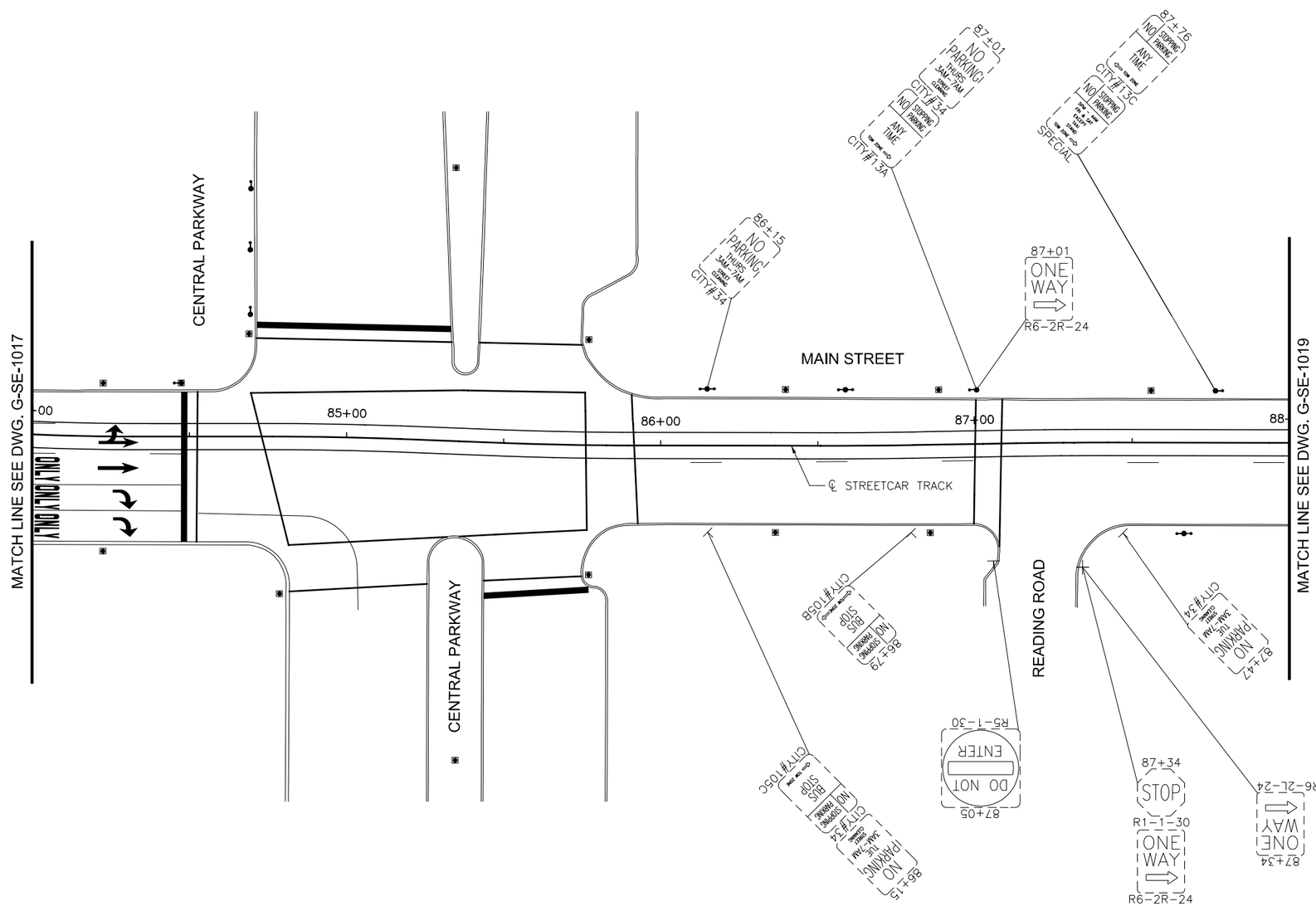

LEGEND

- EXISTING LIGHT POLE
- EXISTING POLE
- EXISTING SIGN POST
- SINGLE PARKING METER
- DOUBLE PARKING METER

CAUTION UNDERGROUND UTILITIES
2 WORKING DAYS

BEFORE YOU DIG

CALL 1-800-362-2764
OHIO UTILITY PROTECTION SERVICE
CALL NON-SERVICE FACILITY
OWNERS DIRECT

GRAPHIC SCALE

20 0 20 40 80

(IN FEET)
1 inch = 20 ft. Full Size
1 inch = 40 ft. Half Size

DOTE_Mono_PDF_Half.pltcfg
T:\29014A-Streetcar\CAD\Traffic_Control\Signing and Marking\S_G-SE-1018.dgn
7/11/2012 11:52:20 AM

CONTRACT DRAWING

PRINTS NOT BEARING THIS STAMP WERE MADE PRIOR TO ADVERTISING FOR BID, AND ARE TO BE CONSIDERED OBSOLETE FOR CONTRACT PURPOSES.

Department of Transportation and Engineering

City of Cincinnati
City Hall
801 Plum Street
Cincinnati, Ohio 45202

CINCINNATI STREETCAR
CENTRAL BUSINESS DISTRICT

EXISTING SIGNING PLAN - MAIN STREET
STA 84+00 TO STA 88+00

Revisions

No.		Date
		7/02/12
		7/02/12
		7/02/12
		7/12/12

Drawn by AAG	Date 7/02/12
Designed by AAG	Date 7/02/12
Checked by JTB	Date 7/02/12
Reviewed by JTB	Date 7/12/12

Consultant

PB HDR

File Number

ACC No. 23126

G-SE-1018

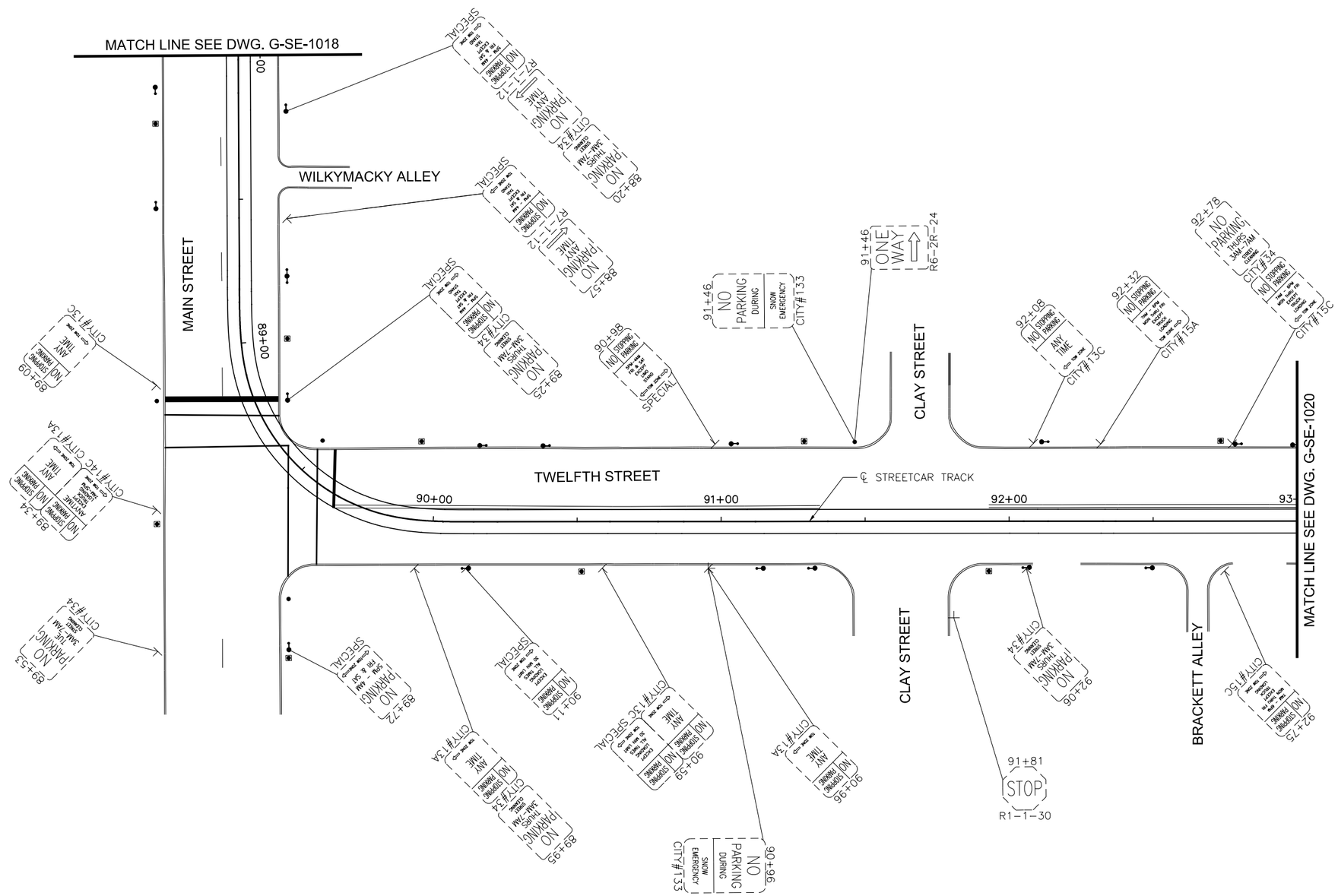

LEGEND

- EXISTING LIGHT POLE
- EXISTING POLE
- EXISTING SIGN POST
- SINGLE PARKING METER
- DOUBLE PARKING METER

CAUTION UNDERGROUND UTILITIES
2 WORKING DAYS
BEFORE YOU DIG
CALL 1-800-362-2764
OHIO UTILITY PROTECTION SERVICE
CALL NON-SERVICE FACILITY
OWNERS DIRECT

GRAPHIC SCALE
20 0 20 40 80
(IN FEET)
1 inch = 20 ft. Full Size
1 inch = 40 ft. Half Size

DOTE_Mono_PDF_Half.pltcfg
T:\29014A-Streetcar\CAD\Traffic_Control\Signing and Marking\S_G-SE-1019.dgn
7/11/2012 11:52:21 AM

CONTRACT DRAWING

PRINTS NOT BEARING THIS STAMP WERE MADE PRIOR TO ADVERTISING FOR BIDS AND ARE TO BE CONSIDERED OBSOLETE FOR CONTRACT PURPOSES.

Department of Transportation and Engineering

City of Cincinnati
City Hall
801 Plum Street
Cincinnati, Ohio 45202

CINCINNATI STREETCAR
CENTRAL BUSINESS DISTRICT
EXISTING SIGNING PLAN - TWELFTH STREET
STA 88+00 TO STA 93+00

Revisions

No.		

Drawn by AAG	Date 7/02/12
Designed by AAG	Date 7/02/12
Checked by JTB	Date 7/02/12
Reviewed by JTB	Date 7/12/12

Consultant

PB HDR

File Number

ACC No. 23126

G-SE-1019

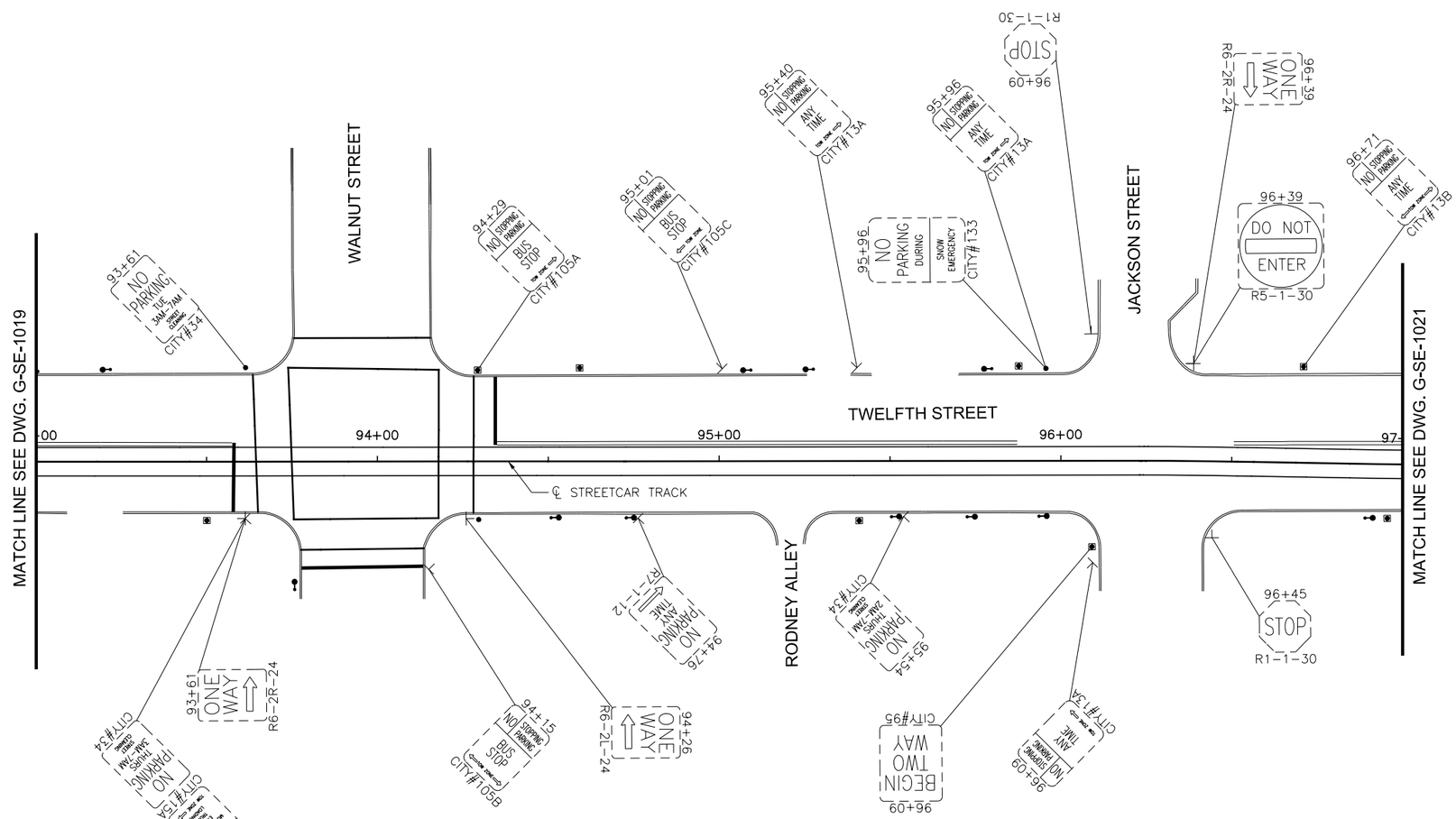

LEGEND

- EXISTING LIGHT POLE
- EXISTING POLE
- EXISTING SIGN POST
- SINGLE PARKING METER
- DOUBLE PARKING METER

CAUTION UNDERGROUND UTILITIES
2 WORKING DAYS
BEFORE YOU DIG
CALL 1-800-362-2764
OHIO UTILITY PROTECTION SERVICE
CALL NON-SERVICE FACILITY
OWNERS DIRECT

GRAPHIC SCALE

20 0 20 40 80

(IN FEET)
1 inch = 20 ft. Full Size
1 inch = 40 ft. Half Size

DOTE_Mono_PDF_Half.pltcfg
T:\29014A-Streetcar\CAD\Traffic_Control\Signing and Marking\S_G-SE-1020.dgn
7/11/2012 11:52:22 AM

CONTRACT DRAWING

PRINTS NOT BEARING THIS STAMP WERE MADE PRIOR TO ADVERTISING FOR BIDS AND ARE TO BE CONSIDERED OBSOLETE FOR CONTRACT PURPOSES.

Department of Transportation and Engineering

City of Cincinnati
City Hall
801 Plum Street
Cincinnati, Ohio 45202

CINCINNATI STREETCAR
CENTRAL BUSINESS DISTRICT
EXISTING SIGNING PLAN - TWELFTH STREET
STA 93+00 TO STA 97+00

Revisions

No.		

Date	7/02/12
Date	7/02/12
Date	7/02/12
Date	7/12/12

Drawn by	AAG
Designed by	AAG
Checked by	JTB
Reviewed by	JTB

Consultant

PB HDR

File Number

ACC No.
23126

G-SE-1020

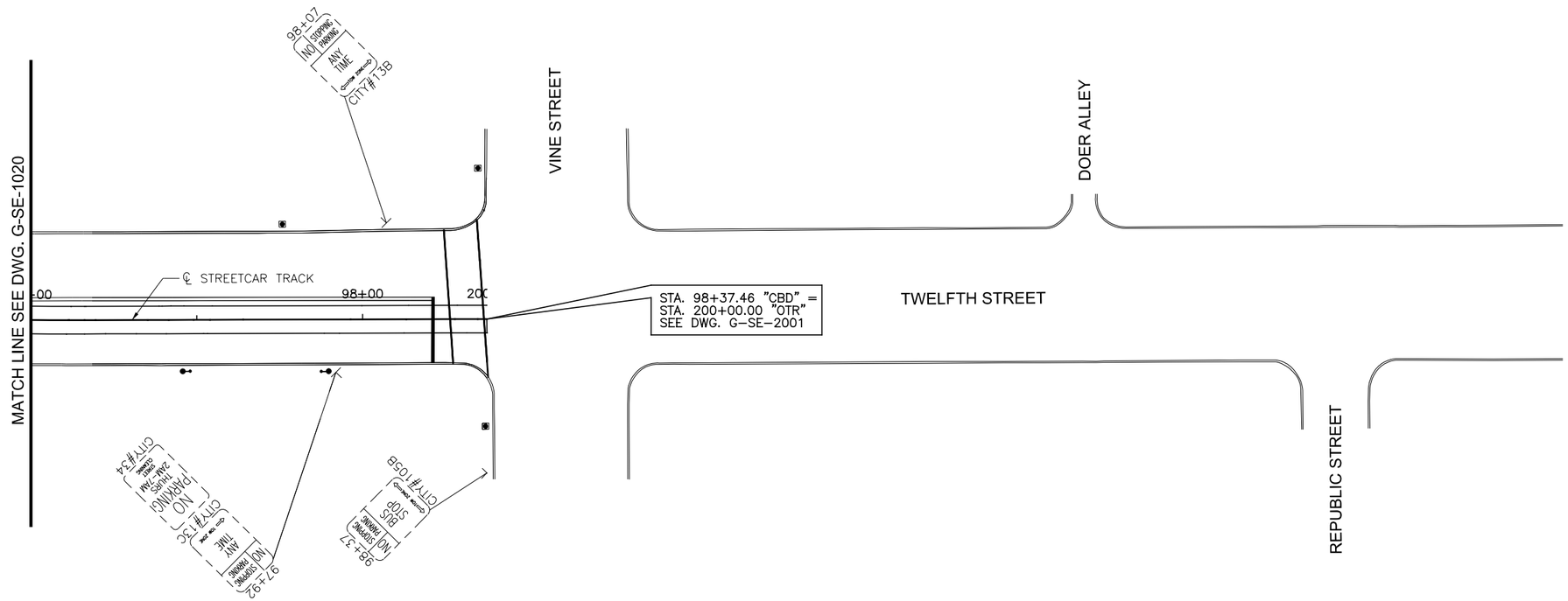

LEGEND

- EXISTING LIGHT POLE
- EXISTING POLE
- EXISTING SIGN POST
- SINGLE PARKING METER
- DOUBLE PARKING METER

CAUTION UNDERGROUND UTILITIES
2 WORKING DAYS
BEFORE YOU DIG
CALL 1-800-362-2764
OHIO UTILITY PROTECTION SERVICE
CALL NON-SERVICE FACILITY
OWNERS DIRECT

GRAPHIC SCALE

20 0 20 40 80

(IN FEET)
1 inch = 20 ft. Full Size
1 inch = 40 ft. Half Size

DOTE_Mono_PDF_Half.pltcfg
T:\29014A-Streetcar\CAD\Traffic_Control\Signing and Marking\S_G-SE-1021.dgn
7/11/2012 11:52:23 AM

CONTRACT DRAWING

PRINTS NOT BEARING THIS STAMP WERE MADE PRIOR TO ADVERTISING FOR BIDS AND ARE TO BE CONSIDERED OBSOLETE FOR CONTRACT PURPOSES.

Department of Transportation and Engineering

City of Cincinnati
City Hall
801 Plum Street
Cincinnati, Ohio 45202

CINCINNATI STREETCAR
CENTRAL BUSINESS DISTRICT
EXISTING SIGNING PLAN- TWELFTH STREET
STA 97+00 TO STA. 98+37.46

Revisions

No.				

Drawn by AAG	Date 7/02/12
Designed by AAG	Date 7/02/12
Checked by JTB	Date 7/02/12
Reviewed by JTB	Date 7/12/12

Consultant

PB HDR

File Number

ACC No. 23126

G-SE-1021

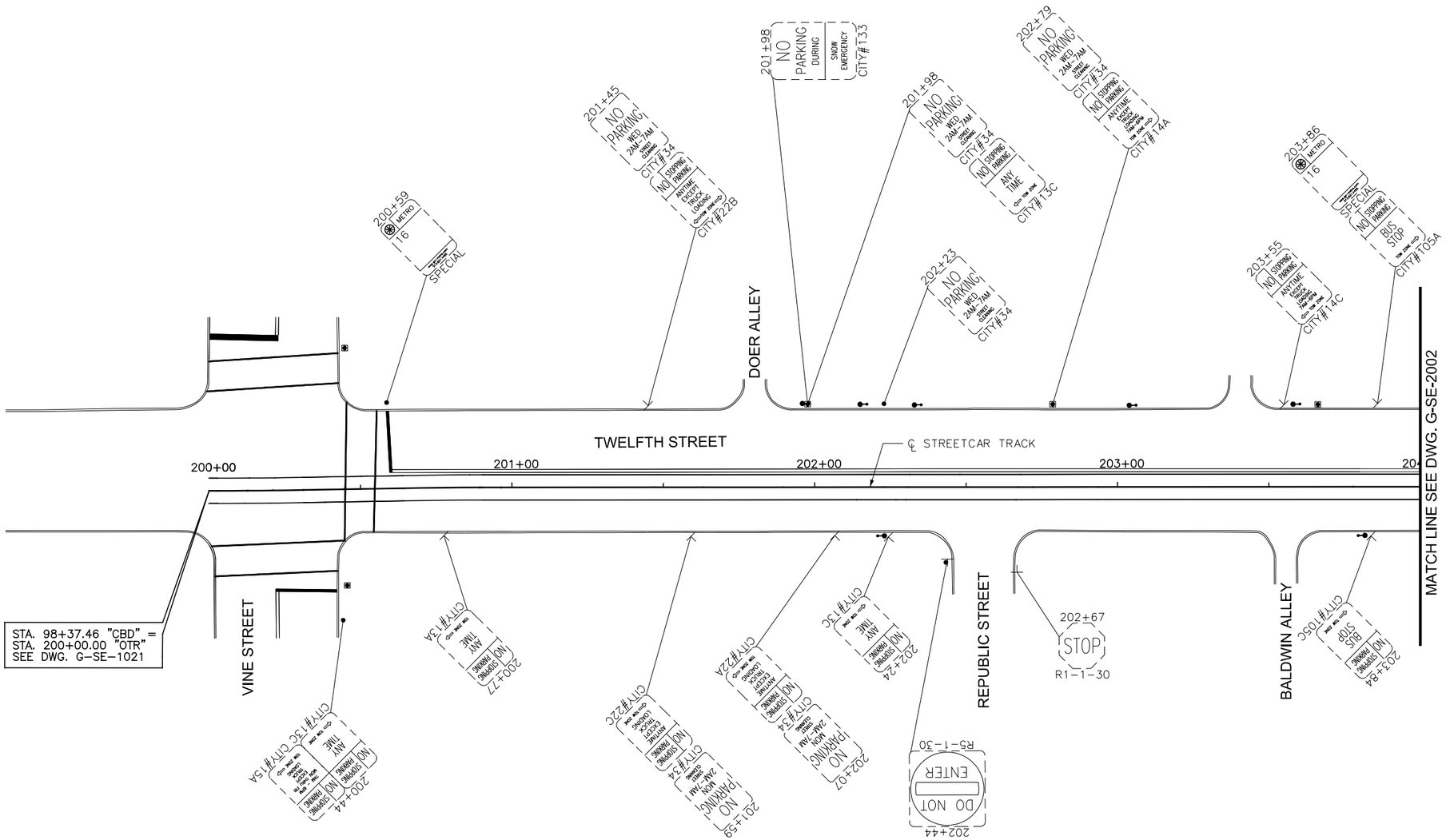

LEGEND

- EXISTING LIGHT POLE
- EXISTING POLE
- EXISTING SIGN POST
- SINGLE PARKING METER
- DOUBLE PARKING METER

CAUTION UNDERGROUND UTILITIES
2 WORKING DAYS
BEFORE YOU DIG
CALL 1-800-362-2764
OHIO UTILITY PROTECTION SERVICE
CALL NON-SERVICE FACILITY
OWNERS DIRECT

GRAPHIC SCALE
20 0 20 40 80
(IN FEET)
1 inch = 20 ft. Full Size
1 inch = 40 ft. Half Size

DOTE_Mono_PDF_Half.pltcfg
T:\29014A-Streetcar\CAD\Traffic_Control\Signing and Marking\S_G-SE-2001.dgn
7/11/2012 11:57:36 AM

CONTRACT DRAWING

PRINTS NOT BEARING THIS STAMP WERE MADE PRIOR TO ADVERTISING FOR BIDS AND ARE TO BE CONSIDERED OBSOLETE FOR CONTRACT PURPOSES.

Department of Transportation and Engineering

City of Cincinnati
City Hall
801 Plum Street
Cincinnati, Ohio 45202

CINCINNATI STREETCAR
OVER THE RHINE
EXISTING SIGNING PLAN - TWELFTH STREET
STA 200+00 TO STA 204+00

Revisions

No.		Date
		7/02/12
		7/02/12
		7/02/12
		7/12/12

Drawn by AAG
Designed by AAG
Checked by JTB
Reviewed by JTB

Consultant

PB HDR

File Number

ACC No. 23126

G-SE-2001

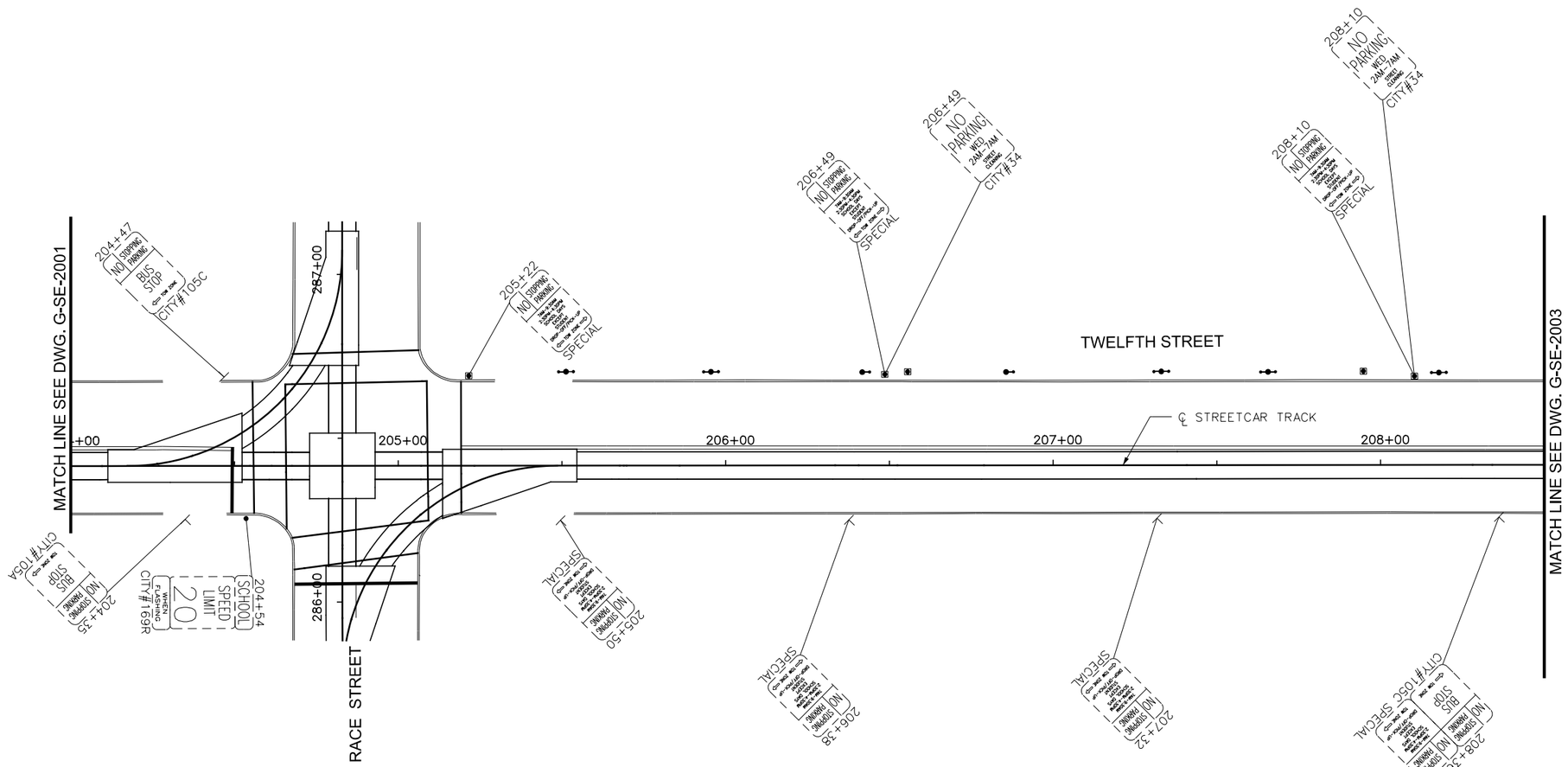

LEGEND

- EXISTING LIGHT POLE
- EXISTING POLE
- EXISTING SIGN POST
- SINGLE PARKING METER
- DOUBLE PARKING METER

CAUTION UNDERGROUND UTILITIES
2 WORKING DAYS
BEFORE YOU DIG
CALL 1-800-362-2764
OHIO UTILITY PROTECTION SERVICE
CALL NON-SERVICE FACILITY
OWNERS DIRECT

GRAPHIC SCALE

20 0 20 40 80

(IN FEET)
1 inch = 20 ft. Full Size
1 inch = 40 ft. Half Size

DOTE_Mono_PDF_Half.pltcfg
T:\29014A-Streetcar\CAD\Traffic_Control\Signing and Marking\S_G-SE-2002.dgn
7/11/2012 11:57:37 AM

DEPARTMENT OF TRANSPORTATION & ENGINEERING
CITY OF CINCINNATI OHIO

CONTRACT DRAWING

PRINTS NOT BEARING THIS STAMP WERE MADE PRIOR TO ADVERTISING FOR BIDS AND ARE TO BE CONSIDERED OBSOLETE FOR CONTRACT PURPOSES.

Department of Transportation and Engineering
City of Cincinnati
City Hall
801 Plum Street
Cincinnati, Ohio 45202

CINCINNATI STREETCAR
OVER THE RHINE
EXISTING SIGNING PLAN - TWELFTH STREET
STA 204+00 TO STA 208+50

Revisions
No.

Drawn by AAG	Date 7/02/12
Designed by AAG	Date 7/02/12
Checked by JTB	Date 7/02/12
Reviewed by JTB	Date 7/12/12

Consultant
PB HDR

File Number

ACC No.
23126

G-SE-2002

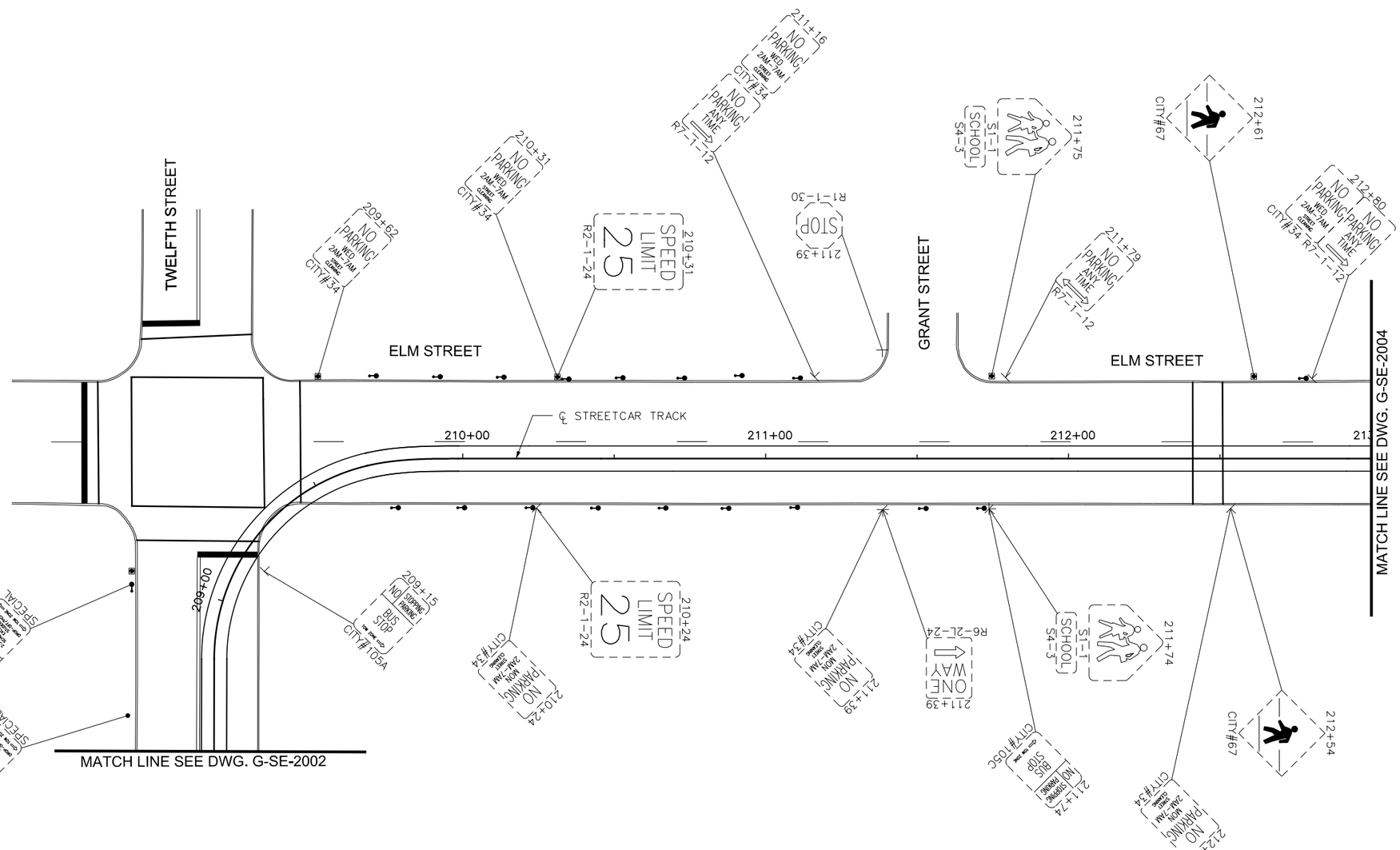

LEGEND

- EXISTING LIGHT POLE
- EXISTING POLE
- EXISTING SIGN POST
- SINGLE PARKING METER
- DOUBLE PARKING METER

GRAPHIC SCALE

20 0 20 40 80

(IN FEET)
1 inch = 20 ft. Full Size
1 inch = 40 ft. Half Size

CAUTION UNDERGROUND UTILITIES
2 WORKING DAYS
BEFORE YOU DIG
CALL 1-800-362-2764
OHIO UTILITY PROTECTION SERVICE
CALL NON-SERVICE FACILITY
OWNERS DIRECT

DOTE_Mono_PDF_Half.pltcfg
T:\29014A-Streetcar\CAD\Traffic_Control\Signing and Marking\S_G-SE-2003.dgn
7/11/2012 11:57:38 AM

CONTRACT DRAWING

PRINTS NOT BEARING THIS STAMP WERE MADE PRIOR TO ADVERTISING FOR BIDS AND ARE TO BE CONSIDERED OBSOLETE FOR CONTRACT PURPOSES.

Department of Transportation and Engineering

City of Cincinnati
City Hall
801 Plum Street
Cincinnati, Ohio 45202

CINCINNATI STREETCAR
OVER THE RHINE
EXISTING SIGNING PLAN - ELM STREET
STA 208+50 TO STA 213+00

Revisions

No.				

Drawn by AAG	Date 7/02/12	Designed by AAG	Date 7/02/12
Checked by JTB	Date 7/02/12	Reviewed by JTB	Date 7/12/12

Consultant

PB HDR

File Number

ACC No. 23126

G-SE-2003

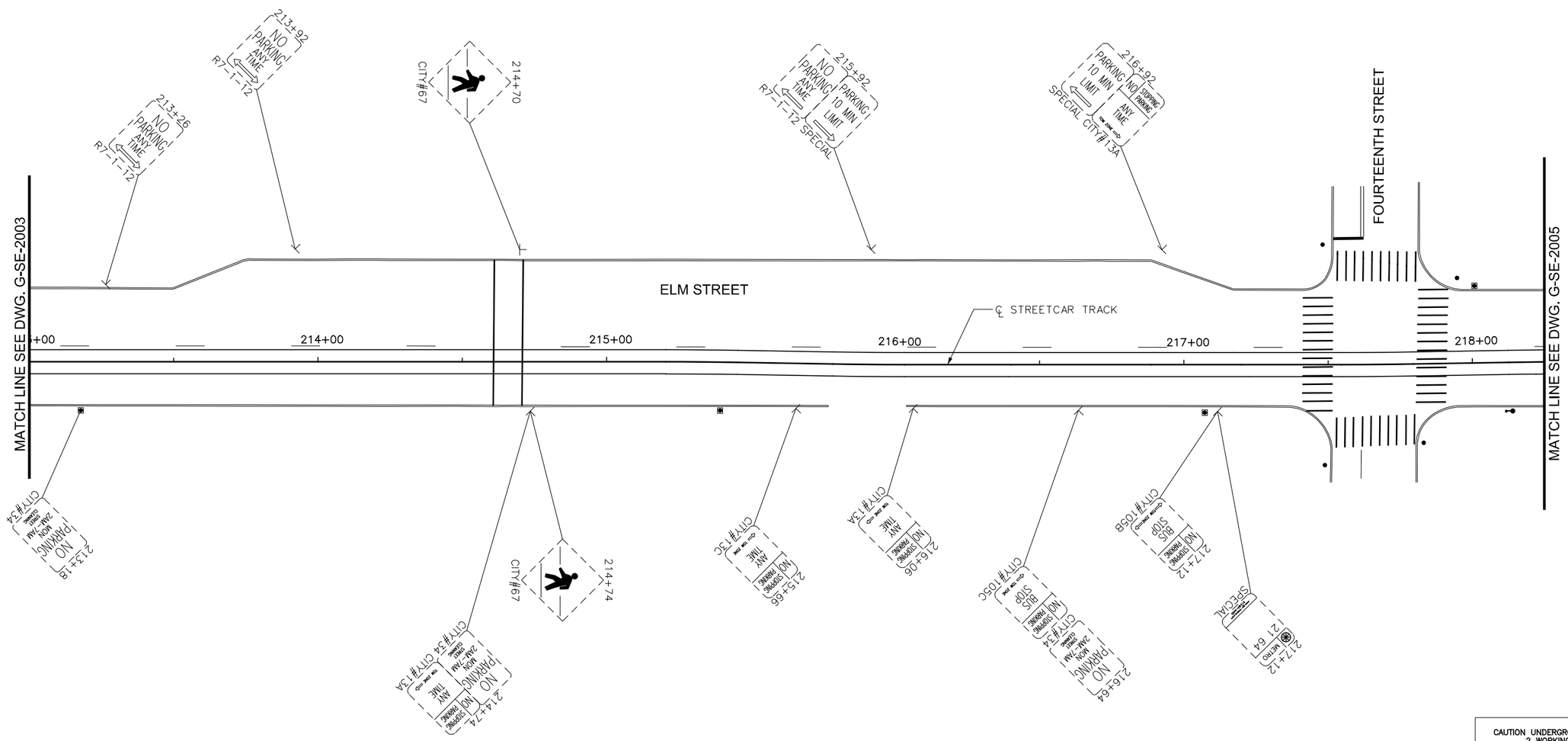

LEGEND

- EXISTING LIGHT POLE
- EXISTING POLE
- EXISTING SIGN POST
- SINGLE PARKING METER
- DOUBLE PARKING METER

CAUTION UNDERGROUND UTILITIES
2 WORKING DAYS
BEFORE YOU DIG
CALL 1-800-362-2764
OHIO UTILITY PROTECTION SERVICE
CALL NON-SERVICE FACILITY
OWNERS DIRECT

GRAPHIC SCALE

20 0 20 40 80

(IN FEET)
1 inch = 20 ft. Full Size
1 inch = 40 ft. Half Size

DOTE_Mono_PDF_Half.pltcfg
T:\29014A-Streetcar\CAD\Traffic_Control\Signing and Marking\S_G-SE-2004.dgn
7/11/2012 11:57:39 AM

CONTRACT DRAWING

PRINTS NOT BEARING THIS STAMP WERE MADE PRIOR TO ADVERTISING FOR BIDS AND ARE TO BE CONSIDERED OBSOLETE FOR CONTRACT PURPOSES.

Department of Transportation and Engineering

City of Cincinnati
City Hall
801 Plum Street
Cincinnati, Ohio 45202

CINCINNATI STREETCAR
OVER THE RHINE
EXISTING SIGNING PLAN - ELM STREET
STA 213+00 TO STA 218+25

Revisions
No.

Drawn by AAG Date 7/02/12
Designed by AAG Date 7/02/12
Checked by JTB Date 7/02/12
Reviewed by JTB Date 7/12/12

Consultant

PB HDR

File Number

ACC No. 23126

G-SE-2004

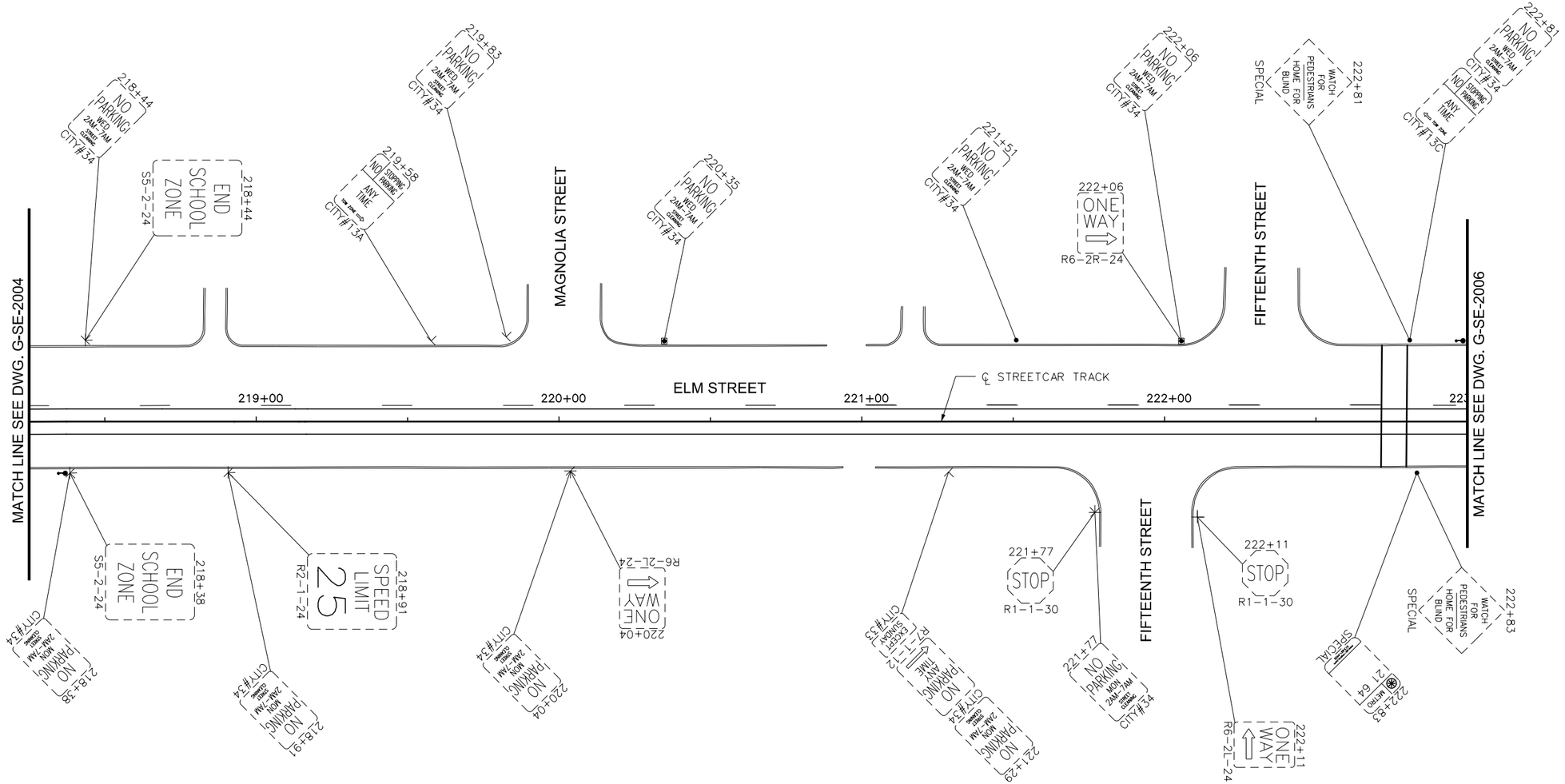

LEGEND

- EXISTING LIGHT POLE
- EXISTING POLE
- EXISTING SIGN POST
- SINGLE PARKING METER
- DOUBLE PARKING METER

CAUTION UNDERGROUND UTILITIES
2 WORKING DAYS
BEFORE YOU DIG
CALL 1-800-362-2764
OHIO UTILITY PROTECTION SERVICE
CALL NON-SERVICE FACILITY
OWNERS DIRECT

GRAPHIC SCALE
20 0 20 40 80
(IN FEET)
1 inch = 20 ft. Full Size
1 inch = 40 ft. Half Size

DOTE_Mono_PDF_Half.pltcfg
T:\29014A-Streetcar\CAD\Traffic_Control\Signing and Marking\S_G-SE-2005.dgn
7/11/2012 11:57:40 AM

DEPARTMENT OF TRANSPORTATION & ENGINEERING
CITY OF CINCINNATI OHIO

CONTRACT DRAWING

PRINTS NOT BEARING THIS STAMP WERE MADE PRIOR TO ADVERTISING FOR BIDS AND ARE TO BE CONSIDERED OBSOLETE FOR CONTRACT PURPOSES.

Department of Transportation and Engineering

City of Cincinnati
City Hall
801 Plum Street
Cincinnati, Ohio 45202

CINCINNATI STREETCAR
OVER THE RHINE
EXISTING SIGNING PLAN - ELM STREET
STA 218+25 TO STA 223+00

Revisions

No.		

Drawn by AAG	Date 7/02/12
Designed by AAG	Date 7/02/12
Checked by JTB	Date 7/02/12
Reviewed by JTB	Date 7/12/12

Consultant

PB HDR

File Number

ACC No. 23126

G-SE-2005

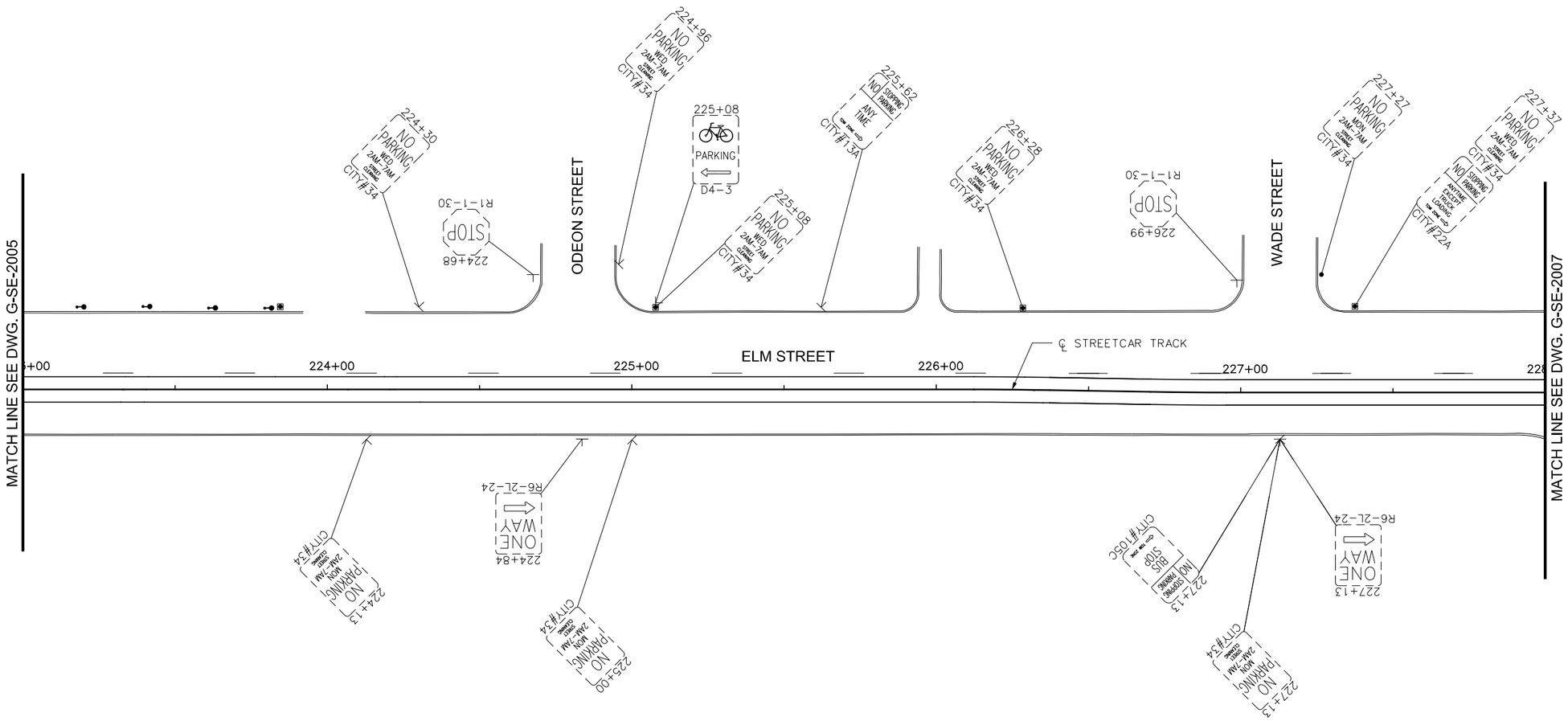

LEGEND

- EXISTING LIGHT POLE
- EXISTING POLE
- EXISTING SIGN POST
- SINGLE PARKING METER
- DOUBLE PARKING METER

CAUTION UNDERGROUND UTILITIES
2 WORKING DAYS
BEFORE YOU DIG
CALL 1-800-362-2764
OHIO UTILITY PROTECTION SERVICE
CALL NON-SERVICE FACILITY
OWNERS DIRECT

GRAPHIC SCALE
20 0 20 40 80
(IN FEET)
1 inch = 20 ft. Full Size
1 inch = 40 ft. Half Size

DOTE_Mono_PDF_Half.pltcfg
T:\29014A-Streetcar\CAD\Traffic_Control\Signing and Marking\S_G-SE-2006.dgn
7/11/2012 11:57:41 AM

DEPARTMENT OF TRANSPORTATION & ENGINEERING CITY OF CINCINNATI OHIO

CONTRACT DRAWING

PRINTS NOT BEARING THIS STAMP WERE MADE PRIOR TO ADVERTISING FOR BID AND ARE TO BE CONSIDERED OBSOLETE FOR CONTRACT PURPOSES.

Department of Transportation and Engineering

City of Cincinnati
City Hall
801 Plum Street
Cincinnati, Ohio 45202

CINCINNATI STREETCAR
OVER THE RHINE
EXISTING SIGNING PLAN - ELM STREET
STA 223+00 TO STA 228+00

Revisions
No.

Date 7/02/12
Date 7/02/12
Date 7/02/12
Date 7/12/12

Drawn by AAG
Designed by AAG
Checked by JTB
Reviewed by JTB

Consultant

PB HDR

File Number

ACC No. 23126

G-SE-2006

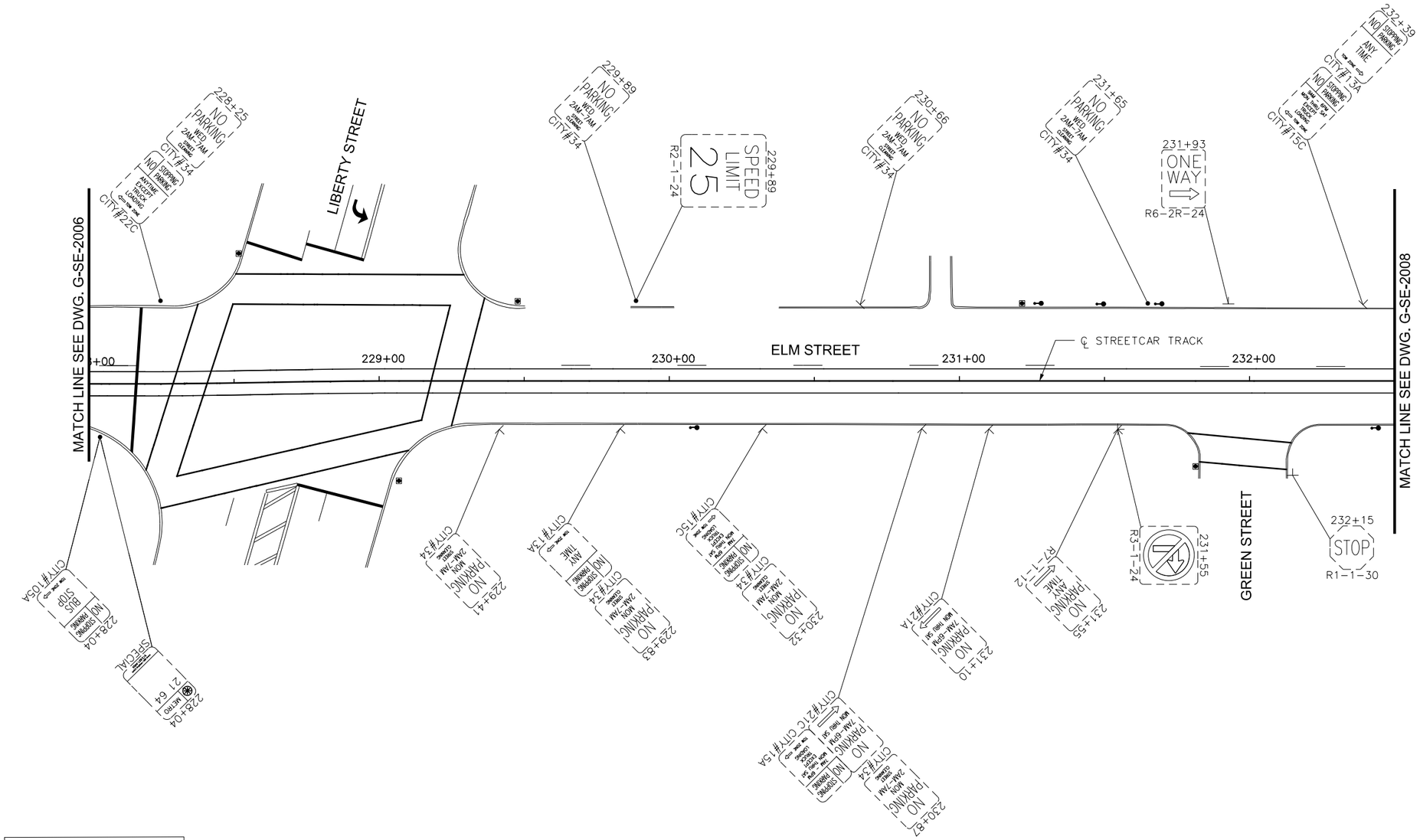

CAUTION UNDERGROUND UTILITIES
2 WORKING DAYS
BEFORE YOU DIG
CALL 1-800-362-2764
OHIO UTILITY PROTECTION SERVICE
CALL NON-SERVICE FACILITY
OWNERS DIRECT

GRAPHIC SCALE
20 0 20 40 80
(IN FEET)
1 inch = 20 ft. Full Size
1 inch = 40 ft. Half Size

DOTE_Mono_PDF_Half.pltcfg
T:\29014A-Streetcar\CAD\Traffic_Control\Signing and Marking\S_G-SE-2007.dgn
7/11/2012 11:57:42 AM

DEPARTMENT OF TRANSPORTATION & ENGINEERING
CITY OF CINCINNATI OHIO

CONTRACT DRAWING

PRINTS NOT BEARING THIS STAMP WERE MADE PRIOR TO ADVERTISING FOR BIDS AND ARE TO BE CONSIDERED OBSOLETE FOR CONTRACT PURPOSES.

Department of Transportation and Engineering
City of Cincinnati
City Hall
801 Plum Street
Cincinnati, Ohio 45202

CINCINNATI STREETCAR
OVER THE RHINE
EXISTING SIGNING PLAN - ELM STREET
STA 228+00 TO STA 232+50

Revisions
No.

	Date
Drawn by AAG	7/02/12
Designed by AAG	7/02/12
Checked by JTB	7/02/12
Reviewed by JTB	7/12/12

Consultant
PB HDR

File Number

ACC No.
23126

G-SE-2007

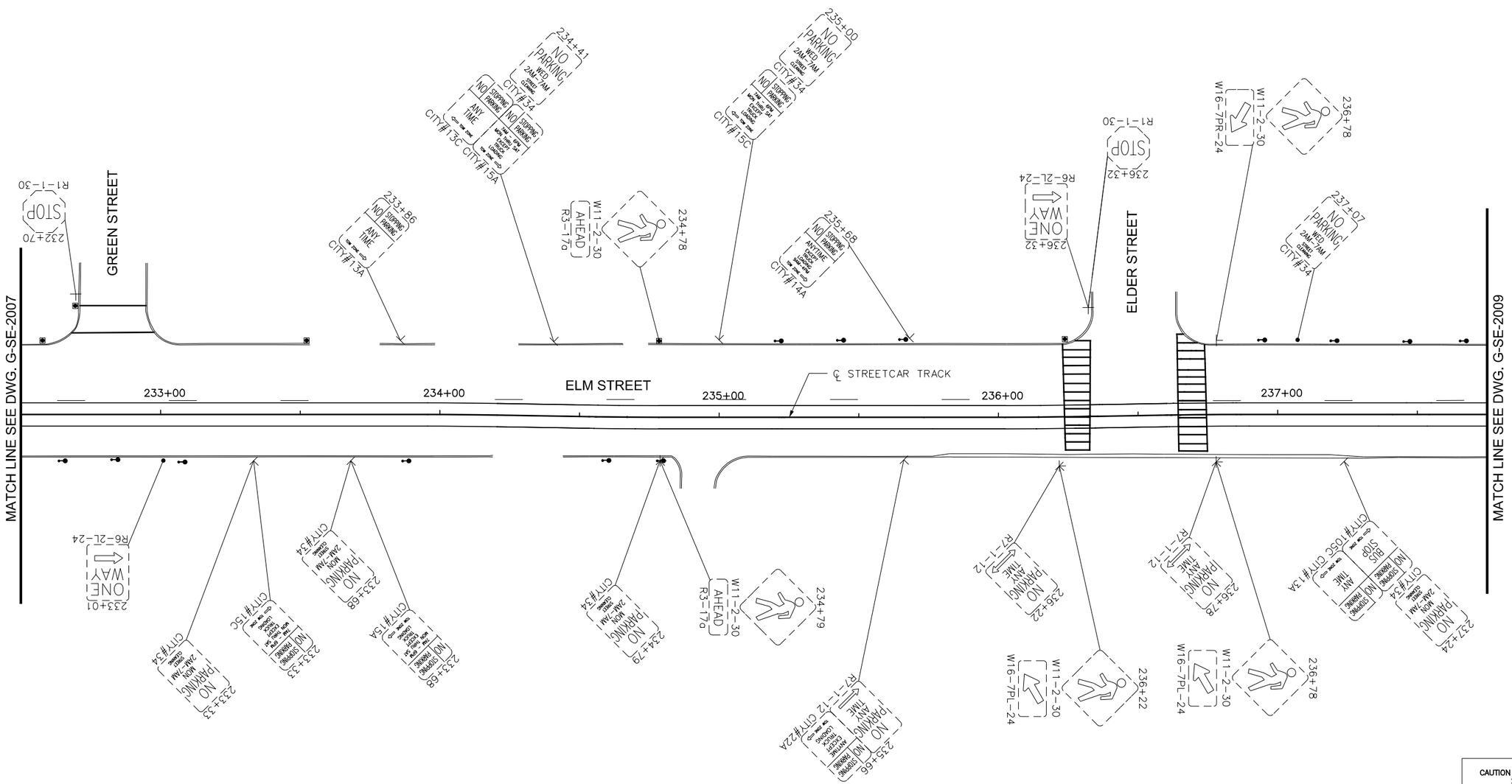

LEGEND

- EXISTING LIGHT POLE
- EXISTING POLE
- EXISTING SIGN POST
- SINGLE PARKING METER
- DOUBLE PARKING METER

CAUTION UNDERGROUND UTILITIES
2 WORKING DAYS
BEFORE YOU DIG
CALL 1-800-362-2764
OHIO UTILITY PROTECTION SERVICE
CALL NON-SERVICE FACILITY
OWNERS DIRECT

GRAPHIC SCALE

20 0 20 40 80

(IN FEET)
1 inch = 20 ft. Full Size
1 inch = 40 ft. Half Size

DOTE_Mono_PDF_Half.pltcfg
T:\29014A-Streetcar\CAD\Traffic_Control\Signing and Marking\S_G-SE-2008.dgn
7/11/2012 11:57:43 AM

DEPARTMENT OF TRANSPORTATION & ENGINEERING
CITY OF CINCINNATI OHIO

CONTRACT DRAWING

PRINTS NOT BEARING THIS STAMP WERE MADE PRIOR TO ADVERTISING FOR BIDS AND ARE TO BE CONSIDERED OBSOLETE FOR CONTRACT PURPOSES.

Department of Transportation and Engineering

City of Cincinnati
City Hall
801 Plum Street
Cincinnati, Ohio 45202

CINCINNATI STREETCAR
OVER THE RHINE
EXISTING SIGNING PLAN - ELM STREET
STA 232+50 TO STA 237+75

Revisions

No.	Date
	7/02/12
	7/02/12
	7/02/12
	7/12/12

Drawn by AAG
Designed by AAG
Checked by JTB
Reviewed by JTB

Consultant

PB HDR

File Number

ACC No. 23126

G-SE-2008

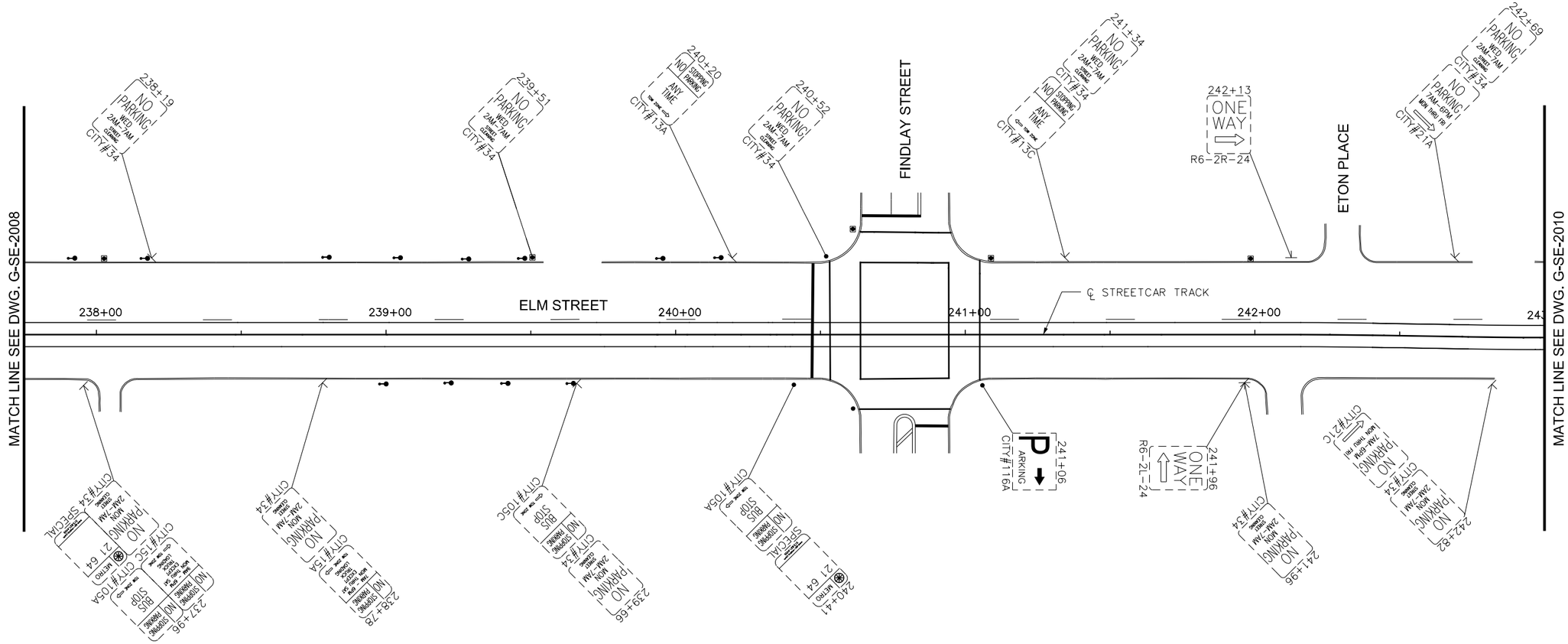

LEGEND

- EXISTING LIGHT POLE
- EXISTING POLE
- EXISTING SIGN POST
- SINGLE PARKING METER
- DOUBLE PARKING METER

CAUTION UNDERGROUND UTILITIES
2 WORKING DAYS
BEFORE YOU DIG
CALL 1-800-362-2764
OHIO UTILITY PROTECTION SERVICE
CALL NON-SERVICE FACILITY
OWNERS DIRECT

GRAPHIC SCALE
20 0 20 40 80
(IN FEET)
1 inch = 20 ft. Full Size
1 inch = 40 ft. Half Size

DOTE_Mono_PDF_Half.pltcfg
T:\29014A-Streetcar\CAD\Traffic_Control\Signing and Marking\S_G-SE-2009.dgn
7/11/2012 11:57:44 AM

DEPARTMENT OF TRANSPORTATION & ENGINEERING CITY OF CINCINNATI OHIO

CONTRACT DRAWING

PRINTS NOT BEARING THIS STAMP WERE MADE PRIOR TO ADVERTISING FOR BID AND ARE TO BE CONSIDERED OBSOLETE FOR CONTRACT PURPOSES.

Department of Transportation and Engineering

City of Cincinnati
City Hall
801 Plum Street
Cincinnati, Ohio 45202

CINCINNATI STREETCAR
OVER THE RHINE
EXISTING SIGNING PLAN - ELM STREET
STA 237+75 TO STA 243+00

Revisions
No.

Date 7/02/12
Date 7/02/12
Date 7/02/12
Date 7/12/12

Drawn by AAG
Designed by AAG
Checked by JTB
Reviewed by JTB

Consultant
PB HDR

File Number

ACC No.
23126

G-SE-2009

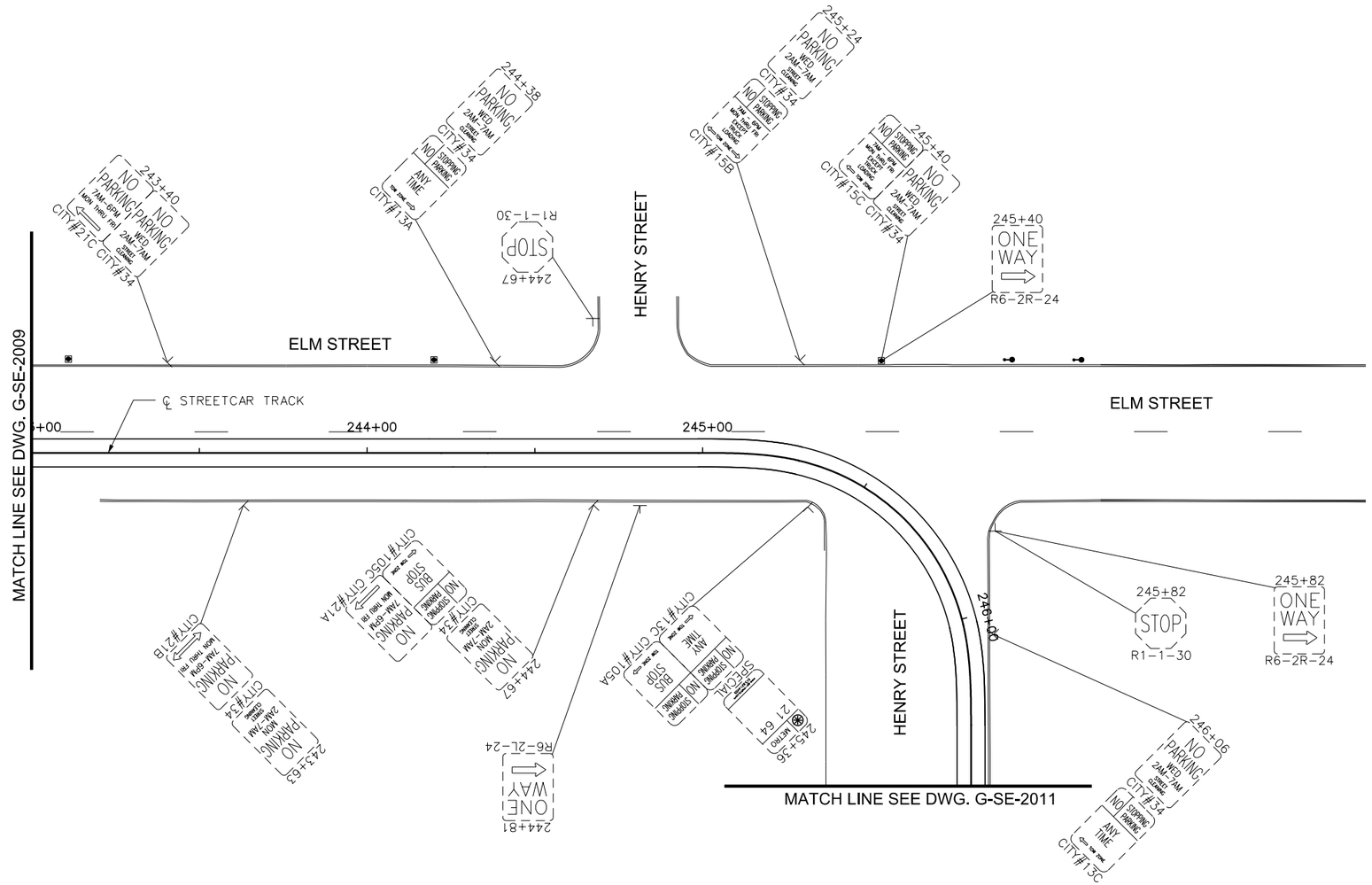

LEGEND

- EXISTING LIGHT POLE
- EXISTING POLE
- EXISTING SIGN POST
- SINGLE PARKING METER
- DOUBLE PARKING METER

CAUTION UNDERGROUND UTILITIES
2 WORKING DAYS

BEFORE YOU DIG

CALL 1-800-362-2764
OHIO UTILITY PROTECTION SERVICE
CALL NON-SERVICE FACILITY
OWNERS DIRECT

GRAPHIC SCALE

20 0 20 40 80

(IN FEET)
1 inch = 20 ft. Full Size
1 inch = 40 ft. Half Size

DOTE_Mono_PDF_Half.pltcfg
T:\29014A-Streetcar\CAD\Traffic_Control\Signing and Marking\S_G-SE-2010.dgn
7/11/2012 11:57:45 AM

CONTRACT DRAWING

PRINTS NOT BEARING THIS STAMP WERE MADE PRIOR TO ADVERTISING FOR BIDS AND ARE TO BE CONSIDERED OBSOLETE FOR CONTRACT PURPOSES.

Department of Transportation and Engineering

City of Cincinnati
City Hall
801 Plum Street
Cincinnati, Ohio 45202

CINCINNATI STREETCAR
OVER THE RHINE
EXISTING SIGNING PLAN - ELM STREET
STA 243+00 TO STA 246+50

Revisions

No.			

Drawn by AAG Date 7/02/12
Designed by AAG Date 7/02/12
Checked by JTB Date 7/02/12
Reviewed by JTB Date 7/12/12

Consultant

PB HDR

File Number

ACC No. 23126

G-SE-2010

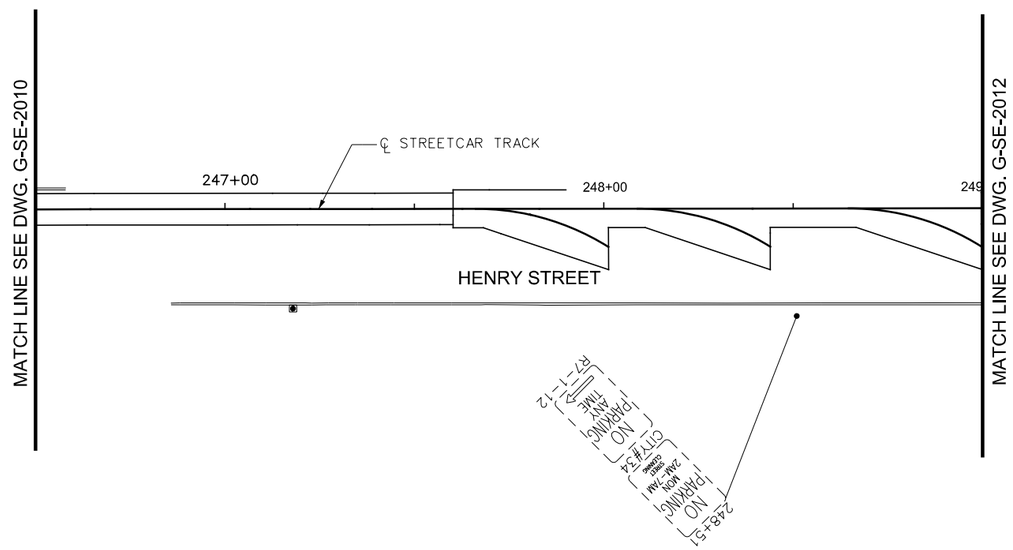

LEGEND

- EXISTING LIGHT POLE
- EXISTING POLE
- EXISTING SIGN POST
- SINGLE PARKING METER
- DOUBLE PARKING METER

CAUTION UNDERGROUND UTILITIES
2 WORKING DAYS
BEFORE YOU DIG
CALL 1-800-362-2764
OHIO UTILITY PROTECTION SERVICE
CALL NON-SERVICE FACILITY
OWNERS DIRECT

GRAPHIC SCALE

20 0 20 40 80

(IN FEET)
1 inch = 20 ft. Full Size
1 inch = 40 ft. Half Size

DOTE_Mono_PDF_Half.pltcfg
T:\29014A-Streetcar\CAD\Traffic_Control\Signing and Marking\S_G-SE-2011.dgn
7/11/2012 11:57:46 AM

CONTRACT DRAWING

PRINTS NOT BEARING THIS STAMP WERE MADE PRIOR TO ADVERTISING FOR BIDS, AND ARE TO BE CONSIDERED OBSOLETE FOR CONTRACT PURPOSES.

Department of Transportation and Engineering

City of Cincinnati
City Hall
801 Plum Street
Cincinnati, Ohio 45202

CINCINNATI STREETCAR
OVER THE RHINE
EXISTING SIGNING PLAN - HENRY STREET
STA 246+50 TO STA 249+00

Revisions
No.

Drawn by AAG	Date 7/02/12
Designed by AAG	Date 7/02/12
Checked by JTB	Date 7/02/12
Reviewed by JTB	Date 7/12/12

Consultant

PB HDR

File Number

ACC No.
23126

G-SE-2011

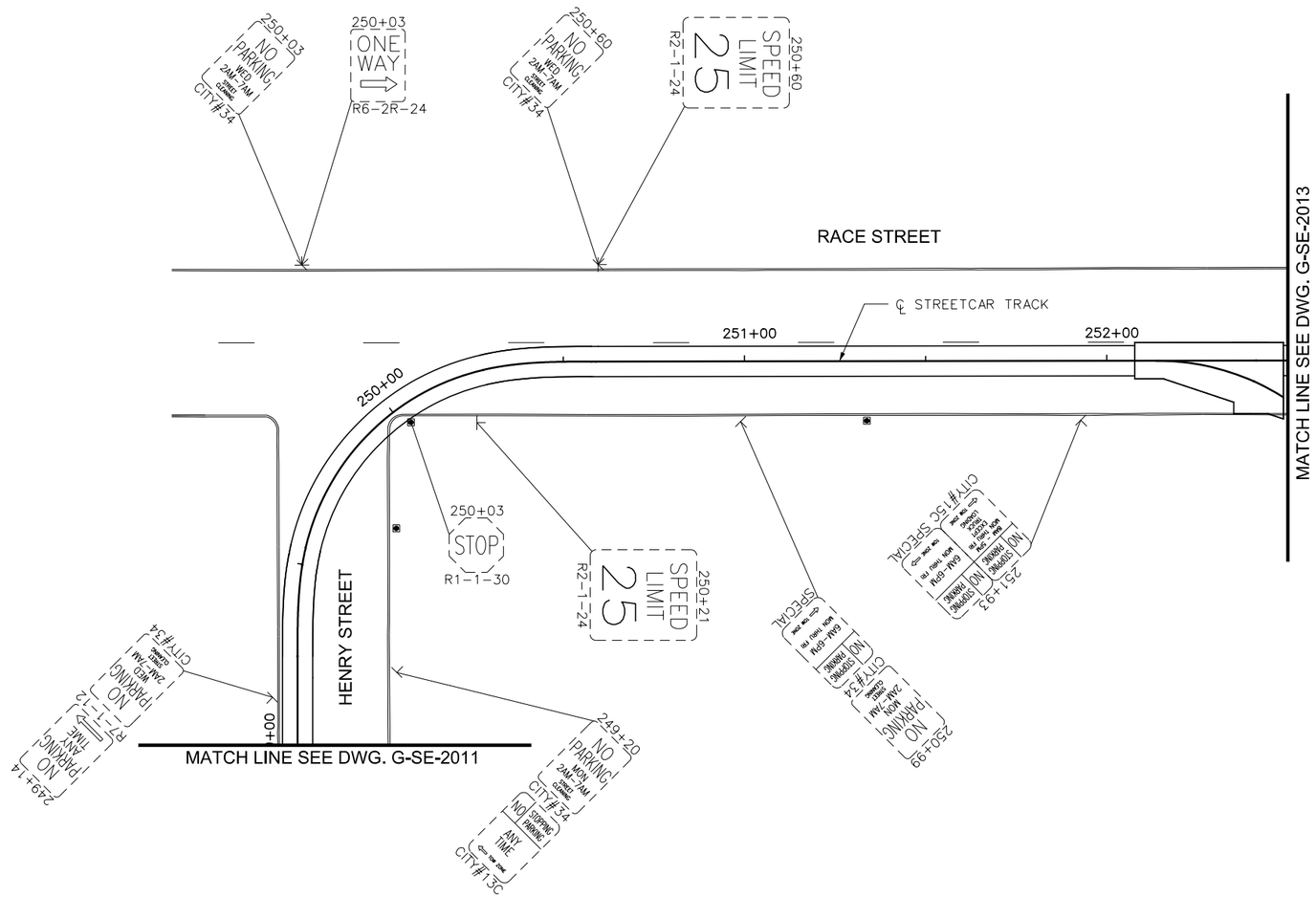

LEGEND

- EXISTING LIGHT POLE
- EXISTING POLE
- EXISTING SIGN POST
- SINGLE PARKING METER
- DOUBLE PARKING METER

GRAPHIC SCALE

20 0 20 40 80

(IN FEET)
1 inch = 20 ft. Full Size
1 inch = 40 ft. Half Size

CAUTION UNDERGROUND UTILITIES
2 WORKING DAYS
BEFORE YOU DIG
CALL 1-800-362-2764
OHIO UTILITY PROTECTION SERVICE
CALL NON-SERVICE FACILITY
OWNERS DIRECT

DOTE_Mono_PDF_Half.pltcfg
T:\29014A-Streetcar\CAD\Traffic_Control\Signing and Marking\S_G-SE-2012.dgn
7/11/2012 11:57:47 AM

CONTRACT DRAWING

PRINTS NOT BEARING THIS STAMP WERE MADE PRIOR TO ADVERTISING FOR BIDS AND ARE TO BE CONSIDERED OBSOLETE FOR CONTRACT PURPOSES.

Department of Transportation and Engineering

City of Cincinnati
City Hall
801 Plum Street
Cincinnati, Ohio 45202

CINCINNATI STREETCAR OVER THE RHINE

EXISTING SIGNING PLAN - RACE STREET
STA 249+00 TO STA 252+50

Revisions

No.			

Date 7/02/12	Date 7/02/12	Date 7/02/12	Date 7/12/12
Drawn by AAG	Designed by AAG	Checked by JTB	Reviewed by JTB

Consultant

PB HDR

File Number

ACC No. 23126

G-SE-2012

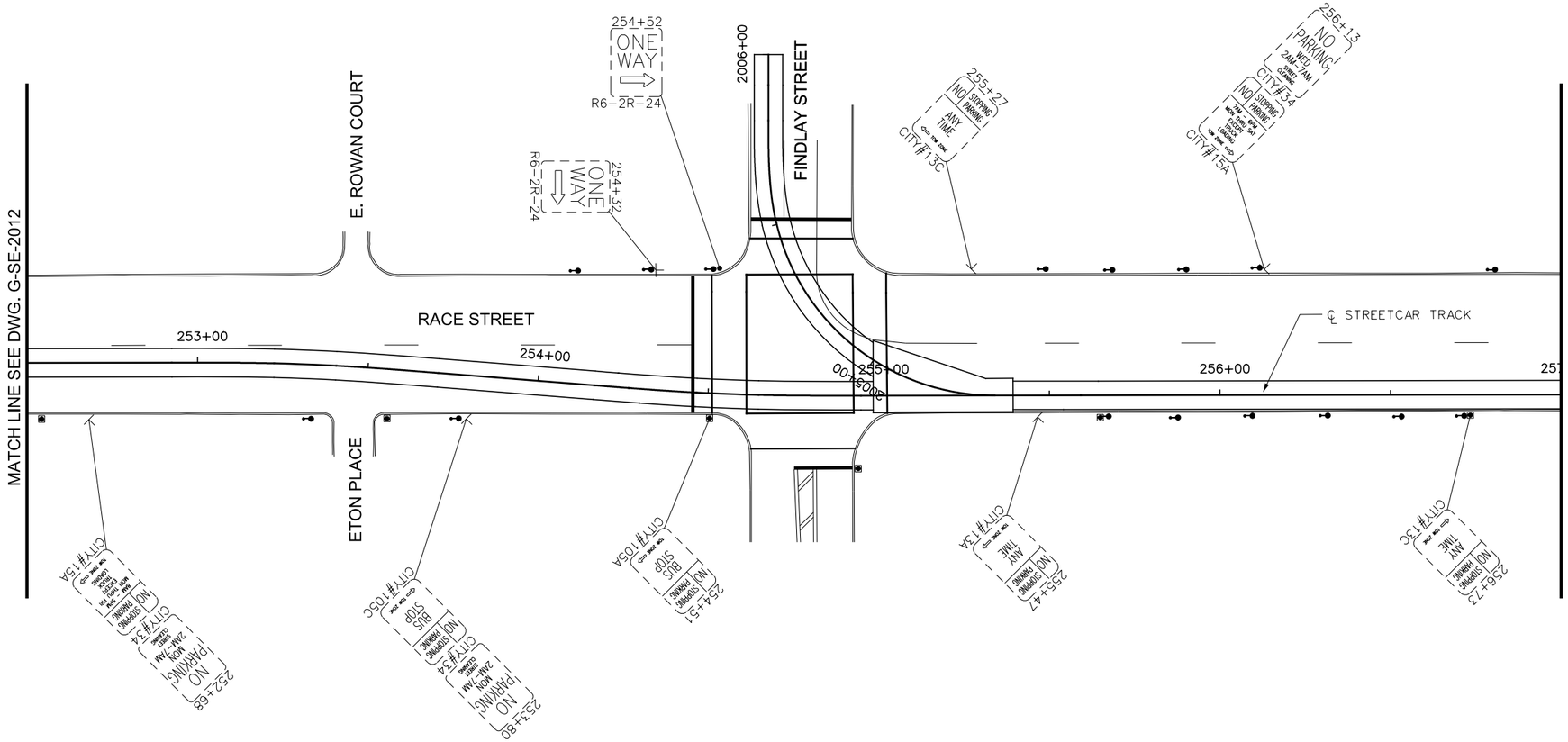

LEGEND

- EXISTING LIGHT POLE
- EXISTING POLE
- EXISTING SIGN POST
- SINGLE PARKING METER
- DOUBLE PARKING METER

CAUTION UNDERGROUND UTILITIES
2 WORKING DAYS
BEFORE YOU DIG
CALL 1-800-362-2764
OHIO UTILITY PROTECTION SERVICE
CALL NON-SERVICE FACILITY
OWNERS DIRECT

GRAPHIC SCALE

20 0 20 40 80

(IN FEET)
1 inch = 20 ft. Full Size
1 inch = 40 ft. Half Size

DOTE_Mono_PDF_Half.pltcfg
T:\29014A-Streetcar\CAD\Traffic_Control\Signing and Marking\S_G-SE-2013.dgn
7/11/2012 11:57:47 AM

CONTRACT DRAWING

PRINTS NOT BEARING THIS STAMP WERE MADE PRIOR TO ADVERTISING FOR BIDS AND ARE TO BE CONSIDERED OBSOLETE FOR CONTRACT PURPOSES.

Department of Transportation and Engineering

City of Cincinnati
City Hall
801 Plum Street
Cincinnati, Ohio 45202

CINCINNATI STREETCAR
OVER THE RHINE
EXISTING SIGNING PLAN - RACE STREET
STA 252+50 TO STA 257+00

Revisions

No.			

Drawn by AAG	Date 7/02/12	
Designed by AAG	Date 7/02/12	
Checked by JTB	Date 7/02/12	
Reviewed by JTB	Date 7/12/12	

Consultant

PB HDR

File Number

ACC No. 23126

G-SE-2013

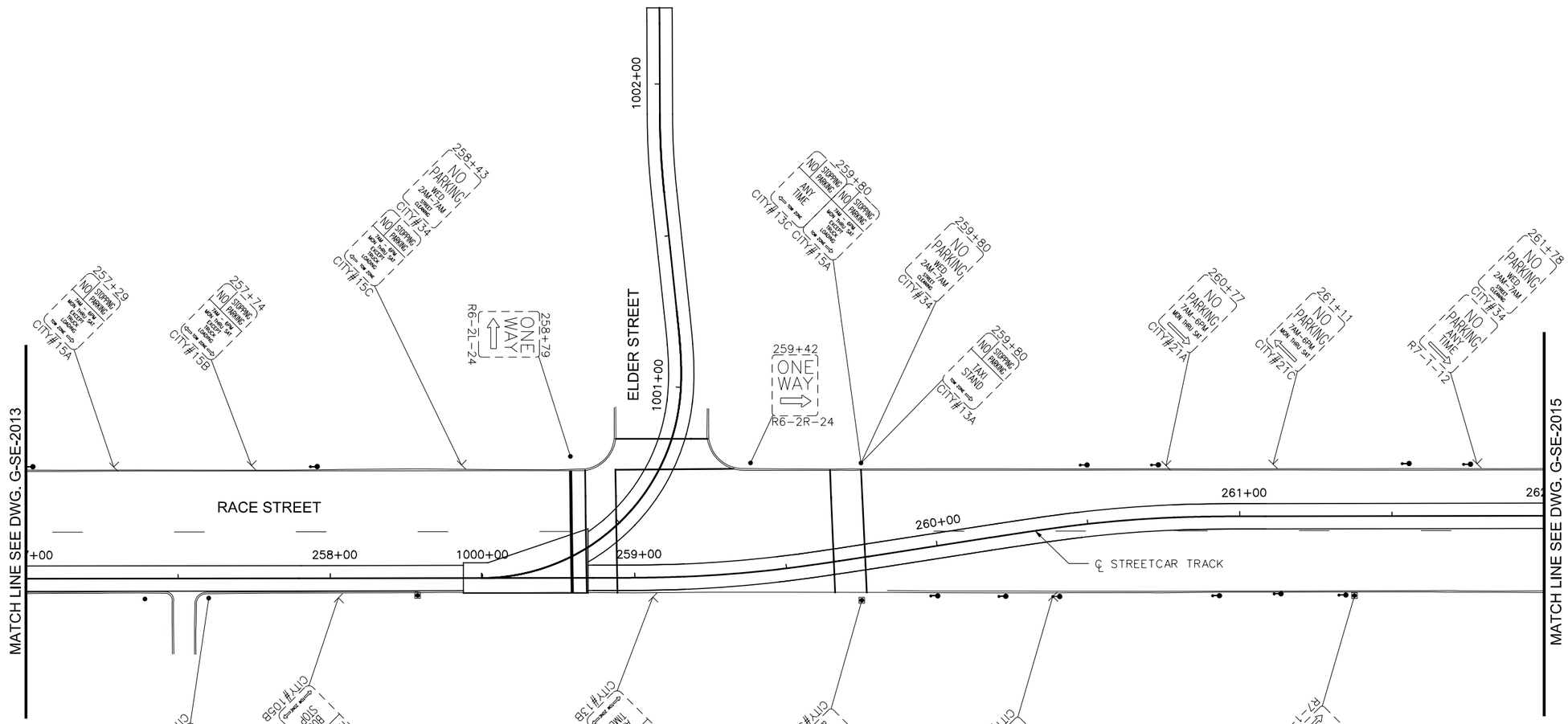

LEGEND

- EXISTING LIGHT POLE
- EXISTING POLE
- EXISTING SIGN POST
- SINGLE PARKING METER
- DOUBLE PARKING METER

CAUTION UNDERGROUND UTILITIES
2 WORKING DAYS
BEFORE YOU DIG
CALL 1-800-362-2764
OHIO UTILITY PROTECTION SERVICE
CALL NON-SERVICE FACILITY
OWNERS DIRECT

GRAPHIC SCALE

20 0 20 40 80

(IN FEET)
1 inch = 20 ft. Full Size
1 inch = 40 ft. Half Size

DOTE_Mono_PDF_Half.pltcfg
T:\29014A-Streetcar\CAD\Traffic_Control\Signing and Marking\S_G-SE-2014.dgn
7/11/2012 11:57:48 AM

DEPARTMENT OF TRANSPORTATION & ENGINEERING
CITY OF CINCINNATI OHIO

CONTRACT DRAWING

PRINTS NOT BEARING THIS STAMP WERE MADE PRIOR TO ADVERTISING FOR BID AND ARE TO BE CONSIDERED OBSOLETE FOR CONTRACT PURPOSES.

Department of Transportation and Engineering

City of Cincinnati
City Hall
801 Plum Street
Cincinnati, Ohio 45202

CINCINNATI STREETCAR
OVER THE RHINE
EXISTING SIGNING PLAN - RACE STREET
STA 257+00 TO STA 262+00

Revisions
No.

Drawn by AAG	Date 7/02/12
Designed by AAG	Date 7/02/12
Checked by JTB	Date 7/02/12
Reviewed by JTB	Date 7/12/12

Consultant

PB HDR

File Number

ACC No.
23126

G-SE-2014

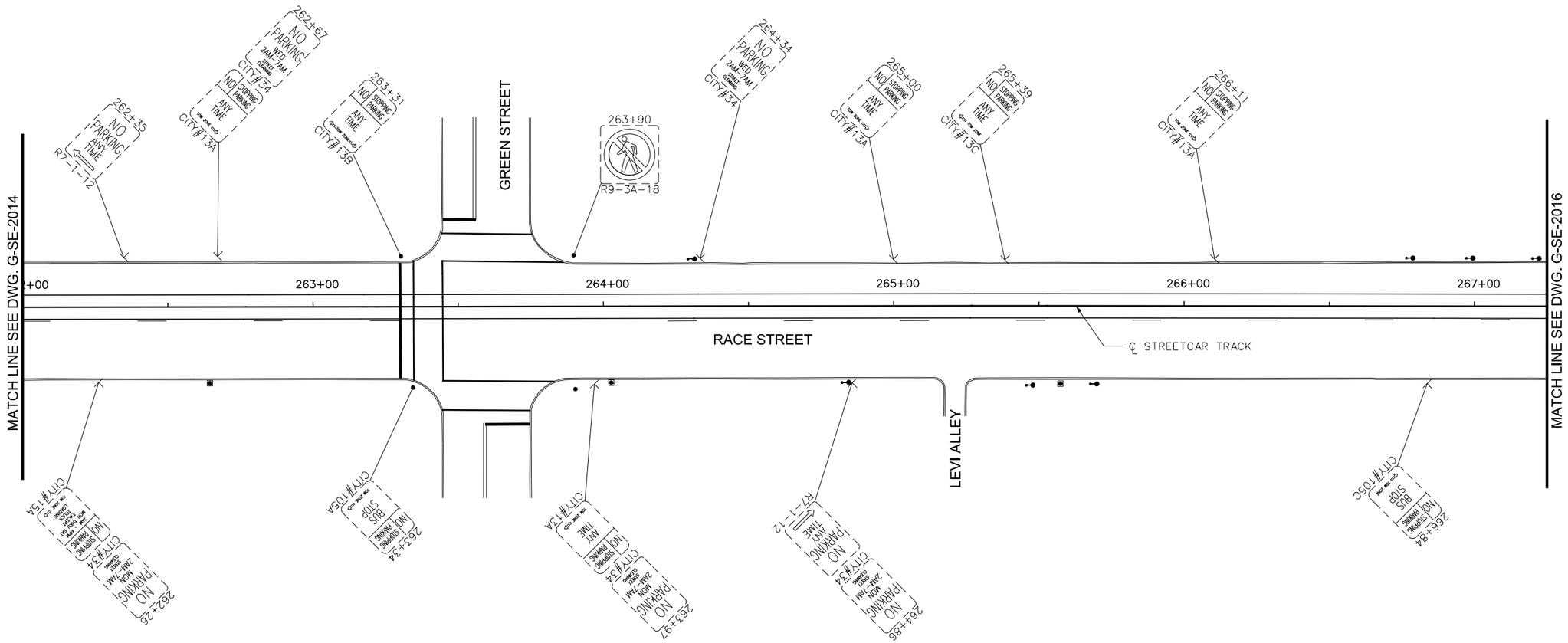

LEGEND

- EXISTING LIGHT POLE
- EXISTING POLE
- EXISTING SIGN POST
- SINGLE PARKING METER
- DOUBLE PARKING METER

CAUTION UNDERGROUND UTILITIES
2 WORKING DAYS
BEFORE YOU DIG
CALL 1-800-362-2764
OHIO UTILITY PROTECTION SERVICE
CALL NON-SERVICE FACILITY
OWNERS DIRECT

GRAPHIC SCALE
20 0 20 40 80
(IN FEET)
1 inch = 20 ft. Full Size
1 inch = 40 ft. Half Size

DEPARTMENT OF TRANSPORTATION & ENGINEERING CITY OF CINCINNATI OHIO

CONTRACT DRAWING

PRINTS NOT BEARING THIS STAMP WERE MADE PRIOR TO ADVERTISING FOR BID AND ARE TO BE CONSIDERED OBSOLETE FOR CONTRACT PURPOSES.

Department of Transportation and Engineering

City of Cincinnati
City Hall
801 Plum Street
Cincinnati, Ohio 45202

CINCINNATI STREETCAR
OVER THE RHINE
EXISTING SIGNING PLAN - RACE STREET
STA 262+00 TO STA 267+25

Revisions

No.				

Date	7/02/12
Date	7/02/12
Date	7/02/12
Date	7/12/12
Drawn by	AAG
Designed by	AAG
Checked by	JTB
Reviewed by	JTB

Consultant

PB HDR

File Number

ACC No.
23126

G-SE-2015

DOTE_Mono_PDF_Half.pltcfg
T:\29014A-Streetcar\CAD\Traffic_Control\Signing and Marking\S_G-SE-2015.dgn
7/11/2012 11:57:49 AM

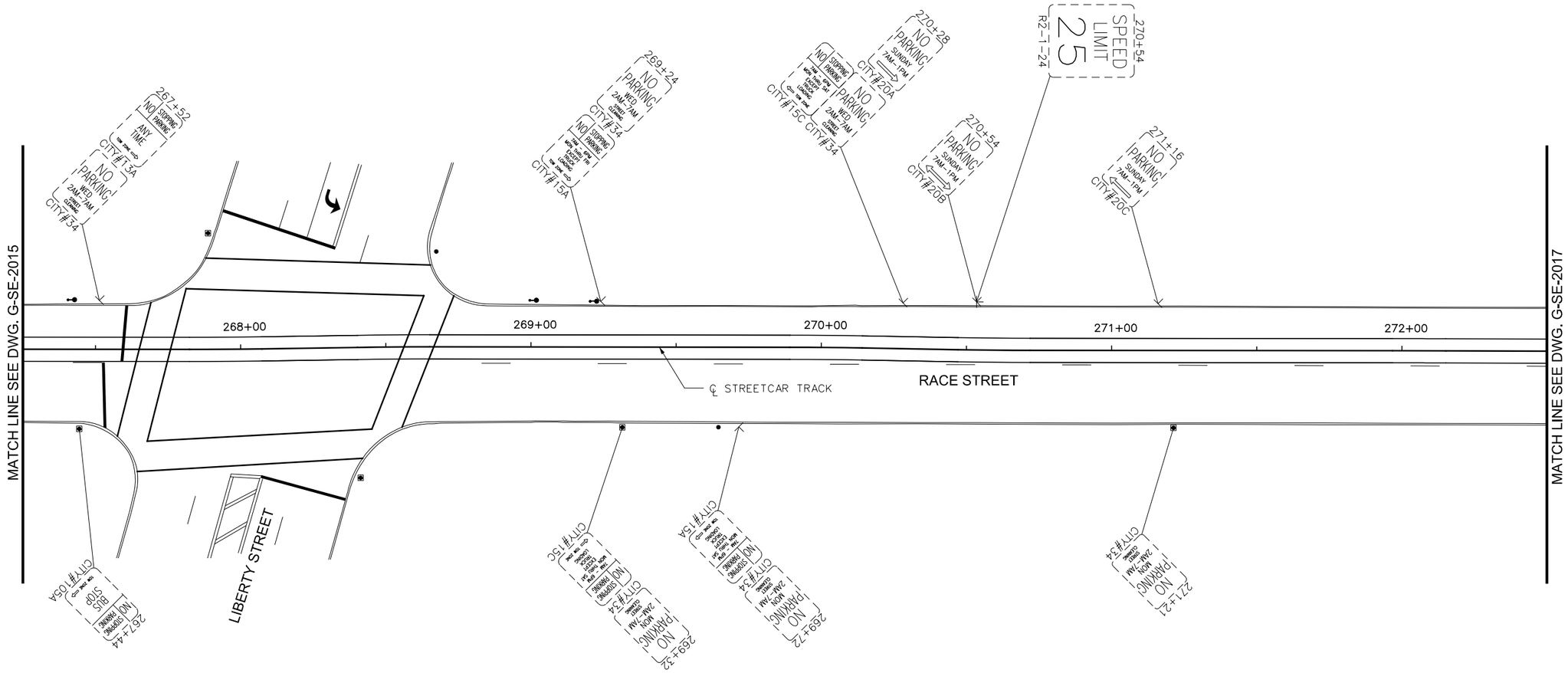

LEGEND

- EXISTING LIGHT POLE
- EXISTING POLE
- EXISTING SIGN POST
- SINGLE PARKING METER
- DOUBLE PARKING METER

CAUTION UNDERGROUND UTILITIES
2 WORKING DAYS

BEFORE YOU DIG

CALL 1-800-362-2764
OHIO UTILITY PROTECTION SERVICE
CALL NON-SERVICE FACILITY
OWNERS DIRECT

GRAPHIC SCALE

20 0 20 40 80

(IN FEET)
1 inch = 20 ft. Full Size
1 inch = 40 ft. Half Size

DOTE_Mono_PDF_Half.pltcfg
T:\29014A-Streetcar\CAD\Traffic_Control\Signing and Marking\S_G-SE-2016.dgn
7/11/2012 11:57:50 AM

CONTRACT DRAWING

PRINTS NOT BEARING THIS STAMP WERE MADE PRIOR TO ADVERTISING FOR BIDS AND ARE TO BE CONSIDERED OBSOLETE FOR CONTRACT PURPOSES.

Department of Transportation and Engineering

City of Cincinnati
City Hall
801 Plum Street
Cincinnati, Ohio 45202

CINCINNATI STREETCAR
OVER THE RHINE

EXISTING SIGNING PLAN - RACE STREET
STA 267+25 TO STA 272+50

Revisions

No.			

Drawn by AAG	Date 7/02/12
Designed by AAG	Date 7/02/12
Checked by JTB	Date 7/02/12
Reviewed by JTB	Date 7/12/12

Consultant

PB HDR

File Number

ACC No. 23126

G-SE-2016

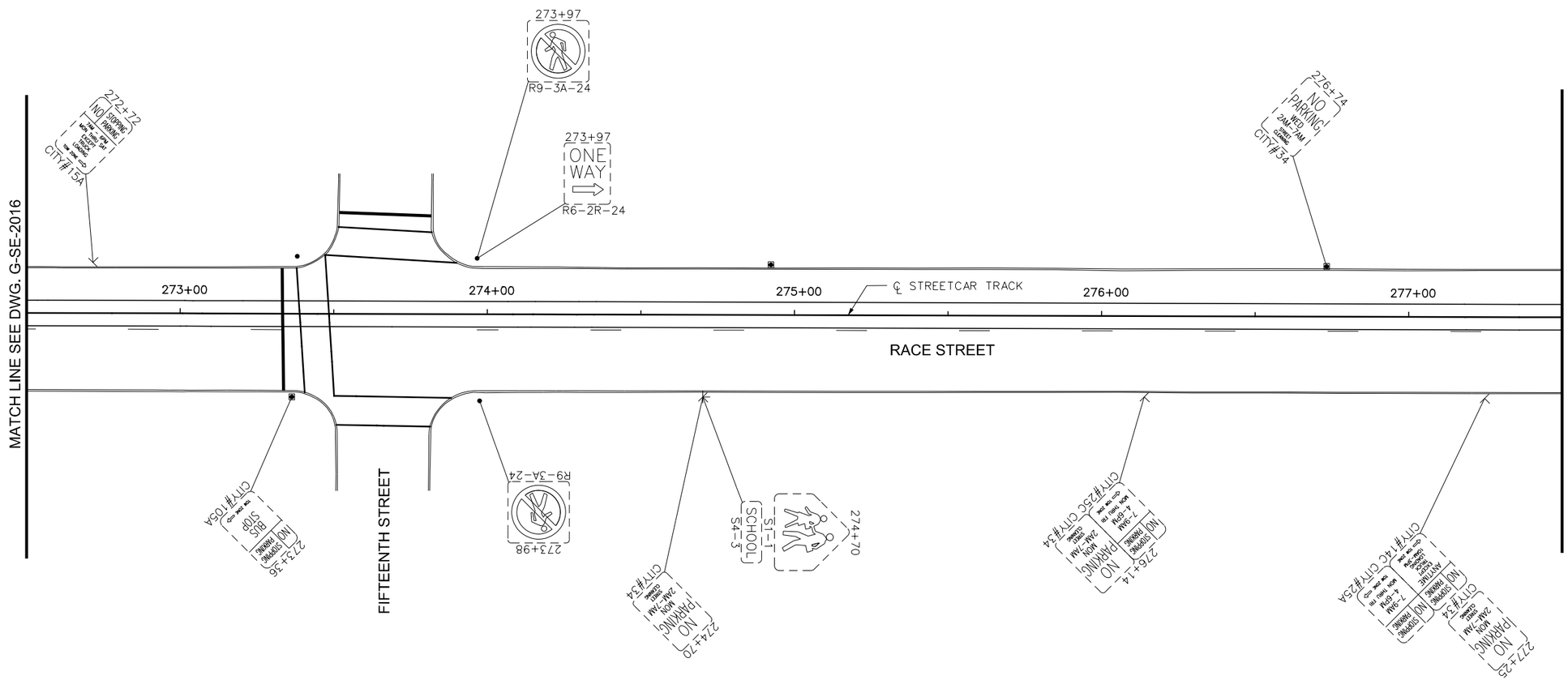

LEGEND

- EXISTING LIGHT POLE
- EXISTING POLE
- EXISTING SIGN POST
- SINGLE PARKING METER
- DOUBLE PARKING METER

CAUTION UNDERGROUND UTILITIES
2 WORKING DAYS

BEFORE YOU DIG

CALL 1-800-362-2764
OHIO UTILITY PROTECTION SERVICE
CALL NON-SERVICE FACILITY
OWNERS DIRECT

GRAPHIC SCALE

20 0 20 40 80

(IN FEET)
1 inch = 20 ft. Full Size
1 inch = 40 ft. Half Size

DOTE_Mono_PDF_Half.pltcfg
T:\29014A-Streetcar\CAD\Traffic_Control\Signing and Marking\S_G-SE-2017.dgn
7/11/2012
11:57:51 AM

DEPARTMENT OF TRANSPORTATION & ENGINEERING
CITY OF CINCINNATI OHIO

CONTRACT DRAWING

PRINTS NOT BEARING THIS STAMP WERE MADE PRIOR TO ADVERTISING FOR BIDS AND ARE TO BE CONSIDERED OBSOLETE FOR CONTRACT PURPOSES.

Department of Transportation and Engineering

City of Cincinnati
City Hall
801 Plum Street
Cincinnati, Ohio 45202

CINCINNATI STREETCAR
OVER THE RHINE

EXISTING SIGNING PLAN - RACE STREET
STA 272+50 TO STA 277+50

Revisions

No.		

Drawn by AAG	Date 7/02/12
Designed by AAG	Date 7/02/12
Checked by JTB	Date 7/02/12
Reviewed by JTB	Date 7/12/12

Consultant

PB HDR

File Number

ACC No. 23126

G-SE-2017

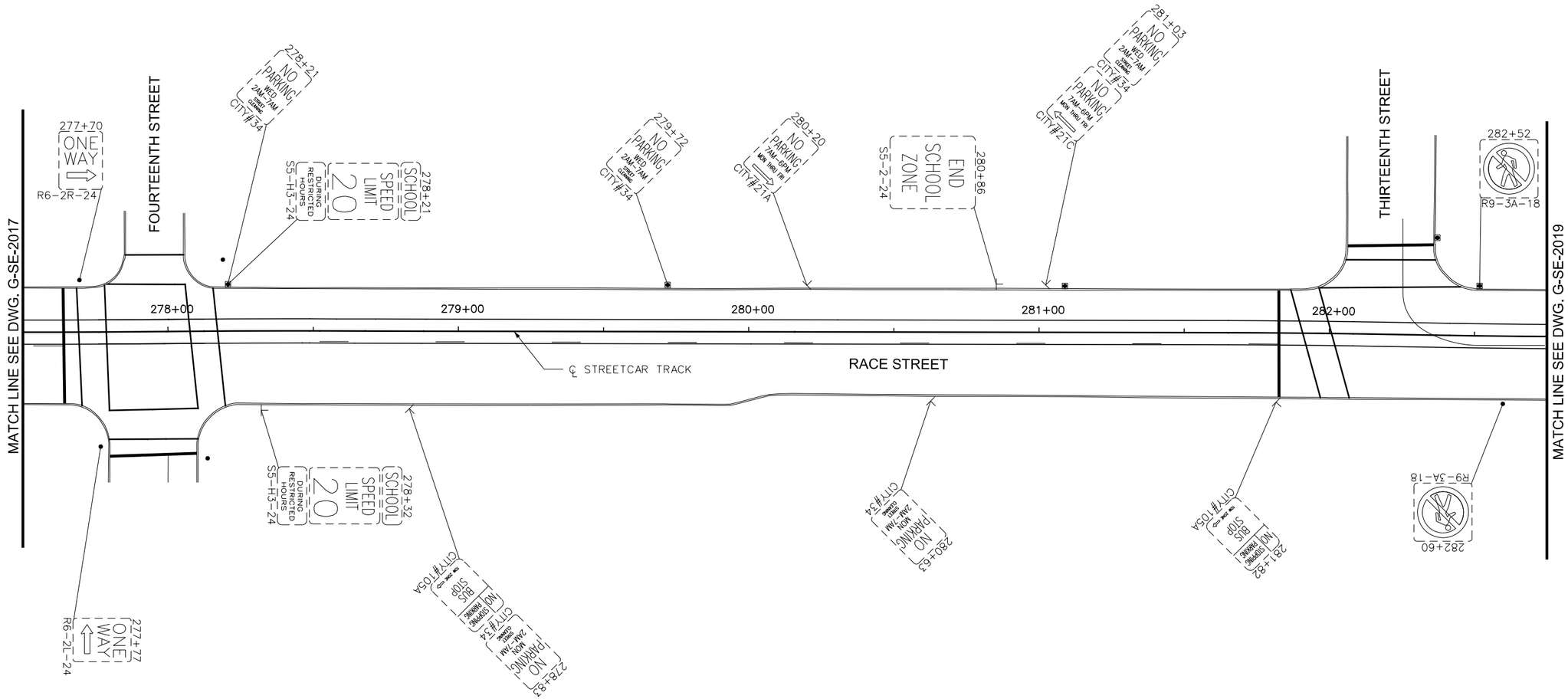

LEGEND

- EXISTING LIGHT POLE
- EXISTING POLE
- EXISTING SIGN POST
- SINGLE PARKING METER
- DOUBLE PARKING METER

CAUTION UNDERGROUND UTILITIES
2 WORKING DAYS
BEFORE YOU DIG
CALL 1-800-362-2764
OHIO UTILITY PROTECTION SERVICE
CALL NON-SERVICE FACILITY
OWNERS DIRECT

GRAPHIC SCALE

20 0 20 40 80

(IN FEET)
1 inch = 20 ft. Full Size
1 inch = 40 ft. Half Size

DOTE_Mono_PDF_Half.pltcfg
T:\29014A-Streetcar\CAD\Traffic_Control\Signing and Marking\S_G-SE-2018.dgn
7/11/2012 11:57:52 AM

CONTRACT DRAWING

PRINTS NOT BEARING THIS STAMP WERE MADE PRIOR TO ADVERTISING FOR BID, AND ARE TO BE CONSIDERED OBSOLETE FOR CONTRACT PURPOSES.

Department of Transportation and Engineering

City of Cincinnati
City Hall
801 Plum Street
Cincinnati, Ohio 45202

CINCINNATI STREETCAR
OVER THE RHINE
EXISTING SIGNING PLAN - RACE STREET
STA 277+50 TO STA 282+75

Revisions

No.				

Date 7/02/12
Date 7/02/12
Date 7/02/12
Date 7/12/12

Drawn by AAG
Designed by AAG
Checked by JTB
Reviewed by JTB

Consultant

PB HDR

File Number

ACC No. 23126

G-SE-2018

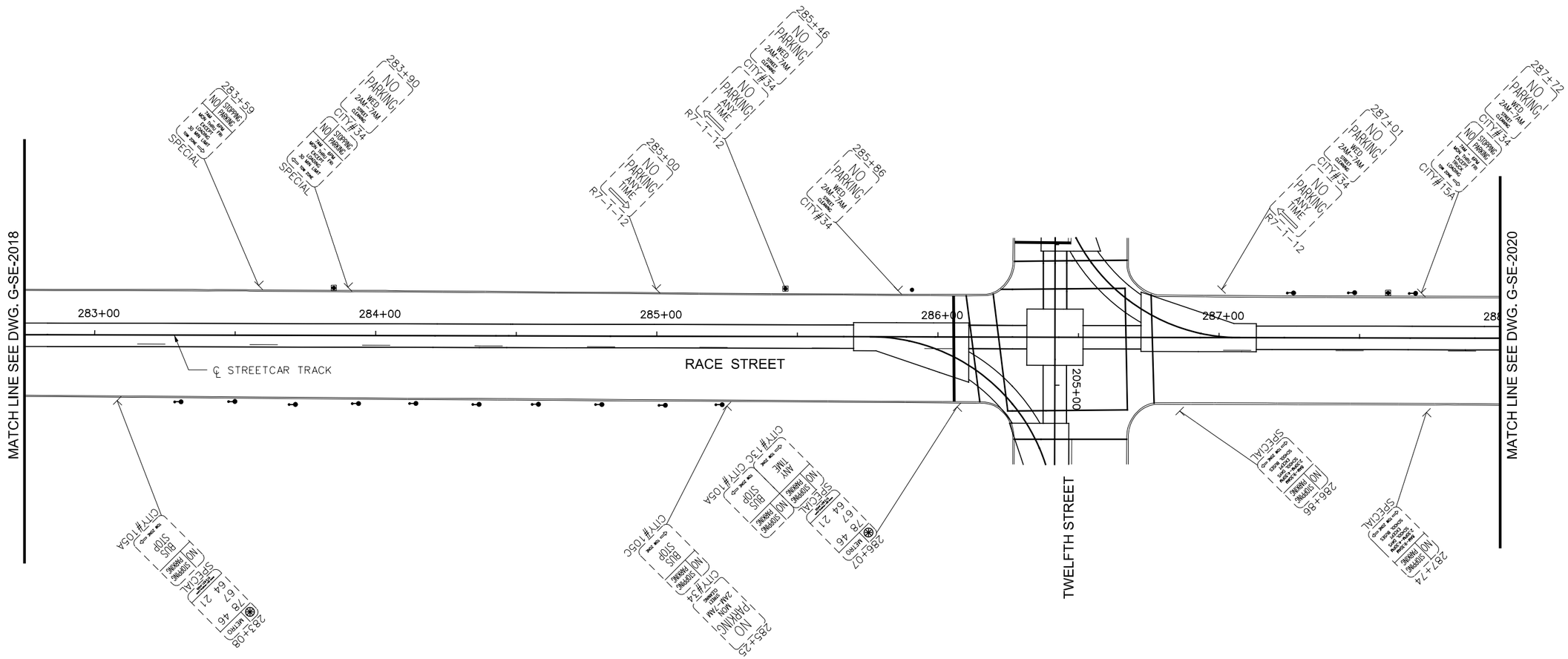

LEGEND

- EXISTING LIGHT POLE
- EXISTING POLE
- EXISTING SIGN POST
- SINGLE PARKING METER
- DOUBLE PARKING METER

GRAPHIC SCALE

20 0 20 40 80

(IN FEET)
1 inch = 20 ft. Full Size
1 inch = 40 ft. Half Size

CAUTION UNDERGROUND UTILITIES
2 WORKING DAYS
BEFORE YOU DIG
CALL 1-800-362-2764
OHIO UTILITY PROTECTION SERVICE
CALL NON-SERVICE FACILITY
OWNERS DIRECT

DOTE_Mono_PDF_Half.pltcfg
T:\29014A-Streetcar\CAD\Traffic_Control\Signing and Marking\S_G-SE-2019.dgn
7/11/2012 11:57:53 AM

CONTRACT DRAWING

PRINTS NOT BEARING THIS STAMP WERE MADE PRIOR TO ADVERTISING FOR BIDS AND ARE TO BE CONSIDERED OBSOLETE FOR CONTRACT PURPOSES.

Department of Transportation and Engineering

City of Cincinnati
City Hall
801 Plum Street
Cincinnati, Ohio 45202

CINCINNATI STREETCAR
OVER THE RHINE
EXISTING SIGNING PLAN - RACE STREET
STA 282+75 TO STA 288+00

Revisions

No.			

Drawn by AAG	Date 7/02/12
Designed by AAG	Date 7/02/12
Checked by JTB	Date 7/02/12
Reviewed by JTB	Date 7/12/12

Consultant

PB HDR

File Number

ACC No. 23126

G-SE-2019

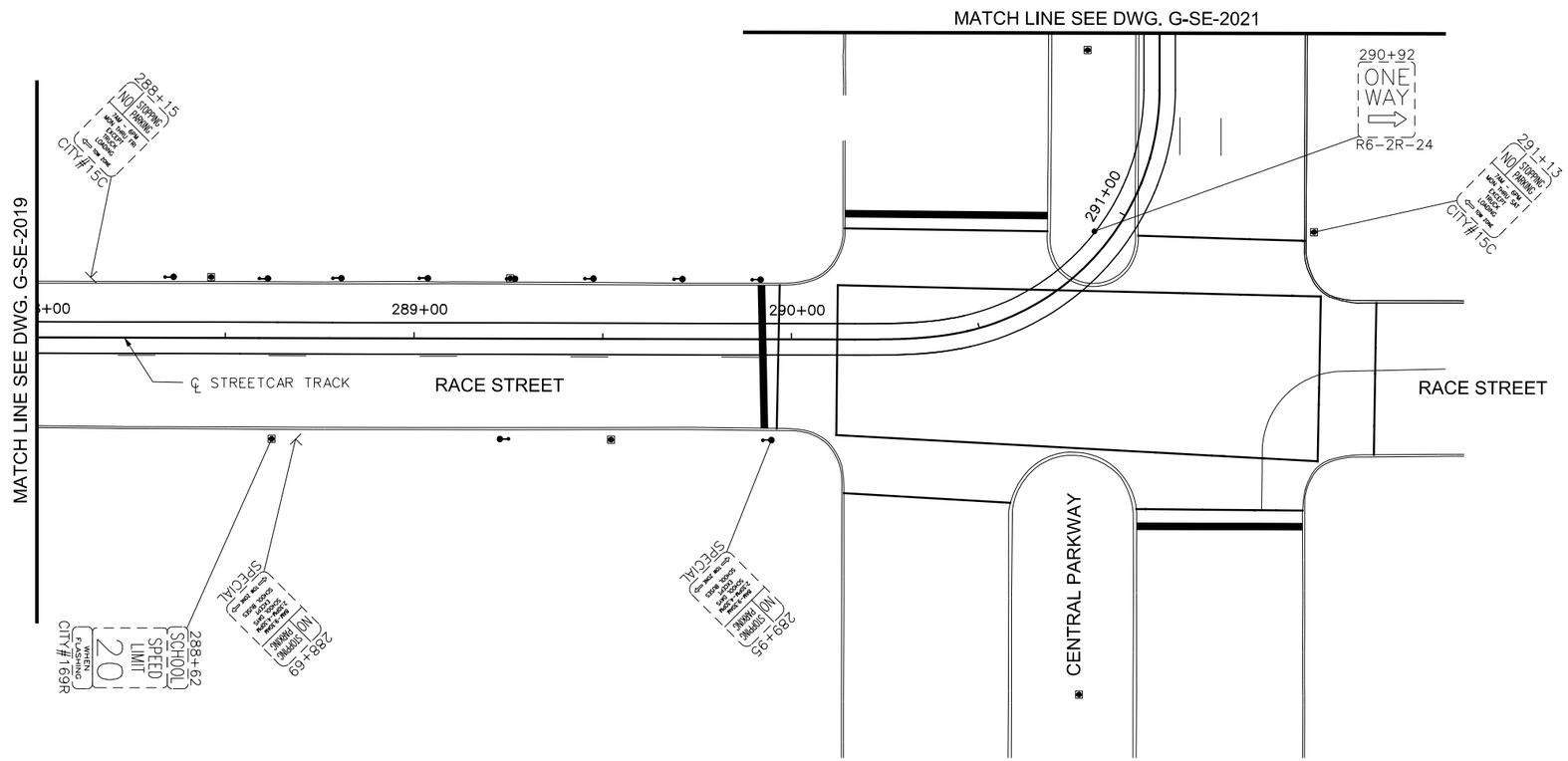

LEGEND

- EXISTING LIGHT POLE
- EXISTING POLE
- EXISTING SIGN POST
- SINGLE PARKING METER
- DOUBLE PARKING METER

CAUTION UNDERGROUND UTILITIES
2 WORKING DAYS

BEFORE YOU DIG

CALL 1-800-362-2764
OHIO UTILITY PROTECTION SERVICE
CALL NON-SERVICE FACILITY
OWNERS DIRECT

GRAPHIC SCALE

20 0 20 40 80

(IN FEET)
1 inch = 20 ft. Full Size
1 inch = 40 ft. Half Size

DOTE_Mono_PDF_Half.pltcfg
T:\29014A-Streetcar\CAD\Traffic_Control\Signing and Marking\S_G-SE-2020.dgn
7/11/2012 11:57:54 AM

CONTRACT DRAWING

PRINTS NOT BEARING THIS STAMP WERE MADE PRIOR TO ADVERTISING FOR BIDS AND ARE TO BE CONSIDERED OBSOLETE FOR CONTRACT PURPOSES.

Department of Transportation and Engineering

City of Cincinnati
City Hall
801 Plum Street
Cincinnati, Ohio 45202

CINCINNATI STREETCAR
OVER THE RHINE

EXISTING SIGNING PLAN - RACE STREET
STA 288+00 TO STA 291+50

Revisions

No.			

Drawn by AAG	Date 7/02/12
Designed by AAG	Date 7/02/12
Checked by JTB	Date 7/02/12
Reviewed by JTB	Date 7/12/12

Consultant

PB HDR

File Number

ACC No. 23126

G-SE-2020

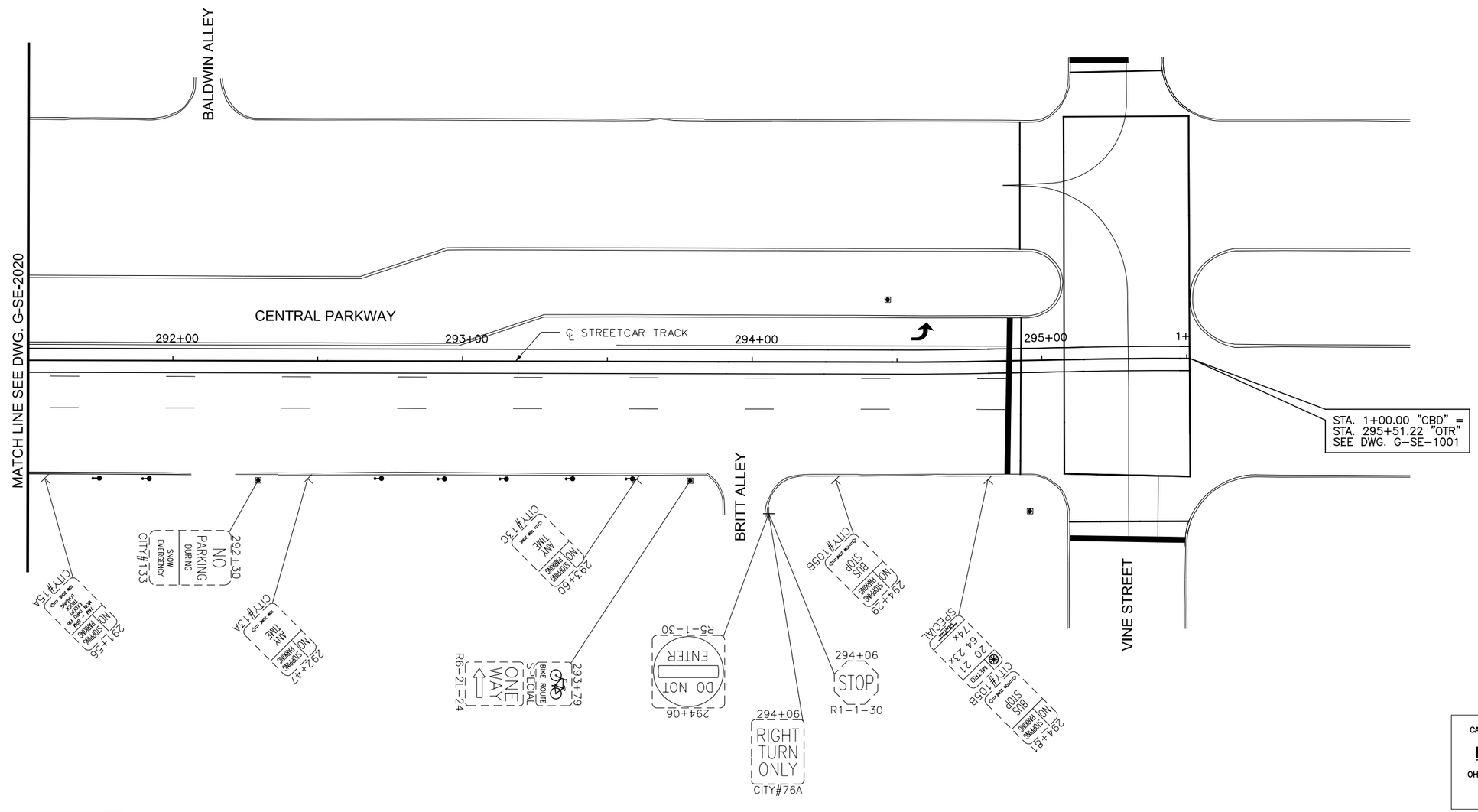

CAUTION UNDERGROUND UTILITIES
2 WORKING DAYS
BEFORE YOU DIG
CALL 1-800-362-2764
OHIO UTILITY PROTECTION SERVICE
CALL NON-SERVICE FACILITY
OWNERS DIRECT

DOTE_Mono_PDF_Half.pltcfg
T:\29014A-Streetcar\CAD\Traffic_Control\Signing and Marking\S_G-SE-2021.dgn
7/11/2012 11:57:55 AM

CONTRACT DRAWING

PRINTS NOT BEARING THIS STAMP WERE MADE PRIOR TO ADVERTISING FOR BIDS AND ARE TO BE CONSIDERED OBSOLETE FOR CONTRACT PURPOSES.

Department of Transportation and Engineering

City of Cincinnati
City Hall
801 Plum Street
Cincinnati, Ohio 45202

CINCINNATI STREETCAR
OVER THE RHINE
EXISTING SIGNING PLAN - CENTRAL PARKWAY
STA 291+50 TO STA 295+51.22

Revisions

No.				

Date 7/02/12
Date 7/02/12
Date 7/02/12
Date 7/12/12

Drawn by AAG
Designed by AAG
Checked by JTB
Reviewed by JTB

Consultant

PB HDR

File Number

ACC No. 23126

G-SE-2021

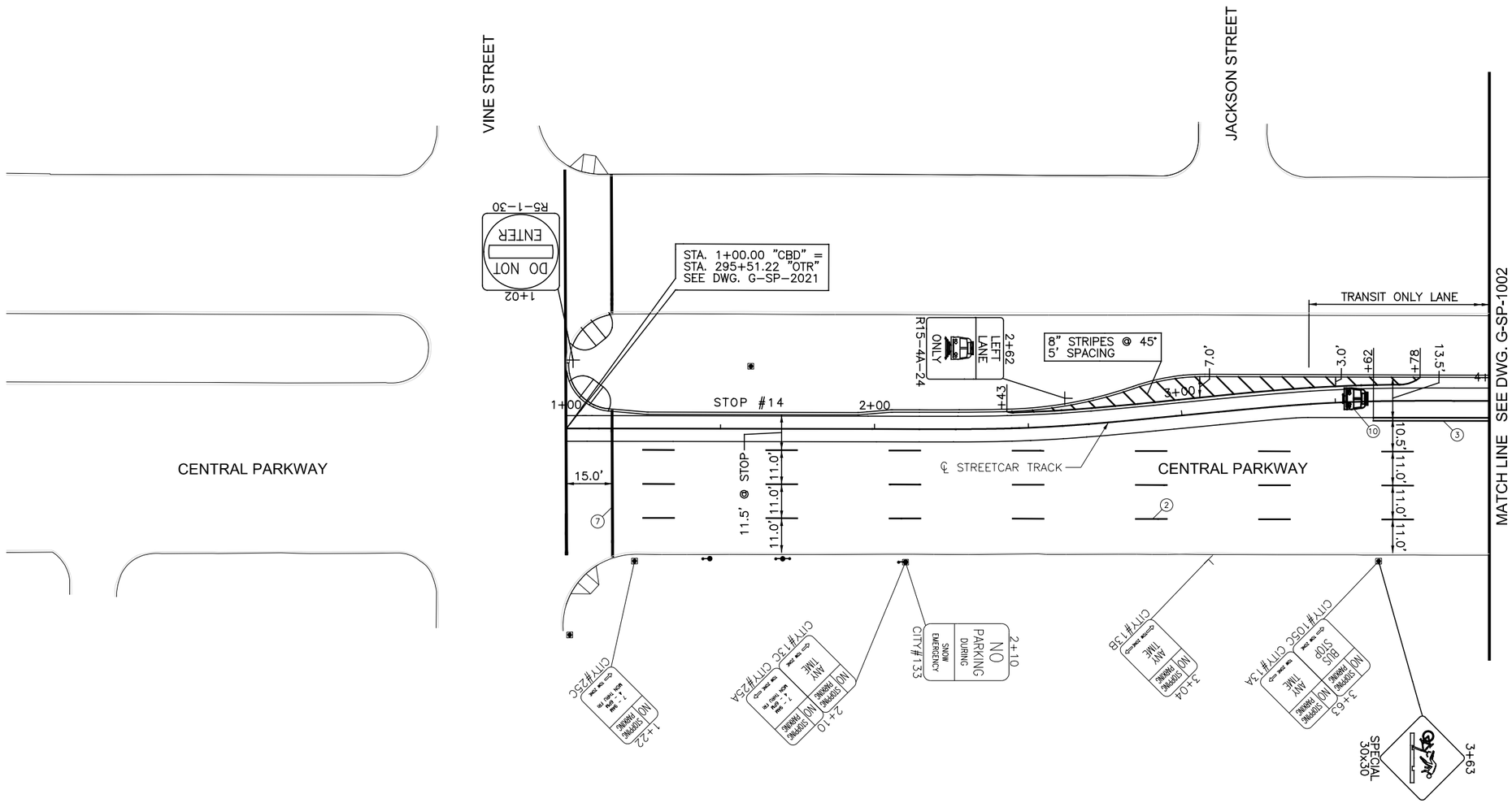

PAVEMENT MARKINGS

1	CENTERLINE, DOUBLE YELLOW:	4"-4"-4"
2	LANE LINE, WHITE:	4", (10'-30'-10')
3	SOLID LANE LINE, DOUBLE WHITE:	4"-4"-4"
4	CHANNELIZING LINE, WHITE:	8"
5	STOP LINE, WHITE:	24"
6	GUIDE LINE, DASHED, WHITE:	4", (2'-4'-2')
7	CROSSWALK LINE, WHITE:	12"
8	CROSSWALK LINE, WHITE:	SEE DWG. G-SP-2023
9	ARROW	STANDARD
10	STREETCAR SYMBOL	SEE DWG. G-SP-2023
11	"BUS ONLY"	EPOXY

SYMBOLS

- EXISTING LIGHT POLE
- EXISTING POLE
- EXISTING SIGN POST
- SINGLE PARKING METER
- DOUBLE PARKING METER
- REMOVAL
- PROPOSED TYPE A SIGN POLE
- PROPOSED TYPE B SIGN POLE

NOTE:
ALL EXISTING SIGNS WILL BE REPLACED UNLESS OTHERWISE NOTED BY REMOVAL SYMBOL.

GRAPHIC SCALE
20 0 20 40 80
(IN FEET)
1 inch = 20 ft. Full Size
1 inch = 40 ft. Half Size

CAUTION UNDERGROUND UTILITIES
2 WORKING DAYS
BEFORE YOU DIG
CALL 1-800-362-2764
OHIO UTILITY PROTECTION SERVICE
CALL NON-SERVICE FACILITY
OWNERS DIRECT

DOTE_Mono_PDF_Half.pltcfg
T:\29014A-Streetcar\CAD\Traffic_Control\Signing and Marking\S_G-SP-1001.dgn
7/11/2012 12:27:24 PM

CONTRACT DRAWING
PRINTS NOT BEARING THIS STAMP WERE MADE PRIOR TO ADVERTISING FOR BIDS AND ARE TO BE CONSIDERED OBSOLETE FOR CONTRACT PURPOSES.

Department of Transportation and Engineering
City of Cincinnati
City Hall
801 Plum Street
Cincinnati, Ohio 45202

CINCINNATI STREETCAR
CENTRAL BUSINESS DISTRICT
PROPOSED SIGNING AND MARKING PLAN
CENTRAL PARKWAY
STA 1+00 TO STA 4+00

Revisions
No.

	Date
Drawn by AAG	7/02/12
Designed by AAG	7/02/12
Checked by JTB	7/02/12
Reviewed by JTB	7/12/12

Consultant
PB HDR

File Number
ACC No. 23126

G-SP-1001

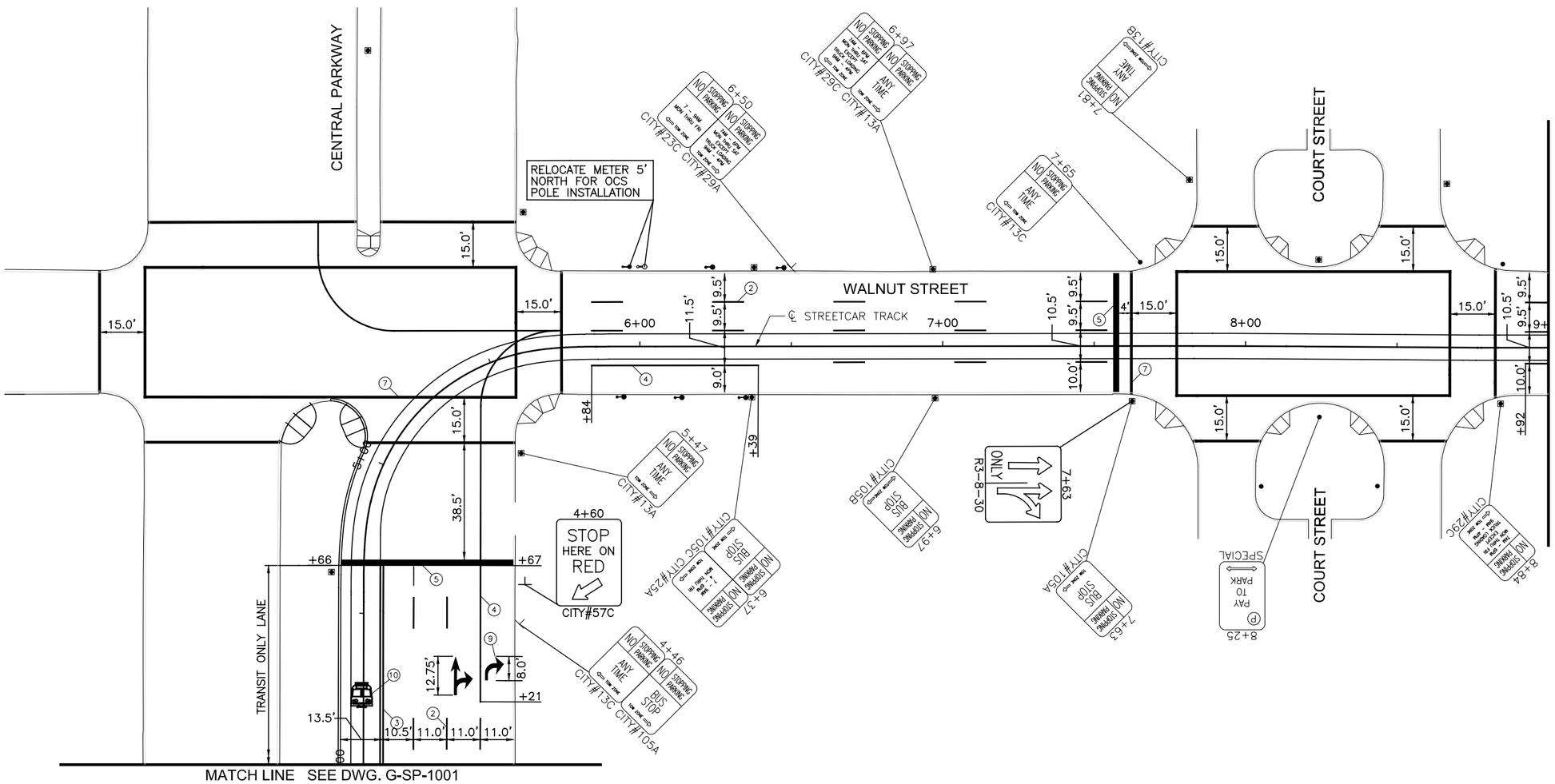

SYMBOLS

- EXISTING LIGHT POLE
- EXISTING POLE
- EXISTING SIGN POST
- SINGLE PARKING METER
- DOUBLE PARKING METER
- REMOVAL
- PROPOSED TYPE A SIGN POLE
- PROPOSED TYPE B SIGN POLE

NOTE:
ALL EXISTING SIGNS WILL BE REPLACED UNLESS OTHERWISE NOTED BY REMOVAL SYMBOL.

GRAPHIC SCALE

20 0 20 40 80

(IN FEET)
1 inch = 20 ft. Full Size
1 inch = 40 ft. Half Size

CAUTION UNDERGROUND UTILITIES
2 WORKING DAYS
BEFORE YOU DIG
CALL 1-800-362-2764
OHIO UTILITY PROTECTION SERVICE
CALL NON-SERVICE FACILITY
OWNERS DIRECT

DOTE_Mono_PDF_Half.pltcfg
T:\29014A-Streetcar\CAD\Traffic_Control\Signing and Marking\S_G-SP-1002.dgn
12:27:25 PM
7/11/2012

CONTRACT DRAWING

PRINTS NOT BEARING THIS STAMP WERE MADE PRIOR TO ADVERTISING FOR BIDS AND ARE TO BE CONSIDERED OBSOLETE FOR CONTRACT PURPOSES.

Department of Transportation and Engineering

City of Cincinnati
City Hall
801 Plum Street
Cincinnati, Ohio 45202

CINCINNATI STREETCAR
CENTRAL BUSINESS DISTRICT
PROPOSED SIGNING AND MARKING PLAN
WALNUT STREET
STA 4+00 TO STA 9+00

Revisions
No.

Drawn by AAG	Date 7/02/12
Designed by AAG	Date 7/02/12
Checked by JTB	Date 7/02/12
Reviewed by JTB	Date 7/12/12

Consultant

PB HDR

File Number

ACC No. 23126

G-SP-1002

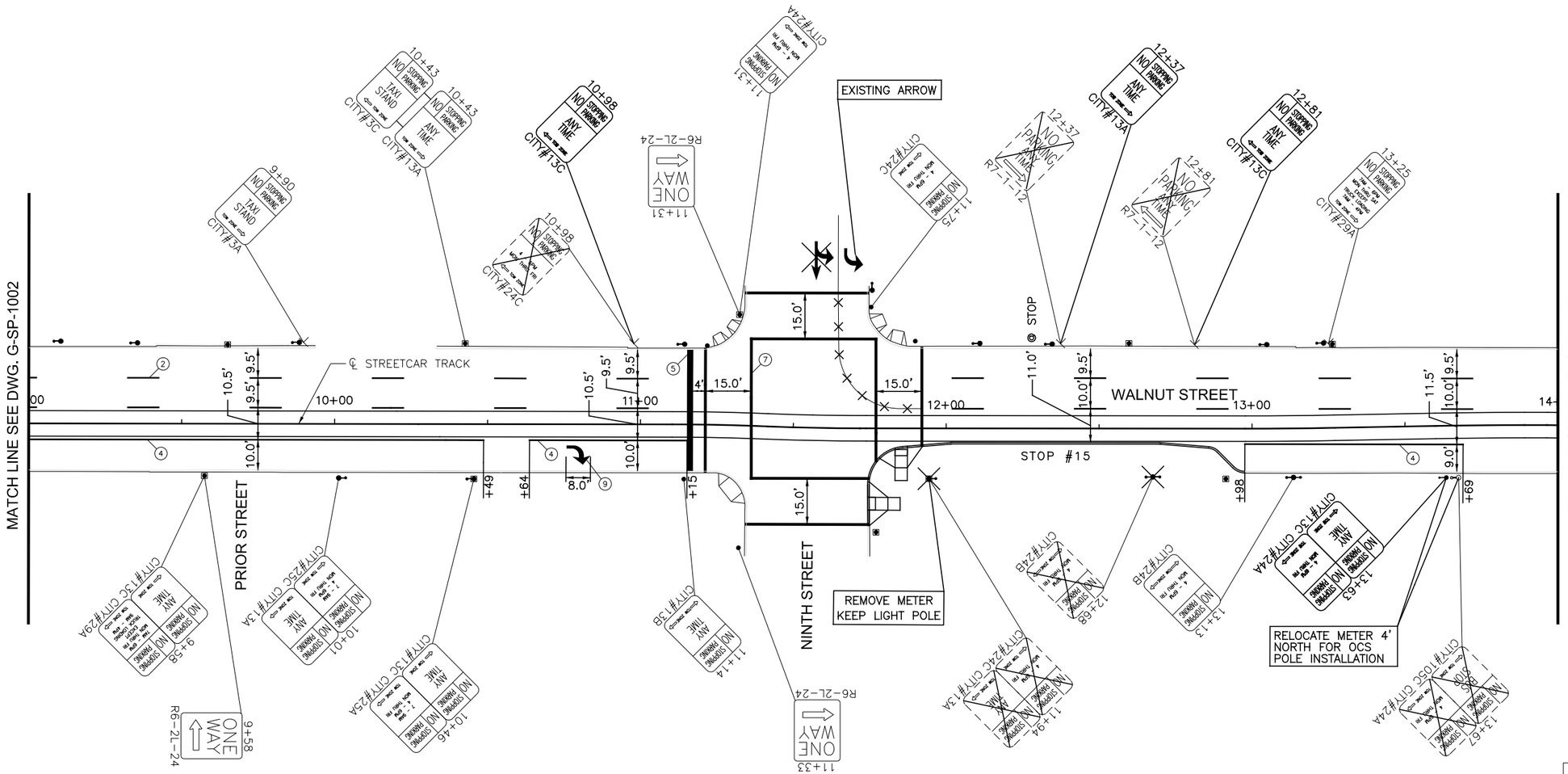

SYMBOLS

- EXISTING LIGHT POLE
- EXISTING POLE
- EXISTING SIGN POST
- SINGLE PARKING METER
- DOUBLE PARKING METER
- REMOVAL
- PROPOSED TYPE A SIGN POLE
- PROPOSED TYPE B SIGN POLE

NOTE:
ALL EXISTING SIGNS WILL BE REPLACED UNLESS OTHERWISE NOTED BY REMOVAL SYMBOL.

GRAPHIC SCALE
20 0 20 40 80
(IN FEET)
1 inch = 20 ft. Full Size
1 inch = 40 ft. Half Size

CAUTION UNDERGROUND UTILITIES
2 WORKING DAYS
BEFORE YOU DIG
CALL 1-800-362-2764
OHIO UTILITY PROTECTION SERVICE
CALL NON-SERVICE FACILITY
OWNERS DIRECT

DOTE_Mono_PDF_Half.pltcfg
T:\29014A-Streetcar\CAD\Traffic_Control\Signing and Marking\S_G-SP-1003.dgn
7/11/2012 12:27:26 PM

CONTRACT DRAWING

PRINTS NOT BEARING THIS STAMP WERE MADE PRIOR TO ADVERTISING FOR BIDS AND ARE TO BE CONSIDERED OBSOLETE FOR CONTRACT PURPOSES.

Department of Transportation and Engineering

City of Cincinnati
City Hall
801 Plum Street
Cincinnati, Ohio 45202

CINCINNATI STREETCAR
CENTRAL BUSINESS DISTRICT
PROPOSED SIGNING AND MARKING PLAN
WALNUT STREET
STA 9+00 TO STA 14+00

Revisions

No.	Date	Drawn by	Designed by	Checked by	Reviewed by
	7/02/12	AAG	AAG	JTB	JTB
	7/02/12				
	7/02/12				
	7/12/12				

Consultant

PB HDR

File Number

ACC No.
23126

G-SP-1003

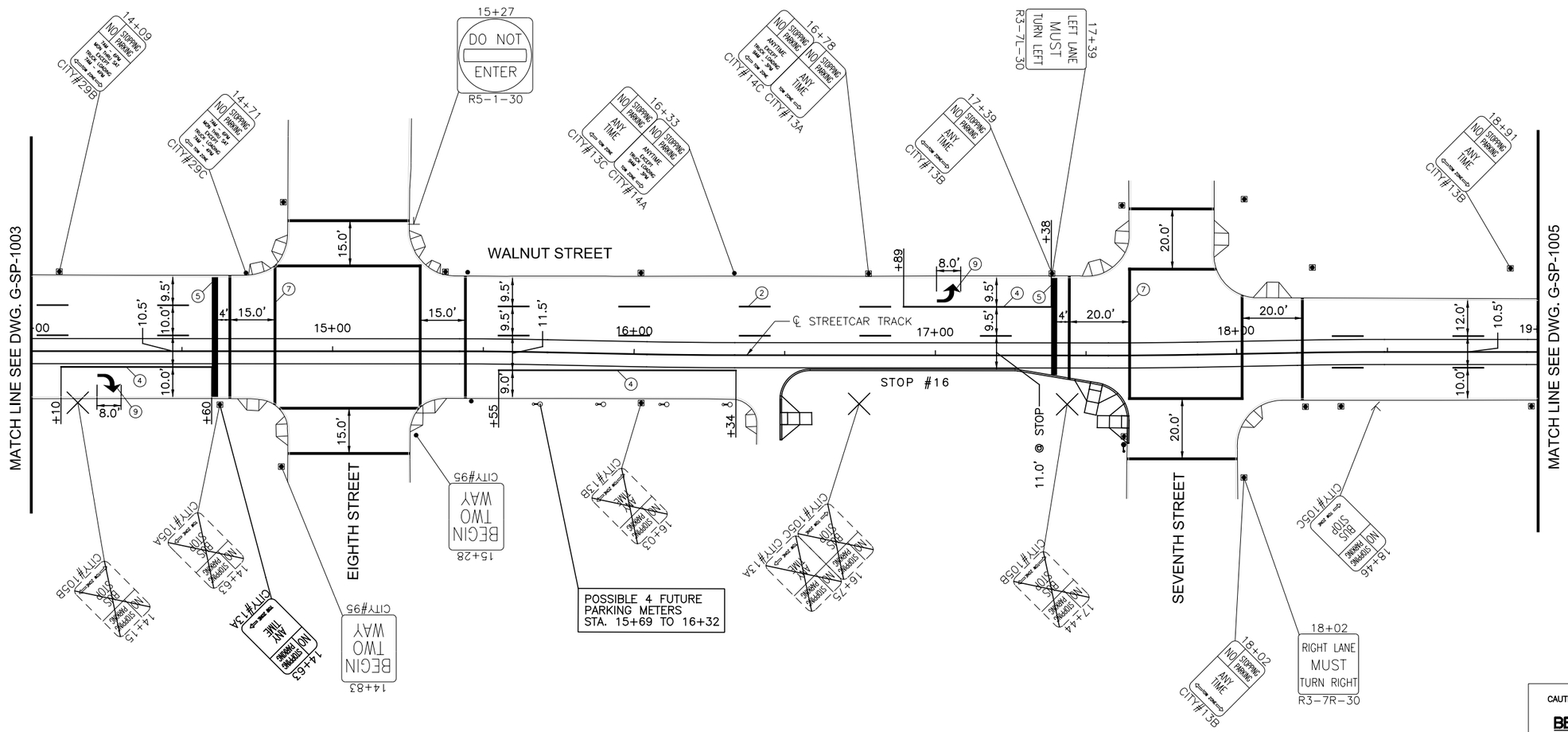

SYMBOLS

- EXISTING LIGHT POLE
- EXISTING POLE
- EXISTING SIGN POST
- SINGLE PARKING METER
- DOUBLE PARKING METER
- REMOVAL
- PROPOSED TYPE A SIGN POLE
- PROPOSED TYPE B SIGN POLE

NOTE:
ALL EXISTING SIGNS WILL BE REPLACED UNLESS OTHERWISE NOTED BY REMOVAL SYMBOL.

GRAPHIC SCALE

20 0 20 40 80

(IN FEET)
1 inch = 20 ft. Full Size
1 inch = 40 ft. Half Size

CAUTION UNDERGROUND UTILITIES
2 WORKING DAYS
BEFORE YOU DIG
CALL 1-800-362-2764
OHIO UTILITY PROTECTION SERVICE
CALL NON-SERVICE FACILITY
OWNERS DIRECT

DOTE_Mono_PDF_Half.pltcfg
T:\29014A-Streetcar\CAD\Traffic_Control\Signing and Marking\S_G-SP-1004.dgn
7/11/2012 12:27:27 PM

CONTRACT DRAWING

PRINTS NOT BEARING THIS STAMP WERE MADE PRIOR TO ADVERTISING FOR BID AND ARE TO BE CONSIDERED OBSOLETE FOR CONTRACT PURPOSES.

Department of Transportation and Engineering

City of Cincinnati
City Hall
801 Plum Street
Cincinnati, Ohio 45202

CINCINNATI STREETCAR
CENTRAL BUSINESS DISTRICT
PROPOSED SIGNING AND MARKING PLAN
WALNUT STREET
STA 14+00 TO STA 19+00

Revisions

No.				

Drawn by AAG	Date 7/02/12
Designed by AAG	Date 7/02/12
Checked by JTB	Date 7/02/12
Reviewed by JTB	Date 7/12/12

Consultant

PB HDR

File Number

ACC No. 23126

G-SP-1004

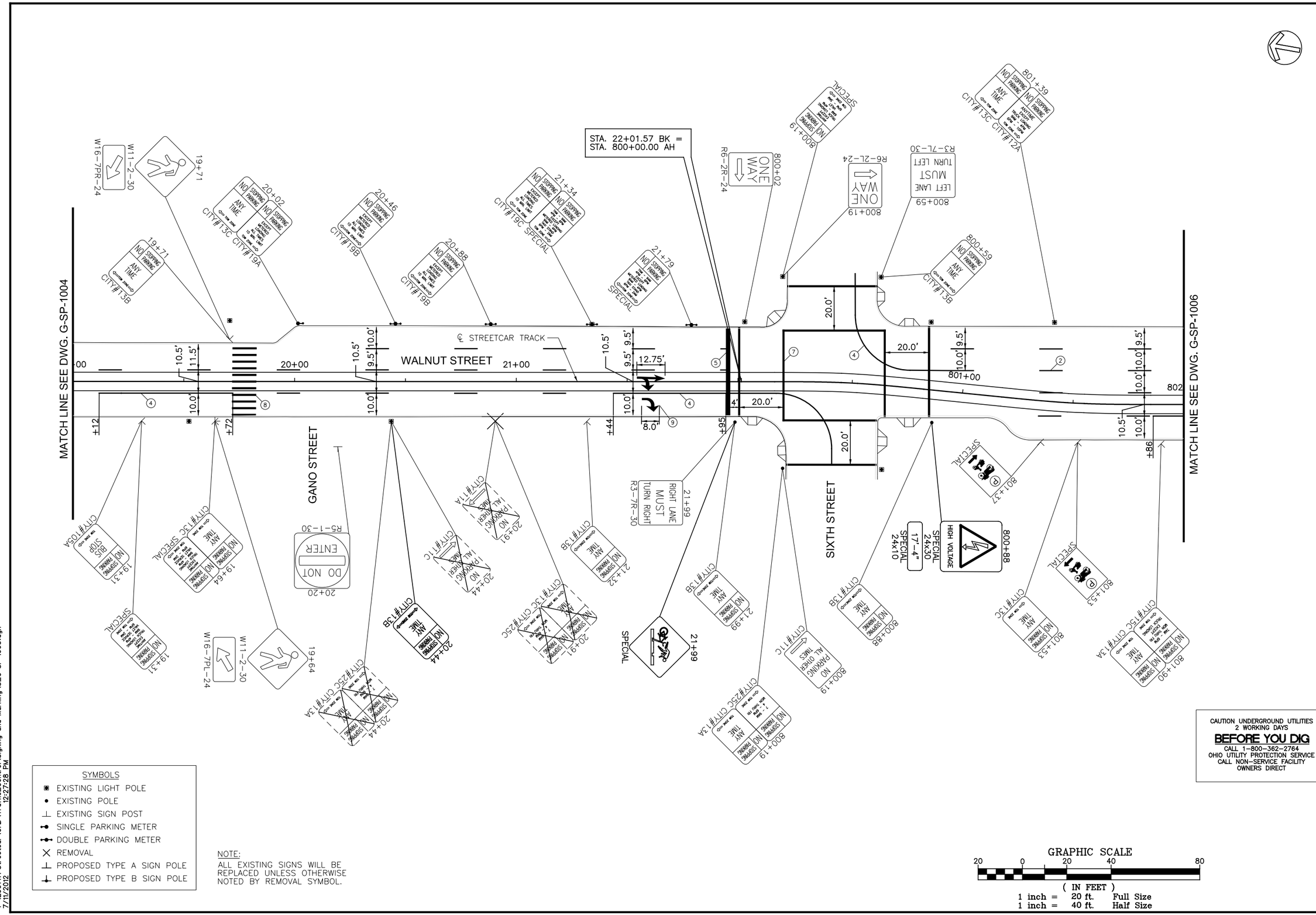

CAUTION, UNDERGROUND UTILITIES
2 WORKING DAYS
BEFORE YOU DIG
CALL 1-800-362-2764
OHIO UTILITY PROTECTION SERVICE
CALL NON-SERVICE FACILITY
OWNERS DIRECT

DEPARTMENT OF TRANSPORTATION & ENGINEERING
CITY OF CINCINNATI
OHIO

CONTRACT DRAWING

PRINTS NOT BEARING THIS STAMP WERE MADE PRIOR TO ADVERTISING FOR BIDS AND ARE TO BE CONSIDERED OBSOLETE FOR CONTRACT PURPOSES.

Department of Transportation and Engineering
City of Cincinnati
City Hall
801 Plum Street
Cincinnati, Ohio 45202

CINCINNATI STREETCAR
CENTRAL BUSINESS DISTRICT
PROPOSED SIGNING AND MARKING PLAN
WALNUT STREET
STA 19+00 TO STA 802+00

Revisions
No.

Drawn by AAG	Date 7/02/12
Designed by AAG	Date 7/02/12
Checked by JTB	Date 7/02/12
Reviewed by JTB	Date 7/12/12

Consultant
PB HDR

File Number

ACC No.
23126

G-SP-1005

DOTE_Mono_PDF_Half.pltcfg
T:\29014A-Streetcar\CAD\Traffic_Control\Signing and Marking\S_G-SP-1005.dgn
12:27:28 PM
7/11/2012

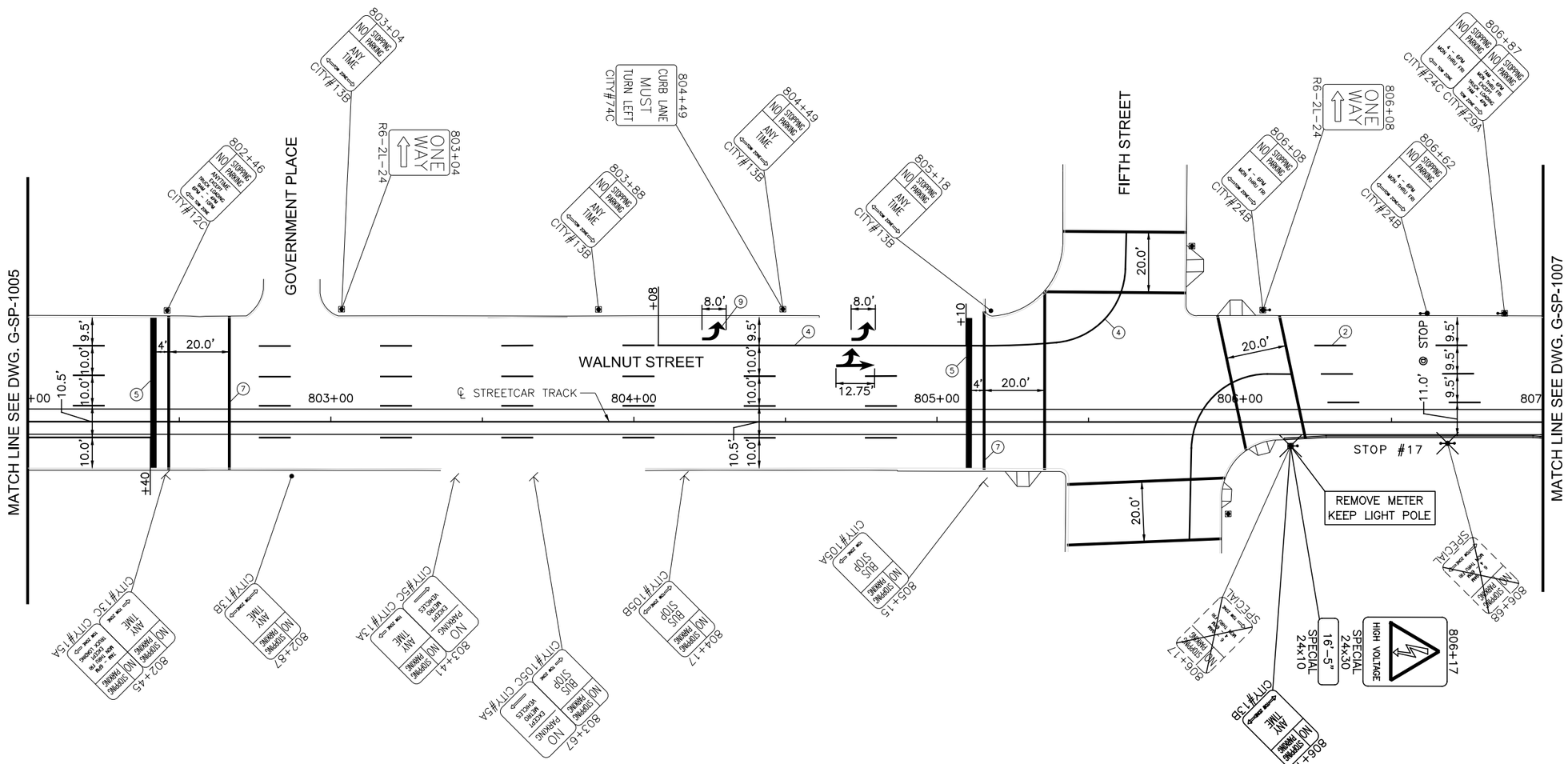

SYMBOLS

- EXISTING LIGHT POLE
- EXISTING POLE
- EXISTING SIGN POST
- SINGLE PARKING METER
- DOUBLE PARKING METER
- REMOVAL
- PROPOSED TYPE A SIGN POLE
- PROPOSED TYPE B SIGN POLE

NOTE:
ALL EXISTING SIGNS WILL BE REPLACED UNLESS OTHERWISE NOTED BY REMOVAL SYMBOL.

CAUTION UNDERGROUND UTILITIES
2 WORKING DAYS
BEFORE YOU DIG
CALL 1-800-362-2764
OHIO UTILITY PROTECTION SERVICE
CALL NON-SERVICE FACILITY OWNERS DIRECT

GRAPHIC SCALE
20 0 20 40 80
(IN FEET)
1 inch = 20 ft. Full Size
1 inch = 40 ft. Half Size

DOTE_Mono_PDF_Half.pltcfg
T:\29014A-Streetcar\CAD\Traffic_Control\Signing and Marking\S_G-SP-1006.dgn
7/11/2012 12:27:29 PM

CONTRACT DRAWING

PRINTS NOT BEARING THIS STAMP WERE MADE PRIOR TO ADVERTISING FOR BIDS AND ARE TO BE CONSIDERED OBSOLETE FOR CONTRACT PURPOSES.

Department of Transportation and Engineering
City of Cincinnati
City Hall
801 Plum Street
Cincinnati, Ohio 45202

CINCINNATI STREETCAR
CENTRAL BUSINESS DISTRICT
PROPOSED SIGNING AND MARKING PLAN
WALNUT STREET
STA 802+00 TO STA 807+00

Revisions
No.

Drawn by AAG	Date 7/02/12
Designed by AAG	Date 7/02/12
Checked by JTB	Date 7/02/12
Reviewed by JTB	Date 7/12/12

Consultant
PB HDR

File Number

ACC No. 23126

G-SP-1006

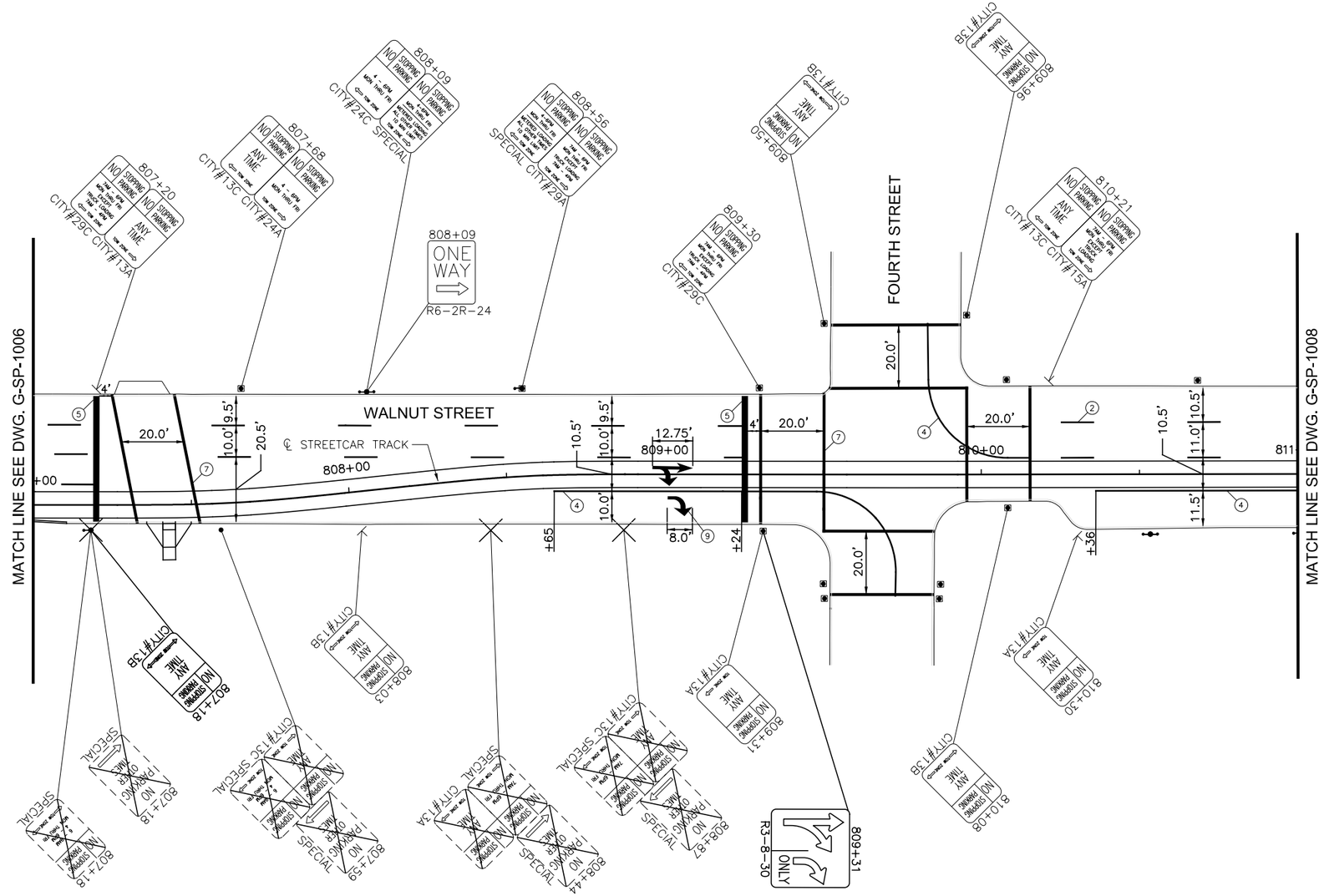

SYMBOLS

- EXISTING LIGHT POLE
- EXISTING POLE
- EXISTING SIGN POST
- SINGLE PARKING METER
- DOUBLE PARKING METER
- REMOVAL
- PROPOSED TYPE A SIGN POLE
- PROPOSED TYPE B SIGN POLE

NOTE:
ALL EXISTING SIGNS WILL BE REPLACED UNLESS OTHERWISE NOTED BY REMOVAL SYMBOL.

GRAPHIC SCALE

20 0 20 40 80

(IN FEET)
1 inch = 20 ft. Full Size
1 inch = 40 ft. Half Size

CAUTION UNDERGROUND UTILITIES
2 WORKING DAYS
BEFORE YOU DIG
CALL 1-800-362-2764
OHIO UTILITY PROTECTION SERVICE
CALL NON-SERVICE FACILITY
OWNERS DIRECT

DOTE_Mono_PDF_Half.pltcfg
T:\29014A-Streetcar\CAD\Traffic_Control\Signing and Marking\S_G-SP-1007.dgn
7/11/2012 12:27:30 PM

CONTRACT DRAWING

PRINTS NOT BEARING THIS STAMP WERE MADE PRIOR TO ADVERTISING FOR BIDS AND ARE TO BE CONSIDERED OBSOLETE FOR CONTRACT PURPOSES.

Department of Transportation and Engineering

City of Cincinnati
City Hall
801 Plum Street
Cincinnati, Ohio 45202

CINCINNATI STREETCAR
CENTRAL BUSINESS DISTRICT
PROPOSED SIGNING AND MARKING PLAN
WALNUT STREET
STA 807+00 TO STA 811+00

Revisions

No.		

Drawn by AAG	Date 7/02/12
Designed by AAG	Date 7/02/12
Checked by JTB	Date 7/02/12
Reviewed by JTB	Date 7/12/12

Consultant

PB HDR

File Number

ACC No. 23126

G-SP-1007

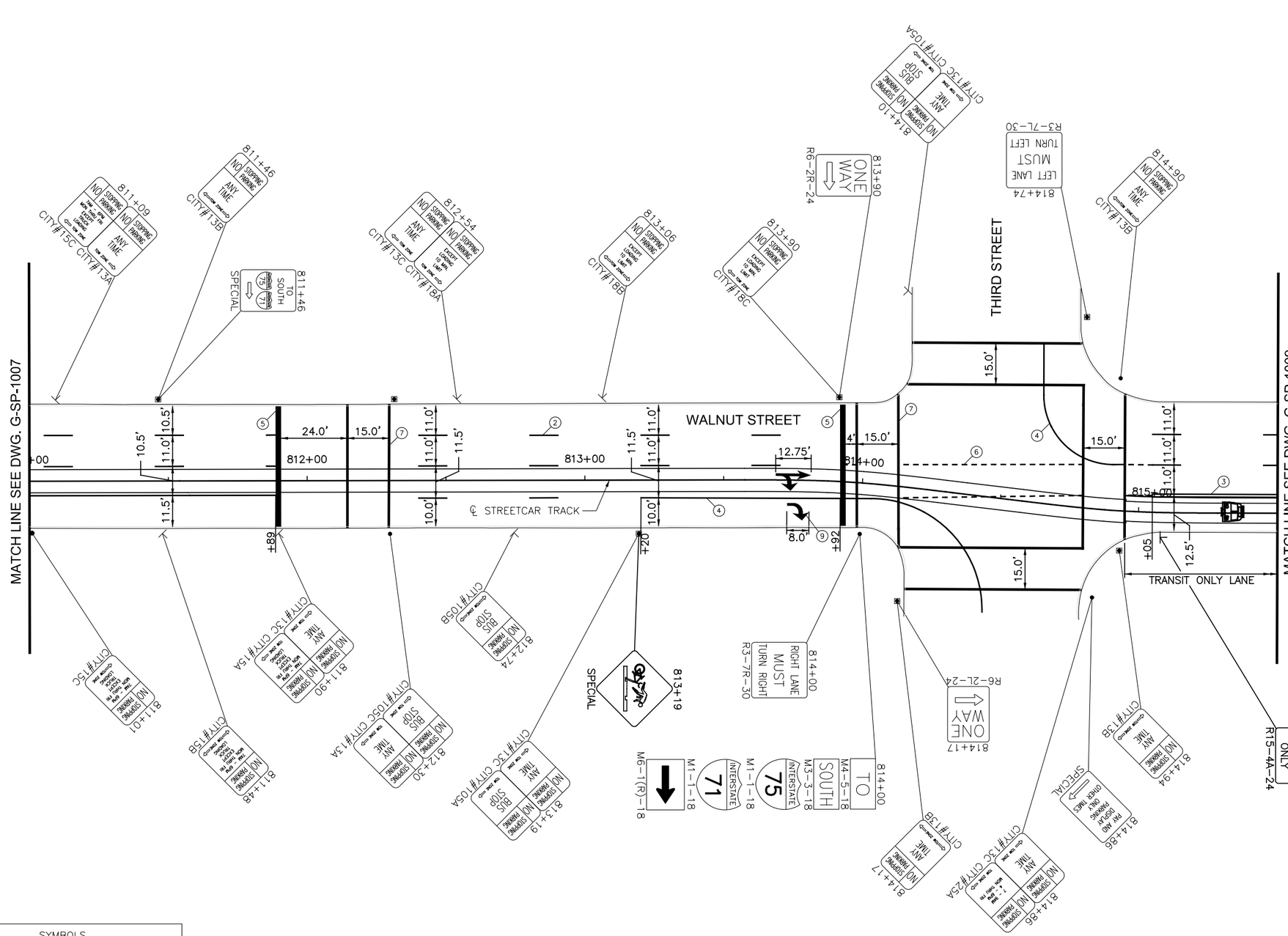
MATCH LINE SEE DWG. G-SP-1007
MATCH LINE SEE DWG. G-SP-1009
WALNUT STREET
THIRD STREET
℄ STREETCAR TRACK
TRANSIT ONLY LANE
812+00
813+00
814+00
815+00
24.0'
15.0'
12.75'
8.0'
12.5'
10.5'
11.0'
11.5'
10.0'
4'
±89
±20
±92
±05
811+09
811+46
811+46
SPECIAL
812+54
813+06
813+90
ONE WAY
R6-2R-24
814+10
LEFT LANE MUST TURN LEFT
R3-7L-30
814+90
815+08
RIGHT LANE ONLY
R15-4A-24
814+00
RIGHT LANE MUST TURN RIGHT
R3-7R-30
814+00
TO
M4-5-18
SOUTH
M3-3-18
INTERSTATE
75
M1-1-18
INTERSTATE
71
M1-1-18
M6-1(R)-18
813+19
SPECIAL
812+74
812+30
811+90
811+48
811+01
814+17
R6-2L-24
814+74
814+86
814+94
814+86
SPECIAL
ANY NO PARKING DISPLAY ONLY OTHER TIMES
CITY#13A
CITY#13B
CITY#13C
CITY#15A
CITY#15B
CITY#15C
CITY#18A
CITY#18B
CITY#18C
CITY#105A
CITY#105B
CITY#105C
CITY#13C CITY#105A
CITY#13C CITY#25A
STOPPING PARKING
NO
ANY TIME
EXCEPT LEGAL LOAD/UNL BTWN 7:00 AM & 7:00 PM
EXCEPT LEGAL LOAD/UNL BTWN 7:00 AM & 7:00 PM
BUS STOP
NO STOPPING NO PARKING
NO STOPPING NO PARKING
NO STOPPING NO PARKING

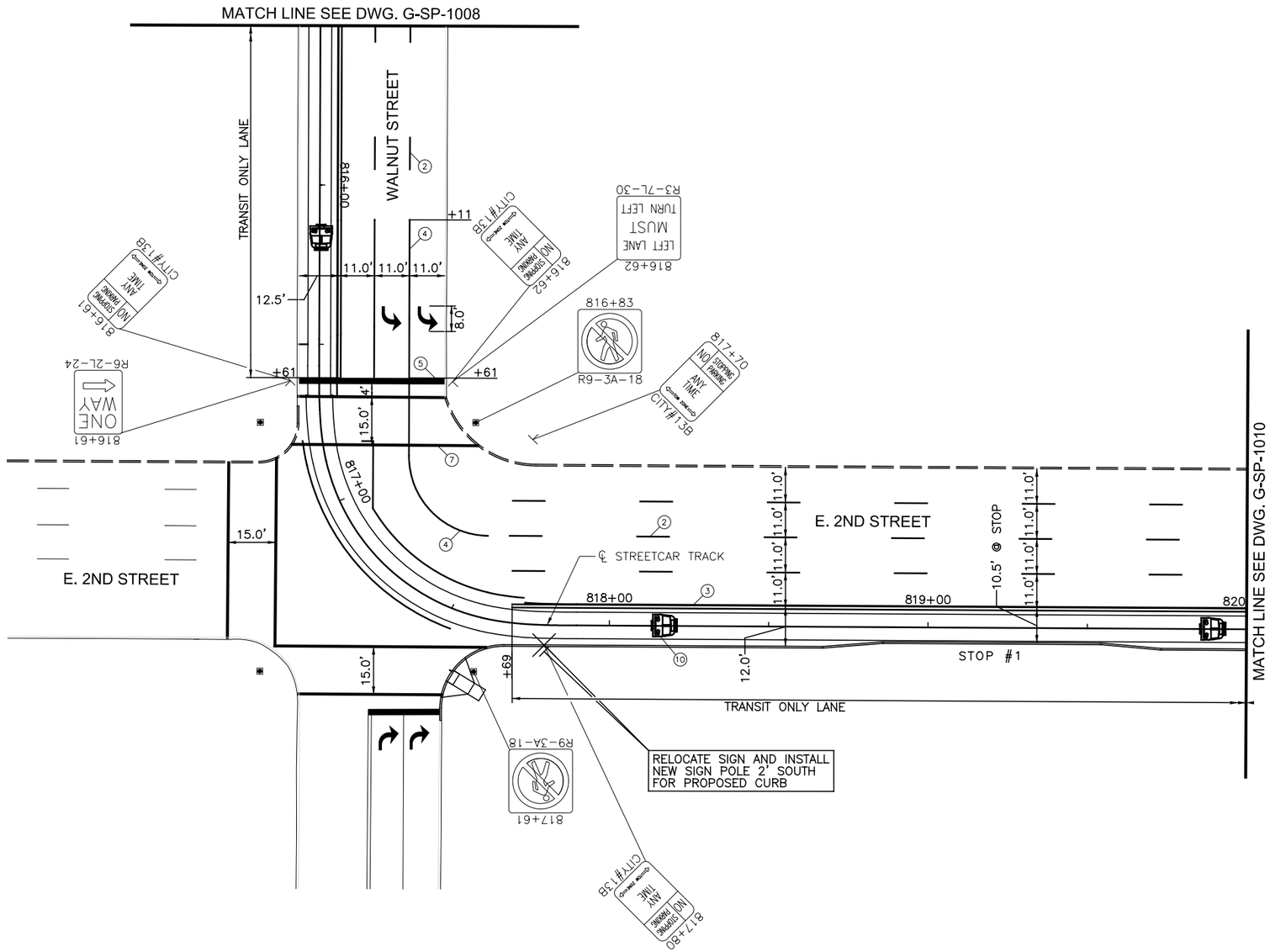

SYMBOLS

- EXISTING LIGHT POLE
- EXISTING POLE
- EXISTING SIGN POST
- SINGLE PARKING METER
- DOUBLE PARKING METER
- REMOVAL
- PROPOSED TYPE A SIGN POLE
- PROPOSED TYPE B SIGN POLE

NOTE:
ALL EXISTING SIGNS WILL BE REPLACED UNLESS OTHERWISE NOTED BY REMOVAL SYMBOL.

GRAPHIC SCALE

20 0 20 40 80

(IN FEET)
1 inch = 20 ft. Full Size
1 inch = 40 ft. Half Size

CAUTION UNDERGROUND UTILITIES
2 WORKING DAYS
BEFORE YOU DIG
CALL 1-800-362-2764
OHIO UTILITY PROTECTION SERVICE
CALL NON-SERVICE FACILITY
OWNERS DIRECT

DOTE_Mono_PDF_Half.pltcfg
T:\29014A-Streetcar\CAD\Traffic_Control\Signing and Marking\S_G-SP-1009.dgn
12:27:32 PM
7/11/2012

CONTRACT DRAWING

PRINTS NOT BEARING THIS STAMP WERE MADE PRIOR TO ADVERTISING FOR BIDS AND ARE TO BE CONSIDERED OBSOLETE FOR CONTRACT PURPOSES.

Department of Transportation and Engineering

City of Cincinnati
City Hall
801 Plum Street
Cincinnati, Ohio 45202

CINCINNATI STREETCAR
CENTRAL BUSINESS DISTRICT
PROPOSED SIGNING AND MARKING PLAN
SECOND STREET
STA 815+50 TO STA 820+00

Revisions
No.

	Date
Drawn by AAG	7/02/12
Designed by AAG	7/02/12
Checked by JTB	7/02/12
Reviewed by JTB	7/12/12

Consultant

PB HDR

File Number

ACC No. 23126

G-SP-1009

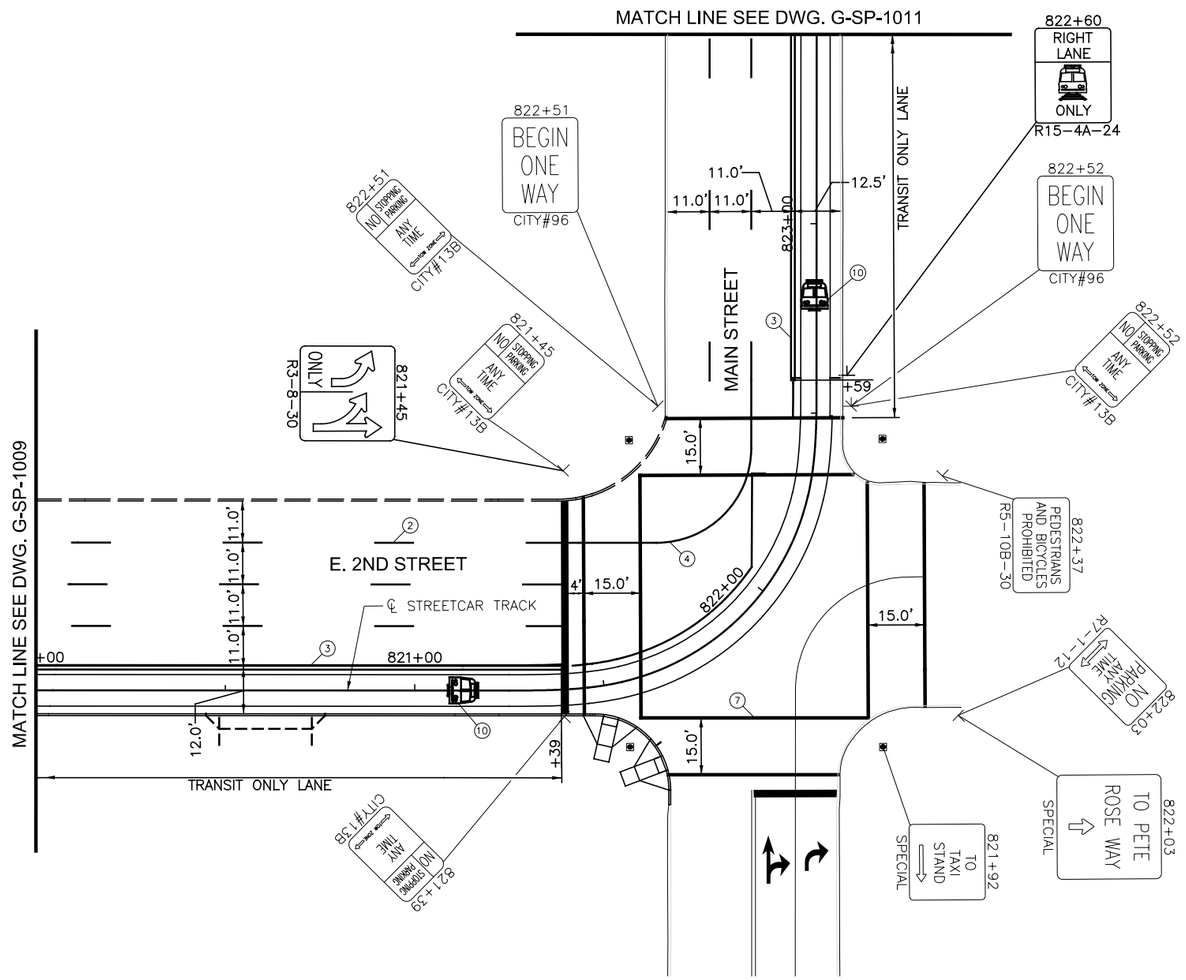

SYMBOLS

- EXISTING LIGHT POLE
- EXISTING POLE
- EXISTING SIGN POST
- SINGLE PARKING METER
- DOUBLE PARKING METER
- REMOVAL
- PROPOSED TYPE A SIGN POLE
- PROPOSED TYPE B SIGN POLE

NOTE:
ALL EXISTING SIGNS WILL BE REPLACED UNLESS OTHERWISE NOTED BY REMOVAL SYMBOL.

GRAPHIC SCALE

20 0 20 40 80

(IN FEET)
1 inch = 20 ft. Full Size
1 inch = 40 ft. Half Size

CAUTION UNDERGROUND UTILITIES
2 WORKING DAYS
BEFORE YOU DIG
CALL 1-800-362-2764
OHIO UTILITY PROTECTION SERVICE
CALL NON-SERVICE FACILITY
OWNERS DIRECT

DOTE_Mono_PDF_Half.pltcfg
T:\29014A-Streetcar\CAD\Traffic_Control\Signing and Marking\S_G-SP-1010.dgn
7/11/2012 12:27:33 PM

CONTRACT DRAWING

PRINTS NOT BEARING THIS STAMP WERE MADE PRIOR TO ADVERTISING FOR BID AND ARE TO BE CONSIDERED OBSOLETE FOR CONTRACT PURPOSES.

Department of Transportation and Engineering

City of Cincinnati
City Hall
801 Plum Street
Cincinnati, Ohio 45202

CINCINNATI STREETCAR
CENTRAL BUSINESS DISTRICT
PROPOSED SIGNING AND MARKING PLAN
SECOND STREET
STA 820+00 TO STA 823+50

Revisions
No.

Drawn by AAG	Date 7/02/12
Designed by AAG	Date 7/02/12
Checked by JTB	Date 7/02/12
Reviewed by JTB	Date 7/12/12

Consultant

PB HDR

File Number

ACC No.
23126

G-SP-1010

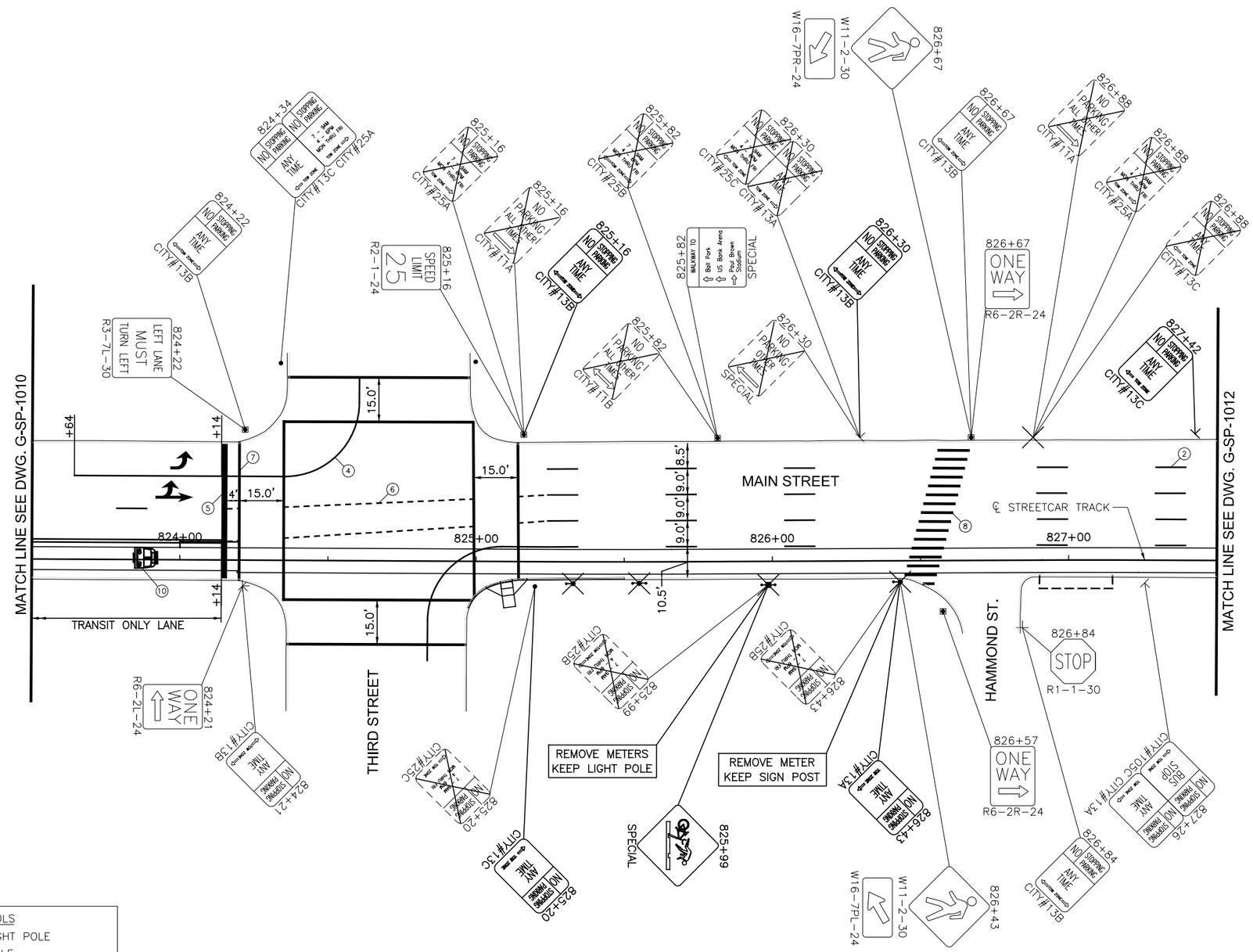

SYMBOLS

- EXISTING LIGHT POLE
- EXISTING POLE
- EXISTING SIGN POST
- SINGLE PARKING METER
- DOUBLE PARKING METER
- REMOVAL
- PROPOSED TYPE A SIGN POLE
- PROPOSED TYPE B SIGN POLE

NOTE:
ALL EXISTING SIGNS WILL BE REPLACED UNLESS OTHERWISE NOTED BY REMOVAL SYMBOL.

GRAPHIC SCALE

20 0 20 40 80

(IN FEET)
1 inch = 20 ft. Full Size
1 inch = 40 ft. Half Size

CAUTION UNDERGROUND UTILITIES
2 WORKING DAYS
BEFORE YOU DIG
CALL 1-800-362-2764
OHIO UTILITY PROTECTION SERVICE
CALL NON-SERVICE FACILITY OWNERS DIRECT

DEPARTMENT OF TRANSPORTATION & ENGINEERING CITY OF CINCINNATI OHIO

CONTRACT DRAWING

PRINTS NOT BEARING THIS STAMP WERE MADE PRIOR TO ADVERTISING FOR BIDS AND ARE TO BE CONSIDERED OBSOLETE FOR CONTRACT PURPOSES.

Department of Transportation and Engineering

City of Cincinnati
City Hall
801 Plum Street
Cincinnati, Ohio 45202

CINCINNATI STREETCAR
CENTRAL BUSINESS DISTRICT
PROPOSED SIGNING AND MARKING PLAN
MAIN STREET
STA 823+50 TO STA 827+50

Revisions

No.		

Drawn by AAG	Date 7/02/12
Designed by AAG	Date 7/02/12
Checked by JTB	Date 7/02/12
Reviewed by JTB	Date 7/12/12

Consultant

PB HDR

File Number

ACC No. 23126

G-SP-1011

DOTE_Mono_PDF_Half.pltcfg
T:\29014A-Streetcar\CAD\Traffic_Control\Signing and Marking\S_G-SP-1011.dgn
7/11/2012 12:27:34 PM

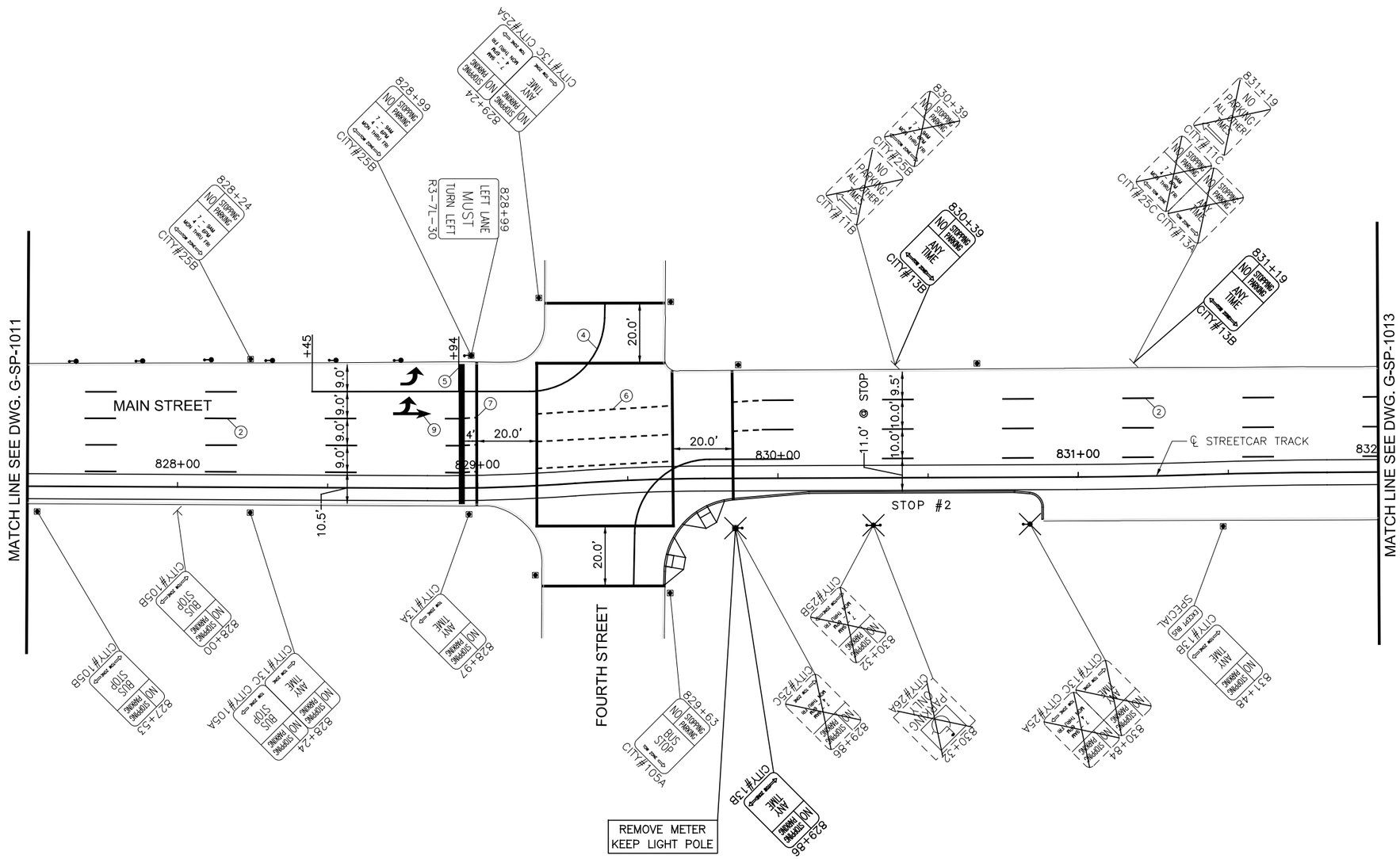

SYMBOLS

- EXISTING LIGHT POLE
- EXISTING POLE
- EXISTING SIGN POST
- SINGLE PARKING METER
- DOUBLE PARKING METER
- REMOVAL
- PROPOSED TYPE A SIGN POLE
- PROPOSED TYPE B SIGN POLE

NOTE:
ALL EXISTING SIGNS WILL BE REPLACED UNLESS OTHERWISE NOTED BY REMOVAL SYMBOL.

CAUTION UNDERGROUND UTILITIES
2 WORKING DAYS
BEFORE YOU DIG
CALL 1-800-362-2764
OHIO UTILITY PROTECTION SERVICE
CALL NON-SERVICE FACILITY
OWNERS DIRECT

GRAPHIC SCALE
20 0 20 40 80
(IN FEET)
1 inch = 20 ft. Full Size
1 inch = 40 ft. Half Size

DOTE_Mono_PDF_Half.pltcfg
T:\29014A-Streetcar\CAD\Traffic_Control\Signing and Marking\S_G-SP-1012.dgn
7/11/2012 12:27:35 PM

CONTRACT DRAWING
PRINTS NOT BEARING THIS STAMP WERE MADE PRIOR TO ADVERTISING FOR BIDS AND ARE TO BE CONSIDERED OBSOLETE FOR CONTRACT PURPOSES.

Department of Transportation and Engineering
City of Cincinnati
City Hall
801 Plum Street
Cincinnati, Ohio 45202

CINCINNATI STREETCAR
CENTRAL BUSINESS DISTRICT
PROPOSED SIGNING AND MARKING PLAN
MAIN STREET
STA 827+50 TO STA 832+00

Revisions
No.

Drawn by AAG	Date 7/02/12
Designed by AAG	Date 7/02/12
Checked by JTB	Date 7/02/12
Reviewed by JTB	Date 7/12/12

Consultant
PB HDR

File Number
ACC No. 23126

G-SP-1012

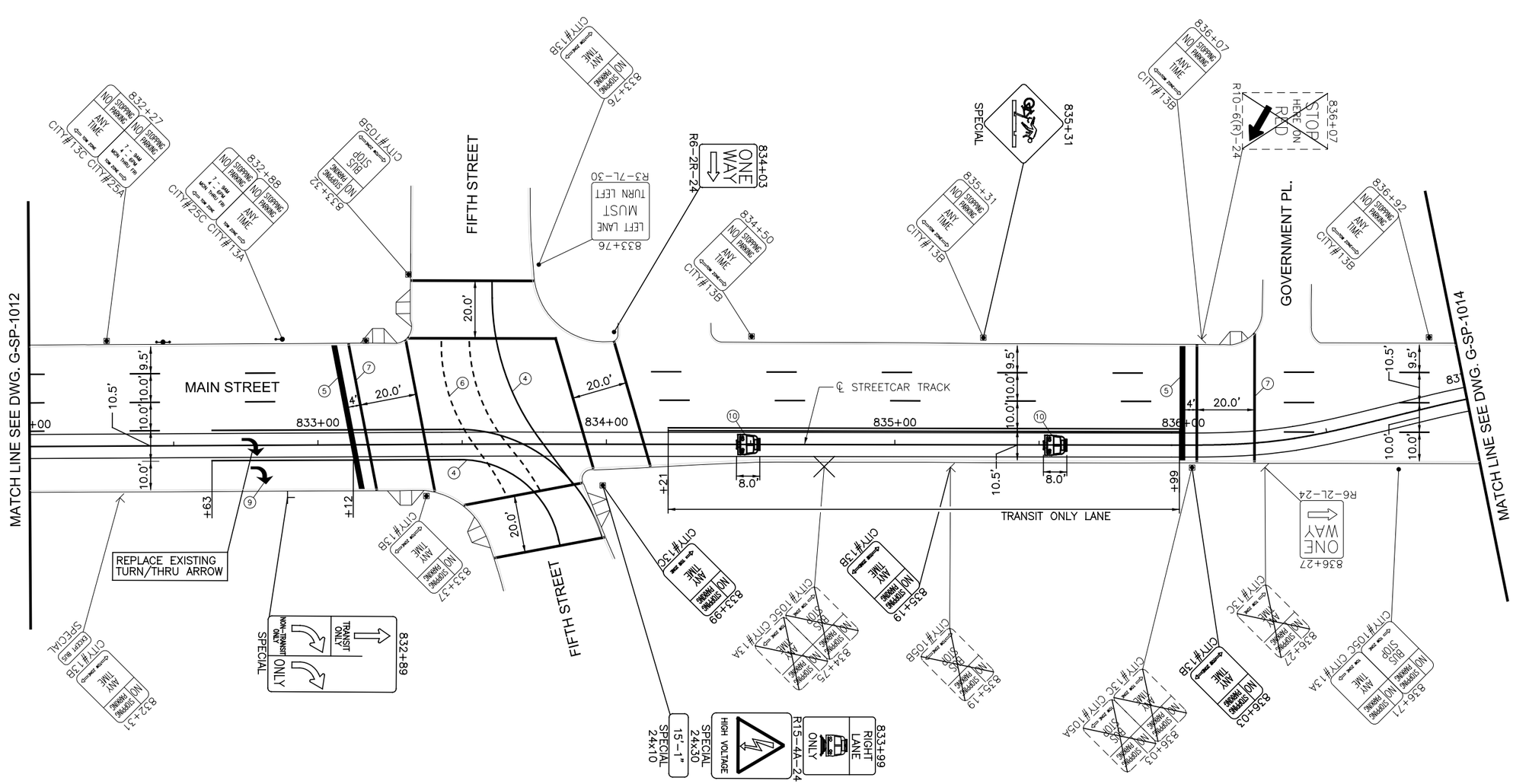

SYMBOLS

- EXISTING LIGHT POLE
- EXISTING POLE
- EXISTING SIGN POST
- SINGLE PARKING METER
- DOUBLE PARKING METER
- REMOVAL
- PROPOSED TYPE A SIGN POLE
- PROPOSED TYPE B SIGN POLE

NOTE:
ALL EXISTING SIGNS WILL BE REPLACED UNLESS OTHERWISE NOTED BY REMOVAL SYMBOL.

GRAPHIC SCALE

20 0 20 40 80

(IN FEET)
1 inch = 20 ft. Full Size
1 inch = 40 ft. Half Size

CAUTION UNDERGROUND UTILITIES
2 WORKING DAYS
BEFORE YOU DIG
CALL 1-800-362-2764
OHIO UTILITY PROTECTION SERVICE
CALL NON-SERVICE FACILITY
OWNERS DIRECT

DEPARTMENT OF TRANSPORTATION & ENGINEERING CITY OF CINCINNATI OHIO

CONTRACT DRAWING

PRINTS NOT BEARING THIS STAMP WERE MADE PRIOR TO ADVERTISING FOR BIDS AND ARE TO BE CONSIDERED OBSOLETE FOR CONTRACT PURPOSES.

Department of Transportation and Engineering
City of Cincinnati
City Hall
801 Plum Street
Cincinnati, Ohio 45202

CINCINNATI STREETCAR
CENTRAL BUSINESS DISTRICT
PROPOSED SIGNING AND MARKING PLAN
MAIN STREET
STA 832+00 TO STA 837+00

Revisions

No.		Date

Drawn by AAG	Date	7/02/12
Designed by AAG	Date	7/02/12
Checked by JTB	Date	7/02/12
Reviewed by JTB	Date	7/12/12

Consultant

PB HDR

File Number

ACC No. 23126

G-SP-1013

DOTE_Mono_PDF_Half.pltcfg
T:\29014A-Streetcar\CAD\Traffic_Control\Signing and Marking\S_G-SP-1013.dgn
7/11/2012 12:27:36 PM

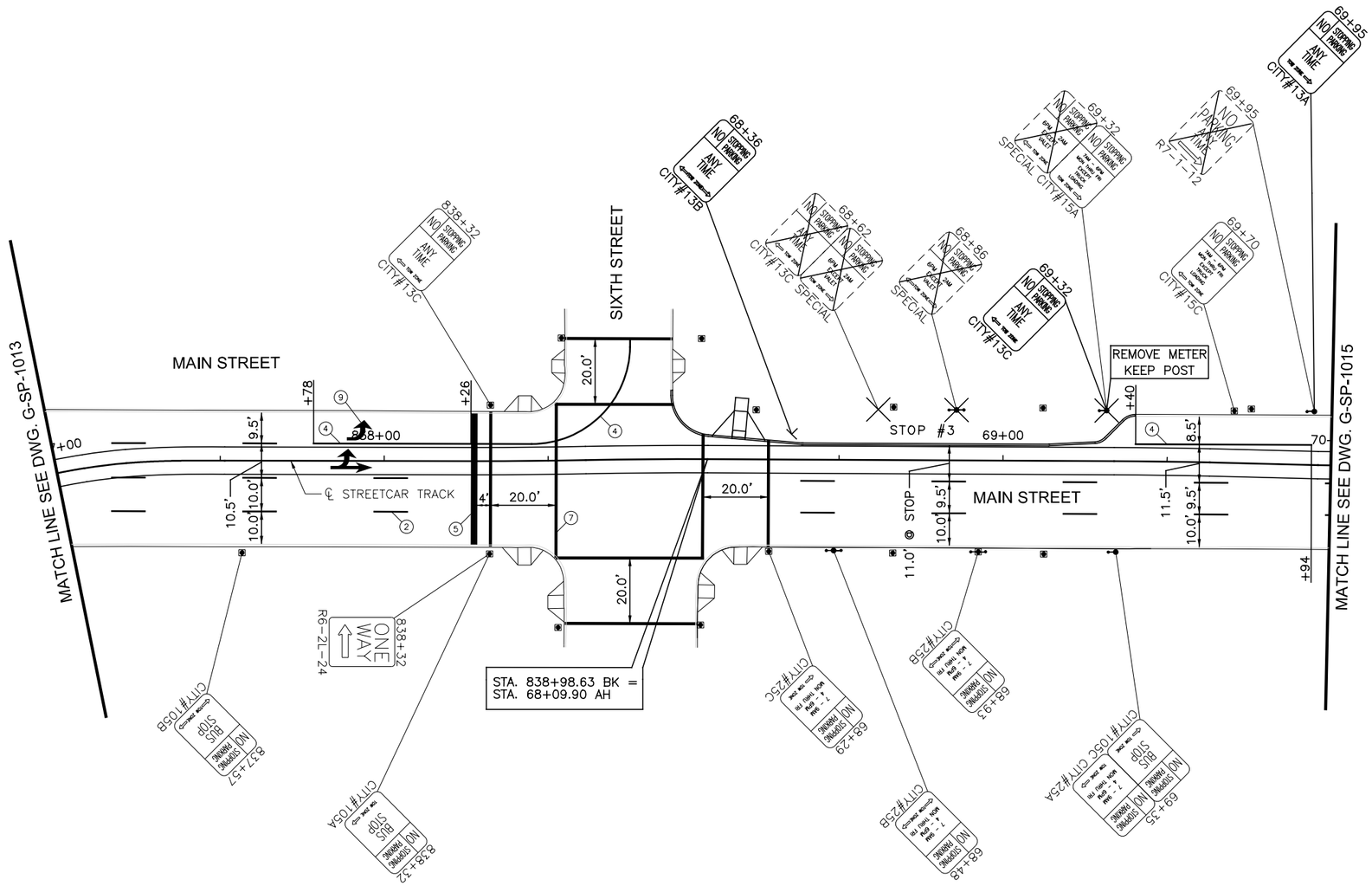

SYMBOLS

- EXISTING LIGHT POLE
- EXISTING POLE
- EXISTING SIGN POST
- SINGLE PARKING METER
- DOUBLE PARKING METER
- REMOVAL
- PROPOSED TYPE A SIGN POLE
- PROPOSED TYPE B SIGN POLE

NOTE:
ALL EXISTING SIGNS WILL BE REPLACED UNLESS OTHERWISE NOTED BY REMOVAL SYMBOL.

CAUTION UNDERGROUND UTILITIES
2 WORKING DAYS
BEFORE YOU DIG
CALL 1-800-362-2764
OHIO UTILITY PROTECTION SERVICE
CALL NON-SERVICE FACILITY
OWNERS DIRECT

GRAPHIC SCALE
20 0 20 40 80
(IN FEET)
1 inch = 20 ft. Full Size
1 inch = 40 ft. Half Size

DOTE_Mono_PDF_Half.pltcfg
T:\29014A-Streetcar\CAD\Traffic_Control\Signing and Marking\S_G-SP-1014.dgn
7/11/2012 12:27:37 PM

CONTRACT DRAWING

PRINTS NOT BEARING THIS STAMP WERE MADE PRIOR TO ADVERTISING FOR BIDS AND ARE TO BE CONSIDERED OBSOLETE FOR CONTRACT PURPOSES.

Department of Transportation and Engineering
City of Cincinnati
City Hall
801 Plum Street
Cincinnati, Ohio 45202

CINCINNATI STREETCAR
CENTRAL BUSINESS DISTRICT
PROPOSED SIGNING AND MARKING PLAN
MAIN STREET
STA 837+00 TO STA 70+00

Revisions
No.

Drawn by AAG	Date 7/02/12
Designed by AAG	Date 7/02/12
Checked by JTB	Date 7/02/12
Reviewed by JTB	Date 7/12/12

Consultant
PB HDR

File Number

ACC No. 23126

G-SP-1014

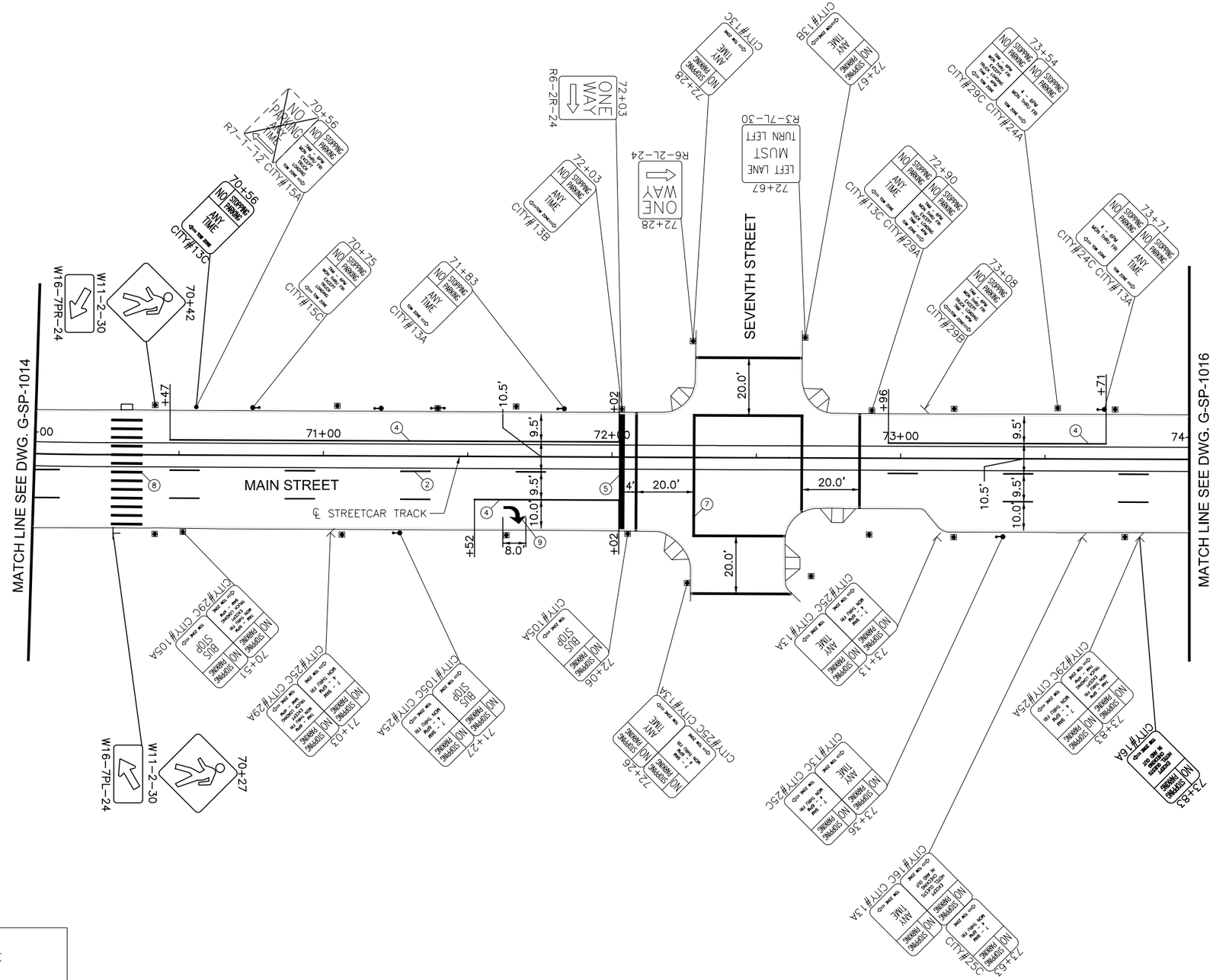

SYMBOLS

- EXISTING LIGHT POLE
- EXISTING POLE
- EXISTING SIGN POST
- SINGLE PARKING METER
- DOUBLE PARKING METER
- REMOVAL
- PROPOSED TYPE A SIGN POLE
- PROPOSED TYPE B SIGN POLE

NOTE:
ALL EXISTING SIGNS WILL BE REPLACED UNLESS OTHERWISE NOTED BY REMOVAL SYMBOL.

GRAPHIC SCALE
20 0 20 40 80
(IN FEET)
1 inch = 20 ft. Full Size
1 inch = 40 ft. Half Size

CAUTION UNDERGROUND UTILITIES
2 WORKING DAYS
BEFORE YOU DIG
CALL 1-800-362-2764
OHIO UTILITY PROTECTION SERVICE
CALL NON-SERVICE FACILITY
OWNERS DIRECT

DEPARTMENT OF TRANSPORTATION & ENGINEERING
CITY OF CINCINNATI
OHIO

CONTRACT DRAWING

PRINTS NOT BEARING THIS STAMP WERE MADE PRIOR TO ADVERTISING FOR BIDS AND ARE TO BE CONSIDERED OBSOLETE FOR CONTRACT PURPOSES.

Department of Transportation and Engineering
City of Cincinnati
City Hall
801 Plum Street
Cincinnati, Ohio 45202

CINCINNATI STREETCAR
CENTRAL BUSINESS DISTRICT
PROPOSED SIGNING AND MARKING PLAN
MAIN STREET
STA 70+00 TO STA 74+00

Revisions
No.

Drawn by AAG	Date 7/02/12
Designed by AAG	Date 7/02/12
Checked by JTB	Date 7/02/12
Reviewed by JTB	Date 7/12/12

Consultant
PB HDR

File Number

ACC No.
23126

G-SP-1015

DOTE_Mono_PDF_Half.pltcfg
T:\29014A-Streetcar\CAD\Traffic_Control\Signing and Marking\S_G-SP-1015.dgn
7/11/2012 12:27:38 PM

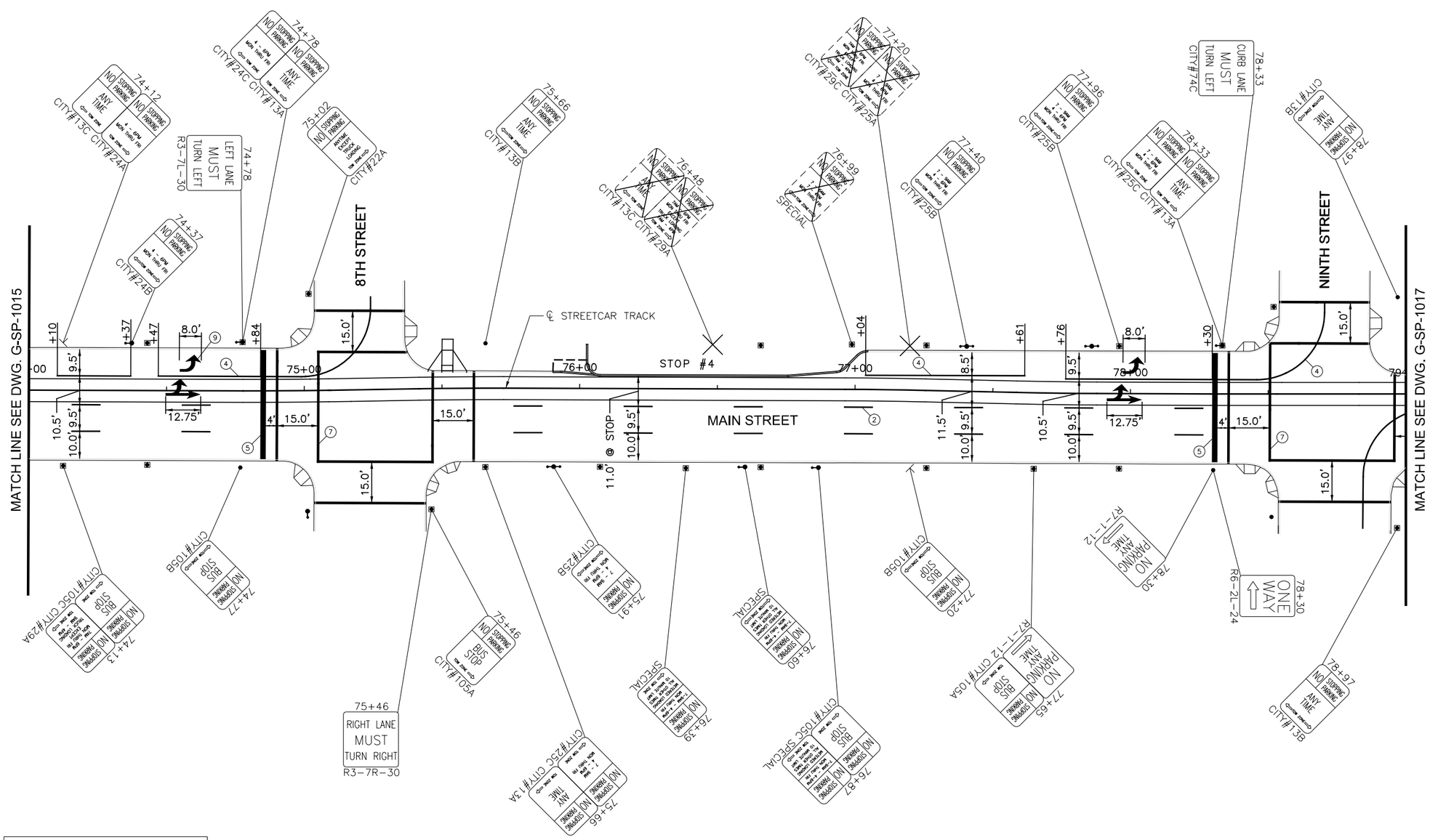

SYMBOLS

- EXISTING LIGHT POLE
- EXISTING POLE
- EXISTING SIGN POST
- SINGLE PARKING METER
- DOUBLE PARKING METER
- REMOVAL
- PROPOSED TYPE A SIGN POLE
- PROPOSED TYPE B SIGN POLE

NOTE:
ALL EXISTING SIGNS WILL BE REPLACED UNLESS OTHERWISE NOTED BY REMOVAL SYMBOL.

CAUTION UNDERGROUND UTILITIES 2 WORKING DAYS
BEFORE YOU DIG
CALL 1-800-362-2764
OHIO UTILITY PROTECTION SERVICE
CALL NON-SERVICE FACILITY OWNERS DIRECT

GRAPHIC SCALE
20 0 20 40 80
(IN FEET)
1 inch = 20 ft. Full Size
1 inch = 40 ft. Half Size

DOTE_Mono_PDF_Half.pltcfg
T:\29014A-Streetcar\CAD\Traffic_Control\Signing and Marking\S_G-SP-1016.dgn
7/11/2012 12:27:39 PM

CONTRACT DRAWING

PRINTS NOT BEARING THIS STAMP WERE MADE PRIOR TO ADVERTISING FOR BIDS AND ARE TO BE CONSIDERED OBSOLETE FOR CONTRACT PURPOSES.

Department of Transportation and Engineering
City of Cincinnati
City Hall
801 Plum Street
Cincinnati, Ohio 45202

CINCINNATI STREETCAR
CENTRAL BUSINESS DISTRICT
PROPOSED SIGNING AND MARKING PLAN
MAIN STREET
STA 74+00 TO STA 79+00

Revisions
No.

Drawn by AAG	Date 7/02/12
Designed by AAG	Date 7/02/12
Checked by JTB	Date 7/02/12
Reviewed by JTB	Date 7/12/12

Consultant
PB HDR

File Number

ACC No. 23126

G-SP-1016

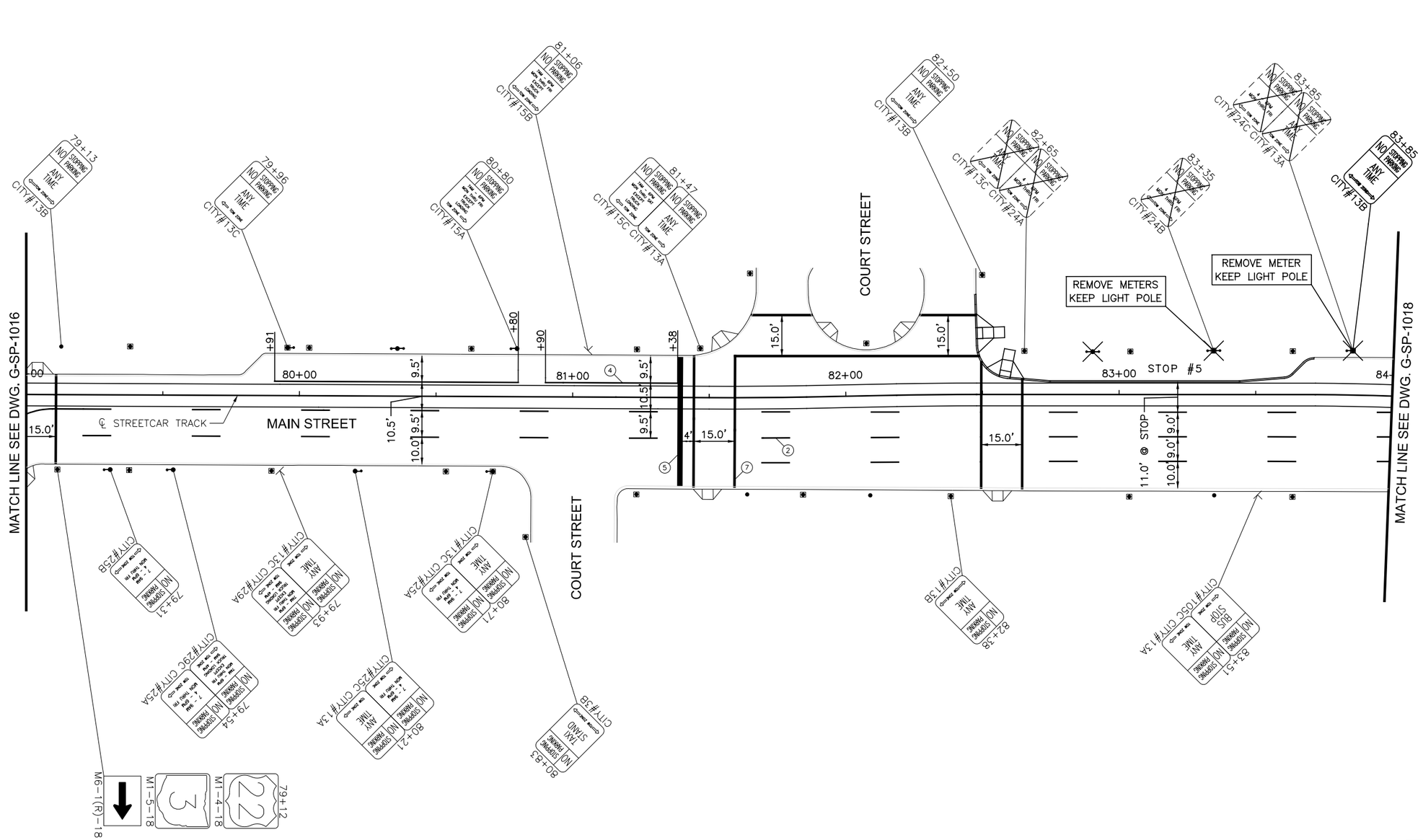

SYMBOLS

- EXISTING LIGHT POLE
- EXISTING POLE
- EXISTING SIGN POST
- SINGLE PARKING METER
- DOUBLE PARKING METER
- REMOVAL
- PROPOSED TYPE A SIGN POLE
- PROPOSED TYPE B SIGN POLE

NOTE:
ALL EXISTING SIGNS WILL BE REPLACED UNLESS OTHERWISE NOTED BY REMOVAL SYMBOL.

CAUTION UNDERGROUND UTILITIES
2 WORKING DAYS
BEFORE YOU DIG
CALL 1-800-362-2764
OHIO UTILITY PROTECTION SERVICE
CALL NON-SERVICE FACILITY
OWNERS DIRECT

GRAPHIC SCALE
20 0 20 40 80
(IN FEET)
1 inch = 20 ft. Full Size
1 inch = 40 ft. Half Size

DEPARTMENT OF TRANSPORTATION & ENGINEERING
CITY OF CINCINNATI OHIO

CONTRACT DRAWING

PRINTS NOT BEARING THIS STAMP WERE MADE PRIOR TO ADVERTISING FOR BIDS AND ARE TO BE CONSIDERED OBSOLETE FOR CONTRACT PURPOSES.

Department of Transportation and Engineering

City of Cincinnati
City Hall
801 Plum Street
Cincinnati, Ohio 45202

CINCINNATI STREETCAR
CENTRAL BUSINESS DISTRICT
PROPOSED SIGNING AND MARKING PLAN
MAIN STREET
STA 79+00 TO STA 84+00

Revisions
No.

Drawn by AAG	Date 7/02/12
Designed by AAG	Date 7/02/12
Checked by JTB	Date 7/02/12
Reviewed by JTB	Date 7/12/12

Consultant
PB HDR

File Number

ACC No.
23126

G-SP-1017

DOTE_Mono_PDF_Half.pltcfg
T:\29014A-Streetcar\CAD\Traffic_Control\Signing and Marking\S_G-SP-1017.dgn
7/11/2012 12:27:41 PM

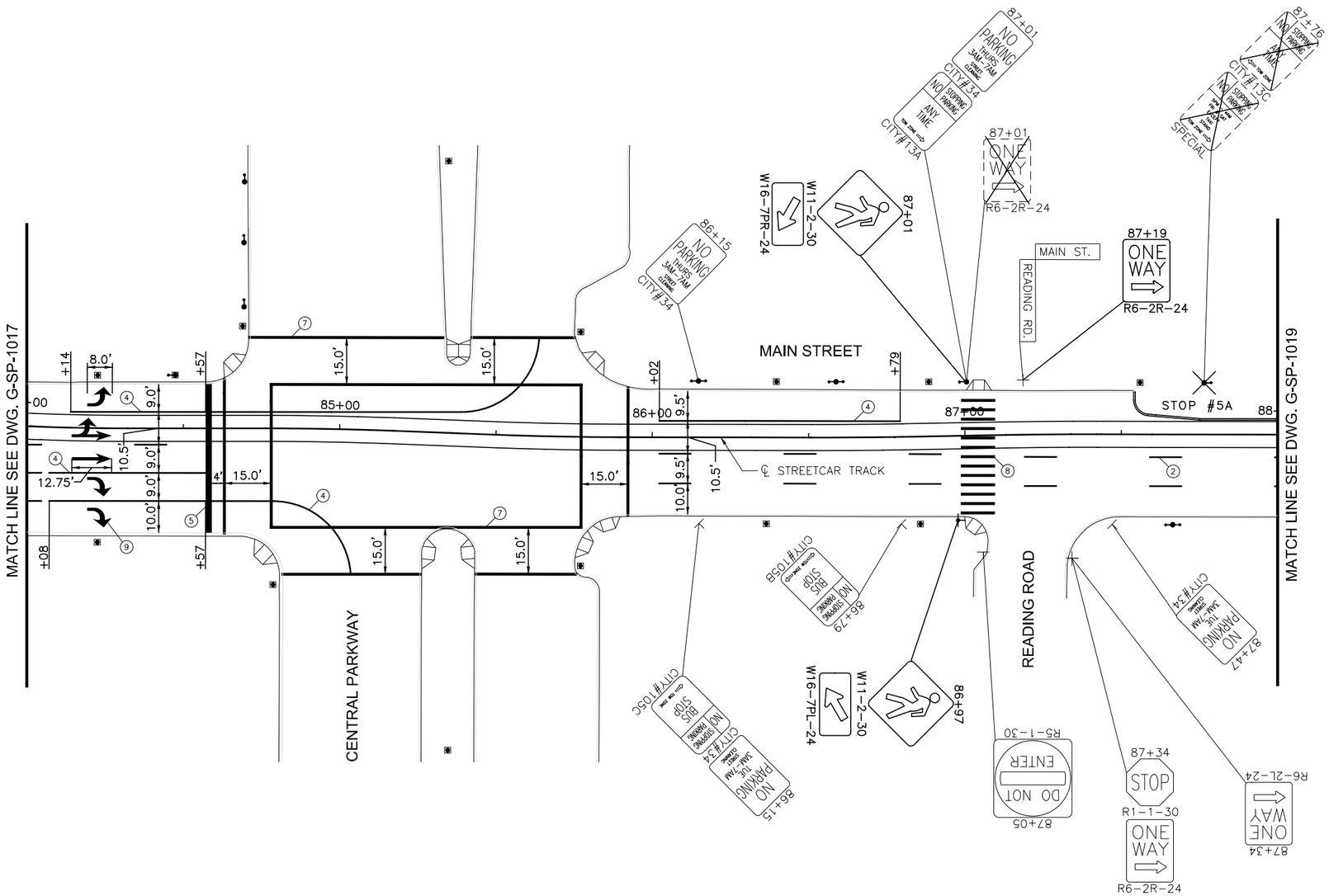

SYMBOLS

- EXISTING LIGHT POLE
- EXISTING POLE
- EXISTING SIGN POST
- SINGLE PARKING METER
- DOUBLE PARKING METER
- REMOVAL
- PROPOSED TYPE A SIGN POLE
- PROPOSED TYPE B SIGN POLE

NOTE:
ALL EXISTING SIGNS WILL BE REPLACED UNLESS OTHERWISE NOTED BY REMOVAL SYMBOL.

GRAPHIC SCALE

20 0 20 40 80

(IN FEET)
1 inch = 20 ft. Full Size
1 inch = 40 ft. Half Size

CAUTION UNDERGROUND UTILITIES
2 WORKING DAYS
BEFORE YOU DIG
CALL 1-800-362-2764
OHIO UTILITY PROTECTION SERVICE
CALL NON-SERVICE FACILITY
OWNERS DIRECT

DEPARTMENT OF TRANSPORTATION & ENGINEERING CITY OF CINCINNATI OHIO

CONTRACT DRAWING

PRINTS NOT BEARING THIS STAMP WERE MADE PRIOR TO ADVERTISING FOR BIDS AND ARE TO BE CONSIDERED OBSOLETE FOR CONTRACT PURPOSES.

Department of Transportation and Engineering

City of Cincinnati
City Hall
801 Plum Street
Cincinnati, Ohio 45202

CINCINNATI STREETCAR
CENTRAL BUSINESS DISTRICT
PROPOSED SIGNING AND MARKING PLAN
MAIN STREET
STA 84+00 TO STA 88+00

Revisions

No.		

Drawn by AAG	Date 7/02/12
Designed by AAG	Date 7/02/12
Checked by JTB	Date 7/02/12
Reviewed by JTB	Date 7/12/12

Consultant

PB HDR

File Number

ACC No. 23126

G-SP-1018

DOTE_Mono_PDF_Half.pltcfg
T:\29014A-Streetcar\CAD\Traffic_Control\Signing and Marking\S_G-SP-1018.dgn
7/11/2012 12:27:42 PM

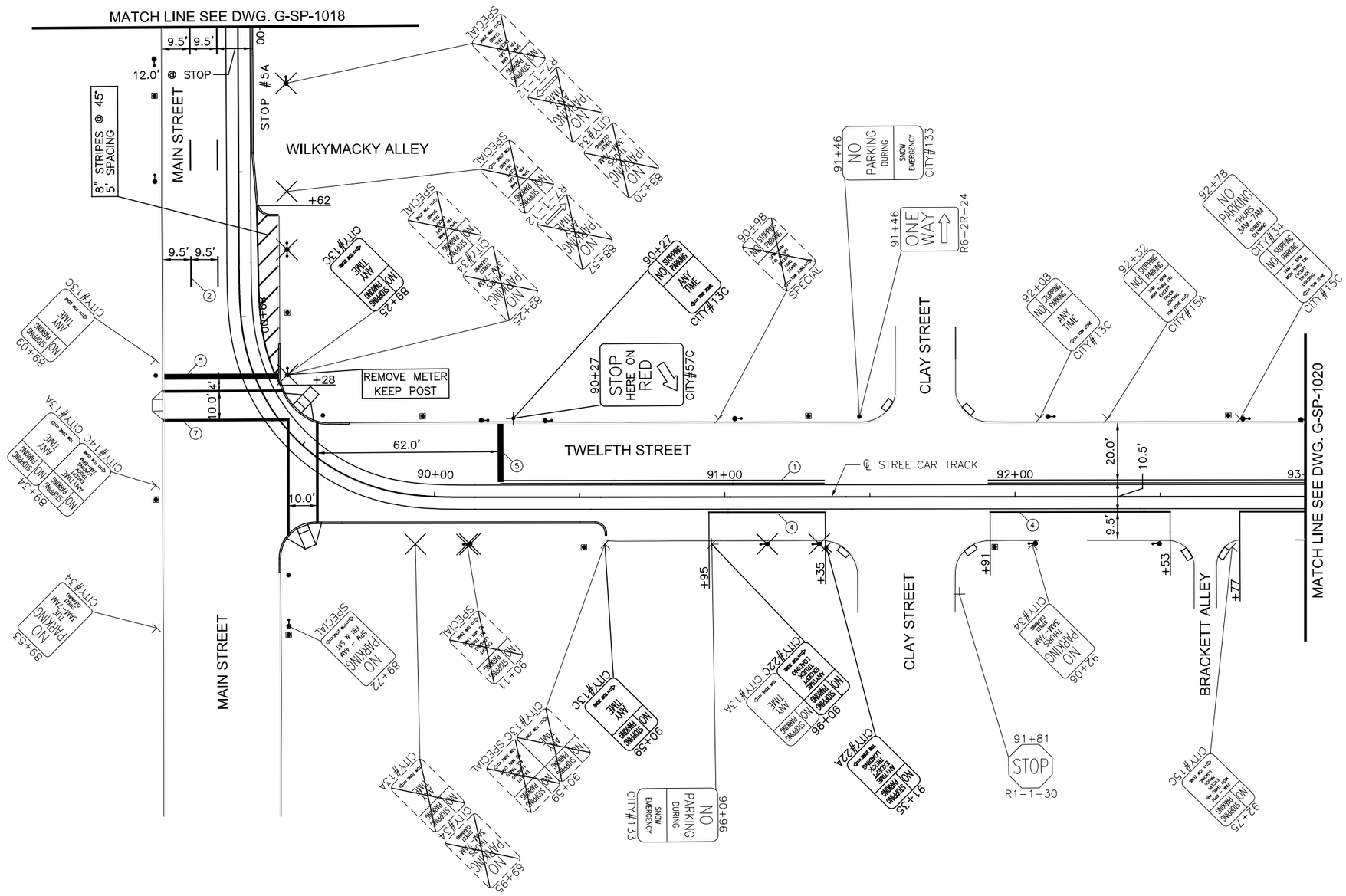

SYMBOLS

- EXISTING LIGHT POLE
- EXISTING POLE
- EXISTING SIGN POST
- SINGLE PARKING METER
- DOUBLE PARKING METER
- REMOVAL
- PROPOSED TYPE A SIGN POLE
- PROPOSED TYPE B SIGN POLE

NOTE:
ALL EXISTING SIGNS WILL BE REPLACED UNLESS OTHERWISE NOTED BY REMOVAL SYMBOL.

GRAPHIC SCALE
20 0 20 40 80
(IN FEET)
1 inch = 20 ft. Full Size
1 inch = 40 ft. Half Size

CAUTION UNDERGROUND UTILITIES
2 WORKING DAYS
BEFORE YOU DIG
CALL 1-800-362-2764
OHIO UTILITY PROTECTION SERVICE
CALL NON-SERVICE FACILITY
OWNERS DIRECT

DOTE_Mono_PDF_Half.pltcfg
T:\29014A-Streetcar\CAD\Traffic_Control\Signing and Marking\S_G-SP-1019.dgn
7/11/2012 12:27:43 PM

CONTRACT DRAWING

PRINTS NOT BEARING THIS STAMP WERE MADE PRIOR TO ADVERTISING FOR BIDS AND ARE TO BE CONSIDERED OBSOLETE FOR CONTRACT PURPOSES.

Department of Transportation and Engineering

City of Cincinnati
City Hall
801 Plum Street
Cincinnati, Ohio 45202

CINCINNATI STREETCAR
CENTRAL BUSINESS DISTRICT
PROPOSED SIGNING AND MARKING PLAN
TWELFTH STREET
STA 88+00 TO STA 93+00

Revisions

No.		

Date 7/02/12
Date 7/02/12
Date 7/02/12
Date 7/12/12

Drawn by AAG
Designed by AAG
Checked by JTB
Reviewed by JTB

Consultant

PB HDR

File Number

ACC No. 23126

G-SP-1019

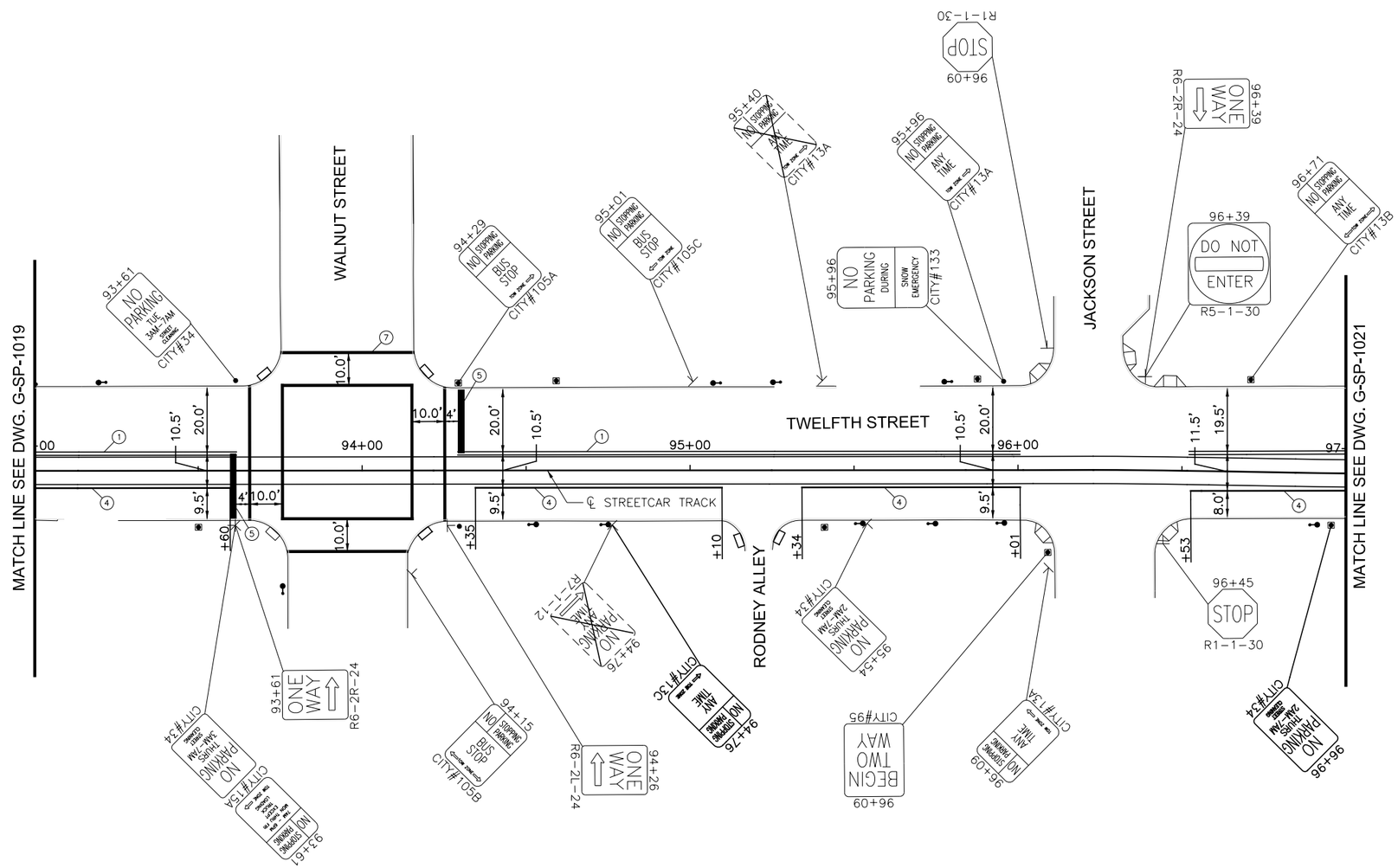

SYMBOLS

- EXISTING LIGHT POLE
- EXISTING POLE
- EXISTING SIGN POST
- SINGLE PARKING METER
- DOUBLE PARKING METER
- REMOVAL
- PROPOSED TYPE A SIGN POLE
- PROPOSED TYPE B SIGN POLE

NOTE:
ALL EXISTING SIGNS WILL BE REPLACED UNLESS OTHERWISE NOTED BY REMOVAL SYMBOL.

CAUTION UNDERGROUND UTILITIES
2 WORKING DAYS
BEFORE YOU DIG
CALL 1-800-362-2764
OHIO UTILITY PROTECTION SERVICE
CALL NON-SERVICE FACILITY
OWNERS DIRECT

GRAPHIC SCALE
20 0 20 40 80
(IN FEET)
1 inch = 20 ft. Full Size
1 inch = 40 ft. Half Size

DOTE_Mono_PDF_Half.pltcfg
T:\29014A-Streetcar\CAD\Traffic_Control\Signing and Marking\S_G-SP-1020.dgn
7/11/2012 12:27:44 PM

CONTRACT DRAWING

PRINTS NOT BEARING THIS STAMP WERE MADE PRIOR TO ADVERTISING FOR BIDS AND ARE TO BE CONSIDERED OBSOLETE FOR CONTRACT PURPOSES.

Department of Transportation and Engineering

City of Cincinnati
City Hall
801 Plum Street
Cincinnati, Ohio 45202

CINCINNATI STREETCAR
CENTRAL BUSINESS DISTRICT
PROPOSED SIGNING AND MARKING PLAN
TWELFTH STREET
STA 93+00 TO STA 97+00

Revisions

No.		Date
		7/02/12
		7/02/12
		7/02/12
		7/12/12

Drawn by AAG	Date 7/02/12
Designed by AAG	Date 7/02/12
Checked by JTB	Date 7/02/12
Reviewed by JTB	Date 7/12/12

Consultant

PB HDR

File Number

ACC No. 23126

G-SP-1020

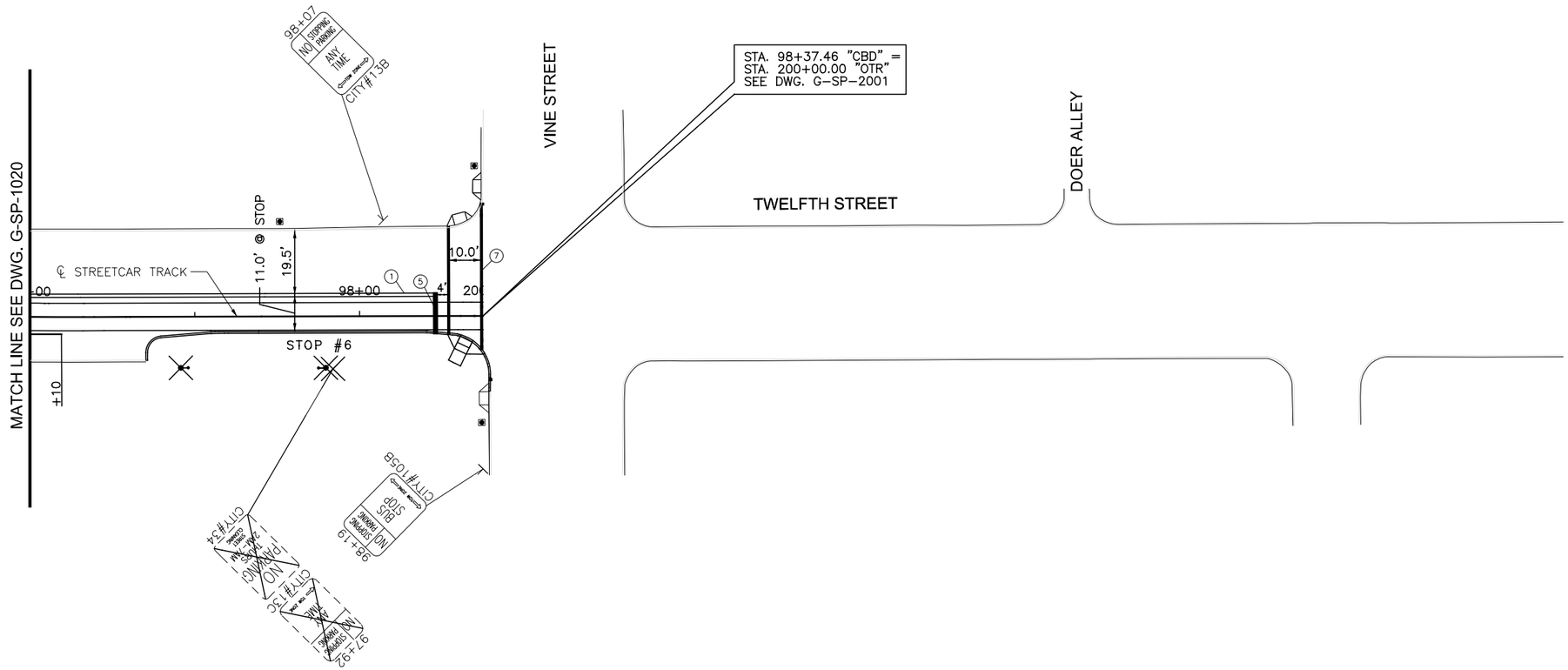

SYMBOLS

- EXISTING LIGHT POLE
- EXISTING POLE
- EXISTING SIGN POST
- SINGLE PARKING METER
- DOUBLE PARKING METER
- REMOVAL
- PROPOSED TYPE A SIGN POLE
- PROPOSED TYPE B SIGN POLE

NOTE:
ALL EXISTING SIGNS WILL BE REPLACED UNLESS OTHERWISE NOTED BY REMOVAL SYMBOL.

GRAPHIC SCALE

20 0 20 40 80

(IN FEET)
1 inch = 20 ft. Full Size
1 inch = 40 ft. Half Size

CAUTION UNDERGROUND UTILITIES
2 WORKING DAYS
BEFORE YOU DIG
CALL 1-800-362-2764
OHIO UTILITY PROTECTION SERVICE
CALL NON-SERVICE FACILITY
OWNERS DIRECT

DOTE_Mono_PDF_Half.pltcfg
T:\29014A-Streetcar\CAD\Traffic_Control\Signing and Marking\S_G-SP-1021.dgn
7/11/2012 12:27:45 PM

CONTRACT DRAWING

PRINTS NOT BEARING THIS STAMP WERE MADE PRIOR TO ADVERTISING FOR BIDS AND ARE TO BE CONSIDERED OBSOLETE FOR CONTRACT PURPOSES.

Department of Transportation and Engineering

City of Cincinnati
City Hall
801 Plum Street
Cincinnati, Ohio 45202

CINCINNATI STREETCAR
CENTRAL BUSINESS DISTRICT
PROPOSED SIGNING AND MARKING PLAN
TWELFTH STREET
STA 97+00 TO STA 98+37.46

Revisions
No.

Drawn by AAG	Date 7/02/12
Designed by AAG	Date 7/02/12
Checked by JTB	Date 7/02/12
Reviewed by JTB	Date 7/12/12

Consultant

PB HDR

File Number

ACC No. 23126

G-SP-1021

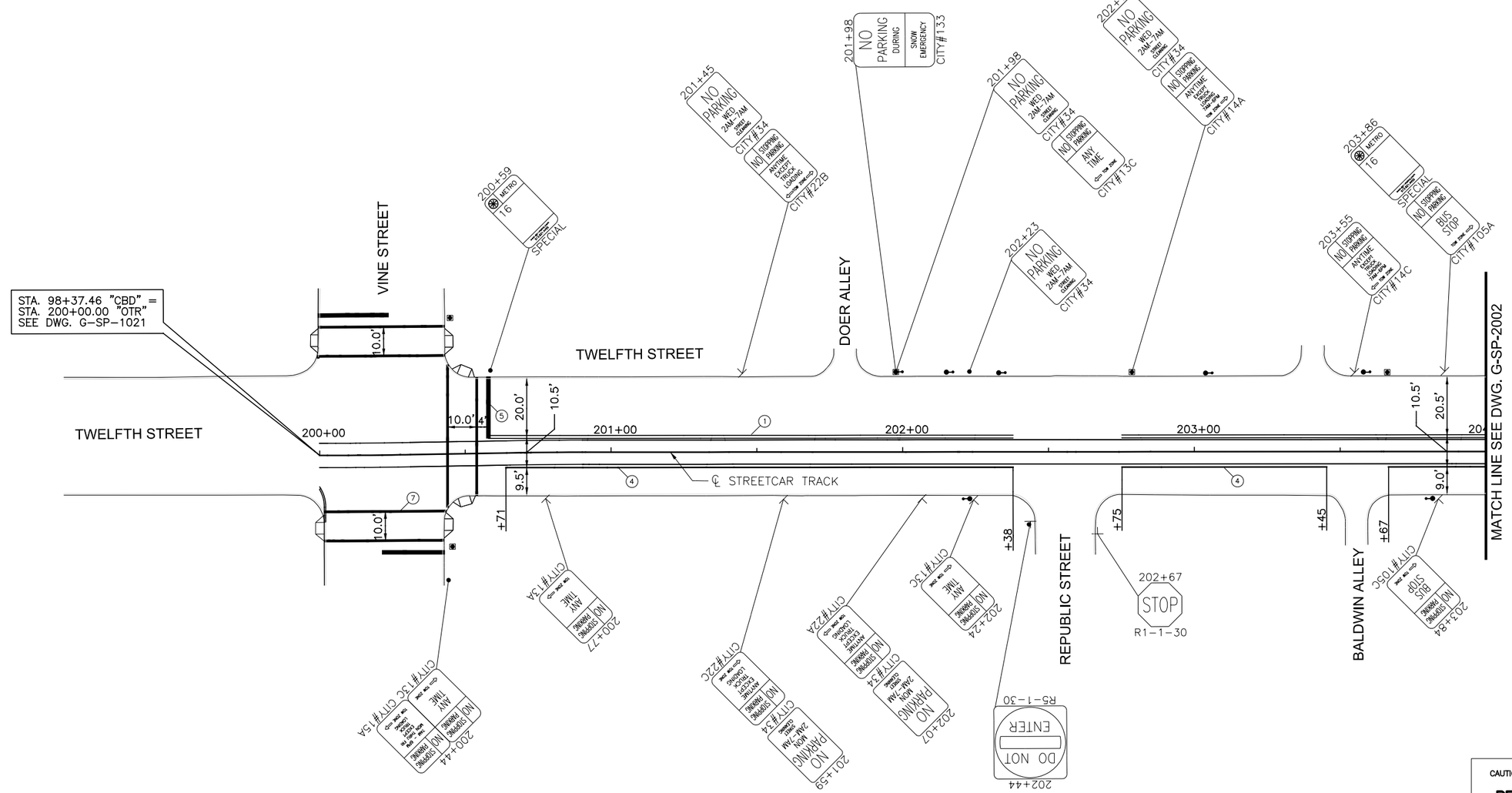

SYMBOLS

- EXISTING LIGHT POLE
- EXISTING POLE
- EXISTING SIGN POST
- SINGLE PARKING METER
- DOUBLE PARKING METER
- REMOVAL
- PROPOSED TYPE A SIGN POLE
- PROPOSED TYPE B SIGN POLE

NOTE:
ALL EXISTING SIGNS WILL BE REPLACED UNLESS OTHERWISE NOTED BY REMOVAL SYMBOL.

CAUTION UNDERGROUND UTILITIES
2 WORKING DAYS
BEFORE YOU DIG
CALL 1-800-362-2764
OHIO UTILITY PROTECTION SERVICE
CALL NON-SERVICE FACILITY OWNERS DIRECT

GRAPHIC SCALE
20 0 20 40 80
(IN FEET)
1 inch = 20 ft. Full Size
1 inch = 40 ft. Half Size

DEPARTMENT OF TRANSPORTATION & ENGINEERING
CITY OF CINCINNATI OHIO

CONTRACT DRAWING

PRINTS NOT BEARING THIS STAMP WERE MADE PRIOR TO ADVERTISING FOR BIDS AND ARE TO BE CONSIDERED OBSOLETE FOR CONTRACT PURPOSES.

Department of Transportation and Engineering
City of Cincinnati
City Hall
801 Plum Street
Cincinnati, Ohio 45202

CINCINNATI STREETCAR
OVER THE RHINE
PROPOSED SIGNING AND MARKING PLAN
TWELFTH STREET
STA 200+00 TO STA 204+00

Revisions

No.		Date
		7/02/12
		7/02/12
		7/02/12
		7/12/12

Drawn by AAG
Designed by AAG
Checked by JTB
Reviewed by JTB

Consultant
PB HDR

File Number

ACC No. 23126

G-SP-2001

DOTE_Mono_PDF_Half.pltcfg
T:\29014A-Streetcar\CAD\Traffic_Control\Signing and Marking\S_G-SP-2001.dgn
7/11/2012 12:36:09 PM

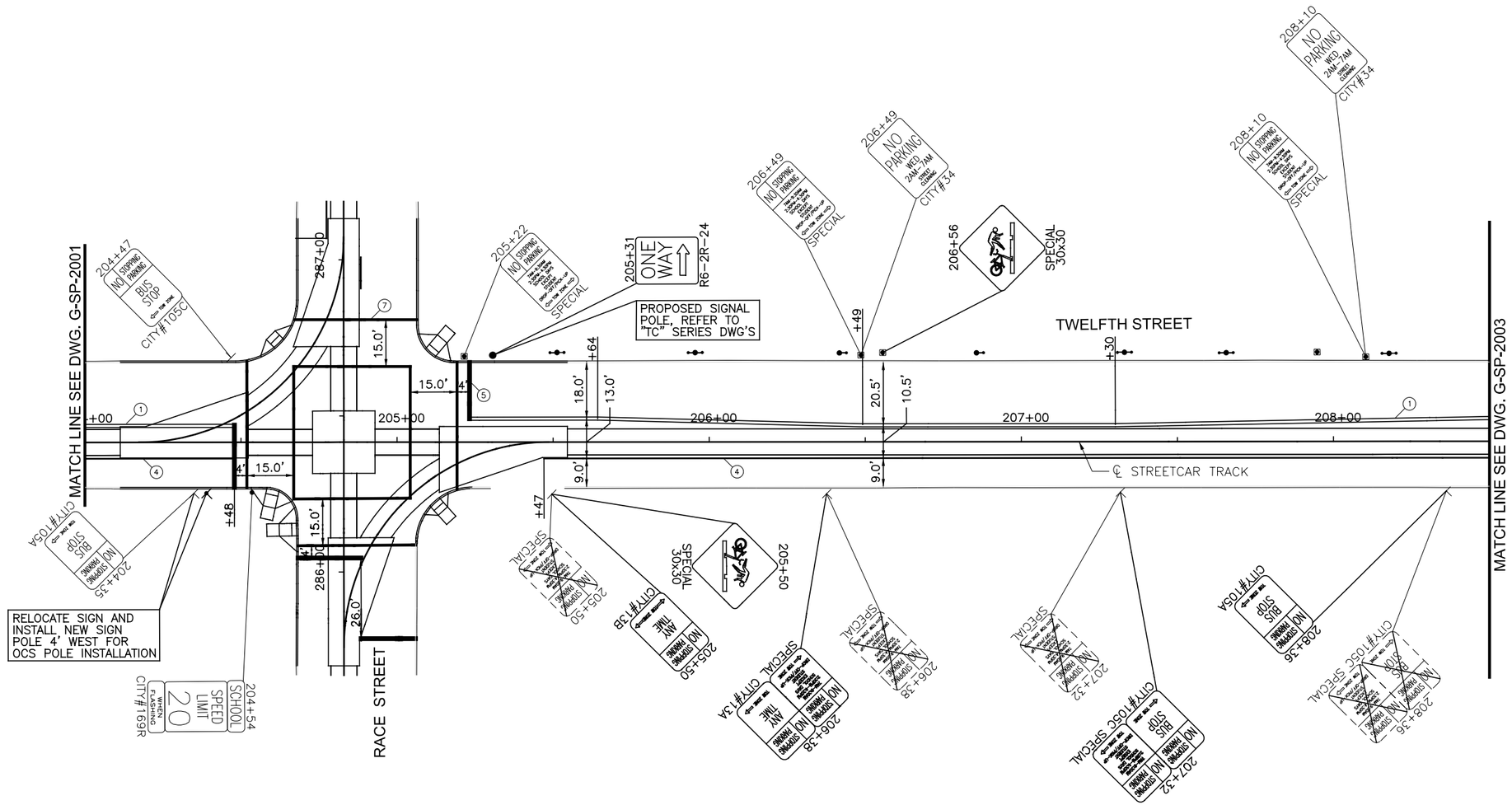

SYMBOLS

- EXISTING LIGHT POLE
- EXISTING POLE
- EXISTING SIGN POST
- SINGLE PARKING METER
- DOUBLE PARKING METER
- REMOVAL
- PROPOSED TYPE A SIGN POLE
- PROPOSED TYPE B SIGN POLE

NOTE:
ALL EXISTING SIGNS WILL BE REPLACED UNLESS OTHERWISE NOTED BY REMOVAL SYMBOL.

GRAPHIC SCALE

20 0 20 40 80

(IN FEET)
1 inch = 20 ft. Full Size
1 inch = 40 ft. Half Size

CAUTION UNDERGROUND UTILITIES
2 WORKING DAYS
BEFORE YOU DIG
CALL 1-800-362-2764
OHIO UTILITY PROTECTION SERVICE
CALL NON-SERVICE FACILITY
OWNERS DIRECT

DOTE_Mono_PDF_Half.pltcfg
T:\29014A-Streetcar\CAD\Traffic_Control\Signing and Marking\S_G-SP-2002.dgn
7/11/2012 12:36:10 PM

CONTRACT DRAWING

PRINTS NOT BEARING THIS STAMP WERE MADE PRIOR TO ADVERTISING FOR BIDS AND ARE TO BE CONSIDERED OBSOLETE FOR CONTRACT PURPOSES.

Department of Transportation and Engineering

City of Cincinnati
City Hall
801 Plum Street
Cincinnati, Ohio 45202

CINCINNATI STREETCAR
OVER THE RHINE
PROPOSED SIGNING AND MARKING PLAN
TWELFTH STREET
STA 204+00 TO STA 208+50

Revisions

No.				

Date	7/02/12
Date	7/02/12
Date	7/02/12
Date	7/12/12

Drawn by	AAG
Designed by	AAG
Checked by	JTB
Reviewed by	JTB

Consultant

PB HDR

File Number

ACC No.
23126

G-SP-2002

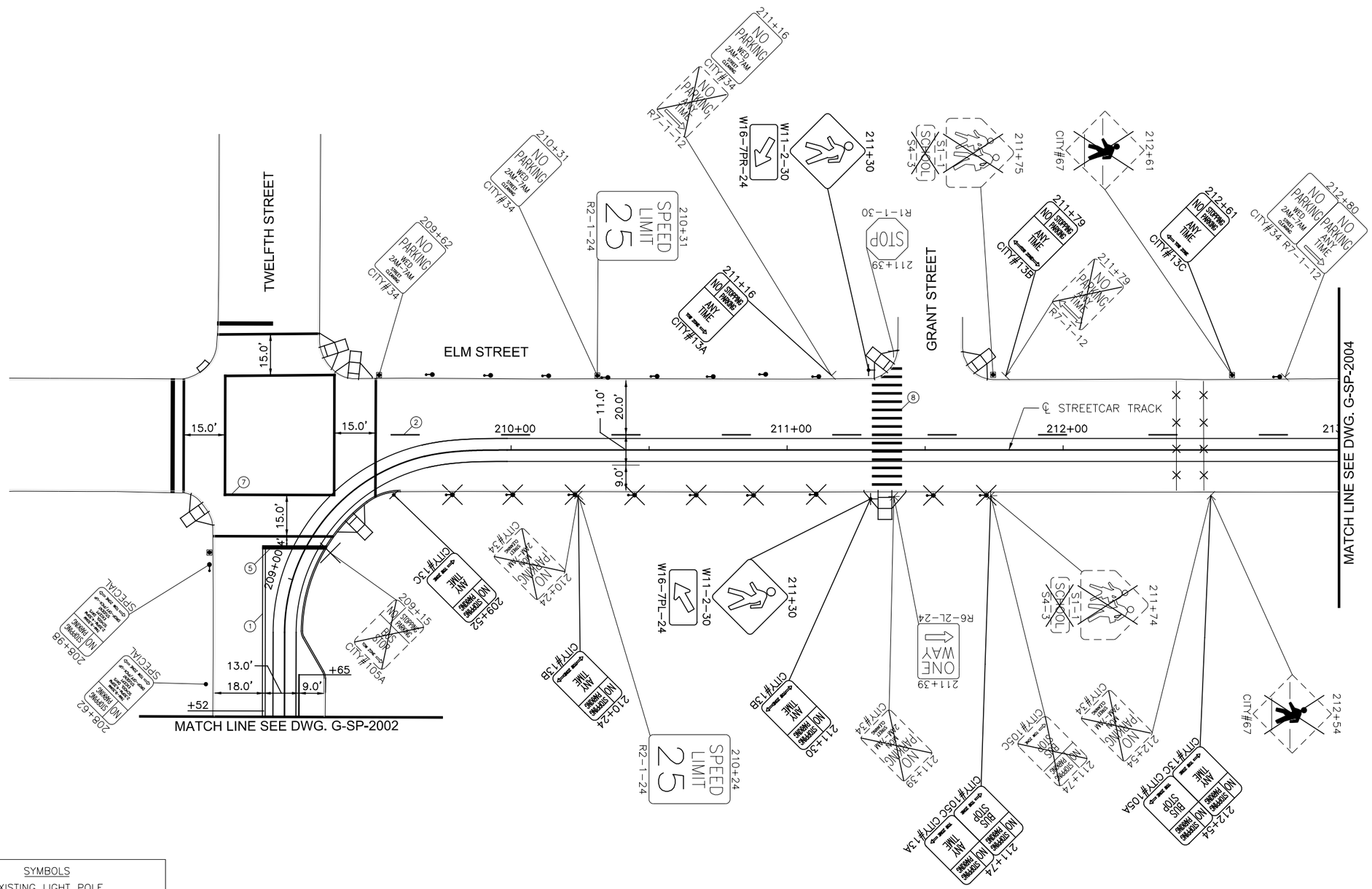

SYMBOLS

- EXISTING LIGHT POLE
- EXISTING POLE
- EXISTING SIGN POST
- SINGLE PARKING METER
- DOUBLE PARKING METER
- REMOVAL
- PROPOSED TYPE A SIGN POLE
- PROPOSED TYPE B SIGN POLE

NOTE:
ALL EXISTING SIGNS WILL BE REPLACED UNLESS OTHERWISE NOTED BY REMOVAL SYMBOL.

GRAPHIC SCALE

20 0 20 40 80

(IN FEET)
1 inch = 20 ft. Full Size
1 inch = 40 ft. Half Size

CAUTION UNDERGROUND UTILITIES
2 WORKING DAYS
BEFORE YOU DIG
CALL 1-800-362-2764
OHIO UTILITY PROTECTION SERVICE
CALL NON-SERVICE FACILITY
OWNERS DIRECT

DOTE_Mono_PDF_Half.pltcfg
T:\29014A-Streetcar\CAD\Traffic_Control\Signing and Marking\S_G-SP-2003.dgn
7/11/2012 12:36:11 PM

DEPARTMENT OF TRANSPORTATION & ENGINEERING CITY OF CINCINNATI OHIO

CONTRACT DRAWING

PRINTS NOT BEARING THIS STAMP WERE MADE PRIOR TO ADVERTISING FOR BIDS AND ARE TO BE CONSIDERED OBSOLETE FOR CONTRACT PURPOSES.

Department of Transportation and Engineering

City of Cincinnati
City Hall
801 Plum Street
Cincinnati, Ohio 45202

CINCINNATI STREETCAR OVER THE RHINE

PROPOSED SIGNING AND MARKING PLAN
ELM STREET
STA 208+50 TO STA 213+00

Revisions

No.		

Drawn by AAG	Date 7/02/12
Designed by AAG	Date 7/02/12
Checked by JTB	Date 7/02/12
Reviewed by JTB	Date 7/12/12

Consultant

PB HDR

File Number

ACC No. 23126

G-SP-2003

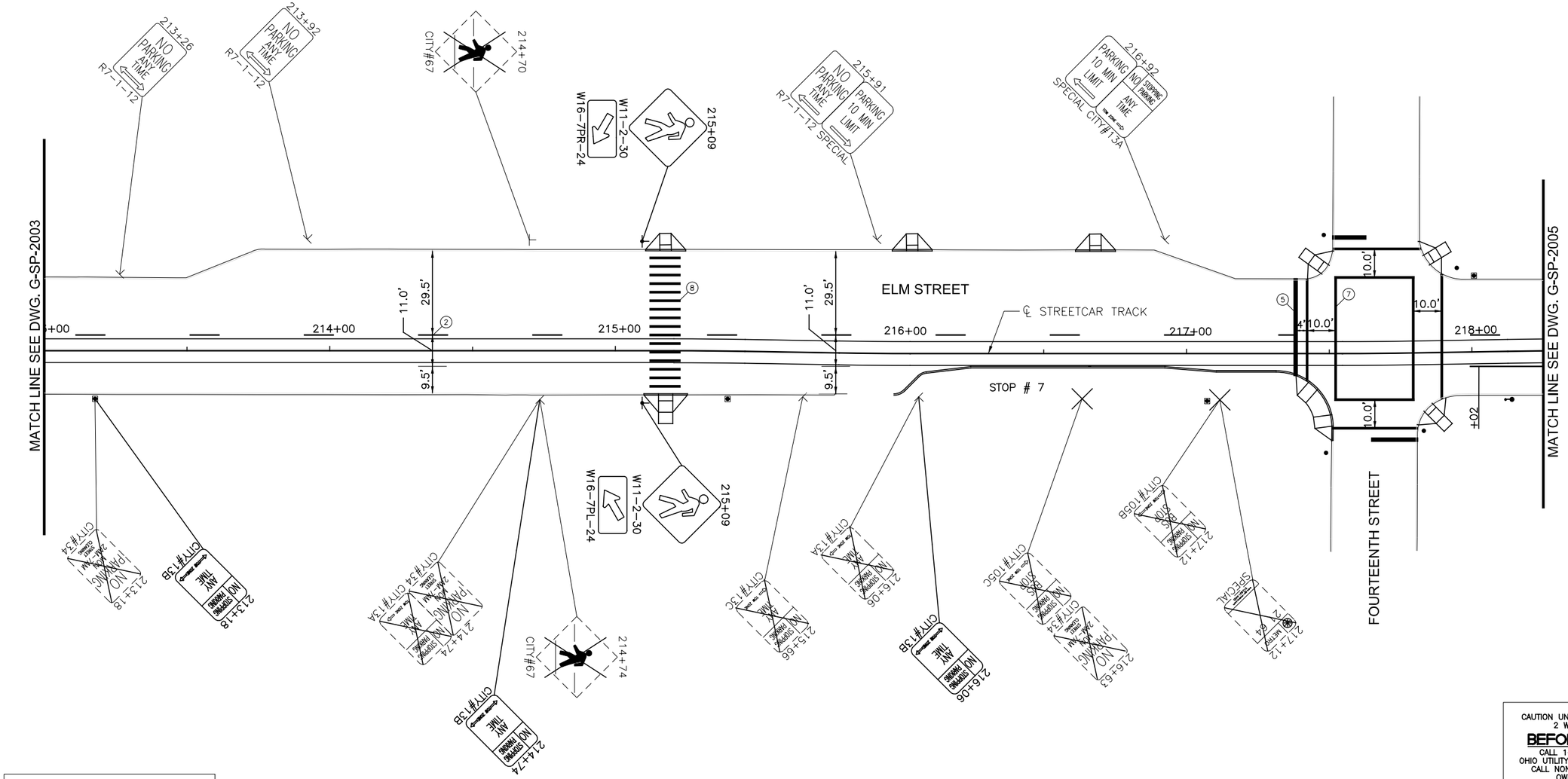

CAUTION UNDERGROUND UTILITIES
2 WORKING DAYS
BEFORE YOU DIG
CALL 1-800-362-2764
OHIO UTILITY PROTECTION SERVICE
CALL NON-SERVICE FACILITY
OWNERS DIRECT

DOTE_Mono_PDF_Half.pltcfg
T:\29014A-Streetcar\CAD\Traffic_Control\Signing and Marking\S_G-SP-2004.dgn
7/11/2012 12:36:12 PM

CONTRACT DRAWING

PRINTS NOT BEARING THIS STAMP WERE MADE PRIOR TO ADVERTISING FOR BIDS AND ARE TO BE CONSIDERED OBSOLETE FOR CONTRACT PURPOSES.

Department of Transportation and Engineering

City of Cincinnati
City Hall
801 Plum Street
Cincinnati, Ohio 45202

CINCINNATI STREETCAR OVER THE RHINE

PROPOSED SIGNING AND MARKING PLAN
ELM STREET
STA 213+00 TO STA 218+25

Revisions

No.		

Date	7/02/12
Date	7/02/12
Date	7/02/12
Date	7/12/12

Drawn by	AAG
Designed by	AAG
Checked by	JTB
Reviewed by	JTB

Consultant

PB HDR

File Number

ACC No.
23126

G-SP-2004

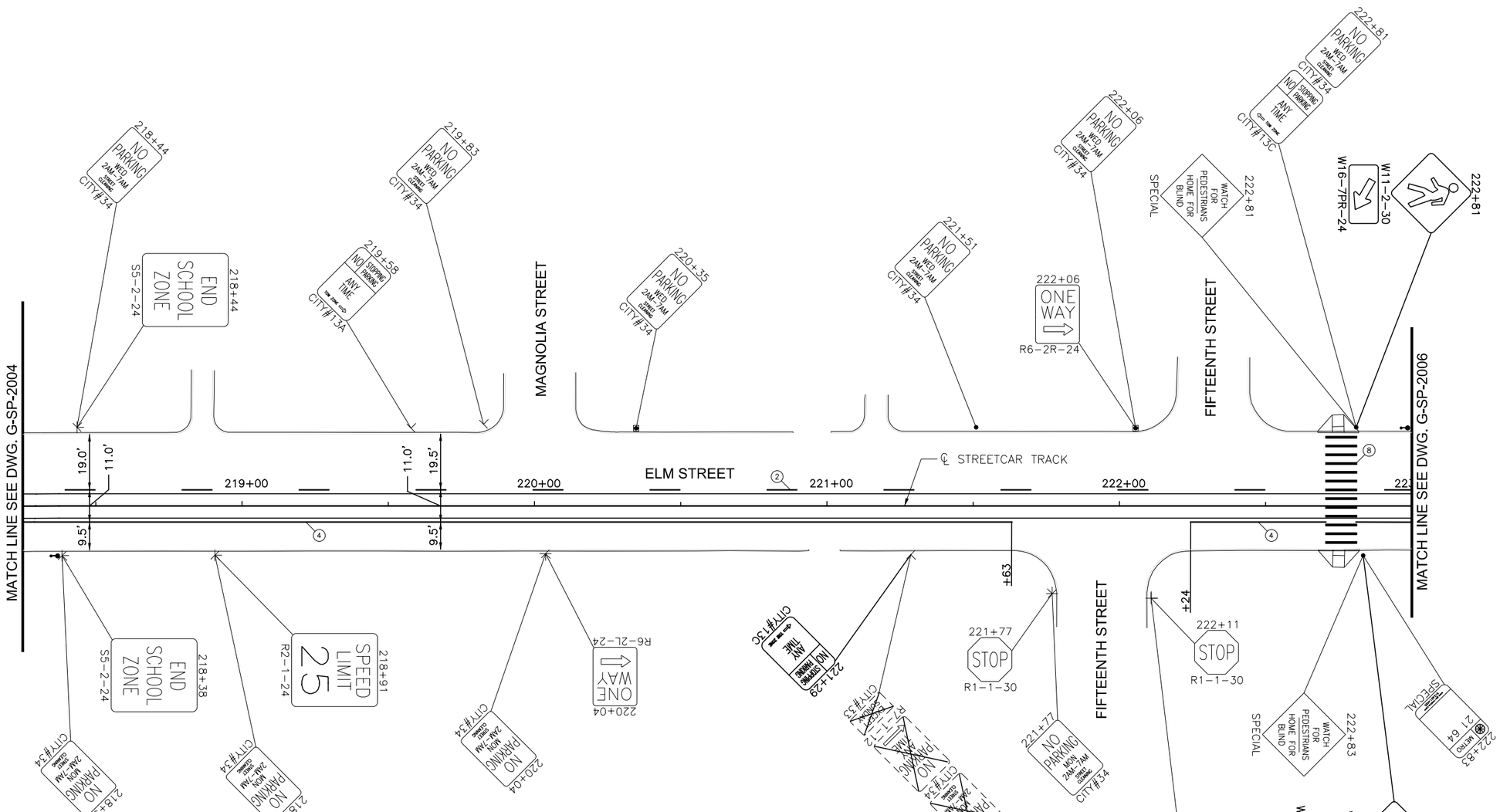

SYMBOLS

- EXISTING LIGHT POLE
- EXISTING POLE
- EXISTING SIGN POST
- SINGLE PARKING METER
- DOUBLE PARKING METER
- REMOVAL
- PROPOSED TYPE A SIGN POLE
- PROPOSED TYPE B SIGN POLE

NOTE:
ALL EXISTING SIGNS WILL BE REPLACED UNLESS OTHERWISE NOTED BY REMOVAL SYMBOL.

GRAPHIC SCALE

20 0 20 40 80

(IN FEET)
1 inch = 20 ft. Full Size
1 inch = 40 ft. Half Size

CAUTION UNDERGROUND UTILITIES
2 WORKING DAYS
BEFORE YOU DIG
CALL 1-800-362-2764
OHIO UTILITY PROTECTION SERVICE
CALL NON-SERVICE FACILITY
OWNERS DIRECT

DOTE_Mono_PDF_Half.pltcfg
T:\29014A-Streetcar\CAD\Traffic_Control\Signing and Marking\S_G-SP-2005.dgn
12:36:13 PM
7/11/2012

DEPARTMENT OF TRANSPORTATION & ENGINEERING CITY OF CINCINNATI OHIO

CONTRACT DRAWING

PRINTS NOT BEARING THIS STAMP WERE MADE PRIOR TO ADVERTISING FOR BIDS AND ARE TO BE CONSIDERED OBSOLETE FOR CONTRACT PURPOSES.

Department of Transportation and Engineering

City of Cincinnati
City Hall
801 Plum Street
Cincinnati, Ohio 45202

CINCINNATI STREETCAR OVER THE RHINE

PROPOSED SIGNING AND MARKING PLAN
ELM STREET
STA 218+25 TO STA 223+00

Revisions

No.				

Date	7/02/12
Date	7/02/12
Date	7/02/12
Date	7/12/12

Drawn by	AAG
Designed by	AAG
Checked by	JTB
Reviewed by	JTB

Consultant

PB HDR

File Number

ACC No.
23126

G-SP-2005

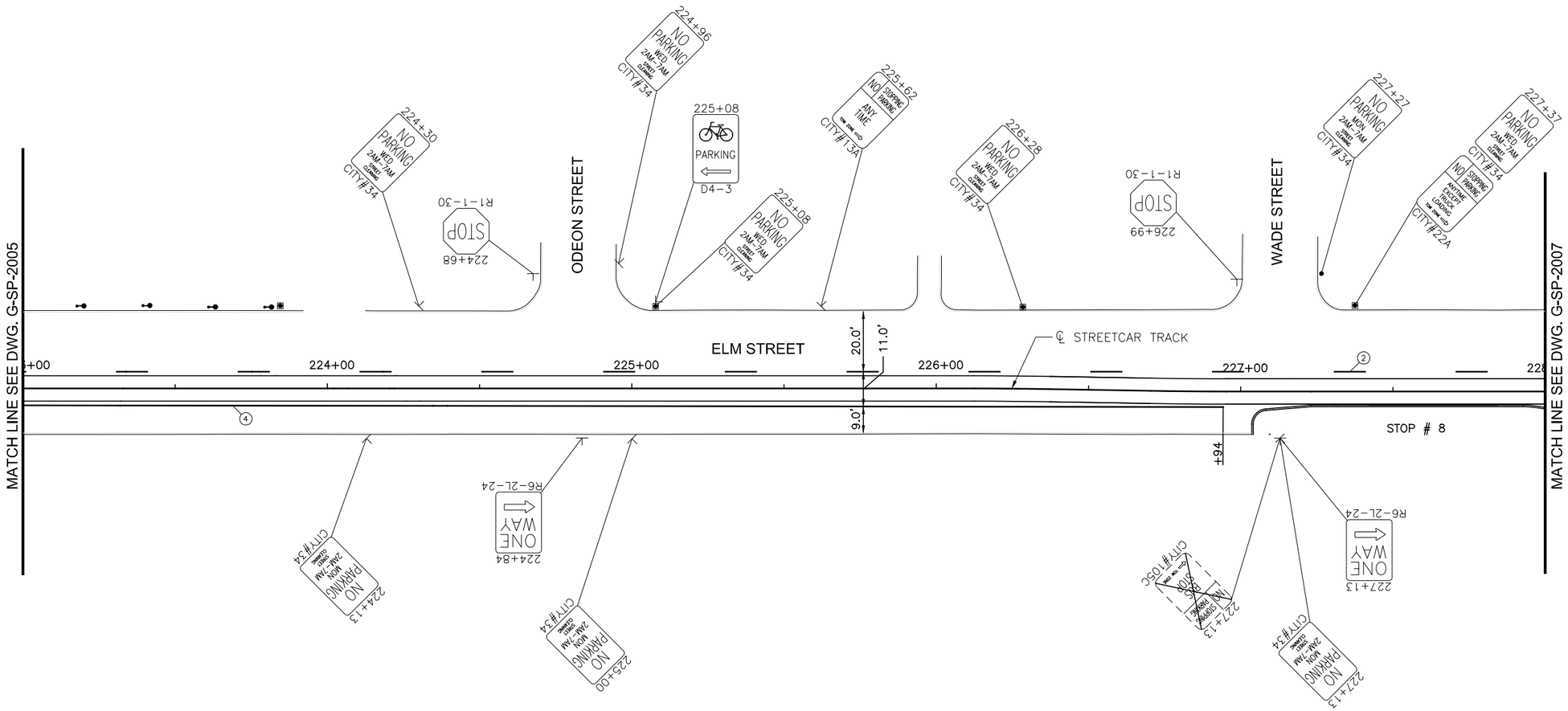

SYMBOLS

- EXISTING LIGHT POLE
- EXISTING POLE
- EXISTING SIGN POST
- SINGLE PARKING METER
- DOUBLE PARKING METER
- REMOVAL
- PROPOSED TYPE A SIGN POLE
- PROPOSED TYPE B SIGN POLE

NOTE:
ALL EXISTING SIGNS WILL BE REPLACED UNLESS OTHERWISE NOTED BY REMOVAL SYMBOL.

GRAPHIC SCALE
20 0 20 40 80
(IN FEET)
1 inch = 20 ft. Full Size
1 inch = 40 ft. Half Size

CAUTION UNDERGROUND UTILITIES
2 WORKING DAYS
BEFORE YOU DIG
CALL 1-800-362-2764
OHIO UTILITY PROTECTION SERVICE
CALL NON-SERVICE FACILITY
OWNERS DIRECT

DOTE_Mono_PDF_Half.pltcfg
T:\29014A-Streetcar\CAD\Traffic_Control\Signing and Marking\S_G-SP-2006.dgn
7/11/2012 12:36:14 PM

CONTRACT DRAWING

PRINTS NOT BEARING THIS STAMP WERE MADE PRIOR TO ADVERTISING FOR BIDS AND ARE TO BE CONSIDERED OBSOLETE FOR CONTRACT PURPOSES.

Department of Transportation and Engineering
City of Cincinnati
City Hall
801 Plum Street
Cincinnati, Ohio 45202

CINCINNATI STREETCAR OVER THE RHINE

PROPOSED SIGNING AND MARKING PLAN
ELM STREET
STA 223+00 TO STA 228+00

Revisions
No.

Drawn by AAG	Date 7/02/12
Designed by AAG	Date 7/02/12
Checked by JTB	Date 7/02/12
Reviewed by JTB	Date 7/12/12

Consultant

File Number

ACC No. 23126

G-SP-2006

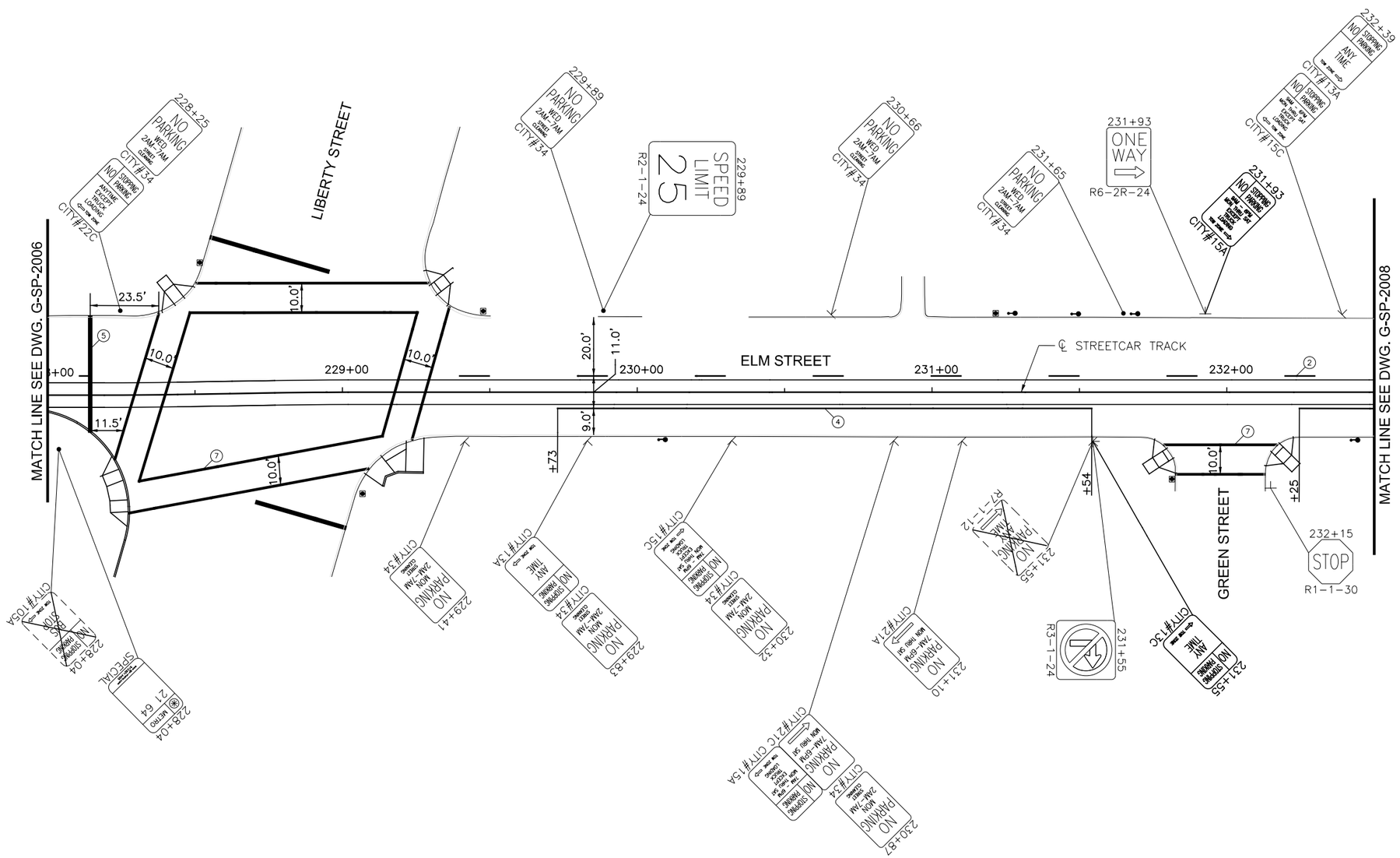

SYMBOLS

- EXISTING LIGHT POLE
- EXISTING POLE
- EXISTING SIGN POST
- SINGLE PARKING METER
- DOUBLE PARKING METER
- REMOVAL
- PROPOSED TYPE A SIGN POLE
- PROPOSED TYPE B SIGN POLE

NOTE:
ALL EXISTING SIGNS WILL BE REPLACED UNLESS OTHERWISE NOTED BY REMOVAL SYMBOL.

GRAPHIC SCALE

20 0 20 40 80

(IN FEET)
1 inch = 20 ft. Full Size
1 inch = 40 ft. Half Size

CAUTION UNDERGROUND UTILITIES
2 WORKING DAYS
BEFORE YOU DIG
CALL 1-800-362-2764
OHIO UTILITY PROTECTION SERVICE
CALL NON-SERVICE FACILITY
OWNERS DIRECT

DOTE_Mono_PDF_Half.pltcfg
T:\29014A-Streetcar\CAD\Traffic_Control\Signing and Marking\S_G-SP-2007.dgn
7/11/2012 12:36:15 PM

CONTRACT DRAWING

PRINTS NOT BEARING THIS STAMP WERE MADE PRIOR TO ADVERTISING FOR BID AND ARE TO BE CONSIDERED OBSOLETE FOR CONTRACT PURPOSES.

Department of Transportation and Engineering

City of Cincinnati
City Hall
801 Plum Street
Cincinnati, Ohio 45202

CINCINNATI STREETCAR OVER THE RHINE

PROPOSED SIGNING AND MARKING PLAN
ELM STREET
STA 228+00 TO STA 232+50

Revisions

No.		

Drawn by AAG	Date 7/02/12
Designed by AAG	Date 7/02/12
Checked by JTB	Date 7/02/12
Reviewed by JTB	Date 7/12/12

Consultant

PB HDR

File Number

ACC No. 23126

G-SP-2007

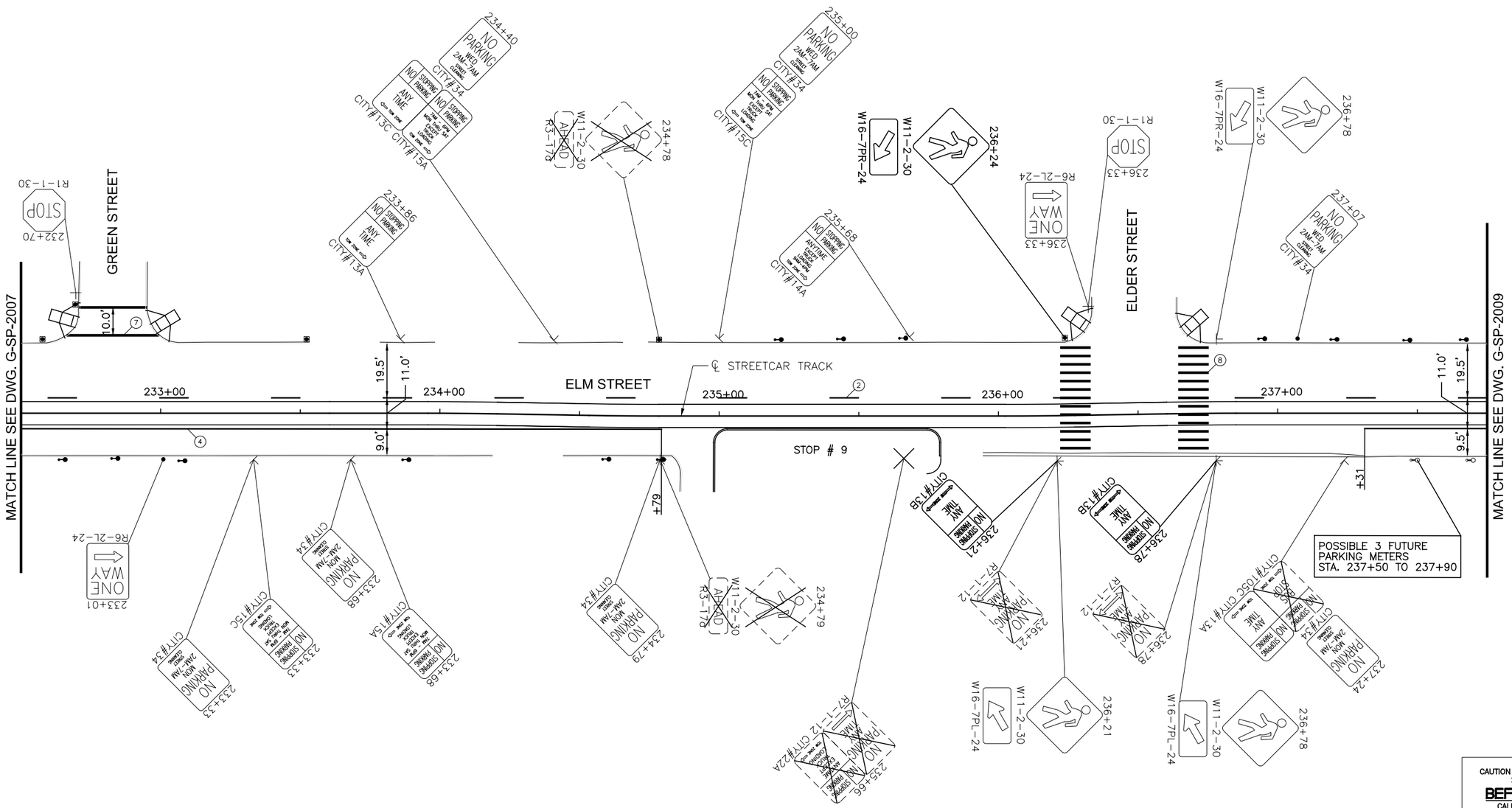

SYMBOLS

- EXISTING LIGHT POLE
- EXISTING POLE
- EXISTING SIGN POST
- SINGLE PARKING METER
- DOUBLE PARKING METER
- REMOVAL
- PROPOSED TYPE A SIGN POLE
- PROPOSED TYPE B SIGN POLE

NOTE:
ALL EXISTING SIGNS WILL BE REPLACED UNLESS OTHERWISE NOTED BY REMOVAL SYMBOL.

GRAPHIC SCALE

20 0 20 40 80

(IN FEET)
1 inch = 20 ft. Full Size
1 inch = 40 ft. Half Size

CAUTION UNDERGROUND UTILITIES
2 WORKING DAYS
BEFORE YOU DIG
CALL 1-800-362-2764
OHIO UTILITY PROTECTION SERVICE
CALL NON-SERVICE FACILITY
OWNERS DIRECT

DOTE_Mono_PDF_Half.pltcfg
T:\29014A-Streetcar\CAD\Traffic_Control\Signing and Marking\S_G-SP-2008.dgn
7/11/2012 12:36:16 PM

DEPARTMENT OF TRANSPORTATION & ENGINEERING CITY OF CINCINNATI OHIO

CONTRACT DRAWING

PRINTS NOT BEARING THIS STAMP WERE MADE PRIOR TO ADVERTISING FOR BID AND ARE TO BE CONSIDERED OBSOLETE FOR CONTRACT PURPOSES.

Department of Transportation and Engineering

City of Cincinnati
City Hall
801 Plum Street
Cincinnati, Ohio 45202

CINCINNATI STREETCAR OVER THE RHINE

PROPOSED SIGNING AND MARKING PLAN
ELM STREET
STA 232+50 TO STA 237+75

Revisions

No.		Date
		7/02/12
		7/02/12
		7/02/12
		7/12/12

Drawn by	AAG
Designed by	AAG
Checked by	JTB
Reviewed by	JTB

Consultant

PB HDR

File Number

ACC No. 23126

G-SP-2008

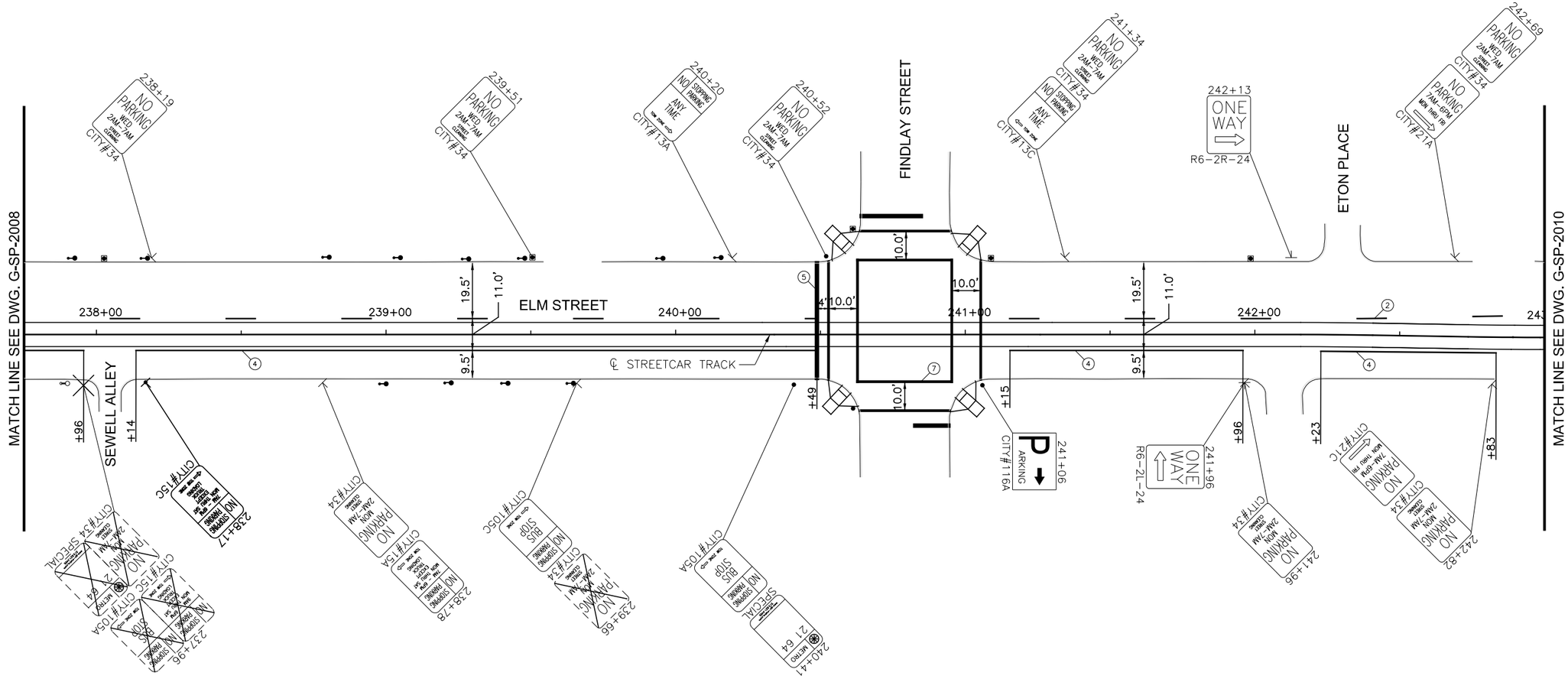
MATCH LINE SEE DWG. G-SP-2008
MATCH LINE SEE DWG. G-SP-2010
SEWELL ALLEY
ELM STREET
FINDLAY STREET
ETON PLACE
℄ STREETCAR TRACK
238+00
239+00
240+00
241+00
242+00
238+19
239+51
240+20
240+52
241+34
242+13
242+69
NO PARKING WED. 2AM-7AM STREET CLEANING CITY#34
NO STOPPING/PARKING ANY TIME CITY#13A
NO STOPPING/PARKING ANY TIME CITY#13C
ONE WAY R6-2R-24
NO PARKING 7AM-6PM MON. THRU FRI CITY#21A
NO PARKING WED. 2AM-7AM STREET CLEANING CITY#34
P PARKING CITY#116A
ONE WAY R6-2L-24
238+17
238+78
239+66
240+41
241+06
241+96
242+82
227+96
NO PARKING MON. THRU FRI 7AM-10PM CITY#21C
NO PARKING WED. 2AM-7AM STREET CLEANING CITY#34
NO PARKING MON. 2AM-7AM CITY#34
NO STOPPING/PARKING CITY#15A
NO STOPPING/PARKING CITY#15C
NO STOPPING/PARKING CITY#105A
NO STOPPING/PARKING CITY#105C
BUS STOP
NO STOPPING/PARKING CITY#34 SPECIAL
NO PARKING CITY#34 SPECIAL
NO STOPPING/PARKING CITY#105A
NO STOPPING/PARKING CITY#105C
NO STOPPING/PARKING CITY#15C
NO STOPPING/PARKING CITY#15A
NO STOPPING/PARKING CITY#34
NO STOPPING/PARKING CITY#34
NO STOPPING/PARKING CITY#34

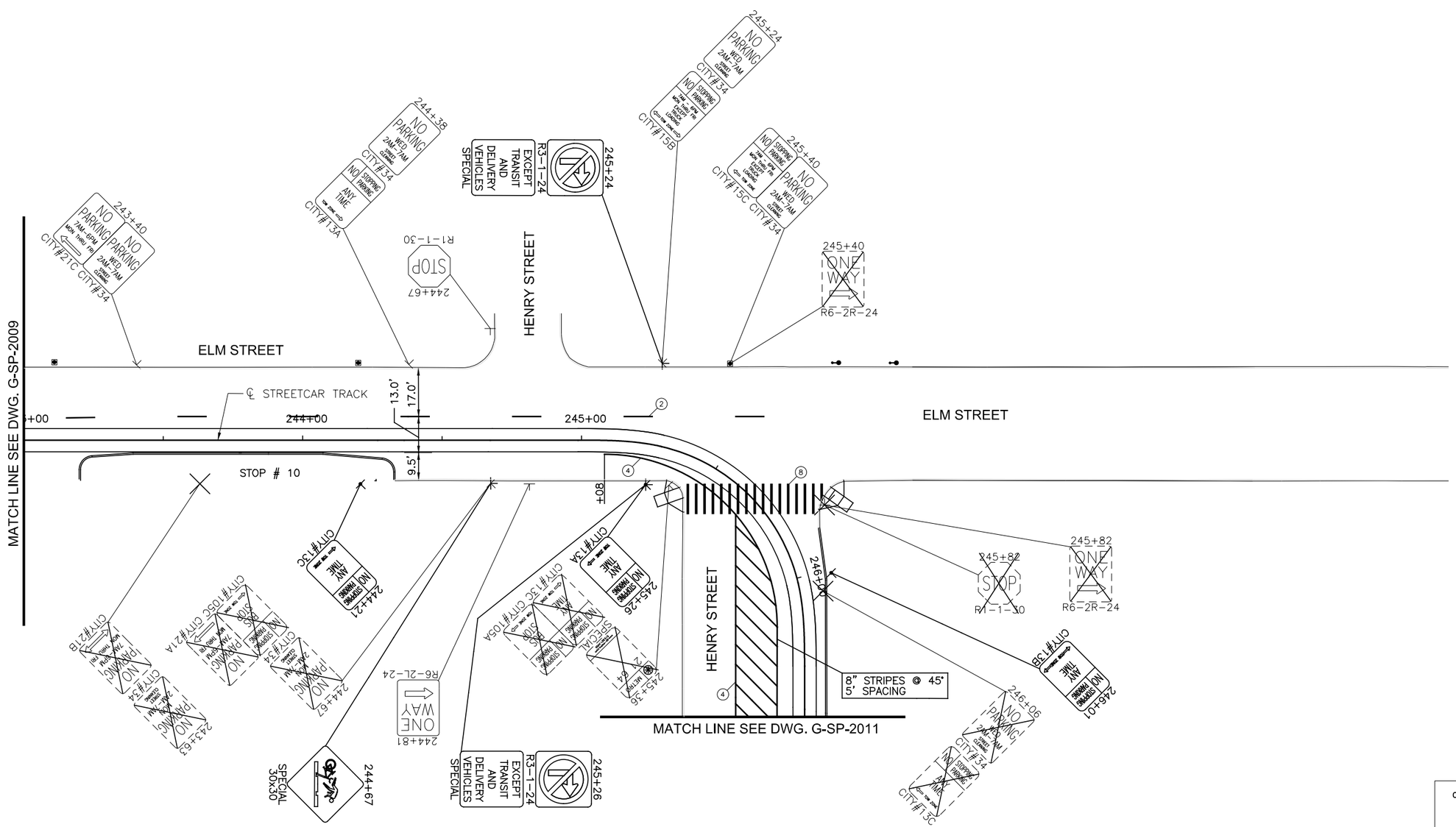

SYMBOLS

- EXISTING LIGHT POLE
- EXISTING POLE
- EXISTING SIGN POST
- SINGLE PARKING METER
- DOUBLE PARKING METER
- REMOVAL
- PROPOSED TYPE A SIGN POLE
- PROPOSED TYPE B SIGN POLE

NOTE:
ALL EXISTING SIGNS WILL BE REPLACED UNLESS OTHERWISE NOTED BY REMOVAL SYMBOL.

GRAPHIC SCALE

20 0 20 40 80

(IN FEET)
1 inch = 20 ft. Full Size
1 inch = 40 ft. Half Size

CAUTION UNDERGROUND UTILITIES
2 WORKING DAYS
BEFORE YOU DIG
CALL 1-800-362-2764
OHIO UTILITY PROTECTION SERVICE
CALL NON-SERVICE FACILITY
OWNERS DIRECT

DOTE_Mono_PDF_Half.pltcfg
T:\29014A-Streetcar\CAD\Traffic_Control\Signing and Marking\S_G-SP-2010.dgn
7/11/2012 12:36:18 PM

DEPARTMENT OF TRANSPORTATION & ENGINEERING
CITY OF CINCINNATI OHIO

CONTRACT DRAWING

PRINTS NOT BEARING THIS STAMP WERE MADE PRIOR TO ADVERTISING FOR BIDS AND ARE TO BE CONSIDERED OBSOLETE FOR CONTRACT PURPOSES.

Department of Transportation and Engineering

City of Cincinnati
City Hall
801 Plum Street
Cincinnati, Ohio 45202

CINCINNATI STREETCAR OVER THE RHINE

PROPOSED SIGNING AND MARKING PLAN
ELM STREET
STA 243+00 TO STA 246+50

Revisions

No.				

Drawn by AAG	Date 7/02/12	
Designed by AAG	Date 7/02/12	
Checked by JTB	Date 7/02/12	
Reviewed by JTB	Date 7/12/12	

Consultant

PB HDR

File Number

ACC No. 23126

G-SP-2010

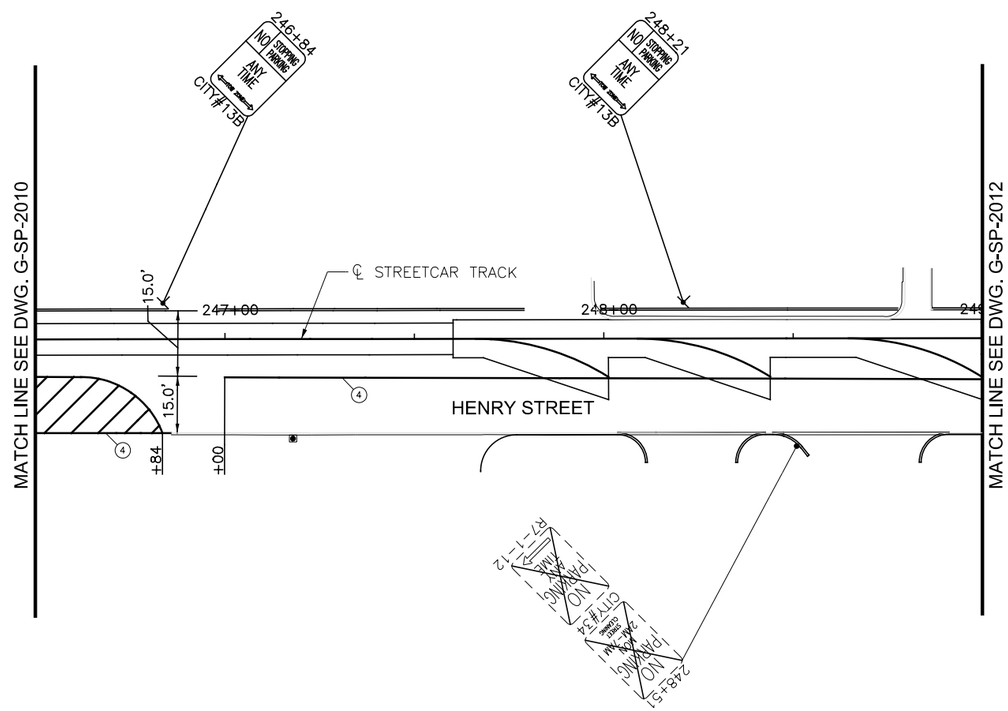

SYMBOLS

- EXISTING LIGHT POLE
- EXISTING POLE
- EXISTING SIGN POST
- SINGLE PARKING METER
- DOUBLE PARKING METER
- REMOVAL
- PROPOSED TYPE A SIGN POLE
- PROPOSED TYPE B SIGN POLE

NOTE:
ALL EXISTING SIGNS WILL BE REPLACED UNLESS OTHERWISE NOTED BY REMOVAL SYMBOL.

GRAPHIC SCALE
20 0 20 40 80
(IN FEET)
1 inch = 20 ft. Full Size
1 inch = 40 ft. Half Size

CAUTION UNDERGROUND UTILITIES
2 WORKING DAYS
BEFORE YOU DIG
CALL 1-800-362-2764
OHIO UTILITY PROTECTION SERVICE
CALL NON-SERVICE FACILITY
OWNERS DIRECT

DOTE_Mono_PDF_Half.pltcfg
T:\29014A-Streetcar\CAD\Traffic_Control\Signing and Marking\S_G-SP-2011.dgn
12:36:19 PM
7/11/2012

CONTRACT DRAWING
PRINTS NOT BEARING THIS STAMP WERE MADE PRIOR TO ADVERTISING FOR BID, AND ARE TO BE CONSIDERED OBSOLETE FOR CONTRACT PURPOSES.

Department of Transportation and Engineering
City of Cincinnati
City Hall
801 Plum Street
Cincinnati, Ohio 45202

CINCINNATI STREETCAR
OVER THE RHINE
PROPOSED SIGNING AND MARKING PLAN
HENRY STREET
STA 246+50 TO STA 249+00

Revisions
No.

Drawn by AAG	Date 7/02/12
Designed by AAG	Date 7/02/12
Checked by JTB	Date 7/02/12
Reviewed by JTB	Date 7/12/12

Consultant
PB HDR

File Number
ACC No. 23126

G-SP-2011

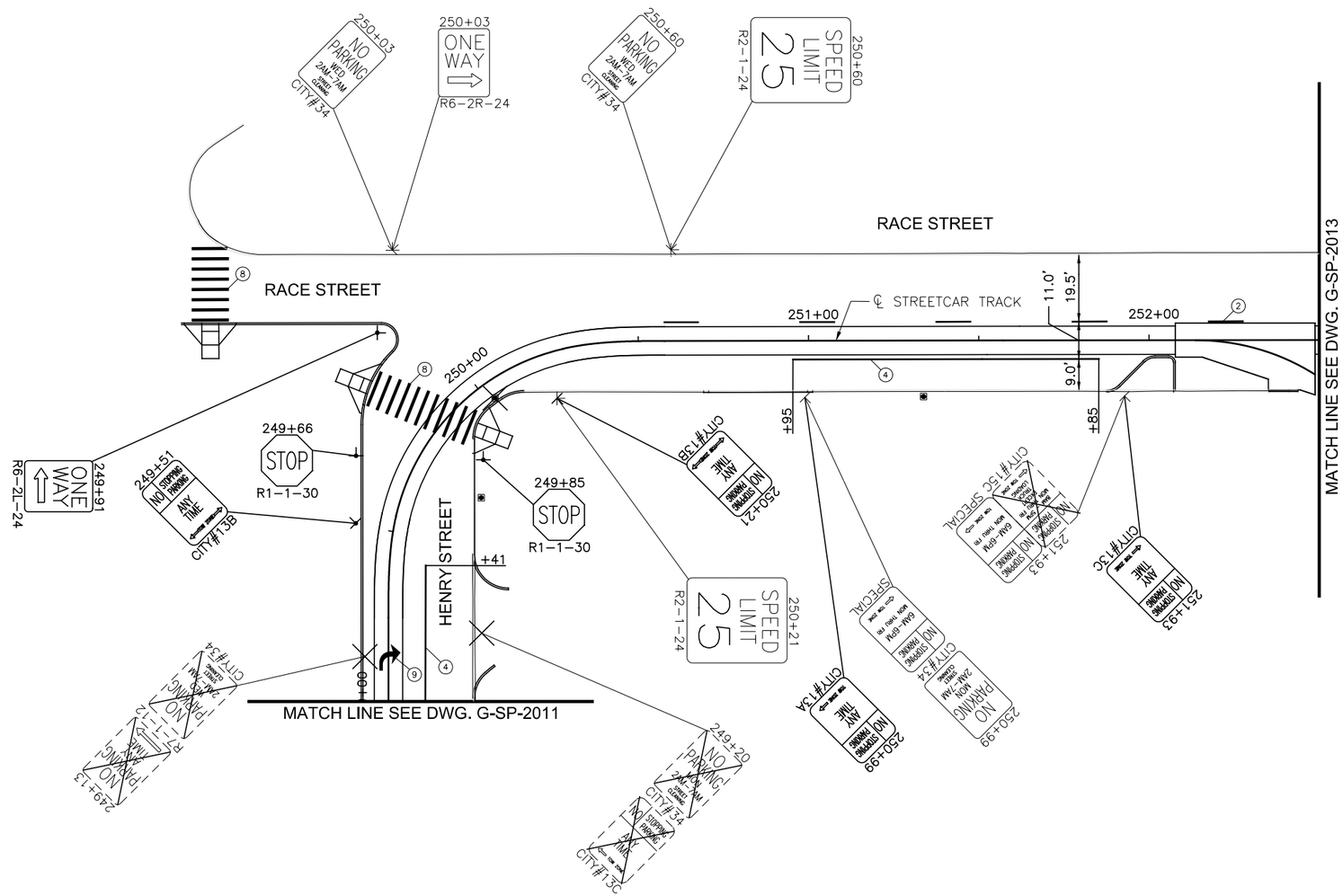

SYMBOLS

- EXISTING LIGHT POLE
- EXISTING POLE
- EXISTING SIGN POST
- SINGLE PARKING METER
- DOUBLE PARKING METER
- REMOVAL
- PROPOSED TYPE A SIGN POLE
- PROPOSED TYPE B SIGN POLE

NOTE:
ALL EXISTING SIGNS WILL BE REPLACED UNLESS OTHERWISE NOTED BY REMOVAL SYMBOL.

GRAPHIC SCALE

20 0 20 40 80

(IN FEET)
1 inch = 20 ft. Full Size
1 inch = 40 ft. Half Size

CAUTION UNDERGROUND UTILITIES
2 WORKING DAYS
BEFORE YOU DIG
CALL 1-800-362-2764
OHIO UTILITY PROTECTION SERVICE
CALL NON-SERVICE FACILITY
OWNERS DIRECT

DOTE_Mono_PDF_Half.pltcfg
T:\29014A-Streetcar\CAD\Traffic_Control\Signing and Marking\S_G-SP-2012.dgn
7/11/2012 12:36:20 PM

CONTRACT DRAWING

PRINTS NOT BEARING THIS STAMP WERE MADE PRIOR TO ADVERTISING FOR BIDS AND ARE TO BE CONSIDERED OBSOLETE FOR CONTRACT PURPOSES.

Department of Transportation and Engineering

City of Cincinnati
City Hall
801 Plum Street
Cincinnati, Ohio 45202

CINCINNATI STREETCAR
OVER THE RHINE
PROPOSED SIGNING AND MARKING PLAN
RACE STREET
STA 249+00 TO STA 252+50

Revisions

No.		

Drawn by AAG	Date 7/02/12
Designed by AAG	Date 7/02/12
Checked by JTB	Date 7/02/12
Reviewed by JTB	Date 7/12/12

Consultant

PB HDR

File Number

ACC No. 23126

G-SP-2012

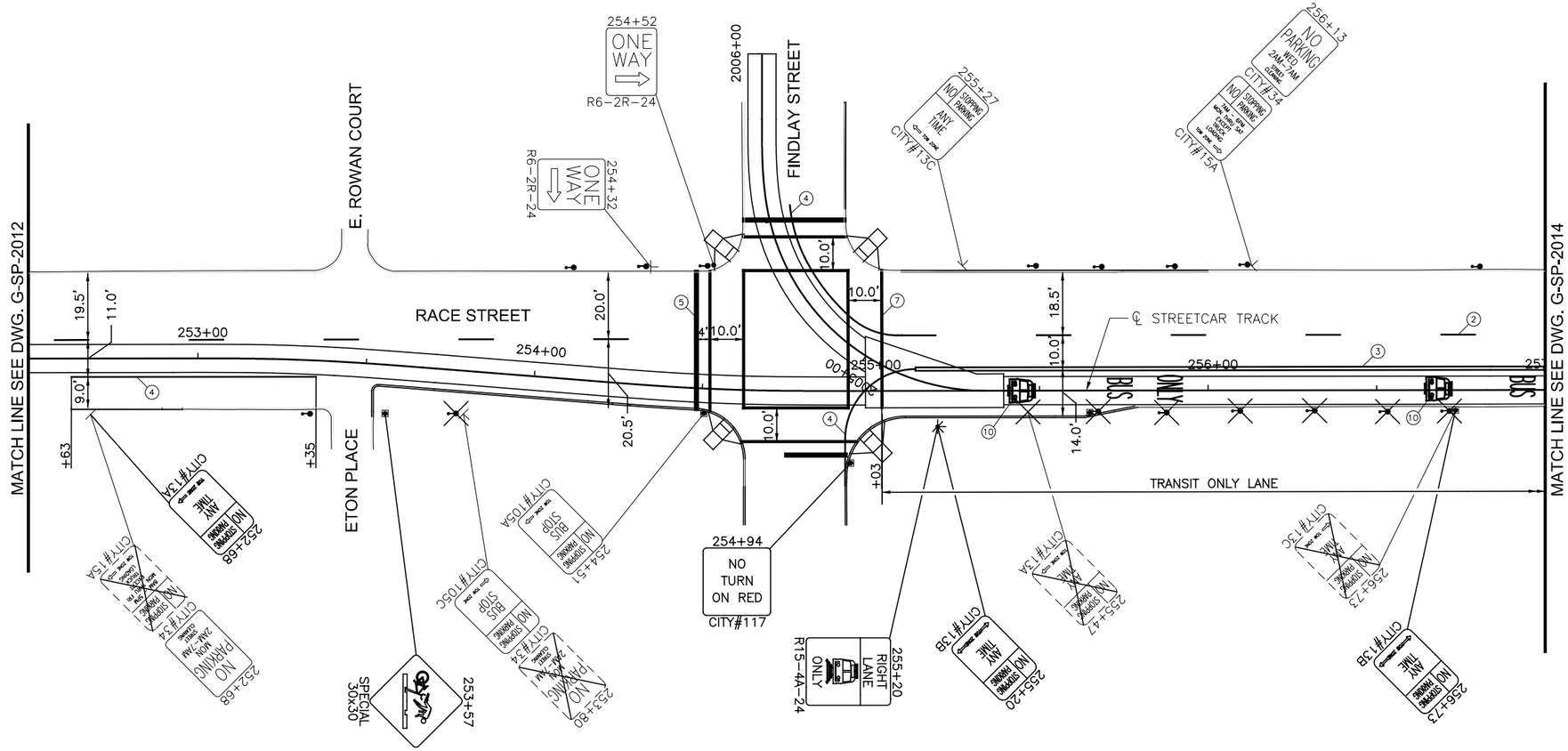

SYMBOLS

- EXISTING LIGHT POLE
- EXISTING POLE
- EXISTING SIGN POST
- SINGLE PARKING METER
- DOUBLE PARKING METER
- REMOVAL
- PROPOSED TYPE A SIGN POLE
- PROPOSED TYPE B SIGN POLE

NOTE:
ALL EXISTING SIGNS WILL BE REPLACED UNLESS OTHERWISE NOTED BY REMOVAL SYMBOL.

CAUTION UNDERGROUND UTILITIES
2 WORKING DAYS
BEFORE YOU DIG
CALL 1-800-362-2764
OHIO UTILITY PROTECTION SERVICE
CALL NON-SERVICE FACILITY
OWNERS DIRECT

GRAPHIC SCALE
20 0 20 40 80
(IN FEET)
1 inch = 20 ft. Full Size
1 inch = 40 ft. Half Size

DOTE_Mono_PDF_Half.pltcfg
T:\29014A-Streetcar\CAD\Traffic_Control\Signing and Marking\S_G-SP-2013.dgn
12:36:21 PM
7/11/2012

CONTRACT DRAWING

PRINTS NOT BEARING THIS STAMP WERE MADE PRIOR TO ADVERTISING FOR BIDS AND ARE TO BE CONSIDERED OBSOLETE FOR CONTRACT PURPOSES.

Department of Transportation and Engineering

City of Cincinnati
City Hall
801 Plum Street
Cincinnati, Ohio 45202

CINCINNATI STREETCAR OVER THE RHINE

PROPOSED SIGNING AND MARKING PLAN
RACE STREET
STA 252+50 TO STA 257+00

Revisions

No.				

Date 7/02/12
Date 7/02/12
Date 7/02/12
Date 7/12/12

Drawn by AAG
Designed by AAG
Checked by JTB
Reviewed by JTB

Consultant

PB HDR

File Number

ACC No. 23126

G-SP-2013

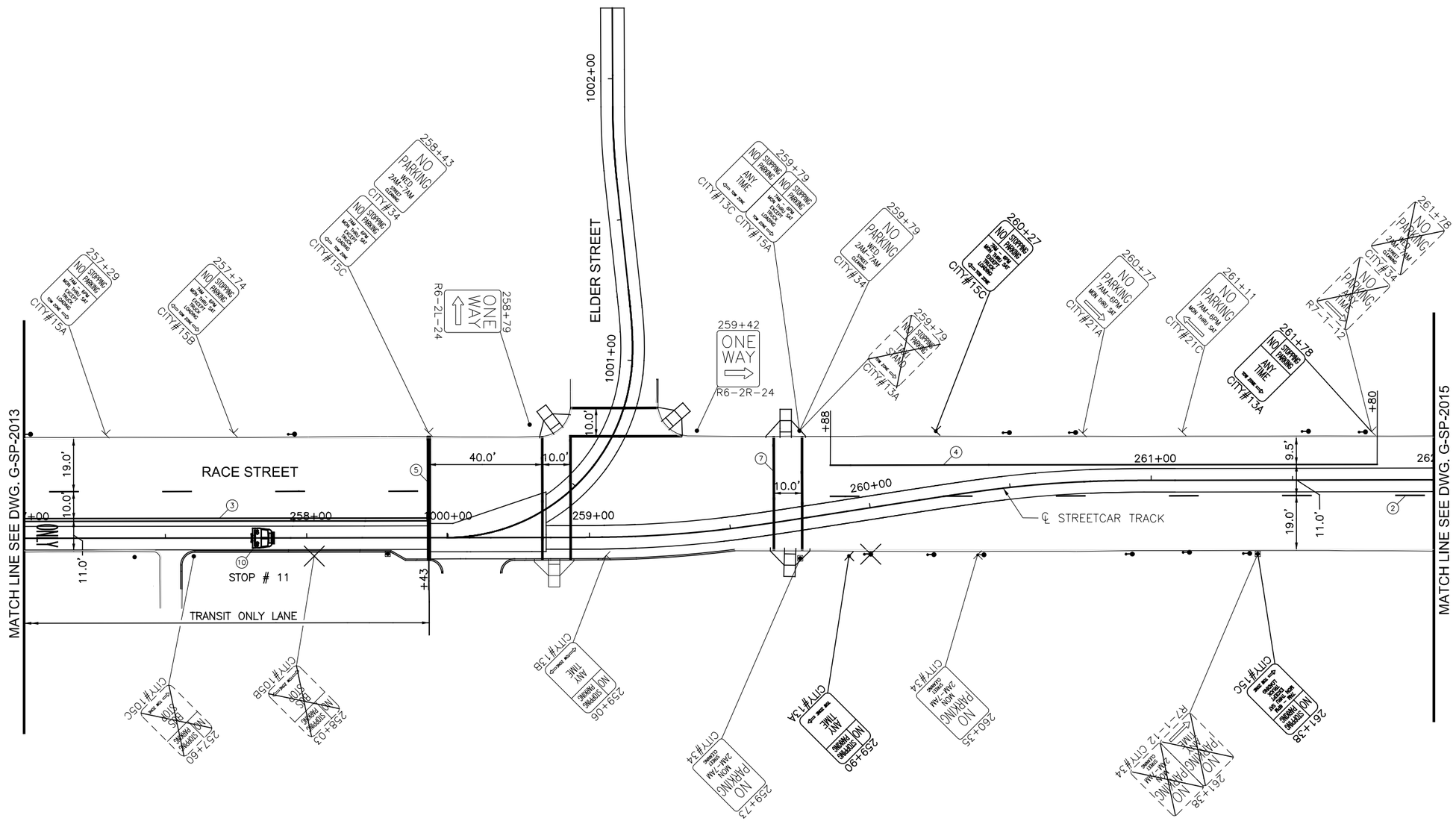

SYMBOLS

- EXISTING LIGHT POLE
- EXISTING POLE
- EXISTING SIGN POST
- SINGLE PARKING METER
- DOUBLE PARKING METER
- REMOVAL
- PROPOSED TYPE A SIGN POLE
- PROPOSED TYPE B SIGN POLE

NOTE:
ALL EXISTING SIGNS WILL BE REPLACED UNLESS OTHERWISE NOTED BY REMOVAL SYMBOL.

GRAPHIC SCALE

20 0 20 40 80

(IN FEET)
1 inch = 20 ft. Full Size
1 inch = 40 ft. Half Size

CAUTION UNDERGROUND UTILITIES
2 WORKING DAYS
BEFORE YOU DIG
CALL 1-800-362-2764
OHIO UTILITY PROTECTION SERVICE
CALL NON-SERVICE FACILITY
OWNERS DIRECT

DOTE_Mono_PDF_Half.pltcfg
T:\29014A-Streetcar\CAD\Traffic_Control\Signing and Marking\S_G-SP-2014.dgn
7/11/2012 12:36:22 PM

CONTRACT DRAWING

PRINTS NOT BEARING THIS STAMP WERE MADE PRIOR TO ADVERTISING FOR BID AND ARE TO BE CONSIDERED OBSOLETE FOR CONTRACT PURPOSES.

Department of Transportation and Engineering

City of Cincinnati
City Hall
801 Plum Street
Cincinnati, Ohio 45202

CINCINNATI STREETCAR
OVER THE RHINE
PROPOSED SIGNING AND MARKING PLAN
RACE STREET
STA 257+00 TO STA 262+00

Revisions

No.		

Drawn by AAG	Date 7/02/12
Designed by AAG	Date 7/02/12
Checked by JTB	Date 7/02/12
Reviewed by JTB	Date 7/12/12

Consultant

PB HDR

File Number

ACC No. 23126

G-SP-2014

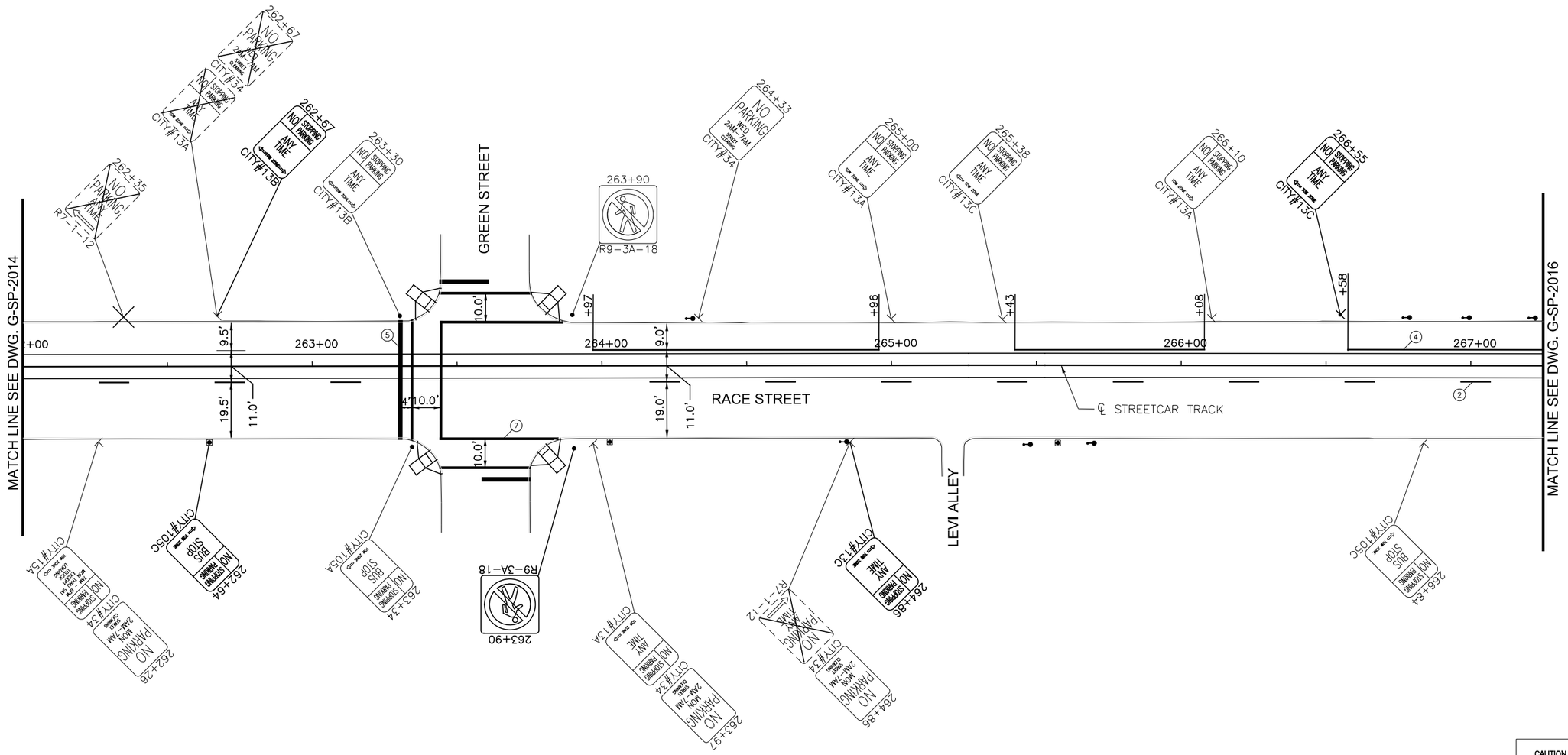

SYMBOLS

- EXISTING LIGHT POLE
- EXISTING POLE
- EXISTING SIGN POST
- SINGLE PARKING METER
- DOUBLE PARKING METER
- REMOVAL
- PROPOSED TYPE A SIGN POLE
- PROPOSED TYPE B SIGN POLE

NOTE:
ALL EXISTING SIGNS WILL BE REPLACED UNLESS OTHERWISE NOTED BY REMOVAL SYMBOL.

GRAPHIC SCALE

20 0 20 40 80

(IN FEET)
1 inch = 20 ft. Full Size
1 inch = 40 ft. Half Size

CAUTION UNDERGROUND UTILITIES
2 WORKING DAYS
BEFORE YOU DIG
CALL 1-800-362-2764
OHIO UTILITY PROTECTION SERVICE
CALL NON-SERVICE FACILITY
OWNERS DIRECT

DOTE_Mono_PDF_Half.pltcfg
T:\29014A-Streetcar\CAD\Traffic_Control\Signing and Marking\S_G-SP-2015.dgn
7/11/2012 12:36:23 PM

DEPARTMENT OF TRANSPORTATION & ENGINEERING
CITY OF CINCINNATI OHIO

CONTRACT DRAWING

PRINTS NOT BEARING THIS STAMP WERE MADE PRIOR TO ADVERTISING FOR BIDS AND ARE TO BE CONSIDERED OBSOLETE FOR CONTRACT PURPOSES.

Department of Transportation and Engineering

City of Cincinnati
City Hall
801 Plum Street
Cincinnati, Ohio 45202

CINCINNATI STREETCAR
OVER THE RHINE
PROPOSED SIGNING AND MARKING PLAN
RACE STREET
STA 262+00 TO STA 267+25

Revisions

No.				

Drawn by AAG	Date 7/02/12
Designed by AAG	Date 7/02/12
Checked by JTB	Date 7/02/12
Reviewed by JTB	Date 7/12/12

Consultant

PB HDR

File Number

ACC No. 23126

G-SP-2015

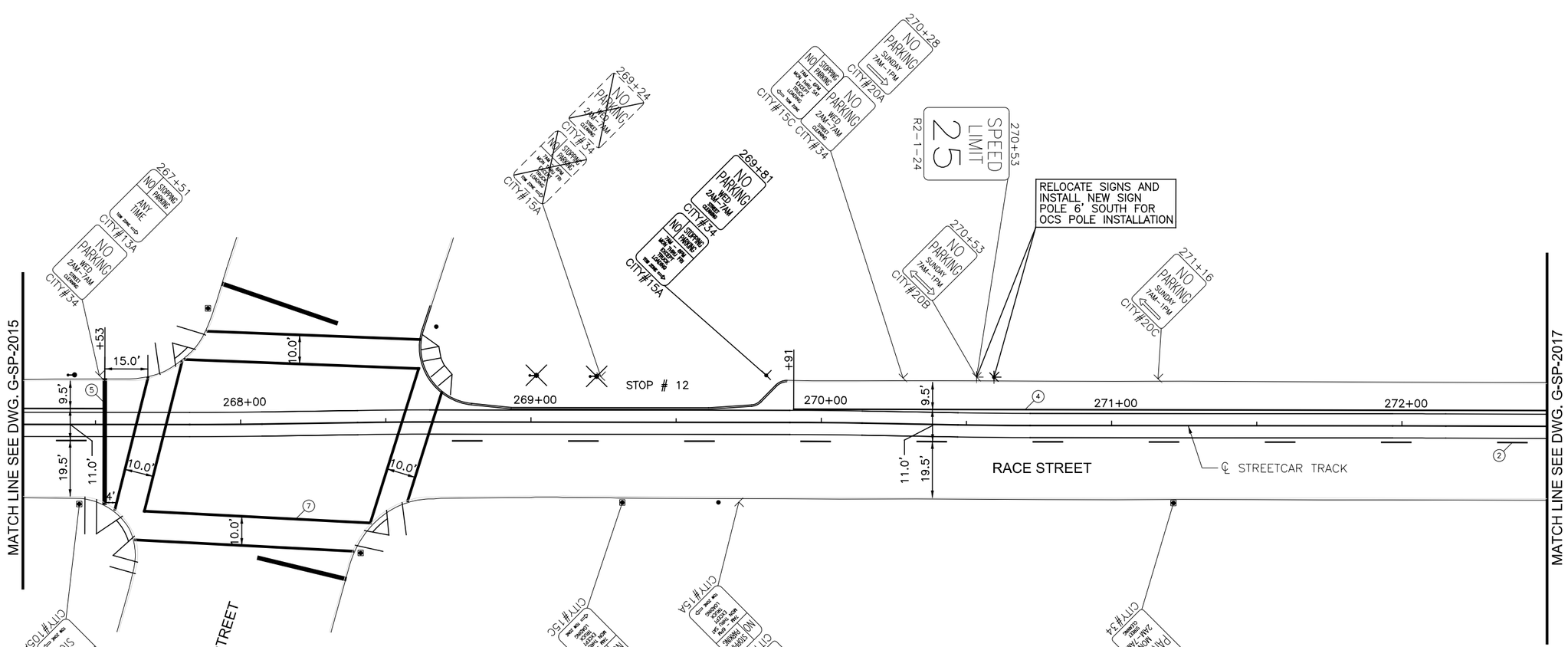

SYMBOLS

- EXISTING LIGHT POLE
- EXISTING POLE
- EXISTING SIGN POST
- SINGLE PARKING METER
- DOUBLE PARKING METER
- REMOVAL
- PROPOSED TYPE A SIGN POLE
- PROPOSED TYPE B SIGN POLE

NOTE:
ALL EXISTING SIGNS WILL BE REPLACED UNLESS OTHERWISE NOTED BY REMOVAL SYMBOL.

GRAPHIC SCALE
20 0 20 40 80
(IN FEET)
1 inch = 20 ft. Full Size
1 inch = 40 ft. Half Size

CAUTION UNDERGROUND UTILITIES
2 WORKING DAYS
BEFORE YOU DIG
CALL 1-800-362-2764
OHIO UTILITY PROTECTION SERVICE
CALL NON-SERVICE FACILITY
OWNERS DIRECT

DOTE_Mono_PDF_Half.pltcfg
T:\29014A-Streetcar\CAD\Traffic_Control\Signing and Marking\S_G-SP-2016.dgn
7/11/2012 12:36:24 PM

CONTRACT DRAWING
PRINTS NOT BEARING THIS STAMP WERE MADE PRIOR TO ADVERTISING FOR BIDS AND ARE TO BE CONSIDERED OBSOLETE FOR CONTRACT PURPOSES.

Department of Transportation and Engineering
City of Cincinnati
City Hall
801 Plum Street
Cincinnati, Ohio 45202

CINCINNATI STREETCAR
OVER THE RHINE
PROPOSED SIGNING AND MARKING PLAN
RACE STREET
STA 267+25 TO STA 272+50

Revisions
No.

Drawn by AAG	Date 7/02/12
Designed by AAG	Date 7/02/12
Checked by JTB	Date 7/02/12
Reviewed by JTB	Date 7/12/12

Consultant
PB HDR

File Number
ACC No. 23126

G-SP-2016

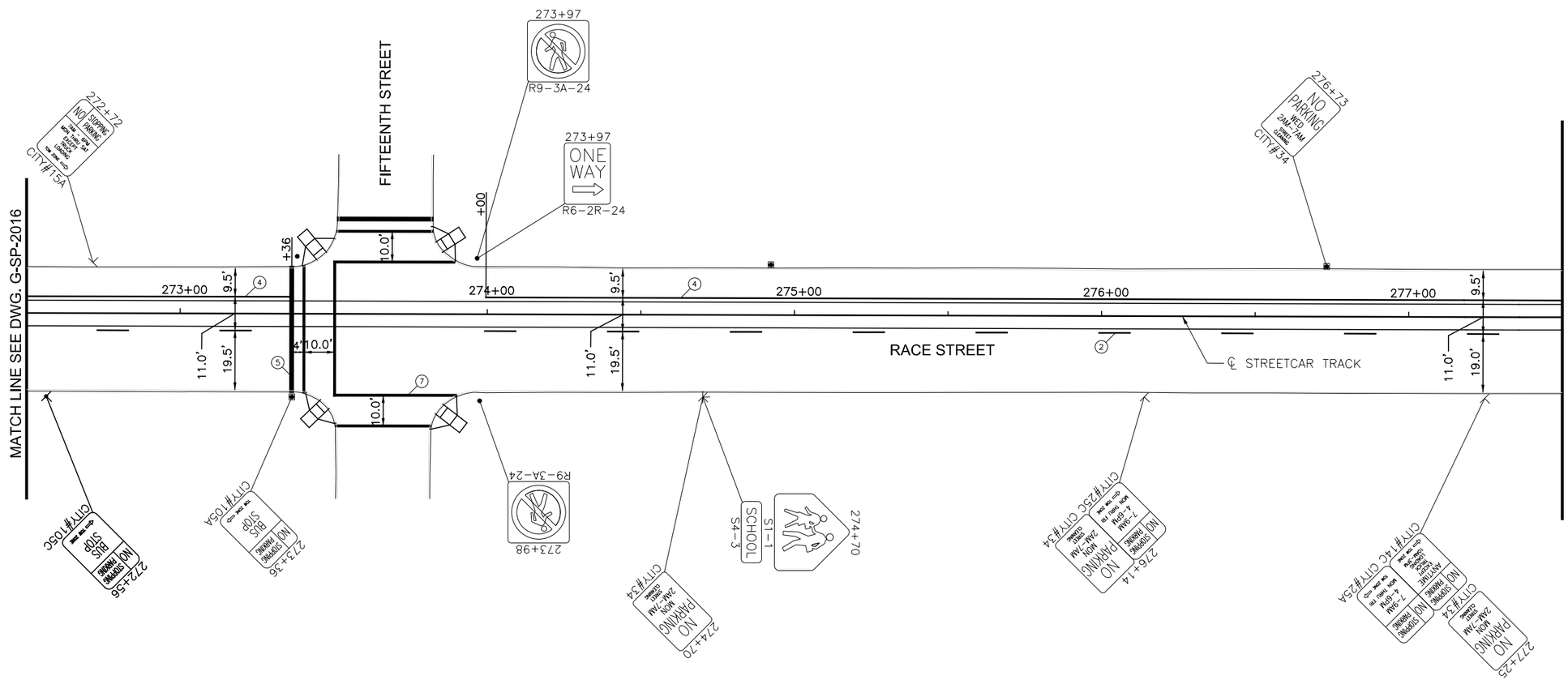

SYMBOLS

- EXISTING LIGHT POLE
- EXISTING POLE
- EXISTING SIGN POST
- SINGLE PARKING METER
- DOUBLE PARKING METER
- REMOVAL
- PROPOSED TYPE A SIGN POLE
- PROPOSED TYPE B SIGN POLE

NOTE:
ALL EXISTING SIGNS WILL BE REPLACED UNLESS OTHERWISE NOTED BY REMOVAL SYMBOL.

GRAPHIC SCALE

20 0 20 40 80

(IN FEET)
1 inch = 20 ft. Full Size
1 inch = 40 ft. Half Size

CAUTION UNDERGROUND UTILITIES
2 WORKING DAYS
BEFORE YOU DIG
CALL 1-800-362-2764
OHIO UTILITY PROTECTION SERVICE
CALL NON-SERVICE FACILITY
OWNERS DIRECT

DOTE_Mono_PDF_Half.pltcfg
T:\29014A-Streetcar\CAD\Traffic_Control\Signing and Marking\S_G-SP-2017.dgn
7/11/2012 12:36:25 PM

CONTRACT DRAWING

PRINTS NOT BEARING THIS STAMP WERE MADE PRIOR TO ADVERTISING FOR BIDS AND ARE TO BE CONSIDERED OBSOLETE FOR CONTRACT PURPOSES.

Department of Transportation and Engineering

City of Cincinnati
City Hall
801 Plum Street
Cincinnati, Ohio 45202

CINCINNATI STREETCAR
OVER THE RHINE
PROPOSED SIGNING AND MARKING PLAN
RACE STREET
STA 272+50 TO STA 277+50

Revisions
No.

Drawn by AAG	Date 7/02/12	
Designed by AAG	Date 7/02/12	
Checked by JTB	Date 7/02/12	
Reviewed by JTB	Date 7/12/12	

Consultant

PB HDR

File Number

ACC No.
23126

G-SP-2017

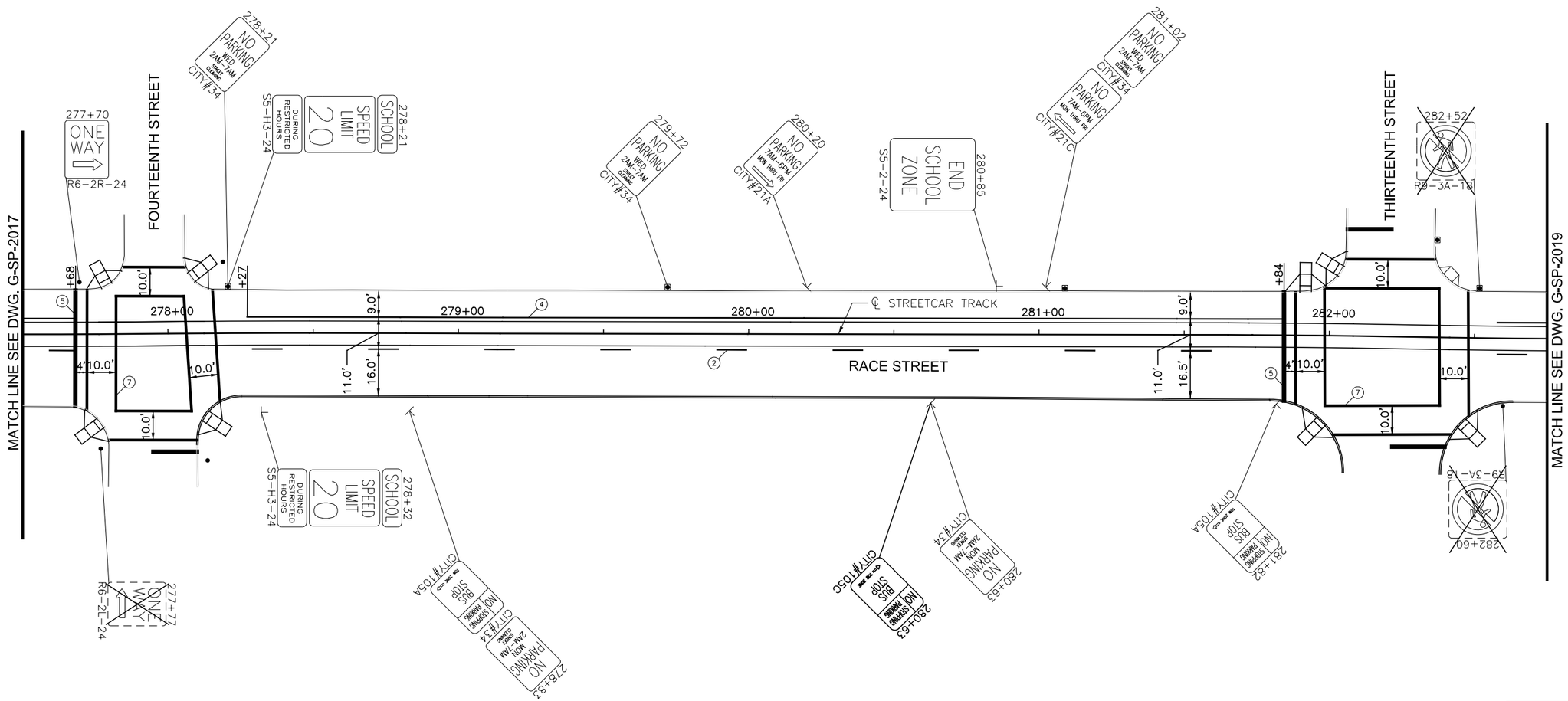

SYMBOLS

- EXISTING LIGHT POLE
- EXISTING POLE
- EXISTING SIGN POST
- SINGLE PARKING METER
- DOUBLE PARKING METER
- REMOVAL
- PROPOSED TYPE A SIGN POLE
- PROPOSED TYPE B SIGN POLE

NOTE:
ALL EXISTING SIGNS WILL BE REPLACED UNLESS OTHERWISE NOTED BY REMOVAL SYMBOL.

GRAPHIC SCALE

20 0 20 40 80

(IN FEET)
1 inch = 20 ft. Full Size
1 inch = 40 ft. Half Size

CAUTION UNDERGROUND UTILITIES
2 WORKING DAYS
BEFORE YOU DIG
CALL 1-800-362-2764
OHIO UTILITY PROTECTION SERVICE
CALL NON-SERVICE FACILITY
OWNERS DIRECT

DOTE_Mono_PDF_Half.pltcfg
T:\29014A-Streetcar\CAD\Traffic_Control\Signing and Marking\S_G-SP-2018.dgn
7/11/2012 12:36:26 PM

CONTRACT DRAWING

PRINTS NOT BEARING THIS STAMP WERE MADE PRIOR TO ADVERTISING FOR BIDS AND ARE TO BE CONSIDERED OBSOLETE FOR CONTRACT PURPOSES.

Department of Transportation and Engineering

City of Cincinnati
City Hall
801 Plum Street
Cincinnati, Ohio 45202

CINCINNATI STREETCAR
OVER THE RHINE
PROPOSED SIGNING AND MARKING PLAN
RACE STREET
STA 277+50 TO STA 282+75

Revisions

No.		Date

Drawn by AAG	Date 7/02/12	
Designed by AAG	Date 7/02/12	
Checked by JTB	Date 7/02/12	
Reviewed by JTB	Date 7/12/12	

Consultant

PB HDR

File Number

ACC No. 23126

G-SP-2018

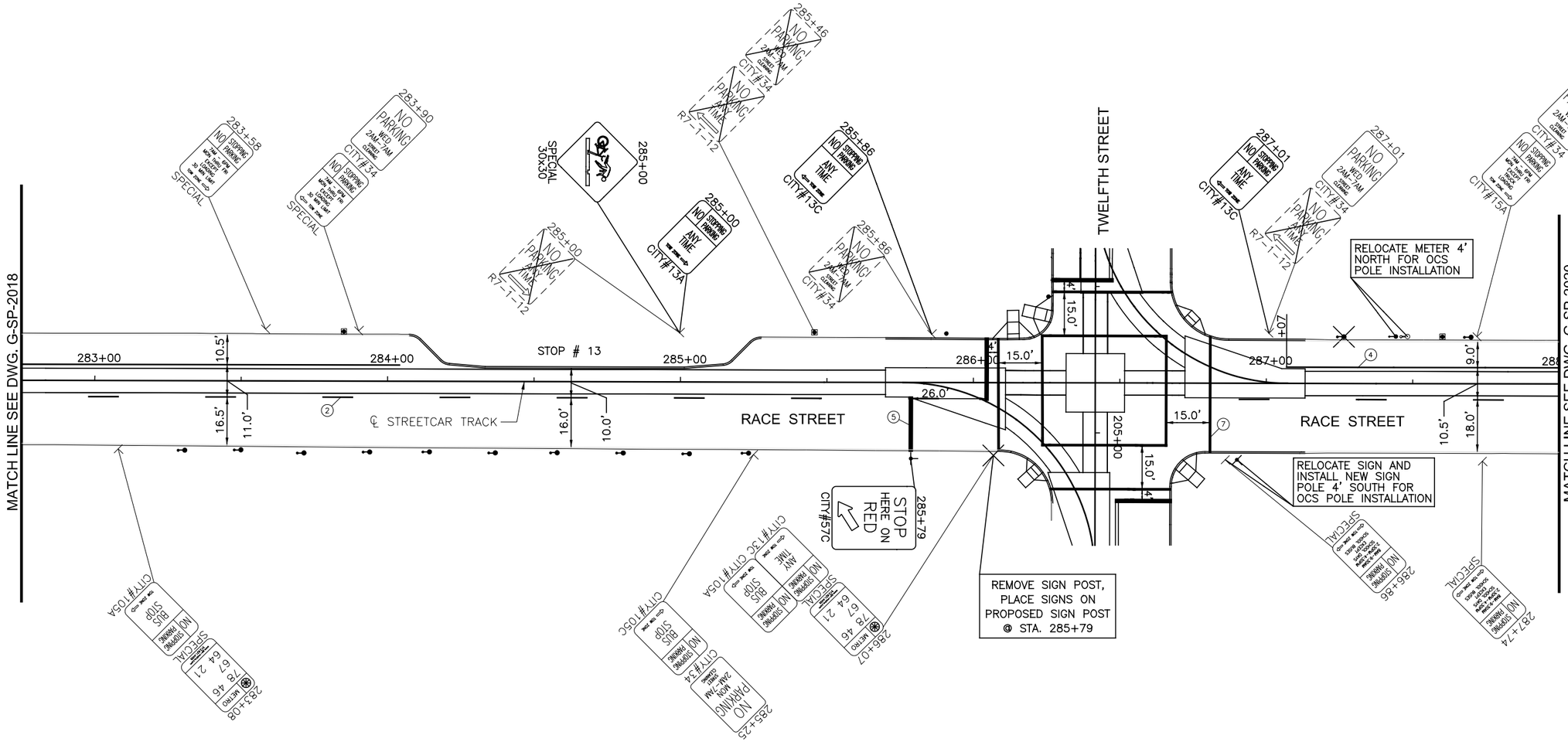

SYMBOLS

- EXISTING LIGHT POLE
- EXISTING POLE
- EXISTING SIGN POST
- SINGLE PARKING METER
- DOUBLE PARKING METER
- REMOVAL
- PROPOSED TYPE A SIGN POLE
- PROPOSED TYPE B SIGN POLE

NOTE:
ALL EXISTING SIGNS WILL BE REPLACED UNLESS OTHERWISE NOTED BY REMOVAL SYMBOL.

GRAPHIC SCALE

20 0 20 40 80

(IN FEET)
1 inch = 20 ft. Full Size
1 inch = 40 ft. Half Size

CAUTION UNDERGROUND UTILITIES
2 WORKING DAYS
BEFORE YOU DIG
CALL 1-800-362-2764
OHIO UTILITY PROTECTION SERVICE
CALL NON-SERVICE FACILITY OWNERS DIRECT

DEPARTMENT OF TRANSPORTATION & ENGINEERING CITY OF CINCINNATI OHIO

CONTRACT DRAWING

PRINTS NOT BEARING THIS STAMP WERE MADE PRIOR TO ADVERTISING FOR BIDS AND ARE TO BE CONSIDERED OBSOLETE FOR CONTRACT PURPOSES.

Department of Transportation and Engineering

City of Cincinnati
City Hall
801 Plum Street
Cincinnati, Ohio 45202

CINCINNATI STREETCAR
OVER THE RHINE
PROPOSED SIGNING AND MARKING PLAN
RACE STREET
STA 282+75 TO STA 288+00

Revisions

No.				

Drawn by AAG	Date 7/02/12	
Designed by AAG	Date 7/02/12	
Checked by JTB	Date 7/02/12	
Reviewed by JTB	Date 7/12/12	

Consultant

PB HDR

File Number

ACC No. 23126

G-SP-2019

DOTE_Mono_PDF_Half.pltcfg
T:\29014A-Streetcar\CAD\Traffic_Control\Signing and Marking\S_G-SP-2019.dgn
7/11/2012 12:36:27 PM

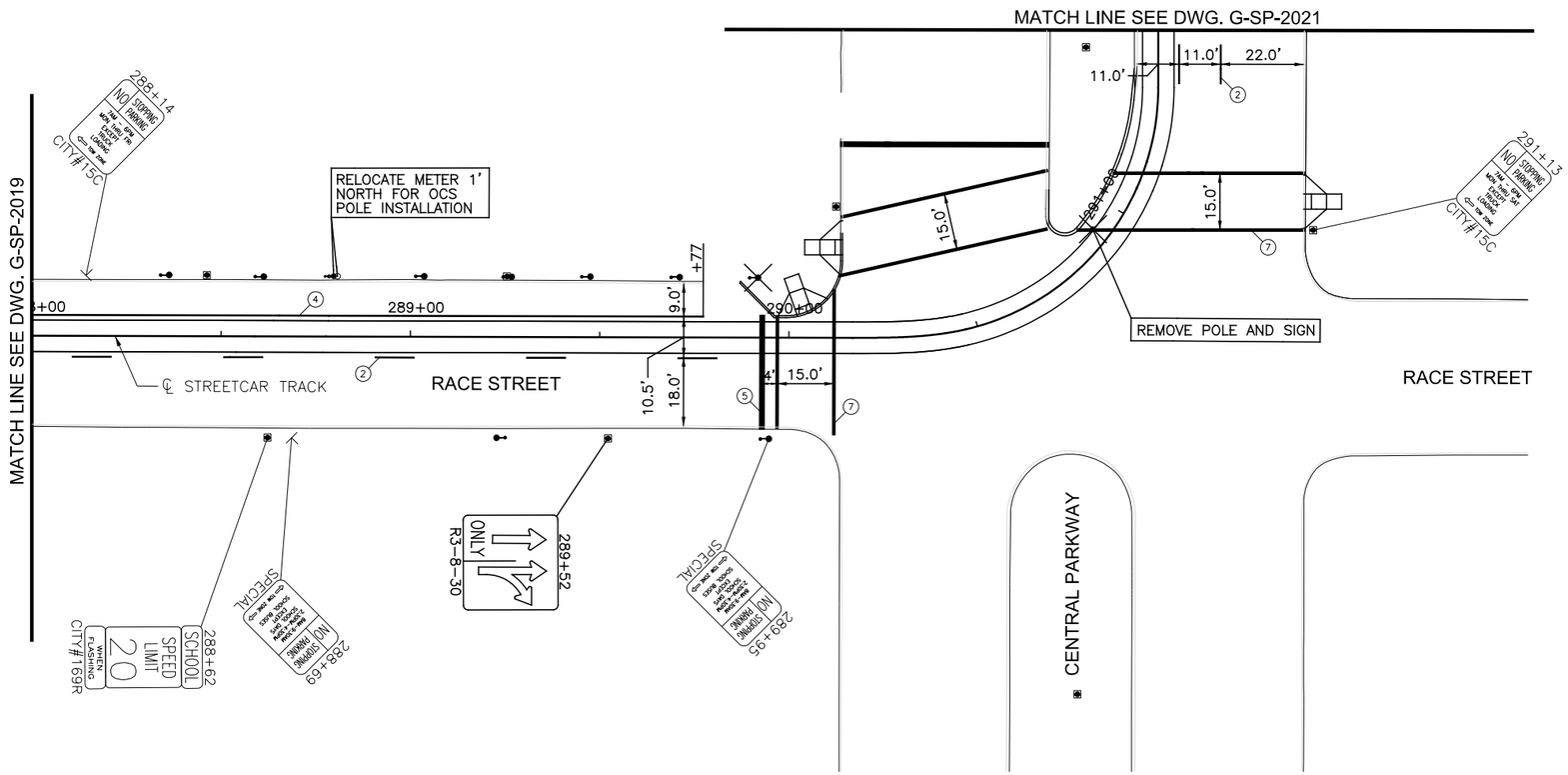

SYMBOLS

- EXISTING LIGHT POLE
- EXISTING POLE
- EXISTING SIGN POST
- SINGLE PARKING METER
- DOUBLE PARKING METER
- REMOVAL
- PROPOSED TYPE A SIGN POLE
- PROPOSED TYPE B SIGN POLE

NOTE:
ALL EXISTING SIGNS WILL BE REPLACED UNLESS OTHERWISE NOTED BY REMOVAL SYMBOL.

GRAPHIC SCALE
20 0 20 40 80
(IN FEET)
1 inch = 20 ft. Full Size
1 inch = 40 ft. Half Size

CAUTION UNDERGROUND UTILITIES
2 WORKING DAYS
BEFORE YOU DIG
CALL 1-800-362-2764
OHIO UTILITY PROTECTION SERVICE
CALL NON-SERVICE FACILITY
OWNERS DIRECT

DOTE_Mono_PDF_Half.pltcfg
T:\29014A-Streetcar\CAD\Traffic_Control\Signing and Marking\S_G-SP-2020.dgn
7/11/2012 12:36:28 PM

CONTRACT DRAWING
PRINTS NOT BEARING THIS STAMP WERE MADE PRIOR TO ADVERTISING FOR BIDS AND ARE TO BE CONSIDERED OBSOLETE FOR CONTRACT PURPOSES.

Department of Transportation and Engineering
City of Cincinnati
City Hall
801 Plum Street
Cincinnati, Ohio 45202

CINCINNATI STREETCAR
OVER THE RHINE
PROPOSED SIGNING AND MARKING PLAN
RACE STREET
STA 288+00 TO STA 291+50

Revisions
No.

Date 7/02/12
Date 7/02/12
Date 7/02/12
Date 7/12/12

Drawn by AAG
Designed by AAG
Checked by JTB
Reviewed by JTB

Consultant
PB HDR

File Number

ACC No.
23126

G-SP-2020

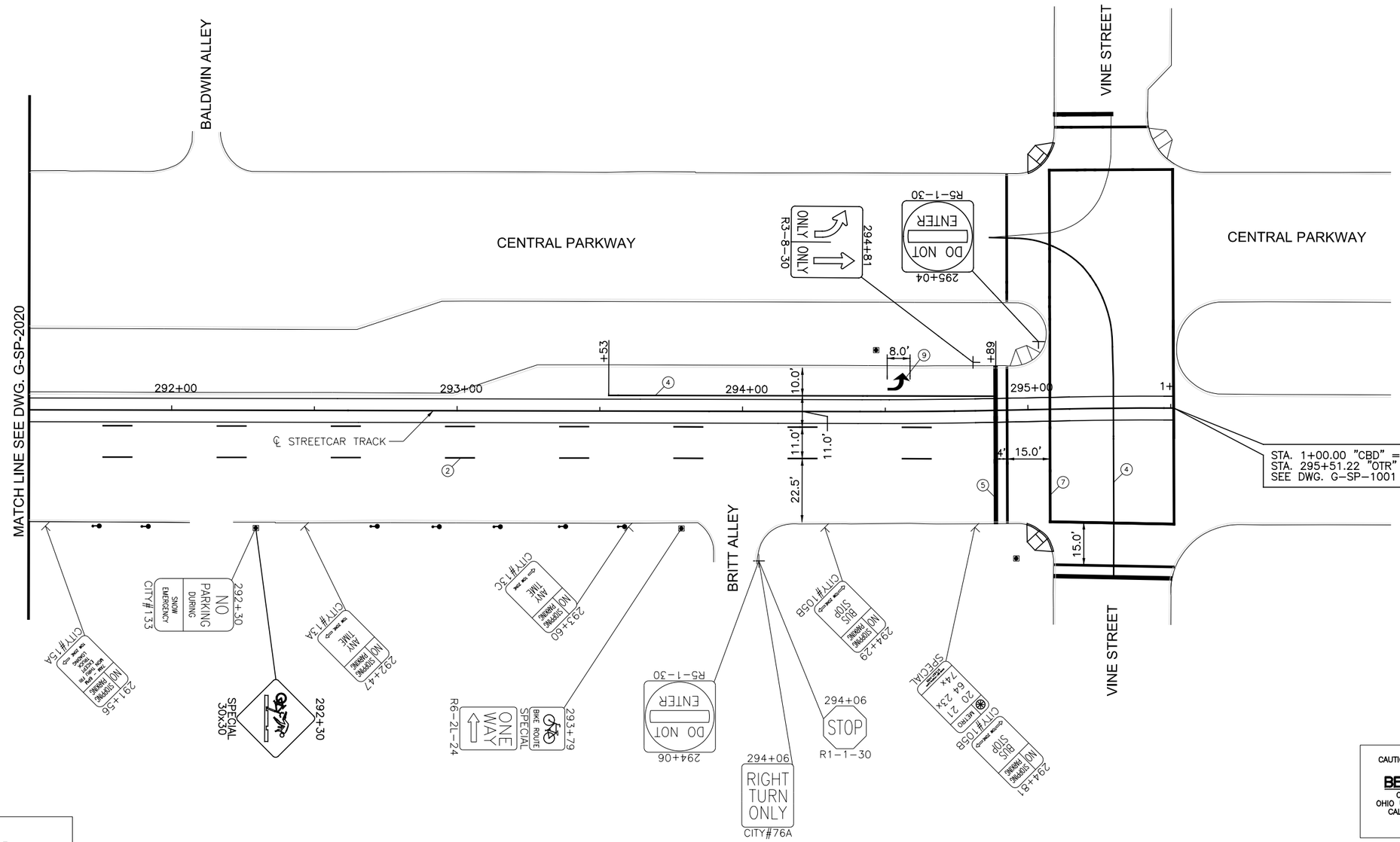

SYMBOLS

- EXISTING LIGHT POLE
- EXISTING POLE
- EXISTING SIGN POST
- SINGLE PARKING METER
- DOUBLE PARKING METER
- REMOVAL
- PROPOSED TYPE A SIGN POLE
- PROPOSED TYPE B SIGN POLE

NOTE:
ALL EXISTING SIGNS WILL BE REPLACED UNLESS OTHERWISE NOTED BY REMOVAL SYMBOL.

GRAPHIC SCALE

20 0 20 40 80

(IN FEET)
1 inch = 20 ft. Full Size
1 inch = 40 ft. Half Size

CAUTION UNDERGROUND UTILITIES
2 WORKING DAYS
BEFORE YOU DIG
CALL 1-800-362-2764
OHIO UTILITY PROTECTION SERVICE
CALL NON-SERVICE FACILITY
OWNERS DIRECT

DOTE_Mono_PDF_Half.pltcfg
T:\29014A-Streetcar\CAD\Traffic_Control\Signing and Marking\S_G-SP-2021.dgn
7/11/2012 12:36:29 PM

CONTRACT DRAWING

PRINTS NOT BEARING THIS STAMP WERE MADE PRIOR TO ADVERTISING FOR BIDS AND ARE TO BE CONSIDERED OBSOLETE FOR CONTRACT PURPOSES.

Department of Transportation and Engineering

City of Cincinnati
City Hall
801 Plum Street
Cincinnati, Ohio 45202

CINCINNATI STREETCAR
OVER THE RHINE
PROPOSED SIGNING AND MARKING PLAN
CENTRAL PARKWAY
STA 291+50 TO STA 295+51.22

Revisions

No.				

Date 7/02/12
Date 7/02/12
Date 7/02/12
Date 7/12/12

Drawn by AAG
Designed by AAG
Checked by JTB
Reviewed by JTB

Consultant

PB HDR

File Number

ACC No.
23126

G-SP-2021

ZEBRA CROSSWALK DETAIL

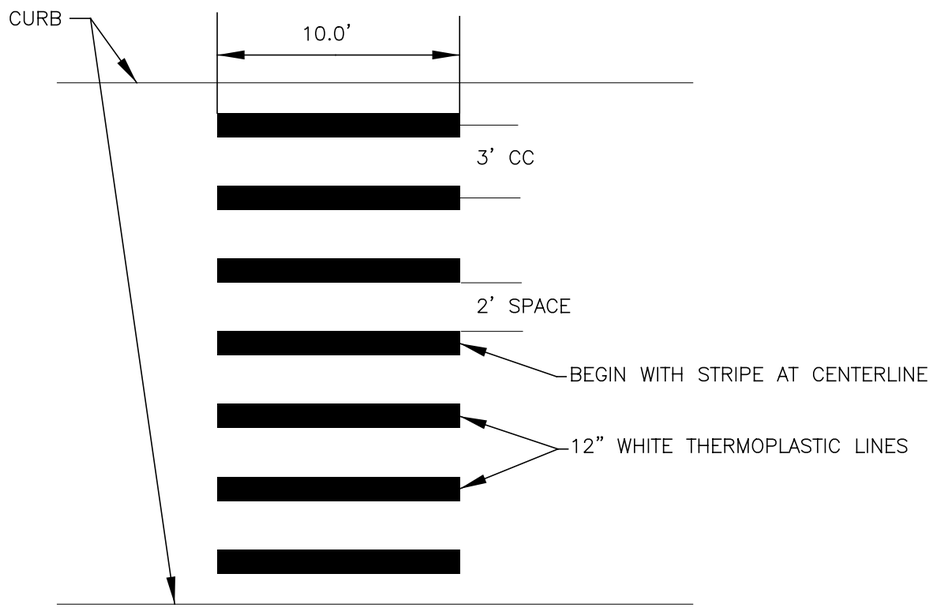

STREETCAR SYMBOL DETAIL

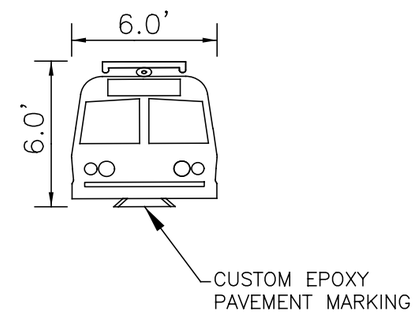

NOTE:

EPOXY STREETCAR SYMBOL AVAILABLE THROUGH FLINT TRADING OR APPROVED EQUAL.

FLINT TRADING INC.
115 TODD COURT
THOMASVILLE, NC 27360
(336)475-6600

CAUTION UNDERGROUND UTILITIES
2 WORKING DAYS
BEFORE YOU DIG
CALL 1-800-362-2764
OHIO UTILITY PROTECTION SERVICE
CALL NON-SERVICE FACILITY
OWNERS DIRECT

CONTRACT DRAWING

PRINTS NOT BEARING THIS STAMP WERE MADE PRIOR TO ADVERTISING FOR BIDS AND ARE TO BE CONSIDERED OBSOLETE FOR CONTRACT PURPOSES.

Department of Transportation and Engineering

City of Cincinnati
City Hall
801 Plum Street
Cincinnati, Ohio 45202

CINCINNATI STREETCAR

PAVEMENT MARKING DETAILS

Revisions
No.

Drawn by AAG	Date 7/02/12
Designed by AAG	Date 7/02/12
Checked by JTB	Date 7/02/12
Reviewed by JTB	Date 7/12/12

Consultant

PB HDR

File Number

ACC No.
23126

G-SP-2022

DOTE_Mono_PDF_Half.pltcfg
T:\29014A-Streetcar\CAD\Traffic_Control\Signing and Marking\S_G-SP-2022.dgn
7/11/2012 12:36:31 PM

TRAFFIC SIGNAL & STREET LIGHTING GENERAL NOTES

632 SIGNAL SUPPORT, MISC: SPECIAL POLE DESIGN

THE CONTRACTOR SHALL OBTAIN CALCULATIONS FROM TRAFFIC SIGNAL AND OCS LOADS AND PROVIDE THEM TO A POLE VENDER FOR DESIGN. THE CONTRACTOR SHALL SUBMIT POLE DRAWINGS TO THE CITY TRAFFIC ENGINEER FOR REVIEW AND APPROVAL. THESE POLES MAY NOT BE PURCHASED OR INSTALLED WITHOUT WRITTEN APPROVAL.

1303 EQUIPMENT QUALITY

ALL EQUIPMENT AND MATERIALS SHALL BE NEW AND OF FIRST QUALITY AS PER SPECIFICATION 1303.

1304 UTILITIES PERMITS AND REGULATIONS

THE CONTRACT DRAWINGS SHOW ALL UTILITIES, WATER, GAS, AND SEWER LINES KNOWN TO EXIST. HOWEVER, THIS DOES NOT GUARANTEE THAT ALL EXISTING LINES AND APPURTENANCES HAVE BEEN SHOWN ON THE CONTRACT DRAWINGS. THE CITY ASSUMES NO RESPONSIBILITY FOR THE ACCURACY THEREOF AND DOES NOT FREE THE CONTRACTOR FROM NECESSARY PRECAUTIONS FOR THE PROTECTION OF ANY UTILITY ENCOUNTERED ON THE PROJECT OR THE RESTORATION OF ANY UTILITY DAMAGED DURING THE WORK. THE CONTRACTOR IS RESPONSIBLE TO OBTAIN ALL NECESSARY PERMITS AND COMPLY WITH ALL LOCAL AND NATIONAL SAFETY CODES.

THE CONTRACTOR SHALL NOTIFY AT LEAST 48 HOURS BEFORE BREAKING GROUND, ALL PUBLIC AND/OR PRIVATE SERVICE CORPORATIONS HAVING WIRE, POLES, PIPES, CONDUIT, MANHOLES OR OTHER STRUCTURES THAT MAY BE AFFECTED BY THIS OPERATION, INCLUDING ALL STRUCTURES WHICH ARE AFFECTED AND NOT SHOWN ON THESE PLANS. OWNERS OF UNDERGROUND UTILITIES WHICH ARE MEMBERS OF THE OHIO UTILITIES PROTECTION SERVICE CAN BE NOTIFIED BY CALLING 800–362–2784 (TOLL FREE). NON–MEMBER UNDERGROUND UTILITY OWNERS MUST BE CALLED DIRECTLY.

SUPPORTING AND/OR PROTECTING EXISTING WATER LINES, GAS MAINS, TELEPHONE CONDUIT, STORM SEWERS, ETC. SHALL BE INCLUDED IN PAYMENT FOR THE VARIOUS CONTRACT ITEMS OF WORK.

ALL WORK REQUIRED FOR THE MAINTENANCE OF SERVICE OF EXISTING UTILITIES SHALL BE DONE BY, AND AT THE EXPENSE OF, THE CONTRACTOR.

ALL MAINTENANCE, REPAIR AND/OR REPLACEMENT OF EXISTING UTILITIES SHALL BE IN ACCORDANCE WITH THE RULES AND REGULATIONS OF THE VARIOUS UTILITY COMPANIES HAVING JURISDICTION.

ALL EXISTING STORM SEWERS, DRIVEWAY DRAINS, AND OTHER SURFACE DRAIN PIPES, WHETHER SHOWN ON THE CONTRACT DRAWINGS OR NOT, REMOVED OR DAMAGED DURING CONSTRUCTION SHALL BE REPAIRED AND RECONNECTED BY THE CONTRACTOR AS DIRECTED BY THE ENGINEER AT NO COST TO THE CITY. REPLACED DRAIN PIPES SHALL BE LAID ON COMPACTED BEDDING EQUAL IN DENSITY TO SURROUNDING STRATUM. ALL UTILITIES OTHER THAN WATER AND SEWER LINES ARE TO BE RELOCATED, AS DIRECTED BY THE ENGINEER, AT NO COST TO THE CITY.

IT IS ASSUMED THAT THERE ARE WATER AND GAS BRANCH LINES, ETC., SERVING EACH RESIDENCE. THE CONTRACTOR SHALL REPAIR AND REPLACE THESE UTILITIES, IF DAMAGED, AT NO COST TO THE CITY.

IT IS THE CONTRACTORS RESPONSIBILITY TO VERIFY WITH THE INDIVIDUAL UTILITY OWNERS THAT ABANDONED SERVICE TAPS HAVE BEEN PROPERLY DISCONNECTED AND TERMINATED IF THE TAPS ARE ENCOUNTERED DURING CONSTRUCTION.

1306 CONTRACTOR FURNISHED EQUIPMENT

THE CONTRACTOR SHALL SUBMIT TO THE CITY TRAFFIC ENGINEER FOR REVIEW AND APPROVAL SEVEN (7) SETS OF DRAWINGS, CATALOG CUTS, SPECIFICATIONS, DATA SHEETS, WIRING DIAGRAMS, ETC., FOR ALL APPARATUS AND EQUIPMENT THAT THE CONTRACTOR PROPOSES TO FURNISH. NO EQUIPMENT MAY BE PURCHASED OR INSTALLED WITHOUT WRITTEN APPROVAL.

1309 INSTALLATION PRACTICES

MINOR REPOSITIONING OF SIGNS OR SIGNALS MAY BE NECESSARY AND THE CONTRACTOR SHALL MAKE THE ADJUSTMENTS AS DIRECTED BY THE ENGINEER. WORK SHALL BE INCIDENTAL TO THE COST OF THE ITEM BEING REPOSITIONED.

1311 INSPECTION

IN ADDITION TO THE PROVISIONS OF ITEM 105.10, THE CONTRACTOR SHALL OBSERVE THE FOLLOWING:

1. ALL CONDUIT IN TRENCH SHALL BE APPROVED BEFORE BACKFILL AND/ OR CONCRETE ENCASEMENT IS COMPLETED.
2. ALL FOUNDATIONS FOR ANCHOR BASE POLES, COMPLETE WITH ANCHOR BOLTS AND REBAR CAGES INTACT, SHALL BE APPROVED PRIOR TO CONCRETE POUR.

1312 ELECTRIC POWER SERVICE

COORDINATE WITH DUKE ENERGY FOR POWER SERVICE. CONTACT JEFF VENTRE, TRAFFIC SERVICES, AT 513–200–5212 FOR ACTUAL REQUEST FOR SERVICE CONNECTION TO DUKE ENERGY SECONDARIES. CONTRACTOR SHALL NOT MAKE CONNECTIONS TO DUKE ENERGY LINES AT ANY TIME.

ELECTRIC SERVICE REQUIREMENTS:

FOR TRAFFIC SIGNALS, 120 VOLTS 2–WIRE.

FOR STREET LIGHTING, 120/240 3–WIRE.

THE CONTRACTOR SHALL PROVIDE ALL SERVICE EQUIPMENT NECESSARY TO CONNECT THE TRAFFIC SIGNALS AND STREET LIGHTING TO THE POWER SOURCE AS PER CONTRACT PLANS, DETAILS AND STANDARD DRAWING ES–2–2 & ES–7–1.

1313 TESTING

TESTING SHALL MEET THE REQUIREMENTS OF ODOT 625.22. PRIOR TO ACCEPTANCE THE CONTRACTOR SHALL CONDUCT A TEN (10) DAY BURN TEST OF THE COMPLETED AND OPERATIONAL STREET LIGHTING SYSTEM. THE LIGHTING SYSTEM SHALL OPERATE FOR TEN CONSECUTIVE DAYS WITHOUT INTERRUPTION AND BE FREE OF ANY MALFUNCTIONS.

THE CONTRACTOR SHALL OPERATE ALL NEW TRAFFIC SIGNALS FOR FIVE (5) CONTINUOUS DAYS IN FLASHING OPERATION, UNLESS OTHERWISE INSTRUCTED BY THE ENGINEER. REBUILT OR REPLACED TRAFFIC SIGNALS ARE TO BE OPERATED IN COLOR MODE DIRECTLY. PRIOR TO ACCEPTANCE OF ANY NEW, REBUILT OR REPLACED TRAFFIC SIGNAL, THE TRAFFIC SIGNAL SHALL HAVE A FINAL TEST CONSISTING OF 30 MINUTES OF COLOR OPERATION WITHOUT FAILURE OR MALFUNCTIONS.

ALL GROUND RODS SHALL BE TESTED BY THE CONTRACTOR AND HAVE A RESISTANCE TO GROUND OF 25 OHMS OR LESS.

CTCS TYPE INTERCONNECT CABLE SHALL BE TESTED BY THE CONTRACTOR TO VERIFY THE CAPABILITY OF VOICE TRANSMISSION AND THE ABSENCE OF EXCESSIVE INDUCED NOISE. MEASUREMENTS SHALL BE PERFORMED BY THE CONTRACTOR ON ALL DATA CIRCUITS TO INSURE THAT THE TRANSMISSION BANDWIDTH IS REASONABLE FOR DATA TRANSMISSION AT 1200 BAUD USING FREQUENCY SHIFT KEYED MODULATION OF 1200 AND 2200 HERTZ. THE TESTS SHALL ALSO VERIFY THAT THERE ARE NO SHORTS OR OPEN CIRCUITS TO ANY TERMINATION POINT, AND THAT EACH PAIR IS CAPACITIVELY BALANCED TO GROUND. ANY DISCREPANCIES OR TEST FAILURES SHALL BE CORRECTED BY THE CONTRACTOR.

COST SHALL BE INCIDENTAL TO THE ITEM TESTED.

1314 MAINTENANCE OF EXISTING TRAFFIC SIGNAL

THE CONTRACTOR SHALL MAINTAIN AND KEEP OPERATIONAL THE EXISTING TRAFFIC SIGNAL UNTIL ALL OTHER NEW EQUIPMENT HAS BEEN INSTALLED AND IS FUNCTIONAL. WORK WILL INCLUDE ANY MODIFICATIONS TO EXISTING OR TEMPORARY TRAFFIC SIGNAL INSTALLATIONS AS REQUIRED BY CHANGES IN CONSTRUCTION OR OPERATIONAL CONDITIONS IN THE PROJECT AREA THROUGHOUT THE ENTIRE CONTRACT PERIOD. THIS WILL INCLUDE RELOCATIONS, REMOVALS, COVERING OR UNCOVERING OF TRAFFIC/PEDESTRIAN SIGNALS AND ILLUMINATED/REFLECTORIZED SIGNS AND OTHER TRAFFIC SIGNAL EQUIPMENT, AND THE INSTALLATION OF TEMPORARY POLES OR TEMPORARY POLE GUYS TO SATISFY SAFETY AND OPERATIONAL CONDITIONS THROUGHOUT THE PROJECT. THIS WORK WILL BE PERFORMED AS DIRECTED BY THE ENGINEER.

WHERE PROPOSED NEW EQUIPMENT BLOCKS OR OBSCURES THE LINE OF SIGHT OF EXISTING EQUIPMENT, OR WHERE NEW EQUIPMENT IS PROPOSED IN THE SAME LOCATION AS EXISTING EQUIPMENT, THE CONTRACTOR SHALL TEMPORARILY ADJUST EXISTING OR NEW SIGNALS AND SIGNS. NEW TRAFFIC SIGNALS AND SIGNS WHICH WERE TEMPORARILY ADJUSTED, SHALL BE REPOSITIONED IN THE PROPOSED LOCATIONS AS INDICATED IN THE PLANS AFTER EXISTING EQUIPMENT IS REMOVED.

ALL ADJUSTMENTS SHALL BE APPROVED BY THE CITY TRAFFIC ENGINEER.

SCHEDULE CONSTRUCTION TROUGHOUT THE PROJECT TO MAINTAIN THE INTERCONNECT SYSTEM DURING THE CONTRACT PERIOD. USE EXISTING, TEMPORARY CABLE OR NEWLY INSTALLED INTERCONNECT CABLE TO MAINTAIN THE INTERCONNECT SYSTEM.

AT INSTALLATIONS WHERE INTERCONNECT CABLE DOES NOT EXIST, INSTALL THE SPECIFIED NEW INTERCONNECT CABLE SYSTEM PRIOR TO COMPLETING AND OPERATING THE NEW OR RECONSTRUCTED TRAFFIC SIGNAL SYSTEMS OR PROVIDE AN EQUIVALENT MEANS, SUBJECT TO THE ENGINEERS APPROVAL, OF MAINTAINING SIGNAL COORDINATION AT ALL TIMES.

1314 MAINTENANCE OF EXISTING STREET LIGHTING CIRCUIT, AS PER PLAN

KEEP THE EXISTING STREET LIGHTING SYSTEM IN OPERATION UNTIL TESTING AND CITY ACCEPTANCE OF THE NEW CIRCUIT(S).

THE CONTRACTOR IS RESPONSIBLE FOR DAMAGE TO ANY STREET LIGHTING EQUIPMENT WHILE IN THE CONTRACTORS POSESSION, OR WHERE EXISTING COMPONENTS ARE DAMAGED DUE TO THE CONTRACTORS OPERATIONS.

THIS ITEM SHALL BE PAID ON A PER CIRCUIT BASIS.

1316 REMOVAL OF EXISTING TRAFFIC SIGNAL, BY LOCATION

THE CONTRACTOR SHALL REMOVE ALL OLD EQUIPMENT AS NOTED ON THE PLANS AND MAKE THE NECESSARY RESTORATIONS. ANY EXISTING TRAFFIC SIGNAL POLE THAT IS PERMENANTLY REMOVED SHALL ALSO HAVE THE TOP OF POLE FOUNDATION REMOVED. IT WILL BE THE CONTRACTORS RESPONSIBILITY TO RETURN TO THE CITY OF CINCINNATI ALL OLD EQUIPMENT EXCEPT CUT OFF STEEL EMBEDDED BASE POLES, OLD SIGNAL CABLE, AND OLD SPAN WIRE. THE CONTRACTOR SHALL CONTACT THE TRAFFIC SERVICES BUREAU SUPERVISOR AT 352–3712 TO ARRANGE RETURN OF THE OLD EQUIPMENT UNDAMAGED. THE CONTRACTOR SHALL BE RESPONSIBLE FOR DISPOSAL OF THE UNWANTED EQUIPMENT.

CAUTION UNDERGROUND UTILITIES
2 WORKING DAYS
BEFORE YOU DIG
CALL 1–800–362–2764
OHIO UTILITY PROTECTION SERVICE
CALL NON–SERVICE FACILITY
OWNERS DIRECT

DEPARTMENT OF TRANSPORTATION & ENGINEERING — CITY OF CINCINNATI — OHIO

CONTRACT DRAWING

PRINTS NOT BEARING THIS STAMP WERE MADE PRIOR TO ADVERTISING AND WERE NOT TO BE CONSIDERED OBSOLETE FOR CONTRACT PURPOSES.

Department of Transportation and Engineering
City of Cincinnati
City Hall
801 Plum Street
Cincinnati, Ohio 45202

CINCINNATI STREETCAR

TRAFFIC SIGNAL AND LIGHTING GENERAL NOTES

Revisions
No.

Date 7/02/12	Drawn by JRL
Date 7/02/12	Designed by JRL
Date 7/02/12	Checked by JTB
Date 7/12/12	Reviewed by JTB

Consultant

PB HDR

File Number

ACC No. 23126

G-TC-1000 A

DOTE_Mono_PDF_Half.pltcfg
W:\29014A-Streetcar\CAD\Traffic_Control\Signals\Traffic Signal General Notes\S_G-TC-1000 A.dgn
7/12/2012 9:13:25 AM

TRAFFIC SIGNAL & STREET LIGHTING GENERAL NOTES

1316 REMOVAL OF EXISTING STREET LIGHTING EQUIPMENT

THIS ITEM SHALL BE PAID ON A LUMP SUM BASIS FOR EACH CIRCUIT. MAKE ARRANGEMENTS PRIOR TO THE RETURN OF ALL REUSABLE EQUIPMENT TO THE TRAFFIC SERVICES BUREAU, 3300 COLERAIN AVENUE. THE CONTRACTOR IS RESPONSIBLE FOR THE LAWFUL DISPOSAL OF ALL UNWANTED EQUIPMENT.

1318 STEEL POLES, PEDESTALS, STREET LIGHTING POLES AND FIXTURES

ALL STEEL POLES SHALL MEET ALL SPECIFICATIONS IN ITEM 1318 AND STANDARD DRAWING ES–10–1.

HOT–DIP GALVANIZED STEEL POLES, SMALL PART STEELWORK AND HARDWARE SHALL BE HOT–DIPPED IN ACCORDANCE WITH ASTM A123, ASTM 385, ASTM A153 AS APPLICABLE. POLES AND MAST ARMS SHALL BE GALVANIZED BOTH INTERNALLY AND EXTERNALLY.

GALVANIZED POLES AND MAST ARMS SHALL BE PAINTED IN ACCORDANCE WITH SPECIFICATION ODOT MATERIAL SPECIFICATION 725 (AS STATED ON THE CITY OF CINCINNATI DRAWING ES–10–1).

THE TERM "PAINT" INCLUDES COATINGS, EMULSIONS, ENAMELS, VARNISHES, PAINTS AND OTHER PROTECTIVE SEALERS, WHETHER USED AS A PRIME, INTERMEDIATE OR FINISH COAT.

THE TYPES OF PAINT APPROVED FOR USE ON THE TRAFFIC SIGNAL POLES ARE AS FOLLOWS:

INTERMEDIATE COATING SHALL BE HIGH–BUILD EPOXY SUCH AS AMERLOCK 400 BY AMERON, SWP RECOATABLE EPOXY PRIMER BY SHERWIN WILLIAMS, CARBOLINE 890, OR AN APPROVED EQUIVALENT, AND SHALL BE APPLIED OVER GALVANIZED SURFACES WHICH HAVE BEEN PRIMED. MINIMUM DRY FILM THICKNESS SHALL BE 5 MILS.

TOP COATING SHALL BE URETHANE SUCH AS AMERSHIELD BY AMERON, HS POLYURETHANE BY SHERWIN WILLIAMS, 4600 SERIES HYTHANE–ALIPHATIC POLYURETHANE, OR AN APPROVED EQUIVALENT, CAPABLE OF RESISTANCE TO WEATHER, ABRASION AND SALT SOLUTIONS, AND HAVING A WIDE SELECTION OF AVAILABLE COLORS. MINIMUM DRY FILM THICKNESS SHALL BE 3 MILS.

AS AN ALTERNATIVE, PSX700 BY AMERON, OR AN APPROVED EQUIVALENT, MAY BE APPLIED DIRECTLY OVER THE PRIMED GALVANIZED SURFACE.

GALVANIZED SURFACES TO BE PAINTED SHALL RECEIVE GALVAPREP NO. 5 BY PORTER PRIMER, OR AN APPROVED EQUIVALENT.

POLE & PEDESTAL COLOR TO BE BLACK, FEDERAL COLOR #27038, SEMI–GLOSS.

TOUCH UP PAINTS INTENDED FOR USE IN THE FIELD SHALL BE STORED IN SEALED COTAINERS THAT LEGIBLY SHOW THE DESIGNATED NAME, FORMULA, BATCH NUMBER, COLOR, QUANTITY, DATE OF MANUFACTURE, MANUFACTURER'S NUMBER, AND DIRECTIONS INCLUDING STORAGE, SPECIAL PRECAUTIONS AND WARNINGS.

THE PAINT COLOR TO BE USED FOR TOUCH UP SHALL BE THE SAME AS THE ORIGINAL PAINTED COLOR OF THE POLE.

THE FINISH SHALL BE PROTECTED DURING TRANSPORTATION BY A SUITABLE PLASTIC OR RUBBER WRAPPING.

ALL POLES, AND ANY MATERIALS ATTACHED TO THEM, SHALL BE LOCATED A MINIMUM OF 2 FEET FROM THE FACE OF THE CURB TO THE FACE OF THE POLE. THIS MAY REQUIRE ATTACHMENT HARDWARE IN EXCESS OF ONE FOOT FOR THE ATTACHMENT OF PEDESTRIAN SIGNALS TO POLES.

ALL MAST ARMS AND BOOMS SHALL BE LOCATED A MINIMUM OF 10' FROM THE CENTERLINE OF THE STREETCAR TRACK. WHENEVER THE POLE TYPE HAS A "UMC" NUMBER, THE CONTRACTOR SHOULD REFER TO THE PLAN DETAILS FOR ADDITIONAL INFORMATION.

WHERE STREET LIGHTING BRACKET ARMS ARE SPECIFIED, POLE PLATES AND 1 1/2" HALF COUPLING SHALL BE WELDED TO THE POLE AS SHOWN IN ES–10–1 AND ES–10–3. BRACKET ARMS SHALL BE SIZE AND TYPE AS PER PLAN. CONTRACTOR TO INSTALL DEAD END CLEVIS TO SERVE STREET LIGHT.

CONTRACTOR SHOULD NOTE THAT NEW 4 INCH PEDESTRIAN SIGNAL PEDESTALS TO BE INSTALLED ARE 10 FEET LONG AND DESIGNATED CITY DESIGN NO. 1045. FOUNDATION FDN–25 REMAINS THE SAME.

THE CONTRACTOR SHALL BE RESPONSIBLE FOR ANY DAMAGE TO THE POLES WHILE IN HIS POSSESSION. MINOR DEFECTS OR SCRATCHES ARE TO BE REPAIRED AS DIRECTED BY THE ENGINEER. IF ANY MAJOR DAMAGE OR SCRATCHES OCCUR, THE CITY SHALL REPLACE THE POLE WITH A DUPLICATE, AND THE CONTRACTOR SHALL REIMBURSE THE CITY THE COST OF THE DAMAGED POLE, OR THE COST SHALL BE DEDUCTED FROM THE PAYMENT TO THE CONTRACTOR.

PAYMENT WILL BE MADE AT THE CONTRACT UNIT PRICE BID FOR EACH ITEM AS SPECIFIED, AND SHALL BE FULL COMPENSATION FOR ALL LABOR, TOOLS, EQUIPMENT AND INCIDENTALS NECESSARY FOR EACH ITEM INSTALLED, COMPLETE IN PLACE AND ACCEPTED. (THE WELDING OF NIPPLES FOR CABLE ENTRANCE AND WEATHERHEADS SHALL BE INCIDENTAL TO THE INSTALLATION BY THE CONTRACTOR).

1319 FOUNDATIONS

THE CONTRACTOR SHALL MARK ALL POLE FOUNDATION LOCATIONS AND HAVE A REPRESENTATIVE FROM THE CITY REVIEW ALL LOCATIONS BEFORE INSTALLING FOUNDATIONS OR ORDERING POLES.

ALL CONCRETE FOUNDATIONS SHALL BE CONSTRUCTED AS PER SPECIFICATION 1319 AND PER STANDARD DRAWING ES–1–1 AND ES–1–2. ALL FOUNDATIONS SHALL INCLUDE ALL REINFORCING RODS, ANCHOR BOLTS AND CONDUIT ELLS.

STREET LIGHT POLE FOUNDATIONS SHALL COMPLY WITH ITEM 1319.

FOUNDATIONS SHALL BE CURED FOR A MINIMUM OF SEVEN (7) DAYS BEFORE ERECTION OF POLES, POSTS AND CABINETS.

FOUNDATIONS SHALL BE CURED FOR A MINIMUM OF FOURTEEN (14) DAYS BEFORE LOADING IS APPLIED. SEE ODOT ITEM 632.14.

CURING TIMES CAN BE ACCELERATED USING FAST SET CONCRETE WITH THE SUBMITTAL OF PROPER MATERIAL DOCUMENTATION AND PRIOR APPROVAL FROM THE ENGINEER.

AT ALL LOCATIONS FOR POLE, PULLBOX AND CABINET FOUNDATIONS, WHERE THE PROXIMITY OF EXISTING UTILITIES OR OTHER EXISTING FACILITIES REQUIRE EXCAVATION METHODS OTHER THAN DRILLING OR STANDARD MACHINE EXCAVATION, HAND EXCAVATE, HYDROVAC AND USE OTHER ALTERNATE EXCAVATION METHODS AS REQUIRED TO LOCATE, MAINTAIN & PROTECT EXISTING UTILITIES/FACILITIES. NO ADDITIONAL COMPENSATION WILL BE PROVIDED FOR THIS WORK.

WHERE EXCAVATION CAUSES CAVING DUE TO SOIL CONDITIONS, THE USE OF CORRUGATED PIPE IS AUTHORIZED, AS DIRECTED BY THE ENGINEER. THE EXCAVATION IS TO BE BACKFILLED WITH CONTROL DENSITY FILL AFTER THE FOUNDATION HAS BEEN POURED. THE USE OF SONO–TUBE OR SIMILAR TUBING MATERIAL IS NOT PERMITTED.

THE COST OF ALL MATERIALS INCLUDING, BUT NOT LIMITED TO THE PIPE, BACKFILL AND LABOR TO INSTALL IT SHALL BE INCIDENTAL TO THE COST OF THE FOUNDATION.

1320 GROUND RODS

A 1" x 10' COPPER CLAD STEEL GROUND ROD SHALL BE DRIVEN INTO THE BOTTOM OF PULLBOXES WHICH ARE ADJACENT TO POLE FOUNDATIONS SO THAT ONE (1) FOOT OF THE ROD IS EXPOSED IN THE PULLBOX. WHERE PULLBOXES ARE NOT ADJACENT TO POLES OR POSTS, DRIVE GROUND RODS ADJACENT TO THE POLE FOUNDATIONS AS PER STANDARD DRAWING ES–1–1. PAYMENTS FOR THE GROUND RODS SHALL BE MADE AT THE CONTRACT UNIT PRICE BID FOR EACH ITEM INSTALLED COMPLETE WITH #4 AWG GROUND WIRE, EXOTHERMIC WELD, TESTED AND ACCEPTED. IF MORE THAN ONE GROUND ROD IS REQUIRED AT A LOCATION TO OBTAIN THE REQUIRED GROUND RESISTANCE, THE ADDITIONAL GROUND RODS SHALL BE PAID FOR AT THE CONTRACT UNIT PRICE EACH AND SHALL INCLUDE ALL WIRE, CONNECTIONS AND OTHER MATERIALS AND LABOR TO INSTALL THE COMPLETE TESTED SYSTEM. TESTS SHALL COMPLY WITH ODOT SPEC. "625.19–TESTING OF INSTALLATIONS".

1321 TRENCH, IN SOD AREA, BLACKTOP PATHS & SIDEWALK

ALL TRENCH FOR INSTALLATION OF CONDUIT IN SOD AREAS, UNDER WALKWAYS, OR SIDEWALKS SHALL BE 24" DEEP. TRENCH IN THE SOD AREAS SHALL INCLUDE BACKFILL AND RESTORATION IN ACCORDANCE WITH ITEM 625.12. THE BACKFILL UNDER SIDEWALKS OR WALKWAYS SHALL BE COMPACTED AS PER ITEM 603.10, AND AGGREGATE BASE SHALL BE RESTORED WITH ITEM 448 OR 608.

1321 TRENCH, IN PAVED AREA

TRENCH UNDER ROADWAYS OR DRIVEWAYS SHALL BE 30" DEEP, AND SHALL INCLUDE PREMARKING THE AREA TO BE TRENCHED, SAW CUTTING, REMOVING THE MATERIAL, BACKFILLING, COMPACTING AND RESTORING THE SURFACE IN ACCORDANCE WITH ITEM 603 AND AS DIRECTED BY THE ENGINEER. BACKFILL UNDER GREEN STORMWATER CONTROLS ACCORDING TO DETAILS SHOWN ON THE PLANS.

1321 CONDUIT

CONDUIT UNDER SIDEWALKS OR SOD AREAS SHALL BE POLYVINYL CHLORIDE (PVC) SCHEDULE 40, TYPE II, WITH CONCRETE ENCASEMENT. SIZE AS SPECIFIED IN THE PLANS.

CONDUIT UNDER STREETS OR DRIVEWAYS SHALL BE GALVANIZED RIGID METAL CONDUIT (RMC) MEETING THE REQUIREMENTS OF ITEM 725.04. SIZE AS SPECIFIED IN THE PLANS.

CONDUIT IN SOD AREAS AND UNDER WALKWAYS OR SIDEWALKS SHALL HAVE A MINIMUM COVER OF 24". GALVANIZED STEEL CONDUIT UNDER ROADWAY SHALL HAVE A MINIMUM COVER OF 30". GROUND BUSHINGS SHALL BE PROVIDED TO GROUND RIGID METALLIC CONDUIT TO THE GROUND ROD IN THE PULLBOX.

WHERE CONDUITS PASS THROUGH TREE WELLS, THEY SHOULD BE TIGHTLY GROUPED TO MINIMIZE THE SPACE TAKEN IN THE WELL.

1321 WEATHERHEAD AND RISER

THE CONTRACTOR SHALL PROVIDE WEATHERHEADS, CONDUIT RISERS, AND ANY OTHER SIGNAL EQUIPMENT ON WOOD UTILITY POLES AS NECESSARY TO SERVE THE TRAFFIC SIGNAL EQUIPMENT AND THE ELECTRIC SERVICE. ALUMINUM CONDUIT FOR RISERS SHALL BE RIGID ALUMINUM CONDUIT PER ANSI C80.5, AND SHALL BE USED IN THE LOWER SECTION OF RISERS, IN LIEU OF STEEL (RMC). REFER TO STANDARD DRAWING ES–2–2 FOR MORE INFORMATION.

1322 ELECTRICAL BOXES

PULLBOXES MAY BE CAST–IN–PLACE OR PRECAST. PRECAST PULLBOXES SHALL HAVE REINFORCING INCLUDED. REFER TO THE STANDARD DRAWING ES–2–1. ALL PULLBOXES IN SIDEWALK OR STREET AREAS SHALL HAVE THE FRAME AND LID CAST INTEGRAL WITH FINAL SIDEWALK OR PAVING. PRECAST PULLBOXES WITH INTEGRAL FRAMES AND LIDS SHALL NOT BE PERMITTED IN THESE AREAS.

THE CONTRACTOR SHALL USE THE 24" X 24", CITY TYPE "C" PULLBOX UNLESS OTHERWISE NOTED ON THE PLANS.

1322 RE–USE EXISTING PULLBOX

THE WORK OF THIS ITEM SHALL INCLUDE CLEARING THE PULLBOX OF DEBRIS, CUTTING INTO THE SIDES OF THE PULLBOX FOR NEW CONDUIT ENTRIES AND CEMENT PATCHING AND REPAIRING THE BOX TO SATISFACTORY CONDITION APPROVED BY THE ENGINEER.

PAYMENT FOR 1322 "RE–USE EXISTING PULLBOX" WILL BE MADE AT THE CONTRACT UNIT BID PRICE AND SHALL BE FULL COMPENSATION FOR ALL LABOR, MATERIAL, TOOLS, EQUIPMENT, AND INCIDENTALS REQUIRED TO COMPLETE THIS ITEM OF WORK.

1322 INSTALLATION OF PULLBOXES OVER EXISTING CONDUITS

THIS WORK SHALL INCLUDE EXCAVATING FOR THE INSTALLATION OF THE NEW PULLBOX, REMOVING PORTIONS OF EXISTING CONDUIT, MAINTAINING AND PROTECTING EXISTING TRAFFIC AND LIGHTING CABLES OR TEMPORARY REMOVAL AND REINSTALLATION OF THESE CABLES, AS APPROVED BY THE ENGINEER.

THIS WORK SHALL ALSO INCLUDE BACKFILLING PER ITEM 603.08 AND DISPOSAL OF REMOVED CONDUIT SECTIONS AND OTHER UNUSABLE EXCAVATED MATERIAL. TYPE A OR B PULLBOXES AS INDICATED MEETING SPEC. 1322.01 (CAST–IN–PLACE OR PRECAST AS APPROVED) SHALL BE INCLUDED IN THIS BID ITEM.

PAYMENT FOR 1322 "INSTALLATION OF PULLBOXES OVER EXISTING CONDUITS" SHALL BE MADE AT THE CONTRACT UNIT PRICE FOR EACH PULLBOX SPECIFIED AND SHALL BE FULL COMPENSATION FOR ALL LABOR, MATERIAL, TOOLS, EQUIPMENT, AND INCIDENTALS TO COMPLETE THIS ITEM OF WORK.

1322 SECTIONALIZERS, BY TYPE

SECTIONALIZERS SHALL BE FURNISHED BY THE CITY, WHERE SPECIFIED, AND INSTALLED BY CONTRACTOR IN ACCORDANCE WITH ITEM 1322.04.

CITY FORCES ARE TO DRILL HOLES FOR CABLE ENTRANCE CONNECTORS AS PART OF CABLE INSTALLATION. CONTRACTOR IS NOT TO DRILL OR CUT INTO SECTIONALIZER.

1323 MESSENGER CABLE, BY SIZE, WITH ACCESSORIES

MESSENGER CABLE SHALL MEET THE REQUIREMENTS OF ITEM 1323.02 AND SHALL BE FURNISHED AND INSTALLED BY CONTRACTOR.

1323 CABLES, CONNECTORS AND ACCESSORIES

TRAFFIC SIGNAL CABLE SHALL BE STRANDED COPPER CONDUCTOR AND MEET THE REQUIREMENTS OF IMSA SPECIFICATION 19–1 OR 20–1. ANY OTHER CABLE AND WIRE SHALL BE THE TYPE AND SIZE SPECIFIED IN ACCORDANCE WITH THE PLANS AND STANDARD DRAWINGS. ALL ACCESSORIES, SPLICES AND HARDWARE WILL BE INCLUDED WITH THE CABLE AND WIRE. THE CITY SHALL APPROVE ALL CONNECTIONS AND SPLICES.

CAUTION UNDERGROUND UTILITIES
2 WORKING DAYS
BEFORE YOU DIG
CALL 1–800–362–2764
OHIO UTILITY PROTECTION SERVICE
CALL NON–SERVICE FACILITY
OWNERS DIRECT

DEPARTMENT OF TRANSPORTATION & ENGINEERING · CITY OF CINCINNATI · OHIO

CONTRACT DRAWING

PRINTS NOT BEARING THIS STAMP WERE MADE PRIOR TO ADVERTISING FOR BIDS AND ARE TO BE CONSIDERED OBSOLETE FOR CONTRACT PURPOSES.

Department of Transportation and Engineering
City of Cincinnati
City Hall
801 Plum Street
Cincinnati, Ohio 45202

CINCINNATI STREETCAR

TRAFFIC SIGNAL AND LIGHTING GENERAL NOTES

Revisions
No.

Date	7/02/12
Date	7/02/12
Date	7/02/12
Date	7/12/12
Drawn by	JRL
Designed by	JRL
Checked by	JTB
Reviewed by	JTB

Consultant

PB HDR

File Number

ACC No. 23126

G-TC-1000 B

DOTE_Mono_PDF_Half.pltcfg
W:\29014A-Streetcar\CAD\Traffic_Control\Signals\Traffic Signal General Notes\S_G-TC-1000 B.dgn
7/11/2012 6:54:00 AM

TRAFFIC SIGNAL & STREET LIGHTING GENERAL NOTES

CONNECTION TO THE ENERGIZED TRAFFIC SIGNAL INTERCONNECT CABLE, OR DISCONNECTION, SHALL BE MADE BY THE CITY OF CINCINNATI FORCES. THE CONTRACTOR SHALL CONTACT THE TRAFFIC SERVICES BUREAU FIVE (5) DAYS IN ADVANCE AT 352–3712 TO ARRANGE THIS WORK.

CITY FORCES SHALL MAKE ALL SECTIONALIZER CONNECTIONS AND DISCONNECTIONS TO NEW OR EXISTING ENERGIZED INTERCONNECT CABLE. THE CONTRACTOR SHALL DO ALL OTHER WORK INVOLVED IN COMPLETING THE INSTALLATION OF THE CABLE SYSTEM.

ALL THIS WORK SHALL BE INCIDENTAL TO THE COST OF ITEM 1323 "INTERCONNECT CABLE".

CTCS CABLE (TRAFFIC CONTROL COMMUNICATION SYSTEM CABLE) WILL BE INSTALLED BY THE CONTRACTOR. PREVIOUS NOTES RELATING TO CONNECTIONS BY CITY FORCES ALSO APPLY TO THIS CABLE.

CABLE TAGS SHALL BE PROVIDED AND INSTALLED BY THE CONTRACTOR PER PLANS AND DETAILS CONTAINED HERIN. PAYMENT FOR CABLE TAGS AND THEIR INSTALLATION IS INCIDENTAL TO THE ITEM "CABLE SUPPLIED AND INSTALLED".

ALL POWER, FEEDER AND POLE AND BRACKET CABLE SHALL BE RHH/RHW/USE INSULATION AND RATED FOR 600 VOLTS. STRANDED COPPER WIRE SHALL MEET THE REQUIREMENTS OF ITEM 1323.01. CONDUCTOR OUTER JACKET COLOR SHALL BE AS INDICATED ON PLAN SHEETS AND BE PROVIDED BY PERMANENTLY COLOR IMPREGNATING THE CONDUCTORS' OUTER JACKET ALONG ITS ENTIRE LENGTH DURING THE MANUFACTURING PROCESS. CODE FOR COLOR IMPREGNATING: LINE 1–RED, LINE 2–BLACK AND GROUND–GREEN. COLOR TAPE OR PAINT ARE NOT ACCEPTABLE SUBSTITUTES.

CONNECTOR KITS AND SPLICE KITS SHALL MEET THE REQUIREMENTS OF ODOT SPEC. ITEM 725.15. FUSED CONNECTORS FOR STREET LIGHTING SHALL INCLUDE 5 AMP UL CLASS CC FUSE, 600 VOLT.

CONNECTION OF ELECTRIC SERVICES TO THE DUKE ENERGY SECONDARY (120/240 VOLT) SYSTEM SHALL BE MADE BY DUKE ENERGY CREWS ONLY.

1324 SAFETY SWITCHES (BY AMPERE SIZE)

TRAFFIC CONTROL DISCONNECT DEVICES (SAFETY SWITCHES) SHALL MEET THE REQUIREMENTS OF ITEM 1324.03. FUSING SHALL BE FURNISHED AND SHALL BE UL CLASS RK–1 RATED FOR 120 VOLTS.

1324 TRAFFIC SIGNAL CONTROLLER

INCLUDES FURNINGING AND INSTALLING THE CITY APPROVED SIGNAL CONTROL EQUIPMENT INCLUDING SIGNAL CONTROLLER, DETECTOR AMPS AND CONTROL CABINET PER ITEM 1324.

INSTALL POLE MOUNTED TRAFFIC SIGNAL CONTROLLER ON POLE AT LOCATION AND REFERENCE ANGLE IDENTIFIED ON PLAN SHEETS.

1327 TRAFFIC SIGNALS

ALL TRAFFIC SIGNAL INDICATIONS SHALL BE OF THE LED TYPE AND ALL TRAFFIC SIGNAL HEADS SHALL BE OF POLYCARBONATE CONSTRUCTION AND BE PROVIDED WITH A 3/8" DRAIN HOLE IN THE BOTTOM AND TUNNEL VISOR. ALL TRAFFIC SIGNALS SHALL BE CONNECTED TO THE DROP PIPE WITH LOCK NUTS ON THE TOP AND UNDERNEATH THE TOP SECTION. THE TRAFFIC SIGNAL LAMP AND ALL MOUNTING HARDWARE ARE INCLUDED IN THE PRICE OF THE TRAFFIC SIGNAL UNIT, INCLUDING THE ATTACHMENT OF REFLECTORIZED SIGNS TO SIGNALS. SEE STANDARD DRAWINGS ES–3–2, ES–3–4 AND ES–3–5 FOR MORE INFORMATION.

THE OPTICAL UNITS SHALL BE APPROVED BY CITY OF CINCINNATI BEFORE ORDERING AND FURNISHED IN THE ARRANGEMENTS THE PLANS SHOW.

GELCORE MODEL DR4RTFB20A40 (8" RED), DR4YTFB20A40 (8" YELLOW), DR4GCFB20A40 (8" GREEN), DR6RTFB20A40 (12" RED), DR6YTFB20A40 (12" YELLOW), DR6GCFB20A40 (12" GREEN), DR6YTAAN21AY (12" YELLOW ARROW), AND DR6MSGCAA21A (12" GREEN ARROW), OR APPROVED EQUAL. THESE OPTICAL UNITS SHALL BE MOUNTED IN POLYCARBONATE UNITS THAT ARE EAGLE SIGNAL NO. SIG130A1111BYB, SIG103A1111BYB, OR APPROVED EQUAL.

WHERE LOUVERS ARE SPECIFIED FOR TRAFFIC SIGNALS, THE CIRCULAR GREEN AND ARROW LENSES SHALL BE FURNISHED WITH LOUVERS IN LIEU OF STANDARD VISORS. THE LOUVERS SHALL BE POLYCARBONATE (ALUMINUM MAY BE FURNISHED ONLY IF POLYCARBONATE UNITS ARE NOT AVAILABLE). FLAT BLACK IN COLOR, 5 VANE, AND 12" LONG. THE COST OF THE LOUVERS SHALL BE INCIDENTAL TO THE TRAFFIC SIGNAL HEADS FURNISHED AND INSTALLED.

EAGLE SIGNAL CO. MODEL A–852270–14 OR APPROVED EQUAL.

1327 PEDESTRIAN SIGNALS

PEDESTRIAN SIGNALS SHALL BE OF ALUMINUM CONSTRUCTION WITH A BLACK FINISH AND SHALL BE THE TYPE D2 (16 INCH, 1 SECTION, LED WITH COUNTDOWN TIMER) & SHALL HAVE THE SYMBOL TYPE LEGENDS SIDE BY SIDE – THE PORTLAND ORANGE HAND (DON'T WALK INDICATION) SHALL OCCUPY THE LEFT ONE HALF OF THE SIGNAL AND LUNAR WHITE WALKING MAN (WALK INDICATION) SHALL OCCUPY THE RIGHT ONE HALF OF THE SIGNAL. SIGNALS SHALL BE PROVIDED WITH A DEFEATABLE SWITCH WITH THE ABILITY TO DISCONNECT THE COUNTDOWN TIMER. SIGNALS SHALL BE PROVIDED WITH A 3/8" DRAIN HOLE IN THE BOTTOM. SIGNALS SHALL BE PROVIDED WITH 1 INCH DEEP EGGCRATE TYPE VISORS. ALL MOUNTING HARDWARE (CLAMSHELL TYPE FOR STEEL POLES, PIPE MOUNT FOR WOOD POLES) SHALL BE INCLUDED IN THE PRICE OF THE SIGNAL. SEE STANDARD DEAWINGS ES–3–2 AND ES–3–6 FOR MORE INFORMATION.

ALL PEDESTRIAN SIGNAL OPTICAL UNITS SHALL BE OF THE LED TYPE AND BE GELCORE MODEL PS7–CFC1–26A, OR APPROVED EQUAL.

1328 PEDESTRIAN PUSHBUTTONS WITH ASSOCIATED SIGNS

THE CONTRACTOR SHALL FURNISH AND INSTALL PUSHBUTTONS AND SIGNS PER ITEM 1328, EXCEPT THAT THE BUTTON AND HOUSING SHALL BE MANUFACTURED BY POLARA, MODEL BDLM2–Y AND APDC–Y, RESPECTIVELY, OR AN APPROVED EQUAL. FOR LOCATIONS WHERE PUSHBUTTONS ARE TO BE MOUNTED ON THE CONTROLLER CABINET, THE CITY WILL PROVIDE THE PUSHBUTTON.

ALL PEDESTRIAN PUSHBUTTON ASSOCIATED SIGNS WILL BE SUPPLIED BY THE CITY OF CINCINNATI SIGN SHOP. THE CONTRACTOR SHALL CONTACT THE SIGN SHOP AT 352–4324 A MINIMUM OF SEVEN (7) WORKING DAYS TO ARRANGE TO PICK UP THE SIGNS TO BE INSTALLED.

IF ANY SIGNS ARE NOT INSTALLED THEY ARE TO BE RETURNED TO THE SIGN SHOP.

THE CONTRACTOR IS TO INCLUDE IN THEIR BID PRICE FOR ITEM 1328, PEDESTRIAN PUSHBUTTONS WITH ASSOCIATED SIGNS ALL FURNISHING OF STAINLESS STEEL MOUNTING HARDWARE, ALUMINUM PIPE, BANDING, ETC. NEEDED TO MOUNT EACH SIGN PER CITY STANDARD DRAWING ES–3–6.

1328 LOOP DETECTORS

LOOP DETECTORS SHALL BE CONSTRUCTED AS PER ITEM 1328 AND PER STANDARD DRAWING ES–4–1.

1328 VIDEO DETECTION

IN ADDITION TO THE REQUIREMENTS OF ITEM 1328 "VIDEO DETECTION", THE FOLLOWING WORK SHOULD BE PERFORMED:

SET UP THE CAMERA DETECTION TO OPERATE WITH 6' X 60' DETECTION ZONES. DETECTION ZONES NEED THE ABILITY TO DISTINGUISH BETWEEN THE STREETCAR AND OTHER VEHICLES. THIS CAN BE DONE THROUGH VEHICLE LENGTH AS SHOWN:

WILL DETECTION TRIGGER QUEUE JUMP?

ITEM 1328 SPECIAL – VIDEO DETECTION MISC.: RELOCATION OF VIDEO SURVEILLANCE CAMERA, AS PER PLAN

THE CONTRACTOR SHALL INCLUDE IN THE BID PRICE FOR THE RELOCATION OF VIDEO SURVEILLANCE CAMERA, THE REMOVAL AND RE–ERECTION OF THE VIDEO SURVEILLANCE CAMERA. ALL LABOR, EQUIPMENT, AND MATERIALS INCLUDING, BUT NOT LIMITED TO MOUNTING HARDWARE, VIDEO CABLE, POWER CABLE AND FITTINGS SHALL BE INCLUDED IN THE BID PRICE FOR THIS ITEM.

1329 REFLECTORIZED SIGNS

ALL OVERHEAD SIGNS WILL BE SUPPLIED BY THE CONTRACTOR.

IF ANY SIGNS ARE NOT INSTALLED THEY ARE TO BE RETURNED TO THE SIGN SHOP.

THE CONTRACTOR IS TO INCLUDE IN THEIR BID PRICE FOR ITEM 1329, REFLECTORIZED SIGNS, ALL FURNISHING OF ALUMINUM DROP PIPE, STAINLESS STEEL MOUNTING HARDWARE, SPAN WIRE ATTACHMENT, SIGNS, ETC. NEEDED TO MOUNT EACH SIGN PER CITY STANDARD DRAWING ES–3–1A.

1332 RELOCATION OF EXISTING STREET LIGHTING LUMINAIRE

WHERE SPECIFIED, THIS ITEM OF WORK SHALL INCLUDE REMOVING THE FIXTURE AND REMOUNTING ON THE SPECIFIED NEW POLE'S BRACKET ARM AND SHALL INCLUDE ALL LABOR, MATERIALS, TOOLS, EQUIPMENT, INCIDENTALS AND HARDWARE TO FURNISH THIS ITEM COMPLETE, TESTED AND ACCEPTED.

1333 MODIFICATION OF EXISTING LIGHTING CIRCUITS

WHERE SPECIFIED, THIS WORK SHALL CONSIST OF VARIOUS ITEMS FOR BID. REFER TO THE SUB SUMMARY SHEET FOR THE ITEMS REQUIRED PER CIRCUIT.

ITEM 1335 CABLE AND POLE IDENTIFICATION

IN ADDITION TO ITEM 1335, ALL INTERCONNECT CABLE INSTALLATIONS SHALL INCLUDE THE INSTALLATION OF WEATHERPROOF PLASTIC CABLE TAGS WITH INDELIBLE, IMPRINTED TEXT "COC 591–6000", ZIP TIED TO THE CABLE AT EVERY POLE ATTACHMENT POINT.

CAUTION UNDERGROUND UTILITIES
2 WORKING DAYS
BEFORE YOU DIG
CALL 1–800–362–2764
OHIO UTILITY PROTECTION SERVICE
CALL NON–SERVICE FACILITY
OWNERS DIRECT

DOTE_Mono_PDF_Half.pltcfg
W:\29014A-Streetcar\CAD\Traffic_Control\Signals\Traffic Signal General Notes\S_G-TC-1000 C.dgn
7/11/2012 6:54:05 AM

CONTRACT DRAWING

PRINTS NOT BEARING THIS STAMP WERE MADE PRIOR TO ADVERTISING FOR BIDS AND ARE TO BE CONSIDERED OBSOLETE FOR CONTRACT PURPOSES.

Department of Transportation and Engineering

City of Cincinnati
City Hall
801 Plum Street
Cincinnati, Ohio 45202

CINCINNATI STREETCAR

TRAFFIC SIGNAL AND LIGHTING GENERAL NOTES

Revisions
No.

Date 7/02/12	Drawn by JRL
Date 7/02/12	Designed by JRL
Date 7/02/12	Checked by JTB
Date 7/12/12	Reviewed by JTB

Consultant

PB HDR

File Number

ACC No. 23126

G-TC-1000 C

SHEET NUMBER							ITEM	ITEM EXT.	GRAND TOTAL	UNIT	DESCRIPTION	SEE SHEET NO.
G-TC-1000 G	G-TC-1000 H	G-TC-1000 I	G-TC-1000 J	G-TC-1000 K	G-TC-1000 L	G-TC-1000 M						
180							614	11120	180	HOUR	LAW ENFORCEMENT OFFICER WITH PATROL CAR FOR ENFORCEMENT	
1							625	17950	1	EACH	BRACKET ARM, 6'	
1							625	35010	1	EACH	REMOVE AND RE-ERECT EXISTING LIGHT POLE	
3							632		3	EACH	SIGNAL SUPPORT FOUNDATION	
3							632		3	EACH	SIGNAL SUPPORT, MISC: SPECIAL POLE DESIGN	G-TC-1000 A
1							633	67100	1	EACH	CABINET FOUNDATION	
15							1312		15	EACH	POWER SERVICE	
41							1314		41	EACH	MAINTENANCE OF EXISTING TRAFFIC SIGNAL LOCATION	
6							1316		6	LUMP SUM	REMOVAL OF EXISTING STREET LIGHTING EQUIPMENT	
41							1316		41	EACH	REMOVAL OF EXISTING TRAFFIC SIGNAL INSTALLATION BY LOCATION	
15							1318		15	EACH	SIGNAL STRAIN POLE, 0 GAUGE, 9 INCHES (BASE) X 26 FEET (LENGTH), CITY DESIGN NO. 29053	
3							1318		3	EACH	SIGNAL STRAIN POLE, 0 GAUGE, 11 INCHES (BASE) X 30 FEET (LENGTH), CITY DESIGN NO. 38045	
1							1318		1	EACH	SIGNAL ARM POLE, 0 GAUGE, 9 INCHES (BASE) X 20.5 FEET (LENGTH), WITH MAST ARM(S) 11 GAUGE, 4 INCHES (BASE) X 2 FEET (LENGTH), DESIGN NO. UMC DESIGN 50700-B1275-Y1	
2							1318		2	EACH	SIGNAL ARM POLE, 0 GAUGE, 9 INCHES (BASE) X 20.5 FEET (LENGTH), WITH MAST ARM(S) 11 GAUGE, 4 INCHES (BASE) X 3 FEET (LENGTH), DESIGN NO. UMC DESIGN 50700-B1275-Y1	
2							1318		2	EACH	SIGNAL ARM POLE, 0 GAUGE, 9 INCHES (BASE) X 20.5 FEET (LENGTH), WITH MAST ARM(S) 11 GAUGE, 4 INCHES (BASE) X 5 FEET (LENGTH), DESIGN NO. UMC DESIGN 50700-B1275-Y1	
2							1318		2	EACH	SIGNAL ARM POLE, 0 GAUGE, 9 INCHES (BASE) X 20.5 FEET (LENGTH), WITH MAST ARM(S) 11 GAUGE, 4 INCHES (BASE) X 6 FEET (LENGTH), DESIGN NO. UMC DESIGN 50700-B1275-Y1	
	1						1318		1	EACH	SIGNAL ARM POLE, 0 GAUGE, 9 INCHES (BASE) X 20.5 FEET (LENGTH), WITH MAST ARM(S) 11 GAUGE, 5 INCHES (BASE) X 10 FEET (LENGTH), DESIGN NO. UMC DESIGN 50700-B1275-Y3	
	1						1318		1	EACH	SIGNAL ARM POLE, 0 GAUGE, 9 INCHES (BASE) X 20.5 FEET (LENGTH), WITH MAST ARM(S) 11 GAUGE, 5 INCHES (BASE) X 12 FEET (LENGTH), DESIGN NO. UMC DESIGN 50700-B1275-Y3	
	1						1318		1	EACH	SIGNAL ARM POLE, 0 GAUGE, 9 INCHES (BASE) X 20.5 FEET (LENGTH), WITH MAST ARM(S) 11 GAUGE, 5.5 INCHES (BASE) X 13 FEET (LENGTH), DESIGN NO. UMC DESIGN 50700-B1275-Y4	
	1						1318		1	EACH	SIGNAL ARM POLE, 0 GAUGE, 9 INCHES (BASE) X 20.5 FEET (LENGTH), WITH MAST ARM(S) 11 GAUGE, 5.5 INCHES (BASE) X 14 FEET (LENGTH), DESIGN NO. UMC DESIGN 50700-B1275-Y4	
	2						1318		2	EACH	SIGNAL ARM POLE, 0 GAUGE, 9 INCHES (BASE) X 20.5 FEET (LENGTH), WITH MAST ARM(S) 7 GAUGE, 6 INCHES (BASE) X 16 FEET (LENGTH), DESIGN NO. UMC DESIGN 50700-B1275-Y5	
	2						1318		2	EACH	SIGNAL ARM POLE, 0 GAUGE, 9 INCHES (BASE) X 20.5 FEET (LENGTH), WITH MAST ARM(S) 7 GAUGE, 6 INCHES (BASE) X 17 FEET (LENGTH), DESIGN NO. UMC DESIGN 50700-B1275-Y5	
	3						1318		3	EACH	SIGNAL ARM POLE, 0 GAUGE, 9 INCHES (BASE) X 20.5 FEET (LENGTH), WITH MAST ARM(S) 7 GAUGE, 6 INCHES (BASE) X 18 FEET (LENGTH), DESIGN NO. UMC DESIGN 50700-B1275-Y5	
	4						1318		4	EACH	SIGNAL ARM POLE, 0 GAUGE, 9 INCHES (BASE) X 20.5 FEET (LENGTH), WITH MAST ARM(S) 7 GAUGE, 6 INCHES (BASE) X 20 FEET (LENGTH), DESIGN NO. UMC DESIGN 50700-B1275-Y5	
	1						1318		1	EACH	SIGNAL ARM POLE, 0 GAUGE, 9 INCHES (BASE) X 26 FEET (LENGTH), WITH MAST ARM(S) 11 GAUGE, 4 INCHES (BASE) X 5 FEET (LENGTH), DESIGN NO. UMC DESIGN 50700-B1284-Y1	
	1						1318		1	EACH	SIGNAL ARM POLE, 0 GAUGE, 9 INCHES (BASE) X 26 FEET (LENGTH), WITH MAST ARM(S) 11 GAUGE, 4 INCHES (BASE) X 6 FEET (LENGTH), DESIGN NO. UMC DESIGN 50700-B1284-Y1	
	2						1318		2	EACH	SIGNAL ARM POLE, 0 GAUGE, 9 INCHES (BASE) X 26 FEET (LENGTH), WITH MAST ARM(S) 11 GAUGE, 4.5 INCHES (BASE) X 7 FEET (LENGTH), DESIGN NO. UMC DESIGN 50700-B1284-Y2	
	1						1318		1	EACH	SIGNAL ARM POLE, 0 GAUGE, 9 INCHES (BASE) X 26 FEET (LENGTH), WITH MAST ARM(S) 11 GAUGE, 5 INCHES (BASE) X 11 FEET (LENGTH), DESIGN NO. UMC DESIGN 50700-B1284-Y3	
	1						1318		1	EACH	SIGNAL ARM POLE, 0 GAUGE, 9 INCHES (BASE) X 26 FEET (LENGTH), WITH MAST ARM(S) 11 GAUGE, 5.5 INCHES (BASE) X 15 FEET (LENGTH), DESIGN NO. UMC DESIGN 50700-B1284-Y4	
	2						1318		2	EACH	SIGNAL ARM POLE, 0 GAUGE, 9 INCHES (BASE) X 26 FEET (LENGTH), WITH MAST ARM(S) 7 GAUGE, 6 INCHES (BASE) X 16 FEET (LENGTH), DESIGN NO. UMC DESIGN 50700-B1284-Y5	
	1						1318		1	EACH	SIGNAL ARM POLE, 0 GAUGE, 9 INCHES (BASE) X 26 FEET (LENGTH), WITH MAST ARM(S) 7 GAUGE, 6 INCHES (BASE) X 18 FEET (LENGTH), DESIGN NO. UMC DESIGN 50700-B1284-Y5	
	1						1318		1	EACH	SIGNAL ARM POLE, 0 GAUGE, 9 INCHES (BASE) X 26 FEET (LENGTH), WITH MAST ARM(S) 7 GAUGE, 6 INCHES (BASE) X 20 FEET (LENGTH), DESIGN NO. UMC DESIGN 50700-B1284-Y5	
		2					1318		2	EACH	SIGNAL ARM POLE, 0 GAUGE, 11 INCHES (BASE) X 30 FEET (LENGTH), WITH MAST ARM(S) 11 GAUGE, 4 INCHES (BASE) X 6 FEET (LENGTH), DESIGN NO. UMC DESIGN 50700-B1285-Y1	
		1					1318		1	EACH	SIGNAL ARM POLE, 0 GAUGE, 11 INCHES (BASE) X 30 FEET (LENGTH), WITH MAST ARM(S) 7 GAUGE, 6 INCHES (BASE) X 16 FEET (LENGTH), DESIGN NO. UMC DESIGN 50700-B1285-Y5	
		1					1318		1	EACH	SIGNAL ARM POLE, 0 GAUGE, 11 INCHES (BASE) X 30 FEET (LENGTH), WITH MAST ARM(S) 7 GAUGE, 6 INCHES (BASE) X 20 FEET (LENGTH), DESIGN NO. UMC DESIGN 50700-B1285-Y5	

CAUTION UNDERGROUND UTILITIES
2 WORKING DAYS
BEFORE YOU DIG
CALL 1-800-362-2764
OHIO UTILITY PROTECTION SERVICE
CALL NON-SERVICE FACILITY
OWNERS DIRECT

DOTE_Mono_PDF_Half.pltcfg
W:\29014A-Streetcar\CAD\Traffic_Control\Signals\1000_Quantities\S_G-TC-1000 D.dgn
6:54:12 AM
7/11/2012

DEPARTMENT OF TRANSPORTATION & ENGINEERING
CITY OF CINCINNATI OHIO

CONTRACT DRAWING

PRINTS NOT BEARING THIS STAMP WERE MADE PRIOR TO ADVERTISING FOR BID, AND ARE TO BE CONSIDERED OBSOLETE FOR CONTRACT PURPOSES.

Department of Transportation and Engineering

City of Cincinnati
City Hall
801 Plum Street
Cincinnati, Ohio 45202

CINCINNATI STREETCAR

TRAFFIC SIGNAL GENERAL SUMMARY

Revisions
No.

Drawn by JRL	Date 12/20/11	Designed by JRL	Date 12/20/11
Checked by JTB	Date 12/20/11	Reviewed by JTB	Date 12/20/11

Consultant

PB HDR

File Number

ACC No. 23126

G-TC-1000 D

SHEET NUMBER							ITEM	ITEM EXT.	GRAND TOTAL	UNIT	DESCRIPTION	SEE SHEET NO.
G-TC-1000 G	G-TC-1000 H	G-TC-1000 I	G-TC-1000 J	G-TC-1000 K	G-TC-1000 L	G-TC-1000 M						
		2					1318		2	EACH	SIGNAL SUPPORT, MISC.: 11 GAUGE, 13 INCHES (BASE) X 15 FEET (LENGTH), DESIGN NO. UMC DESIGN 50054-A934-Y1	
		1					1318		1	EACH	SIGNAL SUPPORT, MISC.: MAST ARM(S) 11 GAUGE, 4 INCHES (BASE) X 4 FEET (LENGTH), DESIGN NO. UMC DESIGN 50303-B217-Y1	
		1					1318		1	EACH	SIGNAL SUPPORT, MISC.: MAST ARM(S) 11 GAUGE, 5.5 INCHES (BASE) X 12 FEET (LENGTH), DESIGN NO. UMC DESIGN 50303-B217-Y4	
		4					1318		4	EACH	MOT SIGNAL POLE, WITH ONE BAY BOOM	
		1					1318		1	EACH	MOT SIGNAL POLE, WITH TWO BAY BOOM	
		3					1318		3	EACH	MOT SIGNAL POLE, WITH THREE BAY BOOM	
		3					1318		3	EACH	MOT SIGNAL POLE, WITH FOUR BAY BOOM	
		1					1318		1	EACH	MOT SIGNAL POLE, WITH FIVE BAY BOOM	
		1					1318		1	EACH	MOTX SIGNAL POLE, WITH SIX BAY BOOM	
		2					1318		2	EACH	MOLT SIGNAL POLE, WITH FIVE BAY BOOM	
		1					1318		1	EACH	MOLT SIGNAL POLE, WITH FIVE BAY BOOM AND TWO BAY BOOM	
		1					1318		1	EACH	MOLTX SIGNAL POLE, WITH ONE BAY BOOM	
			2				1318		2	EACH	MOLTX SIGNAL POLE, WITH SIX BAY BOOM AND ONE BAY BOOM	
			21				1318		21	EACH	SIGNAL SUPPORT, MISC.: ONE BAY BOOM ONLY	
			3				1318		3	EACH	SIGNAL SUPPORT, MISC.: TWO BAY BOOM ONLY	
			3				1318		3	EACH	SIGNAL SUPPORT, MISC.: THREE BAY BOOM ONLY	
			6				1318		6	EACH	SIGNAL SUPPORT, MISC.: FOUR BAY BOOM ONLY	
			21				1318		21	EACH	PEDESTAL, 4 INCHES (DIAMETER) x 10 FEET (LENGTH)	
			49				1318		49	EACH	CABLE SUPPORT ASSEMBLY	
			1				1319		1	EACH	CONCRETE ANCHOR BASE POLE FOUNDATION, 2 FT. DIA. X 8 FT. DEEP, FDN-3	
			46				1319		46	EACH	CONCRETE ANCHOR BASE POLE FOUNDATION, 2.5 FT. DIA. X 10 FT. DEEP, FDN-7	
			7				1319		7	EACH	CONCRETE ANCHOR BASE POLE FOUNDATION, 3 FT. DIA. X 11 FT. DEEP, FDN-10	
			21				1319		21	EACH	CONCRETE ANCHOR BASE POLE FOUNDATION, 2 FT. DIA. X 4 FT. DEEP, FDN-25	
			11				1319		11	EACH	CONCRETE ANCHOR BASE POLE FOUNDATION, 2.5 FT. DIA. X 11 FT. DEEP, FDN-51	
			1				1319		1	EACH	CONCRETE ANCHOR BASE POLE FOUNDATION, 2.5 FT. DIA. X 12 FT. DEEP, FDN-52	
			1				1319		1	EACH	CONCRETE ANCHOR BASE POLE FOUNDATION, 3 FT. DIA. X 13 FT. DEEP, FDN-53	
			3				1319		3	EACH	CONCRETE ANCHOR BASE POLE FOUNDATION, 2.5 FT. DIA. X 14 FT. DEEP, FDN-55	
				3			1319		3	EACH	CONCRETE ANCHOR BASE POLE FOUNDATION, 3 FT. DIA. X 13 FT. DEEP, FDN-56	
				2			1319		2	EACH	SPECIAL - CONCRETE ANCHOR BASE POLE FOUNDATION MISC.: SPREAD FOOTING, AS PER PLAN	
				100			1320		100	EACH	GROUND ROD	
				12186			1321		12186	FOOT	TRENCH, PAVED AREAS, LESS/MORE THAN 6"	
				9161			1321		9161	FOOT	CONDUIT, 3 INCHES (DIAMETER) RMC	
				10023			1321		10023	FOOT	CONDUIT, 4 INCHES (DIAMETER) RMC	
				272			1321		272	FOOT	CONDUIT, 2 INCHES (DIAMETER) PVC CONCRETE ENCASED	
				4357			1321		4357	FOOT	CONDUIT, 3 INCHES (DIAMETER) PVC CONCRETE ENCASED	
				60			1321		60	FOOT	CONDUIT, 4 INCHES (DIAMETER) PVC CONCRETE ENCASED	
				11			1321		11	EACH	WEATHERHEAD AND CONDUIT RISER, 2 INCH (DIAMETER)	
				94			1322		94	EACH	PULLBOX, CONCRETE, 24 INCHES X 24 INCHES, TYPE "C"	
				12			1322		12	EACH	SECTIONALIZERS, TYPE I	
				45529			1323		45529	FOOT	TRAFFIC SIGNAL CABLE 7 CONDUCTOR NO. 14 AWG	
				10012			1323		10012	FOOT	FEEDER AND POLE AND BRACKET CABLE 2 CONDUCTOR NO. 12 AWG	
				1500			1323		1500	FOOT	FEEDER AND POLE AND BRACKET CABLE 2 CONDUCTOR NO. 10 AWG	
				300			1323		300	FOOT	SERIES STREET LIGHTING CABLE 3 CONDUCTOR NO. 8 AWG	
					2846		1323		2846	FOOT	POWER CABLE 1 CONDUCTOR NO. 6 AWG	
					3315		1323		3315	FOOT	6 PAIR OF TCCS CABLE 12 AWG	
					2499		1323		2499	FOOT	MESSENGER WIRE, 7 STRAND NO. 8 AWG (3/8" DIAMETER) WITH ACCESSORIES	
					22		1323		22	EACH	CONNECTOR KIT, TYPE 2 WITH 15 AMP FUSE	
					8		1324		8	EACH	SAFETY SWITCH, 60 AMP	
					39		1324		39	EACH	TRAFFIC SIGNAL CONTROLLER, POLE MOUNT TYPE, INCLUDING CONTROL EQUIPMENT	
					1		1324		1	EACH	TRAFFIC SIGNAL CONTROLLER, BASE MOUNT TYPE, INCLUDING CONTROL EQUIPMENT	
					3		1325		3	EACH	LUMINAIRE, 250 WATT, 120+ VOLT, HIGH PRESSURE SODIUM LAMPS (LIGHT SOURCE), STANDARD ROADWAY TYPE	
					10		1325		10	EACH	LUMINAIRE, 250 WATT, 120+ VOLT, HIGH PRESSURE SODIUM LAMPS (LIGHT SOURCE), SPHERICAL ROADWAY LUMINAIRE TYPE	
					233		1327		233	EACH	VEHICULAR SIGNAL HEAD, ASSEMBLY 3 SECTION, 12 INCH (LED) LENS, 1 WAY	
					19		1327		19	EACH	VEHICULAR SIGNAL HEAD, ASSEMBLY 1 SECTION, 12 INCH (LED) LENS, 1 WAY	
					10		1327		10	EACH	TRANSIT SIGNAL HEAD, ASSEMBLY 2 SECTION, 12 INCH (LED) LENS, 1 WAY	

CAUTION UNDERGROUND UTILITIES
2 WORKING DAYS
BEFORE YOU DIG
CALL 1-800-362-2764
OHIO UTILITY PROTECTION SERVICE
CALL NON-SERVICE FACILITY
OWNERS DIRECT

DOTE_Mono_PDF_Half.pltcfg
W:\29014A-Streetcar\CAD\Traffic_Control\Signals\1000_Quantities\S_G-TC-1000_E.dgn
3:51:34 PM
7/11/2012

CONTRACT DRAWING

PRINTS NOT BEARING THIS STAMP WERE MADE PRIOR TO ADVERTISING FOR BIDS AND ARE TO BE CONSIDERED OBSOLETE FOR CONTRACT PURPOSES.

Department of Transportation and Engineering

City of Cincinnati
City Hall
801 Plum Street
Cincinnati, Ohio 45202

CINCINNATI STREETCAR

TRAFFIC SIGNAL GENERAL SUMMARY

Revisions
No.

Date 12/20/11	Date 12/20/11	Date 12/20/11	Date 12/20/11
Drawn by JRL	Designed by JRL	Checked by JTB	Reviewed by JTB

Consultant

PB HDR

File Number

ACC No. 23126

G-TC-1000 E

SHEET NUMBER							ITEM	ITEM EXT.	GRAND TOTAL	UNIT	DESCRIPTION	SEE SHEET NO.
G-TC-1000 G	G-TC-1000 H	G-TC-1000 I	G-TC-1000 J	G-TC-1000 K	G-TC-1000 L	G-TC-1000 M						
					3		1327		3	EACH	OPTICALLY PROGRAMMED SIGNAL HEAD, ASSEMBLY 3 SECTION, 12 INCH LENS, 1 WAY	
					306		1327		306	EACH	PEDESTRIAN SIGNAL HEAD ASSEMBLY, (LED) COUNTDOWN TYPE D2, WITH DEFEATABLE SWITCH	
					12		1328		12	EACH	PEDESTRIAN PUSHBUTTON WITH ASSOCIATED SIGNS	
					8		1328		8	EACH	VIDEO DETECTION	
						2	1328		2	EACH	SPECIAL – VIDEO DETECTION MISC.: RELOCATION OF VIDEO SURVEILLANCE CAMERA, AS PER PLAN	
						75	1329		75	EACH	INTERNALLY ILLUMINATED SIGN, DOUBLE FACE, T-12 FLOURESCENT LAMP LIGHT SOURCE, 24 INCHES X 30 INCHES	
						132	1329		132	EACH	INTERNALLY ILLUMINATED SIGN, SINGLE FACE, T-12 FLOURESCENT LAMP LIGHT SOURCE, 24 INCHES X 30 INCHES	
						10	1329		10	EACH	INTERNALLY ILLUMINATED SIGN, SINGLE FACE, T-12 FLOURESCENT LAMP LIGHT SOURCE, 24 INCHES X 24 INCHES	
						1	1329		1	EACH	INTERNALLY ILLUMINATED SIGN, SINGLE FACE, T-12 FLOURESCENT LAMP LIGHT SOURCE, 30 INCHES X 30 INCHES	
						1	1329		1	EACH	INTERNALLY ILLUMINATED SIGN, SINGLE FACE, T-12 FLOURESCENT LAMP LIGHT SOURCE, 36 INCHES X 30 INCHES	
						93	1329		93	EACH	SPAN WIRE MOUNTED SIGN ATTACHMENT	
						244	1329		244	EACH	MAST ARM MOUNTED SIGN ATTACHMENT	
						7	1329		7	EACH	POLE MOUNTED SIGN ATTACHMENT	
						97	1329		97	EACH	SIGN, REFLECTORIZED, 24 INCHES X 30 INCHES	
						8	1329		8	EACH	SIGN, REFLECTORIZED, 24 INCHES X 24 INCHES	
						2	1329		2	EACH	SIGN, REFLECTORIZED, 30 INCHES X 30 INCHES	
						2	1329		2	EACH	SIGN, REFLECTORIZED, 36 INCHES X 30 INCHES	
						4	1329		4	EACH	SIGN, REFLECTORIZED, 36 INCHES X 36 INCHES	
						3	1329		3	EACH	SIGN, REFLECTORIZED, EXPRESSWAY DIRECTIONAL	
						7	1329		7	EACH	SIGN, REFLECTORIZED, CITY "SPECIAL" WAYFINDING	

CAUTION UNDERGROUND UTILITIES
2 WORKING DAYS
BEFORE YOU DIG
CALL 1-800-362-2764
OHIO UTILITY PROTECTION SERVICE
CALL NON-SERVICE FACILITY
OWNERS DIRECT

DOTE_Mono_PDF_Half.pltcfg
W:\29014A-Streetcar\CAD\Traffic_Control\Signals\1000_Quantities\S_G-TC-1000_F.dgn
7/11/2012 6:54:22 AM

DEPARTMENT OF TRANSPORTATION & ENGINEERING
CITY OF CINCINNATI OHIO

CONTRACT DRAWING

PRINTS NOT BEARING THIS STAMP WERE MADE PRIOR TO ADVERTISING FOR BID AND ARE TO BE CONSIDERED OBSOLETE FOR CONTRACT PURPOSES.

Department of Transportation and Engineering

City of Cincinnati
City Hall
801 Plum Street
Cincinnati, Ohio 45202

CINCINNATI STREETCAR

TRAFFIC SIGNAL GENERAL SUMMARY

Revisions
No.

Drawn by JRL	Date 12/20/11
Designed by JRL	Date 12/20/11
Checked by JTB	Date 12/20/11
Reviewed by JTB	Date 12/20/11

Consultant

PB HDR

File Number

ACC No.
23126

G-TC-1000 F

SHEET NO.	LOCATION	614 LAW ENFORCEMENT OFFICER WITH PATROL CAR FOR ENFORCEMENT	625 BRACKET ARM, 6'	625 REMOVE AND RE-ERECT EXISTING LIGHT POLE	632 SIGNAL SUPPORT FOUNDATION	632 SIGNAL SUPPORT, MISC: SPECIAL POLE DESIGN	633 CABINET FOUNDATION	1312 POWER SERVICE	1314 MAINTENANCE OF EXISTING TRAFFIC SIGNAL LOCATION	1316 REMOVAL OF EXISTING STREET LIGHTING EQUIPMENT	1316 REMOVAL OF EXISTING TRAFFIC SIGNAL INSTALLATION BY LOCATION	1318 SIGNAL STRAIN POLE, 0 GAUGE, 9 INCHES (BASE) X 26 FEET (LENGTH), CITY DESIGN NO. 29053	1318 SIGNAL STRAIN POLE, 0 GAUGE, 11 INCHES (BASE) X 30 FEET (LENGTH), CITY DESIGN NO. 38045	1318 SIGNAL ARM POLE, 0 GAUGE, 9 INCHES (BASE) X 20.5 FEET (LENGTH), WITH MAST ARM(S) 11 GAUGE, 4 INCHES (BASE) X 2 FEET (LENGTH), DESIGN NO. UMC DESIGN 50700-B1275-Y1	1318 SIGNAL ARM POLE, 0 GAUGE, 9 INCHES (BASE) X 20.5 FEET (LENGTH), WITH MAST ARM(S) 11 GAUGE, 4 INCHES (BASE) X 3 FEET (LENGTH), DESIGN NO. UMC DESIGN 50700-B1275-Y1	1318 SIGNAL ARM POLE, 0 GAUGE, 9 INCHES (BASE) X 20.5 FEET (LENGTH), WITH MAST ARM(S) 11 GAUGE, 4 INCHES (BASE) X 5 FEET (LENGTH), DESIGN NO. UMC DESIGN 50700-B1275-Y1	1318 SIGNAL ARM POLE, 0 GAUGE, 9 INCHES (BASE) X 20.5 FEET (LENGTH), WITH MAST ARM(S) 11 GAUGE, 4 INCHES (BASE) X 6 FEET (LENGTH), DESIGN NO. UMC DESIGN 50700-B1275-Y1
		HOUR	EACH	EACH	EACH	EACH	EACH	EACH	EACH	LUMP SUM	EACH	EACH	EACH	EACH	EACH	EACH	EACH
G-TC-1001 C	CENTRAL PARKWAY AND VINE STREET	4						1	1	1	1						
G-TC-1002 C	CENTRAL PARKWAY AND WALNUT STREET	4							1		1		1				
G-TC-1003 C	WALNUT STREET AND COURT STREET	4							1		1						
G-TC-1004 C	WALNUT STREET AND NINTH STREET	4							1		1						
G-TC-1005 C	WALNUT STREET AND EIGHTH STREET	4							1		1						
G-TC-1006 C	WALNUT STREET AND SEVENTH STREET	4		1					1		1						
G-TC-1007 C	WALNUT STREET AND SIXTH STREET	4							1		1						
G-TC-1008 C	WALNUT STREET AND GOVERNMENT PLACE	4							1		1						
G-TC-1009 C	WALNUT STREET AND FIFTH STREET	4						1	1		1						
G-TC-1010 C	MIDBLOCK (5TH AND 4TH) AND WALNUT STREET	4						1	1	1	1						
G-TC-1011 C	WALNUT STREET AND FOURTH STREET	4							1		1						
G-TC-1012 C	MIDBLOCK (4TH AND 3RD) AND WALNUT STREET	4							1		1						
G-TC-1013 C	WALNUT STREET AND THIRD STREET	4							1		1						
G-TC-1014 C	WALNUT STREET AND SECOND STREET	4			1	1			1	1	1						
G-TC-1016 C	MAIN STREET AND SECOND STREET	16			2	2			1	1	1						
G-TC-1017 C	MAIN STREET AND THIRD STREET	4							1		1						
G-TC-1018 C	MAIN STREET AND FOURTH STREET	4							1		1						
G-TC-1019 C	MAIN STREET AND FIFTH STREET	4							1		1						
G-TC-1020 C	MAIN STREET AND GOVERNMENT PLACE	4							1		1						
G-TC-1021 C	MAIN STREET AND SIXTH STREET	4							1		1						
G-TC-1022 C	MAIN STREET AND SEVENTH STREET	4							1		1						
G-TC-1023 C	MAIN STREET AND EIGHTH STREET	4							1		1						
G-TC-1024 C	MAIN STREET AND NINTH STREET	4							1		1						
G-TC-1025 C	MAIN STREET AND COURT STREET	4							1		1						
G-TC-1026 C	MAIN STREET AND CENTRAL PARKWAY	4							1		1						
G-TC-1027 C	MAIN STREET AND TWELFTH STREET	4					1	1	1		1	3					
G-TC-1028 C	TWELFTH STREET AND WALNUT STREET	4							1		1					1	
G-TC-2001 C	TWELFTH STREET AND VINE STREET	4							1		1	1					1
G-TC-2002 C	TWELFTH STREET AND RACE STREET	4						1	1		1			1	1	1	
G-TC-2003 C	ELM STREET AND TWELFTH STREET	4						1	1		1	1					
G-TC-2004 C	ELM STREET AND FOURTEENTH STREET	4						1	1		1	1					1
G-TC-2005 C	ELM STREET AND LIBERTY STREET	4	1					1	1	1	1		2				
G-TC-2006 C	ELM STREET AND FINDLAY STREET	4							1		1	1					
G-TC-2007 C	RACE STREET AND FINDLAY STREET	4						1	1		1	2					
G-TC-2008 C	RACE STREET AND ELDER STREET	4						1	1		1	2			1		
G-TC-2009 C	RACE STREET AND GREEN STREET	4						1	1		1	1					
G-TC-2010 C	RACE STREET AND LIBERTY STREET	4						1	1		1						
G-TC-2011 C	RACE STREET AND FIFTEENTH STREET	4						1	1		1						
G-TC-2012 C	RACE STREET AND FOURTEENTH STREET	4						1	1		1	3					
G-TC-2013 C	RACE STREET AND THIRTEENTH STREET	8						1	1		1						
G-TC-2014 C	RACE STREET AND CENTRAL PARKWAY	4							1	1	1						
TOTALS CARRIED TO GENERAL SUMMARY		180	1	1	3	3	1	15	41	6	41	15	3	1	2	2	2

CAUTION UNDERGROUND UTILITIES
2 WORKING DAYS
BEFORE YOU DIG
CALL 1-800-362-2764
OHIO UTILITY PROTECTION SERVICE
CALL NON-SERVICE FACILITY
OWNERS DIRECT

DEPARTMENT OF TRANSPORTATION & ENGINEERING CITY OF CINCINNATI OHIO

CONTRACT DRAWING

PRINTS NOT BEARING THIS STAMP WERE MADE PRIOR TO ADVERTISING FOR BIDS AND ARE TO BE CONSIDERED OBSOLETE FOR CONTRACT PURPOSES.

Department of Transportation and Engineering

City of Cincinnati
City Hall
801 Plum Street
Cincinnati, Ohio 45202

CINCINNATI STREETCAR

TRAFFIC SIGNAL SUBSUMMARY

Revisions
No.

Date 12/20/11
Date 12/20/11
Date 12/20/11
Date 12/20/11

Drawn by JRL
Designed by JRL
Checked by JTB
Reviewed by JTB

Consultant

PB HDR

File Number

ACC No.
23126

G-TC-1000 G

DOTE_Mono_PDF_Half.pltcfg
W:\29014A-Streetcar\CAD\Traffic_Control\Signals\1000_Quantities\S_G-TC-1000 G.dgn
7/11/2012 6:54:28 AM

SHEET NO.	LOCATION	1318 SIGNAL ARM POLE, 0 GAUGE, 9 INCHES (BASE) X 20.5 FEET (LENGTH), WITH MAST ARM(S) 11 GAUGE, 5 INCHES (BASE) X 10 FEET (LENGTH), DESIGN NO. UMC DESIGN 50700-B1275-Y3	1318 SIGNAL ARM POLE, 0 GAUGE, 9 INCHES (BASE) X 20.5 FEET (LENGTH), WITH MAST ARM(S) 11 GAUGE, 5 INCHES (BASE) X 12 FEET (LENGTH), DESIGN NO. UMC DESIGN 50700-B1275-Y3	1318 SIGNAL ARM POLE, 0 GAUGE, 9 INCHES (BASE) X 20.5 FEET (LENGTH), WITH MAST ARM(S) 11 GAUGE, 5.5 INCHES (BASE) X 13 FEET (LENGTH), DESIGN NO. UMC DESIGN 50700-B1275-Y4	1318 SIGNAL ARM POLE, 0 GAUGE, 9 INCHES (BASE) X 20.5 FEET (LENGTH), WITH MAST ARM(S) 11 GAUGE, 5.5 INCHES (BASE) X 14 FEET (LENGTH), DESIGN NO. UMC DESIGN 50700-B1275-Y4	1318 SIGNAL ARM POLE, 0 GAUGE, 9 INCHES (BASE) X 20.5 FEET (LENGTH), WITH MAST ARM(S) 7 GAUGE, 6 INCHES (BASE) X 16 FEET (LENGTH), DESIGN NO. UMC DESIGN 50700-B1275-Y5	1318 SIGNAL ARM POLE, 0 GAUGE, 9 INCHES (BASE) X 20.5 FEET (LENGTH), WITH MAST ARM(S) 7 GAUGE, 6 INCHES (BASE) X 17 FEET (LENGTH), DESIGN NO. UMC DESIGN 50700-B1275-Y5	1318 SIGNAL ARM POLE, 0 GAUGE, 9 INCHES (BASE) X 20.5 FEET (LENGTH), WITH MAST ARM(S) 7 GAUGE, 6 INCHES (BASE) X 18 FEET (LENGTH), DESIGN NO. UMC DESIGN 50700-B1275-Y5	1318 SIGNAL ARM POLE, 0 GAUGE, 9 INCHES (BASE) X 20.5 FEET (LENGTH), WITH MAST ARM(S) 7 GAUGE, 6 INCHES (BASE) X 20 FEET (LENGTH), DESIGN NO. UMC DESIGN 50700-B1275-Y5	1318 SIGNAL ARM POLE, 0 GAUGE, 9 INCHES (BASE) X 26 FEET (LENGTH), WITH MAST ARM(S) 11 GAUGE, 4 INCHES (BASE) X 5 FEET (LENGTH), DESIGN NO. UMC DESIGN 50700-B1284-Y1	1318 SIGNAL ARM POLE, 0 GAUGE, 9 INCHES (BASE) X 26 FEET (LENGTH), WITH MAST ARM(S) 11 GAUGE, 4 INCHES (BASE) X 6 FEET (LENGTH), DESIGN NO. UMC DESIGN 50700-B1284-Y1	1318 SIGNAL ARM POLE, 0 GAUGE, 9 INCHES (BASE) X 26 FEET (LENGTH), WITH MAST ARM(S) 11 GAUGE, 4.5 INCHES (BASE) X 7 FEET (LENGTH), DESIGN NO. UMC DESIGN 50700-B1284-Y2	1318 SIGNAL ARM POLE, 0 GAUGE, 9 INCHES (BASE) X 26 FEET (LENGTH), WITH MAST ARM(S) 11 GAUGE, 5 INCHES (BASE) X 11 FEET (LENGTH), DESIGN NO. UMC DESIGN 50700-B1284-Y3	1318 SIGNAL ARM POLE, 0 GAUGE, 9 INCHES (BASE) X 26 FEET (LENGTH), WITH MAST ARM(S) 11 GAUGE, 5.5 INCHES (BASE) X 15 FEET (LENGTH), DESIGN NO. UMC DESIGN 50700-B1284-Y4	1318 SIGNAL ARM POLE, 0 GAUGE, 9 INCHES (BASE) X 26 FEET (LENGTH), WITH MAST ARM(S) 7 GAUGE, 6 INCHES (BASE) X 16 FEET (LENGTH), DESIGN NO. UMC DESIGN 50700-B1284-Y5	1318 SIGNAL ARM POLE, 0 GAUGE, 9 INCHES (BASE) X 26 FEET (LENGTH), WITH MAST ARM(S) 7 GAUGE, 6 INCHES (BASE) X 18 FEET (LENGTH), DESIGN NO. UMC DESIGN 50700-B1284-Y5	1318 SIGNAL ARM POLE, 0 GAUGE, 9 INCHES (BASE) X 26 FEET (LENGTH), WITH MAST ARM(S) 7 GAUGE, 6 INCHES (BASE) X 20 FEET (LENGTH), DESIGN NO. UMC DESIGN 50700-B1284-Y5
		EACH	EACH	EACH	EACH	EACH	EACH	EACH	EACH	EACH	EACH	EACH	EACH	EACH	EACH	EACH	EACH
G-TC-1001 C	CENTRAL PARKWAY AND VINE STREET																
G-TC-1002 C	CENTRAL PARKWAY AND WALNUT STREET																
G-TC-1003 C	WALNUT STREET AND COURT STREET																
G-TC-1004 C	WALNUT STREET AND NINTH STREET																
G-TC-1005 C	WALNUT STREET AND EIGHTH STREET																
G-TC-1006 C	WALNUT STREET AND SEVENTH STREET																
G-TC-1007 C	WALNUT STREET AND SIXTH STREET																
G-TC-1008 C	WALNUT STREET AND GOVERNMENT PLACE																
G-TC-1009 C	WALNUT STREET AND FIFTH STREET																
G-TC-1010 C	MIDBLOCK (5TH AND 4TH) AND WALNUT STREET																
G-TC-1011 C	WALNUT STREET AND FOURTH STREET																
G-TC-1012 C	MIDBLOCK (4TH AND 3RD) AND WALNUT STREET																
G-TC-1013 C	WALNUT STREET AND THIRD STREET																
G-TC-1014 C	WALNUT STREET AND SECOND STREET																
G-TC-1016 C	MAIN STREET AND SECOND STREET																
G-TC-1017 C	MAIN STREET AND THIRD STREET																
G-TC-1018 C	MAIN STREET AND FOURTH STREET																
G-TC-1019 C	MAIN STREET AND FIFTH STREET																
G-TC-1020 C	MAIN STREET AND GOVERNMENT PLACE																
G-TC-1021 C	MAIN STREET AND SIXTH STREET																
G-TC-1022 C	MAIN STREET AND SEVENTH STREET																
G-TC-1023 C	MAIN STREET AND EIGHTH STREET																
G-TC-1024 C	MAIN STREET AND NINTH STREET																
G-TC-1025 C	MAIN STREET AND COURT STREET																
G-TC-1026 C	MAIN STREET AND CENTRAL PARKWAY																
G-TC-1027 C	MAIN STREET AND TWELFTH STREET																
G-TC-1028 C	TWELFTH STREET AND WALNUT STREET					1			2								
G-TC-2001 C	TWELFTH STREET AND VINE STREET						1	1									
G-TC-2002 C	TWELFTH STREET AND RACE STREET	1			1	1											
G-TC-2003 C	ELM STREET AND TWELFTH STREET								1								1
G-TC-2004 C	ELM STREET AND FOURTEENTH STREET										1				1		
G-TC-2005 C	ELM STREET AND LIBERTY STREET																
G-TC-2006 C	ELM STREET AND FINDLAY STREET							1		1						1	
G-TC-2007 C	RACE STREET AND FINDLAY STREET			1				1									
G-TC-2008 C	RACE STREET AND ELDER STREET		1						1								
G-TC-2009 C	RACE STREET AND GREEN STREET											1			1		
G-TC-2010 C	RACE STREET AND LIBERTY STREET																
G-TC-2011 C	RACE STREET AND FIFTEENTH STREET						1							1			
G-TC-2012 C	RACE STREET AND FOURTEENTH STREET																
G-TC-2013 C	RACE STREET AND THIRTEENTH STREET											1	1				
G-TC-2014 C	RACE STREET AND CENTRAL PARKWAY																
TOTALS CARRIED TO GENERAL SUMMARY		1	1	1	1	2	2	3	4	1	1	2	1	1	2	1	1

CAUTION UNDERGROUND UTILITIES
2 WORKING DAYS
BEFORE YOU DIG
CALL 1-800-362-2764
OHIO UTILITY PROTECTION SERVICE
CALL NON-SERVICE FACILITY
OWNERS DIRECT

DOTE_Mono_PDF_Half.pltcfg
W:\29014A-Streetcar\CAD\Traffic_Control\Signals\1000_Quantities\S_G-TC-1000 H.dgn
7/11/2012 6:54:33 AM

CITY DEPARTMENT OF TRANSPORTATION & ENGINEERING CINCINNATI OHIO

CONTRACT DRAWING

PRINTS NOT BEARING THIS STAMP WERE MADE PRIOR TO ADVERTISING FOR BIDS AND ARE TO BE CONSIDERED OBSOLETE FOR CONTRACT PURPOSES.

Department of Transportation and Engineering

City of Cincinnati
City Hall
801 Plum Street
Cincinnati, Ohio 45202

CINCINNATI STREETCAR

TRAFFIC SIGNAL SUBSUMMARY

Revisions
No.

Date 12/20/11
Date 12/20/11
Date 12/20/11
Date 12/20/11

Drawn by JRL
Designed by JRL
Checked by JTB
Reviewed by JTB

Consultant

PB HDR

File Number

ACC No. 23126

G-TC-1000 H

SHEET NO.	LOCATION	1318 SIGNAL ARM POLE, 0 GAUGE, 11 INCHES (BASE) X 30 FEET (LENGTH), WITH MAST ARM(S) 11 GAUGE, 4 INCHES (BASE) X 6 FEET (LENGTH), DESIGN NO. UMC DESIGN 50700-B1285-Y1	1318 SIGNAL ARM POLE, 0 GAUGE, 11 INCHES (BASE) X 30 FEET (LENGTH), WITH MAST ARM(S) 7 GAUGE, 6 INCHES (BASE) X 16 FEET (LENGTH), DESIGN NO. UMC DESIGN 50700-B1285-Y5	1318 SIGNAL ARM POLE, 0 GAUGE, 11 INCHES (BASE) X 30 FEET (LENGTH), WITH MAST ARM(S) 7 GAUGE, 6 INCHES (BASE) X 20 FEET (LENGTH), DESIGN NO. UMC DESIGN 50700-B1285-Y5	1318 SIGNAL SUPPORT, MISC.: 11 GAUGE, 13 INCHES (BASE) X 15 FEET (LENGTH), DESIGN NO. UMC DESIGN 50054-A934-Y1	1318 SIGNAL SUPPORT, MISC.: MAST ARM(S) 11 GAUGE, 4 INCHES (BASE) X 4 FEET (LENGTH), DESIGN NO. UMC DESIGN 50303-B217-Y1	1318 SIGNAL SUPPORT, MISC.: MAST ARM(S) 11 GAUGE, 5.5 INCHES (BASE) X 12 FEET (LENGTH), DESIGN NO. UMC DESIGN 50303-B217-Y4	1318 MOT SIGNAL POLE, WITH ONE BAY BOOM	1318 MOT SIGNAL POLE, WITH TWO BAY BOOM	1318 MOT SIGNAL POLE, WITH THREE BAY BOOM	1318 MOT SIGNAL POLE, WITH FOUR BAY BOOM	1318 MOT SIGNAL POLE, WITH FIVE BAY BOOM	1318 MOTX SIGNAL POLE, WITH SIX BAY BOOM	1318 MOLT SIGNAL POLE, WITH FIVE BAY BOOM	1318 MOLT SIGNAL POLE, WITH FIVE BAY BOOM AND TWO BAY BOOM	1318 MOLTX SIGNAL POLE, WITH ONE BAY BOOM
		EACH	EACH	EACH	EACH	EACH	EACH	EACH	EACH	EACH	EACH	EACH	EACH	EACH	EACH	EACH	
G-TC-1001 C	CENTRAL PARKWAY AND VINE STREET				2											1	
G-TC-1002 C	CENTRAL PARKWAY AND WALNUT STREET							1		1							
G-TC-1003 C	WALNUT STREET AND COURT STREET																
G-TC-1004 C	WALNUT STREET AND NINTH STREET									1	1						
G-TC-1005 C	WALNUT STREET AND EIGHTH STREET							1	1		2						
G-TC-1006 C	WALNUT STREET AND SEVENTH STREET																
G-TC-1007 C	WALNUT STREET AND SIXTH STREET																
G-TC-1008 C	WALNUT STREET AND GOVERNMENT PLACE																
G-TC-1009 C	WALNUT STREET AND FIFTH STREET																
G-TC-1010 C	MIDBLOCK (5TH AND 4TH) AND WALNUT STREET													1			
G-TC-1011 C	WALNUT STREET AND FOURTH STREET																
G-TC-1012 C	MIDBLOCK (4TH AND 3RD) AND WALNUT STREET																
G-TC-1013 C	WALNUT STREET AND THIRD STREET																
G-TC-1014 C	WALNUT STREET AND SECOND STREET																
G-TC-1016 C	MAIN STREET AND SECOND STREET																
G-TC-1017 C	MAIN STREET AND THIRD STREET																
G-TC-1018 C	MAIN STREET AND FOURTH STREET													1			
G-TC-1019 C	MAIN STREET AND FIFTH STREET																
G-TC-1020 C	MAIN STREET AND GOVERNMENT PLACE																
G-TC-1021 C	MAIN STREET AND SIXTH STREET																
G-TC-1022 C	MAIN STREET AND SEVENTH STREET																
G-TC-1023 C	MAIN STREET AND EIGHTH STREET																
G-TC-1024 C	MAIN STREET AND NINTH STREET																
G-TC-1025 C	MAIN STREET AND COURT STREET																
G-TC-1026 C	MAIN STREET AND CENTRAL PARKWAY							2		1		1					
G-TC-1027 C	MAIN STREET AND TWELFTH STREET																
G-TC-1028 C	TWELFTH STREET AND WALNUT STREET																
G-TC-2001 C	TWELFTH STREET AND VINE STREET																
G-TC-2002 C	TWELFTH STREET AND RACE STREET																
G-TC-2003 C	ELM STREET AND TWELFTH STREET																
G-TC-2004 C	ELM STREET AND FOURTEENTH STREET																
G-TC-2005 C	ELM STREET AND LIBERTY STREET	1		1													
G-TC-2006 C	ELM STREET AND FINDLAY STREET																
G-TC-2007 C	RACE STREET AND FINDLAY STREET																
G-TC-2008 C	RACE STREET AND ELDER STREET																
G-TC-2009 C	RACE STREET AND GREEN STREET																
G-TC-2010 C	RACE STREET AND LIBERTY STREET	1	1														
G-TC-2011 C	RACE STREET AND FIFTEENTH STREET																
G-TC-2012 C	RACE STREET AND FOURTEENTH STREET					1	1										
G-TC-2013 C	RACE STREET AND THIRTEENTH STREET																
G-TC-2014 C	RACE STREET AND CENTRAL PARKWAY												1		1		
TOTALS CARRIED TO GENERAL SUMMARY		2	1	1	2	1	1	4	1	3	3	1	1	2	1	1	

CAUTION UNDERGROUND UTILITIES
2 WORKING DAYS
BEFORE YOU DIG
CALL 1-800-362-2764
OHIO UTILITY PROTECTION SERVICE
CALL NON-SERVICE FACILITY
OWNERS DIRECT

DOTE_Mono_PDF_Half.pltcfg
W:\29014A-Streetcar\CAD\Traffic_Control\Signals\1000_Quantities\S_G-TC-1000 I.dgn
7/11/2012 6:54:38 AM

CITY OF CINCINNATI DEPARTMENT OF TRANSPORTATION & ENGINEERING

CONTRACT DRAWING

PRINTS NOT BEARING THIS STAMP WERE MADE PRIOR TO ADVERTISING FOR BIDS AND ARE TO BE CONSIDERED OBSOLETE FOR CONTRACT PURPOSES.

Department of Transportation and Engineering

City of Cincinnati
City Hall
801 Plum Street
Cincinnati, Ohio 45202

CINCINNATI STREETCAR

TRAFFIC SIGNAL SUBSUMMARY

Revisions
No.

Date 12/20/11
Date 12/20/11
Date 12/20/11
Date 12/20/11

Drawn by JRL
Designed by JRL
Checked by JTB
Reviewed by JTB

Consultant

PB HDR

File Number

ACC No.
23126

G-TC-1000 I

SHEET NO.	LOCATION		1318 MOLTX SIGNAL POLE, WITH SIX BAY BOOM AND ONE BAY BOOM	1318 SIGNAL SUPPORT, MISC.: ONE BAY BOOM ONLY	1318 SIGNAL SUPPORT, MISC.: TWO BAY BOOM ONLY	1318 SIGNAL SUPPORT MISC.: THREE BAY BOOM ONLY	1318 SIGNAL SUPPORT, MISC.: FOUR BAY BOOM ONLY	1318 PEDESTAL, 4 INCHES (DIAMETER) X 10 FEET (LENGTH)	1318 CABLE SUPPORT ASSEMBLY	1319 CONCRETE ANCHOR BASE POLE FOUNDATION, 2 FT. DIA. X 8 FT. DEEP, FDN-3	1319 CONCRETE ANCHOR BASE POLE FOUNDATION, 2.5 FT. DIA. X 10 FT. DEEP, FDN-7	1319 CONCRETE ANCHOR BASE POLE FOUNDATION, 3 FT. DIA. X 11 FT. DEEP, FDN-10	1319 CONCRETE ANCHOR BASE POLE FOUNDATION, 2 FT. DIA. X 4 FT. DEEP, FDN-25	1319 CONCRETE ANCHOR BASE POLE FOUNDATION, 2.5 FT. DIA. X 11 FT. DEEP, FDN-51	1319 CONCRETE ANCHOR BASE POLE FOUNDATION, 2.5 FT. DIA. X 12 FT. DEEP, FDN-52	1319 CONCRETE ANCHOR BASE POLE FOUNDATION, 3 FT. DIA. X 13 FT. DEEP, FDN-53	1319 CONCRETE ANCHOR BASE POLE FOUNDATION, 2.5 FT. DIA. X 14 FT. DEEP, FDN-55
			EACH	EACH	EACH	EACH	EACH	EACH	EACH	EACH	EACH	EACH	EACH	EACH	EACH	EACH	EACH
G-TC-1001 C	CENTRAL PARKWAY AND VINE STREET		2			1		2	4				2				
G-TC-1002 C	CENTRAL PARKWAY AND WALNUT STREET						1		4			1		2			
G-TC-1003 C	WALNUT STREET AND COURT STREET			2	1	1											
G-TC-1004 C	WALNUT STREET AND NINTH STREET			2				1					1	2			
G-TC-1005 C	WALNUT STREET AND EIGHTH STREET			1					2					4			
G-TC-1006 C	WALNUT STREET AND SEVENTH STREET			1				1		1			1				
G-TC-1007 C	WALNUT STREET AND SIXTH STREET			1			1										
G-TC-1008 C	WALNUT STREET AND GOVERNMENT PLACE			1													
G-TC-1009 C	WALNUT STREET AND FIFTH STREET						1	1					1				
G-TC-1010 C	MIDBLOCK (5TH AND 4TH) AND WALNUT STREET							2					2				1
G-TC-1011 C	WALNUT STREET AND FOURTH STREET			1			1										
G-TC-1012 C	MIDBLOCK (4TH AND 3RD) AND WALNUT STREET			1													
G-TC-1013 C	WALNUT STREET AND THIRD STREET			1													
G-TC-1014 C	WALNUT STREET AND SECOND STREET																
G-TC-1016 C	MAIN STREET AND SECOND STREET								1								
G-TC-1017 C	MAIN STREET AND THIRD STREET						1										
G-TC-1018 C	MAIN STREET AND FOURTH STREET																1
G-TC-1019 C	MAIN STREET AND FIFTH STREET			1			1										
G-TC-1020 C	MAIN STREET AND GOVERNMENT PLACE			1	1												
G-TC-1021 C	MAIN STREET AND SIXTH STREET			1													
G-TC-1022 C	MAIN STREET AND SEVENTH STREET			1	1												
G-TC-1023 C	MAIN STREET AND EIGHTH STREET			2													
G-TC-1024 C	MAIN STREET AND NINTH STREET			2													
G-TC-1025 C	MAIN STREET AND COURT STREET			2													
G-TC-1026 C	MAIN STREET AND CENTRAL PARKWAY					1			4					3	1		
G-TC-1027 C	MAIN STREET AND TWELFTH STREET								4		3						
G-TC-1028 C	TWELFTH STREET AND WALNUT STREET								2		4						
G-TC-2001 C	TWELFTH STREET AND VINE STREET										4						
G-TC-2002 C	TWELFTH STREET AND RACE STREET							3			6		3				
G-TC-2003 C	ELM STREET AND TWELFTH STREET							1	2		3		1				
G-TC-2004 C	ELM STREET AND FOURTEENTH STREET								3		4						
G-TC-2005 C	ELM STREET AND LIBERTY STREET							1	4			4	1				
G-TC-2006 C	ELM STREET AND FINDLAY STREET								3		3						
G-TC-2007 C	RACE STREET AND FINDLAY STREET							3	2		4		3				
G-TC-2008 C	RACE STREET AND ELDER STREET							1			5		1				
G-TC-2009 C	RACE STREET AND GREEN STREET							2	3		3		2				
G-TC-2010 C	RACE STREET AND LIBERTY STREET								2			2					
G-TC-2011 C	RACE STREET AND FIFTEENTH STREET							1	1		2		1				
G-TC-2012 C	RACE STREET AND FOURTEENTH STREET								4		3						
G-TC-2013 C	RACE STREET AND THIRTEENTH STREET							1	2		2		1				
G-TC-2014 C	RACE STREET AND CENTRAL PARKWAY							1	2				1			1	1
TOTALS CARRIED TO GENERAL SUMMARY			2	21	3	3	6	21	49	1	46	7	21	11	1	1	3

CAUTION UNDERGROUND UTILITIES
2 WORKING DAYS
BEFORE YOU DIG
CALL 1-800-362-2764
OHIO UTILITY PROTECTION SERVICE
CALL NON-SERVICE FACILITY
OWNERS DIRECT

DOTE_Mono_PDF_Half.pltcfg
W:\29014A-Streetcar\CAD\Traffic_Control\Signals\1000_Quantities\S_G-TC-1000 J.dgn
6:54:43 AM
7/11/2012

CITY OF CINCINNATI DEPARTMENT OF TRANSPORTATION & ENGINEERING OHIO

CONTRACT DRAWING

PRINTS NOT BEARING THIS STAMP WERE MADE PRIOR TO ADVERTISING FOR BIDS AND ARE TO BE CONSIDERED OBSOLETE FOR CONTRACT PURPOSES.

Department of Transportation and Engineering

City of Cincinnati
City Hall
801 Plum Street
Cincinnati, Ohio 45202

CINCINNATI STREETCAR

TRAFFIC SIGNAL SUBSUMMARY

Revisions
No.

Date 12/20/11
Date 12/20/11
Date 12/20/11
Date 12/20/11

Drawn by JRL
Designed by JRL
Checked by JTB
Reviewed by JTB

Consultant

PB HDR

File Number

ACC No.
23126

G-TC-1000 J

SHEET NO.	LOCATION	1319 CONCRETE ANCHOR BASE POLE FOUNDATION, 3 FT. DIA. X 13 FT. DEEP, FDN-56	1319 SPECIAL – CONCRETE ANCHOR BASE POLE FOUNDATION MISC.: SPREAD FOOTING, AS PER PLAN	1320 GROUND ROD	1321 TRENCH, PAVED AREAS, LESS/MORE THAN 6"	1321 CONDUIT, 3 INCHES (DIAMETER) RMC	1321 CONDUIT, 4 INCHES (DIAMETER) RMC	1321 CONDUIT, 2 INCHES (DIAMETER) PVC CONCRETE ENCASED	1321 CONDUIT, 3 INCHES (DIAMETER) PVC CONCRETE ENCASED	1321 CONDUIT, 4 INCHES (DIAMETER) PVC CONCRETE ENCASED	1321 WEATHERHEAD AND CONDUIT RISER, 2 INCH (DIAMETER)	1322 PULLBOX, CONCRETE, 24 INCHES X 24 INCHES, TYPE "C"	1322 SECTIONALIZERS, TYPE 1	1323 TRAFFIC SIGNAL CABLE 7 CONDUCTOR NO. 14 AWG	1323 FEEDER AND POLE AND BRACKET CABLE 2 CONDUCTOR NO. 12 AWG	1323 FEEDER AND POLE AND BRACKET CABLE 2 CONDUCTOR NO. 10 AWG	1323 SERIES STREET LIGHTING CABLE 3 CONDUCTOR NO. 8 AWG
		EACH	EACH	EACH	FOOT	FOOT	FOOT	FOOT	FOOT	FOOT	EACH	EACH	EACH	FOOT	FOOT	FOOT	FOOT
G-TC-1001 C	CENTRAL PARKWAY AND VINE STREET	3	2	7	560	315	540		95	35				2900	1210	450	61
G-TC-1002 C	CENTRAL PARKWAY AND WALNUT STREET			3	485	455	430		125					1810	300		
G-TC-1003 C	WALNUT STREET AND COURT STREET				290	225	200		210					300	225		
G-TC-1004 C	WALNUT STREET AND NINTH STREET			3	290	145	200	15	135		1	3		1160	440		
G-TC-1005 C	WALNUT STREET AND EIGHTH STREET			4	330	144	200		170			3		2400	990		
G-TC-1006 C	WALNUT STREET AND SEVENTH STREET			2	325	180	185	25	190			1		1070	420	70	15
G-TC-1007 C	WALNUT STREET AND SIXTH STREET				240		180		90					390	230		
G-TC-1008 C	WALNUT STREET AND GOVERNMENT PLACE				230	180	260		20			1		410	190		
G-TC-1009 C	WALNUT STREET AND FIFTH STREET			1	400	550	370	10	50					2820	950		
G-TC-1010 C	MIDBLOCK (5TH AND 4TH) AND WALNUT STREET			3	110	50	100	40	40	10		3		260		150	20
G-TC-1011 C	WALNUT STREET AND FOURTH STREET				180	80	180		50					290	180		
G-TC-1012 C	MIDBLOCK (4TH AND 3RD) AND WALNUT STREET					50	100										
G-TC-1013 C	WALNUT STREET AND THIRD STREET				255	140	250		65					625	235		
G-TC-1014 C	WALNUT STREET AND SECOND STREET			1	250	315	330		10					1190	385	150	50
G-TC-1016 C	MAIN STREET AND SECOND STREET			2	285	320	330		45			3		1485	460	300	45
G-TC-1017 C	MAIN STREET AND THIRD STREET				330	280	290	10	125					835	120		
G-TC-1018 C	MAIN STREET AND FOURTH STREET			1	280	180	110		130					950	270	150	30
G-TC-1019 C	MAIN STREET AND FIFTH STREET				430	320	230		150			1		1780	930		
G-TC-1020 C	MAIN STREET AND GOVERNMENT PLACE				195	45	180		105		2			545			
G-TC-1021 C	MAIN STREET AND SIXTH STREET				240	140	180		110					170	320		
G-TC-1022 C	MAIN STREET AND SEVENTH STREET				155	60	170		10					165			
G-TC-1023 C	MAIN STREET AND EIGHTH STREET				235	145	200		90					235			
G-TC-1024 C	MAIN STREET AND NINTH STREET				190	225	180		10					220	35		
G-TC-1025 C	MAIN STREET AND COURT STREET				195	115	220		60			1		200	265		
G-TC-1026 C	MAIN STREET AND CENTRAL PARKWAY			4	370	220	200		160					1485	1071		
G-TC-1027 C	MAIN STREET AND TWELFTH STREET			4	215	150	200	10	80			3		645			
G-TC-1028 C	TWELFTH STREET AND WALNUT STREET			4	320	335	230		120			5		1615			
G-TC-2001 C	TWELFTH STREET AND VINE STREET			4	330	90	330		120			4		610			
G-TC-2002 C	TWELFTH STREET AND RACE STREET			9	384	220	440	17	180			8	1	1945			
G-TC-2003 C	ELM STREET AND TWELFTH STREET			4	337	321	206	6	108		1	8	2	1253			
G-TC-2004 C	ELM STREET AND FOURTEENTH STREET			4	302	306	308		115		1	4	2	1525			
G-TC-2005 C	ELM STREET AND LIBERTY STREET			5	530	456	208	26	320	10		7		1632		80	64
G-TC-2006 C	ELM STREET AND FINDLAY STREET			3	385	233	190		275		1	8	1	1445			
G-TC-2007 C	RACE STREET AND FINDLAY STREET			7	350	290	338	21	99		1	4	2	1248			
G-TC-2008 C	RACE STREET AND ELDER STREET			6	312	107	214	26	221		1	5	1	1225			
G-TC-2009 C	RACE STREET AND GREEN STREET			5	346	325	314	28	118			4		1295			
G-TC-2010 C	RACE STREET AND LIBERTY STREET			2	428	487	222		129			5	1	1535			
G-TC-2011 C	RACE STREET AND FIFTEENTH STREET			3	284	327	234	11	51			5		1315			
G-TC-2012 C	RACE STREET AND FOURTEENTH STREET			3	300	310	200		100		2	6	1	1280			
G-TC-2013 C	RACE STREET AND THIRTEENTH STREET			3	38			17	21		1		1	1225			
G-TC-2014 C	RACE STREET AND CENTRAL PARKWAY			3	475	325	574	10	55	5		2		2041	786	150	15
TOTALS CARRIED TO GENERAL SUMMARY		3	2	100	12186	9161	10023	272	4357	60	11	94	12	45529	10012	1500	300

CAUTION UNDERGROUND UTILITIES
2 WORKING DAYS
BEFORE YOU DIG
CALL 1-800-362-2764
OHIO UTILITY PROTECTION SERVICE
CALL NON-SERVICE FACILITY
OWNERS DIRECT

DOTE_Mono_PDF_Half.pltcfg
W:\29014A-Streetcar\CAD\Traffic_Control\Signals\1000_Quantities\S_G-TC-1000 K.dgn
7/11/2012 3:51:46 PM

CITY OF CINCINNATI DEPARTMENT OF TRANSPORTATION & ENGINEERING OHIO

CONTRACT DRAWING

PRINTS NOT BEARING THIS STAMP WERE MADE PRIOR TO ADVERTISING FOR BIDS AND ARE TO BE CONSIDERED OBSOLETE FOR CONTRACT PURPOSES.

Department of Transportation and Engineering

City of Cincinnati
City Hall
801 Plum Street
Cincinnati, Ohio 45202

CINCINNATI STREETCAR

TRAFFIC SIGNAL SUBSUMMARY

Revisions
No.

Date 12/20/11 Date 12/20/11 Date 12/20/11 Date 12/20/11

Drawn by JRL Designed by JRL Checked by JTB Reviewed by JTB

Consultant

PB HDR

File Number

ACC No. 23126

G-TC-1000 K

SHEET NO.	LOCATION	1323 POWER CABLE 1 CONDUCTOR NO. 6 AWG	1323 6 PAIR OF TCCS CABLE 12 AWG	1323 MESSENGER WIRE, 7 STRAND NO. 8 AWG (3/8" DIAMETER) WITH ACCESSORIES	1323 CONNECTOR KIT, TYPE 2 WITH 15 AMP FUSE	1324 SAFETY SWITCH, 60 AMP	1324 TRAFFIC SIGNAL CONTROLLER, POLE MOUNT TYPE, INCLUDING CONTROL EQUIPMENT	1324 TRAFFIC SIGNAL CONTROLLER, BASE MOUNT TYPE, INCLUDING CONTROL EQUIPMENT	1325 LUMINAIRE, 250 WATT, 120+ VOLT, HIGH PRESSURE SODIUM LAMPS (LIGHT SOURCE), STANDARD ROADWAY TYPE	1325 LUMINAIRE, 250 WATT, 120+ VOLT, HIGH PRESSURE SODIUM LAMPS (LIGHT SOURCE), SPHERICAL ROADWAY LUMINAIRE TYPE	1327 VEHICULAR SIGNAL HEAD, ASSEMBLY 3 SECTION, 12 INCH (LED) LENS, 1 WAY	1327 VEHICULAR SIGNAL HEAD, ASSEMBLY 1 SECTION, 12 INCH (LED) LENS, 1 WAY	1327 TRANSIT SIGNAL HEAD, ASSEMBLY 2 SECTION, 12 INCH (LED) LENS, 1 WAY	1327 OPTICALLY PROGRAMMED SIGNAL HEAD, ASSEMBLY 3 SECTION, 12 INCH (LED) LENS, 1 WAY	1327 PEDESTRIAN SIGNAL HEAD ASSEMBLY, (LED) COUNTDOWN TYPE D2, WITH DEFEATABLE SWITCH	1328 PEDESTRIAN PUSHBUTTON WITH ASSOCIATED SIGNS	1328 VIDEO DETECTION
		FOOT	FOOT	FOOT	EACH	EACH	EACH	EACH	EACH	EACH	EACH	EACH	EACH	EACH	EACH	EACH	EACH
G-TC-1001 C	CENTRAL PARKWAY AND VINE STREET	180	100	180	6		1			3	10				12		
G-TC-1002 C	CENTRAL PARKWAY AND WALNUT STREET			220			1				9		2		12		1
G-TC-1003 C	WALNUT STREET AND COURT STREET						1				7	3		3	12		
G-TC-1004 C	WALNUT STREET AND NINTH STREET						1				5				8		
G-TC-1005 C	WALNUT STREET AND EIGHTH STREET			75			1				7	3			8		
G-TC-1006 C	WALNUT STREET AND SEVENTH STREET				2		1		2		5	2			8		
G-TC-1007 C	WALNUT STREET AND SIXTH STREET						1				5				8		
G-TC-1008 C	WALNUT STREET AND GOVERNMENT PLACE						1				2				2		
G-TC-1009 C	WALNUT STREET AND FIFTH STREET	110	70				1				4	2			8	8	
G-TC-1010 C	MIDBLOCK (5TH AND 4TH) AND WALNUT STREET	130			2		1			2	2		1		2		1
G-TC-1011 C	WALNUT STREET AND FOURTH STREET						1				5				8		
G-TC-1012 C	MIDBLOCK (4TH AND 3RD) AND WALNUT STREET						1				2				2		
G-TC-1013 C	WALNUT STREET AND THIRD STREET						1				5				8		
G-TC-1014 C	WALNUT STREET AND SECOND STREET				2		1			1	9		1		6	2	1
G-TC-1016 C	MAIN STREET AND SECOND STREET			75	4		1			2	5		1		8		1
G-TC-1017 C	MAIN STREET AND THIRD STREET						1				4	2			8		
G-TC-1018 C	MAIN STREET AND FOURTH STREET				2		1			1	5	2			8		
G-TC-1019 C	MAIN STREET AND FIFTH STREET						1				4				8		
G-TC-1020 C	MAIN STREET AND GOVERNMENT PLACE						1				2		2		2		1
G-TC-1021 C	MAIN STREET AND SIXTH STREET						1				5				8		
G-TC-1022 C	MAIN STREET AND SEVENTH STREET						1				5	2			8		
G-TC-1023 C	MAIN STREET AND EIGHTH STREET						1				5				8		
G-TC-1024 C	MAIN STREET AND NINTH STREET						1				5				8		
G-TC-1025 C	MAIN STREET AND COURT STREET						1				5				8		
G-TC-1026 C	MAIN STREET AND CENTRAL PARKWAY			300			1				9	3			12		
G-TC-1027 C	MAIN STREET AND TWELFTH STREET	140	65	110				1			4				4		
G-TC-1028 C	TWELFTH STREET AND WALNUT STREET			70			1				8				8		
G-TC-2001 C	TWELFTH STREET AND VINE STREET						1				10				8		
G-TC-2002 C	TWELFTH STREET AND RACE STREET	150	265			1	1				7		2		8		2
G-TC-2003 C	ELM STREET AND TWELFTH STREET	100	275	75		1	1				6				8		
G-TC-2004 C	ELM STREET AND FOURTEENTH STREET	190	250	97			1				6				8		
G-TC-2005 C	ELM STREET AND LIBERTY STREET	170	330	226	2	1	1		1		6				8		
G-TC-2006 C	ELM STREET AND FINDLAY STREET		245	125			1				6				8		
G-TC-2007 C	RACE STREET AND FINDLAY STREET	150	230	65		1	1				9				8		
G-TC-2008 C	RACE STREET AND ELDER STREET	90	275				1				5		1		8		1
G-TC-2009 C	RACE STREET AND GREEN STREET	330	165	134		1	1				7				6		
G-TC-2010 C	RACE STREET AND LIBERTY STREET	306	615	223		1	1				7				8		
G-TC-2011 C	RACE STREET AND FIFTEENTH STREET	400	190	74		1	1				5				6	2	
G-TC-2012 C	RACE STREET AND FOURTEENTH STREET	100	90	125		1	1				5				8		
G-TC-2013 C	RACE STREET AND THIRTEENTH STREET	300	150	188							3						
G-TC-2014 C	RACE STREET AND CENTRAL PARKWAY			137	2		1			1	8				12		
TOTALS CARRIED TO GENERAL SUMMARY		2846	3315	2499	22	8	39	1	3	10	233	19	10	3	306	12	8

CAUTION UNDERGROUND UTILITIES
2 WORKING DAYS
BEFORE YOU DIG
CALL 1-800-362-2764
OHIO UTILITY PROTECTION SERVICE
CALL NON-SERVICE FACILITY
OWNERS DIRECT

DOTE_Mono_PDF_Half.pltcfg
W:\29014A-Streetcar\CAD\Traffic_Control\Signals\1000_Quantities\S_G-TC-1000 L.dgn
7/11/2012 6:54:54 AM

CONTRACT DRAWING

PRINTS NOT BEARING THIS STAMP WERE MADE PRIOR TO ADVERTISING FOR BIDS AND ARE TO BE CONSIDERED OBSOLETE FOR CONTRACT PURPOSES.

Department of Transportation and Engineering

City of Cincinnati
City Hall
801 Plum Street
Cincinnati, Ohio 45202

CINCINNATI STREETCAR

TRAFFIC SIGNAL SUBSUMMARY

Revisions
No.

	Date	Date	Date	Date
	12/20/11	12/20/11	12/20/11	12/20/11

Drawn by	Designed by	Checked by	Reviewed by
JRL	JRL	JTB	JTB

Consultant

PB HDR

File Number

ACC No.
23126

G-TC-1000 L

SHEET NO.	LOCATION	1328 SPECIAL – VIDEO DETECTION MISC.: RELOCATION OF VIDEO SURVEILLANCE CAMERA, AS PER PLAN	1329 INTERNALLY ILLUMINATED SIGN, DOUBLE FACE, T–12 FLOURESCENT LAMP LIGHT SOURCE, 24 INCHES X 30 INCHES	1329 INTERNALLY ILLUMINATED SIGN, SINGLE FACE, T–12 FLOURESCENT LAMP LIGHT SOURCE, 24 INCHES X 30 INCHES	1329 INTERNALLY ILLUMINATED SIGN, SINGLE FACE, T–12 FLOURESCENT LAMP LIGHT SOURCE, 24 INCHES X 24 INCHES	1329 INTERNALLY ILLUMINATED SIGN, SINGLE FACE, T–12 FLOURESCENT LAMP LIGHT SOURCE, 30 INCHES X 30 INCHES	1329 INTERNALLY ILLUMINATED SIGN, SINGLE FACE, T–12 FLOURESCENT LAMP LIGHT SOURCE, 36 INCHES X 30 INCHES	1329 SPAN WIRE MOUNTED SIGN ATTACHMENT	1329 MAST ARM MOUNTED SIGN ATTACHMENT	1329 POLE MOUNTED SIGN ATTACHMENT	1329 SIGN, REFLECTORIZED, 24 INCHES X 30 INCHES	1329 SIGN, REFLECTORIZED, 24 INCHES X 24 INCHES	1329 SIGN, REFLECTORIZED, 30 INCHES X 30 INCHES	1329 SIGN, REFLECTORIZED, 36 INCHES X 30 INCHES	1329 SIGN, REFLECTORIZED, 36 INCHES X 36 INCHES	1329 SIGN, REFLECTORIZED, EXPRESSWAY DIRECTIONAL	1329 SIGN, REFLECTORIZED, CITY "SPECIAL" WAYFINDING
		EACH	EACH	EACH	EACH	EACH	EACH	EACH	EACH	EACH	EACH	EACH	EACH	EACH	EACH	EACH	EACH
G–TC–1001 C	CENTRAL PARKWAY AND VINE STREET		4	2	1			8	7		7	1					
G–TC–1002 C	CENTRAL PARKWAY AND WALNUT STREET		4	2				12	7		9		2		1		
G–TC–1003 C	WALNUT STREET AND COURT STREET		4	15					19	1	1						
G–TC–1004 C	WALNUT STREET AND NINTH STREET		3	4					8								
G–TC–1005 C	WALNUT STREET AND EIGHTH STREET		1	9				7	9		4			1	1		
G–TC–1006 C	WALNUT STREET AND SEVENTH STREET		3	7	2				13					1			
G–TC–1007 C	WALNUT STREET AND SIXTH STREET		4	6					11	1	1						1
G–TC–1008 C	WALNUT STREET AND GOVERNMENT PLACE			1	1				2								
G–TC–1009 C	WALNUT STREET AND FIFTH STREET		3	10					13								
G–TC–1010 C	MIDBLOCK (5TH AND 4TH) AND WALNUT STREET																
G–TC–1011 C	WALNUT STREET AND FOURTH STREET		3	7					11	2	2						1
G–TC–1012 C	MIDBLOCK (4TH AND 3RD) AND WALNUT STREET																
G–TC–1013 C	WALNUT STREET AND THIRD STREET		3	7					10								
G–TC–1014 C	WALNUT STREET AND SECOND STREET		3					9	8		10	3			1		
G–TC–1016 C	MAIN STREET AND SECOND STREET		4					12	4		3	3				3	3
G–TC–1017 C	MAIN STREET AND THIRD STREET		3	10					13								
G–TC–1018 C	MAIN STREET AND FOURTH STREET		3	8	2				14								1
G–TC–1019 C	MAIN STREET AND FIFTH STREET		3	5	2				10								
G–TC–1020 C	MAIN STREET AND GOVERNMENT PLACE			2				1	1								
G–TC–1021 C	MAIN STREET AND SIXTH STREET		4	5	2				12								1
G–TC–1022 C	MAIN STREET AND SEVENTH STREET		3	8					11	1	1						
G–TC–1023 C	MAIN STREET AND EIGHTH STREET		4	6					10	1	1						
G–TC–1024 C	MAIN STREET AND NINTH STREET		4	5					9								
G–TC–1025 C	MAIN STREET AND COURT STREET		4	5		1	1		11								
G–TC–1026 C	MAIN STREET AND CENTRAL PARKWAY		4	6				10	8		8						
G–TC–1027 C	MAIN STREET AND TWELFTH STREET							1			1						
G–TC–1028 C	TWELFTH STREET AND WALNUT STREET								2		2						
G–TC–2001 C	TWELFTH STREET AND VINE STREET																
G–TC–2002 C	TWELFTH STREET AND RACE STREET								3	1	4						
G–TC–2003 C	ELM STREET AND TWELFTH STREET							2	3		5						
G–TC–2004 C	ELM STREET AND FOURTEENTH STREET							2	2		4						
G–TC–2005 C	ELM STREET AND LIBERTY STREET							3			3						
G–TC–2006 C	ELM STREET AND FINDLAY STREET							3			3						
G–TC–2007 C	RACE STREET AND FINDLAY STREET							5	4		7	1			1		
G–TC–2008 C	RACE STREET AND ELDER STREET	2							2		2						
G–TC–2009 C	RACE STREET AND GREEN STREET							2			2						
G–TC–2010 C	RACE STREET AND LIBERTY STREET							5			5						
G–TC–2011 C	RACE STREET AND FIFTEENTH STREET							1	1		2						
G–TC–2012 C	RACE STREET AND FOURTEENTH STREET							3			3						
G–TC–2013 C	RACE STREET AND THIRTEENTH STREET							2			2						
G–TC–2014 C	RACE STREET AND CENTRAL PARKWAY		4	2				5	6		5						
TOTALS CARRIED TO GENERAL SUMMARY		2	75	132	10	1	1	93	244	7	97	8	2	2	4	3	7

CAUTION UNDERGROUND UTILITIES
2 WORKING DAYS
BEFORE YOU DIG
CALL 1–800–362–2764
OHIO UTILITY PROTECTION SERVICE
CALL NON–SERVICE FACILITY
OWNERS DIRECT

DOTE_Mono_PDF_Half.pltcfg
W:\29014A-Streetcar\CAD\Traffic_Control\Signals\1000_Quantities\S_G-TC-1000 M.dgn
6:55:00 AM
7/11/2012

CITY OF CINCINNATI DEPARTMENT OF TRANSPORTATION & ENGINEERING OHIO

CONTRACT DRAWING

PRINTS NOT BEARING THIS STAMP WERE MADE PRIOR TO ADVERTISING FOR BIDS AND ARE TO BE CONSIDERED OBSOLETE FOR CONTRACT PURPOSES.

Department of Transportation and Engineering

City of Cincinnati
City Hall
801 Plum Street
Cincinnati, Ohio 45202

CINCINNATI STREETCAR

TRAFFIC SIGNAL SUBSUMMARY

Revisions
No.

Date 12/20/11
Date 12/20/11
Date 12/20/11
Date 12/20/11

Drawn by JRL
Designed by JRL
Checked by JTB
Reviewed by JTB

Consultant

PB HDR

File Number

ACC No.
23126

G-TC-1000 M

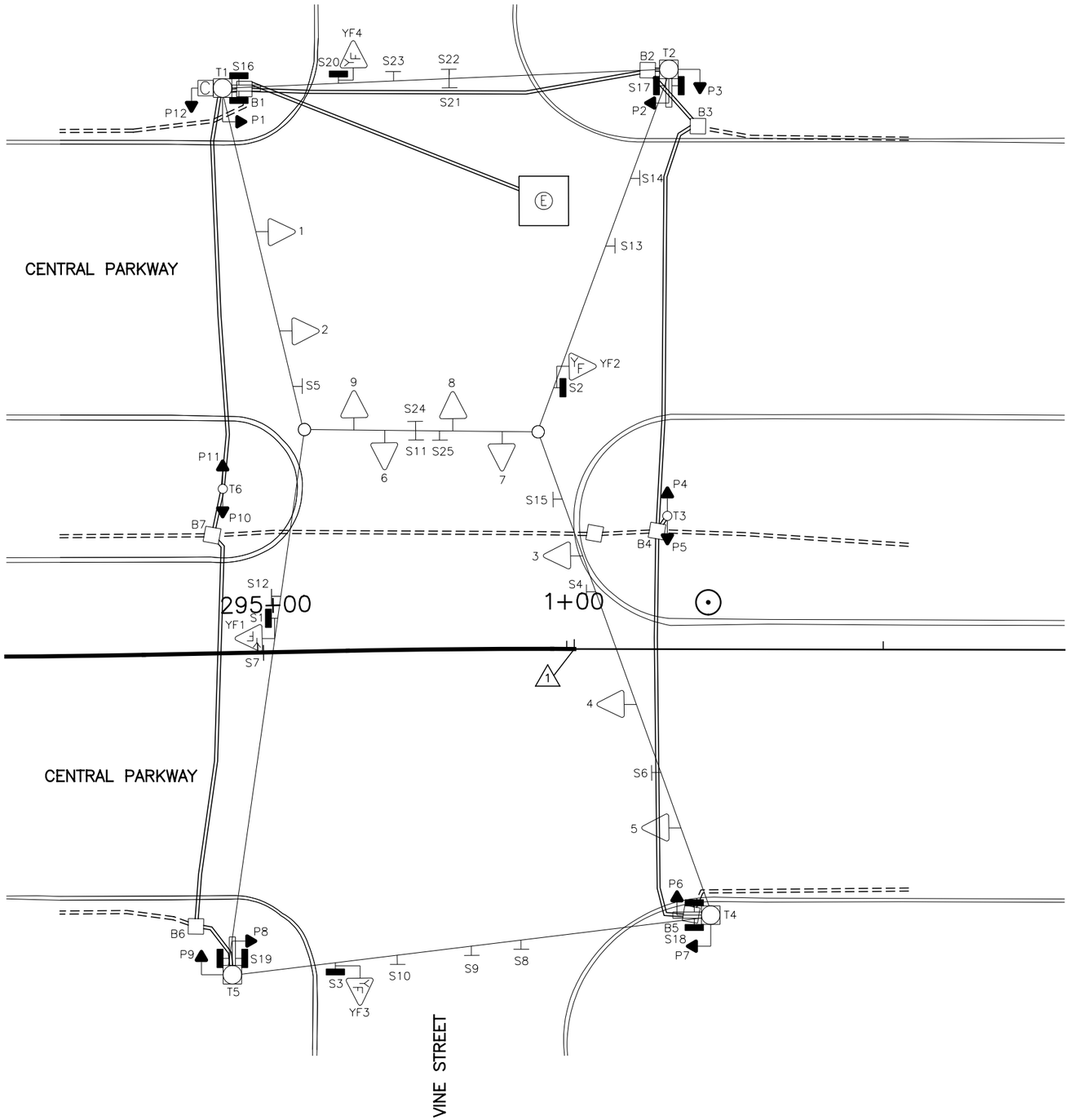

EQUIPMENT LIST	
1, 2, 4, 5	TRAF. SIG. HD., 3 SECT., VERT., 12" RYG
3	TRAF. SIG. HD., 3 SECT., VERT., 12" R,Y←,G←
6, 7, 8, 9	TRAF. SIG. HD., 3 SECT., VERT., 8" RYG
YF1, YF2, YF3, YF4	TRAF. SIG. HD., 1 SECT., 8" Y
P1 – P12	PED. SIG., 2 SECT., 12" INCANDESCENT
S1, S2, S3, S20	ILLUM. SIGN, 30" X 24", "WATCH FOR EMERGENCY VEHICLES WHEN FLASHING", #114
S4	REFL. SIGN, 24" X 30", "LEFT ON ARROW ONLY", #78C
S5, S22	REFL. SIGN, 24" X 24", " ⊗ ", #71
S6	REFL. SIGN, 24" X 30", "ONE WAY ←", #92C
S7, S9, S13	REFL. SIGN, 24" X 30", " ↑ ONLY", #79B
S8, S14, S23	REFL. SIGN, 24" X 30", " ↱ ONLY", #79A
S10, S11, S12	REFL. SIGN, 24" X 30", " ↰ ONLY", #79C
S15	REFL. SIGN, 24" X 30", "LEFT TURN SIGNAL", #77C
S16	ILLUM. SIGN, 24" X 30", DOUBLE FACE, STREET NAME "CENTRAL PARKWAY WEST 0–99"
S17	ILLUM. SIGN, 24" X 30", DOUBLE FACE, STREET NAME "VINE STREET 1199–1100"
S18	ILLUM. SIGN, 24" X 30", DOUBLE FACE, STREET NAME "CENTRAL PARKWAY EAST 0–99"
S19	ILLUM. SIGN, 24" X 30", DOUBLE FACE, STREET NAME "VINE STREET 1000–1099"
S21	REFL. SIGN, 24" X 30", "BEGIN TWO WAY", #95
S24	REFL. SIGN, 30" X 30", "DO NOT ENTER", #52
S25	REFL. SIGN, 24" X 30", "LEFT TURN YIELD ON GREEN ● ", #111
B1, B2, B3, B5, B6	PULLBOX , CONCRETE , 24" X 24" , SPECIAL CBD TYPE
B4, B7	PULLBOX , CONCRETE , 18" X 18" , TYPE B
T1, T2, T4, T5	STEEL POLE, ANCH. BASE, 50 FT. LT, TYPE MOLX W/1 BAY BOOM
T3, T6	STEEL POST, ANCH. BASE, 4.5" X 11', CITY #1145

LEGEND

- MOL, MOT, MOLT SIGNAL POLE
- STEEL PEDESTRIAN POST
- TRAFFIC SIGNAL CONDUIT
- YELLOW FLASHER SIGNAL HEAD
- TRAFFIC SIGNAL HEAD
- PEDESTRIAN SIGNAL HEAD
- REFLECTORIZED SIGN
- ILLUMINATED SIGN
- PULLBOX
- CONTROLLER

NOTES:

1. STA. 1+00.00 "CBD" = STA. 295+51.22 "OTR".

CAUTION UNDERGROUND UTILITIES
2 WORKING DAYS
BEFORE YOU DIG
CALL 1–800–362–2764
OHIO UTILITY PROTECTION SERVICE
CALL NON–SERVICE FACILITY
OWNERS DIRECT

GRAPHIC SCALE
10 0 10 20 40
(IN FEET)
1 inch = 10 ft. Full Size
1 inch = 20 ft. Half Size

CONTRACT DRAWING

PRINTS NOT BEARING THIS STAMP WERE MADE PRIOR TO ADVERTISING FOR BIDS AND ARE TO BE CONSIDERED OBSOLETE FOR CONTRACT PURPOSES.

Department of Transportation and Engineering

City of Cincinnati
City Hall
801 Plum Street
Cincinnati, Ohio 45202

CINCINNATI STREETCAR
CENTRAL BUSINESS DISTRICT
EXISTING TRAFFIC SIGNAL PLAN
CENTRAL PARKWAY AND VINE STREET

Revisions
No.

Drawn by AMW	Date 7/02/12
Designed by AMW	Date 7/02/12
Checked by JTB	Date 7/02/12
Reviewed by JTB	Date 7/12/12

Consultant

PB HDR

File Number

ACC No. 23126

G-TC-1001 A

DOTE_Mono_PDF_Half.pltcfg
W:\29014A-Streetcar\CAD\Traffic_Control\Signals\1001_CentralPkwy&Vine_C-41\S_G-TC-1001 A.dgn
7/11/2012 6:57:55 AM

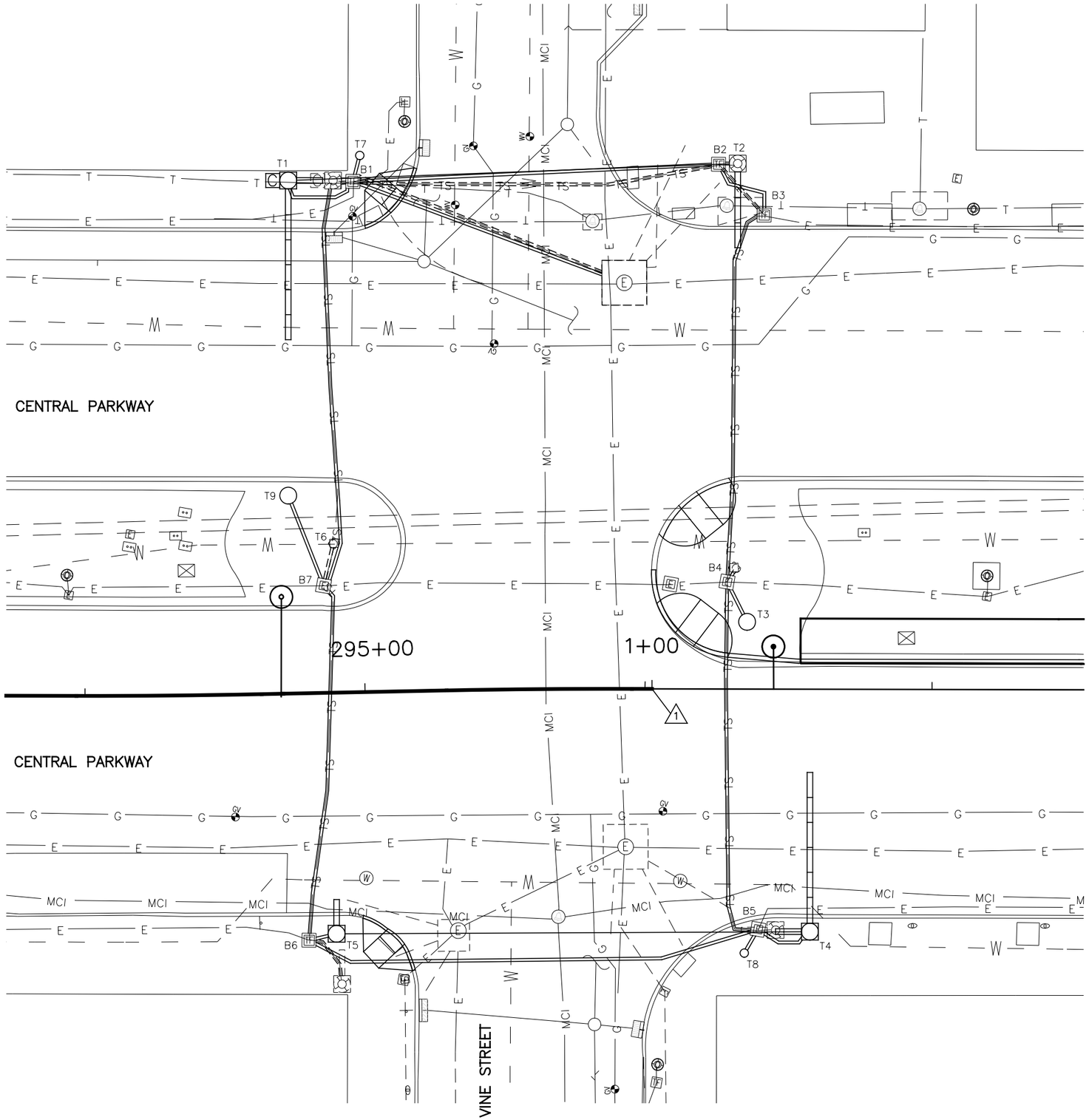

SIGNAL PHASING

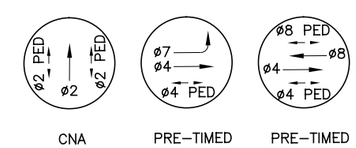

CNA PRE–TIMED PRE–TIMED

THIS IS THE GENERAL SEQUENCING FOR THIS TRAFFIC SIGNAL. REFER TO THE CITY OF CINCINNATI FOR FINAL SEQUENCING, LABELING AND TIMINGS.

CAUTION UNDERGROUND UTILITIES
2 WORKING DAYS
BEFORE YOU DIG
CALL 1–800–362–2764
OHIO UTILITY PROTECTION SERVICE
CALL NON–SERVICE FACILITY
OWNERS DIRECT

NOTES:

1. STA. 1+00.00 "CBD" = STA. 295+51.22 "OTR".

GRAPHIC SCALE

10 0 10 20 40

(IN FEET)
1 inch = 10 ft. Full Size
1 inch = 20 ft. Half Size

DOTE_Mono_PDF_Half.pltcfg
W:\29014A-Streetcar\CAD\Traffic_Control\Signals\1001_CentralPkwy&Vine_C-41\S_G-TC-1001 B.dgn
7/11/2012 6:58:09 AM

CONTRACT DRAWING

PRINTS NOT BEARING THIS STAMP WERE MADE PRIOR TO ADVERTISING FOR BIDS AND ARE TO BE CONSIDERED OBSOLETE FOR CONTRACT PURPOSES.

Department of Transportation and Engineering

City of Cincinnati
City Hall
801 Plum Street
Cincinnati, Ohio 45202

CINCINNATI STREETCAR
CENTRAL BUSINESS DISTRICT
UNDERGROUND UTILITIES & SIGNAL PLAN DETAILS
CENTRAL PARKWAY AND VINE STREET

Revisions
No.

Drawn by AMW	Date 7/02/12
Designed by AMW	Date 7/02/12
Checked by JTB	Date 7/02/12
Reviewed by JTB	Date 7/12/12

Consultant

PB HDR

File Number

ACC No. 23126

G-TC-1001 B

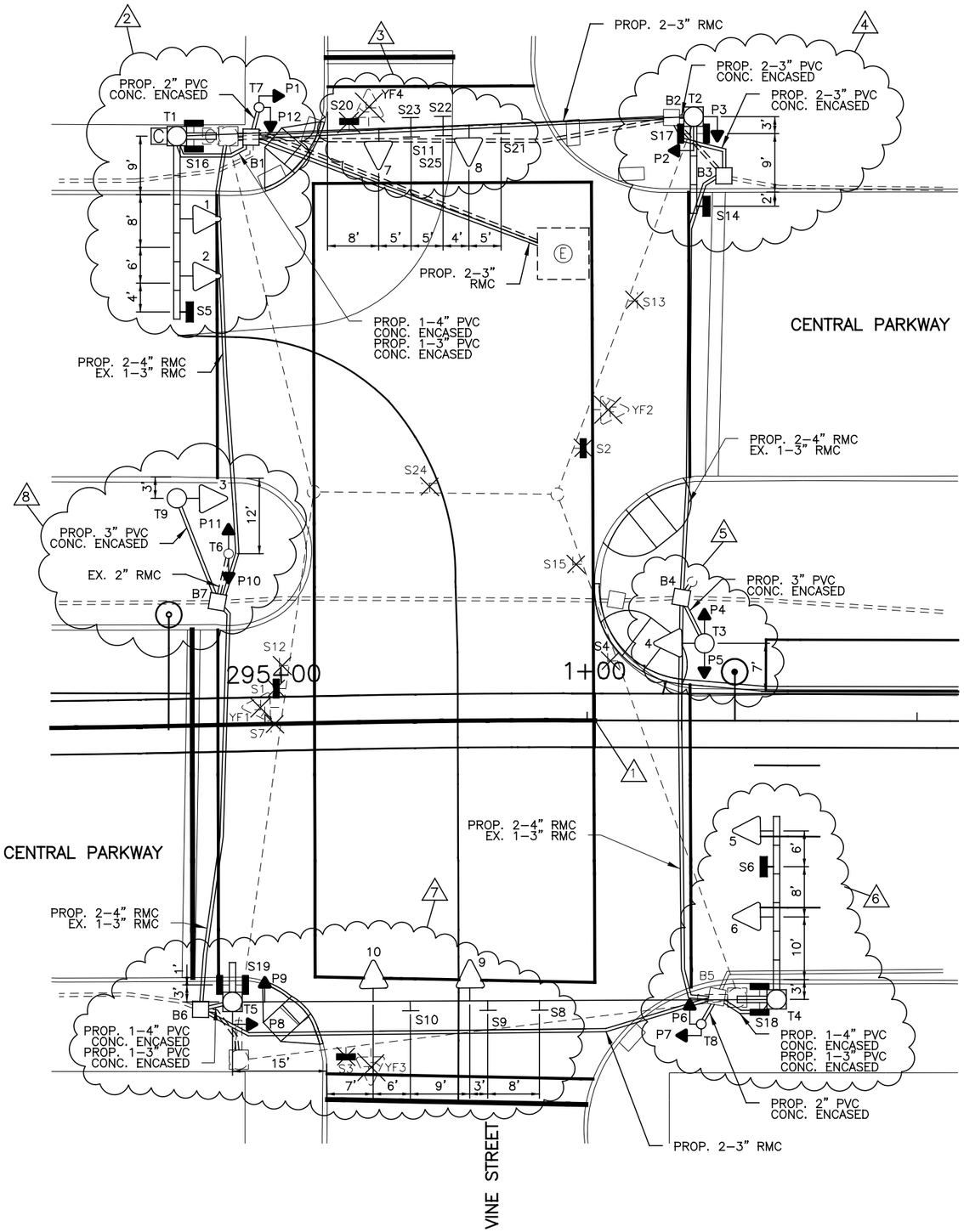

LEGEND

- MOL, MOT, MOLT SIGNAL POLE
- STEEL PEDESTRIAN POST
- TRAFFIC SIGNAL CONDUIT
- YELLOW FLASHER SIGNAL HEAD
- TRAFFIC SIGNAL HEAD
- PEDESTRIAN SIGNAL HEAD
- REFLECTORIZED SIGN
- ILLUMINATED SIGN
- PULLBOX
- CONTROLLER

TYPICAL POLE ORIENTATION

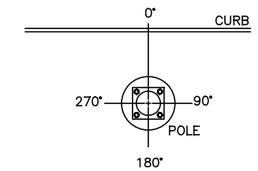

SIGNAL INDICATIONS

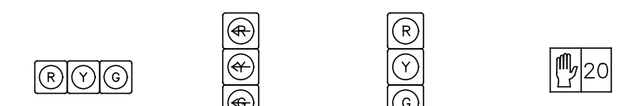

1, 2, 5, 6 — SIGNAL HEAD DETAIL 12" (LED) LENSES

4 — SIGNAL HEAD DETAIL 12" (LED) LENSES

3, 7, 8, 9, 10 — SIGNAL HEAD DETAIL 12" (LED) LENSES

P1, P2, P3, P4, P5, P6, P7, P8, P9, P10, P11, P12 — TYPE D2 PEDESTRIAN (LED) (COUNTDOWN) SIGNAL HEAD

NOTES:

1. STA. 1+00.00 "CBD" = STA. 295+51.22 "OTR".
2. REPLACE THE EXISTING POLE WITH A NEW MOLTX T1 AT STA. 294+88.13, 91.59' LT. ATTACH A 6 SIGNAL BAY BOOM AND A 1 SIGNAL BAY BOOM TO POLE T1. INSTALL TWO 12" LED TRAFFIC SIGNAL HEADS 1 AND 2 ALONG WITH A NEW ILLUMINATED SIGN S5 IN THE 6 SIGNAL BAY BOOM. INSTALL NEW ILLUMINATED SIGN S16 IN THE 1 SIGNAL BAY BOOM. ADD A NEW PEDESTAL POLE T7 AT STA. 295+00.97, 95.79' LT. REPLACE PEDESTRIAN SIGNAL HEADS P1 AND P12 WITH TYPE D2 LED COUNTDOWN PEDESTRIAN SIGNAL HEADS ON POLE T7. REPLACE CONTROLLER ON POLE T1.
3. ATTACH NEW MESSENGER WIRE BETWEEN POLES T1 AND T2. INSTALL TWO 12" LED TRAFFIC SIGNAL HEADS 7 AND 8 ALONG WITH NEW REFLECTORIZED SIGNS S11, S21, S22, S23 AND S25. REMOVE YELLOW FLASHER SIGNAL HEAD YF4 ALONG WITH ILLUMINATED SIGN S20.
4. REPLACE THE 1 SIGNAL BAY BOOM WITH A 3 SIGNAL BAY BOOM ON POLE T2. INSTALL NEW ILLUMINATED SIGN S14 AND S17. REMOVE YELLOW FLASHER SIGNAL HEAD YF2 ALONG WITH ILLUMINATED SIGN S2 AND REFLECTORIZED SIGN S13. REPLACE PEDESTRIAN SIGNAL HEADS P2 AND P3 WITH TYPE D2 LED COUNTDOWN PEDESTRIAN SIGNAL HEADS ON POLE T2.
5. REPLACE THE EXISTING STEEL PEDESTRIAN POST WITH A NEW STEEL POLE T3 AT STA. 1+16.97, 11.99' LT. FOR POLE FOUNDATION TYPE TPF–1 DETAILS SEE SHEET G–ST–2001. INSTALL 12" LED TRAFFIC SIGNAL HEAD 4 ON POLE T3. REMOVE REFLECTORIZED SIGNS S4 AND S15. REPLACE PEDESTRIAN SIGNAL HEADS P4 AND P5 WITH TYPE D2 LED COUNTDOWN PEDESTRIAN SIGNAL HEADS ON POLE T3.
6. REPLACE THE EXISTING POLE WITH A NEW MOLTX T4 AT STA. 1+28.29, 43.29' RT. ATTACH A 6 SIGNAL BAY BOOM AND A 1 SIGNAL BAY BOOM TO POLE T4. INSTALL TWO 12" LED TRAFFIC SIGNAL HEADS 5 AND 6 ALONG WITH NEW ILLUMINATED SIGN S6 IN THE 6 SIGNAL BAY BOOM. INSTALL ILLUMINATED SIGN S18 IN THE 1 SIGNAL BAY BOOM. ADD A NEW PEDESTAL POLE T8 AT STA. 1+16.59, 47.12' RT. REPLACE PEDESTRIAN SIGNAL HEADS P6 AND P7 WITH TYPE D2 LED COUNTDOWN PEDESTRIAN SIGNAL HEADS ON POLE T8.
7. REPLACE THE EXISTING POLE WITH A NEW MOLTX T5 AT STA. 294+94.07, 43.04' RT. ATTACH A 1 SIGNAL BAY BOOM TO POLE T5. INSTALL NEW ILLUMINATED SIGN S19 IN THE 1 SIGNAL BAY BOOM. REMOVE YELLOW FLASHER SIGNAL HEADS YF1 AND YF3 ALONG WITH ILLUMINATED SIGNS S1 AND S3 AND REFLECTORIZED SIGNS S7, S12 AND S24. ATTACH NEW MESSENGER WIRE BETWEEN POLES T4 AND T5. INSTALL TWO 12" LED TRAFFIC SIGNAL HEADS 9 AND 10 ON THE NEW MESSENGER WIRE. INSTALL NEW REFLECTORIZED SIGNS S8, S9, AND S10. REPLACE PEDESTRIAN SIGNAL HEADS P8 AND P9 WITH TYPE D2 LED COUNTDOWN PEDESTRIAN SIGNAL HEADS ON POLE T5.
8. ADD A NEW STEEL POLE T9 AT STA. 294+87.00, 35.34' LT. FOR POLE FOUNDATION TYPE TPF–1 DETAILS SEE SHEET G–ST–2001. INSTALL 12" LED TRAFFIC SIGNAL HEAD 3 ON POLE T9. REPLACE PEDESTRIAN SIGNAL HEADS P10 AND P11 WITH TYPE D2 LED COUNTDOWN PEDESTRIAN SIGNAL HEADS ON POST T6. GROUND MOUNT SIGN S24 IN CENTRAL PARKWAY MEDIAN.
9. INSTALL 2–4" RMC IN ADDITION TO THE 1–3" RMC ACROSS CENTRAL PARKWAY AS SHOWN ON THIS PLAN.
10. A DISTANCE OF SIX FEET BEHIND THE CURB AND 15 FEET ON EITHER SIDE OF PROPOSED OCS POLES AND SIGNAL POLES (INCLUDING ANY DISTURBANCE TO THE EXISTING CURB) HAS BEEN QUANTIFIED FOR BIDDING PURPOSES FOR REMOVAL AND REPLACEMENT OF SIDEWALK. THE CITY'S ENGINEER WILL DETERMINE ACTUAL PAY LIMITS FOR THIS WORK. NO ADDITIONAL INCREASE TO THE UNIT COST WILL BE ALLOWED FOR THIS WORK IF THE QUANTITIES ARE MORE OR LESS THAN THE AMOUNT QUANTIFIED FOR BIDDING PURPOSES.

CAUTION UNDERGROUND UTILITIES
2 WORKING DAYS
BEFORE YOU DIG
CALL 1–800–362–2764
OHIO UTILITY PROTECTION SERVICE
CALL NON–SERVICE FACILITY OWNERS DIRECT

GRAPHIC SCALE
10 0 10 20 40
(IN FEET)
1 inch = 10 ft. Full Size
1 inch = 20 ft. Half Size

DEPARTMENT OF TRANSPORTATION & ENGINEERING — CITY OF CINCINNATI — OHIO

CONTRACT DRAWING

PRINTS NOT BEARING THIS STAMP WERE MADE PRIOR TO ADVERTISING FOR BIDS AND ARE TO BE CONSIDERED OBSOLETE FOR CONTRACT PURPOSES.

Department of Transportation and Engineering

City of Cincinnati
City Hall
801 Plum Street
Cincinnati, Ohio 45202

CINCINNATI STREETCAR
CENTRAL BUSINESS DISTRICT
PROPOSED TRAFFIC SIGNAL PLAN
CENTRAL PARKWAY AND VINE STREET

Revisions
No.

	Date	Date	Date	Date
Drawn by AMW	7/02/12			
Designed by AMW	7/02/12			
Checked by JTB	7/02/12			
Reviewed by JTB	7/12/12			

Consultant

PB HDR

File Number

ACC No. 23126

G-TC-1001 C

DOTE_Mono_PDF_Half.pltcfg
W:\29014A-Streetcar\CAD\Traffic_Control\Signals\1001_CentralPkwy&Vine_C-41\S_G-TC-1001 C.dgn
7/11/2012 6:58:25 AM

MATERIAL SCHEDULE

	VEHICULAR SIGNAL HEADS										
NO.	1	2	3	4	5	6	7	8	9	10	
12 INCH	R	R	R	R	R	R	R	R	R	R	
	Y	Y	Y	~~Y~~	Y	Y	Y	Y	Y	Y	
	G	G	G	~~G~~	G	G	G	G	G	G	

20

TYPE D2 PEDESTRIAN (LED)
(COUNTDOWN) SIGNAL HEAD

NOTE:
USE LENS W/ SYMBOL LEGENDS
PORTLAND ORANGE: HAND (DONT WALK)
LUNAR WHITE: WALKING MAN (WALK)

POLE NO.	POLE DATA: POLE TYPE	TRAFFIC BOOM (BY # OF BAYS)	FOUND. TYPE	PEDESTRIAN SIGNALS P1 D W	P2 D W	P3 D W	P4 D W	P5 D W	P6 D W	P7 D W	P8 D W	P9 D W	P10 D W	P11 D W	P12 D W	CABLE ENTRANCE ANGLE (DEG)	SPAN WIRE ATTACHMENT HEIGHT (FEET)	ATTACHMENT HEIGHT (FEET) TO THE BOTTOM OF BOOM	TRAFFIC BOOM (DEG)	STREET LIGHT BRACKET ARM (DEG)	HANDHOLE (DEG)	CONTROLLER (DEG)
				ANGLE OF ORIENTATION (DEGREES)																		
T1	MOLTX	6/1	FDN–56													270	24.5	17	0/270	0	180	90
T2	MOLTX	3	EXIST.		0	270										90	24.5	EX.	EX.	EX.	EX.	
T3	UMC DESIGN 50054–A934–Y1	–	TPF–1				180	0													180	
T4	MOLTX	6/1	FDN–56													270	24.5	17	0/270	0	180	
T5	MOLTX	1	FDN–56								180	90				90	24.5	17	0	0	180	
T6	1145	–	EXIST.										180	0							EX.	
T7	1045	–	FDN–25	270											0						180	
T8	1045	–	FDN–25						270	180											180	
T9	UMC DESIGN 50054–A934–Y1	–	TPF–1																			

CABLE SCHEDULE

CABLE NO.	CONNECTING DEVICES	CABLE TYPE	CABLE ROUTING	LINEAR FEET
1	TRAFFIC SIGNAL TS1, TS2	7C#14	TS2–TS1–T1–C	40
2	TRAFFIC SIGNAL TS3	7C#14	TS3–T9–B7–B1–T1–C	150
3	TRAFFIC SIGNAL TS4	7C#14	TS4–T3–B4–B3–B2–B1–T1–C	215
4	TRAFFIC SIGNAL TS5, TS6	7C#14	TS5–TS6–T4–B5–B4–B3–B2–B1–T1–C	320
5	TRAFFIC SIGNAL TS7, TS8	7C#14	TS8–TS7–T1–C	70
6	TRAFFIC SIGNAL TS9, TS10	7C#14	TS9–TS10–T5–B6–B7–B1–T1–C	250
7	PED. SIGNAL P1	7C#14	P1–T7–B1–T1–C	35
8	PED. SIGNAL P2	7C#14	P2–T2–B2–B1–T1–C	105
9	PED. SIGNAL P3	7C#14	P3–T2–B2–B1–T1–C	105
10	PED. SIGNAL P4	7C#14	P4–T3–B4–B3–B2–B1–T1–C	200
11	PED. SIGNAL P5	7C#14	P5–T3–B4–B3–B2–B1–T1–C	200
12	PED. SIGNAL P6	7C#14	P6–T8–B5–B4–B3–B2–B1–T1–C	265
13	PED. SIGNAL P7	7C#14	P7–T8–B5–B4–B3–B2–B1–T1–C	265
14	PED. SIGNAL P8	7C#14	P8–T5–B6–B7–B1–T1–C	185
15	PED. SIGNAL P9	7C#14	P9–T5–B6–B7–B1–T1–C	185
16	PED. SIGNAL P10	7C#14	P10–T6–B7–B1–T1–C	125
17	PED. SIGNAL P11	7C#14	P11–T6–B7–B1–T1–C	125
18	PED. SIGNAL P12	7C#14	P12–T7–B1–T1–C	35
19	ILLUM. SIGN S5	2C#12	S5–T1–C	45
20	ILLUM. SIGN S6	2C#12	S6–T4–B5–B4–B3–B2–B1–T1–C	320
21	ILLUM. SIGN S14	2C#12	S14–T2–B2–B1–T1–C	145
22	ILLUM. SIGN S16	2C#12	S16–T1–C	25
23	ILLUM. SIGN S17	2C#12	S17–T2–B2–B1–T1–C	148
24	ILLUM. SIGN S18	2C#12	S18–T4–B5–B4–B3–B2–B1–T1–C	296
25	ILLUM. SIGN S19	2C#12	S19–T5–B6–B7–B1–T1–C	206
26	POWER CABLE, AC POSITIVE, BLACK	1C#6	MH–B1–T1–C	90
27	POWER CABLE, AC NEGATIVE, WHITE	1C#6	MH–B1–T1–C	90
28	INTERCONNECT CABLE	12C#12	MH–B1–T1–C	100

SIGN DETAILS

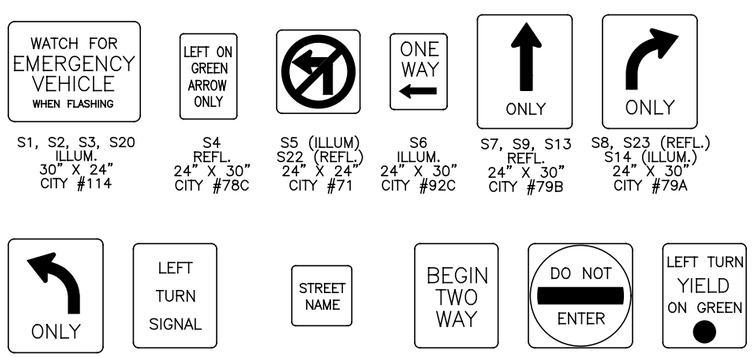

GRAPHIC SCALE

10 0 10 20 40

(IN FEET)
1 inch = 10 ft. Full Size
1 inch = 20 ft. Half Size

CAUTION UNDERGROUND UTILITIES
2 WORKING DAYS
BEFORE YOU DIG
CALL 1–800–362–2764
OHIO UTILITY PROTECTION SERVICE
CALL NON–SERVICE FACILITY
OWNERS DIRECT

DOTE_Mono_PDF_Half.pltcfg
W:\29014A-Streetcar\CAD\Traffic_Control\Signals\1001_CentralPkwy&Vine_C-41\S_G-TC-1001 D.dgn
7/12/2012
6:58:31 AM

CONTRACT DRAWING

PRINTS NOT BEARING THIS STAMP WERE MADE PRIOR TO ADVERTISING FOR BID, AND ARE TO BE CONSIDERED OBSOLETE FOR CONTRACT PURPOSES.

Department of Transportation and Engineering

City of Cincinnati
City Hall
801 Plum Street
Cincinnati, Ohio 45202

CINCINNATI STREETCAR
CENTRAL BUSINESS DISTRICT
PROPOSED TRAFFIC SIGNAL PLAN
CENTRAL PARKWAY AND VINE STREET

Revisions
No.

Date 7/02/12
Date 7/02/12
Date 7/02/12
Date 7/12/12

Drawn by AMW
Designed by AMW
Checked by JTB
Reviewed by JTB

Consultant

PB HDR

File Number

ACC No. 23126

G-TC-1001 D

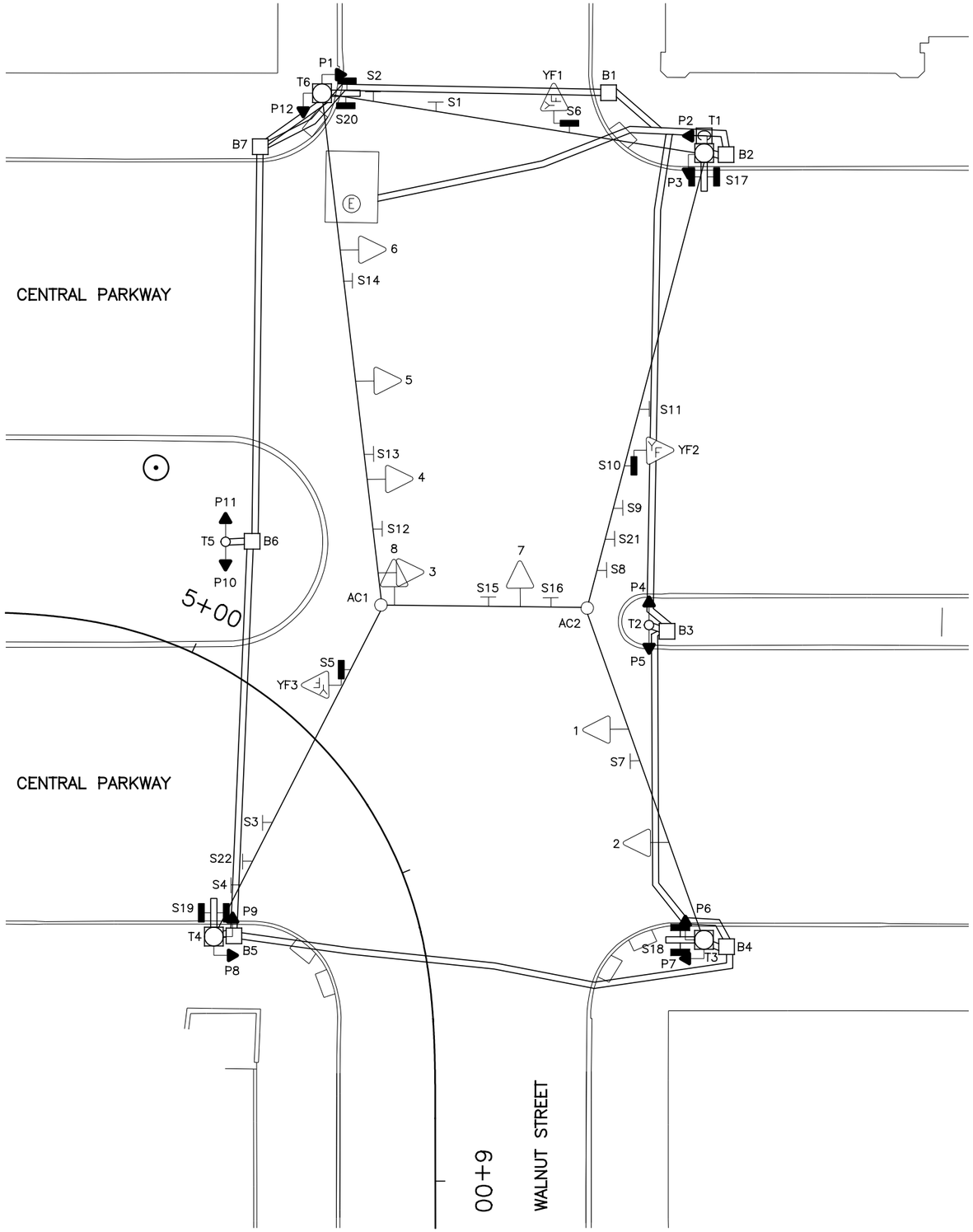

EQUIPMENT LIST

1, 2, 5, 6	TRAF. SIG. HD., 3 SECT., VERT., 12" RYG
3, 4	TRAF. SIG. HD., 3 SECT., VERT., 12" R, Y ←, G ←
7, 8	TRAF. SIG. HD., 3 SECT., VERT., 8" RYG
YF1, YF2, YF3	TRAF. SIG. HD., 1 SECT., 8" Y
P1 – P12	PED. SIG., 2 SECT., 12" INCANDESCENT
S1, S11, S15	REFL. SIGN, 24" X 30", "↑ ONLY", #79B
S2, S3	REFL. SIGN, 24" X 30", "⊢ ", #79AB
S4	REFL. SIGN, 24" X 30", "↱ ONLY", #79A
S5, S6, S10	ILLUM. SIGN, 30" X 24", "WATCH FOR EMERGENCY VEHICLES WHEN FLASHING", #114
S8, S9	REFL. SIGN, 24" X 30", " ↰ ONLY", #79C
S7	REFL. SIGN, 24" X 30", "ONE WAY → ", #92A
S12	REFL. SIGN, 24" X 30", "LEFT TURN SIGNAL", #77C
S13	REFL. SIGN, 24" X 30", "LEFT ON ARROW ONLY", #78C
S14	REFL. SIGN, 24" X 30", "ONE WAY ← ", #92C
S16	REFL. SIGN, 24" X 30", " ⊣ ", #79BC
S17	ILLUM. SIGN, 24" X 30", DOUBLE FACE, STREET NAME "WALNUT ST. 1100–1199"
S18	ILLUM. SIGN, 24" X 30", DOUBLE FACE, STREET NAME "CENTRAL PARKWAY EAST 100–199"
S19	ILLUM. SIGN, 24" X 30", DOUBLE FACE, STREET NAME "WALNUT ST. 1000–1099"
S20	ILLUM. SIGN, 24" X 30", DOUBLE FACE, STREET NAME "CENTRAL PARKWAY EAST 0–99"
S21	REFL. SIGN, 30" X 30", "PARKING ← ", SPECIAL
S22	REFL. SIGN, 30" X 30", "PARKING → ", SPECIAL
B3, B6	PULLBOX, CONCRETE, 18" X 18", TYPE B
B1, B2, B4, B5, B7	PULLBOX, CONCRETE, 24" X 24", SPECIAL CBD TYPE
T1, T3, T4, T6	STEEL POLE, ANCH. BASE, 50 FT LT, TYPE MOLX W/1 BAY BOOM
T2, T5	STEEL POST, ANCH. BASE, 4.5" X 11', CITY #1145

LEGEND

- MOL, MOT, MOLT SIGNAL POLE
- STEEL PEDESTRIAN POST
- TRAFFIC SIGNAL CONDUIT
- YELLOW FLASHER SIGNAL HEAD
- TRAFFIC SIGNAL HEAD
- PEDESTRIAN SIGNAL HEAD
- REFLECTORIZED SIGN
- ILLUMINATED SIGN
- PULLBOX
- CONTROLLER

CAUTION UNDERGROUND UTILITIES
2 WORKING DAYS
BEFORE YOU DIG
CALL 1–800–362–2764
OHIO UTILITY PROTECTION SERVICE
CALL NON–SERVICE FACILITY
OWNERS DIRECT

GRAPHIC SCALE
10 0 10 20 40
(IN FEET)
1 inch = 10 ft. Full Size
1 inch = 20 ft. Half Size

CONTRACT DRAWING

PRINTS NOT BEARING THIS STAMP WERE MADE PRIOR TO ADVERTISING FOR BIDS AND MUST BE CONSIDERED OBSOLETE FOR CONTRACT PURPOSES.

Department of Transportation and Engineering

City of Cincinnati
City Hall
801 Plum Street
Cincinnati, Ohio 45202

CINCINNATI STREETCAR
CENTRAL BUSINESS DISTRICT
EXISTING TRAFFIC SIGNAL PLAN
CENTRAL PARKWAY AND WALNUT STREET

Revisions
No.

	Date
Drawn by AMW	7/02/12
Designed by AMW	7/02/12
Checked by JTB	7/02/12
Reviewed by JTB	7/12/12

Consultant

PB HDR

File Number

ACC No. 23126

G-TC-1002 A

DOTE_Mono_PDF_Half.pltcfg
W:\29014A-Streetcar\CAD\Traffic_Control\Signals\1002_CentralPkwy&Walnut_C-42\S_G-TC-1002 A.dgn
7/11/2012 7:01:26 AM

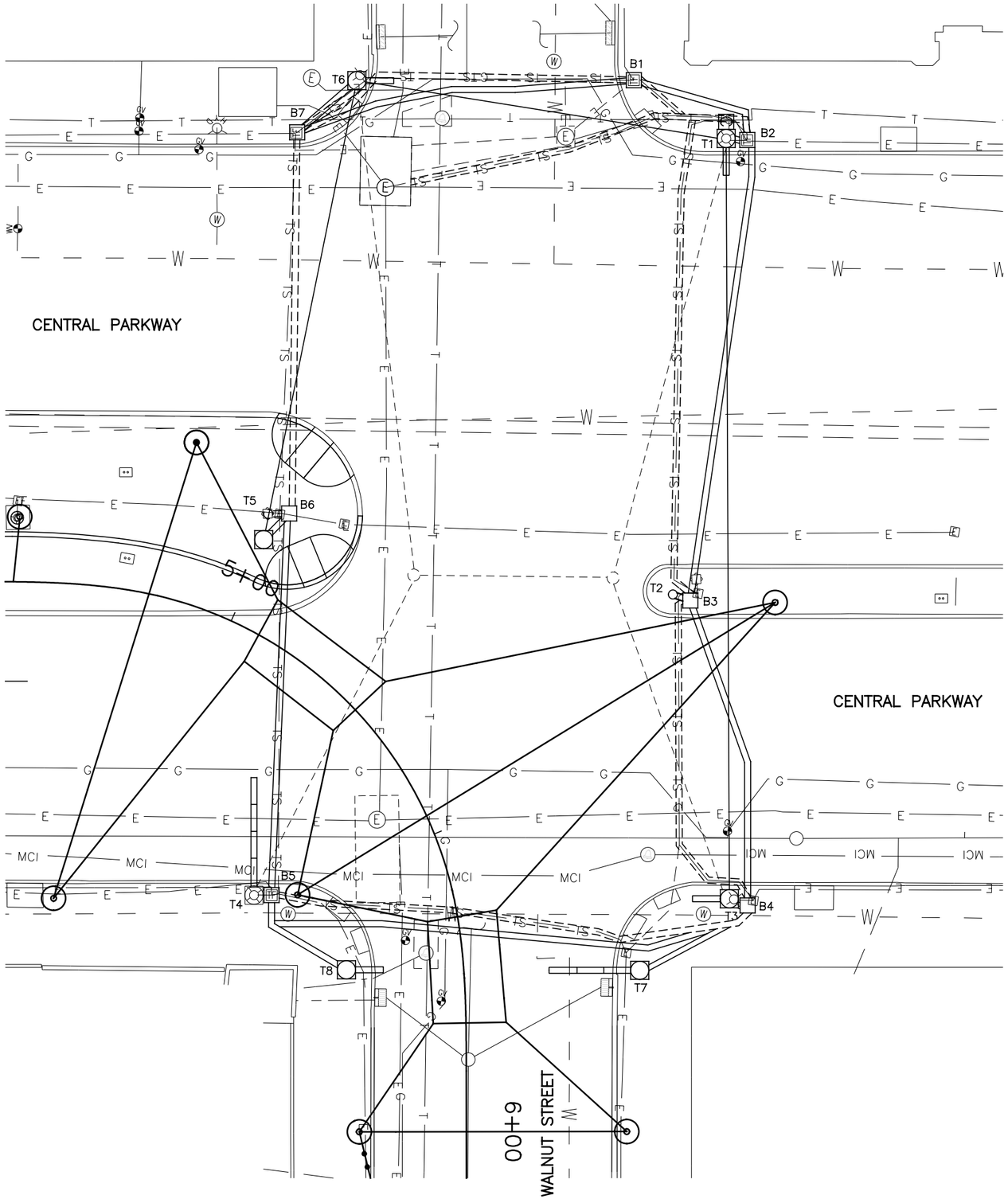

SIGNAL PHASING

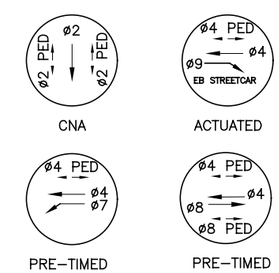

THIS IS THE GENERAL SEQUENCING FOR THIS TRAFFIC SIGNAL. REFER TO THE CITY OF CINCINNATI FOR FINAL SEQUENCING, LABELING AND TIMINGS.

CAUTION UNDERGROUND UTILITIES
2 WORKING DAYS
BEFORE YOU DIG
CALL 1–800–362–2764
OHIO UTILITY PROTECTION SERVICE
CALL NON–SERVICE FACILITY
OWNERS DIRECT

GRAPHIC SCALE

10 0 10 20 40

(IN FEET)
1 inch = 10 ft. Full Size
1 inch = 20 ft. Half Size

DEPARTMENT OF TRANSPORTATION & ENGINEERING
CITY OF CINCINNATI
OHIO

CONTRACT DRAWING

PRINTS NOT BEARING THIS STAMP WERE MADE PRIOR TO ADVERTISING FOR BIDS AND ARE TO BE CONSIDERED OBSOLETE FOR CONTRACT PURPOSES.

Department of Transportation and Engineering

City of Cincinnati
City Hall
801 Plum Street
Cincinnati, Ohio 45202

CINCINNATI STREETCAR
CENTRAL BUSINESS DISTRICT
UNDERGROUND UTILITIES & SIGNAL PLAN DETAILS
CENTRAL PARKWAY AND WALNUT STREET

Revisions

No.		

Date 7/02/12	Drawn by AMW
Date 7/02/12	Designed by AMW
Date 7/02/12	Checked by JTB
Date 7/12/12	Reviewed by JTB

Consultant

PB HDR

File Number

ACC No. 23126

G-TC-1002 B

DOTE_Mono_PDF_Half.pltcfg
W:\29014A-Streetcar\CAD\Traffic_Control\Signals\1002_CentralPkwy&Walnut_C-42\S_G-TC-1002 B.dgn
7/11/2012 7:01:41 AM

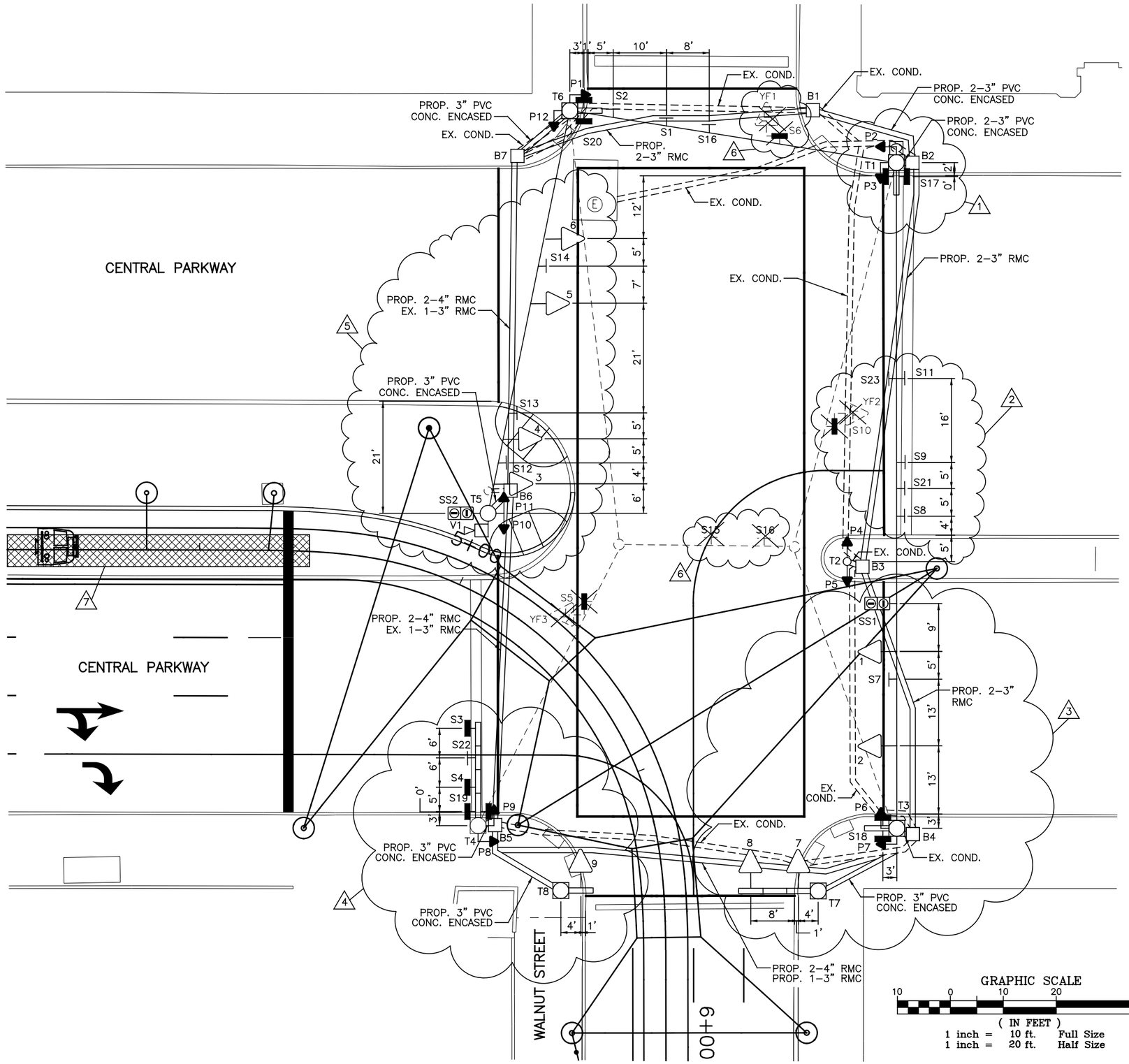

LEGEND

- MOL, MOT, MOLT SIGNAL POLE
- STEEL POLE
- STEEL PEDESTRIAN POST
- TRAFFIC SIGNAL CONDUIT
- YELLOW FLASHER SIGNAL HEAD
- TRAFFIC SIGNAL HEAD
- TRANSIT SIGNAL HEAD
- PEDESTRIAN SIGNAL HEAD
- REFLECTORIZED SIGN
- ILLUMINATED SIGN
- PULLBOX
- CONTROLLER
- VIDEO DETECTION CAMERA
- VIDEO DETECTION ZONE

TYPICAL POLE ORIENTATION

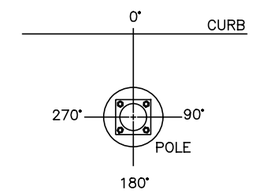

SIGNAL INDICATIONS

1, 2, 5, 6
SIGNAL HEAD DETAIL
12" (LED) LENSES

3, 4
SIGNAL HEAD DETAIL
12" (LED) LENSES

SS1, SS2
LRT SIGNAL HEAD DETAIL
12" (LED) LENSES

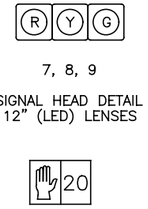

7, 8, 9
SIGNAL HEAD DETAIL
12" (LED) LENSES

P1, P2, P3, P4
P5, P6, P7, P8
P9, P10, P11, P12
TYPE D2 PEDESTRIAN (LED)
(COUNTDOWN) SIGNAL HEAD

CAUTION UNDERGROUND UTILITIES
2 WORKING DAYS
BEFORE YOU DIG
CALL 1-800-362-2764
OHIO UTILITY PROTECTION SERVICE
CALL NON-SERVICE FACILITY
OWNERS DIRECT

DOTE_Mono_PDF_Half.pltcfg
W:\29014A-Streetcar\CAD\Traffic_Control\Signals\1002_CentralPkwy&Walnut_C-42\S_G-TC-1002 C.dgn
7:01:55 AM
7/11/2012

CONTRACT DRAWING

PRINTS NOT BEARING THIS STAMP WERE MADE FROM ELECTRONIC RECORDS AND ARE TO BE CONSIDERED OBSOLETE FOR CONTRACT PURPOSES.

Department of Transportation and Engineering
City of Cincinnati
City Hall
801 Plum Street
Cincinnati, Ohio 45202

CINCINNATI STREETCAR
CENTRAL BUSINESS DISTRICT
PROPOSED TRAFFIC SIGNAL PLAN
CENTRAL PARKWAY AND WALNUT STREET

Revisions
No.

Drawn by AMW	Date 7/02/12	Designed by AMW	Date 7/02/12
Checked by JTB	Date 7/02/12	Reviewed by JTB	Date 7/12/12

Consultant
PB HDR

File Number

ACC No.
23126

G-TC-1002 C

SIGN DETAILS

S1, S11, S15
REFL.
24" X 30"
CITY #79B

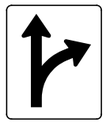

S2 (REFL.)
S3 (ILLUM.)
24" X 30"
CITY #79AB

S4
ILLUM.
24" X 30"
CITY #79A

S8, S9
REFL.
24" X 30"
CITY #79C

S16
REFL.
24" X 30"
CITY #79BC

S5, S6, S10
ILLUM.
30" X 24"
CITY #114

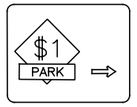

S22
REFL.
30" X 30"
CITY "SPECIAL"

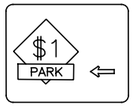

S21
REFL.
30" X 30"
CITY "SPECIAL"

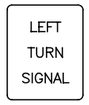

S12
REFL.
24" X 30"
CITY #77C

S13
REFL.
24" X 30"
CITY #78C

S14
REFL.
24" X 30"
CITY #92C

S7
REFL.
24" X 30"
CITY #92A

S17, S18
S19, S20
ILLUM.
24" X 30"
DOUBLE FACE

S23
REFL.
36" X 36"
CITY #52L
S21

NOTES:

1. REPLACE THE EXISTING CONTROLLER CABINET. REMOVE MESSENGER WIRE FROM POLE T1 TO POLE T3 AND INTERMEDIATE SPAN. REPLACE PEDESTRIAN SIGNAL HEADS P2 AND P3 WITH TYPE D2 LED COUNTDOWN PEDESTRIAN SIGNAL HEADS ON POLE T1. REPLACE THE EXISTING CONTROLLER ON POLE T1.

2. REPLACE REFLECTORIZED SIGNS S8, S9, S11 AN S21 AND PLACE ON NEW MESSENGER WIRE. REMOVE ILLUMINATED SIGN S10 AND YELLOW FLASHER SIGNAL YF2. ADD NEW REFLECTORIZED SIGN S23 ON NEW MESSENGER WIRE.

3. REPLACE SIGNAL HEADS 1 AND 2 AND REFLECTORIZED SIGN S7 ON NEW MESSENGER WIRE. INSTALL TRANSIT SIGNAL SS1 ON NEW MESSENGER WIRE. PLACE NEW MOT POLE T7 WITH A 3 SIGNAL BAY BOOM AT STA. 5+73.14, 29.19' LT. PLACE SIGNAL HEADS 7 AND 8 ON BOOM. REPLACE PEDESTRIAN SIGNAL HEADS P6 AND P7 WITH TYPE D2 LED COUNTDOWN PEDESTRIAN SIGNAL HEADS ON POLE T3.

4. REMOVE MESSENGER WIRE FROM POLE T4 TO POLE T6. REMOVE SIGN S5 AND YELLOW FLASHER SIGNAL YF3. REPLACE 1 BAY SIGNAL BOOM WITH A 4 BAY SIGNAL BOOM ON POLE T4. REPLACE SIGNS S3, S4, S19 WITH NEW ILLUMINATED SIGNS AND SIGN S22 WITH NEW REFLECTORIZED SIGN ON SIGNAL BOOM. REPLACE PEDESTRIAN SIGNAL HEADS P8 AND P9 WITH TYPE D2 LED COUNTDOWN PEDESTRIAN SIGNAL HEADS ON POLE T4. PLACE NEW MOT POLE T8 WITH 1 SIGNAL BAY BOOM AT STA. 5+73.14 19.43' RT. PLACE NEW SIGNAL HEAD 9 ON BOOM.

5. REPLACE THE EXISTING STEEL PEDESTRIAN POST WITH A NEW STEEL STRAIN POLE T5 AT STA. 4+99.43, 14.50' LT. PLACE TRANSIT SIGNAL SS2 ON NEW POLE T5. INSTALL NEW VIDEO DETECTION CAMERA V1 ON TOP OF POLE T5. CONNECT POLE T5 AND T6 WITH NEW MESSENGER WIRE. PLACE SIGNAL HEADS 3, 4, 5, AND 6 AS WELL AS NEW SIGNS S12, S13, AND S14 ON NEW MESSENGER WIRE. PLACE NEW PEDESTRIAN SIGNAL HEADS P10 AND P11 ON POLE T5.

6. REMOVE SIGNS S15, S16, S6 AND YELLOW FLASHER SIGNAL YF1.

7. 6' X 60' STREETCAR DETECTION ZONE. SEE TRAFFIC SIGNAL AND STREET LIGHTING GENERAL NOTES FOR ADDITIONAL DETAILS.

8. REPLACE ALL ILLUMINATED AND REFLECTORIZED SIGNS. REPLACE ALL TRAFFIC SIGNALS WITH 12" LED SIGNAL HEADS AND REPLACE ALL PEDESTRIAN SIGNALS WITH TYPE D2 LED COUNTDOWN PEDESTRIAN SIGNAL HEADS.

9. INSTALL 2–4" RMC AND 1–3" RMC UNDER TRACK SLAB AS SHOWN ON PLAN.

10. A DISTANCE OF SIX FEET BEHIND THE CURB AND 15 FEET ON EITHER SIDE OF PROPOSED OCS POLES AND SIGNAL POLES (INCLUDING ANY DISTURBANCE TO THE EXISTING CURB) HAS BEEN QUANTIFIED FOR BIDDING PURPOSES FOR REMOVAL AND REPLACEMENT OF SIDEWALK. THE CITY'S ENGINEER WILL DETERMINE ACTUAL PAY LIMITS FOR THIS WORK. NO ADDITIONAL INCREASE TO THE UNIT COST WILL BE ALLOWED FOR THIS WORK IF THE QUANTITIES ARE MORE OR LESS THAN THE AMOUNT QUANTIFIED FOR BIDDING PURPOSES.

MATERIAL SCHEDULE

VEHICULAR SIGNAL HEADS

NO.	1	2	3	4	5	6	7	8	9
12 INCH	R	R	~~R~~	~~R~~	R	R	R	R	R
	Y	Y	~~Y~~	~~Y~~	Y	Y	Y	Y	Y
	G	G	~~G~~	~~G~~	G	G	G	G	G

TYPE D2 PEDESTRIAN (LED)
(COUNTDOWN) SIGNAL HEAD

NOTE:
USE LENS W/ SYMBOL LEGENDS
PORTLAND ORANGE: HAND (DONT WALK)
LUNAR WHITE: WALKING MAN (WALK)

POLE NO.	POLE TYPE	TRAFFIC BOOM (# OF BAYS)	SHAFT SIZE IN X FT	FOUNDATION TYPE	P1	P2	P3	P4	P5	P6	P7	P8	P9	P10	P11	P12	CABLE ENTRANCE ANGLE (DEG)	CABLE ENTRANCE ANGLE (DEG)	SPAN WIRE ATTACHMENT HEIGHT (FEET)	ATTACHMENT HEIGHT (FEET) TO THE BOTTOM OF BOOM	TRAFFIC BOOM (DEG)	STREET LIGHT BRACKET ARM (DEG)	HANDHOLE (DEG)	CONTROLLER CABINET (DEG)	VIDEO DETECTION CAMERA V1 (DEG)
					PEDESTRIAN SIGNALS																				
					D	D	D	D	D	D	D	D	D	D	D	D									
					W	W	W	W	W	W	W	W	W	W	W	W									
					ANGLE OF ORIENTATION (DEGREES)																				
T1	MOLX	1		EXIST.		180	90										99	0	24.5	EX.	EX.	EX.	EX.	180	
T2	1145			EXIST.				90	270														EX.		
T3	MOLX	1		EXIST.						270	180						0		24.5	EX.	EX.	EX.	EX.		
T4	MOLTX	4		EXIST.								180	90							17	0	EX.	EX.		
T5	38045		11 X 30	FDN–10										0	0		78		24.5				180		90
T6	MOLX	1		EXIST.	270											180	101	9	24.5	EX.	EX.	EX.	EX.		
T7	MOT	3		FDN–51																17	0		180		
T8	MOT	1		FDN–51																17	0		180		

CABLE SCHEDULE

CABLE#	CONNECTING DEVICE	TYPE	CABLE ROUTING	LIN. FT
1	TRAFFIC SIGNAL TS1, TS2	7C#14	TS2–TS1–T1–C	150
2	TRAFFIC SIGNAL TS3, TS4	7C#14	TS3–TS4–T6–B7–B1–B2–T1–C	225
3	TRAFFIC SIGNAL TS5, TS6	7C#14	TS5–TS6–T6–B7–B1–B2–T1–C	190
4	TRAFFIC SIGNAL TS7, TS8	7C#14	TS8–TS7–T7–B4–B3–B2–T1–C	240
5	TRAFFIC SIGNAL TS9	7C#14	TS9–T8–B5–B6–B7–B1–B2–T1–C	285
6	PED. SIGNAL P1	EXIST.	EXIST.	EXIST.
7	PED. SIGNAL P2	EXIST.	EXIST.	EXIST.
8	PED. SIGNAL P3	EXIST.	EXIST.	EXIST.
9	PED. SIGNAL P4	EXIST.	EXIST.	EXIST.
10	PED. SIGNAL P5	EXIST.	EXIST.	EXIST.
11	PED. SIGNAL P6	EXIST.	EXIST.	EXIST.
12	PED. SIGNAL P7	EXIST.	EXIST.	EXIST.
13	PED. SIGNAL P8	EXIST.	EXIST.	EXIST.
14	PED. SIGNAL P9	EXIST.	EXIST.	EXIST.
15	PED. SIGNAL P10	7C#14	P10–T5–B6–B7–B1–B2–T1–C	195
16	PED. SIGNAL P11	7C#14	P11–T5–B6–B7–B1–B2–T1–C	195
17	PED. SIGNAL P12	EXIST.	EXIST.	EXIST.
18	ILLUM. SIGN S17	EXIST.	EXIST.	EXIST.
19	ILLUM. SIGN S18	EXIST.	EXIST.	EXIST.
20	ILLUM. SIGN S3, S4, S19	2C#12	S3–S4–S19–T4–B5–B6–B7–B1–B2–T1–C	300
21	ILLUM. SIGN S20	EXIST.	EXIST.	EXIST.
22	POWER CABLE, AC POSITIVE, BLACK	EXIST.	EXIST.	EXIST.
23	POWER CABLE, AC NEGATIVE, WHITE	EXIST.	EXIST.	EXIST.
24	TRANSIT SIGNAL SS1	7C#14	SS1–T1–C	115
25	TRANSIT SIGNAL SS2	7C#14	SS2–T5–B6–B7–B1–B2–T1–C	215
26	VIDEO DETECTION CAMERA V1	VIDEO CABLE	V1–T5–B6–B7–B1–B2–T1–C	215

CAUTION UNDERGROUND UTILITIES
2 WORKING DAYS
BEFORE YOU DIG
CALL 1–800–362–2764
OHIO UTILITY PROTECTION SERVICE
CALL NON–SERVICE FACILITY
OWNERS DIRECT

CONTRACT DRAWING

PRINTS NOT BEARING THIS STAMP WERE MADE PRIOR TO ADVERTISING FOR BIDS AND ARE TO BE CONSIDERED OBSOLETE FOR CONTRACT PURPOSES.

Department of Transportation and Engineering

City of Cincinnati
City Hall
801 Plum Street
Cincinnati, Ohio 45202

CINCINNATI STREETCAR
CENTRAL BUSINESS DISTRICT
PROPOSED TRAFFIC SIGNAL PLAN
CENTRAL PARKWAY AND WALNUT STREET

Revisions

No.					

Date	7/02/12
Drawn by	AMW
Date	7/02/12
Designed by	AMW
Date	7/02/12
Checked by	JTB
Date	7/12/12
Reviewed by	JTB

Consultant

PB HDR

File Number

ACC No.
23126

G-TC-1002 D

DOTE_Mono_PDF_Half.pltcfg
W:\29014A-Streetcar\CAD\Traffic_Control\Signals\1002_CentralPkwy&Walnut_C-42\S_G-TC-1002 D.dgn
7/11/2012
7:02:01 AM

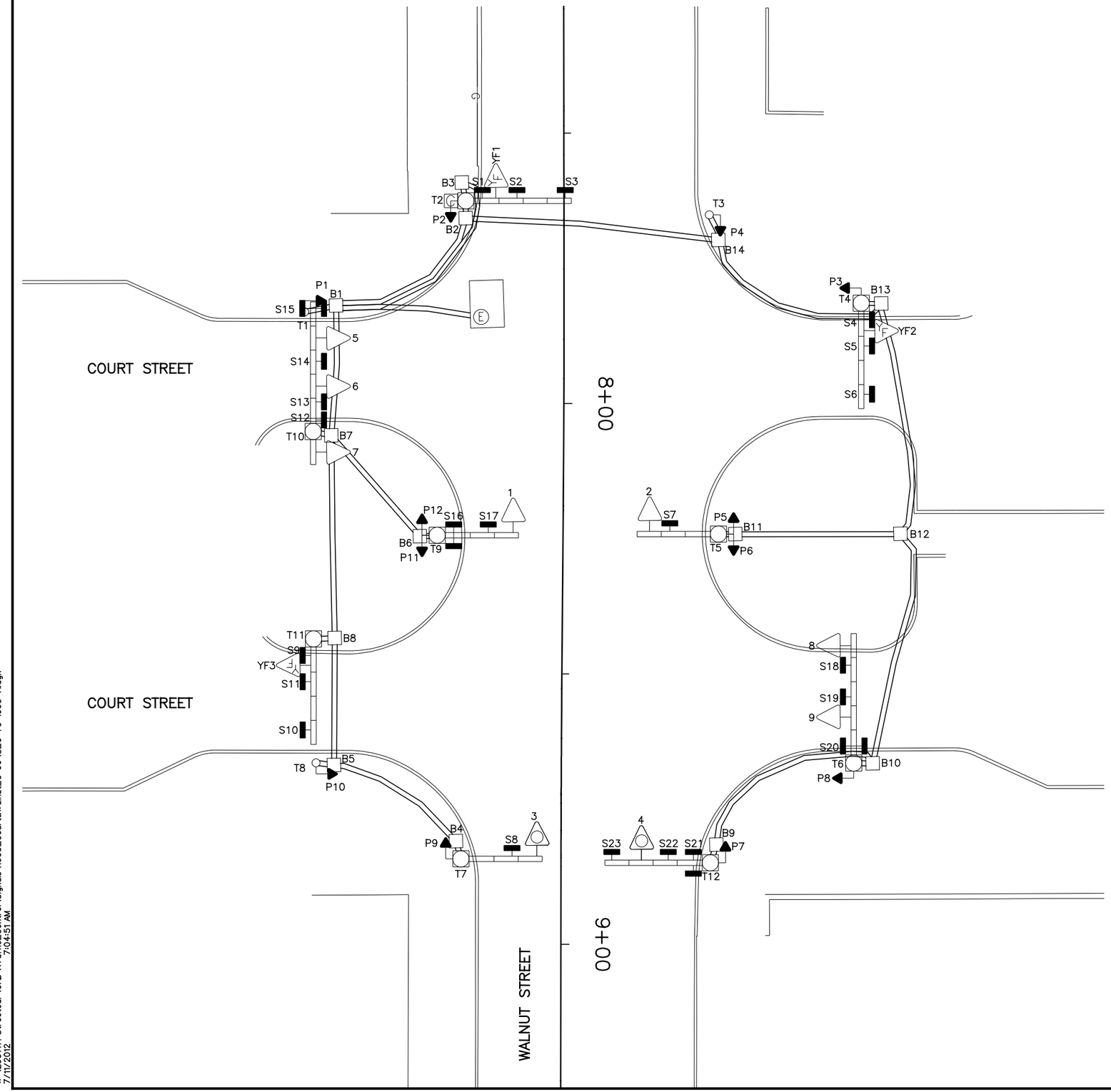

EQUIPMENT LIST

1–9	TRAF. SIG. HD., 3 SECT., HOR 12., 12" RYG
YF1–YF3	TRAF. SIG. HD., 1 SECT., 8" Y
P1–P12	PED. SIG., 2 SECT., 12" INCANDESCENT
S1, S4, S9	ILLUM. SIGN, 30" X 24", "WATCH FOR EMERGENCY VEHICLE WHEN FLASHING", #114
S2	ILLUM. SIGN, 24" X 30", " ", #79AB
S3, S5, S11, S23	ILLUM. SIGN, 24" X 30", " ONLY", #79B
S6	ILLUM. SIGN, 24" X 30", " ONLY", #79C
S7, S18	ILLUM. SIGN, 24" X 30", "ONE WAY ", #92A
S8, S14	ILLUM. SIGN, 24" X 30", "ONE WAY ", #92C
S10	ILLUM. SIGN, 24" X 30", " ONLY", #79A
S12	ILLUM. SIGN, 24" X 30", "LEFT TURN SIGNAL", #77C
S13, S17, S19	ILLUM. SIGN, 24" X 30", "NO TURN ON RED", #117
S15, S20	ILLUM. SIGN, 24" X 30", DOUBLE FACE, "WALNUT ST."
S16, S21	ILLUM. SIGN, 24" X 30", DOUBLE FACE, "COURT ST."
S22	ILLUM. SIGN, 24" X 30", " ", #79AC
B1–B14	PULLBOX, 24" X 24", DOWNTOWN SPECIAL
T1, T3, T8	PEDESTRIAN POST
T2, T4	MOLT POLE, W/4 BAY BOOM
T5, T7	MOLT POLE, W/3 BAY BOOM
T6	MOLT POLE, W/5 BAY BOOM
T9	MOT POLE, W/3 BAY BOOM
T10	MOT POLE, W/5 AND 1 BAY BOOMS
T11, T12	MOT POLE, W/4 BAY BOOM

LEGEND

- MOL, MOT, MOLT SIGNAL POLE
- STEEL PEDESTRIAN POST
- TRAFFIC SIGNAL CONDUIT
- YELLOW FLASHER SIGNAL HEAD
- TRAFFIC SIGNAL HEAD
- OPTICAL TRAFFIC SIGNAL HEAD
- PEDESTRIAN SIGNAL HEAD
- ILLUMINATED SIGN
- PULLBOX
- CONTROLLER

CAUTION UNDERGROUND UTILITIES
2 WORKING DAYS
BEFORE YOU DIG
CALL 1–800–362–2764
OHIO UTILITY PROTECTION SERVICE
CALL NON–SERVICE FACILITY
OWNERS DIRECT

GRAPHIC SCALE
10 0 10 20 40
(IN FEET)
1 inch = 10 ft. Full Size
1 inch = 20 ft. Half Size

DOTE_Mono_PDF_Half.pltcfg
W:\29014A-Streetcar\CAD\Traffic_Control\Signals\1003_Court&Walnut_C-96\S_G-TC-1003 A.dgn
7:04:51 AM
7/11/2012

DEPARTMENT OF TRANSPORTATION & ENGINEERING
CITY OF CINCINNATI OHIO

CONTRACT DRAWING

PRINTS NOT BEARING THIS STAMP WERE MADE PRIOR TO ADVERTISING FOR BID AND ARE TO BE CONSIDERED OBSOLETE FOR CONTRACT PURPOSES.

Department of Transportation and Engineering

City of Cincinnati
City Hall
801 Plum Street
Cincinnati, Ohio 45202

CINCINNATI STREETCAR
CENTRAL BUSINESS DISTRICT
EXISTING TRAFFIC SIGNAL PLAN
WALNUT STREET AND COURT STREET

Revisions
No.

Date	7/02/12
Date	7/02/12
Date	7/02/12
Date	7/12/12
Drawn by	AMW
Designed by	AMW
Checked by	JTB
Reviewed by	JTB

Consultant
PB HDR

File Number

ACC No.
23126

G-TC-1003 A

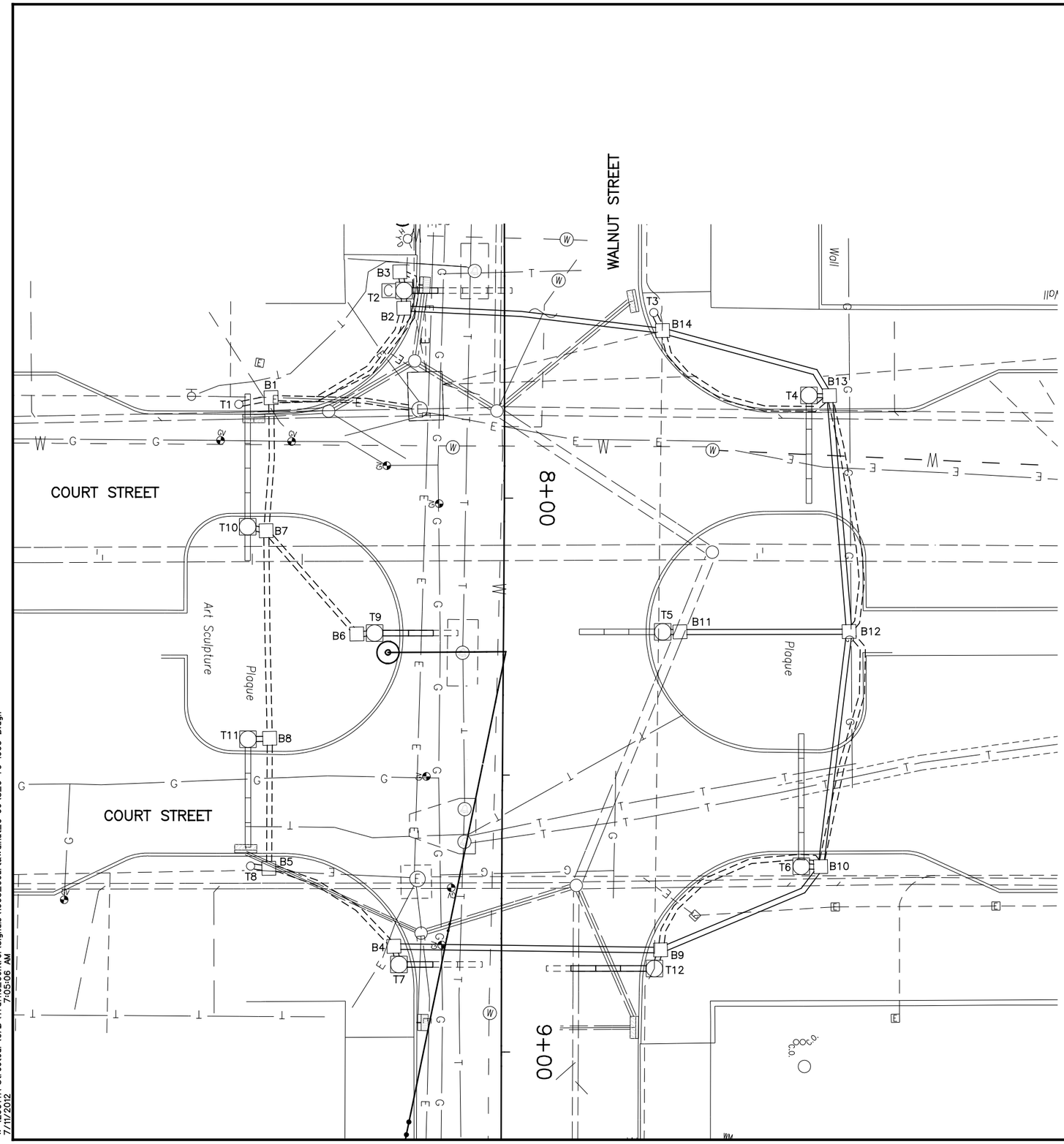

SIGNAL PHASING

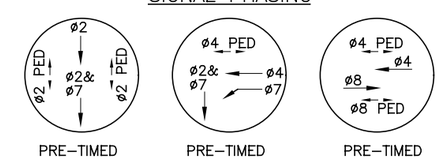

THIS IS THE GENERAL SEQUENCING FOR THIS TRAFFIC SIGNAL. REFER TO THE CITY OF CINCINNATI FOR FINAL SEQUENCING, LABELING AND TIMINGS.

CAUTION UNDERGROUND UTILITIES
2 WORKING DAYS
BEFORE YOU DIG
CALL 1–800–362–2764
OHIO UTILITY PROTECTION SERVICE
CALL NON–SERVICE FACILITY
OWNERS DIRECT

GRAPHIC SCALE
10 0 10 20 40
(IN FEET)
1 inch = 10 ft. Full Size
1 inch = 20 ft. Half Size

DEPARTMENT OF TRANSPORTATION & ENGINEERING
CITY OF CINCINNATI OHIO

CONTRACT DRAWING

PRINTS NOT BEARING THIS STAMP WERE MADE PRIOR TO ADVERTISING FOR BIDS AND ARE TO BE CONSIDERED OBSOLETE FOR CONTRACT PURPOSES.

Department of Transportation and Engineering

City of Cincinnati
City Hall
801 Plum Street
Cincinnati, Ohio 45202

CINCINNATI STREETCAR
CENTRAL BUSINESS DISTRICT
UNDERGROUND UTILITIES & SIGNAL PLAN DETAILS WALNUT STREET AND COURT STREET

Revisions
No.

Drawn by AMW	Date 7/02/12
Designed by AMW	Date 7/02/12
Checked by JTB	Date 7/02/12
Reviewed by JTB	Date 7/12/12

Consultant

PB HDR

File Number

ACC No.
23126

G-TC-1003 B

DOTE_Mono_PDF_Half.pltcfg
W:\29014A-Streetcar\CAD\Traffic_Control\Signals\1003_Court&Walnut_C-96\S_G-TC-1003 B.dgn
7:05:06 AM
7/11/2012

LEGEND

- MOL, MOT, MOLT SIGNAL POLE
- STEEL PEDESTRIAN POST
- TRAFFIC SIGNAL CONDUIT
- YELLOW FLASHER SIGNAL HEAD
- TRAFFIC SIGNAL HEAD
- OPTICAL TRAFFIC SIGNAL HEAD
- PEDESTRIAN SIGNAL HEAD
- REFLECTORIZED SIGN
- ILLUMINATED SIGN
- PULLBOX
- CONTROLLER

SIGNAL INDICATIONS

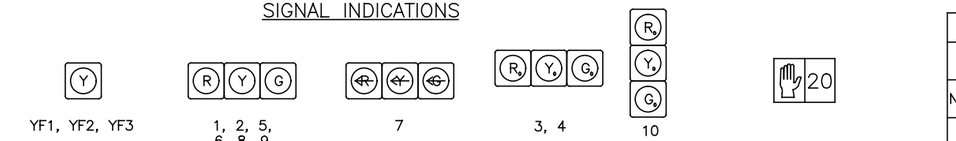

YF1, YF2, YF3 — SIGNAL HEAD DETAIL 12" (LED) LENSES

1, 2, 5, 6, 8, 9 — SIGNAL HEAD DETAIL 12" (LED) LENSES

7 — SIGNAL HEAD DETAIL 12" (LED) LENSES

3, 4 — SIGNAL HEAD DETAIL 12" (OPTICALLY PROGRAMMED) LENSES

10

P1, P2, P3, P4, P5, P6, P7, P8, P9, P10, P11, P12 — TYPE D2 PEDESTRIAN (LED) (COUNTDOWN) SIGNAL HEAD

TYPICAL POLE ORIENTATION

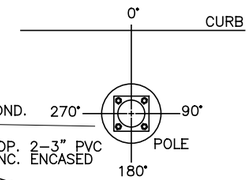

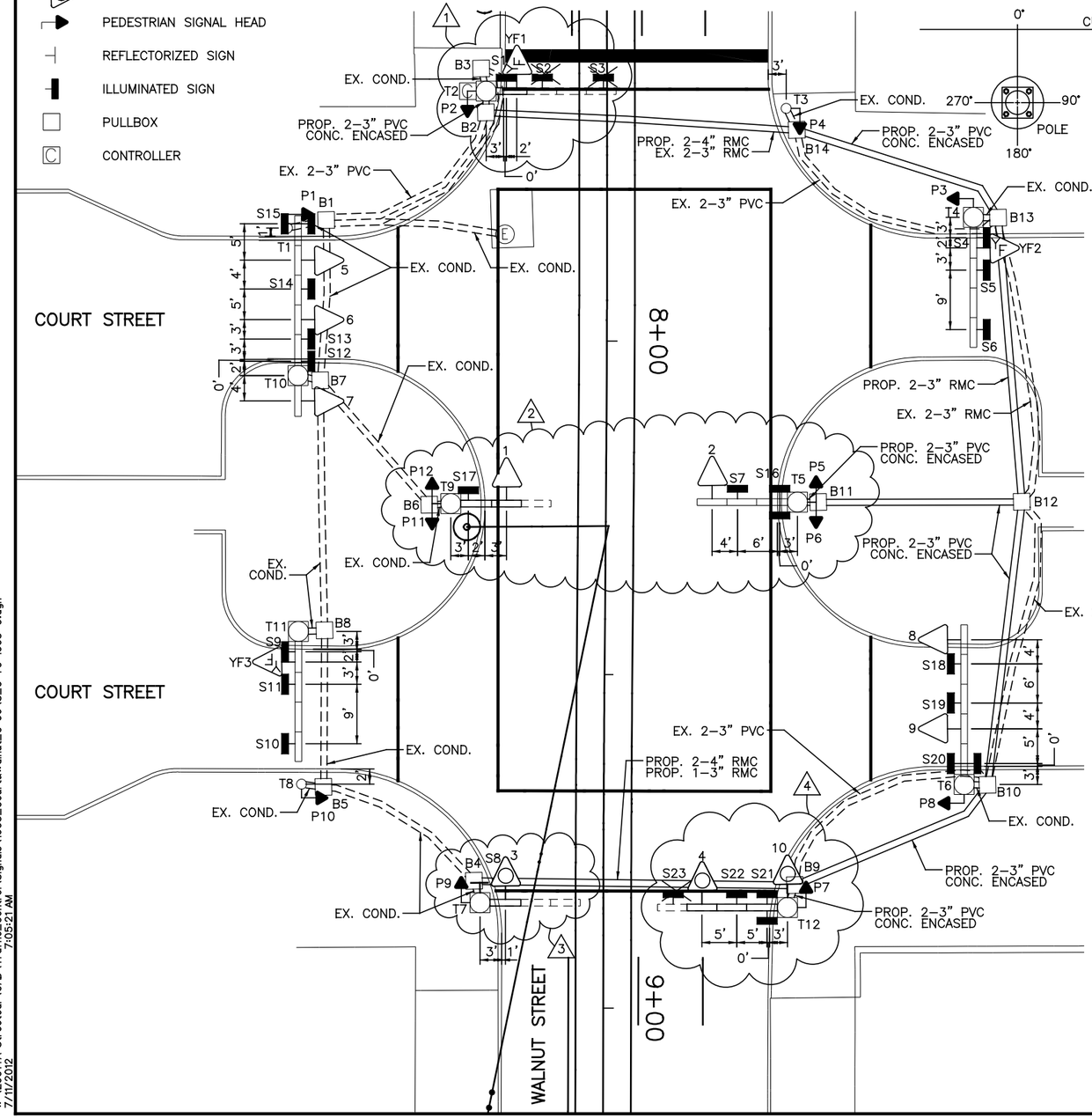

MATERIAL SCHEDULE

VEHICLE SIGNAL HEADS

NO.	1	2	3	4	5	6	7	8	9	10
12 INCH	R	R	R_e	R_e	R	R	~~R~~	R	R	R_e
	Y	Y	Y_e	Y_e	Y	Y	~~Y~~	Y	Y	Y_e
	G	G	G_e	G_e	G	G	~~G~~	G	G	G_e

TYPE D2 PEDESTRIAN (LED) (COUNTDOWN) SIGNAL HEAD

NOTE:
USE LENS W/ SYMBOL LEGENDS
PORTLAND ORANGE: HAND (DONT WALK)
LUNAR WHITE: WALKING MAN (WALK)

POLE NO.	POLE TYPE	TRAFFIC BOOM (# OF BAYS)	FOUND. TYPE	P1	P2	P3	P4	P5	P6	P7	P8	P9	P10	P11	P12	ATTACHMENT HEIGHT (FEET) TO THE BOTTOM OF BOOM	TRAFFIC BOOM (DEG)	STREET LIGHT BRACKET ARM (DEG)	HANDHOLE (DEG)	CONTROLLER (DEG)
				PEDESTRIAN SIGNALS																
				D	D	D	D	D	D	D	D	D	D	D	D					
				W	W	W	W	W	W	W	W	W	W	W	W					
				ANGLE OF ORIENTATION (DEGREES)																
T1	1145		EXIST.	180															EX.	
T2	MOLT	1	EXIST.		180											17	0	EX.	EX.	180
T3	1145		EXIST.				180												EX.	
T4	MOLT	4	EXIST.			180										EX.	EX.	EX.	EX.	
T5	MOLT	3	EXIST.					180	180							EX.	EX.	EX.	EX.	
T6	MOLT	5	EXIST.								180					EX.	EX.	EX.	EX.	
T7	MOLT	1	EXIST.									180				17	0	EX.	EX.	
T8	1145		EXIST.										180						EX.	
T9	MOT	2	EXIST.											180	180	17	0		EX.	
T10	MOT	5 1	EXIST.													EX.	EX.		EX.	
T11	MOT	4	EXIST.													EX.	EX.		EX.	
T12	MOT	3	EXIST.							180						17	0		EX.	

NOTES:

1. REPLACE 4 BAY SIGNAL BOOM WITH A 1 BAY SIGNAL BOOM. REMOVE SIGNS S2 AND S3 AND GROUND MOUNT LANE ASSIGNMENT SIGN FOR WALNUT STREET. INSTALL NEW SIGN S1 AND NEW YF1 SIGNAL IN SINGLE BAY. REPLACE CONTROLLER ON POLE T2.
2. REMOVE 3 SIGNAL BAY BOOM AND REPLACE WITH A 2 SIGNAL BAY BOOM. INSTALL SIGNAL 1 IN BAY 2 AND NEW SIGN S17 IN BAY 1 OF POLE T9. INSTALL NEW SIGN S16 TO BAY 1 OF POLE T5.
3. REPLACE THE EXISTING 3 SIGNAL BAY BOOM WITH A 1 SIGNAL BAY BOOM. INSTALL NEW REFLECTORIZED SIGN S8 ON POLE T7. INSTALL SIGNAL 3 IN BAY 1.
4. REPLACE 4 SIGNAL BAY BOOM WITH A 3 SIGNAL BAY BOOM. REMOVE SIGN S23. PLACE NEW SIGNAL 4 IN BAY 3, NEW SIGN S22 IN BAY 2, AND NEW SIGN S21 IN BAY 1. INSTALL NEW OPTICALLY PROGRAMMED SIGNAL HEAD 10 ON POLE T12.
5. REPLACE ALL SIGNAL HEADS EXCEPT 3 AND 4 WITH NEW 12" LED SIGNAL HEADS. REPLACE SIGNAL HEADS 3 AND 4 WITH OPTICALLY PROGRAMMED SIGNAL HEADS. REPLACE ALL PEDESTRIAN SIGNAL HEADS WITH TYPE D2 LED COUNTDOWN PEDESTRIAN SIGNALS. REPLACE ALL ILLUMINATED AND REFLECTORIZED SIGNS.
6. INSTALL 2–4" AND 1–3" RMC UNDER TRACK SLAB AS SHOWN ON PLAN.
7. A DISTANCE OF SIX FEET BEHIND THE CURB AND 15 FEET ON EITHER SIDE OF PROPOSED OCS POLES AND SIGNAL POLES (INCLUDING ANY DISTURBANCE TO THE EXISTING CURB) HAS BEEN QUANTIFIED FOR BIDDING PURPOSES FOR REMOVAL AND REPLACEMENT OF SIDEWALK. THE CITY'S ENGINEER WILL DETERMINE ACTUAL PAY LIMITS FOR THIS WORK. NO ADDITIONAL INCREASE TO THE UNIT COST WILL BE ALLOWED FOR THIS WORK IF THE QUANTITIES ARE MORE OR LESS THAN THE AMOUNT QUANTIFIED FOR BIDDING PURPOSES.

CAUTION UNDERGROUND UTILITIES
2 WORKING DAYS
BEFORE YOU DIG
CALL 1–800–362–2764
OHIO UTILITY PROTECTION SERVICE
CALL NON–SERVICE FACILITY OWNERS DIRECT

GRAPHIC SCALE
10 0 10 20 40
(IN FEET)
1 inch = 10 ft. Full Size
1 inch = 20 ft. Half Size

DOTE_Mono_PDF_Half.pltcfg
W:\29014A-Streetcar\CAD\Traffic_Control\Signals\1003_Court&Walnut_C-96\S_G-TC-1003_C.dgn
7/11/2012 7:05:21 AM

CONTRACT DRAWING
PRINTS NOT BEARING THIS STAMP WERE MADE PRIOR TO ADVERTISING FOR BIDS AND ARE TO BE CONSIDERED OBSOLETE FOR CONTRACT PURPOSES.

Department of Transportation and Engineering
City of Cincinnati
City Hall
801 Plum Street
Cincinnati, Ohio 45202

CINCINNATI STREETCAR
CENTRAL BUSINESS DISTRICT
PROPOSED TRAFFIC SIGNAL PLAN
WALNUT STREET AND COURT STREET

Revisions
No.

Date 7/02/12
Date 7/02/12
Date 7/02/12
Date 7/12/12

Drawn by AMW
Designed by AMW
Checked by JTB
Reviewed by JTB

Consultant
PB HDR

File Number

ACC No. 23126

G-TC-1003 C

SIGN DETAILS

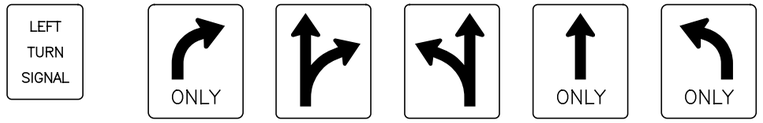

S12 ILLUM. 24" X 30" CITY #77C

S10 ILLUM. 24" X 30" CITY #79A

S2 ILLUM. 24" X 30" CITY #79AB

S22 ILLUM. 24" X 30" CITY #79AC

S3, S5, S11, S23 ILLUM. 24" X 30" CITY #79B

S6 ILLUM. 24" X 30" CITY #79C

S7, S18 ILLUM. 24" X 30" CITY #92A

S8 (REFL.) S14 (ILLUM.) 24" X 30" CITY #92C

S1, S4, S9 ILLUM. 30" X 24" CITY #114

S13, S17, S19 ILLUM. 24" X 30" CITY #117

S15, S16, S20, S21 ILLUM. 24" X 30" DOUBLE FACE

CABLE SCHEDULE

CABLE#	CONNECTING DEVICE	TYPE	CABLE ROUTING	LIN. FT
1	TRAFFIC SIGNAL TS1	EXIST.	EXIST.	EXIST.
2	TRAFFIC SIGNAL TS2	EXIST.	EXIST.	EXIST.
3	TRAFFIC SIGNAL TS3	EXIST.	EXIST.	EXIST.
4	TRAFFIC SIGNAL TS4, TS10	7C#14	TS4–TS10–T12–B9–B10–B12–B13–B14–B2–T2–C	300
5	TRAFFIC SIGNAL TS5, TS6, TS7	EXIST.	EXIST.	EXIST.
6	TRAFFIC SIGNAL TS8, TS9	EXIST.	EXIST.	EXIST.
7	PED. SIGNAL P1	EXIST.	EXIST.	EXIST.
8	PED. SIGNAL P2	EXIST.	EXIST.	EXIST.
9	PED. SIGNAL P3	EXIST.	EXIST.	EXIST.
10	PED. SIGNAL P4	EXIST.	EXIST.	EXIST.
11	PED. SIGNAL P5	EXIST.	EXIST.	EXIST.
12	PED. SIGNAL P6	EXIST.	EXIST.	EXIST.
13	PED. SIGNAL P7	EXIST.	EXIST.	EXIST.
14	PED. SIGNAL P8	EXIST.	EXIST.	EXIST.
15	PED. SIGNAL P9	EXIST.	EXIST.	EXIST.
16	PED. SIGNAL P10	EXIST.	EXIST.	EXIST.
17	PED. SIGNAL P11	EXIST.	EXIST.	EXIST.
18	PED. SIGNAL P12	EXIST.	EXIST.	EXIST.
19	YELLOW FLASHER 1	EXIST.	EXIST.	EXIST.
20	YELLOW FLASHER 2	EXIST.	EXIST.	EXIST.
21	YELLOW FLASHER 3	EXIST.	EXIST.	EXIST.
22	ILLUM. SIGN S1	EXIST.	EXIST.	EXIST.
23	ILLUM. SIGN S4, S5, S6	EXIST.	EXIST.	EXIST.
24	ILLUM. SIGN S7, S16	2C#12	S7–S16–T5–B11–B12–B13–B14–B2–T2–C	225
25	ILLUM. SIGN S9, S10, S11	EXIST.	EXIST.	EXIST.
26	ILLUM. SIGN S12, S13, S14, S15	EXIST.	EXIST.	EXIST.
27	ILLUM. SIGN S17	EXIST.	EXIST.	EXIST.
28	ILLUM. SIGN S18, S19, S20	EXIST.	EXIST.	EXIST.
29	ILLUM. SIGN S21, S22	EXIST.	EXIST.	EXIST.
30	POWER CABLE, AC POSTIVE, BLACK	EXIST.	EXIST.	EXIST.
31	POWER CABLE, AC NEGATIVE, WHITE	EXIST.	EXIST.	EXIST.

CAUTION UNDERGROUND UTILITIES
2 WORKING DAYS
BEFORE YOU DIG
CALL 1–800–362–2764
OHIO UTILITY PROTECTION SERVICE
CALL NON–SERVICE FACILITY
OWNERS DIRECT

GRAPHIC SCALE

0 40

(IN FEET)
1 inch = 10 ft. Full Size
1 inch = 20 ft. Half Size

DOTE_Mono_PDF_Half.pltcfg
W:\29014A-Streetcar\CAD\Traffic_Control\Signals\1003_Court&Walnut_C-96\S_G-TC-1003 D.dgn
7:05:26 AM
7/11/2012

DEPARTMENT OF TRANSPORTATION & ENGINEERING
CITY OF CINCINNATI OHIO

CONTRACT DRAWING

PRINTS NOT BEARING THIS STAMP WERE MADE PRIOR TO ADVERTISING FOR BIDS AND ARE TO BE CONSIDERED OBSOLETE FOR CONTRACT PURPOSES.

Department of Transportation and Engineering

City of Cincinnati
City Hall
801 Plum Street
Cincinnati, Ohio 45202

CINCINNATI STREETCAR
CENTRAL BUSINESS DISTRICT
PROPOSED TRAFFIC SIGNAL PLAN
WALNUT STREET AND COURT STREET

Revisions
No.

	Date
Drawn by AMW	7/02/12
Designed by AMW	7/02/12
Checked by JTB	7/02/12
Reviewed by JTB	7/12/12

Consultant

PB HDR

File Number

ACC No. 23126

G-TC-1003 D

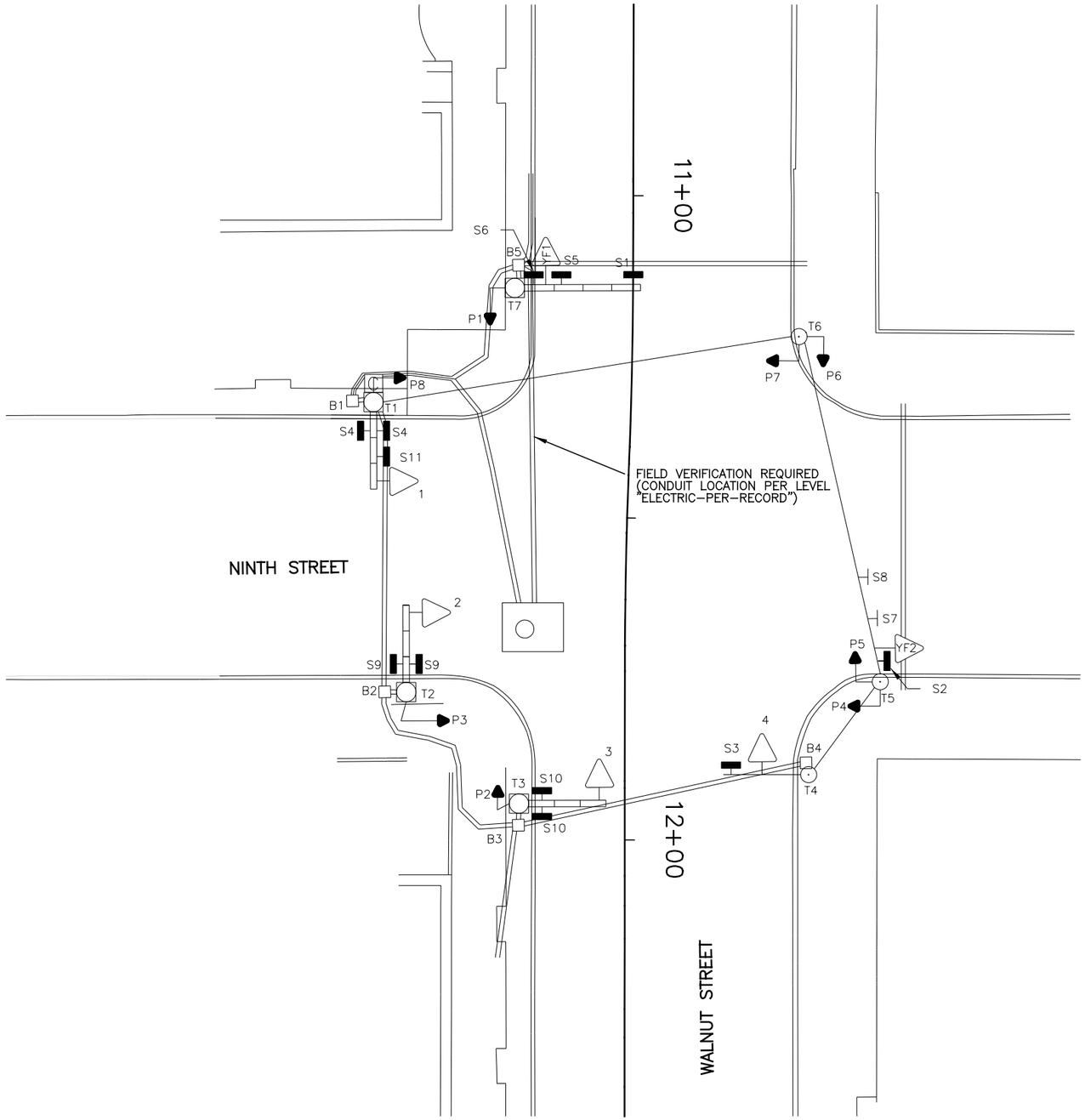

EQUIPMENT LIST	
1, 2, 3, 4	TRAF. SIG. HD., 3 SECT., HORIZ., 8" RYG
YF1, YF2	TRAF. SIG. HD., 1 SECT., 8" YELLOW FLASH.
P1 – P8	PED. SIG., 1 SECT., 16" INCAND., DWW 3 LINE
S2, S6	ILLUM. SIGN, "WATCH FOR EMERGENCY VEHICLE WHEN FLASHING"
S1	ILLUM. SIGN, 24" X 30"," ↑ ONLY " , #79BC
S3	ILLUM. SIGN, "ONE WAY → "
S4, S9	ILLUM. SIGN, 24" X 30", WALNUT ST., DF
S5	ILLUM. SIGN, 24" X 30"," ↱ ONLY", #79A
S7	REFLECT. SIGN, 24" X 30"," ↰ ONLY", #79C
S8	REFLECT. SIGN, 24" X 30"," ↰↑ ", #79BC
S10	ILLUM. SIGN, 24" X 30", NINTH ST EAST., DF
S11	ILLUM. SIGN, "ONE WAY ← "
T2, T3	STEEL POLE, MOLT
T1, T7	STEEL POLE, MOT
T4, T5, T6	EMBEDDED BASE STEEL POLE
B1 – B5	PULLBOX, 24" X 24", DOWNTOWN SPECIAL
B3, B4, B8, B9	PULLBOX, 24" X 24", TYPE "C"
C	CONTROLLER

LEGEND

- MOL, MOT, MOLT SIGNAL POLE
- STEEL POLE
- TRAFFIC SIGNAL CONDUIT
- YELLOW FLASHER SIGNAL HEAD
- TRAFFIC SIGNAL HEAD
- PEDESTRIAN SIGNAL HEAD
- REFLECTORIZED SIGN
- ILLUMINATED SIGN
- PULLBOX
- CONTROLLER

CAUTION UNDERGROUND UTILITIES
2 WORKING DAYS
BEFORE YOU DIG
CALL 1-800-362-2764
OHIO UTILITY PROTECTION SERVICE
CALL NON-SERVICE FACILITY
OWNERS DIRECT

GRAPHIC SCALE
10 0 10 20 40
(IN FEET)
1 inch = 10 ft. Full Size
1 inch = 20 ft. Half Size

DOTE_Mono_PDF_Half.pltcfg
W:\29014A-Streetcar\CAD\Traffic_Control\Signals\1004_Ninth&Walnut_LN-05\S_G-TC-1004 A.dgn
7:08:17 AM
7/11/2012

CONTRACT DRAWING

PRINTS NOT BEARING THIS STAMP WERE MADE PRIOR TO ADVERTISING FOR BID AND ARE TO BE CONSIDERED OBSOLETE FOR CONTRACT PURPOSES.

Department of Transportation and Engineering

City of Cincinnati
City Hall
801 Plum Street
Cincinnati, Ohio 45202

CINCINNATI STREETCAR
CENTRAL BUSINESS DISTRICT

EXISTING TRAFFIC SIGNAL PLAN
WALNUT STREET AND NINTH STREET

Revisions
No.

	Date
Drawn by AMW	7/02/12
Designed by AMW	7/02/12
Checked by JTB	7/02/12
Reviewed by JTB	7/12/12

Consultant

PB HDR

File Number

ACC No. 23126

G-TC-1004 A

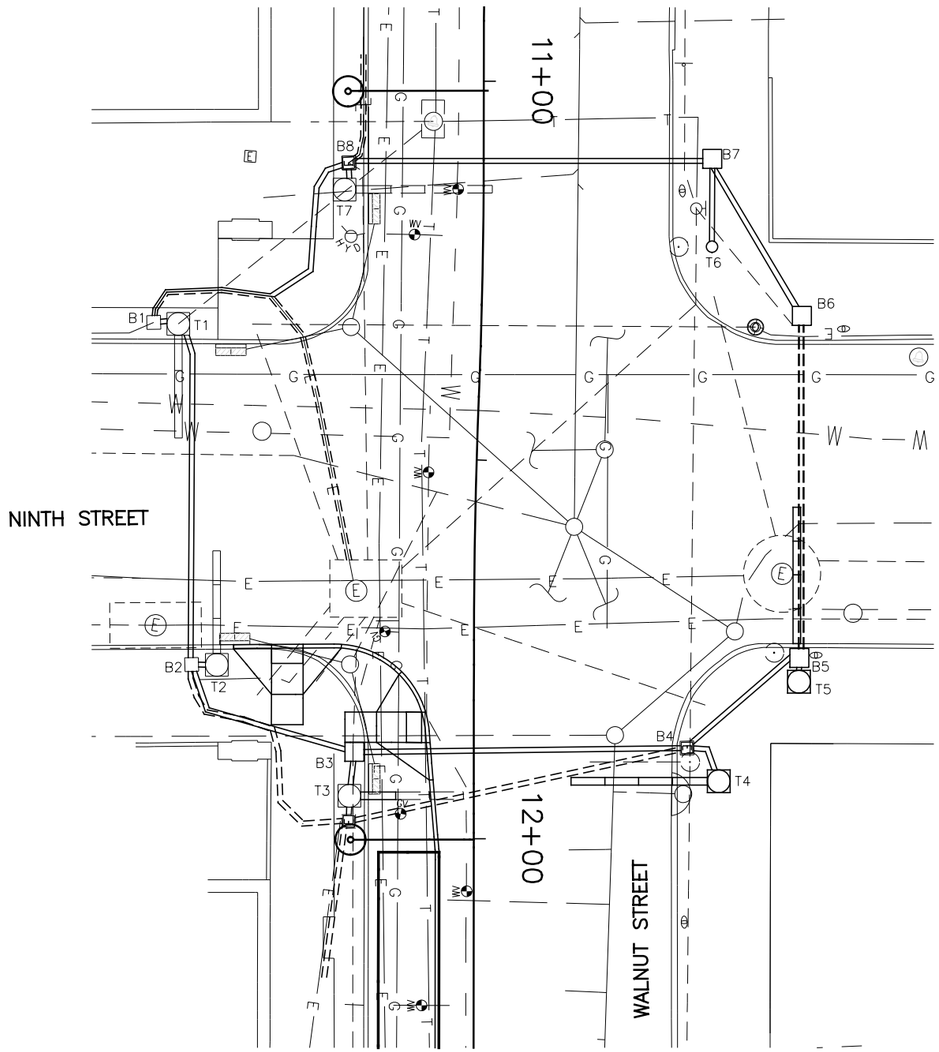

SIGNAL PHASING

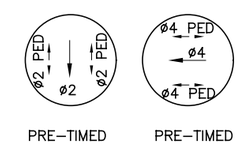

PRE–TIMED PRE–TIMED

THIS IS THE GENERAL SEQUENCING FOR THIS TRAFFIC SIGNAL. REFER TO THE CITY OF CINCINNATI FOR FINAL SEQUENCING, LABELING AND TIMINGS.

CAUTION UNDERGROUND UTILITIES
2 WORKING DAYS
BEFORE YOU DIG
CALL 1–800–362–2764
OHIO UTILITY PROTECTION SERVICE
CALL NON–SERVICE FACILITY
OWNERS DIRECT

GRAPHIC SCALE

10 0 10 20 40

(IN FEET)
1 inch = 10 ft. Full Size
1 inch = 20 ft. Half Size

DEPARTMENT OF TRANSPORTATION & ENGINEERING
CITY OF CINCINNATI OHIO

CONTRACT DRAWING

PRINTS NOT BEARING THIS STAMP WERE MADE PRIOR TO ADVERTISING FOR BIDS AND ARE TO BE CONSIDERED OBSOLETE FOR CONTRACT PURPOSES.

Department of Transportation and Engineering

City of Cincinnati
City Hall
801 Plum Street
Cincinnati, Ohio 45202

CINCINNATI STREETCAR
CENTRAL BUSINESS DISTRICT
UNDERGROUND UTILITIES & SIGNAL PLAN DETAILS WALNUT STREET AND NINTH STREET

Revisions

No.				

Drawn by AMW	Date 7/02/12
Designed by AMW	Date 7/02/12
Checked by JTB	Date 7/02/12
Reviewed by JTB	Date 7/12/12

Consultant

PB HDR

File Number

ACC No. 23126

G-TC-1004 B

DOTE_Mono_PDF_Half.pltcfg
W:\29014A-Streetcar\CAD\Traffic_Control\Signals\1004_Ninth&Walnut_N-05\S_G-TC-1004 B.dgn
7/11/2012 7:08:31 AM

LEGEND

- MOL, MOT, MOLT SIGNAL POLE
- STEEL PEDESTRIAN POST
- TRAFFIC SIGNAL CONDUIT
- YELLOW FLASHER SIGNAL HEAD
- TRAFFIC SIGNAL HEAD
- PEDESTRIAN SIGNAL HEAD
- REFLECTORIZED SIGN
- ILLUMINATED SIGN
- PULLBOX
- CONTROLLER

SIGNAL INDICATIONS

R Y G

1, 2, 3, 4, 5

SIGNAL HEAD DETAIL
12" (LED) LENSES

20

P1, P2, P3, P4
P5, P6, P7, P8

TYPE D2 PEDESTRIAN (LED)
(COUNTDOWN) SIGNAL HEAD

TYPICAL POLE ORIENTATION

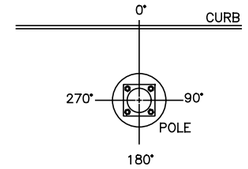

SIGN DETAILS

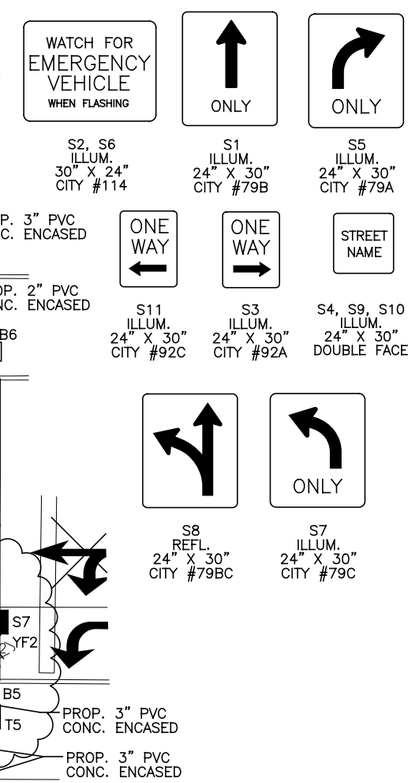

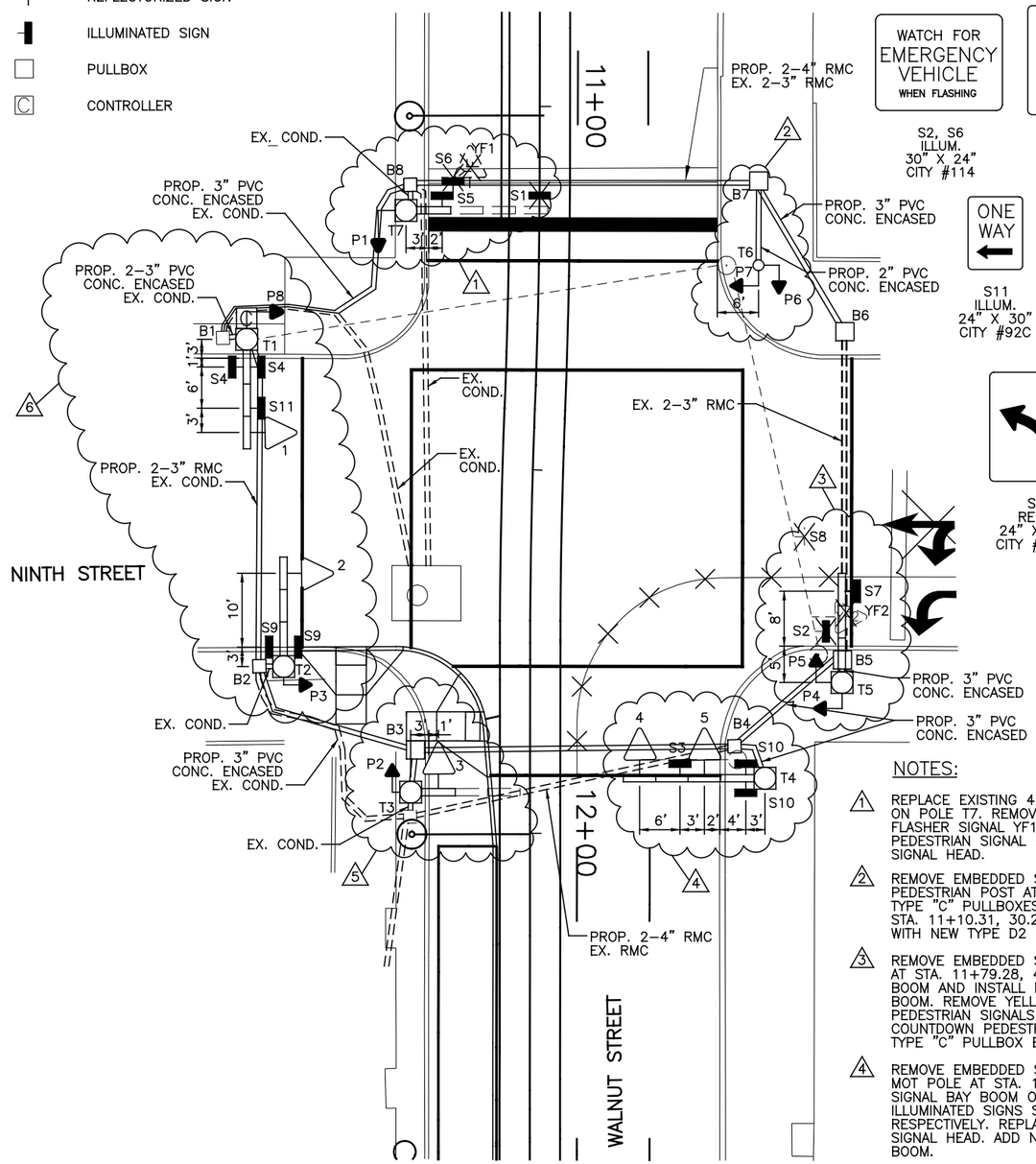

NOTES:

1. REPLACE EXISTING 4 SIGNAL BAY BOOM WITH A 1 SIGNAL BAY BOOM ON POLE T7. REMOVE ILLUMINATED SIGNS S1 AND S6 AND YELLOW FLASHER SIGNAL YF1. INSTALL NEW SIGN S5 IN FIRST BAY. REPLACE PEDESTRIAN SIGNAL P1 WITH NEW TYPE D2 LED COUNTDOWN PEDESTRIAN SIGNAL HEAD.
2. REMOVE EMBEDDED STEEL POLE T6 AND REPLACE WITH STEEL PEDESTRIAN POST AT STA. 11+21.40, 30.22' LT. ADD 24" X 24" CITY TYPE "C" PULLBOXES B6 AT STA. 11+31.05, 42.34' LT. AND B7 AT STA. 11+10.31, 30.20' LT. REPLACE PEDESTRIAN SIGNALS P7 AND P6 WITH NEW TYPE D2 LED COUNTDOWN PEDESTRIAN SIGNAL HEADS.
3. REMOVE EMBEDDED STEEL POLE T5 AND REPLACE WITH MOT POLE AT STA. 11+79.28, 42.90' LT. INSTALL A 3 BAY TRAFFIC SIGNAL BOOM AND INSTALL NEW ILLUMINATED SIGN S7 ON NEW TRAFFIC BOOM. REMOVE YELLOW FLASHER 2 AND SIGN S2 AND S8. REPLACE PEDESTRIAN SIGNALS P5 AND P4 ON NEW POLE WITH TYPE D2 LED COUNTDOWN PEDESTRIAN SIGNAL HEADS. ADD NEW 24" X 24" CITY TYPE "C" PULLBOX B5 AT STA. 11+76.20, 43.00' LT.
4. REMOVE EMBEDDED STEEL POLE T4 AND REPLACE WITH MOT POLE AT STA. 11+87.51, 28.52' LT. INSTALL A 4 SIGNAL BAY BOOM ON NEW POLE T4 AND INSTALL NEW ILLUMINATED SIGNS S10 AND S3 ON FIRST AND THIRD BAY RESPECTIVELY. REPLACE SIGNAL HEAD 4 WITH 12" LED SIGNAL HEAD. ADD NEW 12" LED SIGNAL HEAD 5 TO THE BOOM.
5. REPLACE THE EXISTING 3 SIGNAL BAY BOOM WITH A 1 SIGNAL BAY BOOM. MOVE SIGN S10 TO BAY ON NEW POLE T4. REPLACE TRAFFIC SIGNAL 3 WITH 12" LED SIGNAL HEAD AND INSTALL ON FIRST BAY. REPLACE PULLBOX B3 WITH NEW 24" X 24" CITY TYPE "C" PULLBOX AT STA. 11+88.58, 15.73' RT.
6. REPLACE TRAFFIC SIGNALS 1 AND 2 WITH 12" LED SIGNAL HEADS. REPLACE PEDESTRIAN SIGNALS P2, P3 AND P8 WITH TYPE D2 LED COUNTDOWN PEDESTRIAN SIGNAL HEADS. REPLACE CONTROLLER ON POLE T1.
7. REPLACE ALL ILLUMINATED AND REFLECTORIZED SIGNS.
8. INSTALL 2–4" RMC ALONG WITH EXISTING RMC UNDER TRACK SLAB AS SHOWN ON PLAN.
9. A DISTANCE OF SIX FEET BEHIND THE CURB AND 15 FEET ON EITHER SIDE OF PROPOSED OCS POLES AND SIGNAL POLES (INCLUDING ANY DISTURBANCE TO THE EXISTING CURB) HAS BEEN QUANTIFIED FOR BIDDING PURPOSES FOR REMOVAL AND REPLACEMENT OF SIDEWALK. THE CITY'S ENGINEER WILL DETERMINE ACTUAL PAY LIMITS FOR THIS WORK. NO ADDITIONAL INCREASE TO THE UNIT COST WILL BE ALLOWED FOR THIS WORK IF THE QUANTITIES ARE MORE OR LESS THAN THE AMOUNT QUANTIFIED FOR BIDDING PURPOSES.

MATERIAL SCHEDULE

NO.	VEHICULAR SIGNAL HEADS 1	2	3	4	5			
12 INCH	R	R	R	R	R			
	Y	Y	Y	Y	Y			
	G	G	G	G	G			

20

TYPE D2 PEDESTRIAN (LED)
(COUNTDOWN) SIGNAL HEAD

NOTE:
USE LENS W/ SYMBOL LEGENDS
PORTLAND ORANGE: HAND (DONT WALK)
LUNAR WHITE: WALKING MAN (WALK)

POLE NO.	POLE DATA: POLE TYPE	TRAFFIC BOOM (BY # OF BAYS)	FOUND. TYPE	PEDESTRIAN SIGNALS P1	P2	P3	P4	P5	P6	P7	P8	ATTACHMENT HEIGHT TO BOTTOM OF BOOM (FEET)	TRAFFIC BOOM (DEG)	STREET LIGHT BRACKET ARM (DEG)	HANDHOLE (DEG)	CONTROLLER (DEG)
				D	D	D	D	D	D	D	D					
				W	W	W	W	W	W	W	W					
				ANGLE OF ORIENTATION (DEGREES)												
T1	MOT	3	EXIST.								180	EX.	EX.		EX.	180
T2	MOLT	3	EXIST.			180						EX.	EX.	EX.	EX.	
T3	MOLT	1	EXIST.		180							17	0	EX.	EX.	
T4	MOT	4	FDN–51									17	0		180	
T5	MOT	3	FDN–51				180	270				17	0		180	
T6	1045	–	FDN–25						180	270					180	
T7	MOT	1	EXIST.	180								17	0		EX.	

CABLE SCHEDULE

CABLE NO.	CONNECTING DEVICES	CABLE TYPE	CABLE ROUTING	LINEAR FEET
1	TRAFFIC SIGNAL TS1	EXIST.	EXIST.	EXIST.
2	TRAFFIC SIGNAL TS2	EXIST.	EXIST.	EXIST.
3	TRAFFIC SIGNAL TS3	7C#14	TS3–T3–B3–B2–B1–T1–C	140
4	TRAFFIC SIGNAL TS4, TS5	7C#14	TS4–TS5–T4–B4–B3–B2–B1–T1–C	200
5	PED. SIGNAL P1	EXIST.	EXIST.	EXIST.
6	PED. SIGNAL P2	7C#14	P2–T3–B3–B2–B1–T1–C	125
7	PED. SIGNAL P3	EXIST.	EXIST.	EXIST.
8	PED. SIGNAL P4	7C#14	P4–T5–B5–B4–B3–B2–B1–T1–C	200
9	PED. SIGNAL P5	7C#14	P5–T5–B5–B4–B3–B2–B1–T1–C	200
10	PED. SIGNAL P6	7C#14	P6–T6–B7–B8–B1–T1–C	133
11	PED. SIGNAL P7	7C#14	P7–T6–B7–B8–B1–T1–C	133
12	PED. SIGNAL P8	EXIST.	EXIST.	EXIST.
13	ILLUM. SIGN S3, S10	2C#12	S3–S10–T4–B4–B3–B2–B1–T1–C	200
14	ILLUM. SIGN S4, S11	EXIST.	EXIST.	EXIST.
15	ILLUM. SIGN S5	EXIST.	EXIST.	EXIST.
16	ILLUM. SIGN S7	2C#12	S7–T5–B5–B4–B3–B2–B1–T1–C	230
17	ILLUM. SIGN S9	EXIST.	EXIST.	EXIST.
18	POWER CABLE, AC POSITIVE, BLACK	EXIST.	EXIST.	EXIST.
19	POWER CABLE, AC NEGATIVE, WHITE	EXIST.	EXIST.	EXIST.

CAUTION UNDERGROUND UTILITIES
2 WORKING DAYS
BEFORE YOU DIG
CALL 1–800–362–2764
OHIO UTILITY PROTECTION SERVICE
CALL NON–SERVICE FACILITY
OWNERS DIRECT

GRAPHIC SCALE
10 0 10 20 40
(IN FEET)
1 inch = 10 ft. Full Size
1 inch = 20 ft. Half Size

DEPARTMENT OF TRANSPORTATION & ENGINEERING
CITY OF CINCINNATI OHIO

CONTRACT DRAWING

PRINTS NOT BEARING THIS STAMP WERE MADE PRIOR TO ADVERTISING FOR BIDS AND ARE TO BE CONSIDERED OBSOLETE FOR CONTRACT PURPOSES.

Department of Transportation and Engineering

City of Cincinnati
City Hall
801 Plum Street
Cincinnati, Ohio 45202

CINCINNATI STREETCAR
CENTRAL BUSINESS DISTRICT
PROPOSED TRAFFIC SIGNAL PLAN
WALNUT STREET AND NINTH STREET

Revisions
No.

	Date
Drawn by AMW	7/02/12
Designed by AMW	7/02/12
Checked by JTB	7/02/12
Reviewed by JTB	7/12/12

Consultant

PB HDR

File Number

ACC No. 23126

G-TC-1004 C

DOTE_Mono_PDF_Half.pltcfg
W:\29014A-Streetcar\CAD\Traffic_Control\Signals\1004_Ninth&Walnut_N-05\S_G-TC-1004 C.dgn
7/11/2012 7:08:47 AM

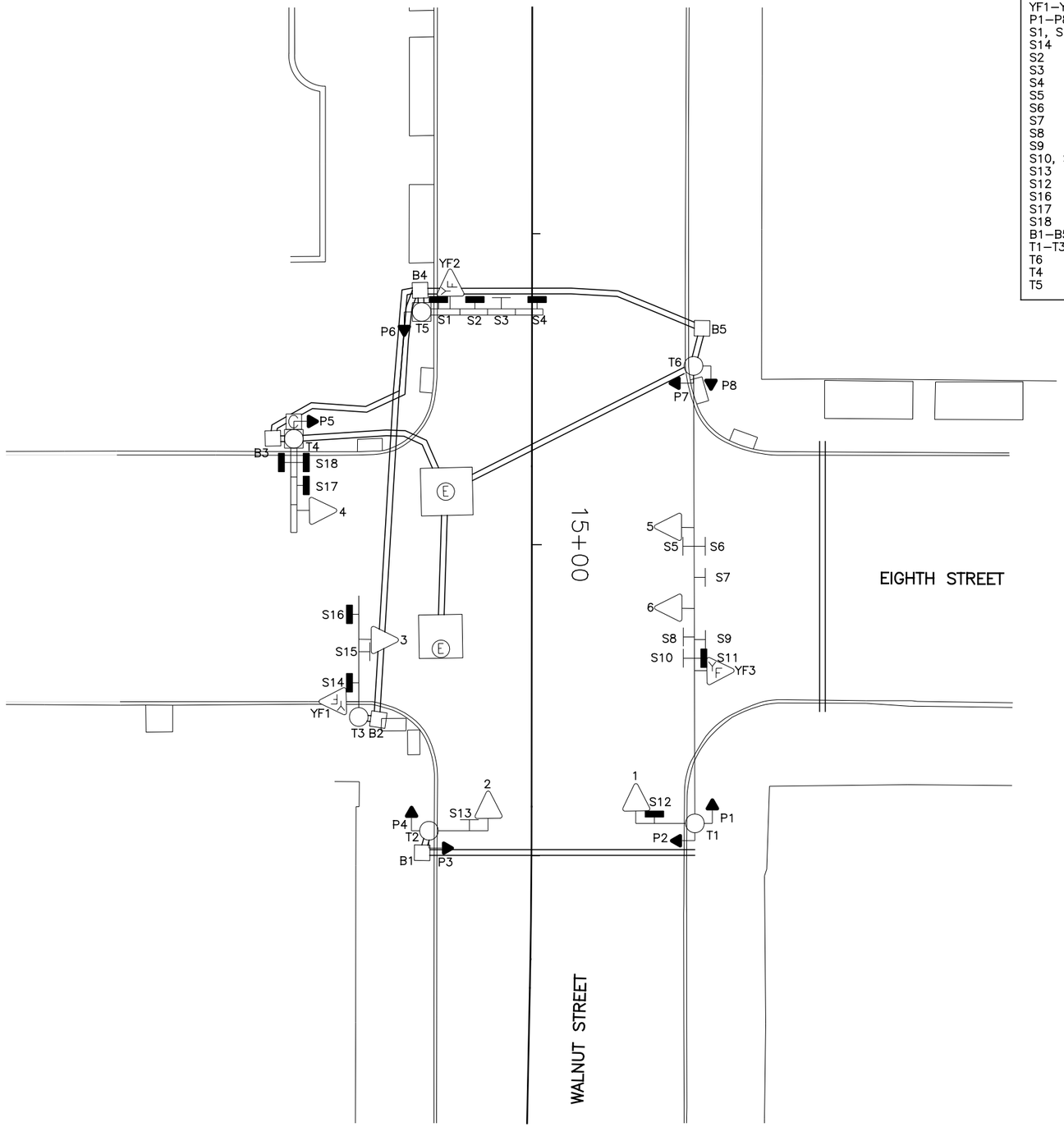

EQUIPMENT LIST

1–6	TRAF. SIG. HD., 3 SECT., HORIZ., 12" RYG
YF1–YF3	TRAF. SIG. HD., 1 SECT., 8" Y
P1–P8	PED. SIG., 2 SECT., 12" INCANDESCENT
S1, S11, S14	ILLUM. SIGN, 30" X 24", "WATCH FOR EMERGENCY VEHICLE WHEN FLASHING", #114
S2	ILLUM. SIGN, 24" X 30", "", #79AB
S3	REFL. SIGN, 36" X 30", "$1 PARK"
S4	ILLUM. SIGN, 24" X 30", "ONLY", #79B
S5	REFL. SIGN, 24" X 30", "ONE WAY", #92A
S6	REFL. SIGN, 24" X 30", "ONLY", #79B
S7	REFL. SIGN, 36" X 30", "$1 PARK"
S8	REFL. SIGN, 36" X 36", "DO NOT ENTER", #52L
S9	REFL. SIGN, 24" X 30", "ONLY", #79C
S10, S15 S13	REFL. SIGN, 24" X 30", "NO TURN ON RED", #117
S12	ILLUM. SIGN, 24" X 30", "", #71
S16	ILLUM. SIGN, 24" X 30", "ONLY", #79A
S17	ILLUM. SIGN, 24" X 30", "ONE WAY", #92C
S18	ILLUM. SIGN, 24" X 30", DOUBLE FACE, "WALNUT ST."
B1–B5	PULLBOX, 24" X 24", DOWNTOWN SPECIAL
T1–T3, T6	STEEL POLE
T4	MOLT POLE, W/ 3 BAY BOOM
T5	MOLT POLE, W/ 4 BAY BOOM

LEGEND

- MOL, MOT, MOLT SIGNAL POLE
- TRAFFIC SIGNAL CONDUIT
- YELLOW FLASHER SIGNAL HEAD
- TRAFFIC SIGNAL HEAD
- PEDESTRIAN SIGNAL HEAD
- REFLECTORIZED SIGN
- ILLUMINATED SIGN
- PULLBOX
- CONTROLLER

CAUTION UNDERGROUND UTILITIES
2 WORKING DAYS
BEFORE YOU DIG
CALL 1–800–362–2764
OHIO UTILITY PROTECTION SERVICE
CALL NON–SERVICE FACILITY
OWNERS DIRECT

GRAPHIC SCALE
10 0 10 20 40
(IN FEET)
1 inch = 10 ft. Full Size
1 inch = 20 ft. Half Size

CONTRACT DRAWING

PRINTS NOT BEARING THIS STAMP WERE MADE PRIOR TO ADVERTISING FOR BID AND ARE TO BE CONSIDERED OBSOLETE FOR CONTRACT PURPOSES.

Department of Transportation and Engineering

City of Cincinnati
City Hall
801 Plum Street
Cincinnati, Ohio 45202

CINCINNATI STREETCAR
CENTRAL BUSINESS DISTRICT
EXISTING TRAFFIC SIGNAL PLAN
WALNUT STREET AND EIGHTH STREET

Revisions
No.

Drawn by AMW	Date 7/02/12
Designed by AMW	Date 7/02/12
Checked by JTB	Date 7/02/12
Reviewed by JTB	Date 7/12/12

Consultant
PB HDR

File Number

ACC No. 23126

G-TC-1005 A

DOTE_Mono_PDF_Half.pltcfg
W:\29014A-Streetcar\CAD\Traffic_Control\Signals\1005_Eighth&Walnut_E-32\S_G-TC-1005 A.dgn
7/11/2012 7:08:56 AM

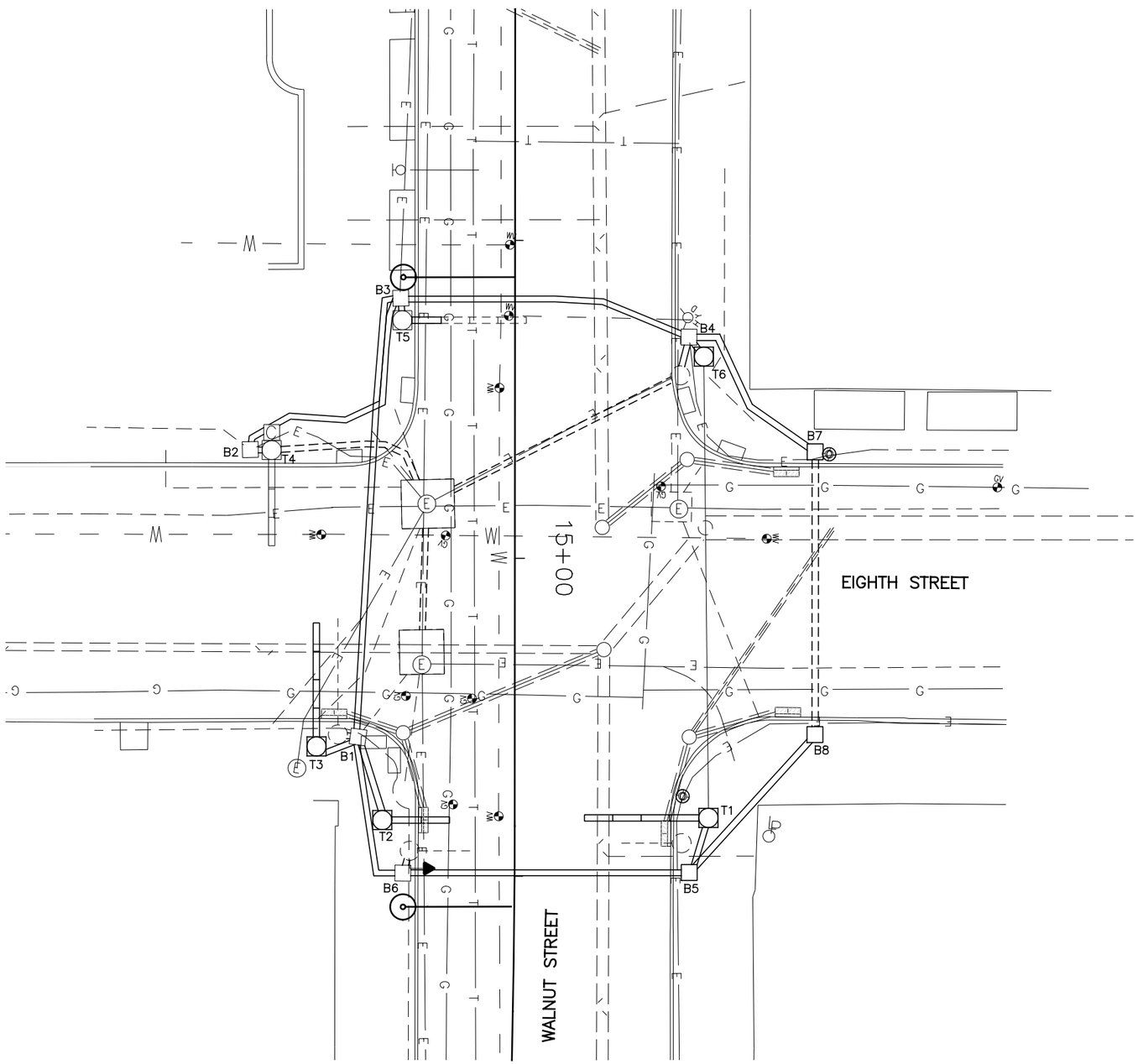

SIGNAL PHASING

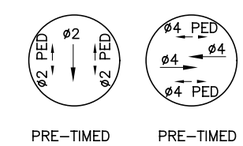

PRE–TIMED PRE–TIMED

THIS IS THE GENERAL SEQUENCING FOR THIS TRAFFIC SIGNAL. REFER TO THE CITY OF CINCINNATI FOR FINAL SEQUENCING, LABELING AND TIMINGS.

CAUTION UNDERGROUND UTILITIES
2 WORKING DAYS
BEFORE YOU DIG
CALL 1–800–362–2764
OHIO UTILITY PROTECTION SERVICE
CALL NON–SERVICE FACILITY
OWNERS DIRECT

GRAPHIC SCALE

10 0 10 20 40

(IN FEET)
1 inch = 10 ft. Full Size
1 inch = 20 ft. Half Size

DOTE_Mono_PDF_Half.pltcfg
W:\29014A-Streetcar\CAD\Traffic_Control\Signals\1005_Eighth&Walnut_E-32\S_G-TC-1005 B.dgn
7:11:13 AM
7/11/2012

CONTRACT DRAWING

PRINTS NOT BEARING THIS STAMP WERE MADE PRIOR TO ADVERTISING FOR BIDS AND ARE TO BE CONSIDERED OBSOLETE FOR CONTRACT PURPOSES.

Department of Transportation and Engineering

City of Cincinnati
City Hall
801 Plum Street
Cincinnati, Ohio 45202

CINCINNATI STREETCAR
CENTRAL BUSINESS DISTRICT
UNDERGROUND UTILITIES & SIGNAL PLAN DETAILS
WALNUT STREET AND EIGHTH STREET

Revisions

No.				

Date 7/02/12	Drawn by AMW
Date 7/02/12	Designed by AMW
Date 7/02/12	Checked by JTB
Date 7/12/12	Reviewed by JTB

Consultant

PB HDR

File Number

ACC No. 23126

G-TC-1005 B

LEGEND

- MOL, MOT, MOLT SIGNAL POLE
- STEEL POLE
- TRAFFIC SIGNAL CONDUIT
- YELLOW FLASHER SIGNAL HEAD
- TRAFFIC SIGNAL HEAD
- PEDESTRIAN SIGNAL HEAD
- REFLECTORIZED SIGN
- ILLUMINATED SIGN
- PULLBOX
- CONTROLLER

SIGNAL INDICATIONS

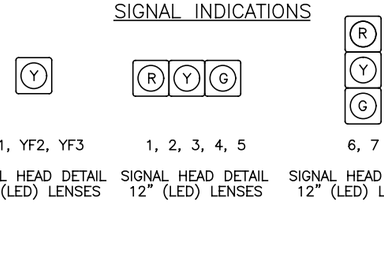

TYPICAL POLE ORIENTATION

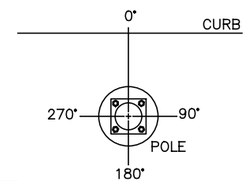

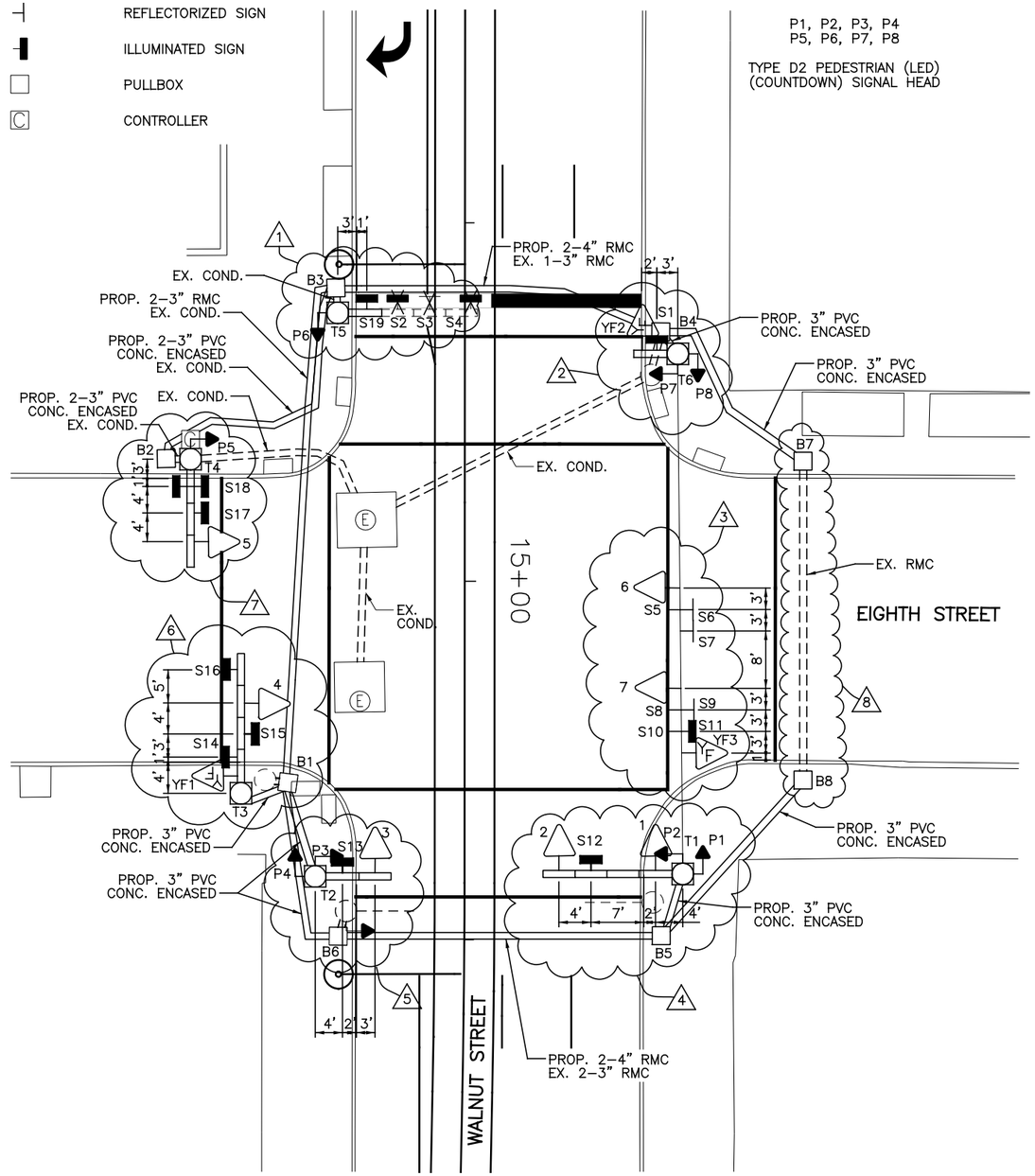

MATERIAL SCHEDULE

VEHICLE SIGNAL HEADS

NO.	1	2	3	4	5	6	7					
12 INCH	R	R	R	R	R	R	R					
	Y	Y	Y	Y	Y	Y	Y					
	G	G	G	G	G	G	G					

20

TYPE D2 PEDESTRIAN (LED)
(COUNTDOWN) SIGNAL HEAD

NOTE:
USE LENS W/ SYMBOL LEGENDS
PORTLAND ORANGE: HAND (DONT WALK)
LUNAR WHITE: WALKING MAN (WALK)

POLE NO.	POLE DATA			PEDESTRIAN SIGNALS								CABLE ENTRANCE ANGLE (DEG)	SPAN WIRE ATTACHMENT HEIGHT (FEET)	ATTACHMENT HEIGHT (FEET) TO THE BOTTOM OF BOOM OR MAST ARM	TRAFFIC BOOM OR MAST ARM (DEG)	STREET LIGHT BRACKET ARM (DEG)	HANDHOLE (DEG)	CONTROLLER (DEG)
	POLE TYPE	TRAFFIC BOOM (# OF BAYS)	FOUNDATION TYPE	P1	P2	P3	P4	P5	P6	P7	P8							
				D	D	D	D	D	D	D	D							
				W	W	W	W	W	W	W	W							
				ANGLE OF ORIENTATION (DEGREES)														
T1	MOT	4	FDN–51	180	90							90	24.5	17	0		180	
T2	MOT	2	FDN–51			270	180							17	0		180	
T3	MOT	4	FDN–51											17	0		180	
T4	MOLT	3	EXIST					180						EX.	EX.	EX.	EX.	180
T5	MOLT	1	EXIST						180					17	0	EX.	EX.	
T6	MOT	1	FDN–51							270	180	270	24.5	17	0		180	

NOTES:

1. REPLACE THE EXISTING 4 SIGNAL BAY BOOM WITH A 1 SIGNAL BAY BOOM. REMOVE SIGNS S2, S3 AND S4. PLACE NEW SIGN S19 IN BAY. REPLACE PEDESTRIAN SIGNAL P6 WITH TYPE D2 LED COUNTDOWN PEDESTRIAN SIGNAL HEAD.
2. REMOVE EMBEDDED STEEL POLE T6 AND REPLACE WITH NEW MOT POLE T6 WITH 1 BAY BOOM AT STA. 14+68.25, 29.71' LT. INSTALL NEW YELLOW FLASHER 2, WITH 12" LED SIGNAL HEAD AND NEW ILLUMINATED SIGN S1 ON SIGNAL BAY BOOM. ATTACH A MESSENGER WIRE CONNECTING TO NEW POLE T1. REPLACE PEDESTRIAN SIGNALS P7 AND P8 WITH TYPE D2 LED COUNTDOWN PEDESTRIAN SIGNAL HEADS.
3. REPLACE TRAFFIC SIGNALS 6, 7 AND YF3 WITH 12" LED SIGNAL HEADS ON NEW MESSENGER WIRE. PLACE NEW SIGNS S5, S6, S7, S8, S9, S10 AND S11 ON NEW MESSENGER WIRE.
4. REMOVE EMBEDDED STEEL POLE T1 AND REPLACE WITH A NEW MOT POLE WITH 4 BAYS AT STA. 15+40.80, 30.46' LT. REPLACE TRAFFIC SIGNAL 1 WITH A 12" LED SIGNAL HEAD IN THE SECOND BAY AND INSTALL NEW 12" LED TRAFFIC SIGNAL 2 IN THE FOURTH BAY. PLACE NEW ILLUMINATED SIGN S12 IN THE THIRD BAY. REPLACE PEDESTRIAN SIGNALS P1 AND P2 WITH TYPE D2 LED COUNTDOWN PEDESTRIAN SIGNAL HEADS. ADD 24" X 24" CITY TYPE "C" PULLBOX B5 AT STA. 15+49.50, 27.51' LT.
5. REMOVE EMBEDDED STEEL POLE T2 AND REPLACE WITH MOT POLE WITH 2 BAYS AT STA. 15+41.18, 20.83' RT. REPLACE TRAFFIC SIGNAL 3 WITH A 12" LED SIGNAL HEAD IN THE SECOND BAY AND PLACE NEW SIGN S13 IN FIRST BAY. REPLACE PEDESTRIAN SIGNALS P3 AND P4 WITH TYPE D2 LED COUNTDOWN PEDESTRIAN SIGNAL HEADS.
6. REMOVE STEEL POLE T3 AND REPLACE WITH A NEW MOT POLE WITH A 4 BAY BOOM AT STA. 15+29.50, 31.19' RT. REPLACE TRAFFIC SIGNAL 4 WITH A 12" LED SIGNAL HEAD AND PLACE IN 3RD BAY. REPLACE YELLOW FLASHER YF1 WITH 12" LED SIGNAL HEAD AND PLACE IN FIRST BAY ALONG WITH NEW SIGN S14. INSTALL NEW SIGNS S15 INTO SECOND BAY AND S16 INTO FOURTH BAY.
7. REPLACE TRAFFIC SIGNAL 5 WITH 12" LED SIGNAL HEAD. REPLACE PEDESTRIAN SIGNAL P5 WITH TYPE D2 LED COUNTDOWN PEDESTRIAN SIGNAL HEAD. REPLACE CONTROLLER ON POLE T4.
8. LOCATE EXISTING RMC CROSSING EIGHTH STREET AND ADD 24" X 24" CITY TYPE "C" PULLBOX B7 AT STA. 14+83.28, 47.23' LT AND 24" X 24" CITY TYPE "C" PULLBOX B8 AT STA. 15+27.76, 47.25' LT.
9. REPLACE ALL SIGNAL HEADS WITH NEW 12" LED SIGNAL HEADS AND REPLACE ALL PEDESTRIAN SIGNALS WITH TYPE D2 LED COUNTDOWN PEDESTRIAN SIGNALS. REPLACE ALL PUSHBUTTONS AND REPLACE ALL ILLUMINATED AND REFLECTORIZED SIGNS.
10. INSTALL 2–4" RMC AND 1–3" RMC UNDER TRACK SLAB AS SHOWN ON PLAN.
11. A DISTANCE OF SIX FEET BEHIND THE CURB AND 15 FEET ON EITHER SIDE OF PROPOSED OCS POLES AND SIGNAL POLES (INCLUDING ANY DISTURBANCE TO THE EXISTING CURB) HAS BEEN QUANTIFIED FOR BIDDING PURPOSES FOR REMOVAL AND REPLACEMENT OF SIDEWALK. THE CITY'S ENGINEER WILL DETERMINE ACTUAL PAY LIMITS FOR THIS WORK. NO ADDITIONAL INCREASE TO THE UNIT COST WILL BE ALLOWED FOR THIS WORK IF THE QUANTITIES ARE MORE OR LESS THAN THE AMOUNT QUANTIFIED FOR BIDDING PURPOSES.

CAUTION UNDERGROUND UTILITIES
2 WORKING DAYS
BEFORE YOU DIG
CALL 1–800–362–2764
OHIO UTILITY PROTECTION SERVICE
CALL NON–SERVICE FACILITY
OWNERS DIRECT

GRAPHIC SCALE
10 0 10 20 40
(IN FEET)
1 inch = 10 ft. Full Size
1 inch = 20 ft. Half Size

CONTRACT DRAWING
PRINTS NOT BEARING THIS STAMP WERE MADE PRIOR TO ADVERTISING FOR BIDS AND ARE TO BE CONSIDERED OBSOLETE FOR CONTRACT PURPOSES.

Department of Transportation and Engineering
City of Cincinnati
City Hall
801 Plum Street
Cincinnati, Ohio 45202

CINCINNATI STREETCAR
CENTRAL BUSINESS DISTRICT
PROPOSED TRAFFIC SIGNAL PLAN
WALNUT STREET AND EIGHTH STREET

Revisions
No.

Date 7/02/12	Drawn by AMW
Date 7/02/12	Designed by AMW
Date 7/02/12	Checked by JTB
Date 7/12/12	Reviewed by JTB

Consultant
PB HDR

File Number
ACC No. 23126
G-TC-1005 C

DOTE_Mono_PDF_Half.pltcfg
W:\29014A-Streetcar\CAD\Traffic_Control\Signals\1005_Eighth&Walnut_E-32\S_G-TC-1005 C.dgn
7/11/2012 7:11:28 AM

SIGN DETAILS

S16, S19
ILLUM.
24" X 30"
CITY #79A

S4 (ILLUM.)
S6 (REFL.)
24" X 30"
CITY #79B

S9
REFL.
24" X 30"
CITY #79C

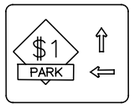

S7
REFL.
36" X 30"
CITY "SPECIAL"

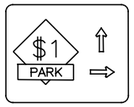

S3
REFL.
36" X 30"
CITY "SPECIAL"

S2
ILLUM.
24" X 30"
CITY #79AB

S1, S11, S14
ILLUM.
30" X 24"
CITY #114

S8
REFL.
36" X 36"
CITY #52L

S17
ILLUM.
24" X 30"
CITY #92C

S5
REFL.
24" X 30"
CITY #92A

S12
ILLUM.
24" X 30"
CITY #71

S10 (REFL.)
S13, S15 (ILLUM.)
24" X 30"
CITY #117

S18
ILLUM.
24" X 30"
DOUBLE FACE

CABLE SCHEDULE

CABLE#	CONNECTING DEVICE	TYPE	CABLE ROUTING	LIN. FT
1	TRAFFIC SIGNAL TS1, TS2	7C#14	TS2–TS1–T1–B5–B6–B1–B3–B2–T4–C	260
2	TRAFFIC SIGNAL TS3	7C#14	TS3–T2–B1–B3–B2–T4–C	200
3	TRAFFIC SIGNAL TS4	7C#14	TS4–T3–B1–B3–B2–T4–C	185
4	TRAFFIC SIGNAL TS5	EXIST.	EXIST.	EXIST.
5	TRAFFIC SIGNAL TS6, TS7	7C#14	TS7–TS6–T6–B4–B3–B2–T4–C	185
6	PED. SIGNAL P1	7C#14	P1–T1–B5–B6–B1–B3–B2–T4–C	240
7	PED. SIGNAL P2	7C#14	P2–T1–B5–B6–B1–B3–B2–T4–C	240
8	PED. SIGNAL P3	7C#14	P3–T2–B1–B3–B2–T4–C	161
9	PED. SIGNAL P4	7C#14	P4–T2–B1–B3–B2–T4–C	161
10	PED. SIGNAL P5	EXIST.	EXIST.	EXIST.
11	PED. SIGNAL P6	EXIST.	EXIST.	EXIST.
12	PED. SIGNAL P7	7C#14	P7–T6–B4–B3–B2–T4–C	126
13	PED. SIGNAL P8	7C#14	P8–T6–B4–B3–B2–T4–C	126
14	YELLOW FLASHER 1	7C#14	YF1–T3–B1–B3–B2–T4–C	180
15	YELLOW FLASHER 2	7C#14	YF2–T6–B4–B3–B2–T4–C	140
16	YELLOW FLASHER 3	7C#14	YF3–T6–B4–B3–B2–T4–C	190
17	ILLUM. SIGN S1	2C#12	S1–T6–B4–B3–B2–T4–C	140
18	ILLUM. SIGN S11	2C#12	S11–T6–B4–B3–B2–T4–C	200
19	ILLUM. SIGN S12	2C#12	S12–T1–B5–B6–B1–B3–B2–T4–C	255
20	ILLUM. SIGN S13	2C#12	S13–T2–B1–B3–B2–T4–C	195
21	ILLUM. SIGN S14, S15, S16	2C#12	S16–S15–S14–T3–B1–B3–B2–T4–C	195
22	ILLUM. SIGN S17, S18	EXIST.	EXIST.	EXIST.
23	POWER CABLE, AC POSITIVE, BLACK	EXIST.	EXIST.	EXIST.
24	POWER CABLE, AC NEGATIVE, WHITE	EXIST.	EXIST.	EXIST.

CAUTION UNDERGROUND UTILITIES
2 WORKING DAYS
BEFORE YOU DIG
CALL 1–800–362–2764
OHIO UTILITY PROTECTION SERVICE
CALL NON–SERVICE FACILITY
OWNERS DIRECT

DOTE_Mono_PDF_Half.pltcfg
W:\29014A-Streetcar\CAD\Traffic_Control\Signals\1005_Eighth&Walnut_E-32\S_G-TC-1005 D.dgn
7:11:32 AM
7/11/2012

CONTRACT DRAWING

PRINTS NOT BEARING THIS STAMP WERE MADE PRIOR TO ADVERTISING FOR BIDS AND ARE TO BE CONSIDERED OBSOLETE FOR CONTRACT PURPOSES.

Department of Transportation and Engineering

City of Cincinnati
City Hall
801 Plum Street
Cincinnati, Ohio 45202

CINCINNATI STREETCAR
CENTRAL BUSINESS DISTRICT
PROPOSED TRAFFIC SIGNAL PLAN
WALNUT STREET AND EIGHTH STREET

Revisions
No.

	Date
Drawn by AMW	7/02/12
Designed by AMW	7/02/12
Checked by JTB	7/02/12
Reviewed by JTB	7/12/12

Consultant

PB HDR

File Number

ACC No.
23126

G-TC-1005 D

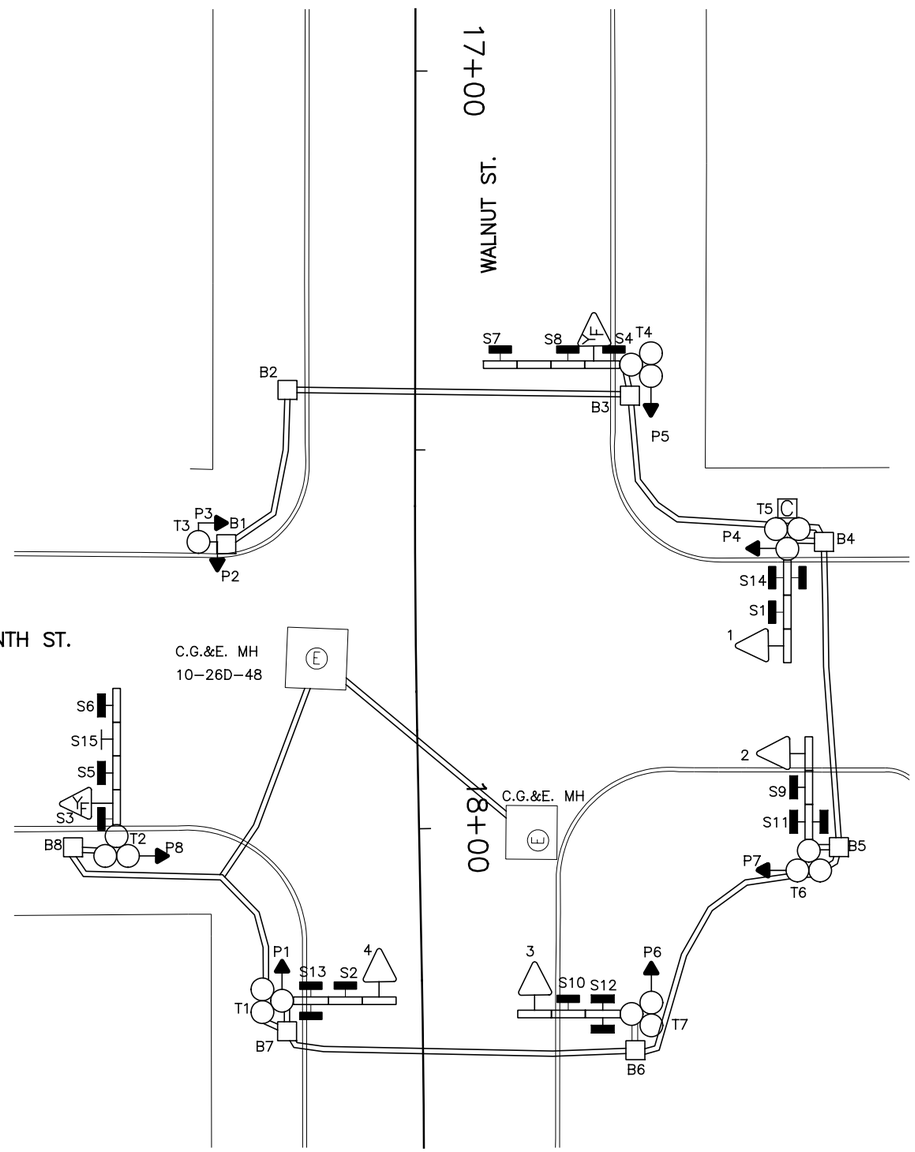

EQUIPMENT LIST

1, 2, 3, 4	TRAF. SIG. HD., 3 SECT., HORIZ., 8" RYG
YF1, YF2	TRAF. SIG. HD., 1 SECT., HORIZ., 8" Y
P1 – P8	PED. SIG., 1 SECT., 16" INCANDESCENT DWW 3 LINE
S1	ILLUM. SIGN, 24" X 30" , "ONE WAY → ",#92C
S2	ILLUM. SIGN, 24" X 30" , "ONE WAY ← ",#92A
S3, S4	ILLUM. SIGN, 30" X 24", "WATCH FOR EMERGENCY VEHICLE WHEN FLASHING ",#114 W/8"YF
S5	ILLUM. SIGN, 24" X 30", " ↰ ",#79A ONLY
S6	ILLUM. SIGN, 24" X 30", " ↑↱ ",#79AB
S7	ILLUM. SIGN, 24" X 30" , " ↑ ONLY",#79B
S8	ILLUM. SIGN, 24" X 30" , " ↰ ONLY", #79C
S9, S10	ILLUM. SIGN, 24" X 24","NO TURN ON RED",#117
S11, S14	ILLUM. SIGN, 24" X 30","WALNUT ST.", SPECIAL, DF
S12, S13	ILLUM. SIGN, 24" X 30","SEVENTH ST.", SPECIAL, DF
S15	REFL. SIGN, 36" X 30", "→ $1 PARK"
T1, T5, T6, T7	MPLT W/3 BAY BOOM
T2, T4	MPLT W/4 BAY BOOM
T3	STEEL POLE
B1	PULLBOX, 18" X 18", C.G.&E. BOX
B2 – B8	PULLBOX, 24" X 24", DOWNTOWN SPECIAL

LEGEND

- MPL, MPT, MPLT SIGNAL POLE
- STEEL POLE
- TRAFFIC SIGNAL CONDUIT
- YELLOW FLASHER SIGNAL HEAD
- TRAFFIC SIGNAL HEAD
- PEDESTRIAN SIGNAL HEAD
- REFLECTORIZED SIGN
- ILLUMINATED SIGN
- PULLBOX
- CONTROLLER

CAUTION UNDERGROUND UTILITIES
2 WORKING DAYS
BEFORE YOU DIG
CALL 1-800-362-2764
OHIO UTILITY PROTECTION SERVICE
CALL NON-SERVICE FACILITY
OWNERS DIRECT

GRAPHIC SCALE
10 0 10 20 40
(IN FEET)
1 inch = 10 ft. Full Size
1 inch = 20 ft. Half Size

DEPARTMENT OF TRANSPORTATION & ENGINEERING CITY OF CINCINNATI OHIO

CONTRACT DRAWING

PRINTS NOT BEARING THIS STAMP WERE MADE PRIOR TO ADVERTISING FOR BID, AND ARE TO BE CONSIDERED OBSOLETE FOR CONTRACT PURPOSES.

Department of Transportation and Engineering

City of Cincinnati
City Hall
801 Plum Street
Cincinnati, Ohio 45202

CINCINNATI STREETCAR
CENTRAL BUSINESS DISTRICT
EXISTING TRAFFIC SIGNAL PLAN
WALNUT STREET AND SEVENTH STREET

Revisions
No.

Drawn by AMW	Date 7/02/12	
Designed by AMW	Date 7/02/12	
Checked by JTB	Date 7/02/12	
Reviewed by JTB	Date 7/12/12	

Consultant

PB HDR

File Number

ACC No. 23126

G-TC-1006 A

DOTE_Mono_PDF_Half.pltcfg
W:\29014A-Streetcar\CAD\Traffic_Control\Signals\1006_Seventh&Walnut_S-07\S_G-TC-1006 A.dgn
7/11/2012 7:14:27 AM

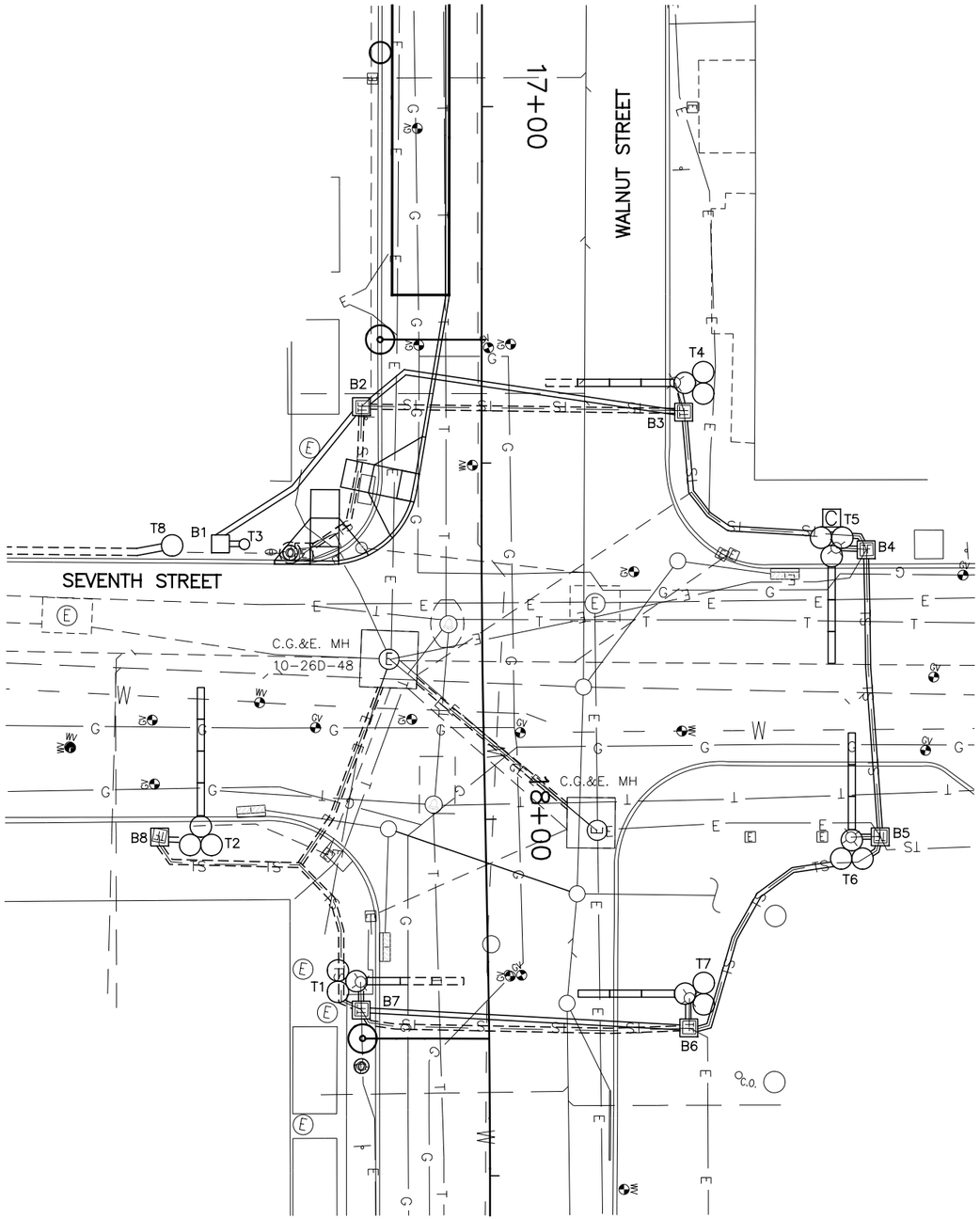

SIGNAL PHASING

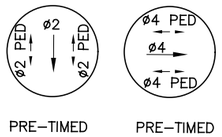

PRE–TIMED PRE–TIMED

THIS IS THE GENERAL SEQUENCING FOR THIS TRAFFIC SIGNAL. REFER TO THE CITY OF CINCINNATI FOR FINAL SEQUENCING, LABELING AND TIMINGS.

CAUTION UNDERGROUND UTILITIES
2 WORKING DAYS
BEFORE YOU DIG
CALL 1–800–362–2764
OHIO UTILITY PROTECTION SERVICE
CALL NON–SERVICE FACILITY
OWNERS DIRECT

GRAPHIC SCALE

10 0 10 20 40

(IN FEET)
1 inch = 10 ft. Full Size
1 inch = 20 ft. Half Size

CONTRACT DRAWING

PRINTS NOT BEARING THIS STAMP WERE MADE PRIOR TO ADVERTISING FOR BIDS AND ARE TO BE CONSIDERED OBSOLETE FOR CONTRACT PURPOSES.

Department of Transportation and Engineering

City of Cincinnati
City Hall
801 Plum Street
Cincinnati, Ohio 45202

CINCINNATI STREETCAR
CENTRAL BUSINESS DISTRICT
UNDERGROUND UTILITIES & SIGNAL PLAN DETAILS
WALNUT STREET AND SEVENTH STREET

Revisions

No.				

Drawn by AMW	Date 7/02/12
Designed by AMW	Date 7/02/12
Checked by JTB	Date 7/02/12
Reviewed by JTB	Date 7/12/12

Consultant

PB HDR

File Number

ACC No. 23126

G-TC-1006 B

DOTE_Mono_PDF_Half.pltcfg
W:\29014A-Streetcar\CAD\Traffic_Control\Signals\1006_Seventh&Walnut_S-07\S_G-TC-1006 B.dgn
7/11/2012 3:56:14 PM

LEGEND

- MPL, MPT, MPLT SIGNAL POLE
- STEEL POLE
- STEEL PEDESTRIAN POST
- TRAFFIC SIGNAL CONDUIT
- YELLOW FLASHER SIGNAL HEAD
- TRAFFIC SIGNAL HEAD
- PEDESTRIAN SIGNAL HEAD
- REFLECTORIZED SIGN
- ILLUMINATED SIGN
- PULLBOX
- CONTROLLER

SIGNAL INDICATIONS

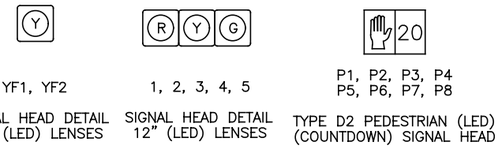

TYPICAL POLE ORIENTATION

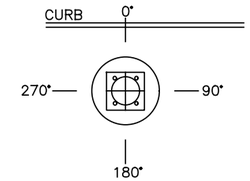

SIGN DETAILS

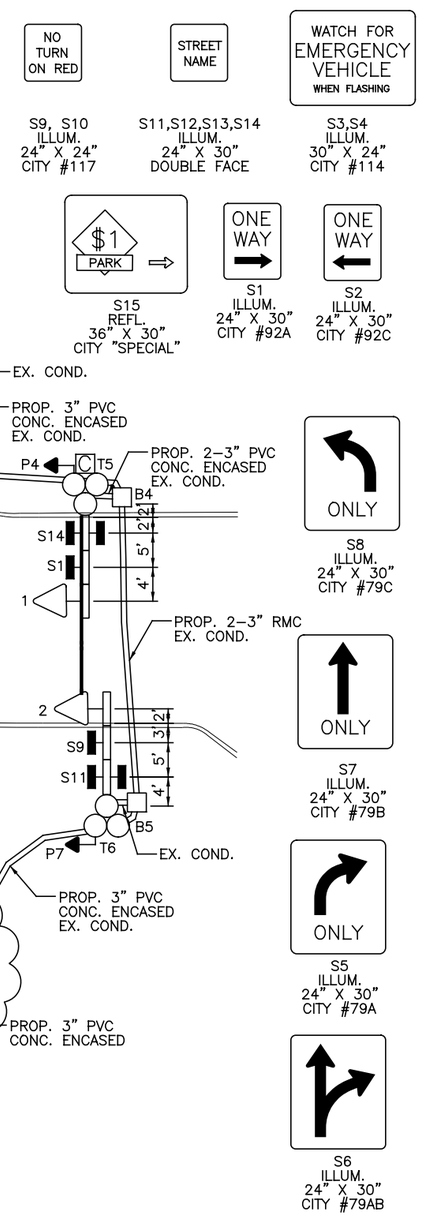

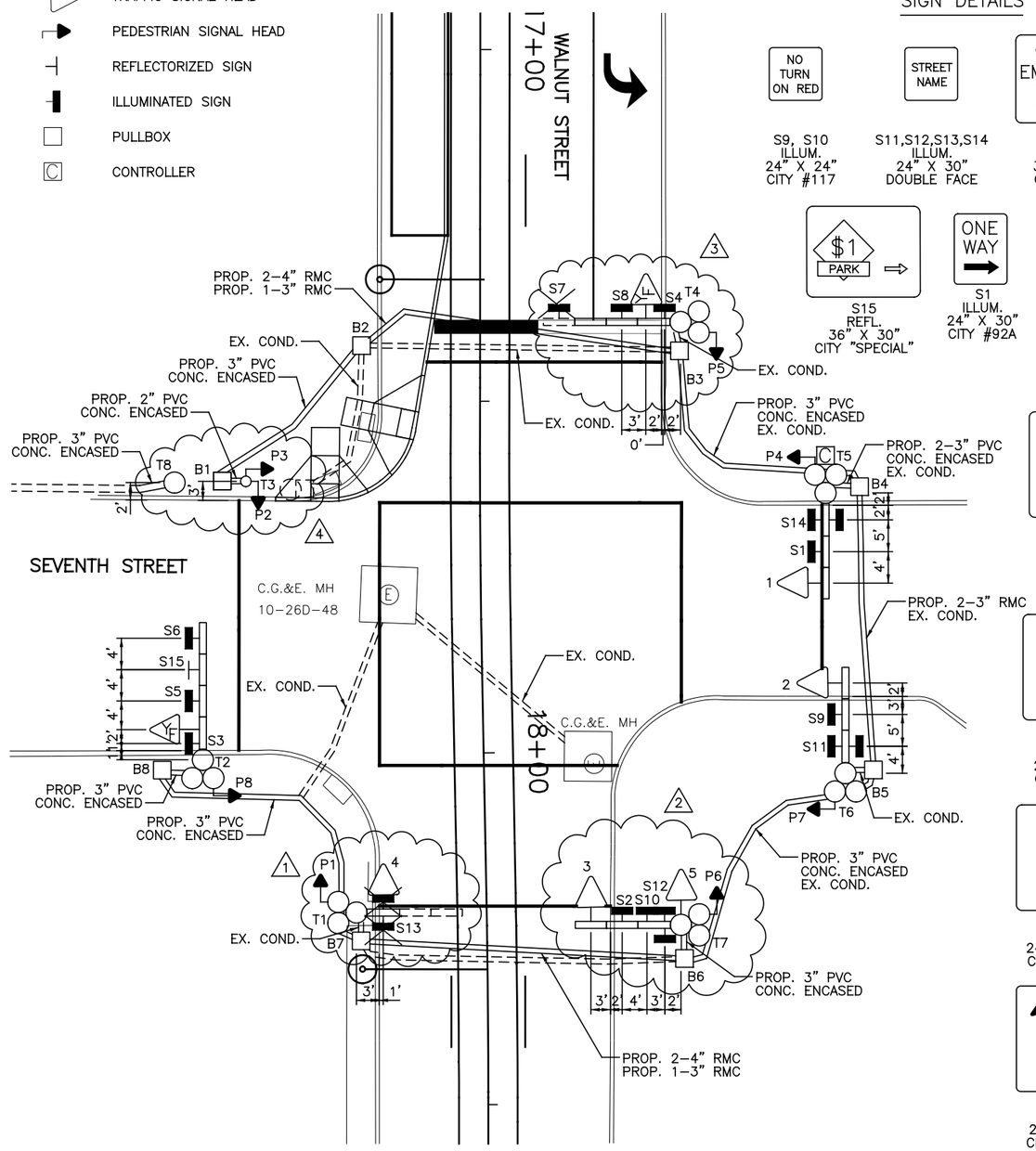

MATERIAL SCHEDULE

VEHICULAR SIGNAL HEADS

NO.	1	2	3	4	5			
12 INCH	R	R	R	R	R			
	Y	Y	Y	Y	Y			
	G	G	G	G	G			

20 TYPE D2 PEDESTRIAN (LED) (COUNTDOWN) SIGNAL HEAD

NOTE:
USE LENS W/ SYMBOL LEGENDS
PORTLAND ORANGE: HAND (DONT WALK)
LUNAR WHITE: WALKING MAN (WALK)

POLE NO.	POLE DATA: POLE TYPE	NUMBER OF BAYS	FOUNDATION TYPE	PEDESTRIAN SIGNALS ANGLE OF ORIENTATION (DEGREES) P1 D W	P2 D W	P3 D W	P4 D W	P5 D W	P6 D W	P7 D W	P8 D W	ATTACHMENT HEIGHT (FEET) TO THE BOTTOM OF BOOM	TRAFFIC BOOM (DEG)	STREET LIGHT BRACKET ARM (DEG)	HANDHOLE (DEG)	CONTROLLER (DEG)
T1	MPLT	1	EXIST.	180								17	0	EX.	EX.	
T2	MPLT	4	EXIST.								180	EX.	EX.	EX.	EX.	
T3	1045	–	FDN 25		270	180									180	
T4	MPLT	3	EXIST.				180					17	0	EX.	EX.	
T5	MPLT	3	EXIST.				180					EX.	EX.	EX.	EX.	180
T6	MPLT	3	EXIST.							180		EX.	EX.	EX.	EX.	
T7	MPLT	3	EXIST.						180			EX.	EX.	EX.	EX.	
T8	LIGHT	–												EX.	EX.	

CABLE SCHEDULE

CABLE#	CONNECTING DEVICE	TYPE	CABLE ROUTING	LIN. FT
1	TRAFFIC SIGNAL TS1	EXIST.	EXIST.	EXIST.
2	TRAFFIC SIGNAL TS2	EXIST.	EXIST.	EXIST.
3	TRAFFIC SIGNAL TS3, TS5	7C#14	TS3–TS5–T7–B6–B5–B4–T5–C	150
4	TRAFFIC SIGNAL TS4	7C#14	TS4–T1–B7–B6–B5–B4–T5–C	190
5	PED. SIGNAL P1	7C#14	P1–T1–B7–B6–B5–B4–T5–C	180
6	PED. SIGNAL P2	7C#14	P2–T3–B1–B2–B3–B4–T5–C	160
7	PED. SIGNAL P3	7C#14	P3–T3–B1–B2–B3–B4–T5–C	160
8	PED. SIGNAL P4	EXIST.	EXIST.	EXIST.
9	PED. SIGNAL P5	EXIST.	EXIST.	EXIST.
10	PED. SIGNAL P6	EXIST.	EXIST.	EXIST.
11	PED. SIGNAL P7	EXIST.	EXIST.	EXIST.
12	PED. SIGNAL P8	7C#14	P8–T2–B8–B7–B6–B5–B4–T5–C	230
13	YELLOW FLASHER, YF1	EXIST.	EXIST.	EXIST.
14	YELLOW FLASHER, YF2	EXIST.	EXIST.	EXIST.
15	ILLUM. SIGN S3, S5, S6	EXIST.	S6–S5–S3–T2–B8–B7–B6–B5–B4–T5–C	270
16	ILLUM. SIGN S4, S8	EXIST.	EXIST.	EXIST.
17	ILLUM. SIGN S9, S11	EXIST.	EXIST.	EXIST.
18	ILLUM. SIGN S2, S10, S12	2C#12	S2–S10–S12–T7–B6–B5–B4–T5–C	150
19	ILLUM. SIGN S1, S14	EXIST.	EXIST.	EXIST.
20	POWER CABLE, AC POSITIVE, BLACK	EXIST.	EXIST.	EXIST.
21	POWER CABLE, AC NEGATIVE, WHITE	EXIST.	EXIST.	EXIST.

NOTES:

1. REMOVE THE 3 SIGNAL BAY BOOM ON POLE T1 AND REPLACE IT WITH A 1 SIGNAL BAY BOOM. RELOCATE SIGNAL HEAD 4 TO THE FIRST BAY. REMOVE SIGN S13.
2. INSTALL NEW SIGNS S10 AND S12 IN THE FIRST BAY AND INSTALL NEW SIGN S2 INTO THE SECOND BAY. REPLACE SIGNAL HEAD 3 IN THE THIRD BAY WITH A NEW 12" LED SIGNAL HEAD.
3. REMOVE THE 4 SIGNAL BAY BOOM ON POLE T4 AND REPLACE IT WITH A 3 SIGNAL BAY BOOM. REMOVE SIGN S7.
4. REMOVE EXISTING PULLBOX AND MOVE LIGHT POLE T3 TO STA 17+61.57, 43.45' RT. THIS WILL NOW BE POLE T8. USE 2" PVC CONCRETE ENCASED TO RECONNECT STREET LIGHT. PLACE NEW PEDESTRIAN POST T3 AT STA. 17+61.39, 33.28' RT. REPLACE PEDESTRIAN SIGNALS P2 AND P3 ON NEW POST T3. PLACE NEW 24" X 24" CITY TYPE "C" PULLBOX B1 AT STA. 17+61.39, 36.7' RT.
5. REPLACE ALL SIGNAL HEADS WITH NEW 12" LED SIGNAL HEADS AND REPLACE ALL PEDESTRIAN SIGNAL HEADS WITH TYPE D2 LED COUNTDOWN PEDESTRIAN SIGNALS. REPLACE ALL ILLUMINATED AND REFLECTORIZED SIGNS. REPLACE CONTROLLER ON POLE T5.
6. INSTALL 2-4" RMC AND 1-3" RMC UNDER TRACK SLAB AS SHOWN ON PLAN.
7. A DISTANCE OF SIX FEET BEHIND THE CURB AND 15 FEET ON EITHER SIDE OF PROPOSED OCS POLES AND SIGNAL POLES (INCLUDING ANY DISTURBANCE TO THE EXISTING CURB) HAS BEEN QUANTIFIED FOR BIDDING PURPOSES FOR REMOVAL AND REPLACEMENT OF SIDEWALK. THE CITY'S ENGINEER WILL DETERMINE ACTUAL PAY LIMITS FOR THIS WORK. NO ADDITIONAL INCREASE TO THE UNIT COST WILL BE ALLOWED FOR THIS WORK IF THE QUANTITIES ARE MORE OR LESS THAN THE AMOUNT QUANTIFIED FOR BIDDING PURPOSES.

CAUTION UNDERGROUND UTILITIES
2 WORKING DAYS
BEFORE YOU DIG
CALL 1-800-362-2764
OHIO UTILITY PROTECTION SERVICE
CALL NON-SERVICE FACILITY
OWNERS DIRECT

GRAPHIC SCALE
10 0 10 20 40
(IN FEET)
1 inch = 10 ft. Full Size
1 inch = 20 ft. Half Size

CONTRACT DRAWING
PRINTS NOT BEARING THIS STAMP WERE MADE PRIOR TO ADVERTISING BID THEREFORE ARE CONSIDERED OBSOLETE FOR CONTRACT PURPOSES.

Department of Transportation and Engineering
City of Cincinnati
801 Plum Street
Cincinnati, Ohio 45202

CINCINNATI STREETCAR
CENTRAL BUSINESS DISTRICT
PROPOSED TRAFFIC SIGNAL PLAN
WALNUT STREET AND SEVENTH STREET

Revisions
No.

Date 7/02/12
Date 7/02/12
Date 7/02/12
Date 7/12/12

Drawn by AMW
Designed by AMW
Checked by JTB
Reviewed by JTB

Consultant
PB HDR

File Number

ACC No. 23126

G-TC-1006 C

DOTE_Mono_PDF_Half.pltcfg
W:\29014A-Streetcar\CAD\Traffic_Control\Signals\1006_Seventh&Walnut_S-07\S_G-TC-1006 C.dgn
7/11/2012 3:56:38 PM

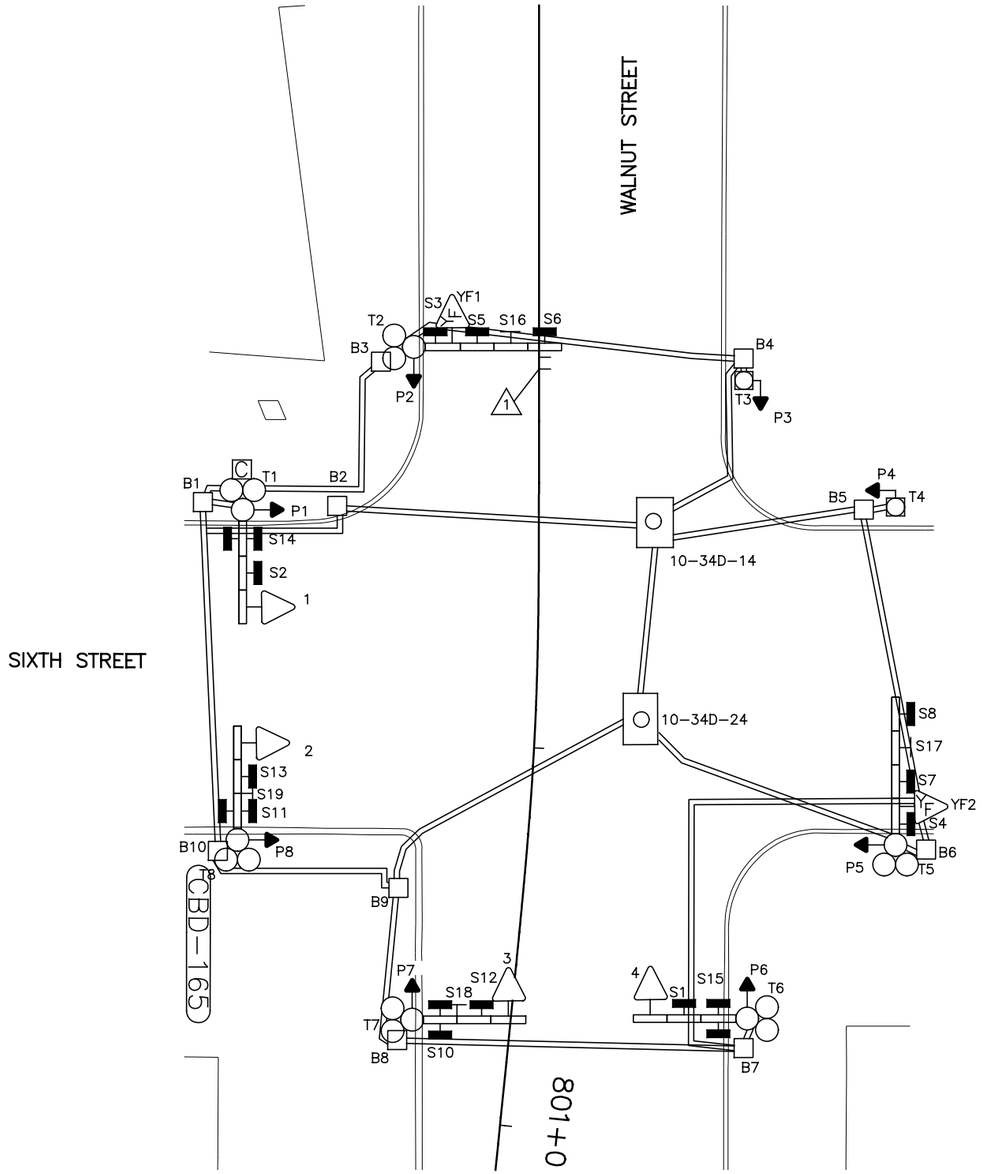

EQUIPMENT LIST

1, 2, 3, 4	TRAF. SIG. HD., 3 SECT., HORIZ., 8" RYG
YF1, YF2	TRAF. SIG. HD., 1 SECT., HORIZ., 8" Y
P1, P2, P3, P4 P5, P6, P7, P8	PED. SIG., 16"INCANDESCENT, (DWW) 3 LINE
S1	ILLUM. SIGN, 24" X 30", "ONE WAY →", #92A
S2	ILLUM. SIGN, 24" X 30", "ONE WAY ←", #92C
S3, S4	ILLUM. SIGN, 30" X 24", "WATCH FOR EMERGENCY VEHICLE WHEN FLASHING", #114
S5	ILLUM. SIGN, 24" X 30", " ↱ ONLY", #79A
S6	ILLUM. SIGN, 24" X 30", " ↰ ", #79AB
S7	ILLUM. SIGN, 24" X 30", " ↰ ONLY", #79C
S8	ILLUM. SIGN, 24" X 30", " ↰ ", #79BC
S10, S15	ILLUM. SIGN, 24" X 30", DOUBLE FACE, "SIXTH ST. EAST"
S11, S14	ILLUM. SIGN, 24" X 30", DOUBLE FACE, "WALNUT ST."
S12, S13	ILLUM. SIGN, 24" X 30", "NO TURN ON RED"
S16	REFL. SIGN, 30" X 30", CITY SPECIAL, GREEN "P-PARKING ↳ "
S17	REFL. SIGN, 30" X 30", CITY SPECIAL, GREEN "P-PARKING ↲ "
S18, S19	REFL. SIGN, 24" X 30", "DO NOT BLOCK INTERSECTION"
B1, B4, B5, B6	PULLBOX, 24" X 24", DOWNTOWN SPECIAL
B2, B7, B8	PULLBOX, 18" X 18"
B3	PULLBOX, 12" X 12"
T5, T6, T8	MPLT POLE
T1, T2, T7	MPT POLE
T3, T4	MOL POLE

LEGEND

- MOL, MOT, MOLT SIGNAL POLE
- MPL, MPT, MPLT SIGNAL POLE
- TRAFFIC SIGNAL CONDUIT
- YELLOW FLASHER SIGNAL HEAD
- TRAFFIC SIGNAL HEAD
- PEDESTRIAN SIGNAL HEAD
- REFLECTORIZED SIGN
- ILLUMINATED SIGN
- PULLBOX
- CONTROLLER

CAUTION UNDERGROUND UTILITIES
2 WORKING DAYS
BEFORE YOU DIG
CALL 1-800-362-2764
OHIO UTILITY PROTECTION SERVICE
CALL NON-SERVICE FACILITY
OWNERS DIRECT

NOTES:

1. STA. 800+00.00 "EXTENSION TO SECOND STREET" = STA. 22+01.57 "CBD".

GRAPHIC SCALE
10 0 10 20 40
(IN FEET)
1 inch = 10 ft. Full Size
1 inch = 20 ft. Half Size

DEPARTMENT OF TRANSPORTATION & ENGINEERING CITY OF CINCINNATI OHIO

CONTRACT DRAWING

PRINTS NOT BEARING THIS STAMP WERE MADE PRIOR TO ADVERTISING FOR BIDS AND ARE TO BE CONSIDERED OBSOLETE FOR CONTRACT PURPOSES.

Department of Transportation and Engineering

City of Cincinnati
City Hall
801 Plum Street
Cincinnati, Ohio 45202

CINCINNATI STREETCAR
CENTRAL BUSINESS DISTRICT
EXISTING TRAFFIC SIGNAL PLAN
WALNUT STREET AND SIXTH STREET

Revisions
No.

Date 7/02/12	Drawn by AMW
Date 7/02/12	Designed by AMW
Date 7/02/12	Checked by JTB
Date 7/12/12	Reviewed by JTB

Consultant
PB HDR

File Number

ACC No. 23126

G-TC-1007 A

DOTE_Mono_PDF_Half.pltcfg
W:\29014A-Streetcar\CAD\Traffic_Control\Signals\1007_Sixth&Walnut_S-11\S_G-TC-1007 A.dgn
7:15:10 AM
7/11/2012

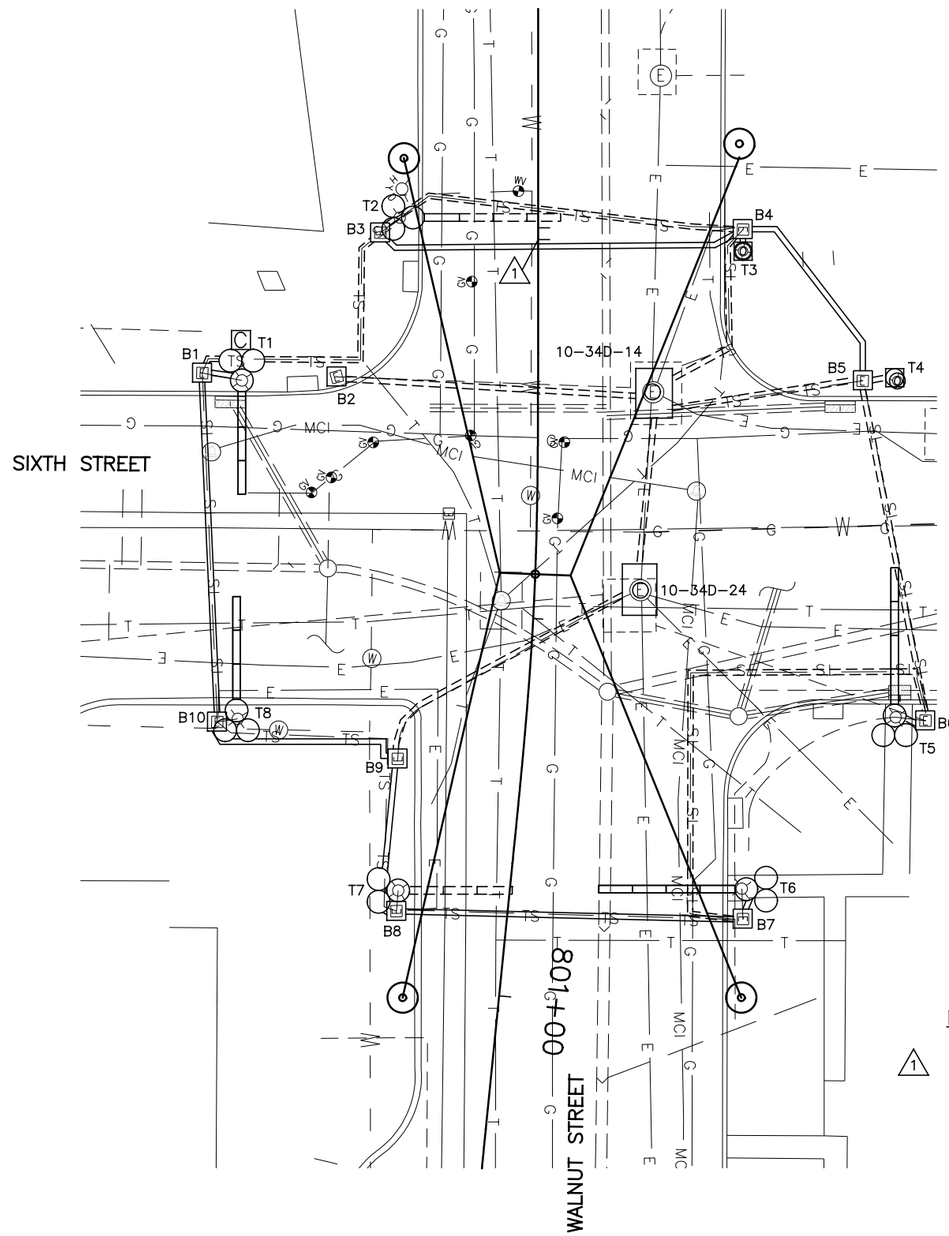

SIGNAL PHASING

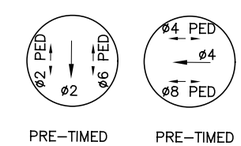

THIS IS THE GENERAL SEQUENCING FOR THIS TRAFFIC SIGNAL. REFER TO THE CITY OF CINCINNATI FOR FINAL SEQUENCING, LABELING AND TIMINGS.

CAUTION UNDERGROUND UTILITIES
2 WORKING DAYS
BEFORE YOU DIG
CALL 1-800-362-2764
OHIO UTILITY PROTECTION SERVICE
CALL NON-SERVICE FACILITY
OWNERS DIRECT

NOTES:

1. STA. 800+00.00 "EXTENSION TO SECOND STREET" = STA. 22+01.57 "CBD".

GRAPHIC SCALE

10 0 10 20 40

(IN FEET)
1 inch = 10 ft. Full Size
1 inch = 20 ft. Half Size

DOTE_Mono_PDF_Half.pltcfg
W:\29014A-Streetcar\CAD\Traffic_Control\Signals\1007_Sixth&Walnut_S-11\S_G-TC-1007 B.dgn
7/11/2012 7:15:25 AM

CONTRACT DRAWING

PRINTS NOT BEARING THIS STAMP WERE MADE PRIOR TO ADVERTISING FOR BIDS AND ARE TO BE CONSIDERED OBSOLETE FOR CONTRACT PURPOSES.

Department of Transportation and Engineering

City of Cincinnati
City Hall
801 Plum Street
Cincinnati, Ohio 45202

CINCINNATI STREETCAR
CENTRAL BUSINESS DISTRICT
UNDERGROUND UTILITIES & SIGNAL PLAN DETAILS WALNUT STREET AND SIXTH STREET

Revisions

No.		Date

Drawn by AMW	Designed by AMW	Checked by JTB	Reviewed by JTB
Date 7/02/12	Date 7/02/12	Date 7/02/12	Date 7/12/12

Consultant

PB HDR

File Number

ACC No. 23126

G-TC-1007 B

LEGEND

- MOL, MOT, MOLT SIGNAL POLE
- MPL, MPT, MPLT SIGNAL POLE
- TRAFFIC SIGNAL CONDUIT
- YELLOW FLASHER SIGNAL HEAD
- TRAFFIC SIGNAL HEAD
- PEDESTRIAN SIGNAL HEAD
- REFLECTORIZED SIGN
- ILLUMINATED SIGN
- PULLBOX
- CONTROLLER

SIGNAL INDICATIONS

R Y G — 1, 2, 3, 4 — SIGNAL HEAD DETAIL 12" (LED) LENSES

R Y G — 5 — SIGNAL HEAD DETAIL 12" (LED) LENSES

20 — P1, P2, P3, P4 P5, P6, P7, P8 — TYPE D2 PEDESTRIAN (LED) (COUNTDOWN) SIGNAL HEAD

TYPICAL POLE ORIENTATION

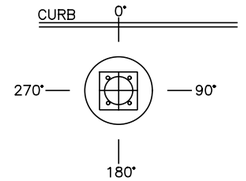

SIGN DETAILS

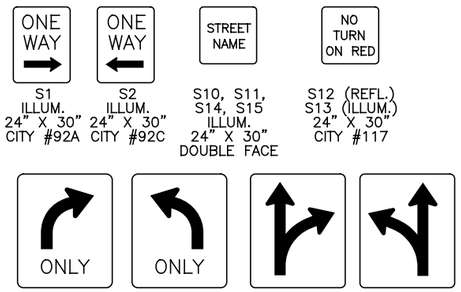

S1 ILLUM. 24" X 30" CITY #92A

S2 ILLUM. 24" X 30" CITY #92C

S10, S11, S14, S15 ILLUM. 24" X 30" DOUBLE FACE

S12 (REFL.) S13 (ILLUM.) 24" X 30" CITY #117

S5 ILLUM. 24" X 30" CITY #79A

S7 ILLUM. 24" X 30" CITY #79C

S6 ILLUM. 24" X 30" CITY #79AB

S8 ILLUM. 24" X 30" CITY #79BC

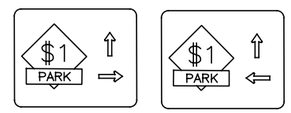

S16 REFL. 30" X 30" CITY "SPECIAL"

S17 REFL. 30" X 30" CITY "SPECIAL"

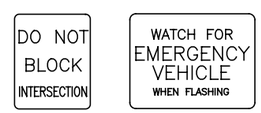

S18, S19 REFL. 24" X 30" CITY #331

S3, S4 ILLUM. 30" X 24" CITY #114

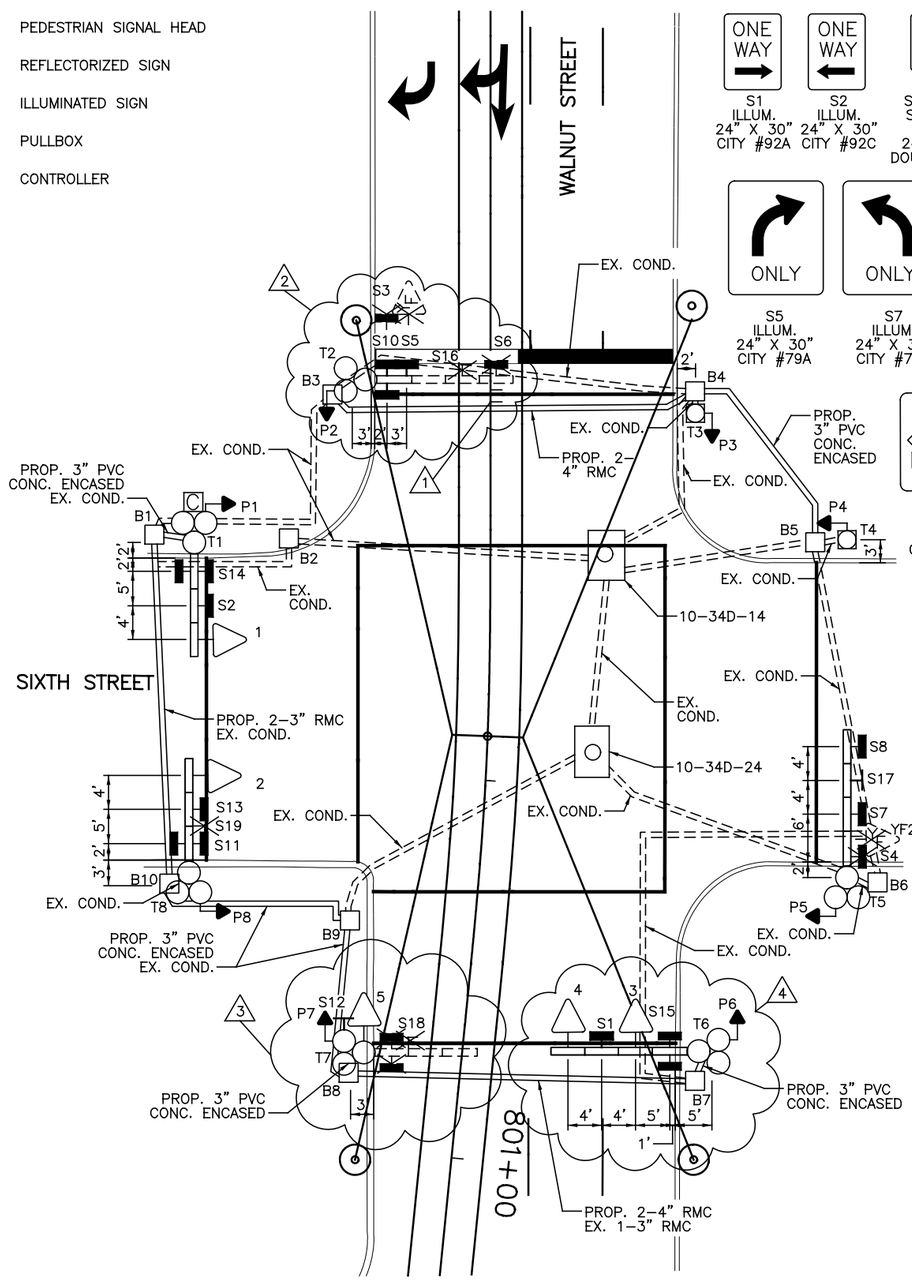

MATERIAL SCHEDULE

VEHICULAR SIGNAL HEADS									
NO.	1	2	3	4	5				
12 INCH	R	R	R	R	R				
	Y	Y	Y	Y	Y				
	G	G	G	G	G				

20 TYPE D2 PEDESTRIAN (LED) (COUNTDOWN) SIGNAL HEAD

NOTE:
USE LENS W/ SYMBOL LEGENDS
PORTLAND ORANGE: HAND (DONT WALK)
LUNAR WHITE: WALKING MAN (WALK)

POLE NO.	POLE DATA: POLE TYPE	NUMBER OF BAYS	FOUNDATION TYPE	PEDESTRIAN SIGNALS ANGLE OF ORIENTATION (DEGREES) P1 D W	P2 D W	P3 D W	P4 D W	P5 D W	P6 D W	P7 D W	P8 D W	ATTACHMENT HEIGHT (FEET) TO THE BOTTOM OF BOOM	TRAFFIC BOOM (DEG)	STREET LIGHT BRACKET ARM (DEG)	HANDHOLE (DEG)	CONTROLLER (DEG)
T1	MPT	3	EXIST.	180								EX.	EX.		EX.	180
T2	MPT	1	EXIST.		180							17	0		EX.	
T3	MOL	–	EXIST.			180								EX.	EX.	
T4	MOL	–	EXIST.				180							EX.	EX.	
T5	MPLT	4	EXIST.					180				EX.	EX.	EX.	EX.	
T6	MPLT	4	EXIST.						180			17	0	EX.	EX.	
T7	MPT	0	EXIST.							180					EX.	
T8	MPLT	3	EXIST.								180	EX.	EX.	EX.	EX.	

CABLE SCHEDULE

CABLE#	CONNECTING DEVICE	TYPE	CABLE ROUTING	LIN. FT
1	TRAFFIC SIGNAL TS1	EXIST.	EXIST.	EXIST.
2	TRAFFIC SIGNAL TS2	EXIST.	EXIST.	EXIST.
3	TRAFFIC SIGNAL TS3, TS4	7C#14	TS4–TS3–T6–B7–B8–B9–B10–B1–T1–C	230
4	TRAFFIC SIGNAL TS5	7C#14	TS5–T7–B8–B9–B10–B1–T1–C	155
5	PED. SIGNAL P1	EXIST.	EXIST.	EXIST.
6	PED. SIGNAL P2	EXIST.	EXIST.	EXIST.
7	PED. SIGNAL P3	EXIST.	EXIST.	EXIST.
8	PED. SIGNAL P4	EXIST.	EXIST.	EXIST.
9	PED. SIGNAL P5	EXIST.	EXIST.	EXIST.
10	PED. SIGNAL P6	EXIST.	EXIST.	EXIST.
11	PED. SIGNAL P7	EXIST.	EXIST.	EXIST.
12	PED. SIGNAL P8	EXIST.	EXIST.	EXIST.
13	ILLUM. SIGN S1, S15	2C#12	S1–S15–T6–B7–B8–B9–B10–B1–T1–C	225
14	ILLUM. SIGN S2, S14	EXIST.	EXIST.	EXIST.
15	ILLUM. SIGN S5, S10	EXIST.	EXIST.	EXIST.
16	ILLUM. SIGN S7, S8	EXIST.	EXIST.	EXIST.
17	ILLUM. SIGN S11, S13	EXIST.	EXIST.	EXIST.
18	POWER CABLE, AC POSITIVE, BLACK	EXIST.	EXIST.	EXIST.
19	POWER CABLE, AC NEGATIVE, WHITE	EXIST.	EXIST.	EXIST.

NOTES:

1. STA. 800+00.00 "EXTENSION TO SECOND STREET" = STA. 22+01.57 "CBD".
2. REMOVE THE 4 SIGNAL BAY BOOM ON POLE T2 AND REPLACE IT WITH A 1 SIGNAL BAY BOOM. REMOVE SIGNS S3, S6 AND S16, AND YELLOW FLASHER SIGNAL HEAD YF1. INSTALL NEW SIGN S5 ON THE FIRST SIGNAL BAY IN THE POSITION FURTHEST FROM THE POLE. INSTALL NEW SIGN S10 INTO THE FIRST BAY OF THE BOOM ON POLE T2, CLOSEST TO THE POLE.
3. REMOVE 3 SIGNAL BAY BOOM ON POLE T7. REMOVE SIGN S18 AND SIGN S10. REPLACE SIGN S12 WITH A NEW REFLECTORIZED SIGN ON POLE T7. PLACE NEW 12" LED SIGNAL HEAD 5 ON POLE T7.
4. REMOVE 3 SIGNAL BAY BOOM ON POLE T6 AND REPLACE IT WITH A 4 SIGNAL BAY BOOM. REPLACE SIGNAL HEAD 4 WITH NEW 12" LED SIGNAL HEAD IN BAY 4 AND INSTALL NEW 12" LED SIGNAL HEAD 3 IN BAY 2. INSTALL NEW ILLUMINATED SIGN S1 IN BAY 3. INSTALL NEW ILLUMINATED SIGN S15 IN BAY 1.
5. REPLACE ALL SIGNAL HEADS WITH NEW 12" LED SIGNAL HEADS AND REPLACE ALL PEDESTRIAN SIGNALS WITH TYPE D2 LED COUNTDOWN PEDESTRIAN SIGNALS. REMOVE REFLECTORIZED SIGN S19. REPLACE ALL ILLUMINATED AND REFLECTORIZED SIGNS. REPLACE CONTROLLER ON POLE T1.
6. INSTALL 2–4" RMC ALONG WITH EXISTING 1–3" RMC UNDER TRACK SLAB AS SHOWN ON PLAN.
7. A DISTANCE OF SIX FEET BEHIND THE CURB AND 15 FEET ON EITHER SIDE OF PROPOSED OCS POLES AND SIGNAL POLES (INCLUDING ANY DISTURBANCE TO THE EXISTING CURB) HAS BEEN QUANTIFIED FOR BIDDING PURPOSES FOR REMOVAL AND REPLACEMENT OF SIDEWALK. THE CITY'S ENGINEER WILL DETERMINE ACTUAL PAY LIMITS FOR THIS WORK. NO ADDITIONAL INCREASE TO THE UNIT COST WILL BE ALLOWED FOR THIS WORK IF THE QUANTITIES ARE MORE OR LESS THAN THE AMOUNT QUANTIFIED FOR BIDDING PURPOSES.

CAUTION UNDERGROUND UTILITIES
2 WORKING DAYS
BEFORE YOU DIG
CALL 1–800–362–2764
OHIO UTILITY PROTECTION SERVICE
CALL NON–SERVICE FACILITY
OWNERS DIRECT

GRAPHIC SCALE
10 0 10 20 40
(IN FEET)
1 inch = 10 ft. Full Size
1 inch = 20 ft. Half Size

CONTRACT DRAWING

PRINTS NOT BEARING THIS STAMP WERE MADE PRIOR TO ADVERTISING FOR BIDS AND ARE TO BE CONSIDERED OBSOLETE FOR CONTRACT PURPOSES.

Department of Transportation and Engineering

City of Cincinnati
City Hall
801 Plum Street
Cincinnati, Ohio 45202

CINCINNATI STREETCAR
CENTRAL BUSINESS DISTRICT
PROPOSED TRAFFIC SIGNAL PLAN WALNUT STREET AND SIXTH STREET

Revisions
No.

Drawn by AMW	Date 7/02/12	Designed by AMW	Date 7/02/12
Checked by JTB	Date 7/02/12	Reviewed by JTB	Date 7/12/12

Consultant

PB HDR

File Number

ACC No. 23126

G-TC-1007 C

DOTE_Mono_PDF_Half.pltcfg
W:\29014A-Streetcar\CAD\Traffic_Control\Signals\1007_Sixth&Walnut_S-11\S_G-TC-1007 C.dgn
7/12/2012 9:17:15 AM

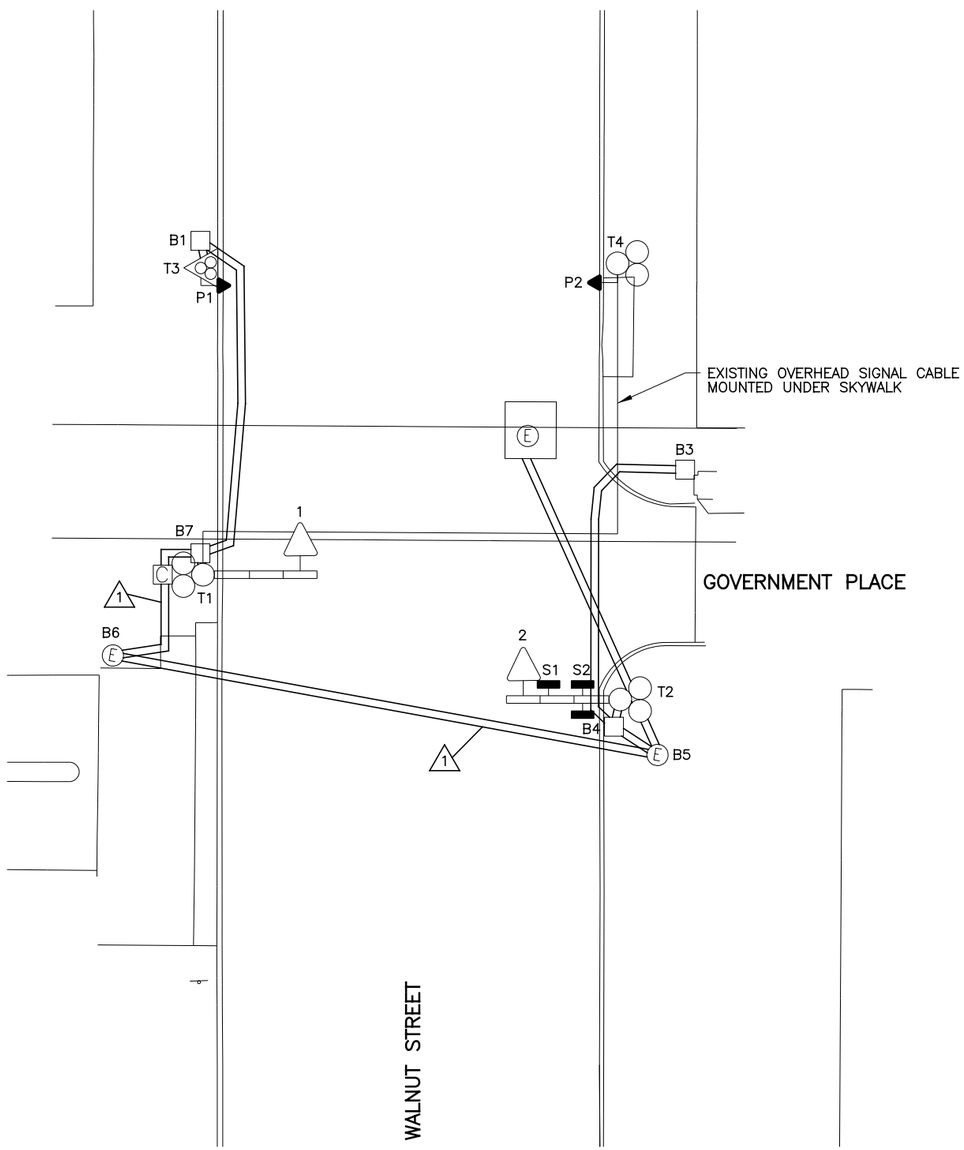

EQUIPMENT LIST	
1, 2	TRAF. SIG. HD., 3 SECT., HORIZ., 8" RYG
P1, P2	PED. SIG., 1 SECT., 16" INCANDESCENT, DWW 3 LINE
S1	ILLUM. SIGN, 24" X 24", "NO TURN ON RED", #117
S2	ILLUM. SIGN, 24" X 30", DF, "GOVERNMENT PLACE"
B1, B3, B4, B7	PULLBOX, 24" X 24", DOWNTOWN SPECIAL
T1	MPT POLE, W/ 3 BAY BOOM
T2	MPLT POLE W/ 3 BAY BOOM
T3	MPIN POLE
T4	MPL POLE

LEGEND

- MPL, MPT, MPLT SIGNAL POLE
- MPIN POLE
- TRAFFIC SIGNAL CONDUIT
- TRAFFIC SIGNAL HEAD
- PEDESTRIAN SIGNAL HEAD
- ILLUMINATED SIGN
- PULLBOX
- CONTROLLER

NOTES:

1. ASSUMED CONDUIT ROUTE FROM POWER SERVICE TO CONTROLLER.

CAUTION UNDERGROUND UTILITIES
2 WORKING DAYS
BEFORE YOU DIG
CALL 1-800-362-2764
OHIO UTILITY PROTECTION SERVICE
CALL NON-SERVICE FACILITY
OWNERS DIRECT

GRAPHIC SCALE

10 0 10 20 40

(IN FEET)
1 inch = 10 ft. Full Size
1 inch = 20 ft. Half Size

DOTE_Mono_PDF_Half.pltcfg
W:\29014A-Streetcar\CAD\Traffic_Control\Signals\1008_Walnut&Government\Pl\S_G-TC-1008 A.dgn
7/11/2012 7:15:55 AM

CONTRACT DRAWING

PRINTS NOT BEARING THIS STAMP WERE MADE PRIOR TO ADVERTISING FOR BID AND ARE TO BE CONSIDERED OBSOLETE FOR CONTRACT PURPOSES.

Department of Transportation and Engineering

City of Cincinnati
City Hall
801 Plum Street
Cincinnati, Ohio 45202

CINCINNATI STREETCAR
CENTRAL BUSINESS DISTRICT
EXISTING TRAFFIC SIGNAL PLAN
WALNUT STREET AT GOVERNMENT PLACE

Revisions

No.		Date

Drawn by AMW	Designed by AMW	Checked by JTB	Reviewed by JTB
Date 7/02/12	Date 7/02/12	Date 7/02/12	Date 7/12/12

Consultant

PB HDR

File Number

ACC No. 23126

G-TC-1008 A

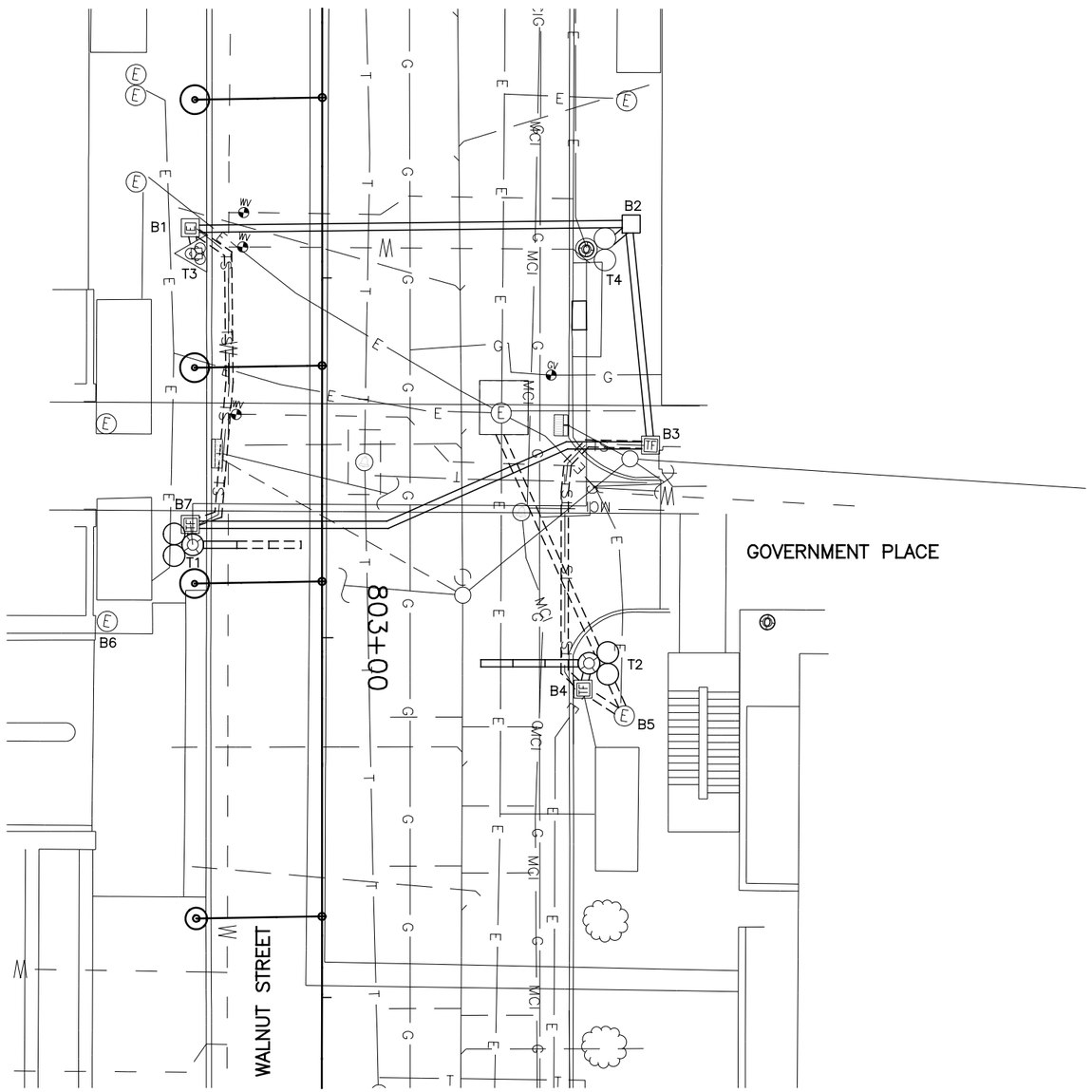

SIGNAL PHASING

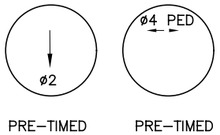

THIS IS THE GENERAL SEQUENCING FOR THIS TRAFFIC SIGNAL. REFER TO THE CITY OF CINCINNATI FOR FINAL SEQUENCING, LABELING AND TIMINGS.

CAUTION UNDERGROUND UTILITIES
2 WORKING DAYS
BEFORE YOU DIG
CALL 1–800–362–2764
OHIO UTILITY PROTECTION SERVICE
CALL NON–SERVICE FACILITY
OWNERS DIRECT

GRAPHIC SCALE
10 0 10 20 40
(IN FEET)
1 inch = 10 ft. Full Size
1 inch = 20 ft. Half Size

DEPARTMENT OF TRANSPORTATION & ENGINEERING
CITY OF CINCINNATI OHIO

CONTRACT DRAWING

PRINTS NOT BEARING THIS STAMP WERE MADE PRIOR TO ADVERTISING FOR BIDS AND ARE TO BE CONSIDERED OBSOLETE FOR CONTRACT PURPOSES.

Department of Transportation and Engineering

City of Cincinnati
City Hall
801 Plum Street
Cincinnati, Ohio 45202

CINCINNATI STREETCAR
CENTRAL BUSINESS DISTRICT
UNDERGROUND UTILITIES & SIGNAL PLAN DETAILS
WALNUT STREET AND GOVERNMENT PLACE

Revisions
No.

Drawn by AMW	Date 7/02/12
Designed by AMW	Date 7/02/12
Checked by JTB	Date 7/02/12
Reviewed by JTB	Date 7/12/12

Consultant

PB HDR

File Number

ACC No. 23126

G-TC-1008 B

DOTE_Mono_PDF_Half.pltcfg
W:\29014A-Streetcar\CAD\Traffic_Control\Signals\1008_Walnut&Government\Pl\S_G-TC-1008 B.dgn
7/11/2012 7:16:09 AM

LEGEND

- MPL, MPT, MPLT SIGNAL POLE
- MPIN POLE
- TRAFFIC SIGNAL CONDUIT
- TRAFFIC SIGNAL HEAD
- PEDESTRIAN SIGNAL HEAD
- ILLUMINATED SIGN
- PULLBOX
- CONTROLLER

SIGNAL INDICATIONS

R Y G

1, 2

SIGNAL HEAD DETAIL
12" (LED) LENSES

20

P1, P2

TYPE D2 PEDESTRIAN (LED)
(COUNTDOWN) SIGNAL HEAD

TYPICAL POLE ORIENTATION

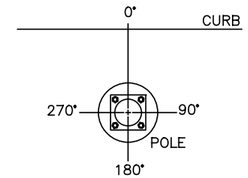

MATERIAL SCHEDULE

VEHICULAR SIGNAL HEADS

NO.	1	2	3	4	5	6	7	8
12 INCH	R	R						
	Y	Y						
	G	G						

20

TYPE D2 PEDESTRIAN (LED)
(COUNTDOWN) SIGNAL HEAD

NOTE:
USE LENS W/ SYMBOL LEGENDS
PORTLAND ORANGE: HAND (DONT WALK)
LUNAR WHITE: WALKING MAN (WALK)

POLE NO.	POLE DATA: POLE TYPE	TRAFFIC BOOM (# OF BAYS)	FOUNDATION TYPE	PEDESTRIAN SIGNALS: P1	P2	P3	P4	P5	P6	P7	P8	ATTACHMENT HEIGHT (FEET) TO THE BOTTOM OF BOOM	TRAFFIC BOOM (DEG)	STREET LIGHT BRACKET ARM (DEG)	HANDHOLE (DEG)	CONTROLLER (DEG)
				D	D											
				W	W											
				ANGLE OF ORIENTATION (DEGREES)												
T1	MPT	1	EXIST.									17	0	EX.	EX.	
T2	MPLT	3	EXIST.									EX.	EX.	EX.	EX.	
T3	MPIN	–	EXIST.	90											EX.	
T4	MPL	–	EXIST.		270									EX.	EX.	180

CABLE SCHEDULE

CABLE#	CONNECTING DEVICE	TYPE	CABLE ROUTING	LIN. FT
1	TRAFFIC SIGNAL TS1	EXIST.	EXIST.	EXIST.
2	TRAFFIC SIGNAL TS2	7C#14	TS2–T2–B4–B3–B7–T1–C	180
3	PED. SIGNAL P1	7C#14	P1–T3–B1–B7–T1–C	85
4	PED. SIGNAL P2	7C#14	P2–T4–B2–B3–B7–T1–C	145
5	ILLUM. SIGN S1, S2	2C#12	S1–S2–T2–B4–B3–B7–T1–C	185
6	POWER CABLE, AC POSITIVE, BLACK	EXIST.	EXIST.	EXIST.
7	POWER CABLE, AC NEGATIVE, WHITE	EXIST.	EXIST.	EXIST.
8	INTERCONNECT CABLE	EXIST.	EXIST.	EXIST.

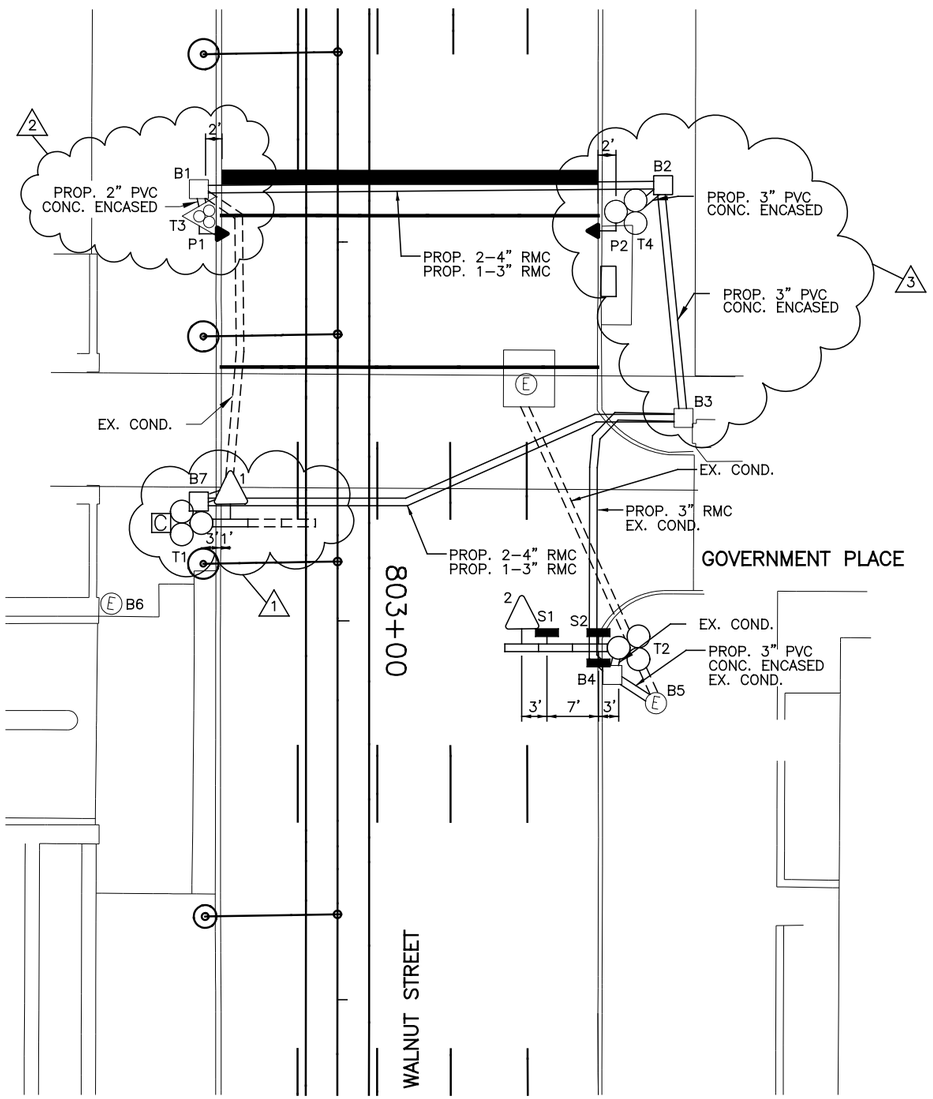

NOTES:

1. REPLACE 3 SIGNAL BAY BOOM ON POLE T1 WITH A 1 SIGNAL BAY BOOM. INSTALL A NEW 12" LED SIGNAL HEAD 1 IN SINGLE BAY BOOM. REPLACE CONTROLLER ON POLE T1.
2. REPLACE PEDESTRIAN SIGNAL P1 ON POLE T3 WITH A NEW TYPE D2 LED COUNTDOWN PEDESTRIAN SIGNAL.
3. REPLACE PEDESTRIAN SIGNAL P2 ON POLE T4 WITH A NEW TYPE D2 LED COUNTDOWN PEDESTRIAN SIGNAL. ADD 2 INCH CONDUIT RISER DOWN POLE T4 FROM P2 TO B2. ADD 24" X 24" CITY TYPE "C" PULLBOX B2 AT STA. 802+42.53, 42.99' LT.
4. REPLACE ALL SIGNAL HEADS WITH NEW 12" LED SIGNAL HEADS AND REPLACE ALL PEDESTRIAN SIGNALS WITH TYPE D2 LED COUNTDOWN PEDESTRIAN SIGNALS. REPLACE ALL ILLUMINATED AND REFLECTORIZED SIGNS.
5. INSTALL 2–4" AND 1–3" RMC UNDER TRACK SLAB AS SHOWN ON PLAN.
6. A DISTANCE OF SIX FEET BEHIND THE CURB AND 15 FEET ON EITHER SIDE OF PROPOSED OCS POLES AND SIGNAL POLES (INCLUDING ANY DISTURBANCE TO THE EXISTING CURB) HAS BEEN QUANTIFIED FOR BIDDING PURPOSES FOR REMOVAL AND REPLACEMENT OF SIDEWALK. THE CITY'S ENGINEER WILL DETERMINE ACTUAL PAY LIMITS FOR THIS WORK. NO ADDITIONAL INCREASE TO THE UNIT COST WILL BE ALLOWED FOR THIS WORK IF THE QUANTITIES ARE MORE OR LESS THAN THE AMOUNT QUANTIFIED FOR BIDDING PURPOSES.

SIGN DETAILS

NO TURN ON RED

S1
ILLUM.
24" X 24"
CITY #117

STREET NAME

S2
ILLUM.
24" X 30"
DOUBLE FACE

CAUTION UNDERGROUND UTILITIES
2 WORKING DAYS
BEFORE YOU DIG
CALL 1–800–362–2764
OHIO UTILITY PROTECTION SERVICE
CALL NON–SERVICE FACILITY
OWNERS DIRECT

GRAPHIC SCALE
10 0 10 20 40
(IN FEET)
1 inch = 10 ft. Full Size
1 inch = 20 ft. Half Size

DOTE_Mono_PDF_Half.pltcfg
W:\29014A-Streetcar\CAD\Traffic_Control\Signals\1008_Walnut&Government\PI\S_G-TC-1008_C.dgn
7/12/2012 9:17:30 AM

CONTRACT DRAWING

PRINTS NOT BEARING THIS STAMP WERE MADE PRIOR TO ADVERTISING FOR BIDS AND ARE TO BE CONSIDERED OBSOLETE FOR CONTRACT PURPOSES.

Department of Transportation and Engineering

City of Cincinnati
City Hall
801 Plum Street
Cincinnati, Ohio 45202

CINCINNATI STREETCAR
CENTRAL BUSINESS DISTRICT
PROPOSED TRAFFIC SIGNAL PLAN
WALNUT STREET AND GOVERNMENT PLACE

Revisions
No.

	Date
Drawn by AMW	7/02/12
Designed by AMW	7/02/12
Checked by JTB	7/02/12
Reviewed by JTB	7/12/12

Consultant

PB HDR

File Number

ACC No.
23126

G-TC-1008 C

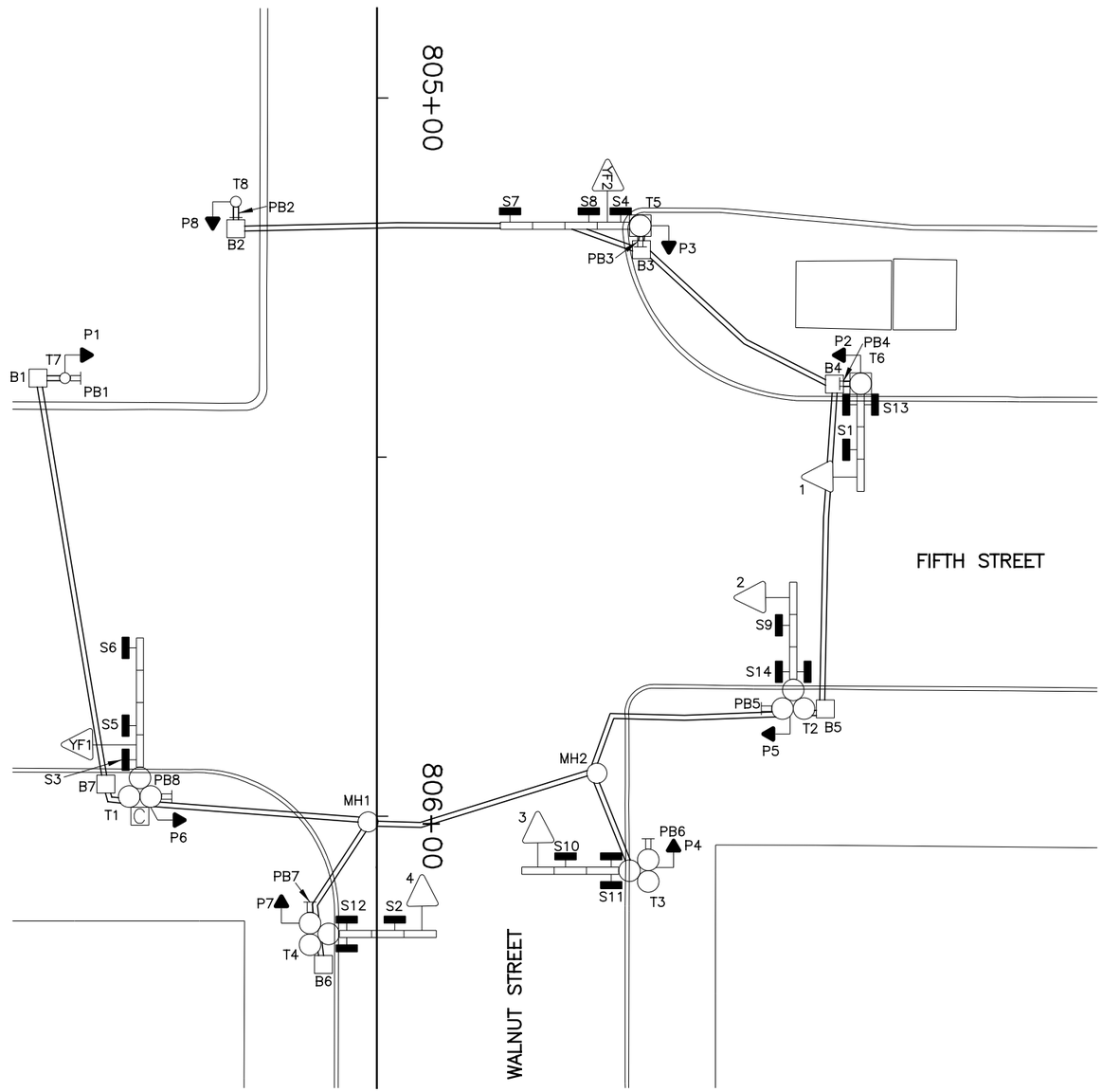

EQUIPMENT LIST

1–4	TRAF. SIG. HD., 3 SECTIONS, HORIZ., 8" RYG
YF1, YF2	TRAF. SIG. HD., 1 SECTION, 8" Y
PB1–PB8	PEDESTRIAN PUSHBUTTON TO ACTIVATE AUDIBLE DEVICES W/ASSOC. BLUE SIGNS
P1–P8	PED. SIG., 2 SECTIONS, 16" INCANDESCENT, W/ AUD. DEVICE
S1	ILLUM. SIGN, 24" X 30", "ONE WAY ⟶ ",#92A
S2	ILLUM. SIGN, 24" X 30", "ONE WAY ⟶ ",#92C
S3, S4	ILLUM. SIGN, 30" X 24","WATCH FOR EMERGENCY VEHICLES WHEN FLASHING", #114
S5	ILLUM. SIGN, 24" X 30", "↱ ONLY", #79A
S6	ILLUM. SIGN, 24" X 30", " ├ ", #79AB
S7	ILLUM. SIGN, 24" X 30", " ┤ ", #79BC
S8	ILLUM. SIGN, 24" X 30", " ↰ ONLY", #79C
S9, S10	ILLUM. SIGN, 24" X 30", "NO TURN ON RED", #117
S11, S12	ILLUM. SIGN, 24" X 30", "FIFTH ST. EAST", DF
S13, S14	ILLUM. SIGN, 24" X 30", "WALNUT ST.", DF
B1–B7	PULLBOX, 24" X 24", DOWNTOWN SPECIAL
T1	MPLT POLE W/ 4 BAY BOOM
T2–T4	MPLT POLE W/ 3 BAY BOOM
T5	MOT POLE W/ 4 BAY BOOM
T6	MOT POLE W/ 3 BAY BOOM
T7, T8	STEEL POLE, ANCH. BASE, 4.5" X 8'

LEGEND

- MOL, MOT, MOLT SIGNAL POLE
- MPL, MPT, MPLT SIGNAL POLE
- STEEL PEDESTRIAN POST
- TRAFFIC SIGNAL CONDUIT
- YELLOW FLASHER SIGNAL HEAD
- TRAFFIC SIGNAL HEAD
- PEDESTRIAN SIGNAL HEAD
- PEDESTRIAN PUSHBUTTON
- ILLUMINATED SIGN
- PULLBOX
- CONTROLLER

CAUTION UNDERGROUND UTILITIES
2 WORKING DAYS
BEFORE YOU DIG
CALL 1–800–362–2764
OHIO UTILITY PROTECTION SERVICE
CALL NON–SERVICE FACILITY
OWNERS DIRECT

GRAPHIC SCALE
10 0 10 20 40
(IN FEET)
1 inch = 10 ft. Full Size
1 inch = 20 ft. Half Size

DEPARTMENT OF TRANSPORTATION & ENGINEERING · CITY OF CINCINNATI · OHIO

CONTRACT DRAWING

PRINTS NOT BEARING THIS STAMP WERE MADE PRIOR TO ADVERTISING FOR BID AND ARE TO BE CONSIDERED OBSOLETE FOR CONTRACT PURPOSES.

Department of Transportation and Engineering

City of Cincinnati
City Hall
801 Plum Street
Cincinnati, Ohio 45202

CINCINNATI STREETCAR
CENTRAL BUSINESS DISTRICT
EXISTING TRAFFIC SIGNAL PLAN WALNUT STREET AND FIFTH STREET

Revisions
No.

Date 7/02/12	Drawn by AMW
Date 7/02/12	Designed by AMW
Date 7/02/12	Checked by JTB
Date 7/12/12	Reviewed by JTB

Consultant

PB HDR

File Number

ACC No. 23126

G-TC-1009 A

DOTE_Mono_PDF_Half.pltcfg
W:\29014A-Streetcar\CAD\Traffic_Control\Signals\1009_Fifth&Walnut\S_G-TC-1009 A.dgn
7/11/2012 7:16:48 AM

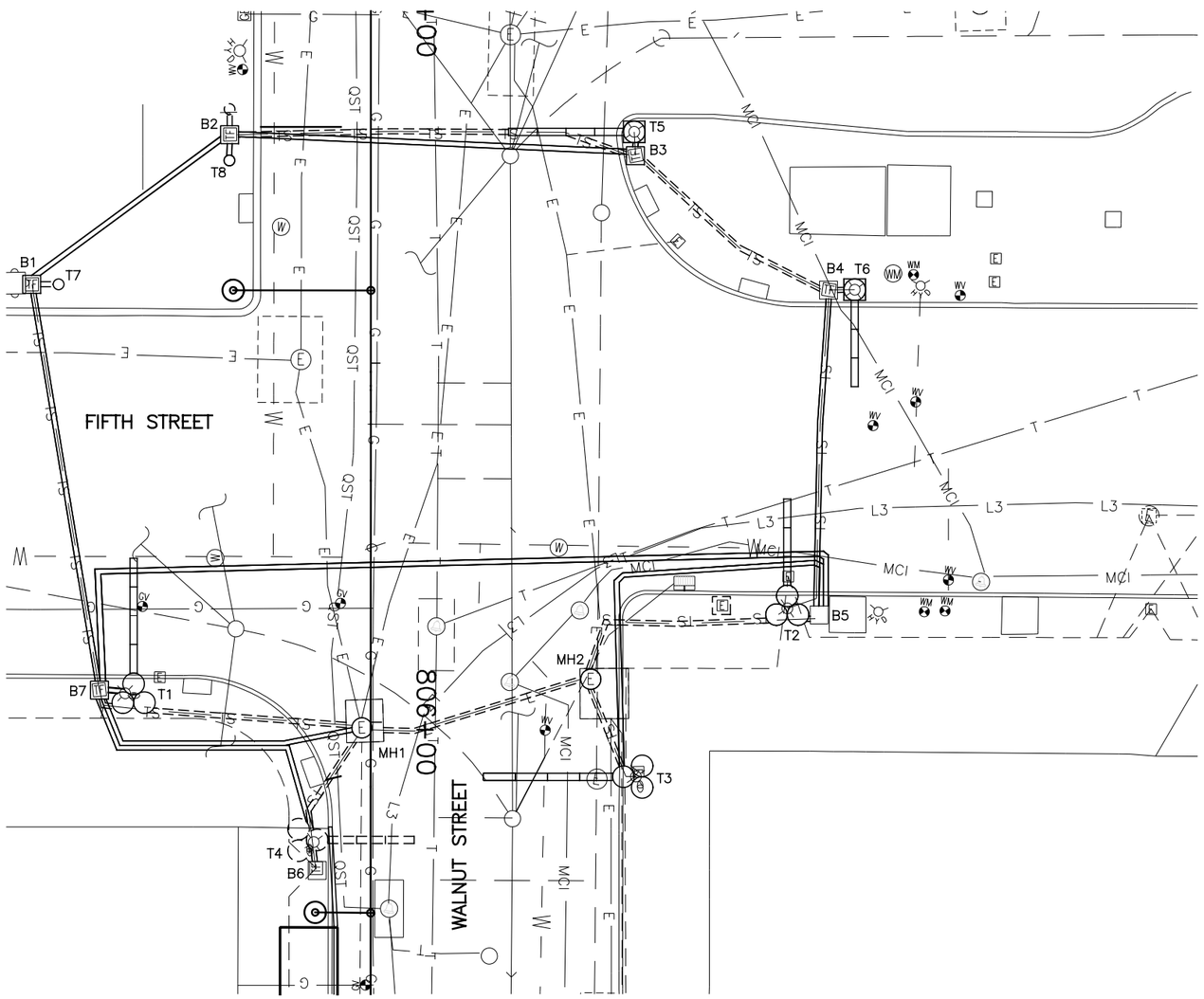

SIGNAL PHASING

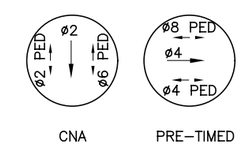

THIS IS THE GENERAL SEQUENCING FOR THIS TRAFFIC SIGNAL. REFER TO THE CITY OF CINCINNATI FOR FINAL SEQUENCING, LABELING AND TIMINGS.

CAUTION UNDERGROUND UTILITIES
2 WORKING DAYS
BEFORE YOU DIG
CALL 1-800-362-2764
OHIO UTILITY PROTECTION SERVICE
CALL NON-SERVICE FACILITY
OWNERS DIRECT

GRAPHIC SCALE
10 0 10 20 40
(IN FEET)
1 inch = 10 ft. Full Size
1 inch = 20 ft. Half Size

CONTRACT DRAWING

PRINTS NOT BEARING THIS STAMP WERE MADE PRIOR TO ADVERTISING FOR BIDS AND ARE TO BE CONSIDERED OBSOLETE FOR CONTRACT PURPOSES.

Department of Transportation and Engineering

City of Cincinnati
City Hall
801 Plum Street
Cincinnati, Ohio 45202

CINCINNATI STREETCAR
CENTRAL BUSINESS DISTRICT
UNDERGROUND UTILITIES & SIGNAL PLAN DETAILS
WALNUT STREET AND FIFTH STREET

Revisions
No.

Drawn by AMW	Date 7/02/12
Designed by AMW	Date 7/02/12
Checked by JTB	Date 7/02/12
Reviewed by JTB	Date 7/12/12

Consultant

PB HDR

File Number

ACC No. 23126

G-TC- 1009 B

DOTE_Mono_PDF_Half.pltcfg
W:\29014A-Streetcar\CAD\Traffic_Control\Signals\1009_Fifth&Walnut\S_G-TC-1009 B.dgn
7:17:24 AM
7/11/2012

LEGEND

- MOL, MOT, MOLT SIGNAL POLE
- MPL, MPT, MPLT SIGNAL POLE
- STEEL PEDESTRIAN POST
- TRAFFIC SIGNAL CONDUIT
- YELLOW FLASHER SIGNAL HEAD
- TRAFFIC SIGNAL HEAD
- PEDESTRIAN SIGNAL HEAD
- PEDESTRIAN PUSHBUTTON
- ILLUMINATED SIGN
- PULLBOX
- CONTROLLER

SIGNAL INDICATIONS

R Y G

1, 2, 3, 4

SIGNAL HEAD DETAIL
12" (LED) LENSES

20

P1, P2, P3, P4
P5, P6, P7, P8

TYPE D2 PEDESTRIAN (LED)
(COUNTDOWN) SIGNAL HEAD

Y

YF1, YF2

SIGNAL HEAD DETAIL
12" (LED) LENSES

TYPICAL POLE ORIENTATION

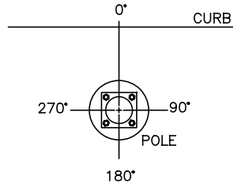

SIGNAL DETAILS

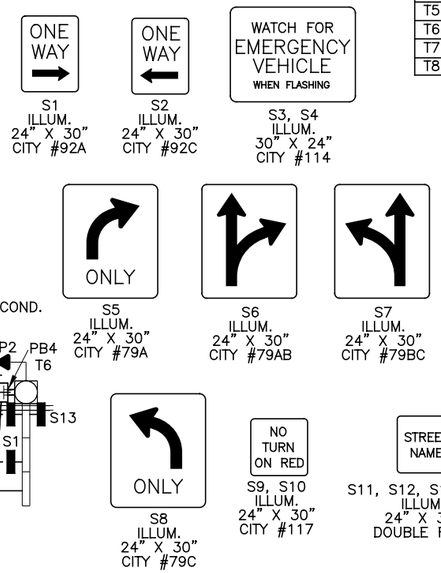

MATERIAL SCHEDULE

NO.	VEHICULAR SIGNAL HEADS 1	2	3	4					TYPE D2 PEDESTRIAN (LED) (COUNTDOWN) SIGNAL HEAD	ATTACHMENT HEIGHT (FEET) TO THE BOTTOM OF BOOM	TRAFFIC BOOM (FEET)	STREET LIGHT BRACKET ARM (DEG)	HANDHOLE (DEG)	CONTROLLER (DEG)
12 INCH	R	R	R	R					NOTE: USE LENS W/ SYMBOL LEGENDS PORTLAND ORANGE: HAND (DONT WALK) LUNAR WHITE: WALKING MAN (WALK)					
	Y	Y	Y	Y										
	G	G	G	G										

POLE NO.	POLE DATA: POLE TYPE	TRAFFIC BOOM (# OF BAYS)	FOUNDATION TYPE	PEDESTRIAN SIGNALS P1 D W	P2 D W	P3 D W	P4 D W	P5 D W	P6 D W	P7 D W	P8 D W	ATTACHMENT HEIGHT (FEET) TO THE BOTTOM OF BOOM	TRAFFIC BOOM (DEG)	STREET LIGHT BRACKET ARM (DEG)	HANDHOLE (DEG)	CONTROLLER (DEG)
				ANGLE OF ORIENTATION (DEGREES)												
T1	MPLT	4	EXIST.						180			EX.	EX.	EX.	EX.	180
T2	MPLT	3	EXIST					180				EX.	EX.	EX.	EX.	
T3	MPLT	4	EXIST.				180					17	0	EX.	EX.	
T4	MPLT	–	EXIST.							180				EX.	EX.	
T5	MOT	4	EXIST.			180						EX.	EX.		EX.	
T6	MOT	3	EXIST.		180							EX.	EX.		EX.	
T7	845	–	EXIST.	180											EX.	
T8	1045	–	FDN–25								180				180	

CABLE SCHEDULE

CABLE#	CONNECTING DEVICE	TYPE	CABLE ROUTING	LIN. FT
1	TRAFFIC SIGNAL TS1	7C#14	TS1–T6–B4–B5–B7–T1–C	245
2	TRAFFIC SIGNAL TS2	7C#14	TS2–T2–B5–B7–T1–C	195
3	TRAFFIC SIGNAL TS3, TS4	7C#14	TS4–TS3–T3–B5–B7–T1–C	260
4	PED. SIGNAL P1	EXIST.	EXIST.	EXIST.
5	PED. SIGNAL P2	7C#14	P2–T5–B3–B2–B1–B7–T1–C	220
6	PED. SIGNAL P3	7C#14	P3–T5–B3–B2–B1–B7–T1–C	205
7	PED. SIGNAL P4	7C#14	P4–T3–B5–B7–T1–C	230
8	PED. SIGNAL P5	7C#14	P5–T2–B5–B7–T1–C	175
9	PED. SIGNAL P6	EXIST.	EXIST.	EXIST.
10	PED. SIGNAL P7	EXIST.	EXIST.	EXIST.
11	PED. SIGNAL P8	7C#14	P8–T8–B2–B1–B7–T1–C	135
12	PUSHBUTTON PB1	EXIST.	EXIST.	EXIST.
13	PUSHBUTTON PB2	7C#14	PB2–T8–B2–B1–B7–T1–C	130
14	PUSHBUTTON PB3	7C#14	PB3–T5–B3–B2–B1–B7–T1–C	200
15	PUSHBUTTON PB4	7C#14	PB4–T5–B3–B2–B1–B7–T1–C	215
16	PUSHBUTTON PB5	7C#14	PB5–T2–B5–B7–T1–C	170
17	PUSHBUTTON PB6	7C#14	PB6–T3–B5–B7–T1–C	225
18	PUSHBUTTON PB7	EXIST.	EXIST.	EXIST.
19	PUSHBUTTON PB8	EXIST.	EXIST.	EXIST.
20	YELLOW FLASHER, YF1	EXIST.	EXIST.	EXIST.
21	YELLOW FLASHER, YF2	7C#14	YF2–T5–B3–B2–B1–B7–T1–C	215
22	ILLUM. SIGN S1, S13	2C#12	S1–S13–T6–B4–B5–B7–T1–C	245
23	ILLUM. SIGN S2, S10, S11	2C#12	S2–S10–S11–T3–B5–B7–T1–C	265
24	ILLUM. SIGN S4, S7, S8	2C#12	S7–S8–S4–T5–B3–B2–B1–B7–T1–C	245
25	ILLUM. SIGN S3, S5, S6	EXIST.	EXIST.	EXIST.
26	ILLUM. SIGN S9, S14	2C#12	S9–S14–T2–B5–B7–T1–C	195
27	POWER CABLE, AC POSITIVE, BLACK	1C#6	MH–B7–T1–C	55
28	POWER CABLE, AC NEGATIVE, WHITE	1C#6	MH–B7–T1–C	55
29	INTERCONNECT CABLE	12C#12	MH–B7–T1–C	65

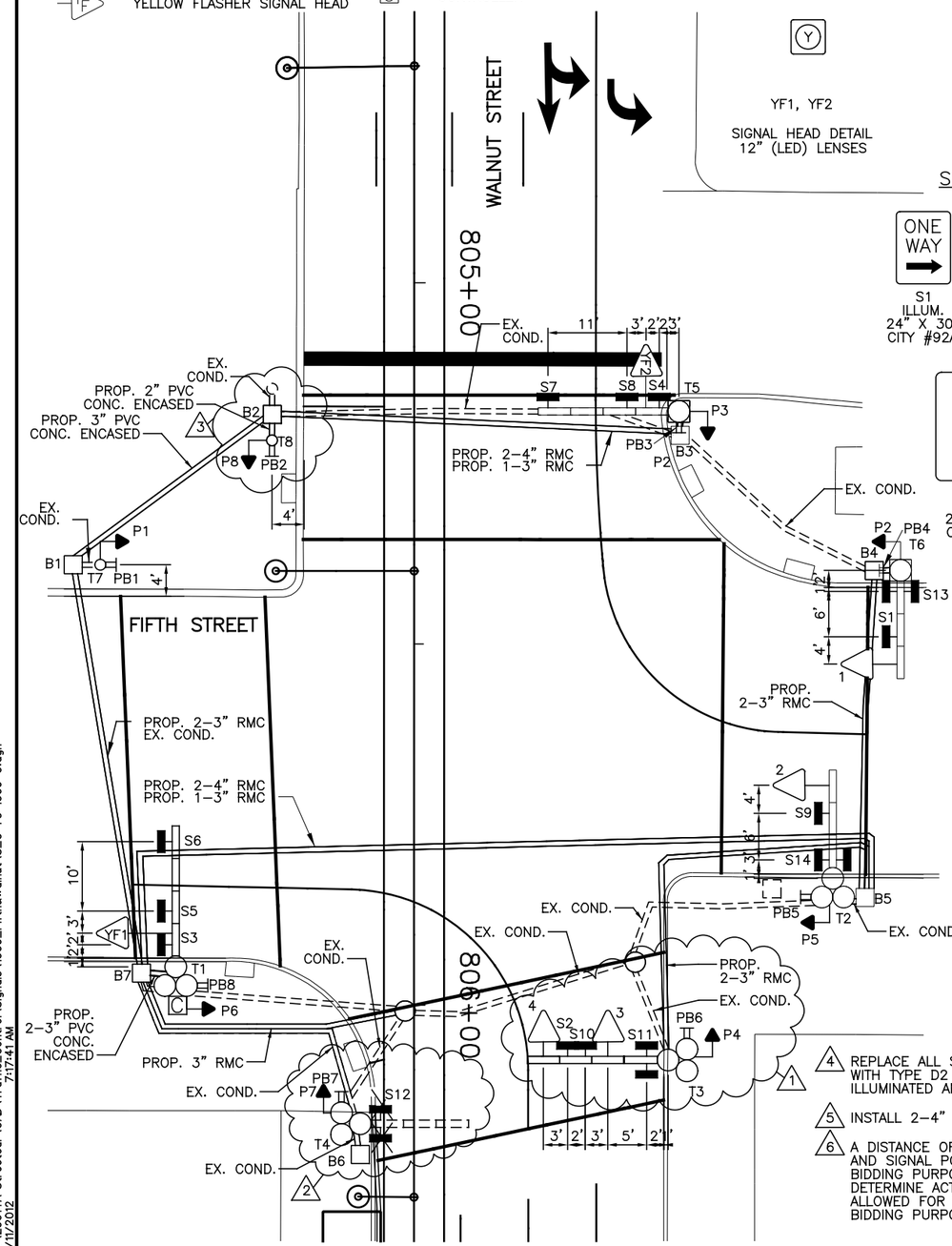

NOTES:

1. REPLACE 3 SIGNAL BAY BOOM ON POLE T3 WITH A NEW 4 SIGNAL BAY BOOM. PLACE 12" LED SIGNAL HEAD 3 IN THE SECOND BAY. PLACE ILLUMINATED SIGN S10 IN THE THIRD BAY ALONG WITH ILLUMINATED SIGN S2. INSTALL 12" LED SIGNAL HEAD 4 IN THE FOURTH BAY.
2. REMOVE EXISTING 3 SIGNAL BAY BOOM AND ILLUMINATED SIGN S12 FROM POLE T4. PLACE ILUMINATED SIGN S2 AND 12" LED SIGNAL HEAD IN BOOM ON POLE T3.
3. REMOVE EXISTING POLE T8 AND INSTALL NEW PEDESTRIAN POST T8 AT STA. 805+21.80, 19.70' LT. INSTALL NEW AUDIBLE PUSH BUTTON PB2 AND PEDESTRIAN SIGNAL P8 TO POLE T8.
4. REPLACE ALL SIGNAL HEADS WITH NEW 12" LED SIGNAL HEADS AND REPLACE ALL PEDESTRIAN SIGNALS WITH TYPE D2 LED COUNTDOWN PEDESTRIAN SIGNALS. REPLACE ALL PUSHBUTTONS AND REPLACE ALL ILLUMINATED AND REFLECTORIZED SIGNS. REPLACE CONTROLLER ON POLE T1.
5. INSTALL 2–4" RMC AND 1–3" RMC UNDER TRACK SLAB AS SHOWN ON PLAN.
6. A DISTANCE OF SIX FEET BEHIND THE CURB AND 15 FEET ON EITHER SIDE OF PROPOSED OCS POLES AND SIGNAL POLES (INCLUDING ANY DISTURBANCE TO THE EXISTING CURB) HAS BEEN QUANTIFIED FOR BIDDING PURPOSES FOR REMOVAL AND REPLACEMENT OF SIDEWALK. THE CITY'S ENGINEER WILL DETERMINE ACTUAL PAY LIMITS FOR THIS WORK. NO ADDITIONAL INCREASE TO THE UNIT COST WILL BE ALLOWED FOR THIS WORK IF THE QUANTITIES ARE MORE OR LESS THAN THE AMOUNT QUANTIFIED FOR BIDDING PURPOSES.

CAUTION UNDERGROUND UTILITIES
2 WORKING DAYS
BEFORE YOU DIG
CALL 1–800–362–2764
OHIO UTILITY PROTECTION SERVICE
CALL NON–SERVICE FACILITY
OWNERS DIRECT

GRAPHIC SCALE
10 0 10 20 40
(IN FEET)
1 inch = 10 ft. Full Size
1 inch = 20 ft. Half Size

DOTE_Mono_PDF_Half.pltcfg
W:\29014A-Streetcar\CAD\Traffic_Control\Signals\1009_Fifth&Walnut\S_G-TC-1009 C.dgn
7:17:41 AM
7/11/2012

CONTRACT DRAWING
PRINTS NOT BEARING THIS STAMP WERE MADE PRIOR TO ADVERTISING FOR BIDS AND ARE TO BE CONSIDERED OBSOLETE FOR CONTRACT PURPOSES.

Department of Transportation and Engineering
City of Cincinnati
City Hall
801 Plum Street
Cincinnati, Ohio 45202

CINCINNATI STREETCAR
CENTRAL BUSINESS DISTRICT
PROPOSED TRAFFIC SIGNAL PLAN
WALNUT STREET AND FIFTH STREET

Revisions
No.

Date	Drawn by	Designed by	Checked by	Reviewed by
7/02/12	AMW	AMW	JTB	JTB
7/02/12				
7/02/12				
7/12/12				

Consultant
PB HDR

File Number
ACC No. 23126

G-TC-1009 C

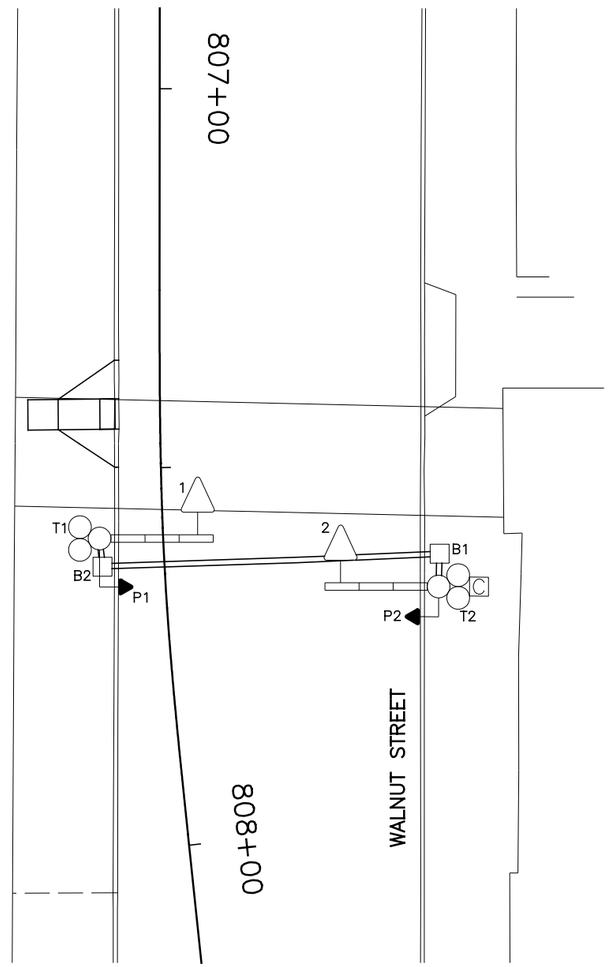

EQUIPMENT LIST	
1–2	TRAF. SIG. HD., 3 SECTIONS, HORIZ., 8" RYG
P1–P2	PED. SIG., 2 SECTIONS, 16" INCANDESCENT
B1–B2	PULLBOX, 24" X 24", DOWNTOWN SPECIAL
T1	MPT POLE W/ 3 BAY BOOM
T2	MPLT POLE W/ 3 BAY BOOM

LEGEND

- MPL, MPT, MPLT SIGNAL POLE
- TRAFFIC SIGNAL CONDUIT
- TRAFFIC SIGNAL HEAD
- PEDESTRIAN SIGNAL HEAD
- PULLBOX
- CONTROLLER

CAUTION UNDERGROUND UTILITIES
2 WORKING DAYS
BEFORE YOU DIG
CALL 1–800–362–2764
OHIO UTILITY PROTECTION SERVICE
CALL NON–SERVICE FACILITY
OWNERS DIRECT

GRAPHIC SCALE
10 0 10 20 40
(IN FEET)
1 inch = 10 ft. Full Size
1 inch = 20 ft. Half Size

CONTRACT DRAWING

PRINTS NOT BEARING THIS STAMP WERE MADE PRIOR TO ADVERTISING FOR BID, AND ARE TO BE CONSIDERED OBSOLETE FOR CONTRACT PURPOSES.

Department of Transportation and Engineering

City of Cincinnati
City Hall
801 Plum Street
Cincinnati, Ohio 45202

CINCINNATI STREETCAR
CENTRAL BUSINESS DISTRICT
EXISTING TRAFFIC SIGNAL PLAN
MIDBLOCK (5TH AND 4TH) AND WALNUT STREET

Revisions
No.

	Date
Drawn by JRL	7/02/12
Designed by JRL	7/02/12
Checked by JTB	7/02/12
Reviewed by JTB	7/12/12

Consultant

PB HDR

File Number

ACC No. 23126

G-TC-1010 A

DOTE_Mono_PDF_Half.pltcfg
W:\29014A-Streetcar\CAD\Traffic_Control\Signals\1010_Midblock (Between 5th and 4th)&Walnut\S_G-TC-1010 A.dgn
7/11/2012 7:17:55 AM

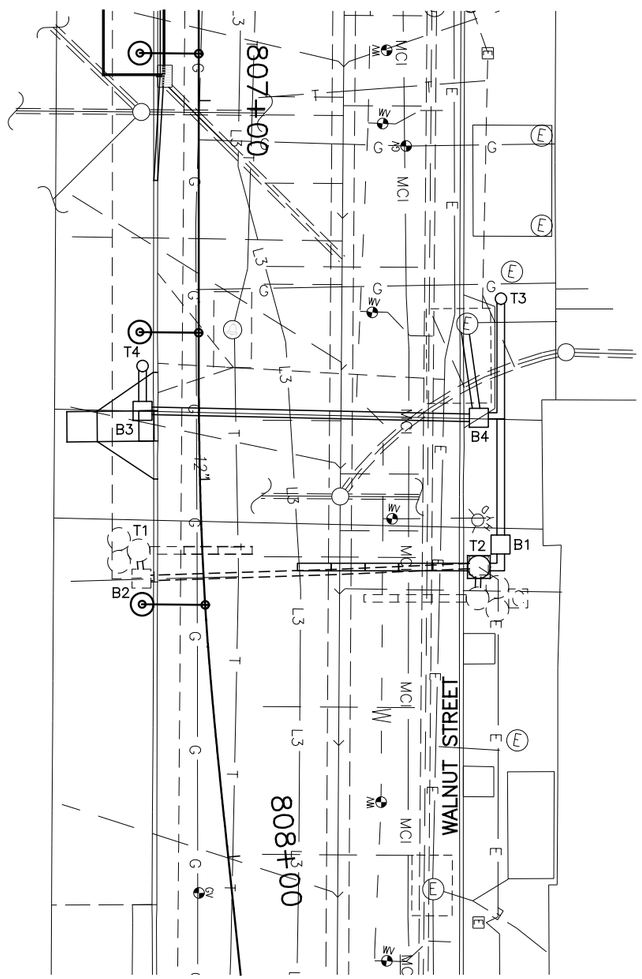

SIGNAL PHASING

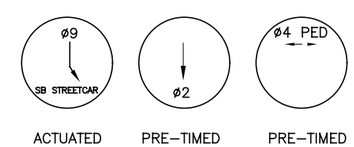

ACTUATED PRE–TIMED PRE–TIMED

THIS IS THE GENERAL SEQUENCING FOR THIS TRAFFIC SIGNAL. REFER TO THE CITY OF CINCINNATI FOR FINAL SEQUENCING, LABELING AND TIMINGS.

CAUTION UNDERGROUND UTILITIES
2 WORKING DAYS
BEFORE YOU DIG
CALL 1–800–362–2764
OHIO UTILITY PROTECTION SERVICE
CALL NON–SERVICE FACILITY
OWNERS DIRECT

GRAPHIC SCALE
10 0 10 20 40
(IN FEET)
1 inch = 10 ft. Full Size
1 inch = 20 ft. Half Size

CONTRACT DRAWING

PRINTS NOT BEARING THIS STAMP WERE MADE PRIOR TO ADVERTISING FOR BIDS AND ARE TO BE CONSIDERED OBSOLETE FOR CONTRACT PURPOSES.

Department of Transportation and Engineering

City of Cincinnati
City Hall
801 Plum Street
Cincinnati, Ohio 45202

CINCINNATI STREETCAR
CENTRAL BUSINESS DISTRICT
UNDERGROUND UTILITIES & SIGNAL PLAN DETAILS
MIDBLOCK (5TH AND 4TH) AND WALNUT STREET

Revisions
No.

Drawn by JRL	Date 7/02/12
Designed by JRL	Date 7/02/12
Checked by JTB	Date 7/02/12
Reviewed by JTB	Date 7/12/12

Consultant

PB HDR

File Number

ACC No. 23126

G-TC-1010 B

DOTE_Mono_PDF_Half.pltcfg
W:\29014A-Streetcar\CAD\Traffic_Control\Signals\1010_Midblock (Between 5th and 4th)&Walnut\S_G-TC-1010 B.dgn
7/11/2012 7:18:09 AM

LEGEND

- MOL, MOT, MOLT SIGNAL POLE
- STEEL PEDESTRIAN POST
- MPL, MPT, MPLT SIGNAL POLE
- TRAFFIC SIGNAL CONDUIT
- TRAFFIC SIGNAL HEAD
- TRANSIT SIGNAL HEAD
- PEDESTRIAN SIGNAL HEAD
- PULLBOX
- CONTROLLER
- VIDEO DETECTION CAMERA
- VIDEO DETECTION ZONE

SIGNAL INDICATIONS

1, 2 — SIGNAL HEAD DETAIL 12" (LED) LENSES

SS1 — LRT SIGNAL HEAD DETAIL 12" (LED) LENSES

P1, P2 — TYPE D2 PEDESTRIAN (LED) (COUNTDOWN) SIGNAL HEAD

TYPICAL POLE ORIENTATION

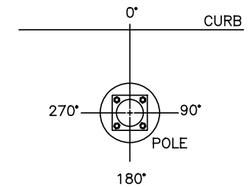

MATERIAL SCHEDULE

NO.	VEHICULAR SIGNAL HEADS 1	2																						
12 INCH	R	R																						
	Y	Y																						
	G	G																						

TYPE D2 PEDESTRIAN (LED) (COUNTDOWN) SIGNAL HEAD

NOTE:
USE LENS W/ SYMBOL LEGENDS
PORTLAND ORANGE: HAND (DONT WALK)
LUNAR WHITE: WALKING MAN (WALK)

POLE NO.	POLE DATA: POLE TYPE	TRAFFIC BOOM (# OF BAYS)	FOUNDATION TYPE	PEDESTRIAN SIGNALS: P1	P2							ATTACHMENT HEIGHT (FEET) TO THE BOTTOM OF THE BOOM	TRAFFIC BOOM (DEG)	STREET LIGHT BRACKET ARM (DEG)	HANDHOLE (DEG)	CONTROLLER (DEG)
				D	D											
				W	W											
				ANGLE OF ORIENTATION (DEGREES)												
T2	MOLT	5	FDN-55									17	0	90/270	180	180
T3	1045		FDN-25		270										180	
T4	1045		FDN-25	90											180	

CABLE SCHEDULE

CABLE#	CONNECTING DEVICE	TYPE	CABLE ROUTING	LIN. FT
1	TRAFFIC SIGNAL TS1, TS2	7C#14	TS1–TS2–T2–C	35
2	PED. SIGNAL P1	7C#14	P1–T4–B3–B4–B1–T2–C	115
3	PED. SIGNAL P2	7C#14	P2–T3–B4–B1–T2–C	80
4	POWER CABLE, AC POSITIVE, BLACK	1C#6	MH–B4–B1–T2–C	65
5	POWER CABLE, AC NEGATIVE, WHITE	1C#6	MH–B4–B1–T2–C	65
6	TRANSIT SIGNAL SS1	7C#14	SS1–T2–C	30
6	VIDEO DETECTION CAMERA V1	VIDEO CABLE	V1–T2–C	35

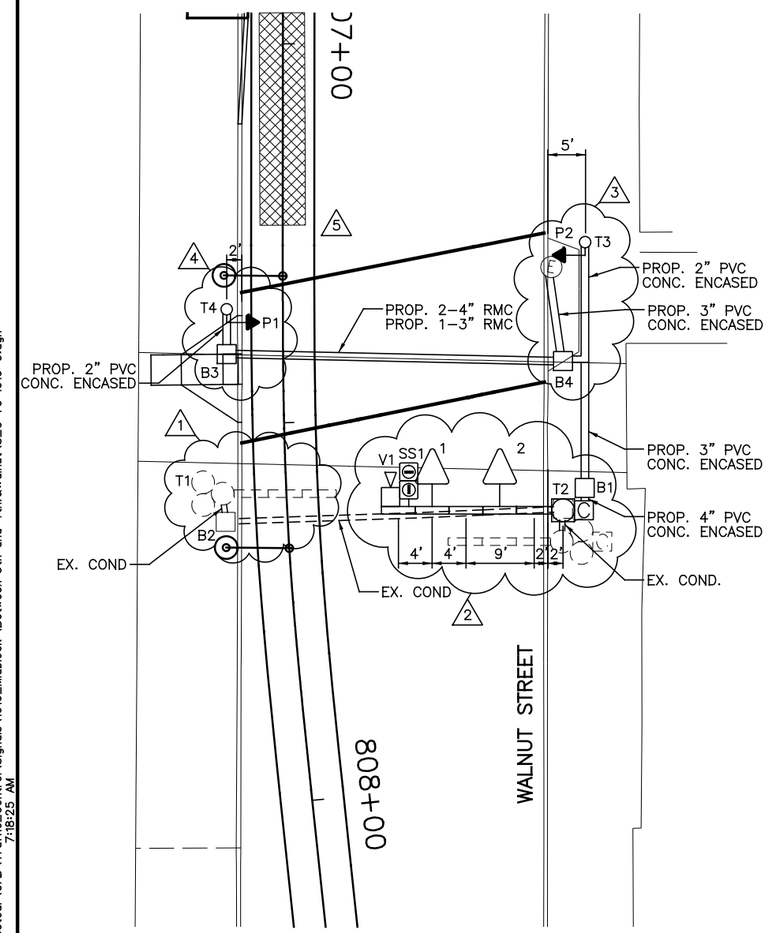

NOTES:

1. REMOVE POLE T1, 3 SIGNAL BAY BOOM, SIGNAL HEAD 1 AND PEDESTRIAN SIGNAL HEAD P1. MOVE SIGNAL HEAD 1 TO NEW SIGNAL BOOM BAY ON NEW POLE T2.
2. REMOVE EXISTING POLE T2, SIGNAL BAY BOOM, SIGNAL HEAD 2, PEDESTRIAN SIGNAL HEAD P2, CONTROLLER CABINET AND PULLBOX B1. INSTALL NEW MOLT POLE T2 WITH 5 SIGNAL BAY BOOM AT STA. 807+63.54, 36.36' LT. PLACE TRANSIT SIGNAL SS1 IN 5TH BAY AND TRANSIT VIDEO DETECTION CAMERA ON TOP OF 5TH BAY OF NEW SIGNAL BAY BOOM. INSTALL 12" LED SIGNAL HEADS 1 AND 2 ON 2ND AND 4TH SIGNAL BAY BOOMS. INSTALL NEW CONTROLLER CABINET ON NEW POLE T2. INSTALL NEW 24" X 24" CITY TYPE "C" PULLBOX B1 AT STA. 807+60.50, 39.39' LT.
3. INSTALL NEW 24" X 24" CITY TYPE "C" PULLBOX B4 AT STA. 807+42.28, 36.98' LT. INSTALL NEW PEDESTRIAN POST T3 AT STA. 807+26.14, 39.91' LT. WITH PEDESTRIAN SIGNAL P2.
4. INSTALL NEW 24" X 24" CITY TYPE "C" PULLBOX B3 AT STA. 807+40.94, 7.41' RT. INSTALL NEW PEDESTRIAN POST T4 AT STA. 807+35.00, 7.42' RT. WITH PEDESTRIAN SIGNAL P1.
5. 6' X 60' STREETCAR DETECTION ZONE. SEE TRAFFIC SIGNAL AND STREET LIGHTING GENERAL NOTES FOR ADDITIONAL DETAILS.
6. REPLACE ALL SIGNAL HEADS WITH NEW 12" LED SIGNAL HEADS AND REPLACE ALL PEDESTRIAN SIGNALS WITH TYPE D2 LED COUNTDOWN PEDESTRIAN SIGNALS.
7. INSTALL 2–4" RMC AND 1–3" RMC UNDER TRACK SLAB AS SHOWN ON PLAN.
8. A DISTANCE OF SIX FEET BEHIND THE CURB AND 15 FEET ON EITHER SIDE OF PROPOSED OCS POLES AND SIGNAL POLES (INCLUDING ANY DISTURBANCE TO THE EXISTING CURB) HAS BEEN QUANTIFIED FOR BIDDING PURPOSES FOR REMOVAL AND REPLACEMENT OF SIDEWALK. THE CITY'S ENGINEER WILL DETERMINE ACTUAL PAY LIMITS FOR THIS WORK. NO ADDITIONAL INCREASE TO THE UNIT COST WILL BE ALLOWED FOR THIS WORK IF THE QUANTITIES ARE MORE OR LESS THAN THE AMOUNT QUANTIFIED FOR BIDDING PURPOSES.

CAUTION UNDERGROUND UTILITIES
2 WORKING DAYS
BEFORE YOU DIG
CALL 1–800–362–2764
OHIO UTILITY PROTECTION SERVICE
CALL NON–SERVICE FACILITY
OWNERS DIRECT

GRAPHIC SCALE
10 0 10 20 40
(IN FEET)
1 inch = 10 ft. Full Size
1 inch = 20 ft. Half Size

DOTE_Mono_PDF_Half.pltcfg
W:\29014A-Streetcar\CAD\Traffic_Control\Signals\1010_Midblock (Between 5th and 4th)&Walnut\S_G-TC-1010 C.dgn
7:18:25 AM
7/11/2012

CONTRACT DRAWING

PRINTS NOT BEARING THIS STAMP WERE MADE PRIOR TO ADVERTISING FOR BIDS AND ARE TO BE CONSIDERED OBSOLETE FOR CONTRACT PURPOSES.

Department of Transportation and Engineering

City of Cincinnati
City Hall
801 Plum Street
Cincinnati, Ohio 45202

CINCINNATI STREETCAR
CENTRAL BUSINESS DISTRICT
PROPOSED TRAFFIC SIGNAL PLAN
MIDBLOCK (5TH AND 4TH) AND WALNUT STREET

Revisions
No.

	Date
Drawn by JRL	7/02/12
Designed by JRL	7/02/12
Checked by JTB	7/02/12
Reviewed by JTB	7/12/12

Consultant

PB HDR

File Number

ACC No. 23126

G-TC-1010 C

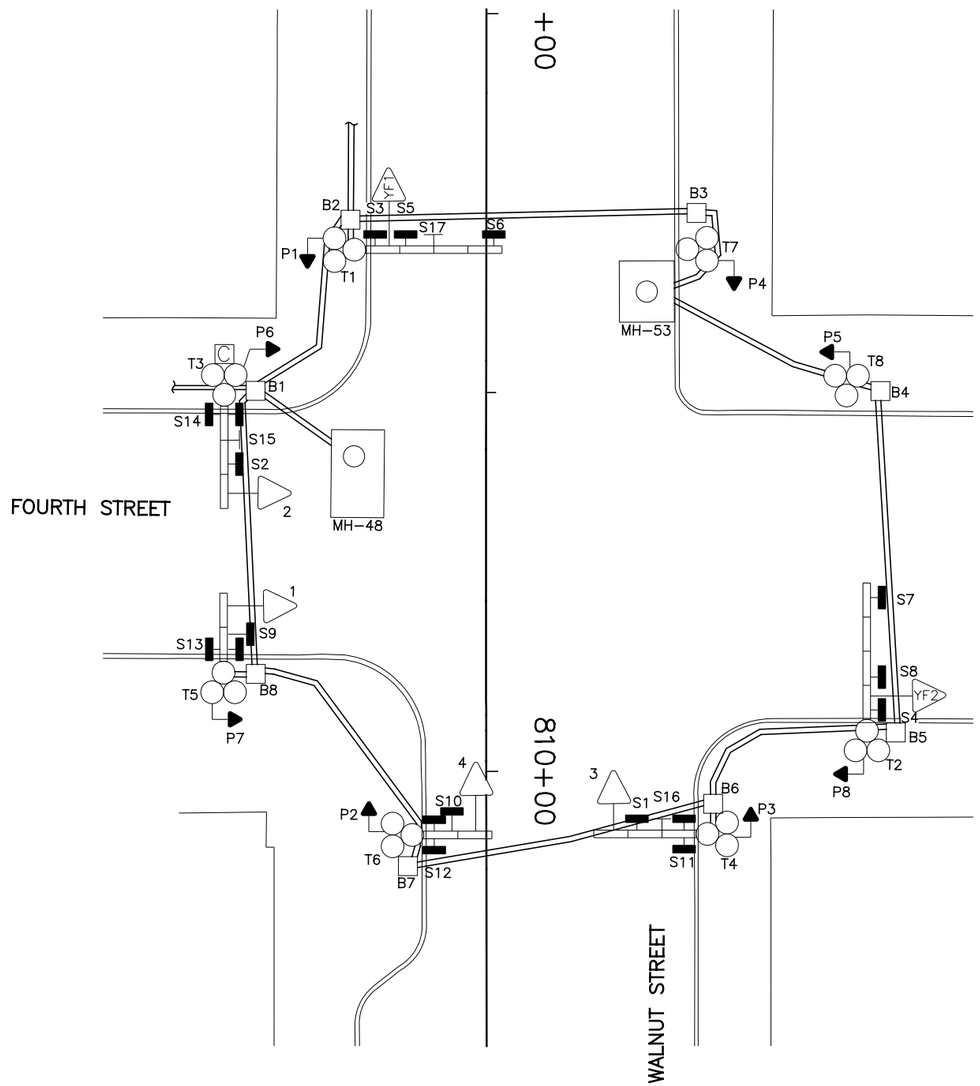

EQUIPMENT LIST	
1–4	TRAF. SIG. HD., 3 SECTIONS, HORIZ., 8" RYG
YF1, YF2	TRAF. SIG. HD., 1 SECTION, 8" Y
P1–P8	PED. SIG., 2 SECTIONS, 16" INCANDESCENT, DWW 3 LINE
S1	ILLUM. SIGN, 24" X 30", "ONE WAY ⟶ ",#92A
S2	ILLUM. SIGN, 24" X 30", "ONE WAY ⟵ ",#92C
S3, S4	ILLUM. SIGN, 30" X 24","WATCH FOR EMERGENCY VEHICLES WHEN FLASHING", #114
S5	ILLUM. SIGN, 24" X 30", "↱ ONLY", #79A
S6	ILLUM. SIGN, 24" X 30", " ├ ", #79AB
S7	ILLUM. SIGN, 24" X 30", " ┤ ", #79BC
S8	ILLUM. SIGN, 24" X 30", "↰ ONLY", #79C
S9, S10	ILLUM. SIGN, 24" X 30", "NO TURN ON RED", #117
S11, S12	ILLUM. SIGN, 24" X 30", "FOURTH ST. EAST", DF
S13, S14	ILLUM. SIGN, 24" X 30", "WALNUT ST.", DF
S15, S16	REFL. SIGN, 24" X 30", "DO NOT BLOCK INTERSECTION"
S17	REFL. SIGN, 30" X 24", "$1 PARK ⟶ ", SPECIAL
B1–B8	PULLBOX, 24" X 24", DOWNTOWN SPECIAL
T1, T2	MPLT POLE W/ 4 BAY BOOM
T3, T4	MPLT POLE W/ 3 BAY BOOM
T5, T6	MPLT POLE W/ 2 BAY BOOM
T7, T8	MPL POLE

LEGEND

- MPL, MPT, MPLT SIGNAL POLE
- TRAFFIC SIGNAL CONDUIT
- YELLOW FLASHER SIGNAL HEAD
- TRAFFIC SIGNAL HEAD
- PEDESTRIAN SIGNAL HEAD
- REFLECTORIZED SIGN
- ILLUMINATED SIGN
- PULLBOX
- CONTROLLER

CAUTION UNDERGROUND UTILITIES
2 WORKING DAYS
BEFORE YOU DIG
CALL 1–800–362–2764
OHIO UTILITY PROTECTION SERVICE
CALL NON–SERVICE FACILITY
OWNERS DIRECT

GRAPHIC SCALE
10 0 10 20 40
(IN FEET)
1 inch = 10 ft. Full Size
1 inch = 20 ft. Half Size

CONTRACT DRAWING

PRINTS NOT BEARING THIS STAMP WERE MADE PRIOR TO ADVERTISING FOR BIDS AND ARE TO BE CONSIDERED OBSOLETE FOR CONTRACT PURPOSES.

Department of Transportation and Engineering

City of Cincinnati
City Hall
801 Plum Street
Cincinnati, Ohio 45202

CINCINNATI STREETCAR
CENTRAL BUSINESS DISTRICT
EXISTING TRAFFIC SIGNAL PLAN
WALNUT STREET AND FOURTH STREET

Revisions
No.

	Date
Drawn by JRL	7/02/12
Designed by JRL	7/02/12
Checked by JTB	7/02/12
Reviewed by JTB	7/12/12

Consultant

PB HDR

File Number

ACC No. 23126

G-TC-1011 A

DOTE_Mono_PDF_Half.pltcfg
W:\29014A-Streetcar\CAD\Traffic_Control\Signals\1011_F-44Fourth&Walnut_F-44\S_G-TC-1011 A.dgn
7/11/2012 7:18:43 AM

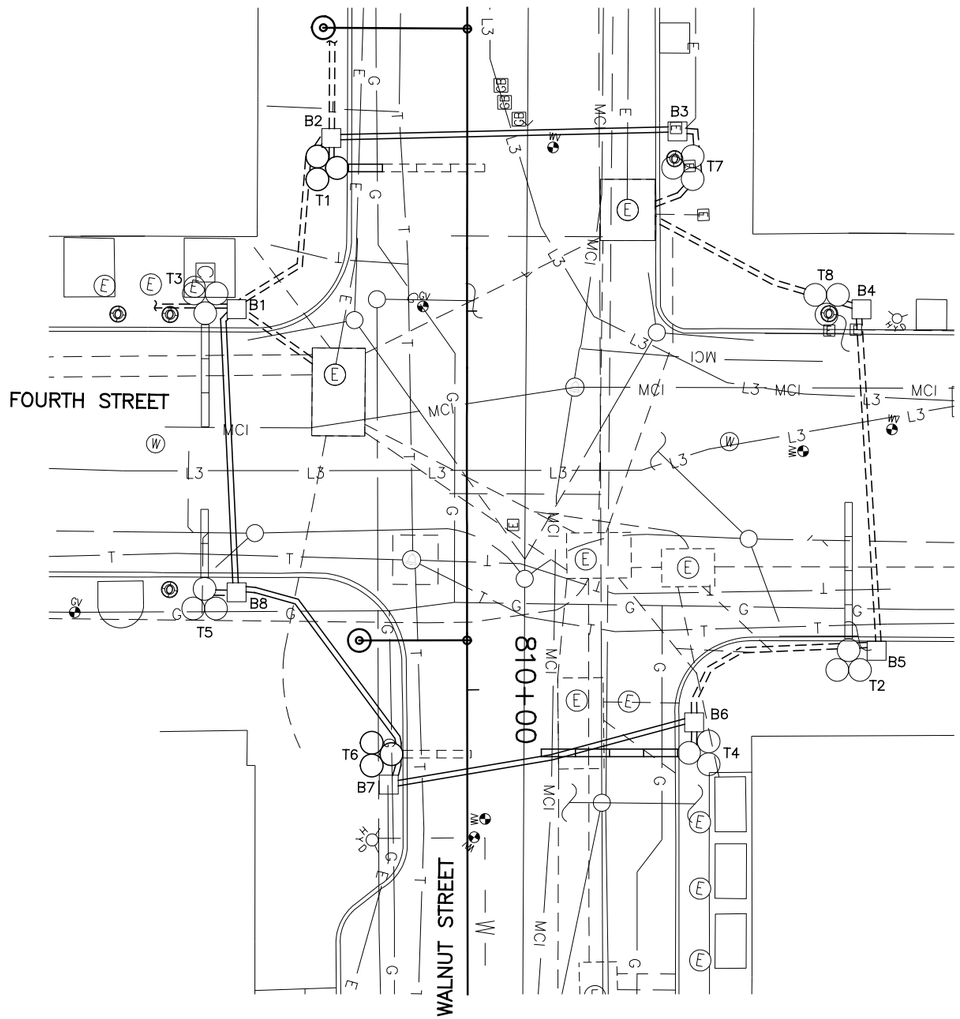

SIGNAL PHASING

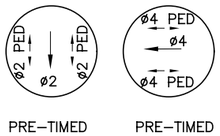

PRE–TIMED PRE–TIMED

THIS IS THE GENERAL SEQUENCING FOR THIS TRAFFIC SIGNAL. REFER TO THE CITY OF CINCINNATI FOR FINAL SEQUENCING, LABELING AND TIMINGS.

CAUTION UNDERGROUND UTILITIES
2 WORKING DAYS
BEFORE YOU DIG
CALL 1–800–362–2764
OHIO UTILITY PROTECTION SERVICE
CALL NON–SERVICE FACILITY
OWNERS DIRECT

GRAPHIC SCALE

10 0 10 20 40

(IN FEET)
1 inch = 10 ft. Full Size
1 inch = 20 ft. Half Size

DOTE_Mono_PDF_Half.pltcfg
W:\29014A-Streetcar\CAD\Traffic_Control\Signals\1011_F-44Fourth&Walnut_F-44\S_G-TC-1011 B.dgn
7:18:57 AM
7/11/2012

CONTRACT DRAWING

PRINTS NOT BEARING THIS STAMP WERE MADE PRIOR TO ADVERTISING FOR BIDS AND ARE TO BE CONSIDERED OBSOLETE FOR CONTRACT PURPOSES.

Department of Transportation and Engineering

City of Cincinnati
City Hall
801 Plum Street
Cincinnati, Ohio 45202

CINCINNATI STREETCAR
CENTRAL BUSINESS DISTRICT
UNDERGROUND UTILITIES & SIGNAL PLAN DETAILS
WALNUT STREET AND FOURTH STREET

Revisions
No.

Drawn by JRL	Date 7/02/12
Designed by JRL	Date 7/02/12
Checked by JTB	Date 7/02/12
Reviewed by JTB	Date 7/12/12

Consultant

PB HDR

File Number

ACC No. 23126

G-TC-1011 B

LEGEND

- MPL, MPT, MPLT SIGNAL POLE
- TRAFFIC SIGNAL CONDUIT
- YELLOW FLASHER SIGNAL HEAD
- TRAFFIC SIGNAL HEAD
- PEDESTRIAN SIGNAL HEAD
- REFLECTORIZED SIGN
- ILLUMINATED SIGN
- PULLBOX
- CONTROLLER

SIGNAL INDICATIONS

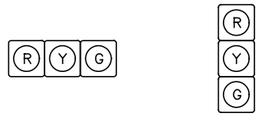

1, 2, 3, 4

SIGNAL HEAD DETAIL
12" (LED) LENSES

5

SIGNAL HEAD DETAIL
12" (LED) LENSES

P1, P2, P3, P4
P5, P6, P7, P8

TYPE D2 PEDESTRIAN (LED)
(COUNTDOWN) SIGNAL HEAD

TYPICAL POLE ORIENTATION

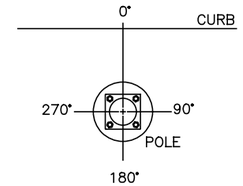

SIGN DETAILS

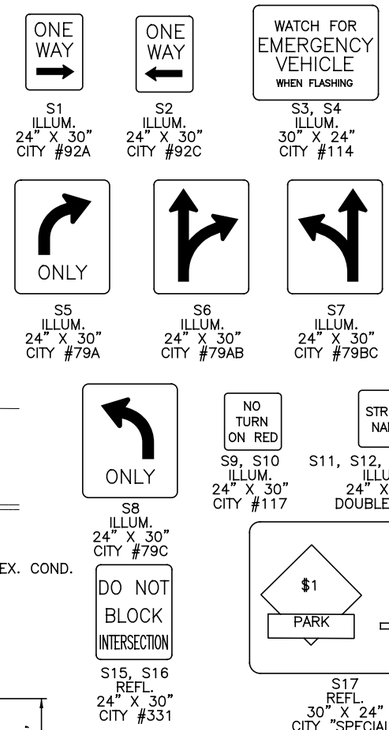

MATERIAL SCHEDULE

NO.	VEHICULAR SIGNAL HEADS 1	2	3	4	5			
12 INCH	R	R	R	R	R			
	Y	Y	Y	Y	Y			
	G	G	G	G	G			

20

TYPE D2 PEDESTRIAN (LED)
(COUNTDOWN) SIGNAL HEAD

NOTE:
USE LENS W/ SYMBOL LEGENDS
PORTLAND ORANGE: HAND (DONT WALK)
LUNAR WHITE: WALKING MAN (WALK)

POLE NO.	POLE DATA: POLE TYPE	TRAFFIC BOOM (# OF BAYS)	FOUNDATION TYPE	PEDESTRIAN SIGNALS P1	P2	P3	P4	P5	P6	P7	P8	ATTACHMENT HEIGHT (FEET) TO THE BOTTOM OF BOOM	TRAFFIC BOOM (DEG)	STREET LIGHT BRACKET ARM (DEG)	HANDHOLE (DEG)	CONTROLLER (DEG)
				D	D	D	D	D	D	D	D					
				W	W	W	W	W	W	W	W					
				ANGLE OF ORIENTATION (DEGREES)												
T1	MPLT	1	EXIST.	180								17	0	EX.	EX.	
T2	MPLT	4	EXIST.								180	EX.	EX.	EX.	EX.	
T3	MPLT	3	EXIST.						180			EX.	EX.	EX.	EX.	180
T4	MPLT	4	EXIST.			180						17	0	EX.	EX.	
T5	MPLT	2	EXIST.							180		EX.	EX.	EX.	EX.	
T6	MPLT	0	EXIST.		180									EX.	EX.	
T7	MPL	–	EXIST.				180							EX.	EX.	
T8	MPL	–	EXIST.					180						EX.	EX.	

CABLE SCHEDULE

CABLE#	CONNECTING DEVICE	TYPE	CABLE ROUTING	LIN. FT
1	TRAFFIC SIGNAL TS1	EXIST.	EXIST.	EXIST.
2	TRAFFIC SIGNAL TS2	EXIST.	EXIST.	EXIST.
3	TRAFFIC SIGNAL TS3, TS4	7C#14	TS4–TS3–T4–B6–B7–B8–B1–T3–C	180
4	TRAFFIC SIGNAL TS5	7C#14	TS5–T6–B7–B8–B1–T3–C	110
5	PED SIGNAL P1	EXIST.	EXIST.	EXIST.
6	PED SIGNAL P2	EXIST.	EXIST.	EXIST.
7	PED SIGNAL P3	EXIST.	EXIST.	EXIST.
8	PED SIGNAL P4	EXIST.	EXIST.	EXIST.
9	PED SIGNAL P5	EXIST.	EXIST.	EXIST.
10	PED SIGNAL P6	EXIST.	EXIST.	EXIST.
11	PED SIGNAL P7	EXIST.	EXIST.	EXIST.
12	PED SIGNAL P8	EXIST.	EXIST.	EXIST.
13	ILLUM. SIGN S1, S10, S11	2C#12	S10–S1–S11–T4–B6–B7–B8–B1–T3–C	180
14	ILLUM. SIGN S2, S14	EXIST.	EXIST.	EXIST.
15	ILLUM. SIGN S7, S8	EXIST.	EXIST.	EXIST.
16	ILLUM. SIGN S5	EXIST.	EXIST.	EXIST.
17	ILLUM. SIGN S9, S13	EXIST.	EXIST.	EXIST.
18	POWER CABLE, AC POSITIVE, BALCK	EXIST.	EXIST.	EXIST.
19	POWER CABLE, AC NEGATIVE, WHITE	EXIST.	EXIST.	EXIST.

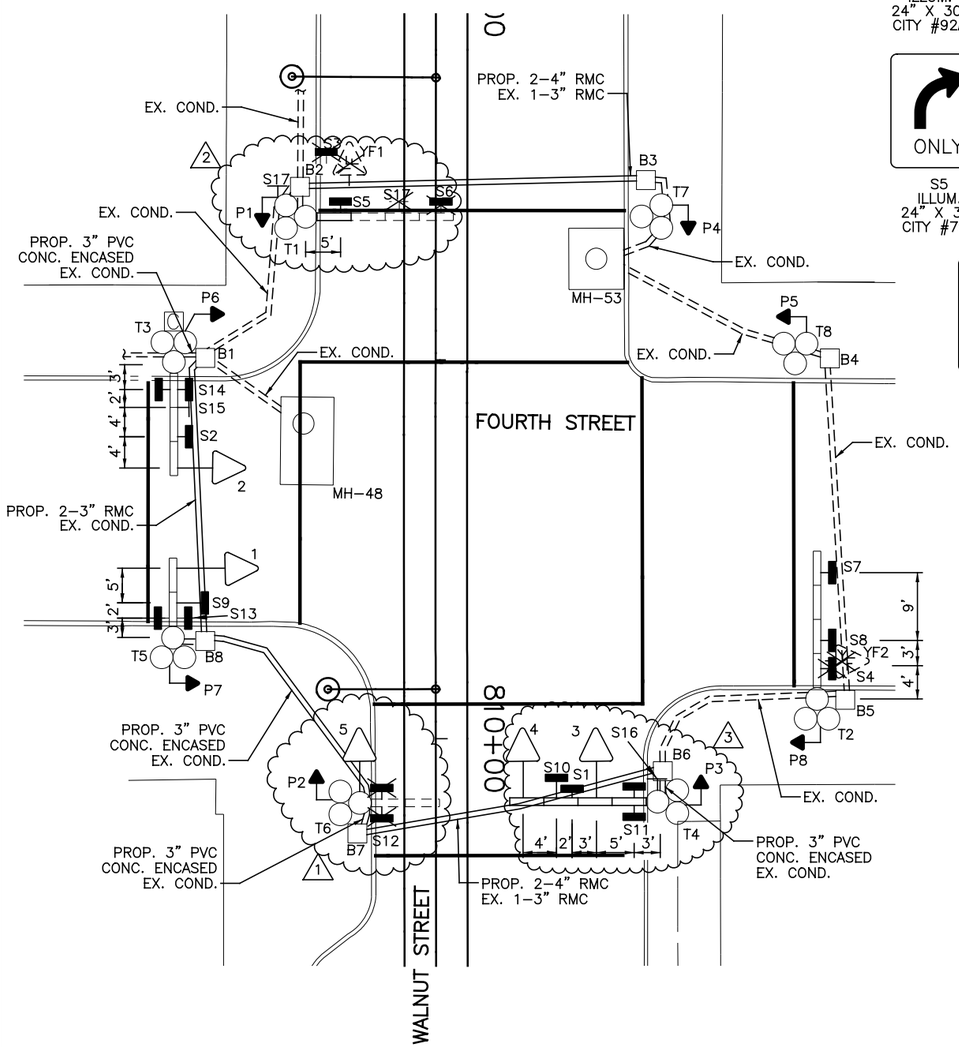

NOTES:

1. REMOVE 2 SIGNAL BAY BOOM FROM POLE T6. PLACE NEW ILLUMINATED SIGN S1 IN BAY BOOM ON POLE T4. PLACE NEW 12" LED SIGNAL HEAD 5 ON POLE T6. REMOVE ILLUMINATED SIGN S12.
2. REMOVE 4 SIGNAL BAY BOOM FROM POLE T1 AND REPLACE IT WITH A NEW 1 SIGNAL BAY BOOM. REMOVE ILLUMINATED SIGNS S6 AND S3, AND YELLOW FLASHER SIGNAL HEAD 1 FROM SIGNAL BAY BOOM ON POLE T1. MOUNT REFLECTORIZED SIGN S17 ON POLE T1. PLACE NEW ILLUMINATED SIGN S5 IN FIRST BAY OF NEW SIGNAL BAY BOOM ON POLE T1.
3. REMOVE 3 SIGNAL BAY BOOM FROM POLE T4 AND REPLACE IT WITH A NEW 4 SIGNAL BAY BOOM. PLACE 12" LED SIGNAL HEAD 4 IN THE FOURTH BAY OF THE NEW SIGNAL BAY BOOM ON POLE T4. PLACE ILLUMINATED SIGNS S10 AND S1 IN THE THIRD BAY ON THE NEW SIGNAL BAY BOOM ON POLE T4. PLACE 12" LED SIGNAL HEAD 3 IN THE SECOND BAY OF THE NEW SIGNAL BAY BOOM ON POLE T4. PLACE ILLUMINATED SIGN S11 TO FIRST BAY OF THE NEW SIGNAL BAY BOOM ON POLE T4. MOUNT REFLECTORIZED SIGN S16 TO POLE T4.
4. REPLACE ALL SIGNAL HEADS WITH NEW 12" LED SIGNAL HEADS AND REPLACE ALL PEDESTRIAN SIGNALS WITH TYPE D2 LED COUNTDOWN PEDESTRIAN SIGNALS. REPLACE ALL ILLUMINATED AND REFLECTORIZED SIGNS. REPLACE CONTROLLER ON POLE T3.
5. INSTALL 2–4" RMC ALONG WITH THE EXISTING 1–3" RMC UNDER TRACK SLAB AS SHOWN ON PLAN.
6. A DISTANCE OF SIX FEET BEHIND THE CURB AND 15 FEET ON EITHER SIDE OF PROPOSED OCS POLES AND SIGNAL POLES (INCLUDING ANY DISTURBANCE TO THE EXISTING CURB) HAS BEEN QUANTIFIED FOR BIDDING PURPOSES FOR REMOVAL AND REPLACEMENT OF SIDEWALK. THE CITY'S ENGINEER WILL DETERMINE ACTUAL PAY LIMITS FOR THIS WORK. NO ADDITIONAL INCREASE TO THE UNIT COST WILL BE ALLOWED FOR THIS WORK IF THE QUANTITIES ARE MORE OR LESS THAN THE AMOUNT QUANTIFIED FOR BIDDING PURPOSES.

CAUTION UNDERGROUND UTILITIES
2 WORKING DAYS
BEFORE YOU DIG
CALL 1–800–362–2764
OHIO UTILITY PROTECTION SERVICE
CALL NON–SERVICE FACILITY
OWNERS DIRECT

GRAPHIC SCALE
10 0 10 20 40
(IN FEET)
1 inch = 10 ft. Full Size
1 inch = 20 ft. Half Size

DOTE_Mono_PDF_Half.pltcfg
W:\29014A-Streetcar\CAD\Traffic_Control\Signals\1011_F-44Fourth&Walnut_F-44\S_G-TC-1011 C.dgn
7:19:14 AM
7/11/2012

CONTRACT DRAWING

PRINTS NOT BEARING THIS STAMP WERE MADE PRIOR TO ADVERTISING FOR BIDS AND ARE TO BE CONSIDERED OBSOLETE FOR CONTRACT PURPOSES.

Department of Transportation and Engineering

City of Cincinnati
City Hall
801 Plum Street
Cincinnati, Ohio 45202

CINCINNATI STREETCAR
CENTRAL BUSINESS DISTRICT
PROPOSED TRAFFIC SIGNAL PLAN
WALNUT STREET AND FOURTH STREET

Revisions
No.

Date 7/02/12	Date 7/12/12
Date 7/02/12	
Date 7/02/12	

Drawn by JRL
Designed by JRL
Checked by JTB
Reviewed by JTB

Consultant

PB HDR

File Number

ACC No. 23126

G-TC-1011 C

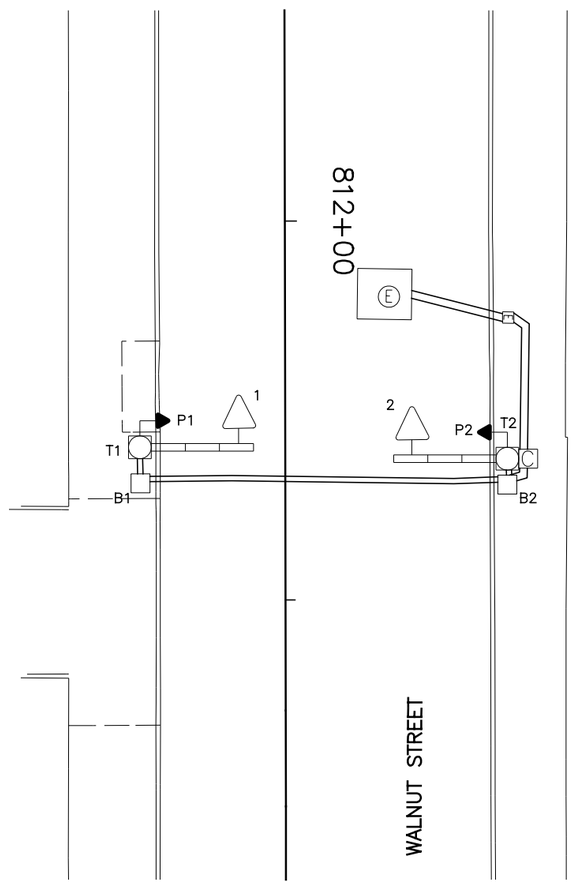

EQUIPMENT LIST	
1–2	TRAF. SIG. HD., 3 SECTIONS, HORIZ., 8" RYG
P1–P2	PED. SIG., 2 SECTIONS, 16" INCANDESCENT
B1–B2	PULLBOX, 24" X 24", DOWNTOWN SPECIAL
T1	MOT POLE W/ 3 BAY BOOM
T2	MOLT POLE W/ 3 BAY BOOM

LEGEND

- MOL, MOT, MOLT SIGNAL POLE
- TRAFFIC SIGNAL CONDUIT
- TRAFFIC SIGNAL HEAD
- PEDESTRIAN SIGNAL HEAD
- PULLBOX
- CONTROLLER

CAUTION UNDERGROUND UTILITIES
2 WORKING DAYS
BEFORE YOU DIG
CALL 1–800–362–2764
OHIO UTILITY PROTECTION SERVICE
CALL NON–SERVICE FACILITY
OWNERS DIRECT

GRAPHIC SCALE
10 0 10 20 40
(IN FEET)
1 inch = 10 ft. Full Size
1 inch = 20 ft. Half Size

CONTRACT DRAWING

PRINTS NOT BEARING THIS STAMP WERE MADE PRIOR TO ADVERTISING FOR BID, AND ARE TO BE CONSIDERED OBSOLETE FOR CONTRACT PURPOSES.

Department of Transportation and Engineering

City of Cincinnati
City Hall
801 Plum Street
Cincinnati, Ohio 45202

CINCINNATI STREETCAR
CENTRAL BUSINESS DISTRICT
EXISTING TRAFFIC SIGNAL PLAN
MIDBLOCK (4TH AND 3RD) AND WALNUT STREET

Revisions
No.

	Date
Drawn by JRL	7/02/12
Designed by JRL	7/02/12
Checked by JTB	7/02/12
Reviewed by JTB	7/12/12

Consultant

File Number

ACC No. 23126

G-TC-1012 A

DOTE_Mono_PDF_Half.pltcfg
W:\29014A-Streetcar\CAD\Traffic_Control\Signals\1012_Midblock (Between 4th and 3rd)&Walnut\S_G-TC-1012 A.dgn
7/11/2012 7:19:28 AM

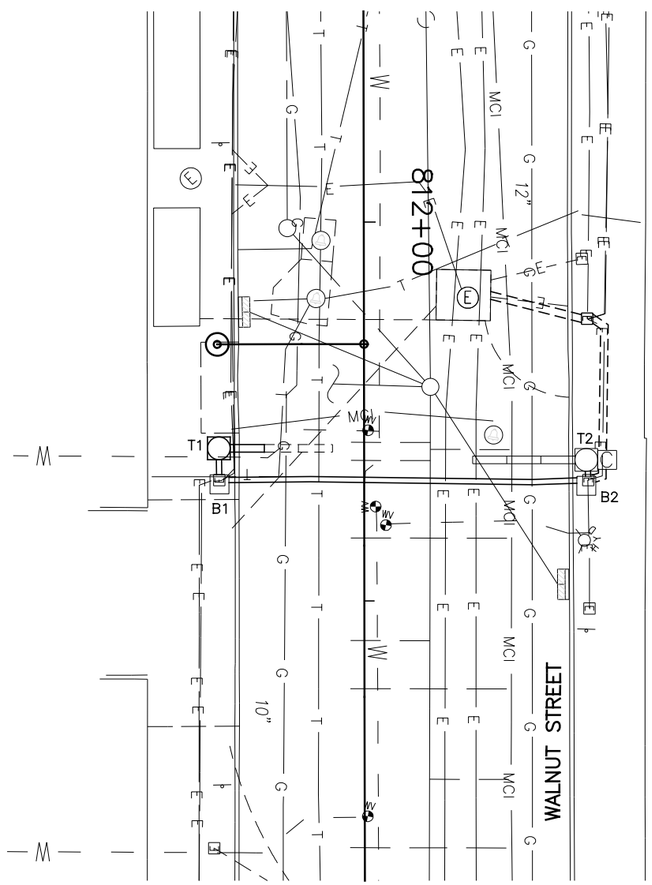

SIGNAL PHASING

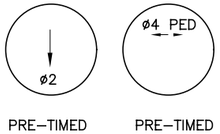

THIS IS THE GENERAL SEQUENCING FOR THIS TRAFFIC SIGNAL. REFER TO THE CITY OF CINCINNATI FOR FINAL SEQUENCING, LABELING AND TIMINGS.

CAUTION UNDERGROUND UTILITIES
2 WORKING DAYS
BEFORE YOU DIG
CALL 1-800-362-2764
OHIO UTILITY PROTECTION SERVICE
CALL NON-SERVICE FACILITY
OWNERS DIRECT

GRAPHIC SCALE

10 0 10 20 40

(IN FEET)
1 inch = 10 ft. Full Size
1 inch = 20 ft. Half Size

CONTRACT DRAWING

PRINTS NOT BEARING THIS STAMP WERE MADE PRIOR TO ADVERTISING FOR BID, AND ARE TO BE CONSIDERED OBSOLETE FOR CONTRACT PURPOSES.

Department of Transportation and Engineering

City of Cincinnati
City Hall
801 Plum Street
Cincinnati, Ohio 45202

CINCINNATI STREETCAR
CENTRAL BUSINESS DISTRICT
UNDERGROUND UTILITIES & SIGNAL PLAN DETAILS
MIDBLOCK (4TH AND 3RD) AND WALNUT STREET

Revisions

No.				

Drawn by JRL	Date 7/02/12
Designed by JRL	Date 7/02/12
Checked by JTB	Date 7/02/12
Reviewed by JTB	Date 7/12/12

Consultant

PB HDR

File Number

ACC No. 23126

G-TC-1012 B

DOTE_Mono_PDF_Half.pltcfg
W:\29014A-Streetcar\CAD\Traffic_Control\Signals\1012_Midblock (Between 4th and 3rd)&Walnut\S_G-TC-1012 B.dgn
7:19:42 AM
7/11/2012

LEGEND

- MOL, MOT, MOLT SIGNAL POLE
- TRAFFIC SIGNAL CONDUIT
- TRAFFIC SIGNAL HEAD
- PEDESTRIAN SIGNAL HEAD
- PULLBOX
- CONTROLLER

SIGNAL INDICATIONS

1, 2

SIGNAL HEAD DETAIL
12" (LED) LENSES

P1, P2

TYPE D2 PEDESTRIAN (LED)
(COUNTDOWN) SIGNAL HEAD

TYPICAL POLE ORIENTATION

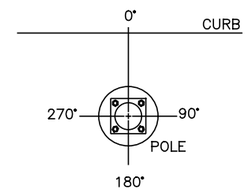

MATERIAL SCHEDULE

	VEHICULAR SIGNAL HEADS														
NO.	1	2							TYPE D2 PEDESTRIAN (LED) (COUNTDOWN) SIGNAL HEAD NOTE: USE LENS W/ SYMBOL LEGENDS PORTLAND ORANGE: HAND (DONT WALK) LUNAR WHITE: WALKING MAN (WALK)	ATTACHMENT HEIGHT (FEET) TO THE BOTTOM OF BOOM	TRAFFIC BOOM (DEG)	STREET LIGHT BRACKET ARM (DEG)	HANDHOLE (DEG)	CONTROLLER (DEG)
12 INCH	R	R													
	Y	Y													
	G	G													

POLE NO.	POLE DATA			PEDESTRIAN SIGNALS											
	POLE TYPE	TRAFFIC BOOM (# OF BAYS)	FOUNDATION TYPE	P1	P2										
				D	D										
				W	W										
				ANGLE OF ORIENTATION (DEGREES)											
T1	MOT	1	EXIST.	270								17	0		EX.	EX.
T2	MOLT	3	EXIST.		90							EX.	EX.	EX.	EX.	

CABLE SCHEDULE

CABLE#	CONNECTING DEVICE	TYPE	CABLE ROUTING	LIN. FT
1	TRAFFIC SIGNAL TS1	EXIST.	EXIST.	EXIST.
2	TRAFFIC SIGNAL TS2	EXIST.	EXIST.	EXIST.
3	PED. SIGNAL P1	EXIST.	EXIST.	EXIST.
4	PED. SIGNAL P2	EXIST.	EXIST.	EXIST.
5	POWER CABLE, AC POSITIVE, BLACK	EXIST.	EXIST.	EXIST.
6	POWER CABLE, AC NEGATIVE, WHITE	EXIST.	EXIST.	EXIST.

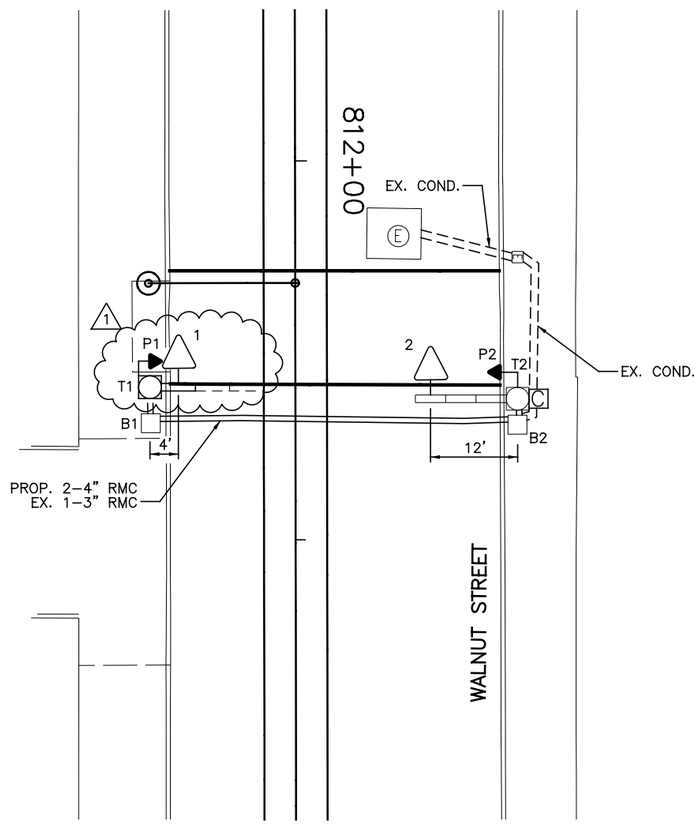

NOTES:

1. REPLACE 3 SIGNAL BAY BOOM WITH NEW 1 SIGNAL BAY BOOM ON POLE T1. PLACE 12" LED SIGNAL HEAD 1 IN FIRST BAY OF NEW 1 SIGNAL BAY BOOM.
2. REPLACE ALL SIGNAL HEADS WITH NEW 12" LED SIGNAL HEADS AND REPLACE ALL PEDESTRIAN SIGNALS WITH TYPE D2 LED COUNTDOWN PEDESTRIAN SIGNALS. REPLACE CONTROLLER ON POLE T2.
3. INSTALL 2-4" RMC ALONG WITH THE EXISTING 1-3" RMC UNDER TRACK SLAB AS SHOWN ON PLAN.
4. A DISTANCE OF SIX FEET BEHIND THE CURB AND 15 FEET ON EITHER SIDE OF PROPOSED OCS POLES AND SIGNAL POLES (INCLUDING ANY DISTURBANCE TO THE EXISTING CURB) HAS BEEN QUANTIFIED FOR BIDDING PURPOSES FOR REMOVAL AND REPLACEMENT OF SIDEWALK. THE CITY'S ENGINEER WILL DETERMINE ACTUAL PAY LIMITS FOR THIS WORK. NO ADDITIONAL INCREASE TO THE UNIT COST WILL BE ALLOWED FOR THIS WORK IF THE QUANTITIES ARE MORE OR LESS THAN THE AMOUNT QUANTIFIED FOR BIDDING PURPOSES.

CAUTION UNDERGROUND UTILITIES
2 WORKING DAYS
BEFORE YOU DIG
CALL 1-800-362-2764
OHIO UTILITY PROTECTION SERVICE
CALL NON-SERVICE FACILITY
OWNERS DIRECT

GRAPHIC SCALE

10 0 10 20 40

(IN FEET)
1 inch = 10 ft. Full Size
1 inch = 20 ft. Half Size

DOTE_Mono_PDF_Half.pltcfg
W:\29014A-Streetcar\CAD\Traffic_Control\Signals\1012_Midblock (Between 4th and 3rd)&Walnut\S_G-TC-1012 C.dgn
7:19:58 AM
7/11/2012

CONTRACT DRAWING

PRINTS NOT BEARING THIS STAMP WERE MADE PRIOR TO ADVERTISING FOR BID AND SHOULD BE CONSIDERED OBSOLETE FOR CONTRACT PURPOSES.

Department of Transportation and Engineering

City of Cincinnati
City Hall
801 Plum Street
Cincinnati, Ohio 45202

CINCINNATI STREETCAR
CENTRAL BUSINESS DISTRICT
PROPOSED TRAFFIC SIGNAL PLAN
MIDBLOCK (4TH AND 3RD) AND WALNUT STREET

Revisions
No.

Drawn by JRL	Date 7/02/12
Designed by JRL	Date 7/02/12
Checked by JTB	Date 7/02/12
Reviewed by JTB	Date 7/12/12

Consultant

PB HDR

File Number

ACC No.
23126

G-TC-1012 C

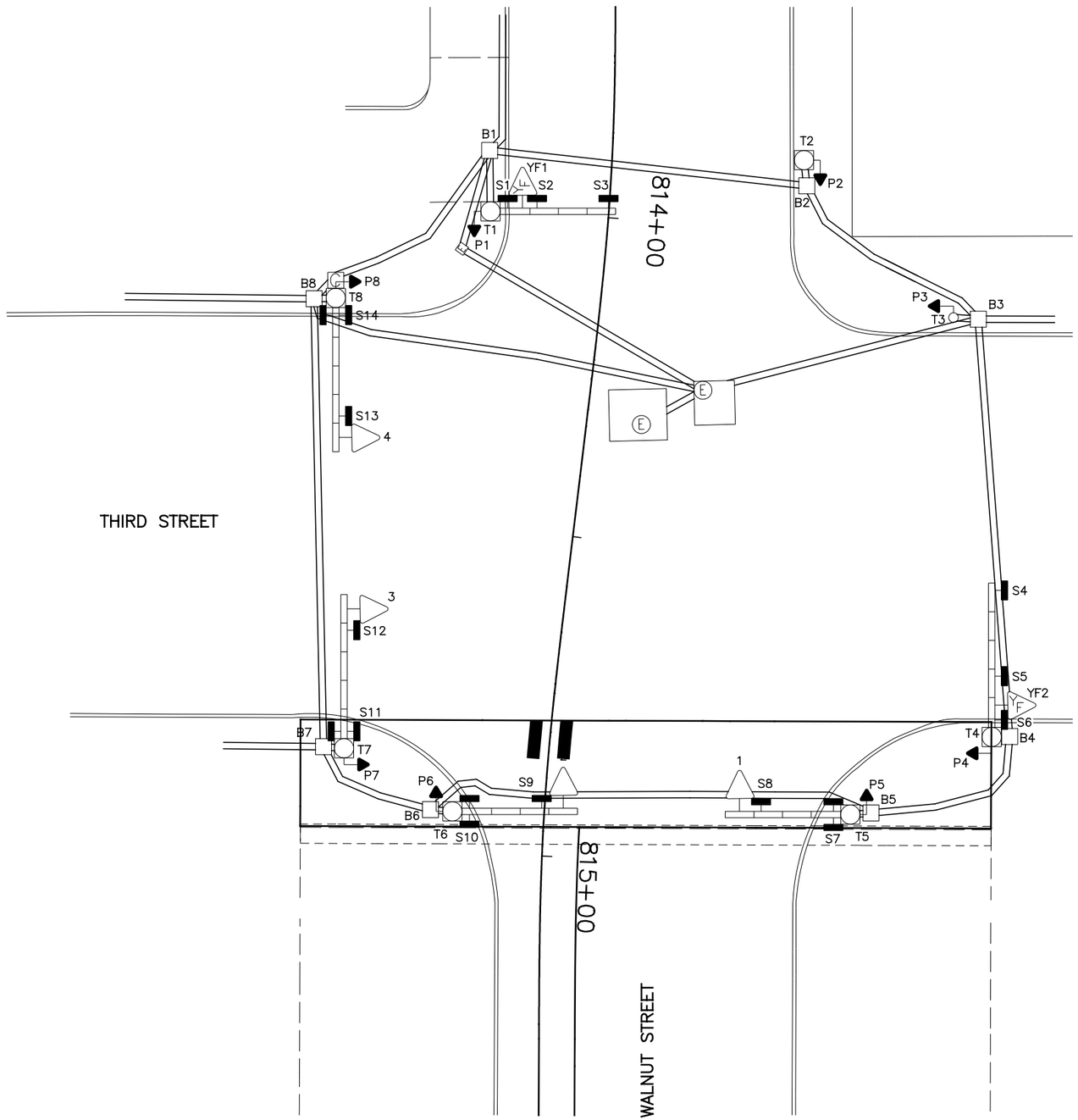

EQUIPMENT LIST

1–4	TRAF. SIG. HD., 3 SECT., HORIZ., 12" RYG
YF1, YF2	TRAF. SIG. HD., 1 SECT., 8" Y
P1–P8	PED. SIG., 2 SECT., 12" INCANDESCENT
S1, S6	ILLUM. SIGN, 30" X 24", "WATCH FOR EMERGENCY VEHICLE WHEN FLASHING", #114
S2	ILLUM. SIGN, 24" X 30", " ONLY", #79A
S3	ILLUM. SIGN, 24" X 30", " ", #79AB
S4	ILLUM. SIGN, 24" X 30", " ", #79BC
S5	ILLUM. SIGN, 24" X 30", " ONLY", #79C
S7, S10	ILLUM. SIGN, 24" X 30", DF, "THIRD ST."
S8	ILLUM. SIGN, 24" X 30", "ONE WAY —", #92A
S9, S12	ILLUM. SIGN, 24" X 30", "NO TURN ON RED", #117
S11, S14	ILLUM. SIGN, 24" X 30", DF, "WALNUT ST."
S13	ILLUM. SIGN, 24" X 30", "ONE WAY —", #92C
B1–B8	PULLBOX, 24" X 24", DOWNTOWN SPECIAL
T1, T5	MOT POLE W/ 4 BAY BOOM
T2	MOL POLE
T3	STEEL POLE, 4" X 8', #845
T4, T8	MOLT POLE W/ 5 BAY BOOM
T6	MOLT POLE W/ 4 BAY BOOM
T7	MOT POLE W/ 5 BAY BOOM

LEGEND

- MOL, MOT, MOLT SIGNAL POLE
- STEEL PEDESTRIAN POST
- TRAFFIC SIGNAL CONDUIT
- YELLOW FLASHER SIGNAL HEAD
- TRAFFIC SIGNAL HEAD
- PEDESTRIAN SIGNAL HEAD
- ILLUMINATED SIGN
- PULLBOX
- CONTROLLER

CAUTION UNDERGROUND UTILITIES
2 WORKING DAYS
BEFORE YOU DIG
CALL 1–800–362–2764
OHIO UTILITY PROTECTION SERVICE
CALL NON–SERVICE FACILITY
OWNERS DIRECT

GRAPHIC SCALE
10 0 10 20 40
(IN FEET)
1 inch = 10 ft. Full Size
1 inch = 20 ft. Half Size

DOTE_Mono_PDF_Half.pltcfg
W:\29014A-Streetcar\CAD\Traffic_Control\Signals\1013_Third&Walnut_T-04\S_G-TC-1013_A.dgn
7/11/2012 7:20:11 AM

CONTRACT DRAWING

PRINTS NOT BEARING THIS STAMP WERE MADE PRIOR TO ADVERTISING FOR BIDS AND ARE TO BE CONSIDERED OBSOLETE FOR CONTRACT PURPOSES.

Department of Transportation and Engineering

City of Cincinnati
City Hall
801 Plum Street
Cincinnati, Ohio 45202

CINCINNATI STREETCAR
CENTRAL BUSINESS DISTRICT
EXISTING TRAFFIC SIGNAL PLAN
WALNUT STREET AND THIRD STREET

Revisions
No.

Drawn by JRL	Date 7/02/12
Designed by JRL	Date 7/02/12
Checked by JTB	Date 7/02/12
Reviewed by JTB	Date 7/12/12

Consultant
PB HDR

File Number

ACC No. 23126

G-TC-1013 A

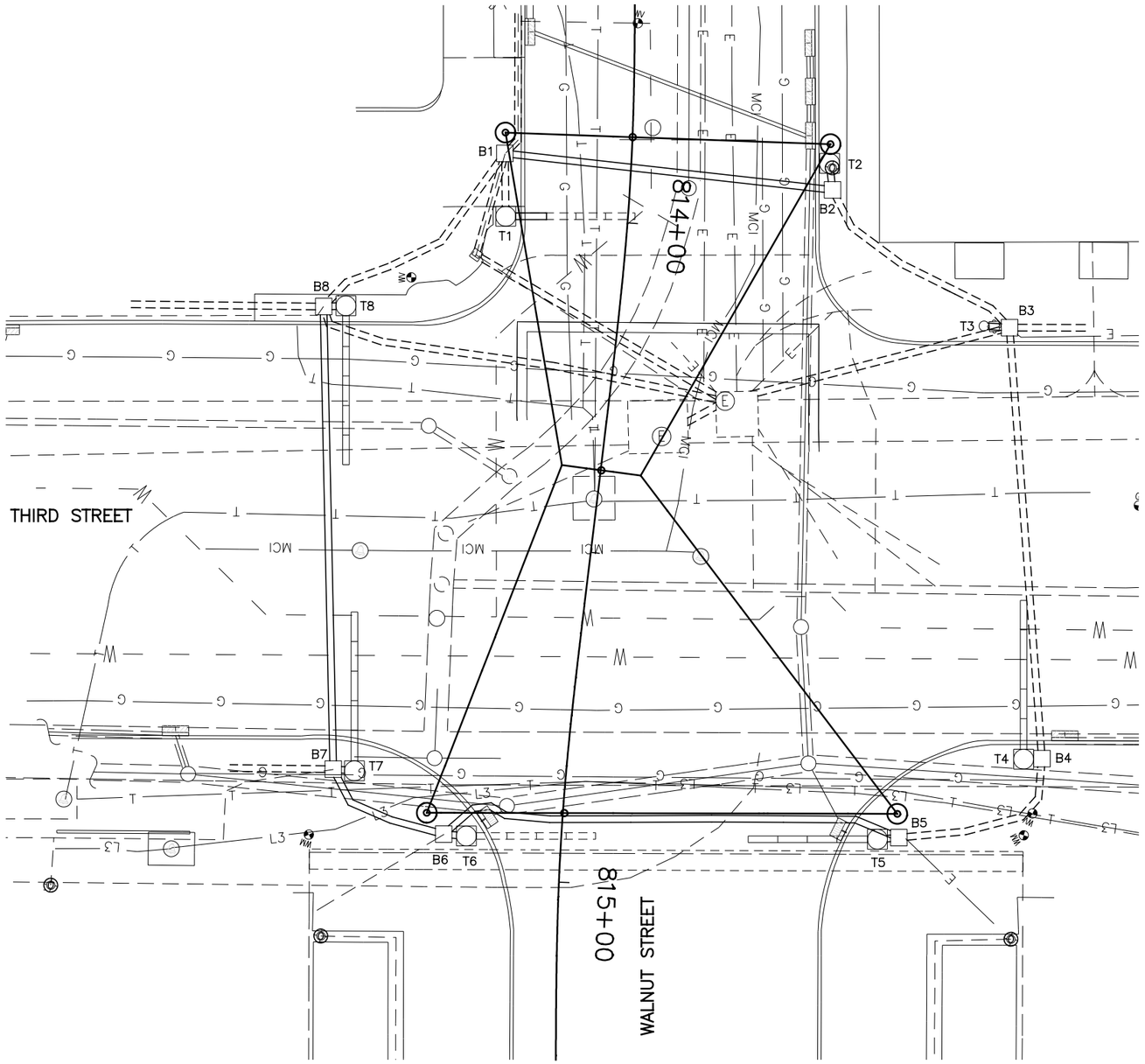

SIGNAL PHASING

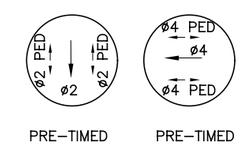

THIS IS THE GENERAL SEQUENCING FOR THIS TRAFFIC SIGNAL. REFER TO THE CITY OF CINCINNATI FOR FINAL SEQUENCING, LABELING AND TIMINGS.

CAUTION UNDERGROUND UTILITIES
2 WORKING DAYS
BEFORE YOU DIG
CALL 1–800–362–2764
OHIO UTILITY PROTECTION SERVICE
CALL NON–SERVICE FACILITY
OWNERS DIRECT

GRAPHIC SCALE
10 0 10 20 40
(IN FEET)
1 inch = 10 ft. Full Size
1 inch = 20 ft. Half Size

DEPARTMENT OF TRANSPORTATION & ENGINEERING
CITY OF CINCINNATI OHIO

CONTRACT DRAWING

PRINTS NOT BEARING THIS STAMP WERE MADE PRIOR TO ADVERTISING FOR BID, AND ARE TO BE CONSIDERED OBSOLETE FOR CONTRACT PURPOSES.

Department of Transportation and Engineering

City of Cincinnati
City Hall
801 Plum Street
Cincinnati, Ohio 45202

CINCINNATI STREETCAR
CENTRAL BUSINESS DISTRICT
UNDERGROUND UTILITIES & SIGNAL PLAN DETAILS
WALNUT STREET AND THIRD STREET

Revisions
No.

Drawn by JRL	Date 7/02/12
Designed by JRL	Date 7/02/12
Checked by JTB	Date 7/02/12
Reviewed by JTB	Date 7/12/12

Consultant

PB HDR

File Number

ACC No. 23126

G-TC-1013 B

DOTE_Mono_PDF_Half.pltcfg
W:\29014\Streetcar\CAD\Traffic_Control\Signals\1013_Third&Walnut_T-04\S_G-TC-1013 B.dgn
7:20:24 AM
7/11/2012

LEGEND

- MOL, MOT, MOLT SIGNAL POLE
- STEEL PEDESTRIAN POST
- TRAFFIC SIGNAL CONDUIT
- YELLOW FLASHER SIGNAL HEAD
- TRAFFIC SIGNAL HEAD
- PEDESTRIAN SIGNAL HEAD
- ILLUMINATED SIGN
- PULLBOX
- CONTROLLER

SIGNAL INDICATIONS

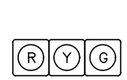

1, 2, 4, 5

SIGNAL HEAD DETAIL
12" (LED) LENSES

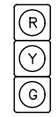

3

SIGNAL HEAD DETAIL
12" (LED) LENSES

P1, P2, P3, P4
P5, P6, P7, P8

TYPE D2 PEDESTRIAN (LED)
(COUNTDOWN) SIGNAL HEAD

TYPICAL POLE ORIENTATION

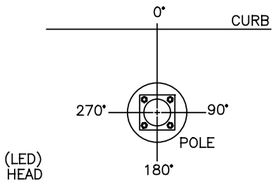

MATERIAL SCHEDULE

NO.	VEHICULAR SIGNAL HEADS 1	2	3	4	5	6	7	8
12 INCH	R	R	R	R	R			
	Y	Y	Y	Y	Y			
	G	G	G	G	G			

TYPE D2 PEDESTRIAN (LED) (COUNTDOWN) SIGNAL HEAD

NOTE:
USE LENS W/ SYMBOL LEGENDS
PORTLAND ORANGE: HAND (DONT WALK)
LUNAR WHITE: WALKING MAN (WALK)

POLE NO.	POLE DATA: POLE TYPE	TRAFFIC BOOM (# OF BAYS)	FOUNDATION TYPE	PEDESTRIAN SIGNALS P1	P2	P3	P4	P5	P6	P7	P8	ATTACHMENT HEIGHT (FEET) TO THE BOTTOM OF BOOM	TRAFFIC BOOM (DEG)	STREET LIGHT BRACKET ARM (DEG)	HANDHOLE (DEG)	CONTROLLER (DEG)
				D	D	D	D	D	D	D	D					
				W	W	W	W	W	W	W	W					
				ANGLE OF ORIENTATION (DEGREES)												
T1	MOT	1	EXIST.	180								17	0		EX.	
T2	MOL	–	EXIST.		180									EX.	EX.	
T3	M845	–	EXIST.			180									EX.	
T4	MOLT	5	EXIST.				180	270				EX.	EX.	EX.	EX.	
T5	MOT	4	EXIST.									EX.	EX.		EX.	
T6	MOLT	0	EXIST.						180					EX.	EX.	
T7	MOT	5	EXIST.							180		EX.	EX.		EX.	
T8	MOLT	5	EXIST.								180	EX.	EX.	EX.	EX.	180

CABLE SCHEDULE

CABLE#	CONNECTING DEVICE	TYPE	CABLE ROUTING	LIN. FT
1	TRAFFIC SIGNAL TS1, TS2	7C#14	TS2–TS1–T5–B5–B6–B7–B8–T8–C	229
2	TRAFFIC SIGNAL TS3	7C#14	TS3–T6–B6–B7–B8–T8–C	140
3	TRAFFIC SIGNAL TS4	EXIST.	EXIST.	EXIST.
4	TRAFFIC SIGNAL TS5	EXIST.	EXIST.	EXIST.
5	PED. SIGNAL P1	EXIST.	EXIST.	EXIST.
6	PED. SIGNAL P2	EXIST.	EXIST.	EXIST.
7	PED. SIGNAL P3	EXIST.	EXIST.	EXIST.
8	PED. SIGNAL P4	EXIST.	EXIST.	EXIST.
9	PED. SIGNAL P5	7C#14	P5–T4–B4–B5–B6–B7–B8–T8–C	245
10	PED. SIGNAL P6	EXIST.	EXIST.	EXIST.
11	PED. SIGNAL P7	EXIST.	EXIST.	EXIST.
12	PED. SIGNAL P8	EXIST.	EXIST.	EXIST.
13	ILLUM. SIGN S2, S9	EXIST.	EXIST.	EXIST.
14	ILLUM. SIGN S4, S5	EXIST.	EXIST.	EXIST.
15	ILLUM. SIGN S7, S8	2C#12	S8–S7–T5–B5–B6–B7–B8–T8–C	224
16	ILLUM. SIGN S11, S12	EXIST.	EXIST.	EXIST.
17	ILLUM. SIGN S13, S14	EXIST.	EXIST.	EXIST.
18	POWER CABLE. AC POSITIVE, BLACK	EXIST.	EXIST.	EXIST.
19	POWER CABLE. AC NEGATIVE, WHITE	EXIST.	EXIST.	EXIST.

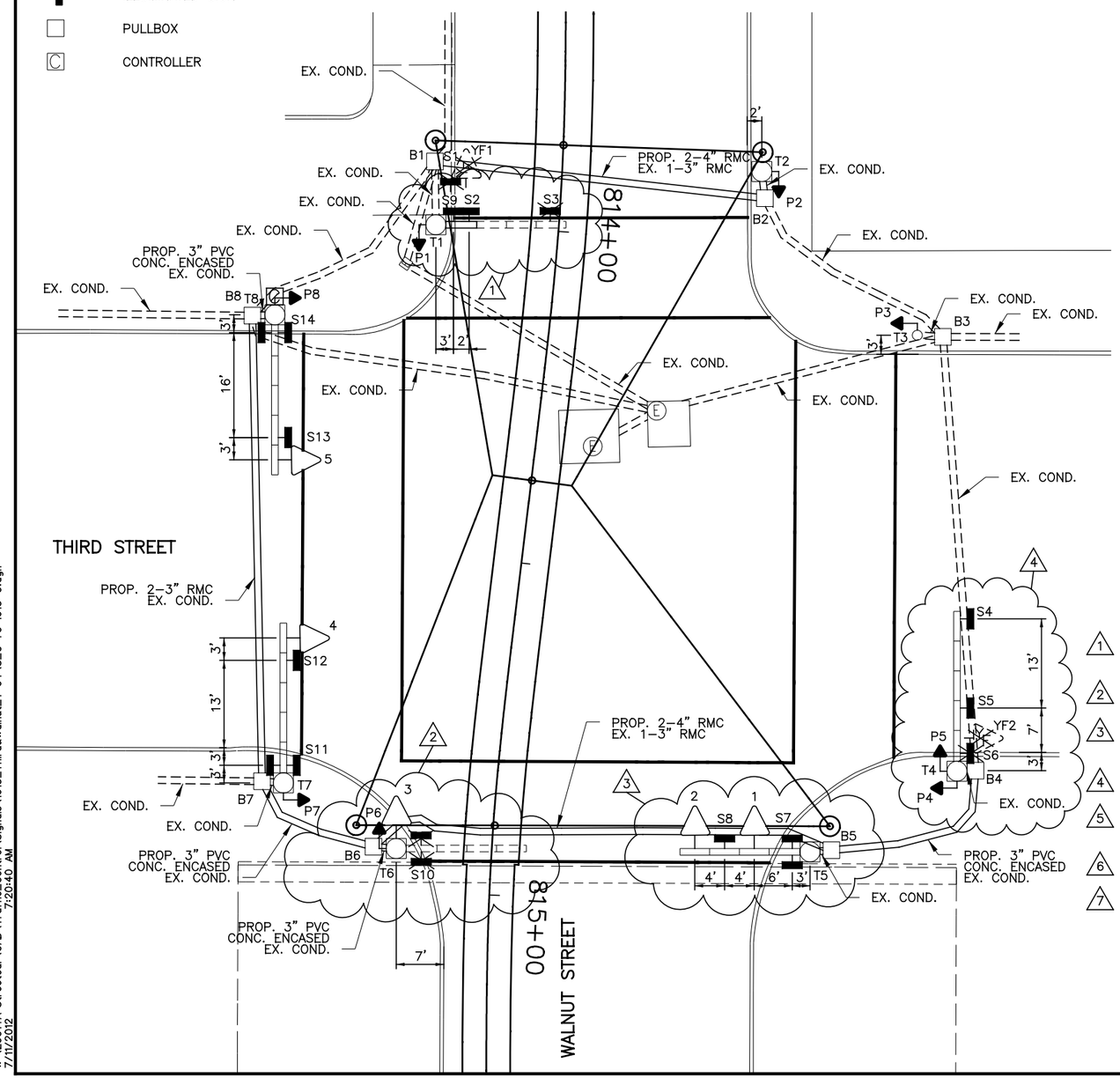

NOTES:

1. REMOVE 4 SIGNAL BAY BOOM FROM POLE T1 AND REPLACE IT WITH A NEW 1 SIGNAL BAY BOOM. REMOVE ILLUMINATED SIGNS S1 AND S3, AND YELLOW FLASHER YF1 FROM SIGNAL BAY BOOM ON POLE T1. REPLACE ILLUMINATED SIGNS S9 AND S2 TO FIRST BAY OF NEW SIGNAL BAY BOOM ON POLE T1.
2. REMOVE 4 SIGNAL BAY BOOM FROM POLE T6. PLACE NEW 12" LED SIGNAL HEAD 3 ON POLE T6. REMOVE ILLUMINATED SIGN S10.
3. PLACE 12" LED SIGNAL HEAD 2 IN THE FOURTH BAY OF THE SIGNAL BAY BOOM. PLACE ILLUMINATED SIGN S8 IN THE THIRD BAY, PLACE 12" LED SIGNAL HEAD 1 IN THE SECOND BAY AND REPLACE ILLUMINATED SIGN S7 IN THE FIRST BAY OF THE SIGNAL BAY BOOM.
4. REMOVE SIGN S6 AND YELLOW FLASHER YF2 FROM SIGNAL BAY BOOM ON POLE T4. PLACE NEW TYPE D2 LED COUNTDOWN PEDESTRIAN SIGNAL ON POLE T4.
5. REPLACE ALL SIGNAL HEADS WITH NEW 12" LED SIGNAL HEADS AND REPLACE ALL PEDESTRIAN SIGNALS WITH TYPE D2 LED COUNTDOWN PEDESTRIAN SIGNALS. REPLACE ALL ILLUMINATED AND REFLECTORIZED SIGNS. REPLACE CONTROLLER ON POLE T8.
6. INSTALL 2–4" RMC ALONG WITH EXISTING 1–3" RMC UNDER TRACK SLAB AS SHOWN ON PLAN.
7. A DISTANCE OF SIX FEET BEHIND THE CURB AND 15 FEET ON EITHER SIDE OF PROPOSED OCS POLES AND SIGNAL POLES (INCLUDING ANY DISTURBANCE TO THE EXISTING CURB) HAS BEEN QUANTIFIED FOR BIDDING PURPOSES FOR REMOVAL AND REPLACEMENT OF SIDEWALK. THE CITY'S ENGINEER WILL DETERMINE ACTUAL PAY LIMITS FOR THIS WORK. NO ADDITIONAL INCREASE TO THE UNIT COST WILL BE ALLOWED FOR THIS WORK IF THE QUANTITIES ARE MORE OR LESS THAN THE AMOUNT QUANTIFIED FOR BIDDING PURPOSES.

CAUTION UNDERGROUND UTILITIES
2 WORKING DAYS
BEFORE YOU DIG
CALL 1–800–362–2764
OHIO UTILITY PROTECTION SERVICE
CALL NON–SERVICE FACILITY
OWNERS DIRECT

GRAPHIC SCALE
10 0 10 20 40
(IN FEET)
1 inch = 10 ft. Full Size
1 inch = 20 ft. Half Size

DOTE_Mono_PDF_Half.pltcfg
W:\29014A-Streetcar\CAD\Traffic_Control\Signals\1013_Third&Walnut_T-04\S_G-TC-1013 C.dgn
7:20:40 AM
7/11/2012

CONTRACT DRAWING
PRINTS NOT BEARING THIS STAMP WERE MADE PRIOR TO ADVERTISING FOR BIDS AND ARE TO BE CONSIDERED OBSOLETE FOR CONTRACT PURPOSES.

Department of Transportation and Engineering
City of Cincinnati
City Hall
801 Plum Street
Cincinnati, Ohio 45202

CINCINNATI STREETCAR
CENTRAL BUSINESS DISTRICT
PROPOSED TRAFFIC SIGNAL PLAN
WALNUT STREET AND THIRD STREET

Revisions
No.

	Date
Drawn by JRL	7/02/12
Designed by JRL	7/02/12
Checked by JTB	7/02/12
Reviewed by JTB	7/12/12

Consultant
PB HDR

File Number
ACC No. 23126

G-TC-1013 C

SIGN DETAILS

S1, S6
ILLUM.
30" X 24"
CITY #114

S2
ILLUM.
24" X 30"
CITY #79A

S3
ILLUM.
24" X 30"
CITY #79AB

S4
ILLUM.
24" X 30"
CITY #79BC

S5
ILLUM.
24" X 30"
CITY #79C

S7, S10, S11, S14
ILLUM.
24" X 30"
DOUBLE FACE

S8
ILLUM.
24" X 30"
CITY #92A

S9, S12
ILLUM.
24" X 30"
CITY #117

S13
ILLUM.
24" X 30"
CITY #92C

CAUTION UNDERGROUND UTILITIES
2 WORKING DAYS
BEFORE YOU DIG
CALL 1-800-362-2764
OHIO UTILITY PROTECTION SERVICE
CALL NON-SERVICE FACILITY
OWNERS DIRECT

GRAPHIC SCALE

10 0 10 20 40

(IN FEET)
1 inch = 10 ft. Full Size
1 inch = 20 ft. Half Size

CINCINNATI STREETCAR
CENTRAL BUSINESS DISTRICT

PROPOSED TRAFFIC SIGNAL PLAN
WALNUT STREET AND THIRD STREET

Department of Transportation and Engineering

City of Cincinnati
City Hall
801 Plum Street
Cincinnati, Ohio 45202

CONTRACT DRAWING

PRINTS NOT BEARING THIS STAMP WERE MADE PRIOR TO ADVERTISING FOR BIDS AND ARE TO BE CONSIDERED OBSOLETE FOR CONTRACT PURPOSES.

Revisions
No.

Date	7/02/12
Drawn by	JRL
Date	7/02/12
Designed by	JRL
Date	7/02/12
Checked by	JTB
Date	7/12/12
Reviewed by	JTB

Consultant

PB HDR

File Number

ACC No.
23126

G-TC-1013 D

DOTE_Mono_PDF_Half.pltcfg
W:\29014A-Streetcar\CAD\Traffic_Control\Signals\1013_Third&Walnut_T-04\S_G-TC-1013 D.dgn
7:20:46 AM
7/11/2012

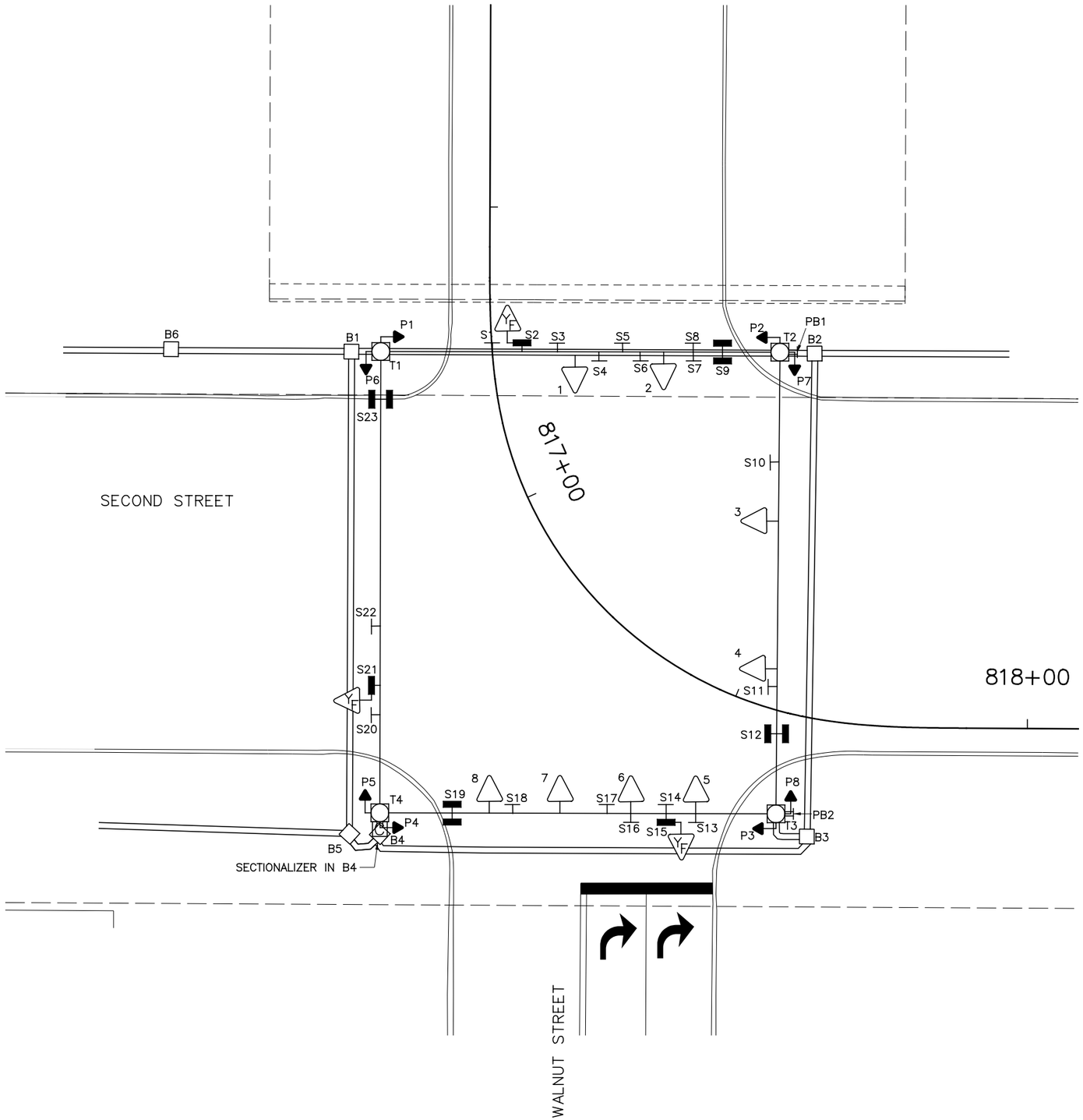

EQUIPMENT LIST

1, 2	TRAF. SIG. HD., 3 SECT., VERT., 12" R ~~Y~~ ~~G~~
3, 4, 7, 8	TRAF. SIG. HD., 3 SECT., VERT., 12" RYG
5, 6	TRAF. SIG. HD., 3 SECT., VERT., 12" R ~~Y~~ ~~G~~
P1–P6	PED. SIG., 1 SECT., 16" INCANDESCENT
S1, S22	REFL. SIGN, 24" X 30", "↑ ONLY", #79B
S2, S15, S21	ILLUM. SIGN, 24" X 30", "WATCH FOR EMERGENCY VEHICLE WHEN FLASHING", #114 W/ 8" Y
S3	REFL. SIGN, 24" X 30", "↰", #79BC
S4	REFL. SIGN, 24" X 30", "ONE WAY →", #92A
S5, S8	REFL. SIGN, 24" X 30", "↰ ONLY", #79C
S6	REFL. SIGN, 36" X 36", "DO NOT ENTER", #52L
S7, S11	REFL. SIGN, 24" X 24", "NO TURN ON RED", #117
S9	ILLUM. SIGN, 24" X 30", "SECOND STREET EAST", "199–100"
S10	ILLUM. SIGN, 24" X 24", "⊗", #71
S12	ILLUM. SIGN, 24" X 30", "WALNUT STREET", "199–100"
S13, S16	REFL. SIGN, 24" X 30", "↱ ONLY", #79A
S14	REFL. SIGN, 24" X 30", "LEFT TURN SIGNAL", #77C
S17	REFL. SIGN, 24" X 30", "LEFT ON ARROW ONLY", #78C
S18	REFL. SIGN, 24" X 30", "ONE WAY ←", #92C
S19	ILLUM. SIGN, 24" X 30", "SECOND STREET EAST", "99–0"
S20	REFL. SIGN, 24" X 30", "↑↰", #79BA
S23	ILLUM. SIGN, 24" X 30", "WALNUT STREET.", "299–200"
B1–B5	PULLBOX, 24" X 24", TYPE "H"
T1–T4	MOLTX POLE

LEGEND

- MOL, MOT, MOLT SIGNAL POLE
- TRAFFIC SIGNAL CONDUIT
- YELLOW FLASHER SIGNAL HEAD
- TRAFFIC SIGNAL HEAD
- PEDESTRIAN SIGNAL HEAD
- REFLECTORIZED SIGN
- ILLUMINATED SIGN
- PULLBOX
- CONTROLLER

GRAPHIC SCALE

10 0 10 20 40

(IN FEET)
1 inch = 10 ft. Full Size
1 inch = 20 ft. Half Size

CAUTION UNDERGROUND UTILITIES
2 WORKING DAYS
BEFORE YOU DIG
CALL 1–800–362–2764
OHIO UTILITY PROTECTION SERVICE
CALL NON–SERVICE FACILITY
OWNERS DIRECT

DEPARTMENT OF TRANSPORTATION & ENGINEERING CITY OF CINCINNATI OHIO

CONTRACT DRAWING

PRINTS NOT BEARING THIS STAMP WERE MADE PRIOR TO ADVERTISING FOR BID, AND ARE TO BE CONSIDERED OBSOLETE FOR CONTRACT PURPOSES.

Department of Transportation and Engineering

City of Cincinnati
City Hall
801 Plum Street
Cincinnati, Ohio 45202

CINCINNATI STREETCAR
CENTRAL BUSINESS DISTRICT

EXISTING TRAFFIC SIGNAL PLAN
WALNUT STREET AND SECOND STREET

Revisions

No.		

Drawn by JRL	Date 7/02/12	
Designed by JRL	Date 7/02/12	
Checked by JTB	Date 7/02/12	
Reviewed by JTB	Date 7/12/12	

Consultant

PB HDR

File Number

ACC No. 23126

G-TC-1014 A

DOTE_Mono_PDF_Half.pltcfg
W:\29014A-Streetcar\CAD\Traffic_Control\Signals\1014_Second&Walnut_S-04\S_G-TC-1014 A.dgn
7/11/2012 7:23:38 AM

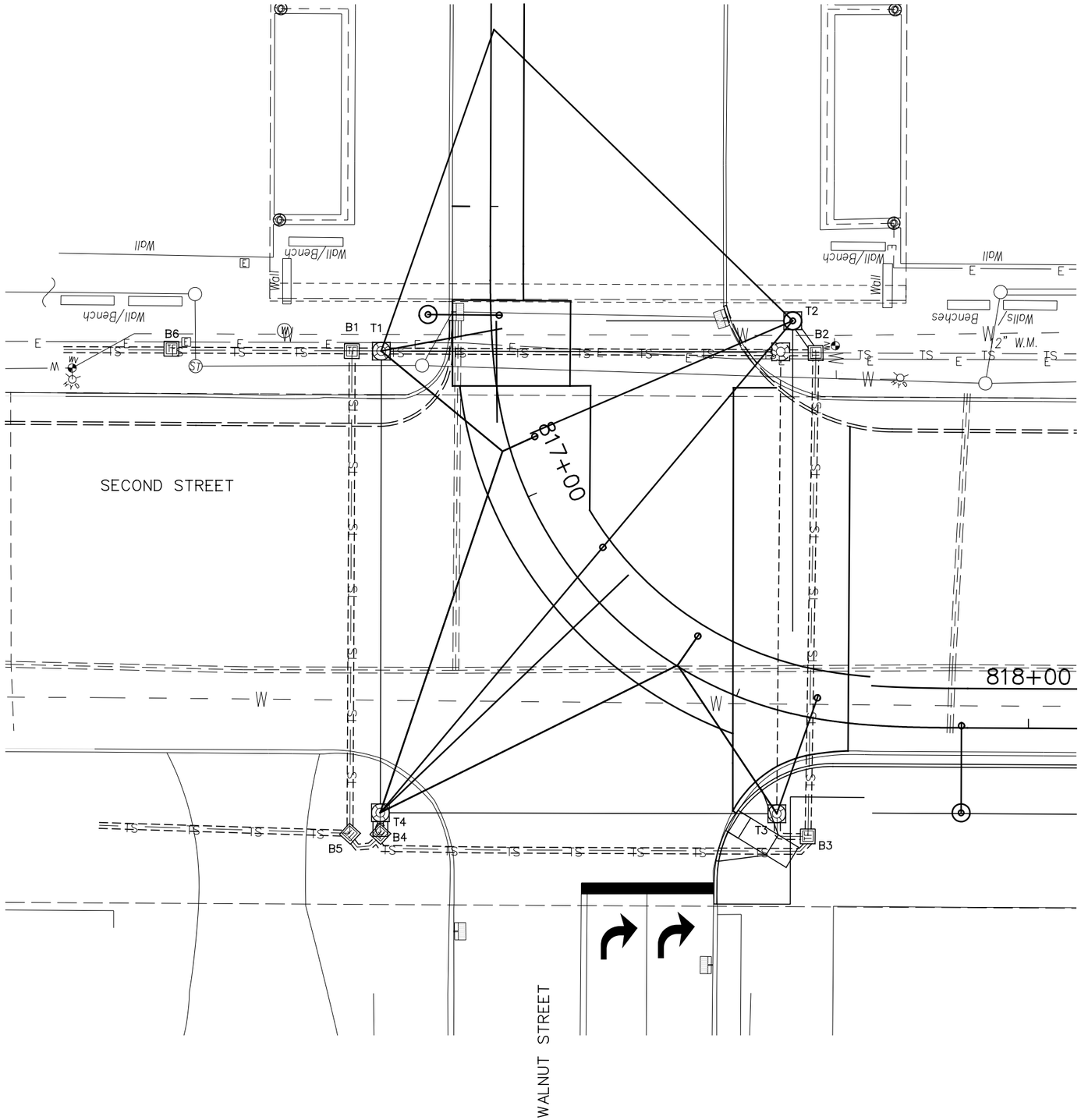

SIGNAL PHASING

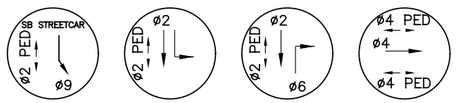

ACTUATED | PRE–TIMED | PRE–TIMED | CNA

THIS IS THE GENERAL SEQUENCING FOR THIS TRAFFIC SIGNAL. REFER TO THE CITY OF CINCINNATI FOR FINAL SEQUENCING, LABELING AND TIMINGS.

CAUTION UNDERGROUND UTILITIES
2 WORKING DAYS
BEFORE YOU DIG
CALL 1–800–362–2764
OHIO UTILITY PROTECTION SERVICE
CALL NON–SERVICE FACILITY
OWNERS DIRECT

GRAPHIC SCALE

10 0 10 20 40

(IN FEET)
1 inch = 10 ft. Full Size
1 inch = 20 ft. Half Size

DOTE_Mono_PDF_Half.pltcfg
W:\29014A-Streetcar\CAD\Traffic_Control\Signals\1014_Second&Walnut_S-04\S_G-TC-1014 B.dgn
7:23:51 AM
7/11/2012

DEPARTMENT OF TRANSPORTATION & ENGINEERING
CITY OF CINCINNATI
OHIO

CONTRACT DRAWING

PRINTS NOT BEARING THIS STAMP WERE MADE PRIOR TO ADVERTISING FOR BIDS AND ARE TO BE CONSIDERED OBSOLETE FOR CONTRACT PURPOSES.

Department of Transportation and Engineering

City of Cincinnati
City Hall
801 Plum Street
Cincinnati, Ohio 45202

CINCINNATI STREETCAR
CENTRAL BUSINESS DISTRICT

UNDERGROUND UTILITIES & SIGNAL PLAN DETAILS
WALNUT STREET AND SECOND STREET

Revisions
No.

Drawn by JRL	Date 7/02/12
Designed by JRL	Date 7/02/12
Checked by JTB	Date 7/02/12
Reviewed by JTB	Date 7/12/12

Consultant

PB HDR

File Number

ACC No. 23126

G-TC-1014 B

LEGEND

- STEEL POLE
- MOL, MOT, MOLT SIGNAL POLE
- TRAFFIC SIGNAL CONDUIT
- YELLOW FLASHER SIGNAL HEAD
- TRAFFIC SIGNAL HEAD
- TRANSIT SIGNAL HEAD
- PEDESTRIAN SIGNAL HEAD
- PEDESTRIAN PUSHBUTTON
- REFLECTORIZED SIGN
- ILLUMINATED SIGN
- PULLBOX
- CONTROLLER
- VIDEO DETECTION CAMERA
- VIDEO DETECTION ZONE

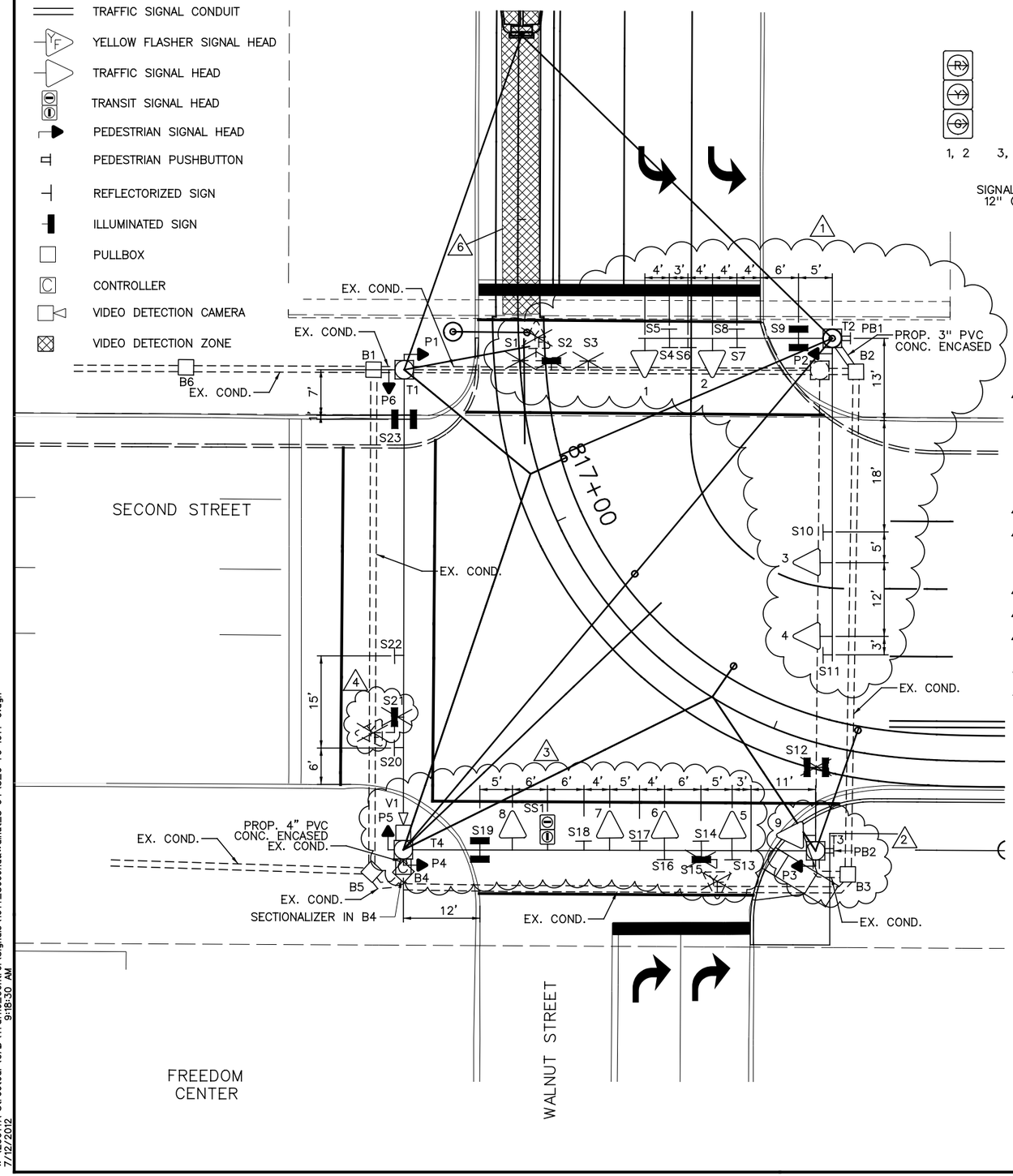

SIGNAL INDICATIONS

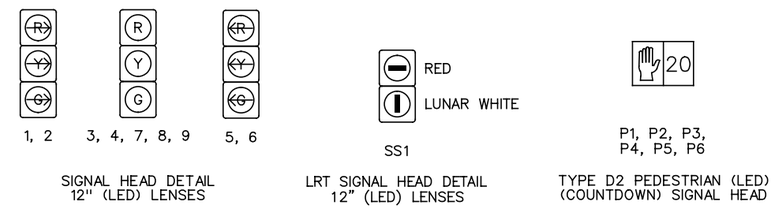

TYPICAL POLE ORIENTATION

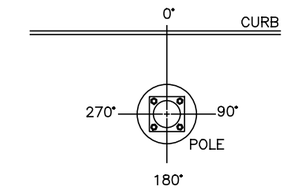

NOTES:

1. REMOVE MESSENGER WIRE FROM POLE T2 TO POLE T1 AND FROM POLE T2 TO POLE T3. REMOVE ILLUMINATED SIGNS S2 AND S12 AND YELLOW FLASHER SIGNAL HEAD. REPLACE THE EXISTING MOLTX POLE WITH A NEW SPECIAL POLE DESIGN POLE T2 WITH A 51 FOOT MAST ARM AND A 30 FOOT MAST ARM AT STA. 816+72.34, 50.99' LT. THE CONTRACTOR WILL WORK WITH THE POLE MANUFACTURER TO PROVIDE A SPECIAL POLE DESIGN. THE DRAWINGS WILL BE REVIEWED AND APPROVED BY THE CITY BEFORE ORDERING POLES. REMOVE THE EXISTING POLE FOUNDATION TO A DEPTH OF 1'-0" BELOW THE APPROACH SLAB. INSTALL SIGNAL HEADS 1 AND 2 AS WELL AS NEW ILLUMINATED SIGN S9 AND NEW REFLECTORIZED SIGNS S4, S5, S6, S7 AND S8 ON 30 FOOT MAST ARM. INSTALL SIGNAL HEADS 3 AND 4 AS WELL AS NEW REFLECTORIZED SIGNS S10 AND S11 ON 51 FOOT MAST ARM. REPLACE SIGNAL HEADS WITH 12" LED SIGNAL HEADS. REPLACE PEDESTRIAN SIGNAL HEAD P2 WITH TYPE D2 LED COUNTDOWN PEDESTRIAN SIGNAL HEAD ON POLE T2.
2. INSTALL NEW 12" LED SIGNAL HEAD 9 ON POLE T3.
3. INSTALL TRANSIT SIGNAL SS1 ON MESSENGER WIRE BETWEEN POLES T3 AND T4. INSTALL VIDEO DETECTION CAMERA ON POLE T4. REMOVE ILLUMINATED SIGN S15 ALONG WITH YELLOW FLASHER SIGNAL HEAD. REPLACE SIGNAL HEADS 5, 6, 7, AND 8 WITH 12" LED SIGNAL HEADS. REPLACE ILLUMINATED SIGN S19 ALONG WITH REFLECTORIZED SIGNS S13, S14, S15, S16, S17 AND S18. REPLACE CONTROLLER ON POLE T4.
4. REMOVE ILLUMINATED SIGNS S21 ALONG WITH YELLOW FLASHER SIGNAL HEAD.
5. 6' X 60' STREETCAR DETECTION ZONE. SEE TRAFFIC SIGNAL AND STREET LIGHTING GENERAL NOTES FOR ADDITIONAL DETAILS.
6. REPLACE ALL SIGNAL HEADS WITH NEW 12" LED SIGNAL HEADS AND REPLACE ALL PEDESTRIAN SIGNALS WITH TYPE D2 LED COUNTDOWN PEDESTRIAN SIGNALS. REPLACE ALL ILLUMINATED AND REFLECTORIZED SIGNS.
7. INSTALL NEW SIGNAL CABLES IN EXISTING CONDUIT AT THIS INTERSECTION.
8. A DISTANCE OF SIX FEET BEHIND THE CURB AND 15 FEET ON EITHER SIDE OF PROPOSED OCS POLES AND SIGNAL POLES (INCLUDING ANY DISTURBANCE TO THE EXISTING CURB) HAS BEEN QUANTIFIED FOR BIDDING PURPOSES FOR REMOVAL AND REPLACEMENT OF SIDEWALK. THE CITY'S ENGINEER WILL DETERMINE ACTUAL PAY LIMITS FOR THIS WORK. NO ADDITIONAL INCREASE TO THE UNIT COST WILL BE ALLOWED FOR THIS WORK IF THE QUANTITIES ARE MORE OR LESS THAN THE AMOUNT QUANTIFIED FOR BIDDING PURPOSES.

CAUTION UNDERGROUND UTILITIES
2 WORKING DAYS
BEFORE YOU DIG
CALL 1-800-362-2764
OHIO UTILITY PROTECTION SERVICE
CALL NON-SERVICE FACILITY
OWNERS DIRECT

GRAPHIC SCALE
10 0 10 20 40
(IN FEET)
1 inch = 10 ft. Full Size
1 inch = 20 ft. Half Size

DOTE_Mono_PDF_Half.pltcfg
W:\29014A-Streetcar\CAD\Traffic_Control\Signals\1014_Second&Walnut_S-04\S_G-TC-1014 C.dgn
7/12/2012 9:18:30 AM

CONTRACT DRAWING

PRINTS NOT BEARING THIS STAMP WERE MADE PRIOR TO ADVERTISING FOR BIDDING AND ARE TO BE CONSIDERED OBSOLETE FOR CONTRACT PURPOSES.

Department of Transportation and Engineering

City of Cincinnati
City Hall
801 Plum Street
Cincinnati, Ohio 45202

CINCINNATI STREETCAR
CENTRAL BUSINESS DISTRICT

PROPOSED TRAFFIC SIGNAL PLAN
WALNUT STREET AND SECOND STREET

Revisions
No.

	Date
Drawn by JRL	7/02/12
Designed by JRL	7/02/12
Checked by JTB	7/02/12
Reviewed by JTB	7/12/12

Consultant

PB HDR

File Number

ACC No. 23126

G-TC-1014 C

MATERIAL SCHEDULE

NO.	VEHICULAR SIGNAL HEADS 1	2	3	4	5	6	7	8	9
12 INCH	~~RD~~	~~RD~~	R	R	~~RD~~	~~RD~~	R	R	R
	~~YD~~	~~YD~~	Y	Y	~~YD~~	~~YD~~	Y	Y	Y
	~~GD~~	~~GD~~	G	G	~~GD~~	~~GD~~	G	G	G

TYPE D2 PEDESTRIAN (LED) (COUNTDOWN) SIGNAL HEAD

NOTE:
USE LENS W/ SYMBOL LEGENDS
PORTLAND ORANGE: HAND (DONT WALK)
LUNAR WHITE: WALKING MAN (WALK)

POLE NO.	POLE DATA: POLE TYPE	SUPPORT DESIGN NO.	TRAFFIC BOOM (# OF BAYS)	FOUNDATION TYPE	PEDESTRIAN SIGNALS ANGLE OF ORIENTATION (DEGREES) P1 (D W)	P2 (D W)	P3 (D W)	P4 (D W)	P5 (D W)	P6 (D W)			CABLE ENTRANCE ANGLE (DEG)	SPAN WIRE ATTACHMENT HEIGHT (FEET)	SPAN WIRE ATTACHMENT HEIGHT (FEET)	ATTACHMENT HEIGHT (FEET) TO THE BOTTOM OF THE BOOM	TRAFFIC BOOM (DEG)	STREET LIGHT BRACKET ARM (DEG)	HANDHOLE (DEG)	CONTROLLER (DEG)	VIDEO DETECTION CAMERA V1 (DEG)
T1	MOLTX			EXIST.	270					180			EX.	EX.				EX.	EX.		
T2	SPECIAL POLE DESIGN			SIGNAL FDN.		270										17	0/270	0	180		
T3	MOLTX			EXIST.			270						EX.	EX.				EX.	EX.	90	270
T4	MOLTX			EXIST.				90	180				EX.	EX.	EX.			EX.	EX.		

CABLE SCHEDULE

CABLE NO.	CONNECTING DEVICE	CABLE TYPE	CABLE ROUTING	LINEAR FEET
1	TRAFFIC SIGNAL TS1, TS2	7C#14	TS1-TS2-T2-B2-B3-B4-T4-C	265
2	TRAFFIC SIGNAL TS3, TS4	7C#14	TS4-TS3-T2-B2-B3-B4-T4-C	285
3	TRAFFIC SIGNAL TS5, TS6	EXIST.	EXIST.	EXIST.
4	TRAFFIC SIGNAL TS7, TS8	EXIST.	EXIST.	EXIST.
5	TRAFFIC SIGNAL TS9	7C#14	TS9-T3-B3-B4-T4-C	130
6	PED. SIGNAL P1	EXIST.	EXIST.	EXIST.
7	PED. SIGNAL P2	7C#14	P2-T2-B2-B3-B4-T4-C	225
8	PED. SIGNAL P3	EXIST.	EXIST.	EXIST.
9	PED. SIGNAL P4	EXIST.	EXIST.	EXIST.
10	PED. SIGNAL P5	EXIST.	EXIST.	EXIST.
11	PED. SIGNAL P6	EXIST.	EXIST.	EXIST.
12	PUSH BUTTON PB1	7C#14	PB1-T2-B2-B3-B4-T4-C	225
13	PUSH BUTTON PB2	EXIST.	EXIST.	EXIST.
14	ILLUM. SIGN S9	2C#12	S9-T2-B2-B3-B4-T4-C	235
15	ILLUM. SIGN S19	2C#12	S19-T4-C	45
16	ILLUM. SIGN S23	2C#12	S23-T4-C	105
17	POWER CABLE, AC POSITIVE, BLACK	EXIST.	EXIST.	EXIST.
18	POWER CABLE, AC NEGATIVE, WHITE	EXIST.	EXIST.	EXIST.
19	TRANSIT SIGNAL SS1	7C#14	SS1—T4—C	60
20	VIDEO DETECTOR V1	VIDEO CABLE	V1—T4—C	35

SIGN DETAIL

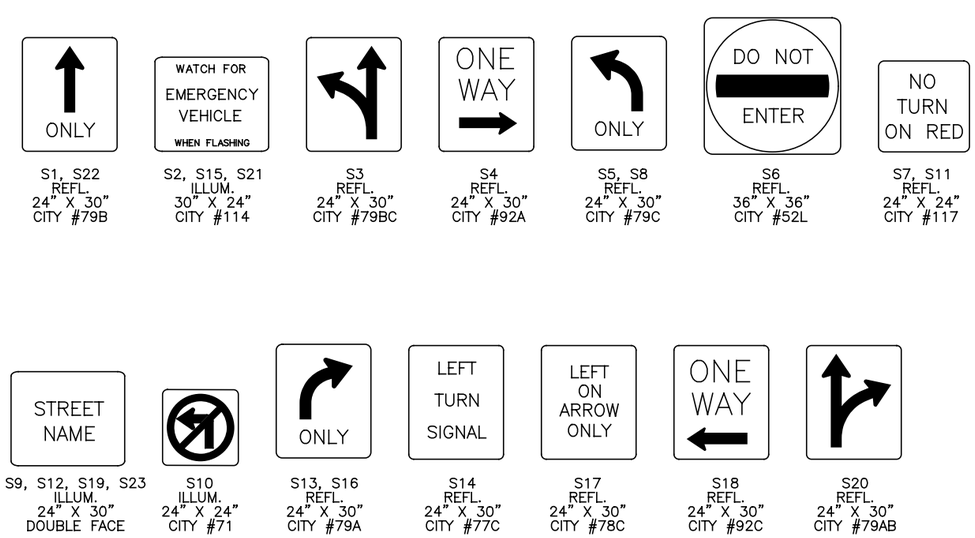

S1, S22 REFL. 24" X 30" CITY #79B
S2, S15, S21 ILLUM. 30" X 24" CITY #114
S3 REFL. 24" X 30" CITY #79BC
S4 REFL. 24" X 30" CITY #92A
S5, S8 REFL. 24" X 30" CITY #79C
S6 REFL. 36" X 36" CITY #52L
S7, S11 REFL. 24" X 24" CITY #117
S9, S12, S19, S23 ILLUM. 24" X 30" DOUBLE FACE
S10 ILLUM. 24" X 24" CITY #71
S13, S16 REFL. 24" X 30" CITY #79A
S14 REFL. 24" X 30" CITY #77C
S17 REFL. 24" X 30" CITY #78C
S18 REFL. 24" X 30" CITY #92C
S20 REFL. 24" X 30" CITY #79AB

CAUTION UNDERGROUND UTILITIES
2 WORKING DAYS
BEFORE YOU DIG
CALL 1-800-362-2764
OHIO UTILITY PROTECTION SERVICE
CALL NON-SERVICE FACILITY
OWNERS DIRECT

GRAPHIC SCALE
10 0 10 20 40
(IN FEET)
1 inch = 10 ft. Full Size
1 inch = 20 ft. Half Size

DOTE_Mono_PDF_Half.pltcfg
W:\29014A-Streetcar\CAD\Traffic_Control\Signals\1014_Second&Walnut_S-04\S_G-TC-1014 D.dgn
7/12/2012 9:18:43 AM

CONTRACT DRAWING
PRINTS NOT BEARING THIS STAMP WERE MADE PRIOR TO ADVERTISING FOR BIDS AND ARE TO BE CONSIDERED OBSOLETE FOR CONTRACT PURPOSES.

Department of Transportation and Engineering
City of Cincinnati
City Hall
801 Plum Street
Cincinnati, Ohio 45202

CINCINNATI STREETCAR
CENTRAL BUSINESS DISTRICT
PROPOSED TRAFFIC SIGNAL PLAN
WALNUT STREET AND SECOND STREET

Revisions
No.

Date 7/02/12	Date 7/02/12	Date 7/02/12	Date 7/12/12
Drawn by JRL	Designed by JRL	Checked by JTB	Reviewed by JTB

Consultant
PB HDR

File Number
ACC No. 23126

G-TC-1014 D

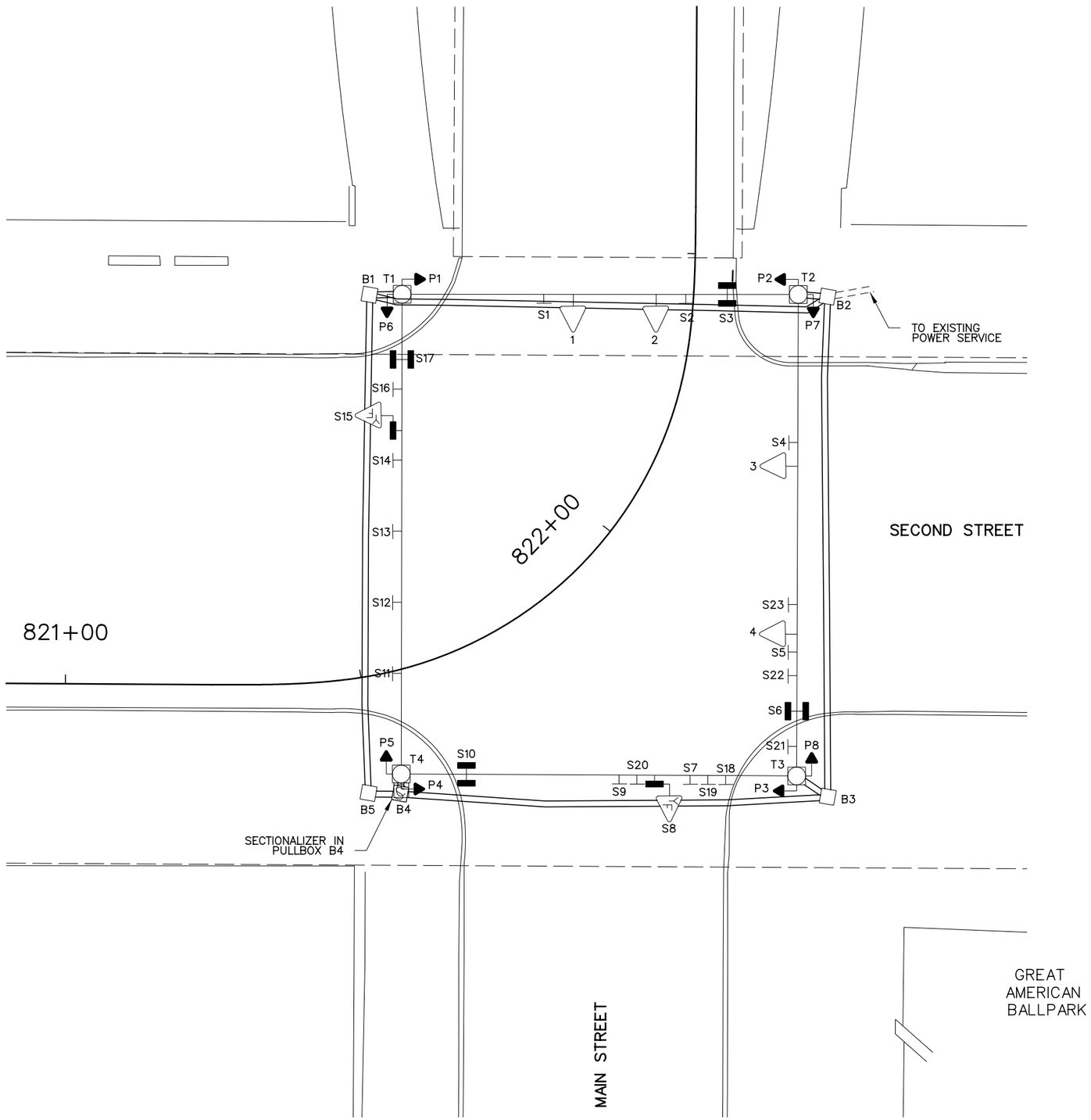

EQUIPMENT LIST	
1, 2, 3, 4	TRAF. SIG. HD., 3 SECT., VERT., 12" RYG
P1 - P8	PED. SIG., 1 SECT., 16" INCANDESCENT
S1	REFL. SIGN, 24" X 30", "ONE WAY →", #92A
S2, S4, S5	REFL. SIGN, 24" X 24", "NO TURN ON RED", #117
S3, S10	ILLUM. SIGN, 24" X 30", "SECOND ST. EAST, DF"
S6, S17	ILLUM. SIGN, 24" X 30", "MAIN ST., DF"
S7	REFL. SIGN, 24" X 30", "↱ ONLY", #79A
S8, S15	ILLUM. SIGN, 30" X 24", "WATCH FOR EMERGENCY VEHICLE WHEN FLASHING", #114 W/ 8" Y
S9, S11	REFL. SIGN, 24" X 30", "↑↱" #79AB
S12, S13	REFL. SIGN, 24" X 30", "↑ ONLY", #79B
S14	REFL. SIGN, 24" X 30", "↰↑", #79BC
S16	REFL. SIGN, 24" X 30", "↰ ONLY", #79C
S18	REFL. EXPWY. SIGN, "TO 50 EAST →"
S19	REFL. EXPWY. SIGN, "TO 471 SOUTH →"
S20	REFL. EXPWY. SIGN, "TO 71 NORTH →"
S21	REFL. SIGN, "→ FREEDOM CENTER PARKING ", SPECIAL
S22	REFL. SIGN, "TO MEHRING WAY/BALLPARK GARAGE ↓", SPECIAL
S23	REFL. SIGN, "TO PETE ROSE WAY/EAST GARAGE ↓", SPECIAL
B1 - B5	PULLBOX, 24" X 24", TYPE "H"
T1 - T4	MOLTX POLE

LEGEND

- MOL, MOT, MOLT SIGNAL POLE
- TRAFFIC SIGNAL CONDUIT
- YELLOW FLASHER SIGNAL HEAD
- TRAFFIC SIGNAL HEAD
- PEDESTRIAN SIGNAL HEAD
- REFLECTORIZED SIGN
- ILLUMINATED SIGN
- PULLBOX
- CONTROLLER
- SECTIONALIZER

CAUTION UNDERGROUND UTILITIES
2 WORKING DAYS
BEFORE YOU DIG
CALL 1-800-362-2764
OHIO UTILITY PROTECTION SERVICE
CALL NON-SERVICE FACILITY
OWNERS DIRECT

GRAPHIC SCALE
10 0 10 20 40
(IN FEET)
1 inch = 10 ft. Full Size
1 inch = 20 ft. Half Size

DEPARTMENT OF TRANSPORTATION & ENGINEERING CITY OF CINCINNATI OHIO

CONTRACT DRAWING

PRINTS NOT BEARING THIS STAMP WERE MADE PRIOR TO ADVERTISING FOR BID AND ARE TO BE CONSIDERED OBSOLETE FOR CONTRACT PURPOSES.

Department of Transportation and Engineering

City of Cincinnati
City Hall
801 Plum Street
Cincinnati, Ohio 45202

CINCINNATI STREETCAR
CENTRAL BUSINESS DISTRICT
EXISTING TRAFFIC SIGNAL PLAN
MAIN STREET AND SECOND STREET

Revisions
No.

Drawn by AMW	Date 7/02/12
Designed by AMW	Date 7/02/12
Checked by JTB	Date 7/02/12
Reviewed by JTB	Date 7/12/12

Consultant
PB HDR

File Number

ACC No. 23126

G-TC-1016 A

DOTE_Mono_PDF_Half.pltcfg
W:\29014A-Streetcar\CAD\Traffic_Control\Signals\1016_Main&Second_M-11\S_G-TC-1016 A.dgn
7:27:01 AM
7/11/2012

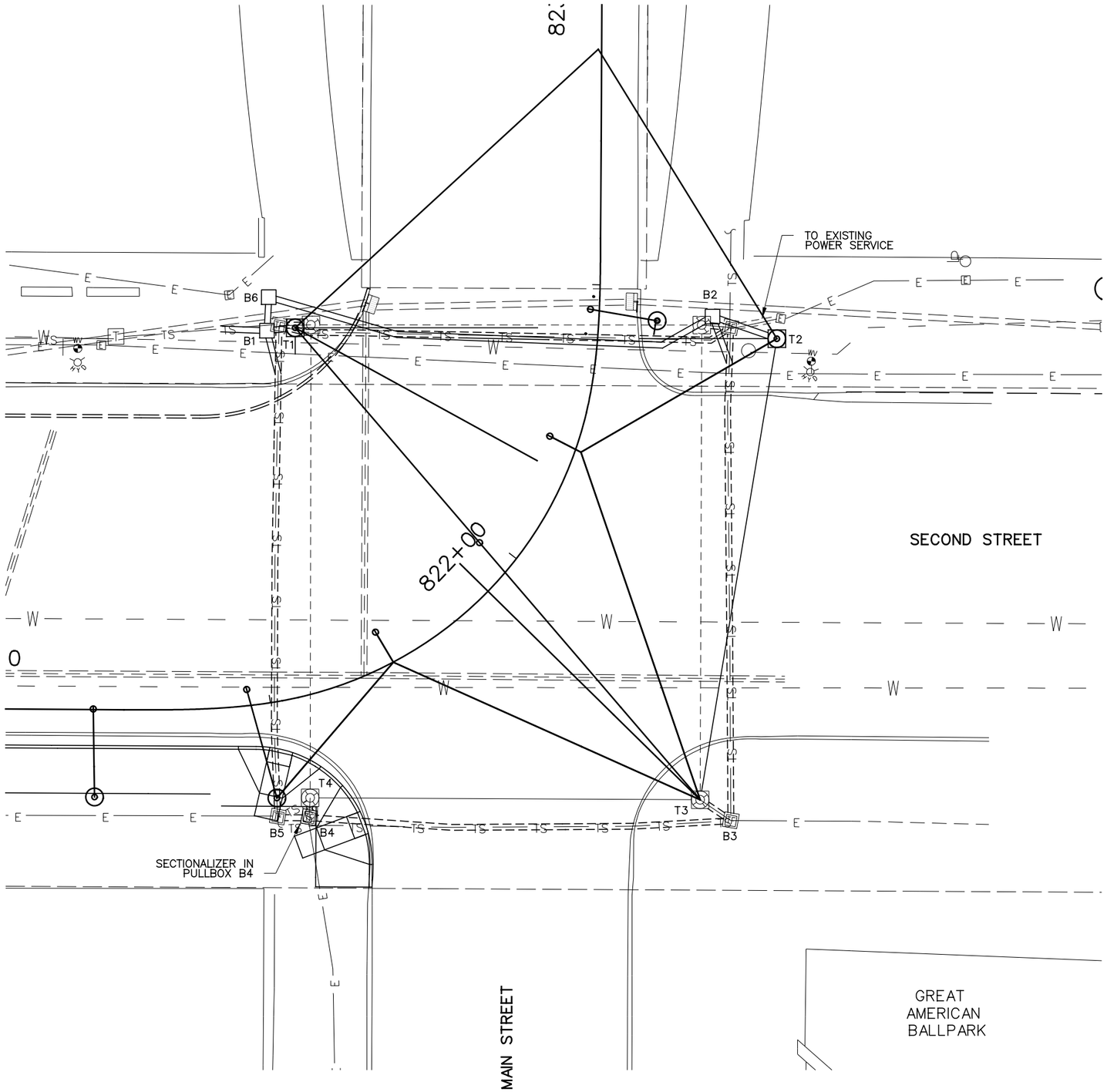

SIGNAL PHASING

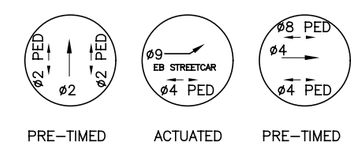

PRE–TIMED ACTUATED PRE–TIMED

THIS IS THE GENERAL SEQUENCING FOR THIS TRAFFIC SIGNAL. REFER TO THE CITY OF CINCINNATI FOR FINAL SEQUENCING, LABELING AND TIMINGS.

CAUTION UNDERGROUND UTILITIES
2 WORKING DAYS
BEFORE YOU DIG
CALL 1–800–362–2764
OHIO UTILITY PROTECTION SERVICE
CALL NON–SERVICE FACILITY
OWNERS DIRECT

GRAPHIC SCALE
10 0 10 20 40
(IN FEET)
1 inch = 10 ft. Full Size
1 inch = 20 ft. Half Size

CONTRACT DRAWING

PRINTS NOT BEARING THIS STAMP WERE MADE PRIOR TO ADVERTISING FOR BIDS AND ARE TO BE CONSIDERED OBSOLETE FOR CONTRACT PURPOSES.

Department of Transportation and Engineering

City of Cincinnati
City Hall
801 Plum Street
Cincinnati, Ohio 45202

CINCINNATI STREETCAR
CENTRAL BUSINESS DISTRICT
UNDERGROUND UTILITIES & SIGNAL PLAN DETAILS MAIN STREET AND SECOND STREET

Revisions
No.

Drawn by AMW	Date 7/02/12
Designed by AMW	Date 7/02/12
Checked by JTB	Date 7/02/12
Reviewed by JTB	Date 7/12/12

Consultant

PB HDR

File Number

ACC No. 23126

G-TC-1016 B

DOTE_Mono_PDF_Half.pltcfg
W:\29014A-Streetcar\CAD\Traffic_Control\Signals\1016_Main&Second_M-11\S_G-TC-1016 B.dgn
7:27:15 AM
7/11/2012

LEGEND

- STEEL POLE
- MOL, MOT, MOLT SIGNAL POLE
- TRAFFIC SIGNAL CONDUIT
- YELLOW FLASHER SIGNAL HEAD
- TRAFFIC SIGNAL HEAD
- TRANSIT SIGNAL HEAD
- PEDESTRIAN SIGNAL HEAD
- REFLECTORIZED SIGN
- ILLUMINATED SIGN
- PULLBOX
- CONTROLLER
- SECTIONALIZER
- VIDEO DETECTION CAMERA
- VIDEO DETECTION ZONE

TYPICAL POLE ORIENTATION

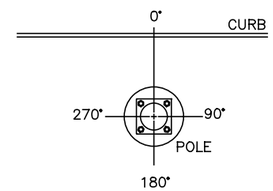

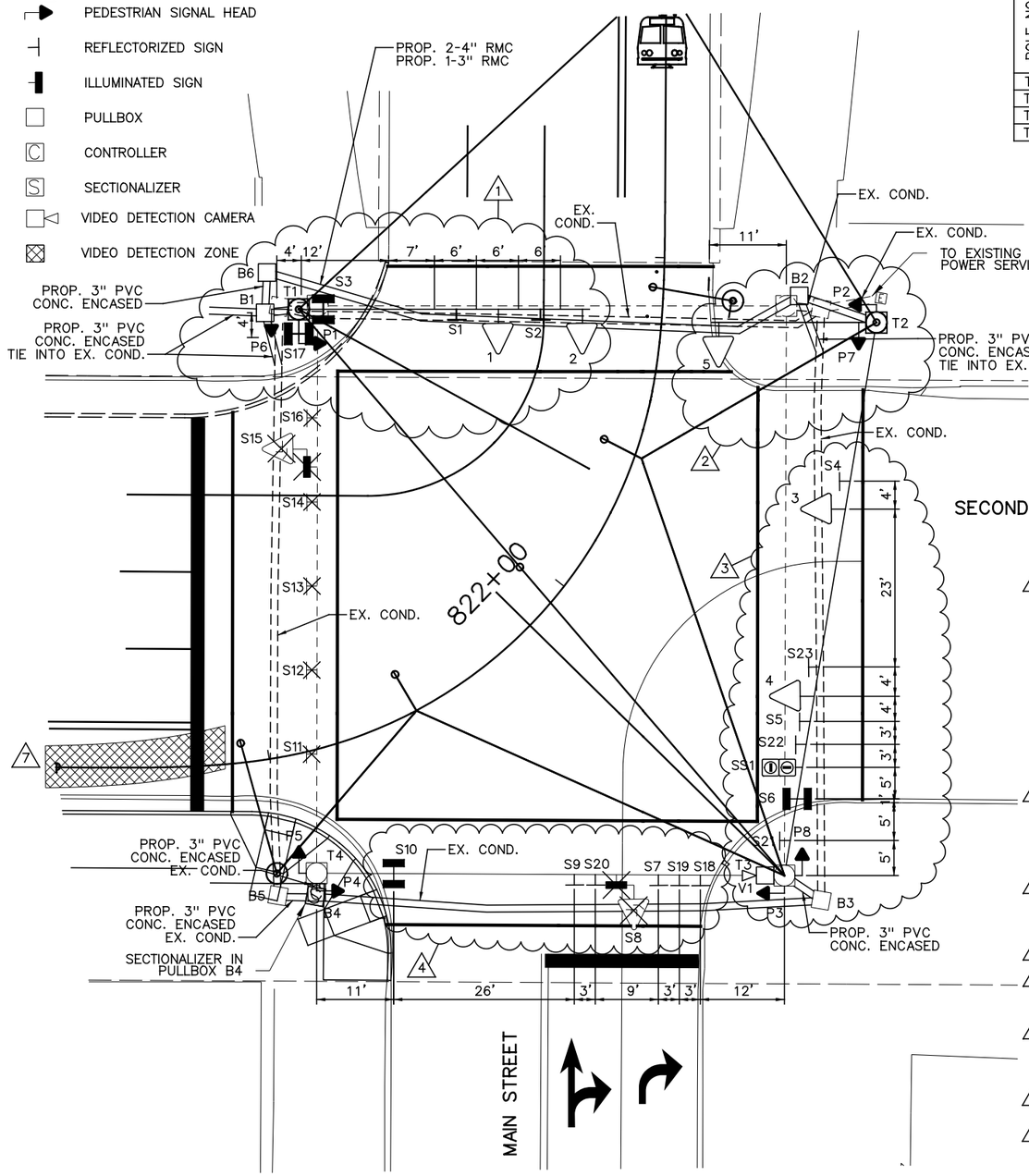

MATERIAL SCHEDULE

NO.	VEHICULAR SIGNAL HEADS 1	2	3	4	5					
12 INCH	R	R	R	R	R					
	Y	Y	Y	Y	Y					
	G	G	G	G	G					

TYPE D2 PEDESTRIAN (LED) (COUNTDOWN) SIGNAL HEAD

NOTE:
USE LENS W/ SYMBOL LEGENDS
PORTLAND ORANGE: HAND (DONT WALK)
LUNAR WHITE: WALKING MAN (WALK)

POLE NO.	POLE DATA: POLE TYPE	SUPPORT DESIGN NO.	FOUNDATION TYPE	PEDESTRIAN SIGNALS ANGLE OF ORIENTATION (DEGREES) P1	P2	P3	P4	P5	P6	P7	P8	CABLE ENTRANCE ANGLE (DEG)	CABLE ENTRANCE ANGLE (DEG)	SPAN WIRE ATTACHMENT HEIGHT (FEET)	ATTACHMENT HEIGHT (FEET) TO THE BOTTOM OF BOOM	TRAFFIC BOOM (DEG)	STREET LIGHT BRACKET ARM (DEG)	HANDHOLE (DEG)	CONTROLLER (DEG)	VIDEO DETECTION CAMERA V1 (DEG)
				D	D	D	D	D	D	D	D									
				W	W	W	W	W	W	W	W									
T1	SPECIAL POLE DESIGN		SIGNAL FDN.	90					180						17/17	0/90	0	180		
T2	SPECIAL POLE DESIGN		SIGNAL FDN.		90					180		9		24.5			90	180		
T3	MOLTX		EXIST.			270					180	EX.	EX.	EX.			EX.	EX.		
T4	MOLTX		EXIST.				90	180				EX.		EX.			EX.	EX.	90	0

CABLE SCHEDULE

CABLE NO.	CONNECTING DEVICE	CABLE TYPE	CABLE ROUTING	LINEAR FEET
1	TRAFFIC SIGNAL TS1, TS2	7C#14	TS2-TS1-T1-B1-B5-B4-T4-C	190
2	TRAFFIC SIGNAL TS3, TS4	7C#14	TS3-TS4-T3-B3-B4-T4-C	190
3	TRAFFIC SIGNAL TS5	7C#14	TS5-T2-B2-B3-B4-T4-C	240
4	PED. SIGNAL P1	7C#14	P1-T1-B1-B5-B4-T4-C	145
5	PED. SIGNAL P2	7C#14	P2-T2-B2-B3-B4-T4-C	210
6	PED. SIGNAL P3	EXIST.	EXIST.	EXIST.
7	PED. SIGNAL P4	EXIST.	EXIST.	EXIST.
8	PED. SIGNAL P5	EXIST.	EXIST.	EXIST.
9	PED. SIGNAL P6	7C#14	P6-T1-B1-B5-B4-T4-C	145
10	PED. SIGNAL P7	7C#14	P7-T2-B2-B3-B4-T4-C	210
11	PED. SIGNAL P8	EXIST.	EXIST.	EXIST.
12	ILLUM. SIGN S3	2C#12	S3-T1-B1-B5-B4-T4-C	155
13	ILLUM. SIGN S6	2C#12	S6-T3-B3-B4-T4-C	145
14	ILLUM. SIGN S10	EXIST.	EXIST.	EXIST.
15	ILLUM. SIGN S17	2C#12	S17-T1-B1-B5-B4-T4-C	155
16	POWER CABLE, AC POSITIVE, BLACK	EXIST.	EXIST.	EXIST.
17	POWER CABLE, AC NEGATIVE, WHITE	EXIST.	EXIST.	EXIST.
18	TRANSIT SIGNAL SS1	7C#14	SS1–T3–B3–B4–T4–C	150
19	VIDEO DETECTOR V1	VIDEO CABLE	V1–T3–B3–B4–T4–C	140

NOTES:

1. REMOVE MESSENGER WIRE FROM POLE T1 TO POLE T4 AND FROM POLE T1 TO POLE T2. REMOVE ILLUMINATED SIGN S15, YELLOW FLASHER SIGNAL HEAD, AND REFLECTORIZED SIGNS S11, S12, S13, S14 AND S16. GROUND MOUNT SECOND STREET LANE ASSIGNMENT SIGN. REPLACE THE EXISTING MOLTX POLE WITH A NEW SPECIAL POLE DESIGN POLE T1 WITH A 40 FOOT MAST ARM AND A 3 FOOT MAST ARM AT STA. 822+36.03, 51.71' LT. THE CONTRACTOR WILL WORK WITH THE POLE MANUFACTURER TO PROVIDE A SPECIAL POLE DESIGN. THE DRAWINGS WILL BE REVIEWED AND APPROVED BY THE CITY BEFORE ORDERING POLES. REMOVE AND STORE THE EXISTING PAVERS IN THE REQUIRED WORK AREA. SAW CUT FULL DEPTH A 4' X 4' AREA OF APPROACH SLAB CONCRETE AT THE LOCATION SHOWN. INSTALL THE REQUIRED POLE FOUNDATION AND ANCHOR BOLTS, WHILE PROVIDING 1" PREFORMED EXPANSION JOINT FILLER BETWEEN THE APPROACH SLAB AND THE SIGNAL POLE FOUNDATION. THE ANCHOR BOLTS SHALL EXTEND HIGH ENOUGH OUT OF THE CONCRETE TO ALLOW THE PAVERS TO BE REINSTALLED UNDER THE POLE BASE PLATE. REINSTALL THE PAVERS, FIELD CUTTING ANY PAVERS NECESSARY TO EXTEND UNDER THE POLE'S BASE PLATE. PROVIDE ANY NEW PAVERS THAT ARE NEEDED. PAVERS SHALL CLOSELY MATCH THE EXISTING. REMOVE THE EXISTING POLE FOUNDATION TO A DEPTH OF 1'-0" BELOW THE APPROACH SLAB. PLACE SIGNAL HEADS 1 AND 2 AS WELL AS NEW ILLUMINATED SIGN S3 AND NEW REFLECTORIZED SIGNS S1 AND S2 ON 40 FOOT MAST ARM. REPLACE SIGNAL HEADS WITH 12" LED SIGNAL HEADS. PLACE NEW ILLUMINATED SIGN S17 ON 3 FOOT MAST ARM. REPLACE PEDESTRIAN SIGNALS P1 AND P6 WITH TYPE D2 LED COUNTDOWN PEDESTRIAN SIGNAL HEADS ON POLE T1. REPLACE PULLBOX B1 WITH NEW 24" X 24" CITY TYPE "C" PULLBOX AT STA. 822+32.41, 56.36' LT. ADD NEW 24" X 24" CITY TYPE "C" PULLBOX B6 AT STA. 822+45.18, 56.60' LT.
2. REMOVE EXISTING POLE T2 AND MESSENGER WIRE AND INSTALL NEW SPECIAL POLE DESIGN POLE T2 WITH A 22 FOOT MAST ARM AT STA. 822+42.72, 30.61' RT. THE CONTRACTOR WILL WORK WITH THE POLE MANUFACTURER TO PROVIDE A SPECIAL POLE DESIGN. THE DRAWINGS WILL BE REVIEWED AND APPROVED BY THE CITY BEFORE ORDERING POLES. REMOVE THE EXISTING POLE FOUNDATION TO A DEPTH OF 1'-0" BELOW THE APPROACH SLAB. CONNECT POLE T2 TO POLE T3 WITH NEW MESSENGER WIRE. INSTALL 12" LED SIGNAL HEAD 5 ON MAST ARM OF NEW POLE T2. REPLACE PEDESTRIAN SIGNALS P2 AND P7 WITH TYPE D2 LED COUNTDOWN PEDESTRIAN SIGNAL HEADS ON POLE T2. REPLACE PULLBOX B2 WITH NEW 24" X 24" CITY TYPE "C" PULLBOX AT STA. 822+45.39, 19.44' RT.
3. REPLACE SIGNAL HEADS 3 AND 4 WITH NEW 12" LED SIGNAL HEADS ON NEW MESSENGER WIRE. REPLACE SIGNS S4, S23, S5, S22 AND S21 WITH NEW REFLECTORIZED SIGNS ON NEW MESSENGER WIRE. REPLACE SIGN S6 WITH NEW ILLUMINATED SIGN ON NEW MESSENGER WIRE. ADD TRANSIT SIGNAL SS1 ON NEW MESSENGER WIRE. INSTALL TRANSIT VIDEO DETECTION CAMERA V1 ON POLE T3.
4. REMOVE ILLUMINATED SIGN S8 AND YELLOW FLASHER SIGNAL HEAD.
5. REPLACE ALL SIGNAL HEADS WITH NEW 12" LED SIGNAL HEADS AND REPLACE ALL PEDESTRIAN SIGNAL HEADS WITH TYPE D2 LED COUNTDOWN PEDESTRIAN SIGNALS. REPLACE ALL ILLUMINATED AND REFLECTORIZED SIGNS. REPLACE CONTROLLER ON POLE T4.
6. A DISTANCE OF SIX FEET BEHIND THE CURB AND 15 FEET ON EITHER SIDE OF PROPOSED OCS POLES AND SIGNAL POLES (INCLUDING ANY DISTURBANCE TO THE EXISTING CURB) HAS BEEN QUANTIFIED FOR BIDDING PURPOSES FOR REMOVAL AND REPLACEMENT OF SIDEWALK. THE CITY'S ENGINEER WILL DETERMINE ACTUAL PAY LIMITS FOR THIS WORK. NO ADDITIONAL INCREASE TO THE UNIT COST WILL BE ALLOWED FOR THIS WORK IF THE QUANTITIES ARE MORE OR LESS THAN THE AMOUNT QUANTIFIED FOR BIDDING PURPOSES.
7. 6' X 60' STREETCAR DETECTION ZONE. SEE TRAFFIC SIGNAL AND LIGHTING GENERAL NOTES FOR ADDITIONAL DETAILS.
8. INSTALL NEW SIGNAL CABLES IN EXISTING CONDUIT AT THIS INTERSECTION.

CAUTION UNDERGROUND UTILITIES
2 WORKING DAYS
BEFORE YOU DIG
CALL 1-800-362-2764
OHIO UTILITY PROTECTION SERVICE
CALL NON-SERVICE FACILITY
OWNERS DIRECT

GRAPHIC SCALE
10 0 10 20 40
(IN FEET)
1 inch = 10 ft. Full Size
1 inch = 20 ft. Half Size

DOTE_Mono_PDF_Half.pltcfg
W:\29014A-Streetcar\CAD\Traffic_Control\Signals\1016_Main&Second_M-11\S_G-TC-1016 C.dgn
7:27:31 AM
7/11/2012

CONTRACT DRAWING

PRINTS NOT BEARING THIS STAMP WERE MADE PRIOR TO ADVERTISING FOR BIDS AND ARE TO BE CONSIDERED OBSOLETE FOR CONTRACT PURPOSES.

Department of Transportation and Engineering

City of Cincinnati
City Hall
801 Plum Street
Cincinnati, Ohio 45202

CINCINNATI STREETCAR
CENTRAL BUSINESS DISTRICT
PROPOSED TRAFFIC SIGNAL PLAN
MAIN STREET AND SECOND STREET

Revisions
No.

Date 7/02/12	Drawn by AMW
Date 7/02/12	Designed by AMW
Date 7/02/12	Checked by JTB
Date 7/12/12	Reviewed by JTB

Consultant

PB HDR

File Number

ACC No. 23126

G-TC-1016 C

SIGNAL INDICATIONS

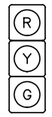

1, 2, 3, 4, 5

SIGNAL HEAD DETAIL
12" (LED) LENSES

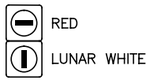

SS1

LRT SIGNAL HEAD DETAIL
12" (LED) LENSES

P1, P2, P3, P4,
P5, P6, P7, P8

TYPE D2 PEDESTRIAN (LED)
(COUNTDOWN) SIGNAL HEAD

SIGN DETAILS

S1
REFL.
24" X 30"
CITY #92A

S2, S4, S5
REFL.
24" X 24"
CITY #117

S3, S6, S10, S17
ILLUM.
24" X 30"
DOUBLE FACE

S7
REFL.
24" X 30"
CITY #79A

S8, S15
ILLUM.
30" X 24"
CITY #114

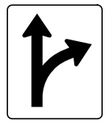

S9, S11
REFL.
24" X 30"
CITY #79AB

S12, S13
REFL.
24" X 30"
CITY #79B

S14
REFL.
24" X 30"
CITY #79BC

S16
REFL.
24" X 30"
CITY #79C

M4-5

M1-H4_OBSOLETE

M3-2

M6-1R

S18
REFL.
SIGN ASSEMBLY

M4-5

M1-1

M3-3

M6-1R

S19
REFL.
SIGN ASSEMBLY

M4-5

M1-1

M3-1

M6-1R

S20
REFL.
SIGN ASSEMBLY

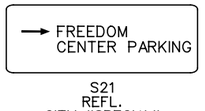

S21
REFL.
CITY "SPECIAL"

S22
REFL.
CITY "SPECIAL"

S23
REFL.
CITY "SPECIAL"

CAUTION UNDERGROUND UTILITIES
2 WORKING DAYS
BEFORE YOU DIG
CALL 1-800-362-2764
OHIO UTILITY PROTECTION SERVICE
CALL NON-SERVICE FACILITY
OWNERS DIRECT

GRAPHIC SCALE

10 0 10 20 40

(IN FEET)
1 inch = 10 ft. Full Size
1 inch = 20 ft. Half Size

DOTE_Mono_PDF_Half.pltcfg
W:\29014A-Streetcar\CAD\Traffic_Control\Signals\1016_Main&Second_M-11\S_G-TC-1016 D.dgn
7:27:35 AM
7/11/2012

CONTRACT DRAWING

PRINTS NOT BEARING THIS STAMP WERE MADE PRIOR TO ADVERTISING FOR BID, AND ARE TO BE CONSIDERED OBSOLETE FOR CONTRACT PURPOSES.

Department of Transportation and Engineering

City of Cincinnati
City Hall
801 Plum Street
Cincinnati, Ohio 45202

CINCINNATI STREETCAR
CENTRAL BUSINESS DISTRICT

PROPOSED TRAFFIC SIGNAL PLAN
MAIN STREET AND SECOND STREET

Revisions

No.				

Date 7/02/12	Date 7/02/12	Date 7/02/12	Date 7/12/12
Drawn by AMW	Designed by AMW	Checked by JTB	Reviewed by JTB

Consultant

PB HDR

File Number

ACC No. 23126

G-TC-1016 D

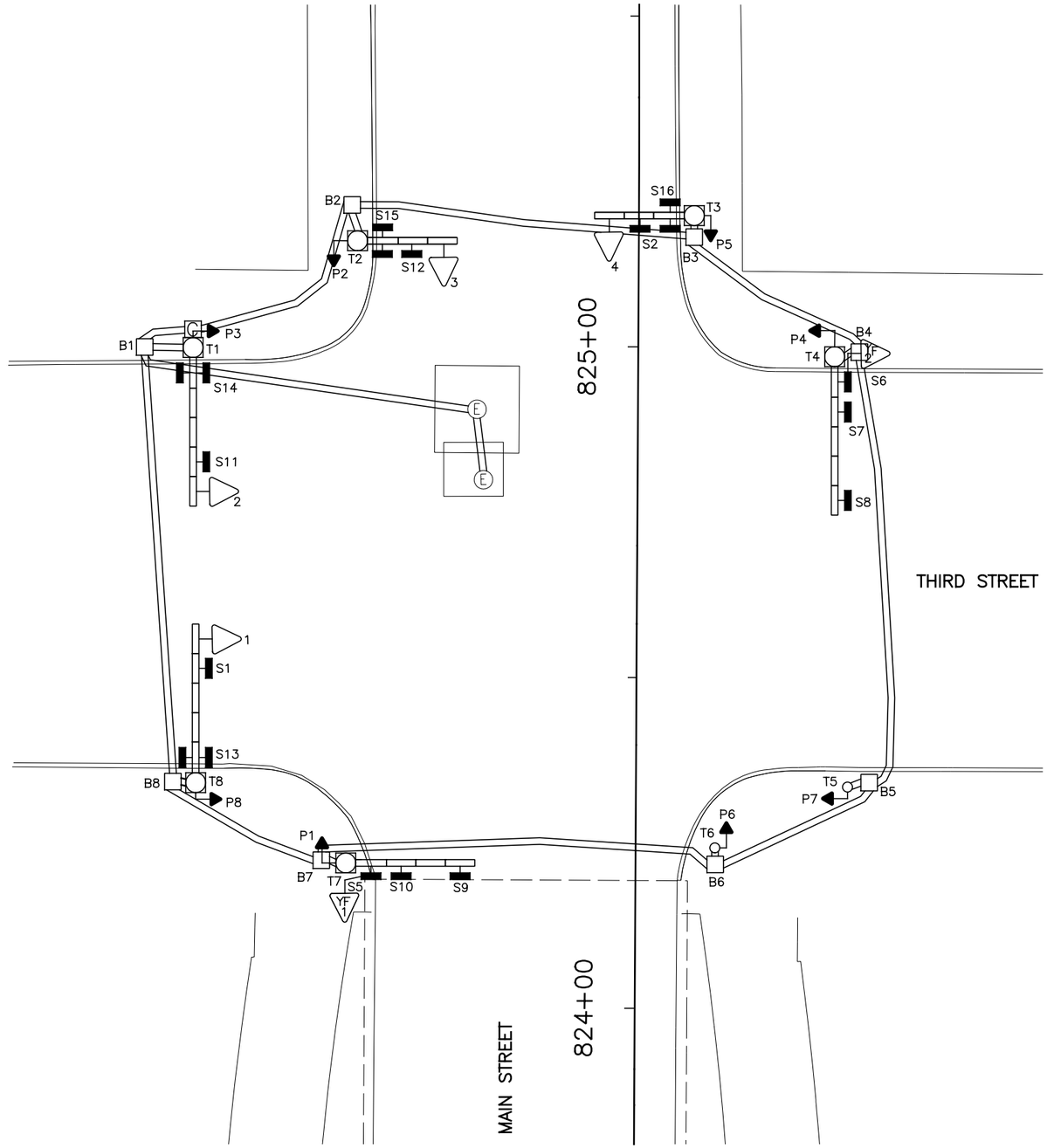

EQUIPMENT LIST	
1, 2, 3, 4	TRAF. SIG. HD., 3 SECT., HORIZ., 8" RYG
YF1, YF2	TRAF. SIG. HD., 1 SECT., HORIZ., 8" Y
P1–P8	PED. SIG., 1 SECT., 16" INCAND., DWW 3 LINE
S1	ILLUM. SIGN, "ONE WAY ⟶ ",#92A
S2	ILLUM. SIGN, "ONE WAY ⟶ ",#92C
S5, S6	ILLUM. SIGN, "WATCH FOR EMERGENCY VEHICLE WHEN FLASHING"
S7	ILLUM. SIGN, 24" X 30"," ↱ ONLY", #79A
S8	ILLUM. SIGN, 24" X 30"," ├ ", #79AB
S9	ILLUM. SIGN, 24" X 30"," ┬┤ ", #79BC
S10	ILLUM. SIGN, 24" X 30"," ↰ ONLY", #79C
S11, S12	ILLUM. SIGN, 24" X 30","NO TURN ON RED", #117
S13, S14	ILLUM. SIGN, 24" X 30", MAIN ST., DF
S15, S16	ILLUM. SIGN, 24" X 30", THIRD ST., DF
T2	MOLT POLE W/ 3 BAY BOOM
T7	MOLT POLE W/ 4 BAY BOOM
T4, T8	MOLT POLE W/ 5 BAY BOOM
T1	MOT POLE W/ 5 BAY BOOM
T3	MOT POLE W/ 3 BAY BOOM
T5, T6	STEEL POLE, 4" X 8', #845

LEGEND

- MOL, MOT, MOLT SIGNAL POLE
- STEEL PEDESTRIAN POST
- TRAFFIC SIGNAL CONDUIT
- YELLOW FLASHER SIGNAL HEAD
- TRAFFIC SIGNAL HEAD
- PEDESTRIAN SIGNAL HEAD
- ILLUMINATED SIGN
- PULLBOX
- CONTROLLER

CAUTION UNDERGROUND UTILITIES
2 WORKING DAYS
BEFORE YOU DIG
CALL 1-800-362-2764
OHIO UTILITY PROTECTION SERVICE
CALL NON-SERVICE FACILITY
OWNERS DIRECT

GRAPHIC SCALE
10 0 10 20 40
(IN FEET)
1 inch = 10 ft. Full Size
1 inch = 20 ft. Half Size

DEPARTMENT OF TRANSPORTATION & ENGINEERING CITY OF CINCINNATI OHIO

CONTRACT DRAWING

PRINTS NOT BEARING THIS STAMP WERE MADE PRIOR TO AWARD OF BIDS FOR BIDS AND ARE TO BE CONSIDERED OBSOLETE FOR CONTRACT PURPOSES.

Department of Transportation and Engineering
City of Cincinnati
City Hall
801 Plum Street
Cincinnati, Ohio 45202

CINCINNATI STREETCAR
CENTRAL BUSINESS DISTRICT

EXISTING TRAFFIC SIGNAL PLAN
MAIN STREET AND THIRD STREET

Revisions

No.				

Drawn by AMW	Date 7/02/12
Designed by AMW	Date 7/02/12
Checked by JTB	Date 7/02/12
Reviewed by JTB	Date 7/12/12

Consultant

PB HDR

File Number

ACC No. 23126

G-TC-1017 A

DOTE_Mono_PDF_Half.pltcfg
W:\29014A-Streetcar\CAD\Traffic_Control\Signals\1017_Third&Main\S_G-TC-1017 A.dgn
7:30:37 AM
7/11/2012

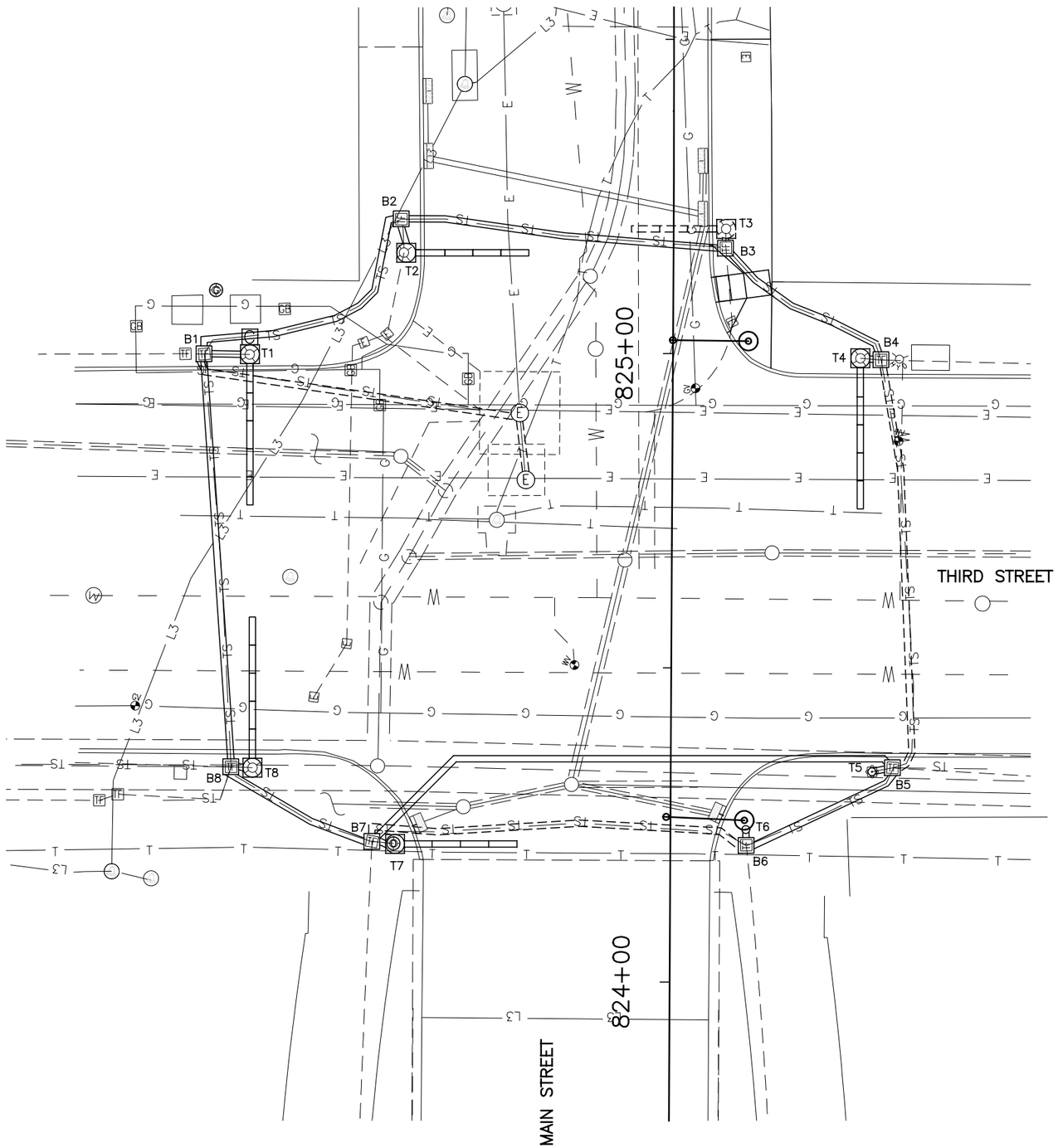

SIGNAL PHASING

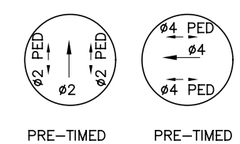

PRE–TIMED PRE–TIMED

THIS IS THE GENERAL SEQUENCING FOR THIS TRAFFIC SIGNAL. REFER TO THE CITY OF CINCINNATI FOR FINAL SEQUENCING, LABELING AND TIMINGS.

CAUTION UNDERGROUND UTILITIES
2 WORKING DAYS
BEFORE YOU DIG
CALL 1–800–362–2764
OHIO UTILITY PROTECTION SERVICE
CALL NON–SERVICE FACILITY
OWNERS DIRECT

GRAPHIC SCALE
10 0 10 20 40
(IN FEET)
1 inch = 10 ft. Full Size
1 inch = 20 ft. Half Size

DEPARTMENT OF TRANSPORTATION & ENGINEERING CITY OF CINCINNATI OHIO

CONTRACT DRAWING

PRINTS NOT BEARING THIS STAMP WERE MADE PRIOR TO ADVERTISING FOR BIDS AND ARE TO BE CONSIDERED OBSOLETE FOR CONTRACT PURPOSES.

Department of Transportation and Engineering

City of Cincinnati
City Hall
801 Plum Street
Cincinnati, Ohio 45202

CINCINNATI STREETCAR
CENTRAL BUSINESS DISTRICT
UNDERGROUND UTILITIES & SIGNAL PLAN DETAILS MAIN STREET AND THIRD STREET

Revisions
No.

Drawn by AMW	Date 7/02/12
Designed by AMW	Date 7/02/12
Checked by JTB	Date 7/02/12
Reviewed by JTB	Date 7/12/12

Consultant

PB HDR

File Number

ACC No.
23126

G-TC-1017 B

DOTE_Mono_PDF_Half.pltcfg
W:\29014A-Streetcar\CAD\Traffic_Control\Signals\1017_Third&Main\S_G-TC-1017 B.dgn
7/11/2012 7:30:50 AM

LEGEND

- MOL, MOT, MOLT SIGNAL POLE
- STEEL PEDESTRIAN POST
- TRAFFIC SIGNAL CONDUIT
- YELLOW FLASHER SIGNAL HEAD
- TRAFFIC SIGNAL HEAD
- PEDESTRIAN SIGNAL HEAD
- ILLUMINATED SIGN
- PULLBOX
- CONTROLLER

SIGNAL INDICATIONS

YF1, YF2
SIGNAL HEAD DETAIL
12" (LED) LENSES

1, 2, 3, 4
SIGNAL HEAD DETAIL
12" (LED) LENSES

P1, P2, P3, P4
P5, P6, P7, P8
TYPE D2 PEDESTRIAN (LED)
(COUNTDOWN) SIGNAL HEAD

TYPICAL POLE ORIENTATION

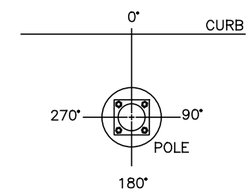

SIGN DETAILS

S1
ILLUM.
24" X 30"
CITY #92A

S2
ILLUM.
24" X 30"
CITY #92C

S5, S6
ILLUM.
30" X 24"
CITY #114

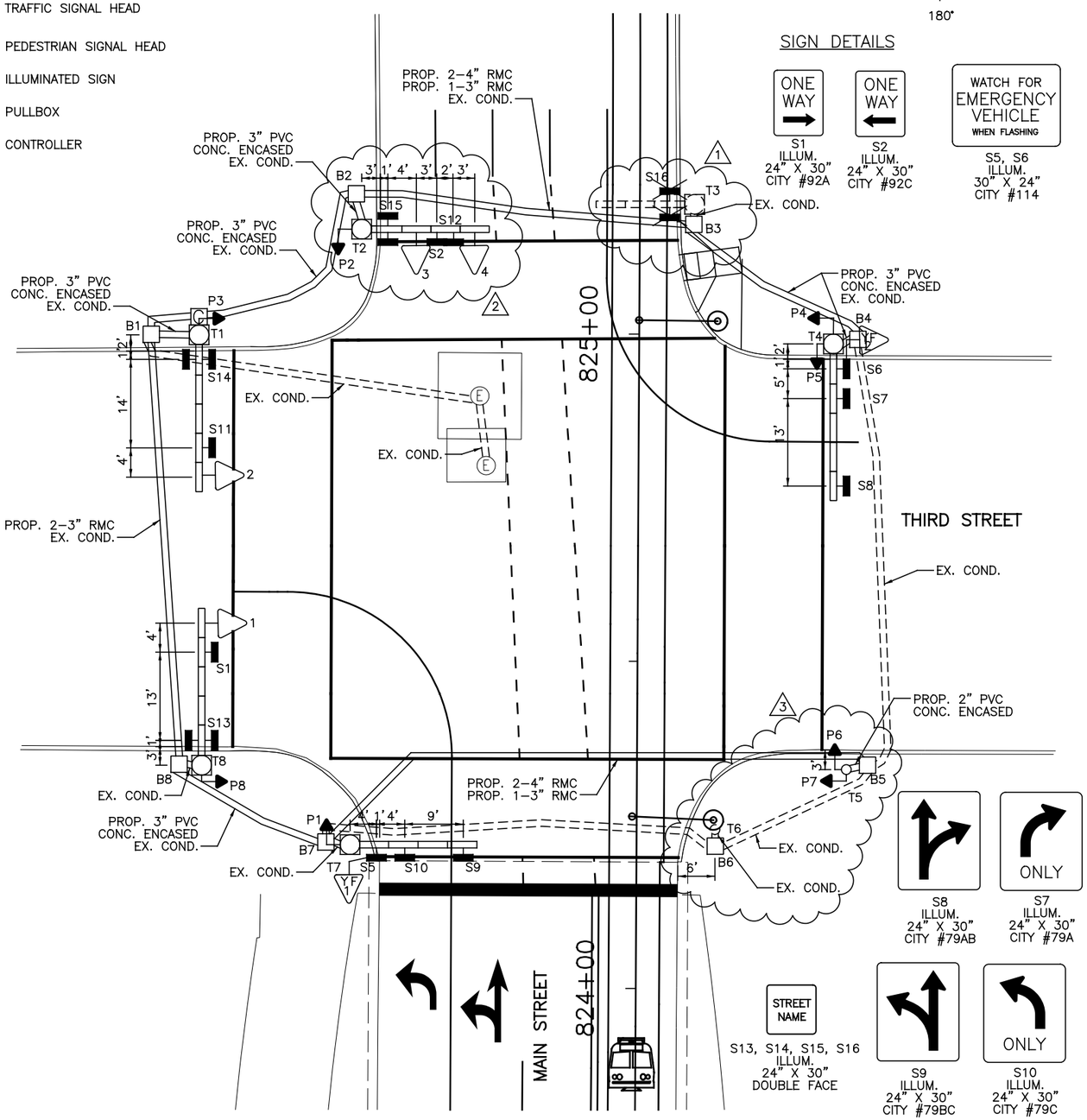

STREET NAME
S13, S14, S15, S16
ILLUM.
24" X 30"
DOUBLE FACE

S8
ILLUM.
24" X 30"
CITY #79AB

S7
ILLUM.
24" X 30"
CITY #79A

S9
ILLUM.
24" X 30"
CITY #79BC

S10
ILLUM.
24" X 30"
CITY #79C

NO TURN ON RED
S11, S12
ILLUM.
24" X 30"
CITY #117

MATERIAL SCHEDULE

NO.	VEHICULAR SIGNAL HEADS 1	2	3	4					TYPE D2 PEDESTRIAN (LED) (COUNTDOWN) SIGNAL HEAD								ATTACHMENT HEIGHT (FEET) TO THE BOTTOM OF BOOM	TRAFFIC BOOM (DEG)	STREET LIGHT BRACKET ARM (DEG)	HANDHOLE (DEG)	CONTROLLER (DEG)
12 INCH	R	R	R	R					NOTE: USE LENS W/ SYMBOL LEGENDS PORTLAND ORANGE: HAND (DONT WALK) LUNAR WHITE: WALKING MAN (WALK)												
	Y	Y	Y	Y																	
	G	G	G	G																	

POLE NO.	POLE DATA: POLE TYPE	TRAFFIC BOOM (# OF BAYS)	FOUNDATION TYPE	PEDESTRIAN SIGNALS ANGLE OF ORIENTATION (DEGREES) P1 D W	P2 D W	P3 D W	P4 D W	P5 D W	P6 D W	P7 D W	P8 D W
T1	MOT	5	EXIST.			180					
T2	MOLT	4	EXIST.		180						
T4	MOLT	5	EXIST.				180	90			
T5	845	–	EXIST.						270	180	
T6	845	–	EXIST.								
T7	MOLT	4	EXIST.	180							
T8	MOLT	5	EXIST.								180

POLE NO.	ATTACHMENT HEIGHT (FEET) TO THE BOTTOM OF BOOM	TRAFFIC BOOM (DEG)	STREET LIGHT BRACKET ARM (DEG)	HANDHOLE (DEG)	CONTROLLER (DEG)
T1	EX.	EX.		EX.	180
T2	17	0	EX.	EX.	
T4	EX.	EX.	EX.	EX.	
T5				EX.	
T6				EX.	
T7	EX.	EX.	EX.	EX.	
T8	EX.	EX.	EX.	EX.	

CABLE SCHEDULE

CABLE#	CONNECTING DEVICE	TYPE	CABLE ROUTING	LIN. FT
1	TRAFFIC SIGNAL TS1	EXIST.	EXIST.	EXIST.
2	TRAFFIC SIGNAL TS2	EXIST.	EXIST.	EXIST.
3	TRAFFIC SIGNAL TS3, TS4	7C#14	TS4–TS3–T2–B2–B1–T1–C	120
4	PED. SIGNAL P1	EXIST.	EXIST.	EXIST.
5	PED. SIGNAL P2	EXIST.	EXIST.	EXIST.
6	PED. SIGNAL P3	EXIST.	EXIST.	EXIST.
7	PED. SIGNAL P4	EXIST.	EXIST.	EXIST.
8	PED. SIGNAL P5	7C#14	P5–T4–B4–B3–B2–B1–T1–C	185
9	PED. SIGNAL P6	7C#14	P6–T5–B5–B7–B8–B1–T1–C	265
10	PED. SIGNAL P7	7C#14	P7–T5–B5–B7–B8–B1–T1–C	265
11	PED. SIGNAL P8	EXIST.	EXIST.	EXIST.
12	YELLOW FLASHER, YF1	EXIST.	EXIST.	EXIST.
13	YELLOW FLASHER, YF2	EXIST.	EXIST.	EXIST.
14	ILLUM. SIGN S1, S13	EXIST.	EXIST.	EXIST.
15	ILLUM. SIGN S2, S12, S15	2C#12	S12–S2–S15–T2–B2–B1–T1–C	120
16	ILLUM. SIGN S5, S9, S10	EXIST.	EXIST.	EXIST.
17	ILLUM. SIGN S6, S7, S8	EXIST.	EXIST.	EXIST.
18	ILLUM. SIGN S11, S14	EXIST.	EXIST.	EXIST.
19	POWER CABLE, AC POSITIVE BLACK	EXIST.	EXIST.	EXIST.
20	POWER CABLE, AC NEGATIVE, WHITE	EXIST.	EXIST.	EXIST.

NOTES:

1. REMOVE THE EXISTING POLE T3 AND THE 3 SIGNAL BAY BOOM. REMOVE SIGN S16 AND MOVE SIGN S2 TO BAY 3 (NEXT TO SIGN S12) AND SIGNAL HEAD 4 TO BAY 4 ON SIGNAL BAY BOOM ON POLE T2.
2. REPLACE 3 BAY SIGNAL BOOM ON POLE T2 WITH A 4 BAY BOOM. MOVE SIGNAL HEAD 3 TO BAY 2, INSTALL NEW SIGN S12 IN BAY 3 ALONG WITH NEW SIGN S2, AND MOVE SIGNAL HEAD 4 FROM POLE T3 TO BAY 4.
3. REMOVE PEDESTRIAN POST T6. INSTALL NEW TYPE D2 LED COUNTDOWN PEDESTRIAN SIGNAL HEAD P6 ON PEDESTRIAN POST T5.
4. REPLACE ALL SIGNAL HEADS WITH 12" LED TRAFFIC SIGNALS AND REPLACE ALL PEDESTRIAN HEADS WITH TYPE D2 LED COUNTDOWN PEDESTRIAN SIGNALS. REPLACE ALL ILLUMINATED SIGNS. REPLACE CONTROLLER ON POLE T1.
5. INSTALL 2–4" RMC AND 1–3" RMC UNDER TRACK SLAB AS SHOWN ON PLAN.
6. A DISTANCE OF SIX FEET BEHIND THE CURB AND 15 FEET ON EITHER SIDE OF PROPOSED OCS POLES AND SIGNAL POLES (INCLUDING ANY DISTURBANCE TO THE EXISTING CURB) HAS BEEN QUANTIFIED FOR BIDDING PURPOSES FOR REMOVAL AND REPLACEMENT OF SIDEWALK. THE CITY'S ENGINEER WILL DETERMINE ACTUAL PAY LIMITS FOR THIS WORK. NO ADDITIONAL INCREASE TO THE UNIT COST WILL BE ALLOWED FOR THIS WORK IF THE QUANTITIES ARE MORE OR LESS THAN THE AMOUNT QUANTIFIED FOR BIDDING PURPOSES.

CAUTION UNDERGROUND UTILITIES
2 WORKING DAYS
BEFORE YOU DIG
CALL 1–800–362–2764
OHIO UTILITY PROTECTION SERVICE
CALL NON–SERVICE FACILITY
OWNERS DIRECT

GRAPHIC SCALE
10 0 10 20 40
(IN FEET)
1 inch = 10 ft. Full Size
1 inch = 20 ft. Half Size

DOTE_Mono_PDF_Half.pltcfg
W:\29014A-Streetcar\CAD\Traffic_Control\Signals\1017_Third&Main\S_G-TC-1017 C.dgn
7/11/2012 7:53:06 AM

CONTRACT DRAWING
PRINTS NOT BEARING THIS STAMP WERE MADE PRIOR TO AWARD OF BIDS FOR BIDS AND ARE TO BE CONSIDERED OBSOLETE FOR CONTRACT PURPOSES.

Department of Transportation and Engineering
City of Cincinnati
City Hall
801 Plum Street
Cincinnati, Ohio 45202

CINCINNATI STREETCAR
CENTRAL BUSINESS DISTRICT
PROPOSED TRAFFIC SIGNAL PLAN
MAIN STREET AND THIRD STREET

Revisions
No.

	Date
Drawn by AMW	7/02/12
Designed by AMW	7/02/12
Checked by JTB	7/02/12
Reviewed by JTB	7/12/12

Consultant
PB HDR

File Number
ACC No. 23126

G-TC-1017 C

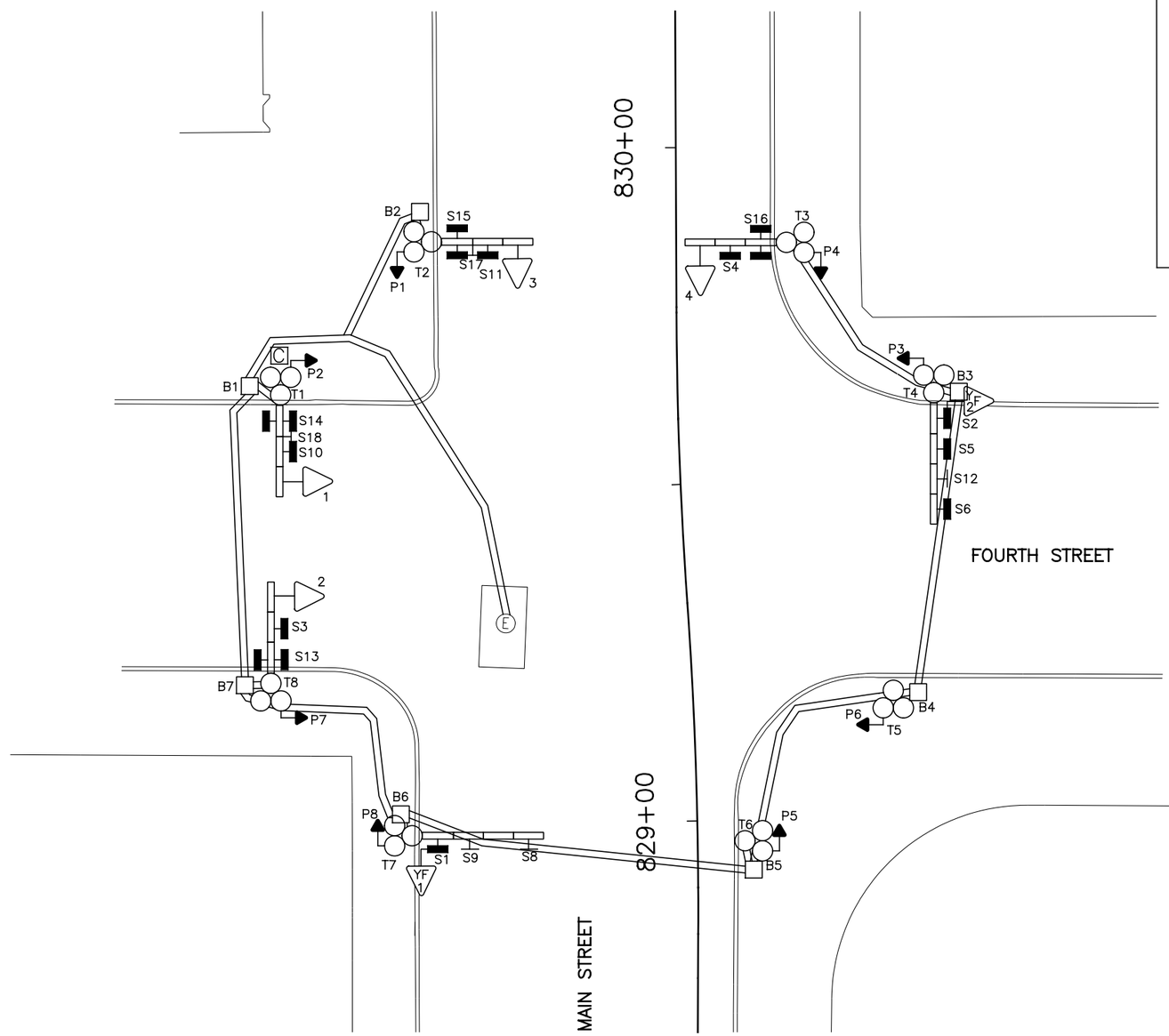

EQUIPMENT LIST	
1, 2, 3, 4	TRAF. SIG. HD., 3 SECT., HORIZ., 8" RYG
YF1, YF2	TRAF. SIG. HD., 3 SECTION, 8" Y
P1 – P8	PED. SIG., 1 SECT., 16" INCAND., DWW 3 LINE
S1, S2	ILLUM. SIGN, "WATCH FOR EMERGENCY VEHICLE WHEN FLASHING"
S3	ILLUM. SIGN, "ONE WAY ← "
S4	ILLUM. SIGN, "ONE WAY ← "
S5	ILLUM. SIGN, 24" X 30","┌ ONLY", #79A
S6	ILLUM. SIGN, 24" X 30","├", #79AB
S8	REFL. SIGN, 24" X 30","┤", #79BC
S9	REFL. SIGN, "┐ ONLY"
S10, S11	ILLUM. SIGN, 24" X 24","NO TURN ON RED", #117
S12	REFL. SIGN, 30" X 24","$1 PARK | ", SPECIAL
S13, S14	ILLUM. SIGN, 24" X 30", MAIN ST., DF
S15, S16	ILLUM. SIGN, 24" X 30", FOURTH ST., DF
S17, S18	REFL. SIGN, 24" X 30", "DO NOT BLOCK INTERSECTION"
T1, T2, T3, T8	MPLT POLE W/ 3 BAY BOOM
T4, T7	MPLT POLE W/ 4 BAY BOOM
T5, T6	MPL POLE

LEGEND

- MPL, MPT, MPLT SIGNAL POLE
- TRAFFIC SIGNAL CONDUIT
- YELLOW FLASHER SIGNAL HEAD
- TRAFFIC SIGNAL HEAD
- PEDESTRIAN SIGNAL HEAD
- REFLECTORIZED SIGN
- ILLUMINATED SIGN
- PULLBOX
- CONTROLLER

GRAPHIC SCALE

10 0 10 20 40

(IN FEET)
1 inch = 10 ft. Full Size
1 inch = 20 ft. Half Size

CAUTION UNDERGROUND UTILITIES
2 WORKING DAYS
BEFORE YOU DIG
CALL 1-800-362-2764
OHIO UTILITY PROTECTION SERVICE
CALL NON-SERVICE FACILITY
OWNERS DIRECT

DEPARTMENT OF TRANSPORTATION & ENGINEERING CITY OF CINCINNATI OHIO

CONTRACT DRAWING

PRINTS NOT BEARING THIS STATEMENT MAY BE PRIOR TO ADVERTISING FOR BIDS AND ARE TO BE CONSIDERED INSUFFICIENT FOR CONTRACT PURPOSES.

Department of Transportation and Engineering

City of Cincinnati
Centennial Plaza
801 Plum Street
Cincinnati, Ohio 45202

CINCINNATI STREETCAR
CENTRAL BUSINESS DISTRICT

EXISTING TRAFFIC SIGNAL PLAN
MAIN STREET AND FOURTH STREET

Revisions
No.

Drawn by AMW	Date 7/02/12
Designed by AMW	Date 7/02/12
Checked by JTB	Date 7/02/12
Reviewed by JTB	Date 7/12/12

Consultant

PB HDR

File Number

ACC No.
23126

G-TC-1018 A

DOTE_Mono_PDF_Half.pltcfg
W:\29014A-Streetcar\CAD\Traffic_Control\Signals\1018_FourthMain_F-36\S_G-TC-1018 A.dgn
7/11/2012 7:31:30 AM

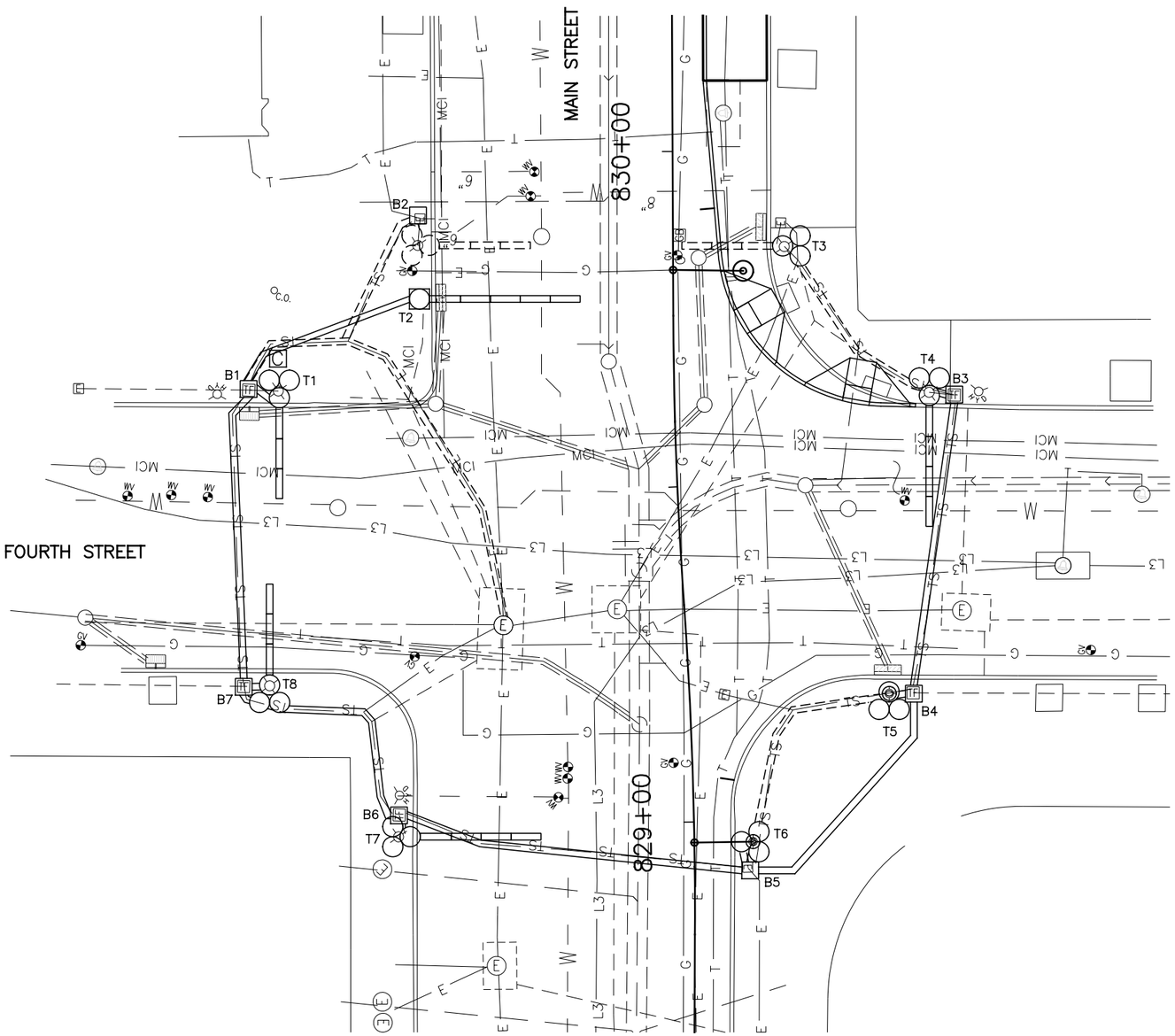

SIGNAL PHASING

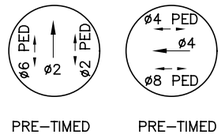

THIS IS THE GENERAL SEQUENCING FOR THIS TRAFFIC SIGNAL. REFER TO THE CITY OF CINCINNATI FOR FINAL SEQUENCING, LABELING AND TIMINGS.

CAUTION UNDERGROUND UTILITIES
2 WORKING DAYS
BEFORE YOU DIG
CALL 1–800–362–2764
OHIO UTILITY PROTECTION SERVICE
CALL NON–SERVICE FACILITY
OWNERS DIRECT

GRAPHIC SCALE

10 0 10 20 40

(IN FEET)
1 inch = 10 ft. Full Size
1 inch = 20 ft. Half Size

CONTRACT DRAWING

PRINTS NOT BEARING THIS STAMP WERE MADE FOR INFORMATIONAL PURPOSES ONLY AND ARE NOT TO BE CONSIDERED OBSOLETE FOR CONTRACT PURPOSES.

Department of Transportation and Engineering

City of Cincinnati
Two Lafayette
801 Plum Street
Cincinnati, Ohio 45202

CINCINNATI STREETCAR
CENTRAL BUSINESS DISTRICT
UNDERGROUND UTILITIES & SIGNAL PLAN DETAILS MAIN STREET AND FOURTH STREET

Revisions
No.

Drawn by AMW	Date 7/02/12
Designed by AMW	Date 7/02/12
Checked by JTB	Date 7/02/12
Reviewed by JTB	Date 7/12/12

Consultant

PB HDR

File Number

ACC No.
23126

G-TC-1018 B

DOTE_Mono_PDF_Half.pltcfg
W:\29014A-Streetcar\CAD\Traffic_Control\Signals\1018_Fourth&Main_F-36\S_G-TC-1018 B.dgn
7/11/2012 7:31:46 AM

LEGEND

- MPL, MPT, MPLT SIGNAL POLE
- TRAFFIC SIGNAL CONDUIT
- YELLOW FLASHER SIGNAL HEAD
- TRAFFIC SIGNAL HEAD
- PEDESTRIAN SIGNAL HEAD
- REFLECTORIZED SIGN
- ILLUMINATED SIGN
- PULLBOX
- CONTROLLER

SIGNAL INDICATIONS

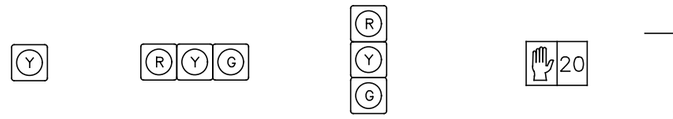

YF1, YF2 — SIGNAL HEAD DETAIL 12" (LED) LENSES

1, 2, 3, 4 — SIGNAL HEAD DETAIL 12" (LED) LENSES

5 — SIGNAL HEAD DETAIL 12" (LED) LENSES

P1, P2, P3, P4 P5, P6, P7, P8 — TYPE D2 PEDESTRIAN (LED) (COUNTDOWN) SIGNAL HEAD

TYPICAL POLE ORIENTATION

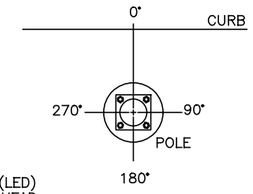

SIGN DETAILS

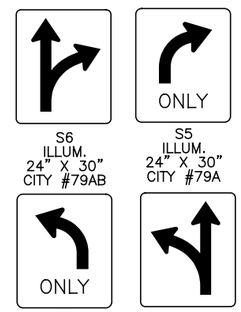

S6 ILLUM. 24" X 30" CITY #79AB

S5 ILLUM. 24" X 30" CITY #79A

S9 ILLUM. 24" X 30" CITY #79C

S8 ILLUM. 24" X 30" CITY #79BC

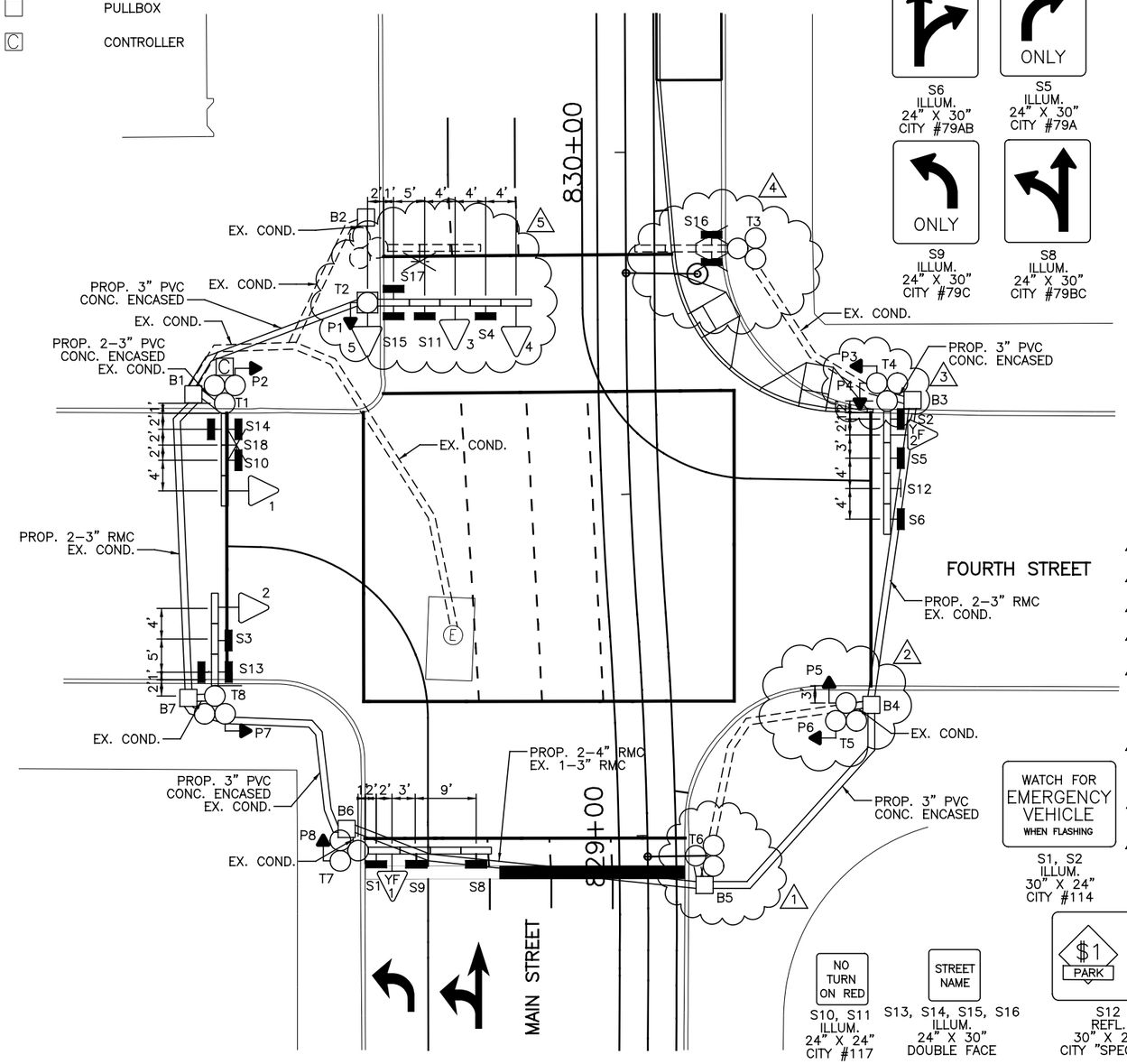

MATERIAL SCHEDULE

NO.	1	2	3	4	5			
12 INCH	R	R	R	R	R			
	Y	Y	Y	Y	Y			
	G	G	G	G	G			

TYPE D2 PEDESTRIAN (LED) (COUNTDOWN) SIGNAL HEAD

NOTE:
USE LENS W/ SYMBOL LEGENDS
PORTLAND ORANGE: HAND (DONT WALK)
LUNAR WHITE: WALKING MAN (WALK)

POLE NO.	POLE DATA: POLE TYPE	TRAFFIC BOOM (# OF BAYS)	FOUNDATION TYPE	PEDESTRIAN SIGNALS P1	P2	P3	P4	P5	P6	P7	P8	ATTACHMENT HEIGHT (FEET) TO THE BOTTOM OF BOOM	TRAFFIC BOOM (DEG)	STREET LIGHT BRACKET ARM (DEG)	HANDHOLE (DEG)	CONTROLLER (DEG)
				D	D	D	D	D	D	D	D					
				W	W	W	W	W	W	W	W					
				ANGLE OF ORIENTATION (DEGREES)												
T1	MPLT	3	EXIST.		180							EX.	EX.	EX.	EX.	180
T2	MOLT	5	FDN-55	180								17	0	0	180	
T3	MOLT	–	EXIST.											EX.	EX.	
T4	MPLT	4	EXIST.			180	90					EX.	EX.	EX.	EX.	
T5	MPL	–	EXIST.					270	180					EX.	EX.	
T6	MPL	–	EXIST.											EX.	EX.	
T7	MPLT	4	EXIST.								180	EX.	EX.	EX.	EX.	
T8	MPLT	3	EXIST.							180		EX.	EX.	EX.	EX.	

CABLE SCHEDULE

CABLE#	CONNECTING DEVICE	TYPE	CABLE ROUTING	LIN. FT
1	TRAFFIC SIGNAL TS1	EXIST.	EXIST.	EXIST.
2	TRAFFIC SIGNAL TS2	EXIST.	EXIST.	EXIST.
3	TRAFFIC SIGNAL TS3, TS4, TS5	7C#14	TS4–TS3–TS5–T2–B1–T1–C	105
4	PED. SIGNAL P1	7C#14	P1–T2–B1–T1–C	70
5	PED. SIGNAL P2	EXIST.	EXIST.	EXIST.
6	PED. SIGNAL P3	EXIST.	EXIST.	EXIST.
7	PED. SIGNAL P4	7C#14	P4–T4–B3–B4–B5–B6–B7–B1–T1–C	290
8	PED. SIGNAL P5	7C#14	P5–T5–B4–B5–B6–B7–B1–T1–C	240
9	PED. SIGNAL P6	7C#14	P6–T5–B4–B5–B6–B7–B1–T1–C	240
10	PED. SIGNAL P7	EXIST.	EXIST.	EXIST.
11	PED. SIGNAL P8	EXIST.	EXIST.	EXIST.
12	YELLOW FLASHER, YF1	EXIST.	EXIST.	EXIST.
13	YELLOW FLASHER, YF2	EXIST.	EXIST.	EXIST.
14	ILLUM. SIGN S1, S8, S9	2C#12	S8–S9–S1–T7–B6–B7–B1–T1–C	170
15	ILLUM. SIGN S2, S5, S6	EXIST.	EXIST.	EXIST.
16	ILLUM. SIGN S3, S13	EXIST.	EXIST.	EXIST.
17	ILLUM. SIGN S4, S11, S15	2C#12	S4–S11–S15–T2–B1–T1–C	100
18	ILLUM. SIGN S10, S14	EXIST.	EXIST.	EXIST.
19	POWER CABLE, AC POSITIVE, BLACK	EXIST.	EXIST.	EXIST.
20	POWER CABLE, AC NEGATIVE, WHITE	EXIST.	EXIST.	EXIST.

NOTES:

1. MOVE PEDESTRIAN SIGNAL P5 TO POLE T5.
2. PLACE PEDESTRIAN SIGNAL P5 ON POLE T5.
3. INSTALL PEDESITRAN SIGNAL P4 ON POLE T4.
4. REMOVE SIGNAL BAY BOOM, SIGNS AND SIGNALS FROM POLE T3. MOVE PEDESTRIAN SIGNAL P4 TO POLE T4. MOVE SIGNAL HEAD 4 AND SIGN S4 TO BAY BOOM ON POLE T2.
5. REMOVE EXISTING POLE T2 AND INSTALL NEW MOLT POLE T2 WITH 5 BAY SIGNAL BOOM AT STA. 829+64.34, 37.83' LT. REMOVE REFLECTORIZED SIGN S17. INSTALL NEW SIGNS S15, S11, AND S4 AS WELL AS NEW SIGNAL HEADS 3 AND 4 ON BOOM AS SHOWN IN PLAN. INSTALL NEW 12" LED SIGNAL HEAD 4 ON POLE T2. MOVE PEDESTRIAN SIGNAL P1 TO NEW POLE T2.
6. REPLACE ALL SIGNAL HEADS WITH 12" LED SIGNAL HEADS AND REPLACE ALL PEDESTRIAN HEADS WITH TYPE D2 LED COUNTDOWN PEDESTRIAN SIGNALS. REMOVE REFLECTORIZED SIGN S18. REPLACE ALL ILLUMINATED AND REFLECTORIZED SIGNS. REPLACE CONTROLLER ON POLE T1.
5. INSTALL 2-4" RMC ALONG WITH EXISTING 1-3" RMC UNDER TRACK SLAB AS SHOWN ON PLAN.
7. A DISTANCE OF SIX FEET BEHIND THE CURB AND 15 FEET ON EITHER SIDE OF PROPOSED OCS POLES AND SIGNAL POLES (INCLUDING ANY DISTURBANCE TO THE EXISTING CURB) HAS BEEN QUANTIFIED FOR BIDDING PURPOSES FOR REMOVAL AND REPLACEMENT OF SIDEWALK. THE CITY'S ENGINEER WILL DETERMINE ACTUAL PAY LIMITS FOR THIS WORK. NO ADDITIONAL INCREASE TO THE UNIT COST WILL BE ALLOWED FOR THIS WORK IF THE QUANTITIES ARE MORE OR LESS THAN THE AMOUNT QUANTIFIED FOR BIDDING PURPOSES.

CAUTION UNDERGROUND UTILITIES 2 WORKING DAYS
BEFORE YOU DIG
CALL 1-800-362-2764
OHIO UTILITY PROTECTION SERVICE
CALL NON-SERVICE FACILITY OWNERS DIRECT

GRAPHIC SCALE
10 0 10 20 40
(IN FEET)
1 inch = 10 ft. Full Size
1 inch = 20 ft. Half Size

DEPARTMENT OF TRANSPORTATION & ENGINEERING CITY OF CINCINNATI OHIO

CONTRACT DRAWING

PRINTS NOT BEARING THE WATERMARK MAY BE USED FOR BIDS AND ARE TO BE CONSIDERED ACCURATE FOR CONTRACT PURPOSES.

Department of Transportation and Engineering

City of Cincinnati
Clifton Plaza Center
801 Plum Street
Cincinnati, Ohio 45202

CINCINNATI STREETCAR
CENTRAL BUSINESS DISTRICT

PROPOSED TRAFFIC SIGNAL PLAN
MAIN STREET AND FOURTH STREET

Revisions
No.

	Date	Drawn by	Designed by	Checked by	Reviewed by
	7/02/12	AMW	AMW	JTB	JTB
	7/02/12				
	7/02/12				
	7/12/12				

Consultant

PB HDR

File Number

ACC No.
23126

G-TC-1018 C

DOTE_Mono_PDF_Half.pltcfg
W:\29014A-Streetcar\CAD\Traffic_Control\Signals\1018_Fourth&Main_F-36\S_G-TC-1018 C.dgn
7/11/2012 7:32:03 AM

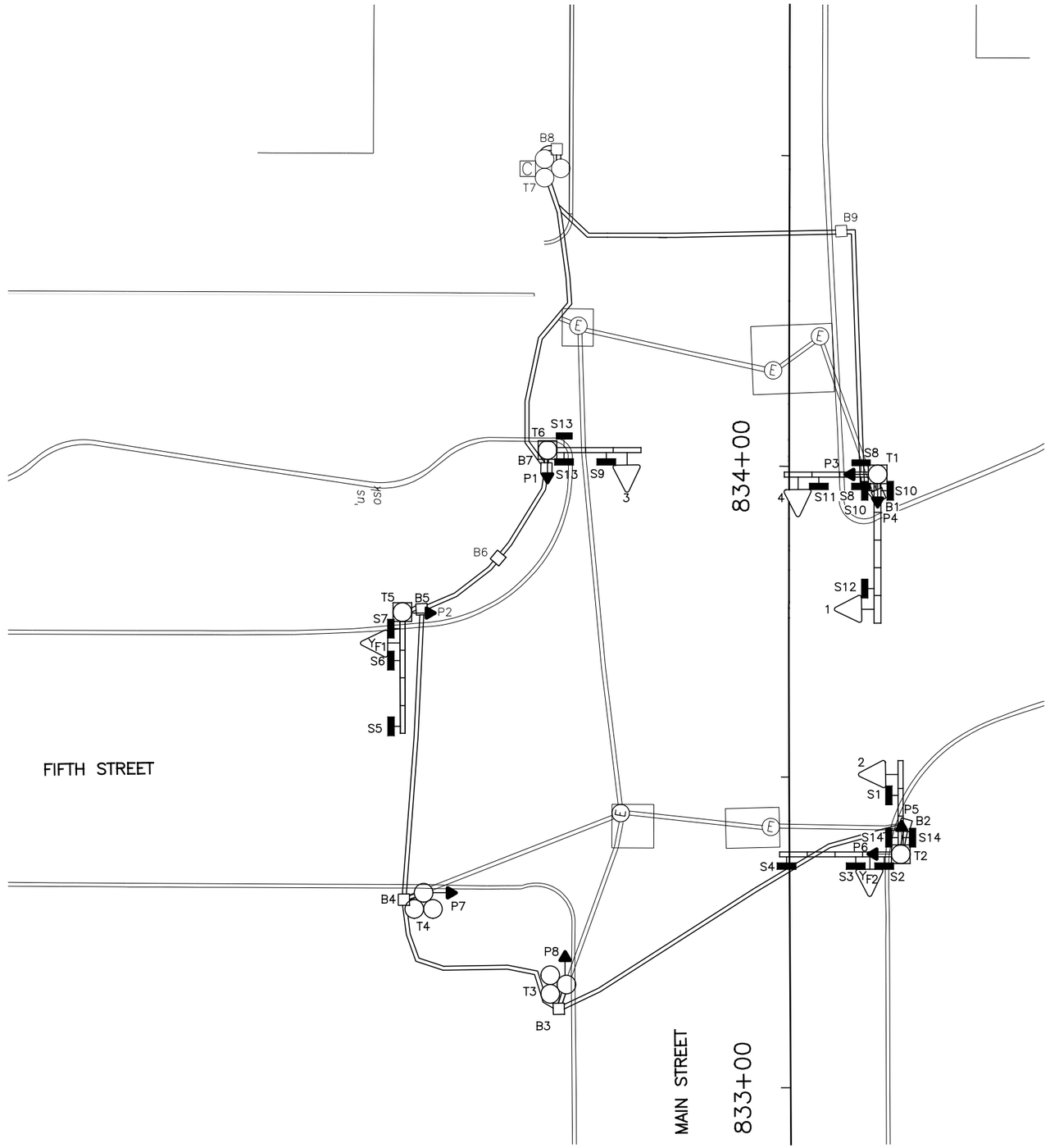

EQUIPMENT LIST	
1, 2, 3, 4	TRAF. SIG. HD., 3 SECT., HORIZ., 8" RYG
YF1, YF2	TRAF. SIG. HD., 1 SECT. HORIZ., 8" Y
P1 – P8	PED. SIG., 1 SECT., 16" INCAND., DWW 3 LINE
S2, S7	ILLUM. SIGN, "WATCH FOR EMERGENCY VEHICLE WHEN FLASHING"
S9	ILLUM. SIGN, "ONE WAY" → #92A
S1	ILLUM. SIGN, "ONE WAY" ← #92C
S3	ILLUM. SIGN, 24" X 30"," ↱ ONLY", #79A
S4	ILLUM. SIGN, 24" X 30"," ↑↱ ", #79 BA
S5	ILLUM. SIGN, 24" X 30"," ↰↑ ", #79BC
S6	ILLUM. SIGN, 24"X 30"," ↰ ONLY "
S11, S12	ILLUM. SIGN, 24" X 24" ,"NO TURN ON RED", #117
S10, S14	ILLUM. SIGN, 24" X 30", MAIN ST., DF
S8, S13	ILLUM. SIGN, 24" X 30", FIFTH ST., DF
B1, B2, B5, B6, B7, B9	PULLBOX, 24" X 24", DOWNTOWN SPECIAL
B3, B4, B8	PULLBOX, 24" X 24", TYPE "C"
T1, T2, T5, T6	STEEL POLE, MOT, 22'
T3, T4, T7	STEEL POLE, MPL, 50'

LEGEND

- MOL, MOT, MOLT SIGNAL POLE
- MPL, MPT, MPLT SIGNAL POLE
- TRAFFIC SIGNAL CONDUIT
- YELLOW FLASHER SIGNAL HEAD
- TRAFFIC SIGNAL HEAD
- PEDESTRIAN SIGNAL HEAD
- ILLUMINATED SIGN
- PULLBOX
- CONTROLLER

CAUTION UNDERGROUND UTILITIES
2 WORKING DAYS
BEFORE YOU DIG
CALL 1-800-362-2764
OHIO UTILITY PROTECTION SERVICE
CALL NON-SERVICE FACILITY
OWNERS DIRECT

GRAPHIC SCALE
10 0 10 20 40
(IN FEET)
1 inch = 10 ft. Full Size
1 inch = 20 ft. Half Size

DOTE_Mono_PDF_Half.pltcfg
W:\29014A-Streetcar\CAD\Traffic_Control\Signals\1019_Fifth&Main\S_G-TC-1019 A.dgn
7:32:18 AM
7/11/2012

CONTRACT DRAWING

PRINTS NOT BEARING THIS STAMP WERE MADE PRIOR TO ADVERTISING FOR BIDS AND ARE TO BE CONSIDERED OBSOLETE FOR CONTRACT PURPOSES.

Department of Transportation and Engineering

City of Cincinnati
City Hall
801 Plum Street
Cincinnati, Ohio 45202

CINCINNATI STREETCAR
CENTRAL BUSINESS DISTRICT

EXISTING TRAFFIC SIGNAL PLAN
MAIN STREET AND FIFTH STREET

Revisions
No.

Drawn by AMW	Date 7/02/12
Designed by AMW	Date 7/02/12
Checked by JTB	Date 7/02/12
Reviewed by JTB	Date 7/12/12

Consultant

PB HDR

File Number

ACC No. 23126

G-TC-1019 A

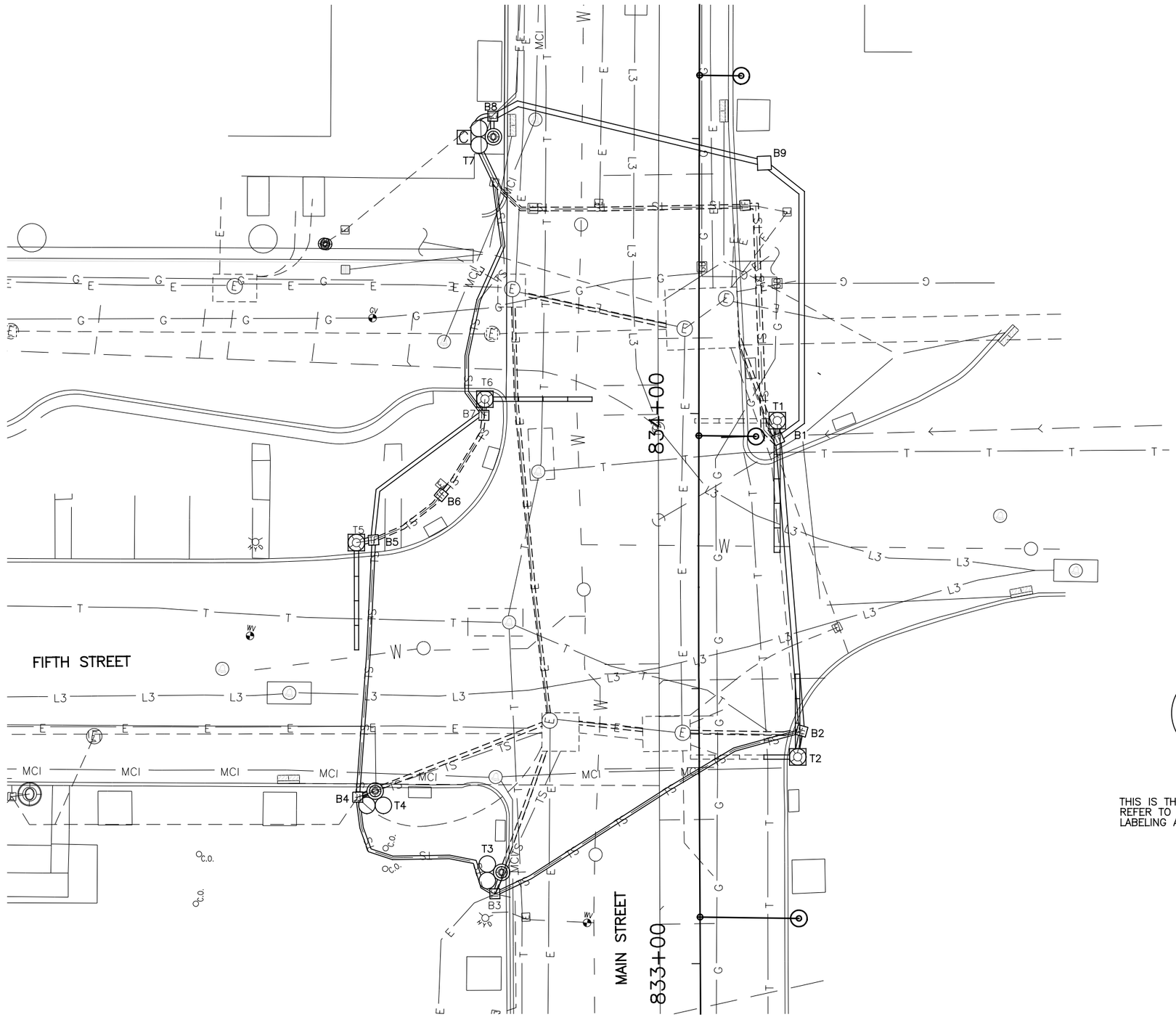

SIGNAL PHASING

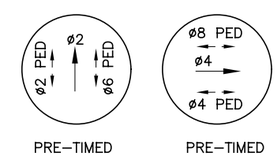

THIS IS THE GENERAL SEQUENCING FOR THIS TRAFFIC SIGNAL. REFER TO THE CITY OF CINCINNATI FOR FINAL SEQUENCING, LABELING AND TIMINGS.

CAUTION UNDERGROUND UTILITIES
2 WORKING DAYS
BEFORE YOU DIG
CALL 1–800–362–2764
OHIO UTILITY PROTECTION SERVICE
CALL NON–SERVICE FACILITY
OWNERS DIRECT

GRAPHIC SCALE

10 0 10 20 40

(IN FEET)
1 inch = 10 ft. Full Size
1 inch = 20 ft. Half Size

DOTE_Mono_PDF_Half.pltcfg
W:\29014A-Streetcar\CAD\Traffic_Control\Signals\1019_Fifth&Main\S_G-TC-1019 B.dgn
7:32:34 AM
7/11/2012

CONTRACT DRAWING

PRINTS NOT BEARING THIS STAMP WERE MADE PRIOR TO ADVERTISING FOR BIDS AND ARE TO BE CONSIDERED OBSOLETE FOR CONTRACT PURPOSES.

Department of Transportation and Engineering

City of Cincinnati
City Hall
801 Plum Street
Cincinnati, Ohio 45202

CINCINNATI STREETCAR
CENTRAL BUSINESS DISTRICT
UNDERGROUND UTILITIES & SIGNAL PLAN DETAILS
MAIN STREET AND FIFTH STREET

Revisions

No.		

Date 7/02/12	Drawn by AMW
Date 7/02/12	Designed by AMW
Date 7/02/12	Checked by JTB
Date 7/12/12	Reviewed by JTB

Consultant

PB HDR

File Number

ACC No.
23126

G-TC-1019 B

LEGEND

- MOL, MOT, MOLT SIGNAL POLE
- MPL, MPT, MPLT SIGNAL POLE
- TRAFFIC SIGNAL CONDUIT
- YELLOW FLASHER SIGNAL HEAD
- TRAFFIC SIGNAL HEAD
- PEDESTRIAN SIGNAL HEAD
- ILLUMINATED SIGN
- PULLBOX
- CONTROLLER

SIGNAL INDICATIONS

1, 2, 3, 4

SIGNAL HEAD DETAIL
12" (LED) LENSES

P1, P2, P3, P4
P5, P6, P7, P8
TYPE D2 PEDESTRIAN (LED)
(COUNTDOWN) SIGNAL HEAD

TYPICAL POLE ORIENTATION

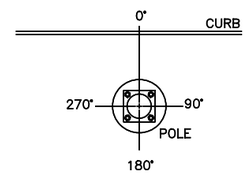

SIGN DETAILS

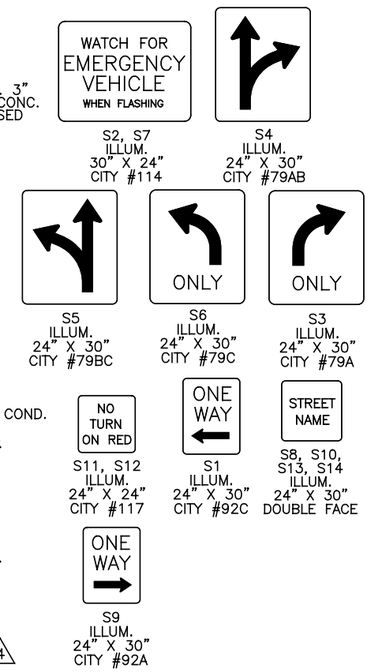

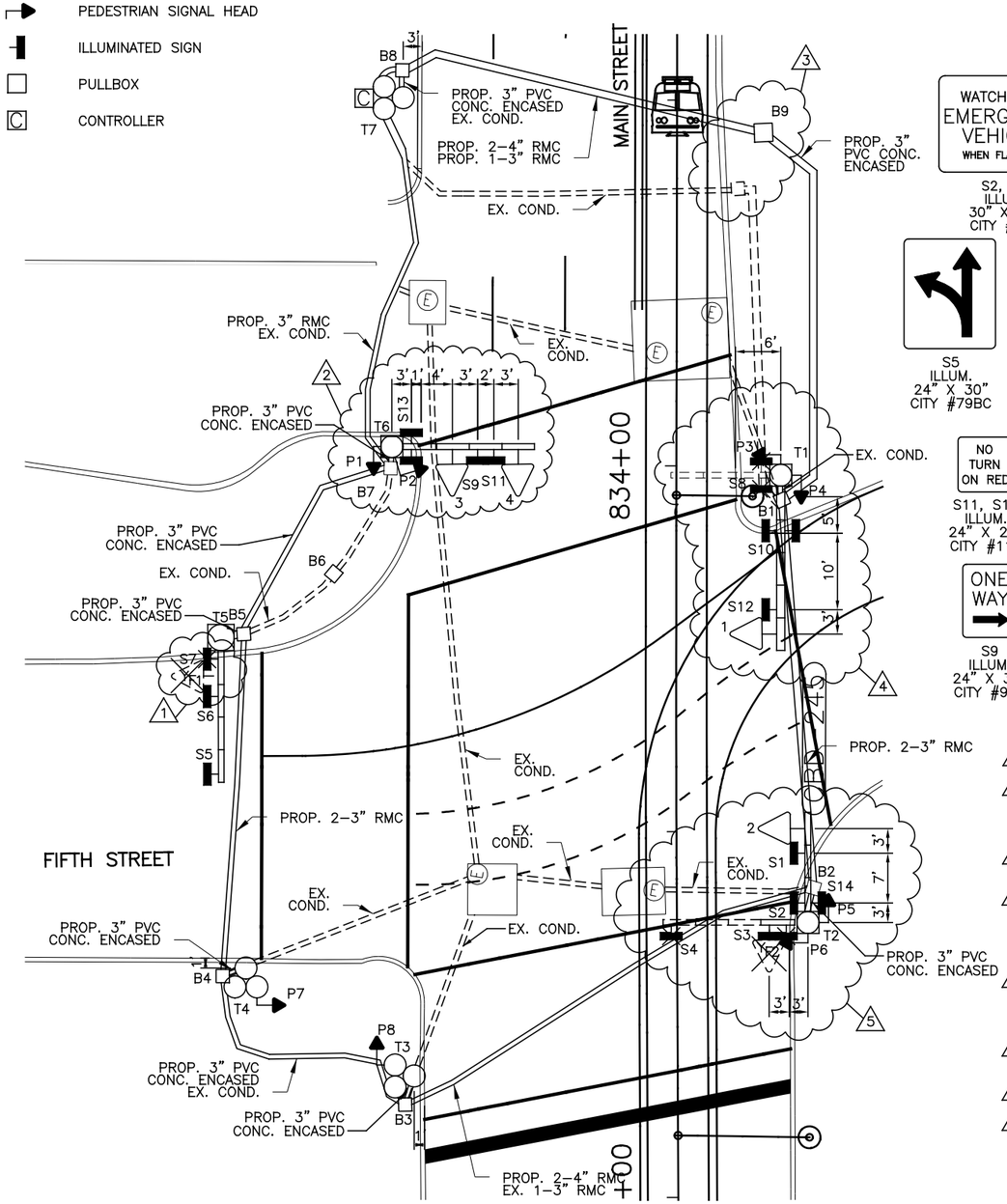

MATERIAL SCHEDULE

NO.	VEHICULAR SIGNAL HEADS 1	2	3	4				
12 INCH	R	R	R	R				
	Y	Y	Y	Y				
	G	G	G	G				

TYPE D2 PEDESTRIAN (LED) (COUNTDOWN) SIGNAL HEAD

NOTE:
USE LENS W/ SYMBOL LEGENDS
PORTLAND ORANGE: HAND (DONT WALK)
LUNAR WHITE: WALKING MAN (WALK)

POLE NO.	POLE DATA: POLE TYPE	TRAFFIC BOOM (BY # OF BAYS)	FOUNDATION TYPE	PEDESTRIAN SIGNALS P1	P2	P3	P4	P5	P6	P7	P8	ATTACHMENT HEIGHT (FEET) TO THE BOTTOM OF BOOM	TRAFFIC BOOM (DEG)	STREET LIGHT BRACKET ARM (DEG)	HANDHOLE (DEG)	CONTROLLER (DEG)
				D	D	D	D	D	D	D	D					
				W	W	W	W	W	W	W	W					
				ANGLE OF ORIENTATION (DEGREES)												
T1	MOLT	– / 5	EXIST.			90	180					EX.	EX.	EX.	EX.	
T2	MOLT	1 / 3	EXIST.					180	270			EX.	0/EX.	EX.	EX.	
T3	MPL		EXIST.								180			EX.	EX.	
T4	MPL		EXIST.							180				EX.	EX.	
T5	MOT	4	EXIST.									EX.	EX.		EX.	
T6	MOT	4	EXIST.	180	74							EX.	0		EX.	
T7	MPL		EXIST.											EX.	EX.	180

CABLE SCHEDULE

CABLE NO.	CONNECTING DEVICES	CABLE TYPE	CABLE ROUTING	LINEAR FEET
1	TRAFFIC SIGNAL TS1	7C#14	TS1–T1–B1–B9–B8–T7–C	180
2	TRAFFIC SIGNAL TS2	7C#14	TS2–T2–B2–B1–B9–B8–T7–C	230
3	TRAFFIC SIGNAL TS3, TS4	7C#14	TS4–TS3–T6–B7–B8–T7–C	135
4	PED. SIGNAL P1	EXIST.	EXIST.	EXIST.
5	PED. SIGNAL P2	7C#14	P2–T6–B7–B8–T7–C	100
6	PED. SIGNAL P3	7C#14	P3–T1–B1–B9–B8–T7–C	145
7	PED. SIGNAL P4	7C#14	P4–T1–B1–B9–B8–T7–C	145
8	PED. SIGNAL P5	7C#14	P5–T2–B2–B1–B9–B8–T7–C	210
9	PED. SIGNAL P6	7C#14	P6–T2–B2–B1–B9–B8–T7–C	210
10	PED. SIGNAL P7	7C#14	P7–T4–B4–B5–B7–B8–T7–C	190
11	PED. SIGNAL P8	7C#14	P8–T3–B3–B4–B5–B7–B8–T7–C	235
12	ILLUM. SIGN S1, S14	2C#12	S1–S14–T2–B2–B1–B9–B8–T7–C	225
13	ILLUM. SIGN S3	2C#12	S3–T2–B2–B1–B9–B8–T7–C	220
14	ILLUM. SIGN S5, S6	2C#12	S5–S6–T5–B5–B7–B8–T7–C	170
15	ILLUM. SIGN S9, S11, S13	2C#12	S11–S9–S13–T6–B7–B8–T7–C	130
16	ILLUM. SIGN S10, S12	2C#12	S12–S10–T1–B1–B9–B8–T7–C	177
17	POWER CABLE, AC POSITIVE, BLACK	EXIST.	EXIST.	EXIST.
18	POWER CABLE, AC NEGATIVE, WHITE	EXIST.	EXIST.	EXIST.

NOTES:

1. REMOVE ILLUMINATED SIGN S6, AND YELLOW FLASHER SIGNAL HEAD YF1. MOVE PEDESTRIAN SIGNAL P2 TO POLE T6.
2. REMOVE 3 SIGNAL BAY BOOM AND REPLACE WITH 4 SIGNAL BAY BOOM ON POLE T6. PLACE 12" LED SIGNAL HEAD 4 IN BAY 4, PLACE NEW ILLUMINATED SIGNS S11 AND S9 IN BAY 3, PLACE 12" LED SIGNAL HEAD 3 IN BAY 2, PLACE NEW ILLUMINATED SIGN S13 IN BAY 1. REPLACE PEDESTRIAN SIGNAL HEADS P1 AND P2 WITH D2 LED COUNTDOWN PEDESTRIAN SIGNAL HEADS ON POLE T6.
3. REMOVE EXISTING PULLBOX B9 AND REPLACE WITH NEW 24" X 24" CITY TYPE "C" PULLBOX AT STA. 834+31.70, 11.82' RT. CONNECT PROPOSED CONDUIT FROM PULLBOX B8 TO PULLBOX B9.
4. REMOVE 3 SIGNAL BAY BOOM ON POLE T1. REMOVE ILLUMINATED SIGN S8. MOVE SIGNAL HEAD 4 TO BAY 4 ON POLE T6. MOVE ILLUMINATED SIGN S11 TO BAY 3 ON POLE T6. EXISTING 5 SIGNAL BAY BOOM TO REMAIN ON POLE T1. REPLACE SIGNAL HEAD 1 WITH 12" LED SIGNAL HEAD. REPLACE ILLUMINATED SIGN S10 IN BAY 2. REPLACE PEDESTRIAN SIGNAL HEADS P3 AND P4 WITH D2 LED COUNTDOWN PEDESTRIAN SIGNAL HEADS ON POLE T1. CONNECT PROPOSED CONDUIT FROM EXISTING PULLBOX B1 TO EXISTING PULLBOX B2.
5. REMOVE 4 SIGNAL BAY BOOM AND REPLACE WITH A 1 SIGNAL BAY BOOM ON POLE T2. REMOVE ILLUMINATED SIGNS S2, S4 AND YELLOW FLASHER SIGNAL HEAD YF2. INSTALL NEW ILLUMINATED SIGN S3 IN BAY 1 ON POLE T2. EXISTING 3 SIGNAL BAY BOOM TO REMAIN ON POLE T2. REPLACE SIGNAL HEAD 2 WITH 12" LED SIGNAL HEAD. REPLACE PEDESTRIAN SIGNAL HEADS P5 AND P6 WITH D2 LED COUNTDOWN PEDESTRIAN SIGNAL HEADS ON POLE T2.
6. REPLACE ALL SIGNAL HEADS WITH NEW 12" LED SIGNAL HEADS AND REPLACE ALL PEDESTRIAN SIGNALS WITH TYPE D2 LED COUNTDOWN PEDESTRIAN SIGNAL HEADS. REPLACE ALL ILLUMINATED SIGNS. REPLACE CONTROLLER ON POLE T7.
7. INSTALL 2–4" RMC AND 1–3" RMC UNDER TRACK SLAB ON FIFTH STREET AND MAIN STREET.
8. A DISTANCE OF SIX FEET BEHIND THE CURB AND 15 FEET ON EITHER SIDE OF PROPOSED OCS POLES AND SIGNAL POLES (INCLUDING ANY DISTURBANCE TO THE EXISTING CURB) HAS BEEN QUANTIFIED FOR BIDDING PURPOSES FOR REMOVAL AND REPLACEMENT OF SIDEWALK. THE CITY'S ENGINEER WILL DETERMINE ACTUAL PAY LIMITS FOR THIS WORK. NO ADDITIONAL INCREASE TO THE UNIT COST WILL BE ALLOWED FOR THIS WORK IF THE QUANTITIES ARE MORE OR LESS THAN THE AMOUNT QUANTIFIED FOR BIDDING PURPOSES.

CAUTION UNDERGROUND UTILITIES
2 WORKING DAYS
BEFORE YOU DIG
CALL 1-800-362-2764
OHIO UTILITY PROTECTION SERVICE
CALL NON-SERVICE FACILITY
OWNERS DIRECT

GRAPHIC SCALE
10 0 10 20 40
(IN FEET)
1 inch = 10 ft. Full Size
1 inch = 20 ft. Half Size

CONTRACT DRAWING
PRINTS NOT BEARING THIS STAMP WERE MADE PRIOR TO ADVERTISING FOR BIDS AND ARE TO BE CONSIDERED OBSOLETE FOR CONTRACT PURPOSES.

Department of Transportation and Engineering
City of Cincinnati
City Hall
801 Plum Street
Cincinnati, Ohio 45202

CINCINNATI STREETCAR
CENTRAL BUSINESS DISTRICT
PROPOSED TRAFFIC SIGNAL PLAN
MAIN STREET AND FIFTH STREET

Revisions
No.

Date	7/02/12
Date	7/02/12
Date	7/02/12
Date	7/12/12
Drawn by	AMW
Designed by	AMW
Checked by	JTB
Reviewed by	JTB

Consultant
PB HDR

File Number
ACC No. 23126

G-TC-1019 C

DOTE_Mono_PDF_Half.pltcfg
W:\29014A-Streetcar\CAD\Traffic_Control\Signals\1019_Fifth&Main\S_G-TC-1019 C.dgn
7:32:52 AM
7/11/2012

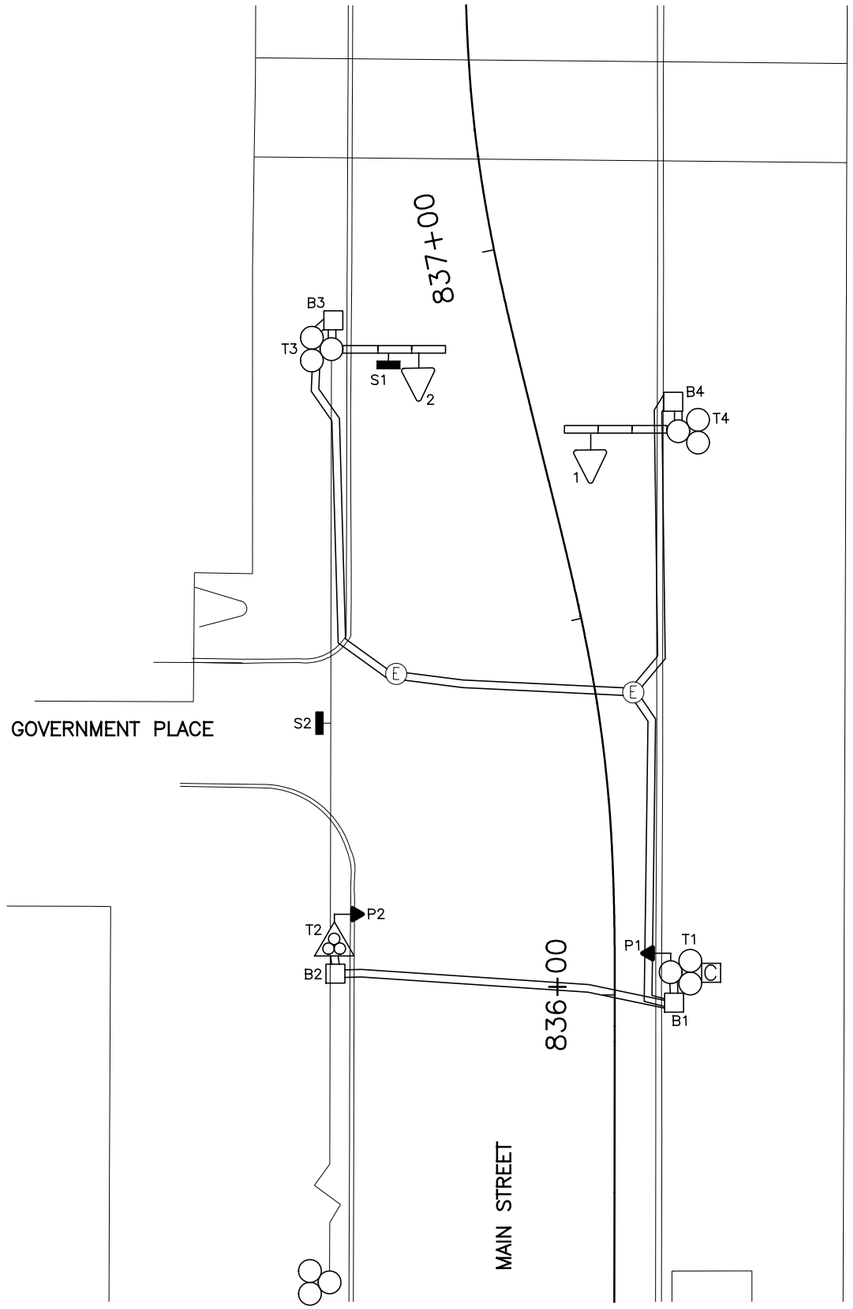

EQUIPMENT LIST	
1, 2	TRAF. SIG. HD., 3 SECT., HORIZ., 8" RYG
P1, P2	PED. SIG., 2 SECTION, 12" INCANDESCENT
S1	ILLUMINATED "ONE WAY —" #92A
S2	ILLUMINATED "ONE WAY —" #92C
B1–B4	PULLBOX, DOWNTOWN SPECIAL, 24" X 24"
T1	MPL POLE
T2	MPIN
T3	MPLT POLE W/ 3 BAY BOOM
T4	MPT POLE W/ 3 BAY BOOM

LEGEND

- MPL, MPT, MPLT SIGNAL POLE
- MPIN POLE
- TRAFFIC SIGNAL CONDUIT
- TRAFFIC SIGNAL HEAD
- PEDESTRIAN SIGNAL HEAD
- ILLUMINATED SIGN
- PULLBOX
- CONTROLLER

CAUTION UNDERGROUND UTILITIES
2 WORKING DAYS
BEFORE YOU DIG
CALL 1-800-362-2764
OHIO UTILITY PROTECTION SERVICE
CALL NON-SERVICE FACILITY
OWNERS DIRECT

GRAPHIC SCALE
10 0 10 20 40
(IN FEET)
1 inch = 10 ft. Full Size
1 inch = 20 ft. Half Size

CONTRACT DRAWING

PRINTS NOT BEARING THIS STAMP MAY BE USED PRIOR TO ADVERTISING FOR BIDS AND ARE TO BE CONSIDERED OBSOLETE FOR CONTRACT PURPOSES.

Department of Transportation and Engineering

City of Cincinnati
Room 450, City Hall
801 Plum Street
Cincinnati, Ohio 45202

CINCINNATI STREETCAR
CENTRAL BUSINESS DISTRICT

EXISTING TRAFFIC SIGNAL PLAN
MAIN STREET AND GOVERNMENT PLACE

Revisions
No.

	Date
Drawn by AMW	7/02/12
Designed by AMW	7/02/12
Checked by JTB	7/02/12
Reviewed by JTB	7/12/12

Consultant

PB HDR

File Number

ACC No.
23126

G-TC-1020 A

DOTE_Mono_PDF_Half.pltcfg
W:\23004-Streetcar\CAD\Traffic_Control\Signals\1020_Main&Government\S_G-TC-1020 A.dgn
7/11/2012 7:33:06 AM

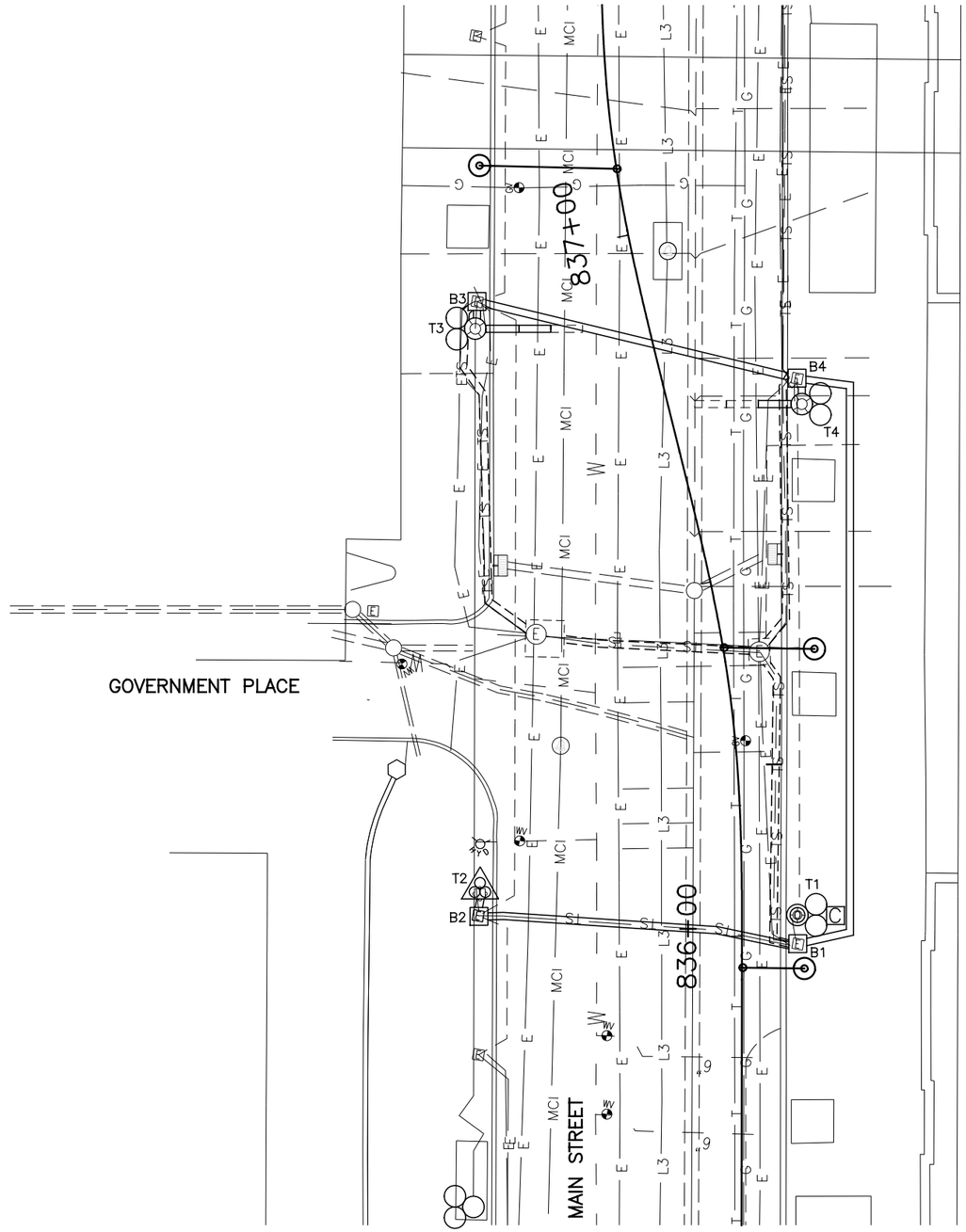

SIGNAL PHASING

ACTUATED | PRE–TIMED | PRE–TIMED

THIS IS THE GENERAL SEQUENCING FOR THIS TRAFFIC SIGNAL. REFER TO THE CITY OF CINCINNATI FOR FINAL SEQUENCING, LABELING AND TIMINGS.

CAUTION UNDERGROUND UTILITIES
2 WORKING DAYS
BEFORE YOU DIG
CALL 1–800–362–2764
OHIO UTILITY PROTECTION SERVICE
CALL NON–SERVICE FACILITY
OWNERS DIRECT

GRAPHIC SCALE

10 0 10 20 40

(IN FEET)
1 inch = 10 ft. Full Size
1 inch = 20 ft. Half Size

DEPARTMENT OF TRANSPORTATION & ENGINEERING
CITY OF CINCINNATI OHIO

CONTRACT DRAWING

PRINTS NOT BEARING THIS STAMP WERE MADE PRIOR TO ADVERTISING FOR BIDS AND ARE TO BE CONSIDERED OBSOLETE FOR CONTRACT PURPOSES.

Department of Transportation and Engineering

City of Cincinnati
City Hall
801 Plum Street
Cincinnati, Ohio 45202

CINCINNATI STREETCAR
CENTRAL BUSINESS DISTRICT
UNDERGROUND UTILITIES & SIGNAL PLAN DETAILS
MAIN STREET AND GOVERNMENT PLACE

Revisions
No.

Drawn by AMW	Designed by AMW	Checked by JTB	Reviewed by JTB
Date 7/02/12	Date 7/02/12	Date 7/02/12	Date 7/12/12

Consultant

PB HDR

File Number

ACC No. 23126

G-TC-1020 B

DOTE_Mono_PDF_Half.pltcfg
W:\29014A-Streetcar\CAD\Traffic_Control\Signals\1020_Main&Government\S_G-TC-1020 B.dgn
7/11/2012 7:33:21 AM

LEGEND

- MPL, MPT, MPLT SIGNAL POLE
- MPIN POLE
- TRAFFIC SIGNAL CONDUIT
- TRAFFIC SIGNAL HEAD
- TRANSIT SIGNAL HEAD
- PEDESTRIAN SIGNAL HEAD
- ILLUMINATED SIGN
- PULLBOX
- CONTROLLER
- VIDEO DETECTION CAMERA
- VIDEO DETECTION ZONE

SIGNAL INDICATIONS

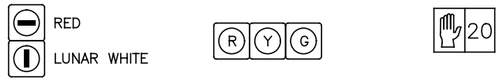

SS1, SS2 — LRT SIGNAL HEAD DETAIL 12" (LED) LENSES

1, 2 — SIGNAL HEAD DETAIL 12" (LED) LENSES

P1, P2 — TYPE D2 PEDESTRIAN (LED) (COUNTDOWN) SIGNAL HEAD

TYPICAL POLE ORIENTATION

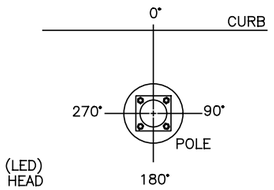

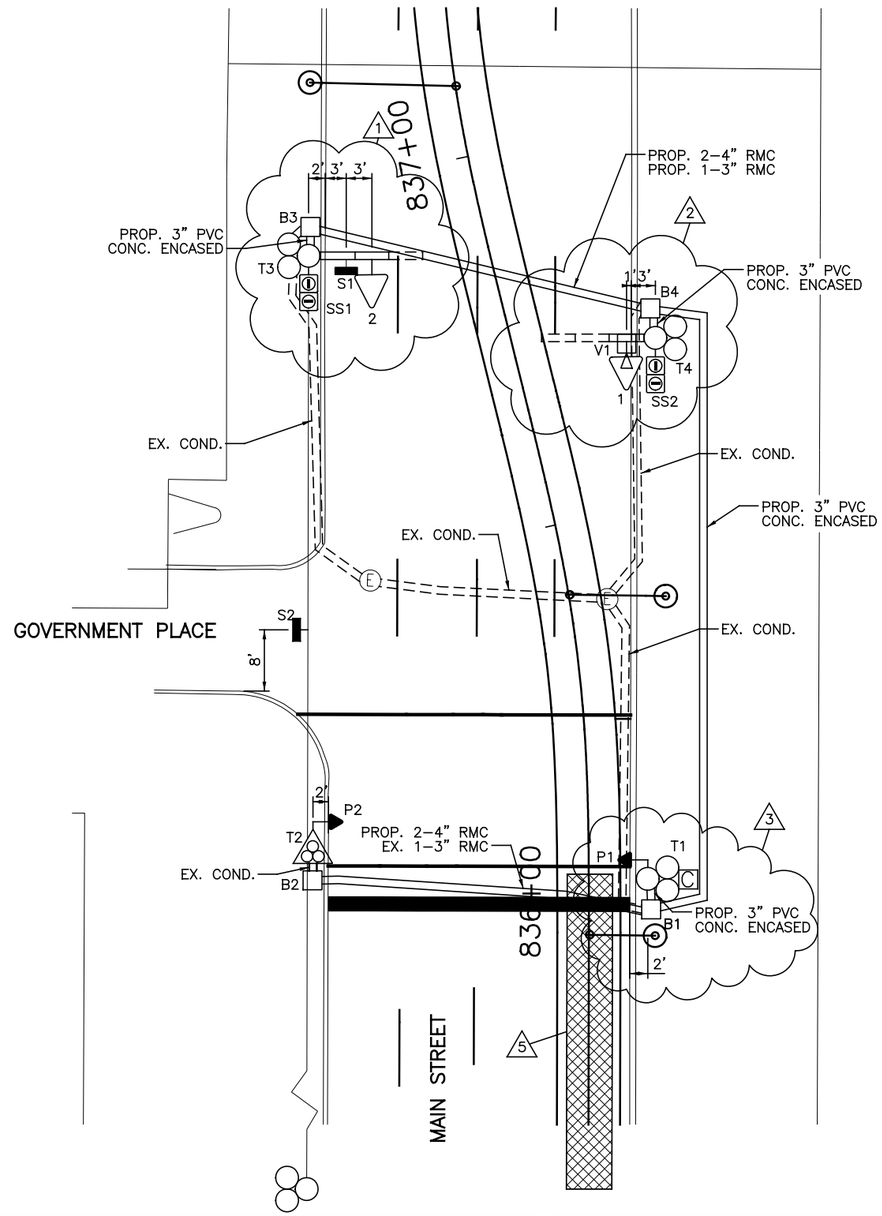

MATERIAL SCHEDULE

NO.	VEHICULAR SIGNAL HEADS 1	2							TYPE D2 PEDESTRIAN (LED) (COUNTDOWN) SIGNAL HEAD	ATTACHMENT HEIGHT (FEET) TO THE BOTTOM OF BOOM	TRAFFIC BOOM (DEG)	STREET LIGHT BRACKET ARM (DEG)	HANDHOLE (DEG)	CONTROLLER (DEG)	VIDEO DETECTION CAMERA V1 (DEG)
12 INCH	R	R							NOTE: USE LENS W/ SYMBOL LEGENDS PORTLAND ORANGE: HAND (DONT WALK) LUNAR WHITE: WALKING MAN (WALK)						
	Y	Y													
	G	G													

POLE NO.	POLE DATA: POLE TYPE	TRAFFIC BOOM (# OF BAYS)	FOUNDATION TYPE	PEDESTRIAN SIGNALS ANGLE OF ORIENTATION (DEGREES) P1 D W	P2 D W												
T1	MPL	–	EXIST.	90										EX.	EX.	180	
T2	MPIN	–	EXIST.		270										EX.		
T3	MPLT	2	EXIST.									17	0	EX.	EX.		
T4	MPT	1	EXIST.									17	0		EX.		0

CABLE SCHEDULE

CABLE#	CONNECTING DEVICE	TYPE	CABLE ROUTING	LIN. FT
1	TRAFFIC SIGNAL TS1	EXIST.	EXIST.	EXIST.
2	TRAFFIC SIGNAL TS2	7C#14	TS2–T3–B3–B4–B1–T1–C	200
3	PED. SIGNAL P1	EXIST.	EXIST.	EXIST.
4	PED. SIGNAL P2	EXIST.	EXIST.	EXIST.
5	ILLUM. SIGN S1	EXIST.	EXIST.	EXIST.
6	ILLUM. SIGN S2	EXIST.	EXIST.	EXIST.
7	POWER CABLE, AC POSITIVE, BLACK	EXIST.	EXIST.	EXIST.
8	POWER CABLE, AC NEGATIVE, WHITE	EXIST.	EXIST.	EXIST.
9	TRANSIT SIGNAL SS1	7C#14	SS1–T3–B3–B4–B1–T1–C	195
10	TRANSIT SIGNAL SS2	7C#14	SS2–T4–B4–B1–T1–C	150
11	VIDEO DETECTION CAMERA V1	VIDEO CABLE	V1–T4–B4–B1–T1–C	150

NOTES:

1. REPLACE THE EXISTING 3 SIGNAL BAY BOOM WITH A 2 SIGNAL BAY BOOM. MOVE SIGNAL HEAD 2 TO BAY 2. INSTALL NEW SIGN S1 TO BAY 1. INSTALL TRANSIT SIGNAL SS1 ON POLE T3.
2. REPLACE THE EXISTING 3 SIGNAL BAY BOOM WITH A 1 SIGNAL BAY BOOM. MOVE SIGNAL HEAD 1 TO BAY 1. INSTALL VIDEO DETECTION CAMERA V1 ON TOP OF THE FIRST BAY ON POLE T4. INSTALL TRANSIT SIGNAL SS2 ON POLE T4.
3. REPLACE PEDESTRIAN HEAD P1 WITH A TYPE D2 LED COUNTDOWN PEDESTRIAN SIGNAL HEAD. REPLACE CONTROLLER ON POLE T1.
4. REPLACE ALL SIGNAL HEADS WITH 12" LED TRAFFIC SIGNALS AND REPLACE ALL PEDESTRIAN HEADS WITH TYPE D2 LED COUNTDOWN PEDESTRIAN SIGNALS. REPLACE ALL ILLUMINATED SIGNS.
5. INSTALL 2–4" RMC AND 1–3" RMC UNDER TRACK SLAB AS NOTED ON THIS PLAN.
6. 6' X 60' STREETCAR DETECTION ZONE. SEE TRAFFIC SIGNAL AND LIGHTING GENERAL NOTES FOR ADDITIONAL DETAILS.
7. A DISTANCE OF SIX FEET BEHIND THE CURB AND 15 FEET ON EITHER SIDE OF PROPOSED OCS POLES AND SIGNAL POLES (INCLUDING ANY DISTURBANCE TO THE EXISTING CURB) HAS BEEN QUANTIFIED FOR BIDDING PURPOSES FOR REMOVAL AND REPLACEMENT OF SIDEWALK. THE CITY'S ENGINEER WILL DETERMINE ACTUAL PAY LIMITS FOR THIS WORK. NO ADDITIONAL INCREASE TO THE UNIT COST WILL BE ALLOWED FOR THIS WORK IF THE QUANTITIES ARE MORE OR LESS THAN THE AMOUNT QUANTIFIED FOR BIDDING PURPOSES.

CAUTION UNDERGROUND UTILITIES
2 WORKING DAYS
BEFORE YOU DIG
CALL 1–800–362–2764
OHIO UTILITY PROTECTION SERVICE
CALL NON–SERVICE FACILITY OWNERS DIRECT

SIGN DETAILS

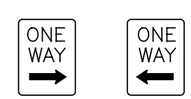

S1 ILLUM. 24" X 30" CITY #92A

S2 ILLUM. 24" X 30" CITY #92C

GRAPHIC SCALE

10 0 10 20 40

(IN FEET)
1 inch = 10 ft. Full Size
1 inch = 20 ft. Half Size

DOTE_Mono_PDF_Half.pltcfg
W:\29014A-Streetcar\CAD\Traffic_Control\Signals\1020_Main&Government\S_G-TC-1020 C.dgn
7:33:36 AM
7/11/2012

CONTRACT DRAWING

PRINTS NOT BEARING THIS STAMP WERE MADE PRIOR TO ADVERTISING FOR BID AND ARE TO BE CONSIDERED OBSOLETE FOR CONTRACT PURPOSES.

Department of Transportation and Engineering

City of Cincinnati
City Hall
801 Plum Street
Cincinnati, Ohio 45202

CINCINNATI STREETCAR
CENTRAL BUSINESS DISTRICT
PROPOSED TRAFFIC SIGNAL PLAN
MAIN STREET AND GOVERNMENT PLACE

Revisions
No.

Drawn by AMW	Date 7/02/12
Designed by AMW	Date 7/02/12
Checked by JTB	Date 7/02/12
Reviewed by JTB	Date 7/12/12

Consultant

PB HDR

File Number

ACC No. 23126

G-TC-1020 C

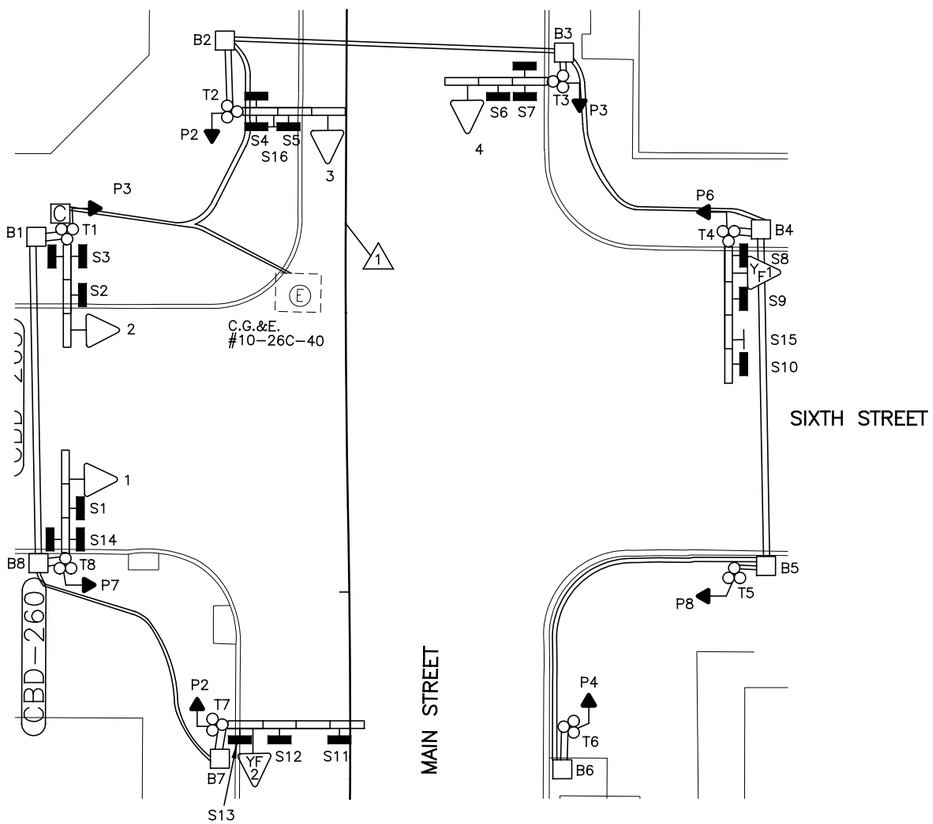

EQUIPMENT LIST	
1–4	TRAF. SIG. HD., 3 SECTIONS, HORIZ., 8" RYG
P1–P8	PED. SIG., 16" INCANDESCENT, DWW 3 LINE
YF1, YF2	TRAF. SIG. HD., 1 SECTION, 8" Y
S1	ILLUM. SIGN, 24" X 30", "ONE WAY →",#92A
S2, S5	ILLUM. SIGN, 24" X 30", "NO TURN ON RED," #117
S3, S14	ILLUM. SIGN, 24" X 30", "MAIN ST.", DF
S4, S7	ILLUM. SIGN, 24" X 30", "SIXTH ST.", DF
S6	ILLUM. SIGN, 24" X 30", "ONE WAY ←",#92C
S8, S13	ILLUM. SIGN, 30" X 24","WATCH FOR EMERGENCY VEHICLES WHEN FLASHING", #114
S9	ILLUM. SIGN, 24" X 30", " ↗ ONLY", #79A
S10	ILLUM. SIGN, 24" X 30", " ↑ ONLY", #79B
S11	ILLUM. SIGN, 24" X 30", " ↰↑ ", #79BC
S12	ILLUM. SIGN, 24" X 30", " ↖ ONLY", #79C
S15	REFL. SIGN, 30" X 24" "PARKING ⊢ ", SPECIAL
S16	REFL. SIGN, 30" X 24" "DO NOT BLOCK INTERSECTION", #331
B1–B8	PULLBOX, 24" X 24", SPECIAL DOWNTOWN TYPE
T1, T2, T3, T8	STEEL POLE, MPLT W/ 3 BAY BOOM
T4, T7	STEEL POLE, MPLT W/ 4 BAY BOOM
T5, T6	STEEL POLE, MPL

LEGEND

- MPL, MPT, MPLT SIGNAL POLE
- TRAFFIC SIGNAL CONDUIT
- YELLOW FLASHER SIGNAL HEAD
- TRAFFIC SIGNAL HEAD
- PEDESTRIAN SIGNAL HEAD
- REFLECTORIZED SIGN
- ILLUMINATED SIGN
- PULLBOX
- CONTROLLER

NOTES:

1. STA. 838+98.63 "CBD" = STA. 68+09.90 "CBD".

CAUTION UNDERGROUND UTILITIES
2 WORKING DAYS
BEFORE YOU DIG
CALL 1–800–362–2764
OHIO UTILITY PROTECTION SERVICE
CALL NON–SERVICE FACILITY
OWNERS DIRECT

GRAPHIC SCALE
10 0 10 20 40
(IN FEET)
1 inch = 10 ft. Full Size
1 inch = 20 ft. Half Size

DOTE_Mono_PDF_Half.pltcfg
W:\29014A-Streetcar\CAD\Traffic_Control\Signals\1021_Sixth&Main\S_G-TC-1021 A.dgn
7:33:52 AM
7/11/2012

CONTRACT DRAWING

PRINTS NOT BEARING THIS STAMP WERE MADE PRIOR TO ADVERTISING FOR BID AND ARE TO BE CONSIDERED OBSOLETE FOR CONTRACT PURPOSES.

Department of Transportation and Engineering

City of Cincinnati
City Hall
801 Plum Street
Cincinnati, Ohio 45202

CINCINNATI STREETCAR
CENTRAL BUSINESS DISTRICT
EXISTING TRAFFIC SIGNAL PLAN
MAIN STREET AND SIXTH STREET

Revisions
No.

	Date
Drawn by AMW	7/02/12
Designed by AMW	7/02/12
Checked by JTB	7/02/12
Reviewed by JTB	7/12/12

Consultant

PB HDR

File Number

ACC No.
23126

G-TC-1021 A

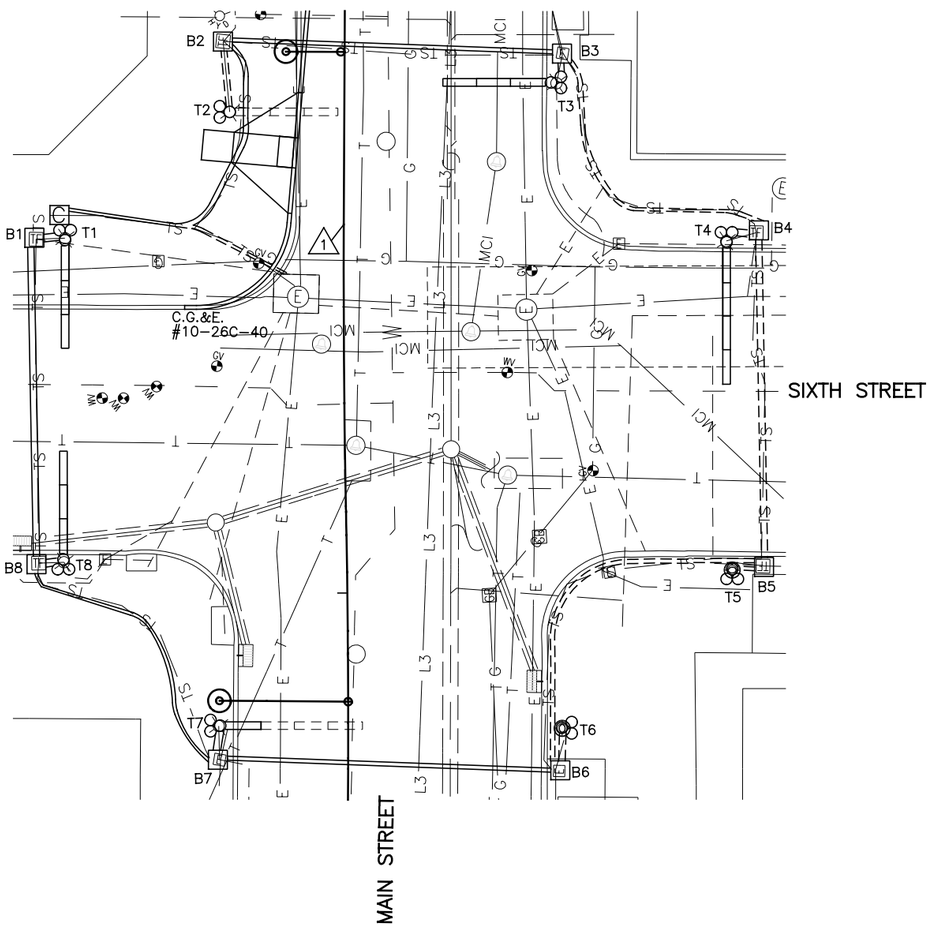

SIGNAL PHASING

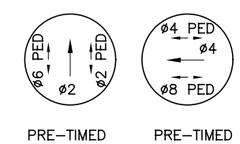

THIS IS THE GENERAL SEQUENCING FOR THIS TRAFFIC SIGNAL. REFER TO THE CITY OF CINCINNATI FOR FINAL SEQUENCING, LABELING AND TIMINGS.

CAUTION UNDERGROUND UTILITIES
2 WORKING DAYS
BEFORE YOU DIG
CALL 1–800–362–2764
OHIO UTILITY PROTECTION SERVICE
CALL NON–SERVICE FACILITY
OWNERS DIRECT

NOTES:

1. STA. 838+98.63 "CBD" = STA. 68+09.90 "CBD".

GRAPHIC SCALE

10 0 10 20 40

(IN FEET)
1 inch = 10 ft. Full Size
1 inch = 20 ft. Half Size

DEPARTMENT OF TRANSPORTATION & ENGINEERING
CITY OF CINCINNATI OHIO

CONTRACT DRAWING

PRINTS NOT BEARING THIS STAMP WERE MADE PRIOR TO ADVERTISING FOR BIDS AND ARE TO BE CONSIDERED OBSOLETE FOR CONTRACT PURPOSES.

Department of Transportation and Engineering

City of Cincinnati
City Hall
801 Plum Street
Cincinnati, Ohio 45202

CINCINNATI STREETCAR
CENTRAL BUSINESS DISTRICT
UNDERGROUND UTILITIES & SIGNAL PLAN DETAILS
MAIN STREET AND SIXTH STREET

Revisions

No.				

Drawn by AMW	Designed by AMW	Checked by JTB	Reviewed by JTB
Date 7/02/12	Date 7/02/12	Date 7/02/12	Date 7/12/12

Consultant

PB HDR

File Number

ACC No. 23126

G-TC-1021 B

DOTE_Mono_PDF_Half.pltcfg
W:\29014A-Streetcar\CAD\Traffic_Control\Signals\1021_Sixth&Main\S_G-TC-1021 B.dgn
7/11/2012 7:34:07 AM

LEGEND

- MPL, MPT, MPLT SIGNAL POLE
- TRAFFIC SIGNAL CONDUIT
- YELLOW FLASHER SIGNAL HEAD
- TRAFFIC SIGNAL HEAD
- PEDESTRIAN SIGNAL HEAD
- REFLECTORIZED SIGN
- ILLUMINATED SIGN
- PULLBOX
- CONTROLLER

SIGNAL INDICATIONS

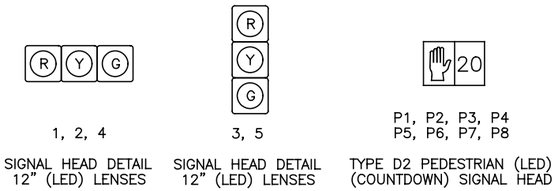

TYPICAL POLE ORIENTATION

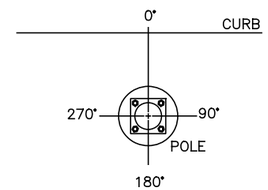

SIGN DETAILS

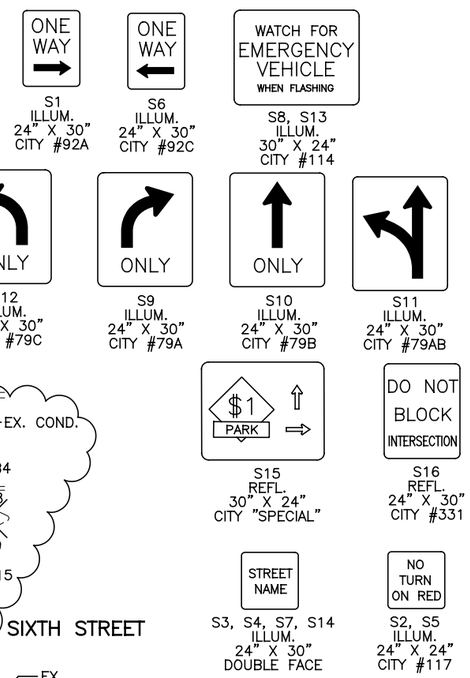

MATERIAL SCHEDULE

NO.	VEHICULAR SIGNAL HEADS 1	2	3	4	5				TYPE D2 PEDESTRIAN (LED) (COUNTDOWN) SIGNAL HEAD	ATTACHMENT HEIGHT (FEET) TO THE BOTTOM OF BOOM	TRAFFIC BOOM (DEG)	STREET LIGHT BRACKET ARM (DEG)	HANDHOLE (DEG)	CONTROLLER (DEG)
12 INCH	R	R	R	R	R				NOTE: USE LENS W/ SYMBOL LEGENDS PORTLAND ORANGE: HAND (DONT WALK) LUNAR WHITE: WALKING MAN (WALK)					
	Y	Y	Y	Y	Y									
	G	G	G	G	G									

POLE NO.	POLE DATA: POLE TYPE	TRAFFIC BOOMS (# OF BAYS)	FOUNDATION TYPE	PEDESTRIAN SIGNALS P1	P2	P3	P4	P5	P6	P7	P8
				D W	D W	D W	D W	D W	D W	D W	D W
				ANGLE OF ORIENTATION (DEGREES)							
T1	MPLT	3	EXIST.					180			
T2	MPLT	0	EXIST.	180							
T3	MPLT	3	EXIST.			180					
T4	MPLT	4	EXIST.						180		
T5	MPL	–	EXIST.								180
T6	MPL	–	EXIST.				180				
T7	MPLT	1	EXIST.		180						
T8	MPLT	3	EXIST.							180	

POLE NO.	ATTACHMENT HEIGHT (FEET) TO THE BOTTOM OF BOOM	TRAFFIC BOOM (DEG)	STREET LIGHT BRACKET ARM (DEG)	HANDHOLE (DEG)	CONTROLLER (DEG)
T1	EX.	EX.	EX.	EX.	180
T2			EX.	EX.	
T3	EX.	EX.	EX.	EX.	
T4	EX.	EX.	EX.	EX.	
T5			EX.	EX.	
T6			EX.	EX.	
T7	17	0	EX.	EX.	
T8	EX.	EX.	EX.	EX.	

CABLE SCHEDULE

CABLE#	CONNECTING DEVICE	TYPE	CABLE ROUTING	LIN. FT
1	TRAFFIC SIGNAL TS1	EXIST.	EXIST.	EXIST.
2	TRAFFIC SIGNAL TS2	EXIST.	EXIST.	EXIST.
3	TRAFFIC SIGNAL TS3	EXIST.	EXIST.	EXIST.
4	TRAFFIC SIGNAL TS4, TS5	7C#14	TS4–T5–T3–B3–B2–B1–T1–C	170
5	PED. SIGNAL P1	EXIST.	EXIST.	EXIST.
6	PED. SIGNAL P2	EXIST.	EXIST.	EXIST.
7	PED. SIGNAL P3	EXIST.	EXIST.	EXIST.
8	PED. SIGNAL P4	EXIST.	EXIST.	EXIST.
9	PED. SIGNAL P5	EXIST.	EXIST.	EXIST.
10	PED. SIGNAL P6	EXIST.	EXIST.	EXIST.
11	PED. SIGNAL P7	EXIST.	EXIST.	EXIST.
12	PED. SIGNAL P8	EXIST.	EXIST.	EXIST.
13	ILLUM. SIGN S1, S14	EXIST.	EXIST.	EXIST.
14	ILLUM. SIGN S2, S3	EXIST.	EXIST.	EXIST.
15	ILLUM. SIGN S4, S12	2C#12	S12–S4–T7–B7–B8–B1–T1–C	145
16	ILLUM. SIGN S5, S6, S7	2C#12	S5–S6–S7–T3–B3–B2–B1–T1–C	170
17	ILLUM. SIGN S9, S10	EXIST.	EXIST.	EXIST.
18	POWER CABLE, AC POSITIVE, BLACK	EXIST.	EXIST.	EXIST.
19	POWER CABLE, AC NEGATIVE, WHITE	EXIST.	EXIST.	EXIST.

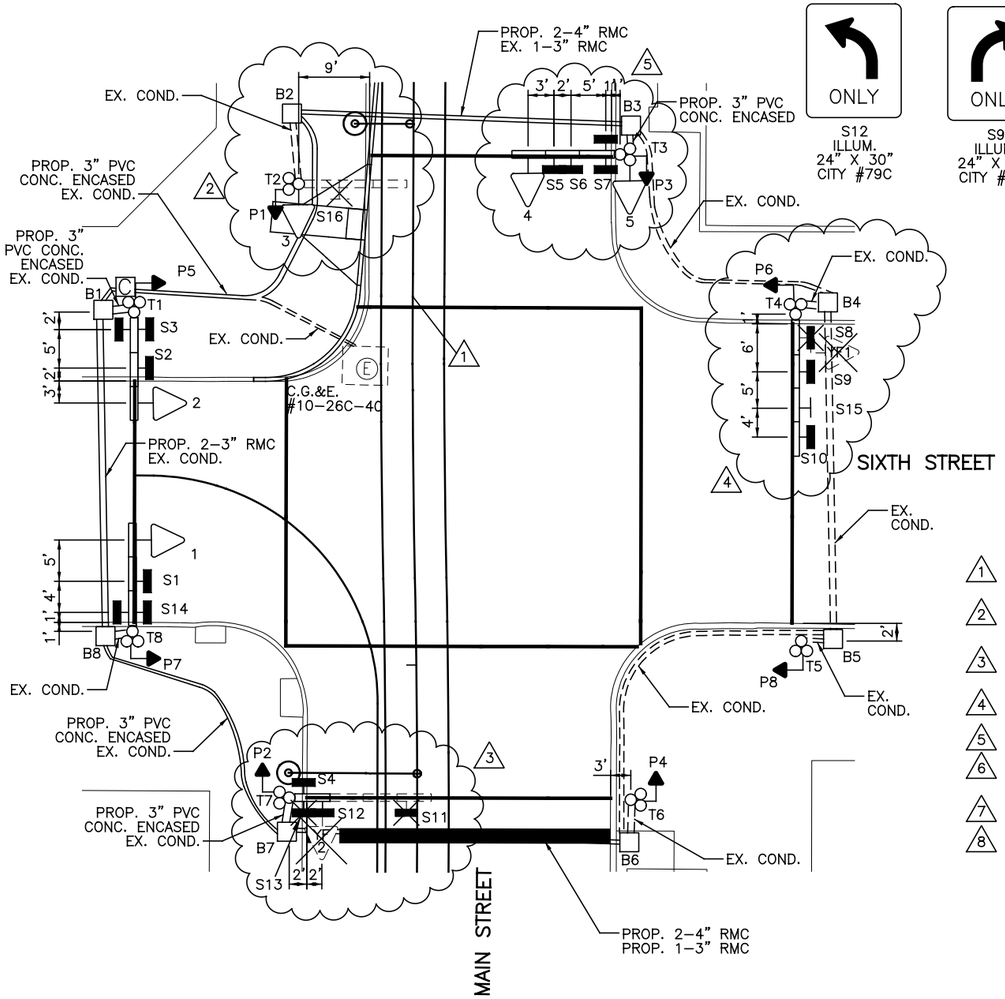

NOTES:

1. STA. 838+98.63 "CBD" = STA. 68+09.90 "CBD".
2. REMOVE 3 SIGNAL BAY BOOM FROM POLE T2. REMOVE REFLECTORIZED SIGN S16. MOVE ILLUMINATED SIGN S4 TO BAY 1 ON POLE T7. MOVE ILLUMINATED SIGN S5 TO BAY 2 OF POLE T3. PLACE A NEW 12" LED SIGNAL HEAD 3 ON POLE T2.
3. REPLACE THE 4 SIGNAL BAY BOOM WITH A NEW 1 SIGNAL BAY BOOM ON POLE T7. REMOVE YELLOW FLASHER SIGNAL HEAD YF2, ILLUMINATED SIGNS S11 AND S13. INSTALL NEW ILLUMINATED SIGNS S4 AND S12 IN THE SIGNAL BAY.
4. REMOVE YELLOW FLASHER SIGNAL HEAD YF1 AND ILLUMINATED SIGN S8.
5. INSTALL NEW ILLUMINATED SIGN S5 INTO BAY 2 ON POLE T3. ADD A NEW 12" LED SIGNAL HEAD 5 ONTO POLE T3.
6. REPLACE ALL SIGNAL HEADS WITH NEW 12" LED SIGNAL HEADS AND REPLACE ALL PEDESTRIAN SIGNALS WITH TYPE D2 LED COUNTDOWN PEDESTRIAN SIGNALS. REPLACE ALL ILLUMINATED AND REFLECTORIZED SIGNS. REPLACE CONTROLLER ON POLE T1.
7. INSTALL 2–4" RMC AND 1–3" RMC UNDER TRACK SLAB AS SHOWN ON THIS PLAN.
8. A DISTANCE OF SIX FEET BEHIND THE CURB AND 15 FEET ON EITHER SIDE OF PROPOSED OCS POLES AND SIGNAL POLES (INCLUDING ANY DISTURBANCE TO THE EXISTING CURB) HAS BEEN QUANTIFIED FOR BIDDING PURPOSES FOR REMOVAL AND REPLACEMENT OF SIDEWALK. THE CITY'S ENGINEER WILL DETERMINE ACTUAL PAY LIMITS FOR THIS WORK. NO ADDITIONAL INCREASE TO THE UNIT COST WILL BE ALLOWED FOR THIS WORK IF THE QUANTITIES ARE MORE OR LESS THAN THE AMOUNT QUANTIFIED FOR BIDDING PURPOSES.

CAUTION UNDERGROUND UTILITIES
2 WORKING DAYS
BEFORE YOU DIG
CALL 1–800–362–2764
OHIO UTILITY PROTECTION SERVICE
CALL NON–SERVICE FACILITY
OWNERS DIRECT

GRAPHIC SCALE
10 0 10 20 40
(IN FEET)
1 inch = 10 ft. Full Size
1 inch = 20 ft. Half Size

DOTE_Mono_PDF_Half.pltcfg
W:\29014A-Streetcar\CAD\Traffic_Control\Signals\1021_Sixth&Main\S_G-TC-1021 C.dgn
7:34:22 AM
7/11/2012

CONTRACT DRAWING
PRINTS NOT BEARING THIS STAMP WERE MADE PRIOR TO ADVERTISING FOR BIDS AND ARE TO BE CONSIDERED OBSOLETE FOR CONTRACT PURPOSES.

Department of Transportation and Engineering
City of Cincinnati
City Hall
801 Plum Street
Cincinnati, Ohio 45202

CINCINNATI STREETCAR
CENTRAL BUSINESS DISTRICT
PROPOSED TRAFFIC SIGNAL PLAN
MAIN STREET AND SIXTH STREET

Revisions
No.

	Date
Drawn by AMW	7/02/12
Designed by AMW	7/02/12
Checked by JTB	7/02/12
Reviewed by JTB	7/12/12

Consultant
PB HDR

File Number
ACC No. 23126

G-TC-1021 C

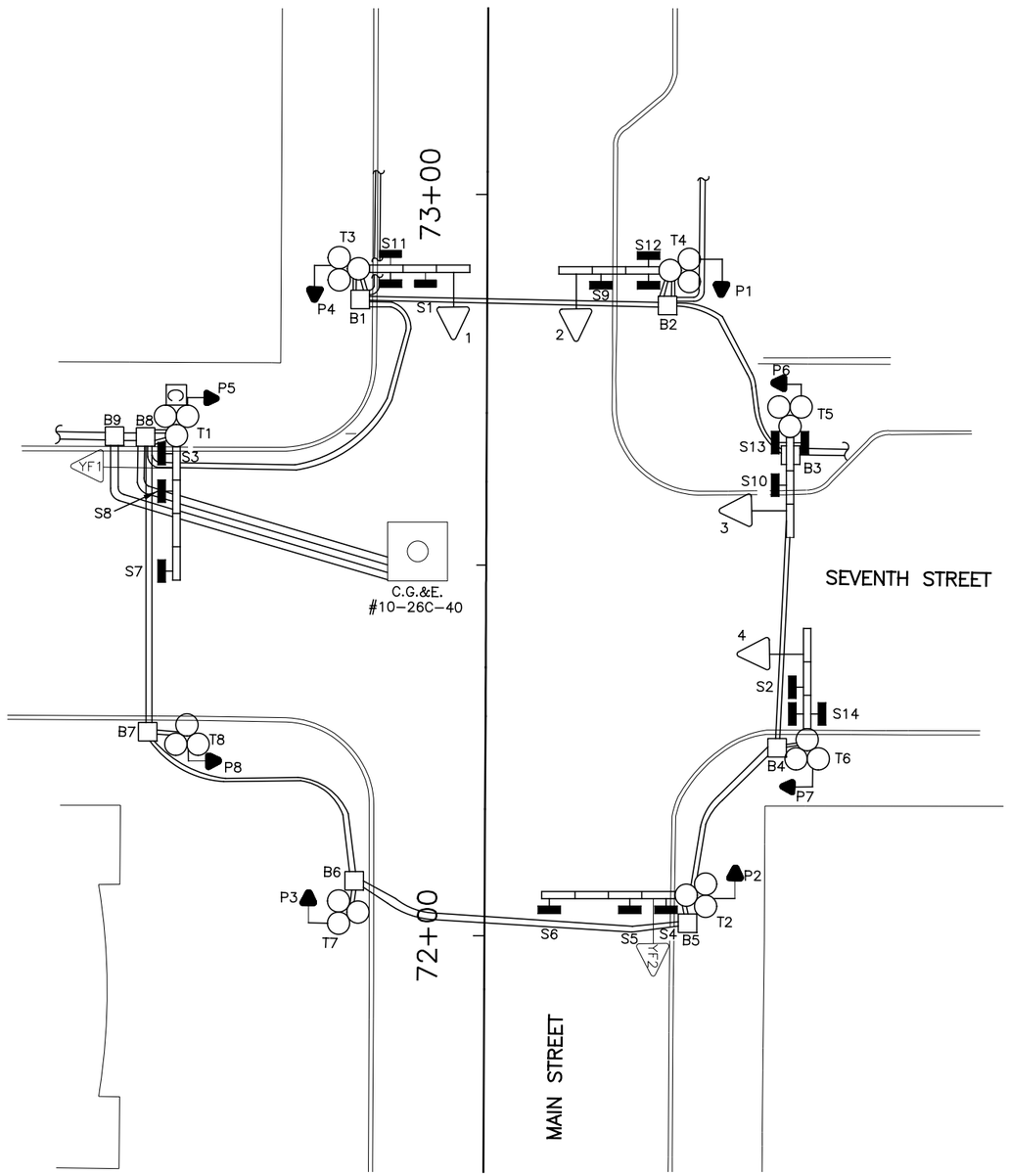

EQUIPMENT LIST

1–4	TRAF. SIG. HD., 3 SECTIONS, HORIZ., 8" RYG
YF1, YF2	TRAF. SIG. HD., 1 SECTION, 8" Y
P1–P8	PED. SIG., 1 SECTION, 16" INCANDESCENT, DWW 3 LINE
S1	ILLUM. SIGN, 24" X 30", "ONE WAY →",#92A
S2	ILLUM. SIGN, 24" X 30", "ONE WAY ←",#92C
S3, S4	ILLUM. SIGN, 30" X 24", "WATCH FOR EMERGENCY VEHICLES WHEN FLASHING", #114
S5	ILLUM. SIGN, 24" X 30", "↗ ONLY", #79A
S6, S7	ILLUM. SIGN, 24" X 30", "↑ ONLY", #79B
S8	ILLUM. SIGN, 24" X 30", "↖ ONLY", #79C
S9, S10	ILLUM. SIGN, 24" X 30", "NO TURN ON RED," #117
S11, S12	ILLUM. SIGN, 24" X 30", SEVENTH ST. EAST, DF
S13, S14	ILLUM. SIGN, 24" X 30", MAIN ST, DF
B1–B9	PULLBOX, 24" X 24", DOWNTOWN SPECIAL
T1, T2	MPLT W/4 BAY BOOM
T3–T6	MPLT W/3 BAY BOOM
T7, T8	MPL

LEGEND

- MPL, MPT, MPLT SIGNAL POLE
- TRAFFIC SIGNAL CONDUIT
- YELLOW FLASHER SIGNAL HEAD
- TRAFFIC SIGNAL HEAD
- PEDESTRIAN SIGNAL HEAD
- ILLUMINATED SIGN
- PULLBOX
- CONTROLLER

CAUTION UNDERGROUND UTILITIES
2 WORKING DAYS
BEFORE YOU DIG
CALL 1–800–362–2764
OHIO UTILITY PROTECTION SERVICE
CALL NON–SERVICE FACILITY
OWNERS DIRECT

GRAPHIC SCALE
10 0 10 20 40
(IN FEET)
1 inch = 10 ft. Full Size
1 inch = 20 ft. Half Size

CONTRACT DRAWING

PRINTS NOT BEARING THIS STAMP WERE MADE PRIOR TO ADVERTISING FOR BID, AND ARE TO BE CONSIDERED OBSOLETE FOR CONTRACT PURPOSES.

Department of Transportation and Engineering

City of Cincinnati
City Hall
801 Plum Street
Cincinnati, Ohio 45202

CINCINNATI STREETCAR
CENTRAL BUSINESS DISTRICT

EXISTING TRAFFIC SIGNAL PLAN
MAIN STREET AND SEVENTH STREET

Revisions
No.

Drawn by AMW	Date 7/02/12
Designed by AMW	Date 7/02/12
Checked by JTB	Date 7/02/12
Reviewed by JTB	Date 7/12/12

Consultant

PB HDR

File Number

ACC No. 23126

G-TC-1022 A

DOTE_Mono_PDF_Half.pltcfg
W:\29014A-Streetcar\CAD\Traffic_Control\Signals\1022_Main&Seventh_M-14\S_G-TC-1022_A.dgn
7:34:43 AM
7/11/2012

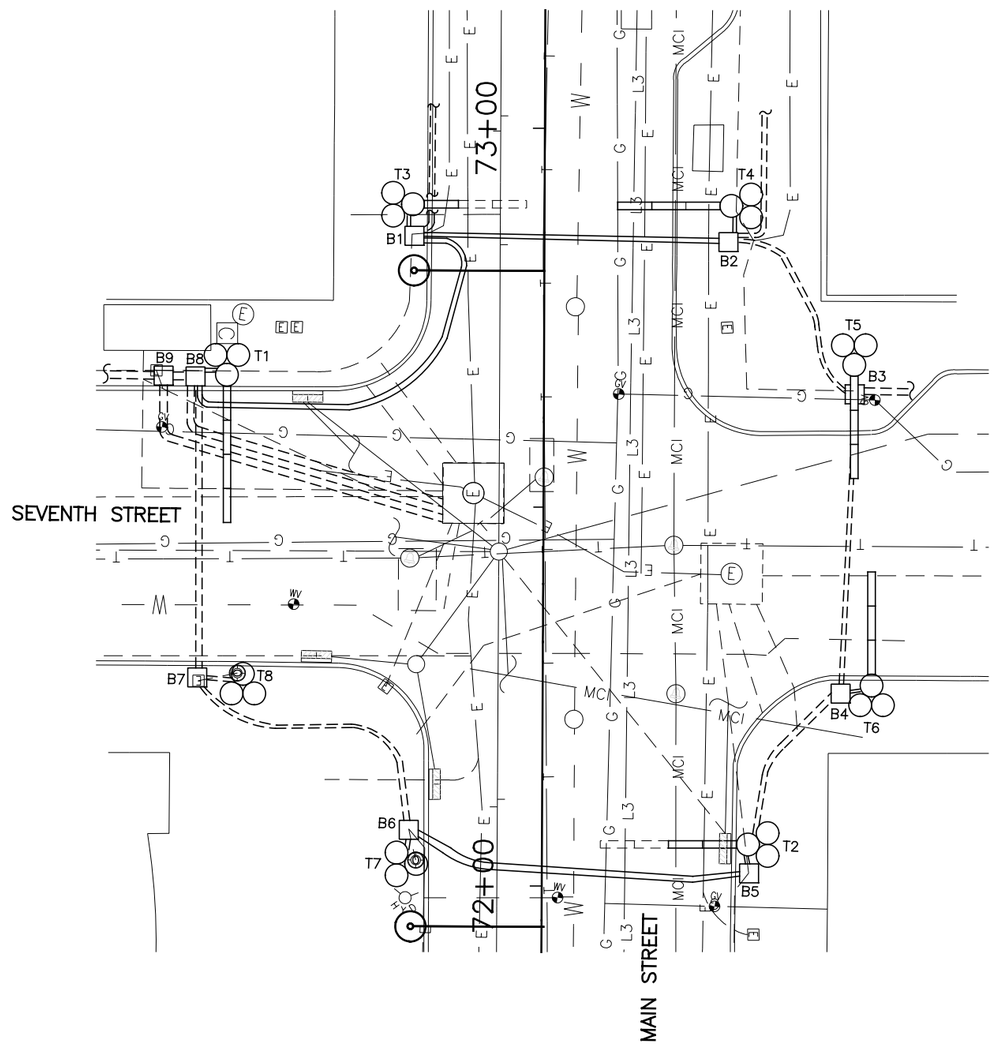

SIGNAL PHASING

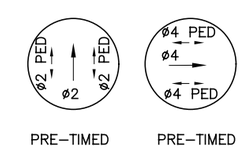

PRE–TIMED PRE–TIMED

THIS IS THE GENERAL SEQUENCING FOR THIS TRAFFIC SIGNAL. REFER TO THE CITY OF CINCINNATI FOR FINAL SEQUENCING, LABELING AND TIMINGS.

CAUTION UNDERGROUND UTILITIES
2 WORKING DAYS
BEFORE YOU DIG
CALL 1–800–362–2764
OHIO UTILITY PROTECTION SERVICE
CALL NON–SERVICE FACILITY
OWNERS DIRECT

GRAPHIC SCALE

10 0 10 20 40

(IN FEET)
1 inch = 10 ft. Full Size
1 inch = 20 ft. Half Size

CINCINNATI STREETCAR
CENTRAL BUSINESS DISTRICT
UNDERGROUND UTILITIES & SIGNAL PLAN DETAILS
MAIN STREET AND SEVENTH STREET

Department of Transportation and Engineering

City of Cincinnati
City Hall
801 Plum Street
Cincinnati, Ohio 45202

CONTRACT DRAWING

PRINTS NOT BEARING THIS STAMP WERE MADE PRIOR TO ADVERTISING FOR BIDS AND ARE TO BE CONSIDERED OBSOLETE FOR CONTRACT PURPOSES.

Revisions

No.			

Drawn by AMW	Date 7/02/12
Designed by AMW	Date 7/02/12
Checked by JTB	Date 7/02/12
Reviewed by JTB	Date 7/12/12

Consultant

PB HDR

File Number

ACC No. 23126

G-TC-1022 B

DOTE_Mono_PDF_Half.pltcfg
W:\29014A-Streetcar\CAD\Traffic_Control\Signals\1022_Main&Seventh_M-14\S_G-TC-1022_B.dgn
7/11/2012 7:34:56 AM

LEGEND

- MPL, MPT, MPLT SIGNAL POLE
- TRAFFIC SIGNAL CONDUIT
- YELLOW FLASHER SIGNAL HEAD
- TRAFFIC SIGNAL HEAD
- PEDESTRIAN SIGNAL HEAD
- REFLECTORIZED SIGN
- ILLUMINATED SIGN
- PULLBOX
- CONTROLLER

SIGNAL INDICATIONS

YF1, YF2
SIGNAL HEAD DETAIL
12" (LED) LENSES

5
SIGNAL HEAD DETAIL
12" (LED) LENSES

1, 2, 3, 4
SIGNAL HEAD DETAIL
12" (LED) LENSES

P1, P2, P3, P4
P5, P6, P7, P8
TYPE D2 PEDESTRIAN (LED)
(COUNTDOWN) SIGNAL HEAD

TYPICAL POLE ORIENTATION

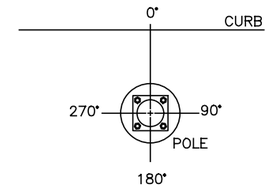

SIGN DETAILS

S1
REFL.
24" X 30"
CITY #92A

S2
ILLUM.
24" X 30"
CITY #92C

S3, S4
ILLUM.
30" X 24"
CITY #114

S5
ILLUM.
24" X 30"
CITY #79A

S6, S7
ILLUM.
24" X 30"
CITY #79B

S8
ILLUM.
24" X 30"
CITY #79C

S9, S10
ILLUM.
24" X 30"
CITY #117

S11, S12, S13, S14
ILLUM.
24" X 30"
DOUBLE FACE

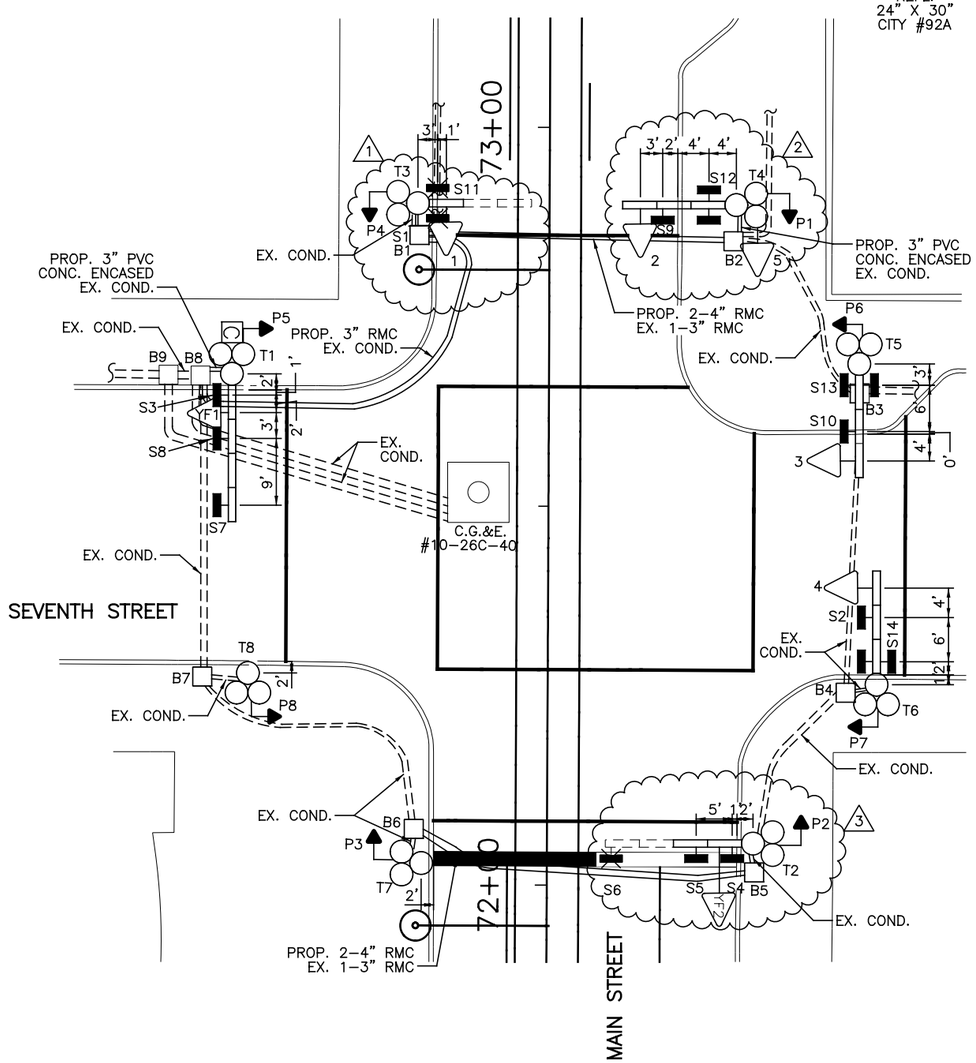

MATERIAL SCHEDULE

NO.	VEHICULAR SIGNAL HEADS 1	2	3	4	5			
12 INCH	R	R	R	R	R			
	Y	Y	Y	Y	Y			
	G	G	G	G	G			

TYPE D2 PEDESTRIAN (LED) (COUNTDOWN) SIGNAL HEAD

NOTE:
USE LENS W/ SYMBOL LEGENDS
PORTLAND ORANGE: HAND (DONT WALK)
LUNAR WHITE: WALKING MAN (WALK)

POLE NO.	POLE DATA: POLE TYPE	TRAFFIC BOOMS (# OF BAYS)	FOUNDATION TYPE	PEDESTRIAN SIGNALS ANGLE OF ORIENTATION (DEGREES) P1 D W	P2 D W	P3 D W	P4 D W	P5 D W	P6 D W	P7 D W	P8 D W	ATTACHMENT HEIGHT (FEET) TO THE BOTTOM OF BOOM	TRAFFIC BOOM (DEG)	STREET LIGHT BRACKET ARM (DEG)	HANDHOLE (DEG)	CONTROLLER (DEG)
T1	MPLT	4	EXIST.					180				EX.	EX.	EX.	EX.	180
T2	MPLT	2	EXIST.		180							17	0	EX.	EX.	
T3	MPLT	1	EXIST.				180					17	0	EX.	EX.	
T4	MPLT	3	EXIST.	180								EX.	EX.	EX.	EX.	
T5	MPLT	3	EXIST.						180			EX.	EX.	EX.	EX.	
T6	MPLT	3	EXIST.							180		EX.	EX.	EX.	EX.	
T7	MPL	–	EXIST.			180								EX.	EX.	
T8	MPL	–	EXIST.								180			EX.	EX.	

CABLE SCHEDULE

CABLE#	CONNECTING DEVICE	TYPE	CABLE ROUTING	LIN. FT
1	TRAFFIC SIGNAL TS1	EXIST.	EXIST.	EXIST.
2	TRAFFIC SIGNAL TS2, TS5	7C#14	TS2–TS5–T4–B2–B1–B8–T1–C	165
3	TRAFFIC SIGNAL TS3	EXIST.	EXIST.	EXIST.
4	TRAFFIC SIGNAL TS4	EXIST.	EXIST.	EXIST.
5	PED. SIGNAL P1	EXIST.	EXIST.	EXIST.
6	PED. SIGNAL P2	EXIST.	EXIST.	EXIST.
7	PED. SIGNAL P3	EXIST.	EXIST.	EXIST.
8	PED. SIGNAL P4	EXIST.	EXIST.	EXIST.
9	PED. SIGNAL P5	EXIST.	EXIST.	EXIST.
10	PED. SIGNAL P6	EXIST.	EXIST.	EXIST.
11	PED. SIGNAL P7	EXIST.	EXIST.	EXIST.
12	PED. SIGNAL P8	EXIST.	EXIST.	EXIST.
13	TRAFFIC SIGNAL YF1	EXIST.	EXIST.	EXIST.
14	TRAFFIC SIGNAL YF2	EXIST.	EXIST.	EXIST.
15	ILLUM. SIGN S9, S12	EXIST.	EXIST.	EXIST.
16	ILLUM. SIGN S2, S14	EXIST.	EXIST.	EXIST.
17	ILLUM. SIGN S3, S7, S8	EXIST.	EXIST.	EXIST.
18	ILLUM. SIGN S4, S5	EXIST.	EXIST.	EXIST.
19	ILLUM. SIGN S10, S13	EXIST.	EXIST.	EXIST.
20	POWER CABLE, AC POSITIVE, BLACK	EXIST.	EXIST.	EXIST.
21	POWER CABLE, AC NEGATIVE, WHITE	EXIST.	EXIST.	EXIST.

NOTES:

1. REPLACE THE 3 SIGNAL BAY BOOM WITH A NEW 1 SIGNAL BAY BOOM ON POLE T3. REMOVE ILLUMINATED SIGN S11 AND REPLACE ILLUMINATED SIGN S1 WITH A REFLECTORIZED SIGN ATTACHED TO POLE T3. PLACE TRAFFIC SIGNAL 1 IN FIRST BAY OF THE NEW SIGNAL BAY BOOM ON POLE T3.
2. PLACE NEW 12" LED SIGNAL HEAD 5 ON POLE T4.
3. REPLACE THE 4 SIGNAL BAY BOOM WITH A NEW 2 SIGNAL BAY BOOM ON POLE T2. REMOVE ILLUMINATED SIGN S6.
4. REPLACE ALL SIGNAL HEADS WITH NEW 12" LED SIGNAL HEADS AND REPLACE ALL PEDESTRIAN SIGNALS WITH TYPE D2 LED COUNTDOWN PEDESTRIAN SIGNALS. REPLACE ALL ILLUMINATED AND REFLECTORIZED SIGNS. REPLACE CONTROLLER ON POLE T1.
5. INSTALL 2–4" RMC IN ADDITION TO THE 1–3" RMC UNDER TRACK SLAB AS SHOWN ON THIS PLAN.
6. A DISTANCE OF SIX FEET BEHIND THE CURB AND 15 FEET ON EITHER SIDE OF PROPOSED OCS POLES AND SIGNAL POLES (INCLUDING ANY DISTURBANCE TO THE EXISTING CURB) HAS BEEN QUANTIFIED FOR BIDDING PURPOSES FOR REMOVAL AND REPLACEMENT OF SIDEWALK. THE CITY'S ENGINEER WILL DETERMINE ACTUAL PAY LIMITS FOR THIS WORK. NO ADDITIONAL INCREASE TO THE UNIT COST WILL BE ALLOWED FOR THIS WORK IF THE QUANTITIES ARE MORE OR LESS THAN THE AMOUNT QUANTIFIED FOR BIDDING PURPOSES.

CAUTION UNDERGROUND UTILITIES
2 WORKING DAYS
BEFORE YOU DIG
CALL 1–800–362–2764
OHIO UTILITY PROTECTION SERVICE
CALL NON–SERVICE FACILITY
OWNERS DIRECT

GRAPHIC SCALE
10 0 10 20 40
(IN FEET)
1 inch = 10 ft. Full Size
1 inch = 20 ft. Half Size

DOTE_Mono_PDF_Half.pltcfg
W:\29014A-Streetcar\CAD\Traffic_Control\Signals\1022_Main&Seventh_M-14\S_G-TC-1022_C.dgn
7/11/2012 7:35:35 AM

CONTRACT DRAWING
PRINTS NOT BEARING THIS STAMP WERE MADE PRIOR TO ADVERTISING FOR BIDS AND ARE TO BE CONSIDERED OBSOLETE FOR CONTRACT PURPOSES.

Department of Transportation and Engineering
City of Cincinnati
City Hall
801 Plum Street
Cincinnati, Ohio 45202

CINCINNATI STREETCAR
CENTRAL BUSINESS DISTRICT
PROPOSED TRAFFIC SIGNAL PLAN
MAIN STREET AND SEVENTH STREET

Revisions
No.

Drawn by AMW	Date 7/02/12
Designed by AMW	Date 7/02/12
Checked by JTB	Date 7/02/12
Reviewed by JTB	Date 7/12/12

Consultant
PB HDR

File Number
ACC No. 23126

G-TC-1022 C

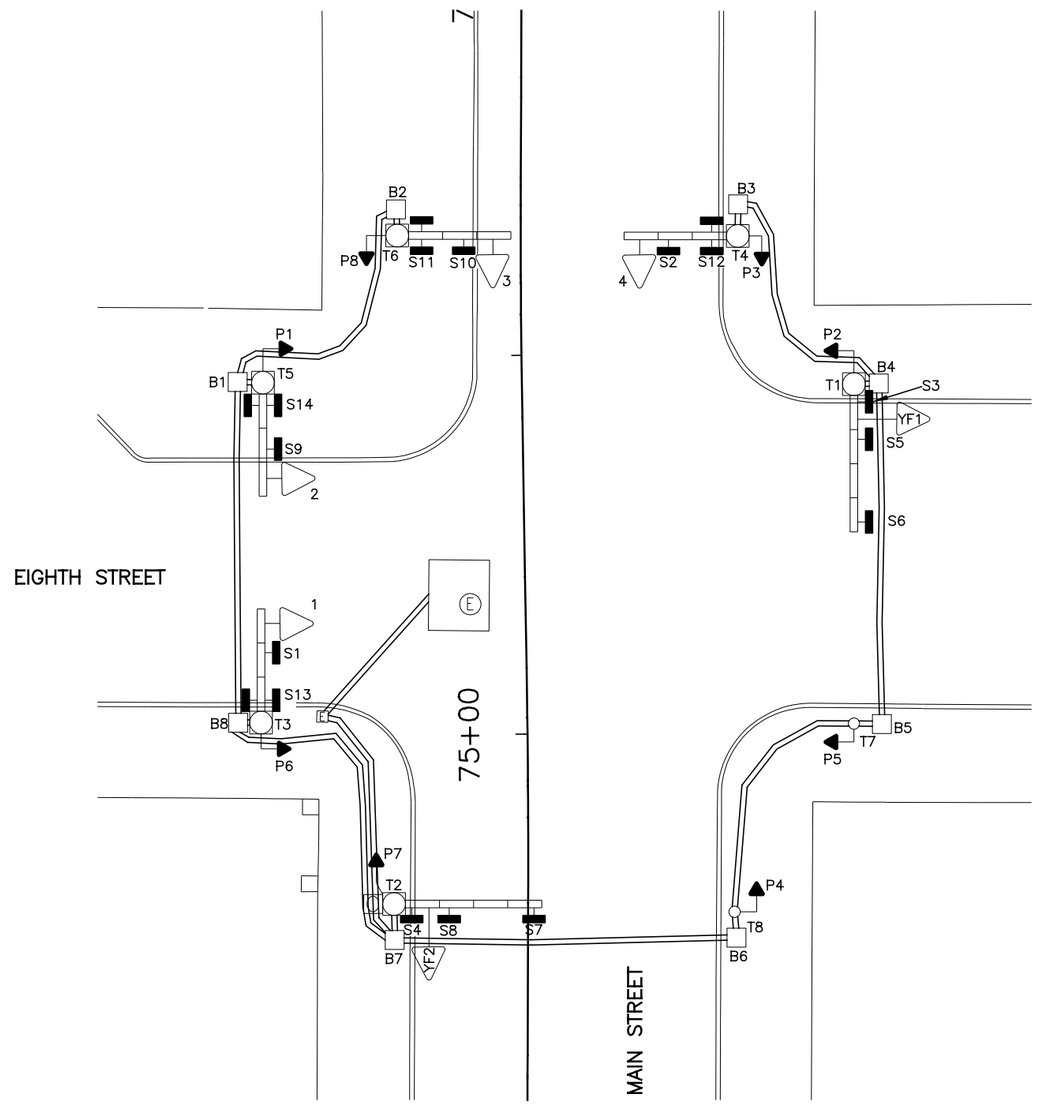

EQUIPMENT LIST	
1–4	TRAF. SIG. HD., 3 SECTIONS, HORIZ., 8" RYG
YF1, YF2	TRAF. SIG. HD., 1 SECTION, 8" Y
P1–P8	PED. SIG., 2 SECTIONS, 12" INCANDESCENT
S1	ILLUM. SIGN, 24" X 30", "ONE WAY ⟶ ",#92A
S2	ILLUM. SIGN, 24" X 30", "ONE WAY ⟵ ",#92C
S3, S4	ILLUM. SIGN, 30" X 24", "WATCH FOR EMERGENCY VEHICLES WHEN FLASHING", #114
S5	ILLUM. SIGN, 24" X 30", " ↱ ONLY", #79A
S6	ILLUM. SIGN, 24" X 30", " ↑ ONLY", #79B
S7	ILLUM. SIGN, 24" X 30", " ⊥ ", #79BC
S8	ILLUM. SIGN, 24" X 30", " ↰ ONLY", #79C
S9, S10	ILLUM. SIGN, 24" X 30", "NO TURN ON RED", #117
S11, S12	ILLUM. SIGN, 24" X 30", "EIGHTH ST. EAST", DF
S13, S14	ILLUM. SIGN, 24" X 30", "WALNUT ST.", DF
B1–B8	PULLBOX, 24" X 24", DOWNTOWN SPECIAL
T1, T2	MOLT W/4 BAY BOOM
T3, T4	MOLT W/3 BAY BOOM
T5, T6	MOT W/3 BAY BOOM
T7, T8	STEEL POLE, 4" X 11', #1145

LEGEND

- MOL, MOT, MOLT SIGNAL POLE
- STEEL PEDESTRIAN POST
- TRAFFIC SIGNAL CONDUIT
- YELLOW FLASHER SIGNAL HEAD
- TRAFFIC SIGNAL HEAD
- PEDESTRIAN SIGNAL HEAD
- ILLUMINATED SIGN
- PULLBOX
- CONTROLLER

CAUTION UNDERGROUND UTILITIES
2 WORKING DAYS
BEFORE YOU DIG
CALL 1–800–362–2764
OHIO UTILITY PROTECTION SERVICE
CALL NON–SERVICE FACILITY
OWNERS DIRECT

GRAPHIC SCALE
20 0 20 40 80
(IN FEET)
1 inch = 20 ft. Full Size
1 inch = 40 ft. Half Size

DEPARTMENT OF TRANSPORTATION & ENGINEERING CITY OF CINCINNATI OHIO

CONTRACT DRAWING

PRINTS NOT BEARING THIS STAMP WERE MADE PRIOR TO ADVERTISING FOR BID, AND ARE TO BE CONSIDERED OBSOLETE FOR CONTRACT PURPOSES.

Department of Transportation and Engineering

City of Cincinnati
City Hall
801 Plum Street
Cincinnati, Ohio 45202

CINCINNATI STREETCAR
CENTRAL BUSINESS DISTRICT
EXISTING TRAFFIC SIGNAL PLAN
MAIN STREET AND EIGHTH STREET

Revisions
No.

	Date
Drawn by JRL	7/02/12
Designed by JRL	7/02/12
Checked by JTB	7/02/12
Reviewed by JTB	7/12/12

Consultant

PB HDR

File Number

ACC No. 23126

G-TC-1023 A

DOTE_Mono_PDF_Half.pltcfg
W:\29014A-Streetcar\CAD\Traffic_Control\Signals\1023_Eighth&Main_E-25\S_G-TC-1023_A.dgn
7/11/2012 7:35:50 AM

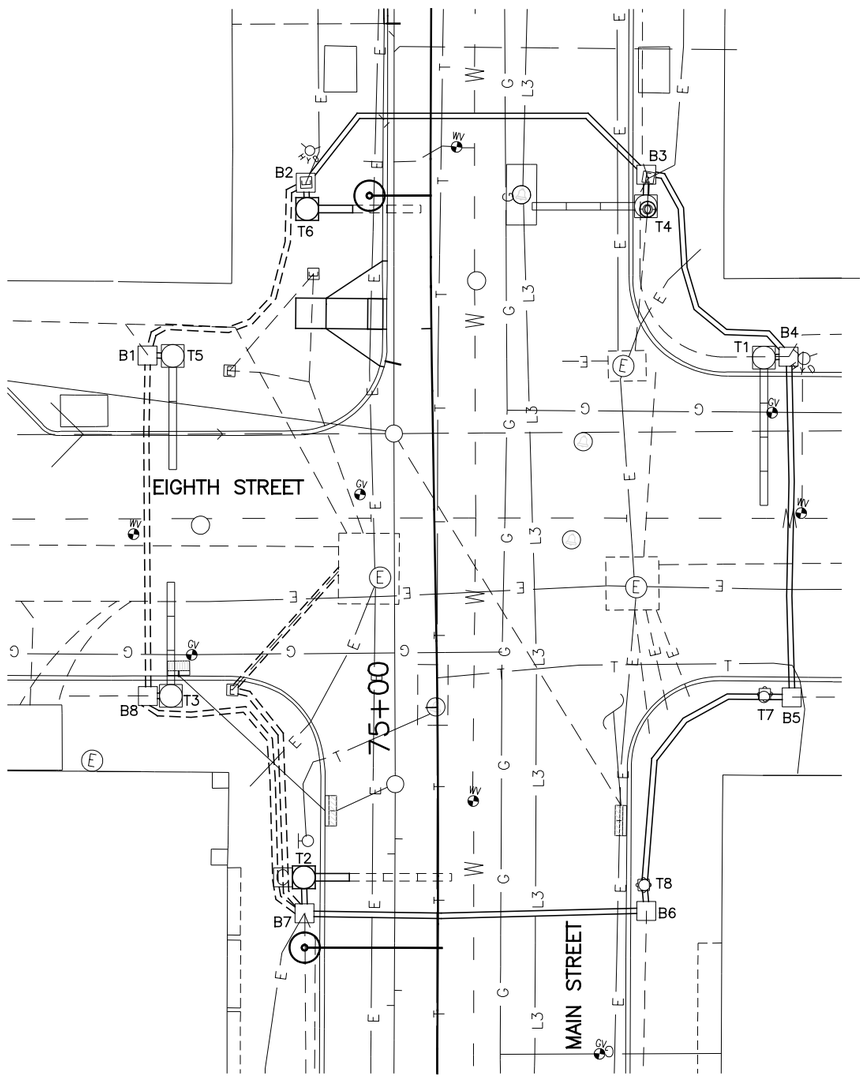

SIGNAL PHASING

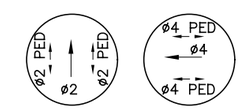

PRE–TIMED PRE–TIMED

THIS IS THE GENERAL SEQUENCING FOR THIS TRAFFIC SIGNAL. REFER TO THE CITY OF CINCINNATI FOR FINAL SEQUENCING, LABELING AND TIMINGS.

CAUTION UNDERGROUND UTILITIES
2 WORKING DAYS
BEFORE YOU DIG
CALL 1–800–362–2764
OHIO UTILITY PROTECTION SERVICE
CALL NON–SERVICE FACILITY
OWNERS DIRECT

GRAPHIC SCALE

20 0 20 40 80

(IN FEET)
1 inch = 20 ft. Full Size
1 inch = 40 ft. Half Size

DEPARTMENT OF TRANSPORTATION & ENGINEERING
CITY OF CINCINNATI OHIO

CONTRACT DRAWING

PRINTS NOT BEARING THIS STAMP WERE MADE PRIOR TO ADVERTISING FOR BIDS AND ARE TO BE CONSIDERED OBSOLETE FOR CONTRACT PURPOSES.

Department of Transportation and Engineering

City of Cincinnati
City Hall
801 Plum Street
Cincinnati, Ohio 45202

CINCINNATI STREETCAR
CENTRAL BUSINESS DISTRICT
UNDERGROUND UTILITIES & SIGNAL PLAN DETAILS
MAIN STREET AND EIGHTH STREET

Revisions
No.

Drawn by JRL	Date 7/02/12
Designed by JRL	Date 7/02/12
Checked by JTB	Date 7/02/12
Reviewed by JTB	Date 7/12/12

Consultant

PB HDR

File Number

ACC No.
23126

G-TC-1023 B

DOTE_Mono_PDF_Half.pltcfg
W:\29014A-Streetcar\CAD\Traffic_Control\Signals\1023_Eighth&Main_E-25\S_G-TC-1023_B.dgn
7:36:05 AM
7/11/2012

LEGEND

- MOL, MOT, MOLT SIGNAL POLE
- STEEL PEDESTRIAN POST
- TRAFFIC SIGNAL CONDUIT
- YELLOW FLASHER SIGNAL HEAD
- TRAFFIC SIGNAL HEAD
- PEDESTRIAN SIGNAL HEAD
- REFLECTORIZED SIGN
- ILLUMINATED SIGN
- PULLBOX
- CONTROLLER

SIGNAL INDICATIONS

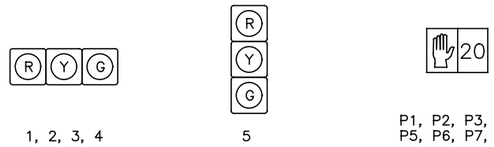

TYPICAL POLE ORIENTATION

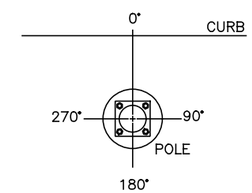

MATERIAL SCHEDULE

NO.	12 INCH VEHICULAR SIGNAL HEADS 1	2	3	4	5			
	R	R	R	R	R			
	Y	Y	Y	Y	Y			
	G	G	G	G	G			

TYPE D2 PEDESTRIAN (LED) (COUNTDOWN) SIGNAL HEAD

NOTE:
USE LENS W/ SYMBOL LEGENDS
PORTLAND ORANGE: HAND (DONT WALK)
LUNAR WHITE: WALKING MAN (WALK)

POLE NO.	POLE DATA: POLE TYPE	TRAFFIC BOOM (# OF BAYS)	FOUNDATION TYPE	PEDESTRIAN SIGNALS ANGLE OF ORIENTATION (DEGREES) P1 D W	P2 D W	P3 D W	P4 D W	P5 D W	P6 D W	P7 D W	P8 D W	ATTACHMENT HEIGHT (FEET) TO THE BOTTOM OF BOOM	TRAFFIC BOOM (DEG)	STREET LIGHT BRACKET ARM (DEG)	HANDHOLE (DEG)	CONTROLLER (DEG)
T1	MOLT	4	EXIST.		180							EX.	EX.	EX.	EX.	
T2	MOLT	1	EXIST.							180		17	0	EX.	EX.	180
T3	MOLT	3	EXIST.						180			EX.	EX.	EX.	EX.	
T4	MOLT	3	EXIST.			180						EX.	EX.	EX.	EX.	
T5	MOT	3	EXIST.	180								EX.	EX.		EX.	
T6	MOT	1	EXIST.								180	17	0		EX.	
T7	1145	–	EXIST.					180							EX.	
T8	1145	–	EXIST.				180								EX.	

CABLE SCHEDULE

CABLE#	CONNECTING DEVICE	TYPE	CABLE ROUTING	LIN. FT
1	TRAFFIC SIGNAL TS1	EXIST.	EXIST.	EXIST.
2	TRAFFIC SIGNAL TS2	EXIST.	EXIST.	EXIST.
3	TRAFFIC SIGNAL TS3	EXIST.	EXIST.	EXIST.
4	TRAFFIC SIGNAL TS4, TS5	7C#14	TS4–TS5–T4–B3–B4–B5–B6–B7–T2–C	235
5	PED. SIGNAL P1	EXIST.	EXIST.	EXIST.
6	PED. SIGNAL P2	EXIST.	EXIST.	EXIST.
7	PED. SIGNAL P3	EXIST.	EXIST.	EXIST.
8	PED. SIGNAL P4	EXIST.	EXIST.	EXIST.
9	PED. SIGNAL P5	EXIST.	EXIST.	EXIST.
10	PED. SIGNAL P6	EXIST.	EXIST.	EXIST.
11	PED. SIGNAL P7	EXIST.	EXIST.	EXIST.
12	PED. SIGNAL P8	EXIST.	EXIST.	EXIST.
13	ILLUM. SIGN S1, S13	EXIST.	EXIST.	EXIST.
14	ILLUM. SIGN S2, S12	EXIST.	EXIST.	EXIST.
15	ILLUM. SIGN S5, S6	EXIST.	EXIST	EXIST.
16	ILLUM. SIGN S8, S11	EXIST.	EXIST.	EXIST.
17	ILLUM. SIGN S9, S14	EXIST.	EXIST.	EXIST.
18	POWER CABLE, AC POSITIVE, BLACK	EXIST.	EXIST.	EXIST.
18	POWER CABLE, AC NEGATIVE, WHITE	EXIST.	EXIST.	EXIST.

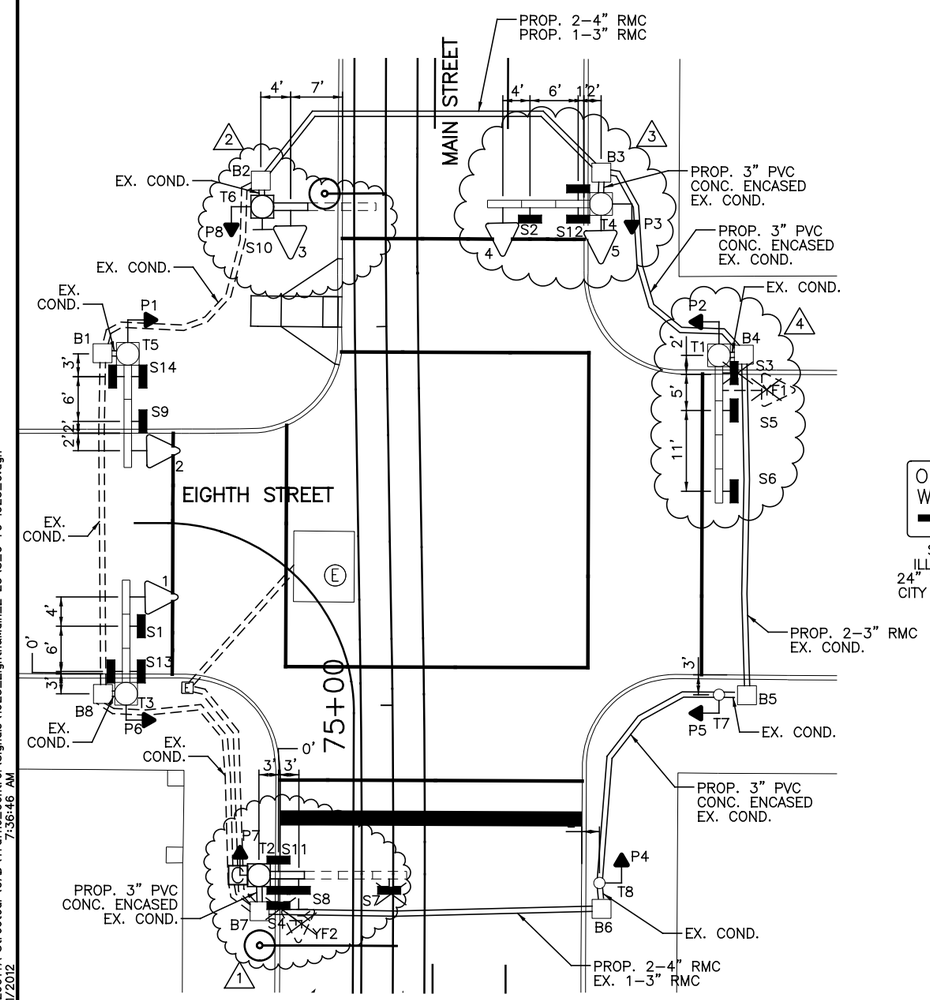

SIGN DETAILS

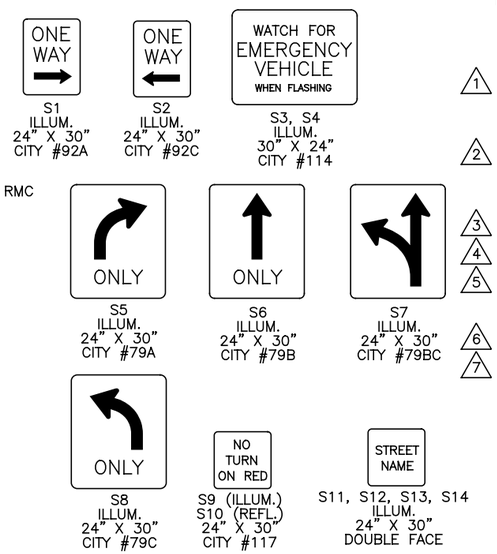

NOTES:

1. REPLACE 4 SIGNAL BAY BOOM WITH NEW 1 SIGNAL BAY BOOM ON POLE T2. REMOVE ILLUMINATED SIGNS S4 AND S7 AS WELL AS YELLOW FLASHER SIGNAL YF2. INSTALL NEW SIGNS S8 AND S11 IN FIRST BAY OF NEW SIGNAL BAY BOOM ON POLE T2. REPLACE CONTROLLER ON POLE T2.
2. REPLACE 3 SIGNAL BAY BOOM WITH NEW 1 SIGNAL BAY BOOM ON POLE T6. MOVE SIGN S11 TO BAY BOOM ON POLE T2. MOVE TRAFFIC SIGNAL 3 TO FIRST BAY OF SIGNAL BAY BOOM ON POLE T6. CHANGE SIGN S10 TO REFLECTORIZED SIGN AND MOUNT ON POLE T6.
3. ADD NEW SIGNAL HEAD 5 ON POLE T4.
4. REMOVE YELLOW FLASHER SIGNAL YF1 AND ILLUMINATED SIGN S3.
5. REPLACE ALL SIGNAL HEADS WITH NEW 12" LED SIGNAL HEADS AND REPLACE ALL PEDESTRIAN SIGNALS WITH TYPE D2 LED COUNTDOWN PEDESTRIAN SIGNALS. REPLACE ALL ILLUMINATED AND REFLECTORIZED SIGNS.
6. INSTALL 2–4" RMC AND 1–3" RMC UNDER TRACK SLAB AS SHOWN ON THIS PLAN.
7. A DISTANCE OF SIX FEET BEHIND THE CURB AND 15 FEET ON EITHER SIDE OF PROPOSED OCS POLES AND SIGNAL POLES (INCLUDING ANY DISTURBANCE TO THE EXISTING CURB) HAS BEEN QUANTIFIED FOR BIDDING PURPOSES FOR REMOVAL AND REPLACEMENT OF SIDEWALK. THE CITY'S ENGINEER WILL DETERMINE ACTUAL PAY LIMITS FOR THIS WORK. NO ADDITIONAL INCREASE TO THE UNIT COST WILL BE ALLOWED FOR THIS WORK IF THE QUANTITIES ARE MORE OR LESS THAN THE AMOUNT QUANTIFIED FOR BIDDING PURPOSES.

CAUTION UNDERGROUND UTILITIES
2 WORKING DAYS
BEFORE YOU DIG
CALL 1–800–362–2764
OHIO UTILITY PROTECTION SERVICE
CALL NON–SERVICE FACILITY
OWNERS DIRECT

GRAPHIC SCALE
20 0 20 40 80
(IN FEET)
1 inch = 20 ft. Full Size
1 inch = 40 ft. Half Size

DOTE_Mono_PDF_Half.pltcfg
W:\29014A-Streetcar\CAD\Traffic_Control\Signals\1023_Eighth&Main_E-25\S_G-TC-1023_C.dgn
7:36:46 AM
7/11/2012

CONTRACT DRAWING
PRINTS NOT BEARING THIS STAMP WERE MADE PRIOR TO ADVERTISING FOR BIDS AND ARE TO BE CONSIDERED OBSOLETE FOR CONTRACT PURPOSES.

Department of Transportation and Engineering
City of Cincinnati
City Hall
801 Plum Street
Cincinnati, Ohio 45202

CINCINNATI STREETCAR
CENTRAL BUSINESS DISTRICT
PROPOSED TRAFFIC SIGNAL PLAN
MAIN STREET AND EIGHTH STREET

Revisions
No.

	Date
Drawn by JRL	7/02/12
Designed by JRL	7/02/12
Checked by JTB	7/02/12
Reviewed by JTB	7/12/12

Consultant
PB HDR

File Number
ACC No. 23126

G-TC-1023 C

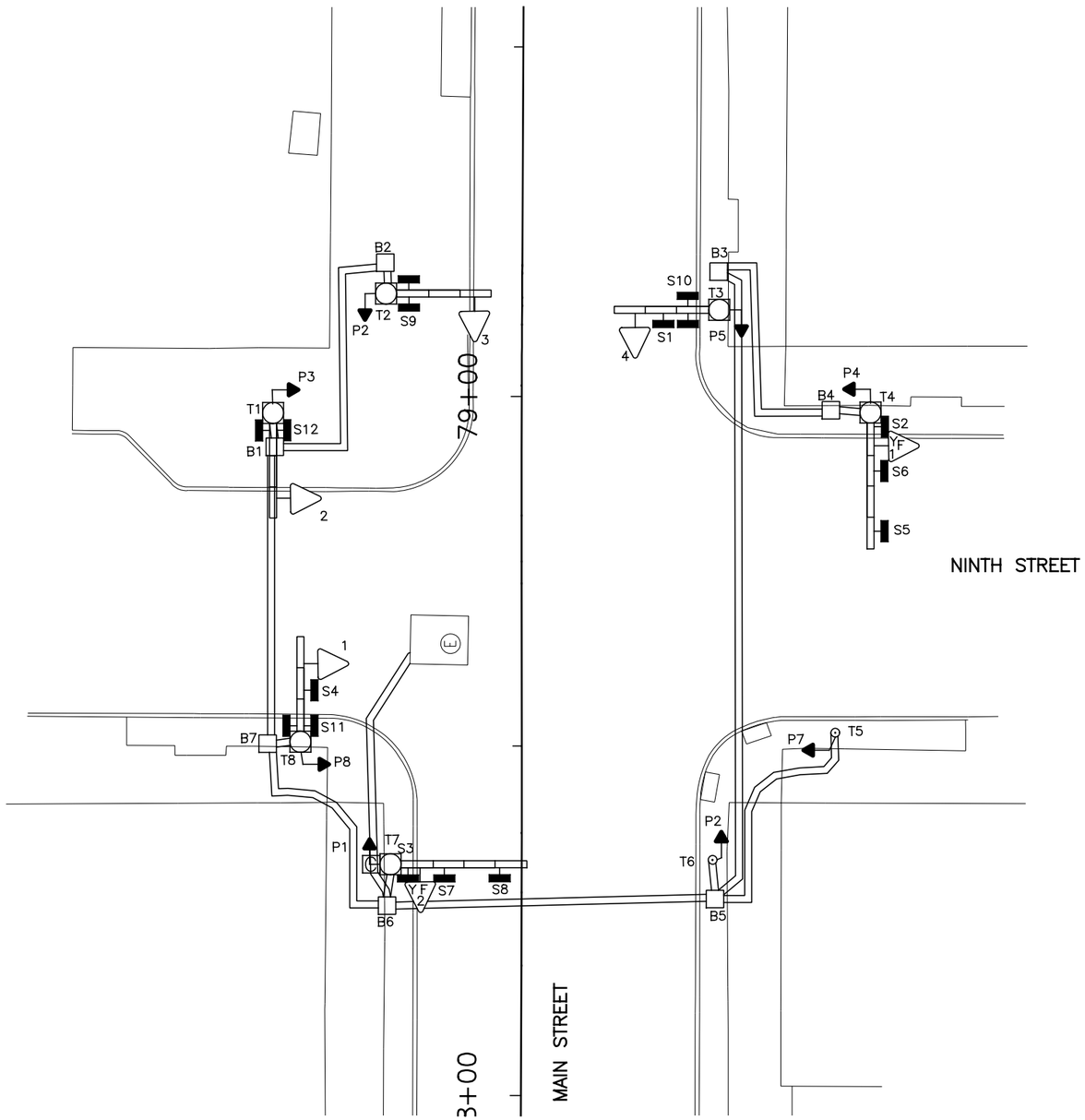

EQUIPMENT LIST	
1–4	TRAF. SIG. HD., 3 SECT., HORIZ., 8" RYG
YF1, YF2	TRAF. SIG. HD., 1 SECTION, 8" Y
P1–P8	PED. SIG., 2 SECTION, 12" INCANDESCENT
S1	ILLUMINATED "ONE WAY —" 92C
S2, S3	ILLUMIN. SIGN 30" X 24" "WATCH FOR EMERGENCY VEHICLE WHEN FLASHING" W/8" Y. #114
S4	ILLUMINATED "ONE WAY —" 92A
S5	ILLUMINATED " ⊢" 79AB
S6	ILLUMINATED " ⌐ ONLY" 79A
S7	ILLUMINATED " ¬ ONLY" 79B
S8	ILLUMINATED " ⊣ " 79BC
S9, S10	ILLUMIN. SIGN 24" X 30" "9TH ST EAST", DF
S11, S12	ILLUMIN. SIGN 24" X 30" "MAIN ST", DF
B1–B7	PULLBOX, DOWNTOWN SPECIAL, 24" X 24"
T3, T8	MOLT W/3 BAY BOOM
T4, T7	MOLT W/4 BAY BOOM
T5, T6	STEEL POLE, 4" X 8', #845
T1, T2	MOT W/3 BAY BOOM

LEGEND

- MOL, MOT, MOLT SIGNAL POLE
- STEEL PEDESTRIAN POST
- TRAFFIC SIGNAL CONDUIT
- YELLOW FLASHER SIGNAL HEAD
- TRAFFIC SIGNAL HEAD
- PEDESTRIAN SIGNAL HEAD
- ILLUMINATED SIGN
- PULLBOX
- CONTROLLER

GRAPHIC SCALE

20 0 20 40 80

(IN FEET)
1 inch = 20 ft. Full Size
1 inch = 40 ft. Half Size

CAUTION UNDERGROUND UTILITIES
2 WORKING DAYS
BEFORE YOU DIG
CALL 1–800–362–2764
OHIO UTILITY PROTECTION SERVICE
CALL NON–SERVICE FACILITY
OWNERS DIRECT

DEPARTMENT OF TRANSPORTATION & ENGINEERING
CITY OF CINCINNATI OHIO

CONTRACT DRAWING

PRINTS NOT BEARING THIS STAMP WERE MADE PRIOR TO AWARD OF CONTRACT AND ARE TO BE CONSIDERED OBSOLETE FOR CONTRACT PURPOSES.

Department of Transportation and Engineering

City of Cincinnati
City Hall
801 Plum Street
Cincinnati, Ohio 45202

CINCINNATI STREETCAR
CENTRAL BUSINESS DISTRICT

EXISTING TRAFFIC SIGNAL PLAN
MAIN STREET AND NINTH STREET

Revisions

No.				

Drawn by JRL	Date 7/02/12
Designed by JRL	Date 7/02/12
Checked by JTB	Date 7/02/12
Reviewed by JTB	Date 7/12/12

Consultant

PB HDR

File Number

ACC No. 23126

G-TC-1024 A

DOTE_Mono_PDF_Half.pltcfg
W:\29014A-Streetcar\CAD\Traffic_Control\Signals\1024_Main&Ninth_M-13\S_G-TC-1024 A.dgn
7/11/2012 7:37:01 AM

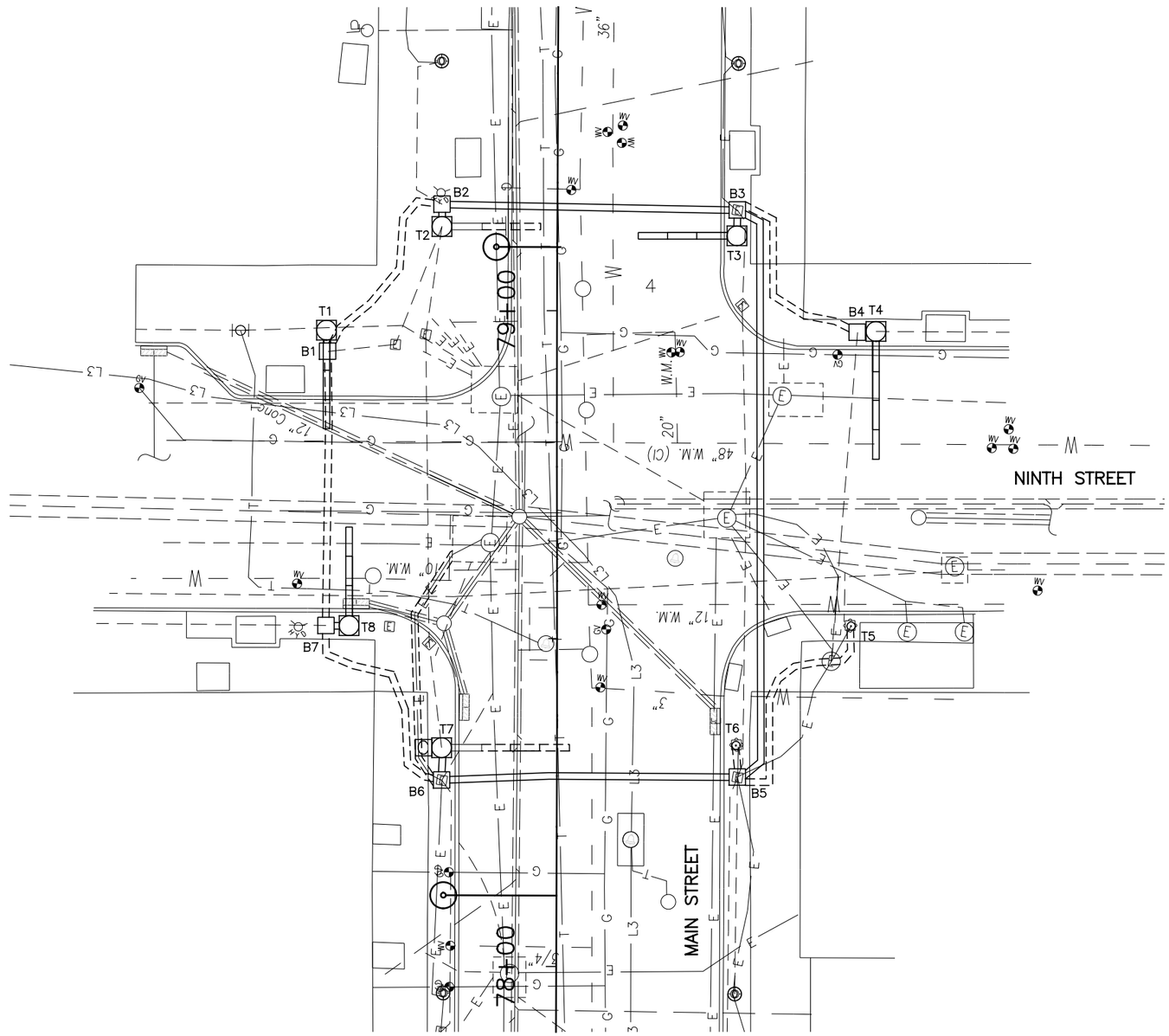

SIGNAL PHASING

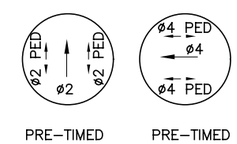

PRE–TIMED PRE–TIMED

THIS IS THE GENERAL SEQUENCING FOR THIS TRAFFIC SIGNAL. REFER TO THE CITY OF CINCINNATI FOR FINAL SEQUENCING, LABELING AND TIMINGS.

CAUTION UNDERGROUND UTILITIES
2 WORKING DAYS
BEFORE YOU DIG
CALL 1–800–362–2764
OHIO UTILITY PROTECTION SERVICE
CALL NON–SERVICE FACILITY
OWNERS DIRECT

GRAPHIC SCALE
20 0 20 40 80
(IN FEET)
1 inch = 20 ft. Full Size
1 inch = 40 ft. Half Size

DEPARTMENT OF TRANSPORTATION & ENGINEERING
CITY OF CINCINNATI OHIO

CONTRACT DRAWING

PRINTS NOT BEARING THIS STAMP WERE MADE PRIOR TO ADVERTISING FOR BID, AND ARE TO BE CONSIDERED OBSOLETE FOR CONTRACT PURPOSES.

Department of Transportation and Engineering

City of Cincinnati
City Hall
801 Plum Street
Cincinnati, Ohio 45202

CINCINNATI STREETCAR
CENTRAL BUSINESS DISTRICT
UNDERGROUND UTILITIES & SIGNAL PLAN DETAILS MAIN STREET AND NINTH STREET

Revisions

No.		Date

Drawn by JRL	Date 7/02/12
Designed by JRL	Date 7/02/12
Checked by JTB	Date 7/02/12
Reviewed by JTB	Date 7/12/12

Consultant

PB HDR

File Number

ACC No. 23126

G-TC-1024 B

DOTE_Mono_PDF_Half.pltcfg
W:\29014A-Streetcar\CAD\Traffic_Control\Signals\1024_Main&Ninth_M-13\S_G-TC-1024 B.dgn
7/11/2012 7:37:17 AM

LEGEND

- MOL, MOT, MOLT SIGNAL POLE
- STEEL PEDESTRIAN POST
- TRAFFIC SIGNAL CONDUIT
- YELLOW FLASHER SIGNAL HEAD
- TRAFFIC SIGNAL HEAD
- PEDESTRIAN SIGNAL HEAD
- ILLUMINATED SIGN
- PULLBOX
- CONTROLLER

SIGNAL INDICATIONS

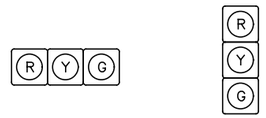

TYPE D2 PEDESTRIAN (LED) (COUNTDOWN) SIGNAL HEAD

P1, P2, P3, P4
P5, P6, P7, P8

TYPICAL POLE ORIENTATION

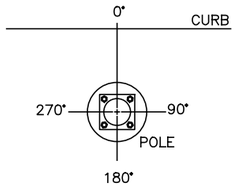

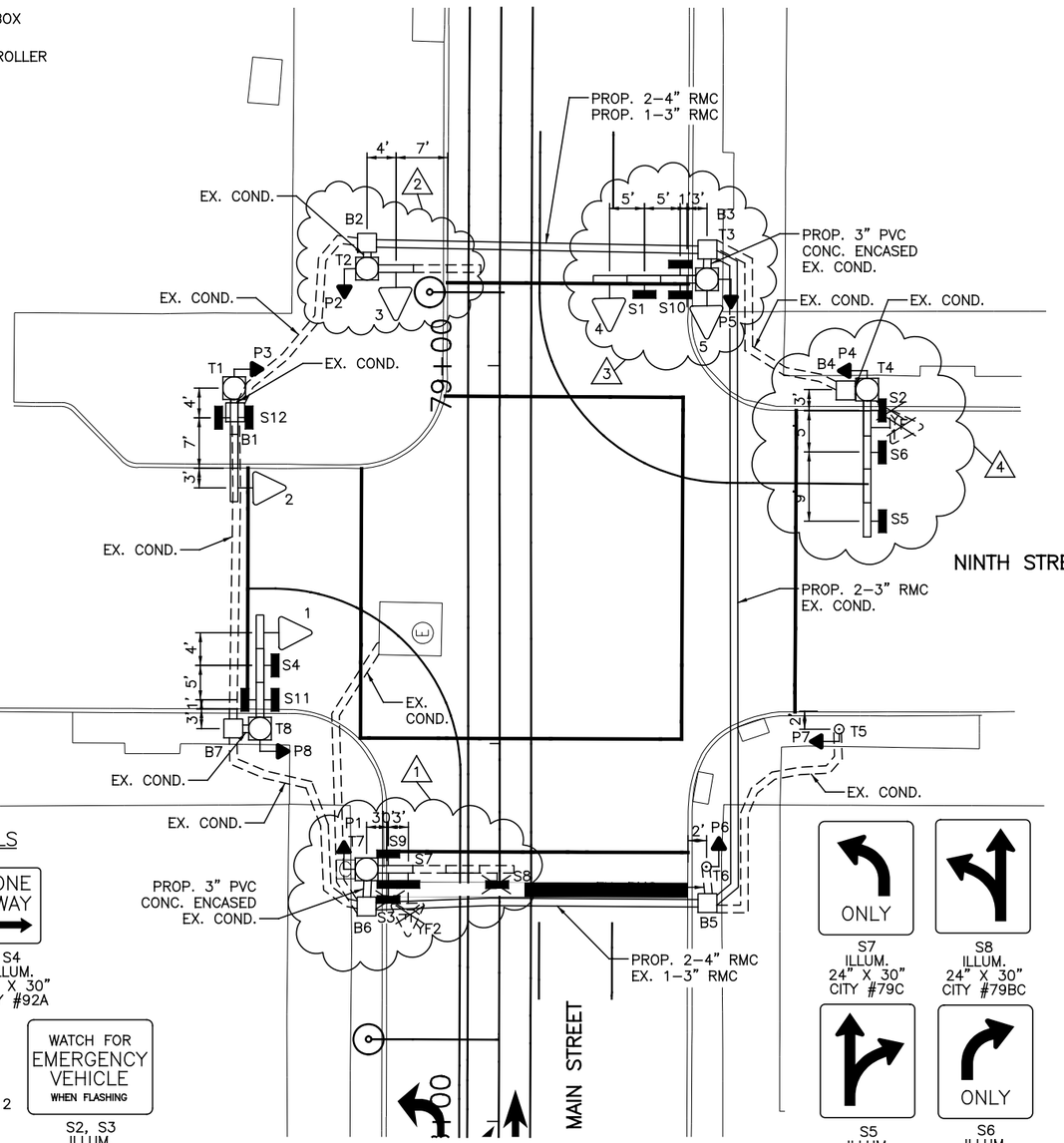

SIGN DETAILS

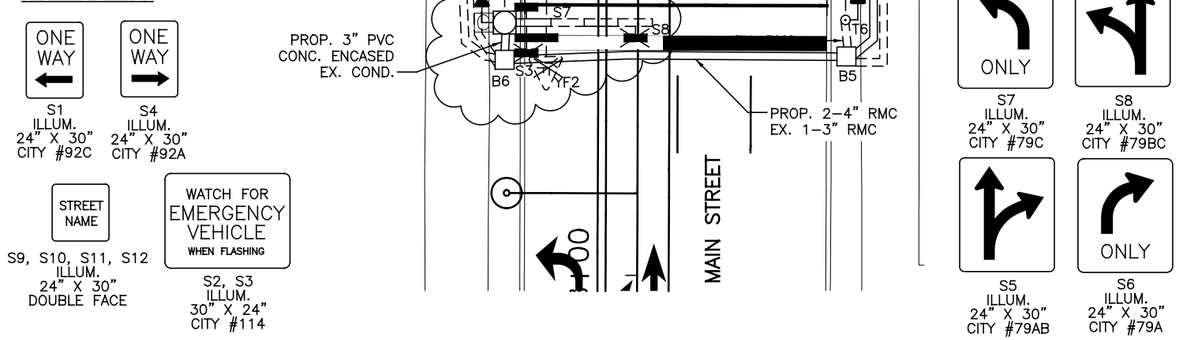

MATERIAL SCHEDULE

NO.	1	2	3	4	5			
12 INCH	R	R	R	R	R			
	Y	Y	Y	Y	Y			
	G	G	G	G	G			

VEHICULAR SIGNAL HEADS

TYPE D2 PEDESTRIAN (LED) (COUNTDOWN) SIGNAL HEAD

NOTE:
USE LENS W/ SYMBOL LEGENDS
PORTLAND ORANGE: HAND (DONT WALK)
LUNAR WHITE: WALKING MAN (WALK)

POLE NO.	POLE DATA: POLE TYPE	TRAFFIC BOOM (# OF BAYS)	FOUNDATION TYPE	PEDESTRIAN SIGNALS P1	P2	P3	P4	P5	P6	P7	P8	ATTACHMENT HEIGHT (FEET) TO THE BOTTOM OF BOOM	TRAFFIC BOOM (DEG)	STREET LIGHT BRACKET ARM (DEG)	HANDHOLE (DEG)	CONTROLLER (DEG)
				D	D	D	D	D	D	D	D					
				W	W	W	W	W	W	W	W					
				ANGLE OF ORIENTATION (DEGREES)												
T1	MOT	3	EXIST.			180						EX.	EX.		EX.	
T2	MOT	1	EXIST.		180							17	0		EX.	
T3	MOLT	3	EXIST.					180				EX.	EX.	EX.	EX.	
T4	MOLT	4	EXIST.				180					EX.	EX.	EX.	EX.	
T5	845	–	EXIST.							180					EX.	
T6	845	–	EXIST.						180						EX.	
T7	MOLT	1	EXIST.	180								17	0	EX.	EX.	180
T8	MOLT	3	EXIST.								180	EX.	EX.	EX.	EX.	

CABLE SCHEDULE

CABLE#	CONNECTING DEVICE	TYPE	CABLE ROUTING	LIN. FT
1	TRAFFIC SIGNAL TS1	EXIST.	EXIST.	EXIST.
2	TRAFFIC SIGNAL TS2	EXIST.	EXIST.	EXIST.
3	TRAFFIC SIGNAL TS3	EXIST.	EXIST.	EXIST.
4	TRAFFIC SIGNAL TS4, TS5	7C#14	TS4–TS5–T3–B3–B5–B6–T7–C	220
5	PED. SIGNAL P1	EXIST.	EXIST.	EXIST.
6	PED. SIGNAL P2	EXIST.	EXIST.	EXIST.
7	PED. SIGNAL P3	EXIST.	EXIST.	EXIST.
8	PED. SIGNAL P4	EXIST.	EXIST.	EXIST.
9	PED. SIGNAL P5	EXIST.	EXIST.	EXIST.
10	PED. SIGNAL P6	EXIST.	EXIST.	EXIST.
11	PED. SIGNAL P7	EXIST.	EXIST.	EXIST.
12	PED. SIGNAL P8	EXIST.	EXIST.	EXIST.
13	ILLUM. SIGN S1, S10	EXIST.	EXIST.	EXIST.
14	ILLUM. SIGN S4, S11	EXIST.	EXIST.	EXIST.
15	ILLUM. SIGN S5, S6	EXIST.	EXIST.	EXIST.
16	ILLUM. SIGN S7, S9	2C#12	S7–S9–T7–C	35
17	ILLUM. SIGN S12	EXIST.	EXIST.	EXIST.
18	POWER CABLE, AC POSITIVE, BLACK	EXIST.	EXIST.	EXIST.
19	POWER CALBE, AC NEGATIVE, WHITE	EXIST.	EXIST.	EXIST.

NOTES:

1. REPLACE THE EXISTING 4 SIGNAL BAY BOOM WITH A 1 SIGNAL BAY BOOM. REMOVE YF2 AND SIGNS S3 AND S8. INSTALL NEW SIGNS S7 AND S9 IN SINGLE BAY BOOM.
2. REPLACE THE EXISTING 3 SIGNAL BAY BOOM WITH A 1 SIGNAL BAY BOOM. MOVE SIGN S9 TO FIRST BAY ON POLE T7 AND MOVE SIGNAL HEAD 3 TO THE FIRST BAY OF BOOM ON POLE T2.
3. ADD NEW SIGNAL HEAD 5 TO POLE T3. CONNECT PULLBOX B2 TO PULLBOX B3 WITH 2–4" RMC AND 1–3" RMC.
4. REMOVE YELLOW FLASHER SIGNAL YF1 AND ILLUMINATED SIGN S2.
5. REPLACE ALL SIGNAL HEADS WITH 12" LED TRAFFIC SIGNALS AND REPLACE ALL PEDESTRIAN HEADS WITH TYPE D2 LED COUNTDOWN PEDESTRIAN SIGNALS. REPLACE ALL ILLUMINATED SIGNS. REPLACE CONTROLLER ON POLE T7.
6. INSTALL 2–4" RMC AND 1–3" RMC UNDER TRACK SLAB AS SHOWN ON THIS PLAN.
7. A DISTANCE OF SIX FEET BEHIND THE CURB AND 15 FEET ON EITHER SIDE OF PROPOSED OCS POLES AND SIGNAL POLES (INCLUDING ANY DISTURBANCE TO THE EXISTING CURB) HAS BEEN QUANTIFIED FOR BIDDING PURPOSES FOR REMOVAL AND REPLACEMENT OF SIDEWALK. THE CITY'S ENGINEER WILL DETERMINE ACTUAL PAY LIMITS FOR THIS WORK. NO ADDITIONAL INCREASE TO THE UNIT COST WILL BE ALLOWED FOR THIS WORK IF THE QUANTITIES ARE MORE OR LESS THAN THE AMOUNT QUANTIFIED FOR BIDDING PURPOSES.

GRAPHIC SCALE

20 0 20 40 80

(IN FEET)
1 inch = 20 ft. Full Size
1 inch = 40 ft. Half Size

CAUTION UNDERGROUND UTILITIES
2 WORKING DAYS
BEFORE YOU DIG
CALL 1–800–362–2764
OHIO UTILITY PROTECTION SERVICE
CALL NON–SERVICE FACILITY
OWNERS DIRECT

CONTRACT DRAWING

PRINTS NOT BEARING THIS STAMP WERE MADE PRIOR TO ADVERTISING FOR BIDS AND MUST BE CONSIDERED OBSOLETE FOR CONTRACT PURPOSES.

Department of Transportation and Engineering

City of Cincinnati
City Hall
801 Plum Street
Cincinnati, Ohio 45202

CINCINNATI STREETCAR
CENTRAL BUSINESS DISTRICT

PROPOSED TRAFFIC SIGNAL PLAN
MAIN STREET AND NINTH STREET

Revisions
No.

	Date
Drawn by JRL	7/02/12
Designed by JRL	7/02/12
Checked by JTB	7/02/12
Reviewed by JTB	7/12/12

Consultant

PB HDR

File Number

ACC No. 23126

G-TC-1024 C

DOTE_Mono_PDF_Half.pltcfg
W:\29014A-Streetcar\CAD\Traffic_Control\Signals\1024_Main&Ninth_M-13\S_G-TC-1024 C.dgn
7/11/2012 7:37:32 AM

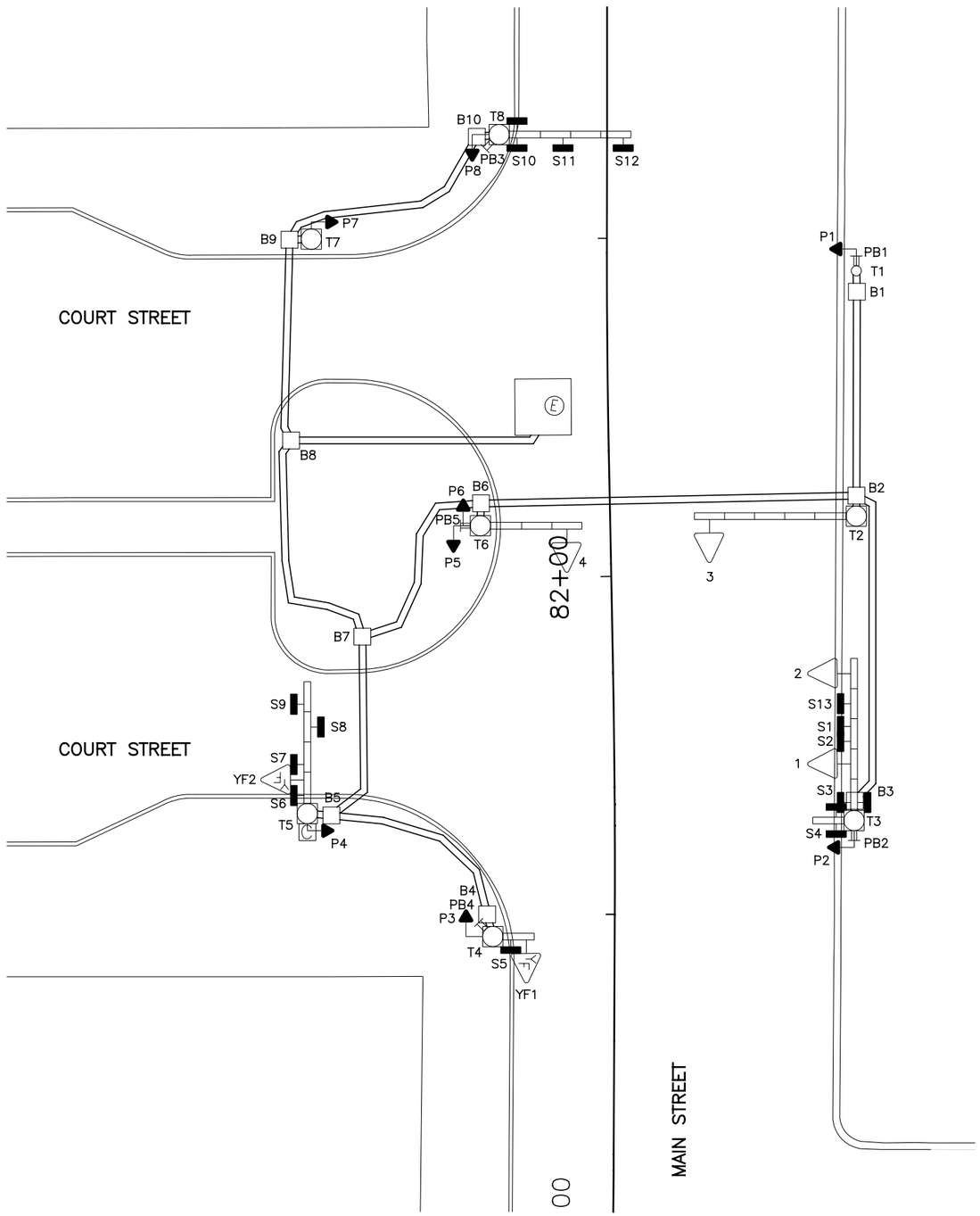

EQUIPMENT LIST	
1–4	TRAF. SIG. HD., 3 SECT., HORIZ., 8" RYG
YF1, YF2	TRAF. SIG. HD., 1 SECT., 8" Y
P1, P2, P4, P7	PED. SIG., 2 SECT., 12" INCAND., W/ AUD. DEVICE (TONE TYPE)
P3, P5, P6, P8	PED. SIG., 2 SECT., 12" INCAND., W/ AUD. DEVICE (PULSE TYPE)
PB1–PB5	PUSHBUTTONS TO ACTIVATE AUDIBLE DEVICES W/ ASSOC. BLUE SIGNS
S1	ILLUM. SIGN, 24" X 30", "NO TURN ON RED", #117
S2	ILLUM. SIGN, 24" X 30", "ONE WAY →", #92C
S3	ILLUM. SIGN, 24" X 30", DF, "MAIN ST."
S4, S10	ILLUM. SIGN, 24" X 30", DF, "COURT ST."
S5, S6	ILLUM. SIGN, 30" X 24", "WATCH FOR EMERGENCY VEHICLE WHEN FLASHING", #114
S7, S9	ILLUM. SIGN, 24" X 30", "↱ ONLY", #79C
S8	ILLUM. SIGN, 30" X 30", "DO NOT ENTER", #52
S11	ILLUM. SIGN, 24" X 30", "↰", #79BC
S12	ILLUM. SIGN, 24" X 30", " ↑ ONLY", #79B
S13	ILLUM. SIGN, 36" X 30", "LEFT TURN YIELD TO PEDESTRIANS IN CROSSWALK", #85C
B1–B10	PULLBOX, 24" X 24", DOWNTOWN SPECIAL
T1	STEEL POLE, 4" X 8', #845
T2	MOT POLE, W/ 5 BAY BOOM
T3	MOT POLE, W/ 5 BAY BOOM & 1 BAY BOOM
T4	MOLT POLE, W/ 1 BAY BOOM
T5, T8	MOLT POLE, W/ 4 BAY BOOM
T6	MOLT POLE, W/ 3 BAY BOOM
T7	MOL POLE

LEGEND

- MOL, MOT, MOLT POLE
- STEEL PEDESTRIAN POST
- TRAFFIC SIGNAL CONDUIT
- YELLOW FLASHER SIGNAL HEAD
- TRAFFIC SIGNAL HEAD
- PEDESTRIAN SIGNAL HEAD
- PEDESTRIAN PUSHBUTTON
- ILLUMINATED SIGN
- PULLBOX
- CONTROLLER

CAUTION UNDERGROUND UTILITIES
2 WORKING DAYS
BEFORE YOU DIG
CALL 1–800–362–2764
OHIO UTILITY PROTECTION SERVICE
CALL NON–SERVICE FACILITY
OWNERS DIRECT

GRAPHIC SCALE
10 0 10 20 40
(IN FEET)
1 inch = 10 ft. Full Size
1 inch = 20 ft. Half Size

DOTE_Mono_PDF_Half.pltcfg
W:\29014A-Streetcar\CAD\Traffic_Control\Signals\1025_Court&Main_C-92\S_G-TC-1025 A.dgn
7:37:45 AM
7/11/2012

CONTRACT DRAWING

PRINTS NOT BEARING THIS STAMP WERE MADE PRIOR TO ADVERTISING FOR BID AND ARE TO BE CONSIDERED OBSOLETE FOR CONTRACT PURPOSES.

Department of Transportation and Engineering

City of Cincinnati
City Hall
801 Plum Street
Cincinnati, Ohio 45202

CINCINNATI STREETCAR
CENTRAL BUSINESS DISTRICT

EXISTING TRAFFIC SIGNAL PLAN
MAIN STREET AND COURT STREET

Revisions

No.				

Date 7/02/12
Date 7/02/12
Date 7/02/12
Date 7/12/12

Drawn by JRL
Designed by JRL
Checked by JTB
Reviewed by JTB

Consultant

PB HDR

File Number

ACC No. 23126

G-TC-1025 A

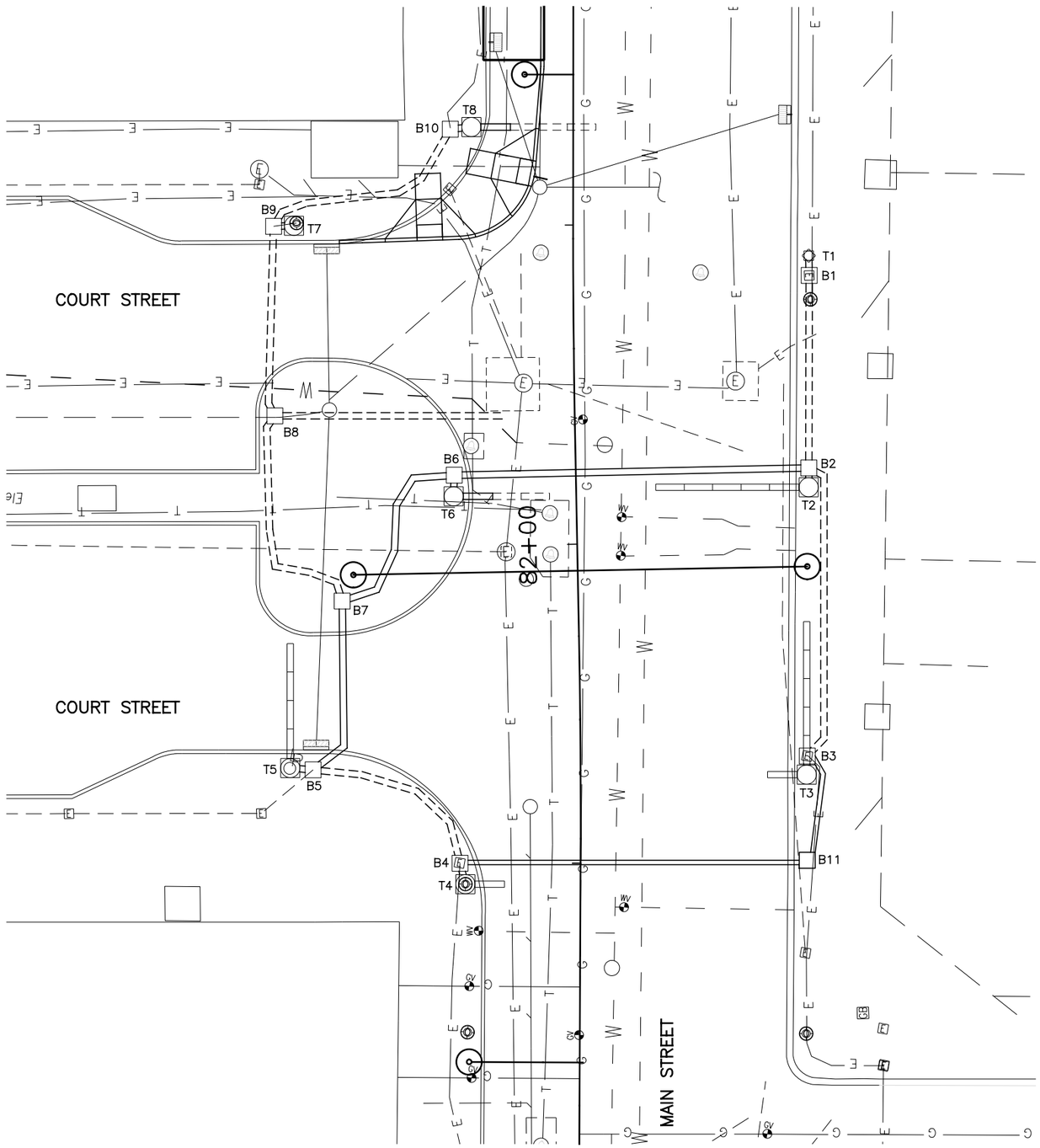

SIGNAL PHASING

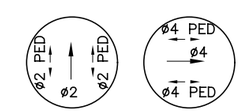

PRE–TIMED PRE–TIMED

THIS IS THE GENERAL SEQUENCING FOR THIS TRAFFIC SIGNAL. REFER TO THE CITY OF CINCINNATI FOR FINAL SEQUENCING, LABELING AND TIMINGS.

CAUTION UNDERGROUND UTILITIES
2 WORKING DAYS
BEFORE YOU DIG
CALL 1–800–362–2764
OHIO UTILITY PROTECTION SERVICE
CALL NON–SERVICE FACILITY
OWNERS DIRECT

GRAPHIC SCALE
10 0 10 20 40
(IN FEET)
1 inch = 10 ft. Full Size
1 inch = 20 ft. Half Size

DEPARTMENT OF TRANSPORTATION & ENGINEERING
CITY OF CINCINNATI OHIO

CONTRACT DRAWING

PRINTS NOT BEARING THIS STAMP WERE MADE PRIOR TO ADVERTISING FOR BIDS AND ARE NOT TO BE CONSIDERED OBSOLETE FOR CONTRACT PURPOSES.

Department of Transportation and Engineering
City of Cincinnati
City Hall
801 Plum Street
Cincinnati, Ohio 45202

CINCINNATI STREETCAR
CENTRAL BUSINESS DISTRICT
UNDERGROUND UTILITIES & SIGNAL PLAN DETAILS
MAIN STREET AND COURT STREET

Revisions
No.

Drawn by JRL	Date 7/02/12
Designed by JRL	Date 7/02/12
Checked by JTB	Date 7/02/12
Reviewed by JTB	Date 7/12/12

Consultant
PB HDR

File Number

ACC No.
23126

G-TC-1025 B

DOTE_Mono_PDF_Half.pltcfg
W:\29014A-Streetcar\CAD\Traffic_Control\Signals\1025_Court&Main_C-92\S_G-TC-1025 B.dgn
7:37:59 AM
7/11/2012

LEGEND

- MOL, MOT, MOLT POLE
- STEEL PEDESTRIAN POST
- TRAFFIC SIGNAL CONDUIT
- YELLOW FLASHER SIGNAL HEAD
- TRAFFIC SIGNAL HEAD
- PEDESTRIAN SIGNAL HEAD
- PEDESTRIAN PUSHBUTTON
- ILLUMINATED SIGN
- PULLBOX
- CONTROLLER

SIGNAL INDICATIONS

R Y G

1, 2, 3, 4, 5

SIGNAL HEAD DETAIL
12" (LED) LENSES

20

P1, P2, P3, P4
P5, P6, P7, P8

TYPE D2 PEDESTRIAN (LED)
(COUNTDOWN) SIGNAL HEAD

TYPICAL POLE ORIENTATION

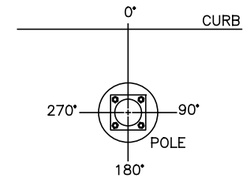

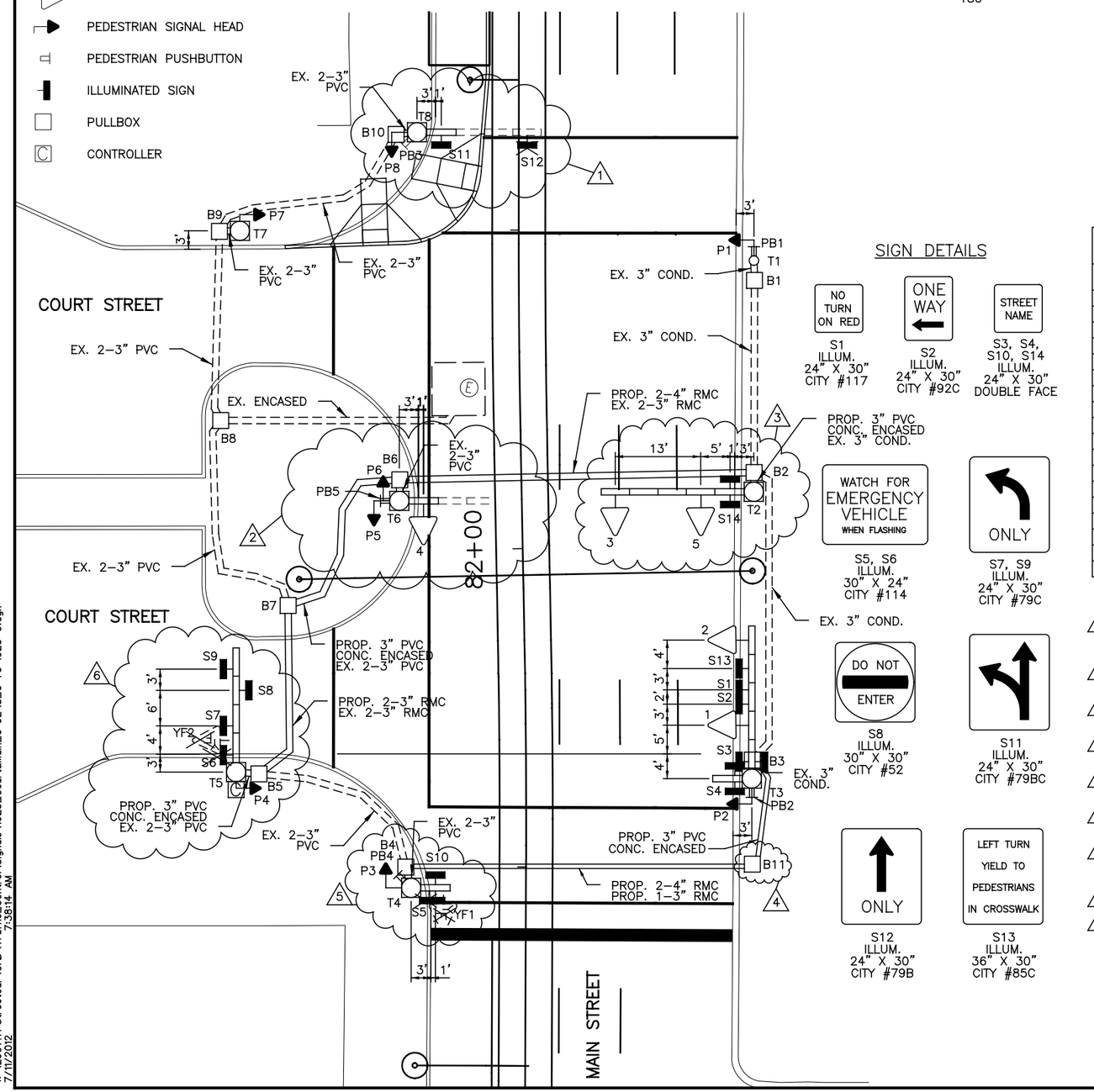
COURT STREET
COURT STREET
MAIN STREET
EX. 2–3" PVC
EX. ENCASED
PROP. 2–4" RMC
EX. 2–3" RMC
PROP. 3" PVC
CONC. ENCASED
EX. 3" COND.
PROP. 2–4" RMC
PROP. 1–3" RMC
B1
B2
B3
B4
B5
B6
B7
B8
B9
B10
B11
T1
T2
T3
T4
T5
T6
T7
T8
P1
P2
P3
P4
P5
P6
P7
P8
PB1
PB2
PB4
PB5
S1
S2
S3
S4
S5
S6
S7
S8
S9
S10
S11
S12
S13
S14
YF1
YF2
1
2
3
4
5
6
E
CH
13'
5'
1'
3'
1'
3'
1'
3

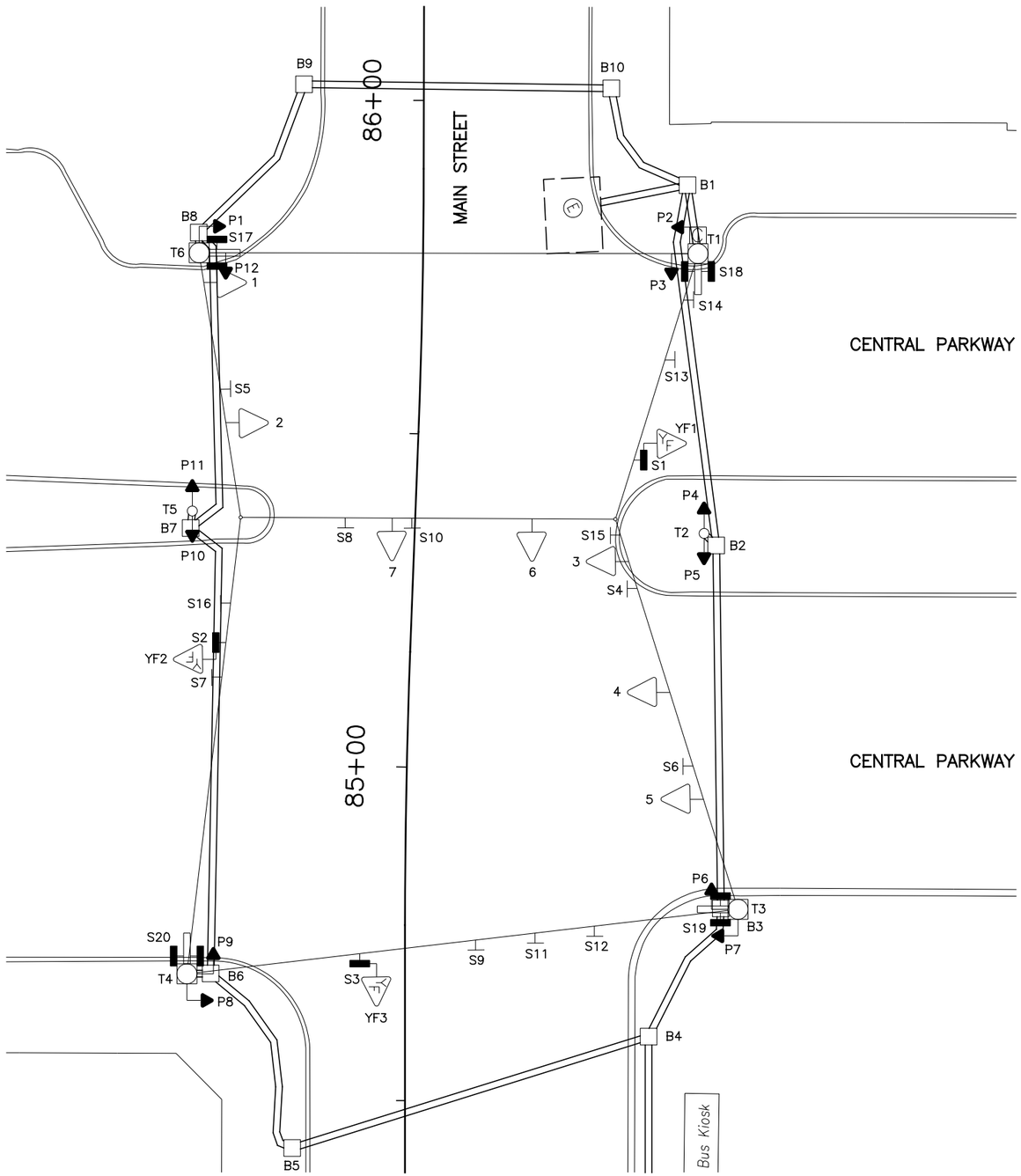

EQUIPMENT LIST	
1, 2, 4, 5	TRAF. SIG. HD., 3 SECT., VERT., 12" RYG
3	TRAF. SIG. HD., 3 SECT., VERT., 12" RY~~G~~
6, 7	TRAF. SIG. HD., 3 SECT., VERT., 8" RYG
YF1–YF3	TRAF. SIG. HD., 1 SECT., 8" Y
P1–P12	PED. SIG., 2 SECT., 12" INCANDESCENT
S1–S3	ILLUM. SIGN, 30" X 24", "WATCH FOR EMERGENCY VEHICLE WHEN FLASHING", #114
S4	REFL. SIGN, 24" X 30", "LEFT TURN SIGNAL", #77C
S5	REFL. SIGN, 24" X 30", "ONE WAY —", #92A
S6	REFL. SIGN, 24" X 30", "ONE WAY —", #92C
S7, S9, S13	REFL. SIGN, 24" X 30", "↑ ONLY", #79B
S8, S16	REFL. SIGN, 24" X 30", "↱ ONLY", #79C
S10	REFL. SIGN, 24" X 30", "↰↑ ONLY", #79BC
S11, S12	REFL. SIGN, 24" X 30", "↱ ONLY", #79A
S14	REFL. SIGN, 24" X 30", "↰ ONLY", #79AB
S15	REFL. SIGN, 24" X 30", "LEFT ON ARROW ONLY", #78C
S17	ILLUM. SIGN, 24" X 30", DF, "CENTRAL PARKWAY EAST 100–199"
S18	ILLUM. SIGN, 24" X 30", DF, "MAIN STREET 1100–1199"
S19	ILLUM. SIGN, 24" X 30", DF, "CENTRAL PARKWAY EAST 200–299"
S20	ILLUM. SIGN, 24" X 30", DF, "MAIN STREET 1000–1099"
B1, B3–B6, B9, B10	PULLBOX, 24" X 24", DOWNTOWN SPECIAL
B2, B7	PULLBOX, 18" X 18", TYPE B
B8	PULLBOX, 26" X 38", DOUBLE LID SPECIAL
T1, T3, T4, T6	STEEL POLE, ANCHOR BASE, 50 FT. LT, TYPE MOLX W/ 1 BAY BOOM
T2, T5	STEEL POST, ANCH. BASE, #1145

LEGEND

- MOL, MOT, MOLT POLE
- STEEL PEDESTRIAN POST
- TRAFFIC SIGNAL CONDUIT
- YELLOW FLASHER SIGNAL HEAD
- TRAFFIC SIGNAL HEAD
- PEDESTRIAN SIGNAL HEAD
- REFLECTORIZED SIGN
- ILLUMINATED SIGN
- PULLBOX
- CONTROLLER

CAUTION UNDERGROUND UTILITIES
2 WORKING DAYS
BEFORE YOU DIG
CALL 1–800–362–2764
OHIO UTILITY PROTECTION SERVICE
CALL NON–SERVICE FACILITY
OWNERS DIRECT

GRAPHIC SCALE
10 0 10 20 40
(IN FEET)
1 inch = 10 ft. Full Size
1 inch = 20 ft. Half Size

DOTE_Mono_PDF_Half.pltcfg
W:\29014A-Streetcar\CAD\Traffic_Control\Signals\1026_CentralPkwy&Main_C-34\S_G-TC-1026 A.dgn
7/11/2012 7:38:28 AM

CONTRACT DRAWING

PRINTS NOT BEARING THIS STAMP WERE MADE PRIOR TO ADVERTISING FOR BIDS AND ARE TO BE CONSIDERED OBSOLETE FOR CONTRACT PURPOSES.

Department of Transportation and Engineering

City of Cincinnati
City Hall
801 Plum Street
Cincinnati, Ohio 45202

CINCINNATI STREETCAR
CENTRAL BUSINESS DISTRICT
EXISTING TRAFFIC SIGNAL PLAN
MAIN STREET AND CENTRAL PARKWAY

Revisions
No.

Drawn by JRL	Date 7/02/12	
Designed by JRL	Date 7/02/12	
Checked by JTB	Date 7/02/12	
Reviewed by JTB	Date 7/12/12	

Consultant

PB HDR

File Number

ACC No. 23126

G-TC-1026 A

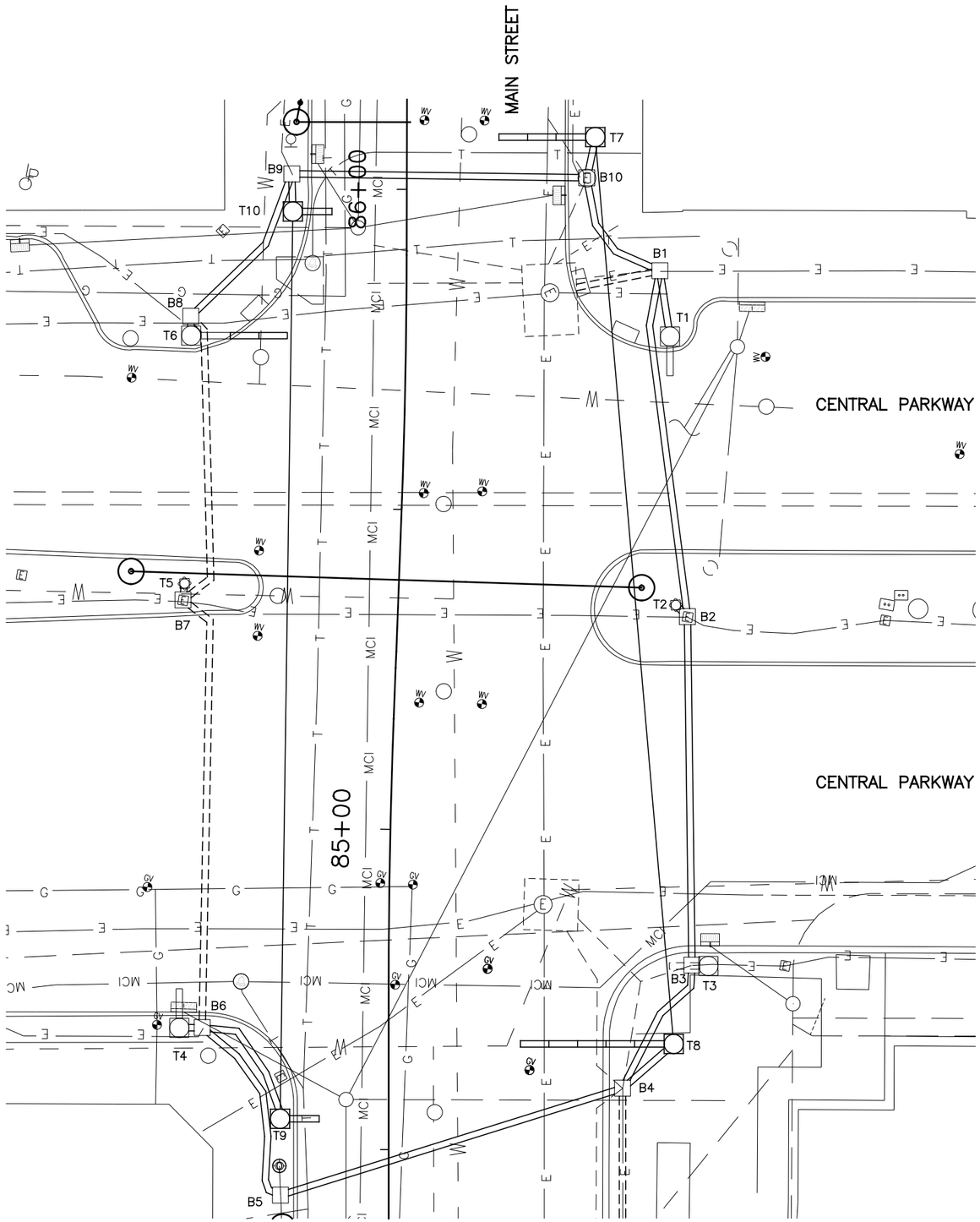

SIGNAL PHASING

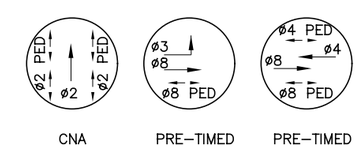

THIS IS THE GENERAL SEQUENCING FOR THIS TRAFFIC SIGNAL. REFER TO THE CITY OF CINCINNATI FOR FINAL SEQUENCING, LABELING AND TIMINGS.

CAUTION UNDERGROUND UTILITIES
2 WORKING DAYS
BEFORE YOU DIG
CALL 1–800–362–2764
OHIO UTILITY PROTECTION SERVICE
CALL NON–SERVICE FACILITY
OWNERS DIRECT

GRAPHIC SCALE
10 0 10 20 40
(IN FEET)
1 inch = 10 ft. Full Size
1 inch = 20 ft. Half Size

DOTE_Mono_PDF_Half.pltcfg
W:\29014A-Streetcar\CAD\Traffic_Control\Signals\1026_CentralPkwy&Main_C-34\S_G-TC-1026 B.dgn
7:38:42 AM
7/11/2012

CONTRACT DRAWING

PRINTS NOT BEARING THIS STAMP WERE MADE PRIOR TO ADVERTISING FOR BID AND ARE TO BE CONSIDERED OBSOLETE FOR CONTRACT PURPOSES.

Department of Transportation and Engineering

City of Cincinnati
City Hall
801 Plum Street
Cincinnati, Ohio 45202

CINCINNATI STREETCAR
CENTRAL BUSINESS DISTRICT
UNDERGROUND UTILITIES & SIGNAL PLAN DETAILS
MAIN STREET AND CENTRAL PARKWAY

Revisions
No.

Date 7/02/12	Drawn by JRL
Date 7/02/12	Designed by JRL
Date 7/02/12	Checked by JTB
Date 7/12/12	Reviewed by JTB

Consultant

PB HDR

File Number

ACC No. 23126

G-TC-1026 B

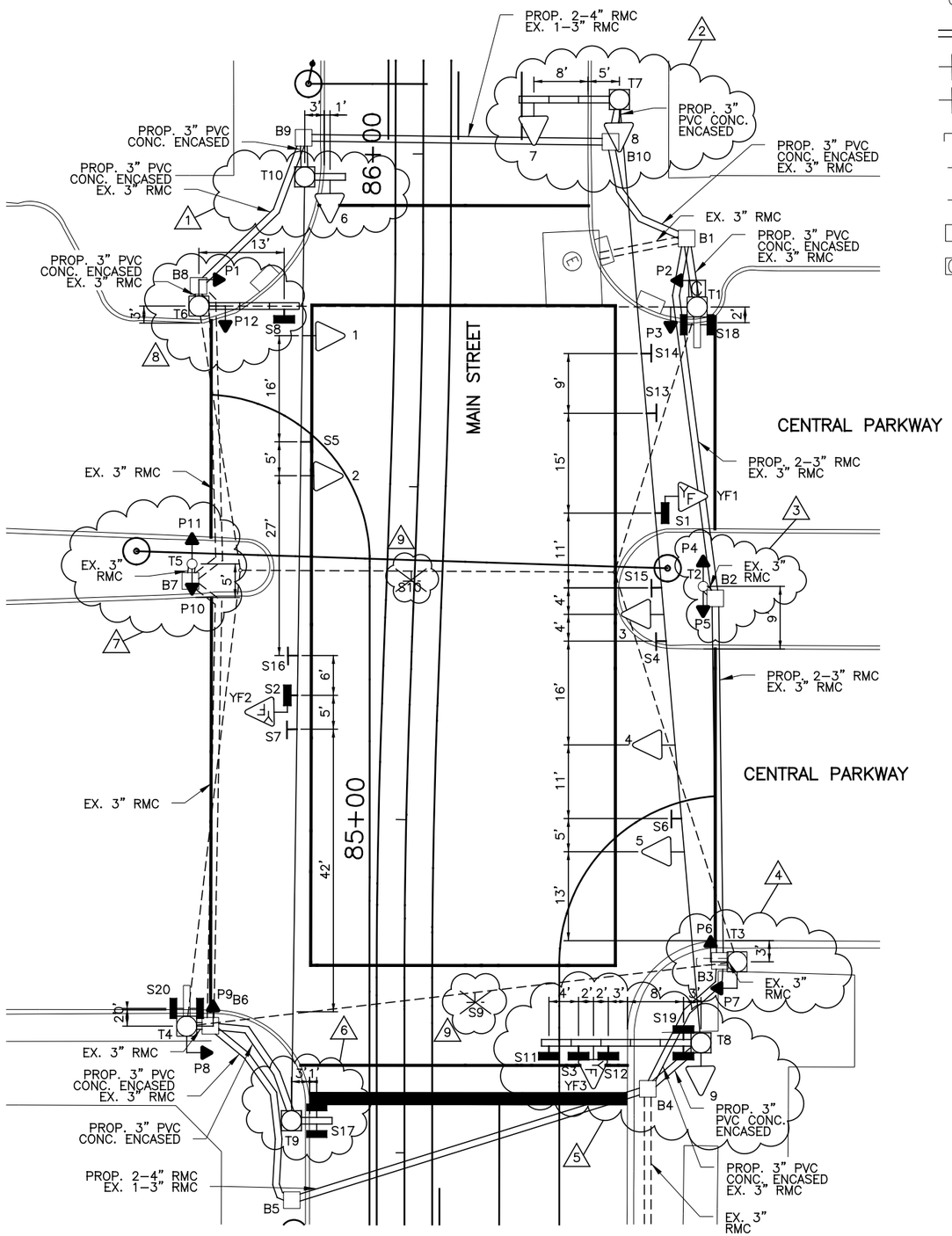

LEGEND

MOL, MOT, MOLT POLE	
STEEL PEDESTRIAN POST	
TRAFFIC SIGNAL CONDUIT	
YELLOW FLASHER SIGNAL HEAD	
TRAFFIC SIGNAL HEAD	
PEDESTRIAN SIGNAL HEAD	
REFLECTORIZED SIGN	
ILLUMINATED SIGN	
PULLBOX	
CONTROLLER	

TYPICAL POLE ORIENTATION

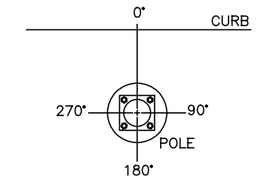

SIGNAL INDICATIONS

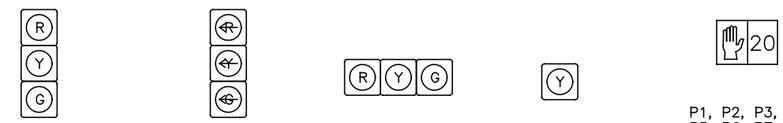

1, 2, 4, 5, 8, 9	3	6, 7	YF1, YF2, YF3	P1, P2, P3, P4 P5, P6, P7, P8 P9, P10, P11, P12
SIGNAL HEAD DETAIL 12" (LED) LENSES	SIGNAL HEAD DETAIL 12" (LED) LENSES	SIGNAL HEAD DETAIL 12" (LED) LENSES	SIGNAL HEAD DETAIL 12" (LED) LENSES	TYPE D2 PEDESTRIAN (LED) (COUNTDOWN) SIGNAL HEAD

NOTES:

1. ADD A NEW MOT POLE T10 AT STA. 85+96.52, 17.80' LT. ATTACH A 1 SIGNAL BAY BOOM TO POLE T10. PLACE TRAFFIC SIGNAL 6 IN THE FIRST BAY OF NEW SIGNAL BAY BOOM ON POLE T10. CONNECT POLE T10 TO POLE T9 WITH NEW MESSENGER WIRE AND INSTALL NEW SIGNS AND SIGNALS ON MESSENGER WIRE.

2. ADD A NEW MOT POLE T7 AT STA. 86+08.23, 29.42' RT. ATTACH A 3 SIGNAL BAY BOOM TO POLE T7. PLACE TRAFFIC SIGNAL 7 IN THE THIRD BAY OF NEW SIGNAL BAY BOOM ON POLE T7. PLACE NEW TRAFFIC SIGNAL 8 ON POLE T7. CONNECT POLE T7 TO POLE T8 WITH NEW MESSENGER WIRE AND INSTALL NEW SIGNS AND SIGNALS ON MESSENGER WIRE.

3. REPLACE PEDESTRIAN SIGNAL HEADS P4 AND P5 WITH TYPE D2 LED COUNTDOWN PEDESTRIAN SIGNAL HEADS.

4. REMOVE 1 SIGNAL BAY BOOM FROM POLE T3. MOVE SIGN S19 IN FIRST BAY OF THE NEW SIGNAL BAY BOOM ON POLE T8.

5. ADD A NEW MOT POLE T8 AT STA. 84+66.52, 44.53' RT. ATTACH A 5 SIGNAL BAY BOOM TO POLE T8. PLACE NEW SIGN S11 IN THE FIFTH BAY OF THE NEW SIGNAL BAY BOOM ON POLE T8. PLACE NEW SIGN S3 AND YELLOW FLASHER YF3 IN THE FOURTH BAY OF THE NEW SIGNAL BAY BOOM ON POLE T8. PLACE NEW SIGN S12 IN THE THIRD BAY OF THE NEW SIGNAL BAY BOOM ON POLE T8. PLACE NEW SIGN S19 IN THE FIRST BAY OF THE NEW SIGNAL BAY BOOM ON POLE T8. PLACE NEW TRAFFIC SIGNAL 9 ON POLE T8.

6. ADD A NEW MOT POLE T9 AT STA. 84+54.80, 16.97' LT. ATTACH A 1 SIGNAL BAY BOOM TO POLE T9. INSTALL NEW SIGN S17 IN THE FIRST BAY OF THE NEW SIGNAL BAY BOOM ON POLE T9.

7. REPLACE PEDESTRIAN SIGNAL HEADS P10 AND P11 WITH TYPE D2 LED COUNTDOWN PEDESTRIAN SIGNAL HEADS.

8. REPLACE 1 SIGNAL BAY BOOM ON POLE T6 WITH A 3 SIGNAL BAY BOOM. INSTALL NEW SIGN S8 INTO THE THIRD BAY. MOVE SIGN S17 TO THE FIRST BAY OF POLE T9.

9. REMOVE REFLECTORIZED SIGNS S9 AND S10.

10. REPLACE ALL SIGNAL HEADS WITH 12" LED TRAFFIC SIGNALS AND REPLACE ALL PEDESTRIAN SIGNAL HEADS WITH TYPE D2 LED COUNTDOWN PEDESTRIAN SIGNAL HEADS. REPLACE CONTROLLER ON POLE T1. REPLACE ALL ILLUMINATED AND REFLECTORIZED SIGNS.

11. INSTALL 2–4" RMC ALONG WITH 1–3" RMC UNDER TRACK SLAB AS SHOWN ON THIS PLAN.

12. A DISTANCE OF SIX FEET BEHIND THE CURB AND 15 FEET ON EITHER SIDE OF PROPOSED OCS POLES AND SIGNAL POLES (INCLUDING ANY DISTURBANCE TO THE EXISTING CURB) HAS BEEN QUANTIFIED FOR BIDDING PURPOSES FOR REMOVAL AND REPLACEMENT OF SIDEWALK. THE CITY'S ENGINEER WILL DETERMINE ACTUAL PAY LIMITS FOR THIS WORK. NO ADDITIONAL INCREASE TO THE UNIT COST WILL BE ALLOWED FOR THIS WORK IF THE QUANTITIES ARE MORE OR LESS THAN THE AMOUNT QUANTIFIED FOR BIDDING PURPOSES.

CAUTION UNDERGROUND UTILITIES
2 WORKING DAYS
BEFORE YOU DIG
CALL 1–800–362–2764
OHIO UTILITY PROTECTION SERVICE
CALL NON–SERVICE FACILITY
OWNERS DIRECT

GRAPHIC SCALE
10 0 10 20 40
(IN FEET)
1 inch = 10 ft. Full Size
1 inch = 20 ft. Half Size

DOTE_Mono_PDF_Half.pltcfg
W:\29014A-Streetcar\CAD\Traffic_Control\Signals\1026_CentralPkwy&Main_C-34\S_G-TC-1026 C.dgn
7:39:01 AM
7/11/2012

CONTRACT DRAWING

PRINTS NOT BEARING THIS STAMP WERE MADE PRIOR TO ADVERTISING FOR BIDS AND ARE TO BE CONSIDERED OBSOLETE FOR CONTRACT PURPOSES.

Department of Transportation and Engineering

City of Cincinnati
City Hall
801 Plum Street
Cincinnati, Ohio 45202

CINCINNATI STREETCAR
CENTRAL BUSINESS DISTRICT
PROPOSED TRAFFIC SIGNAL PLAN MAIN STREET AND CENTRAL PARKWAY

Revisions

No.		Date

	Date
Drawn by JRL	7/02/12
Designed by JRL	7/02/12
Checked by JTB	7/02/12
Reviewed by JTB	7/12/12

Consultant

PB HDR

File Number

ACC No. 23126

G-TC-1026 C

MATERIAL SCHEDULE

NO.	VEHICULAR SIGNAL HEADS 1	2	3	4	5	6	7	8	9
12 INCH	R	R	R	R	R	R	R	R	R
	Y	Y	~~Y~~	Y	Y	Y	Y	Y	Y
	G	G	~~G~~	G	G	G	G	G	G

20

TYPE D2 PEDESTRIAN (LED)
(COUNTDOWN) SIGNAL HEAD

NOTE:
USE LENS W/ SYMBOL LEGENDS
PORTLAND ORANGE: HAND (DONT WALK)
LUNAR WHITE: WALKING MAN (WALK)

POLE NO.	POLE DATA: POLE TYPE	TRAFFIC BOOM (# OF BAYS)	FOUNDATION TYPE	PEDESTRIAN SIGNALS P1 D W	P2 D W	P3 D W	P4 D W	P5 D W	P6 D W	P7 D W	P8 D W	P9 D W	P10 D W	P11 D W	P12 D W	CABLE ENTRANCE ANGLE (DEG)	SPAN WIRE ATTACHMENT HEIGHT (FEET)	ATTACHMENT HEIGHT (FEET) TO THE BOTTOM OF BOOM	TRAFFIC BOOM (DEG)	STREET LIGHT BRACKET ARM (DEG)	HANDHOLE (DEG)	CONTROLLER (DEG)
				ANGLE OF ORIENTATION (DEGREES)																		
T1	MOLTX	1	EXIST.		180	90												EX.	EX.	EX.	EX.	180
T2	1145	–	EXIST.				90	270													EX.	
T3	MOLTX	–	EXIST.						270	180										EX.	EX.	
T4	MOLTX	1	EXIST.								180	90						EX.	EX.	EX.	EX.	
T5	1145	–	EXIST.										90	270							EX.	
T6	MOLTX	3	EXIST.	180											270			17	0	EX.	EX.	
T7	MOT	3	FDN–51													267	24.5	17	0		180	
T8	MOT	5	FDN–52													87	24.5	17	0		180	
T9	MOT	1	FDN–51													271	24.5	17	0		180	
T10	MOT	1	FDN–51													91	24.5	17	0		180	

CABLE SCHEDULE

CABLE#	CONNECTING DEVICE	TYPE	CABLE ROUTING	LIN. FT
1	TRAFFIC SIGNAL TS1, TS2	7C#14	TS2–TS1–T10–B9–B10–B1–T1–C	175
2	TRAFFIC SIGNAL TS3	7C#14	TS3–T7–B10–B1–T1–C	145
3	TRAFFIC SIGNAL TS4, TS5	7C#14	TS5–TS4–T7–B10–B1–T1–C	180
4	TRAFFIC SIGNAL TS6	7C#14	TS6–T10–B9–B10–B1–T1–C	129
5	TRAFFIC SIGNAL TS7, TS8	7C#14	TS7–TS8–T7–B10–B1–T1–C	88
6	TRAFFIC SIGNAL TS9	7C#14	TS9–T8–B4–B3–B2–B1–T1–C	202
7	PED. SIGNAL P1	EXIST.	EXIST.	EXIST.
8	PED. SIGNAL P2	EXIST.	EXIST.	EXIST.
9	PED. SIGNAL P3	EXIST.	EXIST.	EXIST.
10	PED. SIGNAL P4	EXIST.	EXIST.	EXIST.
11	PED. SIGNAL P5	EXIST.	EXIST.	EXIST.
12	PED. SIGNAL P6	EXIST.	EXIST.	EXIST.
13	PED. SIGNAL P7	EXIST.	EXIST.	EXIST.
14	PED. SIGNAL P8	EXIST.	EXIST.	EXIST.
15	PED. SIGNAL P9	EXIST.	EXIST.	EXIST.
16	PED. SIGNAL P10	EXIST.	EXIST.	EXIST.
17	PED. SIGNAL P11	EXIST.	EXIST.	EXIST.
18	PED. SIGNAL P12	EXIST.	EXIST.	EXIST.
19	TRAFFIC SIGNAL YF1	7C#14	YF1–T7–B10–B1–T1–C	129
20	TRAFFIC SIGNAL YF2	7C#14	YF2–T10–B9–B10–B1–T1–C	208
21	TRAFFIC SIGNAL YF3	7C#14	YF3–T8–B4–B3–B2–B1–T1–C	217
22	ILLUM. SIGN S1	2C#12	S1–T7–B10–B1–T1–C	129
23	ILLUM. SIGN S2	2C#12	S2–T10–B9–B10–B1–T1–C	208
24	ILLUM. SIGN S3, S11, S12, S19	2C#12	S11–S3–S12–S19–T8–B4–B3–B2–B1–T1–C	230
25	ILLUM. SIGN S8	2C#12	S8–T6–B8–B9–B10–B1–T1–C	175
26	ILLUM. SIGN S17	2C#12	S17–T9–B6–B5–B4–B3–B2–B1–T1–C	325
27	ILLUM. SIGN S18	EXIST.	EXIST.	EXIST.
28	ILLUM. SIGN S20	EXIST.	EXIST.	EXIST.
29	POWER CABLE, AC POSITIVE, BLACK	EXIST.	EXIST.	EXIST.
30	POWER CABLE, AC NEGATIVE, WHITE	EXIST.	EXIST.	EXIST.

SIGN DETAILS

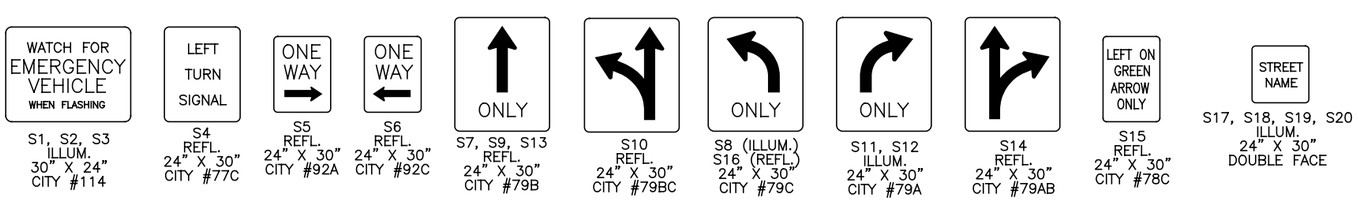

GRAPHIC SCALE
10 0 10 20 40
(IN FEET)
1 inch = 10 ft. Full Size
1 inch = 20 ft. Half Size

CAUTION UNDERGROUND UTILITIES
2 WORKING DAYS
BEFORE YOU DIG
CALL 1–800–362–2764
OHIO UTILITY PROTECTION SERVICE
CALL NON–SERVICE FACILITY
OWNERS DIRECT

DEPARTMENT OF TRANSPORTATION & ENGINEERING CITY OF CINCINNATI OHIO

CONTRACT DRAWING

PRINTS NOT BEARING THIS STAMP WERE MADE PRIOR TO ADVERTISING FOR BID AND ARE TO BE CONSIDERED OBSOLETE FOR CONTRACT PURPOSES.

Department of Transportation and Engineering

City of Cincinnati
City Hall
801 Plum Street
Cincinnati, Ohio 45202

CINCINNATI STREETCAR
CENTRAL BUSINESS DISTRICT

PROPOSED TRAFFIC SIGNAL PLAN
MAIN STREET AND CENTRAL PARKWAY

Revisions
No.

Drawn by JRL Date 7/02/12
Designed by JRL Date 7/02/12
Checked by JTB Date 7/02/12
Reviewed by JTB Date 7/12/12

Consultant
PB HDR

File Number

ACC No. 23126

G-TC-1026 D

DOTE_Mono_PDF_Half.pltcfg
W:\29014A-Streetcar\CAD\Traffic_Control\Signals\1026_CentralPkwy&Main_C-34\S_G-TC-1026 D.dgn
7:39:07 AM
7/11/2012

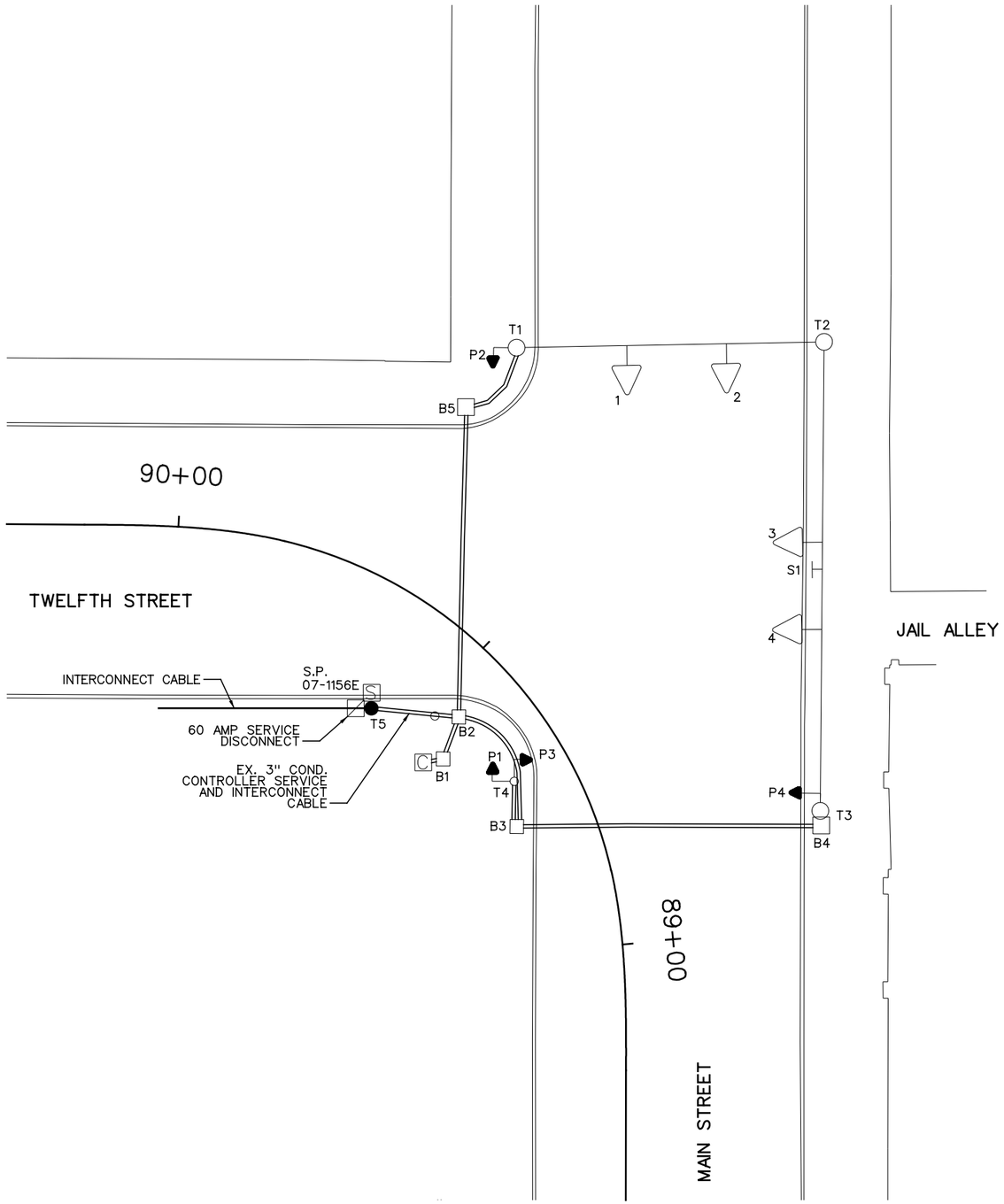

EQUIPMENT LIST	
1, 2, 3, 4	TRAF. SIG. HD., 3 SECT.., VERT., 8" RYG
P1-P4	PED. SIG., 2 SECT., 12" INCANDESCENT
S1	REFL. SIGN, 24" X 30", "ONE WAY ←", #92C
B4, B5	PULLBOX, 18" X 18"
B1, B2, B3	PULLBOX, 24" X 24"
T1, T2, T3	STEEL POLE, ANCH. BASE, 9" X 26', #23065
T4	STEEL POLE, ANCH. BASE, 4" X 12'-6"
T5	WOOD SERVICE POLE

LEGEND

- STEEL POLE
- WOOD POLE
- STEEL PEDESTRIAN POST
- TRAFFIC SIGNAL CONDUIT
- TRAFFIC SIGNAL HEAD
- PEDESTRIAN SIGNAL HEAD
- REFLECTORIZED SIGN
- PULLBOX
- CONTROLLER
- SECTIONALIZER
- DISCONNECT SWITCH (DS)

CAUTION UNDERGROUND UTILITIES
2 WORKING DAYS
BEFORE YOU DIG
CALL 1-800-362-2764
OHIO UTILITY PROTECTION SERVICE
CALL NON-SERVICE FACILITY
OWNERS DIRECT

GRAPHIC SCALE
20 0 10 20 40
(IN FEET)
1 inch = 10 ft. Full Size
1 inch = 20 ft. Half Size

DOTE_Mono_PDF_Half.pltcfg
W:\29014A-Streetcar\CAD\Traffic_Control\Signals\1027_Main&Twelfth_M-18\S_G-TC-1027 A.dgn
7/11/2012 7:42:49 AM

CONTRACT DRAWING

PRINTS NOT BEARING THIS STAMP WERE MADE PRIOR TO ADVERTISING FOR BIDS AND ARE TO BE CONSIDERED OBSOLETE FOR CONTRACT PURPOSES.

Department of Transportation and Engineering
City of Cincinnati
801 Plum Street
Cincinnati, Ohio 45202

CINCINNATI STREETCAR
CENTRAL BUSINESS DISTRICT
EXISTING TRAFFIC SIGNAL PLAN
MAIN STREET AND TWELFTH STREET

Revisions
No.

	Date
Drawn by JRL	7/02/12
Designed by JRL	7/02/12
Checked by JTB	7/02/12
Reviewed by JTB	7/12/12

Consultant
PB HDR

File Number

ACC No. 23126

G-TC-1027 A

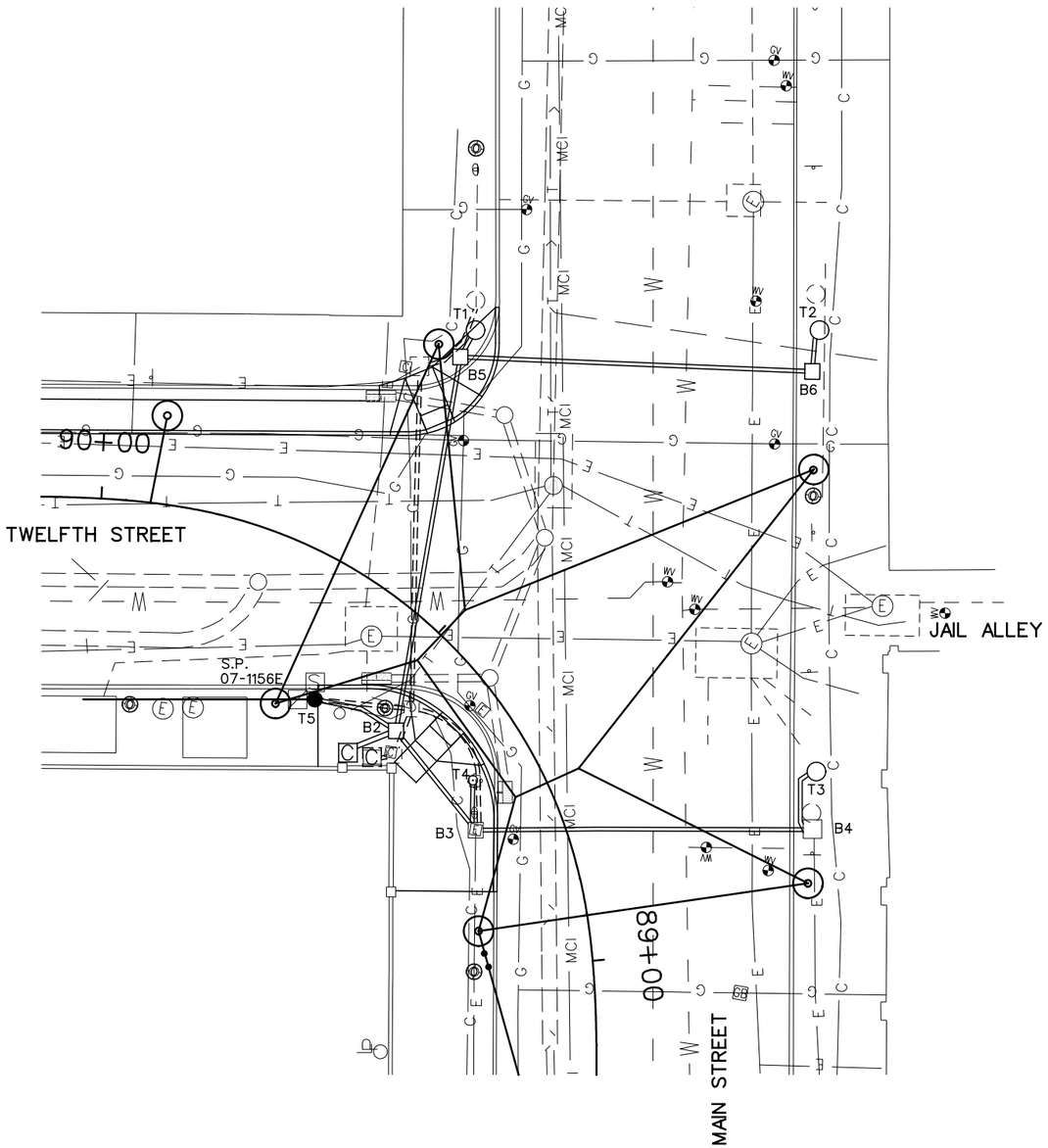

SIGNAL PHASING

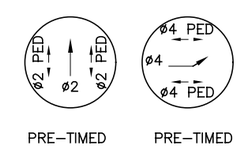

PRE–TIMED PRE–TIMED

THIS IS THE GENERAL SEQUENCING FOR THIS TRAFFIC SIGNAL. REFER TO THE CITY OF CINCINNATI FOR FINAL SEQUENCING, LABELING AND TIMINGS.

CAUTION UNDERGROUND UTILITIES
2 WORKING DAYS
BEFORE YOU DIG
CALL 1–800–362–2764
OHIO UTILITY PROTECTION SERVICE
CALL NON–SERVICE FACILITY
OWNERS DIRECT

GRAPHIC SCALE
20 0 10 20 40
(IN FEET)
1 inch = 10 ft. Full Size
1 inch = 20 ft. Half Size

DEPARTMENT OF TRANSPORTATION & ENGINEERING
CITY OF CINCINNATI OHIO

CONTRACT DRAWING

PRINTS NOT BEARING THIS STAMP WERE MADE PRIOR TO ADVERTISING FOR BID AND ARE TO BE CONSIDERED OBSOLETE FOR CONTRACT PURPOSES.

Department of Transportation and Engineering

City of Cincinnati
City Hall
801 Plum Street
Cincinnati, Ohio 45202

CINCINNATI STREETCAR
CENTRAL BUSINESS DISTRICT
UNDERGROUND UTILITIES & SIGNAL PLAN DETAILS
MAIN STREET AND TWELFTH STREET

Revisions
No.

Drawn by JRL	Date 7/02/12	
Designed by JRL	Date 7/02/12	
Checked by JTB	Date 7/02/12	
Reviewed by JTB	Date 7/12/12	

Consultant
PB HDR

File Number

ACC No.
23126

G-TC-1027 B

DOTE_Mono_PDF_Half.pltcfg
W:\29014A-Streetcar\CAD\Traffic_Control\Signals\1027_Main&Twelfth_M-18\S_G-TC-1027 B.dgn
7/11/2012 7:43:04 AM

LEGEND

- STEEL POLE
- WOOD POLE
- STEEL PEDESTRIAN POST
- TRAFFIC SIGNAL CONDUIT
- TRAFFIC SIGNAL HEAD
- PEDESTRIAN SIGNAL HEAD
- REFLECTORIZED SIGN
- PULLBOX
- CONTROLLER
- SECTIONALIZER
- DISCONNECT SWITCH (DS)

SIGNAL INDICATIONS

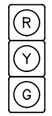

1, 2, 3, 4

SIGNAL HEAD DETAIL
12" (LED) LENSES

P1, P2, P3, P4

TYPE D2 PEDESTRIAN (LED)
(COUNTDOWN) SIGNAL HEAD

TYPICAL POLE ORIENTATION

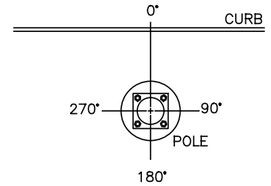

MATERIAL SCHEDULE

NO.	1	2	3	4
12 INCH	R	R	R	R
	Y	Y	Y	Y
	G	G	G	G

TYPE D2 PEDESTRIAN (LED)
(COUNTDOWN) SIGNAL HEAD

NOTE:
USE LENS W/ SYMBOL LEGENDS
PORTLAND ORANGE: HAND (DONT WALK)
LUNAR WHITE: WALKING MAN (WALK)

POLE NO.	POLE TYPE	SHAFT SIZE IN X FT	FOUNDATION TYPE	P1 D W	P2 D W	P3 D W	P4 D W	CABLE ENTRANCE ANGLE (DEG)	SPAN WIRE ATTACHMENT HEIGHT (FEET)	SPAN WIRE ATTACHMENT HEIGHT (FEET)	HANDHOLE (DEG)	DISCONNECT SWITCH (DEG)
	POLE DATA			PEDESTRIAN SIGNALS — ANGLE OF ORIENTATION (DEGREES)								
T1	29053	9 X 26	FDN-7		180				24.5		180	
T2	29053	9 X 26	FDN-7					0	24.5	24.5	180	
T3	29053	9 X 26	FDN-7				90	90	24.5		180	
T4	1045	4 X 12.5	EXIST.	180		270					EX.	
T5	WOOD POLE	-	EXIST.									EX.
C	NEW CONTROLLER - GROUND MOUNTED											

CABLE SCHEDULE

CABLE NO.	CONNECTING DEVICE	CABLE TYPE	CABLE ROUTING	LINEAR FEET
1	TRAFFIC SIGNAL TS1, TS2	7C#14	TS2-TS1-T1-B5-B2-C	145
2	TRAFFIC SIGNAL TS3, TS4	7C#14	TS3-TS4-T3-B4-B3-B2-C	170
3	PED. SIGNAL P1	7C#14	P1-T4-B3-B2-C	60
4	PED. SIGNAL P2	7C#14	P2-T1-B5-B2-C	95
5	PED. SIGNAL P3	7C#14	P3-T4-B3-B2-C	60
6	PED. SIGNAL P4	7C#14	P4-T3-B4-B3-B2-C	115
7	POWER CABLE, AC POSITIVE, BLACK	1C#6	T5-B2-C	70
8	POWER CABLE, AC NEGATIVE, WHITE	1C#6	T5-B2-C	70
9	INTERCONNECT CABLE	12C#12	SECT.-T5-B2-C	70

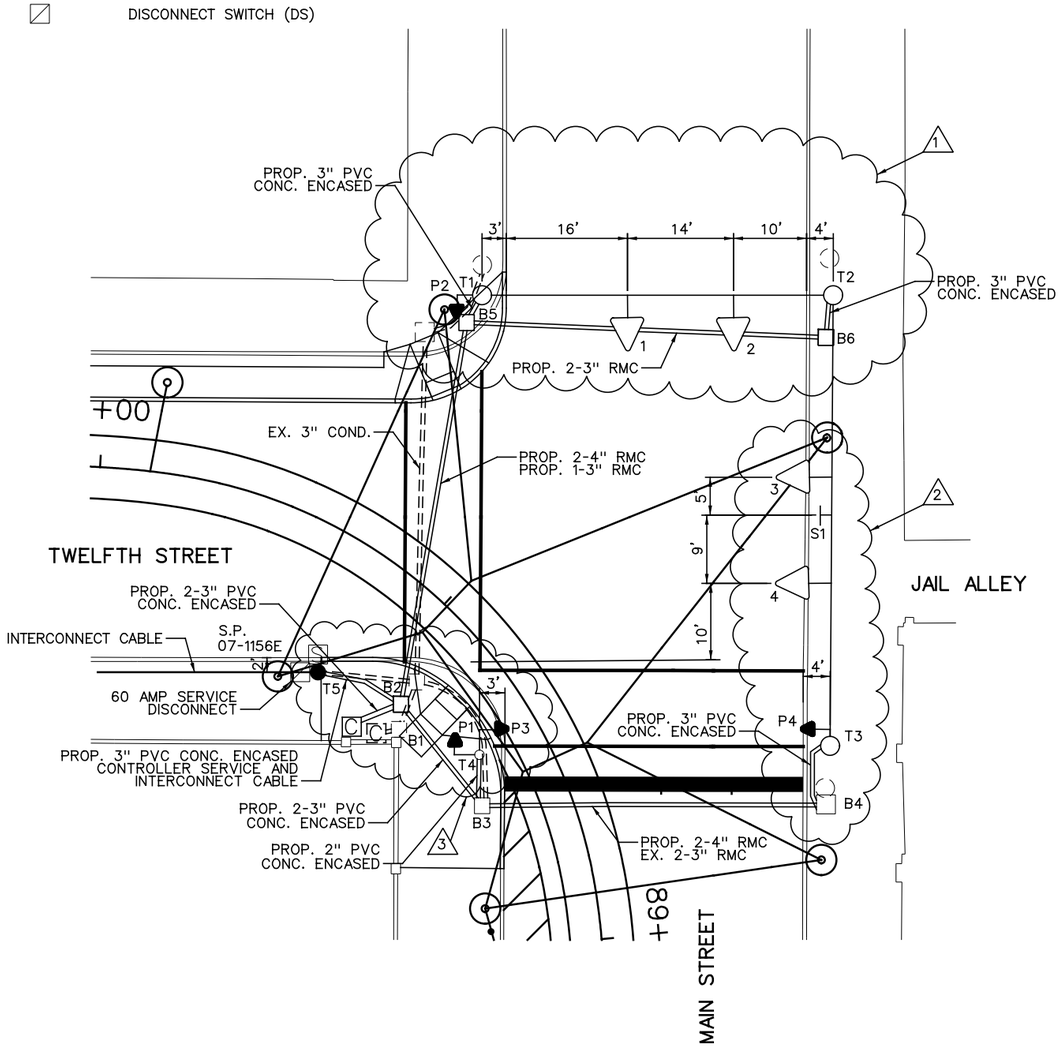

NOTES:

1. REPLACE EXISTING POLES T1 AND T2 WITH A NEW STEEL POLE T1 AT STA. 89+65.80, 36.09' RT AND A NEW STEEL POLE T2 AT STA. 89+45.19, 65.20' RT. LIGHTING CIRCUIT WILL NEED TO BE TEMPORARILY DISCONNECTED TO INSTALL POLE T1 AND POLE T2. CONNECT POLE T1 TO POLE T2 WITH NEW MESSENGER WIRE. REPLACE SIGNAL HEADS 1 AND 2 WITH 12" LED SIGNAL HEADS ON NEW MESSENGER WIRE. REPLACE PEDESTRIAN SIGNAL P2 WITH TYPE D2 LED COUNTDOWN PEDESTRIAN SIGNAL HEAD. REPLACE PULLBOX B5 WITH 24" X 24" CITY TYPE "C" PULLBOX AT STA. 89+65.80, 31.93' RT. ADD 24" X 24" CITY TYPE "C" PULLBOX B6 AT STA. 89+43.40, 60.77' RT.
2. REPLACE EXISTING POLE WITH A NEW STEEL POLE T3 AT STA. 89+15.74, 34.51' RT. LIGHTING CIRCUIT WILL NEED TO BE TEMPORARILY DISCONNECTED TO INSTALL POLE T3. CONNECT POLE T3 TO POLE T2 WITH NEW MESSENGER WIRE. INSTALL NEW SIGN S1 ON MESSENGER WIRE. REPLACE SIGNAL HEADS 3 AND 4 WITH 12" LED SIGNAL HEADS ON NEW MESSENGER WIRE. REPLACE PEDESTRIAN SIGNAL P4 WITH TYPE D2 LED COUNTDOWN PEDESTRIAN SIGNAL HEAD.
3. REMOVE PULLBOX B1. REPLACE PULLBOX B2 WITH 24" X 24" CITY TYPE "C" PULLBOX AT STA. 89+43.89, 13.34' LT. REPLACE PEDESTRIAN SIGNALS P1 AND P3 WITH TYPE D2 LED COUNTDOWN PEDESTRIAN SIGNAL HEAD. INSTALL NEW CONTROLLER AND CONTROLLER PAD AT STA 89+47.00, 20.13' LT.
4. REPLACE ALL SIGNAL HEADS WITH 12" LED TRAFFIC SIGNALS AND REPLACE ALL PEDESTRIAN SIGNAL HEADS WITH TYPE D2 LED COUNTDOWN PEDESTRIAN SIGNALS.
5. INSTALL 2-4" RMC ALONG WITH 2-3" RMC UNDER TRACK SLAB ON TWELFTH STREET AND MAIN STREET.
6. A DISTANCE OF SIX FEET BEHIND THE CURB AND 15 FEET ON EITHER SIDE OF PROPOSED OCS POLES AND SIGNAL POLES (INCLUDING ANY DISTURBANCE TO THE EXISTING CURB) HAS BEEN QUANTIFIED FOR BIDDING PURPOSES FOR REMOVAL AND REPLACEMENT OF SIDEWALK. THE CITY'S ENGINEER WILL DETERMINE ACTUAL PAY LIMITS FOR THIS WORK. NO ADDITIONAL INCREASE TO THE UNIT COST WILL BE ALLOWED FOR THIS WORK IF THE QUANTITIES ARE MORE OR LESS THAN THE AMOUNT QUANTIFIED FOR BIDDING PURPOSES.

SIGN DETAIL

S1
REFL.
24" X 30"
CITY #92C

GRAPHIC SCALE

20 0 10 20 40

(IN FEET)
1 inch = 10 ft. Full Size
1 inch = 20 ft. Half Size

CAUTION UNDERGROUND UTILITIES
2 WORKING DAYS
BEFORE YOU DIG
CALL 1-800-362-2764
OHIO UTILITY PROTECTION SERVICE
CALL NON-SERVICE FACILITY
OWNERS DIRECT

CONTRACT DRAWING

PRINTS NOT BEARING THIS STAMP WERE MADE PRIOR TO ADVERTISING FOR BIDS AND ARE TO BE CONSIDERED OBSOLETE FOR CONTRACT PURPOSES.

Department of Transportation and Engineering

City of Cincinnati
City Hall
801 Plum Street
Cincinnati, Ohio 45202

CINCINNATI STREETCAR
CENTRAL BUSINESS DISTRICT

PROPOSED TRAFFIC SIGNAL PLAN
MAIN STREET AND TWELFTH STREET

Revisions

No.				

Date	7/02/12
Drawn by	JRL
Date	7/02/12
Designed by	JRL
Date	7/02/12
Checked by	JTB
Date	7/12/12
Reviewed by	JTB

Consultant

PB HDR

File Number

ACC No.
23126

G-TC-1027 C

DOTE_Mono_PDF_Half.pltcfg
W:\29014A-Streetcar\CAD\Traffic_Control\Signals\1027_Main&Twelfth_M-18\S_G-TC-1027 C.dgn
7:43:23 AM
7/11/2012

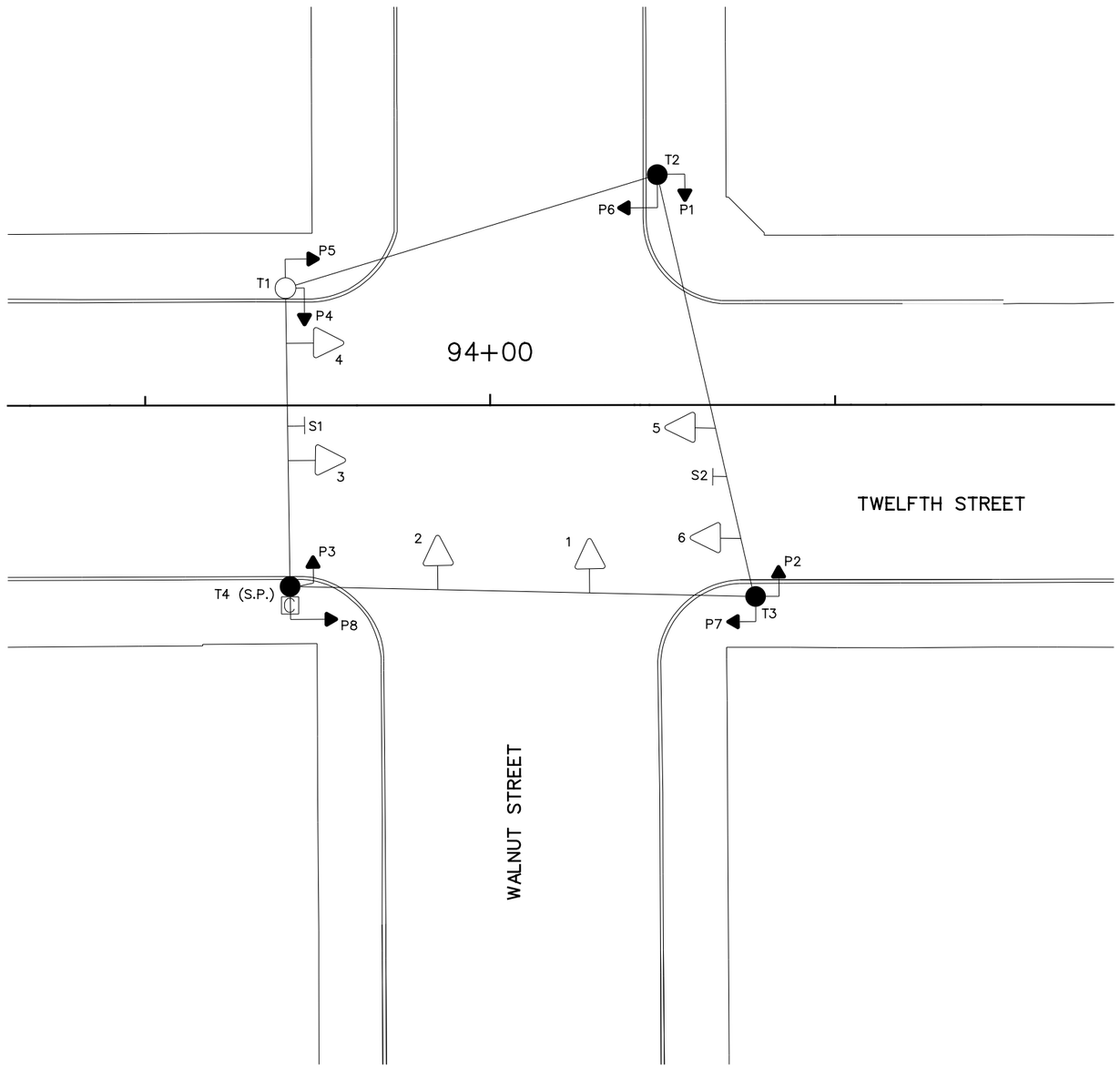

EQUIPMENT LIST	
1-6	TRAF. SIG. HD., 3 SECT., VERT., 8" RYG
P1-P8	PED. SIG., 2 SECT., 12" INCANDESCENT
S1	REFL. SIGN, 24" X 30", "ONE WAY ←", *92C
S2	REFL. SIGN, 24" X 30", "ONE WAY →", *92A
T1	STEEL POLE, ANCH. BASE 8" X 26'
T2, T3	WOOD POLE
T4	WOOD SERVICE POLE

LEGEND

- STEEL POLE
- WOOD POLE
- TRAFFIC SIGNAL CONDUIT
- TRAFFIC SIGNAL HEAD
- PEDESTRIAN SIGNAL HEAD
- REFLECTORIZED SIGN
- PULLBOX
- CONTROLLER

CAUTION UNDERGROUND UTILITIES
2 WORKING DAYS
BEFORE YOU DIG
CALL 1-800-362-2764
OHIO UTILITY PROTECTION SERVICE
CALL NON-SERVICE FACILITY
OWNERS DIRECT

GRAPHIC SCALE
10 0 10 20 40
(IN FEET)
1 inch = 10 ft. Full Size
1 inch = 20 ft. Half Size

DEPARTMENT OF TRANSPORTATION & ENGINEERING CITY OF CINCINNATI OHIO

CONTRACT DRAWING

PRINTS NOT BEARING THIS STAMP WERE MADE PRIOR TO ADVERTISING FOR BID, AND ARE TO BE CONSIDERED OBSOLETE FOR CONTRACT PURPOSES.

Department of Transportation and Engineering

City of Cincinnati
City Hall
801 Plum Street
Cincinnati, Ohio 45202

CINCINNATI STREETCAR
CENTRAL BUSINESS DISTRICT
EXISTING TRAFFIC SIGNAL PLAN
TWELFTH STREET AND WALNUT STREET

Revisions
No.

Drawn by JRL	Date 7/02/12
Designed by JRL	Date 7/02/12
Checked by JTB	Date 7/02/12
Reviewed by JTB	Date 7/12/12

Consultant

PB HDR

File Number

ACC No. 23126

G-TC-1028 A

DOTE_Mono_PDF_Half.pltcfg
W:\29014A-Streetcar\CAD\Traffic_Control\Signals\1028_Twelfth&Walnut\S_G-TC-1028 A.dgn
7/11/2012 7:43:43 AM

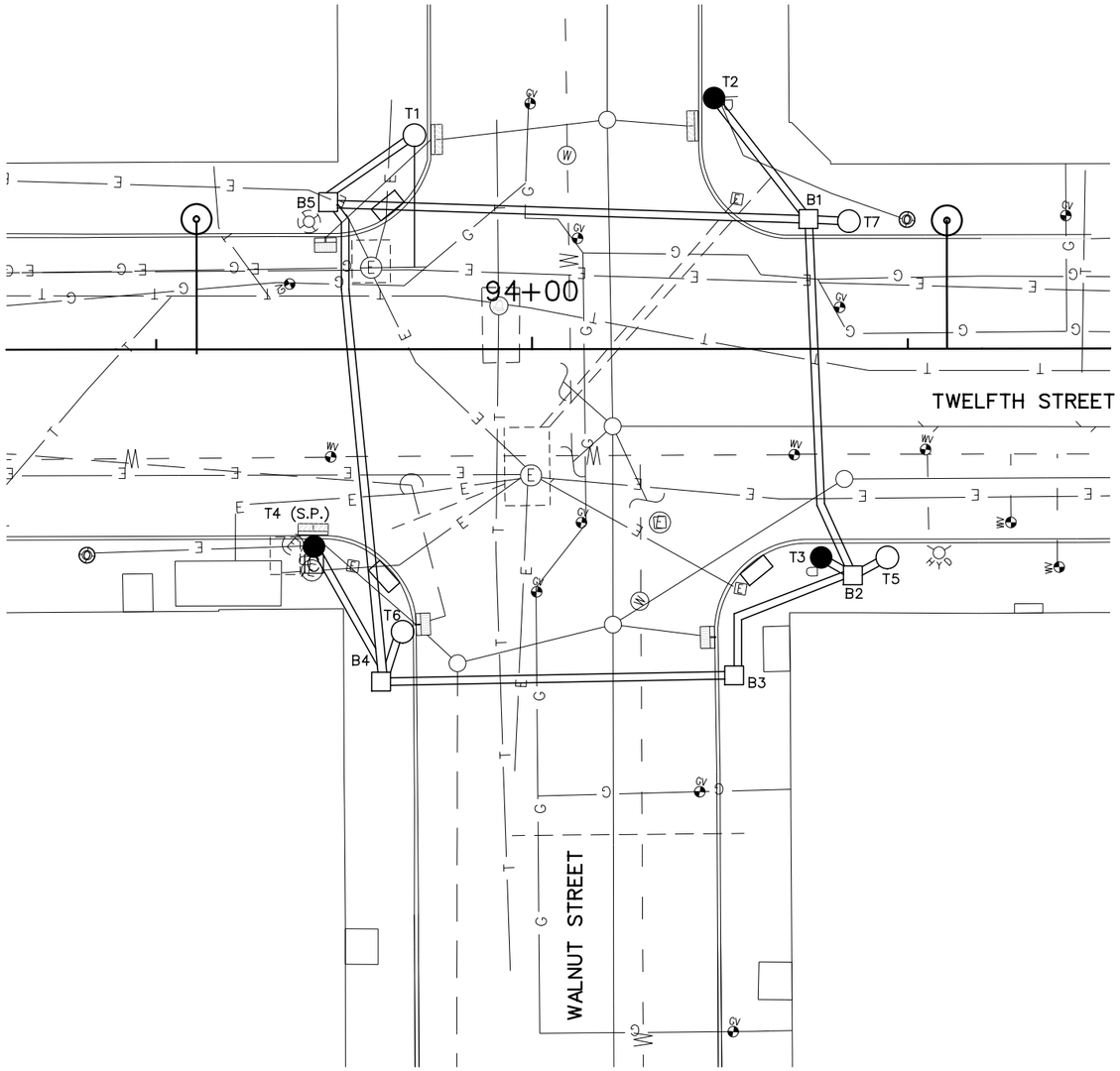

SIGNAL PHASING

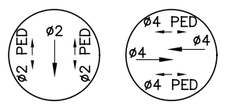

CNA PRE–TIMED

THIS IS THE GENERAL SEQUENCING FOR THIS TRAFFIC SIGNAL. REFER TO THE CITY OF CINCINNATI FOR FINAL SEQUENCING, LABELING AND TIMINGS.

CAUTION UNDERGROUND UTILITIES
2 WORKING DAYS
BEFORE YOU DIG
CALL 1–800–362–2764
OHIO UTILITY PROTECTION SERVICE
CALL NON–SERVICE FACILITY
OWNERS DIRECT

GRAPHIC SCALE

10 0 10 20 40

(IN FEET)
1 inch = 10 ft. Full Size
1 inch = 20 ft. Half Size

CONTRACT DRAWING

PRINTS NOT BEARING THIS STAMP WERE MADE PRIOR TO ADVERTISING FOR BIDS AND ARE TO BE CONSIDERED OBSOLETE FOR CONTRACT PURPOSES.

Department of Transportation and Engineering

City of Cincinnati
City Hall
801 Plum Street
Cincinnati, Ohio 45202

CINCINNATI STREETCAR
CENTRAL BUSINESS DISTRICT
UNDERGROUND UTILITIES & TRAFFIC SIGNAL PLAN
TWELFTH STREET AND WALNUT STREET

Revisions
No.

Drawn by JRL	Designed by JRL	Checked by JTB
Date 7/02/12	Date 7/02/12	Date 7/02/12
Reviewed by JTB	Date 7/12/12	

Consultant

PB HDR

File Number

ACC No. 23126

G-TC-1028 B

DOTE_Mono_PDF_Half.pltcfg
W:\29014A-Streetcar\CAD\Traffic_Control\Signals\1028_Twelfth&Walnut\S_G-TC-1028 B.dgn
7/11/2012 7:47:34 AM

LEGEND

- STEEL POLE
- WOOD POLE
- TRAFFIC SIGNAL CONDUIT
- TRAFFIC SIGNAL HEAD
- PEDESTRIAN SIGNAL HEAD
- REFLECTORIZED SIGN
- PULLBOX
- CONTROLLER

SIGNAL INDICATIONS

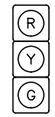

1, 2, 3, 4, 5, 6, 7, 8

SIGNAL HEAD DETAIL
12" (LED) LENSES

P1, P2, P3, P4,
P5, P6, P7, P8

TYPE D2 PEDESTRIAN (LED)
(COUNTDOWN) SIGNAL HEAD

TYPICAL POLE ORIENTATION

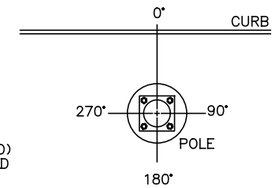

MATERIAL SCHEDULE

NO.	VEHICULAR SIGNAL HEADS 1	2	3	4	5	6	7	8
12 INCH	R	R	R	R	R	R	R	R
	Y	Y	Y	Y	Y	Y	Y	Y
	G	G	G	G	G	G	G	G

TYPE D2 PEDESTRIAN (LED) (COUNTDOWN) SIGNAL HEAD

NOTE:
USE LENS W/ SYMBOL LEGENDS
PORTLAND ORANGE: HAND (DONT WALK)
LUNAR WHITE: WALKING MAN (WALK)

POLE NO.	POLE DATA: POLE TYPE	SHAFT SIZE IN X FT	FOUNDATION TYPE	PEDESTRIAN SIGNALS P1	P2	P3	P4	P5	P6	P7	P8	CABLE ENTRANCE ANGLE (DEG)	SPAN WIRE ATTACHMENT HEIGHT (FEET)	MAST ARM ATTACHMENT HEIGHT (FEET)	MAST ARM (DEG)	STREET LIGHT BRACKET ARM (DEG)	HANDHOLE (DEG)	CONTROLLER (DEG)
				D	D	D	D	D	D	D	D							
				W	W	W	W	W	W	W	W							
				ANGLE OF ORIENTATION (DEGREES)														
T1	UMC DESIGN Y5	9 X 20.5	FDN-7				180	90						18.5	90		180	
T2	WOOD POLE	EXIST.	EXIST.						270							EX.		
T3	WOOD POLE	EXIST.	EXIST.		90					180		270	24.5					
T4	WOOD POLE	EXIST.	EXIST.			90					180	90	24.5			EX.		180
T5	UMC DESIGN Y5	9 X 20.5	FDN-7											18.5	0		180	
T6	UMC DESIGN Y5	9 X 20.5	FDN-7											18.5	270		180	
T7	UMC DESIGN Y1	9 X 20.5	FDN-7	90										18.5	0		180	

CABLE SCHEDULE

CABLE NO.	CONNECTING DEVICE	CABLE TYPE	CABLE ROUTING	LINEAR FEET
1	TRAFFIC SIGNAL TS1, TS2	EXIST.	EXIST.	EXIST.
2	TRAFFIC SIGNAL TS3	7C#14	TS3-T6-B4-T4-C	75
3	TRAFFIC SIGNAL TS4, TS5	7C#14	TS4-TS5-T1-B5-B4-T4-C	155
4	TRAFFIC SIGNAL TS6	7C#14	TS6-T7-B1-B2-B3-B4-T4-C	220
5	TRAFFIC SIGNAL TS7, TS8	7C#14	TS7-TS8-T5-B2-B3-B4-T4-C	180
6	PED. SIGNAL P1	7C#14	P1-T7-B1-B2-B3-B4-T4-C	205
7	PED. SIGNAL P2	7C#14	P2-T3-B2-B3-B4-T4-C	150
8	PED. SIGNAL P3	EXIST.	EXIST.	EXIST.
9	PED. SIGNAL P4	7C#14	P4-T1-B5-B4-T4-C	130
10	PED. SIGNAL P5	7C#14	P5-T1-B5-B4-T4-C	130
11	PED. SIGNAL P6	7C#14	P6-T2-B1-B2-B3-B4-T4-C	220
12	PED. SIGNAL P7	7C#14	P7-T3-B2-B3-B4-T4-C	150
13	PED. SIGNAL P8	EXIST.	EXIST.	EXIST.
14	POWER CABLE, AC POSITIVE, BLACK	EXIST.	EXIST.	EXIST.
14	POWER CABLE, AC NEGATIVE, WHITE	EXIST.	EXIST.	EXIST.

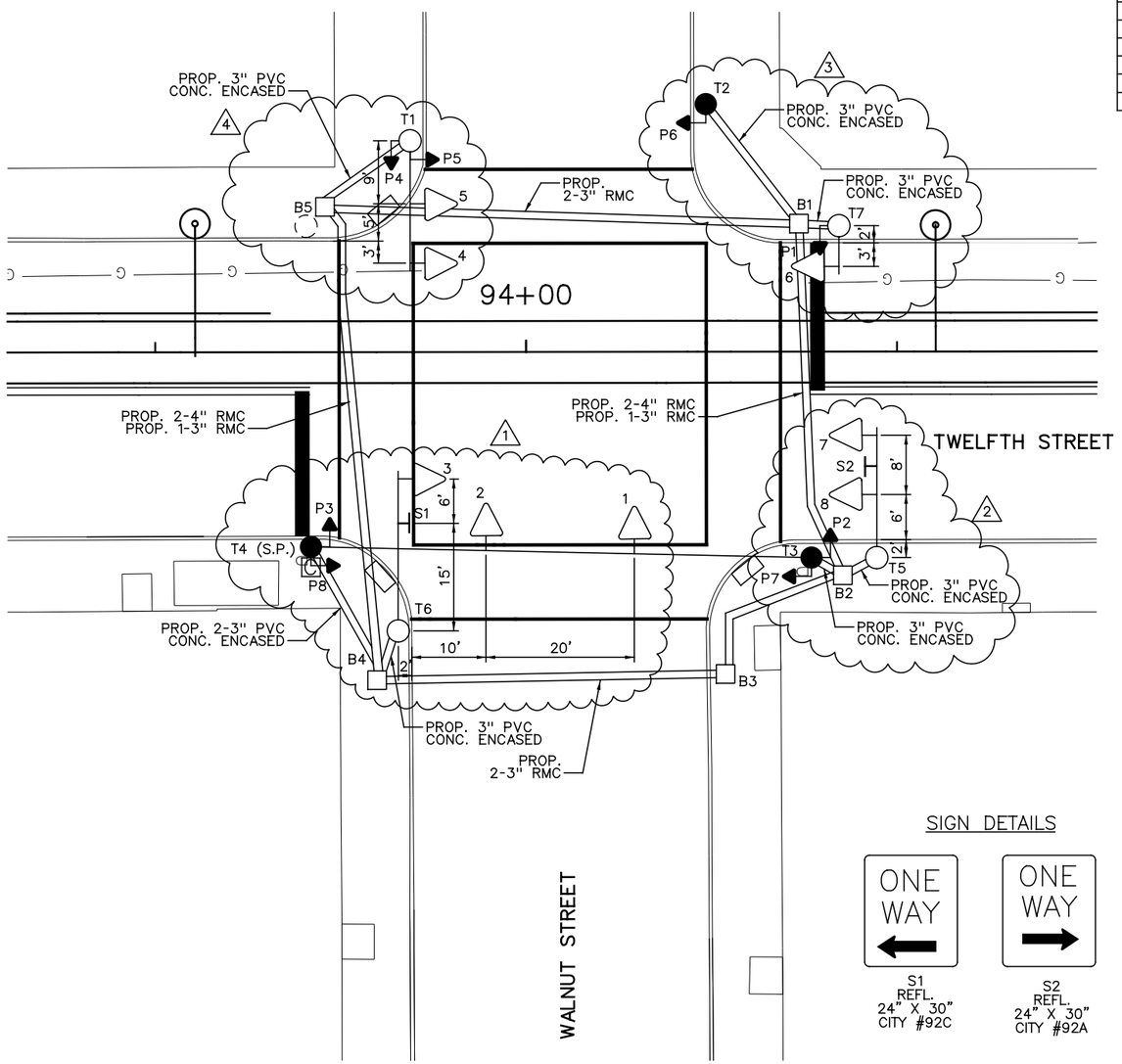

SIGN DETAILS

S1
REFL.
24" X 30"
CITY #92C

S2
REFL.
24" X 30"
CITY #92A

NOTES:

1. REMOVE MESSENGER WIRE FROM EXISTING POLE T4 TO POLE T1. ADD A NEW STEEL POLE T6 AT STA. 94+17.27, 37.58' LT AND ATTACH A 20' MAST ARM TO THE POLE. REPLACE SIGNAL HEAD 3 WITH 12" LED SIGNAL HEAD ON THE MAST ARM. INSTALL NEW REFLECTORIZED SIGN S1 ON THE MAST ARM. REPLACE SIGNAL HEADS 1 AND 2 WITH 12" LED SIGNAL HEADS. REPLACE PEDESTRIAN SIGNALS P3 AND P8 ON POLE T4 WITH TYPE D2 LED COUNTDOWN PEDESTRIAN SIGNAL HEADS. REPLACE CONTROLLER ON POLE T4. ADD 24" X 24" CITY TYPE "C" PULLBOX B4 AT STA. 94+20.03, 44.25' LT.

2. ADD A NEW STEEL POLE T5 AT STA. 93+52.75, 27.78' LT AND ATTACH A 16' MAST ARM TO THE POLE. REPLACE SIGNAL HEADS 5 AND 6 WITH 12" LED SIGNAL HEADS 7 AND 8 TO THE MAST ARM. INSTALL NEW REFLECTORIZED SIGN S2 ON MAST ARM. REPLACE PEDESTRIAN SIGNALS P2 AND P7 ON POLE T3 WITH TYPE D2 LED COUNTDOWN PEDESTRIAN SIGNAL HEADS. ADD 24" X 24" CITY TYPE "C" PULLBOXES B2 AT STA. 93+57.29, 30.20' LT AND B3 AT STA. 93+72.99, 43.51' LT.

3. REMOVE MESSENGER WIRE FROM EXISTING POLE T2 TO POLE T3. ADD A NEW STEEL POLE T7 AT STA. 93+57.81, 16.99' RT AND ATTACH A 5' MAST ARM TO THE POLE. ADD NEW 12" LED SIGNAL HEAD 6 TO THE MAST ARM. REPLACE PEDESTRIAN SIGNALS P1 AND P6 WITH TYPE D2 LED COUNTDOWN PEDESTRIAN SIGNAL HEADS. MOVE PEDESTRIAN SIGNAL P1 TO POLE T7. ADD 24" X 24" CITY TYPE "C" PULLBOX B1 AT STA. 93+63.16, 17.23' RT.

4. REMOVE MESSENGER WIRE FROM EXISTING POLE T1 TO POLE T2. ADD A NEW STEEL POLE T1 AT STA. 94+15.61, 28.50' RT AND ATTACH A 16' MAST ARM TO THE POLE. REPLACE SIGNAL HEAD 4 WITH A 12" LED SIGNAL AND ADD NEW 12" LED SIGNAL HEAD 5 TO THE MAST ARM. REPLACE PEDESTRIAN SIGNALS P4 AND P5 WITH TYPE D2 LED COUNTDOWN PEDESTRIAN SIGNAL HEADS ON NEW POLE T1. ADD 24" X 24" CITY TYPE "C" PULLBOX B5 AT STA. 94+26.99, 19.52' RT.

5. A DISTANCE OF SIX FEET BEHIND THE CURB AND 15 FEET ON EITHER SIDE OF PROPOSED OCS POLES AND SIGNAL POLES (INCLUDING ANY DISTURBANCE TO THE EXISTING CURB) HAS BEEN QUANTIFIED FOR BIDDING PURPOSES FOR REMOVAL AND REPLACEMENT OF SIDEWALK. THE CITY'S ENGINEER WILL DETERMINE ACTUAL PAY LIMITS FOR THIS WORK. NO ADDITIONAL INCREASE TO THE UNIT COST WILL BE ALLOWED FOR THIS WORK IF THE QUANTITIES ARE MORE OR LESS THAN THE AMOUNT QUANTIFIED FOR BIDDING PURPOSES.

CAUTION UNDERGROUND UTILITIES
2 WORKING DAYS
BEFORE YOU DIG
CALL 1-800-362-2764
OHIO UTILITY PROTECTION SERVICE
CALL NON-SERVICE FACILITY
OWNERS DIRECT

GRAPHIC SCALE
10 0 10 20 40
(IN FEET)
1 inch = 10 ft. Full Size
1 inch = 20 ft. Half Size

CONTRACT DRAWING
PRINTS NOT BEARING THIS STAMP WERE MADE PRIOR TO ADVERTISING FOR BIDS AND ARE TO BE CONSIDERED OBSOLETE FOR CONTRACT PURPOSES.

Department of Transportation and Engineering
City of Cincinnati
City Hall
801 Plum Street
Cincinnati, Ohio 45202

CINCINNATI STREETCAR
CENTRAL BUSINESS DISTRICT
PROPOSED TRAFFIC SIGNAL PLAN
TWELFTH STREET AND WALNUT STREET

Revisions
No.

Date 7/02/12	Drawn by JRL
Date 7/02/12	Designed by JRL
Date 7/02/12	Checked by JTB
Date 7/12/12	Reviewed by JTB

Consultant
PB HDR

File Number
ACC No. 23126
G-TC-1028 C

DOTE_Mono_PDF_Half.pltcfg
W:\29014A-Streetcar\CAD\Traffic_Control\Signals\1028_Twelfth&Walnut\S_G-TC-1028 C.dgn
7/11/2012 7:47:49 AM

EQUIPMENT LIST	
1–8	TRAF. SIG. HD., 3 SECT., VERT., 12" RYG
P1–P8	PED. SIG., 1 SECT., 16" LED
B1–B4	PULLBOX, 24" X 24", CITY TYPE "C"
T1–T4	STEEL POLE, 9" X 26', LT TYPE, #29053

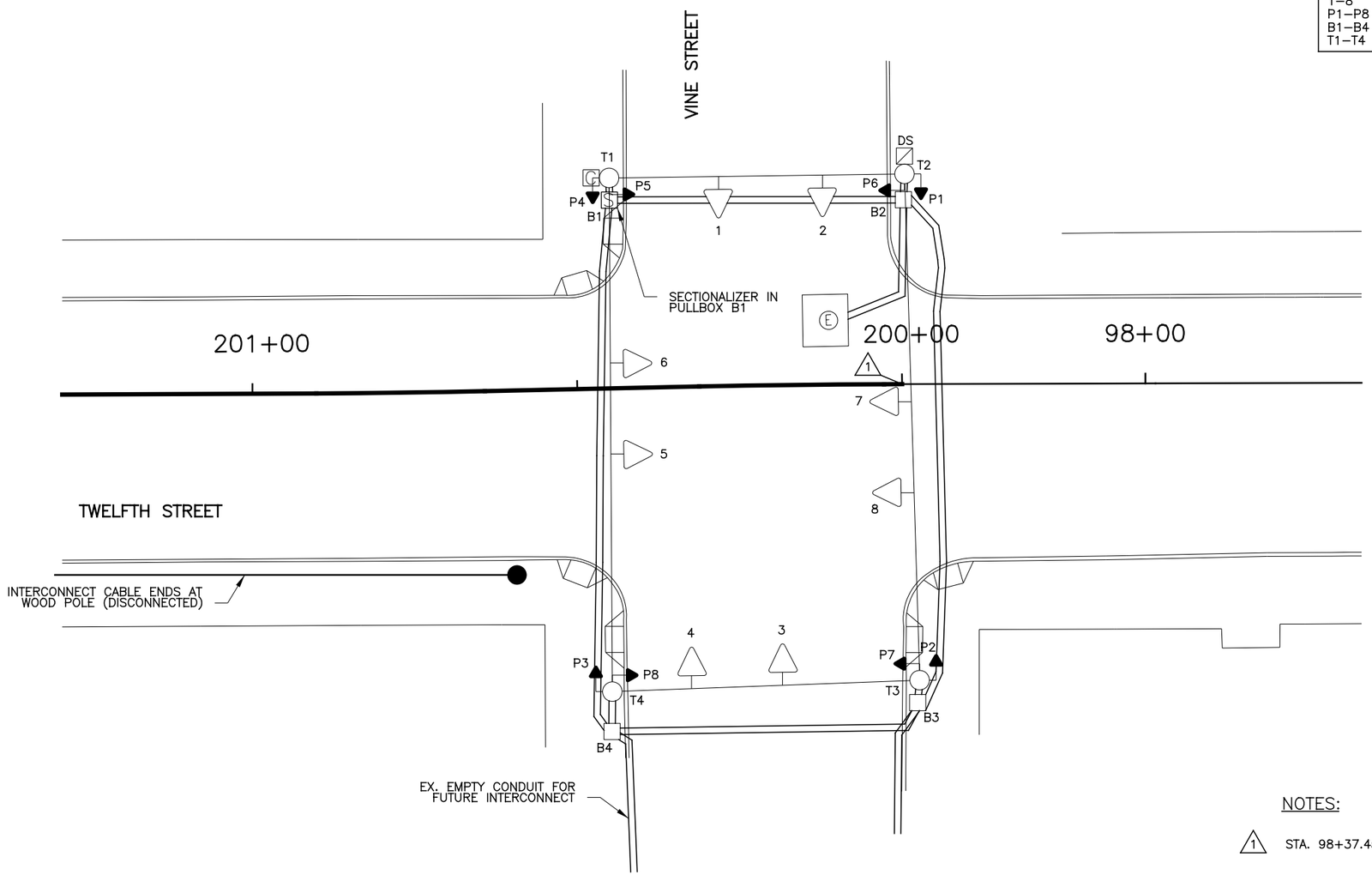

LEGEND

- STEEL POLE
- WOOD POLE
- TRAFFIC SIGNAL CONDUIT
- TRAFFIC SIGNAL HEAD
- PEDESTRIAN SIGNAL HEAD
- PULLBOX
- CONTROLLER
- SECTIONALIZER
- DISCONNECT SWITCH (DS)

NOTES:

1. STA. 98+37.45 "CBD" = STA. 200+00.00 "OTR".

CAUTION UNDERGROUND UTILITIES
2 WORKING DAYS
BEFORE YOU DIG
CALL 1–800–362–2764
OHIO UTILITY PROTECTION SERVICE
CALL NON–SERVICE FACILITY
OWNERS DIRECT

GRAPHIC SCALE

10 0 10 20 40

(IN FEET)
1 inch = 10 ft. Full Size
1 inch = 20 ft. Half Size

DOTE_Mono_PDF_Half.pltcfg
W:\29014A-Streetcar\CAD\Traffic_Control\Signals\2001_Twelfth&Vine_T-07\S_G-TC-2001 A.dgn
7/11/2012 7:49:26 AM

CONTRACT DRAWING

PRINTS NOT BEARING THIS STAMP WERE MADE PRIOR TO ADVERTISING FOR BIDS AND ARE TO BE CONSIDERED OBSOLETE FOR CONTRACT PURPOSES.

Department of Transportation and Engineering

City of Cincinnati
City Hall
801 Plum Street
Cincinnati, Ohio 45202

CINCINNATI STREETCAR
CENTRAL BUSINESS DISTRICT
EXISTING TRAFFIC SIGNAL PLAN TWELFTH STREET AND VINE STREET

Revisions
No.

	Date
Drawn by JRL	7/02/12
Designed by JRL	7/02/12
Checked by JTB	7/02/12
Reviewed by JTB	7/12/12

Consultant

PB HDR

File Number

ACC No. 23126

G-TC-2001 A

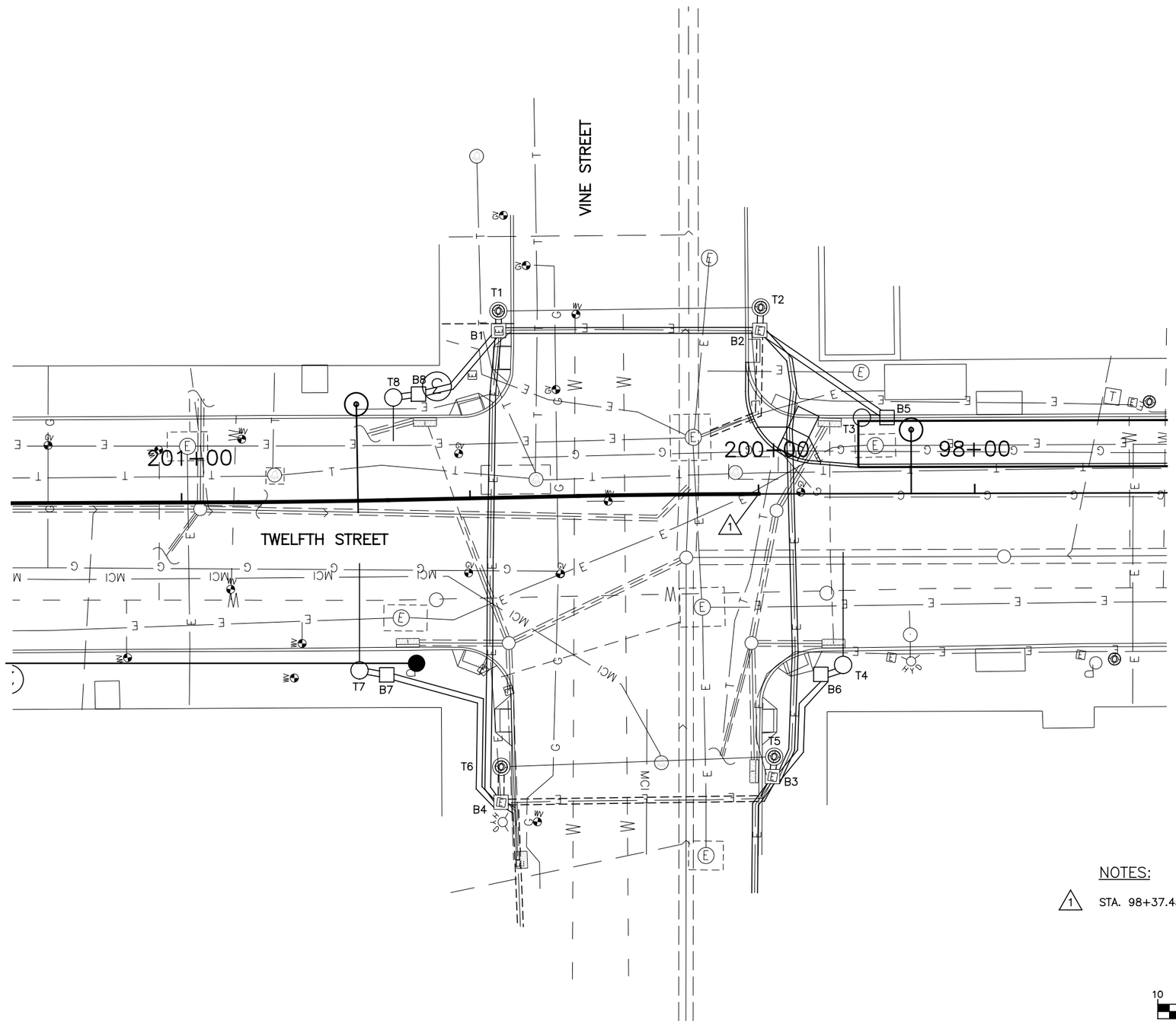

SIGNAL PHASING

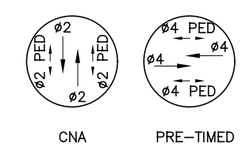

CNA PRE–TIMED

THIS IS THE GENERAL SEQUENCING FOR THIS TRAFFIC SIGNAL. REFER TO THE CITY OF CINCINNATI FOR FINAL SEQUENCING, LABELING AND TIMINGS.

NOTES:

1. STA. 98+37.45 "CBD" = STA. 200+00.00 "OTR".

CAUTION UNDERGROUND UTILITIES
2 WORKING DAYS
BEFORE YOU DIG
CALL 1–800–362–2764
OHIO UTILITY PROTECTION SERVICE
CALL NON–SERVICE FACILITY
OWNERS DIRECT

GRAPHIC SCALE
10 0 10 20 40
(IN FEET)
1 inch = 10 ft. Full Size
1 inch = 20 ft. Half Size

DOTE_Mono_PDF_Half.pltcfg
W:\29014A-Streetcar\CAD\Traffic_Control\Signals\2001_Twelfth&Vine_T-07\S_G-TC-2001 B.dgn
7:49:39 AM
7/11/2012

CONTRACT DRAWING

PRINTS NOT BEARING THIS STAMP WERE MADE PRIOR TO ADVERTISING FOR BIDS AND ARE TO BE CONSIDERED OBSOLETE FOR CONTRACT PURPOSES.

Department of Transportation and Engineering

City of Cincinnati
City Hall
801 Plum Street
Cincinnati, Ohio 45202

CINCINNATI STREETCAR
CENTRAL BUSINESS DISTRICT
UNDERGROUND UTILITIES & SIGNAL PLAN DETAILS TWELFTH STREET AND VINE STREET

Revisions
No.

Drawn by JRL	Date 7/02/12
Designed by JRL	Date 7/02/12
Checked by JTB	Date 7/02/12
Reviewed by JTB	Date 7/12/12

Consultant

PB HDR

File Number

ACC No. 23126

G-TC-2001 B

LEGEND

- STEEL POLE
- TRAFFIC SIGNAL CONDUIT
- TRAFFIC SIGNAL HEAD
- PEDESTRIAN SIGNAL HEAD
- PULLBOX
- CONTROLLER
- SECTIONALIZER
- DISCONNECT SWITCH (DS)

SIGNAL INDICATIONS

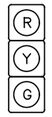

1, 2, 3, 4, 5
6, 7, 8, 9, 10

SIGNAL HEAD DETAIL
12" (LED) LENSES

P1, P2, P3, P4
P5, P6, P7, P8

TYPE D2 PEDESTRIAN (LED)
(COUNTDOWN) SIGNAL HEAD

TYPICAL POLE ORIENTATION

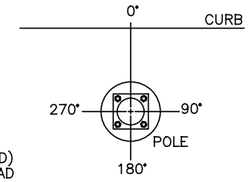

MATERIAL SCHEDULE

VEHICULAR SIGNAL HEADS (12 INCH)

NO.	1	2	3	4	5	6	7	8	9	10
	R	R	R	R	R	R	R	R	R	R
	Y	Y	Y	Y	Y	Y	Y	Y	Y	Y
	G	G	G	G	G	G	G	G	G	G

TYPE D2 PEDESTRIAN (LED)
(COUNTDOWN) SIGNAL HEAD

NOTE:
USE LENS W/ SYMBOL LEGENDS
PORTLAND ORANGE: HAND (DONT WALK)
LUNAR WHITE: WALKING MAN (WALK)

POLE NO.	POLE DATA: POLE TYPE	SHAFT SIZE IN X FT	FOUNDATION TYPE	PEDESTRIAN SIGNALS ANGLE OF ORIENTATION (DEGREES) P1 D W	P2 D W	P3 D W	P4 D W	P5 D W	P6 D W	P7 D W	P8 D W	CABLE ENTRANCE ANGLE (DEG)	SPAN WIRE ATTACHMENT HEIGHT (FEET)	MAST ARM ATTACHMENT HEIGHT (FEET)	MAST ARM (DEG)	STREET LIGHT BRACKET ARM (DEG)	HANDHOLE (DEG)	CONTROLLER (DEG)	DISCONNECT SWITCH (DEG)
T1	29053	9 X 26	EXIST.				180	90				EX.	EX.			EX.	EX.	180	
T2	29053	9 X 26	EXIST.	180					270			EX.	EX.			EX.	EX.		EX.
T3	29053	9 X 26	FDN-7														180		
T4	UMC DESIGN Y5	9 X 20.5	FDN-7											18.5	0		180		
T5	29053	9 X 26	EXIST.		180					90		EX.	EX.			EX.	EX.		
T6	29053	9 X 26	EXIST.			180					270	EX.	EX.			EX.	EX.		
T7	UMC DESIGN Y5	9 X 20.5	FDN-7											18.5	0		180		
T8	UMC DESIGN Y1	9 X 20.5	FDN-7											18.5	0		180		

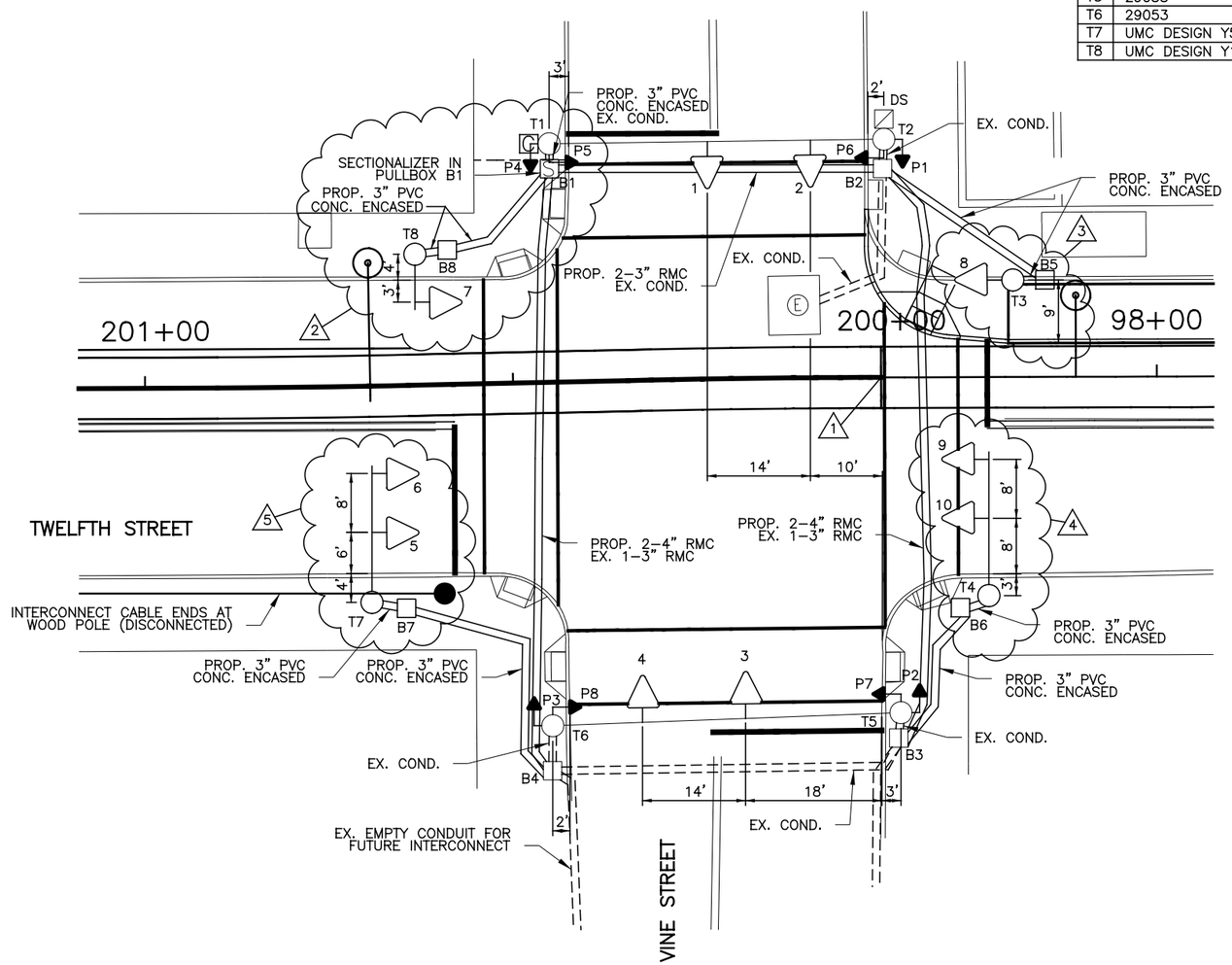

CABLE SCHEDULE

CABLE#	CONNECTING DEVICE	TYPE	CABLE ROUTING	LIN. FT
1	TRAFFIC SIGNAL TS1, TS2	EXIST.	EXIST.	EXIST.
2	TRAFFIC SIGNAL TS3, TS4	EXIST.	EXIST.	EXIST.
3	TRAFFIC SIGNAL TS5, TS6	7C#14	TS6–TS5–T7–B7–B4–B1–T1–C	190
4	TRAFFIC SIGNAL TS7	7C#14	TS7–T8–B8–B1–T1–C	80
5	TRAFFIC SIGNAL TS8	7C#14	TS8–T3–B5–B2–B1–T1–C	115
6	TRAFFIC SIGNAL TS9, TS10	7C#14	TS9–TS10–T4–B6–B3–B2–B1–T1–C	225
7	PED. SIGNAL P1	EXIST.	EXIST.	EXIST.
8	PED. SIGNAL P2	EXIST.	EXIST.	EXIST.
9	PED. SIGNAL P3	EXIST.	EXIST.	EXIST.
10	PED. SIGNAL P4	EXIST.	EXIST.	EXIST.
11	PED. SIGNAL P5	EXIST.	EXIST.	EXIST.
12	PED. SIGNAL P6	EXIST.	EXIST.	EXIST.
13	PED. SIGNAL P7	EXIST.	EXIST.	EXIST.
14	PED. SIGNAL P8	EXIST.	EXIST.	EXIST.
15	POWER CABLE, AC POSITIVE, BLACK	EXIST.	EXIST.	EXIST.
16	POWER CABLE, AC NEGATIVE, WHITE	EXIST.	EXIST.	EXIST.

NOTES:

1. STA. 98+37.45 "CBD" = STA. 200+00.00 "OTR".
2. INSTALL POLE T8 WITH 6' MAST ARM AT STA. 200+63.34, 17.79' RT. ATTACH 12" LED SIGNAL HEAD 7 TO THE MAST ARM. REPLACE CONTROLLER ON POLE T1. ADD 24" X 24" CITY TYPE "C" PULLBOX B8 AT STA. 200+58.52, 18.23' RT.
3. ADD A NEW STEEL STRAIN POLE T3 AT STA. 98+19.51, 13.18' RT. ATTACH 12" LED SIGNAL HEAD 8 TO POLE T3. ADD 24" X 24" CITY TYPE "C" PULLBOX B5 AT STA. 98+15.12, 13.14' RT.
4. ADD A NEW POLE T4 AT STA. 98+22.90, 29.67' LT. ATTACH A 18' MAST ARM TO POLE T4 AND ATTACH 12" LED SIGNAL HEADS 9 AND 10 TO THE MAST ARM. ADD 24" X 24" CITY TYPE "C" PULLBOX B6 AT STA. 98+26.63, 31.36' LT.
5. ADD A NEW POLE T7 AT STA. 200+69.71, 29.37' LT. ATTACH A 17' MAST ARM TO POLE T7 AND ATTACH SIGNAL HEADS 5 AND 6 WITH 12" LED SIGNAL HEADS ON THE MAST ARM. ADD 24" X 24" CITY TYPE "C" PULLBOX B7 AT STA. 200+65.07, 30.31' LT.
6. REMOVE MESSENGER WIRE BETWEEN POLE T1 AND POLE T6 AS WELL AS BETWEEN POLE T2 AND POLE T5.
7. REPLACE ALL SIGNAL HEADS WITH NEW 12" LED SIGNAL HEADS AND REPLACE ALL PEDESTRIAN SIGNALS WITH TYPE D2 LED COUNTDOWN PEDESTRIAN SIGNALS.
8. INSTALL 2–4" RMC ALONG WITH THE EXISTING 1–3" RMC UNDER TRACK SLAB AS SHOWN ON THIS PLAN.
9. A DISTANCE OF SIX FEET BEHIND THE CURB AND 15 FEET ON EITHER SIDE OF PROPOSED OCS POLES AND SIGNAL POLES (INCLUDING ANY DISTURBANCE TO THE EXISTING CURB) HAS BEEN QUANTIFIED FOR BIDDING PURPOSES FOR REMOVAL AND REPLACEMENT OF SIDEWALK. THE CITY'S ENGINEER WILL DETERMINE ACTUAL PAY LIMITS FOR THIS WORK. NO ADDITIONAL INCREASE TO THE UNIT COST WILL BE ALLOWED FOR THIS WORK IF THE QUANTITIES ARE MORE OR LESS THAN THE AMOUNT QUANTIFIED FOR BIDDING PURPOSES.

CAUTION UNDERGROUND UTILITIES
2 WORKING DAYS
BEFORE YOU DIG
CALL 1-800-362-2764
OHIO UTILITY PROTECTION SERVICE
CALL NON-SERVICE FACILITY
OWNERS DIRECT

GRAPHIC SCALE
10 0 10 20 40
(IN FEET)
1 inch = 10 ft. Full Size
1 inch = 20 ft. Half Size

DOTE_Mono_PDF_Half.pltcfg
W:\29014A-Streetcar\CAD\Traffic_Control\Signals\2001_Twelfth&Vine_T-07.S_G-TC-2001 C.dgn
7/11/2012 7:49:53 AM

CONTRACT DRAWING
PRINTS NOT BEARING THIS STAMP WERE MADE PRIOR TO ADVERTISING FOR BIDS AND ARE TO BE CONSIDERED OBSOLETE FOR CONTRACT PURPOSES.

Department of Transportation and Engineering
City of Cincinnati
City Hall
801 Plum Street
Cincinnati, Ohio 45202

CINCINNATI STREETCAR
CENTRAL BUSINESS DISTRICT
PROPOSED TRAFFIC SIGNAL PLAN
TWELFTH STREET AND VINE STREET

Revisions
No.

Date 7/02/12	Drawn by JRL
Date 7/02/12	Designed by JRL
Date 7/02/12	Checked by JTB
Date 7/12/12	Reviewed by JTB

Consultant
PB HDR

File Number
ACC No. 23126

G-TC-2001 C

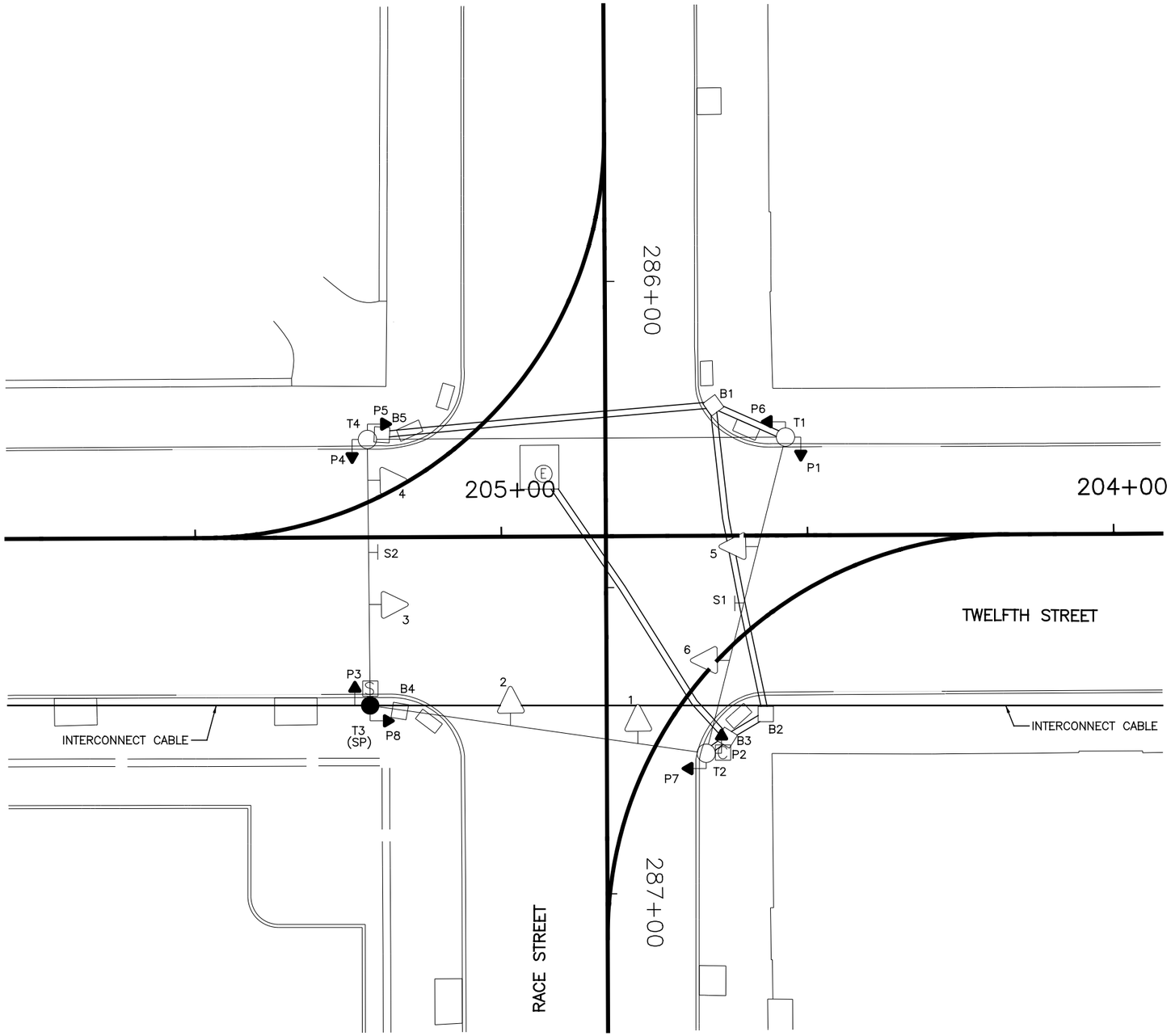

EQUIPMENT LIST	
1, 2, 3, 4, 5, 6	TRAF. SIG. HD., 3 SECT., VERT., 8" RYG
P1–P8	PED. SIG. 2 SECT., 12" INCANDESCENT
S1	REFL. SIGN, 24" X 30", "ONE WAY —", #92A
S2	REFL. SIGN, 24" X 30", "ONE WAY —", #92C
T1, T2, T4	STEEL POLE, ANCHOR BASE
T3	WOOD SERVICE POLE
B1, B2, B3, B4, B5	PULLBOX, 18" X 18"

LEGEND

- STEEL POLE
- WOOD POLE
- TRAFFIC SIGNAL CONDUIT
- TRAFFIC SIGNAL HEAD
- PEDESTRIAN SIGNAL HEAD
- REFLECTORIZED SIGN
- PULLBOX
- CONTROLLER
- SECTIONALIZER
- DISCONNECT SWITCH (DS)

CAUTION UNDERGROUND UTILITIES
2 WORKING DAYS
BEFORE YOU DIG
CALL 1-800-362-2764
OHIO UTILITY PROTECTION SERVICE
CALL NON-SERVICE FACILITY
OWNERS DIRECT

GRAPHIC SCALE
10 0 10 20 40
(IN FEET)
1 inch = 10 ft. Full Size
1 inch = 20 ft. Half Size

DOTE_Mono_PDF_Half.pltcfg
W:\29014A-Streetcar\CAD\Traffic_Control\Signals\2002_Race&Twelfth\S_G-TC-2002 A.dgn
7:50:10 AM
7/11/2012

CONTRACT DRAWING

PRINTS NOT BEARING THIS STAMP WERE MADE PRIOR TO ADVERTISING FOR BIDS AND ARE TO BE CONSIDERED OBSOLETE FOR CONTRACT PURPOSES.

Department of Transportation and Engineering

City of Cincinnati
City Hall
801 Plum Street
Cincinnati, Ohio 45202

CINCINNATI STREETCAR
OVER THE RHINE
EXISTING TRAFFIC SIGNAL PLAN
TWELFTH STREET AND RACE STREET

Revisions
No.

Date 12/20/11
Date 12/20/11
Date 12/20/11
Date 12/20/11

Drawn by JRL
Designed by JRL
Checked by JTB
Reviewed by JTB

Consultant

PB HDR

File Number

ACC No. 23126

G-TC-2002 A

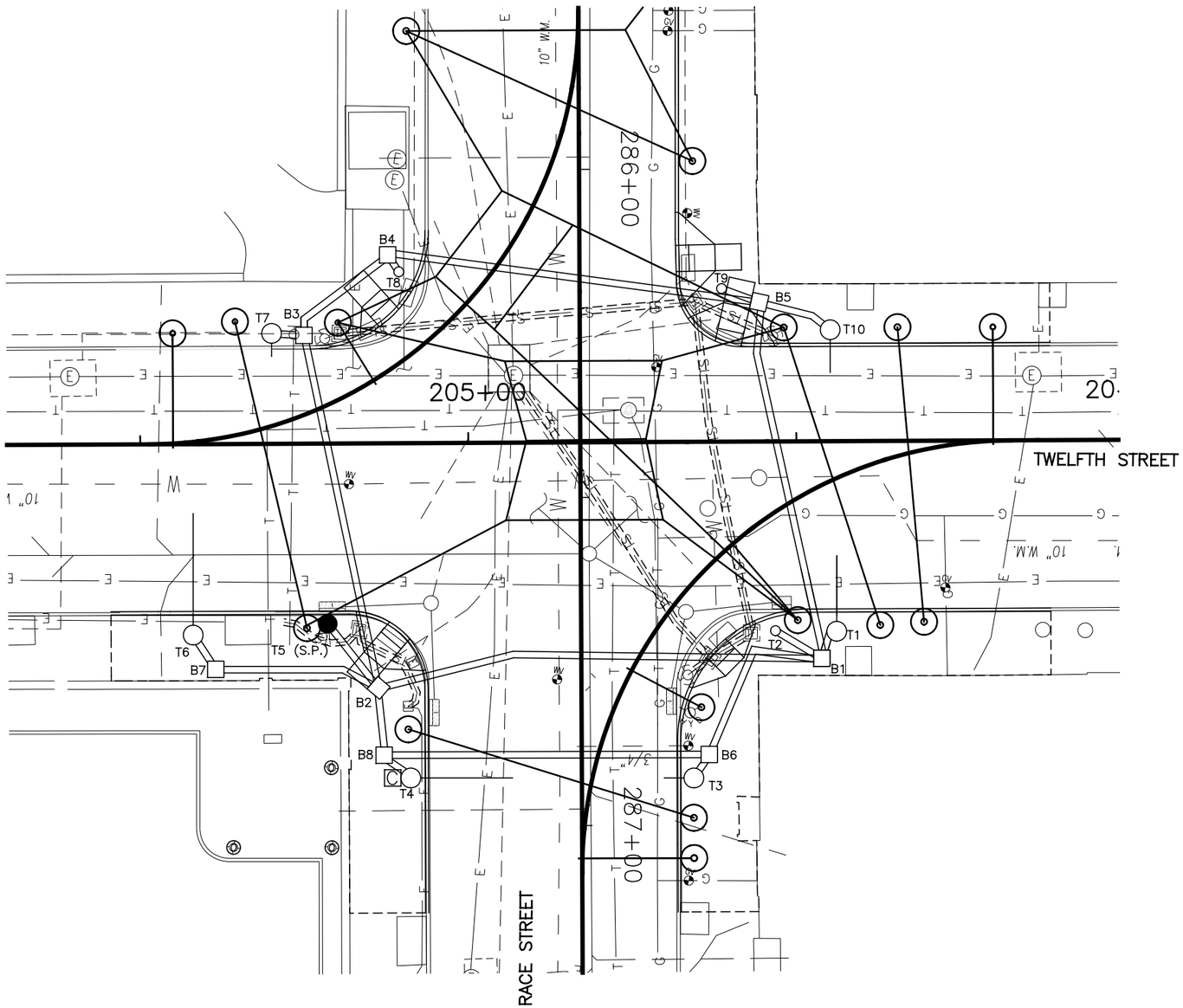

SIGNAL PHASING

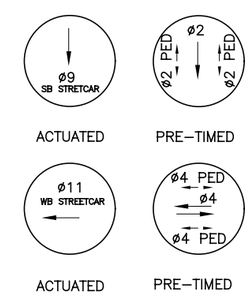

THIS IS THE GENERAL SEQUENCING FOR THIS TRAFFIC SIGNAL. REFER TO THE CITY OF CINCINNATI FOR FINAL SEQUENCING, LABELING AND TIMINGS.

CAUTION UNDERGROUND UTILITIES
2 WORKING DAYS
BEFORE YOU DIG
CALL 1–800–362–2764
OHIO UTILITY PROTECTION SERVICE
CALL NON–SERVICE FACILITY
OWNERS DIRECT

GRAPHIC SCALE
10 0 10 20 40
(IN FEET)
1 inch = 10 ft. Full Size
1 inch = 20 ft. Half Size

CONTRACT DRAWING

PRINTS NOT BEARING THIS STAMP WERE MADE PRIOR TO ADVERTISING FOR BIDS AND ARE TO BE CONSIDERED OBSOLETE FOR CONTRACT PURPOSES.

Department of Transportation and Engineering

City of Cincinnati
City Hall
801 Plum Street
Cincinnati, Ohio 45202

CINCINNATI STREETCAR
OVER THE RHINE
UNDERGROUND UTILITIES & SIGNAL PLAN DETAILS
TWELFTH STREET AND RACE STREET

Revisions
No.

	Date
Drawn by JRL	12/20/11
Designed by JRL	12/20/11
Checked by JTB	12/20/11
Reviewed by JTB	12/20/11

Consultant

PB HDR

File Number

ACC No. 23126

G-TC-2002 B

DOTE_Mono_PDF_Half.pltcfg
W:\29014A-Streetcar\CAD\Traffic_Control\Signals\2002_Race&Twelfth\S_G-TC-2002_B.dgn
7/11/2012 7:50:25 AM

LEGEND

- STEEL POLE
- WOOD POLE
- STEEL PEDESTRIAN POST
- TRAFFIC SIGNAL CONDUIT
- TRAFFIC SIGNAL HEAD
- TRANSIT SIGNAL HEAD
- PEDESTRIAN SIGNAL HEAD
- REFLECTORIZED SIGN
- PULLBOX
- CONTROLLER
- SECTIONALIZER
- DISCONNECT SWITCH (DS)
- VIDEO DETECTION CAMERA
- VIDEO DETECTION ZONE

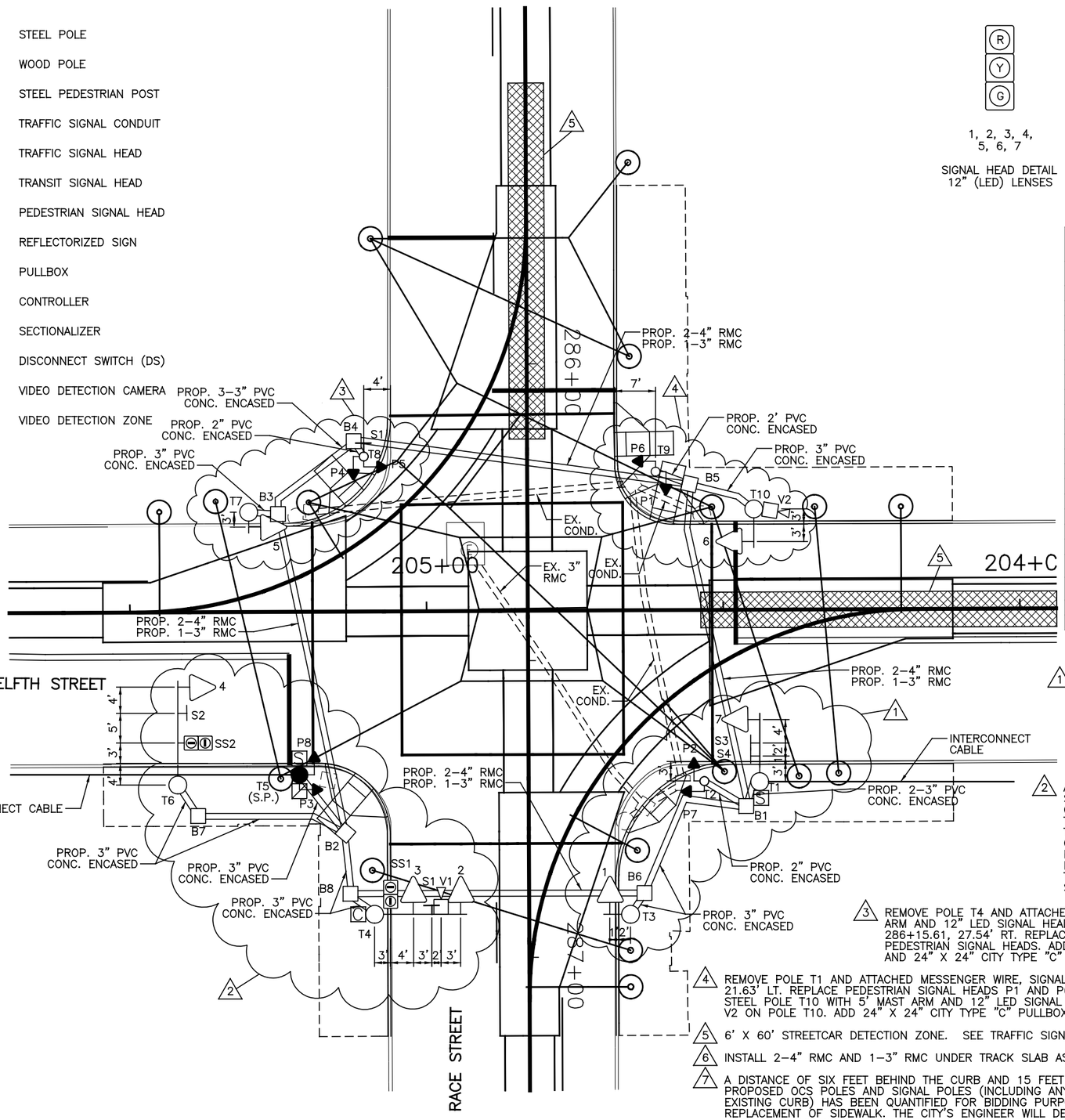

SIGNAL INDICATIONS

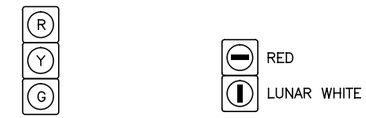

1, 2, 3, 4, 5, 6, 7
SIGNAL HEAD DETAIL 12" (LED) LENSES

SS1, SS2
LRT SIGNAL HEAD DETAIL 12" (LED) LENSES

P1, P2, P3, P4 P5, P6, P7, P8
TYPE D2 PEDESTRIAN (LED) (COUNTDOWN) SIGNAL HEAD

TYPICAL POLE ORIENTATION

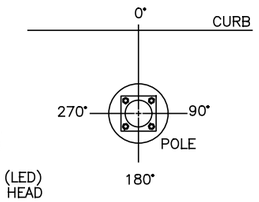

CABLE SCHEDULE

CABLE#	CONNECTING DEVICE	TYPE	CABLE ROUTING	LIN. FT
1	TRAFFIC SIGNAL TS1	7C#14	TS1–T3–B6–B8–T4–C	110
2	TRAFFIC SIGNAL TS2, TS3	7C#14	TS2–TS3–T4–C	40
3	TRAFFIC SIGNAL TS4	7C#14	TS4–T6–B7–B2–B8–T4–C	115
4	TRAFFIC SIGNAL TS5	7C#14	TS5–T7–B3–B2–B8–T4–C	130
5	TRAFFIC SIGNAL TS6	7C#14	TS6–T10–B5–B1–B6–B8–T4–C	210
6	TRAFFIC SIGNAL TS7	7C#14	TS7–T1–B1–B6–B8–T4–C	155
7	PED. SIGNAL P1	7C#14	P1–T9–B5–B1–B6–B8–T4–C	190
8	PED. SIGNAL P2	7C#14	P2–T2–B1–B6–B8–T4–C	135
9	PED. SIGNAL P3	7C#14	P3–T5–B2–B8–T4–C	65
10	PED. SIGNAL P4	7C#14	P4–T8–B4–B3–B2–B8–T4–C	135
11	PED. SIGNAL P5	7C#14	P5–T8–B4–B3–B2–B8–T4–C	135
12	PED. SIGNAL P6	7C#14	P6–T9–B5–B1–B6–B8–T4–C	190
13	PED. SIGNAL P7	7C#14	P7–T2–B1–B6–B8–T4–C	135
14	PED. SIGNAL P8	7C#14	P8–T5–B2–B8–T4–C	65
15	POWER CABLE, AC POSITIVE, BLACK	1C#6	DS–T5–B2–B8–T4–C	75
16	POWER CABLE, AC NEGATIVE, WHITE	1C#6	DS–T5–B2–B8–T4–C	75
17	TRANSIT SIGNAL SS1	7C#14	SS1–T4–C	25
18	TRANSIT SIGNAL SS2	7C#14	SS2–T6–B7–B2–B8–T4–C	110
19	VIDEO DETECTOR V1	VIDEO CABLE	V1–T4–C	30
20	VIDEO DETECTOR V2	VIDEO CABLE	V2–T10–B5–B1–B6–B8–T4–C	210
21	INTERCONNECT CABLE	12C#12	SECT.–T5–B2–B8–T4–C	70
22	INTERCONNECT CABLE	12C#12	SECT.–T5–B2–B8–B6–B1–T1–SECT.	195

NOTES:

1. REMOVE POLE T2, EXISTING CONTROLLER AND ATTACHED MESSENGER WIRE, SIGNAL HEADS AND SIGNS. ADD NEW POLE T1 WITH 10' MAST ARM AND 12" LED SIGNAL HEAD 7 AT STA. 286+71.57, 37.95' LT. ATTACH NEW SIGNS S3 AND S4 ON THE MAST ARM ON T1. ADD NEW SECTIONALIZER ON POLE T1. PLACE NEW PEDESTRIAN POST T2 AT STA. 286+70.30, 29.62' LT. REPLACE PEDESTRIAN HEADS P2 AND P7 ON POST T2 WITH TYPE D2 LED COUNTDOWN PEDESTRIAN SIGNALS. ADD POLE T3 WITH 3' MAST ARM AND 12" LED SIGNAL HEAD 1 AT STA. 286+92.62, 17.08' LT. REMOVE EXISTING PULLBOXES B2 AND B3 AND INSTALL NEW 24" X 24" CITY TYPE "C" PULLBOX B1 AT STA. 286+74.56, 36.70' LT. ADD NEW 24" X 24" CITY TYPE "C" PULLBOX B6 AT STA. 286+89.29. 19.47' LT.

2. ADD POLE T4 WITH CONTROLLER AND A 14' MAST ARM AT STA. 286+92.76, 26.06' RT. PLACE 12" LED SIGNAL HEADS 2 AND 3 ON MAST ARM. PLACE TRANSIT SIGNAL SS1 AND VIDEO DETECTION CAMERA V1 ON MAST ARM ON POLE T4. ATTACH NEW REFLECTORIZED SIGN S1 ON MAST ARM. WOOD SERVICE POLE T3 WILL REMAIN AS POLE T5. REMOVE EXISTING MESSENGER WIRE, SIGNAL HEADS AND SIGNS ATTACHED TO POLE T5. ATTACH NEW DISCONNECT SWITCH TO POLE T5. REPLACE PEDESTRIAN HEADS P3 AND P8 ON POLE T5 WITH TYPE D2 LED COUNTDOWN PEDESTRIAN SIGNAL HEADS. ADD POLE T6 WITH A 16' MAST ARM AT STA. 286+70.98, 59.12' RT. PLACE 12" LED SIGNAL HEAD 4 ON MAST ARM. ATTACH NEW REFLECTORIZED SIGN S2 ON MAST ARM. PLACE TRANSIT SIGNAL SS2 ON MAST ARM. ADD 24" X 24" CITY TYPE "C" PULLBOX B2 AT STA. 286+78.95, 30.90' RT. ADD 24" X 24" CITY TYPE "C" PULLBOX B7 AT STA. 286+75.98, 55.66' RT. ADD 24" X 24" CITY TYPE "C" PULLBOX B8 AT STA. 286+89.32, 30.07' RT.

3. REMOVE POLE T4 AND ATTACHED MESSENGER WIRE, SIGNAL HEADS AND SIGNS. ADD POLE T7 WITH 2' MAST ARM AND 12" LED SIGNAL HEAD 5 AT STA. 286+24.77, 46.96' RT. ADD NEW PEDESTRIAN POST T8 AT STA. 286+15.61, 27.54' RT. REPLACE PEDESTRIAN SIGNAL HEADS P4 AND P5 WITH TYPE D2 LED COUNTDOWN PEDESTRIAN SIGNAL HEADS. ADD 24" X 24" CITY TYPE "C" PULLBOX B3 AT STA. 286+25.15, 42.00' RT AND 24" X 24" CITY TYPE "C" PULLBOX B4 AT STA. 286+13.07, 29.19' RT.

4. REMOVE POLE T1 AND ATTACHED MESSENGER WIRE, SIGNAL HEADS AND SIGNS. ADD NEW PEDESTRIAN POST T9 AT STA. 286+18.14, 21.63' LT. REPLACE PEDESTRIAN SIGNAL HEADS P1 AND P6 WITH TYPE D2 LED COUNTDOWN PEDESTRIAN SIGNAL HEADS. PLACE NEW STEEL POLE T10 WITH 5' MAST ARM AND 12" LED SIGNAL HEAD 6 AT STA. 286+24.44, 38.16' LT. INSTALL VIDEO DETECTION CAMERA V2 ON POLE T10. ADD 24" X 24" CITY TYPE "C" PULLBOX B5 AT STA. 286+20.41, 27.38' LT.

5. 6' X 60' STREETCAR DETECTION ZONE. SEE TRAFFIC SIGNAL AND STREET LIGHTING GENERAL NOTES FOR ADDITIONAL DETAILS.

6. INSTALL 2–4" RMC AND 1–3" RMC UNDER TRACK SLAB AS SHOWN ON PLAN.

7. A DISTANCE OF SIX FEET BEHIND THE CURB AND 15 FEET ON EITHER SIDE OF PROPOSED OCS POLES AND SIGNAL POLES (INCLUDING ANY DISTURBANCE TO THE EXISTING CURB) HAS BEEN QUANTIFIED FOR BIDDING PURPOSES FOR REMOVAL AND REPLACEMENT OF SIDEWALK. THE CITY'S ENGINEER WILL DETERMINE ACTUAL PAY LIMITS FOR THIS WORK. NO ADDITIONAL INCREASE TO THE UNIT COST WILL BE ALLOWED FOR THIS WORK IF THE QUANTITIES ARE MORE OR LESS THAN THE AMOUNT QUANTIFIED FOR BIDDING PURPOSES.

CAUTION UNDERGROUND UTILITIES
2 WORKING DAYS
BEFORE YOU DIG
CALL 1–800–362–2764
OHIO UTILITY PROTECTION SERVICE
CALL NON–SERVICE FACILITY OWNERS DIRECT

GRAPHIC SCALE
10 0 10 20 40
(IN FEET)
1 inch = 10 ft. Full Size
1 inch = 20 ft. Half Size

DOTE_Mono_PDF_Half.pltcfg
W:\29014A-Streetcar\CAD\Traffic_Control\Signals\2002_Race&Twelfth\S_G-TC-2002 C.dgn
7:50:39 AM
7/11/2012

CONTRACT DRAWING
PRINTS NOT BEARING THIS STAMP WERE MADE PRIOR TO ADVERTISING FOR BIDS AND ARE TO BE CONSIDERED OBSOLETE FOR CONTRACT PURPOSES.

Department of Transportation and Engineering
City of Cincinnati
City Hall
801 Plum Street
Cincinnati, Ohio 45202

CINCINNATI STREETCAR OVER THE RHINE
PROPOSED TRAFFIC SIGNAL PLAN
TWELFTH STREET AND RACE STREET

Revisions
No.

Date 12/20/11	Drawn by JRL
Date 12/20/11	Designed by JRL
Date 12/20/11	Checked by JTB
Date 12/20/11	Reviewed by JTB

Consultant
PB HDR

File Number
ACC No. 23126

G-TC-2002 C

MATERIAL SCHEDULE

NO.	VEHICULAR SIGNAL HEADS 1	2	3	4	5	6	7		
12 INCH	R	R	R	R	R	R	R		
	Y	Y	Y	Y	Y	Y	Y		
	G	G	G	G	G	G	G		

20

TYPE D2 PEDESTRIAN (LED) (COUNTDOWN) SIGNAL HEAD

NOTE:
USE LENS W/ SYMBOL LEGENDS
PORTLAND ORANGE: HAND (DONT WALK)
LUNAR WHITE: WALKING MAN (WALK)

POLE NO.	POLE DATA: POLE TYPE	SHAFT SIZE IN X FT	FOUNDATION TYPE	PEDESTRIAN SIGNALS P1 D W	P2 D W	P3 D W	P4 D W	P5 D W	P6 D W	P7 D W	P8 D W	MAST ARM ATTACHMENT HEIGHT (FEET)	MAST ARM (DEG)	HANDHOLE (DEG)	CONTROLLER (DEG)	DISCONNECT SWITCH (DEG)	VIDEO DETECTION CAMERA V1 (DEG)	VIDEO DETECTION CAMERA V2 (DEG)
				ANGLE OF ORIENTATION (DEGREES)														
T1	UMC DESIGN Y3	9 X 20.5	FDN–7									18.5	0	180				
T2	1045	4 X 10	FDN–25		270					180				180				
T3	UMC DESIGN Y1	9 X 20.5	FDN–7									18.5	0	180				
T4	UMC DESIGN Y4	9 X 20.5	FDN–7									18.5	0	180	180		0	
T5	WOOD POLE		EXIST.			180					90					180		
T6	UMC DESIGN Y5	9 X 20.5	FDN–7									18.5	0	180				
T7	UMC DESIGN Y1	9 X 20.5	FDN–7									18.5	0	180				
T8	1045	4 X 10	FDN–25				180	90						180				
T9	1045	4 X 10	FDN–25	180					90					180				
T10	UMC DESIGN Y1	9 X 20.5	FDN–7									18.5	0	180				280

SIGN DETAILS

S3 REFL. 24" X 30" CITY #92A

S2 REFL. 24" X 30" CITY #92C

S1, S4 REFL. 24" X 30" CITY "SPECIAL"

CAUTION UNDERGROUND UTILITIES
2 WORKING DAYS
BEFORE YOU DIG
CALL 1–800–362–2764
OHIO UTILITY PROTECTION SERVICE
CALL NON–SERVICE FACILITY
OWNERS DIRECT

GRAPHIC SCALE

10 0 10 20 40

(IN FEET)
1 inch = 10 ft. Full Size
1 inch = 20 ft. Half Size

CONTRACT DRAWING

PRINTS NOT BEARING THIS STAMP WERE MADE PRIOR TO ADVERTISING FOR BID AND ARE TO BE CONSIDERED OBSOLETE FOR CONTRACT PURPOSES.

Department of Transportation and Engineering

City of Cincinnati
City Hall
801 Plum Street
Cincinnati, Ohio 45202

CINCINNATI STREETCAR
OVER THE RHINE
PROPOSED TRAFFIC SIGNAL PLAN
TWELFTH STREET AND RACE STREET

Revisions
No.

Drawn by JRL Date 12/20/11
Designed by JRL Date 12/20/11
Checked by JTB Date 12/20/11
Reviewed by JTB Date 12/20/11

Consultant

PB HDR

File Number

ACC No. 23126

G-TC-2002 D

DOTE_Mono_PDF_Half.pltcfg
W:\29014A-Streetcar\CAD\Traffic_Control\Signals\2002_Race&Twelfth\S_G-TC-2002 D.dgn
7:50:45 AM
7/11/2012

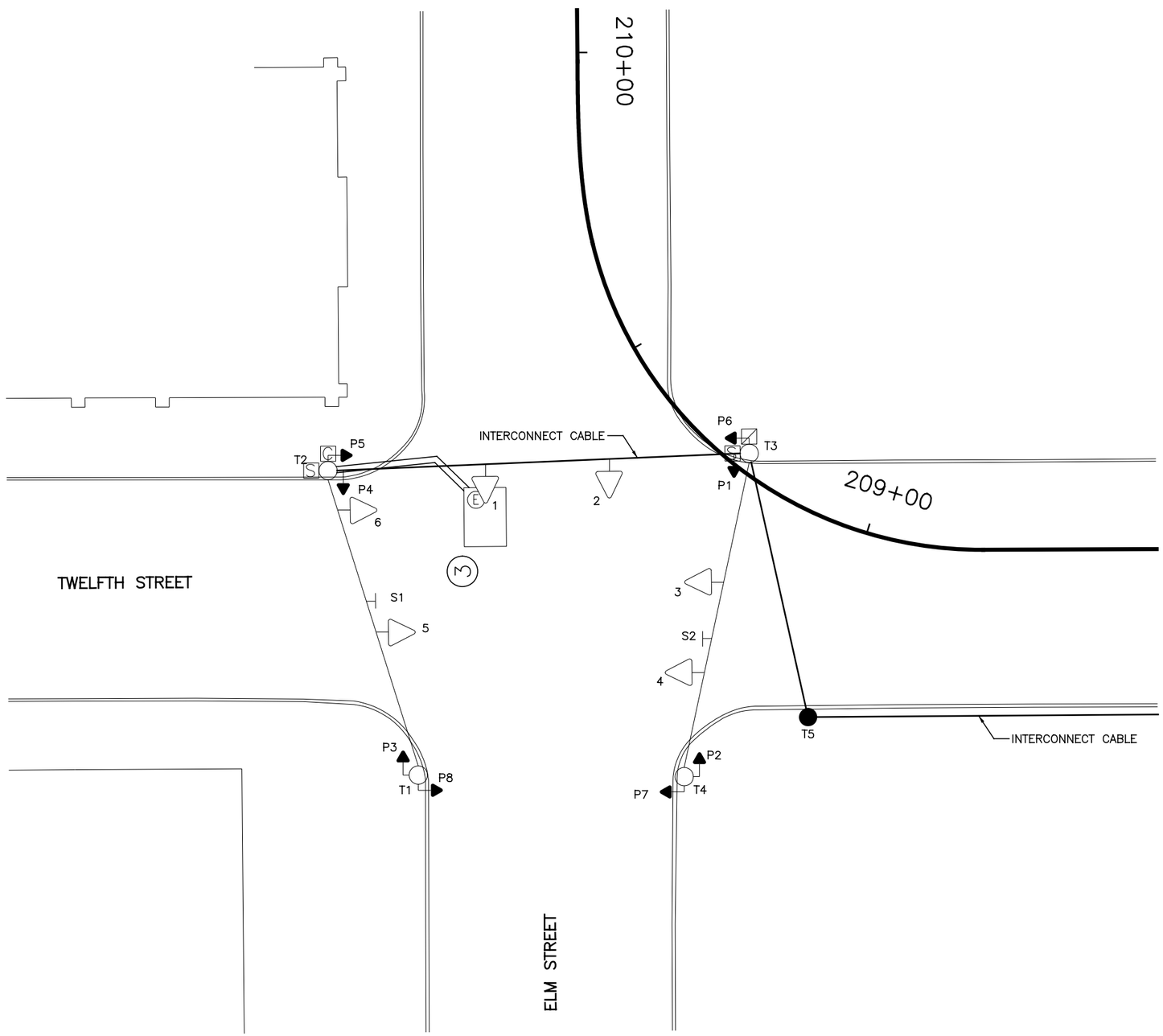

EQUIPMENT LIST	
1, 2, 3, 4, 5, 6	TRAF. SIG. HD., 3 SECT., VERT., 8" RYG
P1–P8	PED. SIG. 2 SECT., 12" INCANDESCENT
S1	REFL. SIGN, 24" X 30", "ONE WAY", #92A
S2	REFL. SIGN, 24" X 30", "ONE WAY", #92C
T1, T3, T4	STEEL POLE, ANCH. BASE
T2	STEEL POLE, EMB. BASE
T5	WOOD POLE

LEGEND

- STEEL POLE
- WOOD POLE
- TRAFFIC SIGNAL CONDUIT
- TRAFFIC SIGNAL HEAD
- PEDESTRIAN SIGNAL HEAD
- REFLECTORIZED SIGN
- PULLBOX
- CONTROLLER
- SECTIONALIZER
- DISCONNECT SWITCH (DS)

CAUTION UNDERGROUND UTILITIES
2 WORKING DAYS
BEFORE YOU DIG
CALL 1-800-362-2764
OHIO UTILITY PROTECTION SERVICE
CALL NON-SERVICE FACILITY
OWNERS DIRECT

GRAPHIC SCALE
10 0 10 20 40
(IN FEET)
1 inch = 10 ft. Full Size
1 inch = 20 ft. Half Size

DOTE_Mono_PDF_Half.pltcfg
W:\29014A-Streetcar\CAD\Traffic_Control\Signals\2003_Elm&Twelfth_E-47\S_G-TC-2003 A.dgn
7:53:42 AM
7/11/2012

CONTRACT DRAWING

PRINTS NOT BEARING THIS STAMP WERE MADE PRIOR TO ADVERTISING FOR BIDS AND ARE TO BE CONSIDERED OBSOLETE FOR CONTRACT PURPOSES.

Department of Transportation and Engineering

City of Cincinnati
City Hall
801 Plum Street
Cincinnati, Ohio 45202

CINCINNATI STREETCAR
OVER THE RHINE
EXISTING TRAFFIC SIGNAL PLAN
ELM STREET AND TWELFTH STREET

Revisions
No.

	Date
Drawn by JRL	12/20/11
Designed by JRL	12/20/11
Checked by JTB	12/20/11
Reviewed by JTB	12/20/11

Consultant

PB HDR

File Number

ACC No. 23126

G-TC-2003 A

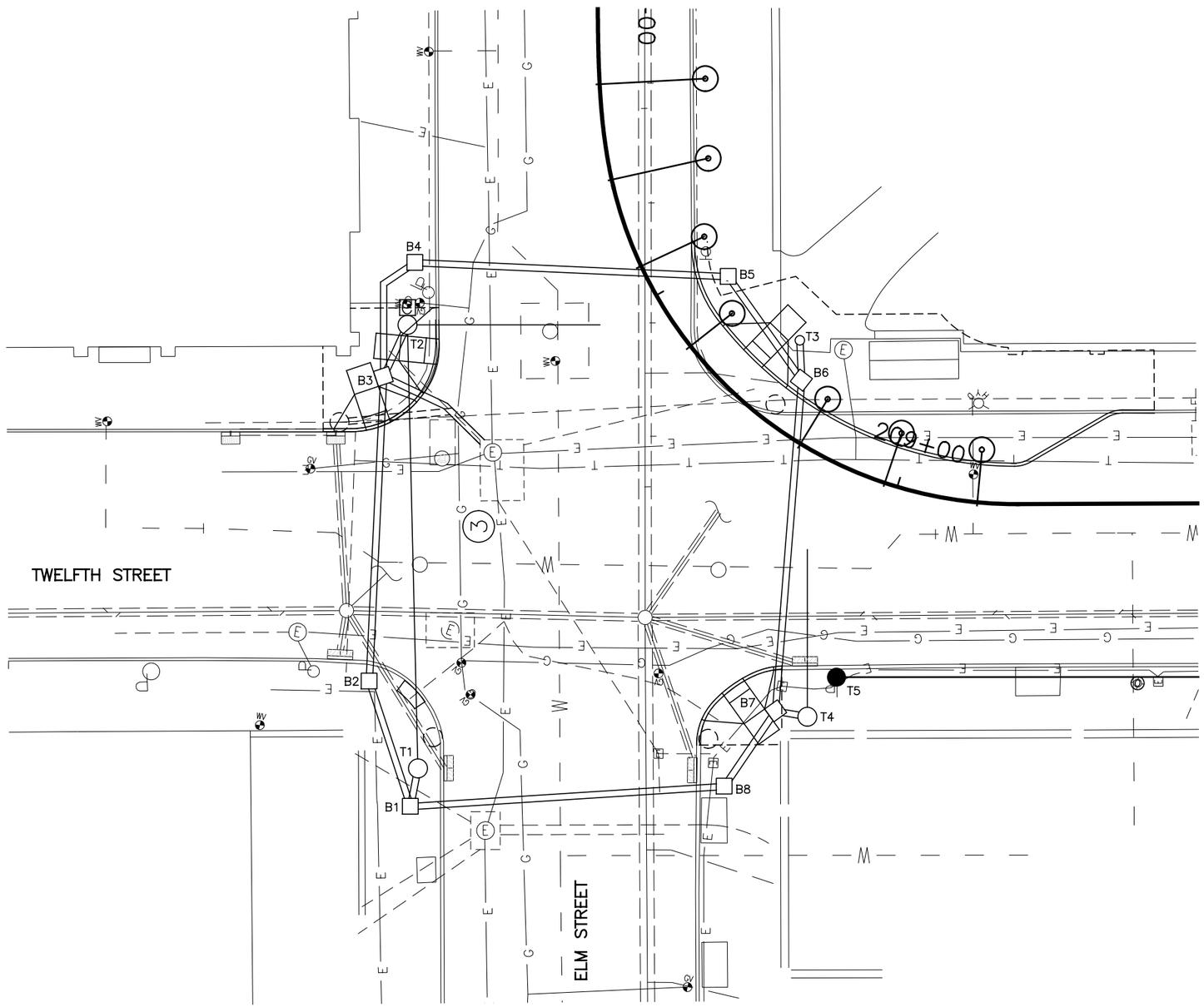

SIGNAL PHASING

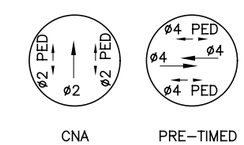

THIS IS THE GENERAL SEQUENCING FOR THIS TRAFFIC SIGNAL. REFER TO THE CITY OF CINCINNATI FOR FINAL SEQUENCING, LABELING AND TIMINGS.

CAUTION UNDERGROUND UTILITIES
2 WORKING DAYS
BEFORE YOU DIG
CALL 1–800–362–2764
OHIO UTILITY PROTECTION SERVICE
CALL NON–SERVICE FACILITY
OWNERS DIRECT

GRAPHIC SCALE

10 0 10 20 40

(IN FEET)
1 inch = 10 ft. Full Size
1 inch = 20 ft. Half Size

DEPARTMENT OF TRANSPORTATION & ENGINEERING
CITY OF CINCINNATI OHIO

CONTRACT DRAWING

PRINTS NOT BEARING THIS STAMP WERE MADE PRIOR TO ADVERTISING FOR BID AND ARE TO BE CONSIDERED OBSOLETE FOR CONTRACT PURPOSES.

Department of Transportation and Engineering

City of Cincinnati
City Hall
801 Plum Street
Cincinnati, Ohio 45202

CINCINNATI STREETCAR
OVER THE RHINE
UNDERGROUND UTILITIES & SIGNAL PLAN DETAILS
ELM STREET AND TWELFTH STREET

Revisions
No.

Drawn by JRL	Date 12/20/11		
Designed by JRL	Date 12/20/11		
Checked by JTB	Date 12/20/11		
Reviewed by JTB	Date 12/20/11		

Consultant

PB HDR

File Number

ACC No. 23126

G-TC-2003 B

DOTE_Mono_PDF_Half.pltcfg
W:\29014A-Streetcar\CAD\Traffic_Control\Signals\2003_Elm&Twelfth_E-47\S_G-TC-2003 B.dgn
7/11/2012 7:53:57 AM

LEGEND

- STEEL POLE
- WOOD POLE
- STEEL PEDESTRIAN POST
- TRAFFIC SIGNAL CONDUIT
- TRAFFIC SIGNAL HEAD
- PEDESTRIAN SIGNAL HEAD
- REFLECTORIZED SIGN
- PULLBOX
- CONTROLLER
- SECTIONALIZER
- DISCONNECT SWITCH (DS)

SIGNAL INDICATIONS

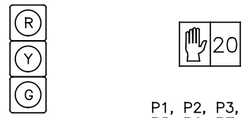

1, 2, 3, 4, 5, 6

SIGNAL HEAD DETAIL
12" (LED) LENSES

P1, P2, P3, P4
P5, P6, P7, P8

TYPE D2 PEDESTRIAN (LED)
(COUNTDOWN) SIGNAL HEAD

TYPICAL POLE ORIENTATION

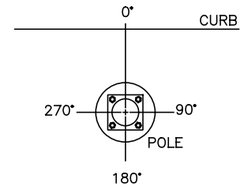

SIGN DETAILS

S1, S3, S5
REFL.
24" X 30"
CITY "SPECIAL"

S2
REFL.
24" X 30"
CITY #92C

S4
REFL.
24" X 30"
CITY #92A

MATERIAL SCHEDULE

NO.	VEHICULAR SIGNAL HEADS 1	2	3	4	5	6		
12 INCH	R	R	R	R	R	R		
	Y	Y	Y	Y	Y	Y		
	G	G	G	G	G	G		

TYPE D2 PEDESTRIAN (LED)
(COUNTDOWN) SIGNAL HEAD

NOTE:
USE LENS W/ SYMBOL LEGENDS
PORTLAND ORANGE: HAND (DONT WALK)
LUNAR WHITE: WALKING MAN (WALK)

POLE NO.	POLE DATA: POLE TYPE	SHAFT SIZE IN X FT	FOUNDATION TYPE	PEDESTRIAN SIGNALS ANGLE OF ORIENTATION (DEGREES) P1 D W	P2 D W	P3 D W	P4 D W	P5 D W	P6 D W	P7 D W	P8 D W	CABLE ENTRANCE ANGLE (DEG)	SPAN WIRE ATTACHMENT HEIGHT (FEET)	MAST ARM ATTACHMENT HEIGHT (FEET)	MAST ARM (DEG)	HANDHOLE (DEG)	CONTROLLER (DEG)	DISCONNECT SWITCH (DEG)
T1	29053	9 X 26	FDN–7			180					270	270	24.5			180		
T2	UMC DESIGN Y5	9 X 26	FDN–7				180	270				90	24.5	18.5	0	180	270	180
T3	1045	4 X 10	FDN–25	0					90							180		
T4	UMC DESIGN Y5	9 X 20.5	FDN–7		90					180				18.5	0	180		
T5	WOOD POLE																	

CABLE SCHEDULE

CABLE#	CONNECTING DEVICE	TYPE	CABLE ROUTING	LIN. FT
1	TRAFFIC SIGNAL TS1, TS2	7C#14	TS2–TS1–T2–C	35
2	TRAFFIC SIGNAL TS3, TS4	7C#14	TS3–TS4–T4–B7–B8–B1–B2–B3–T2–C	226
3	TRAFFIC SIGNAL TS5, TS6	7C#14	TS5–TS6–T2–C	60
4	PED. SIGNAL P1	7C#14	P1–T3–B6–B5–B4–B3–T2–C	142
5	PED. SIGNAL P2	7C#14	P2–T4–B7–B8–B1–B2–B3–T2–C	190
6	PED. SIGNAL P3	7C#14	P3–T1–B1–B2–B3–T2–C	116
7	PED. SIGNAL P4	7C#14	P4–T2–C	18
8	PED. SIGNAL P5	7C#14	P5–T2–C	18
9	PED. SIGNAL P6	7C#14	P6–T3–B6–B5–B4–B3–T2–C	142
10	PED. SIGNAL P7	7C#14	P7–T4–B7–B8–B1–B2–B3–T2–C	190
11	PED. SIGNAL P8	7C#14	P8–T1–B1–B2–B3–T2–C	116
12	POWER CABLE, AC POSITIVE, BLACK	1C#6	MH–B3–T2–C	50
13	POWER CABLE, AC NEGATIVE, WHITE	1C#6	MH–B3–T2–C	50
14	INTERCONNECT CABLE	12C#12	SECT.–T2–C	35
15	INTERCONNECT CABLE	12C#12	SECT.–T2–B3–B4–B5–B6–B7–T5–SECT.	240

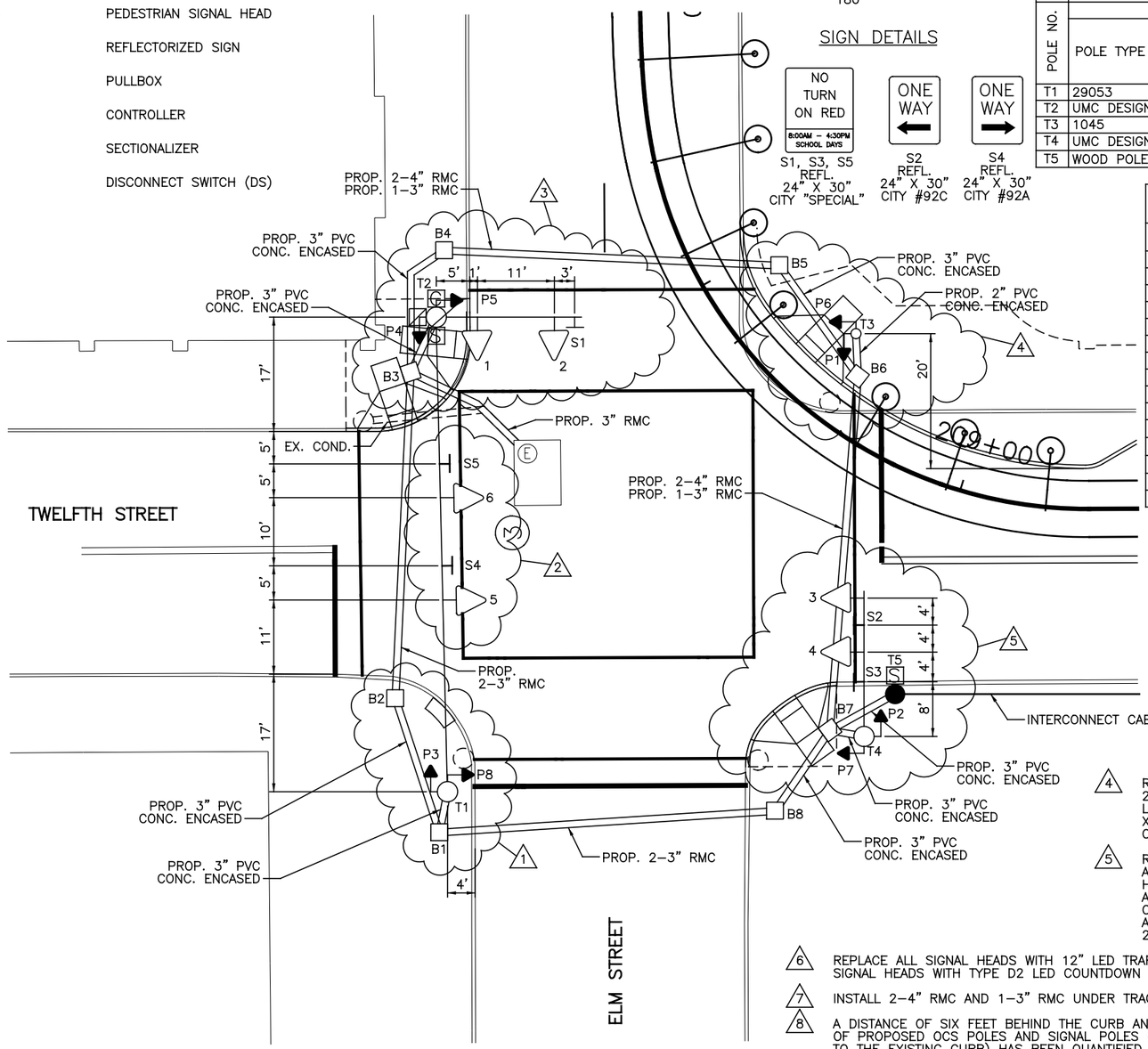

NOTES:

1. REPLACE THE EXISTING POLE WITH A NEW STEEL STRAIN POLE T1 AT STA. 209+28.35, 77.72' LT. REPLACE PEDESTRIAN SIGNALS P3 AND P8 WITH TYPE D2 LED COUNTDOWN PEDESTRIAN SIGNALS. ADD 24" X 24" CITY TYPE "C" PULLBOX B1 AT STA. 209+26.97, 83.07' LT AND 24" X 24" CITY TYPE "C" PULLBOX B2 AT STA. 209+35.40, 73.27' LT. CONNECT POLE T1 TO POLE T2 WITH NEW MESSENGER WIRE.

2. REPLACE SIGNAL HEADS 5 AND 6 WITH 12" LED SIGNAL HEADS ON NEW MESSENGER WIRE BETWEEN POLES T1 AND T2. ADD NEW REFLECTORIZED SIGNS S4 AND S5 TO NEW MESSENGER WIRE.

3. REPLACE THE EXISTING POLE WITH A NEW POLE T2 AT STA. 209+59.26, 38.12' LT. ATTACH A 20' MAST ARM AND REPLACE SIGNAL HEADS 1 AND 2 WITH 12" LED SIGNAL HEADS ON THE MAST ARM. ADD NEW REFLECTORIZED SIGN S1 ON THE MAST ARM. REPLACE THE CONTROLLER BOX AND PLACE NEW CONTROLLER ON POLE T2. REPLACE DISCONNECT SWITCH AND MOVE FROM POLE T3 TO POLE T2. REPLACE SECTIONALIZER AND PLACE ON NEW POLE T2. REPLACE PEDESTRIAN SIGNALS P4 AND P5 WITH TYPE D2 LED COUNTDOWN PEDESTRIAN SIGNAL HEADS. ADD 24" X 24" CITY TYPE "C" PULLBOX B3 AT STA. 209+56.09, 44.41' LT AND 24" X 24" CITY TYPE "C" PULLBOX B4 AT STA. 209+65.67, 33.48' LT.

4. REPLACE THE EXISTING POLE WITH A NEW STEEL PEDESTRIAN POST T3 AT STA. 209+27.70, 13.21' RT. REPLACE PEDESTRIAN SIGNALS P1 AND P6 WITH TYPE D2 LED COUNTDOWN PEDESTRIAN SIGNAL HEADS. REMOVE SECTIONALIZER. ADD 24" X 24" CITY TYPE "C" PULLBOX B5 AT STA. 209+46.26, 11.29' RT AND 24" X 24" CITY TYPE "C" PULLBOX B6 AT STA. 209+22.70, 8.49' RT.

5. REPLACE THE EXISTING POLE WITH A NEW POLE T4 AT STA. 209+02.02, 39.07' LT. ATTACH A 20' MAST ARM AND REPLACE SIGNAL HEADS 3 AND 4 WITH 12" LED SIGNAL HEADS ON THE MAST ARM. ADD NEW REFLECTORIZED SIGNS S2 AND S3 TO THE MAST ARM ON POLE T4. REPLACE PEDESTRIAN SIGNALS P2 AND P7 WITH TYPE D2 LED COUNTDOWN PEDESTRIAN SIGNAL HEADS. ADD 24" X 24" CITY TYPE "C" PULLBOX B7 AT STA. 209+05.17, 39.95' LT AND 24" X 24" CITY TYPE "C" PULLBOX B8 AT STA. 209+06.96, 54.05' LT. ADD NEW SECTIONALIZER ON WOOD POLE.

6. REPLACE ALL SIGNAL HEADS WITH 12" LED TRAFFIC SIGNALS AND REPLACE ALL PEDESTRIAN SIGNAL HEADS WITH TYPE D2 LED COUNTDOWN PEDESTRIAN SIGNAL HEADS.

7. INSTALL 2–4" RMC AND 1–3" RMC UNDER TRACK SLAB AS SHOWN ON THIS PLAN.

8. A DISTANCE OF SIX FEET BEHIND THE CURB AND 15 FEET ON EITHER SIDE OF PROPOSED OCS POLES AND SIGNAL POLES (INCLUDING ANY DISTURBANCE TO THE EXISTING CURB) HAS BEEN QUANTIFIED FOR BIDDING PURPOSES FOR REMOVAL AND REPLACEMENT OF SIDEWALK. THE CITY'S ENGINEER WILL DETERMINE ACTUAL PAY LIMITS FOR THIS WORK. NO ADDITIONAL INCREASE TO THE UNIT COST WILL BE ALLOWED FOR THIS WORK IF THE QUANTITIES ARE MORE OR LESS THAN THE AMOUNT QUANTIFIED FOR BIDDING PURPOSES.

GRAPHIC SCALE

10 0 10 20 40

(IN FEET)
1 inch = 10 ft. Full Size
1 inch = 20 ft. Half Size

CAUTION UNDERGROUND UTILITIES
2 WORKING DAYS
BEFORE YOU DIG
CALL 1–800–362–2764
OHIO UTILITY PROTECTION SERVICE
CALL NON–SERVICE FACILITY
OWNERS DIRECT

DOTE_Mono_PDF_Half.pltcfg
W:\29014A-Streetcar\CAD\Traffic_Control\Signals\2003_Elm&Twelfth_E-47\S_G-TC-2003 C.dgn
7:54:12 AM
7/11/2012

CONTRACT DRAWING

PRINTS NOT BEARING THIS STAMP WERE MADE PRIOR TO ADVERTISING FOR BIDS AND ARE TO BE CONSIDERED OBSOLETE FOR CONTRACT PURPOSES.

Department of Transportation and Engineering

City of Cincinnati
City Hall
801 Plum Street
Cincinnati, Ohio 45202

CINCINNATI STREETCAR
OVER THE RHINE

PROPOSED TRAFFIC SIGNAL PLAN
ELM STREET AND TWELFTH STREET

Revisions
No.

	Date
Drawn by JRL	12/20/11
Designed by JRL	12/20/11
Checked by JTB	12/20/11
Reviewed by JTB	12/20/11

Consultant

PB HDR

File Number

ACC No. 23126

G-TC-2003 C

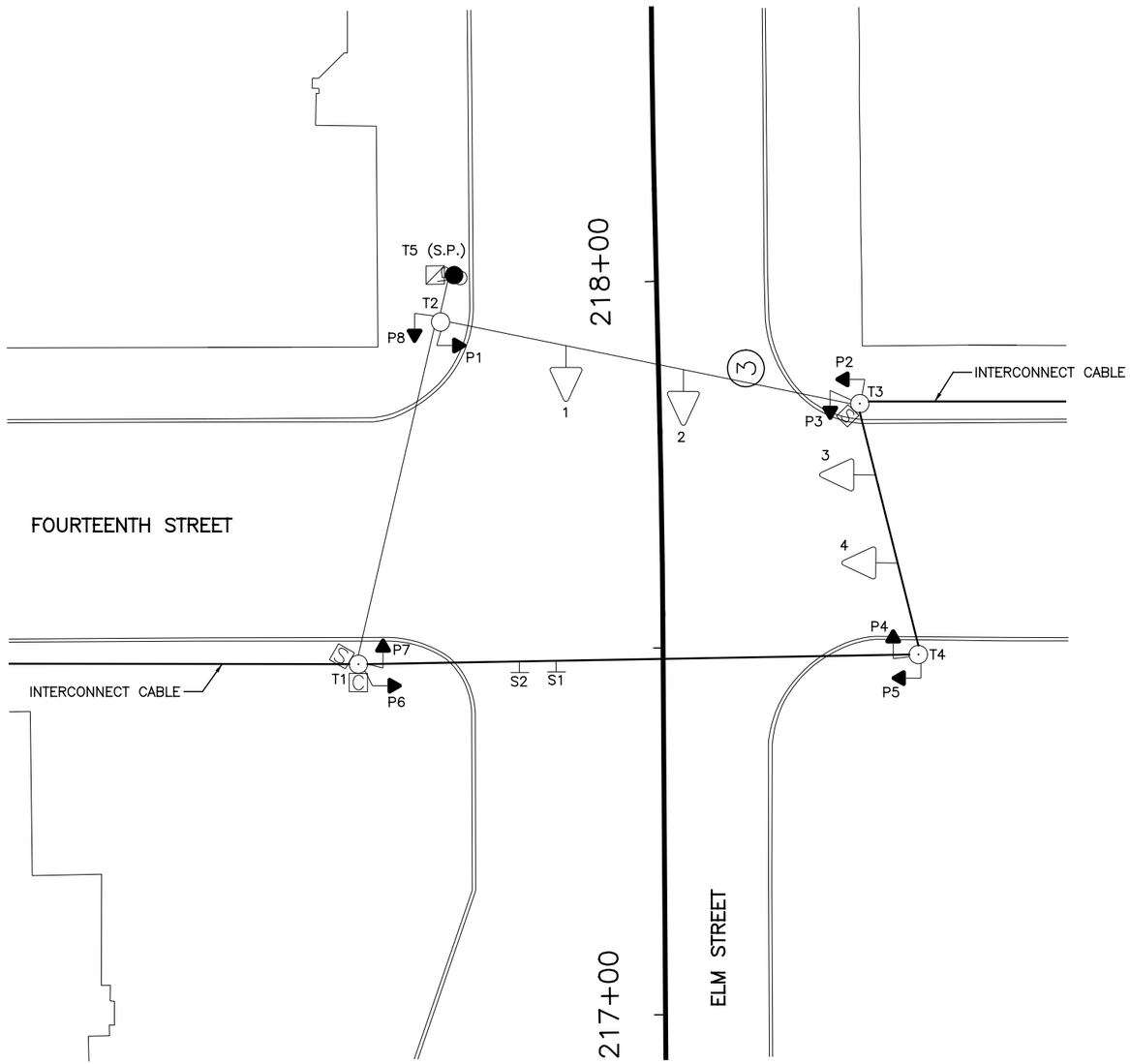

EQUIPMENT LIST	
1–4	TRAF. SIG. HD., 3 SECTIONS, VERT., 8" RYG
P1–P8	PED. SIG., 1 SECTION, 16" INCANDESCENT
S1	REFL. SIGN, 24" X 30", "PARKING ←", CITY #116C
S2	REFL. SIGN, 24" X 30", "↰ ONLY", CITY #79C
T1	STEEL POLE, ANCH. BASE, 10" X 28', CITY #33048
T2–T4	STEEL POLE, ANCH. BASE, 9" X 26', CITY #29053
T5 (S.P.)	WOOD SERVICE POLE, C.G.&E., #07–1263E

LEGEND

- STEEL POLE
- WOOD POLE
- TRAFFIC SIGNAL HEAD
- PEDESTRIAN SIGNAL HEAD
- REFLECTORIZED SIGN
- CONTROLLER
- SECTIONALIZER
- DISCONNECT SWITCH (DS)

CAUTION UNDERGROUND UTILITIES
2 WORKING DAYS
BEFORE YOU DIG
CALL 1–800–362–2764
OHIO UTILITY PROTECTION SERVICE
CALL NON–SERVICE FACILITY
OWNERS DIRECT

GRAPHIC SCALE
10 0 10 20 40
(IN FEET)
1 inch = 10 ft. Full Size
1 inch = 20 ft. Half Size

DOTE_Mono_PDF_Half.pltcfg
W:\29014A-Streetcar\CAD\Traffic_Control\Signals\2004_Elm&Fourteenth_E-38\S_G-TC-2004 A.dgn
7:54:31 AM
7/11/2012

CONTRACT DRAWING

PRINTS NOT BEARING THIS STAMP WERE MADE PRIOR TO ADVERTISING FOR BIDS AND ARE TO BE CONSIDERED OBSOLETE FOR CONTRACT PURPOSES.

Department of Transportation and Engineering

City of Cincinnati
City Hall
801 Plum Street
Cincinnati, Ohio 45202

CINCINNATI STREETCAR
OVER THE RHINE
EXISTING TRAFFIC SIGNAL PLAN
ELM STREET AND FOURTEENTH STREET

Revisions
No.

	Date
Drawn by JRL	12/20/11
Designed by JRL	12/20/11
Checked by JTB	12/20/11
Reviewed by JTB	12/20/11

Consultant

PB HDR

File Number

ACC No. 23126

G-TC-2004 A

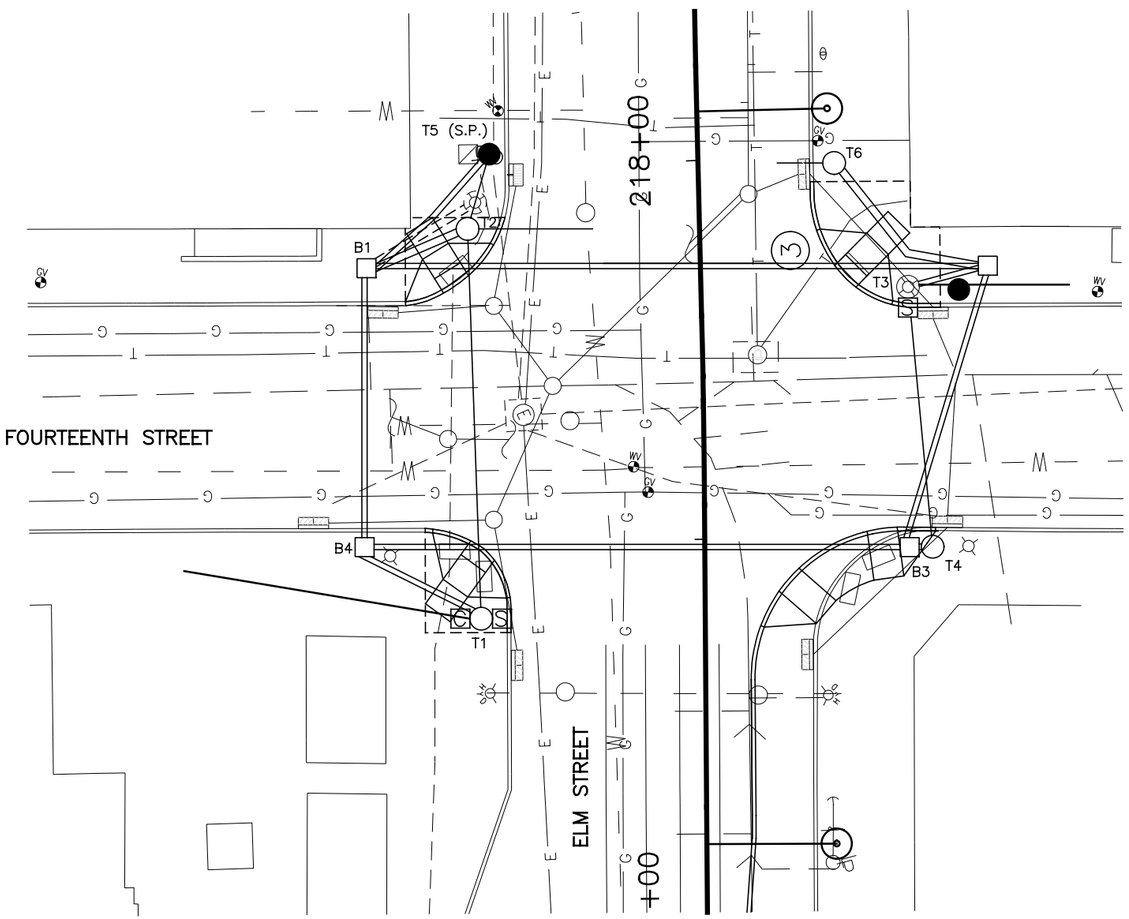

SIGNAL PHASING

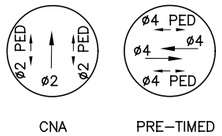

CNA PRE–TIMED

THIS IS THE GENERAL SEQUENCING FOR THIS TRAFFIC SIGNAL. REFER TO THE CITY OF CINCINNATI FOR FINAL SEQUENCING, LABELING AND TIMINGS.

CAUTION UNDERGROUND UTILITIES
2 WORKING DAYS
BEFORE YOU DIG
CALL 1–800–362–2764
OHIO UTILITY PROTECTION SERVICE
CALL NON–SERVICE FACILITY
OWNERS DIRECT

GRAPHIC SCALE
10 0 10 20 40
(IN FEET)
1 inch = 10 ft. Full Size
1 inch = 20 ft. Half Size

CONTRACT DRAWING

PRINTS NOT BEARING THIS STAMP WERE MADE PRIOR TO ADVERTISING FOR BIDS AND ARE TO BE CONSIDERED OBSOLETE FOR CONTRACT PURPOSES.

Department of Transportation and Engineering

City of Cincinnati
City Hall
801 Plum Street
Cincinnati, Ohio 45202

CINCINNATI STREETCAR OVER THE RHINE

UNDERGROUND UTILITIES & SIGNAL PLAN DETAILS
ELM STREET AND FOURTEENTH STREET

Revisions
No.

Drawn by JRL	Date 12/20/11
Designed by JRL	Date 12/20/11
Checked by JTB	Date 12/20/11
Reviewed by JTB	Date 12/20/11

Consultant

PB HDR

File Number

ACC No. 23126

G-TC-2004 B

DOTE_Mono_PDF_Half.pltcfg
W:\29014A-Streetcar\CAD\Traffic_Control\Signals\2004_Elm&Fourteenth_E-38\S_G-TC-2004 B.dgn
7/11/2012 7:54:46 AM

LEGEND

- STEEL POLE
- WOOD POLE
- TRAFFIC SIGNAL CONDUIT
- TRAFFIC SIGNAL HEAD
- PEDESTRIAN SIGNAL HEAD
- REFLECTORIZED SIGN
- PULLBOX
- CONTROLLER
- SECTIONALIZER
- DISCONNECT SWITCH (DS)

SIGNAL INDICATIONS

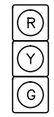

1, 2, 3, 4, 5, 6

SIGNAL HEAD DETAIL
12" (LED) LENSES

P1, P2, P3, P4
P5, P6, P7, P8

TYPE D2 PEDESTRIAN (LED)
(COUNTDOWN) SIGNAL HEAD

TYPICAL POLE ORIENTATION

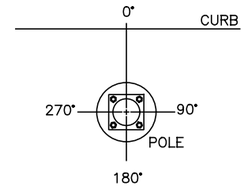

SIGN DETAILS

S1
REFL.
24" X 30"
CITY #116C

S2
REFL.
24" X 30"
CITY #79C

S3
REFL.
24" X 30"
CITY #92A

S4
REFL.
24" X 30"
CITY #92C

MATERIAL SCHEDULE

NO.	VEHICULAR SIGNAL HEADS 1	2	3	4	5	6		
12 INCH	R	R	R	R	R	R		
	Y	Y	Y	Y	Y	Y		
	G	G	G	G	G	G		

20

TYPE D2 PEDESTRIAN (LED)
(COUNTDOWN) SIGNAL HEAD

NOTE:
USE LENS W/ SYMBOL LEGENDS
PORTLAND ORANGE: HAND (DONT WALK)
LUNAR WHITE: WALKING MAN (WALK)

POLE NO.	POLE DATA: POLE TYPE	SHAFT SIZE IN X FT	FOUNDATION TYPE	PEDESTRIAN SIGNALS ANGLE OF ORIENTATION (DEGREES) P1 D/W	P2 D/W	P3 D/W	P4 D/W	P5 D/W	P6 D/W	P7 D/W	P8 D/W	CABLE ENTRANCE ANGLE (DEG)	SPAN WIRE ATTACHMENT HEIGHT (FEET)	MAST ARM ATTACHMENT HEIGHT (FEET)	MAST ARM (DEG)	STREET LIGHT BRACKET ARM (DEG)	HANDHOLE (DEG)	CONTROLLER (DEG)	DISCONNECT SWITCH (DEG)
T1	UMC DESIGN Y1	9 X 26	FDN–7			180					270	270	24.5	18.5	0		180	180	
T2	UMC DESIGN Y5	9 X 26	FDN–7				180	90				90	24.5	18.5	0		180		
T3	29053	9 X 26	EXIST.	90					180										
T4	29053	9 X 26	FDN–7		270					180		0	24.5				180		
T5	WOOD POLE	–	EXIST.									0	24.5			EX.			EX.
T6	UMC DESIGN Y1	9 X 20.5	FDN–7											18.5	0		180		

CABLE SCHEDULE

CABLE#	CONNECTING DEVICE	TYPE	CABLE ROUTING	LIN. FT
1	TRAFFIC SIGNAL TS1	7C#14	TS1–T2–B1–B4–T1–C	130
2	TRAFFIC SIGNAL TS2	7C#14	TS2–T6–B2–B3–B4–T1–C	205
3	TRAFFIC SIGNAL TS3, TS4	7C#14	TS3–TS4–T4–B3–B4–T1–C	180
4	TRAFFIC SIGNAL TS5, TS6	7C#14	TS6–TS5–T1–C	70
5	PED. SIGNAL P1	7C#14	P1–T3–T4–B3–B4–T1–C	215
6	PED. SIGNAL P2	7C#14	P2–T4–B3–B4–T1–C	135
7	PED. SIGNAL P3	7C#14	P3–T1–C	20
8	PED. SIGNAL P4	7C#14	P4–T2–T1–C	100
9	PED. SIGNAL P5	7C#14	P5–T2–T1–C	100
10	PED. SIGNAL P6	7C#14	P6–T3–T4–B3–B4–T1–C	215
11	PED. SIGNAL P7	7C#14	P7–T4–B3–B4–T1–C	135
12	PED. SIGNAL P8	7C#14	P8–T1–C	20
13	POWER CABLE, AC POSITIVE, BLACK	1C#6	T5–B1–T2–T1–C	95
14	POWER CABLE, AC NEGATIVE, WHITE	1C#6	T5–B1–T2–T1–C	95
15	INTERCONNECT CABLE	12C#12	SECT.–T1–C	35
16	INTERCONNECT CABLE	12C#12	SECT.–T1–B4–B3–B2–T3–SECT.	215

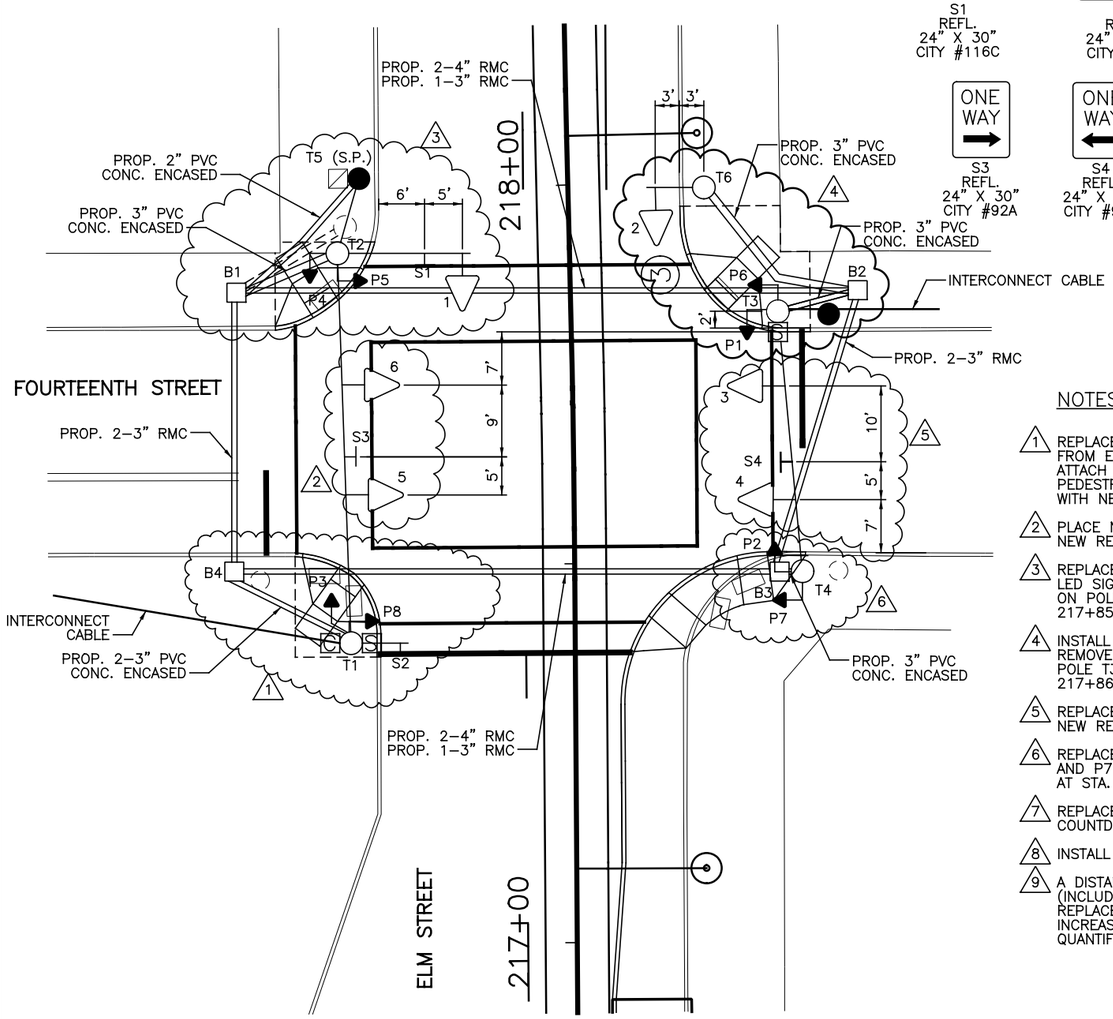

NOTES:

1. REPLACE THE EXISTING POLE WITH A NEW POLE T1 AT STA. 217+39.5, 29.58' RT. REMOVE CONTROLLER AND SECTIONALIZER FROM EXISTING POLE. PLACE NEW CONTROLLER AND SECTIONALIZER ON NEW POLE T1. ATTACH 6' MAST ARM TO POLE T1. ATTACH NEW SIGN S2 ON MAST ARM ON POLE T1. REPLACE PEDESTRIAN SIGNALS P3 AND P8 WITH TYPE D2 LED COUNTDOWN PEDESTRIAN SIGNALS. ADD 24" X 24" CITY TYPE "C" PULLBOX B4 AT STA. 217+49, 44.86' LT. CONNECT POLE T1 TO POLE T2 WITH NEW MESSENGER WIRE.
2. PLACE NEW SIGNAL HEADS 5 AND 6 WITH 12" LED SIGNAL HEADS ON NEW MESSENGER WIRE BETWEEN POLES T1 AND T2. PLACE NEW REFLECTIVE SIGN S3 ON MESSENGER WIRE.
3. REPLACE THE EXISTING STEEL POLE WITH A NEW POLE T2 WITH 16' MAST ARM AT STA. 217+90.92, 30.62' LT. PLACE NEW 12" LED SIGNAL HEAD 1 ON THE MAST ARM ALONG WITH NEW REFLECTORIZED SIGN S1. REPLACE PEDESTRIAN SIGNALS P4 AND P5 ON POLE T2 WITH TYPE D2 LED COUNTDOWN PEDESTRIAN SIGNAL HEADS. ADD 24" X 24" CITY TYPE "C" PULLBOX B1 AT STA. 217+85.8, 44.1' LT.
4. INSTALL POLE T6 WITH 6' MAST ARM AT STA. 217+99.66, 17.95' RT. PLACE NEW 12" LED SIGNAL HEAD 2 ON THE MAST ARM. REMOVE EXISTING SECTIONALIZER AND PLACE NEW SECTIONALIZER ON POLE T3. REPLACE PEDESTRIAN SIGNALS P1 AND P6 ON POLE T3 WITH TYPE D2 LED COUNTDOWN PEDESTRIAN SIGNAL HEADS. ADD 24" X 24" CITY TYPE "C" PULLBOX B2 AT STA. 217+86.2, 38.0' RT. CONNECT POLE T3 TO POLE T4 WITH NEW MESSENGER WIRE.
5. REPLACE SIGNAL HEADS 3 AND 4 WITH 12" LED SIGNAL HEADS ON NEW MESSENGER WIRE BETWEEN POLES T3 AND T4. PLACE NEW REFLECTIVE SIGN S4 ON MESSENGER WIRE.
6. REPLACE EXISITNG POLE WITH A NEW STEEL STRAIN POLE T4 AT STA. 217+49.1, 30.1' RT. REPLACE PEDESTRIAN SIGNALS P2 AND P7 ON POLE T4 WITH TYPE D2 LED COUNTDOWN PEDESTRIAN SIGNAL HEAD. ADD 24" X 24" CITY TYPE "C" PULLBOX B3 AT STA. 217+49.1, 27.1' RT.
7. REPLACE ALL SIGNAL HEADS WITH 12" LED TRAFFIC SIGNALS AND REPLACE ALL PEDESTRIAN SIGNAL HEADS WITH TYPE D2 LED COUNTDOWN PEDESTRIAN SIGNAL HEADS.
8. INSTALL 2–4" RMC AND 1–3" RMC UNDER TRACK SLAB AS SHOWN ON THIS PLAN.
9. A DISTANCE OF SIX FEET BEHIND THE CURB AND 15 FEET ON EITHER SIDE OF PROPOSED OCS POLES AND SIGNAL POLES (INCLUDING ANY DISTURBANCE TO THE EXISTING CURB) HAS BEEN QUANTIFIED FOR BIDDING PURPOSES FOR REMOVAL AND REPLACEMENT OF SIDEWALK. THE CITY'S ENGINEER WILL DETERMINE ACTUAL PAY LIMITS FOR THIS WORK. NO ADDITIONAL INCREASE TO THE UNIT COST WILL BE ALLOWED FOR THIS WORK IF THE QUANTITIES ARE MORE OR LESS THAN THE AMOUNT QUANTIFIED FOR BIDDING PURPOSES.

CAUTION UNDERGROUND UTILITIES
2 WORKING DAYS
BEFORE YOU DIG
CALL 1–800–362–2764
OHIO UTILITY PROTECTION SERVICE
CALL NON–SERVICE FACILITY
OWNERS DIRECT

GRAPHIC SCALE
10 0 10 20 40
(IN FEET)
1 inch = 10 ft. Full Size
1 inch = 20 ft. Half Size

DOTE_Mono_PDF_Half.pltcfg
W:\29014A-Streetcar\CAD\Traffic_Control\Signals\2004_Elm&Fourteenth_E-38\S_G-TC-2004 C.dgn
7:55:28 AM
7/11/2012

CONTRACT DRAWING

PRINTS NOT BEARING THIS STAMP WERE MADE PRIOR TO ADVERTISING FOR BIDS AND ARE TO BE CONSIDERED OBSOLETE FOR CONTRACT PURPOSES.

Department of Transportation and Engineering

City of Cincinnati
City Hall
801 Plum Street
Cincinnati, Ohio 45202

CINCINNATI STREETCAR
CENTRAL BUSINESS DISTRICT
PROPOSED TRAFFIC SIGNAL PLAN
ELM STREET AND FOURTEENTH STREET

Revisions
No.

Date 7/02/12	Drawn by JRL
Date 7/02/12	Designed by JRL
Date 7/02/12	Checked by JTB
Date 7/12/12	Reviewed by JTB

Consultant

PB HDR

File Number

ACC No. 23126

G-TC-2004 C

EQUIPMENT LIST	
1, 2, 3, 4, 5, 6	TRAF. SIG. HD., 3 SECT., VERT., 8" RYG
P1–P8	PED. SIG., 2 SECT., 12" INCANDESCENT
S1	ILLUM. SIGN, 24" X 30", "ONE WAY ←", #92C
S2	REFL. SIGN, 24" X 30", "↑ ONLY", #79B
S3	REFL. SIGN, 24" X 30", "↰ ONLY", #79C
S4	ILLUM. SIGN, 24" X 30", "ONE WAY →", #92A
S.P.	WOOD SERVICE POLE, C.G & E., #07–166E

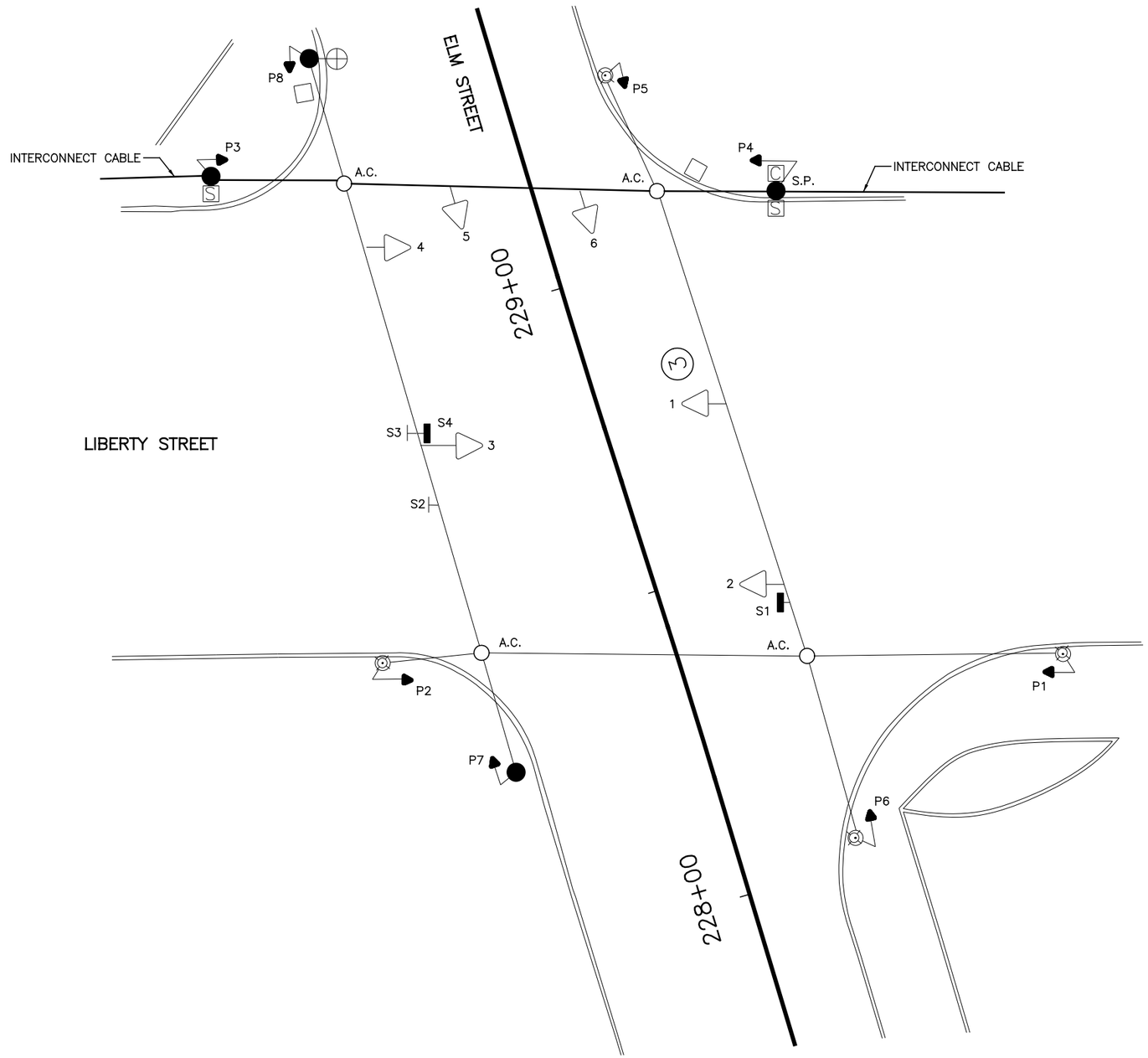

LEGEND

- STEEL POLE
- WOOD POLE
- DETECTOR MICROWAVE
- TRAFFIC SIGNAL HEAD
- PEDESTRIAN SIGNAL HEAD
- REFLECTORIZED SIGN
- ILLUMINATED SIGN
- PULLBOX
- CONTROLLER
- SECTIONALIZER

CAUTION UNDERGROUND UTILITIES
2 WORKING DAYS
BEFORE YOU DIG
CALL 1–800–362–2764
OHIO UTILITY PROTECTION SERVICE
CALL NON–SERVICE FACILITY
OWNERS DIRECT

GRAPHIC SCALE
10 0 10 20 40
(IN FEET)
1 inch = 10 ft. Full Size
1 inch = 20 ft. Half Size

DOTE_Mono_PDF_Half.pltcfg
W:\29014A-Streetcar\CAD\Traffic_Control\Signals\2005_Elm&Liberty_E-40\S_G-TC-2005 A.dgn
7:55:44 AM
7/11/2012

CONTRACT DRAWING

PRINTS NOT BEARING THIS STAMP WERE MADE PRIOR TO ADVERTISING FOR BIDS AND ARE TO BE CONSIDERED OBSOLETE FOR CONTRACT PURPOSES.

Department of Transportation and Engineering
City of Cincinnati
City Hall
801 Plum Street
Cincinnati, Ohio 45202

CINCINNATI STREETCAR
OVER THE RHINE
EXISTING TRAFFIC SIGNAL PLAN
ELM STREET AND LIBERTY STREET

Revisions
No.

	Date
Drawn by JRL	12/20/11
Designed by JRL	12/20/11
Checked by JTB	12/20/11
Reviewed by JTB	12/20/11

Consultant
PB HDR

File Number

ACC No. 23126

G-TC-2005 A

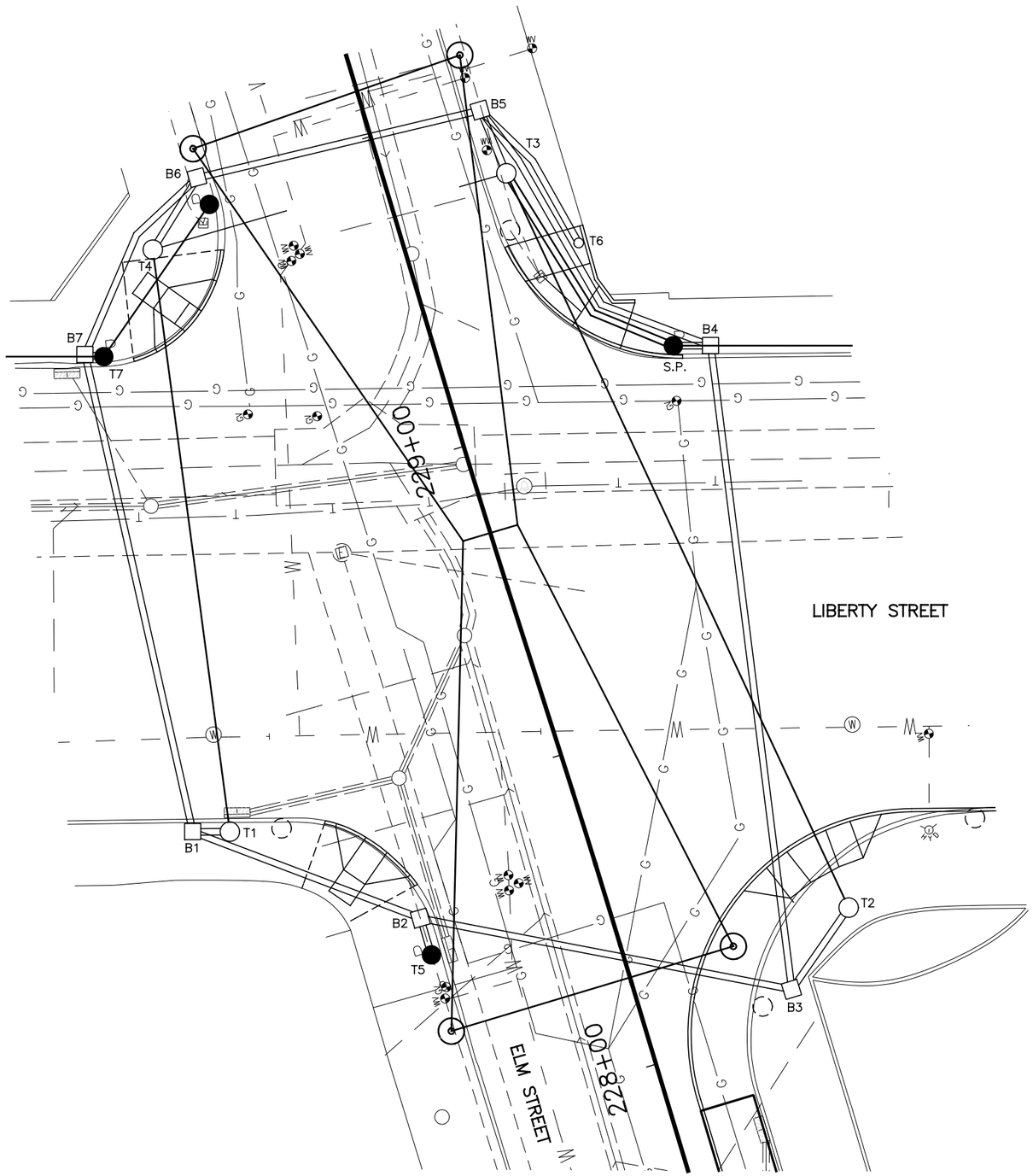

SIGNAL PHASING

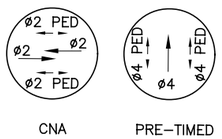

THIS IS THE GENERAL SEQUENCING FOR THIS TRAFFIC SIGNAL. REFER TO THE CITY OF CINCINNATI FOR FINAL SEQUENCING, LABELING AND TIMINGS.

CAUTION UNDERGROUND UTILITIES
2 WORKING DAYS
BEFORE YOU DIG
CALL 1–800–362–2764
OHIO UTILITY PROTECTION SERVICE
CALL NON–SERVICE FACILITY
OWNERS DIRECT

GRAPHIC SCALE

10 0 10 20 40

(IN FEET)
1 inch = 10 ft. Full Size
1 inch = 20 ft. Half Size

DEPARTMENT OF TRANSPORTATION & ENGINEERING
CITY OF CINCINNATI OHIO

CONTRACT DRAWING

PRINTS NOT BEARING THIS STAMP WERE MADE PRIOR TO ADVERTISING FOR BIDS AND ARE TO BE CONSIDERED OBSOLETE FOR CONTRACT PURPOSES.

Department of Transportation and Engineering

City of Cincinnati
City Hall
801 Plum Street
Cincinnati, Ohio 45202

CINCINNATI STREETCAR
OVER THE RHINE
UNDERGROUND UTILITIES & SIGNAL PLAN DETAILS
ELM STREET AND LIBERTY STREET

Revisions

No.	Date	Drawn by	Designed by	Checked by	Reviewed by
	12/20/11	JRL	JRL	JTB	JTB
	12/20/11				
	12/20/11				
	12/20/11				

Consultant

PB HDR

File Number

ACC No.
23126

G-TC-2005 B

DOTE_Mono_PDF_Half.pltcfg
W:\29014A-Streetcar\CAD\Traffic_Control\Signals\2005_Elm&Liberty_E-40\S_G-TC-2005 B.dgn
7:56:02 AM
7/11/2012

LEGEND

- STEEL POLE
- WOOD POLE
- STEEL PEDESTRIAN POST
- TRAFFIC SIGNAL CONDUIT
- TRAFFIC SIGNAL HEAD
- PEDESTRIAN SIGNAL HEAD
- REFLECTORIZED SIGN
- ILLUMINATED SIGN
- PULLBOX
- CONTROLLER
- SECTIONALIZER

SIGNAL INDICATIONS

R Y G

1, 2, 3, 4, 5, 6

SIGNAL HEAD DETAIL
12" (LED) LENSES

20

P1, P2, P3, P4
P5, P6, P7, P8

TYPE D2 PEDESTRIAN (LED)
(COUNTDOWN) SIGNAL HEAD

TYPICAL POLE ORIENTATION

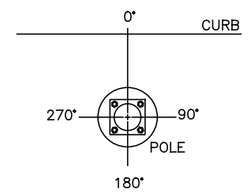

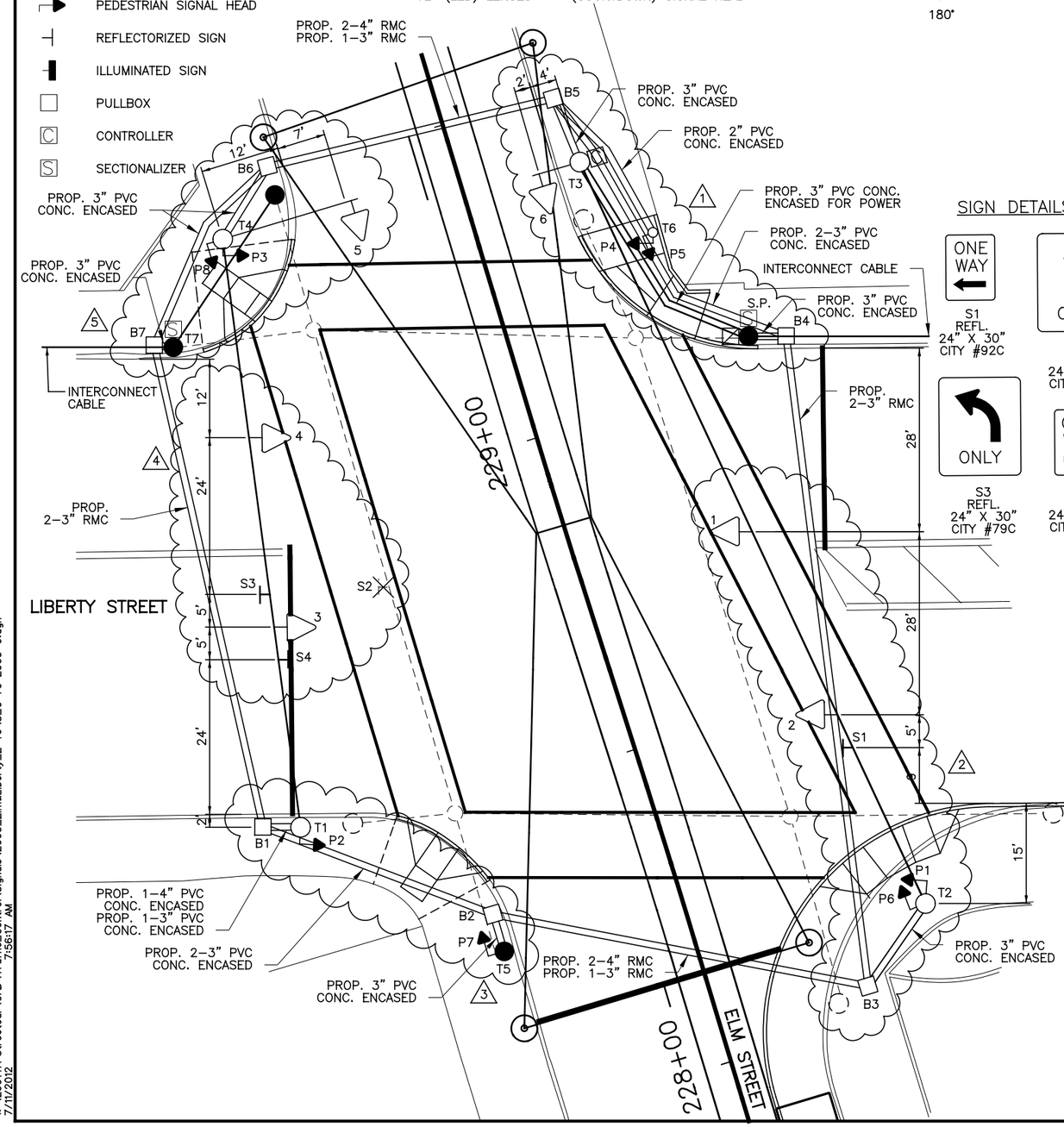

SIGN DETAILS

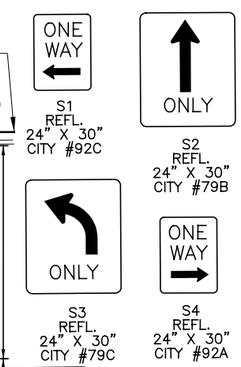

MATERIAL SCHEDULE

NO.	VEHICULAR SIGNAL HEADS 1	2	3	4	5	6		
12 INCH	R	R	R	R	R	R		
	Y	Y	Y	Y	Y	Y		
	G	G	G	G	G	G		

20

TYPE D2 PEDESTRIAN (LED)
(COUNTDOWN) SIGNAL HEAD

NOTE:
USE LENS W/ SYMBOL LEGENDS
PORTLAND ORANGE: HAND (DONT WALK)
LUNAR WHITE: WALKING MAN (WALK)

POLE NO.	POLE DATA: POLE TYPE	SHAFT SIZE IN X FT	FOUNDATION TYPE	PEDESTRIAN SIGNALS ANGLE OF ORIENTATION (DEGREES) P1 D W	P2 D W	P3 D W	P4 D W	P5 D W	P6 D W	P7 D W	P8 D W	CABLE ENTRANCE ANGLE (DEG)	SPAN WIRE ATTACHMENT HEIGHT (FEET)	MAST ARM ATTACHMENT HEIGHT (FEET)	MAST ARM (DEG)	STREET LIGHT BRACKET ARM (DEG)	HANDHOLE (DEG)	CONTROLLER (DEG)
T1	38045	11 X 30	FDN–10		180							352	26.5			0	180	
T2	38045	11 X 30	FDN–10	0					249			338	26.5				180	
T3	UMC DESIGN Y1	11 X 30	FDN–10									264	26.5	18.5	0		180	180
T4	UMC DESIGN Y5	11 X 30	FDN–10			254					180	261	26.5	18.5	0		180	
T5	WOOD POLE	CLASS 2	EXIST.							180								
T6	1045	4 X 10	FDN–25				286	0									180	
T7	WOOD POLE		EXIST.															

CABLE SCHEDULE

CABLE#	CONNECTING DEVICE	TYPE	CABLE ROUTING	LIN. FT
1	TRAFFIC SIGNAL TS1, TS2	7C#14	TS2–TS1–T3–C	115
2	TRAFFIC SIGNAL TS3, TS4	7C#14	TS3–TS4–T4–B6–B5–T3–C	175
3	TRAFFIC SIGNAL TS5	7C#14	TS5–T4–B6–B5–T3–C	130
4	TRAFFIC SIGNAL TS6	7C#14	TS6–T3–C	30
5	PED. SIGNAL P1	7C#14	P1–T2–B3–B4–B5–T3–C	211
6	PED. SIGNAL P2	7C#14	P2–T1–B1–B7–B6–B5–T3–C	206
7	PED. SIGNAL P3	7C#14	P3–T4–B6–B5–T3–C	95
8	PED. SIGNAL P4	7C#14	P4–T6–B5–T3–C	57
9	PED. SIGNAL P5	7C#14	P5–T6–B5–T3–C	57
10	PED. SIGNAL P6	7C#14	P6–T2–B3–B4–B5–T3–C	211
11	PED. SIGNAL P7	7C#14	P7–T5–B2–B1–B7–B6–B5–T3–C	250
12	PED. SIGNAL P8	7C#14	P8–T4–B6–B5–T3–C	95
13	POWER CABLE, AC POSITIVE, BLACK	1C#6	S.P.–T3–C	85
14	POWER CABLE, AC NEGATIVE, WHITE	1C#6	S.P.–T3–C	85
15	INTERCONNECT CABLE	12C#12	SECT.–S.P.–B4–B5–T3–C	120
16	INTERCONNECT CABLE	12C#12	SECT.–T7–B7–B6–B5–B4–S.P.–SECT.	210

NOTES:

1. REPLACE THE EXISTING POLE WITH A NEW POLE T3 AT STA. 229+38.51, 18.46' RT. ATTACH A 6' MAST ARM. ATTACH LED SIGNAL HEAD 6 ON THE MAST ARM. REPLACE THE CONTROLLER BOX AND PLACE NEW CONTROLLER ON POLE T3. INSTALL A NEW DISCONNECT SWITCH ON THE SERVICE POLE. ADD A NEW STEEL PEDESTRIAN POST T6 AT STA. 229+24.98, 26.07' RT. REPLACE PEDESTRIAN SIGNALS P4 AND P5 ON POST T6 WITH TYPE D2 LED COUNTDOWN PEDESTRIAN SIGNAL HEADS. ADD 24" X 24" CITY TYPE "C" PULLBOX B4 AT STA. 229+03.88, 41.05' RT. ADD 24" X 24" CITY TYPE "C" PULLBOX B5 AT STA. 229+48.99, 17.42' RT.
2. REPLACE THE EXISTING POLE WITH A NEW STEEL STRAIN POLE T2 AT STA. 228+14.59, 35.48' RT. REPLACE SIGNAL HEADS 1 AND 2 WITH 12" LED SIGNAL HEADS ON A NEW MESSENGER WIRE CONNECTED TO T3. REPLACE ILLUMINATED SIGN S1 WITH REFLECTORIZED SIGN S1 ON NEW MESSENGER WIRE. ADD 24" X 24" CITY TYPE "C" PULLBOX B3 AT STA. 228+05.00, 23.43' RT.
3. REPLACE THE EXISTING POLE WITH STREET LIGHT WITH A NEW STEEL STRAIN POLE WITH STREET LIGHT T1 AT STA. 228+54.19, 52.39' LT. CONNECT POLE T1 TO POLE T4 WITH NEW MESSENGER WIRE. REPLACE PEDESTRIAN SIGNALS P2 AND P7 WITH TYPE D2 LED COUNTDOWN PEDESTRIAN SIGNALS. ADD 24" X 24" CITY TYPE "C" PULLBOX B1 AT STA. 228+55.95, 57.83' LT. ADD 24" X 24" CITY TYPE "C" PULLBOX B2 AT STA. 228+32.30, 28.30' LT.
4. REPLACE SIGNAL HEADS 3 AND 4 WITH 12" LED SIGNAL HEADS ON NEW MESSENGER WIRE BETWEEN POLES T1 AND T4. REMOVE REFLECTORIZED SIGN S2. REPLACE ILLUMINATED SIGN S4 WITH REFLECTORIZED SIGN S4 ON NEW MESSENGER WIRE. REPLACE REFLECTORIZED SIGN S3 ON NEW MESSENGER WIRE.
5. REPLACE THE EXISTING POLE WITH A NEW POLE T4 AT STA. 229+42.96, 37.28' LT. ATTACH A 20' MAST ARM AND REPLACE SIGNAL HEAD 5 WITH 12" LED SIGNAL HEAD ON THE MAST ARM. REPLACE PEDESTRIAN SIGNALS P3 AND P8 WITH TYPE D2 LED COUNTDOWN PEDESTRIAN SIGNAL HEADS. ADD 24" X 24" CITY TYPE "C" PULLBOX B6 AT STA. 229+51.59, 27.50' LT. ADD 24" X 24" CITY TYPE "C" PULLBOX B7 AT STA. 229+30.40, 51.97' LT.
6. INSTALL 2–4" RMC AND 1–3" RMC UNDER TRACK SLAB AS SHOWN IN PLAN.
7. A DISTANCE OF SIX FEET BEHIND THE CURB AND 15 FEET ON EITHER SIDE OF PROPOSED OCS POLES AND SIGNAL POLES (INCLUDING ANY DISTURBANCE TO THE EXISTING CURB) HAS BEEN QUANTIFIED FOR BIDDING PURPOSES FOR REMOVAL AND REPLACEMENT OF SIDEWALK. THE CITY'S ENGINEER WILL DETERMINE ACTUAL PAY LIMITS FOR THIS WORK. NO ADDITIONAL INCREASE TO THE UNIT COST WILL BE ALLOWED FOR THIS WORK IF THE QUANTITIES ARE MORE OR LESS THAN THE AMOUNT QUANTIFIED FOR BIDDING PURPOSES.

CAUTION UNDERGROUND UTILITIES
2 WORKING DAYS
BEFORE YOU DIG
CALL 1–800–362–2764
OHIO UTILITY PROTECTION SERVICE
CALL NON–SERVICE FACILITY
OWNERS DIRECT

GRAPHIC SCALE
10 0 10 20 40
(IN FEET)
1 inch = 10 ft. Full Size
1 inch = 20 ft. Half Size

DOTE_Mono_PDF_Half.pltcfg
W:\29014A-Streetcar\CAD\Traffic_Control\Signals\2005_Elm&Liberty_E-40\S_G-TC-2005 C.dgn
7:56:17 AM
7/11/2012

CONTRACT DRAWING
PRINTS NOT BEARING THIS STAMP WERE MADE PRIOR TO ADVERTISING FOR BIDS AND ARE TO BE CONSIDERED OBSOLETE FOR CONTRACT PURPOSES.

Department of Transportation and Engineering
City of Cincinnati
City Hall
801 Plum Street
Cincinnati, Ohio 45202

CINCINNATI STREETCAR
OVER THE RHINE
PROPOSED TRAFFIC SIGNAL PLAN
ELM STREET AND LIBERTY STREET

Revisions
No.

Date 12/20/11	Drawn by JRL
Date 12/20/11	Designed by JRL
Date 12/20/11	Checked by JTB
Date 12/20/11	Reviewed by JTB

Consultant
PB HDR

File Number
ACC No. 23126

G-TC-2005 C

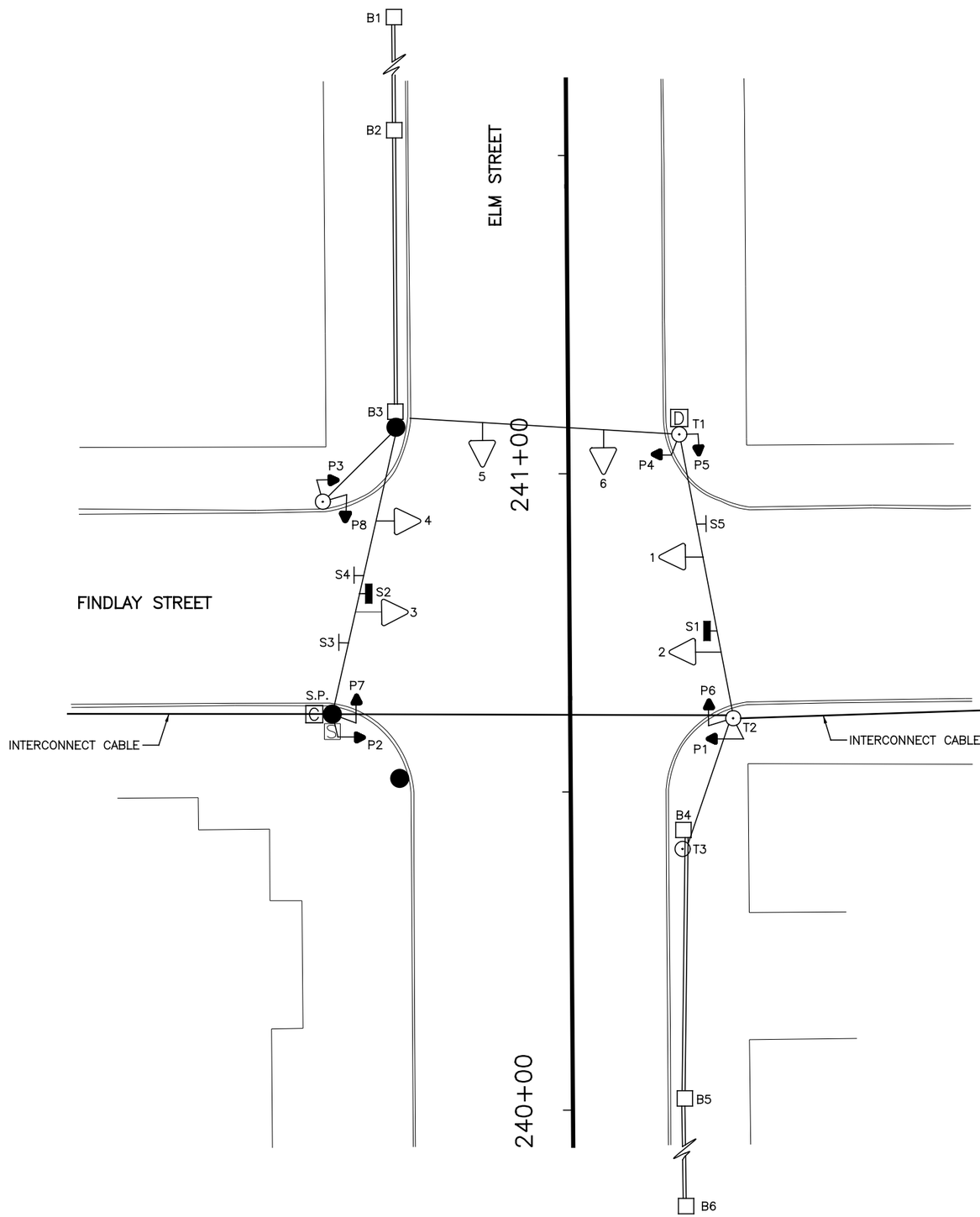

EQUIPMENT LIST	
1, 2, 3, 4, 5, 6	TRAF. SIG. HD., 3 SECT., VERT., 8" RYG
P1–P8	PED. SIG., 2 SECT., 12" INCANDESCENT
S1	ILLUM. SIGN, 24" X 30", "ONE WAY ←", #92C
S2	ILLUM. SIGN, 24" X 30", "ONE WAY →", #92A
S3	REFL. SIGN, 24" X 30", " ↑ ONLY", #79B
S4	REFL. SIGN, 24" X 30", " ↰ ONLY", #79C
S5	REFL. SIGN, 24" X 30", " ↑↱ ", #79AB
B1, B2, B5, B6	PULLBOX, 12" X 18"
B3, B4	PULLBOX, 18" X 18"
T1	STEEL POLE, ANCH. BASE, 26', #21065
T2, T3	STEEL POLE, EMB. BASE, 9" X 26'
S.P.	WOOD SERVICE POLE, C.G. & E., #07–10002

LEGEND

- STEEL POLE
- WOOD POLE
- TRAFFIC SIGNAL HEAD
- PEDESTRIAN SIGNAL HEAD
- REFLECTORIZED SIGN
- ILLUMINATED SIGN
- PULLBOX
- CONTROLLER
- SECTIONALIZER

GRAPHIC SCALE

10 0 10 20 40

(IN FEET)
1 inch = 10 ft. Full Size
1 inch = 20 ft. Half Size

CAUTION UNDERGROUND UTILITIES
2 WORKING DAYS
BEFORE YOU DIG
CALL 1–800–362–2764
OHIO UTILITY PROTECTION SERVICE
CALL NON–SERVICE FACILITY
OWNERS DIRECT

DEPARTMENT OF TRANSPORTATION & ENGINEERING
CITY OF CINCINNATI
OHIO

CONTRACT DRAWING

PRINTS NOT BEARING THIS STAMP WERE MADE PRIOR TO ADVERTISING FOR BIDS AND ARE TO BE CONSIDERED OBSOLETE FOR CONTRACT PURPOSES.

Department of Transportation and Engineering

City of Cincinnati
City Hall
801 Plum Street
Cincinnati, Ohio 45202

CINCINNATI STREETCAR
OVER THE RHINE
EXISTING TRAFFIC SIGNAL PLANS
ELM STREET AND FINDLAY STREET

Revisions
No.

Drawn by JRL	Date 12/20/11
Designed by JRL	Date 12/20/11
Checked by JTB	Date 12/20/11
Reviewed by JTB	Date 12/20/11

Consultant

PB HDR

File Number

ACC No. 23126

G-TC-2006 A

DOTE_Mono_PDF_Half.pltcfg
W:\29014A-Streetcar\CAD\Traffic_Control\Signals\2006_Elm&Findlay_E-37\S_G-TC-2006 A.dgn
7/11/2012 7:56:33 AM

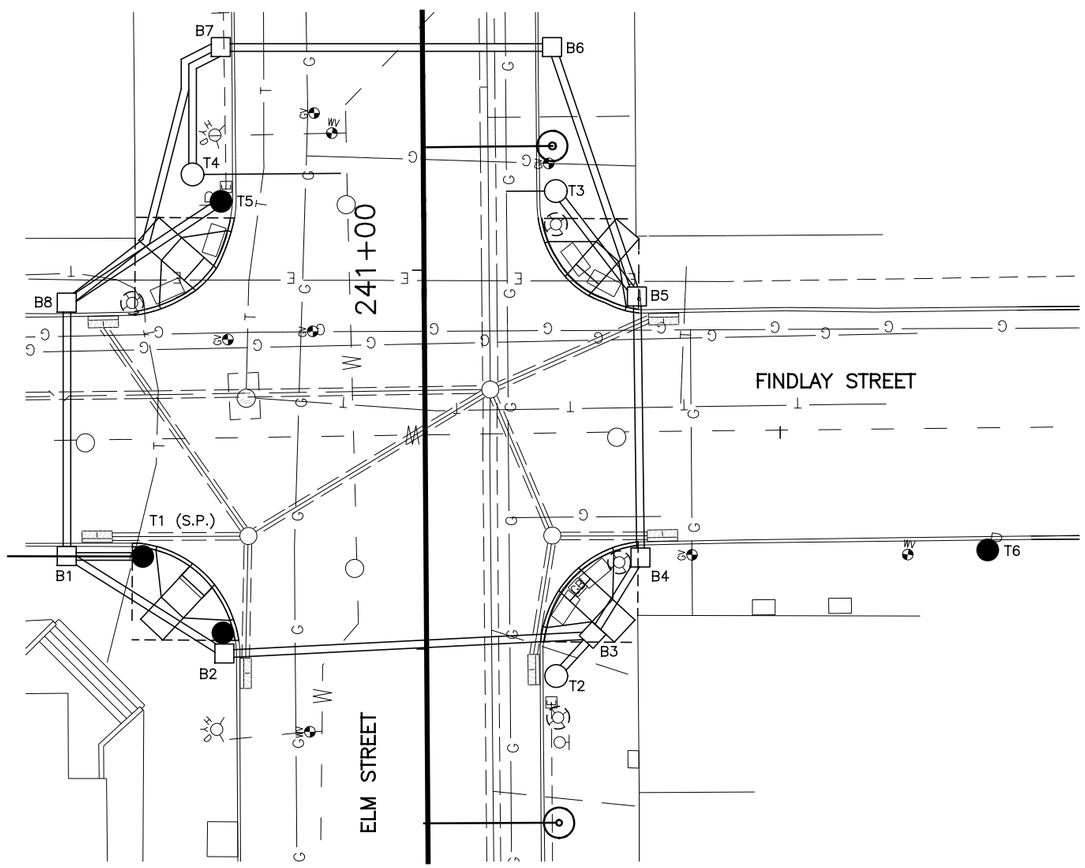

SIGNAL PHASING

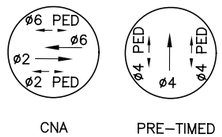

THIS IS THE GENERAL SEQUENCING FOR THIS TRAFFIC SIGNAL. REFER TO THE CITY OF CINCINNATI FOR FINAL SEQUENCING, LABELING AND TIMINGS.

CAUTION UNDERGROUND UTILITIES
2 WORKING DAYS
BEFORE YOU DIG
CALL 1–800–362–2764
OHIO UTILITY PROTECTION SERVICE
CALL NON–SERVICE FACILITY
OWNERS DIRECT

GRAPHIC SCALE

10 0 10 20 40

(IN FEET)
1 inch = 10 ft. Full Size
1 inch = 20 ft. Half Size

DOTE_Mono_PDF_Half.pltcfg
W:\29014A-Streetcar\CAD\Traffic_Control\Signals\2006_Elm&Findlay_E-37\S_G-TC-2006 B.dgn
7/11/2012 7:56:48 AM

CONTRACT DRAWING

PRINTS NOT BEARING THIS STAMP WERE MADE PRIOR TO ADVERTISING FOR BID, AND ARE TO BE CONSIDERED OBSOLETE FOR CONTRACT PURPOSES.

Department of Transportation and Engineering

City of Cincinnati
City Hall
801 Plum Street
Cincinnati, Ohio 45202

CINCINNATI STREETCAR OVER THE RHINE

UNDERGROUND UTILITIES & SIGNAL PLAN DETAILS
ELM STREET AND FINDLAY STREET

Revisions

No.			

Drawn by JRL Date 12/20/11
Designed by JRL Date 12/20/11
Checked by JTB Date 12/20/11
Reviewed by JTB Date 12/20/11

Consultant

PB HDR

File Number

ACC No. 23126

G-TC-2006 B

LEGEND

- STEEL POLE
- WOOD POLE
- TRAFFIC SIGNAL CONDUIT
- TRAFFIC SIGNAL HEAD
- PEDESTRIAN SIGNAL HEAD
- REFLECTORIZED SIGN
- ILLUMINATED SIGN
- PULLBOX
- CONTROLLER
- SECTIONALIZER

SIGNAL INDICATIONS

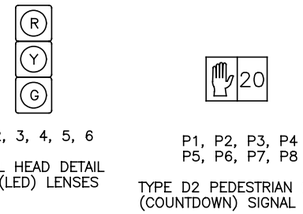

1, 2, 3, 4, 5, 6

SIGNAL HEAD DETAIL
12" (LED) LENSES

P1, P2, P3, P4
P5, P6, P7, P8

TYPE D2 PEDESTRIAN (LED)
(COUNTDOWN) SIGNAL HEAD

TYPICAL POLE ORIENTATION

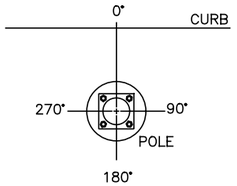

SIGN DETAILS

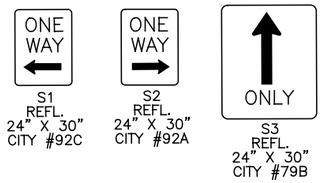

S1
REFL.
24" X 30"
CITY #92C

S2
REFL.
24" X 30"
CITY #92A

S3
REFL.
24" X 30"
CITY #79B

S4
REFL.
24" X 30"
CITY #79C

S5
REFL.
24" X 30"
CITY #79AB

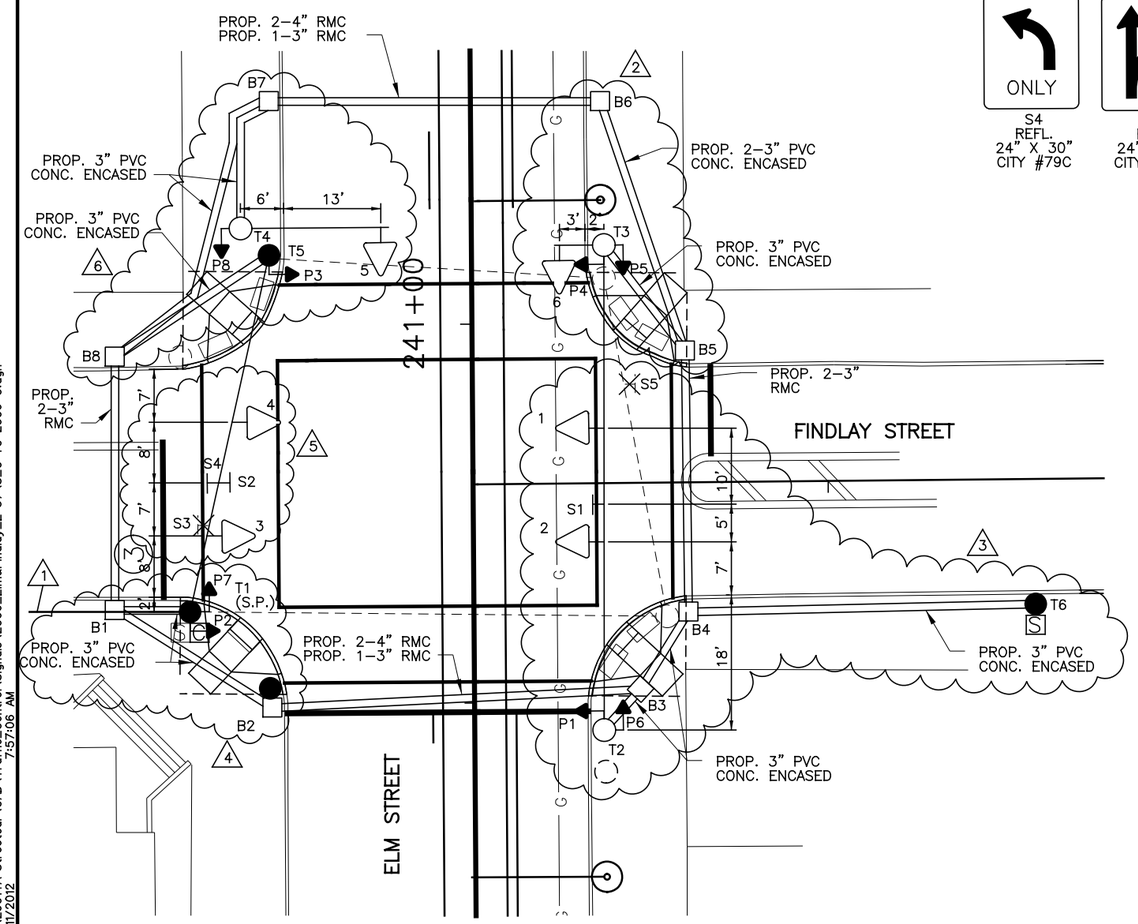

MATERIAL SCHEDULE

NO.	VEHICULAR SIGNAL HEADS 1	2	3	4	5	6		
12 INCH	R	R	R	R	R	R		
	Y	Y	Y	Y	Y	Y		
	G	G	G	G	G	G		

TYPE D2 PEDESTRIAN (LED) (COUNTDOWN) SIGNAL HEAD

NOTE:
USE LENS W/ SYMBOL LEGENDS
PORTLAND ORANGE: HAND (DONT WALK)
LUNAR WHITE: WALKING MAN (WALK)

POLE NO.	POLE DATA: POLE TYPE	SHAFT SIZE IN X FT	FOUNDATION TYPE	PEDESTRIAN SIGNALS ANGLE OF ORIENTATION (DEGREES) P1 D W	P2 D W	P3 D W	P4 D W	P5 D W	P6 D W	P7 D W	P8 D W	CABLE ENTRANCE ANGLE (DEG)	SPAN WIRE ATTACHMENT HEIGHT (FEET)	MAST ARM ATTACHMENT HEIGHT (FEET)	MSAT ARM (DEG)	HANDHOLE (DEG)	CONTROLLER (DEG)
T1	WOOD POLE	CLASS 2	EXIST.		180					90		0	24.5				180
T2	29053	9 X 26	FDN-7	90					180			90	24.5			180	
T3	UMC DESIGN Y1	9 X 26	FDN-7				270	180				270	24.5	18.5	0	180	
T4	UMC DESIGN Y5	9 X 20.5	FDN-7								180	90	24.5	18.5	0	180	
T5	WOOD POLE	EXIST.	EXIST.			90											
T6	WOOD POLE	EXIST.	EXIST.														

CABLE SCHEDULE

CABLE#	CONNECTING DEVICE	TYPE	CABLE ROUTING	LIN. FT
1	TRAFFIC SIGNAL TS1, TS2	7C#14	TS1–TS2–T2–B3–B2–B1–T1–C	180
2	TRAFFIC SIGNAL TS3, TS4	7C#14	TS4–TS3–T1–C	45
3	TRAFFIC SIGNAL TS5	7C#14	TS5–T4–B7–B8–B1–T1–C	166
4	TRAFFIC SIGNAL TS6	7C#14	TS6–T3–B5–B4–B3–B2–B1–T1–C	206
5	PED. SIGNAL P1	7C#14	P1–T2–B3–B2–B1–T1–C	122
6	PED. SIGNAL P2	EXIST.	EXIST.	EXIST.
7	PED. SIGNAL P3	7C#14	P3–T5–B8–B1–T1–C	94
8	PED. SIGNAL P4	7C#14	P4–T3–B5–B4–B3–B2–B1–T1–C	189
9	PED. SIGNAL P5	7C#14	P5–T3–B5–B4–B3–B2–B1–T1–C	189
10	PED. SIGNAL P6	7C#14	P6–T2–B3–B2–B1–T1–C	122
11	PED. SIGNAL P7	EXIST.	EXIST.	EXIST.
12	PED. SIGNAL P8	7C#14	P8–T4–B7–B8–B1–T1–C	132
13	POWER CABLE, AC POSITIVE, BLACK	EXIST.	EXIST.	EXIST.
14	POWER CABLE, AC NEGATIVE, WHITE	EXIST.	EXIST.	EXIST.
15	INTERCONNECT CABLE	12C#12	SECT.–T1–C	30
16	INTERCONNECT CABLE	12C#12	SECT.–T1–B1–B2–B3–B4–T6–SECT.	215

NOTES:

1. INTERCONNECT CABLE
2. REPLACE THE EXISTING POLE WITH A NEW POLE T3 AT STA. 241+10.31, 17.47' RT. ATTACH A 5' MAST ARM AND REPLACE SIGNAL HEAD 6 WITH 12" LED SIGNAL HEAD ON THE MAST ARM. REPLACE PEDESTRIAN SIGNALS P4 AND P5 WITH TYPE D2 LED COUNTDOWN PEDESTRIAN SIGNAL HEADS. ADD 24" X 24" CITY TYPE "C" PULLBOX B5 AT STA. 240+96.26, 28.10' RT. ADD 24" X 24" CITY TYPE "C" PULLBOX B6 AT STA. 241+29.26, 17.15' RT.
3. REPLACE THE EXISTING POLE WITH A NEW STEEL STRAIN POLE T2 AT STA. 240+49.35, 17.09' RT. REPLACE SIGNAL HEADS 1 AND 2 WITH 12" LED SIGNAL HEADS ON A NEW MESSENGER CABLE CONNECTED TO T3. REMOVE REFLECTORIZED SIGN S5. REPLACE ILLUMINATED SIGN S1 WITH A NEW REFLECTORIZED SIGN S1. ADD 24" X 24" CITY TYPE "C" PULLBOX B3 AT STA. 240+51.63, 21.92' RT. ADD 24" X 24" CITY TYPE "C" PULLBOX B4 AT STA. 240+61.82, 28.32' RT. INSTALL A NEW SECTIONALIZER ON WOOD POLE T6.
4. CONNECT SERVICE POLE TO POLE T4 WITH NEW MESSENGER WIRE. REPLACE THE CONTROLLER ON POLE T1. REPLACE PEDESTRIAN SIGNALS P2 AND P7 WITH TYPE D2 LED COUNTDOWN PEDESTRIAN SIGNALS. ADD 24" X 24" CITY TYPE "C" PULLBOX B1 AT STA. 240+62.56, 47.38' LT. ADD 24" X 24" CITY TYPE "C" PULLBOX B2 AT STA. 240+49.53, 26.67' LT.
5. REPLACE SIGNAL HEADS 3 AND 4 WITH 12" LED SIGNAL HEADS ON MESSENGER WIRE BETWEEN WOOD POLES. REMOVE REFLECTORIZED SIGN S3. REPLACE ILLUMINATED SIGN S2 WITH NEW REFLECTORIZED SIGN S2. PLACE NEW REFLECTORIZED SIGN S4 ON MESSENGER WIRE.
6. REPLACE THE EXISTING POLE WITH A NEW POLE T4 AT STA. 241+12.85, 30.47' LT. ATTACH A 18' MAST ARM AND REPLACE SIGNAL HEAD 5 WITH 12" LED SIGNAL HEAD ON THE MAST ARM. REPLACE PEDESTRIAN SIGNALS P3 AND P8 WITH TYPE D2 LED COUNTDOWN PEDESTRIAN SIGNAL HEADS. ADD 24" X 24" CITY TYPE "C" PULLBOX B7 AT STA. 241+29.57, 26.58' LT. ADD 24" X 24" CITY TYPE "C" PULLBOX B8 AT STA. 240+96.00, 47.15' LT.
7. A DISTANCE OF SIX FEET BEHIND THE CURB AND 15 FEET ON EITHER SIDE OF PROPOSED OCS POLES AND SIGNAL POLES (INCLUDING ANY DISTURBANCE TO THE EXISTING CURB) HAS BEEN QUANTIFIED FOR BIDDING PURPOSES FOR REMOVAL AND REPLACEMENT OF SIDEWALK. THE CITY'S ENGINEER WILL DETERMINE ACTUAL PAY LIMITS FOR THIS WORK. NO ADDITIONAL INCREASE TO THE UNIT COST WILL BE ALLOWED FOR THIS WORK IF THE QUANTITIES ARE MORE OR LESS THAN THE AMOUNT QUANTIFIED FOR BIDDING PURPOSES.

CAUTION UNDERGROUND UTILITIES
2 WORKING DAYS
BEFORE YOU DIG
CALL 1-800-362-2764
OHIO UTILITY PROTECTION SERVICE
CALL NON-SERVICE FACILITY
OWNERS DIRECT

GRAPHIC SCALE
10 0 10 20 40
(IN FEET)
1 inch = 10 ft. Full Size
1 inch = 20 ft. Half Size

DOTE_Mono_PDF_Half.pltcfg
W:\29014A-Streetcar\CAD\Traffic_Control\Signals\2006_Elm&Findlay_E-37\S_G-TC-2006 C.dgn
7:57:06 AM
7/11/2012

CONTRACT DRAWING

PRINTS NOT BEARING THIS STAMP WERE MADE PRIOR TO ADVERTISING FOR BID AND ARE TO BE CONSIDERED OBSOLETE FOR CONTRACT PURPOSES.

Department of Transportation and Engineering

City of Cincinnati
City Hall
801 Plum Street
Cincinnati, Ohio 45202

CINCINNATI STREETCAR OVER THE RHINE

PROPOSED TRAFFIC SIGNAL PLAN
ELM STREET AND FINDLAY STREET

Revisions
No.

Date 12/20/11	Drawn by JRL
Date 12/20/11	Designed by JRL
Date 12/20/11	Checked by JTB
Date 12/20/11	Reviewed by JTB

Consultant

PB HDR

File Number

ACC No. 23126

G-TC-2006 C

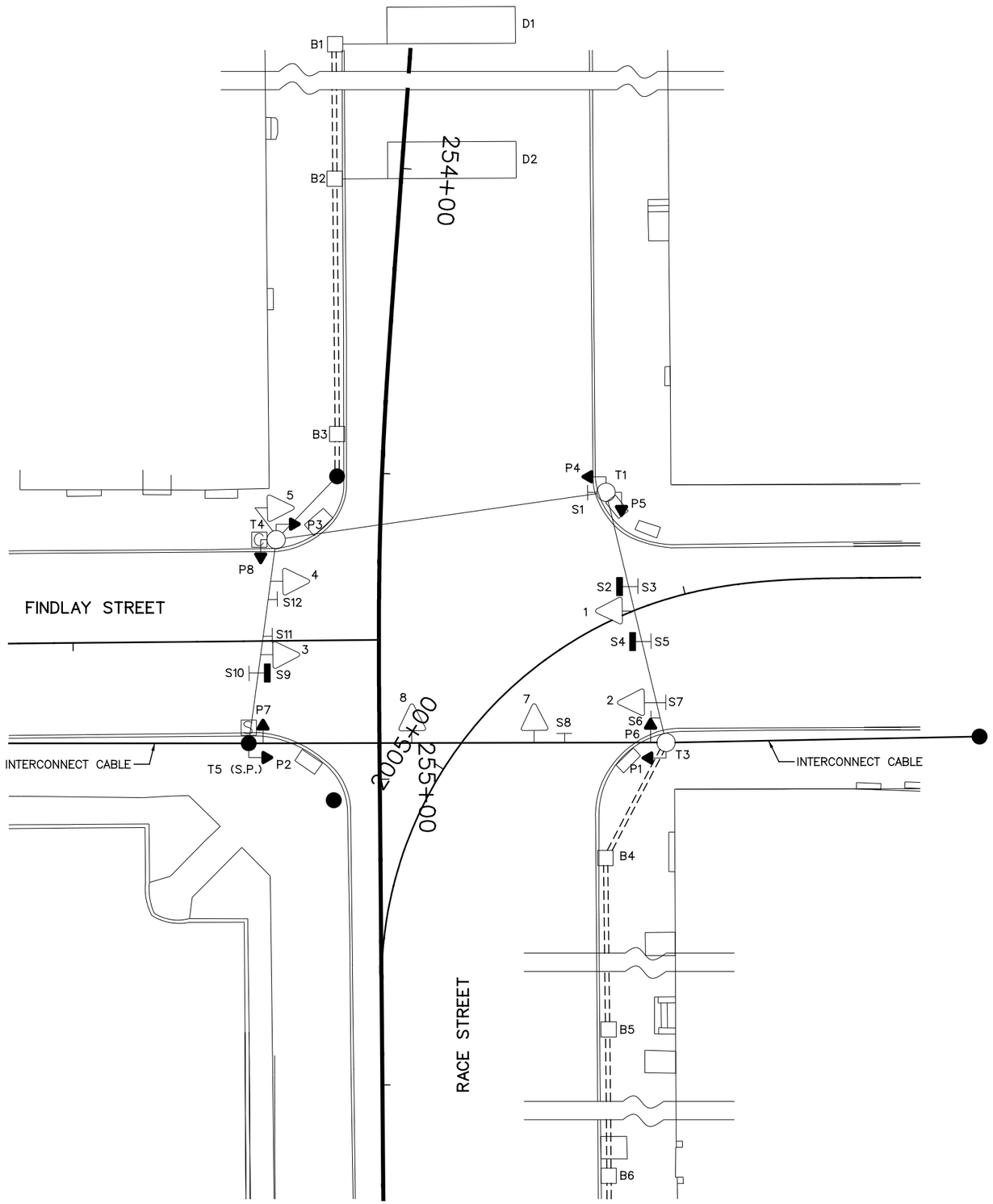

EQUIPMENT LIST	
1, 2, 8	TRAF. SIG., HD., 3 SECT., VERT., 8" RY, 12" G
3	TRAF. SIG., HD., 3 SECT., VERT., 8" RY, 12" G
4, 7	TRAF. SIG., HD., 3 SECT., VERT., 8" RY
5	TRAF. SIG., HD., 3 SECT., VERT., 8" RY, 12"
P1-P8	PED. SIG., 2 SECT., 12" INCANDESCENT
S1, S8	REFL. SIGN, 24" X 30", "ONE WAY ", •92A
S2	ILLUM. SIGN, 24" X 30", "ONE WAY ", •92A
S3	REFL. SIGN, 24" X 30", " ONLY", •79B
S4	ILLUM. SIGN, 36" X 36", "DO NOT ENTER", •52L
S5, S7	REFL. SIGN, 24" X 30", " ONLY", •79C
S6, S11	REFL. SIGN, 24" X 24"," NO TURN ON RED", •117
S9	ILLUM. SIGN, 24" X 30", "LEFT TURN SIGNAL", •77C
S10	REFL. SIGN, 24" X 30", " ONLY", •79A
S12	REFL. SIGN, 24" X 30", "ONE WAY ", •92C
D1, D2	LOOP DET., 21' X 6', 3 TURNS, PAR. TO AMP. •1
B1, B2, B4, B5, B6	PULLBOX, 12" X 18"
B3	PULLBOX, 18" X 18"
T1, T3, T4	STEEL POLE, ANCH. BASE, 9" X 26', CITY •21065
T5 (S.P.)	WOOD SERVICE POLE, C.G.&E., •07-148E

LEGEND

- STEEL POLE
- WOOD POLE
- TRAFFIC SIGNAL CONDUIT
- TRAFFIC SIGNAL HEAD
- PEDESTRIAN SIGNAL HEAD
- REFLECTORIZED SIGN
- ILLUMINATED SIGN
- PULLBOX
- CONTROLLER
- SECTIONALIZER

CAUTION UNDERGROUND UTILITIES
2 WORKING DAYS
BEFORE YOU DIG
CALL 1-800-362-2764
OHIO UTILITY PROTECTION SERVICE
CALL NON-SERVICE FACILITY
OWNERS DIRECT

GRAPHIC SCALE
10 0 10 20 40
(IN FEET)
1 inch = 10 ft. Full Size
1 inch = 20 ft. Half Size

DOTE_Mono_PDF_Half.pltcfg
W:\29014A-Streetcar\CAD\Traffic_Control\Signals\2007_Findlay&Race_F-22\S_G-TC-2007 A.dgn
7:57:21 AM
7/11/2012

CONTRACT DRAWING

PRINTS NOT BEARING THIS STAMP WERE MADE PRIOR TO ADVERTISING FOR BIDS AND ARE TO BE CONSIDERED OBSOLETE FOR CONTRACT PURPOSES.

Department of Transportation and Engineering
City of Cincinnati
City Hall
801 Plum Street
Cincinnati, Ohio 45202

CINCINNATI STREETCAR
OVER THE RHINE
EXISTING SIGNAL PLAN
RACE STREET AND FINDLAY STREET

Revisions
No.

	Date
Drawn by JRL	12/20/11
Designed by JRL	12/20/11
Checked by JTB	12/20/11
Reviewed by JTB	12/20/11

Consultant

PB HDR

File Number

ACC No. 23126

G-TC-2007 A

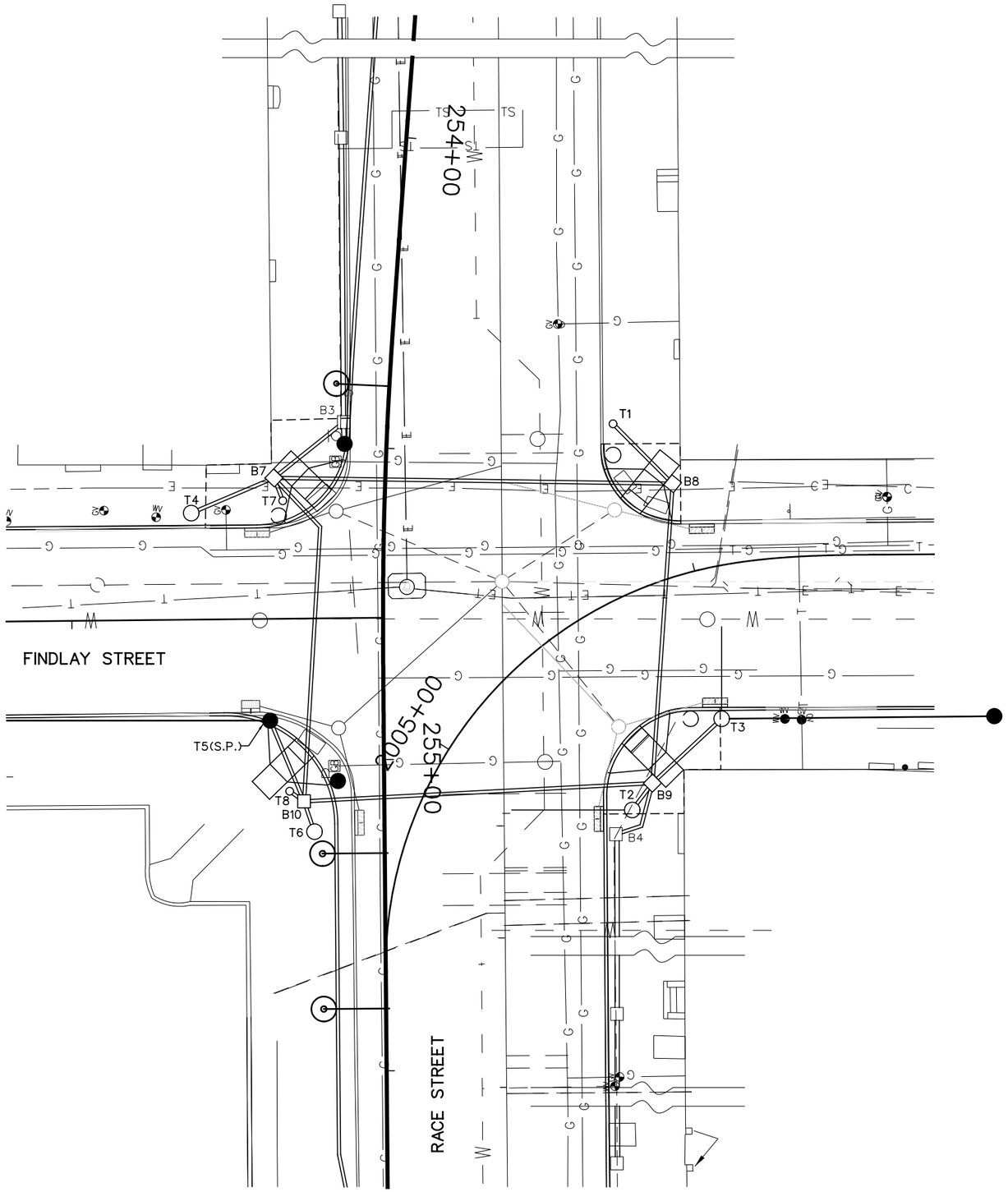

SIGNAL PHASING

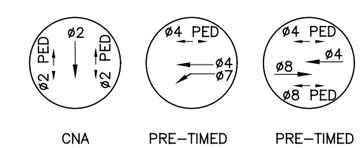

THIS IS THE GENERAL SEQUENCING FOR THIS TRAFFIC SIGNAL. REFER TO THE CITY OF CINCINNATI FOR FINAL SEQUENCING, LABELING AND TIMINGS.

CAUTION UNDERGROUND UTILITIES
2 WORKING DAYS
BEFORE YOU DIG
CALL 1–800–362–2764
OHIO UTILITY PROTECTION SERVICE
CALL NON–SERVICE FACILITY
OWNERS DIRECT

GRAPHIC SCALE

10 0 10 20 40

(IN FEET)
1 inch = 10 ft. Full Size
1 inch = 20 ft. Half Size

DOTE_Mono_PDF_Half.pltcfg
W:\29014A-Streetcar\CAD\Traffic_Control\Signals\2007_Findlay&Race_F-22\S_G-TC-2007 B.dgn
7:57:35 AM
7/11/2012

CONTRACT DRAWING

PRINTS NOT BEARING THIS STAMP WERE MADE PRIOR TO ADVERTISING FOR BIDS AND ARE TO BE CONSIDERED OBSOLETE FOR CONTRACT PURPOSES.

Department of Transportation and Engineering

City of Cincinnati
City Hall
801 Plum Street
Cincinnati, Ohio 45202

CINCINNATI STREETCAR
OVER THE RHINE
UNDERGROUND UTILITIES & SIGNAL PLAN DETAILS
RACE STREET AND FINDLAY STREET

Revisions
No.

Drawn by JRL Date 12/20/11
Designed by JRL Date 12/20/11
Checked by JTB Date 12/20/11
Reviewed by JTB Date 12/20/11

Consultant

PB HDR

File Number

ACC No. 23126

G-TC-2007 B

LEGEND

- STEEL POLE
- WOOD POLE
- STEEL PEDESTRIAN POST
- TRAFFIC SIGNAL CONDUIT
- TRAFFIC SIGNAL HEAD
- PEDESTRIAN SIGNAL HEAD
- REFLECTORIZED SIGN
- ILLUMINATED SIGN
- PULLBOX
- CONTROLLER
- SECTIONALIZER
- DISCONNECT SWITCH (DS)

SIGNAL INDICATIONS

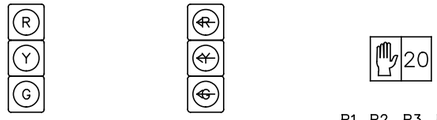

1, 2, 5, 6, 7, 8, 9 — SIGNAL HEAD DETAIL 12" (LED) LENSES

3, 4 — SIGNAL HEAD DETAIL 12" (LED) LENSES

P1, P2, P3, P4, P5, P6, P7, P8 — TYPE D2 PEDESTRIAN (LED) (COUNTDOWN) SIGNAL HEAD

TYPICAL POLE ORIENTATION

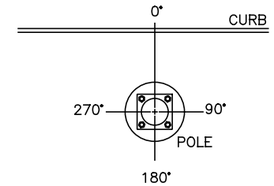

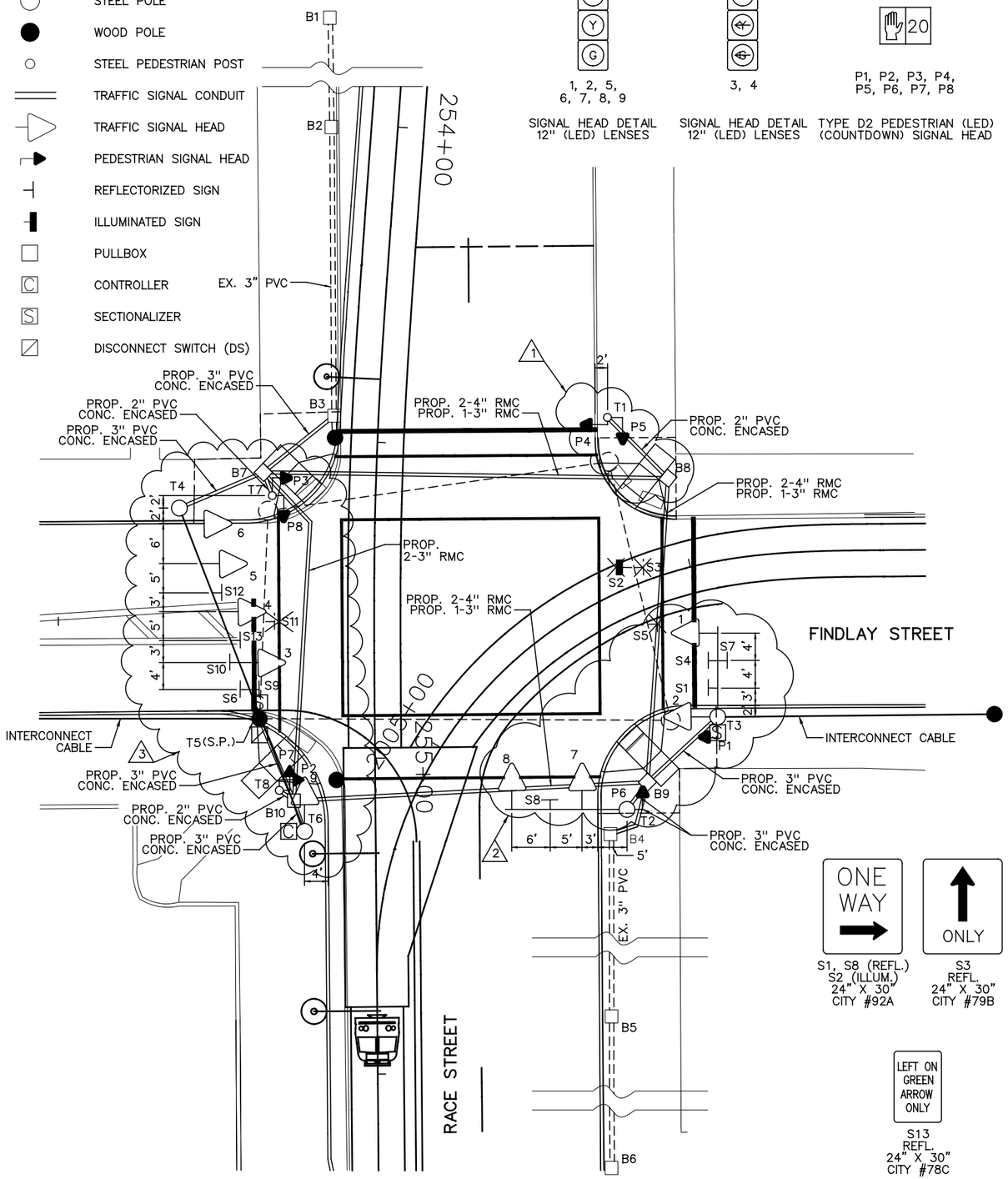

NOTES:

1. REPLACE EXISTING POLE WITH A NEW PEDESTRIAN SIGNAL POLE T1 AT STA. 254+46.07, 36.24' LT. REPLACE PEDESTRIAN SIGNALS P4 AND P5 WITH TYPE D2 LED COUNTDOWN PEDESTRIAN SIGNAL HEADS. ADD 24" X 24" CITY TYPE "C" PULLBOX B8 AT STA. 254+54.10, 46.18' LT. REPLACE SIGN S1 ON MAST ARM ON NEW POLE T3.

2. REPLACE EXISTING POLE WITH A NEW POLE T3 AT STA. 254+93.43, 54' LT. ATTACH A 13' MAST ARM TO POLE T3 AND REPLACE SIGNAL HEAD 1 WITH A 12" LED SIGNAL HEAD ON THE MAST ARM. REPLACE SIGNAL HEAD 2 WITH 12" LED SIGNAL HEAD ON NEW POLE. REPLACE PEDESTRIAN SIGNAL P1 WITH TYPE D2 LED COUNTDOWN PEDESTRIAN SIGNAL HEAD ON POLE T3. REMOVE SIGNS S2, S3 AND S5. REPLACE SIGNS S1, S4 AND S7 WITH NEW REFLECTORIZED SIGNS ON THE MAST ARM. ADD NEW SECTIONALIZER TO POLE T3. ADD A NEW POLE T2 AT STA. 255+10.05, 39.94' LT AND ATTACH AN 18' MAST ARM TO THE POLE. REPLACE SIGNAL HEADS 7 AND 8 WITH 12" LED SIGNAL HEADS ON THE MAST ARM. INSTALL NEW REFLECTORIZED SIGN S8 ON THE MAST ARM. REPLACE PEDESTRIAN SIGNAL P6 WITH TYPE D2 LED COUNTDOWN PEDESTRIAN SIGNAL HEAD ON POLE T2. ADD 24" X 24" CITY TYPE "C" PULLBOX B9 AT STA. 254+96.60, 44.57' LT.

3. INSTALL NEW STEEL POLE T6 AT STA. 255+11.49, 11.25' RT. PLACE A NEW CONTROLLER ON POLE T6. INSTALL 12" LED SIGNAL HEAD 9 ON POLE T6. ADD 24" X 24" CITY TYPE "C" PULLBOX B10 AT STA. 255+1.5, 12.64' RT. INSTALL NEW STEEL PEDESTRIAN POST T8 AT STA. 255+04.96, 15' RT. REPLACE PEDESTRIAN SIGNALS P2 AND P7 WITH TYPE D2 LED COUNTDOWN PEDESTRIAN SIGNAL HEADS ON POST T8. INSTALL NEW DISCONNECT SWITCH AND NEW SECTIONALIZER ON RELOCATED POLE T5. REMOVE EXISTING POLE T4 AND INSTALL NEW STEEL POLE T4 AT STA. 254+61.10, 31.00' RT. CONNECT POLE T4 TO POLE T6 WITH NEW MESSENGER WIRE. PLACE 2 LEFT TURN 12" LED SIGNAL HEADS 3 AND 4 ON NEW MESSENGER WIRE ALONG WITH TWO 12" LED SIGNAL HEADS 5 AND 6. REMOVE SIGN S11. REMOVE SIGN S9 AND REPLACE IT WITH A NEW REFLECTORIZED SIGN ON NEW MESSENGER WIRE. ATTACH NEW REFLECTORIZED SIGNS S6, S9, S10, S12 AND S13 TO NEW MESSENGER WIRE. INSTALL NEW STEEL PEDESTRIAN POST T7 AT STA. 254+58.85, 16.34' RT. REPLACE PEDESTRIAN SIGNALS P3 AND P8 WITH TYPE D2 LED COUNTDOWN PEDESTRIAN SIGNAL HEADS. INSTALL 24" X 24" CITY TYPE "C" PULLBOX B7 AT STA. 254+55.34, 17.86' RT.

4. INSTALL 2-4" RMC AND 1-3" RMC UNDER TRACK SLAB AS SHOWN ON PLAN.

5. A DISTANCE OF SIX FEET BEHIND THE CURB AND 15 FEET ON EITHER SIDE OF PROPOSED OCS POLES AND SIGNAL POLES (INCLUDING ANY DISTURBANCE TO THE EXISTING CURB) HAS BEEN QUANTIFIED FOR BIDDING PURPOSES FOR REMOVAL AND REPLACEMENT OF SIDEWALK. THE CITY'S ENGINEER WILL DETERMINE ACTUAL PAY LIMITS FOR THIS WORK. NO ADDITIONAL INCREASE TO THE UNIT COST WILL BE ALLOWED FOR THIS WORK IF THE QUANTITIES ARE MORE OR LESS THAN THE AMOUNT QUANTIFIED FOR BIDDING PURPOSES.

SIGN DETAILS

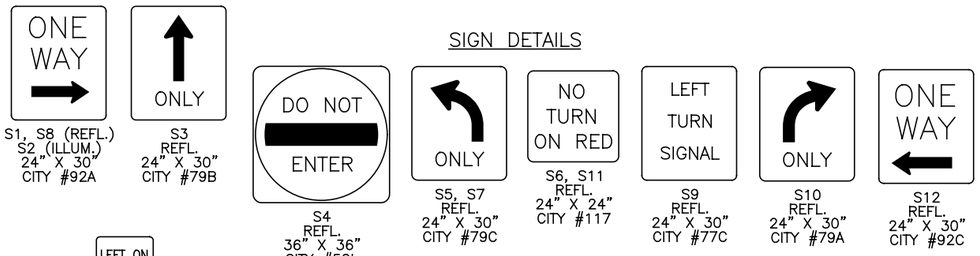

S1, S8 (REFL.) S2 (ILLUM.) 24" X 30" CITY #92A

S3 REFL. 24" X 30" CITY #79B

S4 REFL. 36" X 36" CITY #52L

S5, S7 REFL. 24" X 30" CITY #79C

S6, S11 REFL. 24" X 24" CITY #117

S9 REFL. 24" X 30" CITY #77C

S10 REFL. 24" X 30" CITY #79A

S12 REFL. 24" X 30" CITY #92C

S13 REFL. 24" X 30" CITY #78C

CAUTION UNDERGROUND UTILITIES 2 WORKING DAYS
BEFORE YOU DIG
CALL 1-800-362-2764
OHIO UTILITY PROTECTION SERVICE
CALL NON-SERVICE FACILITY OWNERS DIRECT

GRAPHIC SCALE

10 0 10 20 40

(IN FEET)
1 inch = 10 ft. Full Size
1 inch = 20 ft. Half Size

CONTRACT DRAWING

PRINTS NOT BEARING THIS STAMP WERE MADE PRIOR TO ADVERTISING FOR BIDS AND ARE TO BE CONSIDERED OBSOLETE FOR CONTRACT PURPOSES.

Department of Transportation and Engineering

City of Cincinnati
City Hall
801 Plum Street
Cincinnati, Ohio 45202

CINCINNATI STREETCAR OVER THE RHINE

PROPOSED TRAFFIC SIGNAL PLAN
RACE STREET AND FINDLAY STREET

Revisions

No.				

Date	12/20/11
Date	12/20/11
Date	12/20/11
Date	12/20/11
Drawn by	JRL
Designed by	JRL
Checked by	JTB
Reviewed by	JTB

Consultant

PB HDR

File Number

ACC No. 23126

G-TC-2007 C

DOTE_Mono_PDF_Half.pltcfg
W:\29014A-Streetcar\CAD\Traffic_Control\Signals\2007_Findlay&Race_F-22\S_G-TC-2007 C.dgn
7:57:58 AM
7/11/2012

MATERIAL SCHEDULE

POLE NO.	POLE TYPE	SHAFT SIZE IN X FT	FOUNDATION TYPE	VEHICULAR SIGNAL HEADS 1 (12 INCH)	2	3	4	5	6	7	8	9	PEDESTRIAN SIGNALS P1	P2	P3	P4	P5	P6	P7	P8	CABLE ENTRANCE (DEG)	SPAN WIRE ATTACHMENT HEIGHT (FEET)	MAST ARM ATTACHMENT HEIGHT (FEET)	MAST ARM (DEG)	HANDHOLE (DEG)	CONTROLLER (DEG)	DISCONNECT SWITCH (DEG)
				R	R	R	R	R	R	R	R	R															
				Y	Y	~~Y~~	~~Y~~	Y	Y	Y	Y	Y															
				G	G	~~G~~	~~G~~	G	G	G	G	G															
													D	D	D	D	D	D	D	D							
													W	W	W	W	W	W	W	W							
													ANGLE OF ORIENTATION (DEGREES)														
T1	1045	4 X 10	FDN-25													270	180								180		
T2	UMC DESIGN Y5	9 X 20.5	FDN-7															180					18.5	0	180		
T3	UMC DESIGN Y4	9 X 20.5	FDN-7										180										18.5	0	270		
T4	29053	9 X 26	FDN-7																		339	24.5			270		
T5	WOOD POLE	-	EXIST.																								180
T6	29053	9 X 26	FDN-7																		249	24.5			180	180	
T7	1045	4 X 10	FDN-25												180					270					180		
T8	1045	4 X 10	FDN-25											270					0						180		

20

TYPE D2 PEDESTRIAN (LED)
(COUNTDOWN) SIGNAL HEAD

NOTE:
USE LENS W/ SYMBOL LEGENDS
PORTLAND ORANGE: HAND (DONT WALK)
LUNAR WHITE: WALKING MAN (WALK)

CABLE SCHEDULE

CABLE#	CONNECTING DEVICE	TYPE	CABLE ROUTING	LIN. FT
1	TRAFFIC SIGNAL TS1, TS2	7C#14	TS1-TS2-T3-B9-B10-T6-C	135
2	TRAFFIC SIGNAL TS3, TS4	7C#14	TS4-TS3-T6-C	85
3	TRAFFIC SIGNAL TS5, TS6	7C#14	TS6-TS5-T6-C	100
4	TRAFFIC SIGNAL TS7, TS8	7C#14	TS8-TS7-T2-B9-B10-T6-C	145
5	TRAFFIC SIGNAL TS9	7C#14	TS9-T6-C	25
6	PED. SIGNAL P1	7C#14	P1-T3-B9-B10-T6-C	120
7	PED. SIGNAL P2	7C#14	P2-T8-B10-T6-C	35
8	PED. SIGNAL P3	7C#14	P3-T7-B7-B10-T6-C	87
9	PED. SIGNAL P4	7C#14	P4-T1-B8-B7-B10-T6-C	147
10	PED. SIGNAL P5	7C#14	P5-T1-B8-B7-B10-T6-C	147
11	PED. SIGNAL P6	7C#14	P6-T2-B9-B10-T6-C	100
12	PED. SIGNAL P7	7C#14	P7-T8-B10-T6-C	35
13	PED. SIGNAL P8	7C#14	P8-T7-B7-B10-T6-C	87
14	POWER CABLE, AC POSITIVE, BLACK	1C#6	DS-T5-B10-T6-C	75
15	POWER CABLE, AC NEGATIVE, WHITE	1C#6	DS-T5-B10-T6-C	75
16	INTERCONNECT CABLE	12C#12	SECT.-T5-B10-T6-C	70
17	INTERCONNECT CABLE	12C#12	SECT.-T5-B10-B9-T3-SECT.	160

CAUTION UNDERGROUND UTILITIES
2 WORKING DAYS
BEFORE YOU DIG
CALL 1-800-362-2764
OHIO UTILITY PROTECTION SERVICE
CALL NON-SERVICE FACILITY
OWNERS DIRECT

GRAPHIC SCALE
10 0 10 20 40
(IN FEET)
1 inch = 10 ft. Full Size
1 inch = 20 ft. Half Size

DOTE_Mono_PDF_Half.pltcfg
W:\29014A-Streetcar\CAD\Traffic_Control\Signals\2007_Findlay&Race_F-22\S_G-TC-2007 D.dgn
7/11/2012 7:58:05 AM

DEPARTMENT OF TRANSPORTATION & ENGINEERING
CITY OF CINCINNATI OHIO

CONTRACT DRAWING
PRINTS NOT BEARING THIS STAMP WERE MADE PRIOR TO ADVERTISING FOR BIDS AND ARE TO BE CONSIDERED OBSOLETE FOR CONTRACT PURPOSES.

Department of Transportation and Engineering
City of Cincinnati
City Hall
801 Plum Street
Cincinnati, Ohio 45202

CINCINNATI STREETCAR
OVER THE RHINE
PROPOSED TRAFFIC SIGNAL PLAN
RACE STREET AND FINDLAY STREET

Revisions
No.

Drawn by JRL Date 12/20/11
Designed by JRL Date 12/20/11
Checked by JTB Date 12/20/11
Reviewed by JTB Date 12/20/11

Consultant
PB HDR

File Number

ACC No. 23126

G-TC-2007 D

EQUIPMENT LIST	
1–4	TRAF. SIG. HD., 3 SECT., HORIZ., 12" RYG
P1–P8	PED. SIG., 2 SECT., 12" INCANDESCENT
S1	REFL. SIGN, 24" X 30", "ONE WAY —", #92A
S2	ILLUM. SIGN, 36" X 36", "DO NOT ENTER", #52L
S3	REFL. SIGN, 24" X 30", "⊠", #70
B1–B2	PULLBOX, 24" X 24", DOWNTOWN SPECIAL
T1–T5	STEEL POLE
T6, S.P.	WOOD SERVICE POLE, C.G.&E.

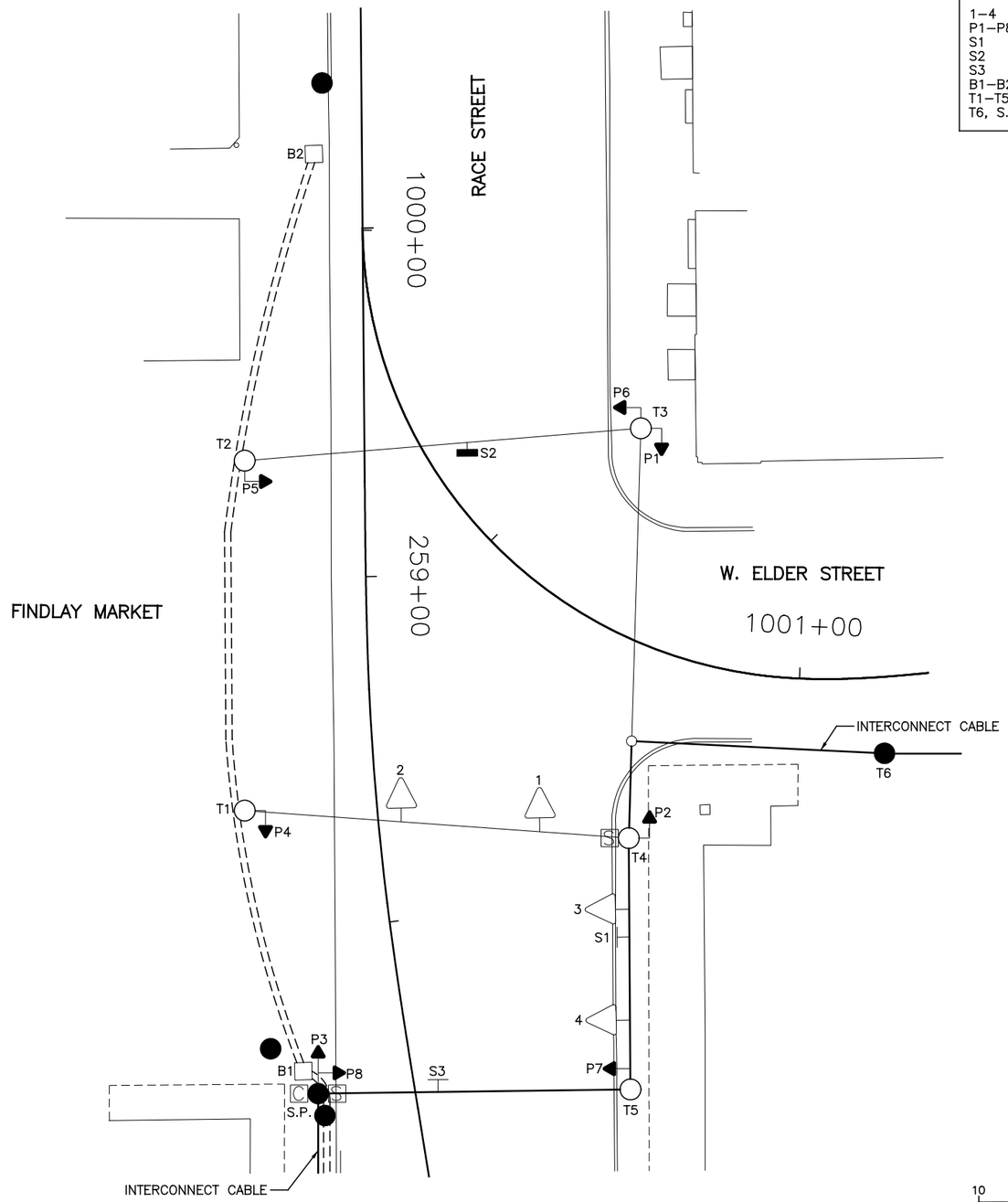

LEGEND

- STEEL POLE
- WOOD POLE
- TRAFFIC SIGNAL CONDUIT
- TRAFFIC SIGNAL HEAD
- PEDESTRIAN SIGNAL HEAD
- REFLECTORIZED SIGN
- ILLUMINATED SIGN
- PULLBOX
- CONTROLLER
- SECTIONALIZER

CAUTION UNDERGROUND UTILITIES
2 WORKING DAYS
BEFORE YOU DIG
CALL 1–800–362–2764
OHIO UTILITY PROTECTION SERVICE
CALL NON–SERVICE FACILITY
OWNERS DIRECT

GRAPHIC SCALE
10 0 10 20 40
(IN FEET)
1 inch = 10 ft. Full Size
1 inch = 20 ft. Half Size

DOTE_Mono_PDF_Half.pltcfg
W:\29014A-Streetcar\CAD\Traffic_Control\Signals\2008_Elder&Race_E-88\S_G-TC-2008 A.dgn
7:58:47 AM
7/11/2012

CONTRACT DRAWING

PRINTS NOT BEARING THIS STAMP WERE MADE PRIOR TO ADVERTISING FOR BIDS AND ARE NOT TO BE CONSIDERED OBSOLETE FOR CONTRACT PURPOSES.

Department of Transportation and Engineering

City of Cincinnati
City Hall
801 Plum Street
Cincinnati, Ohio 45202

CINCINNATI STREETCAR
OVER THE RHINE
EXISTING TRAFFIC SIGNAL PLAN
RACE STREET AND ELDER STREET

Revisions
No.

	Date
Drawn by JRL	12/20/11
Designed by JRL	12/20/11
Checked by JTB	12/20/11
Reviewed by JTB	12/20/11

Consultant

PB HDR

File Number

ACC No. 23126

G-TC-2008 A

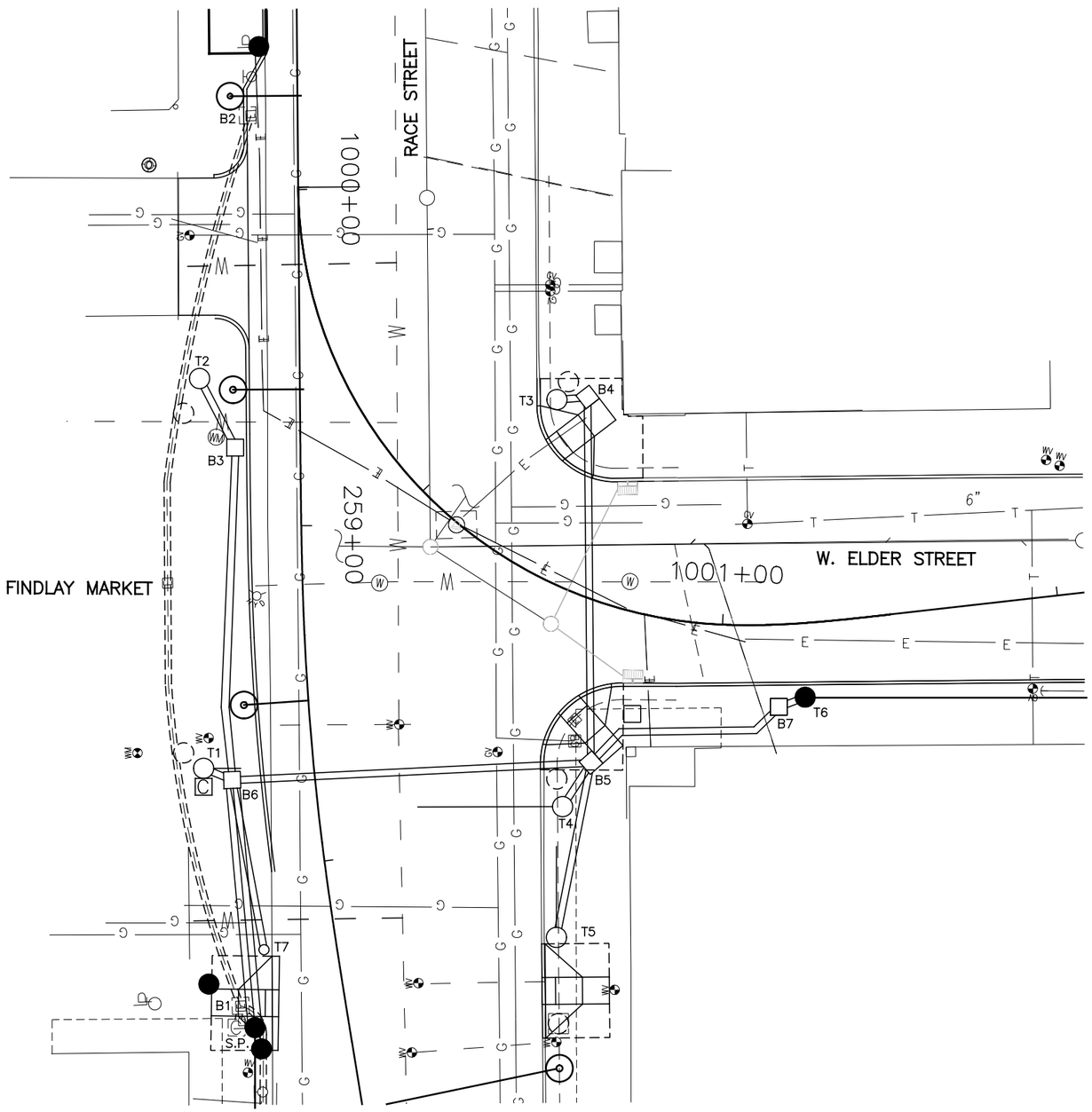

SIGNAL PHASING

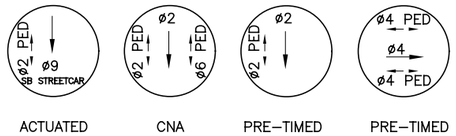

THIS IS THE GENERAL SEQUENCING FOR THIS TRAFFIC SIGNAL. REFER TO THE CITY OF CINCINNATI FOR FINAL SEQUENCING, LABELING AND TIMINGS.

CAUTION UNDERGROUND UTILITIES
2 WORKING DAYS
BEFORE YOU DIG
CALL 1–800–362–2764
OHIO UTILITY PROTECTION SERVICE
CALL NON–SERVICE FACILITY
OWNERS DIRECT

GRAPHIC SCALE

10 0 10 20 40

(IN FEET)
1 inch = 10 ft. Full Size
1 inch = 20 ft. Half Size

DOTE_Mono_PDF_Half.pltcfg
W:\29014A-Streetcar\CAD\Traffic_Control\Signals\2008_Elder&Race_E-88\S_G-TC-2008 B.dgn
7/11/2012
8:01:31 AM

DEPARTMENT OF TRANSPORTATION & ENGINEERING
CITY OF CINCINNATI
OHIO

CONTRACT DRAWING

PRINTS NOT BEARING THIS STAMP WERE MADE PRIOR TO ADVERTISING FOR BIDS AND ARE TO BE CONSIDERED OBSOLETE FOR CONTRACT PURPOSES.

Department of Transportation and Engineering

City of Cincinnati
City Hall
801 Plum Street
Cincinnati, Ohio 45202

CINCINNATI STREETCAR OVER THE RHINE

UNDERGROUND UTILITIES & SIGNAL PLAN DETAILS
RACE STREET AND ELDER STREET

Revisions

No.				

Drawn by JRL	Date 12/20/11
Designed by JRL	Date 12/20/11
Checked by JTB	Date 12/20/11
Reviewed by JTB	Date 12/20/11

Consultant

PB HDR

File Number

ACC No. 23126

G-TC-2008 B

LEGEND

- STEEL POLE
- WOOD POLE
- STEEL PEDESTRIAN POST
- TRAFFIC SIGNAL CONDUIT
- TRAFFIC SIGNAL HEAD
- TRANSIT SIGNAL HEAD
- PEDESTRIAN SIGNAL HEAD
- REFLECTORIZED SIGN
- PULLBOX
- CONTROLLER
- SECTIONALIZER
- VIDEO DETECTION CAMERA
- VIDEO DETECTION ZONE
- POLICE VIDEO SURVEILLANCE CAMERA

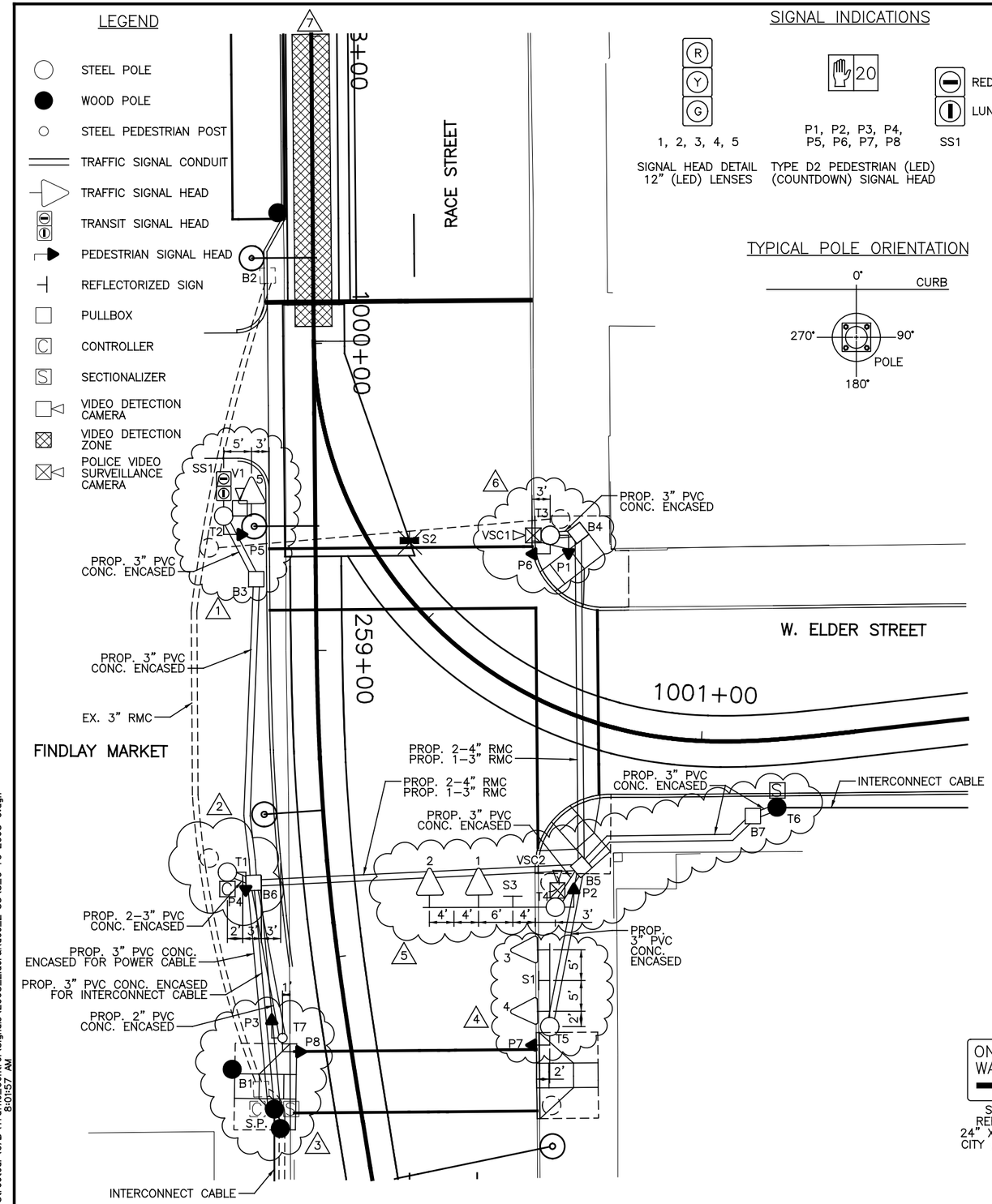

SIGNAL INDICATIONS

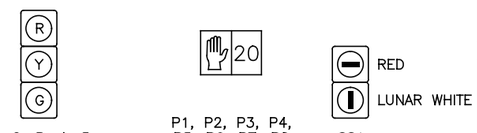

1, 2, 3, 4, 5 — SIGNAL HEAD DETAIL 12" (LED) LENSES

P1, P2, P3, P4, P5, P6, P7, P8 — TYPE D2 PEDESTRIAN (LED) (COUNTDOWN) SIGNAL HEAD

SS1

TYPICAL POLE ORIENTATION

MATERIAL SCHEDULE

POLE NO.	POLE TYPE	SHAFT SIZE IN X FT	FOUNDATION TYPE	P1 (D W)	P2 (D W)	P3 (D W)	P4 (D W)	P5 (D W)	P6 (D W)	P7 (D W)	P8 (D W)	MAST ARM ATTACHMENT HEIGHT (FEET)	MAST ARM (DEG)	HANDHOLE (DEG)	CONTROLLER (DEG)	VIDEO DETECTION CAMERA V1 (DEG)
				ANGLE OF ORIENTATION (DEGREES)												
T1	29053	9 X 26	FDN-7				0						0	180	90	
T2	UMC DESIGN Y1	9 X 20.5	FDN-7					90				18.5		180		0
T3	29053	9 X 26	FDN-7	180					270					180		
T4	UMC DESIGN Y5	9 X 20.5	FDN-7		180							18.5	0	180		
T5	UMC DESIGN Y3	9 X 20.5	FDN-7							270		18.5	90	180		
T6	WOOD POLE		EXIST.													
T7	1045	4 X 10	FDN-25			180					90			180		
S.P.	WOOD POLE		EXIST.													

VEHICULAR SIGNAL HEADS (12 INCH)

NO.	1	2	3	4	5			
	R	R	R	R	R			
	Y	Y	Y	Y	Y			
	G	G	G	G	G			

TYPE D2 PEDESTRIAN (LED) (COUNTDOWN) SIGNAL HEAD
NOTE:
USE LENS W/ SYMBOL LEGENDS
PORTLAND ORANGE: HAND (DONT WALK)
LUNAR WHITE: WALKING MAN (WALK)

NOTES:

1. REMOVE SIGN S2 AND MESSENGER WIRE BETWEEN POLES T2 AND T3. REMOVE POLE T2 AND REPLACE WITH NEW POLE T2 WITH 3' MAST ARM AT STA. 258+77.98, 14.90' RT. INSTALL 12" LED SIGNAL HEAD 5 ON MAST ARM. INSTALL VIDEO DETECTION CAMERA V1 ON TOP OF POLE T2. INSTALL TRANSIT SIGNAL SS1 ON POLE T2. MOVE POLICE SURVEILLANCE CAMERA FROM EXISTING POLE T2 TO NEW POLE T4. ADD 24" X 24" CITY TYPE "C" PULLBOX B3 AT STA. 258+88.35, 9.64' RT. REPLACE PEDESTRIAN SIGNAL P5 WITH TYPE D2 LED COUNTDOWN PEDESTRIAN SIGNAL.
2. REMOVE SIGNALS 1 AND 2 AND MESSENGER WIRE BETWEEN T1 AND T4. REMOVE POLE T1 AND REPLACE WITH NEW POLE T1 AT STA. 259+34.62, 16.33' RT. INSTALL NEW CONTROLLER ON POLE T1. ADD 24" X 24" CITY TYPE "C" PULLBOX B6 AT STA. 259+36.73, 12.23' RT. REPLACE PEDESTRIAN SIGNAL P4 WITH TYPE D2 LED COUNTDOWN SIGNAL.
3. REMOVE MESSENGER WIRE BETWEEN POLES S.P. AND T5. REMOVE OLD CONTROLLER FROM SERVICE POLE. REMOVE PULLBOX B1. INSTALL NEW STEEL PEDESTRIAN POST T7 AT STA. 259+11.69, 10.76' RT. REPLACE PEDESTRIAN SIGNALS P3 AND P8 WITH TYPE D2 LED COUNTDOWN SIGNALS.
4. REMOVE POLE T5, SIGN S1, SIGNALS 3 AND 4, AND MESSENGER WIRE BETWEEN POLES T5 AND T4. INSTALL NEW POLE T5 WITH 12' MAST ARM AT STA. 259+66.59, 32.49' LT. AND REPLACE SIGNALS 3 AND 4 WITH 12" LED SINGAL HEADS ON NEW MAST ARM. ATTACH NEW SIGN S1 TO MAST ARM. REPLACE PEDESTRIAN SIGNAL P7 WITH TYPE D2 LED COUNTDOWN SIGNAL.
5. REMOVE POLE T4 AND INTERCONNECT CABLE TO POLE T6. INSTALL NEW POLE T4 AT STA. 259+46.24, 36.15' LT. PLACE A 20' MAST ARM ON T4 AND REPLACE SIGNALS 1 AND 2 WITH 12" LED SIGNAL HEADS ON NEW POLE T4 MAST ARM. ATTACH NEW SIGN S3 ON MAST ARM ON POLE T4. REPLACE PEDESTRIAN SIGNAL P2 WITH TYPE D2 LED COUNTDOWN SIGNAL. PLACE POLICE SURVEILLANCE CAMERA ON POLE T4 AND CONTACT JEFF VENTRE OF THE PUBLIC SERVICES DEPARTMENT AT 513-352-3712 FOR MORE INFORMATION. ADD 24" X 24" CITY TYPE "C" PULLBOXES B5 AT STA. 259+39.63, 41.05' LT. AND B7 AT STA. 259+33.17, 69.69' LT. ADD NEW SECTIONALIZER TO POLE T6.
6. REMOVE MESSENGER WIRE BETWEEN T3 AND T4. REPLACE POLE T3 WITH NEW STEEL POLE T3 AT STA. 258+81.57, 38.19' LT. STUB OUT A SPARE 2" PVC CONCRETE ENCASED IN THE POLE BASE FOR STREETCAR COMMUNICATIONS CABLE ON THE NORTH SIDE OF POLE T3. REPLACE PEDESTRIAN SIGNALS P1 AND P6 WITH TYPE D2 LED COUNTDOWN SIGNALS. ADD 24" X 24" CITY TYPE "C" PULLBOX B4 AT STA. 258+81.27, 42.74' LT. CONTACT JEFF VENTRE OF THE PUBLIC SERVICES DEPARTMENT AT 513-352-3712 ABOUT RELOCATION OF POLICE VIDEO SURVEILLANCE CAMERA TO NEW POLE T3.
7. 6' X 60' STREETCAR DETECTION ZONE. SEE TRAFFIC SIGNAL AND STREET LIGHTING GENERAL NOTES FOR ADDITIONAL DETAILS.
8. INSTALL 2-4" RMC AND 1-3" RMC UNDER TRACK SLAB AS SHOWN ON PLAN.
9. A DISTANCE OF SIX FEET BEHIND THE CURB AND 15 FEET ON EITHER SIDE OF PROPOSED OCS POLES AND SIGNAL POLES (INCLUDING ANY DISTURBANCE TO THE EXISTING CURB) HAS BEEN QUANTIFIED FOR BIDDING PURPOSES FOR REMOVAL AND REPLACEMENT OF SIDEWALK. THE CITY'S ENGINEER WILL DETERMINE ACTUAL PAY LIMITS FOR THIS WORK. NO ADDITIONAL INCREASE TO THE UNIT COST WILL BE ALLOWED FOR THIS WORK IF THE QUANTITIES ARE MORE OR LESS THAN THE AMOUNT QUANTIFIED FOR BIDDING PURPOSES.

SIGN DETAILS

S1 REFL. 24" X 30" CITY #92A

S2 ILLUM. 36" X 36" CITY #52L

S3 REFL. 24" X 30" CITY #70

CAUTION UNDERGROUND UTILITIES
2 WORKING DAYS
BEFORE YOU DIG
CALL 1-800-362-2764
OHIO UTILITY PROTECTION SERVICE
CALL NON-SERVICE FACILITY OWNERS DIRECT

GRAPHIC SCALE
10 0 10 20 40
(IN FEET)
1 inch = 10 ft. Full Size
1 inch = 20 ft. Half Size

CONTRACT DRAWING

PRINTS NOT BEARING THIS STAMP WERE MADE PRIOR TO ADVERTISING FOR BIDS AND ARE TO BE CONSIDERED OBSOLETE FOR CONTRACT PURPOSES.

Department of Transportation and Engineering

City of Cincinnati
City Hall
801 Plum Street
Cincinnati, Ohio 45202

CINCINNATI STREETCAR OVER THE RHINE

PROPOSED TRAFFIC SIGNAL PLAN
RACE STREET AND ELDER STREET

Revisions

No.	Date
	12/20/11
	12/20/11
	12/20/11
	12/20/11

Drawn by JRL Date 12/20/11
Designed by JRL Date 12/20/11
Checked by JTB Date 12/20/11
Reviewed by JTB Date 12/20/11

Consultant

PB HDR

File Number

ACC No. 23126

G-TC-2008 C

DOTE_Mono_PDF_Half.pltcfg
W:\29014A-Streetcar\CAD\Traffic_Control\Signals\2008_Elder&Race_E-88\S_G-TC-2008 C.dgn
7/11/2012 8:01:57 AM

CABLE SCHEDULE

CABLE#	CONNECTING DEVICE	TYPE	CABLE ROUTING	LIN. FT
1	TRAFFIC SIGNAL TS1, TS2	7C#14	TS2–TS1–T4–B5–B6–T1–C	130
2	TRAFFIC SIGNAL TS3, TS4	7C#14	TS3–TS4–T5–B5–B6–T1–C	140
3	TRAFFIC SIGNAL TS5	7C#14	TS5–T2–B3–B6–T1–C	120
4	PED. SIGNAL P1	7C#14	P1–T3–B4–B5–B6–T1–C	150
5	PED. SIGNAL P2	7C#14	P2–T4–B5–B6–T1–C	95
6	PED. SIGNAL P3	7C#14	P3–T7–B6–T1–C	55
7	PED. SIGNAL P4	7C#14	P4–T1–C	15
8	PED. SIGNAL P5	7C#14	P5–T2–B3–B6–T1–C	95
9	PED. SIGNAL P6	7C#14	P6–T3–B4–B5–B6–T1–C	150
10	PED. SIGNAL P7	7C#14	P7–T5–B5–B6–T1–C	115
11	PED. SIGNAL P8	7C#14	P8–T7–B6–T1–C	55
12	POWER CABLE, AC POSITIVE, BLACK	1C#6	S.P.–T1–C	45
13	POWER CABLE, AC NEGATIVE, WHITE	1C#6	S.P.–T1–C	45
14	TRANSIT SIGNAL SS1	7C#14	SS1–T2–B3–B6–T1–C	105
15	VIDEO DETECTION CAMERA V1	VIDEO CABLE	V1–T2–B3–B6–T1–C	120
16	VIDEO SURVEILLANCE CAMERA VSC1	VIDEO CABLE	VSC1–T3–B4–B5–B6–T1–C	170
17	VIDEO SURVEILLANCE CAMERA VSC2	VIDEO CABLE	VSC2–T4–B5–B6–T1–C	110
18	INTERCONNECT CABLE	12C#12	SECT.–S.P.–B6–T1–C	80
19	INTERCONNECT CABLE	12C#12	SECT.–T6–B7–B5–B6–S.P.–SECT.	195

CAUTION UNDERGROUND UTILITIES
2 WORKING DAYS
BEFORE YOU DIG
CALL 1–800–362–2764
OHIO UTILITY PROTECTION SERVICE
CALL NON–SERVICE FACILITY
OWNERS DIRECT

GRAPHIC SCALE
10 0 10 20 40
(IN FEET)
1 inch = 10 ft. Full Size
1 inch = 20 ft. Half Size

DOTE_Mono_PDF_Half.pltcfg
W:\29014A-Streetcar\CAD\Traffic_Control\Signals\2008_Elder&Race_E-88\S_G-TC-2008 D.dgn
7/11/2012 8:02:03 AM

CONTRACT DRAWING

PRINTS NOT BEARING THIS STAMP WERE MADE PRIOR TO ADVERTISING FOR BIDS AND ARE TO BE CONSIDERED OBSOLETE FOR CONTRACT PURPOSES.

Department of Transportation and Engineering

City of Cincinnati
City Hall
801 Plum Street
Cincinnati, Ohio 45202

CINCINNATI STREETCAR
OVER THE RHINE
PROPOSED TRAFFIC SIGNAL PLAN
RACE STREET AND ELDER STREET

Revisions
No.

Drawn by JRL Date 12/20/11
Designed by JRL Date 12/20/11
Checked by JTB Date 12/20/11
Reviewed by JTB Date 12/20/11

Consultant

File Number

ACC No. 23126

G-TC-2008 D

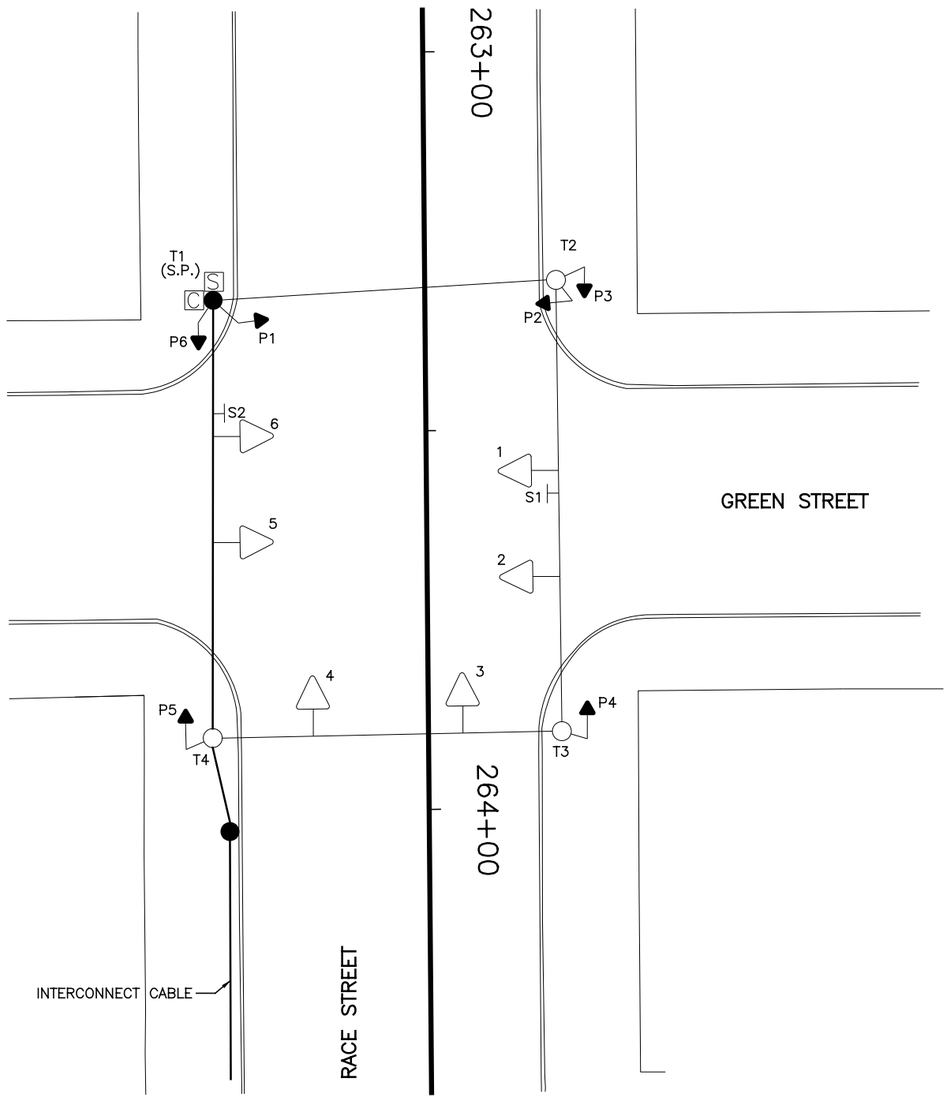

EQUIPMENT LIST	
1–6	TRAF. SIG. HD., 3 SECTIONS, VERT., 8" RYG
P1–P6	PED. SIG., 2 SECTIONS, 16", INCAND., DWW 3 LINE
S1	REFL. SIGN, 24" X 30", "ONE WAY ⟶ ",#92A
S2	REFL. SIGN, 24" X 30", "ONE WAY ⟵ ",#92C
T1 (S.P.)	WOOD SERVICE POLE, C.G.&E., #07–233E
T2	STEEL POLE, EMB. BASE, 8/7/6" X 26/32', #28037 (EXTG)
T3, T4	STEEL POLE, ANCH. BASE, 9" X 26', #21065

LEGEND

- STEEL POLE
- WOOD POLE
- TRAFFIC SIGNAL HEAD
- PEDESTRIAN SIGNAL HEAD
- REFLECTORIZED SIGN
- CONTROLLER
- SECTIONALIZER

CAUTION UNDERGROUND UTILITIES
2 WORKING DAYS
BEFORE YOU DIG
CALL 1–800–362–2764
OHIO UTILITY PROTECTION SERVICE
CALL NON–SERVICE FACILITY
OWNERS DIRECT

GRAPHIC SCALE
10 0 10 20 40
(IN FEET)
1 inch = 10 ft. Full Size
1 inch = 20 ft. Half Size

DOTE_Mono_PDF_Half.pltcfg
W:\29014A-Streetcar\CAD\Traffic_Control\Signals\2009_Green&Race_G-58\S_G-TC-2009 A.dgn
8:05:57 AM
7/11/2012

CONTRACT DRAWING

PRINTS NOT BEARING THIS STAMP WERE MADE PRIOR TO ADVERTISING FOR BIDS AND ARE TO BE CONSIDERED OBSOLETE FOR CONTRACT PURPOSES.

Department of Transportation and Engineering

City of Cincinnati
City Hall
801 Plum Street
Cincinnati, Ohio 45202

CINCINNATI STREETCAR
OVER THE RHINE
EXISTING TRAFFIC SIGNAL PLAN
RACE STREET AND GREEN STREET

Revisions
No.

	Date
Drawn by JRL	12/20/11
Designed by JRL	12/20/11
Checked by JTB	12/20/11
Reviewed by JTB	12/20/11

Consultant

PB HDR

File Number

ACC No.
23126

G-TC-2009 A

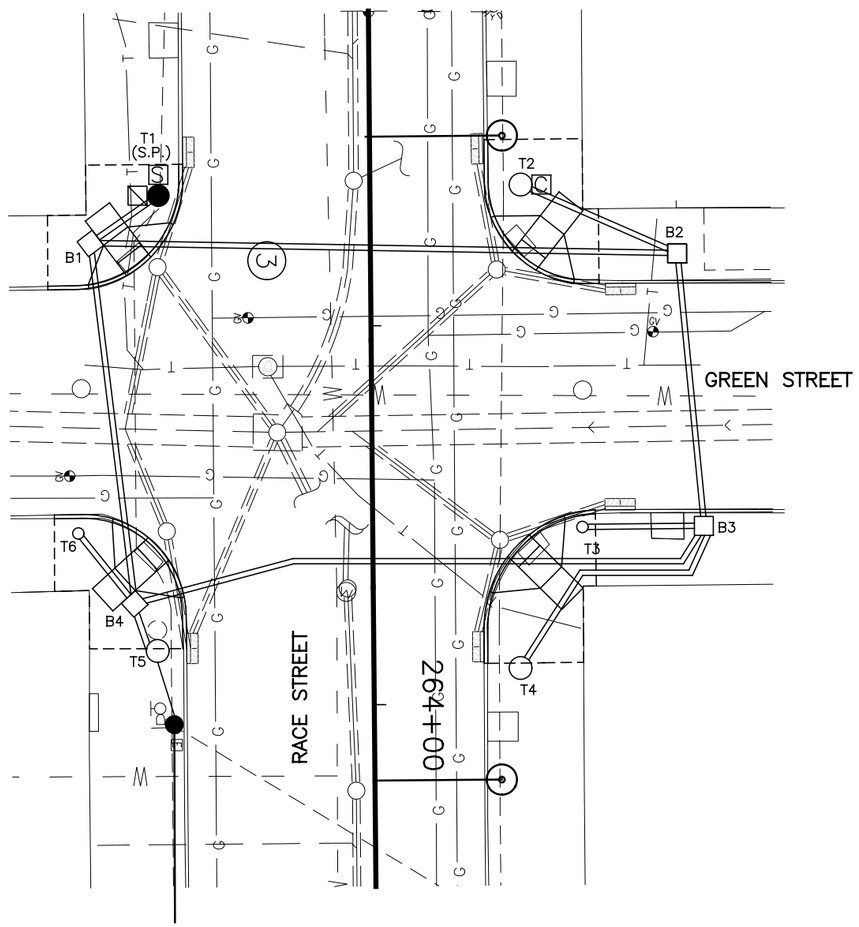

SIGNAL PHASING

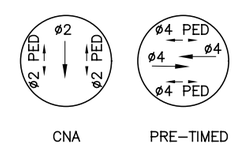

THIS IS THE GENERAL SEQUENCING FOR THIS TRAFFIC SIGNAL. REFER TO THE CITY OF CINCINNATI FOR FINAL SEQUENCING, LABELING AND TIMINGS.

CAUTION UNDERGROUND UTILITIES
2 WORKING DAYS
BEFORE YOU DIG
CALL 1–800–362–2764
OHIO UTILITY PROTECTION SERVICE
CALL NON–SERVICE FACILITY
OWNERS DIRECT

GRAPHIC SCALE
10 0 10 20 40
(IN FEET)
1 inch = 10 ft. Full Size
1 inch = 20 ft. Half Size

CONTRACT DRAWING

PRINTS NOT BEARING THIS STAMP WERE MADE PRIOR TO ADVERTISING FOR BIDS AND ARE TO BE CONSIDERED OBSOLETE FOR CONTRACT PURPOSES.

Department of Transportation and Engineering

City of Cincinnati
City Hall
801 Plum Street
Cincinnati, Ohio 45202

CINCINNATI STREETCAR
OVER THE RHINE
UNDERGROUND UTILITIES & SIGNAL PLAN DETAILS
RACE STREET AND GREEN STREET

Revisions
No.

Drawn by JRL	Date 12/20/11
Designed by JRL	Date 12/20/11
Checked by JTB	Date 12/20/11
Reviewed by JTB	Date 12/20/11

Consultant

PB HDR

File Number

ACC No. 23126

G-TC-2009 B

DOTE_Mono_PDF_Half.pltcfg
W:\29014A-Streetcar\CAD\Traffic_Control\Signals\2009_Green&Race_G-58\S_G-TC-2009 B.dgn
7/11/2012 8:06:23 AM

LEGEND

- STEEL POLE
- WOOD POLE
- STEEL PEDESTRIAN POST
- TRAFFIC SIGNAL CONDUIT
- TRAFFIC SIGNAL HEAD
- PEDESTRIAN SIGNAL HEAD
- REFLECTORIZED SIGN
- PULLBOX
- CONTROLLER
- SECTIONALIZER
- DISCONNECT SWITCH (DS)

SIGNAL INDICATIONS

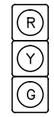

1, 2, 3, 4, 5, 6, 7

SIGNAL HEAD DETAIL
12" (LED) LENSES

P1, P2, P3
P4, P5, P6

TYPE D2 PEDESTRIAN (LED)
(COUNTDOWN) SIGNAL HEAD

TYPICAL POLE ORIENTATION

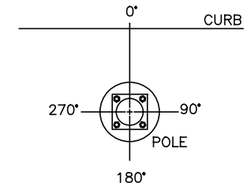

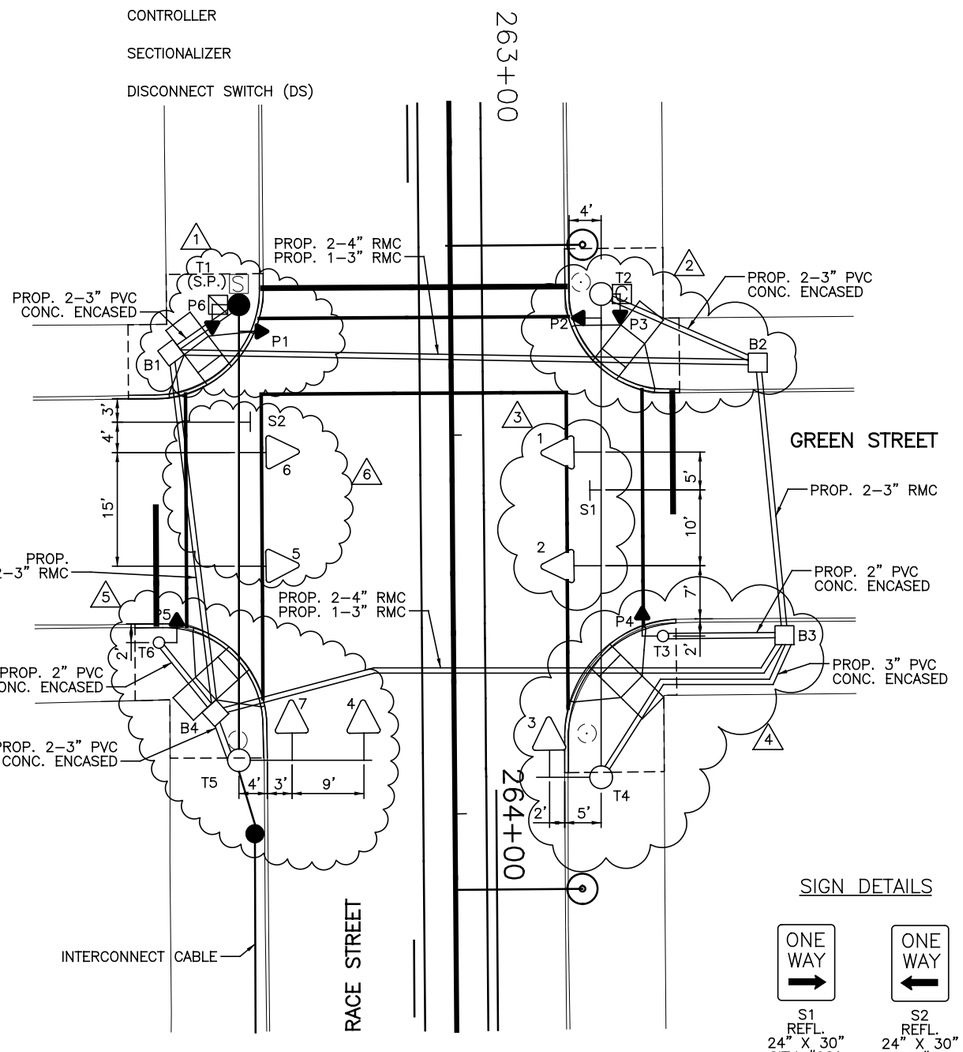

SIGN DETAILS

S1
REFL.
24" X 30"
CITY #92A

S2
REFL.
24" X 30"
CITY #92C

MATERIAL SCHEDULE

NO.	VEHICULAR SIGNAL HEADS 1	2	3	4	5	6	7
12 INCH	R	R	R	R	R	R	R
	Y	Y	Y	Y	Y	Y	Y
	G	G	G	G	G	G	G

TYPE D2 PEDESTRIAN (LED) (COUNTDOWN) SIGNAL HEAD (20)

NOTE:
USE LENS W/ SYMBOL LEGENDS
PORTLAND ORANGE: HAND (DONT WALK)
LUNAR WHITE: WALKING MAN (WALK)

POLE NO.	POLE DATA: POLE TYPE	SHAFT SIZE IN X FT	FOUNDATION TYPE	PEDESTRIAN SIGNALS P1 D W	P2 D W	P3 D W	P4 D W	P5 D W	P6 D W			CABLE ENTRANCE (DEG)	SPAN WIRE ATTACHMENT HEIGHT (FEET)	MAST ARM ATTACHMENT HEIGHT (FEET)	MAST ARM (DEG)	HANDHOLE (DEG)	CONTROLLER (DEG)	DISCONNECT SWITCH (DEG)
				ANGLE OF ORIENTATION (DEGREES)														
T1	WOOD POLE			90					180			90	24.5					180
T2	29053	9 X 26	FDN–7		270	180						270	24.5			180	180	
T3	1045	4 X 10	FDN–25				270									180		
T4	UMC DESIGN Y2	9 X 26	FDN–7									90	24.5	18.5	0	180		
T5	UMC DESIGN Y5	9 X 26	FDN–7									270	24.5	18.5	0	180		
T6	1045	4 X 10	FDN–25					90								180		

CABLE SCHEDULE

CABLE#	CONNECTING DEVICE	TYPE	CABLE ROUTING	LIN. FT
1	TRAFFIC SIGNAL TS1, TS2	7C#14	TS1–TS2–T2–C	75
2	TRAFFIC SIGNAL TS3	7C#14	TS3–T4–B3–B2–T2–C	145
3	TRAFFIC SIGNAL TS4, TS7	7C#14	TS4–TS7–T5–B4–B1–B2–T2–C	230
4	TRAFFIC SIGNAL TS5, TS6	7C#14	TS5–TS6–T1–B1–B2–T2–C	205
5	PED. SIGNAL P1	7C#14	P1–T1–B1–B2–T2–C	150
6	PED. SIGNAL P2	7C#14	P2–T2–C	15
7	PED. SIGNAL P3	7C#14	P3–T2–C	15
8	PED. SIGNAL P4	7C#14	P4–T3–B3–B2–T2–C	110
9	PED. SIGNAL P5	7C#14	P5–T6–B4–B1–B2–T2–C	200
10	PED. SIGNAL P6	7C#14	P6–T1–B1–B2–T2–C	150
11	POWER CABLE, AC POSITIVE, BLACK	1C#6	DS–T1–B1–B2–T2–C	165
12	POWER CABLE, AC NEGATIVE, WHITE	1C#6	DS–T1–B1–B2–T2–C	165
13	INTERCONNECT CABLE	12C#12	SECT.–T1–B1–B2–T2–C	165

NOTES:

1. REMOVE CONTROLLER FROM POLE T1. REPLACE PEDESTRIAN SIGNALS P1 AND P6 WITH TYPE D2 LED COUNTDOWN PEDESTRIAN SIGNALS. ADD 24" X 24" CITY TYPE "C" PULLBOX B1 AT STA. 263+38.76, 36.93' RT. CONNECT POLE T1 TO POLE T5 WITH NEW MESSENGER WIRE. ADD NEW DISCONNECT SWITCH TO POLE T1.
2. REPLACE THE EXISTING POLE WITH A NEW STEEL STRAIN POLE T2 AT STA. 263+31.4, 19.95' LT. ADD NEW CONTROLLER TO POLE T2. REPLACE PEDESTRIAN SIGNALS P2 AND P3 WITH TYPE D2 LED COUNTDOWN PEDESTRIAN SIGNAL HEADS. ADD 24" X 24" CITY TYPE "C" PULLBOX B2 AT STA. 263+40.4, 40.53' LT. CONNECT POLE T2 TO POLE T4 WITH NEW MESSENGER WIRE.
3. REPLACE SIGNAL HEADS 1 AND 2 WITH 12" LED SIGNAL HEADS ON NEW MESSENGER WIRE BETWEEN POLES T2 AND T4. INSTALL NEW REFLECTORIZED SIGN S1 TO NEW MESSENGER WIRE.
4. REPLACE EXISTING POLE WITH A NEW PEDESTRIAN SIGNAL POST T3 AT STA. 263+76.5, 27.68' LT. REPLACE PEDESTRIAN SIGNAL P4 ON POST T3 WITH TYPE D2 LED COUNTDOWN PEDESTRIAN SIGNAL HEAD. ADD A NEW POLE T4 AT STA. 263+95.2, 19.35' LT. ATTACH A 7' MAST ARM TO POLE T4 AND REPLACE SIGNAL HEAD 3 WITH 12" LED SIGNAL HEAD ON THE MAST ARM. ADD 24" X 24" CITY TYPE "C" PULLBOX B3 AT STA. 263+76.76, 43.76' LT.
5. REPLACE EXISTING POLE WITH A NEW PEDESTRIAN SIGNAL POST T6 AT STA. 263+77.4, 38.86' RT. REPLACE PEDESTRIAN SIGNAL P5 ON POST T6 WITH TYPE D2 LED COUNTDOWN PEDESTRIAN SIGNAL HEAD. ADD A NEW STEEL STRAIN POLE T5 AT STA. 263+95.2, 28.37' RT. ATTACH A 16' MAST ARM TO POLE T5 AND REPLACE SIGNAL HEAD 4 WITH 12" LED SIGNAL HEAD ON THE MAST ARM. ADD A NEW 12" LED SIGNAL HEAD 7 ON THE MAST ARM. ADD 24" X 24" CITY TYPE "C" PULLBOX B4 AT STA. 263+86.38, 31.50' RT.
6. REPLACE SIGNAL HEADS 5 AND 6 WITH 12" LED SIGNAL HEADS ON NEW MESSENGER WIRE BETWEEN POLES T1 AND T5. INSTALL NEW REFLECTORIZED SIGN S2 TO NEW MESSENGER WIRE.
7. INSTALL 2–4" RMC AND 1–3" RMC UNDER TRACK SLAB AS SHOWN ON PLAN.
8. A DISTANCE OF SIX FEET BEHIND THE CURB AND 15 FEET ON EITHER SIDE OF PROPOSED OCS POLES AND SIGNAL POLES (INCLUDING ANY DISTURBANCE TO THE EXISTING CURB) HAS BEEN QUANTIFIED FOR BIDDING PURPOSES FOR REMOVAL AND REPLACEMENT OF SIDEWALK. THE CITY'S ENGINEER WILL DETERMINE ACTUAL PAY LIMITS FOR THIS WORK. NO ADDITIONAL INCREASE TO THE UNIT COST WILL BE ALLOWED FOR THIS WORK IF THE QUANTITIES ARE MORE OR LESS THAN THE AMOUNT QUANTIFIED FOR BIDDING PURPOSES.

CAUTION UNDERGROUND UTILITIES
2 WORKING DAYS
BEFORE YOU DIG
CALL 1–800–362–2764
OHIO UTILITY PROTECTION SERVICE
CALL NON–SERVICE FACILITY
OWNERS DIRECT

GRAPHIC SCALE
10 0 10 20 40
(IN FEET)
1 inch = 10 ft. Full Size
1 inch = 20 ft. Half Size

DOTE_Mono_PDF_Half.pltcfg
W:\29014A-Streetcar\CAD\Traffic_Control\Signals\2009_Green&Race_G-58\S_G-TC-2009 C.dgn
8:06:56 AM
7/11/2012

CONTRACT DRAWING

PRINTS NOT BEARING THIS STAMP WERE MADE PRIOR TO ADVERTISING FOR BIDS AND ARE TO BE CONSIDERED OBSOLETE FOR CONTRACT PURPOSES.

Department of Transportation and Engineering

City of Cincinnati
City Hall
801 Plum Street
Cincinnati, Ohio 45202

CINCINNATI STREETCAR OVER THE RHINE

PROPOSED TRAFFIC SIGNAL PLAN
RACE STREET AND GREEN STREET

Revisions
No.

Drawn by	Date	Designed by	Date	Checked by	Date	Reviewed by	Date
JRL	12/20/11	JRL	12/20/11	JTB	12/20/11	JTB	12/20/11

Consultant

PB HDR

File Number

ACC No.
23126

G-TC-2009 C

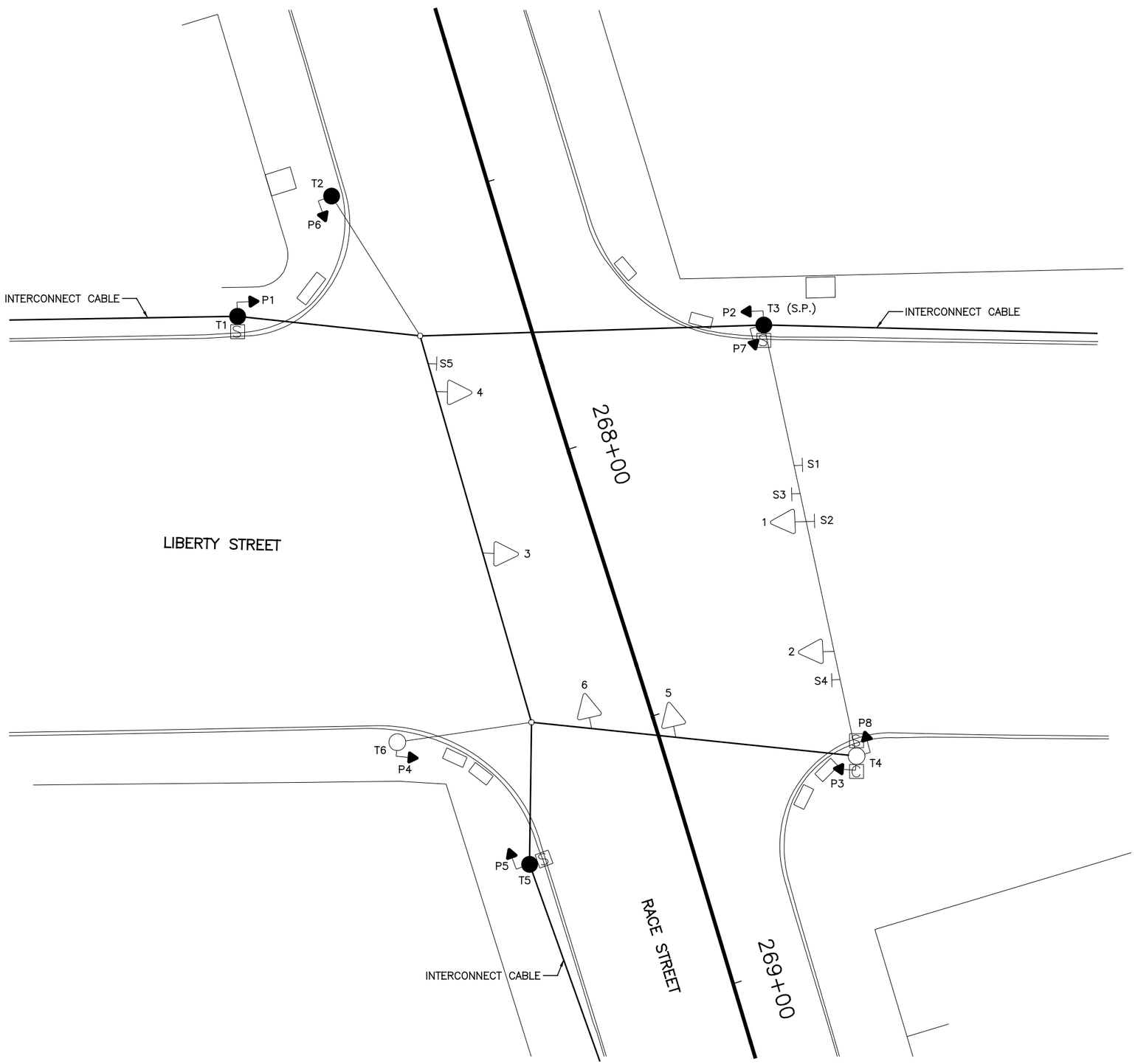

EQUIPMENT LIST	
1–4	TRAF. SIG. HD., 3 SECT., VERT., 12" RYG
5, 6	TRAF. SIG. HD., 3 SECT., VERT., 8" RYG
P1–P8	PED. SIG., 2 SECT., 12" INCANDESCENT
S1	REFL. SIGN, 24" X 30", " ↑ ONLY", #79B
S2	REFL. SIGN, 24" X 30", " ↱ ONLY", #79C
S3	REFL. SIGN, 24" X 30", "ONE WAY →", #92A
S4	REFL. SIGN, 24" X 30", "NO TURN ON RED SCHOOL DAYS 7AM – 4PM", #120
S5	REFL. SIGN, 24" X 30", "ONE WAY ←", #92C
T1	WOOD POLE, CLASS 2 – 45', C.G.&E., #07–200E
T2	WOOD POLE, CLASS 2 – 40', C.G.&E., #07–239E
T3 (S.P.)	WOOD POLE, CLASS 2 – 45', C.G.&E., #07–241E
T4	STEEL POLE, ANCH. BASE, 11" X 30', #38045
T5	WOOD POLE, CLASS 3 – 40', C.G.&E., #07–240E
T6	STEEL POLE, ANCH. BASE, 11" X 30', LT TYPE W/ 12' MAST ARM, #38045

LEGEND

- STEEL POLE
- WOOD POLE
- TRAFFIC SIGNAL HEAD
- PEDESTRIAN SIGNAL HEAD
- REFLECTORIZED SIGN
- CONTROLLER
- SECTIONALIZER

CAUTION UNDERGROUND UTILITIES
2 WORKING DAYS
BEFORE YOU DIG
CALL 1–800–362–2764
OHIO UTILITY PROTECTION SERVICE
CALL NON–SERVICE FACILITY
OWNERS DIRECT

GRAPHIC SCALE
10 0 10 20 40
(IN FEET)
1 inch = 10 ft. Full Size
1 inch = 20 ft. Half Size

DOTE_Mono_PDF_Half.pltcfg
W:\29014A-Streetcar\CAD\Traffic_Control\Signals\2010_Liberty&Race_L-12\S_G-TC-2010 A.dgn
7/11/2012 8:07:11 AM

CONTRACT DRAWING

PRINTS NOT BEARING THIS STAMP WERE MADE PRIOR TO ADVERTISING FOR BIDS AND ARE TO BE CONSIDERED OBSOLETE FOR CONTRACT PURPOSES.

Department of Transportation and Engineering

City of Cincinnati
City Hall
801 Plum Street
Cincinnati, Ohio 45202

CINCINNATI STREETCAR
OVER THE RHINE
EXISTING TRAFFIC SIGNAL PLAN
RACE STREET AND LIBERTY STREET

Revisions
No.

Date 12/20/11	Drawn by JRL
Date 12/20/11	Designed by JRL
Date 12/20/11	Checked by JTB
Date 12/20/11	Reviewed by JTB

Consultant

PB HDR

File Number

ACC No. 23126

G-TC-2010 A

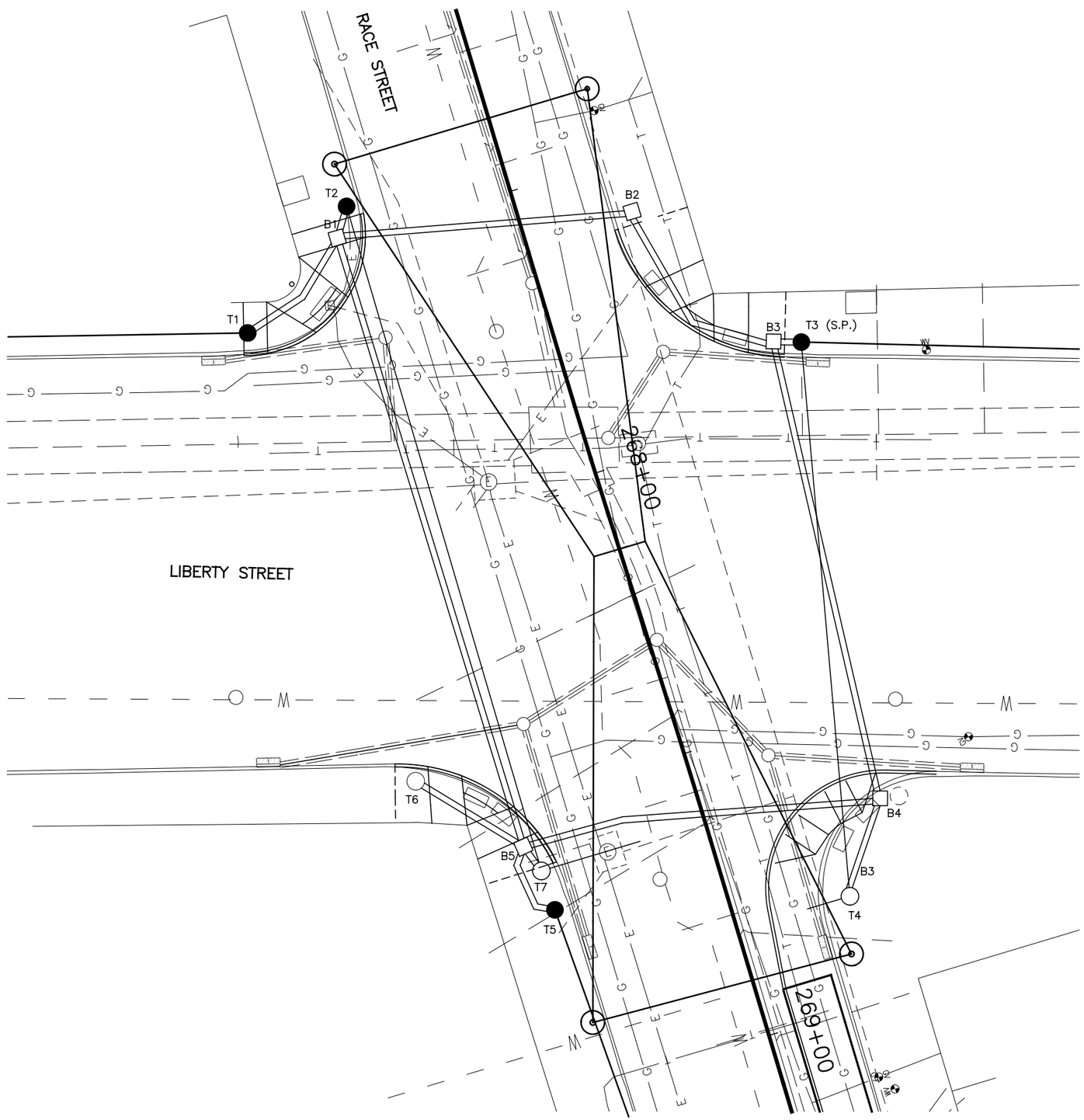

SIGNAL PHASING

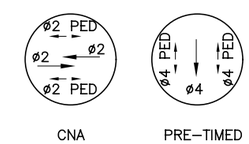

CNA PRE–TIMED

THIS IS THE GENERAL SEQUENCING FOR THIS TRAFFIC SIGNAL. REFER TO THE CITY OF CINCINNATI FOR FINAL SEQUENCING, LABELING AND TIMINGS.

CAUTION UNDERGROUND UTILITIES
2 WORKING DAYS
BEFORE YOU DIG
CALL 1–800–362–2764
OHIO UTILITY PROTECTION SERVICE
CALL NON–SERVICE FACILITY
OWNERS DIRECT

GRAPHIC SCALE
10 0 10 20 40
(IN FEET)
1 inch = 10 ft. Full Size
1 inch = 20 ft. Half Size

DOTE_Mono_PDF_Half.pltcfg
W:\29014A-Streetcar\CAD\Traffic_Control\Signals\2010_Liberty&Race_L-12\S_G-TC-2010 B.dgn
7/11/2012 8:07:33 AM

CONTRACT DRAWING

PRINTS NOT BEARING THIS STAMP WERE MADE PRIOR TO ADVERTISING FOR BIDS AND ARE TO BE CONSIDERED OBSOLETE FOR CONTRACT PURPOSES.

Department of Transportation and Engineering

City of Cincinnati
City Hall
801 Plum Street
Cincinnati, Ohio 45202

CINCINNATI STREETCAR
OVER THE RHINE
UNDERGROUND UTILITIES & SIGNAL PLAN DETAILS
RACE STREET AND LIBERTY STREET

Revisions
No.

Drawn by JRL	Date 12/20/11
Designed by JRL	Date 12/20/11
Checked by JTB	Date 12/20/11
Reviewed by JTB	Date 12/20/11

Consultant

PB HDR

File Number

ACC No. 23126

G-TC-2010 B

LEGEND

- STEEL POLE
- WOOD POLE
- TRAFFIC SIGNAL CONDUIT
- TRAFFIC SIGNAL HEAD
- PEDESTRIAN SIGNAL HEAD
- REFLECTORIZED SIGN
- PULLBOX
- CONTROLLER
- SECTIONALIZER
- DISCONNECT SWITCH

SIGNAL INDICATIONS

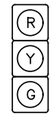

1, 2, 3, 4, 5, 6, 7

SIGNAL HEAD DETAIL
12" (LED) LENSES

P1, P2, P3, P4
P5, P6, P7, P8

TYPE D2 PEDESTRIAN (LED)
(COUNTDOWN) SIGNAL HEAD

TYPICAL POLE ORIENTATION

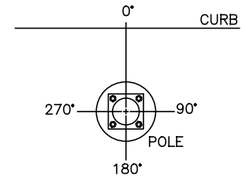

MATERIAL SCHEDULE

NO.	VEHICULAR SIGNAL HEADS 1	2	3	4	5	6	7	8
12 INCH	R	R	R	R	R	R	R	
	Y	Y	Y	Y	Y	Y	Y	
	G	G	G	G	G	G	G	

TYPE D2 PEDESTRIAN (LED) (COUNTDOWN) SIGNAL HEAD

NOTE:
USE LENS W/ SYMBOL LEGENDS
PORTLAND ORANGE: HAND (DONT WALK)
LUNAR WHITE: WALKING MAN (WALK)

POLE NO.	POLE DATA: POLE TYPE	SHAFT SIZE IN X FT	FOUNDATION TYPE	PEDESTRIAN SIGNALS ANGLE OF ORIENTATION (DEGREES) P1	P2	P3	P4	P5	P6	P7	P8	CABLE ENTRANCE ANGLE (DEG)	SPAN WIRE ATTACHMENT HEIGHT (FEET)	MAST ARM ATTACHMENT HEIGHT (FEET)	MAST ARM (DEG)	STREET LIGHT BRACKET ARM (DEG)	HANDHOLE (DEG)	CONTROLLER (DEG)	DISCONNECT SWITCH (DEG)
				D W	D W	D W	D W	D W	D W	D W	D W								
T1	WOOD POLE	CLASS 2	EXIST.	180															
T2	WOOD POLE	CLASS 2	EXIST.						180			90	26.5						
T3	WOOD POLE	CLASS 2	EXIST.		180					78		0	26.5						180
T4	UMC DESIGN Y1	11 X 30	FDN-10			111					180	102	26.5	18.5	0		180	180	
T5	WOOD POLE	CLASS 3	EXIST.																
T6	38045	11 X 30	EXIST.				180									EX.			
T7	UMC DESIGN Y5	11 X 30	FDN-10					180				270	26.5	18.5	0		180		

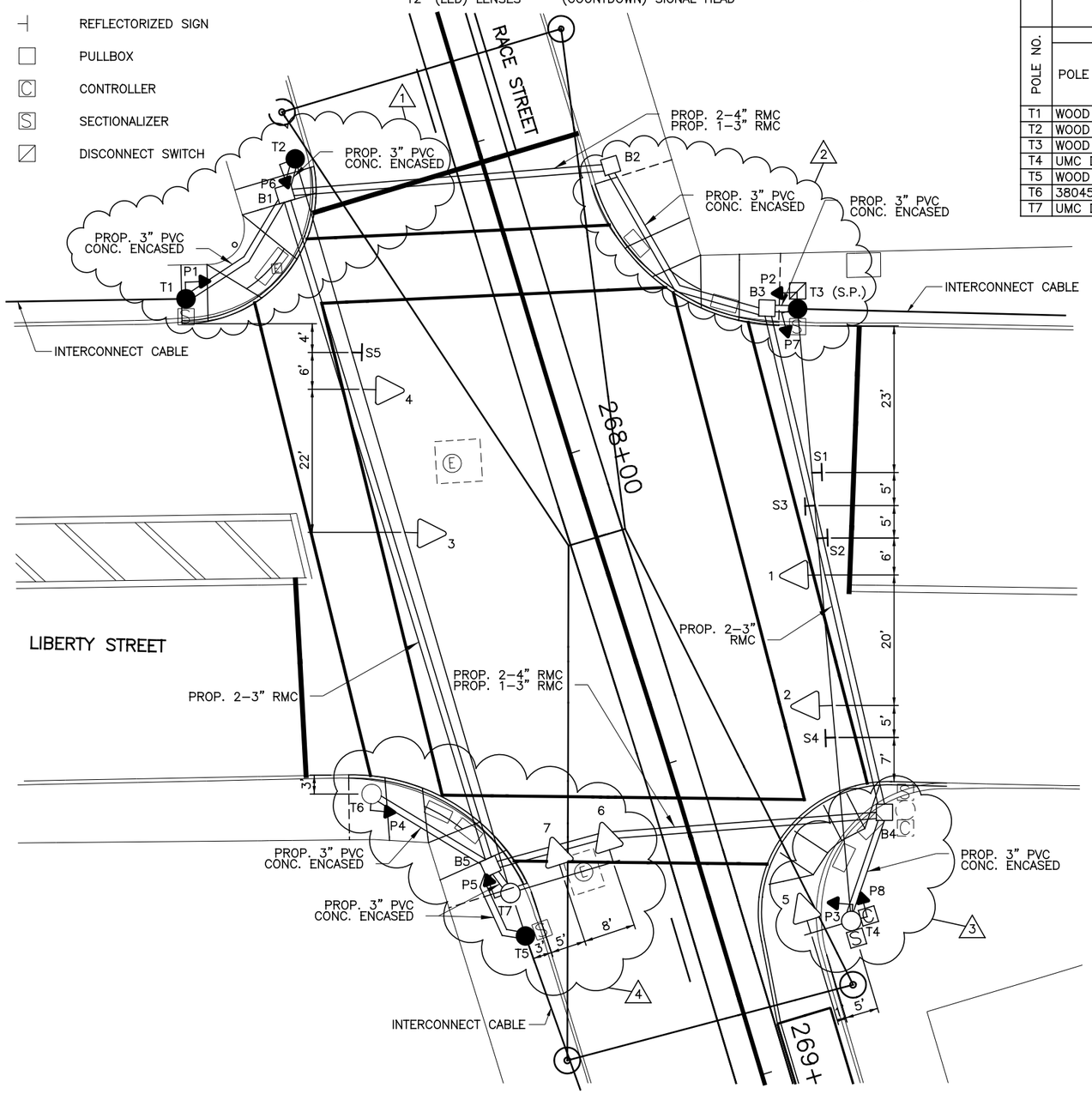

NOTES:

1. REPLACE PEDESTRIAN SIGNALS P6 ON POLE T2 AND P1 ON POLE T1 WITH TYPE D2 LED COUNTDOWN PEDESTRIAN SIGNALS. ADD 24" X 24" CITY TYPE "C" PULLBOX B1 AT STA. 267+50.82, 30.41' RT. CONNECT POLE T2 TO POLE T7 WITH NEW MESSENGER WIRE. REPLACE SIGNAL HEADS 3 AND 4 WITH 12" LED SIGNAL HEADS ON THE NEW MESSENGER WIRE. REPLACE REFLECTORIZED SIGN S5 ON NEW MESSENGER WIRE.

2. REPLACE PEDESTRIAN SIGNALS P2 AND P7 WITH TYPE D2 LED COUNTDOWN PEDESTRIAN SIGNALS. ADD 24" X 24" CITY TYPE "C" PULLBOXES B2 AT STA. 267+53.36, 18.85' LT AND B3 AT STA. 267+86.96, 35.50' LT. CONNECT POLE T3 (S.P.) TO POLE T4 WITH NEW MESSENGER WIRE. REPLACE SIGNAL HEADS 1 AND 2 WITH 12" LED SIGNAL HEADS ON THE NEW MESSENGER WIRE. REPLACE REFLECTORIZED SIGNS S1, S2, S3, AND S4 ON NEW MESSENGER WIRE. ADD NEW DISCONNECT SWITCH ON POLE T3.

3. REPLACE THE EXISTING POLE WITH A NEW POLE T4 AT STA. 268+81.31, 19.96' LT. ATTACH A 6' MAST ARM TO POLE T4 AND REPLACE SIGNAL HEAD 5 WITH 12" LED SIGNAL HEAD ON THE MAST ARM. REPLACE PEDESTRIAN SIGNALS P3 AND P8 WITH TYPE D2 LED COUNTDOWN PEDESTRIAN SIGNAL HEADS. REPLACE CONTROLLER AND SECTIONALIZER ON POLE T4. ADD 24" X 24" CITY TYPE "C" PULLBOX B4 AT STA. 268+66.50, 29.70' LT.

4. ADD A NEW POLE T7 AT STA. 268+62.12, 29.04' RT. ATTACH A 16' MAST ARM TO POLE T7 AND REPLACE SIGNAL HEAD 6 WITH 12" LED SIGNAL HEAD ON THE MAST ARM. INSTALL NEW SIGNAL HEAD 7 ON THE MAST ARM. REPLACE PEDESTRIAN SIGNAL P4 ON POLE T6 AND PEDESTRIAN SIGNAL P5 ON POLE T7 WITH TYPE D2 LED COUNTDOWN PEDESTRIAN SIGNAL HEADS. ADD 24" X 24" CITY TYPE "C" PULLBOX B5 AT STA. 268+57.19, 30.73' RT.

5. REPLACE ALL SIGNAL HEADS WITH NEW 12" LED SIGNAL HEADS AND REPLACE ALL PEDESTRIAN SIGNALS WITH TYPE D2 LED COUNTDOWN PEDESTRIAN SIGNALS.

6. INSTALL 2-4" RMC AND 1-3" RMC UNDER TRACK SLAB AS SHOWN ON PLAN.

7. A DISTANCE OF SIX FEET BEHIND THE CURB AND 15 FEET ON EITHER SIDE OF PROPOSED OCS POLES AND SIGNAL POLES (INCLUDING ANY DISTURBANCE TO THE EXISTING CURB) HAS BEEN QUANTIFIED FOR BIDDING PURPOSES FOR REMOVAL AND REPLACEMENT OF SIDEWALK. THE CITY'S ENGINEER WILL DETERMINE ACTUAL PAY LIMITS FOR THIS WORK. NO ADDITIONAL INCREASE TO THE UNIT COST WILL BE ALLOWED FOR THIS WORK IF THE QUANTITIES ARE MORE OR LESS THAN THE AMOUNT QUANTIFIED FOR BIDDING PURPOSES.

CAUTION UNDERGROUND UTILITIES
2 WORKING DAYS
BEFORE YOU DIG
CALL 1-800-362-2764
OHIO UTILITY PROTECTION SERVICE
CALL NON-SERVICE FACILITY
OWNERS DIRECT

GRAPHIC SCALE
10 0 10 20 40
(IN FEET)
1 inch = 10 ft. Full Size
1 inch = 20 ft. Half Size

DOTE_Mono_PDF_Half.pltcfg
W:\29014A-Streetcar\CAD\Traffic_Control\Signals\2010_Liberty&Race_L-12\S_G-TC-2010 C.dgn
7/11/2012 8:07:58 AM

CONTRACT DRAWING
PRINTS NOT BEARING THIS STAMP WERE MADE PRIOR TO ADVERTISING FOR BIDS AND ARE TO BE CONSIDERED OBSOLETE FOR CONTRACT PURPOSES.

Department of Transportation and Engineering
City of Cincinnati
City Hall
801 Plum Street
Cincinnati, Ohio 45202

CINCINNATI STREETCAR
OVER THE RHINE
PROPOSED TRAFFIC SIGNAL PLAN
RACE STREET AND LIBERTY STREET

Revisions
No.

	Date
Drawn by JRL	12/20/11
Designed by JRL	12/20/11
Checked by JTB	12/20/11
Reviewed by JTB	12/20/11

Consultant
PB HDR

File Number
ACC No. 23126

G-TC-2010 C

CABLE SCHEDULE

CABLE#	CONNECTING DEVICE	TYPE	CABLE ROUTING	LIN. FT
1	TRAFFIC SIGNAL TS1, TS2	7C#14	TS1–TS2–T4–C	75
2	TRAFFIC SIGNAL TS3, TS4	7C#14	TS4–TS3–T7–B5–B4–T4–C	225
3	TRAFFIC SIGNAL TS5	7C#14	TS5–T4–C	35
4	TRAFFIC SIGNAL TS6, TS7	7C#14	TS6–TS7–T7–B5–B4–T4–C	155
5	PED. SIGNAL P1	7C#14	P1–T1–B1–B5–B4–T4–C	250
6	PED. SIGNAL P2	7C#14	P2–T3–B3–B4–T4–C	140
7	PED. SIGNAL P3	7C#14	P3–T4–C	15
8	PED. SIGNAL P4	7C#14	P4–T6–B5–B4–T4–C	135
9	PED. SIGNAL P5	7C#14	P5–T7–B5–B4–T4–C	115
10	PED. SIGNAL P6	7C#14	P6–T2–B1–B5–B4–T4–C	235
11	PED. SIGNAL P7	7C#14	P7–T3–B3–B4–T4–C	140
12	PED. SIGNAL P8	7C#14	P8–T4–C	15
13	POWER CABLE, AC POSITIVE, BLACK	1C#6	DS–T3–B3–B4–T4–C	153
14	POWER CABLE, AC NEGATIVE, WHITE	1C#6	DS–T3–B3–B4–T4–C	153
15	INTERCONNECT CABLE	12C#12	SECT.–T4–C	30
16	INTERCONNECT CABLE	12C#12	SECT.–T1–B1–B5–B4–T4–SECT.	275
17	INTERCONNECT CABLE	12C#12	SECT.–T1–B1–B2–B3–T3–SECT.	180
18	INTERCONNECT CABLE	12C#12	SECT.–T4–B4–B5–T5–SECT.	130

SIGN DETAILS

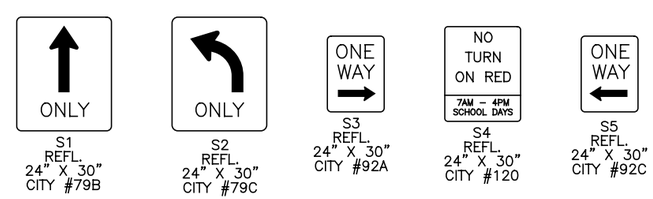

S1 REFL. 24" X 30" CITY #79B

S2 REFL. 24" X 30" CITY #79C

S3 REFL. 24" X 30" CITY #92A

S4 REFL. 24" X 30" CITY #120

S5 REFL. 24" X 30" CITY #92C

CAUTION UNDERGROUND UTILITIES
2 WORKING DAYS
BEFORE YOU DIG
CALL 1–800–362–2764
OHIO UTILITY PROTECTION SERVICE
CALL NON–SERVICE FACILITY
OWNERS DIRECT

GRAPHIC SCALE

10 0 10 20 40

(IN FEET)
1 inch = 10 ft. Full Size
1 inch = 20 ft. Half Size

DOTE_Mono_PDF_Half.pltcfg
W:\29014A-Streetcar\CAD\Traffic_Control\Signals\2010_Liberty&Race_L-12\S_G-TC-2010 D.dgn
7/11/2012 8:08:04 AM

CONTRACT DRAWING

PRINTS NOT BEARING THIS STAMP WERE MADE PRIOR TO ADVERTISING FOR BIDS AND ARE TO BE CONSIDERED OBSOLETE FOR CONTRACT PURPOSES.

Department of Transportation and Engineering

City of Cincinnati
City Hall
801 Plum Street
Cincinnati, Ohio 45202

CINCINNATI STREETCAR
OVER THE RHINE
PROPOSED TRAFFIC SIGNAL PLAN
RACE STREET AND LIBERTY STREET

Revisions
No.

Drawn by JRL	Date 12/20/11	Designed by JRL	Date 12/20/11
Checked by JTB	Date 12/20/11	Reviewed by JTB	Date 12/20/11

Consultant

PB HDR

File Number

ACC No. 23126

G-TC-2010 D

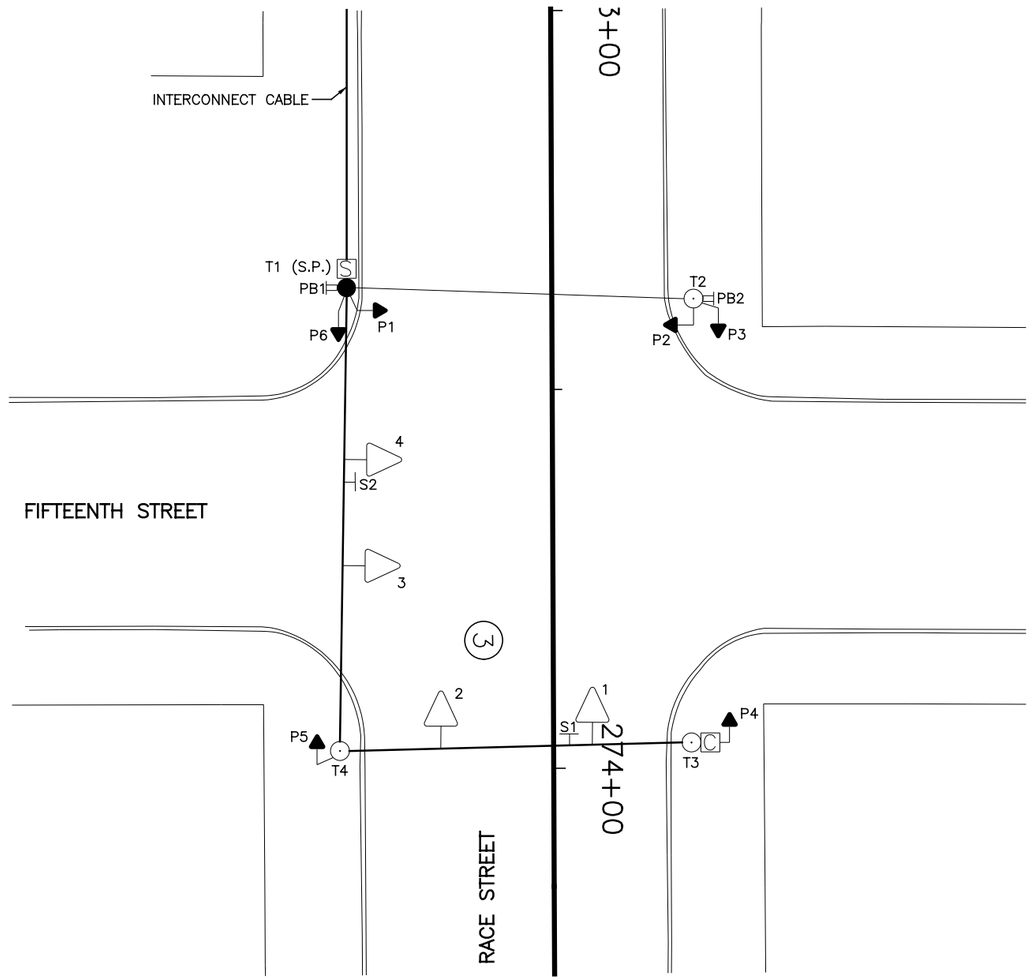

EQUIPMENT LIST	
1–4	TRAF. SIG. HD., 3 SECTIONS, VERT., 8" RYG
P1, P2	PED. SIG., 2 SECTIONS, 12" INCANDESCENT W/ AUDIBLE "TONE" DEVICE
P3–P6	PED. SIG., 2 SECTIONS, 12" INCANDESCENT
PB1, PB2	PED. PUSHBUTTON W/ ASSOC. SIGNS (BLUE AUDIBLE)
S1	REFL. SIGN, 24" X 30", "ONE WAY →", #92A
S2	REFL. SIGN, 24" X 30", "ONE WAY ←", #92C
T1 (S.P.)	WOOD SERVICE POLE, C.G.&E., #07–1161E
T2	STEEL POLE, EMB. BASE, 8/7/6/" X 26/32', #28037(EXTG.)
T3, T4	STEEL POLE, ANCH. BASE, 9" X 26', #21065

LEGEND

- STEEL POLE
- WOOD POLE
- TRAFFIC SIGNAL HEAD
- PEDESTRIAN SIGNAL HEAD
- PEDESTRIAN PUSHBUTTON
- REFLECTORIZED SIGN
- CONTROLLER
- SECTIONALIZER

CAUTION UNDERGROUND UTILITIES
2 WORKING DAYS
BEFORE YOU DIG
CALL 1–800–362–2764
OHIO UTILITY PROTECTION SERVICE
CALL NON–SERVICE FACILITY
OWNERS DIRECT

GRAPHIC SCALE
10 0 10 20 40
(IN FEET)
1 inch = 10 ft. Full Size
1 inch = 20 ft. Half Size

DOTE_Mono_PDF_Half.pltcfg
W:\29014A-Streetcar\CAD\Traffic_Control\Signals\2011_Fifteenth&Race_F-63\S_G-TC-2011 A.dgn
7/11/2012 8:11:11 AM

CONTRACT DRAWING

PRINTS NOT BEARING THIS STAMP WERE MADE PRIOR TO ADVERTISING FOR BIDS AND ARE TO BE CONSIDERED OBSOLETE FOR CONTRACT PURPOSES.

Department of Transportation and Engineering

City of Cincinnati
City Hall
801 Plum Street
Cincinnati, Ohio 45202

CINCINNATI STREETCAR OVER THE RHINE

EXISTING TRAFFIC SIGNAL PLAN
RACE STREET AND FIFTEENTH STREET

Revisions
No.

Drawn by JRL Date 12/20/11
Designed by JRL Date 12/20/11
Checked by JTB Date 12/20/11
Reviewed by JTB Date 12/20/11

Consultant

PB HDR

File Number

ACC No. 23126

G-TC-2011 A

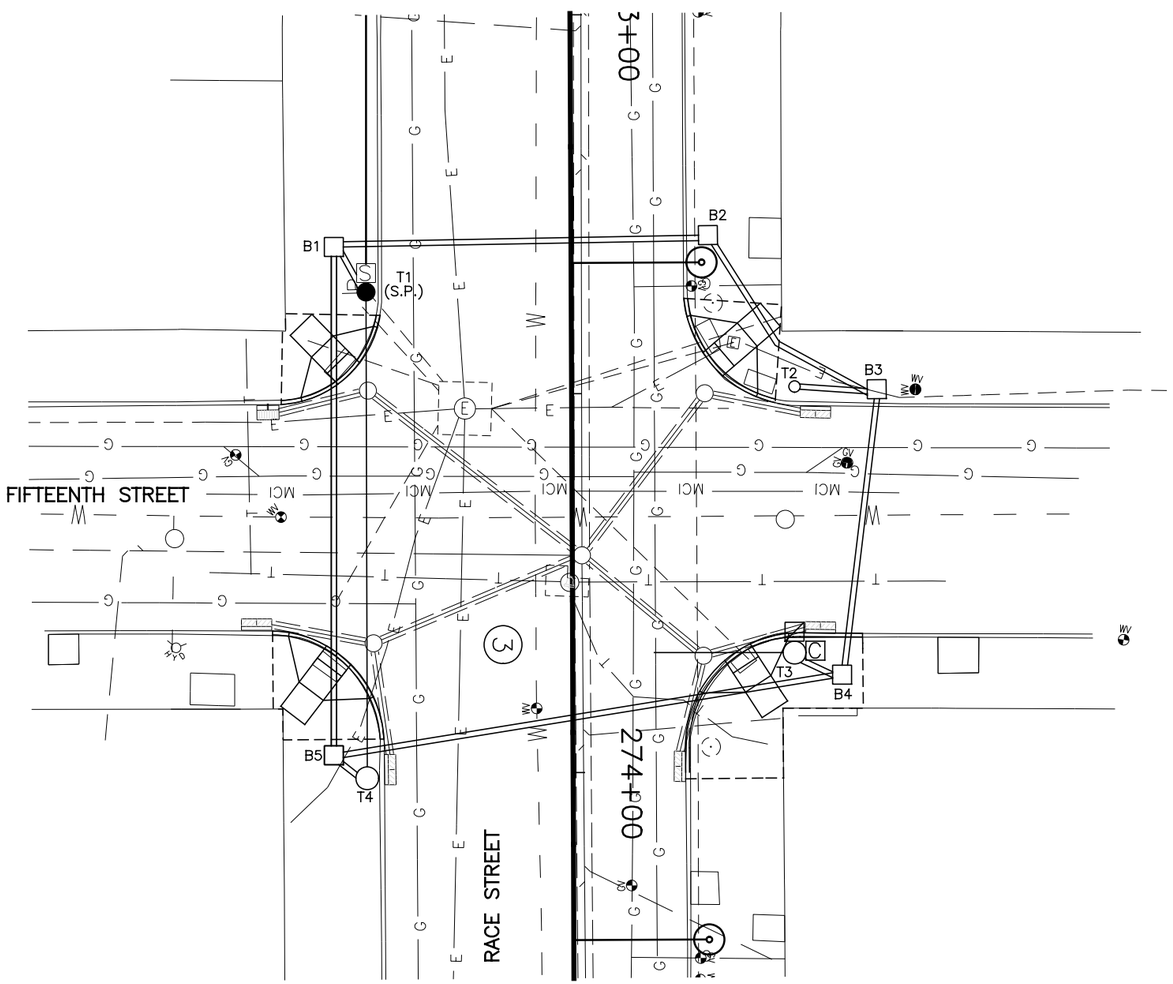

SIGNAL PHASING

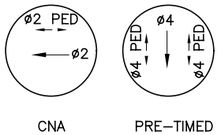

CNA PRE–TIMED

THIS IS THE GENERAL SEQUENCING FOR THIS TRAFFIC SIGNAL. REFER TO THE CITY OF CINCINNATI FOR FINAL SEQUENCING, LABELING AND TIMINGS.

CAUTION UNDERGROUND UTILITIES
2 WORKING DAYS
BEFORE YOU DIG
CALL 1–800–362–2764
OHIO UTILITY PROTECTION SERVICE
CALL NON–SERVICE FACILITY
OWNERS DIRECT

GRAPHIC SCALE
10 0 10 20 40
(IN FEET)
1 inch = 10 ft. Full Size
1 inch = 20 ft. Half Size

DOTE_Mono_PDF_Half.pltcfg
W:\29014A-Streetcar\CAD\Traffic_Control\Signals\2011_Fifteenth&Race_F-63\S_G-TC-2011 B.dgn
7/11/2012 8:11:51 AM

CONTRACT DRAWING

PRINTS NOT BEARING THIS STAMP WERE MADE PRIOR TO ADVERTISING FOR BID, AND ARE TO BE CONSIDERED OBSOLETE FOR CONTRACT PURPOSES.

Department of Transportation and Engineering

City of Cincinnati
City Hall
801 Plum Street
Cincinnati, Ohio 45202

CINCINNATI STREETCAR
OVER THE RHINE
UNDERGROUND UTILITIES & SIGNAL PLAN DETAILS
RACE STREET AND FIFTEENTH STREET

Revisions
No.

Drawn by JRL	Date 12/20/11
Designed by JRL	Date 12/20/11
Checked by JTB	Date 12/20/11
Reviewed by JTB	Date 12/20/11

Consultant

PB HDR

File Number

ACC No. 23126

G-TC-2011 B

LEGEND

- STEEL POLE
- WOOD POLE
- STEEL PEDESTRIAN POST
- TRAFFIC SIGNAL CONDUIT
- TRAFFIC SIGNAL HEAD
- PEDESTRIAN SIGNAL HEAD
- PEDESTRIAN PUSHBUTTON
- REFLECTORIZED SIGN
- PULLBOX
- CONTROLLER
- SECTIONALIZER
- DISCONNECT SWITCH (DS)

SIGNAL INDICATIONS

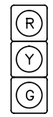

1, 2, 3, 4, 5

SIGNAL HEAD DETAIL
12" (LED) LENSES

P1, P2, P3
P4, P5, P6

TYPE D2 PEDESTRIAN (LED)
(COUNTDOWN) SIGNAL HEAD

TYPICAL POLE ORIENTATION

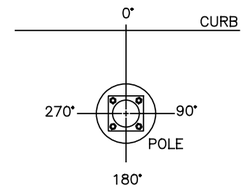

SIGN DETAILS

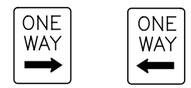

S1
REFL.
24" X 30"
CITY #92A

S2
REFL.
24" X 30"
CITY #92C

MATERIAL SCHEDULE

NO.	VEHICULAR SIGNAL HEADS 1	2	3	4	5			
12 INCH	R	R	R	R	R			
	Y	Y	Y	Y	Y			
	G	G	G	G	G			

TYPE D2 PEDESTRIAN (LED)
(COUNTDOWN) SIGNAL HEAD

NOTE:
USE LENS W/ SYMBOL LEGENDS
PORTLAND ORANGE: HAND (DONT WALK)
LUNAR WHITE: WALKING MAN (WALK)

POLE NO.	POLE DATA: POLE TYPE	SHAFT SIZE IN X FT	FOUNDATION TYPE	PEDESTRIAN SIGNALS ANGLE OF ORIENTATION (DEGREES) P1 D W	P2 D W	P3 D W	P4 D W	P5 D W	P6 D W			CABLE ENTRANCE ANGLE (DEG)	SPAN WIRE ATTACHMENT HEIGHT (FEET)	MAST ARM ATTACHMENT HEIGHT (FEET)	MAST ARM (DEG)	HANDHOLE (DEG)	CONTROLLER (DEG)	DISCONNECT SWITCH (DEG)
T1	WOOD POLE		EXISTING	90				180				90	24.5					270
T2	1045	4 X 10	FDN-25		180	90										180		
T3	UMC DESIGN Y5	9 X 20.5	FDN-7				270					270	24.5	18.5	270	180	90	
T4	UMC DESIGN Y4	9 X 26	FDN-7					180						18.5	0	180		

CABLE SCHEDULE

CABLE#	CONNECTING DEVICE	TYPE	CABLE ROUTING	LIN. FT
1	TRAFFIC SIGNAL TS1	7C#14	TS1–T3–C	40
2	TRAFFIC SIGNAL TS2, TS5	7C#14	TS2–TS5–T4–B5–B4–T3–C	135
3	TRAFFIC SIGNAL TS3, TS4	7C#14	TS4–TS3–T4–B5–B4–T3–C	180
4	PED. SIGNAL P1	7C#14	P1–T1–B1–B5–B4–T3–C	185
5	PED. SIGNAL P2	7C#14	P2–T2–B3–B4–T3–C	90
6	PED. SIGNAL P3	7C#14	P3–T2–B3–B4–T3–C	90
7	PED. SIGNAL P4	7C#14	P4–T3–C	15
8	PED. SIGNAL P5	7C#14	P5–T4–B5–B4–T3–C	120
9	PED. SIGNAL P6	7C#14	P6–T1–B1–B5–B4–T3–C	185
10	PUSHBUTTON PB1	7C#14	PB1–T1–B1–B5–B4–T3–C	185
11	PUSHBUTTON PB2	7C#14	PB2–T2–B3–B4–T3–C	90
12	POWER CABLE, AC POSITIVE, BLACK	1C#6	DS–T1–B1–B5–B4–T3–C	200
13	POWER CABLE, AC NEGATIVE, WHITE	1C#6	DS–T1–B1–B5–B4–T3–C	200
14	INTERCONNECT CABLE	12C#12	SECT.–T1–B1–B2–B3–B4–T3–C	190

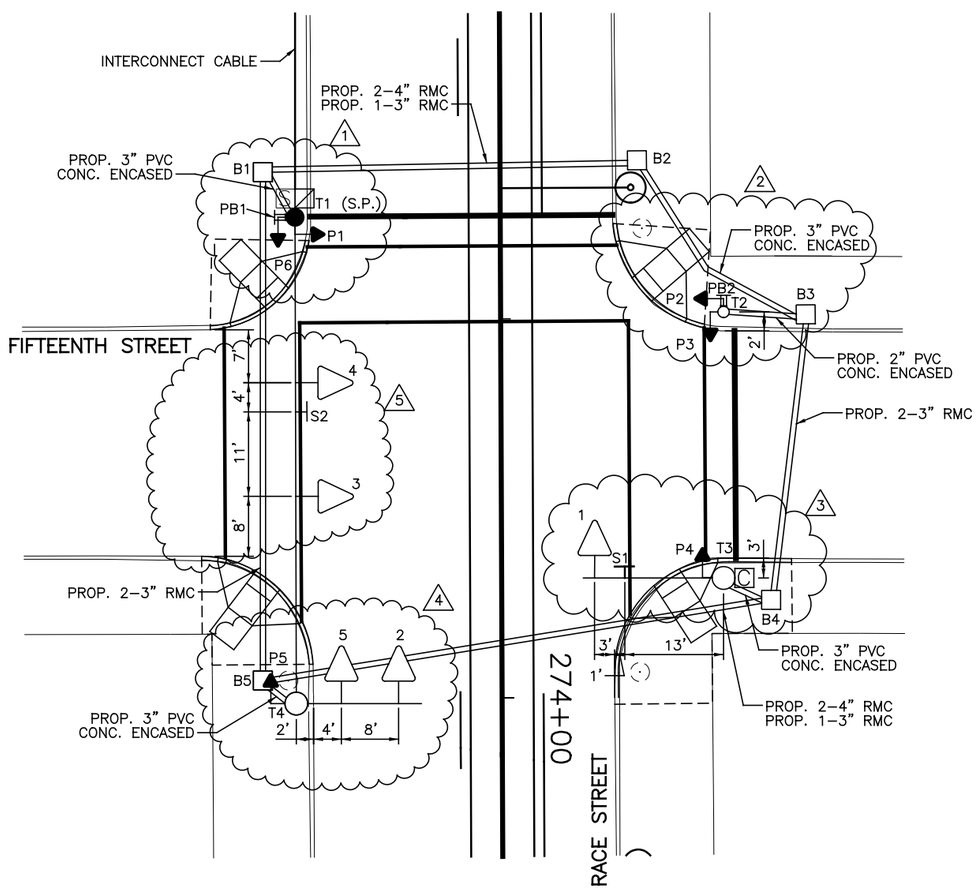

NOTES:

1. REMOVE MESSENGER WIRE BETWEEN POLE T1 AND POLE T2. REPLACE PEDESTRIAN SIGNALS P1 AND P6 WITH TYPE D2 LED COUNTDOWN PEDESTRIAN SIGNALS. ADD 24" X 24" CITY TYPE "C" PULLBOX B1 AT STA. 273+30.6, 31.24' RT. CONNECT EXISTING POLE T1 TO POLE T4 WITH NEW MESSENGER WIRE. PLACE NEW AUDIBLE PUSHBUTTON PB1 WITH ASSOCIATED SIGNS ON POLE T1. ADD NEW DISCONNECT SWITCH ON POLE T1.
2. REPLACE THE EXISTING POLE WITH A NEW STEEL PEDESTRIAN POST T2 AT STA. 273+49.18, 29.44' LT. REPLACE PEDESTRIAN SIGNALS P2 AND P3 WITH TYPE D2 LED COUNTDOWN PEDESTRIAN SIGNAL HEADS. ADD 24" X 24" CITY TYPE "C" PULLBOXES B2 AT STA. 273+29.04, 18.17' LT AND B3 AT STA. 273+49.37, 40.33' LT. PLACE NEW AUDIBLE PUSHBUTTON PB2 WITH ASSOCIATED SIGNS ON POLE T2.
3. REMOVE MESSENGER WIRE BETWEEN POLE T3 AND POLE T4. REPLACE THE EXISTING POLE WITH A NEW POLE T3 AT STA. 273+84.29, 29.13' LT. ATTACH 17' MAST ARM TO POLE T3 AND REPLACE SIGNAL HEAD 1 WITH 12" LED SIGNAL HEAD ON THE MAST ARM. REPLACE REFLECTORIZED SIGN S1 ON THE MAST ARM. REMOVE CONTROLLER AND PLACE NEW CONTROLLER ON NEW POLE T3. REPLACE PEDESTRIAN SIGNAL P4 WITH TYPE D2 LED COUNTDOWN PEDESTRIAN SIGNAL HEAD. ADD 24" X 24" CITY TYPE "C" PULLBOX B4 AT STA. 273+87.04, 35.62' LT.
4. REPLACE THE EXISTING POLE WITH A NEW POLE T4 AT STA. 274+0.75, 27.19' RT. ATTACH 15' MAST ARM TO POLE T4 AND REPLACE SIGNAL HEAD 2 WITH 12" LED SIGNAL HEAD ON THE MAST ARM. ADD NEW 12" LED SIGNAL HEAD 5 TO THE MAST ARM. REPLACE PEDESTRIAN SIGNAL P5 WITH TYPE D2 LED COUNTDOWN PEDESTRIAN SIGNAL HEAD. ADD 24" X 24" CITY TYPE "C" PULLBOX B5 AT STA. 273+97.7, 31.52' RT. CONNECT POLE T4 TO POLE T1 WITH NEW MESSENGER WIRE.
5. REPLACE SIGNAL HEADS 3 AND 4 WITH 12" LED SIGNAL HEADS ON NEW MESSENGER WIRE BETWEEN POLE T1 AND POLE T4. PLACE NEW REFLECTORIZED SIGN S2 ON NEW MESSENGER WIRE.
6. INSTALL 2–4" RMC AND 1–3" RMC UNDER TRACK SLAB AS SHOWN ON PLAN.
7. A DISTANCE OF SIX FEET BEHIND THE CURB AND 15 FEET ON EITHER SIDE OF PROPOSED OCS POLES AND SIGNAL POLES (INCLUDING ANY DISTURBANCE TO THE EXISTING CURB) HAS BEEN QUANTIFIED FOR BIDDING PURPOSES FOR REMOVAL AND REPLACEMENT OF SIDEWALK. THE CITY'S ENGINEER WILL DETERMINE ACTUAL PAY LIMITS FOR THIS WORK. NO ADDITIONAL INCREASE TO THE UNIT COST WILL BE ALLOWED FOR THIS WORK IF THE QUANTITIES ARE MORE OR LESS THAN THE AMOUNT QUANTIFIED FOR BIDDING PURPOSES.

GRAPHIC SCALE
10 0 10 20 40
(IN FEET)
1 inch = 10 ft. Full Size
1 inch = 20 ft. Half Size

CAUTION UNDERGROUND UTILITIES
2 WORKING DAYS
BEFORE YOU DIG
CALL 1–800–362–2764
OHIO UTILITY PROTECTION SERVICE
CALL NON–SERVICE FACILITY
OWNERS DIRECT

DOTE_Mono_PDF_Half.pltcfg
W:\29014A-Streetcar\CAD\Traffic_Control\Signals\2011_Fifteenth&Race_F-63\S_G-TC-2011 C.dgn
8:12:07 AM
7/11/2012

CONTRACT DRAWING
PRINTS NOT BEARING THIS STAMP WERE MADE PRIOR TO ADVERTISING FOR BID AND MAY BE CONSIDERED OBSOLETE FOR CONTRACT PURPOSES.

Department of Transportation and Engineering
City of Cincinnati
City Hall
801 Plum Street
Cincinnati, Ohio 45202

CINCINNATI STREETCAR OVER THE RHINE

PROPOSED TRAFFIC SIGNAL PLAN
RACE STREET AND FIFTEENTH STREET

Revisions
No.

Date 12/20/11
Drawn by JRL
Date 12/20/11
Designed by JRL
Date 12/20/11
Checked by JTB
Date 12/20/11
Reviewed by JTB

Consultant
PB HDR

File Number

ACC No. 23126

G-TC-2011 C

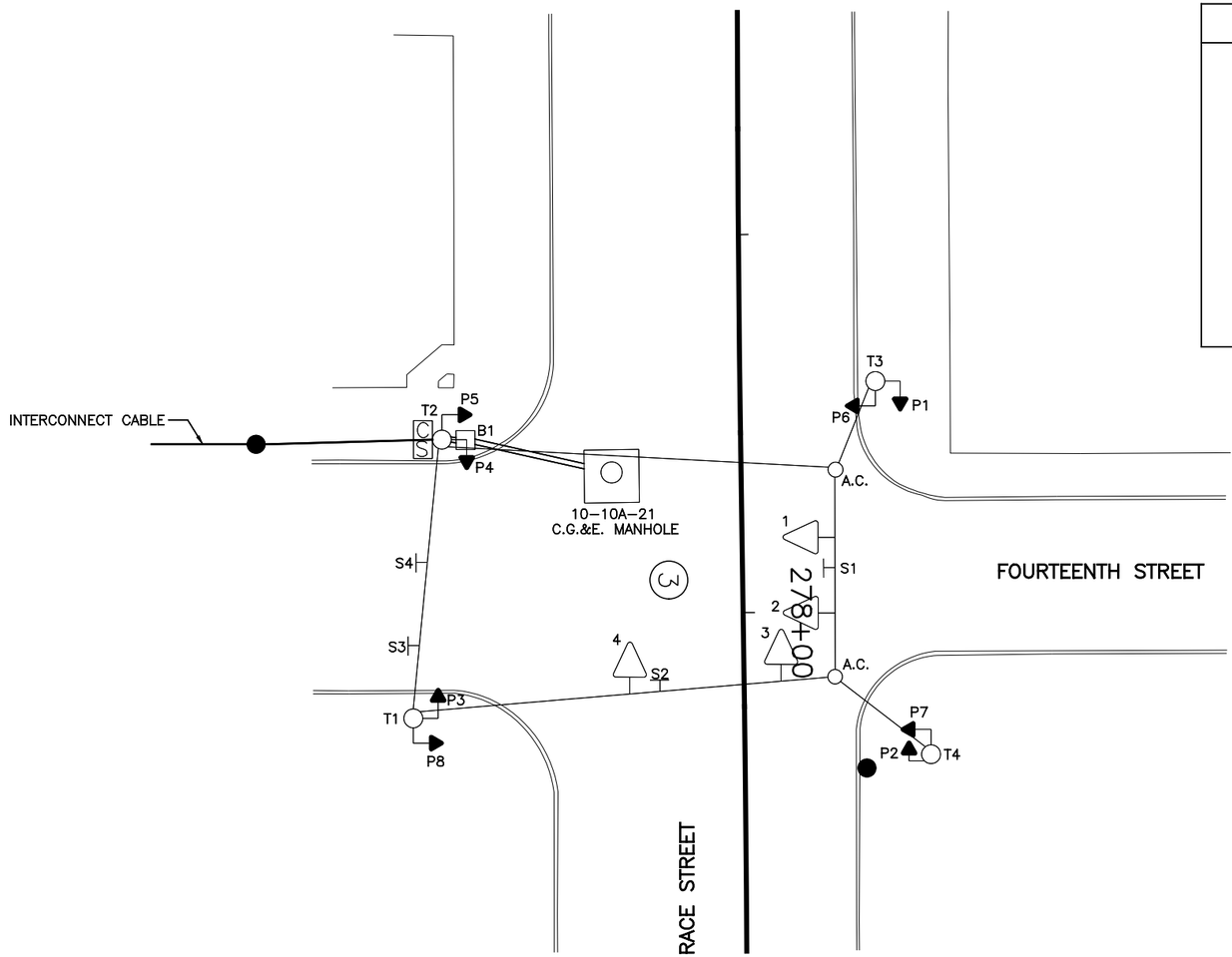

EQUIPMENT LIST	
1–4	TRAF. SIG. HD., 3 SECTIONS, HORIZ., 8" RYG
P1–P8	PED. SIG., 2 SECTIONS, 12" INCANDESCENT
S1	REFL. SIGN, 24" X 30", "ONE WAY → ",#92A
S2	REFL. SIGN, 24" X 30", "ONE WAY ← ",#92C
S3	REFL. SIGN, 24" X 30", " ↗ ONLY", #79A
S4	REFL. SIGN, 24" X 30", " ↑ ONLY", #79B
B1	PULLBOX, 18" X 18"
T1–T4	STEEL POLE, ANCH. BASE, 9" X 26', #21065
S.P.	WOOD SERVICE POLE, C.G.&E., #07–1268E

LEGEND

- STEEL POLE
- WOOD POLE
- TRAFFIC SIGNAL HEAD
- PEDESTRIAN SIGNAL HEAD
- REFLECTORIZED SIGN
- PULLBOX
- CONTROLLER
- SECTIONALIZER

CAUTION UNDERGROUND UTILITIES
2 WORKING DAYS
BEFORE YOU DIG
CALL 1–800–362–2764
OHIO UTILITY PROTECTION SERVICE
CALL NON–SERVICE FACILITY
OWNERS DIRECT

GRAPHIC SCALE
10 0 10 20 40
(IN FEET)
1 inch = 10 ft. Full Size
1 inch = 20 ft. Half Size

DEPARTMENT OF TRANSPORTATION & ENGINEERING CITY OF CINCINNATI OHIO

CONTRACT DRAWING

PRINTS NOT BEARING THIS STAMP WERE MADE PRIOR TO ADVERTISING FOR BIDS AND ARE TO BE CONSIDERED OBSOLETE FOR CONTRACT PURPOSES.

Department of Transportation and Engineering

City of Cincinnati
City Hall
801 Plum Street
Cincinnati, Ohio 45202

CINCINNATI STREETCAR
OVER THE RHINE
EXISTING TRAFFIC SIGNAL PLAN
RACE STREET AND FOURTEENTH STREET

Revisions
No.

	Date
Drawn by JRL	12/20/11
Designed by JRL	12/20/11
Checked by JTB	12/20/11
Reviewed by JTB	12/20/11

Consultant

PB HDR

File Number

ACC No. 23126

G-TC-2012 A

DOTE_Mono_PDF_Half.pltcfg
W:\29014A-Streetcar\CAD\Traffic_Control\Signals\2012_Fourteenth&Race\S_G-TC-2012 A.dgn
7/11/2012 8:12:34 AM

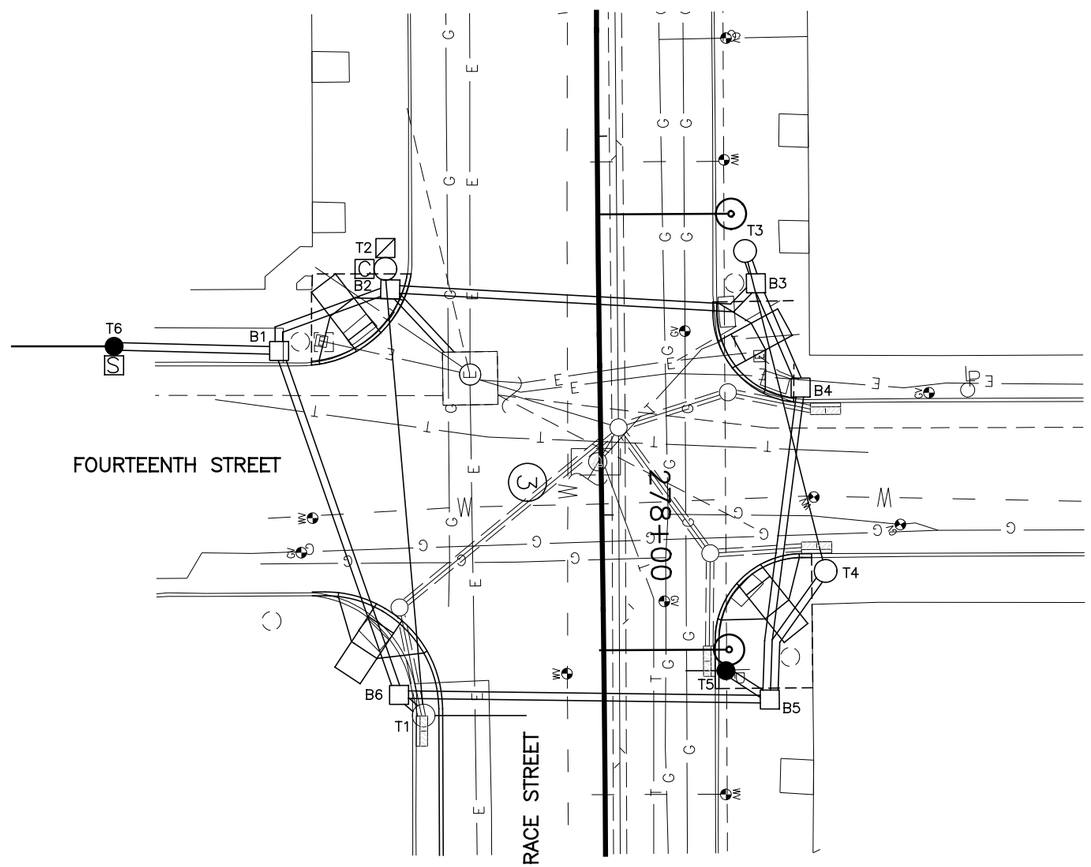

SIGNAL PHASING

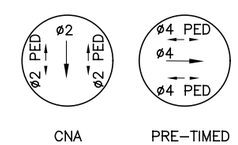

THIS IS THE GENERAL SEQUENCING FOR THIS TRAFFIC SIGNAL. REFER TO THE CITY OF CINCINNATI FOR FINAL SEQUENCING, LABELING AND TIMINGS.

CAUTION UNDERGROUND UTILITIES
2 WORKING DAYS
BEFORE YOU DIG
CALL 1-800-362-2764
OHIO UTILITY PROTECTION SERVICE
CALL NON-SERVICE FACILITY
OWNERS DIRECT

GRAPHIC SCALE
10 0 10 20 40
(IN FEET)
1 inch = 10 ft. Full Size
1 inch = 20 ft. Half Size

DOTE_Mono_PDF_Half.pltcfg
W:\29014A-Streetcar\CAD\Traffic_Control\Signals\2012_Fourteenth&Race\S_G-TC-2012 B.dgn
7/11/2012 8:13:09 AM

CONTRACT DRAWING

PRINTS NOT BEARING THIS STAMP WERE MADE PRIOR TO ADVERTISING FOR BID, AND ARE TO BE CONSIDERED OBSOLETE FOR CONTRACT PURPOSES.

Department of Transportation and Engineering

City of Cincinnati
City Hall
801 Plum Street
Cincinnati, Ohio 45202

CINCINNATI STREETCAR
OVER THE RHINE
UNDERGROUND UTILITIES & SIGNAL PLAN DETAILS RACE STREET AND FOURTEENTH STREET

Revisions
No.

Date 12/20/11	Drawn by JRL
Date 12/20/11	Designed by JRL
Date 12/20/11	Checked by JTB
Date 12/20/11	Reviewed by JTB

Consultant

PB HDR

File Number

ACC No. 23126

G-TC-2012 B

LEGEND

- STEEL POLE
- WOOD POLE
- TRAFFIC SIGNAL CONDUIT
- TRAFFIC SIGNAL HEAD
- PEDESTRIAN SIGNAL HEAD
- REFLECTORIZED SIGN
- PULLBOX
- CONTROLLER
- SECTIONALIZER
- DISCONNECT SWITCH (DS)

SIGNAL INDICATIONS

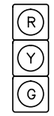

1, 2, 3, 4, 5

SIGNAL HEAD DETAIL
12" (LED) LENSES

P1, P2, P3, P4
P5, P6, P7, P8

TYPE D2 PEDESTRIAN (LED)
(COUNTDOWN) SIGNAL HEAD

TYPICAL POLE ORIENTATION

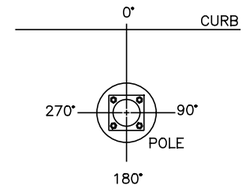

SIGN DETAILS

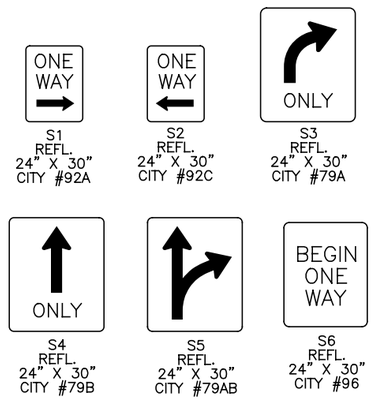

S1 REFL. 24" X 30" CITY #92A
S2 REFL. 24" X 30" CITY #92C
S3 REFL. 24" X 30" CITY #79A
S4 REFL. 24" X 30" CITY #79B
S5 REFL. 24" X 30" CITY #79AB
S6 REFL. 24" X 30" CITY #96

MATERIAL SCHEDULE

NO.	VEHICULAR SIGNAL HEADS 1	2	3	4	5			
12 INCH	R	R	R	R	R			
	Y	Y	Y	Y	Y			
	G	G	G	G	G			

TYPE D2 PEDESTRIAN (LED) (COUNTDOWN) SIGNAL HEAD (20)

NOTE:
USE LENS W/ SYMBOL LEGENDS
PORTLAND ORANGE: HAND (DONT WALK)
LUNAR WHITE: WALKING MAN (WALK)

POLE NO.	POLE DATA: POLE TYPE	SHAFT SIZE IN X FT	FOUNDATION TYPE	PEDESTRIAN SIGNALS ANGLE OF ORIENTATION (DEGREES) P1 D W	P2 D W	P3 D W	P4 D W	P5 D W	P6 D W	P7 D W	P8 D W	CABLE ENTRANCE ANGLE (DEG)	SPAN WIRE ATTACHMENT HEIGHT (FEET)	MAST ARM ATTACHMENT HEIGHT (FEET)	MAST ARM (DEG)	HANDHOLE (DEG)	CONTROLLER (DEG)	DISCONNECT SWITCH (DEG)
T1	UMC DESIGN Y4	9 X 26	EXIST.			180					270	270	24.5	18.5	0	EX.		
T2	29053	9 X 26	FDN-7				180	90				90	24.5			180	180	270
T3	29053	9 X 26	FDN-7	180					270			270	24.5			180		
T4	29053	9 X 26	FDN-7		180					90		90	24.5			180		
T5	WOOD POLE		EXIST.											18.5	0			
T6	WOOD POLE		EXIST.															

CABLE SCHEDULE

CABLE#	CONNECTING DEVICE	TYPE	CABLE ROUTING	LIN. FT
1	TRAFFIC SIGNAL TS1, TS2	7C#14	TS2–TS1–T3–B3–B2–T2–C	155
2	TRAFFIC SIGNAL TS3	7C#14	TS3–T5–B6–B1–B2–T2–C	190
3	TRAFFIC SIGNAL TS4, TS5	7C#14	TS4–TS5–T1–B6–B1–B2–T2–C	145
4	PED. SIGNAL P1	7C#14	P1–T3–B3–B2–T2–C	90
5	PED. SIGNAL P2	7C#14	P2–T4–B5–B6–B1–B2–T2–C	175
6	PED. SIGNAL P3	7C#14	P3–T1–B6–B1–B2–T2–C	110
7	PED. SIGNAL P4	7C#14	P4–T2–C	20
8	PED. SIGNAL P5	7C#14	P5–T2–C	20
9	PED. SIGNAL P6	7C#14	P6–T3–B3–B2–T2–C	90
10	PED. SIGNAL P7	7C#14	P7–T4–B5–B6–B1–B2–T2–C	175
11	PED. SIGNAL P8	7C#14	P8–T1–B6–B1–B2–T2–C	110
12	POWER CABLE, AC POSITIVE, BLACK	1C#6	MH–B2–T2–DS–C	50
13	POWER CABLE, AC NEGATIVE, WHITE	1C#6	MH–B2–T2–DS–C	50
14	INTERCONNECT CABLE	12C#12	SECT.–B1–B2–T2–C	90

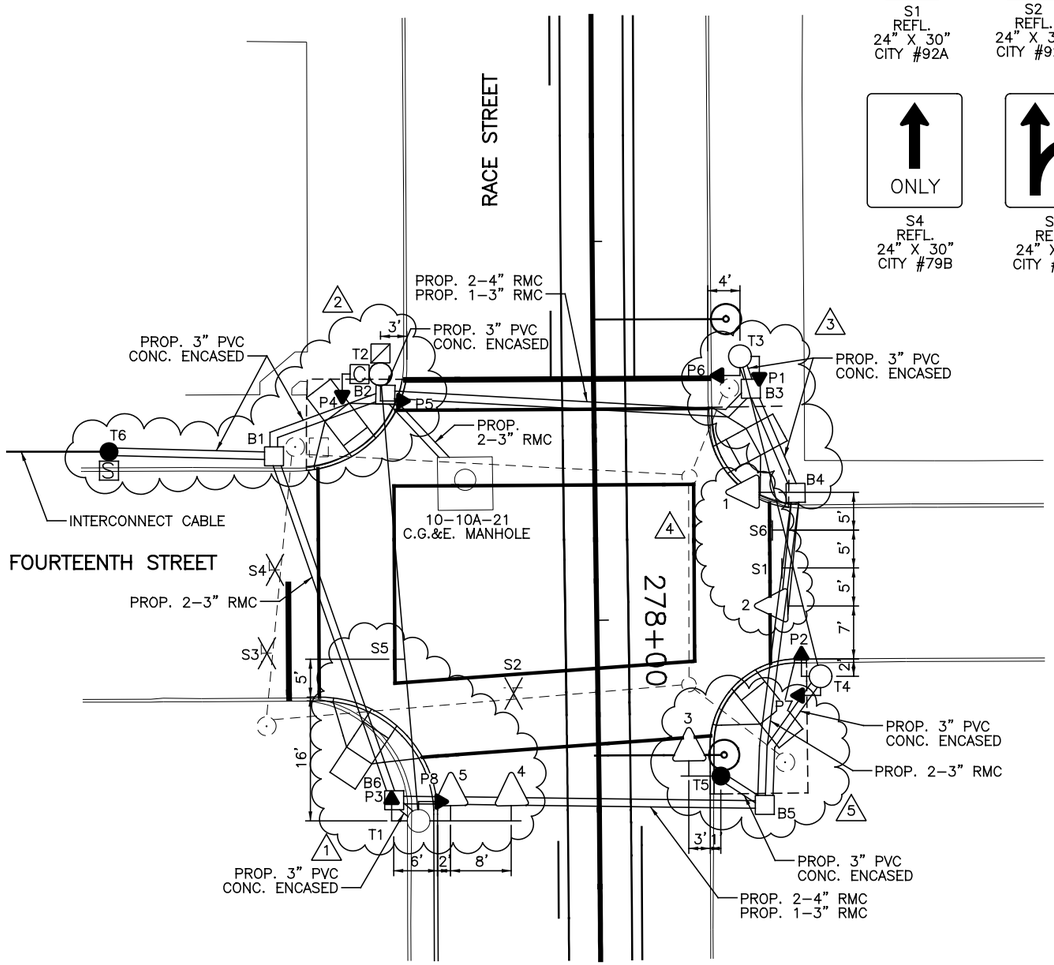

NOTES:

1. REMOVE MESSENGER WIRE BETWEEN POLE T1 AND POLE T2. ATTACH A 12' MAST ARM TO THE EXISTING POLE T1. REPLACE SIGNAL HEAD 4 AND ADD SIGNAL HEAD 5 WITH 12" LED SIGNAL HEADS ON THE MAST ARM. REPLACE PEDESTRIAN SIGNALS P3 AND P8 WITH TYPE D2 LED COUNTDOWN PEDESTRIAN SIGNALS. ADD 24" X 24" CITY TYPE "C" PULLBOX B6 AT STA. 278+23.38, 27.11' RT. CONNECT POLE T1 TO POLE T2 WITH NEW MESSENGER WIRE. REMOVE SIGNS S2, S3, AND S4. PLACE NEW REFLECTORIZED SIGN S5 ON NEW MESSENGER CABLE CONNECTING POLE T1 AND POLE T2.
2. REMOVE MESSENGER WIRE BETWEEN POLE T2 AND POLE T3. REPLACE THE EXISTING POLE WITH A NEW STEEL STRAIN POLE T2 AT STA. 277+67.2, 28.11' RT. PLACE NEW CONTROLLER AND DISCONNECT SWITCH ON POLE T2. REPLACE PEDESTRIAN SIGNALS P4 AND P5 WITH TYPE D2 LED COUNTDOWN PEDESTRIAN SIGNAL HEADS. ADD 24" X 24" CITY TYPE "C" PULLBOX B1 AT STA. 277+77.71, 42.32' RT AND 24" X 24" CITY TYPE "C" PULLBOX B2 AT STA. 277+69.82, 27.53' RT. ADD NEW SECTIONALIZER TO WOOD POLE T6.
3. REMOVE MESSENGER WIRE BETWEEN POLE T3 AND POLE T4. REPLACE THE EXISTING POLE WITH A NEW STEEL STRAIN POLE T3 AT STA. 277+65.37, 19.38' LT. REPLACE PEDESTRIAN SIGNALS P1 AND P6 WITH TYPE D2 LED COUNTDOWN PEDESTRIAN SIGNAL HEADS. ADD 24" X 24" CITY TYPE "C" PULLBOX B3 AT STA. 277+69.65, 20.81' LT AND 24" X 24" CITY TYPE "C" PULLBOX B4 AT STA. 277+83.12, 26.58' LT. CONNECT POLE T3 TO POLE T4 WITH NEW MESSENGER WIRE.
4. REPLACE SIGNAL HEADS 1 AND 2 WITH 12" LED SIGNAL HEADS ON NEW MESSENGER WIRE BETWEEN POLE T3 AND POLE T4. PLACE NEW REFLECTORIZED SIGNS S1 AND S6 ON NEW MESSENGER WIRE.
5. REMOVE MESSENGER WIRE BETWEEN POLE T4 AND POLE T1. REPLACE THE EXISTING POLE WITH A NEW STEEL STRAIN POLE T4 AT STA. 278+07.81, 29.43' LT. REPLACE PEDESTRIAN SIGNALS P2 AND P7 WITH TYPE D2 LED COUNTDOWN PEDESTRIAN SIGNAL HEADS. ATTACH A 8' MAST ARM ON THE EXISTING WOOD POLE T5 AND REPLACE SIGNAL HEAD 3 WITH 12" LED SIGNAL HEAD ON THE MAST ARM. ADD 24" X 24" CITY TYPE "C" PULLBOX B5 AT STA. 278+24.32, 21.91' LT.
6. INSTALL 2–4" RMC AND 1–3" RMC UNDER TRACK SLAB AS SHOWN ON PLAN.
7. A DISTANCE OF SIX FEET BEHIND THE CURB AND 15 FEET ON EITHER SIDE OF PROPOSED OCS POLES AND SIGNAL POLES (INCLUDING ANY DISTURBANCE TO THE EXISTING CURB) HAS BEEN QUANTIFIED FOR BIDDING PURPOSES FOR REMOVAL AND REPLACEMENT OF SIDEWALK. THE CITY'S ENGINEER WILL DETERMINE ACTUAL PAY LIMITS FOR THIS WORK. NO ADDITIONAL INCREASE TO THE UNIT COST WILL BE ALLOWED FOR THIS WORK IF THE QUANTITIES ARE MORE OR LESS THAN THE AMOUNT QUANTIFIED FOR BIDDING PURPOSES.

CAUTION UNDERGROUND UTILITIES
2 WORKING DAYS
BEFORE YOU DIG
CALL 1–800–362–2764
OHIO UTILITY PROTECTION SERVICE
CALL NON–SERVICE FACILITY
OWNERS DIRECT

GRAPHIC SCALE
10 0 10 20 40
(IN FEET)
1 inch = 10 ft. Full Size
1 inch = 20 ft. Half Size

DOTE_Mono_PDF_Half.pltcfg
W:\29014\Streetcar\CAD\Traffic_Control\Signals\2012_Fourteenth&Race\S_G-TC-2012 C.dgn
7/11/2012 8:13:25 AM

CONTRACT DRAWING
PRINTS NOT BEARING THIS STAMP WERE MADE PRIOR TO ADVERTISING FOR BIDS AND ARE TO BE CONSIDERED OBSOLETE FOR CONTRACT PURPOSES.

Department of Transportation and Engineering
City of Cincinnati
City Hall
801 Plum Street
Cincinnati, Ohio 45202

CINCINNATI STREETCAR
OVER THE RHINE
PROPOSED TRAFFIC SIGNAL PLAN
RACE STREET AND FOURTEENTH STREET

Revisions
No.

	Date	Date	Date	Date
	12/20/11	12/20/11	12/20/11	12/20/11
Drawn by	JRL	Designed by	JRL	Checked by	JTB	Reviewed by	JTB

Consultant
PB HDR

File Number
ACC No. 23126

G-TC-2012 C

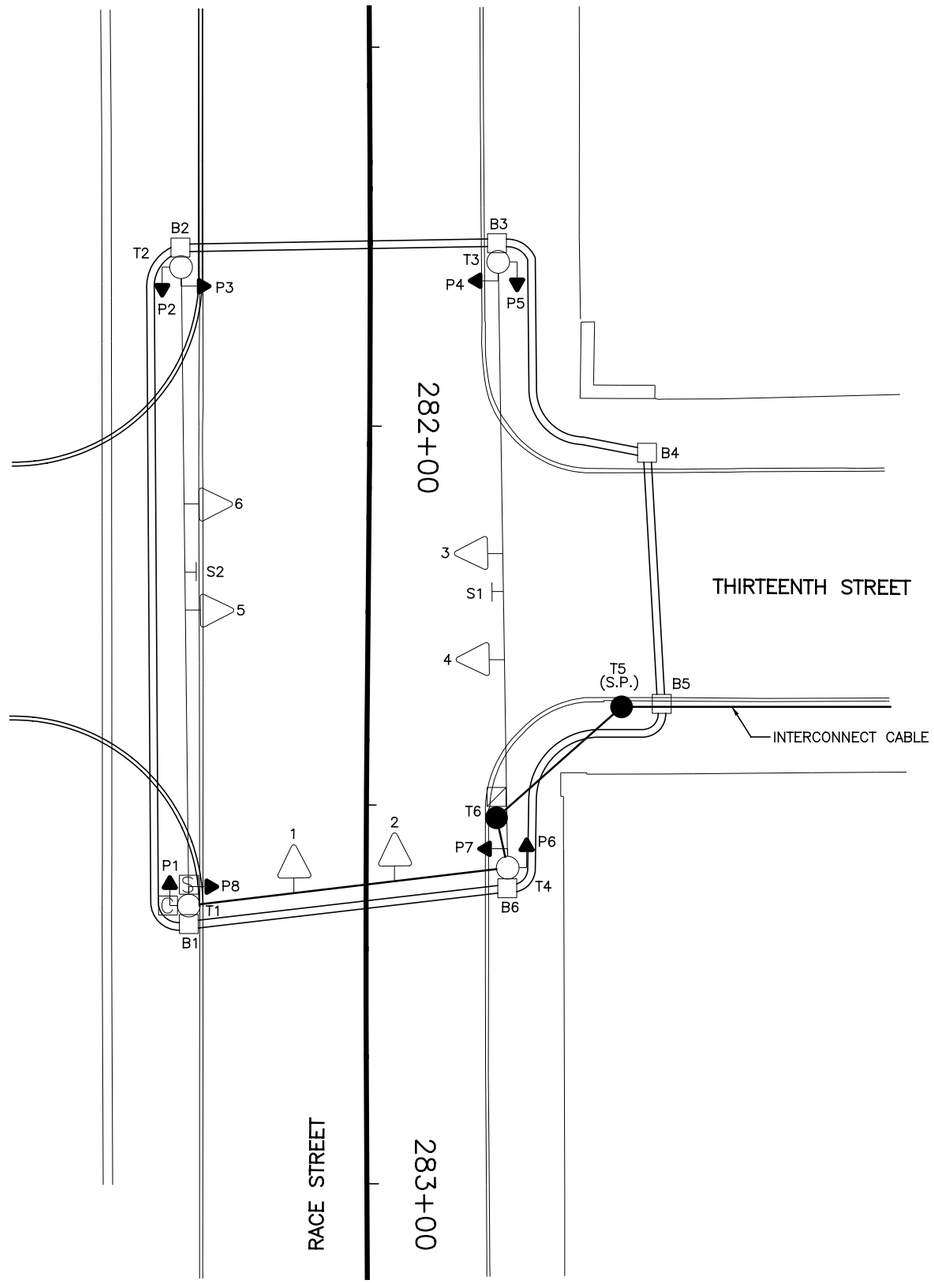

EQUIPMENT LIST	
1, 2, 3, 4, 5, 6	TRAF. SIG. HD., 3 SECT., (VERT.), 12" LED
P1, P2, P3, P4	PED. SIGS., 16" X 18" LED COUNTDOWN
P5, P6, P7, P8	
S1	REFL. SIGN, 24" X 30", "ONE WAY ⟶", 92A
S2	REFL. SIGN, 24" X 30", "ONE WAY ⟵", 92C
T1, T2, T3, T4	STEEL POLE, ANCH. BASE
T5, T6	WOOD SERVICE POLE POLE

LEGEND

- STEEL POLE
- WOOD POLE
- TRAFFIC SIGNAL HEAD
- PEDESTRIAN SIGNAL HEAD
- REFLECTORIZED SIGN
- PULLBOX
- CONTROLLER
- SECTIONALIZER
- DISCONNECT SWITCH (DS)

CAUTION UNDERGROUND UTILITIES
2 WORKING DAYS
BEFORE YOU DIG
CALL 1-800-362-2764
OHIO UTILITY PROTECTION SERVICE
CALL NON-SERVICE FACILITY
OWNERS DIRECT

GRAPHIC SCALE

10 0 10 20 40

(IN FEET)
1 inch = 10 ft. Full Size
1 inch = 20 ft. Half Size

CONTRACT DRAWING

PRINTS NOT BEARING THIS STAMP WERE MADE PRIOR TO ADVERTISING FOR BID, AND ARE TO BE CONSIDERED OBSOLETE FOR CONTRACT PURPOSES.

Department of Transportation and Engineering

City of Cincinnati
City Hall
801 Plum Street
Cincinnati, Ohio 45202

CINCINNATI STREETCAR
OVER THE RHINE
EXISTING TRAFFIC SIGNAL PLAN
RACE STREET AND THIRTEENTH STREET

Revisions
No.

	Date
Drawn by JRL	12/20/11
Designed by JRL	12/20/11
Checked by JTB	12/20/11
Reviewed by JTB	12/20/11

Consultant

PB HDR

File Number

ACC No. 23126

G-TC-2013 A

DOTE_Mono_PDF_Half.pltcfg
W:\29014A-Streetcar\CAD\Traffic_Control\Signals\2013_Race&Thirteenth\S_G-TC-2013 A.dgn
7/11/2012 8:13:44 AM

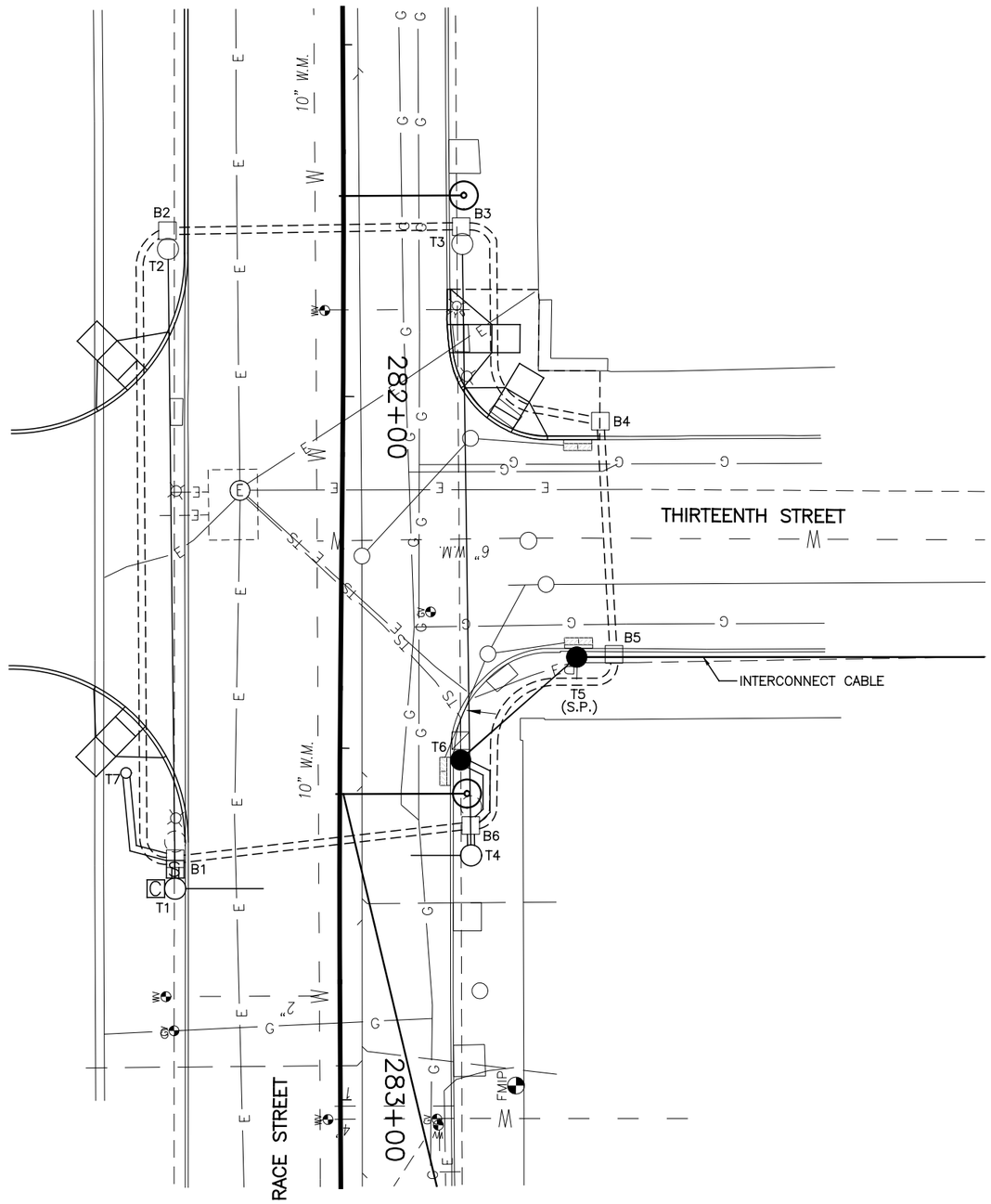

SIGNAL PHASING

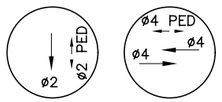

THIS IS THE GENERAL SEQUENCING FOR THIS TRAFFIC SIGNAL. REFER TO THE CITY OF CINCINNATI FOR FINAL SEQUENCING, LABELING AND TIMINGS.

CAUTION UNDERGROUND UTILITIES
2 WORKING DAYS
BEFORE YOU DIG
CALL 1–800–362–2764
OHIO UTILITY PROTECTION SERVICE
CALL NON–SERVICE FACILITY
OWNERS DIRECT

GRAPHIC SCALE

10 0 10 20 40

(IN FEET)
1 inch = 10 ft. Full Size
1 inch = 20 ft. Half Size

CONTRACT DRAWING

PRINTS NOT BEARING THIS STAMP WERE MADE PRIOR TO ADVERTISING FOR BIDS AND ARE TO BE CONSIDERED OBSOLETE FOR CONTRACT PURPOSES.

Department of Transportation and Engineering

City of Cincinnati
City Hall
801 Plum Street
Cincinnati, Ohio 45202

CINCINNATI STREETCAR
OVER THE RHINE
UNDERGROUND UTILITIES & SIGNAL PLAN DETAILS
RACE STREET AND THIRTEENTH STREET

Revisions
No.

Drawn by JRL	Date 12/20/11
Designed by JRL	Date 12/20/11
Checked by JTB	Date 12/20/11
Reviewed by JTB	Date 12/20/11

Consultant

PB HDR

File Number

ACC No. 23126

G-TC-2013 B

DOTE_Mono_PDF_Half.pltcfg
W:\29014A-Streetcar\CAD\Traffic_Control\Signals\2013_Race&Thirteenth\S_G-TC-2013 B.dgn
8:14:01 AM
7/11/2012

LEGEND

- STEEL POLE
- WOOD POLE
- STEEL PEDESTRIAN POST
- TRAFFIC SIGNAL CONDUIT
- TRAFFIC SIGNAL HEAD
- PEDESTRIAN SIGNAL HEAD
- REFLECTORIZED SIGN
- PULLBOX
- CONTROLLER
- SECTIONALIZER
- DISCONNECT SWITCH (DS)

SIGNAL INDICATIONS

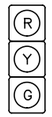

1, 2, 3, 4, 5, 6, 7

SIGNAL HEAD DETAIL
12" (LED) LENSES

P1, P2, P3, P4, P5, P6, P7, P8

TYPE D2 PEDESTRIAN (LED)
(COUNTDOWN) SIGNAL HEAD

TYPICAL POLE ORIENTATION

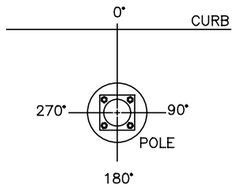

MATERIAL SCHEDULE

NO.	VEHICULAR SIGNAL HEADS 1	2	3	4	5	6	7
12 INCH	R	R	EX.	EX.	EX.	EX.	R
	Y	Y	EX.	EX.	EX.	EX.	Y
	G	G	EX.	EX.	EX.	EX.	G

TYPE D2 PEDESTRIAN (LED) (COUNTDOWN) SIGNAL HEAD

NOTE:
USE LENS W/ SYMBOL LEGENDS
PORTLAND ORANGE: HAND (DONT WALK)
LUNAR WHITE: WALKING MAN (WALK)

POLE NO.	POLE DATA: POLE TYPE	SHAFT SIZE IN X FT	FOUNDATION TYPE	PEDESTRIAN SIGNALS P1	P2	P3	P4	P5	P6	P7	P8	CABLE ENTRANCE ANGLE (DEG)	SPAN WIRE ATTACHMENT HEIGHT (FEET)	MAST ARM ATTACHMENT HEIGHT (FEET)	MAST ARM (DEG)	HANDHOLE (DEG)	CONTROLLER (DEG)	DISCONNECT SWITCH (DEG)
				EX.	EX.	EX.	EX.	EX.	EX.	EX.	EX.							
				EX.	EX.	EX.	EX.	EX.	EX.	EX.	EX.							
				ANGLE OF ORIENTATION (DEGREES)														
T1	UMC DESIGN Y3	9 X 26	FDN-7									270	24.5	18.5	0	180	180	
T2	29053	9 X 26	EXIST.		EX.	EX.						90	24.5			EX.		
T3	29053	9 X 26	EXIST.				EX.	EX.				270	24.5			EX.		
T4	UMC DESIGN Y2	9 X 26	FDN-7									90	24.5	18.5	0	180		
T5	WOOD POLE																	
T6	WOOD POLE								180	90								EX.
T7	1045	4 X 10	FDN-25	180							90					180		

CABLE SCHEDULE

CABLE#	CONNECTING DEVICE	TYPE	CABLE ROUTING	LIN. FT
1	TRAFFIC SIGNAL TS1, TS7	7C#14	TS1–TS7–T1–C	30
2	TRAFFIC SIGNAL TS2	7C#14	TS2–T4–B6–B1–T1–C	95
3	TRAFFIC SIGNAL TS3, TS4	7C#14	TS3–TS4–T4–B6–B1–T1–C	145
4	TRAFFIC SIGNAL TS5, TS6	7C#14	TS6–TS5–T1–C	85
5	PED. SIGNAL P1	7C#14	P1–T7–B1–T1–C	45
6	PED. SIGNAL P2	7C#14	P2–T2–B2–B1–T1–C	130
7	PED. SIGNAL P3	7C#14	P3–T2–B2–B1–T1–C	130
8	PED. SIGNAL P4	7C#14	P4–T3–B3–B2–B1–T1–C	175
9	PED. SIGNAL P5	7C#14	P5–T3–B3–B2–B1–T1–C	175
10	PED. SIGNAL P6	7C#14	P6–T6–B6–B1–T1–C	85
11	PED. SIGNAL P7	7C#14	P7–T6–B6–B1–T1–C	85
12	PED. SIGNAL P8	7C#14	P8–T7–B1–T1–C	45
13	POWER CABLE, AC POSITIVE, BLACK	1C#6	T5–T6–DS–B6–B1–T1–C	150
14	POWER CABLE, AC NEGATIVE, WHITE	1C#6	T5–T6–DS–B6–B1–T1–C	150
15	INTERCONNECT	12C#12	SECT.–T5–B5–B6–B1–T1–C	150

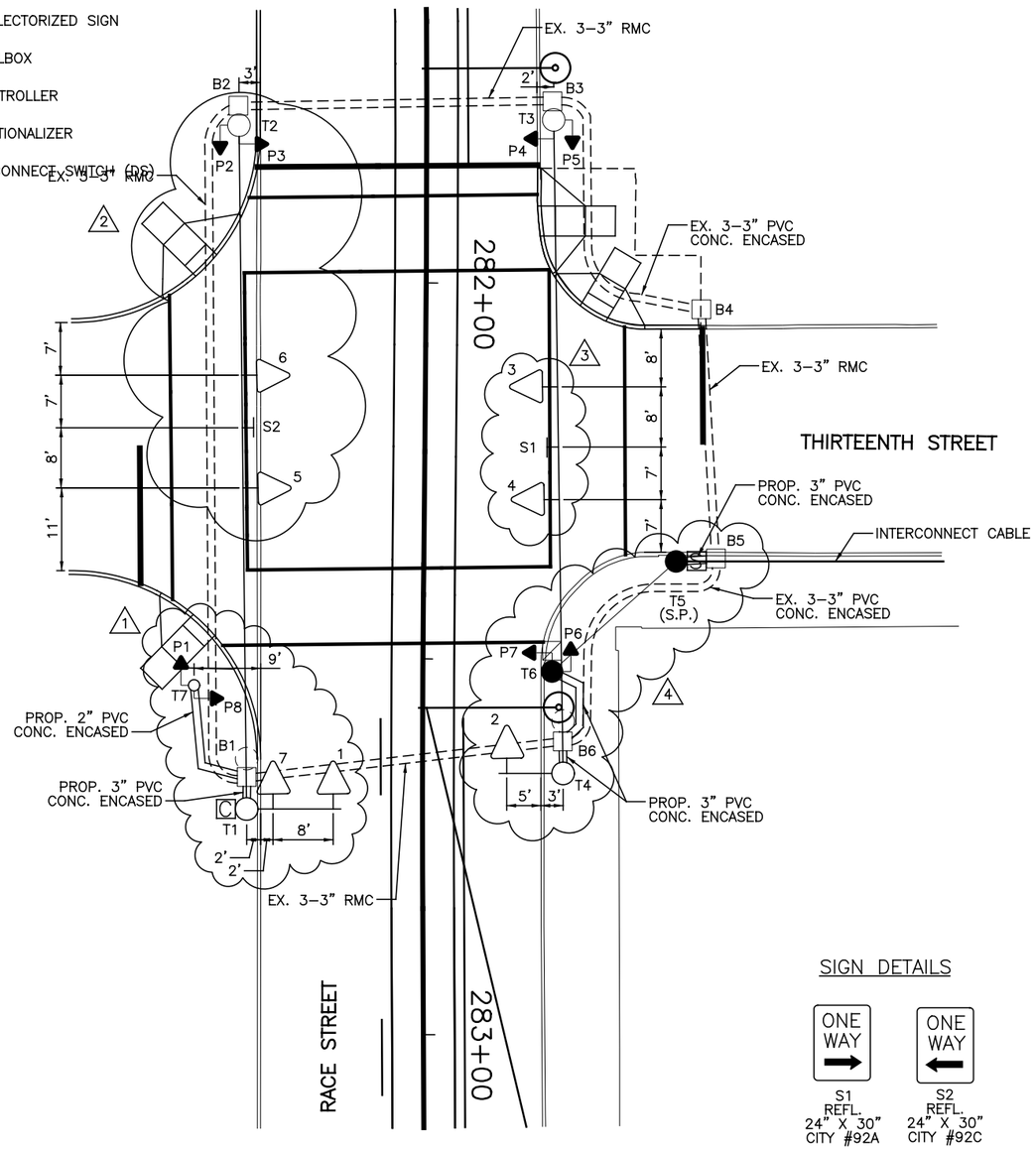

SIGN DETAILS

S1
REFL.
24" X 30"
CITY #92A

S2
REFL.
24" X 30"
CITY #92C

NOTES:

1. REMOVE THE MESSENGER WIRE BETWEEN POLE T1 AND POLE T2. REPLACE T1 WITH A NEW POLE T1 AT STA. 282+69.97, 23.39' RT. ATTACH A 11' MAST ARM ACROSS RACE STREET. ATTACH 12" LED SIGNAL HEADS 1 AND 7 ON THE MAST ARM. CONNECT POLE T1 TO POLE T2 WITH NEW MESSENGER WIRE. RELOCATE CONTROLLER ON NEW POLE T1. ADD NEW STEEL PEDESTRIAN POST T7 AT STA. 282+53.68, 30.41' RT. MOVE PEDESTRIAN SIGNAL HEADS P1 AND P8 TO POST T7.
2. RELOCATE SIGNAL HEADS 5 AND 6 ON NEW MESSENGER WIRE BETWEEN POLES T1 AND T2. ADD NEW REFLECTORIZED SIGN S2 TO NEW MESSENGER WIRE.
3. REMOVE THE MESSENGER WIRE BETWEEN POLE T3 AND POLE T4. PLACE A NEW MESSENGER WIRE BETWEEN POLE T3 AND NEW POLE T4. RELOCATE SIGNAL HEADS 3 AND 4 ON NEW MESSENGER WIRE. ADD NEW REFLECTORIZED SIGN S1 TO NEW MESSENGER WIRE.
4. REPLACE POLE T4 WITH A NEW POLE T4 AT STA. 282+65.20, 18.70' LT. ATTACH A 7' MAST ARM ACROSS RACE STREET. ATTACH 12" LED SIGNAL HEAD 2 ON THE MAST ARM. MOVE PEDESTRIAN SIGNAL HEADS P6 AND P7 ON WOOD POLE T6. ADD SECTIONALIZER ON POLE T5 (S.P.). ADD CONDUIT RISER DOWN POLE T5 AT 90 DEGREES. ADD NEW CONDUIT FROM POLE T5 TO PULLBOX B5.
5. A DISTANCE OF SIX FEET BEHIND THE CURB AND 15 FEET ON EITHER SIDE OF PROPOSED OCS POLES AND SIGNAL POLES (INCLUDING ANY DISTURBANCE TO THE EXISTING CURB) HAS BEEN QUANTIFIED FOR BIDDING PURPOSES FOR REMOVAL AND REPLACEMENT OF SIDEWALK. THE CITY'S ENGINEER WILL DETERMINE ACTUAL PAY LIMITS FOR THIS WORK. NO ADDITIONAL INCREASE TO THE UNIT COST WILL BE ALLOWED FOR THIS WORK IF THE QUANTITIES ARE MORE OR LESS THAN THE AMOUNT QUANTIFIED FOR BIDDING PURPOSES.

GRAPHIC SCALE

10 0 10 20 40

(IN FEET)
1 inch = 10 ft. Full Size
1 inch = 20 ft. Half Size

CAUTION UNDERGROUND UTILITIES
2 WORKING DAYS
BEFORE YOU DIG
CALL 1–800–362–2764
OHIO UTILITY PROTECTION SERVICE
CALL NON–SERVICE FACILITY
OWNERS DIRECT

DEPARTMENT OF TRANSPORTATION & ENGINEERING CITY OF CINCINNATI OHIO

CONTRACT DRAWING

PRINTS NOT BEARING THIS STAMP WERE MADE PRIOR TO ADVERTISING FOR BIDS AND ARE TO BE CONSIDERED OBSOLETE FOR CONTRACT PURPOSES.

Department of Transportation and Engineering

City of Cincinnati
City Hall
801 Plum Street
Cincinnati, Ohio 45202

CINCINNATI STREETCAR OVER THE RHINE

PROPOSED TRAFFIC SIGNAL PLAN
RACE STREET AND THIRTEENTH STREET

Revisions
No.

Date 12/20/11	Date 12/20/11	Date 12/20/11	Date 12/20/11
Drawn by JRL	Designed by JRL	Checked by JTB	Reviewed by JTB

Consultant

PB HDR

File Number

ACC No. 23126

G-TC-2013 C

DOTE_Mono_PDF_Half.pltcfg
W:\29014A-Streetcar\CAD\Traffic_Control\Signals\2013_Race&Thirteenth\S_G-TC-2013 C.dgn
7/11/2012 8:14:16 AM

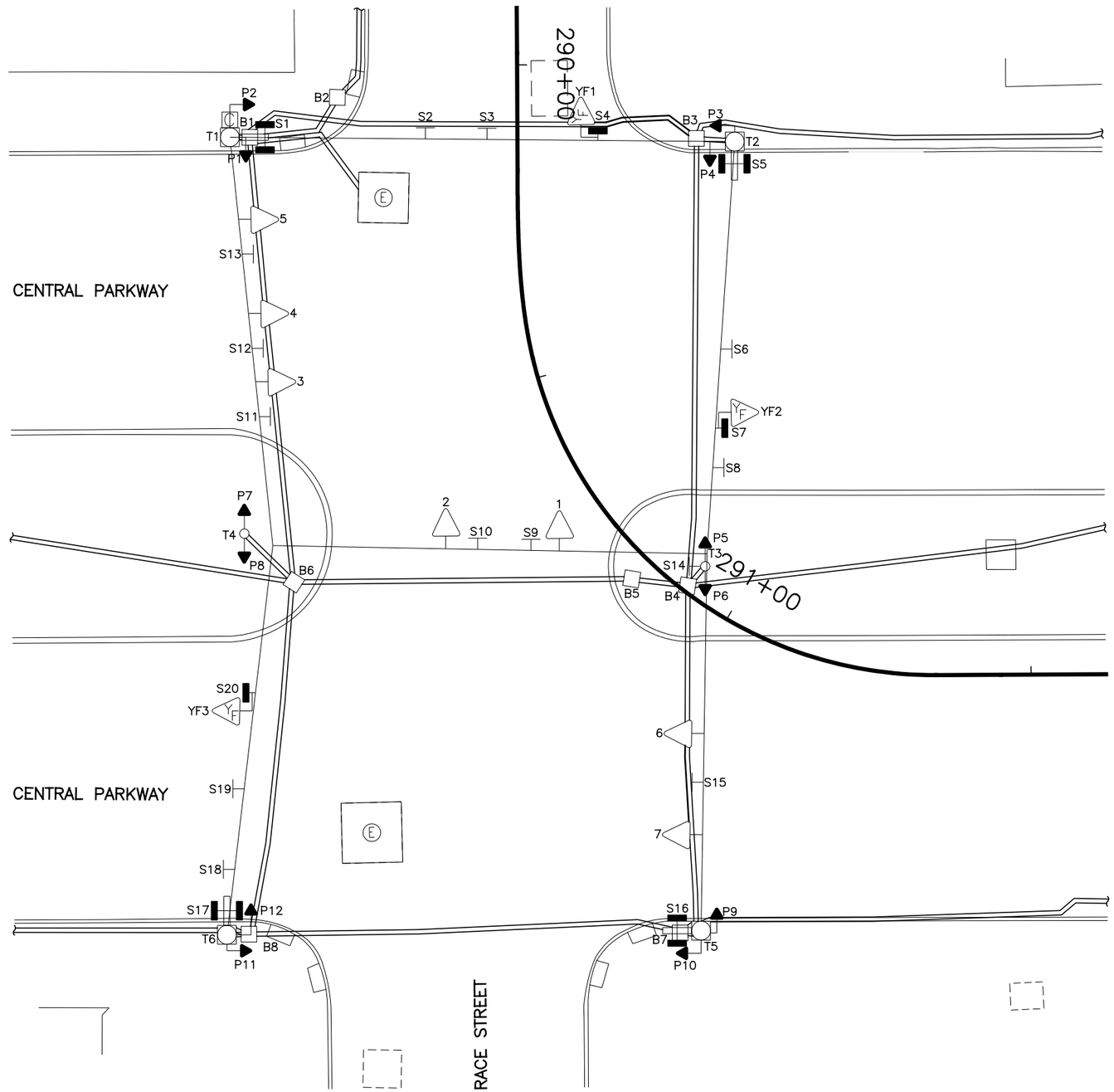

EQUIPMENT LIST

1, 2, 4, 5, 6, 7	TRAF. SIG. HD., 3 SECT., HORIZ., 12" RYG
3	TRAF. SIG. HD., 3 SECT., HORIZ., 12" RYG (ARROW)
YF1–YF3	TRAF. SIG. HD., 1 SECT., HORIZ., 8" Y
P1–P12	PED. SIG., 2 SECT., 12" INCANDESCENT
S1, S16	ILLUM. SIGN, 24" X 30", DOUBLE FACE, "CENTRAL PARKWAY WEST"
S2, S19	REFL. SIGN, 24" X 30", "⊢ ", #79AB
S3, S6, S10	REFL. SIGN, 24" X 30", " ⊣ ONLY", #79B
S4, S7, S20	ILLUM. SIGN, 24" X 30", "WATCH FOR EMERGENCY VEHICLE WHEN FLASHING", #114
S5, S17	ILLUM. SIGN, 24" X 30", DOUBLE FACE, "RACE STREET"
S8	REFL. SIGN, 24" X 30", " ⊣ ONLY", #79C
S9	REFL. SIGN, 24" X 30", " ⊣ ", #79BC
S11	REFL. SIGN, 24" X 30", "LEFT TURN SIGNAL", #77C
S12	REFL. SIGN, 24" X 30", "LEFT ON ARROW ONLY", #78C
S13	REFL. SIGN, 24" X 30", "ONE WAY ← ", #92C
S14, S15	REFL. SIGN, 24" X 30", "ONE WAY → ", #92A
S18	REFL. SIGN, 24" X 30", " ⊢ ONLY", #79A
T1, T2, T5, T6	MOLT POLE, W/1 BAY BOOM
T3, T4	PEDESTRIAN POST
B1–B8	PULLBOX, 24" X 24", DOWNTOWN SPECIAL

LEGEND

- MOL, MOT, MOLT SIGNAL POLE
- STEEL PEDESTRIAN POST
- TRAFFIC SIGNAL CONDUIT
- YELLOW FLASHER SIGNAL HEAD
- TRAFFIC SIGNAL HEAD
- PEDESTRIAN SIGNAL HEAD
- REFLECTORIZED SIGN
- ILLUMINATED SIGN
- PULLBOX
- CONTROLLER

CAUTION UNDERGROUND UTILITIES
2 WORKING DAYS
BEFORE YOU DIG
CALL 1–800–362–2764
OHIO UTILITY PROTECTION SERVICE
CALL NON–SERVICE FACILITY
OWNERS DIRECT

GRAPHIC SCALE
10 0 10 20 40
(IN FEET)
1 inch = 10 ft. Full Size
1 inch = 20 ft. Half Size

DOTE_Mono_PDF_Half.pltcfg
W:\29014A-Streetcar\CAD\Traffic_Control\Signals\2014_CentralPkwy&Race_C-38\S_G-TC-2014 A.dgn
7/11/2012 8:14:30 AM

CITY OF CINCINNATI DEPARTMENT OF TRANSPORTATION & ENGINEERING OHIO

CONTRACT DRAWING

PRINTS NOT BEARING THIS STAMP WERE MADE PRIOR TO ADVERTISING FOR BID AND MUST BE CONSIDERED OBSOLETE FOR CONTRACT PURPOSES.

Department of Transportation and Engineering

City of Cincinnati
City Hall
801 Plum Street
Cincinnati, Ohio 45202

CINCINNATI STREETCAR OVER THE RHINE

EXISTING TRAFFIC SIGNAL PLAN
RACE STREET AND CENTRAL PARKWAY

Revisions
No.

	Date
Drawn by JRL	12/20/11
Designed by JRL	12/20/11
Checked by JTB	12/20/11
Reviewed by JTB	12/20/11

Consultant

PB HDR

File Number

ACC No. 23126

G-TC-2014 A

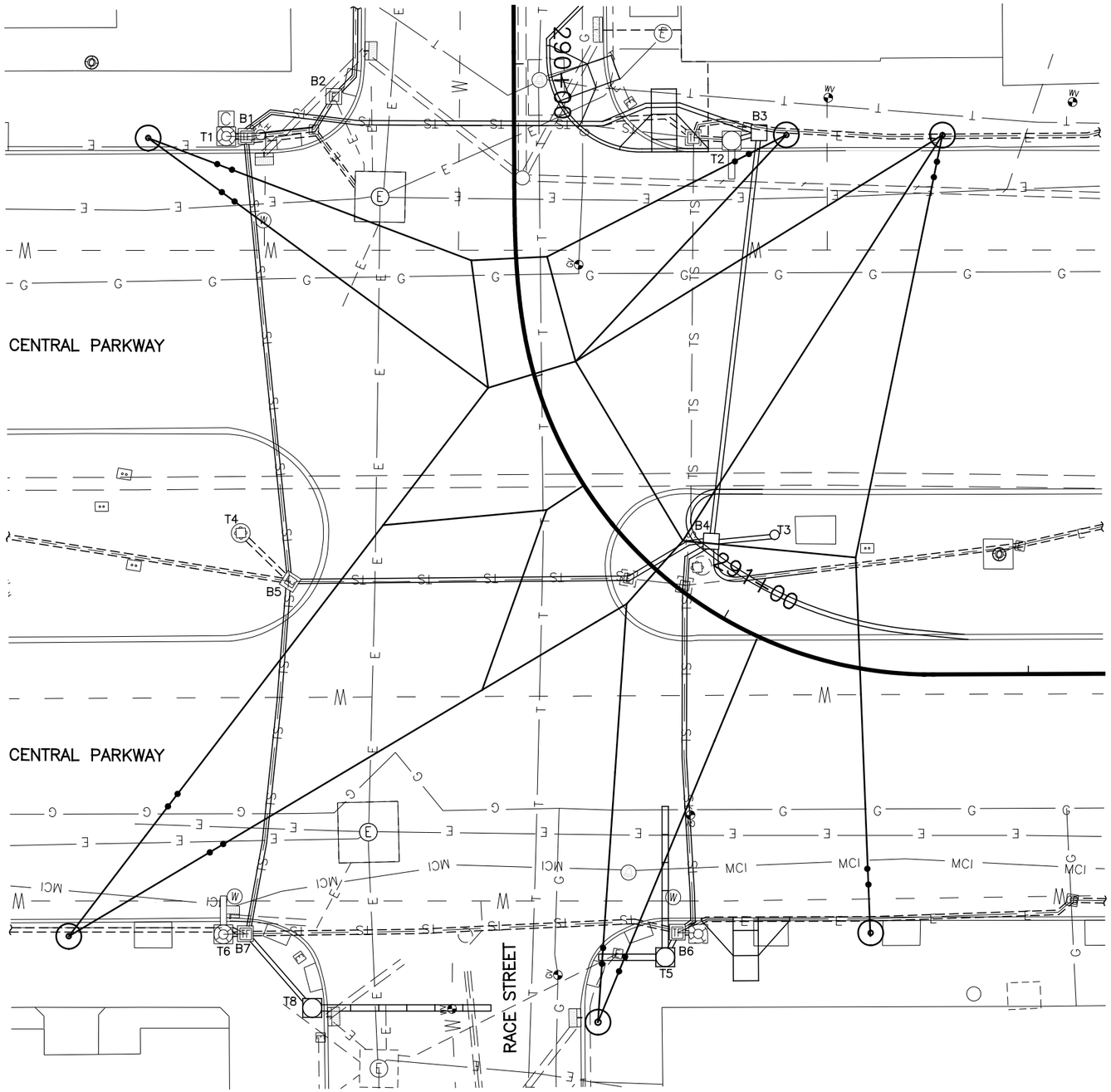

SIGNAL PHASING

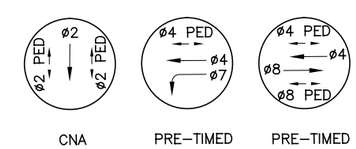

THIS IS THE GENERAL SEQUENCING FOR THIS TRAFFIC SIGNAL. REFER TO THE CITY OF CINCINNATI FOR FINAL SEQUENCING, LABELING AND TIMINGS.

CAUTION UNDERGROUND UTILITIES
2 WORKING DAYS
BEFORE YOU DIG
CALL 1–800–362–2764
OHIO UTILITY PROTECTION SERVICE
CALL NON–SERVICE FACILITY
OWNERS DIRECT

GRAPHIC SCALE
10 0 10 20 40
(IN FEET)
1 inch = 10 ft. Full Size
1 inch = 20 ft. Half Size

DEPARTMENT OF TRANSPORTATION & ENGINEERING
CITY OF CINCINNATI OHIO

CONTRACT DRAWING

PRINTS NOT BEARING THIS STAMP WERE MADE PRIOR TO ADVERTISING FOR BIDS AND ARE TO BE CONSIDERED OBSOLETE FOR CONTRACT PURPOSES.

Department of Transportation and Engineering

City of Cincinnati
City Hall
801 Plum Street
Cincinnati, Ohio 45202

CINCINNATI STREETCAR
OVER THE RHINE

UNDERGROUND UTILITIES & SIGNAL PLAN DETAILS
RACE STREET AND CENTRAL PARKWAY

Revisions
No.

Drawn by JRL	Date 12/20/11
Designed by JRL	Date 12/20/11
Checked by JTB	Date 12/20/11
Reviewed by JTB	Date 12/20/11

Consultant

PB HDR

File Number

ACC No.
23126

G-TC-2014 B

DOTE_Mono_PDF_Half.pltcfg
W:\29014A-Streetcar\CAD\Traffic_Control\Signals\2014_CentralPkwy&Race_C-38\S_G-TC-2014 B.dgn
7/11/2012
8:14:44 AM

LEGEND

- MOL, MOT, MOLT SIGNAL POLE
- STEEL PEDESTRIAN POST
- TRAFFIC SIGNAL CONDUIT
- YELLOW FLASHER SIGNAL HEAD
- TRAFFIC SIGNAL HEAD
- PEDESTRIAN SIGNAL HEAD
- REFLECTORIZED SIGN
- ILLUMINATED SIGN
- PULLBOX
- CONTROLLER

SIGNAL INDICATIONS

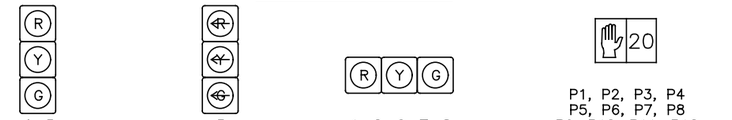

TYPICAL POLE ORIENTATION

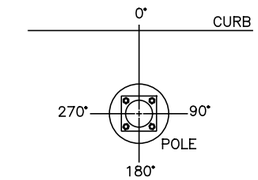

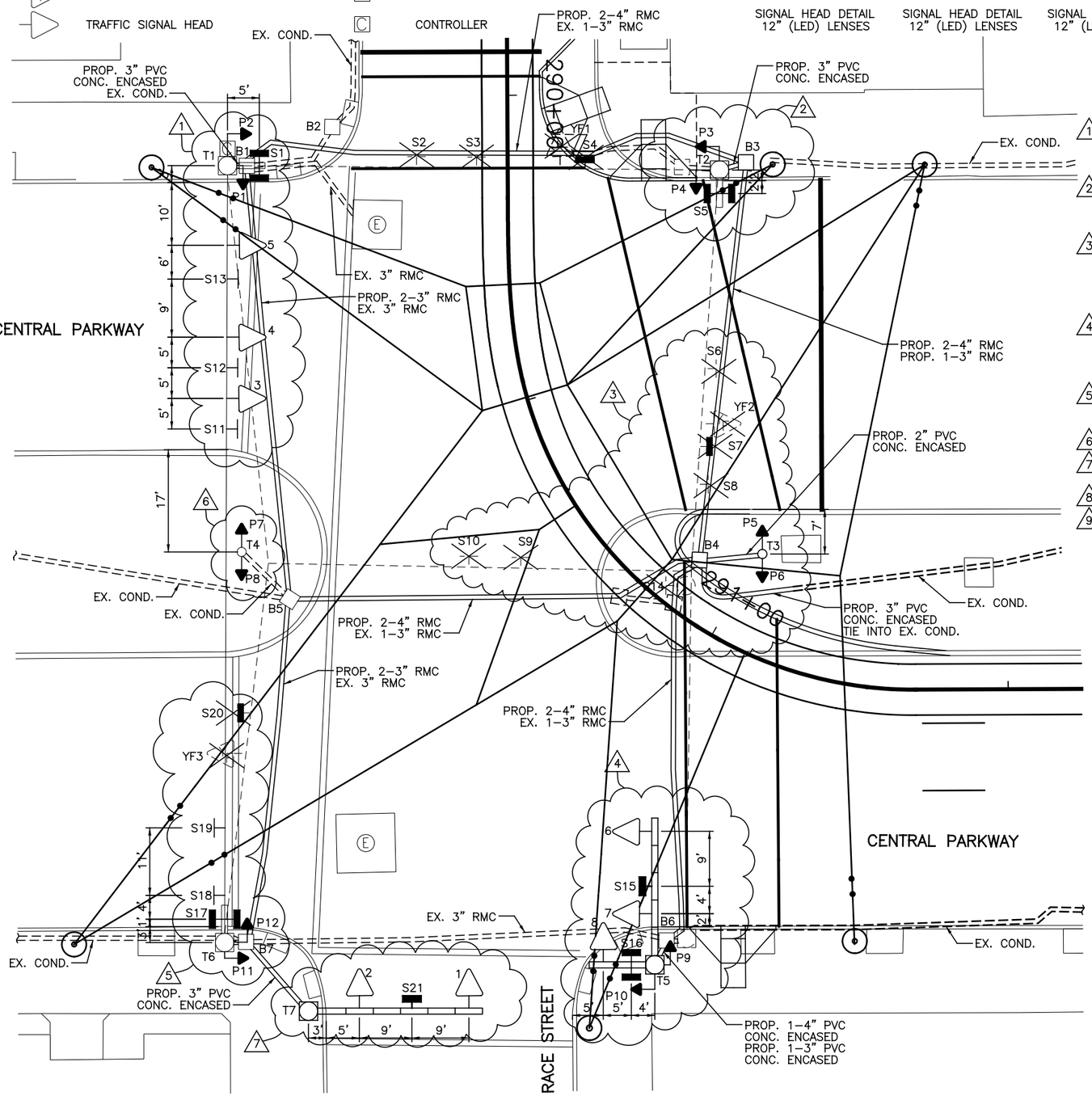

NOTES:

1. REMOVE EXISTING MESSENGER WIRE FROM POLE T1 TO POLE T6 AND REPLACE WITH NEW MESSENGER WIRE. REPLACE TRAFFIC SIGNALS 3, 4, AND 5 WITH 12" LED SIGNAL HEADS. REPLACE REFLECTORIZED SIGNS S11, S12 AND S13 WITH NEW SIGNS ATTACHED TO THE NEW MESSENGER WIRE. REPLACE PEDESTRIAN SIGNALS P1 AND P2 WITH TYPE D2 LED COUNTDOWN PEDESTRIAN SIGNAL HEADS. REPLACE CONTROLLER ON POLE T1.
2. REMOVE MESSENGER WIRE FROM POLE T1 TO POLE T2. REMOVE YELLOW FLASHER SIGNAL YF1 ALONG WITH SIGNS S2, S3, AND S4. GROUND MOUNT LANE ASSIGNMENT SIGN FOR RACE STREET. REPLACE PEDESTRIAN SIGNALS P3 AND P4 WITH TYPE D2 LED COUNTDOWN PEDESTRIAN SIGNAL HEADS. REMOVE EXISTING PULLBOX B3 AND INSTALL NEW 24" X 24" CITY TYPE "C" PULLBOX B3 AT STA. 290+11.19, 38.97' LT.
3. REMOVE PEDESTRIAN POST T3, PEDESTRIAN SIGNALS P5 AND P6, YELLOW FLASHER SIGNAL YF2 AND SIGNS S7, S9, S10 AND S14. INSTALL NEW PEDESTRIAN POST T3 AT STA. 291+00, 15.64' LT. REMOVE SIGNS S6 AND S8 AND REPLACE WITH A COMBINED GROUND MOUNTED SIGN IN THE MEDIAN. INSTALL TYPE D2 LED COUNTDOWN PEDESTRIAN SIGNALS P5 AND P6 TO POST T3. REMOVE EXISTING PULLBOXES B4 AND B5 THAT WERE PREVIOUSLY IN THE MEDIAN. ADD NEW 24" X 24" CITY TYPE "C" PULLBOX B4 AT STA. 290+90.87, 9.05' LT. EXTEND EXISTING CONDUIT FROM THE REMOVED PULLBOXES TO THE NEW PROPOSED PULLBOX B4.
4. REMOVE MESSENGER WIRE FROM T2 TO T5 AND INTERMEDIATE MESSENGER WIRE. REPLACE THE EXISTING POLE WITH A NEW POLE T5 WITH 5 BAY BOOM AND 2 BAY BOOM AT STA. 291+10.58, 52.73' RT. INSTALL NEW 12" LED SIGNAL 6 IN BAY 5, NEW SIGN S15 IN BAY 3, AND NEW 12" LED SIGNAL 7 IN BAY 2. INSTALL NEW SIGN S16 IN BAY 1 OF 2 BAY BOOM AND INSTALL NEW 12" LED SIGNAL 8 TO BAY 2. REPLACE PEDESTRIAN SIGNALS P9 AND P10 WITH TYPE D2 LED COUNTDOWN PEDESTRIAN SIGNAL HEADS.
5. REMOVE YELLOW FLASHER SIGNAL YF3 AND SIGN S20. REPLACE REFLECTORIZED SIGNS S18 AND S19 ON NEW MESSENGER WIRE. REPLACE PEDESTRIAN SIGNALS P11 AND P12 WITH TYPE D2 LED COUNTDOWN PEDESTRIAN SIGNALS.
6. REPLACE PEDESTRIAN SIGNALS P7 AND P8 WITH TYPE D2 LED COUNTDOWN SIGNALS.
7. INSTALL POLE T7 WITH 6 BAY BOOM AT STA. 290+90.00, 88.39' RT. INSTALL 12" LED SIGNAL 1 IN BAY 5. INSTALL SIGN S21 IN BAY 4. INSTALL 12" LED SIGNAL 2 IN BAY 2.
8. INSTALL 2–4" RMC ALONG WITH EXISTING 1–3" RMC UNDER TRACK SLAB AS SHOWN ON PLAN.
9. A DISTANCE OF SIX FEET BEHIND THE CURB AND 15 FEET ON EITHER SIDE OF PROPOSED OCS POLES AND SIGNAL POLES (INCLUDING ANY DISTURBANCE TO THE EXISTING CURB) HAS BEEN QUANTIFIED FOR BIDDING PURPOSES FOR REMOVAL AND REPLACEMENT OF SIDEWALK. THE CITY'S ENGINEER WILL DETERMINE ACTUAL PAY LIMITS FOR THIS WORK. NO ADDITIONAL INCREASE TO THE UNIT COST WILL BE ALLOWED FOR THIS WORK IF THE QUANTITIES ARE MORE OR LESS THAN THE AMOUNT QUANTIFIED FOR BIDDING PURPOSES.

SIGN DETAILS

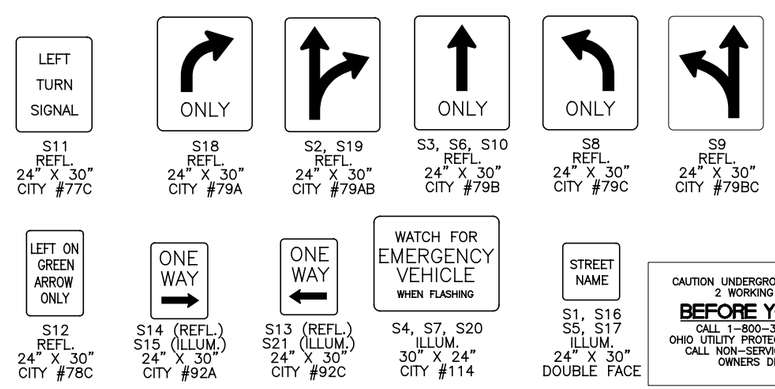

CAUTION UNDERGROUND UTILITIES
2 WORKING DAYS
BEFORE YOU DIG
CALL 1–800–362–2764
OHIO UTILITY PROTECTION SERVICE
CALL NON–SERVICE FACILITY
OWNERS DIRECT

GRAPHIC SCALE

10 0 10 20 40

(IN FEET)
1 inch = 10 ft. Full Size
1 inch = 20 ft. Half Size

CONTRACT DRAWING

PRINTS NOT BEARING THIS STAMP WERE MADE PRIOR TO ADVERTISING FOR BIDS AND ARE TO BE CONSIDERED OBSOLETE FOR CONTRACT PURPOSES.

Department of Transportation and Engineering

City of Cincinnati
City Hall
801 Plum Street
Cincinnati, Ohio 45202

CINCINNATI STREETCAR OVER THE RHINE

PROPOSED TRAFFIC SIGNAL PLAN
RACE STREET AND CENTRAL PARKWAY

Revisions

No.				

Date 12/20/11	Date 12/20/11	Date 12/20/11	Date 12/20/11
Drawn by JRL	Designed by JRL	Checked by JTB	Reviewed by JTB

Consultant

PB HDR

File Number

ACC No. 23126

G-TC-2014 C

DOTE_Mono_PDF_Half.pltcfg
W:\29014A-Streetcar\CAD\Traffic_Control\Signals\2014_CentralPkwy&Race_C-38\S_G-TC-2014 C.dgn
7/11/2012 8:14:58 AM

MATERIAL SCHEDULE

VEHICLE SIGNAL HEADS

NO.	1	2	3	4	5	6	7	8
12 IN. R	R	R	R	R	R	R	R	R
12 IN. Y	Y	Y	~~Y~~	Y	Y	Y	Y	Y
12 IN. G	G	G	~~G~~	G	G	G	G	G

20

TYPE D2 PEDESTRIAN (LED)
(COUNTDOWN) SIGNAL HEAD

NOTE:
USE LENS W/ SYMBOL LEGENDS
PORTLAND ORANGE: HAND (DONT WALK)
LUNAR WHITE: WALKING MAN (WALK)

POLE DATA / PEDESTRIAN SIGNALS

POLE NO.	POLE TYPE	TRAFFIC BOOM (# OF BAYS)	FOUND. TYPE	P1 D W	P2 D W	P3 D W	P4 D W	P5 D W	P6 D W	P7 D W	P8 D W	P9 D W	P10 D W	P11 D W	P12 D W	CABLE ENTRANCE ANGLE (DEG)	SPAN WIRE ATTACHMENT HEIGHT (FEET)	ATTACHMENT HEIGHT (FEET) TO THE BOTTOM OF BOOM	TRAFFIC BOOM (DEG)	STREET LIGHT BRACKET ARM (DEG)	HANDHOLE (DEG)	CONTROLLER (DEG)
				ANGLE OF ORIENTATION (DEGREES)																		
T1	MOLT	1	EXIST.	270	180											0	24.5	EX.	EX.	EX.	EX.	180
T2	MOLT	1	EXIST.			180	90											EX.	EX.	EX.	EX.	
T3	1045		FDN–25					90	270												180	
T4	1045		EXIST.							270	90										EX.	
T5	MOLT	5 2	FDN–55									90	180					17	0 270	0	180	
T6	MOLT	1	EXIST.											180	90	0	24.5	EX.	EX.	EX.	EX.	
T7	MOTX	6	FDN–53															17	0		180	

CABLE SCHEDULE

CABLE#	CONNECTING DEVICE	TYPE	CABLE ROUTING	LIN. FT
1	TRAFFIC SIGNAL TS1, TS2	7C#14	TS1–TS2–T7–B7–B5–B1–T1–C	226
2	TRAFFIC SIGNAL TS3	7C#14	TS3–T1–C	55
3	TRAFFIC SIGNAL TS4, TS5	7C#14	TS4–TS5–T1–C	50
4	TRAFFIC SIGNAL TS6, TS7	7C#14	TS6–TS7–T5–B6–B4–B5–B1–T1–C	280
5	TRAFFIC SIGNAL TS8	7C#14	TS8–T5–B6–B4–B5–B1–T1–C	262
6	PED. SIGNAL P1	EXIST.	EXIST.	EXIST.
7	PED. SIGNAL P2	EXIST.	EXIST.	EXIST.
8	PED. SIGNAL P3	7C#14	P3–T2–B3–B1–T1–C	132
9	PED. SIGNAL P4	7C#14	P4–T2–B3–B1–T1–C	132
10	PED. SIGNAL P5	7C#14	P5–T3–B4–B5–B1–T1–C	205
11	PED. SIGNAL P6	7C#14	P6–T3–B4–B5–B1–T1–C	205
12	PED. SIGNAL P7	EXIST.	EXIST.	EXIST.
13	PED. SIGNAL P8	EXIST.	EXIST.	EXIST.
14	PED. SIGNAL P9	7C#14	P9–T5–B6–B4–B5–B1–T1–C	247
15	PED. SIGNAL P10	7C#14	P10–T5–B6–B4–B5–B1–T1–C	247
16	PED. SIGNAL P11	EXIST.	EXIST.	EXIST.
17	PED. SIGNAL P12	EXIST.	EXIST.	EXIST.
18	ILLUM. SIGN S1	EXIST.	EXIST.	EXIST.
19	ILLUM. SIGN S5	2C#12	S5–T2–B3–B1–T1–C	136
20	ILLUM. SIGN S15	2C#12	S15–T5–B6–B4–B5–B1–T1–C	220
21	ILLUM. SIGN S16	2C#12	S16–T5–B6–B4–B5–B1–T1–C	210
22	ILLUM. SIGN S17	EXIST.	EXIST.	EXIST.
23	ILLUM. SIGN S21	2C#12	S21–T7–B7–B5–B1–T1–C	220
24	POWER CABLE, AC POSTIVE, BLACK	EXIST.	EXIST.	EXIST.
25	POWER CABLE, AC POSTIVE, WHITE	EXIST.	EXIST.	EXIST.

CAUTION UNDERGROUND UTILITIES
2 WORKING DAYS
BEFORE YOU DIG
CALL 1–800–362–2764
OHIO UTILITY PROTECTION SERVICE
CALL NON–SERVICE FACILITY
OWNERS DIRECT

GRAPHIC SCALE
10 0 10 20 40
(IN FEET)
1 inch = 10 ft. Full Size
1 inch = 20 ft. Half Size

DOTE_Mono_PDF_Half.pltcfg
W:\29014A-Streetcar\CAD\Traffic_Control\Signals\2014_CentralPkwy&Race_C-38\S_G-TC-2014 D.dgn
7/11/2012 8:15:06 AM

CONTRACT DRAWING
PRINTS NOT BEARING THIS STAMP WERE MADE PRIOR TO ADVERTISING FOR BID, AND ARE TO BE CONSIDERED OBSOLETE FOR CONTRACT PURPOSES.

Department of Transportation and Engineering
City of Cincinnati
City Hall
801 Plum Street
Cincinnati, Ohio 45202

CINCINNATI STREETCAR
OVER THE RHINE
PROPOSED TRAFFIC SIGNAL PLAN
RACE STREET AND CENTRAL PARKWAY

Revisions
No.

Drawn by JRL Date 12/20/11
Designed by JRL Date 12/20/11
Checked by JTB Date 12/20/11
Reviewed by JTB Date 12/20/11

Consultant
PB HDR

File Number

ACC No. 23126

G-TC-2014 D

QTY	\G1033; \G1033;\b\iUMC DESIGN NUMBER	MAST ARM DATA			MAST ARM CONNECTION DATA (in)								POLE TUBE SIZE	POLE BASE CONNECTION DATA (in)								SIGNALS		SIGNS	
		SPAN	TUBE SIZE	MTG HGT	BOLT ø	X	Y	W	H	H2	APL	PPL		B.C.	S	F	P	T	H	(QTY) A. BOLT SIZE		S	T	M	N
	50303-B215-Y1	6'-0"	11E-4.00x3.16x6'-0"	18'-9"	3/4	9	9	11 1/2	11 1/2	13 1/2	1 1/4	3/4	0E-9.00x6.10x20'-9"	12 1/2	13 1/2	8 13/16	6 1/4	1 1/2	1 3/4	(4) 1 1/2 x 54 x 6	D	5	–	–	2
																					W	74	–	–	5
	50303-B215-Y2	9'-0"	11E-4.50x3.24x9'-0"	18'-9"	3/4	9	9	11 1/2	11 1/2	13 1/2	1 1/4	3/4									D	8	2	5	3
																					W	74	74	5	5
	50303-B215-Y3	12'-0"	11E-5.00x3.32x12'-0"	18'-9"	3/4	9	9	11 1/2	11 1/2	13 1/2	1 1/4	3/4									D	11	2	7	5
																					W	74	74	5	5
	50303-B215-Y4	15'-0"	11E-5.50x3.40x15'-0"	18'-9"	3/4	9	9	11 1/2	11 1/2	13 1/2	1 1/4	3/4									D	14	5	10	1
																					W	74	74	5	5
	50303-B215-Y5	20'-0"	7E-6.00x3.20x20'-0"	18'-9"	3/4	9	9	11 1/2	11 1/2	13 1/2	1 1/4	3/4									D	19	10	15	5
																					W	74	74	5	5

D = DISTANCE (ft)
W = WEIGHT (lbs)

11 GA = 0.120" WALL THICKNESS
7 GA = 0.179" WALL THICKNESS
0 GA = 0.313" WALL THICKNESS
E = ROUND TAPERED STEEL TUBE @ 0.14 in/ft TAPER

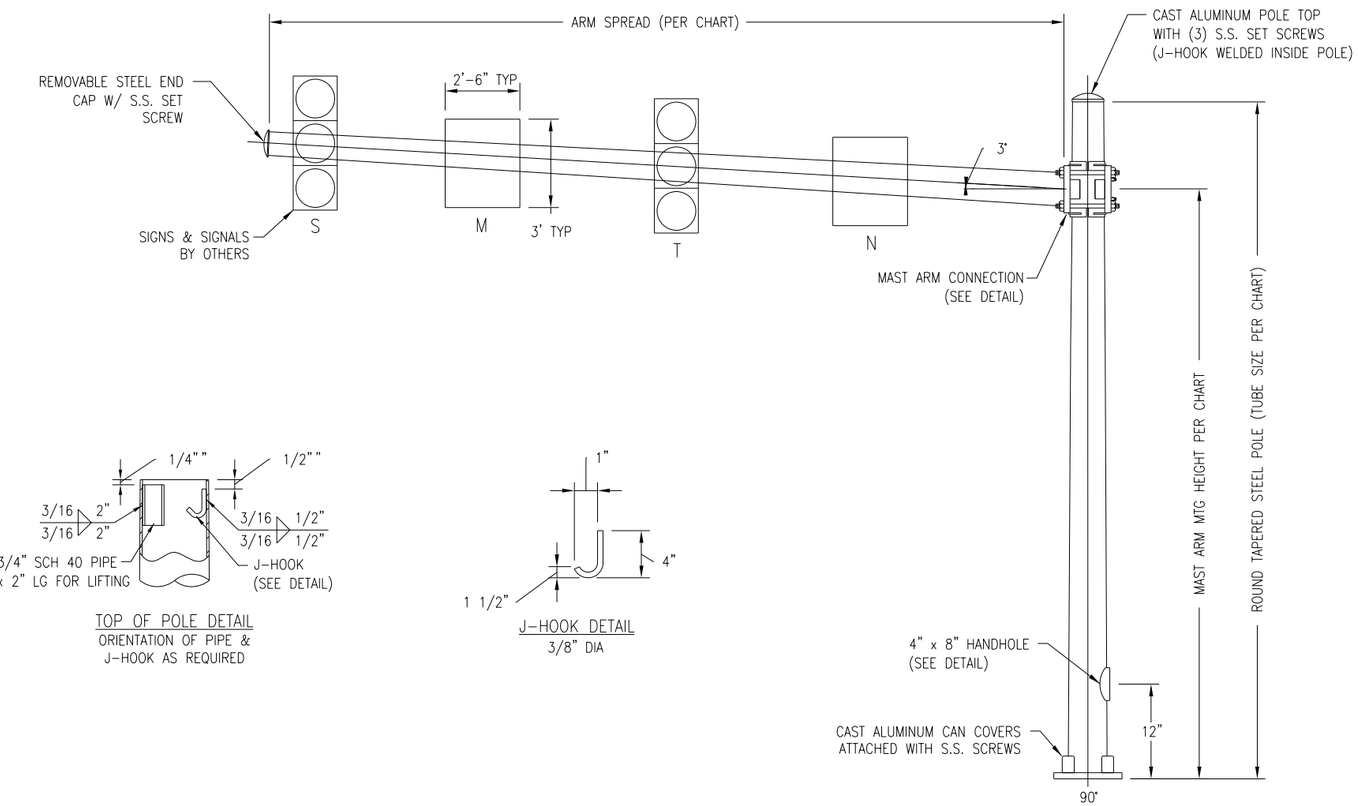

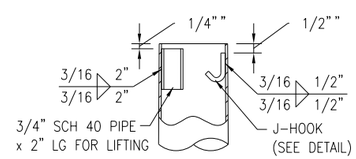

TOP OF POLE DETAIL
ORIENTATION OF PIPE & J-HOOK AS REQUIRED

J-HOOK DETAIL
3/8" DIA

DESIGN CRITERIA:

1. DESIGNED IN ACCORDANCE WITH 2009 AASHTO "STANDARD SPECIFICATIONS FOR STRUCTURAL SUPPORTS FOR HIGHWAY SIGNS, LUMINAIRES, AND TRAFFIC SIGNALS" FOR 90 M.P.H. WIND ZONE.
2. ANCHOR BOLTS ANALYZED FOR STEEL STRENGTH ONLY. THE ANCHOR BOLT EMBEDMENT LENGTH SHOWN ON THIS DRAWING SHALL BE VERIFIED BY THE FOUNDATION ENGINEER.
3. THE EXPOSED LENGTH OF THE ANCHOR BOLT BETWEEN THE TOP OF THE FOUNDATION AND THE BOTTOM OF THE LEVELING NUT SHOULD NOT EXCEED ONE BOLT DIAMETER.
4. VIBRATION IS MORE LIKELY TO OCCUR WHEN STRUCTURES ARE INSTALLED WITHOUT ATTACHING THE SIGNALS AND OR SIGNS. THEREFORE, THE INTENDED EQUIPMENT OR DAMPENING DEVICES MUST BE INSTALLED AT THE TIME OF ERECTION. BECAUSE VIBRATION IS GENERALLY UNPREDICTABLE, A MAINTENANCE PROGRAM SHOULD INCLUDE INSPECTION FOR INDICATIONS OF EXCESSIVE VIBRATION OR FATIGUE AND EXAMINATION FOR ANY STRUCTURAL DAMAGE OR BOLT LOOSENING.
5. CUSTOMER TO CONFIRM ALL DIMENSIONS & ORIENTATIONS BEFORE RELEASING ORDER FOR MANUFACTURING.

MATERIAL SPECIFICATIONS	
TAPERED TUBES	ASTM A595 GR A
PLATES	ASTM A36
HANDHOLE FRAME	ASTM A529 GR 50 (PREFERRED) or ASTM A572 GR 50 or ASTM A709 GR 50
HANDHOLE COVER	ASTM A36 or A1011
ARM CONNECTION STUDS	ASTM A449
ARM CONNECTION NUTS	ASTM A563 GR DH
PIPE	ASTM A500 GR B OR A53 GR B
ANCHOR BOLTS	ASTM F1554 GR 55
ANCHOR BOLT NUTS	ASTM A563 GR A
FLAT WASHERS	ASTM F436
BOLT COVERS	ASTM B26 (356F)
POLE TOP	ASTM B26 (356F)
S.S. HARDWARE	AISI-300 SERIES (18-8)
STRUCTURE FINISH	PER SALES ORDER
HARDWARE FINISH	HD GALV TO ASTM A153

VERIFY POLE HARDWARE, THICKNESS, DIMENSIONS AND MISCELLANEOUS DETAILS WITH MANUFACTURER BEFORE ORDERING.

GRAPHIC SCALE
10 0 10 20 40
(IN FEET)
1 inch = 10 ft. Full Size
1 inch = 20 ft. Half Size

CAUTION UNDERGROUND UTILITIES
2 WORKING DAYS
BEFORE YOU DIG
CALL 1-800-362-2764
OHIO UTILITY PROTECTION SERVICE
CALL NON-SERVICE FACILITY OWNERS DIRECT

CONTRACT DRAWING
PRINTS NOT BEARING THIS STAMP WERE MADE PRIOR TO ADVERTISING FOR BIDS AND ARE TO BE CONSIDERED OBSOLETE FOR CONTRACT PURPOSES.

Department of Transportation and Engineering
City of Cincinnati
City Hall
801 Plum Street
Cincinnati, Ohio 45202

CINCINNATI STREETCAR

ROUND TAPERED STEEL TRAFFIC POLE DETAILS
50303-B215 SHEET 1 OF 2

Revisions
No.

Drawn by UMC	Date 12/20/11	Designed by UMC	Date 12/20/11
Checked by UMC	Date 12/20/11	Reviewed by UMC	Date 12/20/11

Consultant
PB HDR

File Number

ACC No. 23126

G-TC-2015 A

DOTE_Mono_PDF_Half.pltcfg
W:\29014A-Streetcar\CAD\Traffic_Control\Signals\2015_Signal Mast Arm Details\S_G-TC-2015 A.dgn
7/11/2012 8:15:14 AM

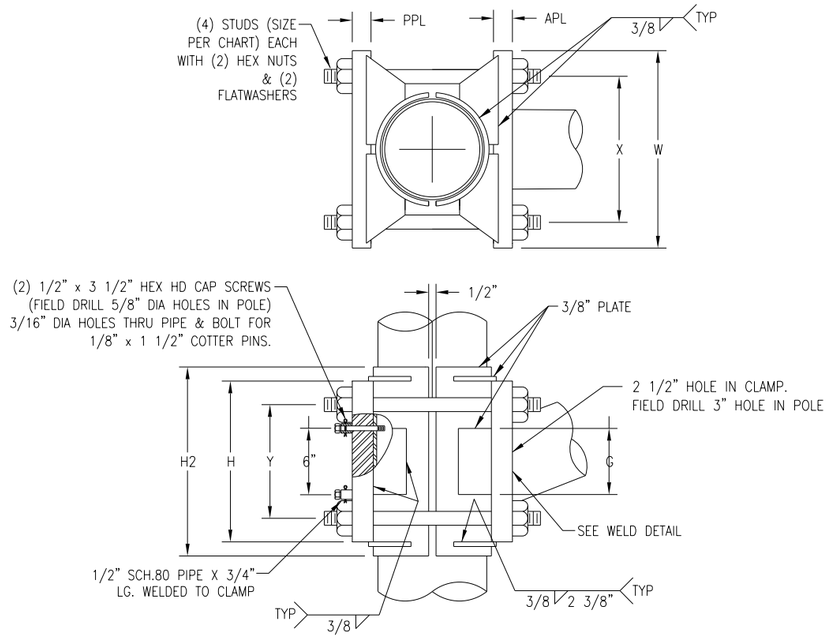

MAST ARM CLAMP CONNECTION DETAIL

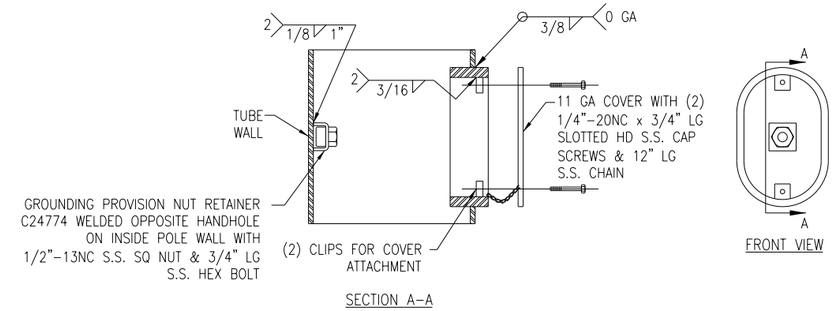

4" x 8" HANDHOLE FRAME DETAIL

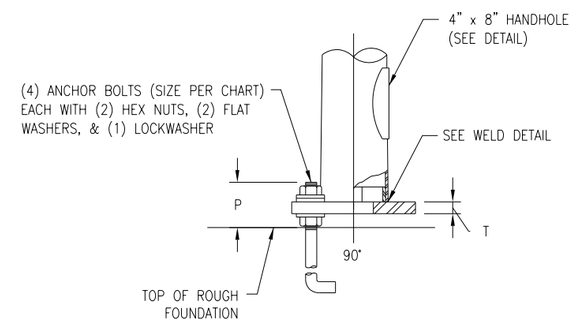

BASE CONNECTION DETAIL

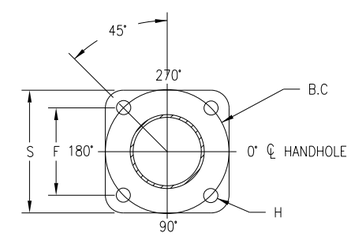

BASE PLATE DETAIL

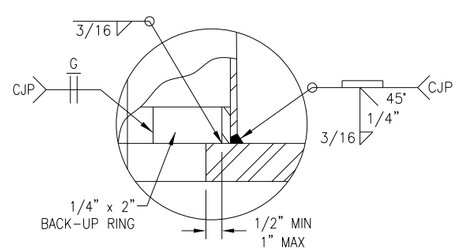

POLE BASE & ARM FLANGE WELD DETAIL

VERIFY POLE HARDWARE, THICKNESS, DIMENSIONS AND MISCELLANEOUS DETAILS WITH MANUFACTURER BEFORE ORDERING.

GRAPHIC SCALE

10 0 10 20 40

(IN FEET)
1 inch = 10 ft. Full Size
1 inch = 20 ft. Half Size

CAUTION UNDERGROUND UTILITIES
2 WORKING DAYS
BEFORE YOU DIG
CALL 1-800-362-2764
OHIO UTILITY PROTECTION SERVICE
CALL NON-SERVICE FACILITY OWNERS DIRECT

DOTE_Mono_PDF_Half.pltcfg
W:\29014A-Streetcar\CAD\Traffic_Control\Signals\2015_Signal Mast Arm Details\S_G-TC-2015 B.dgn
7/11/2012 8:15:21 AM

CONTRACT DRAWING

PRINTS NOT BEARING THIS STAMP WERE MADE PRIOR TO ADVERTISING FOR BIDS AND ARE TO BE CONSIDERED OBSOLETE FOR CONTRACT PURPOSES.

Department of Transportation and Engineering

City of Cincinnati
City Hall
801 Plum Street
Cincinnati, Ohio 45202

CINCINNATI STREETCAR

ROUND TAPERED STEEL TRAFFIC POLE DETAILS
50303-B215 SHEET 2 OF 2

Revisions
No.

Drawn by UMC	Date 12/20/11
Designed by UMC	Date 12/20/11
Checked by UMC	Date 12/20/11
Reviewed by UMC	Date 12/20/11

Consultant

PB HDR

File Number

ACC No. 23126

G-TC-2015 B

QTY	\G1033; \G1033;\b\iUMC DESIGN NUMBER	MAST ARM DATA			MAST ARM CONNECTION DATA (in)								POLE TUBE SIZE	POLE BASE CONNECTION DATA (in)								SIGNALS		SIGNS	
		SPAN	TUBE SIZE	MTG HGT	BOLT ø	X	Y	W	H	H2	APL	PPL		B.C.	S	F	P	T	H	(QTY) A. BOLT SIZE		S	T	M	N
	50303-B217-Y1	6'-0"	11E-4.00x3.16x6'-0"	18'-9"	3/4	9	9	11 1/2	11 1/2	13 1/2	1 1/4	3/4	0E-9.00x5.36x26'-0"	12 1/2	13 1/2	8 13/16	6 1/4	1 1/2	1 3/4	(4) 1 1/2 x 54 x 6	D	5	–	–	2
																					W	74	–	–	5
	50303-B217-Y2	9'-0"	11E-4.50x3.24x9'-0"	18'-9"	3/4	9	9	11 1/2	11 1/2	13 1/2	1 1/4	3/4									D	8	2	5	3
																					W	74	74	5	5
	50303-B217-Y3	12'-0"	11E-5.00x3.32x12'-0"	18'-9"	3/4	9	9	11 1/2	11 1/2	13 1/2	1 1/4	3/4									D	11	2	7	5
																					W	74	74	5	5
	50303-B217-Y4	15'-0"	11E-5.50x3.40x15'-0"	18'-9"	3/4	9	9	11 1/2	11 1/2	13 1/2	1 1/4	3/4									D	14	5	10	1
																					W	74	74	5	5
	50303-B217-Y5	20'-0"	7E-6.00x3.20x20'-0"	18'-9"	3/4	9	9	11 1/2	11 1/2	13 1/2	1 1/4	3/4									D	19	10	15	5
																					W	74	74	5	5

11 GA = 0.120" WALL THICKNESS
7 GA = 0.179" WALL THICKNESS
0 GA = 0.313" WALL THICKNESS
E = ROUND TAPERED STEEL TUBE @ 0.14 in/ft TAPER

D = DISTANCE (ft)
W = WEIGHT (lbs)

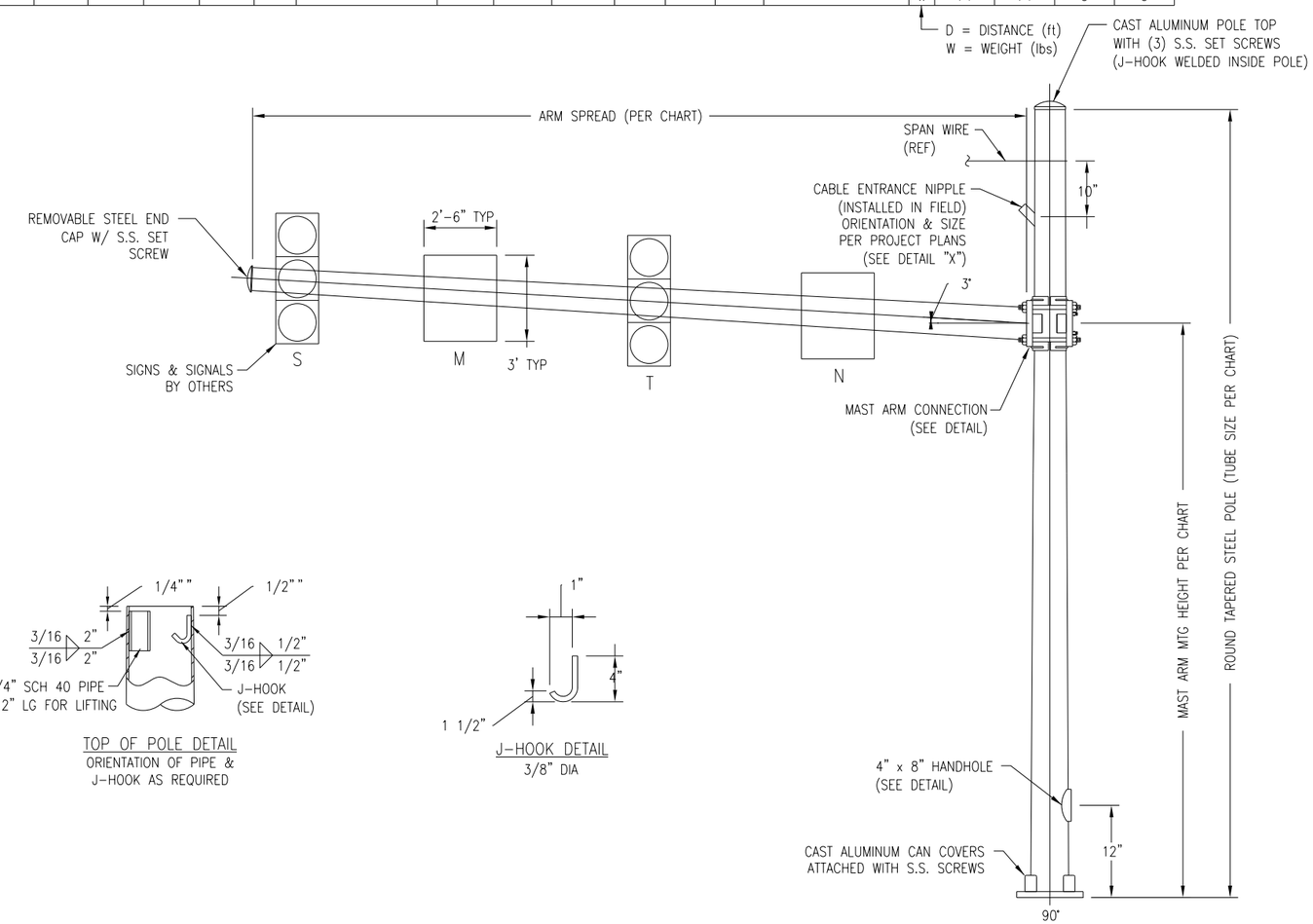

DESIGN CRITERIA:

1. DESIGNED IN ACCORDANCE WITH 2009 AASHTO "STANDARD SPECIFICATIONS FOR STRUCTURAL SUPPORTS FOR HIGHWAY SIGNS, LUMINAIRES, AND TRAFFIC SIGNALS" FOR 90 M.P.H. WIND ZONE.
2. ANCHOR BOLTS ANALYZED FOR STEEL STRENGTH ONLY. THE ANCHOR BOLT EMBEDMENT LENGTH SHOWN ON THIS DRAWING SHALL BE VERIFIED BY THE FOUNDATION ENGINEER.
3. THE EXPOSED LENGTH OF THE ANCHOR BOLT BETWEEN THE TOP OF THE FOUNDATION AND THE BOTTOM OF THE LEVELING NUT SHOULD NOT EXCEED ONE BOLT DIAMETER.
4. VIBRATION IS MORE LIKELY TO OCCUR WHEN STRUCTURES ARE INSTALLED WITHOUT ATTACHING THE SIGNALS AND OR SIGNS. THEREFORE, THE INTENDED EQUIPMENT OR DAMPENING DEVICES MUST BE INSTALLED AT THE TIME OF ERECTION. BECAUSE VIBRATION IS GENERALLY UNPREDICTABLE, A MAINTENANCE PROGRAM SHOULD INCLUDE INSPECTION FOR INDICATIONS OF EXCESSIVE VIBRATION OR FATIGUE AND EXAMINATION FOR ANY STRUCTURAL DAMAGE OR BOLT LOOSENING.
5. CUSTOMER TO CONFIRM ALL DIMENSIONS & ORIENTATIONS BEFORE RELEASING ORDER FOR MANUFACTURING.

MATERIAL SPECIFICATIONS	
TAPERED TUBES	ASTM A595 GR A
PLATES	ASTM A36
HANDHOLE FRAME	ASTM A529 GR 50 (PREFERRED) or ASTM A572 GR 50 or ASTM A709 GR 50
HANDHOLE COVER	ASTM A36 or A1011
ARM CONNECTION STUDS	ASTM A449
ARM CONNECTION NUTS	ASTM A563 GR DH
PIPE	ASTM A500 GR B OR A53 GR B
ANCHOR BOLTS	ASTM F1554 GR 55
ANCHOR BOLT NUTS	ASTM A563 GR A
FLAT WASHERS	ASTM F436
BOLT COVERS	ASTM B26 (356F)
POLE TOP	ASTM B26 (356F)
S.S. HARDWARE	AISI-300 SERIES (18-8)
STRUCTURE FINISH	PER SALES ORDER
HARDWARE FINISH	HD GALV TO ASTM A153

TOP OF POLE DETAIL
ORIENTATION OF PIPE & J-HOOK AS REQUIRED

J-HOOK DETAIL
3/8" DIA

VERIFY POLE HARDWARE, THICKNESS, DIMENSIONS AND MISCELLANEOUS DETAILS WITH MANUFACTURER BEFORE ORDERING.

GRAPHIC SCALE
10 0 10 20 40
(IN FEET)
1 inch = 10 ft. Full Size
1 inch = 20 ft. Half Size

CAUTION UNDERGROUND UTILITIES
2 WORKING DAYS
BEFORE YOU DIG
CALL 1-800-362-2764
OHIO UTILITY PROTECTION SERVICE
CALL NON-SERVICE FACILITY OWNERS DIRECT

DEPARTMENT OF TRANSPORTATION & ENGINEERING CITY OF CINCINNATI OHIO

CONTRACT DRAWING
PRINTS NOT BEARING THIS STAMP WERE MADE PRIOR TO ADVERTISING FOR BIDS AND ARE TO BE CONSIDERED OBSOLETE FOR CONTRACT PURPOSES.

Department of Transportation and Engineering
City of Cincinnati
City Hall
801 Plum Street
Cincinnati, Ohio 45202

CINCINNATI STREETCAR
ROUND TAPERED STEEL TRAFFIC POLE DETAILS
50303-B217 SHEET 1 OF 2

Revisions
No.

Drawn by UMC Date 12/20/11
Designed by UMC Date 12/20/11
Checked by UMC Date 12/20/11
Reviewed by UMC Date 12/20/11

Consultant
PB HDR

File Number

ACC No. 23126

G-TC-2015 C

DOTE_Mono_PDF_Half.pltcfg
W:\29014A-Streetcar\CAD\Traffic_Control\Signals\2015_Signal Mast Arm Details\S_G-TC-2015 C.dgn
7/11/2012 8:15:27 AM

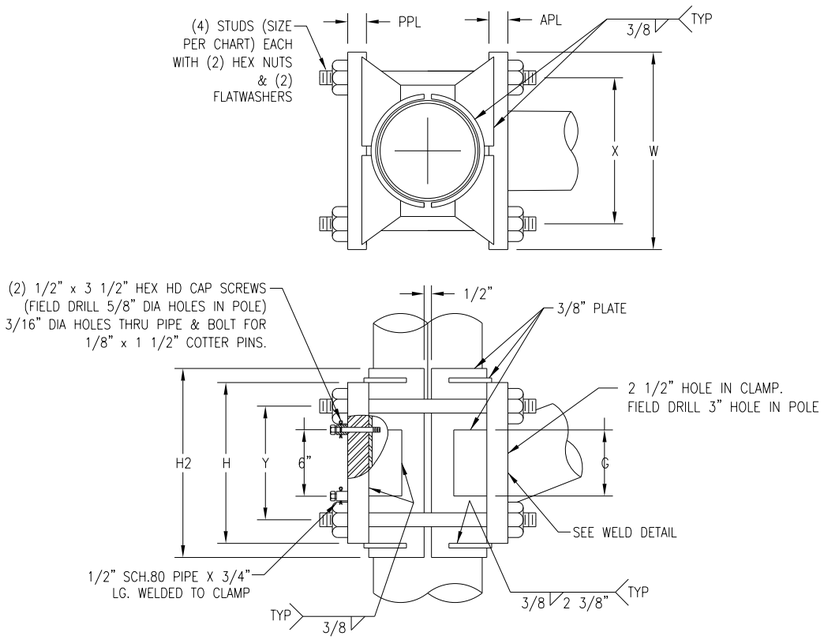

MAST ARM CLAMP CONNECTION DETAIL

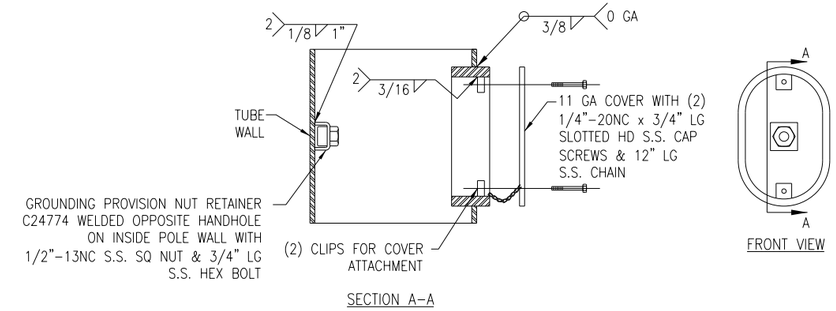

SECTION A-A

FRONT VIEW

4" x 8" HANDHOLE FRAME DETAIL

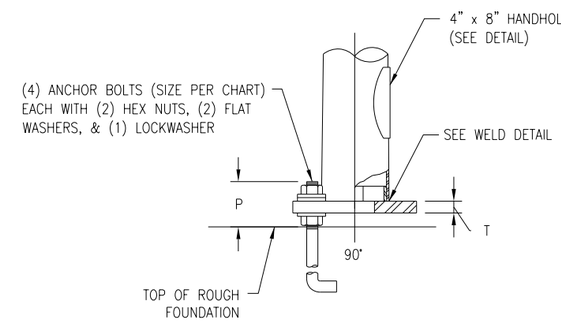

BASE CONNECTION DETAIL

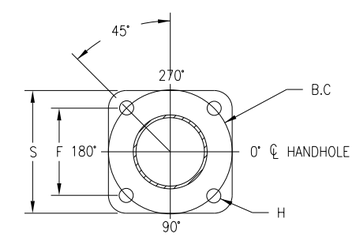

BASE PLATE DETAIL

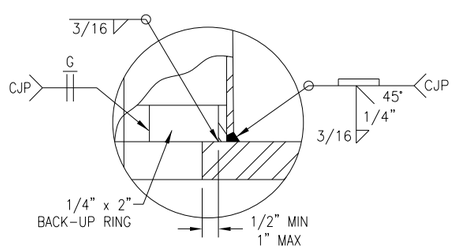

POLE BASE & ARM FLANGE WELD DETAIL

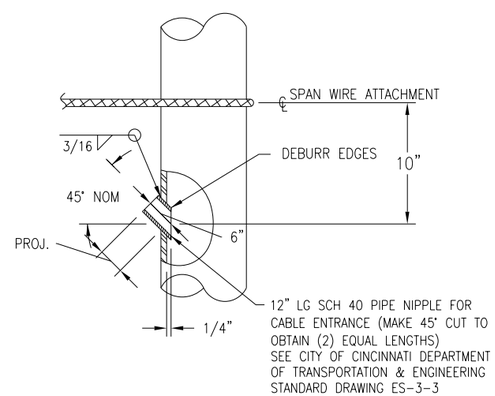

DETAIL "X"

CONTRACTOR TO INSTALL IN FIELD SEE PROJECT PLANS FOR SIZE & ORIENTATION OF PIPE NIPPLE & SPAN WIRE ATTACHMENT HEIGHT

VERIFY POLE HARDWARE, THICKNESS, DIMENSIONS AND MISCELLANEOUS DETAILS WITH MANUFACTURER BEFORE ORDERING.

CAUTION UNDERGROUND UTILITIES
2 WORKING DAYS
BEFORE YOU DIG
CALL 1-800-362-2764
OHIO UTILITY PROTECTION SERVICE
CALL NON-SERVICE FACILITY OWNERS DIRECT

GRAPHIC SCALE

10 0 10 20 40

(IN FEET)
1 inch = 10 ft. Full Size
1 inch = 20 ft. Half Size

CONTRACT DRAWING

PRINTS NOT BEARING THIS STAMP WERE MADE PRIOR TO ADVERTISING FOR BIDS AND ARE TO BE CONSIDERED OBSOLETE FOR CONTRACT PURPOSES.

Department of Transportation and Engineering

City of Cincinnati
City Hall
801 Plum Street
Cincinnati, Ohio 45202

CINCINNATI STREETCAR

ROUND TAPERED STEEL TRAFFIC POLE DETAILS
50303-B217 SHEET 2 OF 2

Revisions

No.			

Date 12/20/11	Date 12/20/11	Date 12/20/11	Date 12/20/11
Drawn by UMC	Designed by UMC	Checked by UMC	Reviewed by UMC

Consultant

PB HDR

File Number

ACC No. 23126

G-TC-2015 D

DOTE_Mono_PDF_Half.pltcfg
W:\29014A-Streetcar\CAD\Traffic_Control\Signals\2015_Signal Mast Arm Details\S_G-TC-2015 D.dgn
7/11/2012 8:15:36 AM

QTY	\G1033; \G1033;\b\iUMC DESIGN NUMBER	MAST ARM DATA			MAST ARM CONNECTION DATA (in)								POLE TUBE SIZE	POLE BASE CONNECTION DATA (in)								SIGNALS		SIGNS	
		SPAN	TUBE SIZE	MTG HGT	BOLT ø	X	Y	W	H	H2	APL	PPL		B.C.	S	F	P	T	H	(QTY) A. BOLT SIZE		S	T	M	N
	50303-B218-Y1	6'-0"	11E-4.00x3.16x6'-0"	18'-9"	3/4	11	11	13 1/2	13 1/2	15 1/2	1 1/4	3/4	0E-11.00x6.80x30'-0"	15	15 3/4	10 5/8	7 1/2	2	2 1/8	(4) 1 3/4 x 84 x 6	D	5	–	–	2
																					W	74	–	–	5
	50303-B218-Y2	9'-0"	11E-4.50x3.24x9'-0"	18'-9"	3/4	11	11	13 1/2	13 1/2	15 1/2	1 1/4	3/4									D	8	2	5	3
																					W	74	74	5	5
	50303-B218-Y3	12'-0"	11E-5.00x3.32x12'-0"	18'-9"	3/4	11	11	13 1/2	13 1/2	15 1/2	1 1/4	3/4									D	11	2	7	5
																					W	74	74	5	5
	50303-B218-Y4	15'-0"	11E-5.50x3.40x15'-0"	18'-9"	3/4	11	11	13 1/2	13 1/2	15 1/2	1 1/4	3/4									D	14	5	10	1
																					W	74	74	5	5
	50303-B218-Y5	20'-0"	7E-6.00x3.20x20'-0"	18'-9"	3/4	11	11	13 1/2	13 1/2	15 1/2	1 1/4	3/4									D	19	10	15	5
																					W	74	74	5	5

D = DISTANCE (ft)
W = WEIGHT (lbs)

11 GA = 0.120" WALL THICKNESS
7 GA = 0.179" WALL THICKNESS
0 GA = 0.313" WALL THICKNESS
E = ROUND TAPERED STEEL TUBE @ 0.14 in/ft TAPER

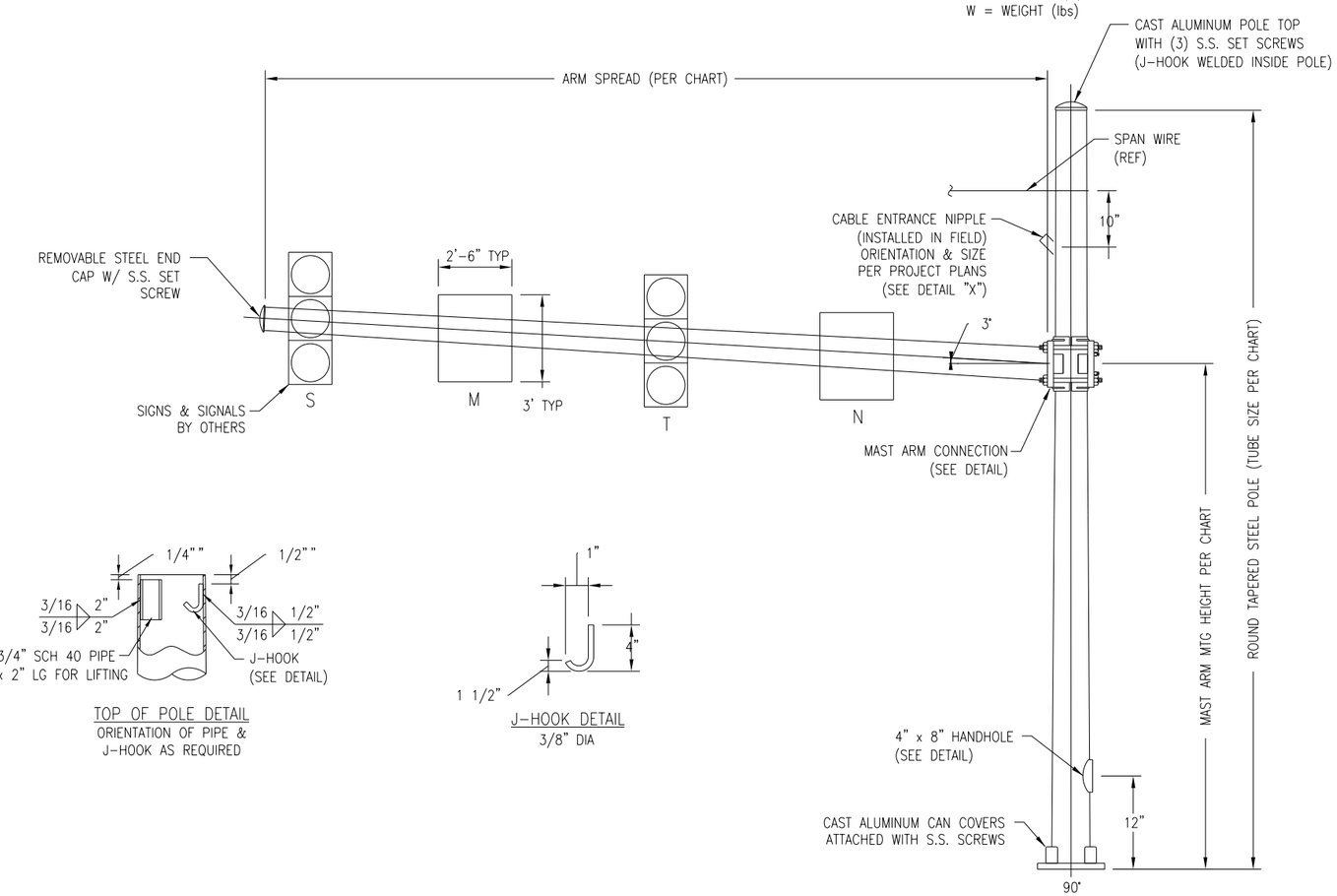

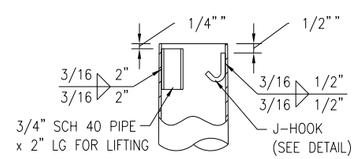

TOP OF POLE DETAIL
ORIENTATION OF PIPE & J-HOOK AS REQUIRED

J-HOOK DETAIL
3/8" DIA

DESIGN CRITERIA:

1. DESIGNED IN ACCORDANCE WITH 2009 AASHTO "STANDARD SPECIFICATIONS FOR STRUCTURAL SUPPORTS FOR HIGHWAY SIGNS, LUMINAIRES, AND TRAFFIC SIGNALS" FOR 90 M.P.H. WIND ZONE.
2. ANCHOR BOLTS ANALYZED FOR STEEL STRENGTH ONLY. THE ANCHOR BOLT EMBEDMENT LENGTH SHOWN ON THIS DRAWING SHALL BE VERIFIED BY THE FOUNDATION ENGINEER.
3. THE EXPOSED LENGTH OF THE ANCHOR BOLT BETWEEN THE TOP OF THE FOUNDATION AND THE BOTTOM OF THE LEVELING NUT SHOULD NOT EXCEED ONE BOLT DIAMETER.
4. VIBRATION IS MORE LIKELY TO OCCUR WHEN STRUCTURES ARE INSTALLED WITHOUT ATTACHING THE SIGNALS AND OR SIGNS. THEREFORE, THE INTENDED EQUIPMENT OR DAMPENING DEVICES MUST BE INSTALLED AT THE TIME OF ERECTION. BECAUSE VIBRATION IS GENERALLY UNPREDICTABLE, A MAINTENANCE PROGRAM SHOULD INCLUDE INSPECTION FOR INDICATIONS OF EXCESSIVE VIBRATION OR FATIGUE AND EXAMINATION FOR ANY STRUCTURAL DAMAGE OR BOLT LOOSENING.
5. CUSTOMER TO CONFIRM ALL DIMENSIONS & ORIENTATIONS BEFORE RELEASING ORDER FOR MANUFACTURING.

MATERIAL SPECIFICATIONS	
TAPERED TUBES	ASTM A595 GR A
PLATES	ASTM A36
HANDHOLE FRAME	ASTM A529 GR 50 (PREFERRED) or ASTM A572 GR 50 or ASTM A709 GR 50
HANDHOLE COVER	ASTM A36 or A1011
ARM CONNECTION STUDS	ASTM A449
ARM CONNECTION NUTS	ASTM A563 GR DH
PIPE	ASTM A500 GR B OR A53 GR B
ANCHOR BOLTS	ASTM F1554 GR 55
ANCHOR BOLT NUTS	ASTM A563 GR A
FLAT WASHERS	ASTM F436
BOLT COVERS	ASTM B26 (356F)
POLE TOP	ASTM B26 (356F)
S.S. HARDWARE	AISI-300 SERIES (18-8)
STRUCTURE FINISH	PER SALES ORDER
HARDWARE FINISH	HD GALV TO ASTM A153

VERIFY POLE HARDWARE, THICKNESS, DIMENSIONS AND MISCELLANEOUS DETAILS WITH MANUFACTURER BEFORE ORDERING.

CAUTION UNDERGROUND UTILITIES
2 WORKING DAYS
BEFORE YOU DIG
CALL 1-800-362-2764
OHIO UTILITY PROTECTION SERVICE
CALL NON-SERVICE FACILITY OWNERS DIRECT

GRAPHIC SCALE
10 0 10 20 40
(IN FEET)
1 inch = 10 ft. Full Size
1 inch = 20 ft. Half Size

DEPARTMENT OF TRANSPORTATION & ENGINEERING CITY OF CINCINNATI OHIO

CONTRACT DRAWING
PRINTS NOT BEARING THIS STAMP WERE MADE PRIOR TO ADVERTISING FOR BIDS AND ARE TO BE CONSIDERED OBSOLETE FOR CONTRACT PURPOSES.

Department of Transportation and Engineering
City of Cincinnati
City Hall
801 Plum Street
Cincinnati, Ohio 45202

CINCINNATI STREETCAR

ROUND TAPERED STEEL TRAFFIC POLE DETAILS
50303-B218 SHEET 1 OF 2

Revisions
No.

Date	Drawn by	Designed by	Checked by	Reviewed by
12/20/11	UMC	UMC	UMC	UMC
12/20/11				
12/20/11				
12/20/11				

Consultant
PB HDR

File Number
ACC No. 23126

G-TC-2015 E

DOTE_Mono_PDF_Half.pltcfg
W:\29014A-Streetcar\CAD\Traffic_Control\Signals\2015_Signal Mast Arm Details\S_G-TC-2015 E.dgn
7/11/2012 8:15:43 AM

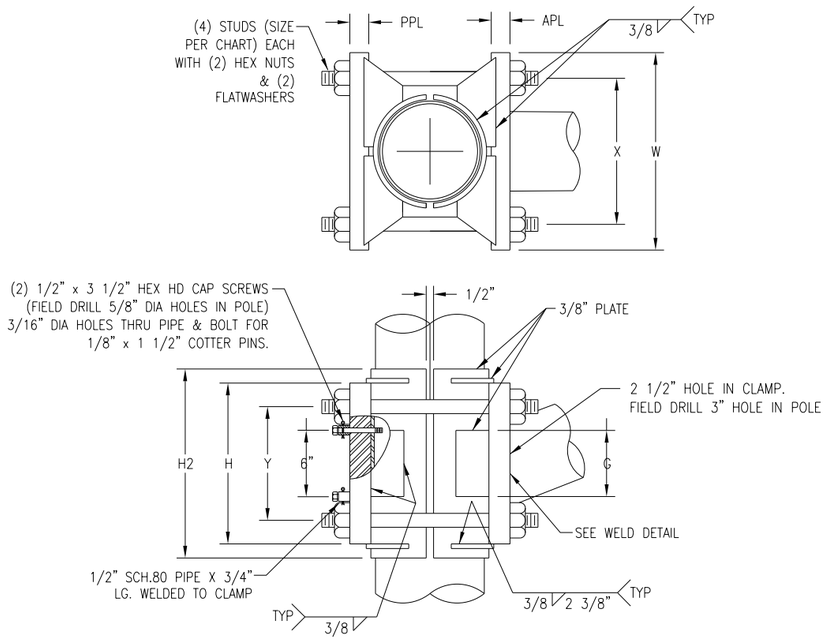

MAST ARM CLAMP CONNECTION DETAIL

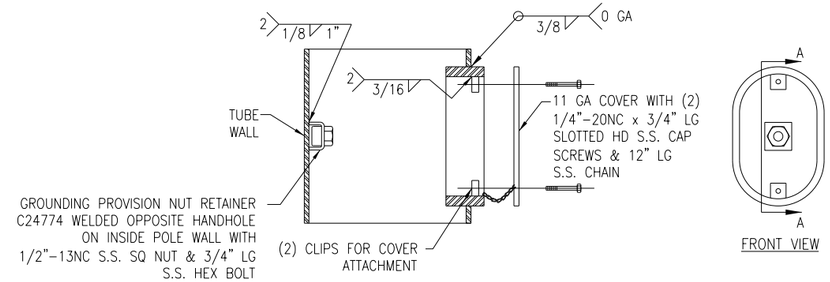

SECTION A-A

FRONT VIEW

4" x 8" HANDHOLE FRAME DETAIL

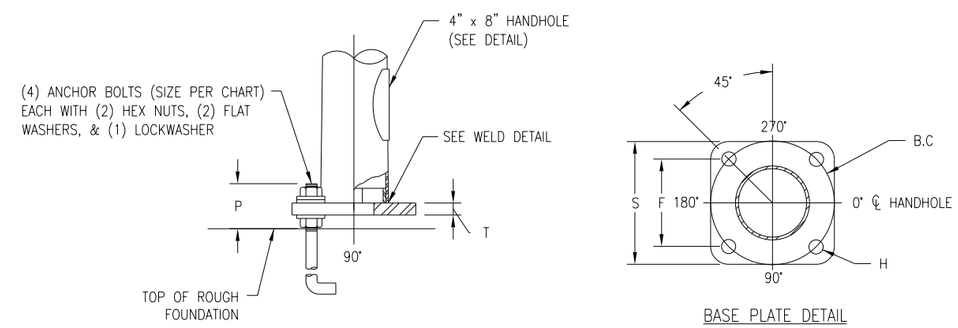

BASE CONNECTION DETAIL

BASE PLATE DETAIL

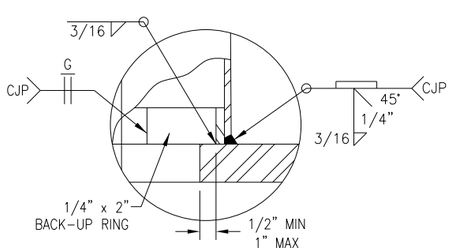

POLE BASE & ARM FLANGE WELD DETAIL

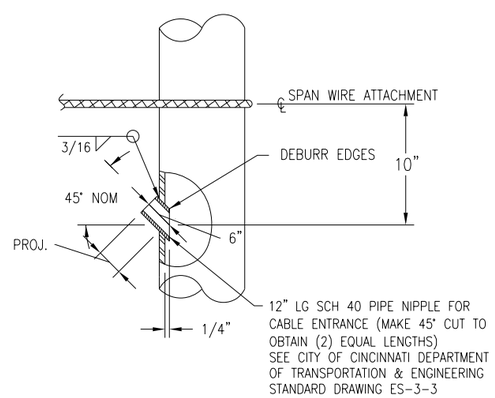

DETAIL "X"

CONTRACTOR TO INSTALL IN FIELD SEE PROJECT PLANS FOR SIZE & ORIENTATION OF PIPE NIPPLE & SPAN WIRE ATTACHMENT HEIGHT

VERIFY POLE HARDWARE, THICKNESS, DIMENSIONS AND MISCELLANEOUS DETAILS WITH MANUFACTURER BEFORE ORDERING.

CAUTION UNDERGROUND UTILITIES
2 WORKING DAYS
BEFORE YOU DIG
CALL 1-800-362-2764
OHIO UTILITY PROTECTION SERVICE
CALL NON-SERVICE FACILITY OWNERS DIRECT

GRAPHIC SCALE

10 0 10 20 40

(IN FEET)
1 inch = 10 ft. Full Size
1 inch = 20 ft. Half Size

CONTRACT DRAWING

PRINTS NOT BEARING THIS STAMP WERE MADE PRIOR TO ADVERTISING BID DATE AND ARE TO BE CONSIDERED OBSOLETE FOR CONTRACT PURPOSES.

Department of Transportation and Engineering

City of Cincinnati
City Hall
801 Plum Street
Cincinnati, Ohio 45202

CINCINNATI STREETCAR

ROUND TAPERED STEEL TRAFFIC POLE DETAILS
50303-B218 SHEET 2 OF 2

Revisions
No.

Drawn by UMC	Date 12/20/11
Designed by UMC	Date 12/20/11
Checked by UMC	Date 12/20/11
Reviewed by UMC	Date 12/20/11

Consultant

PB HDR

File Number

ACC No. 23126

G-TC-2015 F

DOTE_Mono_PDF_Half.pltcfg
W:\29014A-Streetcar\CAD\Traffic_Control\Signals\2015_Signal Mast Arm Details\S_G-TC-2015 F.dgn
7/11/2012 8:15:52 AM

QTY	\G1033; \G1033;\b\iUMC DESIGN NUMBER	MAST ARM DATA				MAST ARM CONNECTION DATA (in)								POLE TUBE SIZE	POLE BASE CONNECTION DATA (in)								SIGNALS		SIGNS	
		SPAN	TUBE SIZE	MTG HGT	ORIENT.	BOLT ø	X	Y	W	H	APL	PPL	G		B.C.	S	F	P	T	H	(QTY) A. BOLT SIZE		S	T	M	N
	50700-B1275-Y1	6'-0"	11E-4.00x3.16x6'-0"																			D	5	–	–	2
																						W	74	–	–	5
	50700-B1275-Y2	9'-0"	11E-4.50x3.24x9'-0"																			D	8	2	5	3
																						W	74	74	5	5
	50700-B1275-Y3	12'-0"	11E-5.00x3.32x12'-0"	18'-6"	180°	1	3 1/2	10	9	15 1/2	1 1/4	1	3/16	0E-9.00x6.13x20'-6"	12 1/2	13 1/2	8 13/16	6 1/4	1 1/2	1 3/4	(4) 1 1/2 x 54 x 6	D	11	2	7	5
																						W	74	74	5	5
	50700-B1275-Y4	15'-0"	11E-5.50x3.40x15'-0"																			D	14	5	10	1
																						W	74	74	5	5
	50700-B1275-Y5	20'-0"	7E-6.00x3.20x20'-0"																			D	19	10	15	5
																						W	74	74	5	5

D = DISTANCE (ft)
W = WEIGHT (lbs)

11 GA = 0.120" WALL THICKNESS
7 GA = 0.179" WALL THICKNESS
0 GA = 0.313" WALL THICKNESS
E = ROUND TAPERED STEEL TUBE @ 0.14 in/ft TAPER

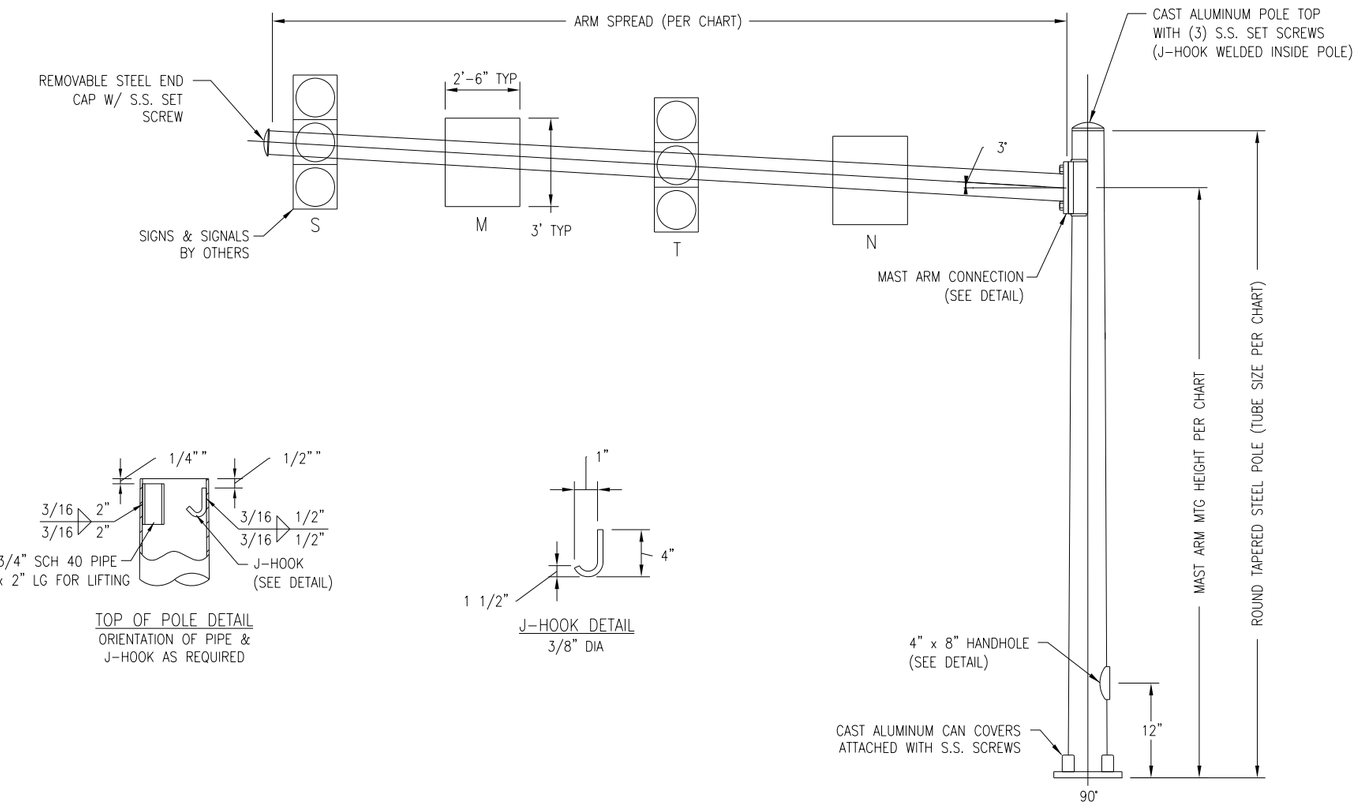

DESIGN CRITERIA:

1. DESIGNED IN ACCORDANCE WITH 2009 AASHTO "STANDARD SPECIFICATIONS FOR STRUCTURAL SUPPORTS FOR HIGHWAY SIGNS, LUMINAIRES, AND TRAFFIC SIGNALS" FOR 90 M.P.H. WIND ZONE.
2. ANCHOR BOLTS ANALYZED FOR STEEL STRENGTH ONLY. THE ANCHOR BOLT EMBEDMENT LENGTH SHOWN ON THIS DRAWING SHALL BE VERIFIED BY THE FOUNDATION ENGINEER.
3. THE EXPOSED LENGTH OF THE ANCHOR BOLT BETWEEN THE TOP OF THE FOUNDATION AND THE BOTTOM OF THE LEVELING NUT SHOULD NOT EXCEED ONE BOLT DIAMETER.
4. VIBRATION IS MORE LIKELY TO OCCUR WHEN STRUCTURES ARE INSTALLED WITHOUT ATTACHING THE SIGNALS AND OR SIGNS. THEREFORE, THE INTENDED EQUIPMENT OR DAMPENING DEVICES MUST BE INSTALLED AT THE TIME OF ERECTION. BECAUSE VIBRATION IS GENERALLY UNPREDICTABLE, A MAINTENANCE PROGRAM SHOULD INCLUDE INSPECTION FOR INDICATIONS OF EXCESSIVE VIBRATION OR FATIGUE AND EXAMINATION FOR ANY STRUCTURAL DAMAGE OR BOLT LOOSENING.
5. CUSTOMER TO CONFIRM ALL DIMENSIONS & ORIENTATIONS BEFORE RELEASING ORDER FOR MANUFACTURING.

MATERIAL SPECIFICATIONS	
TAPERED TUBES	ASTM A595 GR A
PLATES	ASTM A36
HANDHOLE FRAME	ASTM A529 GR 50 (PREFERRED) or ASTM A572 GR 50 or ASTM A709 GR 50
HANDHOLE COVER	ASTM A36 or A1011
ARM CONNECTION BOLTS	ASTM A325
PIPE	ASTM A500 GRB OR A53 GR B
ANCHOR BOLTS	ASTM F1554 GR 55
ANCHOR BOLT NUTS	ASTM A563 GR A
FLAT WASHERS	ASTM F436
BOLT COVERS	ASTM B26 (356F)
POLE TOP	ASTM B26 (356F)
S.S. HARDWARE	AISI-300 SERIES (18-8)
STRUCTURE FINISH	PER SALES ORDER
HARDWARE FINISH	HD GALV TO ASTM A153

VERIFY POLE HARDWARE, THICKNESS, DIMENSIONS AND MISCELLANEOUS DETAILS WITH MANUFACTURER BEFORE ORDERING.

GRAPHIC SCALE
10 0 10 20 40
(IN FEET)
1 inch = 10 ft. Full Size
1 inch = 20 ft. Half Size

CAUTION UNDERGROUND UTILITIES
2 WORKING DAYS
BEFORE YOU DIG
CALL 1-800-362-2764
OHIO UTILITY PROTECTION SERVICE
CALL NON-SERVICE FACILITY OWNERS DIRECT

CONTRACT DRAWING
PRINTS NOT BEARING THIS STAMP WERE MADE PRIOR TO ADVERTISING FOR BIDS AND ARE TO BE CONSIDERED OBSOLETE FOR CONTRACT PURPOSES.

Department of Transportation and Engineering
City of Cincinnati
City Hall
801 Plum Street
Cincinnati, Ohio 45202

CINCINNATI STREETCAR

ROUND TAPERED STEEL TRAFFIC POLE DETAILS
50700-B1275 SHEET 1 OF 2

Revisions
No.

Drawn by UMC Date 12/20/11
Designed by UMC Date 12/20/11
Checked by UMC Date 12/20/11
Reviewed by UMC Date 12/20/11

Consultant
PB HDR

File Number

ACC No. 23126

G-TC-2015 G

DOTE_Mono_PDF_Half.pltcfg
W:\29014A-Streetcar\CAD\Traffic_Control\Signals\2015_Signal Mast Arm Details\S_G-TC-2015 G.dgn
7/11/2012 8:15:57 AM

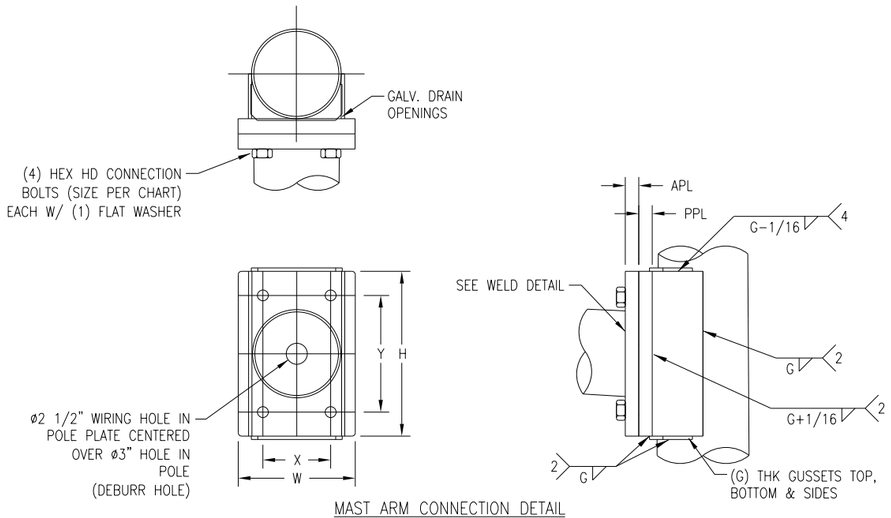

MAST ARM CONNECTION DETAIL

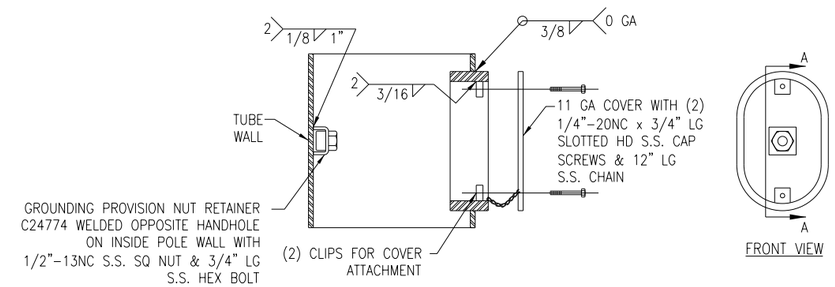

SECTION A-A

FRONT VIEW

4" x 8" HANDHOLE FRAME DETAIL

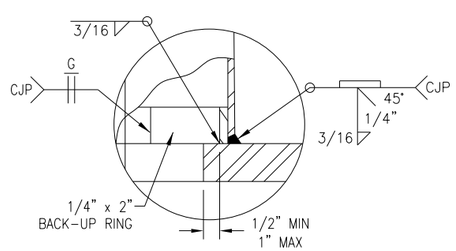

POLE BASE & ARM FLANGE WELD DETAIL

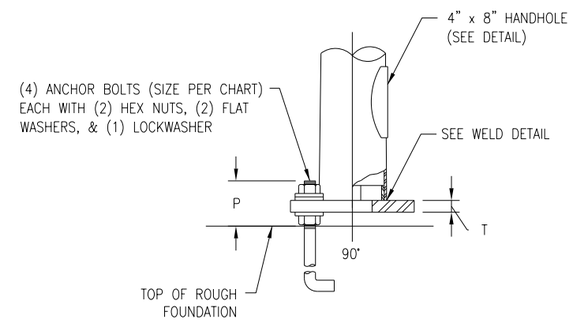

BASE CONNECTION DETAIL

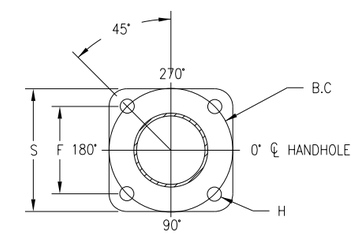

BASE PLATE DETAIL

VERIFY POLE HARDWARE, THICKNESS, DIMENSIONS AND MISCELLANEOUS DETAILS WITH MANUFACTURER BEFORE ORDERING.

GRAPHIC SCALE

10 0 10 20 40

(IN FEET)
1 inch = 10 ft. Full Size
1 inch = 20 ft. Half Size

CAUTION UNDERGROUND UTILITIES
2 WORKING DAYS
BEFORE YOU DIG
CALL 1-800-362-2764
OHIO UTILITY PROTECTION SERVICE
CALL NON-SERVICE FACILITY OWNERS DIRECT

DEPARTMENT OF TRANSPORTATION & ENGINEERING CITY OF CINCINNATI OHIO

CONTRACT DRAWING

PRINTS NOT BEARING THIS STAMP WERE MADE PRIOR TO ADVERTISING FOR BIDS AND ARE TO BE CONSIDERED OBSOLETE FOR CONTRACT PURPOSES.

Department of Transportation and Engineering

City of Cincinnati
City Hall
801 Plum Street
Cincinnati, Ohio 45202

CINCINNATI STREETCAR

ROUND TAPERED STEEL TRAFFIC POLE DETAILS
50700-B1275 SHEET 2 OF 2

Revisions
No.

	Date
Drawn by UMC	12/20/11
Designed by UMC	12/20/11
Checked by UMC	12/20/11
Reviewed by UMC	12/20/11

Consultant

PB HDR

File Number

ACC No. 23126

G-TC-2015 H

DOTE_Mono_PDF_Half.pltcfg
W:\29014A-Streetcar\CAD\Traffic_Control\Signals\2015_Signal Mast Arm Details\S_G-TC-2015 H.dgn
7/11/2012 8:16:04 AM

QTY	\G1033; \G1033;\b\¡UMC DESIGN NUMBER	MAST ARM DATA				MAST ARM CONNECTION DATA (in)								POLE TUBE SIZE	POLE BASE CONNECTION DATA (in)								SIGNALS		SIGNS	
		SPAN	TUBE SIZE	MTG HGT	ORIENT.	BOLT ø	X	Y	W	H	APL	PPL	G		B.C.	S	F	P	T	H	(QTY) A. BOLT SIZE		S	T	M	N
	50700-B1284-Y1	6'-0"	11E-4.00x3.16x6'-0"																			D	5	–	–	2
																						W	74	–	–	5
	50700-B1284-Y2	9'-0"	11E-4.50x3.24x9'-0"																			D	8	2	5	3
																						W	74	74	5	5
	50700-B1284-Y3	12'-0"	11E-5.00x3.32x12'-0"	18'-6"	180°	1	3 1/2	10	9	15 1/2	1 1/4	1	3/16	0E-9.00x5.36x26'-0"	12 1/2	13 1/2	8 13/16	6 1/4	1 1/2	1 3/4	(4) 1 1/2 x 54 x 6	D	11	2	7	5
																						W	74	74	5	5
	50700-B1284-Y4	15'-0"	11E-5.50x3.40x15'-0"																			D	14	5	10	1
																						W	74	74	5	5
	50700-B1284-Y5	20'-0"	7E-6.00x3.20x20'-0"																			D	19	10	15	5
																						W	74	74	5	5

D = DISTANCE (ft)
W = WEIGHT (lbs)

11 GA = 0.120" WALL THICKNESS
7 GA = 0.179" WALL THICKNESS
0 GA = 0.313" WALL THICKNESS
E = ROUND TAPERED STEEL TUBE @ 0.14 in/ft TAPER

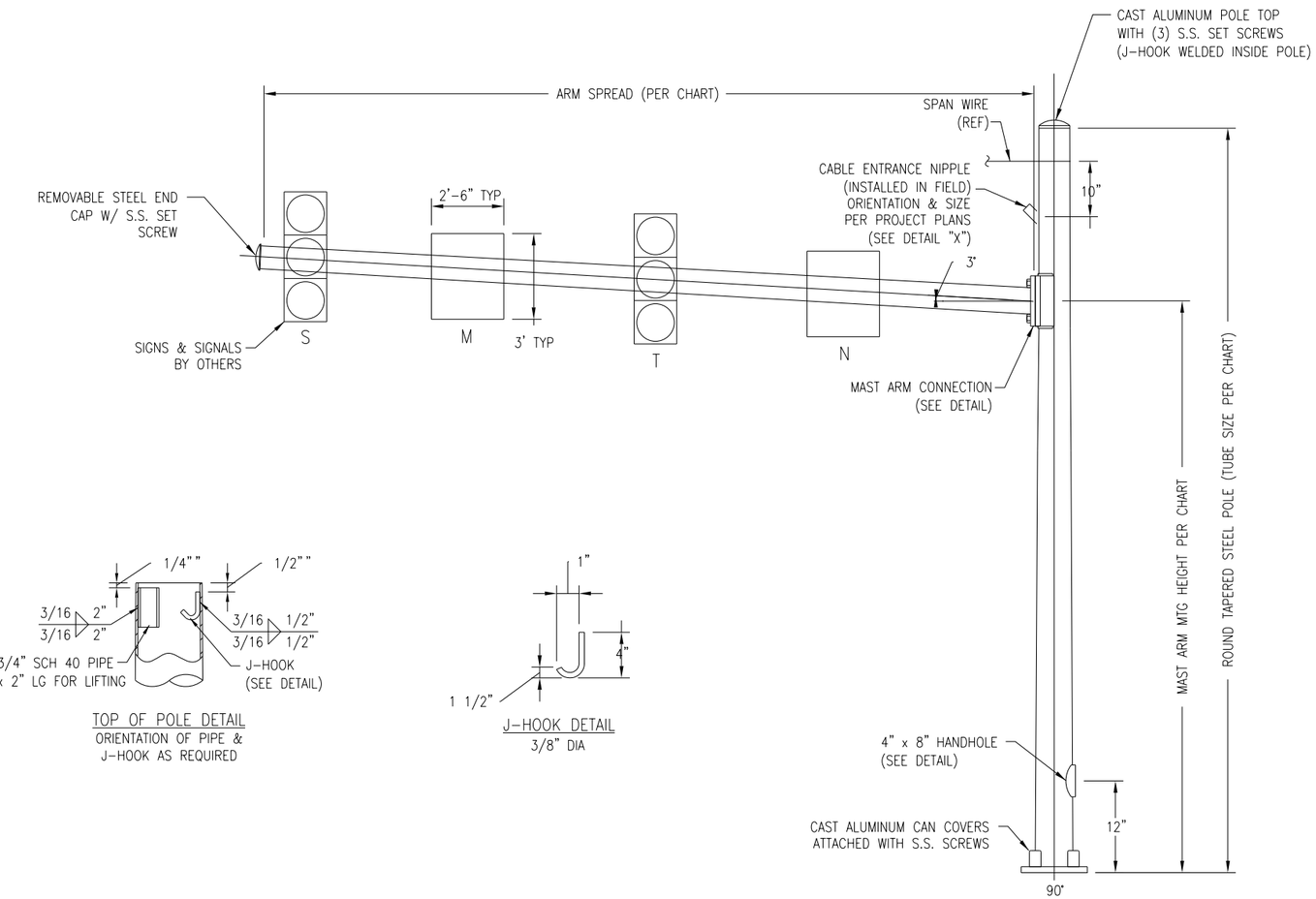

DESIGN CRITERIA:

1. DESIGNED IN ACCORDANCE WITH 2009 AASHTO "STANDARD SPECIFICATIONS FOR STRUCTURAL SUPPORTS FOR HIGHWAY SIGNS, LUMINAIRES, AND TRAFFIC SIGNALS" FOR 90 M.P.H. WIND ZONE.
2. ANCHOR BOLTS ANALYZED FOR STEEL STRENGTH ONLY. THE ANCHOR BOLT EMBEDMENT LENGTH SHOWN ON THIS DRAWING SHALL BE VERIFIED BY THE FOUNDATION ENGINEER.
3. THE EXPOSED LENGTH OF THE ANCHOR BOLT BETWEEN THE TOP OF THE FOUNDATION AND THE BOTTOM OF THE LEVELING NUT SHOULD NOT EXCEED ONE BOLT DIAMETER.
4. VIBRATION IS MORE LIKELY TO OCCUR WHEN STRUCTURES ARE INSTALLED WITHOUT ATTACHING THE SIGNALS AND OR SIGNS. THEREFORE, THE INTENDED EQUIPMENT OR DAMPENING DEVICES MUST BE INSTALLED AT THE TIME OF ERECTION. BECAUSE VIBRATION IS GENERALLY UNPREDICTABLE, A MAINTENANCE PROGRAM SHOULD INCLUDE INSPECTION FOR INDICATIONS OF EXCESSIVE VIBRATION OR FATIGUE AND EXAMINATION FOR ANY STRUCTURAL DAMAGE OR BOLT LOOSENING.
5. CUSTOMER TO CONFIRM ALL DIMENSIONS & ORIENTATIONS BEFORE RELEASING ORDER FOR MANUFACTURING.

MATERIAL SPECIFICATIONS	
TAPERED TUBES	ASTM A595 GR A
PLATES	ASTM A36
HANDHOLE FRAME	ASTM A529 GR 50 (PREFERRED) or ASTM A572 GR 50 or ASTM A709 GR 50
HANDHOLE COVER	ASTM A36 or A1011
ARM CONNECTION BOLTS	ASTM A325
PIPE	ASTM A500 GR B OR A53 GR B
ANCHOR BOLTS	ASTM F1554 GR 55
ANCHOR BOLT NUTS	ASTM A563 GR A
FLAT WASHERS	ASTM F436
BOLT COVERS	ASTM B26 (356F)
POLE TOP	ASTM B26 (356F)
S.S. HARDWARE	AISI-300 SERIES (18-8)
STRUCTURE FINISH	PER SALES ORDER
HARDWARE FINISH	HD GALV TO ASTM A153

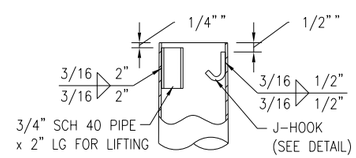

TOP OF POLE DETAIL
ORIENTATION OF PIPE & J-HOOK AS REQUIRED

J-HOOK DETAIL
3/8" DIA

VERIFY POLE HARDWARE, THICKNESS, DIMENSIONS AND MISCELLANEOUS DETAILS WITH MANUFACTURER BEFORE ORDERING.

GRAPHIC SCALE
10 0 10 20 40
(IN FEET)
1 inch = 10 ft. Full Size
1 inch = 20 ft. Half Size

CAUTION UNDERGROUND UTILITIES
2 WORKING DAYS
BEFORE YOU DIG
CALL 1-800-362-2764
OHIO UTILITY PROTECTION SERVICE
CALL NON-SERVICE FACILITY
OWNERS DIRECT

DEPARTMENT OF TRANSPORTATION & ENGINEERING CITY OF CINCINNATI OHIO

CONTRACT DRAWING

PRINTS NOT BEARING THIS STAMP WERE MADE PRIOR TO ADVERTISING FOR BIDS AND ARE TO BE CONSIDERED OBSOLETE FOR CONTRACT PURPOSES.

Department of Transportation and Engineering
City of Cincinnati
City Hall
801 Plum Street
Cincinnati, Ohio 45202

CINCINNATI STREETCAR

ROUND TAPERED STEEL TRAFFIC POLE DETAILS
50700-B1284 SHEET 1 OF 2

Revisions
No.

Drawn by UMC Date 12/20/11
Designed by UMC Date 12/20/11
Checked by UMC Date 12/20/11
Reviewed by UMC Date 12/20/11

Consultant
PB HDR

File Number

ACC No. 23126

G-TC-2015 I

DOTE_Mono_PDF_Half.pltcfg
W:\29014A-Streetcar\CAD\Traffic_Control\Signals\2015_Signal Mast Arm Details\S_G-TC-2015 I.dgn
7/11/2012 8:16:11 AM

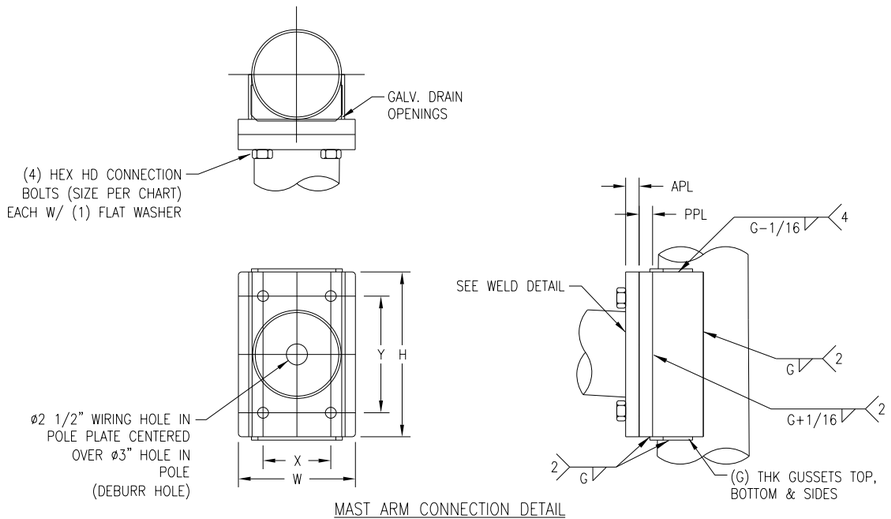

MAST ARM CONNECTION DETAIL

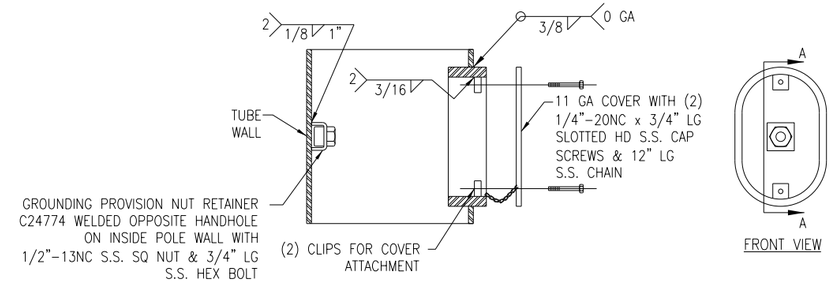

SECTION A-A

FRONT VIEW

4" x 8" HANDHOLE FRAME DETAIL

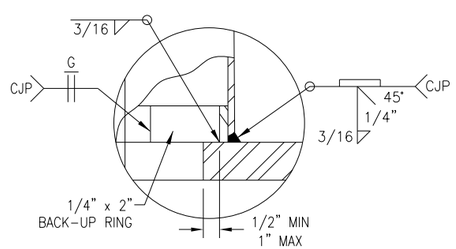

POLE BASE & ARM FLANGE WELD DETAIL

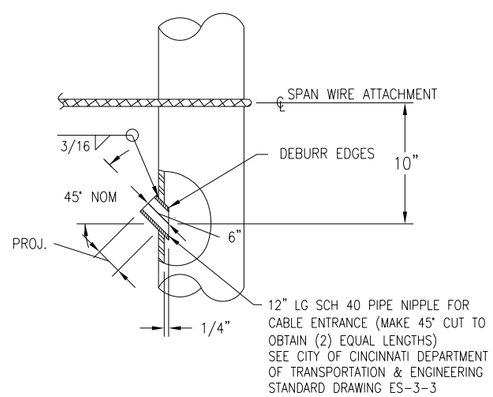

DETAIL "X"

CONTRACTOR TO INSTALL IN FIELD SEE PROJECT PLANS FOR SIZE & ORIENTATION OF PIPE NIPPLE & SPAN WIRE ATTACHMENT HEIGHT

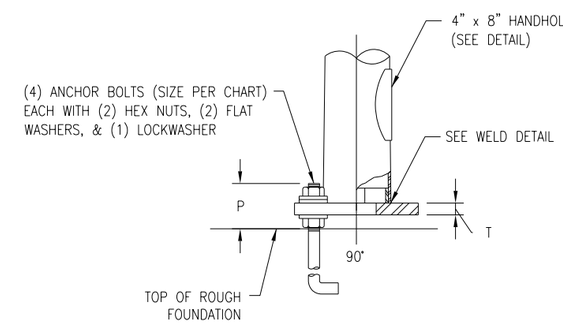

BASE CONNECTION DETAIL

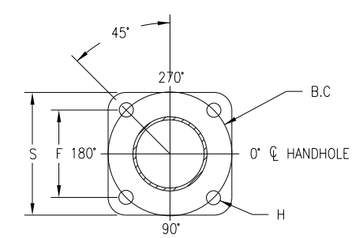

BASE PLATE DETAIL

VERIFY POLE HARDWARE, THICKNESS, DIMENSIONS AND MISCELLANEOUS DETAILS WITH MANUFACTURER BEFORE ORDERING.

GRAPHIC SCALE

10 0 10 20 40

(IN FEET)
1 inch = 10 ft. Full Size
1 inch = 20 ft. Half Size

CAUTION UNDERGROUND UTILITIES
2 WORKING DAYS
BEFORE YOU DIG
CALL 1-800-362-2764
OHIO UTILITY PROTECTION SERVICE
CALL NON-SERVICE FACILITY OWNERS DIRECT

CONTRACT DRAWING

PRINTS NOT BEARING THIS STAMP WERE MADE PRIOR TO ADVERTISING FOR BIDS AND ARE TO BE CONSIDERED OBSOLETE FOR CONTRACT PURPOSES.

Department of Transportation and Engineering

City of Cincinnati
City Hall
801 Plum Street
Cincinnati, Ohio 45202

CINCINNATI STREETCAR

ROUND TAPERED STEEL TRAFFIC POLE DETAILS
50700-B1284 SHEET 2 OF 2

Revisions
No.

Drawn by UMC	Date 12/20/11
Designed by UMC	Date 12/20/11
Checked by UMC	Date 12/20/11
Reviewed by UMC	Date 12/20/11

Consultant

PB HDR

File Number

ACC No. 23126

G-TC-2015 J

DOTE_Mono_PDF_Half.pltcfg
W:\29014A-Streetcar\CAD\Traffic_Control\Signals\2015_Signal Mast Arm Details\S_G-TC-2015 J.dgn
7/11/2012 8:16:18 AM

QTY	\G1033; \G1033;\b\iUMC DESIGN NUMBER	MAST ARM DATA				MAST ARM CONNECTION DATA (in)								POLE TUBE SIZE	POLE BASE CONNECTION DATA (in)								SIGNALS		SIGNS	
		SPAN	TUBE SIZE	MTG HGT	ORIENT.	BOLT ø	X	Y	W	H	APL	PPL	G		B.C.	S	F	P	T	H	(QTY) A. BOLT SIZE		S	T	M	N
																						D	5	–	–	2
	50700-B1285-Y1	6'-0"	11E-4.00x3.16x6'-0"																			W	74	–	–	5
																						D	8	2	5	3
	50700-B1285-Y2	9'-0"	11E-4.50x3.24x9'-0"																			W	74	74	5	5
	50700-B1285-Y3	12'-0"	11E-5.00x3.32x12'-0"	18'-6"	180°	1	3 1/2	10	10	15 1/2	1 1/4	1	3/16	0E-11.00x6.80x30'-0"	15	15 3/4	10 5/8	7 1/2	2	2 1/8	(4) 1 3/4 x 84 x 6	D	11	2	7	5
																						W	74	74	5	5
	50700-B1285-Y4	15'-0"	11E-5.50x3.40x15'-0"																			D	14	5	10	1
																						W	74	74	5	5
	50700-B1285-Y5	20'-0"	7E-6.00x3.20x20'-0"																			D	19	10	15	5
																						W	74	74	5	5

D = DISTANCE (ft)
W = WEIGHT (lbs)

11 GA = 0.120" WALL THICKNESS
7 GA = 0.179" WALL THICKNESS
0 GA = 0.313" WALL THICKNESS
E = ROUND TAPERED STEEL TUBE @ 0.14 in/ft TAPER

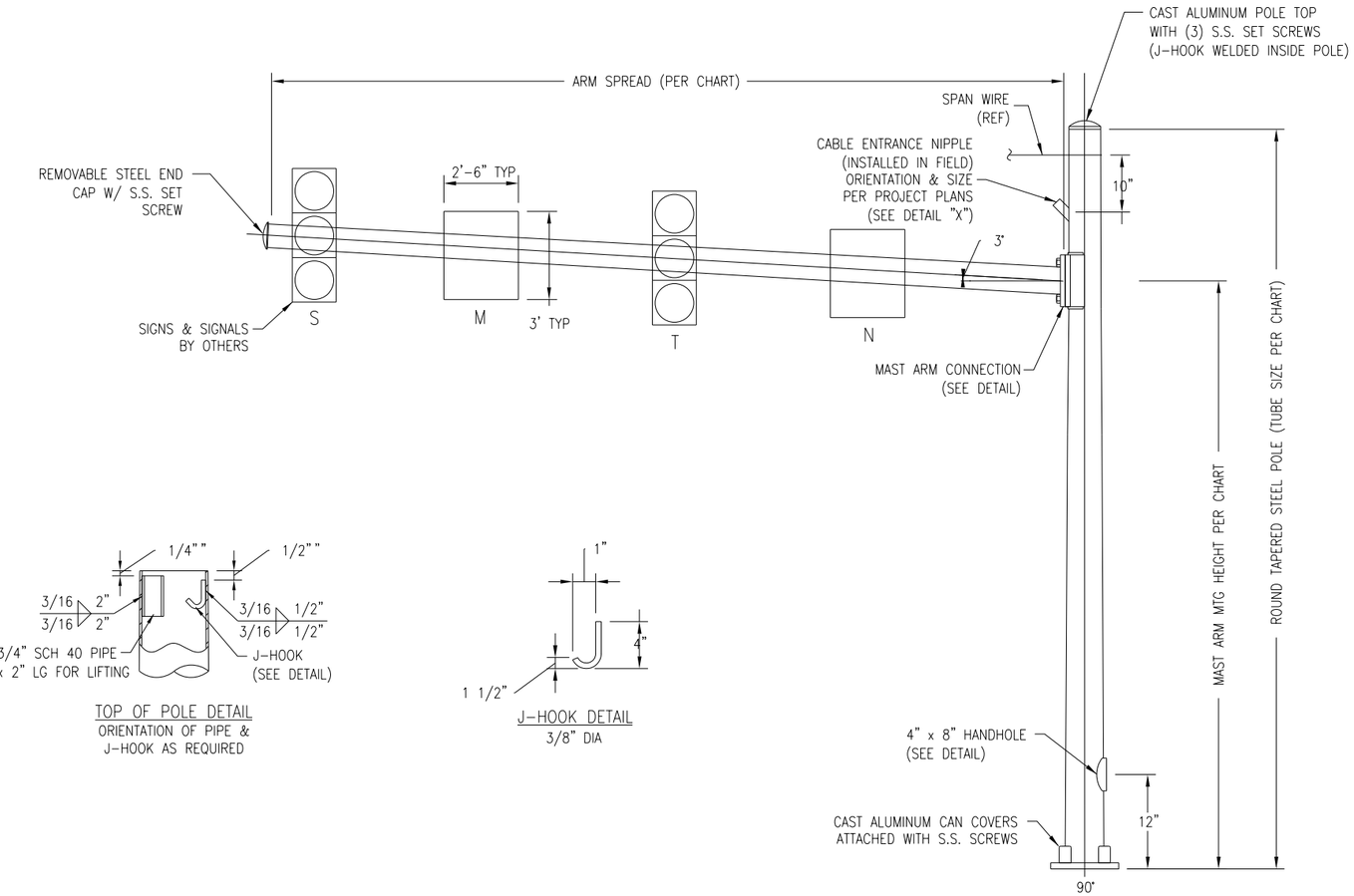

DESIGN CRITERIA:

1. DESIGNED IN ACCORDANCE WITH 2009 AASHTO "STANDARD SPECIFICATIONS FOR STRUCTURAL SUPPORTS FOR HIGHWAY SIGNS, LUMINAIRES, AND TRAFFIC SIGNALS" FOR 90 M.P.H. WIND ZONE.
2. ANCHOR BOLTS ANALYZED FOR STEEL STRENGTH ONLY. THE ANCHOR BOLT EMBEDMENT LENGTH SHOWN ON THIS DRAWING SHALL BE VERIFIED BY THE FOUNDATION ENGINEER.
3. THE EXPOSED LENGTH OF THE ANCHOR BOLT BETWEEN THE TOP OF THE FOUNDATION AND THE BOTTOM OF THE LEVELING NUT SHOULD NOT EXCEED ONE BOLT DIAMETER.
4. VIBRATION IS MORE LIKELY TO OCCUR WHEN STRUCTURES ARE INSTALLED WITHOUT ATTACHING THE SIGNALS AND OR SIGNS. THEREFORE, THE INTENDED EQUIPMENT OR DAMPENING DEVICES MUST BE INSTALLED AT THE TIME OF ERECTION. BECAUSE VIBRATION IS GENERALLY UNPREDICTABLE, A MAINTENANCE PROGRAM SHOULD INCLUDE INSPECTION FOR INDICATIONS OF EXCESSIVE VIBRATION OR FATIGUE AND EXAMINATION FOR ANY STRUCTURAL DAMAGE OR BOLT LOOSENING.
5. CUSTOMER TO CONFIRM ALL DIMENSIONS & ORIENTATIONS BEFORE RELEASING ORDER FOR MANUFACTURING.

MATERIAL SPECIFICATIONS	
TAPERED TUBES	ASTM A595 GR A
PLATES	ASTM A36
HANDHOLE FRAME	ASTM A529 GR 50 (PREFERRED) or ASTM A572 GR 50 or ASTM A709 GR 50
HANDHOLE COVER	ASTM A36 or A1011
ARM CONNECTION BOLTS	ASTM A325
PIPE	ASTM A500 GR B OR A53 GR B
ANCHOR BOLTS	ASTM F1554 GR 55
ANCHOR BOLT NUTS	ASTM A563 GR A
FLAT WASHERS	ASTM F436
BOLT COVERS	ASTM B26 (356F)
POLE TOP	ASTM B26 (356F)
S.S. HARDWARE	AISI-300 SERIES (18-8)
STRUCTURE FINISH	PER SALES ORDER
HARDWARE FINISH	HD GALV TO ASTM A153

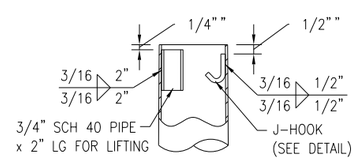

TOP OF POLE DETAIL
ORIENTATION OF PIPE & J-HOOK AS REQUIRED

J-HOOK DETAIL
3/8" DIA

VERIFY POLE HARDWARE, THICKNESS, DIMENSIONS AND MISCELLANEOUS DETAILS WITH MANUFACTURER BEFORE ORDERING.

GRAPHIC SCALE
10 0 10 20 40
(IN FEET)
1 inch = 10 ft. Full Size
1 inch = 20 ft. Half Size

CAUTION UNDERGROUND UTILITIES
2 WORKING DAYS
BEFORE YOU DIG
CALL 1-800-362-2764
OHIO UTILITY PROTECTION SERVICE
CALL NON-SERVICE FACILITY OWNERS DIRECT

DEPARTMENT OF TRANSPORTATION & ENGINEERING CITY OF CINCINNATI OHIO

CONTRACT DRAWING

PRINTS NOT BEARING THIS STAMP WERE MADE PRIOR TO ADVERTISING FOR BIDS AND ARE TO BE CONSIDERED OBSOLETE FOR CONTRACT PURPOSES.

Department of Transportation and Engineering
City of Cincinnati
City Hall
801 Plum Street
Cincinnati, Ohio 45202

CINCINNATI STREETCAR

ROUND TAPERED STEEL TRAFFIC POLE DETAILS
50700-B1285 SHEET 1 OF 2

Revisions
No.

Drawn by	Designed by	Checked by	Reviewed by
UMC	UMC	UMC	UMC
Date 12/20/11	Date 12/20/11	Date 12/20/11	Date 12/20/11

Consultant
PB HDR

File Number

ACC No. 23126

G-TC-2015 K

DOTE_Mono_PDF_Half.pltcfg
W:\29014A-Streetcar\CAD\Traffic_Control\Signals\2015_Signal Mast Arm Details\S_G-TC-2015 K.dgn
7/11/2012 8:16:25 AM

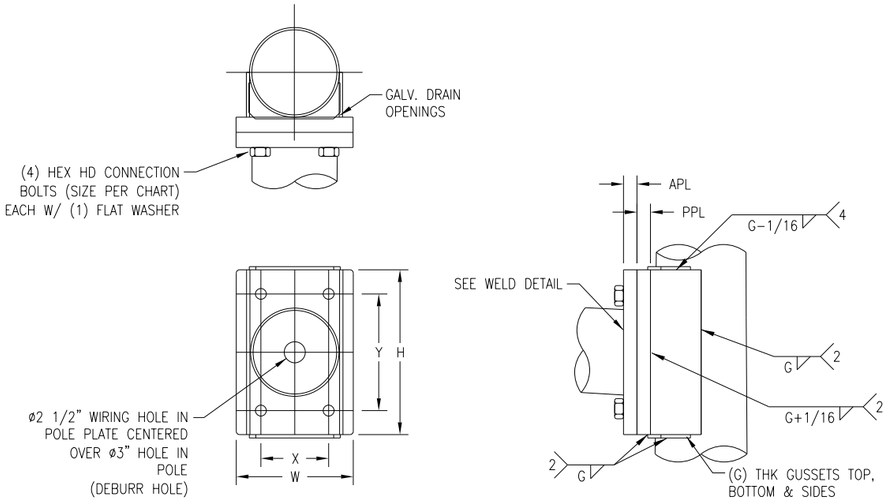

MAST ARM CONNECTION DETAIL

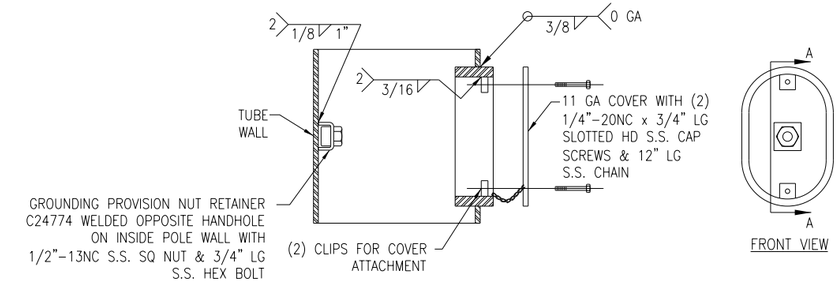

SECTION A-A

FRONT VIEW

4" x 8" HANDHOLE FRAME DETAIL

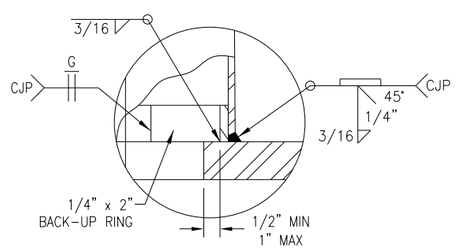

POLE BASE & ARM FLANGE WELD DETAIL

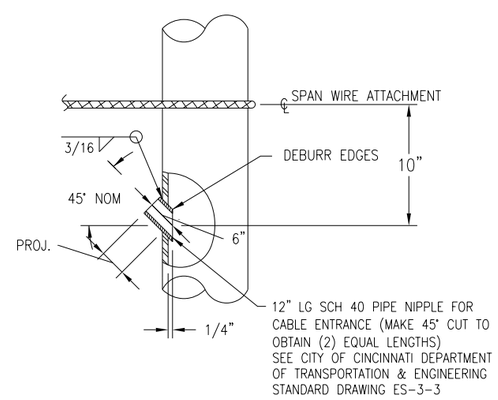

DETAIL "X"

CONTRACTOR TO INSTALL IN FIELD SEE PROJECT PLANS FOR SIZE & ORIENTATION OF PIPE NIPPLE & SPAN WIRE ATTACHMENT HEIGHT

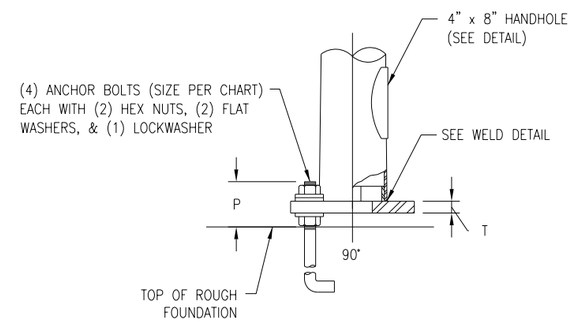

BASE CONNECTION DETAIL

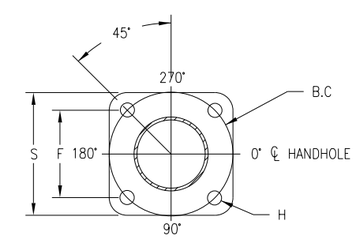

BASE PLATE DETAIL

VERIFY POLE HARDWARE, THICKNESS, DIMENSIONS AND MISCELLANEOUS DETAILS WITH MANUFACTURER BEFORE ORDERING.

GRAPHIC SCALE

10 0 10 20 40

(IN FEET)
1 inch = 10 ft. Full Size
1 inch = 20 ft. Half Size

CAUTION UNDERGROUND UTILITIES
2 WORKING DAYS
BEFORE YOU DIG
CALL 1-800-362-2764
OHIO UTILITY PROTECTION SERVICE
CALL NON-SERVICE FACILITY OWNERS DIRECT

CONTRACT DRAWING

PRINTS NOT BEARING THIS STAMP WERE MADE PRIOR TO ADVERTISING FOR BIDS AND ARE TO BE CONSIDERED OBSOLETE FOR CONTRACT PURPOSES.

Department of Transportation and Engineering

City of Cincinnati
City Hall
801 Plum Street
Cincinnati, Ohio 45202

CINCINNATI STREETCAR

ROUND TAPERED STEEL TRAFFIC POLE DETAILS
50700-B1285 SHEET 2 OF 2

Revisions
No.

Drawn by UMC	Date 12/20/11
Designed by UMC	Date 12/20/11
Checked by UMC	Date 12/20/11
Reviewed by UMC	Date 12/20/11

Consultant

PB HDR

File Number

ACC No. 23126

G-TC-2015 L

DOTE_Mono_PDF_Half.pltcfg
W:\29014A-Streetcar\CAD\Traffic_Control\Signals\2015_Signal Mast Arm Details\S_G-TC-2015 L.dgn
7/11/2012 8:16:32 AM

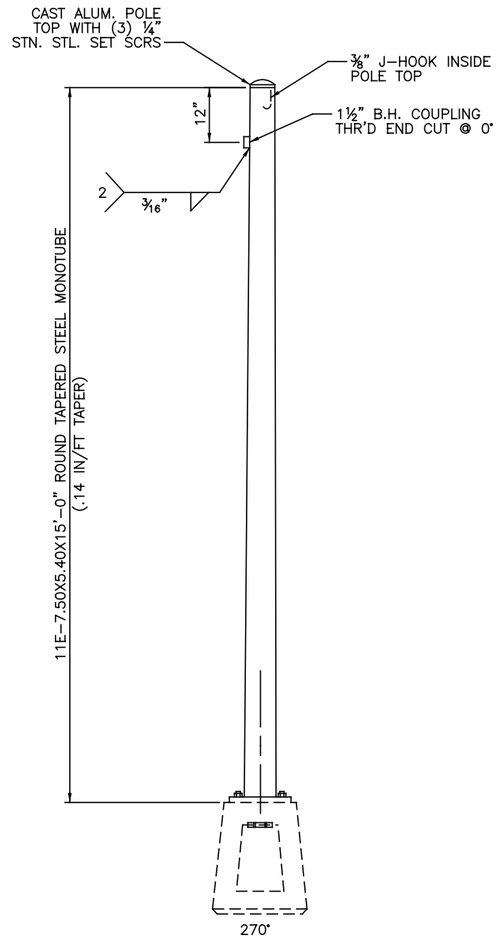

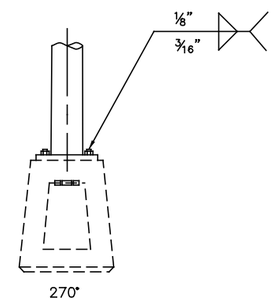

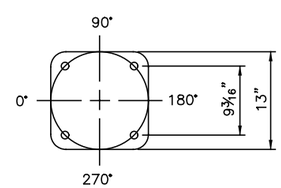

BASE PLATE DETAIL FOR POLE

DESIGN CRITERIA:

DESIGNED IN ACCORDANCE WITH 1994 AASHTO "STANDARD SPECIFICATIONS FOR STRUCTURAL SUPPORTS FOR HIGHWAY SIGNS, LUMINAIRES, AND TRAFFIC SIGNALS" FOR 90 M.P.H. WIND ZONE.

MATERIAL SPECIFICATIONS	
MONOTUBE	ASTM A595 GR A
PLATE	ASTM A36
STRUCTURE FINISH	GALV TO ASTM A123
POLE TOP	ASTM B26 (356F OR 43)
S.S. HARDWARE	AISI-300 SERIES

VERIFY POLE HARDWARE, THICKNESS, DIMENSIONS AND MISCELLANEOUS DETAILS WITH MANUFACTURER BEFORE ORDERING.

CAUTION UNDERGROUND UTILITIES
2 WORKING DAYS
BEFORE YOU DIG
CALL 1-800-362-2764
OHIO UTILITY PROTECTION SERVICE
CALL NON-SERVICE FACILITY
OWNERS DIRECT

GRAPHIC SCALE
10 0 10 20 40
(IN FEET)
1 inch = 10 ft. Full Size
1 inch = 20 ft. Half Size

DOTE_Mono_PDF_Half.pltcfg
W:\29014A-Streetcar\CAD\Traffic_Control\Signals\2015_Signal Mast Arm Details\S_G-TC-2015 M.dgn
8:16:41 AM
7/11/2012

CONTRACT DRAWING

PRINTS NOT BEARING THIS STAMP WERE MADE PRIOR TO ADVERTISING FOR BIDS AND ARE TO BE CONSIDERED OBSOLETE FOR CONTRACT PURPOSES.

Department of Transportation and Engineering

City of Cincinnati
City Hall
801 Plum Street
Cincinnati, Ohio 45202

CINCINNATI STREETCAR

STEEL TRAFFIC POLE DETAILS
50054-A934 SHEET 1 OF 1

Revisions
No.

	Date
Drawn by UMC	12/20/11
Designed by UMC	12/20/11
Checked by UMC	12/20/11
Reviewed by UMC	12/20/11

Consultant

PB HDR

File Number

ACC No.
23126

G-TC-2015 M

SYMBOLS

POWER TRANSFORMER

GROUND

3 WIRE WYE TRANSFORMER CONNECTION

3 WIRE DELTA TRANSFORMER CONNECTION

RECTIFIER TRANSFORMER

600/5
3

CURRENT TRANSFORMER (CT)
- UPPER NO. = RATIO
- LOWER NO. = QUANTITY OF TRANSFORMERS

19.8kV/120V
3

POTENTIAL TRANSFORMER (PT)
- UPPER NO. = RATIO
- LOWER NO. = QUANTITY OF TRANSFORMERS

AC MEDIUM VOLTAGE CIRCUIT BREAKER - DRAWOUT TYPE

DRAWOUT DEVICE

DC CIRCUIT BREAKER
WITH OVERCURRENT DEVICE – DRAWOUT TYPE

800AF
400AT

LOW VOLTAGE CIRCUIT BREAKER
800AF–INDICATES 800AMP FRAME
400AT– INDICATES 400AMP TRIP RATING

50N
51N
1

RELAY OR DEVICE:
NUMBERS AND LETTERS DESIGNATE ANSI DEVICE FUNCTION
OUTSIDE NUMBER DESIGNATES QUANTITY

*AS – AMMETER SWITCH
*VS – VOLTMETER SWITCH
*AXD – CURRENT TRANSDUCER
*VXD – VOLTAGE TRANSDUCER

INSULATED BARRIER

*AM – AMMETER
*VM – VOLTMETER

MANHOLE FOR DC POSITIVE CABLE

MANHOLE FOR DC NEGATIVE CABLE

MANHOLE FOR UTILITY CABLE

SECTION BREAK OR INSULATOR OVERLAP

SA

SURGE ARRESTER

E

ELECTRICAL INTERLOCK

K

KEY INTERLOCK

FUSED DISCONNECT SWITCH

100

FUSE:
100–INDICATES RATING IN AMPS

LOAD BREAK ELBOW

DISCONNECT SWITCH (MANUAL)

DC SHUNT

WIRING TERMINAL

CONDUCTORS CONNECTED

CONDUCTORS NOT CONNECTED

RECTIFIER, DIODE

CONTACTOR

VARIABLE RESISTOR

SHIELDED CABLE

LOAD MEASURING RESISTOR (LMR)

ANSI DEVICE TABLE

DEVICE	DESCRIPTION
26A	RECTIFIER OVERTEMPERATURE ALARM
26T	RECTIFIER OVERTEMPERATURE TRIP
27	UNDERVOLTAGE DEVICE
30	ANNUNCIATOR RELAY
32	DIRECTIONAL POWER DEVICE
33	TRANSFORMER DOOR INTERLOCK
49A	TRANSFORMER THERMAL ALARM
49T	TRANSFORMER THERMAL TRIP
50	PHASE INSTANTANEOUS OVERCURRENT DEVICE
50N	GROUND INSTANTANEOUS OVERCURRENT DEVICE
51	PHASE TIME OVERCURRENT DEVICE
51N	GROUND TIME OVERCURRENT DEVICE
51R	RECTIFIER TIME OVERCURRENT DEVICE
52	AC CIRCUIT BREAKER
59	OVERVOLTAGE DEVICE
64G	GROUNDED RECT AND DC SWGR ENCLOSURE PROTECTIVE DEVICE
64	ENERGIZED RECT AND DC SWGR ENCLOSURE PROTECTIVE DEVICE
72	DC CATHODE CIRCUIT BREAKER
76	DC RECTIFIER BREAKER OVERCURRENT TRIP DEVICE
86	LOCKOUT DEVICE
89	DISCONNECT SWITCH
98	RECTIFIER DIODE FAILURE
99	RECTIFIER SURGE PROTECTION DEVICE
129	ISOLATING CONTACTOR
150M	RATE OF RISE DETECTION DEVICE
172	DC FEEDER CIRCUIT BREAKER
176	DC FEEDER OVERCURRENT TRIP DEVICE
182	DC LOAD MEASURING DEVICE
183	DC VOLTAGE MEASURING DEVICE
186	DC FEEDER LOCK–OUT RELAY
ETS PB	EMERGENCY TRIP STATION PUSH BUTTON
ETS A	EMERGENCY TRIP STATION ALARM

CAUTION UNDERGROUND UTILITIES
2 WORKING DAYS
BEFORE YOU DIG
CALL 1–800–362–2764
OHIO UTILITY PROTECTION SERVICE
CALL NON–SERVICE FACILITY
OWNERS DIRECT

PROFESSIONAL STAMP

SIGN:

DATE:

DEPARTMENT OF TRANSPORTATION & ENGINEERING
CITY OF CINCINNATI OHIO

CONTRACT DRAWING

PRINTS NOT BEARING THIS STAMP WERE MADE PRIOR TO ADVERTISING FOR BIDS AND ARE TO BE CONSIDERED OBSOLETE FOR CONTRACT PURPOSES.

Department of Transportation and Engineering

City of Cincinnati
City Hall
801 Plum Street
Cincinnati, Ohio 45202

CINCINNATI STREETCAR

TRACTION POWER
SYMBOLS & DEVICE LIST

Revisions

No.				

Date 12/20/2011
Date 12/20/2011
Date 07/02/2012
Date 07/12/2012

Drawn by LP
Designed by JM
Checked by RF
Reviewed by JTB

Consultant

PB HDR

File Number

ACC No. 23126

G-PD-0001

$PLTDRV$$
T:\290144_Cincinnati.Street.Car\TP\S_G-PD-0001.dgn
7/10/2012 9:09:03 AM

ABBREVIATIONS

A	AMPERE
AC	ALTERNATING CURRENT
ALU	ALUMINUM
AM	AMMETER
ANNUN	ANNUNCIATION
APCC	AUXILARY POWER CONTROL CABINET
AS	AMMETER SWITCH
AUX	AUXILIARY
AWG	AMERICAN WIRE GAUGE
CAB	CABINET
CKT	CIRCUIT
CNTL	CONTROL
CU	COPPER
DC	DIRECT CURRENT
DIST	DISTRIBUTION
EPR	ETHYLENE PROPYLENE RUBBER
ETS	EMERGENCY TRIP STATION
FDR	FEEDER
FRE	FIBERGLASS REINFORCED EPOXY (FRE™) CONDUIT
GA	GAUGE
GND, G	GROUND
ISO	ISOLATION
kA	THOUSAND AMPERES
KCMIL	THOUSAND CIRCULAR MILS
kV	THOUSAND VOLTS
kVA	THOUSAND VOLT–AMPERES
MVA	MILLION VOLT–AMPERES
NB	NORTH BOUND
NC	NORMALLY CLOSED
NO	NORMALLY OPEN
OCS	OVERHEAD CONTACT SYSTEM
PH	PHASE
PNL	PANEL
PVC	POLYVINYL CHLORIDE CONDUIT
RECT	RECTIFIER
S	SOUTH
SA	SURGE ARRESTER
SB	SOUTH BOUND
SCADA	SUPERVISORY CONTROL AND DATA ACQUISITION
STA	STATIONING
STRDED	STRANDED
SW	SWITCH
SWGR	SWITCHGEAR
TP	TRACTION POWER
TPSS	TRACTION POWER SUBSTATION
TYP	TYPICAL
TVSS	TRASIENT VOLTAGE SURGE SUPPRESSOR
V	VOLT
VM	VOLTMETER
VS	VOLTMETER SWITCH
W	WATT
Y	YARD
X, Y, Z	AUXILIARY DEVICE
XD	TRANSDUCER
XFMR	TRANSFORMER

CAUTION UNDERGROUND UTILITIES
2 WORKING DAYS
BEFORE YOU DIG
CALL 1–800–362–2764
OHIO UTILITY PROTECTION SERVICE
CALL NON–SERVICE FACILITY
OWNERS DIRECT

PROFESSIONAL STAMP

SIGN:
DATE:

CONTRACT DRAWING

PRINTS NOT BEARING THIS STAMP WERE MADE PRIOR TO ADVERTISING FOR BIDS, AND ARE TO BE CONSIDERED OBSOLETE FOR CONTRACT PURPOSES.

Department of Transportation and Engineering
City of Cincinnati
City Hall
801 Plum Street
Cincinnati, Ohio 45202

CINCINNATI STREETCAR

TRACTION POWER ABBREVIATIONS

Revisions
No.

	Date
Drawn by LP	12/20/2011
Designed by JM	12/20/2011
Checked by RF	07/02/2012
Reviewed by JTB	07/12/2012

Consultant

PB HDR

File Number

ACC No. 23126

G-PD-0002

$PLTDRV$$
T:\29014a_Cincinnati.Street.Car\TP\S_G-PD-0002.dgn
7/10/2012 9:09:04 AM

NOTES:

1. KEY INTERLOCK SHALL PREVENT OPENING OF 89 DEVICE UNLESS CATHODE BREAKER IS OPEN AND SHALL PREVENT CLOSING OF CATHODE BREAKER UNLESS 89 DEVICE IS CLOSED.
2. AC TRACTION POWER SWITCHGEAR SHALL BE TYPE II ARC RESISTANT.
3. UTILITY SERVICE SHALL BE IN ACCORDANCE WITH DUKE POWER INTERCONNECTION REQUIREMENTS AND CONDITIONS OF SERVICE.

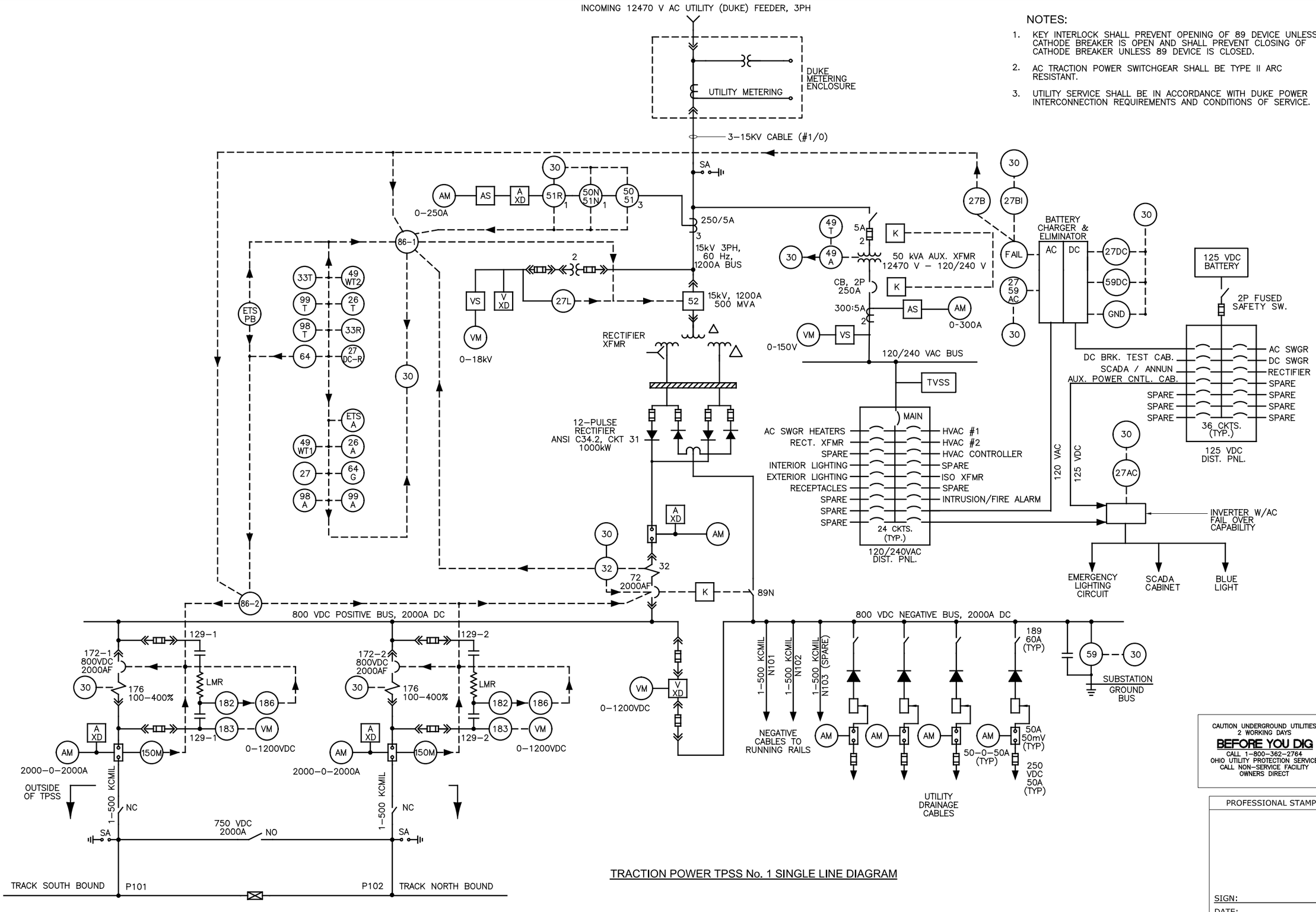

TRACTION POWER TPSS No. 1 SINGLE LINE DIAGRAM

CAUTION UNDERGROUND UTILITIES 2 WORKING DAYS
BEFORE YOU DIG
CALL 1–800–362–2764
OHIO UTILITY PROTECTION SERVICE
CALL NON–SERVICE FACILITY OWNERS DIRECT

PROFESSIONAL STAMP

SIGN:

DATE:

CONTRACT DRAWING

PRINTS NOT BEARING THIS STAMP WERE MADE PRIOR TO ADVERTISING FOR BIDS AND ARE TO BE CONSIDERED OBSOLETE FOR CONTRACT PURPOSES.

Department of Transportation and Engineering

City of Cincinnati
City Hall
801 Plum Street
Cincinnati, Ohio 45202

CINCINNATI STREETCAR

TRACTION POWER
TPSS No. 1 SINGLE LINE DIAGRAM

Revisions

No.	Date
	12/20/2011
	12/20/2011
	07/02/2012
	07/12/2012

Drawn by LP
Designed by JS
Checked by RF
Reviewed by JTB

Consultant

PB HDR

File Number

ACC No. 23126

G-PD-0003

$PLTDRV$$
T:\29014a_Cincinnati:Street.Car\TP\S_G-PD-0003.dgn
7/10/2012 9:09:05 AM

NOTES:

1. KEY INTERLOCK SHALL PREVENT OPENING OF 89 DEVICE UNLESS CATHODE BREAKER IS OPEN AND SHALL PREVENT CLOSING OF CATHODE BREAKER UNLESS 89 DEVICE IS CLOSED.
2. AC TRACTION POWER SWITCHGEAR SHALL BE TYPE II ARC RESISTANT.
3. UTILITY SERVICE SHALL BE IN ACCORDANCE WITH DUKE POWER INTERCONNECTION REQUIREMENTS AND CONDITIONS OF SERVICE.

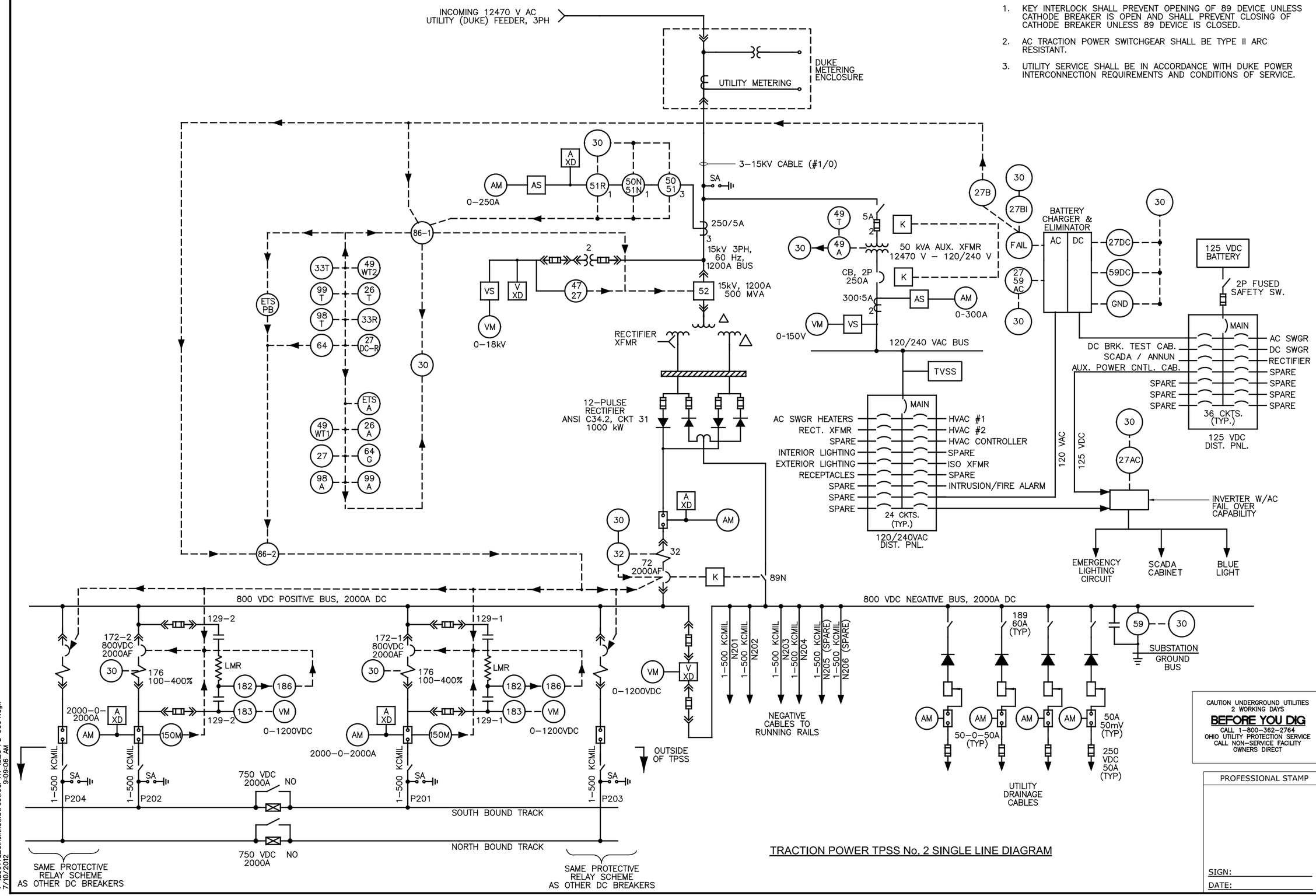

TRACTION POWER TPSS No. 2 SINGLE LINE DIAGRAM

CAUTION UNDERGROUND UTILITIES 2 WORKING DAYS
BEFORE YOU DIG
CALL 1–800–362–2764
OHIO UTILITY PROTECTION SERVICE
CALL NON–SERVICE FACILITY OWNERS DIRECT

PROFESSIONAL STAMP

SIGN:

DATE:

CONTRACT DRAWING

PRINTS NOT BEARING THIS STAMP WERE MADE PRIOR TO ADVERTISING FOR BIDS AND ARE TO BE CONSIDERED OBSOLETE FOR CONTRACT PURPOSES.

Department of Transportation and Engineering

City of Cincinnati
City Hall
801 Plum Street
Cincinnati, Ohio 45202

CINCINNATI STREETCAR

TRACTION POWER
TPSS No. 2 SINGLE LINE DIAGRAM

Revisions

No.	Date
	12/20/2011
	12/20/2011
	07/02/2012
	07/12/2012

Drawn by LP
Designed by JS
Checked by RF
Reviewed by JTB

Consultant

PB HDR

File Number

ACC No. 23126

G-PD-0004

$PLTDRVS$
T:\290144a_Cincinnati.Street.Car\TP.S._G-PD-0004.dgn
9:09:06 AM
7/10/2012

NOTES:

1. KEY INTERLOCK SHALL PREVENT OPENING OF 89 DEVICE UNLESS CATHODE BREAKER IS OPEN AND SHALL PREVENT CLOSING OF CATHODE BREAKER UNLESS 89 DEVICE IS CLOSED.
2. AC TRACTION POWER SWITCHGEAR SHALL BE TYPE II ARC RESISTANT.
3. UTILITY SERVICE SHALL BE IN ACCORDANCE WITH DUKE POWER INTERCONNECTION REQUIREMENTS AND CONDITIONS OF SERVICE.

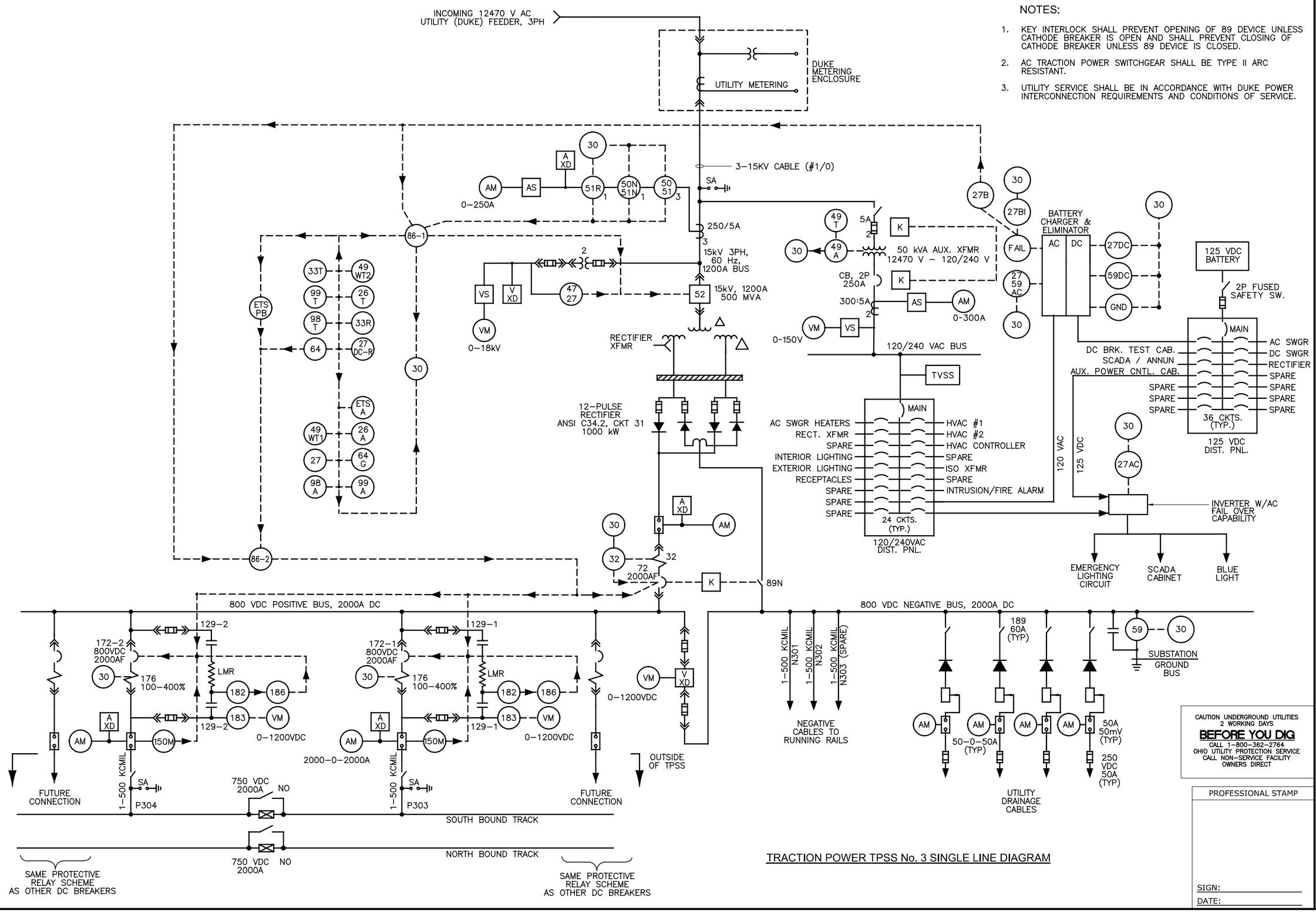

TRACTION POWER TPSS No. 3 SINGLE LINE DIAGRAM

CAUTION UNDERGROUND UTILITIES 2 WORKING DAYS
BEFORE YOU DIG
CALL 1–800–362–2764
OHIO UTILITY PROTECTION SERVICE
CALL NON–SERVICE FACILITY OWNERS DIRECT

PROFESSIONAL STAMP

SIGN:
DATE:

CONTRACT DRAWING

PRINTS NOT BEARING THIS STAMP WERE MADE PRIOR TO ADVERTISING FOR BIDS AND ARE TO BE CONSIDERED OBSOLETE FOR CONTRACT PURPOSES.

Department of Transportation and Engineering
City of Cincinnati
City Hall
801 Plum Street
Cincinnati, Ohio 45202

CINCINNATI STREETCAR

TRACTION POWER
TPSS No. 3 SINGLE LINE DIAGRAM

Revisions

No.	Date
	12/20/2011
	12/20/2011
	07/02/2012
	07/12/2012

Drawn by	LP
Designed by	JS
Checked by	RF
Reviewed by	JTB

Consultant

PB HDR

File Number

ACC No. 23126

G-PD-0005

$PLTDRV$
T:\290144_Cincinnati.Street.Car\TP\S_G-PD-0005.dgn
9:09:07 AM
7/10/2012

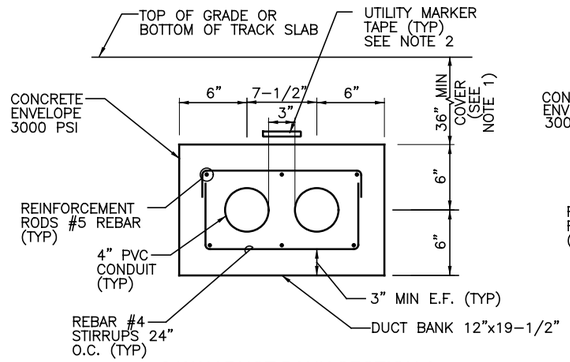

2-WAY DUCT BANK SECTION A

SECTION A / NTS

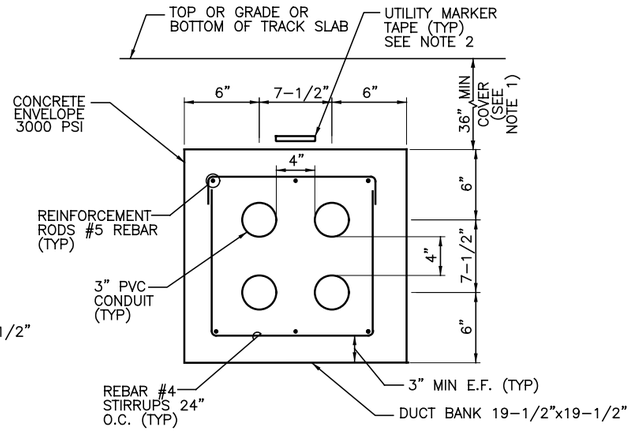

4-WAY DUCT BANK SECTION D

SECTION D / NTS

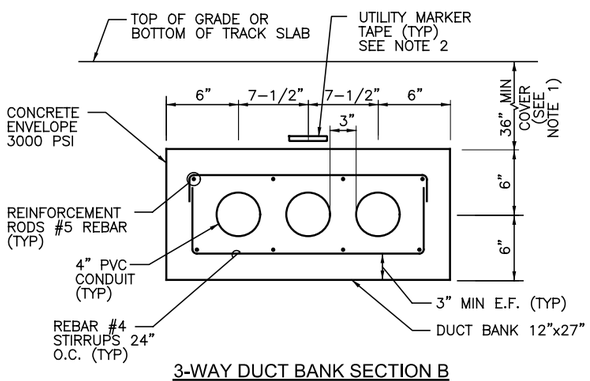

3-WAY DUCT BANK SECTION B

SECTION B / NTS

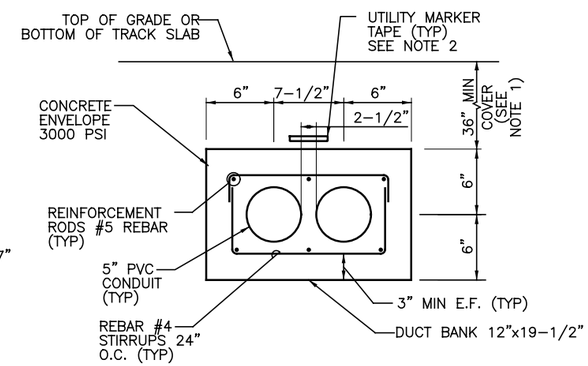

2-WAY (5") DUCT BANK SECTION E

SECTION E / NTS

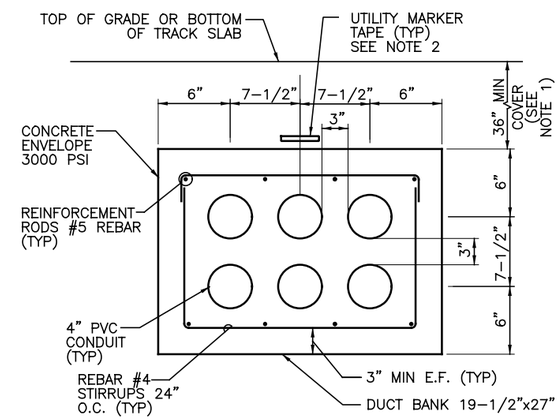

6-WAY DUCT BANK SECTION G

SECTION G / NTS

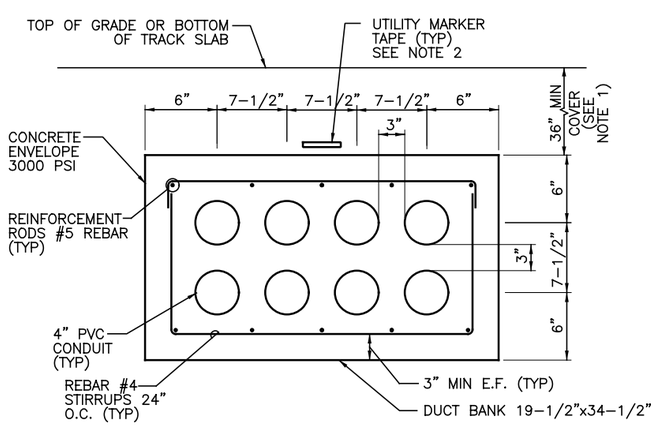

8-WAY DUCT BANK SECTION C

SECTION C / NTS

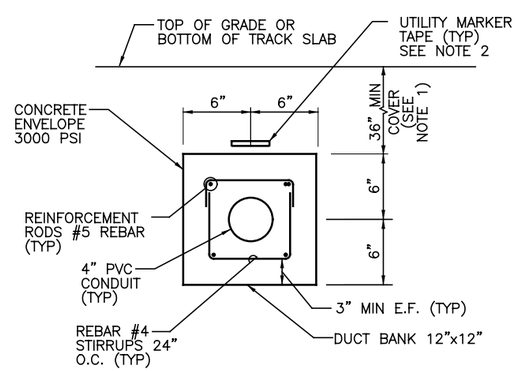

1-WAY DUCT BANK SECTION F

SECTION F / NTS

NOTES:

1. THE CONTRACTOR SHALL MAINTAIN A 36" MINIMUM COVER, FROM TOP OF GRADE TO TOP OF DUCT BANK, WHEN NOT GOING UNDER TRACK. MINIMUM 36" UNDER TRACKS, FROM BOTTOM OF SLAB.
2. THE CONTRACTOR SHALL PROVIDE A 3" WIDE RED MARKER TAPE 12" ABOVE ALL DUCT BANKS. LABEL TAPE "CAUTION ELECTRICAL LINES BURIED BELOW."
3. DUCT BANK SHALL BE INSTALLED ATOP 12" OF #6 CRUSHED STONE. COMPACTED GRANULAR FILL SHALL THEN BE USED TO FILL ATOP THE INSTALLED DUCT BANK IN UNPAVED AREAS. FILL ATOP THE INSTALLED DUCT BANK IN PAVED AREAS TO BE CLSM FILL PER CITY REQUIREMENTS.
4. CONCRETE USED FOR ENCASEMENT SHALL BE CLASS "C" CONCRETE.
5. DUCT BANKS CAN VARY IN ELEVATION AND ALIGNMENT TO AVOID OTHER SUBSURFACE UTILITIES.
6. ALL CONDUITS IN ENCASED DUCTBANKS TO BE SCHEDULE 40 PVC EXCEPT WHERE NOTED.
7. REINFORCEMENT STEEL SHALL BE DEFORMED BARS OF NEW BILLET STEEL CONFORMING TO ASTM AG15, GRADE 60. ALL HOOKS SHALL BE STANDARD HOOKS, UNLESS OTHERWISE STATED.
8. ALL CONDUIT SHALL BE SLOPED TO DRAIN INTO MANHOLE OR HANDHOLE.

CAUTION UNDERGROUND UTILITIES
2 WORKING DAYS
BEFORE YOU DIG
CALL 1-800-362-2764
OHIO UTILITY PROTECTION SERVICE
CALL NON-SERVICE FACILITY OWNERS DIRECT

PROFESSIONAL STAMP

SIGN:
DATE:

CONTRACT DRAWING

PRINTS NOT BEARING THIS STAMP WERE MADE PRIOR TO ADVERTISING FOR BIDS AND ARE TO BE CONSIDERED OBSOLETE FOR CONTRACT PURPOSES.

Department of Transportation and Engineering

City of Cincinnati
City Hall
801 Plum Street
Cincinnati, Ohio 45202

CINCINNATI STREETCAR

TRACTION POWER DUCTBANK DETAILS

Revisions

No.	Date	Drawn by	Date	Designed by	Date	Checked by	Date	Reviewed by
	12/20/2011	LP	12/20/2011	DL	07/02/2012	RF	07/12/2012	JTB

Consultant

PB HDR

File Number

ACC No. 23126

G-PD-0051

$PLTDRV$$
T:\29014a_Cincinnati.Street.Car\TP\S_G-PD-0051.dgn
7/10/2012 9:09:07 AM

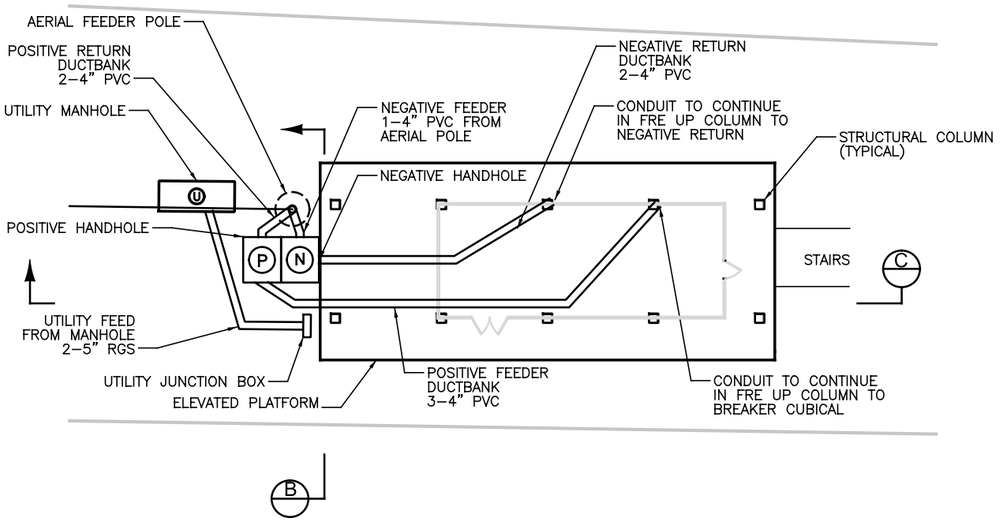

TPSS1 UNDERGROUND DUCTBANK

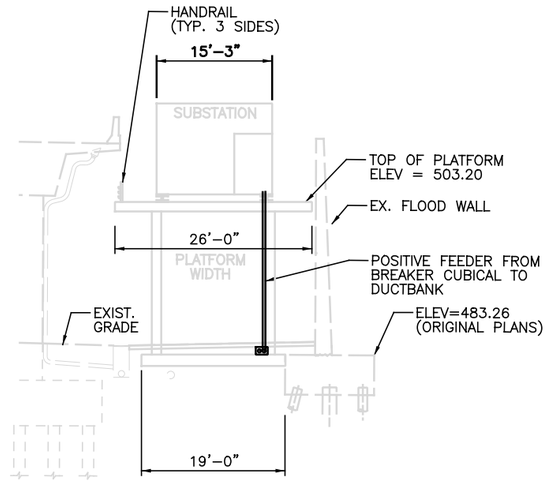

SECTION A

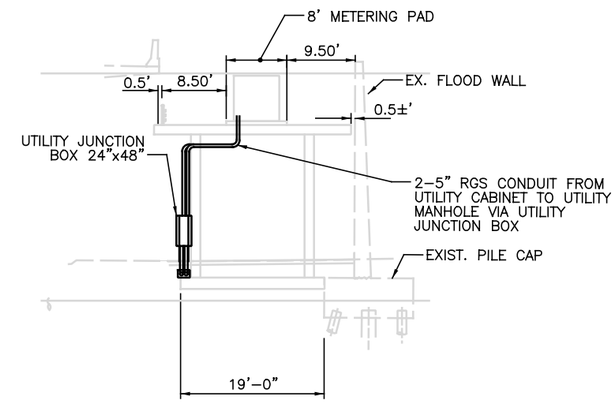

SECTION B

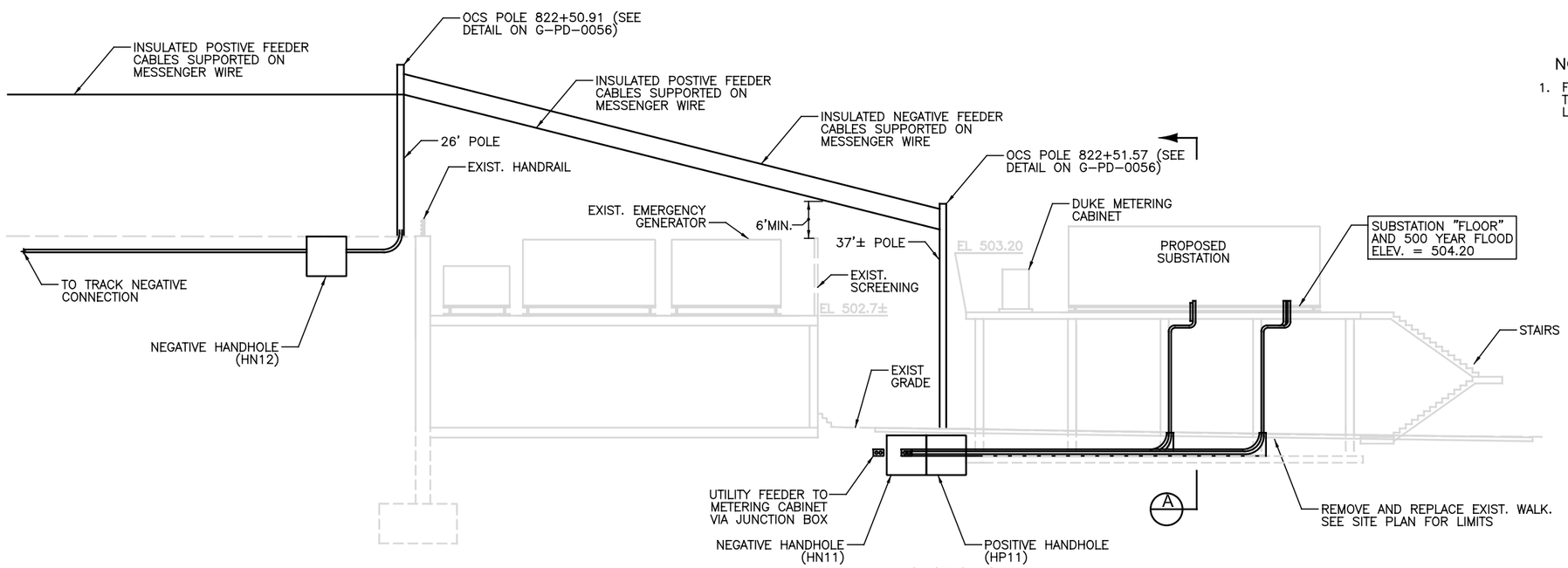

SECTION C

NOTES:

1. FOR MORE DETAIL REFER TO SITE PLAN DWG TP–0020 AND PLATFORM PENETRATION / RACEWAY LAYOUT DETAILS DWG TP–0035.

CAUTION UNDERGROUND UTILITIES
2 WORKING DAYS
BEFORE YOU DIG
CALL 1–800–362–2764
OHIO UTILITY PROTECTION SERVICE
CALL NON–SERVICE FACILITY
OWNERS DIRECT

PROFESSIONAL STAMP

SIGN:

DATE:

CONTRACT DRAWING

PRINTS NOT BEARING THIS STAMP WERE MADE PRIOR TO ADVERTISING FOR BIDS AND ARE TO BE CONSIDERED OBSOLETE FOR CONTRACT PURPOSES.

Department of Transportation and Engineering

City of Cincinnati
City Hall
801 Plum Street
Cincinnati, Ohio 45202

CINCINNATI STREETCAR

TRACTION POWER
DUCTBANK MOUNTING DETAILS

Revisions

No.	Date
	12/20/2011
	12/20/2011
	07/02/2012
	07/12/2012

Drawn by LP
Designed by DL
Checked by RF
Reviewed by JTB

Consultant

PB HDR

File Number

ACC No. 23126

G-PD-0052

$PLTDRV$$
T:\29014a_Cincinnati.Street.Car\TP\S_G-PD-0052.dgn
7/10/2012 9:09:15 AM

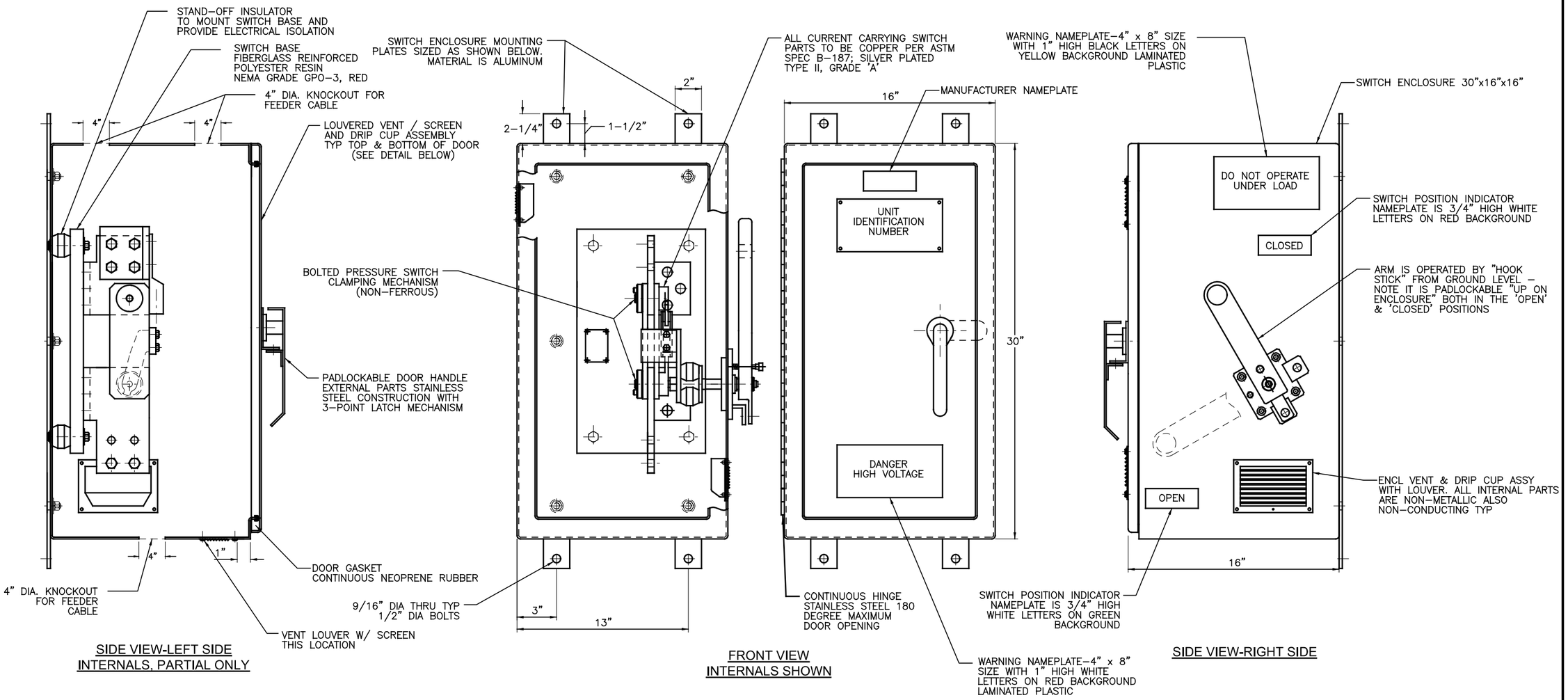

NOTES:

1. ENCLOSURE SHALL BE NEMA TYPE 3R.
2. ALL EXTERIOR HARDWARE SHALL BE CORROSION RESISTANT STAINLESS STEEL AND ALUMINUM.

ELECTRICAL RATING:

CURRENT:	2000 AMP CONTINUOUS
VOLTAGE:	1000 VDC
CURRENT WITHSTAND:	180 KADC 100ms
DIELECTRIC WITHSTAND:	3000VDC 1MIN
HEAT RISE:	50C RISE ABOVE 40C AMB

OPERATING CONDITIONS:

CURRENT:	<2000AMP
VOLTAGE:	750VDC

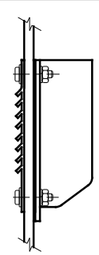

DOOR-SECTION

VENT DESIGN SHOWS LOUVERS ON EXTERIOR OF ENCLOSURE WITH STAINLESS STEEL MESH PLUS DRIP CUP ON THE INSIDE

CAUTION UNDERGROUND UTILITIES
2 WORKING DAYS
BEFORE YOU DIG
CALL 1-800-362-2764
OHIO UTILITY PROTECTION SERVICE
CALL NON-SERVICE FACILITY OWNERS DIRECT

PROFESSIONAL STAMP

STATE OF OHIO
HARVEY M. GLICKENSTEIN
E-56186
REGISTERED PROFESSIONAL ENGINEER

SIGN:

DATE:

CONTRACT DRAWING

PRINTS NOT BEARING THIS STAMP WERE MADE PRIOR TO ADVERTISING FOR BIDS AND ARE TO BE CONSIDERED OBSOLETE FOR CONTRACT PURPOSES.

Department of Transportation and Engineering

City of Cincinnati
City Hall
801 Plum Street
Cincinnati, Ohio 45202

CINCINNATI STREETCAR

TRACTION POWER
DISCONNECT SWITCH DETAILS

Revisions

No.		Date

		Date
Drawn by	LP	12/20/2011
Designed by	DL	12/20/2011
Checked by	RF	12/20/2011
Reviewed by	JTB	12/20/2011

Consultant

PB HDR

File Number

ACC No. 23126

G-PD-0053

$PLTDRV$
T:\29014a_Cincinnati.Street.Car\TP\S_G-PD-0053.dgn
12/16/2011 1:15:17 PM

NOTES:

1. ELECTRICAL BOX AND CONDUIT INSTALLED DURING CIVIL CONSTRUCTION.
2. NEMA TWO-HOLE TERMINAL LUG SHOULD BE FIXED BY A BOLT FITTED WITH A LOCKABLE NUT. (CEMBRE OR EQUIVALENT)

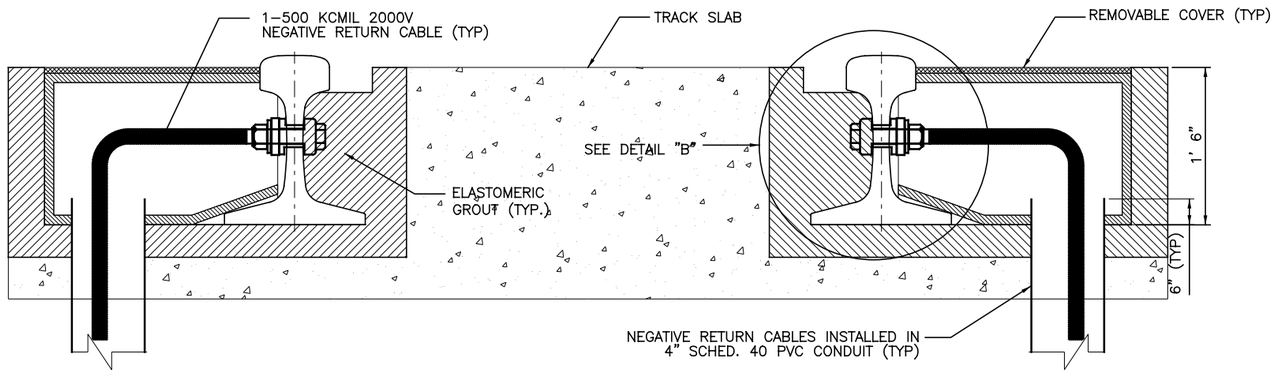

TRACK BOX BONDING SECTION DETAIL (A / -)

NOT TO SCALE

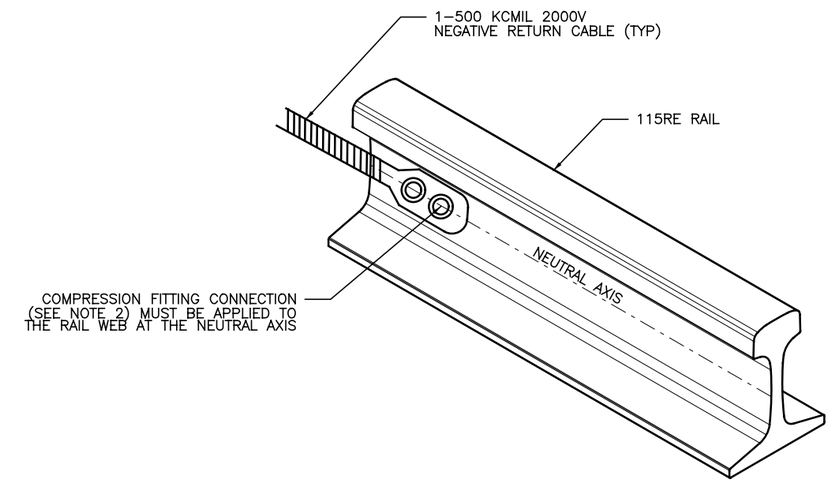

RAIL CONNECTION DETAIL (B / -)

NOT TO SCALE

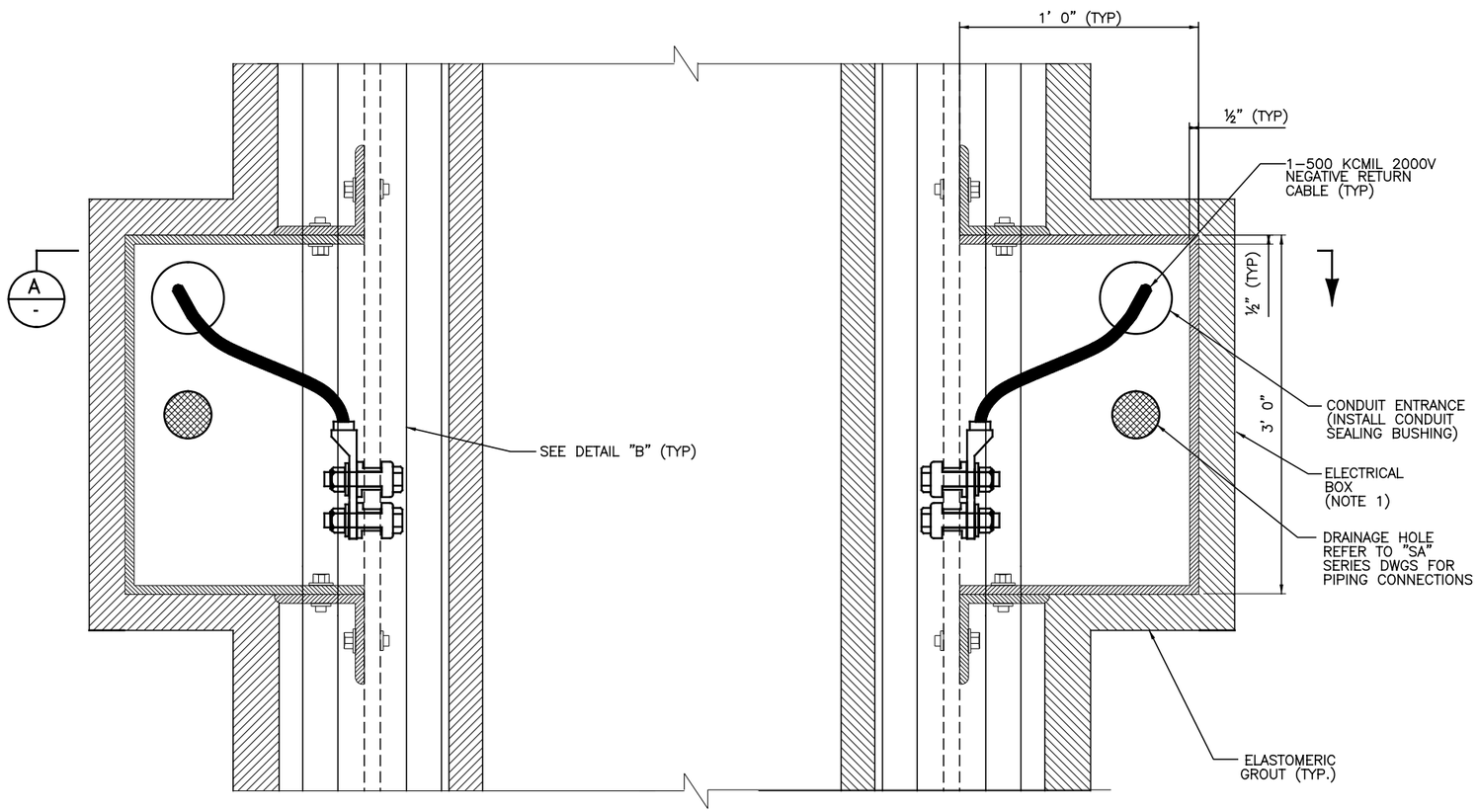

NEGATIVE RAIL RETURN - TRACK ELECTRICAL BOX (PLAN VIEW) (C / -)

NOT TO SCALE

CAUTION UNDERGROUND UTILITIES
2 WORKING DAYS
BEFORE YOU DIG
CALL 1-800-362-2764
OHIO UTILITY PROTECTION SERVICE
CALL NON-SERVICE FACILITY
OWNERS DIRECT

PROFESSIONAL STAMP

SIGN:

DATE:

CONTRACT DRAWING

PRINTS NOT BEARING THIS STAMP WERE MADE PRIOR TO ADVERTISING FOR BIDS AND ARE TO BE CONSIDERED OBSOLETE FOR CONTRACT PURPOSES.

Department of Transportation and Engineering

City of Cincinnati
City Hall
801 Plum Street
Cincinnati, Ohio 45202

CINCINNATI STREETCAR

TRACTION POWER NEGATIVE RAIL RETURN DETAIL

Revisions

No.	Date

Drawn by LP	Date 12/20/2011
Designed by JM	Date 12/20/2011
Checked by RF	Date 07/02/2012
Reviewed by JTB	Date 07/12/2012

Consultant

PB HDR

File Number

ACC No. 23126

G-PD-0054

$PLTDRV$$
T:\29014a_Cincinnati.Street.Car\TP\S_G-PD-0054.dgn
9:09:16 AM
7/10/2012

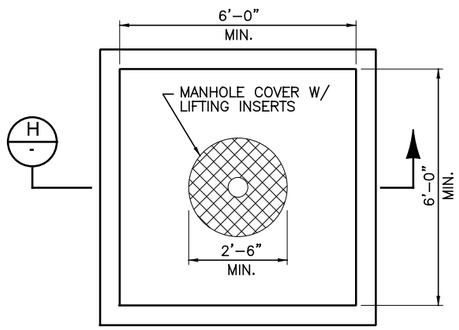

PRECAST MANHOLE
NTS

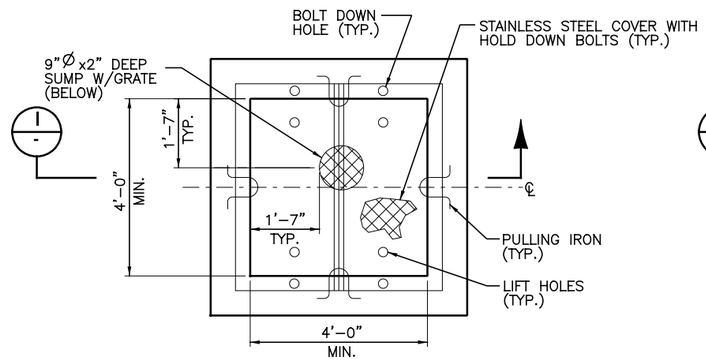

PRECAST HANDHOLE (4'x4')
NTS

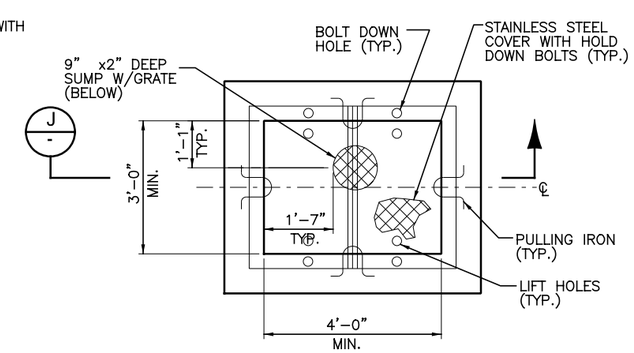

PRECAST HANDHOLE (4'x3')
NTS

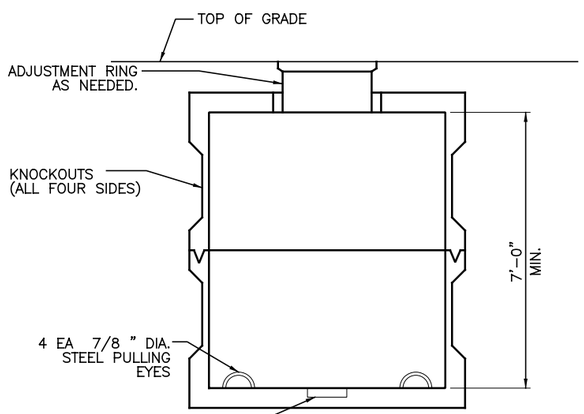

SECTION H
NTS

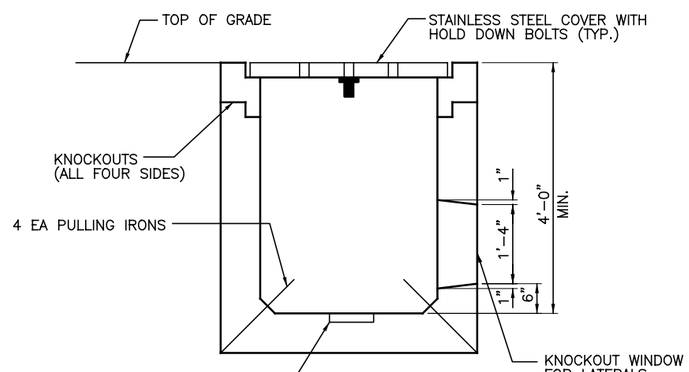

SECTION I
NTS

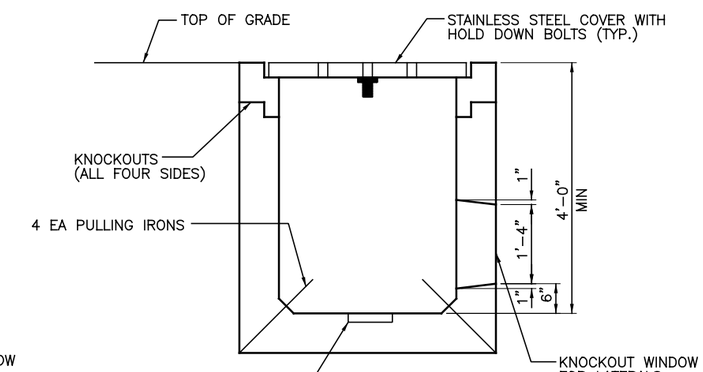

SECTION J
NTS

NOTES:

1. LABEL MANHOLE COVER "STREETCAR TRACTION POWER"
2. CONTRACTOR IS RESPONSIBLE FOR LABELING ALL CABLE ENTRIES PRIOR TO CONSTRUCTION.

CAUTION UNDERGROUND UTILITIES
2 WORKING DAYS
BEFORE YOU DIG
CALL 1–800–362–2764
OHIO UTILITY PROTECTION SERVICE
CALL NON–SERVICE FACILITY
OWNERS DIRECT

PROFESSIONAL STAMP

STATE OF OHIO
HARVEY M. GLICKENSTEIN
E-56186
REGISTERED PROFESSIONAL ENGINEER

SIGN:
DATE:

CONTRACT DRAWING

PRINTS NOT BEARING THIS STAMP WERE MADE PRIOR TO ADVERTISING FOR BIDS AND ARE TO BE CONSIDERED OBSOLETE FOR CONTRACT PURPOSES.

Department of Transportation and Engineering

City of Cincinnati
City Hall
801 Plum Street
Cincinnati, Ohio 45202

CINCINNATI STREETCAR

TRACTION POWER
MANHOLE AND HANDHOLE DETAILS

Revisions

No.		

Drawn by LP	Date 12/20/2011
Designed by DL	Date 12/20/2011
Checked by RF	Date 12/20/2011
Reviewed by JTB	Date 12/20/2011

Consultant

PB HDR

File Number

ACC No. 23126

G-PD-0055

$PLTDRV$$
T:\29014a_Cincinnati.Street.Car\TP\S_G-PD-0055.dgn
12/16/2011 1:15:20 PM

NOTES:

1. MOUNT CONDUIT AND DISCONNECT SWITCHES TO POLE BANDS USING UNISTRUT OR EQUIVALENT.
2. MOUNT FEEDER CABLES ON MESSENGER WIRES PER MANUFACTURER'S SPECIFICATIONS.

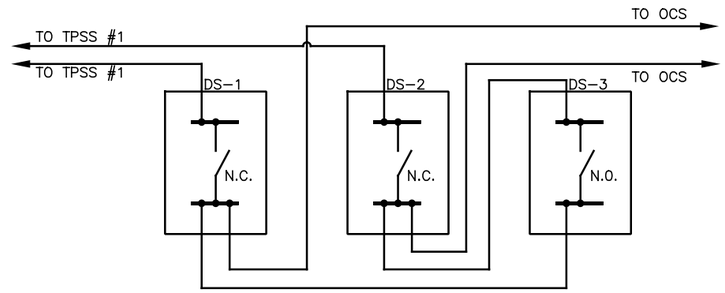

SCHEMATIC VIEW

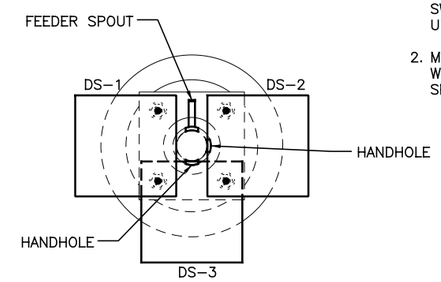

PLAN VIEW

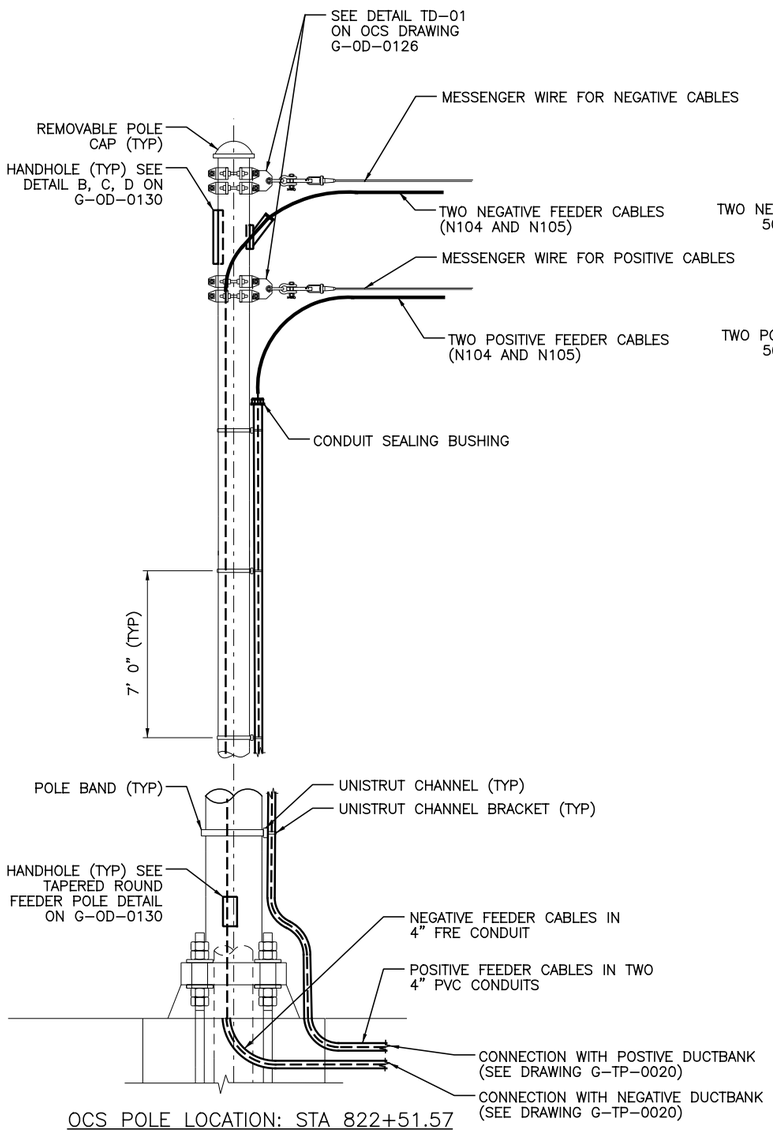

OCS POLE LOCATION: STA 822+51.57

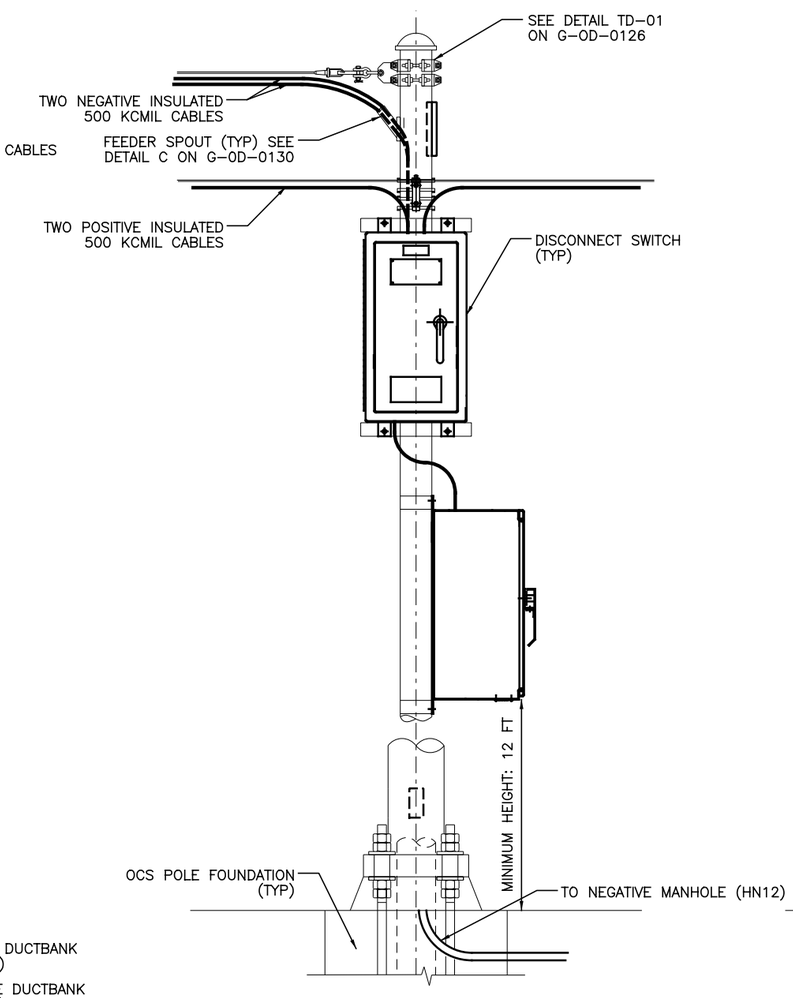

OCS POLE LOCATION: STA 822+50.91
SIDE VIEW

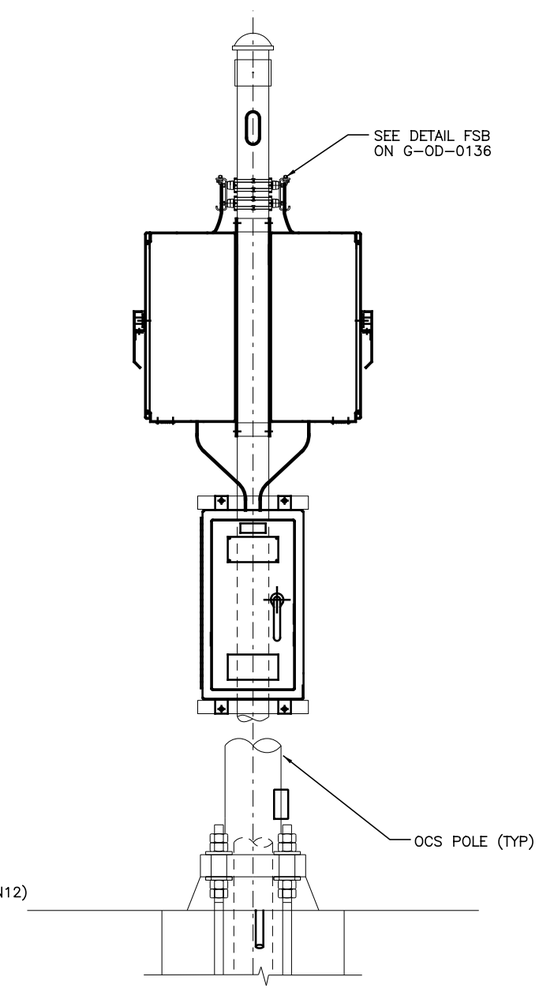

OCS POLE LOCATION: STA 822+50.91
SIDE VIEW (ROTATED 90°)

CAUTION UNDERGROUND UTILITIES
2 WORKING DAYS
BEFORE YOU DIG
CALL 1-800-362-2764
OHIO UTILITY PROTECTION SERVICE
CALL NON-SERVICE FACILITY
OWNERS DIRECT

PROFESSIONAL STAMP

SIGN:

DATE:

CONTRACT DRAWING

PRINTS NOT BEARING THIS STAMP WERE MADE PRIOR TO ADVERTISING FOR BIDS AND ARE TO BE CONSIDERED OBSOLETE FOR CONTRACT PURPOSES.

Department of Transportation and Engineering

City of Cincinnati
City Hall
801 Plum Street
Cincinnati, Ohio 45202

CINCINNATI STREETCAR

DETAIL FOR OCS POLES:
STA 167+49 AND STA 167+59

Revisions

No.		Date
		12/20/2011
		12/20/2011
		07/02/2012
		07/12/2012

Drawn by	LP
Designed by	JM
Checked by	RF
Reviewed by	JTB

Consultant

PB HDR

File Number

ACC No. 23126

G-PD-0056

$PLTDRV$$
T:\29014a_Cincinnati.Street.Car\TP\S_G-PD-0056.dgn
9:09:17 AM
7/10/2012

RACEWAY OR CIRCUIT NUMBER	RUN			CIRCUITS CONTAINED	CONDUIT		CONDUCTOR							REFERENCE INSTALLATION DRAWINGS	REMARKS
	FROM	VIA	TO		SIZE (INCH)	TYPE	SINGLE			MULTIPLE					
							SIZE	INSUL	VOLT	SIZE	NO	INSUL	VOLT		
P101	TPSS1		HP11	P101	4	FRE	500 KCMIL CU	EPR	2000					G–TP–0020	
P102	TPSS1		HP11	P102	4	FRE	500 KCMIL CU	EPR	2000					G–TP–0020	
P103	TPSS1		HP11		4	FRE								G–TP–0020	SPARE
P104	HP11	822+50.91,822+51.57,ML–1045	OCS POLE ML–1046	P101			500 KCMIL CU	EPR	2000					G–TP–0020	SEE NOTE 1 & 2
P105	HP11	822+50.91,822+51.57,ML–1045	OCS POLE ML–1046	P102			500 KCMIL CU	EPR	2000					G–TP–0020	SEE NOTE 1 & 2
N101	TPSS1		HN11	N101	4	FRE	500 KCMIL CU	EPR	2000					G–TP–0020	
N102	TPSS1		HN11	N102	4	FRE	500 KCMIL CU	EPR	2000					G–TP–0020	
N103	TPSS1		HN11		4	FRE								G–TP–0020	SPARE
N104	HN11	OCS POLE 822+51.57	OCS POLE 822+50.91	N101			500 KCMIL CU	EPR	2000					G–TP–0020	SEE NOTE 3
N105	HN11	OCS POLE 822+51.57	OCS POLE 822+50.91	N102			500 KCMIL CU	EPR	2000					G–TP–0020	SEE NOTE 3
N106	OCS POLE 822+50.91	HN12	TRACK	N101	4	PVC	500 KCMIL CU	EPR	2000					G–TP–0020	
N107	OCS POLE 822+50.91	HN12	TRACK	N102	4	PVC	500 KCMIL CU	EPR	2000					G–TP–0020	
U101	UTILITY MANHOLE	UTILITY JUNCTION BOX	METERING CAB	U101	5	FRE	3–1/0 AWG STRDED ALU	EPR	15000					G–TP–0020	
U102	UTILITY MANHOLE	UTILITY JUNCTION BOX	METERING CAB		5	FRE								G–TP–0020	SPARE
U103	METERING CAB		TPSS1	U101	5	FRE	3–1/0 AWG STRDED ALU	EPR	15000					G–TP–0035	
U104	METERING CAB		TPSS1		5	FRE								G–TP–0035	SPARE

NOTES:

1. POSTIVE CABLES SUPPORTED ON A MESSENGER WIRE BETWEEN OCS POLE 822+51.57 TO OCS POLE ML–1046.
2. POSTIVE CABLE CONNECTED TO DISCONNECT SWITCH AT OCS POLE 822+50.91. (SEE DETAIL ON G–PD–0056)
3. NEGATIVE CABLES SUPPORTED ON A MESSENGER WIRE BETWEEN OCS POLE 822+51.57 TO OCS POLE 822+50.91.

CAUTION UNDERGROUND UTILITIES
2 WORKING DAYS
BEFORE YOU DIG
CALL 1–800–362–2764
OHIO UTILITY PROTECTION SERVICE
CALL NON–SERVICE FACILITY
OWNERS DIRECT

PROFESSIONAL STAMP

SIGN:

DATE:

CONTRACT DRAWING

PRINTS NOT BEARING THIS STAMP WERE MADE PRIOR TO ADVERTISING FOR BIDS AND ARE TO BE CONSIDERED OBSOLETE FOR CONTRACT PURPOSES.

Department of Transportation and Engineering

City of Cincinnati
City Hall
801 Plum Street
Cincinnati, Ohio 45202

CINCINNATI STREETCAR

TRACTION POWER
TPSS No.1 CABLE AND CONDUIT SCHEDULE

Revisions

No.		

Drawn by LP	Date 12/20/2011
Designed by JM	Date 12/20/2011
Checked by RF	Date 07/02/2012
Reviewed by JTB	Date 07/12/2012

Consultant

PB HDR

File Number

ACC No. 23126

G-PD-0101

$PLTDRV$$
T:\29014a_Cincinnati:Street.Car\TP\S_G-PD-0101.dgn
7/10/2012 9:09:18 AM

RACEWAY OR CIRCUIT NUMBER	RUN			CIRCUITS CONTAINED	CONDUIT		CONDUCTOR							REFERENCE INSTALLATION DRAWINGS	REMARKS
							SINGLE			MULTIPLE					
	FROM	VIA	TO		SIZE (INCH)	TYPE	SIZE	INSUL	VOLT	SIZE	NO	INSUL	VOLT		
P201	TPSS2	MP21, MP22, HP21	OCS FDR POLE	P201	4	PVC	500 KCMIL CU	EPR	2000					G–TP–0023	
P202	TPSS2	MP21, MP22, HP21, HP22	OCS FDR POLE	P202	4	PVC	500 KCMIL CU	EPR	2000					G–TP–0023	
P203	TPSS2	MP21, MP23, MP24, HP23	OCS FDR POLE	P203	4	PVC	500 KCMIL CU	EPR	2000					G–TP–0023, 0024	
P204	TPSS2	MP21, MP23, MP24, HP24	OCS FDR POLE	P204	4	PVC	500 KCMIL CU	EPR	2000					G–TP–0023, 0024	
P205	TPSS2	MP21, MP22, HP21	HP22		4	PVC								G–TP–0023	SPARE
P206	TPSS2	MP21, MP23	MP24		4	PVC								G–TP–0023, 0024	SPARE
P207	MP24		HP23		4	PVC								G–TP–0024	SPARE
P208	MP24		HP24		4	PVC								G–TP–0024	SPARE
P209	TPSS2		MP21		4	PVC								G–TP–0023	SPARE
P210	TPSS2		MP21		4	PVC								G–TP–0023	SPARE
N201	TPSS2	MN21, HN21	TRACK	N201	4	PVC	500 KCMIL CU	EPR	2000					G–TP–0023	
N202	TPSS2	MN21, HN21	TRACK	N202	4	PVC	500 KCMIL CU	EPR	2000					G–TP–0023	
N203	TPSS2	MN21, MN22, HN22	TRACK	N203	4	PVC	500 KCMIL CU	EPR	2000					G–TP–0023, 0024	
N204	TPSS2	MN21, MN22, HN22	TRACK	N204	4	PVC	500 KCMIL CU	EPR	2000					G–TP–0023, 0024	
N205	TPSS2	MN21	HN21		4	PVC								G–TP–0023	SPARE
N206	TPSS2	MN21, MN22	HN22		4	PVC								G–TP–0023, 0024	SPARE
U201	METERING CAB		TPSS2		5	PVC	3–1/0 AWG STRDED ALU	EPR	15000					G–TP–0023	
U202	METERING CAB		TPSS2		5	PVC								G–TP–0023	SPARE
U203	PROPERTY LINE	DUKE	METERING CAB	DUKE	5	PVC								G–TP–0023	
U204	PROPERTY LINE		METERING CAB		5	PVC								G–TP–0023	SPARE

CAUTION UNDERGROUND UTILITIES
2 WORKING DAYS
BEFORE YOU DIG
CALL 1–800–362–2764
OHIO UTILITY PROTECTION SERVICE
CALL NON–SERVICE FACILITY
OWNERS DIRECT

PROFESSIONAL STAMP

STATE OF OHIO
HARVEY M. GLICKENSTEIN
E-56188
REGISTERED PROFESSIONAL ENGINEER

SIGN:

DATE:

CITY OF CINCINNATI DEPARTMENT OF TRANSPORTATION & ENGINEERING OHIO

CONTRACT DRAWING

PRINTS NOT BEARING THIS STAMP WERE MADE PRIOR TO ADVERTISING FOR BIDS AND ARE TO BE CONSIDERED OBSOLETE FOR CONTRACT PURPOSES.

Department of Transportation and Engineering

City of Cincinnati
City Hall
801 Plum Street
Cincinnati, Ohio 45202

CINCINNATI STREETCAR

TRACTION POWER
TPSS No.2 CABLE AND CONDUIT SCHEDULE

Revisions

No.			

Date 12/20/2011	Date 12/20/2011	Date 12/20/2011	Date 12/20/2011
Drawn by LP	Designed by JM	Checked by RF	Reviewed by JTB

Consultant

PB HDR

File Number

ACC No. 23126

G-PD-0102

$PLTDRV$$
T:\29014a_Cincinnati.Street.Car\TP\S_G-PD-0102.dgn
12/16/2011 1:15:23 PM

RACEWAY OR CIRCUIT NUMBER	RUN			CIRCUITS CONTAINED	CONDUIT		CONDUCTOR							REFERENCE INSTALLATION DRAWINGS	REMARKS
	FROM	VIA	TO		SIZE (INCH)	TYPE	SINGLE			MULTIPLE					
							SIZE	INSUL	VOLT	SIZE	NO	INSUL	VOLT		
P301	TPSS3	MP31, MP32, HP31	OCS FDR POLE	P301	4	PVC								G–TP–0025	FUTURE CABLE INSTALLATION
P302	TPSS3	MP31, MP32, HP32	CONSTRUCTION LIMIT	P302	4	PVC								G–TP–0025	FUTURE CABLE INSTALLATION
P303	TPSS3	MP31, MP33	OCS FDR POLE	P303	4	PVC	500 KCMIL CU	EPR	2000					G–TP–0025	
P304	TPSS3	MP31, MP33, HP33	OCS FDR POLE	P304	4	PVC	500 KCMIL CU	EPR	2000					G–TP–0025, 0026	
P305	TPSS3	MP31, MP32	HP31		4	PVC								G–TP–0025	SPARE
P306	TPSS3	MP31, MP33	HP33		4	PVC								G–TP–0025	SPARE
P307	MP32		CONSTRUCTION LIMIT		4	PVC								G–TP–0025	SPARE
P308	TPSS3		MP31		4	PVC								G–TP–0025	SPARE
P309	TPSS3		MP31		4	PVC								G–TP–0025	SPARE
N301	TPSS3	HN31	TRACK	N301	4	PVC	500 KCMIL CU	EPR	2000					G–TP–0025	
N302	TPSS3	HN31	TRACK	N302	4	PVC	500 KCMIL CU	EPR	2000					G–TP–0025	
N303	TPSS3		HN31		4	PVC								G–TP–0025	SPARE
U301	METERING CAB		TPSS3	U301	5	PVC	3–1/0 AWG STRDED ALU	EPR	15000					G–TP–0025	
U302	METERING CAB		TPSS3		5	PVC								G–TP–0025	SPARE
U303	METERING CAB		PROPERTY LINE	DUKE	5	PVC	DUKE							G–TP–0025	
U304	METERING CAB		PROPERTY LINE		5	PVC								G–TP–0025	SPARE

CAUTION UNDERGROUND UTILITIES
2 WORKING DAYS
BEFORE YOU DIG
CALL 1–800–362–2764
OHIO UTILITY PROTECTION SERVICE
CALL NON–SERVICE FACILITY
OWNERS DIRECT

PROFESSIONAL STAMP

STATE OF OHIO
HARVEY M. GLICKENSTEIN
E-56188
REGISTERED PROFESSIONAL ENGINEER

SIGN:

DATE:

CITY OF CINCINNATI DEPARTMENT OF TRANSPORTATION & ENGINEERING OHIO

CONTRACT DRAWING

PRINTS NOT BEARING THIS STAMP WERE MADE PRIOR TO ADVERTISING FOR BIDS AND ARE TO BE CONSIDERED OBSOLETE FOR CONTRACT PURPOSES.

Department of Transportation and Engineering

City of Cincinnati
City Hall
801 Plum Street
Cincinnati, Ohio 45202

CINCINNATI STREETCAR

TRACTION POWER
TPSS No.3 CABLE AND CONDUIT SCHEDULE

Revisions

No.			

Date 12/20/2011	Date 12/20/2011	Date 12/20/2011	Date 12/20/2011
Drawn by LP	Designed by JM	Checked by RF	Reviewed by JTB

Consultant

PB HDR

File Number

ACC No. 23126

G-PD-0103

$PLTDRV$$
T:\29014a_Cincinnati.Street.Car\TP\S_G-PD-0103.dgn
12/16/2011 1:15:24 PM

RACEWAY OR CIRCUIT NUMBER	RUN			CIRCUITS CONTAINED	CONDUIT		CONDUCTOR							REFERENCE INSTALLATION DRAWINGS	REMARKS
	FROM	VIA	TO		SIZE (INCH)	TYPE	SINGLE			MULTIPLE					
							SIZE	INSUL	VOLT	SIZE	NO	INSUL	VOLT		
P401	OCS POLE	MP41, MP42, MP43	OCS POLE	P401	4	PVC	500 KCMIL CU	EPR	2000					G–TP–0027, G–TP–0028	
P402	MP41	MP42	MP43		4	PVC								G–TP–0027, G–TP–0028	SPARE

CAUTION UNDERGROUND UTILITIES
2 WORKING DAYS
BEFORE YOU DIG
CALL 1–800–362–2764
OHIO UTILITY PROTECTION SERVICE
CALL NON–SERVICE FACILITY
OWNERS DIRECT

PROFESSIONAL STAMP

STATE OF OHIO
HARVEY M. GLICKENSTEIN
E-56186
REGISTERED PROFESSIONAL ENGINEER

SIGN:

DATE:

CITY OF CINCINNATI DEPARTMENT OF TRANSPORTATION & ENGINEERING OHIO

CONTRACT DRAWING

PRINTS NOT BEARING THIS STAMP WERE MADE PRIOR TO ADVERTISING FOR BIDS AND ARE TO BE CONSIDERED OBSOLETE FOR CONTRACT PURPOSES.

Department of Transportation and Engineering

City of Cincinnati
City Hall
801 Plum Street
Cincinnati, Ohio 45202

CINCINNATI STREETCAR

TRACTION POWER
12TH STREET AND RACE STREET
CABLE AND CONDUIT SCHEDULE

Revisions

No.			

Drawn by LP	Designed by JM	Checked by RF	Reviewed by JTB
Date 12/20/2011	Date 12/20/2011	Date 12/20/2011	Date 12/20/2011

Consultant

PB HDR

File Number

ACC No. 23126

G-PD-0104

$PLTDRV$$
T:\29014a_Cincinnati.Street.Car\TP\S_G-PD-0104.dgn
12/16/2011 1:15:25 PM

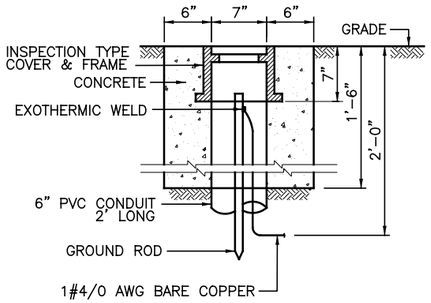

TYPICAL GROUND ROD TEST WELL

DETAIL 1 / –
NTS

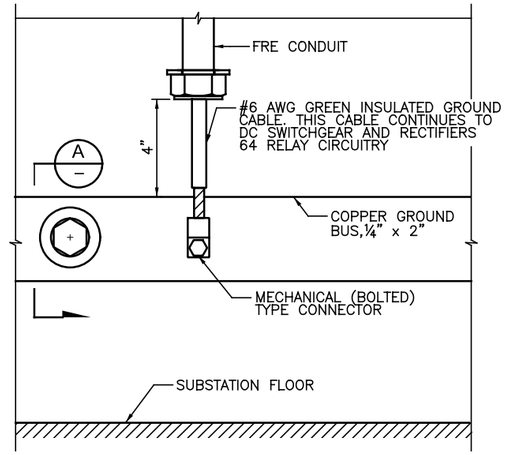

GROUND BUS MOUNTING DETAIL

DETAIL 2 / –
NTS SEE NOTE 1

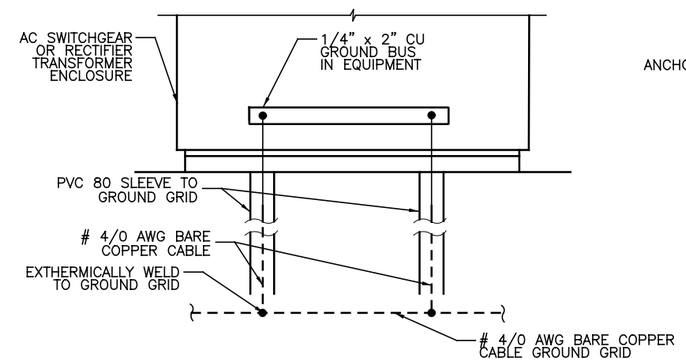

AC SWITCHGEAR AND TRANSFORMER CONNECTION TO GROUND GRID

DETAIL 3 / –
NTS

* TO BE ADJUSTED FOR TPSS #1

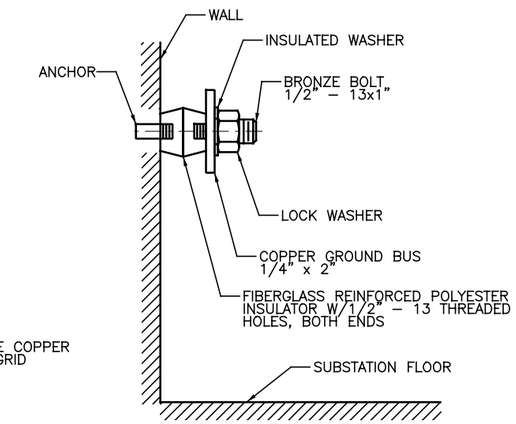

SECTION A / –
NTS

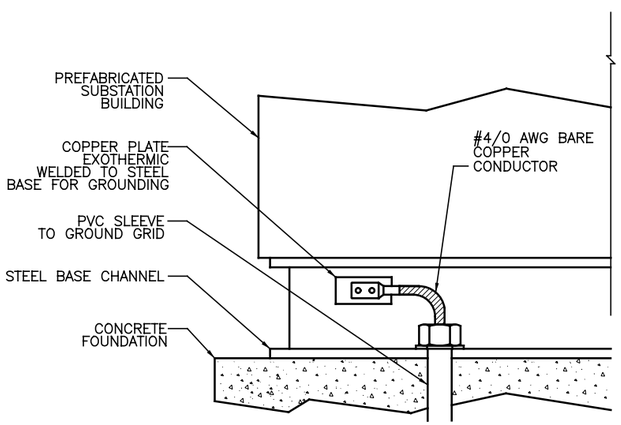

EXTERIOR GROUND CONNECTION TYPICAL AT OPPOSITE CORNERS

DETAIL 4 / –
NTS

* TO BE ADJUSTED FOR TPSS #1

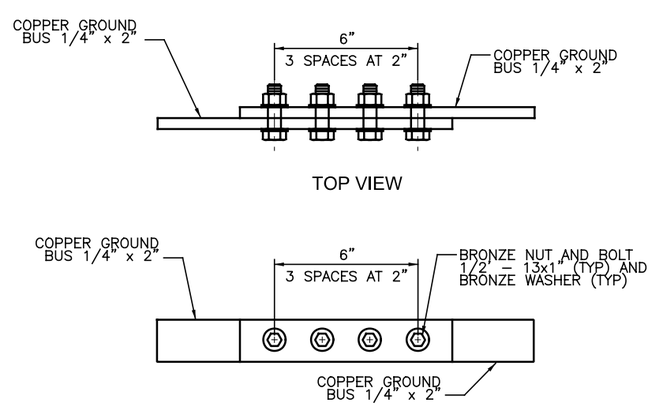

FRONT VIEW
TYPICAL GROUND BUS SPLICE JOINT

DETAIL 5 / –
NTS

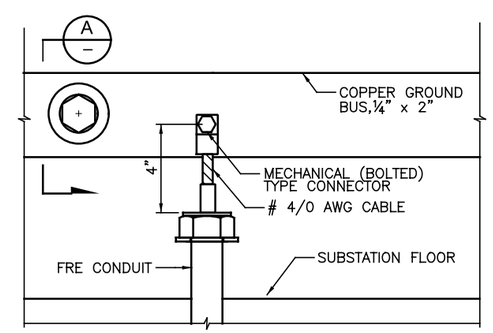

GROUND BUS MOUNTING DETAIL

DETAIL 6 / –
NTS SEE NOTE 1

NOTE:

1. TYPICAL GROUND BUS CONNECTIONS IN EXPOSED FRE FOR DC SWITCHGEAR AND RECTIFIER REQUIRES 2 SEPARATE GROUND CONNECTIONS FOR CIRCUIT 64.

CAUTION UNDERGROUND UTILITIES
2 WORKING DAYS
BEFORE YOU DIG
CALL 1-800-362-2764
OHIO UTILITY PROTECTION SERVICE
CALL NON-SERVICE FACILITY OWNERS DIRECT

PROFESSIONAL STAMP

STATE OF OHIO
HARVEY M. GLICKENSTEIN
E-56186
REGISTERED PROFESSIONAL ENGINEER

SIGN:
DATE:

CONTRACT DRAWING

PRINTS NOT BEARING THIS STAMP WERE MADE PRIOR TO ADVERTISING FOR BIDS AND ARE TO BE CONSIDERED OBSOLETE FOR CONTRACT PURPOSES.

Department of Transportation and Engineering
City of Cincinnati
City Hall
801 Plum Street
Cincinnati, Ohio 45202

CINCINNATI STREETCAR

TRACTION POWER
TPSS GROUNDING DETAILS

Revisions

No.	Date	Drawn by	Designed by	Checked by	Reviewed by
	12/20/2011	LP	JM	RF	JTB
	12/20/2011				
	12/20/2011				
	12/20/2011				

Consultant

PB HDR

File Number

ACC No. 23126

G-PD-0212

$PLTDRV$$
T:\29014a_Cincinnati.Street.Car\TP\S_G-PD-0212.dgn
12/16/2011 1:15:26 PM

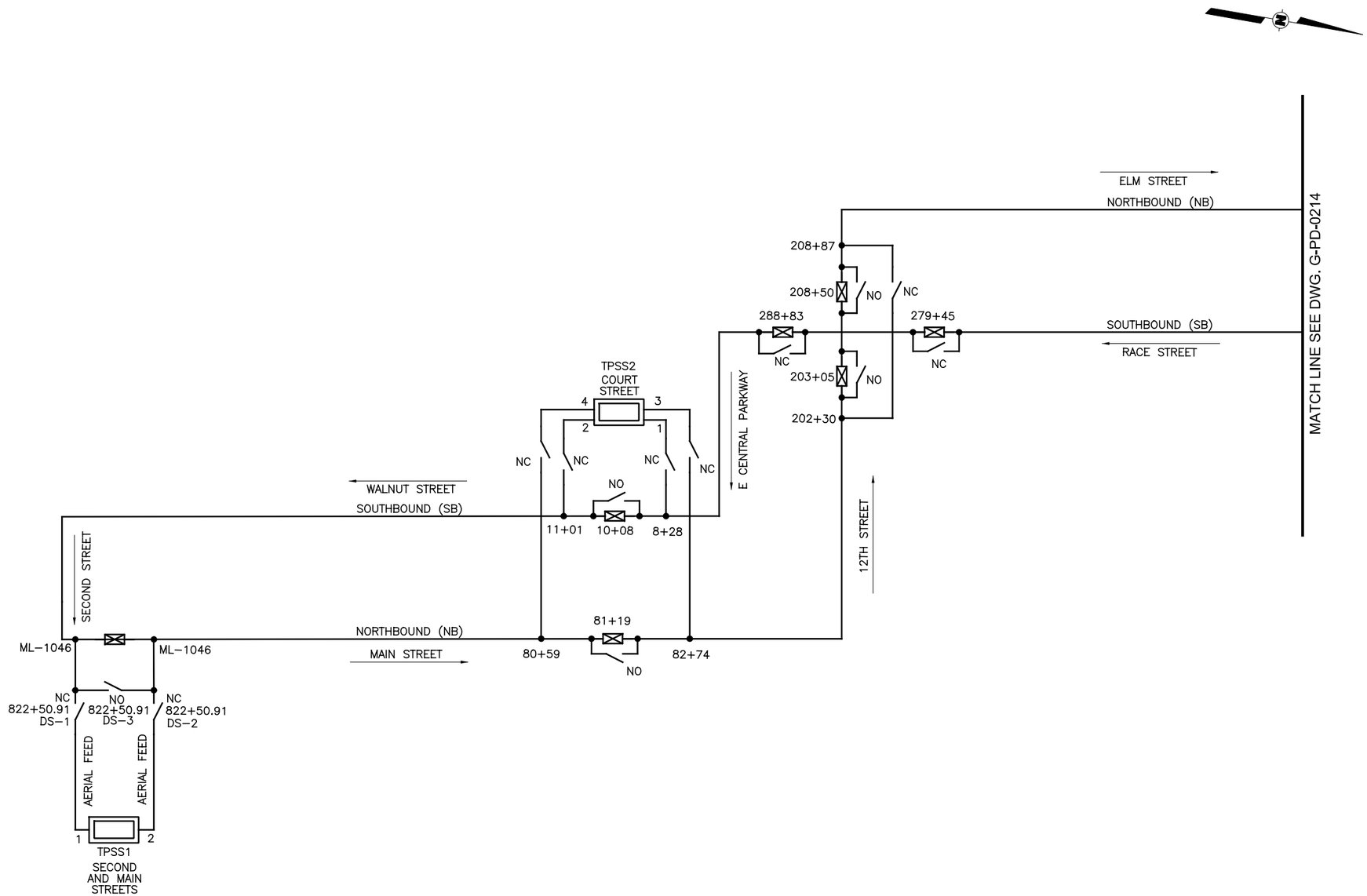

CAUTION UNDERGROUND UTILITIES
2 WORKING DAYS
BEFORE YOU DIG
CALL 1-800-362-2764
OHIO UTILITY PROTECTION SERVICE
CALL NON-SERVICE FACILITY
OWNERS DIRECT

PROFESSIONAL STAMP

SIGN:

DATE:

CONTRACT DRAWING

PRINTS NOT BEARING THIS STAMP WERE MADE PRIOR TO ADVERTISING FOR BID, AND ARE TO BE CONSIDERED OBSOLETE FOR CONTRACT PURPOSES.

Department of Transportation and Engineering

City of Cincinnati
City Hall
801 Plum Street
Cincinnati, Ohio 45202

CINCINNATI STREETCAR

TRACTION POWER
OVERALL SECTIONALIZING DIAGRAM
SHEET 1 OF 2

Revisions

No.				

Date 12/20/2011	Drawn by LP
Date 12/20/2011	Designed by JM
Date 07/02/2012	Checked by RF
Date 07/12/2012	Reviewed by JTB

Consultant

File Number

ACC No. 23126

G-PD-0213

$PLTDRVS$
T:\290144a_Cincinnati.Street.Car\TP\S_G-PD-0213.dgn
7/10/2012
9:41:24 AM

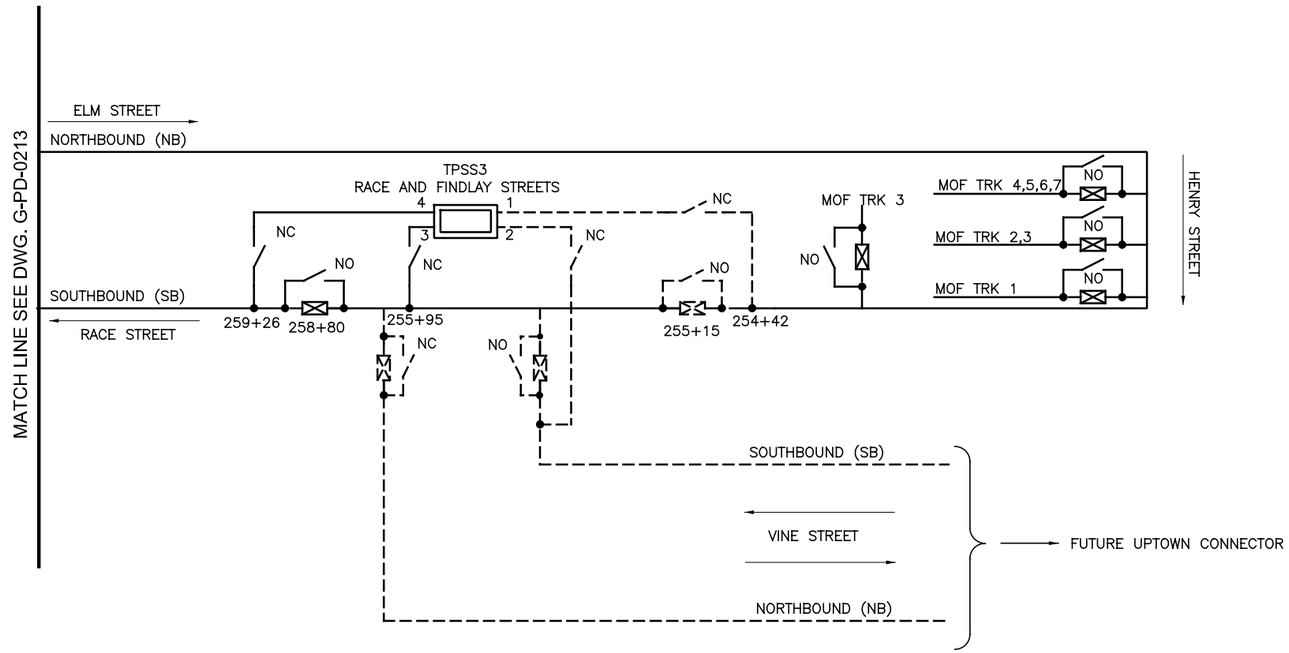

NOTE:

1. DASHED LINES INDICATE FUTURE TRACK OR EQUIPMENT WHICH WILL NOT BE INSTALLED. CERTAIN DUCTBANKS WILL BE PARTIALLY INSTALLED SEE G–TP–0025.
2. FOR DETAILED MAINTENANCE AND OPERATIONS FACILITY SECTIONALIZING SCHEME REFER TO F–OL–2001

CAUTION UNDERGROUND UTILITIES
2 WORKING DAYS
BEFORE YOU DIG
CALL 1–800–362–2764
OHIO UTILITY PROTECTION SERVICE
CALL NON–SERVICE FACILITY
OWNERS DIRECT

PROFESSIONAL STAMP

SIGN:

DATE:

CONTRACT DRAWING

PRINTS NOT BEARING THIS STAMP WERE MADE PRIOR TO ADVERTISING FOR BIDS AND ARE TO BE CONSIDERED OBSOLETE FOR CONTRACT PURPOSES.

Department of Transportation and Engineering

City of Cincinnati
City Hall
801 Plum Street
Cincinnati, Ohio 45202

CINCINNATI STREETCAR

TRACTION POWER
OVERALL SECTIONALIZING DIAGRAM
SHEET 2 OF 2

Revisions

No.			

Drawn by LP	Date 12/20/2011
Designed by JM	Date 12/20/2011
Checked by RF	Date 07/02/2012
Reviewed by JTB	Date 07/12/2012

Consultant

PB HDR

File Number

ACC No. 23126

G-PD-0214

$PLTDRV$$
T:\29014a_Cincinnati.Street.Car\TP\S_G-PD-0214.dgn
7/10/2012 9:09:19 AM

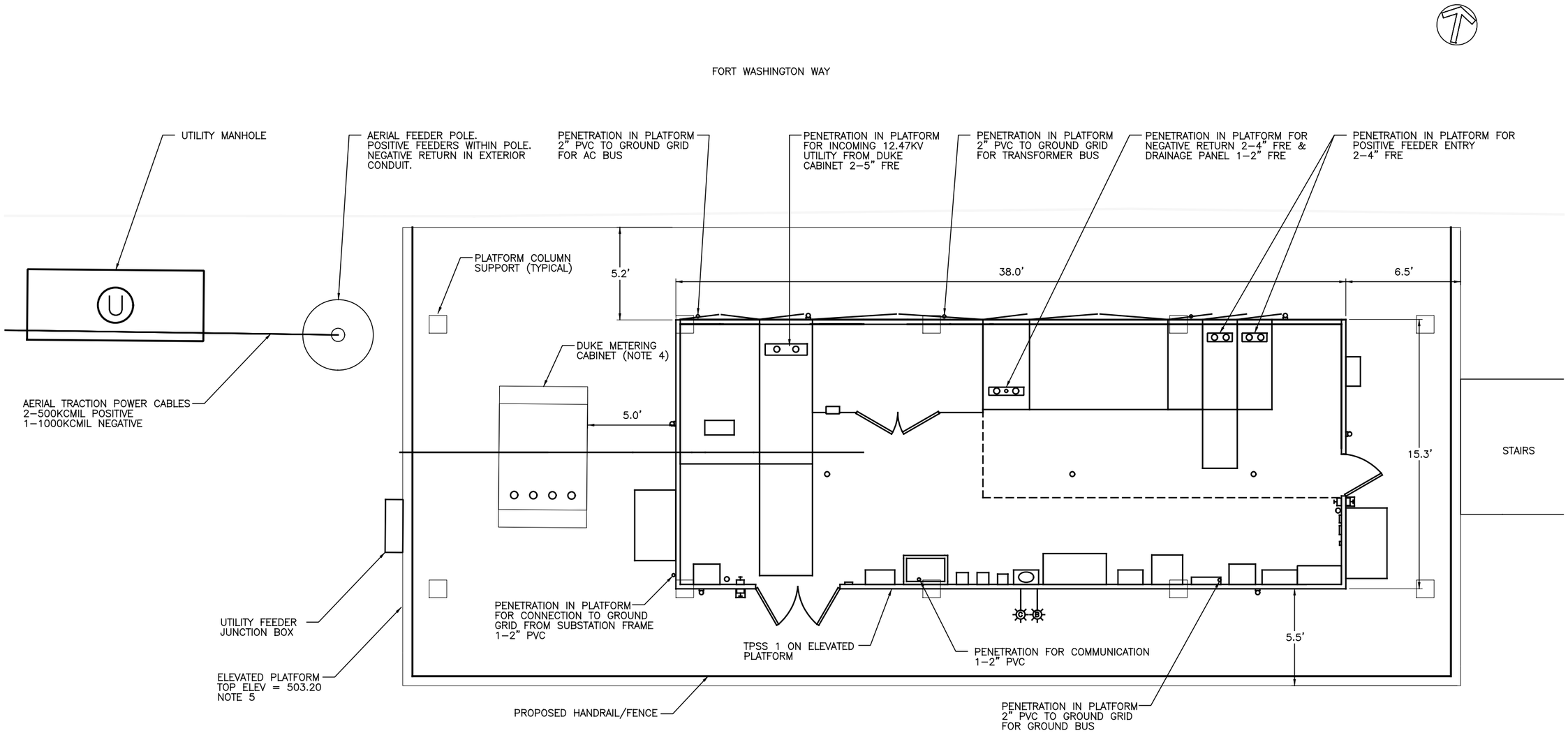

NOTE:

1. CONDUIT PENETRATIONS IN PLATFORM SHALL BE CAPPED IF USED FOR FUTURE.
2. FOR FURTHER DETAILS ON CONDUIT LAYOUT SEE DRAWING G-PD-0052
3. EXACT LOCATION OF PENETRATIONS SHALL BE COORDINATED WITH THE SUBSTATION MANUFACTURER.
4. CONTRACTOR SHALL PROVIDE PENETRATIONS FOR DUKE METERING CABINET GROUNDING.
5. STRUCTURAL REBAR FOR ELEVATED PLATFORM SHALL BE GROUNDED.

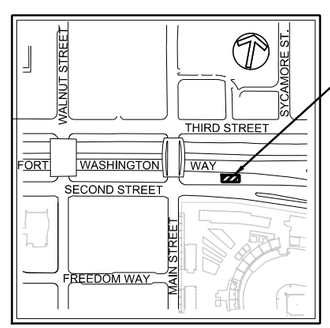

VICINITY MAP

GRAPHIC SCALE

3 0 3 6 12

(IN FEET)
1 inch = 3 ft. Full Size
1 inch = 6 ft. Half Size

CAUTION UNDERGROUND UTILITIES
2 WORKING DAYS
BEFORE YOU DIG
CALL 1-800-362-2764
OHIO UTILITY PROTECTION SERVICE
CALL NON-SERVICE FACILITY OWNERS DIRECT

PROFESSIONAL STAMP

SIGN:

DATE:

CONTRACT DRAWING

PRINTS NOT BEARING THIS STAMP WERE MADE PRIOR TO ADVERTISING FOR BIDS AND ARE TO BE CONSIDERED OBSOLETE FOR CONTRACT PURPOSES.

Department of Transportation and Engineering

City of Cincinnati
City Hall
801 Plum Street
Cincinnati, Ohio 45202

CINCINNATI STREETCAR

TRACTION POWER
TPSS No. 1 SITE FOOTPRINT LAYOUT

Revisions

No.		

Date 12/20/2011	Drawn by LP
Date 12/20/2011	Designed by DL
Date 07/02/2012	Checked by RF
Date 07/12/2012	Reviewed by JTB

Consultant

PB HDR

File Number

ACC No. 23126

G-TP-0010

$PLTDRV$$
T:\29014a_Cincinnati.Street.Car\TP\S_G-TP-0010.dgn
9:09:27 AM
7/10/2012

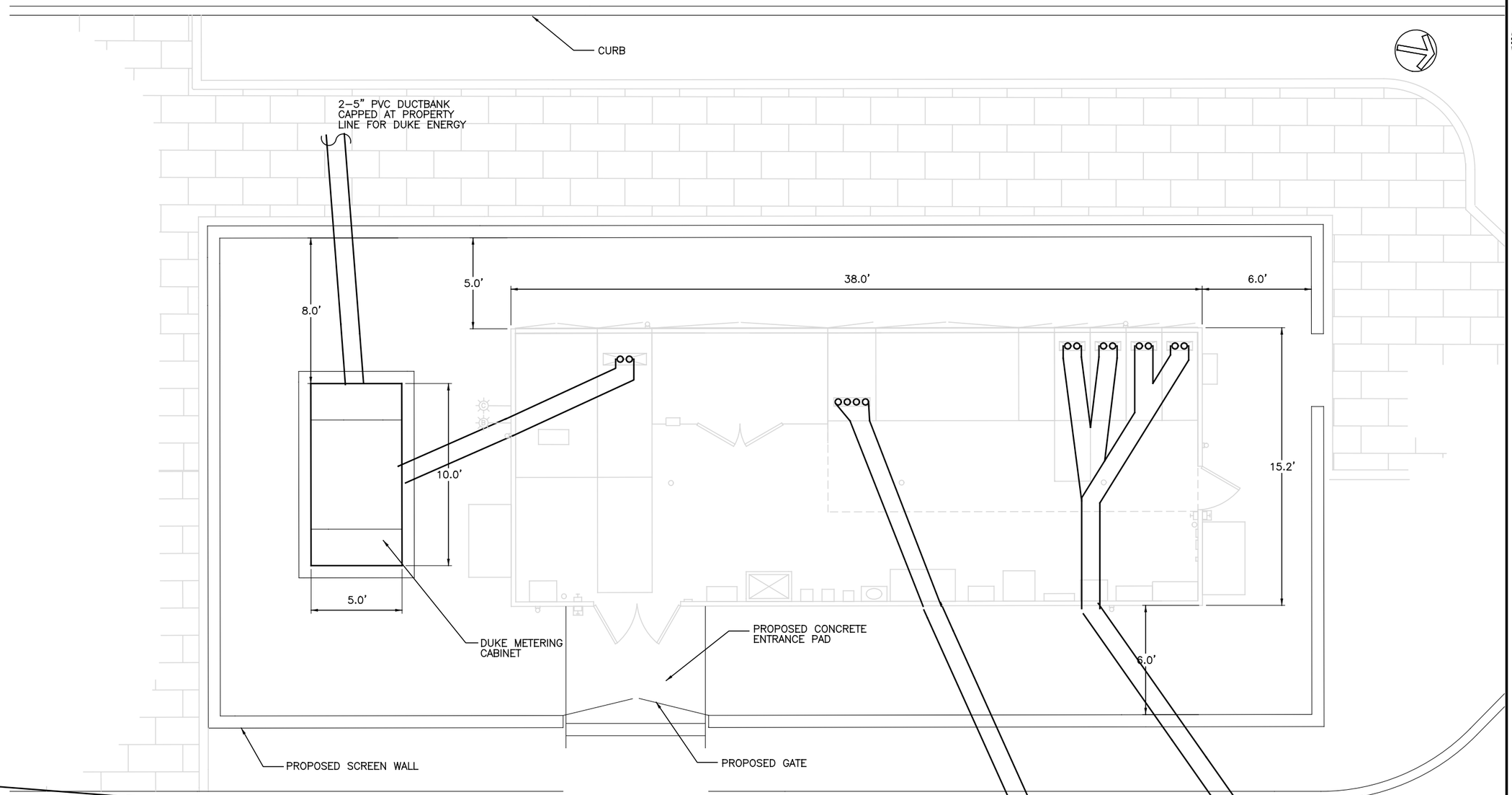

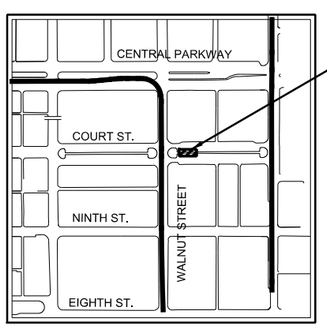

VICINITY MAP

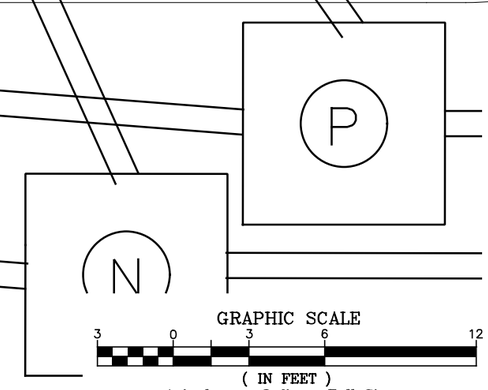

GRAPHIC SCALE

3 0 3 6 12

(IN FEET)
1 inch = 3 ft. Full Size
1 inch = 6 ft. Half Size

CAUTION UNDERGROUND UTILITIES
2 WORKING DAYS
BEFORE YOU DIG
CALL 1-800-362-2764
OHIO UTILITY PROTECTION SERVICE
CALL NON-SERVICE FACILITY
OWNERS DIRECT

PROFESSIONAL STAMP

SIGN:

DATE:

$TIME$
$PLTDRVS$
$FILE$
$DATE$

CONTRACT DRAWING

PRINTS NOT BEARING THIS STAMP WERE MADE PRIOR TO ADVERTISING FOR BIDS AND ARE TO BE CONSIDERED OBSOLETE FOR CONTRACT PURPOSES.

Department of Transportation and Engineering

City of Cincinnati
City Hall
801 Plum Street
Cincinnati, Ohio 45202

CINCINNATI STREETCAR

TRACTION POWER
TPSS No. 2 SITE FOOTPRINT LAYOUT

Revisions

No.		

Drawn by LP	Date 12/20/2011
Designed by JM	Date 12/20/2011
Checked by RF	Date 07/02/2012
Reviewed by JTB	Date 07/12/2012

Consultant

PB HDR

File Number

ACC No. 23126

G-TP-0011

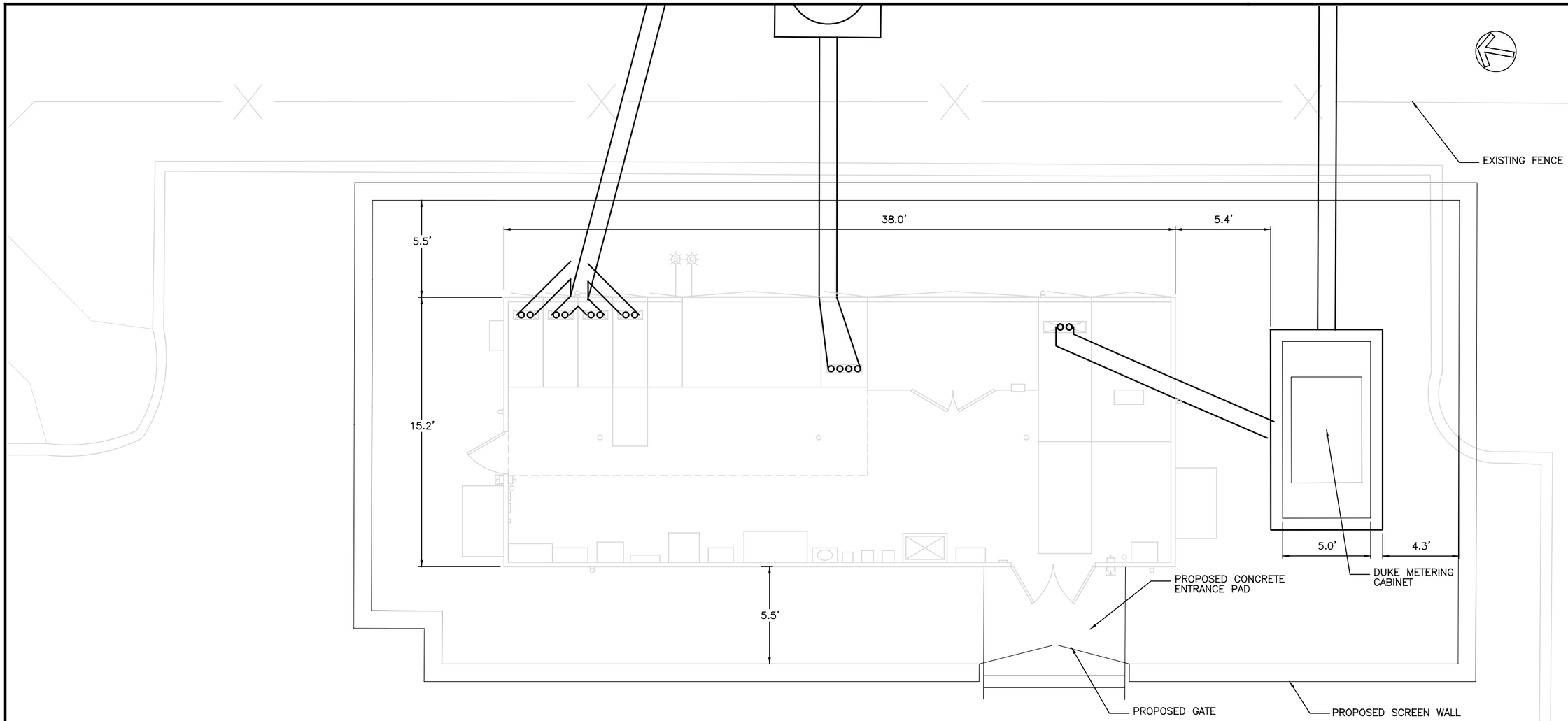

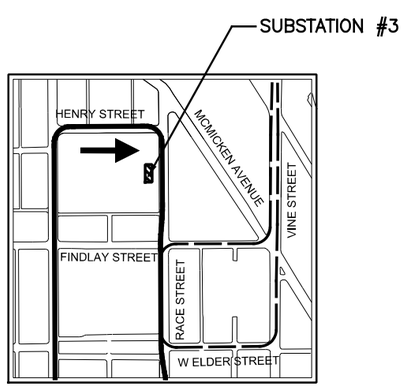

VICINITY MAP

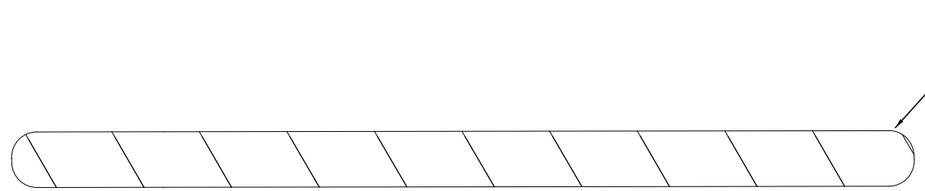

GRAPHIC SCALE

3 0 3 6 12

(IN FEET)
1 inch = 3 ft. Full Size
1 inch = 6 ft. Half Size

CAUTION UNDERGROUND UTILITIES
2 WORKING DAYS
BEFORE YOU DIG
CALL 1-800-362-2764
OHIO UTILITY PROTECTION SERVICE
CALL NON-SERVICE FACILITY
OWNERS DIRECT

PROFESSIONAL STAMP

SIGN:

DATE:

CONTRACT DRAWING

PRINTS NOT BEARING THIS STAMP WERE MADE PRIOR TO ADVERTISING FOR BIDS AND ARE TO BE CONSIDERED OBSOLETE FOR CONTRACT PURPOSES.

Department of Transportation and Engineering

City of Cincinnati
City Hall
801 Plum Street
Cincinnati, Ohio 45202

CINCINNATI STREETCAR
OVER THE RHINE

TRACTION POWER
TPSS No. 3 SITE FOOTPRINT LAYOUT

Revisions

No.	Date

Drawn by LP	Date 12/20/2011
Designed by JM	Date 12/20/2011
Checked by RF	Date 07/02/2012
Reviewed by JTB	Date 07/12/2012

Consultant

PB HDR

File Number

ACC No. 23126

G-TP-0012

$TIME$
$PLTDRV$
$FILE$
$DATE$

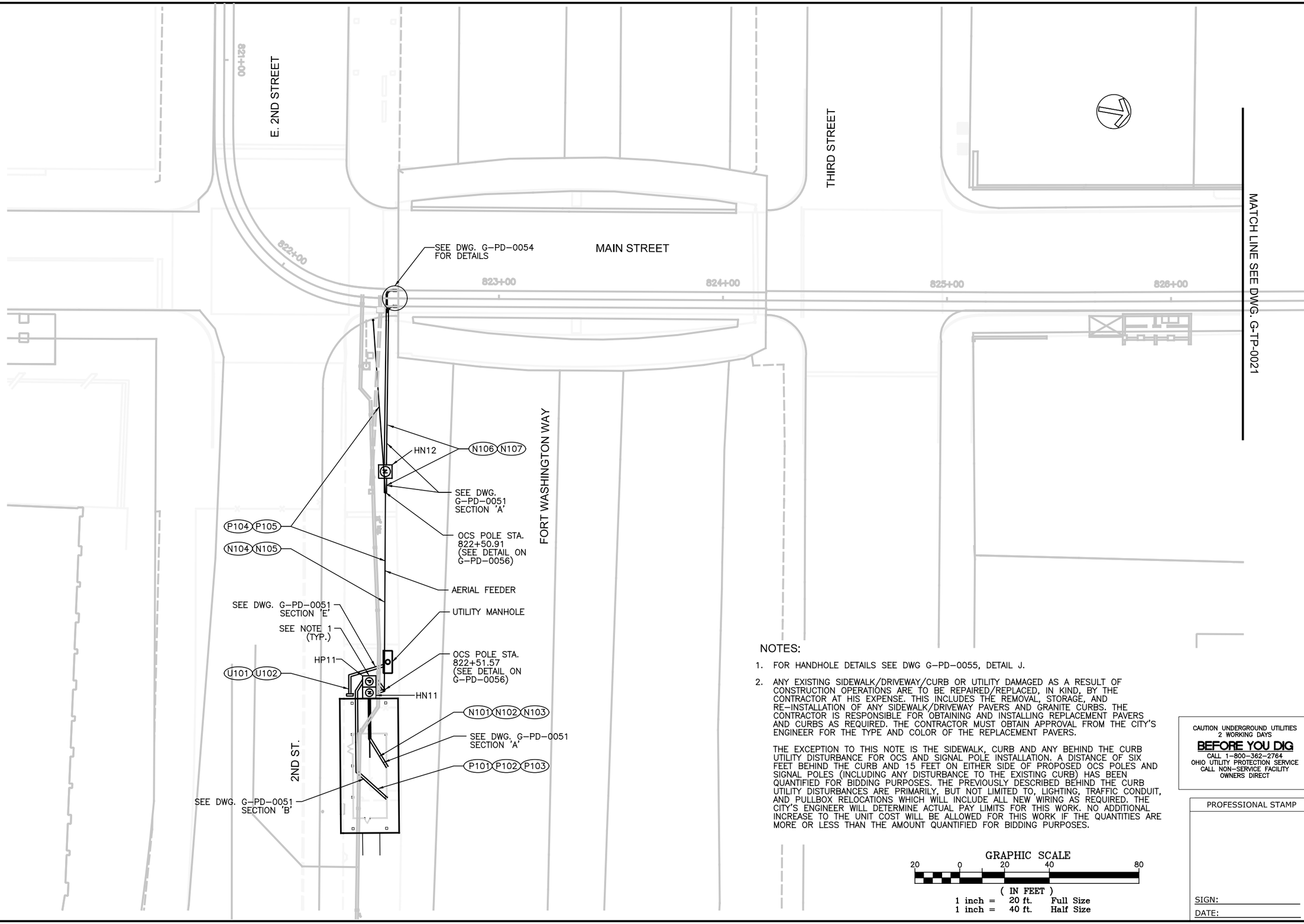

NOTES:

1. FOR HANDHOLE DETAILS SEE DWG G-PD-0055, DETAIL J.
2. ANY EXISTING SIDEWALK/DRIVEWAY/CURB OR UTILITY DAMAGED AS A RESULT OF CONSTRUCTION OPERATIONS ARE TO BE REPAIRED/REPLACED, IN KIND, BY THE CONTRACTOR AT HIS EXPENSE. THIS INCLUDES THE REMOVAL, STORAGE, AND RE-INSTALLATION OF ANY SIDEWALK/DRIVEWAY PAVERS AND GRANITE CURBS. THE CONTRACTOR IS RESPONSIBLE FOR OBTAINING AND INSTALLING REPLACEMENT PAVERS AND CURBS AS REQUIRED. THE CONTRACTOR MUST OBTAIN APPROVAL FROM THE CITY'S ENGINEER FOR THE TYPE AND COLOR OF THE REPLACEMENT PAVERS.

   THE EXCEPTION TO THIS NOTE IS THE SIDEWALK, CURB AND ANY BEHIND THE CURB UTILITY DISTURBANCE FOR OCS AND SIGNAL POLE INSTALLATION. A DISTANCE OF SIX FEET BEHIND THE CURB AND 15 FEET ON EITHER SIDE OF PROPOSED OCS POLES AND SIGNAL POLES (INCLUDING ANY DISTURBANCE TO THE EXISTING CURB) HAS BEEN QUANTIFIED FOR BIDDING PURPOSES. THE PREVIOUSLY DESCRIBED BEHIND THE CURB UTILITY DISTURBANCES ARE PRIMARILY, BUT NOT LIMITED TO, LIGHTING, TRAFFIC CONDUIT, AND PULLBOX RELOCATIONS WHICH WILL INCLUDE ALL NEW WIRING AS REQUIRED. THE CITY'S ENGINEER WILL DETERMINE ACTUAL PAY LIMITS FOR THIS WORK. NO ADDITIONAL INCREASE TO THE UNIT COST WILL BE ALLOWED FOR THIS WORK IF THE QUANTITIES ARE MORE OR LESS THAN THE AMOUNT QUANTIFIED FOR BIDDING PURPOSES.

GRAPHIC SCALE

20 0 20 40 80

(IN FEET)
1 inch = 20 ft. Full Size
1 inch = 40 ft. Half Size

CAUTION UNDERGROUND UTILITIES
2 WORKING DAYS
BEFORE YOU DIG
CALL 1-800-362-2764
OHIO UTILITY PROTECTION SERVICE
CALL NON-SERVICE FACILITY
OWNERS DIRECT

PROFESSIONAL STAMP

SIGN:

DATE:

CONTRACT DRAWING

PRINTS NOT BEARING THIS STAMP WERE MADE PRIOR TO ADVERTISING FOR BIDS AND ARE TO BE CONSIDERED OBSOLETE FOR CONTRACT PURPOSES.

Department of Transportation and Engineering

City of Cincinnati
City Hall
801 Plum Street
Cincinnati, Ohio 45202

CINCINNATI STREETCAR

TRACTION POWER
TPSS No. 1 POSITIVE AND NEGATIVE
FEEDER DUCTBANKS
SHEET 1 OF 3

Revisions

No.		

Drawn by LP	Date 12/20/2011	
Designed by DL	Date 12/20/2011	
Checked by RF	Date 07/02/2012	
Reviewed by JTB	Date 07/12/2012	

Consultant

PB HDR

File Number

ACC No. 23126

G-TP-0020

$PLTDRV$$
T:\29014a_Cincinnati.Street.Car\TP\S_G-TP-0020.dgn
7/10/2012
9:09:31 AM

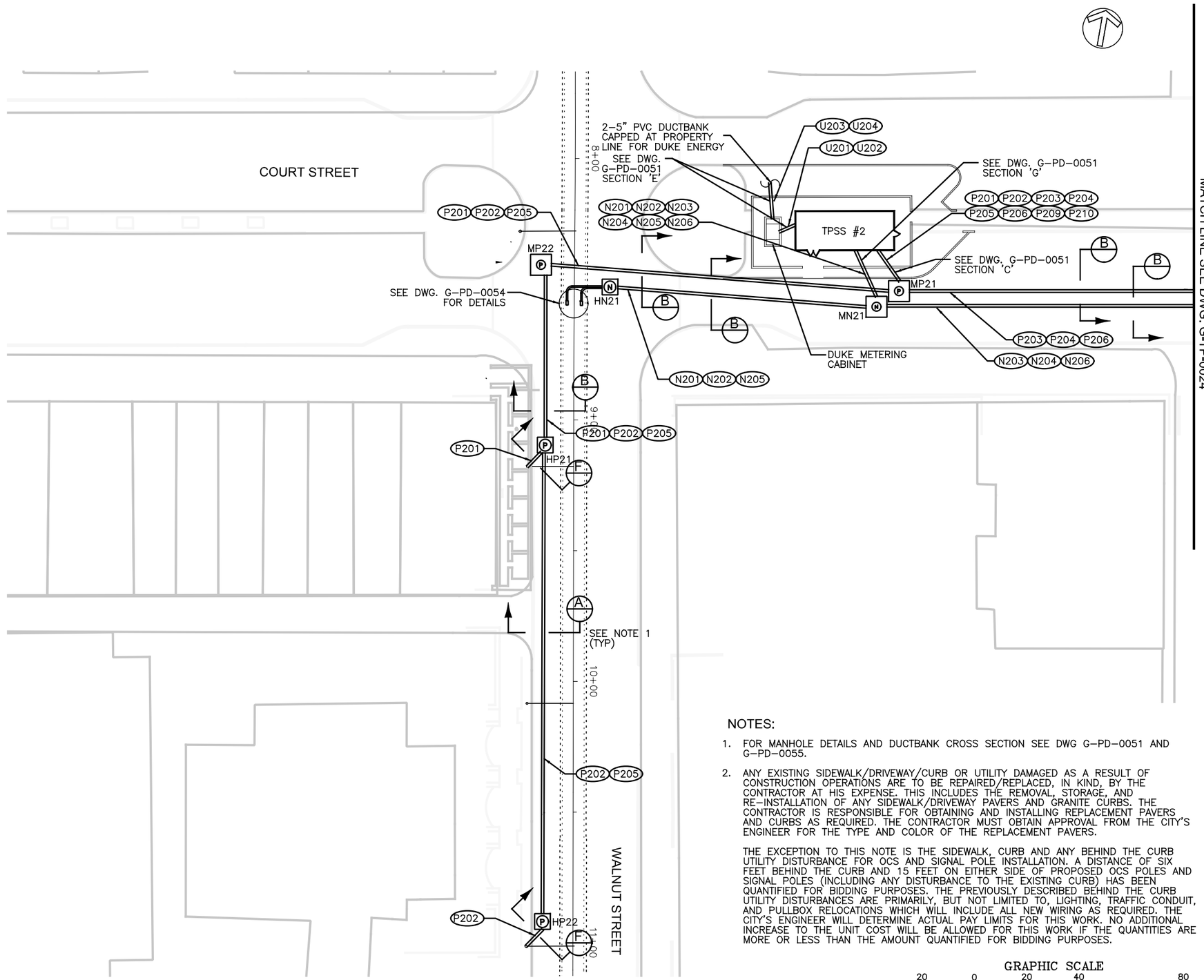

NOTES:

1. FOR MANHOLE DETAILS AND DUCTBANK CROSS SECTION SEE DWG G-PD-0051 AND G-PD-0055.

2. ANY EXISTING SIDEWALK/DRIVEWAY/CURB OR UTILITY DAMAGED AS A RESULT OF CONSTRUCTION OPERATIONS ARE TO BE REPAIRED/REPLACED, IN KIND, BY THE CONTRACTOR AT HIS EXPENSE. THIS INCLUDES THE REMOVAL, STORAGE, AND RE-INSTALLATION OF ANY SIDEWALK/DRIVEWAY PAVERS AND GRANITE CURBS. THE CONTRACTOR IS RESPONSIBLE FOR OBTAINING AND INSTALLING REPLACEMENT PAVERS AND CURBS AS REQUIRED. THE CONTRACTOR MUST OBTAIN APPROVAL FROM THE CITY'S ENGINEER FOR THE TYPE AND COLOR OF THE REPLACEMENT PAVERS.

   THE EXCEPTION TO THIS NOTE IS THE SIDEWALK, CURB AND ANY BEHIND THE CURB UTILITY DISTURBANCE FOR OCS AND SIGNAL POLE INSTALLATION. A DISTANCE OF SIX FEET BEHIND THE CURB AND 15 FEET ON EITHER SIDE OF PROPOSED OCS POLES AND SIGNAL POLES (INCLUDING ANY DISTURBANCE TO THE EXISTING CURB) HAS BEEN QUANTIFIED FOR BIDDING PURPOSES. THE PREVIOUSLY DESCRIBED BEHIND THE CURB UTILITY DISTURBANCES ARE PRIMARILY, BUT NOT LIMITED TO, LIGHTING, TRAFFIC CONDUIT, AND PULLBOX RELOCATIONS WHICH WILL INCLUDE ALL NEW WIRING AS REQUIRED. THE CITY'S ENGINEER WILL DETERMINE ACTUAL PAY LIMITS FOR THIS WORK. NO ADDITIONAL INCREASE TO THE UNIT COST WILL BE ALLOWED FOR THIS WORK IF THE QUANTITIES ARE MORE OR LESS THAN THE AMOUNT QUANTIFIED FOR BIDDING PURPOSES.

GRAPHIC SCALE

20 0 20 40 80

(IN FEET)
1 inch = 20 ft. Full Size
1 inch = 40 ft. Half Size

CAUTION UNDERGROUND UTILITIES
2 WORKING DAYS
BEFORE YOU DIG
CALL 1-800-362-2764
OHIO UTILITY PROTECTION SERVICE
CALL NON-SERVICE FACILITY OWNERS DIRECT

PROFESSIONAL STAMP

SIGN:

DATE:

CONTRACT DRAWING

PRINTS NOT BEARING THIS STAMP WERE MADE PRIOR TO ADVERTISING FOR BIDS AND ARE TO BE CONSIDERED OBSOLETE FOR CONTRACT PURPOSES.

Department of Transportation and Engineering

City of Cincinnati
City Hall
801 Plum Street
Cincinnati, Ohio 45202

CINCINNATI STREETCAR

TRACTION POWER
TPSS No. 2 POSITIVE AND NEGATIVE
FEEDER DUCTBANKS
SHEET 1 OF 2

Revisions

No.	Date
	12/20/2011
	12/20/2011
	07/02/2012
	07/12/2012

Drawn by LP	Date 12/20/2011
Designed by JM	Date 12/20/2011
Checked by RF	Date 07/02/2012
Reviewed by JTB	Date 07/12/2012

Consultant

PB HDR

File Number

ACC No. 23126

G-TP-0023

$PLTDRV$$
T:\29014a_Cincinnati.Street.Car\TP\S_G-TP-0023.dgn
7/10/2012 9:09:32 AM

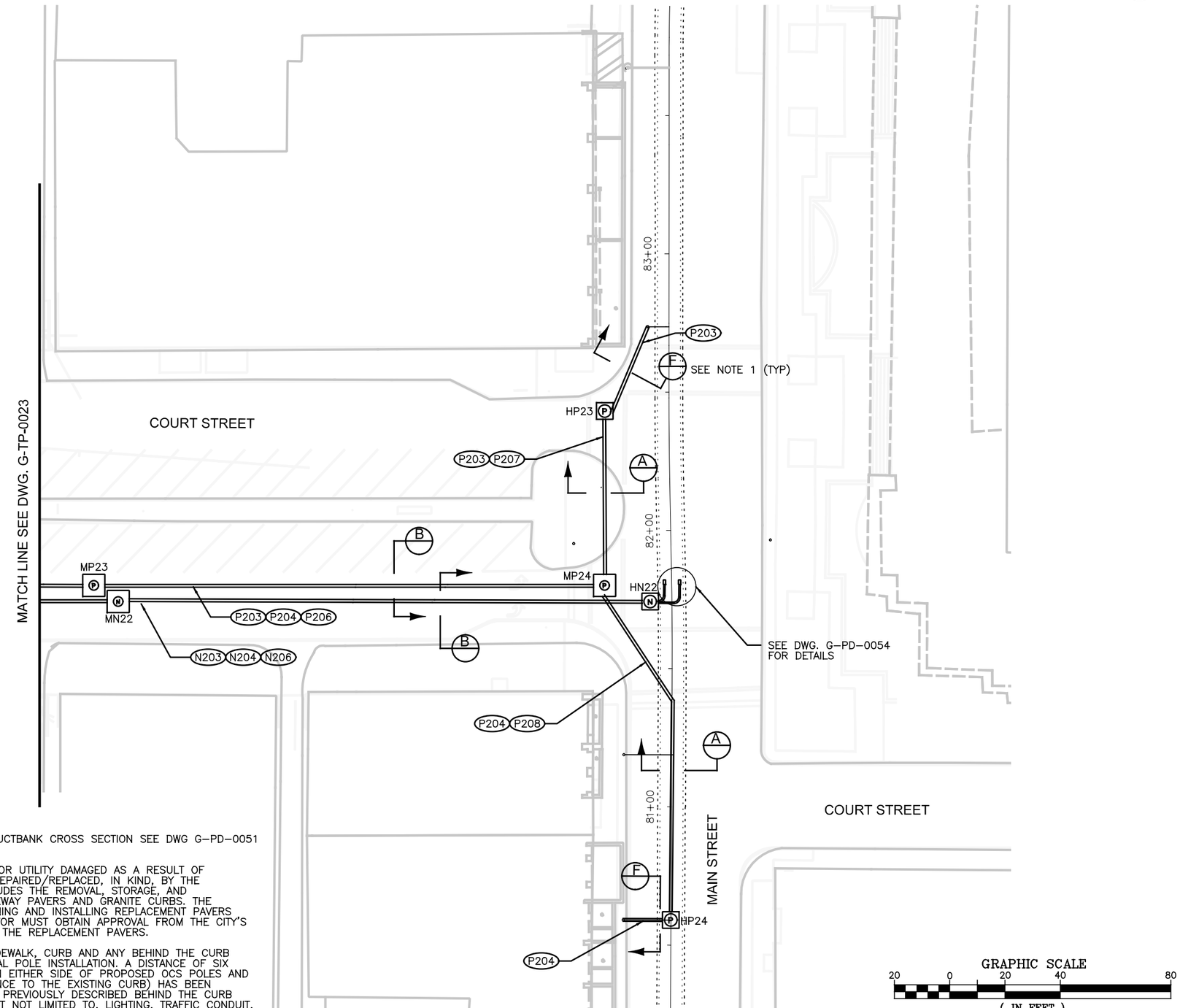

NOTES:

1. FOR MANHOLE/HANDHOLE DETAILS AND DUCTBANK CROSS SECTION SEE DWG G-PD-0051 AND G-PD-0055.

2. ANY EXISTING SIDEWALK/DRIVEWAY/CURB OR UTILITY DAMAGED AS A RESULT OF CONSTRUCTION OPERATIONS ARE TO BE REPAIRED/REPLACED, IN KIND, BY THE CONTRACTOR AT HIS EXPENSE. THIS INCLUDES THE REMOVAL, STORAGE, AND RE-INSTALLATION OF ANY SIDEWALK/DRIVEWAY PAVERS AND GRANITE CURBS. THE CONTRACTOR IS RESPONSIBLE FOR OBTAINING AND INSTALLING REPLACEMENT PAVERS AND CURBS AS REQUIRED. THE CONTRACTOR MUST OBTAIN APPROVAL FROM THE CITY'S ENGINEER FOR THE TYPE AND COLOR OF THE REPLACEMENT PAVERS.

   THE EXCEPTION TO THIS NOTE IS THE SIDEWALK, CURB AND ANY BEHIND THE CURB UTILITY DISTURBANCE FOR OCS AND SIGNAL POLE INSTALLATION. A DISTANCE OF SIX FEET BEHIND THE CURB AND 15 FEET ON EITHER SIDE OF PROPOSED OCS POLES AND SIGNAL POLES (INCLUDING ANY DISTURBANCE TO THE EXISTING CURB) HAS BEEN QUANTIFIED FOR BIDDING PURPOSES. THE PREVIOUSLY DESCRIBED BEHIND THE CURB UTILITY DISTURBANCES ARE PRIMARILY, BUT NOT LIMITED TO, LIGHTING, TRAFFIC CONDUIT, AND PULLBOX RELOCATIONS WHICH WILL INCLUDE ALL NEW WIRING AS REQUIRED. THE CITY'S ENGINEER WILL DETERMINE ACTUAL PAY LIMITS FOR THIS WORK. NO ADDITIONAL INCREASE TO THE UNIT COST WILL BE ALLOWED FOR THIS WORK IF THE QUANTITIES ARE MORE OR LESS THAN THE AMOUNT QUANTIFIED FOR BIDDING PURPOSES.

GRAPHIC SCALE

20 0 20 40 80

(IN FEET)
1 inch = 20 ft. Full Size
1 inch = 40 ft. Half Size

CAUTION UNDERGROUND UTILITIES
2 WORKING DAYS
BEFORE YOU DIG
CALL 1-800-362-2764
OHIO UTILITY PROTECTION SERVICE
CALL NON-SERVICE FACILITY
OWNERS DIRECT

PROFESSIONAL STAMP

STATE OF OHIO
HARVEY M. GLICKENSTEIN
E-56186
REGISTERED PROFESSIONAL ENGINEER

SIGN:

DATE:

CONTRACT DRAWING

PRINTS NOT BEARING THIS STAMP WERE MADE PRIOR TO ADVERTISING FOR BIDS AND ARE TO BE CONSIDERED OBSOLETE FOR CONTRACT PURPOSES.

Department of Transportation and Engineering

City of Cincinnati
City Hall
801 Plum Street
Cincinnati, Ohio 45202

CINCINNATI STREETCAR

TRACTION POWER
TPSS No. 2 POSITIVE AND NEGATIVE
FEEDER DUCTBANKS
SHEET 2 OF 2

Revisions

No.		

Drawn by LP	Date 12/20/2011
Designed by JM	Date 12/20/2011
Checked by RF	Date 12/20/2011
Reviewed by JTB	Date 12/20/2011

Consultant

PB HDR

File Number

ACC No. 23126

G-TP-0024

$PLTDRV$$
T:\29014a_Cincinnati.Street.Car\TP\S_G-TP-0024.dgn
12/16/2011 1:17:04 PM

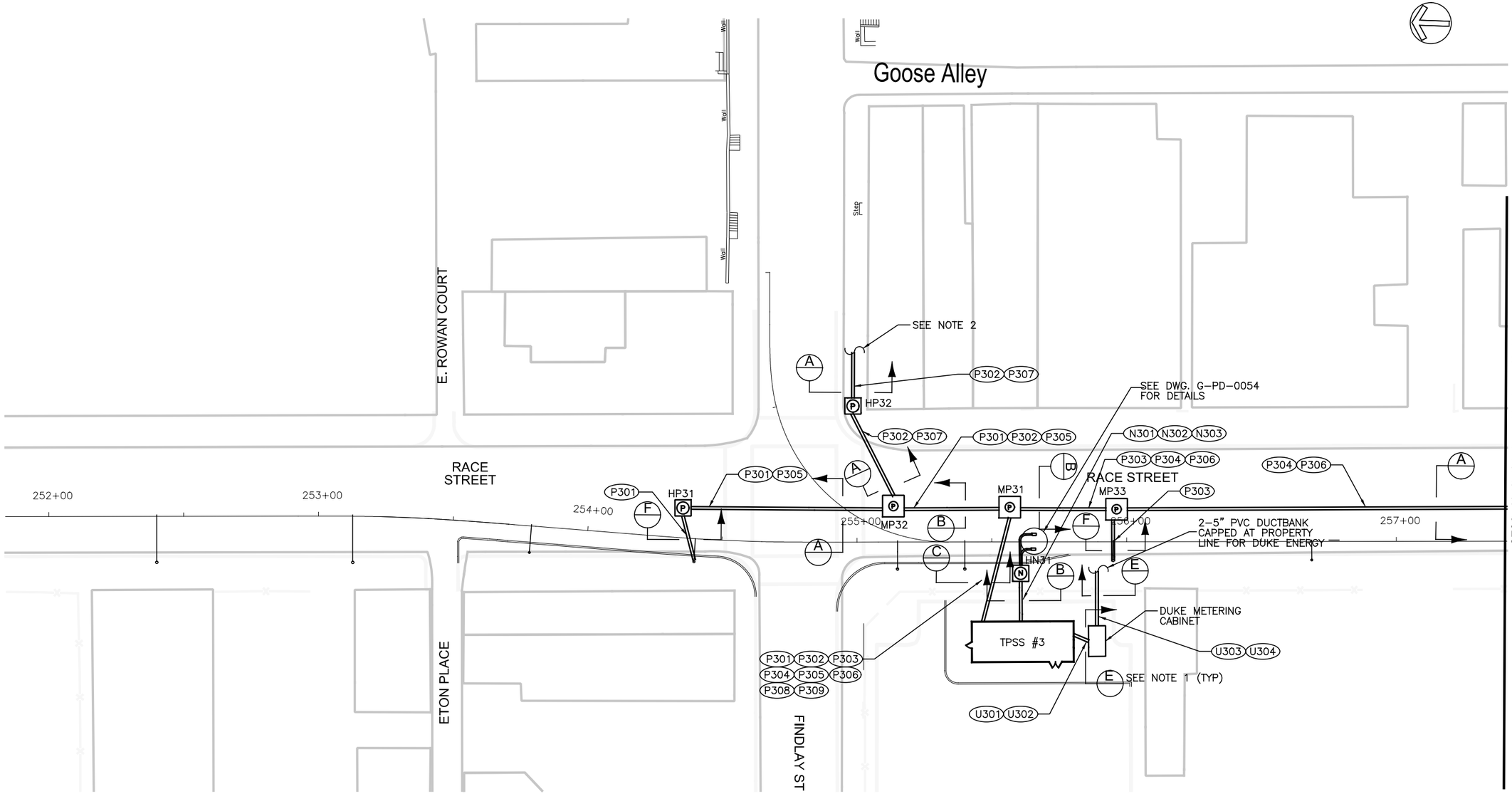

NOTES:

1. FOR MANHOLE/HANDHOLE DETAILS AND DUCTBANK CROSS SECTION SEE DWG G-PD-0051 AND G-PD-0055.
2. DUCTBANK SHOULD BE EXTENDED TO THE LIMIT OF THE CONSTRUCTION AREA AND CONDUITS CAPPED.
3. ANY EXISTING SIDEWALK/DRIVEWAY/CURB OR UTILITY DAMAGED AS A RESULT OF CONSTRUCTION OPERATIONS ARE TO BE REPAIRED/REPLACED, IN KIND, BY THE CONTRACTOR AT HIS EXPENSE. THIS INCLUDES THE REMOVAL, STORAGE, AND RE-INSTALLATION OF ANY SIDEWALK/DRIVEWAY PAVERS AND GRANITE CURBS. THE CONTRACTOR IS RESPONSIBLE FOR OBTAINING AND INSTALLING REPLACEMENT PAVERS AND CURBS AS REQUIRED. THE CONTRACTOR MUST OBTAIN APPROVAL FROM THE CITY'S ENGINEER FOR THE TYPE AND COLOR OF THE REPLACEMENT PAVERS.

   THE EXCEPTION TO THIS NOTE IS THE SIDEWALK, CURB AND ANY BEHIND THE CURB UTILITY DISTURBANCE FOR OCS AND SIGNAL POLE INSTALLATION. A DISTANCE OF SIX FEET BEHIND THE CURB AND 15 FEET ON EITHER SIDE OF PROPOSED OCS POLES AND SIGNAL POLES (INCLUDING ANY DISTURBANCE TO THE EXISTING CURB) HAS BEEN QUANTIFIED FOR BIDDING PURPOSES. THE PREVIOUSLY DESCRIBED BEHIND THE CURB UTILITY DISTURBANCES ARE PRIMARILY, BUT NOT LIMITED TO, LIGHTING, TRAFFIC CONDUIT, AND PULLBOX RELOCATIONS WHICH WILL INCLUDE ALL NEW WIRING AS REQUIRED. THE CITY'S ENGINEER WILL DETERMINE ACTUAL PAY LIMITS FOR THIS WORK. NO ADDITIONAL INCREASE TO THE UNIT COST WILL BE ALLOWED FOR THIS WORK IF THE QUANTITIES ARE MORE OR LESS THAN THE AMOUNT QUANTIFIED FOR BIDDING PURPOSES.

CAUTION UNDERGROUND UTILITIES
2 WORKING DAYS
BEFORE YOU DIG
CALL 1-800-362-2764
OHIO UTILITY PROTECTION SERVICE
CALL NON-SERVICE FACILITY
OWNERS DIRECT

GRAPHIC SCALE
20 0 20 40 80
(IN FEET)
1 inch = 20 ft. Full Size
1 inch = 40 ft. Half Size

PROFESSIONAL STAMP
STATE OF OHIO
HARVEY M. GLICKENSTEIN
E-56186
REGISTERED PROFESSIONAL ENGINEER
SIGN:
DATE:

CONTRACT DRAWING
PRINTS NOT BEARING THIS STAMP WERE MADE PRIOR TO ADVERTISING FOR BID, AND ARE TO BE CONSIDERED OBSOLETE FOR CONTRACT PURPOSES.

Department of Transportation and Engineering
City of Cincinnati
City Hall
801 Plum Street
Cincinnati, Ohio 45202

CINCINNATI STREETCAR
OVER THE RHINE
TRACTION POWER
TPSS No. 3 POSITIVE AND NEGATIVE
FEEDER DUCTBANKS
SHEET 1 OF 2

Revisions
No.

Drawn by LP	Date 12/20/2011	
Designed by JM	Date 12/20/2011	
Checked by RF	Date 12/20/2011	
Reviewed by JTB	Date 12/20/2011	

Consultant
PB HDR

File Number
ACC No. 23126

G-TP-0025

$PLTDRV$$
T:\29014a_Cincinnati.Street.Car\TP\S_G-TP-0025.dgn
12/16/2011 1:17:16 PM

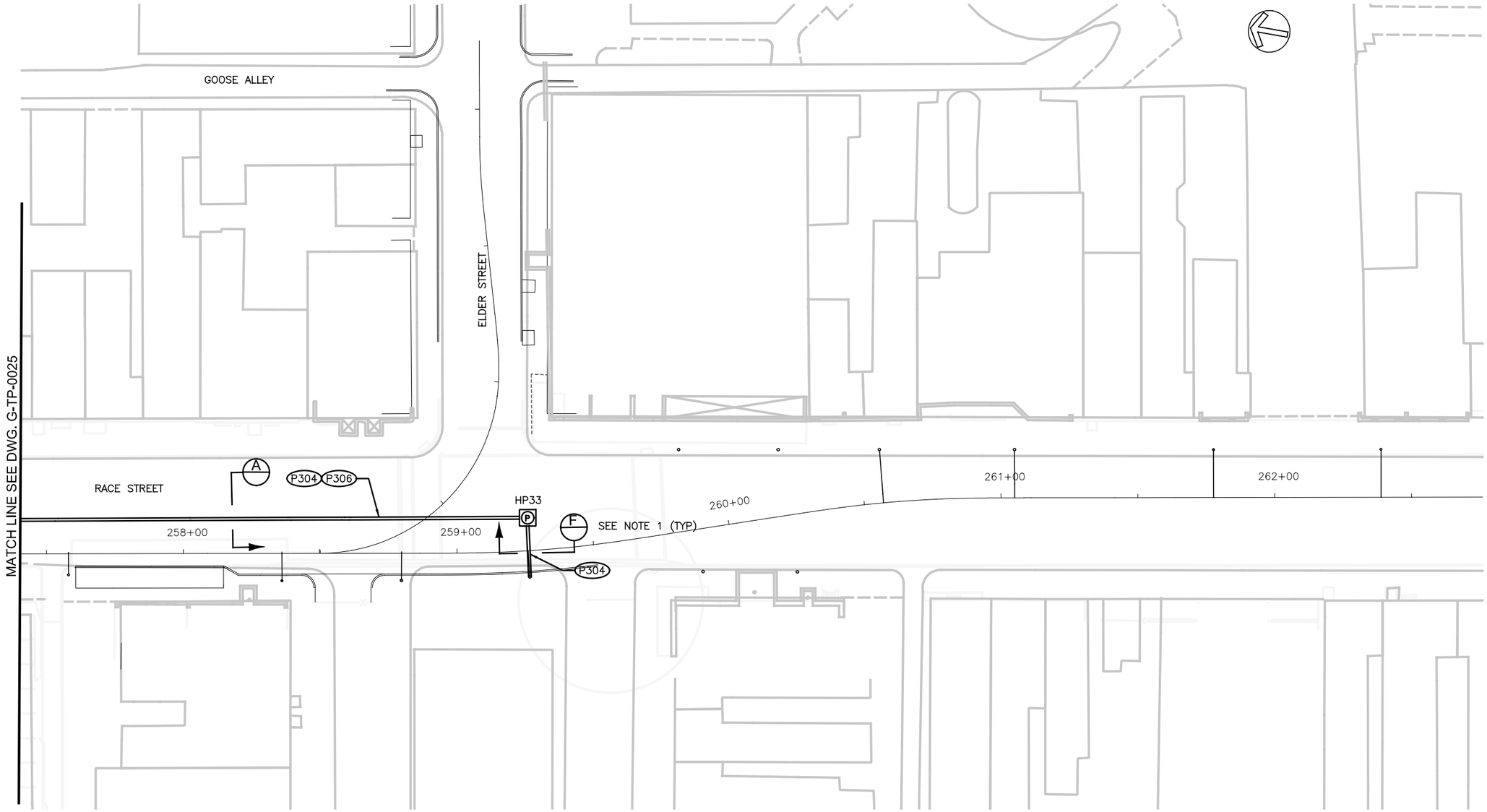

NOTES:

1. FOR MANHOLE/HANDHOLE DETAILS AND DUCTBANK CROSS SECTION SEE DWG G–PD–0051 AND G–PD–0055.

2. ANY EXISTING SIDEWALK/DRIVEWAY/CURB OR UTILITY DAMAGED AS A RESULT OF CONSTRUCTION OPERATIONS ARE TO BE REPAIRED/REPLACED, IN KIND, BY THE CONTRACTOR AT HIS EXPENSE. THIS INCLUDES THE REMOVAL, STORAGE, AND RE–INSTALLATION OF ANY SIDEWALK/DRIVEWAY PAVERS AND GRANITE CURBS. THE CONTRACTOR IS RESPONSIBLE FOR OBTAINING AND INSTALLING REPLACEMENT PAVERS AND CURBS AS REQUIRED. THE CONTRACTOR MUST OBTAIN APPROVAL FROM THE CITY'S ENGINEER FOR THE TYPE AND COLOR OF THE REPLACEMENT PAVERS.

   THE EXCEPTION TO THIS NOTE IS THE SIDEWALK, CURB AND ANY BEHIND THE CURB UTILITY DISTURBANCE FOR OCS AND SIGNAL POLE INSTALLATION. A DISTANCE OF SIX FEET BEHIND THE CURB AND 15 FEET ON EITHER SIDE OF PROPOSED OCS POLES AND SIGNAL POLES (INCLUDING ANY DISTURBANCE TO THE EXISTING CURB) HAS BEEN QUANTIFIED FOR BIDDING PURPOSES. THE PREVIOUSLY DESCRIBED BEHIND THE CURB UTILITY DISTURBANCES ARE PRIMARILY, BUT NOT LIMITED TO, LIGHTING, TRAFFIC CONDUIT, AND PULLBOX RELOCATIONS WHICH WILL INCLUDE ALL NEW WIRING AS REQUIRED. THE CITY'S ENGINEER WILL DETERMINE ACTUAL PAY LIMITS FOR THIS WORK. NO ADDITIONAL INCREASE TO THE UNIT COST WILL BE ALLOWED FOR THIS WORK IF THE QUANTITIES ARE MORE OR LESS THAN THE AMOUNT QUANTIFIED FOR BIDDING PURPOSES.

CAUTION UNDERGROUND UTILITIES
2 WORKING DAYS
BEFORE YOU DIG
CALL 1–800–362–2764
OHIO UTILITY PROTECTION SERVICE
CALL NON–SERVICE FACILITY
OWNERS DIRECT

GRAPHIC SCALE
20 0 20 40 80
(IN FEET)
1 inch = 20 ft. Full Size
1 inch = 40 ft. Half Size

PROFESSIONAL STAMP
STATE OF OHIO
HARVEY M. GLICKENSTEIN
E-66186
REGISTERED PROFESSIONAL ENGINEER
SIGN:
DATE:

CONTRACT DRAWING
PRINTS NOT BEARING THIS STAMP WERE MADE PRIOR TO ADVERTISING FOR BIDS AND ARE TO BE CONSIDERED OBSOLETE FOR CONTRACT PURPOSES.

Department of Transportation and Engineering
City of Cincinnati
City Hall
801 Plum Street
Cincinnati, Ohio 45202

CINCINNATI STREETCAR
OVER THE RHINE
TRACTION POWER
TPSS No. 3 POSITIVE AND NEGATIVE
FEEDER DUCTBANKS
SHEET 2 OF 2

Revisions
No.

Drawn by LP	Date 12/20/2011
Designed by JM	Date 12/20/2011
Checked by RF	Date 12/20/2011
Reviewed by JTB	Date 12/20/2011

Consultant
PB HDR

File Number
ACC No. 23126

G-TP-0026

$PLTDRV$$
T:\29014a_Cincinnati.Street.Car\TP\S_G-TP-0026.dgn
12/16/2011 1:17:29 PM

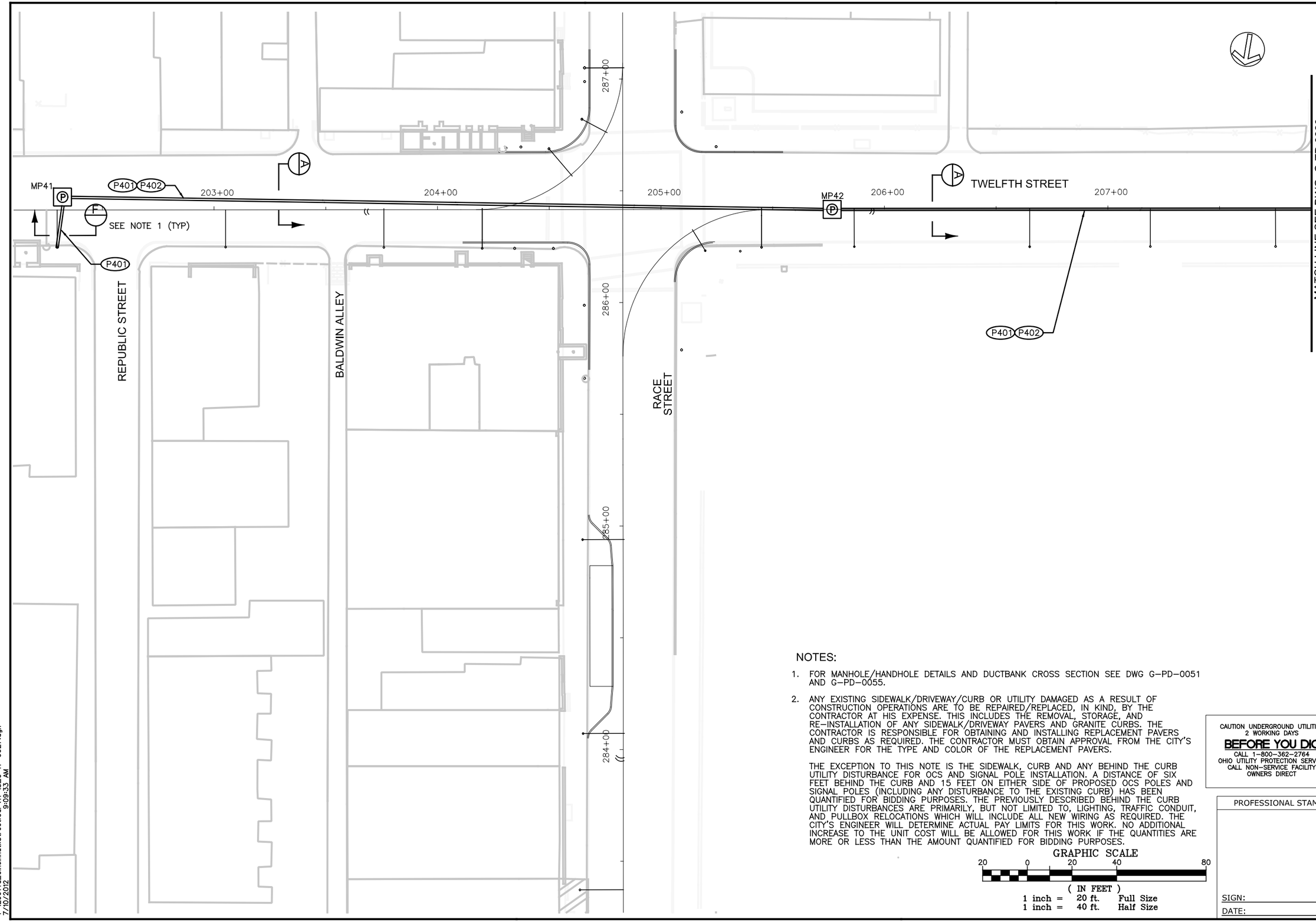

NOTES:

1. FOR MANHOLE/HANDHOLE DETAILS AND DUCTBANK CROSS SECTION SEE DWG G–PD–0051 AND G–PD–0055.

2. ANY EXISTING SIDEWALK/DRIVEWAY/CURB OR UTILITY DAMAGED AS A RESULT OF CONSTRUCTION OPERATIONS ARE TO BE REPAIRED/REPLACED, IN KIND, BY THE CONTRACTOR AT HIS EXPENSE. THIS INCLUDES THE REMOVAL, STORAGE, AND RE–INSTALLATION OF ANY SIDEWALK/DRIVEWAY PAVERS AND GRANITE CURBS. THE CONTRACTOR IS RESPONSIBLE FOR OBTAINING AND INSTALLING REPLACEMENT PAVERS AND CURBS AS REQUIRED. THE CONTRACTOR MUST OBTAIN APPROVAL FROM THE CITY'S ENGINEER FOR THE TYPE AND COLOR OF THE REPLACEMENT PAVERS.

   THE EXCEPTION TO THIS NOTE IS THE SIDEWALK, CURB AND ANY BEHIND THE CURB UTILITY DISTURBANCE FOR OCS AND SIGNAL POLE INSTALLATION. A DISTANCE OF SIX FEET BEHIND THE CURB AND 15 FEET ON EITHER SIDE OF PROPOSED OCS POLES AND SIGNAL POLES (INCLUDING ANY DISTURBANCE TO THE EXISTING CURB) HAS BEEN QUANTIFIED FOR BIDDING PURPOSES. THE PREVIOUSLY DESCRIBED BEHIND THE CURB UTILITY DISTURBANCES ARE PRIMARILY, BUT NOT LIMITED TO, LIGHTING, TRAFFIC CONDUIT, AND PULLBOX RELOCATIONS WHICH WILL INCLUDE ALL NEW WIRING AS REQUIRED. THE CITY'S ENGINEER WILL DETERMINE ACTUAL PAY LIMITS FOR THIS WORK. NO ADDITIONAL INCREASE TO THE UNIT COST WILL BE ALLOWED FOR THIS WORK IF THE QUANTITIES ARE MORE OR LESS THAN THE AMOUNT QUANTIFIED FOR BIDDING PURPOSES.

GRAPHIC SCALE

20 0 20 40 80

(IN FEET)
1 inch = 20 ft. Full Size
1 inch = 40 ft. Half Size

CAUTION UNDERGROUND UTILITIES
2 WORKING DAYS
BEFORE YOU DIG
CALL 1–800–362–2764
OHIO UTILITY PROTECTION SERVICE
CALL NON–SERVICE FACILITY
OWNERS DIRECT

PROFESSIONAL STAMP

SIGN:

DATE:

CONTRACT DRAWING

PRINTS NOT BEARING THIS STAMP WERE MADE PRIOR TO ADVERTISING FOR BIDS AND ARE TO BE CONSIDERED OBSOLETE FOR CONTRACT PURPOSES.

Department of Transportation and Engineering

City of Cincinnati
City Hall
801 Plum Street
Cincinnati, Ohio 45202

CINCINNATI STREETCAR
OVER THE RHINE

TRACTION POWER
12TH STREET AND RACE STREET
POSITIVE AND NEGATIVE FEEDER DUCTBANKS
SHEET 1 OF 2

Revisions

No.			

Drawn by LP	Date 12/20/2011	Designed by JM	Date 12/20/2011
Checked by RF	Date 07/02/2012	Reviewed by JTB	Date 07/12/2012

Consultant

PB HDR

File Number

ACC No. 23126

G-TP-0027

$PLTDRV$$
T:\29014a_Cincinnati.Street.Car\TP\S_G-TP-0027.dgn
7/10/2012 9:09:33 AM

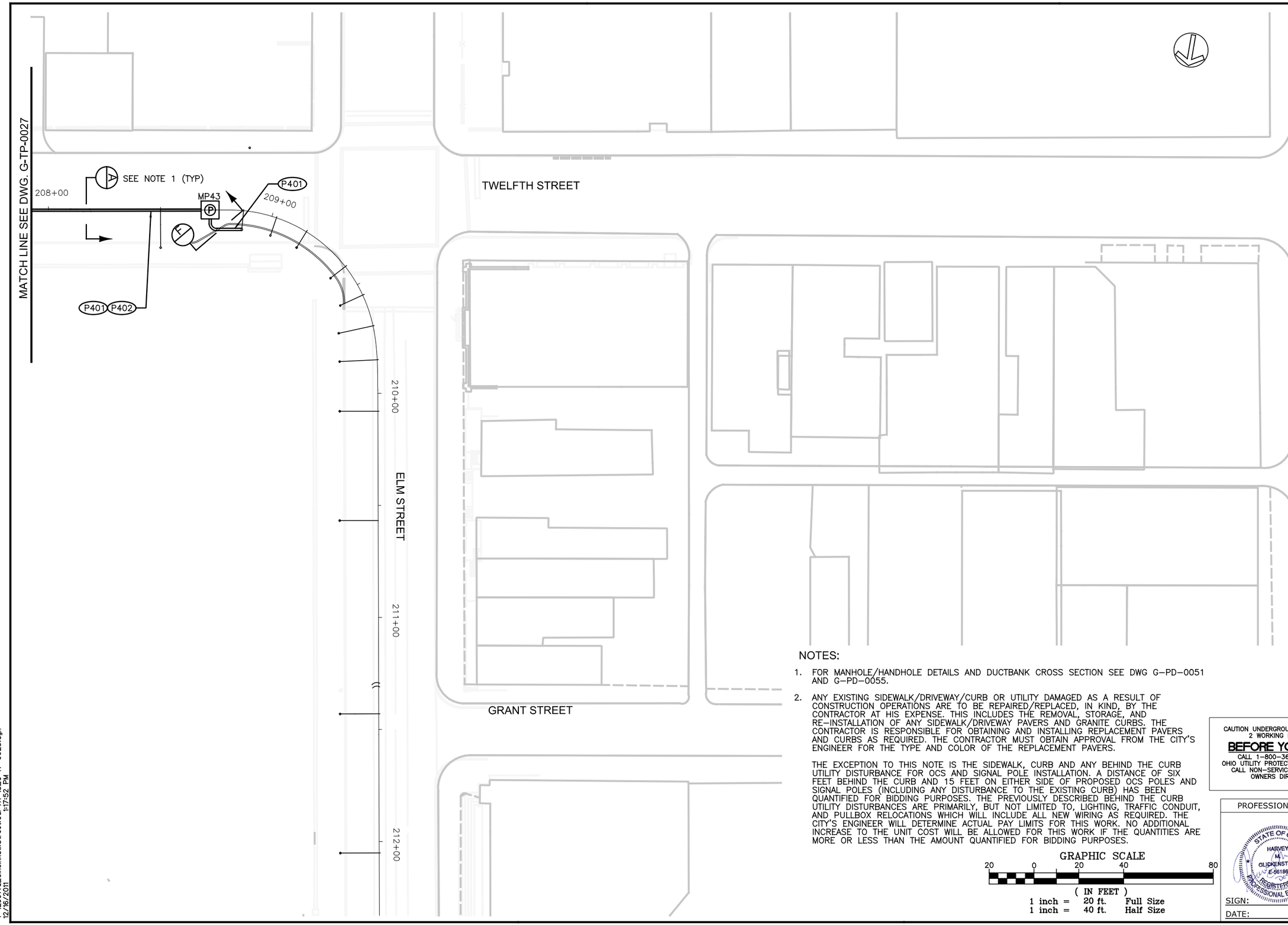

NOTES:

1. FOR MANHOLE/HANDHOLE DETAILS AND DUCTBANK CROSS SECTION SEE DWG G–PD–0051 AND G–PD–0055.

2. ANY EXISTING SIDEWALK/DRIVEWAY/CURB OR UTILITY DAMAGED AS A RESULT OF CONSTRUCTION OPERATIONS ARE TO BE REPAIRED/REPLACED, IN KIND, BY THE CONTRACTOR AT HIS EXPENSE. THIS INCLUDES THE REMOVAL, STORAGE, AND RE–INSTALLATION OF ANY SIDEWALK/DRIVEWAY PAVERS AND GRANITE CURBS. THE CONTRACTOR IS RESPONSIBLE FOR OBTAINING AND INSTALLING REPLACEMENT PAVERS AND CURBS AS REQUIRED. THE CONTRACTOR MUST OBTAIN APPROVAL FROM THE CITY'S ENGINEER FOR THE TYPE AND COLOR OF THE REPLACEMENT PAVERS.

   THE EXCEPTION TO THIS NOTE IS THE SIDEWALK, CURB AND ANY BEHIND THE CURB UTILITY DISTURBANCE FOR OCS AND SIGNAL POLE INSTALLATION. A DISTANCE OF SIX FEET BEHIND THE CURB AND 15 FEET ON EITHER SIDE OF PROPOSED OCS POLES AND SIGNAL POLES (INCLUDING ANY DISTURBANCE TO THE EXISTING CURB) HAS BEEN QUANTIFIED FOR BIDDING PURPOSES. THE PREVIOUSLY DESCRIBED BEHIND THE CURB UTILITY DISTURBANCES ARE PRIMARILY, BUT NOT LIMITED TO, LIGHTING, TRAFFIC CONDUIT, AND PULLBOX RELOCATIONS WHICH WILL INCLUDE ALL NEW WIRING AS REQUIRED. THE CITY'S ENGINEER WILL DETERMINE ACTUAL PAY LIMITS FOR THIS WORK. NO ADDITIONAL INCREASE TO THE UNIT COST WILL BE ALLOWED FOR THIS WORK IF THE QUANTITIES ARE MORE OR LESS THAN THE AMOUNT QUANTIFIED FOR BIDDING PURPOSES.

CAUTION UNDERGROUND UTILITIES
2 WORKING DAYS
BEFORE YOU DIG
CALL 1–800–362–2764
OHIO UTILITY PROTECTION SERVICE
CALL NON–SERVICE FACILITY
OWNERS DIRECT

GRAPHIC SCALE

20 0 20 40 80

(IN FEET)
1 inch = 20 ft. Full Size
1 inch = 40 ft. Half Size

PROFESSIONAL STAMP

STATE OF OHIO
HARVEY M. GLICKENSTEIN
E-56186
REGISTERED PROFESSIONAL ENGINEER

SIGN:

DATE:

CONTRACT DRAWING

PRINTS NOT BEARING THIS STAMP WERE MADE PRIOR TO ADVERTISING FOR BIDS AND ARE TO BE CONSIDERED OBSOLETE FOR CONTRACT PURPOSES.

Department of Transportation and Engineering

City of Cincinnati
City Hall
801 Plum Street
Cincinnati, Ohio 45202

CINCINNATI STREETCAR
OVER THE RHINE

TRACTION POWER
12TH STREET AND RACE STREET
POSITIVE AND NEGATIVE FEEDER DUCTBANKS
SHEET 2 OF 2

Revisions

No.				

Drawn by LP	Date 12/20/2011
Designed by JM	Date 12/20/2011
Checked by RF	Date 12/20/2011
Reviewed by JTB	Date 12/20/2011

Consultant

PB HDR

File Number

ACC No. 23126

G-TP-0028

$PLTDRV$$
T:\29014a_Cincinnati.Street.Car\TP\S_G-TP-0028.dgn
12/16/2011 1:17:52 PM

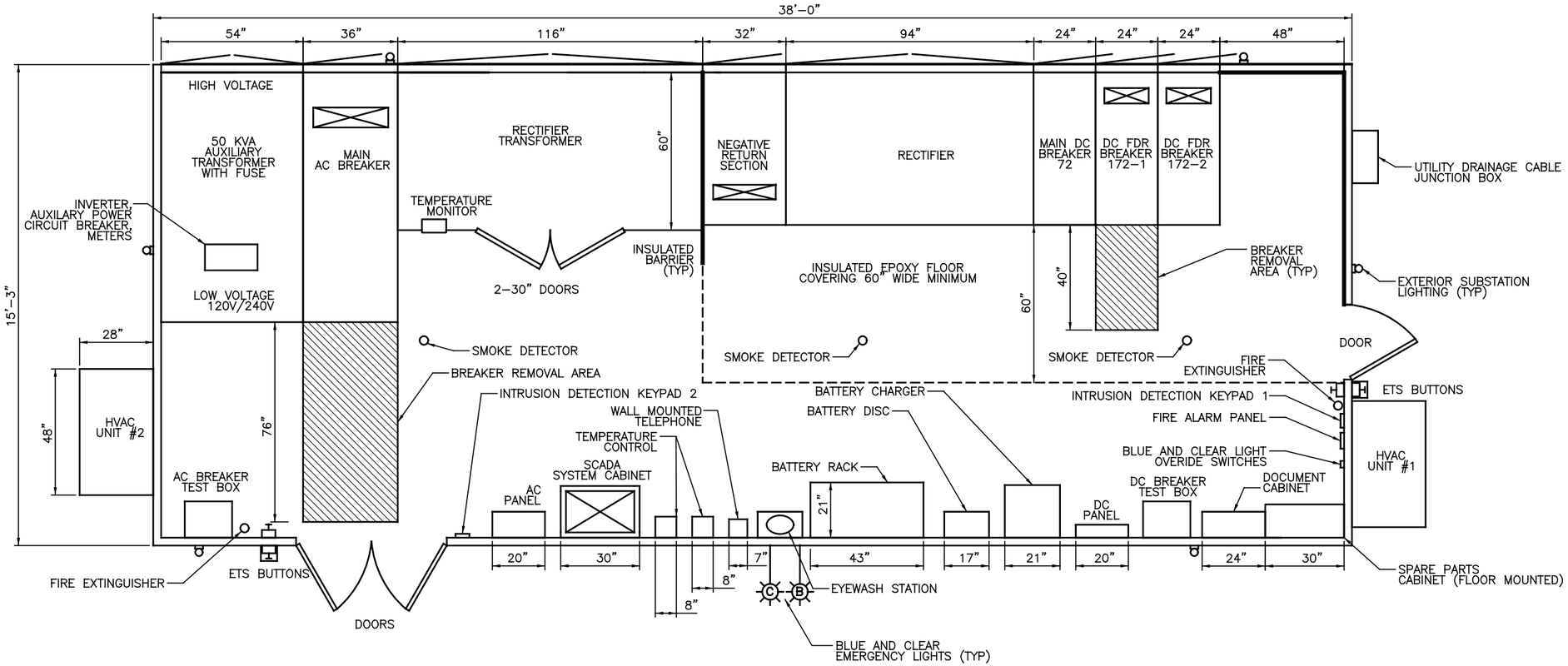

NOTES:

1. THE EQUIPMENT LAYOUT SHOWN IS A SCHEMATIC LAYOUT OF A STANDARD TPSS ENCLOSURE. CONTRACTOR SHALL PROVIDE A DETAILED ENCLOSURE AND EQUIPMENT DESIGN BASED ON THIS LAYOUT FOR APPROVAL IN ACCORDANCE WITH THE SPECIFICATIONS. CONTRACTOR'S DETAILED LAYOUT SHALL INCLUDE SCALED PLAN AND PROFILE VIEWS OF EACH INTERIOR AND EXTERIOR WALL.
2. THE CONTRACTOR SHALL MAKE EVERY EFFORT TO PROVIDE AN ENCLOSURE WITH THE INDICATED EXTERIOR LENGTH AND WIDTH. IF THE ENCLOSURE MUST BE LONGER TO ACCOMMODATE THE INDICATED EQUIPMENT, THE CONTRACTOR SHALL NOTIFY THE CITY IMMEDIATELY. THE CONTRACTOR WILL BE RESPONSIBLE FOR ALL DESIGN, AND INSTALLATION COSTS ASSOCIATED WITH PROVIDING AN ENCLOSURE OF DIFFERENT DIMENSIONS THAN SHOWN.
3. THE CONTRACTOR SHALL DETERMINE THE EXACT LOCATION AND CONFIGURATION OF ALL CONDUITS ENTERING THE ENCLOSURE, IN COORDINATION WITH THE ENCLOSURE MANUFACTURER'S DESIGN, AND THE SPECIFICATIONS.
4. THE CONTRACTOR SHALL COORDINATE SUBSTATION ENCLOSURE DIMENSIONS AND OPENINGS WITH FOUNDATION AND ENTRANCE SLABS.

CAUTION UNDERGROUND UTILITIES
2 WORKING DAYS
BEFORE YOU DIG
CALL 1-800-362-2764
OHIO UTILITY PROTECTION SERVICE
CALL NON-SERVICE FACILITY OWNERS DIRECT

PROFESSIONAL STAMP

SIGN:

DATE:

CONTRACT DRAWING

PRINTS NOT BEARING THIS STAMP WERE MADE PRIOR TO ADVERTISING FOR BIDS AND ARE TO BE CONSIDERED OBSOLETE FOR CONTRACT PURPOSES.

Department of Transportation and Engineering

City of Cincinnati
City Hall
801 Plum Street
Cincinnati, Ohio 45202

CINCINNATI STREETCAR

TRACTION POWER
TPSS No.1 EQUIPMENT LAYOUT

Revisions

No.		

Drawn by LP	Date 12/20/2011
Designed by JS	Date 12/20/2011
Checked by RF	Date 07/02/2012
Reviewed by JTB	Date 07/12/2012

Consultant

PB HDR

File Number

ACC No. 23126

G-TP-0029

$PLTDRV$$
T:\29014a_Cincinnati.Street.Car\TP\S_G-TP-0029.dgn
7/10/2012 9:09:34 AM

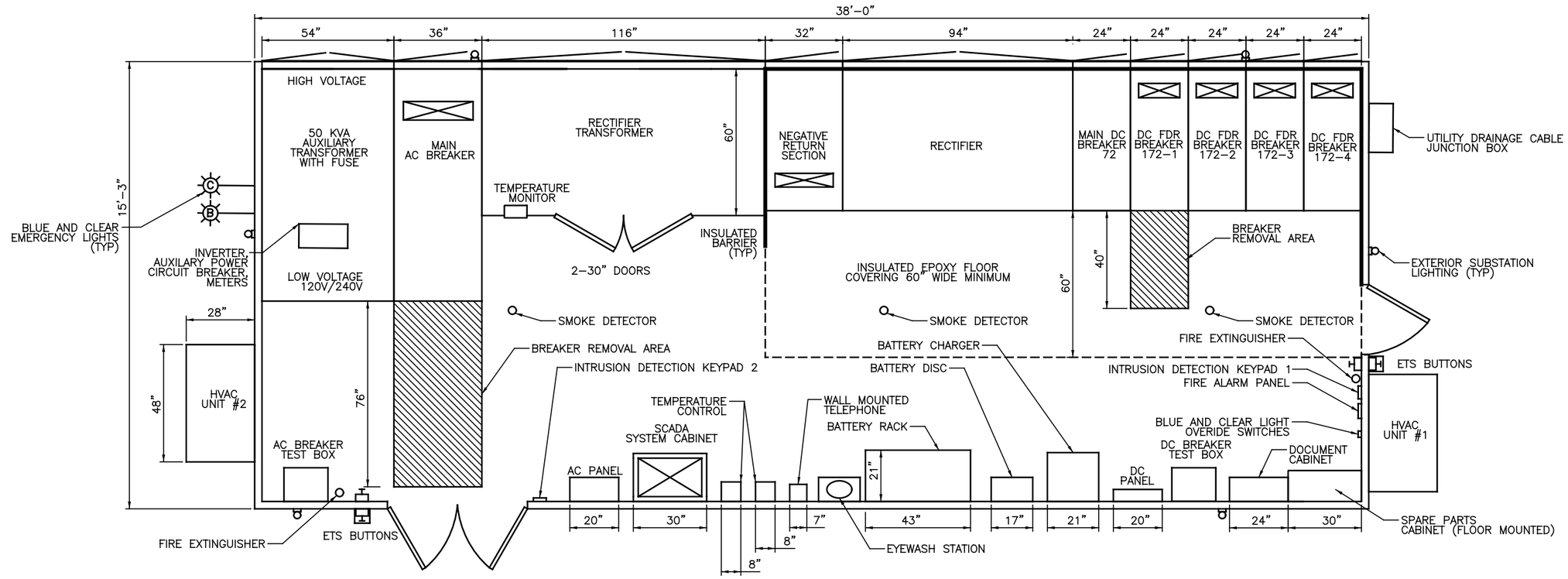

NOTES:

1. THE EQUIPMENT LAYOUT SHOWN IS A SCHEMATIC LAYOUT OF A STANDARD TPSS ENCLOSURE. CONTRACTOR SHALL PROVIDE A DETAILED ENCLOSURE AND EQUIPMENT DESIGN BASED ON THIS LAYOUT FOR APPROVAL IN ACCORDANCE WITH THE SPECIFICATIONS. CONTRACTOR'S DETAILED LAYOUT SHALL INCLUDE SCALED PLAN AND PROFILE VIEWS OF EACH INTERIOR AND EXTERIOR WALL.
2. THE CONTRACTOR SHALL MAKE EVERY EFFORT TO PROVIDE AN ENCLOSURE WITH THE INDICATED EXTERIOR LENGTH AND WIDTH. IF THE ENCLOSURE MUST BE LONGER TO ACCOMMODATE THE INDICATED EQUIPMENT, THE CONTRACTOR SHALL NOTIFY THE CITY IMMEDIATELY. THE CONTRACTOR WILL BE RESPONSIBLE FOR ALL DESIGN, AND INSTALLATION COSTS ASSOCIATED WITH PROVIDING AN ENCLOSURE OF DIFFERENT DIMENSIONS THAN SHOWN.
3. THE CONTRACTOR SHALL DETERMINE THE EXACT LOCATION AND CONFIGURATION OF ALL CONDUITS ENTERING THE ENCLOSURE, IN COORDINATION WITH THE ENCLOSURE MANUFACTURER'S DESIGN, AND THE SPECIFICATIONS.
4. THE CONTRACTOR SHALL COORDINATE SUBSTATION ENCLOSURE DIMENSIONS AND OPENINGS WITH FOUNDATION AND ENTRANCE SLABS.

CAUTION UNDERGROUND UTILITIES
2 WORKING DAYS
BEFORE YOU DIG
CALL 1-800-362-2764
OHIO UTILITY PROTECTION SERVICE
CALL NON-SERVICE FACILITY
OWNERS DIRECT

PROFESSIONAL STAMP

SIGN:
DATE:

CONTRACT DRAWING

PRINTS NOT BEARING THIS STAMP WERE MADE PRIOR TO ADVERTISING FOR BIDS AND ARE TO BE CONSIDERED OBSOLETE FOR CONTRACT PURPOSES.

Department of Transportation and Engineering

City of Cincinnati
City Hall
801 Plum Street
Cincinnati, Ohio 45202

CINCINNATI STREETCAR

TRACTION POWER
TPSS No.2 EQUIPMENT LAYOUT

Revisions

No.		Date
		12/20/2011
		12/20/2011
		07/02/2012
		07/12/2012

Drawn by LP	Date 12/20/2011
Designed by JS	Date 12/20/2011
Checked by RF	Date 07/02/2012
Reviewed by JTB	Date 07/12/2012

Consultant

PB HDR

File Number

ACC No. 23126

G-TP-0030

$PLTDRV$$
T:\29014a_Cincinnati.Street.Car\TP\S_G-TP-0030.dgn
7/10/2012 9:09:35 AM

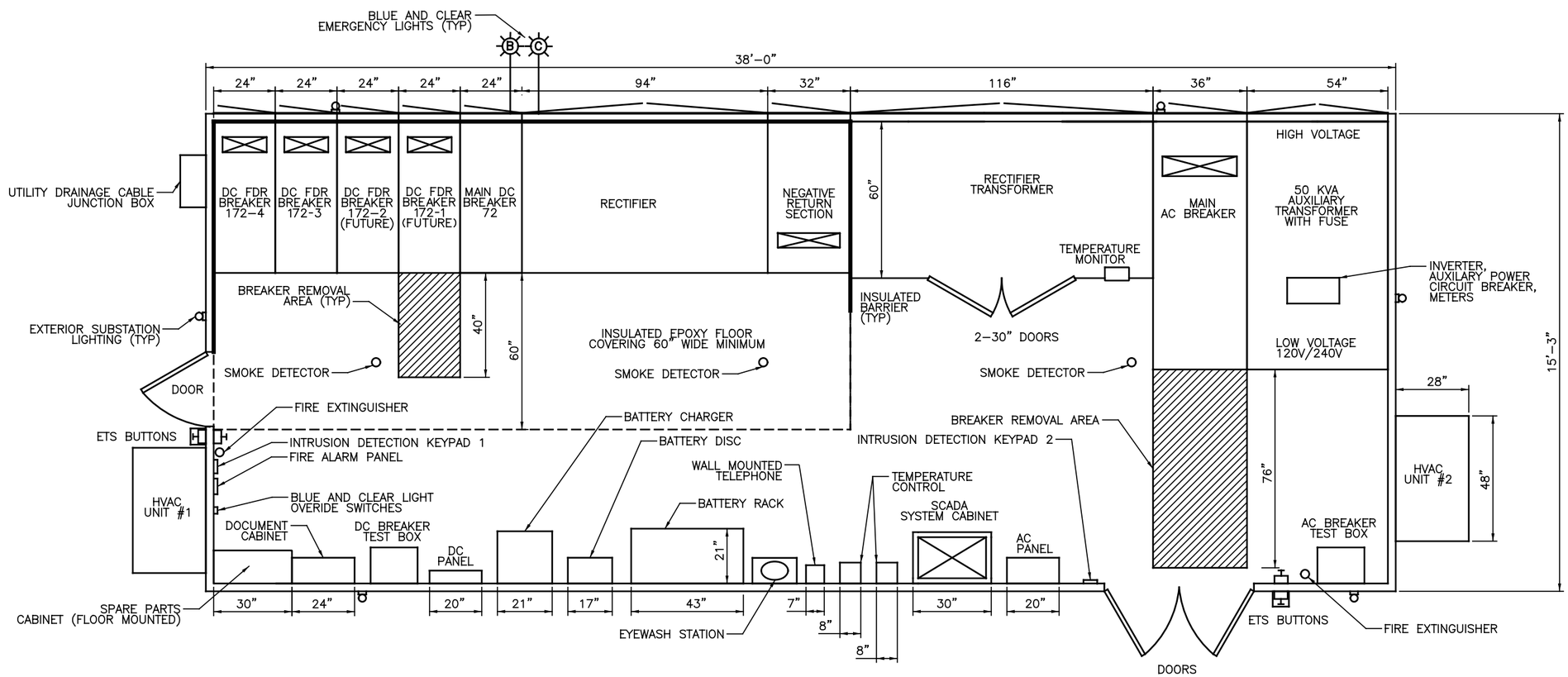

NOTES:

1. THE EQUIPMENT LAYOUT SHOWN IS A SCHEMATIC LAYOUT OF A STANDARD TPSS ENCLOSURE. CONTRACTOR SHALL PROVIDE A DETAILED ENCLOSURE AND EQUIPMENT DESIGN BASED ON THIS LAYOUT FOR APPROVAL IN ACCORDANCE WITH THE SPECIFICATIONS. CONTRACTOR'S DETAILED LAYOUT SHALL INCLUDE SCALED PLAN AND PROFILE VIEWS OF EACH INTERIOR AND EXTERIOR WALL.

2. THE CONTRACTOR SHALL MAKE EVERY EFFORT TO PROVIDE AN ENCLOSURE WITH THE INDICATED EXTERIOR LENGTH AND WIDTH. IF THE ENCLOSURE MUST BE LONGER TO ACCOMMODATE THE INDICATED EQUIPMENT, THE CONTRACTOR SHALL NOTIFY THE CITY IMMEDIATELY. THE CONTRACTOR WILL BE RESPONSIBLE FOR ALL DESIGN, AND INSTALLATION COSTS ASSOCIATED WITH PROVIDING AN ENCLOSURE OF DIFFERENT DIMENSIONS THAN SHOWN.

3. THE CONTRACTOR SHALL DETERMINE THE EXACT LOCATION AND CONFIGURATION OF ALL CONDUITS ENTERING THE ENCLOSURE, IN COORDINATION WITH THE ENCLOSURE MANUFACTURER'S DESIGN, AND THE SPECIFICATIONS.

4. THE CONTRACTOR SHALL COORDINATE SUBSTATION ENCLOSURE DIMENSIONS AND OPENINGS WITH FOUNDATION AND ENTRANCE SLABS.

CAUTION UNDERGROUND UTILITIES
2 WORKING DAYS
BEFORE YOU DIG
CALL 1-800-362-2764
OHIO UTILITY PROTECTION SERVICE
CALL NON-SERVICE FACILITY OWNERS DIRECT

PROFESSIONAL STAMP

SIGN:

DATE:

CONTRACT DRAWING

PRINTS NOT BEARING THIS STAMP WERE MADE PRIOR TO ADVERTISING FOR BIDS AND ARE TO BE CONSIDERED OBSOLETE FOR CONTRACT PURPOSES.

Department of Transportation and Engineering

City of Cincinnati
City Hall
801 Plum Street
Cincinnati, Ohio 45202

CINCINNATI STREETCAR

TRACTION POWER
TPSS No.3 EQUIPMENT LAYOUT

Revisions

No.		Date
		12/20/2011
		12/20/2011
		07/02/2012
		07/12/2012

Drawn by LP	Date 12/20/2011
Designed by JS	Date 12/20/2011
Checked by RF	Date 07/02/2012
Reviewed by JTB	Date 07/12/2012

Consultant

PB HDR

File Number

ACC No. 23126

G-TP-0031

$PLTDRV$$
T:\29014a_Cincinnati.Street.Car\TP\S_G-TP-0031.dgn
7/10/2012 9:09:36 AM

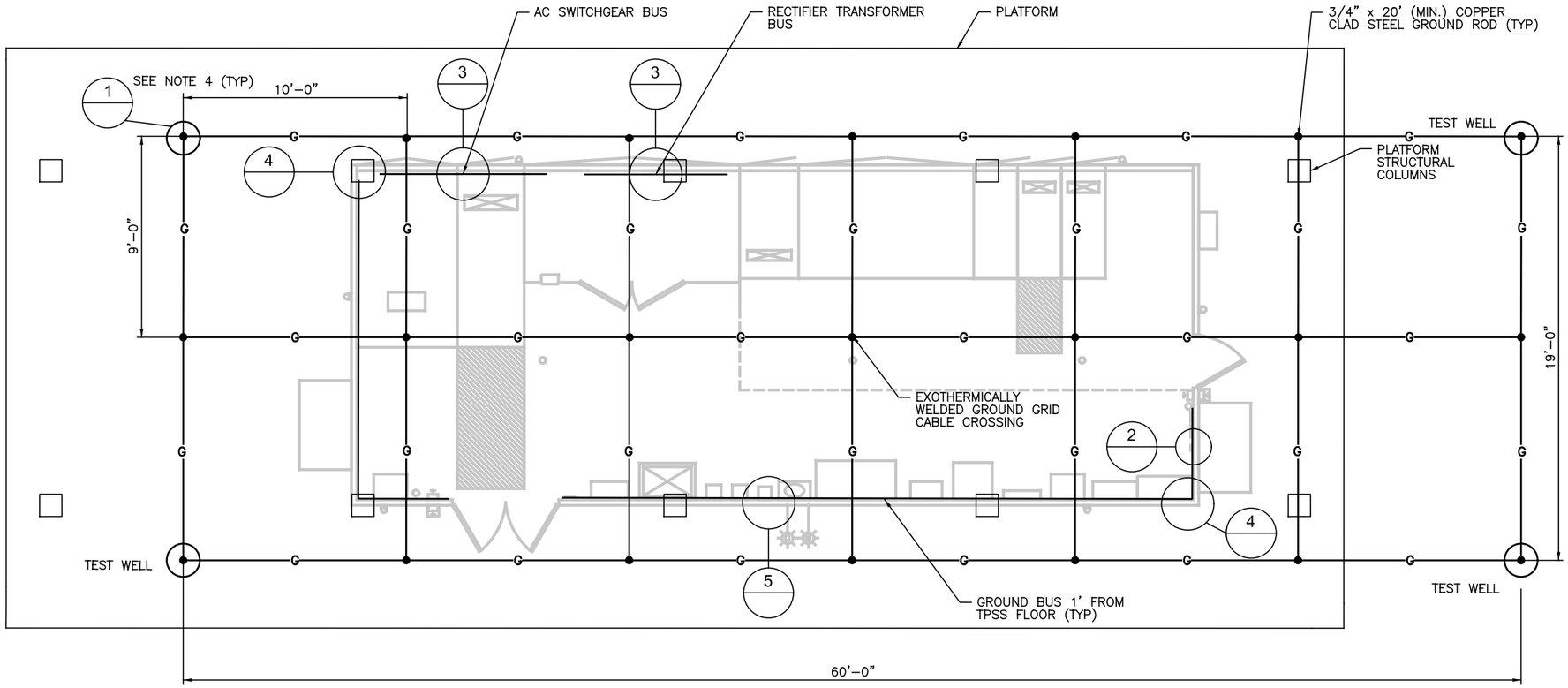

NOTES:

1. GROUND RODS SHALL BE DRIVEN INTO UNDISTURBED EARTH MIN 12" FROM FOOTING AND FOUNDATION WALLS.
2. GROUND RODS AND WELD CONNECTORS LAYOUT SHOWN ARE TYPICAL ARRANGEMENT AND MAY BE RELOCATED SLIGHTLY TO AVOID INTERFERENCES WITH UNDERGROUND CONDUIT AND DUCTBANK. CONTRACTOR SHALL SUBMIT A DETAILED GROUNDING SYSTEM LAYOUT DRAWING FOR APPROVAL, AND SHALL SUBMIT AN AS-BUILT GROUNDING SYSTEM DRAWING BASED ON AS INSTALLED CONDITIONS.
3. FOR CONDUIT PENETRATION THROUGH TPSS PLATFORM SEE DRAWING G-TP-0035.
4. FOR GROUNDING DETAILS SEE DWG G-PD-0212.

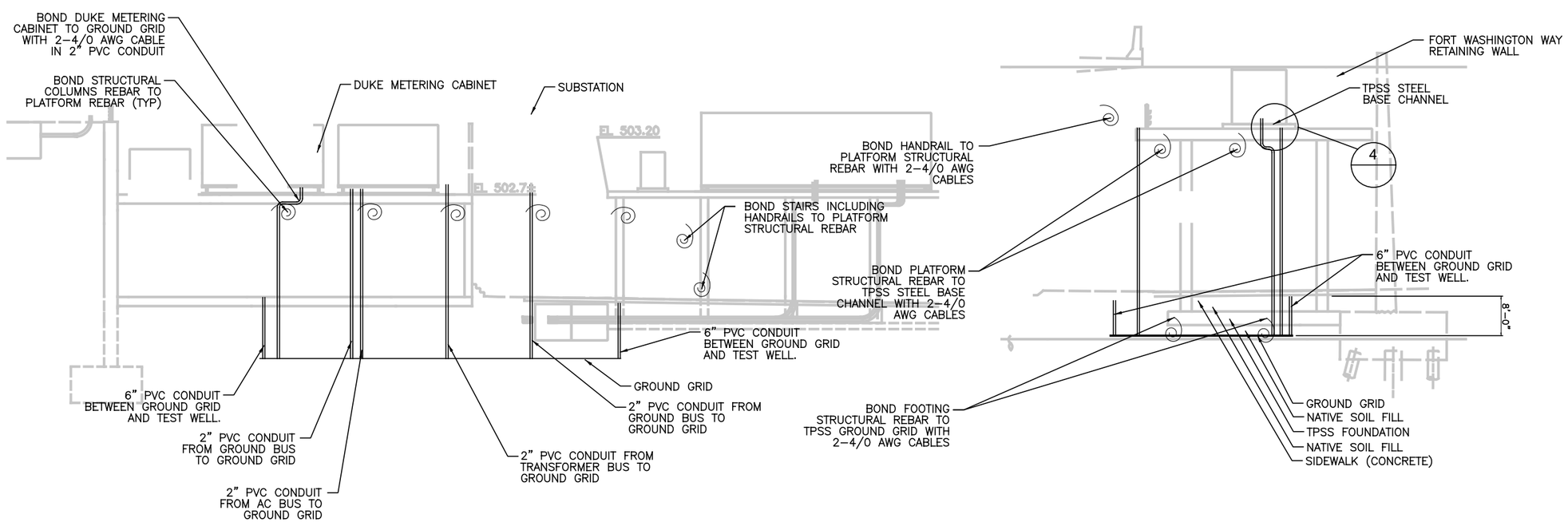

CAUTION UNDERGROUND UTILITIES
2 WORKING DAYS
BEFORE YOU DIG
CALL 1-800-362-2764
OHIO UTILITY PROTECTION SERVICE
CALL NON-SERVICE FACILITY
OWNERS DIRECT

PROFESSIONAL STAMP

SIGN:

DATE:

CITY OF CINCINNATI — DEPARTMENT OF TRANSPORTATION & ENGINEERING — OHIO

CONTRACT DRAWING

PRINTS NOT BEARING THIS STAMP WERE MADE PRIOR TO ADVERTISING FOR BIDS AND ARE TO BE CONSIDERED OBSOLETE FOR CONTRACT PURPOSES.

Department of Transportation and Engineering

City of Cincinnati
City Hall
801 Plum Street
Cincinnati, Ohio 45202

CINCINNATI STREETCAR

TRACTION POWER
TPSS No.1 GROUNDING PLAN

Revisions

No.		

Drawn by LP	Date 12/20/2011
Designed by JM	Date 12/20/2011
Checked by RF	Date 07/02/2012
Reviewed by JTB	Date 07/12/2012

Consultant

PB HDR

File Number

ACC No. 23126

G-TP-0032

$PLTDRV$$
T:\29014a_Cincinnati_Streetcar\TPS\S_G-TP-0032.dgn
7/10/2012 9:09:37 AM

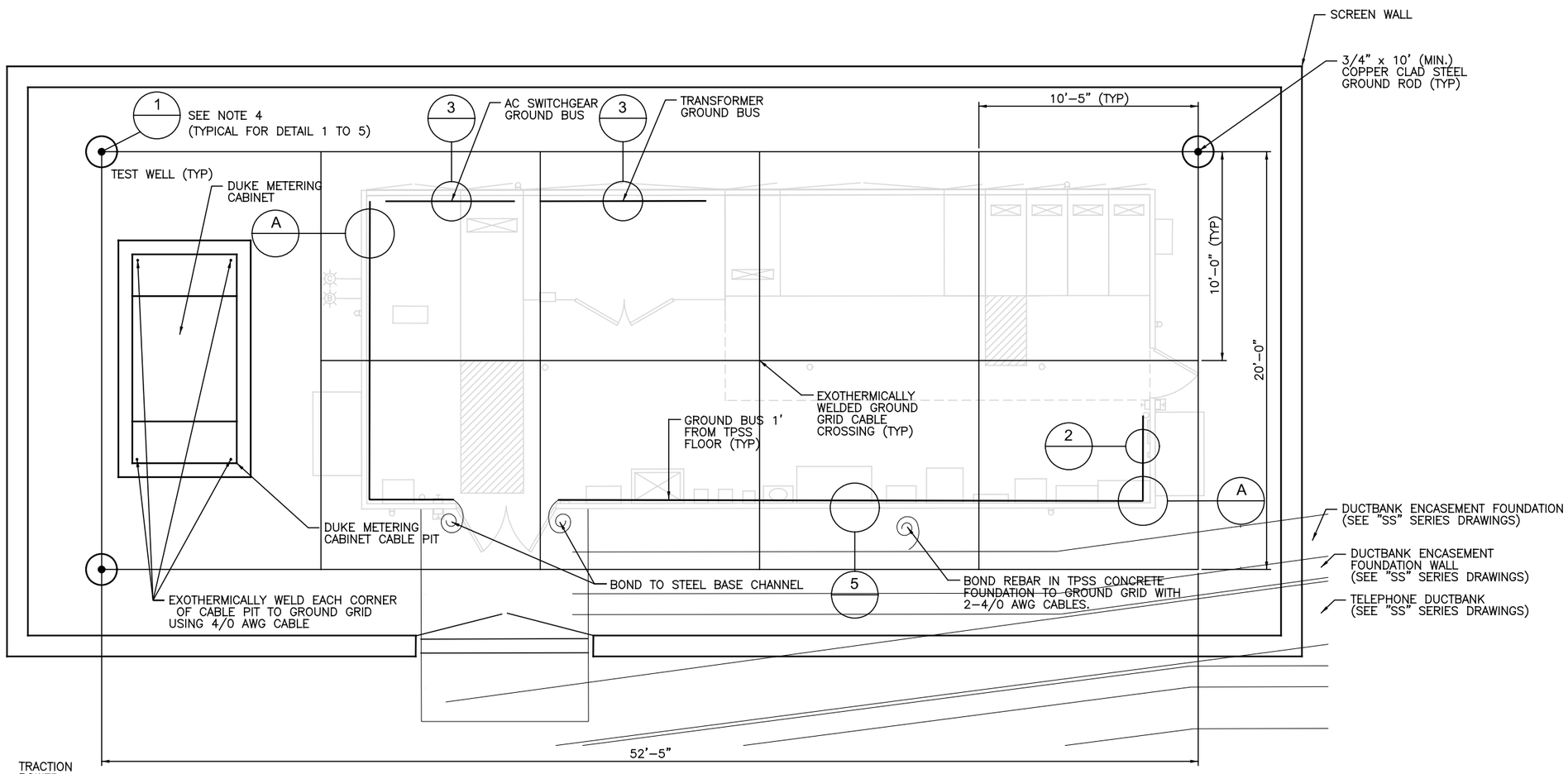

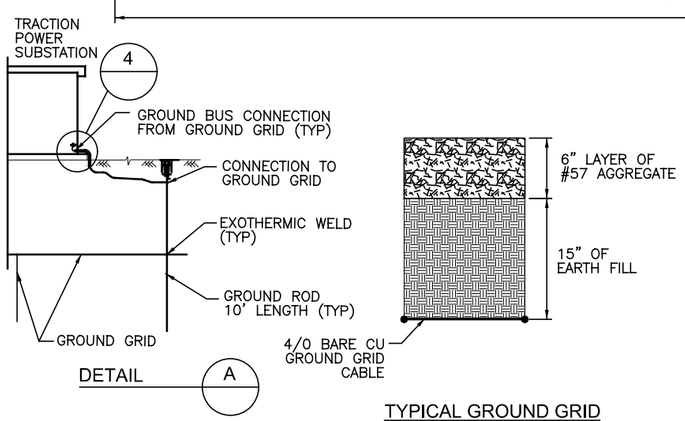

TYPICAL GROUND GRID SECTION VIEW

NOTES:

1. GROUND RODS SHALL BE DRIVEN INTO UNDISTURBED EARTH MIN 12" FROM FOOTING AND FOUNDATION WALLS.
2. GROUND RODS AND WELD CONNECTORS LAYOUT SHOWN ARE TYPICAL ARRANGEMENT AND MAY BE RELOCATED SLIGHTLY TO AVOID INTERFERENCES WITH UNDERGROUND CONDUIT AND DUCTBANK. CONTRACTOR SHALL SUBMIT A DETAILED GROUNDING SYSTEM LAYOUT DRAWING FOR APPROVAL, AND SHALL SUBMIT AN AS-BUILT GROUNDING SYSTEM DRAWING BASED ON AS INSTALLED CONDITIONS.
3. PROVIDE 1 1/2" PVC CONDUIT THRU SLAB (IF NEEDED) AND FOUNDATION WALLS TO PROTECT GROUNDING ELECTRODE CONDUCTOR.
4. FOR GROUNDING DETAILS SEE DWG G-PD-0212.

CAUTION UNDERGROUND UTILITIES 2 WORKING DAYS
BEFORE YOU DIG
CALL 1-800-362-2764
OHIO UTILITY PROTECTION SERVICE
CALL NON-SERVICE FACILITY OWNERS DIRECT

PROFESSIONAL STAMP

SIGN:
DATE:

CONTRACT DRAWING

PRINTS NOT BEARING THIS STAMP WERE MADE PRIOR TO ADVERTISING FOR BIDS AND ARE TO BE CONSIDERED OBSOLETE FOR CONTRACT PURPOSES.

Department of Transportation and Engineering

City of Cincinnati
City Hall
801 Plum Street
Cincinnati, Ohio 45202

CINCINNATI STREETCAR

TRACTION POWER
TPSS No.2 GROUNDING PLAN

Revisions

No.		Date
		12/20/2011
		12/20/2011
		07/02/2012
		07/12/2012

Drawn by LP
Designed by JM
Checked by RF
Reviewed by JTB

Consultant

PB HDR

File Number

ACC No. 23126

G-TP-0033

$PLTDRVS$
$FILE$
$DATE$
$TIME$

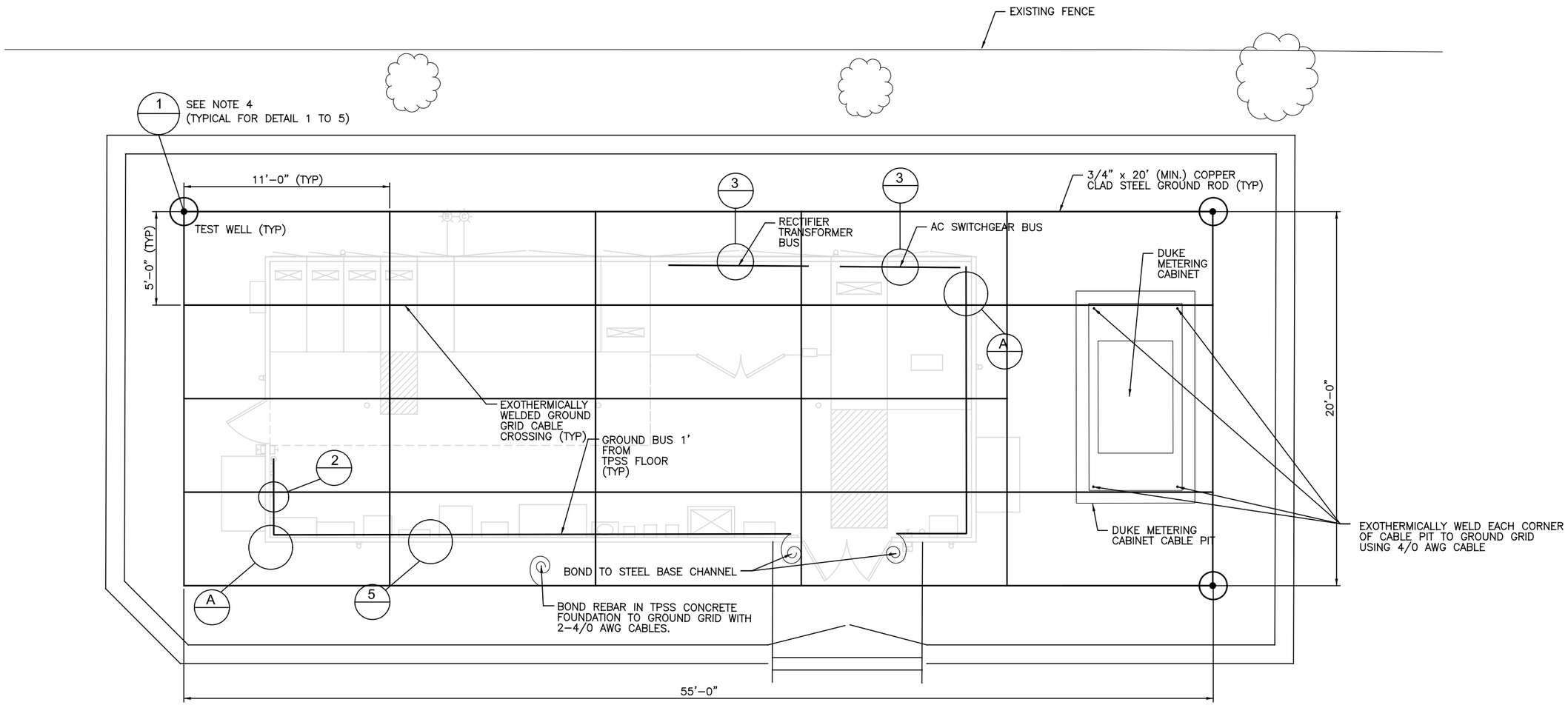

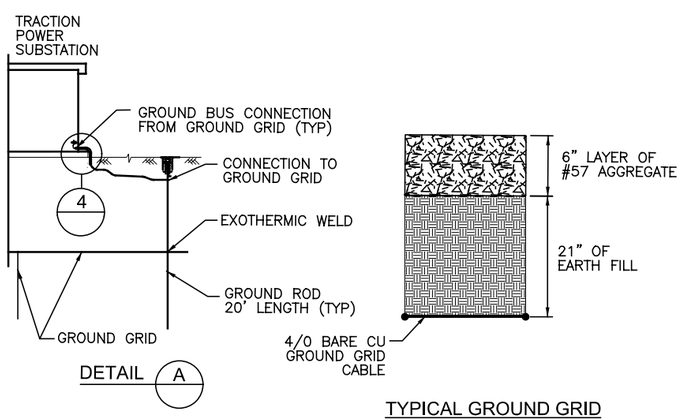

TYPICAL GROUND GRID SECTION VIEW

NOTES:

1. GROUND RODS SHALL BE DRIVEN INTO UNDISTURBED EARTH MIN 12" FROM FOOTING AND FOUNDATION WALLS.
2. GROUND RODS AND WELD CONNECTORS LAYOUT SHOWN ARE TYPICAL ARRANGEMENT AND MAY BE RELOCATED SLIGHTLY TO AVOID INTERFERENCES WITH UNDERGROUND CONDUIT AND DUCTBANK. CONTRACTOR SHALL SUBMIT A DETAILED GROUNDING SYSTEM LAYOUT DRAWING FOR APPROVAL, AND SHALL SUBMIT AN AS–BUILT GROUNDING SYSTEM DRAWING BASED ON AS INSTALLED CONDITIONS.
3. PROVIDE 1 1/2" PVC CONDUIT THRU SLAB (IF NEEDED) AND FOUNDATION WALLS TO PROTECT GROUNDING ELECTRODE CONDUCTOR.
4. FOR GROUNDING DETAILS SEE DWG G–PD–0212.

CAUTION UNDERGROUND UTILITIES
2 WORKING DAYS
BEFORE YOU DIG
CALL 1–800–362–2764
OHIO UTILITY PROTECTION SERVICE
CALL NON–SERVICE FACILITY OWNERS DIRECT

PROFESSIONAL STAMP

SIGN:
DATE:

$TIME$
$PLTDRV$$
$FILE$
$DATE$

CONTRACT DRAWING

PRINTS NOT BEARING THIS STAMP WERE MADE PRIOR TO ADVERTISING FOR BIDS AND ARE TO BE CONSIDERED OBSOLETE FOR CONTRACT PURPOSES.

Department of Transportation and Engineering

City of Cincinnati
City Hall
801 Plum Street
Cincinnati, Ohio 45202

CINCINNATI STREETCAR

TRACTION POWER
TPSS No.3 GROUNDING PLAN

Revisions

No.	Date

	Date
Drawn by LP	12/20/2011
Designed by JM	12/20/2011
Checked by RF	07/02/2012
Reviewed by JTB	07/12/2012

Consultant

PB HDR

File Number

ACC No. 23126

G-TP-0034

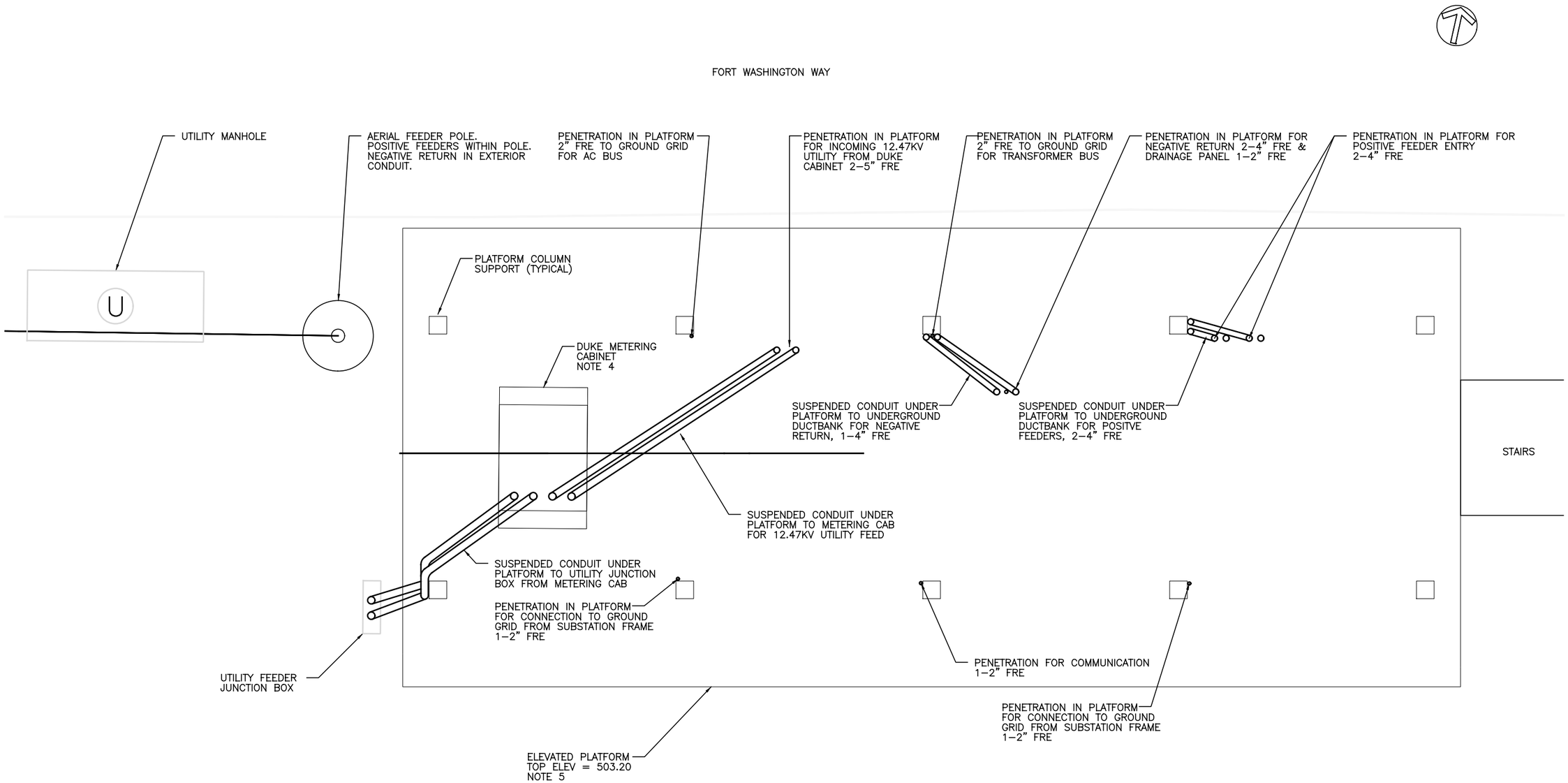

NOTE:

1. CONDUIT PENETRATIONS IN PLATFORM SHALL BE CAPPED IF USED FOR FUTURE.
2. FOR FURTHER DETAILS ON CONDUIT LAYOUT SEE DRAWING G–PD–0052
3. EXACT LOCATION OF PENETRATIONS SHALL BE COORDINATED WITH THE SUBSTATION MANUFACTURER.
4. CONTRACTOR SHALL PROVIDE PENETRATIONS FOR DUKE METERING CABINET GROUNDING.
5. STRUCTURAL REBAR FOR ELEVATED PLATFORM SHALL BE GROUNDED.

CAUTION UNDERGROUND UTILITIES
2 WORKING DAYS
BEFORE YOU DIG
CALL 1–800–362–2764
OHIO UTILITY PROTECTION SERVICE
CALL NON–SERVICE FACILITY OWNERS DIRECT

GRAPHIC SCALE
3 0 3 6 12
(IN FEET)
1 inch = 3 ft. Full Size
1 inch = 6 ft. Half Size

PROFESSIONAL STAMP
SIGN:
DATE:

CONTRACT DRAWING
PRINTS NOT BEARING THIS STAMP WERE MADE PRIOR TO ADVERTISING FOR BIDS AND ARE TO BE CONSIDERED OBSOLETE FOR CONTRACT PURPOSES.

Department of Transportation and Engineering
City of Cincinnati
City Hall
801 Plum Street
Cincinnati, Ohio 45202

CINCINNATI STREETCAR

TRACTION POWER
TPSS No. 1 PLATFORM PENETRATION
& SUSPENDED RACEWAY LAYOUT

Revisions
No.

	Date
Drawn by LP	12/20/2011
Designed by DL	12/20/2011
Checked by RF	07/02/2012
Reviewed by JTB	07/12/2012

Consultant
PB HDR

File Number
ACC No. 23126

G-TP-0035

$PLTDRV$
T:\290144_Cincinnati.Street.Car\TP\S_G-TP-0035.dgn
7/10/2012 9:09:46 AM

OVERHEAD CONTACT SYSTEM

1. UNLESS OTHERWISE SPECIFIED CONTACT WIRE HEIGHT SHALL BE 19'–6".
2. CATALOG NUMBER OF PARTS THAT ARE IN COMPLIANCE WITH THE DESIGN ARE GIVEN ON DRAWINGS. THE NAME OF THE VENDOR IS ALSO GIVEN FOR REFERENCE. THESE CATALOG NUMBERS SHALL NOT BE CONSTRUED AS ABSOLUTE AND AN ALTERNATIVE MAY BE PROPOSED BY THE CONTRACTOR PROVIDED THE PART IS EQUIVALENT AND INTERCHANGEABLE.
3. ALL MATERIALS ARE SUBJECT TO APPROVAL BY THE ENGINEER.
4. OVERHEAD CONTACT SYSTEM WIRE HEIGHTS ARE REFERENCED TO THE LOW RAIL LEVEL OF THE TRACK AT EACH SUPPORT LOCATION.
5. ALL OCS SYSTEM STAGGERS RELATE TO THE PROJECTED TRACK CENTER LINE. IN THE CASE OF CROSSOVER WIRES STAGGER IS REFERENCED TO THE MAIN LINE CENTER LINE.
6. POLE ATTACHMENT HARDWARE SHALL BE SUITABLE FOR ITS APPLICATION, E.G. CROSS SPAN ATTACHMENTS MAY BE BOLTED FORMED STEEL BRACKETS OR POLE BANDS. BRACKETS OR BANDS MAY BE ADJUSTED TO ACHIEVE CONTACT WIRE HEIGHT.
7. OCS STRUCTURES ARE DEPICTED ON THE LAYOUT DRAWINGS. THE STATIONING REFERS TO THE TRACK AND ARE BASED ON THE TRACK ALIGNMENT PLAN AND PROFILE DRAWINGS. CHANGES TO THE ALIGNMENT MAY REQUIRE REVISIONS TO THESE CATENARY LAYOUTS.
8. ALL BOLTS USED IN CATENARY ASSEMBLIES ARE TO BE SUPPLIED WITH LOCKNUTS. OTHER METHODS OF PREVENTING THE BOLTS BECOMING LOOSE DUE TO VIBRATION MAY BE ACCEPTABLE CONTINGENT ON THE ENGINEER'S APPROVAL. LOCKNUTS SHALL NOT BE USED MORE THAN ONCE.
9. ALL LOADS INDICATED IN THE ASSEMBLY DRAWINGS ARE WORST CASE WORKING LOADS (NO SAFETY FACTORS HAVE BEEN ADDED).
10. THE CONTRACTOR IS RESPONSIBLE FOR ANY AND ALL TEMPORARY WORK SUCH AS GUYING, REQUIRED DURING CONSTRUCTION. THE NEED FOR SUCH TEMPORARY WORK SHALL BE ESTABLISHED BY THE CONTRACTOR.
11. INSTALLATION OF THE OVERHEAD CONTACT SYSTEM SHALL BE IN ACCORDANCE WITH LOCAL CODES AND REQUIREMENTS AND AREMA AND NESC AS APPLICABLE. FINAL INSTALLATION PROCEDURES ARE SUBJECT TO THE APPROVAL OF THE ENGINEER.
12. FOR POLE OFFSET, SEE LAYOUT PLANS.
13. SURGE ARRESTORS SHALL BE INSTALLED AT DISCONNECT SWITCH LOCATIONS AND AT MAXIMUM 2000 FT. SPACINGS.
14. POLES, CAPS, AND BASES ARE ALLOCATED IN ACCORDANCE WITH THE CITY OF CINCINNATI STANDARD POLE DESIGN DWG ES–10–1, WHEN LOAD CONDITIONS PERMIT (PROVIDED FOR INFORMATION).
15. POLES THAT HAVE LOAD CONDITIONS THAT ARE OUTSIDE THE RANGE OF DWG ES–10–1 LOADS HAVE BEEN CONSOLIDATED INTO TYPES SHOWN ON DWG G–OD–0130.
16. OCS MATERIAL SUPPLIER SHALL ENSURE THE FORM & FIT OF ALL PARTS SUPPLIED.
17. MATERIAL SUPPLIER SHALL ENSURE ALL ITEMS SUPPLIED ARE SUITABLE FOR CATENARY INSTALLATIONS AND THE LOADING CONDITIONS.
18. CATENARY EQUIPMENT IS FIXED (VARIABLE TENSION).
19. LOCATIONS WHERE THERE ARE MULTIPLE CROSS–SPAN WIRES ATTACHED TO A POLE, THE CROSS–SPAN HEIGHTS SHOWN IN THE LAYOUT PLAN TABLE CORRESPOND TO CROSS–SPANS LOCATED NORMALLY GOING UP–STATION. CONTRACTOR SHALL CONFIRM ALL HEIGHTS PRIOR TO INSTALLATION.
20. STAGGER AS SHOWN IN THE LAYOUT PLAN TABLES SHOWS THE DIMENSION OF THE WIRE LOCATION RELATED TO CENTERLINE OF TRACK IN THE DIRECTION OF THE ARROW.
21. CROSS–SPAN & WIRE TENSION 750 lb.

STRUCTURES

1. SEE THE CITY OF CINCINNATI STANDARD POLE DESIGN, DWG ES–10–1 FOR POLE DESIGN AND GENERAL NOTES. (REFER TO NOTE 12)
2. FIELD CONNECTIONS SHALL BE BOLTED UNLESS OTHERWISE NOTED.
3. ALL DESIGN, FABRICATION AND ERECTION OF STRUCTURAL STEEL SHALL BE DONE IN ACCORDANCE WITH THE AISC MANUAL OF STEEL CONSTRUCTION, LATEST EDITION.
4. ALL WELDING SHALL CONFORM TO STRUCTURAL WELDING CODE, AWS D.I.I., LATEST EDITION. ELECTRODES SHALL BE E70–XX.
5. ALL CONNECTION BOLTS SHALL BE ASTM A325 HEXAGONAL HEAD, COMPLETE WITH HEX NUT AND WASHER, AND SHALL BE GALVANIZED IN ACCORDANCE WITH THE SPECIFICATIONS, UNLESS OTHERWISE NOTED.
6. SIZE OF BOLT HOLES TO BE 1/16" LARGER THAN BOLT DIAMETER, UNLESS OTHERWISE NOTED.
7. OCS POLE DESIGNATION IS SHOWN ON LAYOUT PLANS.
8. CONTRACTOR SHALL ENSURE THAT NEITHER THE POLE NOR GUY (IF REQUIRED) INFRINGES THE VEHICLE CLEARANCE ENVELOPE.
9. BEFORE FABRICATION OF PARTS, ALL RELEVANT DIMENSIONS, DETAILS AND ELEVATIONS SHALL BE VERIFIED BY THE CONTRACTOR IN THE FIELD.
10. SHIPPING MARKS SHALL BE STAMPED (MIN. INDENTATION 1/32") ON EACH ITEM.
11. ALL STANDARD AND SPECIAL POLE FOUNDATIONS SHALL HAVE THREE CONDUITS AS SHOWN ON DETAIL A, SHEET G–ST–2001.
12. THE CITY STANDARD POLES USE THEIR STANDARD FOUNDATIONS. SPECIAL FOUNDATIONS LISTED UNDER "FOUNDATION TYPE" CAN BE FOUND IN THE G–ST "2000" SERIES DRAWINGS.

CAUTION UNDERGROUND UTILITIES
2 WORKING DAYS
BEFORE YOU DIG
CALL 1–800–362–2764
OHIO UTILITY PROTECTION SERVICE
CALL NON–SERVICE FACILITY
OWNERS DIRECT

PROFESSIONAL STAMP

SIGN:
DATE:

CONTRACT DRAWING

PRINTS NOT BEARING THIS STAMP WERE MADE PRIOR TO ADVERTISING FOR BIDS AND ARE TO BE CONSIDERED OBSOLETE FOR CONTRACT PURPOSES.

Department of Transportation and Engineering

City of Cincinnati
City Hall
801 Plum Street
Cincinnati, Ohio 45202

CINCINNATI STREETCAR

OVERHEAD CONTACT SYSTEM
GENERAL NOTES

Revisions

No.			

Drawn by LP	Date 7/02/2012
Designed by MH	Date 7/02/2012
Checked by HSZ	Date 7/02/2012
Reviewed by JTB	Date 7/12/2012

Consultant

PB HDR

File Number

ACC No. 23126

G-OD-0001

$PLTDRV$$
T:\29014a_Cincinnati.Street.Car\OCS\S_G-OD-0001.dgn
7/12/2012 12:44:16 PM

ABBREVIATIONS

ABV	ABOVE
ACT	ACTUAL DIMENSION ALONG TRACK
A/G	AT GRADE
AISC	AMERICAN INSTITUTE OF STEEL CONSTRUCTION
ANC	ANCHOR
APPROX	APPROXIMATE
AREMA	AMERICAN RAILWAY ENGINEERING AND MAINTENANCE–OF–WAY ASSOCIATION
ASSY	ASSEMBLY
ASTM	AMERICAN SOCIETY OF TESTING MATERIALS
AWG	AMERICAN WIRE GAUGE
AWS	AMERICAN WELDING SOCIETY
BOT	BOTTOM
BP	BY–PASS SWITCH
CANT	CANTILEVER
CAT	CATENARY
CATF	CATENARY FOUNDATION
CATP	CATENARY POLE
CED	CATENARY ERECTION DIAGRAM
CLR	CLEARANCE
COND	CONDUCTOR
CONST	CONSTRUCTION
CONTR	CONTRACTOR
CR	CONDUIT RISER
CTR	CENTER
C/W	CONTRACT WIRE
Dc	DEGREE OF CURVATURE
D.E.	DEAD END
DEG	DEGREE
DIA.	DIAMETER
DISC	DISCONNECT
DISC SW	DISCONNECT SWITCH
EA	EACH
E.F.	EACH FACE
EHS	EXTRA HIGH STRENGTH
EL	ELEVATION
EQ	EQUAL
ES	EXTRA STRENGTH
EXIST	EXISTING
F	FAHRENHEIT
FBO	FURNISHED BY OTHERS
FDN	FOUNDATION
FDR	FEEDER
FFJ	FULL FEEDING JUMPER
FG	FINISH GRADE
FJ	FEEDER JUMPER
FOP	FACE OF POLE
F.O.S.	FACTOR OF SAFETY
FP	FEEDER POLE
F.S.	SUBSTATION FEEDER SWITCH
FT	FEEDER TAP, FEET
FTA	FIXED TERMINATION ANCHOR
FUT.	FUTURE
GALV	GALVANIZED
G/L	GROUND LINE
GND	GROUND
GRX	GRADE CROSSING
H.D.	HARD DRAWN
HDWR	HARDWARE
HO	HAND OPERATED
H.R.L	HIGH RAIL LEVEL
H–SPAN	HEAD SPAN
HSS	HIGH STRENGTH STEEL
HT	HEIGHT
IB	IN BOUND
ID	INSIDE DIAMETER
IHRL	INDIVIDUAL HIGH RAIL LEVEL
IN, "	INCH
INSR	INSULATOR
INSUL	INSULATION
I.R.	IN RUNNING (RIDING CONTACT WIRE)
I /S	IN–SPAN
I /SJ	IN–SPAN JUMPER
J	JUMPER
K	KIP
KV	KILOVOLT
LB, LBS	POUND, POUNDS
LB/FT	POUNDS PER FOOT
LF	LINEAR FEET
LGTH	LENGTH
LOC	LOCATION
LT(O)	LINE TAP/SPOUT ORIENTATION
LDP	DECORATIVE POLE WITH LIGHT
MAX	MAXIMUM
MESS	MESSENGER
MIN	MINIMUM
MOP	MOTOR OPERATED
N/A	NOT APPLICABLE
NB	NORTH BOUND
NBR	NON–BRIDGING
NC	NORMALLY CLOSED
NEC	NATIONAL ELECTRICAL CODE
NESC	NATIONAL ELECTRICAL SAFETY CODE
NO	NORMALLY OPEN
No.,	NUMBER
NOM	NOMINAL
N.S.	NEAR SIDE
NTS	NOT TO SCALE
OC	ON CENTER
OCS	OVERHEAD CONTACT SYSTEM
OD	OUTSIDE DIAMETER
OFF	OFFSET
OH	OVERHEAD
OL	OVERLAP
OOR	OUT OF RUNNING (NON–RIDING CONTACT WIRE)
PAN	PANTOGRAPH
PC	POINT OF CURVE
PEJ	POTENTIAL EQUALIZING JUMPER
PF	POINT OF FROG
PI	POINT OF INTERSECTION
PITO	POINT OF INTERSECTION OF TURNOUT
PL	PLATE
PLAT	PLATFORM
POS	POINT OF SWITCH
PS	PEDESTRIAN SIGNAL
PSI	POUNDS PER SQUARE INCH
PT	POINT OF TANGENT
QTY	QUANTITY
R	RADIUS OR RIGHT
RA	ROCK ANCHOR
REQ./REQ'D.	REQUIRED
ROW	RIGHT–OF–WAY
S	SOUTH
SB	SOUTH BOUND
SP	SUPPLEMENTARY POLE
SI	SECTION INSULATOR
SPE	SPARE
SPEC	SPECIFICATION
SPST	SINGLE POLE SINGLE THROW
SQ.	SQUARE
S–SPAN	STEADY SPAN
SST	STAINLESS STEEL
STA	STATION, STATIONING
STC	SINGLE TRACK CANTILEVER
SUB	SUBSTATION
SW	SWITCH
SWA	SINGLE WIRE ANCHOR
SWH	SWITCH HEATER
SWHT	SWITCH HEATER TRANSFORMER
TEMP	TEMPERATURE
TERM	TERMINATION
TL	TENSION LENGTH
TORW	TOP OF RETAINING WALL
TP	TAPERED TUBULAR POLE
TPSS	TRACTION POWER SUBSTATION
TWA	TIE WIRE ANCHOR
TS	TRAFFIC SIGNAL
TYP	TYPICAL
W	WITH
WS	WARNING SIGN
Wt	WEIGHT
WF	WIDE FLANGE
X–ING	CROSSING
X–SPAN	CROSS SPAN

SYMBOLS

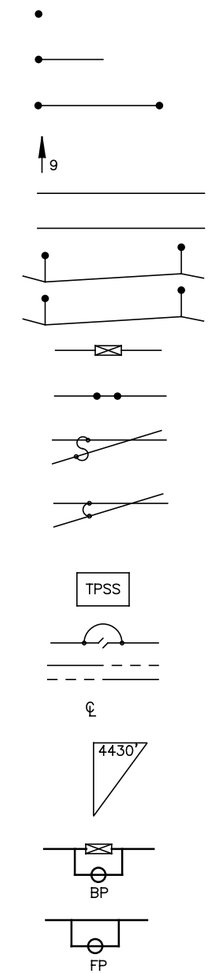

POLE

POLE W/SINGLE CANTILEVER

HEADSPAN OR CROSS SPAN

STAGGER (INCH)

AERIAL FEEDER WIRE

TRACK CENTERLINE

IN–RUNNING CATENARY

OUT–OF RUNNING CATENARY

SECTION INSULATOR – PLAN

IN SPAN INSULATION

FULL FEEDING JUMPER

POTENTIAL EQUALIZING JUMPER

TRACTION POWER SUBSTATION

UNINSULATED OVERLAP
– ELECTRICAL SCHEMATIC
– CATENARY OVERLAP

CENTER LINE

LENGTH BETWEEN TERMINATIONS

FEEDER AND BYPASS SWITCH

FEEDER SWITCH

NOTE:

1. NOT ALL OF THE ABBREVIATIONS ARE USED IN THE CONTRACT.

CAUTION UNDERGROUND UTILITIES
2 WORKING DAYS
BEFORE YOU DIG
CALL 1–800–362–2764
OHIO UTILITY PROTECTION SERVICE
CALL NON–SERVICE FACILITY
OWNERS DIRECT

PROFESSIONAL STAMP

SIGN:

DATE:

CONTRACT DRAWING

PRINTS NOT BEARING THIS STAMP WERE MADE PRIOR TO ADVERTISING FOR BIDS AND ARE TO BE CONSIDERED OBSOLETE FOR CONTRACT PURPOSES.

Department of Transportation and Engineering

City of Cincinnati
City Hall
801 Plum Street
Cincinnati, Ohio 45202

CINCINNATI STREETCAR

OVERHEAD CONTACT SYSTEM
SYMBOLS AND ABBREVIATIONS

Revisions

No.				

Date 7/02/2012	Date 7/02/2012	Date 7/02/2012	Date 7/12/2012
Drawn by LP	Designed by MH	Checked by HSZ	Reviewed by JTB

Consultant

PB HDR

File Number

ACC No. 23126

G-OD-0002

$PLTDRV$$
T:\29014a_Cincinnati.Street.Car\OCS\S_G-OD-0002.dgn
12:44:18 PM
7/12/2012

DESIGN ITEM	UNITS	FIXED TERMINATION TROLLEY	SAG (IN)	REDUCED TENSION	SAG (IN)
MAKE UP OF CONDUCTOR	–	350 Kcmil SOLID		350 Kcmil SOLID	
MATERIAL	–	HARD DRAWN COPPER		HARD DRAWN COPPER	
DIAMETER	IN	0.62		0.62	
CROSS SECTIONAL AREA	SQ. IN	0.276		0.276	
UNIT WEIGHT OF CONDUCTOR	LB/FT	1.063		1.063	
MAXIMUM SPAN	FT	100		85	
INITIAL TENSION AT 60°F	LB	1750		1318	
MODULUS OF ELASTICITY	PSI	1.70E+07		1.70E+07	
COEFFICIENT OF EXPANSION	/°F	9.40E–06		9.40E–06	
OPERATING CONDITION					
RADIAL ICE THICKNESS	IN	0.25		0.25	
WEIGHT OF 1/4" RADIAL ICE ON CONTACT WIRE	LB/FT	0.281		0.281	
WEIGHT OF CATENARY WITH 1/4" RADIAL ICE ON CONTACT WIRE	LB/FT	1.344		1.344	
INITIAL TENSION AT 60°F	LB	1750	9.1	1318	8.74
TENSION AT 60°F WITH A 55 MPH WIND	LB	1804	8.8	1370	8.4
TENSION AT 15°F WITH 1/4" ICE & 40MPH WIND (NESC CONDITION)	LB	3436	5.86	2833	5.1
TENSION AT –10°F NO WIND OR ICE	LB	4239	3.76	3609	3.2
TENSION AT 125°F NO WIND	LB	898	17.75	709	16.25
BREAKING LOAD	LB	11810		11810	
CONTACT WIRE HEIGHT (TYP.)	FT	19.5		19.5	
MINIMUM FACTOR OF SAFETY	–	2.38		3.27	
WITH CONTACT 30% WORN					
WEIGHT OF CATENARY	LB/FT	0.744		0.744	
WEIGHT OF CATENARY WITH 1/4 " RADIAL ICE ON CONTACT WIRE,	LB/FT	0.941		0.941	
TENSION AT 0°F	LB	3001		2389	
BREAKING LOAD	LB	8267		8267	
MINIMUM FACTOR OF SAFETY	–	2.75		3.46	

CAUTION UNDERGROUND UTILITIES
2 WORKING DAYS
BEFORE YOU DIG
CALL 1–800–362–2764
OHIO UTILITY PROTECTION SERVICE
CALL NON–SERVICE FACILITY
OWNERS DIRECT

PROFESSIONAL STAMP

SIGN:
DATE:

CONTRACT DRAWING

PRINTS NOT BEARING THIS STAMP WERE MADE PRIOR TO ADVERTISING FOR BIDS AND ARE TO BE CONSIDERED OBSOLETE FOR CONTRACT PURPOSES.

Department of Transportation and Engineering

City of Cincinnati
City Hall
801 Plum Street
Cincinnati, Ohio 45202

CINCINNATI STREETCAR

OVERHEAD CONTACT SYSTEM
CONDUCTOR PARTICULARS

Revisions
No.

	Date
Drawn by LP	7/02/2012
Designed by MH	7/02/2012
Checked by HSZ	7/02/2012
Reviewed by JTB	7/12/2012

Consultant

PB HDR

File Number

ACC No. 23126

G-OD-0101

$PLTDRV$$
T:\29014a_Cincinnati.Street.Car\OCS\S_G-OD-0101.dgn
7/12/2012 12:44:19 PM

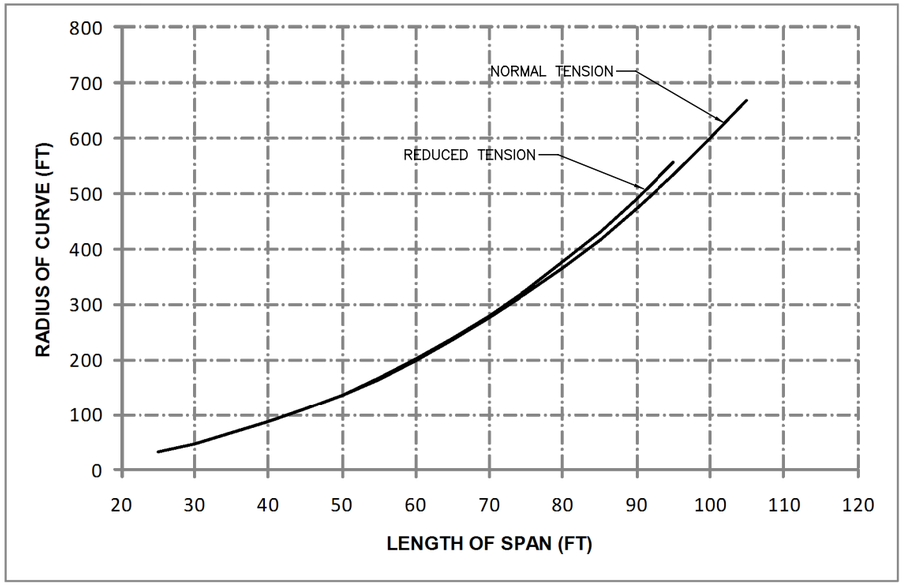

TROLLEY BLOW OFF	
SPAN (FT)	BLOW OFF (INCH)
25	0.21
30	0.31
35	0.42
40	0.55
45	0.69
50	0.86
55	1.04
60	1.23
65	1.45
70	1.68
75	1.93
80	2.19
85	2.48
90	2.78
95	3.10
100	3.43
105	3.78

STRUCTURE SPACING		
SPAN LENGTH (FT)	RADIUS (FT)	REDUCED TENSION (FT)
25	33	33
30	48	48
35	66	66
40	86	87
45	109	110
50	136	137
55	165	167
60	198	201
65	235	239
70	275	280
75	318	326
80	366	376
85	417	430
90	473	490
95	534	556
100	599	
105	670	

NOTES:

1. STRUCTURE SPACING AND BLOW OFF ARE CALCULATED USING WIND SPEED 55 MPH AT A TEMPERATURE OF 60°F.
2. STRUCTURE SPACING SHOWN IN THE TABLE IS THE ABSOLUTE MAXIMUM AND SHALL BE REDUCED BY 5′ FOR CONSTRUCTION PURPOSES (BASED ON 6″ CONTACT WIRE STAGGER).

CAUTION UNDERGROUND UTILITIES
2 WORKING DAYS
BEFORE YOU DIG
CALL 1-800-362-2764
OHIO UTILITY PROTECTION SERVICE
CALL NON-SERVICE FACILITY
OWNERS DIRECT

PROFESSIONAL STAMP

SIGN:

DATE:

CONTRACT DRAWING

PRINTS NOT BEARING THIS STAMP WERE MADE PRIOR TO ADVERTISING FOR BIDS AND ARE TO BE CONSIDERED OBSOLETE FOR CONTRACT PURPOSES.

Department of Transportation and Engineering

City of Cincinnati
City Hall
801 Plum Street
Cincinnati, Ohio 45202

CINCINNATI STREETCAR

OVERHEAD CONTACT SYSTEM
STRUCTURE SPACING AND BLOW OFF CHART

Revisions

No.				

Date	7/02/2012
Date	7/02/2012
Date	7/02/2012
Date	7/12/2012

Drawn by	LP
Designed by	MH
Checked by	HSZ
Reviewed by	JTB

Consultant

PB HDR

File Number

ACC No. 23126

G-OD-0102

$PLTDRVS$
T:\290144_Cincinnati Street Car\OCS\S_G-OD-0102.dgn
7/12/2012
12:44:21 PM

60 FT EQUIVALENT SPAN	
TEMP (°F)	CONTACT
−10	4615
0	4182
10	3752
20	3326
30	2908
40	2500
50	2305
60	1750
70	1435
80	1180
90	986
100	844
110	739

85 FT EQUIVALENT SPAN	
TEMP (°F)	CONTACT
−10	4399
0	3976
10	3560
20	3154
30	2761
40	2390
50	2305
60	1750
70	1499
80	1296
90	1138
100	1015
110	918

100 FT EQUIVALENT SPAN	
TEMP (°F)	CONTACT
−10	4239
0	3826
10	3422
20	3033
30	2663
40	2321
50	2305
60	1750
70	1531
80	1353
90	1211
100	1098
110	1006

CATENARY FIXED EQUIPMENT

60 FT EQUIVALENT SPAN	
TEMP (°F)	CONTACT
−10	3997
0	3569
10	3146
20	2731
30	2330
40	1951
50	1609
60	1318
70	1089
80	919
90	795
100	703
110	634

85 FT EQUIVALENT SPAN	
TEMP (°F)	CONTACT
−10	3609
0	3201
10	2807
20	2433
30	2088
40	1783
50	1526
60	1318
70	1155
80	1028
85	975

REDUCED TENSION
CATENARY FIXED EQUIPMENT

NOTES:

1. ERECTIONS TENSION IN LBS.
   EQUIVALENT SPAN IS EQUAL TO:

2. $$\sqrt[3]{\frac{L1^3 + L2^3 + L3^3 + \ldots + LN^3}{L1 + L2 + L3 + \ldots + LN}}$$

   WHERE L1, L2, L3 ... LN ARE THE LENGTHS OF THE SPANS IN EACH FULL TENSION LENGTH (ANCHOR TO ANCHOR) FOR F.T. CATENARY.

3. FOR INTERMEDIATE TEMPERATURES, BETWEEN THOSE TABLED, THE TENSION VALUE SHALL BE INTERPOLATED ON A STRAIGHT LINE BASIS.

CAUTION UNDERGROUND UTILITIES
2 WORKING DAYS
BEFORE YOU DIG
CALL 1-800-362-2764
OHIO UTILITY PROTECTION SERVICE
CALL NON-SERVICE FACILITY
OWNERS DIRECT

PROFESSIONAL STAMP

SIGN:

DATE:

CONTRACT DRAWING

PRINTS NOT BEARING THIS STAMP WERE MADE PRIOR TO ADVERTISING FOR BIDS, AND ARE TO BE CONSIDERED OBSOLETE FOR CONTRACT PURPOSES.

Department of Transportation and Engineering

City of Cincinnati
City Hall
801 Plum Street
Cincinnati, Ohio 45202

CINCINNATI STREETCAR

OVERHEAD CONTACT SYSTEM
ERECTION TENSION CHART

Revisions

No.				

Drawn by LP	Date 7/02/2012
Designed by MH	Date 7/02/2012
Checked by HSZ	Date 7/02/2012
Reviewed by JTB	Date 7/12/2012

Consultant

PB HDR

File Number

ACC No. 23126

G-OD-0103

$PLTDRVS$
T:\290144_Cincinnati.Street.Car\OCS\S_G-OD-0103.dgn
7/12/2012 12:44:23 PM

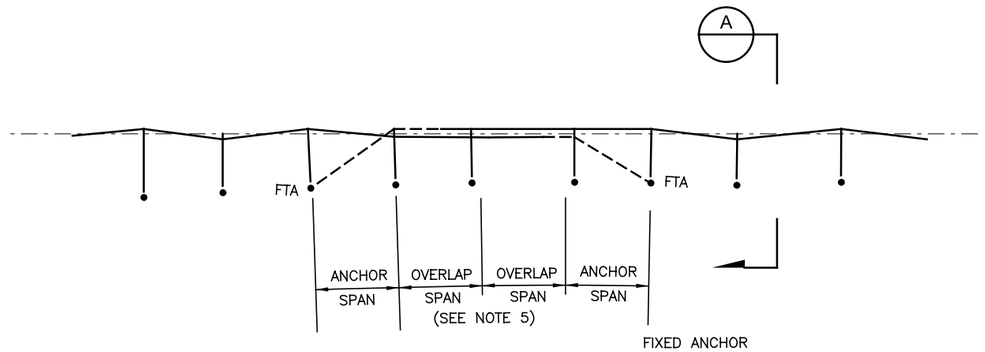

TYPICAL LAYOUT SCHEMATIC FIXED TROLLEY SYSTEM

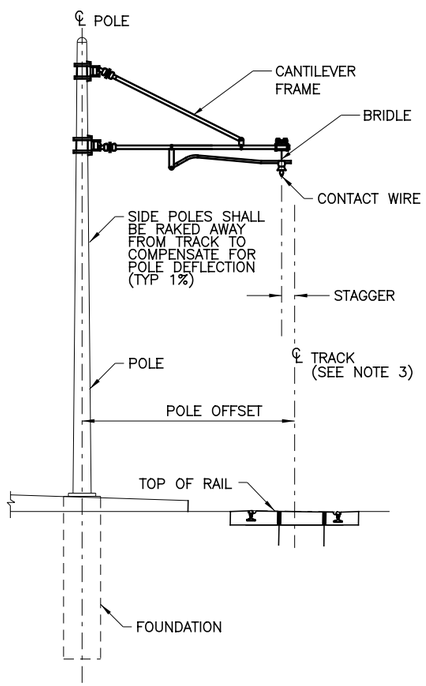

SECTION A

TYPICAL SIDE POLE STRUCTURE WITH SINGLE CANTILEVER

NOTES:

1. CANTILEVER FRAME TO BE INSULATED FROM CONTACT WIRE.
2. CANTILEVER TO BE INSULATED FROM THE POLE.
3. CENTERLINE OF TRACK DENOTES A LINE PERPENDICULAR TO THE PLANE OF THE TOP OF RAILS.
4. FOR STRUCTURE SPACING ON TANGENT OR CURVED TRACK REFER TO OCS DWG NO G–OD–0102.
5. FOR OVERLAP SCHEMATIC REFER TO DWG NO G–OD–0111.
6. POLES ARE STANDARD CITY OF CINCINNATI TAPERED ROUND POLES EXCEPT AS NOTED ON THE LAYOUT PLAN ALLOCATIONS.
7. FOR STAGGERS AND CONTACT WIRE HEIGHT DIMENSIONS, SEE OCS LAYOUT PLANS.

CAUTION UNDERGROUND UTILITIES
2 WORKING DAYS
BEFORE YOU DIG
CALL 1–800–362–2764
OHIO UTILITY PROTECTION SERVICE
CALL NON–SERVICE FACILITY
OWNERS DIRECT

PROFESSIONAL STAMP

SIGN:

DATE:

CONTRACT DRAWING

PRINTS NOT BEARING THIS STAMP WERE MADE PRIOR TO ADVERTISING FOR BIDS, AND ARE TO BE CONSIDERED OBSOLETE FOR CONTRACT PURPOSES.

Department of Transportation and Engineering

City of Cincinnati
City Hall
801 Plum Street
Cincinnati, Ohio 45202

CINCINNATI STREETCAR

OVERHEAD CONTACT SYSTEM
TYPICAL LAYOUT SCHEMATIC
FIXED TROLLEY SYSTEM

Revisions

No.	Date
	7/02/2012
	7/02/2012
	7/02/2012
	7/12/2012

Drawn by LP	Date 7/02/2012
Designed by MH	Date 7/02/2012
Checked by HSZ	Date 7/02/2012
Reviewed by JTB	Date 7/12/2012

Consultant

PB HDR

File Number

ACC No. 23126

G-OD-0110

$PLTDRV$$
T:\29014a_Cincinnati.Street.Car\OCS\S_G-OD-0110.dgn
7/12/2012 12:44:24 PM

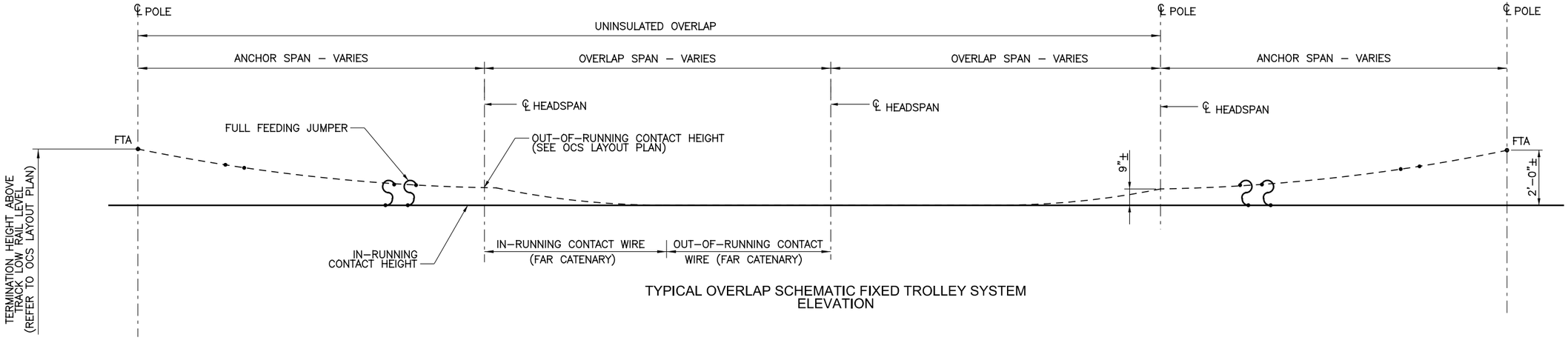

TYPICAL OVERLAP SCHEMATIC FIXED TROLLEY SYSTEM
ELEVATION

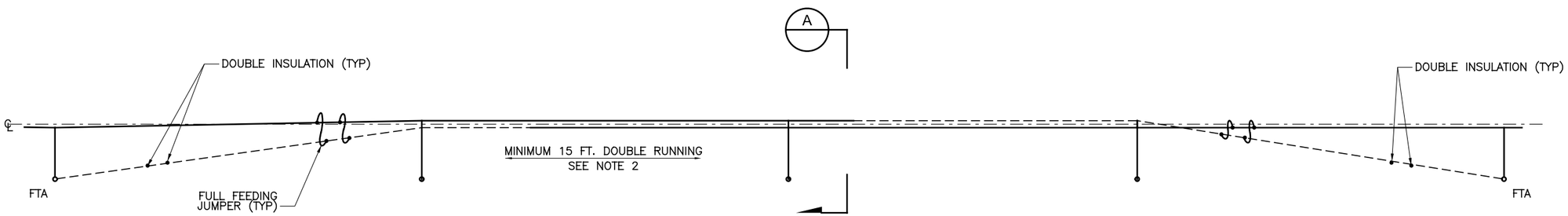

TYPICAL OVERLAP SCHEMATIC FIXED TROLLEY SYSTEM
PLAN

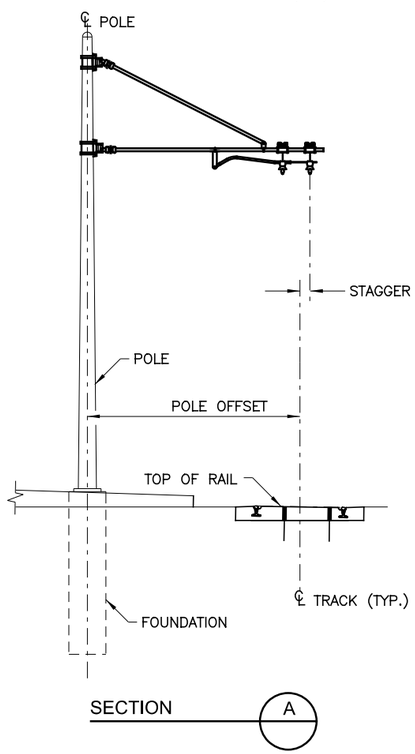

NOTES:

1. STAGGERS ON CURVES MAY NEED ADJUSTING TO ENSURE WIRES ARE SPREAD EQUALLY ABOUT CENTER LINE OF TRACK AT MID–SPAN.
2. AT LEAST 15' OF DOUBLE RUNNING SHOULD BE ACHIEVED TO PROVIDE A SMOOTH CHANGE OVER WITH 20 LBS. UPTHRUST FROM THE PANTOGRAPH.
3. FOR STAGGERS AND CONTACT WIRE HEIGHT DIMENSIONS SEE OCS LAYOUT PLANS.

CAUTION UNDERGROUND UTILITIES
2 WORKING DAYS
BEFORE YOU DIG
CALL 1–800–362–2764
OHIO UTILITY PROTECTION SERVICE
CALL NON–SERVICE FACILITY
OWNERS DIRECT

PROFESSIONAL STAMP

SIGN:
DATE:

CONTRACT DRAWING

PRINTS NOT BEARING THIS STAMP WERE MADE PRIOR TO ADVERTISING FOR BIDS AND ARE TO BE CONSIDERED OBSOLETE FOR CONTRACT PURPOSES.

Department of Transportation and Engineering
City of Cincinnati
City Hall
801 Plum Street
Cincinnati, Ohio 45202

CINCINNATI STREETCAR

OVERHEAD CONTACT SYSTEM
TYPICAL OVERLAP SCHEMATIC
FIXED TROLLEY SYSTEM

Revisions
No.

Drawn by ND	Date 7/02/2012
Designed by MH	Date 7/02/2012
Checked by HSZ	Date 7/02/2012
Reviewed by JTB	Date 7/12/2012

Consultant
PB HDR

File Number

ACC No. 23126

G-OD-0111

$PLTDRV$$
T:\29014a_Cincinnati:Street.Car\OCS\S_G-OD-0111.dgn
7/12/2012 12:44:25 PM

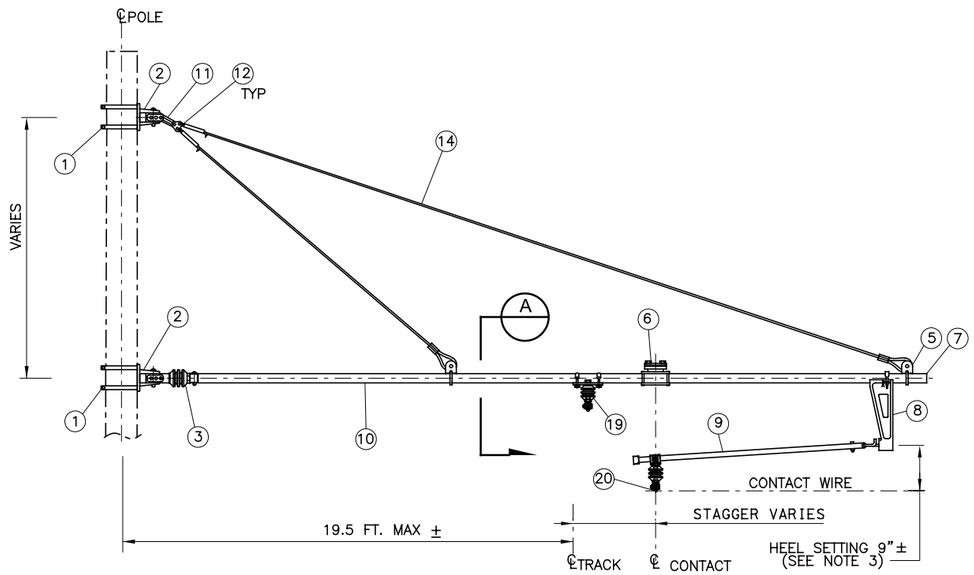

CONTACT WIRE PUSH-OFF CANTILEVER
TYPE C-7 & C-10

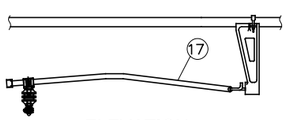

ELEVATION
LIGHT LOAD TYPE C-8

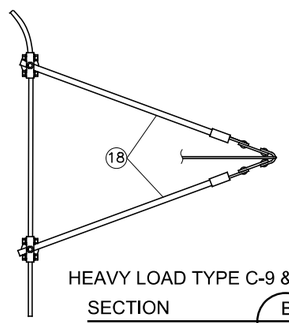

HEAVY LOAD TYPE C-9 & C-10
SECTION B

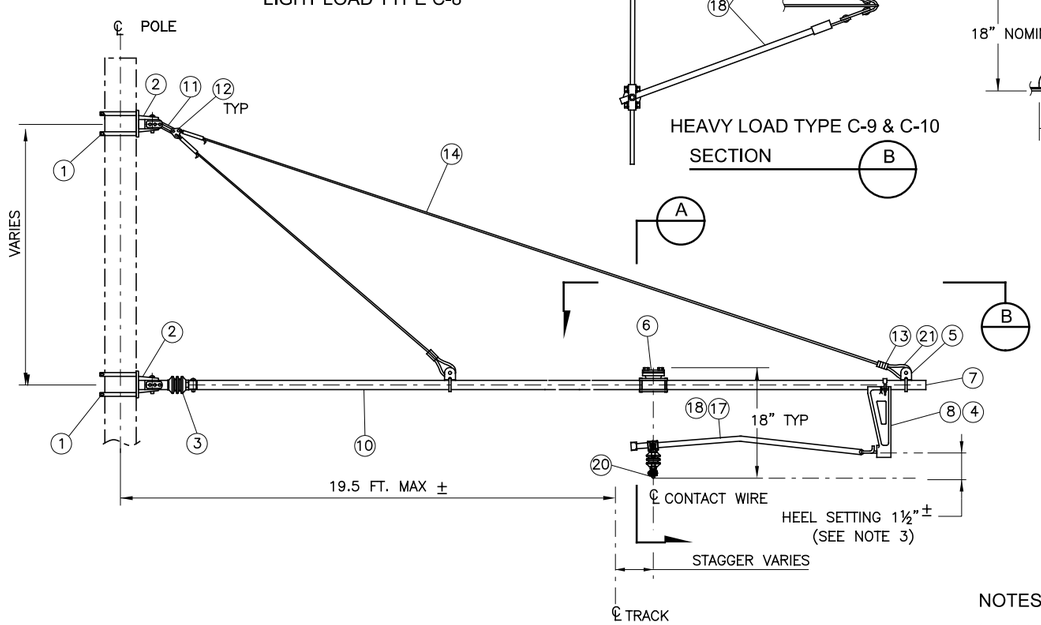

CONTACT WIRE PUSH-OFF CANTILEVER
TYPE C-8 & C-9

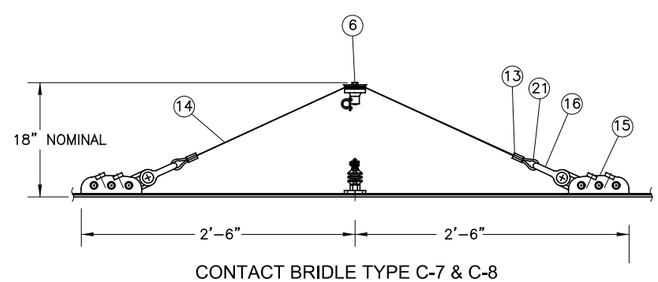

CONTACT BRIDLE TYPE C-7 & C-8
SECTION A

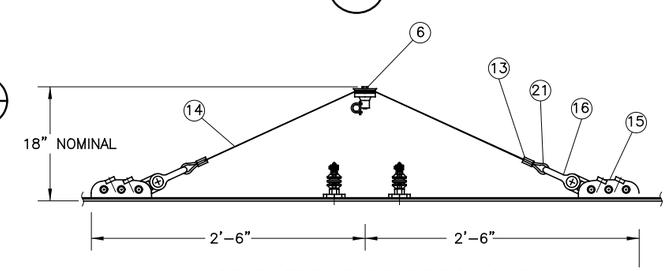

CONTACT BRIDLE TYPE C-9 & C-10
SECTION A

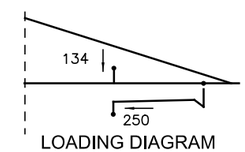

LOADING DIAGRAM
TYPE C-7

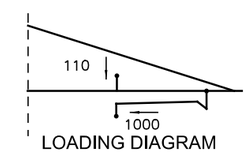

LOADING DIAGRAM
TYPE C-9

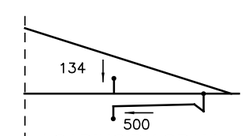

LOADING DIAGRAM
TYPE C-8

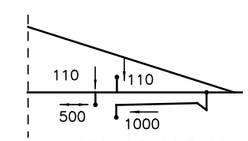

LOADING DIAGRAM
TYPE C-10

BILL OF MATERIALS

ITEM	DESCRIPTION	MANUFACTURER	PART NO.	QUANTITY			
				TYPE C–7	TYPE C–8	TYPE C–9	TYPE C–10
1	POLE CLAMP FOR TUBULAR POLE	MAC	17b	4	4	4	4
2	HINGE	MAC	D2361–01	2	2	2	2
3	PIPE END INSULATOR FOR 2.5" SCH 80 PIPE	MAC	D2372–09	1	1	1	1
4	DROP BRACKET FOR 2.5" PIPE	MAC	D3183–03	–	–	1	1
5	CLEVIS CLAMP FOR 2.5" PIPE	MAC	D3027–02	2	2	2	2
6	BRIDLE SADDLE ASSEMBLY FOR 2.5" PIPE	MAC	D2559–01	1	1	1	1
7	END CAP FOR 2.5" PIPE	–	–	1	1	1	1
8	DROP BRACKET FOR 2.5" PIPE	MAC	D3124–03	1	1	–	–
9	STRAIGHT STEADY ARM (COMPLETE L=59.1")	MAC	D2421–05	1	–	–	–
10	HORIZONTAL PIPE 2.5"	–	–	AS REQ'D.	AS REQ'D.	AS REQ'D.	AS REQ'D.
11	LOOP INSULATOR	MAC	D2786–01	1	1	1	1
12	TRIANGULAR PLATE WIRING DOUBLE	MAC	E0102–02	1	1	1	1
13	3/8" COMPRESSION SLEEVE	MAC	–	6	6	6	6
14	3/8" STAINLESS STEEL CABLE	MAC	–	AS REQ'D.	AS REQ'D.	AS REQ'D.	AS REQ'D.
15	STRAIN CLAMP	MAC	3289–01	2	2	2	2
16	SHACKLE WITH PIN & COTTER	MAC	E0928–01	2	2	2	2
17	INSULATED STEADY ARM ASSEMBLY (COMPLETE)	MAC	D2411–05	–	1	–	–
18	TWIN INSULATED STEADY ARM ASSEMBLY (COMPLETE)	MAC	D2411–05	–	–	2	2
19	2 CONTACT WIRE CLAMPS COMPLETE FOR 2.5" PIPE	MAC	82r (MOD)	–	–	–	1
20	C.W. SWIVEL CLAMP	MAC	E3183–02	1	1	2	2
21	3/8" OPEN THIMBLE	MAC	–	2	2	2	2

NOTES:

1. FOR SET OUT DIMENSIONS, REFER TO OCS LAYOUT PLAN. STEADY ARM SHALL MAINTAIN STAGGER UNDER REVERSE WIND LOAD CONDITIONS.
2. REVERSE WIND HANGERS MAY BE USED AS REQUIRED.
3. CONTRACTOR TO CONFIRM HEEL SETTINGS TO ENSURE ADEQUATE CLEARANCE TO PANTOGRAPH.
4. ON CANTILEVER ASSEMBLY TYPE C–9 ALLOCATED AT STATION 204+49.91 & 205+19.8 (DWG. G–OL–2002) SUBSTITUTE TWIN INSULATED ARM ASSEMBLY COMPLETE WITH INSULATOR MAC ITEM 61 FOR D2411–05.

CAUTION UNDERGROUND UTILITIES
2 WORKING DAYS
BEFORE YOU DIG
CALL 1–800–362–2764
OHIO UTILITY PROTECTION SERVICE
CALL NON–SERVICE FACILITY
OWNERS DIRECT

PROFESSIONAL STAMP

SIGN:
DATE:

CONTRACT DRAWING
PRINTS NOT BEARING THIS STAMP WERE MADE PRIOR TO ADVERTISING FOR BIDS AND ARE TO BE CONSIDERED OBSOLETE FOR CONTRACT PURPOSES.

Department of Transportation and Engineering
City of Cincinnati
City Hall
801 Plum Street
Cincinnati, Ohio 45202

CINCINNATI STREETCAR

OVERHEAD CONTACT SYSTEM
TYPICAL PUSH-OFF CANTILEVER

Revisions

No.	Date
	7/02/2012
	7/02/2012
	7/02/2012
	7/12/2012

Drawn by ND
Designed by MH
Checked by HSZ
Reviewed by JTB

Consultant
PB HDR

File Number

ACC No. 23126

G-OD-0119

$PLTDRV$
T:\290144_Cincinnati.Street.Car\OCS\S_G-OD-0119.dgn
7/12/2012 12:44:27 PM

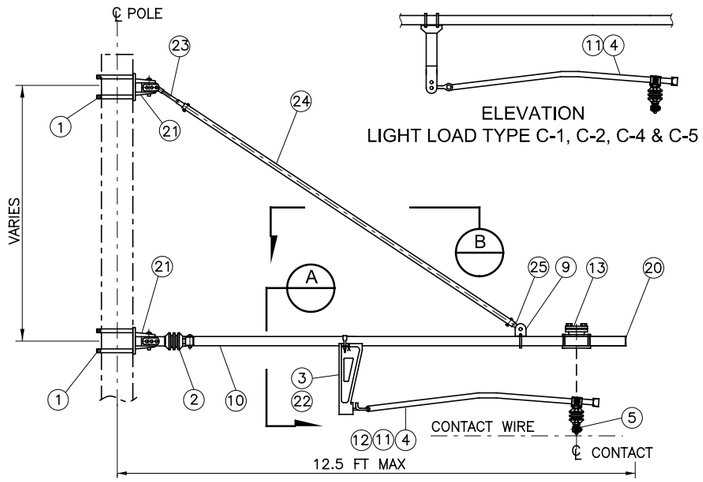

ELEVATION
LIGHT LOAD TYPE C-1, C-2, C-4 & C-5

CONTACT WIRE PULL-OFF CANTILEVER
TYPE C-1, C-2 & C-3

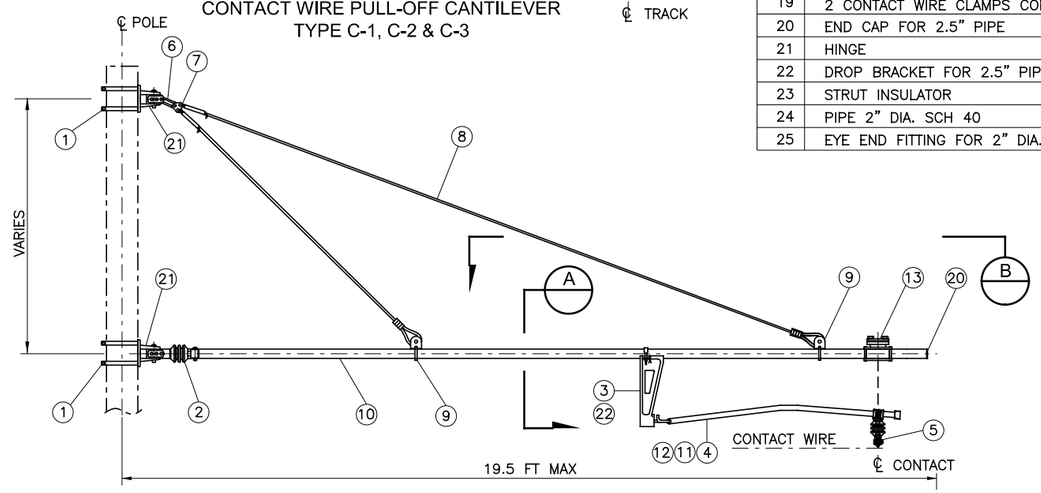

CONTACT WIRE PULL-OFF CANTILEVER
TYPE C-4, C-5 & C-6

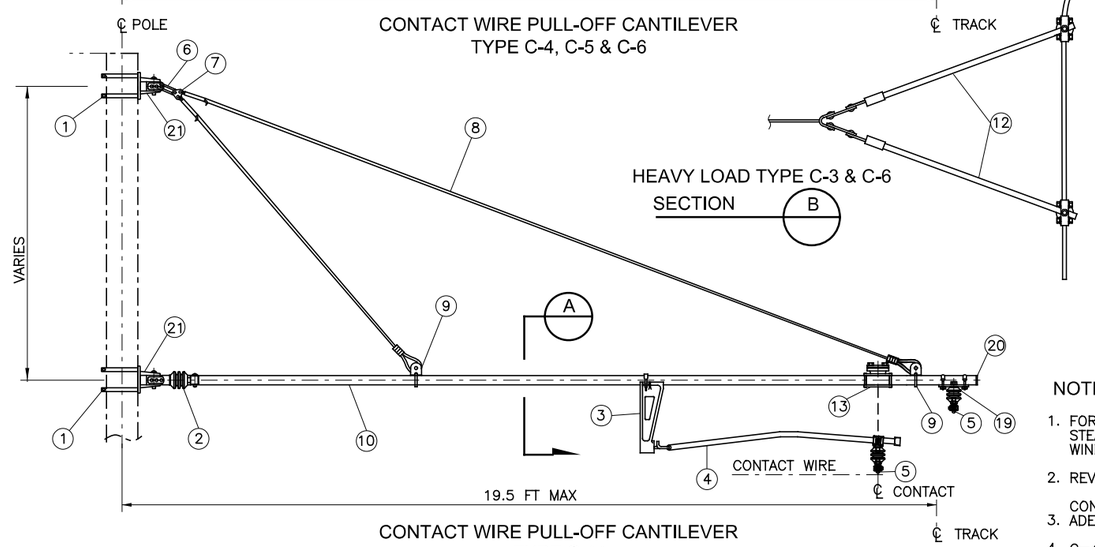

HEAVY LOAD TYPE C-3 & C-6
SECTION B

CONTACT WIRE PULL-OFF CANTILEVER
TYPE C-11

BILL OF MATERIALS

ITEM	DESCRIPTION	MANUFACTURER	PART NO.	QUANTITY						
				TYPE C–1	TYPE C–2	TYPE C–3	TYPE C–4	TYPE C–5	TYPE C–6	TYPE C–11
1	POLE CLAMP FOR TUBULAR POLE	MAC	17b	4	4	4	4	4	4	4
2	PIPE END INSULATOR FOR 2.5" SCH. 80 PIPE	MAC	D2372–09	1	1	1	1	1	1	1
3	DROP BRACKET FOR 2.5" PIPE	MAC	D3124–03	1	1	–	1	1	–	1
4	INSULATED STEADY ARM ASSEMBLY (COMPLETE)	MAC	2411–05	–	1	–	–	1	–	1
5	CONTACT WIRE CLAMP W/ 5/8" THREAD	MAC	E3183–02	1	1	2	1	2	2	2
6	LOOP INSULATOR	MAC	D2786–01	–	–	–	1	1	1	1
7	TRIANGULAR PLATE DOUBLE W/PINS	MAC	E0102–02	–	–	–	1	1	1	1
8	CANTILEVER TIES 3/8" CABLE/THIMBLES, SLEEVES COMPLETE	–	–	–	–	–	1	1	1	1
9	CLEVIS CLAMP FOR 2.5" PIPE	MAC	D3027–02	1	1	1	2	2	2	2
10	PIPE 2.5"	–	–	AS REQ'D.	AS REQ'D.	AS REQ'D.	AS REQ'D.	AS REQ'D.	AS REQ'D.	AS REQ'D.
11	STRAIGHT STEADY ARM (COMPLETE)	MAC	D2421–05	1	–	–	1	–	–	–
12	TWIN INSULATED STEADY ARM ASSEMBLY (COMPLETE)	MAC	D2411–05	–	–	2	–	–	2	–
13	BRIDLE SADDLE ASSEMBLY FOR 2.5" PIPE	MAC	D2363–02	1	1	1	1	1	1	1
14	COMPRESSION SLEEVE	MAC	428–12–VH5	2	2	2	2	2	2	2
15	3/8" STAINLESS STEEL CABLE	–	–	AS REQ'D.	AS REQ'D.	AS REQ'D.	AS REQ'D.	AS REQ'D.	AS REQ'D.	AS REQ'D.
16	STRAIN CLAMP	MAC	D3289–01	2	2	2	2	2	2	2
17	SHACKLE WITH PIN/COTTER	MAC	E0928–01	2	2	2	2	2	2	2
18	3/8" THIMBLE (OPEN)	MAC	KMA 140–2	2	2	2	2	2	2	2
19	2 CONTACT WIRE CLAMPS COMPLETE FOR 2.5" PIPE	MAC	82r (MOD)	–	–	–	–	–	–	1
20	END CAP FOR 2.5" PIPE	–	–	1	1	1	1	1	1	1
21	HINGE	MAC	D2361–01	2	2	2	2	2	2	2
22	DROP BRACKET FOR 2.5" PIPE	MAC	D3183–03	–	–	1	–	–	1	–
23	STRUT INSULATOR	MAC	D2372–02	1	1	1	–	–	–	–
24	PIPE 2" DIA. SCH 40	MAC	BY OTHERS	AS REQ'D.	AS REQ'D.	AS REQ'D.	–	–	–	–
25	EYE END FITTING FOR 2" DIA. PIPE SCH 40	MAC	D2351–01	1	1	1	–	–	–	–

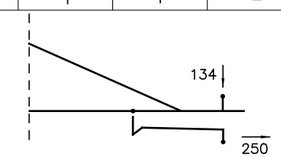

LOADING DIAGRAM
TYPE C-1, C-4

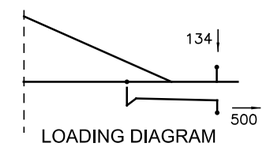

LOADING DIAGRAM
TYPE C-2, C-5

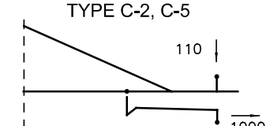

LOADING DIAGRAM
TYPE C-3, C-6

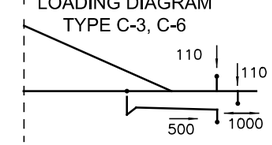

LOADING DIAGRAM
TYPE C-11

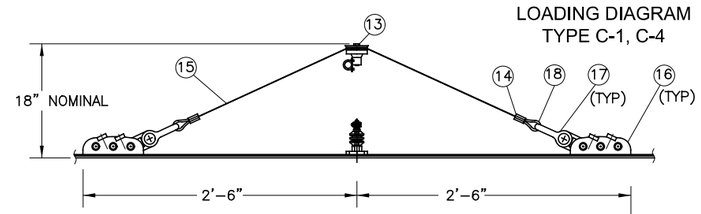

CONTACT BRIDLE TYPES C-1, C-2, C-4 & C-5
SECTION A

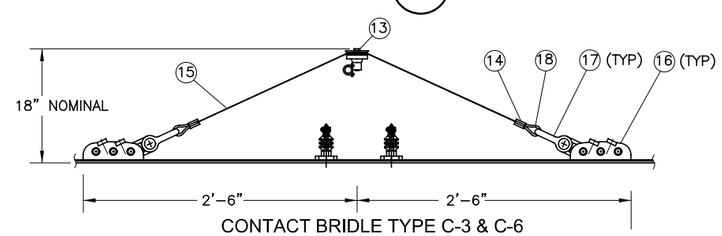

CONTACT BRIDLE TYPE C-3 & C-6
SECTION A

NOTES:

1. FOR SET OUT DIMENSIONS, REFER TO OCS LAYOUT PLAN. STEADY ARM SHALL MAINTAIN STAGGER UNDER REVERSE WIND LOAD CONDITIONS.
2. REVERSE WIND HANGERS MAY BE USED AS REQUIRED.
3. CONTRACTOR TO CONFIRM HEEL SETTINGS TO ENSURE ADEQUATE CLEARANCE TO PANTOGRAPH.
4. C–4 (MOD) NO REGISTRATION ARM REQUIRED.

CAUTION UNDERGROUND UTILITIES
2 WORKING DAYS
BEFORE YOU DIG
CALL 1–800–362–2764
OHIO UTILITY PROTECTION SERVICE
CALL NON–SERVICE FACILITY
OWNERS DIRECT

PROFESSIONAL STAMP

SIGN:
DATE:

DEPARTMENT OF TRANSPORTATION & ENGINEERING
CITY OF CINCINNATI OHIO

CONTRACT DRAWING

PRINTS NOT BEARING THIS STAMP WERE MADE PRIOR TO ADVERTISING FOR BIDS, AND ARE TO BE CONSIDERED OBSOLETE FOR CONTRACT PURPOSES.

Department of Transportation and Engineering

City of Cincinnati
City Hall
801 Plum Street
Cincinnati, Ohio 45202

CINCINNATI STREETCAR

OVERHEAD CONTACT SYSTEM
TYPICAL PULL-OFF CANTILEVER

Revisions
No.

Drawn by ND	Date 7/02/2012	Designed by MH	Date 7/02/2012
Checked by HSZ	Date 7/02/2012	Reviewed by JTB	Date 7/12/2012

Consultant

PB HDR

File Number

ACC No. 23126

G-OD-0120

$PLTDRV$$
T:\29014a_Cincinnati.Street.Car\OCS\S_G-OD-0120.dgn
7/12/2012 12:44:28 PM

NOTES:

1. THIS HEIGHT TO BE ADJUSTED IN THE FIELD BY THE CONTRACTOR TO SUIT FIELD CONDITIONS AND MAINTAIN THE CONTACT WIRE HEIGHT.
2. FOR CONTACT WIRE HEIGHT AND STAGGER SEE LAYOUT PLAN.
3. REGISTRATION ASSEMBLY MAY BE REVERSED DEPENDING ON DIRECTION OF THE RADIAL LOAD.

BILL OF MATERIALS

ITEM	DESCRIPTION	MANUFACTURER	PART NO.	QUANTITY	
				TYPE CST-1	TYPE CST-2
1	POLE BANDS	MAC	KMA-335	4	4
2	CLAMP, W/ CLEVIS END FOR ROUND POLE	MAC	D2623-01	2	2
3	TURNBUCKLE JAW/EYE	MAC	KMA-141-2	2	2
4	3/8" STAINLESS STEEL STRAND	–	–	AS REQ'D.	AS REQ'D.
5	STRAIN INSULATOR EYE/EYE	MAC	KMA-008-6	2	2
6	CLAMPING BOW COMPLETE W/ LEVER ARM	MAC	D0941-01	–	1
7	LINE INSULATOR TYPE 1	MAC	C1670-01	–	1
8	SHACKLE	MAC	KMA-211	–	1
9	Y-CLEVIS	MAC	E3302-02	–	1
10	STEADY ARM WITH SINGLE BEND COMPLETE	MAC	D2411-05	–	2
11	CONTACT WIRE CLAMP	MAC	E3183-02	1	2
12	3/8" STRANDVISE	MAC	KMA-017-3	6	6
13	LINE INSULATOR TYPE 2	MAC	C1729-01	1	–
14	1/8" OPEN THIMBLE	MAC	KMA-140-3	–	1
15	COMPRESSION SLEEVE	MAC	428-4-VM	–	2
16	1/8" CLOSED THIMBLE	MAC	KMA-312	–	1
17	HANGER CLAMP	MAC	KMA-238	–	1
18	1/8" SS CABLE	–	–	–	AS REQ'D

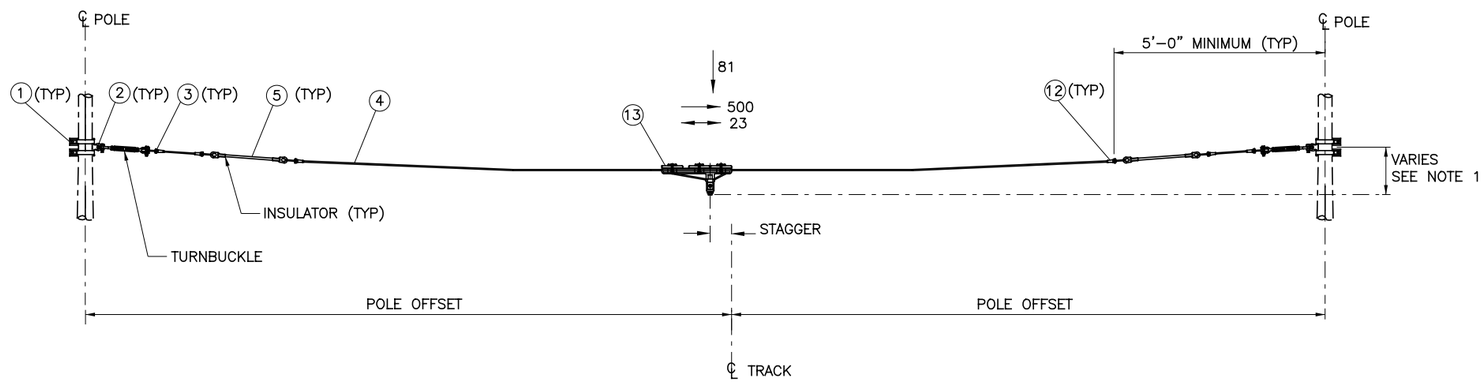

CONTACT WIRE CROSS-SPAN ASSEMBLY
TYPE CST-1

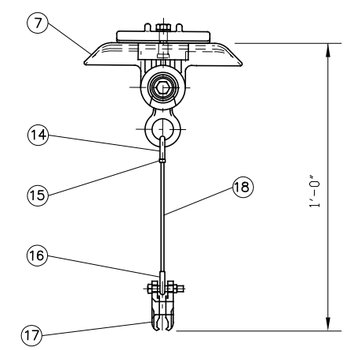

DETAIL A

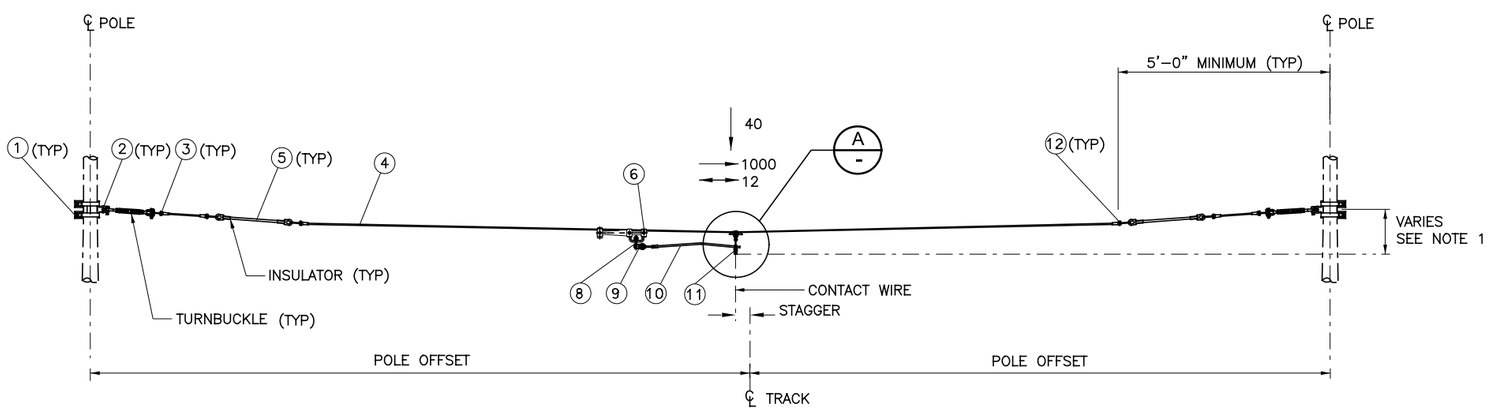

CONTACT WIRE CROSS-SPAN ASSEMBLY
TYPE CST-2

CAUTION UNDERGROUND UTILITIES
2 WORKING DAYS
BEFORE YOU DIG
CALL 1-800-362-2764
OHIO UTILITY PROTECTION SERVICE
CALL NON-SERVICE FACILITY
OWNERS DIRECT

PROFESSIONAL STAMP

SIGN:

DATE:

DEPARTMENT OF TRANSPORTATION & ENGINEERING CITY OF CINCINNATI OHIO

CONTRACT DRAWING

PRINTS NOT BEARING THIS STAMP WERE MADE PRIOR TO ADVERTISING FOR BIDS AND ARE TO BE CONSIDERED OBSOLETE FOR CONTRACT PURPOSES.

Department of Transportation and Engineering

City of Cincinnati
City Hall
801 Plum Street
Cincinnati, Ohio 45202

CINCINNATI STREETCAR

OVERHEAD CONTACT SYSTEM
TYPICAL SINGLE WIRE CROSS-SPAN ASSEMBLIES

Revisions

No.		Date
		7/02/2012
		7/02/2012
		7/02/2012
		7/12/2012

Drawn by ND
Designed by MH
Checked by HSZ
Reviewed by JTB

Consultant

PB HDR

File Number

ACC No. 23126

G-OD-0121

$PLTDRV$$
T:\290144_Cincinnati.Street.Car\OCS\S_G-OD-0121.dgn
12:44:30 PM
7/12/2012

NOTES:

1. CLAMP HEIGHT TO BE ADJUSTED AS NECESSARY TO ACHIEVE THE REQUIRED CONTACT WIRE HEIGHT.
2. OVERALL LENGTH TO BE DETERMINED IN THE FIELD.
3. BULL RINGS MAY BE INSERTED INTO THE CROSS SPAN CABLE.

BILL OF MATERIALS

ITEM	DESCRIPTION	MANUFACTURER	PART NO.	QUANTITY		
				TYPE BPO	TYPE BPO–1	TYPE BPO–2
1	POLE BAND	MAC	KMA–335	4	–	–
2	CLAMP WITH CLEVIS END FOR ROUND POLE	MAC	D2623–01 05 A 2	2	–	–
3	3/8" STRANDVISE	MAC	KMA–017–3	6	6	2
4	STRAIN INSULATOR EYE – EYE	MAC	KMA–008–6	2	–	–
5	TURNBUCKLE JAW – EYE	MAC	KMA–141–2	2	–	–
6	3/8" DIA. STAINLESS STEEL CABLE	–	–	AS REQ.	AS REQ.	AS REQ.
7	GALV. RING 5/8" x 3"	MAC	–	–	2	–

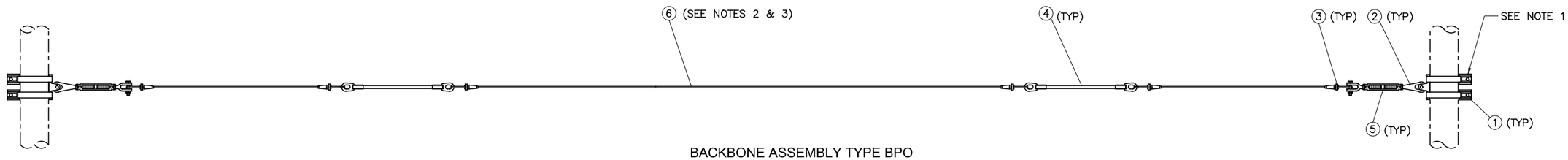

BACKBONE ASSEMBLY TYPE BPO

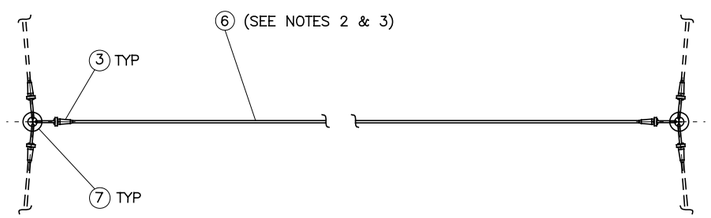

PLAN VIEW

BACKBONE ASSEMBLY TYPE BPO-1

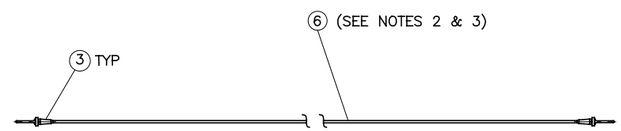

BACKBONE ASSEMBLY TYPE BPO-2

CAUTION UNDERGROUND UTILITIES
2 WORKING DAYS
BEFORE YOU DIG
CALL 1–800–362–2764
OHIO UTILITY PROTECTION SERVICE
CALL NON–SERVICE FACILITY
OWNERS DIRECT

PROFESSIONAL STAMP

SIGN:

DATE:

CONTRACT DRAWING

PRINTS NOT BEARING THIS STAMP WERE MADE PRIOR TO ADVERTISING FOR BIDS AND ARE TO BE CONSIDERED OBSOLETE FOR CONTRACT PURPOSES.

Department of Transportation and Engineering

City of Cincinnati
City Hall
801 Plum Street
Cincinnati, Ohio 45202

CINCINNATI STREETCAR

OVERHEAD CONTACT SYSTEM
TYPICAL BACKBONE ASSEMBLY

Revisions

No.		Date
		7/02/2012
		7/02/2012
		7/02/2012
		7/12/2012

Drawn by ND
Designed by MH
Checked by HSZ
Reviewed by JTB

Consultant

PB HDR

File Number

ACC No. 23126

G-OD-0122

$PLTDRV$$
T:\29014a_Cincinnati.Street.Car\OCS\S_G-OD-0122.dgn
7/12/2012 12:44:31 PM

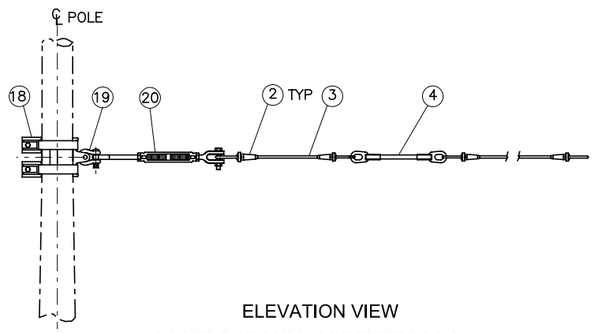

ELEVATION VIEW
BACKBONE PULL-OFF TYPE BBPO-4

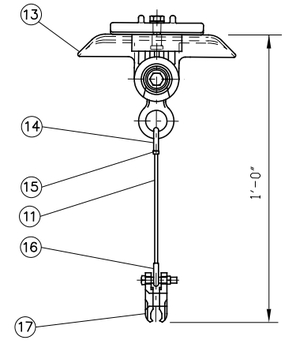

DETAIL A

FOR BACKBONE PULL-OFF
TYPE BBPO-1 & BBPO-3

BILL OF MATERIALS

ITEM	DESCRIPTION	MANUFACTURER	PART NO.	QUANTITY			
				TYPE BBPO-1	TYPE BBPO-2	TYPE BBPO-3	TYPE BBPO-4
1	SUSPENSION CLAMP	MAC	KMA-323	1	1	1	–
2	3/8" STRANDVISE	MAC	KMA-017-3	6	6	6	4
3	3/8" DIA. STAINLESS STEEL CABLE	–	–	AS REQ.	AS REQ.	AS REQ.	AS REQ.
4	INSULATOR EYE/EYE	MAC	KMA-008-6	2	2	2	1
5	STEADY ARM INSULATED COMPLETE	MAC	D2411-05	2	–	2	–
6	TROLLEY CLAMP	MAC	E3183-02	2	1	2	–
7	GALV. RING 5/8 " X 3"	MAC	–	1	1	–	–
8	CLAMPING BOW COMPLETE WITH LEVER ARM	MAC	D0941-01	1	–	1	–
9	SHACKLE	MAC	KMA-212	1	–	1	–
10	Y-CLEVIS	MAC	E3302-02	1	–	1	–
11	1/8" SS CABLE	–	BY OTHERS	AS REQ'D	–	AS REQ'D	–
12	LINE INSULATOR TYPE 2	MAC	C1729-01	–	1	–	–
13	LINE INSULATOR TYPE 1	MAC	C1670-01	1	–	1	–
14	1/8" OPEN THIMBLE	MAC	KMA-140-3	1	–	1	–
15	COMPRESSION SLEEVE	MAC	428-4-VM	2	–	2	–
16	1/8" CLOSED THIMBLE	MAC	KMA-312	2	–	2	–
17	HANGER CLAMP	MAC	KMA-238	1	–	1	–
18	POLE BANDS	MAC	KMA-335	–	–	2	2
19	CLAMP W/CLEVIS END FOR ROUND POLE	MAC	D2623-01	–	–	1	1
20	TURNBUCKLE JAW/EYE	MAC	KMA-141-2	–	–	1	1

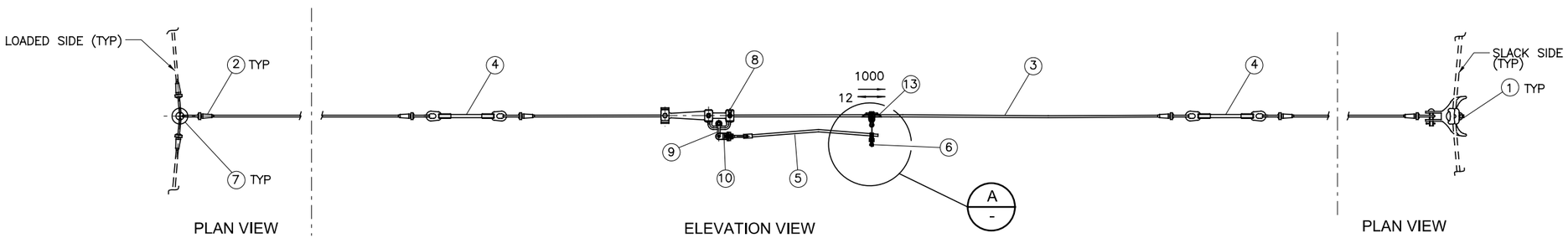

PLAN VIEW — ELEVATION VIEW — PLAN VIEW

BACKBONE PULL-OFF TYPE BBPO-1

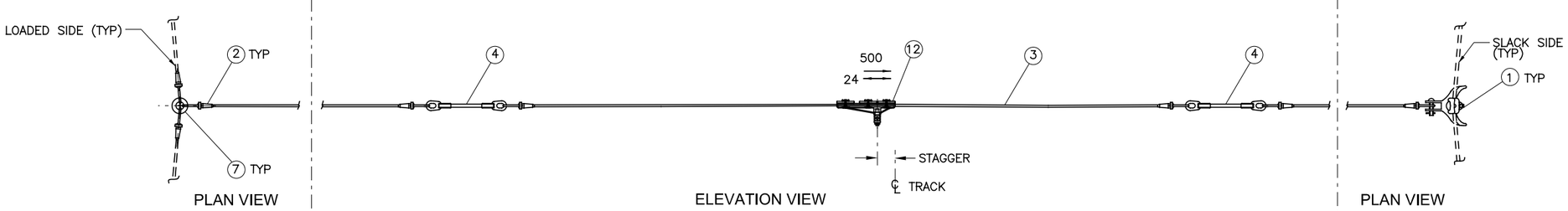

PLAN VIEW — ELEVATION VIEW — PLAN VIEW

BACKBONE PULL-OFF TYPE BBPO-2

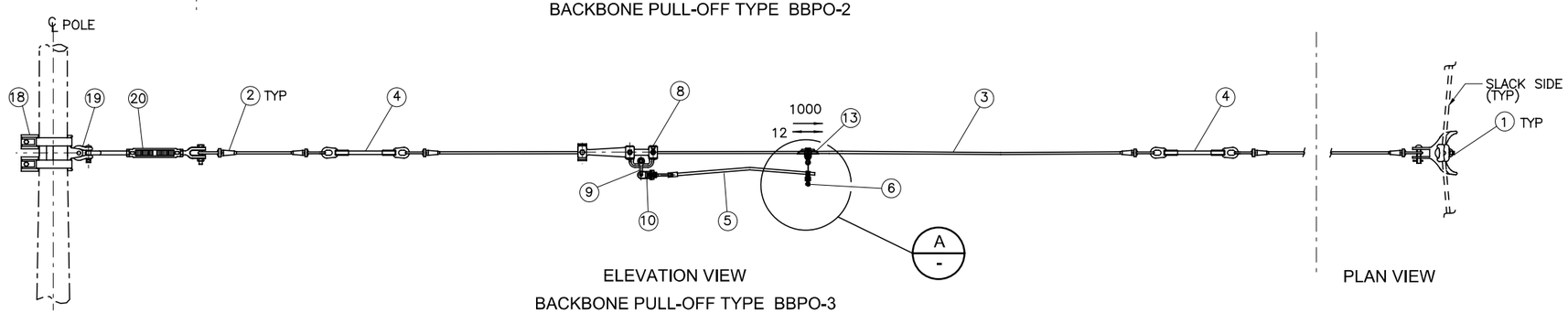

ELEVATION VIEW — PLAN VIEW

BACKBONE PULL-OFF TYPE BBPO-3

NOTES:

1. PLAN AND ELEVATION VIEWS SHOWN FOR CLARITY.
2. REGISTRATION ASSEMBLY MAY BE REVERSED DEPENDING ON THE RADIAL LOAD.
3. BBPO-3(MOD) HAS PULL-OF ARM ASSEMBLY REMOVED.
4. BBPO-1 (MOD) HAS ITEM 1 REMOVED.

CAUTION UNDERGROUND UTILITIES
2 WORKING DAYS
BEFORE YOU DIG
CALL 1-800-362-2764
OHIO UTILITY PROTECTION SERVICE
CALL NON-SERVICE FACILITY
OWNERS DIRECT

PROFESSIONAL STAMP

SIGN:

DATE:

CONTRACT DRAWING

PRINTS NOT BEARING THIS STAMP WERE MADE PRIOR TO ADVERTISING FOR BIDS AND ARE TO BE CONSIDERED OBSOLETE FOR CONTRACT PURPOSES.

Department of Transportation and Engineering

City of Cincinnati
City Hall
801 Plum Street
Cincinnati, Ohio 45202

CINCINNATI STREETCAR

OVERHEAD CONTACT SYSTEM
TYPICAL BACKBONE PULL-OFF ASSEMBLY

Revisions

No.		Date
		7/02/2012
		7/02/2012
		7/02/2012
		7/12/2012

Drawn by ND
Designed by MH
Checked by HSZ
Reviewed by JTB

Consultant

PB HDR

File Number

ACC No. 23126

G-OD-0123

$PLTDRV$$
T:\290144_Cincinnati.Street.Car\OCS\S_G-OD-0123.dgn
12:44:33 PM
7/12/2012

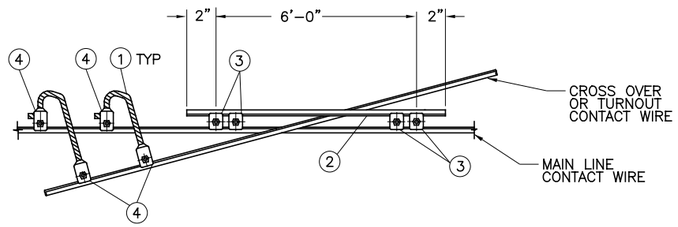

CONTINUITY JUMPER AND CROSS CONTACT BRIDGE
TYPE CC-1

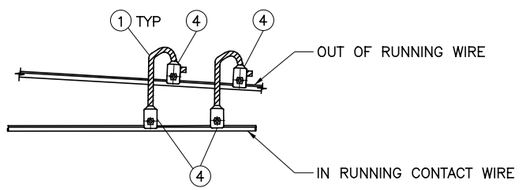

FEEDING JUMPER
TYPE FF-1

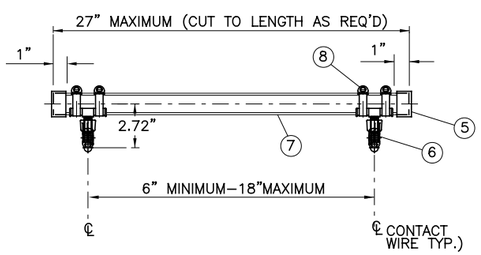

CONTACT WIRE
KNUCKLE TYPE KN-1

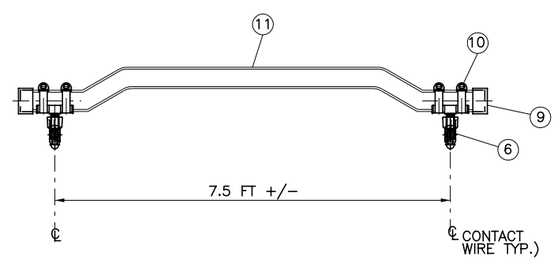

CONTACT WIRE
KNUCKLE TYPE KN-2

BILL OF MATERIALS

ITEM	DESCRIPTION	MANUFACTURER	PART NO.	QUANTITY			
				TYPE CC–1	TYPE FF–1	TYPE KN–1	TYPE KN–2
1	JUMPER, 350 KCMIL, SUPER FLEX, BARE COPPER CABLE	–	–	AS REQ'D	AS REQ'D	–	–
2	CONTACT WIRE, 350 KCMIL SOLID GROOVED, HARD DRAWN COPPER CONTACT BRIDGE	–	–	1	–	–	–
3	CONTACT WIRE BRIDGE CLAMP, 350 KCMIL CONTACT WIRE TO 350 KCMIL CONTACT WIRE	MAC	D0134–01	4	–	–	–
4	TOP ENTRY DUPLEX CLAMP, 350 KCMIL COPPER JUMPER CABLE TO 350 KCMIL CONTACT WIRE	MAC	D0446–01	4	4	–	–
5	PIPE END CAP	–	–	–	–	2	–
6	CONTACT WIRE CLAMP 350 MCM	MAC	D0348–02	–	–	2	2
7	1"OD PIPE WITH 1/4" THICK WALL	–	–	AS REQ.	–	1	–
8	SUPPORT	MAC	D2174–01	–	–	2	–
9	PIPE END CAP	MAC	TBD	–	–	–	2
10	SUPPORT	MAC	TBD	–	–	–	2
11	PIPE	MAC	TBD	–	–	–	1

CAUTION UNDERGROUND UTILITIES
2 WORKING DAYS
BEFORE YOU DIG
CALL 1–800–362–2764
OHIO UTILITY PROTECTION SERVICE
CALL NON–SERVICE FACILITY
OWNERS DIRECT

PROFESSIONAL STAMP

SIGN:

DATE:

DEPARTMENT OF TRANSPORTATION & ENGINEERING
CITY OF CINCINNATI OHIO

CONTRACT DRAWING

PRINTS NOT BEARING THIS STAMP WERE MADE PRIOR TO ADVERTISING FOR BIDS AND ARE TO BE CONSIDERED OBSOLETE FOR CONTRACT PURPOSES.

Department of Transportation and Engineering

City of Cincinnati
City Hall
801 Plum Street
Cincinnati, Ohio 45202

CINCINNATI STREETCAR

OVERHEAD CONTACT SYSTEM
TYPICAL JUMPERS, KNUCKLES
AND CROSS SPAN HANGER

Revisions

No.				

Date 7/02/2012	Date 7/02/2012	Date 7/02/2012	Date 7/12/2012

Drawn by LP	Designed by MH	Checked by HSZ	Reviewed by JTB

Consultant

PB HDR

File Number

ACC No. 23126

G-OD-0124

$PLTDRVS$
T:\290114a_Cincinnati.Street.Car\OCS\S_G-OD-0124.dgn
12:44:34 PM
7/12/2012

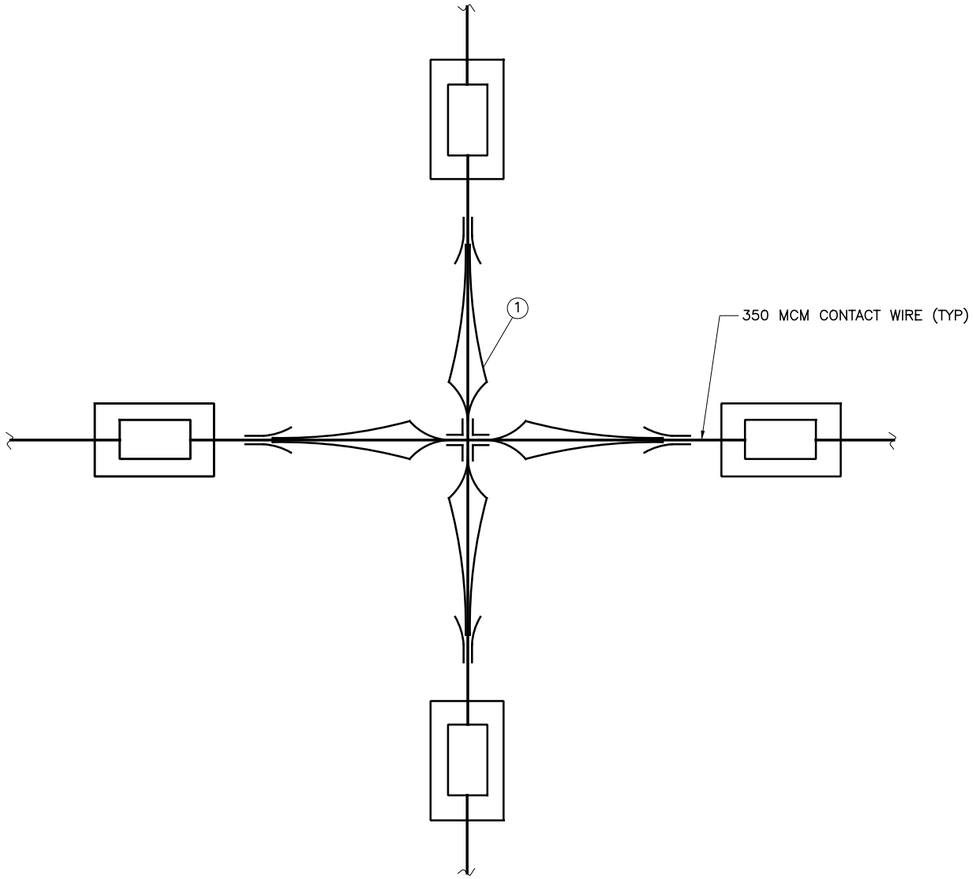

PLAN VIEW

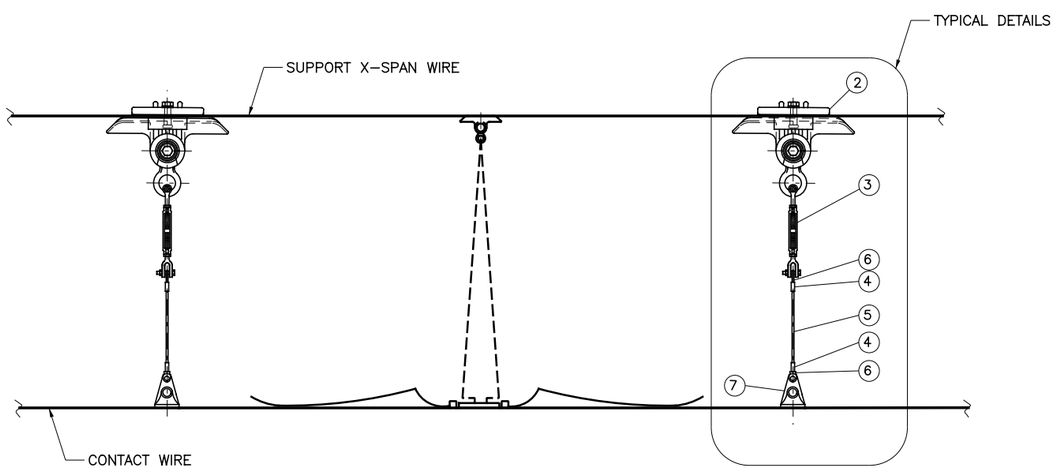

ELEVATION
CROSSING PAN TW-TW KUMAX
TW-TW

BILL OF MATERIALS

ITEM	DESCRIPTION	MANUFACTURER	PART NO.	QUANTITY
				TW–TW
1	KUMAX TRAMWAY CROSSING COMPLETE WITH SUSPENSION HANGER.	MAC	B1180–02	1
2	LINE INSULATOR TYPE 1	MAC	C1670–01	4
3	1/4" x 4" JAW/JAW TURNBUCKLE	CROSBY	G228	4
4	COMPRESSION SLEEVE	MAC	428–4–VM	8
5	1/8" SS CABLE	–	–	AS REQ'D
6	1/8" CLOSED THIMBLE	MAC	KMA–312	8
7	HANGER CLAMP	MAC	KMA–238	4

CAUTION UNDERGROUND UTILITIES
2 WORKING DAYS
BEFORE YOU DIG
CALL 1–800–362–2764
OHIO UTILITY PROTECTION SERVICE
CALL NON–SERVICE FACILITY
OWNERS DIRECT

PROFESSIONAL STAMP

SIGN:
DATE:

CONTRACT DRAWING

PRINTS NOT BEARING THIS STAMP WERE MADE PRIOR TO ADVERTISING FOR BID, AND ARE TO BE CONSIDERED OBSOLETE FOR CONTRACT PURPOSES.

Department of Transportation and Engineering

City of Cincinnati
City Hall
801 Plum Street
Cincinnati, Ohio 45202

CINCINNATI STREETCAR

OVERHEAD CONTACT SYSTEM
90 DEGREE CROSSING ARRANGEMENT

Revisions

No.		

Drawn by LP	Date 7/02/2012
Designed by MH	Date 7/02/2012
Checked by HSZ	Date 7/02/2012
Reviewed by JTB	Date 7/12/2012

Consultant

PB HDR

File Number

ACC No. 23126

G-OD-0125

$PLTDRV$$
T:\29014a_Cincinnati.Street.Car\OCS\S_G-OD-0125.dgn
7/12/2012 12:44:35 PM

NOTE:

1. POLE TERMINATION CLAMPS ITEM 1 MUST ACCEPT THE TERMINATION LOAD GIVEN.
2. FOR TERMINATION HEIGHT, SEE LAYOUT PLANS.

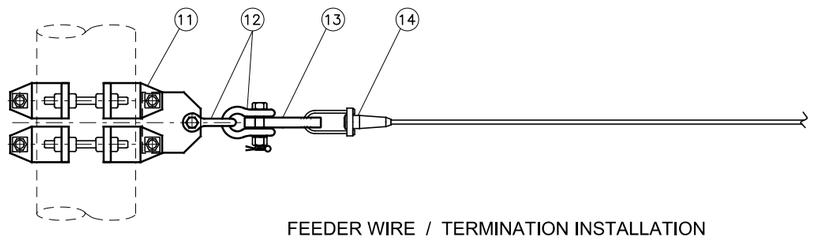

FEEDER WIRE / TERMINATION INSTALLATION
TYPE TD-01

BILL OF MATERIALS

ITEM	DESCRIPTION	MANUFACTURER	PART NO.	QUANTITY TYPE CWT	QUANTITY TYPE IS-1	QUANTITY TYPE TD-01
1	POLE CLAMP FOR TERMINATION	MAC	KMA-090-5	1	–	–
2	TURNBUCKLE, CLEVIS-EYE	MAC	KMA-141-6	1	–	–
3	SHACKLE	MAC	KMA-212-2	1	–	–
4	350 KCMIL CONTACT WIRE TERMINATION CLEVIS END 21,000 LB.	MAC	KMA-007	1	2	–
5	STRAIN INSULATOR EYE-EYE, 21,000 LB.	MAC	KMA-008-6	–	1	–
6	1/2" OPEN THIMBLE	MAC	KMA-141-6	4	–	–
7	1/2" PREFORMED	MAC	KMA-045-1	4	–	–
8	1/2" E.HS GALVANIZED STRAND	–	–	AS REQ	–	–
9	STRAIN INSULATOR CLEVIS/CLEVIS	MAC	KMA-008-7	2	–	–
10	5/8" LINK	MAC	KMA-213	1	–	–
11	TERMINATION BRACKET	IMPULSE	0679763		–	1
12	5/8" SHACKLE	IMPULSE P/N	013722-2000	–	–	2
13	INSULATOR, LOOP OUTLINE	IMPULSE P/N	0694003-3001			1
14	1/2" STRANDVISE	IMPULSE P/N	057236-4001	–	–	1

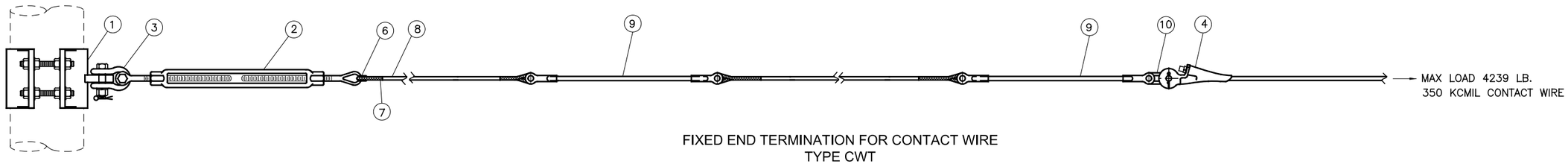

FIXED END TERMINATION FOR CONTACT WIRE
TYPE CWT

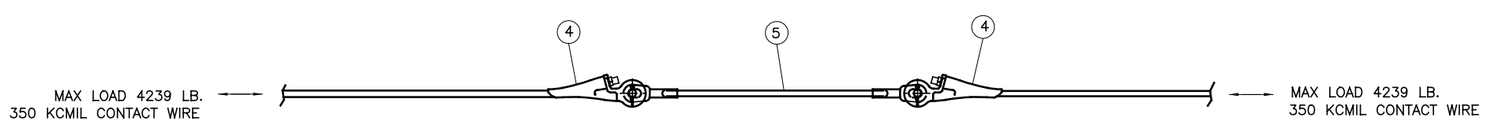

CONTACT WIRE IN-SPAN INSULATED ASSEMBLY TYPE IS-1
(OUT OF RUNNING)

CAUTION UNDERGROUND UTILITIES
2 WORKING DAYS
BEFORE YOU DIG
CALL 1-800-362-2764
OHIO UTILITY PROTECTION SERVICE
CALL NON-SERVICE FACILITY
OWNERS DIRECT

PROFESSIONAL STAMP

SIGN:
DATE:

DEPARTMENT OF TRANSPORTATION & ENGINEERING CITY OF CINCINNATI OHIO

CONTRACT DRAWING

PRINTS NOT BEARING THIS STAMP WERE MADE PRIOR TO ADVERTISING FOR BIDS AND ARE TO BE CONSIDERED OBSOLETE FOR CONTRACT PURPOSES.

Department of Transportation and Engineering

City of Cincinnati
City Hall
801 Plum Street
Cincinnati, Ohio 45202

CINCINNATI STREETCAR

OVERHEAD CONTACT SYSTEM
FIXED TERMINATIONS

Revisions
No.

Date 7/02/2012	Drawn by ND
Date 7/02/2012	Designed by MH
Date 7/02/2012	Checked by HSZ
Date 7/12/2012	Reviewed by JTB

Consultant

PB HDR

File Number

ACC No. 23126

G-OD-0126

$PLTDRV$$
T:\29014a_Cincinnati.Street.Car\OCS\S_G-OD-0126.dgn
7/12/2012 12:44:36 PM

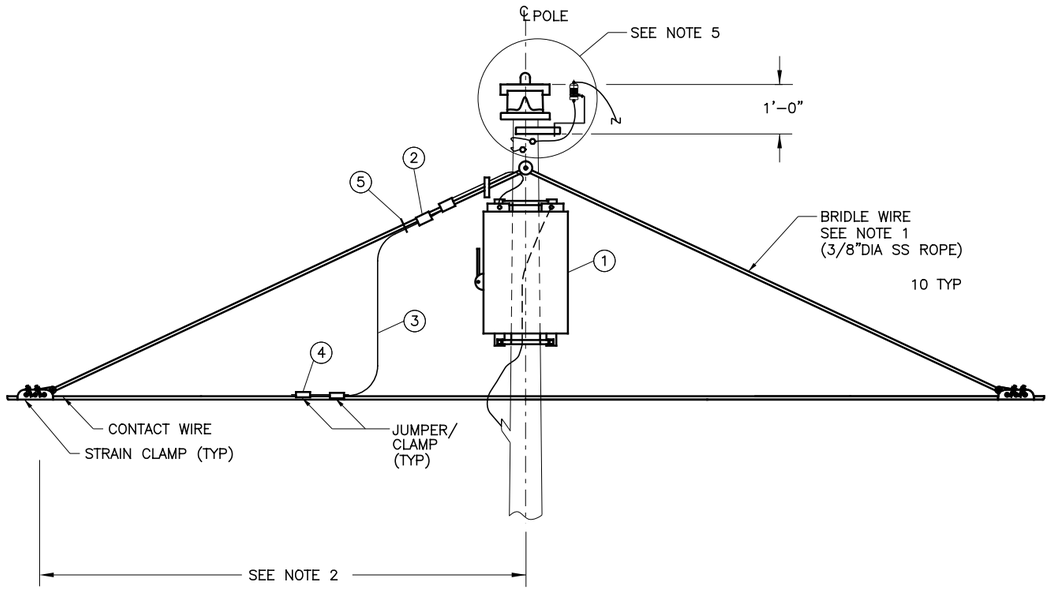

CATENARY EQUIPMENT
FEEDER DISCONNECT SWITCH TYPE FP-1
(ACROSS TRACK SHOWN)

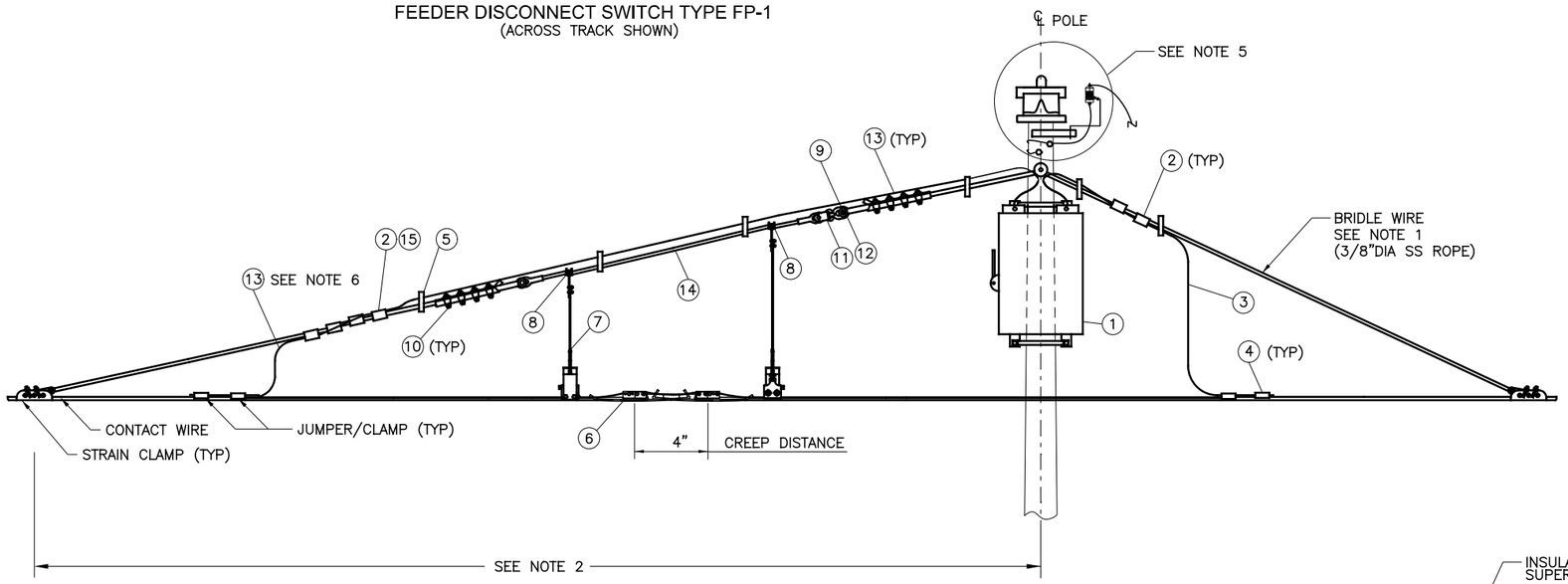

CATENARY EQUIPMENT
BY-PASS SWITCH TYPE BP-1
(ACROSS TRACK SHOWN)

BILL OF MATERIALS

ITEM	DESCRIPTION	MANUFACTURER	PART NO.	QUANTITY TYPE FP–1	QUANTITY TYPE BP–1
1	POLE MOUNTED MANUAL DISCONNECT SWITCH. HOOK STICK OPERATED	MAC	90140	1	1
2	DUPLEX CLAMP 500 KCMIL – 3/8" CABLE	MAC	KMA–002	2	4
3	500 KCMIL SUPER FLEX BARE COPPER	–		AS REQ	AS REQ
4	500 KCMIL–350 KCMIL C/W CLAMP	MAC	T890501A022	2	4
5	WEATHER PROOF TIE WRAPS	–	–	AS REQ	AS REQ
6	1 kV SECTION INSULATOR WITH STABILIZER (CATENARY SYSTEM)	ARTHUR FLURY	LT–1	–	1
7	ROPE–WIRE, ASSEMBLY	MAC	T8905018029	–	4
8	ARMOR & LINER .63" ROD	MAC	301719	–	2
9	3/8" STRANDVISE	MAC	KMA–017–3	–	2
10	CLAMP–STRAIGHT LINE	MAC	KMA–004	–	2
11	CLEVIS, SOCKET ANSY 52–3	MAC	KMA–212–2	–	2
12	EYE, BALL ANSY 52–5 30K	MAC	KMA–213–1	–	2
13	500 KCMIL SUPER FLEX INSULATED CABLE	–	–	–	AS REQ
14	TRANSLITE INSULATOR EYE/EYE	MAC	–	–	1
15	DUPLEX CLAMP 500 KCMIL – 500 KCMIL	MAC	KMA–002–1	–	3

NOTES:

1. FOR TYPICAL BRIDLE SEE DWG. G–OD–0119.
2. DIMENSIONS TO BE DETERMINED BY CONTRACTOR TO PROVIDE SECTION INSULATOR STABILITY.
3. TIE WRAPS SHALL CONTROL AND SUPPORT INSULATED CABLES
4. ON CROSS SPANS MESSENGER AND CANTILEVER PIPES AS REQUIRED. ON FEEDER SWITCHES ONLY ONE SET OF FEEDER JUMPERS PER UNIT ARE REQUIRED.
5. FOR SURGE ARRESTER DETAILS SEE DWG. G–OD–0129.
6. INSULATION CUT BACK

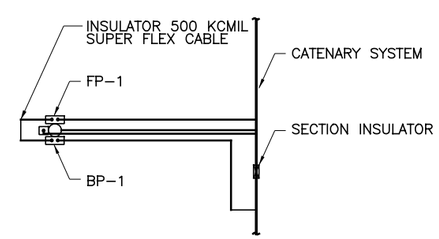

SKETCH 1
(SEE NOTE 4)

CAUTION UNDERGROUND UTILITIES
2 WORKING DAYS
BEFORE YOU DIG
CALL 1–800–362–2764
OHIO UTILITY PROTECTION SERVICE
CALL NON–SERVICE FACILITY
OWNERS DIRECT

PROFESSIONAL STAMP

SIGN:
DATE:

CONTRACT DRAWING
PRINTS NOT BEARING THIS STAMP WERE MADE PRIOR TO ADVERTISING FOR BIDS AND ARE TO BE CONSIDERED OBSOLETE FOR CONTRACT PURPOSES.

Department of Transportation and Engineering
City of Cincinnati
City Hall
801 Plum Street
Cincinnati, Ohio 45202

CINCINNATI STREETCAR

OVERHEAD CONTACT SYSTEM
FEEDER DISCONNECT AND BY-PASS
SWITCH ASSEMBLIES

Revisions
No.

Drawn by LP	Date 7/02/2012
Designed by MH	Date 7/02/2012
Checked by HSZ	Date 7/02/2012
Reviewed by JTB	Date 7/12/2012

Consultant
PB HDR

File Number

ACC No. 23126

G-OD-0127

$PLTDRV$
T:\290144_Cincinnati.Street.Car\OCS\S_G-OD-0127.dgn
7/12/2012 12:44:38 PM

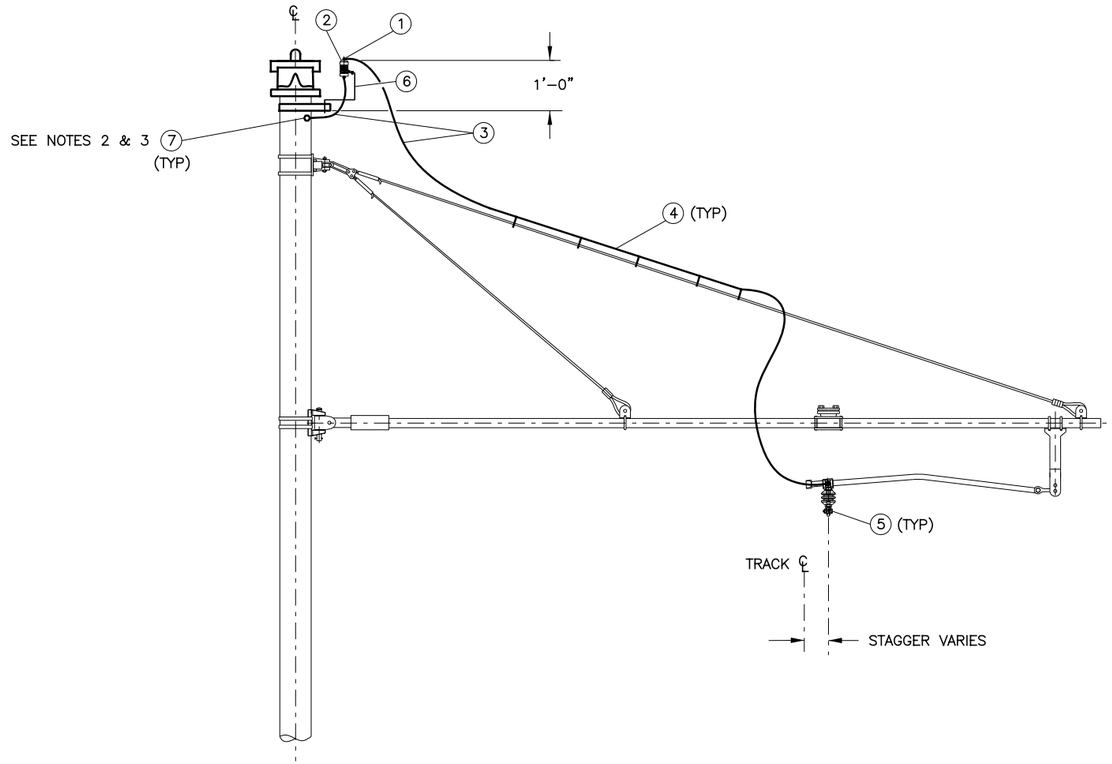

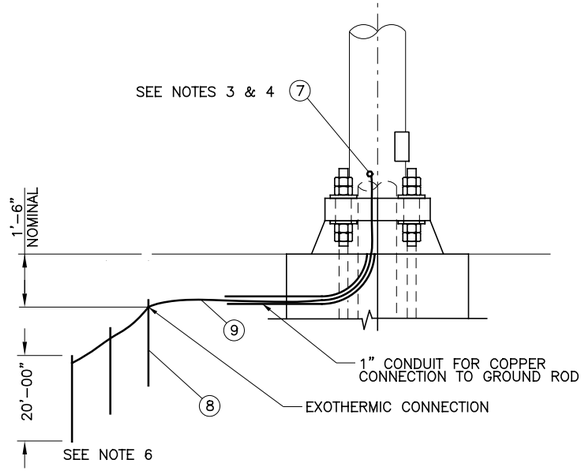

SURGE ARRESTER
TYPE SA-1

BILL OF MATERIALS

ITEM	DESCRIPTION	MANUFACTURER	PART NO.	QUANTITY TYPE SA–1
1	SURGE ARRESTOR 100 MOV DC COMPLETE WITH SUPPORT BRACKET	MAC	KMA–044–1 KMA–044–4	1
2	COMPRESSION LUG	–	MRB 2/0–8	2
3	2/0 INSULATED CABLE	MAC	–	AS REQ
4	WEATHER PROOF TIE WRAPS	–	–	AS REQ
5	DUPLEX CLAMP 2/0–CABLE–350 KCMIL GROOVED CONTACT WIRE	MAC	KMA–335	1
6	POLE BAND	MAC	–	1
7	3/8" STUD, NUT & LOCKWASHER	–	–	2
8	COPPER CLAD GROUND ROD 3/4" X 20.0'	–	–	AS REQ
9	2/0 STRANDED INSULATED COPPER CABLE	–	–	AS REQ

NOTES:

1. POLE TO BE PROVIDED WITH TAPPED HOLES FOR BOLTED GROUNDING CONNECTIONS.
2. ITEM 7 IS LOCATED 12" BELOW TOP OF POLE IN THE ACROSS TRACK DIRECTION ON BOTH SIDES OF THE POLE.
3. ITEM 7 SHALL BE LOCATED OUTSIDE THE POLE AT THE CAP PARALLEL TO THE TRACK AND INSIDE THE POLE AT THE BASE.
4. CABLE AT GROUND LEVEL SHALL BE ROUTED NEATLY INSIDE THE POLE AND TO THE GROUND RODS.
5. SURGE ARRESTER IS REQUIRED FOR EACH BY–PASS DISCONNECT, SWITCH HEATER AND FEEDER SWITCH AND AT MAXIMUM 2000 FT. SPACINGS.
6. CONTRACTOR SHALL INSTALL ARRAY OF ¾" DIAMETER, 20' GROUND RODS PARALLEL TO TRACKS TO ACHIEVE 5 OHMS. GROUND RODS TO BE BONDED TOGETHER WITH BARE 4/0 AWG COPPER CONDUCTOR.

CAUTION UNDERGROUND UTILITIES
2 WORKING DAYS
BEFORE YOU DIG
CALL 1–800–362–2764
OHIO UTILITY PROTECTION SERVICE
CALL NON–SERVICE FACILITY
OWNERS DIRECT

PROFESSIONAL STAMP

SIGN:
DATE:

DEPARTMENT OF TRANSPORTATION & ENGINEERING
CITY OF CINCINNATI OHIO

CONTRACT DRAWING

PRINTS NOT BEARING THIS STAMP WERE MADE PRIOR TO ADVERTISING FOR BIDS AND ARE TO BE CONSIDERED OBSOLETE FOR CONTRACT PURPOSES.

Department of Transportation and Engineering

City of Cincinnati
City Hall
801 Plum Street
Cincinnati, Ohio 45202

CINCINNATI STREETCAR

OVERHEAD CONTACT SYSTEM
TYPICAL SURGE ARRESTER ASSEMBLY

Revisions
No.

Drawn by LP	Designed by DL	Checked by HSZ	Reviewed by JTB
Date 7/02/2012	Date 7/02/2012	Date 7/02/2012	Date 7/12/2012

Consultant

PB HDR

File Number

ACC No. 23126

G-OD-0129

$PLTDRV$$
T:\29014a_Cincinnati:Street:Car\OCS\S_G-OD-0129.dgn
12:44:39 PM
7/12/2012

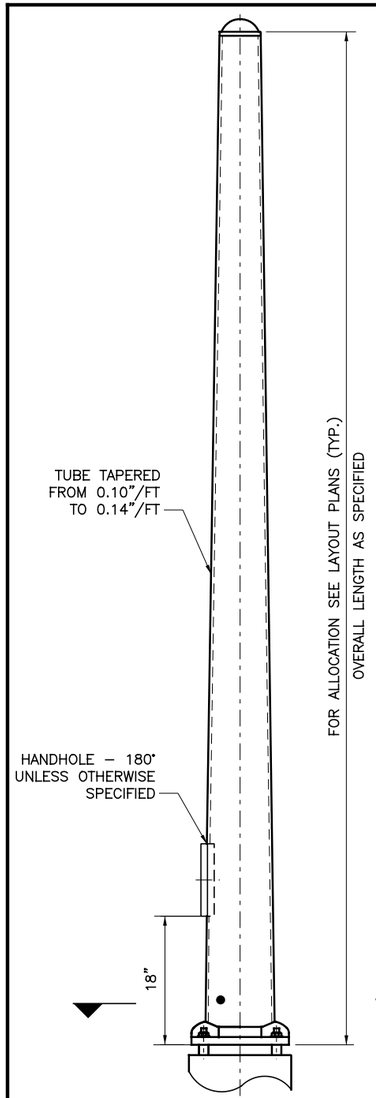

TAPERED ROUND POLE

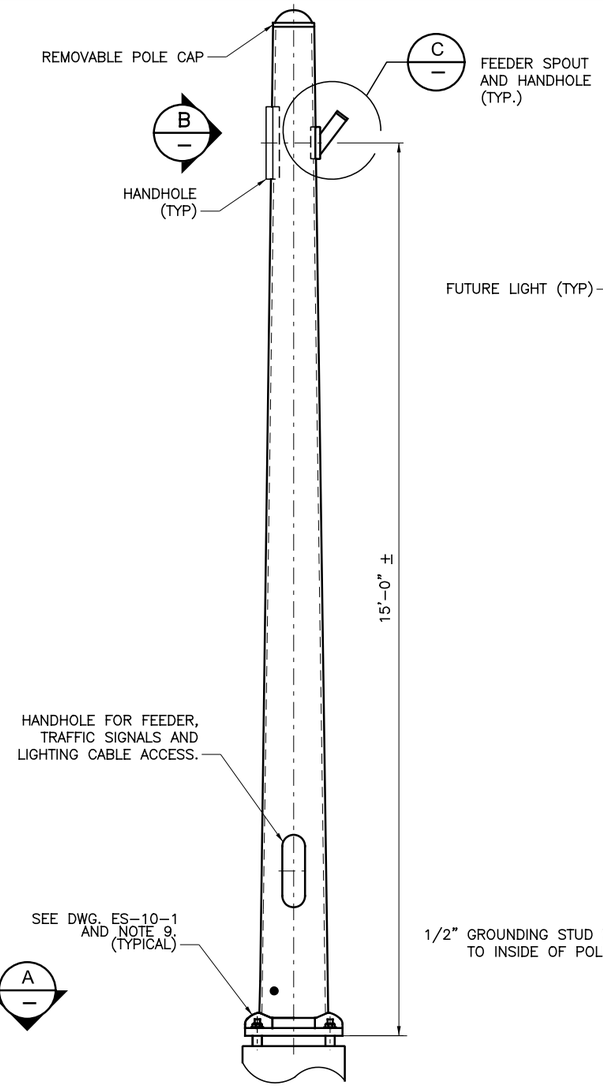

TAPERED ROUND
FEEDER POLE

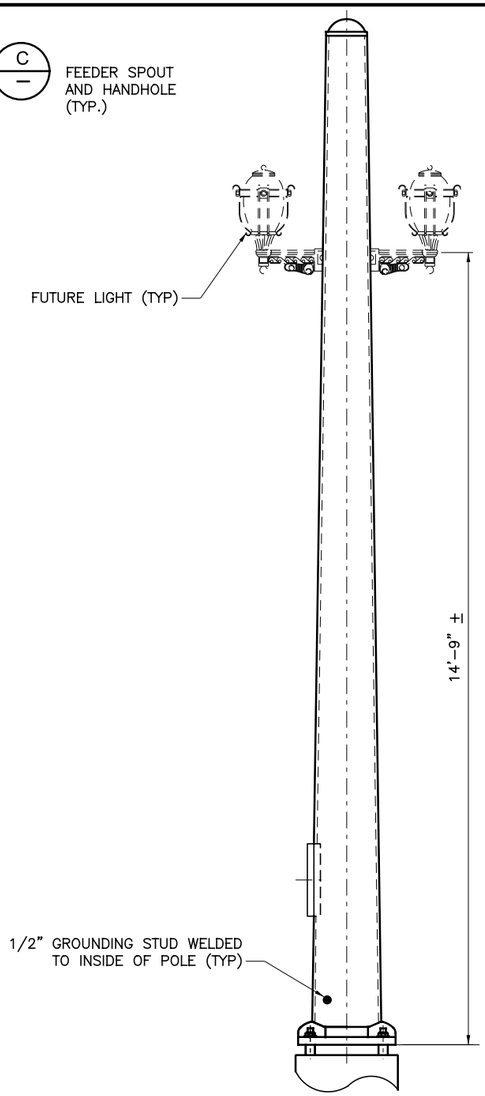

TAPERED ROUND POLE
WITH FUTURE LIGHT ASSEMBLY

		BILL OF MATERIALS				
		SHAFT SIZE		MAXIMUM MOMENT AT BASE (FT–K)	MAXIMUM HORIZONTAL FORCE APPLIED AT 20.5 FT (LB)	MAXIMUM DEFLECTION AT 20.5 FT
		GAGE	BASE DIA. (IN) X LENGTH (FT)			
CITY OF CINCINNATI DESIGN NO.	27070	0	9 x 28	14.00	725	1.92
	33048	0	10 x 28	19.76	1025	1.88
	38045	0	11 x 30	27.28	1400	1.88
	52028	7 x 7	12 x 30	41.50	2100	1.89
	72025	3 x 3	13 x 34	75.20	3750	1.95
POLE DESIGNATION	TP–1	0 x 0	14 x 34	90.90	4300	1.94
	TP–2	0 x 0	14 x 34	112.00	5465	1.91
	TP–3	0 x 0	14 x 26	192.00	8170	2
	TP–4	3 x 3	16.25 x 37	214.00	6119	(1)

(1) DEFLECTION LIMITED TO 2.5% OF POLE HEIGHT

Pole	SHAFT	SIZE	ANCHOR	BOLTS	BASE PLATE	DIMENSION
DESIGN#	GAGE	BASE DIA.	SIZE	BOLT CIRCLE	THICKNESS	F
		INCHES	INCHES	INCHES	INCHES	
TP–1	0 x 0	14 x 34	2 1/4 x 96	22	2 1/4	15 9/16
TP–2	0 x 0	14 x 34	2 1/4 x 96	22	2 1/4	15 9/16
TP–3	0 x 0	14 x 26	2 1/4 x *	22	2 1/4	15 9/16
TP–4	3 x 3	16.25 x 37	2 1/4 x *	22	2 1/4	15 9/16

TP–1 AND TP–2 USE CINCINNATI FDN–13 DATA,
AS SHOWN ON CITY OF CINCINNATI STANDARD POLE DESIGN, DWG ES–10–1.
* – SEE NOTE 10.

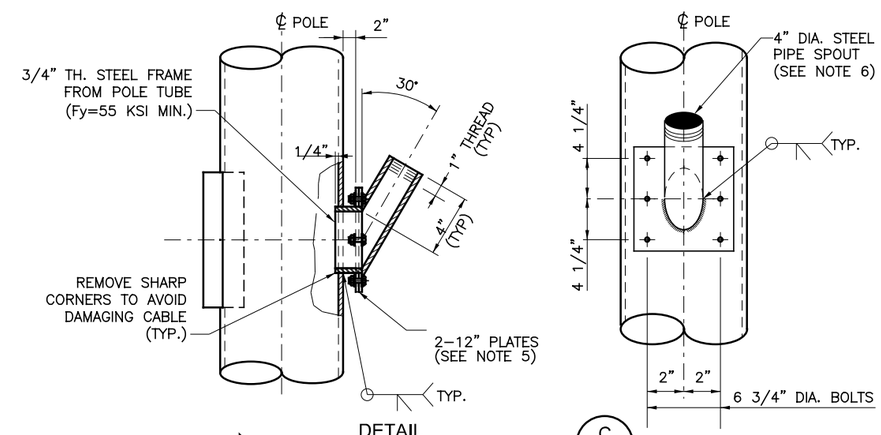

DETAIL C
(FOR TRACTION POWER FEED)

NOTES:

1. SEE LAYOUT PLANS FOR POLE ALLOCATION AND POLE HEIGHT. POLE DESIGNATIONS ENDING WITH "F" REQUIRE FEEDER SPOUT.
2. DESIGN AND FABRICATION OF POLES SHALL BE IN ACCORDANCE WITH THE CITY OF CINCINNATI POLE DESIGN DWG ES–10–1. NESC CRITERIA SHALL BE CONSIDERED FOR OVERLOAD FACTORS.
3. THE HORIZONTAL LIVE LOAD POLE DEFLECTION SHALL NOT EXCEED 2" AT CONTACT WIRE HEIGHT. FOR ELEVATION OF CONTACT WIRE SEE LAYOUT PLANS.
4. MINIMUM ACCEPTABLE POLE WALL THICKNESS – 3 GAUGE.
5. PROVIDE WATERPROOF GROMMIT FOR FEEDER CABLE ENTERING SPOUT.
6. NOTE THAT POLE TYPES DESIGNATED AS "TP–X" ARE NOT STANDARD CINCINNATI POLE TYPES.
7. ALL POLES TO BE PAINTED FEDERAL COLOR #27038 (BLACK SEMI–GLOSS).
8. ALL POLES SHALL BE FITTED WITH A STUD INSIDE THE POLE 12" ABOVE THE BASE PLATE TO ACCEPT THE FOUNDATION GROUND WIRE.
9. BOLT COVERS TO BE PROVIDED FOR NEW POLE TP–1 – TP–4 AS STATED ON CINCINNATI STANDARD POLE DESIGN DWG. ES–10–1.
10. ANCHOR BOLT LENGTH TO BE PROVIDED BY CONTRACTOR.

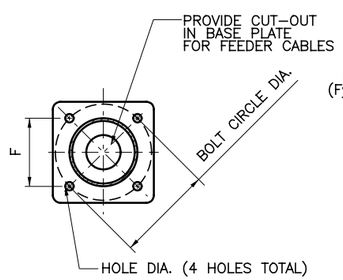

SECTION A
TYPICAL BASE DETAIL

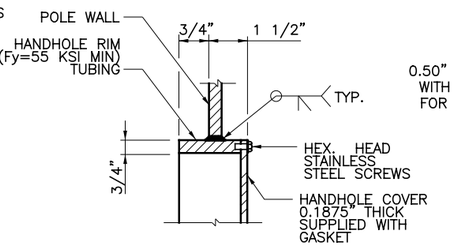

SECTION D

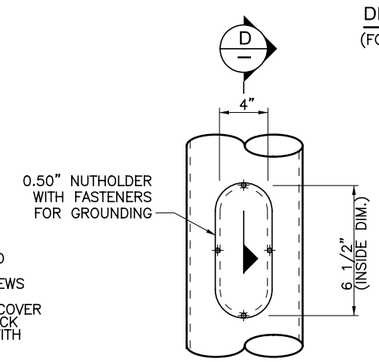

DETAIL B
HANDHOLE AS SHOWN
WITH GROUNDING
LUG REQUIRED ON ALL POLES

CAUTION UNDERGROUND UTILITIES
2 WORKING DAYS
BEFORE YOU DIG
CALL 1–800–362–2764
OHIO UTILITY PROTECTION SERVICE
CALL NON–SERVICE FACILITY
OWNERS DIRECT

PROFESSIONAL STAMP

SIGN:
DATE:

CONTRACT DRAWING

PRINTS NOT BEARING THIS STAMP WERE MADE PRIOR TO ADVERTISING FOR BIDS AND ARE TO BE CONSIDERED OBSOLETE FOR CONTRACT PURPOSES.

Department of Transportation and Engineering

City of Cincinnati
City Hall
801 Plum Street
Cincinnati, Ohio 45202

CINCINNATI STREETCAR

OVERHEAD CONTACT SYSTEM
TYPICAL TAPERED ROUND POLE,
TAPERED ROUND FEEDER POLE,
POLE WITH LIGHT ASSEMBLY

Revisions
No.

Date	7/02/2012
Date	7/02/2012
Date	7/02/2012
Date	7/12/2012
Drawn by	ND
Designed by	MH
Checked by	HSZ
Reviewed by	JTB

Consultant

PB HDR

File Number

ACC No. 23126

G-OD-0130

$PLTDRVS$
T:\290144_Cincinnati.Street.Car\OCS\S_G-OD-0130.dgn
7/12/2012 12:44:40 PM

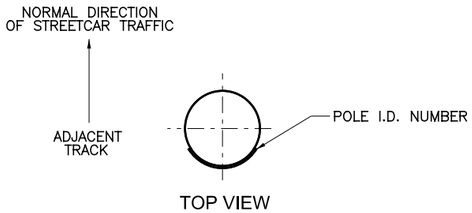

TOP VIEW

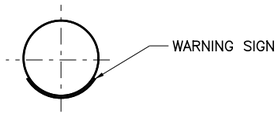

TOP VIEW

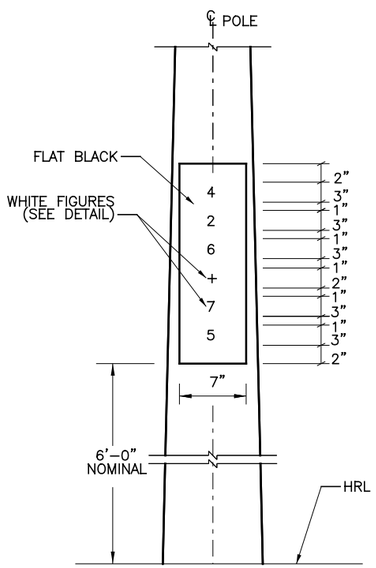

ALONG TRACK VIEW

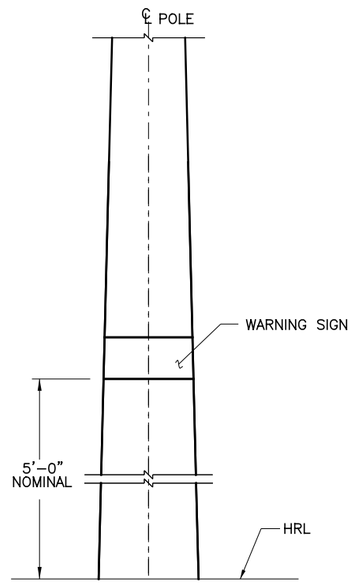

ALONG TRACK VIEW

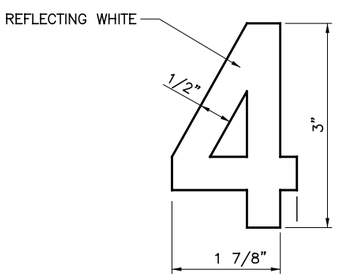

TYPICAL NUMERAL DETAIL
STRUCTURE I.D. NUMBER

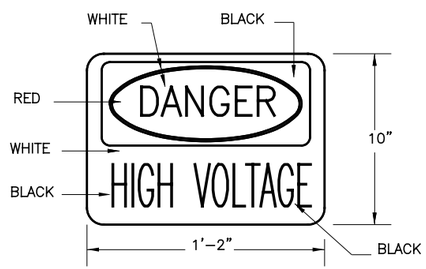

WARNING SIGN
CATENARY POLE

NOTES:

1. ALL SIGNS SHALL BE MADE WITH A .040" THICK RIGID ALUMINUM BACKING PLATE. ALL SHARP EDGES SHALL BE ROUNDED.
2. LETTERS SHALL BE ON FRONT ONLY.
3. WARNING SIGNS SHALL BE PERMANENTLY ATTACHED TO ALL CATENARY POLES. POWER DRIVEN NAILS (STAINLESS STEEL BANDING MATERIALS FOR POLE WARNING SIGN AND POLE I.D. NUMBER PLATES). NAILS SHALL BE CAPABLE OF HOLDING SIGNS AND ANCHORING INTO BACKING OR BASE MATERIAL (STEEL, CONCRETE, WOOD, ETC.).
4. THE 5'–0" NOMINAL DISTANCE FROM HIGH RAIL LEVEL TO THE LOWER EDGE OF THE BLACK BACKGROUND MAY REQUIRE SITE SPECIFIC ADJUSTMENT TO OBTAIN CLEAR VISIBILITY OF THE WARNING SIGNS.
5. SEE SPECIFICATION 1644 FOR SIGN REQUIREMENTS.

CAUTION UNDERGROUND UTILITIES
2 WORKING DAYS
BEFORE YOU DIG
CALL 1–800–362–2764
OHIO UTILITY PROTECTION SERVICE
CALL NON–SERVICE FACILITY
OWNERS DIRECT

PROFESSIONAL STAMP

SIGN:

DATE:

CONTRACT DRAWING

PRINTS NOT BEARING THIS STAMP WERE MADE PRIOR TO ADVERTISING FOR BIDS AND ARE TO BE CONSIDERED OBSOLETE FOR CONTRACT PURPOSES.

Department of Transportation and Engineering

City of Cincinnati
City Hall
801 Plum Street
Cincinnati, Ohio 45202

CINCINNATI STREETCAR

OVERHEAD CONTACT SYSTEM
WARNING SIGNS

Revisions

No.		

Date	7/02/2012
Date	7/02/2012
Date	7/02/2012
Date	7/12/2012

Drawn by	LP
Designed by	MH
Checked by	HSZ
Reviewed by	JTB

Consultant

PB HDR

File Number

ACC No. 23126

G-OD-0131

$PLTDRV$$
T:\290144_Cincinnati.Street.Car\OCS\S_G-OD-0131.dgn
12:44:42 PM
7/12/2012

BILL OF MATERIALS

ITEM	DESCRIPTION	MANUFACTURER	PART NO.	QUANTITY TYPE SM–F
1	DUPLEX CLAMP 500 KCMIL COPPER CABLE 350 KCMIL C/W	_	13853–3306	2
2	JUMPER, 500 KCMIL, 2000V. SUPER FLEX INSULATED COPPER CABLE	_	–	AS REQ'D.
3	TIE– WRAP, PLASTIC	_	–	AS REQ'D.
4	POLE MOUNTED MANUAL DISCONNECT SWITCH HOOK STICK OPERATED	–	–	1
5	SPOUT / CABLE WEATHER PROOF SEAL	–	_	1

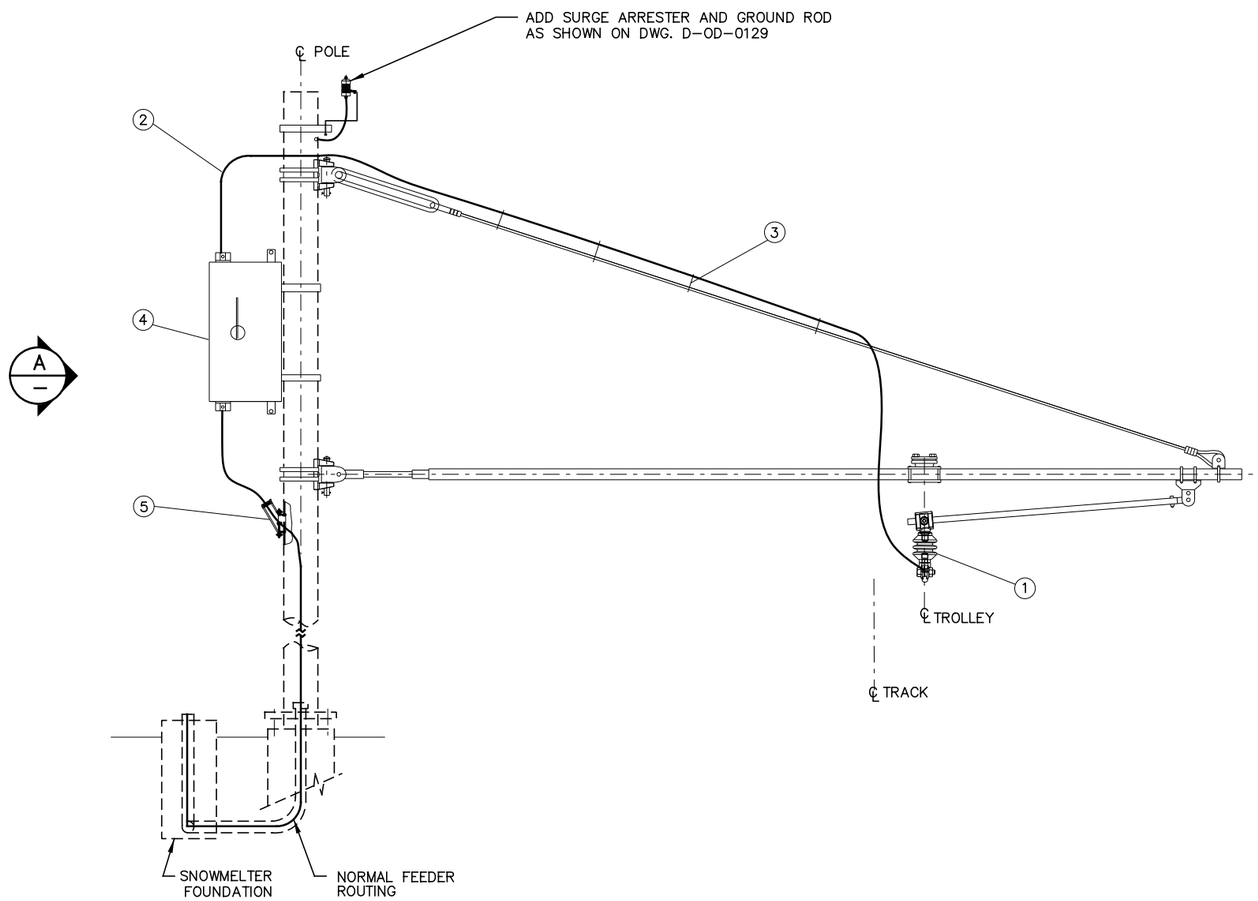

SNOWMELTER FEED
SM-F
ALONG TRACK VIEW

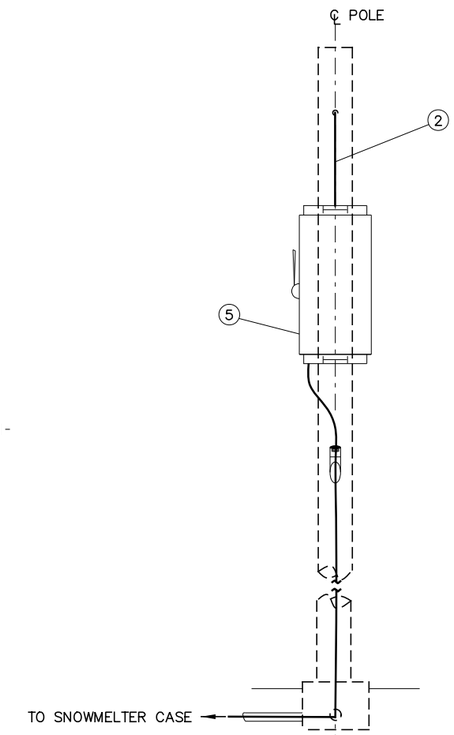

DETAIL A

FOR CLARITY CANTILEVER
NOT SHOWN

CAUTION UNDERGROUND UTILITIES
2 WORKING DAYS
BEFORE YOU DIG
CALL 1–800–362–2764
OHIO UTILITY PROTECTION SERVICE
CALL NON–SERVICE FACILITY
OWNERS DIRECT

PROFESSIONAL STAMP

SIGN:

DATE:

CONTRACT DRAWING

PRINTS NOT BEARING THIS STAMP WERE MADE PRIOR TO ADVERTISING FOR BIDS AND ARE NOT TO BE CONSIDERED OBSOLETE FOR CONTRACT PURPOSES.

Department of Transportation and Engineering

City of Cincinnati
City Hall
801 Plum Street
Cincinnati, Ohio 45202

CINCINNATI STREETCAR

OVERHEAD CONTACT SYSTEM
SNOWMELTER FUSED DISCONNECT
SWITCH ASSEMBLY TYPE SM-F

Revisions

No.				

Drawn by LP	Date 7/02/2012
Designed by MH	Date 7/02/2012
Checked by HSZ	Date 7/02/2012
Reviewed by JTB	Date 7/12/2012

Consultant

PB HDR

File Number

ACC No. 23126

G-OD-0132

$PLTDRV$
T:\29014g_Cincinnati.Street.Car\OCS\S_G-OD-0132.dgn
7/12/2012 12:44:43 PM

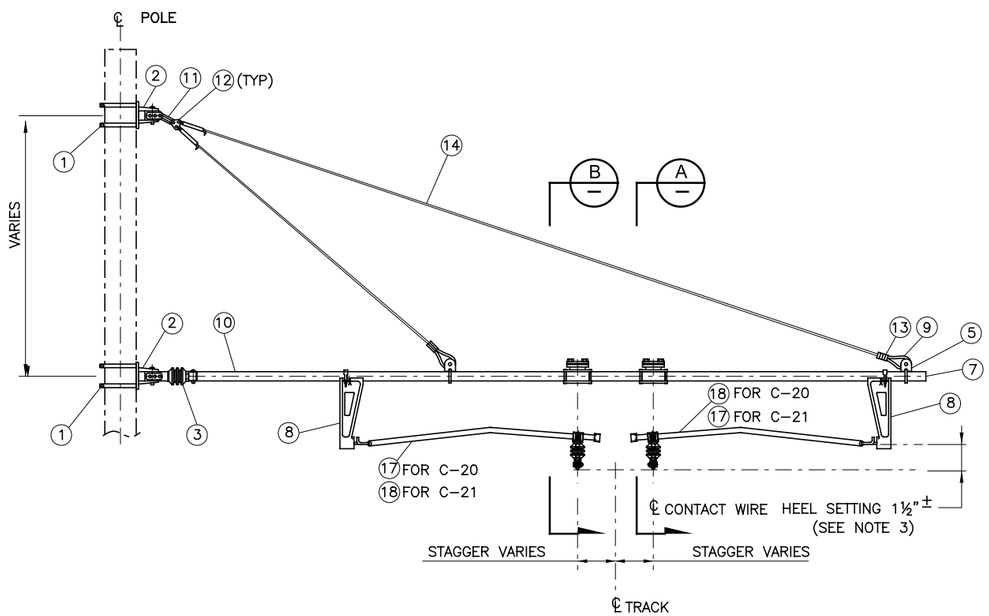

ASSEMBLY TYPE C-20 & C-21

BILL OF MATERIALS

ITEM	DESCRIPTION	MANUFACTURER	PART NO.	QUANTITY	
				TYPE C–20	TYPE C–21
1	POLE CLAMP FOR TUBULAR POLE	MAC	17b	4	4
2	HINGE	MAC	D2361–01	2	2
3	PIPE END INSULATOR FOR 2.5" SCH 80 PIPE	MAC	D2372–09	1	1
4	C.W. SWIVEL CLAMP	MAC	E3183–02	3	3
5	CLEVIS CLAMP FOR 2.5" PIPE	MAC	D3027–02	2	2
6	BRIDLE SADDLE ASSEMBLY FOR 2.5" PIPE	MAC	D2559–01	2	2
7	END CAP FOR 2.5" PIPE	–	–	1	1
8	DROP BRACKET FOR 2.5" PIPE	MAC	D3124–03	2	2
9	3/8" OPEN THIMBLE	MAC	KMA–140–2	6	6
10	HORIZONTAL PIPE 2.5"	–	–	AS REQ'D.	AS REQ'D.
11	LOOP INSULATOR	MAC	D2786–01	1	1
12	TRIANGULAR PLATE WIRING DOUBLE	MAC	E0102–02	1	1
13	3/8" COMPRESSION SLEEVE	MAC	428–12–VH5	6	6
14	3/8" STAINLESS STEEL CABLE	–	–	AS REQ'D.	AS REQ'D.
15	STRAIN CLAMP	MAC	3289–01	4	4
16	SHACKLE WITH PIN & COTTER	MAC	E0928–01	4	4
17	INSULATED STEADY ARM ASSEMBLY (COMPLETE)	MAC	D2411–05	1	1
18	TWIN INSULATED STEADY ARM ASSEMBLY (COMPLETE)	MAC	D2411–05	1	1

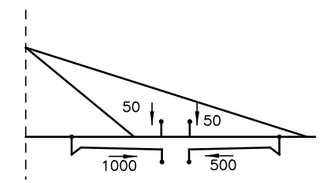

LOADING DIAGRAM
TYPE C-20

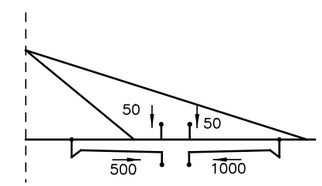

LOADING DIAGRAM
TYPE C-21

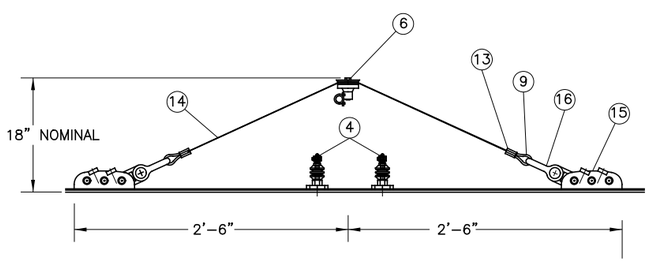

CONTACT BRIDLE TYPE C-20 & C-21

SECTION A

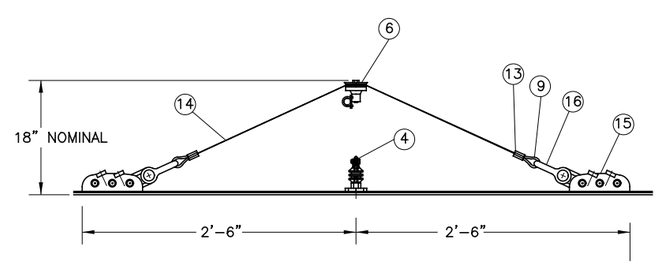

CONTACT BRIDLE TYPES C-20 & C-21

SECTION B

NOTES:

1. FOR SET OUT DIMENSIONS, REFER TO OCS LAYOUT PLAN.
   STEADY ARM SHALL MAINTAIN STAGGER UNDER REVERSE WIND LOAD CONDITIONS.
2. REVERSE WIND HANGERS MAY BE USED AS REQUIRED.
3. CONTRACTOR TO CONFIRM HEEL SETTINGS TO ENSURE ADEQUATE CLEARANCE TO PANTOGRAPH.

CAUTION UNDERGROUND UTILITIES
2 WORKING DAYS
BEFORE YOU DIG
CALL 1–800–362–2764
OHIO UTILITY PROTECTION SERVICE
CALL NON–SERVICE FACILITY
OWNERS DIRECT

PROFESSIONAL STAMP

SIGN:
DATE:

CONTRACT DRAWING

PRINTS NOT BEARING THIS STAMP WERE MADE PRIOR TO ADVERTISING FOR BIDS AND ARE TO BE CONSIDERED OBSOLETE FOR CONTRACT PURPOSES.

Department of Transportation and Engineering

City of Cincinnati
City Hall
801 Plum Street
Cincinnati, Ohio 45202

CINCINNATI STREETCAR

OVERHEAD CONTACT SYSTEM
ASSEMBLY TYPE C-20 & C-21

Revisions

No.	Date
	7/02/2012
	7/02/2012
	7/02/2012
	7/12/2012

Drawn by ND
Designed by MH
Checked by HSZ
Reviewed by JTB

Consultant

PB HDR

File Number

ACC No. 23126

G-OD-0133

$PLTDRVS$
T:\290141a_Cincinnati.Street.Car\OCS\S_G-OD-0133.dgn
7/12/2012
12:44:44 PM

NOTES:

1. CLAMP HEIGHT TO BE ADJUSTED AS NECESSARY TO ACHIEVE THE REQUIRED CONTACT WIRE HEIGHT.
2. OVERALL LENGTH TO BE DETERMINED IN THE FIELD.
3. BULL RINGS MAY BE INSERTED INTO THE CROSS SPAN CABLE.

BILL OF MATERIALS

ITEM	DESCRIPTION	MANUFACTURER	PART NO.	QUANTITY	
				TYPE PO–1	TYPE PO–2
1	POLE BAND	MAC	KMA–335	2	–
2	CLAMP WITH CLEVIS END FOR ROUND POLE	MAC	D2623–01 05 A 2	1	–
3	TURNBUCKLE JAW – EYE	MAC	KMA–141–2	1	–
4	STRANDVISE 3/8"	MAC	KMA–017–3	4	8
5	STRAIN INSULATOR EYE – EYE	MAC	KMA–008–6	1	2
6	STAINLESS STEEL CABLE 3/8" DIA.	–	–	AS REQ.	AS REQ.
7	SHACKLE	MAC	D0231–02	1	1
8	Y–BOLT FOR 2 STEADY ARMS	MAC	E3608–01	1	1
9	INSULATED STEADY ARM COMPLETE	MAC	2411–05	2	2
10	CONTACT WIRE CLAMP	MAC	E3183–02	2	2
11	GALV. RING 5/8" x 3"	MAC	–	–	2

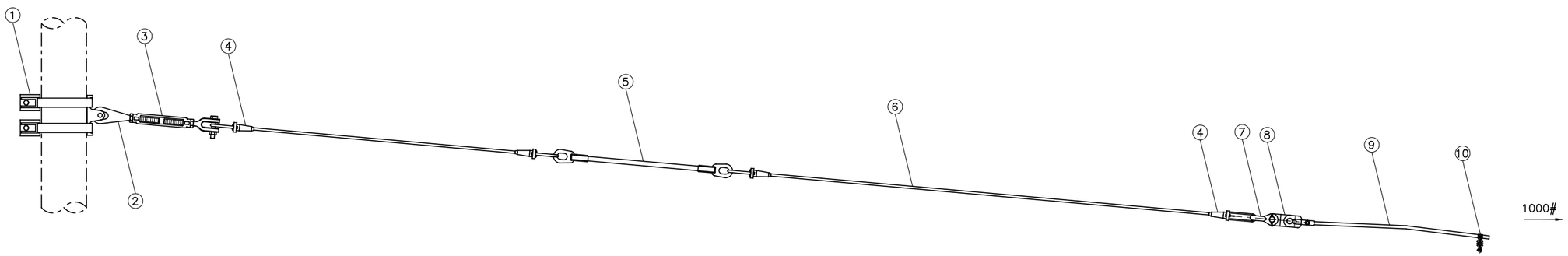

ELEVATION
PULL - OFF ASSEMBLY TYPE PO-1

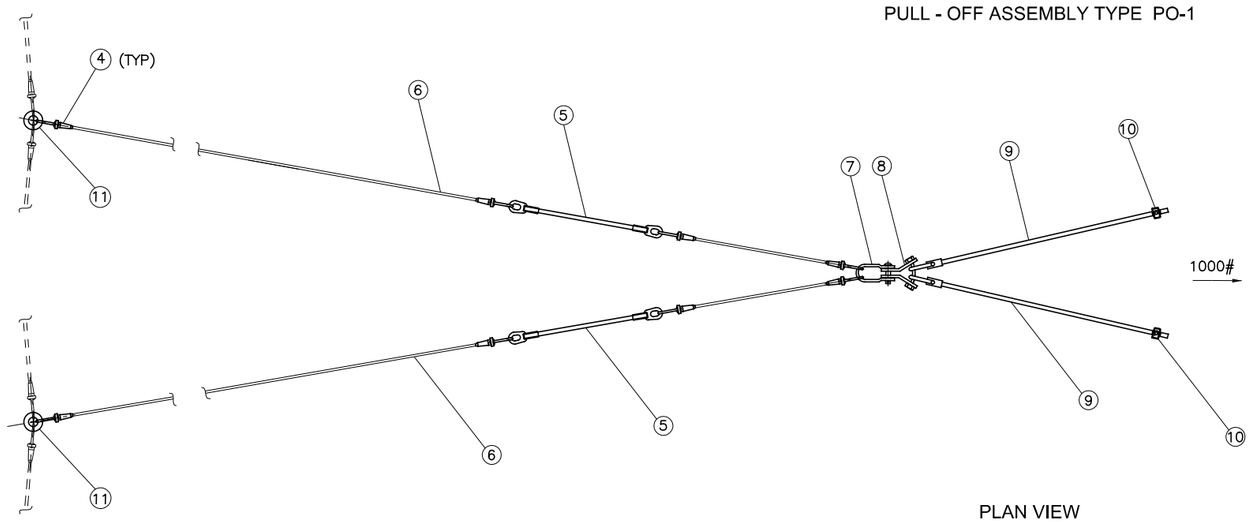

PLAN VIEW
PULL - OFF ASSEMBLY TYPE PO-2

CAUTION UNDERGROUND UTILITIES
2 WORKING DAYS
BEFORE YOU DIG
CALL 1–800–362–2764
OHIO UTILITY PROTECTION SERVICE
CALL NON–SERVICE FACILITY
OWNERS DIRECT

PROFESSIONAL STAMP

SIGN:
DATE:

CONTRACT DRAWING

PRINTS NOT BEARING THIS STAMP WERE MADE PRIOR TO ADVERTISING FOR BIDS AND ARE TO BE CONSIDERED OBSOLETE FOR CONTRACT PURPOSES.

Department of Transportation and Engineering

City of Cincinnati
City Hall
801 Plum Street
Cincinnati, Ohio 45202

CINCINNATI STREETCAR

OVERHEAD CONTACT SYSTEM
PULL - OFF ASSEMBLY

Revisions

No.				

Drawn by ND	Date 7/02/2012	Designed by MH	Date 7/02/2012
Checked by HSZ	Date 7/02/2012	Reviewed by JTB	Date 7/12/2012

Consultant

PB HDR

File Number

ACC No. 23126

G-OD-0134

$PLTDRV$$
T:\29014a_Cincinnati:Street.Car\OCS\S_G-OD-0134.dgn
7/12/2012 12:44:46 PM

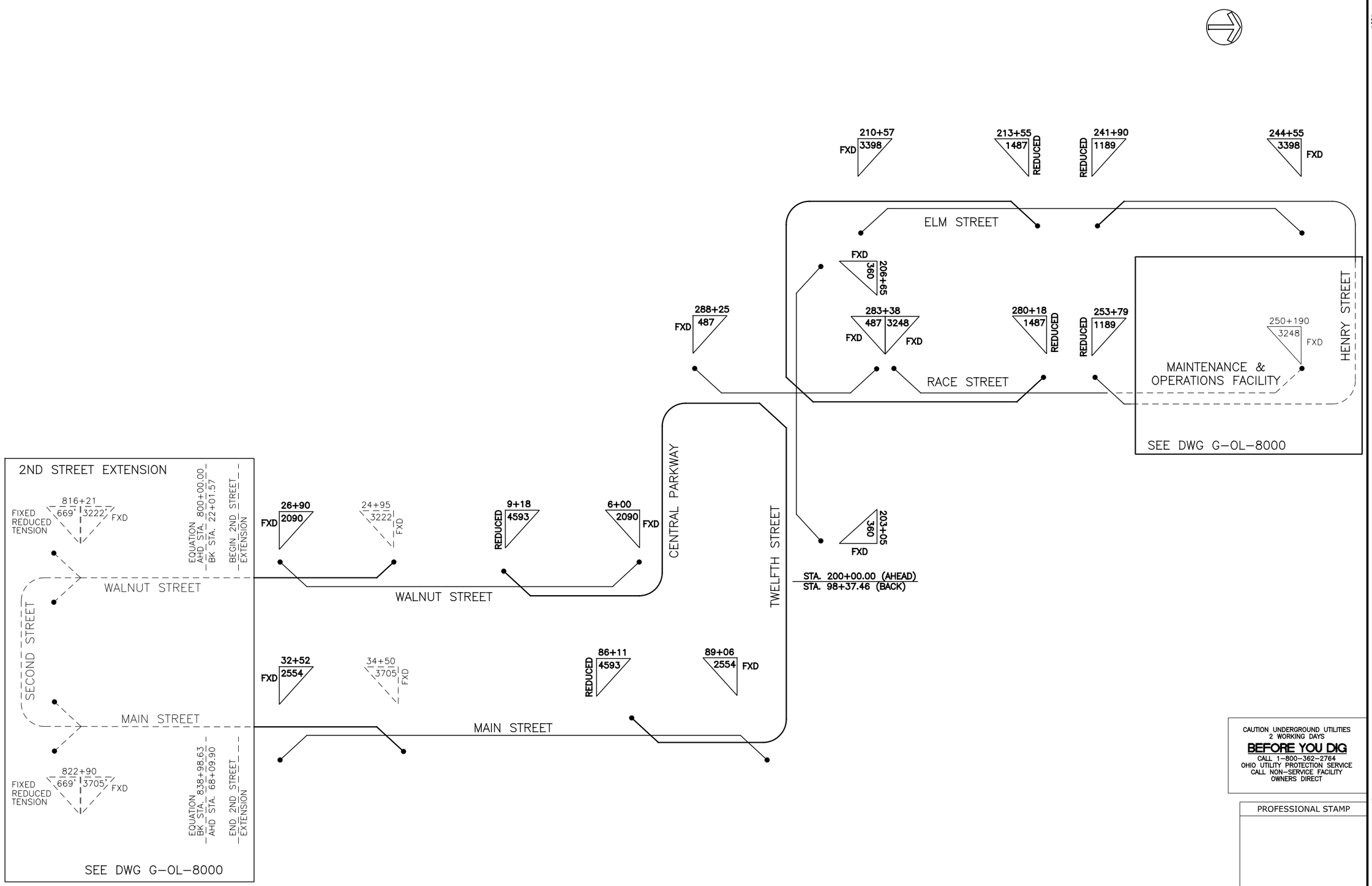

CONTRACT DRAWING

PRINTS NOT BEARING THIS STAMP WERE MADE PRIOR TO ADVERTISING FOR BIDS AND ARE TO BE CONSIDERED OBSOLETE FOR CONTRACT PURPOSES.

Department of Transportation and Engineering

City of Cincinnati
City Hall
801 Plum Street
Cincinnati, Ohio 45202

CINCINNATI STREETCAR

OVERLAP CHART

Revisions

No.				

Date	7/02/2012
Date	7/02/2012
Date	7/02/2012
Date	7/12/2012

Drawn by	ND
Designed by	MH
Checked by	HSZ
Reviewed by	JTB

Consultant

PB HDR

File Number

ACC No. 23126

G-OD-0135

CAUTION UNDERGROUND UTILITIES
2 WORKING DAYS
BEFORE YOU DIG
CALL 1-800-362-2764
OHIO UTILITY PROTECTION SERVICE
CALL NON-SERVICE FACILITY
OWNERS DIRECT

PROFESSIONAL STAMP

SIGN:

DATE:

$PLTDRV$
T:\29014a_Cincinnati.Street.Car\OCS\S_G-OD-0135.dgn
7/12/2012
12:44:47 PM

BILL OF MATERIALS

ITEM	DESCRIPTION	MANUFACTURER	PART NO.	QUANTITY
1	BOLT, 0.63" x 1"	IMPULSE P/N	000001–4411	2
2	INSULATOR, SPOOL	IMPULSE P/N	016835–2000	2
3	LOCKWASHER, 5/8" STL, HDG	IMPULSE P/N	019779–4055	2
4	SUPPORT, TROLLEY	IMPULSE P/N	054940–4001	2
5	BRACKET, SIGNAL CABLE	IMPULSE P/N	057333–3001	1

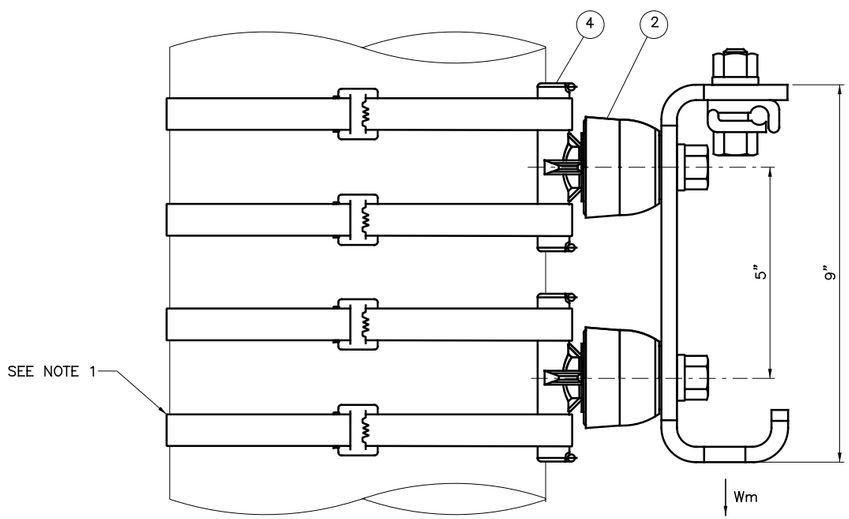

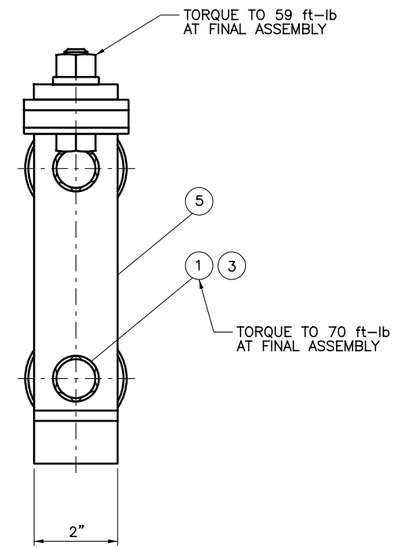

FEEDER SUPPORT BRACKET
FSB

NOTES: UNLESS OTHERWISE SPECIFIED.

1. 0.75" BAND–IT POLE BAND STRAPS, SUPPLIED BY CONTRACTOR.
2. Wm NOT TO EXCEED 1333 Lbs.

CAUTION UNDERGROUND UTILITIES
2 WORKING DAYS
BEFORE YOU DIG
CALL 1–800–362–2764
OHIO UTILITY PROTECTION SERVICE
CALL NON–SERVICE FACILITY
OWNERS DIRECT

PROFESSIONAL STAMP

SIGN:
DATE:

CONTRACT DRAWING

PRINTS NOT BEARING THIS STAMP WERE MADE PRIOR TO ADVERTISING FOR BIDS AND ARE TO BE CONSIDERED OBSOLETE FOR CONTRACT PURPOSES.

Department of Transportation and Engineering

City of Cincinnati
City Hall
801 Plum Street
Cincinnati, Ohio 45202

CINCINNATI STREETCAR

OVERHEAD CONTACT SYSTEM
FEEDER SUPPORT BRACKET

Revisions

No.			

Drawn by ND	Designed by MH	Checked by HSZ	Reviewed by JTB
Date 7/02/2012	Date 7/02/2012	Date 7/02/2012	Date 7/12/2012

Consultant

PB HDR

File Number

ACC No. 23126

G-OD-0136

$PLTDRV$$
T:\29014a_Cincinnati.Street.Car\OCS\S_G-OD-0136.dgn
7/12/2012 12:44:48 PM

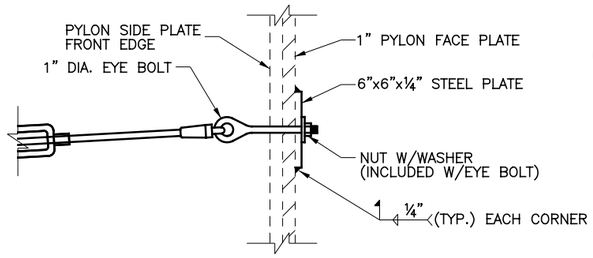

DETAIL "A"
NOT TO SCALE

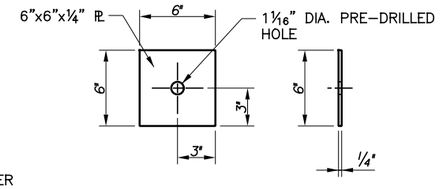

PLATE DETAILS
NOT TO SCALE

NOTES:

1. FOR CONTACT WIRE HEIGHT AND STAGGER SEE OCS LAYOUT PLAN.
2. CONTRACTOR TO CONTACT CITY FOR ACCESS TO THE PYLON INTERIOR FOR EYE BOLT INSTALLATION. (BACKER PLATE, WASHER AND NUT FASTENING).
3. SEE G-OD-0121 AND G-OD-0122 FOR WIRE CROSS-SPAN ASSEMBLY DETAILS.
4. THE CONTRACTOR SHALL PAINT THE 1" Ø EYE BOLT AND 6"x6"x¼" STEEL PLATE PER THE SAME PROCEDURE AND COLOR OF THE EXISTING PYLON AND REPAIR ANY DAMAGE TO THE PYLON PAINT DURING INSTALLAITON. COST INCLUDED WITH ITEM PAYMENTS.
5. 6" X 6" X ¼" PLATE TO BE GR. 50 STEEL. EYE BOLT TO BE TYPE 316 STAINLESS STEEL.

BILL OF MATERIALS

ITEM	DESCRIPTION	QUANTITY
1	1" DIA. THREADED EYE BOLT (PAINTED)	4
2	6"x6"x¼" STEEL PLATE (PAINTED)	4
3	1" THREADED NUT (WITH EYE BOLT)	4
4	1" ROUND WASHER (WITH EYE BOLT)	4
5	FIELD DRILLED HOLE 1 1/16" DIA.	4

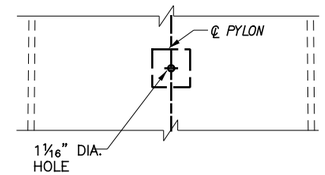

DETAIL "B"
NOT TO SCALE

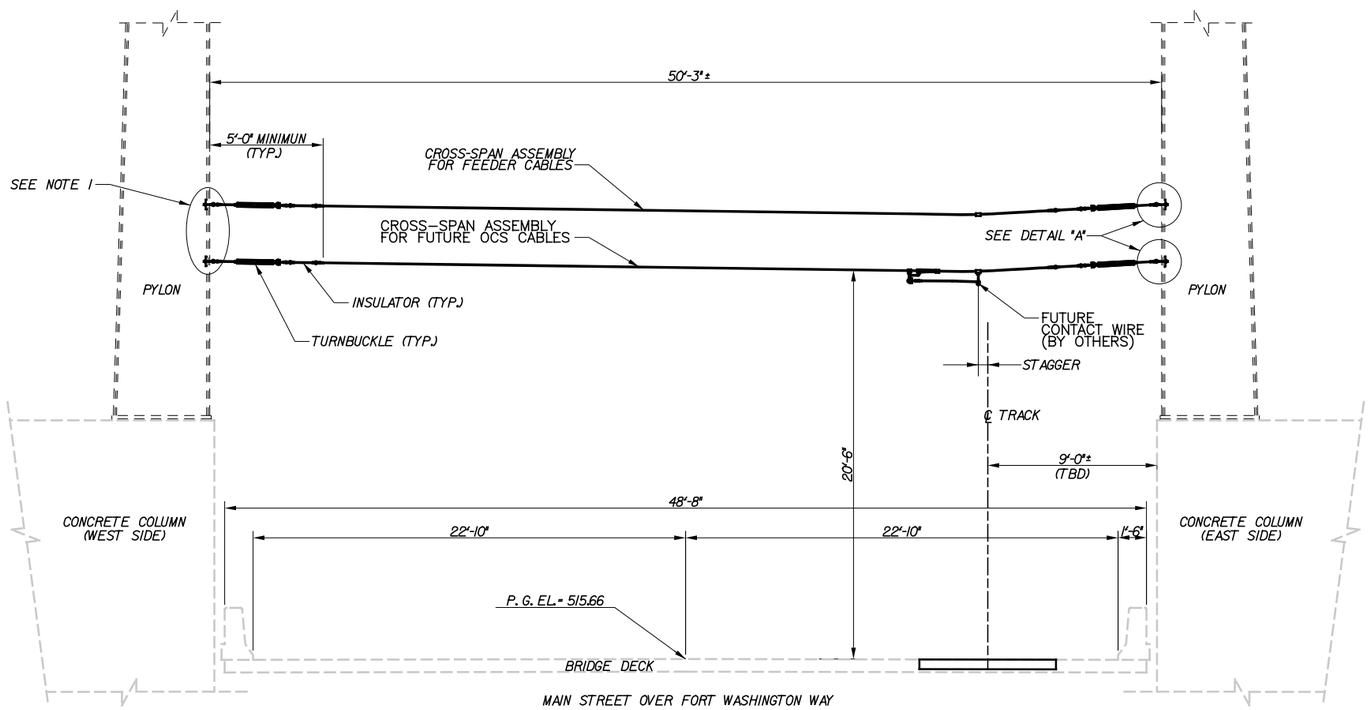

PYLON SECTION
SCALE: 1/4" =1'-0"

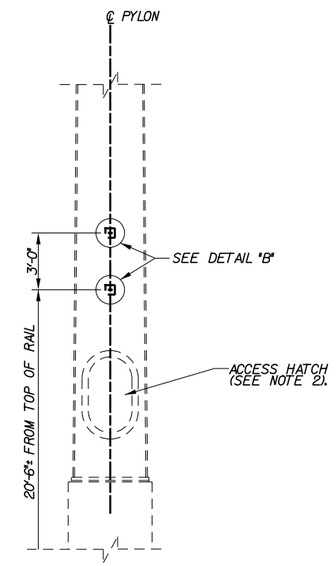

PYLON BACK ELEVATION
SCALE: 1/4" =1'-0"

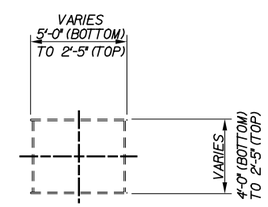

PYLON TYPICAL SECTION
SCALE: 1/4" =1'-0"

NOTE: ALL ELEVATIONS AND DIMENSIONS WERE HARD CONVERTED (1m = 3.2808ft) FROM FORT WASHINGTON WAY PROJECT PLANS.

PLANS FOR THE FORT WASHINGTON WAY PROJECT ARE ON FILE WITH THE CITY OF CINCINNATI AND ARE AVAILABLE UPON REQUEST.

WHERE NEW WORK IS TO BE FITTED TO EXISTING WORK, THE CONTRACTOR SHALL CHECK ALL DIMENSIONS AND CONDITIONS IN THE FIELD, REPORT ANY DISCREPANCIES OR ADVERSE CONDITIONS TO THE ENGINEER AND ASSUME RESPONSIBILITY FOR THEIR CORRECTNESS.

CAUTION UNDERGROUND UTILITIES
2 WORKING DAYS
BEFORE YOU DIG
CALL 1-800-362-2764
OHIO UTILITY PROTECTION SERVICE
CALL NON-SERVICE FACILITY OWNERS DIRECT

DEPARTMENT OF TRANSPORTATION & ENGINEERING CITY OF CINCINNATI OHIO

CONTRACT DRAWING

PRINTS NOT BEARING THIS STAMP WERE MADE PRIOR TO ADVERTISING FOR BIDS AND ARE TO BE CONSIDERED OBSOLETE FOR CONTRACT PURPOSES.

Department of Transportation and Engineering

City of Cincinnati
City Hall
801 Plum Street
Cincinnati, Ohio 45202

CINCINNATI STREETCAR
MAIN STREET
OCS WIRE SUPPORT DETAILS

Revisions
No.

	Date
Drawn by MJC	12/20/2011
Designed by KRK	12/20/2011
Checked by BMG	12/20/2011
Reviewed by JTB	12/20/2011

Consultant

PB HDR

File Number

ACC No. 23126

G-OD-0138

DOTE_Mono_PDF_Half.pltcfg
T:\29014A-Streetcar\CAD\Structures\Main Street\S_G_ST_2001.dgn
12/16/2011 11:06:32 AM

POLE No.					
STATIONING	1+21.67	2+02.79	2+58.16	3+26.45	3+93.96
UPPER CROSS-SPAN HT.(FT)					
POLE TYPE / LENGTH	27070/25.0	27070/26.5	27070/24.5	27070/28.0	27070/26.5
POLE OFFSET	7.59/LT	8.74/LT	8.55/LT	13.06/LT	10.63/LT
CONTACT WIRE HT. (FT)	19.5	19.5	19.5	19.5	19.5
STAGGER (IN)	6↓	6↓	6↓	6↓	0↓
SUPPORT/REGISTRATION TYPE	C-1	C-7	C-1	C-7	C-1
TERMINATION TYPE / HT.					
JUMPER TYPE					
FOUNDATION TYPE	TPF-1	TPF-1	TPF-1	TPF-1	TPF-1
MISCELLANEOUS					

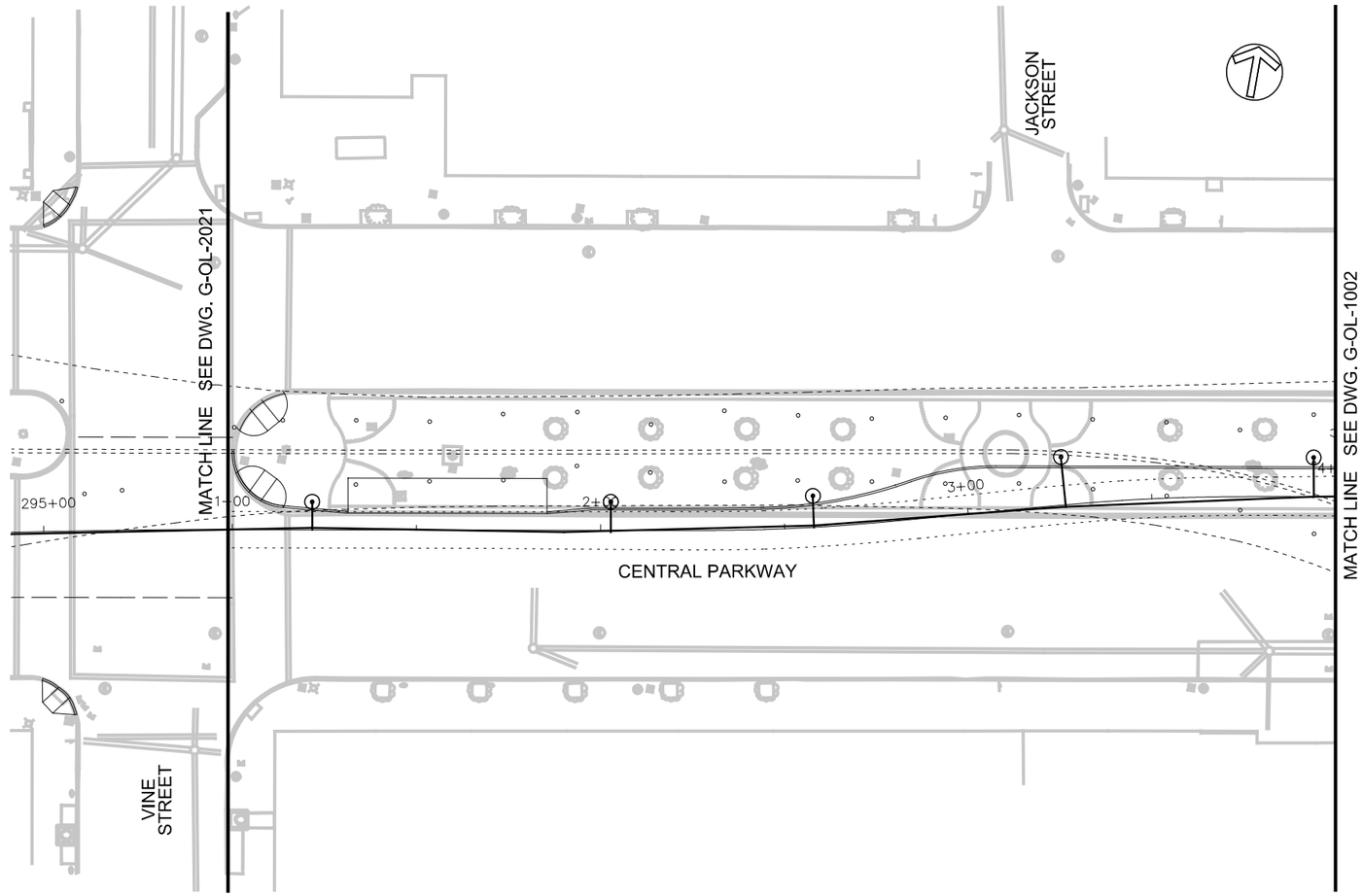

NOTES:

1. A DISTANCE OF SIX FEET BEHIND THE CURB AND 15 FEET ON EITHER SIDE OF PROPOSED OCS POLES AND SIGNAL POLES (INCLUDING ANY DISTURBANCE TO THE EXISTING CURB) HAS BEEN QUANTIFIED FOR BIDDING PURPOSES. THE CITY'S ENGINEER WILL DETERMINE ACTUAL PAY LIMITS FOR THIS WORK. NO ADDITIONAL INCREASE TO THE UNIT COST WILL BE ALLOWED FOR THIS WORK IF THE QUANTITIES ARE MORE OR LESS THAN THE AMOUNT QUANTIFIED FOR BIDDING PURPOSES.

2. A STANDARD CITY OF CINCINNATI FOUNDATION TO BE USED WHERE FOUNDATION TYPES NOT SHOWN BELOW APPLICABLE POLES ON TABULATION.

CAUTION UNDERGROUND UTILITIES
2 WORKING DAYS
BEFORE YOU DIG
CALL 1-800-362-2764
OHIO UTILITY PROTECTION SERVICE
CALL NON-SERVICE FACILITY
OWNERS DIRECT

GRAPHIC SCALE
20 0 20 40 80
(IN FEET)
1 inch = 20 ft. Full Size
1 inch = 40 ft. Half Size

PROFESSIONAL STAMP

SIGN:
DATE:

CONTRACT DRAWING

PRINTS NOT BEARING THIS STAMP WERE MADE PRIOR TO ADVERTISING FOR BIDS AND ARE TO BE CONSIDERED OBSOLETE FOR CONTRACT PURPOSES.

Department of Transportation and Engineering

City of Cincinnati
City Hall
801 Plum Street
Cincinnati, Ohio 45202

CINCINNATI STREETCAR
CENTRAL BUSINESS DISTRICT

OCS PLANS - CENTRAL PARKWAY
STA 1+00.00 TO STA 4+00.00

Revisions

No.		

Drawn by LP/ND	Date 7/02/2012
Designed by MH/RL	Date 7/02/2012
Checked by HSZ	Date 7/02/2012
Reviewed by JTB	Date 7/12/2012

Consultant

PB HDR

File Number

ACC No. 23126

G-OL-1001

$PLTDRV$$
T:\290114a_Cincinnati.Street.Car\OCS\S_G-OL-1001.dgn
12:45:17 PM
7/12/2012

POLE No.									
STATIONING	4+39.98	4+63.91	4+87.41	5+05	5+25	5+42.78	5+64	5+82	6+00
UPPER CROSS-SPAN HT.(FT)			21.4/21.7			22.5/21.4/ 23.0			22.5/21.9
POLE TYPE / LENGTH	27070/25.0	27070/25.5	TP-1/23.0	–	–	TP-2/25.0	–	–	52028/24.0
POLE OFFSET	10.80/LT	10.81/LT	26.21/LT			67.51/LT			26.59/LT
CONTACT WIRE HT. (FT)	19.5	19.5	19.5	19.5	19.5	19.5	19.5	19.5	19.5
STAGGER (IN)	6↓	9↓	9↓	9↓	9↓	9↓	9↓	9↓	9↓
SUPPORT/REGISTRATION TYPE	C-1	C-2	CST-2	BBPO-2	BBPO-2	CST-2	BBPO-2	BBPO-1	CST-1
TERMINATION TYPE / HT.									
JUMPER TYPE									
FOUNDATION TYPE	TPF-1	TPF-1	TPF-2			TPF-7			TPF-6
MISCELLANEOUS					BPO			BPO	

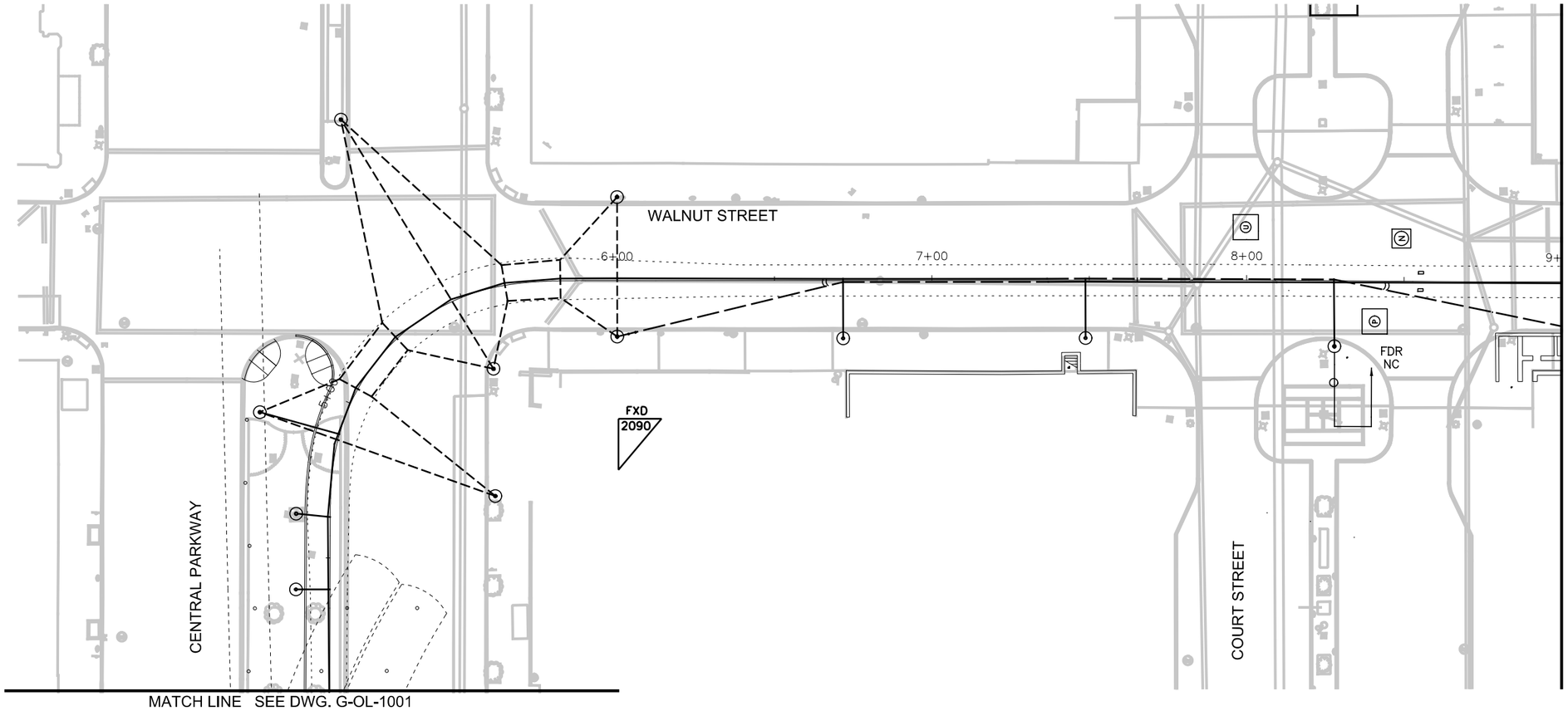

POLE No.						
STATIONING	4+73.30	5+51.52	6+00	6+71.80	7+48.80	8+28.02
UPPER CROSS-SPAN HT.(FT)	22.3/24.6	24.2/22.5/ 23.1	22.9/22.0			
POLE TYPE / LENGTH	52028/26.0	72025/26.0	TP-1/25.0	38045/30.0	38045/30.0	38045F/30.0
POLE OFFSET	52.23/RT	24.79/RT	17.75/RT	18.39/RT	18.38/RT	20.82/RT
CONTACT WIRE HT. (FT)				19.5/20.5	19.5/19.5	20.5/19.5
STAGGER (IN)	–	–	–	6↓ 6↓ (OOR)	6↓ 6↓	(OOR)6↓ 0↓
SUPPORT/REGISTRATION TYPE				C-11	C-4	C-10
TERMINATION TYPE / HT.			CWT/22			
JUMPER TYPE						
FOUNDATION TYPE			TPF-6			
MISCELLANEOUS		BPO	BPO	FF-1	KN-1	FF-1, FP-1, SA-1

NOTES:
1. A DISTANCE OF SIX FEET BEHIND THE CURB AND 15 FEET ON EITHER SIDE OF PROPOSED OCS POLES AND SIGNAL POLES (INCLUDING ANY DISTURBANCE TO THE EXISTING CURB) HAS BEEN QUANTIFIED FOR BIDDING PURPOSES. THE CITY'S ENGINEER WILL DETERMINE ACTUAL PAY LIMITS FOR THIS WORK. NO ADDITIONAL INCREASE TO THE UNIT COST WILL BE ALLOWED FOR THIS WORK IF THE QUANTITIES ARE MORE OR LESS THAN THE AMOUNT QUANTIFIED FOR BIDDING PURPOSES.
2. A STANDARD CITY OF CINCINNATI FOUNDATION TO BE USED WHERE FOUNDATION TYPES NOT SHOWN BELOW APPLICABLE POLES ON TABULATION.

GRAPHIC SCALE
20 0 20 40 80
(IN FEET)
1 inch = 20 ft. Full Size
1 inch = 40 ft. Half Size

CAUTION UNDERGROUND UTILITIES
2 WORKING DAYS
BEFORE YOU DIG
CALL 1-800-362-2764
OHIO UTILITY PROTECTION SERVICE
CALL NON-SERVICE FACILITY OWNERS DIRECT

PROFESSIONAL STAMP

SIGN:
DATE:

CONTRACT DRAWING

PRINTS NOT BEARING THIS STAMP WERE MADE PRIOR TO ADVERTISING FOR BIDS AND ARE TO BE CONSIDERED OBSOLETE FOR CONTRACT PURPOSES.

Department of Transportation and Engineering
City of Cincinnati
City Hall
801 Plum Street
Cincinnati, Ohio 45202

CINCINNATI STREETCAR
CENTRAL BUSINESS DISTRICT
OCS PLANS - WALNUT STREET
STA 4+00.00 TO STA 9+00.00

Revisions
No.

Date	7/02/2012
Date	7/02/2012
Date	7/02/2012
Date	7/12/2012

Drawn by	LP/ND
Designed by	MH/RL
Checked by	HSZ
Reviewed by	JTB

Consultant
PB HDR

File Number
ACC No. 23126

G-OL-1002

$PLTDRV$$
T:\29014a_Cincinnati.Street.Car\OCS\S_G-OL-1002.dgn
12:45:23 PM
7/12/2012

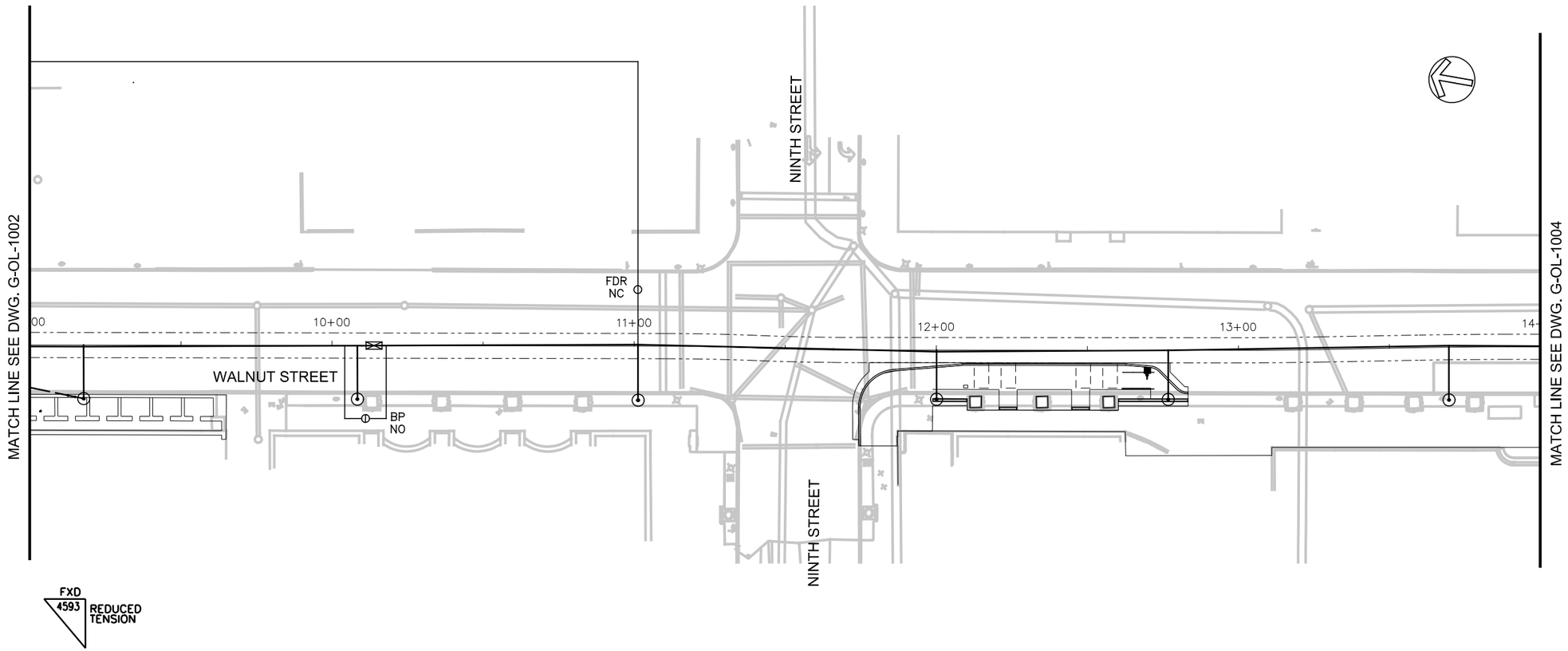

POLE No.						
STATIONING	9+17.85	10+08.45	11+01.37	12+00.13	12+76.81	13+69.52
UPPER CROSS-SPAN HT.(FT)						
POLE TYPE / LENGTH	72025/28.0	27070/28.0	38045F/30.0	27070/28.0	27070/28.0	38045/30.0
POLE OFFSET	17.67/RT	17.71/RT	17.91/RT	16.27/RT	16.26/RT	17.45/RT
CONTACT WIRE HT. (FT)	19.5	19.5	19.5	19.5	19.5	19.5
STAGGER (IN)	6↓	0↓	6↓	6↓	0↓	6↓
SUPPORT/REGISTRATION TYPE	C-4	C-4	C-7	C-4	C-4	C-7
TERMINATION TYPE / HT.	CWT/22.0					
JUMPER TYPE						
FOUNDATION TYPE	TPF-10					
MISCELLANEOUS		BP-1	FP-1, SA-1			

NOTES:

1. A DISTANCE OF SIX FEET BEHIND THE CURB AND 15 FEET ON EITHER SIDE OF PROPOSED OCS POLES AND SIGNAL POLES (INCLUDING ANY DISTURBANCE TO THE EXISTING CURB) HAS BEEN QUANTIFIED FOR BIDDING PURPOSES. THE CITY'S ENGINEER WILL DETERMINE ACTUAL PAY LIMITS FOR THIS WORK. NO ADDITIONAL INCREASE TO THE UNIT COST WILL BE ALLOWED FOR THIS WORK IF THE QUANTITIES ARE MORE OR LESS THAN THE AMOUNT QUANTIFIED FOR BIDDING PURPOSES.

2. A STANDARD CITY OF CINCINNATI FOUNDATION TO BE USED WHERE FOUNDATION TYPES NOT SHOWN BELOW APPLICABLE POLES ON TABULATION.

CAUTION UNDERGROUND UTILITIES
2 WORKING DAYS
BEFORE YOU DIG
CALL 1-800-362-2764
OHIO UTILITY PROTECTION SERVICE
CALL NON-SERVICE FACILITY
OWNERS DIRECT

GRAPHIC SCALE
20 0 20 40 80
(IN FEET)
1 inch = 20 ft. Full Size
1 inch = 40 ft. Half Size

PROFESSIONAL STAMP

SIGN:
DATE:

CONTRACT DRAWING

PRINTS NOT BEARING THIS STAMP WERE MADE PRIOR TO ADVERTISING FOR BIDS AND ARE TO BE CONSIDERED OBSOLETE FOR CONTRACT PURPOSES.

Department of Transportation and Engineering

City of Cincinnati
City Hall
801 Plum Street
Cincinnati, Ohio 45202

CINCINNATI STREETCAR
CENTRAL BUSINESS DISTRICT
OCS PLANS - WALNUT STREET
STA 9+00.00 TO STA 14+00.00

Revisions
No.

	Date
	7/02/2012
	7/02/2012
	7/02/2012
	7/12/2012

Drawn by LP/ND
Designed by MH/RL
Checked by HSZ
Reviewed by JTB

Consultant

PB HDR

File Number

ACC No. 23126

G-OL-1003

$PLTDRV$$
T:\29014a_Cincinnati.Street.Car\OCS\S_G-OL-1003.dgn
7/12/2012
12:45:46 PM

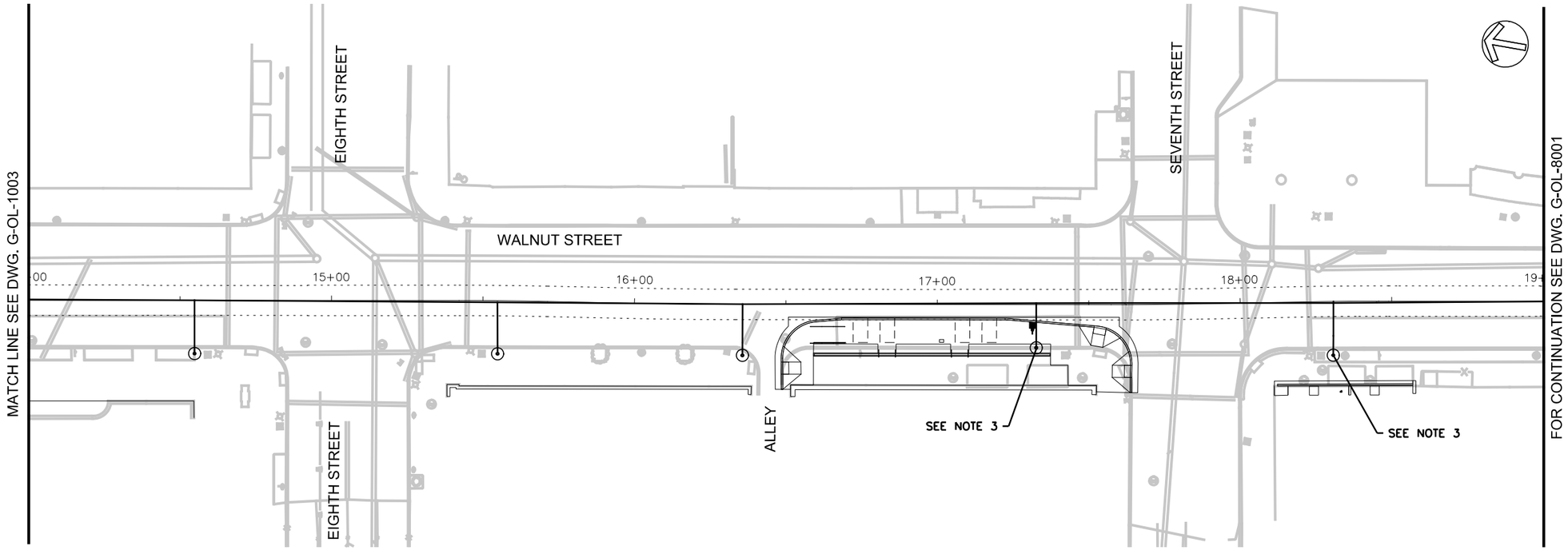

POLE No.					
STATIONING	14+54.78	15+54.99	16+35.68	17+32.69	18+30.54
UPPER CROSS-SPAN HT.(FT)					
POLE TYPE / LENGTH	27070/28.0	27070/28.0	27070/28.0	38045/30.0	27070/28
POLE OFFSET	17.57/RT	17.51/RT	16.82/RT	14.26/RT	17.76/RT
CONTACT WIRE HT. (FT)	19.5	19.5	19.5	19.5	19.5
STAGGER (IN)	0ł	6ł	0 NR.	6ł	6ł
SUPPORT/REGISTRATION TYPE	C-4	C-4	C-4 (MOD)	C-7	C-4
TERMINATION TYPE / HT.					
JUMPER TYPE					
FOUNDATION TYPE				TPF-11	
MISCELLANEOUS					

NOTES:

1. A DISTANCE OF SIX FEET BEHIND THE CURB AND 15 FEET ON EITHER SIDE OF PROPOSED OCS POLES AND SIGNAL POLES (INCLUDING ANY DISTURBANCE TO THE EXISTING CURB) HAS BEEN QUANTIFIED FOR BIDDING PURPOSES. THE CITY'S ENGINEER WILL DETERMINE ACTUAL PAY LIMITS FOR THIS WORK. NO ADDITIONAL INCREASE TO THE UNIT COST WILL BE ALLOWED FOR THIS WORK IF THE QUANTITIES ARE MORE OR LESS THAN THE AMOUNT QUANTIFIED FOR BIDDING PURPOSES.
2. A STANDARD CITY OF CINCINNATI FOUNDATION TO BE USED WHERE FOUNDATION TYPES NOT SHOWN BELOW APPLICABLE POLES ON TABULATION.
3. VERIFY EXTENT AND LOCATION OF EXISTING ELECTRIC VAULT PRIOR TO FOUNDATION INSTALLATION.

GRAPHIC SCALE

20 0 20 40 80

(IN FEET)
1 inch = 20 ft. Full Size
1 inch = 40 ft. Half Size

CAUTION UNDERGROUND UTILITIES
2 WORKING DAYS
BEFORE YOU DIG
CALL 1-800-362-2764
OHIO UTILITY PROTECTION SERVICE
CALL NON-SERVICE FACILITY
OWNERS DIRECT

PROFESSIONAL STAMP

SIGN:

DATE:

CONTRACT DRAWING

PRINTS NOT BEARING THIS STAMP WERE MADE PRIOR TO ADVERTISING FOR BIDS AND ARE TO BE CONSIDERED OBSOLETE FOR CONTRACT PURPOSES.

Department of Transportation and Engineering

City of Cincinnati
City Hall
801 Plum Street
Cincinnati, Ohio 45202

CINCINNATI STREETCAR
CENTRAL BUSINESS DISTRICT

OCS PLANS - WALNUT STREET
STA 14+00.00 TO STA 19+00.00

Revisions

No.				

Drawn by LP/ND Date 7/02/2012
Designed by MH/RL Date 7/02/2012
Checked by HSZ Date 7/02/2012
Reviewed by JTB Date 7/12/2012

Consultant

PB HDR

File Number

ACC No. 23126

G-OL-1004

$PLTDRVS$
T:\29014g_Cincinnati.Street.Car\OCS\S_G-OL-1004.dgn
7/12/2012 12:46:03 PM

POLE No.							
STATIONING	69+08.77	69+62.98	70+59.16	71+33.51	71+94.60	72+81.18	73+80.51
UPPER CROSS-SPAN HT.(FT)							
POLE TYPE / LENGTH	27070/23.0	38045/30.0	27070/28.0	27070/28.0	38045/30.0	27070/28.0	27070/28.0
POLE OFFSET	7.50/LT	16.54/LT	17.32/LT	17.27/LT	17.31/LT	17.20/LT	17.25/LT
CONTACT WIRE HT. (FT)	17.4	18.2	19.2	19.5	19.5	19.5	19.5
STAGGER (IN)	0 NR.	6↓	0 NR.	6↓	3↓	6↓	0 NR.
SUPPORT/REGISTRATION TYPE	C-4(MOD)	C-7	C-4(MOD)	C-4	C-7	C-4	C-4(MOD)
TERMINATION TYPE / HT.							
JUMPER TYPE							
FOUNDATION TYPE						TPF-13	
MISCELLANEOUS							

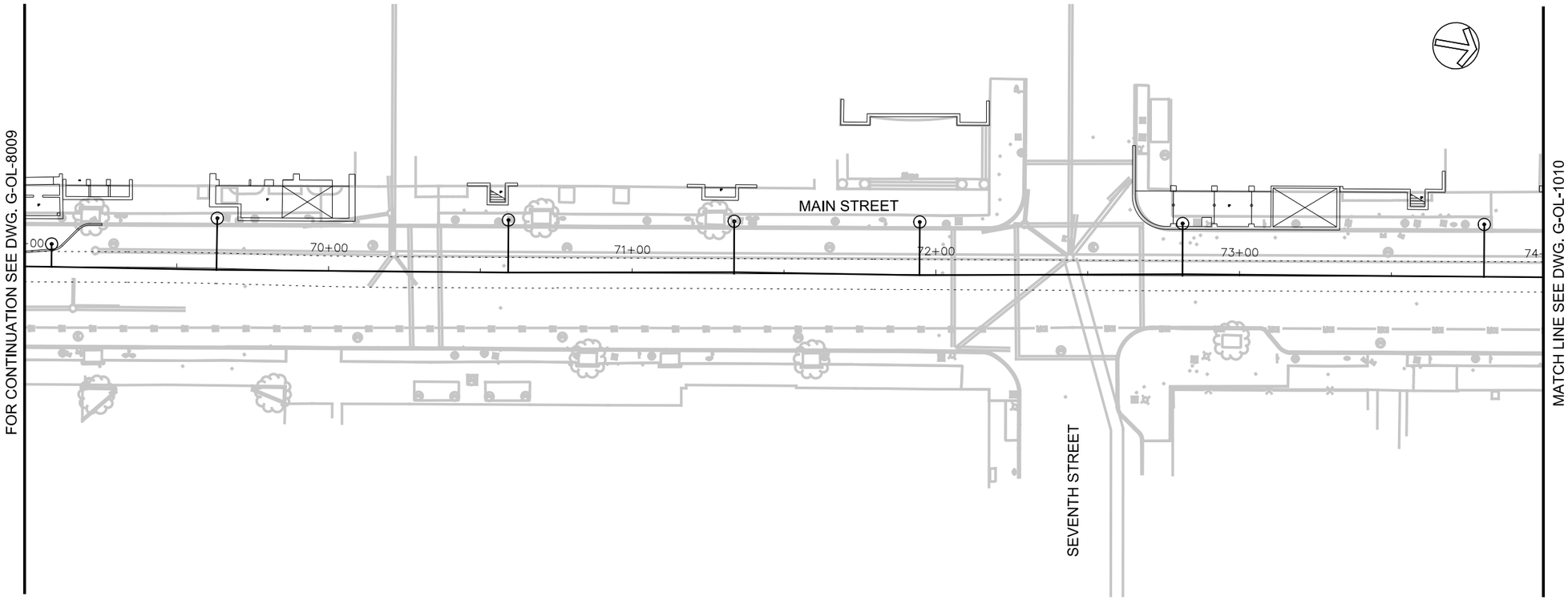

NOTES:

1. A DISTANCE OF SIX FEET BEHIND THE CURB AND 15 FEET ON EITHER SIDE OF PROPOSED OCS POLES AND SIGNAL POLES (INCLUDING ANY DISTURBANCE TO THE EXISTING CURB) HAS BEEN QUANTIFIED FOR BIDDING PURPOSES. THE CITY'S ENGINEER WILL DETERMINE ACTUAL PAY LIMITS FOR THIS WORK. NO ADDITIONAL INCREASE TO THE UNIT COST WILL BE ALLOWED FOR THIS WORK IF THE QUANTITIES ARE MORE OR LESS THAN THE AMOUNT QUANTIFIED FOR BIDDING PURPOSES.

2. A STANDARD CITY OF CINCINNATI FOUNDATION TO BE USED WHERE FOUNDATION TYPES NOT SHOWN BELOW APPLICABLE POLES ON TABULATION.

CAUTION UNDERGROUND UTILITIES
2 WORKING DAYS
BEFORE YOU DIG
CALL 1-800-362-2764
OHIO UTILITY PROTECTION SERVICE
CALL NON-SERVICE FACILITY
OWNERS DIRECT

GRAPHIC SCALE
20 0 20 40 80
(IN FEET)
1 inch = 20 ft. Full Size
1 inch = 40 ft. Half Size

PROFESSIONAL STAMP

SIGN:

DATE:

CONTRACT DRAWING

PRINTS NOT BEARING THIS STAMP WERE MADE PRIOR TO ADVERTISING FOR BIDS AND ARE TO BE CONSIDERED OBSOLETE FOR CONTRACT PURPOSES.

Department of Transportation and Engineering

City of Cincinnati
City Hall
801 Plum Street
Cincinnati, Ohio 45202

CINCINNATI STREETCAR
CENTRAL BUSINESS DISTRICT
OCS PLANS - MAIN STREET
STA 69+00.00 TO STA 74+00.00

Revisions

No.		

Date 7/02/2012
Date 7/02/2012
Date 7/02/2012
Date 7/12/2012

Drawn by LP/ND
Designed by MH/RL
Checked by HSZ
Reviewed by JTB

Consultant

PB HDR

File Number

ACC No. 23126

G-OL-1009

$PLTDRV$
T:\29014a_Cincinnati.Street.Car\OCS\S_G-OL-1009.dgn
7/12/2012 12:46:09 PM

POLE No.						
STATIONING	74+68.24	75+67.54	76+04.50	76+74.74	77+30.45	78+10.80
UPPER CROSS-SPAN HT.(FT)						
POLE TYPE / LENGTH	38045/30.0	27070/25.0	27070/25.5	38045/28.5	38045/30.0	27070/28.0
POLE OFFSET	17.57/LT	8.06/LT	9.02/LT	14.16/LT	16.43/LT	17.27/LT
CONTACT WIRE HT. (FT)	19.5	19.5	19.5	19.5	19.5	19.5
STAGGER (IN)	6↑	6↑	3↑	6↑	6↑	6↑
SUPPORT/REGISTRATION TYPE	C-7	C-1	C-1	C-7	C-7	C-4
TERMINATION TYPE / HT.						
JUMPER TYPE						
FOUNDATION TYPE						
MISCELLANEOUS						

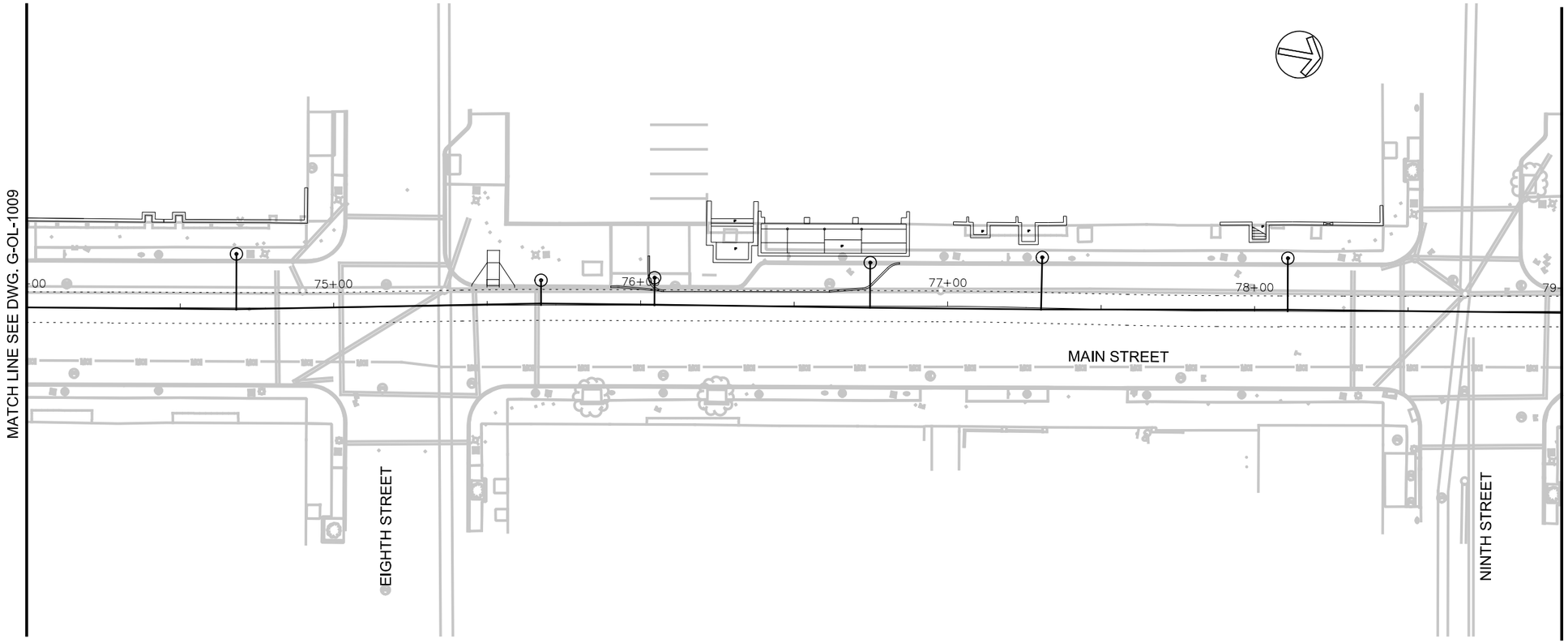

NOTES:

1. A DISTANCE OF SIX FEET BEHIND THE CURB AND 15 FEET ON EITHER SIDE OF PROPOSED OCS POLES AND SIGNAL POLES (INCLUDING ANY DISTURBANCE TO THE EXISTING CURB) HAS BEEN QUANTIFIED FOR BIDDING PURPOSES. THE CITY'S ENGINEER WILL DETERMINE ACTUAL PAY LIMITS FOR THIS WORK. NO ADDITIONAL INCREASE TO THE UNIT COST WILL BE ALLOWED FOR THIS WORK IF THE QUANTITIES ARE MORE OR LESS THAN THE AMOUNT QUANTIFIED FOR BIDDING PURPOSES.

2. A STANDARD CITY OF CINCINNATI FOUNDATION TO BE USED WHERE FOUNDATION TYPES NOT SHOWN BELOW APPLICABLE POLES ON TABULATION.

CAUTION UNDERGROUND UTILITIES
2 WORKING DAYS
BEFORE YOU DIG
CALL 1-800-362-2764
OHIO UTILITY PROTECTION SERVICE
CALL NON-SERVICE FACILITY
OWNERS DIRECT

GRAPHIC SCALE
20 0 20 40 80
(IN FEET)
1 inch = 20 ft. Full Size
1 inch = 40 ft. Half Size

PROFESSIONAL STAMP

SIGN:
DATE:

CONTRACT DRAWING

PRINTS NOT BEARING THIS STAMP WERE MADE PRIOR TO ADVERTISING FOR BIDS AND ARE TO BE CONSIDERED OBSOLETE FOR CONTRACT PURPOSES.

Department of Transportation and Engineering

City of Cincinnati
City Hall
801 Plum Street
Cincinnati, Ohio 45202

CINCINNATI STREETCAR
CENTRAL BUSINESS DISTRICT
OCS PLANS - MAIN STREET
STA 74+00.00 TO STA 79+00.00

Revisions
No.

	Date
Drawn by LP/ND	7/02/2012
Designed by MH/RL	7/02/2012
Checked by HSZ	7/02/2012
Reviewed by JTB	7/12/2012

Consultant

PB HDR

File Number

ACC No. 23126

G-OL-1010

$PLTDRV$$
T:\290114a_Cincinnati.Street.Car\OCS\S_G-OL-1010.dgn
7/12/2012 12:46:14 PM

POLE No.							
STATIONING	79+09.67	79+81.66	80+59.04	81+18.79	81+95.86	82+72.10	83+67.09
UPPER CROSS-SPAN HT.(FT)					24.1		
POLE TYPE / LENGTH	27070/28.0	27070/28.0	27070F/28.0	38045/30.0	33048/25.5	27070F/25.0	27070/28.0
POLE OFFSET	9.29/LT	13.26/LT	17.29/LT	17.32/LT	35.17/LT	6.99/LT	15.43/LT
CONTACT WIRE HT. (FT)	19.5	19.5	19.5	19.5	19.5	19.5	19.5
STAGGER (IN)	6↓	0 NR.	6↓	6↓	0↓	6↑	6↑
SUPPORT/REGISTRATION TYPE	C-7	C-4(MOD)	C-4	C-7	CST-1	C-1	C-4
TERMINATION TYPE / HT.							
JUMPER TYPE							
FOUNDATION TYPE							
MISCELLANEOUS			FP-1, SA-1	BP-1		FP-1, SA-1	

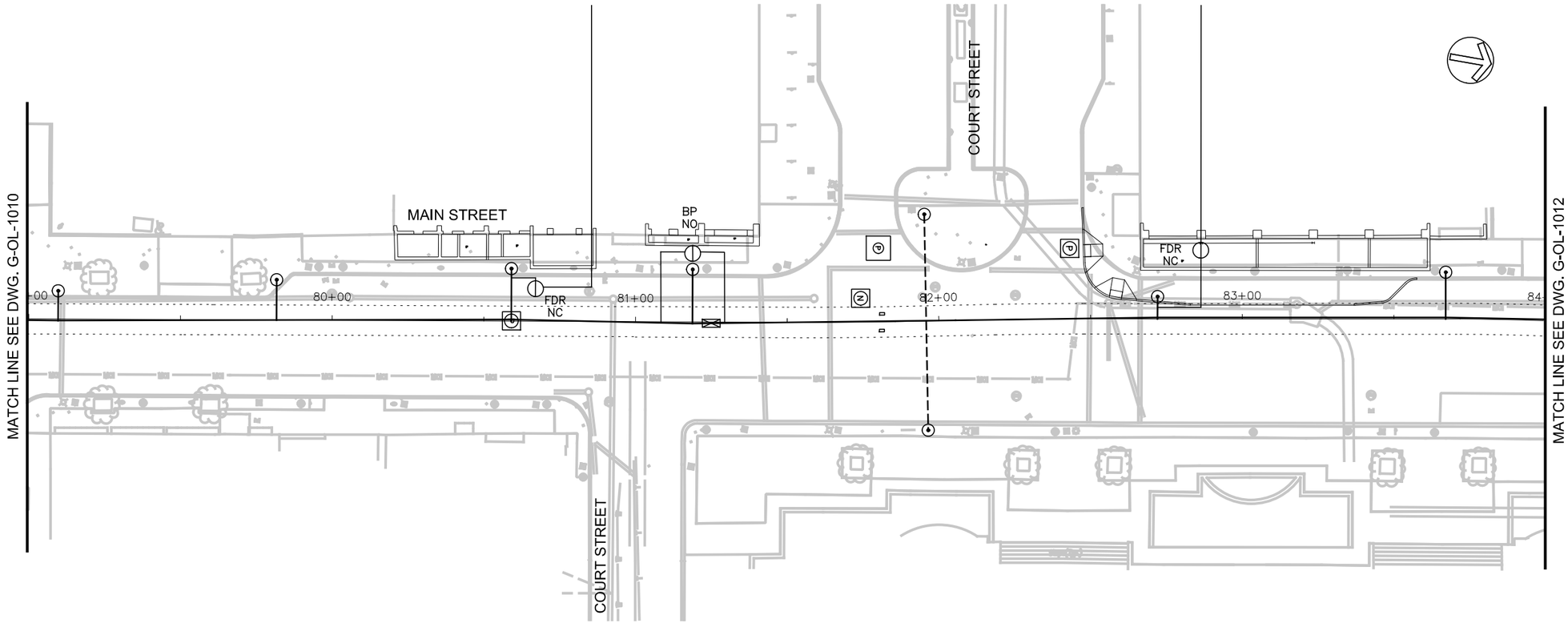

POLE No.	
STATIONING	81+95.83
UPPER CROSS-SPAN HT.(FT)	23.9
POLE TYPE / LENGTH	38045/25.0
POLE OFFSET	35.99/RT
CONTACT WIRE HT. (FT)	
STAGGER (IN)	-
SUPPORT/REGISTRATION TYPE	
TERMINATION TYPE / HT.	
JUMPER TYPE	
FOUNDATION TYPE	
MISCELLANEOUS	

NOTES:

1. A DISTANCE OF SIX FEET BEHIND THE CURB AND 15 FEET ON EITHER SIDE OF PROPOSED OCS POLES AND SIGNAL POLES (INCLUDING ANY DISTURBANCE TO THE EXISTING CURB) HAS BEEN QUANTIFIED FOR BIDDING PURPOSES. THE CITY'S ENGINEER WILL DETERMINE ACTUAL PAY LIMITS FOR THIS WORK. NO ADDITIONAL INCREASE TO THE UNIT COST WILL BE ALLOWED FOR THIS WORK IF THE QUANTITIES ARE MORE OR LESS THAN THE AMOUNT QUANTIFIED FOR BIDDING PURPOSES.

2. A STANDARD CITY OF CINCINNATI FOUNDATION TO BE USED WHERE FOUNDATION TYPES NOT SHOWN BELOW APPLICABLE POLES ON TABULATION.

GRAPHIC SCALE

20 0 20 40 80

(IN FEET)
1 inch = 20 ft. Full Size
1 inch = 40 ft. Half Size

CAUTION UNDERGROUND UTILITIES
2 WORKING DAYS
BEFORE YOU DIG
CALL 1-800-362-2764
OHIO UTILITY PROTECTION SERVICE
CALL NON-SERVICE FACILITY
OWNERS DIRECT

PROFESSIONAL STAMP

SIGN:

DATE:

CONTRACT DRAWING

PRINTS NOT BEARING THIS STAMP WERE MADE PRIOR TO ADVERTISING FOR BID, AND ARE TO BE CONSIDERED OBSOLETE FOR CONTRACT PURPOSES.

Department of Transportation and Engineering

City of Cincinnati
City Hall
801 Plum Street
Cincinnati, Ohio 45202

CINCINNATI STREETCAR
CENTRAL BUSINESS DISTRICT
OCS PLANS - MAIN STREET
STA 79+00.00 TO STA 84+00.00

Revisions

No.		

Date	7/02/2012
Date	7/02/2012
Date	7/02/2012
Date	7/12/2012
Drawn by	LP/ND
Designed by	MH/RL
Checked by	HSZ
Reviewed by	JTB

Consultant

PB HDR

File Number

ACC No. 23126

G-OL-1011

$PLTDRV$$
T:\29014a_Cincinnati.Street.Car\OCS\S_G-OL-1011.dgn
12:46:19 PM
7/12/2012

POLE No.					
STATIONING	84+37.92	85+38.76	86+10.50	86+95.83	87+65.51
UPPER CROSS-SPAN HT.(FT)		24.7			
POLE TYPE / LENGTH	27070/28.0	38045/26.0	72025/30.0	38045/30.0	27070/30.0
POLE OFFSET	16.59/LT	41.88/LT	17.26/LT	16.50/LT	16.11/LT
CONTACT WIRE HT. (FT)	19.5	19.5	19.5	20.5/19.5	19.5/19.5
STAGGER (IN)	6↓	6↓	6↓	(OOR) 6↓ 6↓	6↓6↓
SUPPORT/REGISTRATION TYPE	C-4	CST-1	C-7	C-10	C-7
TERMINATION TYPE / HT.			CWT/22.0		
JUMPER TYPE					
FOUNDATION TYPE					
MISCELLANEOUS				FF-1	KN-1

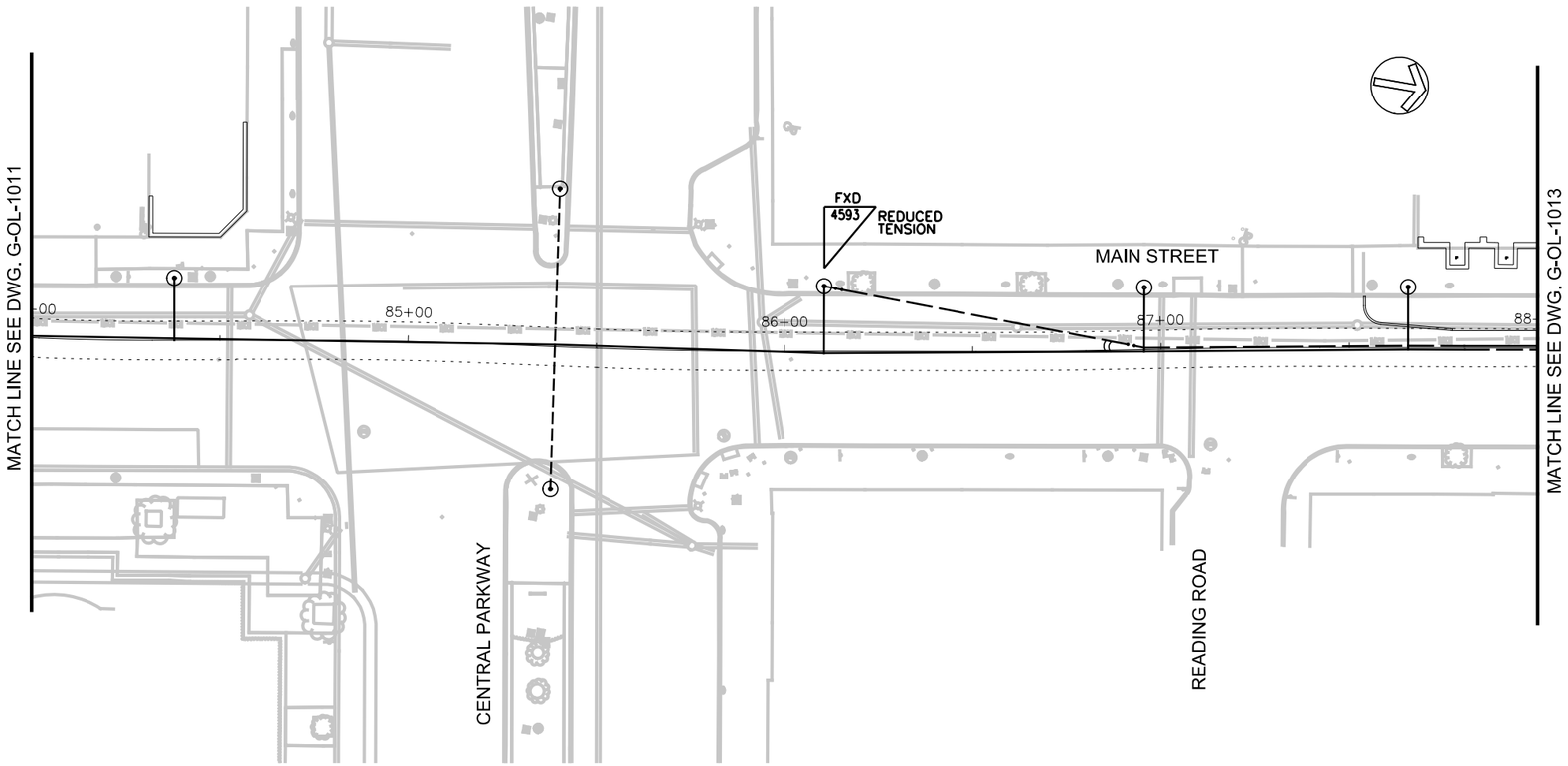

POLE No.	
STATIONING	85+39.21
UPPER CROSS-SPAN HT.(FT)	25.0
POLE TYPE / LENGTH	38045/26.0
POLE OFFSET	37.93/RT
CONTACT WIRE HT. (FT)	
STAGGER (IN)	-
SUPPORT/REGISTRATION TYPE	
TERMINATION TYPE / HT.	
JUMPER TYPE	
FOUNDATION TYPE	
MISCELLANEOUS	

NOTES:

1. A DISTANCE OF SIX FEET BEHIND THE CURB AND 15 FEET ON EITHER SIDE OF PROPOSED OCS POLES AND SIGNAL POLES (INCLUDING ANY DISTURBANCE TO THE EXISTING CURB) HAS BEEN QUANTIFIED FOR BIDDING PURPOSES. THE CITY'S ENGINEER WILL DETERMINE ACTUAL PAY LIMITS FOR THIS WORK. NO ADDITIONAL INCREASE TO THE UNIT COST WILL BE ALLOWED FOR THIS WORK IF THE QUANTITIES ARE MORE OR LESS THAN THE AMOUNT QUANTIFIED FOR BIDDING PURPOSES.
2. A STANDARD CITY OF CINCINNATI FOUNDATION TO BE USED WHERE FOUNDATION TYPES NOT SHOWN BELOW APPLICABLE POLES ON TABULATION.

CAUTION UNDERGROUND UTILITIES
2 WORKING DAYS
BEFORE YOU DIG
CALL 1-800-362-2764
OHIO UTILITY PROTECTION SERVICE
CALL NON-SERVICE FACILITY OWNERS DIRECT

GRAPHIC SCALE
20 0 20 40 80
(IN FEET)
1 inch = 20 ft. Full Size
1 inch = 40 ft. Half Size

PROFESSIONAL STAMP
SIGN:
DATE:

CONTRACT DRAWING
PRINTS NOT BEARING THIS STAMP WERE MADE PRIOR TO ADVERTISING FOR BIDS AND ARE TO BE CONSIDERED OBSOLETE FOR CONTRACT PURPOSES.

Department of Transportation and Engineering
City of Cincinnati
City Hall
801 Plum Street
Cincinnati, Ohio 45202

CINCINNATI STREETCAR
CENTRAL BUSINESS DISTRICT
OCS PLANS - MAIN STREET
STA 84+00.00 TO STA 88+00.00

Revisions
No.

	Date
Drawn by LP/ND	7/02/2012
Designed by MH/RL	7/02/2012
Checked by HSZ	7/02/2012
Reviewed by JTB	7/12/2012

Consultant
PB HDR

File Number
ACC No. 23126
G-OL-1012

$PLTDRV$
T:\290144_Cincinnati Street Car\OCS\S_G-OL-1012.dgn
7/12/2012 12:46:24 PM

POLE No.				
STATIONING	88+45.32	88+82.45	89+06.41	89+64.08
UPPER CROSS-SPAN HT.(FT)		22.2	22.1/21.0	21.1/21.5
POLE TYPE / LENGTH	38045/30.0	33048/23.5	TP-1/23.5	72025/23.0
POLE OFFSET	13.79/LT	15.97/LT	14.78/LT	20.96/LT
CONTACT WIRE HT. (FT)	19.5/20.5			
STAGGER (IN)	6↓6↓(OOR)	-	-	-
SUPPORT/REGISTRATION TYPE	C-11			
TERMINATION TYPE / HT.	CWT/21.5			
JUMPER TYPE				
FOUNDATION TYPE	TPF-6			
MISCELLANEOUS	FF-1		BPO	

NOTES:

1. IF REQUIRED DUE TO SITE CONDITIONS OOR TERMINATION WIRE MAY BE ATTACHED TO CROSS SPAN 88+83.
2. A DISTANCE OF SIX FEET BEHIND THE CURB AND 15 FEET ON EITHER SIDE OF PROPOSED OCS POLES AND SIGNAL POLES (INCLUDING ANY DISTURBANCE TO THE EXISTING CURB) HAS BEEN QUANTIFIED FOR BIDDING PURPOSES. THE CITY'S ENGINEER WILL DETERMINE ACTUAL PAY LIMITS FOR THIS WORK. NO ADDITIONAL INCREASE TO THE UNIT COST WILL BE ALLOWED FOR THIS WORK IF THE QUANTITIES ARE MORE OR LESS THAN THE AMOUNT QUANTIFIED FOR BIDDING PURPOSES.
3. A STANDARD CITY OF CINCINNATI FOUNDATION TO BE USED WHERE FOUNDATION TYPES NOT SHOWN BELOW APPLICABLE POLES ON TABULATION.
4. VERIFY EXTENT AND LOCATION OF EXISTING ADJACENT ELECTRIC VAULT PRIOR TO FOUNDATION INSTALLATION.

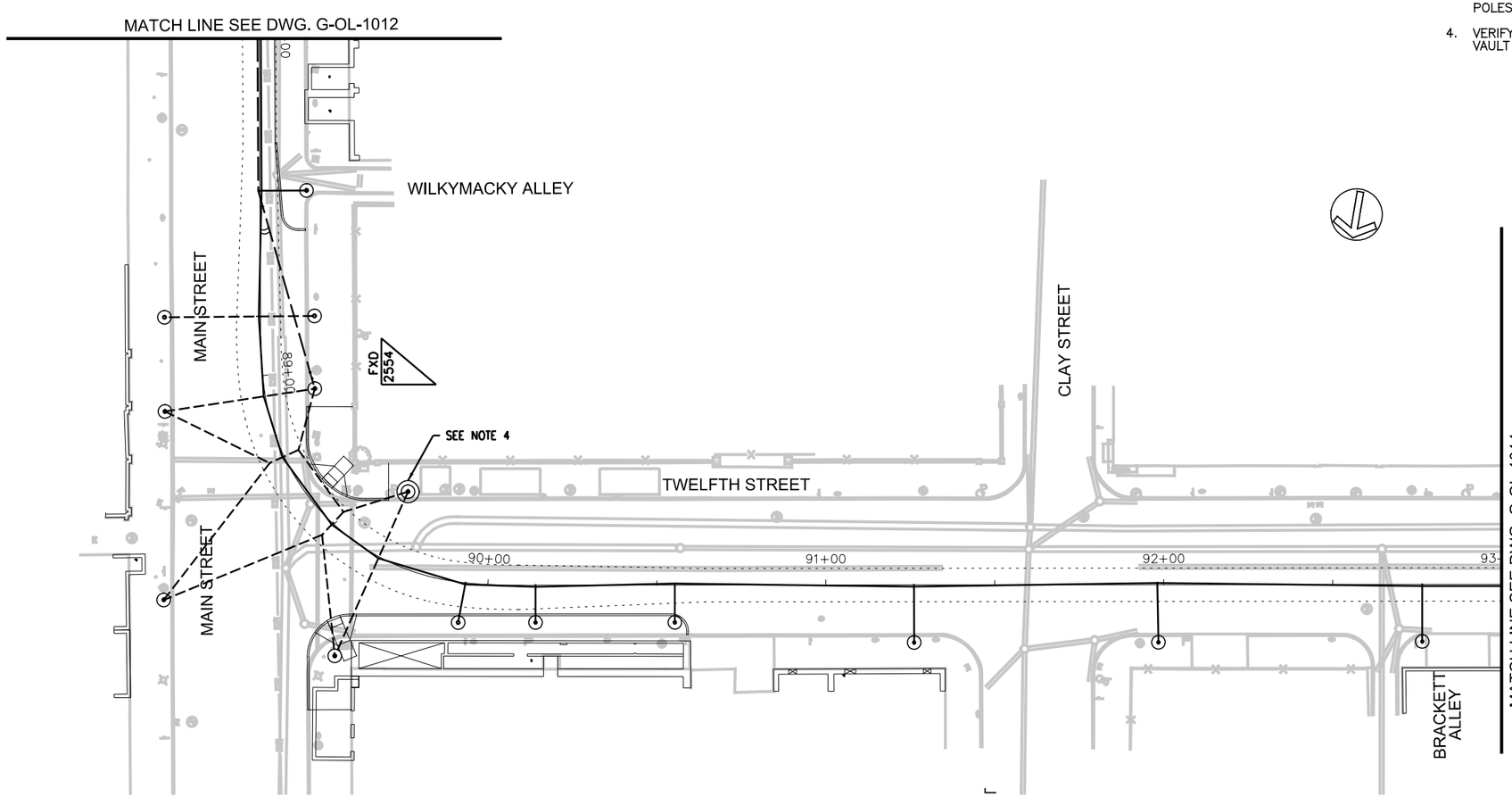

POLE No.												
STATIONING	88+82.61	89+05.90	89+25	89+37.81	89+50	89+68.07	89+92.54	90+14.08	90+55.31	91+26.11	91+98.41	92+76.49
UPPER CROSS-SPAN HT.(FT)	21.8	21.4/21.3		21.1/21.2		21.3/22.7						
POLE TYPE / LENGTH	38045/23.0	52028/23.5	-	72025/23.0	-	52028/23.0	33048/27.0	27070/26.0	38045/29.0	27070/28.0	38045/30.0	27070/28.0
POLE OFFSET	28.44/RT	30.06/RT		52.65/RT		32.07/RT	11.92/RT	11.00/RT	11.00/RT	17.02/RT	17.02/RT	16.84/RT
CONTACT WIRE HT. (FT)	19.5	19.5	19.5		19.5	19.5	19.5	19.5	19.5	19.5	19.5	19.5
STAGGER (IN)	6↓	6↓	6↓	-	6↓	6↓	6↓	6↓	6↓	6↓	6↓	6↓
SUPPORT/REGISTRATION TYPE	CST-1	CST-2	BBPO-2		BBPO-2	CST-2	C-6	C-1	C-7	C-4	C-7	C-4
TERMINATION TYPE / HT.												
JUMPER TYPE												
FOUNDATION TYPE												
MISCELLANEOUS			BPO		BPO							

GRAPHIC SCALE

20 0 20 40 80

(IN FEET)
1 inch = 20 ft. Full Size
1 inch = 40 ft. Half Size

CAUTION UNDERGROUND UTILITIES
2 WORKING DAYS
BEFORE YOU DIG
CALL 1-800-362-2764
OHIO UTILITY PROTECTION SERVICE
CALL NON-SERVICE FACILITY OWNERS DIRECT

PROFESSIONAL STAMP

SIGN:

DATE:

CONTRACT DRAWING

PRINTS NOT BEARING THIS STAMP WERE MADE PRIOR TO ADVERTISING FOR BIDS AND ARE TO BE CONSIDERED OBSOLETE FOR CONTRACT PURPOSES.

Department of Transportation and Engineering

City of Cincinnati
City Hall
801 Plum Street
Cincinnati, Ohio 45202

CINCINNATI STREETCAR
CENTRAL BUSINESS DISTRICT
OCS PLANS - TWELFTH STREET
STA 88+00.00 TO STA 93+00.00

Revisions

No.		Date
		7/02/2012
		7/02/2012
		7/02/2012
		7/12/2012

Drawn by LP/ND
Designed by MH/RL
Checked by HSZ
Reviewed by JTB

Consultant

PB HDR

File Number

ACC No. 23126

G-OL-1013

$PLTDRV$$
T:\29014a_Cincinnati.Street.Car\OCS\S_G-OL-1013.dgn
12:46:28 PM
7/12/2012

NOTES:

1. A DISTANCE OF SIX FEET BEHIND THE CURB AND 15 FEET ON EITHER SIDE OF PROPOSED OCS POLES AND SIGNAL POLES (INCLUDING ANY DISTURBANCE TO THE EXISTING CURB) HAS BEEN QUANTIFIED FOR BIDDING PURPOSES. THE CITY'S ENGINEER WILL DETERMINE ACTUAL PAY LIMITS FOR THIS WORK. NO ADDITIONAL INCREASE TO THE UNIT COST WILL BE ALLOWED FOR THIS WORK IF THE QUANTITIES ARE MORE OR LESS THAN THE AMOUNT QUANTIFIED FOR BIDDING PURPOSES.

2. A STANDARD CITY OF CINCINNATI FOUNDATION TO BE USED WHERE FOUNDATION TYPES NOT SHOWN BELOW APPLICABLE POLES ON TABULATION.

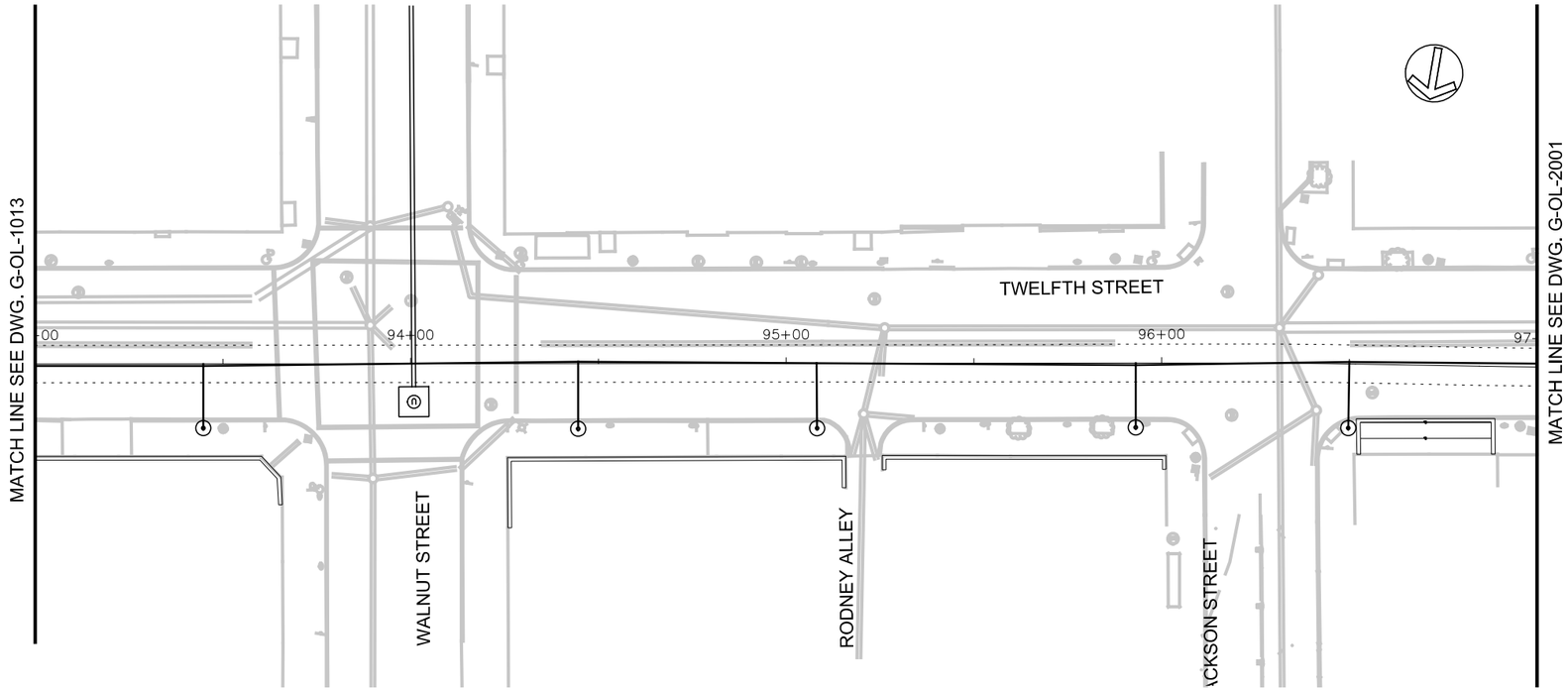

POLE No.					
STATIONING	93+44.77	94+44.61	95+08.24	95+93.10	96+50.00
UPPER CROSS-SPAN HT.(FT)					
POLE TYPE / LENGTH	27070/28.0	38045/30.0	27070/28.0	27070/28.0	38045/30.0
POLE OFFSET	17.07/RT	17.35/RT	17.25/RT	17.11/RT	17.08/RT
CONTACT WIRE HT. (FT)	19.5			19.5	19.5
STAGGER (IN)	6↓	6↓	0 NR	6↓	6↓
SUPPORT/REGISTRATION TYPE	C-4	C-7	C-4(MOD)	C-4	C-7
TERMINATION TYPE / HT.					
JUMPER TYPE					
FOUNDATION TYPE					
MISCELLANEOUS					

CAUTION UNDERGROUND UTILITIES
2 WORKING DAYS
BEFORE YOU DIG
CALL 1-800-362-2764
OHIO UTILITY PROTECTION SERVICE
CALL NON-SERVICE FACILITY
OWNERS DIRECT

GRAPHIC SCALE
20 0 20 40 80
(IN FEET)
1 inch = 20 ft. Full Size
1 inch = 40 ft. Half Size

PROFESSIONAL STAMP

SIGN:
DATE:

CONTRACT DRAWING

PRINTS NOT BEARING THIS STAMP WERE MADE PRIOR TO ADVERTISING FOR BIDS AND ARE TO BE CONSIDERED OBSOLETE FOR CONTRACT PURPOSES.

Department of Transportation and Engineering

City of Cincinnati
City Hall
801 Plum Street
Cincinnati, Ohio 45202

CINCINNATI STREETCAR
CENTRAL BUSINESS DISTRICT
OCS PLANS - TWELFTH STREET
STA 93+00.00 TO STA 97+00.00

Revisions

No.		

Date	7/02/2012
Date	7/02/2012
Date	7/02/2012
Date	7/12/2012

Drawn by	LP/ND
Designed by	MH/RL
Checked by	HSZ
Reviewed by	JTB

Consultant

PB HDR

File Number

ACC No. 23126

G-OL-1014

$PLTDRV$$
T:\29014a_Cincinnati.Street.Car\OCS\S_G-OL-1014.dgn
7/12/2012 12:46:33 PM

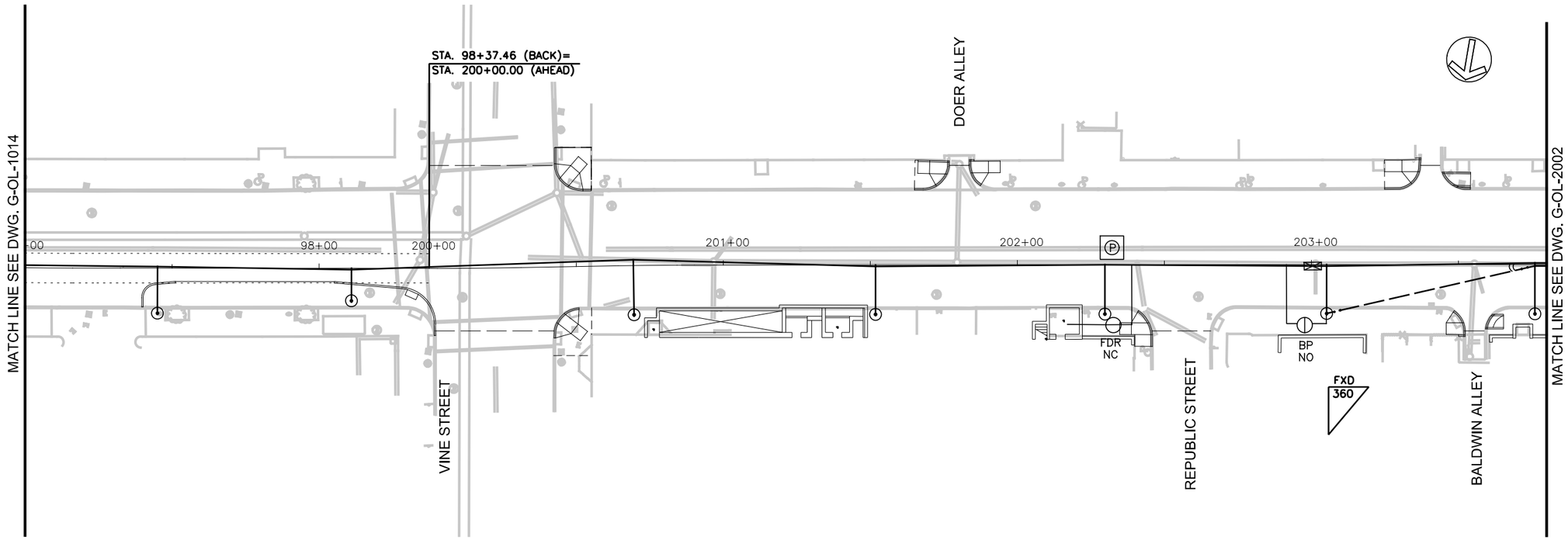

POLE No.							
STATIONING	97+45.02	98+10.99	200+69.42	201+51.76	202+29.76	203+05.17	203+76.00
UPPER CROSS-SPAN HT.(FT)							
POLE TYPE / LENGTH	38045/30.0	27070/26.0	38045/30.0	27070/28.0	38045F/30.0	72025/28.0	38045/30
POLE OFFSET	15.34/RT	11.06/RT	16.74/RT	16.80/RT	16.76/RT	16.62/RT	16.81/RT
CONTACT WIRE HT. (FT)	19.5	19.5	19.5	19.5	19.5	19.5	19.5/20.5
STAGGER (IN)	6↓	6↓	6↓	6↓	↑0	6↓	6↓ 6↓ (OOR)
SUPPORT/REGISTRATION TYPE	C-7	C-1	C-7	C-4	C-7	C-4	C-10
TERMINATION TYPE / HT.						CWT/22.0	
JUMPER TYPE							
FOUNDATION TYPE							
MISCELLANEOUS					FP-1, SA-1	BP-1	FF-1

NOTES:

1. A DISTANCE OF SIX FEET BEHIND THE CURB AND 15 FEET ON EITHER SIDE OF PROPOSED OCS POLES AND SIGNAL POLES (INCLUDING ANY DISTURBANCE TO THE EXISTING CURB) HAS BEEN QUANTIFIED FOR BIDDING PURPOSES. THE CITY'S ENGINEER WILL DETERMINE ACTUAL PAY LIMITS FOR THIS WORK. NO ADDITIONAL INCREASE TO THE UNIT COST WILL BE ALLOWED FOR THIS WORK IF THE QUANTITIES ARE MORE OR LESS THAN THE AMOUNT QUANTIFIED FOR BIDDING PURPOSES.

2. A STANDARD CITY OF CINCINNATI FOUNDATION TO BE USED WHERE FOUNDATION TYPES NOT SHOWN BELOW APPLICABLE POLES ON TABULATION.

GRAPHIC SCALE

20 0 20 40 80

(IN FEET)
1 inch = 20 ft. Full Size
1 inch = 40 ft. Half Size

CAUTION UNDERGROUND UTILITIES
2 WORKING DAYS
BEFORE YOU DIG
CALL 1-800-362-2764
OHIO UTILITY PROTECTION SERVICE
CALL NON-SERVICE FACILITY
OWNERS DIRECT

PROFESSIONAL STAMP

SIGN:
DATE:

CONTRACT DRAWING

PRINTS NOT BEARING THIS STAMP WERE MADE PRIOR TO ADVERTISING FOR BIDS AND ARE TO BE CONSIDERED OBSOLETE FOR CONTRACT PURPOSES.

Department of Transportation and Engineering

City of Cincinnati
City Hall
801 Plum Street
Cincinnati, Ohio 45202

CINCINNATI STREETCAR
OVER THE RHINE
OCS PLANS - TWELFTH STREET
STA 97+00.00 TO STA 98+37.46(200+00) TO STA 203+80

Revisions

No.	Date
	7/02/2012
	7/02/2012
	7/02/2012
	7/12/2012

Drawn by LP/ND
Designed by MH/RL
Checked by HSZ
Reviewed by JTB

Consultant

PB HDR

File Number

ACC No. 23126

G-OL-2001

$PLTDRV$$
T:\29014a_Cincinnati.Street.Car\OCS\S_G-OL-2001.dgn
7/12/2012 12:46:38 PM

POLE No.				
STATIONING	204+30.67	204+37.35	204+49.91	205+24.72
UPPER CROSS-SPAN HT.(FT)	21.5	21.5	21.7/24.02	24.1/21.5
POLE TYPE / LENGTH	33048/22.5	52028/25.0	TP-1/30.0	72025/25.0
POLE OFFSET	27.58/LT	28.05/LT	27.24/LT	28.12/LT
CONTACT WIRE HT. (FT)	19.5			
STAGGER (IN)	-	-	6↓	-
SUPPORT/REGISTRATION TYPE	C-9, CST-2			
TERMINATION TYPE / HT.				
JUMPER TYPE				
FOUNDATION TYPE				
MISCELLANEOUS	KN-2(2)			

NOTES:

1. POLE STATIONING BASED ON TWELFTH STREET STATIONING.
2. A DISTANCE OF SIX FEET BEHIND THE CURB AND 15 FEET ON EITHER SIDE OF PROPOSED OCS POLES AND SIGNAL POLES (INCLUDING ANY DISTURBANCE TO THE EXISTING CURB) HAS BEEN QUANTIFIED FOR BIDDING PURPOSES. THE CITY'S ENGINEER WILL DETERMINE ACTUAL PAY LIMITS FOR THIS WORK. NO ADDITIONAL INCREASE TO THE UNIT COST WILL BE ALLOWED FOR THIS WORK IF THE QUANTITIES ARE MORE OR LESS THAN THE AMOUNT QUANTIFIED FOR BIDDING PURPOSES.
3. A STANDARD CITY OF CINCINNATI FOUNDATION TO BE USED WHERE FOUNDATION TYPES NOT SHOWN BELOW APPLICABLE POLES ON TABULATION.

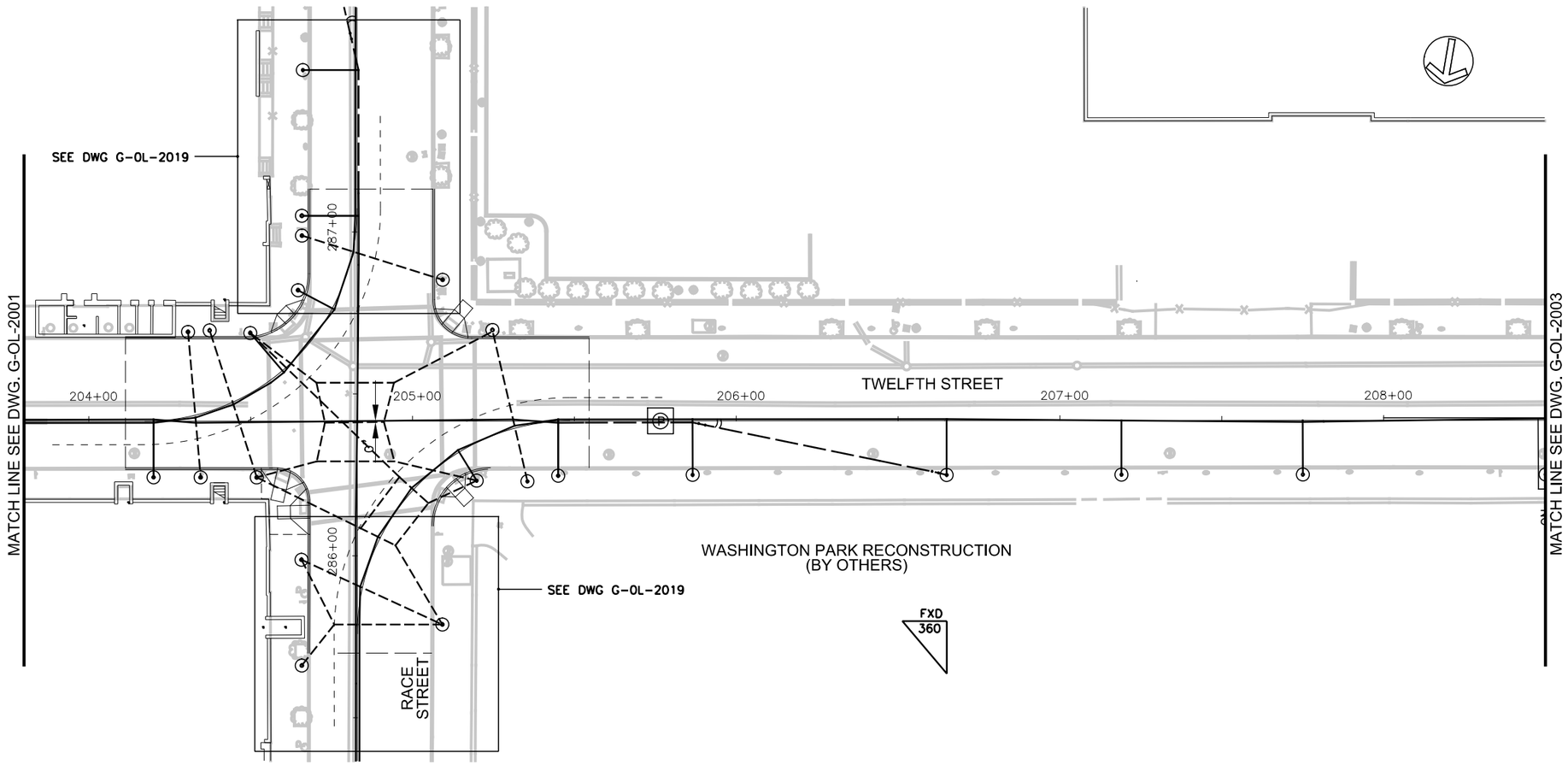

POLE No.												
STATIONING	204+19.99	204+34.52	204+51.86	204+70	204+94	205+19.80	205+35.48	205+44.99	205+86.52	206+65.00	207+19.00	207+75.04
UPPER CROSS-SPAN HT.(FT)		21.0	21.1/23.88/22.7			21.7/24.35	21.7					
POLE TYPE / LENGTH	38045/30.0	52028/22.0	72025/25.0	-	-	72025/27.5	33048/23.0	38045/30.0	38045/30.0	72025/30.0	27070/28	27070/28
POLE OFFSET	17.29/RT	17.33/RT	17.37/RT			18.42/RT	18.65/RT	16.90/RT	16.67/RT	16.77/RT	16.71/RT	16.73/RT
CONTACT WIRE HT. (FT)	19.5/19.5	19.5	19.5/19.5	19.5	19.5	19.5	19.5	19.5/19.5	19.5/20.5	19.5	19.5	19.5
STAGGER (IN)	6↓6↓	6↓9↓	6↓9↓	0	0	9↓	6↓9↓	6↓6↓	6↓6↓(OOR)	6↓	0↓	6↓
SUPPORT/REGISTRATION TYPE	C-20	CST-2	CST-2(2)	BPO	BPO	C-9	CST-1	C-21	C-10	C-7	C-4	C-4
TERMINATION TYPE / HT.										CWT-22.5		
JUMPER TYPE												
FOUNDATION TYPE												
MISCELLANEOUS		KN-1(2)	KN-2(4)	TW-TW, BPO-1(3)			KN-2		FF-1			

CAUTION UNDERGROUND UTILITIES
2 WORKING DAYS
BEFORE YOU DIG
CALL 1-800-362-2764
OHIO UTILITY PROTECTION SERVICE
CALL NON-SERVICE FACILITY
OWNERS DIRECT

GRAPHIC SCALE
20 0 20 40 80
(IN FEET)
1 inch = 20 ft. Full Size
1 inch = 40 ft. Half Size

PROFESSIONAL STAMP

SIGN:
DATE:

CONTRACT DRAWING

PRINTS NOT BEARING THIS STAMP WERE MADE PRIOR TO ADVERTISING FOR BIDS AND ARE TO BE CONSIDERED OBSOLETE FOR CONTRACT PURPOSES.

Department of Transportation and Engineering

City of Cincinnati
City Hall
801 Plum Street
Cincinnati, Ohio 45202

CINCINNATI STREETCAR OVER THE RHINE

OCS PLANS - TWELFTH STREET
STA 203+80 TO STA 208+50

Revisions
No.

	Date	Drawn by	Designed by	Checked by	Reviewed by
	7/02/2012	LP/ND	MH/RL	HSZ	JTB
	7/02/2012				
	7/02/2012				
	7/12/2012				

Consultant

PB HDR

File Number

ACC No. 23126

G-OL-2002

$PLTDRV$
T:\290114a_Cincinnati.Street.Car\OCS\S_G-OL-2002.dgn
7/12/2012 12:46:43 PM

NOTES:

1. A DISTANCE OF SIX FEET BEHIND THE CURB AND 15 FEET ON EITHER SIDE OF PROPOSED OCS POLES AND SIGNAL POLES (INCLUDING ANY DISTURBANCE TO THE EXISTING CURB) HAS BEEN QUANTIFIED FOR BIDDING PURPOSES. THE CITY'S ENGINEER WILL DETERMINE ACTUAL PAY LIMITS FOR THIS WORK. NO ADDITIONAL INCREASE TO THE UNIT COST WILL BE ALLOWED FOR THIS WORK IF THE QUANTITIES ARE MORE OR LESS THAN THE AMOUNT QUANTIFIED FOR BIDDING PURPOSES.

2. A STANDARD CITY OF CINCINNATI FOUNDATION TO BE USED WHERE FOUNDATION TYPES NOT SHOWN BELOW APPLICABLE POLES ON TABULATION.

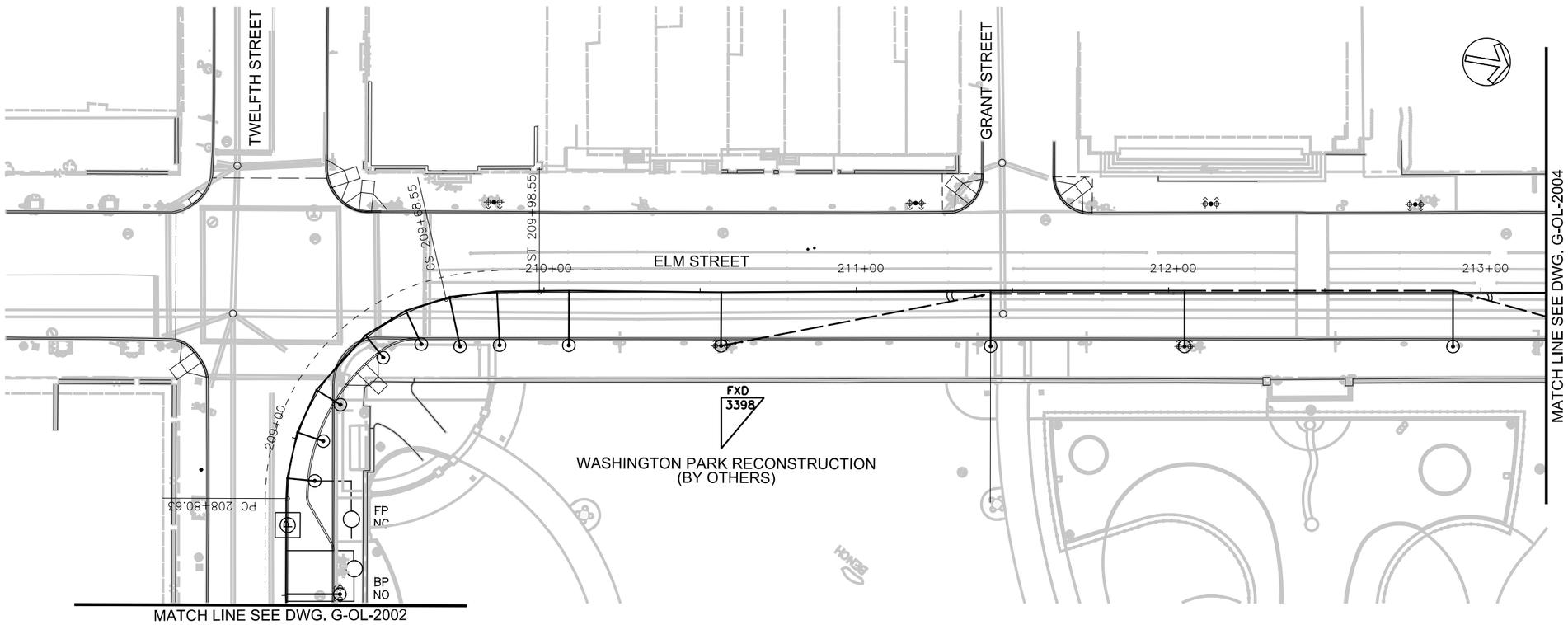

POLE No.													
STATIONING	208+50.04	208+87.14	209+02.06	209+16.85	209+40.28	209+55.21	209+69.72	209+84.99	210+07.94	210+56.70	211+43.01	212+05.11	212+91.06
UPPER CROSS-SPAN HT.(FT)													
POLE TYPE / LENGTH	38045/30.0	27070F/28.0	27070/28.0	33048/28.0	33048/28.0	33048/28.0	38045/30.0	38045/30.0	38045/30.0	72025/28.0	38045/30.0	27070/28.0	38045/30.0
POLE OFFSET	16.77/RT	8.37/RT	8.31/RT	8.27/RT	8.40/RT	11.03/RT	15.67/RT	16.78/RT	17.00/RT	17.16/RT	17.26/RT	17.37/RT	17.41/RT
CONTACT WIRE HT. (FT)	19.5	19.5	19.5	19.5	19.5	19.5	19.5	19.5	19.5	19.5	19.5/20.5	19.5/19.5	20.5/19.5
STAGGER (IN)	6↓	6↓	6↓	9↓	9↓	9↓	6↓	6↓	6↓	0↓	6↓ 6↓ (OOR)	6↓ 6↓	(OOR) 6↓ 6↓
SUPPORT/REGISTRATION TYPE	C-7	C-9	C-9	C-9	C-9	C-9	C-9	C-8	C-7	C-4	C-10	C-4	C-11
TERMINATION TYPE / HT.										CWT/22.5			
JUMPER TYPE													
FOUNDATION TYPE													
MISCELLANEOUS	BP-1 FP-1, SA-1										FF-1	KN-1	FF-1

CAUTION UNDERGROUND UTILITIES
2 WORKING DAYS
BEFORE YOU DIG
CALL 1-800-362-2764
OHIO UTILITY PROTECTION SERVICE
CALL NON-SERVICE FACILITY
OWNERS DIRECT

GRAPHIC SCALE
20 0 20 40 80
(IN FEET)
1 inch = 20 ft. Full Size
1 inch = 40 ft. Half Size

PROFESSIONAL STAMP

SIGN:
DATE:

CONTRACT DRAWING

PRINTS NOT BEARING THIS STAMP WERE MADE PRIOR TO ADVERTISING FOR BIDS AND ARE TO BE CONSIDERED OBSOLETE FOR CONTRACT PURPOSES.

Department of Transportation and Engineering

City of Cincinnati
City Hall
801 Plum Street
Cincinnati, Ohio 45202

CINCINNATI STREETCAR
OVER THE RHINE
OCS PLANS - ELM STREET
STA 208+50 TO STA 213+20

Revisions
No.

	Date	Drawn by	Designed by	Checked by	Reviewed by
	7/02/2012	LP/ND	MH/RL	HSZ	JTB
	7/02/2012				
	7/02/2012				
	7/12/2012				

Consultant

PB HDR

File Number

ACC No. 23126

G-OL-2003

$PLTDRVS$
T:\29014a_Cincinnati.Street.Car\OCS\S_G-OL-2003.dgn
12:46:58 PM
7/12/2012

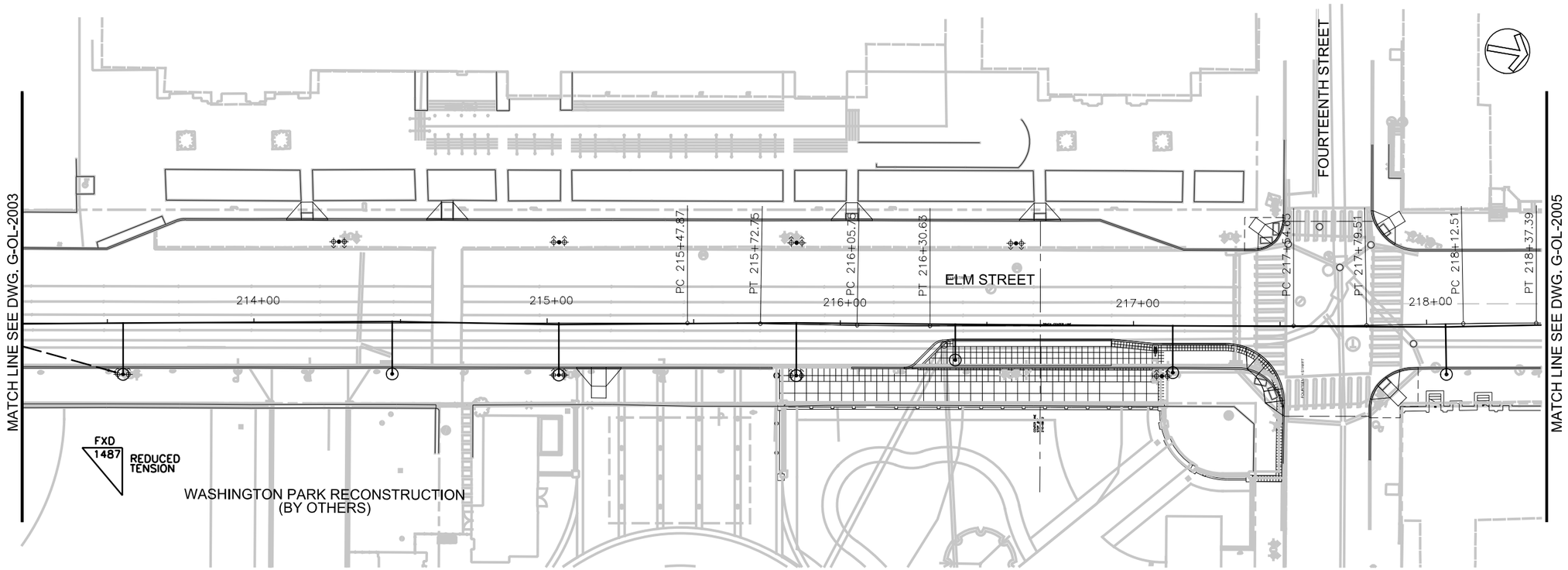

POLE No.							
STATIONING	213+55.38	214+47.14	215+03.98	215+85.28	216+39.21	217+13.41	218+06.47
UPPER CROSS-SPAN HT.(FT)							
POLE TYPE / LENGTH	72025/30.0	38045/30.0	27070/28.0	38045/30.0	38045/30.0	38045/30.0	27070/28.0
POLE OFFSET	17.47/RT	17.33/RT	17.71/RT	17.50/RT	11.63/RT	15.90/RT	17.18/RT
CONTACT WIRE HT. (FT)	19.5	19.5	19.5	19.5	19.5	19.5	19.5
STAGGER (IN)	0↓	6↑	6↓	6↑	6↑	0↓	6↓
SUPPORT/REGISTRATION TYPE	C-4	C-7	C-4	C-7	C-7	C-7	C-4
TERMINATION TYPE / HT.	CWT/21.75						
JUMPER TYPE							
FOUNDATION TYPE							
MISCELLANEOUS							

NOTES:

1. A DISTANCE OF SIX FEET BEHIND THE CURB AND 15 FEET ON EITHER SIDE OF PROPOSED OCS POLES AND SIGNAL POLES (INCLUDING ANY DISTURBANCE TO THE EXISTING CURB) HAS BEEN QUANTIFIED FOR BIDDING PURPOSES. THE CITY'S ENGINEER WILL DETERMINE ACTUAL PAY LIMITS FOR THIS WORK. NO ADDITIONAL INCREASE TO THE UNIT COST WILL BE ALLOWED FOR THIS WORK IF THE QUANTITIES ARE MORE OR LESS THAN THE AMOUNT QUANTIFIED FOR BIDDING PURPOSES.

2. A STANDARD CITY OF CINCINNATI FOUNDATION TO BE USED WHERE FOUNDATION TYPES NOT SHOWN BELOW APPLICABLE POLES ON TABULATION.

CAUTION UNDERGROUND UTILITIES
2 WORKING DAYS
BEFORE YOU DIG
CALL 1-800-362-2764
OHIO UTILITY PROTECTION SERVICE
CALL NON-SERVICE FACILITY
OWNERS DIRECT

GRAPHIC SCALE
0 — 80
(IN FEET)
1 inch = 20 ft. Full Size
1 inch = 40 ft. Half Size

PROFESSIONAL STAMP

SIGN:
DATE:

CONTRACT DRAWING

PRINTS NOT BEARING THIS STAMP WERE MADE PRIOR TO ADVERTISING FOR BIDS AND ARE TO BE CONSIDERED OBSOLETE FOR CONTRACT PURPOSES.

Department of Transportation and Engineering

City of Cincinnati
City Hall
801 Plum Street
Cincinnati, Ohio 45202

CINCINNATI STREETCAR
OVER THE RHINE

OCS PLANS - ELM STREET
STA 213+20 TO STA 218+40

Revisions

No.		

Date 7/02/2012
Date 7/02/2012
Date 7/02/2012
Date 7/12/2012

Drawn by LP/ND
Designed by MH/RL
Checked by HSZ
Reviewed by JTB

Consultant

PB HDR

File Number

ACC No. 23126

G-OL-2004

$PLTDRV$
T:\290114a_Cincinnati.Street.Car\OCS\S_G-OL-2004.dgn
7/12/2012 12:47:13 PM

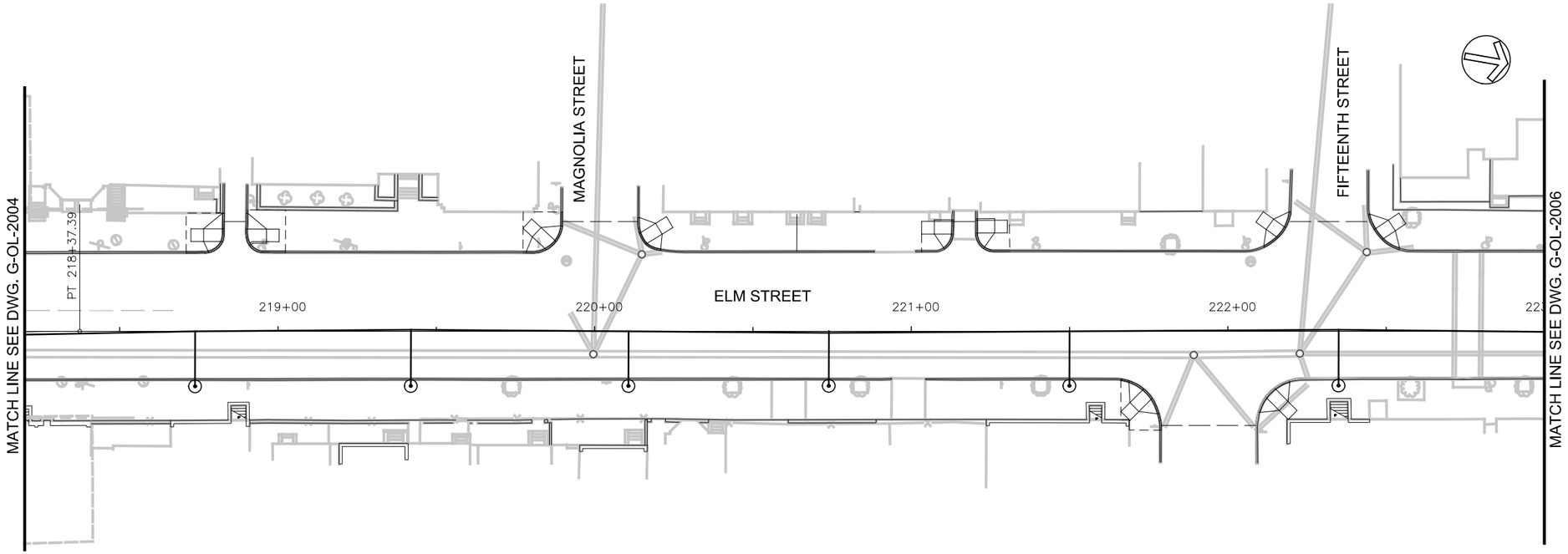

POLE No.						
STATIONING	218+73.82	219+41.94	220+10.68	220+73.95	221+49.95	222+34.95
UPPER CROSS-SPAN HT.(FT)						
POLE TYPE / LENGTH	27070/28.0	38045/30.0	27070/28.0	27070/28.0	27070/28.0	38045/30.0
POLE OFFSET	17.37/RT	17.27/RT	17.26/RT	17.22/RT	17.21/RT	17.14/RT
CONTACT WIRE HT. (FT)	19.5	19.5	19.5	19.5	19.5	19.5
STAGGER (IN)	0↓	6↓	0↓	6↓	0↓	6↓
SUPPORT/REGISTRATION TYPE	C-4	C-7	C-4	C-4	C-4	C-7
TERMINATION TYPE / HT.						
JUMPER TYPE						
FOUNDATION TYPE						
MISCELLANEOUS						

NOTES:

1. A DISTANCE OF SIX FEET BEHIND THE CURB AND 15 FEET ON EITHER SIDE OF PROPOSED OCS POLES AND SIGNAL POLES (INCLUDING ANY DISTURBANCE TO THE EXISTING CURB) HAS BEEN QUANTIFIED FOR BIDDING PURPOSES. THE CITY'S ENGINEER WILL DETERMINE ACTUAL PAY LIMITS FOR THIS WORK. NO ADDITIONAL INCREASE TO THE UNIT COST WILL BE ALLOWED FOR THIS WORK IF THE QUANTITIES ARE MORE OR LESS THAN THE AMOUNT QUANTIFIED FOR BIDDING PURPOSES.

2. A STANDARD CITY OF CINCINNATI FOUNDATION TO BE USED WHERE FOUNDATION TYPES NOT SHOWN BELOW APPLICABLE POLES ON TABULATION.

GRAPHIC SCALE

0 — 80

(IN FEET)
1 inch = 20 ft. Full Size
1 inch = 40 ft. Half Size

CAUTION UNDERGROUND UTILITIES
2 WORKING DAYS
BEFORE YOU DIG
CALL 1-800-362-2764
OHIO UTILITY PROTECTION SERVICE
CALL NON-SERVICE FACILITY
OWNERS DIRECT

PROFESSIONAL STAMP

SIGN:

DATE:

CONTRACT DRAWING

PRINTS NOT BEARING THIS STAMP WERE MADE PRIOR TO ADVERTISING FOR BIDS AND ARE TO BE CONSIDERED OBSOLETE FOR CONTRACT PURPOSES.

Department of Transportation and Engineering

City of Cincinnati
City Hall
801 Plum Street
Cincinnati, Ohio 45202

CINCINNATI STREETCAR
OVER THE RHINE

OCS PLANS - ELM STREET
STA 218+40 TO STA 223+00

Revisions

No.			

Drawn by LP/ND	Date 7/02/2012
Designed by MH/RL	Date 7/02/2012
Checked by HSZ	Date 7/02/2012
Reviewed by JTB	Date 7/12/2012

Consultant

PB HDR

File Number

ACC No. 23126

G-OL-2005

$PLTDRV$$
T:\29014a_Cincinnati Street Car\OCS\S_G-OL-2005.dgn
7/12/2012 12:47:28 PM

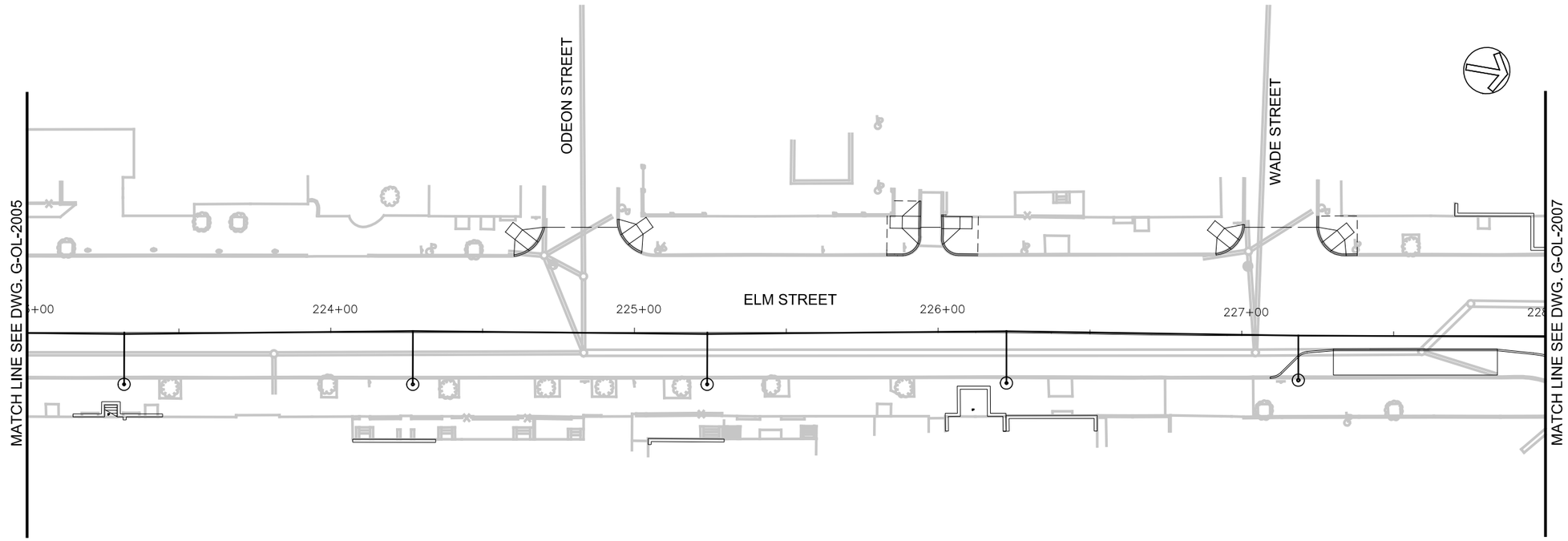

POLE No.					
STATIONING	223+31.95	224+27.02	225+23.95	226+22.62	227+18.63
UPPER CROSS-SPAN HT.(FT)					
POLE TYPE / LENGTH	27070/28.0	38045/30.0	27070/28.0	38045/30.0	27070/28.0
POLE OFFSET	17.03/RT	17.04/RT	17.04/RT	16.59/RT	14.71/RT
CONTACT WIRE HT. (FT)	19.5	19.5	19.5	19.5	19.5
STAGGER (IN)	6↓	6↓	6↓	6↓	0 NR.
SUPPORT/REGISTRATION TYPE	C-4	C-7	C-4	C-7	C-4(MOD)
TERMINATION TYPE / HT.					
JUMPER TYPE					
FOUNDATION TYPE					
MISCELLANEOUS					

NOTES:

1. A DISTANCE OF SIX FEET BEHIND THE CURB AND 15 FEET ON EITHER SIDE OF PROPOSED OCS POLES AND SIGNAL POLES (INCLUDING ANY DISTURBANCE TO THE EXISTING CURB) HAS BEEN QUANTIFIED FOR BIDDING PURPOSES. THE CITY'S ENGINEER WILL DETERMINE ACTUAL PAY LIMITS FOR THIS WORK. NO ADDITIONAL INCREASE TO THE UNIT COST WILL BE ALLOWED FOR THIS WORK IF THE QUANTITIES ARE MORE OR LESS THAN THE AMOUNT QUANTIFIED FOR BIDDING PURPOSES.

2. A STANDARD CITY OF CINCINNATI FOUNDATION TO BE USED WHERE FOUNDATION TYPES NOT SHOWN BELOW APPLICABLE POLES ON TABULATION.

GRAPHIC SCALE

20 0 20 40 80

(IN FEET)
1 inch = 20 ft. Full Size
1 inch = 40 ft. Half Size

CAUTION UNDERGROUND UTILITIES
2 WORKING DAYS
BEFORE YOU DIG
CALL 1-800-362-2764
OHIO UTILITY PROTECTION SERVICE
CALL NON-SERVICE FACILITY
OWNERS DIRECT

PROFESSIONAL STAMP

SIGN:

DATE:

CONTRACT DRAWING

PRINTS NOT BEARING THIS STAMP WERE MADE PRIOR TO ADVERTISING FOR BIDS AND ARE TO BE CONSIDERED OBSOLETE FOR CONTRACT PURPOSES.

Department of Transportation and Engineering

City of Cincinnati
City Hall
801 Plum Street
Cincinnati, Ohio 45202

CINCINNATI STREETCAR
OVER THE RHINE

OCS PLANS - ELM STREET
STA 223+00 TO STA 228+00

Revisions

No.			

Drawn by LP/ND	Designed by MH/RL	Checked by HSZ	Reviewed by JTB
Date 7/02/2012	Date 7/02/2012	Date 7/02/2012	Date 7/12/2012

Consultant

PB HDR

File Number

ACC No. 23126

G-OL-2006

$PLTDRV$$
T:\29014a_Cincinnati\Street.Car\OCS\S_G-OL-2006.dgn
7/12/2012 12:47:33 PM

POLE No.			
STATIONING	228+14.00	228+86	229+56.10
UPPER CROSS-SPAN HT.(FT)	22.7/24.3		24.3/22.2
POLE TYPE / LENGTH	52028/25.5	-	52028/25.5
POLE OFFSET	28.82/LT		26.82/LT
CONTACT WIRE HT. (FT)	19.5	19.5	19.5
STAGGER (IN)	6↓	0↓	6↓
SUPPORT/REGISTRATION TYPE	CST-1	BBPO-1	CST-1
TERMINATION TYPE / HT.			
JUMPER TYPE			
FOUNDATION TYPE			
MISCELLANEOUS		BPO	

NOTES:

1. A DISTANCE OF SIX FEET BEHIND THE CURB AND 15 FEET ON EITHER SIDE OF PROPOSED OCS POLES AND SIGNAL POLES (INCLUDING ANY DISTURBANCE TO THE EXISTING CURB) HAS BEEN QUANTIFIED FOR BIDDING PURPOSES. THE CITY'S ENGINEER WILL DETERMINE ACTUAL PAY LIMITS FOR THIS WORK. NO ADDITIONAL INCREASE TO THE UNIT COST WILL BE ALLOWED FOR THIS WORK IF THE QUANTITIES ARE MORE OR LESS THAN THE AMOUNT QUANTIFIED FOR BIDDING PURPOSES.
2. A STANDARD CITY OF CINCINNATI FOUNDATION TO BE USED WHERE FOUNDATION TYPES NOT SHOWN BELOW APPLICABLE POLES ON TABULATION.

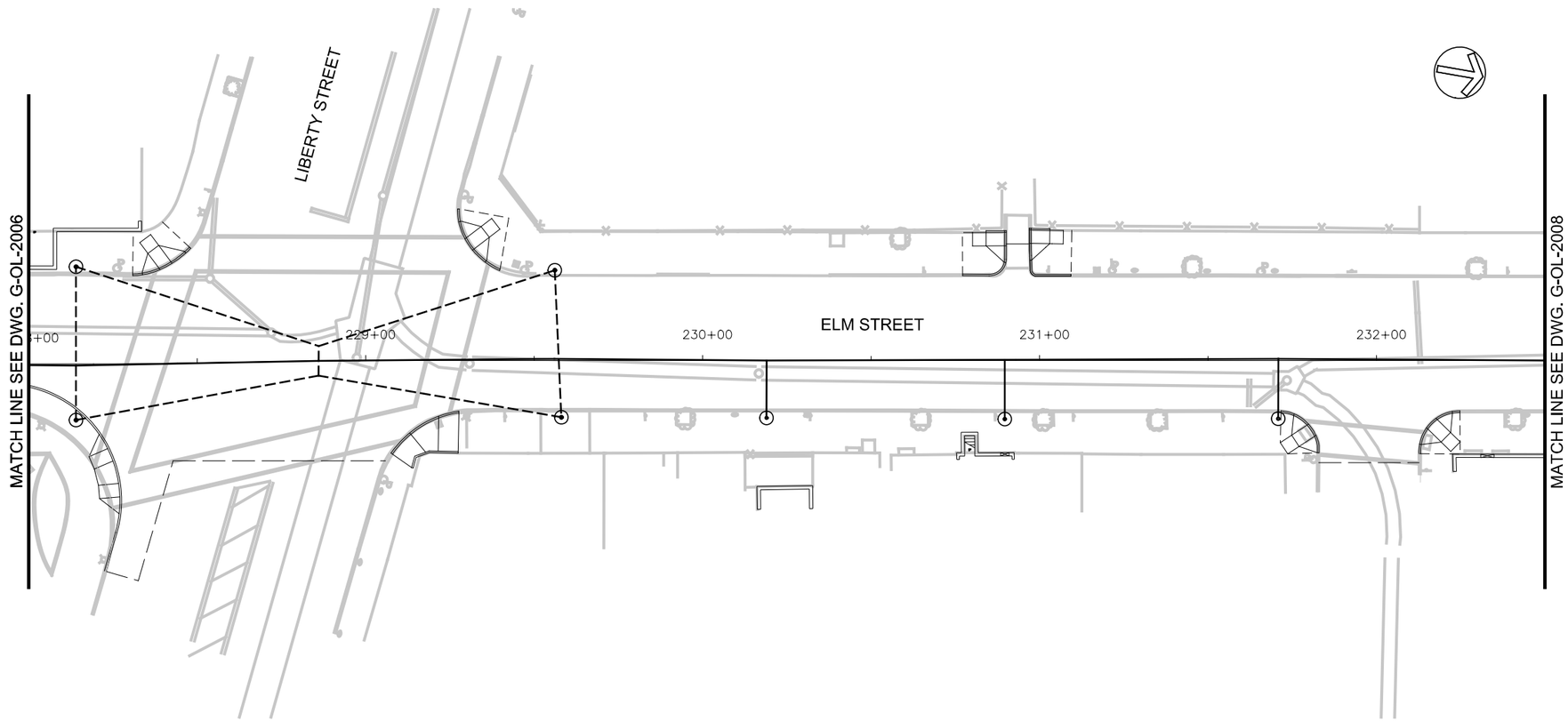

POLE No.					
STATIONING	228+14.00	229+58.06	230+18.95	230+89.65	231+70.81
UPPER CROSS-SPAN HT.(FT)	22.4/24.8	24.8/22.4			
POLE TYPE / LENGTH	52028/26.0	52028/26.0	27070/28.0	38045/30.0	38045/30.0
POLE OFFSET	16.70/RT	16.83/RT	17.00/RT	17.37/RT	17.24/RT
CONTACT WIRE HT. (FT)			19.5	19.5	19.5
STAGGER (IN)	-	-	0↓	3↓	6↓
SUPPORT/REGISTRATION TYPE			C-4	C-7	C-7
TERMINATION TYPE / HT.					
JUMPER TYPE					
FOUNDATION TYPE					
MISCELLANEOUS		BPO			

GRAPHIC SCALE

20 0 20 40 80

(IN FEET)
1 inch = 20 ft. Full Size
1 inch = 40 ft. Half Size

CAUTION UNDERGROUND UTILITIES
2 WORKING DAYS
BEFORE YOU DIG
CALL 1-800-362-2764
OHIO UTILITY PROTECTION SERVICE
CALL NON-SERVICE FACILITY
OWNERS DIRECT

PROFESSIONAL STAMP

SIGN:

DATE:

CONTRACT DRAWING

PRINTS NOT BEARING THIS STAMP WERE MADE PRIOR TO ADVERTISING FOR BIDS AND ARE TO BE CONSIDERED OBSOLETE FOR CONTRACT PURPOSES.

Department of Transportation and Engineering

City of Cincinnati
City Hall
801 Plum Street
Cincinnati, Ohio 45202

CINCINNATI STREETCAR
OVER THE RHINE

OCS PLANS - ELM STREET
STA 228+00 TO STA 232+50

Revisions

No.			

Drawn by LP/ND	Date 7/02/2012
Designed by MH/RL	Date 7/02/2012
Checked by HSZ	Date 7/02/2012
Reviewed by JTB	Date 7/12/2012

Consultant

PB HDR

File Number

ACC No. 23126

G-OL-2007

$PLTDRV$
T:\290114a_Cincinnati.Street.Car\OCS\S_G-OL-2007.dgn
7/12/2012 12:47:37 PM

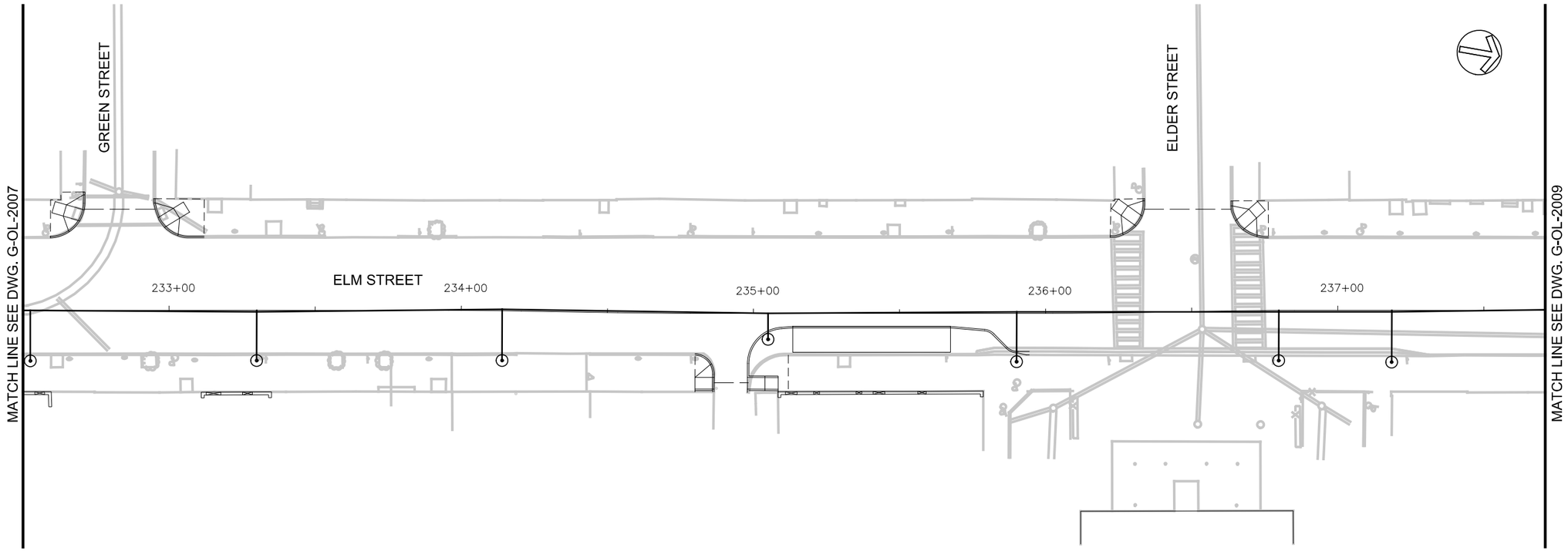

POLE No.							
STATIONING	232+52.49	233+29.95	234+14.16	235+04.99	235+90.05	236+79.69	237+18.41
UPPER CROSS-SPAN HT.(FT)							
POLE TYPE / LENGTH	27070/28.0	27070/28.0	38045/30.0	27070/26.0	38045/30.0	27070/28.0	27070/28.0
POLE OFFSET	17.27/RT	17.16/RT	17.02/RT	8.94/RT	16.60/RT	17.14/RT	17.69/RT
CONTACT WIRE HT. (FT)	19.5	19.5	19.5	19.5	19.5	19.5	19.5
STAGGER (IN)	0 NR	6↓	6↓	0↓	6↑	6↑	0 NR
SUPPORT/REGISTRATION TYPE	C-4(MOD)	C-4	C-7	C-1	C-7	C-4	C-4(MOD)
TERMINATION TYPE / HT.							
JUMPER TYPE							
FOUNDATION TYPE							
MISCELLANEOUS							

NOTES:

1. A DISTANCE OF SIX FEET BEHIND THE CURB AND 15 FEET ON EITHER SIDE OF PROPOSED OCS POLES AND SIGNAL POLES (INCLUDING ANY DISTURBANCE TO THE EXISTING CURB) HAS BEEN QUANTIFIED FOR BIDDING PURPOSES. THE CITY'S ENGINEER WILL DETERMINE ACTUAL PAY LIMITS FOR THIS WORK. NO ADDITIONAL INCREASE TO THE UNIT COST WILL BE ALLOWED FOR THIS WORK IF THE QUANTITIES ARE MORE OR LESS THAN THE AMOUNT QUANTIFIED FOR BIDDING PURPOSES.

2. A STANDARD CITY OF CINCINNATI FOUNDATION TO BE USED WHERE FOUNDATION TYPES NOT SHOWN BELOW APPLICABLE POLES ON TABULATION.

GRAPHIC SCALE

20 0 20 40 80

(IN FEET)
1 inch = 20 ft. Full Size
1 inch = 40 ft. Half Size

CAUTION UNDERGROUND UTILITIES
2 WORKING DAYS
BEFORE YOU DIG
CALL 1-800-362-2764
OHIO UTILITY PROTECTION SERVICE
CALL NON-SERVICE FACILITY
OWNERS DIRECT

PROFESSIONAL STAMP

SIGN:

DATE:

CONTRACT DRAWING

PRINTS NOT BEARING THIS STAMP WERE MADE PRIOR TO ADVERTISING FOR BIDS AND ARE TO BE CONSIDERED OBSOLETE FOR CONTRACT PURPOSES.

Department of Transportation and Engineering

City of Cincinnati
City Hall
801 Plum Street
Cincinnati, Ohio 45202

CINCINNATI STREETCAR
OVER THE RHINE

OCS PLANS - ELM STREET
STA 232+50 TO STA 237+70

Revisions

No.				

Drawn by LP/ND	Date 7/02/2012
Designed by MH/RL	Date 7/02/2012
Checked by HSZ	Date 7/02/2012
Reviewed by JTB	Date 7/12/2012

Consultant

PB HDR

File Number

ACC No. 23126

G-OL-2008

$PLTDRV$$
T:\29014a_Cincinnati:Street:Car\OCS\S_G-OL-2008.dgn
7/12/2012 12:47:42 PM

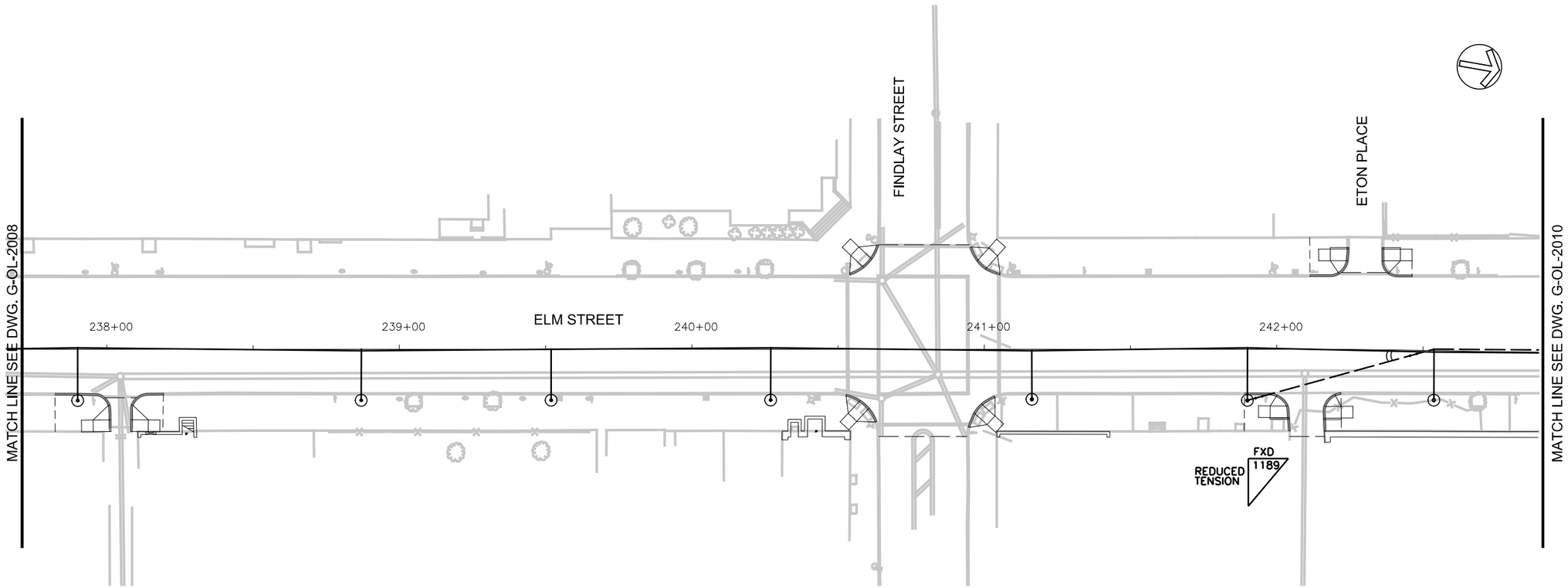

POLE No.							
STATIONING	237+90.00	238+86.94	239+51.87	240+26.94	241+16.27	241+89.94	242+53.97
UPPER CROSS-SPAN HT.(FT)							
POLE TYPE / LENGTH	38045/30.0	27070/28.0	27070/28.0	38045/30.0	27070/28.0	72025/30.0	38045/30.0
POLE OFFSET	17.48/RT	17.40/RT	17.37/RT	17.32/RT	17.05/RT	17.42/RT	16.93/RT
CONTACT WIRE HT. (FT)	19.5	19.5	19.5	19.5	19.5	19.5	20.5/19.5
STAGGER (IN)	6↓	6↓	0 NR.	6↓	6↓	6↓	(OOR)6↓6↓
SUPPORT/REGISTRATION TYPE	C-7	C-4	C-4(MOD)	C-7	C-4	C-7	C-11
TERMINATION TYPE / HT.						CWT/22.25	
JUMPER TYPE							
FOUNDATION TYPE							
MISCELLANEOUS							FF-1

NOTES:

1. A DISTANCE OF SIX FEET BEHIND THE CURB AND 15 FEET ON EITHER SIDE OF PROPOSED OCS POLES AND SIGNAL POLES (INCLUDING ANY DISTURBANCE TO THE EXISTING CURB) HAS BEEN QUANTIFIED FOR BIDDING PURPOSES. THE CITY'S ENGINEER WILL DETERMINE ACTUAL PAY LIMITS FOR THIS WORK. NO ADDITIONAL INCREASE TO THE UNIT COST WILL BE ALLOWED FOR THIS WORK IF THE QUANTITIES ARE MORE OR LESS THAN THE AMOUNT QUANTIFIED FOR BIDDING PURPOSES.

2. A STANDARD CITY OF CINCINNATI FOUNDATION TO BE USED WHERE FOUNDATION TYPES NOT SHOWN BELOW APPLICABLE POLES ON TABULATION.

CAUTION UNDERGROUND UTILITIES
2 WORKING DAYS
BEFORE YOU DIG
CALL 1-800-362-2764
OHIO UTILITY PROTECTION SERVICE
CALL NON-SERVICE FACILITY
OWNERS DIRECT

GRAPHIC SCALE
20 0 20 40 80
(IN FEET)
1 inch = 20 ft. Full Size
1 inch = 40 ft. Half Size

PROFESSIONAL STAMP

SIGN:
DATE:

CONTRACT DRAWING

PRINTS NOT BEARING THIS STAMP WERE MADE PRIOR TO ADVERTISING FOR BID, AND ARE TO BE CONSIDERED OBSOLETE FOR CONTRACT PURPOSES.

Department of Transportation and Engineering
City of Cincinnati
City Hall
801 Plum Street
Cincinnati, Ohio 45202

CINCINNATI STREETCAR
OVER THE RHINE

OCS PLANS - ELM STREET
STA 237+70 TO STA 242+90

Revisions
No.

	Date
Drawn by LP/ND	7/02/2012
Designed by MH/RL	7/02/2012
Checked by HSZ	7/02/2012
Reviewed by JTB	7/12/2012

Consultant
PB HDR

File Number
ACC No. 23126

G-OL-2009

$PLTDRV$$
T:\29014a_Cincinnati.Street.Car\OCS\S_G-OL-2009.dgn
12:47:46 PM
7/12/2012

NOTES:

1. A DISTANCE OF SIX FEET BEHIND THE CURB AND 15 FEET ON EITHER SIDE OF PROPOSED OCS POLES AND SIGNAL POLES (INCLUDING ANY DISTURBANCE TO THE EXISTING CURB) HAS BEEN QUANTIFIED FOR BIDDING PURPOSES. THE CITY'S ENGINEER WILL DETERMINE ACTUAL PAY LIMITS FOR THIS WORK. NO ADDITIONAL INCREASE TO THE UNIT COST WILL BE ALLOWED FOR THIS WORK IF THE QUANTITIES ARE MORE OR LESS THAN THE AMOUNT QUANTIFIED FOR BIDDING PURPOSES.

2. A STANDARD CITY OF CINCINNATI FOUNDATION TO BE USED WHERE FOUNDATION TYPES NOT SHOWN BELOW APPLICABLE POLES ON TABULATION.

POLE No.							
STATIONING	245+32.47	245+52	245+72	245+84.22	245+95.12	246+14.99	246+46.00
UPPER CROSS-SPAN HT.(FT)	21.4			21.2			
POLE TYPE / LENGTH	72025/22.5	–	–	72025/22.5	33048/27.0	27070/26.0	27070/26.0
POLE OFFSET	32.78/LT			19.81/LT	13.61/LT	10.43/LT	10.00/LT
CONTACT WIRE HT. (FT)		19.5	19.5				
STAGGER (IN)	–	6↯	6↯	–	6↯	6↯	6↯
SUPPORT/REGISTRATION TYPE		BBPO-2	BBPO-2		C-6	C-3	C-1
TERMINATION TYPE / HT.							
JUMPER TYPE							
FOUNDATION TYPE							
MISCELLANEOUS		BPO					

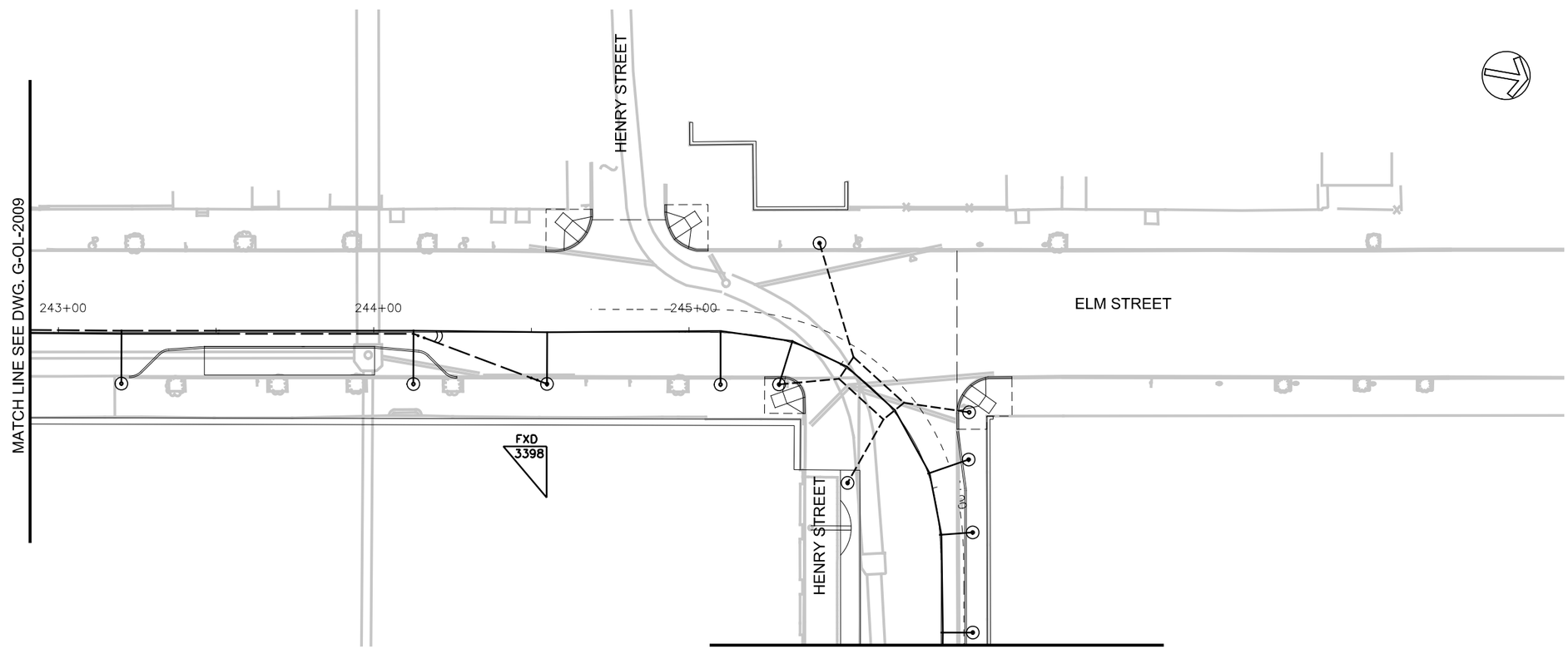

POLE No.						
STATIONING	243+19.96	244+12.57	244+54.95	245+10.57	245+32.80	245+86.27
UPPER CROSS-SPAN HT.(FT)					23.3	23.0
POLE TYPE / LENGTH	27070/28.0	38045/30.0	72025/30.0	38045/30.0	52028/30.0	33048/24.0
POLE OFFSET	16.30/RT	16.44/RT	16.42/RT	16.48/RT	13.86/RT	24.75/RT
CONTACT WIRE HT. (FT)	19.5/19.5	19.5/20.5	19.5	19.5	19.5	
STAGGER (IN)	6↯ 6↯	6↯6↯ (OOR)	0↯	6↯	6↯	–
SUPPORT/REGISTRATION TYPE	C-4	C-10	C-4	C-8	C-9	
TERMINATION TYPE / HT.			CWT/21.5			
JUMPER TYPE						
FOUNDATION TYPE						
MISCELLANEOUS	KN-1	FF-1			BPO	

GRAPHIC SCALE

20 0 20 40 80

(IN FEET)
1 inch = 20 ft. Full Size
1 inch = 40 ft. Half Size

CAUTION UNDERGROUND UTILITIES
2 WORKING DAYS
BEFORE YOU DIG
CALL 1-800-362-2764
OHIO UTILITY PROTECTION SERVICE
CALL NON-SERVICE FACILITY
OWNERS DIRECT

PROFESSIONAL STAMP

SIGN:

DATE:

CONTRACT DRAWING

PRINTS NOT BEARING THIS STAMP WERE MADE PRIOR TO ADVERTISING FOR BIDS AND ARE TO BE CONSIDERED OBSOLETE FOR CONTRACT PURPOSES.

Department of Transportation and Engineering

City of Cincinnati
City Hall
801 Plum Street
Cincinnati, Ohio 45202

CINCINNATI STREETCAR
OVER THE RHINE

OCS PLANS - ELM STREET
STA 242+90 TO STA 246+50

Revisions

No.			

Drawn by LP/ND	Designed by MH/RL	Checked by HSZ	Reviewed by JTB
Date 7/02/2012	Date 7/02/2012	Date 7/02/2012	Date 7/12/2012

Consultant

PB HDR

File Number

ACC No. 23126

G-OL-2010

$PLTDRV$$
T:\29014a_Cincinnati.Street.Car\OCS\S_G-OL-2010.dgn
7/12/2012 12:47:51 PM

POLE No.			
STATIONING	247+01.00	247+61.22	248+35.03
UPPER CROSS-SPAN HT.(FT)			
POLE TYPE / LENGTH	27070/26.5	27070/24.5	27070/24.5
POLE OFFSET	7.64/LT	7.89/LT	7.46/LT
CONTACT WIRE HT. (FT)	19.5	19.5	19.5
STAGGER (IN)	6↓	0 NR.	6↑
SUPPORT/REGISTRATION TYPE	C-7	C-4(MOD)	C-1
TERMINATION TYPE / HT.			
JUMPER TYPE			
FOUNDATION TYPE			
MISCELLANEOUS			

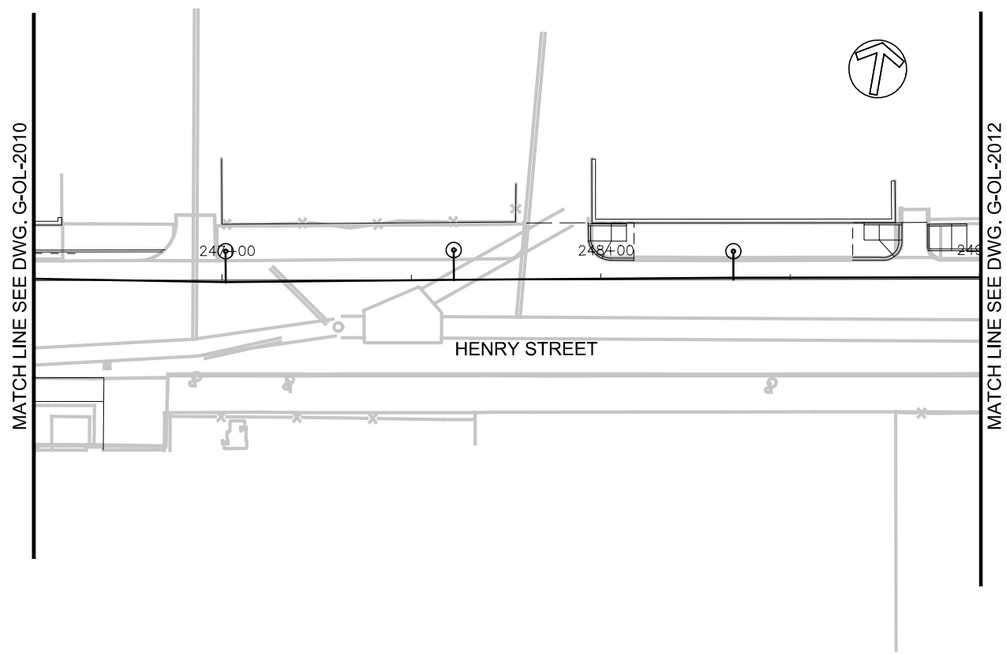

NOTES:

1. A DISTANCE OF SIX FEET BEHIND THE CURB AND 15 FEET ON EITHER SIDE OF PROPOSED OCS POLES AND SIGNAL POLES (INCLUDING ANY DISTURBANCE TO THE EXISTING CURB) HAS BEEN QUANTIFIED FOR BIDDING PURPOSES. THE CITY'S ENGINEER WILL DETERMINE ACTUAL PAY LIMITS FOR THIS WORK. NO ADDITIONAL INCREASE TO THE UNIT COST WILL BE ALLOWED FOR THIS WORK IF THE QUANTITIES ARE MORE OR LESS THAN THE AMOUNT QUANTIFIED FOR BIDDING PURPOSES.

2. A STANDARD CITY OF CINCINNATI FOUNDATION TO BE USED WHERE FOUNDATION TYPES NOT SHOWN BELOW APPLICABLE POLES ON TABULATION.

GRAPHIC SCALE

20 0 20 40 80

(IN FEET)
1 inch = 20 ft. Full Size
1 inch = 40 ft. Half Size

CAUTION UNDERGROUND UTILITIES
2 WORKING DAYS
BEFORE YOU DIG
CALL 1-800-362-2764
OHIO UTILITY PROTECTION SERVICE
CALL NON-SERVICE FACILITY
OWNERS DIRECT

PROFESSIONAL STAMP

STATE OF OHIO
HERBERT SAUL ZWELLING III-E-6348
REGISTERED PROFESSIONAL ENGINEER

SIGN: 12/20/11
DATE:

CONTRACT DRAWING

PRINTS NOT BEARING THIS STAMP WERE MADE PRIOR TO ADVERTISING FOR BIDS AND ARE TO BE CONSIDERED OBSOLETE FOR CONTRACT PURPOSES.

Department of Transportation and Engineering

City of Cincinnati
City Hall
801 Plum Street
Cincinnati, Ohio 45202

CINCINNATI STREETCAR
OVER THE RHINE
OCS PLANS - HENRY STREET
STA 246+50 TO STA 249+00

Revisions

No.		Date
		12/20/2011
		12/20/2011
		12/20/2011
		12/20/2011

Drawn by LP/ND Date 12/20/2011
Designed by MH/RL Date 12/20/2011
Checked by HSZ Date 12/20/2011
Reviewed by JTB Date 12/20/2011

Consultant

PB HDR

File Number

ACC No. 23126

G-OL-2011

$PLTDRV$
T:\29014a_Cincinnati.Street.Car\OCS\S_G-OL-2011.dgn
12/16/2011 12:19:39 PM

POLE No.				
STATIONING	249+04.00	249+33.79	249+54.64	249+68.91
UPPER CROSS-SPAN HT.(FT)				
POLE TYPE / LENGTH	27070/26.0	27070/26.0	33048/27.0	38045/29.0
POLE OFFSET	10.00/LT	10.07/LT	12.61/LT	17.45/LT
CONTACT WIRE HT. (FT)	19.5	19.5	19.5	19.5
STAGGER (IN)	6↓	6↓	6↓	6↓
SUPPORT/REGISTRATION TYPE	C-1	C-2	C-6	C-6
TERMINATION TYPE / HT.				
JUMPER TYPE				
FOUNDATION TYPE				
MISCELLANEOUS				

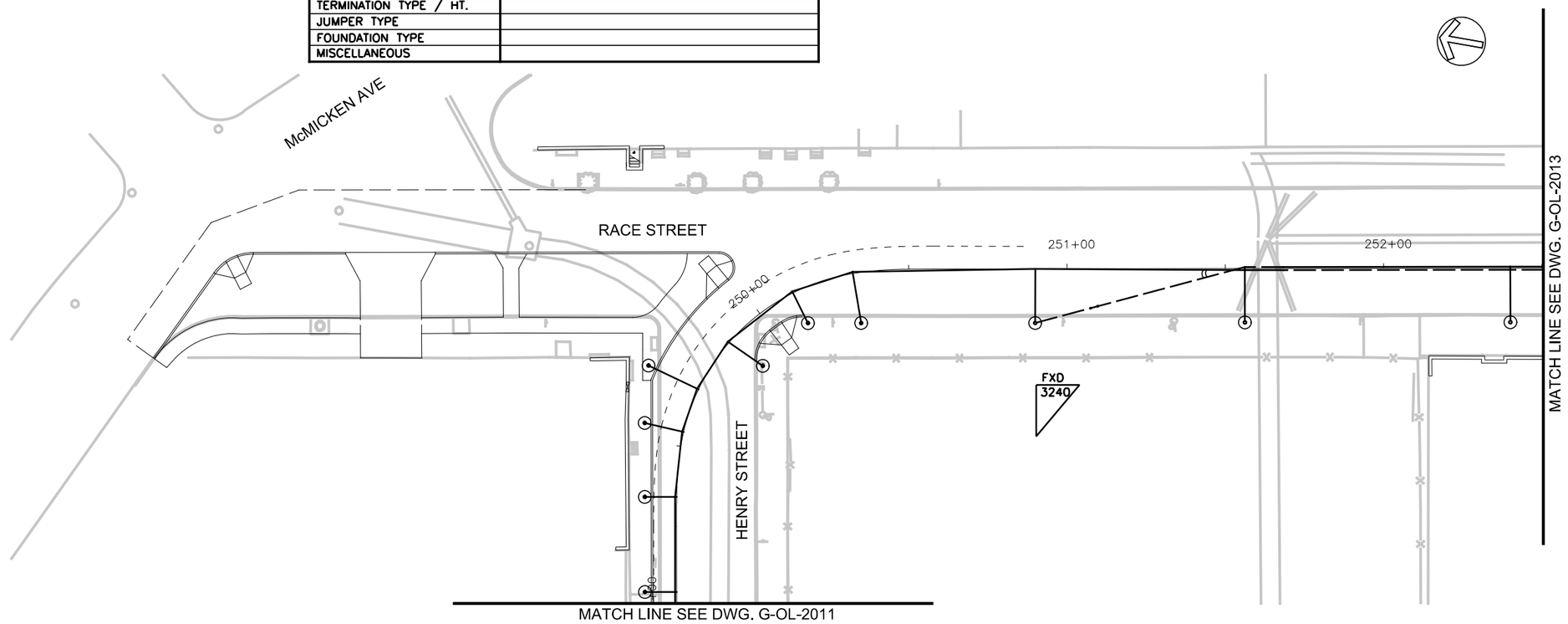

POLE No.						
STATIONING	249+88.40	250+12.30	250+32.30	250+89.92	251+56.15	252+40.00
UPPER CROSS-SPAN HT.(FT)						
POLE TYPE / LENGTH	38045/30.0	52028/30.0	38045/30.0	72025/30.0	38045/30.0	27070/28.0
POLE OFFSET	12.85/RT	10.63/RT	15.83/RT	17.08/RT	17.00/RT	17.05/RT
CONTACT WIRE HT. (FT)	19.5	19.5	19.5	19.5	20.5/19.5	19.5/19.5
STAGGER (IN)	6↓	6↓	6↓	0↓	(OOR)6↓6↓	6↓6↓
SUPPORT/REGISTRATION TYPE	C-9	C-9	C-9	C-4	C-11	C-4
TERMINATION TYPE / HT.				CWT/22		
JUMPER TYPE						
FOUNDATION TYPE						
MISCELLANEOUS					FF-1	KN-1

NOTES:

1. A DISTANCE OF SIX FEET BEHIND THE CURB AND 15 FEET ON EITHER SIDE OF PROPOSED OCS POLES AND SIGNAL POLES (INCLUDING ANY DISTURBANCE TO THE EXISTING CURB) HAS BEEN QUANTIFIED FOR BIDDING PURPOSES. THE CITY'S ENGINEER WILL DETERMINE ACTUAL PAY LIMITS FOR THIS WORK. NO ADDITIONAL INCREASE TO THE UNIT COST WILL BE ALLOWED FOR THIS WORK IF THE QUANTITIES ARE MORE OR LESS THAN THE AMOUNT QUANTIFIED FOR BIDDING PURPOSES.

2. A STANDARD CITY OF CINCINNATI FOUNDATION TO BE USED WHERE FOUNDATION TYPES NOT SHOWN BELOW APPLICABLE POLES ON TABULATION.

GRAPHIC SCALE

20 0 20 40 80

(IN FEET)
1 inch = 20 ft. Full Size
1 inch = 40 ft. Half Size

CAUTION UNDERGROUND UTILITIES
2 WORKING DAYS
BEFORE YOU DIG
CALL 1-800-362-2764
OHIO UTILITY PROTECTION SERVICE
CALL NON-SERVICE FACILITY
OWNERS DIRECT

PROFESSIONAL STAMP

STATE OF OHIO
HERMAN L. RAUB
DWELLING
REGISTERED
PROFESSIONAL ENGINEER

SIGN: 12/20/11
DATE:

CONTRACT DRAWING

PRINTS NOT BEARING THIS STAMP WERE MADE PRIOR TO ADVERTISING FOR BIDS AND ARE TO BE CONSIDERED OBSOLETE FOR CONTRACT PURPOSES.

Department of Transportation and Engineering

City of Cincinnati
City Hall
801 Plum Street
Cincinnati, Ohio 45202

CINCINNATI STREETCAR
OVER THE RHINE
OCS PLANS -RACE STREET
STA 249+00 -TO STA 252+50

Revisions

No.	Date	Drawn by	Designed by	Checked by	Reviewed by
	12/20/2011	LP/ND	MH/RL	HSZ	JTB
	12/20/2011				
	12/20/2011				
	12/20/2011				

Consultant

PB HDR

File Number

ACC No. 23126

G-OL-2012

$PLTDRVS$
T:\29014a_Cincinnati:Street.Car\OCS\S_G-OL-2012.dgn
12:19:43 PM
12/16/2011

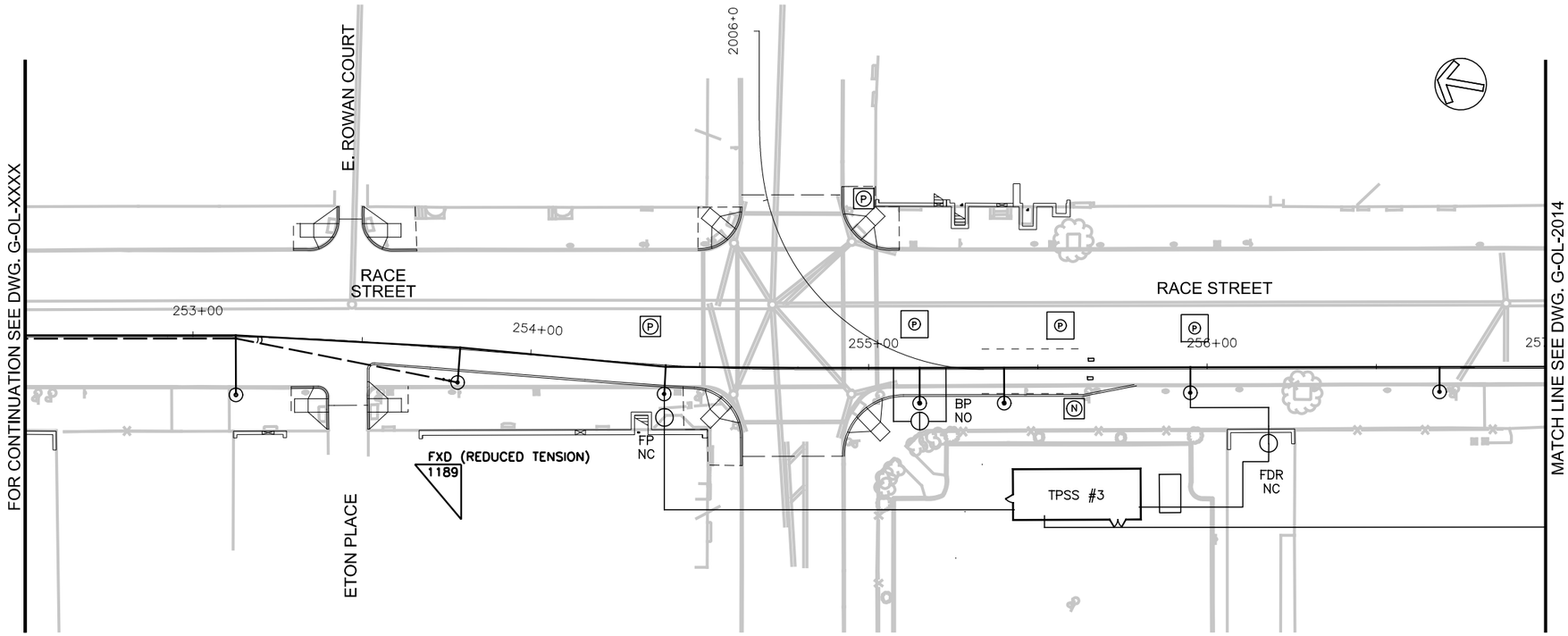

POLE No.							
STATIONING	253+12.87	253+79.09	254+40.07	255+15.04	255+40.00	255+95.00	256+68.63
UPPER CROSS-SPAN HT.(FT)							
POLE TYPE / LENGTH	38045/30.0	72025/30.0	27070F/25.5	38045/29.0	27070F/26.0	27070F/27.0	27070/25.0
POLE OFFSET	17.13/RT	9.84/RT	8.54/RT	10.00/RT	10.00/RT	7.03/RT	6.85/RT
CONTACT WIRE HT. (FT)	19.5/20.5	19.5	19.5	19.5	19.5	19.5	19.5
STAGGER (IN)	6↑ 6↓ (OOR)	6↑	6↑	6↑	6↑	6↑	6↑
SUPPORT/REGISTRATION TYPE	C-10	C-7	C-2	C-4	C-1	C-7	C-1
TERMINATION TYPE / HT.		CWT/22					
JUMPER TYPE							
FOUNDATION TYPE							
MISCELLANEOUS	FF-1		FP-1, SA-1	BP-1	SM-F, SA-1	FP-1, SA-1	

NOTES:

1. ALLOCATION FOR STATIONING 254+80 TO 256+75 DO NOT INCLUDE FOR THE VINE STREET FUTURE CATENARY ASSEMBLY.
2. CATENARY POLE/FOUNDATION FOR 254+80 TO 256+75 DO INCLUDE FOR FUTURE VINE STREET CATENARY LOAD.
3. A DISTANCE OF SIX FEET BEHIND THE CURB AND 15 FEET ON EITHER SIDE OF PROPOSED OCS POLES AND SIGNAL POLES (INCLUDING ANY DISTURBANCE TO THE EXISTING CURB) HAS BEEN QUANTIFIED FOR BIDDING PURPOSES. THE CITY'S ENGINEER WILL DETERMINE ACTUAL PAY LIMITS FOR THIS WORK. NO ADDITIONAL INCREASE TO THE UNIT COST WILL BE ALLOWED FOR THIS WORK IF THE QUANTITIES ARE MORE OR LESS THAN THE AMOUNT QUANTIFIED FOR BIDDING PURPOSES.
4. A STANDARD CITY OF CINCINNATI FOUNDATION TO BE USED WHERE FOUNDATION TYPES NOT SHOWN BELOW APPLICABLE POLES ON TABULATION.

GRAPHIC SCALE

20 0 20 40 80

(IN FEET)
1 inch = 20 ft. Full Size
1 inch = 40 ft. Half Size

CAUTION UNDERGROUND UTILITIES
2 WORKING DAYS
BEFORE YOU DIG
CALL 1-800-362-2764
OHIO UTILITY PROTECTION SERVICE
CALL NON-SERVICE FACILITY
OWNERS DIRECT

PROFESSIONAL STAMP

SIGN:

DATE:

CONTRACT DRAWING

PRINTS NOT BEARING THIS STAMP WERE MADE PRIOR TO ADVERTISING FOR BIDS AND ARE TO BE CONSIDERED OBSOLETE FOR CONTRACT PURPOSES.

Department of Transportation and Engineering
City of Cincinnati
City Hall
801 Plum Street
Cincinnati, Ohio 45202

CINCINNATI STREETCAR
OVER THE RHINE

OCS PLANS - RACE STREET
STA 252+50 TO STA 257+00

Revisions

No.			

Drawn by LP/ND	Designed by MH/RL	Checked by HSZ	Reviewed by JTB
Date 7/02/2012	Date 7/02/2012	Date 7/02/2012	Date 7/12/2012

Consultant

PB HDR

File Number

ACC No. 23126

G-OL-2013

$PLTDRV$$
T:\29014a_Cincinnati.Street.Car\OCS\S_G-OL-2013.dgn
7/12/2012 12:47:56 PM

NOTES:

1. ALLOCATION FOR STATIONING 254+80 TO 256+75 DO NOT INCLUDE FOR THE VINE STREET FUTURE CATENARY ASSEMBLY.
2. CATENARY POLE/FOUNDATION FOR 254+80 TO 256+75 DO INCLUDE FOR FUTURE VINE STREET CATENARY LOAD.
3. FOR OLC DETAIL, SEE DRAWING NO. G-SD-1007.
4. A DISTANCE OF SIX FEET BEHIND THE CURB AND 15 FEET ON EITHER SIDE OF PROPOSED OCS POLES AND SIGNAL POLES (INCLUDING ANY DISTURBANCE TO THE EXISTING CURB) HAS BEEN QUANTIFIED FOR BIDDING PURPOSES. THE CITY'S ENGINEER WILL DETERMINE ACTUAL PAY LIMITS FOR THIS WORK. NO ADDITIONAL INCREASE TO THE UNIT COST WILL BE ALLOWED FOR THIS WORK IF THE QUANTITIES ARE MORE OR LESS THAN THE AMOUNT QUANTIFIED FOR BIDDING PURPOSES.
5. A STANDARD CITY OF CINCINNATI FOUNDATION TO BE USED WHERE FOUNDATION TYPES NOT SHOWN BELOW APPLICABLE POLES ON TABULATION.

POLE No.					
STATIONING	259+86.03	260+21.94	260+57.31	261+04.99	261+77.68
UPPER CROSS-SPAN HT.(FT)	22.1	21.7			
POLE TYPE / LENGTH	33048/23.0	38045/23.0	38045/30.0	38045/30.0	38045/30.0
POLE OFFSET	29.83/LT	24.24/LT	19.52/LT	17.64/LT	17.46/LT
CONTACT WIRE HT. (FT)			19.5	19.5	19.5
STAGGER (IN)	-	-	6↓	6↓	0↓
SUPPORT/REGISTRATION TYPE			C-5	C-4	C-7
TERMINATION TYPE / HT.					
JUMPER TYPE					
FOUNDATION TYPE					
MISCELLANEOUS					

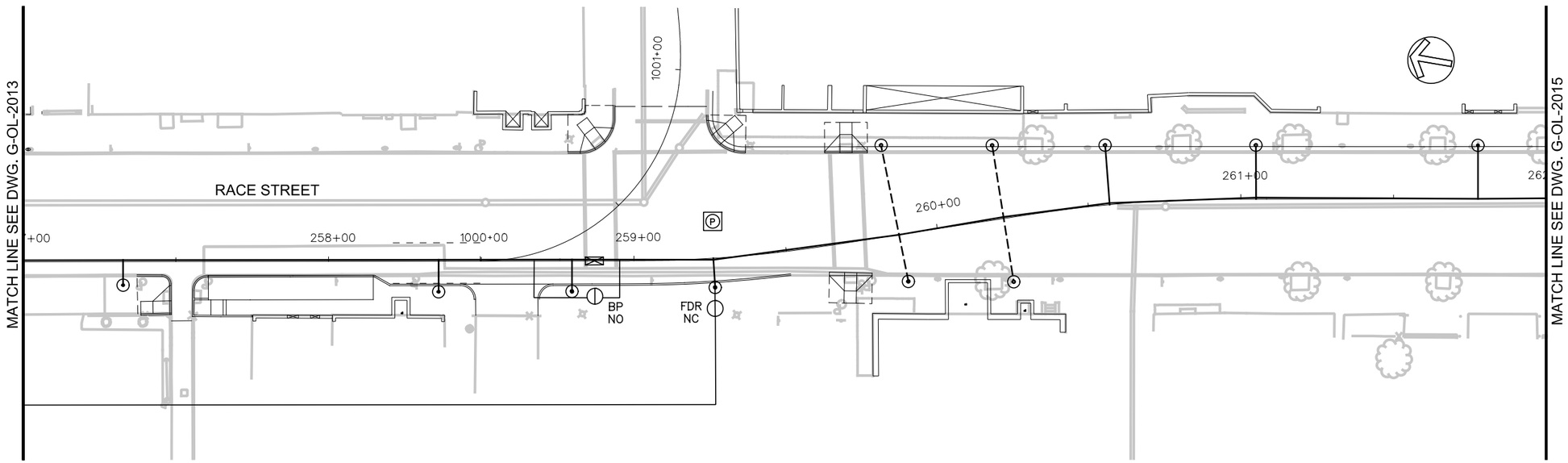

POLE No.						
STATIONING	257+32.73	258+36.03	258+79.69	259+26.02	259+88.01	260+22.11
UPPER CROSS-SPAN HT.(FT)					21.9	22.0
POLE TYPE / LENGTH	27070F/27.0	27070F/26.0	38045/30.0	27070F/26.0	38045F/23.0	33048/23.0
POLE OFFSET	7.68/RT	10.00/RT	9.94/RT	9.60/RT	15.57/RT	20.96/RT
CONTACT WIRE HT. (FT)	19.5	19.5	19.5	19.5	19.5	19.5
STAGGER (IN)	6↓	6↓	6↓	6↓	0↓	6↓
SUPPORT/REGISTRATION TYPE	C-7	C-1	C-7	C-2	CST-1	CST-1
TERMINATION TYPE / HT.						
JUMPER TYPE						
FOUNDATION TYPE						
MISCELLANEOUS	OLC	SM-F SA-1	BP-1	FP-1, SA-1	OLC	

CAUTION UNDERGROUND UTILITIES
2 WORKING DAYS
BEFORE YOU DIG
CALL 1-800-362-2764
OHIO UTILITY PROTECTION SERVICE
CALL NON-SERVICE FACILITY
OWNERS DIRECT

GRAPHIC SCALE
20 0 20 40 80
(IN FEET)
1 inch = 20 ft. Full Size
1 inch = 40 ft. Half Size

PROFESSIONAL STAMP

SIGN:
DATE:

CONTRACT DRAWING

PRINTS NOT BEARING THIS STAMP WERE MADE PRIOR TO ADVERTISING FOR BIDS AND ARE TO BE CONSIDERED OBSOLETE FOR CONTRACT PURPOSES.

Department of Transportation and Engineering

City of Cincinnati
City Hall
801 Plum Street
Cincinnati, Ohio 45202

CINCINNATI STREETCAR
OVER THE RHINE

OCS PLANS - RACE STREET
STA 257+00 TO STA 262+00

Revisions

No.			

Drawn by LP/ND	Date 7/02/2012	Designed by MH/RL	Date 7/02/2012
Checked by HSZ	Date 7/02/2012	Reviewed by JTB	Date 7/12/2012

Consultant

PB HDR

File Number

ACC No. 23126

G-OL-2014

$PLTDRVS$
T:\29014a_Cincinnati.Street.Car\OCS\S_G-OL-2014.dgn
7/12/2012 12:48:01 PM

POLE No.						
STATIONING	262+38.87	263+25.03	264+10.03	264+90.03	265+82.84	266+75.70
UPPER CROSS-SPAN HT.(FT)						
POLE TYPE / LENGTH	27070/28.0	38045/30.0	27070/28.0	38045/30.0	27070/28.0	27070/28.0
POLE OFFSET	17.51/LT	17.48/LT	16.75/LT	16.82/LT	16.97/LT	17.26/LT
CONTACT WIRE HT. (FT)	19.5	19.5	19.5	19.5	19.5	19.5
STAGGER (IN)	3↑	6↑	6↑	6↑	6↑	0↑
SUPPORT/REGISTRATION TYPE	C-4	C-7	C-4	C-7	C-4	C-4
TERMINATION TYPE / HT.						
JUMPER TYPE						
FOUNDATION TYPE						
MISCELLANEOUS						

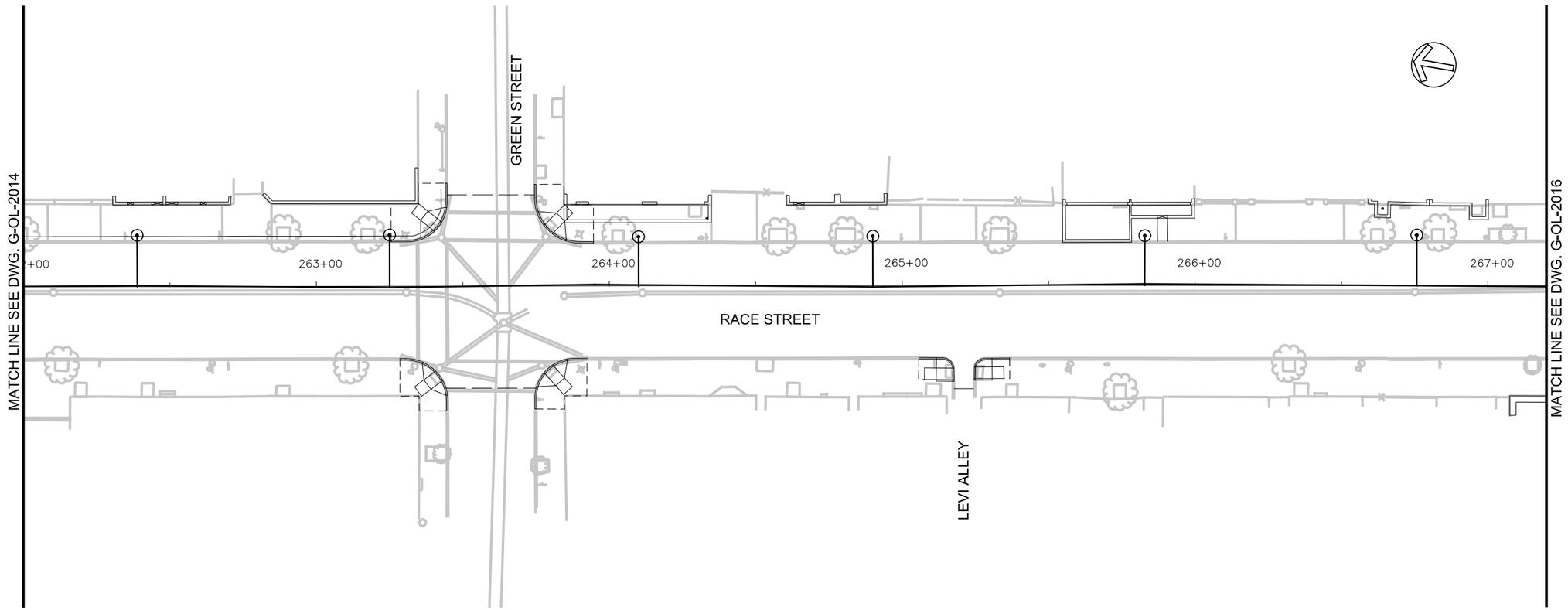

NOTES:

1. A DISTANCE OF SIX FEET BEHIND THE CURB AND 15 FEET ON EITHER SIDE OF PROPOSED OCS POLES AND SIGNAL POLES (INCLUDING ANY DISTURBANCE TO THE EXISTING CURB) HAS BEEN QUANTIFIED FOR BIDDING PURPOSES. THE CITY'S ENGINEER WILL DETERMINE ACTUAL PAY LIMITS FOR THIS WORK. NO ADDITIONAL INCREASE TO THE UNIT COST WILL BE ALLOWED FOR THIS WORK IF THE QUANTITIES ARE MORE OR LESS THAN THE AMOUNT QUANTIFIED FOR BIDDING PURPOSES.

2. A STANDARD CITY OF CINCINNATI FOUNDATION TO BE USED WHERE FOUNDATION TYPES NOT SHOWN BELOW APPLICABLE POLES ON TABULATION.

GRAPHIC SCALE

20 0 20 40 80

(IN FEET)
1 inch = 20 ft. Full Size
1 inch = 40 ft. Half Size

CAUTION UNDERGROUND UTILITIES
2 WORKING DAYS
BEFORE YOU DIG
CALL 1-800-362-2764
OHIO UTILITY PROTECTION SERVICE
CALL NON-SERVICE FACILITY
OWNERS DIRECT

PROFESSIONAL STAMP

SIGN:

DATE:

CONTRACT DRAWING

PRINTS NOT BEARING THIS STAMP WERE MADE PRIOR TO ADVERTISING FOR BID, AND ARE TO BE CONSIDERED OBSOLETE FOR CONTRACT PURPOSES.

Department of Transportation and Engineering

City of Cincinnati
City Hall
801 Plum Street
Cincinnati, Ohio 45202

CINCINNATI STREETCAR OVER THE RHINE

OCS PLANS - RACE STREET
STA 262+00 TO STA 267+20

Revisions

No.			

Date 7/02/2012	Date 7/02/2012	Date 7/02/2012	Date 7/12/2012
Drawn by LP/ND	Designed by MH/RL	Checked by HSZ	Reviewed by JTB

Consultant

PB HDR

File Number

ACC No. 23126

G-OL-2015

$PLTDRV$$
T:\29014a_Cincinnati.Street.Car\OCS\S_G-OL-2015.dgn
7/12/2012 12:48:06 PM

POLE No.						
STATIONING	267+37.04	268+14	268+90.77	269+66.62	270+54.82	271+48.70
UPPER CROSS-SPAN HT.(FT)	22.3/24.5		24.5/22.4			
POLE TYPE / LENGTH	52028/26.0	-	52028/26.0	38045/30.0	27070/28.0	27070/28.0
POLE OFFSET	17.53/LT		17.40/LT	15.43/LT	17.24/LT	17.25/LT
CONTACT WIRE HT. (FT)	19.5	19.5	19.5	19.5	19.5	19.5
STAGGER (IN)	6↓	0↓	6↓	6↓	0 (N.R.)	6↓
SUPPORT/REGISTRATION TYPE	CST-1	BBPO-1	CST-1	C-7	C-4(MOD)	C-4
TERMINATION TYPE / HT.						
JUMPER TYPE						
FOUNDATION TYPE						
MISCELLANEOUS		BPO				

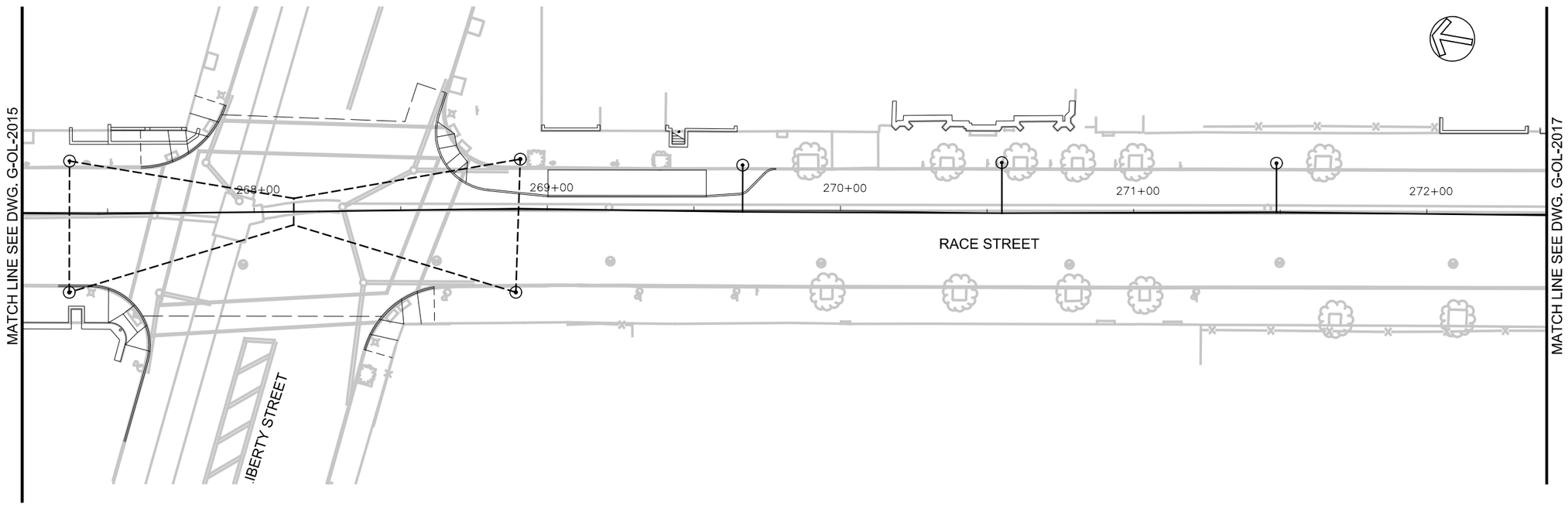

POLE No.		
STATIONING	267+36.98	268+89.31
UPPER CROSS-SPAN HT.(FT)	22.1/25.4	25.4/22.6
POLE TYPE / LENGTH	52028/27.0	52028/27.0
POLE OFFSET	27.29/RT	28.06/RT
CONTACT WIRE HT. (FT)		
STAGGER (IN)	-	-
SUPPORT/REGISTRATION TYPE		
TERMINATION TYPE / HT.		
JUMPER TYPE		
FOUNDATION TYPE		
MISCELLANEOUS	BPO	

NOTES:

1. A DISTANCE OF SIX FEET BEHIND THE CURB AND 15 FEET ON EITHER SIDE OF PROPOSED OCS POLES AND SIGNAL POLES (INCLUDING ANY DISTURBANCE TO THE EXISTING CURB) HAS BEEN QUANTIFIED FOR BIDDING PURPOSES. THE CITY'S ENGINEER WILL DETERMINE ACTUAL PAY LIMITS FOR THIS WORK. NO ADDITIONAL INCREASE TO THE UNIT COST WILL BE ALLOWED FOR THIS WORK IF THE QUANTITIES ARE MORE OR LESS THAN THE AMOUNT QUANTIFIED FOR BIDDING PURPOSES.
2. A STANDARD CITY OF CINCINNATI FOUNDATION TO BE USED WHERE FOUNDATION TYPES NOT SHOWN BELOW APPLICABLE POLES ON TABULATION.

CAUTION UNDERGROUND UTILITIES
2 WORKING DAYS
BEFORE YOU DIG
CALL 1-800-362-2764
OHIO UTILITY PROTECTION SERVICE
CALL NON-SERVICE FACILITY
OWNERS DIRECT

GRAPHIC SCALE
20 0 20 40 80
(IN FEET)
1 inch = 20 ft. Full Size
1 inch = 40 ft. Half Size

PROFESSIONAL STAMP

SIGN:
DATE:

CONTRACT DRAWING
PRINTS NOT BEARING THIS STAMP WERE MADE PRIOR TO ADVERTISING FOR BIDS AND ARE TO BE CONSIDERED OBSOLETE FOR CONTRACT PURPOSES.

Department of Transportation and Engineering
City of Cincinnati
City Hall
801 Plum Street
Cincinnati, Ohio 45202

CINCINNATI STREETCAR OVER THE RHINE

OCS PLANS - RACE STREET
STA 267+20 TO STA 272+40

Revisions
No.

Drawn by LP/ND	Date 7/02/2012	
Designed by MH/RL	Date 7/02/2012	
Checked by HSZ	Date 7/02/2012	
Reviewed by JTB	Date 7/12/2012	

Consultant
PB HDR

File Number
ACC No. 23126

G-OL-2016

$PLTDRV$$
T:\29014a_Cincinnati.Street.Car\OCS\S_G-OL-2016.dgn
7/12/2012 12:48:11 PM

POLE No.								
STATIONING	272+42.69	273+32.72	274+22.10	274+88.09	275+56.13	276+37.94	277+06.33	277+60.42
UPPER CROSS-SPAN HT.(FT)								
POLE TYPE / LENGTH	38045/30.0	27070/28.0	38045/30.0	27070/28.0	38045/30.0	27070/28.0	38045/30.0	27070/28.0
POLE OFFSET	17.15/LT	17.22/LT	17.88/LT	17.24/LT	17.36/LT	17.36/LT	17.50/LT	17.58/LT
CONTACT WIRE HT. (FT)	19.5	19.5	19.5	19.5	19.5	19.5	19.5	19.5
STAGGER (IN)	6↓	6↓	6↓	6↓	6↓	6↓	6↓	6↓
SUPPORT/REGISTRATION TYPE	C-7	C-4	C-7	C-4	C-7	C-4	C-7	C-4
TERMINATION TYPE / HT.								
JUMPER TYPE								
FOUNDATION TYPE								
MISCELLANEOUS								

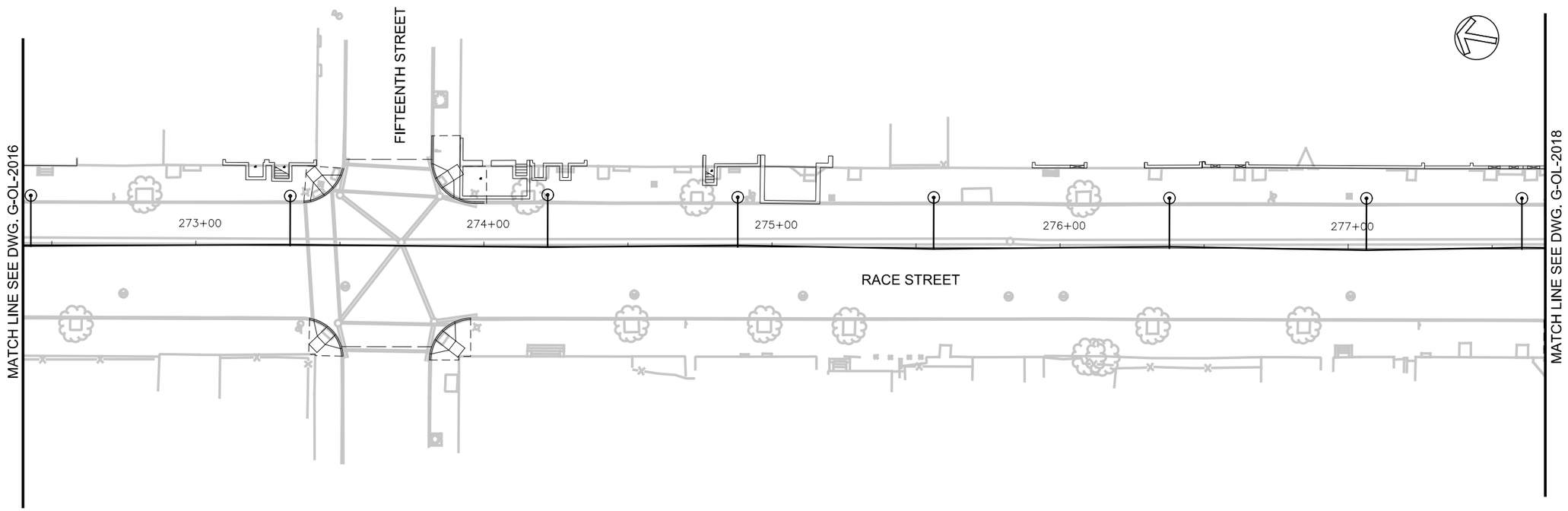

NOTES:

1. A DISTANCE OF SIX FEET BEHIND THE CURB AND 15 FEET ON EITHER SIDE OF PROPOSED OCS POLES AND SIGNAL POLES (INCLUDING ANY DISTURBANCE TO THE EXISTING CURB) HAS BEEN QUANTIFIED FOR BIDDING PURPOSES. THE CITY'S ENGINEER WILL DETERMINE ACTUAL PAY LIMITS FOR THIS WORK. NO ADDITIONAL INCREASE TO THE UNIT COST WILL BE ALLOWED FOR THIS WORK IF THE QUANTITIES ARE MORE OR LESS THAN THE AMOUNT QUANTIFIED FOR BIDDING PURPOSES.

2. A STANDARD CITY OF CINCINNATI FOUNDATION TO BE USED WHERE FOUNDATION TYPES NOT SHOWN BELOW APPLICABLE POLES ON TABULATION.

CAUTION UNDERGROUND UTILITIES
2 WORKING DAYS
BEFORE YOU DIG
CALL 1-800-362-2764
OHIO UTILITY PROTECTION SERVICE
CALL NON-SERVICE FACILITY
OWNERS DIRECT

GRAPHIC SCALE
20 0 20 40 80
(IN FEET)
1 inch = 20 ft. Full Size
1 inch = 40 ft. Half Size

PROFESSIONAL STAMP

SIGN:
DATE:

CONTRACT DRAWING

PRINTS NOT BEARING THIS STAMP WERE MADE PRIOR TO ADVERTISING FOR BIDS AND ARE TO BE CONSIDERED OBSOLETE FOR CONTRACT PURPOSES.

Department of Transportation and Engineering

City of Cincinnati
City Hall
801 Plum Street
Cincinnati, Ohio 45202

CINCINNATI STREETCAR
OVER THE RHINE

OCS PLANS - RACE STREET
STA 272+40 TO STA 277+70

Revisions
No.

Drawn by LP/ND	Date 7/02/2012	
Designed by MH/RL	Date 7/02/2012	
Checked by HSZ	Date 7/02/2012	
Reviewed by JTB	Date 7/12/2012	

Consultant

PB HDR

File Number

ACC No. 23126

G-OL-2017

$PLTDRV$$
T:\29014a_Cincinnati.Street.Car\OCS\S_G-OL-2017.dgn
7/12/2012 12:48:16 PM

POLE No.							
STATIONING	278+17.98	278+77.90	279+45.18	280+23.44	280+90.05	281+71.45	282+56.37
UPPER CROSS-SPAN HT.(FT)							
POLE TYPE / LENGTH	38045/30.0	27070/28.0	38045/30.0	72025/30.0	38045/30.0	27070/28.0	72025/30.5
POLE OFFSET	16.56/LT	16.76/LT	16.88/LT	17.32/LT	16.96/LT	17.11/LT	18.10/LT
CONTACT WIRE HT. (FT)	19.5	19.5	19.5	19.5	20.5/19.5	19.5/19.5	20.5/19.5
STAGGER (IN)	6↓	6↓	6↓	0 NR.	(OOR) 6↓ 6↑	6↓ 6↑	(OOR) 6↓ 6↓
SUPPORT/REGISTRATION TYPE	C-7	C-4	C-7	C-4(MOD)	C-11	C-4	C-10
TERMINATION TYPE / HT.				CWT/22			
JUMPER TYPE							
FOUNDATION TYPE							
MISCELLANEOUS			BP-1		FF-1	KN-1	FF-1

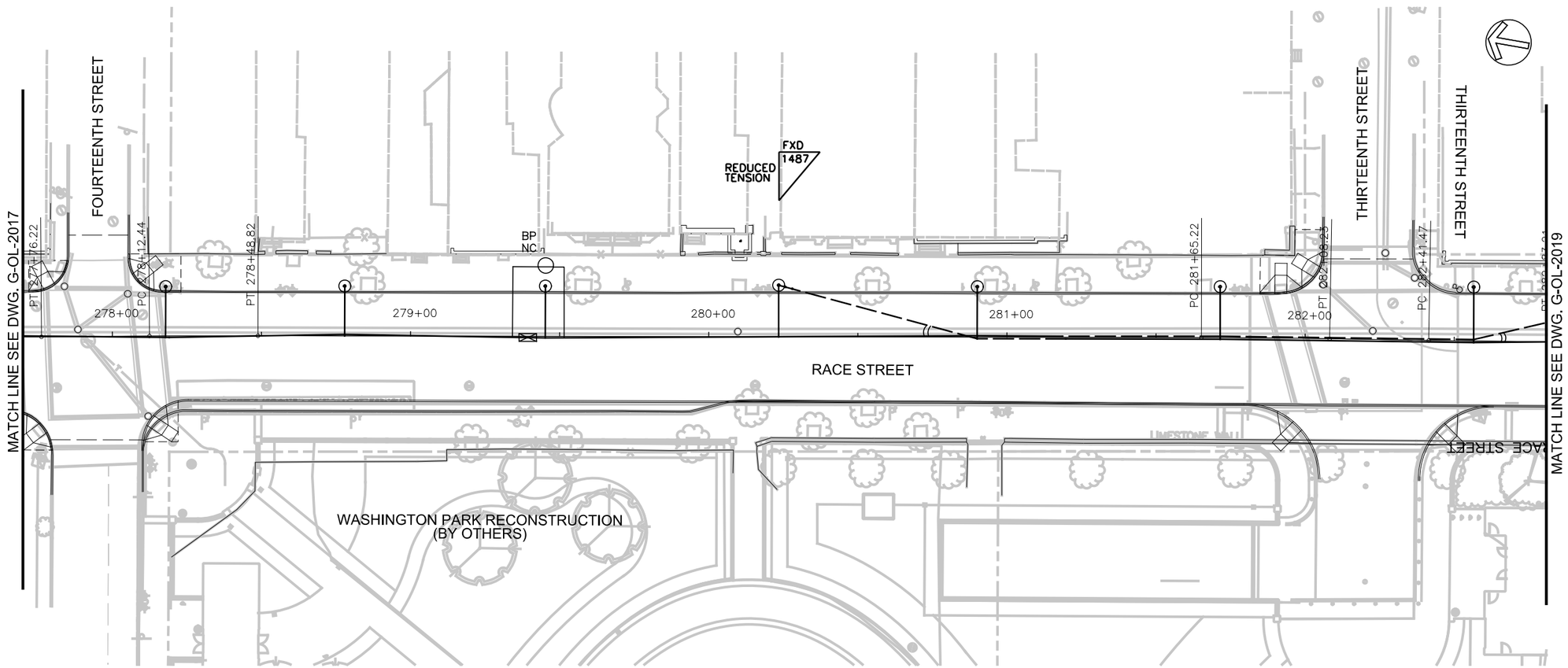

NOTES:

1. A DISTANCE OF SIX FEET BEHIND THE CURB AND 15 FEET ON EITHER SIDE OF PROPOSED OCS POLES AND SIGNAL POLES (INCLUDING ANY DISTURBANCE TO THE EXISTING CURB) HAS BEEN QUANTIFIED FOR BIDDING PURPOSES. THE CITY'S ENGINEER WILL DETERMINE ACTUAL PAY LIMITS FOR THIS WORK. NO ADDITIONAL INCREASE TO THE UNIT COST WILL BE ALLOWED FOR THIS WORK IF THE QUANTITIES ARE MORE OR LESS THAN THE AMOUNT QUANTIFIED FOR BIDDING PURPOSES.

2. A STANDARD CITY OF CINCINNATI FOUNDATION TO BE USED WHERE FOUNDATION TYPES NOT SHOWN BELOW APPLICABLE POLES ON TABULATION.

CAUTION UNDERGROUND UTILITIES
2 WORKING DAYS
BEFORE YOU DIG
CALL 1-800-362-2764
OHIO UTILITY PROTECTION SERVICE
CALL NON-SERVICE FACILITY
OWNERS DIRECT

GRAPHIC SCALE
20 0 20 40 80
(IN FEET)
1 inch = 20 ft. Full Size
1 inch = 40 ft. Half Size

PROFESSIONAL STAMP

SIGN:
DATE:

CONTRACT DRAWING

PRINTS NOT BEARING THIS STAMP WERE MADE PRIOR TO ADVERTISING FOR BID AND ARE TO BE CONSIDERED OBSOLETE FOR CONTRACT PURPOSES.

Department of Transportation and Engineering
City of Cincinnati
City Hall
801 Plum Street
Cincinnati, Ohio 45202

CINCINNATI STREETCAR
OVER THE RHINE

OCS PLANS - RACE STREET
STA 277+70 TO STA 282+80

Revisions
No.

	Date
Drawn by LP/ND	7/02/2012
Designed by MH/RL	7/02/2012
Checked by HSZ	7/02/2012
Reviewed by JTB	7/12/2012

Consultant
PB HDR

File Number
ACC No. 23126

G-OL-2018

$PLTDRVS$
T:\290144_Cincinnati.Street.Car\OCS\S_G-OL-2018.dgn
7/12/2012
12:48:31 PM

POLE No.									
STATIONING	283+37.23	284+07.19	284+93.95	285+66.13	285+98.80	286+82.04	286+98.89	287+05.03	287+50.02
UPPER CROSS-SPAN HT.(FT)				22.3	22.9/21.1		21.9		
POLE TYPE / LENGTH	72025/28.0	72025/31.0	72025/31.0	38045/23.5	72025/24.0	38045/30.0	33048/23.0	27070/28.0	38045F/30.0
POLE OFFSET	19.44/LT	17.98/LT	18.13/LT	17.20/LT	17.28/LT	18.28/LT	17.05/LT	17.07/LT	16.72/LT
CONTACT WIRE HT. (FT)	19.5	20.5/19.5	19.5/19.5		19.5/19.5	19.5		19.5/19.5	19.5/20.5
STAGGER (IN)	6↓	(OOR)6↓ 6↓	6↓6↓	-	6↓ 9↓	9↓	-	6↓6↓	6↓6↓(OOR)
SUPPORT/REGISTRATION TYPE	C-4	C-10	C-4		CST-2	C-9		C-5	C-11
TERMINATION TYPE / HT.	CWT/22.5 CWT/21.75								
JUMPER TYPE									
FOUNDATION TYPE	TPF-12								
MISCELLANEOUS		FF-1	KN-1		BPO KN-1(2)			KN-1	SM-F, SA-1, FF-1

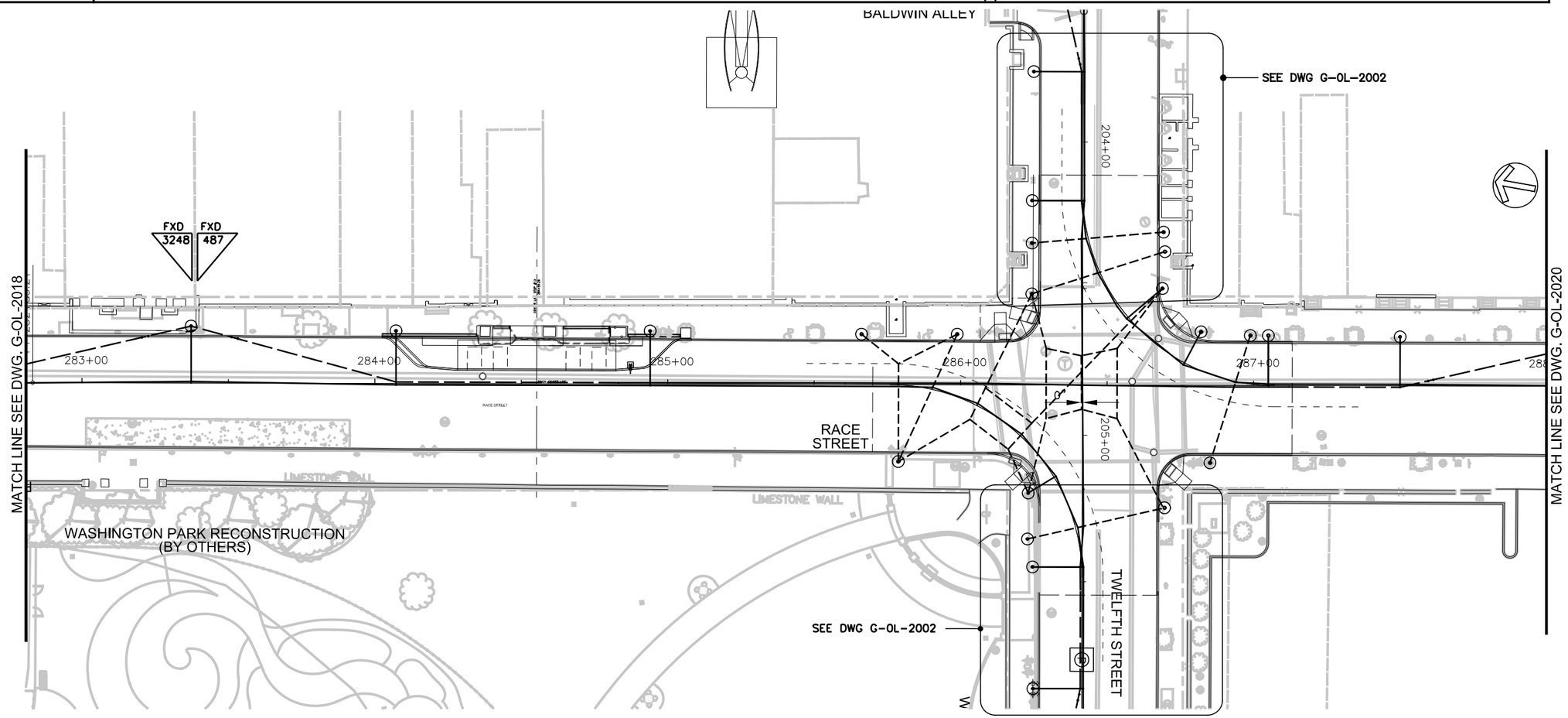

NOTES:

1. POLE STATIONING BASED ON RACE STREET STATIONING.
2. A DISTANCE OF SIX FEET BEHIND THE CURB AND 15 FEET ON EITHER SIDE OF PROPOSED OCS POLES AND SIGNAL POLES (INCLUDING ANY DISTURBANCE TO THE EXISTING CURB) HAS BEEN QUANTIFIED FOR BIDDING PURPOSES. THE CITY'S ENGINEER WILL DETERMINE ACTUAL PAY LIMITS FOR THIS WORK. NO ADDITIONAL INCREASE TO THE UNIT COST WILL BE ALLOWED FOR THIS WORK IF THE QUANTITIES ARE MORE OR LESS THAN THE AMOUNT QUANTIFIED FOR BIDDING PURPOSES.
3. A STANDARD CITY OF CINCINNATI FOUNDATION TO BE USED WHERE FOUNDATION TYPES NOT SHOWN BELOW APPLICABLE POLES ON TABULATION.

POLE No.				
STATIONING	285+78.77	286+05	286+18	286+85.21
UPPER CROSS-SPAN HT.(FT)	22.4/21.7/23.28			21.3
POLE TYPE / LENGTH	72025/24.5			52028/22.5
POLE OFFSET	26.23/RT			26.40/RT
CONTACT WIRE HT. (FT)	19.5/19.5	19.5/19.5	19.5	19.5/19.5
STAGGER (IN)	6↓ 6↓	9↓6↓	9↓	9↓6↓
SUPPORT/REGISTRATION TYPE	BBPO-3	BPO-1	BPO-1	CST-2
TERMINATION TYPE / HT.				
JUMPER TYPE				
FOUNDATION TYPE				
MISCELLANEOUS	KN-1(2)			KN-2(2)

GRAPHIC SCALE

20 0 20 40 80

(IN FEET)
1 inch = 20 ft. Full Size
1 inch = 40 ft. Half Size

CAUTION UNDERGROUND UTILITIES
2 WORKING DAYS
BEFORE YOU DIG
CALL 1-800-362-2764
OHIO UTILITY PROTECTION SERVICE
CALL NON-SERVICE FACILITY
OWNERS DIRECT

PROFESSIONAL STAMP

SIGN:
DATE:

CONTRACT DRAWING

PRINTS NOT BEARING THIS STAMP WERE MADE PRIOR TO ADVERTISING FOR BIDS AND ARE TO BE CONSIDERED OBSOLETE FOR CONTRACT PURPOSES.

Department of Transportation and Engineering

City of Cincinnati
City Hall
801 Plum Street
Cincinnati, Ohio 45202

CINCINNATI STREETCAR
OVER THE RHINE

OCS PLANS - RACE STREET
STA 282+80 TO STA 288+00

Revisions

No.		Date
		7/02/2012
		7/02/2012
		7/02/2012
		7/12/2012

Drawn by LP/ND
Designed by MH/RL
Checked by HSZ
Reviewed by JTB

Consultant

PB HDR

File Number

ACC No. 23126

G-OL-2019

$PLTDRV$$
T:\29014a_Cincinnati.Street.Car\OCS\S_G-OL-2019.dgn
7/12/2012 12:48:47 PM

POLE No.					
STATIONING	288+25.02	288+82.84	289+76.69	290+11.48	290+11.63
UPPER CROSS-SPAN HT.(FT)			23.6	23.3/23.16	28.7/24.75
POLE TYPE / LENGTH	72025/28.0	27070/28.0	38045/30.0	52028/25.0	72025/31.0
POLE OFFSET	16.79/LT	16.79/LT	16.17/LT	43.27/LT	68.09/LT
CONTACT WIRE HT. (FT)	19.5	19.5	19.5	19.5	19.5
STAGGER (IN)	0↓	6↓	6↓	–	
SUPPORT/REGISTRATION TYPE	C-4	C-4	C-7	BBPO-4	BBPO-4(2)
TERMINATION TYPE / HT.	CWT/22.25				
JUMPER TYPE					
FOUNDATION TYPE					
MISCELLANEOUS		BP-1		BPO-1(2) BPO-2	

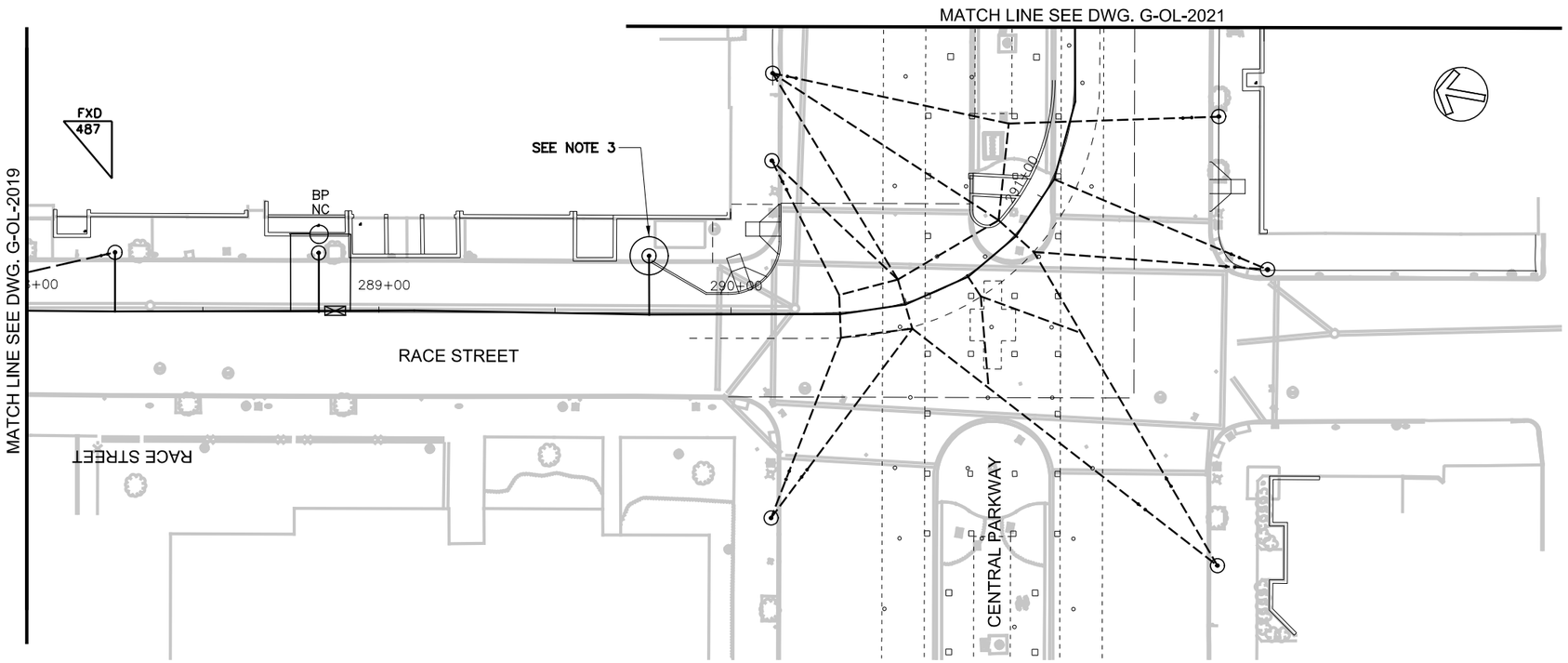

POLE No.						
STATIONING	290+11.51	290+49.45	290+68.95	290+75.02	291+07.45	291+28.64
UPPER CROSS-SPAN HT.(FT)	23.05/23.13			22.4/24.46	20.9/21.5	22.0
POLE TYPE / LENGTH	72025/24.5	–	–	TP-1/26.0	72025/23.5	52028/24.0
POLE OFFSET	58.16/RT			108.40/RT	66.34/RT	41.48/RT
CONTACT WIRE HT. (FT)	19.5	19.5	19.5	19.5	19.5	19.5
STAGGER (IN)	6↓	6↓	6↓	6↓	6↓	6↓
SUPPORT/REGISTRATION TYPE	CST-1	BBPO-1 (MOD)	PO-2	BBPO-1(MOD)	PO-1	CST-2
TERMINATION TYPE / HT.						
JUMPER TYPE						
FOUNDATION TYPE				TPF-6		
MISCELLANEOUS			BPO, BPO-1	BPO		

NOTES:

1. A DISTANCE OF SIX FEET BEHIND THE CURB AND 15 FEET ON EITHER SIDE OF PROPOSED OCS POLES AND SIGNAL POLES (INCLUDING ANY DISTURBANCE TO THE EXISTING CURB) HAS BEEN QUANTIFIED FOR BIDDING PURPOSES. THE CITY'S ENGINEER WILL DETERMINE ACTUAL PAY LIMITS FOR THIS WORK. NO ADDITIONAL INCREASE TO THE UNIT COST WILL BE ALLOWED FOR THIS WORK IF THE QUANTITIES ARE MORE OR LESS THAN THE AMOUNT QUANTIFIED FOR BIDDING PURPOSES.
2. A STANDARD CITY OF CINCINNATI FOUNDATION TO BE USED WHERE FOUNDATION TYPES NOT SHOWN BELOW APPLICABLE POLES ON TABULATION.
3. VERIFY EXTENT AND LOCATION OF EXISTING ADJACENT ELECTRIC VAULT PRIOR TO FOUNDATION INSTALLATION.

GRAPHIC SCALE

20 0 20 40 80

(IN FEET)
1 inch = 20 ft. Full Size
1 inch = 40 ft. Half Size

CAUTION UNDERGROUND UTILITIES
2 WORKING DAYS
BEFORE YOU DIG
CALL 1-800-362-2764
OHIO UTILITY PROTECTION SERVICE
CALL NON-SERVICE FACILITY
OWNERS DIRECT

PROFESSIONAL STAMP

SIGN:

DATE:

CONTRACT DRAWING

PRINTS NOT BEARING THIS STAMP WERE MADE PRIOR TO ADVERTISING FOR BIDS AND ARE TO BE CONSIDERED OBSOLETE FOR CONTRACT PURPOSES.

Department of Transportation and Engineering

City of Cincinnati
City Hall
801 Plum Street
Cincinnati, Ohio 45202

CINCINNATI STREETCAR
OVER THE RHINE

OCS PLANS - RACE STREET
STA 288+00 TO STA 291+50

Revisions
No.

	Date
Drawn by LP/ND	7/02/2012
Designed by MH/RL	7/02/2012
Checked by HSZ	7/02/2012
Reviewed by JTB	7/12/2012

Consultant

PB HDR

File Number

ACC No. 23126

G-OL-2020

$PLTDRV$$
T:\29014a_Cincinnati.Street.Car\OCS\S_G-OL-2020.dgn
7/12/2012 12:48:52 PM

POLE No.					
STATIONING	291+90.03	292+60.03	293+35.03	294+10.02	294+85.41
UPPER CROSS-SPAN HT.(FT)					
POLE TYPE / LENGTH	27070/25.0	27070/25.0	38045/30.0	27070/28.0	38045/30.0
POLE OFFSET	7.83/LT	7.80/LT	17.71/LT	17.73/LT	17.30/LT
CONTACT WIRE HT. (FT)	19.5	19.5	19.5	19.5	19.5
STAGGER (IN)	0↓	6↓	6↓	6↓	6↓
SUPPORT/REGISTRATION TYPE	C-1	C-1	C-7	C-4	C-7
TERMINATION TYPE / HT.					
JUMPER TYPE					
FOUNDATION TYPE	TPF-1	TPF-1	TPF-1	TPF-1	TPF-1
MISCELLANEOUS					

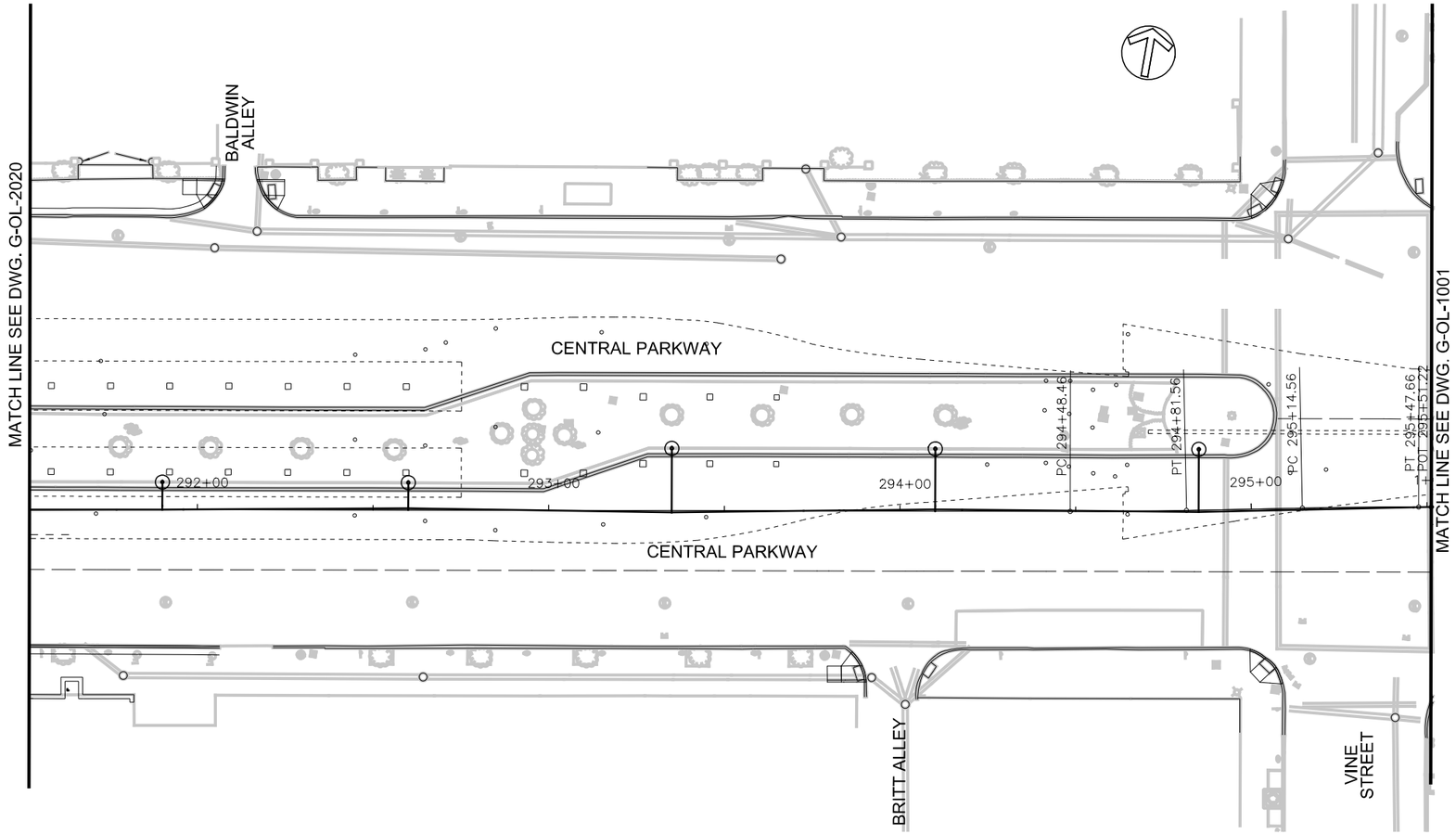

NOTES:

1. A DISTANCE OF SIX FEET BEHIND THE CURB AND 15 FEET ON EITHER SIDE OF PROPOSED OCS POLES AND SIGNAL POLES (INCLUDING ANY DISTURBANCE TO THE EXISTING CURB) HAS BEEN QUANTIFIED FOR BIDDING PURPOSES. THE CITY'S ENGINEER WILL DETERMINE ACTUAL PAY LIMITS FOR THIS WORK. NO ADDITIONAL INCREASE TO THE UNIT COST WILL BE ALLOWED FOR THIS WORK IF THE QUANTITIES ARE MORE OR LESS THAN THE AMOUNT QUANTIFIED FOR BIDDING PURPOSES.

2. A STANDARD CITY OF CINCINNATI FOUNDATION TO BE USED WHERE FOUNDATION TYPES NOT SHOWN BELOW APPLICABLE POLES ON TABULATION.

GRAPHIC SCALE

20 0 20 40 80

(IN FEET)
1 inch = 20 ft. Full Size
1 inch = 40 ft. Half Size

CAUTION UNDERGROUND UTILITIES
2 WORKING DAYS
BEFORE YOU DIG
CALL 1-800-362-2764
OHIO UTILITY PROTECTION SERVICE
CALL NON-SERVICE FACILITY
OWNERS DIRECT

PROFESSIONAL STAMP

SIGN:

DATE:

CONTRACT DRAWING

PRINTS NOT BEARING THIS STAMP WERE MADE PRIOR TO ADVERTISING FOR BIDS AND ARE TO BE CONSIDERED OBSOLETE FOR CONTRACT PURPOSES.

Department of Transportation and Engineering

City of Cincinnati
City Hall
801 Plum Street
Cincinnati, Ohio 45202

CINCINNATI STREETCAR
OVER THE RHINE

OCS PLANS - CENTRAL PARKWAY
STA 291+50 TO STA 295+49

Revisions

No.			

Date 7/02/2012	Date 7/02/2012	Date 7/02/2012	Date 7/12/2012
Drawn by LP/ND	Designed by MH/RL	Checked by HSZ	Reviewed by JTB

Consultant

PB HDR

File Number

ACC No. 23126

G-OL-2021

$PLTDRV$$
T:\29014a_Cincinnati.Street.Car\OCS\S_G-OL-2021.dgn
12:49:08 PM
7/12/2012

CHECK PRINT

PARSONS BRINCKERHOFF

Drawn By/Originator: _____ Date: / /

Checked By: _____ Date: / /

Back-Checked By: _____ Date: / /

Corrected By: _____ Date: / /

Verified By: _____ Date: / /

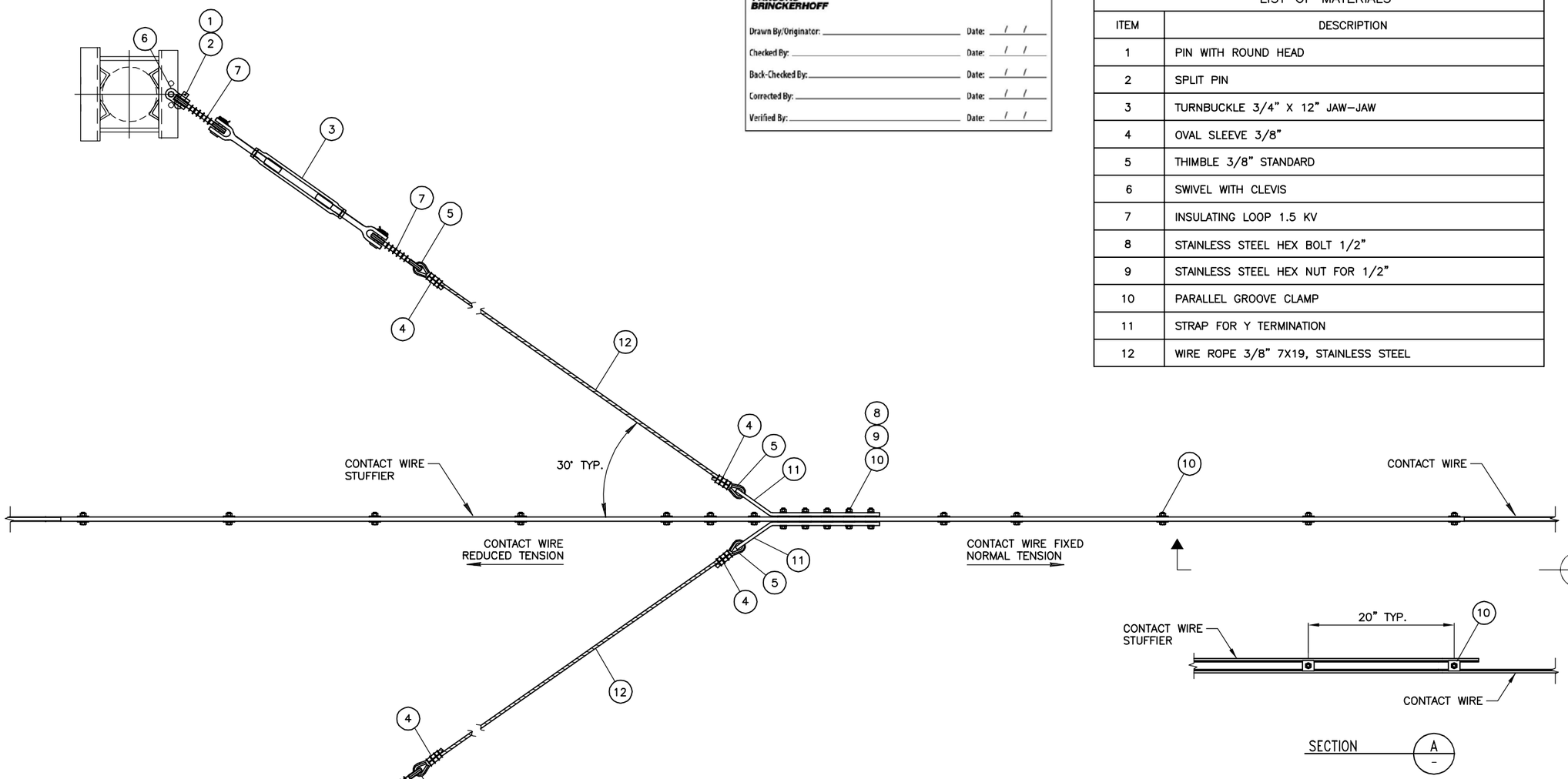

LIST OF MATERIALS	
ITEM	DESCRIPTION
1	PIN WITH ROUND HEAD
2	SPLIT PIN
3	TURNBUCKLE 3/4" X 12" JAW–JAW
4	OVAL SLEEVE 3/8"
5	THIMBLE 3/8" STANDARD
6	SWIVEL WITH CLEVIS
7	INSULATING LOOP 1.5 KV
8	STAINLESS STEEL HEX BOLT 1/2"
9	STAINLESS STEEL HEX NUT FOR 1/2"
10	PARALLEL GROOVE CLAMP
11	STRAP FOR Y TERMINATION
12	WIRE ROPE 3/8" 7X19, STAINLESS STEEL

CONTACT WIRE TENSION REDUCER ASSEMBLY
TYPE TR–01
SCALE: NTS

NOTES:

1. FOR GENERAL NOTES SEE DRAWING NO. G–OD–0001.
2. FOR SYMBOLS & ABBREVIATIONS SEE DRAWING NO. G–OD–0002.
3. DESIGN DRAWINGS ARE GENERIC IN NATURE. CONTRACTOR SHALL SUBMIT SHOP DRAWINGS COMPLETE WITH QUANTITIES AND CATALOG NUMBER FOR APPROVAL. CONTRACTOR TO ENSURE PROPER FIT OF ALL COMPONENTS.
4. FOR CONTACT WIRE ERECTION TENSION CHART SEE DRAWING G–OD–0103.

CAUTION UNDERGROUND UTILITIES
2 WORKING DAYS
BEFORE YOU DIG
CALL 1–800–362–2764
OHIO UTILITY PROTECTION SERVICE
CALL NON–SERVICE FACILITY OWNERS DIRECT

PROFESSIONAL STAMP

SIGN:

DATE:

CONTRACT DRAWING

PRINTS NOT BEARING THIS STAMP WERE MADE PRIOR TO ADVERTISING FOR BID AND ARE NOT TO BE CONSIDERED OBSOLETE FOR CONTRACT PURPOSES.

Department of Transportation and Engineering

City of Cincinnati
City Hall
801 Plum Street
Cincinnati, Ohio 45202

CINCINNATI STREETCAR
CENTRAL BUSINESS DISTRICT
OVERHEAD CONTACT SYSTEM
CONTACT WIRE TENSION REDUCER ASSEMBLY

Revisions

No.				

Date	07/02/12
Date	07/02/12
Date	07/02/12
Date	07/12/12
Drawn by	AN
Designed by	JL
Checked by	MH
Reviewed by	JTB

Consultant

PB HDR

File Number

ACC No. 23126

G–OD–8001

$TIME$
$PLTDRV$$
$FILE$
$DATE$

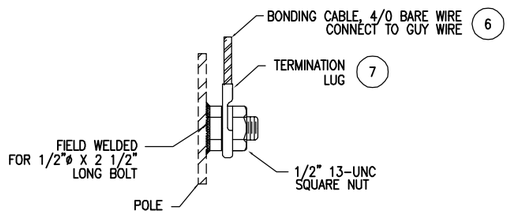

DETAIL 1
NTS
OD-8002

LIST OF MATERIALS	
ITEM	DESCRIPTION
1	POLE BRACKET
2	EYE-EYE CONNECTOR
3	STRAIN CLAMP
4	PARALLEL CABLE CLAMP
5	4/0 AWG BARE CABLE
6	BONDING CABLE 4/0
7	TERMINATION LUG

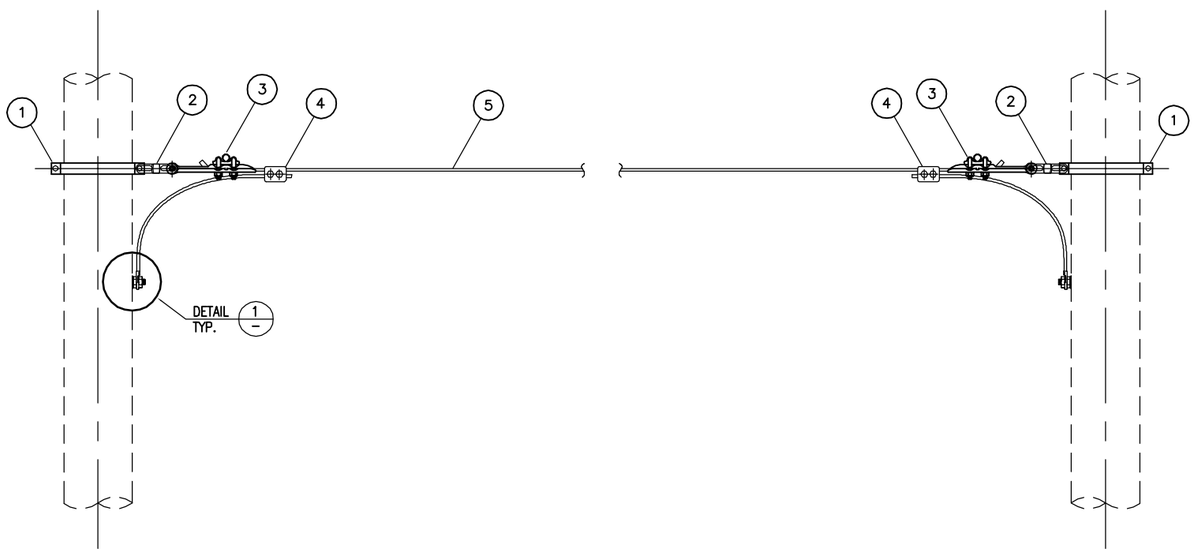

OCS POLE AERIAL GROUND WIRE ASSEMBLY
TYPE GP-01
SCALE: NTS

NOTES:

1. FOR GENERAL NOTES SEE DRAWING NO. G-OD-0001.
2. FOR SYMBOLS & ABBREVIATIONS SEE DRAWING NO. G-OD-0002.
3. DESIGN DRAWINGS ARE GENERIC IN NATURE. CONTRACTOR SHALL SUBMIT SHOP DRAWINGS COMPLETE WITH QUANTITIES AND CATALOG NUMBER FOR APPROVAL. CONTRACTOR TO ENSURE PROPER FIT OF ALL COMPONENTS.
4. FOR AERIAL GROUND WIRE ERECTION TENSION IS 500 LBS AT 60 DEGREE.

CHECK PRINT
PARSONS BRINCKERHOFF

Drawn By/Originator: _____ Date: / /
Checked By: _____ Date: / /
Back-Checked By: _____ Date: / /
Corrected By: _____ Date: / /
Verified By: _____ Date: / /

CAUTION UNDERGROUND UTILITIES
2 WORKING DAYS
BEFORE YOU DIG
CALL 1-800-362-2764
OHIO UTILITY PROTECTION SERVICE
CALL NON-SERVICE FACILITY OWNERS DIRECT

PROFESSIONAL STAMP

SIGN:
DATE:

CONTRACT DRAWING
PRINTS NOT BEARING THIS STAMP WERE MADE PRIOR TO ADVERTISING FOR BID AND ARE NOT TO BE CONSIDERED OBSOLETE FOR CONTRACT PURPOSES.

Department of Transportation and Engineering
City of Cincinnati
City Hall
801 Plum Street
Cincinnati, Ohio 45202

CINCINNATI STREETCAR
CENTRAL BUSINESS DISTRICT
OVERHEAD CONTACT SYSTEM
AERIAL GROUND WIRE ASSEMBLY

Revisions
No.

	Date
Drawn by AN	07/02/12
Designed by JL	07/02/12
Checked by MH	07/02/12
Reviewed by JTB	07/12/12

Consultant
PB HDR

File Number
ACC No. 23126

G-OD-8002

$TIME$
$PLTDRVS$
$FILE$
$DATE$

POLE No.		ML-1005		ML-1007
STATIONING		21+90.05	800+44.14	801+00.24
UPPER CROSS-SPAN HT.(FT)		22.40/22.20	–	20.80/22.10
POLE TYPE / LENGTH (FT)		52028/30	–	52028/30
POLE OFFSET (FT)		26.59 LT	–	31.99 LT
CONTACT WIRE HT. (FT)		–	19.32	–
STAGGER (IN)		–	6	–
SUPPORT/REGISTRATION TYPE		BPO	BBPO-2	BPO
TERMINATION TYPE / HT.		–	–	–
JUMPER TYPE		–	–	–
FOUNDATION TYPE		–	–	–
MISCELLANEOUS		–	–	–

CHECK PRINT

PARSONS BRINCKERHOFF

Drawn By/Originator: _____ Date: / /
Checked By: _____ Date: / /
Back-Checked By: _____ Date: / /
Corrected By: _____ Date: / /
Verified By: _____ Date: / /

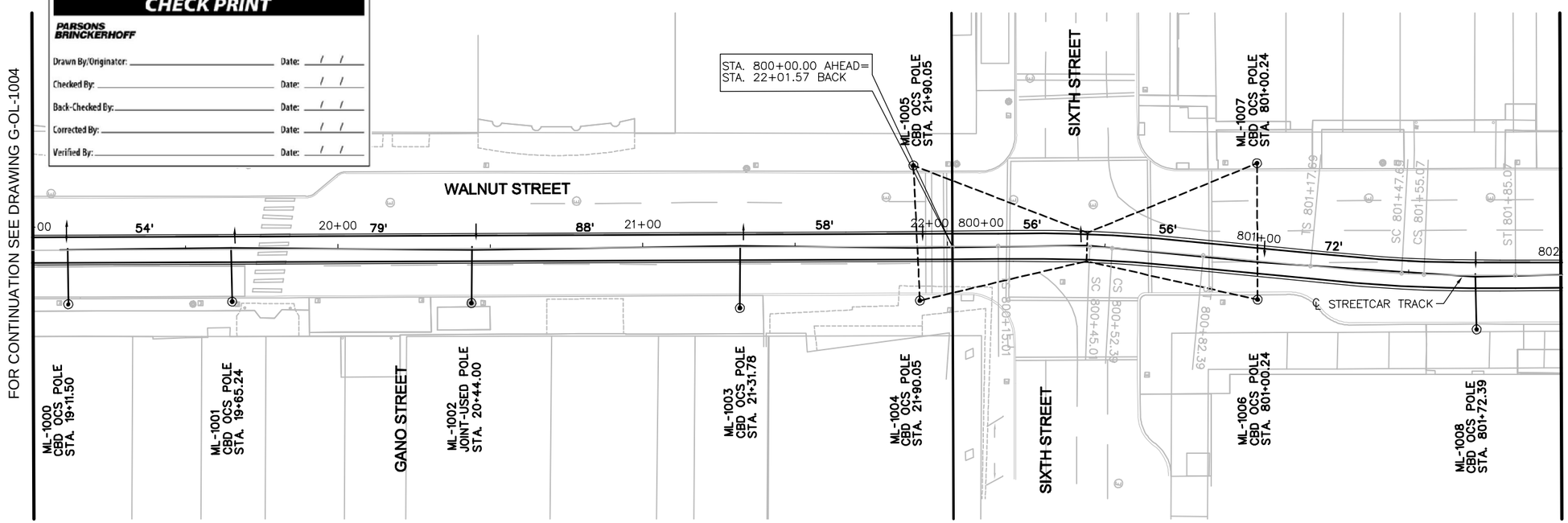

POLE No.	ML-1000	ML-1001	ML-1002	ML-1003	ML-1004	ML-1006	ML-1008
STATIONING	19+11.50	19+65.24	20+44.00	21+31.78	21+90.05	801+00.24	801+72.39
UPPER CROSS-SPAN HT.(FT)	–	–	–	–	22.60/23.30	20.70/23.30	–
POLE TYPE / LENGTH (FT)	33048/28	33048/28	33048/28	33048/28	52028/30	52028/30	33048/28
POLE OFFSET (FT)	17.83 RT	17.13 RT	17.91 RT	19.91 RT	17.73 RT	12.71 RT	17.73 RT
CONTACT WIRE HT. (FT)	19.50	19.50	19.50	19.50	19.50	18.94	18.02
STAGGER (IN)	0	6	6	6	6	6	6
SUPPORT/REGISTRATION TYPE	C-4	C-7	C-4	C-7	CST-1	CST-1	C-5
TERMINATION TYPE / HT.	–	–	–	–	–	–	–
JUMPER TYPE	–	–	–	–	–	–	–
FOUNDATION TYPE	–	–	–	TPF-11	–	–	–
MISCELLANEOUS	–	–	–	–	–	–	–

NOTES:

1. A DISTANCE OF SIX FEET BEHIND THE CURB AND 15 FEET ON EITHER SIDE OF PROPOSED OCS POLES AND SIGNAL POLES (INCLUDING ANY DISTURBANCE TO THE EXISTING CURB) HAS BEEN QUANTIFIED FOR BIDDING PURPOSES. THE CITY'S ENGINEER WILL DETERMINE ACTUAL PAY LIMITS FOR THIS WORK. NO ADDITIONAL INCREASE TO THE UNIT COST WILL BE ALLOWED FOR THIS WORK IF THE QUANTITIES ARE MORE OR LESS THAN THE AMOUNT QUANTIFIED FOR BIDDING PURPOSES.
2. A STANDARD CITY OF CINCINNATI FOUNDATION TO BE USED WHERE FOUNDATION TYPES NOT SHOWN BELOW APPLICABLE POLES ON TABULATION.
3. OCS STRUCTURE STATIONING IS REFERENCE PERPENDICULAR TO TRACK CENTERLINE.
4. CONTRACTOR SHALL VERIFY CBD OCS STRUCTURE STATIONING WITH THE LATEST CBD TRACK ALIGNMENT.
5. FOR INTERFACE CBD OCS LAYOUT AND MATERIAL ALLOCATION REFER TO CBD SUBMITTAL DRAWING NO. G-OL-1005.
6. THE CATENARY EQUIPMENT LAYOUT AND STATIONING ARE BASED ON THE TRACK ALIGNMENT DRAWINGS. ANY CHANGE TO THE ALIGNMENT IN THE LINE SECTION MAY REQUIRE REVISIONS TO ASSOCIATED CATENARY LAYOUT PLAN OR PLANS.

GRAPHIC SCALE

20 0 20 40 80

(IN FEET)
1 inch = 20 ft. Full Size
1 inch = 40 ft. Half Size

CAUTION UNDERGROUND UTILITIES
2 WORKING DAYS
BEFORE YOU DIG
CALL 1-800-362-2764
OHIO UTILITY PROTECTION SERVICE
CALL NON-SERVICE FACILITY OWNERS DIRECT

PROFESSIONAL STAMP

SIGN:
DATE:

CONTRACT DRAWING

PRINTS NOT BEARING THIS STAMP WERE MADE PRIOR TO AWARD OF CONTRACT AND ARE TO BE CONSIDERED OBSOLETE FOR CONTRACT PURPOSES.

Department of Transportation and Engineering

City of Cincinnati
City Hall
801 Plum Street
Cincinnati, Ohio 45202

CINCINNATI STREETCAR
CENTRAL BUSINESS DISTRICT
OCS LAYOUT PLAN - WALNUT STREET
STA. 19+00 TO STA. 802+00

Revisions

No.		Date
		07/02/12
		07/02/12
		07/02/12
		07/12/12

Drawn by AN
Designed by JL
Checked by MH
Reviewed by JTB

Consultant

PB HDR

File Number

ACC No. 23126

G-OL-8001

$TIME$
$PLTDRV$$
$FILE$
$DATE$

POLE No.	
STATIONING	
UPPER CROSS–SPAN HT.(FT)	
POLE TYPE / LENGTH (FT)	
POLE OFFSET (FT)	
CONTACT WIRE HT. (FT)	
STAGGER (IN)	
SUPPORT/REGISTRATION TYPE	
TERMINATION TYPE / HT.	
JUMPER TYPE	
FOUNDATION TYPE	
MISCELLANEOUS	

CHECK PRINT

PARSONS BRINCKERHOFF

Drawn By/Originator: _____ Date: / /
Checked By: _____ Date: / /
Back-Checked By: _____ Date: / /
Corrected By: _____ Date: / /
Verified By: _____ Date: / /

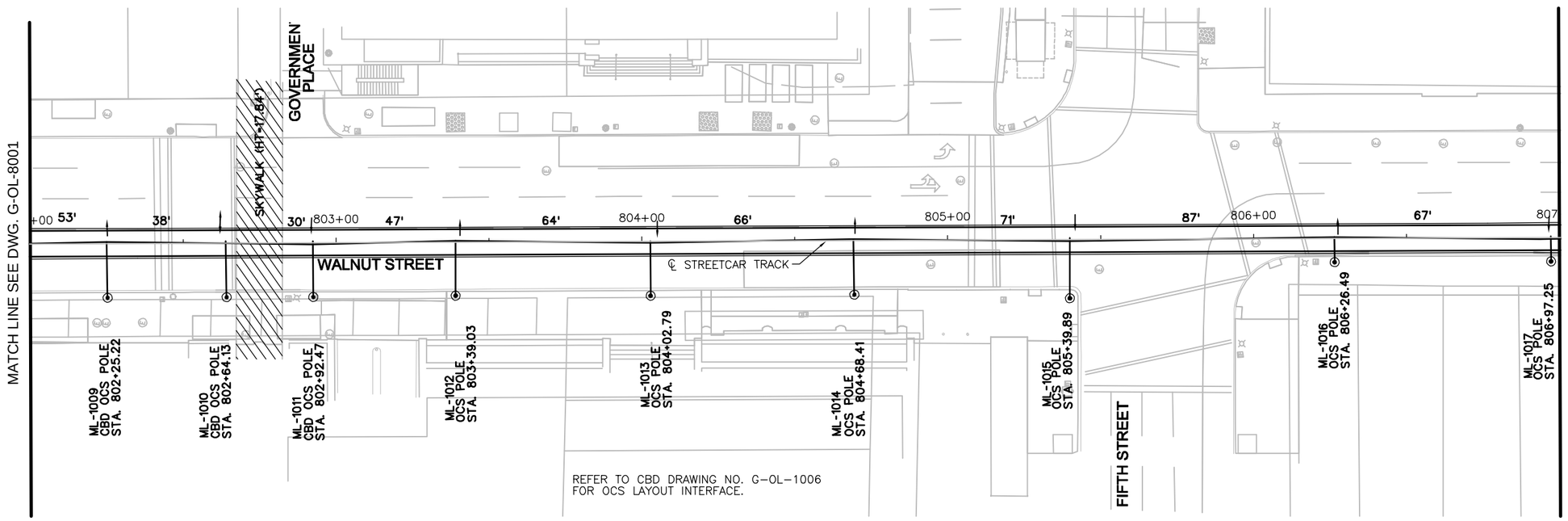

POLE No.	ML–1009	ML–1010	ML–1011	ML–1012	ML–1013	ML–1014	ML–1015	ML–1016	ML–1017
STATIONING	802+25.22	802+64.13	802+92.47	803+39.03	804+02.79	804+68.41	805+39.89	806+26.49	806+97.25
UPPER CROSS–SPAN HT.(FT)	–	–	–	–	–	–	–	–	–
POLE TYPE / LENGTH (FT)	33048/28	33048/28	33048/28	33048/28	33048/28	33048/28	33048/28	27070/28	27070/28
POLE OFFSET (FT)	17.71 RT	17.67 RT	17.73 RT	17.42 RT	17.76 RT	17.64 RT	19.16 RT	7.72 RT	7.76 RT
CONTACT WIRE HT. (FT)	17.33	17.09	17.09	17.26	17.68	17.91	17.91	17.34	16.47
STAGGER (IN)	6	0	0	6	6	6	6	6	6
SUPPORT/REGISTRATION TYPE	C–7	C–4	C–4	C–7	C–4	C–7	C–4	C–7	C–7
TERMINATION TYPE / HT.	–	–	–	–	–	–	–	–	–
JUMPER TYPE	–	–	–	–	–	–	–	–	–
FOUNDATION TYPE	–	–	–	–	–	–	–	–	–
MISCELLANEOUS	–	–	–	–	–	–	–	–	–

NOTES:

1. A DISTANCE OF SIX FEET BEHIND THE CURB AND 15 FEET ON EITHER SIDE OF PROPOSED OCS POLES AND SIGNAL POLES (INCLUDING ANY DISTURBANCE TO THE EXISTING CURB) HAS BEEN QUANTIFIED FOR BIDDING PURPOSES. THE CITY'S ENGINEER WILL DETERMINE ACTUAL PAY LIMITS FOR THIS WORK. NO ADDITIONAL INCREASE TO THE UNIT COST WILL BE ALLOWED FOR THIS WORK IF THE QUANTITIES ARE MORE OR LESS THAN THE AMOUNT QUANTIFIED FOR BIDDING PURPOSES.
2. A STANDARD CITY OF CINCINNATI FOUNDATION TO BE USED WHERE FOUNDATION TYPES NOT SHOWN BELOW APPLICABLE POLES ON TABULATION.
3. OCS STRUCTURE STATIONING IS REFERENCE PERPENDICULAR TO TRACK CENTERLINE.
4. THE CONTRACTOR SHALL PROVIDE A FIBERGLASS PROTECTION SHIELD TO BE LOCATED ABOVE THE CATENARY FOR THE COMPLETE WIDTH OF EACH SKYWALK, AND 2.0 FT. VERTICAL AT EACH BRIDGE FACE. THE SHIELD SHALL BE 4.0 FT. WIDE IN THE CROSS TRACK DIRECTION (2.0 FT. EITHER SIDE OF THE CONTACT WIRE +/–) FIBERGLASS SHEETS SHALL BE PROVIDED IN 8.0 FT. X 4.0 FT. X 0.5 INCH THICK SECTIONS. MINIMUM VOLUME RESISTIVITY SHALL BE 1 X 10 OHM–CM. THE CONTRACTOR SHALL SUBMIT MATERIAL SAMPLE FOR APPROVAL PRIOR TO MANUFACTURE, TOGETHER WITH A PROPOSED METHOD OF ATTACHING TO THE BRIDGES. THE COLOR OF THE MATERIAL SHALL MATCH THE SKYWALK, USING COMPATIBLE SURFACE COLORING AS NEEDED. SINCE THIS IS AN INSULATED MEMBER, THE PROTECTION SHIELD MUST BE ATTACHED TO THE BRIDGE USING INSULATING ACCESSORIES.

GRAPHIC SCALE

20 0 20 40 80

(IN FEET)
1 inch = 20 ft. Full Size
1 inch = 40 ft. Half Size

CAUTION UNDERGROUND UTILITIES
2 WORKING DAYS
BEFORE YOU DIG
CALL 1–800–362–2764
OHIO UTILITY PROTECTION SERVICE
CALL NON–SERVICE FACILITY
OWNERS DIRECT

PROFESSIONAL STAMP

SIGN:
DATE:

$TIME$
$PLTDRV$
$FILE$
$DATE$

DEPARTMENT OF TRANSPORTATION & ENGINEERING — CITY OF CINCINNATI — OHIO

CONTRACT DRAWING

PRINTS NOT BEARING THIS STAMP WERE MADE PRIOR TO ADVERTISING FOR BIDS AND ARE TO BE CONSIDERED OBSOLETE FOR CONTRACT PURPOSES.

Department of Transportation and Engineering

City of Cincinnati
City Hall
801 Plum Street
Cincinnati, Ohio 45202

CINCINNATI STREETCAR
CENTRAL BUSINESS DISTRICT
OCS LAYOUT PLAN - WALNUT STREET
STA. 802+00 TO STA. 807+00

Revisions

No.		Date
		07/02/12
		07/02/12
		07/02/12
		07/12/12

Drawn by	AN	Designed by	JL
Checked by	MH	Reviewed by	JTB

Consultant

PB HDR

File Number

ACC No. 23126

G-OL-8002

POLE No.	
STATIONING	
UPPER CROSS–SPAN HT.(FT)	
POLE TYPE / LENGTH (FT)	
POLE OFFSET (FT)	
CONTACT WIRE HT. (FT)	
STAGGER (IN)	
SUPPORT/REGISTRATION TYPE	
TERMINATION TYPE / HT.	
JUMPER TYPE	
FOUNDATION TYPE	
MISCELLANEOUS	

CHECK PRINT

PARSONS BRINCKERHOFF

Drawn By/Originator: _____ Date: / /

Checked By: _____ Date: / /

Back-Checked By: _____ Date: / /

Corrected By: _____ Date: / /

Verified By: _____ Date: / /

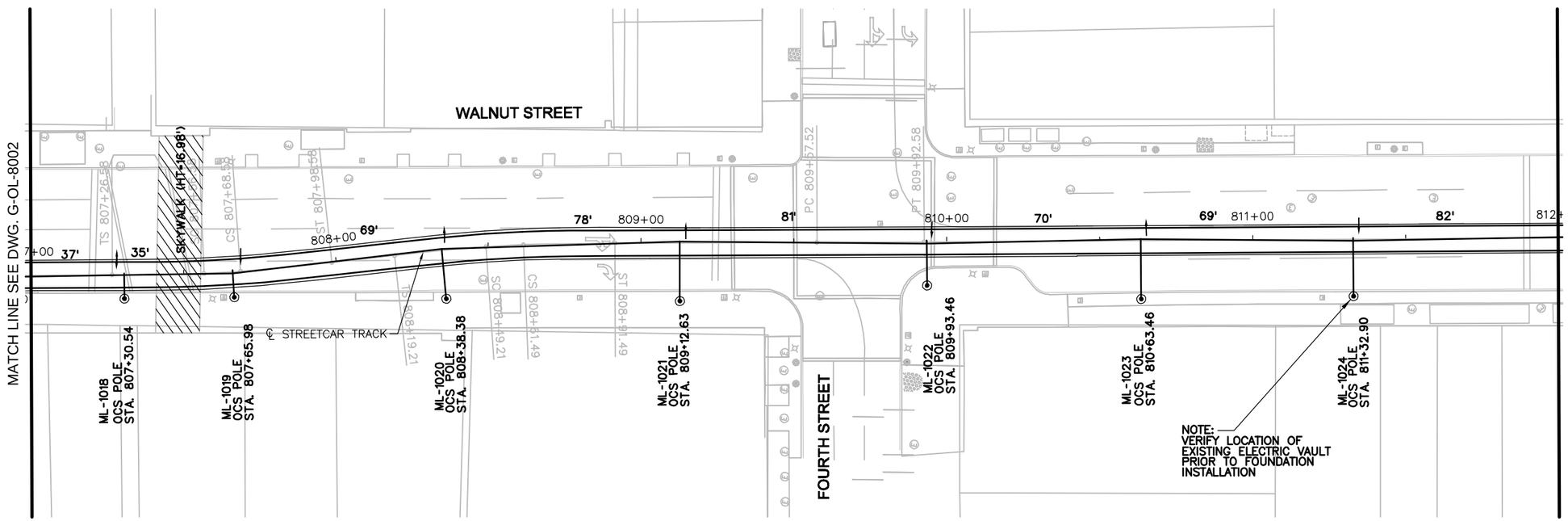

POLE No.	ML–1018	ML–1019	ML–1020	ML–1021	ML–1022	ML–1023	ML–1024
STATIONING	807+30.54	807+65.98	808+38.38	809+12.63	809+93.46	810+63.46	811+32.90
UPPER CROSS–SPAN HT.(FT)	–	–	–	–	–	–	–
POLE TYPE / LENGTH (FT)	33048/28	33048/28	33048/28	33048/28	33048/28	33048/28	33048/28
POLE OFFSET (FT)	7.76 RT	8.30 RT	15.81 RT	19.00 RT	14.22 RT	19.09 RT	18.56 RT
CONTACT WIRE HT. (FT)	16.23	16.23	16.71	17.65	18.70	19.24	19.50
STAGGER (IN)	6	6	6	6	6	6	6
SUPPORT/REGISTRATION TYPE	C–2	C–3	C–9	C–7	C–4	C–7	C–4
TERMINATION TYPE / HT.	–	–	–	–	–	–	–
JUMPER TYPE	–	–	–	–	–	–	–
FOUNDATION TYPE	–	–	–	TPF–11	–	–	–
MISCELLANEOUS	–	–	–	–	–	–	–

CAUTION UNDERGROUND UTILITIES
2 WORKING DAYS
BEFORE YOU DIG
CALL 1–800–362–2764
OHIO UTILITY PROTECTION SERVICE
CALL NON–SERVICE FACILITY
OWNERS DIRECT

NOTES:

1. A DISTANCE OF SIX FEET BEHIND THE CURB AND 15 FEET ON EITHER SIDE OF PROPOSED OCS POLES AND SIGNAL POLES (INCLUDING ANY DISTURBANCE TO THE EXISTING CURB) HAS BEEN QUANTIFIED FOR BIDDING PURPOSES. THE CITY'S ENGINEER WILL DETERMINE ACTUAL PAY LIMITS FOR THIS WORK. NO ADDITIONAL INCREASE TO THE UNIT COST WILL BE ALLOWED FOR THIS WORK IF THE QUANTITIES ARE MORE OR LESS THAN THE AMOUNT QUANTIFIED FOR BIDDING PURPOSES.
2. A STANDARD CITY OF CINCINNATI FOUNDATION TO BE USED WHERE FOUNDATION TYPES NOT SHOWN BELOW APPLICABLE POLES ON TABULATION.
3. OCS STRUCTURE STATIONING IS REFERENCE PERPENDICULAR TO TRACK CENTERLINE.
4. THE CONTRACTOR SHALL PROVIDE A FIBERGLASS PROTECTION SHIELD TO BE LOCATED ABOVE THE CATENARY FOR THE COMPLETE WIDTH OF EACH SKYWALK, AND 2.0 FT. VERTICAL AT EACH BRIDGE FACE. THE SHIELD SHALL BE 4.0 FT. WIDE IN THE CROSS TRACK DIRECTION (2.0 FT. EITHER SIDE OF THE CONTACT WIRE +/–) FIBERGLASS SHEETS SHALL BE PROVIDED IN 8.0 FT. X 4.0 FT. X 0.5 INCH THICK SECTIONS. MINIMUM VOLUME RESISTIVITY SHALL BE 1 X 10 OHM–CM. THE CONTRACTOR SHALL SUBMIT MATERIAL SAMPLE FOR APPROVAL PRIOR TO MANUFACTURE, TOGETHER WITH A PROPOSED METHOD OF ATTACHING TO THE BRIDGES. THE COLOR OF THE MATERIAL SHALL MATCH THE SKYWALK, USING COMPATIBLE SURFACE COLORING AS NEEDED. SINCE THIS IS AN INSULATED MEMBER, THE PROTECTION SHIELD MUST BE ATTACHED TO THE BRIDGE USING INSULATING ACCESSORIES.

GRAPHIC SCALE
20 0 20 40 80
(IN FEET)
1 inch = 20 ft. Full Size
1 inch = 40 ft. Half Size

PROFESSIONAL STAMP

SIGN:
DATE:

$PLTDRVS$
$FILE$
$DATE$
$TIME$

CONTRACT DRAWING

PRINTS NOT BEARING THIS STAMP WERE MADE PRIOR TO ADVERTISING FOR BID AND ARE NOT TO BE CONSIDERED OBSOLETE FOR CONTRACT PURPOSES.

Department of Transportation and Engineering

City of Cincinnati
City Hall
801 Plum Street
Cincinnati, Ohio 45202

CINCINNATI STREETCAR
CENTRAL BUSINESS DISTRICT
OCS LAYOUT PLAN - WALNUT STREET
STA. 807+00 TO STA. 812+00

Revisions
No.

Date 07/02/12
Date 07/02/12
Date 07/02/12
Date 07/12/12

Drawn by AN
Designed by JL
Checked by MH
Reviewed by JTB

Consultant
PB HDR

File Number

ACC No.
23126

G-OL-8003

POLE No.		ML–1028	–	ML–1030
STATIONING		813+86.01	814+37.55	814+88.62
UPPER CROSS–SPAN HT.(FT)		–		–
POLE TYPE / LENGTH (FT)		52028/30	–	52028/30
POLE OFFSET (FT)		29.87 LT	–	50.47 LT
CONTACT WIRE HT. (FT)		–	19.50	–
STAGGER (IN)		–	6	–
SUPPORT/REGISTRATION TYPE		BPO	BBPO–2	BPO
TERMINATION TYPE / HT.		–	–	–
JUMPER TYPE		–	–	–
FOUNDATION TYPE		–	–	–
MISCELLANEOUS		–	–	–

CHECK PRINT

PARSONS BRINCKERHOFF

Drawn By/Originator: _____ Date: / /
Checked By: _____ Date: / /
Back-Checked By: _____ Date: / /
Corrected By: _____ Date: / /
Verified By: _____ Date: / /

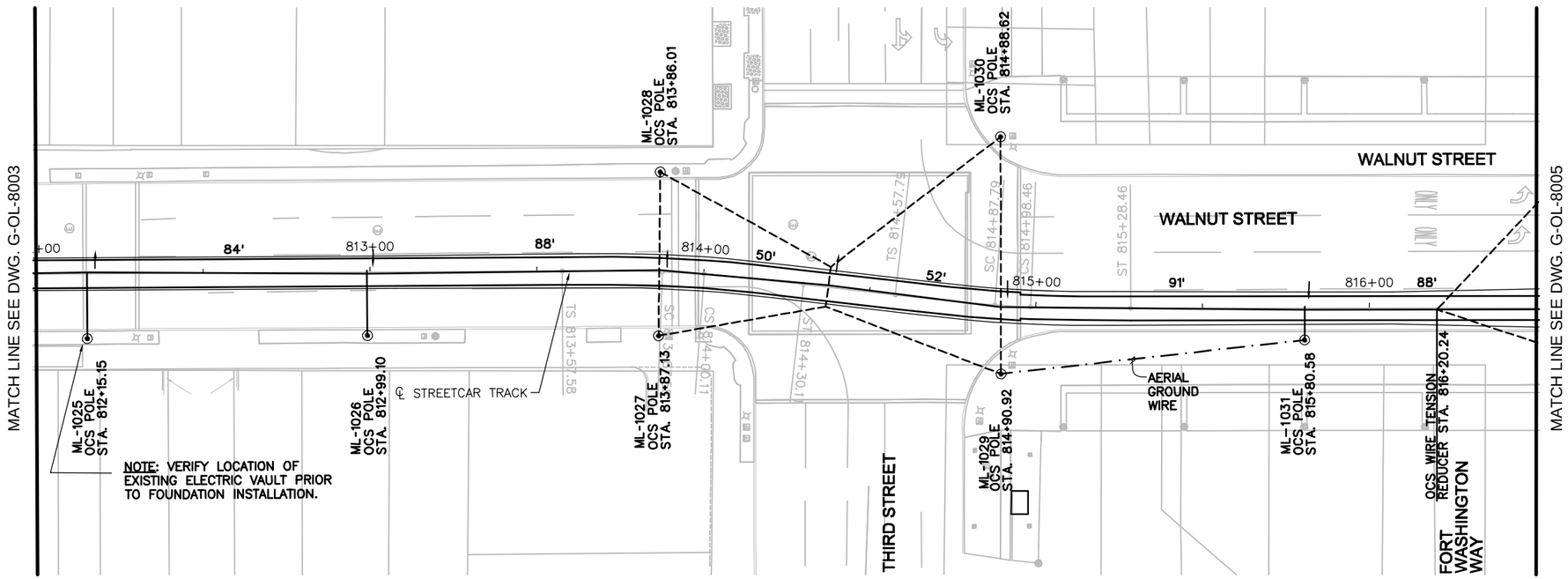

POLE No.	ML–1025	ML–1026	ML–1027	ML–1029	ML–1031
STATIONING	812+15.15	812+99.10	813+87.13	814+90.92	815+80.58
UPPER CROSS–SPAN HT.(FT)	–	–	–	–	–
POLE TYPE / LENGTH (FT)	33048/28.00	33048/28.00	52028/30	72025/34	52028/30
POLE OFFSET (FT)	19.37 RT	18.97 RT	19.20 RT	20.53 RT	9.52 RT
CONTACT WIRE HT. (FT)	19.50	19.50	19.50	19.50	19.50
STAGGER (IN)	6	6	6	6	6
SUPPORT/REGISTRATION TYPE	C–7	C–4	CST–1	CST–1	C–1
TERMINATION TYPE / HT.	–	–	–	–	GP–01/23
JUMPER TYPE	–	–	–	–	–
FOUNDATION TYPE	–	–	–	–	SEE NOTE 4
MISCELLANEOUS	–	–	–	–	–

NOTES:

1. A DISTANCE OF SIX FEET BEHIND THE CURB AND 15 FEET ON EITHER SIDE OF PROPOSED OCS POLES AND SIGNAL POLES (INCLUDING ANY DISTURBANCE TO THE EXISTING CURB) HAS BEEN QUANTIFIED FOR BIDDING PURPOSES. THE CITY'S ENGINEER WILL DETERMINE ACTUAL PAY LIMITS FOR THIS WORK. NO ADDITIONAL INCREASE TO THE UNIT COST WILL BE ALLOWED FOR THIS WORK IF THE QUANTITIES ARE MORE OR LESS THAN THE AMOUNT QUANTIFIED FOR BIDDING PURPOSES. (THIS DOES NOT APPLY TO WALKS ON EXIST. STRUCTURE)
2. A STANDARD CITY OF CINCINNATI FOUNDATION TO BE USED WHERE FOUNDATION TYPES NOT SHOWN BELOW APPLICABLE POLES ON TABULATION.
3. OCS STRUCTURE STATIONING IS REFERENCE PERPENDICULAR TO TRACK CENTERLINE.
4. FOR FOUNDATION DETAILS REFER TO G–ST–8000 SERIES DRAWINGS.

GRAPHIC SCALE
20 0 20 40 80
(IN FEET)
1 inch = 20 ft. Full Size
1 inch = 40 ft. Half Size

CAUTION UNDERGROUND UTILITIES
2 WORKING DAYS
BEFORE YOU DIG
CALL 1–800–362–2764
OHIO UTILITY PROTECTION SERVICE
CALL NON–SERVICE FACILITY
OWNERS DIRECT

PROFESSIONAL STAMP

SIGN:
DATE:

$PLTDRVS$
$FILE$
$DATE$
$TIME$

CONTRACT DRAWING

PRINTS NOT BEARING THIS STAMP WERE MADE PRIOR TO ADVERTISING FOR BIDS AND ARE TO BE CONSIDERED OBSOLETE FOR CONTRACT PURPOSES.

Department of Transportation and Engineering

City of Cincinnati
City Hall
801 Plum Street
Cincinnati, Ohio 45202

CINCINNATI STREETCAR
CENTRAL BUSINESS DISTRICT
OCS LAYOUT PLAN - WALNUT STREET
STA. 812+00 TO STA. 816+50

Revisions
No.

Drawn by AN	Date 07/02/12	Designed by JL	Date 07/02/12
Checked by MH	Date 07/02/12	Reviewed by JTB	Date 07/12/12

Consultant

PB HDR

File Number

ACC No. 23126

G-OL-8004

POLE No.	ML–1032	ML–1033	ML–1035
STATIONING	816+67.99	816+73.26	816+90.31
UPPER CROSS–SPAN HT.(FT)		23.05/20.04	30.61/20.59
POLE TYPE / LENGTH (FT)	38045/30	EXISTING (JOINT–USED)	SEE NOTE 3
POLE OFFSET (FT)	10.64 RT	18.98 RT	52.37 LT
CONTACT WIRE HT. (FT)	19.50	–	–
STAGGER (IN)	6	–	–
SUPPORT/REGISTRATION TYPE	C–3	–	–
TERMINATION TYPE / HT.	–	–	GP–01/23
JUMPER TYPE	–	–	–
FOUNDATION TYPE	–	EXISTING	–
MISCELLANEOUS	TR–01	BBPO–3	–

CHECK PRINT

PARSONS BRINCKERHOFF

Drawn By/Originator: _____ Date: / /
Checked By: _____ Date: / /
Back-Checked By: _____ Date: / /
Corrected By: _____ Date: / /
Verified By: _____ Date: / /

MATCH LINE SEE DWG. G-OL-8004

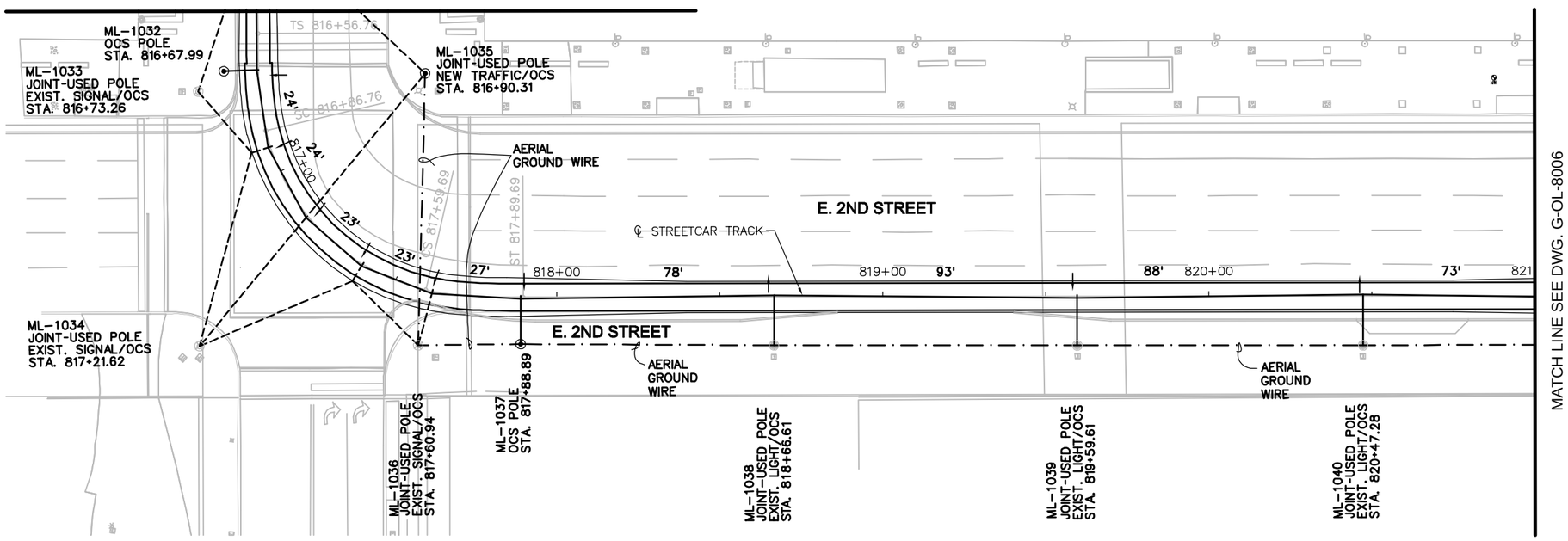

POLE No.	ML–1034	ML–1036	ML–1037	ML–1038	ML–1039	ML–1040
STATIONING	817+21.62	817+60.94	817+88.89	818+66.61	819+59.61	820+47.28
UPPER CROSS–SPAN HT.(FT)	20.44/20.68/20.35	20.37	–	–	–	–
POLE TYPE / LENGTH (FT)	EXISTING (JOINT–USED)	EXISTING (JOINT–USED)	52028/30	EXISTING (JOINT–USED)	EXISTING (JOINT–USED)	EXISTING (JOINT–USED)
POLE OFFSET (FT)	51.36 RT	17.11 RT	14.38 RT	14.78 RT	15.03 RT	15.29 RT
CONTACT WIRE HT. (FT)	19.50	19.50	19.50	19.50	19.50	19.50
STAGGER (IN)	9	9	6	6	6	6
SUPPORT/REGISTRATION TYPE	CST–2	PO–1	C–6	C–7	C–4	C–7
TERMINATION TYPE / HT.	–	GP–01/23	GP–01/23	–	GP–01/23	GP–01/23
JUMPER TYPE	–	–	–	–	–	–
FOUNDATION TYPE	EXISTING	EXISTING	SEE NOTE 4	EXISTING	EXISTING	EXISTING
MISCELLANEOUS	BBPO–3	–	–	–	–	–

NOTES:

1. A STANDARD CITY OF CINCINNATI FOUNDATION TO BE USED WHERE FOUNDATION TYPES NOT SHOWN BELOW APPLICABLE POLES ON TABULATION.
2. OCS STRUCTURE STATIONING IS REFERENCE PERPENDICULAR TO TRACK CENTERLINE.
3. NEW JOINT–USED POLE TYPE & DETAIL REFER TO TRAFFIC POLE DETAIL DRAWINGS.
4. FOR FOUNDATION DETAILS REFER TO G–ST–8000 SERIES DRAWINGS.

GRAPHIC SCALE

20 0 20 40 80

(IN FEET)
1 inch = 20 ft. Full Size
1 inch = 40 ft. Half Size

CAUTION UNDERGROUND UTILITIES
2 WORKING DAYS
BEFORE YOU DIG
CALL 1–800–362–2764
OHIO UTILITY PROTECTION SERVICE
CALL NON–SERVICE FACILITY
OWNERS DIRECT

PROFESSIONAL STAMP

SIGN:
DATE:

DEPARTMENT OF TRANSPORTATION & ENGINEERING
CITY OF CINCINNATI
OHIO

CONTRACT DRAWING

PRINTS NOT BEARING THIS STAMP WERE MADE PRIOR TO ADVERTISING FOR BIDS AND ARE TO BE CONSIDERED OBSOLETE FOR CONTRACT PURPOSES.

Department of Transportation and Engineering

City of Cincinnati
City Hall
801 Plum Street
Cincinnati, Ohio 45202

CINCINNATI STREETCAR
CENTRAL BUSINESS DISTRICT
OCS LAYOUT PLAN - 2ND STREET
STA. 816+50 TO STA. 821+00

Revisions

No.		Date
		07/02/12
		07/02/12
		07/02/12
		07/12/12

Drawn by AN	Designed by JL	Checked by MH	Reviewed by JTB

Consultant

PB HDR

File Number

ACC No. 23126

G-OL-8005

$TIME$
$PLTDRVS$
$FILE$
$DATE$

POLE No.	ML-1041	ML-1042	ML-1044	ML-1048	SS-1	SS-2	
STATIONING	821+19.77	821+48.82	822+16.29	823+34.55	822+51.57	822+50.91	
UPPER CROSS-SPAN HT.(FT)	–	20.24	20.59/27.00	–	30.00/26.00	30.00/26.00	
POLE TYPE / LENGTH (FT)	38045/30	72025/34	SEE NOTE 5	EXISTING (JOINT-USED)	TP-4F/37	TP-2F/34	
POLE OFFSET (FT)	14.97 RT	16.31 RT	52.75 LT	41.46 LT	175.02 RT	86.73 RT	
CONTACT WIRE HT. (FT)	19.50	19.50	–	–	–	–	
STAGGER (IN)	6	9	–	–	–	–	
SUPPORT/REGISTRATION TYPE	C-4	PO-1	–	–	–	–	
TERMINATION TYPE / HT.	GP-01/23	GP-01/23	GP-01/23	GP-01/25	–	–	
JUMPER TYPE	–	–	–	–	–	–	
FOUNDATION TYPE	SEE NOTE 7	SEE NOTE 7	–	EXISTING	TPF-9	TPF-7	
MISCELLANEOUS	–	BBPO-3	TR-01	–	TD-01 (2)	FSB (2), TD-01	

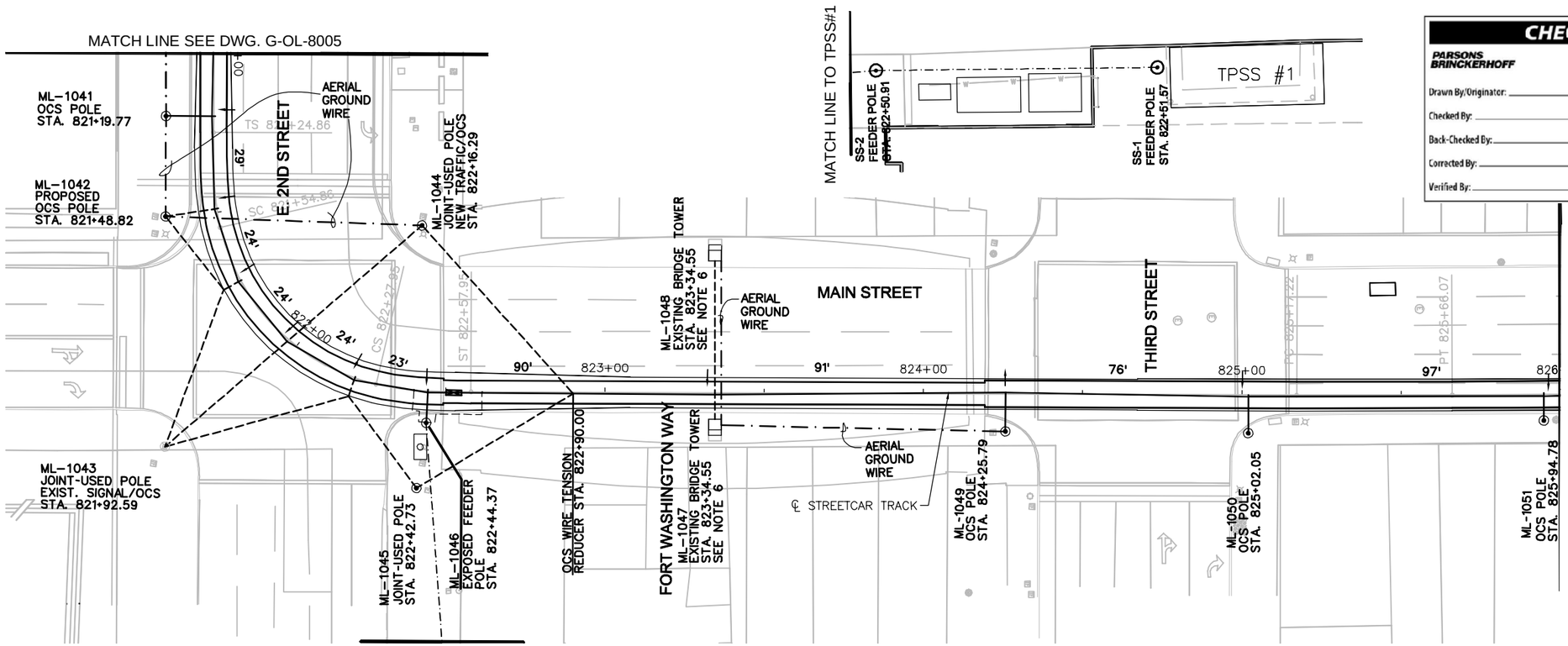

POLE No.	ML-1043	ML-1045	ML-1046	ML-1047	ML-1049	ML-1050	ML-1051
STATIONING	821+92.59	822+42.73	822+44.37	823+34.55	824+25.79	825+02.05	825+94.78
UPPER CROSS-SPAN HT.(FT)	20.33/20.69/20.51	20.29/23.34	26.00	–	–	–	–
POLE TYPE / LENGTH (FT)	EXISTING JOINT USED	SEE NOTE 5	TP-2/34	EXISTING (JOINT-USED)	52028/30	33048/28	33048/28
POLE OFFSET (FT)	50.93 RT	30.64 RT	9.98 RT	8.28 RT	11.74 RT	12.01 RT	8.16 RT
CONTACT WIRE HT. (FT)	19.50	–	19.50	19.50	19.50	19.50	19.50
STAGGER (IN)	9	–	6	6	6	6	6
SUPPORT/REGISTRATION TYPE	CST-2	–	C-3	CST-1	C-7	C-1	C-1
TERMINATION TYPE / HT.	–	–	–	GP-01/25	GP-01/25	–	–
JUMPER TYPE	–	–	–	–	–	–	–
FOUNDATION TYPE	EXISTING	–	–	EXISTING	–	–	TPF-11
MISCELLANEOUS	BBPO-3	–	SA-1 (2), TD-01	–	–	–	–

NOTES:

1. A DISTANCE OF SIX FEET BEHIND THE CURB AND 15 FEET ON EITHER SIDE OF PROPOSED OCS POLES AND SIGNAL POLES (INCLUDING ANY DISTURBANCE TO THE EXISTING CURB) HAS BEEN QUANTIFIED FOR BIDDING PURPOSES. THE CITY'S ENGINEER WILL DETERMINE ACTUAL PAY LIMITS FOR THIS WORK. NO ADDITIONAL INCREASE TO THE UNIT COST WILL BE ALLOWED FOR THIS WORK IF THE QUANTITIES ARE MORE OR LESS THAN THE AMOUNT QUANTIFIED FOR BIDDING PURPOSES. (THIS DOES NOT APPLY TO WALKS ON EXIST. STRUCTURE)
2. A STANDARD CITY OF CINCINNATI FOUNDATION TO BE USED WHERE FOUNDATION TYPES NOT SHOWN BELOW APPLICABLE POLES ON TABULATION.
3. OCS STRUCTURE STATIONING IS REFERENCE PERPENDICULAR TO TRACK CENTERLINE.
4. FOR AERIAL FEEDING ROUTE FROM TPSS SEE DRAWING NO. G-OD-0056 AND G-TP-8020.
5. NEW JOINT-USED POLE TYPE & DETAIL REFER TO TRAFFIC POLE DETAIL DRAWINGS.
6. OCS CONTRACTOR SHALL PROVIDED ATTACHMENT DETAILS FOR THE CROSS SPAN ANCHORAGE AT THE EXISTING STRUCTURE WITH CITY ENGINEER'S APPROVAL.
7. FOR FOUNDATION DETAILS REFER TO G-ST-8000 SERIES DRAWINGS.

GRAPHIC SCALE

20 0 20 40 80

(IN FEET)
1 inch = 20 ft. Full Size
1 inch = 40 ft. Half Size

CHECK PRINT

PARSONS BRINCKERHOFF

Drawn By/Originator: Date: / /
Checked By: Date: / /
Back-Checked By: Date: / /
Corrected By: Date: / /
Verified By: Date: / /

CAUTION UNDERGROUND UTILITIES
2 WORKING DAYS
BEFORE YOU DIG
CALL 1-800-362-2764
OHIO UTILITY PROTECTION SERVICE
CALL NON-SERVICE FACILITY
OWNERS DIRECT

PROFESSIONAL STAMP

SIGN:
DATE:

CONTRACT DRAWING

PRINTS NOT BEARING THIS STAMP WERE MADE PRIOR TO ADVERTISING FOR BIDS AND ARE NOT TO BE CONSIDERED OBSOLETE FOR CONTRACT PURPOSES.

Department of Transportation and Engineering

City of Cincinnati
City Hall
801 Plum Street
Cincinnati, Ohio 45202

CINCINNATI STREETCAR
CENTRAL BUSINESS DISTRICT
OCS LAYOUT PLAN - MAIN STREET
STA. 821+00 TO STA. 826+00

Revisions

No.		Date
		07/02/12
		07/02/12
		07/02/12
		07/12/12

Drawn by AN Date 07/02/12
Designed by JL Date 07/02/12
Checked by MH Date 07/02/12
Reviewed by JTB Date 07/12/12

Consultant

PB HDR

File Number

ACC No. 23126

G-OL-8006

$TIME$
$PLTDRVS$
$FILE$
$DATE$

POLE No.	
STATIONING	
UPPER CROSS–SPAN HT.(FT)	
POLE TYPE / LENGTH (FT)	
POLE OFFSET (FT)	
CONTACT WIRE HT. (FT)	
STAGGER (IN)	
SUPPORT/REGISTRATION TYPE	
TERMINATION TYPE / HT.	
JUMPER TYPE	
FOUNDATION TYPE	
MISCELLANEOUS	

CHECK PRINT

PARSONS BRINCKERHOFF

Drawn By/Originator: _____ Date: / /

Checked By: _____ Date: / /

Back-Checked By: _____ Date: / /

Corrected By: _____ Date: / /

Verified By: _____ Date: / /

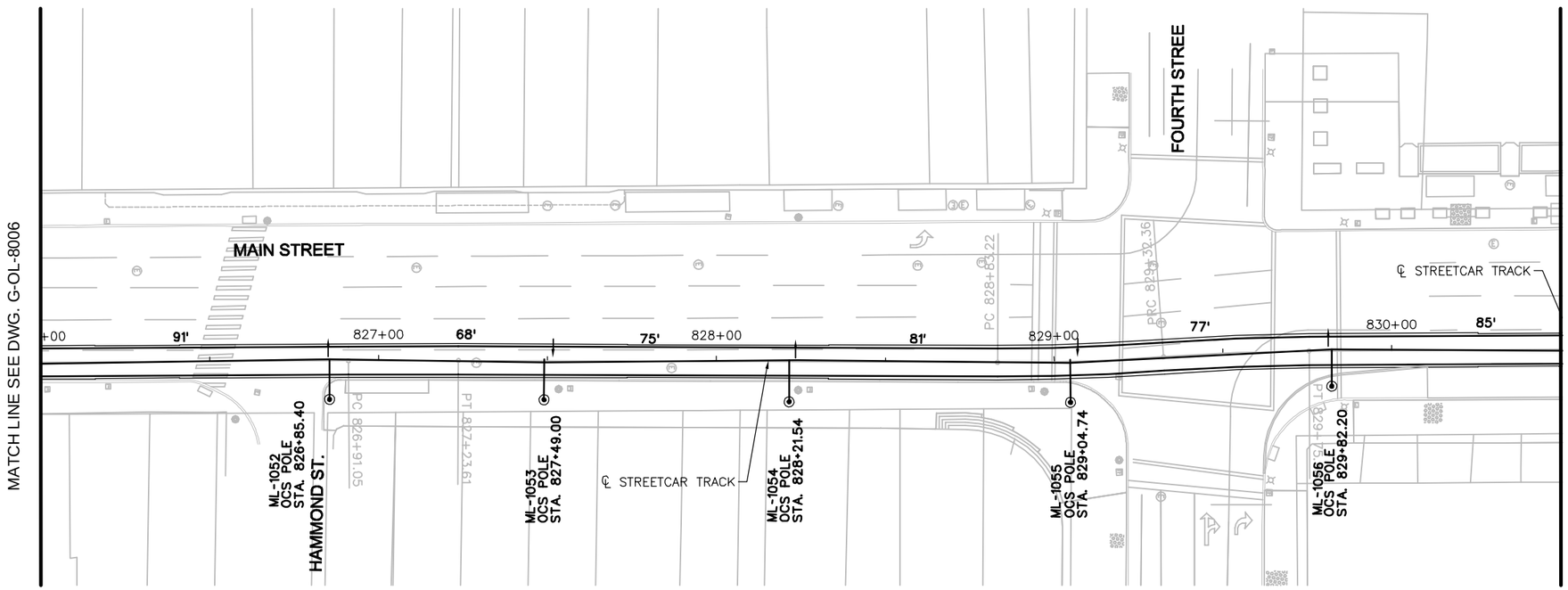

POLE No.	ML–1052	ML–1053	ML–1054	ML–1055	ML–1056
STATIONING	826+85.40	827+49.00	828+21.54	829+04.74	829+82.20
UPPER CROSS–SPAN HT.(FT)	–	–	–	–	–
POLE TYPE / LENGTH (FT)	33048/28	33048/28	33048/28	33048/28	33048/28
POLE OFFSET (FT)	11.43 RT	11.54 RT	11.88 RT	12.15 RT	10.45 RT
CONTACT WIRE HT. (FT)	19.50	19.50	19.50	19.50	19.50
STAGGER (IN)	6	6	6	6	6
SUPPORT/REGISTRATION TYPE	C–7	C–1	C–7	C–2	C–8
TERMINATION TYPE / HT.	–	–	–	–	–
JUMPER TYPE	–	–	–	–	–
FOUNDATION TYPE	–	TPF–11	TPF–11	–	–
MISCELLANEOUS	–	–	–	–	–

NOTES:

1. A DISTANCE OF SIX FEET BEHIND THE CURB AND 15 FEET ON EITHER SIDE OF PROPOSED OCS POLES AND SIGNAL POLES (INCLUDING ANY DISTURBANCE TO THE EXISTING CURB) HAS BEEN QUANTIFIED FOR BIDDING PURPOSES. THE CITY'S ENGINEER WILL DETERMINE ACTUAL PAY LIMITS FOR THIS WORK. NO ADDITIONAL INCREASE TO THE UNIT COST WILL BE ALLOWED FOR THIS WORK IF THE QUANTITIES ARE MORE OR LESS THAN THE AMOUNT QUANTIFIED FOR BIDDING PURPOSES.
2. A STANDARD CITY OF CINCINNATI FOUNDATION TO BE USED WHERE FOUNDATION TYPES NOT SHOWN BELOW APPLICABLE POLES ON TABULATION.
3. OCS STRUCTURE STATIONING IS REFERENCE PERPENDICULAR TO TRACK CENTERLINE.

GRAPHIC SCALE

20 0 20 40 80

(IN FEET)
1 inch = 20 ft. Full Size
1 inch = 40 ft. Half Size

CAUTION UNDERGROUND UTILITIES
2 WORKING DAYS
BEFORE YOU DIG
CALL 1–800–362–2764
OHIO UTILITY PROTECTION SERVICE
CALL NON–SERVICE FACILITY OWNERS DIRECT

PROFESSIONAL STAMP

SIGN:

DATE:

CONTRACT DRAWING

PRINTS NOT BEARING THIS STAMP WERE MADE PRIOR TO AWARDING THE CONTRACT AND ARE TO BE CONSIDERED OBSOLETE FOR CONTRACT PURPOSES.

Department of Transportation and Engineering

City of Cincinnati
City Hall
801 Plum Street
Cincinnati, Ohio 45202

CINCINNATI STREETCAR
CENTRAL BUSINESS DISTRICT
OCS LAYOUT PLAN - MAIN STREET
STA. 826+00 TO STA. 830+50

Revisions

No.		Date
		07/02/12
		07/02/12
		07/02/12
		07/12/12

Drawn by: AN Date 07/02/12
Designed by: JL Date 07/02/12
Checked by: MH Date 07/02/12
Reviewed by: JTB Date 07/12/12

Consultant

PB HDR

File Number

ACC No. 23126

G-OL-8007

$TIME$
$PLTDRVS$
$FILE$
$DATE$

POLE No.	
STATIONING	
UPPER CROSS–SPAN HT.(FT)	
POLE TYPE / LENGTH (FT)	
POLE OFFSET (FT)	
CONTACT WIRE HT. (FT)	
STAGGER (IN)	
SUPPORT/REGISTRATION TYPE	
TERMINATION TYPE / HT.	
JUMPER TYPE	
FOUNDATION TYPE	
MISCELLANEOUS	

CHECK PRINT

PARSONS BRINCKERHOFF

Drawn By/Originator: _____ Date: / /

Checked By: _____ Date: / /

Back-Checked By: _____ Date: / /

Corrected By: _____ Date: / /

Verified By: _____ Date: / /

MATCH LINE SEE DWG. G-OL-8007

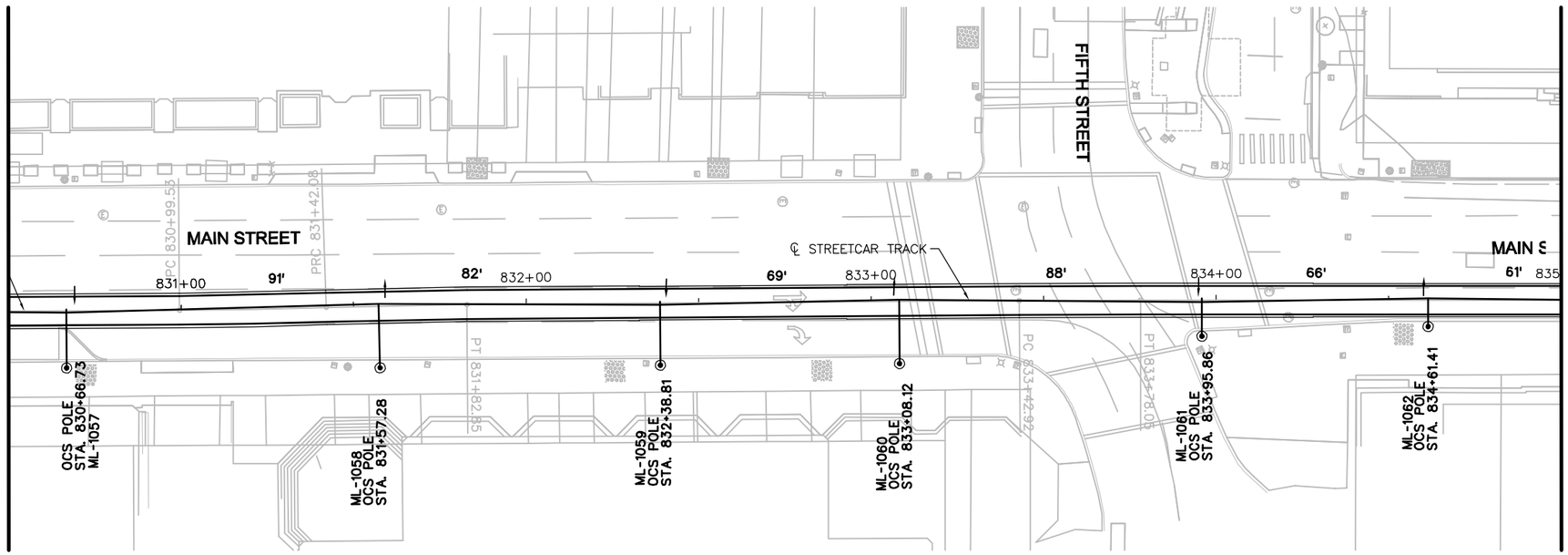

MATCH LINE SEE DWG. G-OL-8009

POLE No.	ML–1057	ML–1058	ML–1059	ML–1060	ML–1061	ML–1062
STATIONING	830+66.73	831+57.28	832+38.81	833+08.12	833+95.86	834+61.41
UPPER CROSS–SPAN HT.(FT)	–	–	–	–	–	–
POLE TYPE / LENGTH (FT)	33048/28	33048/28	33048/28	33048/28	33048/28	33048/28
POLE OFFSET (FT)	16.51 RT	17.95 RT	17.95 RT	17.97 RT	10.40 RT	7.60 RT
CONTACT WIRE HT. (FT)	19.50	19.50	19.50	19.22	18.52	17.68
STAGGER (IN)	6	6	6	6	6	6
SUPPORT/REGISTRATION TYPE	C–4	C–7	C–4	C–7	C–1	C–7
TERMINATION TYPE / HT.	–	–	–	–	–	–
JUMPER TYPE	–	–	–	–	–	–
FOUNDATION TYPE	–	–	–	–	–	–
MISCELLANEOUS	–	–	–	–	–	–

NOTES:

1. A DISTANCE OF SIX FEET BEHIND THE CURB AND 15 FEET ON EITHER SIDE OF PROPOSED OCS POLES AND SIGNAL POLES (INCLUDING ANY DISTURBANCE TO THE EXISTING CURB) HAS BEEN QUANTIFIED FOR BIDDING PURPOSES. THE CITY'S ENGINEER WILL DETERMINE ACTUAL PAY LIMITS FOR THIS WORK. NO ADDITIONAL INCREASE TO THE UNIT COST WILL BE ALLOWED FOR THIS WORK IF THE QUANTITIES ARE MORE OR LESS THAN THE AMOUNT QUANTIFIED FOR BIDDING PURPOSES.
2. A STANDARD CITY OF CINCINNATI FOUNDATION TO BE USED WHERE FOUNDATION TYPES NOT SHOWN BELOW APPLICABLE POLES ON TABULATION.
3. OCS STRUCTURE STATIONING IS REFERENCE PERPENDICULAR TO TRACK CENTERLINE.

GRAPHIC SCALE

20 0 20 40 80

(IN FEET)

1 inch = 20 ft. Full Size

1 inch = 40 ft. Half Size

CAUTION UNDERGROUND UTILITIES
2 WORKING DAYS
BEFORE YOU DIG
CALL 1–800–362–2764
OHIO UTILITY PROTECTION SERVICE
CALL NON–SERVICE FACILITY
OWNERS DIRECT

PROFESSIONAL STAMP

SIGN:

DATE:

CONTRACT DRAWING

PRINTS NOT BEARING THIS STAMP WERE MADE PRIOR TO AWARD OF CONTRACT AND ARE TO BE CONSIDERED OBSOLETE FOR CONTRACT PURPOSES.

Department of Transportation and Engineering

City of Cincinnati
City Hall
801 Plum Street
Cincinnati, Ohio 45202

CINCINNATI STREETCAR
CENTRAL BUSINESS DISTRICT
OCS LAYOUT PLAN - MAIN STREET
STA. 830+50 TO STA. 835+00

Revisions

No.				

Drawn by AN	Date 07/02/12
Designed by JL	Date 07/02/12
Checked by MH	Date 07/02/12
Reviewed by JTB	Date 07/12/12

Consultant

PB HDR

File Number

ACC No. 23126

G-OL-8008

$PLTDRV$$
$FILE$$
$DATE$$
$TIME$$

POLE No.		ML–1066	ML–1067	ML–1068	ML–1069	ML–1070	ML–1071
STATIONING		837+12.47	837+41.72	837+71.42	838+35.82	68+32.69	69+08.00
UPPER CROSS–SPAN HT.(FT)		–	–	–	–	–	–
POLE TYPE / LENGTH (FT)		38045/30	33048/28	33048/28	33048/28	27070/28	33048/28
POLE OFFSET (FT)		18.93 LT	17.26 LT	17.07 LT	16.98 LT	7.74 LT	19.13 LT
CONTACT WIRE HT. (FT)		14.90	14.90	15.10	15.93	17.05	17.89
STAGGER (IN)		6	6	0	6	6	0
SUPPORT/REGISTRATION TYPE		C–6	C–6	C–4	C–4	C–1	C–4
TERMINATION TYPE / HT.		–	–	–	–	–	–
JUMPER TYPE		–	–	–	–	–	–
FOUNDATION TYPE		–	–	–	–	–	TPF–11
MISCELLANEOUS		–	–	–	–	–	–

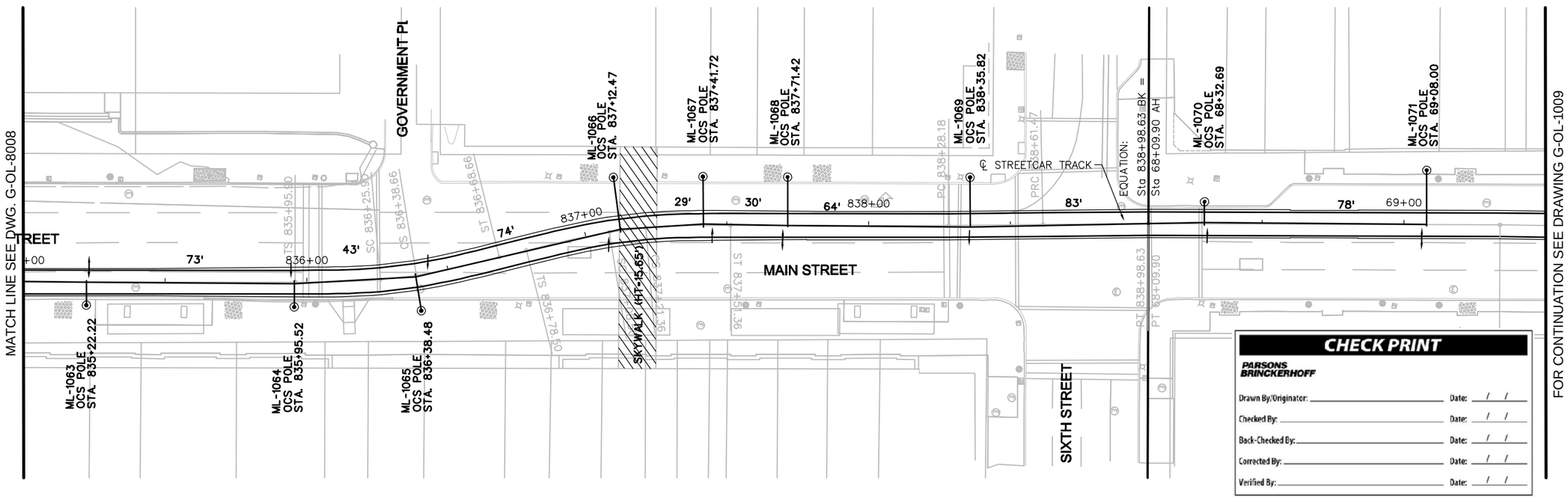

CHECK PRINT

PARSONS BRINCKERHOFF

Drawn By/Originator: _____ Date: / /

Checked By: _____ Date: / /

Back-Checked By: _____ Date: / /

Corrected By: _____ Date: / /

Verified By: _____ Date: / /

POLE No.	ML–1063	ML–1064	ML–1065	
STATIONING	835+22.22	835+95.52	836+38.48	
UPPER CROSS–SPAN HT.(FT)	–	–	–	
POLE TYPE / LENGTH (FT)	33048/28	33048/28	38045/30	
POLE OFFSET (FT)	8.14 RT	8.75 RT	12.62 RT	
CONTACT WIRE HT. (FT)	16.88	15.93	15.35	
STAGGER (IN)	0	6	6	
SUPPORT/REGISTRATION TYPE	C–1	C–2	C–5	
TERMINATION TYPE / HT.	–	–	–	
JUMPER TYPE	–	–	–	
FOUNDATION TYPE	–	–	–	
MISCELLANEOUS	–	–	–	

NOTES:

1. A DISTANCE OF SIX FEET BEHIND THE CURB AND 15 FEET ON EITHER SIDE OF PROPOSED OCS POLES AND SIGNAL POLES (INCLUDING ANY DISTURBANCE TO THE EXISTING CURB) HAS BEEN QUANTIFIED FOR BIDDING PURPOSES. THE CITY'S ENGINEER WILL DETERMINE ACTUAL PAY LIMITS FOR THIS WORK. NO ADDITIONAL INCREASE TO THE UNIT COST WILL BE ALLOWED FOR THIS WORK IF THE QUANTITIES ARE MORE OR LESS THAN THE AMOUNT QUANTIFIED FOR BIDDING PURPOSES.
2. A STANDARD CITY OF CINCINNATI FOUNDATION TO BE USED WHERE FOUNDATION TYPES NOT SHOWN BELOW APPLICABLE POLES ON TABULATION.
3. OCS STRUCTURE STATIONING IS REFERENCE PERPENDICULAR TO TRACK CENTERLINE.
4. THE CONTRACTOR SHALL PROVIDE A FIBERGLASS PROTECTION SHIELD TO BE LOCATED ABOVE THE CATENARY FOR THE COMPLETE WIDTH OF EACH SKYWALK, AND 2.0 FT. VERTICAL AT EACH BRIDGE FACE. THE SHIELD SHALL BE 4.0 FT. WIDE IN THE CROSS TRACK DIRECTION (2.0 FT. EITHER SIDE OF THE CONTACT WIRE +/–) FIBERGLASS SHEETS SHALL BE PROVIDED IN 8.0 FT. X 4.0 FT. X 0.5 INCH THICK SECTIONS. MINIMUM VOLUME RESISTIVITY SHALL BE 1 X 10 OHM–CM. THE CONTRACTOR SHALL SUBMIT MATERIAL SAMPLE FOR APPROVAL PRIOR TO MANUFACTURE, TOGETHER WITH A PROPOSED METHOD OF ATTACHING TO THE BRIDGES. THE COLOR OF THE MATERIAL SHALL MATCH THE SKYWALK, USING COMPATIBLE SURFACE COLORING AS NEEDED. SINCE THIS IS AN INSULATED MEMBER, THE PROTECTION SHIELD MUST BE ATTACHED TO THE BRIDGE USING INSULATING ACCESSORIES.

GRAPHIC SCALE

20 0 20 40 80

(IN FEET)

1 inch = 20 ft. Full Size

1 inch = 40 ft. Half Size

CAUTION UNDERGROUND UTILITIES
2 WORKING DAYS
BEFORE YOU DIG
CALL 1–800–362–2764
OHIO UTILITY PROTECTION SERVICE
CALL NON–SERVICE FACILITY OWNERS DIRECT

PROFESSIONAL STAMP

SIGN: _____

DATE: _____

DEPARTMENT OF TRANSPORTATION & ENGINEERING — CITY OF CINCINNATI — OHIO

CONTRACT DRAWING

PRINTS NOT BEARING THIS STAMP WERE MADE PRIOR TO ADVERTISING FOR BIDS AND SHOULD BE CONSIDERED OBSOLETE FOR CONTRACT PURPOSES.

Department of Transportation and Engineering

City of Cincinnati
City Hall
801 Plum Street
Cincinnati, Ohio 45202

CINCINNATI STREETCAR
CENTRAL BUSINESS DISTRICT
OCS LAYOUT PLAN - MAIN STREET
STA. 835+00 TO STA. 69+50

Revisions

No.				

Drawn by AN	Date 07/02/12
Designed by JL	Date 07/02/12
Checked by MH	Date 07/02/12
Reviewed by JTB	Date 07/12/12

Consultant

PB HDR

File Number

ACC No. 23126

G-OL-8009

$TIME$
$PLTDRVS$
$FILE$
$DATE$

ABBREVIATIONS

VITAL RELAY NOMENCLATURE

LRR – LOCK ROUTE RELAY
NWCR – NORMAL SWITCH CORRESPONDENCE RELAY
NWSR – NORMAL SWITCH STICK RELAY
RWCR – REVERSE SWITCH CORRESPONDENCE RELAY
RWSR – REVERSE SWITCH STICK RELAY
TSR – TRACK STICK RELAY

NON-VITAL RELAY NOMENCLATURE

CK–INR – CHECK–IN NORMAL RELAY
CK–OUTNR – CHECK–OUT NORMAL RELAY
CK–OUTRR – CHECK–OUT REVERSE RELAY
DSR – DOOR SWITCH RELAY
NREQR – NORMAL REQUEST RELAY
POK – POWER OFF INDICATION RELAY
RREQR – REVERSE REQUEST RELAY
SMZR – SNOWMELTER OPERATION RELAY

MISCELLANEOUS NOMENCLATURE

CB – CIRCUIT BREAKER
GND – GROUND
PS – POINT OF SWITCH
SC – SIGNAL CABINET
SM – SNOWMELTER CABINET
T/R – TOP OF RAIL
TPSS – TRACTION POWER SUBSTATION

SYMBOLS

LIGHTNING ARRESTER
LIGHTNING EQUALIZER
GROUND
VARIABLE RESISTOR
FUSE
TERMINAL BLOCK WITH TEST LINK
TWISTED PAIR
1 POLE CIRCUIT BREAKER
2 POLE CIRCUIT BREAKER
SHIELDED CABLE
VITAL – BIASED NEUTRAL RELAY
VITAL – TIME ELEMENT RELAY
NON–VITAL RELAY
NORMALLY DE–ENERGIZED FRONT CONTACT
NORMALLY ENERGIZED FRONT CONTACT
NORMALLY DE–ENERGIZED BACK CONTACT
NORMALLY ENERGIZED BACK CONTACT
FRONT CONTACT HEAVY DUTY
BACK CONTACT HEAVY DUTY

STEP DOWN TRANSFORMER
INVERTER
AC SURGE PROTECTOR
SM — SNOWMELTER CABINET
SC — SIGNAL CABINET
M SW — MANUAL EMBEDDED SWITCH MACHINE
S SW — SPRING EMBEDDED SWITCH MACHINE
P SW — POWER EMBEDDED SWITCH MACHINE
SWITCH INDICATOR ENCLOSURE EMBEDDED (GREEN AND AMBER)
JB — JUNCTION BOX
M — METER POWER DROP
C — OVERHEAD LINE CONTACTOR
H — SWITCH HEATER JUNCTION BOX
S — SNOWMELTER SENSOR / GROUND JUNCTION BOX
R — RELAY
CURRENT SENSOR
HIGH VOLTAGE TERMINAL BLOCK
RW — RAIL TEMPERATURE SENSOR
CONTACTOR OPEN CONTACT
CONTACTOR CLOSED CONTACT

CAUTION UNDERGROUND UTILITIES
2 WORKING DAYS
BEFORE YOU DIG
CALL 1–800–362–2764
OHIO UTILITY PROTECTION SERVICE
CALL NON–SERVICE FACILITY
OWNERS DIRECT

PROFESSIONAL STAMP
STATE OF OHIO
HARVEY M. GLICKENSTEIN
E-56186
REGISTERED PROFESSIONAL ENGINEER
SIGN:
DATE:

CONTRACT DRAWING
PRINTS NOT BEARING THIS STAMP WERE MADE PRIOR TO ADVERTISING FOR BIDS AND ARE TO BE CONSIDERED OBSOLETE FOR CONTRACT PURPOSES.

Department of Transportation and Engineering
City of Cincinnati
City Hall
801 Plum Street
Cincinnati, Ohio 45202

CINCINNATI STREETCAR

SYMBOLS AND ABBREVIATIONS

Revisions
No.

	Date
Drawn by SB	12/20/2011
Designed by GM	12/20/2011
Checked by HG	12/20/2011
Reviewed by JTB	12/20/2011

Consultant
PB HDR

File Number
ACC No. 23126

G-SD-1001

$PLTDRV$
T:\290144_Cincinnati Street Car\SIGNALS\S_G-SD-1001.dgn
12/16/2011 12:34:45 PM

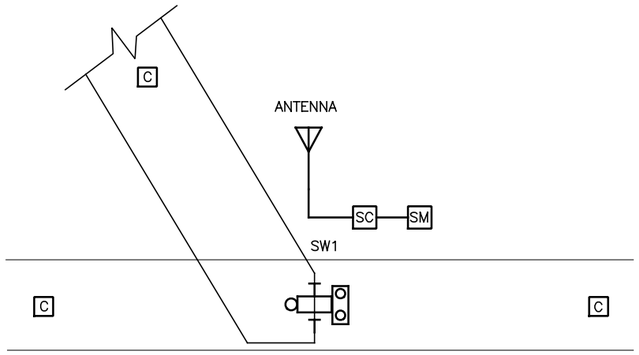

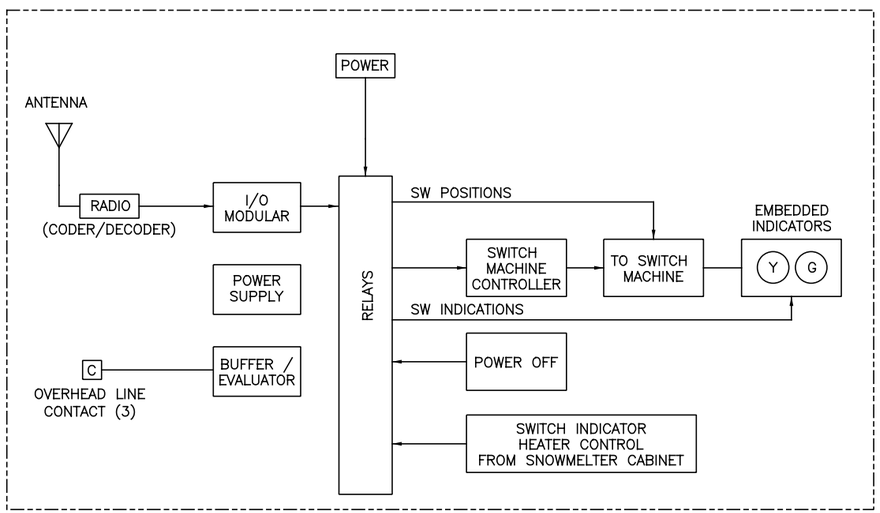

SIGNAL CABINET

SYMBOLS AND ABBREVIATIONS

- C – OVERHEAD LINE CONTACT
- – EMBEDDED SWITCH INDICATOR
- – EMBEDDED SWITCH MACHINE
- SC – SIGNAL CABINET
- SM – SNOWMELTER CABINET

CAUTION UNDERGROUND UTILITIES
2 WORKING DAYS
BEFORE YOU DIG
CALL 1-800-362-2764
OHIO UTILITY PROTECTION SERVICE
CALL NON-SERVICE FACILITY
OWNERS DIRECT

PROFESSIONAL STAMP

STATE OF OHIO
HARVEY M. GLICKENSTEIN
E-56186
REGISTERED PROFESSIONAL ENGINEER

SIGN:

DATE:

CONTRACT DRAWING

PRINTS NOT BEARING THIS STAMP WERE MADE PRIOR TO ADVERTISING FOR BIDS AND ARE TO BE CONSIDERED OBSOLETE FOR CONTRACT PURPOSES.

Department of Transportation and Engineering

City of Cincinnati
City Hall
801 Plum Street
Cincinnati, Ohio 45202

CINCINNATI STREETCAR

SIGNAL FUNCTIONAL
OVERALL BLOCK DIAGRAM

Revisions

No.				

Drawn by LP	Date 12/20/2011
Designed by GM	Date 12/20/2011
Checked by HG	Date 12/20/2011
Reviewed by JTB	Date 12/20/2011

Consultant

PB HDR

File Number

ACC No. 23126

G-SD-1002

$PLTDRVS$
T:\290144_Cincinnati Street Car\SIGNALS\S_G-SD-1002.dgn
12/16/2011 12:34:46 PM

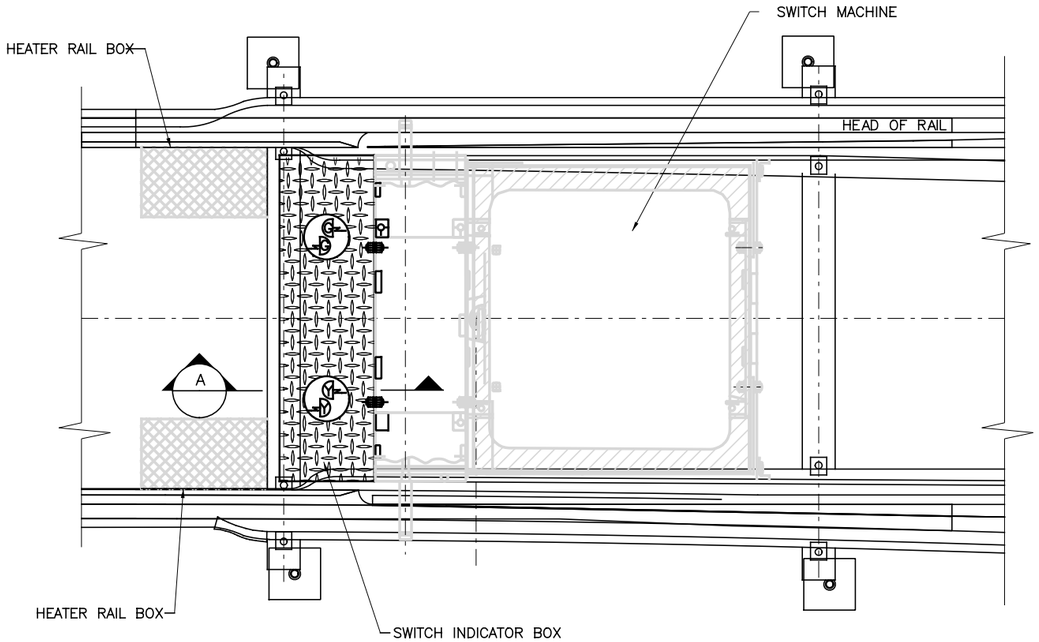

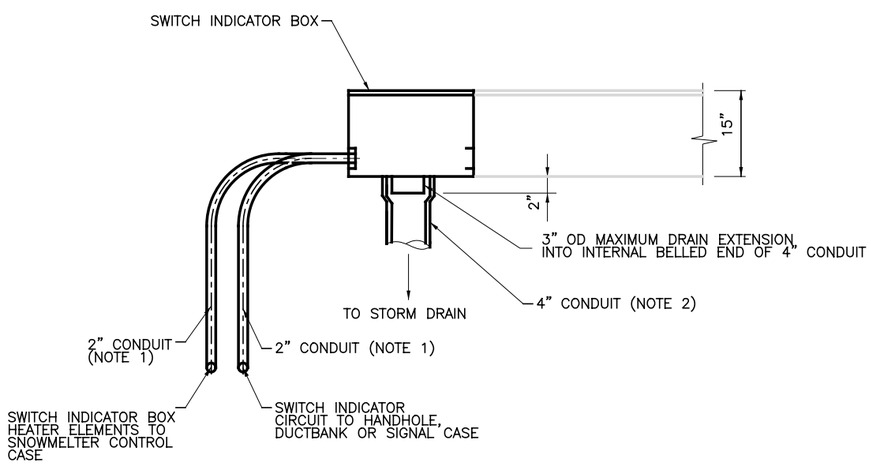

SECTION A

NOTES:

1. COORDINATE FINAL CONDUIT LOCATION AND SIZE WITH MANUFACTURER AND OTHER DISCIPLINES.
2. COORDINATE PROPER ROUTING AND SIZE OF ALL DRAIN CONDUITS TO STORM DRAIN PER DRAINAGE REQUIREMENTS.
3. LAYOUT SHALL INCLUDE ALL COVERS, LIDS, AND ROOF PLATES TO ALLOW SAFE VEHICLE/PEDESTRIAN TRAFFIC WITH H-25 LOAD RATING.
4. PVC CONDUIT TO BE USED ON STREET RUNNING LOCATIONS.
5. SWITCH INDICATOR BOXES SHALL CONTAIN HEATING ELEMENTS FOR CONTROL OF ICE AND SNOW.
6. SWITCH INDICATORS SHALL BE CONTROLLED FROM SYSTEM INDICATING ROUTING AND CORRESPONDENCE OF SWITCH.
7. EMBEDDED TRACK ILLUSTRATIONS MAY NOT REFLECT THE ACTUAL FINAL DESIGNED STRUCTURE.

CAUTION UNDERGROUND UTILITIES
2 WORKING DAYS
BEFORE YOU DIG
CALL 1-800-362-2764
OHIO UTILITY PROTECTION SERVICE
CALL NON-SERVICE FACILITY
OWNERS DIRECT

PROFESSIONAL STAMP

STATE OF OHIO
HARVEY M. GLICKENSTEIN
E-56188
REGISTERED PROFESSIONAL ENGINEER

SIGN:

DATE:

CONTRACT DRAWING

PRINTS NOT BEARING THIS STAMP WERE MADE PRIOR TO ADVERTISING FOR BIDS AND ARE TO BE CONSIDERED OBSOLETE FOR CONTRACT PURPOSES.

Department of Transportation and Engineering

City of Cincinnati
City Hall
801 Plum Street
Cincinnati, Ohio 45202

CINCINNATI STREETCAR

TYPICAL SWITCH INDICATOR LAYOUT - EMBEDDED TRACK

Revisions

No.				

Date	12/20/2011
Date	12/20/2011
Date	12/20/2011
Date	12/20/2011
Drawn by	LP
Designed by	GM
Checked by	HG
Reviewed by	JTB

Consultant

PB HDR

File Number

ACC No. 23126

G-SD-1003

$PLTDRV$$
T:\29014a_Cincinnati.Street.Car\SIGNALS\S_G-SD-1003.dgn
12:34:48 PM
12/16/2011

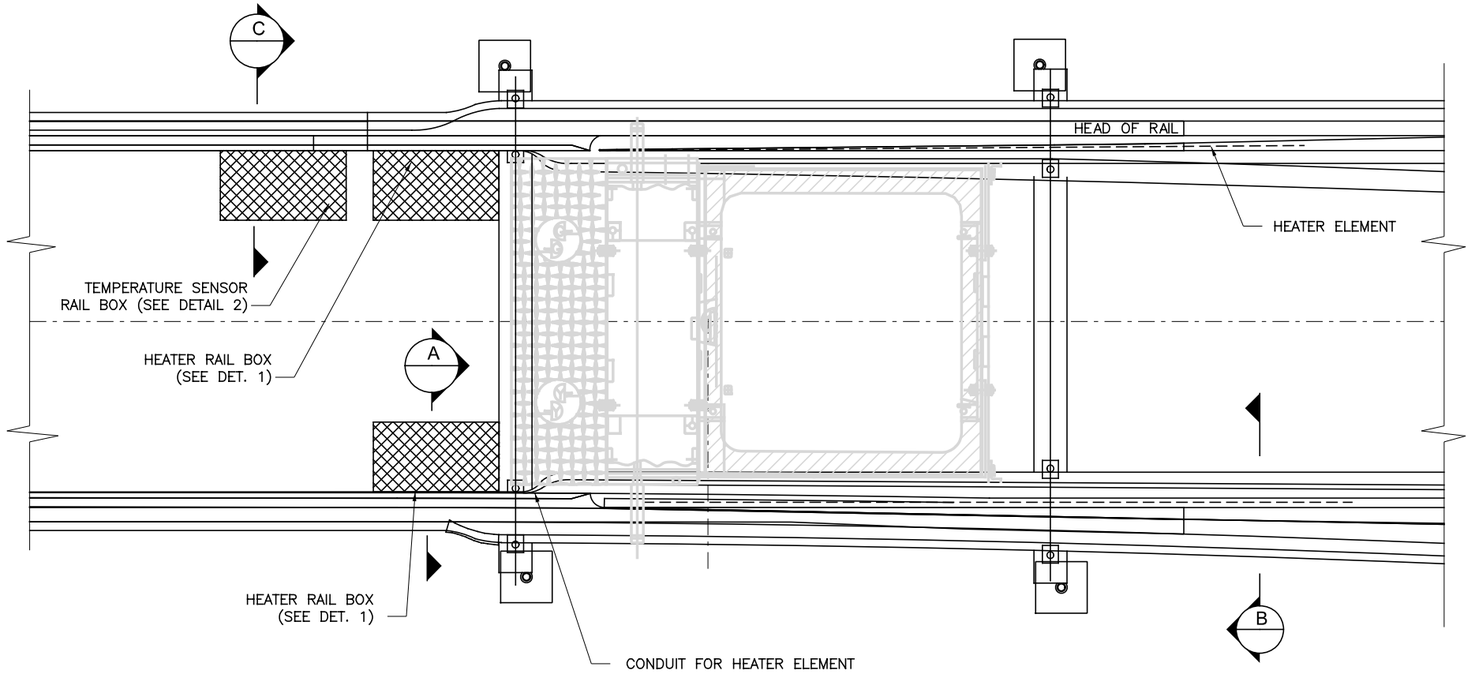

NOTES:

1. COORDINATE EXACT LOCATION OF CONDUIT STUB-UP FOR HEATER RAIL BOX WITH TRACKWORK DESIGN.
2. SWITCH INDICATION EARTHBOX SHALL INCLUDE SNOWMELTER ELEMENT.
3. OVERHEATING SENSORS SHALL BE INSTALLED TO PREVENT INJURY TO PUBLIC.
4. THE FINAL DESIGN TO INCLUDE CABLE ACCESS TO HEATER ELEMENTS WITHIN THE SWITCH CASTING. PROVISIONS FOR MAINTENANCE OF RODS (INCLUDING REPLACEMENT) SHALL BE INCORPORATED.
5. TEMPERATURE SENSOR CONNECTION AND NEGATIVE RAIL GROUND CONNECTION ARE SEPARATED BY A BOLT CONNECTION.

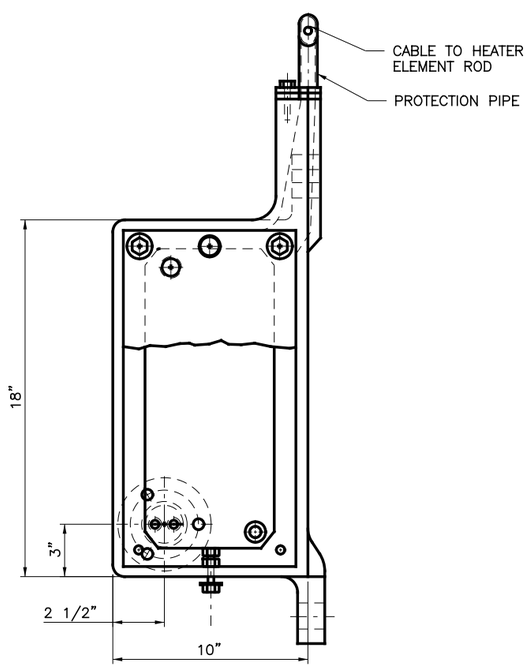

TYPICAL HEATER RAIL BOX BOLTED TO RAIL
DETAIL 1 -

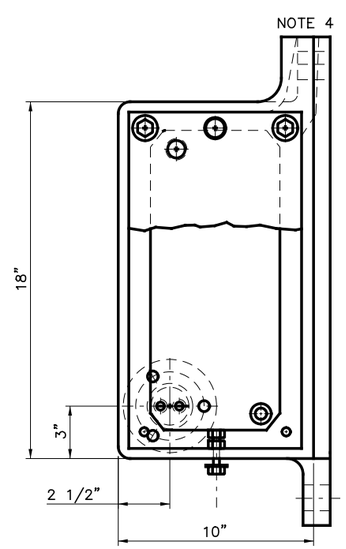

TYPICAL TEMPERATURE SENSOR RAIL BOX BOLTED TO RAIL
DETAIL 2 -

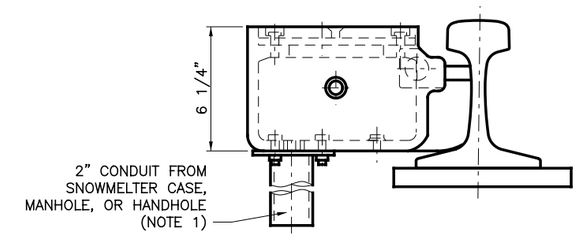

INNER RAIL HEATING HEATER RAIL BOX
PARTIAL VIEW A -

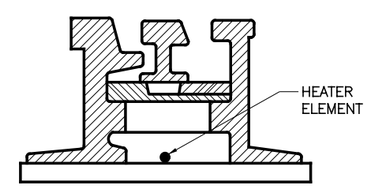

RAIL HEATING ELEMENT
PARTIAL VIEW B -

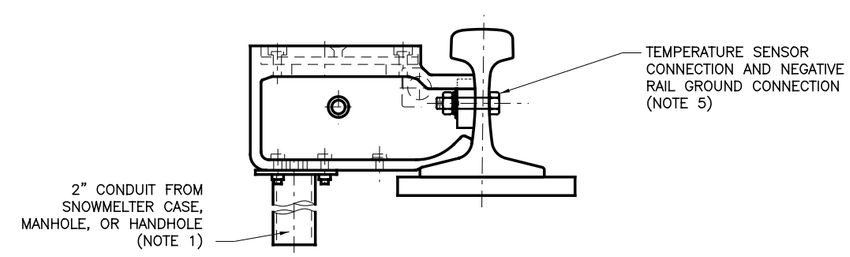

TEMPERATURE SENSOR RAIL BOX
PARTIAL VIEW C -

CAUTION UNDERGROUND UTILITIES
2 WORKING DAYS
BEFORE YOU DIG
CALL 1-800-362-2764
OHIO UTILITY PROTECTION SERVICE
CALL NON-SERVICE FACILITY
OWNERS DIRECT

PROFESSIONAL STAMP

STATE OF OHIO
HARVEY M. GLICKENSTEIN
E-56186
REGISTERED PROFESSIONAL ENGINEER

SIGN:
DATE:

CONTRACT DRAWING

PRINTS NOT BEARING THIS STAMP WERE MADE PRIOR TO ADVERTISING FOR BIDS AND ARE TO BE CONSIDERED OBSOLETE FOR CONTRACT PURPOSES.

Department of Transportation and Engineering

City of Cincinnati
City Hall
801 Plum Street
Cincinnati, Ohio 45202

CINCINNATI STREETCAR

TYPICAL SWITCH HEATER LAYOUT - EMBEDDED TRACK

Revisions

No.				

Drawn by LP	Date 12/20/2011
Designed by GM	Date 12/20/2011
Checked by HG	Date 12/20/2011
Reviewed by JTB	Date 12/20/2011

Consultant

PB HDR

File Number

ACC No. 23126

G-SD1004

$PLTDRVS$
T:\290144_Cincinnati Street Car\SIGNALS\S_G-SD-1004.dgn
12/16/2011 12:34:49 PM

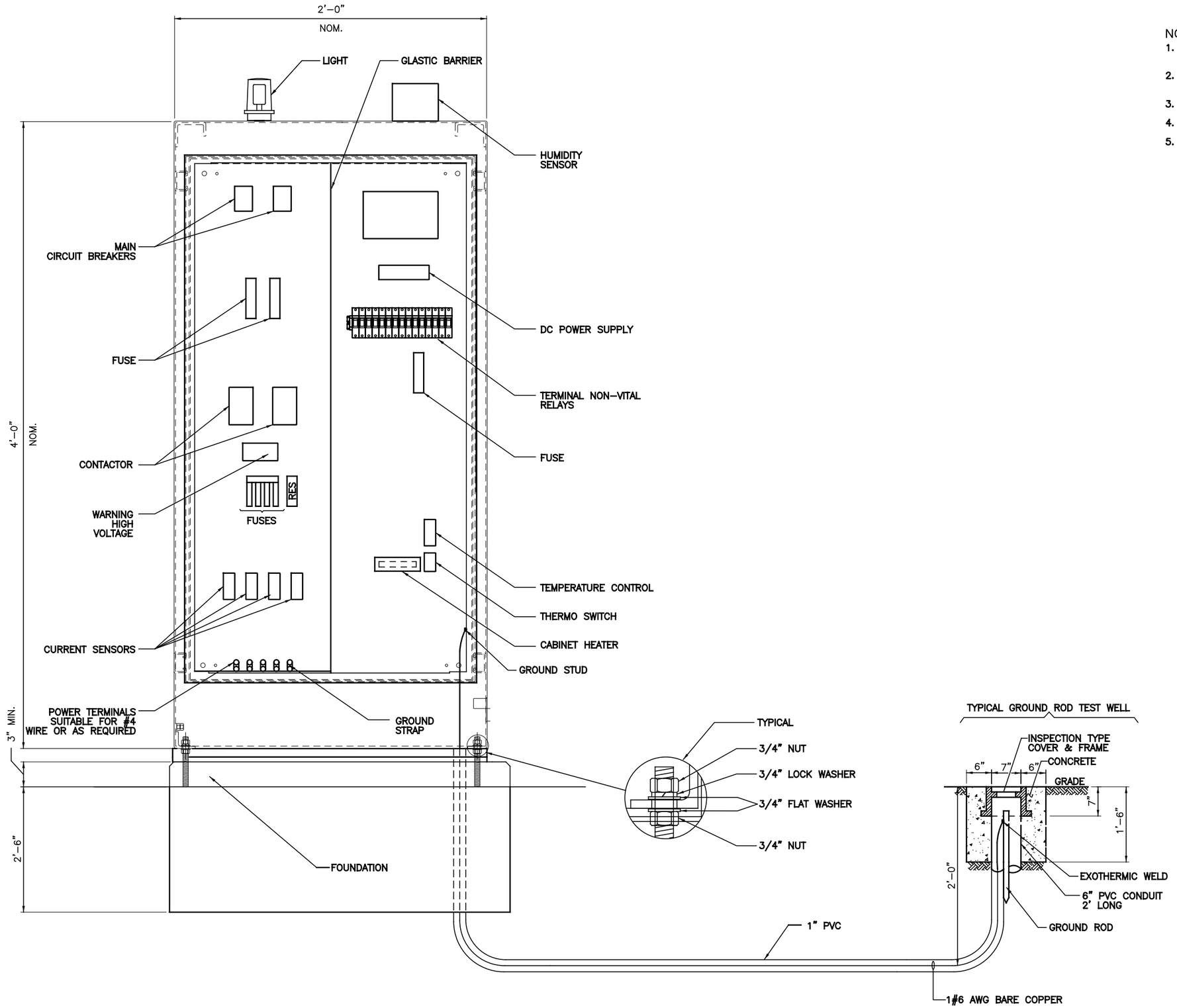

NOTES:

1. SEE ELECTRICAL DRAWINGS FOR CONDUIT ROUTING AND FOUNDATION.
2. CONTRACTOR TO SIZE ALL MATERIAL EQUIPMENT AND COORDINATE WITH FOUNDATION SUPPLIES.
3. STAINLESS ENCLOSURE OR APPROVED EQUAL.
4. DOOR TO OPEN 180°.
5. CONDUIT ENTRANCES AND CONDUITS ARE TO BE SEALED TO PREVENT ENTRANCE OF RODENTS, IN AN APPROVED MANNER.

CAUTION UNDERGROUND UTILITIES
2 WORKING DAYS
BEFORE YOU DIG
CALL 1-800-362-2764
OHIO UTILITY PROTECTION SERVICE
CALL NON-SERVICE FACILITY OWNERS DIRECT

PROFESSIONAL STAMP

STATE OF OHIO
HARVEY M. GLICKENSTEIN
E-56186
REGISTERED PROFESSIONAL ENGINEER

SIGN:

DATE:

CONTRACT DRAWING

PRINTS NOT BEARING THIS STAMP WERE MADE PRIOR TO ADVERTISING FOR BID, AND ARE TO BE CONSIDERED OBSOLETE FOR CONTRACT PURPOSES.

Department of Transportation and Engineering

City of Cincinnati
City Hall
801 Plum Street
Cincinnati, Ohio 45202

CINCINNATI STREETCAR

SIGNAL SYSTEMS
TYPICAL SWITCH HEATER CABINET

Revisions

No.		

Drawn by SB	Date 12/20/2011
Designed by GM	Date 12/20/2011
Checked by HG	Date 12/20/2011
Reviewed by JTB	Date 12/20/2011

Consultant

PB HDR

File Number

ACC No. 23126

G-SD-1005

$PLTDRV$
T:\29014a_Cincinnati.Street.Car\SIGNALS\S_G-SD-1005.dgn
12:34:50 PM
12/16/2011

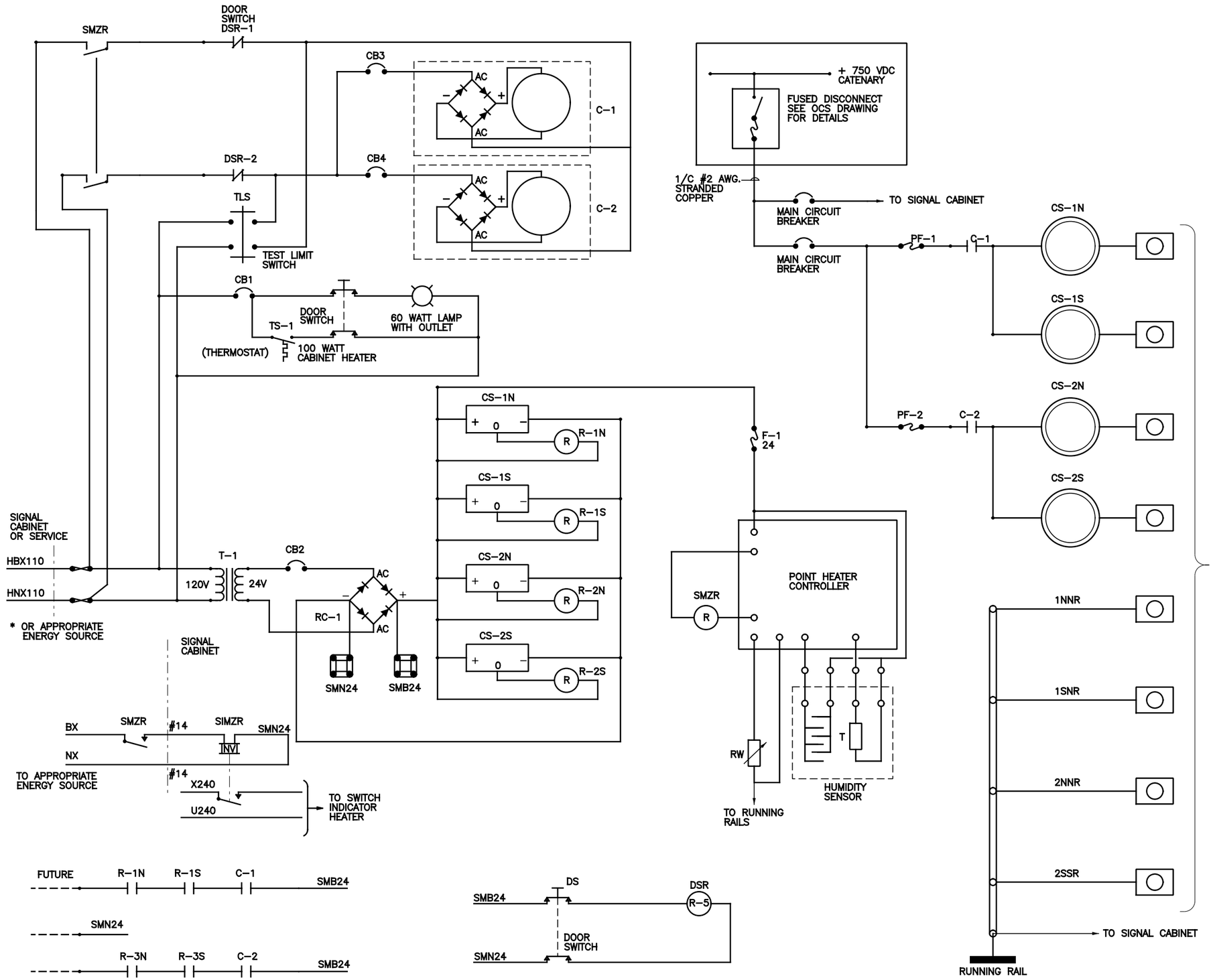

NOTES:

1. CIRCUIT BREAKER SHALL BE SIZED BY CONTRACTOR TO MATCH DESIGN. WIRE USED FOR HIGH VOLTAGE CIRCUITS (750 VDC) MUST BE IN ACCORDANCE WITH SPECIFICATION.
2. CONTRACTOR SHALL DESIGN THE CABINET TO MEET REQUIREMENTS IN THE FIELD.

LEGEND:

- C – CONTACTOR
- CB – CIRCUIT BREAKER
- CS – CURRENT SENSOR
- DS – DOOR SWITCH
- DSR – DOOR SWITCH RELAY
- P-TB – POWER TERMINAL BOARD
- PF – POWER FUSE
- RC – RECTIFIER
- SMZR – SNOWMELTER OPERATION RELAY
- TDR – TIME DELAY RELAY
- TLS – TEST LIMIT SWITCH
- (R) – RELAY
- – CURRENT SENSOR
- – HIGH VOLTAGE TERMINAL BLOCK
- RW – RAIL TEMPERATURE SENSOR

CAUTION UNDERGROUND UTILITIES 2 WORKING DAYS

BEFORE YOU DIG

CALL 1-800-362-2764
OHIO UTILITY PROTECTION SERVICE
CALL NON-SERVICE FACILITY OWNERS DIRECT

PROFESSIONAL STAMP

STATE OF OHIO HARVEY M. GLICKENSTEIN E-56186 REGISTERED PROFESSIONAL ENGINEER

SIGN:

DATE:

CONTRACT DRAWING

PRINTS NOT BEARING THIS STAMP WERE MADE PRIOR TO ADVERTISING BID. THEY ARE TO BE CONSIDERED OBSOLETE FOR CONTRACT PURPOSES.

Department of Transportation and Engineering

City of Cincinnati
City Hall
801 Plum Street
Cincinnati, Ohio 45202

CINCINNATI STREETCAR

TYPICAL SNOWMELTER CONTROL WIRING DIAGRAM

Revisions

No.				

Drawn by	Designed by	Checked by	Reviewed by
SB	GM	HG	JTB
Date 12/20/2011	Date 12/20/2011	Date 12/20/2011	Date 12/20/2011

Consultant

PB HDR

File Number

ACC No. 23126

G-SD-1006

$PLTDRVS$
T:\29014a_Cincinnati_Street_Car\SIGNALS\S_G-SD-1006.dgn
12:34:51 PM
12/16/2011

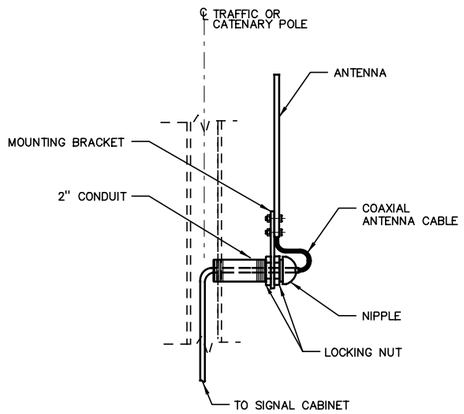

FOR TRAFFIC OR CATENARY POLE

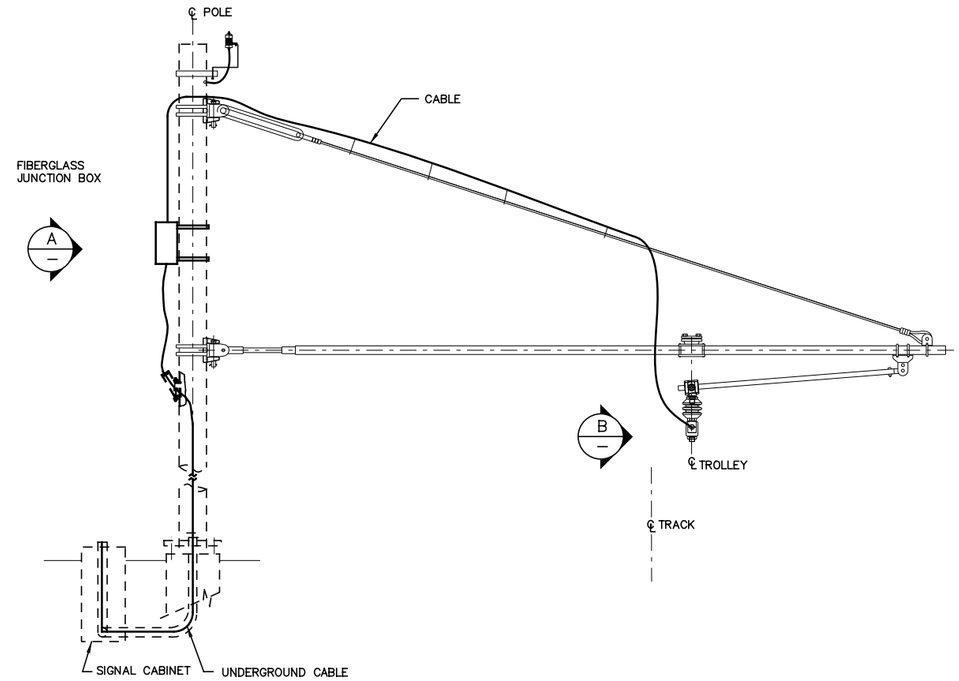

OVERHEAD LINE CONTACT CONNECTION

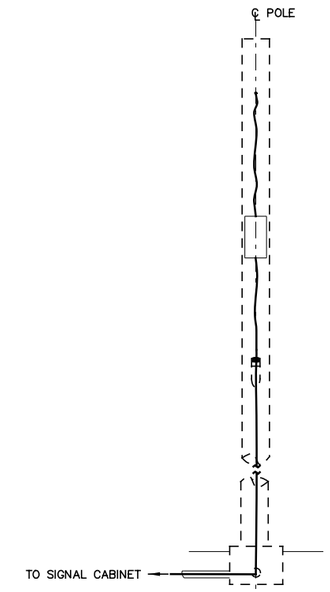

DETAIL A

FOR CLARITY CANTILEVER NOT SHOWN

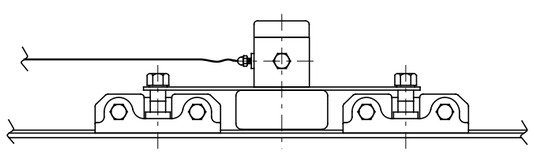

DETAIL B

CAUTION UNDERGROUND UTILITIES
2 WORKING DAYS
BEFORE YOU DIG
CALL 1-800-362-2764
OHIO UTILITY PROTECTION SERVICE
CALL NON-SERVICE FACILITY
OWNERS DIRECT

NOTE:

INSTALL CABLE IN FLEXIBLE PVC CONDUIT IN TRAFFIC OR CATENARY POLE, PER NEC.

PROFESSIONAL STAMP

STATE OF OHIO
HARVEY M. GLICKENSTEIN
E-56186
REGISTERED PROFESSIONAL ENGINEER

SIGN:

DATE:

CONTRACT DRAWING

PRINTS NOT BEARING THIS STAMP WERE MADE PRIOR TO ADVERTISING FOR BID AND ARE TO BE CONSIDERED OBSOLETE FOR CONTRACT PURPOSES.

Department of Transportation and Engineering

City of Cincinnati
City Hall
801 Plum Street
Cincinnati, Ohio 45202

CINCINNATI STREETCAR

TYPICAL OVERHEAD LINE CONTACT SYSTEM

Revisions

No.				

Date	12/20/2011
Date	12/20/2011
Date	12/20/2011
Date	12/20/2011
Drawn by	ND
Designed by	GM
Checked by	HG
Reviewed by	JTB

Consultant

PB HDR

File Number

ACC No. 23126

G-SD-1007

$PLTDRV$$
T:\29014a_Cincinnati.Street.Car\SIGNALS\S_G-SD-1007.dgn
12:34:52 PM
12/16/2011

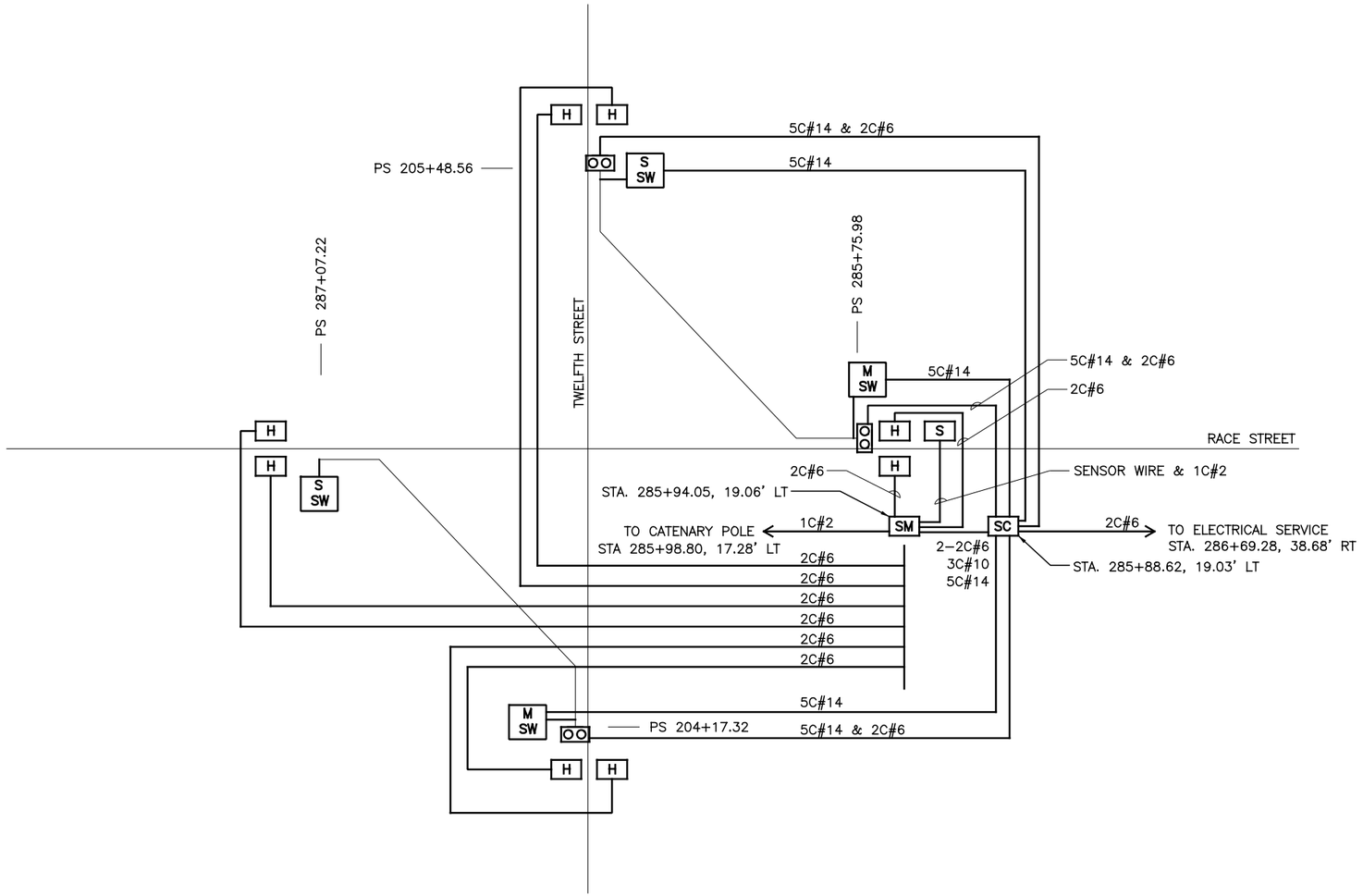

NOTE:

1. ANY EXISTING SIDEWALK/DRIVEWAY/CURB OR UTILITY DAMAGED AS A RESULT OF CONSTRUCTION OPERATIONS ARE TO BE REPAIRED/REPLACED, IN KIND, BY THE CONTRACTOR AT HIS EXPENSE. THIS INCLUDES THE REMOVAL, STORAGE, AND RE–INSTALLATION OF ANY SIDEWALK/DRIVEWAY PAVERS AND GRANITE CURBS. THE CONTRACTOR IS RESPONSIBLE FOR OBTAINING AND INSTALLING REPLACEMENT PAVERS AND CURBS AS REQUIRED. THE CONTRACTOR MUST OBTAIN APPROVAL FROM THE CITY'S ENGINEER FOR THE TYPE AND COLOR OF THE REPLACEMENT PAVERS.

   THE EXCEPTION TO THIS NOTE IS THE SIDEWALK, CURB AND ANY BEHIND THE CURB UTILITY DISTURBANCE FOR OCS AND SIGNAL POLE INSTALLATION. A DISTANCE OF SIX FEET BEHIND THE CURB AND 15 FEET ON EITHER SIDE OF PROPOSED OCS POLES AND SIGNAL POLES (INCLUDING ANY DISTURBANCE TO THE EXISTING CURB) HAS BEEN QUANTIFIED FOR BIDDING PURPOSES. THE PREVIOUSLY DESCRIBED BEHIND THE CURB UTILITY DISTURBANCES ARE PRIMARILY, BUT NOT LIMITED TO, LIGHTING, TRAFFIC CONDUIT, AND PULLBOX RELOCATIONS WHICH WILL INCLUDE ALL NEW WIRING AS REQUIRED. THE CITY'S ENGINEER WILL DETERMINE ACTUAL PAY LIMITS FOR THIS WORK. NO ADDITIONAL INCREASE TO THE UNIT COST WILL BE ALLOWED FOR THIS WORK IF THE QUANTITIES ARE MORE OR LESS THAN THE AMOUNT QUANTIFIED FOR BIDDING PURPOSES.

CAUTION UNDERGROUND UTILITIES
2 WORKING DAYS
BEFORE YOU DIG
CALL 1–800–362–2764
OHIO UTILITY PROTECTION SERVICE
CALL NON–SERVICE FACILITY
OWNERS DIRECT

PROFESSIONAL STAMP

STATE OF OHIO
HARVEY M. GLICKENSTEIN
E-56186
REGISTERED PROFESSIONAL ENGINEER

SIGN:

DATE:

CONTRACT DRAWING

PRINTS NOT BEARING THIS STAMP WERE MADE PRIOR TO ADVERTISING FOR BIDS AND ARE TO BE CONSIDERED OBSOLETE FOR CONTRACT PURPOSES.

Department of Transportation and Engineering

City of Cincinnati
City Hall
801 Plum Street
Cincinnati, Ohio 45202

CINCINNATI STREETCAR

TRACK AND CABLE PLAN
RACE STREET AND TWELFTH STREET

Revisions

No.			

Drawn by LP	Designed by GM	Checked by HG	Reviewed by JTB
Date 12/20/2011	Date 12/20/2011	Date 12/20/2011	Date 12/20/2011

Consultant

PB HDR

File Number

ACC No. 23126

G-SD-1008

$PLTDRV$$
T:\29014a_Cincinnati.Street.Car\SIGNALS\S_G-SD-1008.dgn
12/19/2011 11:39:08 AM

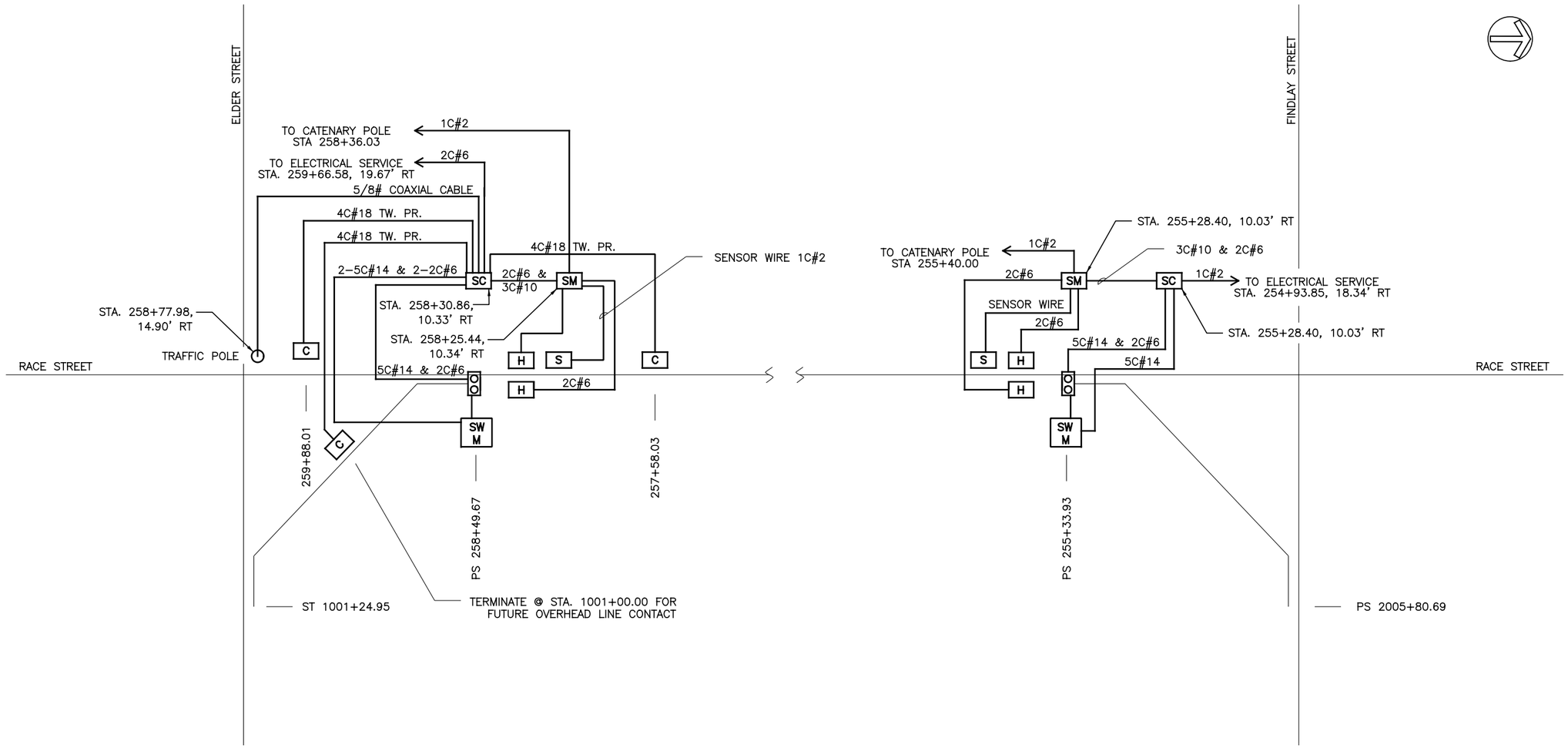

NOTE:

1. ANY EXISTING SIDEWALK/DRIVEWAY/CURB OR UTILITY DAMAGED AS A RESULT OF CONSTRUCTION OPERATIONS ARE TO BE REPAIRED/REPLACED, IN KIND, BY THE CONTRACTOR AT HIS EXPENSE. THIS INCLUDES THE REMOVAL, STORAGE, AND RE-INSTALLATION OF ANY SIDEWALK/DRIVEWAY PAVERS AND GRANITE CURBS. THE CONTRACTOR IS RESPONSIBLE FOR OBTAINING AND INSTALLING REPLACEMENT PAVERS AND CURBS AS REQUIRED. THE CONTRACTOR MUST OBTAIN APPROVAL FROM THE CITY'S ENGINEER FOR THE TYPE AND COLOR OF THE REPLACEMENT PAVERS.

   THE EXCEPTION TO THIS NOTE IS THE SIDEWALK, CURB AND ANY BEHIND THE CURB UTILITY DISTURBANCE FOR OCS AND SIGNAL POLE INSTALLATION. A DISTANCE OF SIX FEET BEHIND THE CURB AND 15 FEET ON EITHER SIDE OF PROPOSED OCS POLES AND SIGNAL POLES (INCLUDING ANY DISTURBANCE TO THE EXISTING CURB) HAS BEEN QUANTIFIED FOR BIDDING PURPOSES. THE PREVIOUSLY DESCRIBED BEHIND THE CURB UTILITY DISTURBANCES ARE PRIMARILY, BUT NOT LIMITED TO, LIGHTING, TRAFFIC CONDUIT, AND PULLBOX RELOCATIONS WHICH WILL INCLUDE ALL NEW WIRING AS REQUIRED. THE CITY'S ENGINEER WILL DETERMINE ACTUAL PAY LIMITS FOR THIS WORK. NO ADDITIONAL INCREASE TO THE UNIT COST WILL BE ALLOWED FOR THIS WORK IF THE QUANTITIES ARE MORE OR LESS THAN THE AMOUNT QUANTIFIED FOR BIDDING PURPOSES.

CAUTION UNDERGROUND UTILITIES
2 WORKING DAYS
BEFORE YOU DIG
CALL 1-800-362-2764
OHIO UTILITY PROTECTION SERVICE
CALL NON-SERVICE FACILITY
OWNERS DIRECT

PROFESSIONAL STAMP

STATE OF OHIO
HARVEY M. GLICKENSTEIN
E-56186
REGISTERED PROFESSIONAL ENGINEER

SIGN:

DATE:

CONTRACT DRAWING

PRINTS NOT BEARING THIS STAMP WERE MADE PRIOR TO ADVERTISING FOR BIDS AND ARE TO BE CONSIDERED OBSOLETE FOR CONTRACT PURPOSES.

Department of Transportation and Engineering

City of Cincinnati
City Hall
801 Plum Street
Cincinnati, Ohio 45202

CINCINNATI STREETCAR

TRACK AND CABLE PLAN
RACE STREET AND ELDER / FINDLAY STREET

Revisions

No.				

Drawn by LP	Date 12/20/2011
Designed by GM	Date 12/20/2011
Checked by HG	Date 12/20/2011
Reviewed by JTB	Date 12/20/2011

Consultant

PB HDR

File Number

ACC No. 23126

G-SD-1009

$PLTDRV$$
T:\290140_Cincinnati Street Car\SIGNALS\S_G-SD-1009.dgn
12/19/2011 11:41:34 AM

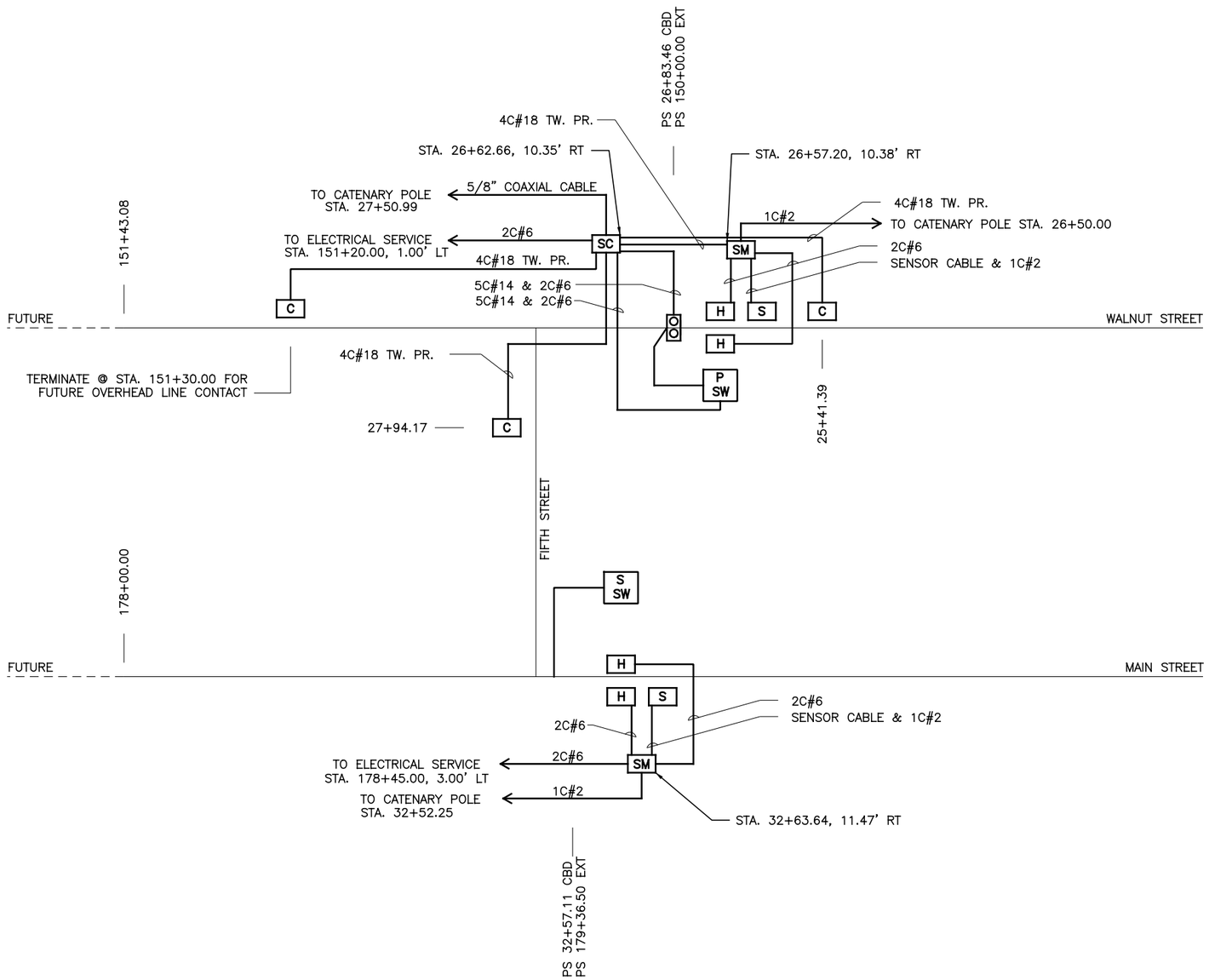

NOTE:

1. ANY EXISTING SIDEWALK/DRIVEWAY/CURB OR UTILITY DAMAGED AS A RESULT OF CONSTRUCTION OPERATIONS ARE TO BE REPAIRED/REPLACED, IN KIND, BY THE CONTRACTOR AT HIS EXPENSE. THIS INCLUDES THE REMOVAL, STORAGE, AND RE-INSTALLATION OF ANY SIDEWALK/DRIVEWAY PAVERS AND GRANITE CURBS. THE CONTRACTOR IS RESPONSIBLE FOR OBTAINING AND INSTALLING REPLACEMENT PAVERS AND CURBS AS REQUIRED. THE CONTRACTOR MUST OBTAIN APPROVAL FROM THE CITY'S ENGINEER FOR THE TYPE AND COLOR OF THE REPLACEMENT PAVERS.

   THE EXCEPTION TO THIS NOTE IS THE SIDEWALK, CURB AND ANY BEHIND THE CURB UTILITY DISTURBANCE FOR OCS AND SIGNAL POLE INSTALLATION. A DISTANCE OF SIX FEET BEHIND THE CURB AND 15 FEET ON EITHER SIDE OF PROPOSED OCS POLES AND SIGNAL POLES (INCLUDING ANY DISTURBANCE TO THE EXISTING CURB) HAS BEEN QUANTIFIED FOR BIDDING PURPOSES. THE PREVIOUSLY DESCRIBED BEHIND THE CURB UTILITY DISTURBANCES ARE PRIMARILY, BUT NOT LIMITED TO, LIGHTING, TRAFFIC CONDUIT, AND PULLBOX RELOCATIONS WHICH WILL INCLUDE ALL NEW WIRING AS REQUIRED. THE CITY'S ENGINEER WILL DETERMINE ACTUAL PAY LIMITS FOR THIS WORK. NO ADDITIONAL INCREASE TO THE UNIT COST WILL BE ALLOWED FOR THIS WORK IF THE QUANTITIES ARE MORE OR LESS THAN THE AMOUNT QUANTIFIED FOR BIDDING PURPOSES.

CAUTION UNDERGROUND UTILITIES
2 WORKING DAYS
BEFORE YOU DIG
CALL 1-800-362-2764
OHIO UTILITY PROTECTION SERVICE
CALL NON-SERVICE FACILITY
OWNERS DIRECT

PROFESSIONAL STAMP

STATE OF OHIO
HARVEY M. GLICKENSTEIN
E-56186
REGISTERED PROFESSIONAL ENGINEER

SIGN:

DATE:

CONTRACT DRAWING

PRINTS NOT BEARING THIS STAMP WERE MADE PRIOR TO ADVERTISING FOR BIDS AND ARE TO BE CONSIDERED OBSOLETE FOR CONTRACT PURPOSES.

Department of Transportation and Engineering

City of Cincinnati
City Hall
801 Plum Street
Cincinnati, Ohio 45202

CINCINNATI STREETCAR

TRACK AND CABLE PLAN
MAIN / WALNUT STREET AND FIFTH STREET

Revisions

No.		

Drawn by LP	Date 12/20/2011
Designed by GM	Date 12/20/2011
Checked by HG	Date 12/20/2011
Reviewed by JTB	Date 12/20/2011

Consultant

PB HDR

File Number

ACC No. 23126

G-SD-1010

$PLTDRV$$
T:\290144_Cincinnati.Street.Car\SIGNALS\S_G-SD-1010.dgn
12/19/2011 11:45:47 AM

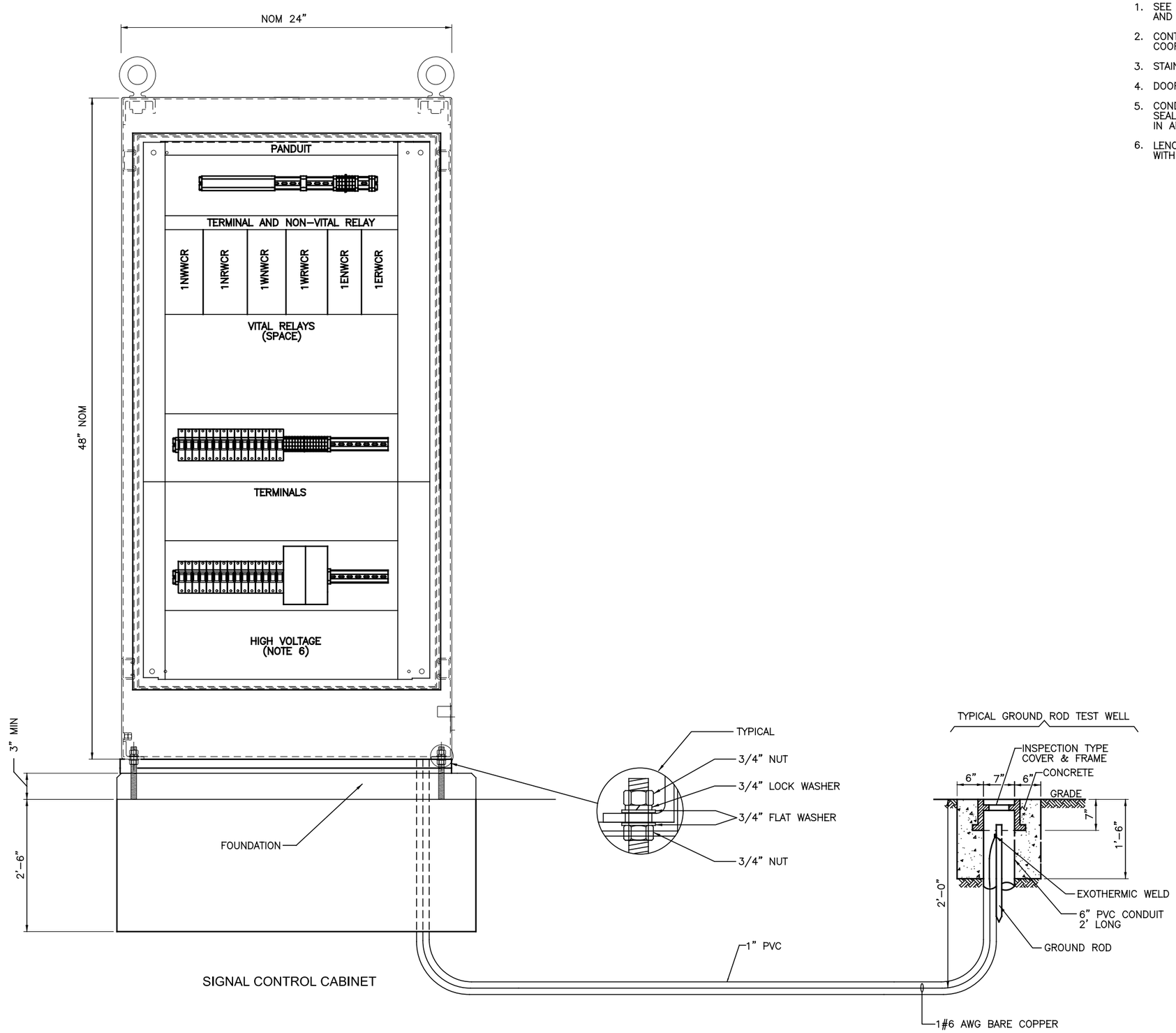

NOTES:

1. SEE ELECTRICAL DRAWINGS FOR CONDUIT ROUTING AND FOUNDATION.
2. CONTRACTOR TO SIZE ALL MATERIAL EQUIPMENT AND COORDINATE WITH FOUNDATION SUPPLIES.
3. STAINLESS ENCLOSURE OR APPROVED EQUAL.
4. DOOR TO OPEN 180°.
5. CONDUIT ENTRANCES AND CONDUITS ARE TO BE SEALED TO PREVENT ENTRANCE OF RODENTS, IN AN APPROVED MANNER.
6. LENOX PLASTIC COVER OVER HIGH VOLTAGE SECTION WITH HIGH VOLTAGE LABEL.

CAUTION UNDERGROUND UTILITIES
2 WORKING DAYS
BEFORE YOU DIG
CALL 1-800-362-2764
OHIO UTILITY PROTECTION SERVICE
CALL NON-SERVICE FACILITY
OWNERS DIRECT

PROFESSIONAL STAMP

STATE OF OHIO
HARVEY M. GLICKENSTEIN
E-56186
REGISTERED PROFESSIONAL ENGINEER

SIGN:
DATE:

CONTRACT DRAWING

PRINTS NOT BEARING THIS STAMP WERE MADE PRIOR TO ADVERTISING FOR BIDS AND ARE TO BE CONSIDERED OBSOLETE FOR CONTRACT PURPOSES.

Department of Transportation and Engineering

City of Cincinnati
City Hall
801 Plum Street
Cincinnati, Ohio 45202

CINCINNATI STREETCAR

SIGNAL CONTROL CABINET LAYOUT-
RACE STREET AND TWELFTH STREET

Revisions

No.				

Date 12/20/2011	Date 12/20/2011	Date 12/20/2011	Date 12/20/2011
Drawn by LP	Designed by GM	Checked by HG	Reviewed by JTB

Consultant

PB HDR

File Number

ACC No. 23126

G-SD-1015

$PLTDRVS$
T:\290144_Cincinnati Street Car\SIGNALS\S_G-SD-1015.dgn
12/16/2011 12:34:56 PM

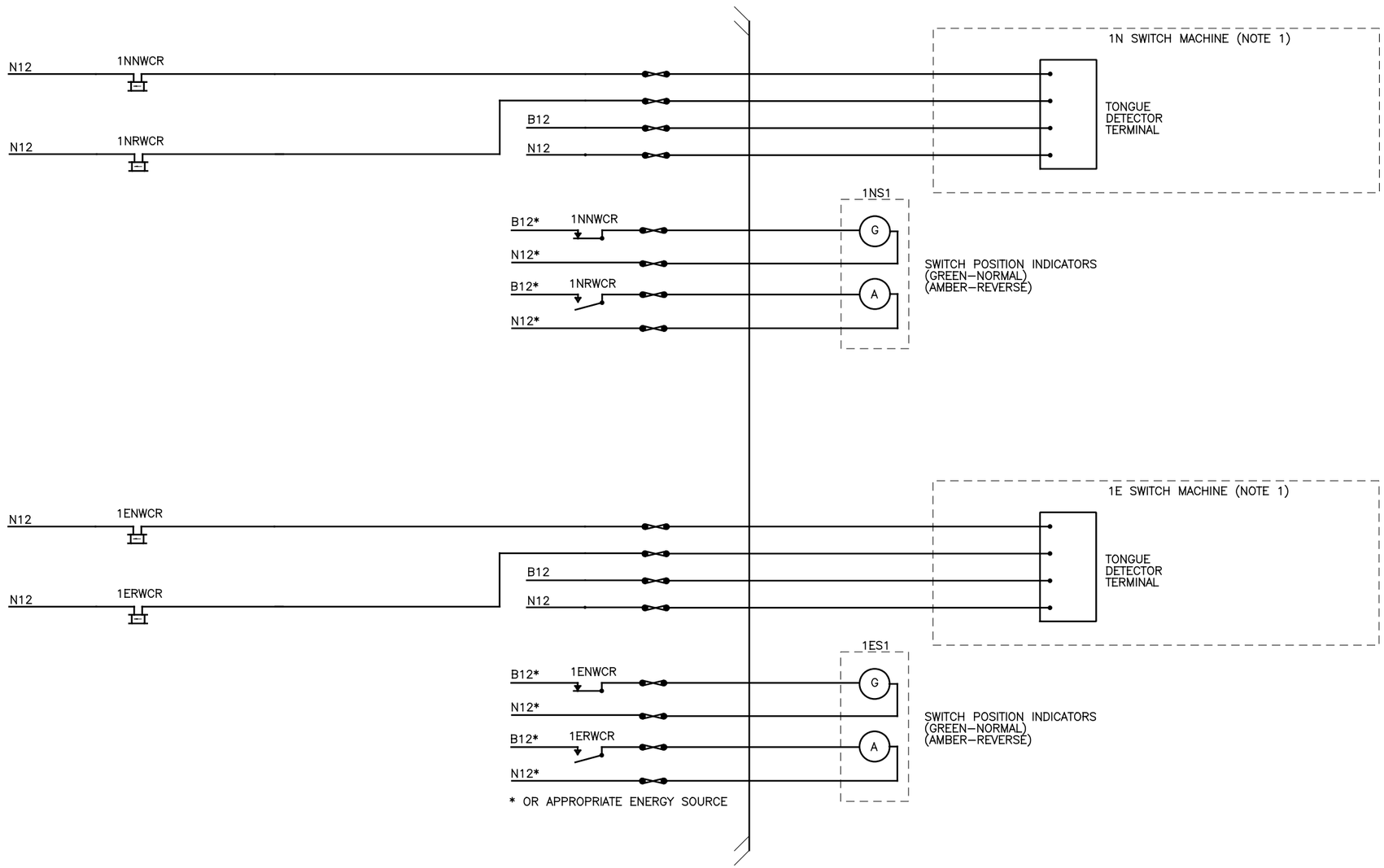

NOTES:

1. SEE TRACKWORK DRAWINGS FOR DETAILS

CAUTION UNDERGROUND UTILITIES
2 WORKING DAYS
BEFORE YOU DIG
CALL 1–800–362–2764
OHIO UTILITY PROTECTION SERVICE
CALL NON–SERVICE FACILITY
OWNERS DIRECT

PROFESSIONAL STAMP

STATE OF OHIO
HARVEY M. GLICKENSTEIN
E-56186
REGISTERED PROFESSIONAL ENGINEER

SIGN:

DATE:

CONTRACT DRAWING

PRINTS NOT BEARING THIS STAMP WERE MADE PRIOR TO ADVERTISING FOR BIDS AND ARE TO BE CONSIDERED OBSOLETE FOR CONTRACT PURPOSES.

Department of Transportation and Engineering

City of Cincinnati
City Hall
801 Plum Street
Cincinnati, Ohio 45202

CINCINNATI STREETCAR

SWITCH AND INDICATION CIRCUITS–
RACE AND TWELFTH STREET

Revisions

No.		

Date 12/20/2011
Date 12/20/2011
Date 12/20/2011
Date 12/20/2011

Drawn by ND
Designed by GM
Checked by HG
Reviewed by JTB

Consultant

PB HDR

File Number

ACC No. 23126

G-SD-1016

$PLTDRVS$
T:\290144_Cincinnati Street Car\SIGNALS\S_G-SD-1016.dgn
12:34:57 PM
12/16/2011

NOTES:

1. INTRA MODULE WIRING #24 SOLID AND INTRA RACK WIRING #20 STRANDED, UNLESS OTHERWISE NOTED.
2. ALL 240/120 VOLT MODULE CIRCUITS TO BE HARNESSED SEPARATELY. FOR WIRE WRAP MODULE USE #20 SOLID WIRES.
3. POWER INDICATOR SHALL BE REQUIRED IF DC POWER SUPPLY HAS NO POWER INDICATION.
4. CONTRACTOR SHALL SIZE FUSES AND CIRCUIT BREAKERS IN FINAL DESIGN.

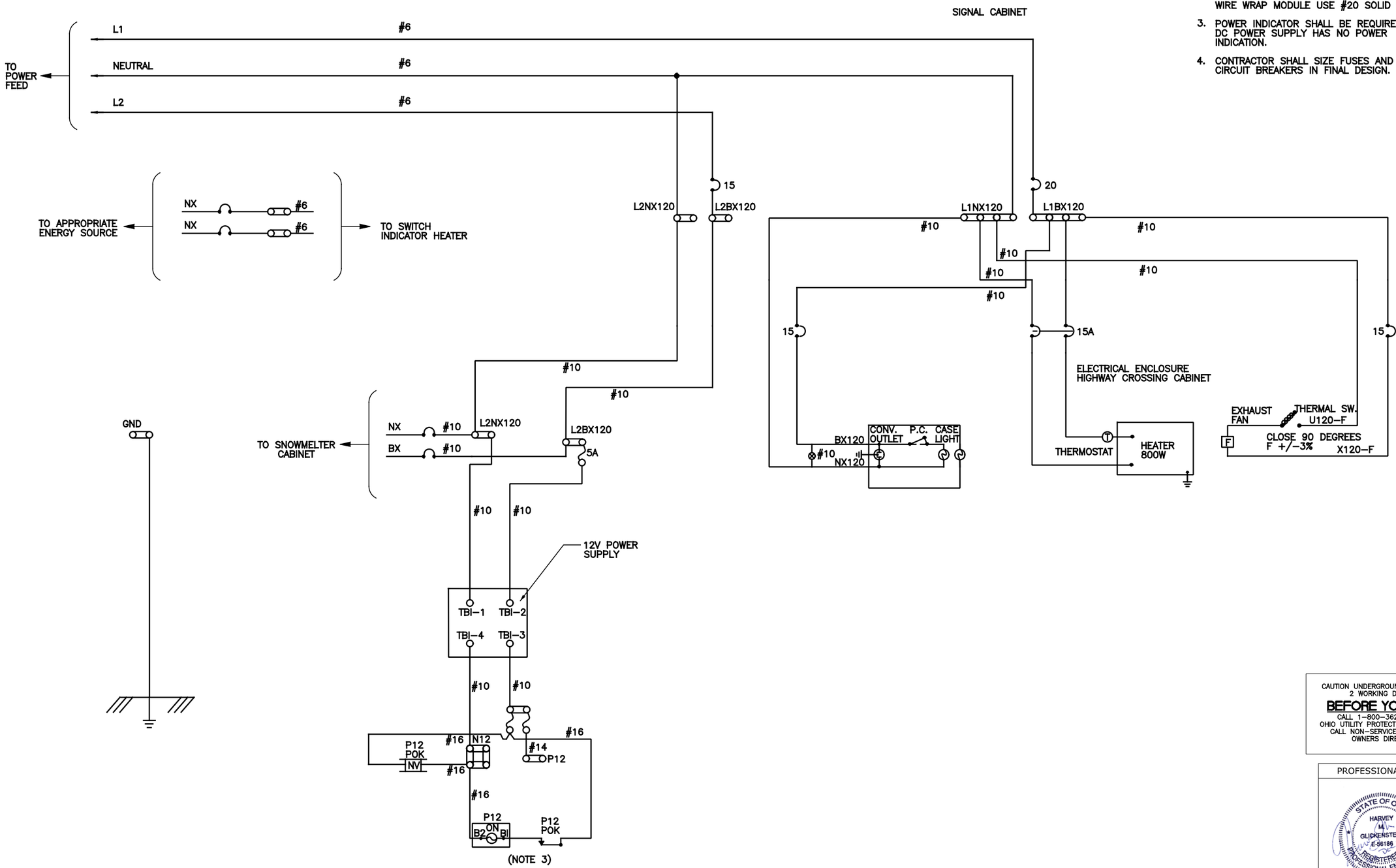

CAUTION UNDERGROUND UTILITIES
2 WORKING DAYS
BEFORE YOU DIG
CALL 1-800-362-2764
OHIO UTILITY PROTECTION SERVICE
CALL NON-SERVICE FACILITY OWNERS DIRECT

PROFESSIONAL STAMP

STATE OF OHIO
HARVEY M. GLICKENSTEIN
E-56186
REGISTERED PROFESSIONAL ENGINEER

SIGN:
DATE:

CONTRACT DRAWING

PRINTS NOT BEARING THIS STAMP WERE MADE PRIOR TO ADVERTISING FOR BID, AND ARE TO BE CONSIDERED OBSOLETE FOR CONTRACT PURPOSES.

Department of Transportation and Engineering

City of Cincinnati
City Hall
801 Plum Street
Cincinnati, Ohio 45202

CINCINNATI STREETCAR

POWER DISTRIBUTION CIRCUIT
RACE AND TWELFTH STREET

Revisions

No.				

Drawn by SB	Date 12/20/2011
Designed by GM	Date 12/20/2011
Checked by HG	Date 12/20/2011
Reviewed by JTB	Date 12/20/2011

Consultant

PB HDR

File Number

ACC No. 23126

G-SD-1017

$PLTDRVS$
T:\290144_Cincinnati Street Car\SIGNALS\S_G-SD-1017.dgn
12:34:58 PM
12/16/2011

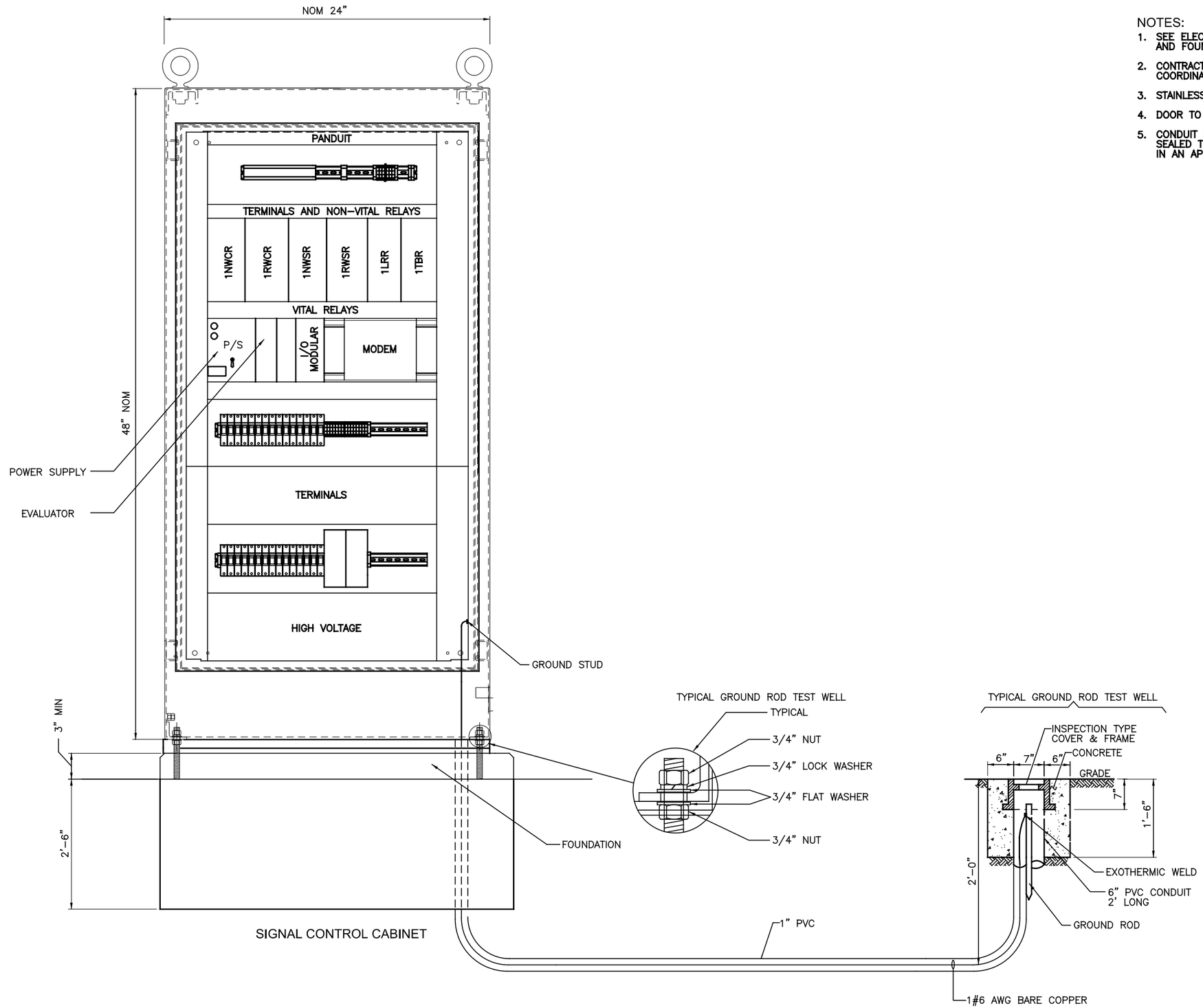

NOTES:

1. SEE ELECTRICAL DRAWINGS FOR CONDUIT ROUTING AND FOUNDATION.
2. CONTRACTOR TO SIZE ALL MATERIAL EQUIPMENT AND COORDINATE WITH FOUNDATION SUPPLIES.
3. STAINLESS ENCLOSURE OR APPROVED EQUAL.
4. DOOR TO OPEN 180°.
5. CONDUIT ENTRANCES AND CONDUITS ARE TO BE SEALED TO PREVENT ENTRANCE OF RODENTS, IN AN APPROVED MANNER.

CAUTION UNDERGROUND UTILITIES
2 WORKING DAYS
BEFORE YOU DIG
CALL 1-800-362-2764
OHIO UTILITY PROTECTION SERVICE
CALL NON-SERVICE FACILITY OWNERS DIRECT

PROFESSIONAL STAMP

STATE OF OHIO
HARVEY M. GLICKENSTEIN
E-56186
REGISTERED PROFESSIONAL ENGINEER

SIGN:

DATE:

CONTRACT DRAWING

PRINTS NOT BEARING THIS STAMP WERE MADE PRIOR TO ADVERTISING FOR BID, AND ARE TO BE CONSIDERED OBSOLETE FOR CONTRACT PURPOSES.

Department of Transportation and Engineering

City of Cincinnati
City Hall
801 Plum Street
Cincinnati, Ohio 45202

CINCINNATI STREETCAR

SIGNAL CONTROL CABINET LAYOUT-
RACE AND ELDER STREET

Revisions

No.		

Drawn by LP	Designed by GM	Checked by HG	Reviewed by JTB
Date 12/20/2011	Date 12/20/2011	Date 12/20/2011	Date 12/20/2011

Consultant

PB HDR

File Number

ACC No. 23126

G-SD-1018

$PLTDRV$$
T:\29014a_Cincinnati.Street.Car\SIGNALS\S_G-SD-1018.dgn
12/16/2011 12:34:59 PM

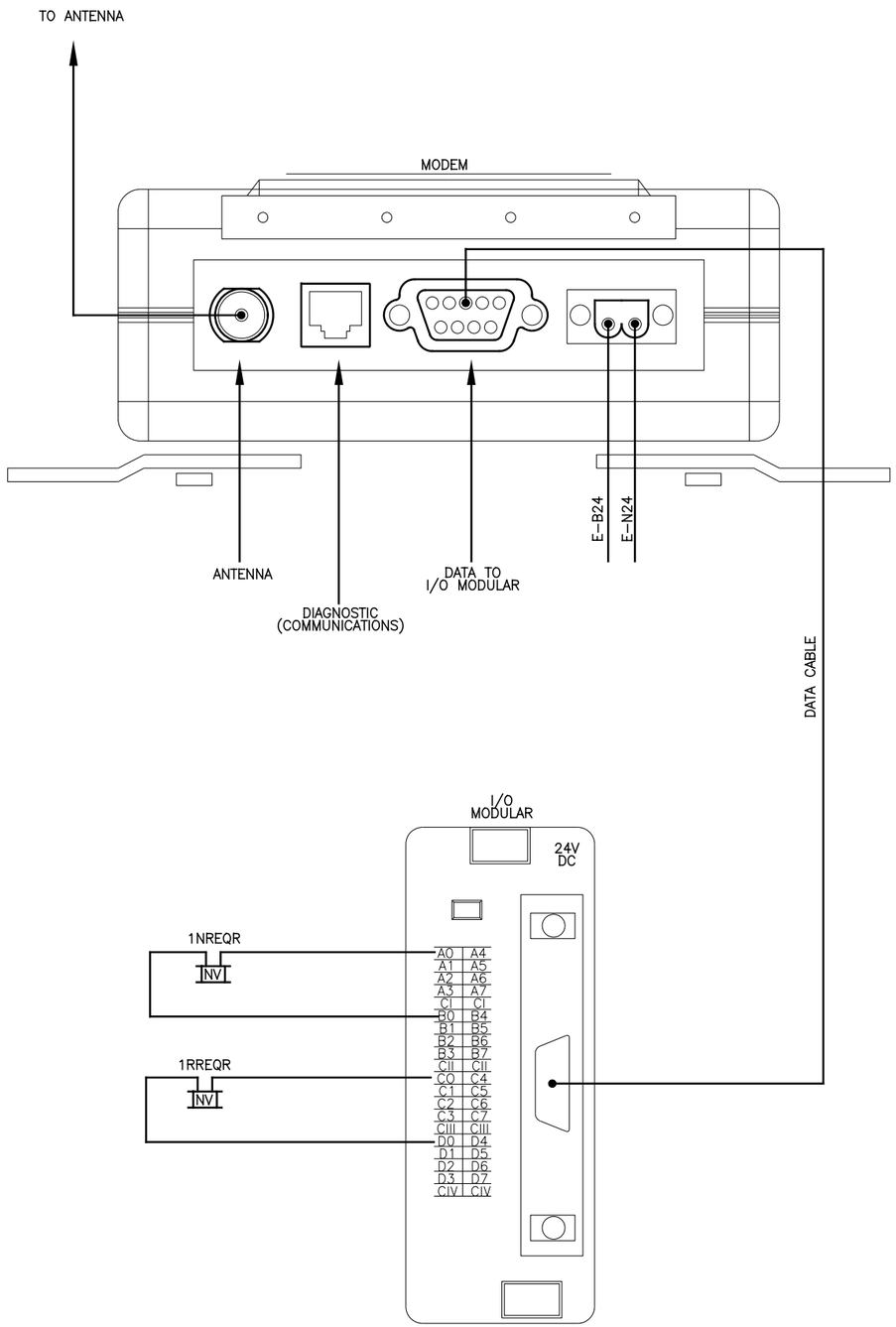

SIGNAL CABINET

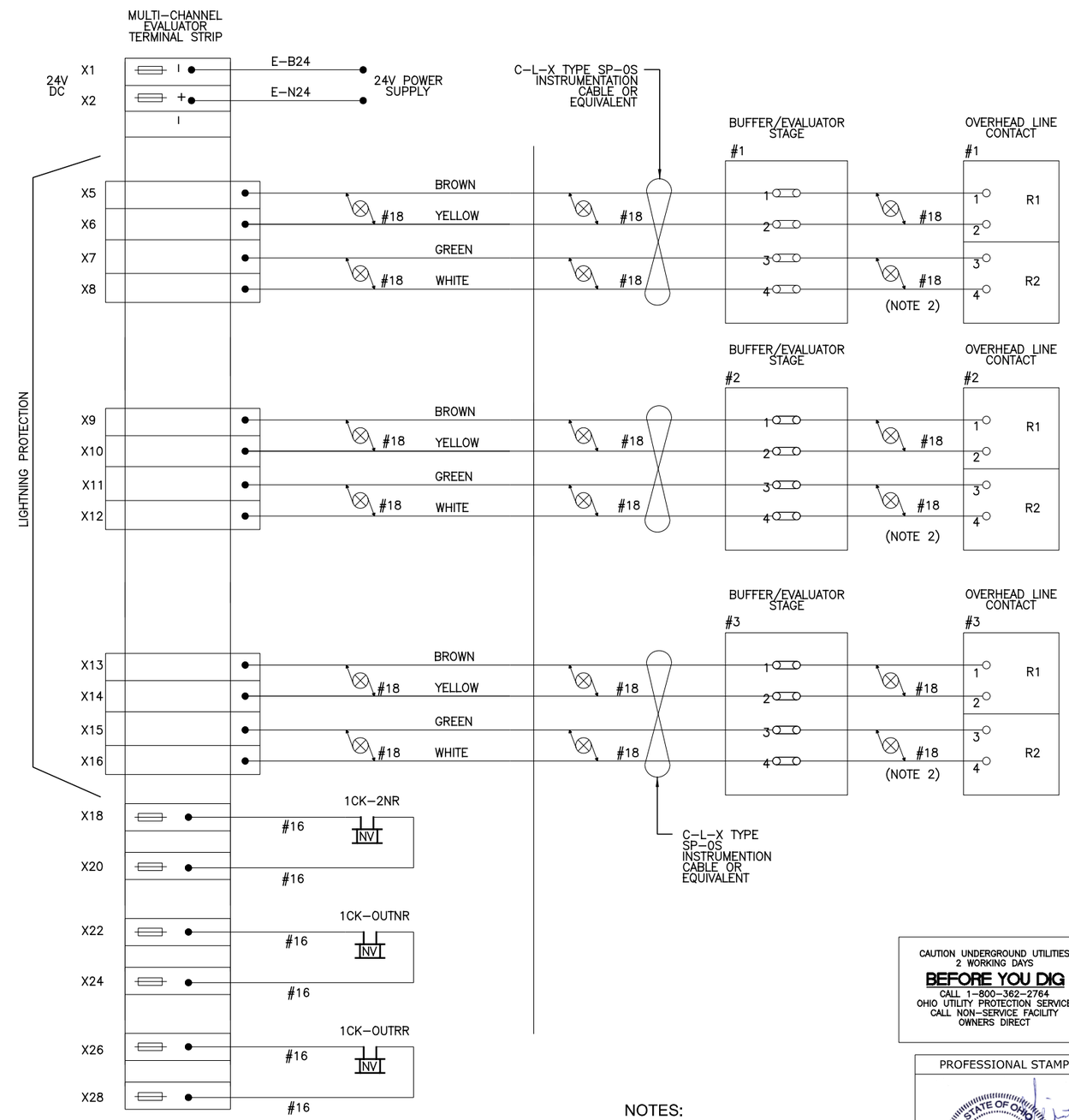

CAUTION UNDERGROUND UTILITIES
2 WORKING DAYS
BEFORE YOU DIG
CALL 1-800-362-2764
OHIO UTILITY PROTECTION SERVICE
CALL NON-SERVICE FACILITY OWNERS DIRECT

NOTES:

1. ALL WIRING #16 EXCEPT AS NOTED.
2. CABLE WILL BE PER MANUFACTURER'S REQUIREMENT.

PROFESSIONAL STAMP

STATE OF OHIO
HARVEY M. GLICKENSTEIN
E-56188
REGISTERED PROFESSIONAL ENGINEER

SIGN:
DATE:

CONTRACT DRAWING

PRINTS NOT BEARING THIS STAMP WERE MADE PRIOR TO ADVERTISING FOR BIDS AND ARE TO BE CONSIDERED OBSOLETE FOR CONTRACT PURPOSES.

Department of Transportation and Engineering

City of Cincinnati
City Hall
801 Plum Street
Cincinnati, Ohio 45202

CINCINNATI STREETCAR

OVERHEAD LINE CONTACT CIRCUIT-
RACE AND ELDER STREET

Revisions

No.	Date
	12/20/2011
	12/20/2011
	12/20/2011
	12/20/2011

Drawn by ND — Date 12/20/2011
Designed by GM — Date 12/20/2011
Checked by HG — Date 12/20/2011
Reviewed by JTB — Date 12/20/2011

Consultant

PB HDR

File Number

ACC No. 23126

G-SD-1019

$PLTDRV$$
T:\290144_Cincinnati.Street.Car\SIGNALS\S_G-SD-1019.dgn
12/16/2011 12:35:00 PM

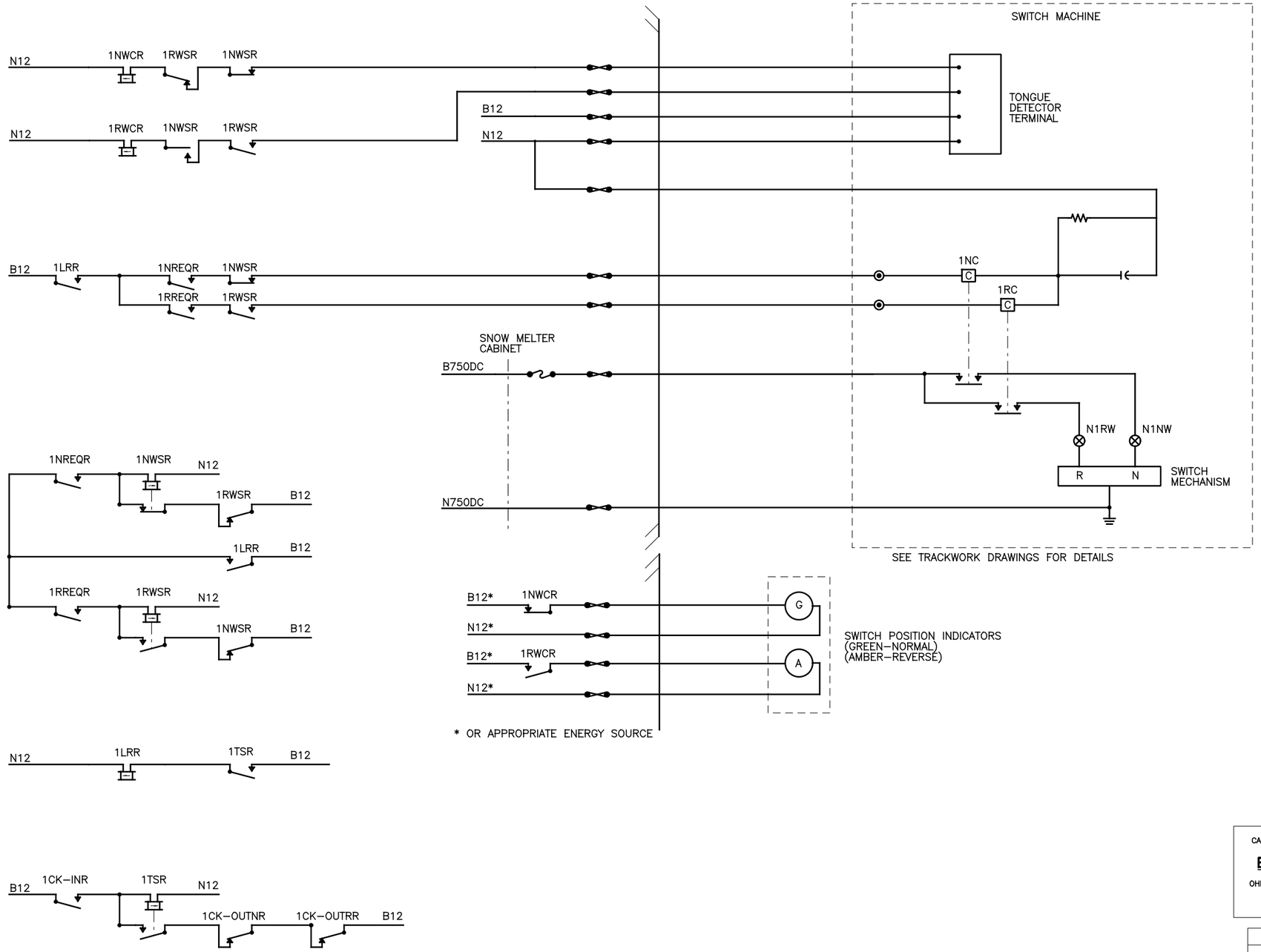

CONTRACT DRAWING

PRINTS NOT BEARING THIS STAMP WERE MADE PRIOR TO ADVERTISING FOR BIDS AND ARE TO BE CONSIDERED OBSOLETE FOR CONTRACT PURPOSES.

Department of Transportation and Engineering

City of Cincinnati
City Hall
801 Plum Street
Cincinnati, Ohio 45202

CINCINNATI STREETCAR

SWITCH AND INDICATION CIRCUITS–
RACE AND ELDER STREET

Revisions

No.		

Drawn by ND	Date 12/20/2011
Designed by GM	Date 12/20/2011
Checked by HG	Date 12/20/2011
Reviewed by JTB	Date 12/20/2011

Consultant

PB HDR

File Number

ACC No. 23126

G-SD-1020

CAUTION UNDERGROUND UTILITIES
2 WORKING DAYS
BEFORE YOU DIG
CALL 1–800–362–2764
OHIO UTILITY PROTECTION SERVICE
CALL NON–SERVICE FACILITY
OWNERS DIRECT

PROFESSIONAL STAMP

STATE OF OHIO
HARVEY M. GLICKENSTEIN
E-56186
REGISTERED PROFESSIONAL ENGINEER

SIGN:

DATE:

$PLTDRV$$
T:\29014a_Cincinnati.Street.Car\SIGNALS\S_G-SD-1020.dgn
12:35:01 PM
12/16/2011

NOTES:

1. INTRA MODULE WIRING #24 SOLID AND INTRA RACK WIRING #20 STRANDED, UNLESS OTHERWISE NOTED.
2. ALL 240/120 VOLT MODULE CIRCUITS TO BE HARNESSED SEPARATELY. FOR WIRE WRAP MODULE USE #20 SOLID WIRES.
3. POWER INDICATOR SHALL BE REQUIRED IF DC POWER SUPPLY HAS NO POWER INDICATION.

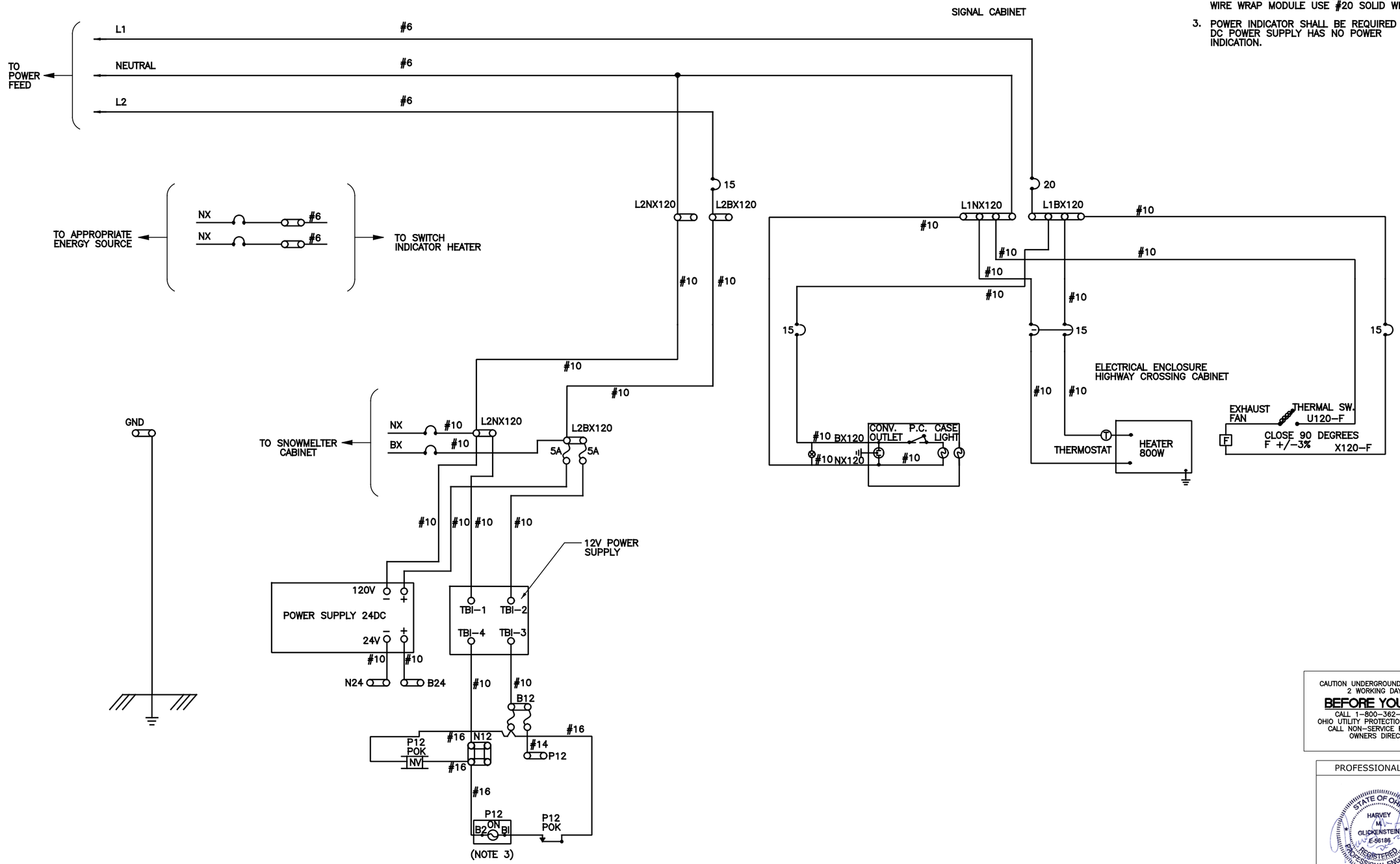

CAUTION UNDERGROUND UTILITIES
2 WORKING DAYS
BEFORE YOU DIG
CALL 1-800-362-2764
OHIO UTILITY PROTECTION SERVICE
CALL NON-SERVICE FACILITY
OWNERS DIRECT

PROFESSIONAL STAMP

STATE OF OHIO
HARVEY M. GLICKENSTEIN
E-56186
REGISTERED PROFESSIONAL ENGINEER

SIGN:

DATE:

CONTRACT DRAWING

PRINTS NOT BEARING THIS STAMP WERE MADE PRIOR TO ADVERTISING FOR BIDS AND ARE TO BE CONSIDERED OBSOLETE FOR CONTRACT PURPOSES.

Department of Transportation and Engineering

City of Cincinnati
City Hall
801 Plum Street
Cincinnati, Ohio 45202

CINCINNATI STREETCAR

POWER DISTRIBUTION CIRCUIT
RACE AND ELDER STREET

Revisions

No.				

Date 12/20/2011	Date 12/20/2011	Date 12/20/2011	Date 12/20/2011
Drawn by SB	Designed by GM	Checked by HG	Reviewed by JTB

Consultant

PB HDR

File Number

ACC No. 23126

G-SD-1021

$PLTDRV$$
T:\29014a_Cincinnati_Street_Car\SIGNALS\S_G-SD-1021.dgn
12:35:02 PM
12/16/2011

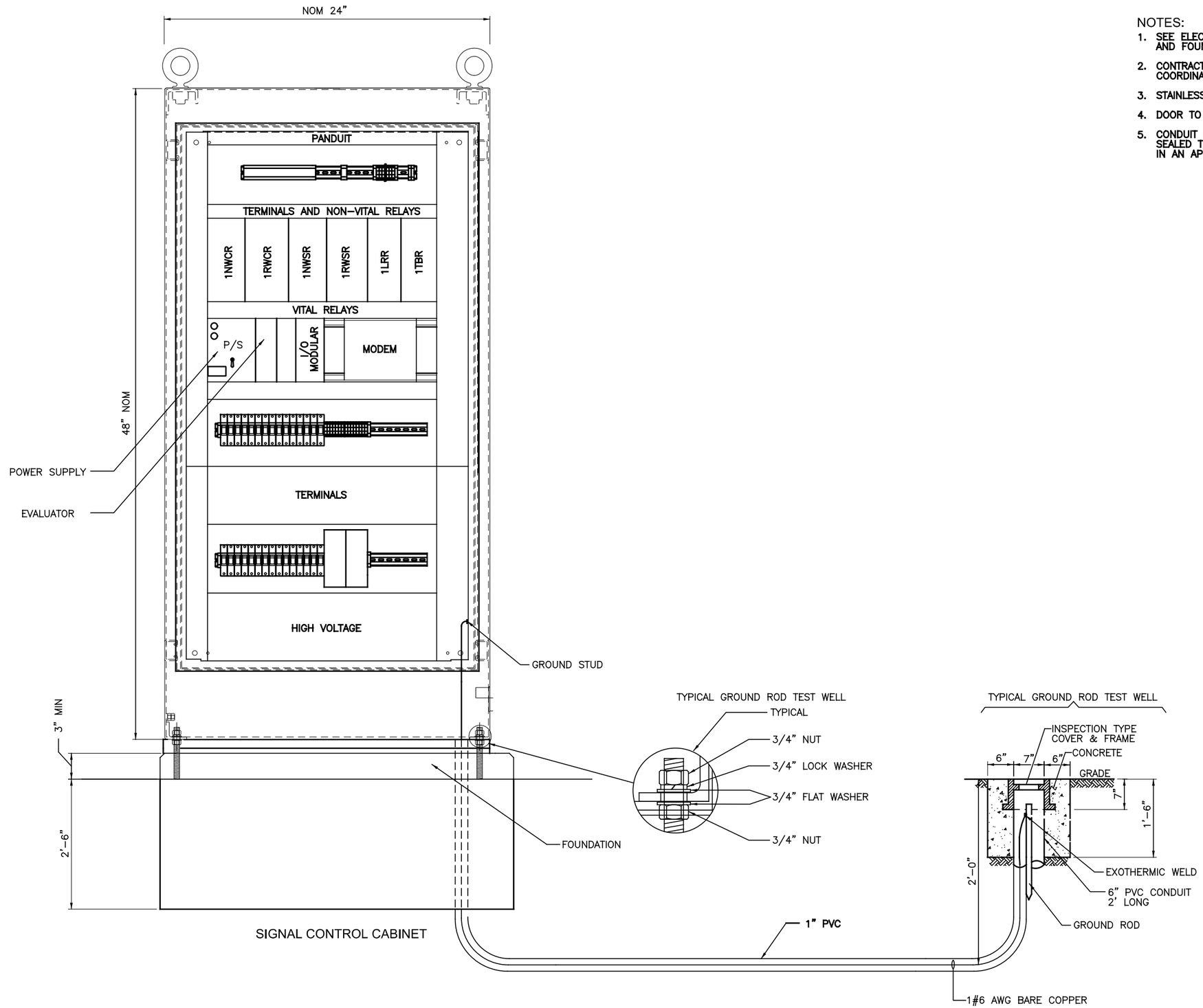

NOTES:

1. SEE ELECTRICAL DRAWINGS FOR CONDUIT ROUTING AND FOUNDATION.
2. CONTRACTOR TO SIZE ALL MATERIAL EQUIPMENT AND COORDINATE WITH FOUNDATION SUPPLIES.
3. STAINLESS ENCLOSURE OR APPROVED EQUAL.
4. DOOR TO OPEN 180°.
5. CONDUIT ENTRANCES AND CONDUITS ARE TO BE SEALED TO PREVENT ENTRANCE OF RODENTS, IN AN APPROVED MANNER.

CAUTION UNDERGROUND UTILITIES
2 WORKING DAYS
BEFORE YOU DIG
CALL 1-800-362-2764
OHIO UTILITY PROTECTION SERVICE
CALL NON-SERVICE FACILITY OWNERS DIRECT

PROFESSIONAL STAMP

STATE OF OHIO
HARVEY M. GLICKENSTEIN
E-56186
REGISTERED PROFESSIONAL ENGINEER

SIGN:

DATE:

CONTRACT DRAWING

PRINTS NOT BEARING THIS STAMP WERE MADE PRIOR TO ADVERTISING FOR BID, AND ARE TO BE CONSIDERED OBSOLETE FOR CONTRACT PURPOSES.

Department of Transportation and Engineering

City of Cincinnati
City Hall
801 Plum Street
Cincinnati, Ohio 45202

CINCINNATI STREETCAR

SIGNAL CONTROL CABINET LAYOUT-
WALNUT AND FIFTH STREET

Revisions

No.				

Drawn by LP	Date 12/20/2011	Designed by GM	Date 12/20/2011
Checked by HG	Date 12/20/2011	Reviewed by JTB	Date 12/20/2011

Consultant

PB HDR

File Number

ACC No. 23126

G-SD-1022

$PLTDRV$$
T:\29014a_Cincinnati.Street.Car\SIGNALS\S_G-SD-1022.dgn
12/16/2011 12:35:03 PM

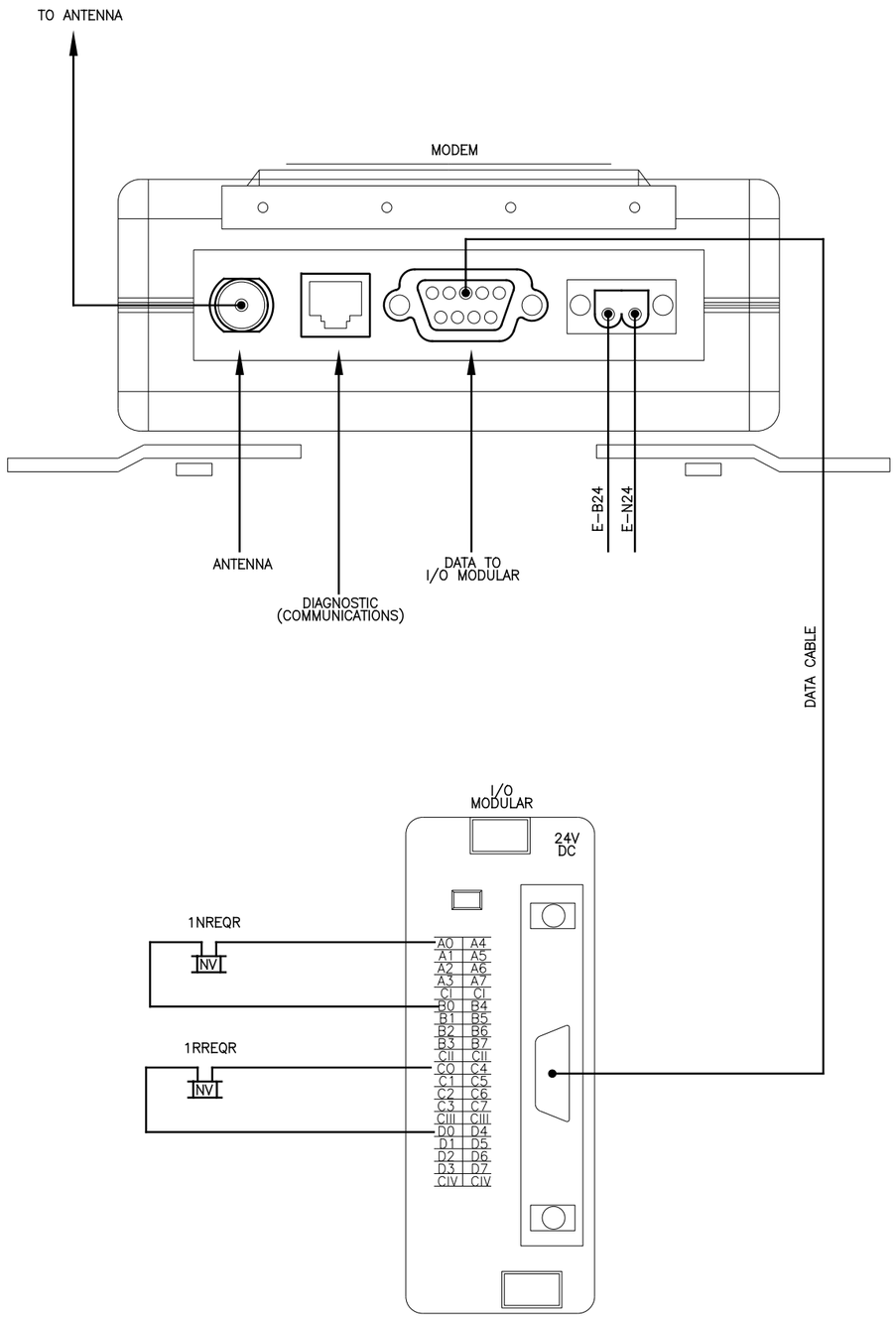

SIGNAL CABINET

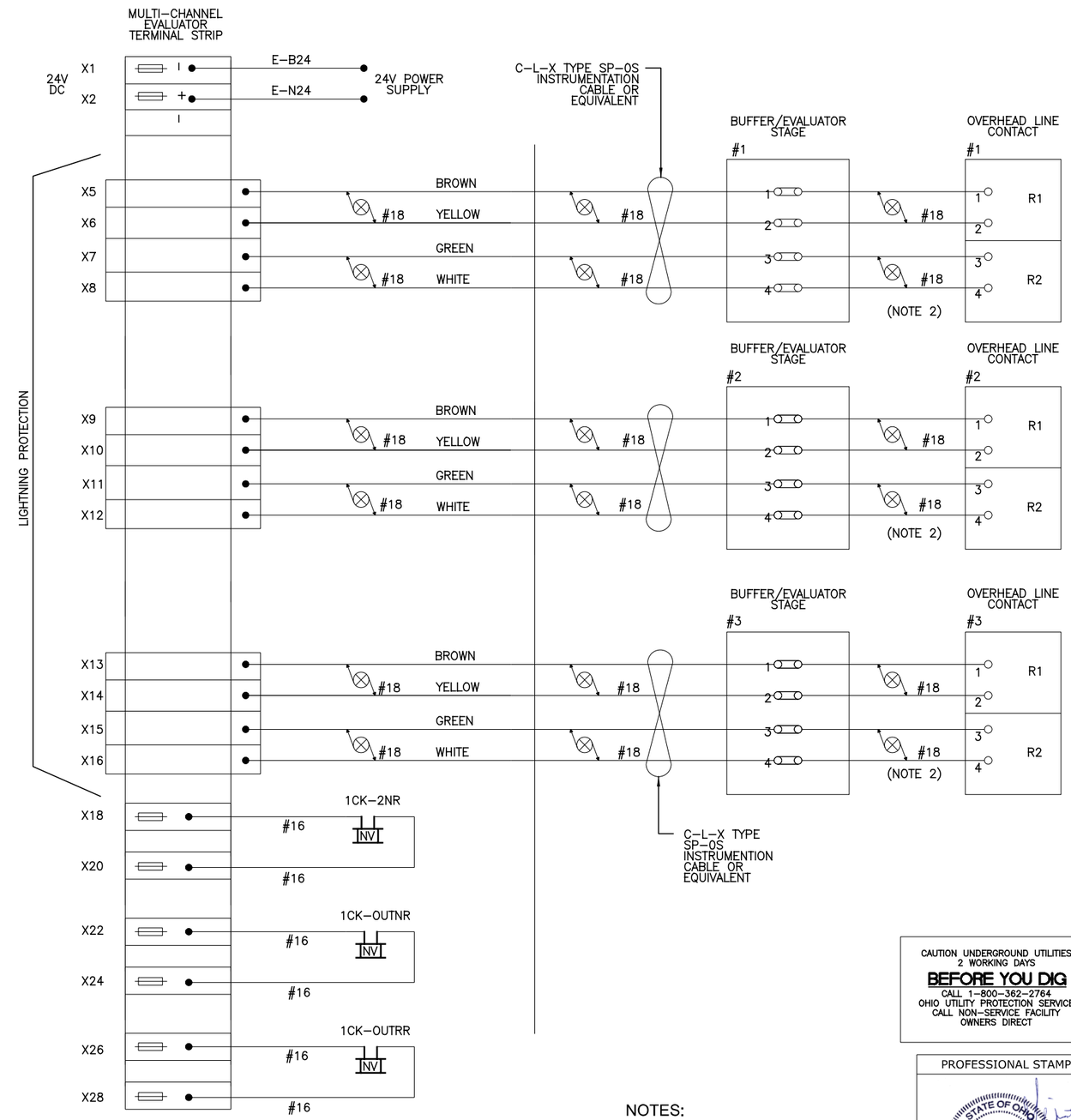

CAUTION UNDERGROUND UTILITIES
2 WORKING DAYS
BEFORE YOU DIG
CALL 1-800-362-2764
OHIO UTILITY PROTECTION SERVICE
CALL NON-SERVICE FACILITY OWNERS DIRECT

NOTES:

1. ALL WIRING #16 EXCEPT AS NOTED.
2. CABLE WILL BE PER MANUFACTURER'S REQUIREMENT.

PROFESSIONAL STAMP

STATE OF OHIO
HARVEY M. GLICKENSTEIN
E-56186
REGISTERED PROFESSIONAL ENGINEER

SIGN:

DATE:

CONTRACT DRAWING

PRINTS NOT BEARING THIS STAMP WERE MADE PRIOR TO ADVERTISING FOR BIDS AND ARE TO BE CONSIDERED OBSOLETE FOR CONTRACT PURPOSES.

Department of Transportation and Engineering

City of Cincinnati
City Hall
801 Plum Street
Cincinnati, Ohio 45202

CINCINNATI STREETCAR

OVERHEAD LINE CONTACT CIRCUIT-
WALNUT AND FIFTH STREET

Revisions

No.				

Date	12/20/2011
Date	12/20/2011
Date	12/20/2011
Date	12/20/2011
Drawn by	ND
Designed by	GM
Checked by	HG
Reviewed by	JTB

Consultant

PB HDR

File Number

ACC No. 23126

G-SD-1023

$PLTDRVS$
T:\290144_Cincinnati Street Car\SIGNALS\S_G-SD-1023.dgn
12/16/2011 12:58:48 PM

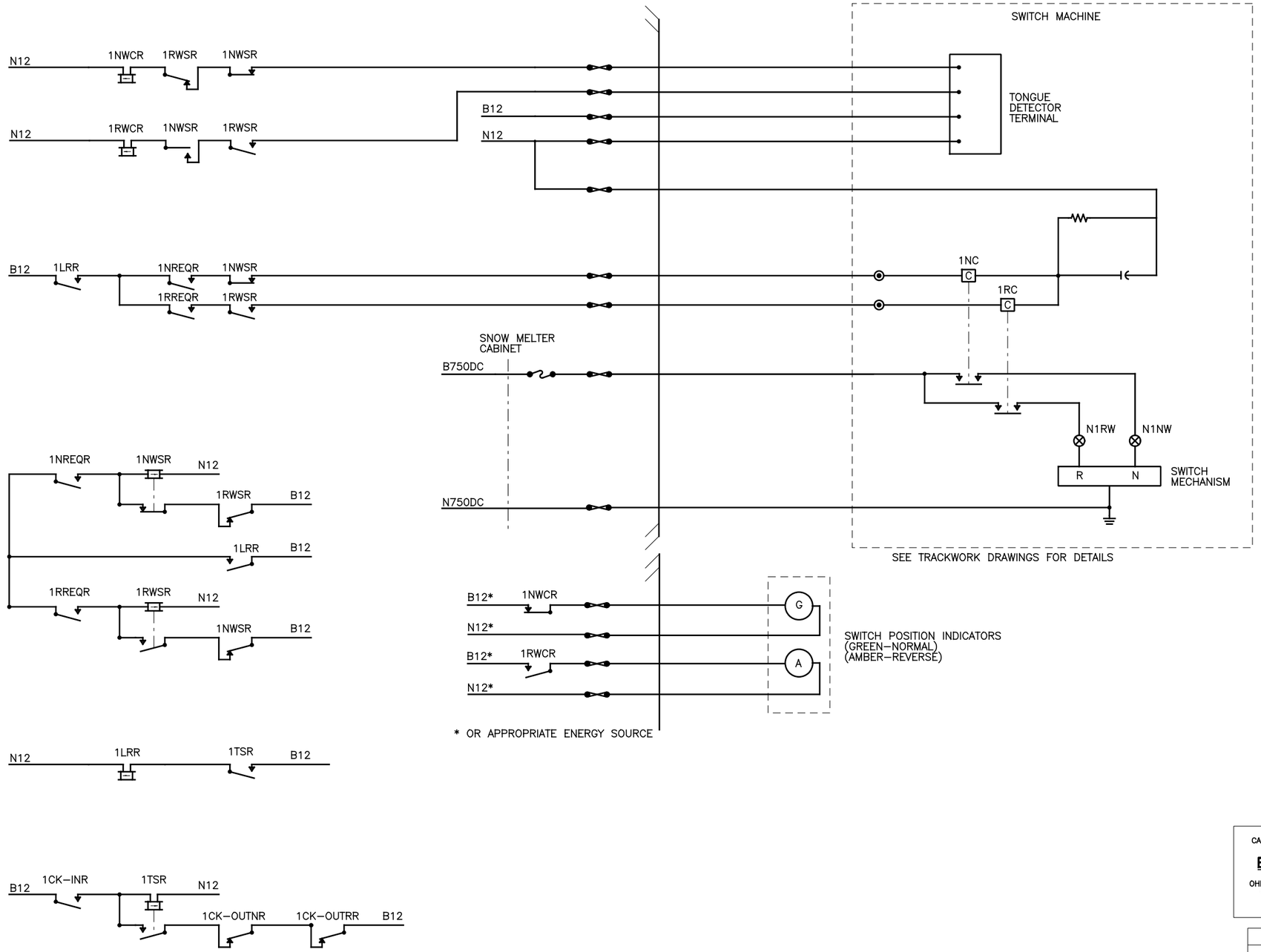

CONTRACT DRAWING

PRINTS NOT BEARING THIS STAMP WERE MADE PRIOR TO ADVERTISING FOR BIDS AND ARE TO BE CONSIDERED OBSOLETE FOR CONTRACT PURPOSES.

Department of Transportation and Engineering

City of Cincinnati
City Hall
801 Plum Street
Cincinnati, Ohio 45202

CINCINNATI STREETCAR

SWITCH AND INDICATION CIRCUITS-
WALNUT AND FIFTH STREET

Revisions

No.				

Drawn by ND	Date 12/20/2011	Designed by GM	Date 12/20/2011
Checked by HG	Date 12/20/2011	Reviewed by JTB	Date 12/20/2011

Consultant

PB HDR

File Number

ACC No. 23126

G-SD-1024

CAUTION UNDERGROUND UTILITIES
2 WORKING DAYS
BEFORE YOU DIG
CALL 1–800–362–2764
OHIO UTILITY PROTECTION SERVICE
CALL NON–SERVICE FACILITY
OWNERS DIRECT

PROFESSIONAL STAMP

STATE OF OHIO
HARVEY M. GLICKENSTEIN
E-56186
REGISTERED PROFESSIONAL ENGINEER

SIGN:

DATE:

$PLTDRV$$
T:\29014a_Cincinnati.Street.Car\SIGNALS\S_G-SD-1024.dgn
12:35:05 PM
12/16/2011

NOTES:

1. INTRA MODULE WIRING #24 SOLID AND INTRA RACK WIRING #20 STRANDED, UNLESS OTHERWISE NOTED.
2. ALL 240/120 VOLT MODULE CIRCUITS TO BE HARNESSED SEPARATELY. FOR WIRE WRAP MODULE USE #20 SOLID WIRES.
3. POWER INDICATOR SHALL BE REQUIRED IF DC POWER SUPPLY HAS NO POWER INDICATION.

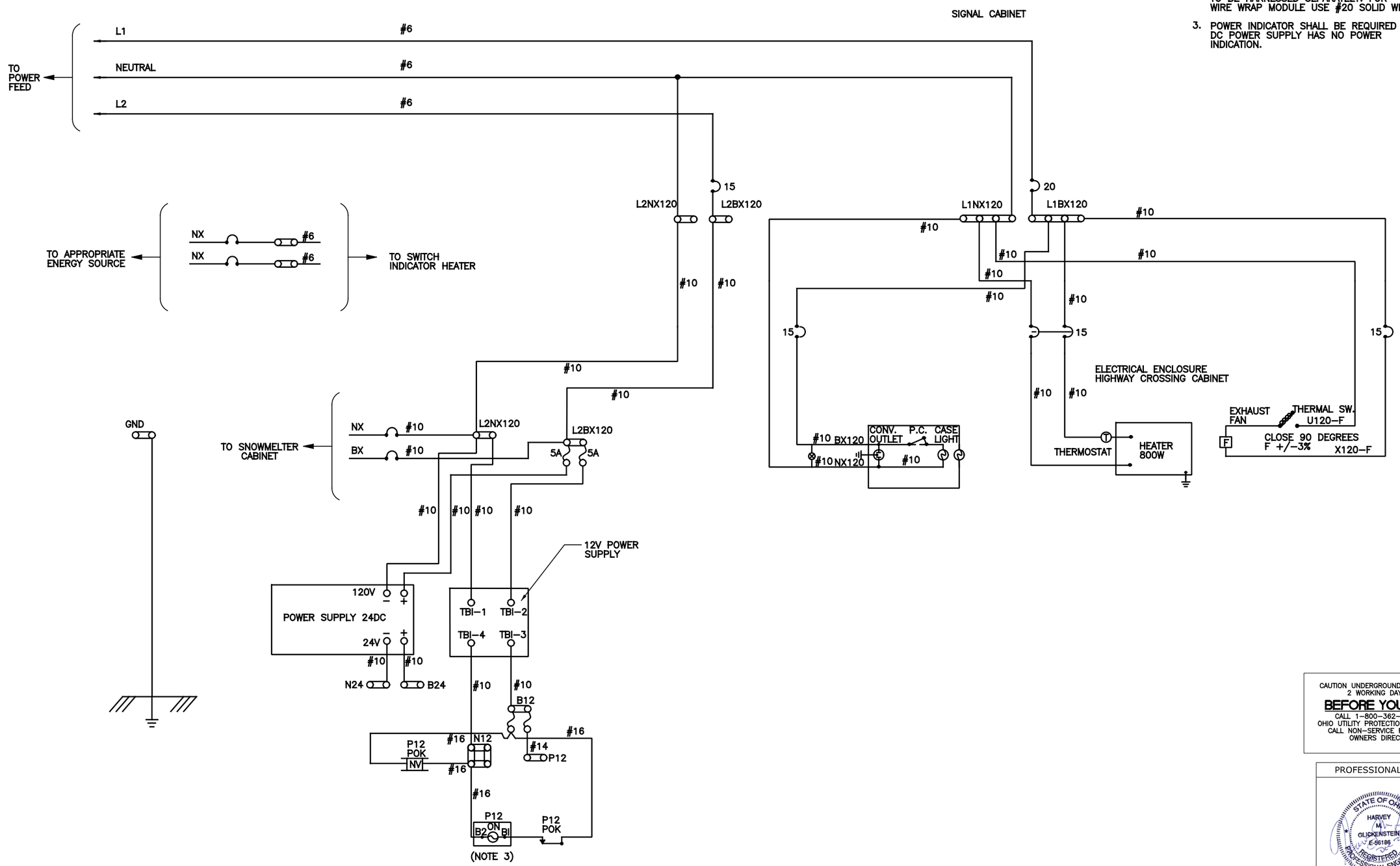

CONTRACT DRAWING

PRINTS NOT BEARING THIS STAMP WERE MADE PRIOR TO ADVERTISING FOR BIDS AND ARE TO BE CONSIDERED OBSOLETE FOR CONTRACT PURPOSES.

Department of Transportation and Engineering

City of Cincinnati
City Hall
801 Plum Street
Cincinnati, Ohio 45202

CINCINNATI STREETCAR

POWER DISTRIBUTION CIRCUIT
WALNUT AND FIFTH STREET

Revisions

No.				

Drawn by SB	Date 12/20/2011
Designed by GM	Date 12/20/2011
Checked by HG	Date 12/20/2011
Reviewed by JTB	Date 12/20/2011

Consultant

PB HDR

File Number

ACC No. 23126

G-SD-1025

CAUTION UNDERGROUND UTILITIES
2 WORKING DAYS
BEFORE YOU DIG
CALL 1-800-362-2764
OHIO UTILITY PROTECTION SERVICE
CALL NON-SERVICE FACILITY OWNERS DIRECT

PROFESSIONAL STAMP

STATE OF OHIO
HARVEY M. GLICKENSTEIN
E-56186
REGISTERED PROFESSIONAL ENGINEER

SIGN:

DATE:

$PLTDRV$
T:\29014a_Cincinnati Street Car\SIGNALS\S_G-SD-1025.dgn
12:35:06 PM
12/16/2011

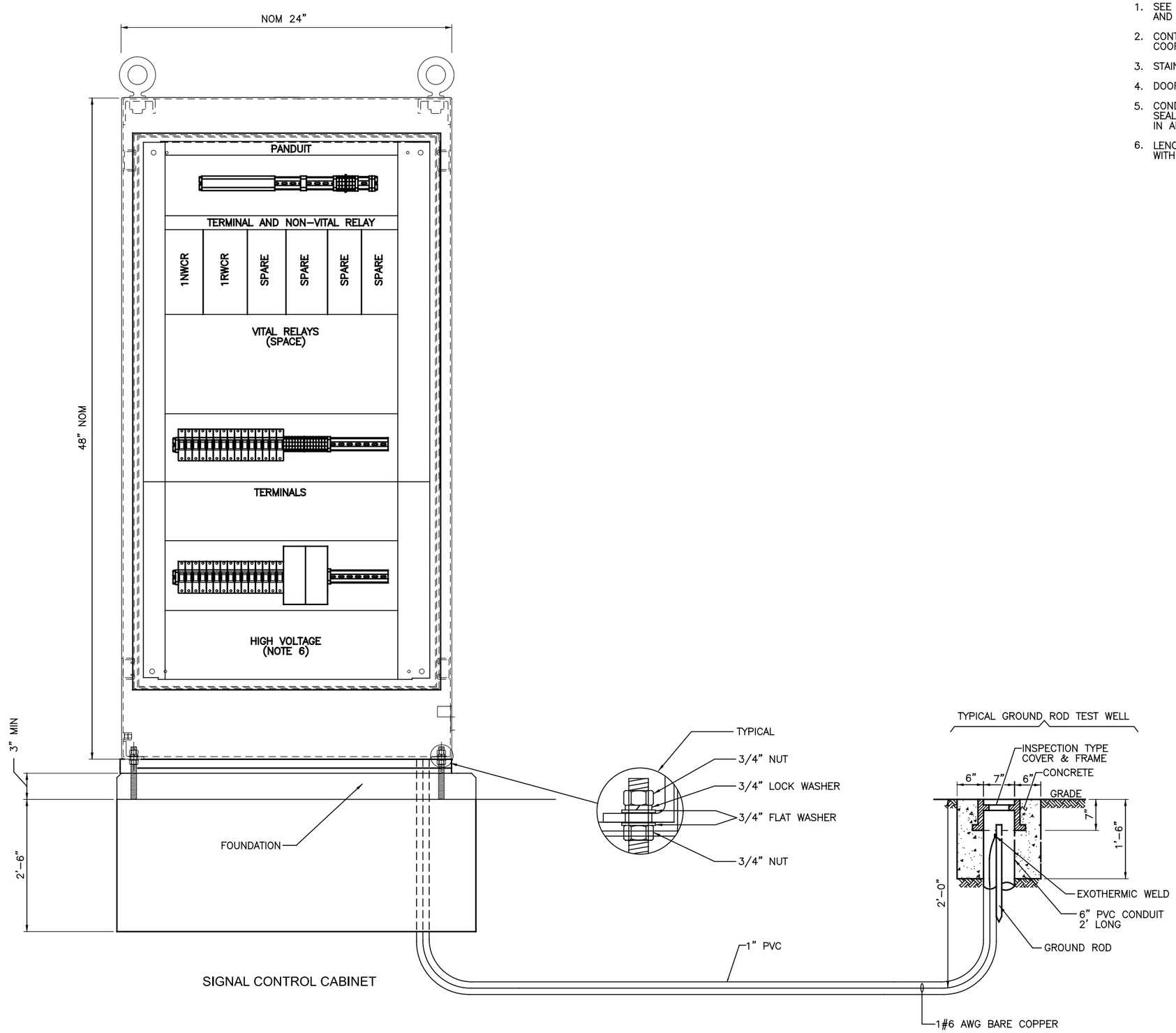

NOTES:

1. SEE ELECTRICAL DRAWINGS FOR CONDUIT ROUTING AND FOUNDATION.
2. CONTRACTOR TO SIZE ALL MATERIAL EQUIPMENT AND COORDINATE WITH FOUNDATION SUPPLIES.
3. STAINLESS ENCLOSURE OR APPROVED EQUAL.
4. DOOR TO OPEN 180°.
5. CONDUIT ENTRANCES AND CONDUITS ARE TO BE SEALED TO PREVENT ENTRANCE OF RODENTS, IN AN APPROVED MANNER.
6. LENOX PLASTIC COVER OVER HIGH VOLTAGE SECTION WITH HIGH VOLTAGE LABEL.

CAUTION UNDERGROUND UTILITIES
2 WORKING DAYS
BEFORE YOU DIG
CALL 1-800-362-2764
OHIO UTILITY PROTECTION SERVICE
CALL NON-SERVICE FACILITY
OWNERS DIRECT

PROFESSIONAL STAMP

STATE OF OHIO
HARVEY M. GLICKENSTEIN
E-56186
REGISTERED PROFESSIONAL ENGINEER

SIGN:

DATE:

CONTRACT DRAWING

PRINTS NOT BEARING THIS STAMP WERE MADE PRIOR TO ADVERTISING FOR BIDS AND ARE TO BE CONSIDERED OBSOLETE FOR CONTRACT PURPOSES.

Department of Transportation and Engineering

City of Cincinnati
City Hall
801 Plum Street
Cincinnati, Ohio 45202

CINCINNATI STREETCAR

SIGNAL CONTROL CABINET LAYOUT-
RACE STREET AND FINDLAY STREET

Revisions

No.				

Date 12/20/2011	Date 12/20/2011	Date 12/20/2011	Date 12/20/2011
Drawn by LP	Designed by GM	Checked by HG	Reviewed by JTB

Consultant

PB HDR

File Number

ACC No. 23126

G-SD-1030

$PLTDRVS$
T:\290144_Cincinnati Street Car\SIGNALS\S_G-SD-1030.dgn
12:35:07 PM
12/16/2011

NOTES:

1. INTRA MODULE WIRING #24 SOLID AND INTRA RACK WIRING #20 STRANDED, UNLESS OTHERWISE NOTED.
2. ALL 240/120 VOLT MODULE CIRCUITS TO BE HARNESSED SEPARATELY. FOR WIRE WRAP MODULE USE #20 SOLID WIRES.
3. POWER INDICATOR SHALL BE REQUIRED IF DC POWER SUPPLY HAS NO POWER INDICATION.
4. CONTRACTOR SHALL SIZE FUSES AND CIRCUIT BREAKERS IN FINAL DESIGN.

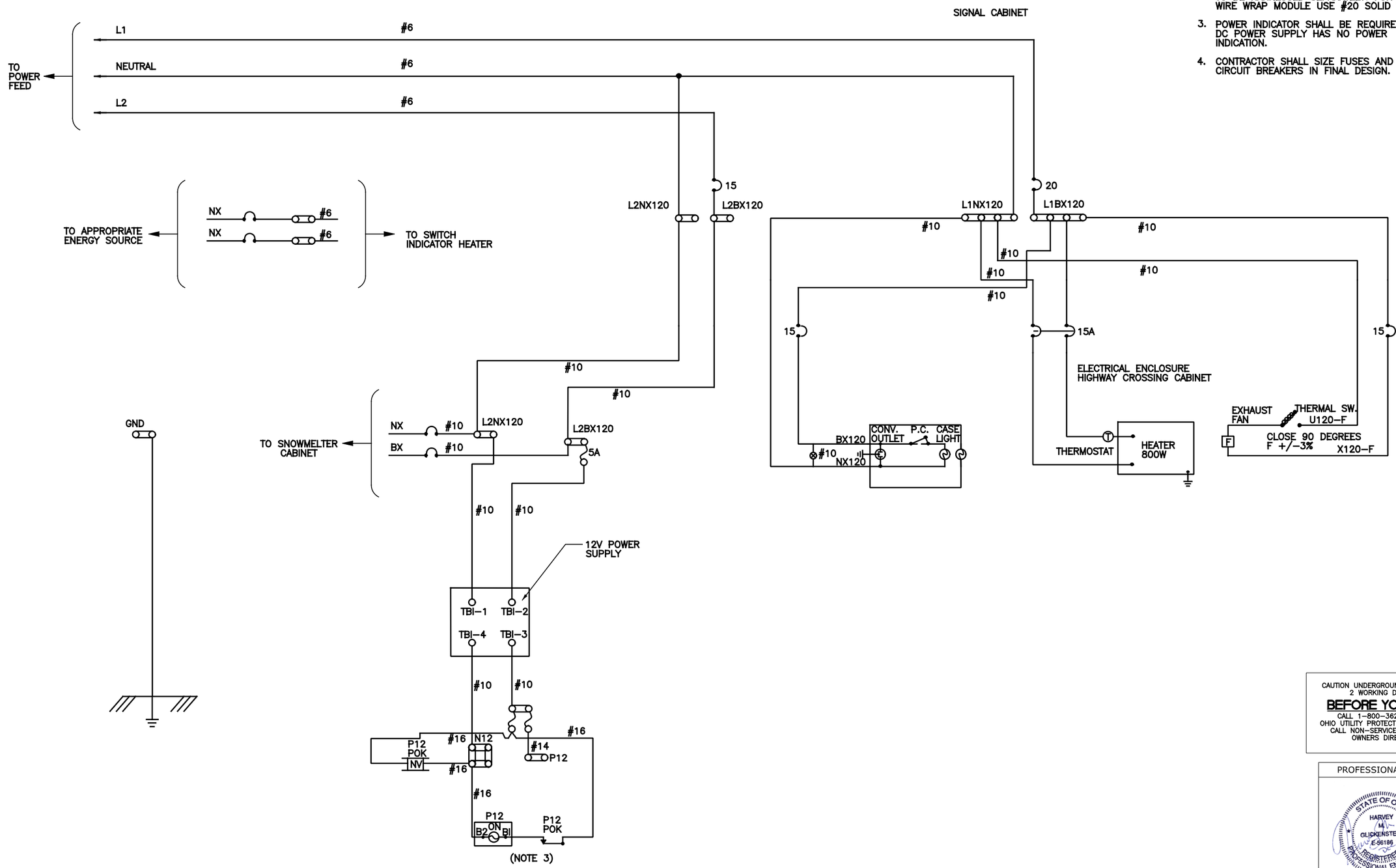

CAUTION UNDERGROUND UTILITIES
2 WORKING DAYS
BEFORE YOU DIG
CALL 1-800-362-2764
OHIO UTILITY PROTECTION SERVICE
CALL NON-SERVICE FACILITY
OWNERS DIRECT

PROFESSIONAL STAMP

STATE OF OHIO
HARVEY M. GLICKENSTEIN
E-56186
REGISTERED PROFESSIONAL ENGINEER

SIGN:

DATE:

CONTRACT DRAWING

PRINTS NOT BEARING THIS STAMP WERE MADE PRIOR TO ADVERTISING FOR BIDS AND ARE TO BE CONSIDERED OBSOLETE FOR CONTRACT PURPOSES.

Department of Transportation and Engineering

City of Cincinnati
City Hall
801 Plum Street
Cincinnati, Ohio 45202

CINCINNATI STREETCAR

POWER DISTRIBUTION CIRCUIT
RACE AND FINDLAY STREET

Revisions

No.			

Drawn by SB	Designed by GM	Checked by HG	Reviewed by JTB
Date 12/20/2011	Date 12/20/2011	Date 12/20/2011	Date 12/20/2011

Consultant

PB HDR

File Number

ACC No. 23126

G-SD-1032

$PLTDRV$$
T:\29014a_Cincinnati Street Car\SIGNALS\S_G-SD-1032.dgn
12/16/2011 12:35:08 PM

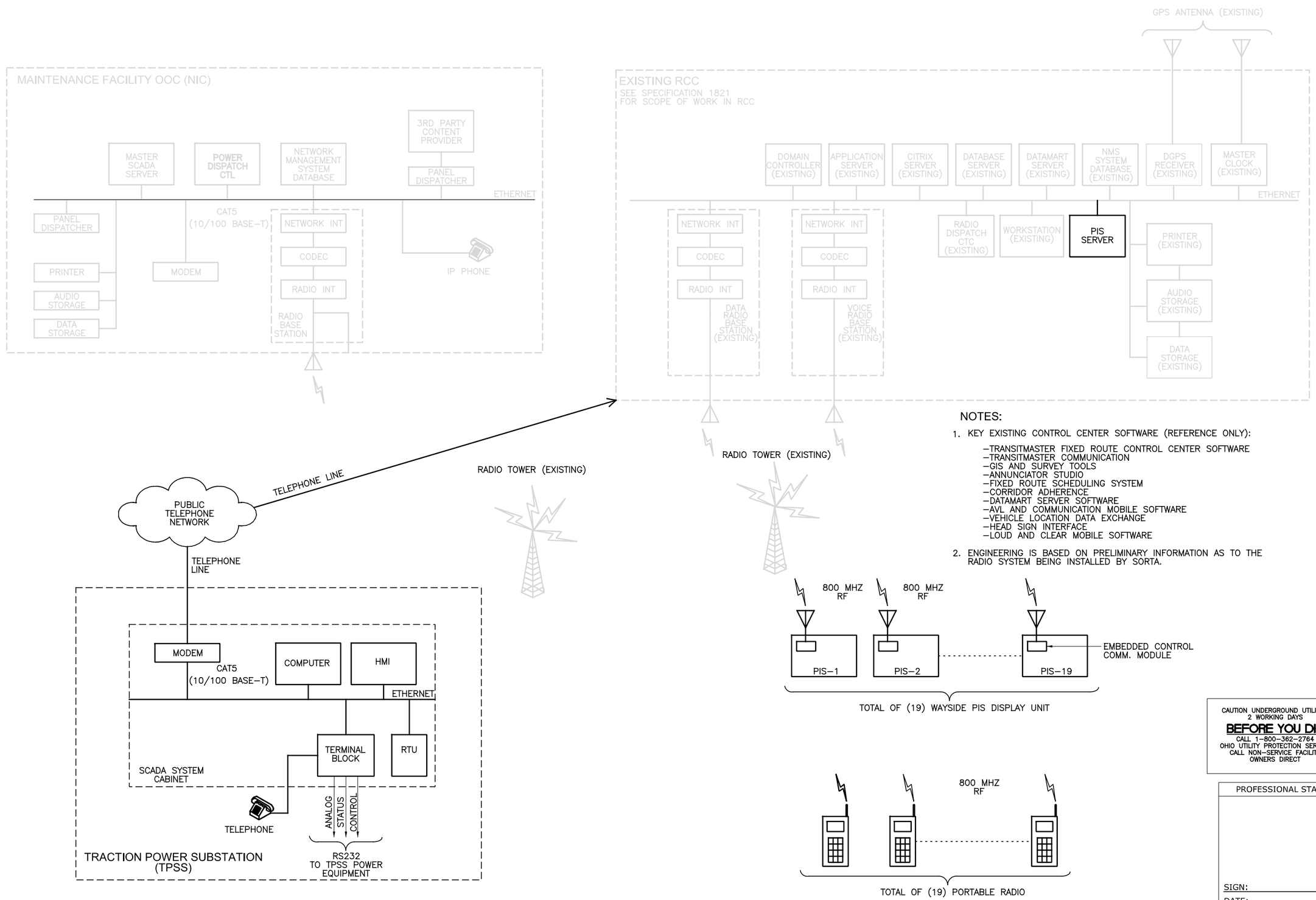

NOTES:

1. KEY EXISTING CONTROL CENTER SOFTWARE (REFERENCE ONLY):
   - TRANSITMASTER FIXED ROUTE CONTROL CENTER SOFTWARE
   - TRANSITMASTER COMMUNICATION
   - GIS AND SURVEY TOOLS
   - ANNUNCIATOR STUDIO
   - FIXED ROUTE SCHEDULING SYSTEM
   - CORRIDOR ADHERENCE
   - DATAMART SERVER SOFTWARE
   - AVL AND COMMUNICATION MOBILE SOFTWARE
   - VEHICLE LOCATION DATA EXCHANGE
   - HEAD SIGN INTERFACE
   - LOUD AND CLEAR MOBILE SOFTWARE
2. ENGINEERING IS BASED ON PRELIMINARY INFORMATION AS TO THE RADIO SYSTEM BEING INSTALLED BY SORTA.

CAUTION UNDERGROUND UTILITIES
2 WORKING DAYS
BEFORE YOU DIG
CALL 1-800-362-2764
OHIO UTILITY PROTECTION SERVICE
CALL NON-SERVICE FACILITY OWNERS DIRECT

PROFESSIONAL STAMP

SIGN:
DATE:

CONTRACT DRAWING

PRINTS NOT BEARING THIS STAMP WERE MADE PRIOR TO ADVERTISING FOR BIDS AND ARE TO BE CONSIDERED OBSOLETE FOR CONTRACT PURPOSES.

Department of Transportation and Engineering

City of Cincinnati
City Hall
801 Plum Street
Cincinnati, Ohio 45202

CINCINNATI STREETCAR

COMMUNICATION SYSTEMS
COMMUNICATION ARCHITECTURE LAYOUT

Revisions

No.	Date	Date	Date	Date

Drawn by LP
Designed by GM
Checked by HG
Reviewed by JTB

Consultant

PB HDR

File Number

ACC No. 23126

G-SD-2001

$PLTDRV$$
T:\29014a_Cincinnati:Street.Car\SIGNALS\S_G-SD-2001.dgn
2:51:04 PM
7/10/2012

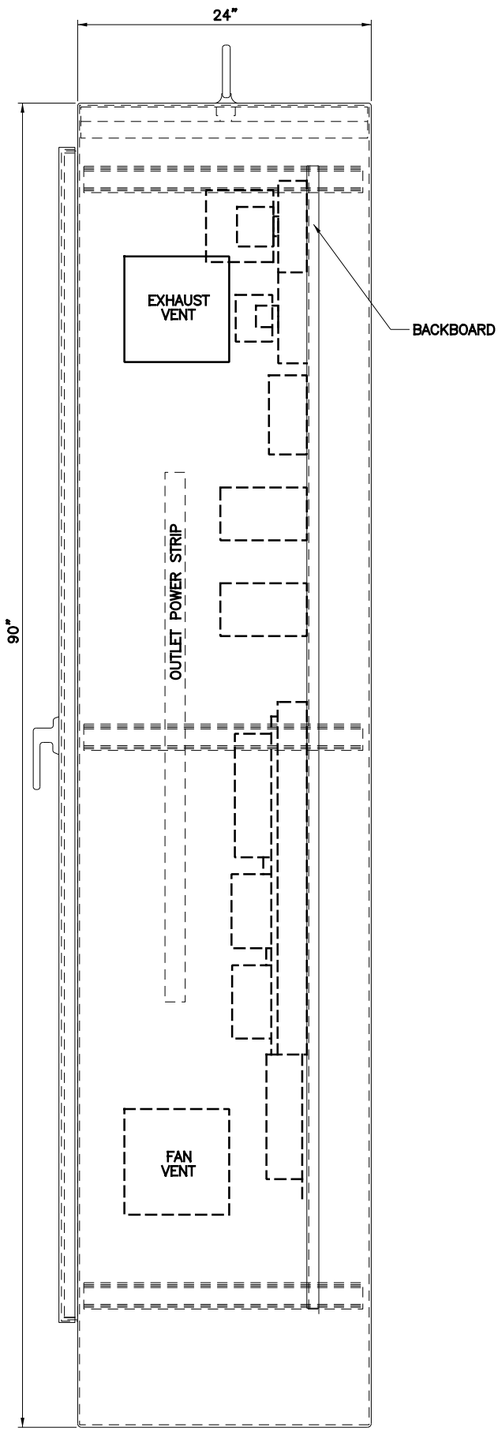

SCADA SYSTEM CABINET
SIDE VIEW (EXTERNAL)

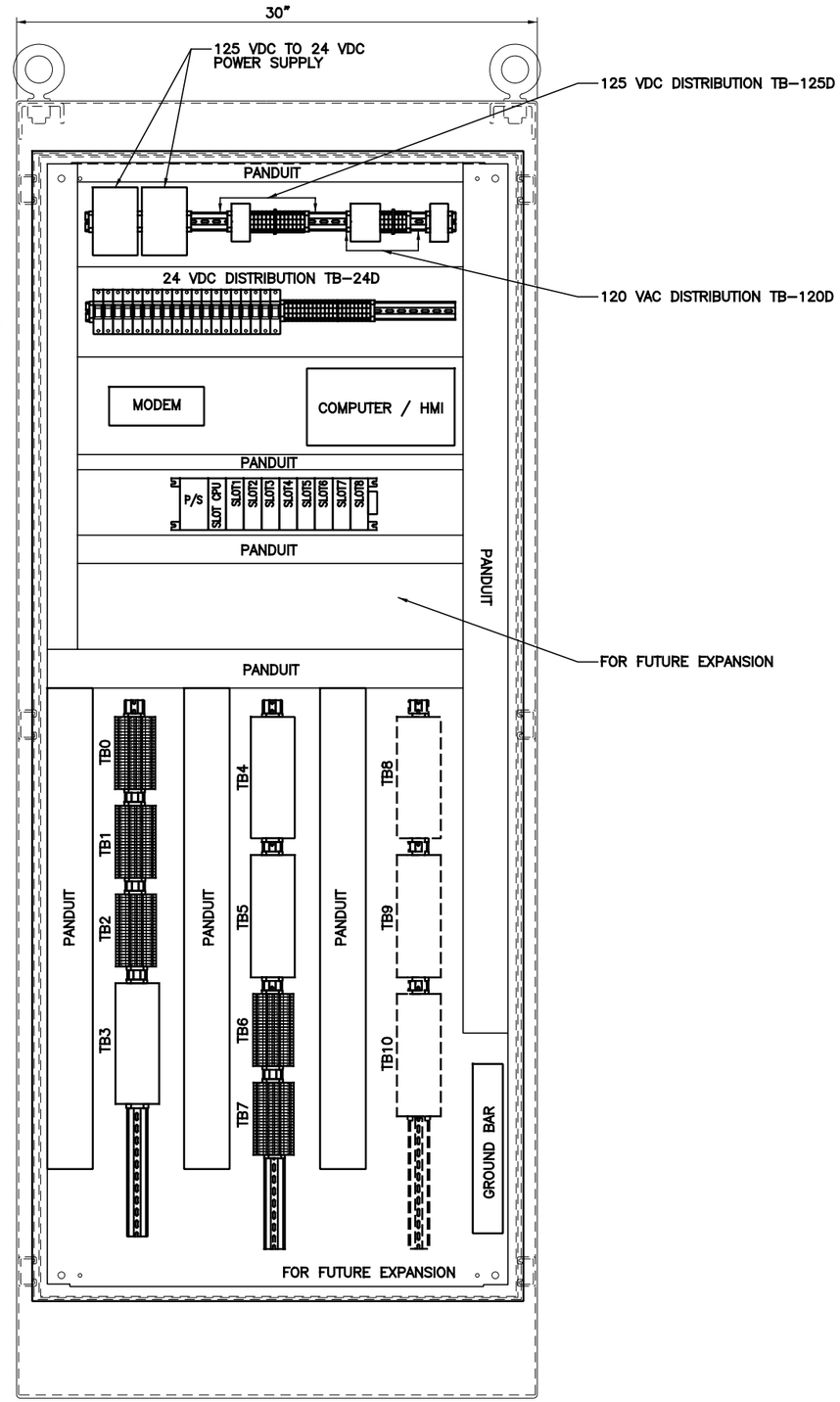

SCADA SYSTEM CABINET
FRONT VIEW (INTERNAL)

CAUTION UNDERGROUND UTILITIES
2 WORKING DAYS
BEFORE YOU DIG
CALL 1-800-362-2764
OHIO UTILITY PROTECTION SERVICE
CALL NON-SERVICE FACILITY
OWNERS DIRECT

PROFESSIONAL STAMP

STATE OF OHIO
HARVEY M. GLICKENSTEIN
E-56186
REGISTERED PROFESSIONAL ENGINEER

SIGN:

DATE:

CONTRACT DRAWING

PRINTS NOT BEARING THIS STAMP WERE MADE PRIOR TO ADVERTISING FOR BIDS AND ARE TO BE CONSIDERED OBSOLETE FOR CONTRACT PURPOSES.

Department of Transportation and Engineering

City of Cincinnati
City Hall
801 Plum Street
Cincinnati, Ohio 45202

CINCINNATI STREETCAR

COMMUNICATION SYSTEMS
TRACTION POWER SUBSTATION
SCADA SYSTEM CABINET LAYOUT
SHEET 1 OF 2

Revisions

No.				

Drawn by LP	Designed by GM	Checked by HG	Reviewed by JTB
Date 12/20/2011	Date 12/20/2011	Date 12/20/2011	Date 12/20/2011

Consultant

PB HDR

File Number

ACC No. 23126

G-SD-2002

$PLTDRV$$
T:\29014a_Cincinnati.Street.Car\SIGNALS\S_G-SD-2002.dgn
12/16/2011 1:05:41 PM

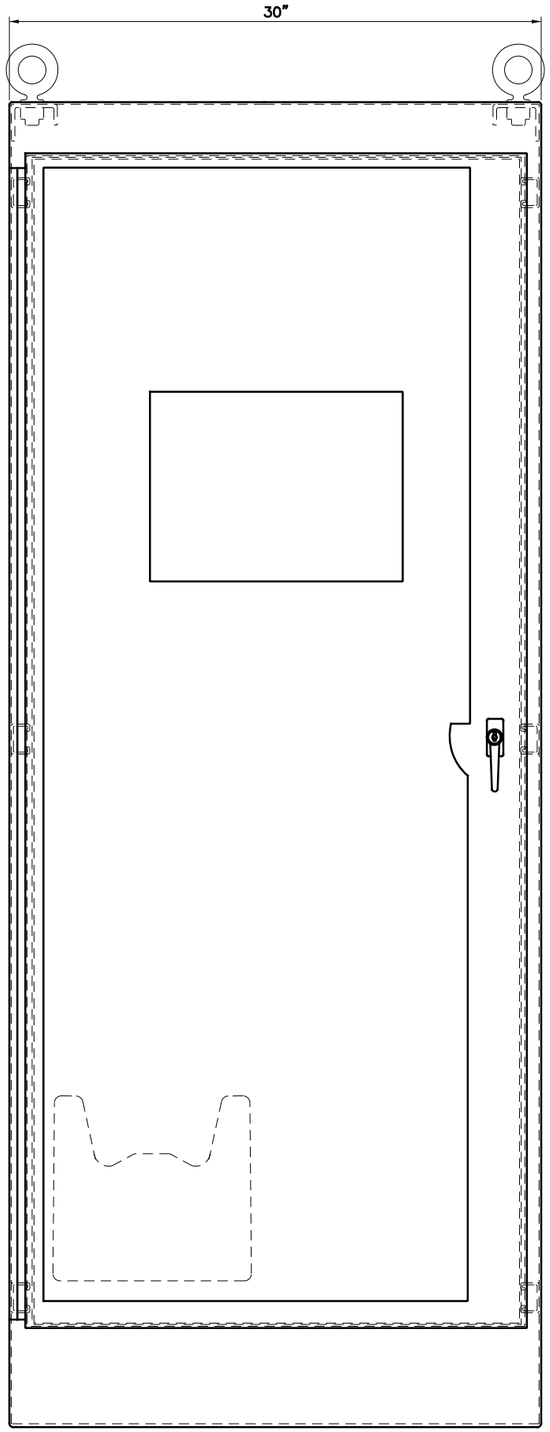

SCADA SYSTEM CABINET
DOOR VIEW (EXTERNAL)

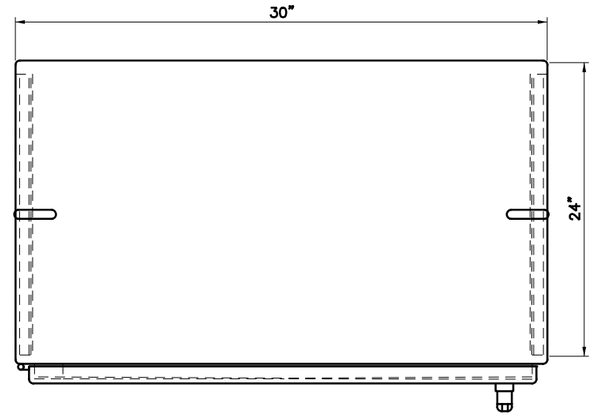

SCADA SYSTEM CABINET
TOP VIEW

CAUTION UNDERGROUND UTILITIES
2 WORKING DAYS
BEFORE YOU DIG
CALL 1-800-362-2764
OHIO UTILITY PROTECTION SERVICE
CALL NON-SERVICE FACILITY
OWNERS DIRECT

PROFESSIONAL STAMP

STATE OF OHIO
HARVEY M. GLICKENSTEIN
E-56186
REGISTERED PROFESSIONAL ENGINEER

SIGN:

DATE:

CONTRACT DRAWING

PRINTS NOT BEARING THIS STAMP WERE MADE PRIOR TO ADVERTISING FOR BIDS, AND ARE TO BE CONSIDERED OBSOLETE FOR CONTRACT PURPOSES.

Department of Transportation and Engineering

City of Cincinnati
City Hall
801 Plum Street
Cincinnati, Ohio 45202

CINCINNATI STREETCAR

COMMUNICATION SYSTEMS
TRACTION POWER SUBSTATION
SCADA SYSTEM CABINET LAYOUT
SHEET 2 OF 2

Revisions

No.			

Drawn by LP	Designed by GM	Checked by HG	Reviewed by JTB
Date 12/20/2011	Date 12/20/2011	Date 12/20/2011	Date 12/20/2011

Consultant

PB HDR

File Number

ACC No. 23126

G-SD-2003

$PLTDRV$$
T:\29014a_Cincinnati.Street.Car\SIGNALS\S_G-SD-2003.dgn
12/16/2011 1:05:42 PM

NOTE:

1. REFER TO DWG. G-SD-2006, G-SD-2007, G-SD-2008 AND G-SD-2009 FOR WIRING SCHEMATICS AND POINT TABLES OF TYPICAL CURRENT INPUT MODULE, PC INPUT MODULE AND OUTPUT MODULE IN SCADA RTU.

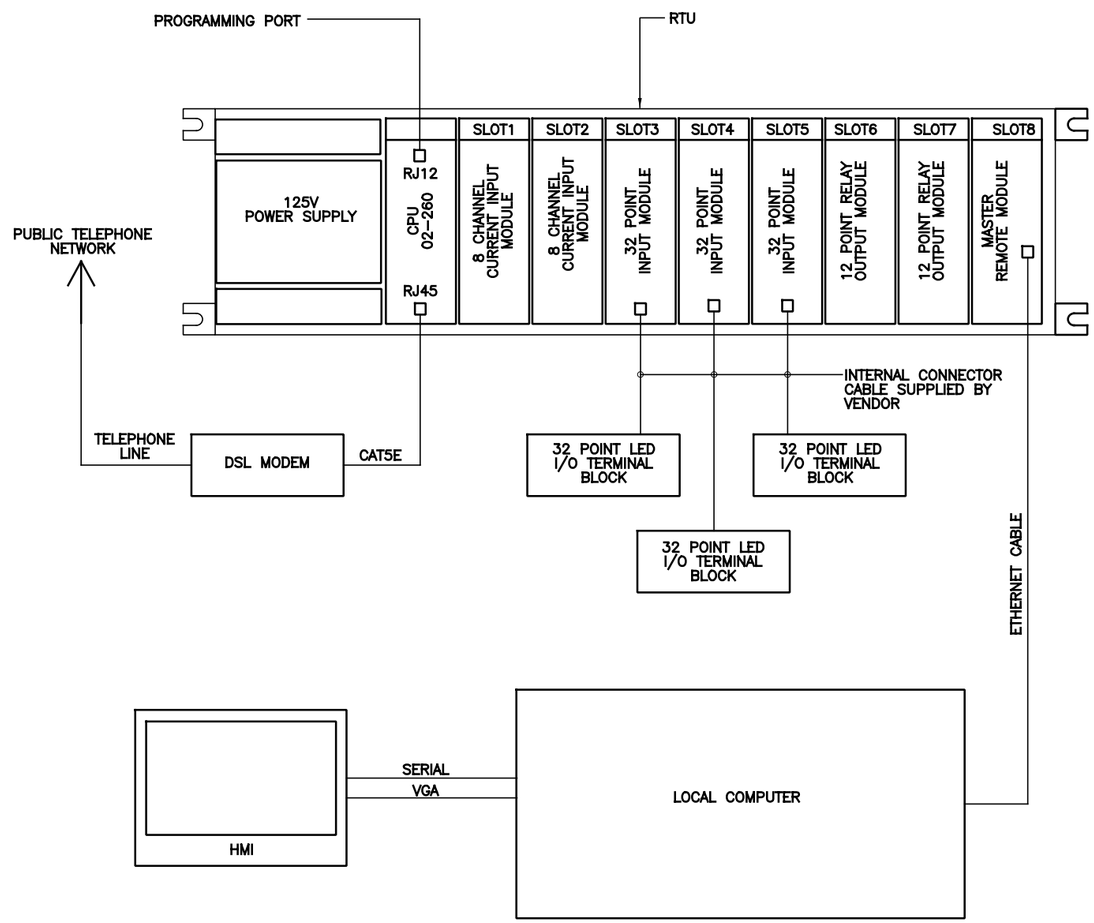

SCADA SYSTEM SERVICE BLOCK DIAGRAM

N.T.S.

CAUTION UNDERGROUND UTILITIES
2 WORKING DAYS

BEFORE YOU DIG

CALL 1-800-362-2764
OHIO UTILITY PROTECTION SERVICE
CALL NON-SERVICE FACILITY
OWNERS DIRECT

PROFESSIONAL STAMP

STATE OF OHIO
HARVEY M. GLICKENSTEIN
E-56186
REGISTERED PROFESSIONAL ENGINEER

SIGN:

DATE:

CONTRACT DRAWING

PRINTS NOT BEARING THIS STAMP WERE MADE PRIOR TO ADVERTISING FOR BIDS AND ARE TO BE CONSIDERED OBSOLETE FOR CONTRACT PURPOSES.

Department of Transportation and Engineering

City of Cincinnati
City Hall
801 Plum Street
Cincinnati, Ohio 45202

CINCINNATI STREETCAR

SCADA SYSTEM
SERVER BLOCK DIAGRAM

Revisions

No.				

Drawn by LP	Date 12/20/2011	
Designed by GM	Date 12/20/2011	
Checked by HG	Date 12/20/2011	
Reviewed by JTB	Date 12/20/2011	

Consultant

PB HDR

File Number

ACC No. 23126

G-SD-2004

$PLTDRV$$
T:\29014a_Cincinnati:Street.Car\SIGNALS\S_G-SD-2004.dgn
12/16/2011 1:05:42 PM

NOTES:

1. SEE TRACTION POWER DWG. G–PD–0003, G–PD–0004, AND G–PD–0005 FOR SIZE AND DESIGNATION OF PANELS AND CIRCUIT BREAKERS FEEDING VARIOUS COMPONENTS OF SCADA SYSTEM.
2. ALL ELECTRICAL WIRING SHALL BE #12 AWG UNLESS OTHERWISE SPECIFIED.

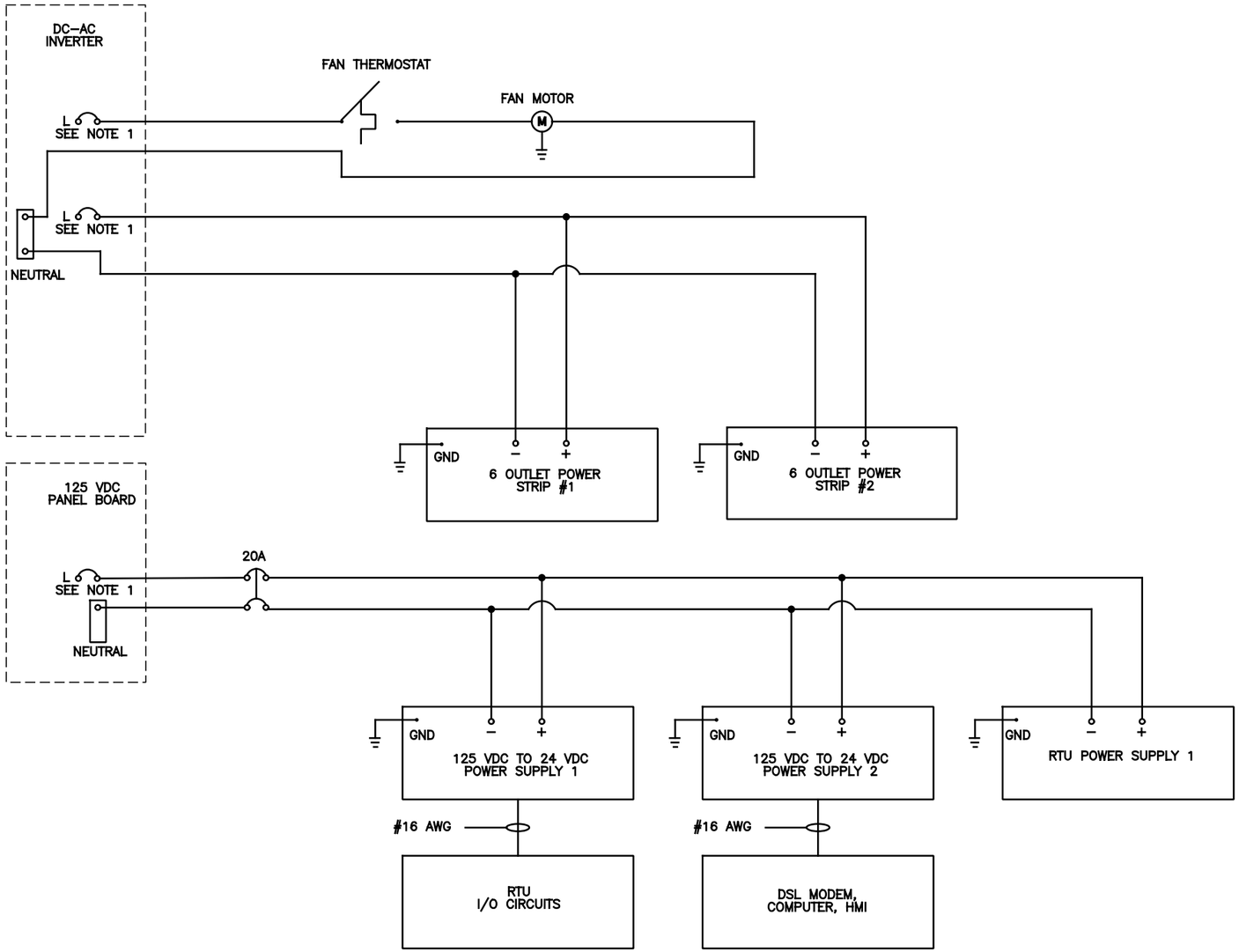

SCADA SYSTEM POWER DISTRIBUTION DIAGRAM

N.T.S.

CAUTION UNDERGROUND UTILITIES
2 WORKING DAYS
BEFORE YOU DIG
CALL 1–800–362–2764
OHIO UTILITY PROTECTION SERVICE
CALL NON–SERVICE FACILITY
OWNERS DIRECT

PROFESSIONAL STAMP

STATE OF OHIO
HARVEY M. GLICKENSTEIN
E-56186
REGISTERED PROFESSIONAL ENGINEER

SIGN:

DATE:

CONTRACT DRAWING

PRINTS NOT BEARING THIS STAMP WERE MADE PRIOR TO ADVERTISING FOR BIDS, AND ARE TO BE CONSIDERED OBSOLETE FOR CONTRACT PURPOSES.

Department of Transportation and Engineering

City of Cincinnati
City Hall
801 Plum Street
Cincinnati, Ohio 45202

CINCINNATI STREETCAR

SCADA SYSTEM
POWER DISTRIBUTION DIAGRAM

Revisions

No.		

Drawn by LP	Date 12/20/2011
Designed by GM	Date 12/20/2011
Checked by HG	Date 12/20/2011
Reviewed by JTB	Date 12/20/2011

Consultant

PB HDR

File Number

ACC No. 23126

G-SD-2005

$PLTDRV$$
T:\29014a_Cincinnati:Street.Car\SIGNALS\S_G-SD-2005.dgn
12/16/2011 1:05:44 PM

NOTES:

1. ALL WIRE #18 AWG UNLESS OTHERWISE SPECIFIED.
2. INTERFACE POINTS TO BE FIELD DETERMINED.

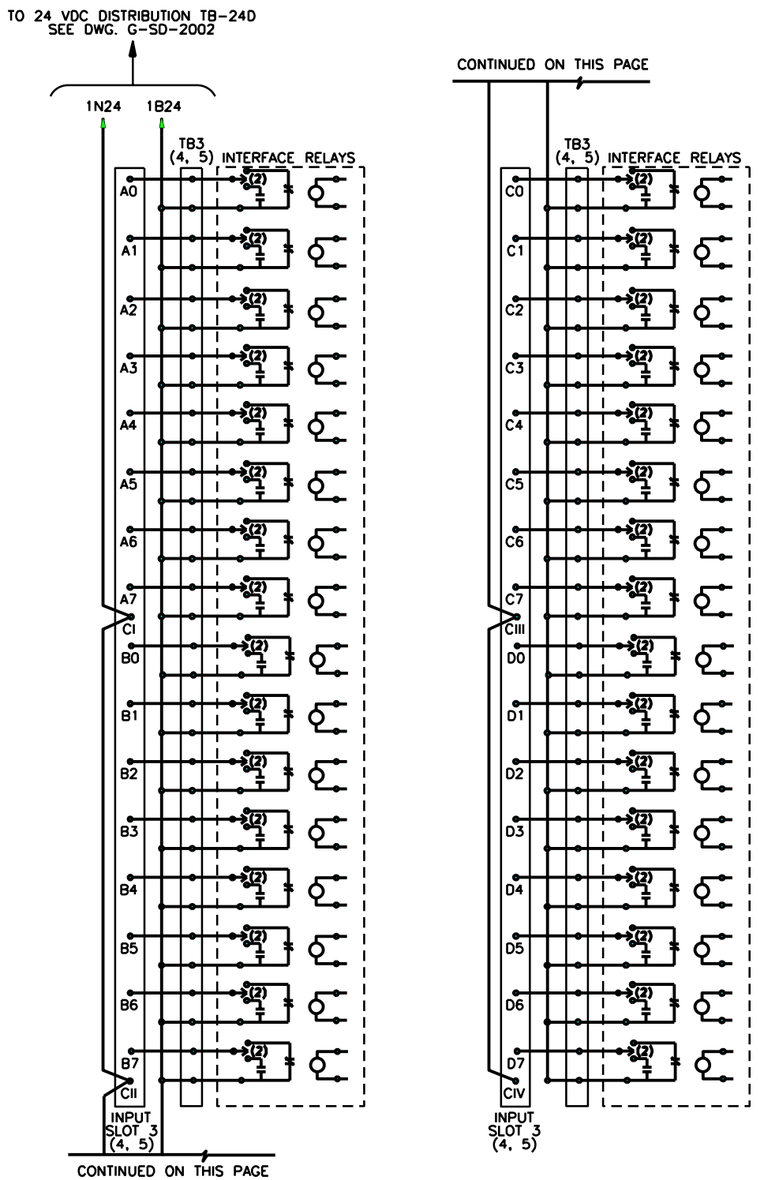

SCADA RTU RELAY INPUT MODULE WIRING SCHEMATIC

N.T.S.

32 POINT INPUT MODULE SLOT-3	
POINT DESIGNATION	DESCRIPTION
1-3-A0	15 KV MAIN BREAKER - CLOSED
1-3-A1	15 KV MAIN BREAKER - OPEN
1-3-A2	15 KV MAIN BREAKER - LOCAL
1-3-A3	15 KV MAIN BREAKER - REMOTE
1-3-A4	RECTIFIER DC BREAKER (MAIN, CATHODE) - CLOSED
1-3-A5	RECTIFIER DC BREAKER (MAIN, CATHODE) - OPEN
1-3-A6	RECTIFIER DC BREAKER (MAIN, CATHODE) - LOCAL
1-3-A7	RECTIFIER DC BREAKER (MAIN, CATHODE) - REMOTE
1-3-B0	DC FEEDER BREAKER 172-1 - CLOSED
1-3-B1	DC FEEDER BREAKER 172-1 - OPEN
1-3-B2	DC FEEDER BREAKER 172-1 - LOCAL
1-3-B3	DC FEEDER BREAKER 172-1 - REMOTE
1-3-B4	DC FEEDER BREAKER 172-2 - CLOSED
1-3-B5	DC FEEDER BREAKER 172-2 - OPEN
1-3-B6	DC FEEDER BREAKER 172-2 - LOCAL
1-3-B7	DC FEEDER BREAKER 172-2 - REMOTE
1-3-C0	DC FEEDER BREAKER 172-3 - CLOSED
1-3-C1	DC FEEDER BREAKER 172-3 - OPEN
1-3-C2	DC FEEDER BREAKER 172-3 - LOCAL
1-3-C3	DC FEEDER BREAKER 172-3 - REMOTE
1-3-C4	DC FEEDER BREAKER 172-4 - CLOSED
1-3-C5	DC FEEDER BREAKER 172-4 - OPEN
1-3-C6	DC FEEDER BREAKER 172-4 - LOCAL
1-3-C7	DC FEEDER BREAKER 172-4 - REMOTE
1-3-D0	EMERGENCY TPSS SHUTDOWN (ETS) - CLOSED
1-3-D1	AUXILIARY POWER CIRCUIT BREAKER - CLOSED
1-3-D2	AUXILIARY POWER CIRCUIT BREAKER - OPEN
1-3-D3	NEGATIVE BUS TO GROUND OVERVOLTAGE DEVICE - CLOSED
1-3-D4	SPARE
1-3-D5	SPARE
1-3-D6	SPARE
1-3-D7	SPARE

32 POINT INPUT MODULE SLOT-5	
POINT DESIGNATION	DESCRIPTION
1-5-A0	HOT DC ENCLOSURE (ENERGIZED) - 64
1-5-A1	GROUNDED DC ENCLOSURE - 64G
1-5-A2	DC FDR. BKR. 172-1 TIME OVERCURRENT TRIP - 150M-1
1-5-A3	DC FDR. BKR. 172-2 TIME OVERCURRENT TRIP - 150M-2
1-5-A4	DC FDR. BKR. 172-3 TIME OVERCURRENT TRIP - 150M-3
1-5-A5	DC FDR. BKR. 172-4 TIME OVERCURRENT TRIP - 150M-4
1-5-A6	DC FDR. BKR. 172-1 INST. OVERCURRENT TRIP - 176-1
1-5-A7	DC FDR. BKR. 172-2 INST. OVERCURRENT TRIP - 176-2
1-5-B0	DC FDR. BKR. 172-3 INST. OVERCURRENT TRIP - 176-3
1-5-B1	DC FDR. BKR. 172-4 INST. OVERCURRENT TRIP - 176-4
1-5-B2	DC FDR. BKR. 172-1 AUTO-RECLOSE LOCKOUT - 186-1
1-5-B3	DC FDR. BKR. 172-2 AUTO-RECLOSE LOCKOUT - 186-2
1-5-B4	DC FDR. BKR. 172-3 AUTO-RECLOSE LOCKOUT - 186-3
1-5-B5	DC FDR. BKR. 172-4 AUTO-RECLOSE LOCKOUT - 186-4
1-5-B6	LOSS OF 125 VDC CONTROL POWER - ALL 27 DC DEVICES
1-5-B7	LOSS OF 120/240 VAC POWER - 27A
1-5-C0	LOSS OF INVERTER 120 VAC POWER - 27AC
1-5-C1	BATTERY CHARGER FAILURE (INSTANTANEOUS) - 27BI
1-5-C2	BATTERY NEG/POS GROUND
1-5-C3	BATTERY DC OV/UV OR DISC. SW. OPEN - 27DC/59DC
1-5-C4	BATTERY AC OVER/UNDERVOLTAGE - 27/59AC
1-5-C5	BATTERY EXHAUST FAN FAILURE - FFT
1-5-C6	SPARE
1-5-C7	SPARE
1-5-D0	SPARE
1-5-D1	SPARE
1-5-D2	SPARE
1-5-D3	SPARE
1-5-D4	SPARE
1-5-D5	SPARE
1-5-D6	SPARE
1-5-D7	SPARE

32 POINT INPUT MODULE SLOT-4	
POINT DESIGNATION	DESCRIPTION
1-4-A0	SMOKE DETECTOR - SDX
1-4-A1	TPSS ENCLOSURE HIGH TEMPERATURE
1-4-A2	INTRUSION DETECTION - IDX
1-4-A3	HVAC FAILURE
1-4-A4	DUKE ENERGY SYSTEM OUTAGE (LOSS OF 12,470 V) - 27L
1-4-A5	PHASE OVERCURRENT RELAY TRIP - 50/51
1-4-A6	AC GROUND OVERCURRENT RELAY TRIP - 50N/51N
1-4-A7	RECTIFIER TRANSFORMER OVERTEMP. STAGE 1 - 49WT1
1-4-B0	RECTIFIER TRANSFORMER OVERTEMP. STAGE 2 - 49WT2
1-4-B1	AC LOCKOUT RELAY 86-1 TRIP
1-4-B2	DC LOCKOUT RELAY 86-2 TRIP
1-4-B3	RECT. DIODE OVERTEMPERATURE STAGE 1 - 26A
1-4-B4	RECT. DIODE OVERTEMPERATURE STAGE 2 - 26T
1-4-B5	RECT. DIODE FAILURE STAGE 1 - 98A
1-4-B6	RECT. DIODE FAILURE STAGE 2 - 98T
1-4-B7	RECT. DIODE SURGE PROTECTION FAILURE STAGE 1 - 99A
1-4-C0	RECT. DIODE SURGE PROTECTION FAILURE STAGE 2 - 99T
1-4-C1	RECTIFIER DOOR INTERLOCK - 33R
1-4-C2	RECTIFIER TRANSFORMER DOOR INTERLOCK - 33T
1-4-C3	RECTIFIER DC REVERSE TRIP - 32
1-4-C4	RECTIFIER TIME OVERCURRENT RELAY TRIP - 51R
1-4-C5	SPARE
1-4-C6	SPARE
1-4-C7	SPARE
1-4-D0	SPARE
1-4-D1	SPARE
1-4-D2	SPARE
1-4-D3	SPARE
1-4-D4	SPARE
1-4-D5	SPARE
1-4-D6	SPARE
1-4-D7	SPARE

LEGEND:

1-3-A0
"1" TPSS NUMBER
"3" SLOT NUMBER
"A0" PORT NUMBER

SCADA RTU RELAY INPUT MODULE POINT TABLE

N.T.S.

CAUTION UNDERGROUND UTILITIES
2 WORKING DAYS
BEFORE YOU DIG
CALL 1-800-362-2764
OHIO UTILITY PROTECTION SERVICE
CALL NON-SERVICE FACILITY
OWNERS DIRECT

PROFESSIONAL STAMP

SIGN:
DATE:

CONTRACT DRAWING

PRINTS NOT BEARING THIS STAMP WERE MADE PRIOR TO ADVERTISING FOR BIDS AND ARE TO BE CONSIDERED OBSOLETE FOR CONTRACT PURPOSES.

Department of Transportation and Engineering

City of Cincinnati
City Hall
801 Plum Street
Cincinnati, Ohio 45202

CINCINNATI STREETCAR

SCADA SYSTEM
TYPICAL TPSS RELAY INPUT DETAIL
SLOT 3-5

Revisions

No.		

	Date
Drawn by LP	12/20/2012
Designed by GM	12/20/2012
Checked by HG	7/02/2012
Reviewed by JTB	7/12/2012

Consultant

PB HDR

File Number

ACC No. 23126

G-SD-2006

$PLTDRV$$
T:\29014a_Cincinnati_Street_Car\SIGNALS\COMM_Updated\S_G-SD-2006.dgn
3:04:45 PM
7/13/2012

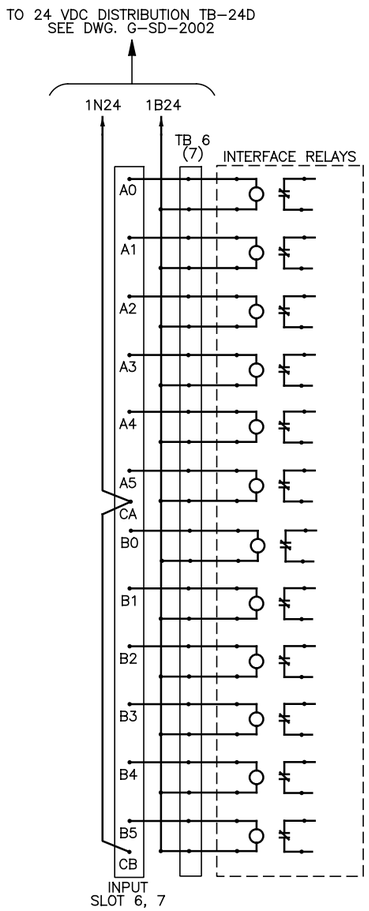

SCADA RTU RELAY OUTPUT MODULE WIRING SCHEMATIC

N.T.S.

NOTES:

1. ALL WIRE #18 AWG UNLESS OTHERWISE SPECIFIED.
2. INTERFACE POINTS TO BE FIELD DETERMINED.

12 POINT RELAY OUTPUT MODULE SLOT-6	
POINT DESIGNATION	DESCRIPTION
1-6-A0	12.47 KV MAIN BREAKER - CLOSE
1-6-A1	12.47 KV MAIN BREAKER - TRIP
1-6-A2	RECTIFIER DC BREAKER (MAIN, CATHODE) - CLOSE
1-6-A3	RECTIFIER DC BREAKER (MAIN, CATHODE) - TRIP
1-6-A4	SPARE
1-6-A5	SPARE
1-6-B0	SPARE
1-6-B1	SPARE
1-6-B2	SPARE
1-6-B3	SPARE
1-6-B4	SPARE
1-6-B5	SPARE

12 POINT RELAY OUTPUT MODULE SLOT-7	
POINT DESIGNATION	DESCRIPTION
1-7-A0	DC FEEDER BREAKER 172-1 - CLOSE
1-7-A1	DC FEEDER BREAKER 172-1 - TRIP
1-7-A2	DC FEEDER BREAKER 172-2 - CLOSE
1-7-A3	DC FEEDER BREAKER 172-2 - TRIP
1-7-A4	DC FEEDER BREAKER 172-3 - CLOSE
1-7-A5	DC FEEDER BREAKER 172-3 - TRIP
1-7-B0	DC FEEDER BREAKER 172-4 - CLOSE
1-7-B1	DC FEEDER BREAKER 172-4 - TRIP
1-7-B2	EMERGENCY TPSS SHUTDOWN (ETS) -99E - TRIP
1-7-B3	SPARE
1-7-B4	SPARE
1-7-B5	SPARE

LEGEND:

1-6-A0
"1" TPSS NUMBER
"6" SLOT NUMBER
"A0" PORT NUMBER

SCADA RTU RELAY OUTPUT MODULE POINT TABLE

N.T.S.

CAUTION UNDERGROUND UTILITIES
2 WORKING DAYS
BEFORE YOU DIG
CALL 1-800-362-2764
OHIO UTILITY PROTECTION SERVICE
CALL NON-SERVICE FACILITY
OWNERS DIRECT

PROFESSIONAL STAMP

STATE OF OHIO
HARVEY M. GLICKENSTEIN
E-56186
REGISTERED PROFESSIONAL ENGINEER

SIGN:

DATE:

CONTRACT DRAWING

PRINTS NOT BEARING THIS STAMP WERE MADE PRIOR TO ADVERTISING FOR BIDS AND ARE TO BE CONSIDERED OBSOLETE FOR CONTRACT PURPOSES.

Department of Transportation and Engineering

City of Cincinnati
City Hall
801 Plum Street
Cincinnati, Ohio 45202

CINCINNATI STREETCAR

SCADA SYSTEM
TYPICAL TPSS RELAY OUTPUT TABLE
SLOT 7-8

Revisions

No.			

Date 12/20/2011	Date 12/20/2011	Date 12/20/2011	Date 12/20/2011
Drawn by LP	Designed by GM	Checked by HG	Reviewed by JTB

Consultant

PB HDR

File Number

ACC No. 23126

G-SD-2007

$PLTDRV$$
T:\29014a_Cincinnati.Street.Car\SIGNALS\S_G-SD-2007.dgn
12/16/2011 1:05:47 PM

NOTES:

1. SHIELDS SHOULD BE GROUNDED AT SIGNAL SOURCE.
2. REFERENCE INTERFACE TABLE ON DWG. G-SD-2010 FOR BIT ASSIGNMENTS.
3. ALL WIRE #18 AWG. UNLESS OTHERWISE SPECIFIED.

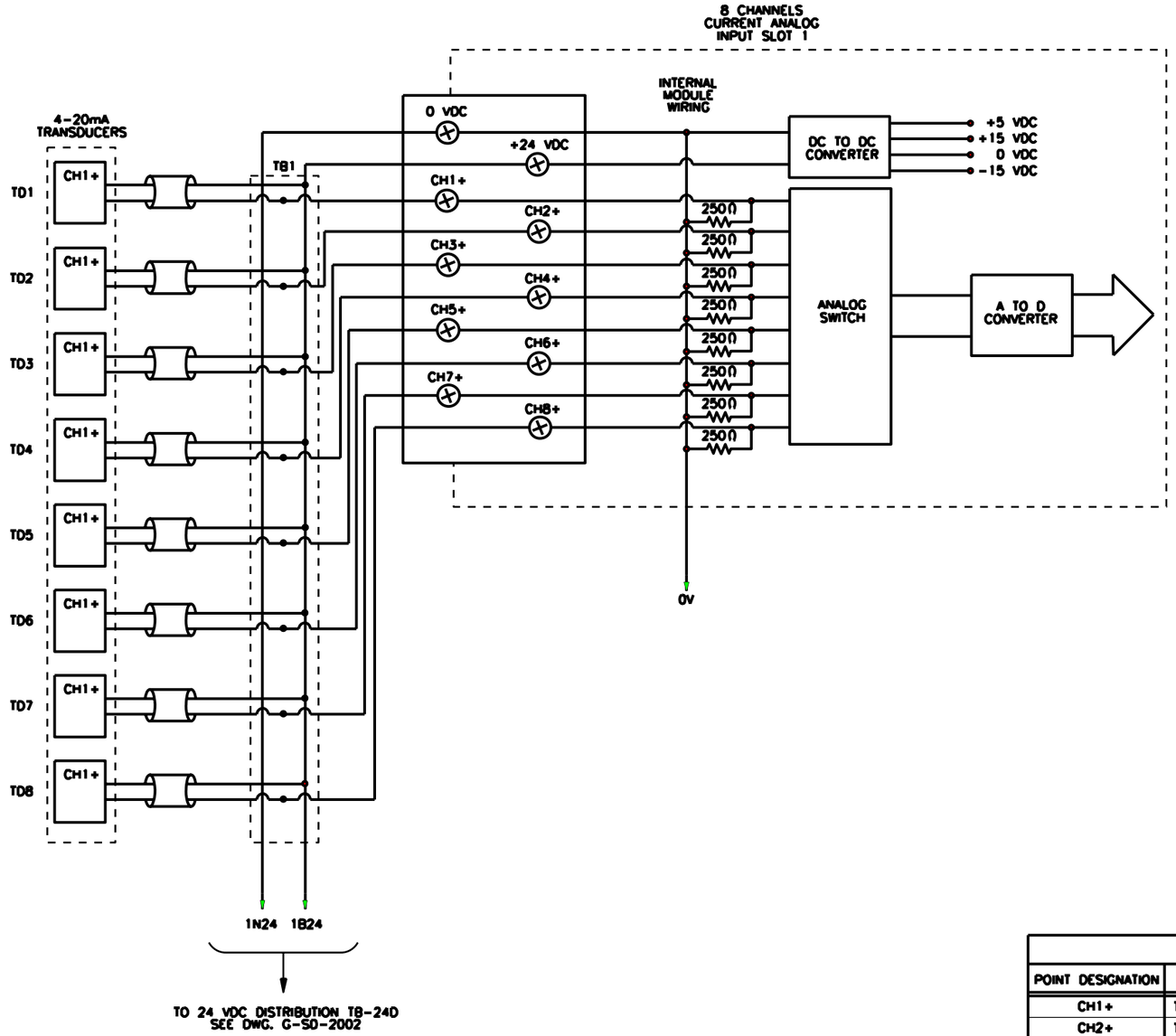

SCADA RTU RELAY CURRENT INPUT MODULE 1 WIRING SCHEMATIC

N.T.S.

8 CHANNEL CURRENT INPUT MODULE SLOT 1	
POINT DESIGNATION	DESCRIPTION
CH1+	TPSS #1 - 15,000V BUS VOLTAGE, PHASE A-B
CH2+	TPSS #1 - 15,000V BUS VOLTAGE, PHASE B-C
CH3+	TPSS #1 - 15,000V BUS VOLTAGE, PHASE C-A
CH4+	TPSS #1 - 15,000V BUS CURRENT, PHASE A
CH5+	TPSS #1 - 15,000V BUS CURRENT, PHASE B
CH6+	TPSS #1 - 15,000V BUS CURRENT, PHASE C
CH7+	TPSS #1 - 800 VDC BUS VOLTAGE
CH8+	TPSS #1 - RECTIFIER CURRENT

SCADA RTU RELAY CURRENT INPUT MODULE 1 POINT TABLE

N.T.S.

CAUTION UNDERGROUND UTILITIES
2 WORKING DAYS
BEFORE YOU DIG
CALL 1-800-362-2764
OHIO UTILITY PROTECTION SERVICE
CALL NON-SERVICE FACILITY
OWNERS DIRECT

PROFESSIONAL STAMP

SIGN:

DATE:

CONTRACT DRAWING

PRINTS NOT BEARING THIS STAMP WERE MADE PRIOR TO ADVERTISING FOR BIDS AND ARE TO BE CONSIDERED OBSOLETE FOR CONTRACT PURPOSES.

Department of Transportation and Engineering

City of Cincinnati
City Hall
801 Plum Street
Cincinnati, Ohio 45202

CINCINNATI STREETCAR

SCADA SYSTEM
TYPICAL TPSS ANALOG INPUT
SLOT 1

Revisions

No.				

Drawn by LP	Date 12/20/2012
Designed by GM	Date 12/20/2012
Checked by HG	Date 7/02/2012
Reviewed by JTB	Date 7/12/2012

Consultant

PB HDR

File Number

ACC No. 23126

G-SD-2008

$PLTDRVS$
T:\290140_Cincinnati Street Car\SIGNALS\COMM_Updated\S_G-SD-2008.dgn
3:13:46 PM
7/13/2012

NOTES:

1. SHIELDS SHOULD BE GROUNDED AT SIGNAL SOURCE.
2. REFERENCE INTERFACE TABLE ON DWG. G-SD-2010 FOR BIT ASSIGNMENTS.
3. ALL WIRE #18 AWG. UNLESS OTHERWISE SPECIFIED.

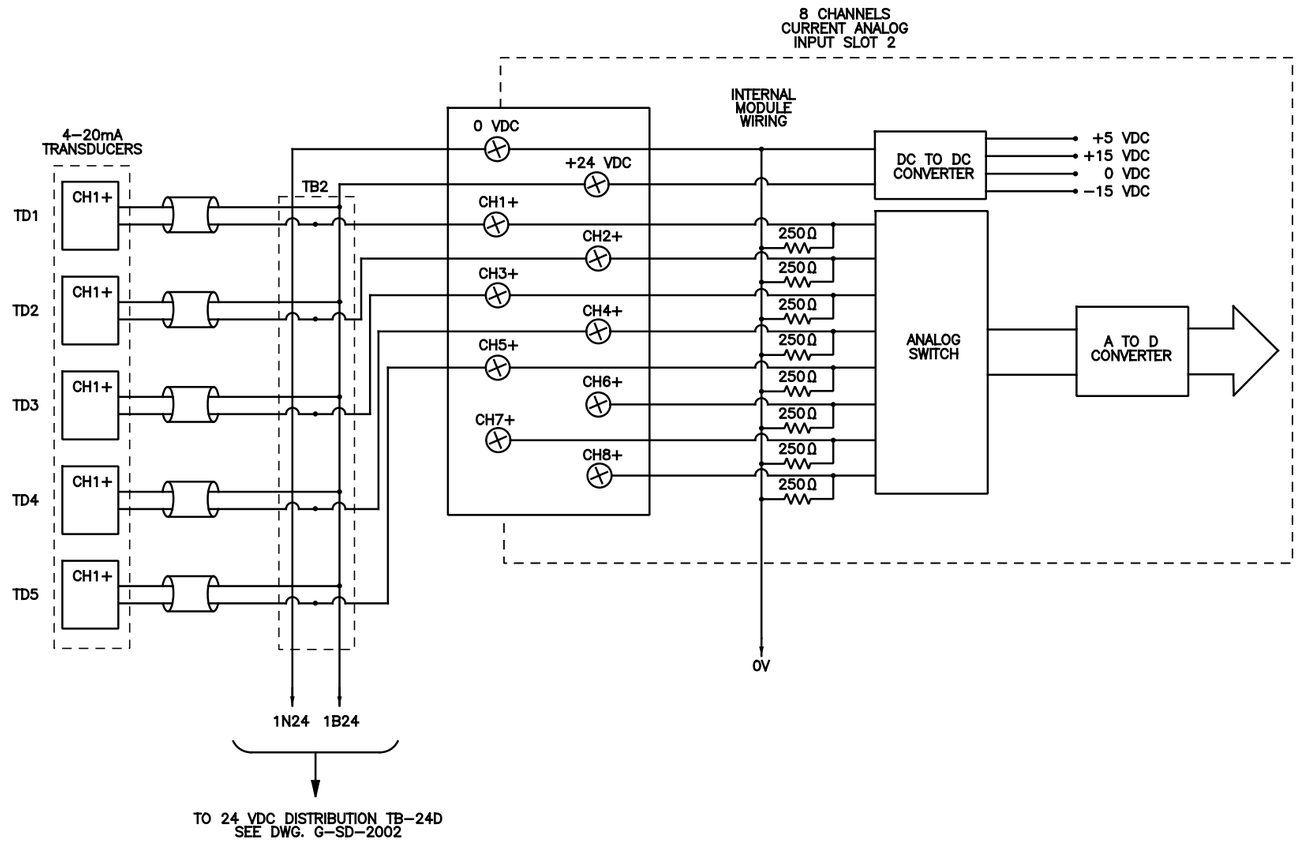

SCADA RTU RELAY CURRENT INPUT MODULE 2 WIRING SCHEMATIC

N.T.S.

8 CHANNEL CURRENT INPUT MODULE SLOT 2	
POINT DESIGNATION	DESCRIPTION
CH1+	TPSS #1 – DC FEEDER BREAKER 172-1 CURRENT
CH2+	TPSS #1 – DC FEEDER BREAKER 172-2 CURRENT
CH3+	TPSS #1 – DC FEEDER BREAKER 172-3 CURRENT
CH4+	TPSS #1 – DC FEEDER BREAKER 172-4 CURRENT
CH5+	SPARE
CH6+	SPARE
CH7+	SPARE
CH8+	SPARE

SCADA RTU RELAY CURRENT INPUT MODULE 2 POINT TABLE

N.T.S.

CAUTION UNDERGROUND UTILITIES
2 WORKING DAYS
BEFORE YOU DIG
CALL 1-800-362-2764
OHIO UTILITY PROTECTION SERVICE
CALL NON-SERVICE FACILITY
OWNERS DIRECT

PROFESSIONAL STAMP

STATE OF OHIO
HARVEY M. GLICKENSTEIN
E-56186
REGISTERED PROFESSIONAL ENGINEER

SIGN:

DATE:

CONTRACT DRAWING

PRINTS NOT BEARING THIS STAMP WERE MADE PRIOR TO ADVERTISING FOR BIDS AND ARE TO BE CONSIDERED OBSOLETE FOR CONTRACT PURPOSES.

Department of Transportation and Engineering

City of Cincinnati
City Hall
801 Plum Street
Cincinnati, Ohio 45202

CINCINNATI STREETCAR

SCADA SYSTEM
TYPICAL TPSS ANALOG INPUT
SLOT 2

Revisions

No.			

Drawn by LP	Designed by GM	Checked by HG	Reviewed by JTB
Date 12/20/2011	Date 12/20/2011	Date 12/20/2011	Date 12/20/2011

Consultant

PB HDR

File Number

ACC No. 23126

G-SD-2009

$PLTDRV$$
T:\29014a_Cincinnati:Street.Car\SIGNALS\S_G-SD-2009.dgn
12/16/2011 1:05:49 PM

POINT DESCRIPTION	ACTUATING DEVICE	DEVICE NO.	DISCRETE POINT		ANALOG INPUT			INPUT POINT	TERMINATION SIG	TERMINATION B24	FIELD TERMINATION POINT 1	FIELD TERMINATION POINT 2
			CONTROL	INDICATION	UNIT	LOW	HIGH					

TYPICAL TPSS SCADA SYSTEM INTERFACE TABLE

NOTE:

1. THE SCADA SYSTEM INTERFACE TABLE AS SHOWN SHALL BE FILLED OUT BY CONTRACTOR DURING CONSTRUCTION AND BE SUBMITTED AS AS-BUILT DRAWINGS.

CAUTION UNDERGROUND UTILITIES
2 WORKING DAYS
BEFORE YOU DIG
CALL 1-800-362-2764
OHIO UTILITY PROTECTION SERVICE
CALL NON-SERVICE FACILITY
OWNERS DIRECT

PROFESSIONAL STAMP

STATE OF OHIO
HARVEY M. GLICKENSTEIN
E-56186
REGISTERED PROFESSIONAL ENGINEER

SIGN:

DATE:

CONTRACT DRAWING

PRINTS NOT BEARING THIS STAMP WERE MADE PRIOR TO ADVERTISING FOR BID, MAY BE TO BE CONSIDERED OBSOLETE FOR CONTRACT PURPOSES.

Department of Transportation and Engineering

City of Cincinnati
City Hall
801 Plum Street
Cincinnati, Ohio 45202

CINCINNATI STREETCAR

TYPICAL TPSS SCADA SYSTEM INTERFACE TABLE

Revisions

No.			

Drawn by LP	Designed by GM	Checked by HG	Reviewed by JTB
Date 12/20/2011	Date 12/20/2011	Date 12/20/2011	Date 12/20/2011

Consultant

PB HDR

File Number

ACC No. 23126

G-SD-2010

$PLTDRV$$
T:\29014a_Cincinnati.Street.Car\SIGNALS\S_G-SD-2010.dgn
12/16/2011 1:05:51 PM

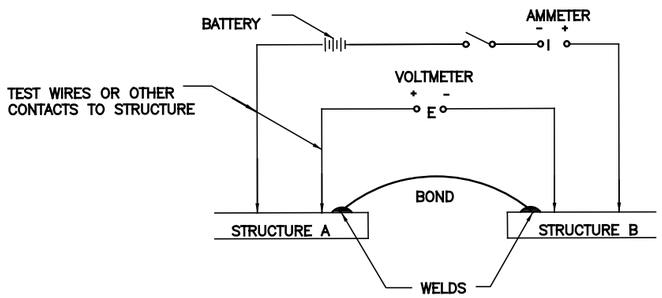

SINGLE BOND AND MULTIPLE BONDS IN PARALLEL

NOTE:

VOLTMETER CONTACTS TO STRUCTURE MUST BE CLOSE ENOUGH TO WELDS TO ENSURE THAT STRUCTURE RESISTANCE IS NOT SIGNIFICANT.

FORMULA FOR DETERMINING RESISTANCE OF SINGLE BOND USING TEST DATA:

$$R_B = \Delta E / \Delta I$$

WHERE R_B = RESISTANCE OF ONE BOND (OHMS)

ΔE = INCREMENTAL CHANGE IN POTENTIAL (VOLTS)

ΔI = INCREMENTAL CHANGE IN CURRENT (AMPERES)

FORMULA FOR CALCULATING THEORETICAL RESISTANCE OF SINGLE BOND:

$$R_T = (L) \times (R_L)$$

WHERE R_T = THEORETICAL RESISTANCE OF ONE BOND (OHMS)

L = LENGTH OF BOND (FEET)

R_L = RESISTANCE OF AWG SIZE WIRE USED FOR BOND (OHMS/FOOT), OBTAINED FROM WIRE RESISTANCE TABLE.

FORMULA FOR CALCULATING THEORETICAL RESISTANCE BETWEEN STRUCTURES CONNECTED BY MULTIPLE BONDS IN PARALLEL:

$$R_{TP} = R_T / N$$

WHERE R_{TP} = THEORETICAL RESISTANCE OF MULTIPLE BOND WIRES IN PARALLEL (OHMS)

R_T = THEORETICAL RESISTANCE OF ONE BOND WIRE (OHMS)

N = NUMBER OF BOND WIRES IN PARALLEL

NOTE:

1. CONTRACTOR IS RESPONSIBLE TO FIELD TEST BONDS RESISTANCE WITHIN THE SPECIFIED TOLERANCE AS COMPARED TO THE THEORETICAL RESISTANCE.

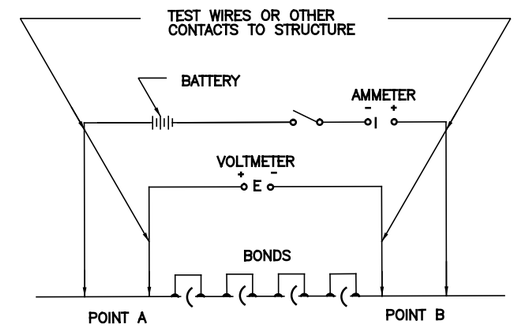

MULTIPLE BONDS IN SERIES

FORMULA FOR CALCULATING THEORETICAL RESISTANCE OF STRUCTURE WITH MULTIPLE BONDS IN SERIES:

$$R_{TS} = R_T \times N + P \frac{L}{A}$$

WHERE R_{TS} = THEORETICAL RESISTANCE OF STRUCTURE WITH MULTIPLE BONDS IN SERIES (OHMS)

R_T = THEORETICAL RESISTANCE OF ONE BOND (OHMS)

N = NUMBER OF BONDS IN SERIES

P = RESISTIVITY OF STRUCTURE (OHMS–FT)

L = LENGTH OF STRUCTURE (FT)

A = CROSS SECTIONAL AREA OF STRUCTURE (FT^2)

CAUTION UNDERGROUND UTILITIES
2 WORKING DAYS
BEFORE YOU DIG
CALL 1–800–362–2764
OHIO UTILITY PROTECTION SERVICE
CALL NON–SERVICE FACILITY
OWNERS DIRECT

PROFESSIONAL STAMP

SIGN:

DATE:

CONTRACT DRAWING

PRINTS NOT BEARING THIS STAMP WERE MADE PRIOR TO ADVERTISING FOR BIDS AND ARE TO BE CONSIDERED OBSOLETE FOR CONTRACT PURPOSES.

Department of Transportation and Engineering

City of Cincinnati
City Hall
801 Plum Street
Cincinnati, Ohio 45202

CINCINNATI STREETCAR

CORROSION CONTROL
SYSTEM TESTING DETAILS

Revisions

No.				

Drawn by SB Date
Designed by MB Date
Checked by DF Date
Reviewed by JTB Date

Consultant

PB HDR

File Number

ACC No. 23126

G-PD-0201

$PLTDRV$$
T:\29014a_Cincinnati.Street.Car\CORROSION\S_G-PD-0201.dgn
7/10/2012
1:26:41 PM

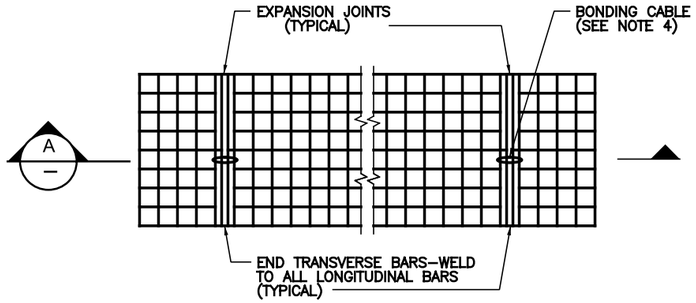

TYPICAL BONDING OF REINFORCING BARS AT EXPANSION JOINTS

PLAN

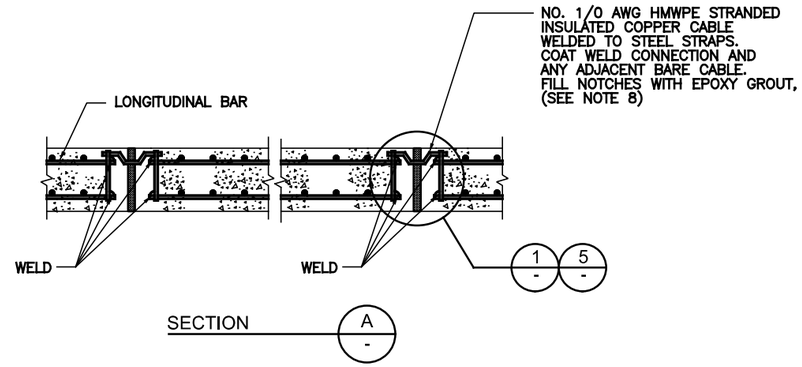

SECTION A

NOTES:

1. ALL LONGITUDINAL REINFORCING BARS MUST BE FULLY BONDED. TRANSVERSE BARS ARE TO BE BONDED AT THE EXPANSION JOINTS TO ELECTRICALLY TIE LONGITUDINAL BARS TOGETHER.
2. ALL WELDING AND EXTRA STEEL FOR BONDING SHALL BE SHOWN ON THE REINFORCING SHOP DRAWINGS.
3. THERMITE WELDS OF CABLES TO REBAR SHALL BE PAINTED WITH COAL TAR MASTIC COMPLETELY COVERING THE WELD.
4. BONDS SHALL BE LOCATED AT THE EXPANSION JOINTS.
5. BOND LOCATIONS SHOWN ARE APPROXIMATE. ADJUST AS REQUIRED TO AVOID ELECTRICAL CONDUITS, ETC.
6. BOND CABLE AND STEEL STRAP SHALL BE INSTALLED AT LAST TRANSVERSE BAR AT EXPANSION JOINTS FOR FUTURE ELECTRICAL CONTINUATION, OR IF ADJACENT MAT IS TO BE COMPLETED AT A LATER DATE.
7. COPPER BOND CABLES SHALL BE INSULATED.
8. STRAP SHALL BE OF SUFFICIENT LENGTH TO FACILITATE WELDING TO TOP AND BOTTOM OF RE–BAR CAGE.
9. ALL OVERLAPS IN LONGITUDINAL REINFORCING BARS SHALL BE WELDED FOR ELECTRICAL CONTINUITY (SEE DETAIL 2).
10. ALL BOND CABLE CONNECTIONS SHALL BE EXOTHERMICALLY WELDED.

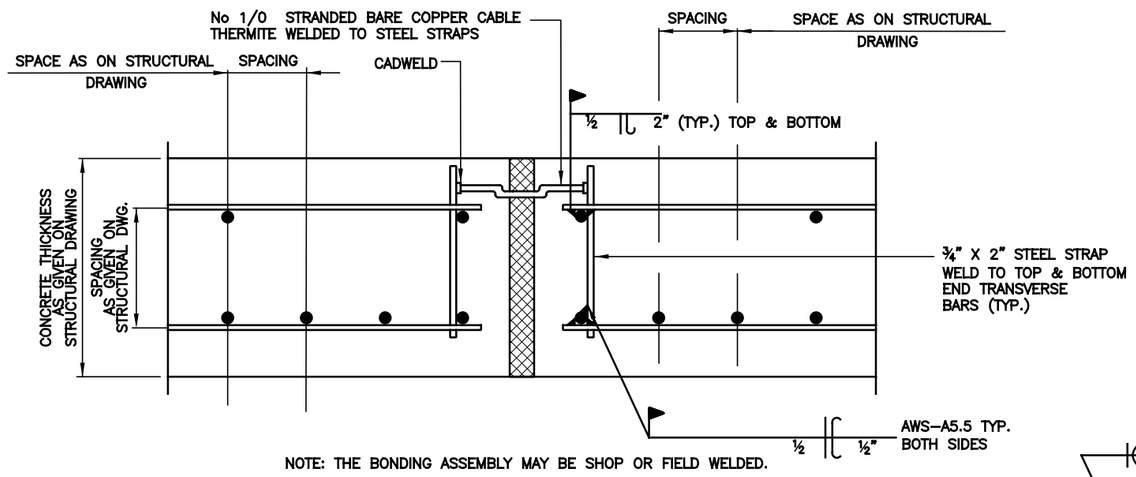

NOTE: THE BONDING ASSEMBLY MAY BE SHOP OR FIELD WELDED.

EXPANSION JOINT END OF APPROACH SLAB

DETAIL 1

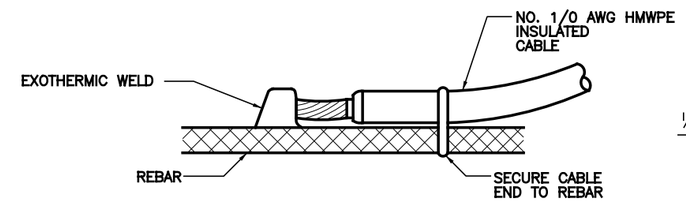

CABLE TO HORIZONTAL REINFORCING

DETAIL BONDING OF CABLE TO REINFORCING BAR

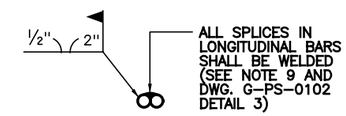

SPLICE DETAIL

DETAIL 2

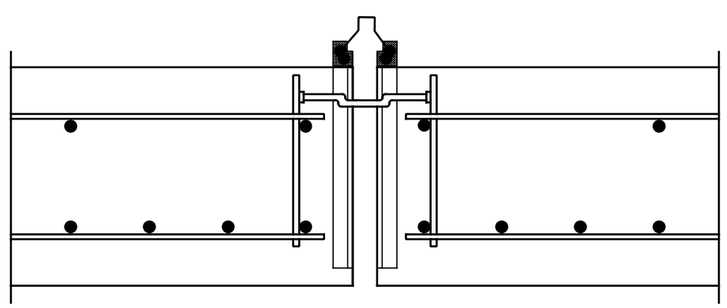

2ND STREET EXPANSION JOINT

DETAIL 5

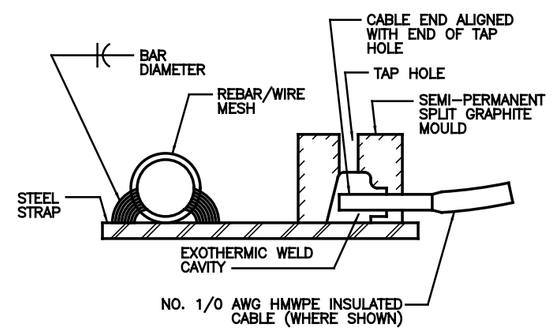

STEEL STRAP TO REINFORCING

DETAIL 3

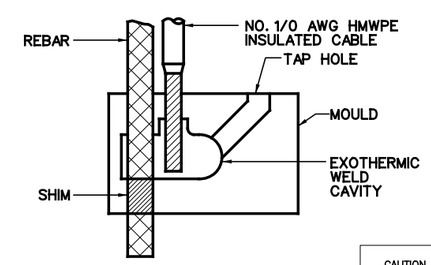

CABLE TO VERTICAL REINFORCING

DETAIL 4

CAUTION UNDERGROUND UTILITIES
2 WORKING DAYS
BEFORE YOU DIG
CALL 1–800–362–2764
OHIO UTILITY PROTECTION SERVICE
CALL NON–SERVICE FACILITY OWNERS DIRECT

PROFESSIONAL STAMP

SIGN:

DATE:

CONTRACT DRAWING

PRINTS NOT BEARING THIS STAMP WERE MADE PRIOR TO ADVERTISING FOR BIDS AND ARE TO BE CONSIDERED OBSOLETE FOR CONTRACT PURPOSES.

Department of Transportation and Engineering

City of Cincinnati
City Hall
801 Plum Street
Cincinnati, Ohio 45202

CINCINNATI STREETCAR

CORROSION CONTROL
STRUCTURAL BONDING DETAILS
SHEET 1 OF 2

Revisions

No.	Date	Date	Date	Date

Drawn by LP
Designed by MB
Checked by DF
Reviewed by JTB

Consultant

PB HDR

File Number

ACC No. 23126

G-PS-0101

$PLTDRV$$
T:\29014a_Cincinnati.Street.Car\CORROSION\S_G-PS-0101.dgn
7/10/2012 1:26:44 PM

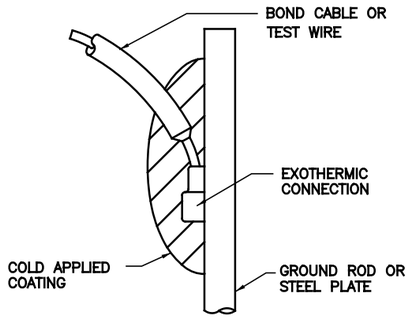

EXOTHERMIC WELD CONNECTION TO GROUND ROD DETAIL (1 / -)

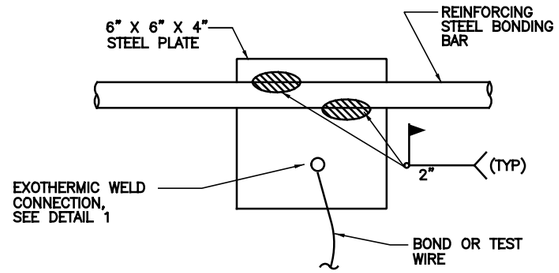

TYPICAL CONNECTOR PLATE DETAIL (2 / -)

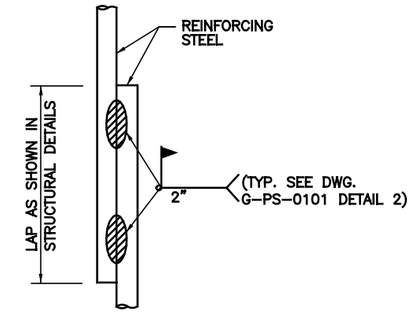

LAP SPLICE DETAIL (3 / -)

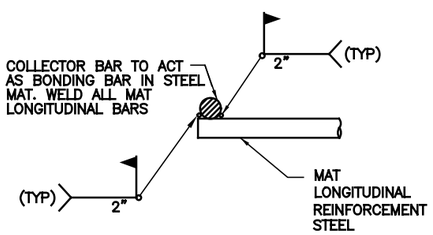

CROSS SPLICE AT SECTION BREAK OR EXPANSION JOINT DETAIL (4 / -)

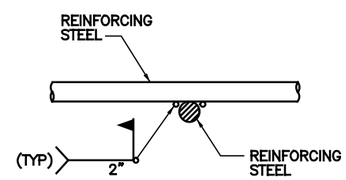

CROSS SPLICE DETAIL (5 / -)

CAUTION UNDERGROUND UTILITIES
2 WORKING DAYS
BEFORE YOU DIG
CALL 1-800-362-2764
OHIO UTILITY PROTECTION SERVICE
CALL NON-SERVICE FACILITY
OWNERS DIRECT

PROFESSIONAL STAMP

SIGN:

DATE:

CONTRACT DRAWING

PRINTS NOT BEARING THIS STAMP WERE MADE PRIOR TO ADVERTISING FOR BIDS, AND ARE TO BE CONSIDERED OBSOLETE FOR CONTRACT PURPOSES.

Department of Transportation and Engineering

City of Cincinnati
City Hall
801 Plum Street
Cincinnati, Ohio 45202

CINCINNATI STREETCAR

CORROSION CONTROL
STRUCTURAL BONDING DETAILS
SHEET 2 OF 2

Revisions

No.				

Date | Date | Date | Date

Drawn by LP | Designed by MB | Checked by DF | Reviewed by JTB

Consultant

PB HDR

File Number

ACC No. 23126

G-PS-0102

$PLTDRV$$
T:\29014a_Cincinnati:Street.Car\CORROSION\S_G-PS-0102.dgn
7/10/2012 1:26:45 PM

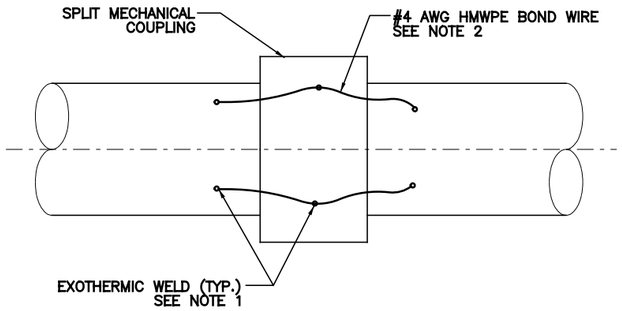

GROOVE END PIPE BOND DETAIL (1 / -)

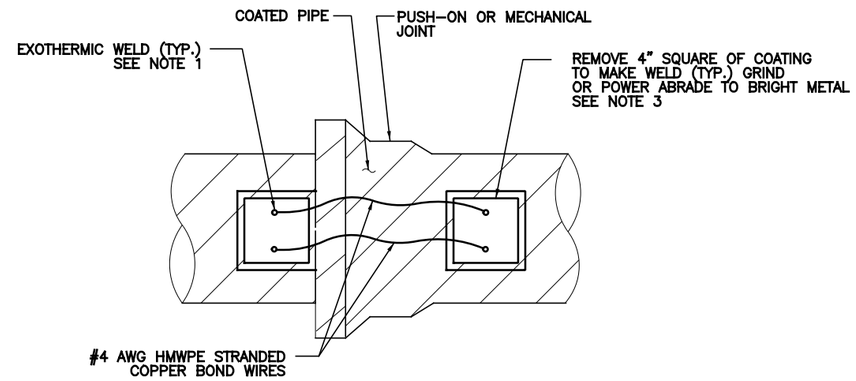

PUSH-ON OR MECHANICAL JOINT BOND DETAIL (2 / -)

NOTES:

1. CLEAN EXOTHERMIC WELDS AND APPLY COAL TAR MASTIC COMPLETELY COVERING THE WELD.
2. DO NOT SPLICE BOND WIRES.
3. RECOAT ALL EXPOSED PIPE PER SPECIFICATIONS UPON COMPLETION

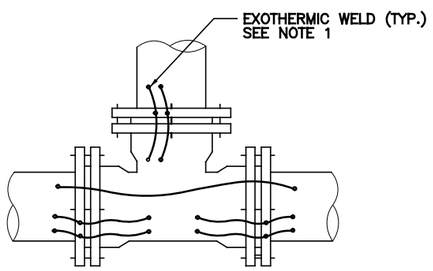

TEE

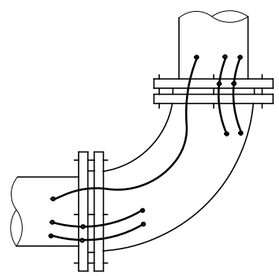

BEND
(90° SHOWN AS TYPICAL)

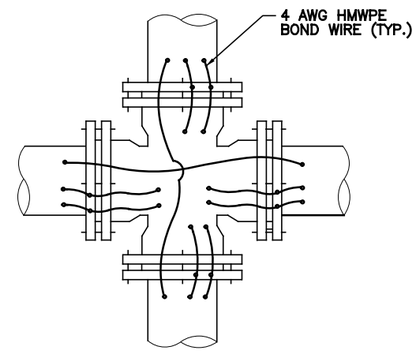

CROSS

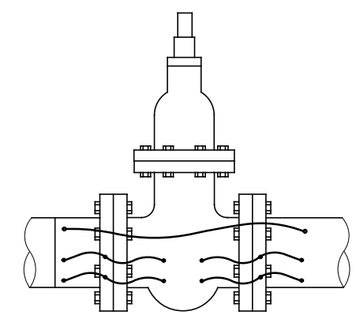

VALVE

FITTINGS BONDING DETAIL (3 / -)

CAUTION UNDERGROUND UTILITIES
2 WORKING DAYS
BEFORE YOU DIG
CALL 1-800-362-2764
OHIO UTILITY PROTECTION SERVICE
CALL NON-SERVICE FACILITY
OWNERS DIRECT

PROFESSIONAL STAMP

SIGN:
DATE:

DEPARTMENT OF TRANSPORTATION & ENGINEERING
CITY OF CINCINNATI OHIO

CONTRACT DRAWING

PRINTS NOT BEARING THIS STAMP WERE MADE PRIOR TO ADVERTISING FOR BIDS AND ARE TO BE CONSIDERED OBSOLETE FOR CONTRACT PURPOSES.

Department of Transportation and Engineering

City of Cincinnati
City Hall
801 Plum Street
Cincinnati, Ohio 45202

CINCINNATI STREETCAR

CORROSION CONTROL
UTILITY BONDING DETAILS

Revisions
No.

Drawn by LP	Date	Designed by MB	Date
Checked by RF	Date	Reviewed by JTB	Date

Consultant

PB HDR

File Number

ACC No. 23126

G-PS-0103

$PLTDRV$$
T:\290144_Cincinnati Street Car\CORROSION\S_G-PS-0103.dgn
7/10/2012 1:26:46 PM

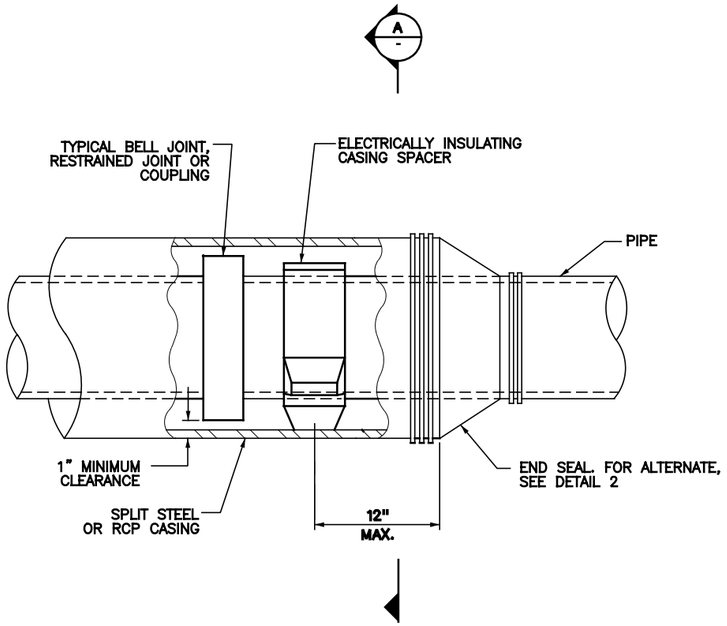

CASING ISOLATION AND END SEAL DETAIL (1 / -)

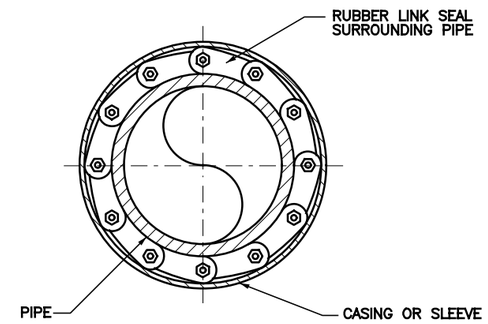

WALL/FLOOR SEAL OR ALTERNATE CASING END SEAL DETAIL (2 / -)

NOTES:

1. PROVIDE FITTING AND INSULATING ELEMENTS RATED FOR TEMPERATURE PRESSURE, AND MATERIALS IN CONTACT WITH THE INTERIOR AND EXTERIOR PIPE SURFACE.
2. SELECT INSULATION JOINT MATERIAL SUITABLE FOR THE INSTALLATION.
3. COAT BURIED INSULATED FITTINGS WITH MASTIC–FILLED HEAT–SHRINKABLE SLEEVES. COAT INSIDE OF PIPE AND COMPLY WITH MANUFACTURER RECOMMENDATIONS.

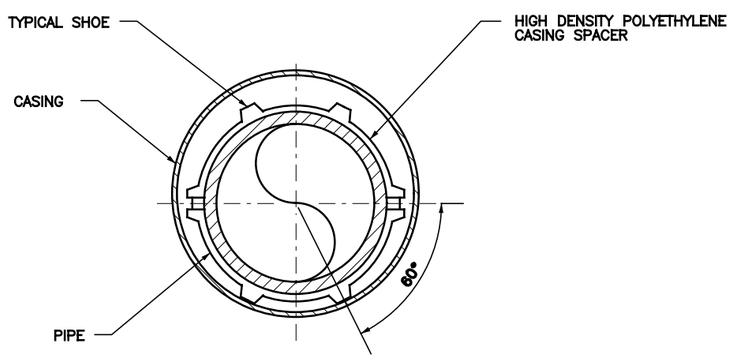

SECTION A / - CASING INSULATOR

CAUTION UNDERGROUND UTILITIES
2 WORKING DAYS
BEFORE YOU DIG
CALL 1–800–362–2764
OHIO UTILITY PROTECTION SERVICE
CALL NON–SERVICE FACILITY
OWNERS DIRECT

PROFESSIONAL STAMP

SIGN:

DATE:

CONTRACT DRAWING

PRINTS NOT BEARING THIS STAMP WERE MADE PRIOR TO ADVERTISING FOR BIDS AND ARE TO BE CONSIDERED OBSOLETE FOR CONTRACT PURPOSES.

Department of Transportation and Engineering

City of Cincinnati
City Hall
801 Plum Street
Cincinnati, Ohio 45202

CINCINNATI STREETCAR

CORROSION CONTROL
PIPE ISOLATION DETAILS

Revisions

No.				

Drawn by LP Date
Designed by MB Date
Checked by RF Date
Reviewed by JTB Date

Consultant

PB HDR

File Number

ACC No. 23126

G-PS-0104

$PLTDRVS$
T:\290144_Cincinnati Street Car\CORROSION\S_G-PS-0104.dgn
7/10/2012 1:26:48 PM

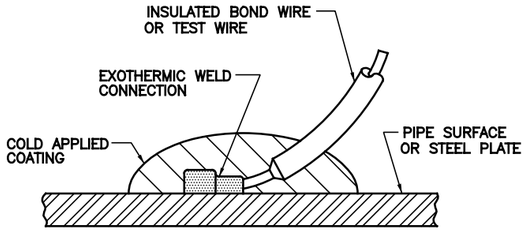

EXOTHERMIC WELD CONNECTION DETAIL 1 -

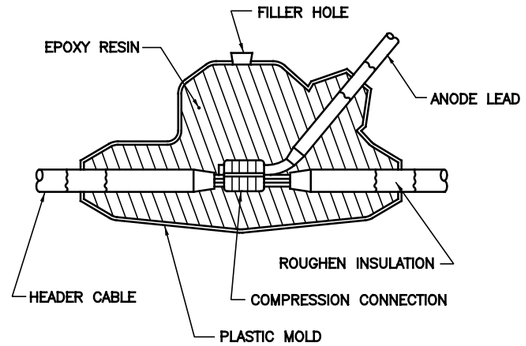

EPOXY RESIN CABLE SPICE DETAIL 2 -

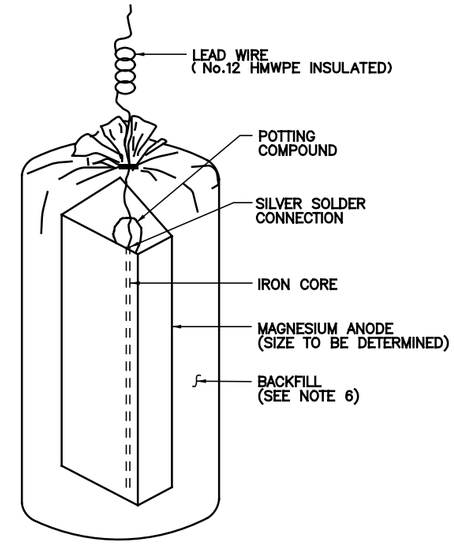

MAGNESIUM ANODE DETAIL 3 -

NOTES:

1. ALL BURIED TEST WIRES SHALL BE LOOSE LAID WITH SLACK TO PREVENT DAMAGE. CAREFULLY BACKFILL WIRES WITH TOP SOIL NO STONES OVER ¼" DIAMETER SHALL BE PERMITTED.
2. ANODE LEAD CONNECTION AND REFERENCE ELECTRODE LEAD CONNECTION SHALL BE A PERMANENT SILVER SOLDERED CONNECTION.
3. ZINC ANODE BACKFILL MATERIAL WITHIN CLOTH SACK SHALL BE 50 PERCENT BENTONITE AND 50 PERCENT HYDRATED GYPSUM. NO SODIUM SULFATE SHALL BE PERMITTED FOR ZINC ELECTRODES.
4. APPLY COAL TAR MASTIC TO COAT ALL BURIED EXOTHERMIC WELD CONNECTIONS.
5. PROVIDE SUFFICIENT WIRE COILED IN TEST STATION TO EXTEND A MINIMUM OF 12" ABOVE GRADE.
6. HIGH POTENTIAL MAGNESIUM ANODE BACKFILL MATERIAL WITHIN CLOTH SACK SHALL BE 75 PERCENT BENTONITE, 20 PERCENT HYDRATED GYPSUM AND 5 PERCENT SODIUM SULFATE.

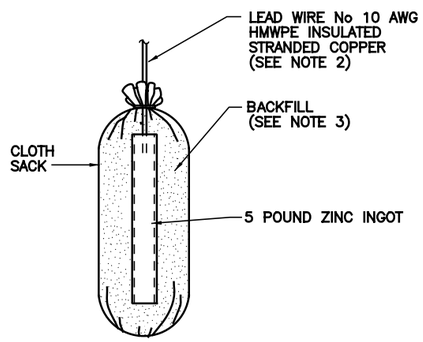

REFERENCE ELECTRODE DETAIL 4 -

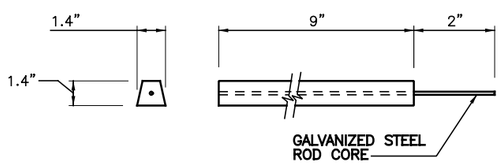

ZINC INGOT DETAIL 5 -

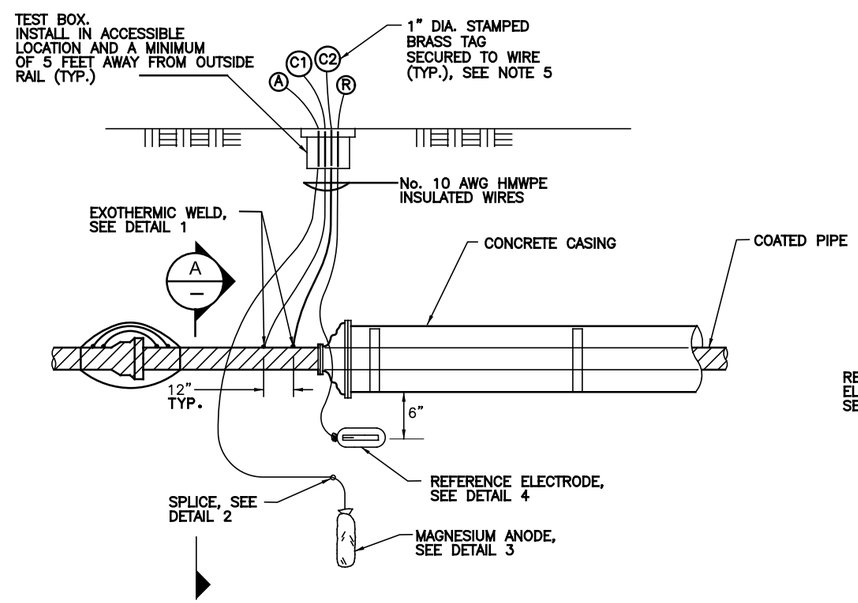

TEST STATION AT STEEL CASING DETAIL 6 -

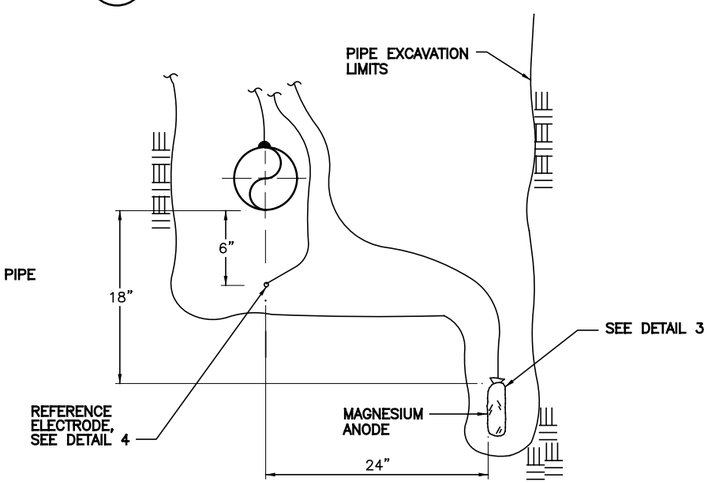

SECTION A -

CAUTION UNDERGROUND UTILITIES
2 WORKING DAYS
BEFORE YOU DIG
CALL 1-800-362-2764
OHIO UTILITY PROTECTION SERVICE
CALL NON-SERVICE FACILITY
OWNERS DIRECT

PROFESSIONAL STAMP

SIGN:

DATE:

CONTRACT DRAWING

PRINTS NOT BEARING THIS STAMP WERE MADE PRIOR TO ADVERTISING FOR BIDS AND ARE TO BE CONSIDERED OBSOLETE FOR CONTRACT PURPOSES.

Department of Transportation and Engineering

City of Cincinnati
City Hall
801 Plum Street
Cincinnati, Ohio 45202

CINCINNATI STREETCAR

CORROSION CONTROL
CATHODIC PROTECTION DETAILS

Revisions

No.			

Date Date Date Date

Drawn by LP
Designed by MB
Checked by RF
Reviewed by JTB

Consultant

PB HDR

File Number

ACC No. 23126

G-PS-0105

$PLTDRV$
T:\290144_Cincinnati Street Car\CORROSION\S_G-PS-0105.dgn
7/10/2012 1:26:50 PM

TRACK SLAB TEST STATIONS

TEST STATION No.	STATIONING	LOCATION RELATIVE TO TRACK
1	1+50	NORTH
2	3+50	NORTH
3	5+50	WEST
4	7+50	WEST
5	9+50	WEST
6	11+30	WEST
7	13+50	WEST
8	15+50	WEST
9	17+50	WEST
10	19+50	WEST
11	21+50	WEST
12	23+50	WEST
13	25+50	WEST
14	27+20	EAST
15	29+50	NORTH
16	31+50	NORTH
17	33+50	EAST
18	35+50	WEST
19	68+50	WEST
20	70+50	WEST
21	72+25	WEST
22	74+50	WEST
23	76+50	WEST
24	78+50	WEST
25	80+50	WEST
26	82+50	WEST
27	84+50	WEST
28	86+50	WEST
29	88+50	WEST
30	90+50	NORTH

TEST STATION No.	STATIONING	LOCATION RELATIVE TO TRACK
31	92+50	NORTH
32	94+50	NORTH
33	96+50	NORTH
34	200+50	NORTH
35	202+40	NORTH
36	204+50	NORTH
37	206+50	NORTH
38	208+50	NORTH
39	210+50	EAST
40	212+50	EAST
41	214+50	EAST
42	216+50	EAST
43	218+50	EAST
44	220+50	EAST
45	222+50	EAST
46	224+50	EAST
47	226+50	EAST
48	228+00	EAST
49	230+00	EAST
50	231+70	EAST
51	233+50	EAST
52	235+50	EAST
53	237+50	EAST
54	239+50	EAST
55	241+50	EAST
56	243+50	EAST
57	245+40	EAST
58	247+50	NORTH
59	249+50	NORTH
60	251+50	WEST

TEST STATION No.	STATIONING	LOCATION RELATIVE TO TRACK
61	253+50	WEST
62	255+50	WEST
63	257+50	WEST
64	259+50	WEST
65	261+50	EAST
66	263+40	EAST
67	265+50	EAST
68	267+50	EAST
69	269+50	EAST
70	271+50	EAST
71	273+50	EAST
72	275+50	EAST
73	277+50	EAST
74	279+50	EAST
75	281+50	EAST
76	283+50	EAST
77	285+50	EAST
78	287+50	EAST
79	289+50	EAST
80	291+50	NORTH
81	293+50	NORTH
82	295+50	NORTH

NOTES:

1. ROADWAY TEST BOX DETAIL FOR TRACK SLAB IS SHOWN ON DETAIL 1. TWO AWG No. 10 INSULATED TEST WIRES FROM EACH SIDE OF ELECTRICALLY BONDED STEEL REINFORCING SHALL BE TERMINATED AT REMOVABLE TERMINAL BOARD OF TEST BOX. EACH TEST STATION SHALL CONSIST OF 4 WIRES TOTAL, ONE WIRE PER TERMINAL.
2. AWG No. 10 INSULATED COPPER WIRES SHALL BE EXOTHERMICALLY WELDED TO STEEL REBARS.
3. ROADWAY CAST IRON TEST BOXES SHALL BE H–20 TRAFFIC LOAD RATED, MANUFACTURED BY NEENAH FOUNDRY Co. OR APPROVED EQUAL.
4. TEST BOXES SHALL BE EMBEDDED AT ACCESSIBLE LOCATIONS ON STREET OR SIDEWALK 2 FEET MAXIMUM FROM CURB.
5. ROADWAY TEST BOX FOR DUCTILE IRON SEWER PIPES IS SHOWN ON DETAIL 6 DRAWING G–PS–0105.

TEST STATIONS ON DICTILE IRON SEWER PIPES

TEST STATION No.	STATIONING	OFFSET
83	5+81.00	14.21 WEST
84	5+83.24	12.87 EAST
85	232+67.44	11.03 WEST
86	232+78.97	15.60 EAST
87	247+10.24	10.96 NORTH
88	247+23.17	10.17 SOUTH

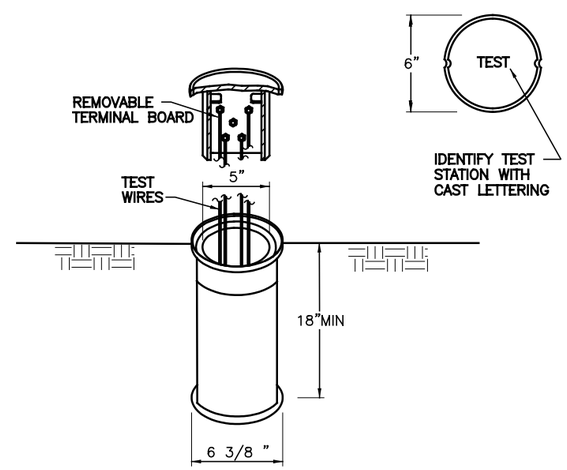

ROADWAY TEST BOX DETAIL 1 -

CAUTION UNDERGROUND UTILITIES
2 WORKING DAYS
BEFORE YOU DIG
CALL 1–800–362–2764
OHIO UTILITY PROTECTION SERVICE
CALL NON–SERVICE FACILITY
OWNERS DIRECT

PROFESSIONAL STAMP

SIGN:
DATE:

CONTRACT DRAWING

PRINTS NOT BEARING THIS STAMP WERE MADE PRIOR TO ADVERTISING FOR BIDS AND ARE TO BE CONSIDERED OBSOLETE FOR CONTRACT PURPOSES.

Department of Transportation and Engineering

City of Cincinnati
City Hall
801 Plum Street
Cincinnati, Ohio 45202

CINCINNATI STREETCAR

CORROSION CONTROL
TEST STATIONS LOCATION

Revisions
No.

Drawn by LP Date
Designed by MB Date
Checked by DF Date
Reviewed by JTB Date

Consultant

PB HDR

File Number

ACC No. 23126

G-PS-0106

$PLTDRV$$
T:\29014a_Cincinnati.Street.Car\CORROSION\S_G-PS-0106.dgn
1:26:51 PM
7/10/2012

③ KEYNOTES

1. EXISTING STORM MH TO REMAIN.
2. EXISTING STORM SEWER TO REMAIN.
3. EXISTING INLET TO REMAIN.
4. PROPOSED 12" WATER BY GCWW. FIELD VERIFY INSTALLED LOCATION.
5. "PLUG" BY GCWW. FIELD VERIFY INSTALLED LOCATION.
6. PROPOSED OVERHEAD FEEDER LINES. REFER TO OCS DWG'S.
7. EXISTING 12" WATER TO REMAIN.
8. EXISTING FIRE HYDRANT, RELOCATED BY GCWW.
9. CONSTRUCT MH/VAULT ON EXISTING DUCT BANK. PROVIDE 4'X10' MH SIMILAR TO DUKE ENERGY STD DWG #677.
10. CONSTRUCT MH/VAULT ON EXISTING DUCT BANK. PROVIDE 5'X10' MH PER DUKE ENERGY STD DWG #677.
11. EXISTING DUCT BANK TO BE ABANDONED. REMOVE WHERE INTERFERING WITH PROPOSED CONSTRUCTION.
12. EXISTING 12" WATER MAIN TO BE ABANDONED. REMOVE WHERE INTERFERING WITH PROPOSED CONSTRUCTION.
13. EDGE OF ELEVATED PLATFORM. REFER TO STRUCTURAL DRAWINGS.
14. CONCRETE PAD & STEP @ MAIN SUBSTATION DOOR. REFER TO STRUCTURAL DRAWINGS.
15. EXISTING COVERED STORAGE FOR TRANSIT CENTER FLOODGATE STORAGE. TEMPORARILY STORE FLOODGATES IN TRANSIT CENTER WHERE DIRECTED BY SORTA & THE CITY OF CINCINNATI. REMOVE EXISTING ROOF/COLUMNS & SALVAGE AS DIRECTED. REMOVE & STORE EXISTING GROUND MOUNTED FLOODGATE STORAGE SUPPORTS FOR REUSE. REMOVE & SALVAGE EXISTING FENCING, GATES & HARDWARE FOR REUSE. REFER TO SHEET G-SS-1003.
16. (2) 5" DUCTS, DUCT BANK
17. ELECTRIC CABINET BY DUKE ENERGY. PROVIDE 2'X4'X6" CONCRETE PAD PER DUKE ENERGY REQUIREMENTS.
18. POSITIVE & NEGATIVE D.C. CONDUITS. (BELOW GRADE & ABOVE MAT FOUNDATION) REFER TO TP & PD SERIES DRAWINGS. CONDUITS TO BE INSTALLED ON THE SOUTH FACE OF PLATFORM COLUMNS WHERE INDICATED ON THIS PLAN.
19. STAIRS, REFER TO STRUCTURAL DRAWINGS.
20. OCS/FEEDER POLE, REFER TO "OL" SERIES DRAWINGS.
21. TRACTION POWER MANHOLES. REFER TO "TP" & "PD" SERIES DRAWINGS.
22. NOTE: OUTLINE INDICATED REPRESENTS LIMITS OF ELEVATED PLATFORM. MAT FOUNDATION BELOW PLATFORM IS SMALLER THAN UPPER PLATFORM. REFER TO STRUCTURAL DRAWINGS.
23. METERING CABINET PER DUKE ENERGY STD DWG 678b. REFER TO STRUCTURAL DRAWINGS FOR CONCRETE PAD ON PLATFORM. PROVIDE ALL MATERIALS & INSTALLATIONS NOT FURNISHED BY DUKE ENERGY.
24. CONDUITS BELOW GRADE, FROM ELECTRIC CABINET, UP WEST FACE OF COLUMN, TO METERING CABINET. REFER TO STRUCTURAL, "TP" & "PD" SERIES DRAWINGS.
25. GUARDRAIL, (TYP.) 4 SIDES, EXTEND TO ABUT FLOODWALL. REFER TO STRUCTURAL DRAWINGS.
26. (4) 5" DUCTS. VERIFY WITH DUKE ENERGY PRIOR TO CONSTRUCTION.
27. 26.00'(MIN.) PLATFORM ABOVE FIELD. ESTABLISH PLATFORM LAYOUT AND EXTEND/CONSTRUCT NORTH PLATFORM EDGE AT 0.25'(MIN.) FROM THE SOUTH FACE OF EXISTING FLOODWALL.
28. NEGATIVE RETURN DUCTS/DUCTBANK. REFER TO "TP" & "PD" SERIES DWG'S.
29. NEGATIVE RETURN BOXES, REFER TO TRACKWORK DWG'S.

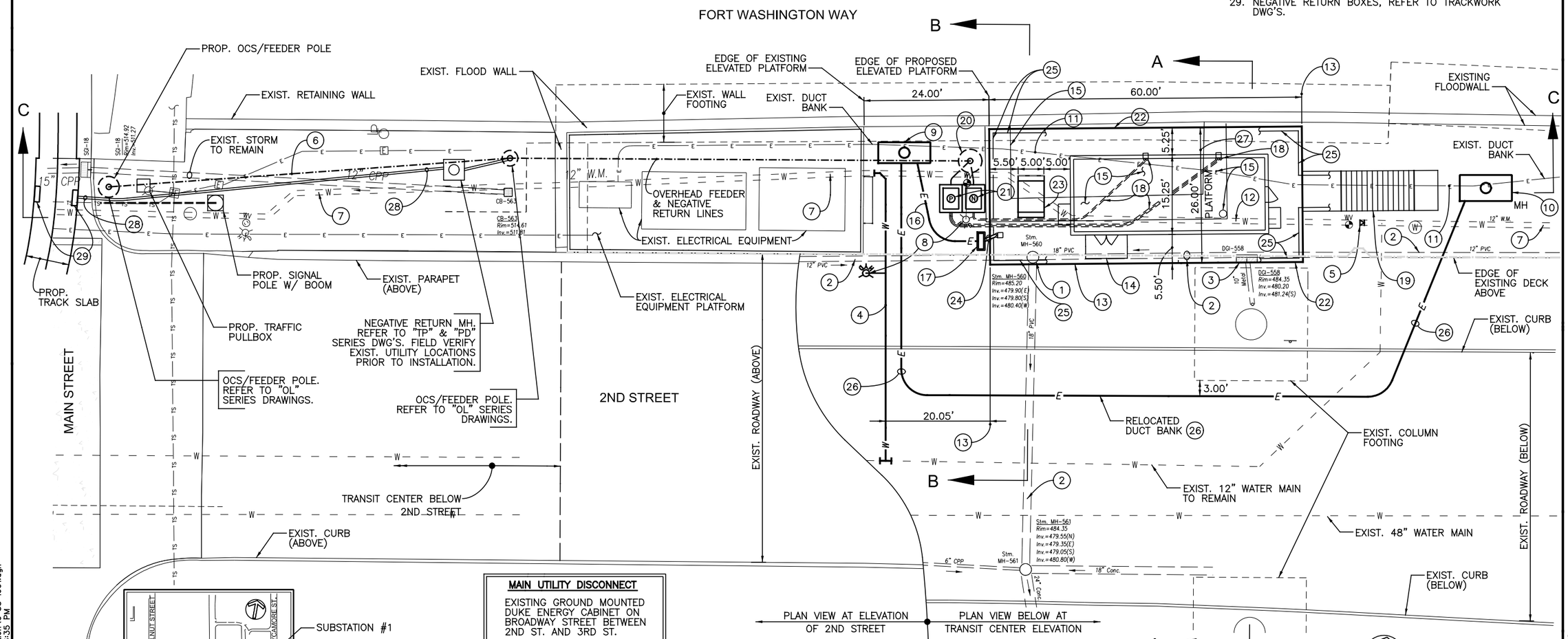

PLAN

VICINITY MAP

SUBSTATION #1

MAIN UTILITY DISCONNECT

EXISTING GROUND MOUNTED DUKE ENERGY CABINET ON BROADWAY STREET BETWEEN 2ND ST. AND 3RD ST.

NOTES

1. PRIOR TO COMMENCING CONSTRUCTION, VERIFY THAT THE DIMENSIONAL REQUIREMENTS FOR ACTUAL SELECTED SUBSTATION ENCLOSURE AND EQUIPMENT ARE COMPATIBLE WITH THE PROVIDED STRUCTURAL AND SITEWORK DESIGN. NOTIFY THE ENGINEER IF THE SELECTED EQUIPMENT IS NOT COMPATIBLE WITH THE PROVIDED DESIGNS PRIOR TO ORDERING/PURCHASING EQUIPMENT.
2. REFER TO TRACTION POWER SUBSTATION #1 PLANS AND DETAILS SHEET FOR GEOTECHNICAL REQUIREMENTS.

CAUTION UNDERGROUND UTILITIES
2 WORKING DAYS
BEFORE YOU DIG
CALL 1-800-362-2764
OHIO UTILITY PROTECTION SERVICE
CALL NON-SERVICE FACILITY OWNERS DIRECT

GRAPHIC SCALE
10 0 10 20 40
(IN FEET)
1 inch = 10 ft. Full Size
1 inch = 20 ft. Half Size

DOTE_Mono_PDF_Half.pltcfg
T:\Z9014A-Streetcar\CAD\Substation\G-SS-1001.dgn
7/15/2012 1:56:35 PM

CITY OF CINCINNATI DEPARTMENT OF TRANSPORTATION & ENGINEERING OHIO

CONTRACT DRAWING

PRINTS NOT BEARING THIS STAMP WERE MADE PRIOR TO ADVERTISING FOR BIDS AND MUST BE CONSIDERED OBSOLETE FOR CONTRACT PURPOSES.

Department of Transportation and Engineering

City of Cincinnati
City Hall
801 Plum Street
Cincinnati, Ohio 45202

CINCINNATI STREETCAR
TRACTION POWER SUBSTATION #1
SITE LAYOUT PLAN

Revisions
No.

Date	7/02/12
Date	7/02/12
Date	7/02/12
Date	7/12/12
Drawn by	AAG
Designed by	SAJ
Checked by	SAJ
Reviewed by	JTB

Consultant

PB HDR

File Number

ACC No. 23126

G-SS-1001

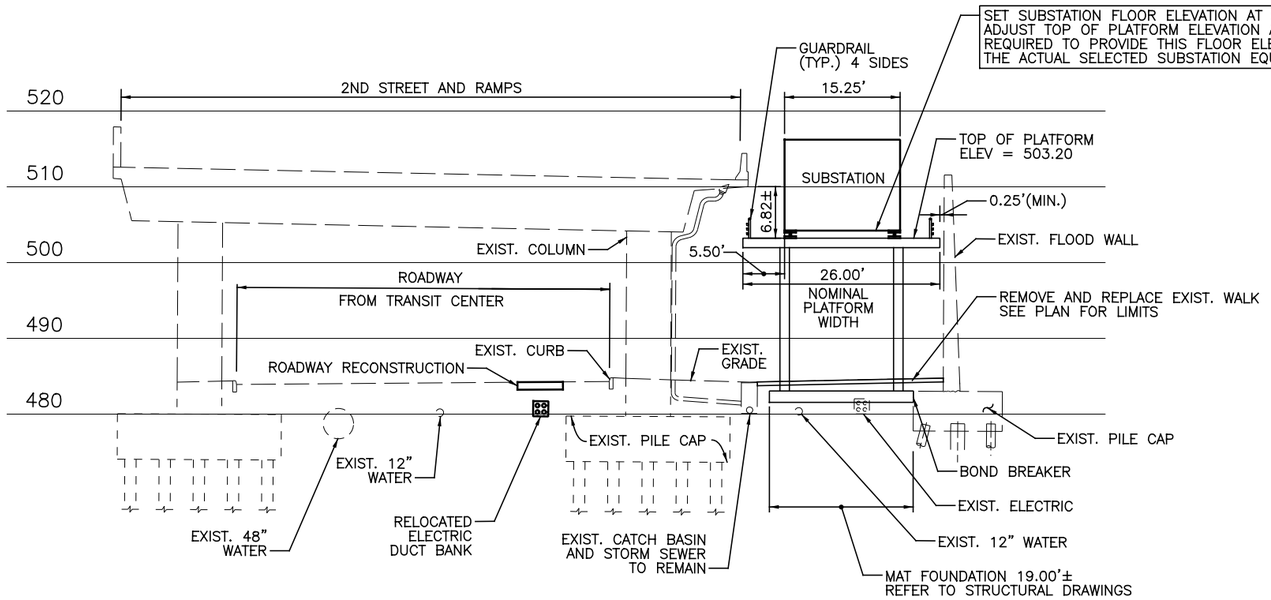

SECTION A-A

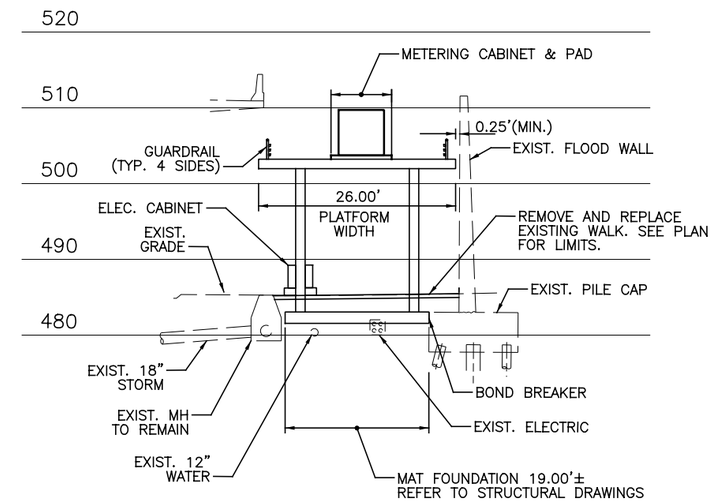

SECTION B-B

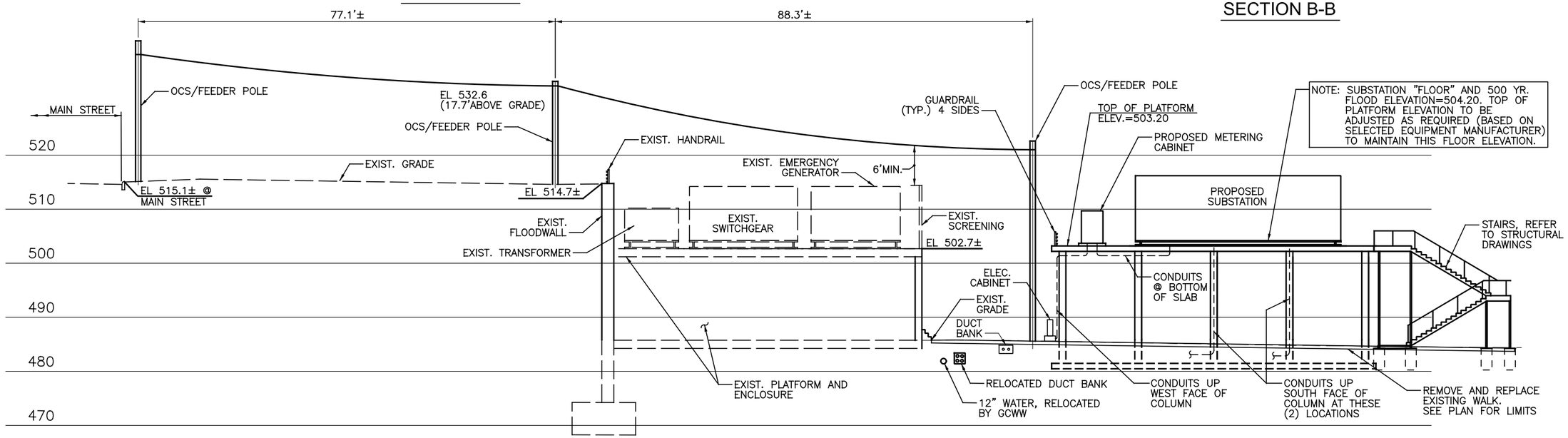

SECTION C-C

CAUTION UNDERGROUND UTILITIES
2 WORKING DAYS
BEFORE YOU DIG
CALL 1-800-362-2764
OHIO UTILITY PROTECTION SERVICE
CALL NON-SERVICE FACILITY OWNERS DIRECT

DOTE_Mono_PDF_Half.pltcfg
T:\29014A-Streetcar\CAD\Substation\G-SS-1002.dgn
7/15/2012 1:56:36 PM

CONTRACT DRAWING

PRINTS NOT BEARING THIS STAMP WERE MADE PRIOR TO ADVERTISING FOR BIDS AND ARE TO BE CONSIDERED OBSOLETE FOR CONTRACT PURPOSES.

Department of Transportation and Engineering

City of Cincinnati
City Hall
801 Plum Street
Cincinnati, Ohio 45202

CINCINNATI STREETCAR
TRACTION POWER SUBSTATION #1
SITE SECTIONS

Revisions
No.

Drawn by AAG	Date 7/02/12
Designed by SAJ	Date 7/02/12
Checked by SAJ	Date 7/02/12
Reviewed by JTB	Date 7/12/12

Consultant

PB HDR

File Number

ACC No. 23126

G-SS-1002

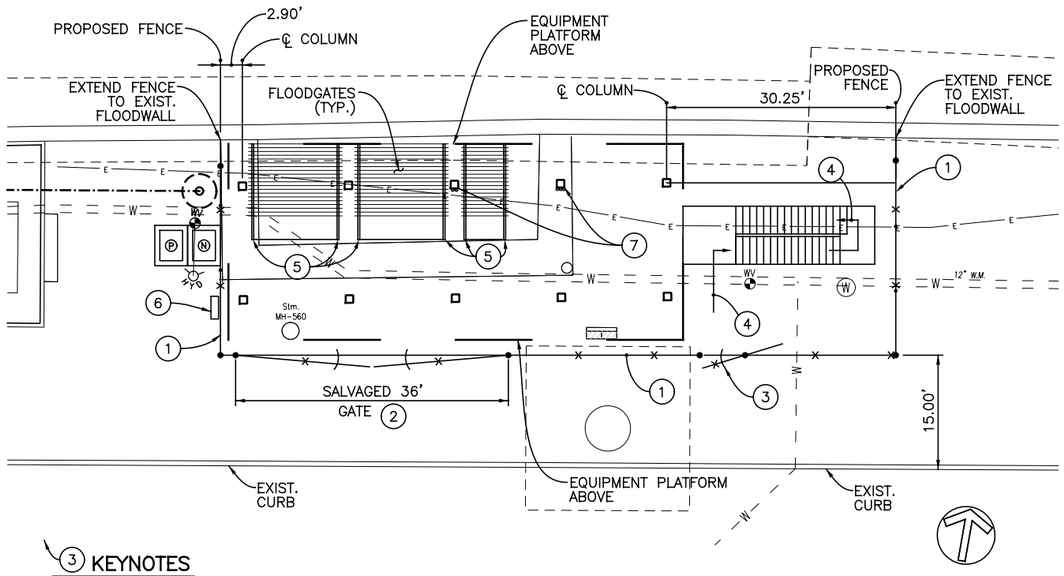

KEYNOTES

1. 8'–0" HIGH CHAIN–LINK FENCE WITH TOP RAIL. INSTALL PER APPLICABLE REQUIREMENTS OF ITEM 607 "FENCE". REUSE SALVAGED FENCING MATERIAL & HARDWARE TO THE EXTENT POSSIBLE AND PROVIDE NEW MATERIALS AS REQUIRED TO COMPLETE THE INSTALLATION AS INDICATED. PROVIDE NEW FENCE & GATE POSTS INSTALLED PER ITEM 607 & THE MANUFACTURER'S RECOMMENDATIONS. DO NOT INSTALL NEW FENCE POSTS IN LOCATIONS CONFLICTING WITH UTILITIES OR EXISTING FOUNDATIONS.
2. REUSE SALVAGED DOUBLE SWING 36'–0" GATE. PROVIDE NEW GATE POSTS, STOPS, KEEPERS & HARDWARE AS REQUIRED. PROVIDE LOCKS & LOCKING HARDWARE AS DIRECTED BY SORTA & THE CITY OF CINCINNATI.
3. 6'–0" SINGLE SWING GATE COMPLETE WITH STOPS, KEEPERS & HARDWARE. PROVIDE LOCKS & LOCKING HARDWARE AS DIRECTED BY SORTA & THE CITY OF CINCINNATI.
4. PATH OF EGRESS
5. REUSE SALVAGED FLOODGATE STORAGE "RAILS" & "BRACKETS". INSTALL TO MATCH EXISTING INSTALLATION AS CLOSELY AS POSSIBLE PROVIDING ALL NEW MATERIALS/INSTALLATIONS REQUIRED TO STORE THE TRANSIT CENTER FLOODGATES. EXPANSION BOLT TO NEW SLAB AS REQUIRED.
   NOTE: FLOODGATES ARE NOT TO BEAR/LEAN AGAINST PLATFORM COLUMNS AT ANY TIME.
6. ELECTRIC CABINET OUTSIDE FENCE
7. COLUMN WITH CONDUIT PROTECTION. REFER TO DETAILS THIS DRAWING.

FENCING & TRANSIT CENTER FLOODGATE STORAGE PLAN

1" = 10.00'

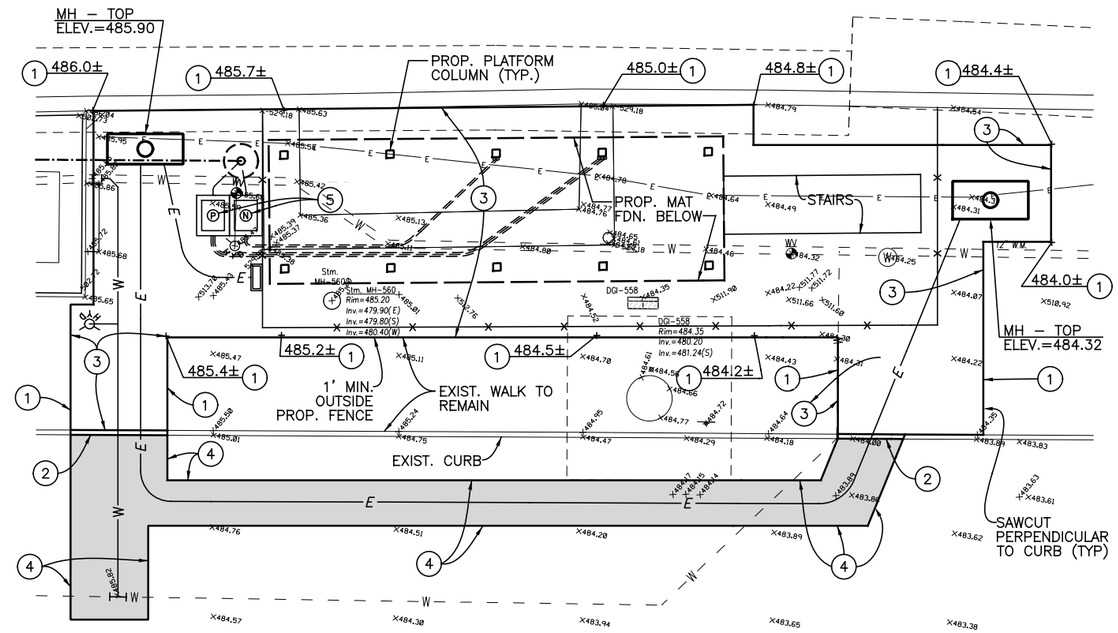

SIDEWALK REMOVAL AND RESTORATION

PAVEMENT REMOVAL AND RESTORATION

KEYNOTES

1. MEET EXISTING WALK/SLAB ELEVATION.
2. REMOVE & REPLACE EXISTING CURB AS REQUIRED. PROVIDE INTEGRAL CURB, SIMILAR TO TYPE P2, MATCHING EXISTING.
3. REMOVE & REPLACE EXISTING CONCRETE WALK. PROVIDE 5" MINIMUM THICKNESS OR MATCH EXISTING THICKNESS (WHICHEVER IS GREATER). PROVIDE TOOLED JOINTS TO MATCH EXISTING JOINTING PATTERN.
4. REMOVE & REPLACE EXISTING CONCRETE PAVEMENT. PROVIDE 12" MINIMUM THICKNESS OR MATCH EXISTING THICKNESS (WHICHEVER IS GREATER). INSTALL ON MINIMUM 6" COMPACTED 304 BASE & PROVIDE EPOXY COATED #5 DOWELS, 12" LONG, DRILLED & EPOXY GROUTED 6" INTO EXISTING PAVEMENT @ 24" O.C. PROVIDE SAWCUT OR TOOLED JOINTS TO MATCH EXISTING JOINTING PATTERN.
5. MH – TOP ELEV=485.45
   (2) MANHOLES

PAVEMENT REMOVAL, REPLACEMENT & GRADING PLAN

1" = 10.00'

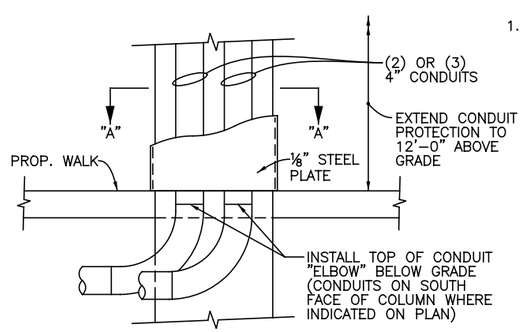

ALTERNATE CONDUIT PROTECTION SYSTEM MAY BE PROPOSED BY THE CONTRACTOR. SUBMIT SHOP DRAWINGS OF ALTERNATE TO THE ENGINEER FOR APPROVAL.

ELEVATION

NOTES

1. PRIME AND PAINT STEEL PLATE, BOTH SIDES, PER PAINT MANUFACTURER'S RECOMMENDATIONS. COLOR TO BE FEDERAL COLOR #27038(BLACK SEMI–GLOSS)

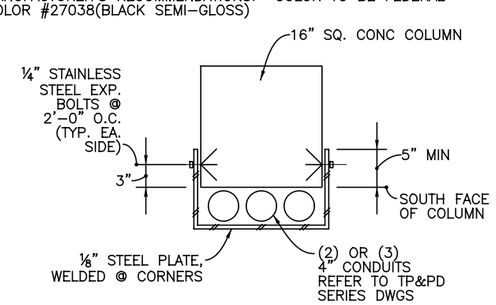

SECTION "A-A"

CONDUIT PROTECTION DETAILS

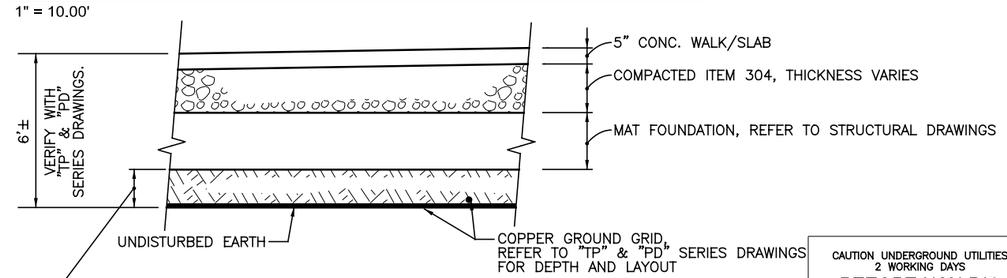

"EARTH FILL", ITEM 203 EXCAVATION & BACKFILL. CONTRACTOR TO ENGAGE A GEOTECHNICAL ENGINEER TO VERIFY THE SUITABILITY OF EXISTING SOILS FOR RE–USE AND TO ENSURE THAT AN ALLOWABLE BEARING CAPACITY OF 2000 PSF AND A MODULUS OF SUBGRADE REACTION OF 70 PCI ARE ACHIEVED.

EXCAVATE TO REQUIRED DEPTH FOR GROUND GRID INSTALLATION. BACKFILL TO TOP OF MAT FOUNDATION ELEVATION IN 8" MAXIMUM LIFTS, COMPACTED PER THE RECOMMENDATIONS OF THE GEOTECHNICAL ENGINEER. EXCAVATE TO REQUIRED MAT FOUNDATION SUBGRADE ELEVATION FOR INSTALLATION OF MAT. PROVIDE SUITABLE FILL MATERIALS AS NECESSARY TO SUPPLEMENT EXISTING SOILS. DISPOSE OF EXCESS EXCAVATED MATERIAL LEGALLY OFF SITE

PRIOR TO COMMENCING EXCAVATION AND BACKFILLING, SUBMIT THE GEOTECHNICAL RECOMMENDATIONS, INCLUDING ANTICIPATED TESTING AND INSPECTION PROCEDURES, TO THE ENGINEER FOR APPROVAL.

CAUTION UNDERGROUND UTILITIES
2 WORKING DAYS
BEFORE YOU DIG
CALL 1–800–362–2764
OHIO UTILITY PROTECTION SERVICE
CALL NON–SERVICE FACILITY OWNERS DIRECT

SECTION

GROUND GRID INSTALLATION

DOTE_Mono_PDF_Half.pltcfg
T:\29014A-Streetcar\CAD\Substation\G-SS-1003.dgn
7/15/2012 1:56:37 PM

CITY OF CINCINNATI DEPARTMENT OF TRANSPORTATION & ENGINEERING

CONTRACT DRAWING

PRINTS NOT BEARING THIS STAMP WERE MADE PRIOR TO ADVERTISING FOR BIDS AND ARE TO BE CONSIDERED OBSOLETE FOR CONTRACT PURPOSES.

Department of Transportation and Engineering

City of Cincinnati
City Hall
801 Plum Street
Cincinnati, Ohio 45202

CINCINNATI STREETCAR
TRACTION POWER SUBSTATION #1
PLANS AND DETAILS

Revisions

No.				

Date 7/02/12	Date 7/02/12	Date 7/02/12	Date 7/12/12
Drawn by AAG	Designed by SAJ	Checked by SAJ	Reviewed by JTB

Consultant

PB HDR

File Number

ACC No. 23126

G-SS-1003

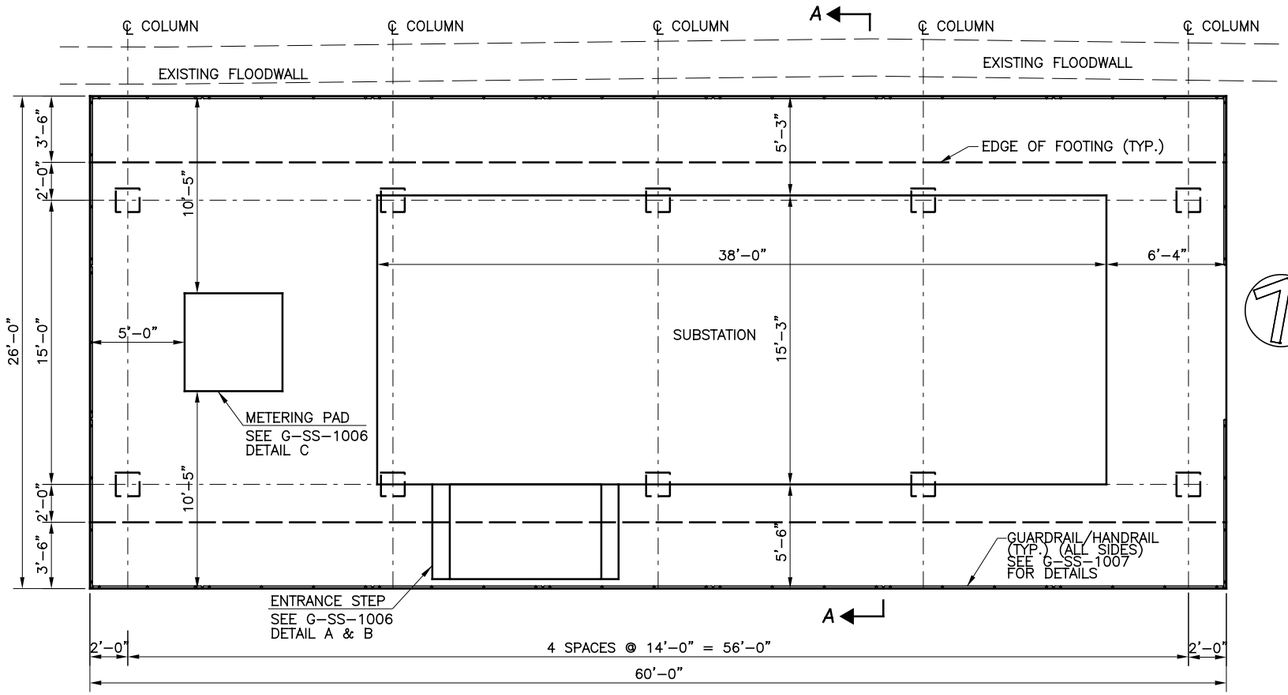

PLAN
SCALE: 1/4"=1'–0"

NOTES:

1. PROVIDE CONCRETE WITH A MINIMUM COMPRESSION STRENGTH OF Fc' = 4000 PSI.
2. ALL REINFORCEMENT SHALL BE EPOXY COATED PER ASTM: 775 GRADE 60
3. ALL REINFORCEMENT SHALL PROVIDE A MINIMUM CLEAR COVER AS SHOWN IN THE DRAWINGS.
4. STRUCTURE DESIGN SHOWN IS IN ACCORDANCE WITH ASCE/SEI 7–10 "MINIMUM DESIGN LOADS FOR BUILDINGS AND OTHER STRUCTURES" AND THE CINCINNATI BUILDING CODE. IT IS BASED ON MAXIMUM SUBSTATION ENCLOSURE DESIGN, WITH DESIGN WEIGHT OF 81,500 LBS (SUBSTATION WEIGHT IS ASSUMED TO BE DISTRIBUTED ALONG THE PERIMETER OF THE SUPPORT BEAM), 2,500 LBS FOR THE METERING CABINET, A FLOOR LIVE LOAD OF 60 PSF, A 10 LB/SFT UTILITY LOAD ACTING AT A LOCATION OF A CONTROLLING DESIGN SECTION, AND ALL APPLICABLE RAIN, SNOW, ICE AND WIND LOAD CASES IN ACCORDANCE WITH ASCE/SEI 7–10.
5. IF SUBSTATION WEIGHT EXCEEDS MAXIMUM DESIGN WEIGHT, CONTRACTOR SHALL SUBMIT SHOP DRAWINGS AND CALCULATIONS FOR APPROVAL BY THE ENGINEER. CONTRACTOR SHALL SUBMIT SHOP DRAWINGS SHOWING CONNECTION OF SUBSTATION TO SUPPORT BEAM AND CONNECTION OF SUPPORT BEAM TO PLATFORM.
6. SEE DRAWING G–SS–1001 FOR ORIENTATION AND PLACEMENT OF SUBSTATION, METERING CABINET PAD, AND ENTRANCE SLAB ON PLATFORM.
7. SEE DRAWING TP & PD SERIES DRAWINGS FOR SPECIFICATIONS ON THE DESIGN SUBSTATION.
8. SEE DRAWING G–TP–0032 FOR GROUNDING DETAILS OF STRUCTURAL ELEMENTS.
9. SEE CONDUIT AND CABLE SCHEDULES FOR SIZE AND QUANTITY OF CABLE RISERS. CONDUIT RISER LOCATIONS SHALL BE DETERMINED AND DOCUMENTED BY CONTRACTOR TO SUIT CONTRACTORS SUBSTATION EQUIPMENT AND ARRANGMENT. CONDUIT HOLES IN THE REINFORCED SLAB SHALL NOT EXCEED 6" AND SHALL BE FORMED DURING THE CONCRETE POUR. ALL MECHANICAL ANCHORING DEVICES REQUIRED FOR THE ATTACHMENT OF CONDUIT SHALL BE CAST INTO THE CONCRETE POUR.
10. CONTRACTOR SHALL ENSURE THAT AN ALLOWABLE BEARING CAPACITY OF 2000 PSF AND A MODULUS OF SUBGRADE REACTION OF 70 PCI ARE ACHIEVED, IF EXISTING SOIL UNDERNEATH THE SUBSTATION IS DISTURBED.
11. ENTRANCE SLABS SHALL BE LOCATED TO SUIT FINAL ENTRANCE LOCATIONS. ENTRANCE SLABS SHALL BE FLUSH WITH DOOR THRESHOLDS.
12. ALL REBAR DIMENSIONS ARE OUT TO OUT UNLESS OTHERWISE NOTED.
13. SEE DRAWING G–SS–1007 FOR GUARDRAIL DETAILS.
14. SEE DRAWING G–SS–1006 FOR DETAILS A, B AND C.
15. WHERE NEW WORK IS TO BE ADJACENT TO EXISTING WORK, THE CONTRACTOR SHALL CHECK ALL DIMENSIONS AND CONDITIONS IN THE FIELD, REPORT ANY ERRORS OR DISCREPANCIES TO THE ENGINEER AND ASSUME RESPONSIBILITY FOR THEIR CORRECTNESS.
16. COST OF P.E.J.F (BOND BREAKER) SHALL BE INCLUDED WITH THE COST OF CONCRETE.
17. SEE DRAWING G–SS–1003 FOR PAVEMENT REMOVAL, REPLACEMENT AND GRADING PLAN.
18. SEE DRAWING G–SS–1002 FOR EXISTING UTILITIES

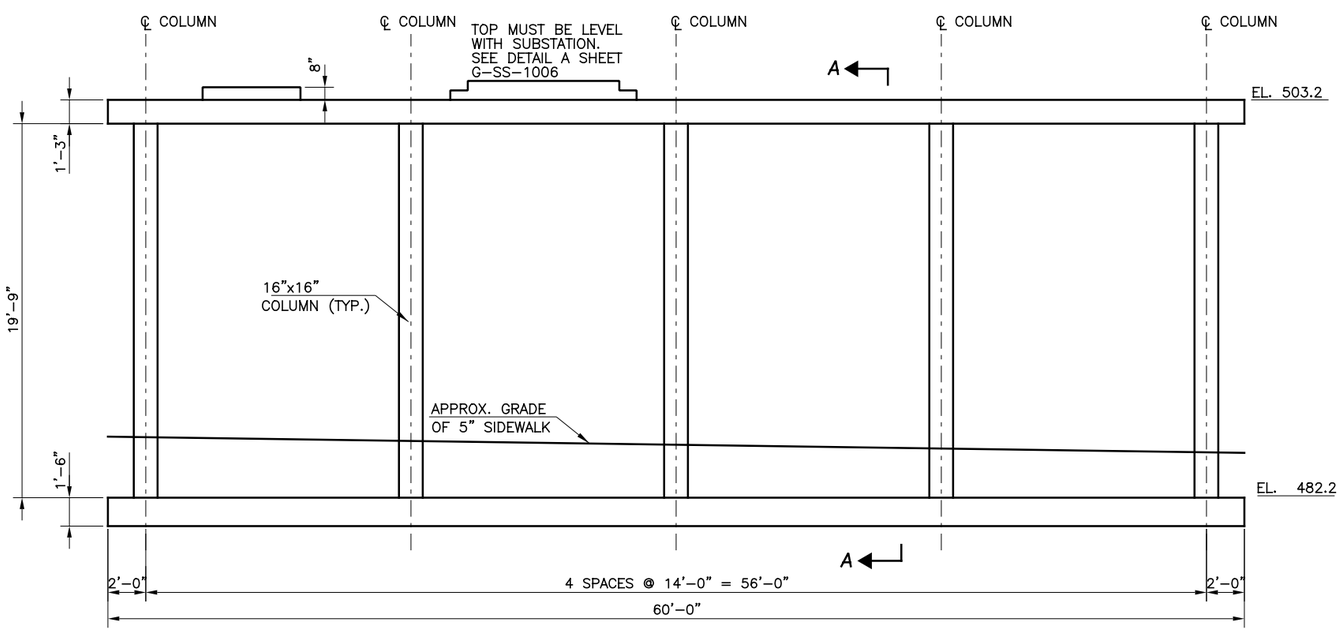

ELEVATION
SCALE: 1/4"=1'–0"

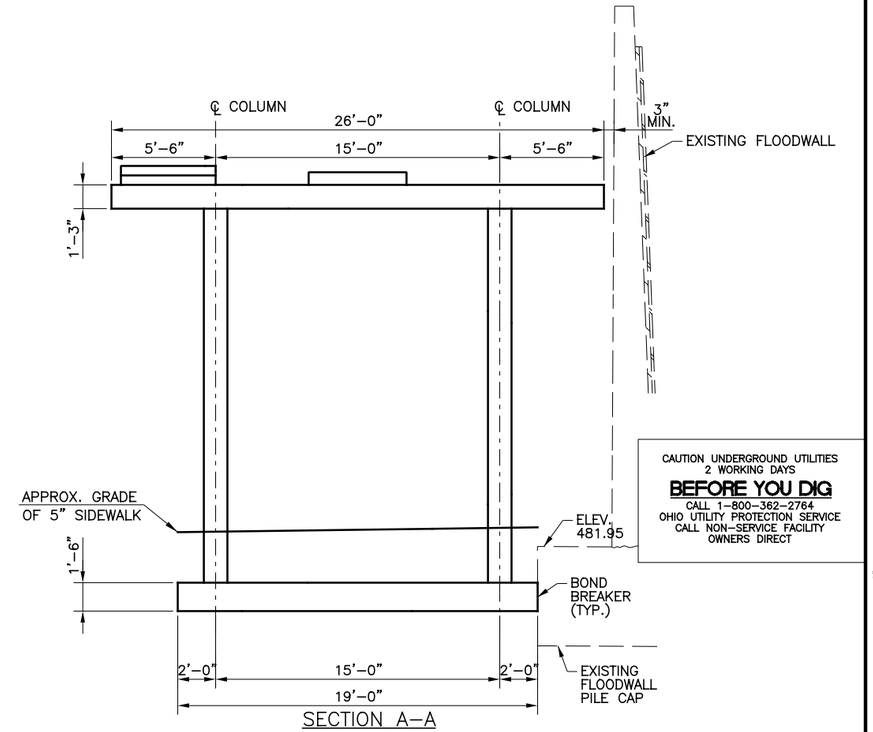

SECTION A–A
SCALE: 1/4"=1'–0"

CONTRACT DRAWING

PRINTS NOT BEARING THIS STAMP WERE MADE PRIOR TO ADVERTISING FOR BIDS AND SHOULD BE CONSIDERED OBSOLETE FOR CONTRACT PURPOSES.

Department of Transportation and Engineering

City of Cincinnati
City Hall
801 Plum Street
Cincinnati, Ohio 45202

CINCINNATI STREETCAR
TRACTION SUBSTATION #1
STRUCTURAL PLAN, ELEVATION AND SECTION

Revisions

No.			

Drawn by MJC	Date 12/20/11	Designed by JLP	Date 12/20/11
Checked by BWB	Date 12/20/11	Reviewed by JTB	Date 12/20/11

Consultant

PB HDR

File Number

ACC No. 23126

G-SS-1004

DOTE_Mono_PDF_Half.pltcfg
T:\29014A-Streetcar\CAD\Structures\TPSS #1\GDS\S_F_ST_1001.dgn
12/16/2011 11:03:55 AM

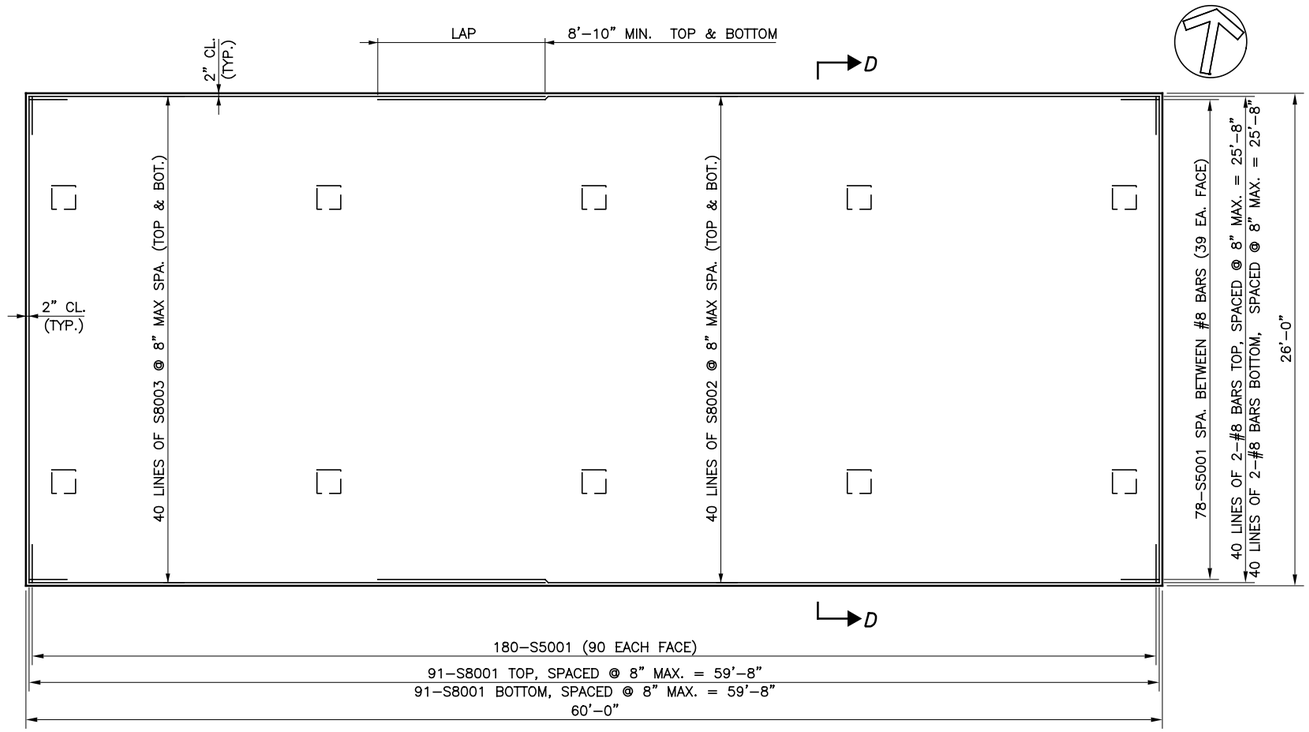

TOP SLAB PLAN
SCALE: ¼"=1'–0"

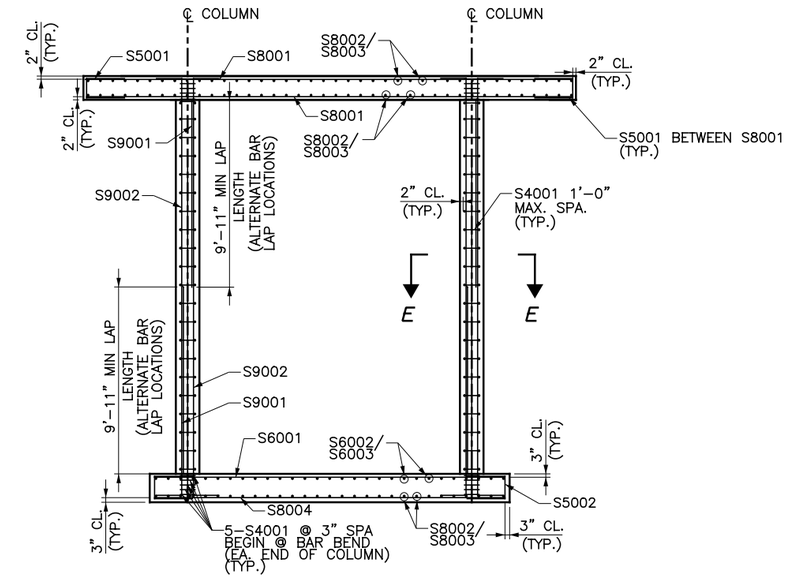

SECTION D–D
SCALE: ¼"=1'–0"

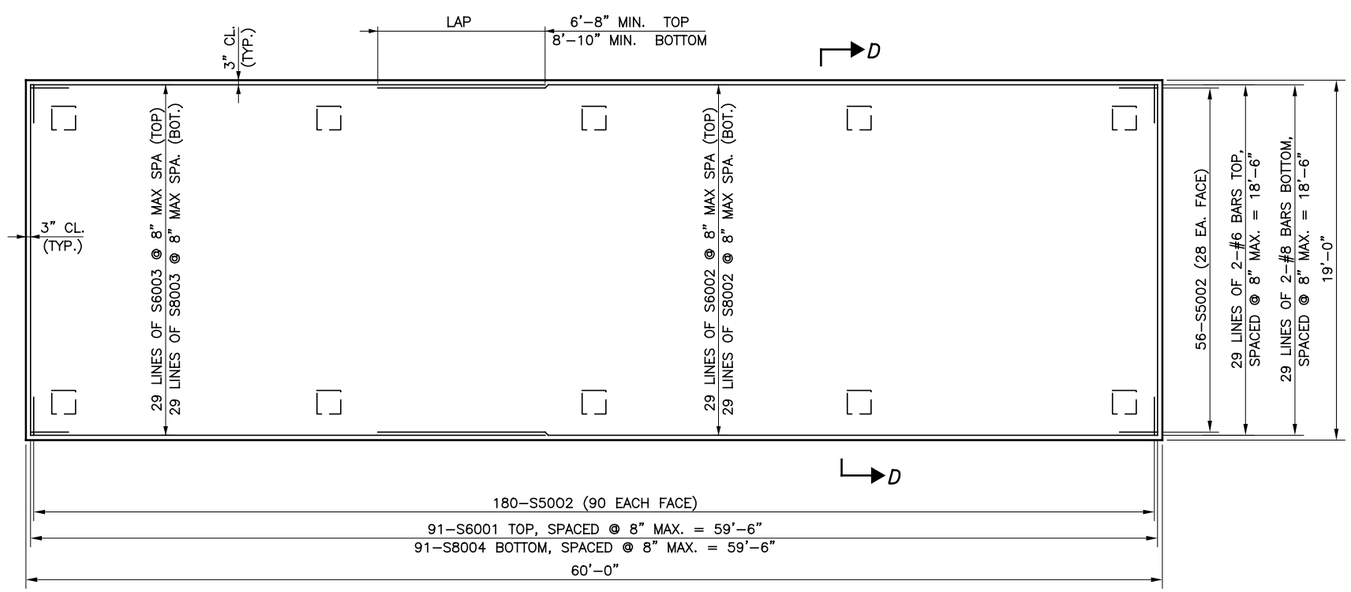

FOOTING PLAN
SCALE: ¼"=1'–0"

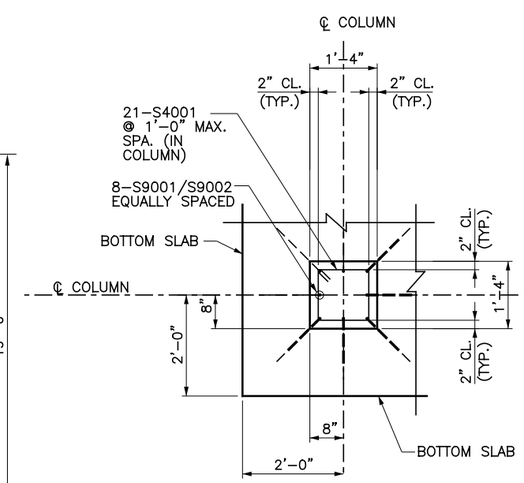

SECTION E–E
SCALE: 3/4"=1'–0"

NOTES:

1. ALL REINFORCING TO BE EPOXY COATED PER ASTM: 775 GRADE 60
2. SEE SHEET G–SS–1006 FOR REINFORCING SCHEDULES.

CAUTION UNDERGROUND UTILITIES
2 WORKING DAYS
BEFORE YOU DIG
CALL 1–800–362–2764
OHIO UTILITY PROTECTION SERVICE
CALL NON–SERVICE FACILITY
OWNERS DIRECT

CONTRACT DRAWING
PRINTS NOT BEARING THIS STAMP WERE MADE PRIOR TO ADVERTISING FOR BIDS AND MUST BE CONSIDERED OBSOLETE FOR CONTRACT PURPOSES.

Department of Transportation and Engineering
City of Cincinnati
City Hall
801 Plum Street
Cincinnati, Ohio 45202

CINCINNATI STREETCAR
TRACTION POWER SUBSTATION #1
SLAB, FOUNDATION PLANS, SECTIONS & DETAILS

Revisions
No.

Drawn by MJC	Date 12/20/11
Designed by JLP	Date 12/20/11
Checked by BWB	Date 12/20/11
Reviewed by JTB	Date 12/20/11

Consultant
PB HDR

File Number

ACC No.
23126

G-SS-1005

DOTE_Mono_PDF_Half.pltcfg
T:\29014A-Streetcar\CAD\Structures\TPSS #1\DDS\S_F_ST_1002.dgn
12/16/2011 11:03:56 AM

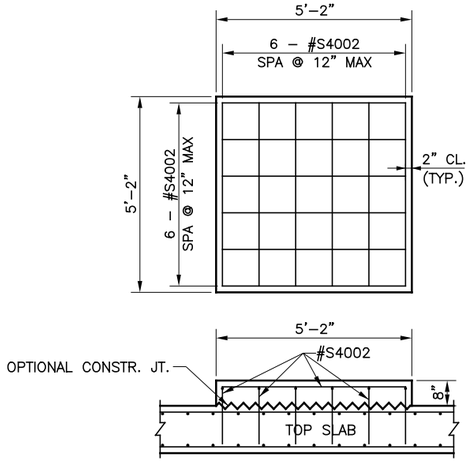

METERING PAD – DETAIL C
SCALE: 1/2" = 1'–0"

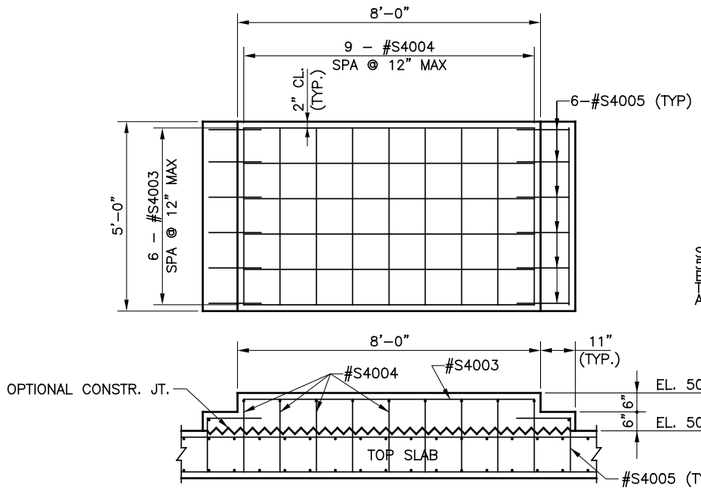

ENTRANCE STEP – DETAIL B
SCALE: 1/2" = 1'–0"

STANDARD HOOK DETAILS

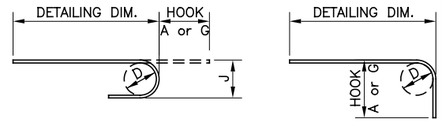

BAR SIZE	D	°180 HOOKS		°90 HOOKS
		A or G	J	A or G
#3	2¼"	5"	3"	6"
#4	3"	6"	4"	8"
#5	3¾"	7"	5"	10"
#6	4½"	8"	6"	12"
#7	5¼"	10"	7"	14"
#8	6"	11"	8"	16"
#9	9½"	15"	11¾"	19"
#10	10¾"	17"	13¼"	22"
#11	12"	19"	14¾"	24"
#14	18¼"	27"	21¾"	31"
#18	24"	36"	28½"	41"

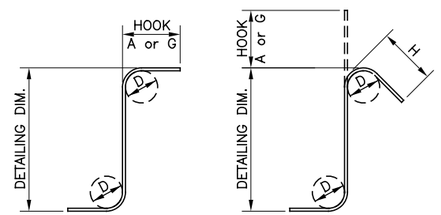

RECOMMENDED STIRRUP & TIE HOOK DIMENSIONS

BAR SIZE	D	°90 HOOKS	°135 HOOKS	
		A or G	A or G	H
#3	2¼"	4"	4"	2½"
#4	3"	4½"	4½"	3"
#5	3¾"	6"	5½"	3¾"
#6	4½"	12"	8"	4½"
#7	5¼"	14"	9"	5½"
#8	6"	16"	11"	6"

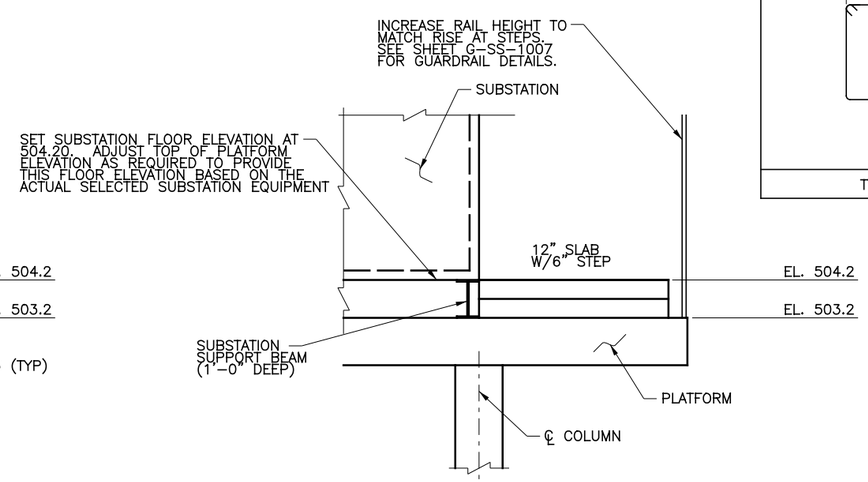

ENTRANCE STEP – DETAIL A
SCALE: 1/2" = 1'–0"

REINFORCING SCHEDULE

MARK	NUMBER	LENGTH	TYPE	DIMENSIONS					WEIGHT (LBS)	DESCRIPTION
				A	B	C	D	E		
S4001	310	4'–6"	3		1'–0"	1'–0"			932	
S4002	12	7'–8"	2	4'–10"	1'–6"				61	
S4003	6	11'–4"	2	7'–8"	1'–11"				45	
S4004	9	8'–4"	2	4'–8"	1'–11"				50	
S4005	12	2'–9"	4	1'–5"	1'–5"				22	
S5001	258	4'–8"	2	11"	2'–0"				1,256	
S5002	236	4'–9"	2	1'–0"	2'–0"				1,169	
S6001	91	18'–6"	1		18'–6"				2,529	
S6002	29	40'–0"	1		40'–0"				1,742	
S6003	29	26'–4"	1		26'–4"				1,147	
S8001	182	25'–8"	1		25'–8"				12,472	
S8002	109	40'–0"	1		40'–0"				11,641	
S8003	109	28'–6"	1		28'–6"				8,294	
S8004	91	18'–6"	1		18'–6"				4,495	
S9001	80	12'–2"	4	11'–2"	1'–3"				3,309	
S9002	80	21'–10"	4	20'–10"	1'–3"				5,939	
								TOTAL	55,103	

BEND DIAGRAM

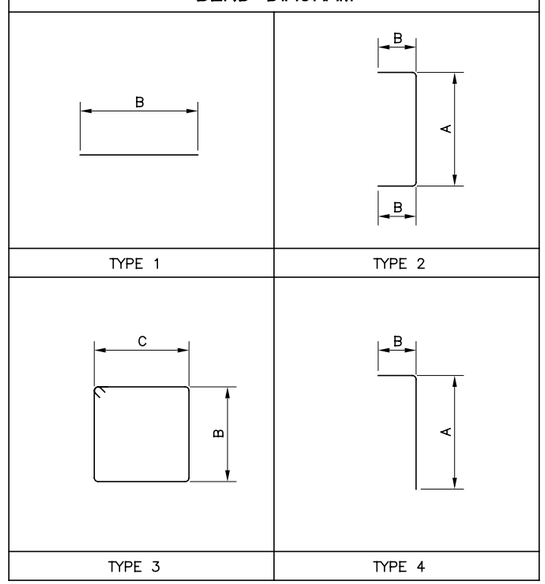

CAUTION UNDERGROUND UTILITIES
2 WORKING DAYS
BEFORE YOU DIG
CALL 1–800–362–2764
OHIO UTILITY PROTECTION SERVICE
CALL NON–SERVICE FACILITY
OWNERS DIRECT

NOTE:

1. ALL REINFORCEMENT SHALL BE EPOXY COATED PER ASTM: 775 GRADE 60.

DEPARTMENT OF TRANSPORTATION & ENGINEERING CITY OF CINCINNATI OHIO

CONTRACT DRAWING

PRINTS NOT BEARING THIS STAMP WERE MADE PRIOR TO ADVERTISING FOR BIDS AND ARE TO BE CONSIDERED OBSOLETE FOR CONTRACT PURPOSES.

Department of Transportation and Engineering

City of Cincinnati
City Hall
801 Plum Street
Cincinnati, Ohio 45202

CINCINNATI STREETCAR
TRACTION POWER SUBSTATION #1
REINFORCING SCHEDULE & DETAILS

Revisions
No.

Date 12/20/11	Date 12/20/11	Date 12/20/11	Date 12/20/11
Drawn by MJC	Designed by JLP	Checked by BWB	Reviewed by JTB

Consultant

PB HDR

File Number

ACC No. 23126

G-SS-1006

DOTE_Mono_PDF_Half.pltcfg
T:\29014A-Streetcar\CAD\Structures\TPSS #1\CDS\S_F_ST_1003.dgn
12/16/2011 11:03:57 AM

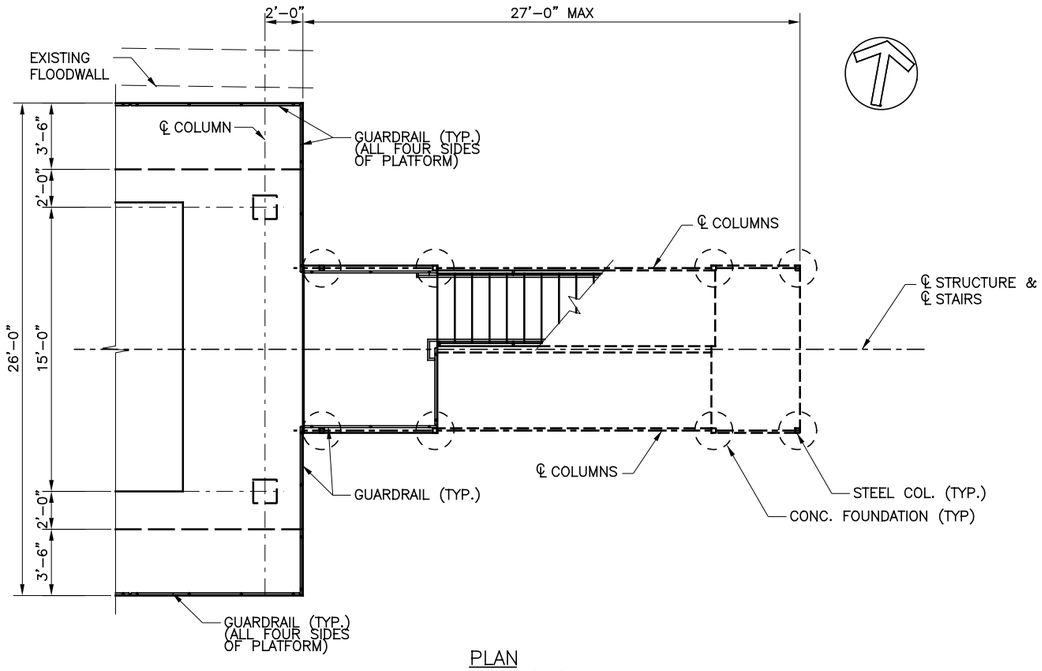

PLAN
SCALE: 1/4"=1'-0"

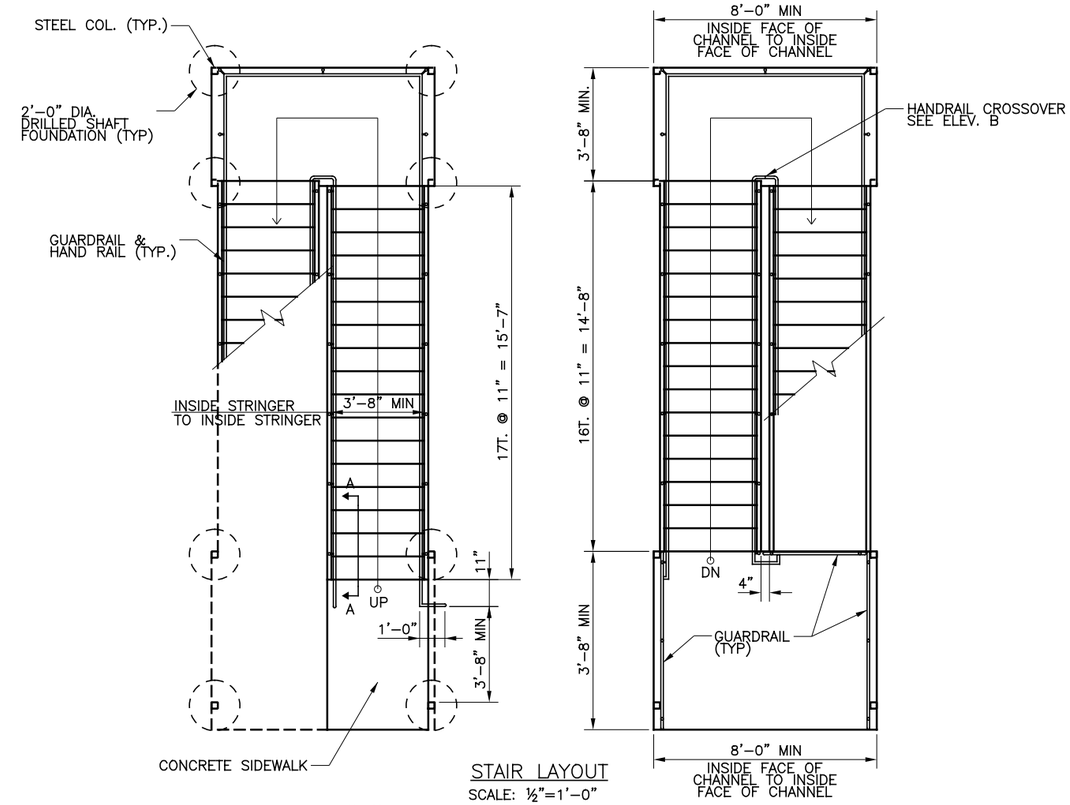

STAIR LAYOUT
SCALE: ½"=1'-0"

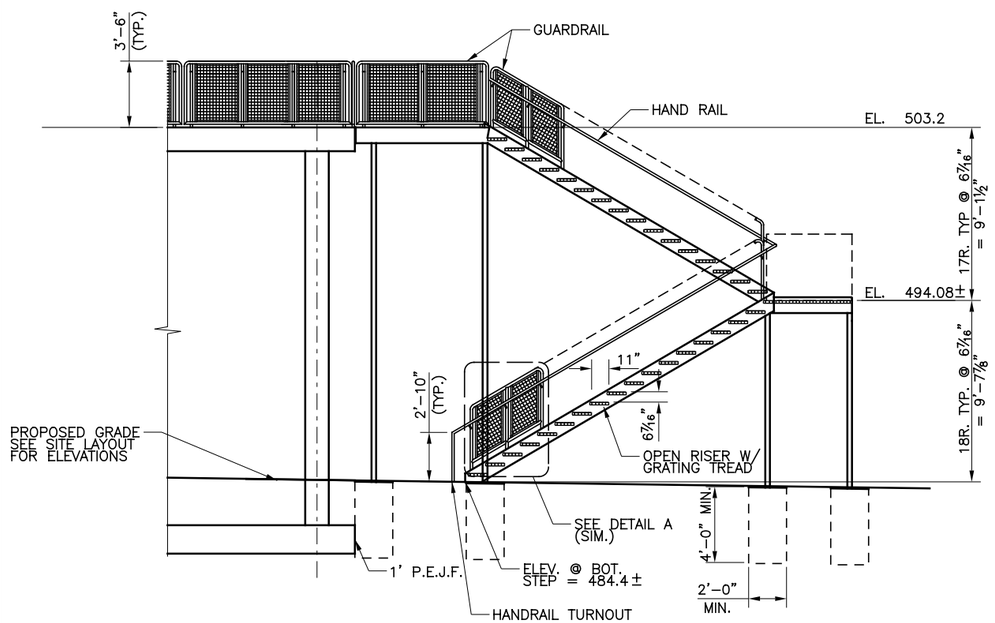

ELEVATION VIEW
SCALE: ¼"=1'-0"
(NOT ALL GUARDRAIL PANELS SHOWN FOR CLARITY)

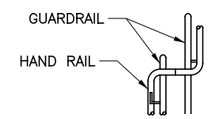

ELEVATION B
SCALE: NTS

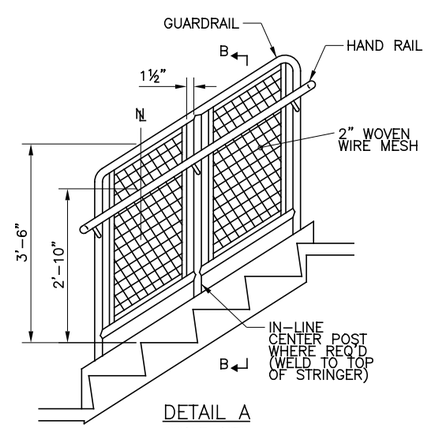

DETAIL A
SCALE: NTS

NOTES:

1. CONTRACTOR SHALL SUBMIT SHOP DRAWINGS SEALED BY A LICENSED ENGINEER WITH FINAL STRUCTURAL DESIGN, AND DRAWINGS FOR STAIRS, LANDINGS, GUARDRAILS, HAND RAILS, COLUMNS AND FOUNDATIONS TO THE ENGINEER FOR APPROVAL.
2. DIMENSIONS SHOWN ARE OUT TO OUT UNLESS NOTED.
3. WIRE MESH SCREEN ON GUARDRAIL SHALL HAVE 2" OPENINGS.
4. STAIR TREADS AND LANDING SHALL BE GRATED GALVANIZED STEEL WITH A MAX OPENING OF ¼" BETWEEN GRATES. THE SUPPLIER OF THE STEEL BAR GRATE TREAD SHALL BE AMERICAN STAIR, TRUE EDGE INCORPORATED, OR APPROVED EQUAL.
5. ALL STRUCTURAL STEEL AND MISC. STEEL ITEMS SHALL BE HOT DIPPED GALVANIZED.
6. ALL GUARDS, HAND RAILS, AND WOVEN WIRE MESH SHALL BE HOT DIPPED GALVANIZED.
7. STAIR STRUCTURE SHALL BE EXPOSED GALVANIZED STEEL. NO PAINT SHALL BE APPLIED.
8. WELDS SHALL BE GROUND SMOOTH.
9. PAYMENT FOR THE STAIRS WILL BE LUMP SUM AND INCLUDE HANDRAILS, GUARDRAILS, FOUNDATION CONCRETE, STRUCTURAL STEEL, STRINGERS, AND ALL INCIDENTALS.
10. COST OF P.E.J.F. SHALL BE INCLUDED WITH THE COST OF SUBSTATION CONCRETE.
11. WHERE NEW WORK IS TO BE ADJACENT TO EXISTING WORK, THE CONTRACTOR SHALL FIELD LOCATE ALL POTENTIAL CONFLICTS AND REPORT ANY DISCREPANCIES TO THE ENGINEER AND ASSUME RESPONSIBILITY FOR THEIR CORRECTNESS

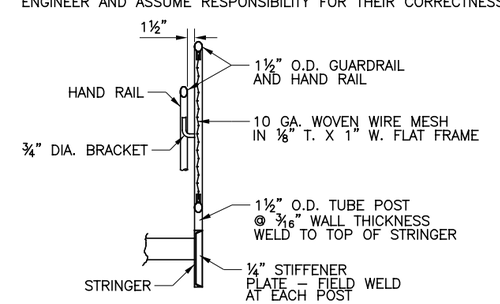

SECTION B–B
SCALE: NTS

CAUTION UNDERGROUND UTILITIES
2 WORKING DAYS
BEFORE YOU DIG
CALL 1-800-362-2764
OHIO UTILITY PROTECTION SERVICE
CALL NON-SERVICE FACILITY OWNERS DIRECT

CONTRACT DRAWING

PRINTS NOT BEARING THIS STAMP WERE MADE PRIOR TO ADVERTISING FOR BIDS AND ARE TO BE CONSIDERED OBSOLETE FOR CONTRACT PURPOSES.

Department of Transportation and Engineering

City of Cincinnati
City Hall
801 Plum Street
Cincinnati, Ohio 45202

CINCINNATI STREETCAR

TRACTION SUBSTATION #1 STAIRWAY PLANS & DETAILS

Revisions

No.				

Drawn by MJC	Designed by JLP	Checked by BWB	Reviewed by JTB
Date 12/20/11	Date 12/20/11	Date 12/20/11	Date 12/20/11

Consultant

PB HDR

File Number

ACC No. 23126

G-SS-1007

DOTE_Mono_PDF_Half.pltcfg
T:\29014A-Streetcar\CAD\Structures\TPSS #1\CDS\S_F_ST_1004.dgn
11:03:58 AM
12/16/2011

NOTES

1. PRIOR TO COMMENCING CONSTRUCTION, VERIFY THAT THE DIMENSIONAL REQUIREMENTS FOR ACTUAL SELECTED SUBSTATION ENCLOSURE AND EQUIPMENT ARE COMPATIBLE WITH THE PROVIDED STRUCTURAL AND SITEWORK DESIGN. NOTIFY THE ENGINEER IF THE SELECTED EQUIPMENT IS NOT COMPATIBLE WITH THE PROVIDED DESIGNS PRIOR TO ORDERING/PURCHASING EQUIPMENT.
2. MAINTAIN THROUGH TRAFFIC, PARKING & PEDESTRIAN ACCESS TO PARKING AT ALL TIMES DURING CONSTRUCTION. PROVIDE ALL SIGNAGE, TEMPORARY FENCING AND BARRICADES REQUIRED.
3. COPPER GROUNDING GRID TO BE INSTALLED BELOW SUBSTATION. REFER TO "TP" & "PD" SERIES DRAWINGS FOR DEPTH AND HORIZONTAL LIMITS.
4. REFER TO TRACTION POWER SUBSTATION #2 SITE DETAIL SHEET FOR GEOTECHNICAL REQUIREMENTS.

(3) KEYNOTES

1. REMOVE EXISTING CURB.
2. EXISTING CURB TO REMAIN.
3. REMOVE EXISTING TREE.
4. REMOVE EXISTING PARKING METER. SALVAGE & DELIVER TO CITY AS DIRECTED.
5. EXISTING TREE TO REMAIN.
6. EXISTING 36" SEWER TO REMAIN. (FIELD VERIFY LOCATION)
7. OUTSIDE FACE OF SCREEN WALL.
8. EXISTING UNDERGROUND ELECTRIC TO BE RELOCATED BY DUKE ENERGY.
9. EXISTING ROADWAY PAVERS– REMOVE AS REQUIRED TO INSTALL INDICATED PROPOSED IMPROVEMENTS. CUT & RESET PAVERS ADJACENT TO PROPOSED CURBS AS REQUIRED. SALVAGE & PALLETIZE REMOVED PAVERS. DELIVER PALLETIZED PAVERS TO THE CITY AS DIRECTED.
10. EXIST. TELEPHONE DUCT BANK TO REMAIN. MAINTAIN & PROTECT DURING CONSTRUCTION.
11. REMOVE & RELOCATE EXISTING LIGHT POLE & ADJACENT PULLBOX. PROVIDE ALL CITY STANDARD FOUNDATIONS, WIRING, CONDUITS AND INSTALLATIONS REQUIRED TO RECONNECT RELOCATED LIGHT POLE TO EXISTNG LIGHTING SYSTEM. IN ADDITION, RELOCATE/RESTORE ANY OTHER PORTIONS OF EXISTING LIGHTING SYSTEM(S) DISTURBED BY PROPOSED IMPROVEMENTS. REMOVE EXISTING POLE FOUNDATION TO 12" BELOW PROPOSED GRADE.
12. EXISTING GAS, TRAFFIC CONDUITS TO REMAIN UNDISTURBED.
13. REMOVE WALK PAVERS. SALVAGE & RESTORE FOR RE–USE ON SITE.
14. PAVER WALK & CONCRETE PAVER BANDS. MATCH EXISTING PAVER WALK PATTERN.
15. HANDRAIL, TYP. BOTH SIDES OF STAIR. REFER TO SUBSTATION #2 DETAIL SHEET.
16. 8'–0" SLIDING GATE. CENTER ON MAIN ACCESS DOOR TO SUBSTATION ENCLOSURE. REFER TO SCREEN WALL & GATE DETAILS.
17. CURB, TYPE S–1
18. CONCRETE PAD & STAIRS, 8'–0" WIDE, CENTERED ON DOOR. REFER TO SUBSTATION #2 DETAIL SHEET.
19. CONSTRUCT METERING CABINET FOUNDATION PER DUKE ENERGY STD. DWG. 678b. VERIFY DIMENSIONING & CABLE LAYOUT WITH DUKE ENERGY PRIOR TO CONSTRUCTION. FURNISH ALL MATERIALS & INSTALLATIONS NOT PROVIDED BY DUKE ENERGY.
20. 13" SCREEN WALL, REFER TO SCREEN WALL PLANS AND DETAILS.
21. PROVIDE CHAIN, FASTENERS TO HANDRAILS FOR SUPPORT AND LOCKING, PADLOCK AND KEYS. PROVIDE SIGN ON CHAIN READING "DANGER–HIGH VOLTAGE–KEEP OUT" SUBMIT SHOP DRAWINGS OF THE INSTALLATION AND SIGNAGE TO THE ENGINEER FOR APPROVAL PRIOR TO FABRICATION.
22. 4'–0" GATE, REFER TO SCREEN WALL & GATE DETAILS FOR LOCATIONS.
23. 4'–0" X 4'–0" X 6" PLAIN CONCRETE PAD AT DOOR.
24. 5.00' RADIUS.
25. SCREEN WALL FOOTINGS AND EXIST. DUCT BANK PROTECTION REFER TO SCREEN WALL DWG'S.

MAIN UTILITY DISCONNECT

POLE MOUNTED ON DUKE ENERGY POLE
NORTHEAST CORNER OF 12TH AND WALNUT STREETS

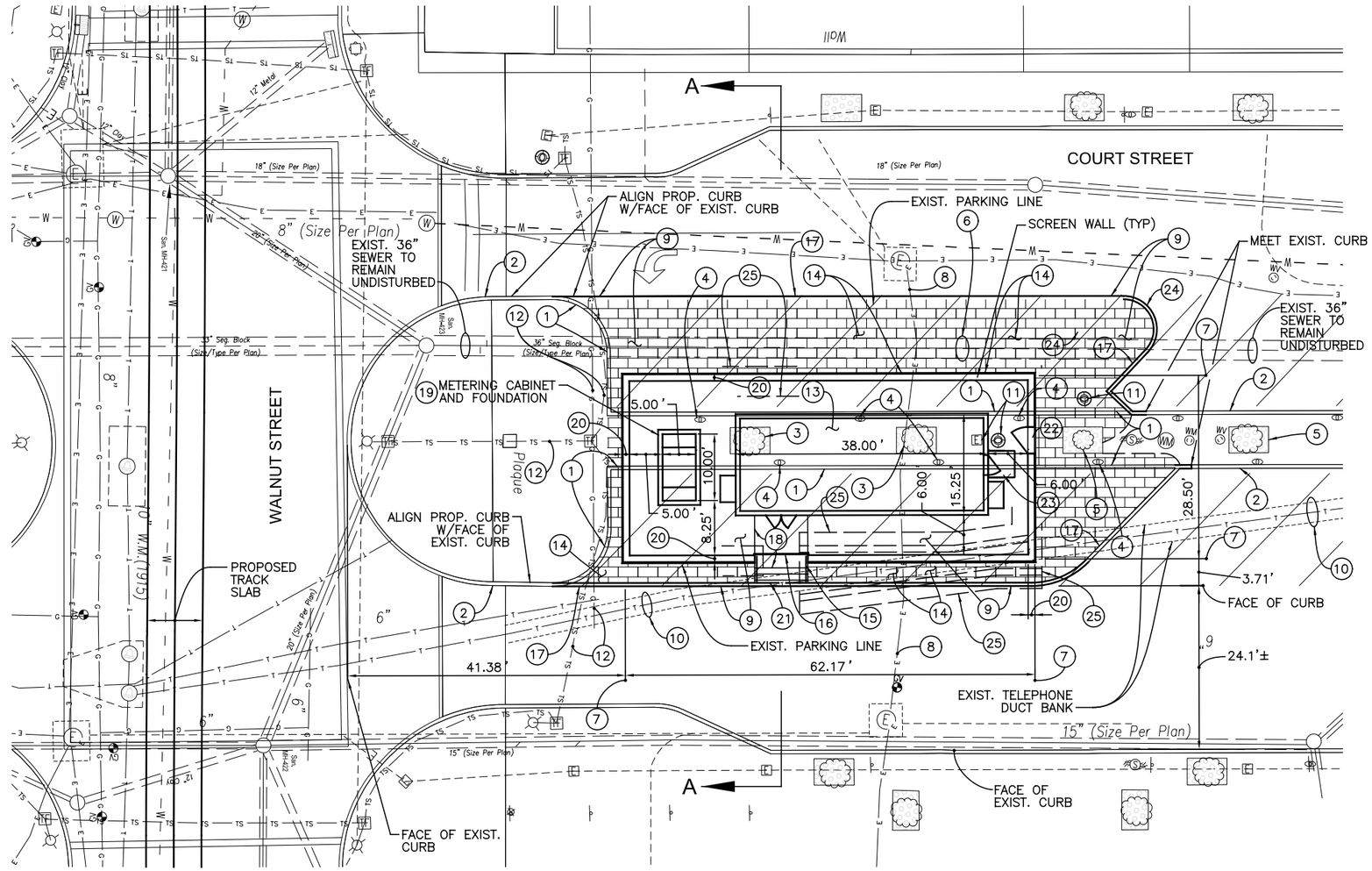

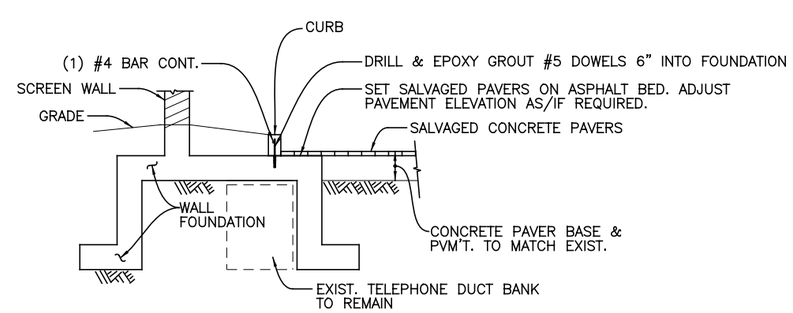

CONDITIONS AT WALL FOUNDATION, CURB INTERFACE

(SOUTH SIDE OF TPSS #2) N.T.S

GRAPHIC SCALE

10 0 10 20 40

(IN FEET)
1 inch = 10 ft. Full Size
1 inch = 20 ft. Half Size

CAUTION UNDERGROUND UTILITIES
2 WORKING DAYS
BEFORE YOU DIG
CALL 1–800–362–2764
OHIO UTILITY PROTECTION SERVICE
CALL NON–SERVICE FACILITY OWNERS DIRECT

DOTE_Mono_PDF_Half.pltcfg
T:\29014A-Streetcar\CAD\Substation\G-SS-1008.dgn
1:56:38 PM
7/15/2012

CONTRACT DRAWING

PRINTS NOT BEARING THIS STAMP WERE MADE PRIOR TO ADVERTISING FOR BID AND MUST BE CONSIDERED OBSOLETE FOR CONTRACT PURPOSES.

Department of Transportation and Engineering

City of Cincinnati
City Hall
801 Plum Street
Cincinnati, Ohio 45202

CINCINNATI STREETCAR
TRACTION POWER SUBSTATION #2
SITE LAYOUT PLAN

Revisions
No.

Date 7/02/12	Drawn by AAG
Date 7/02/12	Designed by SAJ
Date 7/02/12	Checked by CJC
Date 7/12/12	Reviewed by JTB

Consultant

PB HDR

File Number

ACC No. 23126

G-SS-1008

NOTES

1. PRIOR TO COMMENCING CONSTRUCTION, VERIFY SUBSTATION AND FOUNDATION ELEVATIONS FOR ACTUAL SELECTED SUBSTATION EQUIPMENT ENCLOSURE.

③ KEYNOTES

1. TOP OF METERING CABINET FOUNDATION ELEVATION=548.90
2. TOP OF STAIRS ELEVATION=548.80
3. MEET EXISTING PAVER ELEVATION.
4. SINGLE VALLEY INLET, COORDINATE LOCATION WITH SCREEN WALL & SUBSTATION FOUNDATIONS – TOP ELEVATION 547.50, IE 8" OUT=542.50, CONNECT 6" SUBSOIL DRAINS AS SHOWN ON SUBSTATION #2 DETAIL SHEET. COORDINATE INVERT WITH ROUTING PIPE UNDER ADJACENT EXISTING TELEPHONE DUCT BANK PRIOR TO INSTALLATION.
5. CONCRETE PAD AT ELEV. 547.50.
6. SAWCUT & RESTORATION (INCLUDING PAVERS) TO BE IN ACCORDANCE WITH THE CITY OF CINCINNATI "STREET RESTORATION BOOK".
7. POWER SUPPLY DUCT TO METERING CABINET BY DUKE ENERGY. FIELD VERIFY LOCATION.
8. SUPPLY & RETURN DUCT BANKS, MANHOLES. REFER TO TRACTION POWER DRAWINGS. INSTALL DUCT BANKS BENEATH SCREEN WALL FOOTINGS & EXIST. TELEPHONE DUCTS.
9. CAUTION: EXIST. TELEPHONE DUCT BANK TO REMAIN. MAINTAIN & PROTECT DURING CONSTRUCTION.

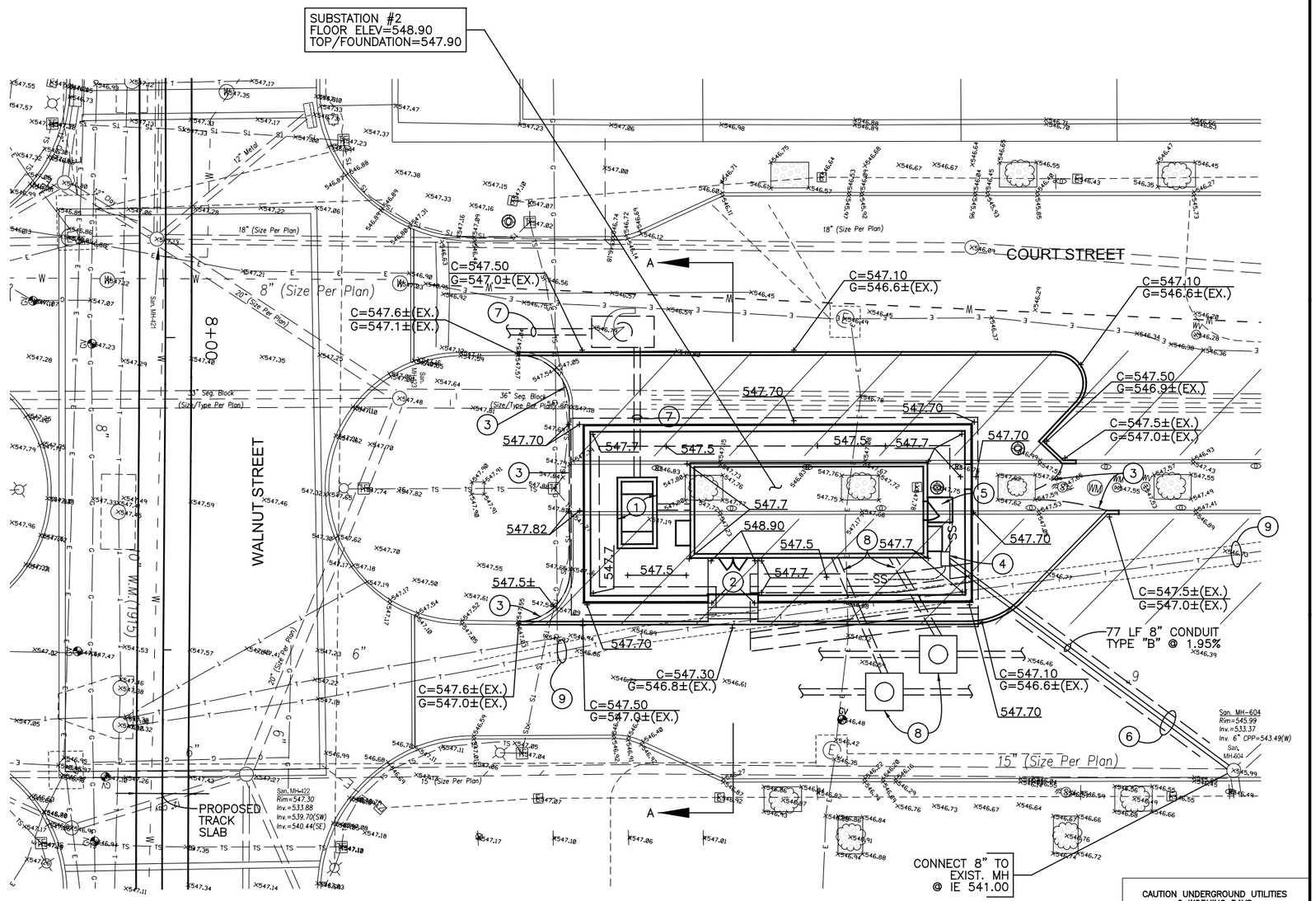

NOTE: FOR TRACTION POWER AND ALL OTHER UTILITY WORK IN COURT STREET, REMOVE AND REPLACE EXISTING PAVERS AND BASE TO MATCH EXISTING CONSTRUCTION.

CAUTION UNDERGROUND UTILITIES
2 WORKING DAYS
BEFORE YOU DIG
CALL 1-800-362-2764
OHIO UTILITY PROTECTION SERVICE
CALL NON-SERVICE FACILITY
OWNERS DIRECT

GRAPHIC SCALE
10 0 10 20 40
(IN FEET)
1 inch = 10 ft. Full Size
1 inch = 20 ft. Half Size

DOTE_Mono_PDF_Half.pltcfg
T:\29014A-Streetcar\CAD\Substation\G-SS-1009.dgn
1:56:39 PM
7/15/2012

CONTRACT DRAWING
PRINTS NOT BEARING THIS STAMP WERE MADE PRIOR TO ADVERTISING BID AND ARE NOT TO BE CONSIDERED OBSOLETE FOR CONTRACT PURPOSES.

Department of Transportation and Engineering
City of Cincinnati
City Hall
801 Plum Street
Cincinnati, Ohio 45202

CINCINNATI STREETCAR
TRACTION POWER SUBSTATION #2
SITE GRADING / UTILITIES PLAN

Revisions
No.

Date 7/02/12	Drawn by AAG
Date 7/02/12	Designed by SAJ
Date 7/02/12	Checked by CJC
Date 7/12/12	Reviewed by JTB

Consultant
PB HDR

File Number

ACC No.
23126

G-SS-1009

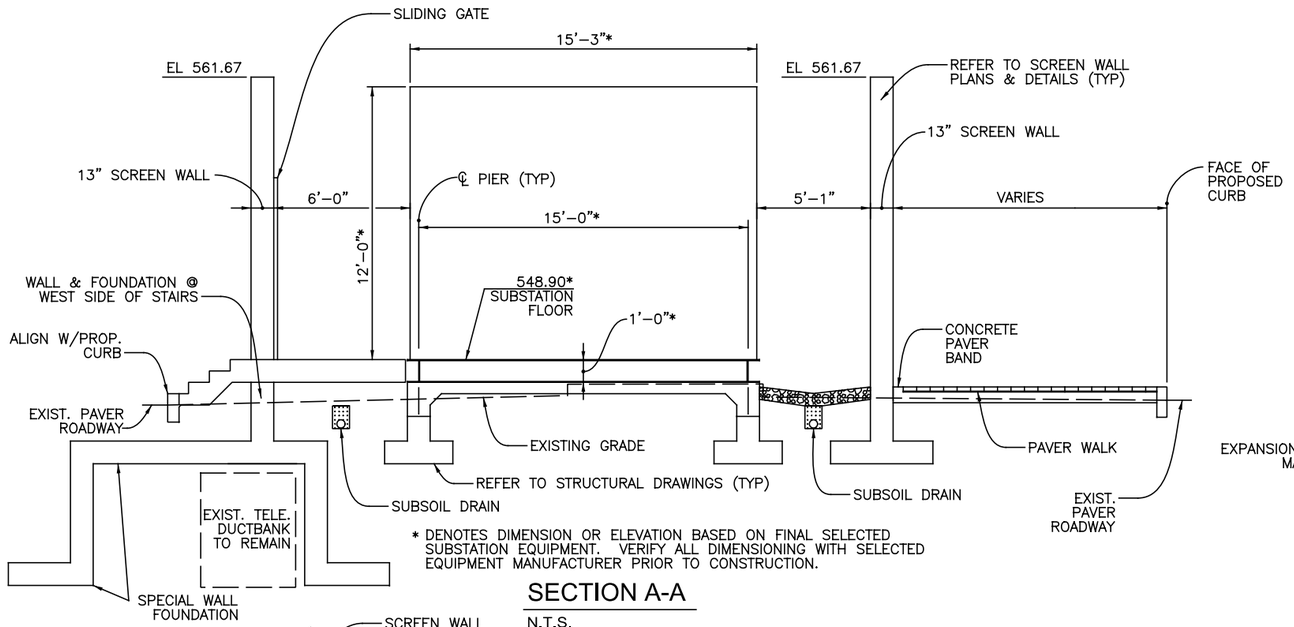

* DENOTES DIMENSION OR ELEVATION BASED ON FINAL SELECTED SUBSTATION EQUIPMENT. VERIFY ALL DIMENSIONING WITH SELECTED EQUIPMENT MANUFACTURER PRIOR TO CONSTRUCTION.

SECTION A-A

N.T.S.

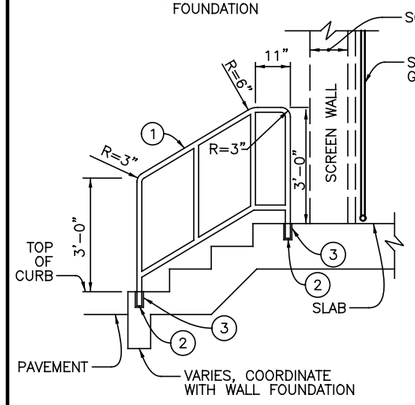

1. ITEM SPECIAL – 1-½" (1.9" O.D.) STAINLESS STEEL PIPE HANDRAIL AND POST (SEE STAINLESS STEEL GENERAL NOTES)
2. CORE DRILL 2-½" DIA. 6" DEEP, AND FILL WITH ITEM 705.20, NON-SHRINK GROUT.
3. ITEM SPECIAL – PLAIN FLANGE, 4-¼" DIAMETER STAINLESS STEEL. (SEE STAINLESS STEEL GENERAL NOTES).

STAIR HANDRAIL - TPSS #2

N.T.S.

HANDRAIL
STAINLESS STEEL GENERAL NOTES

1. ALL STAINLESS STEEL COMPONENTS SHALL BE FABRICATED FROM TYPE 316 STAINLESS STEEL.
2. PIPES SHALL BE SCHEDULE 40 THICKNESS UNLESS OTHERWISE NOTED.
3. FINISH SHALL BE 180-GRIT POLISH.
4. MINIMIZE WELDING. FABRICATE HANDRAILS FROM A SINGLE PIECE OF BENT PIPE WHENEVER POSSIBLE.
5. ALL WELDING SHALL BE DONE IN THE SHOP TO THE EXTENT POSSIBLE.
6. DO NOT WELD ANYTHING IN THE FIELD NEAR NEWLY INSTALLED OR STOCKPILED STAINLESS STEEL RAILINGS.

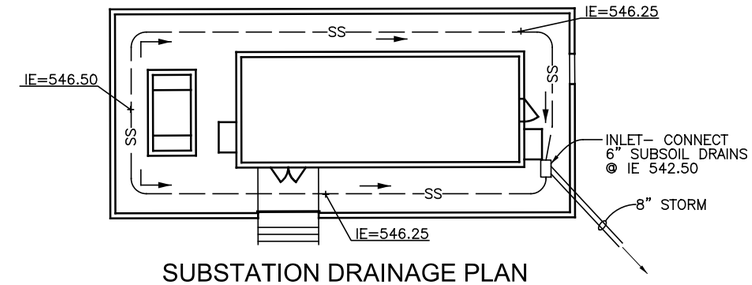

SUBSTATION DRAINAGE PLAN

1" = 10.00'

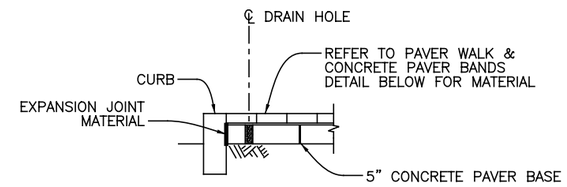

PAVER CONSTRUCTION @ CURB

N.T.S.

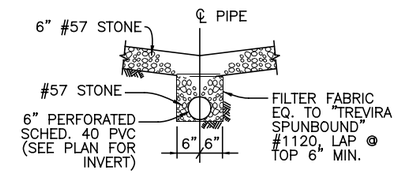

NOTE: FIELD COORDINATE INSTALLED INVERT ELEVATIONS WITH GROUND GRID & CONNECTING INLET ELEVATIONS.

SECTION

SUBSOIL DRAIN

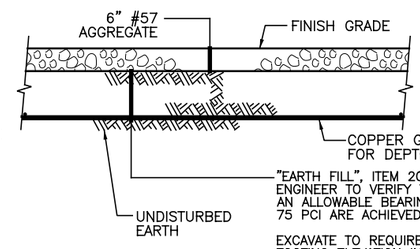

NOTE: PROVIDE SIMILAR SECTION BENEATH SUBSTATION SLAB. REFER TO STRUCTURAL DRAWINGS.

"EARTH FILL", ITEM 203 EXCAVATION & BACKFILL. CONTRACTOR TO ENGAGE A GEOTECHNICAL ENGINEER TO VERIFY THE SUITABILITY OF EXISTING SOILS FOR RE-USE AND TO ENSURE THAT AN ALLOWABLE BEARING CAPACITY OF 2200 PSF AND A MODULUS OF SUBGRADE REACTION OF 75 PCI ARE ACHIEVED.

EXCAVATE TO REQUIRED DEPTH FOR GROUND GRID INSTALLATION. BACKFILL TO TOP OF PIER FOOTING ELEVATION IN 8" MAXIMUM LIFTS, COMPACTED PER THE RECOMMENDATIONS OF THE GEOTECHNICAL ENGINEER. EXCAVATE TO REQUIRED PIER FOOTING SUBGRADE ELEVATION FOR INSTALLATION OF FOOTING. PROVIDE SUITABLE FILL MATERIALS AS NECESSARY TO SUPPLEMENT EXISTING SOILS. DISPOSE OF EXCESS EXCAVATED MATERIAL LEGALLY OFF SITE

PRIOR TO COMMENCING EXCAVATION AND BACKFILLING, SUBMIT THE GEOTECHNICAL RECOMMENDATIONS, INCLUDING ANTICIPATED TESTING AND INSPECTION PROCEDURES, TO THE ENGINEER FOR APPROVAL.

SECTION

GROUND GRID INSTALLATION

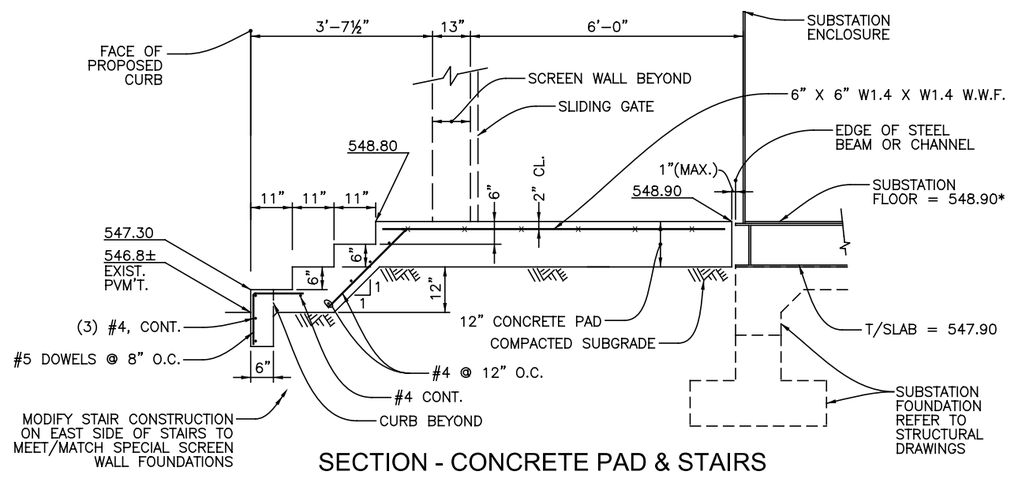

SECTION - CONCRETE PAD & STAIRS

N.T.S.

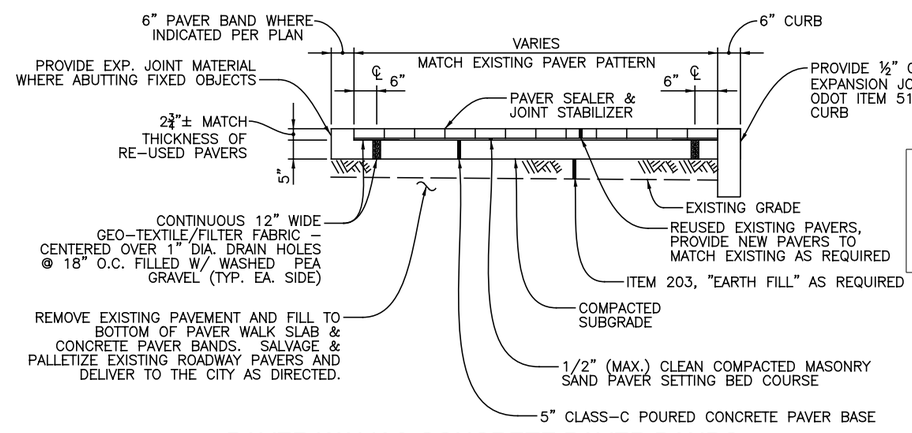

PAVER WALK & CONCRETE PAVER BANDS

N.T.S.

CAUTION UNDERGROUND UTILITIES
2 WORKING DAYS
BEFORE YOU DIG
CALL 1-800-362-2764
OHIO UTILITY PROTECTION SERVICE
CALL NON-SERVICE FACILITY OWNERS DIRECT

DOTE_Mono_PDF_Half.pltcfg
T:\29014A-Streetcar\CAD\Substation\G-SS-1010.dgn
7/15/2012 1:56:40 PM

CONTRACT DRAWING

PRINTS NOT BEARING THIS STAMP WERE MADE PRIOR TO ADVERTISING FOR BID AND ARE TO BE CONSIDERED OBSOLETE FOR CONTRACT PURPOSES.

Department of Transportation and Engineering

City of Cincinnati
City Hall
801 Plum Street
Cincinnati, Ohio 45202

CINCINNATI STREETCAR
TRACTION POWER SUBSTATION #2
SITE DETAILS

Revisions

No.		Date

Drawn by AAG	Date 7/02/12
Designed by SAJ	Date 7/02/12
Checked by CJC	Date 7/02/12
Reviewed by JTB	Date 7/12/12

Consultant

PB HDR

File Number

ACC No. 23126

G-SS-1010

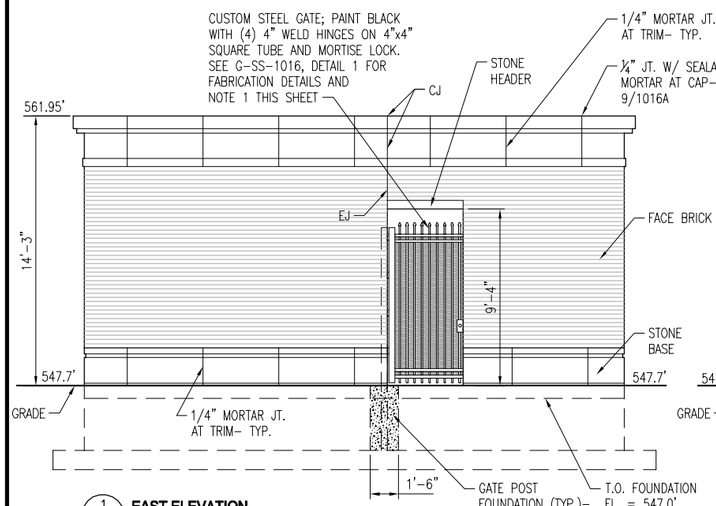

1 EAST ELEVATION
G-SS-1011 SCALE: 1/4" = 1'-0"

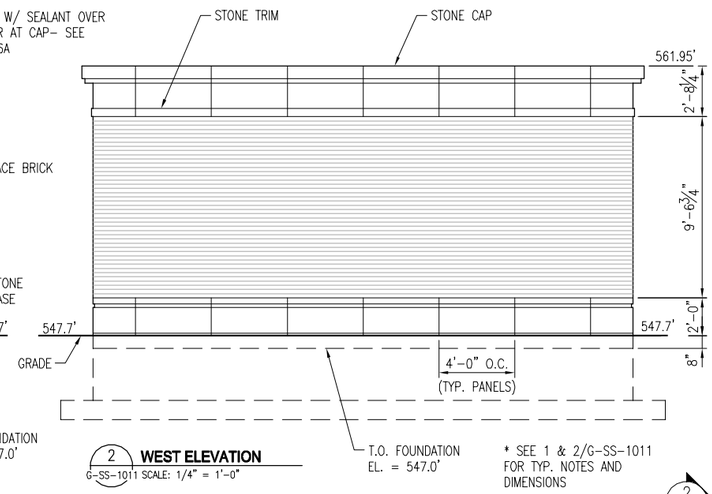

2 WEST ELEVATION
G-SS-1011 SCALE: 1/4" = 1'-0"

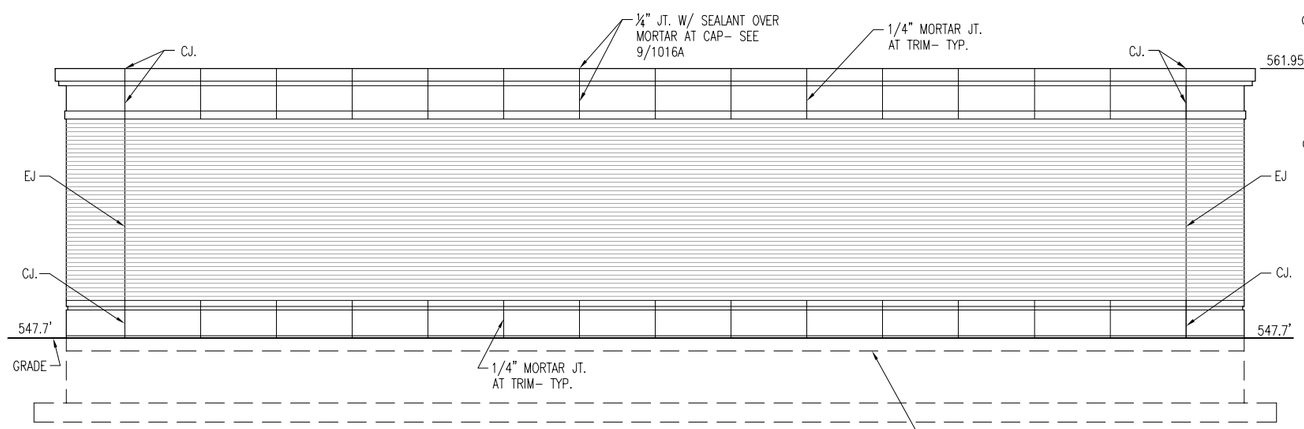

3 NORTH ELEVATION
G-SS-1011 SCALE: 1/4" = 1'-0"

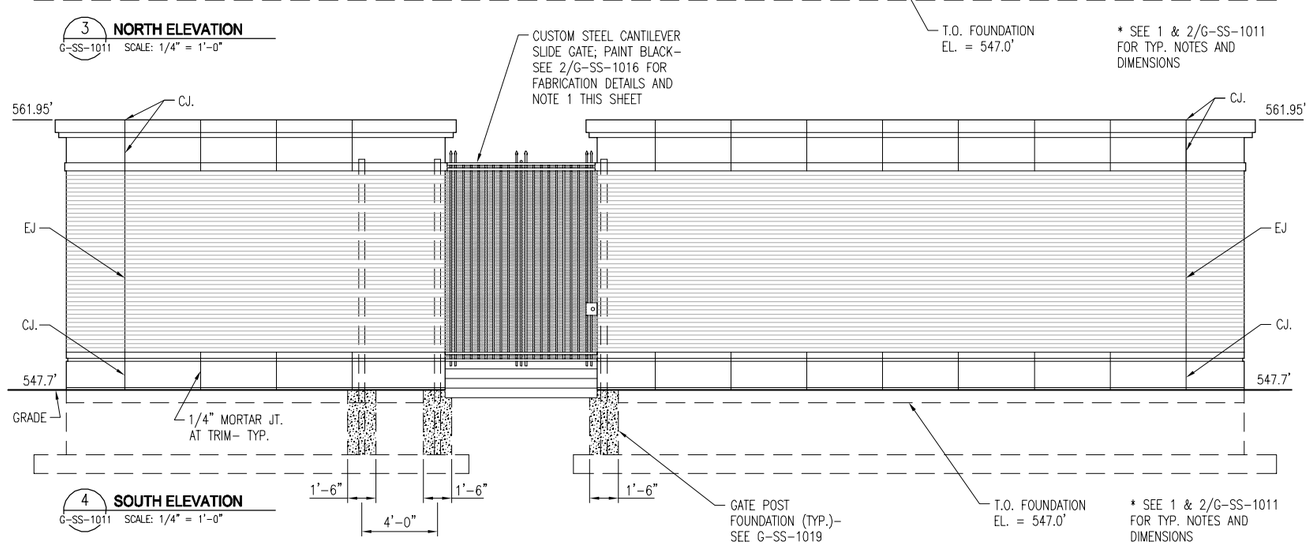

4 SOUTH ELEVATION
G-SS-1011 SCALE: 1/4" = 1'-0"

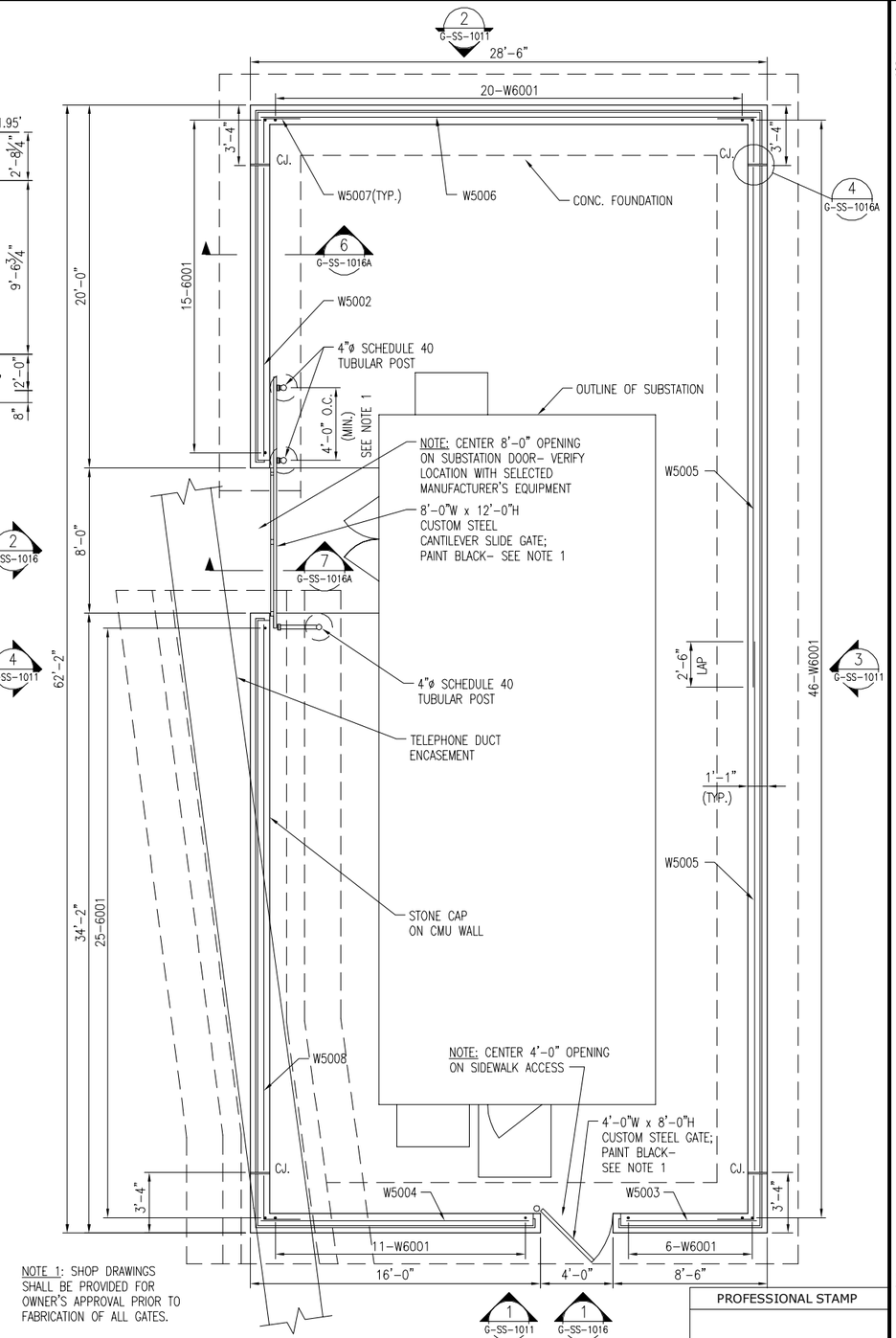

NOTE 1: SHOP DRAWINGS SHALL BE PROVIDED FOR OWNER'S APPROVAL PRIOR TO FABRICATION OF ALL GATES.

5 SUBSTATION #2 SCREENWALL PLAN
G-SS-1011 SCALE: 1/4" = 1'-0"

CAUTION UNDERGROUND UTILITIES
2 WORKING DAYS
BEFORE YOU DIG
CALL 1-800-362-2764
OHIO UTILITY PROTECTION SERVICE
CALL NON-SERVICE FACILITY OWNERS DIRECT

PROFESSIONAL STAMP

SIGN:
DATE:

CONTRACT DRAWING

PRINTS NOT BEARING THIS STAMP WERE MADE PRIOR TO ADVERTISING FOR BIDS AND ARE NOT TO BE CONSIDERED OBSOLETE FOR CONTRACT PURPOSES.

Department of Transportation and Engineering
City of Cincinnati
City Hall
801 Plum Street
Cincinnati, Ohio 45202

CINCINNATI STREETCAR
TRACTION POWER SUBSTATION #2
SCREENWALL PLAN & ELEVATIONS

Revisions
No.

Date 07/02/12	Drawn by JF
Date 07/02/12	Designed by JW
Date 07/02/12	Checked by WW
Date 07/12/12	Reviewed by JTB

Consultant

Structure File Number

ACC No. 23126

G-SS-1011

NOTES

1. PRIOR TO COMMENCING CONSTRUCTION, VERIFY THAT THE DIMENSIONAL REQUIREMENTS FOR ACTUAL SELECTED SUBSTATION ENCLOSURE AND EQUIPMENT ARE COMPATIBLE WITH THE PROVIDED STRUCTURAL AND SITEWORK DESIGN. NOTIFY THE ENGINEER IF THE SELECTED EQUIPMENT IS NOT COMPATIBLE WITH THE PROVIDED DESIGNS PRIOR TO ORDERING/PURCHASING EQUIPMENT.
2. REFER TO TRACTION POWER SUBSTATION #3 PLANS AND DETAILS SHEET FOR GEOTECHNICAL REQUIREMENTS.
3. MAINTAIN VEHICULAR AND PEDESTRIAN ACCESS AT ALL TIMES ON EXISTING SIDEWALKS AND REMAINING PARKING AREAS. PROVIDE ALL SIGNAGE, TEMPORARY FENCING AND BARRICADES REQUIRED.
4. COPPER GROUNDING GRID TO BE INSTALLED BELOW SUBSTATION. REFER TO "TP" & "PD" SERIES DWG'S FOR DEPTH & HORIZONTAL LIMITS.

(3) KEYNOTES

1. EXISTING DECORATIVE FENCE TO REMAIN.
2. EXISTING TREE TO REMAIN.
3. RELOCATE EXISTING SIGN.
4. EXISTING LANDSCAPING TO REMAIN BEHIND WALK. WHERE DISTURBED, ADD TOPSOIL, RESTORE PLANTINGS AND MULCH AS REQUIRED.
5. MEET EXISTING CURB.
6. 13" SCREEN WALL. REFER TO SCREEN WALL PLANS AND DETAILS.
7. REMOVE EXISTING CURB.
8. SAWCUT EXISTING ASPHALT FOR CURB INSTALLATION. REMOVE EXISTING ASPHALT PAVEMENT INSIDE THE LIMITS OF CURBS AROUND SUBSTATION. PATCH ASPHALT AS REQUIRED AND PROVIDE ASPHALT SEAL ON PARKING LOT SIDE OF PROPOSED CURB.
9. REFER TO SUBSTATION #3 STRUCTURAL DRAWINGS FOR FOUNDATION CONSTRUCTION.
10. "PAINT OUT" EXISTING STRIPING.
11. 8'–0" SLIDING GATE, CENTER ON MAIN ACCESS DOOR TO SUBSTATION ENCLOSURE. REFER TO SCREEN WALL & GATE DETAILS.
12. 4'–0" x 4'–0" x 6" PLAIN CONCRETE PAD @ DOOR.
13. CONCRETE PAD & STAIRS, 8'–0" WIDE, CENTERED ON DOOR. REFER TO SUBSTATION #3 DETAIL SHEET.
14. CONSTRUCT METERING CABINET FOUNDATION PER DUKE ENERGY STD DWG 678b. VERIFY DIMENSIONING & CABLE LAYOUT WITH DUKE ENERGY PRIOR TO CONSTRUCTION. FURNISH ALL LABOR & MATERIALS NOT PROVIDED BY DUKE ENERGY.
15. REFER TO NOTE #1, THIS DRAWING.
16. "NO PARKING" SIGN, PER CITY STD. SIGN #13B MOUNTED ON SCREENWALL @ 7.00' ABOVE GRADE. FASTEN TO WALL WITH STAINLESS STEEL ANCHORS AND BOLTS.
17. STD. THRU ARROW, WHITE, 12.75' TYP. OF (2)
18. HANDRAIL, TYP. BOTH SIDE OF STAIRS. REFER TO SUBSTATION #3 DETAIL SHEET.
19. PROVIDE CHAIN, FASTENERS TO HANDRAILS FOR SUPPORT AND LOCKING, PADLOCK AND KEYS. PROVIDE SIGN ON CHAIN READING "DANGER–HIGH VOLTAGE–KEEP OUT" SUBMIT SHOP DRAWINGS OF THE INSTALLATION AND SIGNAGE TO THE ENGINEER FOR APPROVAL PRIOR TO FABRICATION.
20. REFER TO SCREEN WALL PLANS & ELEVATIONS FOR WALL OFFSETS THIS AREA.

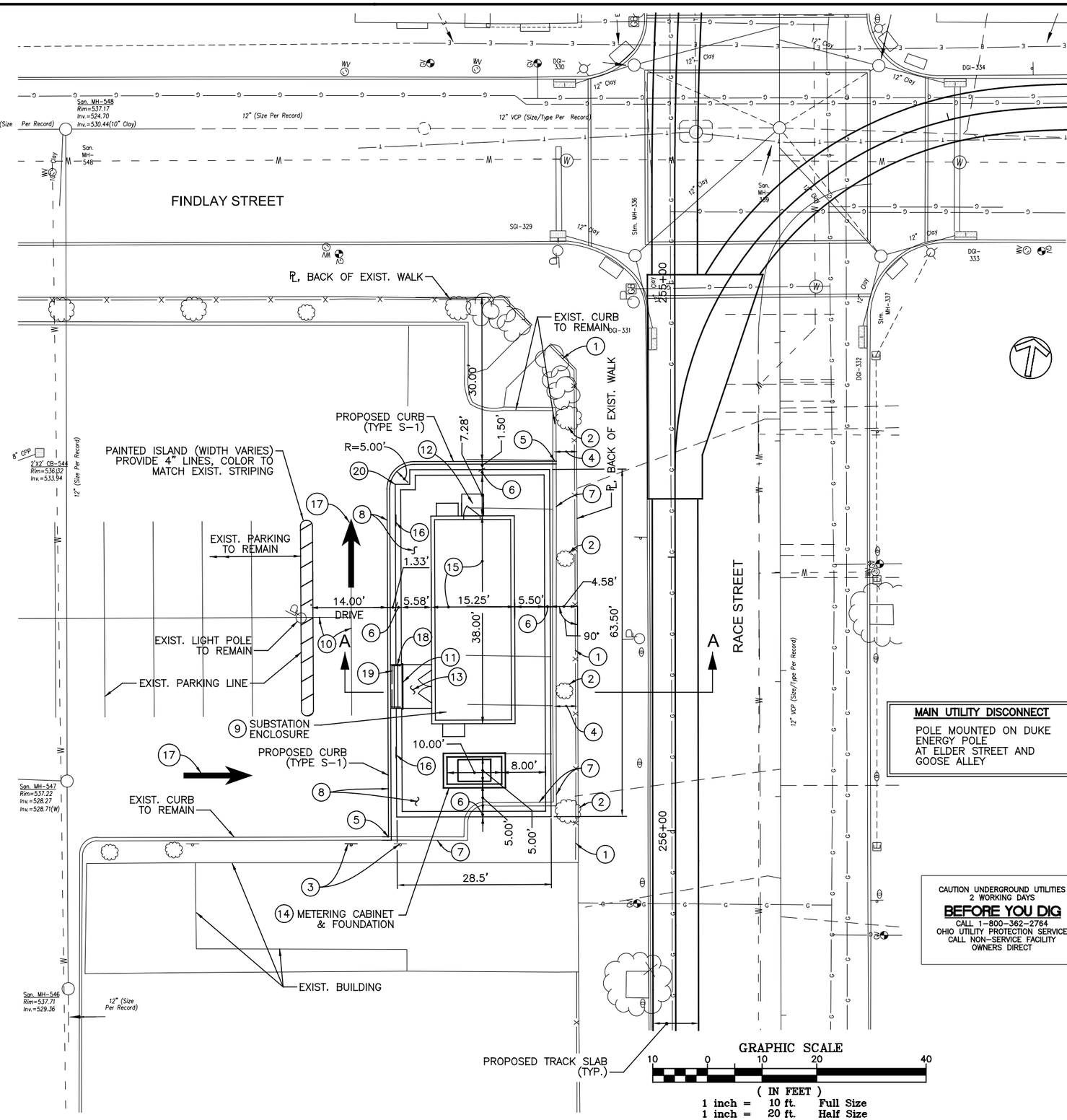

MAIN UTILITY DISCONNECT

POLE MOUNTED ON DUKE ENERGY POLE AT ELDER STREET AND GOOSE ALLEY

CAUTION UNDERGROUND UTILITIES
2 WORKING DAYS
BEFORE YOU DIG
CALL 1–800–362–2764
OHIO UTILITY PROTECTION SERVICE
CALL NON–SERVICE FACILITY OWNERS DIRECT

DOTE_Mono_PDF_Half.pltcfg
T:\29014A-Streetcar\CAD\Substation\G-SS-1012.dgn
7/15/2012 1:56:42 PM

CONTRACT DRAWING

PRINTS NOT BEARING THIS STAMP WERE MADE PRIOR TO ADVERTISING FOR BIDS AND ARE TO BE CONSIDERED OBSOLETE FOR CONTRACT PURPOSES.

Department of Transportation and Engineering

City of Cincinnati
City Hall
801 Plum Street
Cincinnati, Ohio 45202

CINCINNATI STREETCAR
TRACTION POWER SUBSTATION #3
SITE LAYOUT PLAN

Revisions

No.		Date
		7/02/12
		7/02/12
		7/02/12
		7/12/12

Drawn by AAG	Date 7/02/12
Designed by SAJ	Date 7/02/12
Checked by CJC	Date 7/02/12
Reviewed by JTB	Date 7/12/12

Consultant

PB HDR

File Number

ACC No. 23126

G-SS-1012

NOTES

1. PRIOR TO COMMENCING CONSTRUCTION, VERIFY SUBSTATION AND FOUNDATION ELEVATIONS FOR ACTUAL SELECTED SUBSTATION EQUIPMENT ENCLOSURE.

3 KEYNOTES

1. EXISTING LIGHT POLE TO REMAIN. FIELD VERIFY LOCATION OF EXISTING LIGHTING CIRCUITS. MAINTAIN & PROTECT EXISTING CIRCUITS AND/OR RELOCATE EXISTING CIRCUITS AS REQUIRED TO MAINTAIN THIS LIGHT IN OPERATIONAL CONDITION.
2. SINGLE VALLEY INLET – TOP ELEVATION=537.50, IE. 8" OUT=532.00. CONNECT 6" SUBSOIL DRAINS AS SHOWN ON SUBSTATION #3 DETAIL SHEET. COORDINATE LOCATION TO CLEAR SCREEN WALL FOOTING.
3. EXISTING LANDSCAPED AREA TO REMAIN. ADD ADDITIONAL TOPSOIL & MULCH AS REQUIRED TO PROVIDE POSITIVE SURFACE DRAINAGE FROM SCREEN WALL TO BACK OF EXISTING WALK. MAINTAIN & PROTECT EXISTING PLANTINGS THROUGHOUT CONSTRUCTION.
4. RESTORE SIDEWALK TO MATCH EXISTING.
5. SHALLOW SWALE, GRADE AREA TO DRAIN TOWARD DEPRESSED CURVE.
6. NOTE: REFER TO SCREEN WALL DETAILS FOR TOP OF FOUNDATION ELEVATION.
7. TOPSOIL – FERTILIZE, SEED & MULCH DISTURBED AREA PER APPLICABLE REQUIREMENTS OF ITEM 659.
8. NEATLY SAWCUT & REMOVE ASPHALT PAVEMENT. BACKFILL WITH CDF FILL TO SUBGRADE. RESTORE PAVEMENT TO MATCH EXISTING.
9. CONCRETE PAD @ ELEV. 538.20.
10. SUPPLY & RETURN DUCT BANKS, MANHOLE. REFER TO TRACTION POWER DRAWINGS.
11. POWER SUPPLY DUCT BANK TO METERING CABINET BY DUKE ENERGY. FIELD VERIFY LOCATION.
12. PROPOSED CURB, REFER TO "PP" SERIES DRAWINGS.

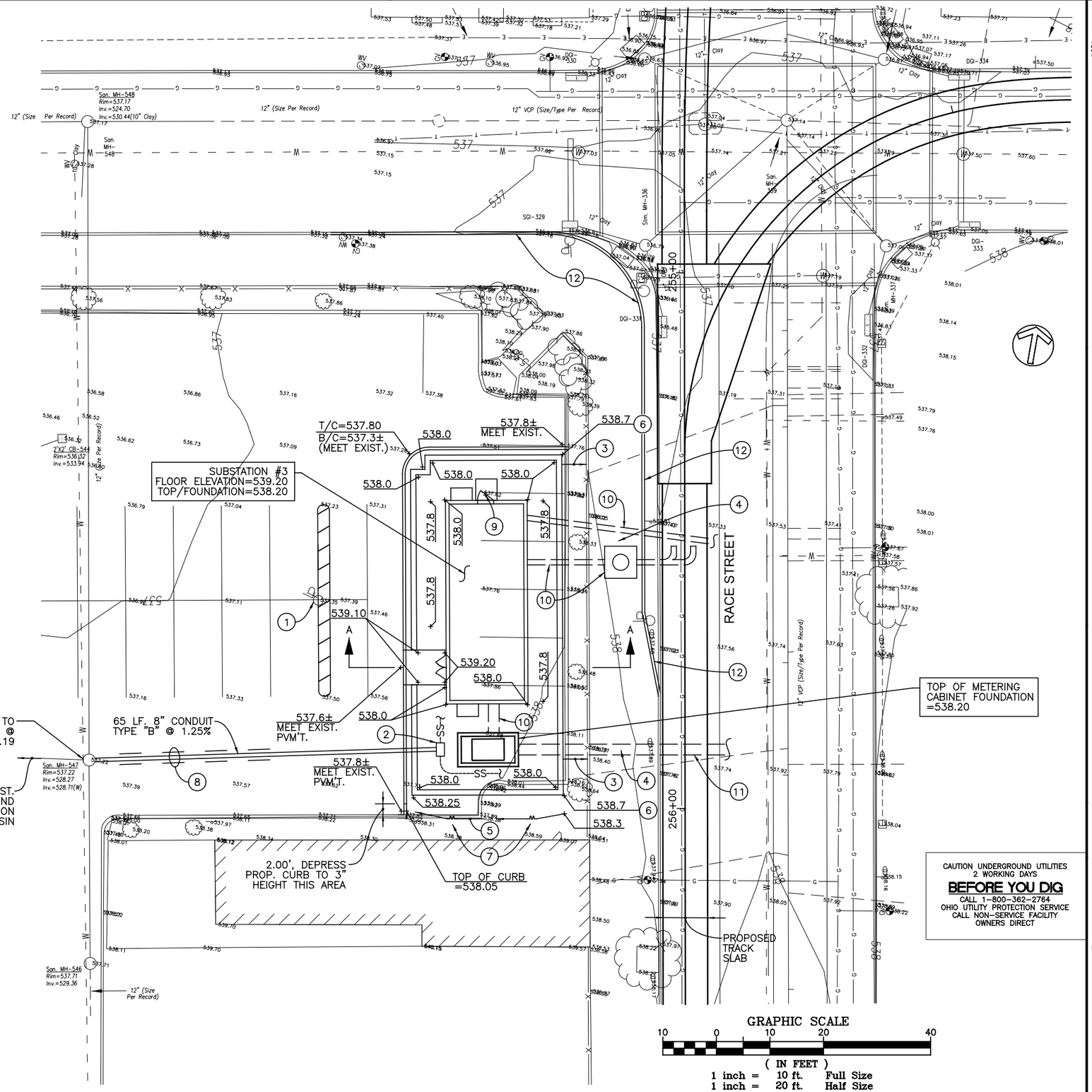

CAUTION UNDERGROUND UTILITIES
2 WORKING DAYS
BEFORE YOU DIG
CALL 1-800-362-2764
OHIO UTILITY PROTECTION SERVICE
CALL NON-SERVICE FACILITY OWNERS DIRECT

DEPARTMENT OF TRANSPORTATION & ENGINEERING
CITY OF CINCINNATI OHIO

CONTRACT DRAWING

PRINTS NOT BEARING THIS STAMP WERE MADE PRIOR TO ADVERTISING BID AND MAY BE CONSIDERED OBSOLETE FOR CONTRACT PURPOSES.

Department of Transportation and Engineering

City of Cincinnati
City Hall
801 Plum Street
Cincinnati, Ohio 45202

CINCINNATI STREETCAR
TRACTION POWER SUBSTATION #3
SITE GRADING / UTILITIES PLAN

Revisions

No.		Date

Drawn by AAG	Date 7/02/12	Designed by SAJ	Date 7/02/12
Checked by CJC	Date 7/02/12	Reviewed by JTB	Date 7/12/12

Consultant

PB HDR

File Number

ACC No. 23126

G-SS-1013

DOTE_Mono_PDF_Half.pltcfg
T:\29014A-Streetcar\CAD\Substation\G-SS-1013.dgn
7/15/2012 1:57:23 PM

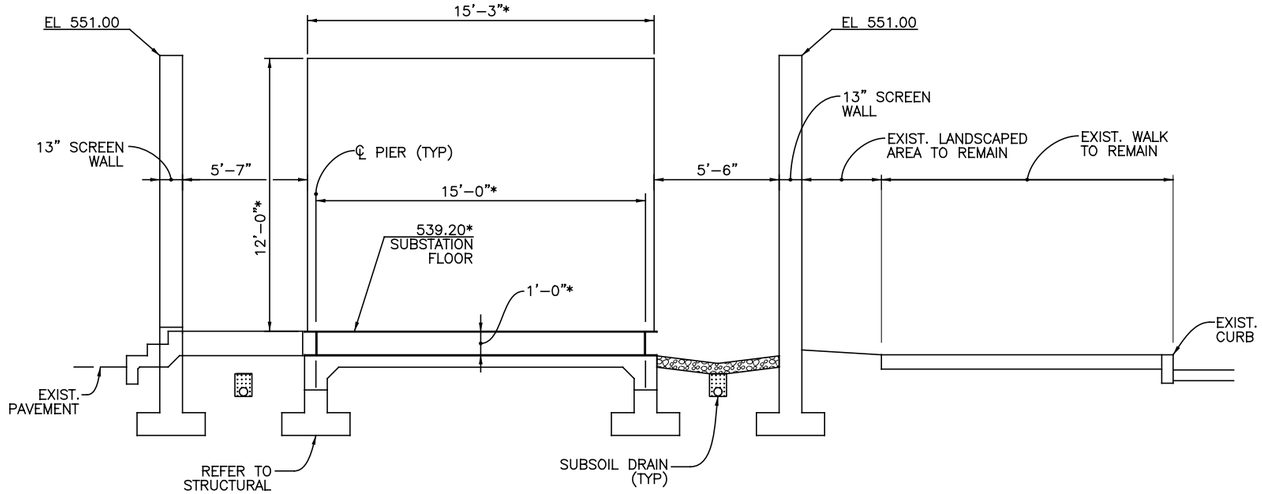

* DENOTES DIMENSION OR ELEVATION BASED ON FINAL SELECTED SUBSTATION EQUIPMENT. VERIFY ALL DIMENSIONING WITH SELECTED EQUIPMENT MANUFACTURER PRIOR TO CONSTRUCTION.

SECTION A-A

N.T.S.

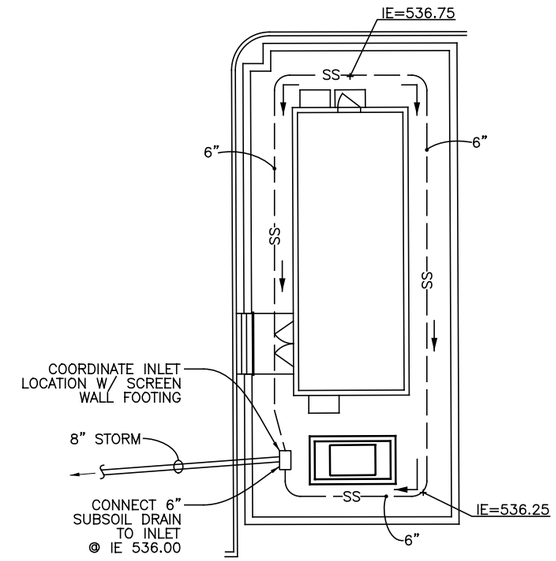

SUBSTATION DRAINAGE PLAN

1" = 10.00'

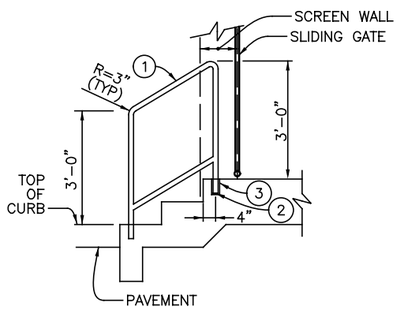

1. ITEM SPECIAL – 1-½" (1.9" O.D.) STAINLESS STEEL PIPE HANDRAIL AND POST (SEE STAINLESS STEEL GENERAL NOTES)
2. CORE DRILL 2-½" DIA. 6" DEEP, AND FILL WITH ITEM 705.20, NON-SHRINK GROUT.
3. ITEM SPECIAL – PLAIN FLANGE, 4-¼" DIAMETER STAINLESS STEEL. (SEE STAINLESS STEEL GENERAL NOTES).

HANDRAIL

STAINLESS STEEL GENERAL NOTES

1. ALL STAINLESS STEEL COMPONENTS SHALL BE FABRICATED FROM TYPE 316 STAINLESS STEEL.
2. PIPES SHALL BE SCHEDULE 40 THICKNESS UNLESS OTHERWISE NOTED.
3. FINISH SHALL BE 180-GRIT POLISH.
4. MINIMIZE WELDING. FABRICATE HANDRAILS FROM A SINGLE PIECE OF BENT PIPE WHENEVER POSSIBLE.
5. ALL WELDING SHALL BE DONE IN THE SHOP TO THE EXTENT POSSIBLE.
6. DO NOT WELD ANYTHING IN THE FIELD NEAR NEWLY INSTALLED OR STOCKPILED STAINLESS STEEL RAILINGS.

STAIR HANDRAIL - TPSS #3

N.T.S.

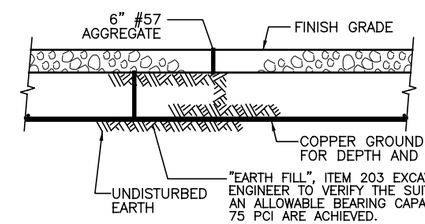

NOTE: PROVIDE SIMILAR SECTION BENEATH SUBSTATION SLAB. REFER TO STRUCTURAL DRAWING.

"EARTH FILL", ITEM 203 EXCAVATION & BACKFILL. CONTRACTOR TO ENGAGE A GEOTECHNICAL ENGINEER TO VERIFY THE SUITABILITY OF EXISTING SOILS FOR RE-USE AND TO ENSURE THAT AN ALLOWABLE BEARING CAPACITY OF 2200 PSF AND A MODULUS OF SUBGRADE REACTION OF 75 PCI ARE ACHIEVED.

EXCAVATE TO REQUIRED DEPTH FOR GROUND GRID INSTALLATION. BACKFILL TO TOP OF PIER FOOTING ELEVATION IN 8" MAXIMUM LIFTS, COMPACTED PER THE RECOMMENDATIONS OF THE GEOTECHNICAL ENGINEER. EXCAVATE TO REQUIRED PIER FOOTING SUBGRADE ELEVATION FOR INSTALLATION OF FOOTING. PROVIDE SUITABLE FILL MATERIALS AS NECESSARY TO SUPPLEMENT EXISTING SOILS. DISPOSE OF EXCESS EXCAVATED MATERIAL LEGALLY OFF SITE

PRIOR TO COMMENCING EXCAVATION AND BACKFILLING, SUBMIT THE GEOTECHNICAL RECOMMENDATIONS, INCLUDING ANTICIPATED TESTING AND INSPECTION PROCEDURES, TO THE ENGINEER FOR APPROVAL.

SECTION

GROUND GRID INSTALLATION

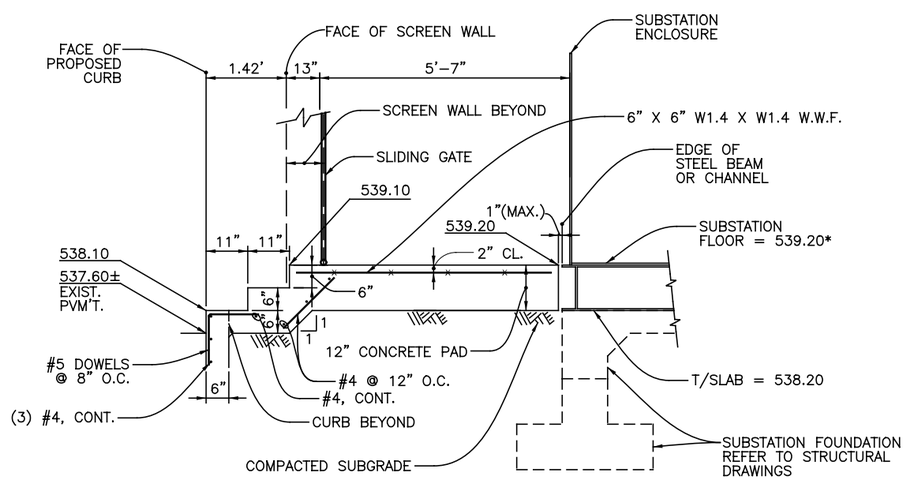

SECTION - CONCRETE PAD & STAIRS

N.T.S.

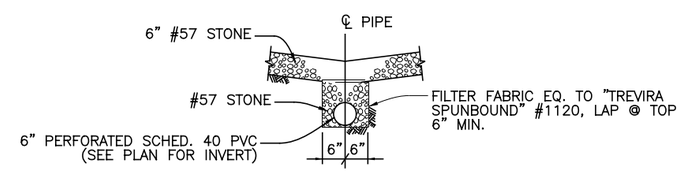

NOTE: FIELD COORDINATE INSTALLED INVERT ELEVATIONS WITH GROUND GRID & CONNECTING INLET ELEVATIONS.

SECTION

SUBSOIL DRAIN

CAUTION UNDERGROUND UTILITIES
2 WORKING DAYS
BEFORE YOU DIG
CALL 1-800-362-2764
OHIO UTILITY PROTECTION SERVICE
CALL NON-SERVICE FACILITY OWNERS DIRECT

DEPARTMENT OF TRANSPORTATION & ENGINEERING CITY OF CINCINNATI OHIO

CONTRACT DRAWING

PRINTS NOT BEARING THIS STAMP WERE MADE PRIOR TO ADVERTISING FOR BIDS AND ARE TO BE CONSIDERED OBSOLETE FOR CONTRACT PURPOSES.

Department of Transportation and Engineering

City of Cincinnati
City Hall
801 Plum Street
Cincinnati, Ohio 45202

CINCINNATI STREETCAR
TRACTION POWER SUBSTATION #3
SITE DETAILS

Revisions

No.			

Drawn by AAG	Date 7/02/12
Designed by SAJ	Date 7/02/12
Checked by CJC	Date 7/02/12
Reviewed by JTB	Date 7/12/12

Consultant

PB HDR

File Number

ACC No. 23126

G-SS-1014

DOTE_Mono_PDF_Half.pltcfg
T:\29014A-Streetcar\CAD\Substation\G-SS-1014.dgn
7/15/2012 1:57:26 PM

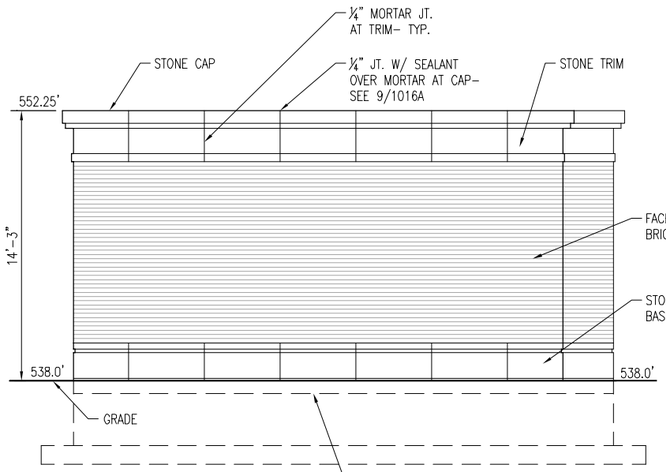

1 G-SS-1015 **NORTH ELEVATION** SCALE: 1/4" = 1'–0"

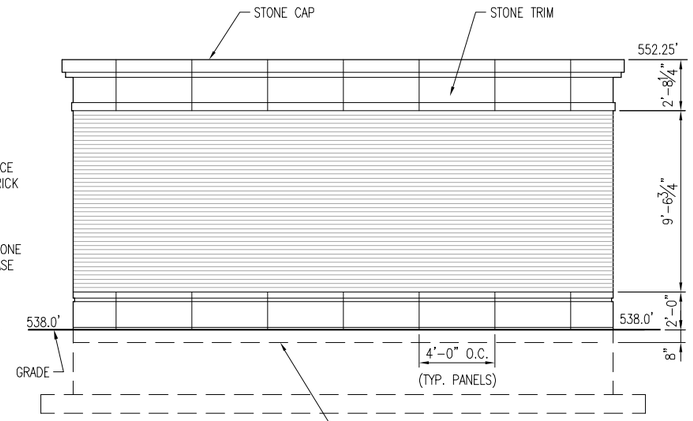

2 G-SS-1015 **SOUTH ELEVATION** SCALE: 1/4" = 1'–0"

* SEE 1 & 2/G-SS-1015 FOR TYP. NOTES AND DIMENSIONS

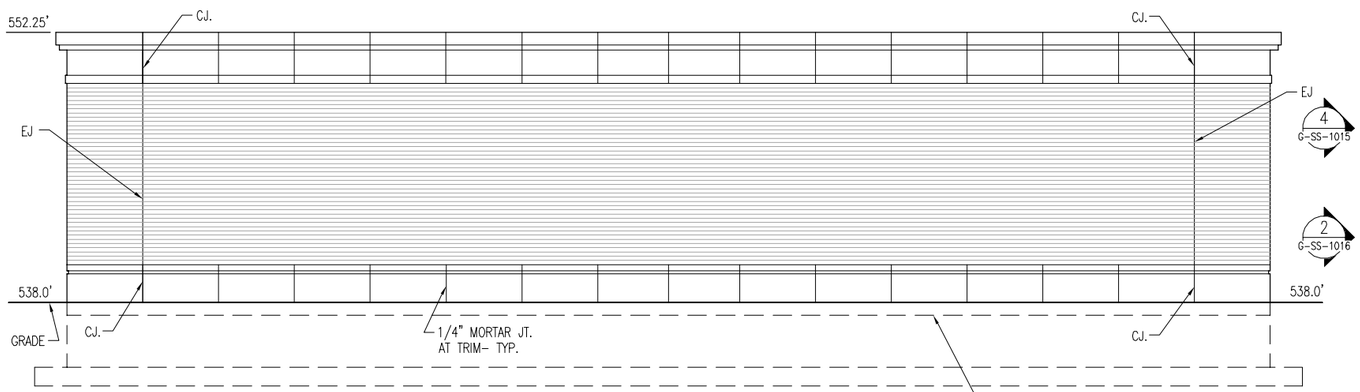

3 G-SS-1015 **EAST ELEVATION** SCALE: 1/4" = 1'–0"

* SEE 1 & 2/G-SS-1015 FOR TYP. NOTES AND DIMENSIONS

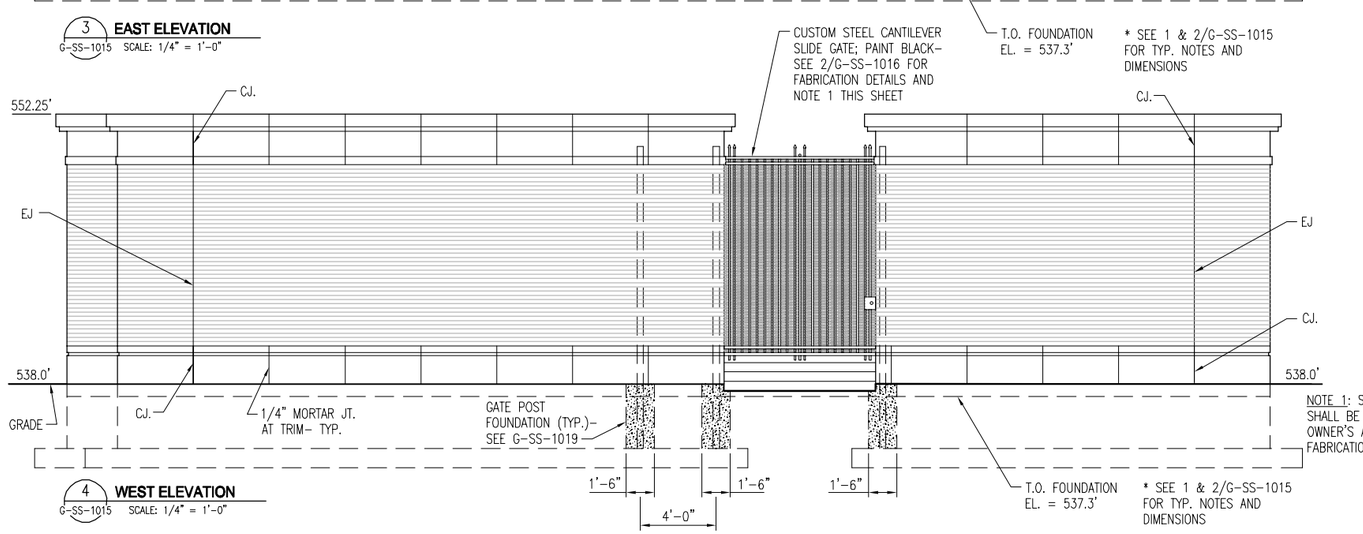

4 G-SS-1015 **WEST ELEVATION** SCALE: 1/4" = 1'–0"

* SEE 1 & 2/G-SS-1015 FOR TYP. NOTES AND DIMENSIONS

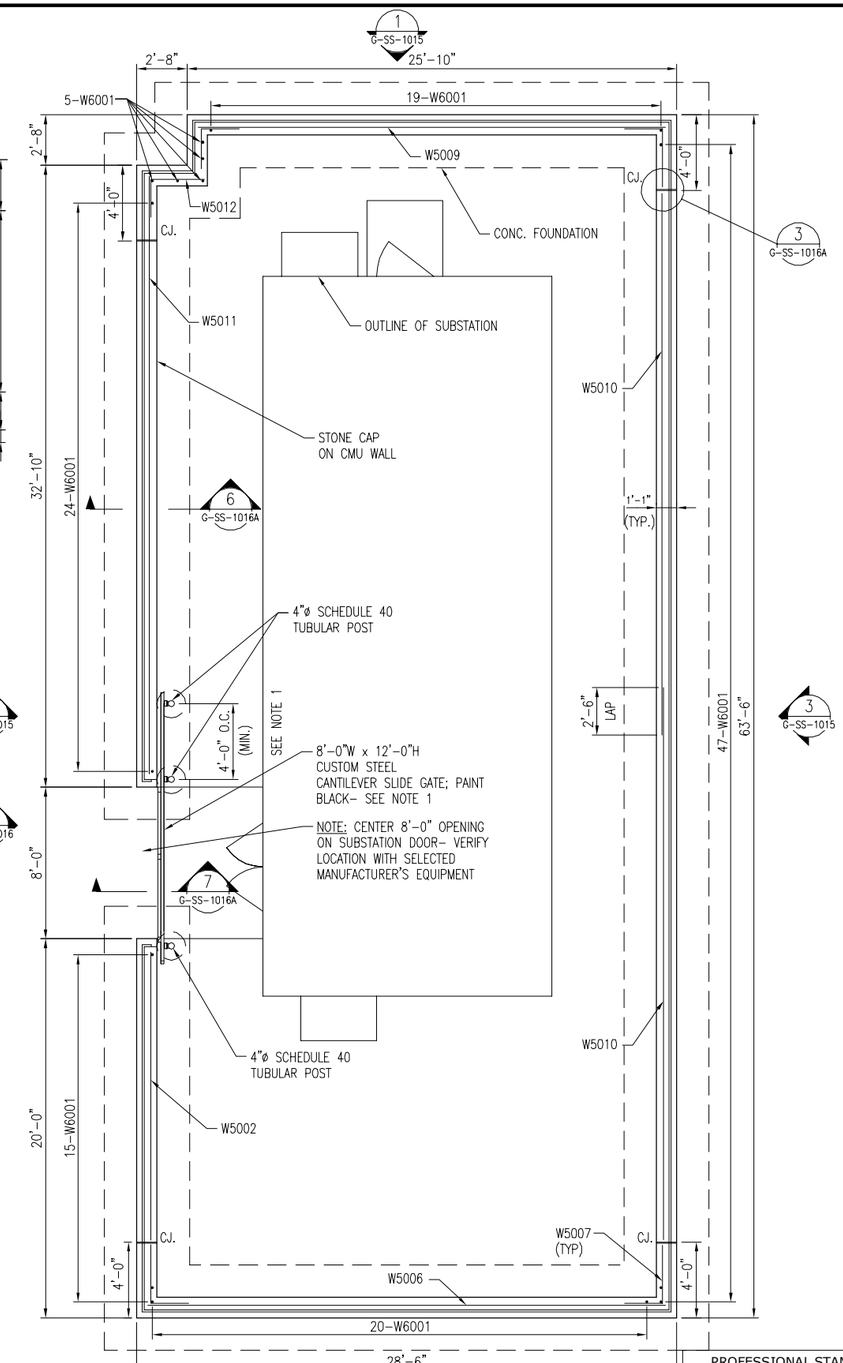

5 G-SS-1015 **SUBSTATION #3 SCREENWALL PLAN** SCALE: 1/4" = 1'–0"

NOTE 1: SHOP DRAWINGS SHALL BE PROVIDED FOR OWNER'S APPROVAL PRIOR TO FABRICATION OF ALL GATES.

CAUTION UNDERGROUND UTILITIES
2 WORKING DAYS
BEFORE YOU DIG
CALL 1–800–362–2764
OHIO UTILITY PROTECTION SERVICE
CALL NON–SERVICE FACILITY
OWNERS DIRECT

PROFESSIONAL STAMP

SIGN:

DATE:

CITY OF CINCINNATI DEPARTMENT OF TRANSPORTATION & ENGINEERING OHIO

CONTRACT DRAWING

PRINTS NOT BEARING THIS STAMP WERE MADE PRIOR TO ADVERTISING FOR BIDS AND ARE NOT TO BE CONSIDERED OBSOLETE FOR CONTRACT PURPOSES.

Department of Transportation and Engineering

City of Cincinnati
City Hall
801 Plum Street
Cincinnati, Ohio 45202

CINCINNATI STREETCAR TRACTION POWER SUBSTATION #3

SCREENWALL PLAN & ELEVATIONS

Revisions

No.		

Date 07/02/12	Date 07/02/12
Date 07/02/12	Date 07/12/12
Drawn by JF	Designed by JW
Checked by WW	Reviewed by JTB

Consultant

PB HDR

Structure File Number

ACC No. 23126

G-SS-1015

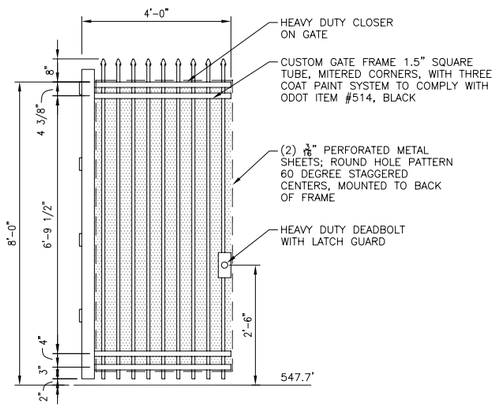

1 HINGED GATE ELEVATION
G-SS-1016 SCALE: 1/2" = 1'-0"

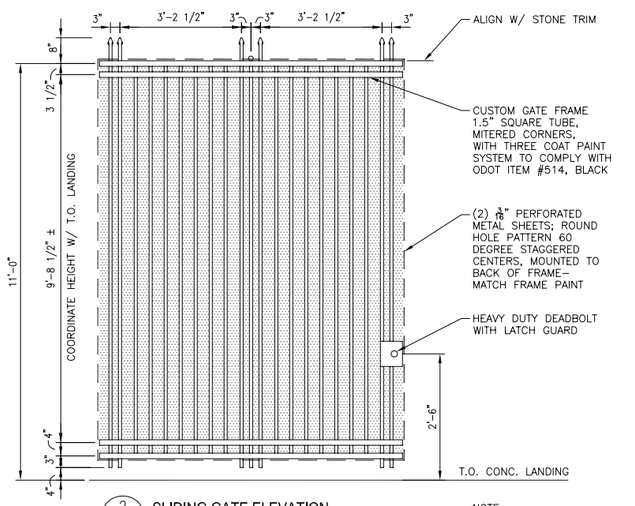

2 SLIDING GATE ELEVATION
G-SS-1016 SCALE: 1/2" = 1'-0"

NOTE:

COORDINATE GATE HEIGHT BETWEEN STONE TRIM AND TOP OF CONCRETE LANDING.

GENERAL NOTES

SCREEN WALL NOTES:

1. COLD-WEATHER REQUIREMENTS: DO NOT USE FROZEN MATERIALS OR MATERIALS MIXED OR COATED WITH ICE OR FROST. DO NOT BUILD ON FROZEN SUBSTRATES. REMOVE AND REPLACE UNIT MASONRY DAMAGED BY FROST OR BY FREEZING CONDITIONS. COMPLY WITH COLD-WEATHER CONSTRUCTION REQUIREMENTS CONTAINED IN ACI 530.1/ASCE 6/TMS 602.

2. COMPLY WITH HOT-WEATHER CONSTRUCTION REQUIREMENTS CONTAINED IN ACI 530.1/ASCE 6/TMS 602.

3. SUBJECT TO COMPLIANCE WITH REQUIREMENTS, MANUFACTURERS OFFERING PRODUCTS THAT MAY BE INCORPORATED INTO THE WORK INCLUDE, BUT ARE NOT LIMITED TO MANUFACTURERS SPECIFIED, OR APPROVED EQUAL.

4. PROVIDE UNITS WITH MINIMUM COMPRESSIVE STRENGTH OF 1900 PSI.
PROVIDE:
- Portland Cement: ASTM C 150, Type I or II, except Type III for cold-weather construction.
- Hydrated Lime: ASTM C 207, Type S.
- Masonry Cement: ASTM C 91.

5. MORTAR FOR UNIT MASONRY TO COMPLY WITH ASTM C 270, PROPORTION SPECIFICATION.
GROUT FOR UNIT MASONRY TO COMPLY WITH ASTM C 476.

6. USE GROUT TYPE TO COMPLY WITH TABLE 1.15.1 IN ACI 530.1/ASCE 6/TMS 602 FOR DIMENSIONS OF GROUT SPACES AND POUR HEIGHT.

7. PROVIDE GROUT WITH A SLUMP OF 8 TO 11 INCHES AS MEASURED ACCORDING TO ASTM C 143/C 143M. GROUT MUST HAVE A MINIMUM COMPRESSIVE STRENGTH OF 2000 PSI.

8. UNCOATED STEEL REINFORCING BARS TO COMPLY WITH ASTM A 615/A 615M OR ASTM A 996/A 996M, Grade 60.

9. MASONRY JOINT REINFORCEMENT TO COMPLY WITH ASTM A 951; HOT-DIP GALVANIZED, CARBON-STEEL WIRE FOR EXTERIOR WALLS. WIRE SIZE FOR SIDE RODS: W2.8 OR 0.188-INCH DIAMETER. WIRE SIZE FOR CROSS RODS: W2.8 OR 0.188-INCH DIAMETER.

10. SPACING OF CROSS RODS, TABS, AND CROSS TIES TO BE NOT MORE THAN 16 INCHES O.C. LADDER OR USE TRUSS TYPE BRACING WITH SINGLE PAIR OF SIDE RODS WITH SINGLE-WYTHE MASONRY.

11. PROVIDE ANCHORS THAT ALLOW VERTICAL OR HORIZONTAL ADJUSTMENT BUT RESIST TENSION AND COMPRESSION FORCES PERPENDICULAR TO PLANE OF WALL.

ANCHOR SECTION FOR WELDING TO STEEL FRAME: CRIMPED 1/4-INCH- DIAMETER, HOT-DIP GALVANIZED STEEL WIRE.

TIE SECTION: TRIANGULAR-SHAPED WIRE TIE, SIZED TO EXTEND WITHIN 1 INCH OF MASONRY FACE, MADE FROM 0.188-INCH DIAMETER, HOT-DIP GALVANIZED STEEL WIRE.

PREMOLDED FILLER STRIPS TO COMPLY WITH ASTM D 1056, GRADE 2A1; COMPRESSIBLE UP TO 35 PERCENT; FORMULATED FROM NEOPRENE OR PVC.

12. PREFORMED CONTROL-JOINT GASKETS TO BE FABRICATED FROM STYRENE-BUTADIENE-RUBBER COMPOUND, COMPLYING WITH ASTM D 2000, DESIGNATION M2AA-805 OR PVC, COMPLYING WITH ASTM D 2287, TYPE PVC-65406 AND DESIGNED TO FIT STANDARD SASH BLOCK AND TO MAINTAIN LATERAL STABILITY IN MASONRY WALL.

13. BOND-BREAKER STRIPS TO BE ASPHALT -SATURATED, ORGANIC ROOFING FELT COMPLYING WITH ASTM D 226, TYPE I (NO. 15 ASPHALT FELT).

14. MORTAR/ GROUT STAINS TO BE REMOVED WITH MANUFACTURER'S STANDARD-STRENGTH CLEANER FROM NEW MASONRY WITHOUT DAMAGING MASONRY. USE PRODUCT APPROVED FOR INTENDED USE BY CLEANER MANUFACTURER AND MANUFACTURER OF MASONRY UNITS BEING CLEANED.

15. DO NOT USE ADMIXTURES, UNLESS OTHERWISE INDICATED. DO NOT USE CALCIUM CHLORIDE IN MORTAR OR GROUT. ADD COLD-WEATHER ADMIXTURE (IF USED) AT SAME RATE FOR ALL MORTAR THAT WILL BE EXPOSED TO VIEW, REGARDLESS OF WEATHER CONDITIONS, TO ENSURE THAT MORTAR COLOR IS CONSISTENT.

16. USE FULL-SIZE UNITS WITHOUT CUTTING IF POSSIBLE. IF CUTTING IS REQUIRED, CUT UNITS WITH MOTOR-DRIVEN SAWS; PROVIDE CLEAN, SHARP, UNCHIPPED EDGES. ALLOW UNITS TO DRY BEFORE LAYING UNLESS WETTING OF UNITS IS SPECIFIED. INSTALL CUT UNITS WITH CUT SURFACES AND, WHERE POSSIBLE, CUT EDGES CONCEALED.

17. SELECT AND ARRANGE UNITS FOR EXPOSED UNIT MASONRY TO PRODUCE A UNIFORM BLEND OF COLORS AND TEXTURES.

18. COMPLY WITH TOLERANCES IN ACI 530.1/ASCE 6/TMS 602.

19. FOR CONSPICUOUS VERTICAL LINES, SUCH AS EXTERNAL CORNERS, REVEALS, AND EXPANSION AND CONTROL JOINTS, DO NOT VARY FROM PLUMB BY MORE THAN 1/8 INCH IN 10 FEET.

20. FOR CONSPICUOUS HORIZONTAL LINES, SUCH AS LINTELS AND COPING, DO NOT VARY FROM LEVEL BY MORE THAN 1/8 INCH IN 10 FEET.

21. DO NOT USE UNITS WITH LESS THAN NOMINAL 4-INCH HORIZONTAL FACE DIMENSIONS AT CORNERS OR JAMBS.

22. COMPLY WITH PLACING REINFORCEMENT REQUIREMENTS IN ACI 530.1/ASCE 6/TMS 602

23. COMPLY WITH REQUIREMENTS IN ACI 530.1/ASCE 6/TMS 602 FOR CLEANOUTS AND FOR GROUT PLACEMENT, INCLUDING MINIMUM GROUT SPACE AND MAXIMUM POUR HEIGHT.

24. DO NOT PLACE GROUT UNTIL ENTIRE HEIGHT OF MASONRY TO BE GROUTED HAS ATTAINED ENOUGH STRENGTH TO RESIST GROUT PRESSURE.

25. CLEAN UNIT MASONRY AS WORK PROGRESSES BY DRY BRUSHING TO REMOVE MORTAR FINS AND SMEARS BEFORE TOOLING JOINTS.

26. AFTER MORTAR IS THOROUGHLY SET AND CURED, CLEAN EXPOSED MASONRY AS FOLLOWS: TEST CLEANING METHODS ON SAMPLE WALL PANEL; LEAVE ONE-HALF OF PANEL UNCLEANED FOR COMPARISON PURPOSES. PROTECT ADJACENT SURFACES FROM CONTACT WITH CLEANER.

27. WET WALL SURFACES WITH WATER BEFORE APPLYING CLEANERS; REMOVE CLEANERS PROMPTLY BY RINSING SURFACES THOROUGHLY WITH CLEAR WATER.

28. CLEAN MASONRY BY BUCKET-AND-BRUSH HAND-CLEANING METHOD.

FOUNDATION NOTES:

1. PROVIDE CONCRETE WITH MINIMUM COMPRESSIVE STREGTH f'c = 4000 PSI.

2. ALL REINFORCEMENT SHALL BE ASTM:775 GRADE 60.

3. FOUNDATION DESIGN SHOWN IS BASED ON AN ALLOWABLE SOIL PRESSURE OF 2200 PSI.

METAL GATE NOTES:

1. SHOP DRAWINGS TO BE PROVIDED TO OWNER BY FABRICTOR FOR APPROVAL.

CAUTION UNDERGROUND UTILITIES
2 WORKING DAYS
BEFORE YOU DIG
CALL 1-800-362-2764
OHIO UTILITY PROTECTION SERVICE
CALL NON-SERVICE FACILITY OWNERS DIRECT

PROFESSIONAL STAMP

SIGN:

DATE:

CONTRACT DRAWING

PRINTS NOT BEARING THIS STAMP WERE MADE PRIOR TO ADVERTISING FOR BIDS AND ARE TO BE CONSIDERED OBSOLETE FOR CONTRACT PURPOSES.

Department of Transportation and Engineering

City of Cincinnati
City Hall
801 Plum Street
Cincinnati, Ohio 45202

CINCINNATI STREETCAR
TRACTION POWER SUBSTATION #2 & #3

GENERAL NOTES AND GATE ELEVATIONS

Revisions

No.				

Date 07/02/12
Date 07/02/12
Date 07/02/12
Date 07/12/12

Drawn by JF
Designed by JW
Checked by WW
Reviewed by JTB

Consultant

PB HDR

Structure File Number

ACC No. 23126

G-SS-1016

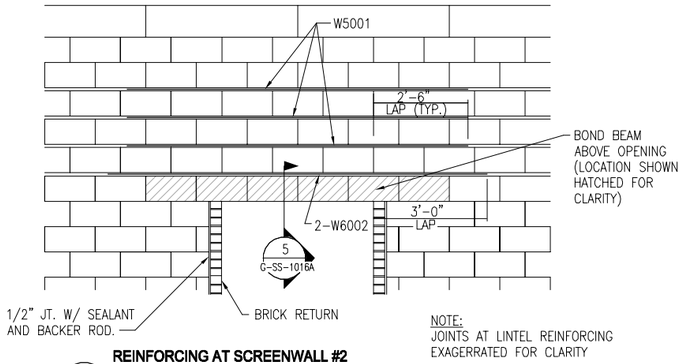

1 G-SS-1016A **REINFORCING AT SCREENWALL #2 EAST WALL GATE OPENING** SCALE: N.T.S.

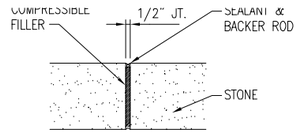

NOTE: STONE C.J. IS TO EXTEND THRU STONE TRIM AND STONE CAP.

2 G-SS-1016A **TYP. STONE C.J.** SCALE: 1-1/2" = 1'-0"

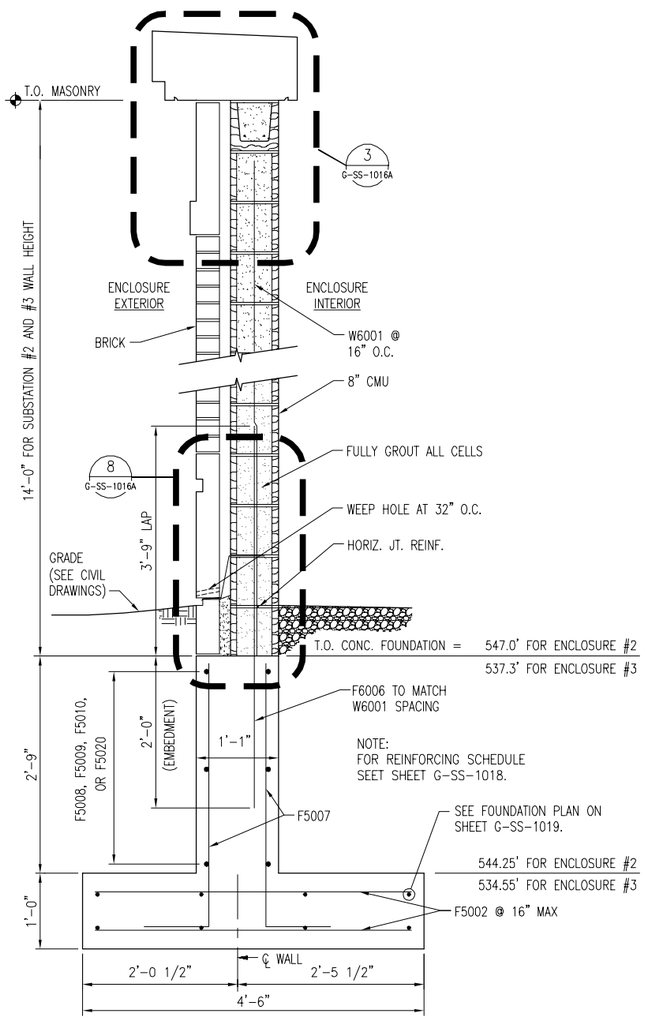

6 G-SS-1016A **WALL SECTION- (TYP.)** SCALE: 1" = 1'-0"

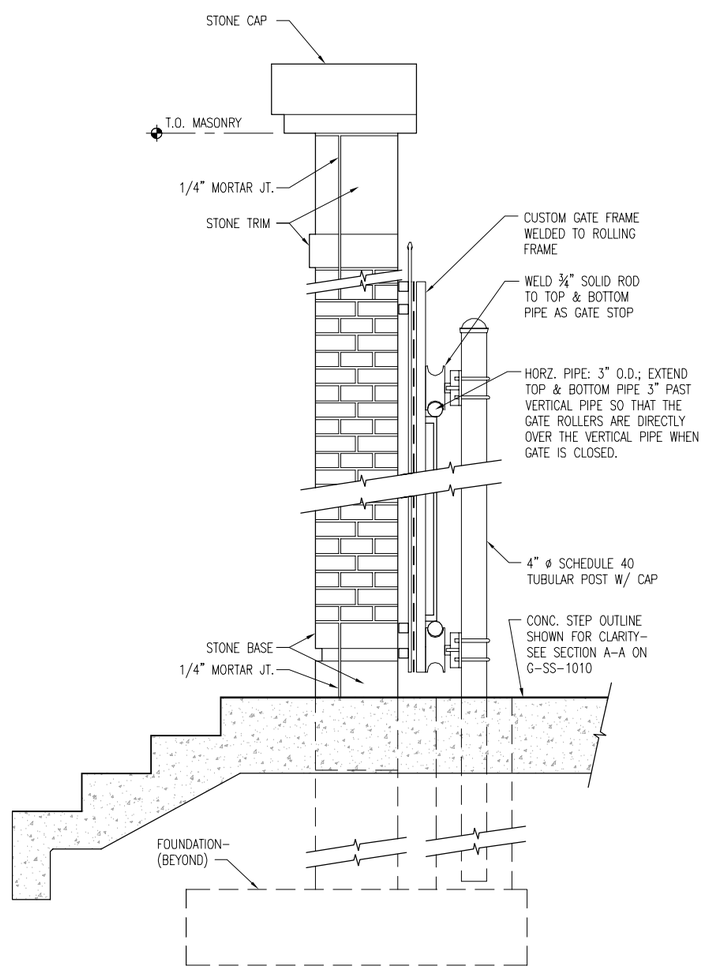

7 G-SS-1016A **SECTION AT GATE** SCALE: 1" = 1'-0"

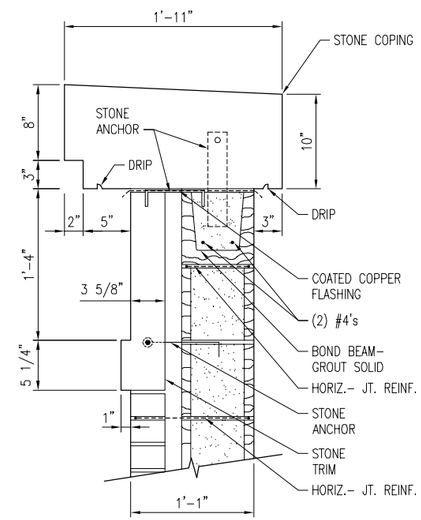

3 G-SS-1016A **CAP DETAIL** SCALE: 1-1/2" = 1'-0"

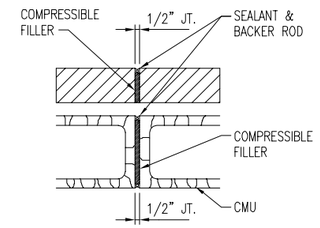

4 G-SS-1016A **TYP. CONC. MASONRY CONTROL JOINT** SCALE: 1-1/2" = 1'-0"

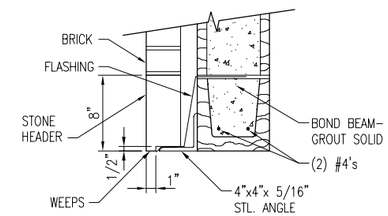

5 G-SS-1016A **BOND BEAM DETAIL** SCALE: 1-1/2" = 1'-0"

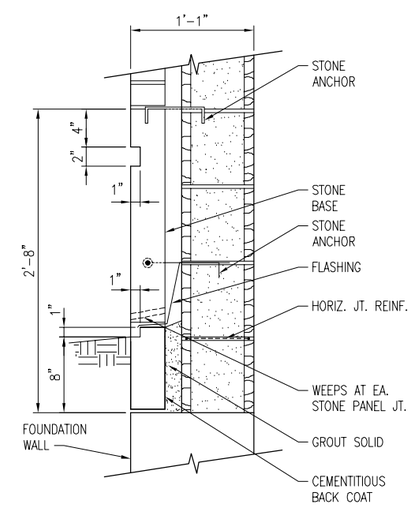

8 G-SS-1016A **BASE DETAIL** SCALE: 1-1/2" = 1'-0"

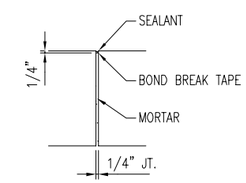

9 G-SS-1016A **STONE COPING JOINT** SCALE: 1-1/2" = 1'-0"

CAUTION UNDERGROUND UTILITIES 2 WORKING DAYS
BEFORE YOU DIG
CALL 1-800-362-2764
OHIO UTILITY PROTECTION SERVICE
CALL NON-SERVICE FACILITY OWNERS DIRECT

PROFESSIONAL STAMP

SIGN:

DATE:

CONTRACT DRAWING

PRINTS NOT BEARING THIS STAMP WERE MADE PRIOR TO ADVERTISING FOR BIDS AND ARE TO BE CONSIDERED OBSOLETE FOR CONTRACT PURPOSES.

Department of Transportation and Engineering

City of Cincinnati
City Hall
801 Plum Street
Cincinnati, Ohio 45202

CINCINNATI STREETCAR TRACTION POWER SUBSTATION #2 & #3

SCREENWALL AND GATE DETAILS

Revisions

No.		

Date 07/02/12	Date 07/02/12	Date 07/02/12	Date 07/12/12
Drawn by JF	Designed by JW	Checked by WW	Reviewed by JTB

Consultant

PB HDR

Structure File Number

ACC No. 23126

G-SS-1016A

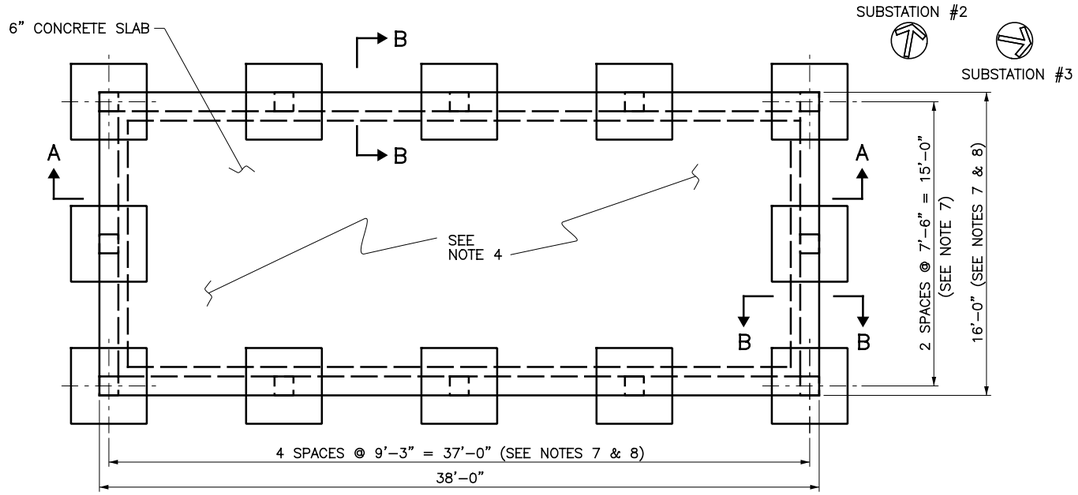

PLAN
SCALE: 1/4"=1'-0"

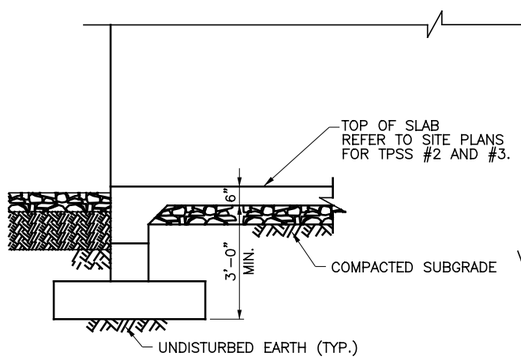

SECTION A–A
SCALE: ½"=1'-0"

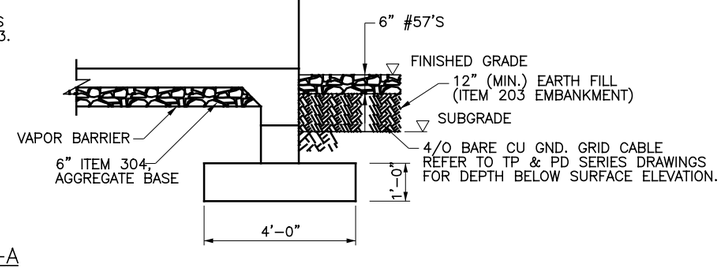

NOTES:

1. PROVIDE CONCRETE WITH A MINIMUM COMPRESSION STRENGTH OF Fc' = 4000 PSI.
2. ALL REINFORCEMENT SHALL BE EPOXY COATED PER ASTM: 775, GRADE 60.
3. ALL REINFORCEMENT SHALL HAVE A MINIMUM CLEAR CONCRETE COVER AS SHOWN ON THE DRAWING.
4. SEE DRAWING G–TP–0033 (SUBSTATION 2) AND G–TP–0034 (SUBSTATION 3) FOR GROUNDING DETAILS OF STRUCTURAL ELEMENTS.
5. CONTRACTOR TO VERIFY & PROVIDE ALL REQUIRED SLEEVES/OPENINGS FOR CONDUIT PENETRATIONS THROUGH SLAB. REFER TO TP & PD SERIES DRAWINGS AND SUBSTATION MANUFACTURER'S DRAWINGS. ALL OPENINGS SHALL BE FORMED.
6. ALL FOUNDATION SOIL BEARING SURFACES SHALL BE DRY AND COMPACTED PER CMS–203.
7. FOUNDATION DESIGN SHOWN IS BASED ON SOIL BORING DATA AND MAXIMUM SUBSTATION ENCLOSURE DESIGN WEIGHT OF 81,500 LBS. A FLOOR LIVE LOAD OF 125 PSF, A ROOF LIVE LOAD OF 20 PSF, A SNOW LOAD OF 21.1 PSI, A ICE LOAD OF 5.1 PSF, AND A HORIZONTAL WIND LOAD OF 8,462 LBS. ALL SUBSTATION LOADS INDICATED ABOVE ARE TO BE SUPPORTED UNIFORMLY ALONG THE CENTERLINE OF THE PERIMETER GRADE BEAMS. IF SUBSTATION WEIGHT EXCEEDS THE MAXIMUM DESIGN WIEGHT, CONTRACTOR SHALL INSTALL ADDITIONAL FOOTINGS AS REQUIRED. THE ALLOWABLE SOIL PRESSURE SHALL BE 2.2 KSF. ALTERNATE DESIGN MUST BE SIGNED AND STAMPED BY A PROFESSIONAL ENGINEER REGISTERED IN THE STATE OF OHIO AND SUBMITTED TO THE ENGINEER FOR APPROVAL.
8. PRIOR TO CONSTRUCTION, VERIFY THAT INDICATED FOUNDATION/SLAB DIMENSIONING IS CONSISTENT WITH SELECTED SUBSTATION MANUFACTURER'S FURNISHED EQUIPMENT.

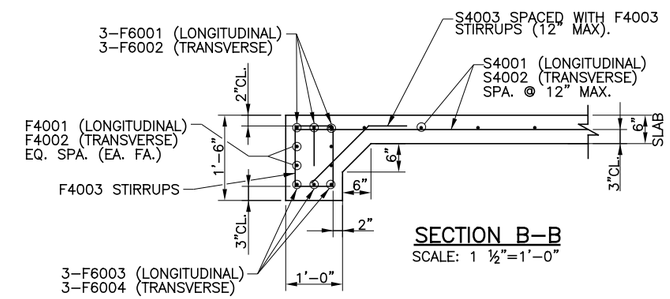

SECTION B–B
SCALE: 1 ½"=1'-0"

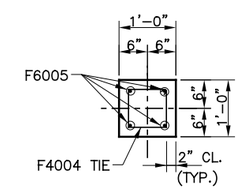

PEDESTAL REINFORCEMENT
SCALE: 1 ½"=1'-0"

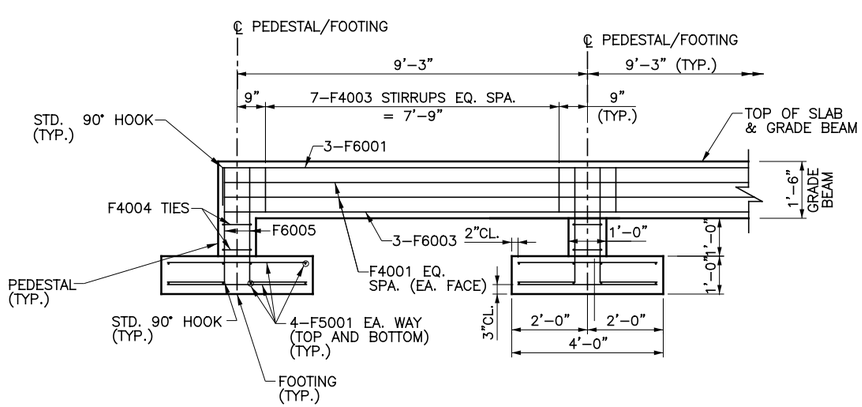

LONGITUDINAL FOUNDATION REINFORCEMENT
SCALE: ½"=1'-0"

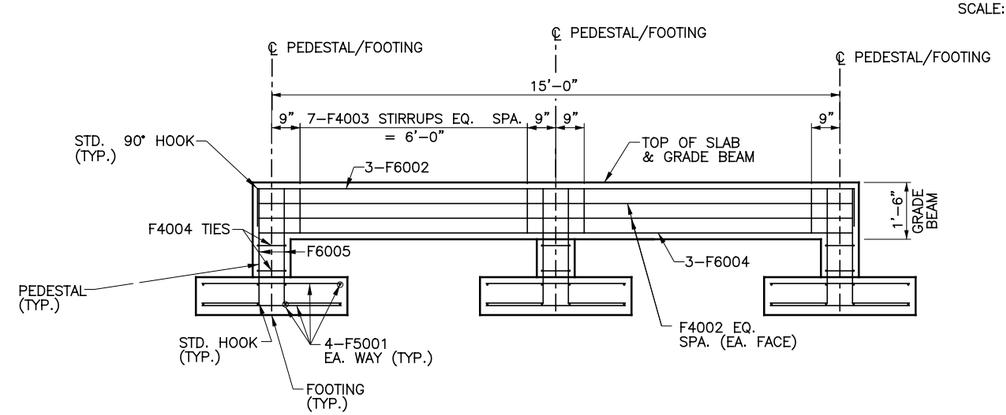

TRANSVERSE FOUNDATION REINFORCEMENT
SCALE: ½"=1'-0"

CAUTION UNDERGROUND UTILITIES
2 WORKING DAYS
BEFORE YOU DIG
CALL 1–800–362–2764
OHIO UTILITY PROTECTION SERVICE
CALL NON–SERVICE FACILITY
OWNERS DIRECT

CONTRACT DRAWING
PRINTS NOT BEARING THIS STAMP WERE MADE PRIOR TO ADVERTISING FOR BIDS AND ARE TO BE CONSIDERED OBSOLETE FOR CONTRACT PURPOSES.

Department of Transportation and Engineering
City of Cincinnati
City Hall
801 Plum Street
Cincinnati, Ohio 45202

CINCINNATI STREETCAR
TRACTION POWER
SUBSTATIONS #2 & #3
STRUCTURAL PLANS AND DETAILS

Revisions
No.

Drawn by MJC	Date 12/20/11	Designed by BAC	Date 12/20/11
Checked by BMG	Date 12/20/11	Reviewed by JTB	Date 20/20/11

Consultant
PB HDR

File Number
ACC No. 23126

G-SS-1017

DOTE_Mono_PDF_Half.pltcfg
T:\29014A-Streetcar\CAD\Structures\TPSS •2\CDS\S_F_ST_2001.dgn
12/16/2011 11:05:16 AM

STANDARD HOOK DETAILS

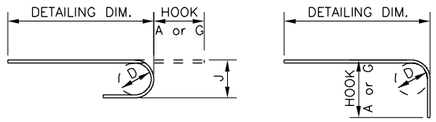

BAR SIZE	D	°180 HOOKS		°90 HOOKS
		A or G	J	A or G
#3	2¼"	5"	3"	6"
#4	3"	6"	4"	8"
#5	3¾"	7"	5"	10"
#6	4½"	8"	6"	12"
#7	5¼"	10"	7"	14"
#8	6"	11"	8"	16"
#9	9½"	15"	11¾"	19"
#10	10¾"	17"	13¼"	22"
#11	12"	19"	14¾"	24"
#14	18¼"	27"	21¾"	31"
#18	24"	36"	28½"	41"

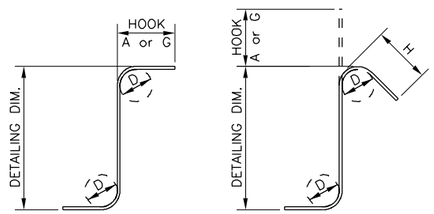

RECOMMENDED STIRRUP & TIE HOOK DIMENSIONS

BAR SIZE	D	°90 HOOKS	°135 HOOKS	
		A or G	A or G	H
#3	2¼"	4"	4"	2½"
#4	3"	4½"	4½"	3"
#5	3¾"	6"	5½"	3¾"
#6	4½"	12"	8"	4½"
#7	5¼"	14"	9"	5½"
#8	6"	16"	11"	6"

BEND DIAGRAM

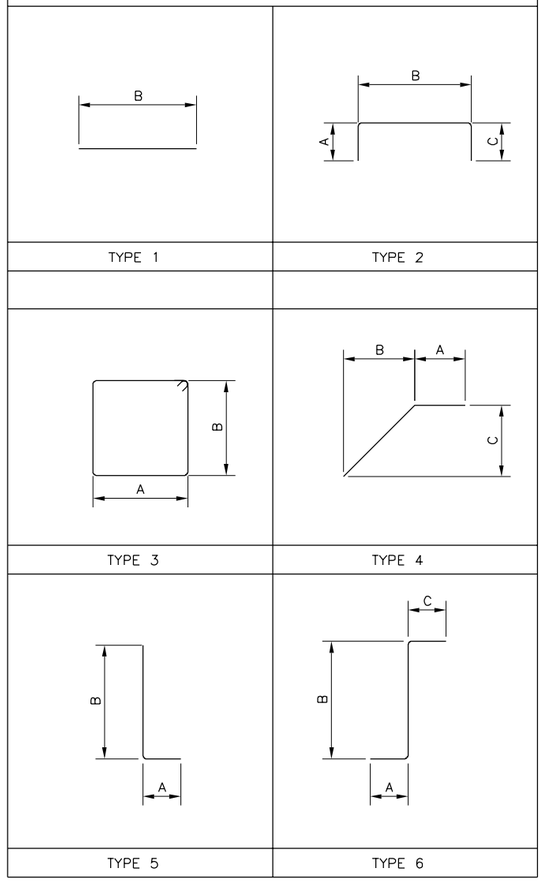

SUBSTATION 2 REINFORCING SCHEDULE FOR FOUNDATION (SUBSTATION 3 SAME)

MARK	NUMBER	LENGTH	TYPE	DIMENSIONS					WEIGHT (LBS)	DESCRIPTION
				A	B	C	D	E		
F4001	8	37'-8"	1		37'-8"				201	
F4002	8	19'-6"	2	2'-0"	15'-8"	2'-0"			104	
F4003	100	4'-0"	3		1'-1"	8"			267	
F4004	24	3'-2"	3		8"	8"			51	
F5001	192	3'-8"	1		3'-8"				734	
F6001	6	39'-4"	2	1'-0"	37'-8"	1'-0"			354	
F6002	6	17'-4"	2	1'-0"	15'-8"	1'-0"			156	
F6003	6	37'-8"	1		37'-8"				339	
F6004	6	15'-8"	1		15'-8"				141	
F6005	48	3'-9"	5	2'-11"	1'-0"				270	
S4001	15	38'-10"	2	37'-8"	8"				389	
S4002	37	16'-10"	2	15'-8"	8"				416	
S4003	104	2'-1"	4	8"	1'-0"	1'-0"			145	
TOTAL									3567	

SUBSTATION 2 REINFORCING SCHEDULE FOR SCREEN WALL

MARK	NUMBER	LENGTH	TYPE	DIMENSIONS					WEIGHT (LBS)	DESCRIPTION
				A	B	C	D	E		
F5002	178	4'-0"	1		4'-0"				743	
F5003	10	22'-8"	1		22'-8"				236	
F5004	10	31'-0"	1		31'-0"				323	
F5005	20	33'-7"	1		33'-7"				701	
F5006	10	24'-10"	1		24'-10"				259	
F5007	496	4'-4"	5	1'-2"	3'-4"				2242	
F5008	6	19'-8"	1		19'-8"				123	
F5009	12	32'-2"	1		32'-2"				403	
F5010	12	28'-2"	1		28'-2"				353	
F5011	10	4'-10"	5	10"	4'-2"				51	
F5020	22	5'-2"	5	2'-8"	2'-8"				119	
F5021	12	2'-6"	5	10"	1'-9"				31	
F5022	74	10'-0"	6	2'-1"	3'-3"	4'-11"			772	
F5023	13	21'-9"	1		21'-9"				295	
F5024	16	19'-6"	1		19'-6"				325	
F5025	13	28'-4"	1		28'-4"				384	
F5026	13	5'-5"	1		5'-5"				73	
F5027	13	11'-8"	1		11'-8"				158	
F5028	26	6'-6"	4	3'-2"	3'-3"	5"			176	
	2 SER.	7'-0"			7'-0"					
F5029	OF	TO	1		TO				92	
	3	22'-4"			22'-4"					
F5030	2	5'-0"	1		5'-0"				10	
F5031	74	9'-11"	6	2'-8"	3'-3"	4'-3"			765	
F5032	4	33'-10"	1		33'-10"				142	
F6006	123	5'-9"	1		5'-9"				1062	
W5001	3	9'-0"	1		9'-0"				28	
W5002	7	16'-2"	1		16'-2"				118	
W5003	7	7'-4"	1		7'-4"				54	
W5004	7	14'-10"	1		14'-10"				109	
W5005	14	29'-1"	1		29'-1"				425	
W5006	7	27'-4"	1		27'-4"				200	
W5007	28	4'-7"	5	2'-2"	2'-6"				134	
W5008	7	30'-4"	1		30'-4"				221	
W6001	123	12'-8"	1		12'-8"				2340	
W6002	2	10'-0"	1		10'-0"				30	
TOTAL									13497	

SUBSTATION 3 REINFORCING SCHEDULE FOR SCREEN WALL

MARK	NUMBER	LENGTH	TYPE	DIMENSIONS					WEIGHT (LBS)	DESCRIPTION
				A	B	C	D	E		
F5002	224	4'-0"	1		4'-0"				935	
F5003	10	22'-8"	1		22'-8"				236	
F5004	10	31'-0"	1		31'-0"				323	
F5007	518	4'-4"	5	1'-2"	3'-4"				2341	
F5008	6	20'-1"	1		20'-1"				126	
F5012	12	32'-10"	1		32'-10"				411	
F5013	6	28'-2"	1		28'-2"				177	
F5014	10	28'-4"	1		28'-4"				296	
F5015	6	32'-1"	1		32'-1"				201	
F5016	20	6'-8"	1		6'-8"				139	
F5017	6	25'-6"	1		25'-6"				160	
F5018	10	34'-8"	1		34'-8"				362	
F5019	20	34'-3"	1		34'-3"				714	
F5020	36	5'-2"	5	2'-8"	2'-8"				194	
F6006	130	5'-9"	1		5'-9"				1123	
W5002	6	16'-6"	1		16'-6"				104	
W5006	6	27'-4"	1		27'-4"				171	
W5007	6	4'-7"	5	2'-2"	2'-6"				29	
W5009	6	24'-8"	1		24'-8"				154	
W5010	12	29'-11"	1		29'-11"				375	
W5011	6	31'-3"	1		31'-3"				196	
W5012	3	5'-4"	5	3'-0"	2'-6"				17	
W6001	130	12'-8"	1		12'-8"				2473	
TOTAL									11257	

CAUTION UNDERGROUND UTILITIES
2 WORKING DAYS
BEFORE YOU DIG
CALL 1-800-362-2764
OHIO UTILITY PROTECTION SERVICE
CALL NON-SERVICE FACILITY
OWNERS DIRECT

CONTRACT DRAWING

PRINTS NOT BEARING THIS STAMP WERE MADE FOR REVIEW AND COMMENT PURPOSES ONLY, ARE NOT TO BE CONSIDERED OBSOLETE FOR CONTRACT PURPOSES.

Department of Transportation and Engineering

City of Cincinnati
City Hall
801 Plum Street
Cincinnati, Ohio 45202

CINCINNATI STREETCAR
TRACTION POWER SUBSTATIONS #2 & #3 REINFORCING SCHEDULES & DETAILS

Revisions

No.				

Date 7/02/12	Date 7/02/12	Date 7/02/12	Date 7/12/12
Drawn by M1C	Designed by BAC	Checked by BMG	Reviewed by JTB

Consultant

PB HDR

Structure File Number

ACC No.

G-SS-1018

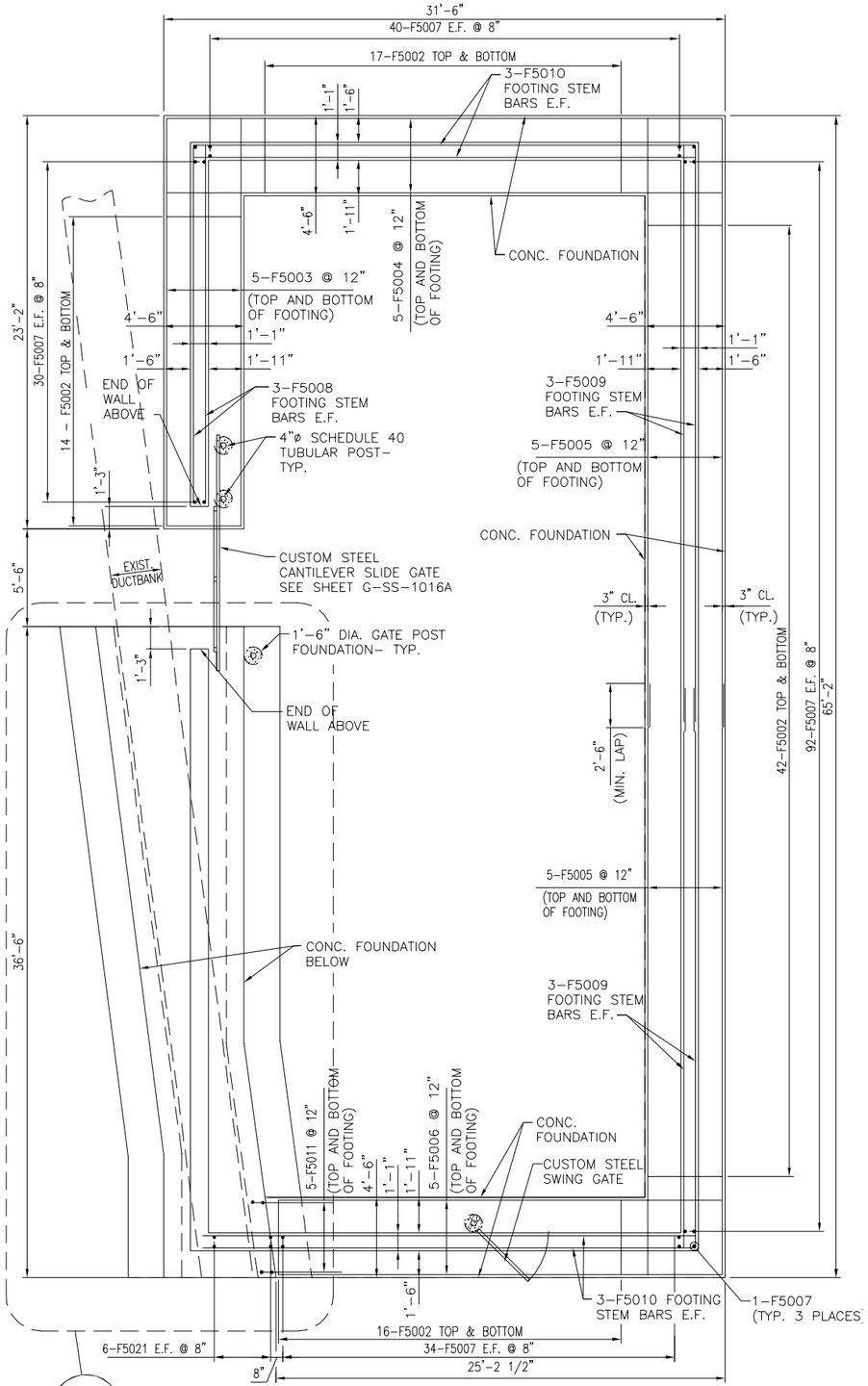

1 SUBSTATION #2 SCREENWALL FOUNDATION PLAN
G-SS-1019 SCALE: 1/4" = 1'-0"

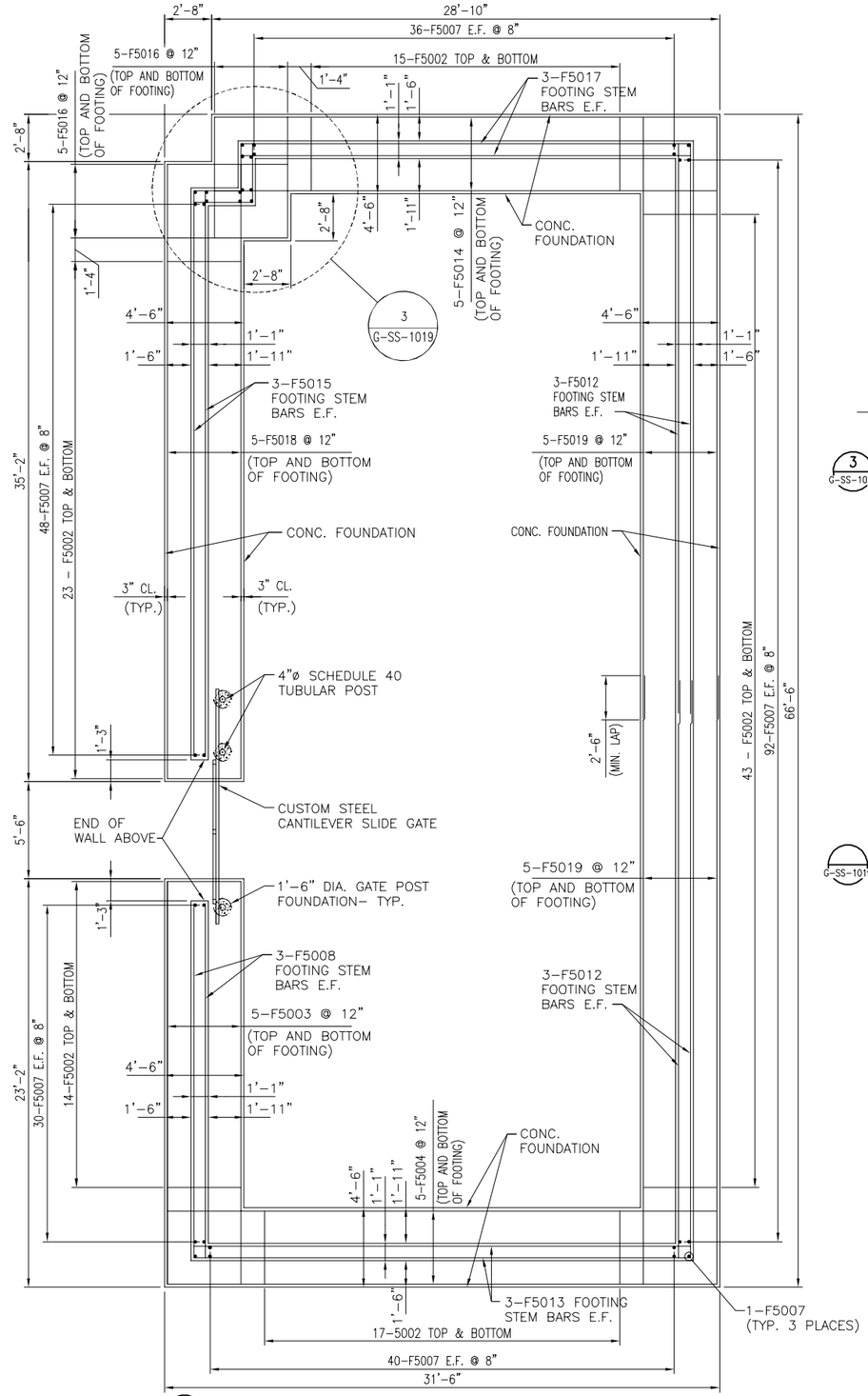

2 SUBSTATION #3 SCREENWALL FOUNDATION PLAN
G-SS-1019 SCALE: 1/4" = 1'-0"

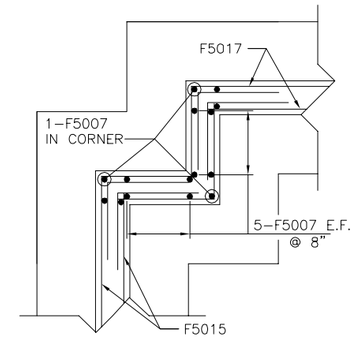

3 SUBSTATION #3 SCREENWALL CORNER DETAIL
G-SS-1019 SCALE: NOT TO SCALE

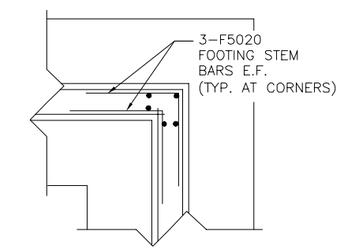

TYPICAL STEM CORNER REINFORCEMENT DETAIL
G-SS-1019 SCALE: NOT TO SCALE

CAUTION UNDERGROUND UTILITIES
2 WORKING DAYS
BEFORE YOU DIG
CALL 1-800-362-2764
OHIO UTILITY PROTECTION SERVICE
CALL NON-SERVICE FACILITY OWNERS DIRECT

NOTE:
FOR REINFORCING SCHEDULE SEE SHEET G-SS-1018

DEPARTMENT OF TRANSPORTATION & ENGINEERING CITY OF CINCINNATI OHIO

CONTRACT DRAWING
PRINTS NOT BEARING THIS STAMP WERE MADE PRIOR TO ADVERTISING FOR BIDS AND ARE TO BE CONSIDERED PRELIMINARY FOR CONTRACT PURPOSES.

Department of Transportation and Engineering
City of Cincinnati
City Hall
801 Plum Street
Cincinnati, Ohio 45202

CINCINNATI STREETCAR
TRACTION POWER SUBSTATION #2 & #3
SCREENWALL FOUNDATION PLANS

Revisions
No.

	Date
Drawn by BC	7/02/12
Designed by BC	7/02/12
Checked by DP	7/02/12
Reviewed by JTB	7/12/12

Consultant
PB HDR

Structure File Number

ACC No.
23126

G-SS-1019

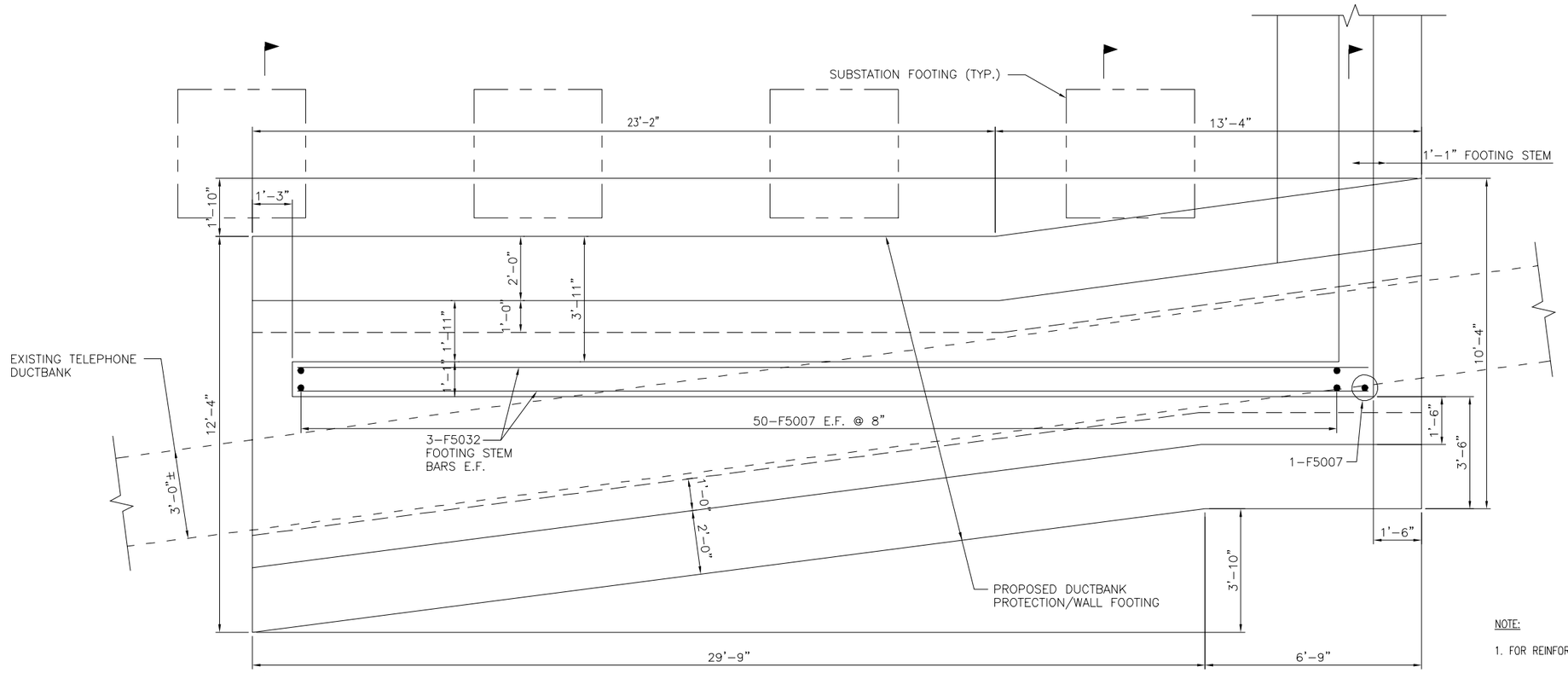

NOTE:

1. FOR REINFORCING SCHEDULE, SEE SHEET G-SS-1018.

1 G-SS-1018B

1 DUCTBANK ENCASEMENT PLAN

G-SS-1019A SCALE: ½" = 1'-0"

2 G-SS-1018B

3 G-SS-1018B

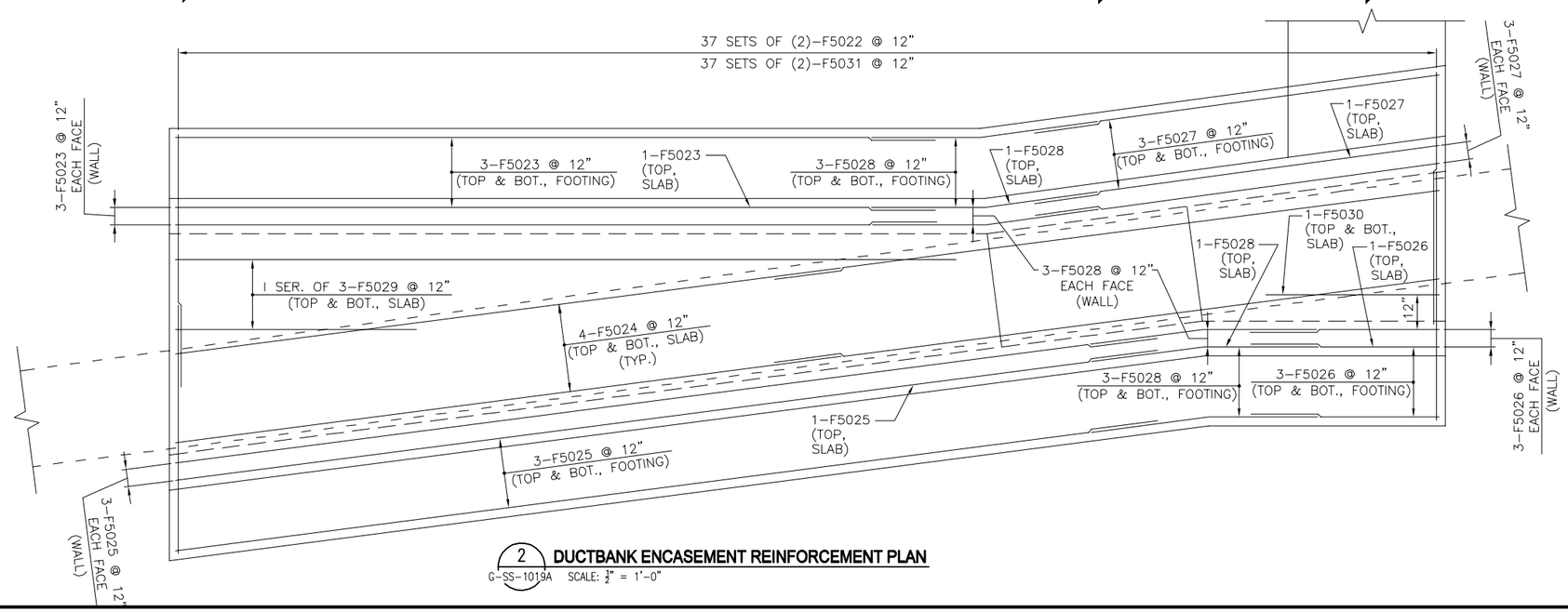

2 DUCTBANK ENCASEMENT REINFORCEMENT PLAN

G-SS-1019A SCALE: ½" = 1'-0"

CAUTION UNDERGROUND UTILITIES
2 WORKING DAYS

BEFORE YOU DIG

CALL 1-800-362-2764
OHIO UTILITY PROTECTION SERVICE
CALL NON-SERVICE FACILITY
OWNERS DIRECT

DEPARTMENT OF TRANSPORTATION & ENGINEERING — CITY OF CINCINNATI — OHIO

CONTRACT DRAWING

PRINTS NOT BEARING THIS STAMP WERE MADE FOR INFORMATION ONLY FOR BIDS AND ARE TO BE CONSIDERED OBSOLETE FOR CONTRACT PURPOSES.

Department of Transportation and Engineering

City of Cincinnati
City Hall
801 Plum Street
Cincinnati, Ohio 45202

CINCINNATI STREETCAR
TRACTION POWER SUBSTATION #2
DUCTBANK ENCASEMENT FOUNDATION PLANS

Revisions

No.			

Drawn by APV	Date 7/02/12
Designed by APV	Date 7/02/12
Checked by ECM	Date 7/02/12
Reviewed by JTB	Date 7/12/12

Consultant

PB HDR

Structure File Number

ACC No. 23126

G-SS-1019A

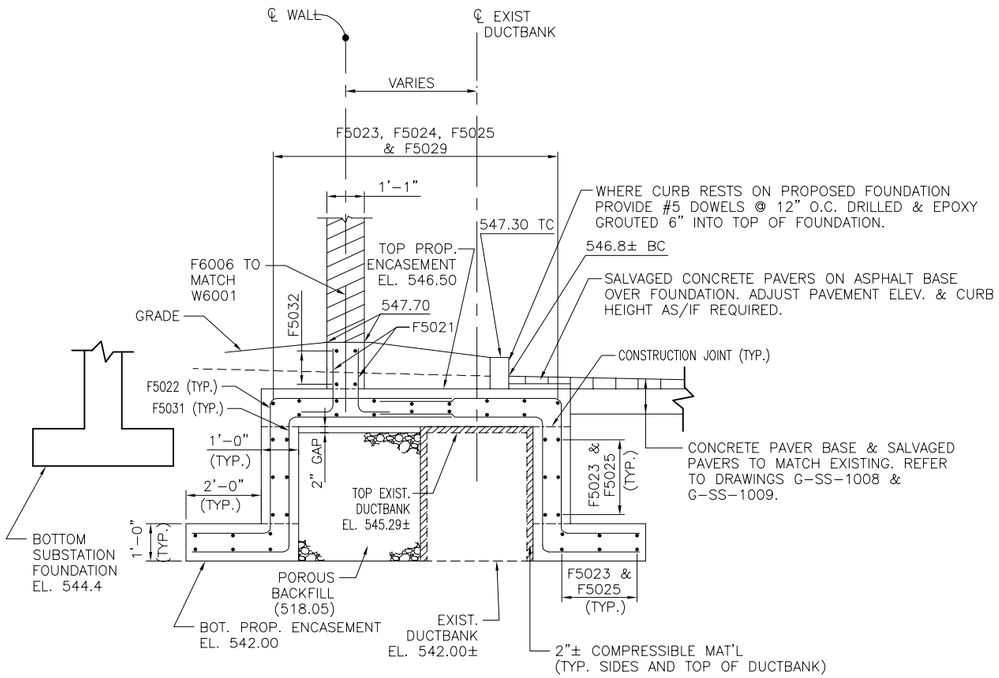

1 **DUCTBANK ENCASEMENT SECTION**
G–SS–1019B SCALE: ½" = 1'–0"

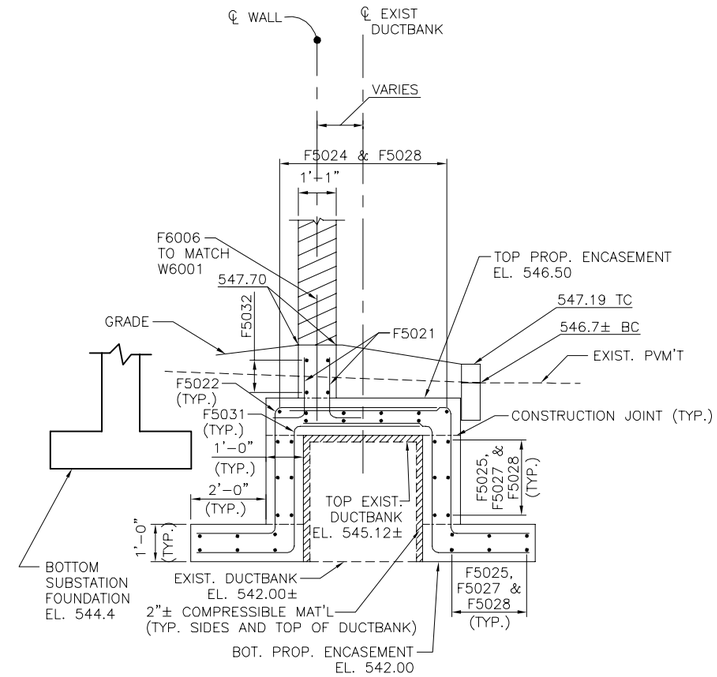

2 **DUCTBANK ENCASEMENT SECTION**
G–SS–1019B SCALE: ½" = 1'–0"

NOTES:

1. CONTRACTOR SHALL VERIFY THE BOTTOM OF DUCTBANK ELEVATION. IF LOWEST BOTTOM OF DUCTBANK ELEVATION IS FOUND TO BE DIFFERENT FROM WHAT IS SHOWN IN THE PLANS, THE CONTRACTOR SHALL ADJUST THE BOTTOM OF ENCASEMENT ELEVATION AND REINFORCING AS APPROPRIATE AND SUBMIT TO THE ENGINEER FOR REVIEW.

1. FOR REINFORCING SCHEDULE, SEE SHEET G–SS–1018.

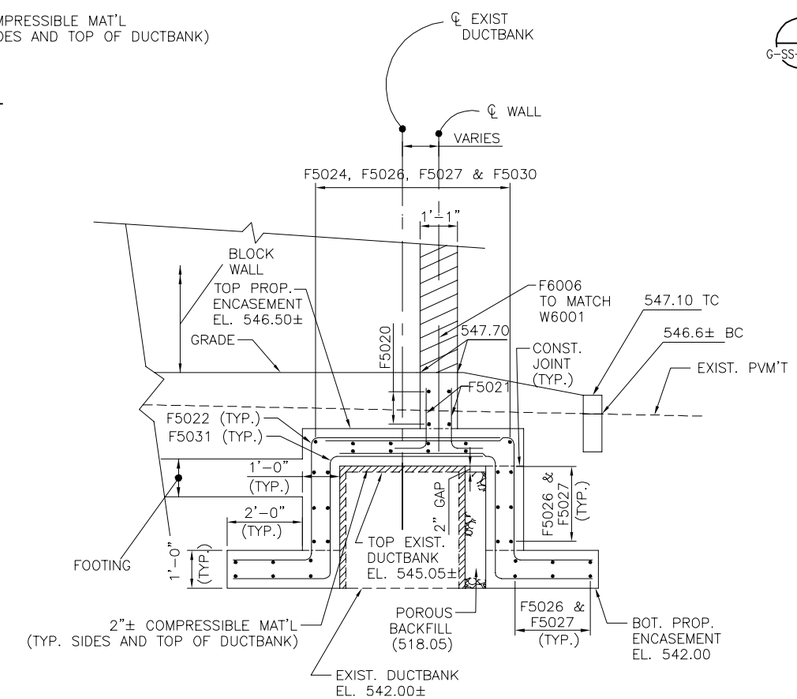

3 **DUCTBANK ENCASEMENT SECTION**
G–SS–1019B SCALE: ½" = 1'–0"

CAUTION UNDERGROUND UTILITIES
2 WORKING DAYS
BEFORE YOU DIG
CALL 1–800–362–2764
OHIO UTILITY PROTECTION SERVICE
CALL NON–SERVICE FACILITY OWNERS DIRECT

CONTRACT DRAWING

PRINTS NOT BEARING THIS STAMP WERE MADE FOR INFORMATION ONLY FOR BIDS AND ARE TO BE CONSIDERED OBSOLETE FOR CONTRACT PURPOSES.

Department of Transportation and Engineering
City of Cincinnati
City Hall
801 Plum Street
Cincinnati, Ohio 45202

CINCINNATI STREETCAR
TRACTION POWER SUBSTATION #2
DUCTBANK ENCASEMENT SECTIONS

Revisions
No.

Drawn by APV	Date 7/02/12
Designed by APV	Date 7/02/12
Checked by ECM	Date 7/02/12
Reviewed by JTB	Date 7/12/12

Consultant

Structure File Number

ACC No. 23126

G-SS-1019B

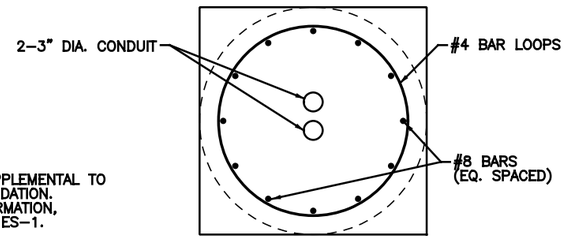

NOTES:
DETAIL SHOWN IS SUPPLEMENTAL TO STANDARD BASE FOUNDATION. FOR ALL OTHER INFORMATION, SEE DOTE STD. DWG. ES–1.

SECTION B G–ST–2001

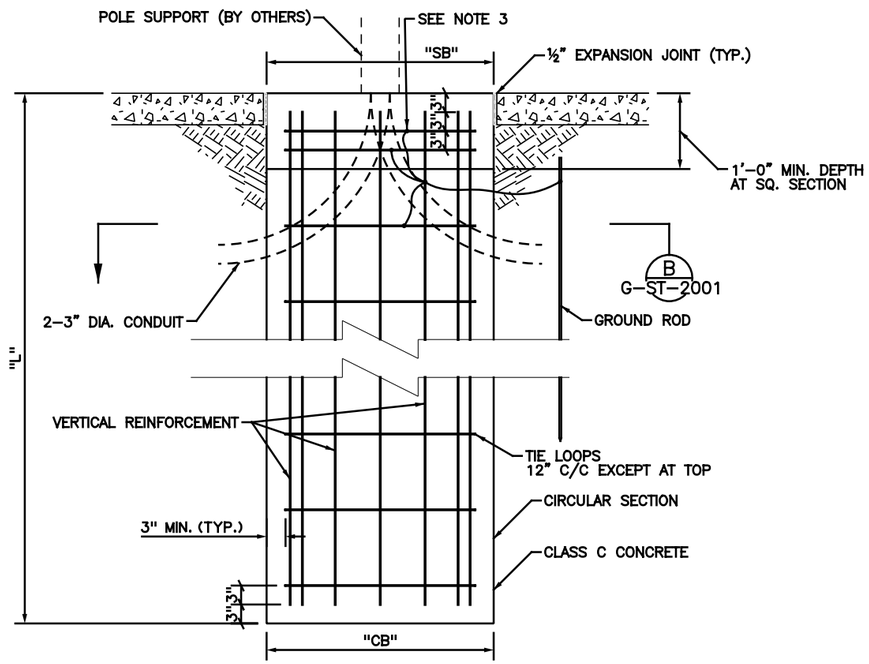

CATENARY POLE BASE FOUNDATION

POLE DESIGNATION	FOUNDATION DESIGNATION	SQUARE BASE (SB)	CIRCULAR BASE DIA. (CB)	LENGTH (L)	NUMBER OF #8 BARS VERTICAL REINFORCEMENT	NUMBER OF #4 BARS TIE LOOPS
TP–1	TPF–6	3'–0"	3'–0"	18'–0"	14	18
TP–2	TPF–7	3'–0"	3'–0"	18'–0"	14	18
TP–3	TPF–8	3'–6"	3'–6"	22'–0"	18	22
TP–4	TPF–9	3'–6"	3'–6"	22'–0"	18	22

OCS FOUNDATION NOTES:

1. ALL FOUNDATIONS SHALL BE IN ACCORDANCE WITH CITY STD. DWG. ES–1–1 EXCEPT AS MODIFIED IN THESE PLANS.
2. POLE FOUNDATION ITEMS SHALL INCLUDE INCIDENTAL RESTORATION COSTS TO SURROUNDING SIDEWALK, PAVERS, CURB OR LANDSCAPED AREAS AT NO ADDITIONAL COST TO THE CITY.
3. THE GROUND WIRE CONNECTION TO THE GROUND ROD SHALL BE EXOTHERMICALLY WELDED TO THE VERTICAL AND SPRIAL REBARS. GROUND ROD SHALL BE LOCATED PARALLEL TO THE TRACK AND MINIMUM 2'–0" FROM THE FACE OF THE FOUNDATION. TOP OF GROUND ROD SHALL BE 1'–0" BELOW FINAL SUBGRADE. CONTRACTOR SHALL ADD ADDITIONAL GROUND RODAS REQUIRED TO MEET GROUNDING RESISTANCE REQUIREMENTS.
4. WHERE ADJACENT VERTICAL GROUND ROD INSTALLATION IS RESTRICTED BY UNDERGROUND STRUCTURES, CONTRACTOR SHALL PROVIDE OTHER GROUNDING METHODS TO REACH THE 24 OHM GROUND RESISTANT REQUIREMENT. CONNECTING GROUND WIRE TO NEW TRACK SLAB REINFORCEMENT IS ACCEPTABLE WHEN THE TRACK SLAB REINFORCEMENT IS GROUNDED AND THE 24 OHM REQUIREMENT IS REACHED.
5. FOR EXISTING FOUNDATIONS, CONTRACTOR SHALL VERIFY THE EXISTING GROUNDING TO MEET THE 24 OHM REQUIREMENT.

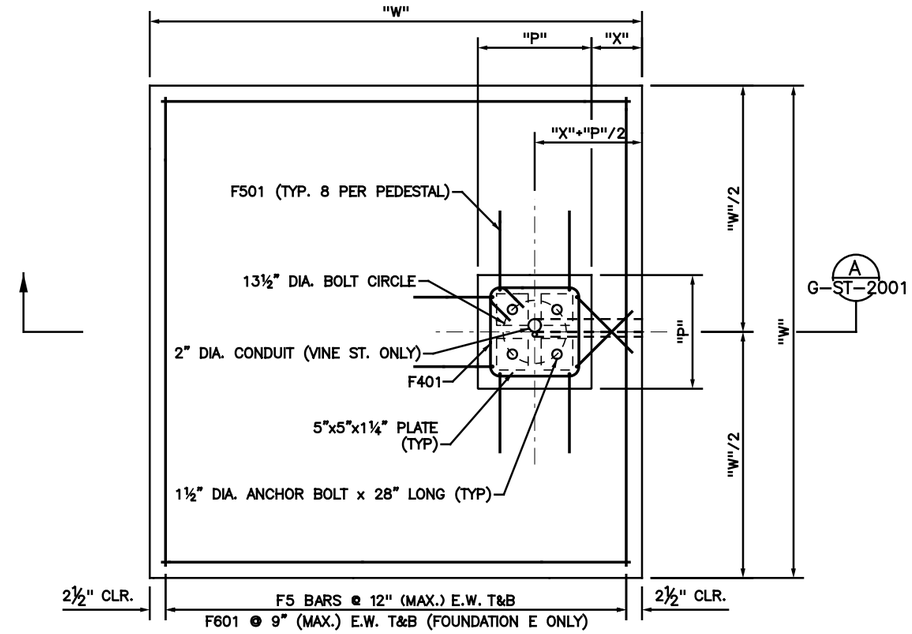

CATENARY POLE SPREAD FOOTING PLAN

LEGEND:
E.W. EACH WAY
T&B TOP AND BOTTOM.

NOTES:
1. CONSTRUCT FOUNDATION DIRECTLY ON TOP OF EXISTING SUBWAY TUNNEL. EXISTING TUNNEL ELEVATION SHALL BE FIELD VERIFIED AT EACH FOUNDATION LOCATION AND APPROVED BY THE ENGINEER.

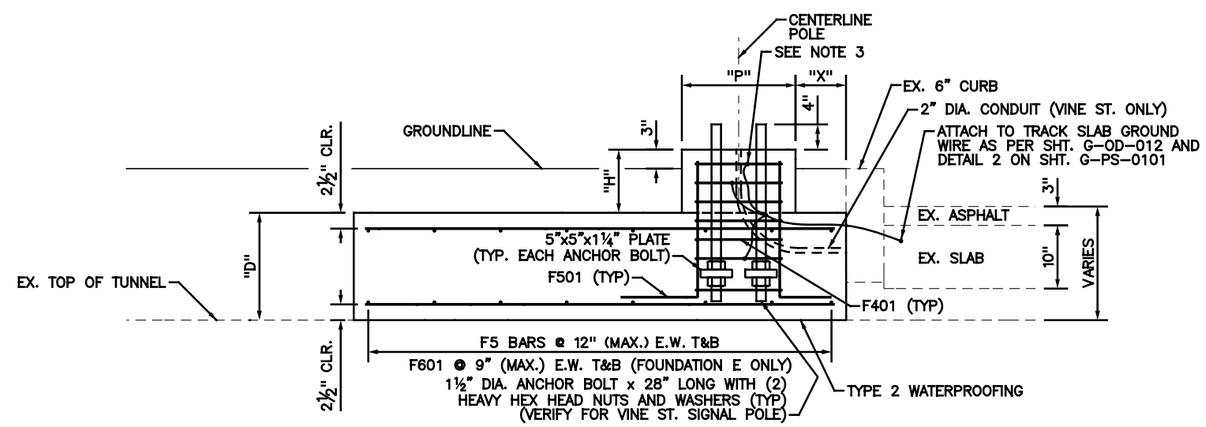

SECTION A G–ST–2001

CAUTION UNDERGROUND UTILITIES
2 WORKING DAYS
BEFORE YOU DIG
CALL 1–800–362–2764
OHIO UTILITY PROTECTION SERVICE
CALL NON–SERVICE FACILITY
OWNERS DIRECT

FOUNDATION DESIGNATION	WIDTH (W)	DEPTH (D)	PEDESTAL WIDTH (P)	PEDESTAL HEIGHT (H)	PEDESTAL OFFSET (X)
TPF–1	6'–0"	1'–0"	1'–6"	VARIES (0'–6" MIN.)	0'–8"
TPF–2	12'–6"	1'–6"	1'–6"	VARIES (0'–6" MIN.)	0'–8"

DEPARTMENT OF TRANSPORTATION & ENGINEERING CITY OF CINCINNATI OHIO

CONTRACT DRAWING

PRINTS NOT BEARING THIS STAMP WERE MADE PRIOR TO ADVERTISING FOR BIDS AND ARE TO BE CONSIDERED OBSOLETE FOR CONTRACT PURPOSES.

Department of Transportation and Engineering

City of Cincinnati
City Hall
801 Plum Street
Cincinnati, Ohio 45202

CINCINNATI STREETCAR

POLE FOUNDATION DETAIL SHEET

Revisions
No.

Drawn by RBK	Date 07/02/12	Designed by RBK	Date 07/02/12
Checked by CHN	Date 07/02/12	Reviewed by JTB	Date 07/12/12

Consultant

PB HDR

File Number

ACC No.
23126

G-ST-2001

DOTE_Mono_PDF_Half.pltcfg
c:\pwworking\pitt\d0309031\S_G-ST-2001.dgn
Wednesday, July 11, 2012 11:27:05 AM

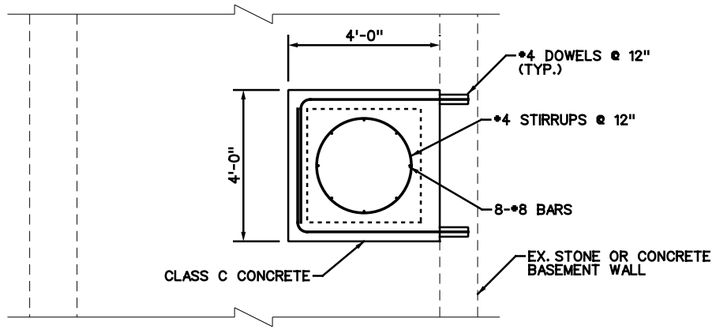

SECTION A
TPF-11

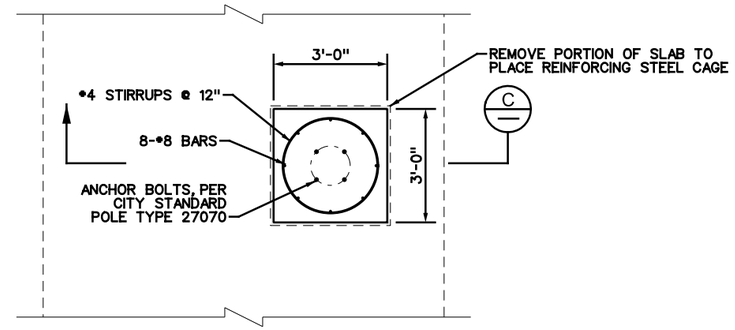

SECTION B
TPF-11

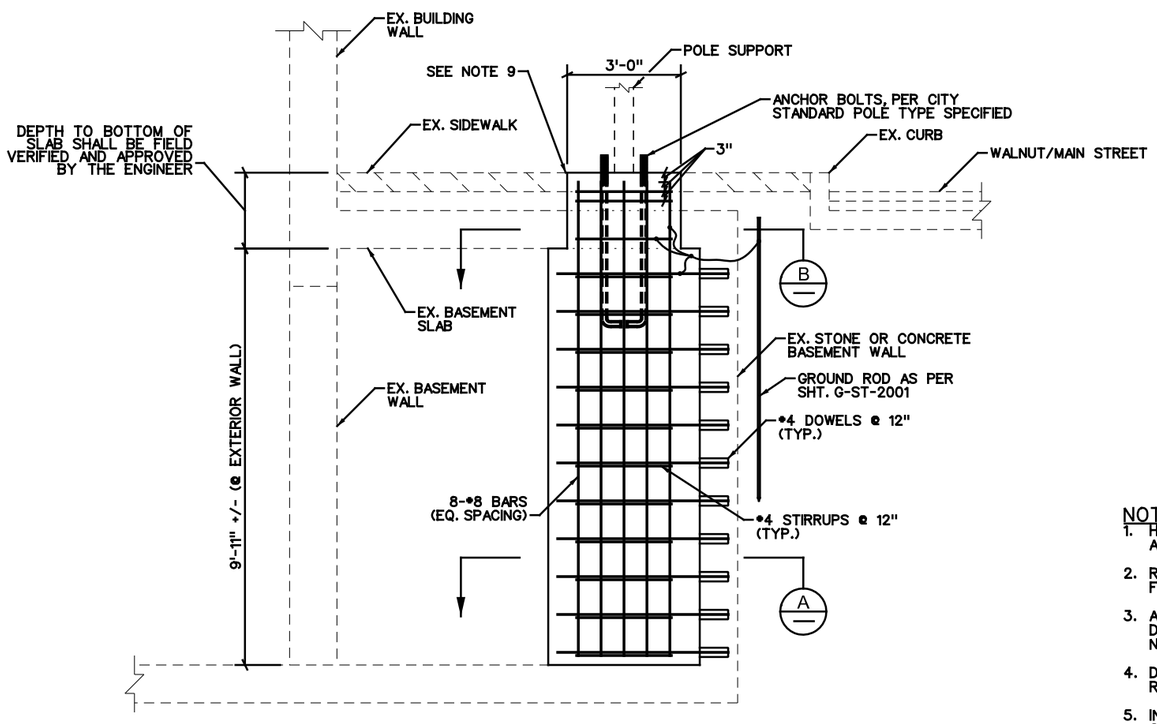

BASEMENT ENCROACHMENT POLE BASE FOUNDATION ELEVATION
TPF-11

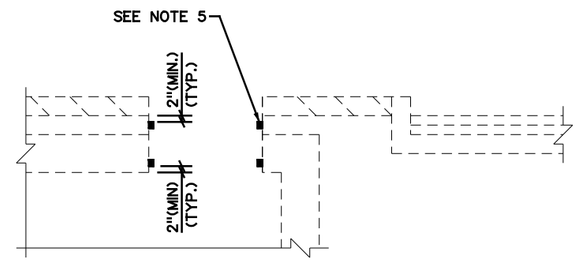

SECTION C
TPF-11

NOTES:

1. HOLE IN SIDEWALK SHALL BE DRILLED AROUND PERIMETER AND CHIPPED OUT AS NEATLY AS POSSIBLE.
2. RESTORATION OF SIDEWALK PAVERS IS INCLUDED IN FOUNDATION ITEM FOR PAYMENT.
3. ALL WORK SHALL BE IN ACCORDANCE WITH CITY STANDARD DRAWING ES-1, ANCHOR BASE POLE FOUNDATIONS, UNLESS NOTED OTHERWISE.
4. DOWEL INSTALLATION SHALL FOLLOW MANUFACTURER'S RECOMMENDATIONS, AS APPROVED BY THE ENGINEER.
5. INSTALL SWELLSEAL WA BY DE NEEF CONSTRUCTION CHEMICALS OR APPROVED EQUIVALENT.
6. INSTALL WATERPROOFING AT LEAST 2" BELOW TOP OF SIDEWALK SLAB AND AT LEAST 2" ABOVE THE BOTTOM OF THE SIDEWALK SLAB.
7. IF THE EXISTING SIDEWALK SLAB IS NOT THICK ENOUGH TO ACCCOMODATE TWO BEADS OF WATERPROOFING MATERIAL, INSTALL ONE BEAD AT ¾" THICK.
8. INSTALL WATERPROOFING MATERIAL ACCORDING TO MANUFACTURER'S RECOMMENDATIONS.
9. INSTALL A BEAD OF SIKAFLEX-1A OR APPROVED EQUIVALENT ALONG CONSTRUCTION JOINT AFTER CONCRETE CURED.

CAUTION UNDERGROUND UTILITIES
2 WORKING DAYS
BEFORE YOU DIG
CALL 1-800-362-2764
OHIO UTILITY PROTECTION SERVICE
CALL NON-SERVICE FACILITY OWNERS DIRECT

CONTRACT DRAWING

PRINTS NOT BEARING THIS STAMP WERE MADE PRIOR TO ADVERTISING FOR BIDS AND ARE TO BE CONSIDERED OBSOLETE FOR CONTRACT PURPOSES.

Department of Transportation and Engineering

City of Cincinnati
City Hall
801 Plum Street
Cincinnati, Ohio 45202

CINCINNATI STREETCAR

609 WALNUT STREET
POLE FOUNDATION
DETAIL SHEET

Revisions

No.				

Drawn by RBK	Date 07/02/12	Designed by RBK	Date 07/02/12
Checked by CHN	Date 07/02/12	Reviewed by JTB	Date 07/12/12

Consultant

PB HDR

File Number

ACC No.
23126

G-ST-2002

DOTE_Mono_PDF_Half.pltcfg
c:\pwworking\pitt\d0309031\S_G-ST-2002.dgn
Wednesday, July 11, 2012 11:28:10:28:10 AM

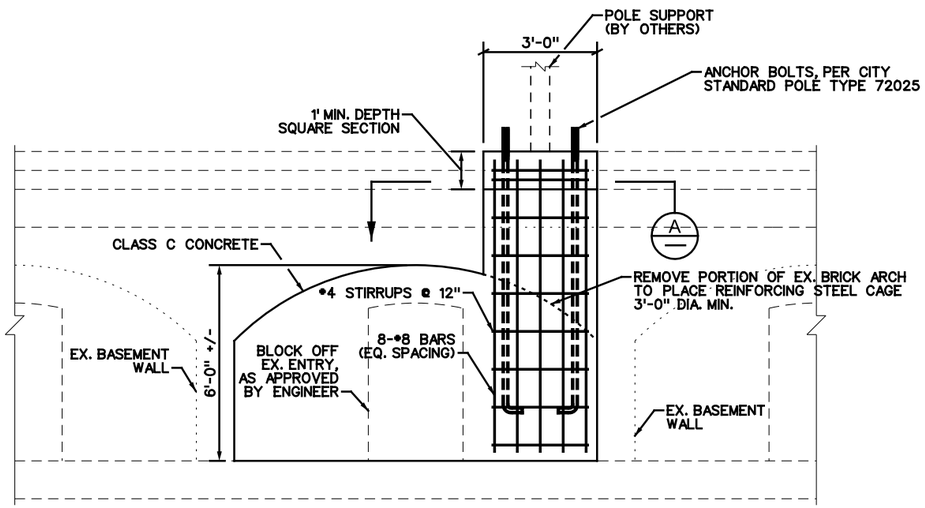

41 COURT STREET POLE BASE FOUNDATION ELEVATION

TPF-10

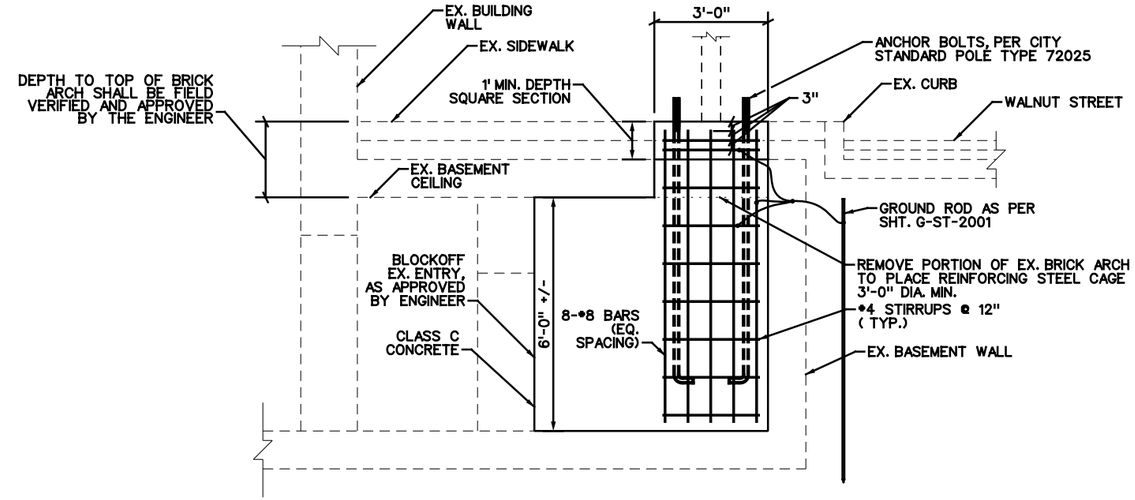

41 COURT STREET POLE BASE FOUNDATION SECTION

TPF-10

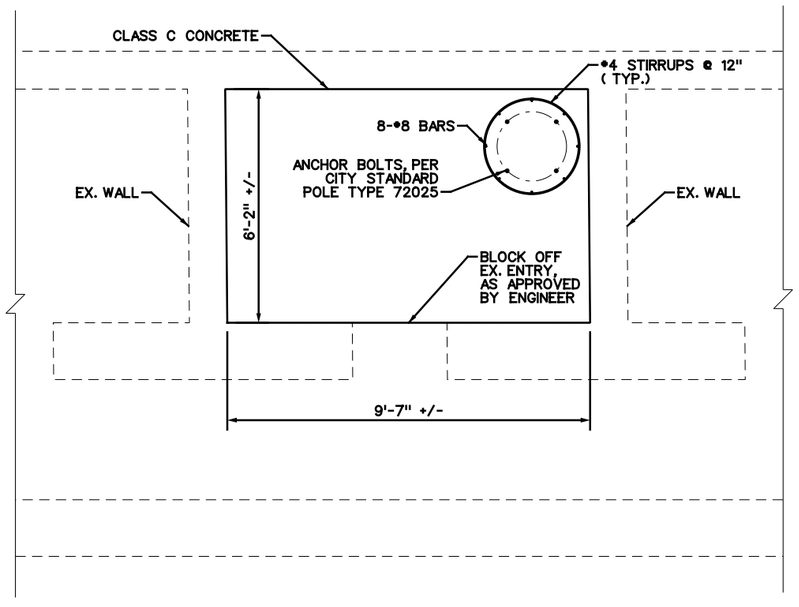

41 COURT STREET POLE BASE FOUNDATION PLAN

TPF-10

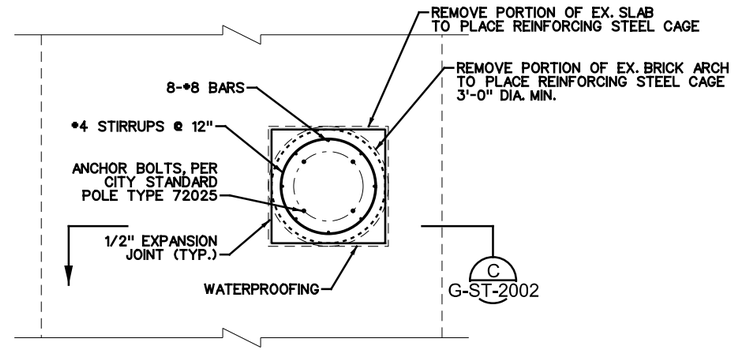

SECTION A
TPF-10

NOTES:

1. HOLE IN SIDEWALK SHALL BE DRILLED AROUND PERIMETER AND CHIPPED OUT AS NEATLY AS POSSIBLE.
2. RESTORATION OF SIDEWALK IS INCLUDED IN FOUNDATION ITEM FOR PAYMENT.
3. ALL WORK SHALL BE IN ACCORDANCE WITH CITY STANDARD DRAWING ES-1, ANCHOR BASE POLE FOUNDATIONS, UNLESS NOTED OTHERWISE.

CAUTION UNDERGROUND UTILITIES
2 WORKING DAYS
BEFORE YOU DIG
CALL 1-800-362-2764
OHIO UTILITY PROTECTION SERVICE
CALL NON-SERVICE FACILITY
OWNERS DIRECT

CONTRACT DRAWING

PRINTS NOT BEARING THIS STAMP WERE MADE PRIOR TO ADVERTISING FOR BIDS AND SHOULD BE CONSIDERED OBSOLETE FOR CONTRACT PURPOSES.

Department of Transportation and Engineering

City of Cincinnati
City Hall
801 Plum Street
Cincinnati, Ohio 45202

CINCINNATI STREETCAR

41 COURT STREET
POLE FOUNDATION
DETAIL SHEET

Revisions

No.				

Drawn by RBK	Date 07/02/12	Designed by RBK	Date 07/02/12
Checked by CHN	Date 07/02/12	Reviewed by JTB	Date 07/12/12

Consultant

PB HDR

File Number

ACC No.
23126

G-ST-2003

DOTE_Mono_PDF_Half.pltcfg
c:\pwworking\pitt\d0309031\S_G-ST-2003.dgn
Wednesday, July 11, 2012 11:29:12 AM

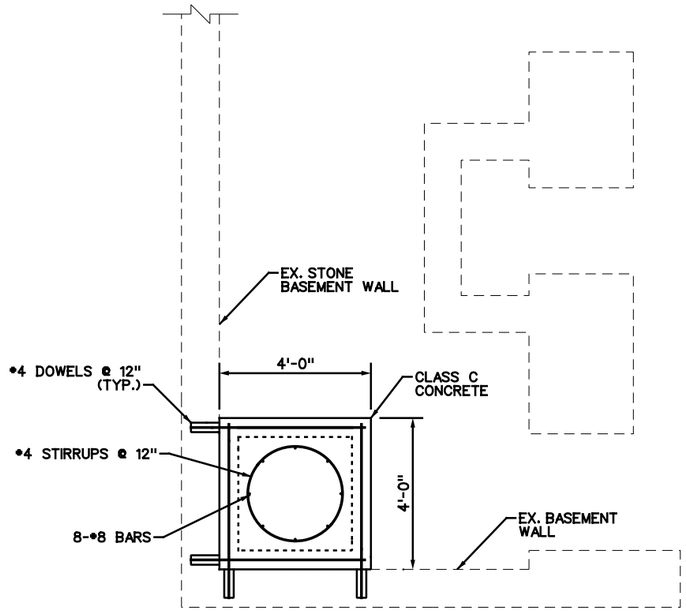

SECTION A / TPF-12

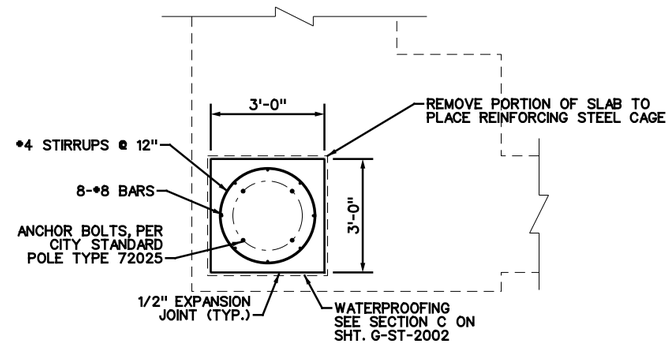

SECTION B / TPF-12

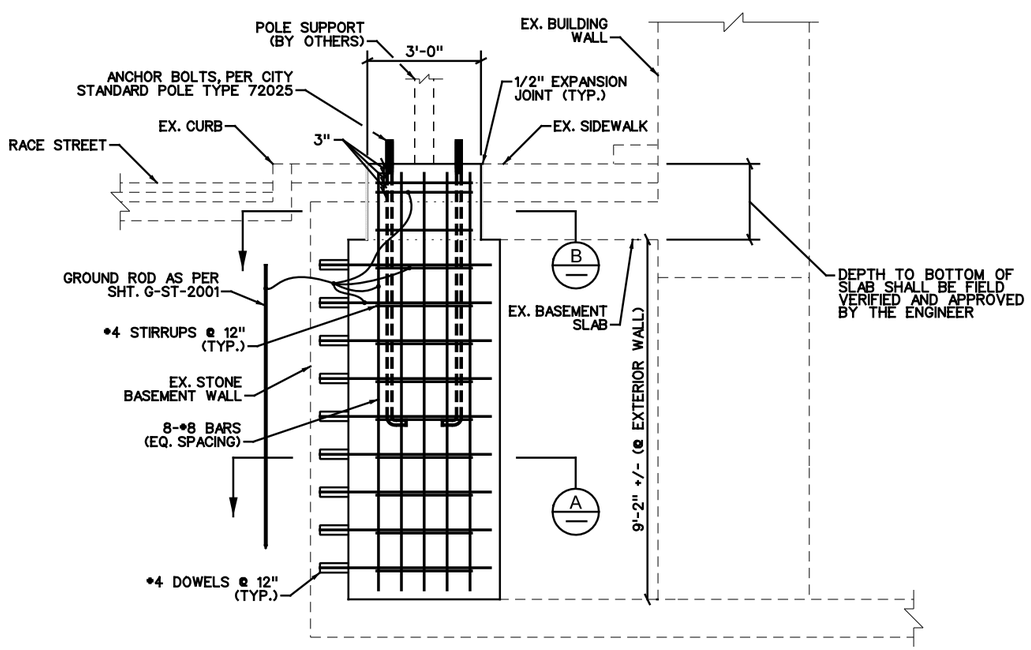

1222 RACE STREET POLE BASE FOUNDATION ELEVATION

TPF-12

NOTES:

1. HOLE IN SIDEWALK SHALL BE DRILLED AROUND PERIMETER AND CHIPPED OUT AS NEATLY AS POSSIBLE.
2. RESTORATION OF SIDEWALK IS INCLUDED IN FOUNDATION ITEM FOR PAYMENT.
3. ALL WORK SHALL BE IN ACCORDANCE WITH CITY STANDARD DRAWING ES-1, ANCHOR BASE POLE FOUNDATIONS, UNLESS NOTED OTHERWISE.
4. DOWEL INSTALLATION SHALL FOLLOW MANUFACTURER'S RECOMMENDATIONS, AS APPROVED BY THE ENGINEER.

CAUTION UNDERGROUND UTILITIES
2 WORKING DAYS
BEFORE YOU DIG
CALL 1-800-362-2764
OHIO UTILITY PROTECTION SERVICE
CALL NON-SERVICE FACILITY OWNERS DIRECT

DOTE_Mono_PDF_Half.pltcfg
c:\pwworking\pitt\d0309031\S_G-ST-2004.dgn
Wednesday, July 11, 2012 11:29:12 AM

CONTRACT DRAWING

PRINTS NOT BEARING THIS STAMP WERE MADE PRIOR TO ADVERTISING FOR BIDS AND ARE TO BE CONSIDERED OBSOLETE FOR CONTRACT PURPOSES.

Department of Transportation and Engineering

City of Cincinnati
801 Plum Street
Cincinnati, Ohio 45202

CINCINNATI STREETCAR

1222 RACE STREET
POLE FOUNDATION
DETAIL SHEET

Revisions

No.		

Drawn by RBK	Date 07/02/12
Designed by RBK	Date 07/02/12
Checked by CHN	Date 07/02/12
Reviewed by JTB	Date 07/12/12

Consultant

PB HDR

File Number

ACC No. 23126

G-ST-2004

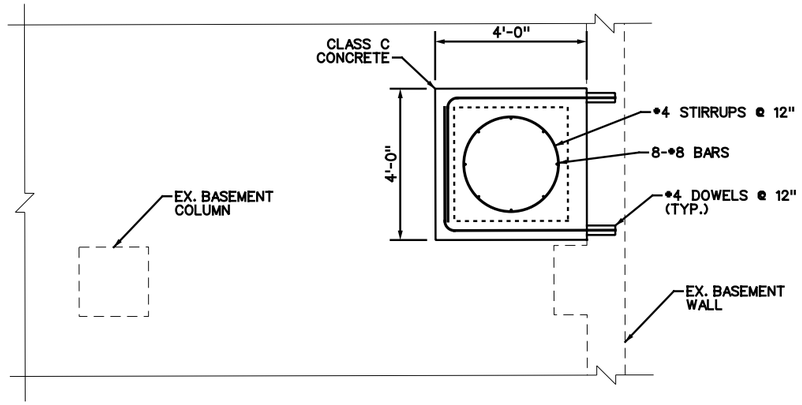

SECTION A
TPF-13

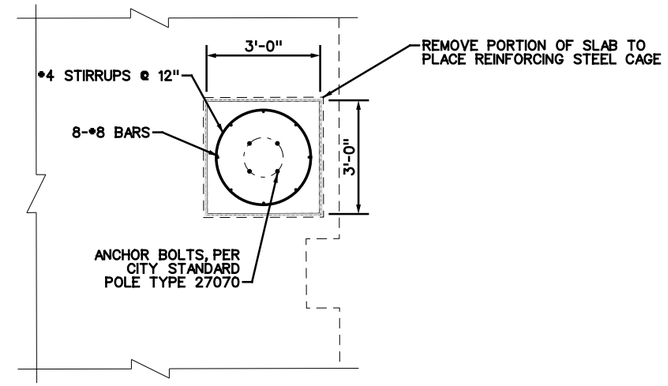

SECTION B
TPF-13

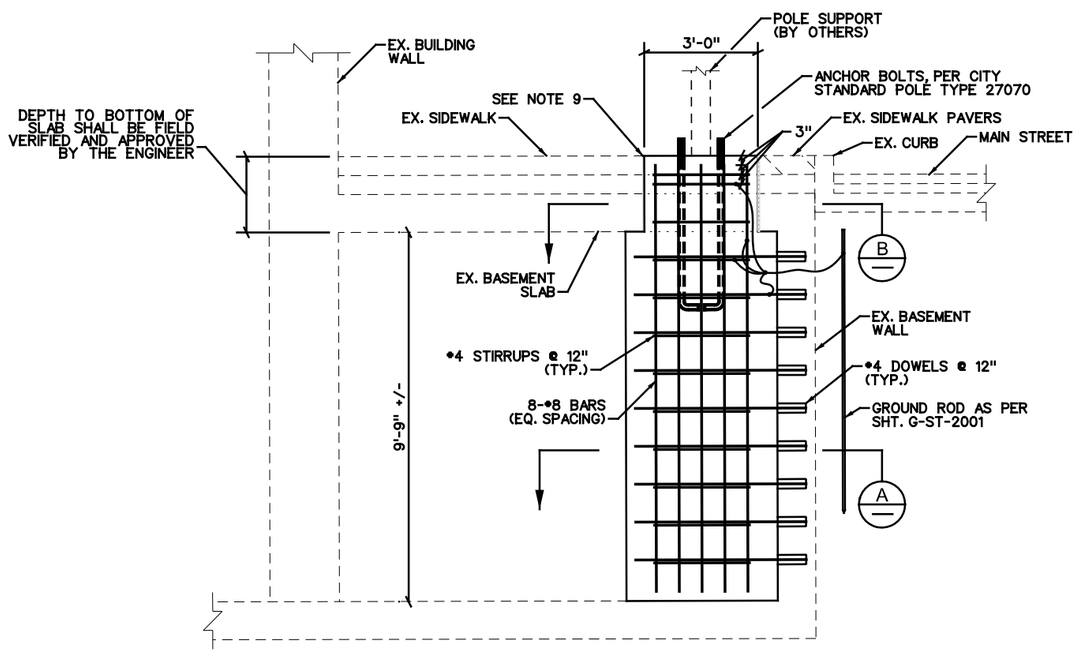

701 MAIN STREET POLE BASE FOUNDATION ELEVATION

TPF-13

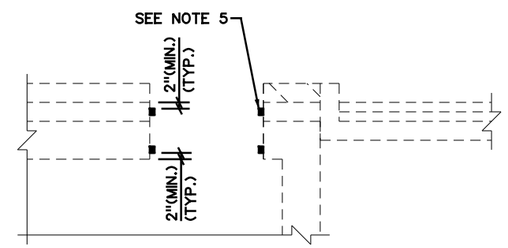

SECTION C
TPF-13

NOTES:

1. HOLE IN SIDEWALK SHALL BE DRILLED AROUND PERIMETER AND CHIPPED OUT AS NEATLY AS POSSIBLE.
2. RESTORATION OF SIDEWALK PAVERS IS INCLUDED IN FOUNDATION ITEM FOR PAYMENT.
3. ALL WORK SHALL BE IN ACCORDANCE WITH CITY STANDARD DRAWING ES-1, ANCHOR BASE POLE FOUNDATIONS, UNLESS NOTED OTHERWISE.
4. DOWEL INSTALLATION SHALL FOLLOW MANUFACTURER'S RECOMMENDATIONS, AS APPROVED BY THE ENGINEER.
5. INSTALL SWELLSEAL WA BY DE NEEF CONSTRUCTION CHEMICALS OR APPROVED EQUIVALENT.
6. INSTALL WATERPROOFING AT LEAST 2" BELOW TOP OF SIDEWALK SLAB AND AT LEAST 2" ABOVE THE BOTTOM OF THE SIDEWALK SLAB.
7. IF THE EXISTING SIDEWALK SLAB IS NOT THICK ENOUGH TO ACCCOMODATE TWO BEADS OF WATERPROOFING MATERIAL, INSTALL ONE BEAD AT 3#4" THICK.
8. INSTALL WATERPROOFING MATERIAL ACCORDING TO MANUFACTURER'S RECOMMENDATIONS.
9. INSTALL A BEAD OF SIKAFLEX-1A OR APPROVED EQUIVALENT ALONG CONSTRUCTION JOINT AFTER CONCRETE CURED.

CAUTION UNDERGROUND UTILITIES
2 WORKING DAYS
BEFORE YOU DIG
CALL 1-800-362-2764
OHIO UTILITY PROTECTION SERVICE
CALL NON-SERVICE FACILITY
OWNERS DIRECT

DEPARTMENT OF TRANSPORTATION & ENGINEERING
CITY OF CINCINNATI
OHIO

CONTRACT DRAWING

PRINTS NOT BEARING THIS STAMP WERE MADE PRIOR TO ADVERTISING FOR BIDS AND ARE TO BE CONSIDERED OBSOLETE FOR CONTRACT PURPOSES.

Department of Transportation and Engineering

City of Cincinnati
801 Plum Street
Cincinnati, Ohio 45202

CINCINNATI STREETCAR

701 MAIN STREET
POLE FOUNDATION
DETAIL SHEET

Revisions

No.		

Drawn by RBK	Date 07/02/12
Designed by RBK	Date 07/02/12
Checked by CHN	Date 07/02/12
Reviewed by JTB	Date 07/12/12

Consultant

PB HDR

File Number

ACC No.
23126

G-ST-2005

DOTE_Mono_PDF_Half.pltcfg
c:\pwworking\pitt\d0309031\S_G-ST-2005.dgn
Wednesday, July 11, 2012 11:29:12:05 AM

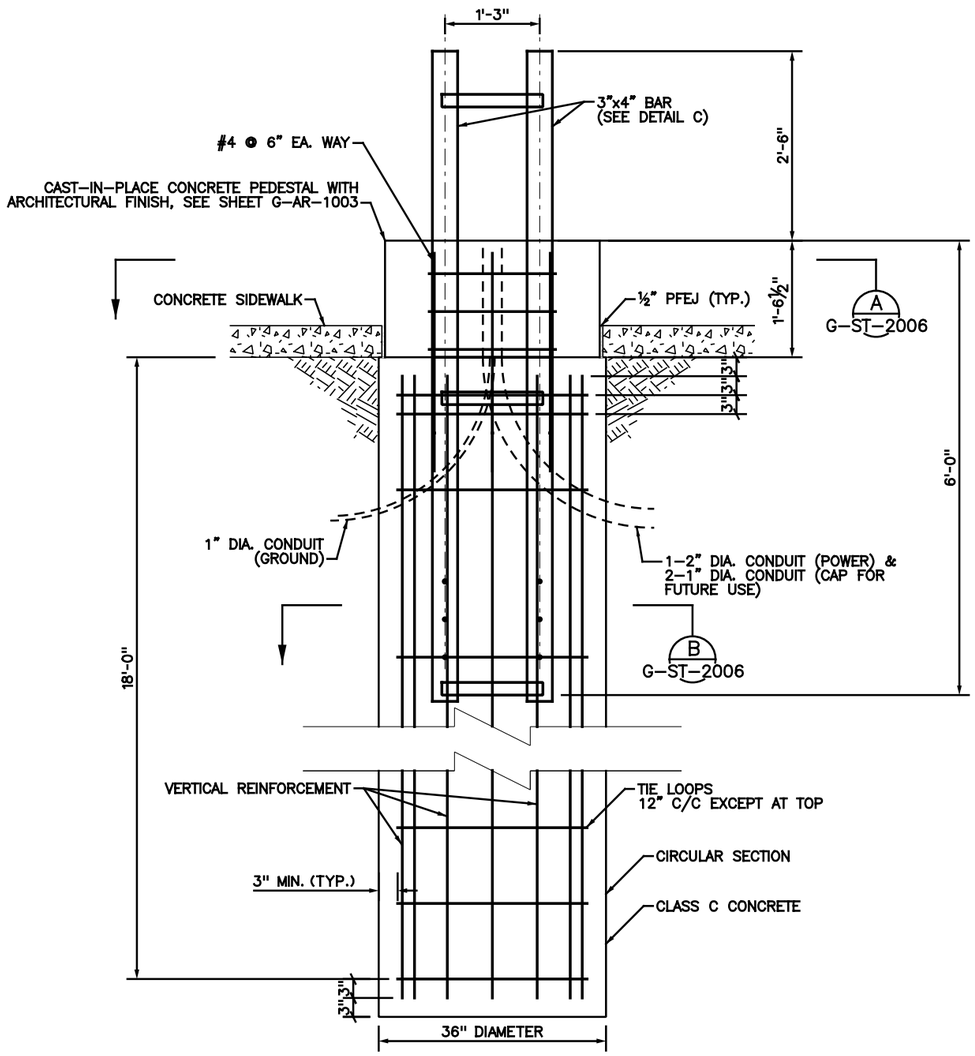

SHELTER POLE BASE FOUNDATION

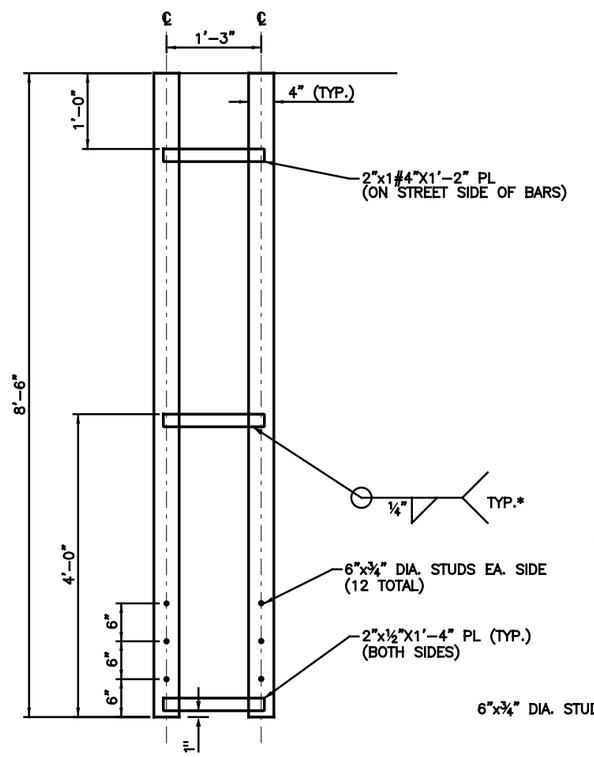

DETAIL C: 3"x4" BAR ASSEMBLY

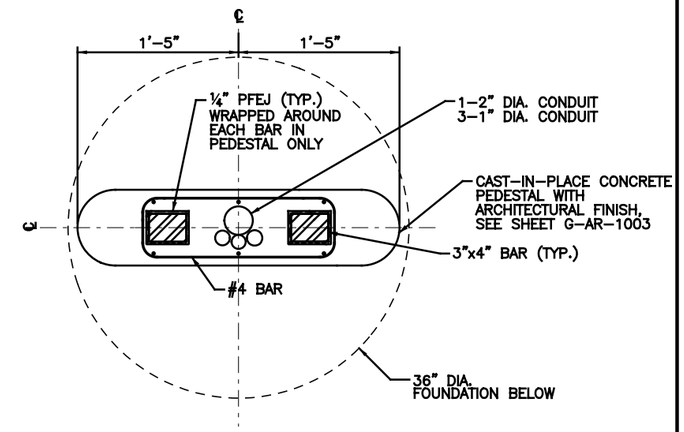

SECTION A
G-ST-2006

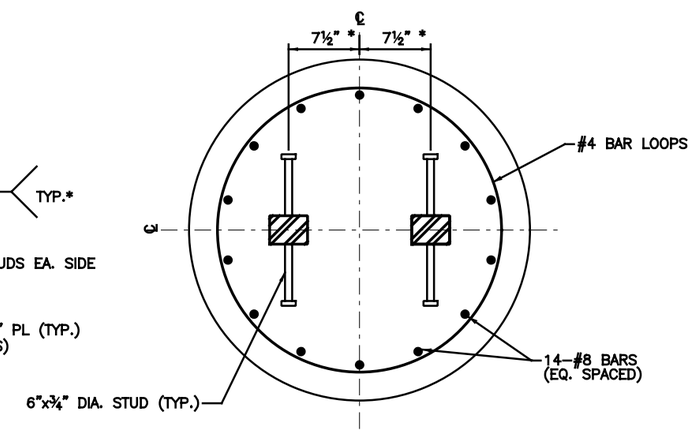

SECTION B
G-ST-2006

* SET BAR ASSEMBLY USING STATION AND OFFSET DIMENSION ON STREETCAR STOP SITE PLANS (G-LS SERIES)

SHELTER FOUNDATION NOTES:

1. ALL FOUNDATIONS SHALL BE IN ACCORDANCE WITH CITY STD. DWG. ES-1-1 EXCEPT AS MODIFIED IN THESE PLANS.
2. POLE FOUNDATION ITEMS SHALL INCLUDE INCIDENTAL RESTORATION COSTS TO SURROUNDING SIDEWALK, PAVERS, CURB OR LANDSCAPED AREAS AT NO ADDITIONAL COST TO THE CITY.
3. PFEJ DENOTES PREFORMED EXPANSION JOINT MATERIAL PER ODOT CMS 705.03.
4. SECTION A AND SECTION B SHOWN ARE SUPPLEMENTAL TO STANDARD BASE FOUNDATION. FOR ALL OTHER INFORMATION, SEE DOTE STD. DWG. ES-1.
5. 3"x4" BAR ASSEMBLY SHALL BE 50 KSI STEEL (LEVEL SF) IN ACCORDANCE WITH ODOT CMS 513. ASSEMBLY SHALL BE HOT-DIPPED GALVANIZED PER ODOT CMS 711.02.

CAUTION UNDERGROUND UTILITIES
2 WORKING DAYS
BEFORE YOU DIG
CALL 1-800-362-2764
OHIO UTILITY PROTECTION SERVICE
CALL NON-SERVICE FACILITY
OWNERS DIRECT

DOTE_Mono_PDF_Half.pltcfg
c:\pwworking\pitt\d0309031\S_G-ST-2006.dgn
Wednesday, July 11, 2012 11:29:12 AM

CONTRACT DRAWING

PRINTS NOT BEARING THIS STAMP WERE MADE PRIOR TO ADVERTISING FOR BIDS AND ARE TO BE CONSIDERED OBSOLETE FOR CONTRACT PURPOSES.

Department of Transportation and Engineering

City of Cincinnati
City Hall
801 Plum Street
Cincinnati, Ohio 45202

CINCINNATI STREETCAR

CENTRAL BUSINESS DISTRICT
AND OVER THE RHINE

SHELTER FOUNDATION
DETAIL SHEET

Revisions

No.	Date
	07/02/12
	07/02/12
	07/02/12
	07/12/12

Drawn by RBK	Date 07/02/12
Designed by RBK	Date 07/02/12
Checked by CHN	Date 07/02/12
Reviewed by JTB	Date 07/12/12

Consultant

PB HDR

File Number

ACC No.
23126

G-ST-2006

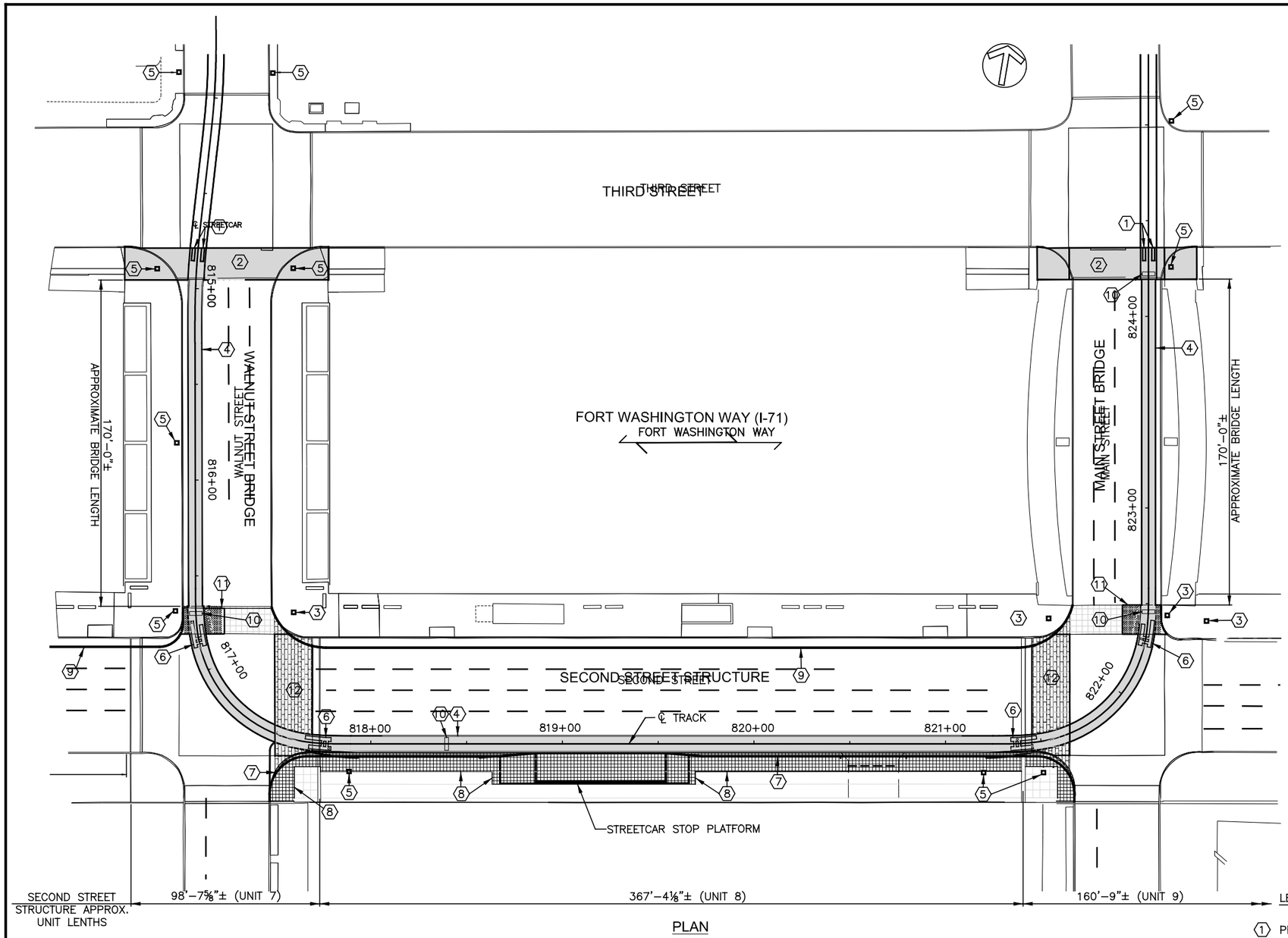

PLAN

EXISTING STRUCTURE - WALNUT STREET

TYPE: TWO–2 SPAN PRECAST BOX BEAMS WITH REINFORCED CONCRETE DECK WITH INTEGRAL ABUTMENTS

LENGTH OF SPANS: 83'–11⅞" AND 83'–11⅞" C/C BEARING (MEASURED ALONG ℄ BRIDGE)

ROADWAY WIDTH: 43'–3 11/16"

DESIGN LOADING: AASHTO MS18, MILITARY LOADING & LIGHT RAIL

SKEW: 0°

SUPERELEVATION: CROWN 0.016

WEARING SURFACE: 1" MONOLITHIC CONCRETE

APPROACH SLAB: 16'–5⅝" LONG

ALIGNMENT: TANGENT

LATITUDE: N39°05'54" LONGITUDE: W84°30'36"

STRUCTURE FILE NUMBER: 3106268

EXISTING STRUCTURE - SECOND STREET

TYPE: SUPERSTRUCTRE IS TRANSVERSE PRECAST PRESTRESSED "I" BEAMS WITH REINFORCED CONCRETE DECK. SUBSTRUCTURE IS POST–TENSIONED CONCRETE BEAMS WITH REINFORCED CONCRETE PIERS

LENGTH OF SPANS: UNIT 7: 14'–4½", 69'–10⅝", 14'–4½"
UNIT 8: 8'–11½", 5@69'–10⅝", 8'–11½"
UNIT 9: 14'–4½", 2@65'–3⅝", 15'–9⅛"
℄ EXP. JT TO ℄ PIER (MEASURED ALONG SECOND STREET)

ROADWAY WIDTH: 59'–0⅝" CURB TO CURB

DESIGN LOADING: AASHTO MS18, MILITARY LOADING & LIGHT RAIL

SKEW: 0°

SUPERELEVATION: VARIES

WEARING SURFACE: 1½" MICROSILICA OVERLAY

APPROACH SLAB: N/A

ALIGNMENT: TANGENT

LATITUDE: N39°05'54" LONGITUDE: W84°30'42"

STRUCTURE FILE NUMBER: 3160696

EXISTING STRUCTURE - MAIN STREET

TYPE: TWO–2 SPAN PRECAST BOX BEAMS WITH REINFORCED CONCRETE DECK WITH INTEGRAL ABUTMENTS

LENGTH OF SPANS: 83'–11⅞" AND 83'–11⅞" C/C BEARING (MEASURED ALONG ℄ BRIDGE)

ROADWAY WIDTH: 46'–3⅛"

DESIGN LOADING: AASHTO MS18, MILITARY LOADING & LIGHT RAIL

SKEW: 0°

SUPERELEVATION: CROWN 0.016

WEARING SURFACE: 1" MONOLITHIC CONCRETE

APPROACH SLAB: 16'–5⅝" LONG

ALIGNMENT: TANGENT

LATITUDE: N39°05'54" LONGITUDE: W84°30'30"

STRUCTURE FILE NUMBER: 3106349

LEGEND:

1. PROPOSED TANGENT RAIL EXPANSION BOXES
2. PROPOSED APPROACH SLAB
3. PROPOSED JOINT – USE TRAFFIC SIGNAL/OCS POLE
4. PROPOSED TRACK SLAB
5. PROPOSED OCS POLE
6. PROPOSED FLEXIVE RAIL ASSEMBLY (EXPANSION BOX)
7. PROPOSED CURB
8. LIMITS OF PROPOSED SIDEWALK RECONSTRUCTION
9. CURB LOCATION BY CITY, NOT PART OF THIS CONTRACT
10. PROPOSED TRACK DRAIN
11. PROPOSED CONCRETE INFILL OF APPROACH SLAB RECESS
12. PROPOSED CONCRETE INFILL OF PAVER RECESS

CAUTION UNDERGROUND UTILITIES
2 WORKING DAYS
BEFORE YOU DIG
POLE CALL 1–800–362–2764
OHIO UTILITY PROTECTION SERVICE
CALL NON–SERVICE FACILITY
OWNERS DIRECT

INDEX OF SHEETS

STRUCTURAL SITE PLAN	G–ST–8001
STRUCTURAL GENERAL NOTES	G–ST–8002 TO G–ST–8003
DEMOLITION PLANS	G–ST–8004 TO G–ST–8006
DEMOLITION SECTIONS AND DETAILS	G–ST–8007 TO G–ST–8010
DECK MODIFICATION PLANS	G–ST–8011 TO G–ST–8013
WALNUT STREET APPROACH SLAB	G–ST–8014
DECK MODIFICATION SECTIONS AND DETAILS	G–ST–8015 TO G–ST–8021
MAIN STREET APPROACH SLAB	G–ST–8022
DRAINAGE MODIFICATIONS TO SECOND STREET STRUCTURE	G–ST–8023 TO G–ST–8027

PROPOSED WORK

THIS PORTION OF WORK INCLUDES THE SELECT AND LIMITED DEMOLITION OF EXISTING FACILITIES AND INFRASTRUCTURE AND THE PROVISION AND COORDINATION OF MATERIALS REQUIRED TO PROVIDE FOR COMPLETE INSTALLATION AND OPERATION OF STREETCARS OVER THE WALNUT STREET, SECOND STREET AND MAIN STREET STRUCTURES AND APPROACH SLABS IN ACCORDANCE WITH THESE PLANS AND SPECIFICATIONS.

GENERAL LIMITS OF PROPOSED WORK ARE SHOWN ON THIS PLAN. ONLY KEY ELEMENTS ARE SHOWN ON THIS PLAN. FULL SCOPE OF THE WORK INCLUDE THE FULL AND COMPLETE SET OF CONTRACT DOCUMENTS, INCLUDING SPECIFICATIONS. SEE G–PP, G–TD AND RELATED DRAWINGS FOR WORK FROM THIRD STREET NORTH.

DEPARTMENT OF TRANSPORTATION & ENGINEERING CITY OF CINCINNATI OHIO

CONTRACT DRAWING

PRINTS NOT BEARING THIS STAMP WERE MADE PRIOR TO ADVERTISING FOR BIDS AND ARE TO BE CONSIDERED OBSOLETE FOR CONTRACT PURPOSES.

Department of Transportation and Engineering
City of Cincinnati
City Hall
801 Plum Street
Cincinnati, Ohio 45202

CINCINNATI STREETCAR
CENTRAL BUSINESS DISTRICT

STRUCTURAL SITE PLAN

Revisions

No.	Date	Date	Date	Date
	07/02/12	07/02/12	07/02/12	07/12/12

Drawn by	Designed by	Checked by	Reviewed by
DDE	GCG	WAH	JTB

Consultant

PB HDR

File Number

ACC No. 23126

G-ST-8001

DOTE_Mono_PDF_Half.pltcfg
J:\29014A Cincinnati Street Car\CADD\S_G-ST-8001.dgn
7/13/2012 2:12:05 PM

GENERAL NOTES:

G–ST 8000 SERIES DRAWINGS REPRESENT THE STRUCTURAL WORK SOUTH OF 3RD STREET ALONG THE ALIGNMENT OF THIS PROJECT. STRUCTURAL WORK IN OTHER PARTS OF THIS PROJECT IS INDICATED ON OTHER ST SERIES DRAWINGS INCLUDED IN THE DOCUMENTS.

ORIGINAL DRAWINGS INDICATE THE BRIDGES OF WALNUT STREET AND MAIN STREET OVER FT WASHINGTON WAY (I–71), AND 2ND STREET STRUCTURE WERE DESIGNED TO ACCOMMODATE LIGHT RAIL VEHICLES. REFER TO INITIAL DESIGN DOCUMENTS FOR EXISTING CONDITIONS AND ADDITIONAL INFORMATION. THE WORK HEREIN IS TO PLACE THE PRO–POSED TRACK AND SLAB IN THE RAIL BLOCKOUTS (TROUGHS) PROVIDED, TO THE EXTENT PRACTICAL.

CONSTRUCTION SPECIFICATIONS:

ODOT REFERS TO THE STATE OF OHIO, DEPARTMENT OF TRANSPORTATION CONSTRUCTION AND MATERIALS SPECIFICATION (CMS) AND THE CITY OF CINCINNATI SUPPLEMENT TO THE ODOT CMS. ALL WORK, NOT SPECIFIED OTHERWISE, SHALL BE IN ACCORDANCE WITH THE ODOT CMS (2010) AND THE CITY SUPPLEMENT TO THE ODOT CMS (2011). ITEMS NOT SPECIFICALLY COVERED BY THE AFOREMENTIONED STANDARD SPECIFICATIONS SHALL BE IN ACCORDANCE WITH OTHER STANDARD SPECIFICATIONS AS DIRECTED IN EACH SPECIFIC ITEM LISTED IN THE SPECIAL PROVISIONS AND AS DIRECTED IN THE PLANS.

COORDINATION OF DISCIPLINES:

THESE ST SERIES DRAWINGS SHALL BE WORKED AND COORDINATED WITH THE COMPLETE SET OF CONTRACT DOCUMENTS. IT IS THE CON–TRACTOR'S RESPONSIBILITY TO ASSURE COORDINATION BETWEEN DRAWING SERIES AND WORK DISCIPLINES. SUCH COORDINATION SHALL INCLUDE, BUT NOT BE LIMITED TO:

REFERRING TO PP SERIES DRAWINGS FOR PLAN AND TRACK PROFILE;
REFERRING TO SA SERIES DRAWINGS FOR DRAINAGE CONNECTIONS;
REFERRING TO TC SERIES DRAWINGS FOR LOCATION OF PROPOSED TRAFFIC POLES
REFERRING TO OL SERIES DRAWINGS FOR LOCATION OF PROPOSED OCS POLES; AND
REFERRING TO TD SERIES DRAWINGS FOR TRACK DETAILS.

DESIGN REFERENCES:

THESE DRAWINGS ARE BASED, IN PART, ON DESIGN DRAWINGS PROVIDED BY CITY OF CINCINNATI:

1. WALNUT STREET (BRIDGE NO. 14) AND MAIN STREET BRIDGE (BRIDGE NO. 15) OVER FORT WASHINGTON WAY BY PARSONS BRINCKERHOFF, 9/30/1998; AND MODIFICATION DESIGN BY JANSSEN & SPAANS ENG., INC., 8/9/1999.

2. BRIDGE No. 36, 2ND STREET BRIDGE BY PARSONS BRINCKERHOFF, 8/30/1999.

3. PRECAST BOX BEAM SHOP DRAWING BY JANSSEN & SPAANS ENGINEERING, INC., 4/29/1999.

4. STANDARD REINFORCED CONCRETE APPROACH SLAB, ODOT AS–1–81, DATED 10/25/1994, REVISED 7/19/2002.

5. APPROACH SLAB DETAILS, SHEETS 85 & 86 OF 209, CITY OF CINCINNATI CONTRACT NO. 75X5753, BY KZF, 11/13/1998.

DESIGN SPECIFICATIONS:

1. AMERICAN ASSOCIATION OF STATE HIGHWAY AND TRANSPORTATION OFFICIALS. AASHTO LRFD BRIDGE DESIGN SPECIFICATIONS, CUSTOMARY U.S. UNITS, 5TH EDITION. 2010; (PROPOSED APPROACH SLABS)

2. AMERICAN ASSOCIATION OF STATE HIGHWAY AND TRANSPORTATION OFFICIALS STANDARD SPECIFICATIONS FOR HIGHWAY BRIDGES, 18TH EDITION INCLUDING 1997 INTERIMS; (EXISTING STRUCTURES)

3. OHIO DEPARTMENT OF TRANSPORTATION (ODOT) BRIDGE DESIGN MANUAL, 2007 EDITION; (PROPOSED APPROACH SLABS)

4. OHIO DEPARTMENT OF TRANSPORTATION (ODOT) BRIDGE DESIGN MANUAL, EDITION CURRENT IN 1998; (EXISTING STRUCTURES)

DESIGN LOADING:

ROADWAY: AASHTO LRFD HL–93 LOADING (PROPOSED APPROACH SLABS), AASHTO STANDARD SPECIFICATION HS20 (EXISTING STRUCTURES)

STREETCAR TRACK: VEHICLE AW3
WEIGHT 109.26 KIPS; DESIGN AXLE LOAD AS SHOWN IN TOP OF NEXT COLUMN TO THE RIGHT:

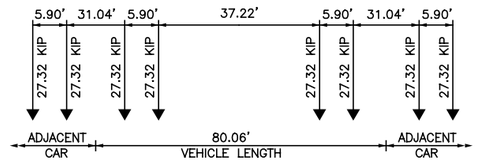

PEDESTRIAN LIVE LOAD: 75 PSF

FUTURE WEARING SURFACE: 40 PSF

DESIGN DATA:

CONCRETE FOR APPROACH SLABS SHALL BE ODOT CLASS S CONCRETE WITH A MINIMUM 28 DAY COMPRESSIVE STRENGTH OF 4,500 PSI. APPROACH SLAB CONCRETE SHALL NOT INCLUDE MICROSILICA.

CONCRETE FOR TRACK SLAB SHALL SATISFY ODOT REQUIREMENT FOR CLASS HP CONCRETE WITH A 28 DAY COMPRESSIVE STRENGTH OF 5,500 PSI IN ADDITION TO THE FOLLOWING REQUIREMENTS:
ADD 2 POUNDS OF SYNTHETIC FIBER REINFORCEMENT PER CUBIC YARD OF CONCRETE;
RAPID CHLORIDE PERMEABILITY TEST RESULTS SHALL BE LESS THAN 1200 COULOMBS AT 56 DAYS;
RESISTIVITY SHALL BE GREATER THAN 20,000 OHM–CM AT 56 DAYS. THE CONTRACTOR SHALL PROPOSE A PROCEDURE FOR MEASURING RESISTIVITY TO BE REVIEWED; AND
THE CONCRETE MIX SHALL NOT INCLUDE MICROSILICA.

CONCRETE FOR APPROACH SLABS, INFILL AND PAVER DEPRESSIONS INFILL SHALL SATISFY ODOT REQUIREMENT FOR CLASS HP CONCRETE WITH A 28 DAY COMPRESSIVE STRENGTH OF 5,500 PSI. THE CONCRETE MIX SHALL NOT INCLUDE MICROSILICA.

CONCRETE FOR SIDEWALKS AND CURBS SHALL BE ODOT CLASS HP WITH A MINIMUM 28 DAY COMPRESSIVE STRENGTH OF 4,500 PSI. THE CONCRETE SHALL NOT INCLUDE MICROSILICA.

CONCRETE FOR FOUNDATIONS SHALL BE ODOT CLASS S MODIFIED CONCRETE WITH A MINIMUM 28 DAY COMPRESSIVE STRENGTH OF 4,000 PSI.

MIX DESIGNS WITH SUPPORTING TEST RESULTS SHALL BE SUBMITTED FOR REVIEW A MINIMUM OF 30 DAYS PRIOR TO COMMENCING WORK. THE MIX DESIGN, QUALITY CONTROL AND QUALITY ASSURANCE SHALL BE DEVELOPED IN COMPLIANCE WITH ODOT SUPPLEMENTAL SPECIFI–CATION 898.

TRACK SLAB REINFORCING BARS SHALL BE ASTM A706 GRADE 60, FY=60 KSI, UNCOATED BARS. ALL OTHER REINFORCING, EXCLUDING THE TRACK SLAB, SHALL BE AASHTO M31 OR M322, GRADE 60 EPOXY COATED. WELDED WIRE REINFORCEMENT SHALL BE ASTM A884.

ANCHOR RODS – ASTM F1554 GRADE 105, FU = 125 KSI, GALVANIZED, INCLUDING ALL NUTS AND WASHERS.

BASE PLATE AND BARS – ASTM A572, GRADE 50, GALVANIZED, IN ACCORDANCE WITH ASTM A123.

STRUCTURAL STEEL AASHTO M270, GRADE 50, GALVANIZED IN ACCORDANCE WITH ASTM A123.

PROPORTIONING AND MIXING:

THE CONTRACTOR SHALL WORK WITH THE CONCRETE SUPPLIER TO SUBMIT A HIGH PERFORMANCE MIX DESIGN FOR APPROVAL BY THE ENGINEER. THE ENGINEER DESIRES TO WORK WITH THE CONTRACTOR AND CONCRETE SUPPLIER TO ACHIEVE A DURABLE, WORKABLE CONCRETE, WHICH DOES NOT CRACK. BLENDING OF AGGREGATES TO ACHIEVE A UNIFORM GRADATION IS REQUIRED. THE FIBERS SHALL BE INCORPORATED INTO THE MIX IN SUCH A WAY THAT NO "BALLING" OCCURS. UPON INSPECTION OF THE MIX AT THE TIME OF PLACE–MENT, IF ANY "BALLING" OCCURS, THE ENGINEER SHALL REJECT THE REMAINDER OF THE LOAD AT ANY TIME DURING THE POUR. THE TRANSIT MIXER CHARGE SHALL BE LIMITED TO ¾ OF ITS RATED CAPACITY OR 6 CUBIC YARDS, WHICHEVER IS SMALLER, UNLESS SIZE IS APPROVED BY THE ENGINEER.

DECK PROTECTION METHOD

MINIMUM 2½" CONCRETE COVER TO TOP REBAR IN TRACK SLAB.

MEMBRANE WATERPROOFING WITH DRAINAGE BOARD BELOW TRACK SLAB

VERIFICATION OF EXISTING STRUCTURE:

THESE PLANS WERE PREPARED BASED ON THE ORIGINAL PLANS AND ON MEASUREMENTS TAKEN IN THE FIELD. THEY MAY NOT REPRESENT THE EXACT CONDITIONS THAT THE CONTRACTOR WILL ENCOUNTER AT THE SITE. TAKE FIELD MEASUREMENTS AND BECOME ACQUAINTED WITH THE WORK TO BE PERFORMED AND THE CONSTRAINTS WITHIN WHICH TO ACCOMPLISH EVERY FACET OF THE WORK. VARIATION IN DIMENSIONS, SIZES OR LOCATIONS OF EXISTING MEMBERS OR QUANTITIES OF ANY OR ALL ITEMS MAY BE GREATER OR LESS THAN THE STATED ESTIMATED QUANTITIES.

SOIL COMPACTION:

PRIOR TO REBAR PLACEMENT FOR THE APPROACH SLABS, THE SUBGRADE SHALL BE PROPERLY COMPACTED TO PROVIDE CONTINUOUS SOIL SUPPORT TO THE APPROACH SLAB. BACKFILL SUBGRADE TO CLOSE ANY VOIDS. PAY SPECIAL ATTENTION TO AREAS BEHIND ABUTMENTS AND RETAINING WALLS AND AROUND EXISTING INLETS AND MANHOLES. BACKFILL MATERIAL SHALL BE GRAVELLY SOILS, WELL–GRADED SANDS AND SAND–GRAVEL MIXTURES. REMOVE DELETERIOUS MATERIAL FROM THE BACKFILL.

EXISTING FILL AND BACKFILL SHALL BE COMPACTED TO A MINIMUM OF 95% AASHTO T–180C DENSITY.

TRACK SLAB TROUGH SURFACE PREPARATION:

FOLLOWING HYDRODEMOLITION, PREPARE THE BOTTOM OF THE TRACK SLAB TROUGH IN ACCORDANCE WITH APPLICABLE SECTIONS OF ODOT CMS ITEM 256. PREPARE THE SURFACE IN ACCORDANCE WITH 256.05, MIX AND APPLY BONDING GROUT IN ACCORDANCE WITH ITEM 256.06 AND MIX, APPLY AND FINISH TYPE A PATCHING MATERIAL IN ACCORDANCE WITH 256.07. SIDES OF THE TRACK SLAB TROUGH SHALL BE CLEANED IN ACCORDANCE WITH 256.05. COORDINATE WITH THE WATERPROOFING MEMBRANE APPLICATOR TO PROVIDE SURFACES ACCEPTABLE TO RECEIVE THE MEMBRANE. ALL COSTS ASSOCIATED WITH THIS WORK SHALL BE INCLUDED IN ITEMS SPECIAL REINFORCED CONCRETE TRACK SLAB WITH EMBEDDED TRACK AND EMBEDDED RESTRAINED TRACK ON STRUCTURE.

REINFORCING STEEL, AS PER PLAN:

IN ADDITION TO THE PROVISIONS OF ITEM 509, FIELD BEND AND/OR FIELD CUT THE REINFORCING STEEL DESIGNATED IN THE PLANS, AS NECESSARY, IN ORDER TO MAINTAIN THE REQUIRED CLEARANCES AND BAR SPACINGS AND TO AVOID OBSTRUCTIONS AND PENETRATIONS AS INDICATED ON THE PLANS OR DISCOVERED ON SITE. ALL COSTS ASSOCIATED WITH BENDING AND CUTTING REINFORCING SHALL BE INCLUDED WITH ITEMS SPECIAL REINFORCED CONCRETE TRACK SLAB WITH EMBEDDED TRACK AND WITH EMBEDDED RESTRAINED TRACK ON STRUCTURE.

ITEM 202E22901 APPROACH SLAB REMOVED, AS PER PLAN:

REMOVE APPROACH SLAB ENTIRELY BUT MAINTAIN THE EXISTING REINFORCING BARS EXTENDING FROM THE BRIDGE AS INDICATED IN DEMOLITION DETAILS. IF SOME EXISTING REINFORCING BARS ARE FOUND TO BE NOT RE–USABLE, REPLACE THE REBAR IN ACCORDANCE WITH ITEM 509E20001.

THE DEMOLITION SHALL ALSO INCLUDE REMOVAL OF BRICK PAVERS AND CONCRETE CURBS ON THE APPROACH SLAB AND BRICK PAVERS ON THE SECOND STREET STRUCTURE. REMOVED PAVERS SHALL BE SALVAGED, STACKED ON PALLETS AND DELIVERED TO A STORAGE LOCATION DESIGNATED BY THE CITY.

THE DEMOLITION SHALL NOT DAMAGE OR LOOSEN THE RAILING ALONG THE BRIDGE SIDEWALKS. THE DEMOLITION SHALL NOT DAMAGE THE RETAINING WALL ANCHORS. IT IS ASSUMED THE APPROACH SLAB IS NOT STRUCTURALLY ATTACHED TO THE RAILING OR THE RETAINING WALL. VERIFY THESE ASSUMPTIONS PRIOR TO FULL SCALE DEMOLITION. CONTRACTOR SHALL REPORT TO THE OWNER IF THE FIELD CONDITIONS DIFFER FROM THE ENGINEER'S ASSUMPTIONS. ALL COSTS ASSOCIATED WITH APPROACH SLAB REMOVAL SHALL BE INCLUDED WITH ITEM 202.

ITEM 202E11201 PORTIONS OF STRUCTURE REMOVED, AS PER PLAN:

CAREFULLY CUT AND REMOVE DECK CONCRETE AND REINFORCING AS INDICATED. CONCRETE REMOVAL SHALL EMPLOY HYDRODEMOLIITION WITHOUT DAMAGING EXISTING POST–TENSIONING STRANDS. HYDRODEMOLITION EQUIPMENT SHALL BE CALIBRATED DURING TEST DEMOLITION TO REMOVE CONCRETE TO A DEPTH NO GREATER THAN ONE INCH (1") BELOW THE REQUIRED DEPTH.

A TEST DEMOLITION SHALL BE PERFORMED OVER A 10 FEET LONG STRIP AT THE SOUTH END OF WALNUT STREET AND MAIN STREET BRIDGES AS INDICATED IN THE PLANS TO DETERMINE THE STRAND DEPTH. PRIOR TO FURTHER REMOVAL THE TEST DEMOLITION MUST BE INSPECTED BY ODOT. IF POST–TENSIONING STRANDS ARE SEVERED DURING TEST OR

ITEM 202E11201 (CONT.)

PRODUCTION DEMOLITION THE CONTRACTOR SHALL DOCUMENT THE NUMBER AND LOCATION OF SEVERED STRANDS AND REPORT IT TO THE ENGINEER FOR REVIEW AND RECOMMENDATION. THE CONTRACTOR SHALL BE RESPONSIBLE FOR NECESSARY REPAIRS RECOMMENDED BY THE ENGINEER AT NO ADDITIONAL COST. DAMAGE TO THE POST–TENSIONING DUCTS SHALL BE REPAIRED AS REQUIRED BY THE ENGINEER FOR CORROSION PROTECTION OF THE STRANDS AT NO ADDITIONAL COST TO THE OWNER.

A TEST DEMOLITION SHALL BE CONDUCTED IN THE INTERSECTION OF WALNUT STREET AND SECOND STREET OVER AN AREA INDICATED ON THE PLANS TO DETERMINE POTENTIAL INTERFERENCE OF THE TRACK TROUGH WITH THE POST–TENSIONNING STRAND DUCTS EXTENDING FROM THE PRECAST TEE BEAMS. PRIOR TO FURTHER REMOVAL THE TEST DEMOLITION MUST BE INSPECTED BY THE CITY OF CINCINNATI. IF THE POST–TENSIONING STRAND DUCTS ARE ENCOUNTERED PRIOR TO ACHIEVING THE INDICATED DEPTH, STOP DEMOLITION AND REPORT THE CONDITION TO THE ENGINEER FOR RESOLUTION. IF TENDONS ARE DAMAGED, THE CONTRACTOR SHALL BE RESPONSIBLE FOR NECESSARY REPAIRS RECOMMENDED BY THE ENGINEER AT NO ADDITIONAL COST. DAMAGE TO THE POST–TENTIONING DUCTS SHALL BE REPAIRED AS REQUIRED BY THE ENGINEER FOR CORROSION PROTECTION OF THE STRANDS AT NO ADDITIONAL COST TO THE OWNER.

INCREMENTAL DEMOLITION – A SEGMENT OF TRACK SLAB TROUGH DEMOLITION INDICATED ON THE PLANS JUST SOUTH OF THE WALNUT AND MAIN STREET BRIDGE APPROACH SLABS ALONG THE NORTH EDGE OF THE SECOND STREET STRUCTURE SHALL BE ADVANCED IN INCREMENTS OF ONE INCH DEPTH UNTIL THE SPECIFIED DEPTH IS REACHED. DAMAGE TO THE POST–TENTIONING DUCTS SHALL BE REPAIRED AS REQUIRED BY THE ENGINEER FOR CORROSION PROTECTION OF THE STRANDS AT NO ADDITIONAL COST TO THE OWNER.

REMOVAL SHALL ALSO INCLUDE REMOVAL OF BRICK PAVERS ALONG SECOND STREET AS SHOWN ON THE PLANS. REMOVED PAVERS SHALL BE SALVAGED, STACKED ON PALLETS AND DELIVERED TO A STORAGE LOCATION DESIGNATED BY THE CITY. DAMAGE TO THE POST–TENTIONING DUCTS SHALL BE REPAIRED AS REQUIRED BY THE ENGINEER FOR CORROSION PROTECTION OF THE STRANDS.

PRIOR TO DEMOLITION OF ANY PORTION OF THE EXISTING STRUCTURE, SUBMIT PLANS FOR THE MAINTENANCE OF TRAFFIC (VEHICULAR, PEDESTRIAN, ETC.) ADJACENT TO AND UNDER THE STRUCTURE TO THE OWNER AT LEAST 30 DAYS BEFORE CONSTRUCTION BEGINS. THESE PLANS SHALL INCLUDE PROVISIONS FOR ANY DEVICES AND STRUCTURES THAT MAY BE NECESSARY TO ENSURE SUCH PROTECTION. ALL COSTS ASSOCIATED WITH THIS TRAFFIC PROTECTION WILL BE INCLUDED WITH ITEM 202 FOR PAYMENT. ALL COST ASSOCIATED WITH TEST AND PRODUCTION DEMOLITION SHALL BE INCLUDED WITH ITEM 202 FOR PAYMENT.

ITEM 202E23011 PAVEMENT REMOVED, ASPHALT, AS PER PLAN:

THIS ITEM SHALL INCLUDE REMOVAL OF THE ASPHALT FILL IN THE SOUTH APPROACH SLABS OF THE WALNUT AND MAIN STREET BRIDGES. THIS ITEM SHALL ALSO INCLUDE CONCRETE SURFACE PREPARATION IN COMPLIANCE WITH ITEM 256.05 PRIOR TO PLACEMENT OF APPROACH SLAB INFILL CONCRETE. ALL COSTS ASSOCIATED WITH PAVEMENT REMOVED, ASPHALT, SHALL BE INCLUDED IN ITEM 202.

ITEM 509E10001 EPOXY COATED REINFORCING STEEL, AS PER PLAN:

IN ADDITION TO THE PROVISIONS OF ITEM 509, FIELD BEND AND/OR FIELD CUT THE REINFORCING STEEL DESIGNATED IN THE PLANS, AS NECESSARY, IN ORDER TO MAINTAIN THE REQUIRED CLEARANCES AND BAR SPACINGS. REPAIR ALL DAMAGE TO THE EPOXY COATING, AS A RESULT OF THIS WORK, ACCORDING TO 709.00. ALL COSTS ASSOCIATED WITH BENDING AND CUTTING EPOXY COATED REINFORCING STEEL SHALL BE INCLUDED WITH ITEM 509.

LIST OF ABREVIATIONS

ADD'L	ADDITIONAL
B	BOTTOM
CL	CENTER LINE
CLR	CLEAR (COVER)
CONC	CONCRETE
CONT	CONTINUOUS
DWG	DRAWING
EJ	EXPANSION JOINT
EQ	EQUAL
EXIST	EXISTING
NIC	NOT IN CONTRACT
OC	ON CENTER
PEJF	PREFORMED EXPANSION JOINT FILLER
REQ'D	REQUIRED
STD	STANDARD
T	TOP
T&B	TOP AND BOTTOM
TYP	TYPICAL

CAUTION UNDERGROUND UTILITIES
2 WORKING DAYS
BEFORE YOU DIG
CALL 1–800–362–2764
OHIO UTILITY PROTECTION SERVICE
CALL NON–SERVICE FACILITY
OWNERS DIRECT

DOTE_Mono_PDF_Half.pltcfg
J:\29014A Cincinnati Street Car\CADD\S_G-ST-8002.dgn
7/13/2012 2:12:06 PM

CONTRACT DRAWING

PRINTS NOT BEARING THIS STAMP WERE MADE PRIOR TO ADVERTISING FOR BIDS AND ARE TO BE CONSIDERED OBSOLETE FOR CONTRACT PURPOSES.

Department of Transportation and Engineering

City of Cincinnati
City Hall
801 Plum Street
Cincinnati, Ohio 45202

CINCINNATI STREETCAR
CENTRAL BUSINESS DISTRICT

STRUCTURAL GENERAL NOTES
SHEET 1 OF 2

Revisions
No.

Date 07/02/12	Drawn by DDE
Date 07/02/12	Designed by GCG
Date 07/02/12	Checked by WAH
Date 07/12/12	Reviewed by JTB

Consultant

PB HDR

File Number

ACC No. 23126

G-ST-8002

ITEM 509E20001 REINFORCING STEEL, REPLACEMENT OF EXISTING REINFORCING STEEL, AS PER PLAN:

REPLACE ALL EXISTING REINFORCING STEEL DEEMED BY THE ENGINEER TO BE UNUSABLE WITH EPOXY COATED REINFORCING STEEL OF THE SAME SIZE AT THE SAME SPACING. DOWEL HOLES SHALL BE 1'–6" DEEP AND FILLED WITH NON–METALLIC, NON–SHRINK GROUT IN ACCORDANCE WITH ITEM 510. THE DEPARTMENT WILL MEASURE THE REPLACEMENT REINFORCING STEEL BY THE NUMBER OF POUNDS ACCEPTED IN PLACE, GRADE 60 STEEL SHALL BE USED.

REPLACE ALL EXISTING REINFORCING STEEL BARS WHICH ARE TO BE INCORPORATED INTO THE NEW WORK AND ARE DEEMED BY THE ENGINEER TO BE MADE UNUSABLE BY CONCRETE REMOVAL OPERATIONS WITH NEW EPOXY COATED REINFORCING STEEL OF THE SAME SIZE AT NO COST TO THE CITY. ALL COSTS ASSOCIATED WITH REPLACING REINFORCING STEEL SHALL BE INCLUDED WITH ITEM 509.

DOWEL HOLES WITH NONSHRINK NONMETALLIC GROUT

DRILL DOWEL HOLES WHERE SHOWN IN THE PLANS. INSTALL REINFORCING STEEL ACCORDING TO ITEM 510 USING EPOXY GROUT, 705.20. PRIOR TO DRILLING DOWEL HOLES, LOCATE ALL EXISTING REINFORCING STEEL IN THE AREA OF THE DOWEL HOLE WITH THE AID OF A REINFORCING STEEL LOCATOR (PACHOMETER). IF AN EXISTING BAR IS ENCOUNTERED AT THE SAME LOCATION AS A PROPOSED DOWEL HOLE, THE DOWEL HOLE SHALL BE MOVED TO EITHER SIDE OF THE EXISTING BAR. ALL COSTS ASSOCIATED WITH DOWEL HOLES SHALL BE INCLUDED WITH ITEM SPECIAL REINFORCED CONCRETE WALK ON STRUCTURE OR ITEM SPECIAL REINFORCED CONCRETE APPROACH SLAB.

ITEM 511E52000 CLASS HP CONCRETE, TEST SLAB (TRACK SLAB):

PRODUCE A TRIAL BATCH OF CONCRETE EQUAL IN SIZE TO THE BATCH REQUIRED FOR THE TRACK SLAB AND CONFORMING TO THE APPROVED MIX DESIGN. ENSURE THE TRIAL BATCH IS WORKABLE AND FINISHABLE.

PLACE AN 8 FT. LONG TEST SLAB MOCK UP ADJACENT TO THE PROPOSED TRACK SLAB, WHEN ATMOSPHERIC CONDITIONS APPROXIMATE THE CONDITIONS ANTICIPATED FOR PLACING THE ENTIRE WORK. FINISH AND TEXTURE THE TEST SLAB ACCORDING TO THE APPLICABLE SPECIFICATIONS AND NOTES.

IF THE ENGINEER DETERMINES THAT THE TRIAL BATCH IS NOT WORKABLE OR NOT ABLE TO BE PROPERLY FINISHED, MODIFY THE MIX DESIGN OR BATCHING SEQUENCE. SUBMIT THE REVISED MIX DESIGN AND BATCHING SEQUENCE TO THE ENGINEER, AND PLACE ANOTHER TEST SLAB. REPEAT THE SUBMITTAL AND TEST SLAB PROCESS UNTIL PRODUCING A TRIAL BATCH THAT IS BOTH WORKABLE AND FINISHABLE. DO NOT PLACE ANY TRACK SLAB UNTIL THE ENGINEER ACCEPTS THE TEST SLAB PLACEMENT.

THE COST OF THE CONCRETE TEST SLABS AND TESTING SHALL BE IN–CLUDED IT ITEM 511.

ITEM SPECIAL REINFORCED CONCRETE TRACK SLAB WITH EMBEDDED TRACK ON STRUCTURE, AS PER PLAN:

THIS ITEM SHALL INCLUDE THE EMBEDDED RAILS, STEEL TIES, CONCRETE, STEEL REINFORCING, WATERPROOFING MEMBRANE, DRAINAGE BOARD, SURFACE PREPARATION AND INCIDENTALS TO COMPLETE THE WORK AS INDICATED ON THE PLANS. ALL COSTS ASSOCIATED WITH THIS WORK SHALL BE INCLUDED WITH THIS ITEM AND PAID FOR BY UNITS OF TRACK FEET (TF).

ITEM SPECIAL REINFORCED CONCRETE TRACK SLAB WITH EMBEDDED RESTRAINED TRACK ON STRUCTURE, AS PER PLAN:

THIS ITEM SHALL INCLUDE THE EMBEDDED RAILS, STEEL TIES, CONCRETE, STEEL REINFORCING, WATERPROOFING MEMBRANE, DRAINAGE BOARD, SURFACE PREPARATION AND INCIDENTALS TO COMPLETE THE WORK AS INDICATED ON THE PLANS. ALL COSTS ASSOCIATED WITH THIS WORK SHALL BE INCLUDED WITH THIS ITEM AND PAID FOR BY UNITS OF TRACK FEET (TF).

PLACING AND FINISHING

APPROACH SLABS SHALL BE PLACED AND FINISHED IN ACCORDANCE WITH ODOT SPECIFICATION ITEM 526. SIDEWALKS AND CURBS SHALL BE FINISHED IN ACCORDANCE WITH ODOT SPECIFICATION 511.21. THE TRACK SLAB SHALL BE FINISHED IN ACCORDANCE WITH ODOT SPECIFICATION 511.19. THE TRACK SLAB SURFACE SHALL NOT BE GROOVED.

CURING

ALL CONCRETE SHALL BE CURED IN ACCORDANCE WITH ODOT SPECIFICATIONS 511.17.A METHOD A, WATER CURING.

CONSTRUCTION JOINT PREPARATION

SAW CUT BOUNDARIES OF PROPOSED CONCRETE REMOVALS 1 INCH DEEP. REMOVE CONCRETE TO A ROUGH SURFACE. THE EXISTING REINFORCING STEEL SHALL BE LEFT IN PLACE IF SPECIFIED ON PLAN. PRIOR TO PLACING PROPOSED MATERIAL, ABRASIVELY CLEAN JOINT SURFACES AND EXISTING EXPOSED REINFORCEMENT TO REMOVE LOOSE AND DISINTEGRATED CONCRETE AND LOOSE RUST.

THE JOINT SURFACE AND EXPOSED REINFORCEMENT SHALL BE THOROUGHLY CLEANED OF ALL DIRT, DUST, RUST OR OTHER FOREIGN MATERIAL BY THE USE OF WATER, AIR UNDER PRESSURE OR OTHER METHODS THAT PRODUCE SATISFACTORY RESULTS. EXISTING REINFORCING STEEL DOES NOT HAVE TO HAVE A BRIGHT STEEL FINISH BUT ALL LOOSE RUST SHALL BE REMOVED. EXISTING CONCRETE SURFACES WHICH NEW CONCRETE WILL BE PLACED AGAINST SHALL BE WET, BUT WITHOUT FREE WATER, AT THE TIME OF CONCRETE PLACEMENT.

ITEM 512 SEALING OF CONCRETE SURFACES (NON–EPOXY), AS PER PLAN:

ALL NEWLY INSTALLED EXPOSED CONCRETE SHALL BE SEALED WITH A NON–EPOXY SEALER IN ACCORDANCE WITH ODOT SPECIFICATION ITEM 512.

ITEM SPECIAL REINFORCED CONCRETE WALK ON STRUCTURE

THIS ITEM SHALL INCLUDE THE REINFORCED CONCRETE WALK, DOWEL HOLES AND BOND BREAKER.

CAUTION UNDERGROUND UTILITIES
2 WORKING DAYS
BEFORE YOU DIG
CALL 1–800–362–2764
OHIO UTILITY PROTECTION SERVICE
CALL NON–SERVICE FACILITY
OWNERS DIRECT

DEPARTMENT OF TRANSPORTATION & ENGINEERING · CITY OF CINCINNATI · OHIO

CONTRACT DRAWING

PRINTS NOT BEARING THIS STAMP WERE MADE PRIOR TO ADVERTISING FOR BID, AND ARE TO BE CONSIDERED OBSOLETE FOR CONTRACT PURPOSES.

Department of Transportation and Engineering

City of Cincinnati
City Hall
801 Plum Street
Cincinnati, Ohio 45202

CINCINNATI STREETCAR
CENTRAL BUSINESS DISTRICT

STRUCTURAL GENERAL NOTES
SHEET 2 OF 2

Revisions

No.				

Drawn by DDE	Date 07/02/12
Designed by GCG	Date 07/02/12
Checked by WAH	Date 07/02/12
Reviewed by JTB	Date 07/12/12

Consultant

PB HDR

File Number

ACC No. 23126

G-ST-8003

DOTE_Mono_PDF_Half.pltcfg
J:\29014A Cincinnati Street Car\CADD\S_G-ST-8003.dgn
7/13/2012 2:12:07 PM

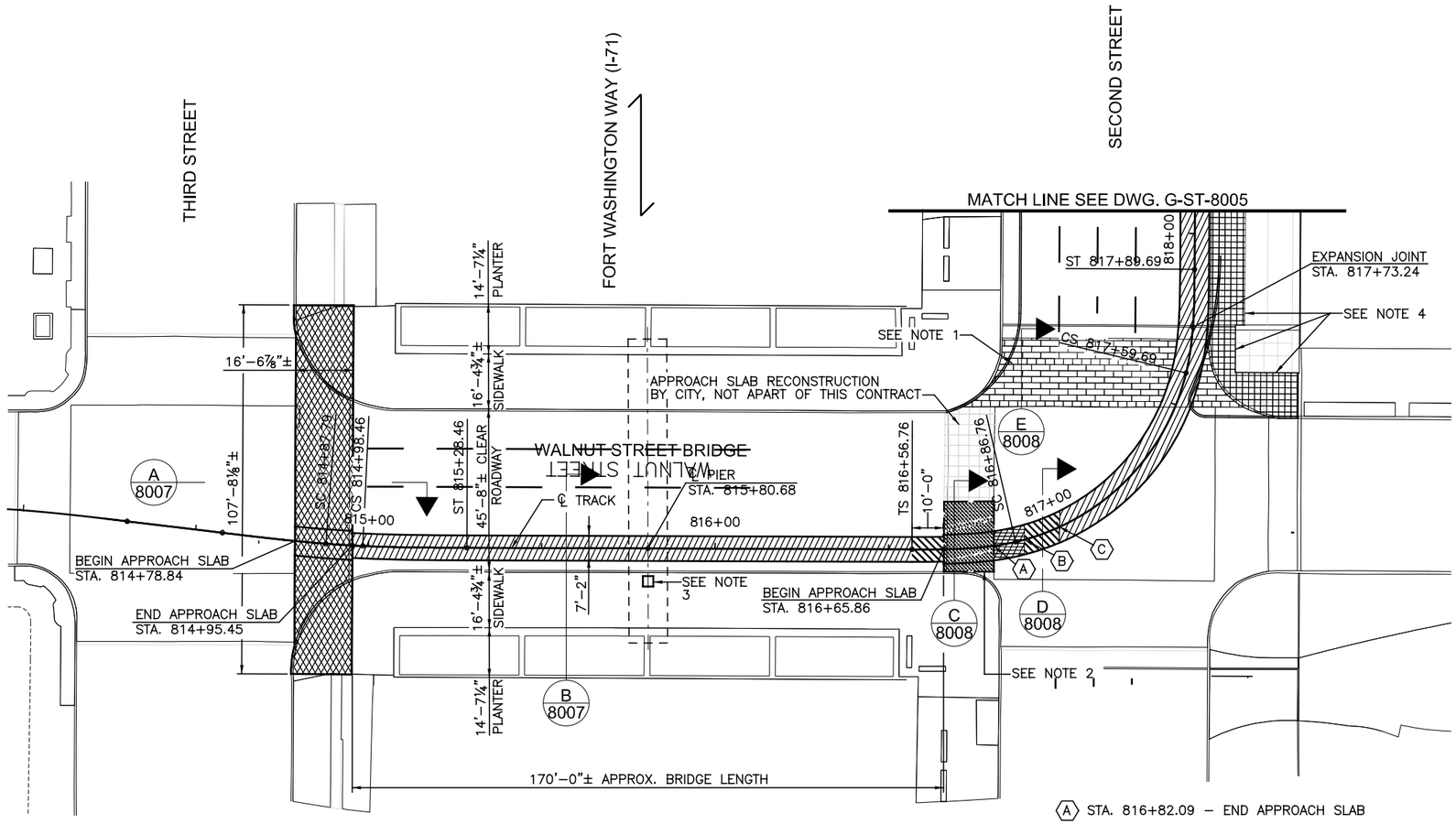

WALNUT STREET BRIDGE PLAN

(A) STA. 816+82.09 – END APPROACH SLAB
BEGIN INCREMENTAL DEMOLITION

(B) STA. 816+89.41 – END INCREMENTAL DEMOLITION
BEGIN TEST DEMOLITION

(C) STA. 817+00.61 – END TEST DEMOLITION

NOTES:

1. SALVAGE AND PALLETIZE REMOVED PAVERS. DELIVER PALLETIZED PAVERS TO THE CITY AS DIRECTED. CUT AND RESET PAVERS AS REQUIRED.
2. FOR AS BUILT LOCATION AND SIZE OF EXISTING ASPHALT FILLED APPROACH SLAB DEPRESSION, CONTACT CITY FOR DRAWINGS PREPARED FOR THIS AREA AS PART OF AN EARLIER PROJECT.
3. REMOVE 1'-6"x1'-6" AREA TO TOP OF BRIDGE DECK SLAB, SEE DETAIL D/8015. CUT AND RESET ADJACENT PAVERS AS REQUIRED.
4. SEE SIDEWALK REMOVAL LIMITS SHEET G-ST-8009.

LEGEND:

- INCREMENTAL DEMOLITION SEE ITEM 202E11201
- REMOVE APPROACH SLAB, SIDEWALK PAVERS & CURB TO EXTENT OF EXISTING BRIDGE ABUTMENT
- PARTIALLY REMOVE REINFORCED CONCRETE
- TEST DEMOLITION AREA, SEE ITEM 202E11201
- REMOVE ASPHALT FROM APPROACH SLAB DEPRESSION, SEE ITEM 202E23011
- REMOVE SIDEWALK AND CURB
- REMOVE PAVER/CROSSWALK

CAUTION UNDERGROUND UTILITIES
2 WORKING DAYS
BEFORE YOU DIG
CALL 1-800-362-2764
OHIO UTILITY PROTECTION SERVICE
CALL NON-SERVICE FACILITY
OWNERS DIRECT

GRAPHIC SCALE
20 0 20 40 80
(IN FEET)
1 inch = 20 ft. Full Size
1 inch = 40 ft. Half Size

CONTRACT DRAWING
PRINTS NOT BEARING THIS STAMP WERE MADE PRIOR TO ADVERTISING FOR BIDS AND ARE TO BE CONSIDERED OBSOLETE FOR CONTRACT PURPOSES.

Department of Transportation and Engineering
City of Cincinnati
City Hall
801 Plum Street
Cincinnati, Ohio 45202

CINCINNATI STREETCAR
CENTRAL BUSINESS DISTRICT

DEMOLITION PLAN
WALNUT ST. BRIDGE & SECOND ST. INTERSECTION

Revisions
No.

Drawn by DDE	Date 07/02/12
Designed by WAH	Date 07/02/12
Checked by GCG	Date 07/02/12
Reviewed by JTB	Date 07/12/12

Consultant
PB HDR

File Number

ACC No. 23126

G-ST-8004

D0TE_Mono_PDF_Half.pltcfg
J:\29014A Cincinnati Street Car\CADD\S_G-ST-8004.dgn
7/13/2012 2:12:09 PM

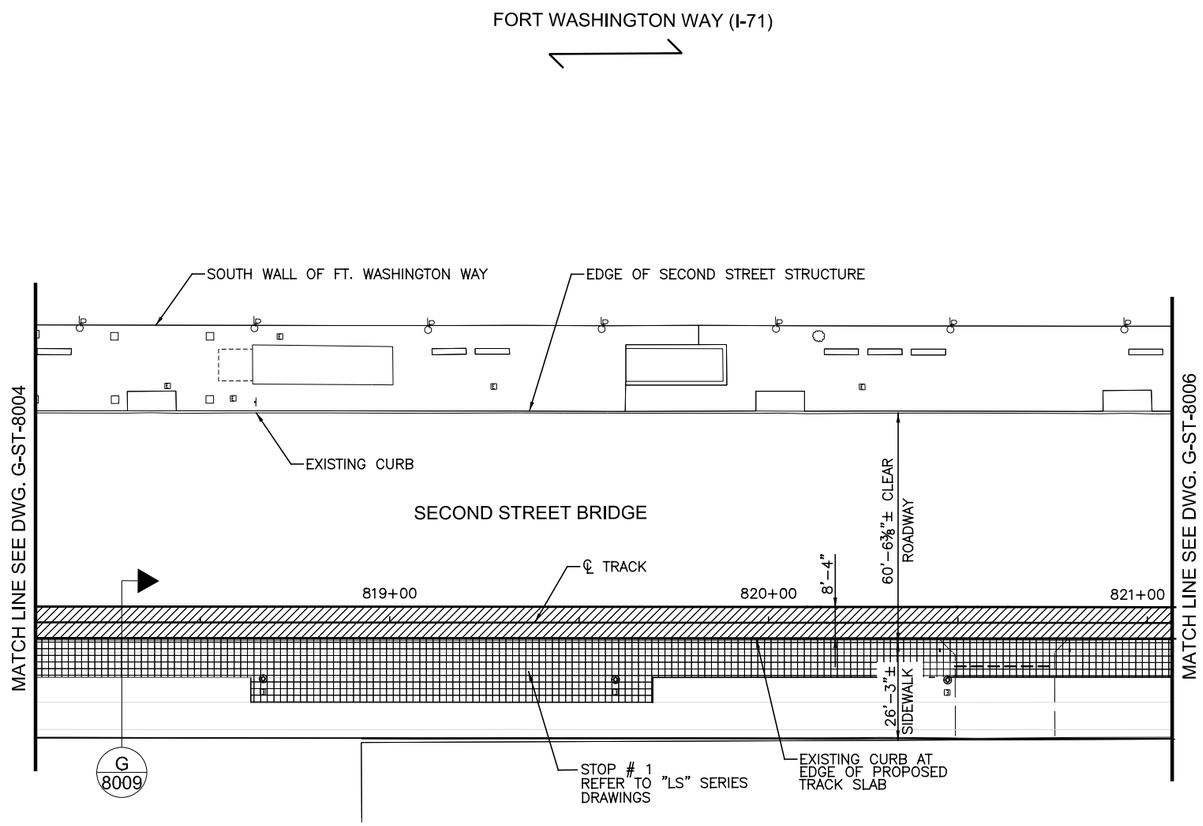

SECOND STREET STRUCTURE PLAN

SEE SIDEWALK REMOVAL LIMITS, SHEET G–ST–8009.

LEGEND:

REMOVE REINFORCED CONCRETE

REMOVE SIDEWALK AND CURB

CAUTION UNDERGROUND UTILITIES
2 WORKING DAYS
BEFORE YOU DIG
CALL 1–800–362–2764
OHIO UTILITY PROTECTION SERVICE
CALL NON–SERVICE FACILITY
OWNERS DIRECT

GRAPHIC SCALE

20 0 20 40 80

(IN FEET)
1 inch = 20 ft. Full Size
1 inch = 40 ft. Half Size

CONTRACT DRAWING

PRINTS NOT BEARING THIS STAMP WERE MADE PRIOR TO ADVERTISING FOR BIDS AND ARE TO BE CONSIDERED OBSOLETE FOR CONTRACT PURPOSES.

Department of Transportation and Engineering

City of Cincinnati
City Hall
801 Plum Street
Cincinnati, Ohio 45202

CINCINNATI STREETCAR
CENTRAL BUSINESS DISTRICT

DEMOLITION PLAN
SECOND STREET

Revisions

No.		

Drawn by DDE	Date 07/02/12
Designed by WAH	Date 07/02/12
Checked by GCG	Date 07/02/12
Reviewed by JTB	Date 07/12/12

Consultant

PB HDR

File Number

ACC No. 23126

G-ST-8005

DOTE_Mono_PDF_Half.pltcfg
J:\29014A Cincinnati Street Car\CADD\S_G-ST-8005.dgn
7/13/2012 2:12:11 PM

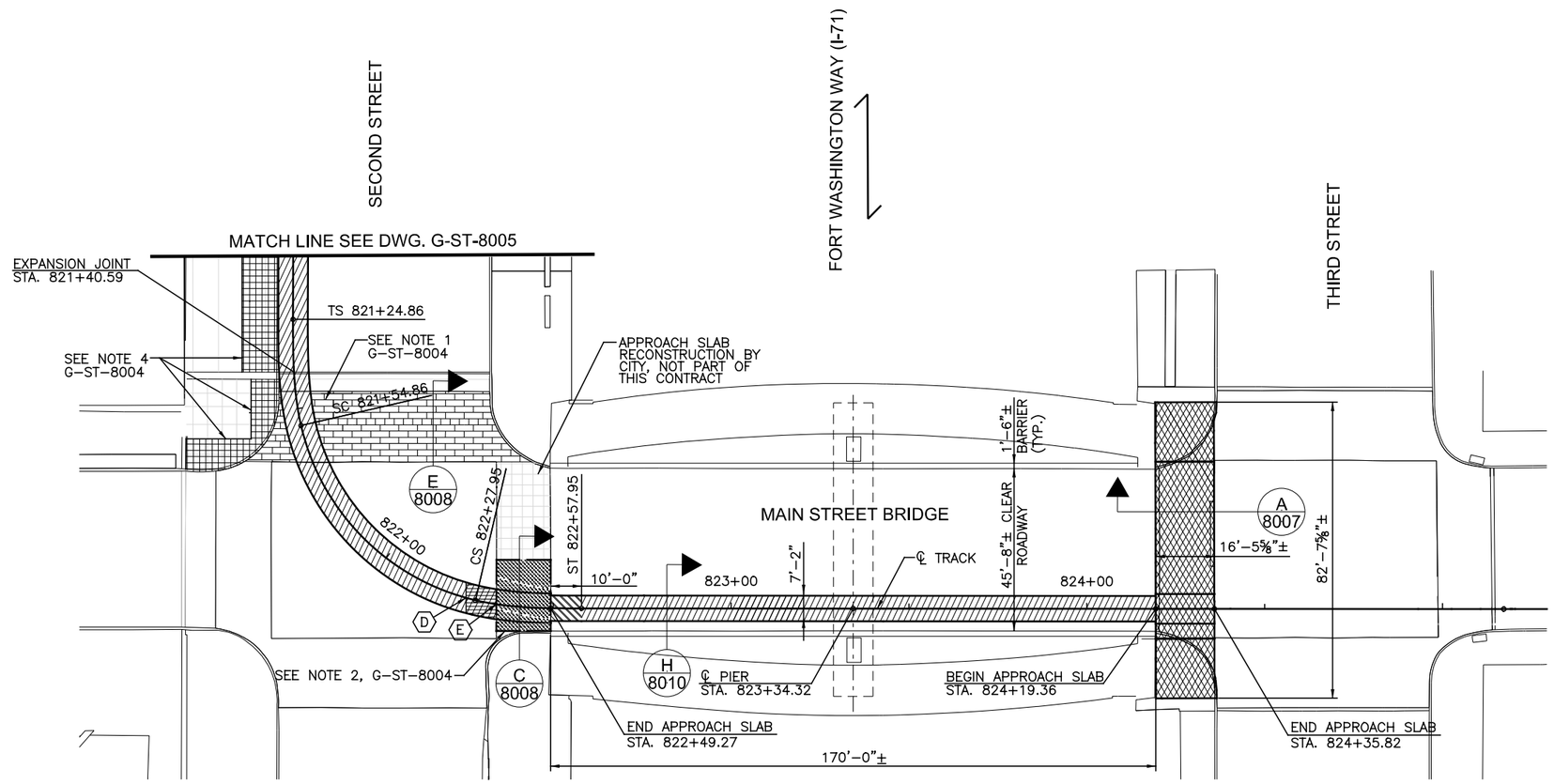

MAIN STREET BRIDGE PLAN

(D) STA. 822+25.25 – BEGIN INCREMENTAL DEMOLITION

(E) STA. 822+34.06 – END INCREMENTAL DEMOLITION
BEGIN APPROACH SLAB

LEGEND:

- INCREMENTAL DEMOLITION. SEE ITEM 202E1201
- REMOVE APPROACH SLAB, SIDEWALK PAVERS AND CURB TO EXTENT OF EXISTING PEDESTRIAN BRIDGE ABUTMENTS
- REMOVE REINFORCED CONCRETE
- TEST DEMOLITION AREA. SEE ITEM 202E1201
- REMOVE ASPHALT APPROACH SLAB DEPRESSION. SEE ITEM 202E23011
- REMOVE SIDEWALK AND CURB
- REMOVE PAVER CROSSWALK

CAUTION UNDERGROUND UTILITIES
2 WORKING DAYS
BEFORE YOU DIG
CALL 1-800-362-2764
OHIO UTILITY PROTECTION SERVICE
CALL NON-SERVICE FACILITY
OWNERS DIRECT

GRAPHIC SCALE
20 0 20 40 80
(IN FEET)
1 inch = 20 ft. Full Size
1 inch = 40 ft. Half Size

DOTE_Mono_PDF_Half.pltcfg
J:\29014A Cincinnati Street Car\CADD\S_G-ST-8006.dgn
7/13/2012 2:12:12 PM

CONTRACT DRAWING

PRINTS NOT BEARING THIS STAMP WERE MADE PRIOR TO ADVERTISING FOR BIDS AND ARE TO BE CONSIDERED OBSOLETE FOR CONTRACT PURPOSES.

Department of Transportation and Engineering

City of Cincinnati
City Hall
801 Plum Street
Cincinnati, Ohio 45202

CINCINNATI STREETCAR
CENTRAL BUSINESS DISTRICT

DEMOLITION PLAN
MAIN ST. BRIDGE & SECOND ST. INTERSECTION

Revisions

No.		Date
		07/02/12
		07/02/12
		07/02/12
		07/12/12

Drawn by DDE
Designed by WAH
Checked by GCG
Reviewed by JTB

Consultant

PB HDR

File Number

ACC No. 23126

G-ST-8006

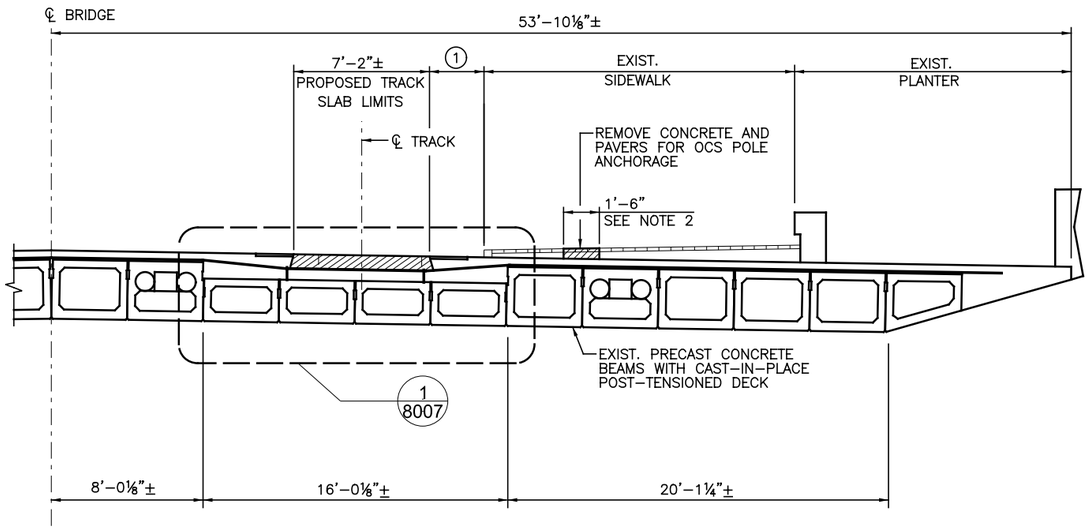

SECTION B / 8007

1 VARIES 2'–10⅜" TO 3'–0" LOCATE TRACK TROUGH BY ALIGNMENT ON G–PP DRAWINGS

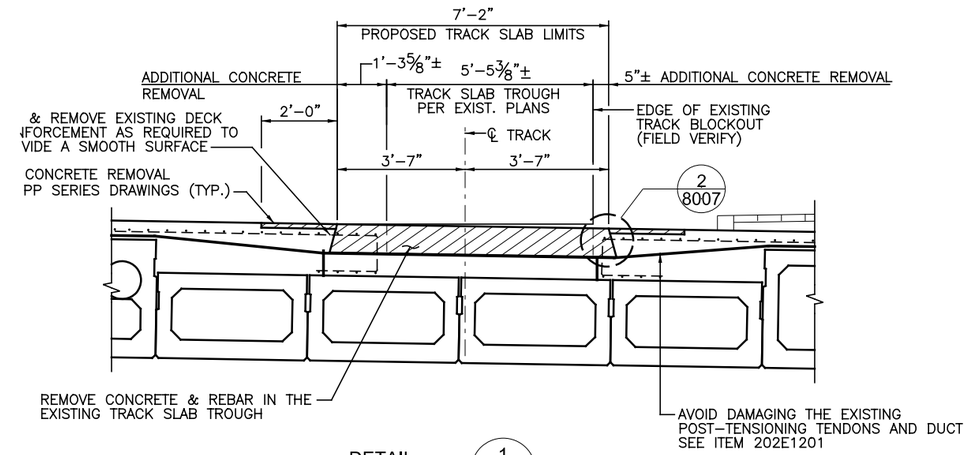

DETAIL 1 / 8007

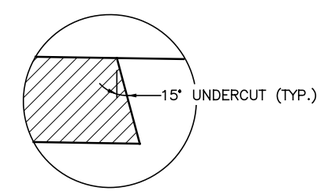

DETAIL 2 / 8007

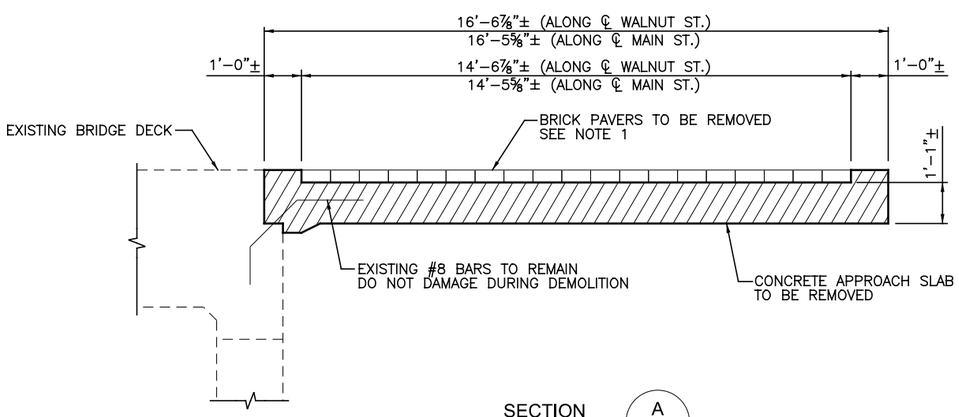

SECTION A / 8007

FIELD VERIFY EXISTING APPROACH SLAB EXTENTS

NOTES:

1. SALVAGE AND PALLETIZE REMOVED PAVERS. DELIVER PALLETIZED PAVERS TO THE CITY AS DIRECTED.
2. SEE G–ST–8011 FOR PROPOSED POLE LOCATIONS.

LEGEND:

REMOVE REINFORCED CONCRETE

CAUTION UNDERGROUND UTILITIES
2 WORKING DAYS
BEFORE YOU DIG
CALL 1–800–362–2764
OHIO UTILITY PROTECTION SERVICE
CALL NON–SERVICE FACILITY OWNERS DIRECT

DEPARTMENT OF TRANSPORTATION & ENGINEERING CITY OF CINCINNATI OHIO

CONTRACT DRAWING

PRINTS NOT BEARING THIS STAMP WERE MADE PRIOR TO ADVERTISING FOR BID AND ARE TO BE CONSIDERED OBSOLETE FOR CONTRACT PURPOSES.

Department of Transportation and Engineering

City of Cincinnati
City Hall
801 Plum Street
Cincinnati, Ohio 45202

CINCINNATI STREETCAR
CENTRAL BUSINESS DISTRICT

DEMOLITION SECTIONS AND DETAILS
WALNUT STREET BRIDGE

Revisions

No.		

Date	07/02/12
Date	07/02/12
Date	07/02/12
Date	07/12/12

Drawn by	DDE
Designed by	WAH
Checked by	GCG
Reviewed by	JTB

Consultant

PB HDR

File Number

ACC No. 23126

G-ST-8007

DOTE_Mono_PDF_Half.pltcfg
J:\29014A Cincinnati Street Car\CADD\S_G-ST-8007.dgn
7/13/2012 2:12:13 PM

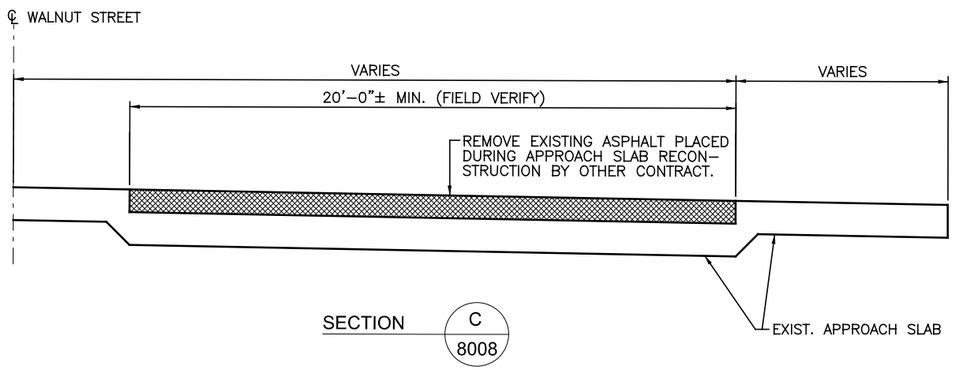

SECTION C / 8008

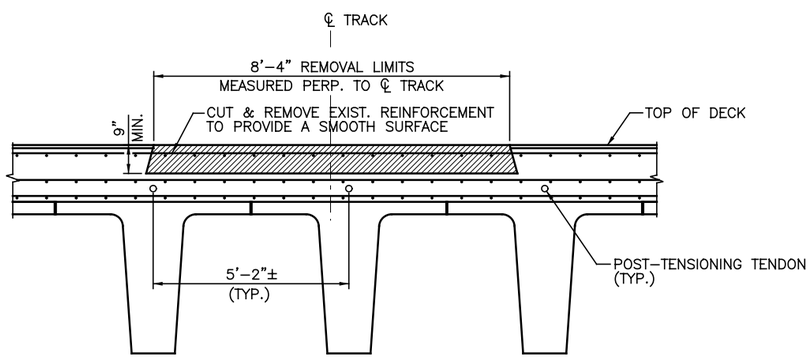

SECTION B / 8007

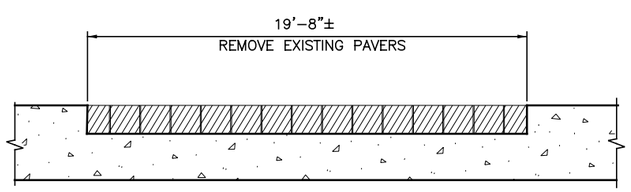

SECTION E / 8008

LEGEND:

REMOVE REINFORCED CONCRETE AND PAVERS. SALVAGE AND PALLETIZE REMOVED PAVERS. DELIVER PALLETIZED PAVERS TO THE CITY AS DIRECTED.

REMOVE ASPHALT

CAUTION UNDERGROUND UTILITIES
2 WORKING DAYS
BEFORE YOU DIG
CALL 1–800–362–2764
OHIO UTILITY PROTECTION SERVICE
CALL NON–SERVICE FACILITY
OWNERS DIRECT

CONTRACT DRAWING

PRINTS NOT BEARING THIS STAMP WERE MADE PRIOR TO ADVERTISING FOR BIDS AND ARE TO BE CONSIDERED OBSOLETE FOR CONTRACT PURPOSES.

Department of Transportation and Engineering

City of Cincinnati
City Hall
801 Plum Street
Cincinnati, Ohio 45202

CINCINNATI STREETCAR
CENTRAL BUSINESS DISTRICT

DEMOLITION SECTIONS AND DETAILS
WALNUT ST. BRIDGE & SECOND ST. INTERSECTION

Revisions

No.				

Date 07/02/12	Drawn by DDE
Date 07/02/12	Designed by GCG
Date 07/02/12	Checked by WAH
Date 07/12/12	Reviewed by JTB

Consultant

PB HDR

File Number

ACC No. 23126

G-ST-8008

DOTE_Mono_PDF_Half.pltcfg
J:\29014A Cincinnati Street Car\CADD\S_G-ST-8008.dgn
7/13/2012 2:12:14 PM

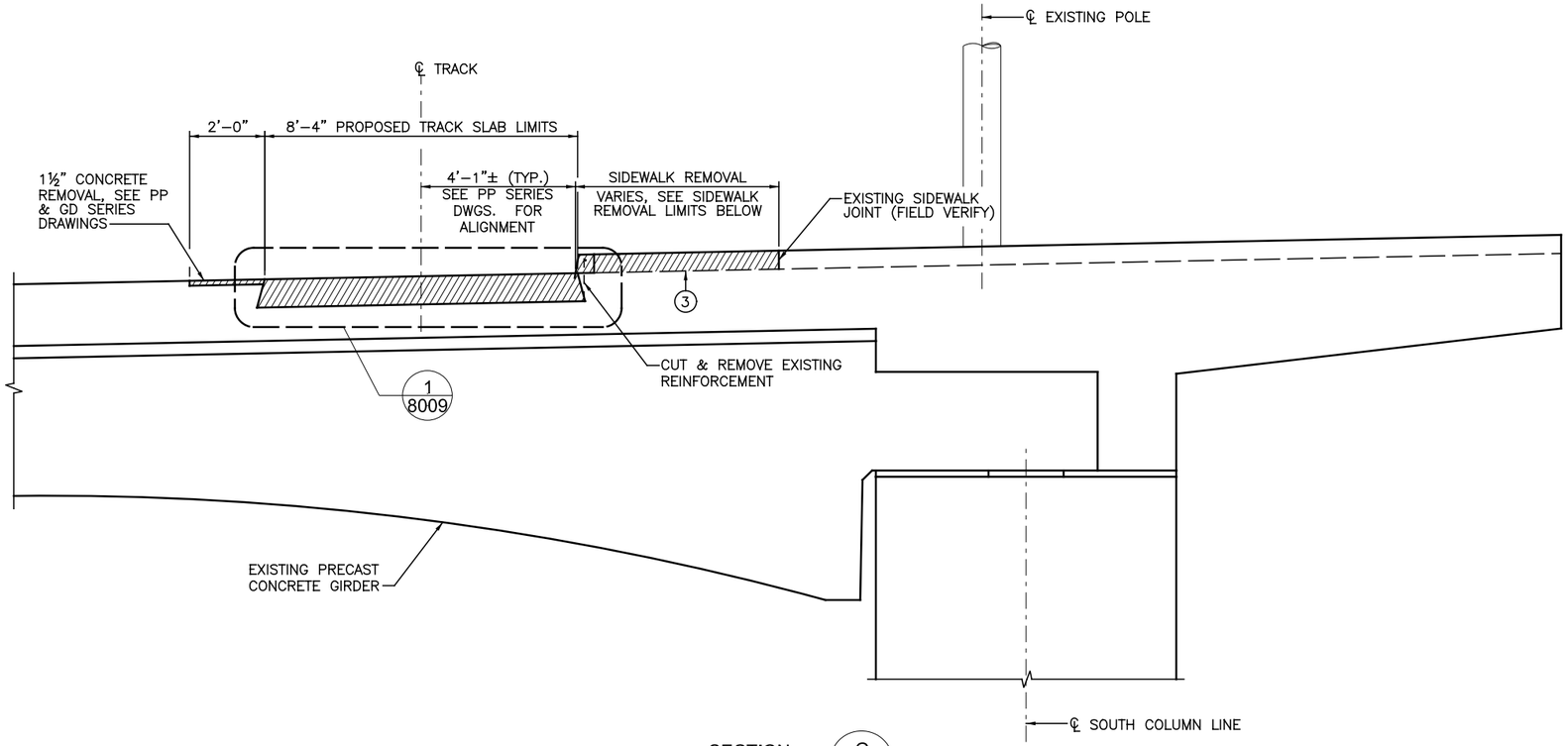

SECTION G / 8009

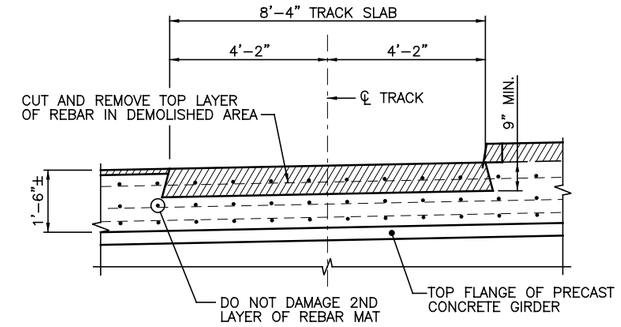

DETAIL 1 / 8009

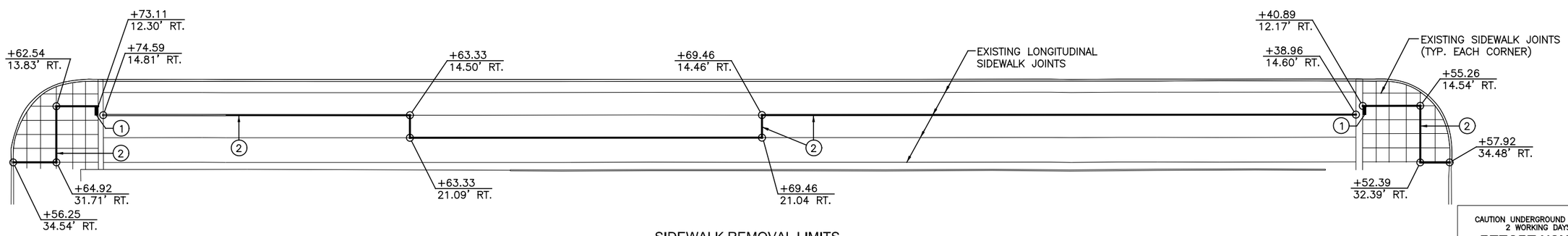

SIDEWALK REMOVAL LIMITS

CAUTION UNDERGROUND UTILITIES
2 WORKING DAYS
BEFORE YOU DIG
CALL 1–800–362–2764
OHIO UTILITY PROTECTION SERVICE
CALL NON–SERVICE FACILITY OWNERS DIRECT

NOTES:

1. PROVIDE ADDITIONAL DEMOLITION AS REQUIRED TO ALIGN INSTALLATION OF PROPOSED EXPANSION JOINT RETENTION RAILS.
2. LIMITS OF SIDEWALK REMOVAL SHALL COINCIDE WITH EXISTING SIDEWALK JOINTS (FIELD VERIFY).
3. DEPTH OF REMOVAL SHALL COINCIDE WITH AND BE LIMITED TO THE DEPTH OF EXISTING SIDEWALK PLACEMENT ON TOP OF THE EXISTING DECK.

LEGEND:

REMOVE REINFORCED CONCRETE

CONTRACT DRAWING

PRINTS NOT BEARING THIS STAMP WERE MADE PRIOR TO ADVERTISING FOR BID AND ARE TO BE CONSIDERED OBSOLETE FOR CONTRACT PURPOSES.

Department of Transportation and Engineering

City of Cincinnati
City Hall
801 Plum Street
Cincinnati, Ohio 45202

CINCINNATI STREETCAR
CENTRAL BUSINESS DISTRICT

DEMOLITION SECTIONS AND DETAILS
SECOND STREET BRIDGE

Revisions

No.	Date
	07/02/12
	07/02/12
	07/02/12
	07/12/12

Drawn by DDE
Designed by GCG
Checked by WAH
Reviewed by JTB

Consultant

PB HDR

File Number

ACC No. 23126

G-ST-8009

DOTE_Mono_PDF_Half.pltcfg
J:\29014A Cincinnati Street Car\CADD\S_G-ST-8009.dgn
7/13/2012 2:12:15 PM

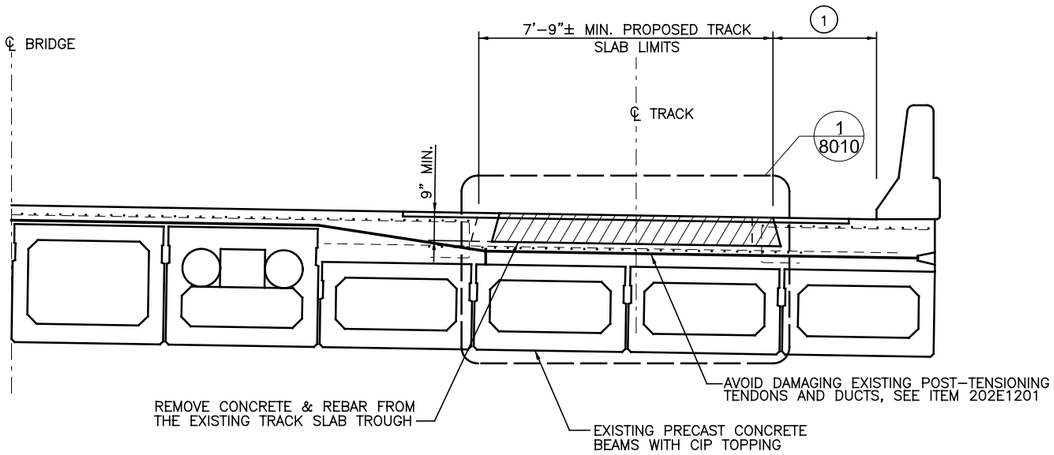

SECTION H 8010

(1) VARIES 2'–7¼" TO 2'–9⅞" LOCATE TRACK TROUGH BY ALIGNMENT ON G–PP DRAWINGS.

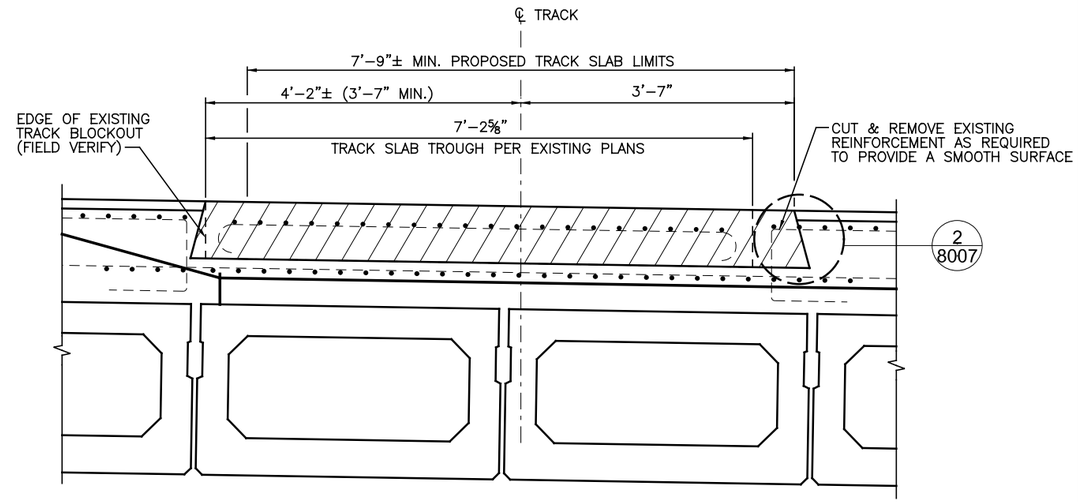

DETAIL 1 8010

LEGEND:

REMOVE REINFORCED CONCRETE

CAUTION UNDERGROUND UTILITIES
2 WORKING DAYS
BEFORE YOU DIG
CALL 1–800–362–2764
OHIO UTILITY PROTECTION SERVICE
CALL NON–SERVICE FACILITY
OWNERS DIRECT

CONTRACT DRAWING

PRINTS NOT BEARING THIS STAMP WERE MADE PRIOR TO ADVERTISING FOR BIDS AND ARE TO BE CONSIDERED OBSOLETE FOR CONTRACT PURPOSES.

Department of Transportation and Engineering

City of Cincinnati
City Hall
801 Plum Street
Cincinnati, Ohio 45202

CINCINNATI STREETCAR
CENTRAL BUSINESS DISTRICT

DEMOLITION SECTIONS AND DETAILS
MAIN ST. BRIDGE

Revisions
No.

	Date
Drawn by DDE	07/02/12
Designed by GCG	07/02/12
Checked by WAH	07/02/12
Reviewed by JTB	07/12/12

Consultant

PB HDR

File Number

ACC No.
23126

G-ST-8010

DOTE_Mono_PDF_Half.pltcfg
J:\29014A Cincinnati Street Car\CADD\S_G-ST-8010.dgn
7/13/2012 2:12:16 PM

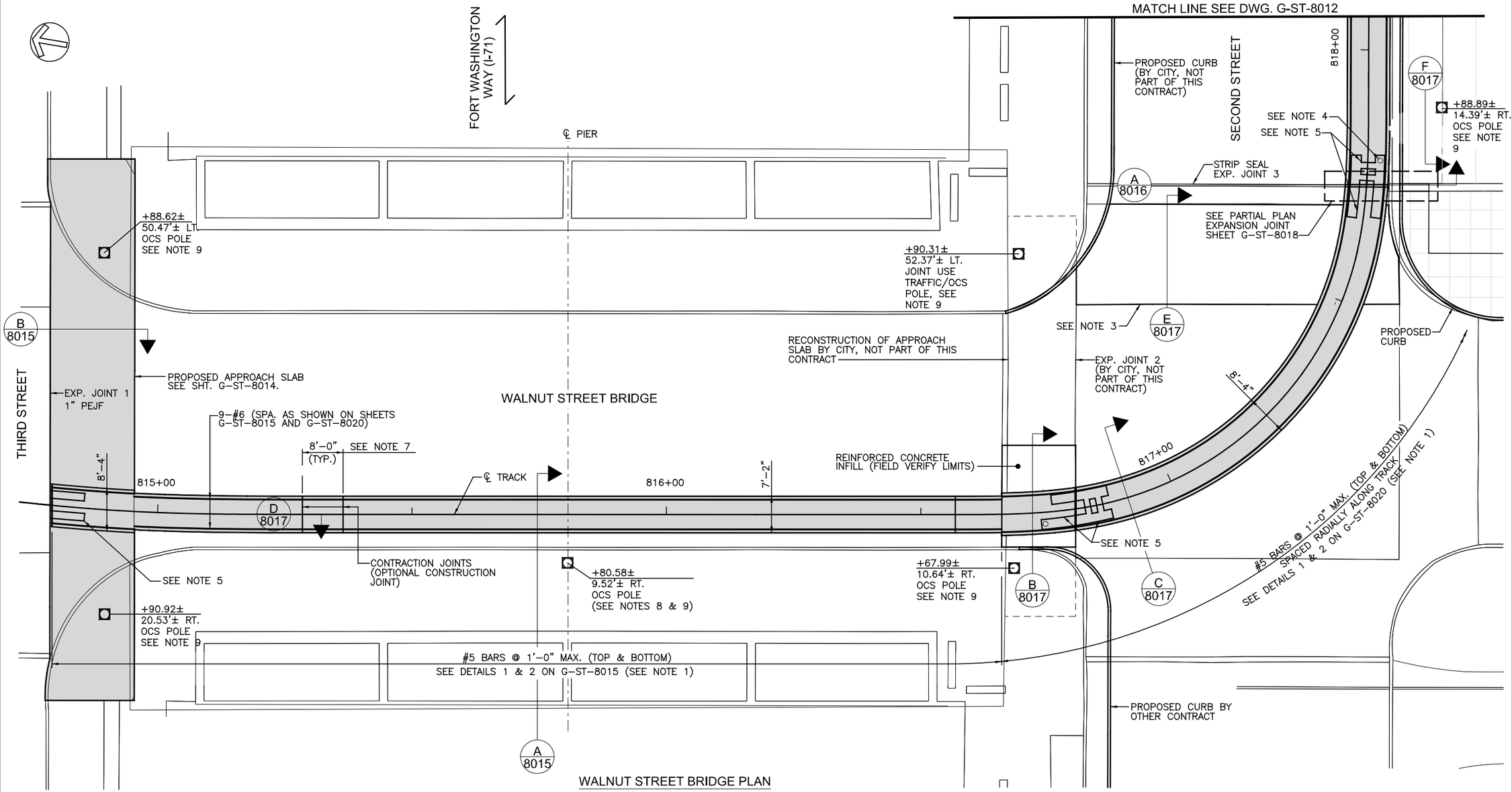

WALNUT STREET BRIDGE PLAN

SEE NOTE 6

EXPANSION JOINT DESIGN VALUES		
JOINT NO.	EXPANSION	CONTRACTION
1	0.33"	0.25"
2	0.50"	0.30"
3	1.00"	0.70"

NOTES

1. ADJUST SPACING OF TRANSVERSE REINFORCEMENT TO PROVIDE 1½" HORIZONTAL CLR. TO STEEL CROSS TIES SUPPORTING RAILS.
2. TRACK SLAB LONGITUDINAL #6 BARS MINIMUM LAP = 2'-4".
3. LIMITS OF CONCRETE INFILL IN CROSSWALK PAVER REMOVAL AREAS.
4. FIELD VERIFY LOCATION OF TRACK BOX DRAIN TO PENETRATE DECK CENTERED OVER ABUTTING EDGES OF PRECAST T-BEAM FLANGES BELOW. SEE DRAWINGS G-ST-8023 TO G-ST-8026 FOR ADDITIONAL INFORMATION.
5. EXPANSION BOXES, SEE TD SERIES DRAWINGS FOR DETAILS.
6. COORDINATE AND WORK THIS DRAWING WITH TRACK DRAWINGS (TD SERIES) FOR TRACK INSTALLATION AND CORROSION CONTROL DRAWING (PS SERIES) FOR ELECTRICAL BONDING OF REINFORCEMENT.
7. CONTRACTION JOINTS SHALL BE LOCATED DIRECTLY OVER THE STEEL TRACK TIES. JOINTS SHALL BE TOOLED IN PLASTIC CONCRETE OR FORMED BY INSERTION OF A STRIP. JOINT SHALL BE SEALED WITH A JOINT SEALER IN COMPLIANCE WITH ODOT CMS 705.04.
8. FIELD VERIFY AND ADJUST LOCATION OF OCS POLE CENTER TO MATCH CENTERLINE OF PIER AND DIAPHRAGM BETWEEN BEAM ENDS.
9. VERIFY POLE LOCATIONS WITH OL AND TC SERIES DRAWINGS.

CAUTION UNDERGROUND UTILITIES
2 WORKING DAYS
BEFORE YOU DIG
CALL 1-800-362-2764
OHIO UTILITY PROTECTION SERVICE
CALL NON-SERVICE FACILITY OWNERS DIRECT

GRAPHIC SCALE
10 0 10 20 40
(IN FEET)
1 inch = 10 ft. Full Size
1 inch = 20 ft. Half Size

DOTE_Mono_PDF_Half.pltcfg
J:\29014A Cincinnati Street Car\CADD\S_G-ST-8011.dgn
7/13/2012 2:12:18 PM

CONTRACT DRAWING
PRINTS NOT BEARING THIS STAMP WERE MADE PRIOR TO ADVERTISING FOR BIDS AND ARE TO BE CONSIDERED OBSOLETE FOR CONTRACT PURPOSES.

Department of Transportation and Engineering
City of Cincinnati
City Hall
801 Plum Street
Cincinnati, Ohio 45202

CINCINNATI STREETCAR
CENTRAL BUSINESS DISTRICT

DECK MODIFICATION PLAN
WALNUT ST. BRIDGE & SECOND ST. INTERSECTION

Revisions
No.

Date	07/02/12
Date	07/02/12
Date	07/02/12
Date	07/12/12

Drawn by DDE
Designed by WAH
Checked by GCG
Reviewed by JTB

Consultant
PB HDR

File Number

ACC No. 23126

G-ST-8011

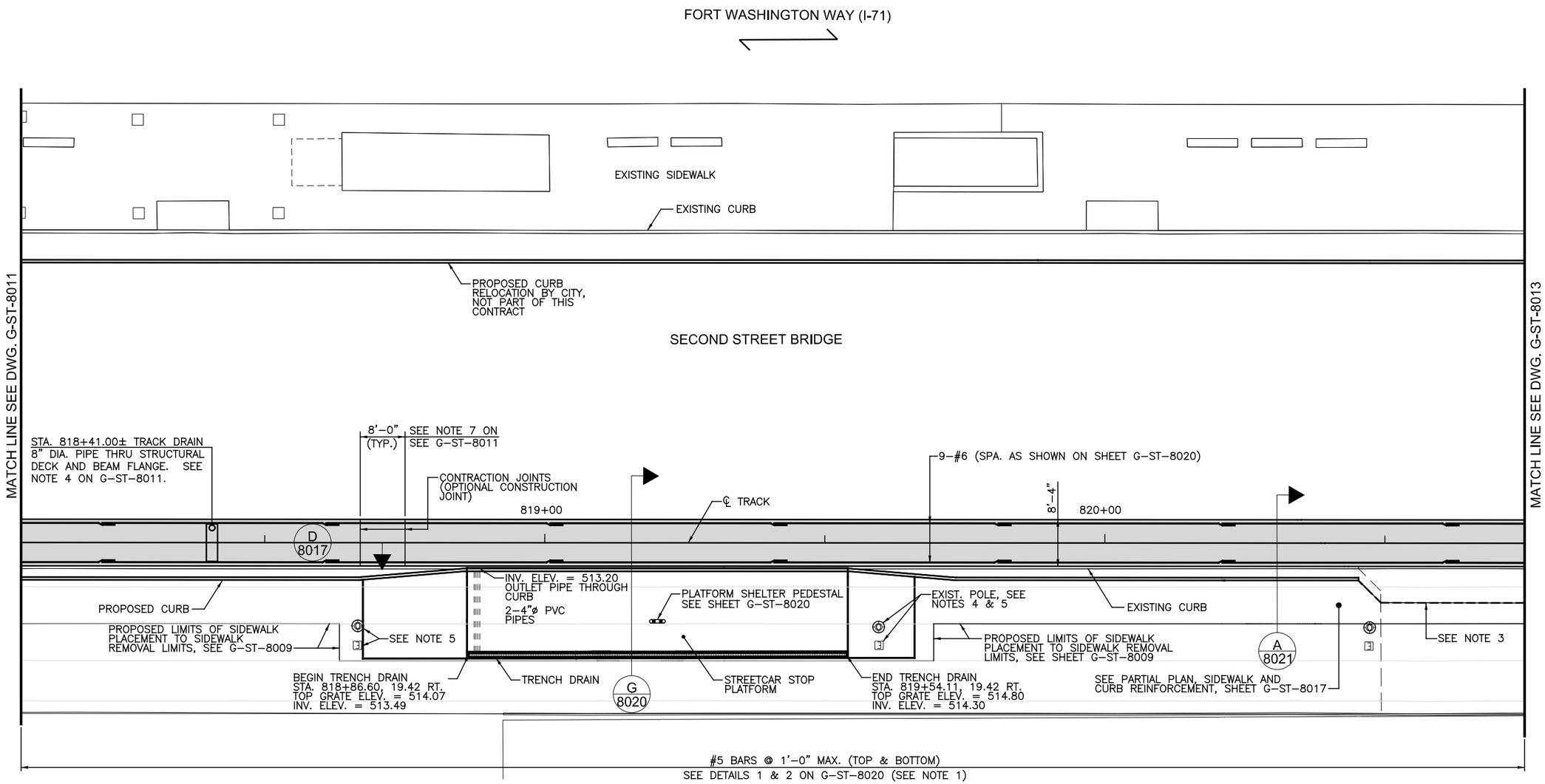

SECOND STREET PLAN

SEE NOTES 6 & 7 ON G-ST-8011

NOTES

1. ADJUST SPACING OF TRANSVERSE REINFORCEMENT TO PROVIDE 1½" CLR. TO STEEL CROSS TIES SUPPORTING RAILS.
2. TRACK SLAB LONGITUDINAL #6 BARS MINIMUM LAP = 2'-4".
3. RECONSTRUCT DRIVEWAY SIMILAR TO CITY STANDARD DRAWING ACC 21516, MATCH EXISTING DRIVEWAY CONSTRUCTION.
4. THE CONCRETE AROUND THE EXISING BASE PLATE SHALL BE WARPED OVER 2 FEET TRANSITION WIDTH AS REQUIRED TO MEET THE BOTTOM OF THE EXISTING BASEPLATE. MAINTAIN CONCRETE SLOPES AND ELEVATIONS OUTSIDE TRANSITIONS.
5. EXISTING LIGHT POLES AND PULL BOXES TO REMAIN. ADJUST PULL BOX TOP ELEVATIONS AS REQUIRED.

CAUTION UNDERGROUND UTILITIES
2 WORKING DAYS
BEFORE YOU DIG
CALL 1-800-362-2764
OHIO UTILITY PROTECTION SERVICE
CALL NON-SERVICE FACILITY OWNERS DIRECT

GRAPHIC SCALE
10 0 10 20 40
(IN FEET)
1 inch = 10 ft. Full Size
1 inch = 20 ft. Half Size

DOTE_Mono_PDF_Half.pltcfg
J:\29014A Cincinnati Street Car\CADD\S_G-ST-8012.dgn
7/13/2012 2:12:20 PM

CONTRACT DRAWING
PRINTS NOT BEARING THIS STAMP WERE MADE PRIOR TO ADVERTISING FOR BID AND ARE TO BE CONSIDERED OBSOLETE FOR CONTRACT PURPOSES.

Department of Transportation and Engineering
City of Cincinnati
City Hall
801 Plum Street
Cincinnati, Ohio 45202

CINCINNATI STREETCAR
CENTRAL BUSINESS DISTRICT

DECK MODIFICATION PLAN
SECOND STREET

Revisions
No.

Date 07/02/12	Drawn by DDE
Date 07/02/12	Designed by WAH
Date 07/02/12	Checked by GCG
Date 07/12/12	Reviewed by JTB

Consultant
PB HDR

File Number

ACC No. 23126

G-ST-8012

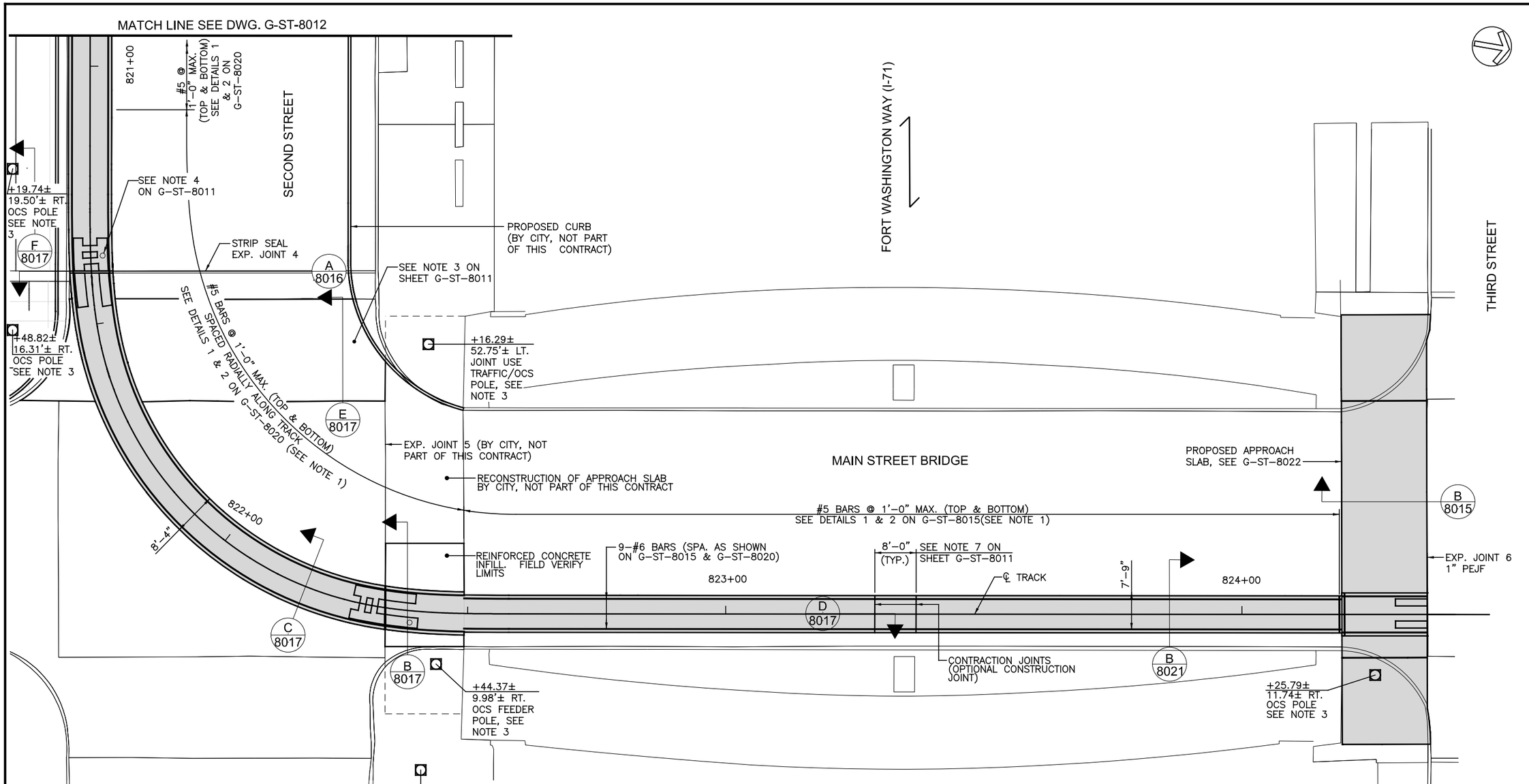

MAIN STREET BRIDGE PLAN

SEE NOTES 6 & 7 ON G-ST-8011

EXPANSION JOINT DESIGN VALUES		
JOINT NO.	EXPANSION	CONTRACTION
4	1.00"	0.70"
5	0.50"	0.30"
6	0.33"	0.25"

NOTES

1. ADJUST SPACING OF TRANSVERSE REINFORCEMENT TO PROVIDE 1½" CLR. TO STEEL CROSS TIES SUPPORTING RAILS.
2. TRACK SLAB LONGITUDINAL #6 BARS MINIMUM LAP = 2'-4".
3. VERIFY POLE LOCATIONS WITH OL AND TC SERIES DRAWINGS.

CAUTION UNDERGROUND UTILITIES
2 WORKING DAYS
BEFORE YOU DIG
CALL 1-800-362-2764
OHIO UTILITY PROTECTION SERVICE
CALL NON-SERVICE FACILITY OWNERS DIRECT

GRAPHIC SCALE
10 0 10 20 40
(IN FEET)
1 inch = 10 ft. Full Size
1 inch = 20 ft. Half Size

DOTE_Mono_PDF_Half.pltcfg
J:\29014A Cincinnati Street Car\CADD\S_G-ST-8013.dgn
7/13/2012 2:12:21 PM

CONTRACT DRAWING

PRINTS NOT BEARING THIS STAMP WERE MADE PRIOR TO ADVERTISING FOR BIDS AND ARE TO BE CONSIDERED OBSOLETE FOR CONTRACT PURPOSES.

Department of Transportation and Engineering

City of Cincinnati
City Hall
801 Plum Street
Cincinnati, Ohio 45202

CINCINNATI STREETCAR
CENTRAL BUSINESS DISTRICT

DECK MODIFICATION PLAN
MAIN ST. BRIDGE & SECOND ST. INTERSECTION

Revisions
No.

Date 07/02/12	Drawn by DDE
Date 07/02/12	Designed by WAH
Date 07/02/12	Checked by GCG
Date 07/12/12	Reviewed by JTB

Consultant

PB HDR

File Number

ACC No. 23126

G-ST-8013

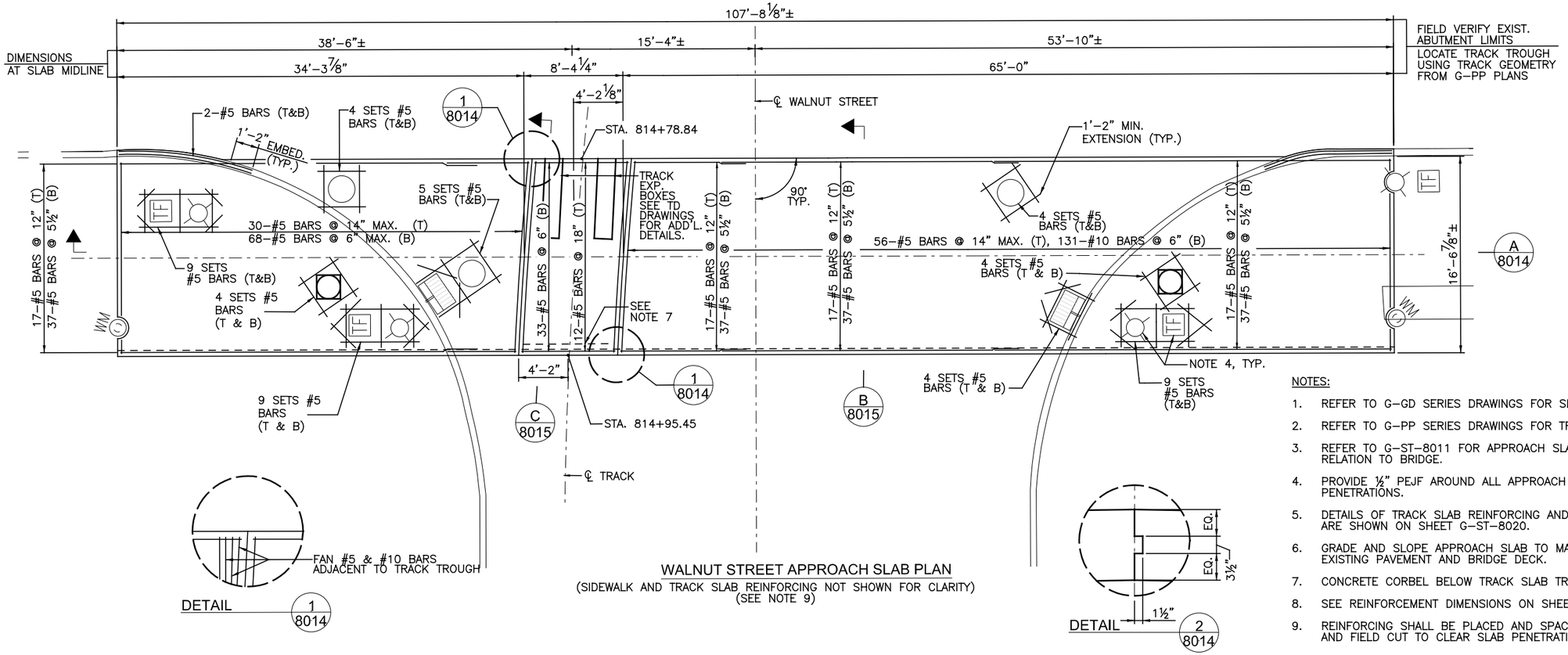

WALNUT STREET APPROACH SLAB PLAN
(SIDEWALK AND TRACK SLAB REINFORCING NOT SHOWN FOR CLARITY)
(SEE NOTE 9)

NOTES:

1. REFER TO G–GD SERIES DRAWINGS FOR SLAB ELEVATIONS.
2. REFER TO G–PP SERIES DRAWINGS FOR TRACK ALIGNMENT.
3. REFER TO G–ST–8011 FOR APPROACH SLAB LOCATION IN RELATION TO BRIDGE.
4. PROVIDE ½" PEJF AROUND ALL APPROACH SLAB PENETRATIONS.
5. DETAILS OF TRACK SLAB REINFORCING AND CONCRETE FILL ARE SHOWN ON SHEET G–ST–8020.
6. GRADE AND SLOPE APPROACH SLAB TO MATCH EXISTING PAVEMENT AND BRIDGE DECK.
7. CONCRETE CORBEL BELOW TRACK SLAB TROUGH.
8. SEE REINFORCEMENT DIMENSIONS ON SHEET G–ST–8022
9. REINFORCING SHALL BE PLACED AND SPACED AS SHOWN AND FIELD CUT TO CLEAR SLAB PENETRATIONS BY 2".

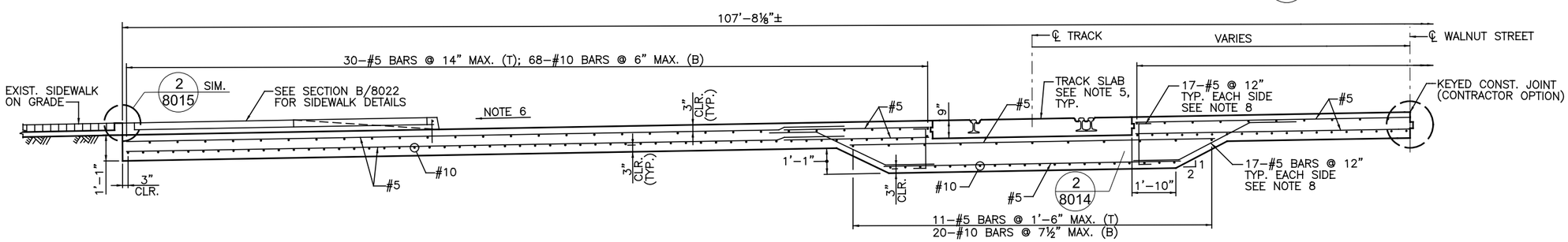

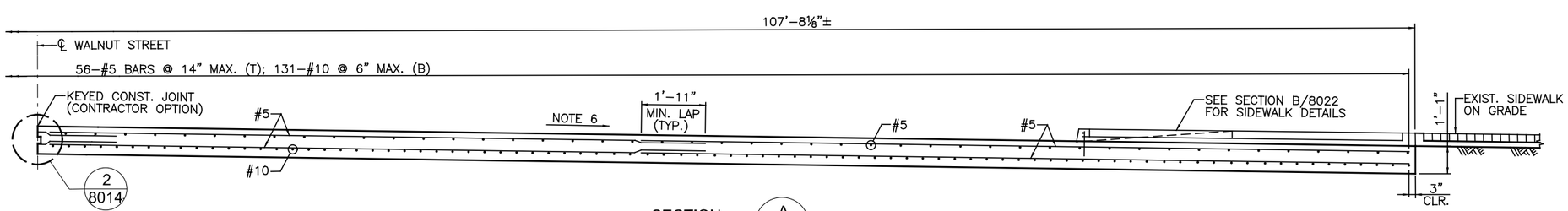

SECTION A/8014

CAUTION UNDERGROUND UTILITIES
2 WORKING DAYS
BEFORE YOU DIG
CALL 1–800–362–2764
OHIO UTILITY PROTECTION SERVICE
CALL NON–SERVICE FACILITY OWNERS DIRECT

CONTRACT DRAWING

PRINTS NOT BEARING THIS STAMP WERE MADE PRIOR TO ADVERTISING FOR BIDS AND ARE TO BE CONSIDERED OBSOLETE FOR CONTRACT PURPOSES.

Department of Transportation and Engineering
City of Cincinnati
City Hall
801 Plum Street
Cincinnati, Ohio 45202

CINCINNATI STREETCAR
CENTRAL BUSINESS DISTRICT

APPROACH SLAB DETAILS
WALNUT STREET BRIDGE AT THIRD STREET

Revisions

No.		Date
		07/02/12
		07/02/12
		07/02/12
		07/12/12

Drawn by DDE Date 07/02/12
Designed by WAH Date 07/02/12
Checked by GCG Date 07/02/12
Reviewed by JTB Date 07/12/12

Consultant

PB HDR

File Number

ACC No. 23126

G-ST-8014

DOTE_Mono_PDF_Half.pltcfg
J:\29014A Cincinnati Street Car\CADD\S_G-ST-8014.dgn
7/13/2012 2:12:22 PM

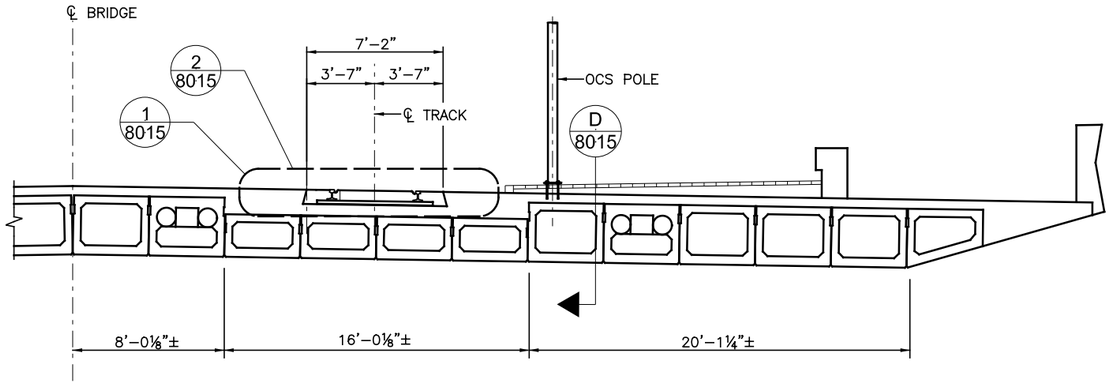

SECTION A 8015

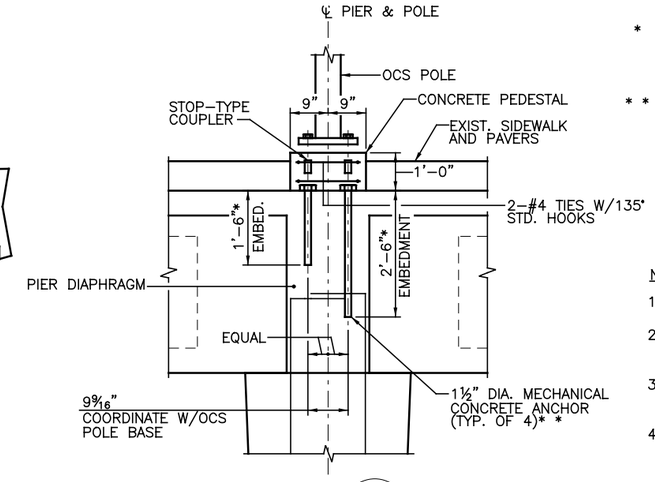

SECTION D 8015

* STAGGERED EMBEDMENT AS SHOWN. EMBED DIAGONALLY OPPOSITE ANCHORS TO EQUAL EMBEDMENT. INSTALL ONE ANCHOR AT A TIME ALLOWING GROUT TO CURE PRIOR TO INSTALLING NEXT ANCHOR. INSTALL DEEPER ANCHORS FIRST.

* * MECHANICAL ANCHORS INSTALLED IN ACCORDANCE WITH MANUFACTURER'S SPECIFICATIONS AND RECOMMENDATIONS TO DEVELOP CAPACITY EQUAL TO OR IN EXCESS OF ANCHOR BOLTS SPECIFIED BY THE CITY OF CINCINNATI ON DRAWING ES–10–1. EMBEDMENT HOLES SHALL BE GROUTED AFTER ANCHOR SET.

NOTES

1. SEE TD SERIES DRAWINGS FOR ADDITIONAL DETAILS.
2. SEE PP SERIES DRAWINGS FOR TOP OF RAIL ELEVATIONS.
3. CROSS SLOPE VARIES TO MATCH EXISTING DECK ±5% MAX. REFER TO GD SERIES DRAWINGS.
4. FIELD VERIFY WIDTH REQUIRED TO REMOVE CONCRETE OF EXISTING TRACK TROUGH AND ADJUST REIN–FORCEMENT DIMENSIONS ACCORDINGLY.
5. SEE TS & PP SERIES DRAWINGS FOR LOCATION AND WIDTH OF REQUIRED OVERLAY. SEE GD SERIES DRAWINGS FOR PROPOSED ELEVATIONS.

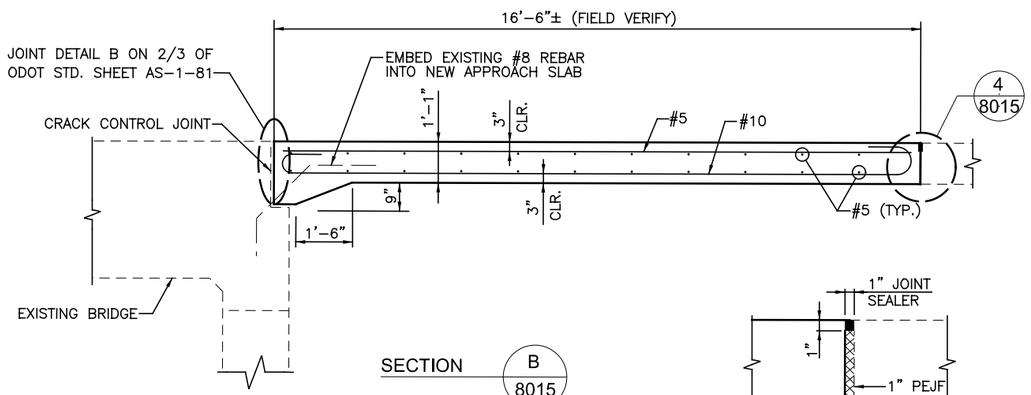

SECTION B 8015

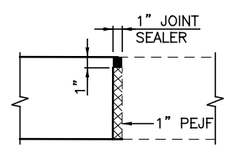

DETAIL 4 8015

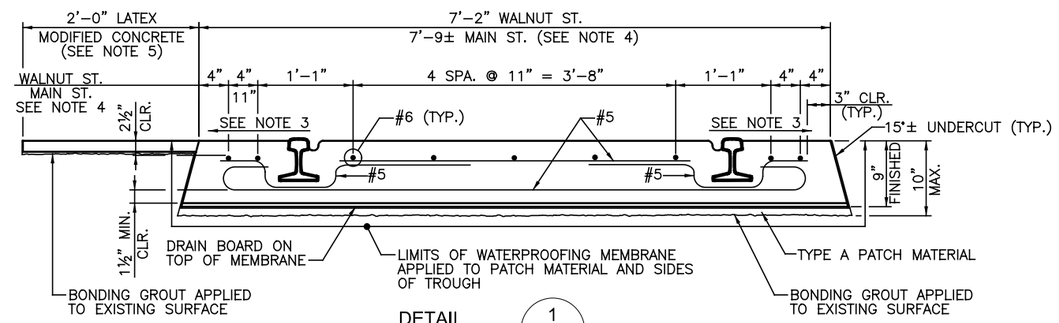

DETAIL 1 8015

TRACK SECTION WITHOUT RESTRAINING RAIL PRESENT
SEE NOTE 1

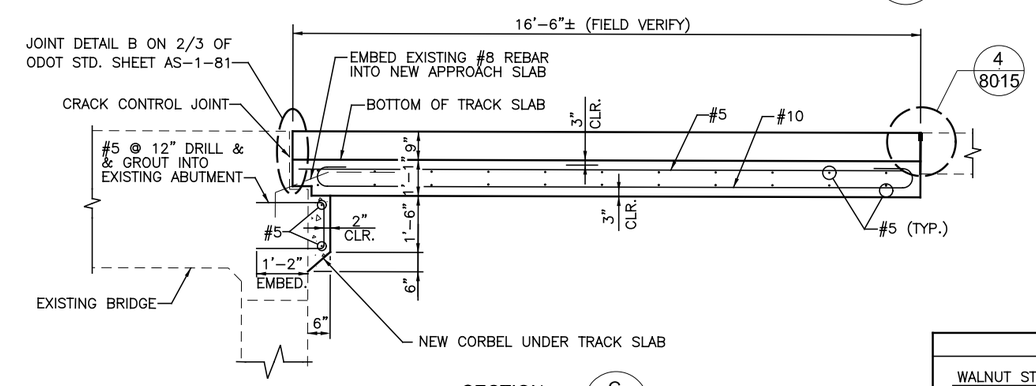

SECTION C 8015

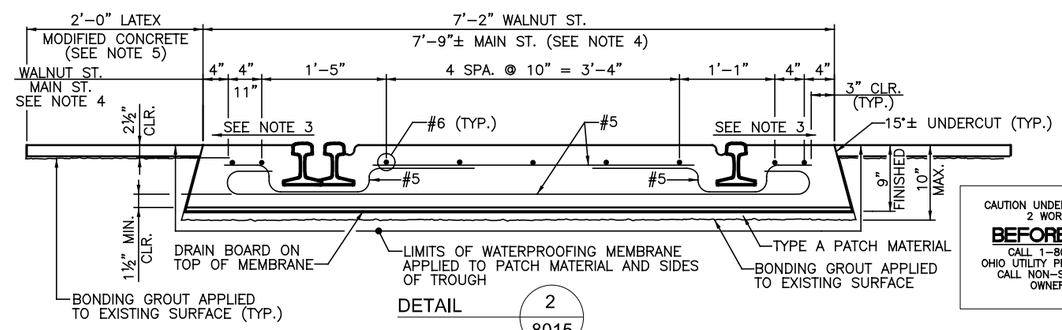

DETAIL 2 8015

TRACK SECTION WITH RESTRAINING RAIL PRESENT
SEE NOTE 1

REINFORCEMENT DIMENSIONS

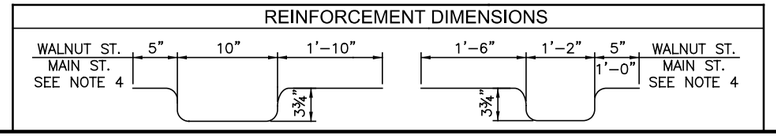

CONTRACT DRAWING

PRINTS NOT BEARING THIS STAMP WERE MADE FOR BIDDING PURPOSES AND ARE TO BE CONSIDERED OBSOLETE FOR CONTRACT PURPOSES.

Department of Transportation and Engineering

City of Cincinnati
City Hall
801 Plum Street
Cincinnati, Ohio 45202

CINCINNATI STREETCAR
CENTRAL BUSINESS DISTRICT

DECK MODIFICATION SECTIONS AND DETAILS
WALNUT STREET BRIDGE

Revisions

No.		Date
		07/02/12
		07/02/12
		07/02/12
		07/12/12

Drawn by DDE — Date 07/02/12
Designed by WAH — Date 07/02/12
Checked by GCG — Date 07/02/12
Reviewed by JTB — Date 07/12/12

CAUTION UNDERGROUND UTILITIES
2 WORKING DAYS
BEFORE YOU DIG
CALL 1–800–362–2764
OHIO UTILITY PROTECTION SERVICE
CALL NON–SERVICE FACILITY OWNERS DIRECT

Consultant

PB HDR

File Number

ACC No. 23126

G-ST-8015

DOTE_Mono_PDF_Half.pltcfg
J:\29014A Cincinnati Street Car\CADD\S_G-ST-8015.dgn
7/13/2012 2:12:23 PM

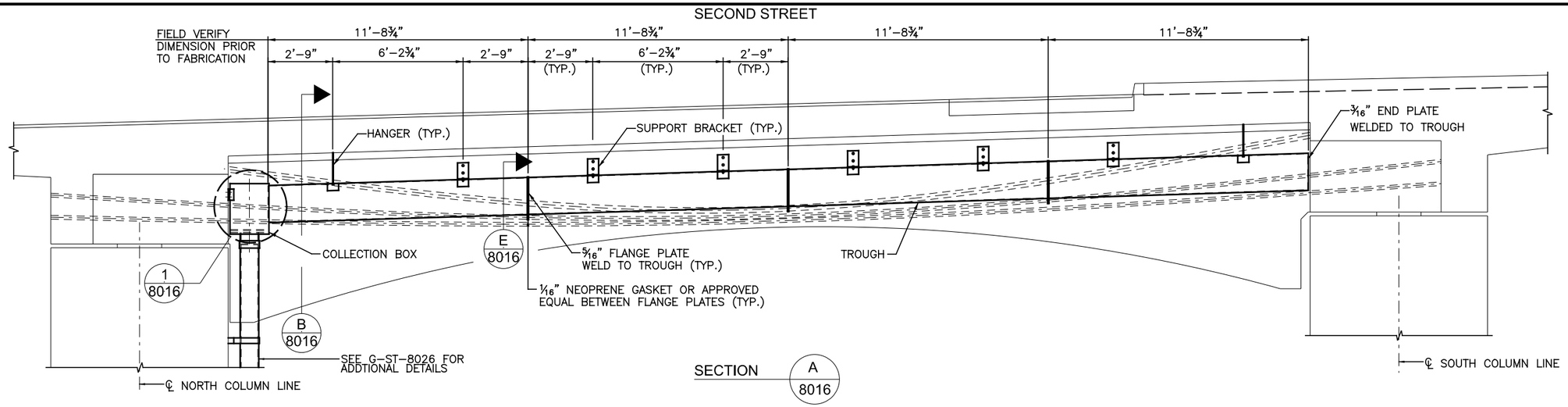

SECTION A 8016

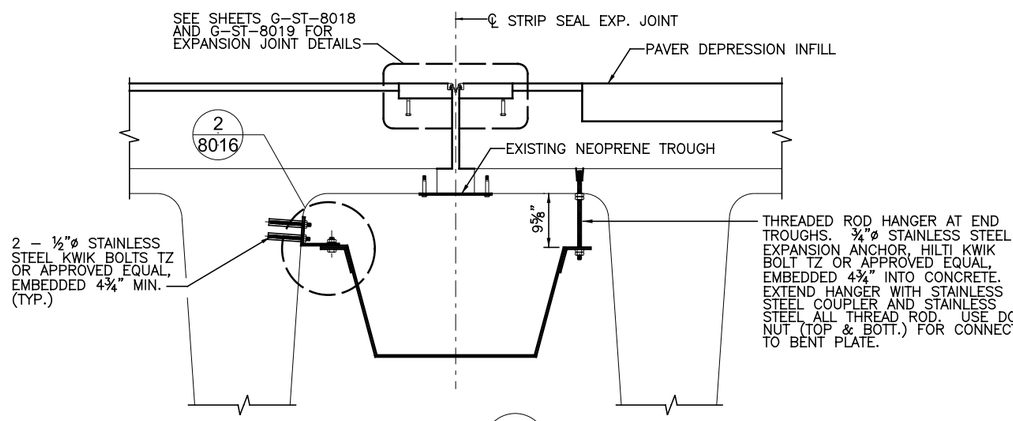

SECTION B 8016

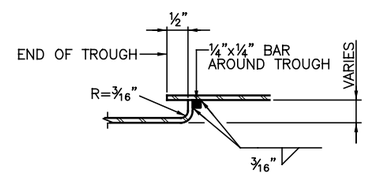

SECTION C 8016

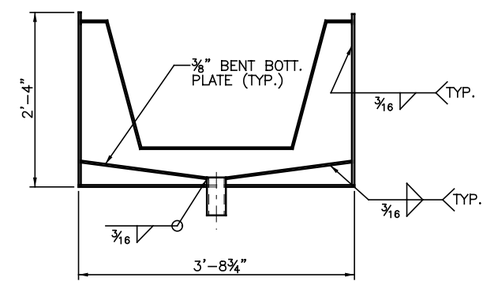

SECTION D 8016

NOTES:

ALL ASSEMBLES, PARTS AND FASTENERS ON THIS SHEET, EXCEPT STAINLESS STEEL, SHALL BE GALVANIZED AFTER ALL SHOP WELDING AND FABRICATION.

THESE PLANS WERE DEVELOPED USING PRIOR CONTRACT PLANS AND DO NOT REFLECT CON-STRUCTION VARIATIONS. THE CONTRACTOR SHALL VERIFY DIMENSIONS AND ELEVATIONS PRIOR TO FABRICATION.

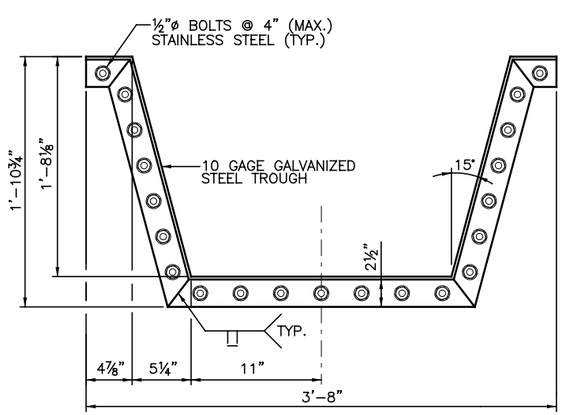

SECTION E 8016

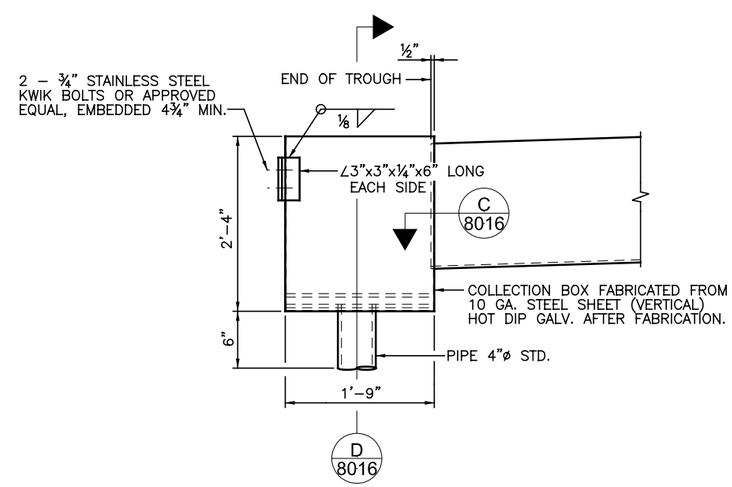

D 8016

DETAIL 1 8016

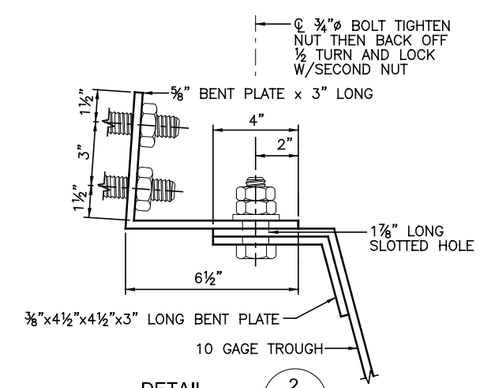

DETAIL 2 8016

CAUTION UNDERGROUND UTILITIES
2 WORKING DAYS
BEFORE YOU DIG
CALL 1-800-362-2764
OHIO UTILITY PROTECTION SERVICE
CALL NON-SERVICE FACILITY OWNERS DIRECT

DEPARTMENT OF TRANSPORTATION & ENGINEERING CITY OF CINCINNATI OHIO

CONTRACT DRAWING

PRINTS NOT BEARING THIS STAMP WERE MADE PRIOR TO ADVERTISING FOR BIDS AND ARE TO BE CONSIDERED OBSOLETE FOR CONTRACT PURPOSES.

Department of Transportation and Engineering

City of Cincinnati
City Hall
801 Plum Street
Cincinnati, Ohio 45202

CINCINNATI STREETCAR
CENTRAL BUSINESS DISTRICT

DRAINAGE TROUGH DETAILS

Revisions

No.	Date
	07/02/12
	07/02/12
	07/02/12
	07/12/12

Drawn by DDE
Designed by GCG
Checked by WAH
Reviewed by JTB

Consultant

PB HDR

File Number

ACC No. 23126

G-ST-8016

DOTE_Mono_PDF_Half.pltcfg
J:\29014A Cincinnati Street Car\CADD\S_G-ST-8016.dgn
7/13/2012 2:18:57 PM

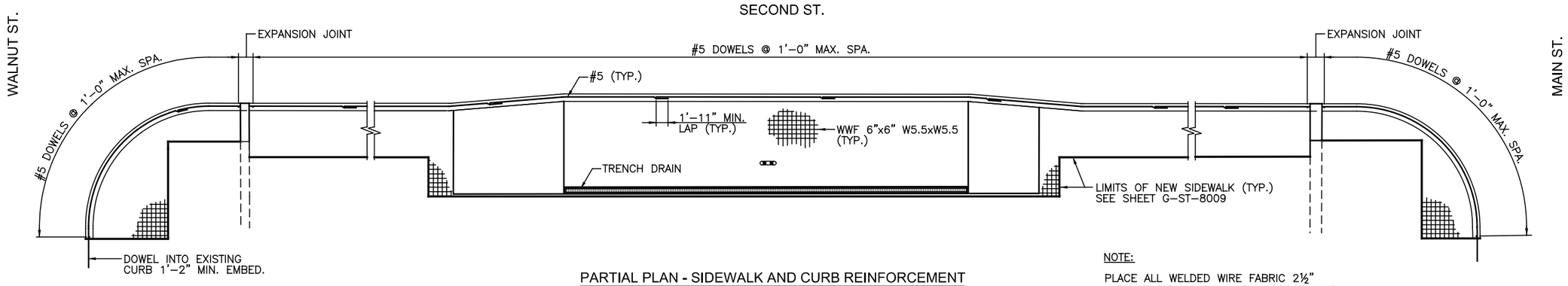

PARTIAL PLAN - SIDEWALK AND CURB REINFORCEMENT

NOTE:

PLACE ALL WELDED WIRE FABRIC 2½" CLR. OF TOP OF FINISHED SURFACE, CUT 2" CLR. FROM EDGES

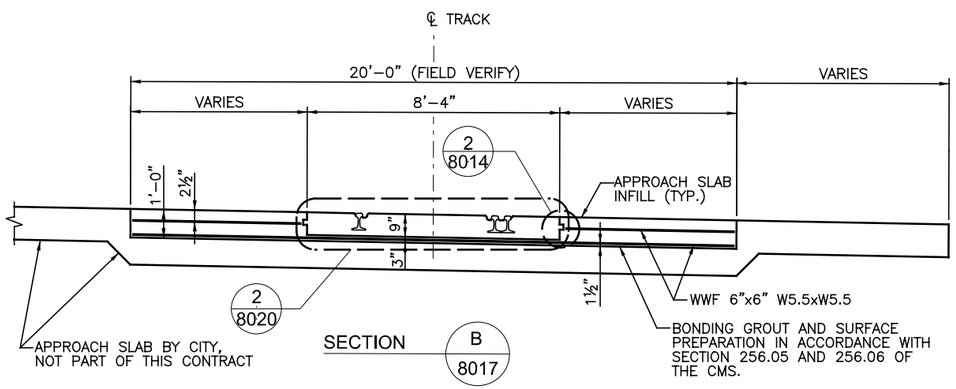

SECTION B 8017

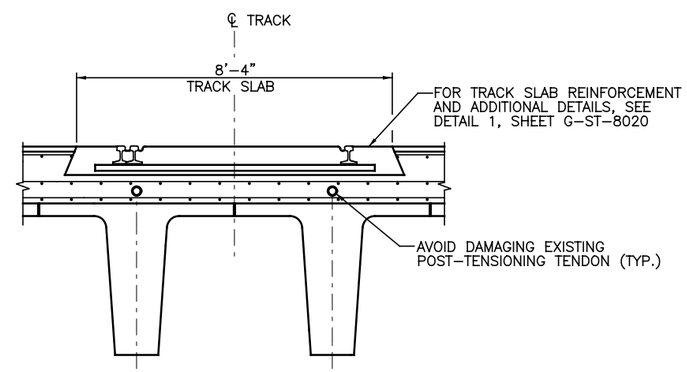

SECTION C 8017

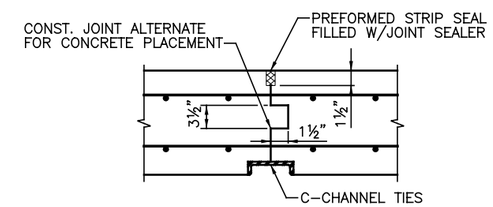

SECTION D 8017

NOTE: COORDINATE LOCATION OF CONSTRUCTION & CONTRACTION JOINTS W/LOCATION OF RAIL TIES

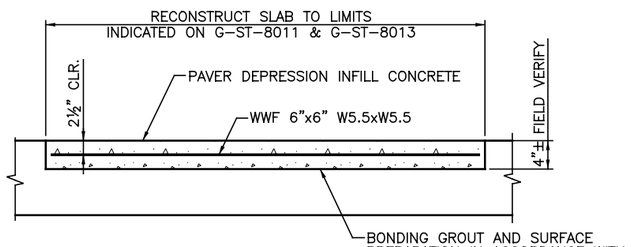

SECTION E 8017

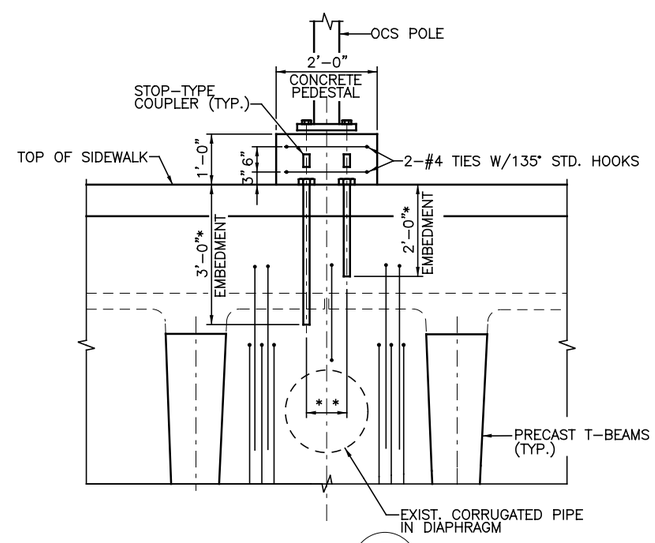

SECTION F 8017

ANCHOR BOLTS * *	
DIAMETER	SPACING
1¾"	10⅝"
2"	12¾"

COORDINATE SIZE AND SPACING WITH POLE REQUIREMENTS AND CITY OF CINCINNATI STD. DRAWINGS.

* STAGGERED EMBEDMENT AS SHOWN. EMBED DIAGONALLY OPPOSITE ANCHORS TO EQUAL EMBEDMENT. INSTALL ONE ANCHOR AT A TIME ALLOWING GROUT TO CURE PRIOR TO INSTALLING NEXT ANCHOR. INSTALL DEEPER ANCHORS FIRST.

* * MECHANICAL ANCHORS INSTALLED IN ACCORDANCE WITH MANUFACTURER'S SPECIFICATIONS AND RECOMMENDATIONS TO DEVELOP CAPACITY EQUAL TO OR IN EXCESS OF ANCHOR BOLTS SPECIFIED BY THE CITY OF CINCINNATI ON DRAWING ES-10-1. EMBEDMENT HOLES SHALL BE GROUTED AFTER ANCHOR SET.

CAUTION UNDERGROUND UTILITIES 2 WORKING DAYS
BEFORE YOU DIG
CALL 1-800-362-2764
OHIO UTILITY PROTECTION SERVICE
CALL NON-SERVICE FACILITY OWNERS DIRECT

DOTE_Mono_PDF_Half.pltcfg
J:\29014A Cincinnati Street Car\CADD\S_G-ST-8017.dgn
7/13/2012 2:12:25 PM

CONTRACT DRAWING

PRINTS NOT BEARING THIS STAMP WERE MADE PRIOR TO ADVERTISING BID AND ARE NOT TO BE CONSIDERED OBSOLETE FOR CONTRACT PURPOSES.

Department of Transportation and Engineering

City of Cincinnati
City Hall
801 Plum Street
Cincinnati, Ohio 45202

CINCINNATI STREETCAR
CENTRAL BUSINESS DISTRICT

DECK MODIFICATION SECTIONS AND DETAILS
SECOND STREET

Revisions

No.				

Date	07/02/12
Date	07/02/12
Date	07/02/12
Date	07/12/12

Drawn by	DDE
Designed by	WAH
Checked by	GCG
Reviewed by	JTB

Consultant

PB HDR

File Number

ACC No. 23126

G-ST-8017

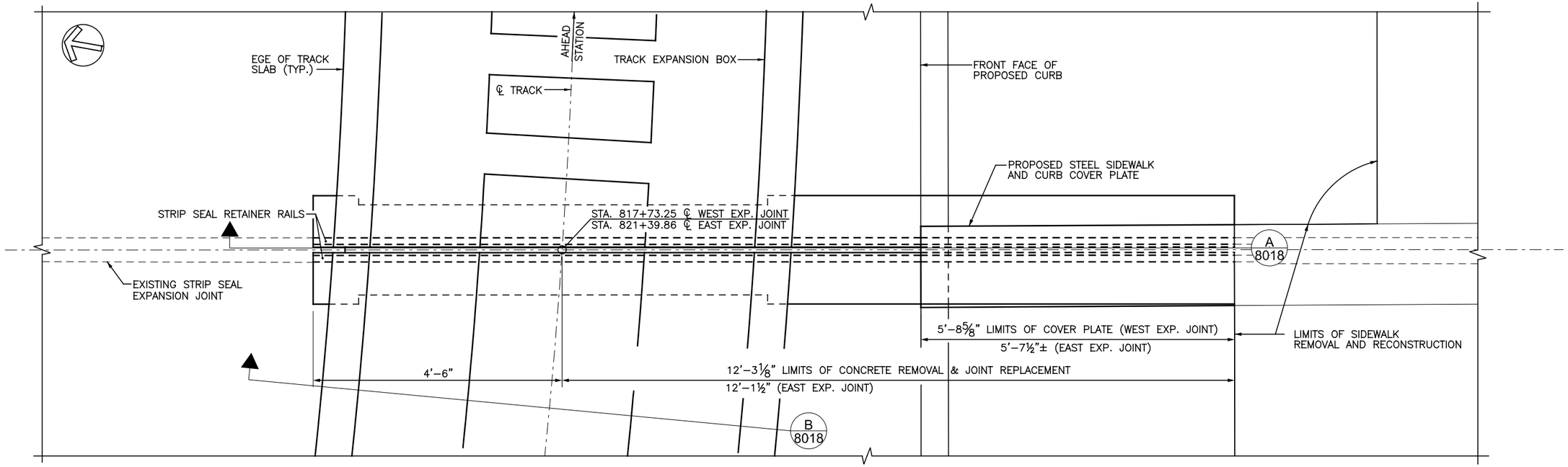

PARTIAL PLAN - WEST EXPANSION JOINT
(EAST EXPANSION JOINT SIMILAR)

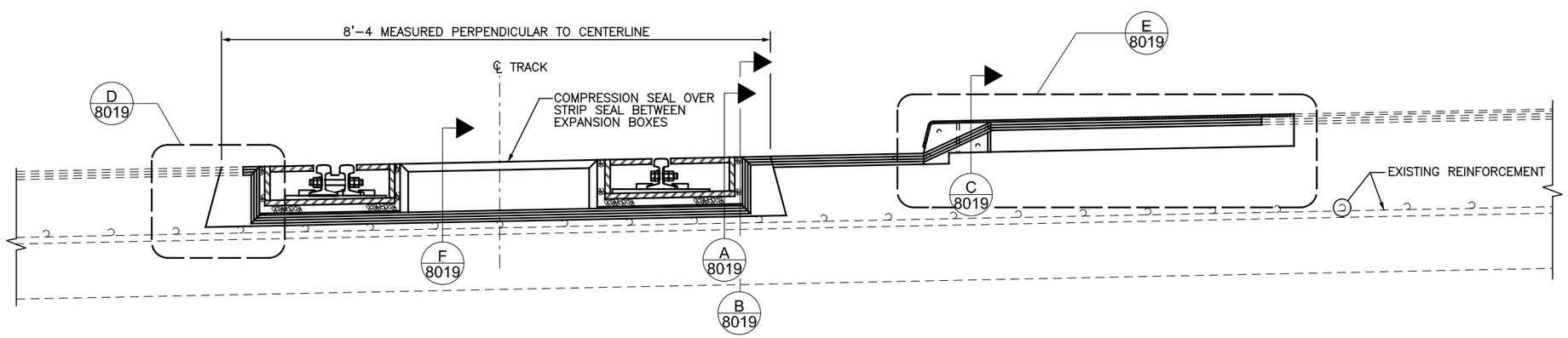

SECTION A 8018

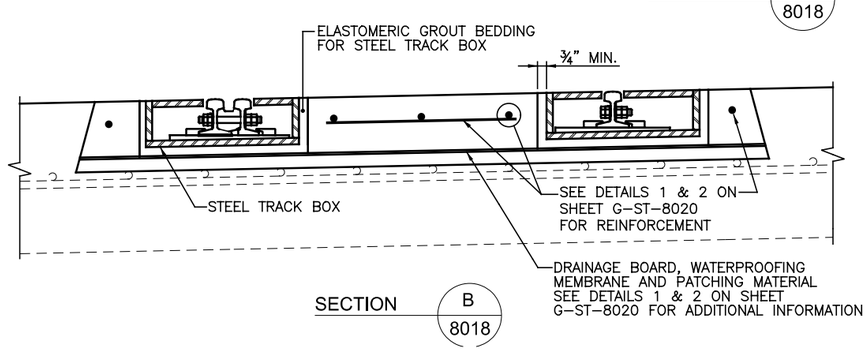

SECTION B 8018

CAUTION UNDERGROUND UTILITIES
2 WORKING DAYS
BEFORE YOU DIG
CALL 1–800–362–2764
OHIO UTILITY PROTECTION SERVICE
CALL NON–SERVICE FACILITY
OWNERS DIRECT

CONTRACT DRAWING

PRINTS NOT BEARING THIS STAMP WERE MADE PRIOR TO ADVERTISING FOR BIDS AND ARE TO BE CONSIDERED OBSOLETE FOR CONTRACT PURPOSES.

Department of Transportation and Engineering

City of Cincinnati
City Hall
801 Plum Street
Cincinnati, Ohio 45202

CINCINNATI STREETCAR
CENTRAL BUSINESS DISTRICT

EXPANSION JOINT DETAILS

Revisions

No.				

Drawn by DDE	Date 07/02/12
Designed by GCG	Date 07/02/12
Checked by WAH	Date 07/02/12
Reviewed by JTB	Date 07/12/12

Consultant

PB HDR

File Number

ACC No. 23126

G-ST-8018

D0TE_Mono_PDF_Half.pltcfg
J:\29014A Cincinnati Street Car\CADD\S_G-ST-8018.dgn
7/13/2012 2:12:26 PM

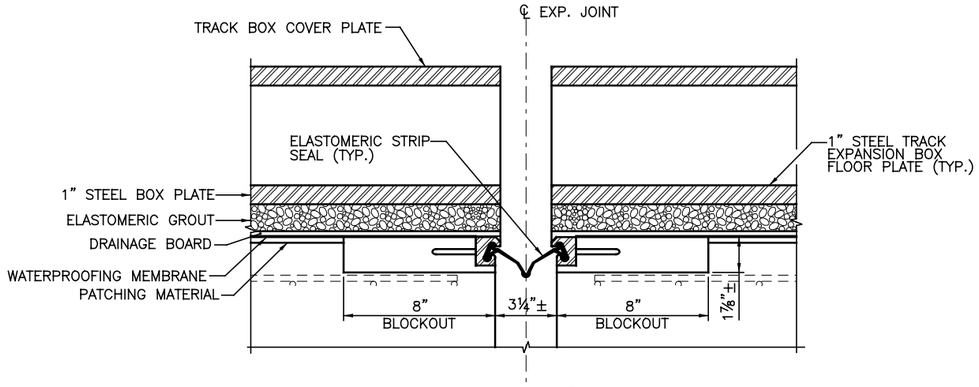

SECTION A 8019

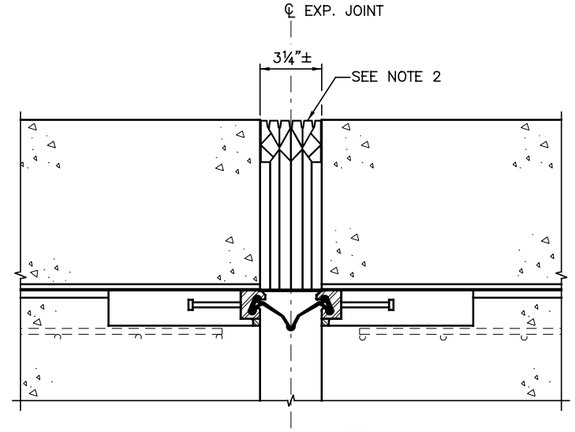

SECTION F 8019

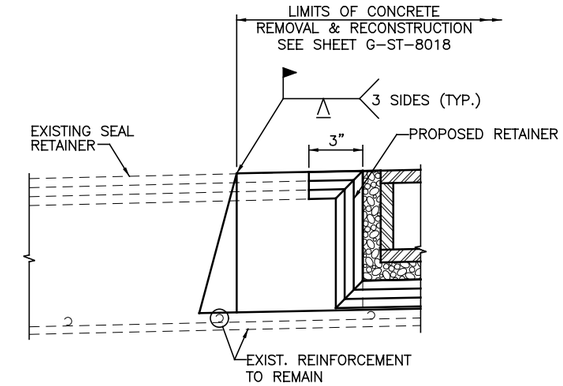

DETAIL D 8019

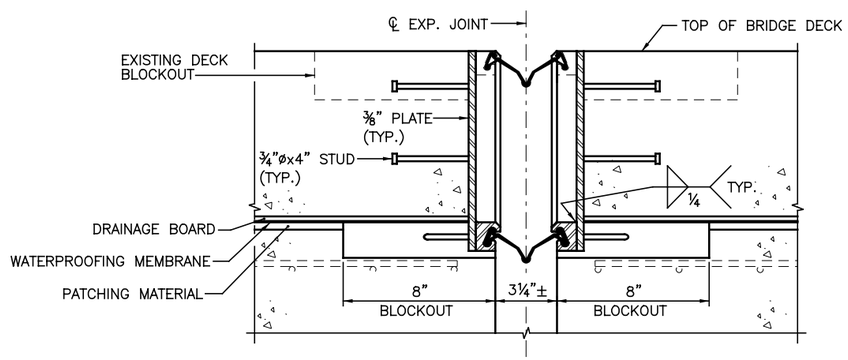

SECTION B 8019

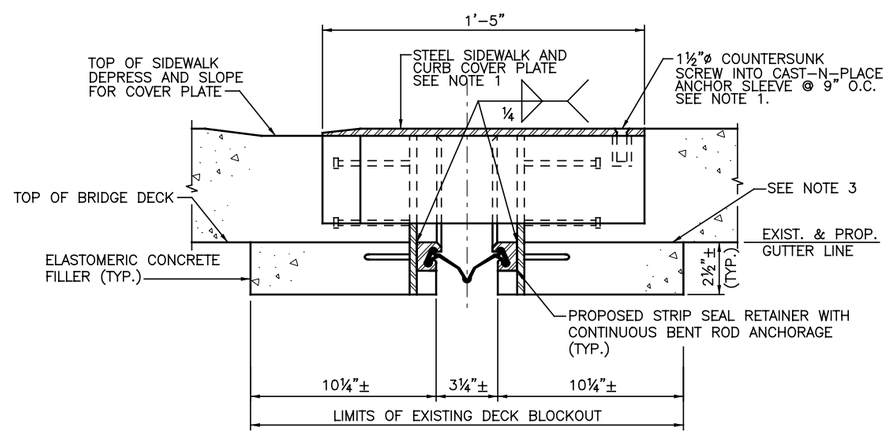

SECTION C 8019

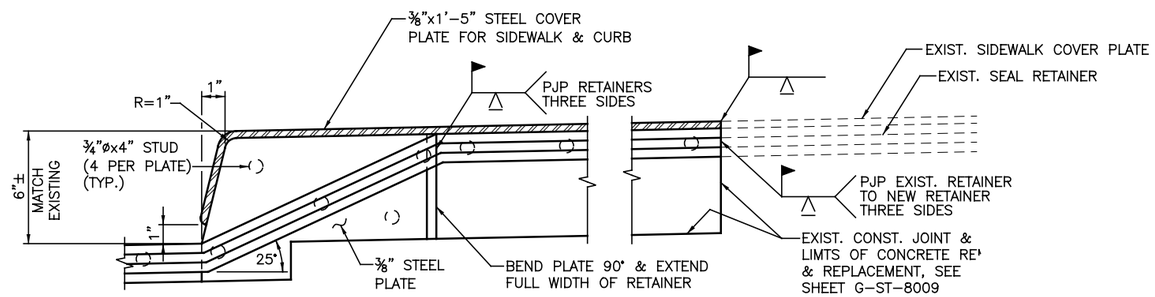

DETAIL E 8019

NOTES:

1. THE MATERIAL, FINISH, DIMENSION, BEVEL AND FASTENING OF THE COVER PLATE SHALL MATCH EXISTING. THE CONTRACTOR MAY SALVAGE THE EXISTING COVER PLATE AND FABRICATE TO COVER THE PROPOSED CURB. IF EXISTING PLATE IS DAMAGED DURING DEMOLITION, SALVAGE, STORAGE OR FABRICATION, CONTRACTOR SHALL FURNISH A NEW PLATE AT NO ADDITIONAL COST TO THE CITY.

2. COMPRESSION SEAL INSTALLED VERTICALLY, HORIZONTALLY AND MITERED BETWEEN TRACK BOXES AS SHOWN IN SECTION A/8018. SEAL SHALL BE SIZED APPROPRIATE TO THE OPENING AND INSTALLED WITH ADHESIVE IN ACCORDANCE WITH MANUFACTURER'S SPECIFICATIONS. ACCEPTED PRODUCTS ARE WATSON-BOWMAN-ACME JEENE W SERIES OR D.S. BROWN J SERIES OR APPROVED EQUIVALENT. FIELD VERIFY JOINT WIDTH BEFORE ORDERING AND FABRICATING JOINT MATERIAL.

3. SET GRADE AND SLOPE OF SEAL AND ELASTOMERIC CONCRETE TO MATCH EXISTING.

CAUTION UNDERGROUND UTILITIES
2 WORKING DAYS
BEFORE YOU DIG
CALL 1-800-362-2764
OHIO UTILITY PROTECTION SERVICE
CALL NON-SERVICE FACILITY OWNERS DIRECT

CONTRACT DRAWING

PRINTS NOT BEARING THIS STAMP WERE MADE PRIOR TO ADVERTISING FOR BID AND ARE NOW CONSIDERED OBSOLETE FOR CONTRACT PURPOSES.

Department of Transportation and Engineering

City of Cincinnati
City Hall
801 Plum Street
Cincinnati, Ohio 45202

CINCINNATI STREETCAR
CENTRAL BUSINESS DISTRICT

EXPANSION JOINT DETAILS

Revisions

No.	Date
	07/02/12
	07/02/12
	07/02/12
	07/12/12

Drawn by DDE
Designed by GCG
Checked by WAH
Reviewed by JTB

Consultant

PB HDR

File Number

ACC No. 23126

G-ST-8019

DOTE_Mono_PDF_Half.pltcfg
JA\29014A Cincinnati Street Car\CADD\S_G-ST-8019.dgn
7/13/2012 2:12:27 PM

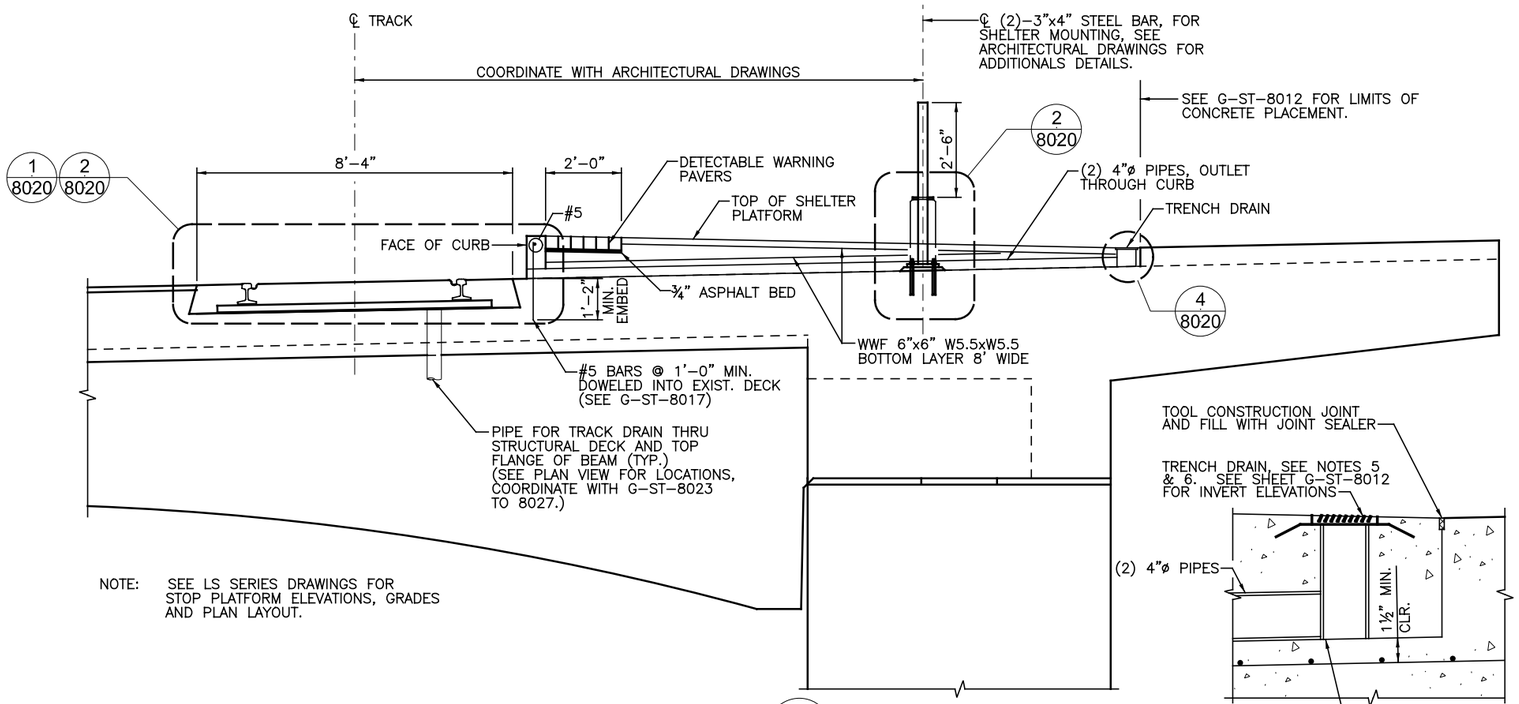

SECTION G / 8012 8020

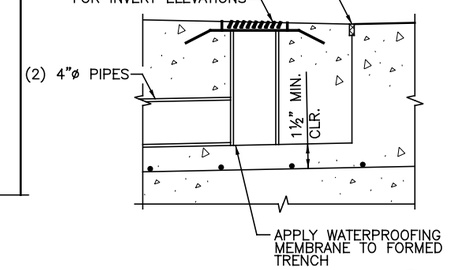

TRENCH DRAIN DETAIL 4 / 8020

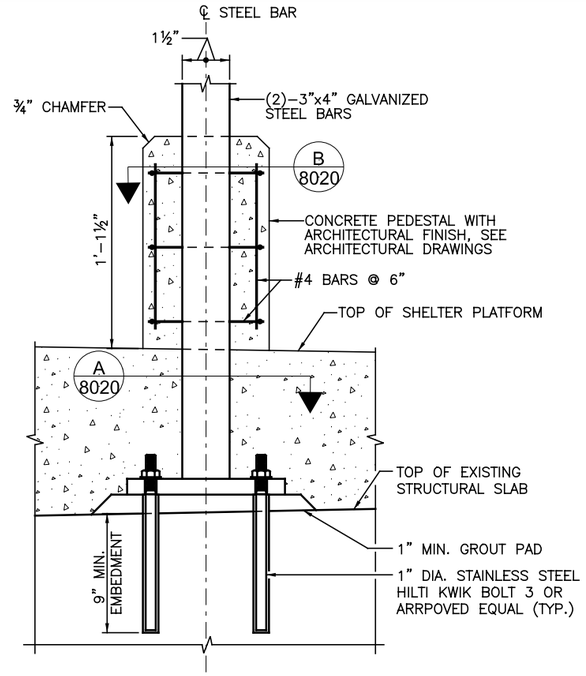

SHELTER ANCHORAGE DETAIL 2 / 8020

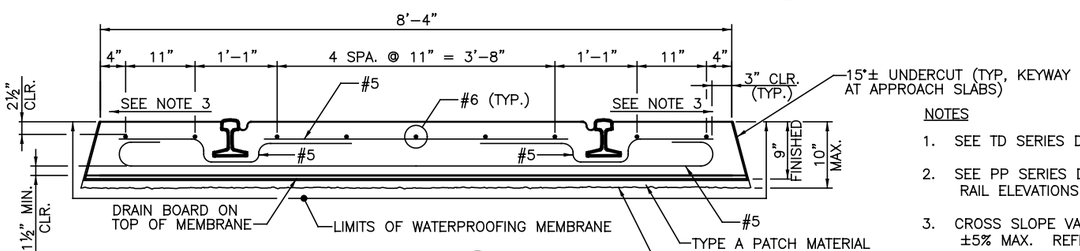

DETAIL 1 / 8020

TRACK SECTION WITHOUT RESTRAINING RAIL PRESENT

NOTES

1. SEE TD SERIES DRAWINGS FOR ADDITIONAL DETAILS.
2. SEE PP SERIES DRAWINGS FOR TOP OF RAIL ELEVATIONS.
3. CROSS SLOPE VARIES TO MATCH EXISTING DECK, ±5% MAX. REFER TO GRADING PLANS.
4. PAYMENT FOR ANCHORAGE OF THE SHELTER STOP TO THE STRUCTURE SHALL BE INCLUDED WITH ITEM SPECIAL STREETCAR STOP SHELTER FOR PAYMENT.
5. PROVIDE DURA SLOPE DUCTILE IRON FRAME PART NO. DS–200 OR APPROVED EQUAL. CONTRACTOR SHALL INSTALL FRAME IN STRICT ACCORDANCE WITH MANUFACTURER'S RECOMMENDATIONS.
6. INSTALL A DURA SLOPE GRATE DS–670 OR APPROVED EQUAL, ADA COMPLIANT, HEEL–PROOF GRATE. INSTALLATION SHALL BE IN STRICT ACCORDANCE WITH MANUFACTURER'S RECOMMENDATIONS.

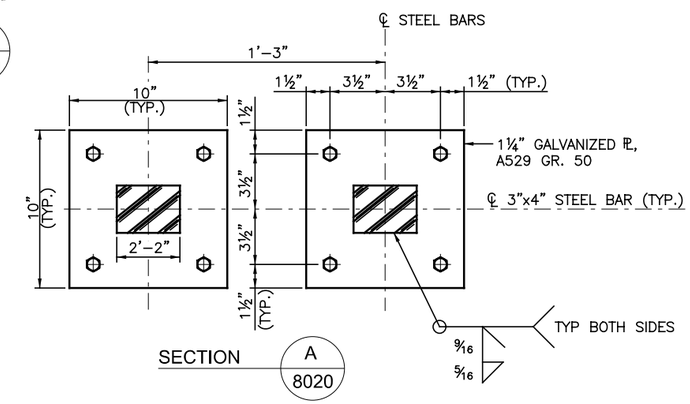

SECTION A / 8020

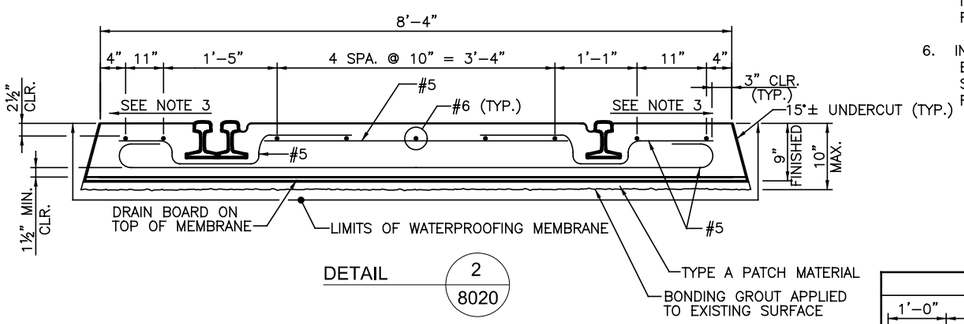

DETAIL 2 / 8020

TRACK SECTION WITH RESTRAINING RAIL PRESENT

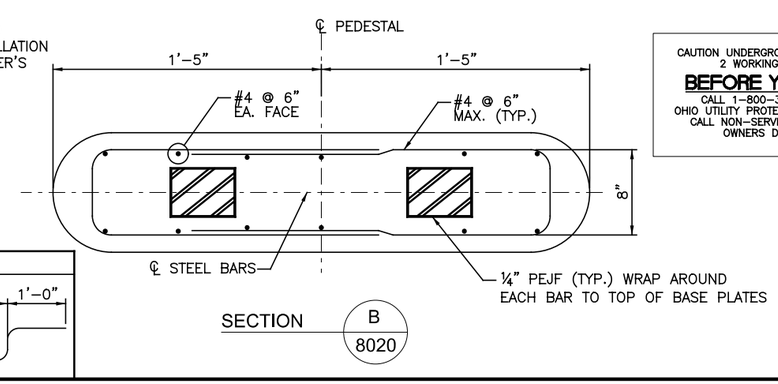

SECTION B / 8020

REINFORCEMENT DIMENSIONS

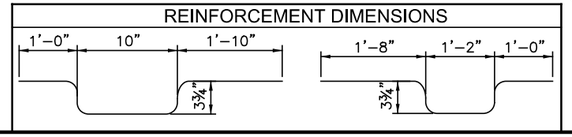

CAUTION UNDERGROUND UTILITIES 2 WORKING DAYS
BEFORE YOU DIG
CALL 1–800–362–2764
OHIO UTILITY PROTECTION SERVICE
CALL NON–SERVICE FACILITY OWNERS DIRECT

DOTE_Mono_PDF_Half.pltcfg
J:\29014A Cincinnati Street Car\CADD\S_G-ST-8020.dgn
7/13/2012 2:12:28 PM

CONTRACT DRAWING

PRINTS NOT BEARING THIS STAMP WERE MADE PRIOR TO ADVERTISING FOR BIDS AND ARE TO BE CONSIDERED OBSOLETE FOR CONTRACT PURPOSES.

Department of Transportation and Engineering
City of Cincinnati
City Hall
801 Plum Street
Cincinnati, Ohio 45202

CINCINNATI STREETCAR
CENTRAL BUSINESS DISTRICT
DECK MODIFICATION SECTIONS AND DETAILS
SECOND STREET

Revisions
No.

Date 07/02/12	Drawn by DDE
Date 07/02/12	Designed by WAH
Date 07/02/12	Checked by GCG
Date 07/12/12	Reviewed by JTB

Consultant

PB HDR

File Number

ACC No. 23126

G-ST-8020

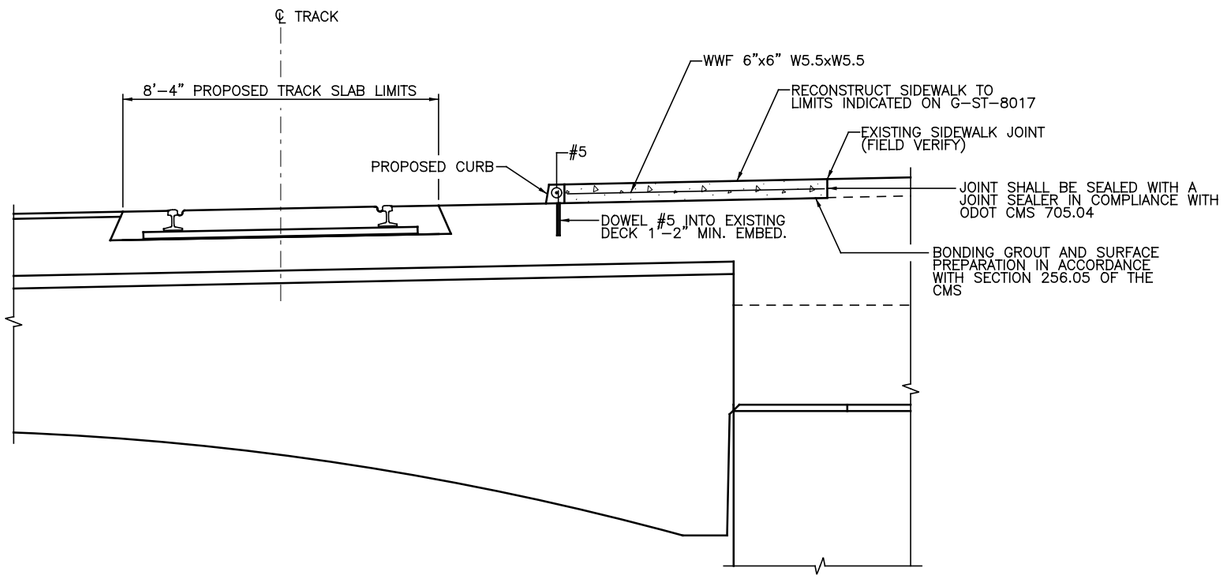

SECTION A / 8021

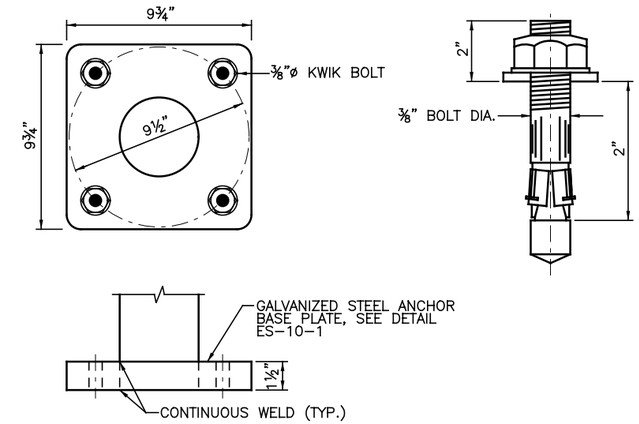

STOP IDENTIFICATION SIGN ANCHORAGE DETAILS

STANDARD GALVANIZED KWIK–BOLTS: (OR APPROVED EQUAL)

STUD (BOLT MATERIAL) SHALL BE AISI 11L41 FOR BOLT DIAMETERS ¼"–½" AND AISI 1144 FOR DIAMETERS ⅝"–1¼", MEETING THE CHEMICAL REQUIREMENTS FOR ASTM SPECIFICATION A 108. TWO INDEPENDENT EXPANSION WEDGES SHALL BE MADE FROM AISI 1050 SPRING STEEL.

NUTS SHALL BE OF COMMERICAL MANUFACTURE, MEETING ASTM A 307 GRADE A (E.G. AISI SERIES 10XX).

WASHERS SHALL BE FABRICATED FROM SAE STANDARD MATERIAL IN ACCORDANCE WITH ASA STANDARD #827.2–1965.

KWIK–BOLT SHALL MEET THE DIMENSIONAL REQUIREMENTS OF FEDERAL SPECIFICATION QQ–Z–325C, TYPE II, CLASS 3, (CLEAR CHROMATE TREATMENT.

THE KWIK–BOLT SHALL MEET THE DIMENSIONAL REQUIREMENTS OF FEDERAL SPECIFICATION FF–S–325, GROUP II, TYPE 4, CLASS 1.

KWIK–BOLT INSTALLATION:

1. DRILL HOLE SAME DIAMETER AS BOLT AND DEEPER THAN BOLT DEPTH.
2. DRIVE BOLT USING A SPARE NUT ON EXPOSED END FOR DRIVING SURFACE. OBSERVE BOLT PROJECTION DIMENSION.
3. TIGHTEN NUT TO WHERE RESISTANCE INCREASES AFTER THIRD OR FOURTH TURN.

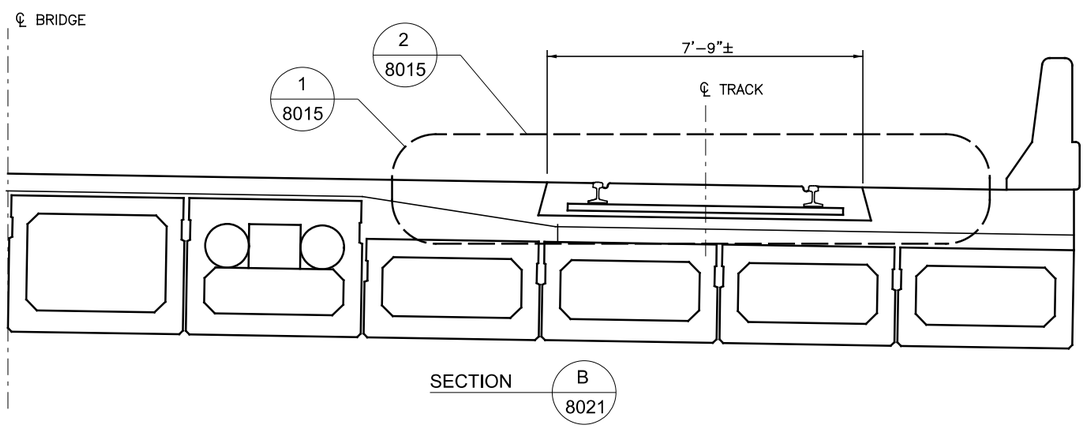

SECTION B / 8021

CAUTION UNDERGROUND UTILITIES
2 WORKING DAYS
BEFORE YOU DIG
CALL 1–800–362–2764
OHIO UTILITY PROTECTION SERVICE
CALL NON–SERVICE FACILITY
OWNERS DIRECT

CONTRACT DRAWING

PRINTS NOT BEARING THIS STAMP WERE MADE PRIOR TO ADVERTISING FOR BID AND ARE TO BE CONSIDERED OBSOLETE FOR CONTRACT PURPOSES.

Department of Transportation and Engineering

City of Cincinnati
City Hall
801 Plum Street
Cincinnati, Ohio 45202

CINCINNATI STREETCAR
CENTRAL BUSINESS DISTRICT

DECK MODIFICATION SECTIONS AND DETAILS
SECOND STREET AND MAIN STREET BRDIGE

Revisions

No.				

Date	07/02/12
Date	07/02/12
Date	07/02/12
Date	07/12/12
Drawn by	DDE
Designed by	GCG
Checked by	WAH
Reviewed by	JTB

Consultant

File Number

ACC No.
23126

G-ST-8021

DOTE_Mono_PDF_Half.pltcfg
J:\29014A Cincinnati Street Car\CADD\S_G-ST-8021.dgn
7/13/2012 2:12:29 PM

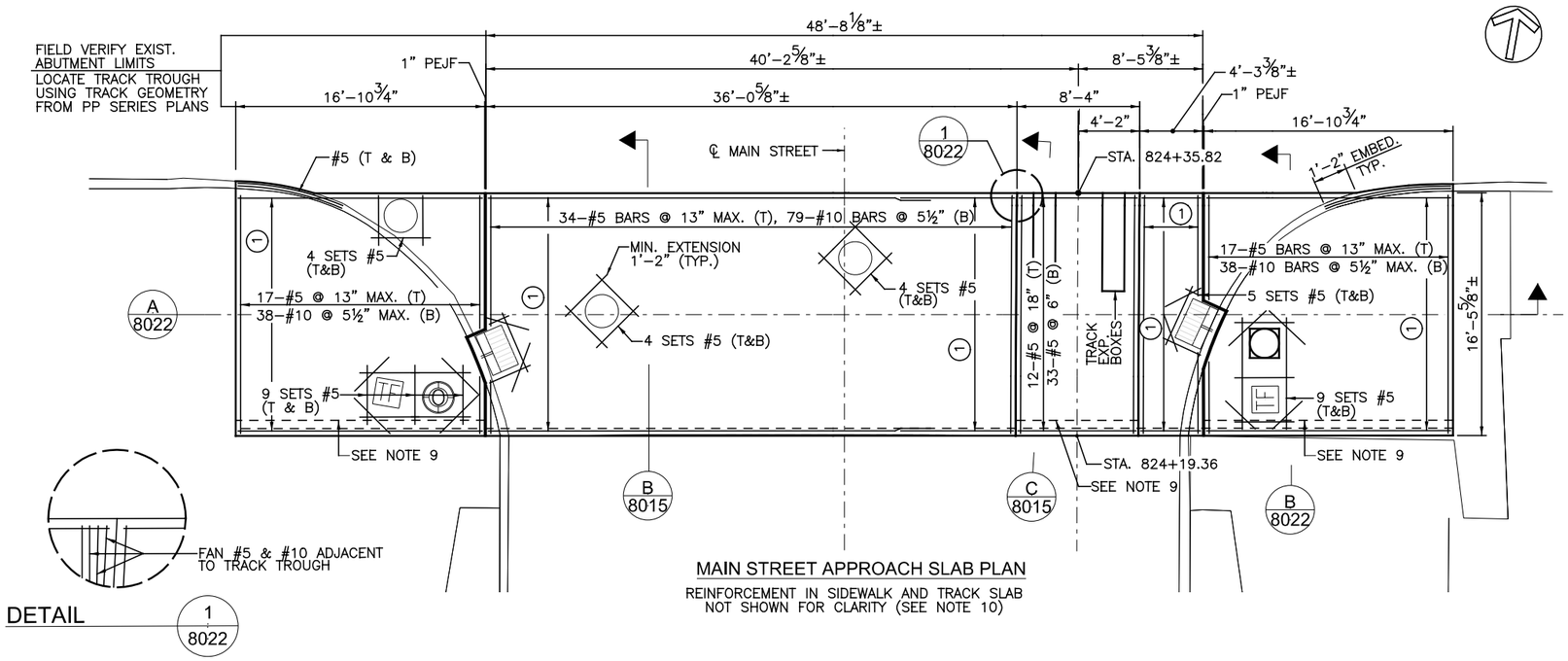

MAIN STREET APPROACH SLAB PLAN

REINFORCEMENT IN SIDEWALK AND TRACK SLAB NOT SHOWN FOR CLARITY (SEE NOTE 10)

NOTES:

1. REFER TO G-GD DRAWINGS FOR SLAB ELEVATION.
2. REFER TO G-PP DRAWINGS FOR TRACK ALIGNMENT AND ORIENTATION.
3. REFER TO G-ST-8013 FOR APPROACH SLAB LOCATION IN RELATION TO BRIDGE.
4. PROVIDE ½" PEJF AROUND ALL APPROACH SLAB PENETRATIONS.
5. DETAILS OF TRACK SLAB REINFORCING AND CONCRETE FILL ARE SHOWN ON SHEET G-ST-8020.
6. GRADE AND SLOPE APPROACH SLAB TO MATCH EXISTING PAVEMENT AND BRIDGE DECK.
7. REINFORCEMENT IN SIDEWALK AND CURB SHALL BE INCLUDED WITH ITEM SPECIAL-REINFORCED CONCRETE WALK ON STRUCTURE.
8. PLACE WWF 2" CLR. FROM TOP OF FINISHED SURFACE & CUT 2" CLR. FROM EDGES.
9. CONCRETE CORBEL BELOW TRACK SLAB TROUGHT AND SIDEWALK SLAB.
10. REINFORCING SHALL BE PLACED AND SPACED AS SHOWN AND FIELD CUT TO CLEAR SLAB PENETRATIONS BY 2".

(1) 17-#5 BARS @ 12" MAX. (T)
36-#5 BARS @ 5½" MAX. (B)

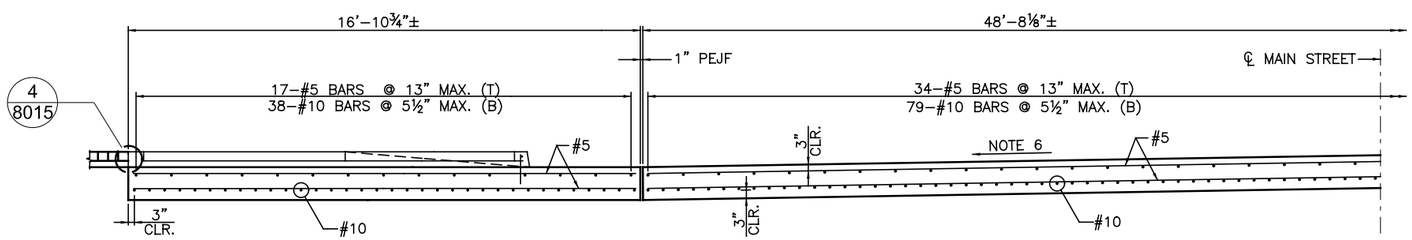

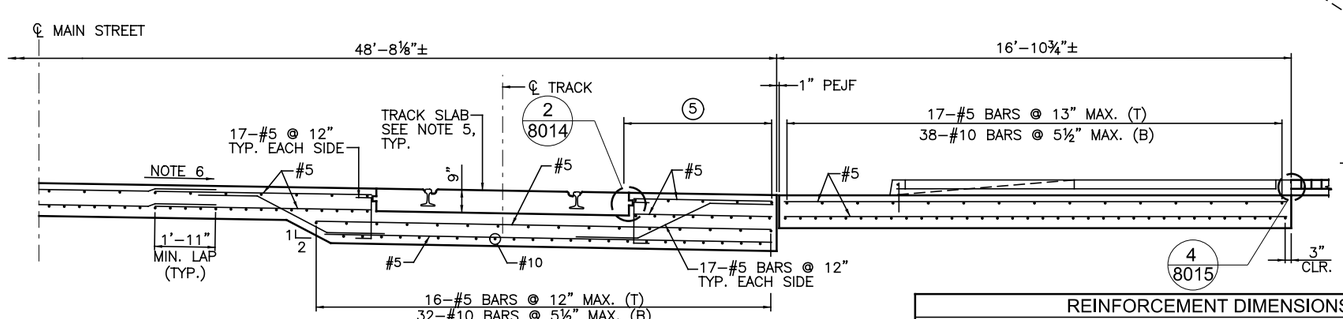

SECTION A 8022

REINFORCEMENT DIMENSIONS

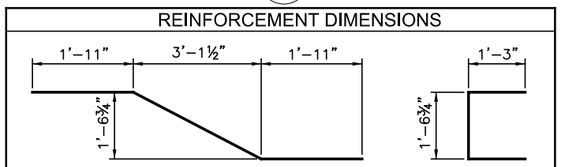

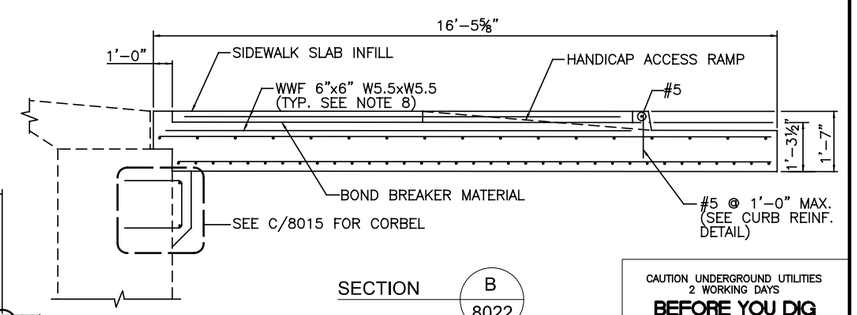

SECTION B 8022

CAUTION UNDERGROUND UTILITIES 2 WORKING DAYS
BEFORE YOU DIG
CALL 1-800-362-2764
OHIO UTILITY PROTECTION SERVICE
CALL NON-SERVICE FACILITY OWNERS DIRECT

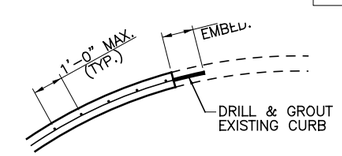

CURB REINFORCEMENT DETAIL

DEPARTMENT OF TRANSPORTATION & ENGINEERING CITY OF CINCINNATI OHIO

CONTRACT DRAWING

PRINTS NOT BEARING THIS STAMP WERE MADE PRIOR TO ADVERTISING FOR BIDS AND ARE TO BE CONSIDERED OBSOLETE FOR CONTRACT PURPOSES.

Department of Transportation and Engineering

City of Cincinnati
City Hall
801 Plum Street
Cincinnati, Ohio 45202

CINCINNATI STREETCAR
CENTRAL BUSINESS DISTRICT

APPROACH SLAB DETAILS
MAIN STREET BRIDGE AT THIRD STREET

Revisions

No.		Date	Drawn by	Date	Designed by	Date	Checked by	Date	Reviewed by
		07/02/12	DDE	07/02/12	WAH	07/02/12	GCG	07/12/12	JTB

Consultant

PB HDR

File Number

ACC No. 23126

G-ST-8022

DOTE_Mono_PDF_Half.pltcfg
J:\29014A Cincinnati Street Car\CADD\S_G-ST-8022.dgn
7/13/2012 2:12:30 PM

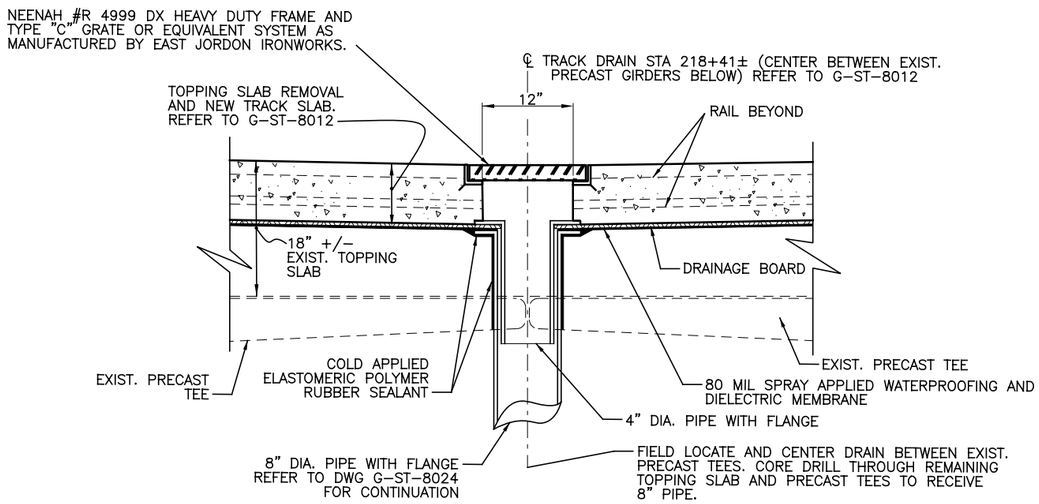

SECOND STREET TRACK DRAIN PROFILE VIEW

N.T.S.

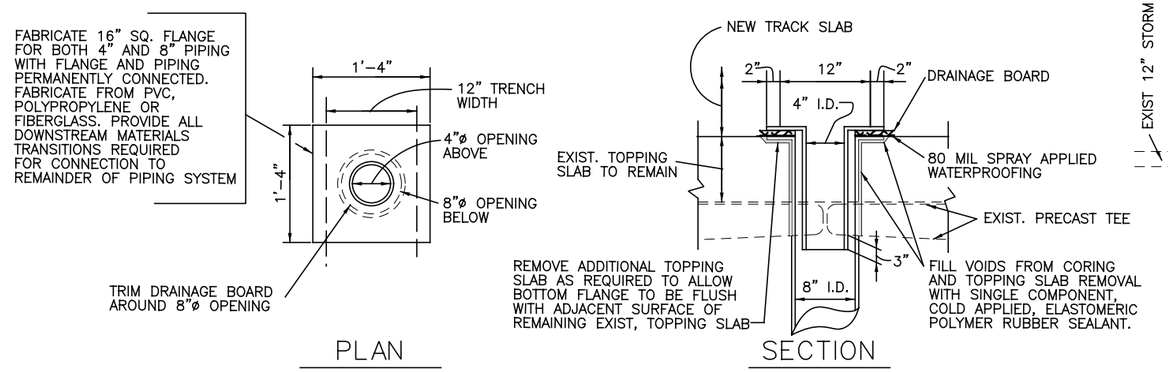

TRACK DRAIN AND FLANGED PIPE CONSTRUCTION

N.T.S.

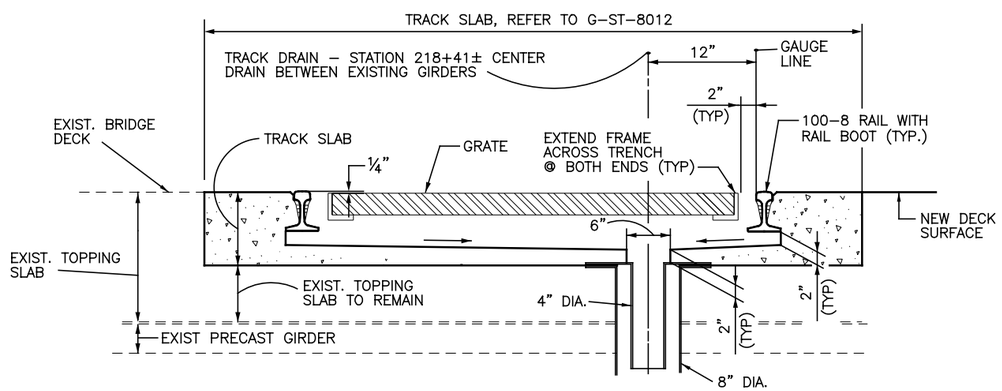

TRACK DRAIN SECTION

N.T.S.

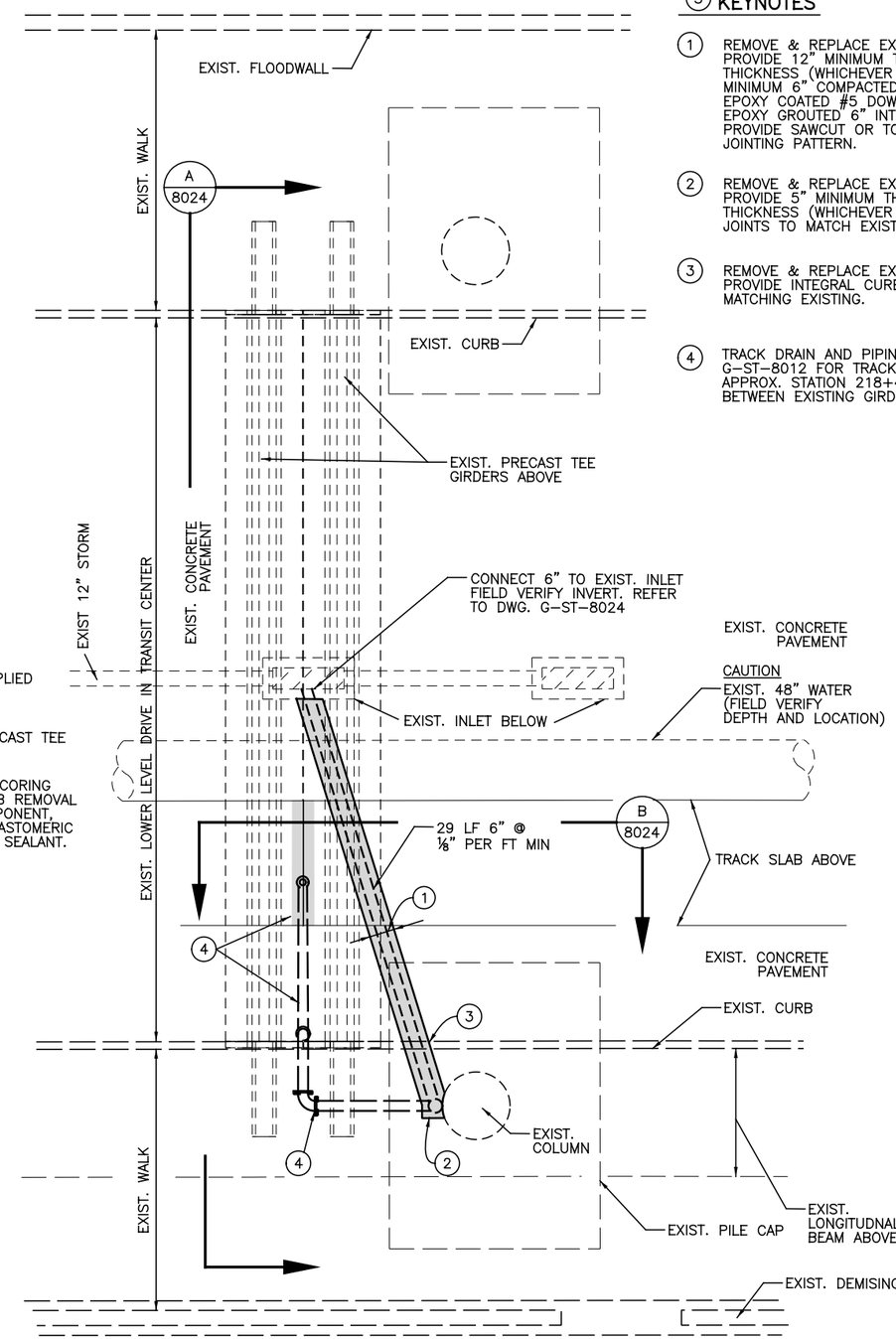

PLAN - TRACK DRAIN STA 218+41±

1" = 5'

KEYNOTES

1. REMOVE & REPLACE EXISTING CONCRETE PAVEMENT. PROVIDE 12" MINIMUM THICKNESS OR MATCH EXISTING THICKNESS (WHICHEVER IS GREATER). INSTALL ON MINIMUM 6" COMPACTED 304 BASE & PROVIDE EPOXY COATED #5 DOWELS, 12" LONG, DRILLED & EPOXY GROUTED 6" INTO EXISTING PAVEMENT @ 24" O.C. PROVIDE SAWCUT OR TOOLED JOINTS TO MATCH EXISTING JOINTING PATTERN.
2. REMOVE & REPLACE EXISTING CONCRETE WALK. PROVIDE 5" MINIMUM THICKNESS OR MATCH EXISTING THICKNESS (WHICHEVER IS GREATER). PROVIDE TOOLED JOINTS TO MATCH EXISTING JOINTING PATTERN.
3. REMOVE & REPLACE EXISTING CURB AS REQUIRED. PROVIDE INTEGRAL CURB, SIMILAR TO TYPE P2, MATCHING EXISTING.
4. TRACK DRAIN AND PIPING ABOVE. REFER TO DWG G-ST-8012 FOR TRACK DRAIN. LOCATION APPROX. STATION 218+41 ±. CENTER DRAIN BETWEEN EXISTING GIRDERS

CAUTION UNDERGROUND UTILITIES 2 WORKING DAYS
BEFORE YOU DIG
CALL 1-800-362-2764
OHIO UTILITY PROTECTION SERVICE
CALL NON-SERVICE FACILITY OWNERS DIRECT

DEPARTMENT OF TRANSPORTATION & ENGINEERING CITY OF CINCINNATI OHIO

CONTRACT DRAWING

PRINTS NOT BEARING THIS STAMP WERE MADE PRIOR TO ADVERTISING FOR BIDS AND ARE TO BE CONSIDERED OBSOLETE FOR CONTRACT PURPOSES.

Department of Transportation and Engineering

City of Cincinnati
City Hall
801 Plum Street
Cincinnati, Ohio 45202

CINCINNATI STREETCAR
CENTRAL BUSINESS DISTRICT

DRAINAGE MODIFICATIONS TO SECOND STREET STRUCTURE

Revisions

No.		

Drawn by JFL	Date 7/02/12
Designed by SAJ	Date 7/02/12
Checked by CJC	Date 7/02/12
Reviewed by JTB	Date 7/12/12

Consultant

PB HDR

File Number

ACC No. 23126

G-ST- 8023

DOTE_Mono_PDF_Half.pltcfg
T:\29014A-Streetcar\CAD\Structures\2nd st drainage\G-ST-8023.dgn
7/13/2012 4:17:13 PM

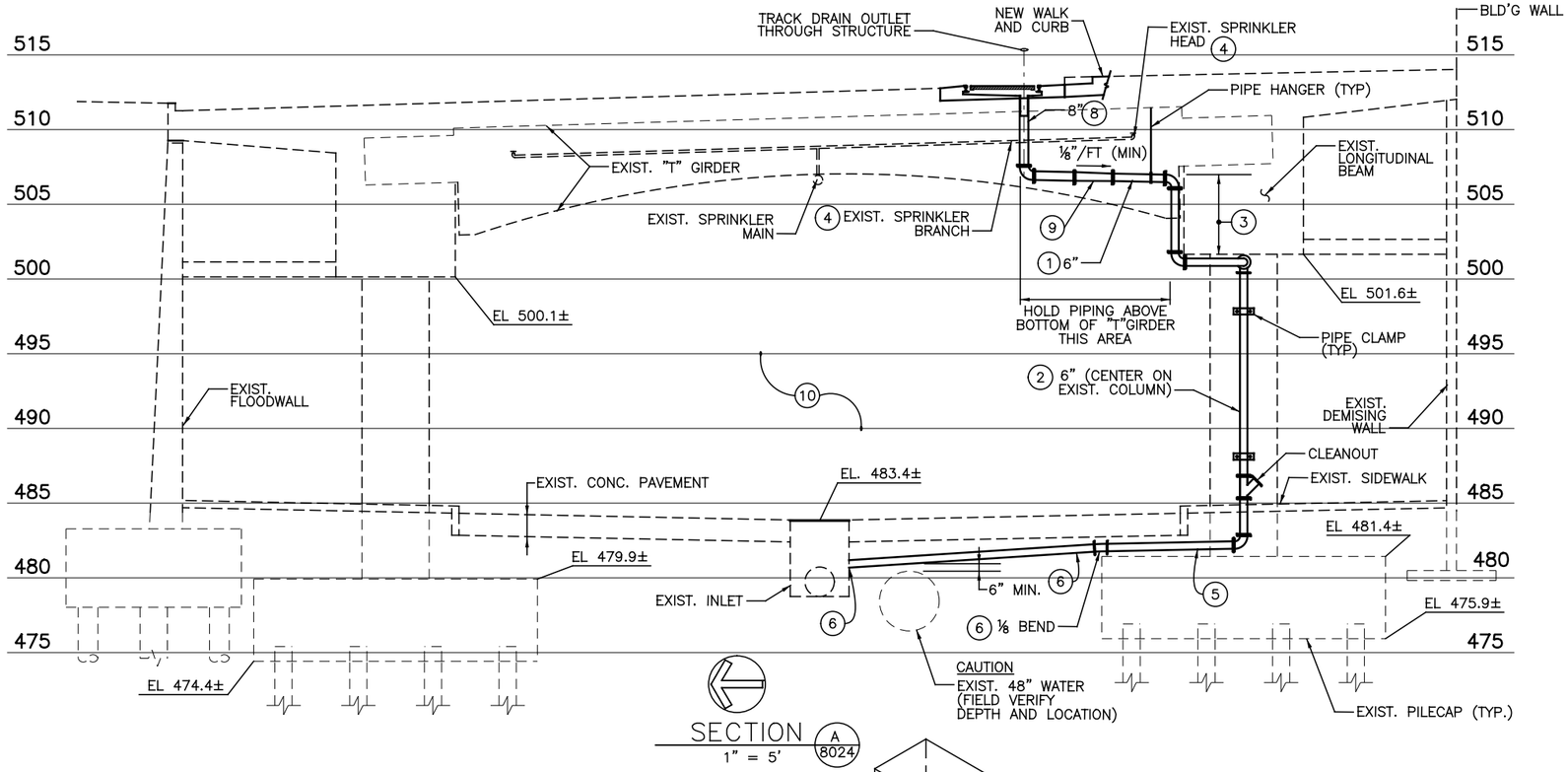

SECTION (A 8024)
1" = 5'

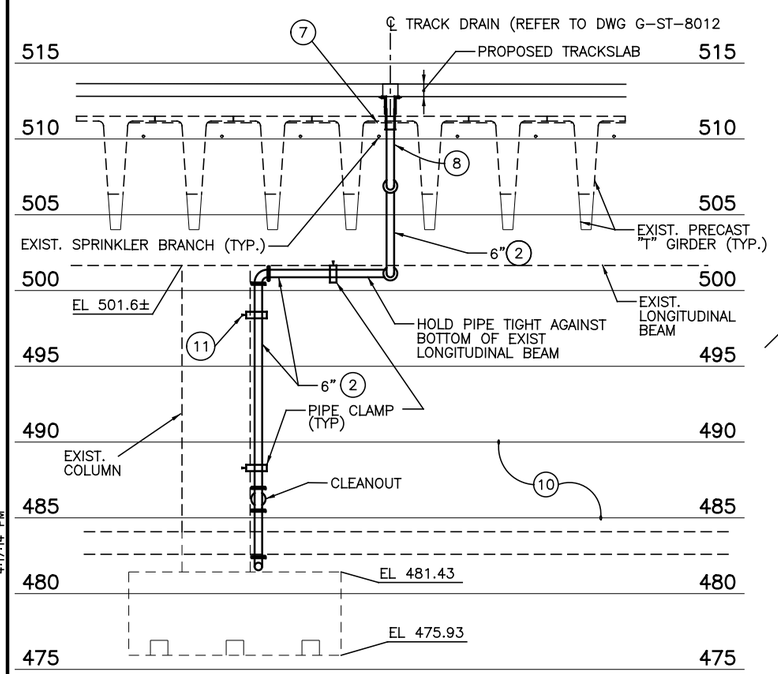

SECTION (B 8024)
1" = 5'

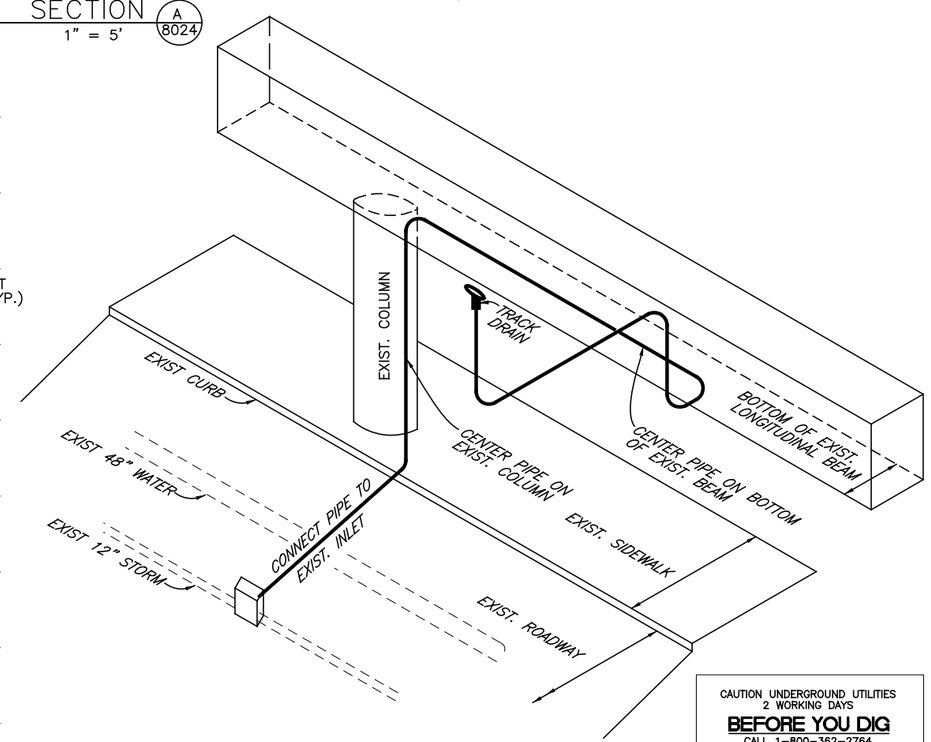

ISOMETRIC
N.T.S.

CAUTION UNDERGROUND UTILITIES
2 WORKING DAYS
BEFORE YOU DIG
CALL 1-800-362-2764
OHIO UTILITY PROTECTION SERVICE
CALL NON-SERVICE FACILITY OWNERS DIRECT

NOTES

1. DRAIN PIPING AND RELATED MATERIALS/INSTALLATIONS SHALL CONFORM TO THE APPLICABLE REQUIREMENTS OF ODOT – ITEM 518. FURNISH GALVANIZED HANGERS AND CLAMPS IN ACCORDANCE WITH ITEM 518 AND SUPPLEMENT THESE WITH COMMERCIALLY AVAILABLE GALVANIZED HANGERS, CLAMPS AND SUPPORTS MANUFACTURED FOR THE INTENDED APPLICATION AS REQUIRED. ANCHOR CLAMPS AND HANGERS TO THE EXISTING STRUCTURE WITH STAINLESS STEEL EXPANSION ANCHORS AND BOLTS. PROVIDE AND SPACE HANGER AND CLAMP ASSEMBLIES AS REQUIRED TO SECURELY FASTEN PIPING TO THE STRUCTURE.
2. CONTRACTOR TO VISIT SITE AND BECOME FAMILIAR WITH EXISTING CONDITIONS PRIOR TO SUBMITTING BIDS/PRICING FOR WORK IN THIS AREA.
3. FOR DISPOSITION OF EXIST. FIRE PROTECTION PIPING REFER TO KEYNOTE #4 BELOW. FIELD VERIFY LOCATION OF EXISTING LIGHTING AND LIGHTING CIRCUITS/CONDUITS. ANY MODIFICATIONS TO THE EXISTING LIGHTING SYSTEM SHALL BE DESIGNED AND INSTALLED BY A LICENSED ELECTRICAL CONTRACTOR. STAMPED DRAWINGS SHALL BE SUMBITTED TO THE CITY AND SORTA FOR PERMIT AND APPROVAL.

(3) KEYNOTES

(1) 6" PLASTIC PIPE – ODOT ITEM 518

(2) 6" GALVANIZED STEEL PIPE – ODOT ITEM 518

(3) TRANSITION FROM PLASTIC TO STEEL PIPE IN THIS AREA. PROVIDE ALL FITTINGS/TRANSITIONS REQUIRED.

(4) FIELD VERIFY LOCATION OF EXISTING SPRINKLER HEAD AND BRANCH PIPING. MAINTAIN AND PROTECT DURING DRAINAGE PIPE INSTALLATION OR CONSTRUCT OFFSET IF REQUIRED TO CLEAR DRAINAGE PIPE INSTALLATION. IF PORTION OF SPRINKLER BRANCH AND SPRINKLER HEAD ARE REQUIRED TO BE RELOCATED, CONTRACTOR SHALL ENGAGE A LICENSED FIRE SUPPRESSION CONTRACTOR TO DESIGN AND INSTALL ANY MODIFICATIONS TO THE EXISTING SYSTEM. STAMPED DRAWINGS OF MODIFICATIONS TO THE EXISTING SPRINKLER SYSTEM SHALL BE SUBMITTED TO THE CITY FOR APPROVAL. ALL SPRINKLER WORK SHALL ALSO BE COORDINATED WITH AND APPROVED BY SORTA (MANAGERS OF THE TRANSIT CENTER).

(5) HOLD 6" PIPE AS CLOSE AS POSSIBLE TO TOP OF EXIST. PILE CAP.

(6) FIELD VERIFY EXIST. INLET AND WATER LINE DEPTH. INSTALL DRAIN LINE AS DEEP AS POSSIBLE WITHIN THESE CONSTRAINTS. MIN. SLOPE (NORTH OF PILE CAP)=⅛" /FT

(7) REMOVE, CUT, REPLACE EXIST. SOUND DAMPENING INSTALLATION AS REQUIRED TO FACILITATE PIPING INSTALLATION.

(8) 8" PLASTIC PIPE, ODOT ITEM 518

(9) 8" TO 6" ECCENTRIC REDUCER

(10) NOTE: ELEVATIONS ARE APPROXIMATE AND ARE FURNISHED FOR REFERENCE ONLY

(11) EXPANSION ANCHOR AND BOLT (TYP)

(11) TRANSITION FROM PLASTIC TO METAL PIPE THIS AREA.

NOTE:
THESE SECTIONS AND ISOMETRICS ARE INDICATED TO CONVEY DESIGN INTENT. REFER TO G-ST-8023 FOR PLAN VIEWS INDICATING LAYOUT AND ORIENTATION OF EXISTING COLUMNS AND PRECAST TEE GIRDERS.

DEPARTMENT OF TRANSPORTATION & ENGINEERING CITY OF CINCINNATI OHIO

CONTRACT DRAWING

PRINTS NOT BEARING THIS STAMP WERE MADE PRIOR TO ADVERTISING FOR BIDS AND ARE TO BE CONSIDERED OBSOLETE FOR CONTRACT PURPOSES.

Department of Transportation and Engineering

City of Cincinnati
City Hall
801 Plum Street
Cincinnati, Ohio 45202

CINCINNATI STREETCAR
CENTRAL BUSINESS DISTRICT

DRAINAGE MODIFICATIONS TO SECOND STREET STRUCTURE

Revisions

No.				

Drawn by JFL	Date 7/02/12
Designed by SAJ	Date 7/02/12
Checked by SAJ	Date 7/02/12
Reviewed by JTB	Date 7/12/12

Consultant

PB HDR

File Number

ACC No. 23126

G-ST-8024

DOTE_Mono_PDF_Half.pltcfg
T:\29014A-Streetcar\CAD\Structures\2nd st drainage\G-ST-8024.dgn
7/13/2012 4:17:14 PM

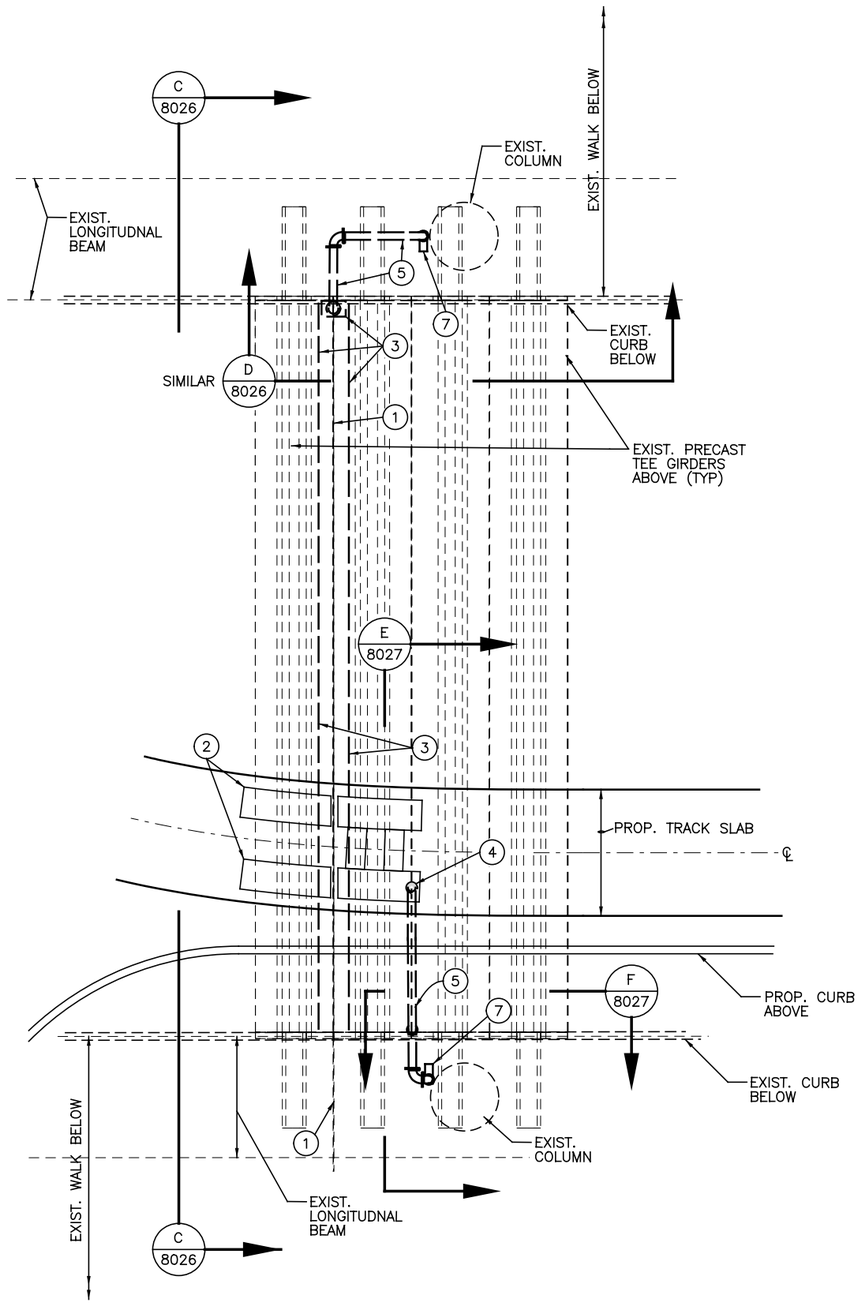

PLAN - EXPANSION JOINT AND EXPANSION BOX DRAINAGE STA. 817+74±

1" = 5'

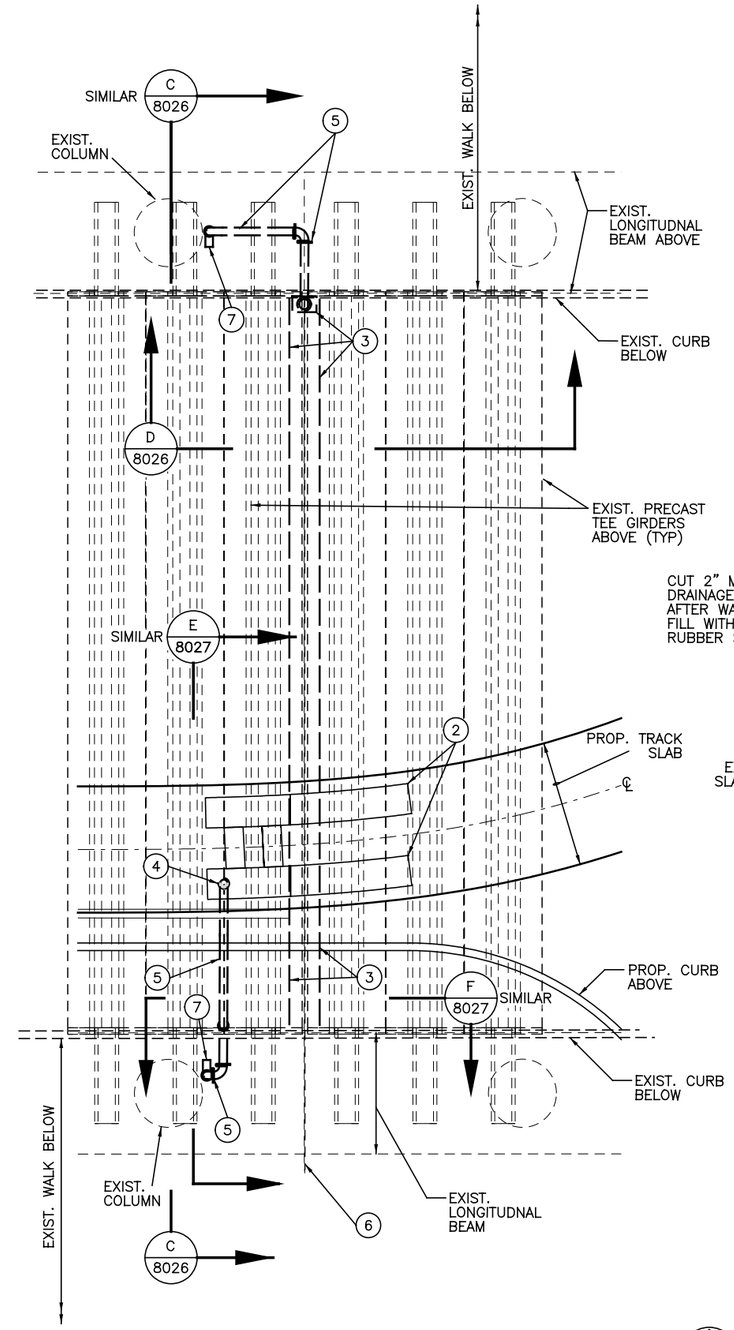

PLAN - EXPANSION JOINT AND EXPANSION BOX DRAINAGE STA. 821+41±

1" = 5'

③ KEYNOTES

1. RECONSTRUCTED EXPANSION JOINT – STA. 817+74±
2. RAIL EXPANSION BOX. REFER TO "TD" SERIES DRAWINGS AND 1/8025
3. PROPOSED "GUTTER" AND DRAINAGE BOX BELOW RECONSTRUCTED EXPANSION JOINT
4. 4" DRAIN FROM RAIL EXPANSION BOX. CENTER BETWEEN EXIST. PRECAST TEE GIRDERS. (FIELD VERIFY LOCATION)
5. 4" DIA. PIPING IN TRANSIT CENTER SUPERSTRUCTURE
6. RECONSTRUCTED EXPANSION JOINT – STA. 821+41±
7. OUTLET PIPE ON SIDEWALK IN TRANSIT CENTER BELOW

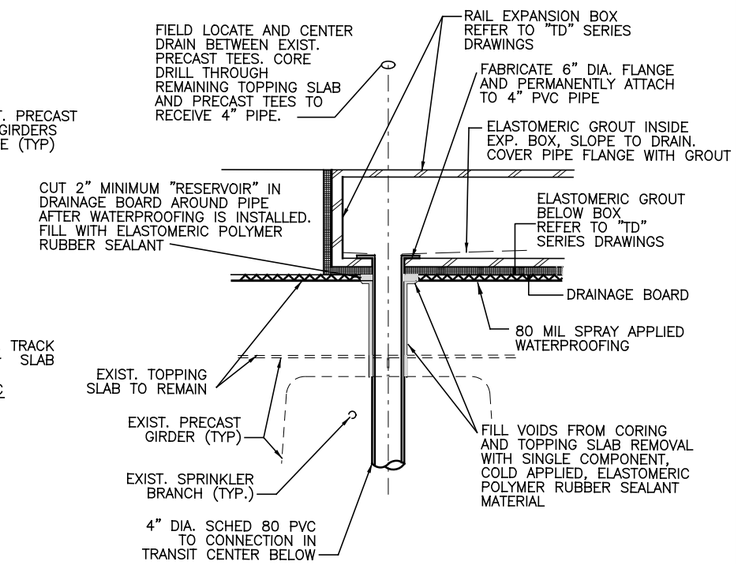

RAIL EXPANSION BOX DRAINAGE

N.T.S

1 / 8025

CAUTION UNDERGROUND UTILITIES
2 WORKING DAYS
BEFORE YOU DIG
CALL 1-800-362-2764
OHIO UTILITY PROTECTION SERVICE
CALL NON-SERVICE FACILITY OWNERS DIRECT

DOTE_Mono_PDF_Half.pltcfg
T:\29014A-Streetcar\CAD\Structures\2nd st drainage\G-ST-8025.dgn
7/13/2012 4:17:15 PM

CONTRACT DRAWING

PRINTS NOT BEARING THIS STAMP WERE MADE PRIOR TO ADVERTISING FOR BIDS AND ARE TO BE CONSIDERED OBSOLETE FOR CONTRACT PURPOSES.

Department of Transportation and Engineering

City of Cincinnati
City Hall
801 Plum Street
Cincinnati, Ohio 45202

CINCINNATI STREETCAR
CENTRAL BUSINESS DISTRICT
DRAINAGE MODIFICATIONS TO SECOND STREET STRUCTURE

Revisions

No.				

Drawn by JFL	Date 7/02/12	Designed by SAJ	Date 7/02/12
Checked by CJC	Date 7/02/12	Reviewed by JTB	Date 7/12/12

Consultant

PB HDR

File Number

ACC No. 23126

G-ST- 8025

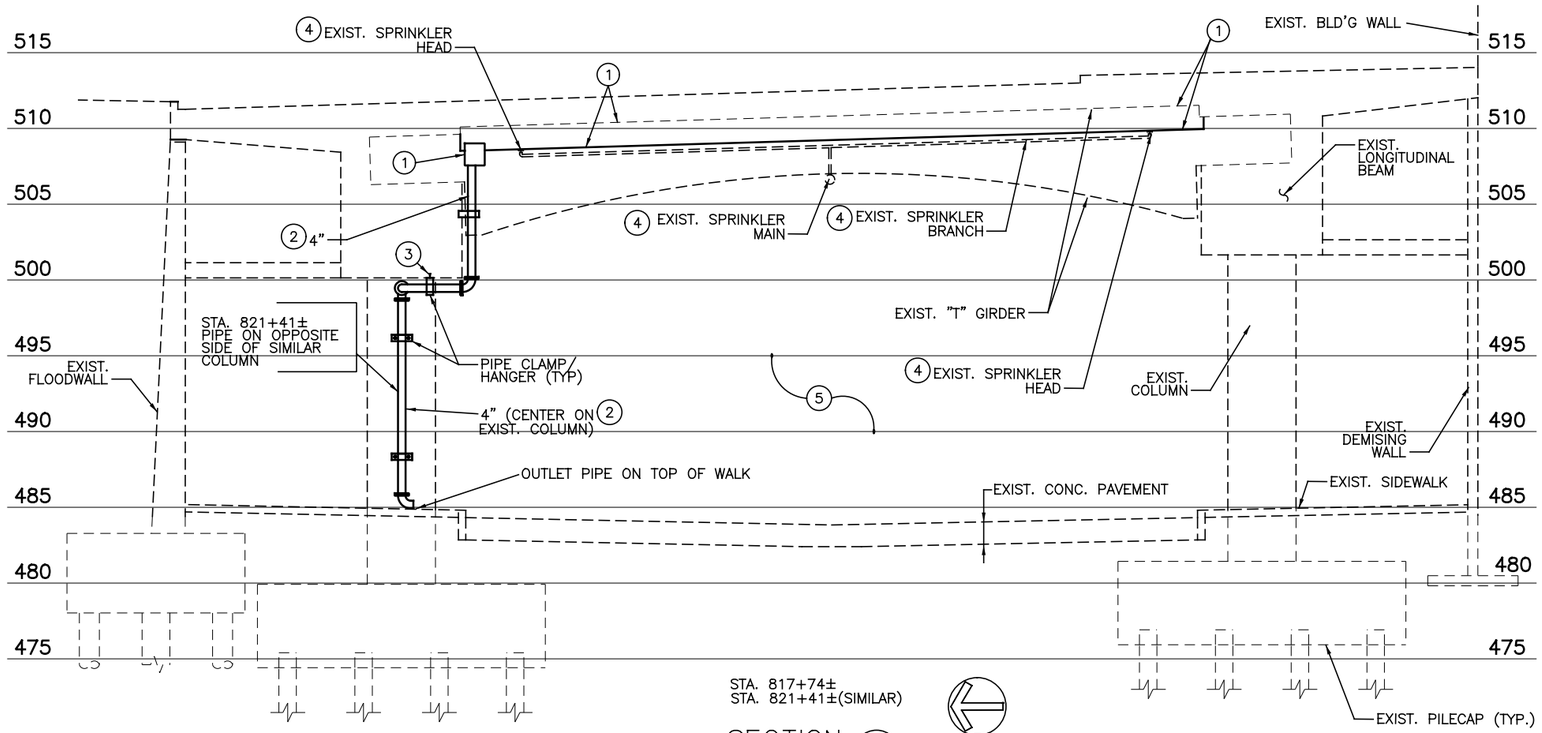

STA. 817+74±
STA. 821+41±(SIMILAR)

SECTION C 8026
1" = 5'

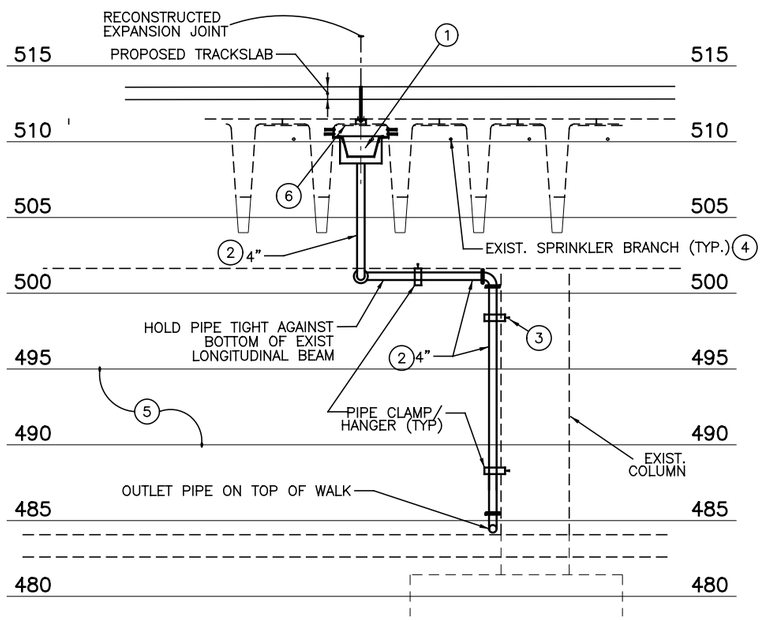

STA. 817+74± (SIMILAR, OPP. HAND)
STA. 821+41±

SECTION D 8026
1" = 5'

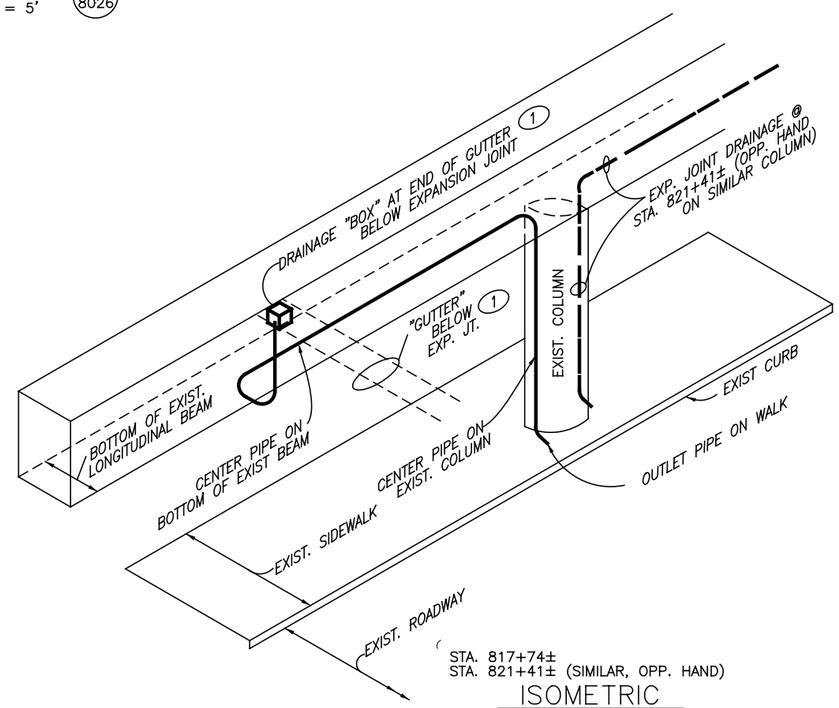

STA. 817+74±
STA. 821+41± (SIMILAR, OPP. HAND)

ISOMETRIC
N.T.S.

NOTES

1. DRAIN PIPING AND RELATED MATERIALS/INSTALLATIONS SHALL CONFORM TO THE APPLICABLE REQUIREMENTS OF ODOT – ITEM 518. FURNISH GALVANIZED HANGERS AND CLAMPS IN ACCORDANCE WITH ITEM 518 AND SUPPLEMENT THESE WITH COMMERCIALLY AVAILABLE GALVANIZED HANGERS, CLAMPS AND SUPPORTS MANUFACTURED FOR THE INTENDED APPLICATION AS REQUIRED. ANCHOR CLAMPS AND HANGERS TO THE EXISTING STRUCTURE WITH STAINLESS STEEL ANCHORS AND EXPANSION BOLTS. PROVIDE AND SPACE HANGER AND CLAMP ASSEMBLIES AS REQUIRED TO SECURELY FASTEN PIPING TO THE STRUCTURE.
2. CONTRACTOR TO VISIT SITE AND BECOME FAMILIAR WITH EXISTING CONDITIONS PRIOR TO SUBMITTING BIDS/PRICING FOR WORK IN THIS AREA.
3. FOR DISPOSITION OF EXIST. FIRE PROTECTION PIPING REFER TO KEYNOTE #4 BELOW. FIELD VERIFY LOCATION OF EXISTING LIGHTING AND LIGHTING CIRCUITS/CONDUITS. ANY MODIFICATIONS TO THE EXISTING LIGHTING SYSTEM NECESSARY FOR PIPING INSTALLATION SHALL BE DESIGNED AND INSTALLED BY A LICENSED ELECTRICAL CONTRACTOR. STAMPED DRAWINGS SHALL BE SUMBITTED TO THE CITY AND SORTA FOR PERMIT AND APPROVALS.

3 KEYNOTES

1. PROPOSED METAL GUTTER & DRAINAGE BOX BELOW RECONSTRUCTED EXPANSION JOINT.
2. 4" GALVANIZED STEEL PIPE – ODOT ITEM 518
3. EXPANSION ANCHOR AND BOLT (TYP)
4. FIELD VERIFY LOCATION OF EXISTING SPRINKLER HEADS, MAINS AND BRANCH PIPING. MAINTAIN AND PROTECT DURING DRAINAGE PIPE INSTALLATION OR CONSTRUCT OFFSET IF REQUIRED TO CLEAR DRAINAGE PIPE INSTALLATION. IF PORTION OF SPRINKLER BRANCH AND SPRINKLER HEAD ARE REQUIRED TO BE RELOCATED, CONTRACTOR SHALL ENGAGE A LICENSED FIRE SUPPRESSION CONTRACTOR TO DESIGN AND INSTALL ANY MODIFICATIONS TO THE EXISTING SYSTEM. STAMPED DRAWINGS OF MODIFICATIONS TO THE EXISTING SPRINKLER SYSTEM SHALL BE SUBMITTED TO THE CITY FOR APPROVAL. ALL SPRINKLER WORK SHALL ALSO BE COORDINATED WITH AND APPROVED BY SORTA (MANAGERS OF THE TRANSIT CENTER).
5. INDICATED ELEVATIONS ARE APPROXIMATE AND FURNISHED FOR REFERENCE ONLY
6. REMOVE, CUT, REPLACE EXIST. SOUND DAMPENING INSTALLATION AS REQUIRED TO FACILITATE INSTALLATION.

NOTE:
THESE SECTIONS AND ISOMETRICS ARE INDICATED TO CONVEY DESIGN INTENT. REFER TO G-ST-8025 FOR PLAN VIEWS INDICATING LAYOUT AND ORIENTATION OF EXISTING COLUMNS AND PRECAST TEE GIRDERS.

CAUTION UNDERGROUND UTILITIES
2 WORKING DAYS
BEFORE YOU DIG
CALL 1-800-362-2764
OHIO UTILITY PROTECTION SERVICE
CALL NON-SERVICE FACILITY
OWNERS DIRECT

DEPARTMENT OF TRANSPORTATION & ENGINEERING CITY OF CINCINNATI OHIO

CONTRACT DRAWING

PRINTS NOT BEARING THIS STAMP WERE MADE PRIOR TO ADVERTISING FOR BIDS AND ARE TO BE CONSIDERED OBSOLETE FOR CONTRACT PURPOSES.

Department of Transportation and Engineering

City of Cincinnati
City Hall
801 Plum Street
Cincinnati, Ohio 45202

CINCINNATI STREETCAR
CENTRAL BUSINESS DISTRICT

DRAINAGE MODIFICATIONS TO SECOND STREET STRUCTURE

Revisions

No.		

Drawn by JFL	Date 7/02/12
Designed by SAJ	Date 7/02/12
Checked by SAJ	Date 7/02/12
Reviewed by JTB	Date 7/12/12

Consultant

PB HDR

File Number

ACC No. 23126

G-ST-8026

DOTE_Mono_PDF_Half.pltcfg
T:\29014A-Streetcar\CAD\Structures\2nd st drainage\G-ST-8026.dgn
7/13/2012 4:17:15 PM

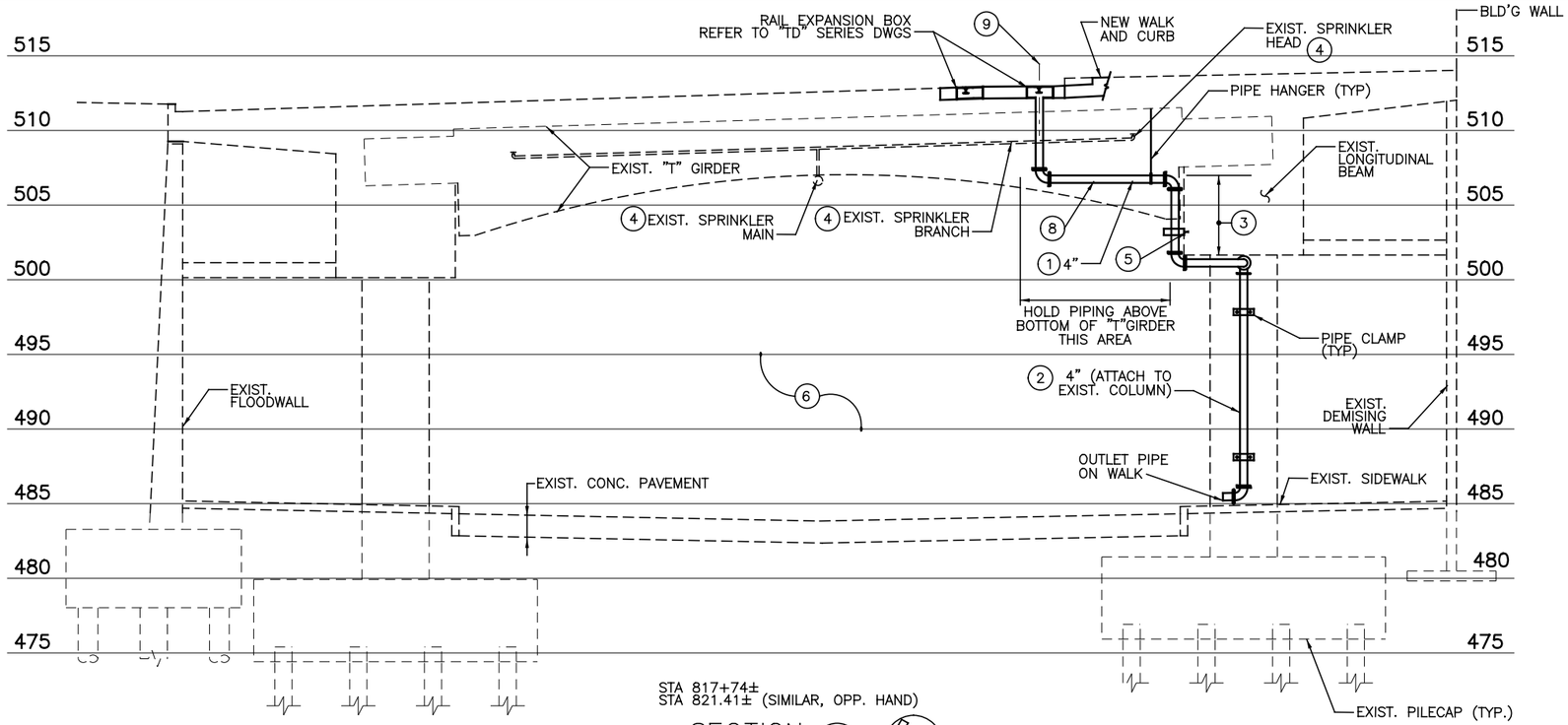

STA 817+74±
STA 821.41± (SIMILAR, OPP. HAND)

SECTION E 8027
1" = 5'

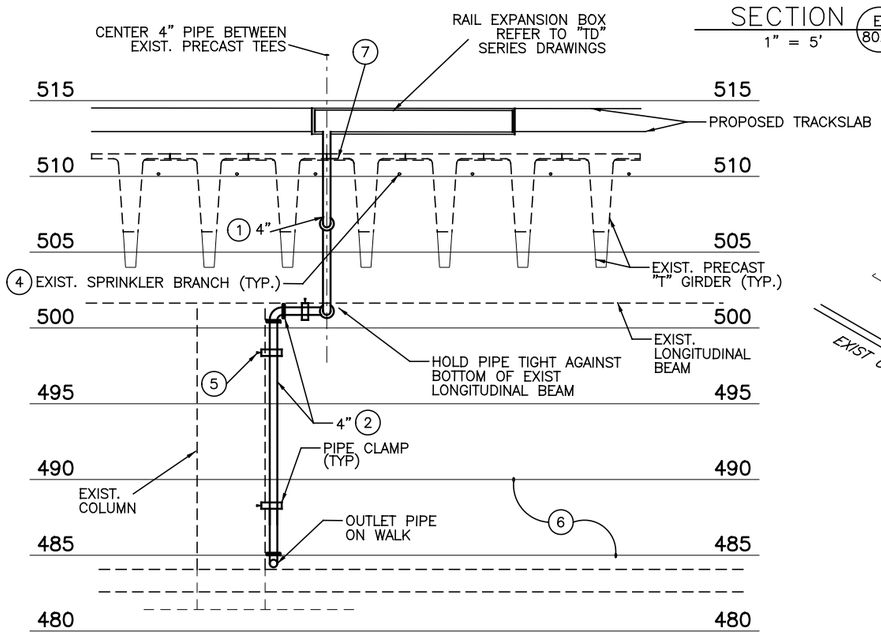

STA 817+74±
STA 821.41± (SIMILAR, OPP. HAND)

SECTION F 8027
1" = 5'

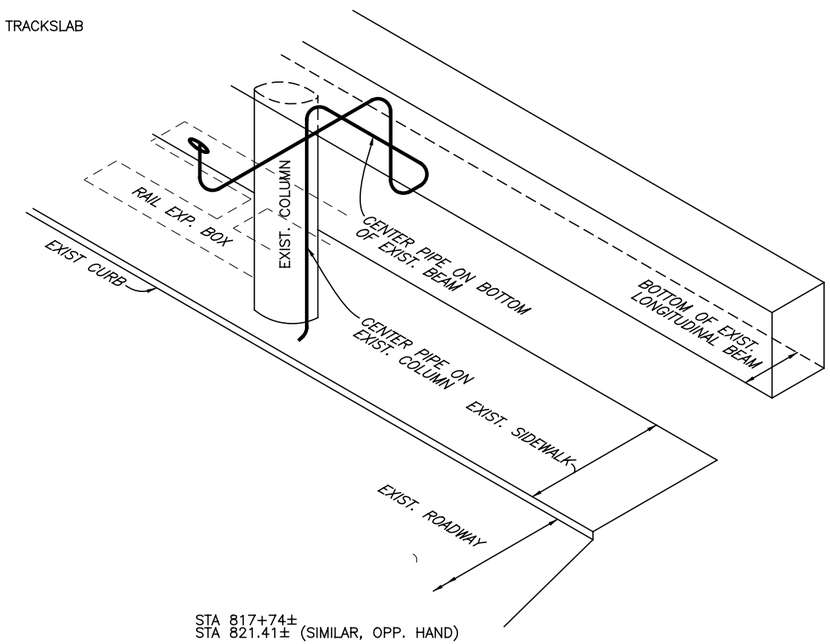

STA 817+74±
STA 821.41± (SIMILAR, OPP. HAND)

ISOMETRIC
N.T.S.

NOTES

1. DRAIN PIPING AND RELATED MATERIALS/INSTALLATIONS SHALL CONFORM TO THE APPLICABLE REQUIREMENTS OF ODOT – ITEM 518. FURNISH GALVANIZED HANGERS AND CLAMPS IN ACCORDANCE WITH ITEM 518 AND SUPPLEMENT THESE WITH COMMERCIALLY AVAILABLE GALVANIZED HANGERS, CLAMPS AND SUPPORTS MANUFACTURED FOR THE INTENDED APPLICATION AS REQUIRED. ANCHOR CLAMPS AND HANGERS TO THE EXISTING STRUCTURE WITH STAINLESS STEEL EXPANSION ANCHORS AND BOLTS. PROVIDE AND SPACE HANGER AND CLAMP ASSEMBLIES AS REQUIRED TO SECURELY FASTEN PIPING TO THE STRUCTURE.
2. CONTRACTOR TO VISIT SITE AND BECOME FAMILIAR WITH EXISTING CONDITIONS PRIOR TO SUBMITTING BIDS/PRICING FOR WORK IN THIS AREA.
3. FOR DISPOSITION OF EXIST. FIRE PROTECTION PIPING REFER TO KEYNOTE #4 BELOW. FIELD VERIFY LOCATION OF EXISTING LIGHTING AND LIGHTING CIRCUITS/CONDUITS. ANY MODIFICATIONS TO THE EXISTING LIGHTING SYSTEM NECESSARY FOR PIPING INSTALLATION SHALL BE DESIGNED AND INSTALLED BY A LICENSED ELECTRICAL CONTRACTOR. STAMPED DRAWINGS SHALL BE SUMBITTED TO THE CITY AND SORTA FOR PERMIT AND APPROVALS.

3 KEYNOTES

1. 4" PLASTIC PIPE – ODOT ITEM 518
2. 4" GALVANIZED STEEL PIPE – ODOT ITEM 518
3. TRANSITION FROM PLASTIC TO STEEL PIPE IN THIS AREA. PROVIDE ALL FITTINGS/TRANSITIONS REQUIRED.
4. FIELD VERIFY LOCATION OF EXISTING SPRINKLER HEAD AND BRANCH PIPING. MAINTAIN AND PROTECT DURING DRAINAGE PIPE INSTALLATION OR CONSTRUCT OFFSET IF REQUIRED TO CLEAR DRAINAGE PIPE INSTALLATION. IF PORTION OF SPRINKLER BRANCH AND SPRINKLER HEAD ARE REQUIRED TO BE RELOCATED, CONTRACTOR SHALL ENGAGE A LICENSED FIRE SUPPRESSION CONTRACTOR TO DESIGN AND INSTALL ANY MODIFICATIONS TO THE EXISTING SYSTEM. STAMPED DRAWINGS OF MODIFICATIONS TO THE EXISTING SPRINKLER SYSTEM SHALL BE SUBMITTED TO THE CITY FOR APPROVAL. ALL SPRINKLER WORK SHALL ALSO BE COORDINATED WITH AND APPROVED BY SORTA (MANAGERS OF THE TRANSIT CENTER).
5. EXPANSION ANCHOR AND BOLT (TYP)
6. NOTE: ELEVATIONS ARE APPROXIMATE AND ARE FURNISHED FOR REFERENCE ONLY
7. REMOVE, CUT, REPLACE EXIST. SOUND DAMPENING INSTALLATION AS REQUIRED TO FACILITATE PIPING INSTALLATION.
8. ⅛" PER FT. MIN. SLOPE
9. CENTER 4" DRAIN IN TRACK BOX ON JOINT BETWEEN EXISTING PRECAST GIRDERS

NOTE:
THESE SECTIONS AND ISOMETRICS ARE INDICATED TO CONVEY DESIGN INTENT. REFER TO G–ST–8023 FOR PLAN VIEWS INDICATING LAYOUT AND ORIENTATION OF EXISTING COLUMNS AND PRECAST TEE GIRDERS.

CAUTION UNDERGROUND UTILITIES
2 WORKING DAYS
BEFORE YOU DIG
CALL 1–800–362–2764
OHIO UTILITY PROTECTION SERVICE
CALL NON–SERVICE FACILITY
OWNERS DIRECT

DEPARTMENT OF TRANSPORTATION & ENGINEERING CITY OF CINCINNATI OHIO

CONTRACT DRAWING

PRINTS NOT BEARING THIS STAMP WERE MADE PRIOR TO ADVERTISING FOR BIDS AND ARE TO BE CONSIDERED OBSOLETE FOR CONTRACT PURPOSES.

Department of Transportation and Engineering

City of Cincinnati
City Hall
801 Plum Street
Cincinnati, Ohio 45202

CINCINNATI STREETCAR
CENTRAL BUSINESS DISTRICT

DRAINAGE MODIFICATIONS TO SECOND STREET STRUCTURE

Revisions
No.

Date 7/02/12	Drawn by JFL
Date 7/02/12	Designed by SAJ
Date 7/02/12	Checked by SAJ
Date 7/12/12	Reviewed by JTB

Consultant

PB HDR

File Number

ACC No. 23126

G-ST-8027

DOTE_Mono_PDF_Half.pltcfg
T:\29014A-Streetcar\CAD\Structures\2nd st drainage\G-ST-8027.dgn
4:17:16 PM
7/13/2012

LEGEND:

RIGHT-OF-WAY LINE (CAGIS)
TRACK CENTER LINE
STREETCAR STOP CENTER LINE

EXISTING BUILDING

EXISTING BASEMENT ENCROACHMENT

SEWERS – STORM, COMBINED, AND SANITARY*
EXISTING TO REMAIN
EXISTING TO BE ABANDONED
PROPOSED
PROPOSED MANHOLE
PROPOSED CATCH BASIN
*REFER TO SA SERIES DRAWINGS.

EXISTING TO REMAIN	EXISTING TO BE ABANDONED	PROPOSED‡	UNDERGROUND UTILITIES†
C	C	C	CABLE
T	T	T	TELEPHONE
QST	QST	QST	QUEST COMMUNICATIONS
MCI	MCI	MCI	MCI COMMUNICATIONS
L3	L3	L3	LEVEL 3 COMMUNICATIONS
TS	TS	TS	TRAFFIC SIGNAL LINE
G	G	G	GAS LINE
E	E	E	ELECTRIC LINE
W	W	W	WATER LINE

† WORK SHALL BE PERFORMED BY UTILITY COMPANY (EXCEPT LIGHTING/TRAFFIC CIRCUITS).
‡ LOCATIONS OF PROPOSED UTILITIES NOT IN CONTRACT ARE APPROXIMATE. ACTUAL DESIGN BY UTILITY COMPANY.

EXISTING PAVERS

EXISTING LANDSCAPING AREA

ITEM SPECIAL – TREE PROTECTION FENCE, SEE 1/G-LS-1104

ITEM 202 – REMOVE EXISTING PAVEMENTS, CURBS, AND BASE MATERIALS (EXISTING GRANITE CURBS TO BE SALVAGED AND STORED)

ITEM 628 – SAW CUT

ITEM 202 – PAVEMENT REMOVAL ABOVE BASEMENT ENCROACHMENT: REMOVE EXISTING PAVERS AND MORTAR ONLY. APPLY NEW TYPE 3 WATERPROOFING PER ITEM 512.08. REPLACE WITH CONCRETE TO MATCH EXISTING FINISHED GRADE, UNLESS OTHERWISE NOTED.

ITEM 202 – REMOVE ITEM

ITEM 608 – CLASS C CONCRETE PAVEMENT, SEE 5/G-LS-1101

ITEM 608 – CONCRETE PAVEMENT WITH SPECIAL SCORING PATTERN, SEE 6/G-LS-1101

ITEM 705.03 – EXPANSION JOINT (EJ LABEL ONLY APPEARS ON GRADING PLANS)

ITEM 608 – STEP

ITEM SPECIAL – PROPOSED PAVERS

ITEM 608 – DETECTABLE WARNING PAVERS

ITEM 609 – TYPE P-2 CONCRETE STREETCAR STOP CURB, SEE 1/G-LS-1101

ITEM SPECIAL – TRENCH DRAIN

ITEM SPECIAL – STAINLESS STEEL HANDRAIL (ONLY END AND CORNER POST LOCATIONS ARE SHOWN.)

FUTURE TICKETING KIOSK LOCATION (NOT IN CONTRACT)

SHELTER – SEE AR SERIES DRAWINGS

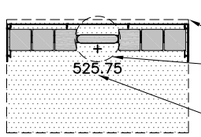

SHELTER CANOPY

SHELTER FOUNDATION – SEE 8/G-LS-1104 FOR SHELTER BASE DETAIL

SHELTER ELEVATION – EQUALS ELEVATION 100'-0" ON AR SERIES DRAWINGS

NOTE: ALL SHELTERS SHALL BE ENCLOSED UNLESS NOTED OTHERWISE ON STREETCAR STOP PLANS.

STOP IDENTIFICATION SIGN – SEE 1/G-LS-1105

ITEM 661 – PROPOSED LANDSCAPING AREA

FUTURE TRASH RECEPTACLE (NOT IN CONTRACT)

DEMOLITION CODED NOTE

CONSTRUCTION CODED NOTE

2 / G-LS-1102 — DETAIL NUMBER / SHEET NUMBER

+EX 540.64 — EXISTING SPOT ELEVATION

+540.38 — PROPOSED SPOT ELEVATION

1.02% — PROPOSED SLOPE

ITEM 603 TYPE B CONDUIT: 4" DIA. WHEN CONNECTING TWO TRENCH DRAIN SECTIONS, 6" DIA. WHEN CONNECTING TRENCH DRAIN TO STORM SEWER SYSTEM.

OCS POLE – SEE OL SERIES DRAWINGS

EXISTING LIGHT POLE

ABBREVIATIONS:

#	NUMBER
%	FEET PER ONE HUNDRED FEET SLOPE
&	AND
AASHTO	AMERICAN ASSOCIATION OF STATE HIGHWAY AND TRANSPORTATION OFFICIALS
ACC	ACCESSION NUMBER
ACI	AMERICAN CONCRETE INSTITUTE
ADA	AMERICANS WITH DISABILITIES ACT
ANSI	AMERICAN NATIONAL STANDARDS INSTITUTE
CAGIS	CINCINNATI AREA GEOGRAPHIC INFORMATION SYSTEM
COC	CITY OF CINCINNATI
CONC	CONCRETE
Cont.	CONTAINER
CTR	CENTER
DIA	DIAMETER
EJ	EXPANSION JOINT
EX	EXISTING
GCWW	GREATER CINCINNATI WATER WORKS
MAX	MAXIMUM
MIN	MINIMUM
MSD	METROPOLITAN SEWER DISTRICT OF GREATER CINCINNATI
O.C.	ON CENTER
O.D.	OUTSIDE DIAMETER
OCS	OVERHEAD CATENARY SYSTEM
ODOT	OHIO DEPARTMENT OF TRANSPORTATION
PC	POINT OF CURVATURE
P.P.	PEAT POT
PT	POINT OF TANGENCY
PVC	POLY-VINYL CHLORIDE
qt.	QUART
R	RADIUS
REBAR	STEEL REINFORCING BAR
STD	STANDARD
TYP	TYPICAL
UD	UNDER DRAIN

GENERAL NOTES:

DEMOLITION GENERAL NOTES:

1. LIMITS OF PAVEMENT REMOVAL ARE SHOWN SCHEMATICALLY. REMOVE THE MINIMUM AMOUNT OF PAVEMENT REQUIRED TO CONSTRUCT THE PROPOSED IMPROVEMENTS UNLESS OTHERWISE NOTED.
2. EDGES OF PAVEMENT REMOVAL AREAS SHALL BE CLEANLY AND NEATLY SAW CUT.
3. CONCRETE PAVEMENT REMOVAL SHALL BE TO THE NEAREST CONTROL JOINT.
4. PAVER REMOVAL SHALL BE TO THE NEAREST PAVER JOINT.

DEMOLITION GENERAL NOTES (CONTINUED):

5. IF A CURB RAMP FALLS PARTIALLY WITHIN THE AREA TO BE DEMOLISHED, REMOVE THE ENTIRE CURB RAMP TO NEAREST CONTROL JOINT UNLESS OTHERWISE NOTED.
6. SALVAGE EXISTING GRANITE CURBS AND DELIVER TO A CITY FACILITY AS DIRECTED BY THE CITY INSPECTOR FOR STORAGE.
7. SAVE AND PROTECT ALL EXISTING TREES UNLESS OTHERWISE NOTED.
8. PRUNE TREES (PER ITEM 666) TO ELIMINATE INTERFERENCES BETWEEN TREE BRANCHES AND SHELTER CANOPIES. ALL PRUNING SHALL BE DONE WITH CLEAN, SHARP TOOLS.
9. REMOVE EXISTING TREE GRATES AND TREE GRATE FRAMES WITHIN AREAS TO BE DEMOLISHED. SALVAGE TREE GRATES AND RETURN TO A CITY FACILITY AS DIRECTED BY THE CITY INSPECTOR, UNLESS OTHERWISE NOTED.
10. DO NOT STOCKPILE MATERIALS OR DRIVE VEHICLES UNDER TREES OR WITHIN TREE PROTECTION FENCE.
11. EXCAVATE WITH CARE NEAR EXISTING TREES SO AS TO MINIMIZE DAMAGE TO EXISTING TREE ROOTS. IF MAJOR ROOTS ARE ENCOUNTERED (2" DIA. OR LARGER), NOTIFY ENGINEER AND AWAIT RESOLUTION PRIOR TO PROCEEDING WITH WORK. MINOR ROOTS (<2" DIA.) MAY BE CUT USING CLEAN, SHARP TOOLS.
12. CONTRACTOR SHALL REPAIR OR REPLACE IN-KIND, AS DETERMINED BY THE CITY, ITEMS OUTSIDE OF DEMOLITION LIMITS THAT ARE DAMAGED DUE TO CONSTRUCTION ACTIVITY. REPAIR OR REPLACEMENT SHALL BE AT CONTRACTOR'S EXPENSE
13. PRIOR TO COMMENCING WORK ADJACENT TO ANY BUILDING, FIELD VERIFY BASEMENT ENCROACHMENTS, NOTIFY THE CITY OF ANY CONFLICTS DISCOVERED, AND AWAIT RESOLUTION PRIOR TO PROCEEDING WITH WORK.
14. FIELD VERIFY BASEMENT ENCROACHMENTS THAT MAY OCCUR NEAR DEMOLITION ACTIVITIES THAT COULD IMPACT BASEMENT ENCROACHMENTS. NOTIFY THE CITY OF ANY CONFLICTS DISCOVERED AND AWAIT RESOLUTION PRIOR TO PROCEEDING WITH WORK.
15. UNDERGROUND UTILITY LOCATIONS ARE BASED ON A COMBINATION OF FIELD OBSERVATION AND RESEARCH AND ARE NOT GUARANTEED. CONTRACTOR SHALL VERIFY LOCATIONS OF UNDERGROUND UTILITIES AND BE RESPONSIBLE FOR ANY DAMAGE TO UNDERGROUND UTILITIES THAT ARE TO REMAIN. CONTACT THE OHIO UTILITIES PROTECTION SERVICE AT 1-800-362-2764 PRIOR TO ANY EXCAVATION AND AWAIT COMPLETION OF UTILITY MARKING PRIOR TO BEGINNING WORK. CONTACT NON-OUPS UTILITIES DIRECTLY.

GRADING GENERAL NOTES:

1. SLOPE ALL SURFACES TO DRAIN: 1.0% MINIMUM ON PAVED SURFACES, 2.0% MINIMUM ON GRASS/MULCH SURFACES, UNLESS OTHERWISE NOTED.
2. CROSS SLOPE SHALL NOT EXCEED 2.0% ON ADA ACCESSIBLE ROUTES.
3. SLOPE SHALL NOT EXCEED 2.0% IN ANY DIRECTION AT RAMP LANDINGS AND IN WHEELCHAIR TURNING AREAS.
4. RUNNING SLOPES ALONG WALKWAYS EXCEEDING 5.0% IN THE DIRECTION OF TRAVEL SHALL BE CONSIDERED RAMPS AND HANDRAILS SHALL BE PROVIDED ON BOTH SIDES. HANDRAILS ARE NOT REQUIRED ON RAMPS WHERE THE CHANGE IN ELEVATION IS LESS THAN 6" AND RAMP LENGTH IS LESS THAN 6'.
5. EDGE PROTECTION IN THE FORM OF A 4" HIGH CONCRETE CURB SHALL BE PROVIDED ALONG RAMP EDGES, EXCEPT WHERE THE PAVEMENT EXTENDS AT LEAST 12" BEYOND THE HANDRAIL.
6. SLOPE SHALL NOT EXCEED 8.33% IN THE DIRECTION OF TRAVEL ALONG AN ACCESSIBLE ROUTE.
7. UNLESS OTHERWISE NOTED, GRADES OF ADJACENT SURFACES SHALL MEET AND MATCH, WITH SMOOTH TRANSITIONS IN COMPLIANCE WITH ADA STANDARDS.
8. MEET EXISTING GRADES AT FACES OF BUILDINGS UNLESS OTHERWISE NOTED. WATERPROOFING PER ITEM 512.08 IS REQUIRED WHERE GRADE IS RAISED AT BUILDING FACE.
9. SPOT GRADES SHOWN WHERE NEW WORK MEETS EXISTING WORK ARE ESTIMATES OF EXISTING GRADE ELEVATIONS. MEET EXISTING GRADE AT THESE LOCATIONS. MAKE MINOR ADJUSTMENTS AS NECESSARY, COMPLYING WITH ADA STANDARDS.

CONSTRUCTION GENERAL NOTES:

1. ITEM NUMBERS REFER TO THE 2010 OHIO DEPARTMENT OF TRANSPORTATION CONSTRUCTION AND MATERIALS SPECIFICATIONS WITH 2011 CITY OF CINCINNATI SUPPLEMENT.
2. RESTORE ADJACENT PAVEMENT AREAS TO THEIR ORIGINAL CONDITION UNLESS OTHERWISE NOTED.
3. PLACE EXPANSION JOINTS BETWEEN EXISTING AND NEW WORK. JOINT MATERIAL SHALL BE ITEM 705.03.
4. SEAL ALL EXPANSION JOINTS WITH ITEM 705.04 SEALANT, COLOR TO MATCH ADJACENT CONCRETE.
5. IN SIDEWALK AREAS, IF A CONTROL JOINT PATTERN IS NOT SHOWN ON THE PLANS, EXTEND CONTROL AND EXPANSION JOINT PATTERN OF ADJACENT EXISTING WALK. COMPLY WITH ACI 301.
6. EXPOSED CONTROL JOINTS SHALL BE TOOLED. CONTROL JOINTS IN SLABS UNDER PAVERS MAY BE SAW CUT.
7. FOR SLABS UNDER PAVERS, PROVIDE CONTROL JOINTS AT 5' O.C. MAX. AND EXPANSION JOINTS AT 30' O.C. MAX, BOTH WAYS.
8. FOR CURBS AND WALLS, PROVIDE CONTROL JOINTS AT 20' O.C. MAX. AND EXPANSION JOINTS AT 60' O.C. MAX.

CONSTRUCTION GENERAL NOTES (CONTINUED):

9. TOP OF OCS POLE FOUNDATIONS IN SIDEWALK AND STREETCAR STOP PLATFORM AREAS SHALL BE FLUSH WITH ADJACENT PAVEMENT.
10. EXCEPT AT STREETCAR STOP PLATFORMS, NEW CONCRETE CURBS SHALL BE CITY OF CINCINNATI STANDARD TYPE P-5 UNLESS OTHERWISE NOTED. REFER TO CITY STANDARD DRAWING ACC. 21433.
11. AT STREETCAR STOP PLATFORMS AND CURB TRANSITIONS, NEW CONCRETE CURBS SHALL BE SIMILAR TO CITY OF CINCINNATI STANDARD TYPE P-2. TOP OF CURB SHALL BE 14" ABOVE TOP OF RAIL AT PLATFORMS. CURB HEIGHT WILL VARY IN TRANSITION AREAS. REFER TO SHEET G-LS-1101 AND CITY STANDARD DRAWING ACC. 21435.
12. CURB RAMPS SHALL BE CITY OF CINCINNATI STANDARD TYPE P UNLESS OTHERWISE NOTED. REFER TO CITY STANDARD DRAWING ACC. 27256.
13. THE CITY OF CINCINNATI STANDARD GENERAL NOTES FOR CURB RAMPS AND DETECTABLE WARNINGS ARE HEREBY INCORPORATED BY REFERENCE. REFER TO CITY OF CINCINNATI STANDARD DRAWING ACC. 27256.
14. FIELD VERIFY BASEMENT ENCROACHMENTS THAT MAY OCCUR NEAR PROPOSED STREETCAR STOP SHELTER FOUNDATIONS, TRENCH DRAINS, OR OTHER CONSTRUCTION THAT COULD IMPACT BASEMENT ENCROACHMENTS. NOTIFY THE CITY OF ANY CONFLICTS DISCOVERED AND AWAIT RESOLUTION PRIOR TO PROCEEDING WITH WORK.
15. CONTRACTOR IS RESPONSIBLE FOR CONTACTING, AND COORDINATING WITH, UTILITY COMPANIES/AGENCIES AS REQUIRED TO HAVE THE UTILITY COMPANIES ADJUST THEIR FACILITIES TO PROPOSED PLAN ELEVATIONS. THE REQUIRED ADJUSTMENTS TO THESE FACILITIES ARE INDICATED FOR INFORMATIONAL PURPOSES ONLY AND ARE INDICATED TO THE EXTENT IN WHICH THEY ARE KNOWN. THERE MAY BE OTHER UTILITY FACILITIES NOT SHOWN ON THESE PLANS THAT NEED TO BE ADJUSTED AS WELL. THIS WORK SHALL BE COORDINATED AND COMPLETED IN A TIME FRAME CONSISTENT WITH THE PROJECT SCHEDULE. THIS COORDINATION IS DEEMED INCIDENTAL TO THE CONTRACT AND NO ADDITIONAL COMPENSATION WILL BE PROVIDED TO THE CONTRACTOR. THESE ITEMS ARE NOT QUANTIFIED.
16. REMOVE ABANDONED UTILITIES WHERE THEY INTERFERE WITH NEW WORK.
17. PRIOR TO PROCEEDING WITH WORK THAT AFFECTS ABANDONED OR RELOCATED UTILITIES, CONTACT THE APPROPRIATE UTILITY COMPANY TO VERIFY THAT ABANDONMENT OR RELOCATION WORK HAS ACTUALLY BEEN COMPLETED.
18. LIGHTING CIRCUITS THAT ARE IMPACTED BY STREETCAR STOP SHELTER FOUNDATIONS SHALL BE RELOCATED BY THE CONTRACTOR AS DIRECTED BY THE CITY ENGINEER PRIOR TO CONSTRUCTION OF SHELTER FOUNDATION. LIGHTING CIRCUIT RELOCATION SHALL BE INCLUDED IN SHELTER FOUNDATION UNIT COST AS AN INCIDENTAL ITEM.
19. EXISTING CONDUITS TO REMAIN IN PROPOSED LANDSCAPING BED AREAS SHALL BE REPLACED WITH RIGID METAL CONDUIT, AND NEW CONDUITS IN LANDSCAPING BED AREAS SHALL BE RIGID METAL CONDUIT PER ITEM 725.04.
20. WHERE MANHOLES/VAULTS FORMERLY IN THE STREET ARE INCORPORATED INTO STREETCAR STOP AREAS, PROVIDE NEW PEDESTRIAN-FRIENDLY SKID-PROOF MANHOLE COVERS.
21. NEW OR RELOCATED MANHOLE COVERS CONSTRUCTED IN THE STREET THAT ARE LOCATED IN PROPOSED STREETCAR STOP AREAS SHALL BE CONSTRUCTED TO BE FLUSH WITH THE STREET TO ALLOW CONTINUED USE OF THE LANE AND THEN LATER ADJUSTED TO FINAL GRADE DURING STREETCAR STOP CONSTRUCTION. ADJUSTMENT COST SHALL BE INCLUDED IN MANHOLE PRICE.
22. MANHOLE COVERS IN RAMP AREAS SHALL BE SET AT AN ANGLE TO MATCH THE RAMP SLOPE.
23. SEVERAL STOPS HAVE UTILITY CORRIDORS PLANNED THROUGH THEM. THE EXACT LOCATIONS OF THESE UTILITIES HAVE NOT BEEN DETERMINED AT THE TIME OF PRINTING. CONTRACTOR SHALL CONTACT THE APPROPRIATE UTILITY COMPANY TO IDENTIFY THE FINAL LOCATIONS OF PLANNED UTILITIES AND SHALL COORDINATE THE WORK OF THIS CONTRACT WITH THE PLANNED UTILITIES.
24. WHERE WORK OCCURS OVER STRUCTURAL SLABS, OR WHERE THE GRADE IS RAISED AGAINST A BUILDING, APPLY TYPE 3 WATERPROOFING PER ITEM 512.08 AND SEAL WITH A BEAD OF ONE PART POLYURETHANE, MOISTURE CURED, ELASTOMETRIC SEALANT.

LANDSCAPE GENERAL NOTES:

1. SAVE AND PROTECT ALL EXISTING TREES UNLESS OTHERWISE NOTED. ANY EXISTING TREES THAT DECLINE OR DIE DURING CONSTRUCTION SHALL BE REPLACED IN-KIND BY THE CONTRACTOR AT CONTRACTOR'S EXPENSE.
2. AT LANDSCAPE BED EDGE, HOLD DOWN GRADE SO THAT TOP OF MULCH WILL BE FLUSH WITH ADJACENT SURFACE AFTER MULCH IS ADDED.
3. IN LANDSCAPING AREAS, WORK GRADE SO THAT, AFTER MULCH IS ADDED, GRADE WILL MEET AND MATCH ADJACENT SURFACES WHEREVER POSSIBLE, WITH SLOPE NOT TO EXCEED 3H:1V.
4. MINIMIZE FILL NEAR EXISTING TREES. DO NOT PLACE FILL AGAINST TREE TRUNK UNDER ANY CIRCUMSTANCES.
5. TREE PRUNING SHALL BE PER ITEM 666.

PROFESSIONAL STAMP

SIGN:
DATE:

CONTRACT DRAWING

PRINTS NOT BEARING THIS STAMP WERE MADE PRIOR TO ADVERTISING FOR BIDS AND ARE TO BE CONSIDERED OBSOLETE FOR CONTRACT PURPOSES.

Department of Transportation and Engineering

City of Cincinnati
City Hall
801 Plum Street
Cincinnati, Ohio 45202

CINCINNATI STREETCAR
STREETCAR STOPS
LEGEND AND GENERAL NOTES

Revisions
No.

Drawn by ML	Date 07/02/12
Designed by ML	Date 07/02/12
Checked by SJ/MM	Date 07/02/12
Reviewed by JTB	Date 07/12/12

Consultant

File Number

ACC No. 23126

G-LS-1000

H:\1208 Streetcar Stops Revisions\Sheets\Streetcar Legend and Note Sheet.dwg
11/19/2010 4:00:31 PM

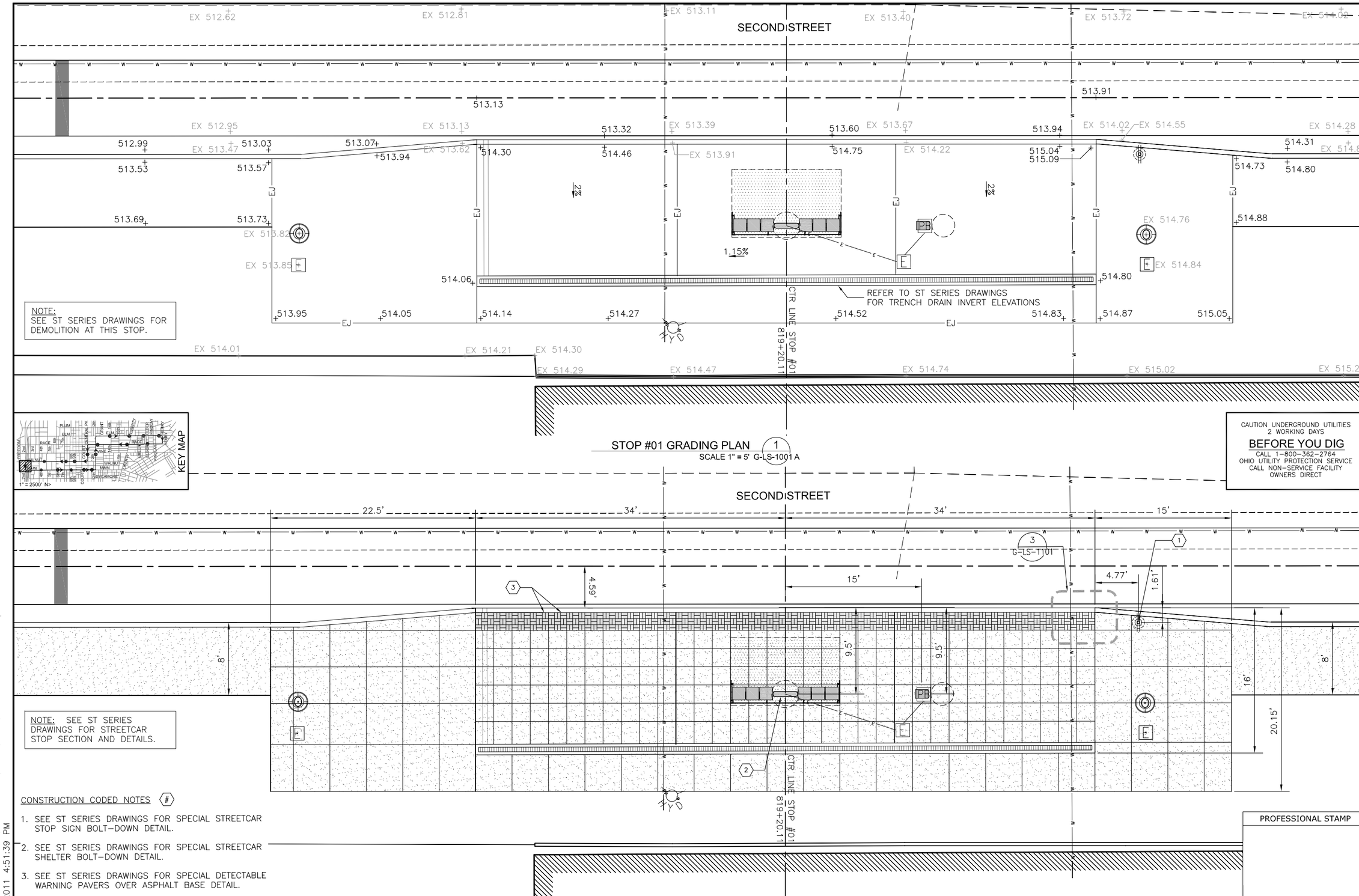

CONSTRUCTION CODED NOTES #

1. SEE ST SERIES DRAWINGS FOR SPECIAL STREETCAR STOP SIGN BOLT-DOWN DETAIL.
2. SEE ST SERIES DRAWINGS FOR SPECIAL STREETCAR SHELTER BOLT-DOWN DETAIL.
3. SEE ST SERIES DRAWINGS FOR SPECIAL DETECTABLE WARNING PAVERS OVER ASPHALT BASE DETAIL.

PROFESSIONAL STAMP

SIGN:

DATE:

CONTRACT DRAWING

PRINTS NOT BEARING THIS STAMP WERE MADE PRIOR TO ADVERTISING FOR BIDS AND ARE TO BE CONSIDERED OBSOLETE FOR CONTRACT PURPOSES.

Department of Transportation and Engineering

City of Cincinnati
City Hall
801 Plum Street
Cincinnati, Ohio 45202

CINCINNATI STREETCAR
STREETCAR STOPS
STOP #01 DETAIL DRAWINGS

Revisions

No.	Date
	07/02/12
	07/02/12
	07/02/12
	07/12/12

Drawn by ML	Date 07/02/12
Designed by ML	Date 07/02/12
Checked by SJ/MM	Date 07/02/12
Reviewed by JTB	Date 07/12/12

Consultant

File Number

ACC No. 23126

G-LS-1001A

H:\1208 Streetcar Stops Revisions\Plans\Land\streetcar xsite CBD.dwg
10/25/2011 4:51:39 PM

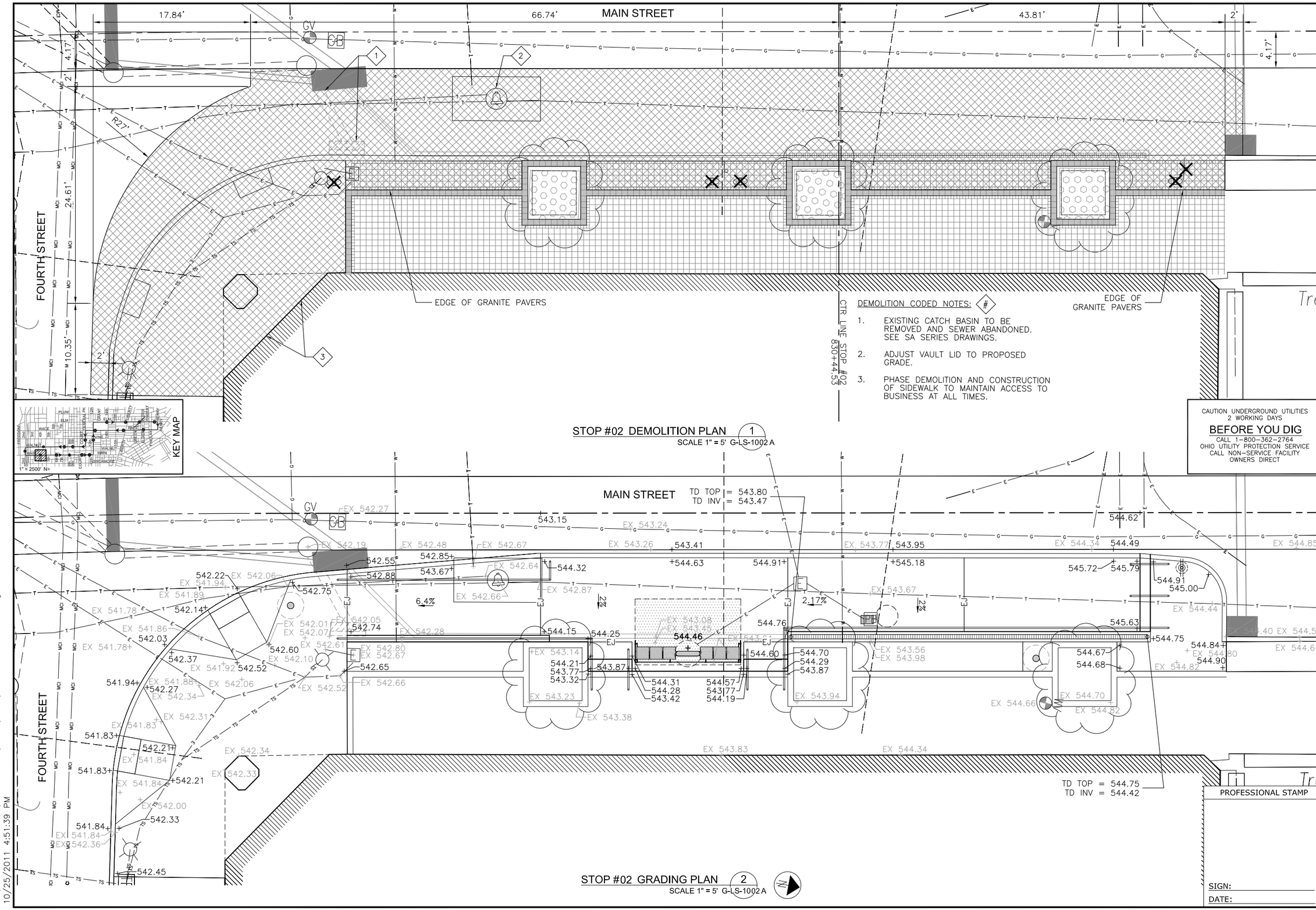
MAIN STREET
FOURTH STREET
17.84'
66.74'
43.81'
2'
4.17'
24.61'
10.35'
R27'
GV
CB
EDGE OF GRANITE PAVERS
CTR LINE STOP #02
830+44.53
KEY MAP
1" = 2500' N>
TD TOP = 543.80
TD INV = 543.47
TD TOP = 544.75
TD INV = 544.42
6.4%
2.17%
2%
544.46
544.60
544.70
544.29
543.87
544.31
544.28
543.42
544.21
543.77
543.32
543.87
544.15
544.25
544.76
544.91
545.00
545.63
544.75
544.84
544.90
544.67
544.68
545.72
545.79
544.62
544.49
543.95
543.41
543.15
544.32
542.55
542.85
542.88
543.67
542.75
542.74
542.65
542.60
542.52
542.37
542.03
542.14
542.22
541.94
542.27
541.83
542.21
541.84
542.33
542.45
541.84
542.36
542.00
541.83
541.94
542.27
542.21
542.33
EX 543.23
EX 543.94
EX 544.70
EX 543.38
EX 543.83
EX 544.34
EX 544.66
EX 544.82
EX 544.44
EX 544.40
EX 544.56
EX 544.66
EX 544.80
EX 544.82
EX 543.56
EX 543.98
EX 543.67
EX 543.77
EX 543.26
EX 543.24
EX 542.27
EX 542.19
EX 542.48
EX 542.67
EX 542.64
EX 542.66
EX 542.87
EX 542.28
EX 542.80
EX 542.67
EX 542.66
EX 542.52
EX 542.34
EX 542.31
EX 542.06
EX 541.94
EX 541.89
EX 541.78
EX 541.86
EX 541.78+
EX 541.92
EX 541.88
EX 541.84
EX 541.83
EX 542.34
EX 542.33
EX 542.36
EX 542.45
EX 542.00
EX 542.01
EX 542.05
EX 542.07
EX 542.61
EX 542.10
EX 542.28
EX 543.14
EX 543.08
EX 543.45
EX 543.61
EX 544.84
EX 544.85
EX 544.49
EX 544.34
EX 544.62
EX 543.77
EX 543.24
EX 543.26
EX 543.41
EX 543.15

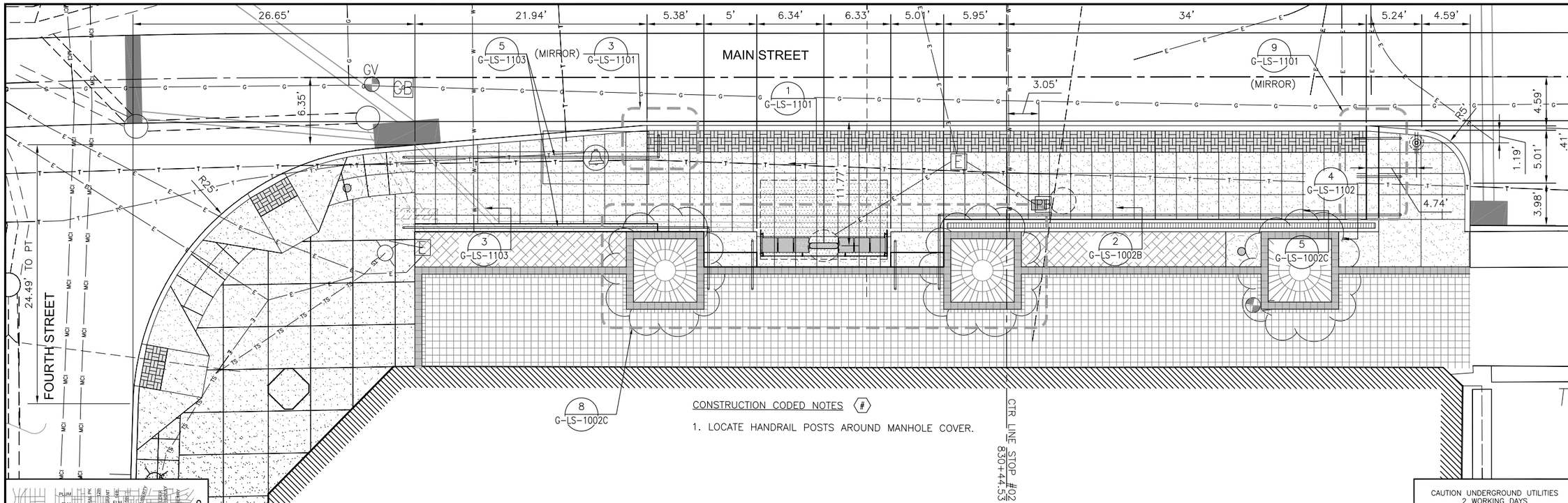

CONSTRUCTION CODED NOTES #

1. LOCATE HANDRAIL POSTS AROUND MANHOLE COVER.

STOP #02 LAYOUT & MATERIALS PLAN 1
SCALE 1" = 5' G-LS-1002 B

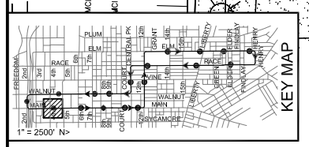

CAUTION UNDERGROUND UTILITIES
2 WORKING DAYS
BEFORE YOU DIG
CALL 1-800-362-2764
OHIO UTILITY PROTECTION SERVICE
CALL NON-SERVICE FACILITY
OWNERS DIRECT

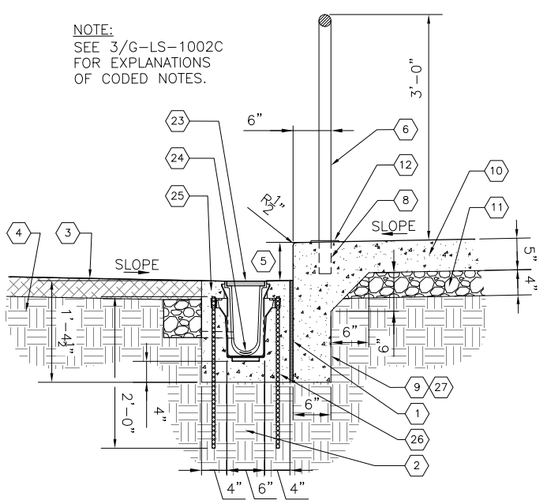

TURNED DOWN SLAB AT TRENCH DRAIN & LANDSCAPING 2
SCALE 1" = 1'-0" G-LS-1002 B

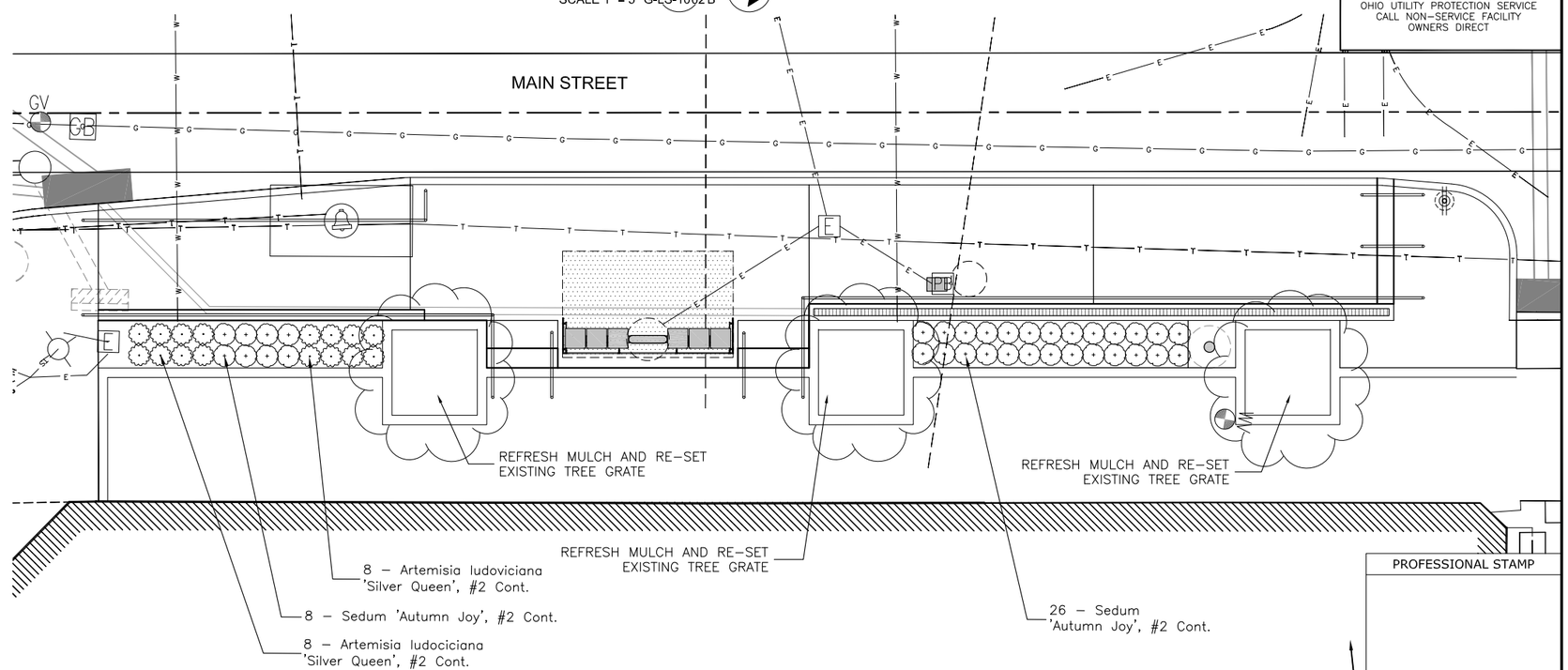

STOP #02 LANDSCAPE PLAN 3
SCALE 1" = 5' G-LS-1002 B

PROFESSIONAL STAMP

SIGN:

DATE:

CONTRACT DRAWING

PRINTS NOT BEARING THIS STAMP WERE MADE PRIOR TO ADVERTISING FOR BIDS AND ARE NOT TO BE CONSIDERED OBSOLETE FOR CONTRACT PURPOSES.

Department of Transportation and Engineering

City of Cincinnati
City Hall
801 Plum Street
Cincinnati, Ohio 45202

CINCINNATI STREETCAR
STREETCAR STOPS
STOP #02 DETAIL DRAWINGS

Revisions

No.		

Drawn by ML	Date 07/02/12
Designed by ML	Date 07/02/12
Checked by SJ/MM	Date 07/02/12
Reviewed by JTB	Date 07/12/12

Consultant

File Number

ACC No. 23126

G-LS-1002 B

H:\1208 Streetcar Stops Revisions\Plans\Land\streetcar xsite CBD.dwg
10/25/2011 4:50:58 PM

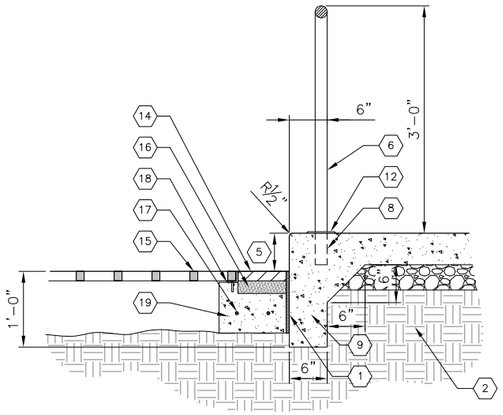

TURNED DOWN SLAB AT TREE GRATE (1)
SCALE 1" = 1'-0" G-LS-1002C

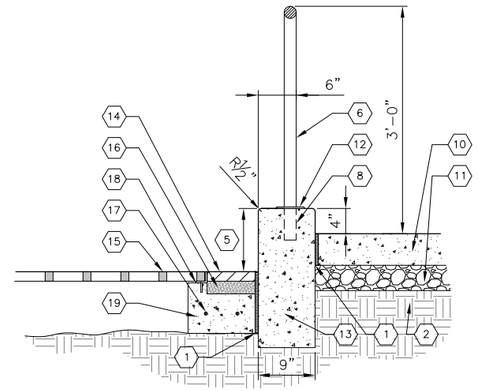

RAMP EDGE PROTECTION AT TREE GRATE (2)
SCALE 1" = 1'-0" G-LS-1002C

(#) CODED NOTES:

1. ITEM 705.03 – 1/2" EXPANSION JOINT, SEAL PER ITEM 705.04.
2. ITEM 204 – COMPACTED SUBGRADE.
3. ITEM 661 – MULCH, 3" DEPTH.
4. IMPORTED SHREDDED TOPSOIL. SEE
5. VARIES, SEE GRADING PLAN.
6. ITEM SPECIAL – 1–1/2" (1.9" O.D.) STAINLESS STEEL PIPE HANDRAIL AND POSTS (SEE STAINLESS STEEL GENERAL NOTES ON SHEET G–LS–1101).
7. 6" X 1/2" DIA. SMOOTH STEEL DOWEL WITH EXPANSION SLEEVE ON ONE SIDE, 2' O.C. – SIMILAR TO ITEM 451.08–C.
8. CORE DRILL 2–1/2" DIA., 5" DEEP AND FILL WITH ITEM 705.20, NON–SHRINK GROUT.
9. TURNED DOWN SLAB – ITEM 499, CLASS C CONCRETE.
10. ITEM 608 – 5" THICK CLASS C CONCRETE SIDEWALK.
11. ITEM 304 – 4" AGGREGATE BASE.
12. ITEM SPECIAL – PLAIN FLANGE, 4–1/4" DIAMETER, STAINLESS STEEL, (SEE STAINLESS STEEL GENERAL NOTES ON SHEET G–LS–1101).
13. ITEM 609 – CLASS C CONCRETE CURB.
14. EXISTING PAVER(S).
15. EXISTING TREE GRATE.
16. EXISTING MORTAR BED.
17. EXISTING REBAR.
18. EXISTING STEEL ANGLE.
19. EXISTING CONCRETE.
20. CORE DRILL 1–1/2" DIA. TO RECEIVE DOWEL, AND FILL WITH ITEM 705.20, NON–SHRINK GROUT. SPACE POSTS EQUALLY, 5' O.C. MAX.
21. ITEM 705.03 – 3/8" EXPANSION JOINT, SEAL PER ITEM 705.04.
22. NOT USED.
23. ITEM SPECIAL – ADA COMPLIANT CHANNEL GRATE.
24. ITEM SPECIAL – TRENCH DRAIN.
25. ITEM 499 – 4" MIN. CLASS C CONCRETE ENCASEMENT.
26. ITEM 709.09 – #4 REBAR, 2' O.C.
27. EXTEND TURNED DOWN SLAB TO BOTTOM OF TRENCH DRAIN.
28. CORE DRILL 2–1/2" DIA., 8" DEEP AND FILL WITH ITEM 705.20, NON–SHRINK GROUT.
29. ITEM 709.09 – #4 REBAR, CONTINUOUS.
30. ITEM 608 – CLASS C CONCRETE STEPS.
31. ITEM 304 – 6" AGGREGATE BASE.
32. CONDITION AT HANDRAIL END SHOWN. DO NOT PROVIDE RADIUS AT HANDRAIL CORNERS.

CODED NOTES (3)
NOT TO SCALE G-LS-1002C

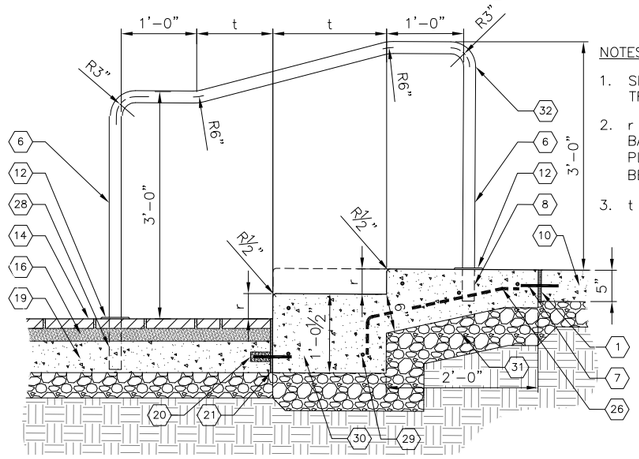

NOTES:

1. SLOPE ALL STEP TREADS 2% TO DRAIN.
2. r = RISER HEIGHT BASED ON GRADING PLAN. (MUST BE BETWEEN 4" AND 7").
3. t = 26" – 2r

DOUBLE STEP AT EXISTING PAVERS (4)
SCALE 1" = 1'-0" G-LS-1002C

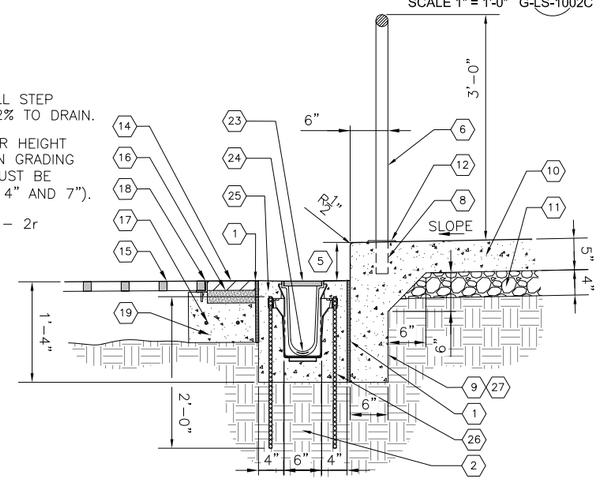

TURNED DOWN SLAB AT TRENCH DRAIN & TREE GRATE (5)
SCALE 1" = 1'-0" G-LS-1002C

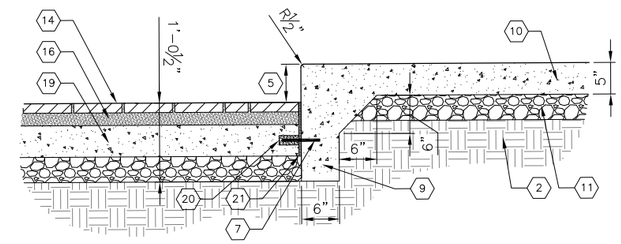

TURNED DOWN SLAB AT EXISTING PAVERS (6)
SCALE 1" = 1'-0" G-LS-1002C

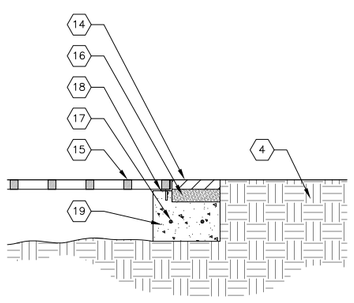

LANDSCAPING AT TREE GRATE (7)
SCALE 1" = 1'-0" G-LS-1002C

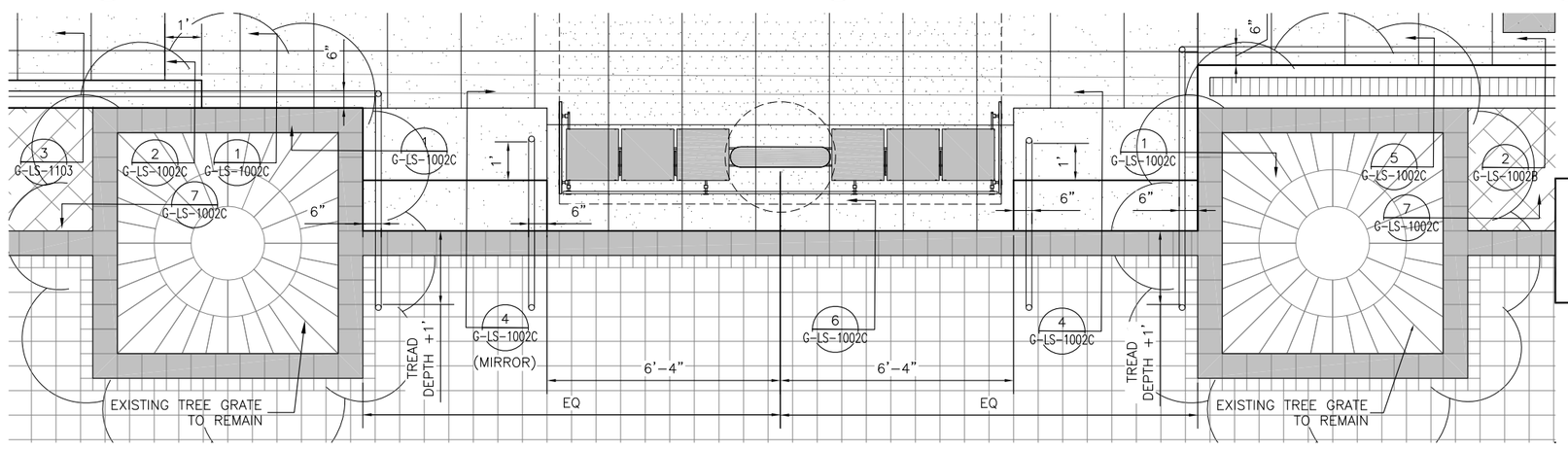

STOP #2 STEP ENLARGEMENT PLAN (8)
SCALE 1/2" = 1'-0" G-LS-1002C

CAUTION UNDERGROUND UTILITIES
2 WORKING DAYS
BEFORE YOU DIG
CALL 1–800–362–2764
OHIO UTILITY PROTECTION SERVICE
CALL NON–SERVICE FACILITY
OWNERS DIRECT

PROFESSIONAL STAMP

SIGN:
DATE:

CONTRACT DRAWING
PRINTS NOT BEARING THIS STAMP WERE MADE PRIOR TO ADVERTISING FOR BIDS AND ARE TO BE CONSIDERED OBSOLETE FOR CONTRACT PURPOSES.

Department of Transportation and Engineering
City of Cincinnati
801 Plum Street
Cincinnati, Ohio 45202

CINCINNATI STREETCAR
STREETCAR STOPS
STOP #02 SPECIAL DETAILS

Revisions
No.

Drawn by ML	Date 07/02/12
Designed by NL	Date 07/02/12
Checked by SJ/MM	Date 07/02/12
Reviewed by JTB	Date 07/12/12

Consultant
PB
HDR
DNK

File Number

ACC No. 23126

G-LS-1002C

H:\1208 Streetcar Stops Revisions\Plans\Land\streetcar xsite CBD.dwg
11/19/2010 4:00:31 PM

DEMOLITION CODED NOTES: (#)

1. ADJUST EXISTING VALVE TO NEW GRADE.
2. EXISTING POLE TO REMAIN.
3. EXISTING FIRE HYDRANT TO REMAIN.
4. EXISTING LIGHT TO REMAIN: REMOVE BOOT, SET ASIDE AND REINSTALL WHEN NEW PAVEMENT IS IN PLACE.
5. EXISTING PULL BOX TO REMAIN.
6. EXISTING MANHOLE AND SEWER TO BE ABANDONED. SEE SA SERIES DRAWINGS.
7. SUNESYS TO REMOVE ABANDONED MANHOLE/DUCT BANK WHERE THEY INTERFERE WITH NEW WORK.
8. EXISTING ELECTRICAL LINE TO BE RELOCATED BY DUKE ENERGY.
9. REMOVE PAVERS TO THE MINIMUM EXTENT NECESSARY TO INSTALL THE PROPOSED IMPROVEMENTS. CAREFULLY SAW CUT AT PAVER JOINTS.
10. EDGE OF PROPOSED TRACK SLAB.

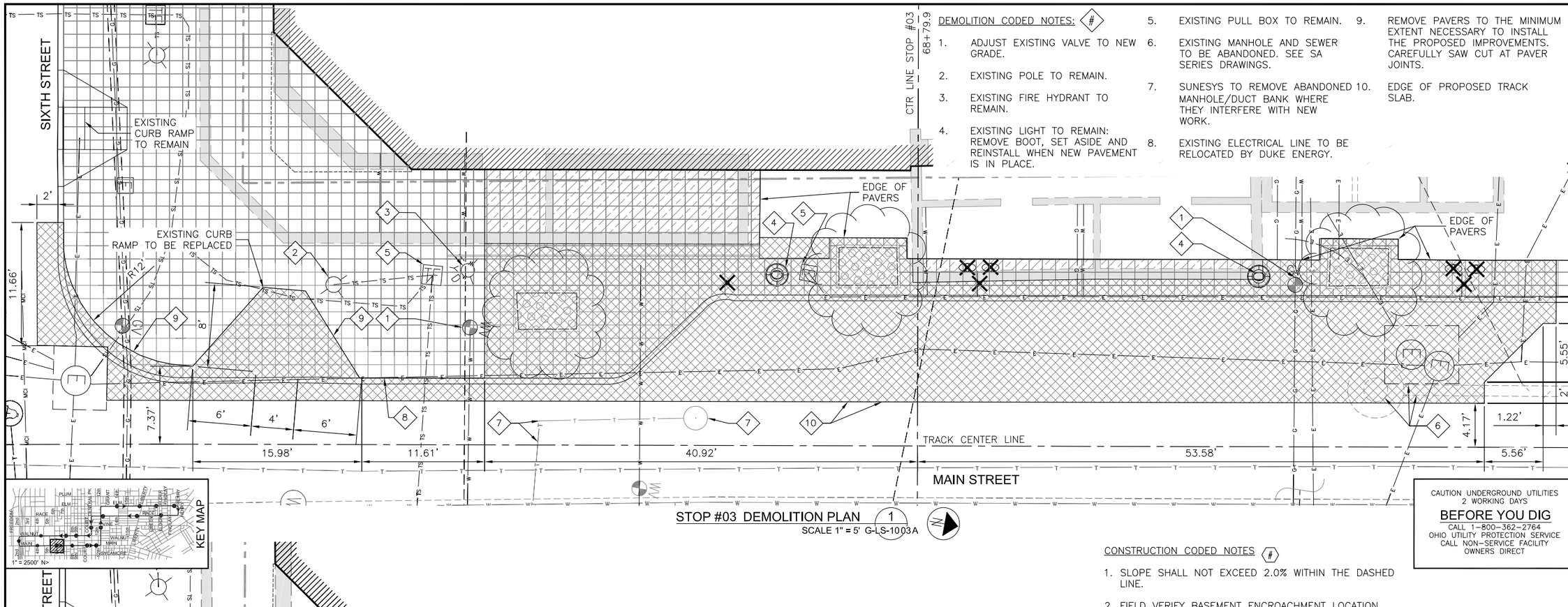

STOP #03 DEMOLITION PLAN (1)
SCALE 1" = 5' G-LS-1003A

CAUTION UNDERGROUND UTILITIES
2 WORKING DAYS
BEFORE YOU DIG
CALL 1-800-362-2764
OHIO UTILITY PROTECTION SERVICE
CALL NON-SERVICE FACILITY OWNERS DIRECT

CONSTRUCTION CODED NOTES (#)

1. SLOPE SHALL NOT EXCEED 2.0% WITHIN THE DASHED LINE.
2. FIELD VERIFY BASEMENT ENCROACHMENT LOCATION PRIOR TO SHELTER FOUNDATION CONSTRUCTION.
3. FIELD VERIFY LOCATION OF ELECTRIC LINE PRIOR TO CONSTRUCTION OF OCS POLE FOUNDATION. RELOCATE ELECTRIC LINE IF NECESSARY.
4. ITEM 512.08 – TYPE 3 WATERPROOFING.

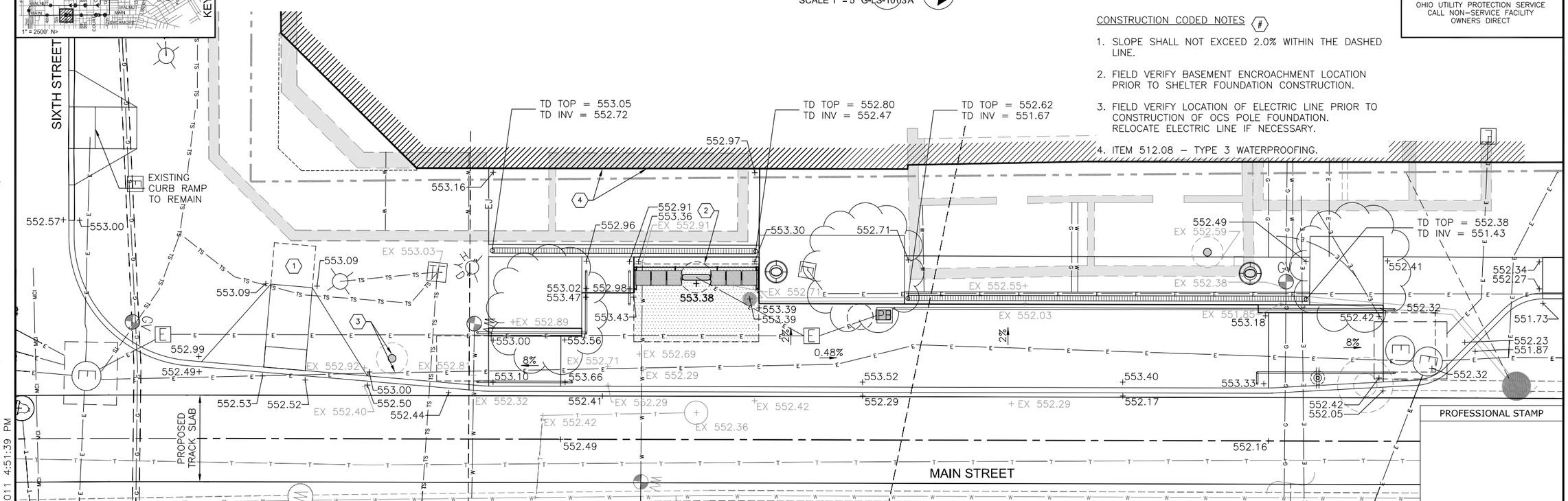

STOP #03 GRADING PLAN (2)
SCALE 1" = 5' G-LS-1003A

PROFESSIONAL STAMP

SIGN:

DATE:

CONTRACT DRAWING

PRINTS NOT BEARING THIS STAMP WERE MADE PRIOR TO ADVERTISING FOR BIDS AND ARE TO BE CONSIDERED OBSOLETE FOR CONTRACT PURPOSES.

Department of Transportation and Engineering

City of Cincinnati
City Hall
801 Plum Street
Cincinnati, Ohio 45202

CINCINNATI STREETCAR
STREETCAR STOPS
STOP #03 DETAIL DRAWINGS

Revisions

No.		

Drawn by ML	Date 07/02/12
Designed by ML	Date 07/02/12
Checked by SJ/MM	Date 07/02/12
Reviewed by JTB	Date 07/12/12

Consultant

PB
HDR
DMS

File Number

ACC No. 23126

G-LS-1003A

H:\1208 Streetcar Stops Revisions\Plans\Land\streetcar xsite CBD.dwg
10/25/2011 4:51:39 PM

CONSTRUCTION CODED NOTES (#)

1. SLOPE SHALL NOT EXCEED 2.0% WITHIN THE DASHED LINE.
2. FIELD VERIFY BASEMENT ENCROACHMENT LOCATION PRIOR TO SHELTER FOUNDATION CONSTRUCTION.
3. FIELD VERIFY LOCATION OF ELECTRIC LINE PRIOR TO CONSTRUCTION OF OCS POLE FOUNDATION. RELOCATE ELECTRIC LINE IF NECESSARY.
4. ITEM 512.08 – TYPE 3 WATERPROOFING.
5. EXTEND TURNED DOWN SLAB 3' BEYOND END OF TRENCH DRAIN.
6. RELOCATE LIGHTING CIRCUIT AS NEEDED TO CONSTRUCT TRENCH DRAIN.

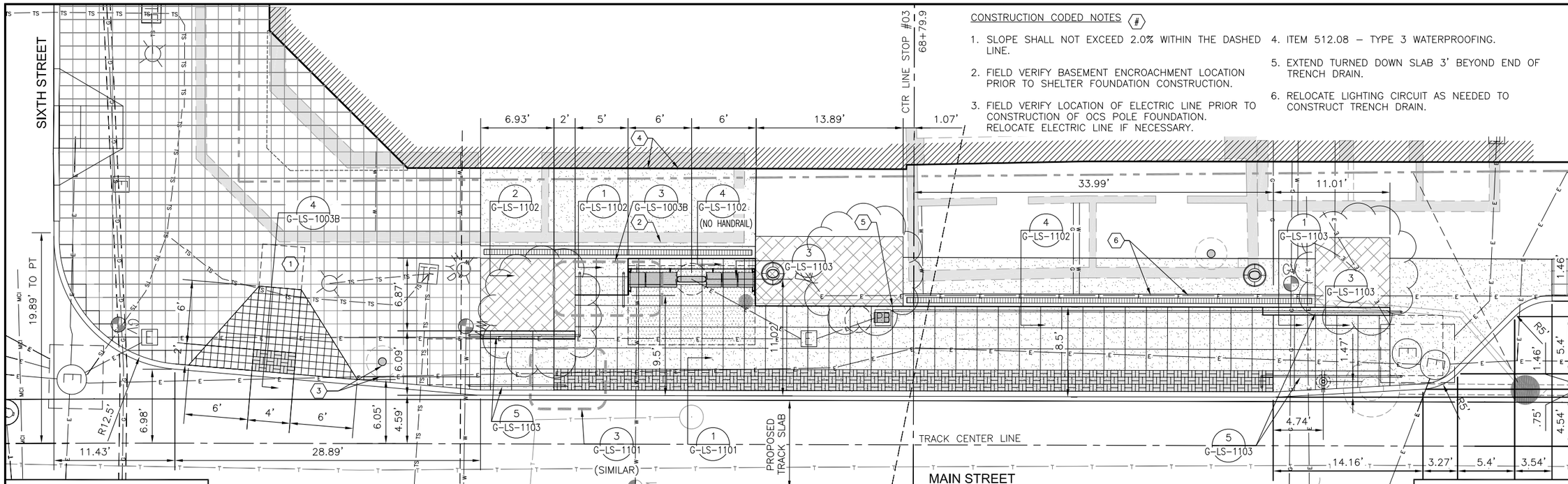

STOP #03 LAYOUT & MATERIALS PLAN (1)
SCALE 1" = 5' G-LS-1003 B

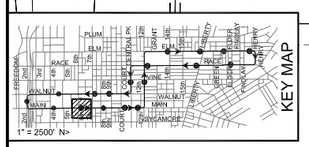

CAUTION UNDERGROUND UTILITIES
2 WORKING DAYS
BEFORE YOU DIG
CALL 1-800-362-2764
OHIO UTILITY PROTECTION SERVICE
CALL NON-SERVICE FACILITY
OWNERS DIRECT

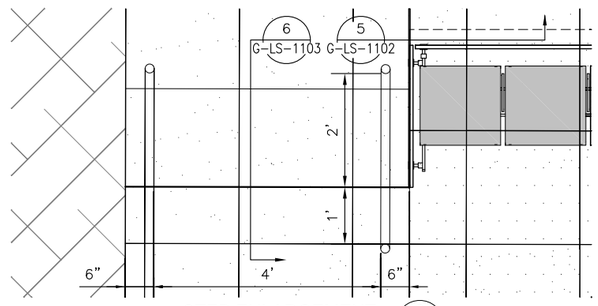

STEP ENLARGEMENT (3)
PLAN - SCALE 3/4" = 1'-0" G-LS-1003 B

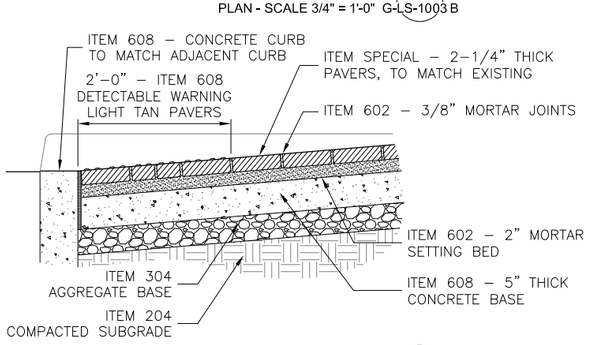

MORTARED PAVER CURB RAMP (4)
SECTION - SCALE 1" = 1'-0" G-LS-1003 B

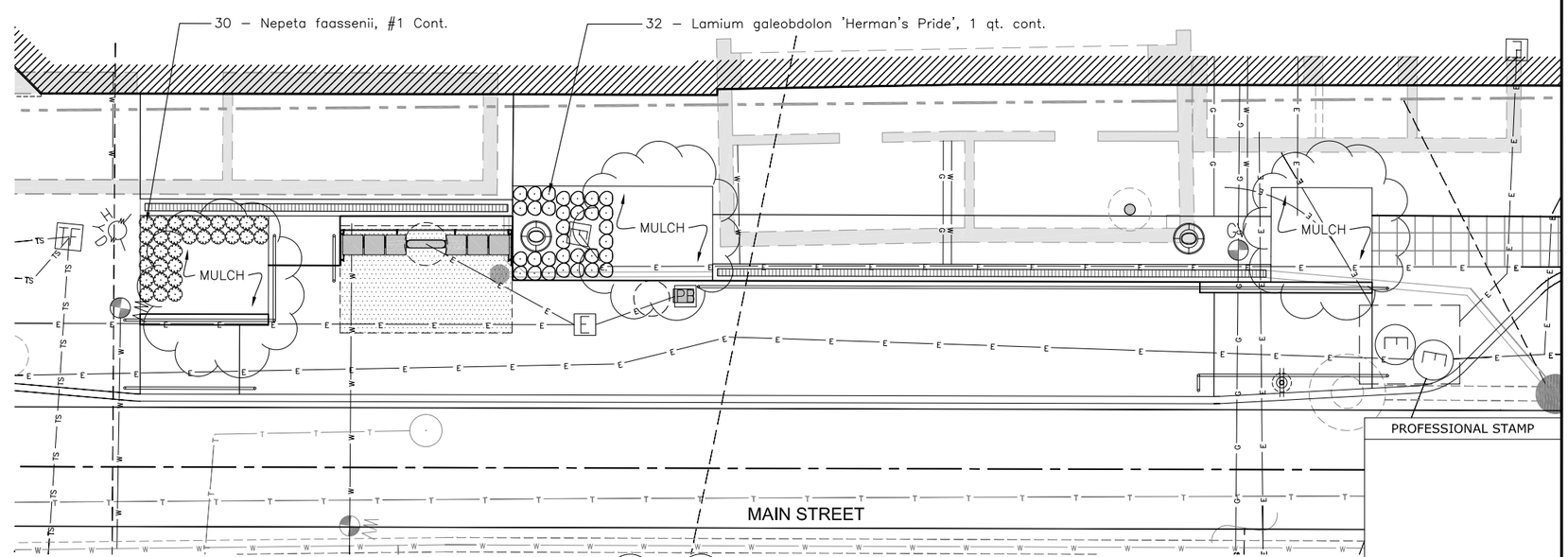

STOP #03 LANDSCAPE PLAN (2)
SCALE 1" = 5' G-LS-1003 B

PROFESSIONAL STAMP

SIGN:
DATE:

CONTRACT DRAWING
PRINTS NOT BEARING THIS STAMP WERE MADE PRIOR TO ADVERTISING FOR BIDS AND ARE TO BE CONSIDERED OBSOLETE FOR CONTRACT PURPOSES.

Department of Transportation and Engineering
City of Cincinnati
City Hall
801 Plum Street
Cincinnati, Ohio 45202

CINCINNATI STREETCAR
STREETCAR STOPS
STOP #03 DETAIL DRAWINGS

Revisions
No.

Drawn by ML	Date 07/02/12
Designed by ML	Date 07/02/12
Checked by SJ/MM	Date 07/02/12
Reviewed by JTB	Date 07/12/12

Consultant
PB
HDR
DNK

File Number
ACC No. 23126

G-LS-1003 B

H:\1208 Streetcar Stops Revisions\Plans\Land\streetcar xsite CBD.dwg
10/25/2011 4:50:58 PM

DEMOLITION CODED NOTES: (#)

1. ADJUST EXISTING VALVE TO NEW GRADE.
2. DUKE ENERGY TO RELOCATE EXISTING VAULT MANHOLE OUT OF PROPOSED DETECTABLE WARNING AREA. RELOCATED VAULT MANHOLE TO MEET FINISHED GRADE ELEVATION.
3. EXISTING LIGHT TO REMAIN: REMOVE BOOT, SET ASIDE AND REINSTALL WHEN NEW PAVEMENT IS IN PLACE.
4. DUKE ENERGY TO ADJUST MANHOLE TO FINISHED GRADE.
5. EXISTING ELECTRICAL LINE TO BE RELOCATED BY DUKE ENERGY.
6. EDGE OF PROPOSED TRACK SLAB.

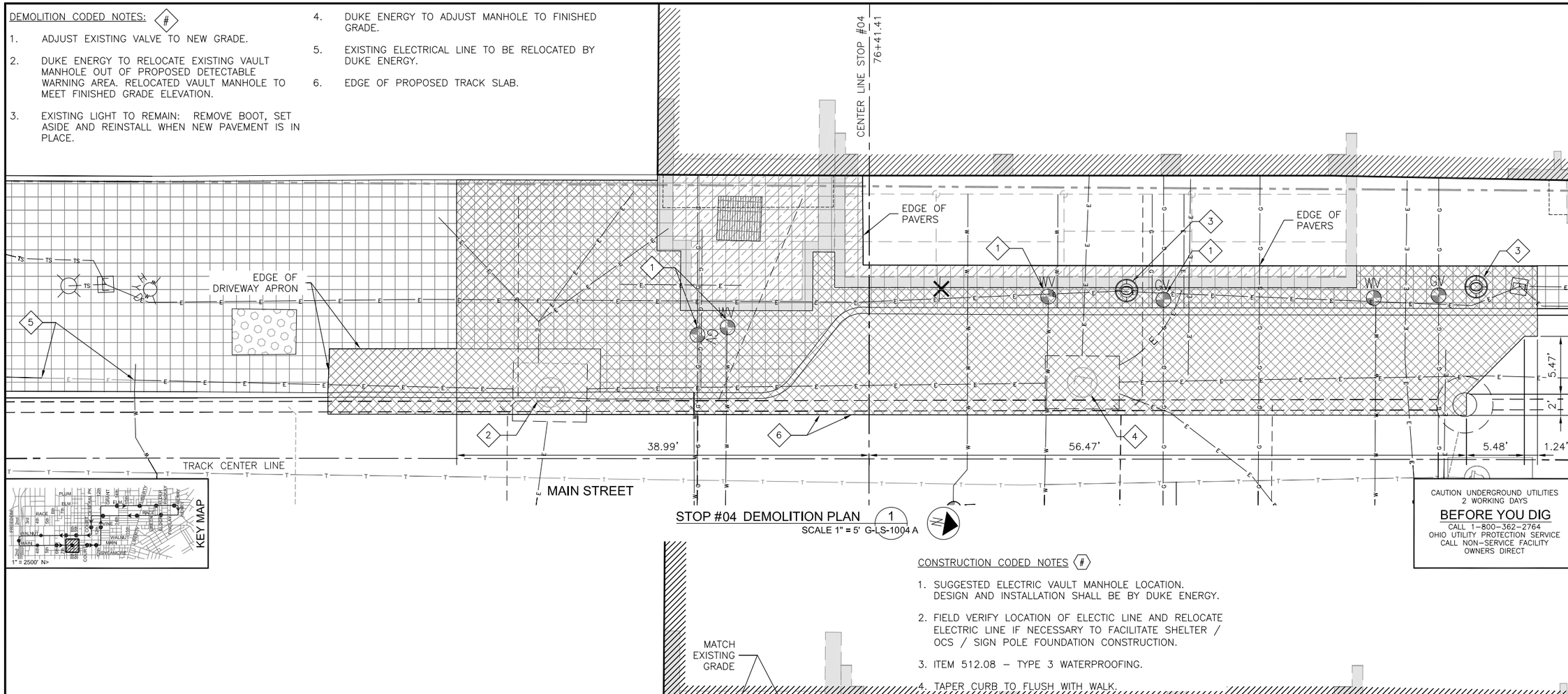

STOP #04 DEMOLITION PLAN (1)
SCALE 1" = 5' G-LS-1004 A

CAUTION UNDERGROUND UTILITIES
2 WORKING DAYS
BEFORE YOU DIG
CALL 1-800-362-2764
OHIO UTILITY PROTECTION SERVICE
CALL NON-SERVICE FACILITY
OWNERS DIRECT

CONSTRUCTION CODED NOTES (#)

1. SUGGESTED ELECTRIC VAULT MANHOLE LOCATION. DESIGN AND INSTALLATION SHALL BE BY DUKE ENERGY.
2. FIELD VERIFY LOCATION OF ELECTIC LINE AND RELOCATE ELECTRIC LINE IF NECESSARY TO FACILITATE SHELTER / OCS / SIGN POLE FOUNDATION CONSTRUCTION.
3. ITEM 512.08 – TYPE 3 WATERPROOFING.
4. TAPER CURB TO FLUSH WITH WALK.

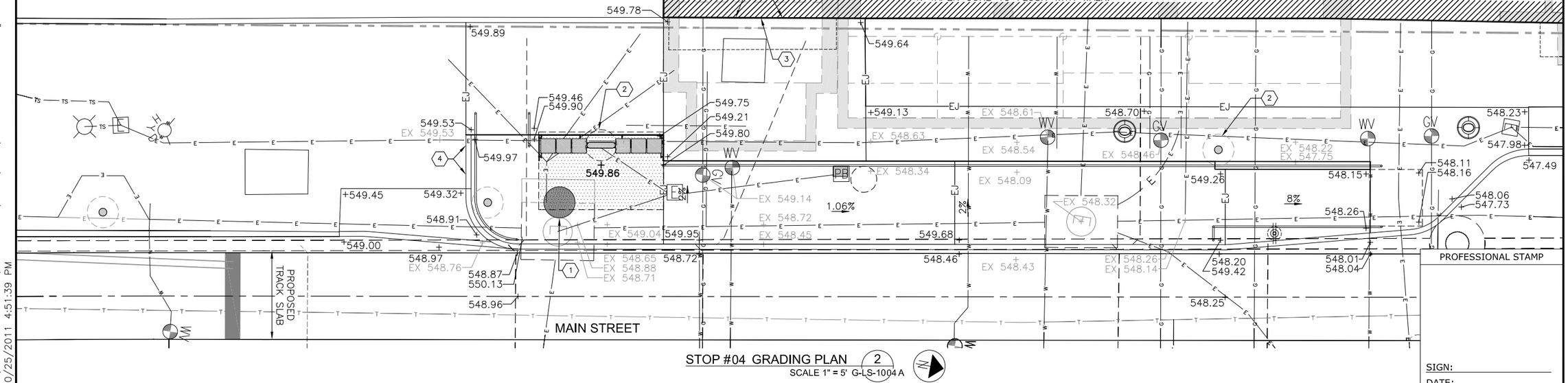

STOP #04 GRADING PLAN (2)
SCALE 1" = 5' G-LS-1004 A

PROFESSIONAL STAMP

SIGN:
DATE:

CONTRACT DRAWING
PRINTS NOT BEARING THIS STAMP WERE MADE PRIOR TO ADVERTISING BID DATE AND ARE TO BE CONSIDERED OBSOLETE FOR CONTRACT PURPOSES.

Department of Transportation and Engineering
City of Cincinnati
City Hall
801 Plum Street
Cincinnati, Ohio 45202

CINCINNATI STREETCAR
STREETCAR STOPS
STOP #04 DETAIL DRAWINGS

Revisions
No.

Drawn by ML	Date 07/02/12
Designed by ML	Date 07/02/12
Checked by SJ/MM	Date 07/02/12
Reviewed by JTB	Date 07/12/12

Consultant
PB
HDR
DNK

File Number

ACC No. 23126

G-LS-1004 A

H:\1208 Streetcar Stops Revisions\Plans\Land\streetcar xsite CBD.dwg
10/25/2011 4:51:39 PM

CONSTRUCTION CODED NOTES (#)

1. SUGGESTED ELECTRIC VAULT MANHOLE LOCATION. DESIGN AND INSTALLATION SHALL BE BY DUKE ENERGY.
2. FIELD VERIFY LOCATION OF ELECTRIC LINE AND RELOCATE ELECTRIC LINE IF NECESSARY TO FACILITATE SHELTER / OCS / SIGN POLE FOUNDAITON CONSTRUCTION.

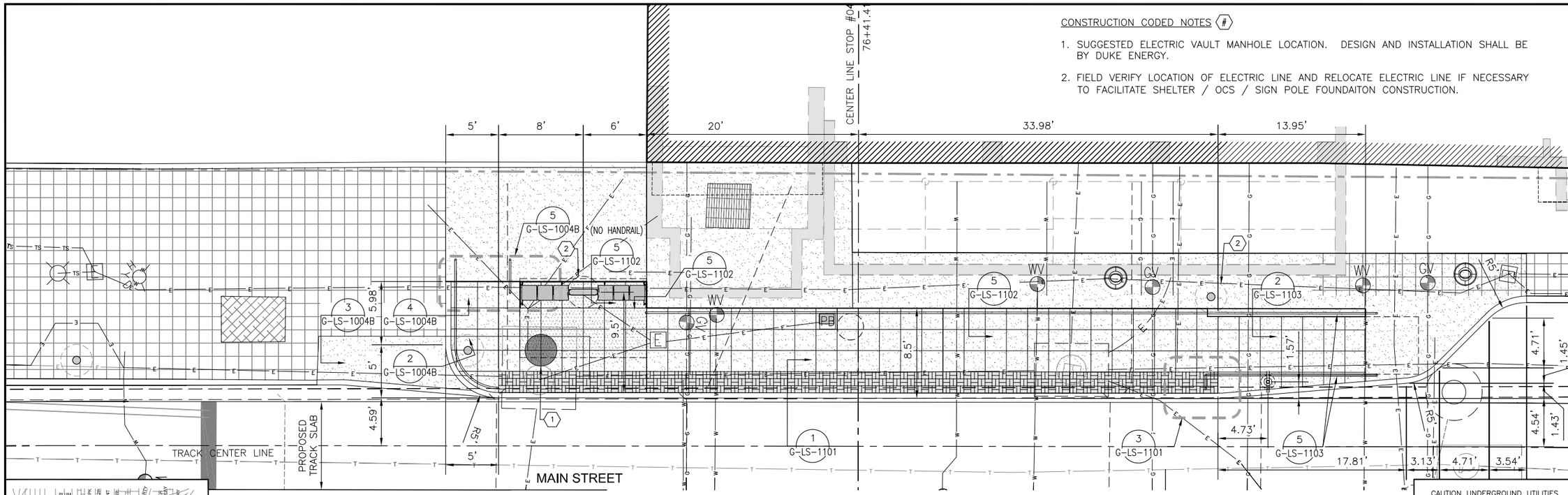

STOP #04 LAYOUT & MATERIALS PLAN (1)
SCALE 1" = 5' G-LS-1004B

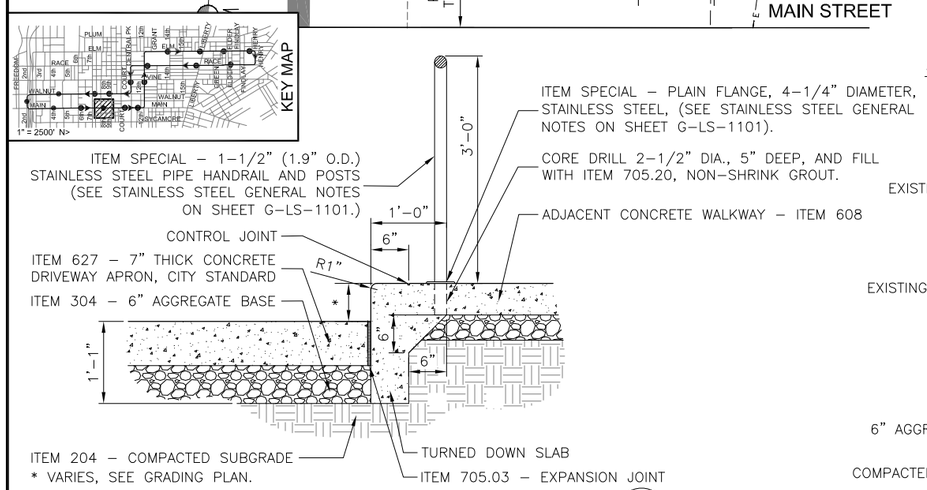

TURNED DOWN SLAB AT CONC. DRIVEWAY (2)
SCALE 1" = 1'-0" G-LS-1004 B

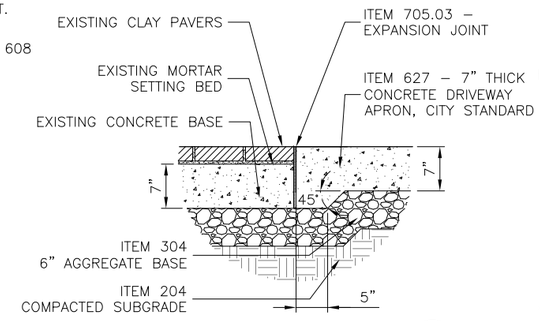

CONCRETE TO PAVER TRANSITION (3)
SCALE 1" = 1'-0" G-LS-1004 B

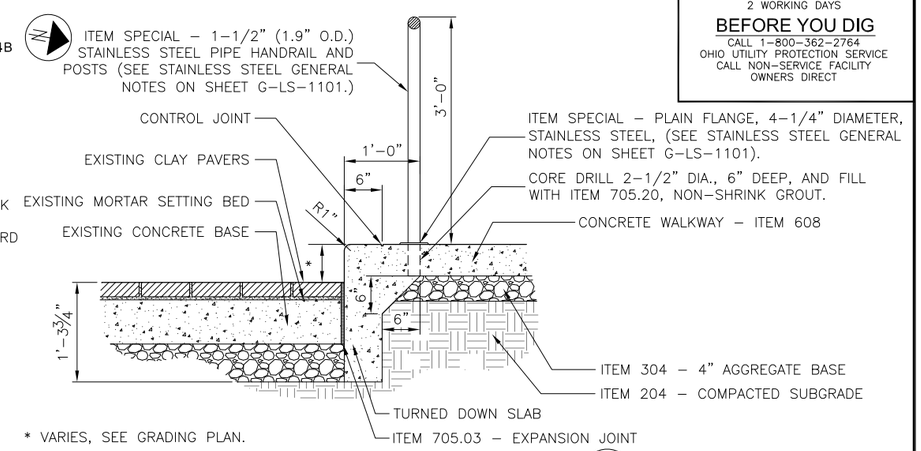

TURNED DOWN SLAB AT MORTARED PAVERS (4)
SCALE 1" = 1'-0" G-LS-1004 B

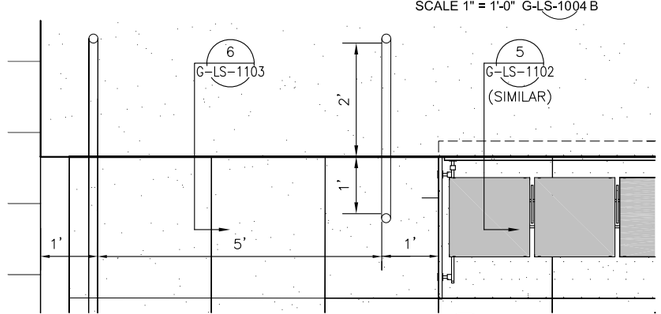

STEP ENLARGEMENT (5)
SCALE 1" = 1'-0" G-LS-1004 B

CAUTION UNDERGROUND UTILITIES
2 WORKING DAYS
BEFORE YOU DIG
CALL 1-800-362-2764
OHIO UTILITY PROTECTION SERVICE
CALL NON-SERVICE FACILITY OWNERS DIRECT

PROFESSIONAL STAMP

SIGN:
DATE:

CONTRACT DRAWING
PRINTS NOT BEARING THIS STAMP WERE MADE PRIOR TO ADVERTISING FOR BIDS AND ARE TO BE CONSIDERED OBSOLETE FOR CONTRACT PURPOSES.

Department of Transportation and Engineering
City of Cincinnati
City Hall
801 Plum Street
Cincinnati, Ohio 45202

CINCINNATI STREETCAR
STREETCAR STOPS
STOP #04 DETAIL DRAWINGS

Revisions
No.

Date 07/02/12	Date 07/12/12
Date 07/02/12	
Date 07/02/12	
Drawn by ML	Designed by ML
Checked by SJ/MM	Reviewed by JTB

Consultant

File Number

ACC No. 23126

G-LS-1004 B

H:\1208 Streetcar Stops Revisions\Plans\Land\streetcar xsite CBD.dwg
10/25/2011 4:50:58 PM

DEMOLITION CODED NOTES: (#)

1. EXISTING BOX TO REMAIN.
2. EXISTING POLE TO REMAIN.
3. ADJUST PULL BOX TO NEW GRADE.
4. EXISTING CATCH BASIN TO BE REMOVED. SEE SA SERIES DRAWINGS.
5. EXISTING MANHOLE AND SEWERS TO BE ABANDONED. REMOVE WHERE INTERFERING WITH NEW WORK. SEE SA SERIES DRAWINGS FOR DETAILS.
6. EXISTING CATCH BASIN TO REMAIN.
7. EXISTING LIGHT TO REMAIN: REMOVE BOOT, SET ASIDE AND REINSTALL WHEN NEW PAVEMENT IS IN PLACE.
8. EXISTING MCI/VERIZON DUCT BANK AND MANHOLE TO BE RELOCATED BY VERIZON.
9. EXISTING GAS LINE TO BE ABANDONED/RELOCATED BY DUKE ENERGY.
10. EDGE OF PROPOSED TRACK SLAB.
11. EXISTING MANHOLE TO BE REMOVED AND REPLACED. SEE SA SERIES DRAWINGS FOR DETAILS.

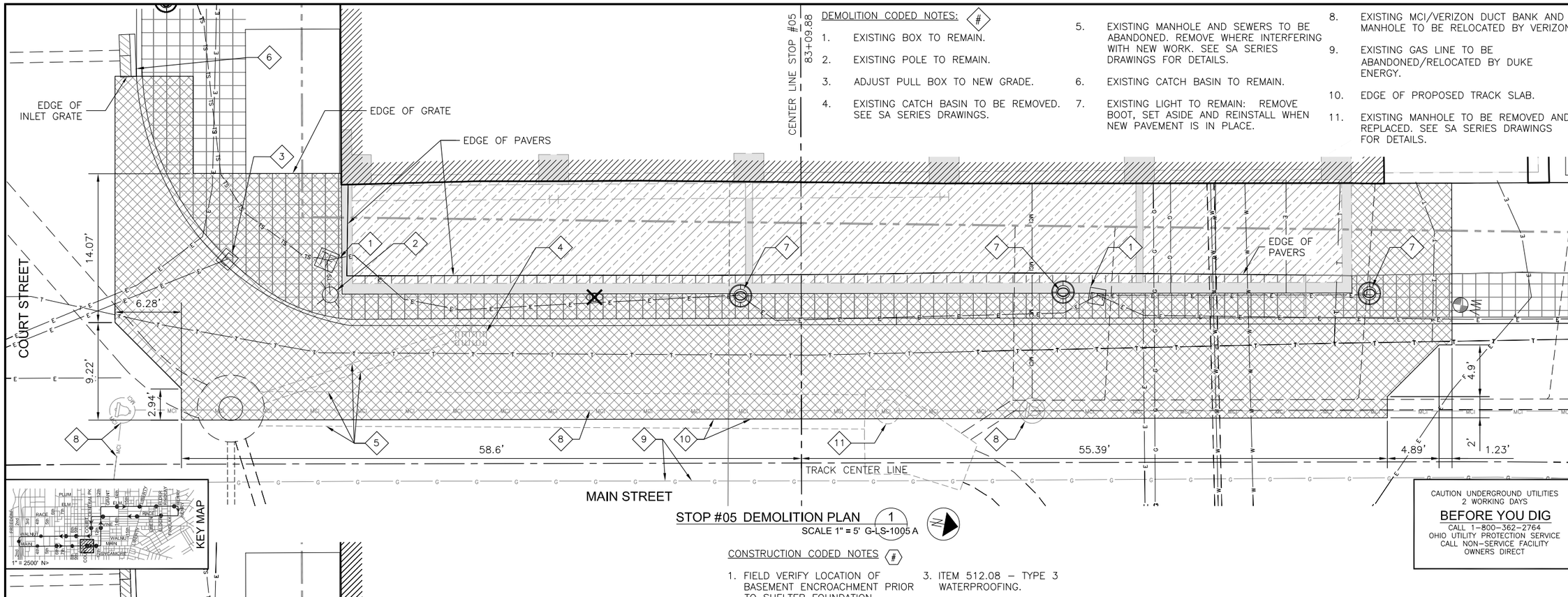

STOP #05 DEMOLITION PLAN (1)
SCALE 1" = 5' G-LS-1005 A

CONSTRUCTION CODED NOTES (#)

1. FIELD VERIFY LOCATION OF BASEMENT ENCROACHMENT PRIOR TO SHELTER FOUNDATION CONSTRUCTION.
2. FIELD VERIFY LOCATION OF ELECTRIC LINES RELATIVE TO OCS POLE FOUNDATION AND RELOCATE ELECTRIC LINES IF NEEDED.
3. ITEM 512.08 – TYPE 3 WATERPROOFING.

CAUTION UNDERGROUND UTILITIES
2 WORKING DAYS
BEFORE YOU DIG
CALL 1-800-362-2764
OHIO UTILITY PROTECTION SERVICE
CALL NON-SERVICE FACILITY OWNERS DIRECT

STOP #05 GRADING PLAN (2)
SCALE 1" = 5' G-LS-1005 A

PROFESSIONAL STAMP

SIGN:
DATE:

CONTRACT DRAWING
PRINTS NOT BEARING THIS STAMP WERE MADE PRIOR TO ADVERTISING FOR BIDS AND ARE NOT CONSIDERED OBSOLETE FOR CONTRACT PURPOSES.

Department of Transportation and Engineering
City of Cincinnati
City Hall
801 Plum Street
Cincinnati, Ohio 45202

CINCINNATI STREETCAR
STREETCAR STOPS
STOP #05 DETAIL DRAWINGS

Revisions
No.

Drawn by ML	Date 07/02/12
Designed by ML	Date 07/02/12
Checked by SJ/MM	Date 07/02/12
Reviewed by JTB	Date 07/12/12

Consultant
PB
HDR
DNK

File Number
ACC No. 23126

G-LS-1005 A

H:\1208 Streetcar Stops Revisions\Plans\Land\streetcar xsite CBD.dwg
10/25/2011 4:51:39 PM

CONSTRUCTION CODED NOTES (#)

1. FIELD VERIFY LOCATION OF BASEMENT ENCROACHMENT PRIOR TO SHELTER FOUNDATION CONSTRUCTION.
2. FIELD VERIFY LOCATION OF ELECTRIC LINES RELATIVE TO OCS POLE FOUNDATION AND RELOCATE ELECTRIC LINES IF NEEDED.
3. RELOCATE LIGHTING CIRCUIT AS NEEDED TO CONSTRUCT TRENCH DRAIN.
4. NEW PAVERS TO MATCH EXISTING.
5. FIELD VERIFY DEPTH OF EXISTING SEWER PRIOR TO INSTALLATION OF SIGN. USE BOLT-DOWN VERSION FROM ST SERIES DRAWINGS IF NEEDED.

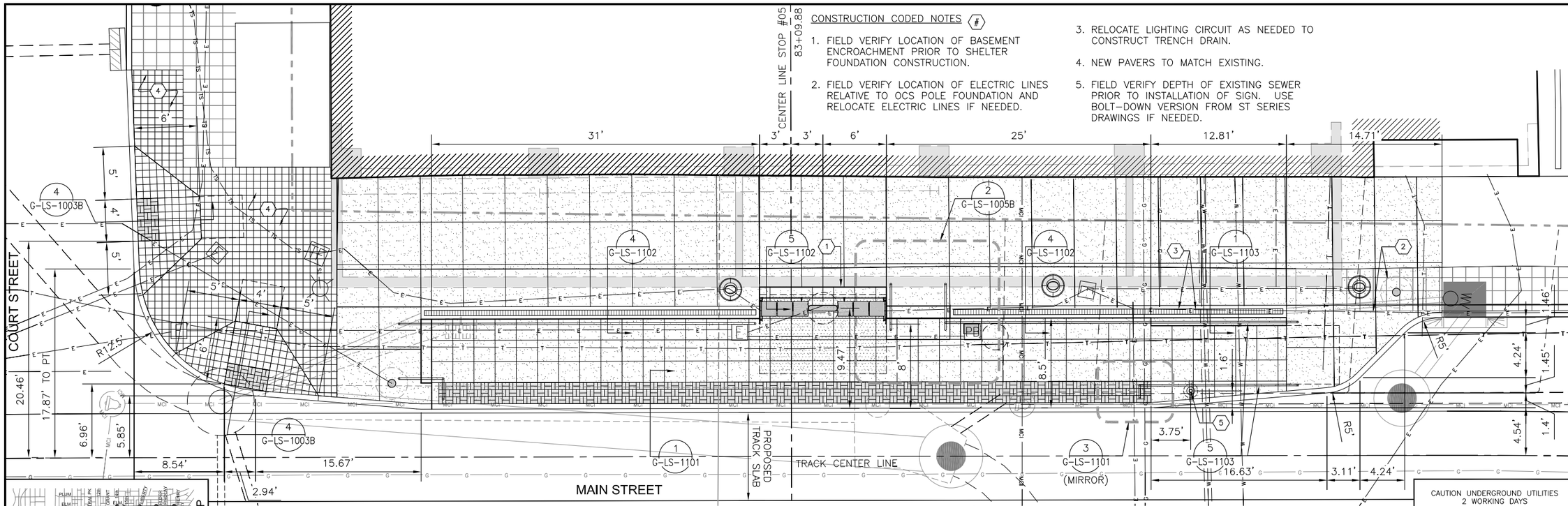

STOP #05 LAYOUT & MATERIALS PLAN (1)
SCALE 1" = 5' G-LS-1005B

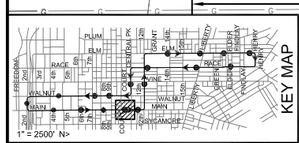

CAUTION UNDERGROUND UTILITIES
2 WORKING DAYS
BEFORE YOU DIG
CALL 1-800-362-2764
OHIO UTILITY PROTECTION SERVICE
CALL NON-SERVICE FACILITY
OWNERS DIRECT

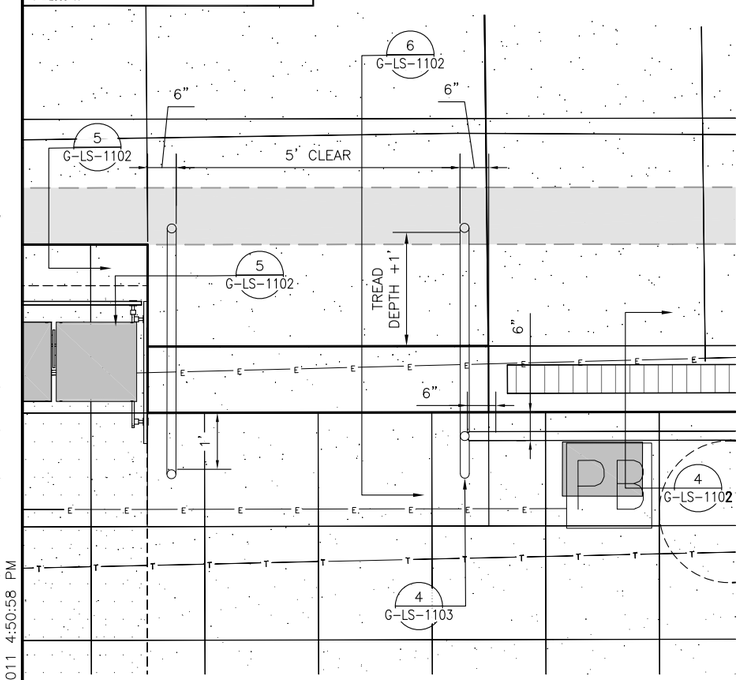

STAIR ENLARGEMENT (2)
SCALE 3/4" = 1'-0" G-LS-1005B

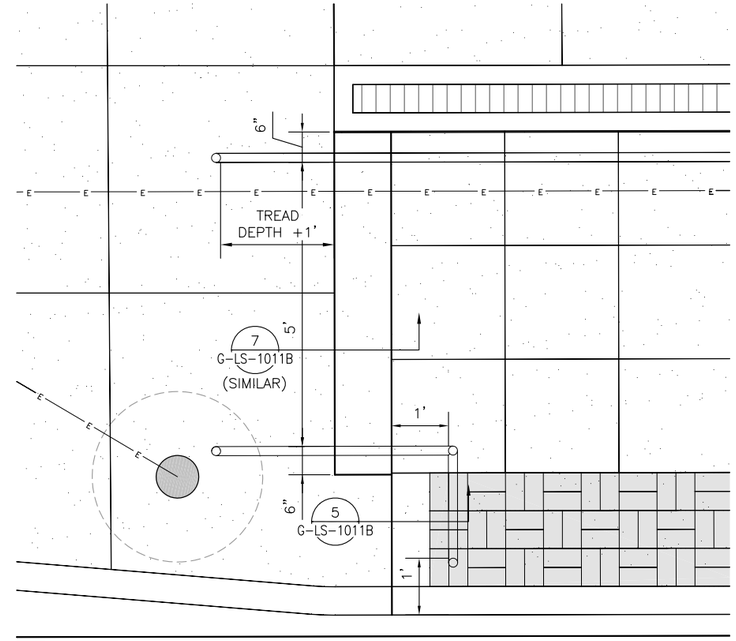

PLATFORM END ENLARGEMENT (3)
SCALE 3/4" = 1'-0" G-LS-1005B

PROFESSIONAL STAMP

SIGN:

DATE:

CONTRACT DRAWING

PRINTS NOT BEARING THIS STAMP WERE MADE PRIOR TO ADVERTISING FOR BIDS AND ARE NOT CONSIDERED OBSOLETE FOR CONTRACT PURPOSES.

Department of Transportation and Engineering

City of Cincinnati
City Hall
801 Plum Street
Cincinnati, Ohio 45202

CINCINNATI STREETCAR
STREETCAR STOPS
STOP #05 DETAIL DRAWINGS

Revisions

No.		

Drawn by ML	Date 07/02/12
Designed by ML	Date 07/02/12
Checked by SJ/MM	Date 07/02/12
Reviewed by JTB	Date 07/12/12

Consultant

File Number

ACC No. 23126

G-LS-1005B

H:\1208 Streetcar Stops Revisions\Plans\Land\streetcar xsite CBD.dwg
10/25/2011 4:50:58 PM

DEMOLITION CODED NOTES: (#)

1. EXISTING MANHOLE TO REMAIN.
2. EXISTING LIGHT TO REMAIN: REMOVE BOOT, SET ASIDE AND REINSTALL WHEN NEW PAVEMENT IS IN PLACE.
3. EXISTING FIRE HYDRANT TO BE RELOCATED AND WATER LINE ABANDONED BY GCWW.
4. EXISTING VALVE TO REMAIN. DUKE ENERGY/GCWW TO RELOCATE IF NEEDED TO CONSTRUCT TRENCH DRAIN.
5. EDGE OF PROPOSED TRACK SLAB.
6. ADJUST EXISTING VALVE TO NEW GRADE.
7. EXISTING CATCH BASIN TO BE REMOVED. SEE SA SERIES DRAWINGS.
8. EXISTING MANHOLE: TOP TO BE REMOVED AND MANHOLE CAPPED, MANHOLE TO REMAIN FUNCTIONAL. SEE SA SERIES DRAWINGS.
9. EXISTING PULL BOX TO BE RELOCATED BY TIME WARNER.
10. FIELD VERIFY BASEMENT ENCROACHMENT LOCATION PRIOR TO DEMOLITION.
11. EXISTING SEWERS TO BE ABANDONED. SEE SA SERIES DRAWINGS.
12. RELOCATE EXISTING LIGHTING CIRCUIT OUT OF SHELTER FOUNDATION / TRENCH DRAIN FOOTPRINT.
13. EXISTING GAS LINE TO BE ABANDONED/RELOCATED BY DUKE ENERGY.

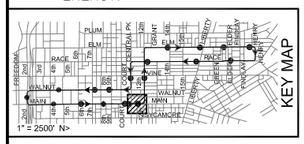

CONSTRUCTION CODED NOTES (#)

1. FIELD VERIFY LOCATION OF BASEMENT ENCROACHMENT PRIOR TO CONSTRUCTION.
2. FIELD VERIFY LOCATION OF EXISITNG UNDERGROUND CABLE TV LINE. TIME WARNER TO RELOCATE IF NECESSARY TO INSTALL SHELTER FOUNDATION.
3. ITEM 512.08 – TYPE 3 WATERPROOFING.
4. PROPOSED CABLE PULL BOX LOCATION. DESIGN AND INSTALLATION BY TIME WARNER.
5. ADJUST MANHOLE TO FINISHED GRADE ELEVATION. SEE SA SERIES DRAWINGS.

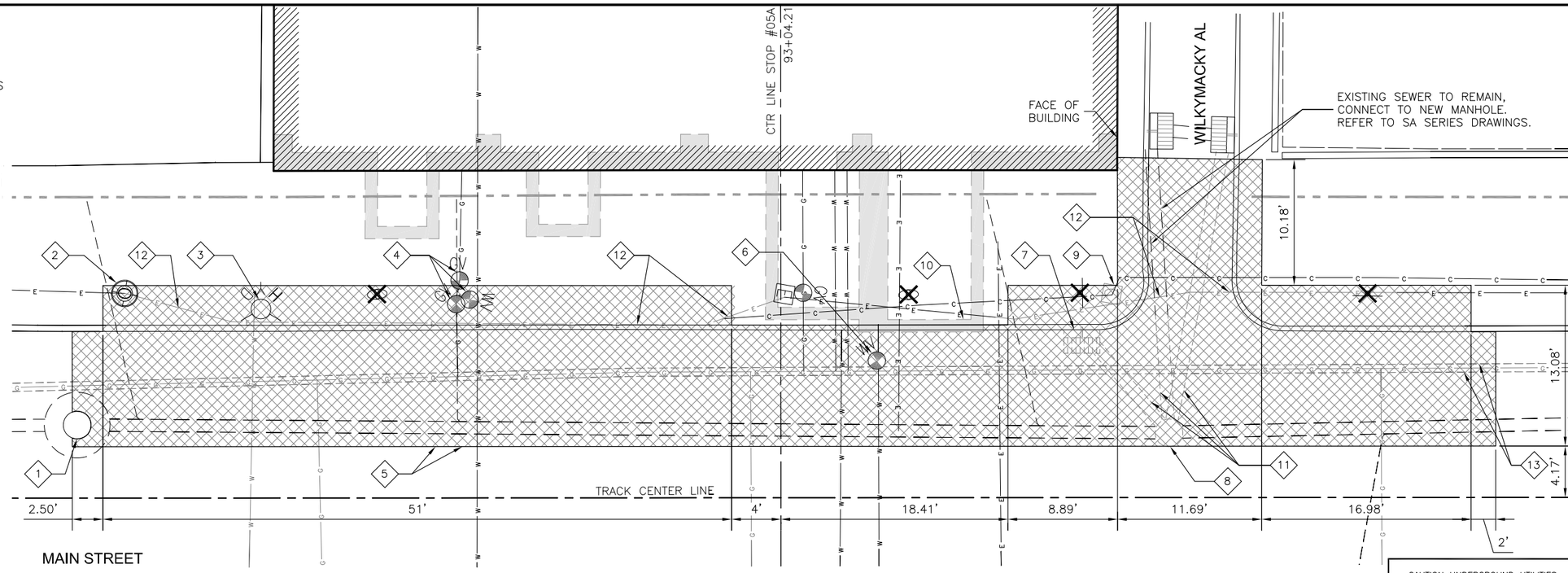

STOP #5A DEMOLITION PLAN (1)
SCALE 1" = 5' G-LS-1005 C

CAUTION UNDERGROUND UTILITIES
2 WORKING DAYS
BEFORE YOU DIG
CALL 1-800-362-2764
OHIO UTILITY PROTECTION SERVICE
CALL NON-SERVICE FACILITY OWNERS DIRECT

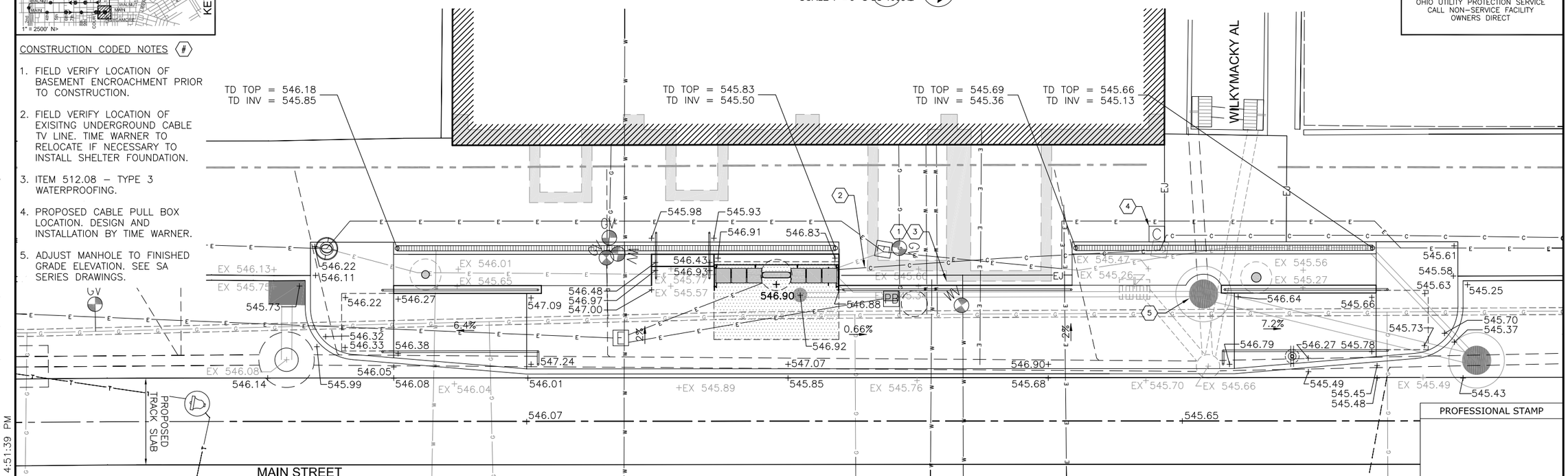

STOP #5A GRADING PLAN (2)
SCALE 1" = 5' G-LS-1005 C

PROFESSIONAL STAMP

SIGN:

DATE:

CONTRACT DRAWING

PRINTS NOT BEARING THIS STAMP WERE MADE PRIOR TO ADVERTISING FOR BIDS AND ARE TO BE CONSIDERED OBSOLETE FOR CONTRACT PURPOSES.

Department of Transportation and Engineering

City of Cincinnati
City Hall
801 Plum Street
Cincinnati, Ohio 45202

CINCINNATI STREETCAR
STREETCAR STOPS
STOP #05A DETAIL DRAWINGS

Revisions

No.	Date

Drawn by ML — Date 07/02/12
Designed by ML — Date 07/02/12
Checked by SJ/MM — Date 07/02/12
Reviewed by JTB — Date 07/12/12

Consultant

File Number

ACC No. 23126

G-LS-1005 C

H:\1208 Streetcar Stops Revisions\Plans\Land\streetcar xsite CBD.dwg
10/25/2011 4:51:39 PM

CONSTRUCTION CODED NOTES (#)

1. FIELD VERIFY LOCATION OF BASEMENT ENCROACHMENT PRIOR TO CONSTRUCTION.
2. FIELD VERIFY LOCATION OF EXISITNG UNDERGROUND CABLE TV LINE. TIME WARNER TO RELOCATE IF NECESSARY TO INSTALL SHELTER FOUNDATION.
3. ITEM 512.08 – TYPE 3 WATERPROOFING.

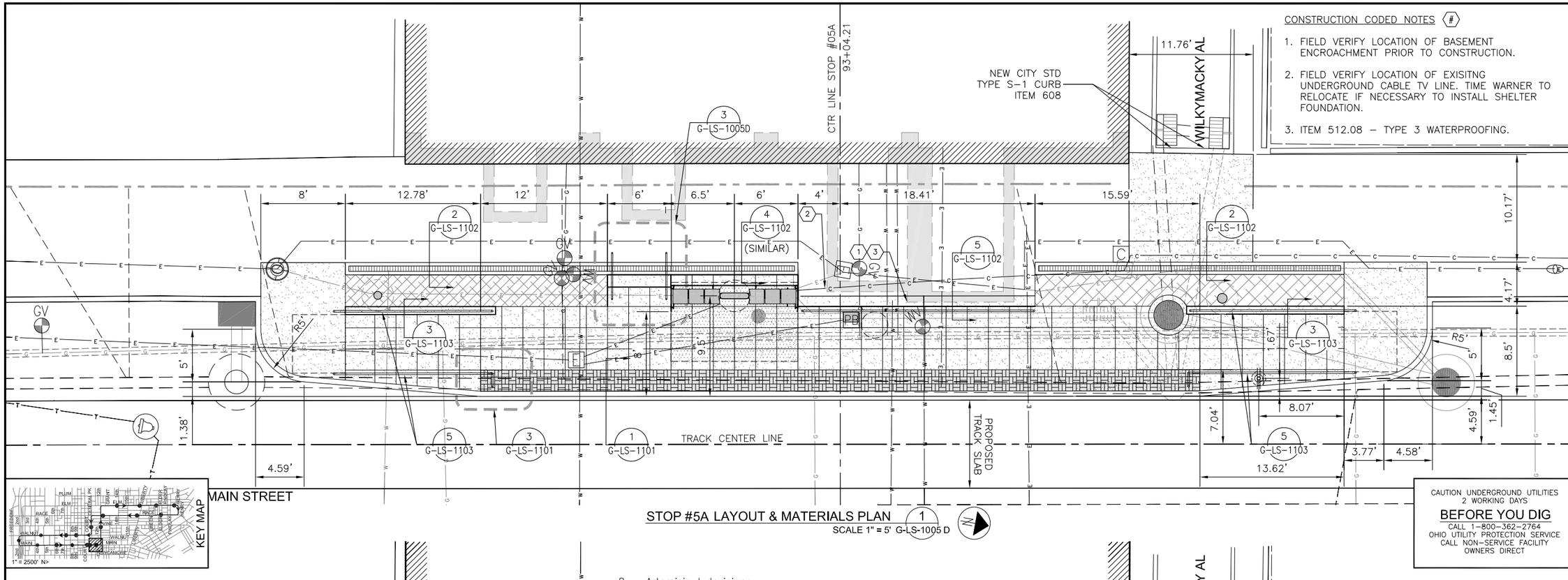

STOP #5A LAYOUT & MATERIALS PLAN (1)
SCALE 1" = 5' G-LS-1005 D

CAUTION UNDERGROUND UTILITIES
2 WORKING DAYS
BEFORE YOU DIG
CALL 1-800-362-2764
OHIO UTILITY PROTECTION SERVICE
CALL NON-SERVICE FACILITY
OWNERS DIRECT

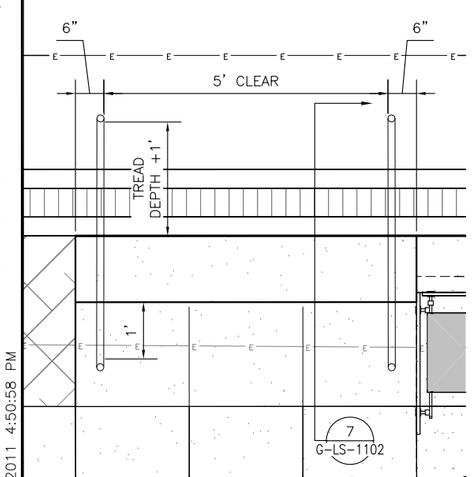

STEP ENLARGEMENT (3)
SCALE 3/4" = 1'-0" G-LS-1005 D

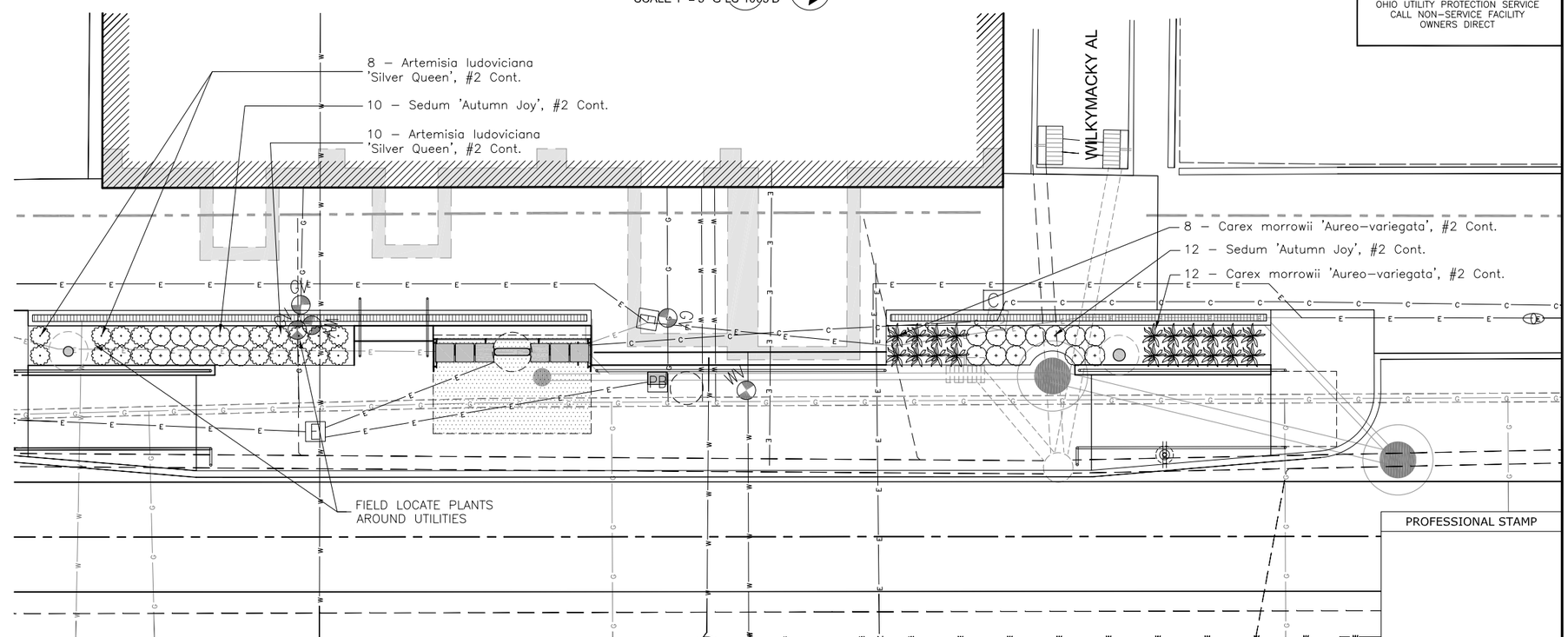

STOP #5A LANDSCAPE PLAN (2)
SCALE 1" = 5' G-LS-1005 D

PROFESSIONAL STAMP

SIGN:
DATE:

CONTRACT DRAWING
PRINTS NOT BEARING THIS STAMP WERE MADE PRIOR TO ADVERTISING FOR BIDS AND ARE TO BE CONSIDERED OBSOLETE FOR CONTRACT PURPOSES.

Department of Transportation and Engineering
City of Cincinnati
City Hall
801 Plum Street
Cincinnati, Ohio 45202

CINCINNATI STREETCAR
STREETCAR STOPS
STOP #05A DETAIL DRAWINGS

Revisions
No.

Date 07/02/12	Date 07/02/12	Date 07/02/12	Date 07/12/12
Drawn by ML	Designed by ML	Checked by SJ/MM	Reviewed by JTB

Consultant
PB
HDR
DNK

File Number

ACC No. 23126

G-LS-1005 D

H:\1208 Streetcar Stops Revisions\Plans\Land\streetcar xsite CBD.dwg
10/25/2011 4:50:58 PM

DEMOLITION CODED NOTES: #

1. EXISTING LIGHT TO REMAIN: REMOVE BOOT, SET ASIDE AND REINSTALL WHEN NEW SURFACE IS IN PLACE.
2. EXISTING PULL BOX TO REMAIN.
3. DUKE ENERGY TO ABANDON/ RELOCATE EXISTING ELECTRIC MANHOLE AND DUCT BANK.
4. EXISTING CATCH BASIN TO BE REMOVED AND SEWER ABANDONED. SEE SA SERIES DRAWINGS.
5. EXISTING PULL BOX TO REMAIN. CINCINNATI BELL TO RELOCATE IF NECESSARY TO CONSTRUCT TRENCH DRAIN.
6. RELOCATE EXISTING LIGHTING CIRCUIT OUT OF SHELTER FOUNDATION FOOTPRINT.
7. DUKE ENERGY TO ABANDON/ RELOCATE EXISTING GAS LINE.
8. MAINTAIN ACCESS TO EXISTING DRIVEWAY DURING DEMOLITION AND CONSTRUCTION.
9. ABANDONED GAS LINE.

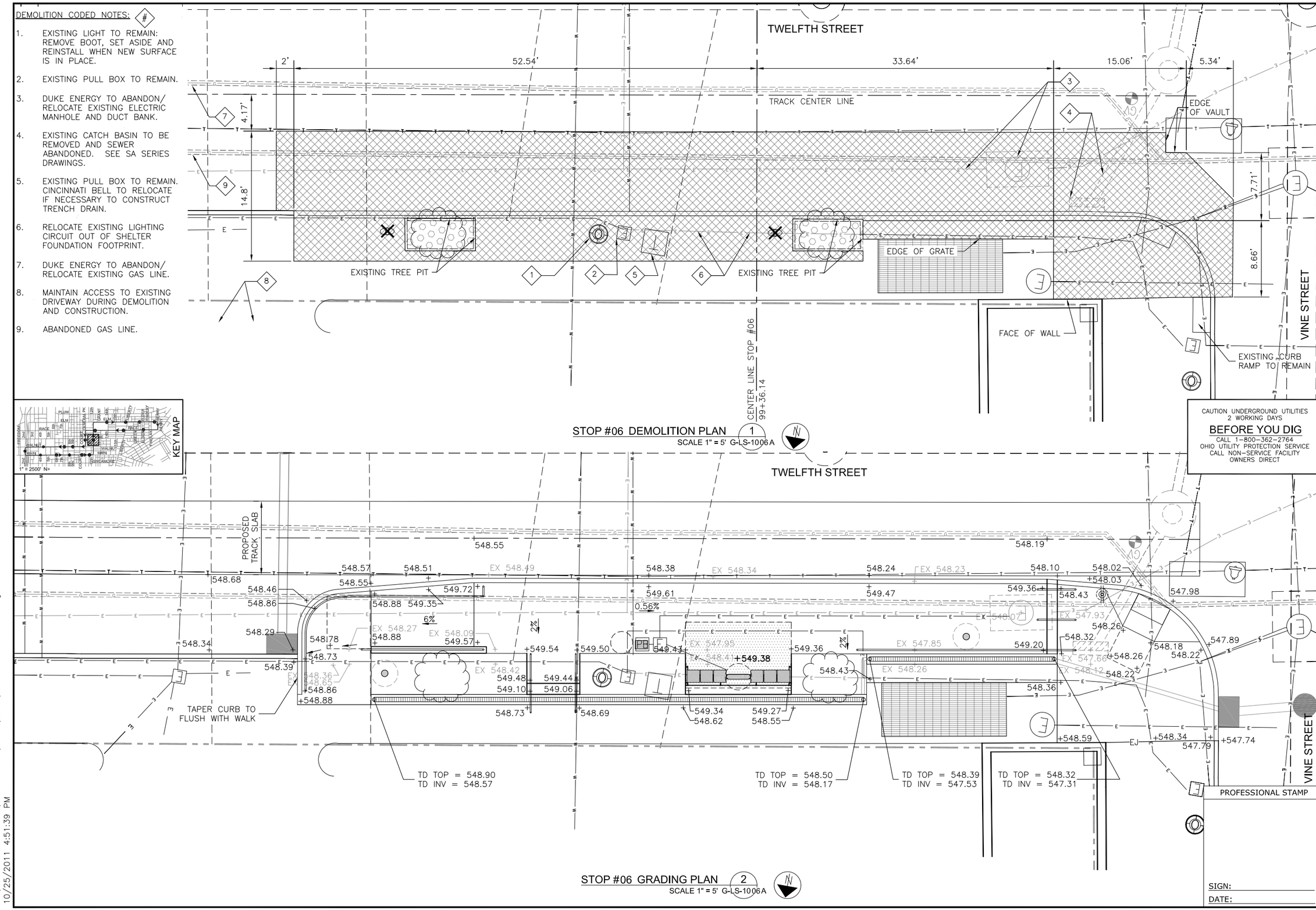

SIGN:

DATE:

CONTRACT DRAWING

PRINTS NOT BEARING THIS STAMP WERE MADE PRIOR TO ADVERTISING FOR BIDS AND ARE TO BE CONSIDERED OBSOLETE FOR CONTRACT PURPOSES.

Department of Transportation and Engineering

City of Cincinnati
City Hall
801 Plum Street
Cincinnati, Ohio 45202

CINCINNATI STREETCAR
STREETCAR STOPS
STOP #06 DETAIL DRAWINGS

Revisions

No.	Date
	07/02/12
	07/02/12
	07/02/12
	07/12/12

Drawn by ML | Designed by ML | Checked by SJ/MM | Reviewed by JTB

Consultant

PB HDR

File Number

ACC No. 23126

G-LS-1006A

H:\1208 Streetcar Stops Revisions\Plans\Land\streetcar xsite CBD.dwg
10/25/2011 4:51:39 PM

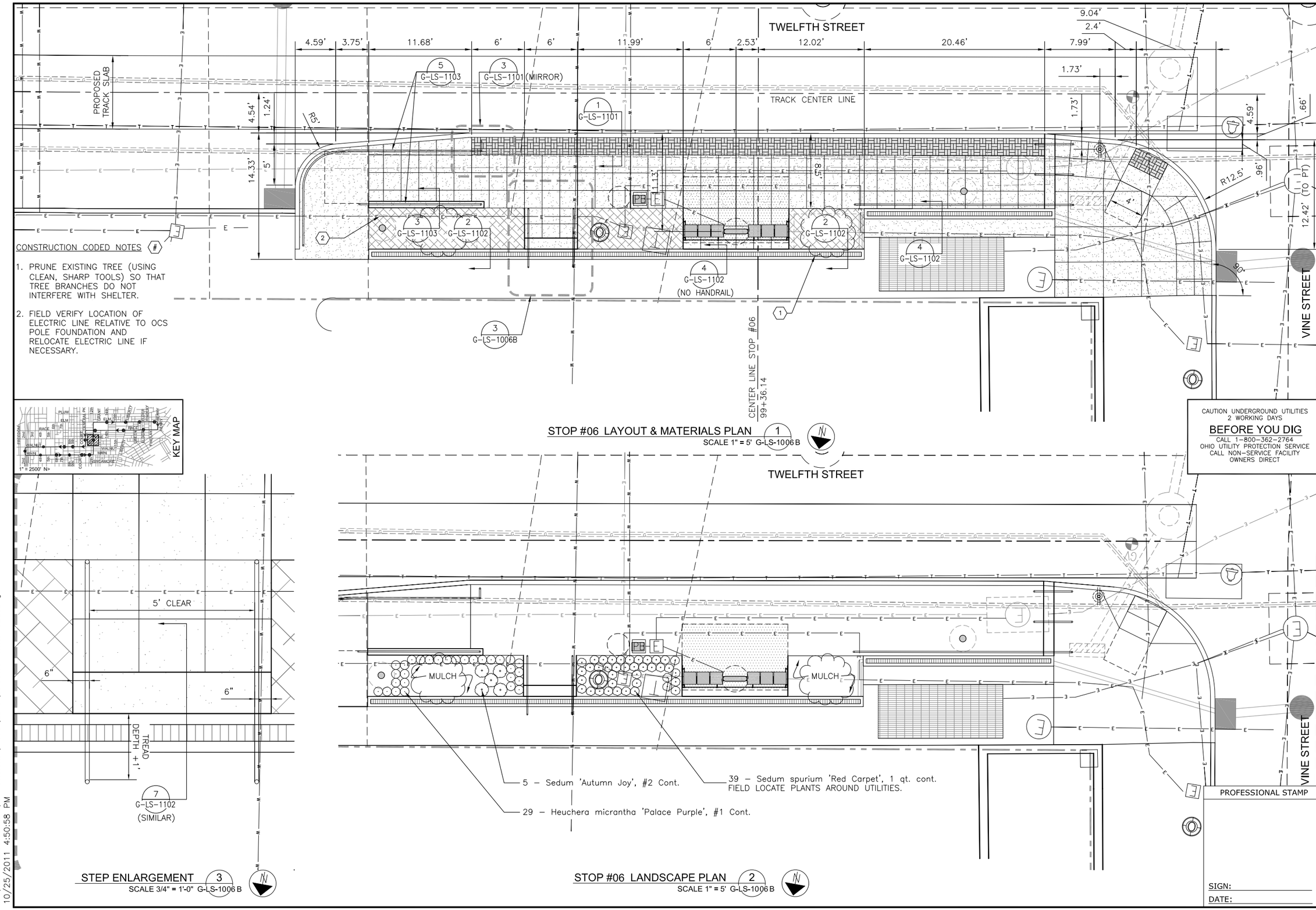

CONTRACT DRAWING

PRINTS NOT BEARING THIS STAMP WERE MADE PRIOR TO ADVERTISING FOR BIDS AND ARE TO BE CONSIDERED OBSOLETE FOR CONTRACT PURPOSES.

Department of Transportation and Engineering

City of Cincinnati
City Hall
801 Plum Street
Cincinnati, Ohio 45202

CINCINNATI STREETCAR
STREETCAR STOPS
STOP #06 DETAIL DRAWINGS

Revisions

No.	Date

Drawn by ML	Date 07/02/12
Designed by ML	Date 07/02/12
Checked by SJ/MM	Date 07/02/12
Reviewed by JTB	Date 07/12/12

Consultant

File Number

ACC No. 23126

G-LS-1006B

H:\1208 Streetcar Stops Revisions\Plans\Land\streetcar xsite CBD.dwg
10/25/2011 4:50:58 PM

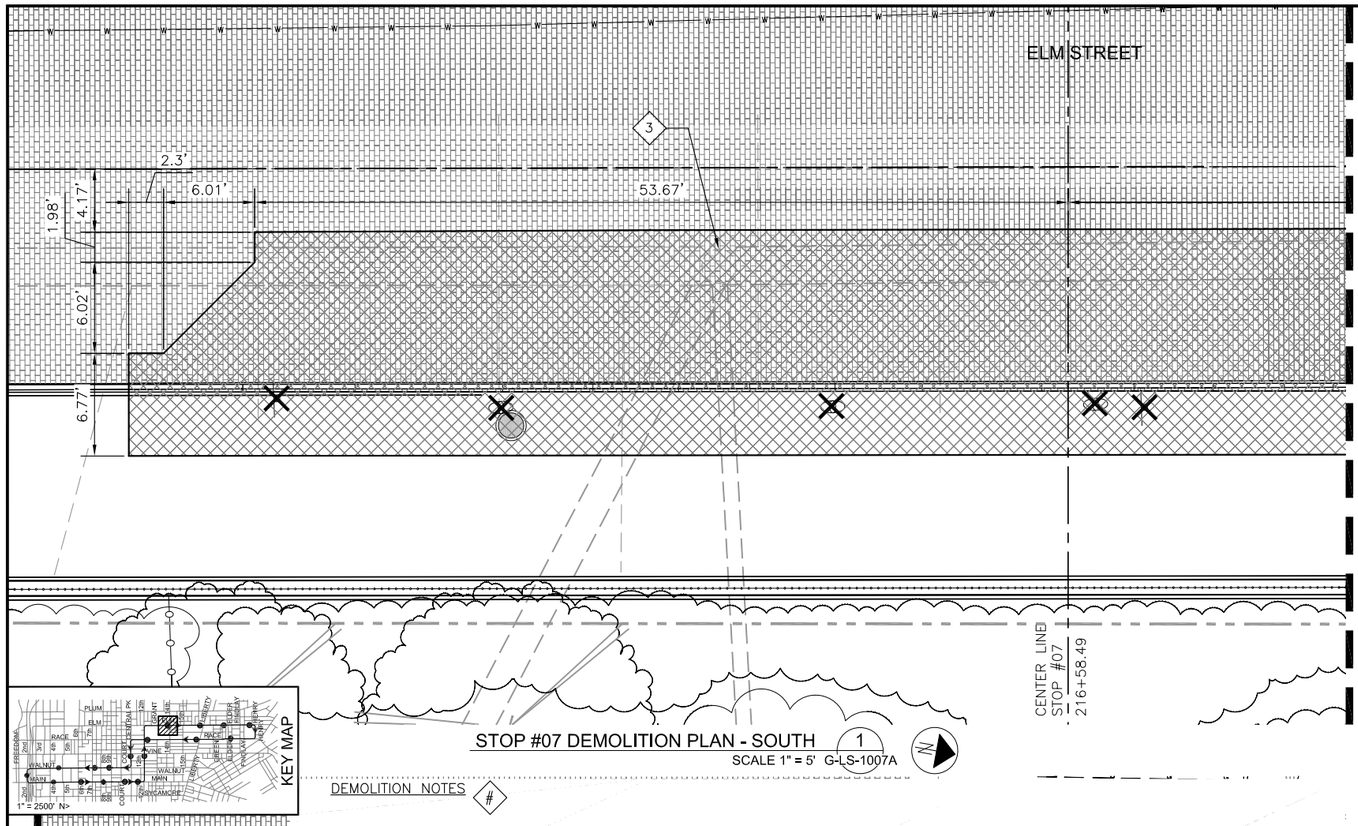

STOP #07 DEMOLITION PLAN - SOUTH (1)
SCALE 1" = 5' G-LS-1007A

DEMOLITION NOTES #

1. EXISTING POLE AND GUY WIRE TO BE RELOCATED BY DUKE ENERGY.
2. GCWW TO RELOCATE EXISTING FIRE HYDRANT.
3. EXISTING MANHOLE TO BE OFFSET.*
4. SALVAGE EXISTING GRANITE PAVERS AND COBBLESTONES AND STORE FOR RE-USE.
5. EXISTING CATCH BASIN TO BE REMOVED.*
6. EXISTING 12" SEWER TO BE ABANDONED.*
7. EXISTING WATER MAIN TO BE ABANDONED BY GCWW.

*REFER TO SA SERIES DRAWINGS.

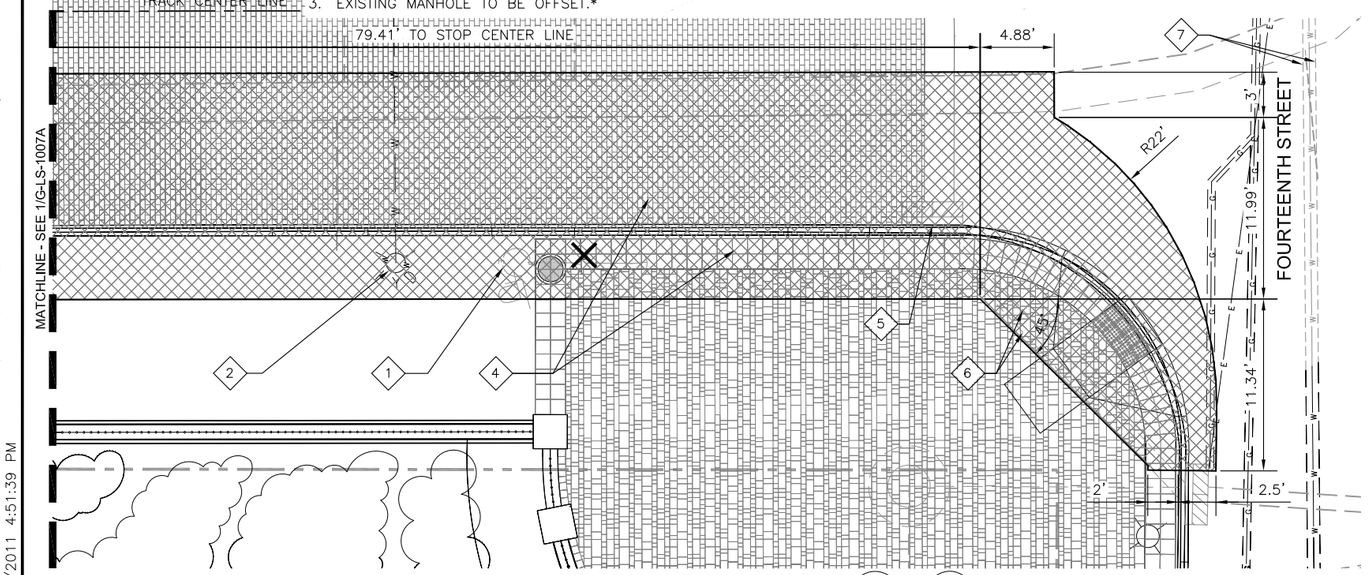

STOP #07 DEMOLITION PLAN - NORTH (2)
SCALE 1" = 5' G-LS-1007A

NOTE: ALL STEEL FENCE COMPONENTS TO BE POWDER COATED BLACK PER ITEM 708.06.

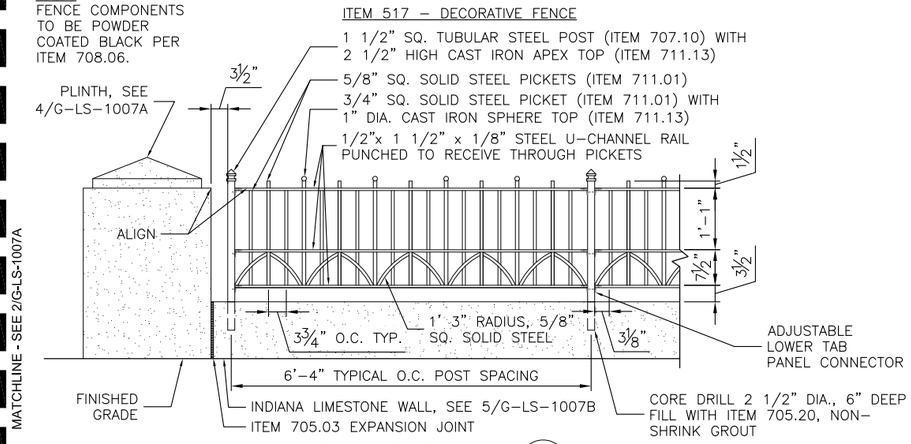

FENCE AT TOP OF WALL (3)
SCALE 3/4" = 1'-0" G-LS-1007A

NOTE: ALL FENCE AND RAILING ELEMENTS AT THIS STOP TO BE POWDER COATED BLACK PER ITEM 708.06

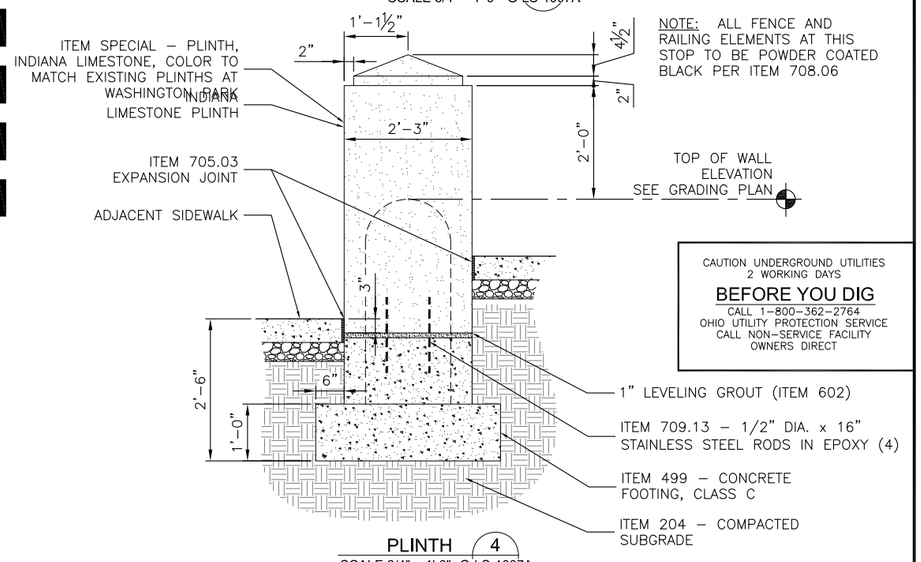

CAUTION UNDERGROUND UTILITIES
2 WORKING DAYS
BEFORE YOU DIG
CALL 1-800-362-2764
OHIO UTILITY PROTECTION SERVICE
CALL NON-SERVICE FACILITY OWNERS DIRECT

PLINTH (4)
SCALE 3/4" = 1'-0" G-LS-1007A

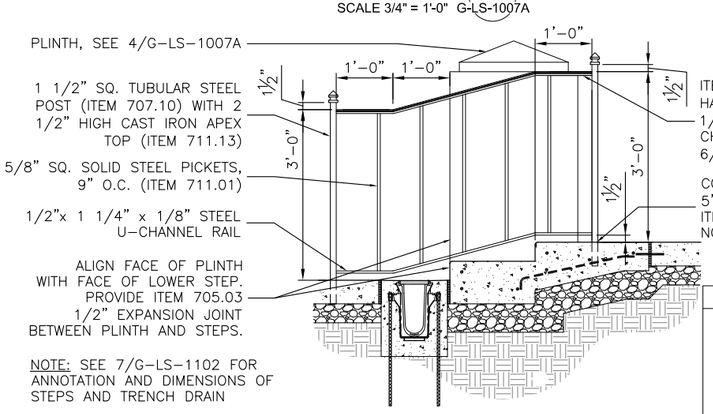

NOTE: SEE 7/G-LS-1102 FOR ANNOTATION AND DIMENSIONS OF STEPS AND TRENCH DRAIN

DOUBLE STEP AT PLINTH (5)
SCALE 3/4" = 1'-0" G-LS-1007A

PROFESSIONAL STAMP

SIGN:
DATE:

CONTRACT DRAWING
PRINTS NOT BEARING THIS STAMP WERE MADE PRIOR TO ADVERTISING FOR BIDS AND ARE NOT CONSIDERED OBSOLETE FOR CONTRACT PURPOSES.

Department of Transportation and Engineering
City of Cincinnati
City Hall
801 Plum Street
Cincinnati, Ohio 45202

CINCINNATI STREETCAR
STREETCAR STOPS
STOP #07 DETAIL DRAWINGS

Revisions
No.

Date 07/02/12
Date 07/02/12
Date 07/02/12
Date 07/12/12

Drawn by ML
Designed by ML
Checked by SJ/MM
Reviewed by JTB

Consultant
PB
HDR
DNK

File Number

ACC No. 23126

G-LS-1007A

H:\1208 Streetcar Stops Revisions\Plans\Land\streetcar xsite OTR.dwg
10/25/2011 4:51:39 PM

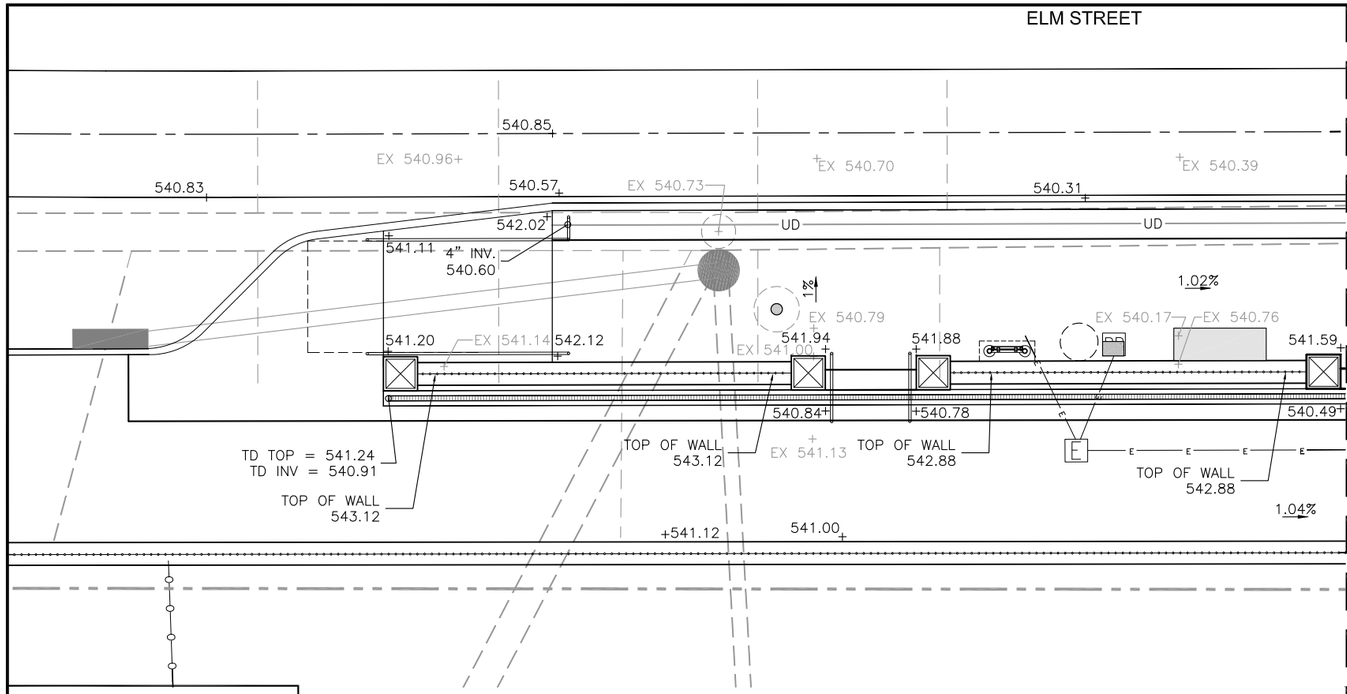

STOP #07 GRADING PLAN - SOUTH (1)
SCALE 1" = 5' G-LS-1007B

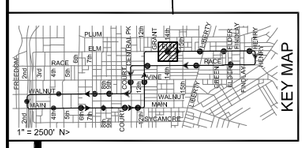

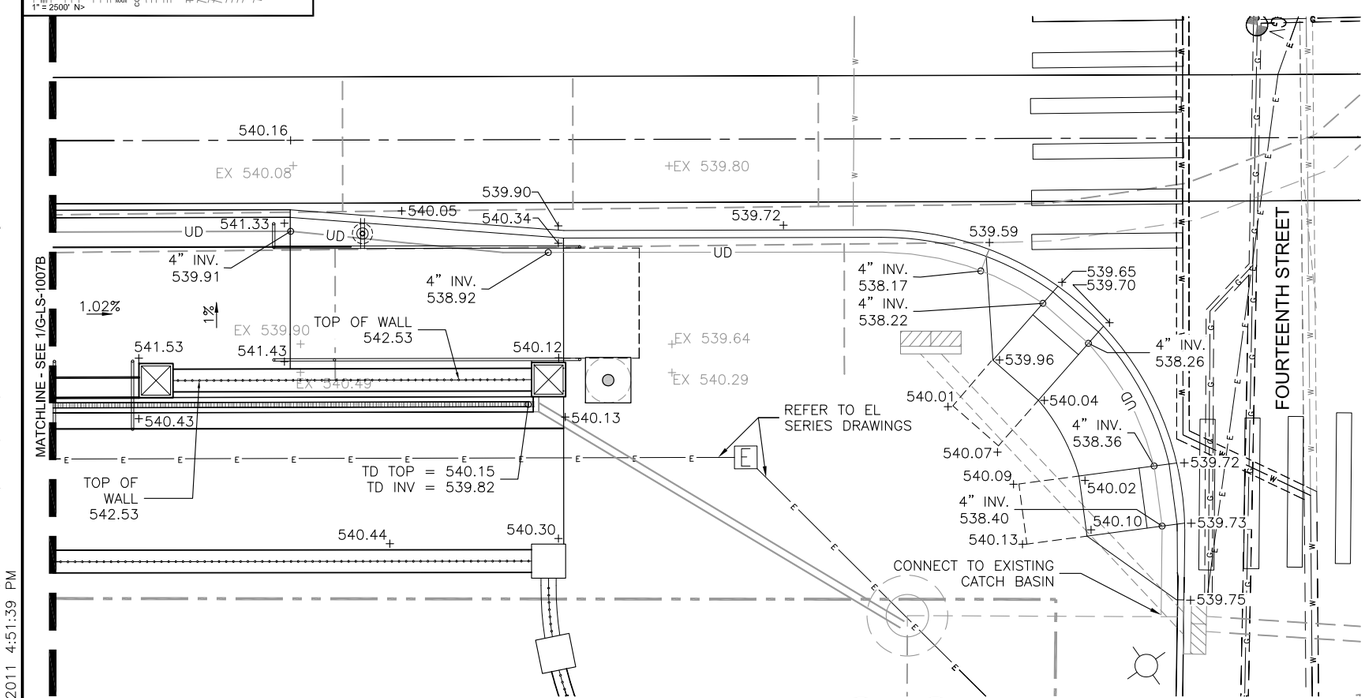

STOP #07 GRADING PLAN - NORTH (2)
SCALE 1" = 5' G-LS-1007B

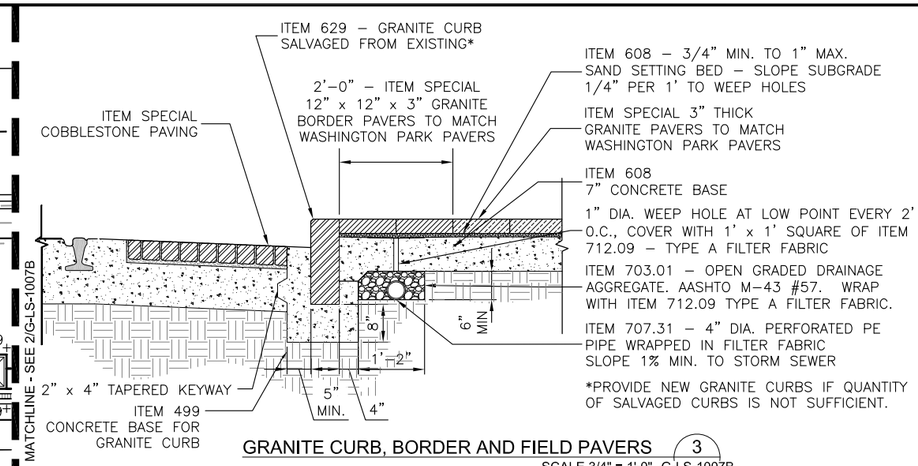

GRANITE CURB, BORDER AND FIELD PAVERS (3)
SCALE 3/4" = 1'-0" G-LS-1007B

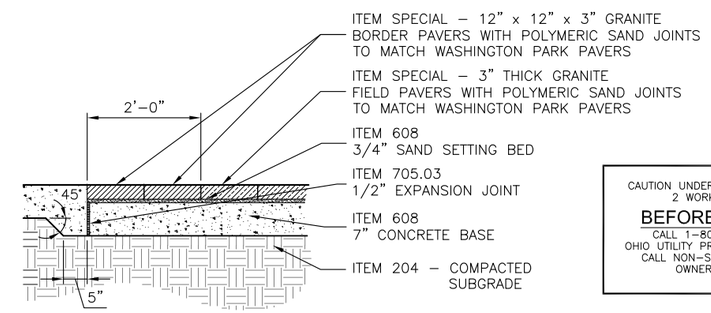

GRANITE BORDER AND FIELD PAVERS (4)
SCALE 3/4" = 1'-0" G-LS-1007B

CAUTION UNDERGROUND UTILITIES
2 WORKING DAYS
BEFORE YOU DIG
CALL 1–800–362–2764
OHIO UTILITY PROTECTION SERVICE
CALL NON–SERVICE FACILITY
OWNERS DIRECT

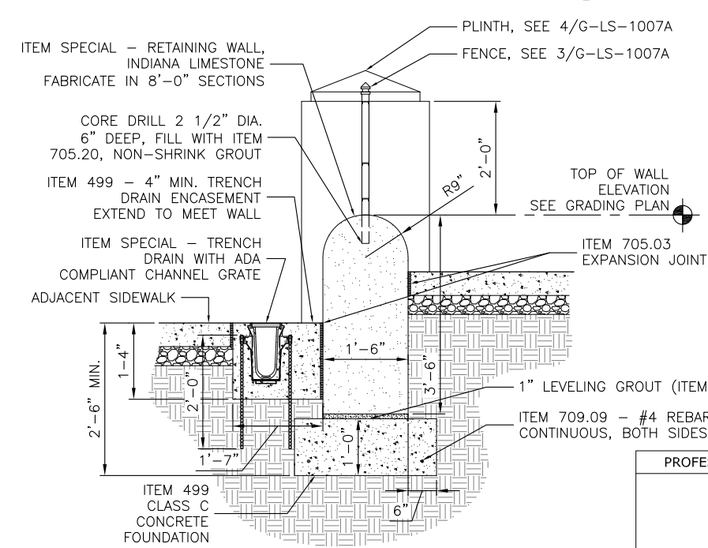

PARK RETAINING WALL (5)
SCALE 3/4" = 1'-0" G-LS-1007B

PROFESSIONAL STAMP

SIGN:

DATE:

CONTRACT DRAWING

PRINTS NOT BEARING THIS STAMP WERE MADE PRIOR TO ADVERTISING FOR BIDS AND ARE TO BE CONSIDERED OBSOLETE FOR CONTRACT PURPOSES.

Department of Transportation and Engineering

City of Cincinnati
801 Plum Street
Cincinnati, Ohio 45202

CINCINNATI STREETCAR
STREETCAR STOPS
STOP #07 DETAIL DRAWINGS

Revisions

No.	Date

Drawn by ML	Date 07/02/12
Designed by ML	Date 07/02/12
Checked by SJ/MM	Date 07/02/12
Reviewed by JTB	Date 07/12/12

Consultant

PB
HDR
DNK

File Number

ACC No.
23126

G-LS-1007B

H:\1208 Streetcar Stops Revisions\Plans\Land\streetcar xsite OTR.dwg
10/25/2011 4:51:39 PM

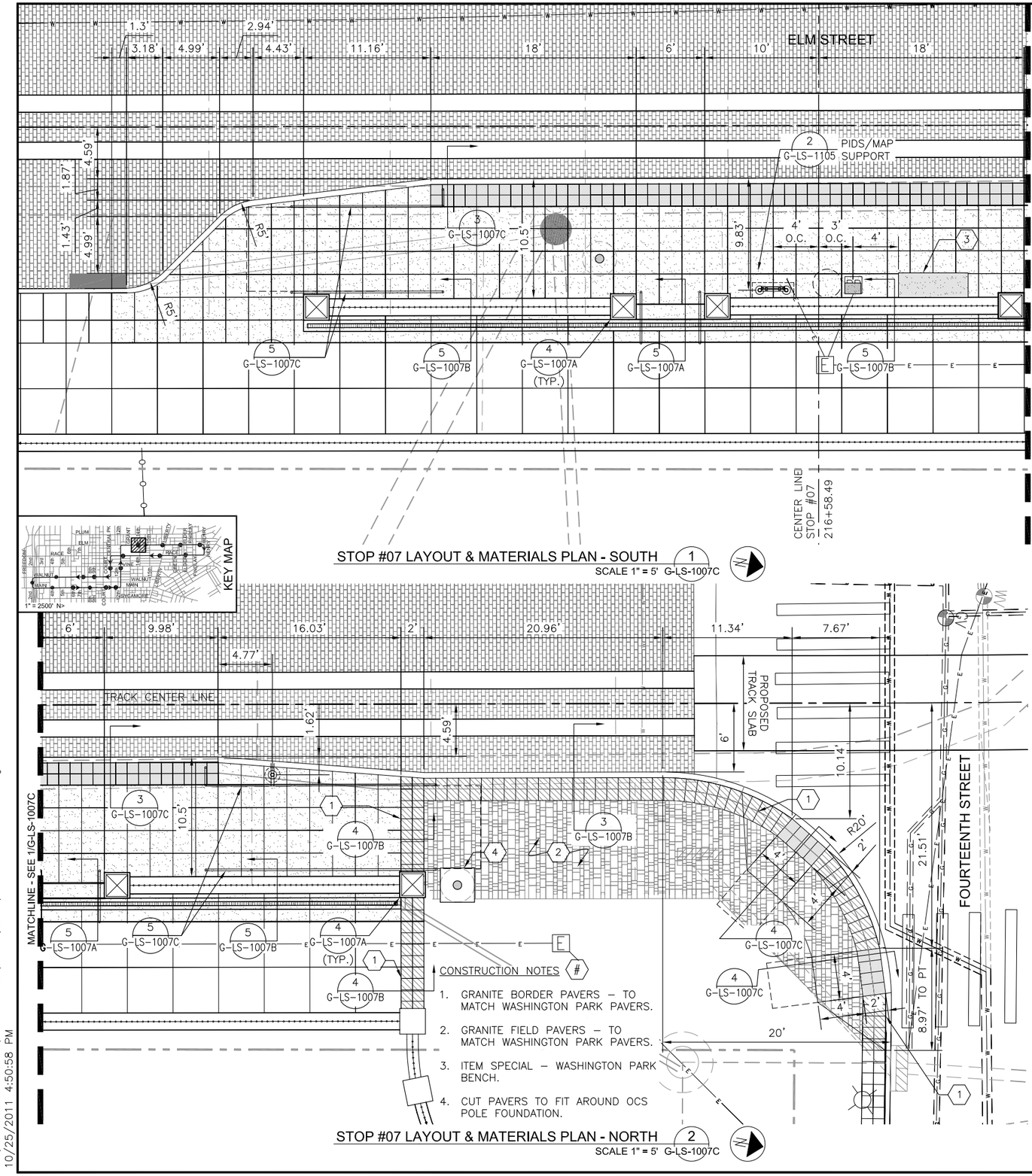

STOP #07 LAYOUT & MATERIALS PLAN - SOUTH (1)
SCALE 1" = 5' G-LS-1007C

STOP #07 LAYOUT & MATERIALS PLAN - NORTH (2)
SCALE 1" = 5' G-LS-1007C

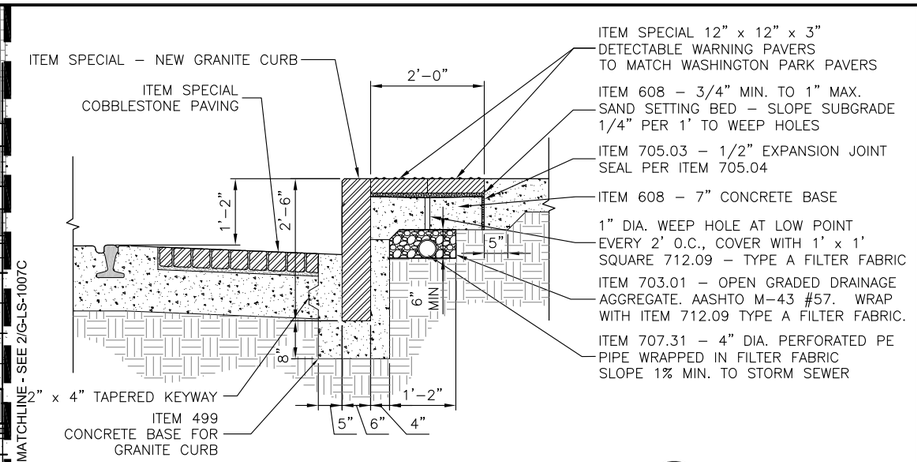

GRANITE CURB AND DETECTABLE WARNING (3)
SCALE 3/4" = 1'-0" G-LS-1007C

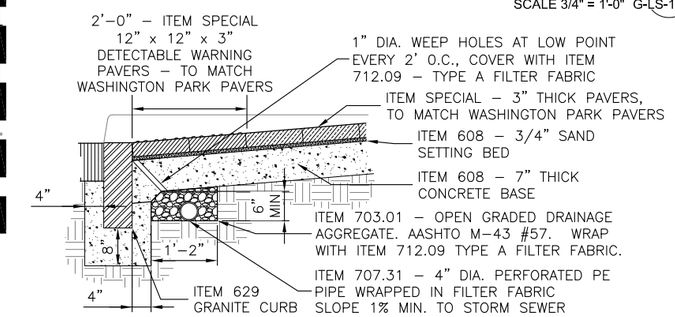

PAVER CURB RAMP (4)
SCALE 3/4" = 1'-0" G-LS-1007C

CAUTION UNDERGROUND UTILITIES
2 WORKING DAYS
BEFORE YOU DIG
CALL 1–800–362–2764
OHIO UTILITY PROTECTION SERVICE
CALL NON–SERVICE FACILITY OWNERS DIRECT

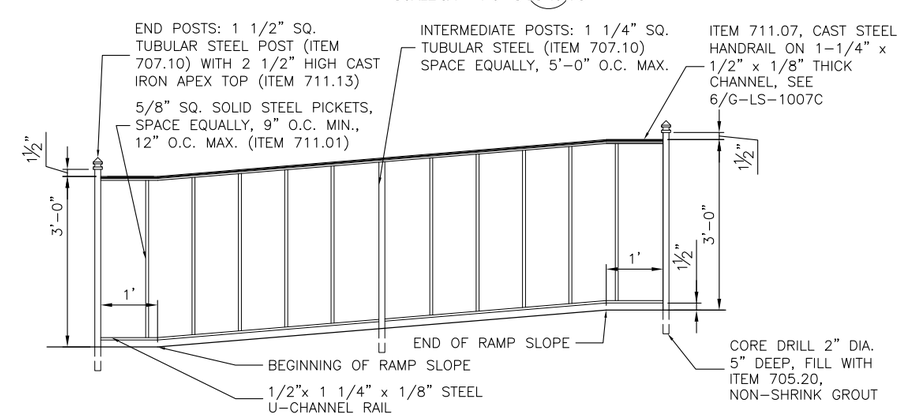

RAMP HANDRAIL AT WASHINGTON PARK (5)
SCALE 3/4" = 1'-0" G-LS-1007C

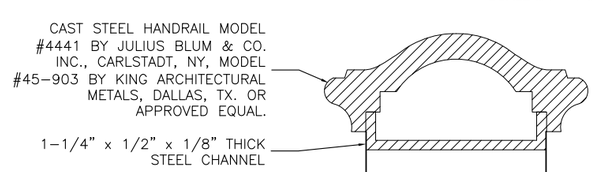

CAST STEEL HANDRAIL (6)
FULL SIZE G-LS-1007C

PROFESSIONAL STAMP

SIGN:

DATE:

CONTRACT DRAWING
PRINTS NOT BEARING THIS STAMP WERE MADE PRIOR TO ADVERTISING FOR BIDS AND ARE TO BE CONSIDERED OBSOLETE FOR CONTRACT PURPOSES.

Department of Transportation and Engineering
City of Cincinnati
801 Plum Street
Cincinnati, Ohio 45202

CINCINNATI STREETCAR
STREETCAR STOPS
STOP #07 DETAIL DRAWINGS

Revisions
No.

Drawn by ML	Designed by ML	Checked by SJ/MM	Reviewed by JTB
Date 07/02/12	Date 07/02/12	Date 07/02/12	Date 07/12/12

Consultant
PB
HDR
DNK

File Number

ACC No. 23126

G-LS-1007C

H:\1208 Streetcar Stops Revisions\Plans\Land\streetcar xsite OTR.dwg
10/25/2011 4:50:58 PM

DEMOLITION NOTES #

1. EXISTING MANHOLE TO BE ABANDONED.*
2. EXISTING CATCH BASIN TO BE REMOVED.*
3. EXISTING POLE TO REMAIN.
4. EXISTING FIRE HYDRANT TO REMAIN.
5. EXISTING SEWER(S) TO BE ABANDONED.*
6. EXISTING GAS LINE TO BE ABANDONED BY DUKE ENERGY.
7. PREVIOUSLY ABANDONED GAS LINE.
8. EDGE OF PROPOSED TRACK SLAB.

*REFER TO SA SERIES DRAWINGS.

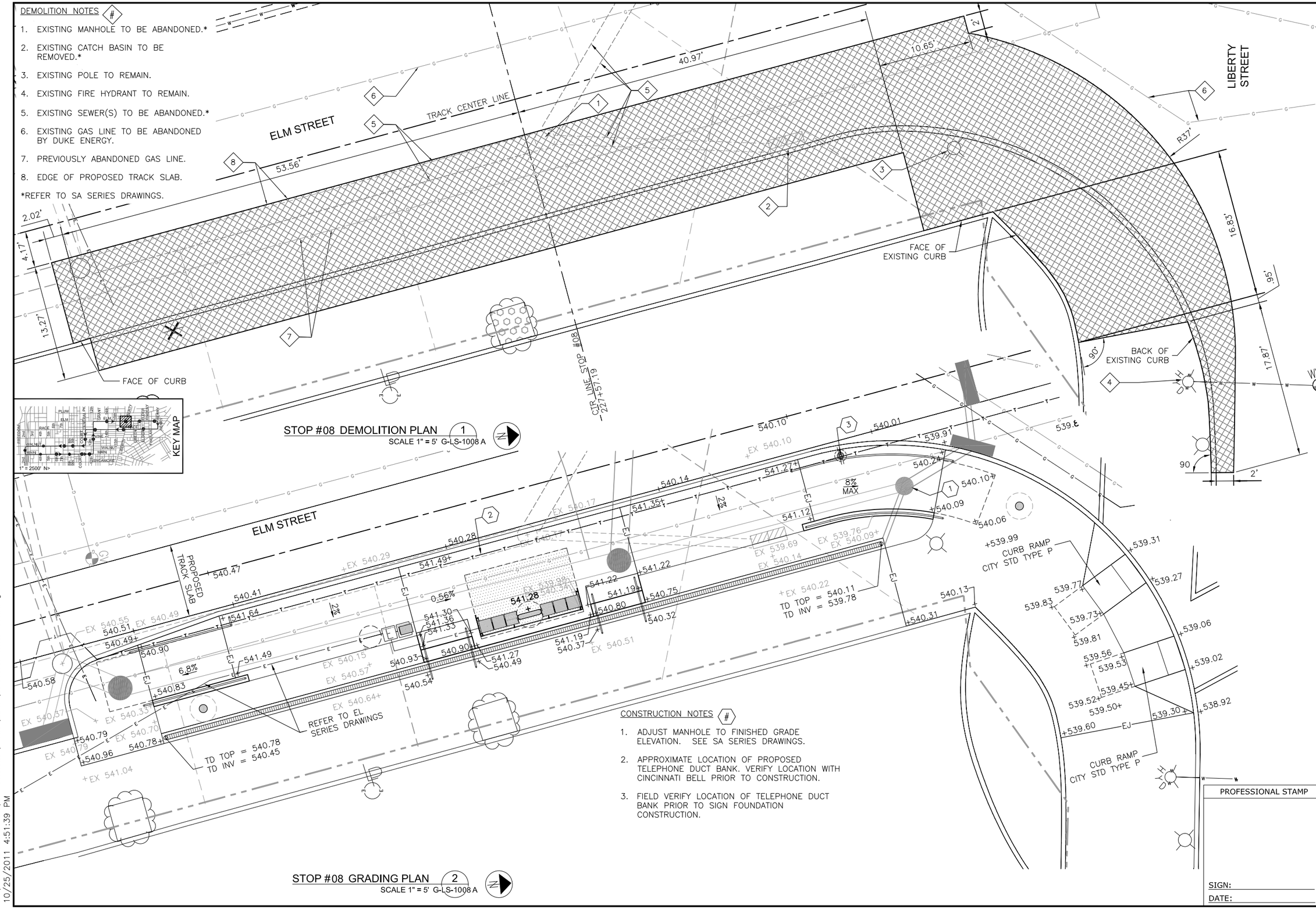

STOP #08 DEMOLITION PLAN (1)
SCALE 1" = 5' G-LS-1008 A

STOP #08 GRADING PLAN (2)
SCALE 1" = 5' G-LS-1008 A

CONSTRUCTION NOTES #

1. ADJUST MANHOLE TO FINISHED GRADE ELEVATION. SEE SA SERIES DRAWINGS.
2. APPROXIMATE LOCATION OF PROPOSED TELEPHONE DUCT BANK. VERIFY LOCATION WITH CINCINNATI BELL PRIOR TO CONSTRUCTION.
3. FIELD VERIFY LOCATION OF TELEPHONE DUCT BANK PRIOR TO SIGN FOUNDATION CONSTRUCTION.

PROFESSIONAL STAMP

SIGN:
DATE:

CONTRACT DRAWING

PRINTS NOT BEARING THIS STAMP WERE MADE PRIOR TO ADVERTISING FOR BIDS AND ARE TO BE CONSIDERED OBSOLETE FOR CONTRACT PURPOSES.

Department of Transportation and Engineering
City of Cincinnati
City Hall
801 Plum Street
Cincinnati, Ohio 45202

CINCINNATI STREETCAR
STREETCAR STOPS
STOP #08 DETAIL DRAWINGS

Revisions
No.

Drawn by ML — Date 07/02/12
Designed by ML — Date 07/02/12
Checked by SJ/MM — Date 07/02/12
Reviewed by JTB — Date 07/12/12

Consultant
PB
HDR
DNK

File Number

ACC No. 23126

G-LS-1008 A

H:\1208_Streetcar_Stops_Revisions\Plans\Land\streetcar xsite OTR.dwg
10/25/2011 4:51:39 PM

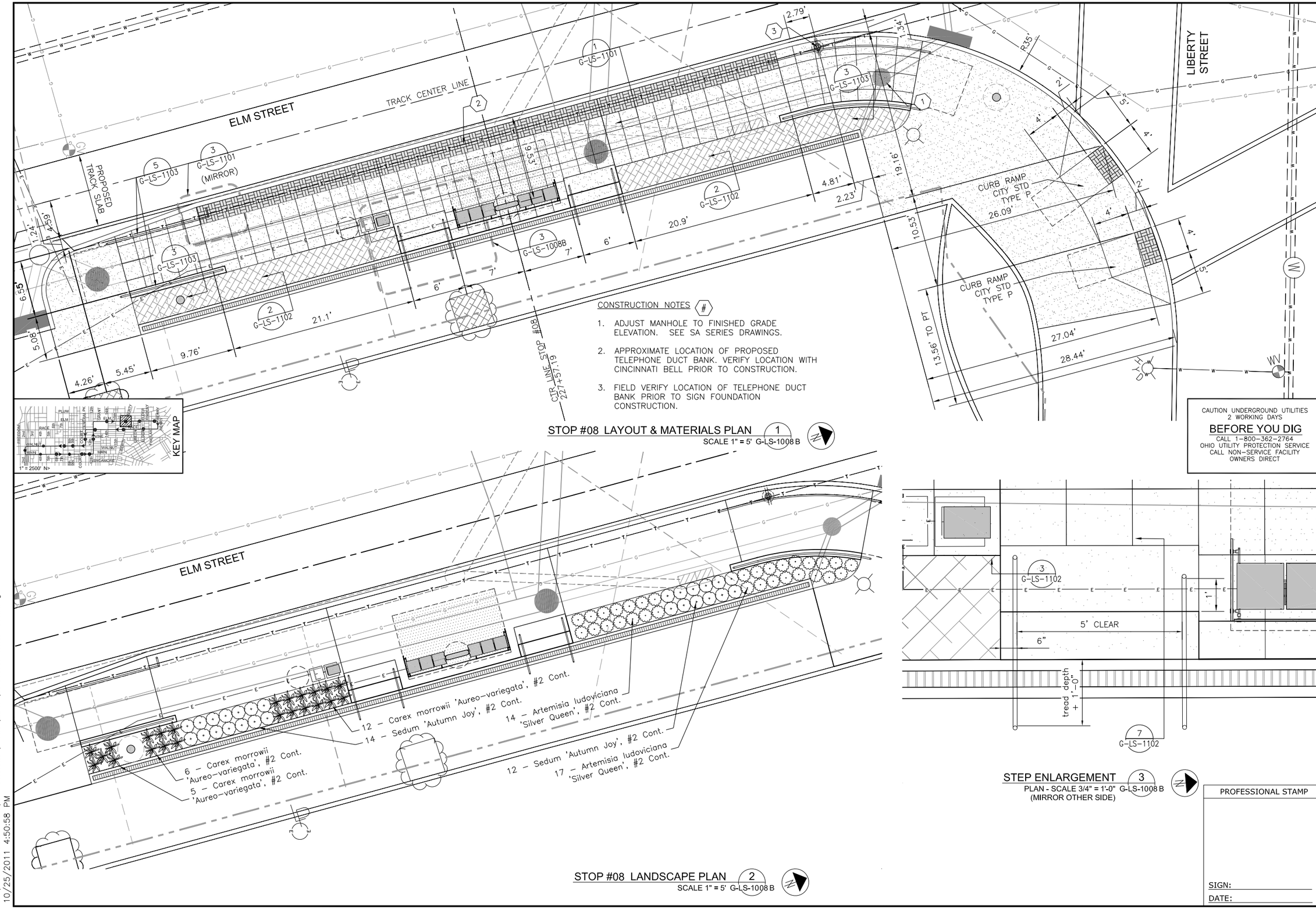

STOP #08 LAYOUT & MATERIALS PLAN (1)
SCALE 1" = 5' G-LS-1008 B

STOP #08 LANDSCAPE PLAN (2)
SCALE 1" = 5' G-LS-1008 B

STEP ENLARGEMENT (3)
PLAN - SCALE 3/4" = 1'-0" G-LS-1008 B
(MIRROR OTHER SIDE)

PROFESSIONAL STAMP

SIGN:

DATE:

CONTRACT DRAWING

PRINTS NOT BEARING THIS STAMP WERE MADE PRIOR TO ADVERTISING BID. THEY ARE NOT TO BE CONSIDERED OBSOLETE FOR CONTRACT PURPOSES.

Department of Transportation and Engineering

City of Cincinnati
City Hall
801 Plum Street
Cincinnati, Ohio 45202

CINCINNATI STREETCAR
STREETCAR STOPS
STOP #08 DETAIL DRAWINGS

Revisions

No.	Date
	07/02/12
	07/02/12
	07/02/12
	07/12/12

Drawn by ML
Designed by ML
Checked by SJ/MM
Reviewed by JTB

Consultant

File Number

ACC No. 23126

G-LS-1008 B

H:\1208 Streetcar Stops Revisions\Plans\Land\streetcar xsite QTR.dwg
10/25/2011 4:50:58 PM

DEMOLITION NOTES #

1. EXISTING PULL BOX TO REMAIN.
2. RELOCATE LIGHTING CIRCUIT OUT OF STREETCAR STOP SHELTER FOUNDATION FOOTPRINT.
3. DUKE ENERGY TO RELOCATE GAS LINE OUT OF OCS POLE FOUNDATION FOOTPRINT.
4. EDGE OF PROPOSED TRACK SLAB.

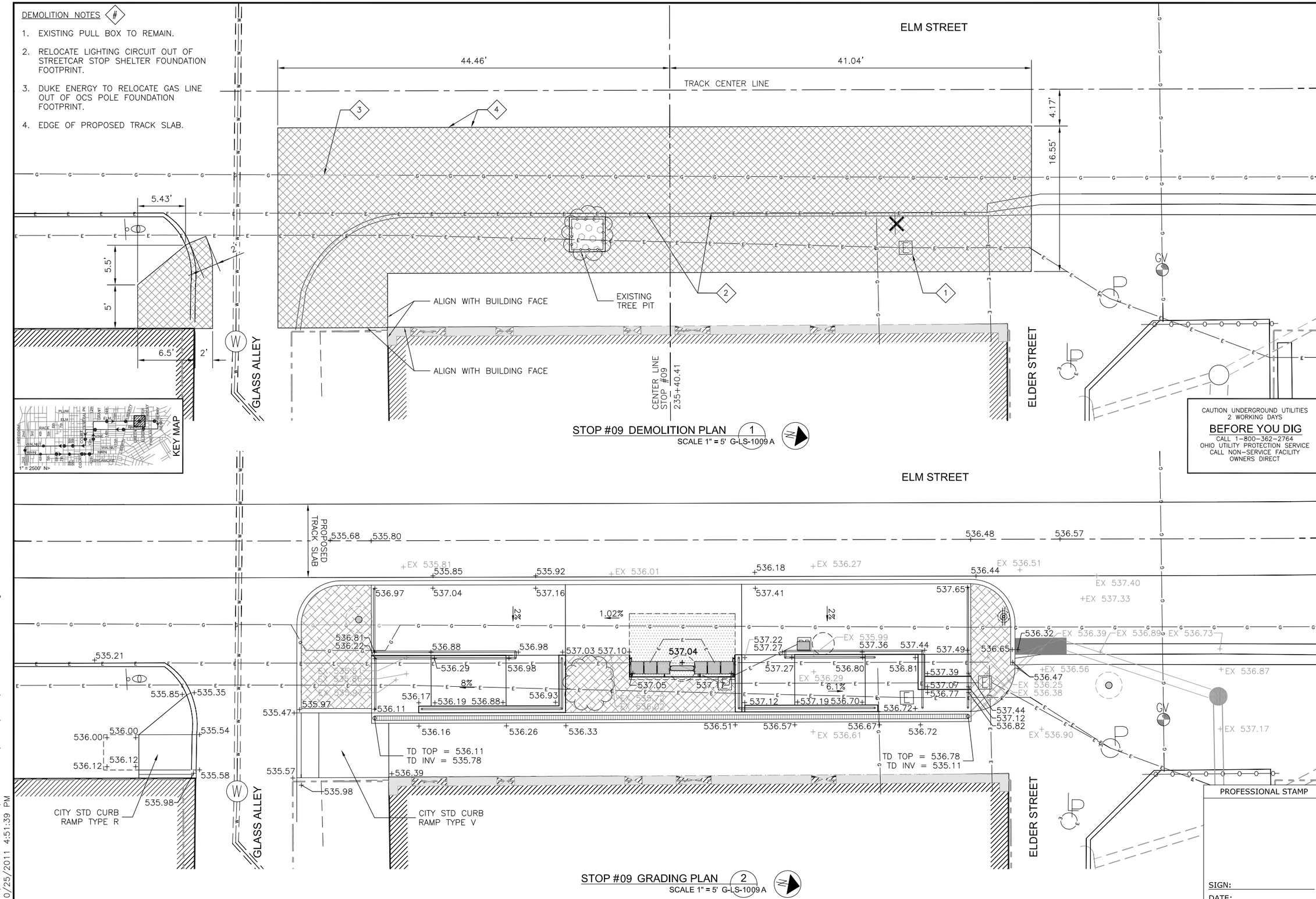

PROFESSIONAL STAMP

SIGN:

DATE:

CONTRACT DRAWING

PRINTS NOT BEARING THIS STAMP WERE MADE PRIOR TO ADVERTISING FOR BIDS AND ARE TO BE CONSIDERED OBSOLETE FOR CONTRACT PURPOSES.

Department of Transportation and Engineering

City of Cincinnati
City Hall
801 Plum Street
Cincinnati, Ohio 45202

CINCINNATI STREETCAR
STREETCAR STOPS
STOP #09 DETAIL DRAWINGS

Revisions

No.		Date
		07/02/12
		07/02/12
		07/02/12
		07/12/12

Drawn by: ML
Designed by: ML
Checked by: SJ/MM
Reviewed by: JTB

Consultant

File Number

ACC No. 23126

G-LS-1009A

H:\1208 Streetcar Stops Revisions\Plans\Land\streetcar xsite OTR.dwg
10/25/2011 4:51:39 PM

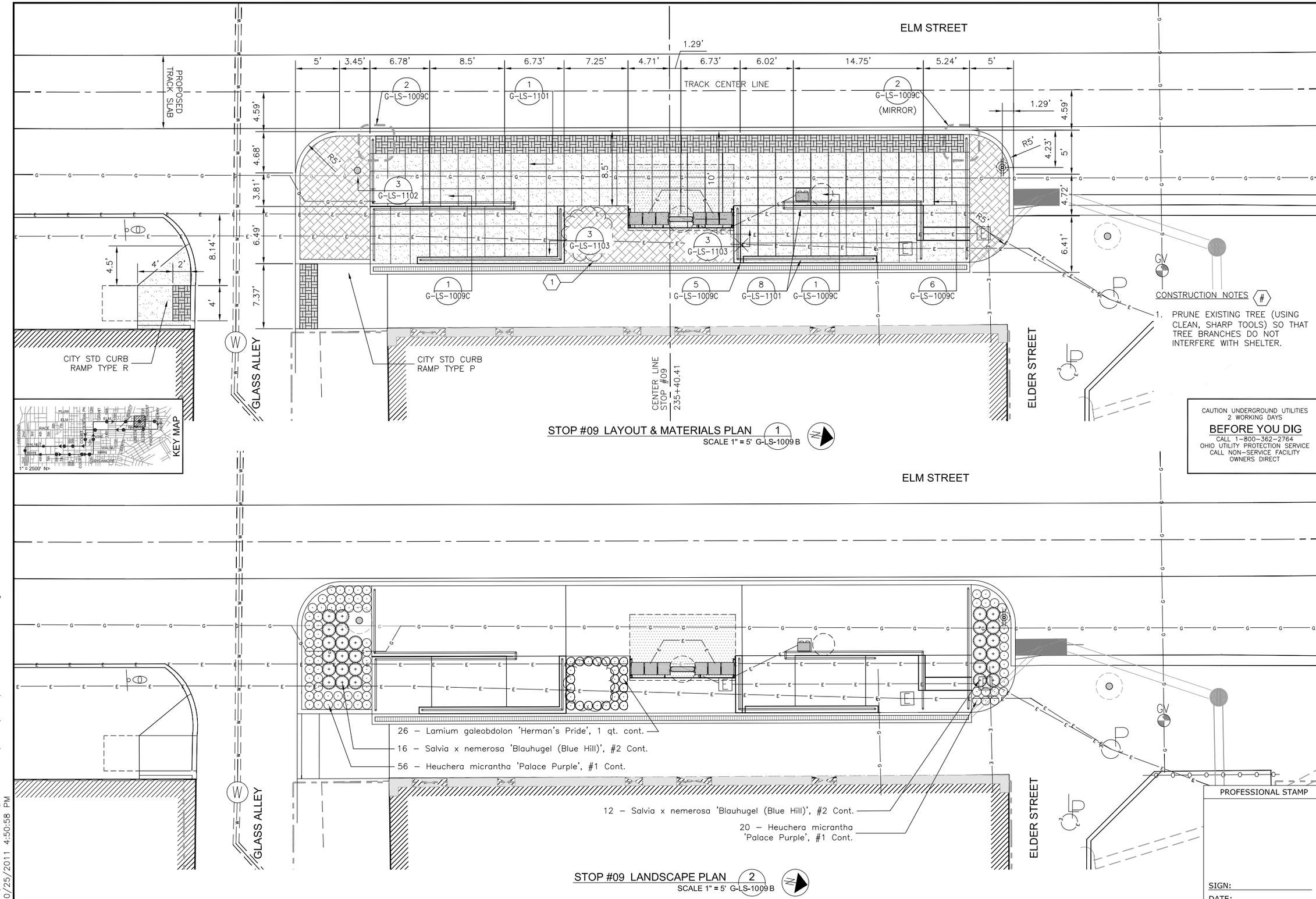

PROFESSIONAL STAMP

SIGN:

DATE:

CONTRACT DRAWING

PRINTS NOT BEARING THIS STAMP WERE MADE PRIOR TO ADVERTISING FOR BIDS AND ARE TO BE CONSIDERED OBSOLETE FOR CONTRACT PURPOSES.

Department of Transportation and Engineering

City of Cincinnati
City Hall
801 Plum Street
Cincinnati, Ohio 45202

CINCINNATI STREETCAR
STREETCAR STOPS
STOP #09 DETAIL DRAWINGS

Revisions

No.		Date
		07/02/12
		07/02/12
		07/02/12
		07/12/12

Drawn by	Designed by	Checked by	Reviewed by
ML	ML	SJ/MM	JTB

Consultant

File Number

ACC No.
23126

G-LS-1009 B

H:\1208 Streetcar Stops Revisions\Plans\Land\streetcar xsite OTR.dwg
10/25/2011 4:50:58 PM

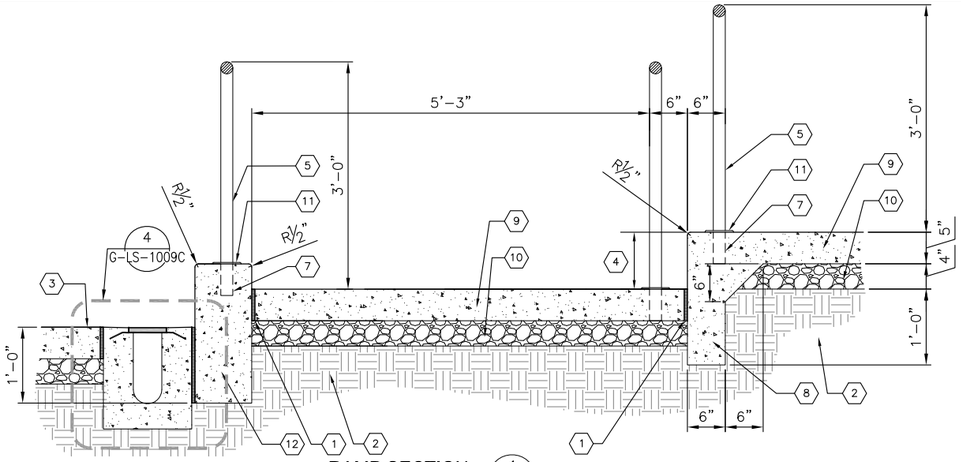

RAMP SECTION 1
SCALE 1" = 1'-0" G-LS-1009C

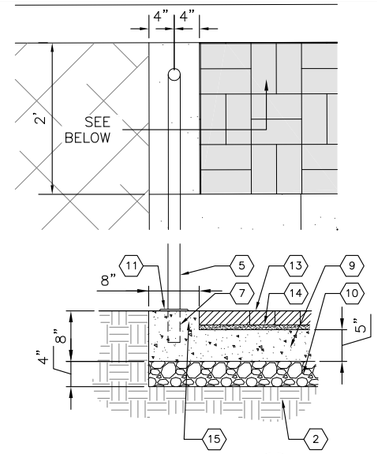

PAVER EDGE RESTRAINT 2
PLAN AND SECTION - SCALE 1" = 1'-0" G-LS-1009C

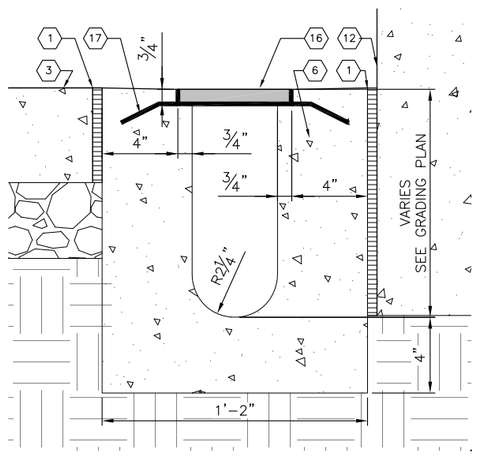

CUSTOM REVERSE SLOPE TRENCH DRAIN 4
SECTION - SCALE 3/4" = 1'-0" G-LS-1009C

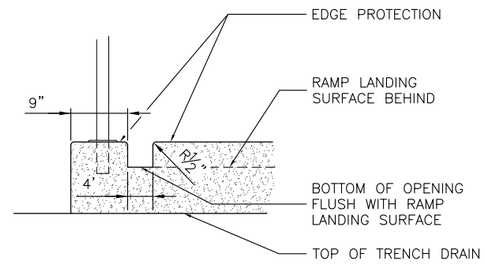

DRAINAGE OPENING 5
ELEVATION - SCALE 1" = 1'-0" G-LS-1009C

NOTES:

1. SLOPE ALL STEP TREADS 2% TO DRAIN.
2. r = RISER HEIGHT BASED ON GRADING PLAN. (MUST BE BETWEEN 4" AND 7").
3. t = 26" - 2r

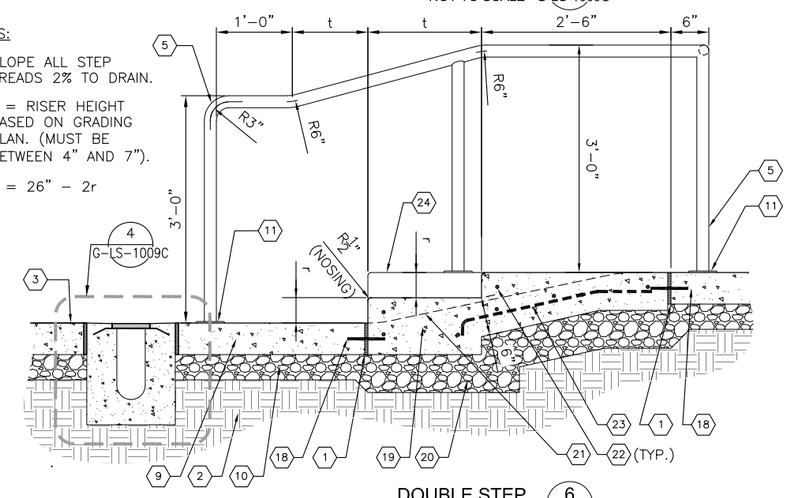

DOUBLE STEP 6
SECTION - SCALE 1" = 1'-0" G-LS-1009C

CODED NOTES 3
NOT TO SCALE G-LS-1009C

(#) CODED NOTES:

1. ITEM 705.03 – 1/2" EXPANSION JOINT. SEAL PER ITEM 705.04.
2. ITEM 204 – COMPACTED SUBGRADE.
3. ADJACENT CONCRETE SIDEWALK.
4. VARIES, SEE GRADING PLAN.
5. ITEM SPECIAL – 1-1/2" (1.9" O.D.) STAINLESS STEEL PIPE HANDRAIL AND POSTS (SEE STAINLESS STEEL GENERAL NOTES ON SHEET G-LS-1101).
6. ITEM 499 – 4" MIN. CLASS C CONCRETE ENCASEMENT
7. CORE DRILL 2-1/2" DIA., 5" DEEP, AND FILL WITH ITEM 705.20, NON-SHRINK GROUT.
8. TURNED DOWN SLAB – ITEM 499, CLASS C CONCRETE.
9. ITEM 608 – 5" THICK CLASS C CONCRETE SIDEWALK
10. ITEM 304 – 4" AGGREGATE BASE.
11. ITEM SPECIAL – PLAIN FLANGE, 4-1/4" DIAMETER, STAINLESS STEEL, (SEE STAINLESS STEEL GENERAL NOTES ON SHEET G-LS-1101).
12. ITEM 609 – CLASS C CONCRETE VERTICAL CURB.
13. ITEM 608 – 4" x 8" x 2 1/4" CLAY DETECTABLE WARNING PAVERS.
14. ITEM 608 – 3/4" SAND SETTING BED.
15. ITEM 608 – TURNED UP CONCRETE EDGE.
16. ITEM SPECIAL – ADA COMPLIANT CHANNEL GRATE.
17. ITEM SPECIAL – DUCTILE IRON CHANNEL GRATE FRAME.
18. 6" x 1/2" DIA. SMOOTH STEEL DOWEL WITH EXPANSION SLEEVE ON ONE SIDE, 2' O.C. – SIMILAR TO ITEM 451.08-C.
19. ITEM 608 – CONCRETE STEPS.
20. ITEM 304 – 6" AGGREGATE BASE.
21. FINISHED GRADE OF ADJACENT LANDSCAPING AREA.
22. ITEM 709.09 – #4 REBAR, CONTINUOUS.
23. ITEM 709.09 – #4 REBAR, 2' O.C.
24. ITEM 608 – 9" THICK RAMP CURB BEHIND.

CAUTION UNDERGROUND UTILITIES
2 WORKING DAYS
BEFORE YOU DIG
CALL 1-800-362-2764
OHIO UTILITY PROTECTION SERVICE
CALL NON-SERVICE FACILITY OWNERS DIRECT

PROFESSIONAL STAMP

SIGN:
DATE:

CONTRACT DRAWING
PRINTS NOT BEARING THIS STAMP WERE MADE PRIOR TO ADVERTISING BID. THESE PRINTS ARE CONSIDERED OBSOLETE FOR CONTRACT PURPOSES.

Department of Transportation and Engineering
City of Cincinnati
City Hall
801 Plum Street
Cincinnati, Ohio 45202

CINCINNATI STREETCAR
STREETCAR STOPS
STOP #09 SPECIAL DETAILS

Revisions
No.

	Date
Drawn by ML	07/02/12
Designed by ML	07/02/12
Checked by SJ/MM	07/02/12
Reviewed by JTB	07/12/12

Consultant

File Number

ACC No.
23126

G-LS-1009C

H:\1208 Streetcar Stops Revisions\Plans\Land\streetcar xsite OTR.dwg
11/19/2010 4:00:31 PM

DEMOLITION NOTES #

1. EXISTING VALVE TO BE RELOCATED BY GCWW.
2. EXISTING MANHOLE TO REMAIN.
3. EXISTING WATER MAIN TO BE ABANDONED AND RELOCATED BY GCWW.
4. EDGE OF PROPOSED TRACK SLAB.

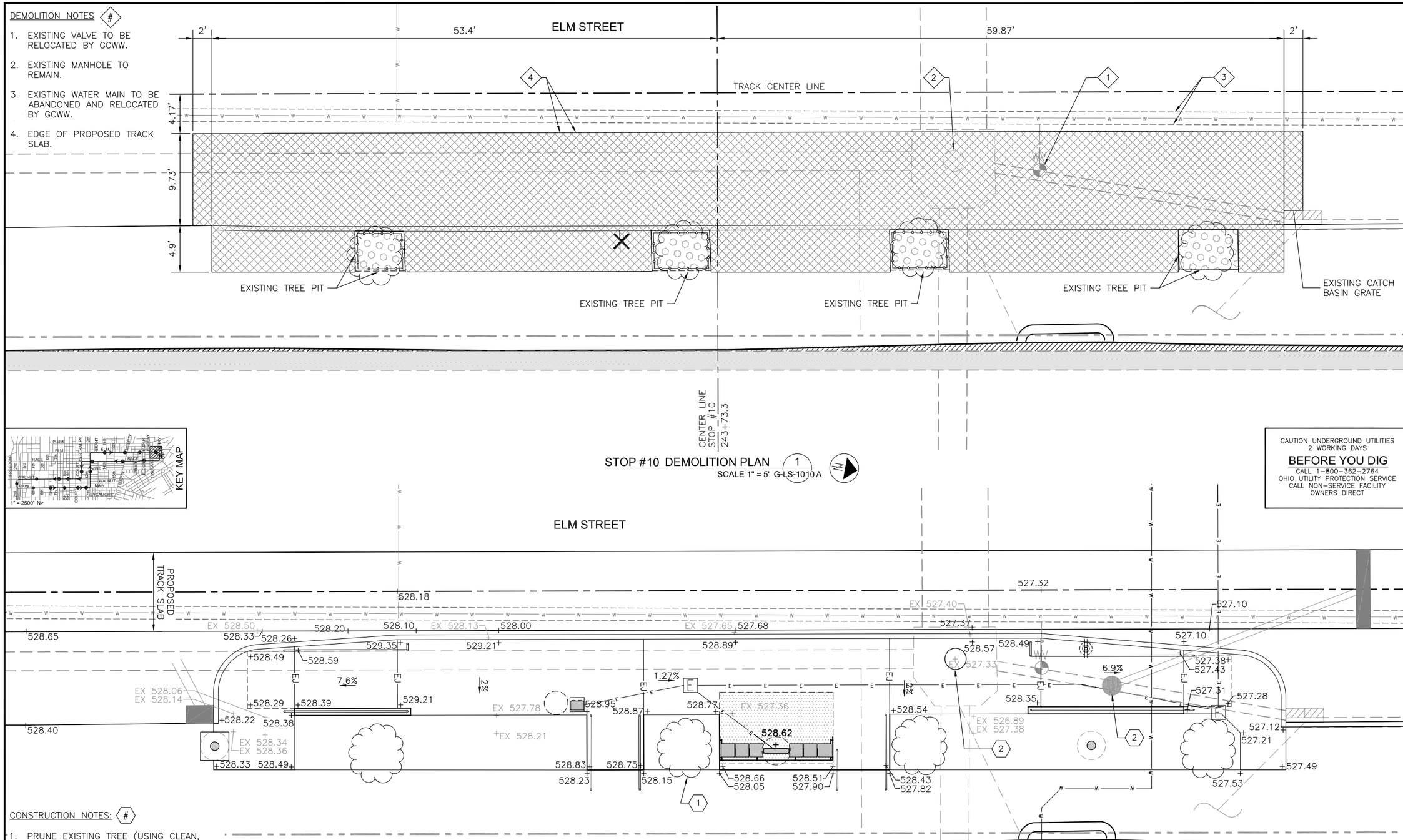

STOP #10 DEMOLITION PLAN (1)
SCALE 1" = 5' G-LS-1010 A

CAUTION UNDERGROUND UTILITIES
2 WORKING DAYS
BEFORE YOU DIG
CALL 1-800-362-2764
OHIO UTILITY PROTECTION SERVICE
CALL NON-SERVICE FACILITY OWNERS DIRECT

CONSTRUCTION NOTES: #

1. PRUNE EXISTING TREE (USING CLEAN, SHARP TOOLS) SO THAT TREE BRANCHES DO NOT INTERFERE WITH SHELTER.
2. ADJUST MANHOLE TO FINISHED GRADE ELEVATION. SEE SA SERIES DRAWINGS. PROVIDE SURFACE-APPLIED DETECTABLE WARNING ON MANHOLE COVER PER ITEM 608.071 TYPE O.

STOP #10 GRADING PLAN (2)
SCALE 1" = 5' G-LS-1010 A

PROFESSIONAL STAMP

SIGN:
DATE:

CONTRACT DRAWING
PRINTS NOT BEARING THIS STAMP WERE MADE PRIOR TO ADVERTISING FOR BIDS AND ARE TO BE CONSIDERED OBSOLETE FOR CONTRACT PURPOSES.

Department of Transportation and Engineering
City of Cincinnati
City Hall
801 Plum Street
Cincinnati, Ohio 45202

CINCINNATI STREETCAR
STREETCAR STOPS
STOP #10 DETAIL DRAWINGS

Revisions
No.

Drawn by ML Date 07/02/12
Designed by ML Date 07/02/12
Checked by SJ/MM Date 07/02/12
Reviewed by JTB Date 07/12/12

Consultant
PB
HDR
DNK ARCHITECTS

File Number

ACC No. 23126

G-LS-1010 A

H:\1208 Streetcar Stops Revisions\Plans\Land\streetcar xsite OTR.dwg
10/25/2011 4:51:39 PM

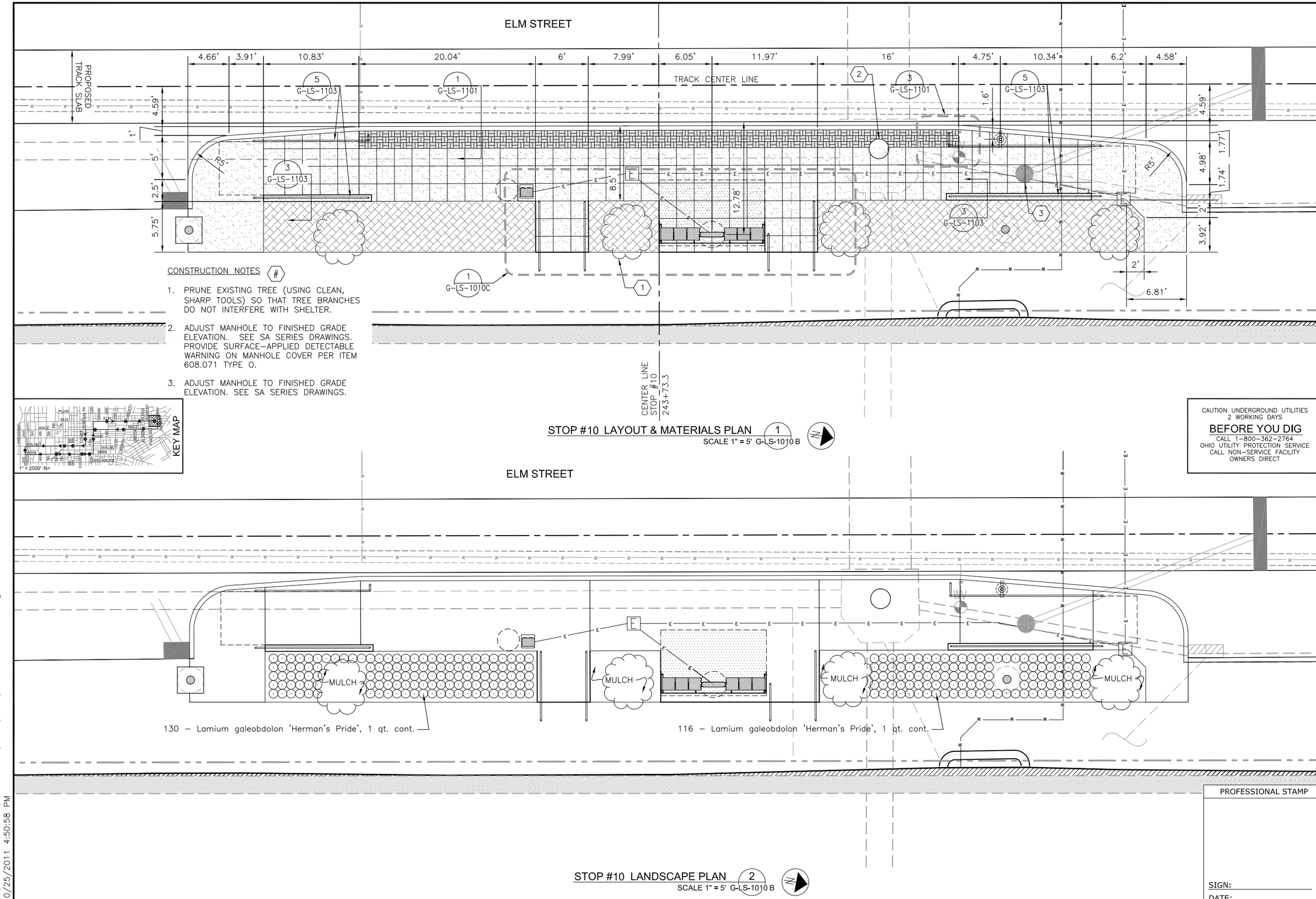

CONSTRUCTION NOTES #

1. PRUNE EXISTING TREE (USING CLEAN, SHARP TOOLS) SO THAT TREE BRANCHES DO NOT INTERFERE WITH SHELTER.
2. ADJUST MANHOLE TO FINISHED GRADE ELEVATION. SEE SA SERIES DRAWINGS. PROVIDE SURFACE–APPLIED DETECTABLE WARNING ON MANHOLE COVER PER ITEM 608.071 TYPE O.
3. ADJUST MANHOLE TO FINISHED GRADE ELEVATION. SEE SA SERIES DRAWINGS.

STOP #10 LAYOUT & MATERIALS PLAN (1)
SCALE 1" = 5' G-LS-1010 B

STOP #10 LANDSCAPE PLAN (2)
SCALE 1" = 5' G-LS-1010 B

CAUTION UNDERGROUND UTILITIES
2 WORKING DAYS
BEFORE YOU DIG
CALL 1–800–362–2764
OHIO UTILITY PROTECTION SERVICE
CALL NON–SERVICE FACILITY OWNERS DIRECT

PROFESSIONAL STAMP

SIGN:
DATE:

CONTRACT DRAWING
PRINTS NOT BEARING THIS STAMP WERE MADE PRIOR TO ADVERTISING FOR BIDS AND ARE TO BE CONSIDERED OBSOLETE FOR CONTRACT PURPOSES.

Department of Transportation and Engineering
City of Cincinnati
City Hall
801 Plum Street
Cincinnati, Ohio 45202

CINCINNATI STREETCAR
STREETCAR STOPS
STOP #10 DETAIL DRAWINGS

Revisions
No.

Date 07/02/12	Date 07/02/12
Date 07/02/12	Date 07/12/12
Drawn by ML	Designed by ML
Checked by SJ/MM	Reviewed by JTB

Consultant

File Number

ACC No. 23126

G-LS-1010 B

H:\1208 Streetcar Stops Revisions\Plans\Land\streetcar xsite OTR.dwg
10/25/2011 4:50:58 PM

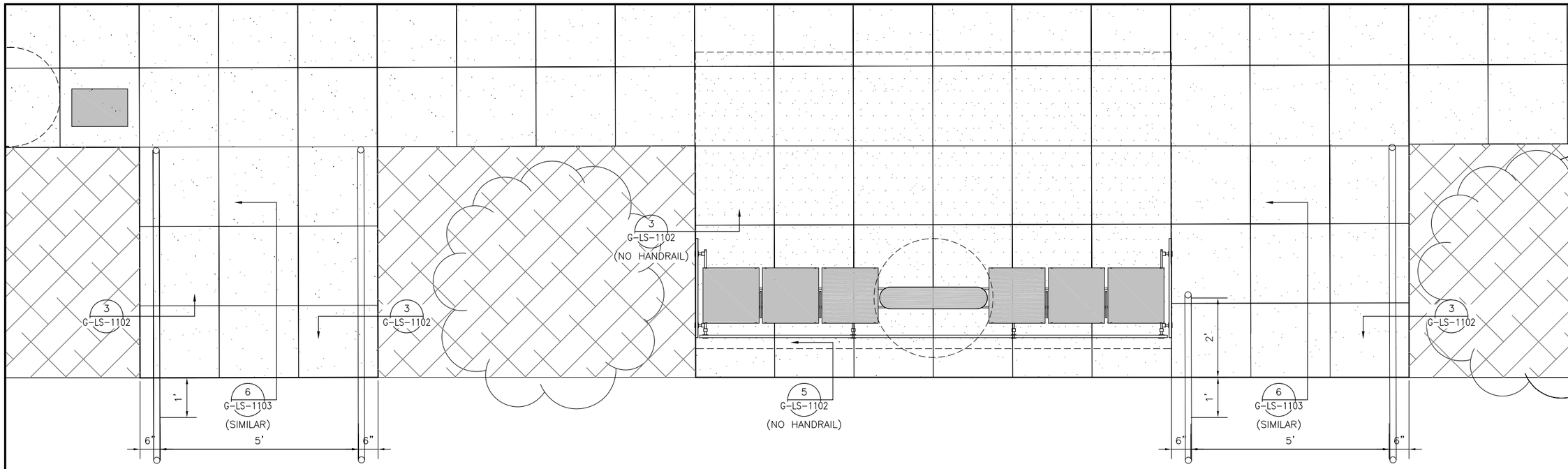

STOP #10 STEP ENLARGEMENT PLAN (1)
SCALE 3/4" = 1'-0" G-LS-1010 C

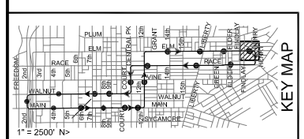

CAUTION UNDERGROUND UTILITIES
2 WORKING DAYS
BEFORE YOU DIG
CALL 1-800-362-2764
OHIO UTILITY PROTECTION SERVICE
CALL NON-SERVICE FACILITY
OWNERS DIRECT

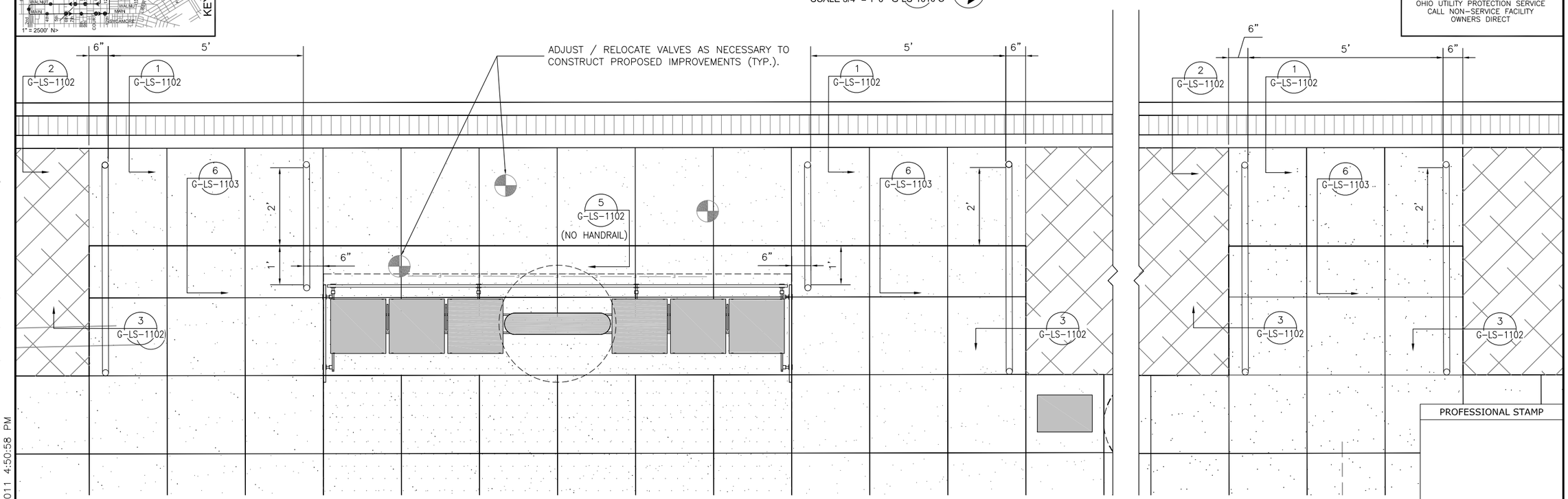

STOP #12 STEP ENLARGEMENT PLANS (2)
SCALE 3/4" = 1'-0" G-LS-1010 C

PROFESSIONAL STAMP

SIGN:
DATE:

CONTRACT DRAWING

PRINTS NOT BEARING THIS STAMP WERE MADE PRIOR TO ADVERTISING FOR BIDS AND ARE TO BE CONSIDERED OBSOLETE FOR CONTRACT PURPOSES.

Department of Transportation and Engineering

City of Cincinnati
City Hall
801 Plum Street
Cincinnati, Ohio 45202

CINCINNATI STREETCAR
STREETCAR STOPS
STOP #10 DETAIL DRAWINGS

Revisions

No.		

Drawn by ML	Date 07/02/12
Designed by ML	Date 07/02/12
Checked by SJ/MM	Date 07/02/12
Reviewed by JTB	Date 07/12/12

Consultant

File Number

ACC No.
23126

G-LS-1010 C

H:\1208 Streetcar Stops Revisions\Plans\Land\streetcar xsite OTR.dwg
10/25/2011 4:50:58 PM

DEMOLITION NOTES #

1. EXISTING POLE TO REMAIN.
2. GCWW AND DUKE ENERGY TO RELOCATE EXISTING VALVES OUT OF DETECTABLE WARNING AREA.
3. ABANDONED GAS LINE.
4. WATER MAIN TO BE ABANDONED/RELOCATED BY GCWW.
5. EXISTING PAY TELEPHONE TO BE REMOVED BY CINCINNATI BELL.
6. EDGE OF PROPOSED TRACK SLAB.
7. EXISTING ELECTRICAL BOX TO BE RELOCATED BY DUKE ENERGY.
8. CONTRACTOR TO BULKHEAD EXISTING OPENING AND FILL ENCROACHMENT WITH CLSM PER ITEM 613.

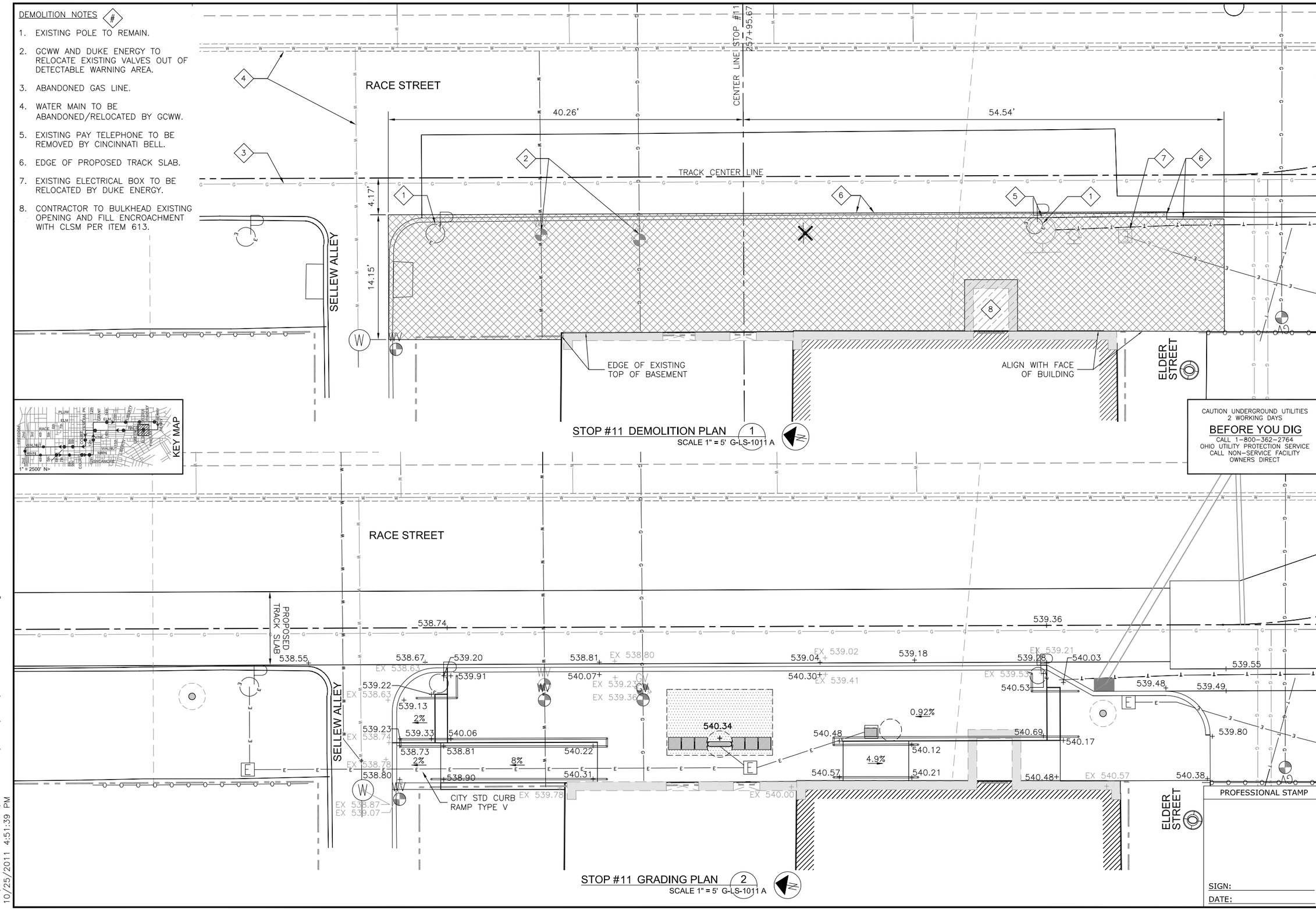

PROFESSIONAL STAMP

SIGN:

DATE:

CONTRACT DRAWING

PRINTS NOT BEARING THIS STAMP WERE MADE PRIOR TO ADVERTISING FOR BIDS AND ARE TO BE CONSIDERED OBSOLETE FOR CONTRACT PURPOSES.

Department of Transportation and Engineering

City of Cincinnati
City Hall
801 Plum Street
Cincinnati, Ohio 45202

CINCINNATI STREETCAR
STREETCAR STOPS
STOP #11 DETAIL DRAWINGS

Revisions

No.	Date
	07/02/12
	07/02/12
	07/02/12
	07/12/12

Drawn by ML
Designed by ML
Checked by SJ/MM
Reviewed by JTB

Consultant

File Number

ACC No. 23126

G-LS-1011 A

H:\1208 Streetcar Stops Revisions\Plans\Land\streetcar xsite OTR.dwg
10/25/2011 4:51:39 PM

(#) CODED NOTES
(FOR DETAILS BELOW):

1. ITEM 705.03 – 1/2" EXPANSION JOINT. SEAL PER ITEM 705.04.
2. ITEM 204 – COMPACTED SUBGRADE.
3. ADJACENT CONCRETE SIDEWALK.
4. VARIES, SEE GRADING PLAN.
5. ITEM SPECIAL – 1–1/2" (1.9" O.D.) STAINLESS STEEL PIPE HANDRAIL AND POSTS (SEE STAINLESS STEEL GENERAL NOTES ON SHEET G–LS–1101).
6. HANDRAIL POST SETTING IN PAVERS, SEE 7/G–LS–1101
7. CORE DRILL 2–1/2" DIA., 5" DEEP, AND FILL WITH ITEM 705.20, NON–SHRINK GROUT.
8. TURNED DOWN SLAB – ITEM 499, CLASS C CONCRETE.
9. ITEM 608 – 5" THICK CLASS C CONCRETE SIDEWALK
10. ITEM 304 – 4" AGGREGATE BASE.
11. ITEM SPECIAL – PLAIN FLANGE, 4–1/4" DIAMETER, STAINLESS STEEL, (SEE STAINLESS STEEL GENERAL NOTES ON G–LS–1101).
12. ITEM 609 – CLASS C CONCRETE VERTICAL CURB.
13. ITEM 608 – 4" x 8" x 2 1/4" CLAY DETECTABLE WARNING PAVERS.
14. ITEM 608 – 3/4" SAND SETTING BED.
15. 6" x 1/2" DIA. SMOOTH STEEL DOWEL WITH EXPANSION SLEEVE ON ONE SITE, 2' O.C. – SIMILAR TO ITEM 451.08–C.
16. ITEM 709.09 – #4 REBAR, 2' O.C.
17. ITEM 709.09 – #4 REBAR, CONTINUOUS.
18. ITEM 608 – CLASS C CONCRETE STEP(S).
19. ITEM 512.08 – TYPE 3 WATERPROOFING

CONSTRUCTION NOTES (#)
(FOR STOP LAYOUT PLAN)

1. MOUNT STREETCAR STOP IDENTIFICATION SIGNS TO UTILITY POLE USING STAINLESS STEEL STRAPS.
2. BUILD AROUND EXISTING UTILITY POLE TO REMAIN. PLACE ITEM 705.03 EXPANSION JOINT BETWEEN UTILITY POLE AND NEW CONSTRUCTION.
3. MAINTAIN 1 1/2" MINIMUM CLEARANCE BETWEEN HANDRAIL AND UTILITY POLE.
4. NON–ENCLOSED SHELTER.
5. PROPOSED LOCATION FOR RELOCATED PULL BOX.

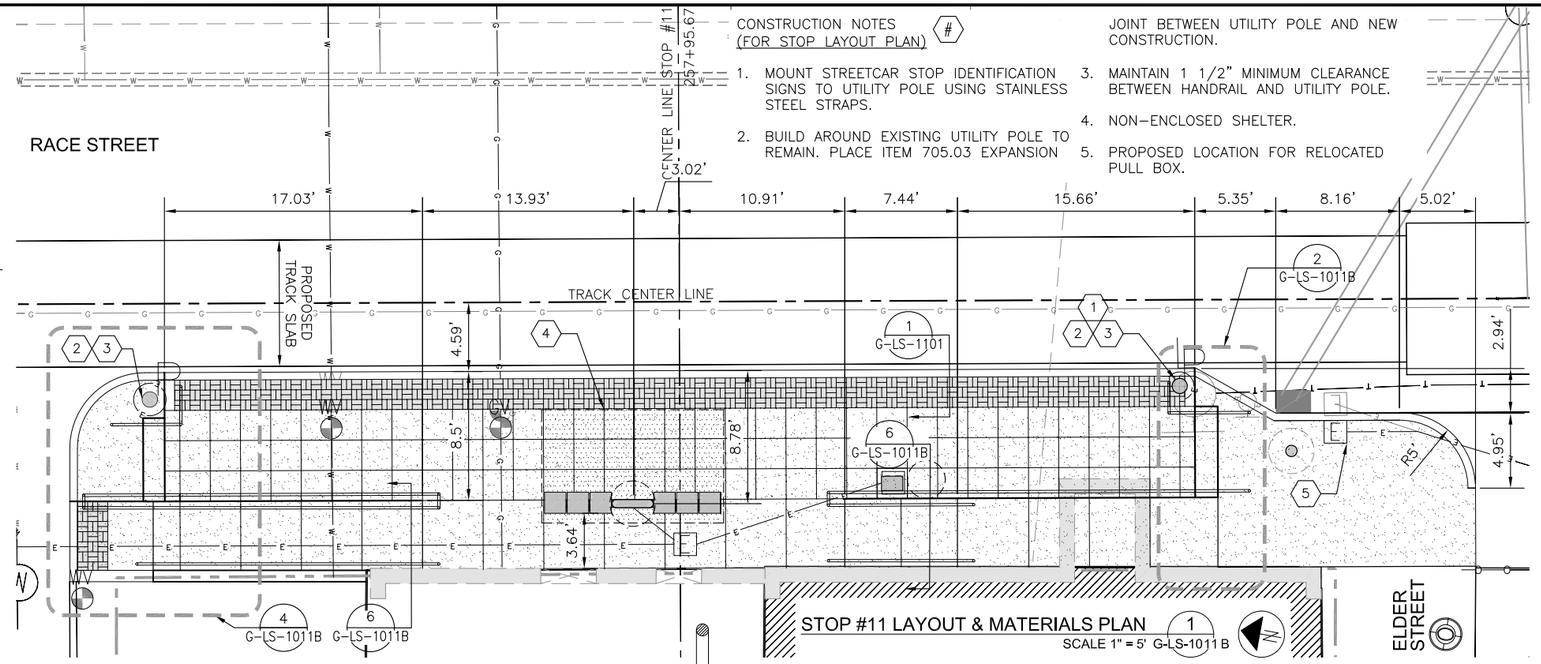

STOP #11 LAYOUT & MATERIALS PLAN (1)
SCALE 1" = 5' G-LS-1011 B

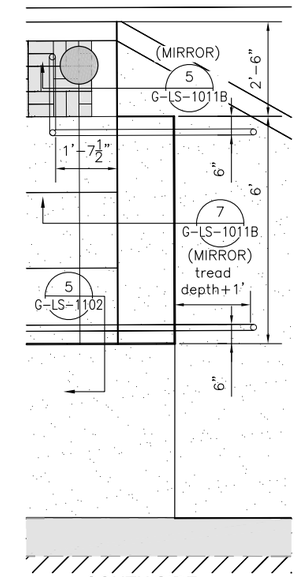

SOUTH SIDE ENLARGEMENT (2)
SCALE 1/2" = 1'-0" G-LS-1011 B

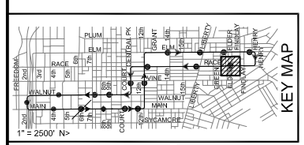

CAUTION UNDERGROUND UTILITIES
2 WORKING DAYS
BEFORE YOU DIG
CALL 1–800–362–2764
OHIO UTILITY PROTECTION SERVICE
CALL NON–SERVICE FACILITY
OWNERS DIRECT

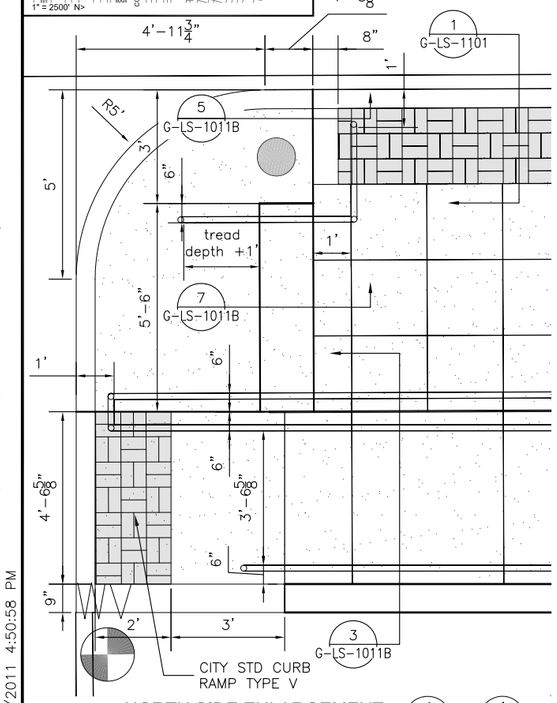

NORTH SIDE ENLARGEMENT (4)
PLAN - SCALE 1/2" = 1'-0" G-LS-1011 B

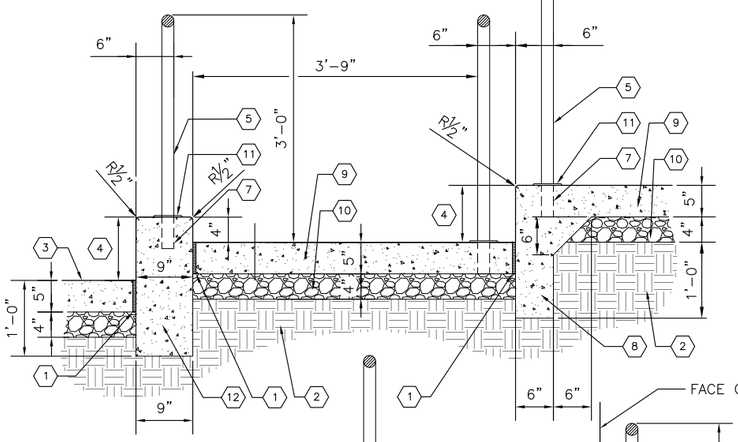

RAMP SECTION (3)
SCALE 1" = 1'-0" G-LS-1011 B

NOTES FOR STEPS:

1. SLOPE ALL STEP TREADS 2% TO DRAIN.
2. r = RISER HEIGHT BASED ON GRADING PLAN. (MUST BE BETWEEN 4" AND 7").
3. t = 26" – 2r

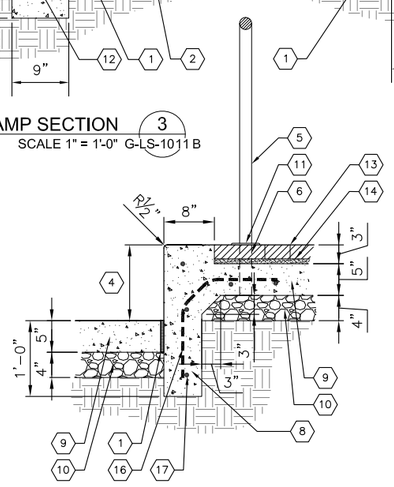

PLATFORM END (5)
SCALE 1" = 1'-0" G-LS-1011 B

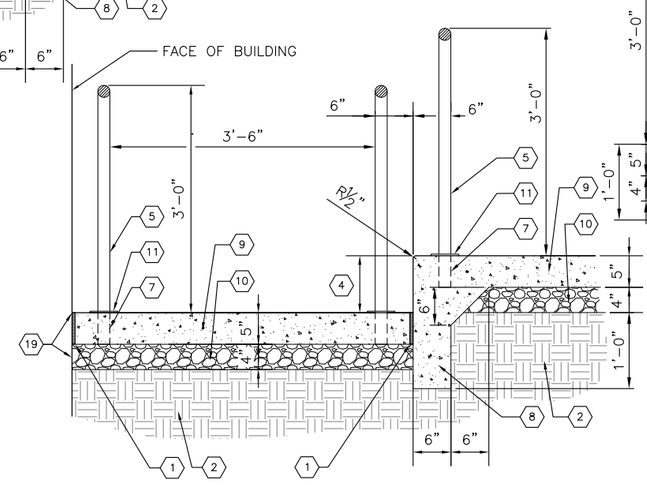

RAMP SECTION (6)
SCALE 1" = 1'-0" G-LS-1011 B

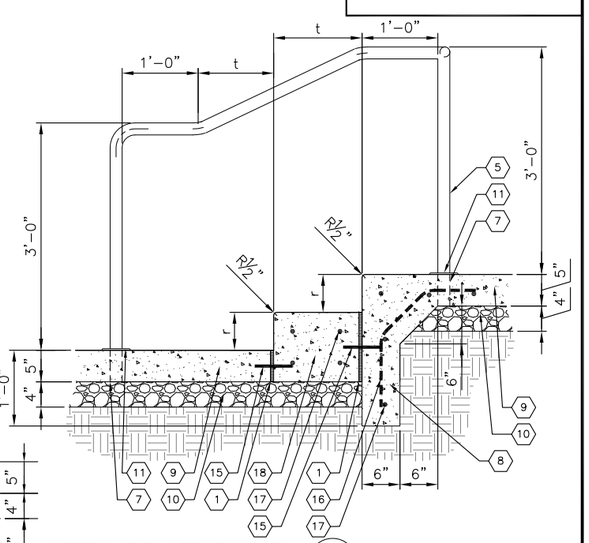

STEPS AT PLATFORM END (7)
SCALE 1" = 1'-0" G-LS-1011 B

PROFESSIONAL STAMP

SIGN:
DATE:

CITY OF CINCINNATI
DEPARTMENT OF TRANSPORTATION & ENGINEERING

CONTRACT DRAWING
PRINTS NOT BEARING THIS STAMP WERE MADE PRIOR TO ADVERTISING FOR BIDS AND ARE TO BE CONSIDERED OBSOLETE FOR CONTRACT PURPOSES.

Department of Transportation and Engineering
City of Cincinnati
801 Plum Street
Cincinnati, Ohio 45202

CINCINNATI STREETCAR
STREETCAR STOPS
STOP #11 DETAIL DRAWINGS

Revisions
No.

Drawn by ML	Date 07/02/12
Designed by ML	Date 07/02/12
Checked by SJ/MM	Date 07/02/12
Reviewed by JTB	Date 07/12/12

Consultant
PB
HDR
DNK SURVEYING

File Number

ACC No. 23126

G-LS-1011 B

H:\1208 Streetcar Stops Revisions\Plans\Land\streetcar xsite OTR.dwg
10/25/2011 4:50:58 PM

DEMOLITION NOTES #

1. EXISTING POLE TO BE REMOVED.
2. EXISTING CATCH BASIN TO BE REMOVED.*
3. EXISTING VALVE TO REMAIN.
4. EXISTING VALVE TO BE REMOVED BY DUKE ENERGY.
5. EXISTING VALVES TO BE ADJUSTED TO NEW GRADE.
6. EXISTING MANHOLE TO BE REMOVED AND REPLACED.*
7. RELOCATE LIGHTING CIRCUIT OUT OF STREETCAR STOP SHELTER / OCS POLE FOUNDATION FOOTPRINT.
8. PREVIOUSLY ABANDONED GAS LINE.
9. GAS LINE TO BE ABANDONED BY DUKE ENERGY.
10. EDGE OF PROPOSED TRACK SLAB.

*REFER TO SA SERIES DRAWINGS.

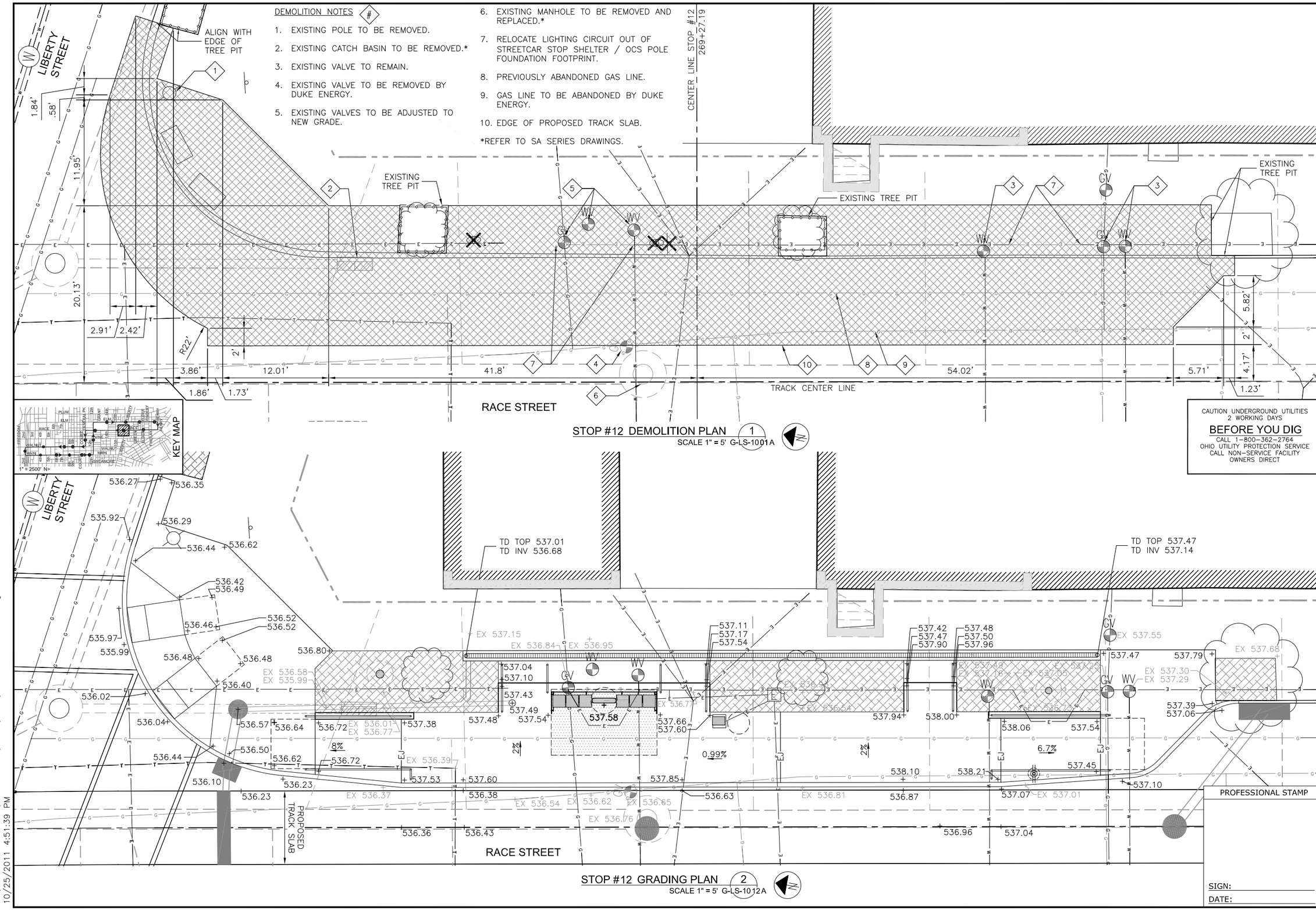

STOP #12 DEMOLITION PLAN 1
SCALE 1" = 5' G-LS-1001A

STOP #12 GRADING PLAN 2
SCALE 1" = 5' G-LS-1012A

CAUTION UNDERGROUND UTILITIES
2 WORKING DAYS
BEFORE YOU DIG
CALL 1-800-362-2764
OHIO UTILITY PROTECTION SERVICE
CALL NON-SERVICE FACILITY OWNERS DIRECT

PROFESSIONAL STAMP

SIGN:
DATE:

CONTRACT DRAWING

PRINTS NOT BEARING THIS STAMP WERE MADE PRIOR TO ADVERTISING FOR BIDS AND ARE TO BE CONSIDERED OBSOLETE FOR CONTRACT PURPOSES.

Department of Transportation and Engineering
City of Cincinnati
City Hall
801 Plum Street
Cincinnati, Ohio 45202

CINCINNATI STREETCAR
STREETCAR STOPS
STOP #12 DETAIL DRAWINGS

Revisions
No.

Date	Date	Date	Date
07/02/12	07/02/12	07/02/12	07/12/12

Drawn by	Designed by	Checked by	Reviewed by
ML	ML	SJ/MM	JTB

Consultant

File Number

ACC No.
23126

G-LS-1012 A

H:\1208 Streetcar Stops Revisions\Plans\Land\streetcar xsite OTR.dwg
10/25/2011 4:51:39 PM

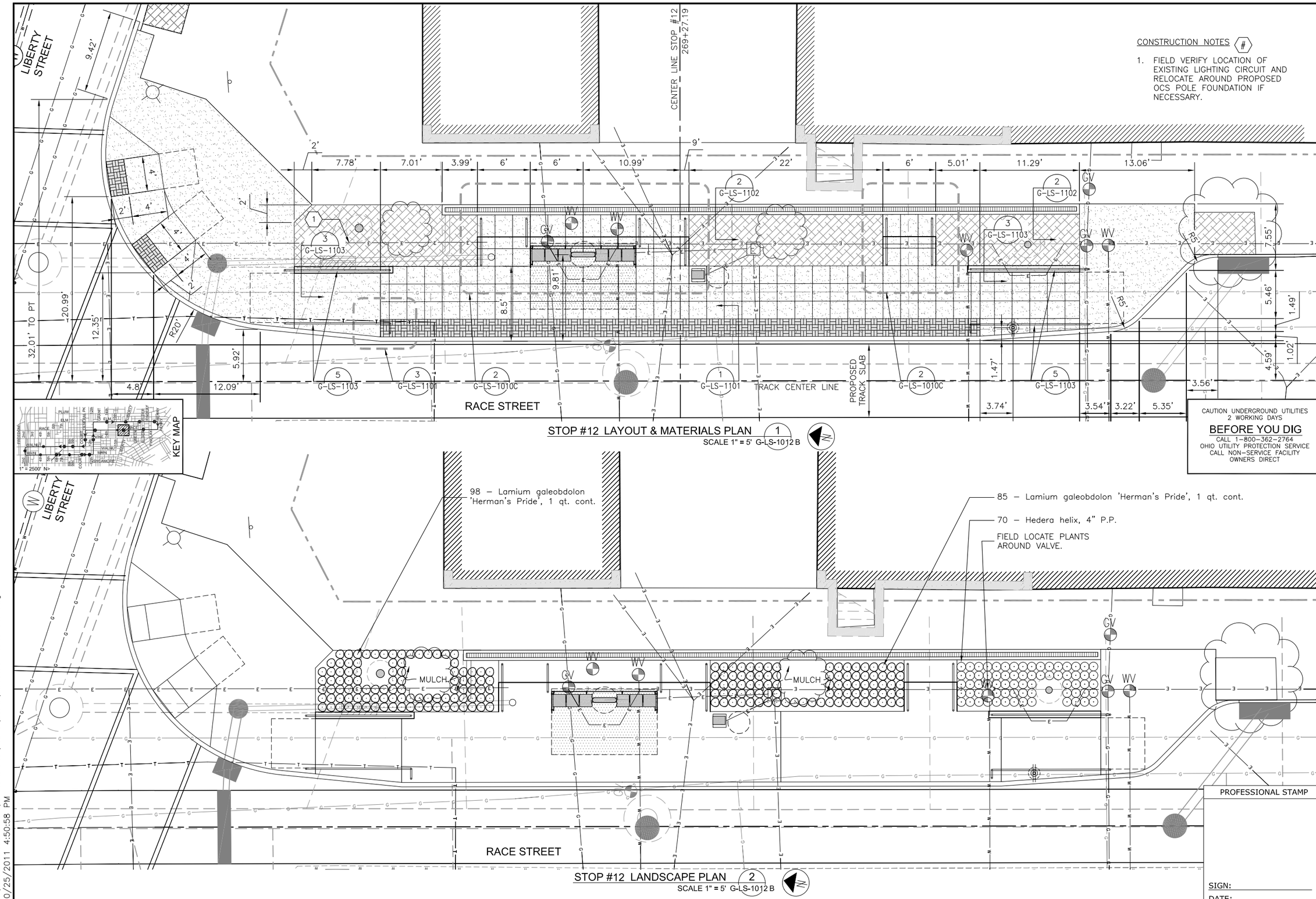

CONSTRUCTION NOTES #

1. FIELD VERIFY LOCATION OF EXISTING LIGHTING CIRCUIT AND RELOCATE AROUND PROPOSED OCS POLE FOUNDATION IF NECESSARY.

CAUTION UNDERGROUND UTILITIES
2 WORKING DAYS
BEFORE YOU DIG
CALL 1-800-362-2764
OHIO UTILITY PROTECTION SERVICE
CALL NON-SERVICE FACILITY OWNERS DIRECT

CONTRACT DRAWING

PRINTS NOT BEARING THIS STAMP WERE MADE PRIOR TO ADVERTISING BEFORE BIDS WERE DUE AND CONSIDERED OBSOLETE FOR CONTRACT PURPOSES.

Department of Transportation and Engineering
City of Cincinnati
City Hall
801 Plum Street
Cincinnati, Ohio 45202

CINCINNATI STREETCAR
STREETCAR STOPS
STOP #12 DETAIL DRAWINGS

Revisions
No.

Date 07/02/12	Date 07/02/12
Date 07/02/12	Date 07/12/12
Drawn by ML	Designed by ML
Checked by SJ/MM	Reviewed by JTB

Consultant

File Number

ACC No. 23126

G-LS-1012 B

H:\1208 Streetcar Stops Revisions\Plans\Land\streetcar xsite OTR.dwg
10/25/2011 4:50:58 PM

DEMOLITION NOTES (#)

1. EXISTING VALVES TO REMAIN: ELEVATIONS TO BE ADJUSTED AS NEEDED.
2. EXISTING MANHOLE TO BE REMOVED AND REPLACED. SEE SA SERIES DRAWINGS.
3. RELOCATE EXISTING LIGHTING CIRCUIT OUT OF STREETCAR STOP SHELTER / OCS POLE FOUNDATION FOOTPRINT.
4. EDGE OF PROPOSED TRACK SLAB.

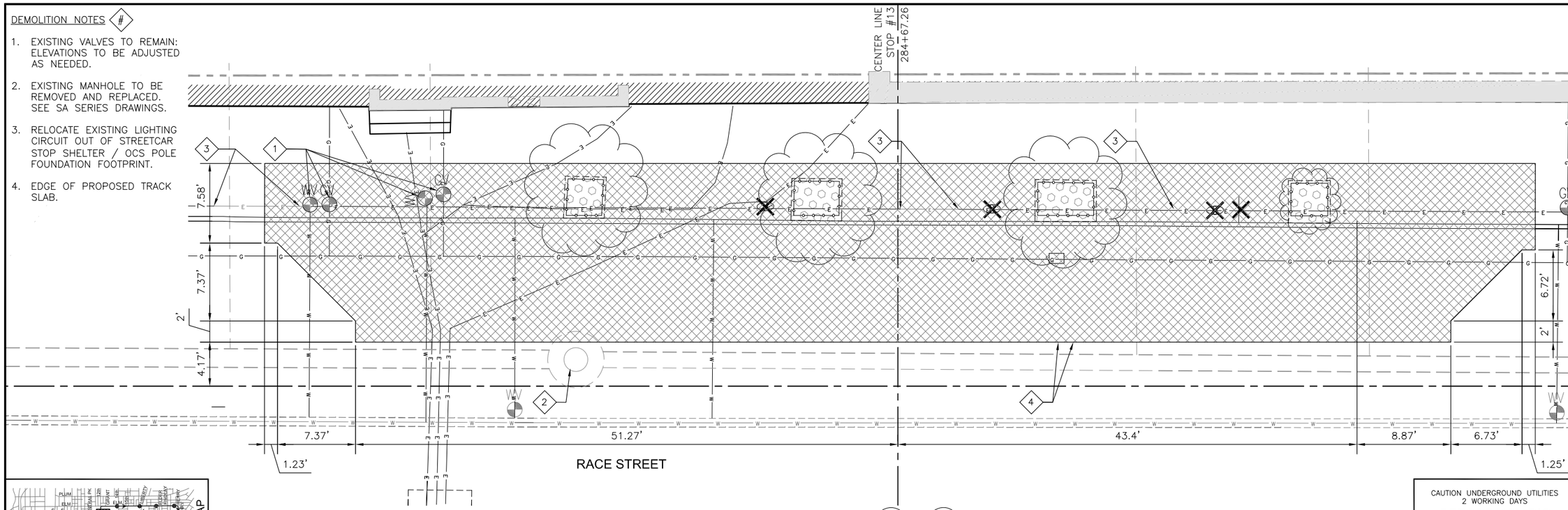

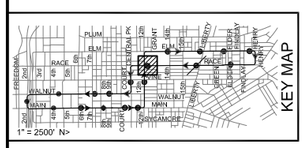

STOP #13 DEMOLITION PLAN (1)
SCALE 1" = 5' G-LS-1013 A

CAUTION UNDERGROUND UTILITIES
2 WORKING DAYS
BEFORE YOU DIG
CALL 1-800-362-2764
OHIO UTILITY PROTECTION SERVICE
CALL NON-SERVICE FACILITY
OWNERS DIRECT

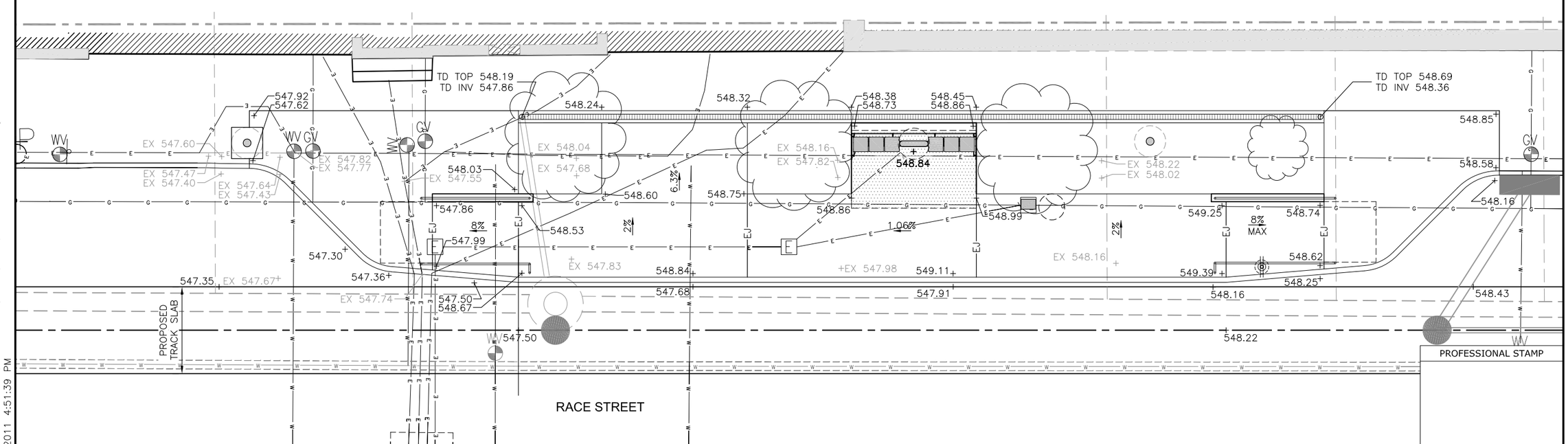

STOP #13 GRADING PLAN (2)
SCALE 1" = 5' G-LS-1013 A

PROFESSIONAL STAMP

SIGN:
DATE:

CONTRACT DRAWING

PRINTS NOT BEARING THIS STAMP WERE MADE PRIOR TO ADVERTISING BID. THEY MAY BE CONSIDERED OBSOLETE FOR CONTRACT PURPOSES.

Department of Transportation and Engineering

City of Cincinnati
City Hall
801 Plum Street
Cincinnati, Ohio 45202

CINCINNATI STREETCAR
STREETCAR STOPS
STOP #13 DETAIL DRAWINGS

Revisions

No.	Date
	07/02/12
	07/02/12
	07/02/12
	07/12/12

Drawn by ML
Designed by ML
Checked by SJ/MM
Reviewed by JTB

Consultant

File Number

ACC No. 23126

G-LS-1013 A

H:\1208 Streetcar Stops Revisions\Plans\Land\streetcar xsite OTR.dwg
10/25/2011 4:51:39 PM

CONSTRUCTION NOTES #

1. PRUNE EXISTING TREE (USING CLEAN, SHARP TOOLS) SO THAT TREE BRANCHES DO NOT INTERFERE WITH SHELTER.
2. FIELD VERIFY LOCATION OF EXISTING LIGHTING CIRCUIT AND RELOCATE AROUND PROPOSED OCS POLE FOUNDATION IF NECESSARY.

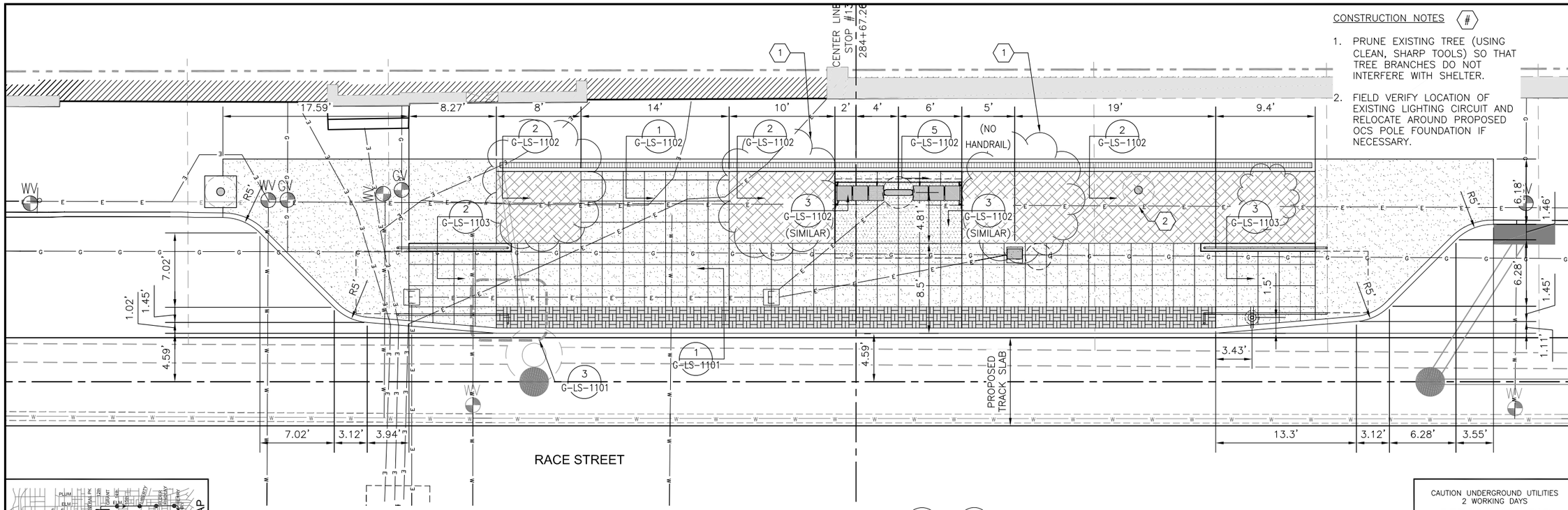

STOP #13 LAYOUT & MATERIALS PLAN (1)
SCALE 1" = 5' G-LS-1013B

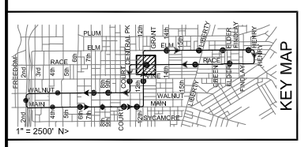

CAUTION UNDERGROUND UTILITIES
2 WORKING DAYS
BEFORE YOU DIG
CALL 1-800-362-2764
OHIO UTILITY PROTECTION SERVICE
CALL NON-SERVICE FACILITY
OWNERS DIRECT

155 – Lamium galeobdolon 'Herman's Pride', 1 qt. cont.

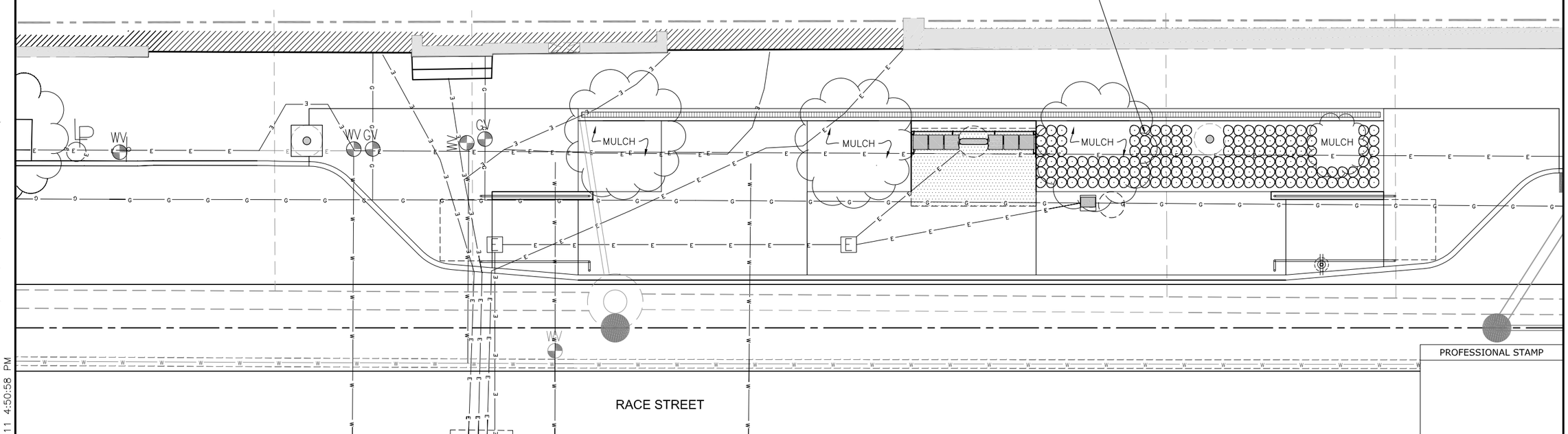

STOP #13 LANDSCAPE PLAN (2)
SCALE 1" = 5' G-LS-1013B

PROFESSIONAL STAMP

SIGN:
DATE:

CONTRACT DRAWING
PRINTS NOT BEARING THIS STAMP WERE MADE PRIOR TO ADVERTISING BID DATE AND ARE TO BE CONSIDERED OBSOLETE FOR CONTRACT PURPOSES.

Department of Transportation and Engineering
City of Cincinnati
City Hall
801 Plum Street
Cincinnati, Ohio 45202

CINCINNATI STREETCAR
STREETCAR STOPS
STOP #13 DETAIL DRAWINGS

Revisions
No.

Date 07/02/12	Drawn by ML
Date 07/02/12	Designed by ML
Date 07/02/12	Checked by SJ/MM
Date 07/12/12	Reviewed by JTB

Consultant
PB
HDR
DNK

File Number

ACC No.
23126

G-LS-1013B

H:\1208 Streetcar Stops Revisions\Plans\Land\streetcar xsite OTR.dwg
10/25/2011 4:50:58 PM

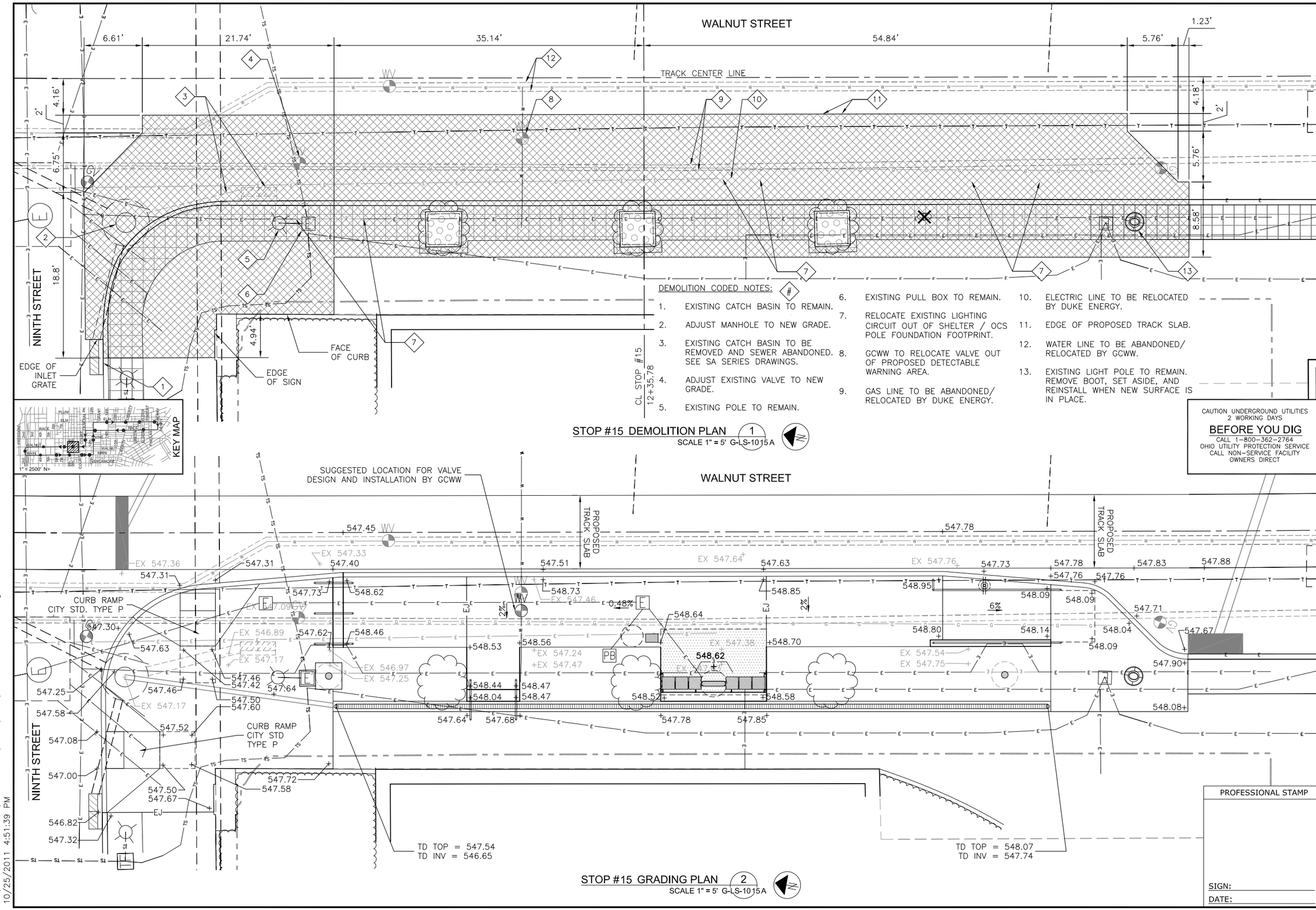

DEMOLITION CODED NOTES: #

1. EXISTING CATCH BASIN TO REMAIN.
2. ADJUST MANHOLE TO NEW GRADE.
3. EXISTING CATCH BASIN TO BE REMOVED AND SEWER ABANDONED. SEE SA SERIES DRAWINGS.
4. ADJUST EXISTING VALVE TO NEW GRADE.
5. EXISTING POLE TO REMAIN.
6. EXISTING PULL BOX TO REMAIN.
7. RELOCATE EXISTING LIGHTING CIRCUIT OUT OF SHELTER / OCS POLE FOUNDATION FOOTPRINT.
8. GCWW TO RELOCATE VALVE OUT OF PROPOSED DETECTABLE WARNING AREA.
9. GAS LINE TO BE ABANDONED/ RELOCATED BY DUKE ENERGY.
10. ELECTRIC LINE TO BE RELOCATED BY DUKE ENERGY.
11. EDGE OF PROPOSED TRACK SLAB.
12. WATER LINE TO BE ABANDONED/ RELOCATED BY GCWW.
13. EXISTING LIGHT POLE TO REMAIN. REMOVE BOOT, SET ASIDE, AND REINSTALL WHEN NEW SURFACE IS IN PLACE.

STOP #15 DEMOLITION PLAN (1)
SCALE 1" = 5' G-LS-1015 A

STOP #15 GRADING PLAN (2)
SCALE 1" = 5' G-LS-1015 A

CAUTION UNDERGROUND UTILITIES
2 WORKING DAYS
BEFORE YOU DIG
CALL 1-800-362-2764
OHIO UTILITY PROTECTION SERVICE
CALL NON-SERVICE FACILITY OWNERS DIRECT

PROFESSIONAL STAMP

SIGN:
DATE:

CONTRACT DRAWING
PRINTS NOT BEARING THIS STAMP WERE MADE PRIOR TO ADVERTISING FOR BIDS AND ARE TO BE CONSIDERED OBSOLETE FOR CONTRACT PURPOSES.

Department of Transportation and Engineering
City of Cincinnati
City Hall
801 Plum Street
Cincinnati, Ohio 45202

CINCINNATI STREETCAR
STREETCAR STOPS
STOP #15 DETAIL DRAWINGS

Revisions
No.

Drawn by ML	Date 07/02/12
Designed by ML	Date 07/02/12
Checked by SJ/MM	Date 07/02/12
Reviewed by JTB	Date 07/12/12

Consultant
PB
HDR
D N K ARCHITECTS ENGINEERS

File Number

ACC No.
23126

G-LS-1015 A

H:\1208 Streetcar Stops Revisions\Plans\Land\streetcar xsite CBD.dwg
10/25/2011 4:51:39 PM

WALNUT STREET

TRACK CENTER LINE

NINTH STREET

CURB RAMP CITY STD TYPE P

CURB RAMP CITY STD TYPE P

(NO HANDRAIL)

CL STOP #15 12+35.78

CONSTRUCTION CODED NOTES (#)

1. SUGGESTED LOCATION FOR WATER VALVE. DESIGN AND INSTALLATION BY GCWW.
2. PRUNE EXISTING TREE (USING CLEAN, SHARP TOOLS) SO THAT TREE BRANCHES DO NOT INTERFERE WITH SHELTER.
3. RELOCATE LIGHTING CIRCUIT AS NECESSARY TO CONSTRUCT TRENCH DRAIN.

KEY MAP

1" = 2500' N>

STOP #15 LAYOUT & MATERIALS PLAN (1)
SCALE 1" = 5' G-LS-1015 B

CAUTION UNDERGROUND UTILITIES
2 WORKING DAYS
BEFORE YOU DIG
CALL 1-800-362-2764
OHIO UTILITY PROTECTION SERVICE
CALL NON-SERVICE FACILITY OWNERS DIRECT

WALNUT STREET

NINTH STREET

MULCH

80 – Sedum acre, 4" P.P.
58 – Lamium galeobdolon 'Herman's Pride', 1 qt. cont.
72 – Lamium galeobdolon 'Herman's Pride', 1 qt. cont.
63 – Heuchera micrantha 'Palace Purple', #1 Cont.
4 – Artemisia ludoviciana 'Silver Queen', #2 Cont.
8 – Sedum 'Autumn Joy', #2 Cont.
6 – Artemisia ludociciana 'Silver Queen', #2 Cont.

STOP #15 LANDSCAPE PLAN (2)
SCALE 1" = 5' G-LS-1015 B

PROFESSIONAL STAMP

SIGN:

DATE:

H:\1208 Streetcar Stops Revisions\Plans\Land\streetcar xsite CBD.dwg
10/25/2011 4:50:58 PM

CITY OF CINCINNATI DEPARTMENT OF TRANSPORTATION & ENGINEERING

CONTRACT DRAWING

PRINTS NOT BEARING THIS STAMP WERE MADE PRIOR TO ADVERTISING BID AND SHOULD BE CONSIDERED OBSOLETE FOR CONTRACT PURPOSES.

Department of Transportation and Engineering

City of Cincinnati
City Hall
801 Plum Street
Cincinnati, Ohio 45202

CINCINNATI STREETCAR
STREETCAR STOPS
STOP #15 DETAIL DRAWINGS

Revisions

No.		Date
		07/02/12
		07/02/12
		07/02/12
		07/12/12

Drawn by	Designed by	Checked by	Reviewed by
MIL	MIL	SJ/MM	JTB

Consultant

PB
HDR
DNK

File Number

ACC No.
23126

G-LS-1015 B

DEMOLITION CODED NOTES: #

1. DUKE ENERGY TO RELOCATE ELECTRIC VAULT AND DUCT BANK.
2. DUKE ENERGY TO ABANDON/RELOCATE EXISTING GAS LINE AND VALVES.
3. EXISTING TRAFFIC BOX TO REMAIN.
4. EXISTING MANHOLE TO REMAIN.
5. EXISTING CATCH BASIN TO BE REMOVED AND SEWER ABANDONED. SEE SA SERIES DRAWINGS.
6. EXISTING PULL BOX TO BE REMOVED.
7. EXISTING LIGHT TO BE REMOVED.
8. RELOCATE EXISTING LIGHTING CIRCUIT OUT OF SHELTER / OCS FOUNDATION FOOTPRINT.
9. FIELD VERIFY PULL BOX LOCATION AND RELOCATE / ADJUST AS NEEDED TO CONSTRUCT TRENCH DRAIN / SHELTER.
10. TRAFFIC LINE TO BE ABANDONED.
11. WATER LINE TO BE ABANDONED/.RELOCATED BY GCWW.
12. EDGE OF PROPOSED TRACK SLAB.

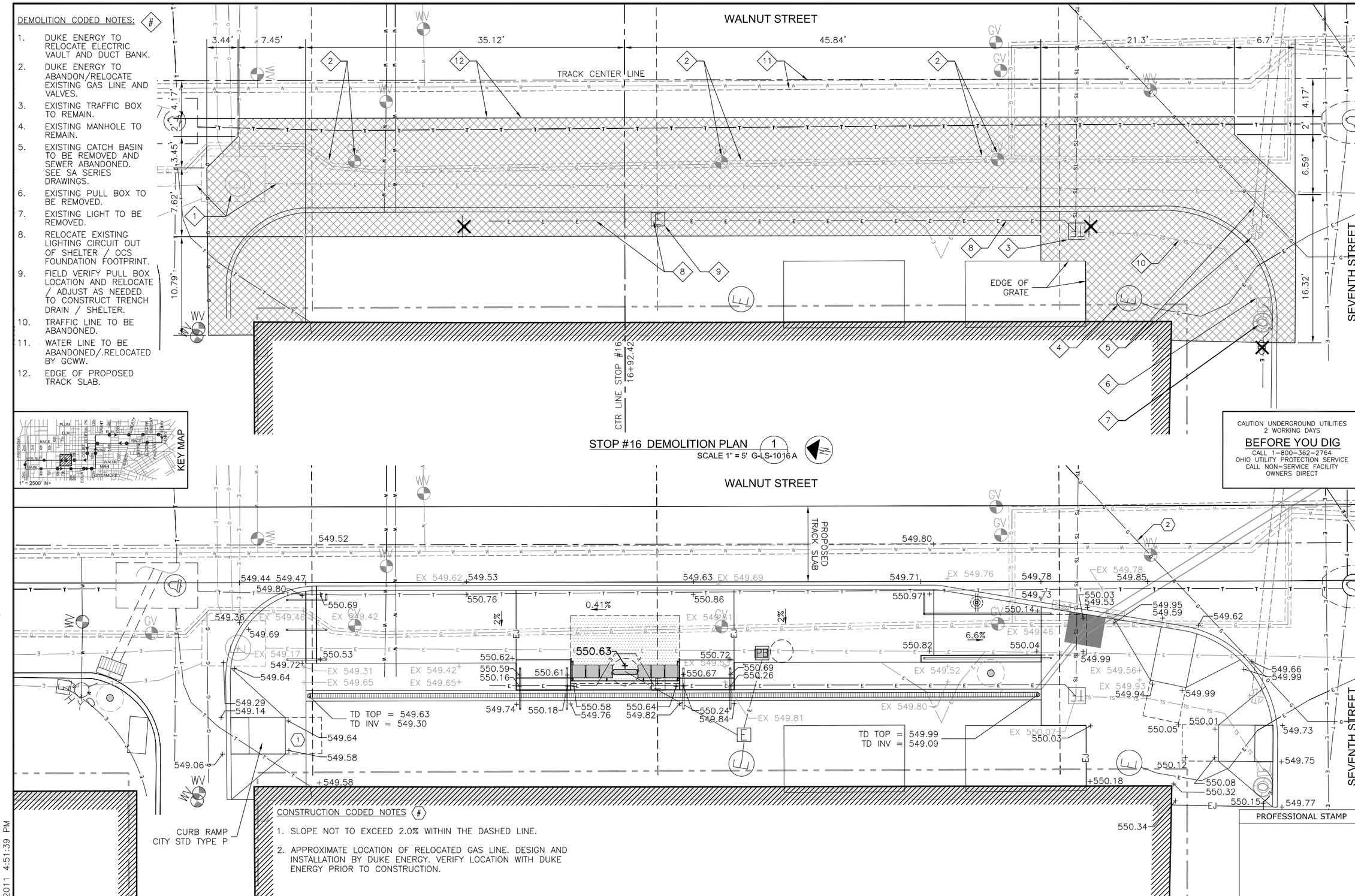

STOP #16 DEMOLITION PLAN (1)
SCALE 1" = 5' G-LS-1016 A

STOP #16 GRADING PLAN (2)
SCALE 1" = 5' G-LS-1016 A

CONSTRUCTION CODED NOTES #

1. SLOPE NOT TO EXCEED 2.0% WITHIN THE DASHED LINE.
2. APPROXIMATE LOCATION OF RELOCATED GAS LINE. DESIGN AND INSTALLATION BY DUKE ENERGY. VERIFY LOCATION WITH DUKE ENERGY PRIOR TO CONSTRUCTION.

PROFESSIONAL STAMP

SIGN:
DATE:

CONTRACT DRAWING

PRINTS NOT BEARING THIS STAMP WERE MADE PRIOR TO ADVERTISING FOR BIDS AND ARE TO BE CONSIDERED OBSOLETE FOR CONTRACT PURPOSES.

Department of Transportation and Engineering
City of Cincinnati
801 Plum Street
Cincinnati, Ohio 45202

CINCINNATI STREETCAR
STREETCAR STOPS
STOP #16 DETAIL DRAWINGS

Revisions
No.

Drawn by ML Date 07/02/12
Designed by ML Date 07/02/12
Checked by SJ/MM Date 07/02/12
Reviewed by JTB Date 07/12/12

Consultant
PB
HDR
DNK

File Number

ACC No. 23126

G-LS-1016 A

H:\1208 Streetcar Stops Revisions\Plans\Land\streetcar xsite CBD.dwg
10/25/2011 4:51:39 PM

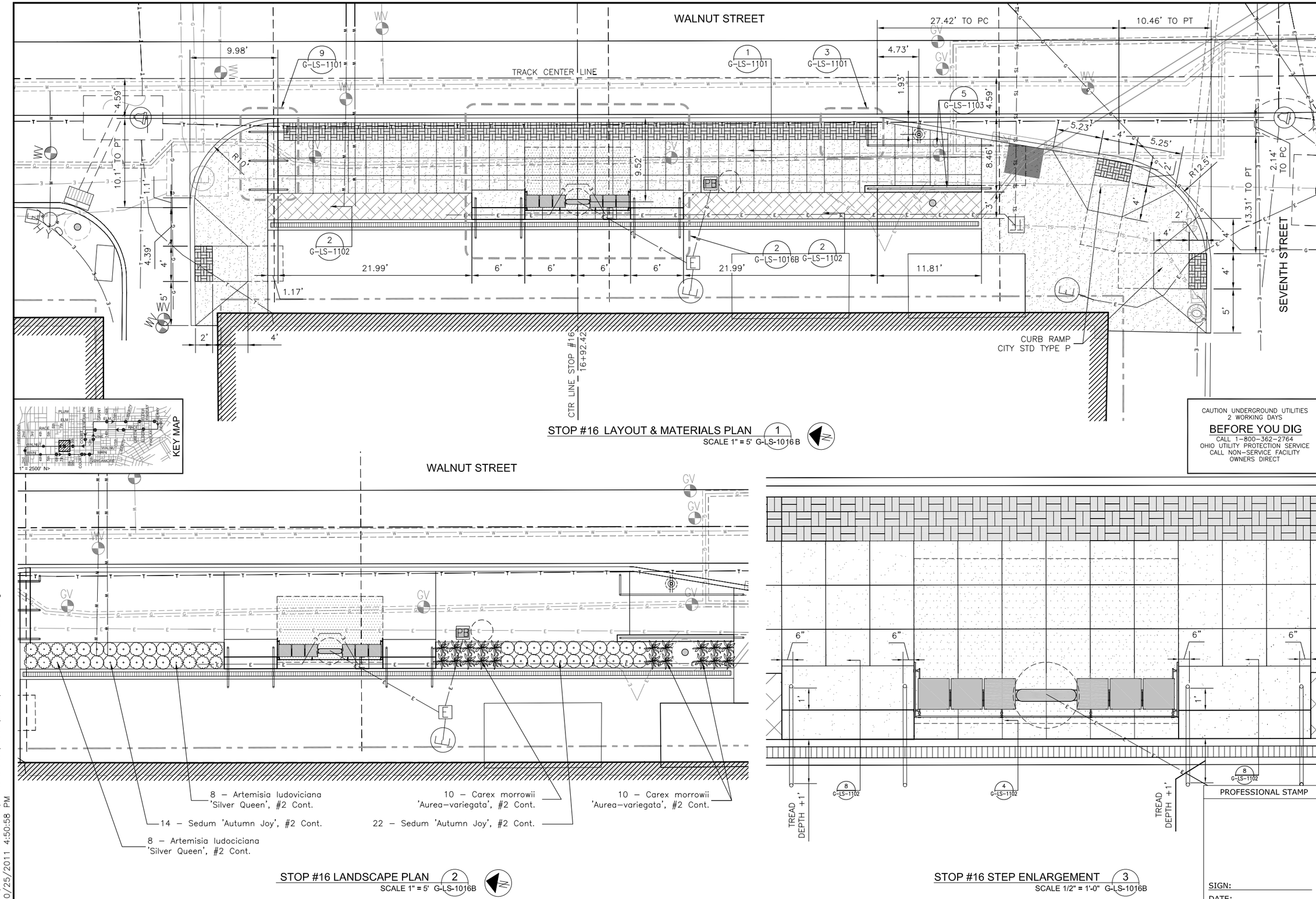

STOP #16 LAYOUT & MATERIALS PLAN (1)
SCALE 1" = 5' G-LS-1016 B

STOP #16 LANDSCAPE PLAN (2)
SCALE 1" = 5' G-LS-1016B

STOP #16 STEP ENLARGEMENT (3)
SCALE 1/2" = 1'-0" G-LS-1016B

SIGN:
DATE:

CONTRACT DRAWING

PRINTS NOT BEARING THIS STAMP WERE MADE PRIOR TO ADVERTISING BID DATE AND ARE TO BE CONSIDERED OBSOLETE FOR CONTRACT PURPOSES.

Department of Transportation and Engineering

City of Cincinnati
City Hall
801 Plum Street
Cincinnati, Ohio 45202

CINCINNATI STREETCAR
STREETCAR STOPS
STOP #16 DETAIL DRAWINGS

Revisions

No.	Date
	07/02/12
	07/02/12
	07/02/12
	07/12/12

Drawn by ML	Date 07/02/12
Designed by ML	Date 07/02/12
Checked by SJ/MM	Date 07/02/12
Reviewed by JTB	Date 07/12/12

Consultant

File Number

ACC No. 23126

G-LS-1016 B

H:\1208 Streetcar Stops Revisions\Plans\Land\streetcar xsite CBD.dwg
10/25/2011 4:50:58 PM

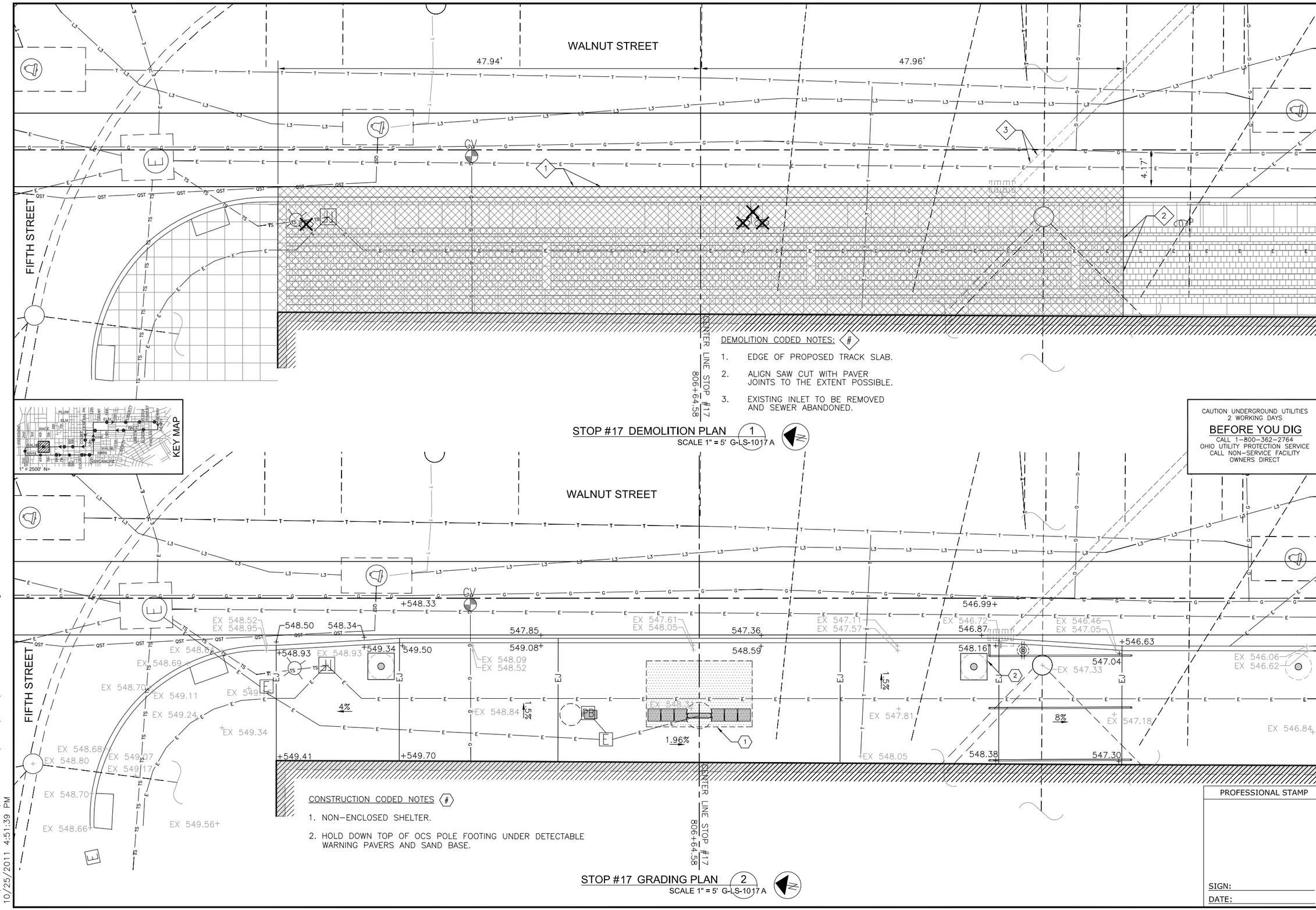

DEMOLITION CODED NOTES: (#)

1. EDGE OF PROPOSED TRACK SLAB.
2. ALIGN SAW CUT WITH PAVER JOINTS TO THE EXTENT POSSIBLE.
3. EXISTING INLET TO BE REMOVED AND SEWER ABANDONED.

STOP #17 DEMOLITION PLAN (1)
SCALE 1" = 5' G-LS-1017 A

CAUTION UNDERGROUND UTILITIES
2 WORKING DAYS
BEFORE YOU DIG
CALL 1-800-362-2764
OHIO UTILITY PROTECTION SERVICE
CALL NON-SERVICE FACILITY
OWNERS DIRECT

CONSTRUCTION CODED NOTES (#)

1. NON-ENCLOSED SHELTER.
2. HOLD DOWN TOP OF OCS POLE FOOTING UNDER DETECTABLE WARNING PAVERS AND SAND BASE.

STOP #17 GRADING PLAN (2)
SCALE 1" = 5' G-LS-1017 A

PROFESSIONAL STAMP

SIGN:
DATE:

CONTRACT DRAWING

PRINTS NOT BEARING THIS STAMP WERE MADE PRIOR TO ADVERTISING FOR BIDS AND ARE TO BE CONSIDERED OBSOLETE FOR CONTRACT PURPOSES.

Department of Transportation and Engineering
City of Cincinnati
City Hall
801 Plum Street
Cincinnati, Ohio 45202

CINCINNATI STREETCAR
STREETCAR STOPS
STOP #17 DETAIL DRAWINGS

Revisions
No.

Date 07/02/12	Drawn by ML
Date 07/02/12	Designed by ML
Date 07/02/12	Checked by SJ/MM
Date 07/12/12	Reviewed by JTB

Consultant

File Number

ACC No. 23126

G-LS-1017A

H:\1208 Streetcar Stops Revisions\Plans\Land\streetcar xsite CBD.dwg
10/25/2011 4:51:39 PM

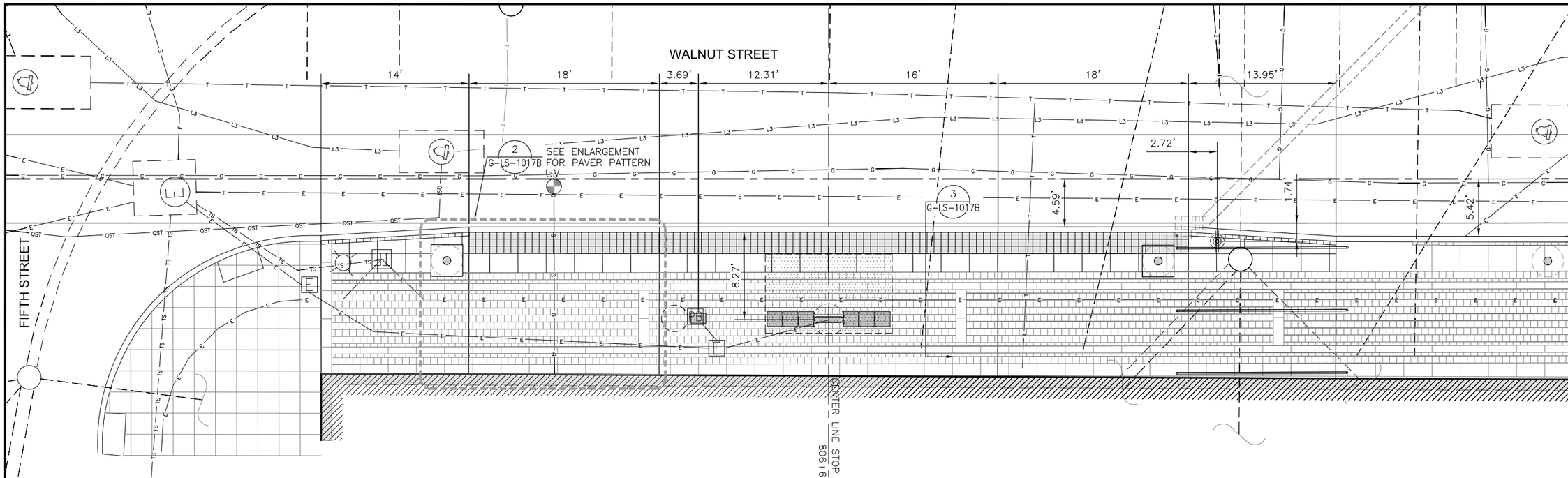

STOP #17 LAYOUT & MATERIALS PLAN (1)
SCALE 1" = 5' G-LS-1017B

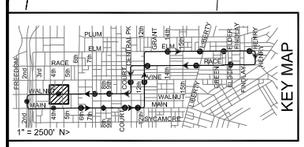

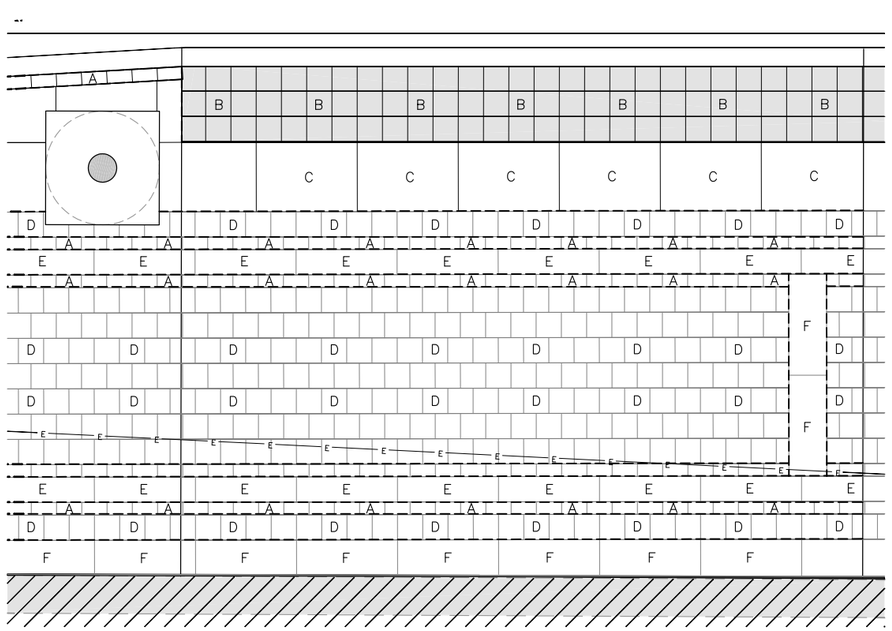

PAVER ENLARGEMENT PLAN (2)
SCALE 1/2" = 1'-0" G-LS-1017B

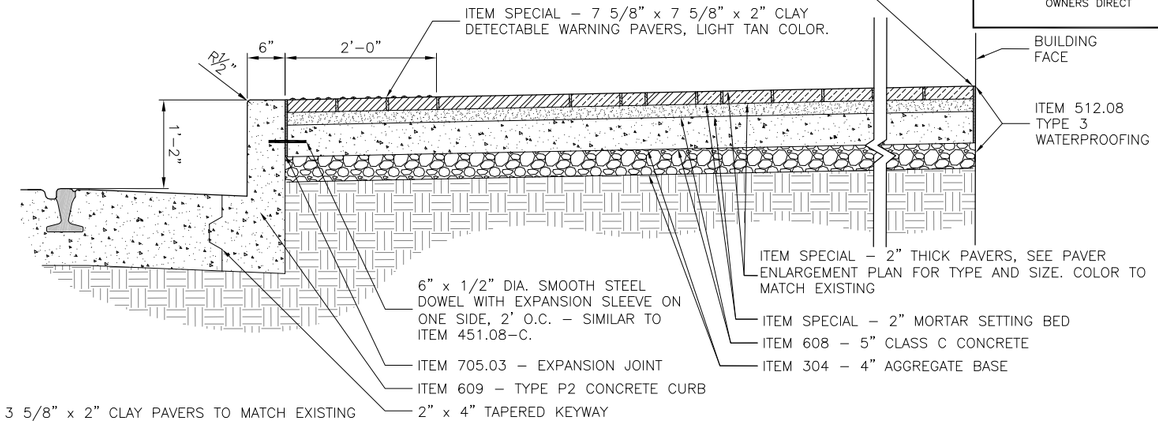

SECTION (3)
SCALE 1" = 1'-0" G-LS-1017B

KEY:

A. 7 5/8" x 3 5/8" x 2" CLAY PAVERS TO MATCH EXISTING

B. 7 5/8" x 7 5/8" x 2" CLAY DETECTABLE WARNING PAVERS, LIGHT TAN COLOR

C. 3'–0" MAX. (VARIES) x 2'–7 5/8" x 2" GRANITE PAVERS TO MATCH EXISTING

D. 7 5/8" x 7 5/8" x 2" CLAY PAVERS TO MATCH EXISTING

E. 2'–7 5/8" x 7 5/8" x 2" GRANITE PAVERS TO MATCH EXISTING

F. 2'–7 5/8" x 11 5/8" x 2" GRANITE PAVERS TO MATCH EXISTING

NOTES:

1. CONTRACTOR SHALL VERIFY LAYOUT AND QUANTITIES OF PAVERS IN THE FIELD PRIOR TO ORDERING PAVERS.

CAUTION UNDERGROUND UTILITIES
2 WORKING DAYS
BEFORE YOU DIG
CALL 1–800–362–2764
OHIO UTILITY PROTECTION SERVICE
CALL NON–SERVICE FACILITY OWNERS DIRECT

PROFESSIONAL STAMP

SIGN:
DATE:

DEPARTMENT OF TRANSPORTATION & ENGINEERING
CITY OF CINCINNATI
OHIO

CONTRACT DRAWING
PRINTS NOT BEARING THIS STAMP WERE MADE PRIOR TO ADVERTISING FOR BIDS AND ARE TO BE CONSIDERED OBSOLETE FOR CONTRACT PURPOSES.

Department of Transportation and Engineering
City of Cincinnati
City Hall
801 Plum Street
Cincinnati, Ohio 45202

CINCINNATI STREETCAR
STREETCAR STOPS
STOP #17 DETAIL DRAWINGS

Revisions
No.

Drawn by ML	Date 07/02/12
Designed by ML	Date 07/02/12
Checked by SJ/MM	Date 07/02/12
Reviewed by JTB	Date 07/12/12

Consultant
PB
HDR
DNK ARCHITECTS

File Number

ACC No.
23126

G-LS-1017B

H:\1208 Streetcar Stops Revisions\Plans\Land\streetcar xsite CBD.dwg
10/25/2011 4:50:58 PM

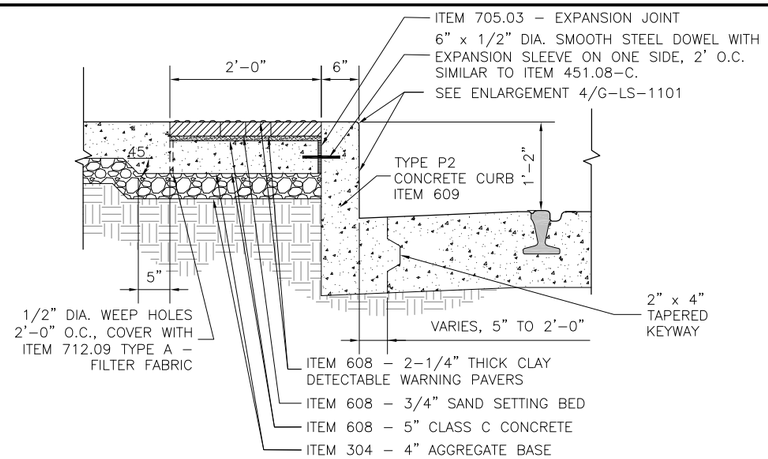

CONCRETE CURB AND DETECTABLE WARNING (1)
SECTION - SCALE 1" = 1'-0" G-LS-1101

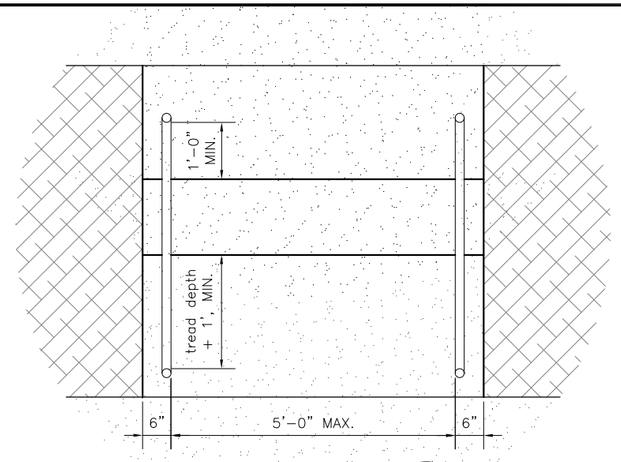

TYPICAL HANDRAIL PLACEMENT AT STEPS (2)
PLAN - SCALE 3/4" = 1'-0" G-LS-1101

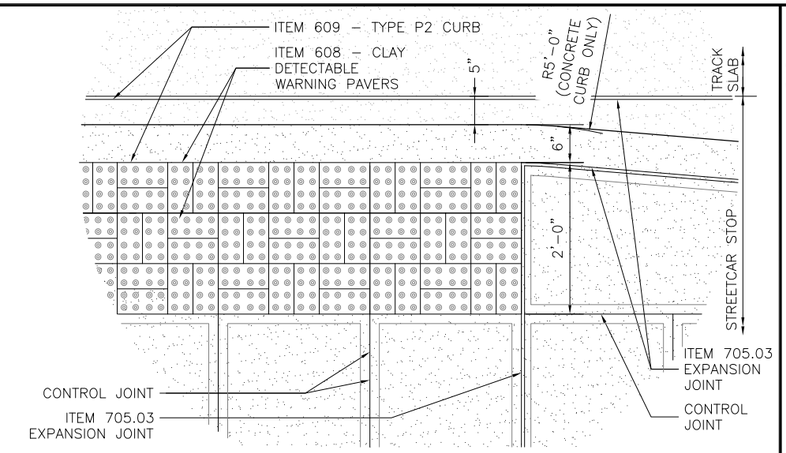

DETECTABLE WARNING LAYOUT (3)
PLAN - SCALE 1" = 1'-0" G-LS-1101

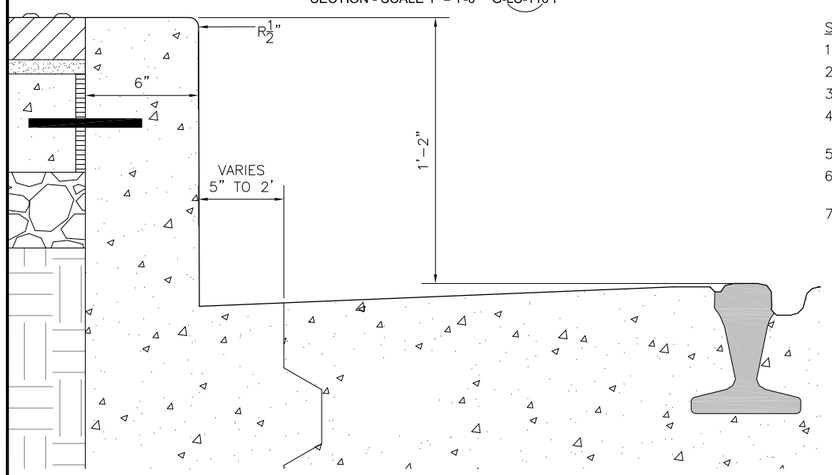

STREETCAR STOP CURB DETAIL (4)
SECTION - SCALE 3" = 1'-0" G-LS-1101

STAINLESS STEEL GENERAL NOTES:

1. ALL STAINLESS STEEL COMPONENTS SHALL BE TYPE 316 STAINLESS STEEL.
2. PIPES SHALL BE SCHEDULE 40 THICKNESS UNLESS OTHERWISE NOTED.
3. FINISH SHALL BE 180–GRIT POLISH.
4. MINIMIZE WELDING. FABRICATE HANDRAILS FROM A SINGLE PIECE OF BENT PIPE WHENEVER POSSIBLE.
5. ALL WELDING SHALL BE DONE IN THE SHOP TO THE EXTENT POSSIBLE.
6. DO NOT WELD ANYTHING IN THE FIELD NEAR NEWLY INSTALLED OR STOCKPILED STAINLESS STEEL RAILINGS.
7. PROVIDE EXTENDED POSTS TO ACCOUNT FOR DEPTH OF POST SETTING IN GROUT.

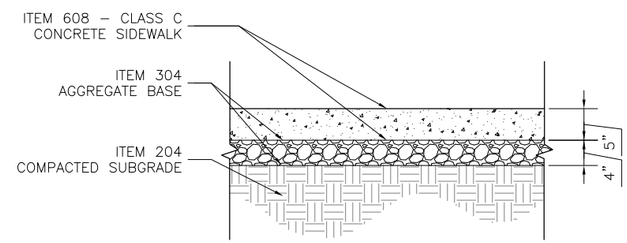

STREETCAR STOP AND SIDEWALK PAVEMENT (5)
SECTION - SCALE 1" = 1'-0" G-LS-1101

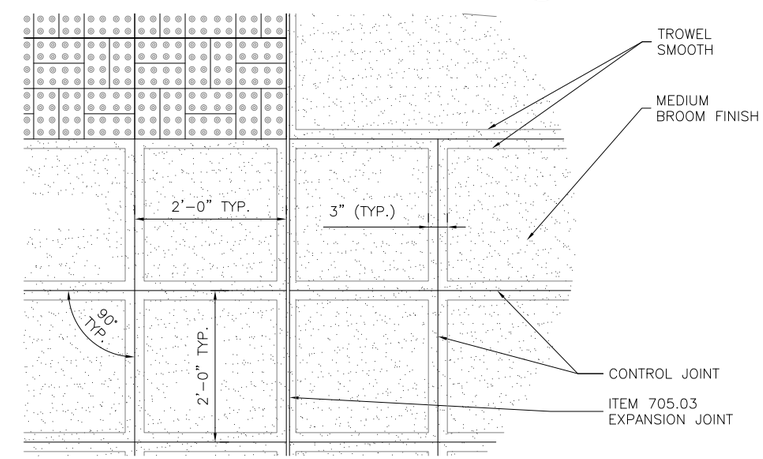

STREETCAR STOP CONTROL JOINT LAYOUT (6)
PLAN - SCALE 1" = 1'-0" G-LS-1101

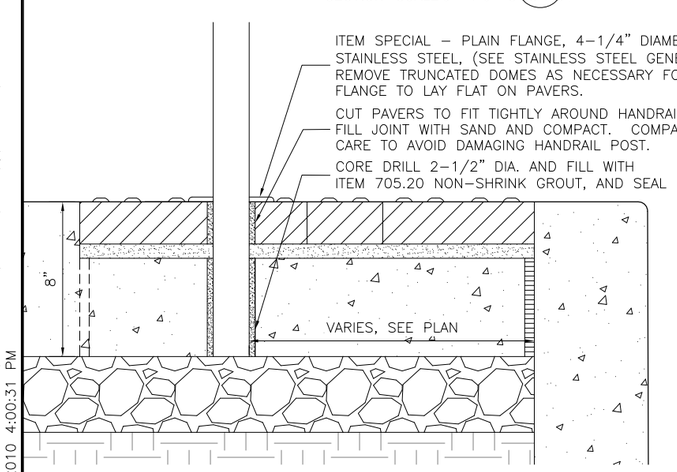

HANDRAIL POST AT PAVERS (7)
SECTION - SCALE 3" = 1'-0" G-LS-1101

NOTES:

1. ALL RAILING COMPONENTS SHALL BE 1–1/2" NOMINAL, 1.90" ACTUAL DIAMETER STAINLESS STEEL PIPE (SEE STAINLESS STEEL GENERAL NOTES THIS SHEET).

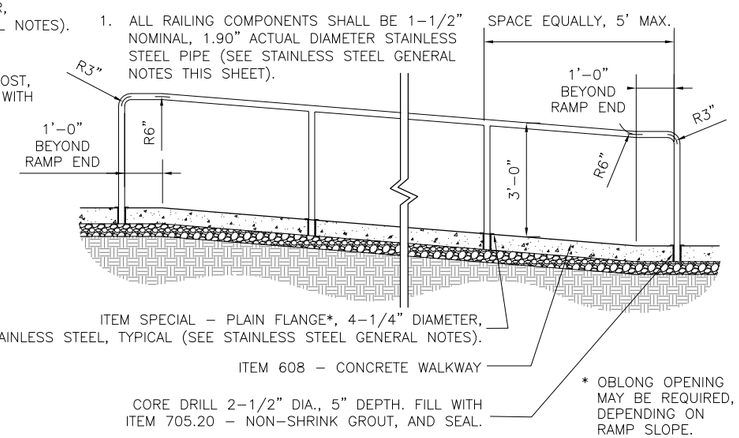

HANDRAIL AT RAMP (8)
SECTION - SCALE 1/2" = 1'-0" G-LS-1101

NOTE:
HANDRAILS NOT SHOWN FOR CLARITY.

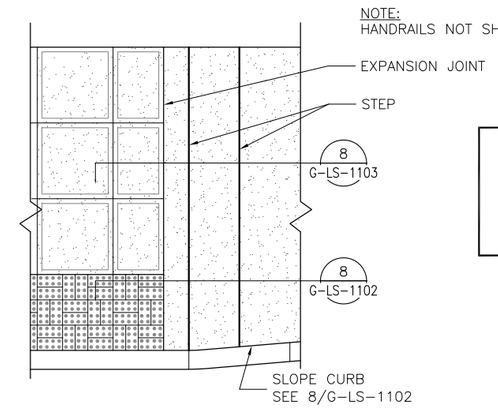

DOUBLE STEP AT PLATFORM END (9)
PLAN ENLARGEMENT - SCALE 1/2" = 1'-0" G-LS-1101

CAUTION UNDERGROUND UTILITIES
2 WORKING DAYS
BEFORE YOU DIG
CALL 1–800–362–2764
OHIO UTILITY PROTECTION SERVICE
CALL NON–SERVICE FACILITY OWNERS DIRECT

PROFESSIONAL STAMP

SIGN:
DATE:

CONTRACT DRAWING
PRINTS NOT BEARING THIS STAMP WERE MADE PRIOR TO ADVERTISING FOR BIDS AND ARE TO BE CONSIDERED OBSOLETE FOR CONTRACT PURPOSES.

Department of Transportation and Engineering
City of Cincinnati
City Hall
801 Plum Street
Cincinnati, Ohio 45202

CINCINNATI STREETCAR
STREETCAR STOPS
SITE DETAILS

Revisions
No.

Date 07/02/12	Drawn by ML
Date 07/02/12	Designed by ML
Date 07/02/12	Checked by SJ/MM
Date 07/12/12	Reviewed by JTB

Consultant
PB
HDR
DNK

File Number

ACC No. 23126

G-LS-1101

H:\1208 Streetcar Stops Revisions\Details\Land\Typical Stop Details.dwg
11/19/2010 4:00:31 PM

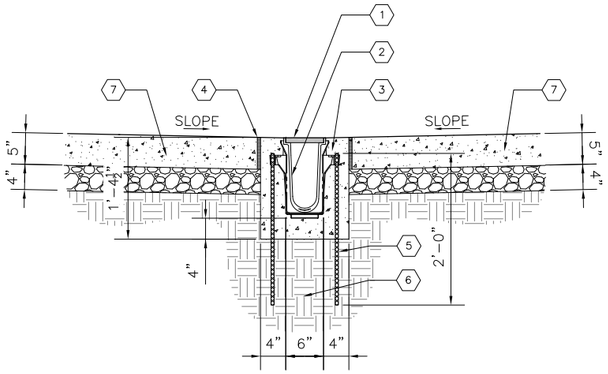

TRENCH DRAIN AT CONCRETE WALK (BOTH SIDES) 1
SECTION - SCALE 1" = 1'-0" G-LS-1102

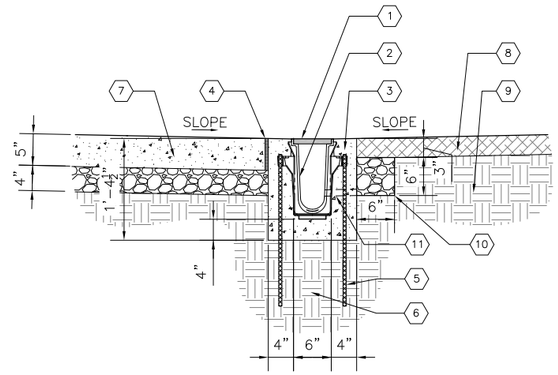

TRENCH DRAIN AT CONCRETE WALK AND LANDSCAPING 2
SECTION - SCALE 1" = 1'-0" G-LS-1102

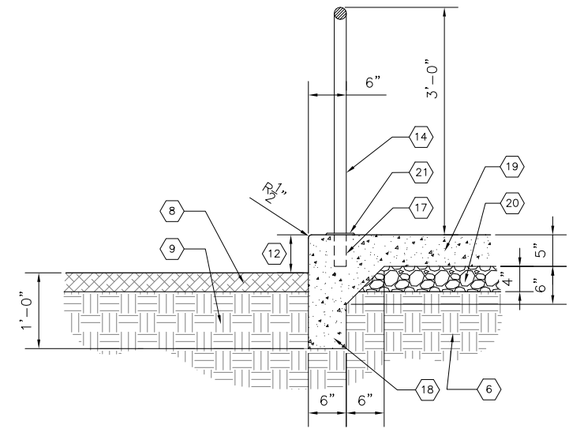

TURNED DOWN SLAB AT LANDSCAPING 3
SECTION - SCALE 1" = 1'-0" G-LS-1102

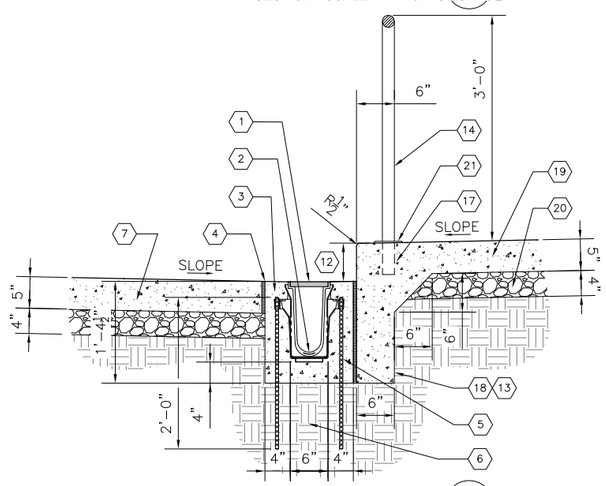

TURNED DOWN SLAB AT TRENCH DRAIN 4
SECTION - SCALE 1" = 1'-0" G-LS-1102

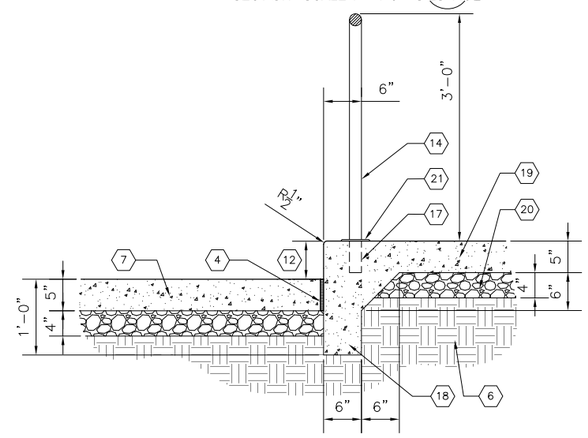

TURNED DOWN SLAB AT CONC. WALK 5
SECTION - SCALE 1" = 1'-0" G-LS-1102

(#) CODED NOTES:

1. ITEM SPECIAL – ADA COMPLIANT CHANNEL GRATE.
2. ITEM SPECIAL – TRENCH DRAIN.
3. ITEM 499 – 4" MIN. CLASS C CONCRETE ENCASEMENT.
4. ITEM 705.03 – 1/2" EXPANSION JOINT, SEAL PER ITEM 705.04.
5. ITEM 709.09 – #4 REBAR, 2' O.C.
6. ITEM 204 – COMPACTED SUBGRADE.
7. ITEM 608 – ADJACENT CONCRETE SIDEWALK, SEE DETAIL 5 ON SHEET G-LS-1101.
8. ITEM 661 – MULCH, 3" DEPTH.
9. IMPORTED SHREDDED TOPSOIL.
10. ITEM 703.01 – OPEN GRADED DRAINAGE AGGREGATE. AASHTO M-43 #57. WRAP WITH ITEM 712.09 TYPE A FILTER FABRIC.
11. 1" DIA. WEEP HOLES, 2' O.C.
12. VARIES, SEE GRADING PLAN.
13. EXTEND TURNED DOWN SLAB TO BOTTOM OF TRENCH DRAIN.
14. ITEM SPECIAL – 1-1/2" (1.9" O.D.) STAINLESS STEEL PIPE HANDRAIL AND POSTS, WHERE INDICATED ON PLAN (SEE STAINLESS STEEL GENERAL NOTES ON SHEET G-LS-1101).
15. 6" x 1/2" DIA. SMOOTH STEEL DOWEL WITH EXPANSION SLEEVE ON ONE SIDE, 2' O.C. – SIMILAR TO ITEM 451.08-C.
16. NOT USED.
17. CORE DRILL 2-1/2" DIA., 5" DEEP, AND FILL WITH ITEM 705.20, NON-SHRINK GROUT, WHERE HANDRAIL IS INDICATED ON PLAN. SPACE POSTS EQUALLY, 5' O.C. MAX.
18. TURNED DOWN SLAB – ITEM 499, CLASS C CONCRETE.
19. ITEM 608 – 5" THICK CLASS C CONCRETE SIDEWALK.
20. ITEM 304 – 4" AGGREGATE BASE.
21. ITEM SPECIAL – PLAIN FLANGE, 4-1/4" DIAMETER, STAINLESS STEEL, WHERE HANDRAIL IS INDICATED ON PLAN (SEE STAINLESS STEEL GENERAL NOTES ON SHEET G-LS-1101).
22. ITEM 609 – CLASS C CONCRETE CURB
23. ITEM 709.09 – #4 REBAR, CONTINUOUS
24. ITEM 304 – 6" AGGREGATE BASE
25. ITEM 608 – CLASS C CONCRETE STEPS
26. CONDITION AT HANDRAIL END. NO RADIUS WHERE HANDRAIL INTERSECTS ANOTHER HANDRAIL. SEE PLAN.
27. APPROXIMATE FINISHED GRADE OF ADJACENT LANDSCAPE AREA.

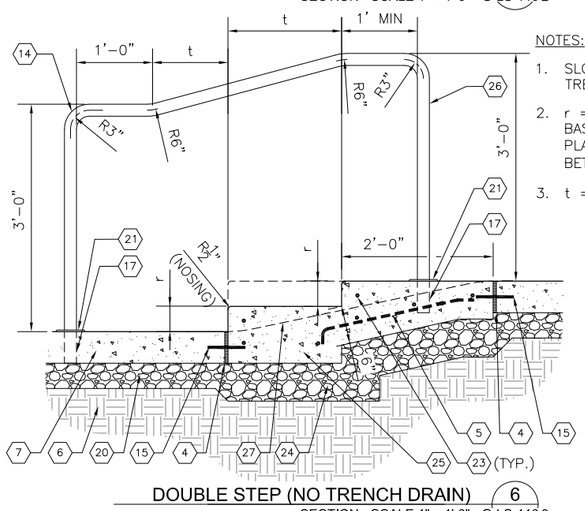

NOTES:

1. SLOPE ALL STEP TREADS 2% TO DRAIN.
2. r = RISER HEIGHT BASED ON GRADING PLAN. (MUST BE BETWEEN 4" AND 7").
3. t = 26" – 2r

DOUBLE STEP (NO TRENCH DRAIN) 6
SECTION - SCALE 1" = 1'-0" G-LS-1102

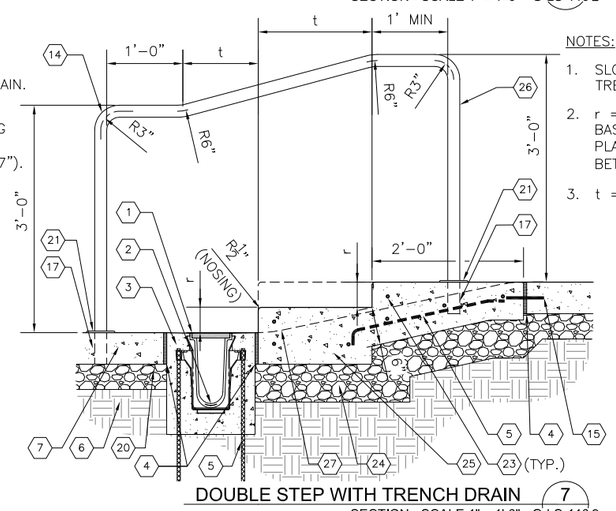

NOTES:

1. SLOPE ALL STEP TREADS 2% TO DRAIN.
2. r = RISER HEIGHT BASED ON GRADING PLAN. (MUST BE BETWEEN 4" AND 7").
3. t = 26" – 2r

DOUBLE STEP WITH TRENCH DRAIN 7
SECTION - SCALE 1" = 1'-0" G-LS-1102

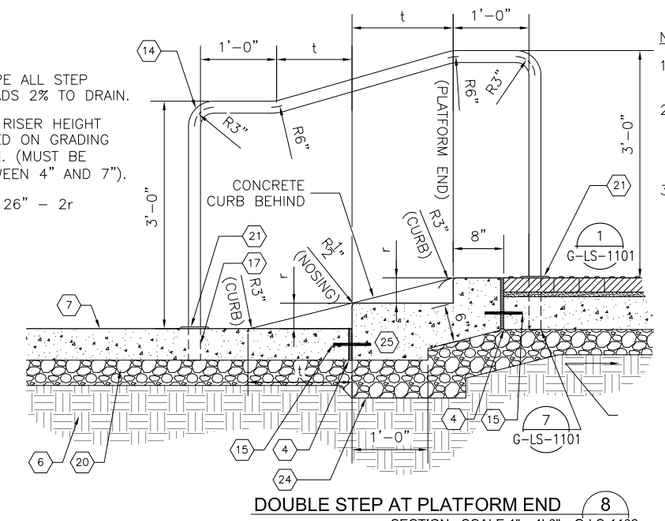

NOTES:

1. SLOPE ALL STEP TREADS 2% TO DRAIN.
2. r = RISER HEIGHT BASED ON GRADING PLAN. (MUST BE BETWEEN 4" AND 7").
3. t = 26" – 2r

DOUBLE STEP AT PLATFORM END 8
SECTION - SCALE 1" = 1'-0" G-LS-1102

CAUTION UNDERGROUND UTILITIES
2 WORKING DAYS
BEFORE YOU DIG
CALL 1-800-362-2764
OHIO UTILITY PROTECTION SERVICE
CALL NON-SERVICE FACILITY OWNERS DIRECT

PROFESSIONAL STAMP

SIGN:

DATE:

CONTRACT DRAWING

PRINTS NOT BEARING THIS STAMP WERE MADE PRIOR TO ADVERTISING BID. THEY ARE NOW TO BE CONSIDERED OBSOLETE FOR CONTRACT PURPOSES.

Department of Transportation and Engineering
City of Cincinnati
City Hall
801 Plum Street
Cincinnati, Ohio 45202

CINCINNATI STREETCAR
STREETCAR STOPS
SITE DETAILS

Revisions
No.

Date 07/02/12 Drawn by ML
Date 07/02/12 Designed by ML
Date 07/02/12 Checked by SJ/MR
Date 07/12/12 Reviewed by JTB

Consultant
PB HDR DNK

File Number

ACC No. 23126

G-LS-1102

H:\1208 Streetcar Stops Revisions\Details\Land\Typical Stop Details.dwg
11/19/2010 4:00:31 PM

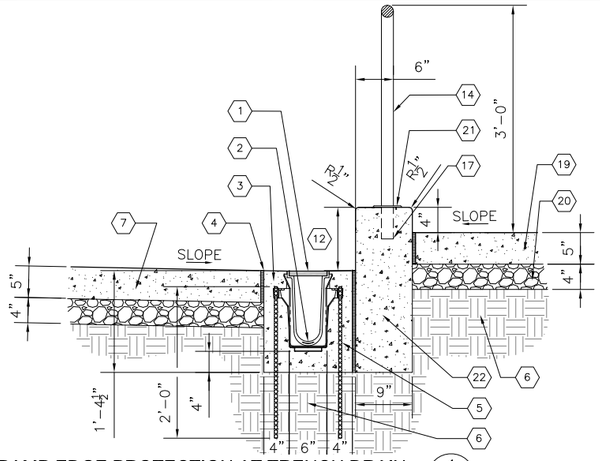

RAMP EDGE PROTECTION AT TRENCH DRAIN (1)
SECTION - SCALE 1" = 1'-0" G-LS-1103

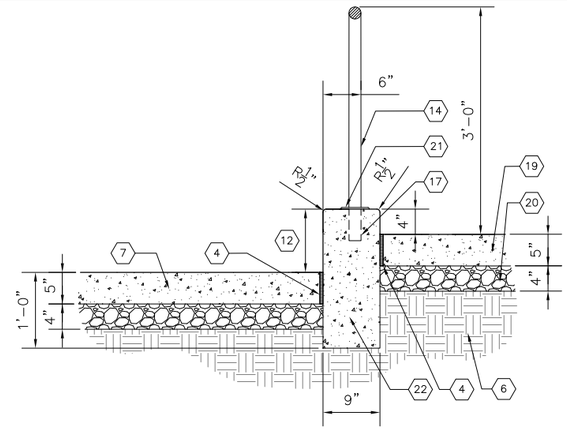

RAMP EDGE PROTECTION AT CONC. WALK (2)
SECTION - SCALE 1" = 1'-0" G-LS-1103

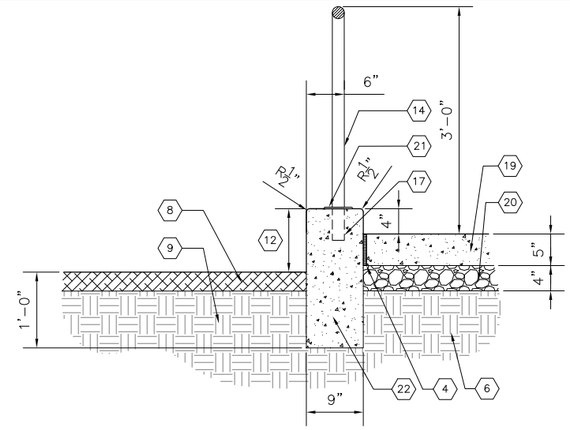

RAMP EDGE PROTECTION AT LANDSCAPING (3)
SECTION - SCALE 1" = 1'-0" G-LS-1103

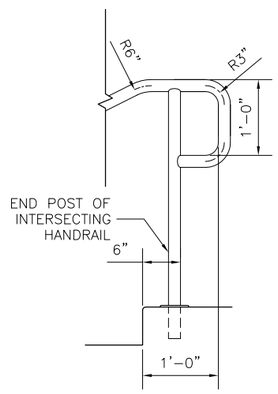

HANDRAIL EXTENSION RETURN (4)
ELEVATION - SCALE 1" = 1'-0" G-LS-1103

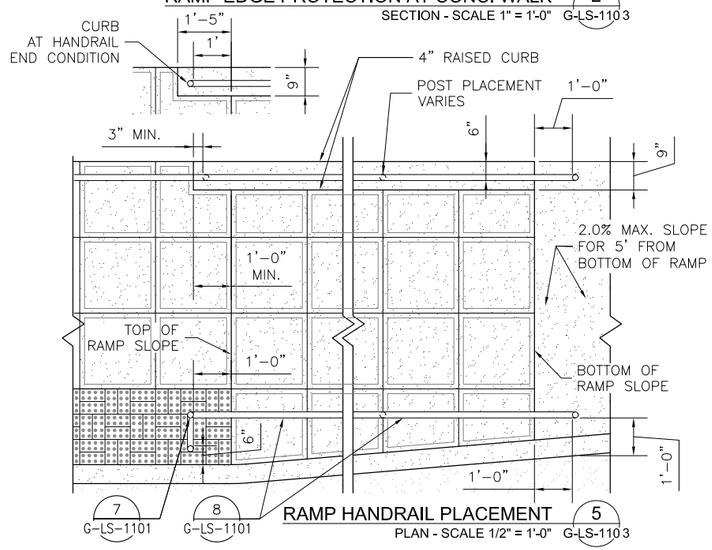

RAMP HANDRAIL PLACEMENT (5)
PLAN - SCALE 1/2" = 1'-0" G-LS-1103

(#) CODED NOTES:

1. ITEM SPECIAL – ADA COMPLIANT CHANNEL GRATE.
2. ITEM SPECIAL – TRENCH DRAIN.
3. ITEM 499 – 4" MIN. CLASS C CONCRETE ENCASEMENT.
4. ITEM 705.03 – 1/2" EXPANSION JOINT, SEAL PER ITEM 705.04.
5. ITEM 709.09 – #4 REBAR, 2' O.C.
6. ITEM 204 – COMPACTED SUBGRADE.
7. ITEM 608 – ADJACENT CONCRETE SIDEWALK, SEE DETAIL 5 ON SHEET G-LS-1101.
8. ITEM 661 – MULCH, 3" DEPTH.
9. IMPORTED SHREDDED TOPSOIL.
10. NOT USED.
11. 1" DIA. WEEP HOLES, 2' O.C.
12. VARIES, SEE GRADING PLAN.
13. EXTEND TURNED DOWN SLAB TO BOTTOM OF TRENCH DRAIN.
14. ITEM SPECIAL – 1-1/2" (1.9" O.D.) STAINLESS STEEL PIPE HANDRAIL AND POSTS, WHERE INDICATED ON PLAN (SEE STAINLESS STEEL GENERAL NOTES ON SHEET G-LS-1101).
15. 6" x 1/2" DIA. SMOOTH STEEL DOWEL WITH EXPANSION SLEEVE ON ONE SIDE, 2' O.C. – SIMILAR TO ITEM 451.08-C.
16. NOT USED.
17. CORE DRILL 2-1/2" DIA., 5" DEEP, AND FILL WITH ITEM 705.20, NON-SHRINK GROUT, WHERE HANDRAIL IS INDICATED ON PLAN. SPACE POSTS EQUALLY, 5' O.C. MAX.
18. TURNED DOWN SLAB – ITEM 499, CLASS C CONCRETE.
19. ITEM 608 – 5" THICK CLASS C CONCRETE SIDEWALK.
20. ITEM 304 – 4" AGGREGATE BASE.
21. ITEM SPECIAL – PLAIN FLANGE, 4-1/4" DIAMETER, STAINLESS STEEL, WHERE HANDRAIL IS INDICATED ON PLAN (SEE STAINLESS STEEL GENERAL NOTES ON SHEET G-LS-1101).
22. ITEM 609 – CLASS C CONCRETE CURB
23. ITEM 709.09 – #4 REBAR, CONTINUOUS
24. ITEM 304 – 6" AGGREGATE BASE
25. ITEM 608 – CLASS C CONCRETE STEPS
26. CONDITION AT HANDRAIL END. NO RADIUS WHERE HANDRAIL INTERSECTS ANOTHER HANDRAIL. SEE PLAN.
27. APPROXIMATE FINISHED GRADE OF ADJACENT LANDSCAPE AREA.

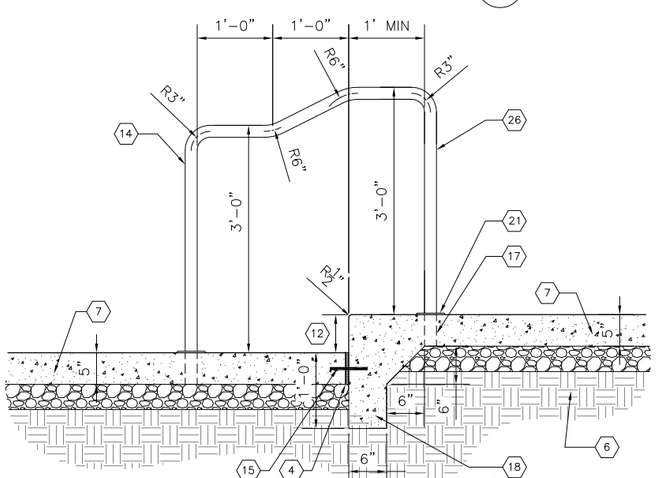

SINGLE STEP (NO TRENCH DRAIN) (6)
SECTION - SCALE 1" = 1'-0" G-LS-1103

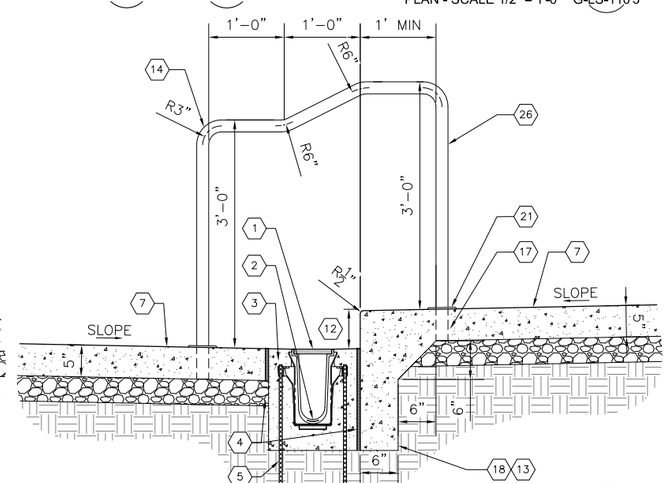

SINGLE STEP WITH TRENCH DRAIN (7)
SECTION - SCALE 1" = 1'-0" G-LS-1103

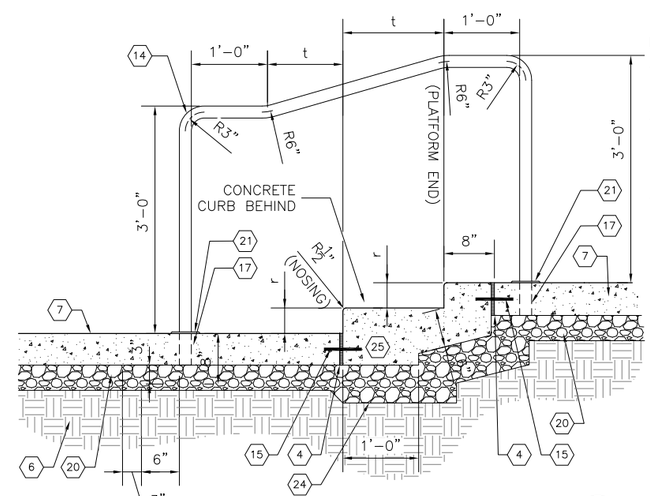

DOUBLE STEP AT PLATFORM END (8)
SECTION - SCALE 1" = 1'-0" G-LS-1103

NOTES:

1. SLOPE ALL STEP TREADS 2% TO DRAIN.
2. r = RISER HEIGHT BASED ON GRADING PLAN. (MUST BE BETWEEN 4" AND 7").
3. t = 26" – 2r

CAUTION UNDERGROUND UTILITIES
2 WORKING DAYS
BEFORE YOU DIG
CALL 1-800-362-2764
OHIO UTILITY PROTECTION SERVICE
CALL NON-SERVICE FACILITY
OWNERS DIRECT

PROFESSIONAL STAMP

SIGN:
DATE:

CONTRACT DRAWING
PRINTS NOT BEARING THIS STAMP WERE MADE PRIOR TO ADVERTISING BID AND ARE NOT TO BE CONSIDERED OBSOLETE FOR CONTRACT PURPOSES.

Department of Transportation and Engineering
City of Cincinnati
City Hall
801 Plum Street
Cincinnati, Ohio 45202

CINCINNATI STREETCAR
STREETCAR STOPS
SITE DETAILS

Revisions
No.

Drawn by ML Date 07/02/12
Designed by ML Date 07/02/12
Checked by SJ/MM Date 07/02/12
Reviewed by JTB Date 07/12/12

Consultant
PB
HDR
DNK

File Number

ACC No. 23126

G-LS-1103

H:\1208 Streetcar Stops Revisions\Details\Land\Typical Stop Details.dwg
11/19/2010 4:00:31 PM

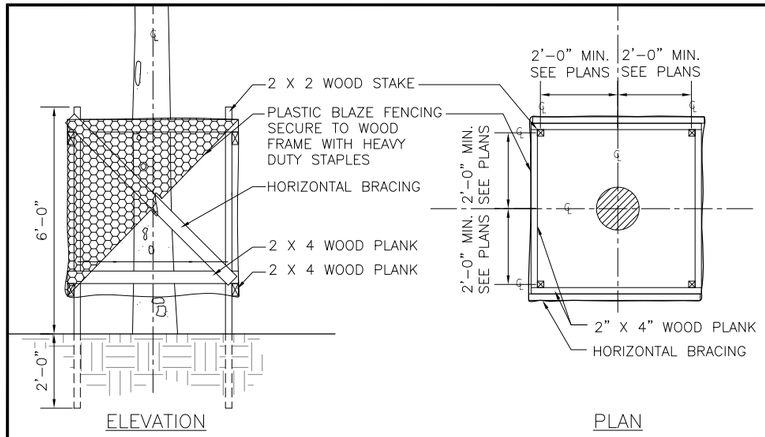

TREE PROTECTION FENCE (1)

SCALE 1/2" = 1'-0" G-LS-1104

NOT USED (2)

G-LS-1104

PLANTING NOTES:

1. CONTRACTOR SHALL REPORT ANY SOIL OR DRAINAGE CONDITIONS CONSIDERED DETRIMENTAL TO GROWTH OF PLANT MATERIAL TO ENGINEER PRIOR TO PLANTING.
2. QUALITY AND SIZE OF PLANTS, SPREAD OF ROOTS, AND SIZE OF ROOT BALL SHALL BE IN ACCORDANCE WITH THE MOST RECENT VERSION OF ANSI Z60 "AMERICAN STANDARD FOR NURSERY STOCK."
3. ALL PLANT MATERIAL SHALL BE SPRAYED WITH ANTI-DESSICANT PER MANUFACTURERS INSTRUCTIONS.
4. CONTRACTOR SHALL LOCATE UNDERGROUND UTILITIES PRIOR TO PLANTING. CONTRACTOR SHALL BE RESPONSIBLE FOR DAMAGE RESULTING FROM FAILURE TO PROPERLY LOCATE AND PROTECT UTILITIES.
5. PLAN SYMBOL QUANTITIES PREVAIL OVER WRITTEN QUANTITIES IN THE EVENT OF A DISCREPANCY.
6. CONTRACTOR SHALL SUBMIT TOPSOIL ANALYSIS FROM AN APPROVED TESTING AGENCY.
7. ALL PLANTS SHALL BE PLANTED IN TOPSOIL AMENDED AND FERTILIZED IN ACCORDANCE WITH THE RECOMMENDATIONS OF THE APPROVED TOPSOIL ANALYSIS.
8. SIZES STATED ARE MINIMUM SIZES.
9. TREAT ALL LANDSCAPE BEDS WITH PRE-EMERGENT WEED KILLER, EXCEPT WHERE SEEDING IS SPECIFIED.
10. EXCAVATION OF PLANT PITS WITH AUGERS IS PROHIBITED.
11. WATER PLANTS DURING THE MAINTENANCE PERIOD. PLANTS SHALL BE WATERED AT THE MINIMUM RATE OF ONE INCH PER WEEK, BUT NOT LESS THAN IS NEEDED TO MAINTAIN PLANT VITALITY. RAIN THAT FALLS DURING THE WEEK MAY BE SUBTRACTED FROM THE MINIMUM WATERING REQUIREMENT.

PLANTING NOTES (3)

G-LS-1104

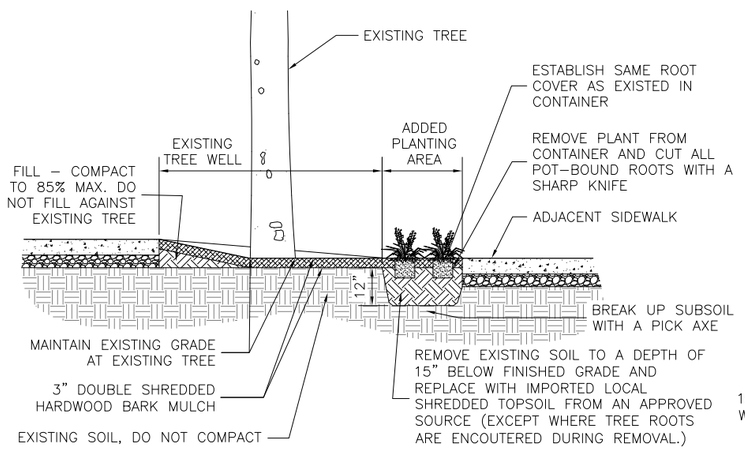

PLANTING DETAIL AT EXISTING TREE (4)

SECTION - SCALE 1/2" = 1'-0" G-LS-1104

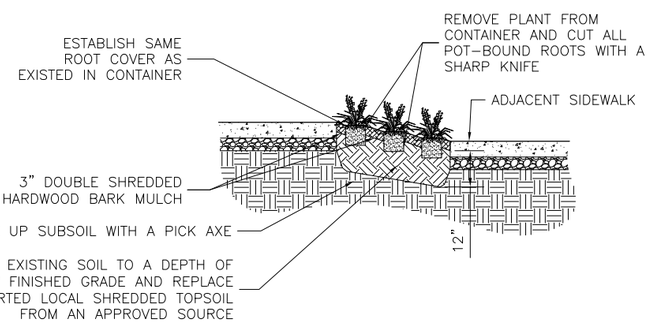

PLANTING AT NEW PLANTING BED (5)

SECTION - SCALE 1/2" = 1'-0" G-LS-1104

NOT USED (6)

G-LS-1104

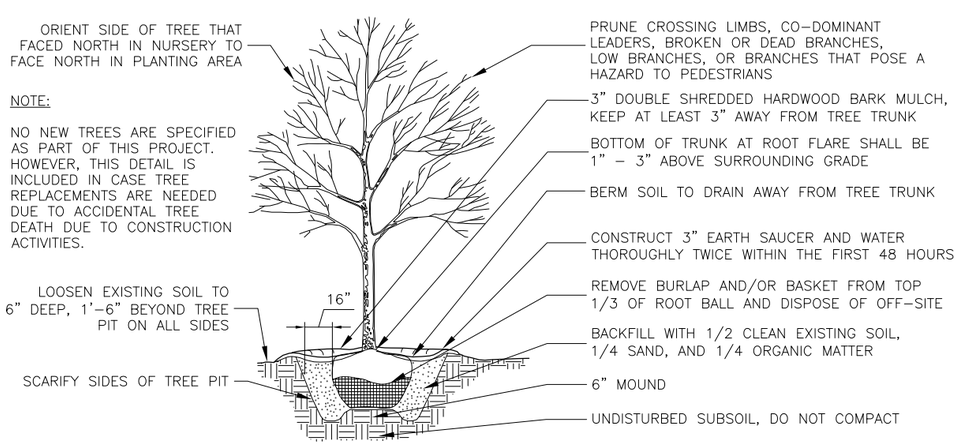

TREE PLANTING (7)

SECTION - NOT TO SCALE G-LS-1104

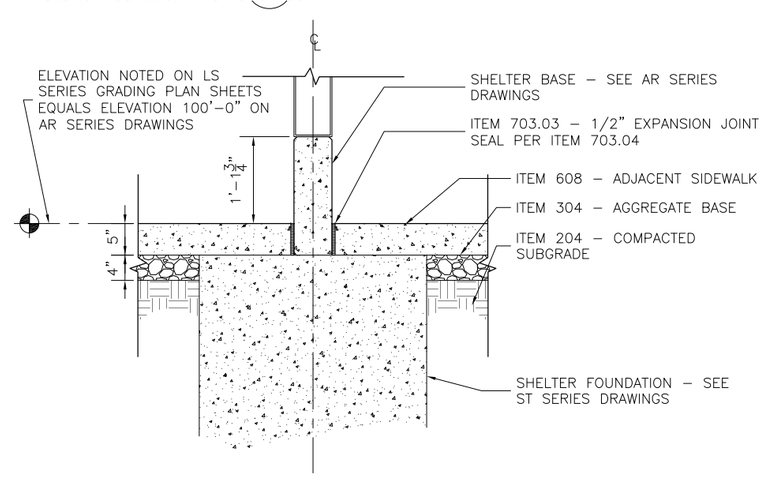

SHELTER BASE (8)

SECTION - SCALE 1" = 1'-0" G-LS-1104

CAUTION UNDERGROUND UTILITIES
2 WORKING DAYS
BEFORE YOU DIG
CALL 1-800-362-2764
OHIO UTILITY PROTECTION SERVICE
CALL NON-SERVICE FACILITY OWNERS DIRECT

PROFESSIONAL STAMP

SIGN:

DATE:

CONTRACT DRAWING

PRINTS NOT BEARING THIS STAMP WERE MADE PRIOR TO ADVERTISING BIDS AND ARE NOT TO BE CONSIDERED OBSOLETE FOR CONTRACT PURPOSES.

Department of Transportation and Engineering

City of Cincinnati
City Hall
801 Plum Street
Cincinnati, Ohio 45202

CINCINNATI STREETCAR
STREETCAR STOPS
SITE DETAILS

Revisions

No.				

Drawn by ML Date 07/02/12
Designed by ML Date 07/02/12
Checked by SJ/MM Date 07/02/12
Reviewed by JTB Date 07/12/12

Consultant

File Number

ACC No. 23126

G-LS-1104

H:\1208 Streetcar Stops Revisions\Details\Land\Typical Stop Details.dwg
11/19/2010 4:00:31 PM

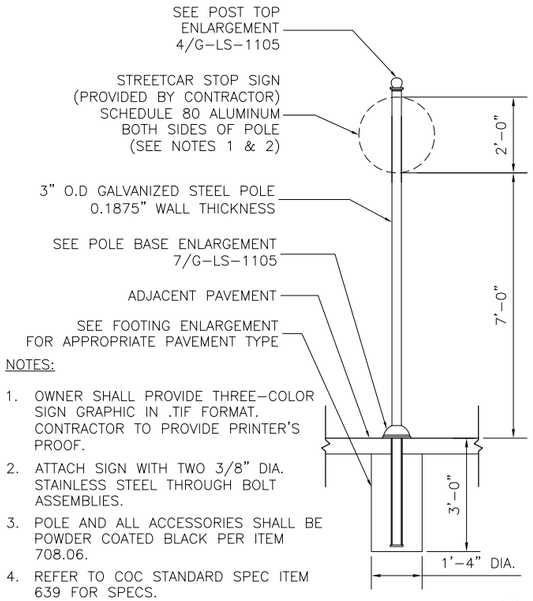

NOTES:

1. OWNER SHALL PROVIDE THREE-COLOR SIGN GRAPHIC IN .TIF FORMAT. CONTRACTOR TO PROVIDE PRINTER'S PROOF.
2. ATTACH SIGN WITH TWO 3/8" DIA. STAINLESS STEEL THROUGH BOLT ASSEMBLIES.
3. POLE AND ALL ACCESSORIES SHALL BE POWDER COATED BLACK PER ITEM 708.06.
4. REFER TO COC STANDARD SPEC ITEM 639 FOR SPECS.

STOP IDENTIFICATION SIGN (1)

SCALE 1/2" = 1'-0" G-LS-1105

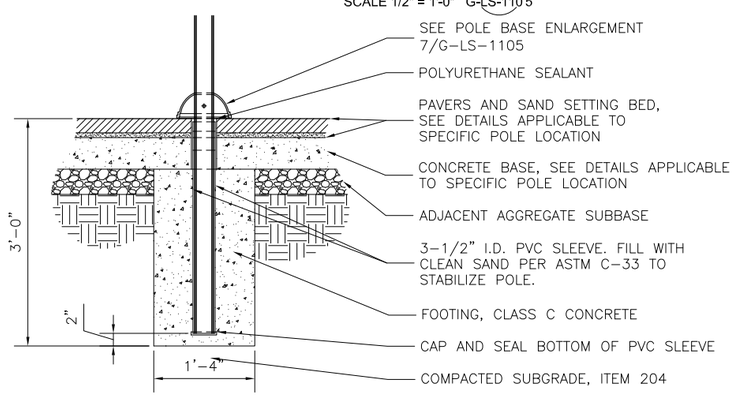

FOOTING ENLARGEMENT PAVER WALK INSTALLATION (5)

SCALE 1" = 1'-0" G-LS-1105

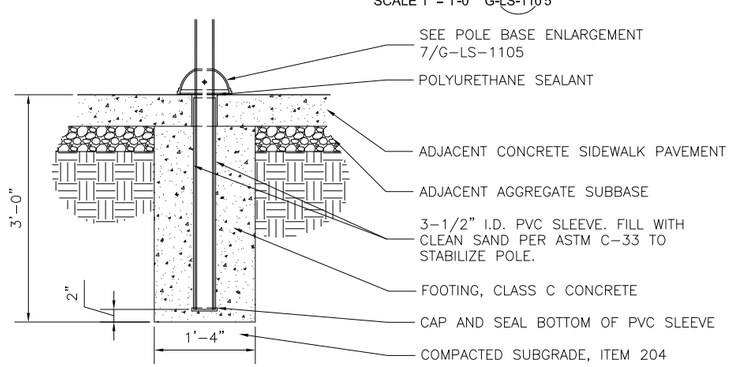

FOOTING ENLARGEMENT CONCRETE WALK INSTALLATION (6)

SCALE 1" = 1'-0" G-LS-1105

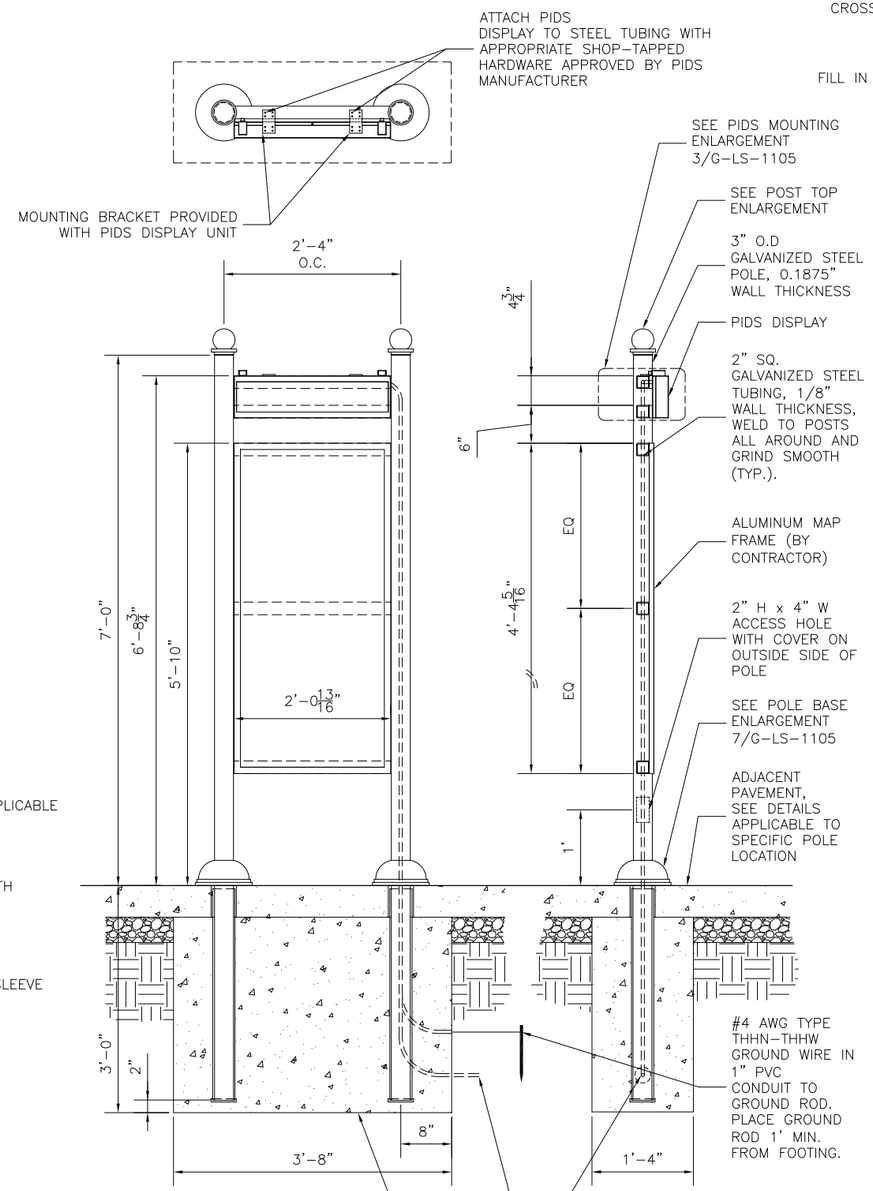

NOTES:

1. POLES, CROSS ARMS, AND ACCESSORIES (EXCEPT MAP FRAME) TO BE POWDER COATED BLACK PER ITEM 708.06.
2. REFER TO COC STANDARD SPEC ITEM 639 FOR SPECS.

PIDS / MAP SUPPORT FOR NON-SHELTER STOPS (2)

SCALE 1/2" = 1'-0" G-LS-1105

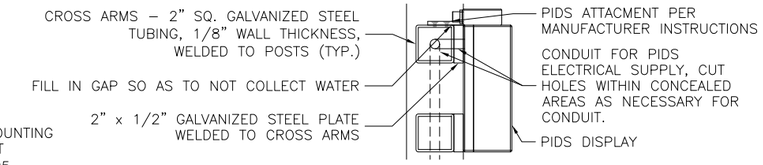

PIDS MOUNTING ENLARGEMENT (3)

SCALE 3" = 1'-0" G-LS-1105

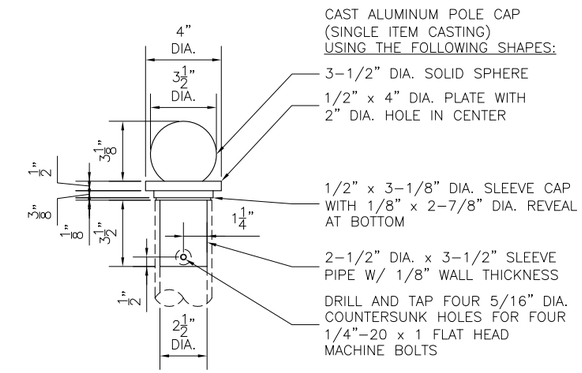

POST TOP ENLARGEMENT (4)

SCALE 3" = 1'-0" G-LS-1105

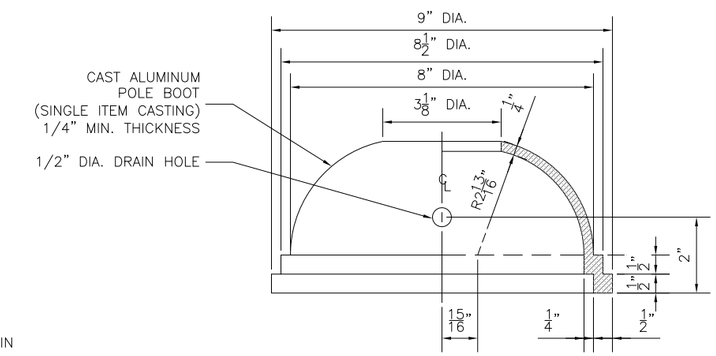

POST BASE ENLARGEMENT (7)

SCALE 6" = 1'-0" G-LS-1105

CAUTION UNDERGROUND UTILITIES
2 WORKING DAYS
BEFORE YOU DIG
CALL 1-800-362-2764
OHIO UTILITY PROTECTION SERVICE
CALL NON-SERVICE FACILITY OWNERS DIRECT

PROFESSIONAL STAMP

SIGN:

DATE:

CONTRACT DRAWING

PRINTS NOT BEARING THIS STAMP WERE MADE PRIOR TO ADVERTISING BIDDING AND ARE TO BE CONSIDERED OBSOLETE FOR CONTRACT PURPOSES.

Department of Transportation and Engineering

City of Cincinnati
City Hall
801 Plum Street
Cincinnati, Ohio 45202

CINCINNATI STREETCAR
STREETCAR STOPS
SITE DETAILS

Revisions

No.	Date
	07/02/12
	07/02/12
	07/02/12
	07/02/12
	07/12/12

Drawn by ML | Designed by ML | Checked by SJ/MM | Reviewed by JTB

Consultant

File Number

ACC No. 23126

G-LS-1105

H:\1208 Streetcar Stops Revisions\Details\Land\Typical Stop Details.dwg
11/19/2010 4:00:31 PM