FINAL PLANS

STATE OF OHIO
DEPARTMENT OF TRANSPORTATION

WAR-71-2.54

SOCIALVILLE-FOSTERS ROAD

WARREN COUNTY, OHIO

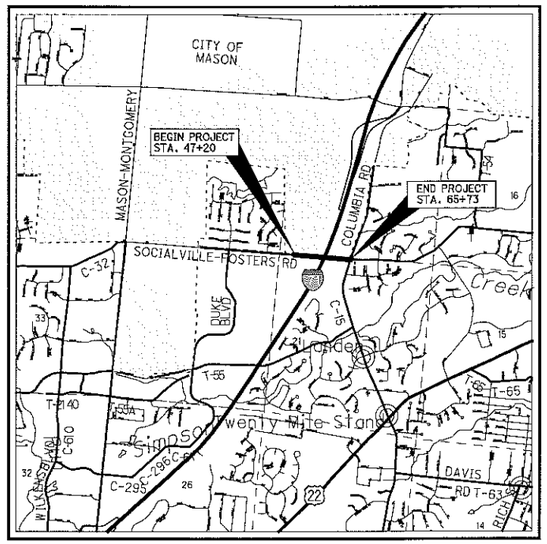

LOCATION MAP

LATITUDE: 39°19'17" LONGITUDE: 84°17'18"

SCALE IN MILES

0 1/2 1 1.5 2

N

PORTION TO BE IMPROVED
INTERSTATE HIGHWAY
FEDERAL ROUTES
STATE ROUTES
COUNTY & TOWNSHIP ROADS
OTHER ROADS

DESIGN DESIGNATION

CURRENT ADT (2016)	11032
DESIGN YEAR ADT (2036)	18080
DESIGN HOURLY VOLUME (2036)	1808
DIRECTIONAL DISTRIBUTION	61 %
TRUCKS (24 HOUR B&C)	5 %
DESIGN SPEED	45 MPH
LEGAL SPEED	45 MPH
DESIGN FUNCTIONAL CLASSIFICATION:	URBAN MAJOR COLLECTOR
NHS PROJECT	NO

DESIGN EXCEPTIONS

NONE REQUIRED

UNDERGROUND UTILITIES

CONTACT BOTH SERVICES
CALL TWO WORKING DAYS
BEFORE YOU DIG

CALL
1-800-362-2764
(TOLL FREE)
OHIO UTILITIES PROTECTION SERVICE
NON-MEMBERS
MUST BE CALLED DIRECTLY

OIL & GAS PRODUCERS UNDERGROUND
PROTECTION SERVICE CALL: **1-800-925-0988**

PLAN PREPARED BY:

CT Consultants
engineers | architects | planners
7965 N. High Street, Suite 340, Columbus, Ohio 43235
614.885.1700 www.ctconsultants.com

ENGINEERS SEAL:
FOR ROADWAY
STATE OF OHIO ERIC J. TROYER E-53926 REGISTERED PROFESSIONAL ENGINEER
SIGNED: Eric J. Troyer
DATE: 11-10-15

ENGINEERS SEAL:
FOR STRUCTURES OVER 20'
STATE OF OHIO TAJUDEEN A. BAKARE E-59643 REGISTERED PROFESSIONAL ENGINEER
SIGNED:
DATE: 11/10/2015

INDEX OF SHEETS:

PROJECT DESCRIPTION

THIS PROJECT ENTAILS THE REPLACEMENT OF THE SOCIALVILLE-FOSTERS ROAD BRIDGE OVER I-71, THE WIDENING OF SOCIALVILLE-FOSTERS ROAD TO 5 LANES, THE ADDITION OF A TWO-LANE ROUNDABOUT AT INNOVATION WAY AND TRAFFIC SIGNAL IMPROVEMENTS AT COLUMBIA ROAD.

PROJECT EARTH DISTURBED AREA:	6.70 ACRES
ESTIMATED CONTRACTOR EARTH DISTURBED AREA:	0.25 ACRES
NOTICE OF INTENT EARTH DISTURBED AREA:	6.95 ACRES

2013 SPECIFICATIONS

THE STANDARD SPECIFICATIONS OF THE STATE OF OHIO, DEPARTMENT OF TRANSPORTATION, INCLUDING CHANGES AND SUPPLEMENTAL SPECIFICATIONS LISTED IN THE PROPOSAL SHALL GOVERN THIS IMPROVEMENT.

I HEARBY APPROVE THESE PLANS AND DECLARE THAT THE MAKING OF THIS IMPROVEMENT WILL REQUIRE THE CLOSING OF TRAFFIC OF SOCIALVILLE-FOSTERS ROAD AND THAT DETOURS WILL BE PROVIDED AS INDICATED ON SHEET 15.

APPROVED _____
DATE _____ WARREN COUNTY ENGINEER

APPROVED _____
DATE _____ DISTRICT DEPUTY DIRECTOR

APPROVED _____
DATE _____ DIRECTOR, DEPARTMENT OF TRANSPORTATION

ODOT STANDARD CONSTRUCTION DRAWINGS										WARREN CO. SCD'S		ODOT SUPPLEMENTAL SPECIFICATIONS	
BP-3.1	7-18-14	CB-1.1	1-18-13	RM-3.1	7-19-13	HL-50.11	1-16-15	TC-82.10	7-17-15	S-9	6-1-12	800	10-16-15
BP-4.1	7-19-13	CB-1.2	1-18-13	RM-4.3M	10-21-97	HL-60.11	1-17-14	TC-83.20	7-17-15				
BP-5.1	7-19-13	CB-2.1	1-18-13	RM-4.4	7-18-14			TC-84.20	10-18-13	S-17	3-1-08	821	4-20-12
BP-7.1	7-18-14	CB-2.2	1-17-14	RM-4.5	7-18-14			TC-84.21	10-18-13	S-21	6-1-12	832	1-17-14
		CB-2.3	1-18-13					TC-85.21	1-16-15				
F-2.1	7-19-13	CB-3.2	1-18-13	LA-1.1	10-15-10			TC-85.22	1-16-15			840	7-17-15
F-3.1	7-19-13									W-2	6-1-12		
		HW-2.2	7-17-15	HL-10.11	1-17-14					W-3	6-1-12	SPECIAL PROVISIONS	
F-3.4	7-19-13			HL-10.12	1-17-14			MT-95.30	7-18-14	W-8	6-1-12		
		MH-1.2	1-18-13	HL-10.13	7-17-15	TC-41.20	10-18-13	MT-95.50	10-16-15	W-9	6-1-12		
MGS-1.1	7-19-13			HL-20.11	1-16-15	TC-41.30	10-18-13	MT-97.10	7-18-14				
MGS-2.1	7-19-13	DM-1.1	1-18-13	HL-30.11	1-16-15	TC-42.20	10-18-13	MT-99.20	7-19-13	W-16	3-1-08		
MGS-3.1	7-18-14	DM-1.2	1-18-13	HL-30.21	1-17-14	TC-52.10	10-18-13	MT-101.60	7-19-13	W-18	3-1-08		
MGS-4.2	7-19-13					TC-52.20	7-18-14	MT-101.70	1-17-14	W-20	6-1-08		
		DM-4.3	7-19-13	HL-40.10	1-17-14	TC-71.10	1-17-14	MT-101.90	7-17-15				
		DM-4.4	7-20-12	HL-40.20	1-16-15	TC-81.10	10-18-13	MT-105.10	7-19-13				

FEDERAL PROJECT NO.

PID NO.

CONSTRUCTION PROJECT NO.

RAILROAD INVOLVEMENT
NONE

WAR-71-2.54

BENCHMARKS

SOURCE BM: THE STATION IS LOCATED NORTHWEST OF THE INTERSECTION OF COLUMBIA ROAD AND SOCIALVILLE-FOSTERS ROAD. THE STATION IS A CONCRETE MONUMENT WITH AN ALUMINUM DISK, SET +/- 0.2' BELOW GRADE AND IS STAMPED WARREN CO. GIS, GPS 34, 1995. ELEVATION=842.98

BM 1: TOP OF CONCRETE LIGHT POLE BASE AT THE NORTHWEST CORNER OF O.S.G. TAP AND DYE BUILDING. LIGHT POLE IS APPROXIMATELY 285' WEST OF THE INTERSECTION OF SOCIALVILLE-FOSTERS ROAD AND COLUMBIA ROAD AND 94' SOUTH OF THE CENTERLINE OF SOCIALVILLE-FOSTERS ROAD. ELEVATION=854.92

BM 2: ANGLE IN NORTH SIDE OF SIDEWALK NORTH OF AC UNITS OF KING OF KINGS LUTHERAN CHURCH. SIDEWALK IS APPROXIMATELY 698' WEST OF THE INTERSECTION OF SOCIALVILLE-FOSTERS ROAD AND COLUMBIA ROAD AND 85' SOUTH OF THE CENTERLINE OF SOCIALVILLE-FOSTERS ROAD. ELEVATION=856.78

BM 3: TOP OF RAILROAD SPIKE SET IN 48" STUMP. STUMP IS APPROXIMATELY 98' EAST OF THE INTERSECTION OF INNOVATION WAY AND SOCIALVILLE-FOSTERS ROAD AND 124' SOUTH OF THE CENTERLINE OF SOCIALVILLE-FOSTERS ROAD. ELEVATION=853.35

BM 4: TOP OF RAILROAD SPIKE SET IN 28" STUMP. STUMP IS APPROXIMATELY 156' WEST OF THE INTERSECTION OF INNOVATION WAY AND SOCIALVILLE-FOSTERS ROAD AND 104' SOUTH OF THE CENTERLINE OF SOCIALVILLE-FOSTERS ROAD. ELEVATION=859.94

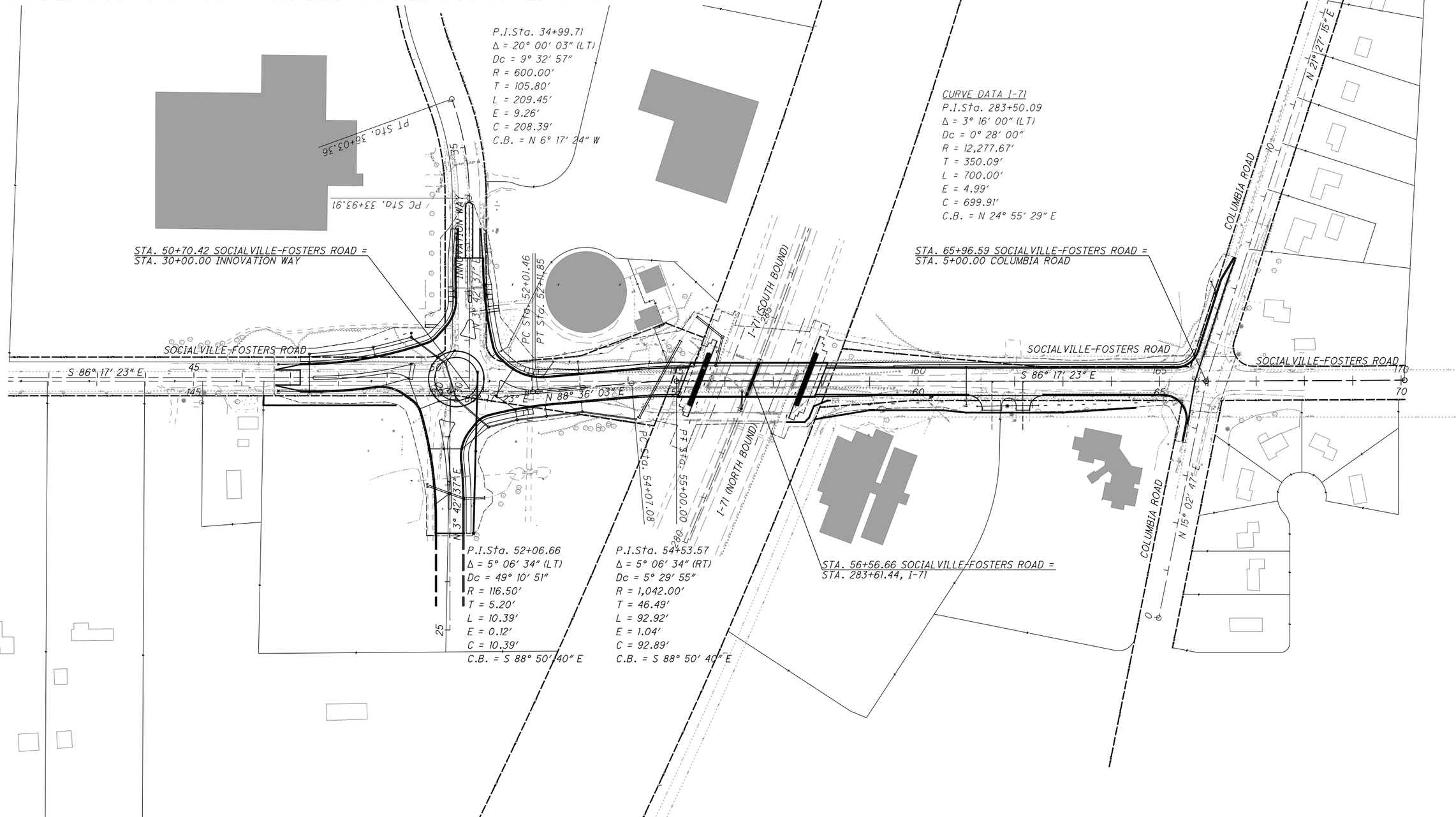

HORIZONTAL SCALE IN FEET 0 50 100 200

CALCULATED EJT
CHECKED REN

SCHEMATIC PLAN

WAR-71-2.54

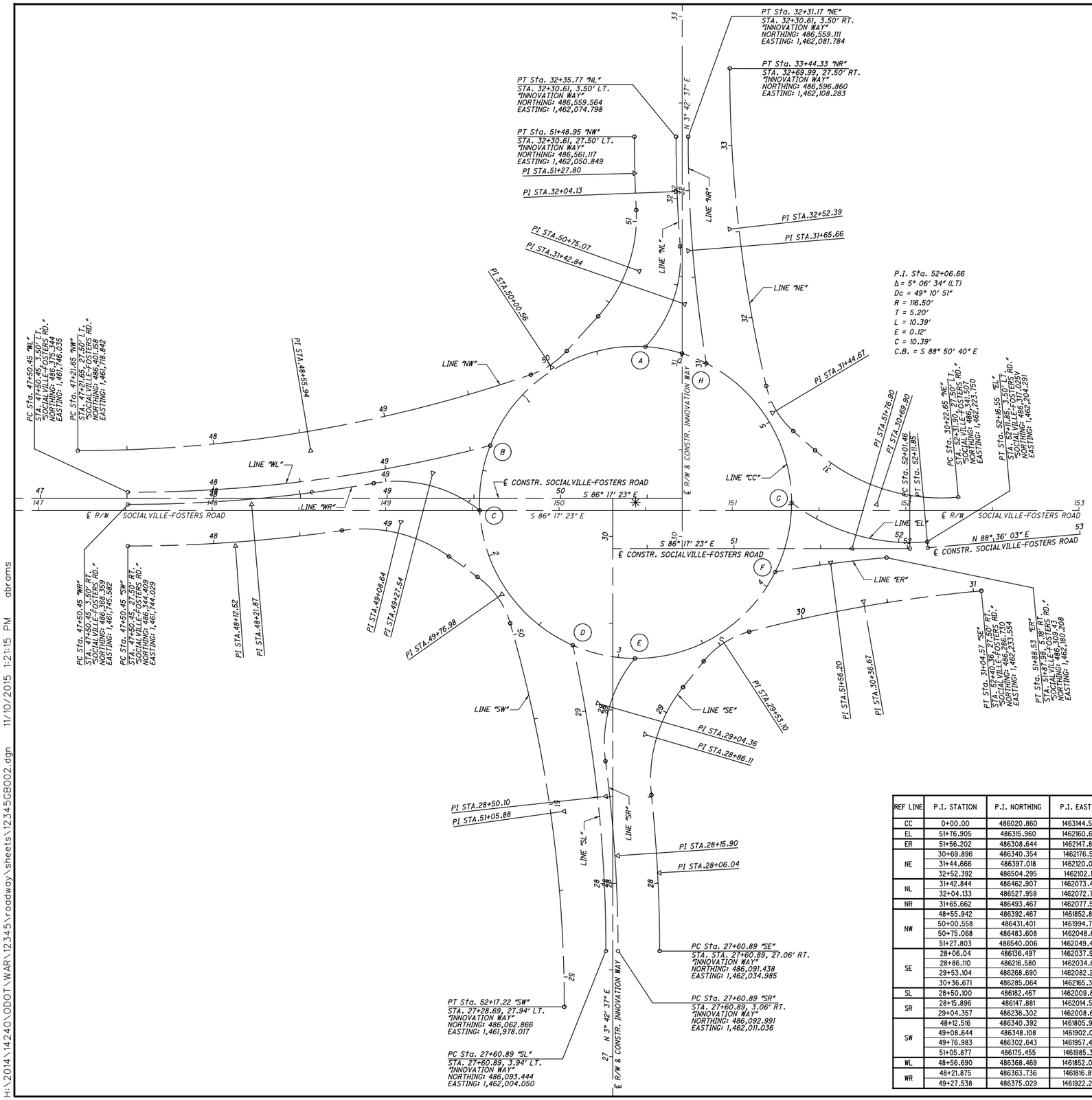

* CENTER OF ROUNDABOUT			
STA. 30+19.64, 26.84' LT. INNOVATION WAY (NORTH) =			
STA. 30+19.64, 13.16' RT. INNOVATION WAY (SOUTH) =			
STA. 50+43.27, 2.36' RT. SOCIALVILLE-FOSTERS ROAD (WEST) =			
STA. 50+43.27, 26.64' LT. SOCIALVILLE-FOSTERS ROAD (EAST)			
NORTHING: 486,350.552			
EASTING: 1,462,037.857			
RADIUS: 90.00'			
	STATION	NORTHING	EASTING
A	0+21.52 "CC" = 31+09.460 "NL"	486439.810	1462049.387
B	1+35.05 "CC" = 49+61.764 "WL"	486388.709	1461956.346
C	1+73.24 "CC" = 49+57.967 "WR"	486351.766	1461947.865
D	2+72.75 "CC" = 29+38.619 "SL"	486270.664	1461996.410
E	3+09.64 "CC" = 29+34.132 "SR"	486260.764	1462031.681
F	4+09.80 "CC" = 51+23.840 "ER"	486305.319	1462115.664
G	4+51.13 "CC" = 51+33.270 "EL"	486344.488	1462127.652
H	5+50.42 "CC" = 30+99.880 "NR"	486427.979	1462083.739

REF LINE	P.I. STATION	P.I. NORTHING	P.I. EASTING	Δ	Δ c	TANGENT LENGTH (FT)	ARC LENTGH (FT)	RADUIS (FT)	BEGIN CURVE	END CURVE
CC	0+00.00	486020.860	1463144.505	360° 00' 00.0" (LT)		0.00	565.49	90.00	0+00.000	5+65.487
EL	51+76.905	486315.960	1462160.669	42° 13' 41.1" (LT)	50° 42' 15.2"	43.64	83.28	113.00	51+33.270	52+16.553
ER	51+56.202	486308.644	1462147.855	4° 29' 53.6" (RT	6° 57' 12.1"	32.36	64.69	824.00	51+23.840	51+88.531
NE	30+69.896	486340.354	1462176.518	46° 29' 16.9" (RT)	52° 05' 13.5"	47.25	89.25	110.00	30+22.650	31+11.901
	31+44.666	486397.018	1462120.029	35° 27' 35.6" (RT)	114° 35' 29.6"	15.99	30.95	50.00	31+28.680	31+59.625
	32+52.392	486504.295	1462102.171	13° 13' 43.7" (RT)	7° 09' 43.1"	92.77	184.71	800.00	31+59.625	33+44.334
NL	31+42.844	486462.907	1462073.492	46° 52' 45.8" (LT)	74° 24' 36.4"	33.38	63.00	77.00	31+09.460	31+72.461
	32+04.133	486527.959	1462072.749	4° 21' 55.2" (RT)	6° 53' 41.3"	31.67	63.31	831.00	31+72.461	32+35.775
NR	31+65.662	486493.467	1462077.527	9° 07' 43.7" (RT)	6° 57' 12.1"	65.78	131.29	824.00	30+99.880	32+31.166
NW	48+55.942	486392.467	1461852.852	19° 03' 29.5" (LT)	7° 09' 43.1"	134.29	266.10	800.00	47+21.650	49+87.753
	50+00.558	486431.401	1461994.704	28° 43' 50.1" (LT)	114° 35' 29.6"	12.81	25.07	50.00	49+87.753	50+12.825
	50+75.068	486483.608	1462048.618	45° 02' 46.0" (LT)	67° 24' 24.5"	35.25	66.83	85.00	50+39.820	51+06.647
	51+27.803	486540.006	1462049.480	2° 50' 05.6" (RT)	6° 42' 04.5"	21.16	42.30	855.00	51+06.647	51+48.951
SE	28+06.04	486136.497	1462037.907	6° 02' 45.8" (LT)	6° 42' 04.5"	45.15	90.22	855.00	27+60.890	28+51.113
	28+86.110	486216.580	1462034.641	44° 45' 24.6" (RT)	67° 24' 24.5"	35.00	66.40	85.00	28+51.113	29+17.511
	29+53.104	486268.690	1462082.259	36° 25' 48.4" (RT)	114° 35' 29.6"	16.45	31.79	50.00	29+36.650	29+68.442
	30+36.671	486285.064	1462165.344	9° 44' 58.4" (RT)	7° 09' 43.1"	68.23	136.13	800.00	29+68.442	31+04.571
SL	28+50.100	486182.467	1462009.823	12° 21' 29.3" (LT)	6° 57' 12.1"	89.21	177.73	824.00	27+60.890	29+38.619
SR	28+15.896	486147.881	1462014.595	7° 34' 26.4" (LT)	6° 53' 41.3"	55.01	109.85	831.00	27+60.890	28+70.741
	29+04.357	486236.302	1462008.624	47° 10' 09.9" (RT	74° 24' 36.4"	33.62	63.39	77.00	28+70.741	29+34.132
SW	48+12.516	486340.392	1461805.965	8° 18' 13.8" (LT)	6° 42' 04.5"	62.07	123.92	855.00	47+50.450	48+74.365
	49+08.644	486348.108	1461902.001	43° 55' 36.2" (RT)	67° 24' 24.5"	34.28	65.17	85.00	48+74.365	49+39.531
	49+76.983	486302.643	1461957.483	38° 19' 19.2" (RT)	114° 35' 29.6"	17.37	33.44	50.00	49+59.610	49+93.052
	51+05.877	486175.455	1461985.318	16° 03' 18.4" (RT)	7° 09' 43.1"	112.83	224.17	800.00	49+93.052	52+17.223
WL	48+56.690	486368.469	1461852.052	14° 41' 36.3" (LT)	6° 57' 12.1"	106.24	211.31	824.00	47+50.450	49+61.764
WR	48+21.875	486363.736	1461816.857	9° 49' 30.2" (LT)	6° 53' 41.3"	71.43	142.50	831.00	47+50.450	48+92.949
	49+27.538	486375.029	1461922.268	48° 22' 47.6" (RT)	74° 24' 36.4"	34.59	65.02	77.00	48+92.949	49+57.967

HORIZONTAL SCALE IN FEET
0 30 60

CALCULATED EJT
CHECKED REN

ROUNDABOUT GEOMETRIC LAYOUT

WAR-71-2.54

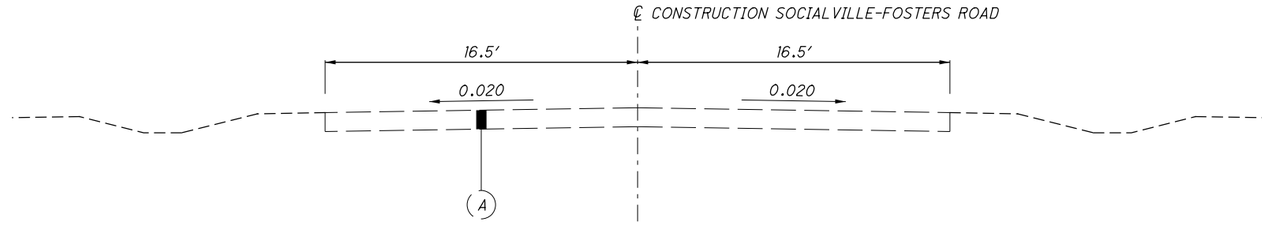

SOCIALVILLE-FOSTERS ROAD
EXISTING TYPICAL SECTION
STA. 46+50.00

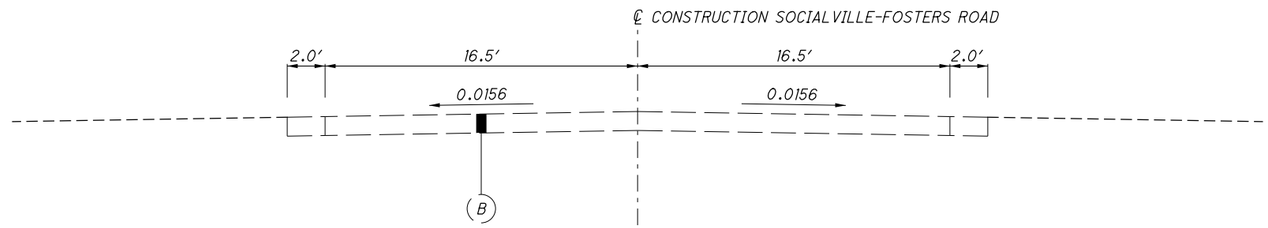

SOCIALVILLE-FOSTERS ROAD
EXISTING TYPICAL SECTION
STA. 67+00.00

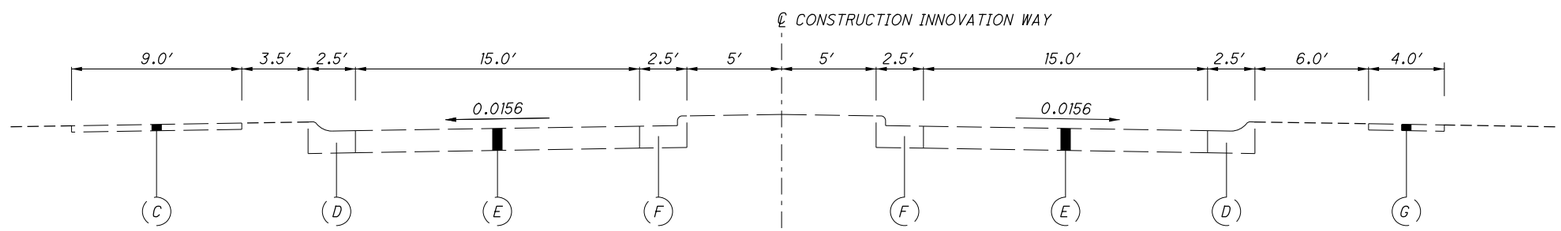

INNOVATION WAY
EXISTING TYPICAL SECTION
STA. 33+00.00

LEGEND

- (A) EX. ASPHALT (T=12″±)
- (B) EX. ASPHALT (T=14″±)
- (C) EX. ASPHALT BIKE PATH
- (D) EX. COMBINATION CURB & GUTTER, TYPE 3
- (E) EX. ASPHALT (T=9″±)
- (F) EX. COMBINATION CURB & GUTTER, TYPE 2
- (G) EX. CONCRETE WALK

CALCULATED EJT
CHECKED REN

TYPICAL SECTIONS

WAR-71-2.54

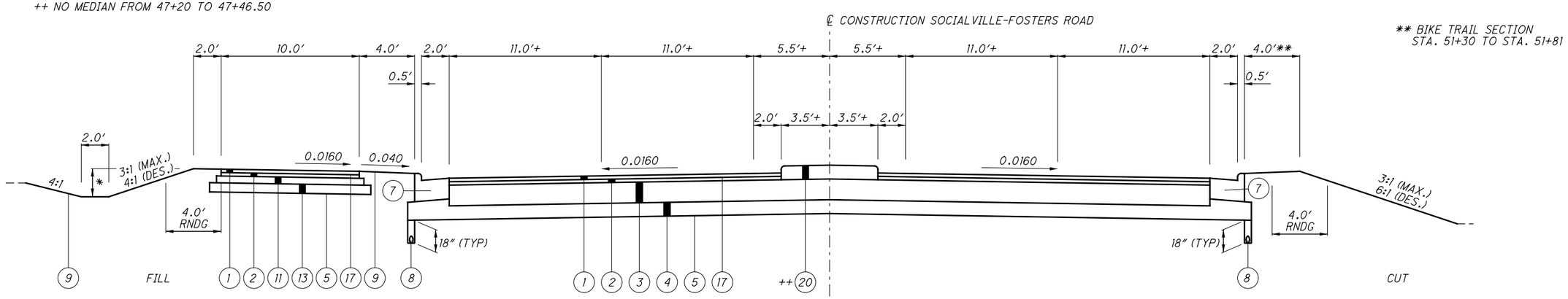

SOCIALVILLE-FOSTERS ROAD MEDIAN SECTION

STA. 47+20.00 TO STA. 49+53.00
STA. 51+30.00 TO STA. 53+11.00

LEGEND

1. ITEM 442 - 1½" ASPHALT CONCRETE SURFACE COURSE, 12.5MM, TYPE A, (448), PG70-22M
2. ITEM 448 - 1½" ASPHALT CONCRETE INTERMEDIATE COURSE, TYPE 1, PG64-22
3. ITEM 301 - 9" ASPHALT CONCRETE BASE, PG64-22
4. ITEM 304 - 6" AGGREGATE BASE
5. ITEM 204 - SUBGRADE COMPACTION
6. ITEM 608 - 4" CONCRETE WALK
7. ITEM 609 - COMBINATION CURB AND GUTTER, TYPE 2
8. ITEM 605 - 6" SHALLOW PIPE UNDERDRAINS
9. ITEM 659 - SEEDING AND MULCHING
10. ITEM 452 - 10" NON-REINFORCED CONCRETE PAVEMENT, CLASS QC1
11. ITEM 301 - 3" ASPHALT CONCRETE BASE, PG64-22
12. ITEM 609 - CURB TYPE 6
13. ITEM 304 - 4" AGGREGATE BASE
14. ITEM 526 - REINFORCED CONCRETE APPROACH SLAB (T=17")
15. ITEM 606 - GUARDRAIL, TYPE MGS
16. NOT USED
17. ITEM 407 - TACK COAT FOR INTERMEDIATE COURSE (@ 0.10 GAL./S.Y.)
18. ITEM 609- CURB MISC.: 4" MOUNTABLE CONCRETE CURB
19. NOT USED
20. ITEM 609 - 6" CONCRETE TRAFFIC ISLAND
21. ITEM 442 - 1 1/2" ASPHALT CONCRETE SURFACE COURSE, 12.5 MM, TYPE A (446)
22. ITEM 407 - TACK COAT FOR INTERMEDIATE COURSE (0.04 GAL./SY.)
23. ITEM 442 - 1 3/4" ASPHALT CONCRETE INTERMEDIATE COURSE, 19 MM, TYPE A (446)
24. ITEM 301 - 4" ASPHALT CONCRETE BASE, PG64-22
25. ITEM 302 - 8" ASPHALT CONCRETE BASE, PG64-22
26. ITEM 304 - 9" AGGREGATE BASE
27. ITEM 203 - SUBGRADE COMPACTION

CALCULATED EJT
CHECKED REN

TYPICAL SECTIONS

WAR-71-2.54

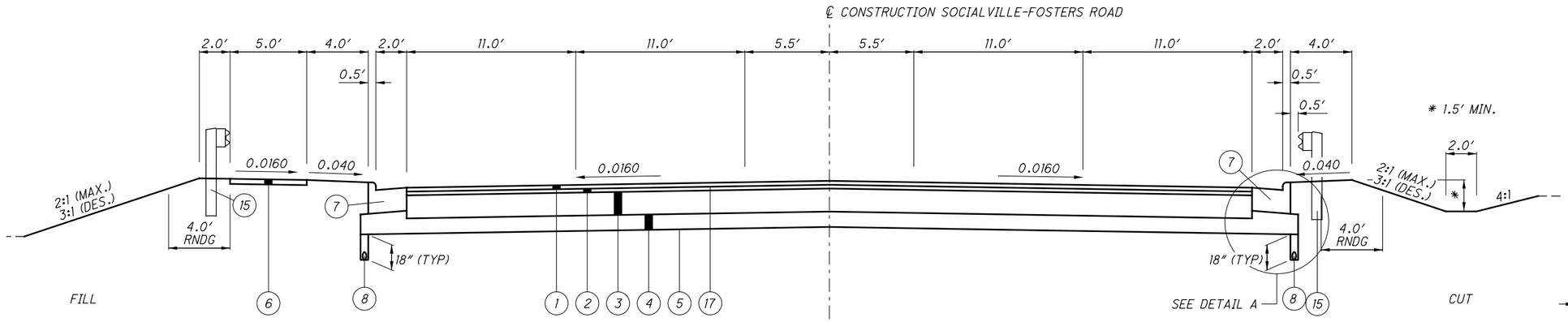

SOCIALVILLE-FOSTERS ROAD NORMAL SECTION
STA. 57+98.40 TO STA. 65+73.00

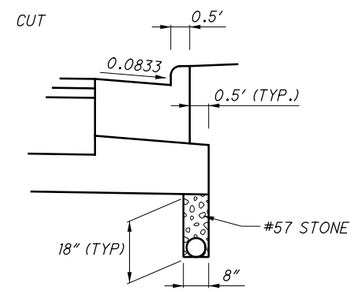

DETAIL A

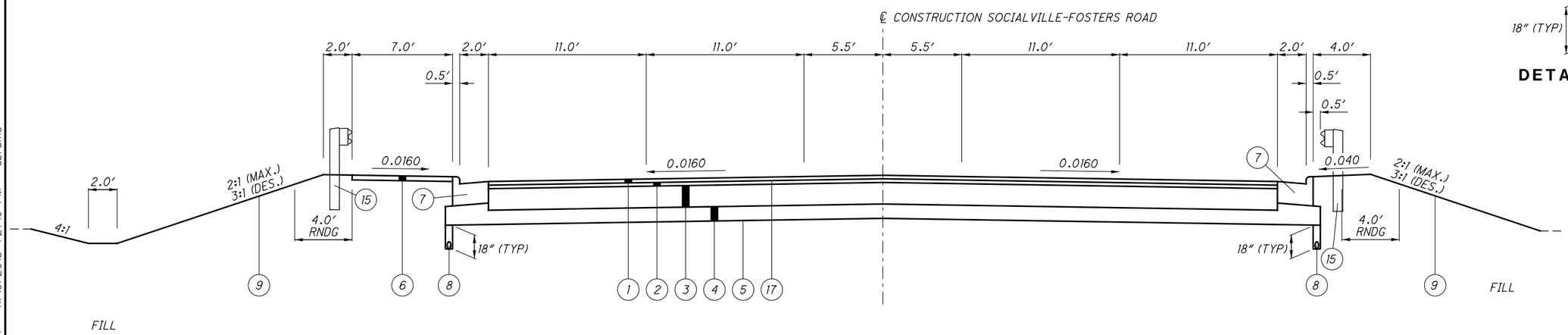

SOCIALVILLE-FOSTERS ROAD NORMAL SECTION
STA. 53+11.00 TO STA. 55+14.93

FOR PROPOSED TYPICAL SECTION LEGEND SEE SHEET 5.

CALCULATED EJT
CHECKED REN

TYPICAL SECTIONS

WAR-71-2.54

* - SEE INTERSECTION DETAILS
** - PAYMENT FOR 1" PEJF TO BE INCLUDED IN THE COST FOR ITEM 452.

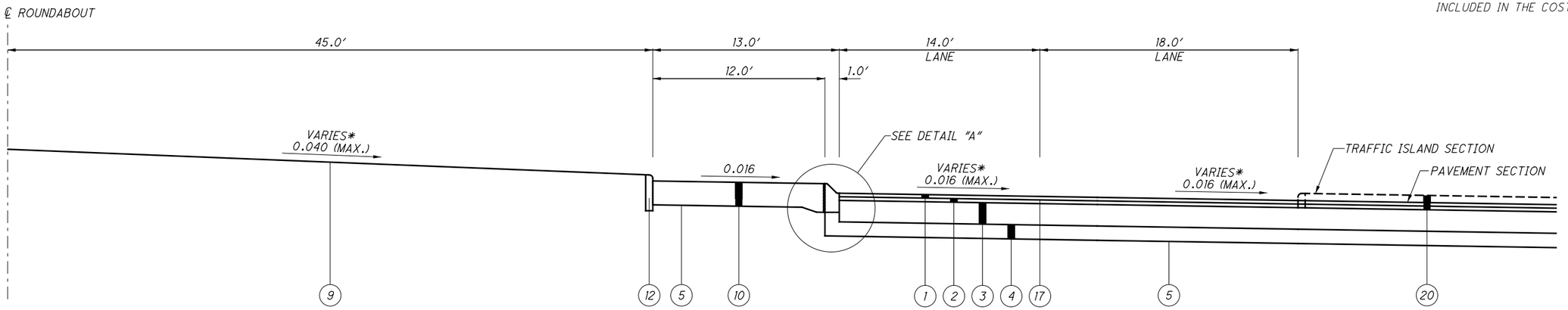

SOCIALVILLE-FOSTERS ROAD ROUNDABOUT SECTION

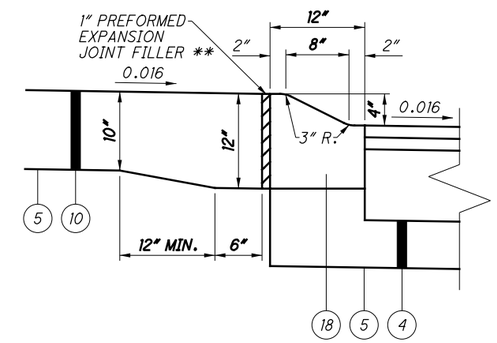

DETAIL A

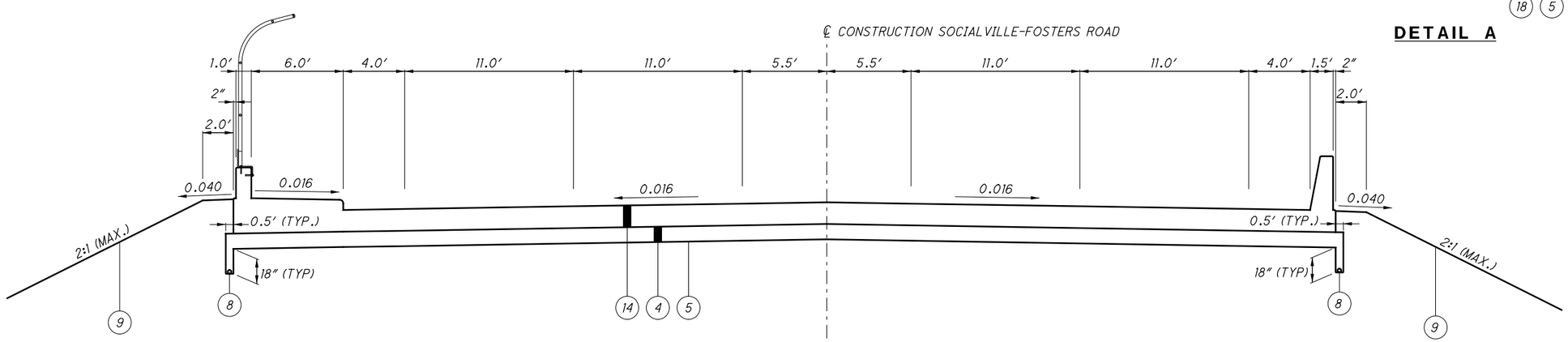

SOCIALVILLE-FOSTERS ROAD APPROACH SLAB SECTION

STA. 55+14.93 TO STA. 55+44.93 = 30.00'
STA. 57+68.40 TO STA. 57+98.40 = 30.00'

FOR PROPOSED TYPICAL SECTION LEGEND SEE SHEET 5.

CALCULATED EJT
CHECKED REN

TYPICAL SECTIONS

WAR-71-2.54

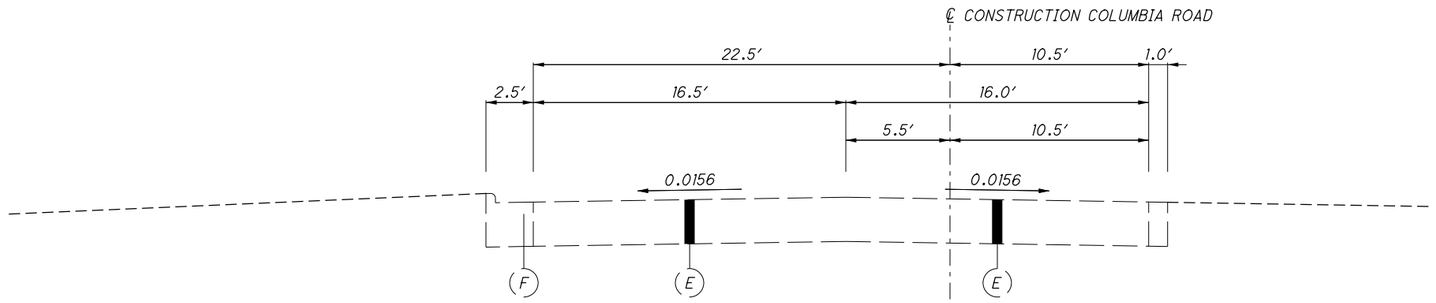

COLUMBIA ROAD
EXISTING TYPICAL SECTION
STA. 8+00

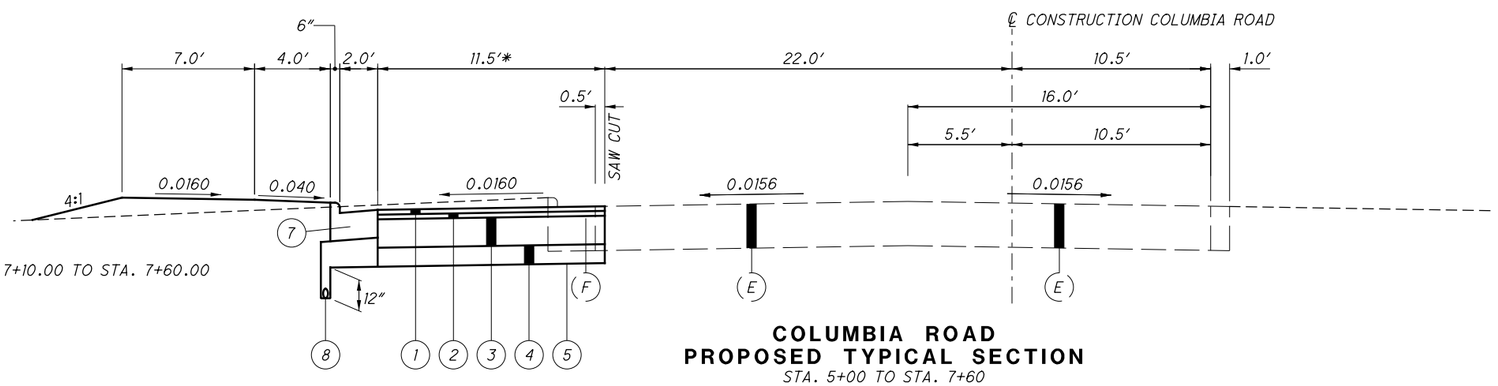

* - VARIES 0′ TO 11.5′ FROM STA. 7+10.00 TO STA. 7+60.00

COLUMBIA ROAD
PROPOSED TYPICAL SECTION
STA. 5+00 TO STA. 7+60

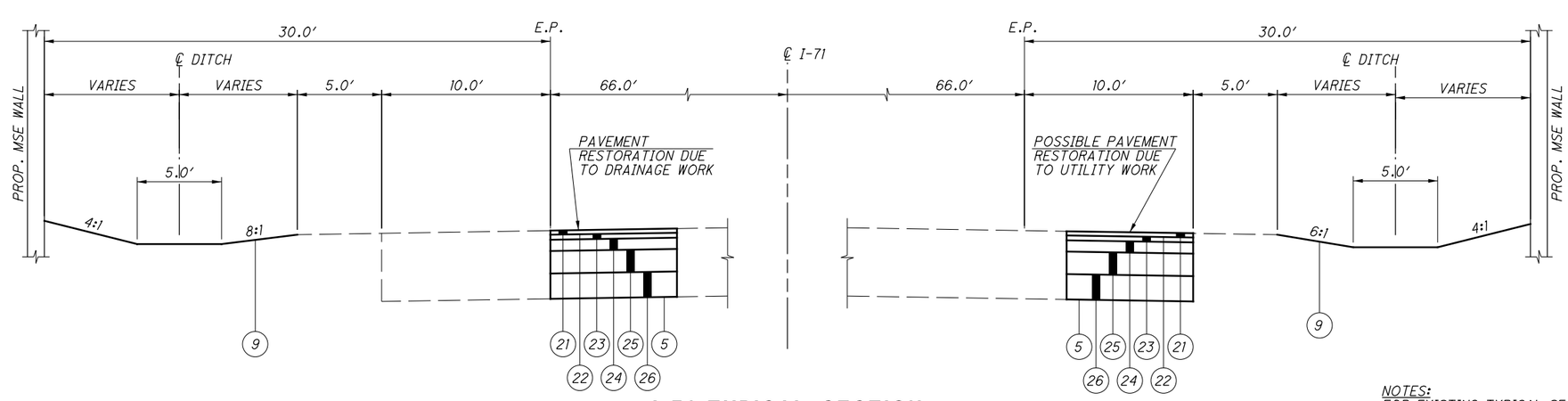

I-71 TYPICAL SECTION
STA. 281+50 TO STA. 285+00, LT.
STA. 282+50 TO STA. 285+50, RT.

NOTES:
FOR EXISTING TYPICAL SECTION LEGEND SEE SHEET 4.
FOR PROPOSED TYPICAL SECTION LEGEND SEE SHEET 5.
FOR I-71 PIER DETAILS, SEE SHEETS 107-108.
FOR MSE WALL DETAILS, SEE SHEETS 96-98.

CALCULATED EJT
CHECKED REN

TYPICAL SECTIONS

WAR-71-2.54

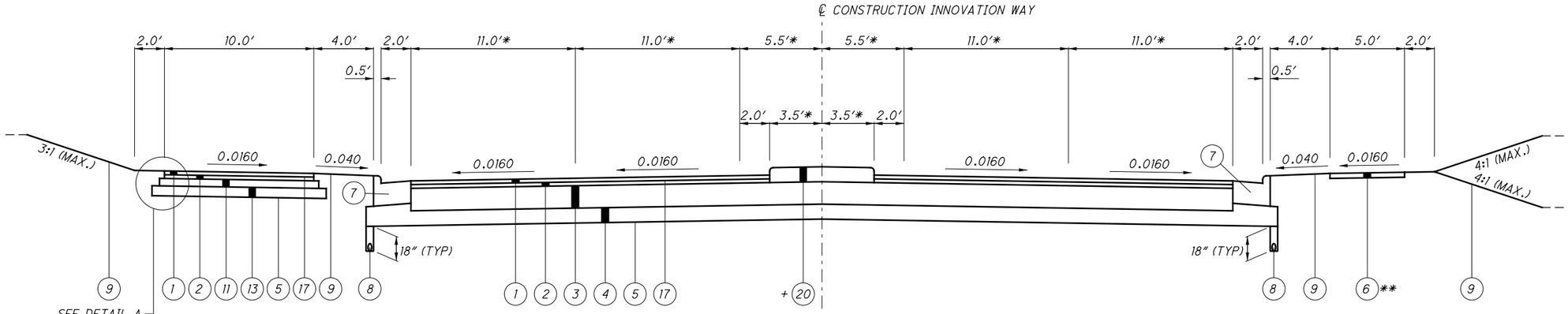

INNOVATION WAY NORTH OF ROUNDABOUT
TYPICAL SECTION
STA. 31+06 TO STA. 32+70

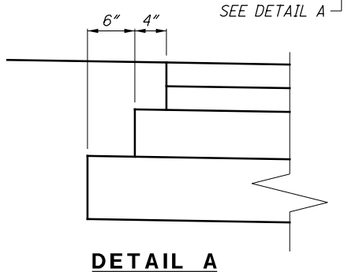

DETAIL A

* VARIES
** BIKE TRAIL FROM STA. 31+06 TO 31+83
SIDEWALK CURB RAMP FROM STA. 31+83 TO STA. 32+15
SIDEWALK TRANSITION FROM STA. 32+15 TO STA. 32+40
SIDEWALK FROM STA. 32+40 TO STA. 33+20
\+ NO MEDIAN FROM STA. 27+00 TO STA. 27+50
AND STA. 31+45 TO STA. 31+77.5

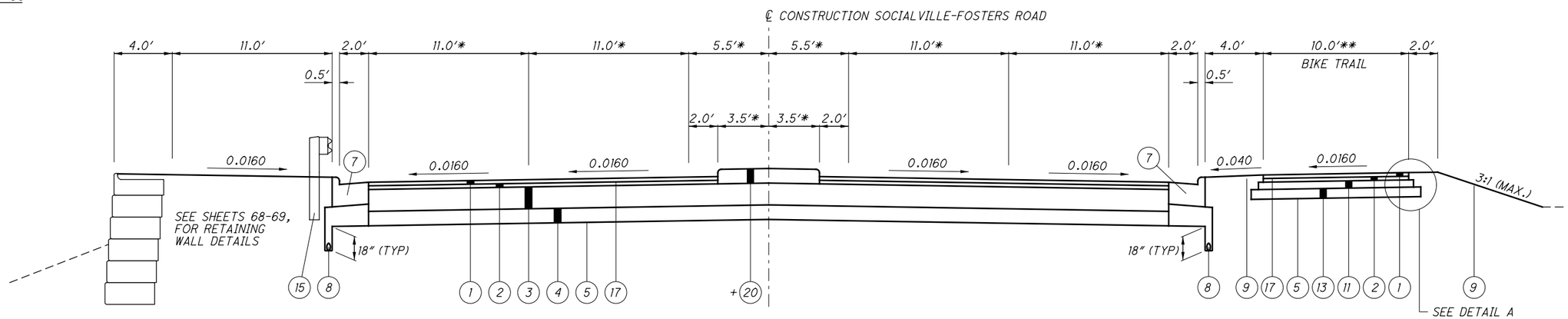

INNOVATION WAY SOUTH OF ROUNDABOUT
TYPICAL SECTION
STA. 27+00 TO STA. 29+31

FOR PROPOSED TYPICAL SECTION LEGEND SEE SHEET 5.

CALCULATED EJT
CHECKED REN

TYPICAL SECTIONS

WAR-71-2.54

ROUNDING

THE ROUNDING AT SLOPE BREAKPOINTS SHOWN ON THE TYPICAL SECTIONS APPLIES TO ALL CROSS-SECTIONS EVEN THOUGH OTHERWISE SHOWN.

UTILITIES

LISTED BELOW ARE ALL UTILITIES LOCATED WITHIN THE PROJECT CONSTRUCTION LIMITS TOGETHER WITH THEIR RESPECTIVE OWNERS:

POWER:
DUKE ENERGY ELECTRIC (DIST.)
139 E. FOURTH ST., RM 467A
CINCINNATI, OHIO 45202
(513) 287-2685
ATTN: TROY DITTMER

DUKE ENERGY ELECTRIC (TRANS.)
139 E. FOURTH ST., RM 501
CINCINNATI, OHIO 45202
(513) 287-1266
ATTN: TIM MEYER

TELEPHONE:
CINCINNATI BELL
201 EAST FOURTH STREET
ROOM 103-1100
CINCINNATI, OHIO 45202
(513) 397-9071
ATTN: RICHARD RAYLE

CENTURY LINK
803 E. 12TH STREET
GREENVILLE, OHIO 45331
(937) 547-4255
ATTN: DAVID KAPLAN

AT&T TRANSMISSION
59806 WILCOX PLACE
DUBLIN, OHIO 43016
(614) 760-8320
ATTN: GREG BELEW

GAS:
DUKE ENERGY GAS
139 EAST FOURTH STREET, ROOM 467A
CINCINNATI, OHIO 45202
(513) 287-2202
ATTN: KATHARINE WILSON

CABLE TV:
TIME WARNER CABLE
11252 CORNELL PARK DRIVE
CINCINNATI, OHIO 45242
(513) 386-5483
ATTN: JIM O'REILLY

WATER:
WARREN COUNTY WATER & SEWER
WARREN COUNTY GOVERNMENT CENTER, 1ST FLOOR
406 JUSTICE DRIVE
LEBANON, OHIO 45036
(513) 695-1193
ATTN: CHRIS BRAUSCH

CINCINNATI WATER
4747 SPRING GROVE ROAD
CINCINNATI, OHIO 45232
(513) 557-5799
ATTN: JOHN HUNSEDER

SANITARY:
WARREN COUNTY WATER & SEWER
WARREN COUNTY GOVERNMENT CENTER, 1ST FLOOR
406 JUSTICE DRIVE
LEBANON, OHIO 45036
(513) 695-1193
ATTN: CHRIS BRAUSCH

CITY OF MASON
6000 MASON-MONTGOMERY ROAD
MASON, OHIO, 45040
(513) 229-8520
ATTN: KURT SEILER

STORM:
CITY OF MASON
6000 MASON-MONTGOMERY ROAD
MASON, OHIO, 45040
(513) 229-8520
ATTN: KURT SEILER

TRAFFIC: ODOT, DISTRICT 8
505 SOUTH S.R. 741
LEBANON, OHIO 45036
(513) 932-3030
ATTN: RICK HIVELY

THE LOCATION OF THE UNDERGROUND UTILITIES SHOWN ON THE PLANS ARE AS OBTAINED FROM THE OWNERS AS REQUIRED BY SECTION 153.64 O.R.C.

EXISTING PLANS

EXISTING PLANS ENTITLED WAR-1-0.06 AND HAM/WAR-71-27.310/.000 MAY BE INSPECTED IN THE ODOT DISTRICT 8 OFFICE IN LEBANON, OHIO.

CONSTRUCTION NOISE

ACTIVITIES AND LAND USE ADJACENT TO THIS PROJECT MAY BE AFFECTED BY CONSTRUCTION NOISE. IN ORDER TO MINIMIZE ANY ADVERSE CONSTRUCTION NOISE IMPACTS, DO NOT OPERATE POWER-OPERATED CONSTRUCTION-TYPE DEVICES BETWEEN THE HOURS OF 7:00 PM AND 7:00 AM. IN ADDITION, DO NOT OPERATE AT ANY TIME ANY DEVICE IN SUCH A MANNER THAT THE NOISE CREATED SUBSTANTIALLY EXCEEDS THE NOISE CUSTOMARILY AND NECESSARILY ATTENDANT TO THE REASONABLE AND EFFICIENT PERFORMANCE OF SUCH EQUIPMENT.

SURVEYING PARAMETERS:

PRIMARY PROJECT CONTROL MONUMENTS GOVERN ALL POSITIONING ON ODOT PROJECTS. SEE SHEET 2 OF THE PLANS FOR A TABLE CONTAINING PROJECT CONTROL INFORMATION.

USE THE FOLLOWING PROJECT CONTROL, VERTICAL POSITIONING, AND HORIZONTAL POSITIONING PARAMETERS FOR ALL SURVEYING:

PROJECT CONTROL:

POSITIONING METHOD: OHIO DEPARTMENT OF TRANSPORTATION CORS NETWORK
MONUMENT TYPE: CONCRETE MONUMENT WITH ALUMINUM DISK

VERTICAL POSITIONING:

ORTHOMETRIC HEIGHT DATUM: NAVD 88 (CORS 96)
GEOID: 12A

HORIZONTAL POSITIONING:

REFERENCE FRAME: NAD 83 (2011)
ELLIPSOID: GRS 80
MAP PROJECTION: LAMBERT
COORDINATE SYSTEM: OHIO STATE PLANE COORDINATE SYSTEM-SOUTH ZONE
COMBINED SCALE FACTOR: 1 (ONE)

USE THE POSITIONING METHODS AND MONUMENT TYPE USED IN THE ORIGINAL SURVEY TO RESTORE ALL MONUMENTS RELATED TO PRIMARY PROJECT CONTROL THAT ARE DAMAGED OR DESTROYED BY CONSTRUCTION ACTIVITIES. RESTORE THE DAMAGED OR DESTROYED MONUMENTS IN ACCORDANCE WITH SUPPLEMENTAL SPECIFICATION 823.

UNITS ARE IN U.S. SURVEY FEET. USE THE FOLLOWING CONVERSION FACTOR: 1 METER = 3.280833333 U.S. SURVEY FEET.

WORK LIMITS

THE WORK LIMITS SHOWN ON THESE PLANS ARE FOR PHYSICAL CONSTRUCTION ONLY. PROVIDE THE INSTALLATION AND OPERATION OF ALL WORK ZONE TRAFFIC CONTROL AND WORK ZONE TRAFFIC CONTROL DEVICES REQUIRED BY THESE PLANS WHETHER INSIDE OR OUTSIDE THESE WORK LIMITS.

CLEARING AND GRUBBING

REMOVE ALL TREES AND STUMPS SPECIFICALLY MARKED FOR REMOVAL WITHIN THE CONSTRUCTION LIMITS UNDER THE LUMP SUM BID FOR ITEM 201, CLEARING AND GRUBBING. THE FOLLOWING IS AN APPROXIMATE ESTIMATE OF THE NUMBER OF TREES AND STUMPS TO BE REMOVED.

SIZES	NO. TREES	NO. STUMPS	TOTAL
18"	13	0	13
30"	2	0	2

BENCHING OF FOUNDATION SLOPES

ALTHOUGH CROSS-SECTIONS INDICATE SPECIFIC DIMENSIONS FOR PROPOSED BENCHING OF THE EMBANKMENT FOUNDATIONS IN CERTAIN AREAS, NO WAIVER OF THE SPECIFICATIONS IS INTENDED. BENCH ALL OTHER SLOPED EMBANKMENT AREAS AS SET FORTH IN 203.05. NO ADDITIONAL PAYMENT WILL BE MADE FOR BENCHING REQUIRED UNDER THE PROVISIONS OF 203.05.

ITEM 204 - PROOF ROLLING

THE FOLLOWING QUANTITY IS PROVIDED IN THE GENERAL SUMMARY TO ADDRESS LOCATIONS REQUIRING PROOF ROLLING. SEE PLAN SHEET NO. 25 FOR ADDITIONAL INFORMATION.

ITEM 204 - PROOF ROLLING 6 HOUR

FENCE LENGTHS

THE LENGTHS OF FENCE SHOWN IN THE PLANS ARE HORIZONTAL DIMENSIONS. MEASUREMENTS OF THE FINAL QUANTITIES WILL BE IN ACCORDANCE WITH ITEM 607.

SEEDING AND MULCHING

THE FOLLOWING QUANTITIES ARE PROVIDED TO PROMOTE GROWTH AND CARE OF PERMANENT SEEDED AREAS:

659, SOIL ANALYSIS TEST 2 EACH

659, TOPSOIL 2148 CU. YD.

659, SEEDING AND MULCHING 19351 SQ. YD.

659, REPAIR SEEDING AND MULCHING 968 SQ. YD

659, COMMERCIAL FERTILIZER 2.7 TON

659, LIME 4.0 ACRES

659, WATER 105 M. GAL.

659, MOWING 44 M. SQ. FT.

SEEDING AND MULCHING SHALL BE APPLIED TO ALL AREAS OF EXPOSED SOIL BETWEEN THE RIGHT-OF-WAY LINES, AND WITHIN THE CONSTRUCTION LIMITS FOR AREAS OUTSIDE THE RIGHT-OF-WAY LINES COVERED BY WORK AGREEMENT OR SLOPE EASEMENT. QUANTITY CALCULATIONS FOR SEEDING AND MULCHING ARE BASED ON THESE LIMITS.

CROSSINGS AND CONNECTIONS TO EXISTING PIPES AND UTILITIES

WHERE PLANS PROVIDE FOR A PROPOSED CONDUIT TO BE CONNECTED TO, OR CROSS OVER OR UNDER AN EXISTING SEWER OR UNDERGROUND UTILITY, THE CONTRACTOR SHALL LOCATE THE EXISTING PIPES OR UTILITIES BOTH AS TO LINE AND GRADE BEFORE STARTING TO LAY THE PROPOSED CONDUIT.

IF IT IS DETERMINED THAT THE ELEVATION OF THE EXISTING CONDUIT, OR EXISTING APPURTENANCE TO BE CONNECTED, DIFFERS FROM THE PLAN ELEVATION OR RESULTS IN A CHANGE IN THE PLAN CONDUIT SLOPE, THE ENGINEER SHALL BE NOTIFIED BEFORE STARTING CONSTRUCTION OF ANY PORTION OF THE PROPOSED CONDUIT WHICH WILL BE AFFECTED BY THE VARIANCE IN THE EXISTING ELEVATIONS.

IF IT IS DETERMINED THAT THE PROPOSED CONDUIT WILL INTERSECT AN EXISTING SEWER OR UNDERGROUND UTILITY IF CONSTRUCTED AS SHOWN ON THE PLAN, THE ENGINEER SHALL BE NOTIFIED BEFORE STARTING CONSTRUCTION OF ANY PORTION OF THE PROPOSED CONDUIT WHICH WOULD BE AFFECTED BY THE INTERFERENCE WITH AN EXISTING FACILITY.

PAYMENT FOR ALL THE OPERATIONS DESCRIBED ABOVE SHALL BE INCLUDED IN THE CONTRACT PRICE FOR THE PERTINENT 611 CONDUIT ITEM.

ITEM 607 FENCE REBUILT, AS PER PLAN

FENCE SHALL BE REBUILT AS PER ITEM 607 USING THE SAME STYLE AS THE EXISTING FENCE. FENCE ADJACENT TO WATER TREATMENT PLANT SHALL BE CONSTRUCTED PRIOR TO REMOVAL OF EXISTING FENCE. FENCE SHALL BE LOCATED 6" TO 12" OUTSIDE OF PROPOSED RIGHT OF WAY. CONTRACTOR TO PLACE NEW FENCE PRIOR TO THE REMOVAL OF THE OLD FENCE.

PIPE CONNECTIONS TO CORRUGATED METAL STRUCTURES

CONNECTIONS OF PROPOSED LONGITUDINAL DRAINAGE TO CORRUGATED METAL STRUCTURES SHALL BE MADE BY MEANS OF A SHOP FABRICATED OR FIELD WELDED STUB ON THE STRUCTURE. THE STUB SHALL MEET THE REQUIREMENTS OF 707 AND HAVE A MINIMUM LENGTH OF 2 FEET AND A MINIMUM WALL THICKNESS OF 0.064 INCHES.

THE LOCATION AND ELEVATION OF THE STUB ARE TO BE CONSIDERED APPROXIMATE AND MAY BE ADJUSTED BY THE ENGINEER TO AVOID CUTTING THROUGH JOINTS IN THE STRUCTURE.

THE FIELD WELDED JOINT, IF USED, SHALL BE THOROUGHLY CLEANED AND REGALVANIZED OR OTHERWISE SUITABLY REPAIRED. WELDING SHALL MEET THE REQUIREMENTS OF 513.21.

A MASONRY COLLAR, AS PER STANDARD DRAWING DM-1.1, WILL BE REQUIRED TO CONNECT THE LONGITUDINAL DRAINAGE TO THE STUB, WHEN PIPE OTHER THAN CORRUGATED METAL IS PROVIDED FOR THE LONGITUDINAL DRAINAGE.

PAYMENT FOR CUTTING INTO THE STRUCTURE AND PROVIDING THE CONNECTION DESCRIBED, SHALL BE INCLUDED IN THE CONTRACT PRICE FOR ITEM 611.

FARM DRAINS

ALL FARM DRAINS, WHICH ARE ENCOUNTERED DURING CONSTRUCTION, SHALL BE PROVIDED WITH UNOBSTRUCTED OUTLETS. EXISTING COLLECTORS WHICH ARE LOCATED BELOW THE ROADWAY DITCH ELEVATIONS, AND WHICH CROSS THE ROADWAY, SHALL BE REPLACED WITHIN THE (RIGHT OF WAY) (CONSTRUCTION) LIMITS BY ITEM 611 CONDUIT, TYPE B, ONE COMMERCIAL SIZE LARGER THAN THE EXISTING CONDUIT.

EXISTING COLLECTORS AND ISOLATED FARM DRAINS, WHICH ARE ENCOUNTERED ABOVE THE ELEVATION OF ROADWAY DITCHES, SHALL BE OUTLETTED INTO THE ROADWAY DITCH BY 611 TYPE F CONDUIT. THE OPTIMUM OUTLET ELEVATION SHALL BE ONE FOOT ABOVE THE FLOWLINE ELEVATION OF THE DITCH. LATERAL FIELD TILES WHICH CROSS THE ROADWAY SHALL BE INTERCEPTED BY 611, TYPE E CONDUIT, AND CARRIED IN A LONGITUDINAL DIRECTION TO AN ADEQUATE OUTLET OR ROADWAY CROSSING.

THE LOCATION, TYPE, SIZE AND GRADE OF REPLACEMENTS SHALL BE DETERMINED BY THE ENGINEER AND PAYMENT SHALL BE MADE ON FINAL MEASUREMENTS.

EROSION CONTROL PADS AND ANIMAL GUARDS SHALL BE PROVIDED AT THE OUTLET END OF ALL FARM DRAINS AS PER STANDARD CONSTRUCTION DRAWING DM-1.1, EXCEPT WHEN THEY OUTLET INTO A DRAINAGE STRUCTURE. PAYMENT FOR THE EROSION CONTROL PADS AND ANIMAL GUARDS AND ANY NECESSARY BENDS OR BRANCHES SHALL BE INCLUDED FOR PAYMENT IN THE PERTINENT CONDUIT ITEMS.

THE FOLLOWING ESTIMATED QUANTITIES HAVE BEEN INCLUDED IN THE GENERAL SUMMARY FOR THE WORK NOTED ABOVE:

611 8" CONDUIT, TYPE B 50 FT.

611 8" CONDUIT, TYPE E 50 FT.

611 8" CONDUIT, TYPE F 50 FT.

601 ROCK CHANNEL PROTECTION TYPE C WITH FABRIC FILTER 5 CU. YD.

ITEM 611 DRAINAGE STRUCTURE MISC., TIE EXISTING STORM SEWER INTO PROPOSED DRAINAGE STRUCTURE

THIS WORK ENTAILS THE CONNECTIONS OF EXISTING STORM SEWERS INTO PROPOSED DRAINAGE STRUCTURES SUCH AS MANHOLES AND CATCH BASINS. 5 FEET OF STORM SEWER (ITEM 611) HAVING THE SAME DIAMETER AND MATERIAL AS THE EXISTING PIPE SHALL BE PLACED BETWEEN AND BE CONNECTED TO THE PROPOSED DRAINAGE STRUCTURE AND THE EXISTING PIPE. THE PROPOSED PIPE SHALL BE CONNECTED TO THE EXISTING PIPE WITH A MASONRY COLLAR AS PER SCD DM-1.1. ALL WORK NECESSARY TO ACCOMPLISH THE ABOVE WORK, INCLUDING THE REMOVAL OF THE EXISTING PIPE, SHALL BE INCLUDED IN THE PRICE BID FOR ITEM 611 DRAINAGE STRUCTURE, MISC.: TIE EXISTING STORM SEWER INTO PROPOSED DRAINAGE STRUCTURE.

ITEM 620 REBOUNDABLE TUBULAR PYLON, AS PER PLAN

THE REBOUNDABLE TUBULAR PYLON SHALL BE MANUFACTURED BY KWIK-CURB OR AN APPROVED EQUAL.

REVIEW OF DRAINAGE FACILITIES

BEFORE ANY WORK IS STARTED ON THE PROJECT AND AGAIN BEFORE FINAL ACCEPTANCE BY THE COUNTY, REPRESENTATIVES OF THE COUNTY AND THE CONTRACTOR, SHALL MAKE AN INSPECTION OF ALL EXISTING SEWERS WHICH ARE TO REMAIN IN SERVICE AND WHICH MAY BE AFFECTED BY THE WORK. THE CONDITION OF THE EXISTING CONDUITS AND THEIR APPURTENANCE SHALL BE DETERMINED FROM FIELD OBSERVATIONS. RECORDS OF THE INSPECTION SHALL BE KEPT IN WRITING BY THE COUNTY.

ALL NEW CONDUITS, INLETS, CATCH BASINS, AND MANHOLES CONSTRUCTED AS A PART OF THE PROJECT SHALL BE FREE OF ALL FOREIGN MATTER AND IN A CLEAN CONDITION BEFORE THE PROJECT WILL BE ACCEPTED BY THE COUNTY.

ALL EXISTING SEWERS INSPECTED INITIALLY BY THE ABOVE MENTIONED PARTIES SHALL BE MAINTAINED AND LEFT IN A CONDITION REASONABLY COMPARABLE TO THAT DETERMINED BY THE ORIGINAL INSPECTION. ANY CHANGE IN THE CONDITION RESULTING FROM THE CONTRACTOR'S OPERATIONS SHALL BE CORRECTED BY THE CONTRACTOR TO THE SATISFACTION OF THE ENGINEER.

PAYMENT FOR ALL OPERATIONS DESCRIBED ABOVE SHALL BE INCLUDED IN THE CONTRACT PRICE FOR THE PERTINENT 611 CONDUIT ITEMS.

ITEM SPECIAL - PIPE CLEANOUT

THIS WORK SHALL CONSIST OF REMOVING SEDIMENT AND DEBRIS FROM THE EXISTING DRAINAGE CONDUITS SPECIFIED BELOW. ALL MATERIAL REMOVED SHALL BE DISPOSED OF AS PER 105.16 AND 105.17. ALL SEWERS SHALL BE CLEANED OUT TO THE SATISFACTION OF THE ENGINEER.

LOCATION	SIZE	LENGTH
STA. 65+08, RT. TO STA. 65+32, LT.	24"	102 FT
STA. 64+85, LT. TO STA. 65+30, LT.	12"	50 FT
STA. 65+11, RT. TO STA. 66+08, RT.	15"	100 FT
STA. 283+35 TO STA. 283+65, R/L, I-71	18"	75 FT

CLEANOUT OF THE PIPE SHALL BE PAID FOR AT THE UNIT PRICE BID FOR ITEM SPECIAL - PIPE CLEANOUT. THIS PRICE SHALL INCLUDE THE COST FOR MATERIAL, EQUIPMENT, LABOR, AND ALL INCIDENTALS REQUIRED TO COMPLETE THE CLEANOUT.

THE FOLLOWING ESTIMATED QUANTITIES HAVE BEEN INCLUDED IN THE GENERAL SUMMARY FOR THE ABOVE NOTED WORK:

SPECIAL, PIPE CLEANOUT 327 FT.

ITEM SPECIAL - FILL AND PLUG EXISTING CONDUIT

THIS ITEM SHALL CONSIST OF THE CONSTRUCTION OF BULK-HEADS IN AN EXISTING 15 IN DIAMETER CONDUIT AND FILLING THE AREA THUS SEALED OFF WITH ITEM 613, SAND OR OTHER MATERIAL APPROVED BY THE ENGINEER.

BULKHEADS SHALL BE LOCATED AT THE LIMITS OF THE AREA TO BE FILLED AS INDICATED ON THE PLANS. THE BULKHEADS SHALL CONSIST OF BRICK OR CONCRETE MASONRY WITH A MINIMUM THICKNESS OF 12 INCHES.

THE FILL MATERIAL SHALL BE PUMPED INTO PLACE, OR PLACED BY OTHER MEANS APPROVED BY THE ENGINEER, SO THAT, AFTER SETTLEMENT, AT LEAST 90 PERCENT OF THE CROSS-SECTIONAL AREA OF THE CONDUIT, FOR ITS ENTIRE LENGTH, SHALL BE FILLED. THE LENGTH OF FILLED AND PLUGGED CONDUIT TO BE PAID FOR SHALL BE THE ACTUAL NUMBER OF FEET (MEASURED ALONG THE CENTERLINE OF EACH CONDUIT FROM OUTER FACE TO OUTER FACE OF BULKHEADS) FILLED AND PLUGGED AS DESCRIBED ABOVE.

IN LIEU OF FILLING AND PLUGGING THE EXISTING CONDUIT, THE PIPE MAY BE CRUSHED AND BACKFILLED IN ACCORDANCE WITH THE PROVISIONS OF 203, OR IT MAY BE REMOVED. THE LENGTH, MEASURED AS PROVIDED ABOVE, SHALL BE PAID FOR AT THE CONTRACT PRICE PER FOOT FOR, ITEM SPECIAL, FILL AND PLUG EXISTING CONDUIT.

MEDIAN AND/OR CURBING ON APPROACH SLABS

WITHIN THE LIMITS OF THE APPROACH SLAB, TRANSITION THE SHAPE OF THE MEDIAN AND/OR CURBING ON APPROACH SLABS FROM THE STANDARD SECTION ON THE APPROACHES TO THE SECTION USED ON THE BRIDGE.

POST CONSTRUCTION STORM WATER TREATMENT

THIS PLAN UTILIZES STRUCTURAL BEST MANAGEMENT PRACTICES (BMP'S) FOR POST CONSTRUCTION STORM WATER TREATMENT.

VEGETATED BIOFILTERS HAVE BEEN USED TO MEET THESE REQUIREMENTS (SEE DETAIL ON THIS SHEET). THE LOCATIONS OF THE VEGETATED BIOFILTERS ARE AS FOLLOWS:

STA. 52+50 TO STA. 55+10, LT.
STA. 58+50 TO STA. 65+00, RT.

TOPSOIL AND DITCH EROSION PROTECTION SHALL BE APPLIED TO THE ABOVE DITCHES AS PER THE DETAIL ON THIS SHEET.

CONTINGENCY QUANTITY

THE FOLLOWING QUANTITY HAS BEEN ADDED TO THE GENERAL SUMMARY TO BE USED AS DIRECTED BY THE ENGINEER.

ITEM 638 VALVE BOX ADJUSTED TO GRADE 10 EACH

CONSTRUCTION NOTIFICATION

THE CONTRACTOR WILL ADVISE THE PROJECT ENGINEER A MINIMUM OF FOURTEEN (14) DAYS PRIOR TO THE FOLLOWING: THE START OF CONSTRUCTION ACTIVITIES, LANE RESTRICTIONS, LANE CLOSURES, AND OR ROAD CLOSURES. THE PROJECT ENGINEER WILL FORWARD THIS INFORMATION TO THE FOLLOWING:

WARREN COUNTY ENGINEER BY FAX AT (513) 695-3323 OR EMAIL AT NEIL.TUNISON@CO.WARREN.OH.US

DISTRICT PUBLIC INFORMATION OFFICER (PIO) BY FAX AT(513)933-9472 OR EMAIL AT SHARON.SMIGIELSKI@DOT.STATE.OH.US

DISTRICT PERMIT SECTION BY FAX AT (513)933-9472 OR EMAIL AT TOM.MARKIS@DOT.STATE.OH.US

CENTRAL OFFICE SPECIAL HAUL PERMITS SECTION BY FAX AT (614)728-4099 OR EMAIL AT HAULING.PERMITS@DOT.STATE.OH.US

THE WARREN COUNTY ENGINER AND THE PIO WILL, IN TURN, NOTIFY THE PUBLIC, THE LOCAL EMERGENCY SERVICES, AFFECTED SCHOOLS AND BUSINESSES, AND ANY OTHER IMPACTED LOCAL PUBLIC AGENCY OF ANY OF THE ABOVE MENTIONED ITEMS, VIA MEDIA SOURCES.

ITEM 202 WATER VALVE REMOVED, AS PER PLAN

THE WATER VALVE, ADJOINING WATER SERVICE AND ANY OTHER ADJOINING ASSEMBLIES SUCH AS PITS OR BOXES SHALL BE REMOVED AND DIPOSED OF. THE WATER SERVICE SHALL BE REMOVED UP TO THE CORPORATION STOP ON THE ADJACENT WATER MAIN. THE CORPORATION STOP SHALL BE PLUGGED PER WARREN COUNTY STANDARDS. THE ABOVE WORK SHALL BE PAID FOR UNDER THE ITEM BID FOR ITEM 638 WATER VALVE REMOVED, AS PER PLAN.

ITEM 638 WATER WORK MISC.: WATER METER IN SERVICE REMOVED

THE WATER METER, ADJOINING WATER SERVICE AND ANY OTHER ADJOINING ASSEMBLIES SUCH AS PITS OR BOXES SHALL BE REMOVED AND DIPOSED OF. THE WATER SERVICE SHALL BE REMOVED UP TO THE CORPORATION STOP ON THE ADJACENT WATER MAIN. THE CORPORATION STOP SHALL BE PLUGGED PER WARREN COUNTY STANDARDS. THE ABOVE WORK SHALL BE PAID FOR UNDER THE ITEM BID FOR ITEM 638 WATER WORK MISC.: WATER METER IN SERVICE REMOVED.

ITEM 638 WATER WORK MISC.: CUT AND PLUG 6" WATER LINE

WATER LINE SHALL BE CUT AND PLUGGED AS PER WARREN COUNTY SCD W-20.

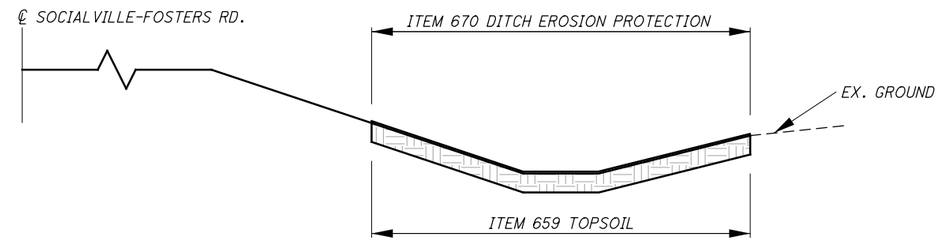

VEGETATED BIOFILTER DETAIL

CALCULATED EJT
CHECKED REN

GENERAL NOTES

WAR-71-2.54

ITEM 614, MAINTAINING TRAFFIC

TRAFFIC CLOSURES ON I-71 SHALL BE AS PER THE LANE CLOSURE CHART AND THE LANE CLOSURE NOTE.

NO WORK SHALL BE PERFORMED AND ALL EXISTING LANES SHALL BE OPEN TO TRAFFIC ON I-71 DURING THE FOLLOWING DESIGNATED HOLIDAYS OR EVENTS:

CHRISTMAS	FOURTH OF JULY
NEW YEARS	LABOR DAY
MEMORIAL DAY	THANKSGIVING
EASTER	

THE PERIOD OF TIME THAT THE LANES ARE TO BE OPEN DEPENDS ON THE DAY OF THE WEEK ON WHICH THE HOLIDAY OR EVENT FALLS. THE FOLLOWING SCHEDULE SHALL BE USED TO DETERMINE THIS PERIOD:

DAY OF HOLIDAY OR EVENT	TIME ALL LANES MUST BE OPEN TO TRAFFIC
SUNDAY	12:00N FRIDAY THROUGH 12:00N MONDAY
MONDAY	12:00N FRIDAY THROUGH 12:00N TUESDAY
TUESDAY	12:00N MONDAY THROUGH 12:00N WEDNESDAY
WEDNESDAY	12:00N TUESDAY THROUGH 12:00N THURSDAY
THURSDAY	12:00N WEDNESDAY THROUGH 12:00N FRIDAY
THURSDAY (THANKSGIVING ONLY)	12:00N WEDNESDAY THROUGH 12:00N MONDAY
FRIDAY	12:00N THURSDAY THROUGH 12:00N MONDAY
SATURDAY	12:00N FRIDAY THROUGH 12:00N MONDAY

NO EXTENSIONS OF TIME SHALL BE GRANTED FOR DELAYS IN MATERIAL DELIVERIES, UNLESS SUCH DELAYS ARE INDUSTRY-WIDE, OR FOR LABOR STRIKES, UNLESS SUCH STRIKES ARE AREA-WIDE.

SHOULD THE CONTRACTOR FAIL TO MEET ANY OF THESE REQUIREMENTS, THE CONTRACTOR SHALL BE ASSESSED A DISINCENTIVE IN THE AMOUNT OF $50 FOR EACH MINUTE THE ABOVE DESCRIBED LANE CLOSURE RESTRICTIONS ARE VIOLATED.

LENGTH AND DURATION OF LANE CLOSURES AND RESTRICTIONS SHALL BE AT THE APPROVAL OF THE ENGINEER. IT IS THE INTENT TO MINIMIZE THE IMPACT TO THE TRAVELING PUBLIC. LANE CLOSURES OR RESTRICTIONS OVER SEGMENTS OF THE PROJECT IN WHICH NO WORK IS ANTICIPATED WITHIN A REASONABLE TIME FRAME, AS DETERMINED BY THE ENGINEER, SHALL NOT BE PERMITTED. THE LEVEL OF UTILIZATION OF MAINTENANCE OF TRAFFIC DEVICES SHALL BE COMMENSURATE WITH THE WORK IN PROGRESS.

A MINIMUM OF ONE LANE IN EACH DIRECTION ON SOCIALVILLE-FOSTERS ROAD SHALL BE MAINTAINED AT ALL TIMES, EXCEPT FOR A PERIOD WHEN THROUGH TRAFFIC MAY BE DETOURED AS SHOWN ON THE DETOUR MAP. LIQUIDATED DAMAGES SHALL BE ASSESSED IN ACCORDANCE WITH 108.08 FOR EACH CALENDAR DAY THE ROADWAY REMAINS CLOSED TO TRAFFIC BEYOND THE SPECIFIED LIMIT.

ACCESS TO ALL ADJOINING PROPERTIES SHALL BE MAINTAINED AT ALL TIMES. THIS INCLUDES MAIL AND GARBAGE SERVICES.

NOTICE OF CLOSURE SIGNS FOR SOCIALVILLE-FOSTERS ROAD, AS DETAILED IN THESE PLANS, SHALL BE ERECTED BY THE CONTRACTOR AT LEAST ONE WEEK IN ADVANCE OF THE SCHEDULED ROAD CLOSURE. THE SIGNS SHALL BE ERECTED ON THE RIGHT-HAND SIDE OF THE ROAD FACING TRAFFIC. THEY SHALL BE PLACED SO AS NOT TO INTERFERE WITH THE VISIBILITY OF ANY OTHER TRAFFIC CONTROL SIGNS. ON ROADWAYS, THEY SHOULD BE ERECTED AT THE POINT OF CLOSURE.

THE FOLLOWING ESTIMATED CONTINGENCY QUANTITIES HAVE BEEN INCLUDED IN THE GENERAL SUMMARY FOR USE AS DETERMINED BY THE ENGINEER FOR THE MAINTENANCE OF TRAFFIC.

ITEM 410, TRAFFIC COMPACTED SURFACE, TYPE A OR B	30 CU. YD.
ITEM 614, ASPHALT CONCRETE FOR MAINTAINING TRAFFIC	30 CU. YD.
ITEM 616, WATER	50 M. GAL.

THE CONTRACTOR SHALL PROVIDE, ERECT AND MAINTAIN STANDARD 48 X 30 INCH ROAD CLOSED SIGNS, SIGN SUPPORTS, BARRICADES AND LIGHTS, AS DETAILED IN SCD MT-101.60 AT THE FOLLOWING LOCATIONS DURING PERIODS IN WHICH THE AFFECTED ROADS ARE CLOSED TO TRAFFIC:

THE CONTRACTOR SHALL PROVIDE, ERECT AND MAINTAIN SIGNS AND SIGN SUPPORTS, AS DETAILED IN THE OHIO MANUAL OF UNIFORM TRAFFIC CONTROL DEVICES, AND TYPE III BARRICADES OF THE TYPE AND LOCATION AS FOLLOWS:

STA. 52+00: TYPE III BARRICADES
STA. 65+50: TYPE III BARRICADES

ALL WORK AND TRAFFIC CONTROL DEVICES SHALL BE IN ACCORDANCE WITH CMS 614 AND OTHER APPLICABLE PORTIONS OF THE SPECIFICATIONS, AS WELL AS THE OHIO MANUAL OF UNIFORM TRAFFIC CONTROL DEVICES. PAYMENT FOR ALL LABOR, EQUIPMENT AND MATERIALS SHALL BE INCLUDED IN THE LUMP SUM CONTRACT PRICE FOR ITEM 614, MAINTAINING TRAFFIC, UNLESS SEPARATELY ITEMIZED IN THE PLAN.

DUST CONTROL

THE CONTRACTOR SHALL FURNISH AND APPLY WATER FOR DUST CONTROL AS DIRECTED BY THE ENGINEER. THE FOLLOWING ESTIMATED QUANTITIES HAVE BEEN INCLUDED FOR DUST CONTROL PURPOSES:

ITEM 616, WATER 100 M. GAL

ITEM 614, REPLACEMENT SIGN

FLAT SHEET SIGNS FURNISHED BY THE CONTRACTOR IN ACCORDANCE WITH THE REQUIREMENTS OF THE PLANS, SPECIFICATIONS AND PROPOSAL WHICH BECOME DAMAGED BY TRAFFIC FOR REASONS BEYOND THE CONTROL OF THE CONTRACTOR SHALL BE REPLACED IN KIND WHEN ORDERED BY THE ENGINEER. REPLACEMENT SIGNS SHALL BE NEW. OTHER MATERIALS MAY BE IN USED, BUT GOOD, CONDITION SUBJECT TO APPROVAL BY THE ENGINEER.

PAYMENT FOR THE NEW SIGNS SHALL BE MADE AT THE CONTRACT PRICE PER EACH FOR ITEM 614, REPLACEMENT SIGN, AND SHALL INCLUDE THE COST OF REMOVING AND DISPOSING OF DAMAGED SIGNS, HARDWARE AND SUPPORTS, AND PROVIDING THE NECESSARY REPLACEMENT HARDWARE, SUPPORTS, ETC.

AN ESTIMATED QUANTITY OF 25 EACH HAS BEEN PROVIDED IN THE GENERAL SUMMARY.

ITEM 614, REPLACEMENT DRUM

DRUMS FURNISHED BY THE CONTRACTOR IN ACCORDANCE WITH THE REQUIREMENTS OF THE PLANS, SPECIFICATIONS AND PROPOSAL WHICH BECOME DAMAGED BY TRAFFIC FOR REASONS BEYOND THE CONTROL OF THE CONTRACTOR SHALL BE REPLACED IN KIND WHEN ORDERED BY THE ENGINEER. REPLACEMENT DRUMS SHALL BE NEW.

PAYMENT FOR THE NEW DRUMS SHALL BE MADE AT THE CONTRACT PRICE PER EACH FOR ITEM 614, REPLACEMENT DRUM, AND SHALL INCLUDE THE COST OF REMOVING AND DISPOSING OF THE DAMAGED DRUM, AND PROVIDING AND MAINTAINING THE REPLACEMENT DRUM IN ACCORDANCE WITH THE CONTRACT REQUIREMENTS FOR THE ORIGINAL DRUM.

AN ESTIMATED QUANTITY OF 100 EACH HAS BEEN PROVIDED IN THE GENERAL SUMMARY.

ITEM 614, BARRIER REFLECTORS AND/OR OBJECT MARKERS

BARRIER REFLECTORS AND/OR OBJECT MARKERS SHALL BE INSTALLED ON ALL PORTABLE BARRIER (PB) USED FOR TRAFFIC CONTROL. BARRIER REFLECTORS, OBJECT MARKERS AND THEIR INSTALLATION SHALL CONFORM TO CMS 626, EXCEPT THAT THE SPACING SHALL BE 50 FEET. AN ESTIMATED QUANTITY OF 50 EACH OF ITEM 614 BARRIER REFLECTOR, TYPE B AND 50 EACH OF ITEM 614 OBJECT MARKER, ONE-WAY HAVE BEEN PROVIDED AND CARRIED TO THE GENERAL SUMMARY.

ITEM 614, WORK ZONE IMPACT ATTENUATOR FOR 24" WIDE HAZARDS (UNIDIRECTIONAL OR BIDIRECTIONAL)

THIS ITEM SHALL CONSIST OF FURNISHING AND INSTALLING A NON-GATING IMPACT ATTENUATOR. FURNISH AN IMPACT ATTENUATOR FROM THE OFFICE OF ROADWAY ENGINEERING APPROVED LIST FOR WORK ZONE IMPACT ATTENUATORS. THE APPROVED LIST IS AVAILABLE AT THE "ROADWAY STANDARDS: PROPRIETARY ROADSIDE SAFETY DEVICES" WEB PAGE ON THE OFFICE OF ROADWAY ENGINEERING WEBSITE.

INSTALLATION SHALL BE AT THE LOCATIONS SPECIFIED IN THE PLANS IN ACCORDANCE WITH THE MANUFACTURER'S SPECIFICATIONS.

THE CONTRACTOR SHALL REPAIR OR REPLACE A DAMAGED UNIT WITHIN 24 HOURS OF A DAMAGING IMPACT.

WHEN BIDIRECTIONAL DESIGNS ARE SPECIFIED, THE CONTRACTOR SHALL SUPPLY APPROPRIATE TRANSITIONS.

WHEN GATING IMPACT ATTENUATORS ARE DESIRED, THE CONTRACTOR SHALL SUBMIT DOCUMENTATION TO THE ENGINEER FOR ACCEPTANCE.

THE COST FOR THE ADDITIONAL BARRIER REQUIRED FOR A GATING IMPACT ATTENUATOR SHALL BE INCLUDED IN THE COST OF THE GATING IMPACT ATTENUATOR.

PAYMENT FOR THE ABOVE WORK SHALL BE MADE AT THE UNIT PRICE BID AND SHALL INCLUDE ALL LABOR, TOOLS, EQUIPMENT AND MATERIALS NECESSARY TO CONSTRUCT AND MAINTAIN A COMPLETE AND FUNCTIONAL IMPACT ATTENUATOR SYSTEM, INCLUDING ALL RELATED BACKUPS, TRANSITIONS, LEVELING PADS, HARDWARE AND GRADING, NOT SEPARATELY SPECIFIED, AS REQUIRED BY THE MANUFACTURER.

BARRIER DELINEATION

INCREASED DELINEATION, AS SPECIFIED HEREIN, SHALL BE INSTALLED ON ALL PORTABLE BARRIER AND CONCRETE PERMANENT BARRIER LOCATED WITHIN 5-FEET OF THE EDGE OF THE TRAVELED LANE UNDER EITHER OF THE FOLLOWING CONDITIONS:

ALONG TAPERS AND TRANSITION AREAS

ALONG CURVES (OUTSIDE ONLY) WITH DEGREE OF CURVATURE GREATER THAN OR EQUAL TO 3 DEGREES

THE INCREASED DELINEATION SHALL CONSIST OF EITHER LINEAR DELINEATION PANELS OR THE TRIPLE STACKING OF WORK ZONE BARRIER REFLECTORS.

THE LINEAR DELINEATION PANELS SHALL CONSIST OF PANELS OF DELINEATION, APPROXIMATELY 34 INCHES LONG AND 6-INCHES WIDE AND SHALL BE "CRIMPED". PANELS SHALL BE PROVIDED AT THE RATE OF ONE PANEL EVERY 10 FEET ON PORTABLE BARRIER AND PERMANENT CONCRETE BARRIER, SPACED EVENLY ALONG THE LENGTH OF THE RUN. THE PANELS SHALL BE MOUNTED SUCH THAT THE TOPS OF THE PANELS ARE 26 INCHES ABOVE THE PAVEMENT.

TRIPLE STACKED BARRIER REFLECTORS SHALL CONSIST OF THREE BARRIER REFLECTORS STACKED VERTICALLY IN THEIR ATTACHMENT TO PORTABLE BARRIER. THERE SHALL BE NO OPEN SPACE BETWEEN THE ADJACENT BARRIER REFLECTORS. THE TOP OF THE MIDDLE BARRIER REFLECTOR SHALL BE LOCATED 26 IN ABOVE THE PAVEMENT.

PAYMENT SHALL BE FULL COMPENSATION FOR ALL MATERIAL, LABOR, INCIDENTALS AND EQUIPMENT NECESSARY FOR FURNISHING, INSTALLING, MAINTAINING AND REMOVING LINEAR DELINEATION.

THE FOLLOWING ESTIMATED QUANTITY HAS BEEN INCLUDED IN THE PLANS:

614 LINEAR DELINEATION 1000 FOOT

ALONG RUNS OF PORTABLE CONCRETE BARRIER WHERE THIS ITEM IS PROVIDED, THE QUANTITY SHALL BE MEASURED AS THE ENTIRE LENGTH OF THE RUN BEING DELINEATED, INCLUDING THE SPACES BETWEEN THE INDIVIDUAL PANELS OR STACKS OF BARRIER REFLECTORS.

ITEM 614 - LAW ENFORCEMENT OFFICER (WITH PATROL CAR) FOR ASSISTANCE DURING CONSTRUCTION OPERATIONS

USE OF LAW ENFORCEMENT OFFICERS (LEOS) BY CONTRACTORS OTHER THAN THE USES SPECIFIED BELOW WILL NOT BE PERMITTED AT PROJECT COST. LEOS SHOULD NOT BE USED WHERE THE OMUTCD INTENDS THAT FLAGGERS BE USED.

IN ADDITION TO THE REQUIREMENTS OF CMS 614 AND THE OMUTCD, A UNIFORMED LEO WITH AN OFFICIAL PATROL CAR (CAR WITH TOP-MOUNTED EMERGENCY FLASHING LIGHTS AND COMPLETE MARKINGS OF THE APPROPRIATE LAW ENFORCEMENT AGENCY) SHALL BE PROVIDED FOR THE FOLLOWING TRAFFIC CONTROL TASKS:

DURING THE ENTIRE ADVANCE PREPARATION AND CLOSURE SEQUENCE WHERE COMPLETE BLOCKAGE OF TRAFFIC IS REQUIRED.

DURING A TRAFFIC SIGNAL INSTALLATION WHEN IMPACTING THE NORMAL FUNCTION OF THE SIGNAL OR THE FLOW OF TRAFFIC OR WHEN TRAFFIC NEEDS TO BE DIRECTED THROUGH AN ENERGIZED TRAFFIC SIGNAL CONTRARY TO THE SIGNAL DISPLAY (E.G., DIRECTING MOTORISTS THROUGH A RED LIGHT).

IN ADDITION TO THE REQUIREMENT OF CMS 614 AND THE OMUTCD, A UNIFORMED LEO WITH AN OFFICIAL PATROL CAR (CAR WITH TOP-MOUNTED EMERGENCY FLASHING LIGHTS AND COMPLETE MARKINGS OF THE APPROPRIATE LAW ENFORCEMENT AGENCY) SHOULD BE PROVIDED FOR THE FOLLOWING TRAFFIC CONTROL TASKS:

FOR LANE CLOSURES: DURING INITIAL SET-UP PERIODS, TEAR DOWN PERIODS, SUBSTANTIAL SHIFTS OF A CLOSURE POINT OR WHEN NEW LANE CLOSURE ARRANGEMENTS ARE INITIATED FOR LONG-TERM LANE CLOSURES/SHIFTS (FOR THE FIRST AND LAST DAY OF MAJOR CHANGES IN TRAFFIC CONTROL SETUP). IN GENERAL, LEOS SHOULD BE POSITIONED AT THE POINT OF LANE RESTRICTION OR ROAD CLOSURE AND TO MANUALLY CONTROL TRAFFIC MOVEMENTS THROUGH INTERSECTIONS IN WORK ZONES.

WHEN CONSTRUCTION VEHICLES ARE ENTERING/EXITING THE ZONE DIRECTLY FROM/INTO AN OPEN LANE OF TRAFFIC. IF A LANE HAS BEEN CLOSED TO PROVIDE AN ACCELERATION/DECELERATION LANE FOR THE VEHICLE, THE LEO WILL NOT BE REQUIRED.

LEOS SHOULD NOT FORGO THEIR TRAFFIC CONTROL RESPONSIBILITIES TO APPREHEND MOTORISTS FOR ROUTINE TRAFFIC VIOLATIONS. HOWEVER, IF A MOTORIST'S ACTIONS ARE CONSIDERED TO BE RECKLESS, THEN PURSUIT OF THE MOTORIST IS APPROPRIATE.

THE LEOS WORK AT THE DIRECTION OF THE CONTRACTOR. THE CONTRACTOR IS RESPONSIBLE FOR SECURING THE SERVICES OF THE LEOS WITH THE APPROPRIATE AGENCIES AND COMMUNICATING THE INTENTIONS OF THE PLANS WITH RESPECT TO DUTIES OF THE LEOS. THE ENGINEER SHALL HAVE FINAL CONTROL OVER THE LEOS' DUTIES AND PLACEMENT, AND WILL RESOLVE ANY ISSUES THAT MAY ARISE BETWEEN THE TWO PARTIES.

THE LEO SHALL REPORT IN TO THE CONTRACTOR PRIOR TO THE START OF THE SHIFT, IN ORDER TO RECEIVE INSTRUCTIONS REGARDING SPECIFIC WORK ASSIGNMENTS DURING HIS/HER SHIFT. THE LEO IS EXPECTED TO STAY AT THE PROJECT SITE FOR THE ENTIRE DURATION OF HIS/HER SHIFT. THE LEO SHALL REPORT TO THE CONTRACTOR AT THE END OF HIS/HER SHIFT. ONCE THE LEO HAS COMPLETED THE DUTIES DESCRIBED ABOVE AND STILL HAS TIME REMAINING ON HIS/HER SHIFT, THE LEO MAY BE ASKED TO PATROL THROUGH THE WORK ZONE (WITH FLASHING LIGHTS OFF) OR BE PLACED AT A LOCATION TO DETER MOTORISTS FROM SPEEDING. SHOULD IT BE NECESSARY TO LEAVE THE PROJECT SITE, THE LEO SHALL NOTIFY THE ENGINEER. THE CONTRACTOR SHALL PROVIDE THE LEO WITH A TWO-WAY COMMUNICATION DEVICE WHICH SHALL BE RETURNED TO THE CONTRACTOR AT THE END OF HIS/HER SHIFT.

LEOS (WITH PATROL CAR) REQUIRED BY THE TRAFFIC MAINTENANCE TASKS ABOVE SHALL BE PAID FOR ON A UNIT PRICE (HOURLY) BASIS UNDER ITEM 614, LAW ENFORCEMENT OFFICER (WITH PATROL CAR) FOR ASSISTANCE. THE FOLLOWING ESTIMATED QUANTITIES HAVE BEEN CARRIED TO THE GENERAL SUMMARY.

ITEM 614, LAW ENFORCEMENT OFFICER WITH PATROL CAR FOR ASSISTANCE 100 HOURS

THE HOURS PAID SHALL INCLUDE ANY MINIMUM SHOW-UP TIME REQUIRED BY THE LAW ENFORCEMENT AGENCY INVOLVED.

ANY ADDITIONAL COSTS (ADMINISTRATIVE OR OTHERWISE) INCURRED BY THE CONTRACTOR TO OBTAIN THE SERVICES OF AN LEO ARE INCLUDED WITH THE BID UNIT PRICE FOR ITEM 614, LAW ENFORCEMENT OFFICER WITH PATROL CAR FOR ASSISTANCE.

MAINTENANCE OF TRAFFIC SIGNAL/FLASHER INSTALLATION

THE CONTRACTOR SHALL BE RESPONSIBLE FOR MAINTAINING TRAFFIC SIGNAL/FLASHER INSTALLATIONS WITHIN THE PROJECT UNDER THE FOLLOWING CONDITIONS:

1. EXISTING SIGNAL/FLASHER INSTALLATIONS WHICH THE PLANS REQUIRE THE CONTRACTOR TO ADJUST, MODIFY, ADD ONTO OR REMOVE, OR WHICH THE CONTRACTOR ACTUALLY ADJUSTS, MODIFIES OR OTHERWISE DISTURBS. THE CONTRACTOR SHALL BE RESPONSIBLE FOR THE ENTIRE INSTALLATION (AT AN INTERSECTION) FROM THE TIME HIS OPERATIONS FIRST DISTURB THE INSTALLATION UNTIL THE INSTALLATION HAS BEEN SUBSEQUENTLY REMOVED OR MODIFIED AND THE WORK ACCEPTED.

2. NEW OR REUSED SIGNAL/FLASHER INSTALLATIONS OR DEVICES, INSTALLED BY THE CONTRACTOR. THE CONTRACTOR SHALL BE RESPONSIBLE FOR MAINTENANCE OF THESE FROM THE TIME OF INSTALLATION UNTIL THE WORK IS ACCEPTED.

THE CONTRACTOR SHALL CORRECT AS QUICKLY AS POSSIBLE ALL OUTAGES OR MALFUNCTIONS. HE SHALL PROVIDE THE MAINTAINING AGENCY AND THE ENGINEER SUCH ADDRESSES AND PHONE NUMBERS WHERE HIS MAINTENANCE FORCES CAN BE CONTACTED. THE CONTRACTOR SHALL PROVIDE ONE OR MORE PERSONS TO RECEIVE ALL CALLS AND DISPATCH THE NECESSARY MAINTENANCE FORCES TO CORRECT OUTAGES. SUCH A PERSON OR PERSONS MAY BE USED TO PERFORM OTHER DUTIES AS LONG AS PROMPT ATTENTION IS GIVEN TO THESE CALLS AND A PERSON IS READILY AVAILABLE CONTINUOUSLY 24 HOURS A DAY, 7 DAYS A WEEK. ALL LAMP OUTAGES, CABLE OUTAGES, ELECTRICAL FAILURES, EQUIPMENT MALFUNCTIONS AND MISALIGNED SIGNAL HEADS SHALL BE CORRECTED TO THE SATISFACTION OF THE ENGINEER WITH THE SIGNAL BACK TO SERVICE WITHIN FOUR HOURS AFTER THE CONTRACTOR HAS BEEN NOTIFIED OF THE OUTAGE.

IN THE EVENT NEW SIGNALS ARE DAMAGED PRIOR TO ACCEPTANCE, ALL DAMAGED EQUIPMENT EXCEPT POLES AND CONTROL EQUIPMENT SHALL BE REPLACED BY THE CONTRACTOR TO THE SATISFACTION OF THE ENGINEER WITH THE SIGNAL BACK IN SERVICE WITHIN 8 HOURS AFTER THE CONTRACTOR'S NOTIFICATION OF THE OUTAGE. THE CONTRACTOR SHALL ARRANGE FOR FULL TRAFFIC CONTROL UNTIL THE SIGNAL IS BACK IN OPERATION.

IF POLES AND/OR CONTROL EQUIPMENT ARE DAMAGED AND MUST BE REPLACED, THE CONTRACTOR SHALL MAKE TEMPORARY REPAIRS AS NECESSARY TO BRING THE SIGNAL BACK INTO FULL OPERATION WITHIN THE ALLOWED 8-HOUR PERIOD, AND SHALL MAKE PERMANENT REPAIRS OR REPLACEMENT AS SOON THEREAFTER AS POSSIBLE.

NONE OF THE ABOVE SHALL BE CONSTRUED AS COLLECTIVE OR CONSECUTIVE OUTAGE TIME PERIODS AT ANY ONE LOCATION. THAT IS, WHERE MORE THAN ONE OUTAGE OCCURS AT ANY ONE LOCATION THEN THE ALLOTTED TIME LIMIT SHALL BE FOR THE WORST SINGLE OUTAGE.

WHERE OUTAGES ARE THE DIRECT RESULT OF A VEHICLE ACCIDENT, THE RESPONSE OF THE CONTRACTOR SHALL BE AS OUTLINED ABOVE. THE CONTRACTOR SHALL BE RESPONSIBLE FOR COLLECTION OF ANY COMPENSATION FOR THIS WORK FROM THOSE PARTIES RESPONSIBLE FOR THE DAMAGE.

WHERE THE CONTRACTOR HAS FAILED TO, OR CANNOT RESPOND TO, AN OUTAGE OR SIGNAL EQUIPMENT MALFUNCTION, AT THESE LOCATIONS WITHIN HIS RESPONSIBILITY, WITHIN PERIODS AS SPECIFIED ABOVE, THE ENGINEER MAY INVOKE THE PROVISIONS OF SECTION 105.15 AND ANY SUBSEQUENT BILLINGS TO THE STATE OR THE CITY OF MASON FOR POLICE SERVICES AND MAINTENANCE SERVICES BY CITY FORCES SHALL BE DEDUCTED FROM MONIES DUE OR TO BECOME DUE THE CONTRACTOR IN ACCORDANCE WITH PROVISIONS OF SECTION 105.15.

THE CONTRACTOR SHALL PROVIDE THE MAINTENANCE SERVICE ENTIRELY WITH HIS FORCES OR HE MAY CHOOSE TO ENTER INTO A COOPERATIVE UNDERSTANDING WITH THE LOCAL MAINTAINING AGENCY TO PROVIDE THE MAINTENANCE. THE CONTRACTOR SHALL INFORM THE ENGINEER, IN WRITING, OF THE MAINTENANCE METHOD SELECTED.

THE CONTRACTOR SHALL BE RESPONSIBLE FOR ANY DAMAGE TO ANY TRAFFIC SIGNAL COMPONENTS REQUIRED TO BE HANDLED DURING THE RELOCATION OF POLES AND REVISIONS TO THE SIGNAL SYSTEM.

WHEN A TRAFFIC SIGNAL MUST BE TAKEN OUT OF SERVICE BY THE CONTRACTOR, DUE TO CONSTRUCTION PROCEDURES, THIS OUTAGE SHALL NOT EXCEED 2 HOURS AND SHALL NOT INCLUDE THE HOURS OF 7 AM TO 7 PM. ANY SIGNALIZED INTERSECTION, WHERE THE SIGNAL IS OUT OF SERVICE DUE TO CONSTRUCTION PROCEDURES, OR DUE TO AN OUTAGE OR MALFUNCTION OF EQUIPMENT AS DESCRIBED ABOVE, SHALL BE PROTECTED, BY THE CONTRACTOR, BY THE INSTALLATION OF TEMPORARY "STOP" SIGNS.

ANY VEHICULAR TRAFFIC SIGNAL HEAD, EITHER NEW OR EXISTING WHICH WILL BE OUT OF OPERATION SHALL BE COVERED IN THE MANNER DESCRIBED IN 632.25.

THE CONTRACTOR SHALL MAINTAIN COMPLETE RECORDS OF MALFUNCTIONS INCLUDING:

1. TIME OF NOTIFICATION OF MALFUNCTION;
2. TIME OF WORK CREWS ARRIVAL TO CORRECT THE MALFUNCTION;
3. ACTIONS TAKEN TO CORRECT THE MALFUNCTION, INCLUDING A LIST OF PARTS REPAIRED OR REPLACED;
4. A DIAGNOSIS OF REASON FOR THE MALFUNCTION AND PROBABILITY OF REOCCURRENCE;
5. TIME OF COMPLETION OF THE REPAIR AND SYSTEM RESTORED TO FULL SERVICE.

A COPY OF THESE RECORDS SHALL BE PROVIDED TO THE ENGINEER WITHIN THREE (3) WORKING DAYS FOLLOWING COMPLETION OF EACH REPAIR.

ALL COSTS RESULTING FROM THE ABOVE REQUIREMENTS SHALL BE CONSIDERED TO BE INCLUDED IN THE LUMP SUM PRICE BID FOR ITEM 614, MAINTAINING TRAFFIC.

LANE CLOSURES ON I-71

THE OUTSIDE LANE ON I-71 IN BOTH THE NORTHBOUND AND SOUTHBOUND DIRECTIONS CAN NEVER BE CLOSED EXCEPT AS OUTLINED BELOW. LANE CLOSURES AND RESTRICTIONS SHALL BE AS PER THE ODOT PERMITTED LANE AND CLOSURE CHART.

THE CHART CAN BE FOUND AT:
HTTP://PLCM.DOT.STATE.OH.US

SHOULD THE CONTRACTOR FAIL TO MEET THE REQUIREMENTS IN THE CHART, THE CONTRACTOR SHALL BE ASSESSED DISINCENTIVES IN THE AMOUNT OF $2,500 PER HOUR OR PORTION OF THEREOF THAT THE LANE REDUCTION REMAINS BEYOND THE SPECIFIED LIMIT.

WHILE KINGS ISLAND IS OPEN (APPROXIMATELY BETWEEN APRIL 15TH AND LABOR DAY, THE FOLLOWING LANE CLOSURE RESTRICTIONS APPLY ON I-71:

1. NO LANE CLOSURES ARE ALLOWED ON MONDAYS OR FRIDAYS IN BOTH THE NORTHBOUND AND SOUTHBOUND DIRECTIONS.
2. NO LANE CLOSURES ARE ALLOWED BETWEEN 6:00 AM AND NOON EVERY DAY OF THE WEEK IN THE NORTHBOUND DIRECTION.
3. RAMP LANE CLOSURES ARE NOT PERMITTED.

FOR LANE CLOSURES ON I-71, WORK SHALL BE DONE AS PER SCD MT-95.40.

FOR SHOULDER CLOSURES ON I-71, WORK SHALL BE AS PER MAINTENANCE OF TRAFFIC SUBSET SHEETS 1-7 LOCATED AT THE END OF THIS PLAN SET.

DURING THE REMOVAL OF THE EXISTING STEEL BRIDGE BEAMS AND CONCRETE DECK AND DURING INSTALLATION OF THE STEEL BRIDGE BEAMS, A ROLLING ROADBLOCK SHALL BE USED TO HALT TRAFFIC ON I-71. THE CONTRACTOR SHALL COORDINATE THIS WORK WITH ODOT AND THE STATE HIGHWAY PATROL. ALTERNATELY, 15 MINUTE SHORT DURATION COMPLETE CLOSURES IN ACCORDANCE WITH PLAN INSERT SHEET 209960 (SHEET 13A) ARE PERMITTED BETWEEN 11 PM AND 5 AM.

CONSTRUCTION SEQUENCE

PHASE IA

1. CLOSE DOWN SOCIALVILLE-FOSTERS ROAD TO TRAFFIC BETWEEN INNOVATION WAY AND THE CHURCH DRIVEWAY USING DETOUR SHOWN ON SHEET 15.

2. REMOVE THE EXISTING SOCIALVILLE-FOSTERS ROAD BRIDGE OVER I-71. ANY LANE CLOSURES ON I-71 SHALL BE IN ACCORDANCE WITH THE LANE CLOSURES ON I-71 NOTE. FOR SHOULDER CLOSURES ON I-71, WORK SHALL BE AS PER MAINTENANCE OF TRAFFIC SUBSET SHEETS 1-7 LOCATED AT THE END OF THIS PLAN SET. ADDITIONAL FIGURES IN THE OMUTCD AS FOUND IN TABLE 6H-1 SHALL BE USED AS NECESSARY DURING THE DEMOLITION OF THE EXISTING BRIDGE.

3. CONSTRUCT NEW SOCIALVILLE-FOSTERS ROAD BRIDGE OVER I-71. ANY LANE CLOSURES ON I-71 SHALL BE IN ACCORDANCE WITH THE LANE CLOSURES ON I-71 NOTE. FOR SHOULDER CLOSURES ON I-71, WORK SHALL BE AS PER MAINTENANCE OF TRAFFIC SUBSET SHEETS 1-7 LOCATED AT THE END OF THIS PLAN SET. ADDITIONAL FIGURES IN THE OMUTCD AS FOUND IN TABLE 6H-1 SHALL BE USED AS NECESSARY DURING THE CONSTRUCTION OF THE PROPOSED BRIDGE.

4. CONSTRUCT SOCIALVILLE-FOSTERS ROAD FROM THE ROUNDABOUT TO THE CHURCH DRIVEWAY. CONSTRUCT THE EAST AND SOUTH LEGS OF THE ROUNDABOUT. MAINTAIN ACCESS BETWEEN SOCIALVILLE-FOSTERS ROAD (WEST OF INNOVATION WAY) AND INNOVATION WAY BY MAINTAINING TRAFFIC ON EXISTING PAVEMENT AND TEMPORARY PAVEMENT IF NECESSARY. ONCE THIS IS COMPLETED, CLOSE DOWN TRAFFIC BETWEEN INNOVATION WAY AND SOCIALVILLE-FOSTERS ROAD AND THEN CONSTRUCT THE REMAINING NORTH AND WEST PORTIONS OF THE ROUNDABOUT. MAXIMUM LENGTH OF CLOSURE SHALL BE 28 CALENDAR DAYS.

PHASE IB

WHILE MAINTAINING TWO LANE TWO WAY TRAFFIC TO THE CHURCH AND SCHOOL DRIVEWAYS ON EXISTING AND TEMPORARY PAVEMENT, CONSTRUCT THE LEFT HALF OF SOCIALVILLE-FOSTERS ROAD (EXCEPT FOR THE TOP PAVEMENT COURSE) BETWEEN THE CHURCH DRIVEWAY AND COLUMBIA ROAD AND THE RIGHT TURN LANE ON COLUMBIA ROAD. THE CONTRACTOR SHALL SHIFT THE EXISTING SIGNAL HEADS FOR EAST BOUND TRAFFIC SO THAT THEY ALIGN WITH THE PHASE IB LANE ALIGNMENTS.

PHASE IC

1. CONSTRUCT THE RIGHT HALF OF SOCIALVILLE-FOSTERS ROAD (EXCEPT FOR THE TOP PAVEMENT COURSE) BETWEEN THE CHURCH DRIVEWAY AND COLUMBIA ROAD AND THE INTERSECTION RETURN WHILE MAINTAINING TWO WAY TWO LANE TRAFFIC ON PAVEMENT CONSTRUCTED DURING PHASE IA. THE CONTRACTOR SHALL SHIFT THE EXISTING SIGNAL HEADS FOR EAST BOUND TRAFFIC SO THAT THEY ALIGN WITH THE PHASE IC LANE ALIGNMENTS.

PHASE II

1. CONSTRUCT THE TOP COURSE OF PAVEMENT ON SOCIALVILLE-FOSTERS ROAD BETWEEN THE BRIDGE AND COLUMBIA ROAD AND ON COLUMBIA ROAD USING SCD 95.31.

2. INSTALL THE NEW TRAFFIC SIGNAL AT COLUMBIA ROAD.

3. UPON COMPLETION OF THE NEW BRIDGE, OPEN SOCIALVILLE-FOSTERS ROAD AND THE COLUMBIA ROAD SOUTHBOUND RIGHT TURN LANE TO FULL TRAFFIC.

SHEET NO.	LOCATION		615		622			873	873		873								
			PAVEMENT FOR MAINTAINING TRAFFIC, CLASS B		PORTABLE BARRIER, 32"			WORK ZONE EDGE LINE, CLASS 1	WORK ZONE CENTER LINE, CLASS 1		WORK ZONE STOP LINE, CLASS 1								
			SY		FT			MILE	MILE		FT								
	PHASE IA																		
	ROUNDABOUT AREA		800		1600			0.6	0.3										
	PHASE IB																		
	BETWEEN CHURCH DRIVEWAY AND COLUMBIA ROAD, LT							0.2	0.1		15								
	PHASE IC																		
	BETWEEN CHURCH DRIVEWAY AND COLUMBIA ROAD, RT							0.2	0.1		15								
	TOTALS CARRIED TO GENERAL SUMMARY		800		1600			1.00	0.50		30								

CALCULATED EJT
CHECKED REN

MAINTENANCE OF TRAFFIC SUBSUMMARY

WAR-71-2.54

1 M3-2-30 B/O EAST 48"x24" B/O SOCIALVILLE FOSTERS ROAD M4-9R-48 DETOUR

2 M3-4-30 B/O WEST 48"x24" B/O SOCIALVILLE FOSTERS ROAD M4-9L-48 DETOUR

3 M3-2-30 B/O EAST 48"x24" B/O SOCIALVILLE FOSTERS ROAD M4-9L-48 DETOUR

4 48"x24" B/O SOCIALVILLE FOSTERS ROAD R11-3a-60 ROAD CLOSED 1 MILE AHEAD LOCAL TRAFFIC ONLY M4-10L-48 DETOUR

5 R11-3a-60 ROAD CLOSED 0.1 MILE AHEAD LOCAL TRAFFIC ONLY M4-10R-48 DETOUR

6 M3-2-30 B/O EAST 48"x24" B/O SOCIALVILLE FOSTERS ROAD R11-3a-60 ROAD CLOSED 1 MILE AHEAD LOCAL TRAFFIC ONLY M4-10L-48 DETOUR

7 ROAD CLOSED R11-2-48

8 ROAD CLOSED AHEAD 500 FT W20-3-48 W16-2a-30

9 ROAD CLOSED AHEAD 1000 FT W20-3-48 W16-2a-30

10 ROAD CLOSED 0.5 MILE AHEAD LOCAL TRAFFIC ONLY R11-3a-60

11 ROAD CLOSED AHEAD W20-3-48

12 DETOUR AHEAD W20-2-48

13 DETOUR M4-9C-48

14 DETOUR SPECIAL 36"x48" B/O

15 DETOUR SPECIAL 36"x48" B/O

16 SOCIALVILLE-FOSTERS ROAD BRIDGE OVER I-71 WILL BE CLOSED [DATE *] FOR ___ WEEKS INFO: 513-925-3301 WARREN COUNTY

NOTICE OF CLOSURE SIGN (48"x30")

** PUT ACTUAL DATE OF CLOSURE ON SIGN*

HORIZONTAL SCALE IN FEET 0 50 100

CALCULATED EJT CHECKED REN

MAINTENANCE OF TRAFFIC PHASE I DETOUR ROUTE

WAR-71-2.54

H:\2014\14240\ODOT\WAR\12345\roadway\sheets\12345MD001.dgn 11/10/2015 1:21:19 PM abrams

SHEET NUMBER													ALT.	ITEM	ITEM EXT.	GRAND TOTAL	UNIT	DESCRIPTION	SEE SHEET NO.
10	11		20	21	21A	22	24	25	66	90			(X)						
																		ROADWAY	
LS														201	11000	LS		CLEARING AND GRUBBING	
			1						2					202	20010	3	EACH	HEADWALL REMOVED	
			924				419	6582						202	23000	7925	SY	PAVEMENT REMOVED	
			1285											202	30000	1285	SF	WALK REMOVED	
			330											202	30700	330	FT	CONCRETE BARRIER REMOVED	
			991											202	32500	991	FT	CURB AND GUTTER REMOVED	
			114											202	32600	114	FT	GUTTER REMOVED	
			361											202	35100	361	FT	PIPE REMOVED, 24" AND UNDER	
									145					202	35200	145	FT	PIPE REMOVED, OVER 24"	
			934											202	38000	934	FT	GUARDRAIL REMOVED	
			3											202	42000	3	EACH	ANCHOR ASSEMBLY REMOVED, TYPE A	
			1											202	53100	1	EACH	MAILBOX REMOVED	
			7											202	58100	7	EACH	CATCH BASIN REMOVED	
			644											202	75000	644	FT	FENCE REMOVED	
			1											202	98100	1	EACH	REMOVAL MISC.: JUNCTION CHAMBER	27
							140	3868						203	10000	4008	CY	EXCAVATION	
								18283						203	20000	18283	CY	EMBANKBENT	
								17607						204	10000	17607	SY	SUBGRADE COMPACTION	
6														204	45000	6	HOUR	PROOF ROLLING	
			38				80	907						252	01500	1025	FT	FULL DEPTH PAVEMENT SAWING	
				812.5										606	15100	812.5	FT	GUARDRAIL, TYPE MGS, WITH LONG POSTS	
				3										606	20000	3	EACH	FLARED END SECTION	
				1										606	20050	1	EACH	ROUNDED END SECTION	
				5										606	26150	5	EACH	ANCHOR ASSEMBLY, MGS TYPE E	
				3										606	27820	3	EACH	ANCHOR ASSEMBLY, MGS TYPE T	
				2										606	35002	2	EACH	MGS BRIDGE TERMINAL ASSEMBLY, TYPE 1	
				2										606	35102	2	EACH	MGS BRIDGE TERMINAL ASSEMBLY, TYPE 2	
			262											607	15000	262	FT	FENCE, TYPE 47	
				260										607	23101	260	FT	FENCE REBUILT, AS PER PLAN	10
				7123										608	10000	7123	SF	4" CONCRETE WALK	
				1160										608	52060	1160	SF	CURB RAMP, TYPE C2	
				80										608	53020	80	SF	DETECTABLE WARNING	
				230										622	90000	230	FT	BARRIER MISC.: CONCRETE BARRIER AS PER SCD RM-4.3M	70
			2											625	75400	2	EACH	LIGHT POLE REMOVED	
			2											625	75500	2	EACH	LIGHT POLE FOUNDATION REMOVED	
			2											625	75506	2	EACH	LUMINAIRE REMOVED	
			380											SPECIAL	20270000	380	FT	SPECIAL - FILL AND PLUG EXISTING CONDUIT	11
	327													SPECIAL	20270100	327	FT	SPECIAL - PIPE CLEANOUT	11
																		EROSION CONTROL	
									9					601	32104	9	CY	ROCK CHANNEL PROTECTION, TYPE B, WITH FABRIC FILTER	
5					5	4			3					601	32204	17	CY	ROCK CHANNEL PROTECTION, TYPE C, WITH FABRIC FILTER	
				115										601	40050	115	SY	PAVED GUTTER MISC.: 6" CONCRETE GUTTER	70
2														659	00100	2	EACH	SOILS ANALYSIS TEST	
2148					142									659	00300	2290	CY	TOPSOIL	
19351														659	10000	19351	SY	SEEDING AND MULCHING	
968														659	14000	968	SY	REPAIR SEEDING AND MULCHING	
2.7														659	20000	2.7	TON	COMMERCIAL FERTILIZER	
4.0														659	31000	4.0	ACRE	LIME	
105														659	35000	105	MGAL	WATER	
44														659	40000	44	MSF	MOWING	
					1276									670	00700	1276	SY	DITCH EROSION PROTECTION	
										48461				832	30000	48461	EACH	EROSION CONTROL	

CALCULATED EJT
CHECKED REN

GENERAL SUMMARY

WAR-71-2.54

SHEET NUMBER													ALT.	ITEM	ITEM EXT.	GRAND TOTAL	UNIT	DESCRIPTION	SEE SHEET NO.
10		20	21	22	23	24	25		66				(X)						
																		DRAINAGE	
				2.57					1.68					602	20000	4.25	CY	CONCRETE MASONRY	
					3707									605	11100	3707	FT	6" SHALLOW PIPE UNDERDRAINS	
					107									605	13300	107	FT	6" UNCLASSIFIED PIPE UNDERDRAINS	
					280									611	00510	280	FT	6" CONDUIT, TYPE F, FOR UNDERDRAIN OUTLET	
50														611	01800	50	FT	8" CONDUIT, TYPE B	
50														611	02500	50	FT	8" CONDUIT, TYPE E	
50														611	02600	50	FT	8" CONDUIT, TYPE F	
				660										611	04400	660	FT	12" CONDUIT, TYPE B, 706.02 (RCP)	
				231										611	04600	231	FT	12" CONDUIT, TYPE C, 706.02 (RCP)	
				316										611	05900	316	FT	15" CONDUIT, TYPE B, 706.02 (RCP)	
				19										611	06100	19	FT	15" CONDUIT, TYPE C, 706.02 (RCP)	
				235										611	07600	235	FT	18" CONDUIT, TYPE C, 706.02 (RCP)	
				90										611	08900	90	FT	21" CONDUIT, TYPE B, 706.02 (RCP)	
				77										611	09100	77	FT	21" CONDUIT, TYPE C, 706.02 (RCP)	
				89										611	10400	89	FT	24" CONDUIT, TYPE B, 706.02 (RCP)	
				325										611	10600	325	FT	24" CONDUIT, TYPE C, 706.02 (RCP)	
				75										611	16600	75	FT	36" CONDUIT, TYPE B, 706.02 (RCP)	
									183					611	19200	183	FT	42" CONDUIT, TYPE A, 706.02 (RCP)	
				37										611	52203	37	FT	14" X 23" CONDUIT, TYPE B, 706.04, AS PER PLAN	55
				61										611	52402	61	FT	22" X 34" CONDUIT, TYPE B, 706.04	
				118										611	52502	118	FT	24" X 38" CONDUIT, TYPE B, 706.04	
				6										611	98150	6	EACH	CATCH BASIN, NO. 3	
				19										611	98180	19	EACH	CATCH BASIN, NO. 3A	
				1										611	98300	1	EACH	CATCH BASIN, NO. 5	
				6										611	98370	6	EACH	CATCH BASIN, NO. 6	
				4										611	98470	4	EACH	CATCH BASIN, NO. 2-2B	
				1										611	98540	1	EACH	CATCH BASIN, NO. 2-4	
				11										611	99574	11	EACH	MANHOLE, NO. 3	
				1										611	99578	1	EACH	MANHOLE, NO. 3, WITH 60" BASE I.D.	
		2												611	99654	2	EACH	MANHOLE, ADJUSTED TO GRADE	
				5										611	99900	5	EACH	DRAINAGE STRUCTURE, MISC.: TIE EXISTING CONDUIT INTO PROPOSED DRAINAGE STRUCTURE	10
																		PAVEMENT	
						61	3579							301	46000	3640	CY	ASPHALT CONCRETE BASE, PG64-22	
						63	2910							304	20000	2973	CY	AGGREGATE BASE	
						36	1499							407	14000	1535	GALLON	TACK COAT FOR INTERMEDIATE COURSE	
						15	588							442	20000	603	CY	ASPHALT CONCRETE SURFACE COURSE, 12.5MM, TYPE A, (448) PG70-22M	
						15	588							448	46020	603	CY	ASPHALT CONCRETE INTERMEDIATE COURSE, TYPE 1, PG64-22	
						8								452	12010	8	SY	8" NON-REINFORCED CONCRETE PAVEMENT	
							428							452	14010	428	SY	10" NON-REINFORCED CONCRETE PAVEMENT	
			3705											609	12000	3705	FT	COMBINATION CURB AND GUTTER, TYPE 2	
			400											609	12001	400	FT	COMBINATION CURB AND GUTTER, TYPE 2, AS PER PLAN	29-30
			515											609	26000	515	FT	CURB, TYPE 6	
							887							609	54000	887	SY	6" CONCRETE TRAFFIC ISLAND	
			362											609	98000	362	FT	CURB MISC.: 4" MOUNTABLE CONCRETE CURB	7

CALCULATED EJT
CHECKED REN

GENERAL SUMMARY

WAR-71-2.54

SHEET NUMBER													ALT.	ITEM	ITEM EXT.	GRAND TOTAL	UNIT	DESCRIPTION	SEE SHEET NO.
11	21	22			69	69F	74	75					(X)						
																		WATER WORK	
						120								202	35100	120	FT	PIPE REMOVED, UNDER 24" (WATER MAIN)	
	3													202	75611	3	EACH	VALVE BOX REMOVED, AS PER PLAN	11
	18													638	00700	18	FT	6" WATER MAIN DUCTILE IRON PIPE, ANSI CLASS 52, MECHANICAL JOINTS AND FITTINGS	
						340								638	02500	340	FT	12" WATER MAIN DUCTILE IRON PIPE, ANSI CLASS 52, MECHANICAL JOINTS AND FITTINGS	
						112								638	03100	112	FT	16" WATER MAIN DUCTILE IRON PIPE, ANSI CLASS 52, MECHANICAL JOINTS AND FITTINGS	
	2													638	07480	2	EACH	6" GATE VALVE	
	1													638	09890	1	EACH	16"X6" TAPPING SLEEVE, VALVE AND VALVE BOX	
						1								638	09908	1	EACH	16"X12" TAPPING SLEEVE, VALVE AND VALVE BOX	
	2													638	10200	2	EACH	6" FIRE HYDRANT	
	2													638	10480	2	EACH	FIRE HYDRANT REMOVED	
10	3													638	10800	13	EACH	VALVE BOX ADJUSTED TO GRADE	
	1													638	98000	1	EACH	WATER WORK MISC.: CUT AND PLUG 6" WATER LINE	11
						1								638	98000	1	EACH	WATER WORK MISC.: CAP AND PLUG 12" WATER MAIN	69D
	2													638	98000	2	EACH	WATER WORK MISC.: WATER METER IN SERVICE REMOVED	11
						1								638	98000	1	EACH	WATER WORK MISC.: BLOWOFF	69D
																		SANITARY	
						120								202	35100	120	FT	PIPE REMOVED, UNDER 24" (SANITARY)	
						LS								503	11101	LS		COFFERDAMS AND EXCAVATION BRACING, AS PER PLAN	69C
						126								611	01909	126	FT	8" CONDUIT, TYPE B, DUCTILE IRON PIPE, ANSI CLASS 53, MECHANICAL JOINTS AND FITTINGS, AS PER PLAN	69C
		1												611	99654	1	EACH	MANHOLE ADJUSTED TO GRADE	
		1				1								611	99661	2	EACH	MANHOLE RECONSTRUCTED TO GRADE, AS PER PLAN	49, 69C
						38								638	22850	38	FT	SPECIAL - 18" STEEL CASING PIPE	
																		TRAFFIC CONTROL	
							12							620	60000	12	EACH	REBOUNDABLE TUBULAR PYLON, AS PER PLAN	10
								26						626	00100	26	EACH	BARRIER REFLECTOR	
							514							630	03100	514	FT	GROUND MOUNTED SUPPORT, NO. 3 POST	
							60							630	04100	60	FT	GROUND MOUNTED SUPPORT, NO. 4 POST	
							104							630	06100	104	FT	GROUND MOUNTED SUPPORT, NO. 6 POST	
							50							630	08600	50	EACH	SIGN POST REFLECTOR	
							353							630	80100	353	SF	SIGN, FLAT SHEET	
							7							630	84900	7	EACH	REMOVAL OF GROUND MOUNTED SIGN AND DISPOSAL	
							8							630	85100	8	EACH	REMOVAL OF GROUND MOUNTED SIGN AND REERECTION	
							13							630	86002	13	EACH	REMOVAL OF GROUND MOUNTED POST SUPPORT AND DISPOSAL	
							0.41							644	00100	0.41	MILE	EDGE LINE, 4"	
							0.29							644	00200	0.29	MILE	LANE LINE, 4"	
							0.45							644	00300	0.45	MILE	CENTER LINE	
							2019							644	00400	2019	FT	CHANNELIZING LINE, 8"	
							97							644	00500	97	FT	STOP LINE	
							360							644	00600	360	FT	CROSSWALK LINE	
							1716							644	00700	1716	FT	TRANSVERSE/DIAGONAL LINE	
							57							644	00900	57	SF	ISLAND MARKING	
							22							644	01300	22	EACH	LANE ARROW	
							9							644	01400	9	EACH	WORD ON PAVEMENT, 72"	
							209							644	01514	209	FT	DOTTED LINE, 8"	
							66							644	20800	66	FT	YIELD LINE	
							0.110							646	10100	0.110	MILE	LANE LINE, 4"	
							0.110							646	10200	0.110	MILE	CENTER LINE	

CALCULATED EJT
CHECKED REN

GENERAL SUMMARY

WAR-71-2.54

SHEET NUMBER													ALT.	ITEM	ITEM EXT.	GRAND TOTAL	UNIT	DESCRIPTION	SEE SHEET NO.
12	13	14		25	69								(X)						
																		TRAFFIC SIGNALS	
																		FOR TRAFFIC SIGNAL QUANTITIES, SEE SHEET 81	
																		LIGHTING	
																		FOR LIGHTING QUANTITIES, SEE SHEET 87B	
																		RETAINING WALL	
					1967									610	50010	1967	SF	SPECIAL - RETAINING WALL, MISC.: CONCRETE BLOCK RETAINING WALL	68,69
																		STRUCTURES	
																		FOR STRUCTURES QUANTITIES, SEE SHEET 95	
																		MAINTENANCE OF TRAFFIC	
30														410	12000	30	CY	TRAFFIC COMPACTED SURFACE, TYPE A OR B	
LS	LS													614	11000	LS		MAINTAINING TRAFFIC	
1000														614	11620	1000	FT	LINEAR DELINEATION	
25														614	12500	25	EACH	REPLACEMENT SIGN	
100														614	12600	100	EACH	REPLACEMENT DRUM	
30														614	13000	30	CY	ASPHALT CONCRETE FOR MAINTAINING TRAFFIC	
50														614	13100	50	EACH	BARRIER REFLECTOR	
50														614	13350	50	EACH	OBJECT MARKER, ONE WAY	
		800		40										615	25000	840	SY	PAVEMENT FOR MAINTAINING TRAFFIC, CLASS B	
150														616	12000	150	MGAL	WATER	
		1600												622	41000	1600	FT	PORTABLE BARRIER, 32"	
		0.5												873	21000	0.5	MILE	WORK ZONE CENTER LINE, CLASS I	
		1.0												873	22000	1.0	MILE	WORK ZONE EDGE LINE, CLASS I	
		30												873	25000	30	FT	WORK ZONE STOP LINE, CLASS I	
																		INCIDENTALS	
														623	10000	LS		CONSTRUCTION LAYOUT STAKES AND SURVEYING	
														624	1000	LS		MOBILIZATION	

CALCULATED EJT
CHECKED REN

GENERAL SUMMARY

WAR-71-2.54

REF. NO.	SHEET NO.	STATION TO STATION		SIDE	202 PAVEMENT REMOVED (SY)	202 WALK REMOVED (SF)	202 CONCRETE BARRIER REMOVED (FT)	202 CURB AND GUTTER REMOVED (FT)	202 GUTTER REMOVED (SY)	202 PIPE REMOVED 24" AND UNDER (FT)	202 GUARDRAIL REMOVED (FT)	202 ANCHOR ASSEMBLY REMOVED, TYPE A (EACH)	202 MAILBOX REMOVED (EACH)	202 CATCH BASIN REMOVED (EACH)		202 FENCE REMOVED (FT)	202 REMOVAL MISC.: JUNCTION CHAMBER (EACH)	202 HEADWALL REMOVED (EACH)	252 FULL DEPTH PAVEMENT SAWING (FT)	606 ROUNDED END SECTION (EACH)	607 FENCE, TYPE 47 (FT)	611 MANHOLE, ADJUSTED TO GRADE (EACH)	625 LIGHT POLE REMOVED (EACH)	625 LIGHT POLE FOUNDATION REMOVED (EACH)	625 LUMINAIRE REMOVED (EACH)	SPEC SPECIAL - PLUG AND FILL EXISTING CONDUIT (FT)		
R-1	27	49+80 TO 50+32	S/F ROAD	LT	35																							
R-2	27	30+76 TO 31+50	INNOVATION WAY	LT				74																				
R-3	27	30+76 TO 31+50	INNOVATION WAY	RT				74																				
R-4	27	30+65 TO 31+50	INNOVATION WAY	LT	85																							
R-5	27	30+63 TO 31+50	INNOVATION WAY	RT		435																						
R-6	27	51+67 TO 53+00	S/F ROAD	LT												208												
R-7	27	50+14 TO 50+25	S/F ROAD	LT/RT						55				1														
R-8	27	50+25	S/F ROAD	RT													1											
R-9	27	49+72 TO 50+49	S/F ROAD	RT	481														12									
R-10	27	51+86 TO 52+17	S/F ROAD	RT						31																		
R-11	27	52+37	S/F ROAD	RT									1															
R-12	27	52+01 TO 53+00	S/F ROAD	LT							99																	
R-13	27	51+77 TO 52+17	S/F ROAD	LT/RT	123														11									
R-14	29	53+00 TO 55+13	S/F ROAD	LT							213																	
R-15	29	53+00 TO 55+02	S/F ROAD	RT							102	1																
R-16	29	58+11 TO 58+25	S/F ROAD	LT							14																	
R-17	29	58+00 TO 58+25	S/F ROAD	RT							25																	
R-44	29	53+00 TO 54+04	S/F ROAD	LT												110												
R-18	30	58+25 TO 59+63	S/F ROAD	LT							138	1																
R-19	30	58+25 TO 59+52	S/F ROAD	RT							127	1																
R-20	30	61+33 TO 61+88	S/F ROAD	RT						55				1														
R-21	30	61+88 TO 62+58	S/F ROAD	RT						70																		
R-22	30	61+94	S/F ROAD	RT																		1						
R-23	31	64+85	S/F ROAD	LT										1														
R-24	31	65+26	S/F ROAD	LT										1														
R-25	31	64+85	S/F ROAD	RT										1														
R-26	31	65+12	S/F ROAD	RT										1														
R-27	31	65+44	S/F ROAD	RT																		1						
R-28	42	6+15 TO 7+60	COLUMBIA ROAD	LT				145																				
R-40	47	28+12 TO 30+00	INNOVATION WAY	LT																						380		
R-29	49	31+50 TO 33+30	INNOVATION WAY	LT	200														10									
R-30	49	31+50 TO 33+30	INNOVATION WAY	LT				180																				
R-31	49	31+65 TO 33+85	INNOVATION WAY	LT				224																				
R-32	49	31+65 TO 33+85	INNOVATION WAY	RT				224																				
R-33	49	31+50 TO 33+30	INNOVATION WAY	RT				180																				
R-34	49	31+50 TO 33+20	INNOVATION WAY	RT		850													5									
R-41	49	31+80	INNOVATION WAY	CL																			1	1	1			
R-45	49	33+31	INNOVATION WAY	CL																			1	1	1			
R-35	55	283+08 TO 284+81	I-71	LT			51				125																	
R-36	55	282+96 TO 284+09.68	I-71	LT			114																					
R-37	55	282+96 TO 284+09.68	I-71	RT			114																					
R-38	55	282+96 TO 284+09.68	I-71	LT/RT					114																			
R-39	55	282+80 TO 284+20	I-71	RT			51				91									1								
R-42	55	283+65 TO 284+00	I-71	LT						70																		
R-43	55	284+00 TO 284+00	I-71	LT						80				1				1										
F-3	29	55+15 TO 55+62	S/F ROAD	LT												90					49							
F-4	29	54+65 TO 55+32	S/F ROAD	RT												78					80							
F-5	29	58+12 TO 58+25	S/F ROAD	LT												31					50							
F-6	29	57+57 TO 58+01	S/F ROAD	RT												75					55							
F-7	30	58+25 TO 58+48	S/F ROAD	LT												52					28							
TOTALS CARRIED TO GENERAL SUMMARY					924	1285	330	1101	114	361	934	3	1	7		644	1	1	38	1	262	2	2	2	2	380		

CALCULATED EJT
CHECKED REN

ROADWAY SUBSUMMARY

WAR-71-2.54

REF. NO.	SHEET NO.	STATION TO STATION		SIDE	202 VALVE BOX REMOVED, AS PER PLAN		601 PAVED GUTTER MISC.: 6" CONCRETE GUTTER	606 GUARDRAIL, TYPE MGS WITH LONG POSTS	606 FLARRED END SECTION	606 ANNCHOR ASSEMBLY, MGS TYPE E	606 ANNCHOR ASSEMBLY, MGS TYPE T	606 MGS BRIDGE TERMINAL ASSEMBLY, TYPE 1	606 MGS BRIDGE TERMINAL ASSEMBLY, TYPE 2	607 FENCE REBUILT, AS PER PLAN	608 4" CONCRETE WALK	608 CURB RAMP, TYPE C2	608 DETECTABLE WARNING	609 COMBINATION CURB AND GUTTER, TYPE 2	609 COMBINATION CURB AND GUTTER, TYPE 2, AS PER PLAN	609 CURB, TYPE 6	609 CURB, MISC.: 4" MOUNTABLE CONCRETE CURB	622 BARRIER, MISC.: CONCRETE BARRIER AS PER SCD RM-4.3M	638 VALVE BOX ADJUSTED TO GRADE	638 FIRE HYDRANT REMOVED	638 6" FIRE HYDRANT	638 16"x6" TAPPING SLEVE AND VALVE & VALVE BOX	638 WATER WORK MISC.: CUT AND PLUG 6" WATER LINE	638 6" WATER MAIN DIP ANSI CLASS 53 MECHANICAL JOIONTS AND FITTINGS	638 6" GATE VALVE	638 WATER WORK MISC.: WATER METER IN SERVICE REMOVED
					EACH		SY	FT	EACH	EACH	EACH	EACH	EACH	FT	SF	SF	SF	FT	FT	FT	FT	FT	EACH	EACH	EACH	EACH	EACH	FT	EACH	EACH
C-1	26	47+20 TO 48+75	S/F ROAD	LT														165												
C-2	26	47+20 TO 48+75	S/F ROAD	RT														165												
C-3	27	48+75 TO 31+50	S/F ROAD / INNOVATION WAY	LT														190												
C-4	27	31+50 TO 53+00	INNOVATION WAY /S/F ROAD	RT/LT														262												
C-5	27	48+75 TO 27+00	S/F ROAD / INNOVATION WAY	LT														363												
C-6	27	27+00 TO 53+00	INNOVATION WAY /S/F ROAD	RT														465												
C-7	27	49+99 TO 50+88	S/F ROAD	LT/RT																286										
C-8	27	49+85 TO 51+01	S/F ROAD	LT/RT																	362									
F-1	27	51+67 TO 53+00	S/F ROAD	LT										150																
SW-1	27	52+12 TO 53+00	S/F ROAD	LT											765															
GR-1	27	52+56.71 TO 53+00	S/F ROAD	LT				43.29	1		1																			
GR-2	27	52+55.30 + 53+00	S/F ROAD	RT				7.2		1																				
CR-1	27	51+91	S/F ROAD	LT												340	20													
CR-2	27	51+93	S/F ROAD	RT												240	20													
W-8	27	50+07		RT																										1
W-9	27	50+77		RT																										1
C-9	29	53+00 TO 55+27	S/F ROAD	LT														127	100											
C-10	29	53+00 TO 55+04	S/F ROAD	RT														104	100											
C-11	29	58+09 TO 58+25	S/F ROAD	LT															16											
C-12	29	57+87 TO 58+25	S/F ROAD	RT															38											
SW-2	29	53+00 TO 55+28	S/F ROAD	LT											1596															
SW-3	29	58+12 TO 58+25	S/F ROAD	LT											78															
GR-3	29	53+00 TO 55+31.71	S/F ROAD	LT				206.71					1																	
GR-4	29	53+00 TO 55+05.30	S/F ROAD	RT				180.3				1																		
GR-5	29	58+10.35 TO 58+25	S/F ROAD	LT								1																		
GR-6	29	57+83.93 TO 58+25	S/F ROAD	RT				16.07					1																	
F-2	29	53+00 TO 54+10	S/F ROAD	LT										110																
C-13	30	58+25 TO 63+00	S/F ROAD	LT														391	84											
C-14	30	58+25 TO 63+00	S/F ROAD	RT														278	62	135										
C-15	30	61+05 TO 61+33	S/F ROAD	RT																47										
C-16	30	62+31 TO 62+59	S/F ROAD	RT																47										
SW-4	30	58+25 TO 63+00	S/F ROAD	LT											2665															
GR-7	30	58+25 TO 59+60.35	S/F ROAD	LT				87.5		1	1																			
GR-8	30	58+25 TO 60+08.93	S/F ROAD	RT				46.43	1	1																				
W-1	30	59+57	S/F ROAD	RT	1																			1			1			
W-2	30	60+25	S/F ROAD	RT																					1	1		10	1	
W-3	30	59+46	S/F ROAD	RT																			1							
SW-5	31	63+00 TO 5+55	S/F ROAD / COLUMBIA ROAD	LT											1431															
C-17	31	63+00 TO 7+60	S/F ROAD / COLUMBIA ROAD	LT														502												
C-18	31	63+00 TO 3+69	S/F ROAD / COLUMBIA ROAD	RT/LT														333												
W-7	31	64+47	S/F ROAD	RT																			1							
GR-9	47	27+00 TO 49+30	INNOVATION WAY / S/F ROAD	LT/RT				225	1	2	1																			
W-4	47	27+57, 27+62	INNOVATION WAY	RT	2																									
C-19	49	31+50 TO 33+30	INNOVATION WAY	LT														180												
C-20	49	31+50 TO 33+30	INNOVATION WAY	RT														180												
SW-6	49	32+14 TO 33+20	INNOVATION WAY	RT											588															
CR-3	49	31+95	INNOVATION WAY	LT												340	20													
CR-4	49	31+98	INNOVATION WAY	RT												240	20													
W-5	49	31+76	INNOVATION WAY	RT																			1							
W-6	49	32+14	INNOVATION WAY	RT																				1	1			8	1	
B-1	55	282+95 TO 284+09.68	I-71	LT																		115								
B-2	55	282+95 TO 284+09.68	I-71	RT																		115								
G-1	55	282+95 TO 284+09.68	I-71	LT/RT			115																							
TOTALS CARRIED TO GENERAL SUMMARY					3		115	812.5	3	5	3	2	2	260	7123	1160	80	3705	400	515	362	230	3	2	2	1	1	18	2	2

CALCULATED EJT
CHECKED REN

ROADWAY SUBSUMMARY

WAR-71-2.54

REF. NO.	SHEET NO.	STATION TO STATION		SIDE	601 ROCK CHANNEL PROTECTION, TYPE C, WITH FABRIC FILTER (CY)		659 TOPSOIL (CY)	670 DITCH EROSION PROTECTION (SY)
EC-1	27	52+50 TO 53+00	S/F ROAD	LT			8	67
EC-2	29	53+00 TO 55+10	S/F ROAD	LT			31	280
EC-3	29	58+00 TO 58+25	S/F ROAD	RT			4	33
EC-4	30	58+25 TO 61+22	S/F ROAD	RT			44	396
EC-5	30	62+50 TO 63+00	S/F ROAD	RT			9	83
EC-6	31	63+00 TO 65+00	S/F ROAD	RT			46	417
EC-7	47	27+74	INNOVATION WAY	RT	4			
EC-8	67	284+46	I-71	LT	1			
TOTALS CARRIED TO GENERAL SUMMARY					5		142	1276

CALCULATED EJT
CHECKED REN

ROADWAY SUBSUMMARY

WAR-71-2.54

REF. NO.	SHEET NO.	STATION TO STATION		SIDE	601 ROCK CHANNEL PROTECTION, TYPE C, WITH FABRIC FILTER	602 CONCRETE MASONRY	611 12" CONDUIT, TYPE B	611 12" CONDUIT, TYPE C	611 15" CONDUIT, TYPE B	611 15" CONDUIT, TYPE C	611 18" CONDUIT, TYPE C	611 21" CONDUIT, TYPE B	611 21" CONDUIT, TYPE C	611 24" CONDUIT, TYPE B	611 24" CONDUIT, TYPE C	611 36" CONDUIT, TYPE B	611 14"x23" CONDUIT, TYPE B, 706.04, AS PER PLAN	611 22"x34" CONDUIT, TYPE B, 706.04	611 24"x38" CONDUIT, TYPE B, 706.04	611 CATCH BASIN, NO. 2-2B	611 CATCH BASIN, NO. 3	611 CATCH BASIN, NO. 3A	611 CATCH BASIN, NO. 2-4	611 CATCH BASIN, NO. 5	611 CATCH BASIN, NO. 6	611 MANHOLE, NO. 3	611 MANHOLE, NO. 3, WITH 60" BASE I.D.	611 DRAINAGE STRUCTURE MISC.: TIE EX STORM SEWER INTO PR DRAINAGE STRUCTURE	611 MANHOLE ADJUSTED TO GRADE	611 MANHOLE RECONSTRUCTED TO GRADE, AS PER PLAN
					CY	CY	FT	FT	FT	FT	FT	FT	FT	FT	FT	FT	FT	FT	FT	EA	EA	EA	EA	EA	EA	EA	EA	EA	EA	EA
D-1	26	46+75 TO 47+40	S/F ROAD	LT					65											1										
D-2	26	46+75 TO 47+40	S/F ROAD	RT					65											1										
D-3	26	47+40 TO 47+40	S/F ROAD	LT/RT					59													1								
D-4	26	47+40 TO 47+40	S/F ROAD	LT							20											1								
D-5	26	47+40 TO 48+71	S/F ROAD	LT							133															1				
D-6	26	48+50 TO 48+71	S/F ROAD	LT			25															1								
D-7	26	48+75 TO 48+71	S/F ROAD	LT				19														1								
D-8	26	48+50 TO 48+75	S/F ROAD	RT			25															1								
D-9	27	48+71 TO 49+50	S/F ROAD	LT							82															1				
D-10	27	49+50 TO 49+50	S/F ROAD	LT				10												1										
D-11	27	49+50 TO 50+21	S/F ROAD	LT								90									1					1				
D-12	27	50+40 TO 50+21	S/F ROAD	LT			32																		1					
D-13	27	50+21 TO 50+43.3	S/F ROAD	LT/RT									77													1				
D-14	27	49+50 TO 49+45	S/F ROAD	LT/RT			29																		1					
D-15	27	48+75 TO 49+45	S/F ROAD	RT			73															1								
D-16	27	49+45 TO 49+66.1	S/F ROAD	RT			67																		1					
D-17	27	49+66.1 TO 50+07.5	S/F ROAD	RT			44															1								
D-18	27	50+07.5 TO 50+43.3	S/F ROAD	RT			36																		1					
D-19	27	50+43.3 TO 51+10	S/F ROAD	RT										89												1				
D-20	27	28+75 TO 28+75	INNOVATION WAY	LT			31															1								
D-21	27	28+75 TO 28+75	INNOVATION WAY	LT/RT			37																		1					
D-22	27	28+75 TO 51+10	INNOVATION WAY / S/F ROAD	RT				71														1								
D-23	27	51+10 TO 51+69.4	S/F ROAD	RT											61											1				
D-24	27	51+65.4 TO 51+69.4	S/F ROAD	RT				21														1								
D-25	27	51+69.4 TO 52+25.4	S/F ROAD	RT											61											1				
D-26	27	52+25 TO 52+25.4	S/F ROAD	RT			23														1									
D-27	27	52+25.4 TO 53+00	S/F ROAD	RT											75											1				
D-28	27	52+50 TO 52+25	S/F ROAD	LT		0.21		39													1									
D-29	27	51+61.4 TO 51+26.1	S/F ROAD	LT/RT			66															1								
D-30	27	51+26.1 TO 51+65.4	S/F ROAD	RT			49																		1					
S-1	27	30+89	INNOVATION WAY	LT																									1	
D-31	29	53+00 TO 53+00	S/F ROAD	LT		0.21		25														1								
D-32	29	53+00 TO 53+00	S/F ROAD	RT				20														1								
D-34	29	53+00 TO 54+30	S/F ROAD	RT											112											1				
D-35	30	61+00 TO 61+00	S/F ROAD	LT/RT			59															1								
D-36	30	61+00 TO 61+00	S/F ROAD	RT		0.27				19												1								
D-37	30	61+22 TO 61+85	S/F ROAD	RT		0.27			63																					
D-38	30	61+85 TO 62+50	S/F ROAD	RT		0.27			64											1										
D-39	31	64+88.5	S/F ROAD	LT																		1						1		
D-40	31	65+26	S/F ROAD	LT	4																1							2		
D-41	31	64+85 TO 65+11.5	S/F ROAD	RT			27														1	1						2		
D-42	42	6+80 TO 7+00	COLUMBIA ROAD	LT		0.21		26														1								
D-43	47	27+60 TO 27+83	INNOVATION WAY	LT			37															1								
D-44	47	NOT USED																												
D-45	47	27+83 TO 28+00	INNOVATION WAY	LT/RT															51											
D-46	47	27+72 TO 27+83	INNOVATION WAY	RT												32											1			
D-47	47	27+72 TO 27+74	INNOVATION WAY	RT		0.69										43					1									
S-2	49	32+64	INNOVATION WAY	LT																										1
D-48	55	283+00 TO 283+34	I-71	LT													37							1		1				
D-49	55	283+64 TO 284+25	I-71	LT														61								1				
D-50	55	284+65 TO 284+45	I-71	LT		0.44													67				1							
TOTALS CARRIED TO GENERAL SUMMARY					4	2.57	660	231	316	19	235	90	77	89	309	75	37	61	118	4	6	19	1	1	6	11	1	5	1	1

CALCULATED EJT
CHECKED REN

DRAINAGE SUBSUMMARY

WAR-71-2.54

REF. NO.	SHEET NO.	STATION TO STATION		SIDE	605 6" SHALLOW PIPE UNDERDRAINS	605 6" UNCLASSIFIED PIPE UNDERDRAINS	611 6" CONDUIT, TYPE F FOR UNDERDRAIN OUTLET		FOR INFORMATION ONLY 6" END CAP
					FT	FT			EACH
UD-1	26	47+20 TO 47+40	S/F ROAD	RT	10		10		1
UD-2	26	47+45 TO 48+50	S/F ROAD	RT	95		10		1
UD-3	26	48+55 TO 48+75	S/F ROAD	RT	10		10		1
UD-4	26	47+20 TO 47+40	S/F ROAD	LT	10		10		1
UD-5	26	47+45 TO 48+50	S/F ROAD	LT	95		10		1
UD-6	26	45+55 TO 48+75	S/F ROAD	LT	10		10		1
UD-7	27	48+80 TO 31+50	S/F ROAD INNOVATION WAY	LT	184				1
UD-8	27	48+80 TO 49+66.1	S/F ROAD	RT	99				
UD-9	27,47	29+53 TO 28+75	INNOVATION WAY	LT	70		10		1
UD-10	27,47	28+70 TO 27+60	INNOVATION WAY	LT	100		10		1
UD-11	27,47	28+70 TO 27+72	INNOVATION WAY	RT	88		10		1
UD-12	27	28+75 TO 51+65.4	INNOVATION WAY / S/F ROAD	RT	131		20		
UD-13	27	51+70.4 TO 52+25	S/F ROAD	RT	48		10		1
UD-14	27	52+25 TO 52+95	S/F ROAD	RT	60		10		1
UD-15	27	31+50 TO 51+61.4	INNOVATION WAY / S/F ROAD	RT/LT	106		20		
UD-16	27	51+66.4 TO 52+25	S/F ROAD	LT	51		10		1
UD-17	27	52+25 TO 52+95	S/F ROAD	LT	60		10		1
UD-18	29	53+00 TO 55+28	S/F ROAD	LT	218		10		1
UD-19	29	53+00 TO 55+02	S/F ROAD	RT	192		10		1
UD-20	29	58+11 TO 58+25	S/F ROAD	LT	14				1
UD-21	29	57+87 TO 58+25	S/F ROAD	RT	38				1
UD-22	30	58+25 TO 61+00	S/F ROAD	LT	265		10		
UD-23	30	61+05 TO 63+00	S/F ROAD	LT	185				1
UD-24	30	58+25 TO 61+00	S/F ROAD	RT	265		10		
UD-25	30	61+05 TO 63+00	S/F ROAD	RT	185				1
UD-26	31	63+00 TO 64+88.5	S/F ROAD	LT	179		10		
UD-27	31	64+93.5 TO 65+26	S/F ROAD	LT	23		10		1
UD-28	31, 42	65+31 TO 6+80	S/F ROAD / COLUMBIA ROAD	LT	189				
UD-29	31	63+00 TO 64+85	S/F ROAD	RT	175		10		
UD-30	31	64+90 TO 65+11.5	S/F ROAD	RT	12		10		1
UD-31	31, 42	65+16.5 TO 3+70	S/F ROAD / COLUMBIA ROAD	RT/LT	105		10		1
UD-36	42	6+85 TO 7+60	COLUMBIA ROAD	LT	75				1
UD-32	47	27+00 TO 27+55	INNOVATION WAY	LT		45	10		1
UD-33	47	27+00 TO 27+72	INNOVATION WAY	RT		62	10		1
UD-34	49	31+50 TO 33+30	INNOVATION WAY	LT	180				
UD-35	49	31+50 TO 33+30	INNOVATION WAY	RT	180				
TOTALS CARRIED TO GENERAL SUMMARY					3707	107	280		26

CALCULATED EJT
CHECKED REN

UNDERDRAIN SUBSUMMARY

WAR-71-2.54

SHEET NO.	REFERENCE NO.	STATION	SIDE	DRIVE TYPE	MATERIAL	DRIVE ANGLE	APRON LENGTH "L1"	DRIVE LENGTH "L2"	WIDTH "W"	R1 (LEFT SIDE RADII OR RETURN WIDTH)	R2 (RIGHT SIDE RADII OR RETURN WIDTH)	SURFACE AREA ASPHALT	SURFACE AREA CONCRETE	202 PAVEMENT REMOVED	203 EXCAVATION	252 FULL DEPTH PAVEMENT SAWING	301 ASPHALT CONCRETE BASE, PG64-22	301 EDGE COURSE	304 6" AGGREGATE BASE	304 EDGE COURSE	407 TACK COAT FOR INTERMEDIATE COURSE 0.10 GAL./SY	442 1½" ASPHALT CONCRETE SURFACE COURSE, 12.5MM, TYPE A, (448) PG70-22M	448 1½" ASPHALT CONCRETE INTERMEDIATE COURSE, TYPE 1, PG64-22	452 8" NON-REINFORCED CONCRETE PAVEMENT, CLASS QC1
						DEG.	FT.	FT.	FT.	FT.	FT.	SF		SY	CY	FT.	CY		CY		GAL.	CY	CY	SY
30	DW-1	61+53	RT	1 (COMM.)	ASPHALT	90	30	2.5	40	15	30	1654		181	61	40	30.7	0.4	30.7	0.9	18.4	7.7	7.7	
30	DW-2	62+17	RT	1 (COMM.)	ASPHALT	90	30	2.5	28	28	15	1295		171	57	28	24.0	0.4	24.0	0.9	14.4	6.0	6.0	
49	DW-3	31+58.10	RT	2 (COMM.)	ASPHALT*	82	4	20	12	4.5	4.5	240	66	67	22	12	4.5	0.3	5.7	0.5	2.7	1.2	1.2	7.4
SUB TOTAL																	59.2	1.1	60.4	2.3	35.5	14.9	14.9	7.4
TOTALS CARRIED TO GENERAL SUMMARY														419	140	80	61		63		36	15	15	8

* THIS DRIVE HAS A CONCRETE APRON.

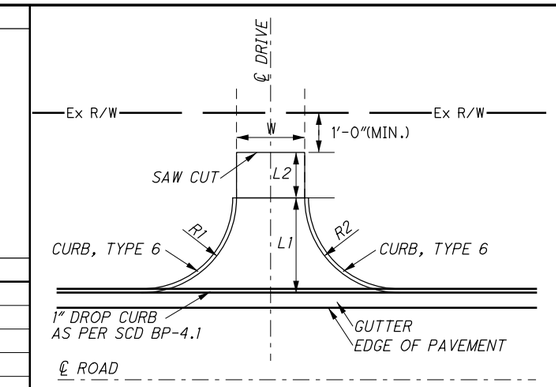

TYPE 1 DRIVEWAY PLAN VIEW (TYPICAL)

NOTES:
1. CURB QUANTITY ACCOUNTED FOR ON SHEET 30.

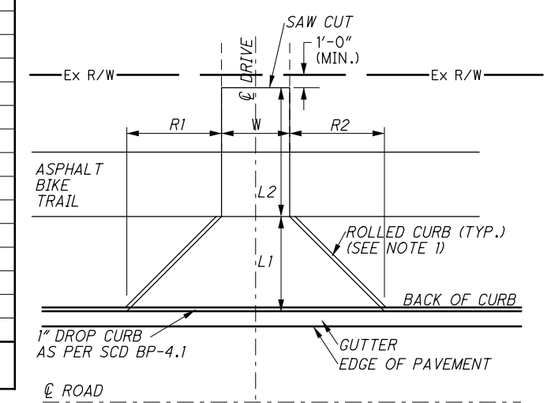

TYPE 2 DRIVEWAY PLAN VIEW (TYPICAL)

NOTES:
2. ROLLED CURB TAPERS IN HEIGHT FROM 6" TO 0" BETWEEN THE ROADWAY AND THE SIDEWALK TO BE PAID FOR UNDER ITEM 452.

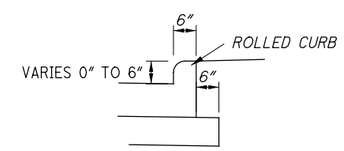

DETAIL A

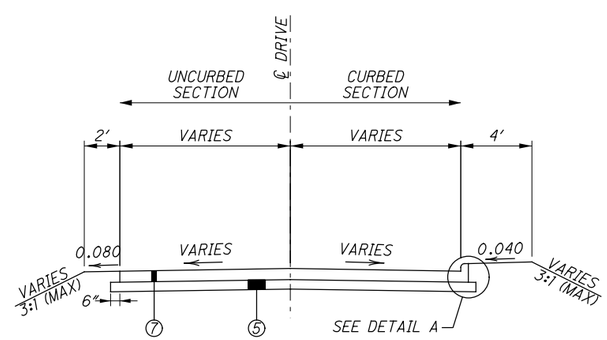

CONCRETE COMMERCIAL DRIVE TYPICAL SECTION

LEGEND

⑤ 304 6" AGGREGATE BASE
⑦ 452 8" NON-REINFORCED CONCRETE PAVEMENT

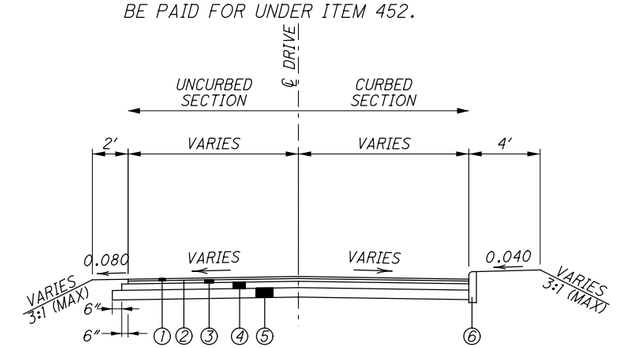

ASPHALT COMMERCIAL DRIVE TYPICAL SECTION

LEGEND

① 442 1½" ASPHALT CONCRETE SURFACE COURSE, 12.5MM, TYPE A, (448) PG70-22M
② 407 TACK COAT FOR INTERMEDIATE COURSE (0.10 GAL./SY)
③ 448 1½ " ASPHALT CONCRETE INTERMEDIATE COURSE, TYPE 1, PG64-22
④ 301 6" ASPHALT CONCRETE BASE, PG64-22
⑤ 304 6" AGGREGATE BASE
⑥ 609 CURB, TYPE 6

CALCULATED EJT
CHECKED REM

DRIVEWAY SUBSUMMARY

WAR-71-2.54

SHEET NO.	STATION FROM	STATION TO	659 SEEDING AND MULCHING (SQ YD)	203 EXCAVATION (CU YD)	203 EMBANKMENT (CU YD)
	SOCIALVILLE-FOSTERS ROAD				
32	45+00	47+00	270	8	11
33	47+00	48+50	1284	221	136
34	48+50	50+50	1680	139	1384
35	50+50	53+00	1956	429	1813
36	53+00	55+07	2669	452	5452
37	55+07	58+50	1012	1	2999
38	58+50	61+00	2017	91	2871
39	61+00	63+00	1312	592	158
40	63+00	65+00	1169	591	58
41	65+00	65+73	445	102	100
	COLUMBIA ROAD				
43	3+70	4+00	83	4	6
44	4+00	5+50	0	52	26
45	5+50	7+00	370	123	73
46	7+00	7+60	193	31	31
	INNOVATION WAY				
51	27+00	28+00	906	32	1329
52	28+00	29+00	873	0	1675
53	31+25	32+50	908	720	0
54	32+50	33+30	466	250	0
	I-71				
56	280+00	281+50	0	0	0
57	281+50	283+50	769	17	56
58	283+50	285+50	969	13	105
59	285+50	287+00	0	0	0
TOTALS CARRIED TO GENERAL NOTES			19351		
TOTALS CARRIED TO GENERAL SUMMARY				3868	18283

EROSION CONTROL CALCULATIONS

ITEM 659 LIME
SEEDING AND MULCHING = 19351 SY
19351 SY X 9 SF/SY / 43560 SF/ACRE = 4.00 ACRE
QUANTITY CARRIED TO GENERAL NOTES = 4.0 ACRE

ITEM 659 WATER
SEEDING AND MULCHING = 19351 SY
[(19351 SY x 9 SF/SY x 2 x 300 GAL)] / 1000 SF / 1000 GAL / MGAL = 104.50 MGAL
QUANTITY CARRIED TO GENERAL NOTES = 105 MGAL

ITEM 659 SOILS ANALYSIS TEST
SEEDING AND MULCHING = 19351 SY
[(19351 SY /48400 SY/EACH = 0.4 EACH (2 TESTS MINIMUM)
QUANTITY CARRIED TO GENERAL NOTES = 2 EACH

ITEM 659 REPAIR SEEDING AND MULCHING
SEEDING AND MULCHING = 19351 SY
19351 SY X 0.05 = 967.55 SY
QUANTITY CARRIED TO GENERAL NOTES = 968 SY

ITEM 659 COMMERCIAL FERTILIZER
SEEDING AND MULCHING = 19351 SY
[(19351 SY x 9 SF/SY x 30 LBS)] / 1000 SF / 2000 LBS / TON = 2.62 TON
QUANTITY CARRIED TO GENERAL NOTES = 2.7 TON

ITEM 659 TOPSOIL
SEEDING AND MULCHING = 19351 SY
19351 SY X 111 CY / 1000 SY = 2147.96 CY
QUANTITY CARRIED TO GENERAL NOTES = 2148 CY

ITEM 659 MOWING
SEEDING AND MULCHING = 19351 SY
[(19351 SY x 9 SF/SY x 0.25 / 1000 SF/MSF = 43.5 MSF
QUANTITY CARRIED TO GENERAL NOTES = 44 MSF

MISCELLANEOUS CALCULATIONS

ITEM 204 PROOF ROLLING
SUBGRADE COMPACTION = 17607 SQ. YD.
17607/3000 SQ. YD. / HR = 5.9 HOUR
QUANTITY CARRIED TO GENERAL NOTES = 6 HOUR

PAVEMENT CALCULATIONS

PAVEMENT AREA (BY CADD):
AREA WEST OF BRIDGE = 77329 SF
AREA EAST OF BRIDGE = 46439 SF
INNOVATION WAY MEDIAN REPLACEMENT = 1725 SF
PAVEMENT AREA = [(77329 + 46439+1725)]/9 = 13944 SY

TRUCK APRON AREA:
(3.141 x 57 x 57) - (3.141 x 45 x 45) = 3845.3 SF
TRUCK APRON AREA = 3845.3 / 9 = 427.26 SY

APPROACH SLAB AREA:
STA. 55+14.93 TO STA. 55+44.93 = 30 FT
STA. 57+68.40 TO STA. 57+98.40 = 30 FT
APPROACH SLAB AREA = [(30 + 30) x 71.83]/9 = 478.89 SQ YD

SPLITTER ISLAND AREA (BY CADD):
NORTH MEDIAN: 1190 SF
NORTH SPLITTER ISLAND: 769 SF
EAST SPLITTER ISLAND: 2115 SF
SOUTH SPLITTER ISLAND: 1843 SF
WEST SPLITTER ISLAND: 2064 SF
SPLITTER ISLAND AREA (TOTAL) = (1190 + 769 + 2115 + 1843 + 2064) / 9 = 886.78 SY

BIKE TRAIL AREA (BY CADD):
ROUNDABOUT, NW: 3065 SF
CONNECTOR: 122 SF
INNOVATION WAY, LT: 1161 SF
ROUNDABOUT, NE: 1729 SF
ROUNDABOUT, SE: 3257 SF
BIKE TRAIL AREA (TOTAL) = (3065 + 122 + 1161 + 1729 + 3257) / 9 = 1037.12 SY

BIKE TRAIL LENGTH = 307 + 12 + 116 + 173 + 326 = 934 FT

CURB AND GUTTER AREA:
CURB, TYPE 6: 515 FT
COMBINATION CURB AND GUTTER, TYPE 2: 3705 FT
COMBINATION CURB AND GUTTER, TYPE 2, A.P.P.: 400 FT
CURB MISC.: 4" MOUNTABLE CONCRETE CURB: 362 FT
[(515' x 0.5') + (3705' x 2.5') + 0.75 X (400 X 4') + (362' x 1.0')] / 9 = 1231.34 SY

ITEM 202 PAVEMENT REMOVED (BY CADD):
PAVEMENT REMOVED = (33902 + 25334)/9 = 6581.78 SY
QUANTITY CARRIED TO GENERAL SUMMARY = 6582 SY

ITEM 204 SUBGRADE COMPACTION
PAVEMENT AREA = 13944 SY
TRUCK APRON AREA = 427.26 SY
APPROACH SLAB AREA = 478.89 SY
SPLITTER ISLAND AREA = 886.78 SY
CURB AREA = 1231.34 SY
ADD FOR 18" BEYOND BACK OF CURB:
[(515 + 3705 + 400 + 362) x 1.5']/9 = 830.34 SY
TOTAL AREA = 13944 + 427.26 + 478.89 + 886.78 + 1231.34 + 830.34 = 17798.61 SY
QUANTITY CARRIED TO GENERAL SUMMARY = 17799 SY

ITEM 252 FULL DEPTH PAVEMENT SAWING
STA. 46+70 TO STA. 47+20, S/F RD.: 50 + 50 + 33 = 133 FT
STA. 31+29, LT, INNOVATION WAY SIDEWALK CONNECTOR = 6 FT
STA. 4+06 TO STA. 7+60, LT., COLUMBIA ROAD = 354 FT
STA. 33+30, INNOVATION WAY BIKE TRAIL = 10 FT
STA. 32+70 TO STA. 33+30, LT&RT, INNOVATION WAY = 120 FT
STA. 32+70 TO STA. 33+85, LT&RT, INNOVATION WAY = 230 FT
STA. 32+70, LT&RT, INNOVATION WAY = 30 FT
STA. 282+95, I-71 = 12 FT
STA. 284+10, I-71 = 12 FT
TOTAL LENGTH = 133+6+354+10+120+230+30+12+12= 907 FT
QUANTITY CARRIED TO GENERAL SUMMARY = 907 FT

ITEM 301 ASPHALT CONCRETE BASE, PG64-22
PAVEMENT AREA = 13944 SY
BIKE TRAIL AREA = 1037.12 SY
[(13944 x 9") + (1037.12 x 3")] / (12 x 3) = 3572.43 CY
ADD FOR EDGE COURSE (BIKE TRAIL):
2 x (4" x 3" x 934')/(12 x 12 x 27) = 5.77 CY
TOTAL = 3572.43 + 5.77 = 3578.20 CY
QUANTITY CARRIED TO GENERAL SUMMARY = 3579 CY

ITEM 304 AGGREGATE BASE
PAVEMENT AREA = 13944 SY
APPROACH SLAB AREA = 478.89 SY
BIKE TRAIL AREA = 1037.12 SY
[(13944 + 478.89 + 1037.12) X 6" / (12 x 3)] = 2576.67 CY
ADD FOR CURB AND GUTTER AREA:
[(3705' x 2.5' x 7.75") + 0.75 x (400' x 4.5' x 7.75)] / (12 x 27) = 253.85 CY
ADD FOR MOUNTABLE CURB AREA:
(12" x 10" x 362') / (12 x 12 x 27) = 11.18 CY
ADD FOR EDGE COURSE (CURB AND GUTTER):
[(6" x 6" x (3705 + 400)]/(12 x 12 x 27) = 38.01 CY
ADD FOR EDGE COURSE (APP SLAB):
2 X (6" x 6" x 60') / (12 x 12 x 27) = 1.12 CY
ADD FOR EDGE COURSE (BIKE TRAIL):
2 X (6" x 10" x 934') / (12 x 12 x 27) = 28.83 CY
TOTAL = 2576.67 + 253.85 + 11.18 + 38.01 + 1.12 + 28.83 = 2909.66 CY
QUANTITY CARRIED TO GENERAL SUMMARY = 2910 CY

ITEM 407 TACK COAT FOR INTERMEDIATE COURSE
PAVEMENT AREA = 13944 SY
BIKE TRAIL AREA = 1037.12 SY
(13944 + 1037.12) x 0.10 GAL/SY = 1498.1 GAL
QUANTITY CARRIED TO GENERAL SUMMARY = 1499 GAL

ITEM 442 ASPHALT CONCRETE SURFACE COURSE, 12.5MM, TYPE A (448), PG70-22M
PAVEMENT AREA = 13944 SY
BIKE TRAIL AREA = 1037.12 SY
DEDUCT SPLITTER ISLAND AREA = 886.78 SY
(13944 + 1037.12 - 886.78) x 1.5")/(12 x 3) = 587.26 CY
QUANTITY CARRIED TO GENERAL SUMMARY = 588 CY

ITEM 448 ASPHALT CONCRETE INTERMEDIATE COURSE, TYPE 1 PG64-22
PAVEMENT AREA = 13944 SY
BIKE TRAIL AREA = 1037.12 SY
DEDUCT SPLITTER ISLAND AREA = 886.78 CY
(13944 + 1037.12 - 886.78) x 1.5")/(12 x 3) = 579.27 SY
QUANTITY CARRIED TO GENERAL SUMMARY = 588 CU YD

ITEM 452 10" NON-REINFORCED CONCRETE PAVEMENT
TRUCK APRON AREA = 427.26 SY
QUANTITY CARRIED TO GENERAL SUMMARY = 428 SY

ITEM 609 6" CONCRETE TRAFFIC ISLAND
SPLITTER ISLAND AREA = 886.78 SY
QUANTITY CARRIED TO GENERAL SUMMARY = 887 SY

ITEM 615 PAVEMENT FOR MAINTAINING TRAFFIC, TYPE B
STA. 32+70 TO STA. 33+30, LT = 60 FT
STA. 32+70 TO STA. 33+30, RT = 60 FT
(60'+60')x3'(AVG. WIDTH)/9 = 40 SY
QUANTITY CARRIED TO GENERAL SUMMARY = 40 SY

CALCULATED EJT
CHECKED REN

EARTHWORK SUBSUMMARY AND CALCULATIONS

WAR-71-2.54

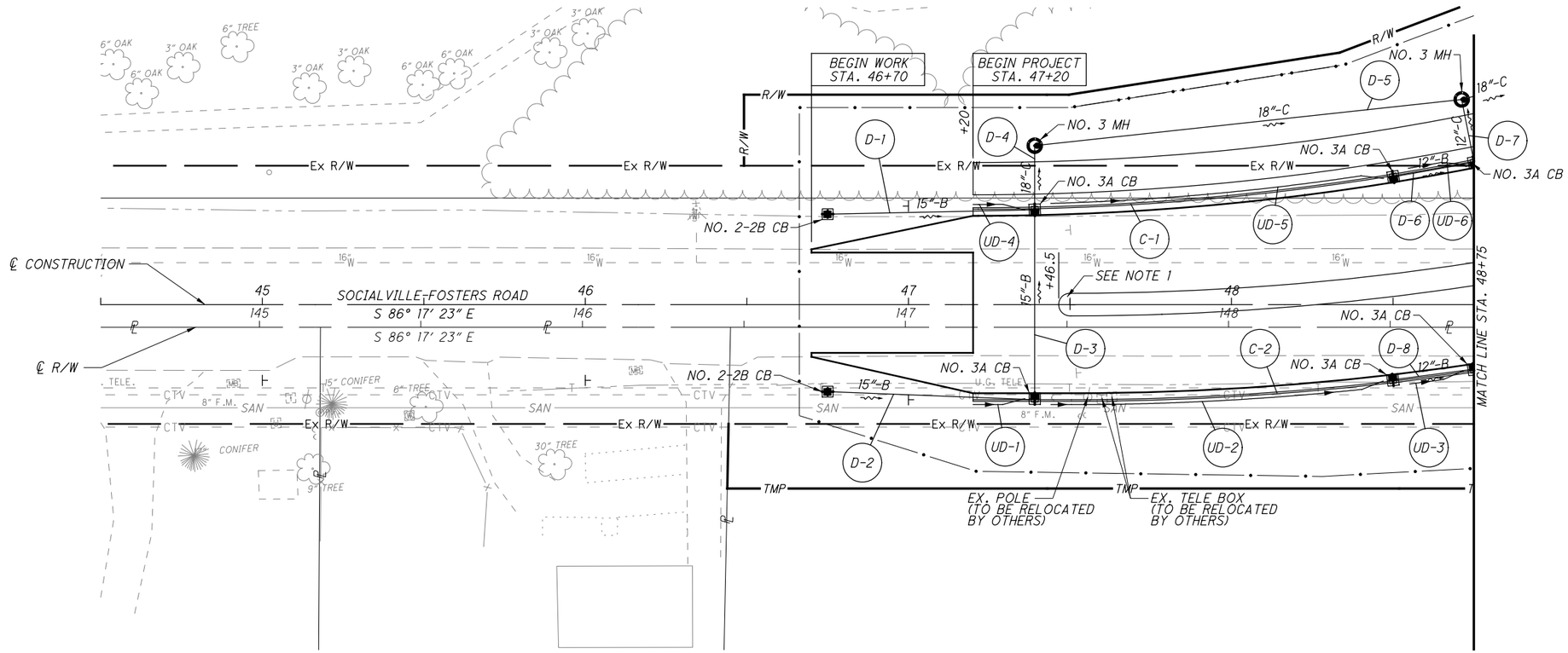

NOTES:
1. NOSE VARIES 0" TO 6" IN HEIGHT OVER 10'.

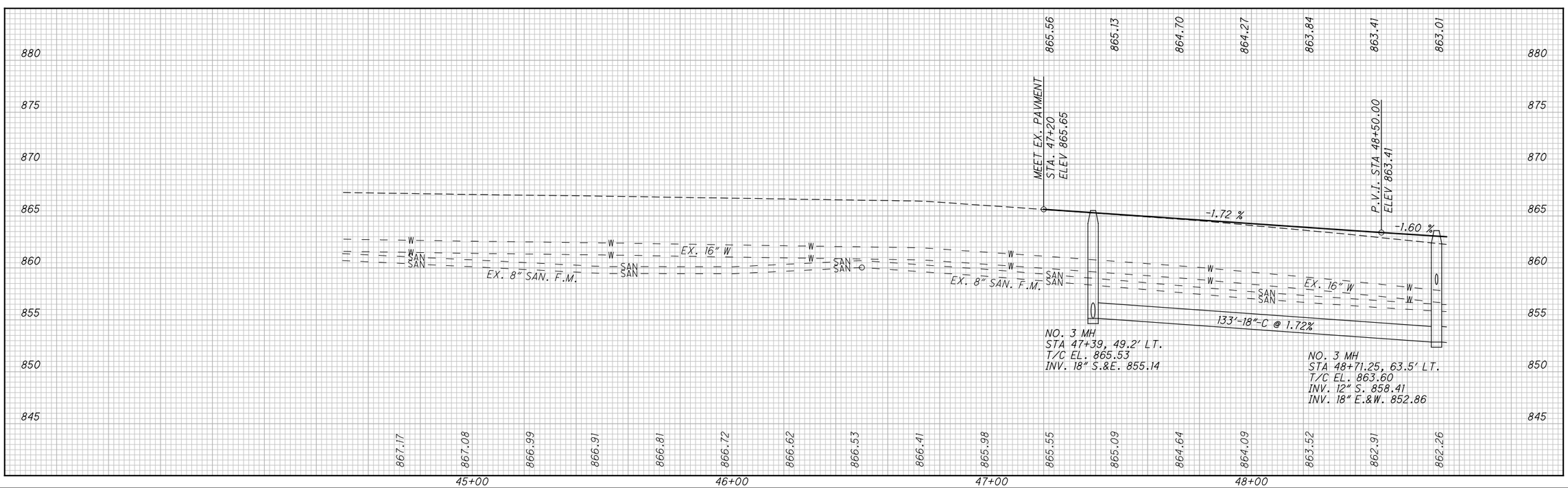

HORIZONTAL SCALE IN FEET
0 10 20 40

CALCULATED EJT
CHECKED REN

PLAN AND PROFILE SOCIALVILLE-FOSTERS RD.
STA. 44+50 TO STA. 48+75

WAR-71-2.54

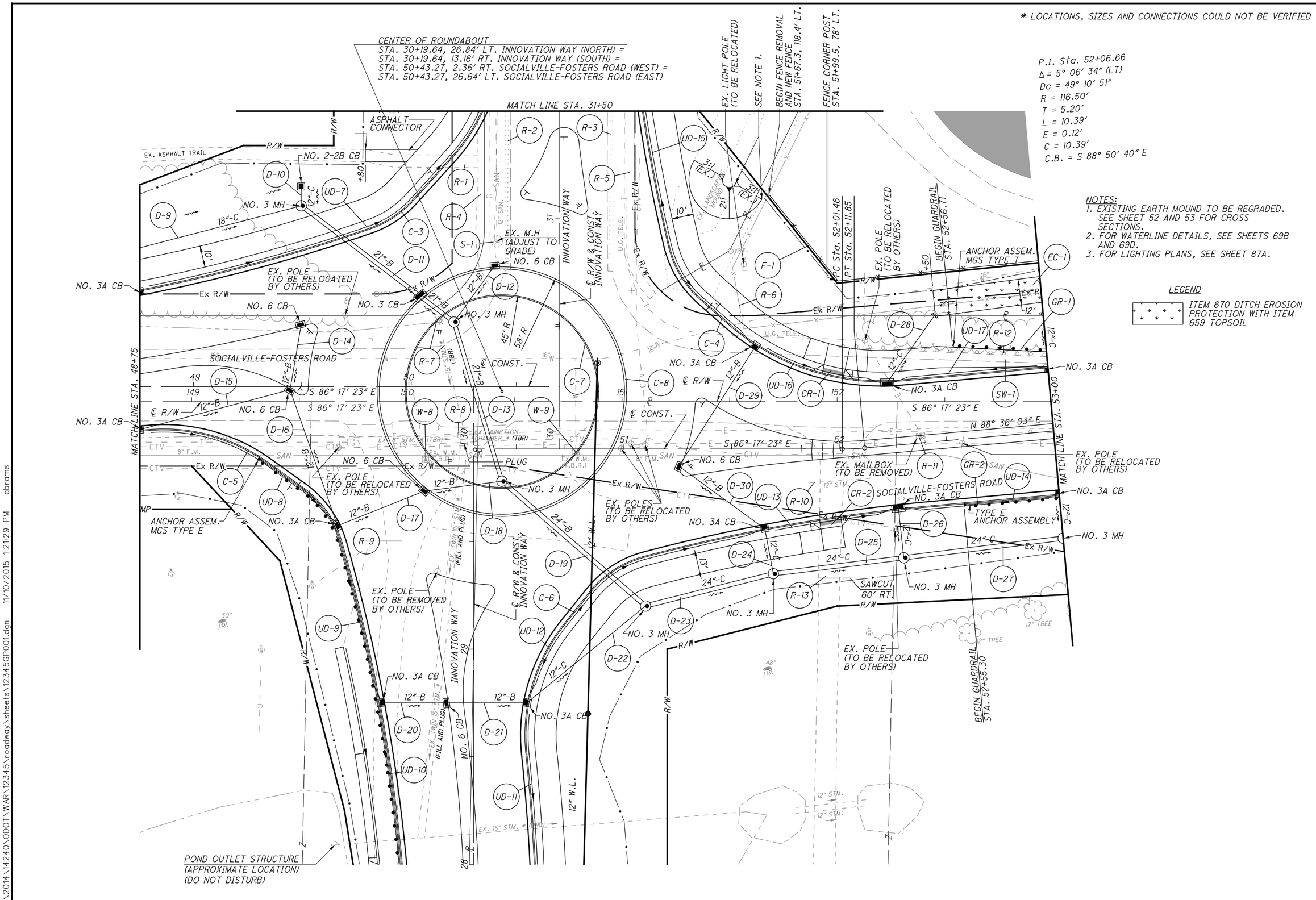

HORIZONTAL SCALE IN FEET 0 10 20 40

CALCULATED EJT
CHECKED REN

PLAN SOCIALVILLE-FOSTERS RD. STA. 48+75 TO STA. 53+00

WAR-71-2.54

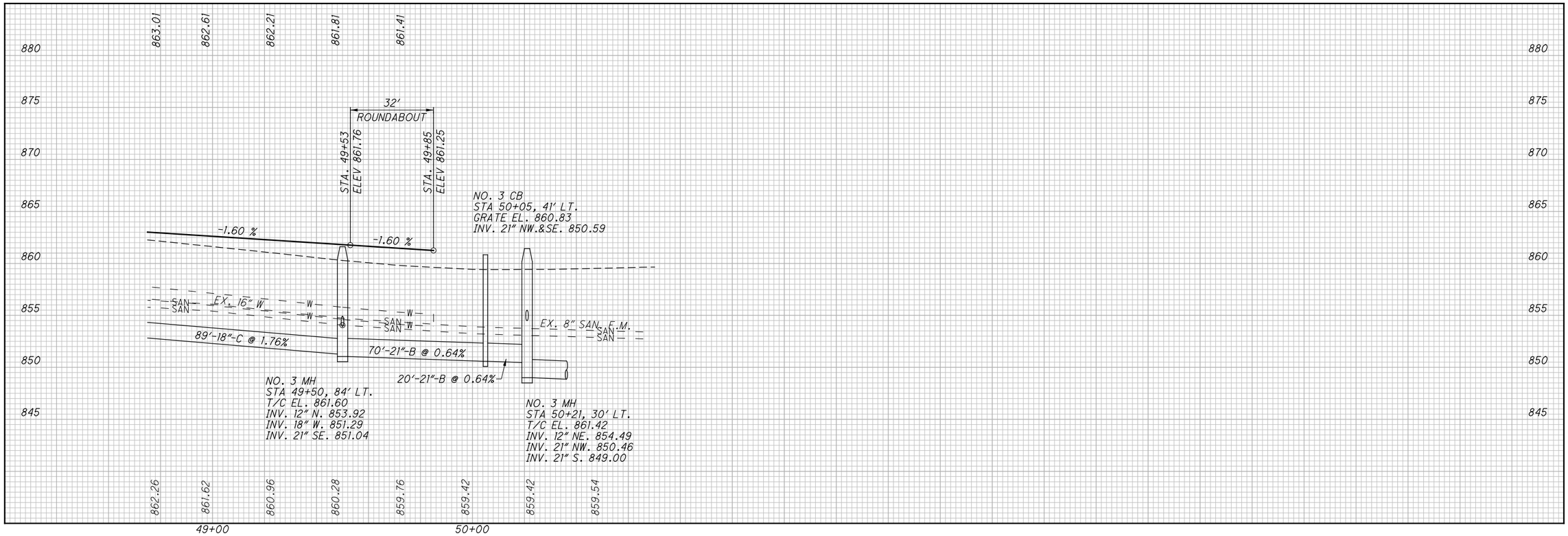

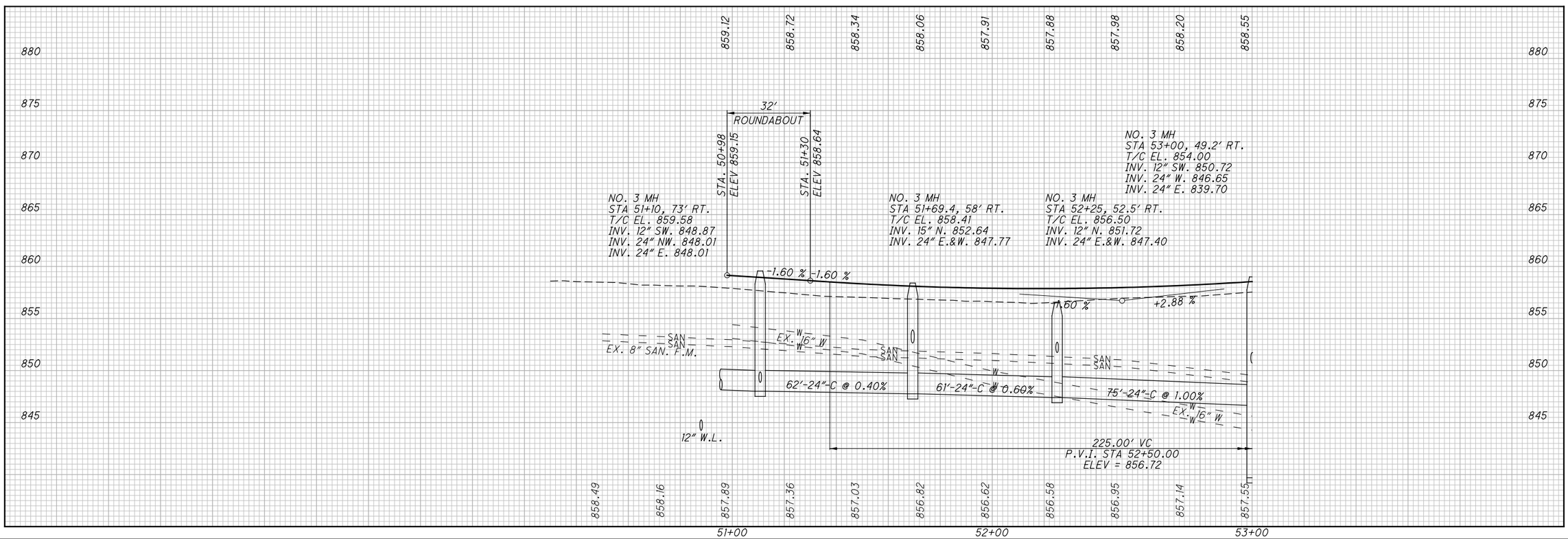

CALCULATED EJT
CHECKED REN

PROFILE - SOCIALVILLE-FOSTERS RD.
STA. 48+75 TO STA. 53+00

WAR-71-2.54

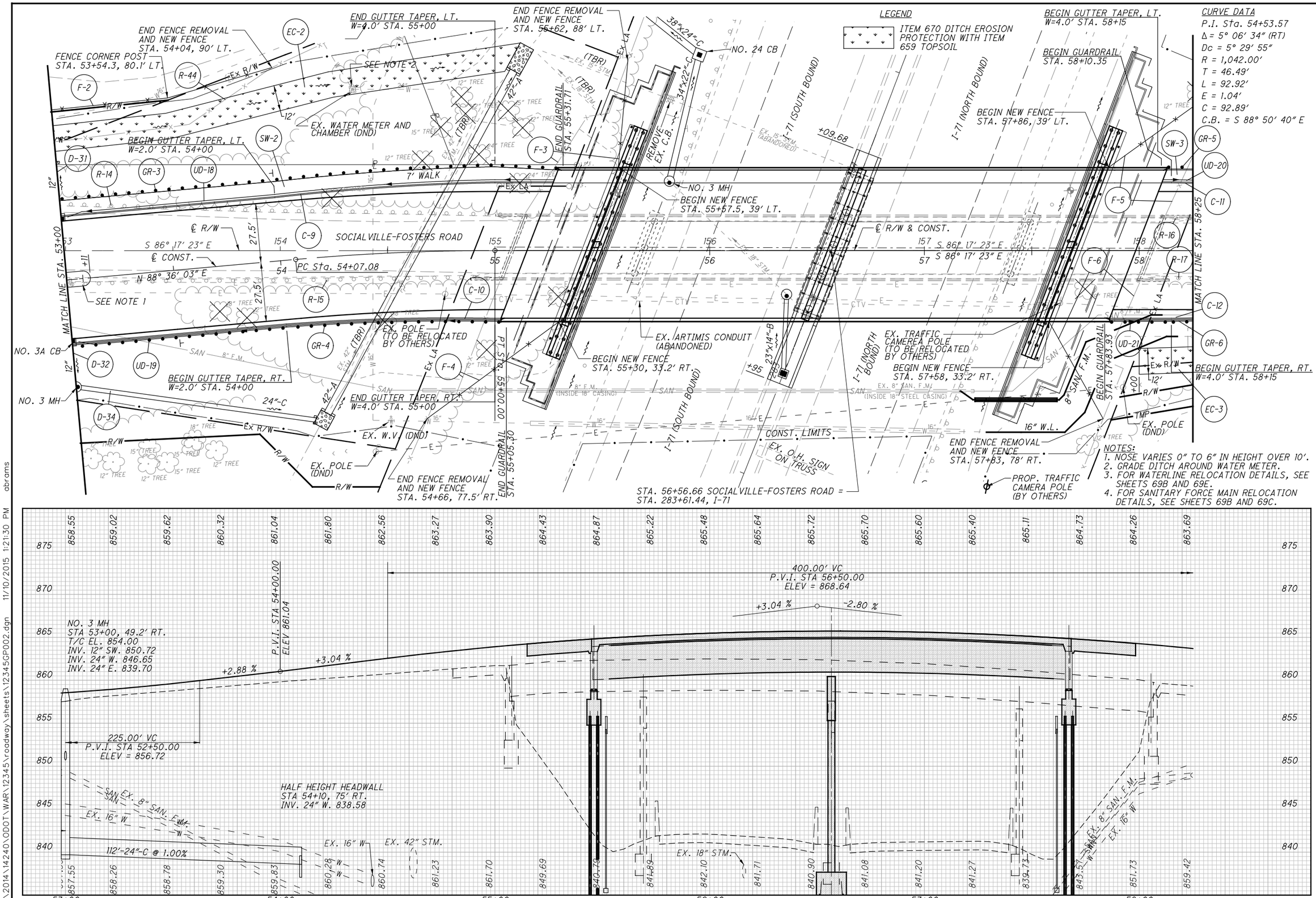

CALCULATED EJT
CHECKED REN

PLAN AND PROFILE SOCIALVILLE-FOSTERS RD.
STA. 53+00 TO STA. 58+25

WAR-71-2.54

END FENCE REMOVAL AND NEW FENCE STA. 58+47, 82.5' LT.

END GUTTER TAPER, LT. STA. 59+15

BEGIN WALK TRANSITION STA. 59+50

END GUARDRAIL STA. 59+60.35

END WALK TRANSITION STA. 60+00

EX. POLE (TO BE RELOCATED BY OTHERS)

ANCHOR ASSEMBLY, MGS TYPE E

MATCH LINE STA. 58+25

MATCH LINE STA. 63+00

NO. 3A CB

EX. POLE (TO BE RELOCATED BY OTHERS)

℄ R/W & CONST.

SOCIALVILLE-FOSTERS ROAD

S 86° 17' 23" E

1" DROP CURB AS PER SCD BP-4.1

EX. F.H. (TBR) (SEE DETAIL A)

FIRE HYDRANT STA. 60+25, 34' RT. (SEE DETAIL B)

EX. TELE. M.H. (ADJUST TO GRADE)

SEE NOTE 1

ANCHOR ASSEM. MGS TYPE 5

R=15'
NO. 2-2B CB

R=28'

EX. POLE (TO BE RELOCATED BY OTHERS)

END GUTTER TAPER, RT. STA. 59+15

EX. POLE (TO BE RELOCATED BY OTHERS)

EX. SIGN (DO NOT DISTURB)

END GUARDRAIL STA. 60+08.93

SEE NOTE 2

COMM. DRIVE STA. 61+53 W=40'

COMM. DRIVE STA. 62+17 W=28'

EX. SIGN (TO BE RELOCATED BY OTHERS)

EX. CONC. WATER VAULT W/ 3 WATER VALVES (RECONSTRUCTED TO GRADE BY OTHERS)

EX. CONC. WATER VAULT W/ ELECTRIC BOOSTER PUMP (DO NOT DISTURB)

DETAIL A

EX. F.H. (TBR)

EX. 6" W.V. (TBR)

6" CUT & CAP

EX. 16" W.L.

DETAIL B

16"x6" TAPPING SLEEVE, VALVE, AND VALVE BOX

EX. 16" W.L.

PROP. 6" W.V.

6" W.L.

90° BEND

PROP. F.H.

LEGEND

ITEM 670 DITCH EROSION PROTECTION WITH ITEM 659 TOPSOIL

NOTES:
1. TRANSITION GUTTER SLOPE FROM 1.6% TO 8.33% IN 10'.
2. TAPER CURB HEIGHT FROM 6" TO 2" IN 10'.

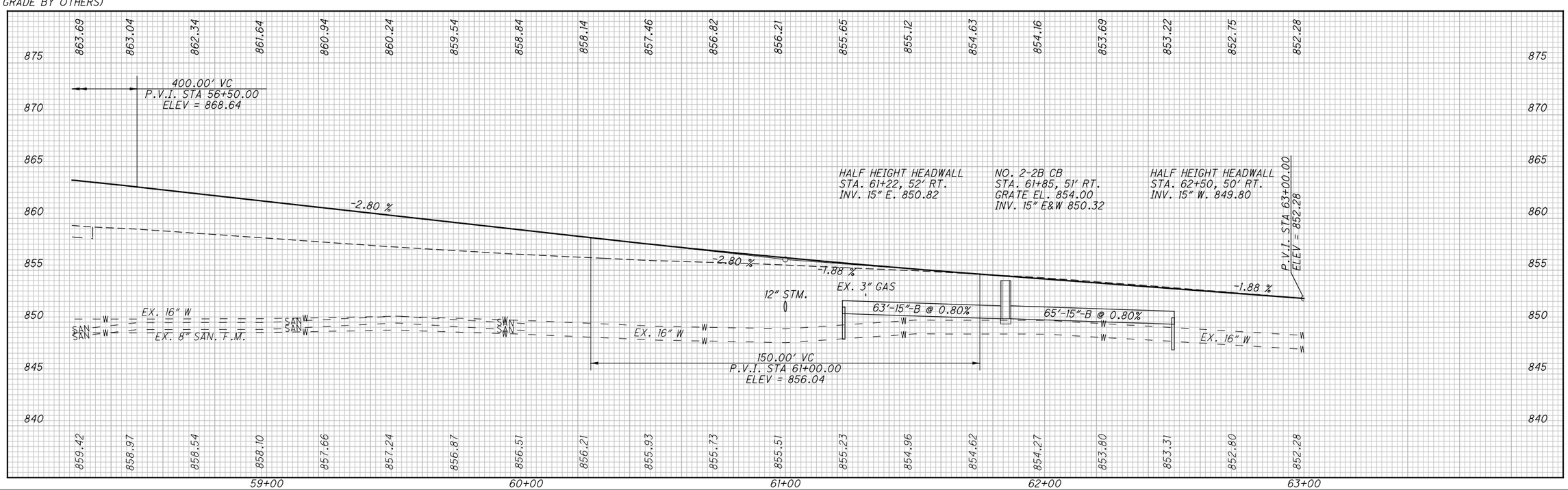

HORIZONTAL SCALE IN FEET

CALCULATED EJT
CHECKED REN

PLAN AND PROFILE SOCIALVILLE-FOSTERS RD.
STA. 58+25 TO STA. 63+00

WAR-71-2.54

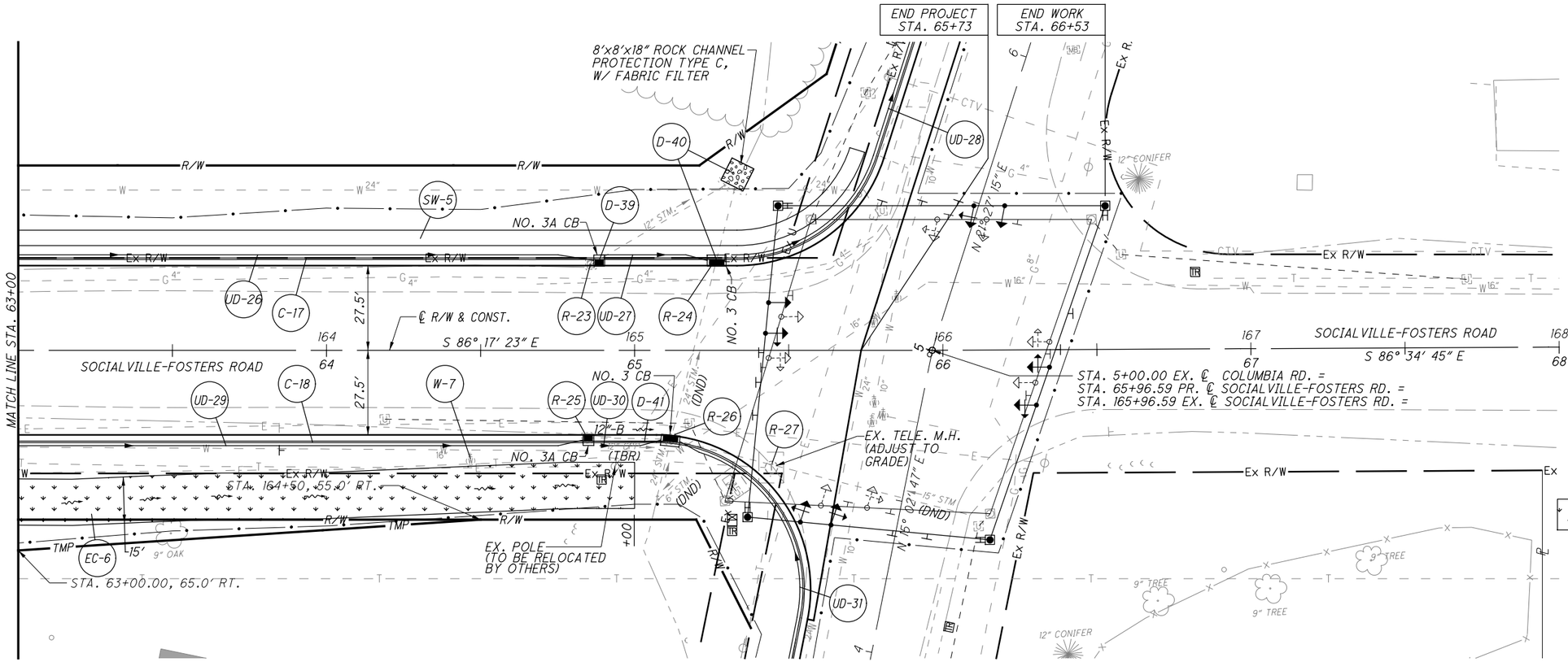

NOTES:
1. SEE TRAFFIC SIGNAL PLANS, SHEET 84.

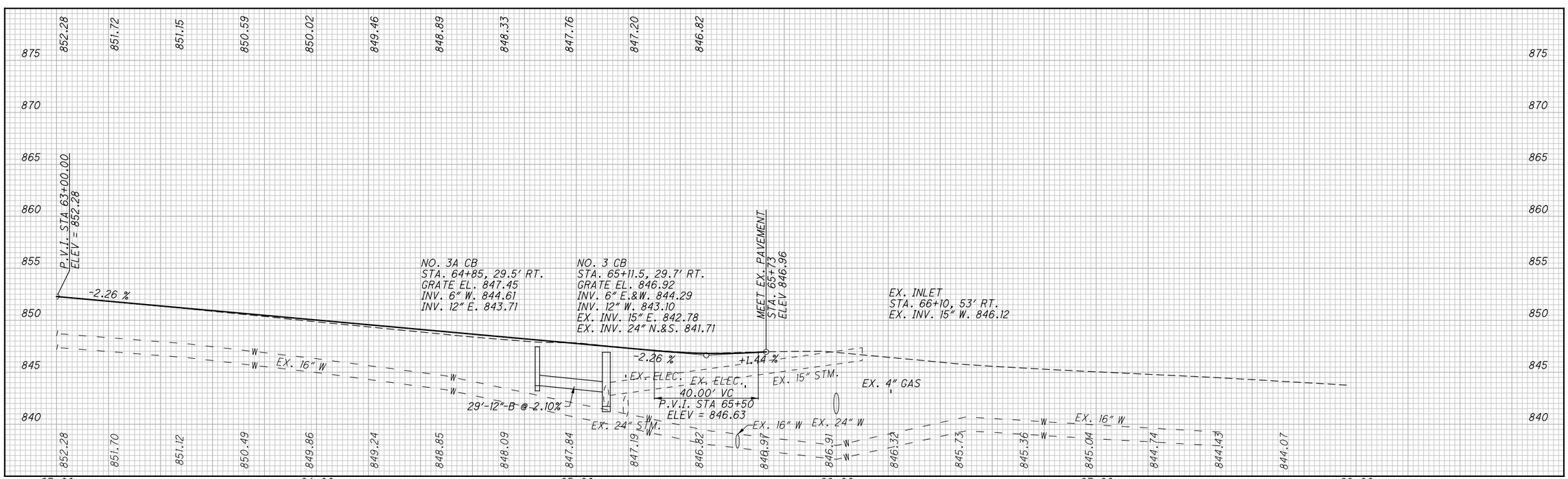

HORIZONTAL SCALE IN FEET
0 10 20 40

CALCULATED EJT
CHECKED REN

PLAN AND PROFILE SOCIALVILLE-FOSTERS RD.
STA. 63+00 TO STA. 68+00

WAR-71-2.54

SEEDING END WIDTH	SEEDING SQ. YDS.
75	
	270
87	
	270

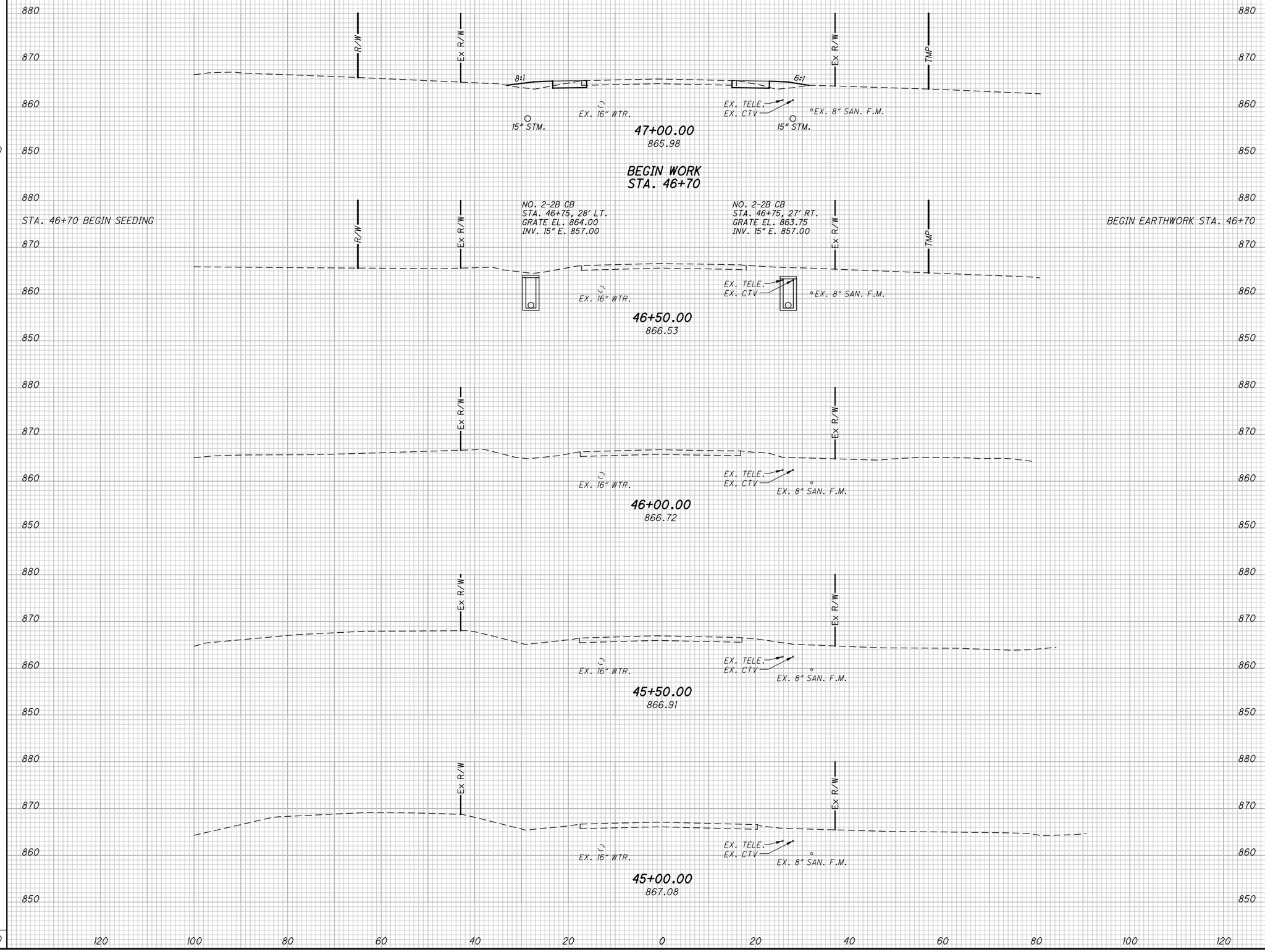

END AREA CUT	END AREA FILL	VOLUME CUT	VOLUME FILL
14	19		
		8	11
0	0		
		8	11

CALCULATED EJT
CHECKED REN

CROSS SECTIONS SOCIALVILLE-FOSTERS ROAD
STA. 45+00.00 TO STA. 47+00.00

WAR-71-2.54

SEEDING END WIDTH	SEEDING SQ. YDS.	END AREA CUT	END AREA FILL	VOLUME CUT	VOLUME FILL
65	339	26	43	72	60
57	303	51	21	88	38
52	289	44	19	43	23
52	353	32	21	18	15
75	1284	14	19	221	136

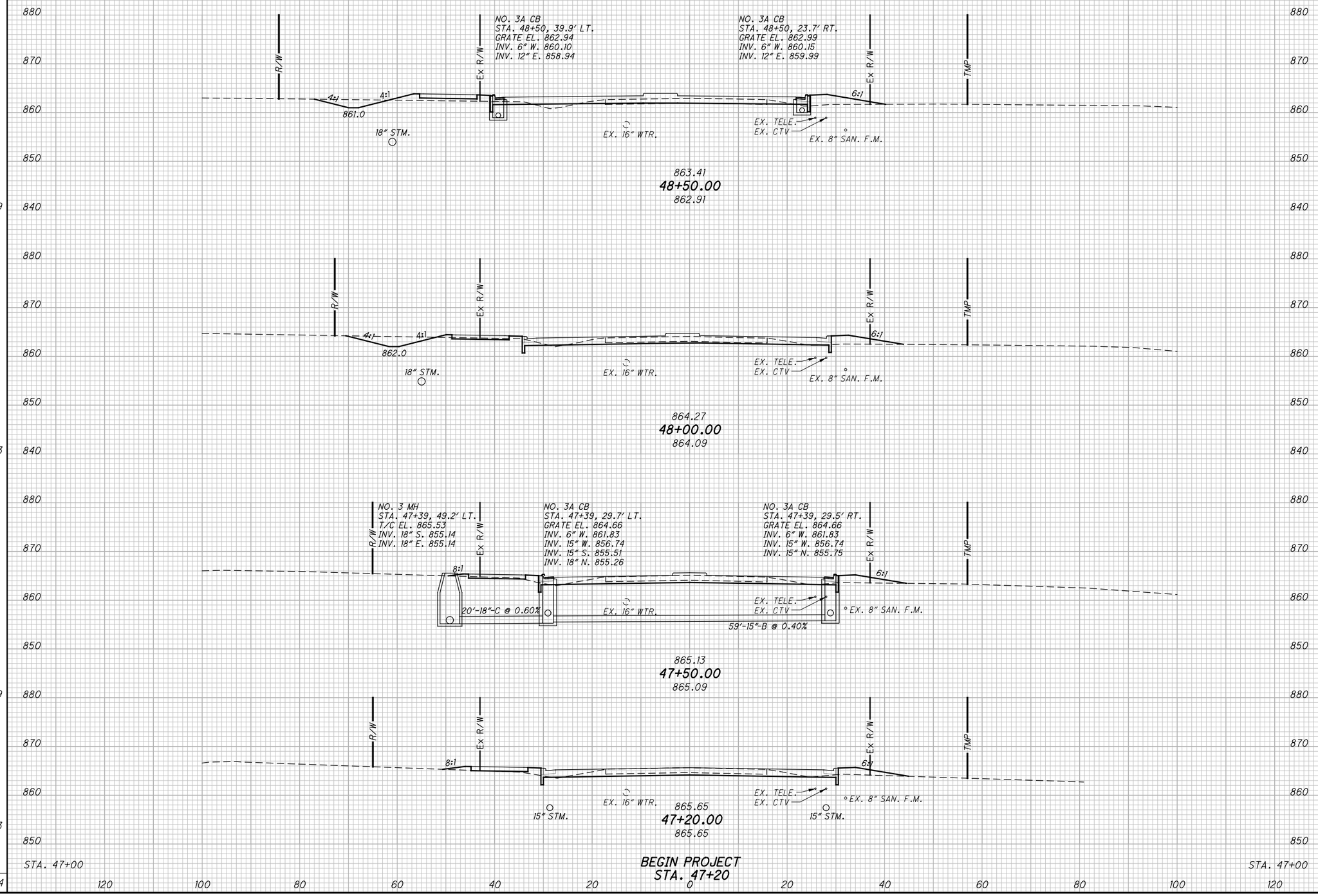

CALCULATED EJT
CHECKED REN

CROSS SECTIONS SOCIALVILLE-FOSTERS ROAD
STA. 47+20.00 TO STA. 48+50.00

WAR-71-2.54

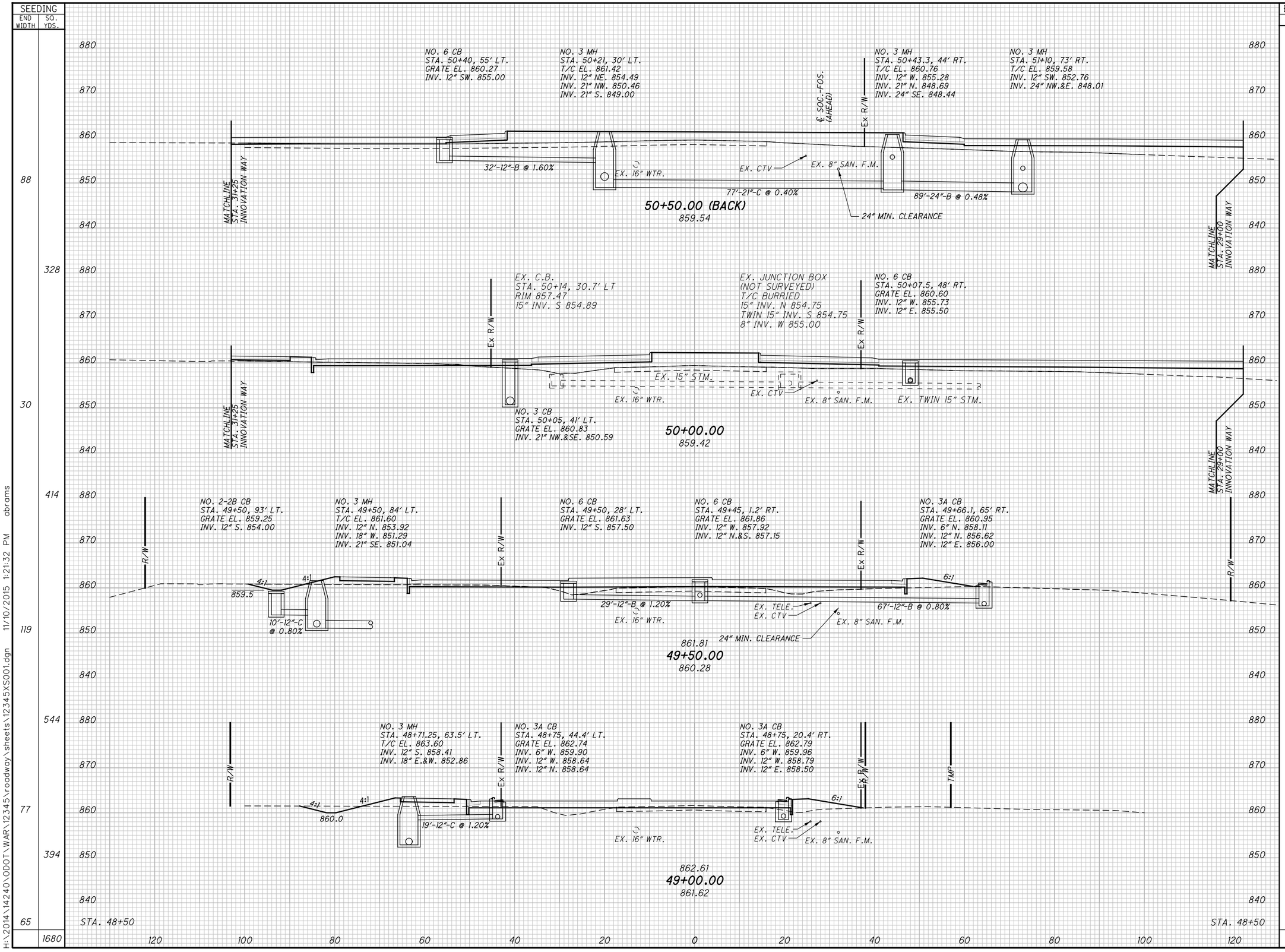
SEEDING
END WIDTH
SQ. YDS.
NO. 6 CB
STA. 50+40, 55' LT.
GRATE EL. 860.27
INV. 12" SW. 855.00
NO. 3 MH
STA. 50+21, 30' LT.
T/C EL. 861.42
INV. 12" NE. 854.49
INV. 21" NW. 850.46
INV. 21" S. 849.00
NO. 3 MH
STA. 50+43.3, 44' RT.
T/C EL. 860.76
INV. 12" W. 855.28
INV. 21" N. 848.69
INV. 24" SE. 848.44
NO. 3 MH
STA. 51+10, 73' RT.
T/C EL. 859.58
INV. 12" SW. 852.76
INV. 24" NW.&E. 848.01
℄ SOC.-FOS. (AHEAD)
EX R/W
32'-12"-B @ 1.60%
EX. 16" WTR.
EX. CTV
EX. 8" SAN. F.M.
77'-21"-C @ 0.40%
89'-24"-B @ 0.48%
24" MIN. CLEARANCE
50+50.00 (BACK)
859.54
MATCHLINE STA. 31+26 INNOVATION WAY
MATCHLINE STA. 29+00 INNOVATION WAY
EX. C.B.
STA. 50+14, 30.7' LT
RIM 857.47
15" INV. S 854.89
EX. JUNCTION BOX
(NOT SURVEYED)
T/C BURRIED
15" INV. N 854.75
TWIN 15" INV. S 854.75
8" INV. W 855.00
NO. 6 CB
STA. 50+07.5, 48' RT.
GRATE EL. 860.60
INV. 12" W. 855.73
INV. 12" E. 855.50
EX. 15" STM.
EX. TWIN 15" STM.
NO. 3 CB
STA. 50+05, 41' LT.
GRATE EL. 860.83
INV. 21" NW.&SE. 850.59
50+00.00
859.42
NO. 2-2B CB
STA. 49+50, 93' LT.
GRATE EL. 859.25
INV. 12" S. 854.00
NO. 3 MH
STA. 49+50, 84' LT.
T/C EL. 861.60
INV. 12" N. 853.92
INV. 18" W. 851.29
INV. 21" SE. 851.04
NO. 6 CB
STA. 49+50, 28' LT.
GRATE EL. 861.63
INV. 12" S. 857.50
NO. 6 CB
STA. 49+45, 1.2' RT.
GRATE EL. 861.86
INV. 12" W. 857.92
INV. 12" N.&S. 857.15
NO. 3A CB
STA. 49+66.1, 65' RT.
GRATE EL. 860.95
INV. 6" N. 858.11
INV. 12" N. 856.62
INV. 12" E. 856.00
R/W
4:1
859.5
10'-12"-C @ 0.80%
29'-12"-B @ 1.20%
EX. TELE.
67'-12"-B @ 0.80%
861.81
49+50.00
860.28
NO. 3 MH
STA. 48+71.25, 63.5' LT.
T/C EL. 863.60
INV. 12" S. 858.41
INV. 18" E.&W. 852.86
NO. 3A CB
STA. 48+75, 44.4' LT.
GRATE EL. 862.74
INV. 6" W. 859.90
INV. 12" W. 858.64
INV. 12" N. 858.64
NO. 3A CB
STA. 48+75, 20.4' RT.
GRATE EL. 862.79
INV. 6" W. 859.96
INV. 12" W. 858.79
INV. 12" E. 858.50
TMP
6:1
860.0
19'-12"-C @ 1.20%
862.61
49+00.00
861.62
STA. 48+50
880
870
860
850
840
120
100
80
60
40
20
0
20
40
60
80
100
120
END AREA
CUT
FILL
VOLUME
CUT
FILL
88
328
30
414
119
544
77
394
65
1680
4
458
23
688
20
285
38
376
21
121
37
196
18
90
41
124
26
43
139
1384
CALCULATED EJT
CHECKED REN
CROSS SECTIONS SOCIALVILLE-FOSTERS ROAD
STA. 49+00.00 TO STA. 50+50.00
WAR-71-2.54
34
137
H:\2014\14240\ODOT\WAR\12345\roadway\sheets\12345XS001.dgn 11/10/2015 1:21:32 PM abrams

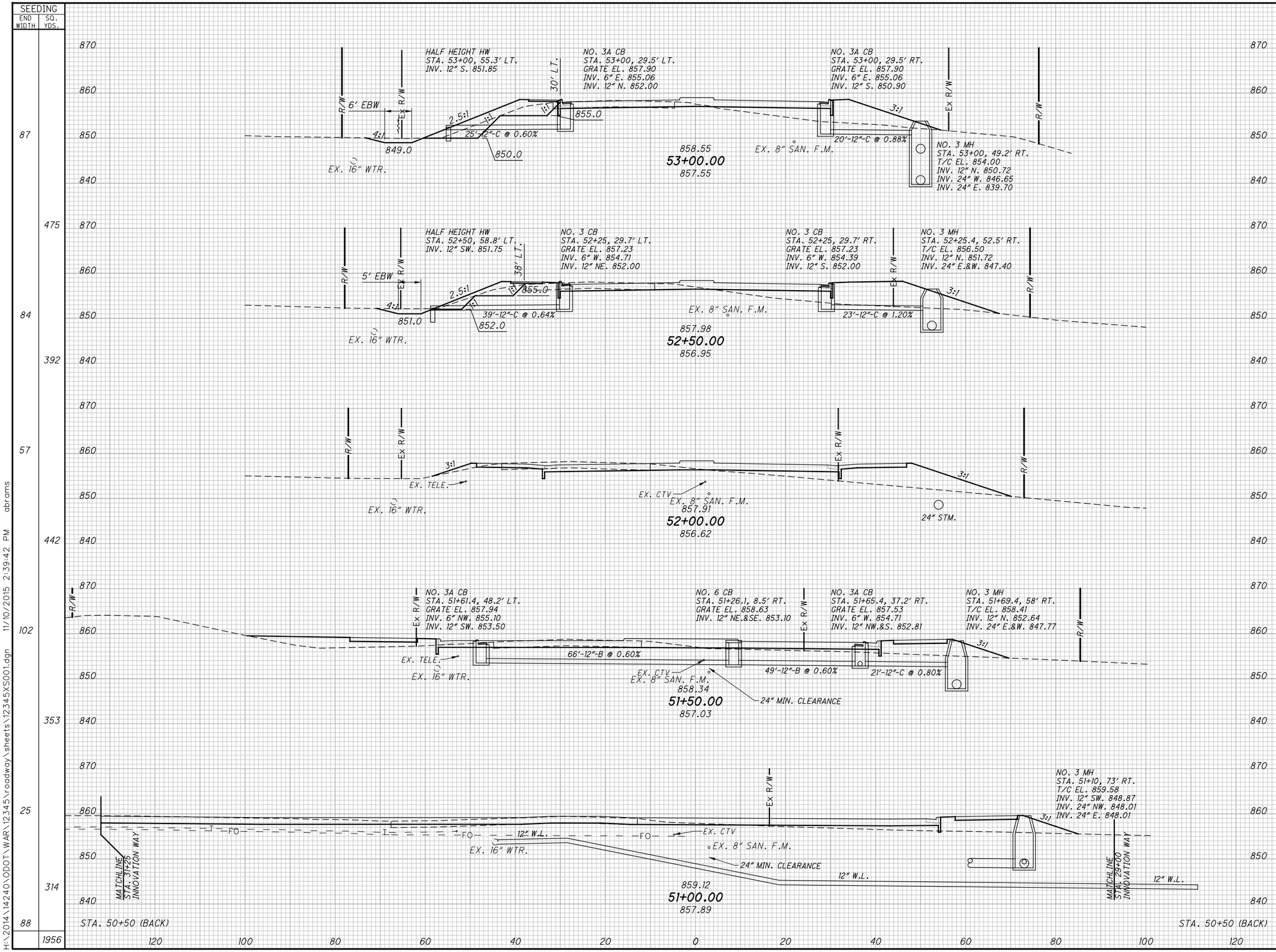

SEEDING END WIDTH	SEEDING SQ. YDS.	END AREA CUT	END AREA FILL	VOLUME CUT	VOLUME FILL
87		58	200		
	475			101	397
84		51	229		
	392			70	357
57		25	156		
	442			50	288
102		28	144		
	353			115	240
25		96	115		
	314			93	531
88		4	458		
	1956			429	1813

CALCULATED EJT
CHECKED REN

CROSS SECTIONS SOCIALVILLE-FOSTERS ROAD
STA. 51+00.00 TO STA. 53+00.00

WAR-71-2.54

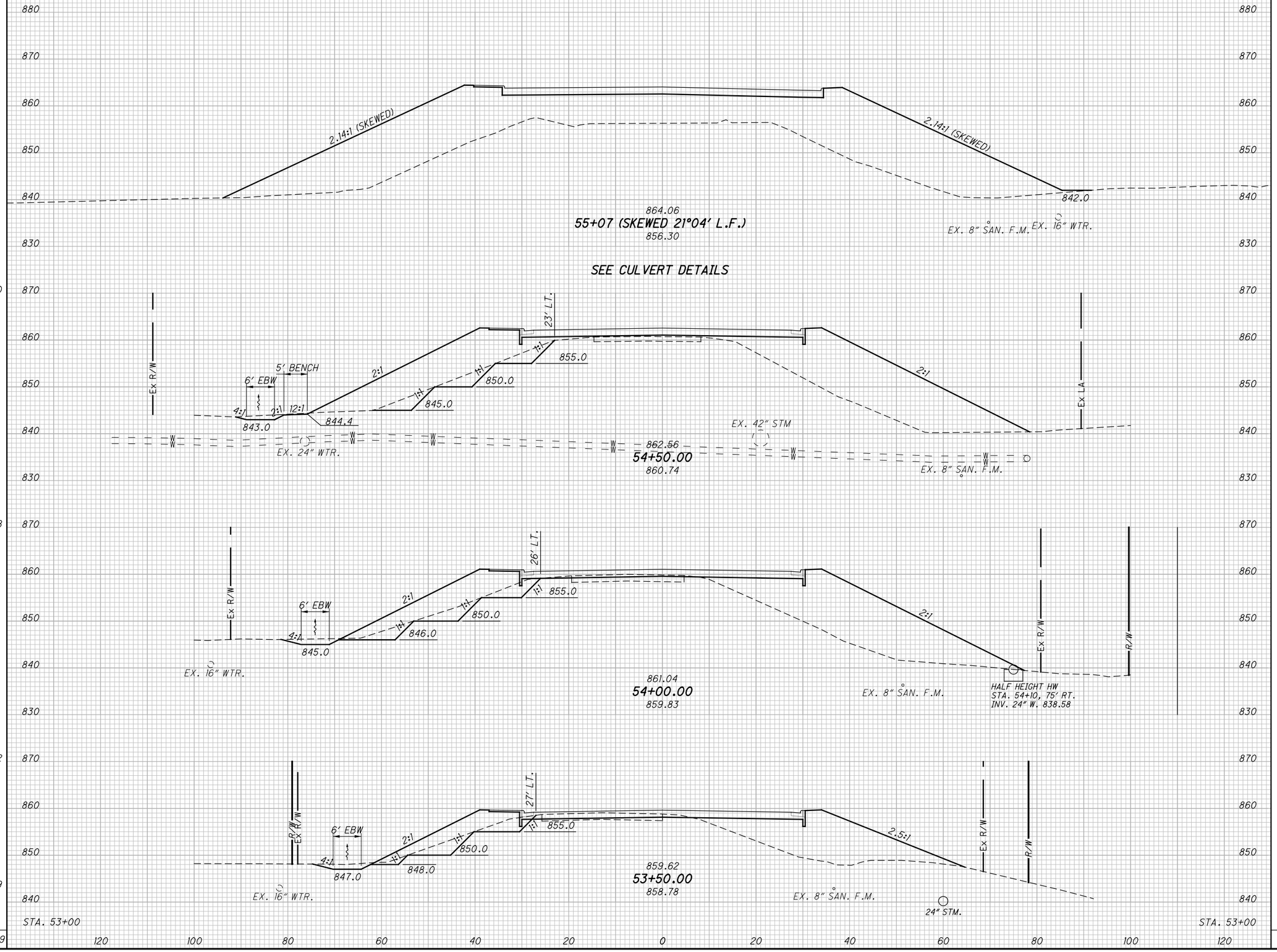

SEEDING END WIDTH	SEEDING SQ. YDS.	END AREA CUT	END AREA FILL	VOLUME CUT	VOLUME FILL
147		0	1404		
	880			69	2431
131		65	899		
	708			125	1509
124		76	731		
	592			131	1002
89		65	351		
	489			107	510
87		50	200		
	2669			432	5452

CALCULATED EJT
CHECKED REN

CROSS SECTIONS SOCIALVILLE-FOSTERS ROAD
STA. 53+50.00 TO STA. 55+07.00

WAR-71-2.54

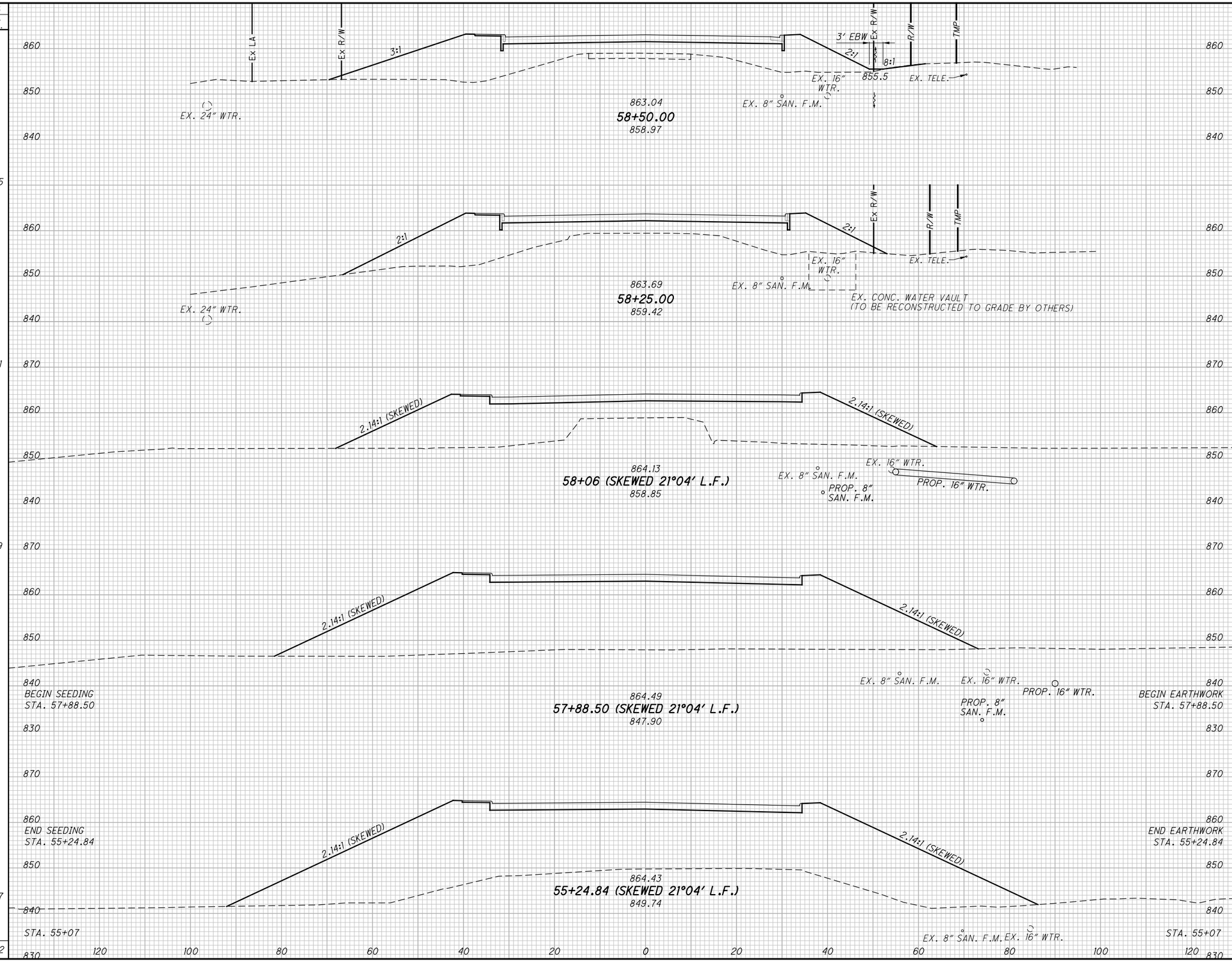

SEEDING END WIDTH	SEEDING SQ. YDS.	END AREA CUT	END AREA FILL	VOLUME CUT	VOLUME FILL
87		1	579		
	265			1	540
104		0	587		
	221			0	502
105		0	838		
	219			0	836
120		0	1741		
163		0	1987		
	307			0	1121
147		0	1404		
	1012			1	2999

CALCULATED EJT
CHECKED REN

CROSS SECTIONS SOCIALVILLE-FOSTERS ROAD
STA. 55+24.84 TO STA. 58+50.00

WAR-71-2.54

SEEDING END WIDTH	SEEDING SQ. YDS.	END AREA CUT	END AREA FILL	VOLUME CUT	VOLUME FILL
59		49	89		
	336			52	235
62		7	165		
	367			13	388
70		7	254		
	406			13	552
76		6	342		
	439			9	738
82		3	455		
	469			4	958
87		1	579		
	2017			91	2871

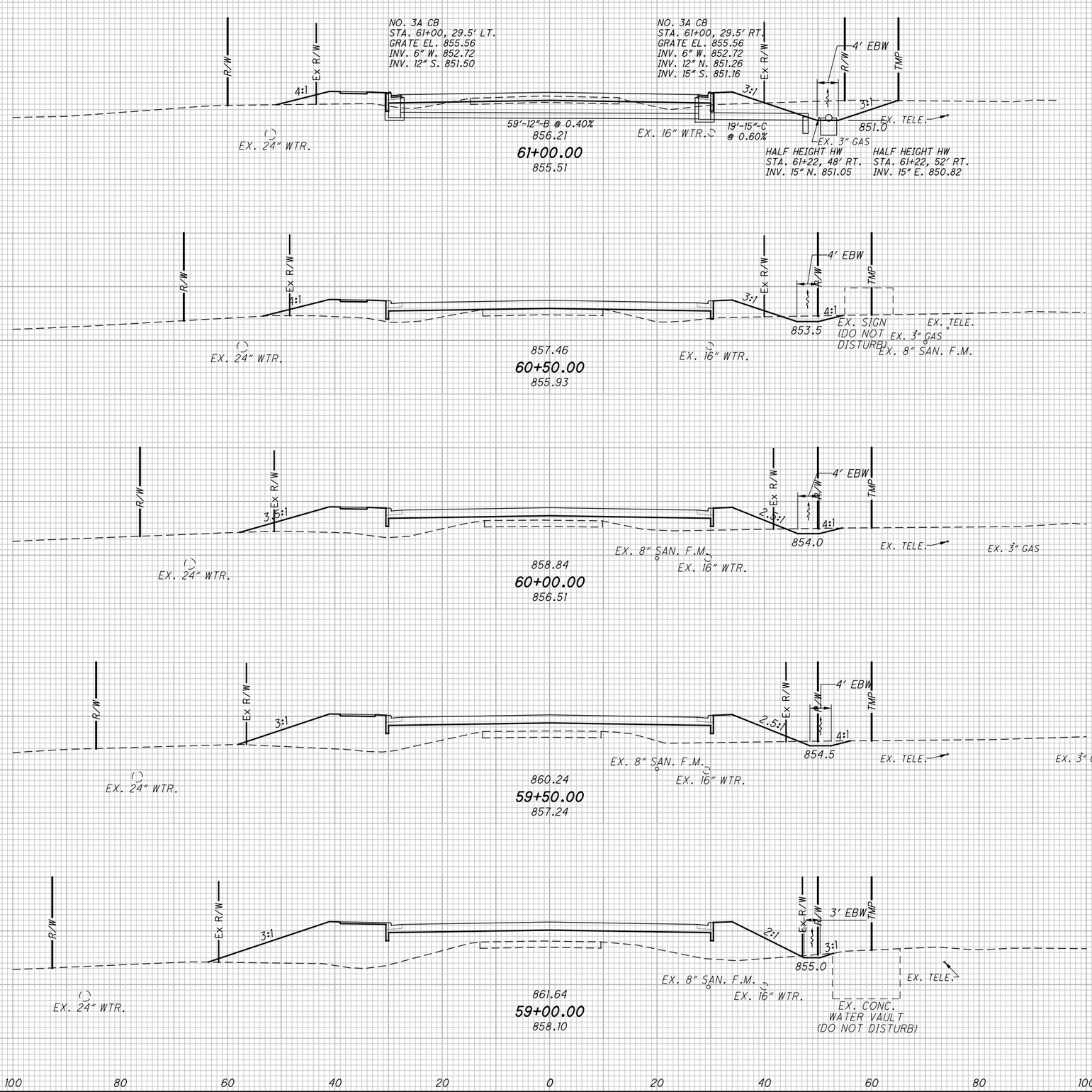

CALCULATED EJT
CHECKED REN

CROSS SECTIONS SOCIALVILLE-FOSTERS ROAD
STA. 59+00.00 TO STA. 61+00.00

WAR-71-2.54

SEEDING END WIDTH	SEEDING SQ. YDS.	END AREA CUT	END AREA FILL	VOLUME CUT	VOLUME FILL
59		110	4		
	328			218	11
59		125	7		
	328			186	18
59		75	12		
	328			106	29
59		39	19		
	328			82	100
59		49	89		
	1312			592	158

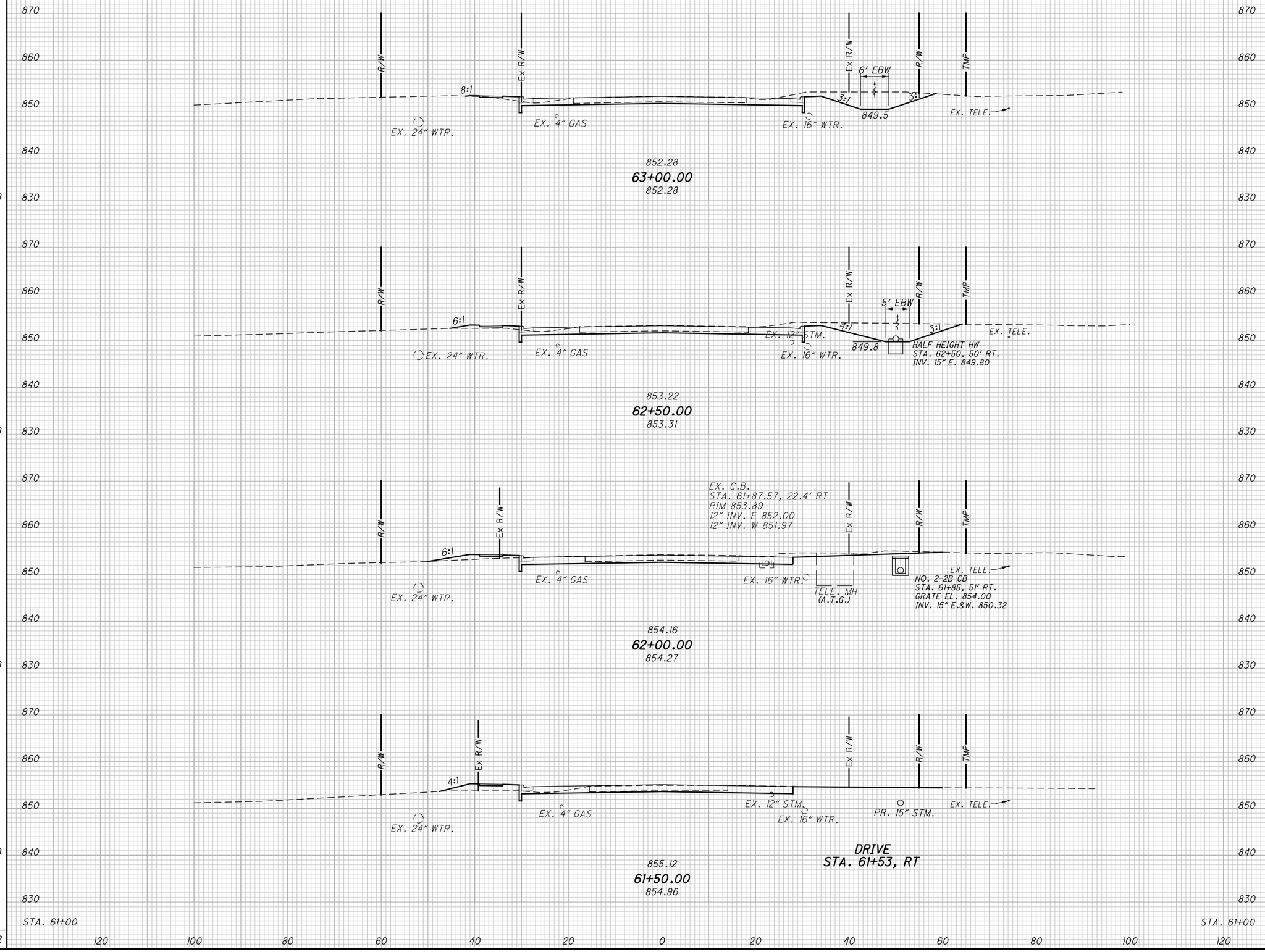

CALCULATED EJT
CHECKED REN

CROSS SECTIONS SOCIALVILLE-FOSTERS ROAD
STA. 61+50.00 TO STA. 63+00.00

WAR-71-2.54

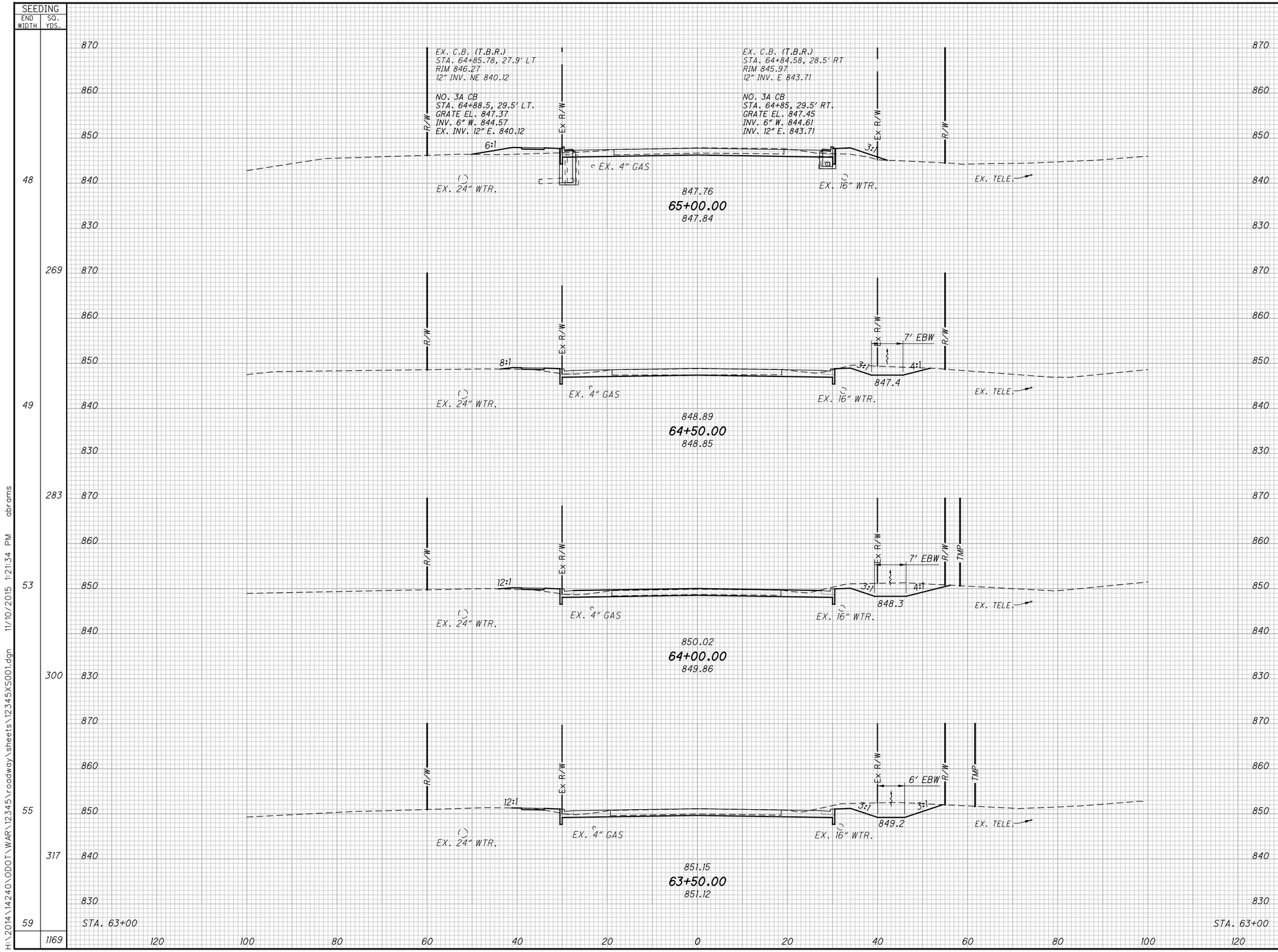
SEEDING
END WIDTH
SQ. YDS.
EX. C.B. (T.B.R.)
STA. 64+85.78, 27.9' LT
RIM 846.27
12" INV. NE 840.12
NO. 3A CB
STA. 64+88.5, 29.5' LT.
GRATE EL. 847.37
INV. 6" W. 844.57
EX. INV. 12" E. 840.12
EX. C.B. (T.B.R.)
STA. 64+84.58, 28.5' RT
RIM 845.97
12" INV. E 843.71
NO. 3A CB
STA. 64+85, 29.5' RT.
GRATE EL. 847.45
INV. 6" W. 844.61
INV. 12" E. 843.71
R/W
Ex R/W
6:1
3:1
EX. 4" GAS
EX. 24" WTR.
EX. 16" WTR.
EX. TELE.
847.76
65+00.00
847.84
8:1
7' EBW
4:1
847.4
848.89
64+50.00
848.85
12:1
TMP
848.3
850.02
64+00.00
849.86
6' EBW
849.2
851.15
63+50.00
851.12
STA. 63+00
END AREA
CUT
FILL
VOLUME
CUT
FILL
48 269 45 30
49 100 33
53 283 62 5
55 136 10
59 300 84 5
317 165 8
1169 95 3
190 7
110 4
591 58
CALCULATED EJT
CHECKED REN
CROSS SECTIONS SOCIALVILLE-FOSTERS ROAD
STA. 63+50.00 TO STA. 65+00.00
WAR-71-2.54
40
137
H:\2014\14240\ODOT\WAR\12345\roadway\sheets\12345XS001.dgn 11/10/2015 1:21:34 PM abrams

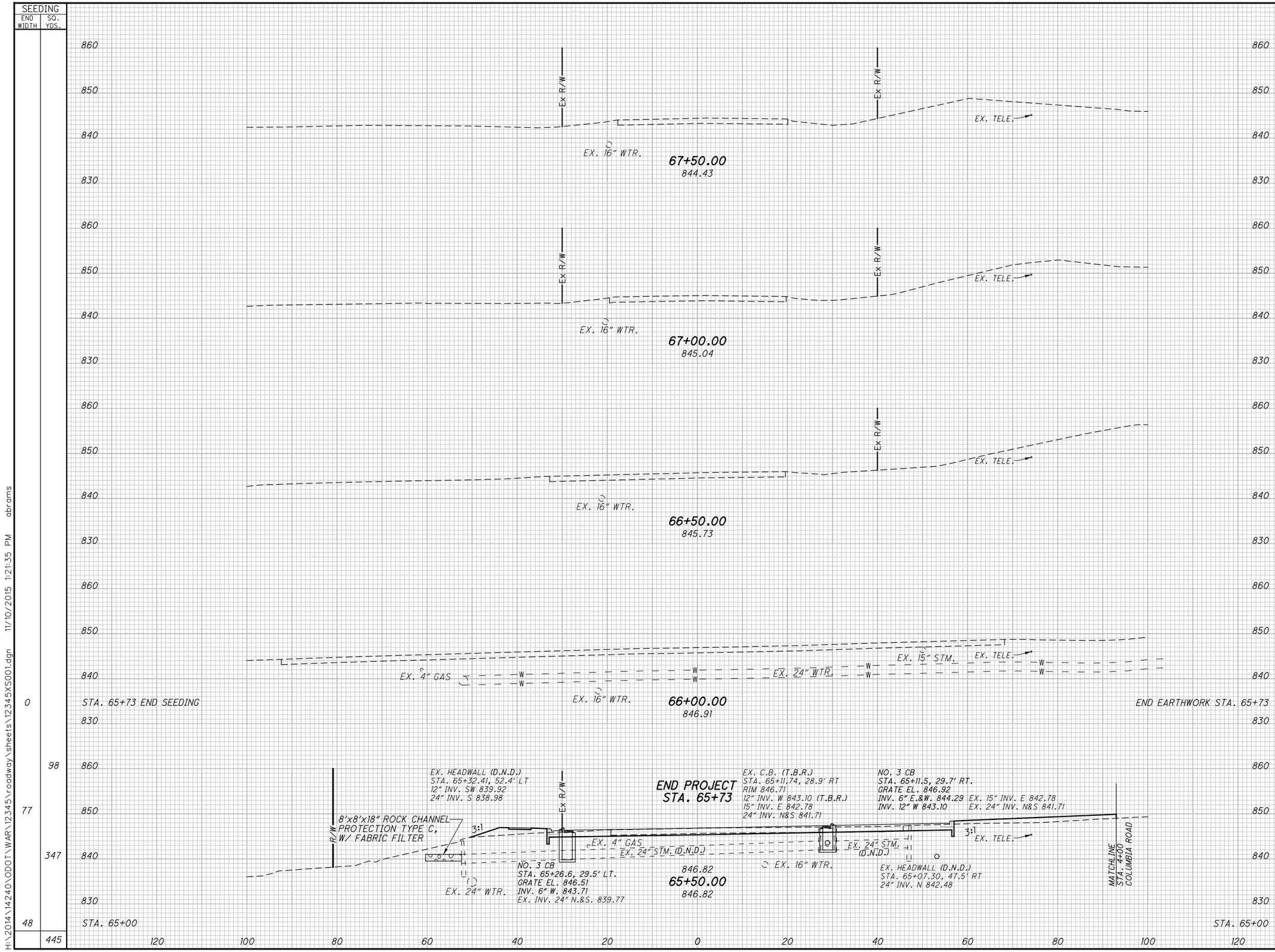

END AREA CUT	END AREA FILL	VOLUME CUT	VOLUME FILL
0	0		
44	53	19	23
45	30	83	77
		102	100

CALCULATED EJT
CHECKED REN

CROSS SECTIONS SOCIALVILLE-FOSTERS ROAD
STA. 65+50.00 TO STA. 67+50.00

WAR-71-2.54

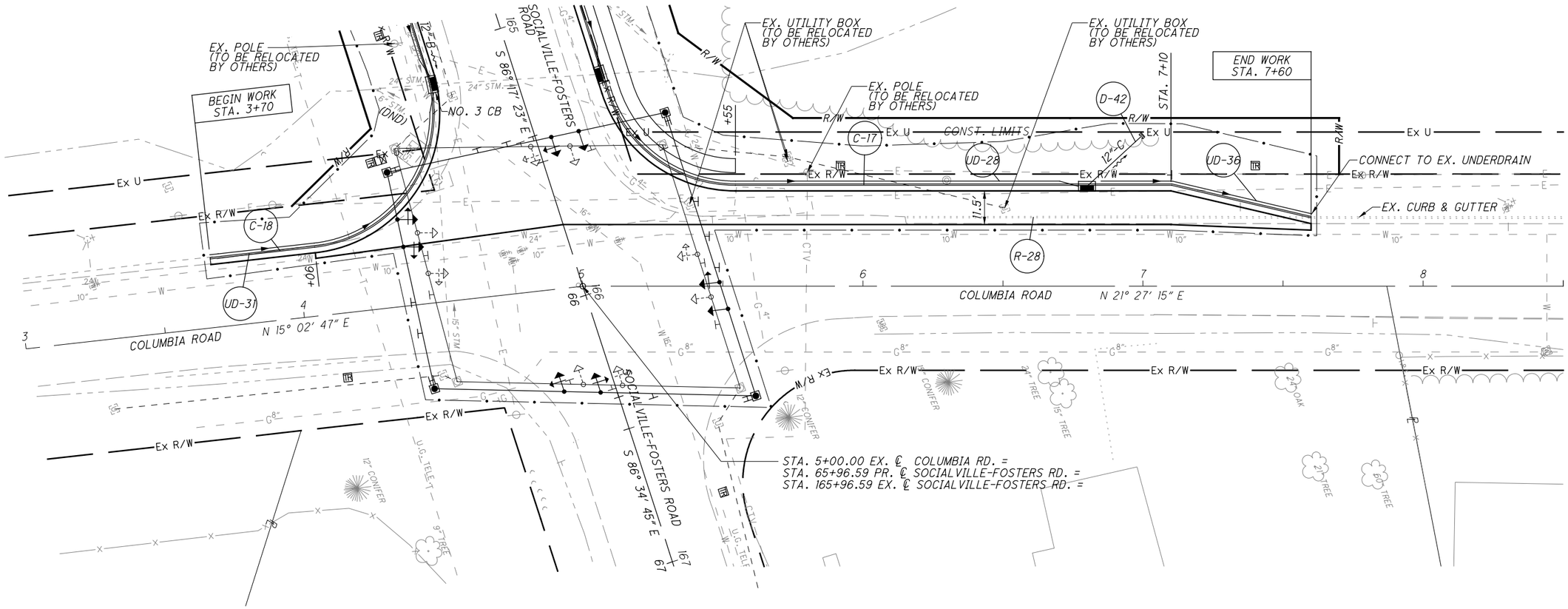

NOTES:
1. SEE TRAFFIC SIGNAL PLANS, SHEET 84.

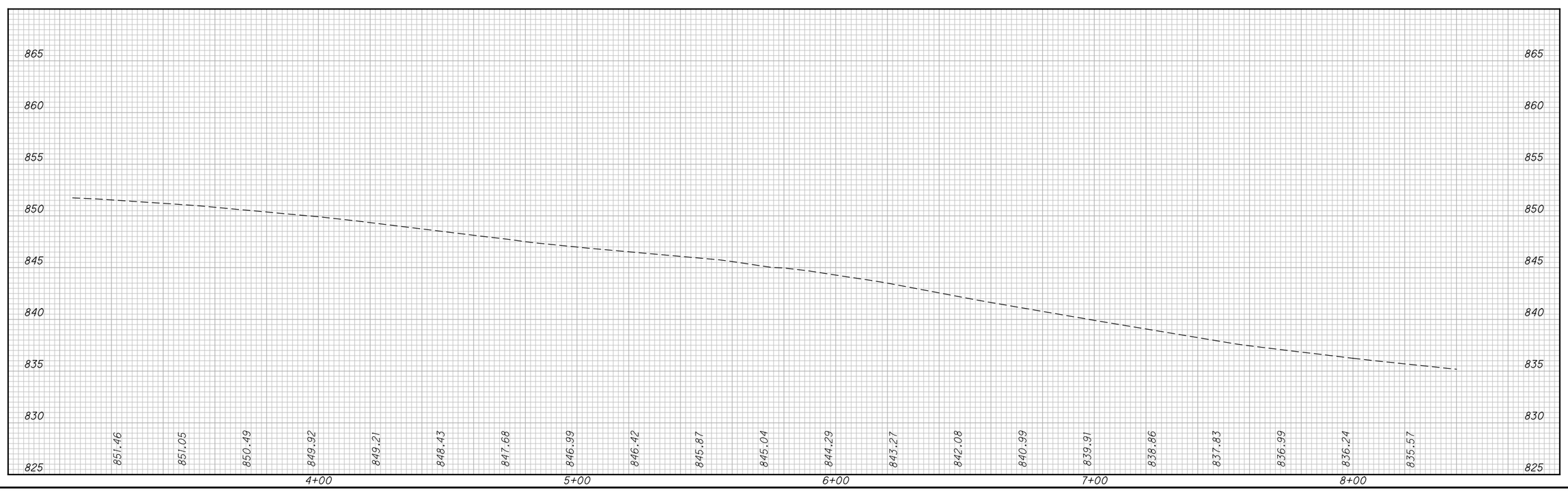

HORIZONTAL SCALE IN FEET 0 10 20 40

CALCULATED EJT
CHECKED REN

PLAN AND PROFILE - COLUMBIA RD.
STA. 3+00 TO STA. 8+50

WAR-71-2.54

SEEDING END WIDTH	SEEDING SQ. YDS.	END AREA CUT	END AREA FILL	VOLUME CUT	VOLUME FILL
25		6	10		
	83			4	6
25		0	0		
	83			4	6

CALCULATED EJT
CHECKED REN

CROSS SECTIONS COLUMBIA ROAD
STA. 3+05.00 TO STA. 4+00.00

WAR-71-2.54

SEEDING END WIDTH	SEEDING SQ. YDS.	END AREA CUT	END AREA FILL	VOLUME CUT	VOLUME FILL
18		18	18		
				27	17
		11	0		
				15	0
		5	0		
				10	9
		6	10		
				52	26

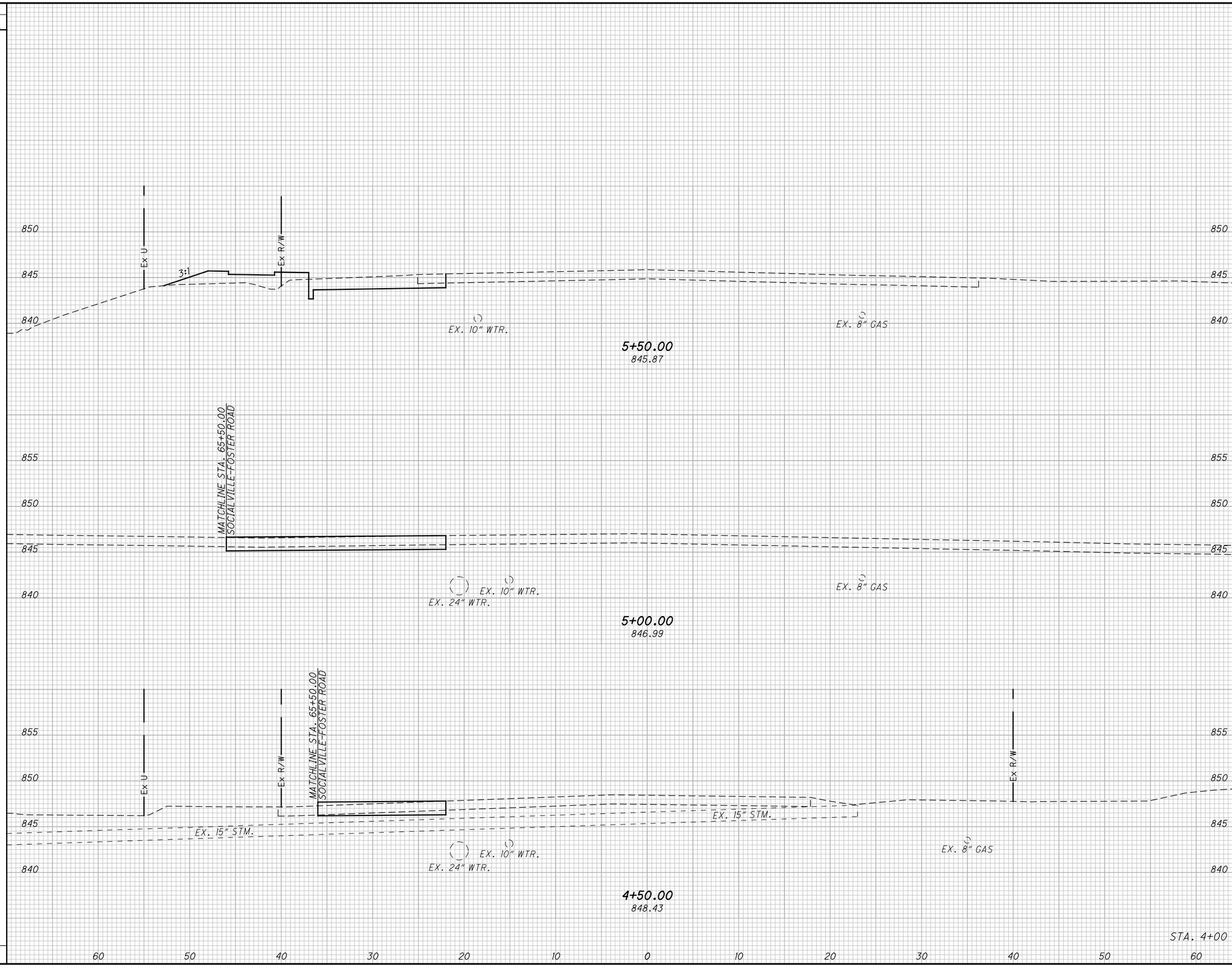

CALCULATED EJT
CHECKED REN

CROSS SECTIONS COLUMBIA ROAD
STA. 4+50.00 TO STA. 5+50.00

WAR-71-2.54

SEEDING END WIDTH	SEEDING SQ. YDS.	END AREA CUT	END AREA FILL	VOLUME CUT	VOLUME FILL
23	128	23	15	45	18
23	128	25	4	42	21
23	114	20	18	36	34
18	370	18	18	123	73

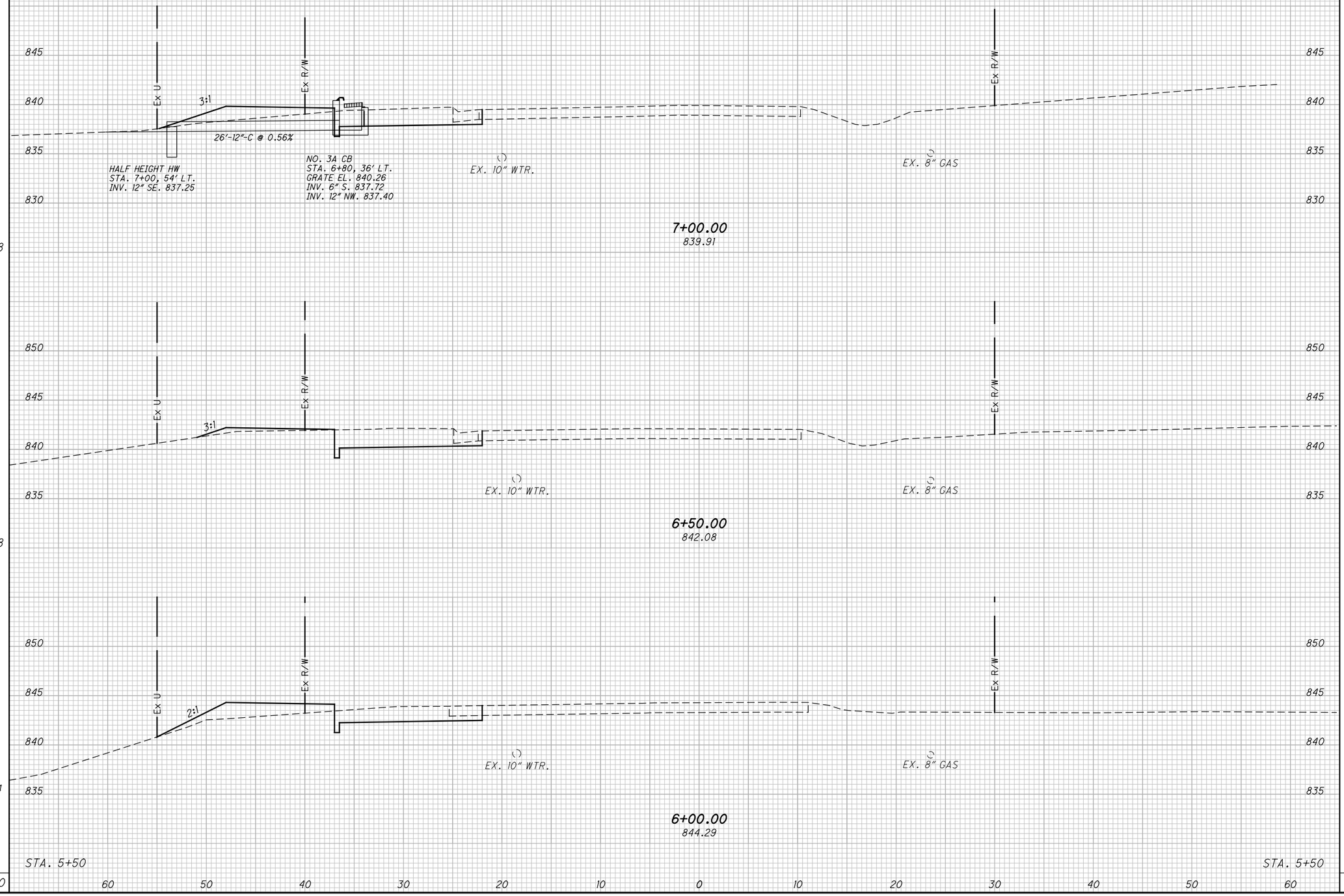

CALCULATED EJT
CHECKED REN

CROSS SECTIONS COLUMBIA ROAD
STA. 6+00.00 TO STA. 7+00.00

WAR-71-2.54

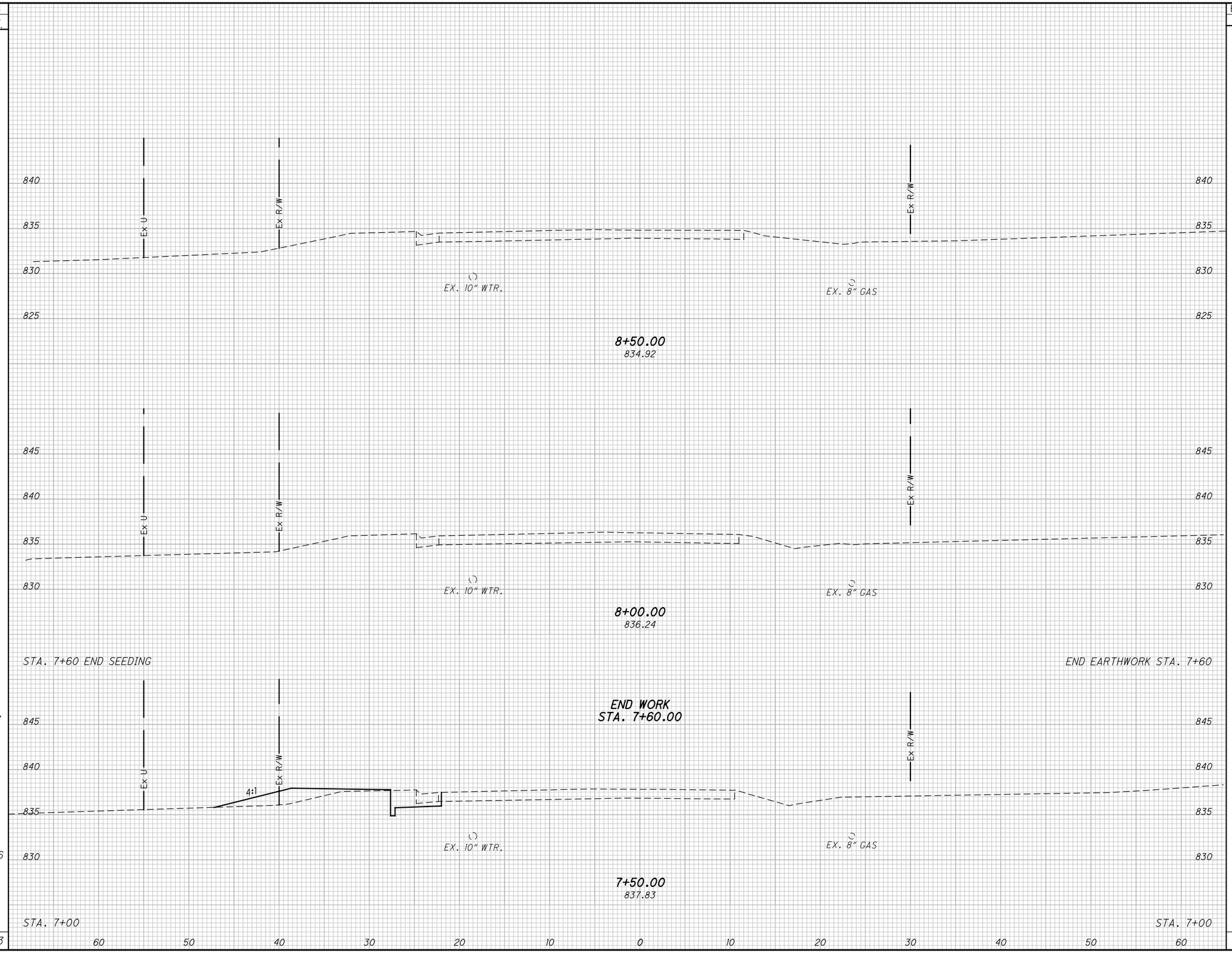

SEEDING END WIDTH	SEEDING SQ. YDS.	END AREA CUT	END AREA FILL	VOLUME CUT	VOLUME FILL
33					
33	37	0	0		
23	156	8	15	2	3
	193	23	15	29	28
				31	31

CALCULATED EJT
CHECKED REN

CROSS SECTIONS COLUMBIA ROAD
STA. 7+50.00 TO STA. 8+50.00

WAR-71-2.54

NOTES
1. FOR RETAINING WALL DETAILS, SEE SHEETS 68-69.
2. EXISTING EARTH MOUND TO BE REGRADED. SEE SHEET 52 FOR CROSS SECTION.
3. FOR WATERLINE DETAILS, SEE SHEETS 69B AND 69D.

* LOCATIONS, SIZES AND CONNECTIONS COULD NOT BE VERIFIED

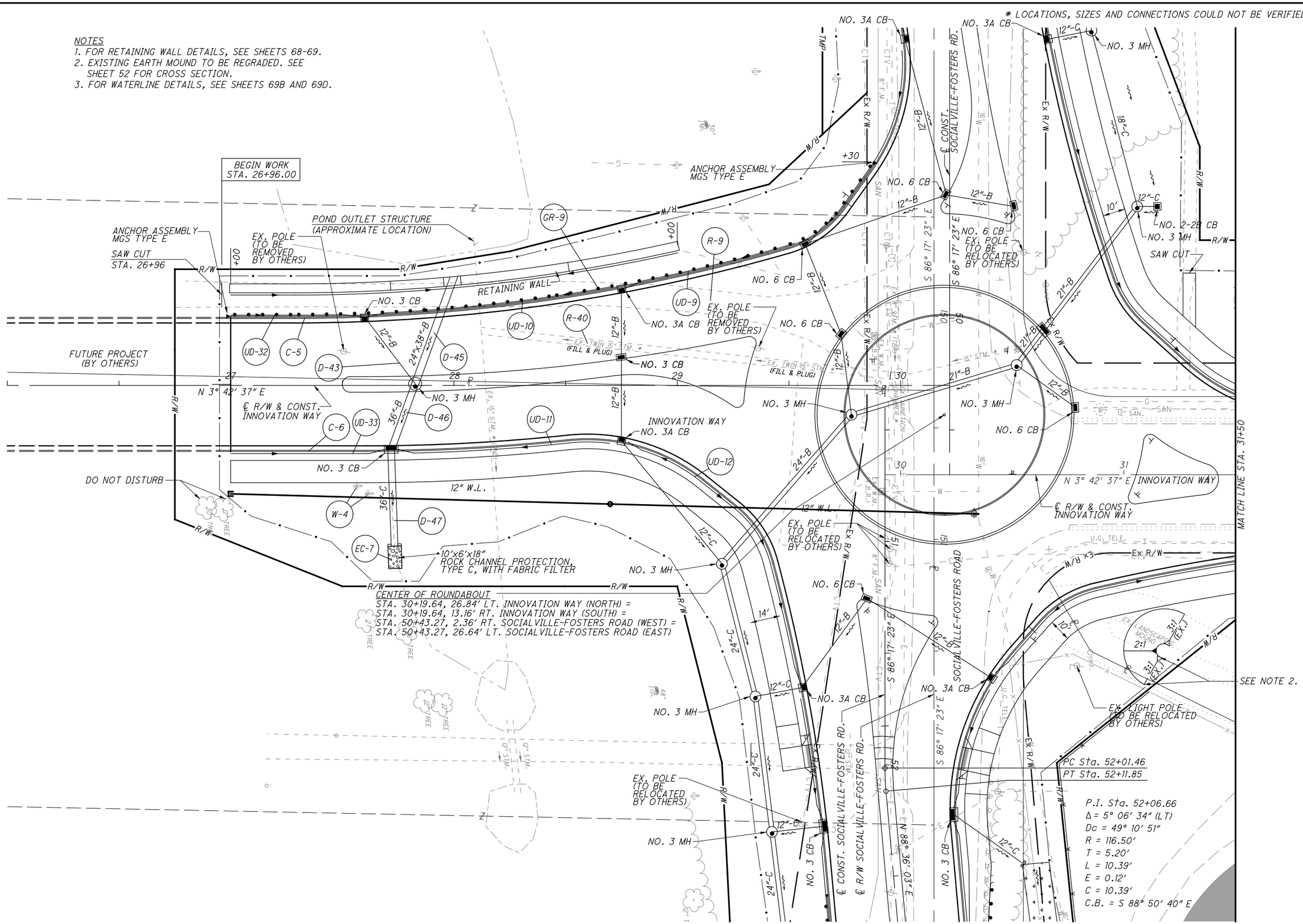

HORIZONTAL SCALE IN FEET 0 10 20 40

CALCULATED EJT
CHECKED REN

PLAN - INNOVATION WAY
STA. 28+00 TO STA. 33+50

WAR-71-2.54

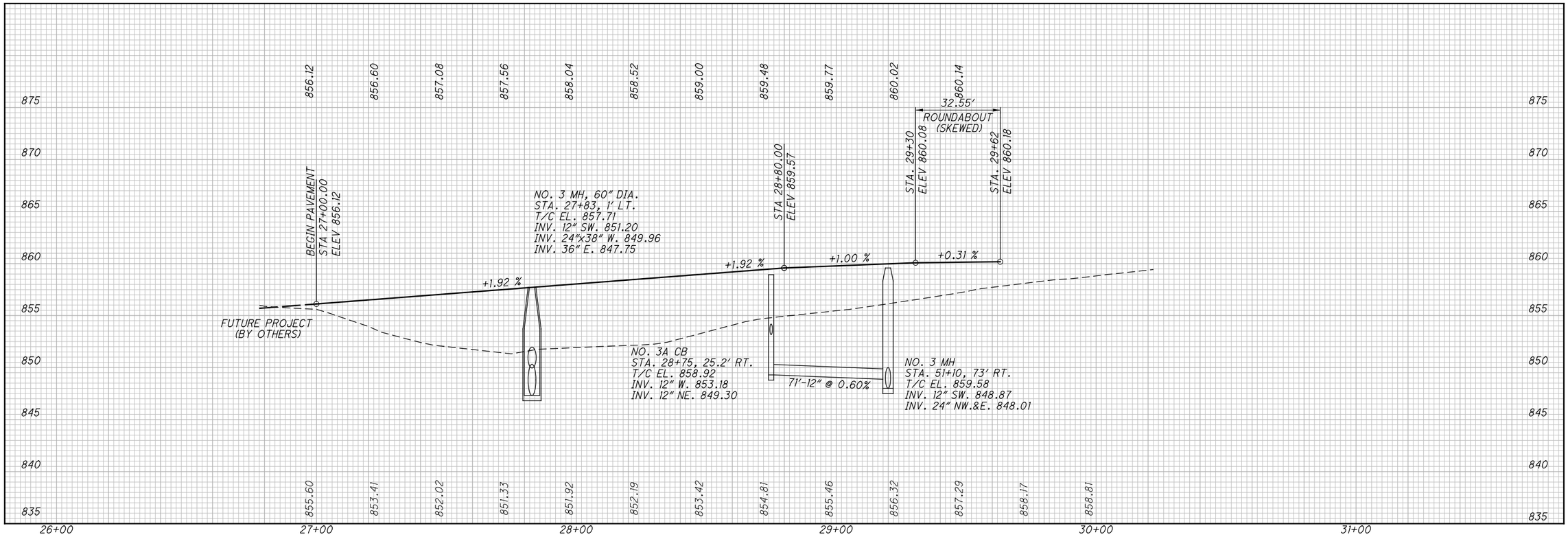

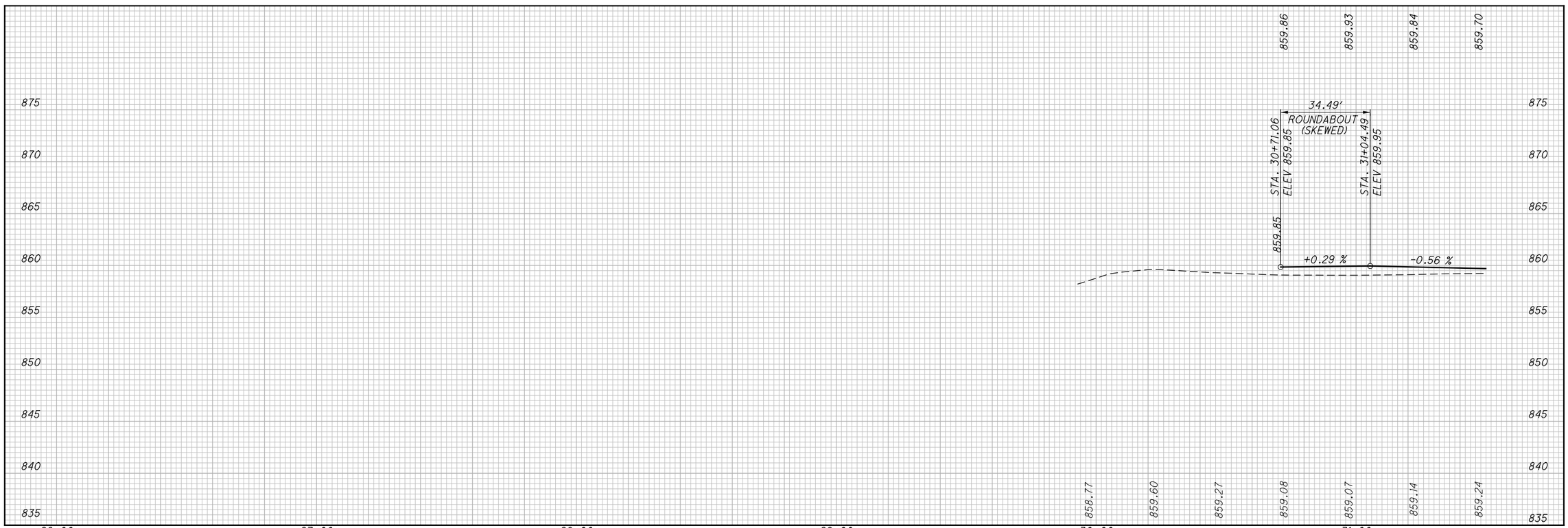

CALCULATED EJT
CHECKED KPA

PROFILE - INNOVATION WAY
STA. 28+00 TO STA. 33+50

WAR-71-2.54

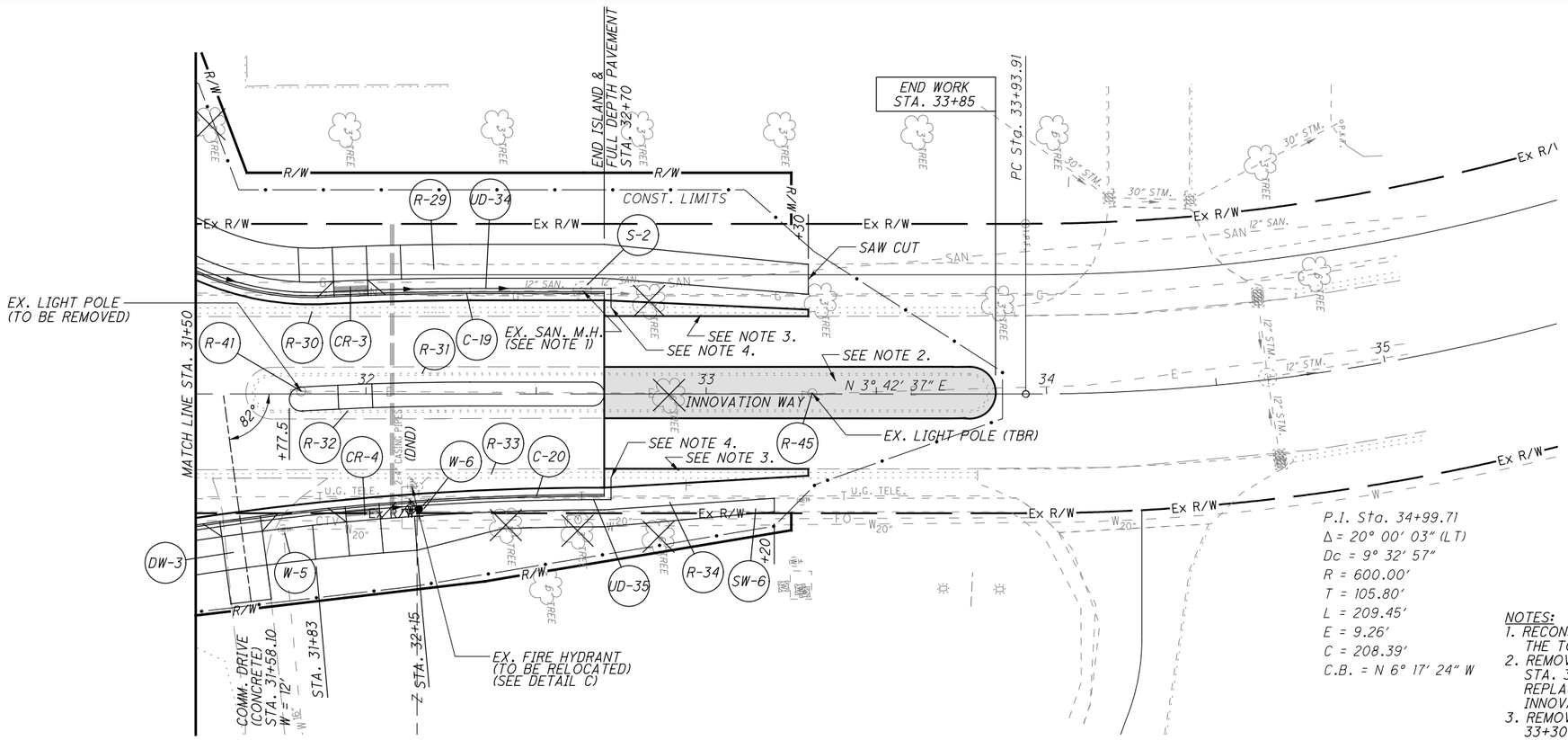

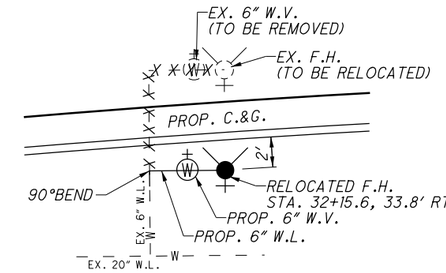

DETAIL C

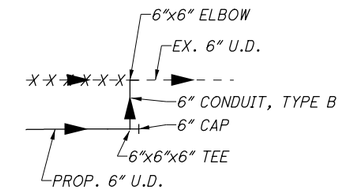

DETAIL D

(RIGHT SIDE SHOWN)

NOTES:

1. RECONSTRUCT MANHOLE TO GRADE SUCH THAT THE OPENING AT THE TOP IS ECCENTRIC AND BEHIND THE PROPOSED CURB.
2. REMOVE EX. GRASS MEDIAN AND EX. CURB AND GUTTER FROM STA. 32+70 TO STA. 33+85. SAW CUT 6" OF PAVEMENT. REPLACE WITH ASPHALT PAVEMENT BUILDUP EQUAL TO INNOVATION WAY TYPICAL SECTION SHOWN ON SHEET 9.
3. REMOVE EX. CURB AND GUTTER FROM STA. 32+70 TO STA. 33+30. SAWCUT 6" OF PAVEMENT AND ADD ITEM 615 PAVEMENT FOR MAINTAINING TRAFFIC, TYPE B.
4. CONNECT PROPOSED UNDERDRAIN TO EXISTING UNDERDRAIN WITH 6" TYPE B CONDUIT AT STA. 32+72 AS PER DETAIL D.

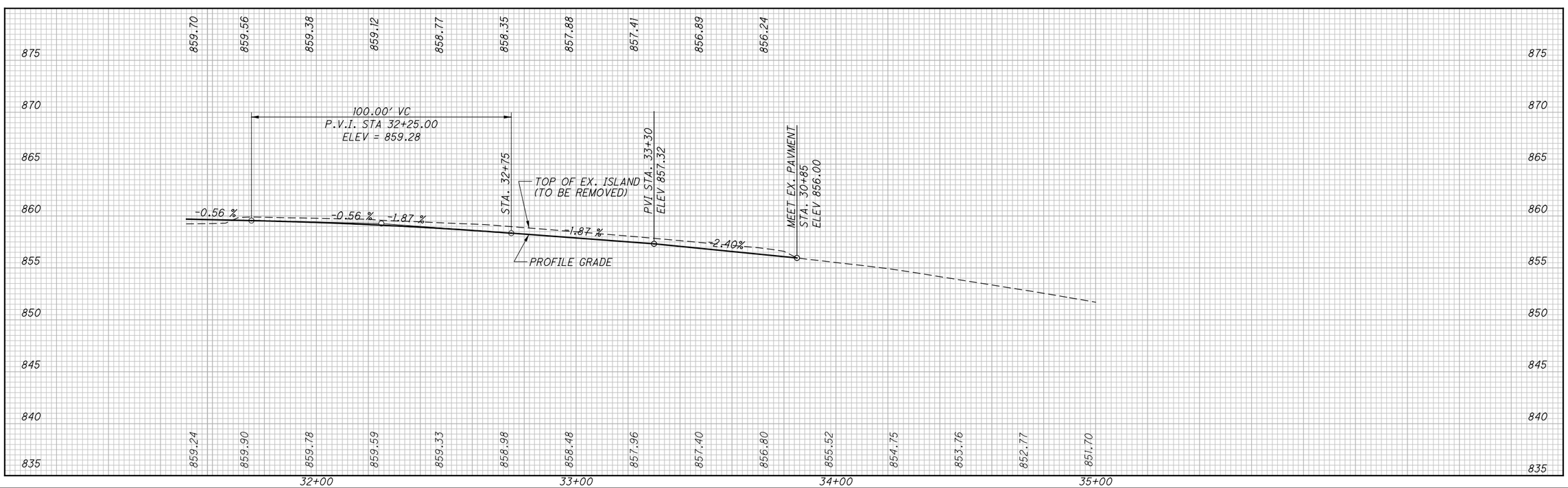

HORIZONTAL SCALE IN FEET 0 10 20 40

CALCULATED EJT
CHECKED REN

PLAN AND PROFILE - INNOVATION WAY
STA. 28+00 TO STA. 33+50

WAR-71-2.54

SEEDING	
END WIDTH	SQ. YDS.

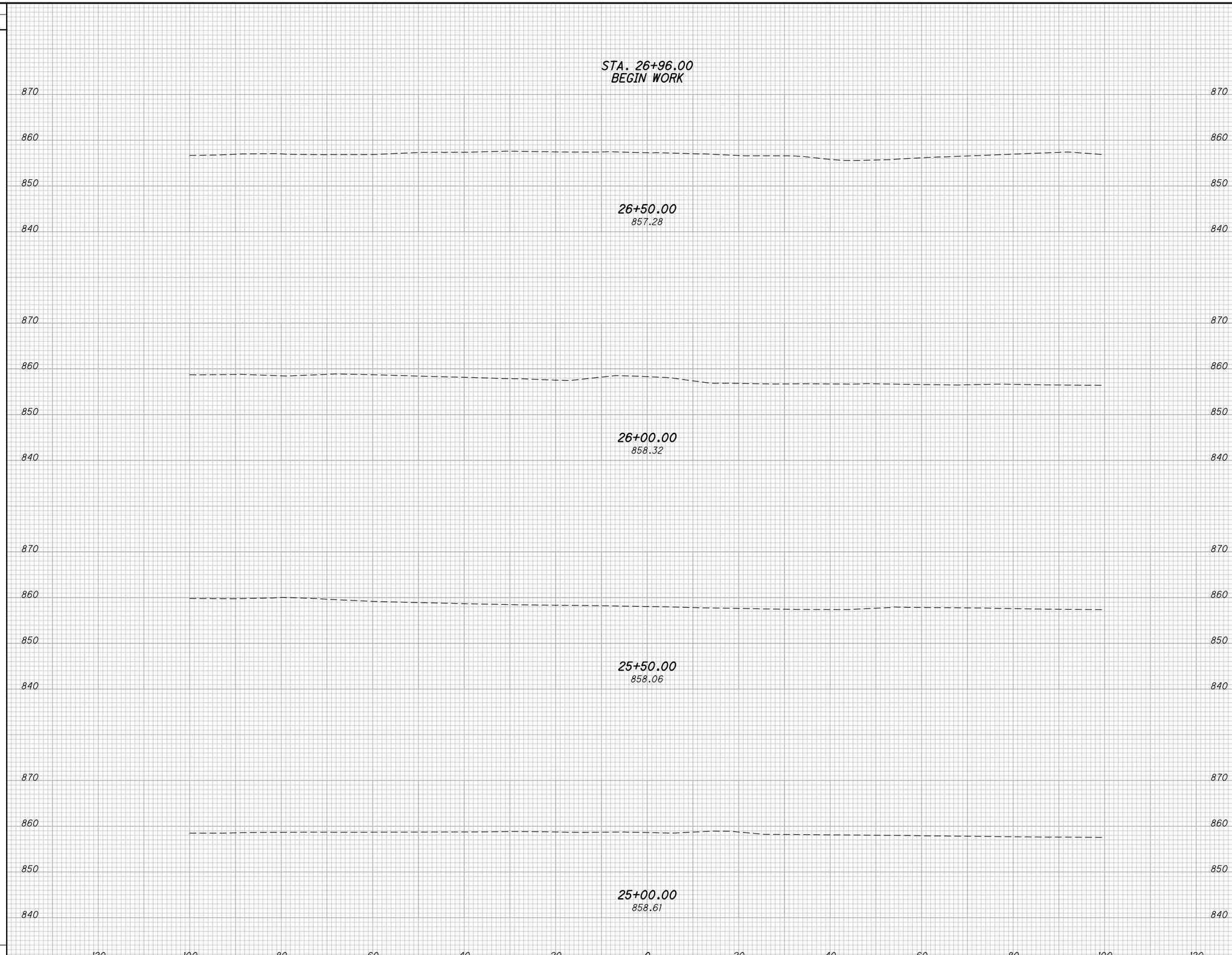

END AREA		VOLUME	
CUT	FILL	CUT	FILL

CALCULATED EJT
CHECKED REN

CROSS SECTIONS INNOVATION WAY
STA. 25+00.00 TO STA. 26+50.00

WAR-71-2.54

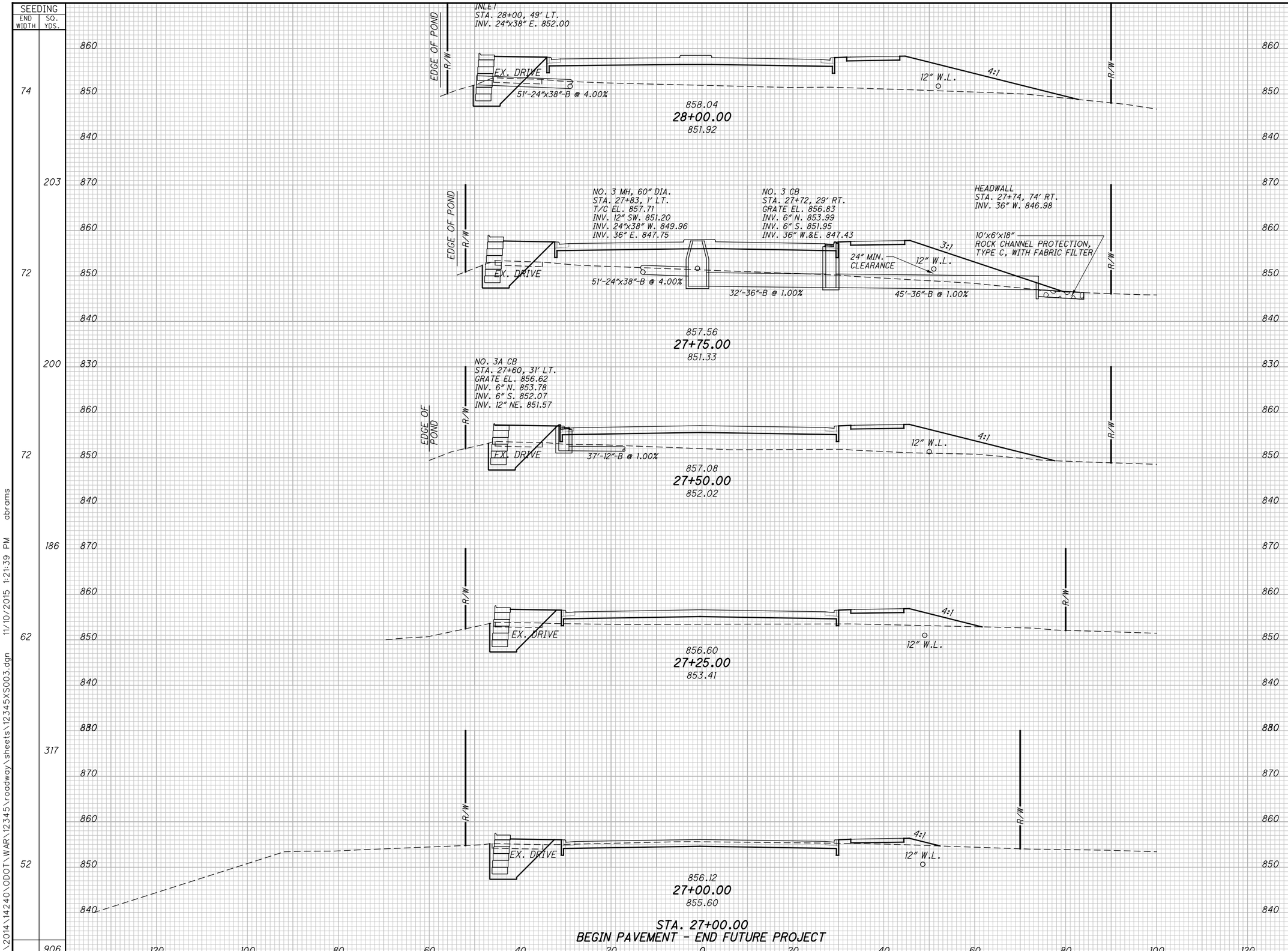

SEEDING END WIDTH	SEEDING SQ. YDS.	END AREA CUT	END AREA FILL	VOLUME CUT	VOLUME FILL
74					
		0	523		
	203				
72				0	513
		0	584		
	200			0	444
72		0	378		
	186			1	266
62		1	195		
	317			31	106
52		65	33		
	906			32	1329

CALCULATED EJT
CHECKED REN

CROSS SECTIONS INNOVATION WAY
STA. 27+00.00 TO STA. 28+00.00

WAR-71-2.54

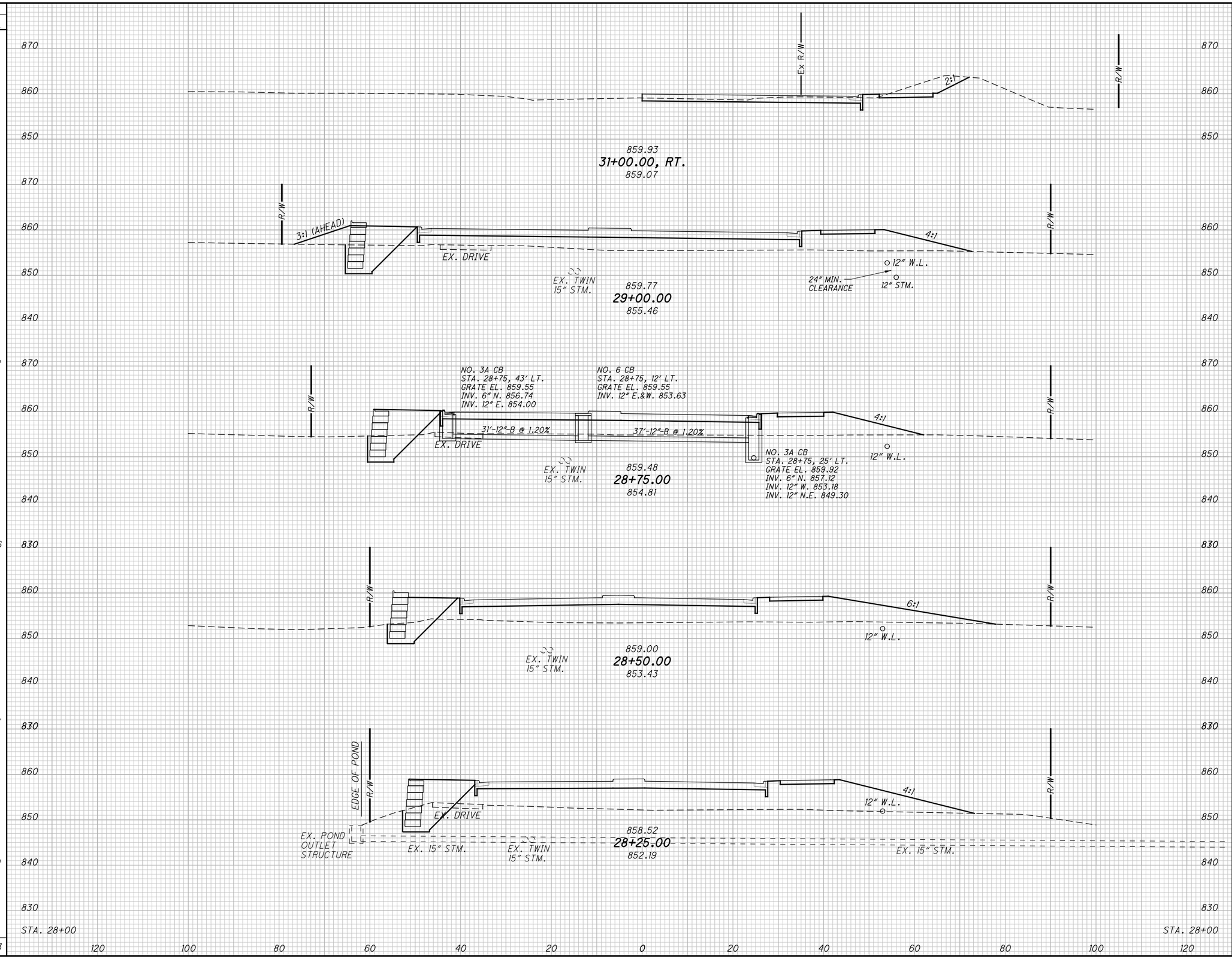

SEEDING END WIDTH	SEEDING SQ. YDS.	END AREA CUT	END AREA FILL	VOLUME CUT	VOLUME FILL
75		0	360		
	219			0	352
83		0	400		
	226			0	397
80		0	457		
	218			0	448
77		0	509		
	210			0	478
74		0	523		
	873			0	1675

CALCULATED EJT
CHECKED REN

CROSS SECTIONS INNOVATION WAY
STA. 28+25.00 TO STA. 29+00.00, STA. 31+00, RT.

WAR-71-2.54

SEEDING END WIDTH	SEEDING SQ. YDS.	END AREA CUT	END AREA FILL	VOLUME CUT	VOLUME FILL
44		80	0		
	244			251	0
44		191	0		
	325			353	0
73		190	0		
	339			116	0
49		61	24		
	908			720	0

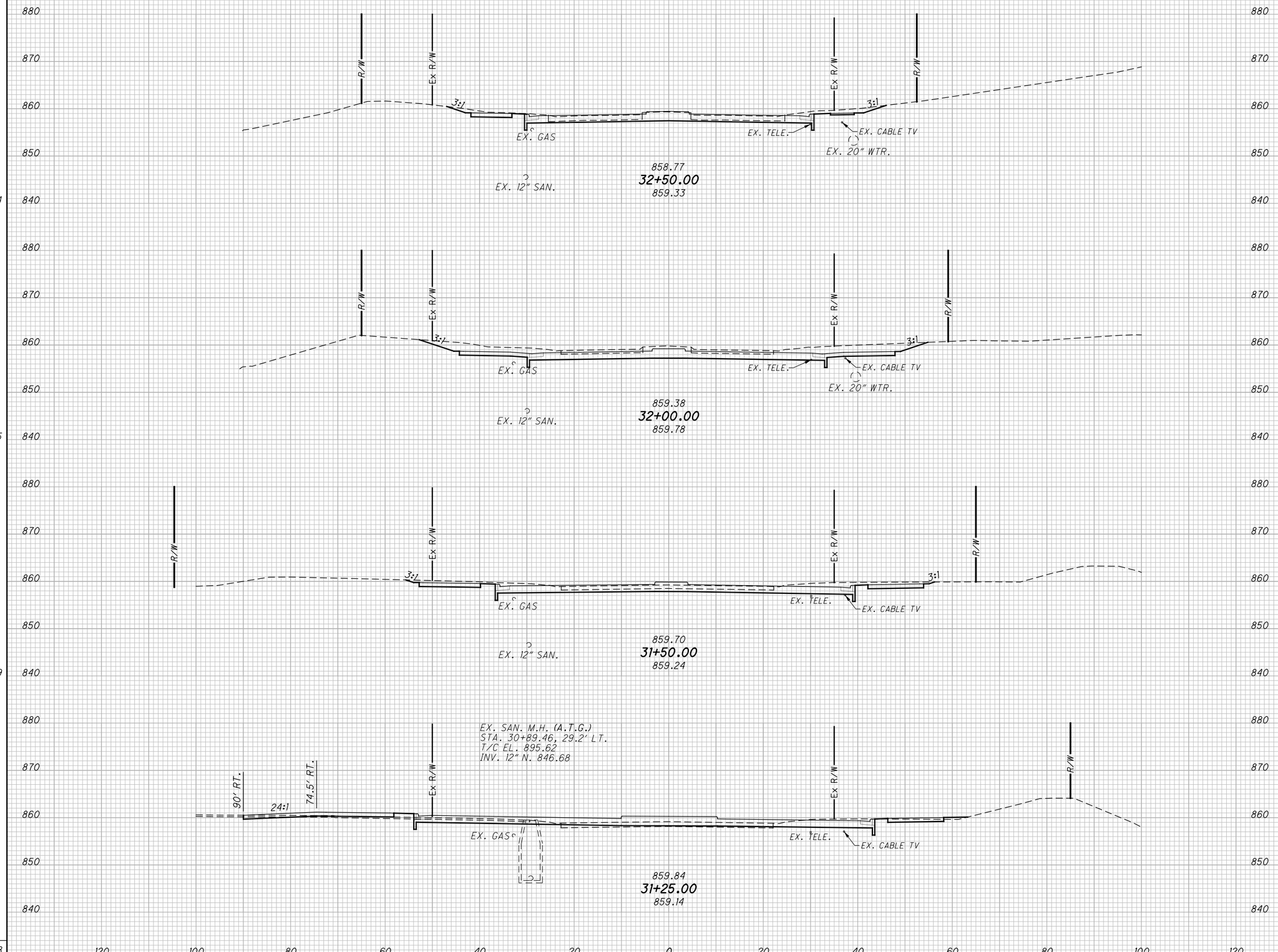

CALCULATED EJT
CHECKED REN

CROSS SECTIONS INNOVATION WAY
STA. 31+25.00 TO STA. 32+50.00

WAR-71-2.54

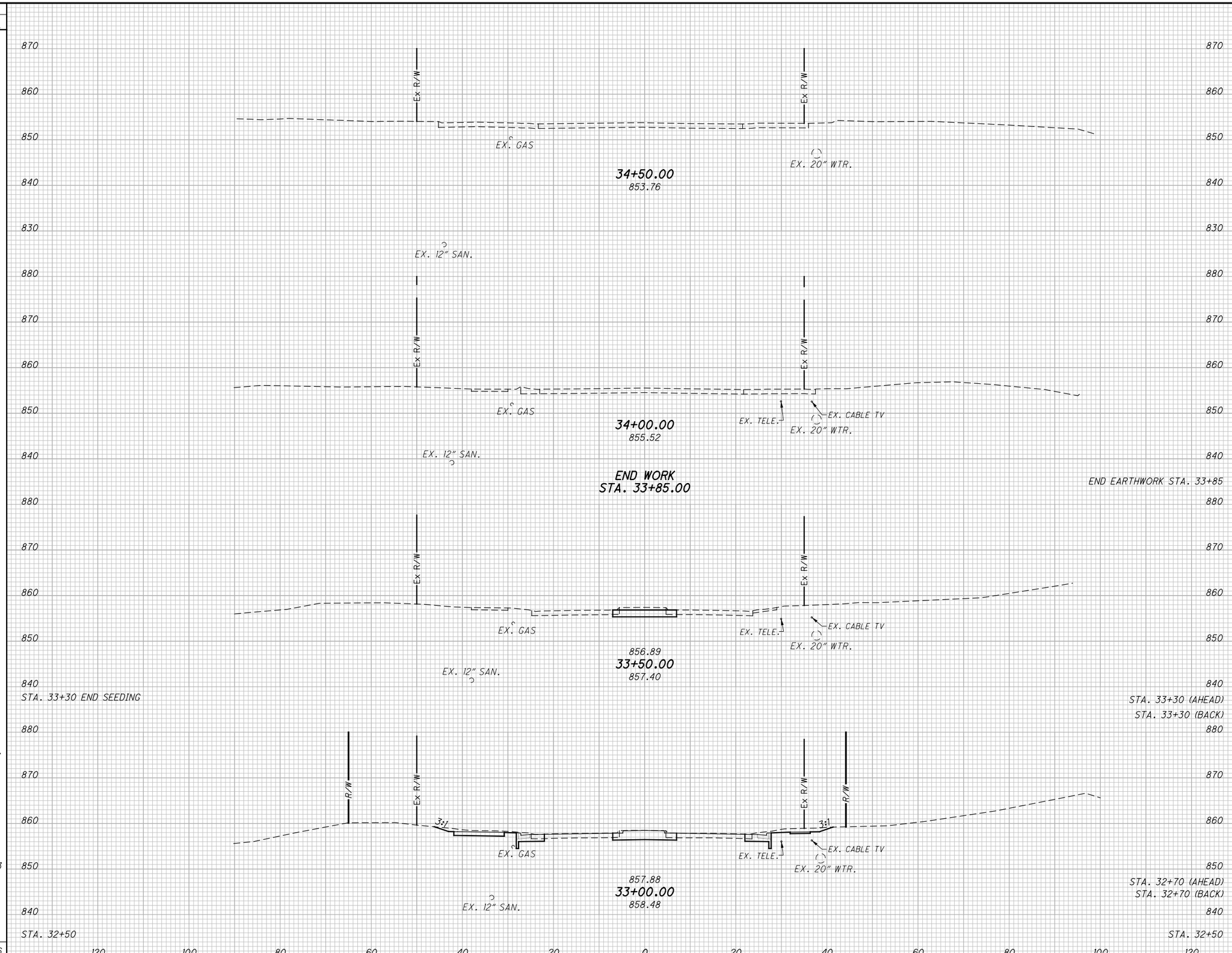

SEEDING END WIDTH	SEEDING SQ. YDS.
40	
	133
40	
	233
44	
	466

END AREA CUT	END AREA FILL	VOLUME CUT	VOLUME FILL
28	0		
		37	0
28	0		
		21	0
28	0		
71	0		
		79	0
71	0		
		79	0
71	0		
80	0		
		60	0
80	0		
		276	0

CALCULATED EJT
CHECKED REN

CROSS SECTIONS INNOVATION WAY
STA. 33+00.00 TO STA. 34+50.00

WAR-71-2.54

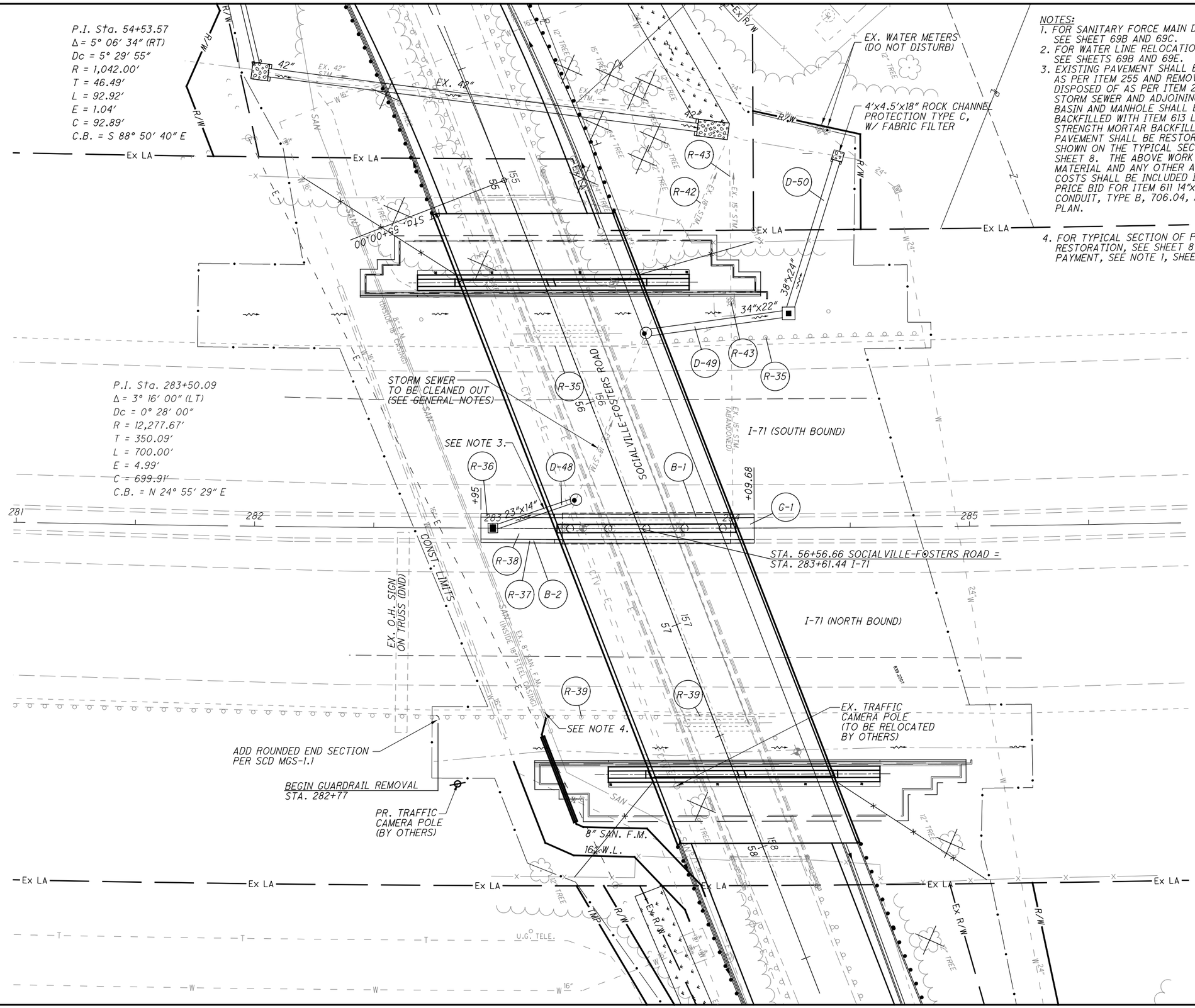

NOTES:

1. FOR SANITARY FORCE MAIN DETAILS, SEE SHEET 69B AND 69C.
2. FOR WATER LINE RELOCATION DETAILS, SEE SHEETS 69B AND 69E.
3. EXISTING PAVEMENT SHALL BE SAW CUT AS PER ITEM 255 AND REMOVED AND DISPOSED OF AS PER ITEM 202. THE STORM SEWER AND ADJOINING CATCH BASIN AND MANHOLE SHALL BE BACKFILLED WITH ITEM 613 LOW STRENGTH MORTAR BACKFILL. PAVEMENT SHALL BE RESTORED AS SHOWN ON THE TYPICAL SECTION ON SHEET 8. THE ABOVE WORK AND MATERIAL AND ANY OTHER ASSOCIATED COSTS SHALL BE INCLUDED IN THE UNIT PRICE BID FOR ITEM 611 14″x23″ CONDUIT, TYPE B, 706.04, AS PER PLAN.
4. FOR TYPICAL SECTION OF PAVEMENT RESTORATION, SEE SHEET 8. FOR PAYMENT, SEE NOTE 1, SHEET 69C.

HORIZONTAL SCALE IN FEET: 0 10 20 40

CALCULATED EJT
CHECKED REN

PLAN I-71
STA. 282+00 TO STA. 285+00

WAR-71-2.54

SEEDING	
END WIDTH	SQ. YDS.

END AREA		VOLUME	
CUT	FILL	CUT	FILL

CALCULATED EJT
CHECKED REN

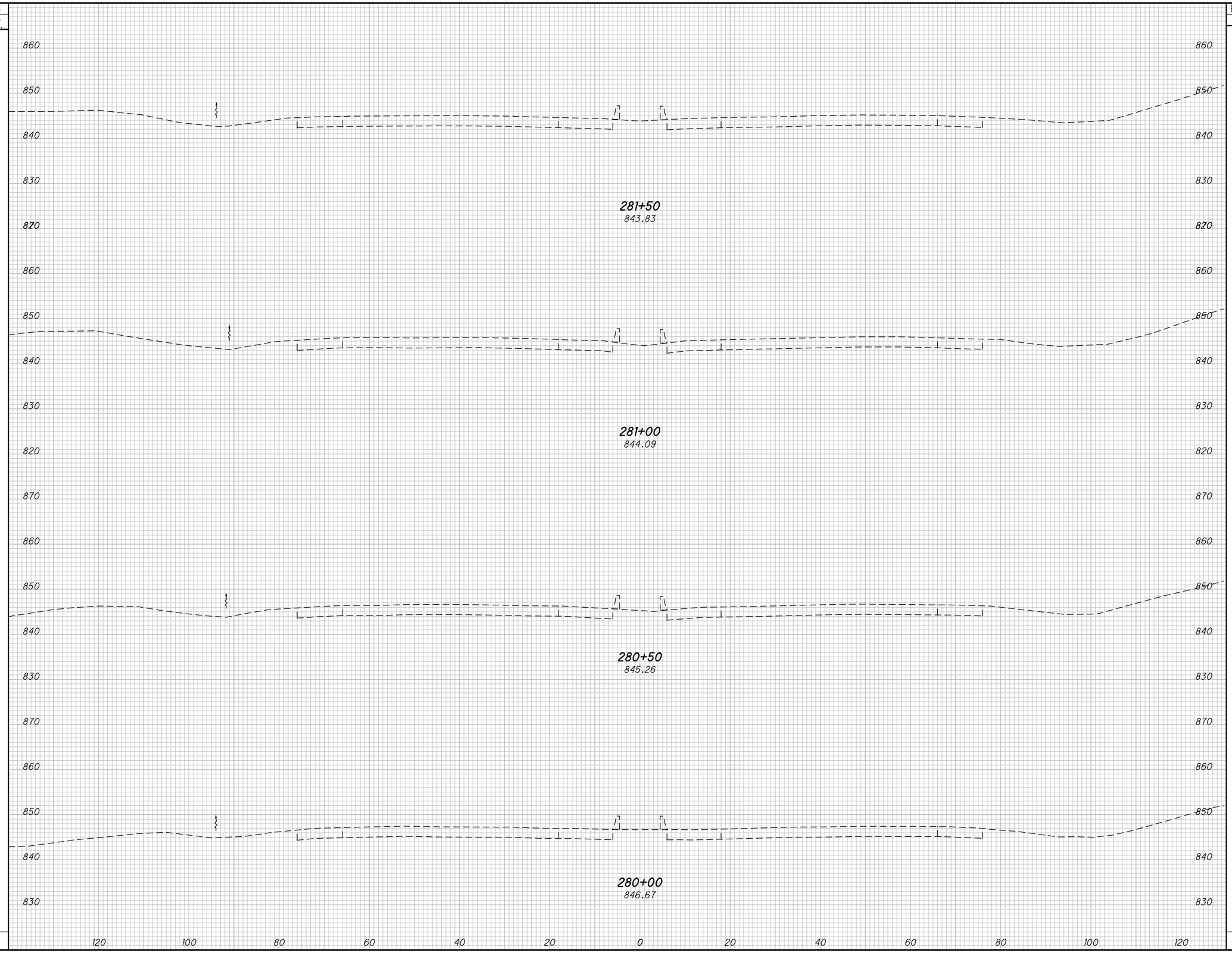

CROSS SECTIONS I-71
STA. 280+00.00 TO STA. 281+50.00

WAR-71-2.54

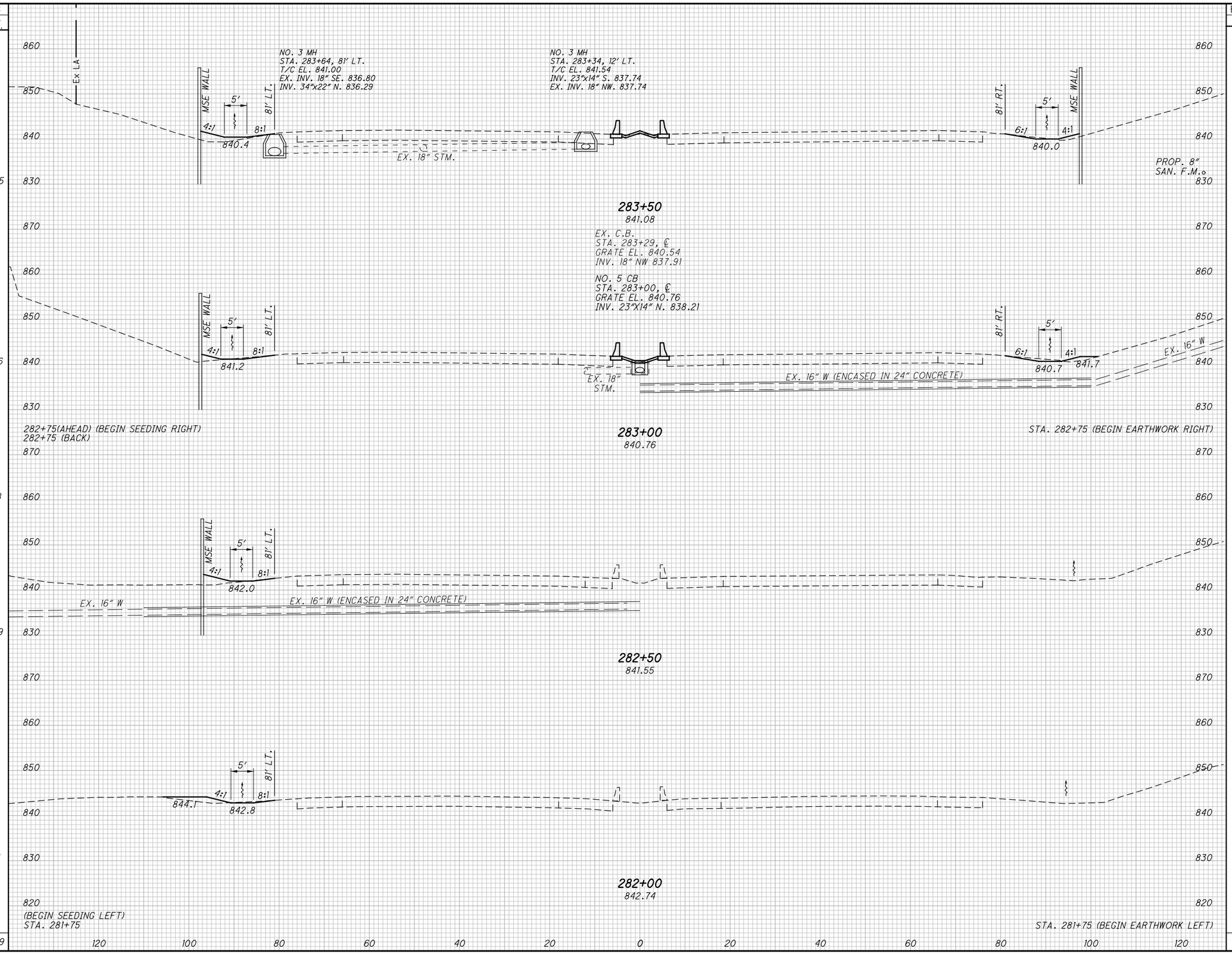

SEEDING END WIDTH	SEEDING SQ. YDS.	END AREA CUT	END AREA FILL	VOLUME CUT	VOLUME FILL
43		2	16		
	275			8	23
56		6	9		
	156			4	7
56 / 21		1	5		
	58			1	5
21		1	5		
	169			3	15
40		2	11		
	111			1	6
40		0	0		
	769			17	56

CALCULATED EJT
CHECKED REN

CROSS SECTIONS I-71
STA. 282+00.00 TO STA. 283+50.00

WAR-71-2.54

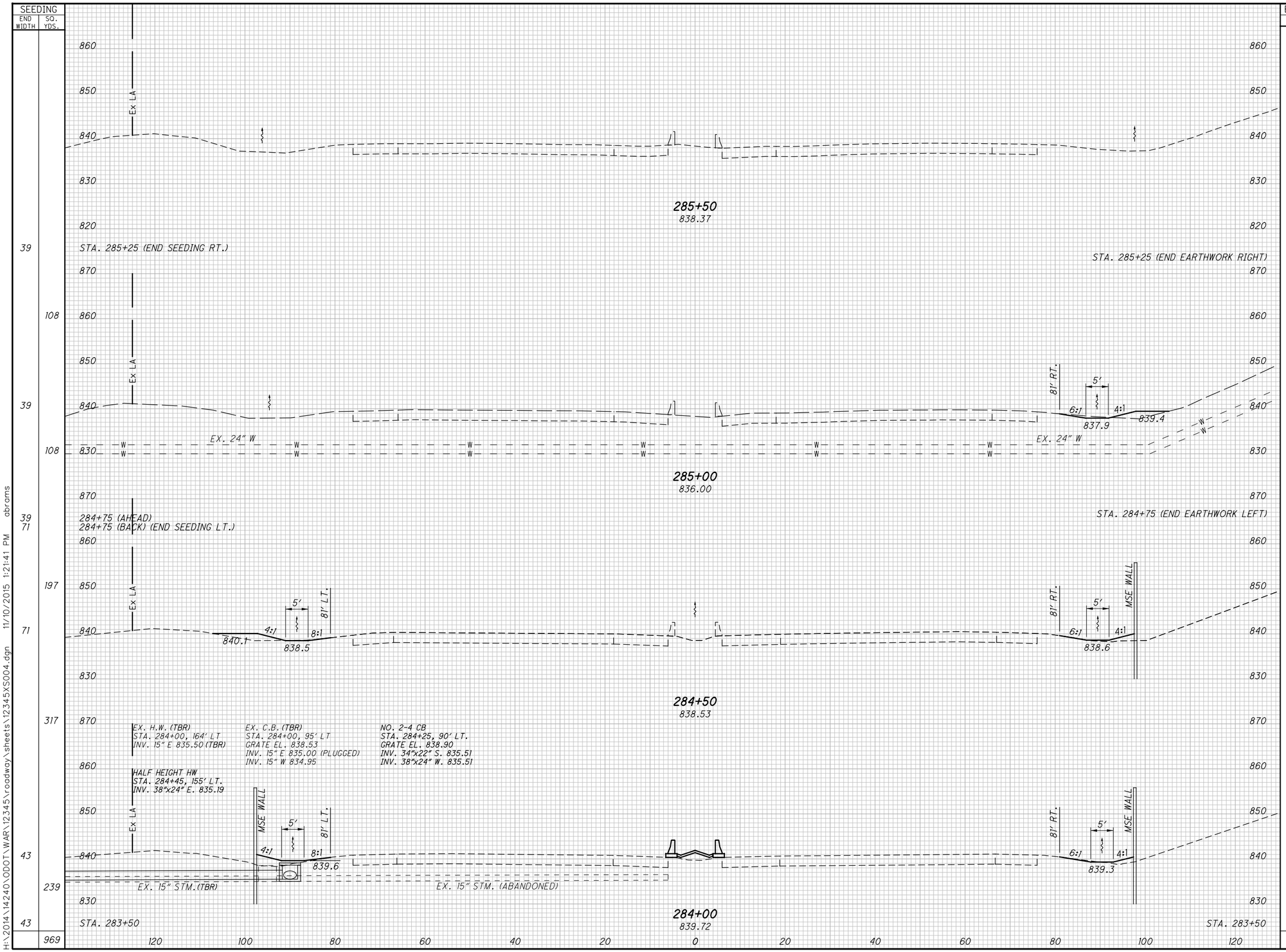

SEEDING END WIDTH	SEEDING SQ. YDS.	END AREA CUT	END AREA FILL	VOLUME CUT	VOLUME FILL
39		0	0		
	108			2	6
39		4	12		
	108			3	14
39		1	18		
71				1	17
	197				
71		1	18		
	317			3	35
43		2	19		
	239			4	33
43		2	16		
	969			13	105

CALCULATED EJT
CHECKED REN

CROSS SECTIONS I-71
STA. 284+00.00 TO STA. 285+50.00

WAR-71-2.54

SEEDING	
END WIDTH	SQ. YDS.

END AREA		VOLUME	
CUT	FILL	CUT	FILL

CALCULATED EJT
CHECKED REN

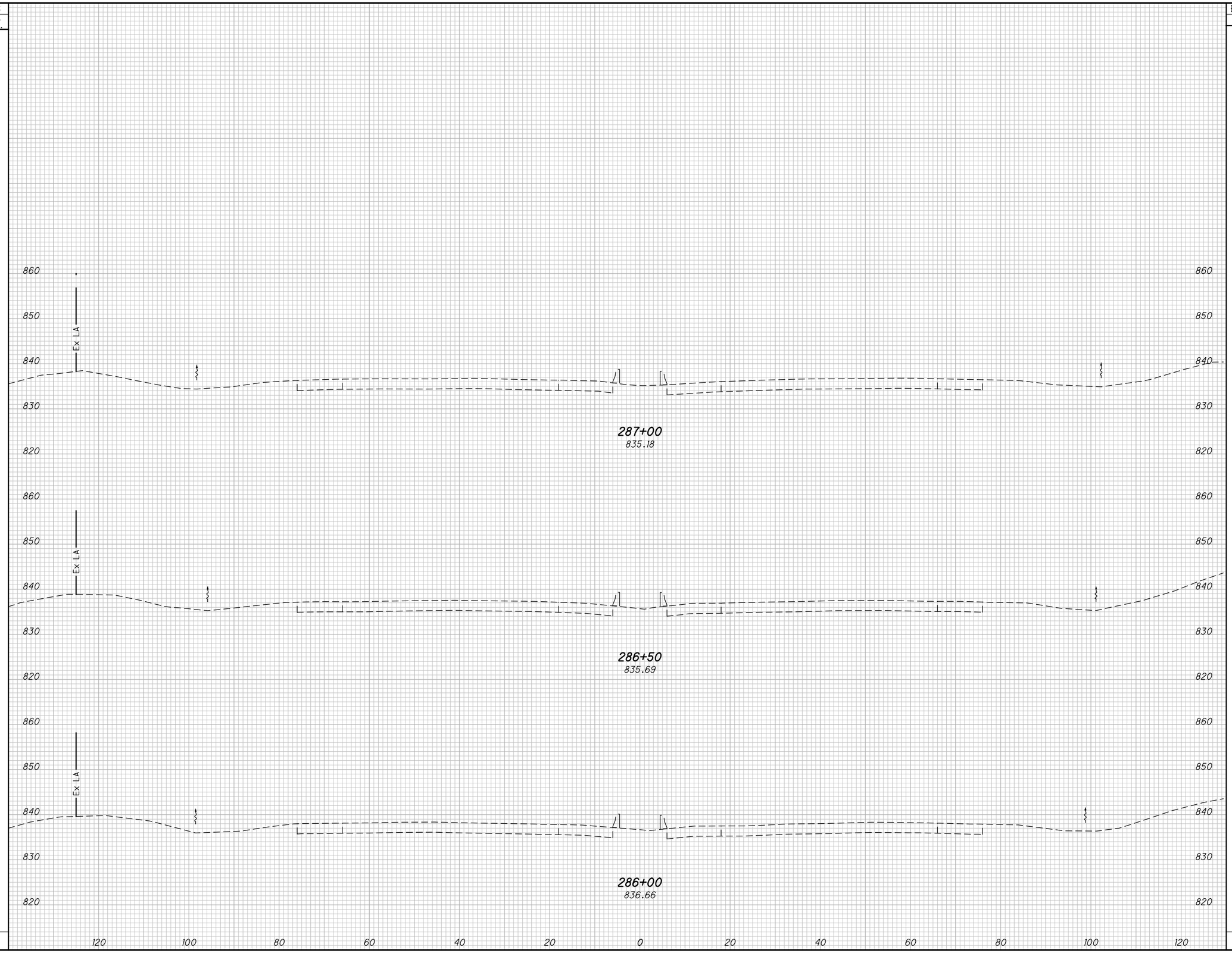

CROSS SECTIONS I-71
STA. 286+00.00 TO STA. 287+00.00

WAR-71-2.54

SEEDING	
END WIDTH	SQ. YDS.

END AREA		VOLUME	
CUT	FILL	CUT	FILL

CALCULATED EJT
CHECKED REN

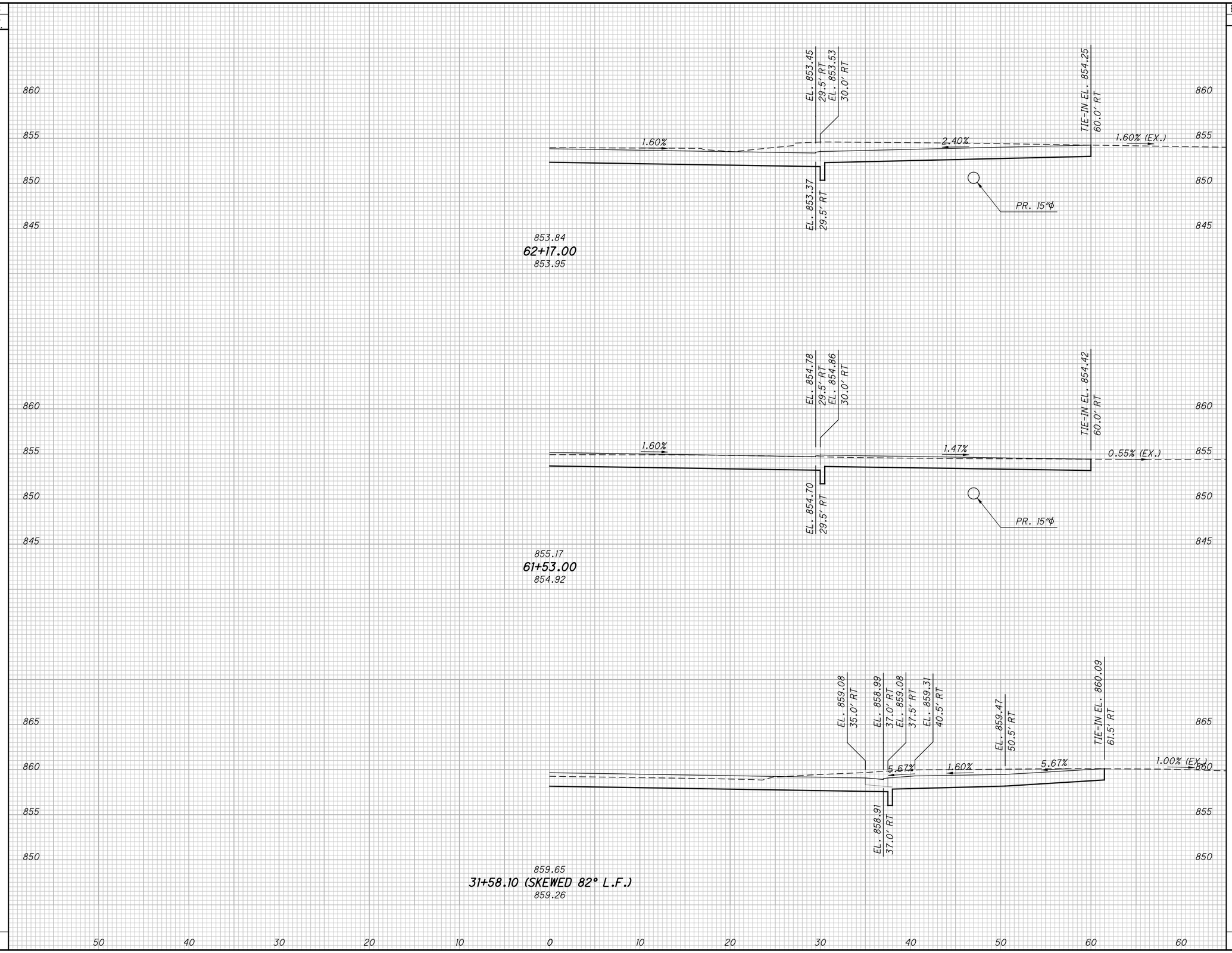

DRIVEWAY PROFILES

WAR-71-2.54

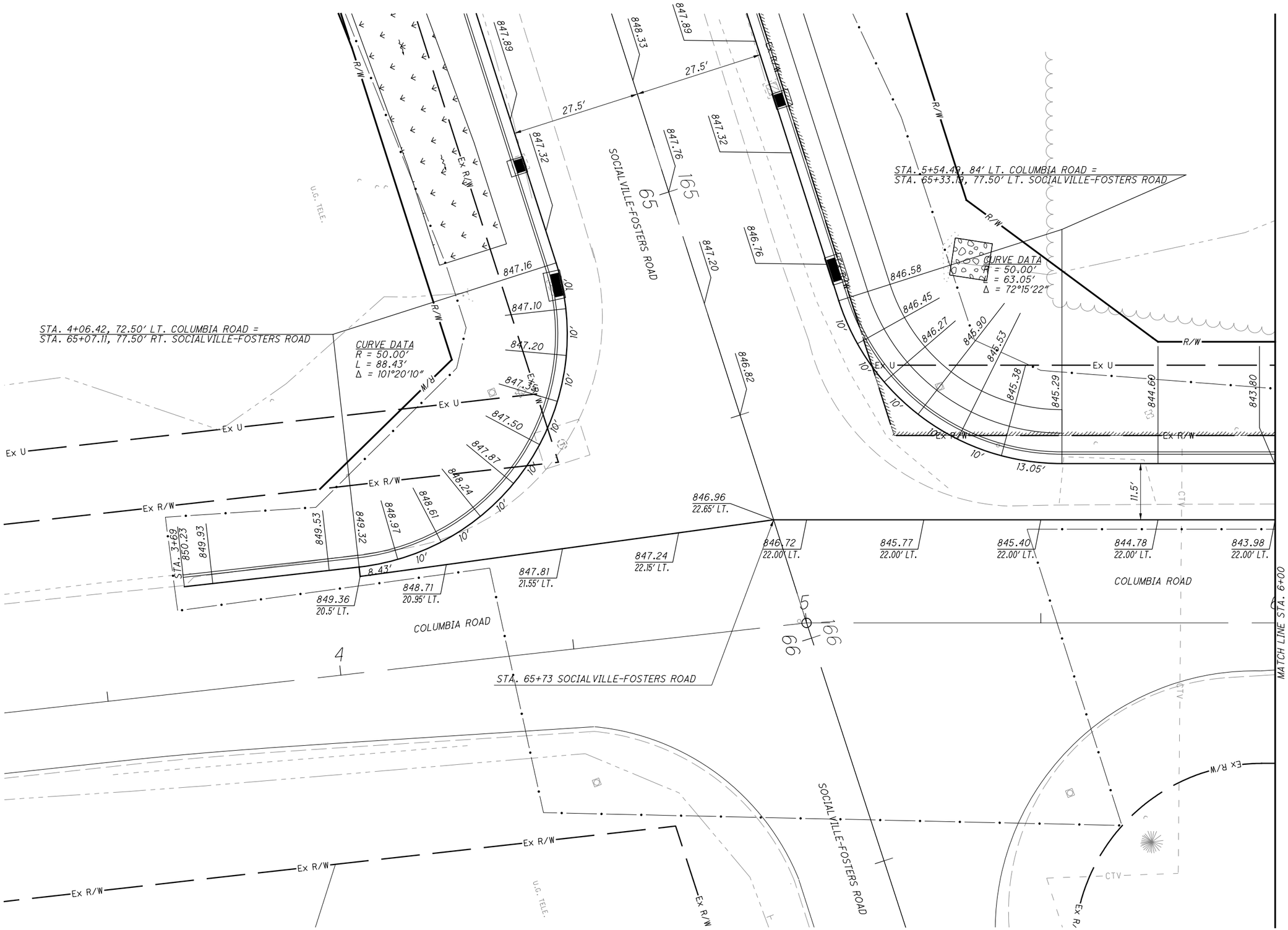

HORIZONTAL SCALE IN FEET
0 10 20

CALCULATED EJT
CHECKED REN

INTERSECTION DETAILS

WAR-71-2.54

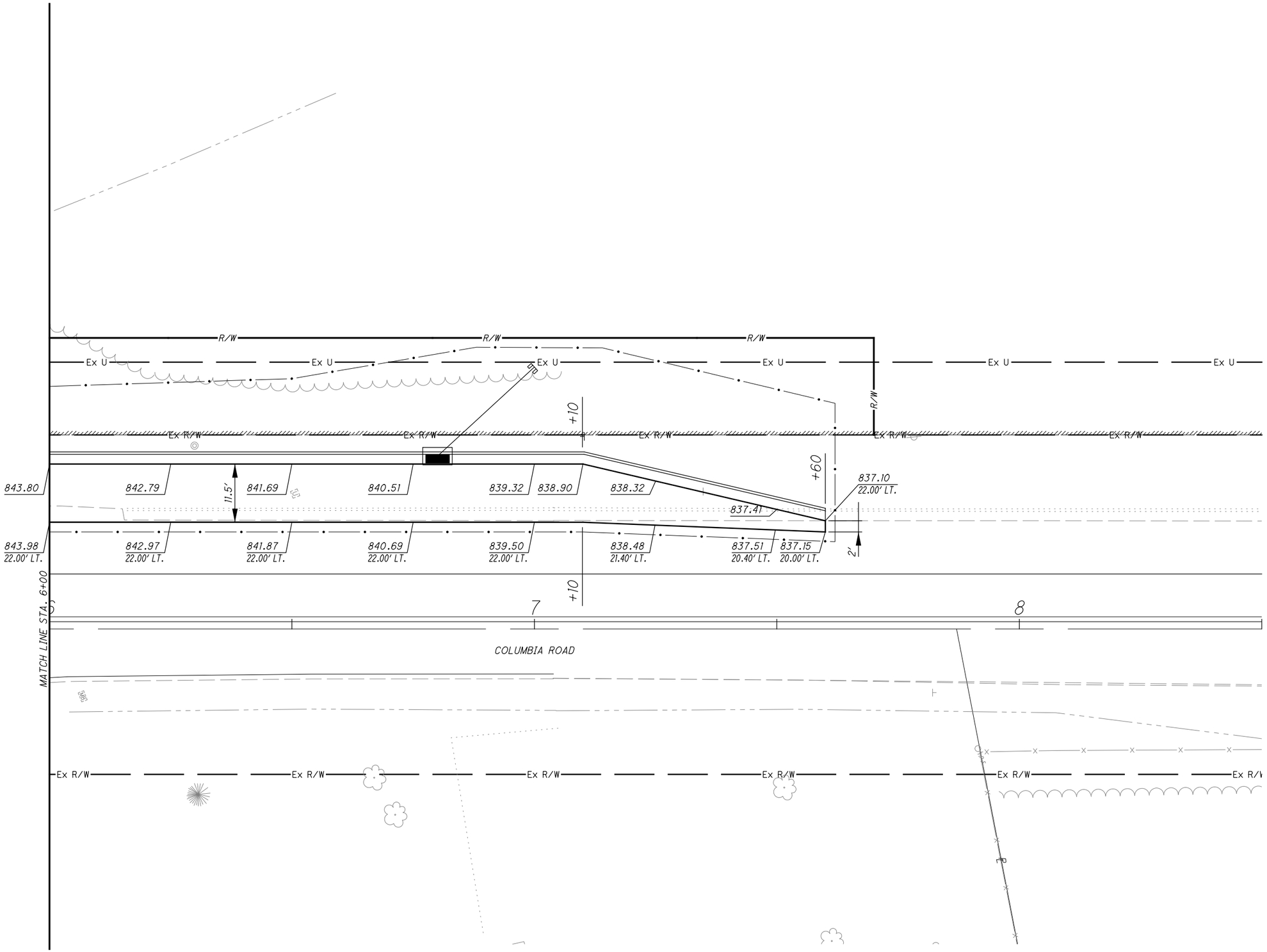

HORIZONTAL SCALE IN FEET
0 10 20

CALCULATED EJT
CHECKED REN

INTERSECTION DETAILS

WAR-71-2.54

CURVE DATA					
	RADIUS	DELTA	LENGTH	CENTER NORTHING	CENTER EASTING
A	3.5′	180°00′00″	11.00′	486371.88	1461745.35
B	3.0′	122°08′09″	6.40′	486384.70	1461951.35
C	3.0′	123°16′06″	6.45′	486357.96	1461945.15
D	3.0′	122°08′09″	6.40′	486265.51	1462000.21
E	3.0′	121°29′12″	6.36′	486258.36	1462025.60
F	3.0′	122°08′09″	6.40′	486308.87	1462120.99
G	3.0′	120°38′14″	6.32′	486338.60	1462130.09
H	3.0′	122°8′09″	6.40′	486433.33	1462080.24
I	7.0′	155°18′42″	18.97′	486464.19	1462074.10
J	3.0′	121°03′30″	6.34′	486441.85	1462055.55
K	3.5′	180°00′00″	11.00′	486085.85	1462007.06

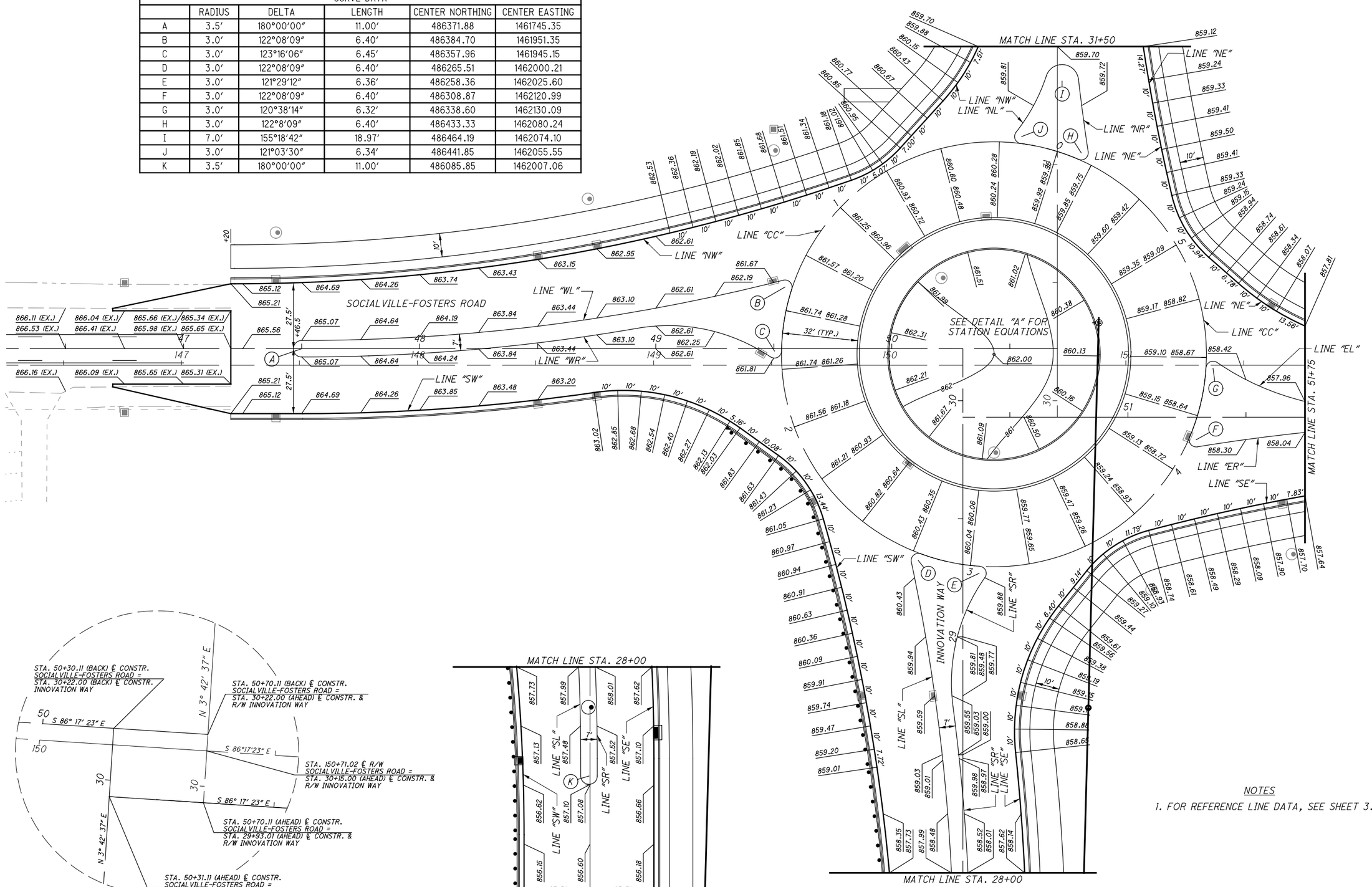

NOTES

1. FOR REFERENCE LINE DATA, SEE SHEET 3.

LEGEND

·— — — = FUTURE PROJECT (BY OTHERS)

HORIZONTAL SCALE IN FEET 0 20 40

CALCULATED EJT
CHECKED REN

INTERSECTION DETAILS

WAR-71-2.54

CURVE DATA
P.I. Sta. 52+06.66
Δ = 5° 06′ 34″ (LT)
Dc = 49° 10′ 51″
R = 116.50′
T = 5.20′
L = 10.39′
E = 0.12′
C = 10.39′
C.B. = S 88° 50′ 40″ E

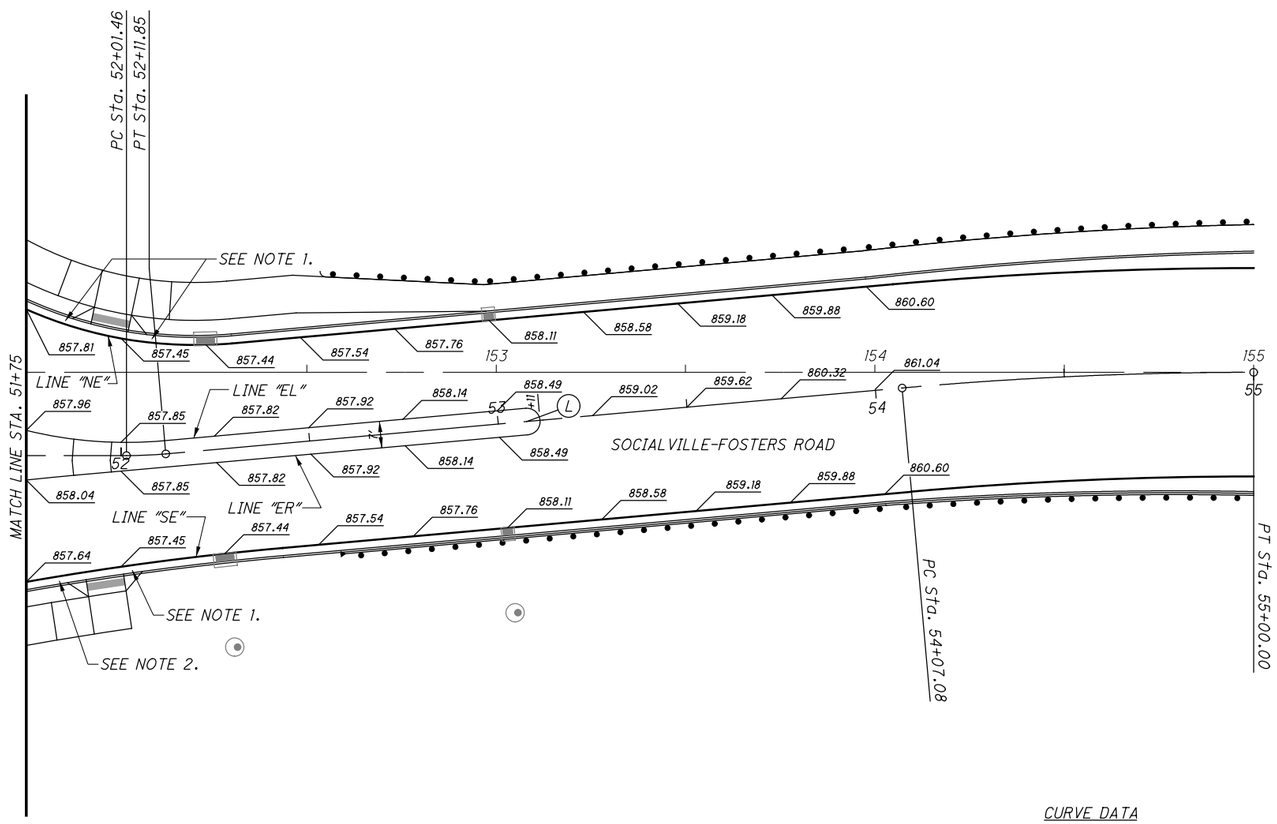

CURVE DATA
P.I. Sta. 54+53.57
Δ = 5° 06′ 34″ (RT)
Dc = 5° 29′ 55″
R = 1,042.00′
T = 46.49′
L = 92.92′
E = 1.04′
C = 92.89′
C.B. = S 88° 50′ 40″ E

CURVE DATA					
	RADIUS	DELTA	LENGTH	CENTER NORTHING	CENTER EASTING
L	3.5′	180°00′00″	11.00′	486315.86	1462300.07

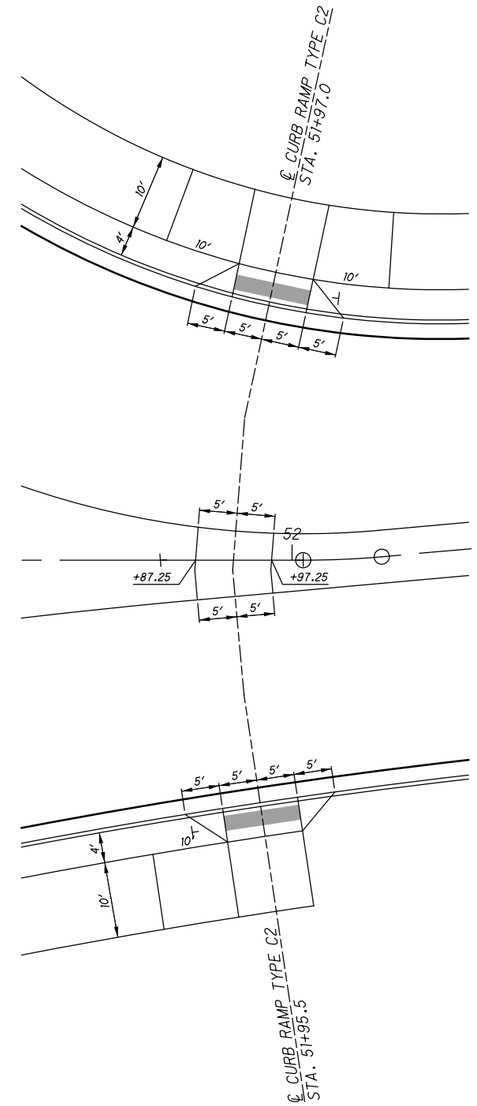

CURB RAMP DETAIL
1″ = 10′

NOTES:
1. TRANSITION GUTTER SLOPE FROM 5.0% AT CURB RAMP TO 8.33% IN 10′.
2. TRANSITION GUTTER SLOPE FROM 5.0% AT CURB RAMP TO 8.33% IN 15′.
3. FOR REFERENCE LINE DATA, SEE SHEET 3.

HORIZONTAL SCALE IN FEET
0 20 40

CALCULATED EJT
CHECKED REN

INTERSECTION DETAILS

WAR-71-2.54

CURVE DATA
P.I. Sta. 34+99.71
Δ = 20° 00′ 03″ (LT)
Dc = 9° 32′ 57″
R = 600.00′
T = 105.80′
L = 209.45′
E = 9.26′
C = 208.39′
C.B. = N 6° 17′ 24″ W

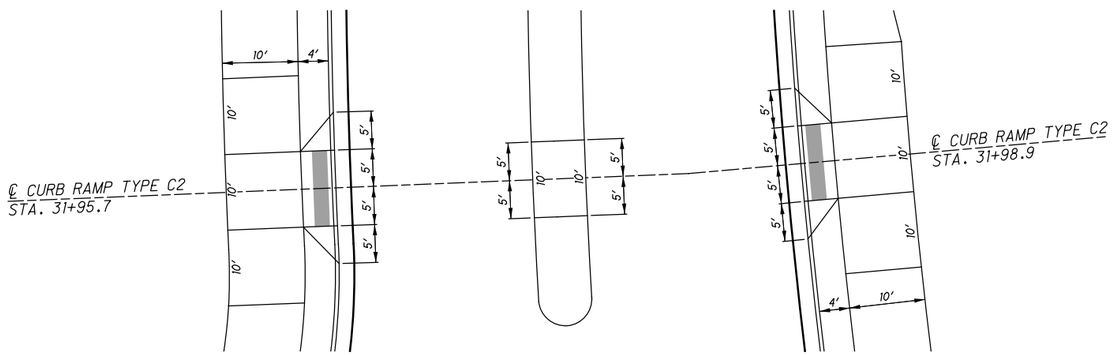

CURB RAMP DETAIL
1″ = 10′

CURVE DATA					
	RADIUS	DELTA	LENGTH	CENTER NORTHING	CENTER EASTING
M	3.5′	180°00′00″	11.00′	486509.72	1462076.57
N	3.5′	180°00′00″	11.00′	486595.15	1462080.61

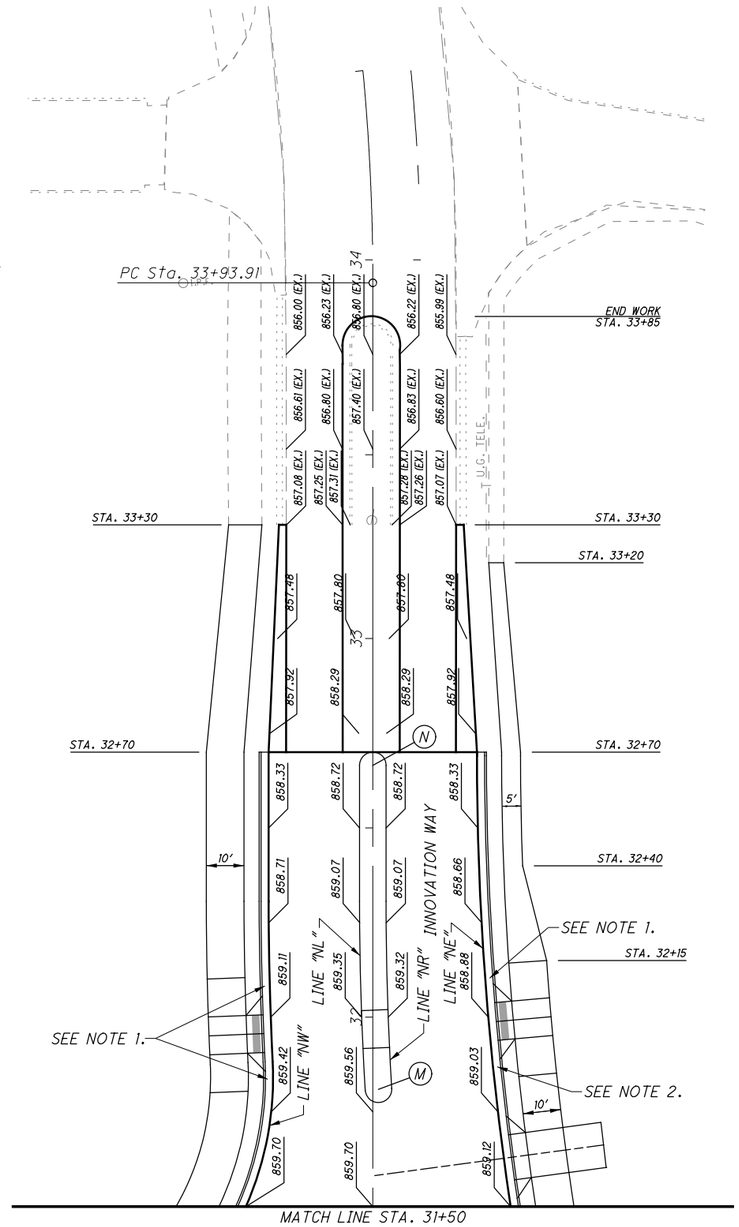

NOTES:
1. TRANSITION GUTTER SLOPE FROM 5.0% AT CURB RAMP TO 8.33% IN 10′.
2. TRANSITION GUTTER SLOPE FROM 5.0% AT CURB RAMP TO 8.33% IN 15′.
3. FOR REFERENCE LINE DATA, SEE SHEET 3.

HORIZONTAL SCALE IN FEET
0 20 40

CALCULATED EJT
CHECKED REN

INTERSECTION DETAILS

WAR-71-2.54

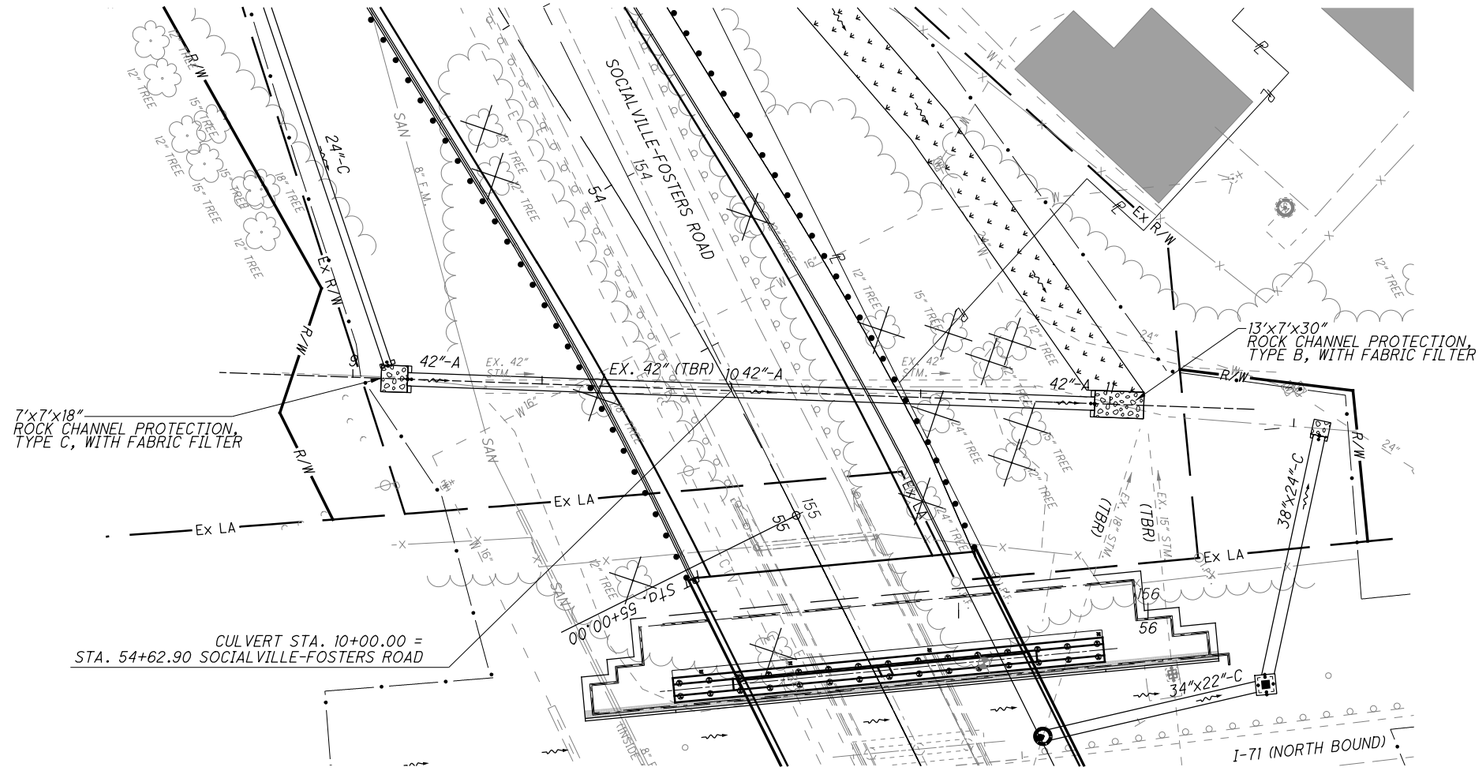

ESTIMATED QUANTITIES

ITEM 202 - HEADWALL REMOVED	2 EACH
ITEM 202 - PIPE REMOVED, OVER 24"	145 FT
ITEM 601 - ROCK CHANNEL PROTECTION, TYPE B, WITH FABRIC FILTER	9 CY
ITEM 601 - ROCK CHANNEL PROTECTION, TYPE C, WITH FABRIC FILTER	3 CY
ITEM 602 - CONCRETE MASONRY	1.68 CY
ITEM 611 - 42" CONDUIT, TYPE A, 706.02	183 FT

DRAINAGE AREA = 35 ACRES
Q_{50} = 81 CFS
Q_{100} = 100 CFS
V_{50} = 12.4 FPS
V_{100} = 12.6 FPS

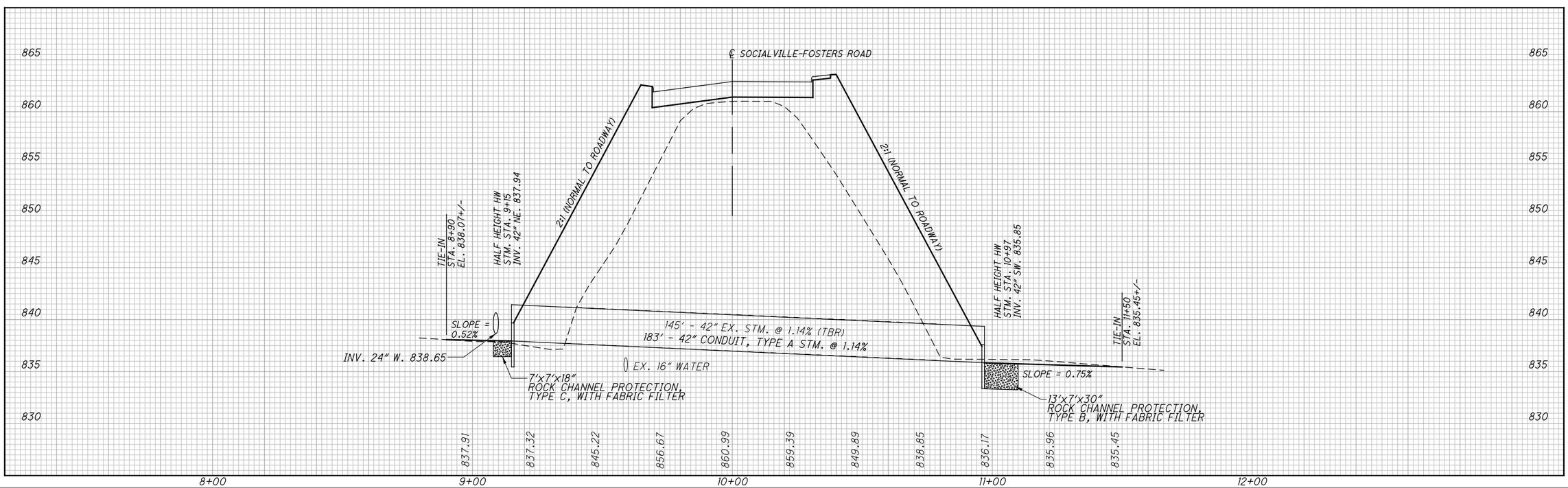

CULVERT DETAILS
STA. 54+62.90 SOCIALVILLE-FOSTERS ROAD

CALCULATED EJT
CHECKED REN

HORIZONTAL SCALE IN FEET
0 10 20 40

WAR-71-2.54

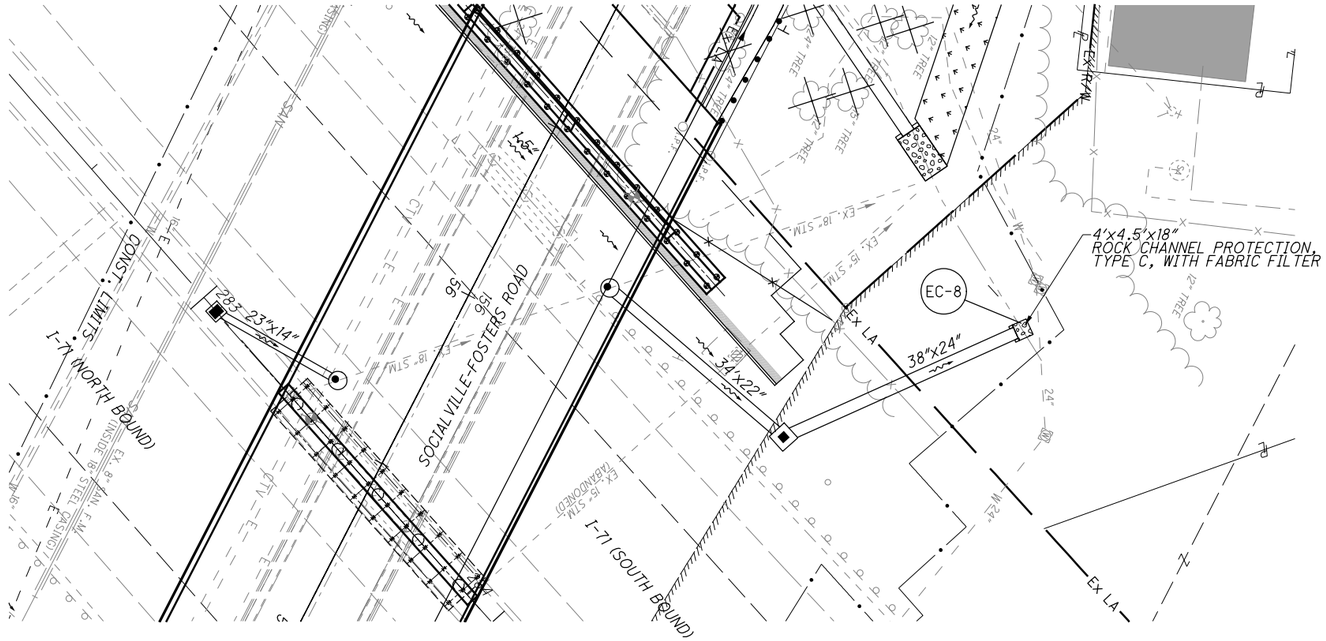

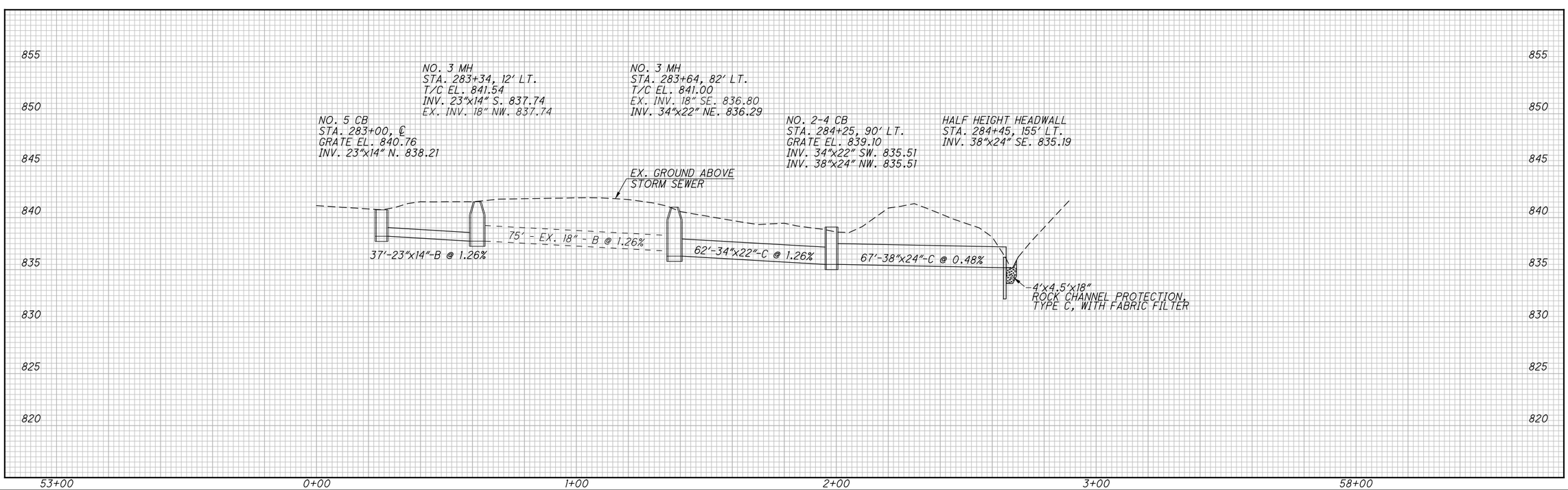

HORIZONTAL SCALE IN FEET
0 10 20 40

CALCULATED EJT
CHECKED REN

STORM SEWER PROFILES
STA. 53+00 TO STA. 58+25

WAR-71-2.54

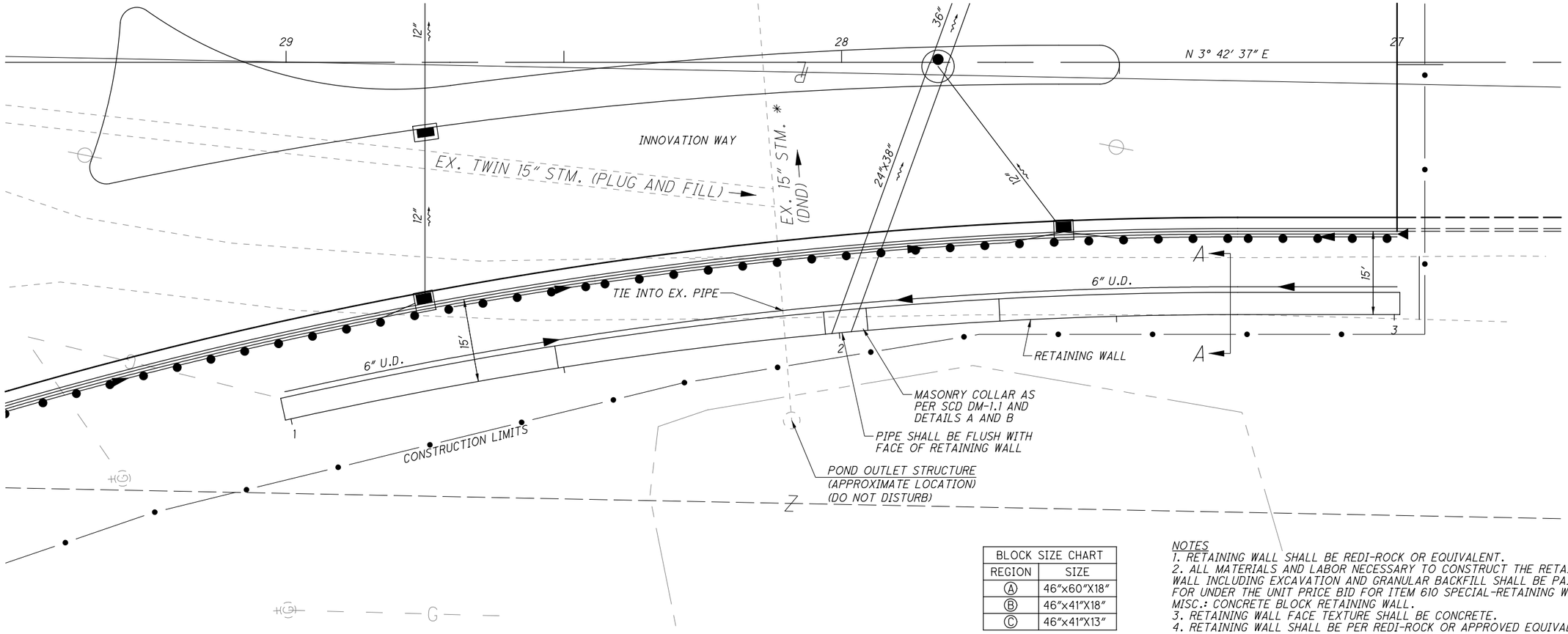

BLOCK SIZE CHART	
REGION	SIZE
Ⓐ	46"x60"X18"
Ⓑ	46"x41"X18"
Ⓒ	46"x41"X13"

NOTES
1. RETAINING WALL SHALL BE REDI-ROCK OR EQUIVALENT.
2. ALL MATERIALS AND LABOR NECESSARY TO CONSTRUCT THE RETAINING WALL INCLUDING EXCAVATION AND GRANULAR BACKFILL SHALL BE PAID FOR UNDER THE UNIT PRICE BID FOR ITEM 610 SPECIAL-RETAINING WALL MISC.: CONCRETE BLOCK RETAINING WALL.
3. RETAINING WALL FACE TEXTURE SHALL BE CONCRETE.
4. RETAINING WALL SHALL BE PER REDI-ROCK OR APPROVED EQUIVALENT.

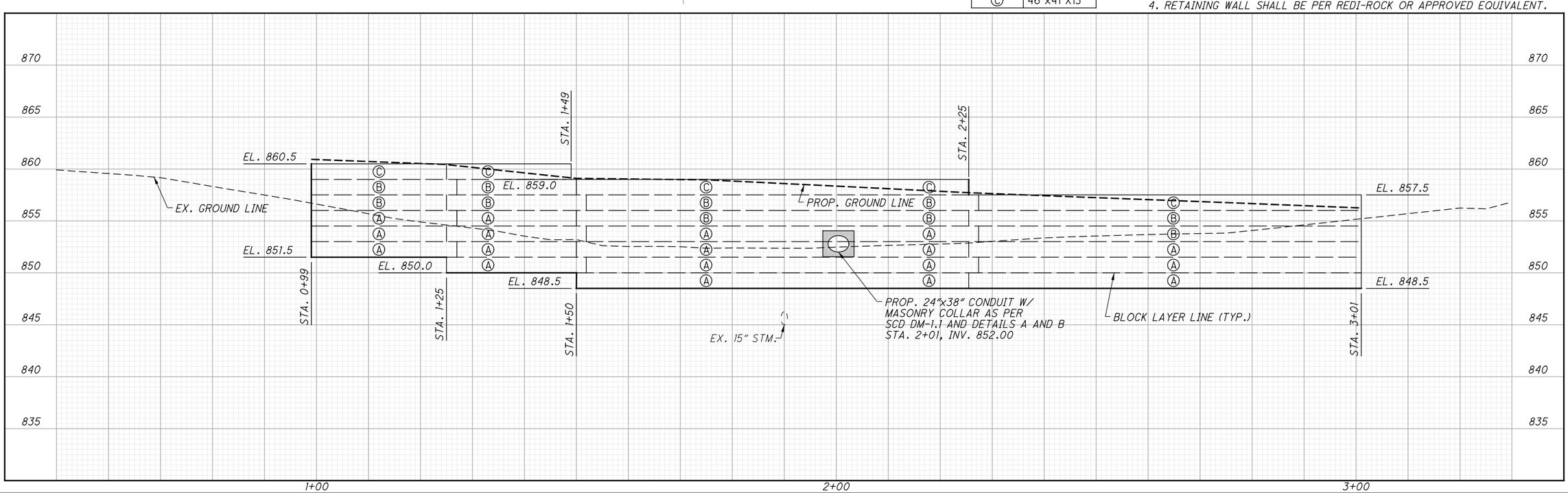

N

HORIZONTAL SCALE IN FEET
0 5 10 20

CALCULATED EJT
CHECKED REN

RETAINING WALL PLAN AND PROFILE
STA. 0+50 TO STA. 3+30

WAR-71-2.54

DETAIL B

DETAIL A

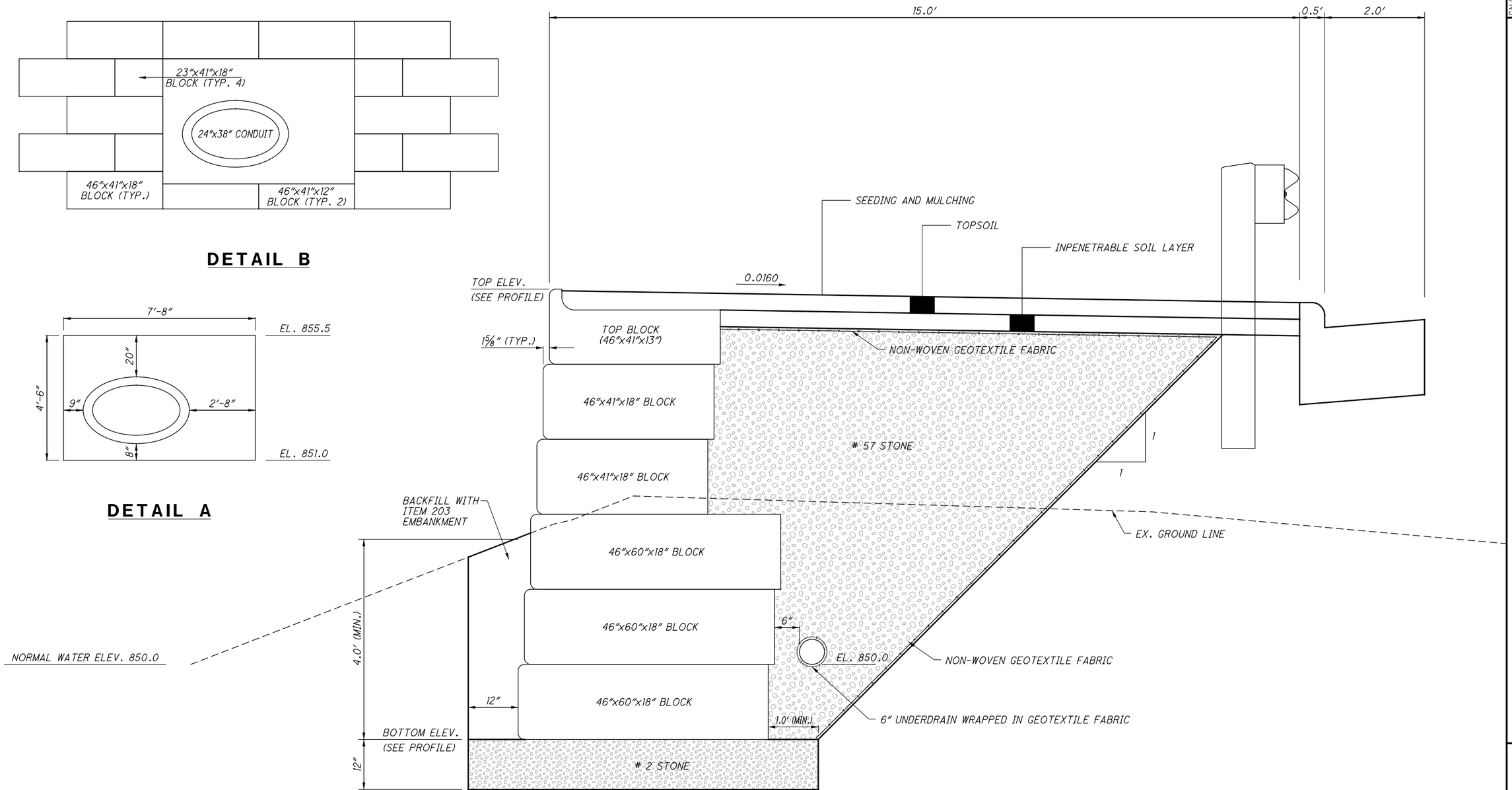

SECTION A-A

QUANTITIES

ITEM 610 SPECIAL - RETAINING WALL MISC.: CONCRETE BLOCK RETAINING WALL (WALL TO BE REDI-ROCK OR APPROVED EQUIVALENT) 1967 SF

CALCULATED EJT
CHECKED REN

RETAINING WALL DETAILS

WAR-71-2.54

GENERAL

1. THE PROPOSED SANITARY FORCE MAIN AND WATER LINES SHALL BE ADJUSTED AS NECESSARY IN THE FIELD FOR "FIT-UP" PURPOSES.

2. ANY CASING PIPE BENEATH THE MSE WALL SHALL EXTEND TEN (10) FEET BEYOND THE FRONT EDGE OF THE MSE WALL AND TEN (10) FEET BEYOND THE LIMITS OF THE SELECT GRANULAR BACKFILL BEHIND THE MSE WALL.

DETAILED PROCEDURES FOR SANITARY SEWER

STORM WATER AND EXTRANEOUS FLOWS ARE PROHIBITED FROM ENTERING THE EXISTING SYSTEM DURING CONSTRUCTION. NO OPEN CUT TRENCHES WILL BE ALLOWED TO REMAIN OPEN OVERNIGHT. STORM DRAINS, DIVERSION DITCHES, PUMPS ETC., SHALL BE USED AS REQUIRED TO MAINTAIN THE INTEGRITY OF THE SYSTEM AT ALL TIMES.

ALL SANITARY SEWER PIPE MUST BE BEDDED WITH NUMBER 57 STONE EXTENDING FROM A POINT NOT LESS THAN 6" BELOW THE BOTTOM OF THE PIPE TO THE SPRINGLINE OF THE PIPE. BACKFILL WITH NUMBER 9 GRITS FROM THE SPRINGLINE TO A POINT NOT LESS THAN 12" ABOVE THE CROWN OF THE PIPE. BEDDING SHALL PROVIDE A UNIFORM SUPPORT ALONG THE ENTIRE PIPE BARREL, WITHOUT LOAD CONCENTRATION AT JOINT COLLARS OR BELLS. BEDDING DISTURBED BY PIPE MOVEMENT OR BY REMOVAL OF SHORING OR MOVEMENT OF THE TRENCH SHIELD OR BOX SHALL BE RECONSOLIDATED PRIOR TO BACKFILL.

SEWER

ALL SANITARY PIPE SHALL CONFORM TO ASTM D-2680 FOR ABS/PVC GASKETED COMPOSITE PIPE (TRUSS), ASTM D-3034 FOR SDR 26 GASKETED 4" - 15" DIAMETER OR ASTM F-679 FOR SDR 26 GASKETED 18" - 30" DIAMETER. PIPE LARGER THAN 15" SHALL CONFORM TO ASTM F-949 (A2000) OR ASTM F-1803. CERAMIC COATED CLASS 53 DUCTILE IRON PIPE OR EQUAL MUST BE USED WHERE SPECIFIED BY THE COUNTY SANITARY ENGINEER. JOINTS FOR PVC GRAVITY SEWER PIPE SHALL BE PUSH- ON TYPES WITH RUBBER GASKETS. PIPE ENDS SHALL NOT BE BEVELED. PIPE ENDS MUST BE SEALED.

THE CONTRACTOR MUST EITHER CONSTRUCT BULKHEAD(S) OR INSTALL MECHANICAL PLUGS(S) AT THE POINT(S) OF CONNECTION TO THE EXISTING SEWER PRIOR TO INITIATING ANY CONSTRUCTION. THE BULKHEAD(S) OR MECHANICAL PLUG(S) SHALL REMAIN IN PLACE UNTIL THE NEW MAINS HAVE BEEN FLUSHED, CLEANED, TESTED AND APPROVED FOR USE BY WARREN COUNTY. THE BULKHEAD(S) OR MECHANICAL PLUG(S) CAN ONLY BE REMOVED IN THE PRESENCE OF A WARREN COUNTY SEWER INSPECTOR.

TRENCH SAFETY IS THE RESPONSIBILITY OF THE CONTRACTOR. THE CONTRACTOR MUST INSURE THAT ALL APPLICABLE OSHA OPEN TRENCH SAFETY REQUIREMENTS ARE FOLLOWED. IT IS NOT WARREN COUNTY'S RESPONSIBILITY TO INSPECT EACH SITE FOR COMPLIANCE.

ALL MATERIALS USED SHALL BE DOMESTIC, MADE IN THE UNITED STATES OF AMERICA.

WATER

1. ALL WATER MAINS SHALL HAVE A MINIMUM COVER OF 4'-6".

2. ALL WATER MAINS SHALL BE DUCTILE IRON CONFORMING WITH AWWA SPEC. C-151 CLASS 52 IN SIZES 4"-16" AND PSI CLASS 350 FOR 20" AND ABOVE.

3. COMPACT FITTINGS ARE PERMITTED.

4. ALL WATER VALVES MUST OPEN LEFT. ALL VALVE BOX LIDS MUST BE CAST/STAMPED "WCWD" IN 1 1/2" LETTERS AND BE NEENAH NF-19130002 OR EQUAL. ALL VALVE EXTENSIONS TO HAVE SET SCREWS.

5. A CONCRETE SLAB MUST BE PROVIDED AT FINAL GRADE AROUND ALL WATER MAIN VALVE BOXES. THE SLABS MUST BE EIGHTEEN INCHES (18") SQUARE /CIRCLE AND NINE INCHES (9") THICK.

6. WATER AND SEWER LINES SHALL HAVE A MINIMUM OF TEN FEET (10') HORIZONTAL SEPARATION AND/ OR TWO FEET (2') VERTICAL SEPARATION.

7. NO GATE VALVE, METER PIT, BLOW OFF OR CORPORATION STOP SHALL BE LOCATED UNDER OR WITHIN THREE FEET (3') OF DRIVEWAYS, ROADWAYS OR SIDEWALKS.

8. NO DRIVEWAY SHALL BE INSTALLED WITHIN FIVE FEET (5') OF A FIRE HYDRANT.

9. A MINIMUM OF THREE FEET (3') IS REQUIRED BETWEEN CORPORATION STOPS. NO TAP SHALL BE MADE WITHIN THREE (3') OF A BELL.

10. THE LOCATION OF WATER SERVICE LATERALS MUST BE STAMPED IN THE CURB AT THE TIME THE CURB IS PLACED TO PERMANENTLY INDICATE THE LOCATION OF SAID LATERALS.

11. THE LOCATION OF ALL WATER SERVICE LATERALS MUST BE PROVIDED ON THE AS-BUILT PLANS.

12. CONTRACTOR SHALL SUBMIT AS-BUILT PLANS FOR ANY WATER LATERAL CONNECTIONS TO THE OWNER.

13. ALL WATER MAINS CROSSING UNDER STORM DRAINS SHALL BE BACK-FILLED WITH GRANULAR MATERIAL, O.D.O.T. ITEM 310.02, BETWEEN MAINS AND DRAINS.

20. SWAB PIPE WITH 50 PPM CHLORINE SOLUTION BEFORE INSTALLATION.

21. ALL NEW WATER MAINS SHALL BE PRESSURE TESTED FOR 2 HOURS AT 1.5 TIMES THE OPERATING PRESSURE OR AT 150 PSI, WHICHEVER IS GREATER. ALLOWABLE LEAKAGE SHALL BE PER TABLE 6A OF AWWA C-600.

25. ALL MATERIALS USED SHALL BE DOMESTIC, MADE IN THE UNITED STATES OF AMERICA.

PROCEDURE FOR CONNECTION TO EXISTING WATER SYSTEM

1. THE CONTRACTOR MUST NOTIFY WARREN COUNTY WATER DEPARTMENT THREE (3) DAYS IN ADVANCE OF ANY SHUT DOWN. WARREN COUNTY WILL ISSUE THE SHUT DOWN NOTIFICATION AND/OR BOIL ADVISORY TO AFFECTED CUSTOMERS PER OHIO EPA REQUIREMENTS IF DETERMINED NECESSARY BY WARREN COUNTY.

2. EXPOSE EXISTING MAIN AT PROPOSED CONNECTION POINT. NO WET TAP SHALL BE MADE WITHIN THREE (3) FEET OF A BELL OR PIPE CONNECTION.

3. COUNTY PERSONNEL TO OPERATE CLOSING OF APPROPRIATE VALVES TO ISOLATE LINE TO BE TAPPED.

4. INSTALL PROPER TAPPING SLEEVE AND TAPPING VALVE. THE TAPPING SLEEVE AND VALVE SHALL BE TESTED AT 200 PSI FOR A PERIOD OF AT LEAST 5 MINUTES. THE PIPE SLUG MUST BE REMOVED AND INSPECTED BY COUNTY PERSONNEL.

5. IF THE TAPPING SLEEVE AND VALVE WILL BE UNDER FUTURE PAVEMENT, THE BURIED VALVE MUST BE LEFT OPEN AND A NEW VALVE SET OUT OF PAVEMENT.

6. FIELD CUT EXISTING MAIN AS NECESSARY TO ACCOMMODATE TEE AND CLOSE COUPLED VALVES AT EACH END OF TEE. CARE IS TO BE TAKEN SO AS NOT TO GET DIRT IN EXISTING MAIN.

7. THOROUGHLY CLEAN AND DISINFECT PIPE AND APPURTENANCES TO BE INSTALLED.

8. INSTALL TEE AND VALVES - DRESSER COUPLINGS CAN BE USED IF NECESSARY. PROPOSED MAIN VALVE IS TO BE CAPPED AND SHUT OFF. EXISTING MAIN IS THEN TO BE RETURNED TO SERVICE BY COUNTY PERSONNEL.

9. CONSTRUCTION OF PROPOSED MAIN IS TO BE COMPLETED WITHIN A JOINT OF CONNECTION TO TEE AND VALVES INSTALLED ABOVE.

10. ENTIRE LINE IS TO BE PRESSURE TESTED AND DISINFECTED TO COUNTY STANDARDS.

11. ENTIRE LENGTH OF PIPE IS TO BE THOROUGHLY CLEANED AND DISINFECTED PRIOR TO INSTALLATION. PERMATEX CHLORINE TABLETS TO BE USED FOR DISINFECTION. DOSAGE SHALL BE PER MANUFACTURER'S SPECIFICATIONS BASED ON PIPE MATERIAL.

12. NEW MAIN IS TO BE PUT INTO SERVICE BY COUNTY PERSONNEL.

13. TAPPING SLEEVES/SADDLES TO BE TWO-PIECE CAST IRON. SIZE ON SIZE TAPPING SLEEVES ARE NOT PERMITTED.

PAYMENT

ALL OF THE WORK NOTED ABOVE SHALL INCLUDED IN THE COST OF THE CORRESPONDING 611 AND 638 ITEMS.

UTILITY RELOCATION CONSTRUCTION SEQUENCE

PHASE I:

1. CONSTRUCT PROPOSED WATER MAIN UP TO TIE- IN POINT AT EACH END.
2. PERFORM ALL TESTING AND DISINFECTION PROCEDURES NOTED IN THE PLANS AND SPECIFICATIONS.
3. SHUT OFF WATER FLOW. DISCONNECT EXISTING WATER MAIN AND CONNECT PROPOSED WATER MAIN AT EACH TIE-IN POINT.
4. OPEN UP WATER FLOW.
5. REMOVE EXISTING WATER MAIN.

PHASE II:

1. CONSTRUCT SANITARY FORCE MAIN UP TO TIE-IN POINTS AT EACH END.
2. SHUT OFF SANITARY FORCE MAIN FLOW. DISCONNECT EXISTING SANITARY FORCE MAIN AND CONNECT PROPOSED SANITARY FORCE MAIN AT EACH TIE-IN POINT. COLLECT EFFLUENT FROM THE FORCE MAIN IN PORTABLE CONTAINER(S), ENSURING THAT SPILLAGE DOES NOT OCCUR.
3. PERFORM ALL TESTING NOTED IN THE PLANS AND SPECIFICATIONS.
4. OPEN UP SANITARY FLOW.
5. REMOVE EXISTING SANITARY FORCE MAIN.
6. DISPOSE OF COLLECTED WASTE WATER AS PER NOTE 2 ON SHEET 69C.

CALCULATED EJT
CHECKED REN

UTILITY RELOCATION GENERAL NOTES

WAR-71-2.54

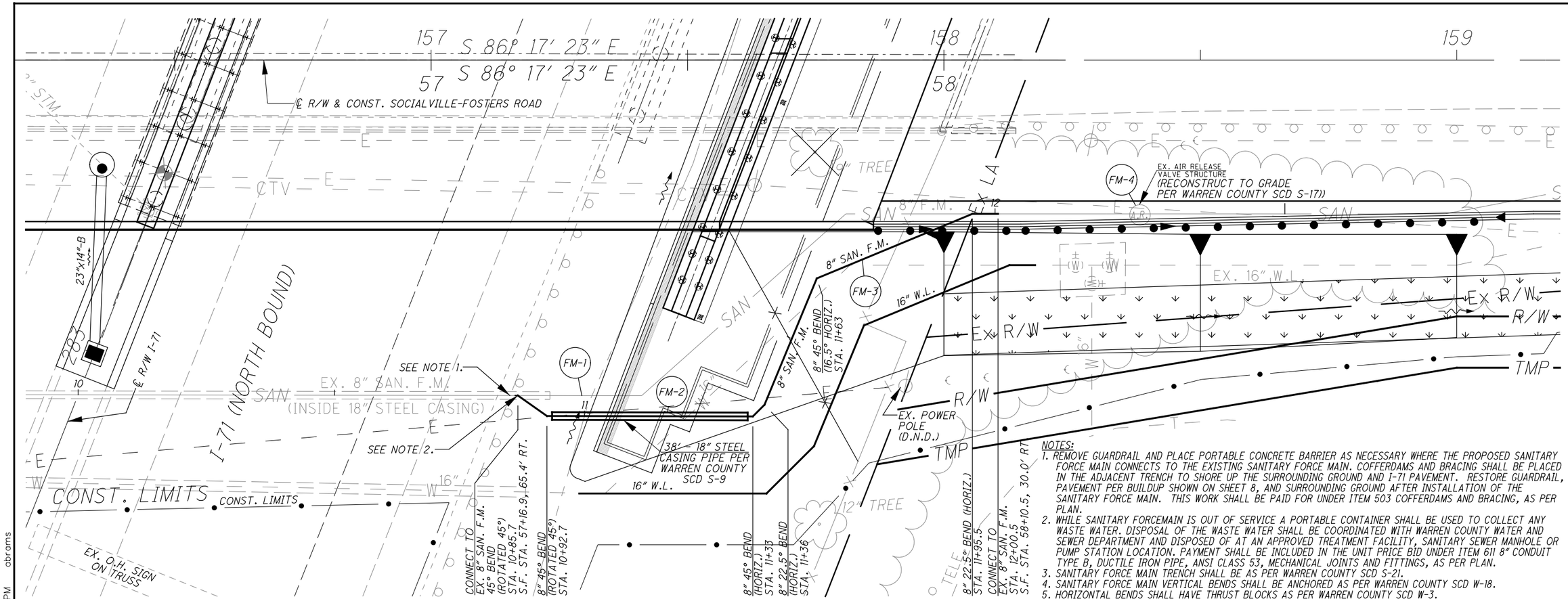

NOTES:

1. REMOVE GUARDRAIL AND PLACE PORTABLE CONCRETE BARRIER AS NECESSARY WHERE THE PROPOSED SANITARY FORCE MAIN CONNECTS TO THE EXISTING SANITARY FORCE MAIN. COFFERDAMS AND BRACING SHALL BE PLACED IN THE ADJACENT TRENCH TO SHORE UP THE SURROUNDING GROUND AND I-71 PAVEMENT. RESTORE GUARDRAIL, PAVEMENT PER BUILDUP SHOWN ON SHEET 8, AND SURROUNDING GROUND AFTER INSTALLATION OF THE SANITARY FORCE MAIN. THIS WORK SHALL BE PAID FOR UNDER ITEM 503 COFFERDAMS AND BRACING, AS PER PLAN.
2. WHILE SANITARY FORCEMAIN IS OUT OF SERVICE A PORTABLE CONTAINER SHALL BE USED TO COLLECT ANY WASTE WATER. DISPOSAL OF THE WASTE WATER SHALL BE COORDINATED WITH WARREN COUNTY WATER AND SEWER DEPARTMENT AND DISPOSED OF AT AN APPROVED TREATMENT FACILITY, SANITARY SEWER MANHOLE OR PUMP STATION LOCATION. PAYMENT SHALL BE INCLUDED IN THE UNIT PRICE BID UNDER ITEM 611 8" CONDUIT TYPE B, DUCTILE IRON PIPE, ANSI CLASS 53, MECHANICAL JOINTS AND FITTINGS, AS PER PLAN.
3. SANITARY FORCE MAIN TRENCH SHALL BE AS PER WARREN COUNTY SCD S-21.
4. SANITARY FORCE MAIN VERTICAL BENDS SHALL BE ANCHORED AS PER WARREN COUNTY SCD W-18.
5. HORIZONTAL BENDS SHALL HAVE THRUST BLOCKS AS PER WARREN COUNTY SCD W-3.

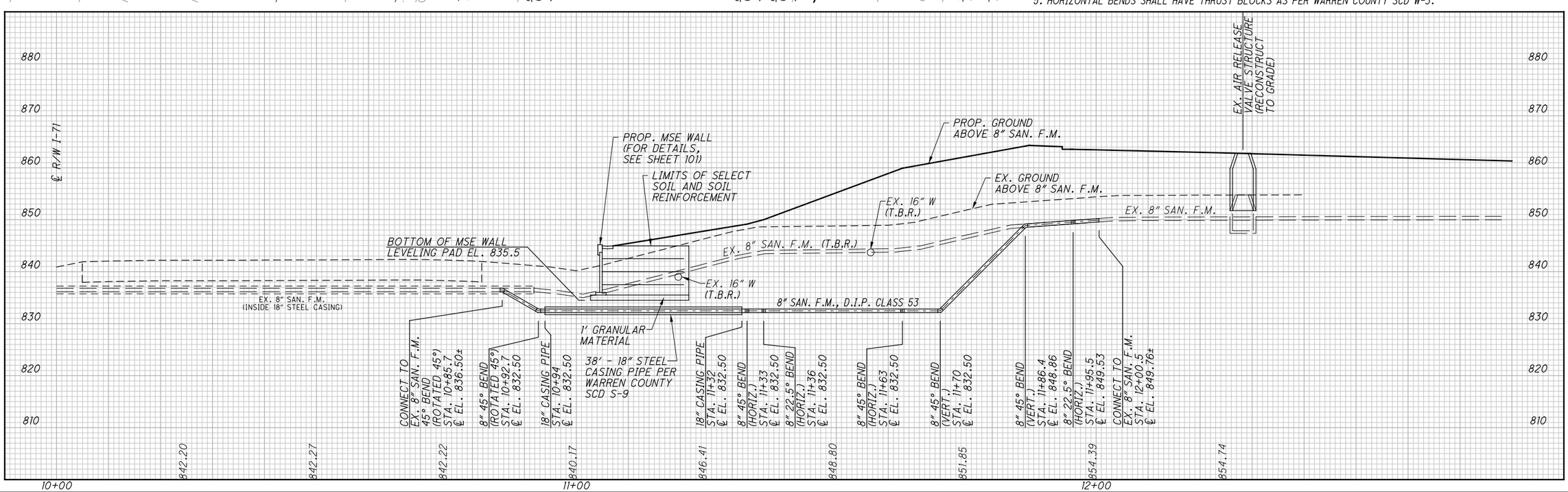

HORIZONTAL SCALE IN FEET 0 5 10 20

CALCULATED EJT
CHECKED REN

PLAN AND PROFILE SANITARY FORCE MAIN RELOCATION STA. 10+00 TO STA. 12+50

WAR-71-2.54

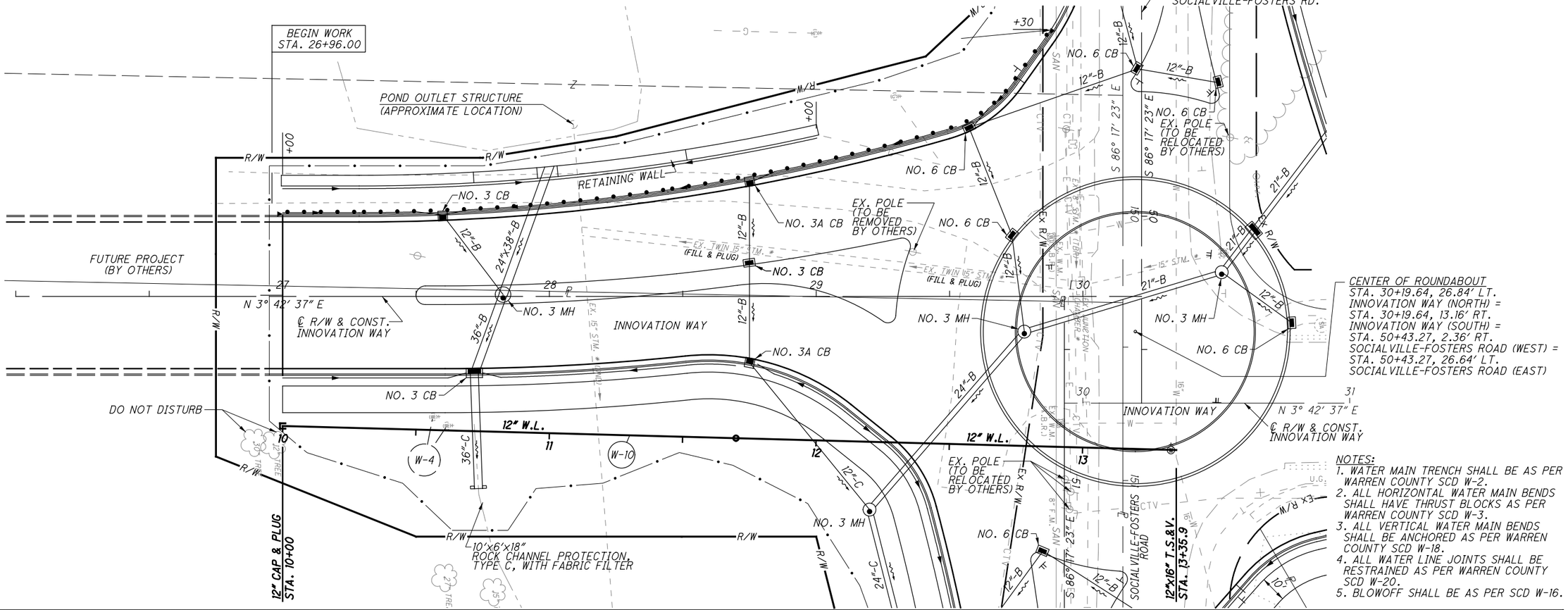

NOTES:
1. WATER MAIN TRENCH SHALL BE AS PER WARREN COUNTY SCD W-2.
2. ALL HORIZONTAL WATER MAIN BENDS SHALL HAVE THRUST BLOCKS AS PER WARREN COUNTY SCD W-3.
3. ALL VERTICAL WATER MAIN BENDS SHALL BE ANCHORED AS PER WARREN COUNTY SCD W-18.
4. ALL WATER LINE JOINTS SHALL BE RESTRAINED AS PER WARREN COUNTY SCD W-20.
5. BLOWOFF SHALL BE AS PER SCD W-16.

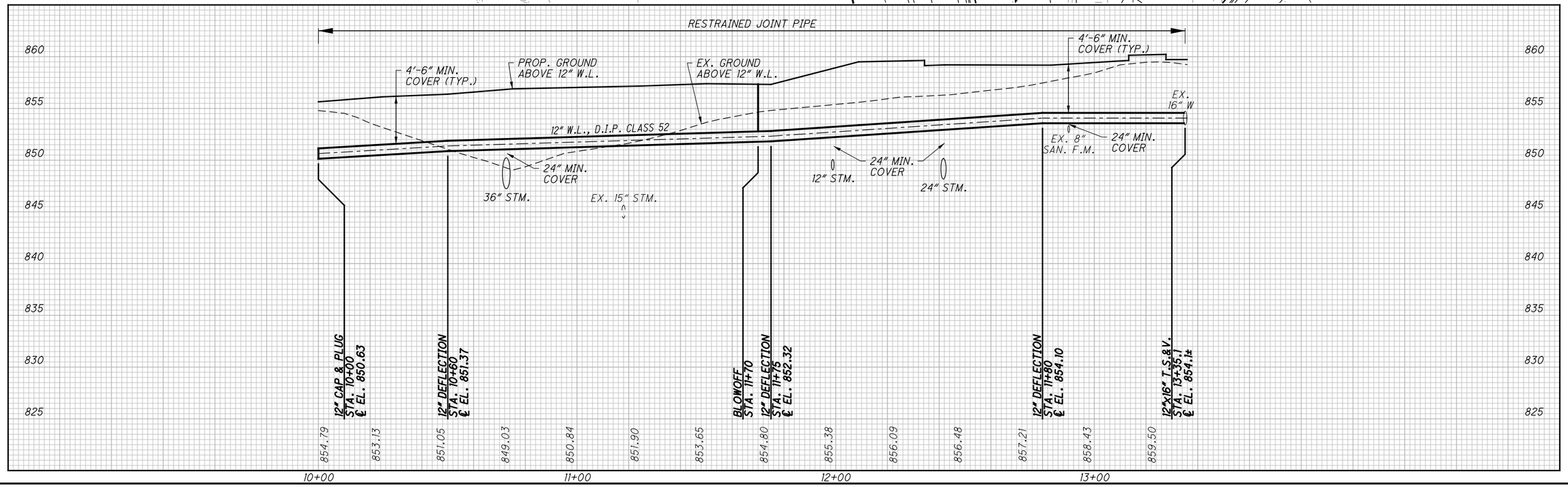

PLAN AND PROFILE INNOVATION WAY WATERLINE STA. 10+00 TO STA. 13+36

WAR-71-2.54

HORIZONTAL SCALE IN FEET 0 10 20 40

CALCULATED

CHECKED

69D
137

H:\2014\14240\ODOT\WAR\12345\roadway\sheets\12345GP006-WAT.dgn 11/10/2015 1:21:46 PM abrams

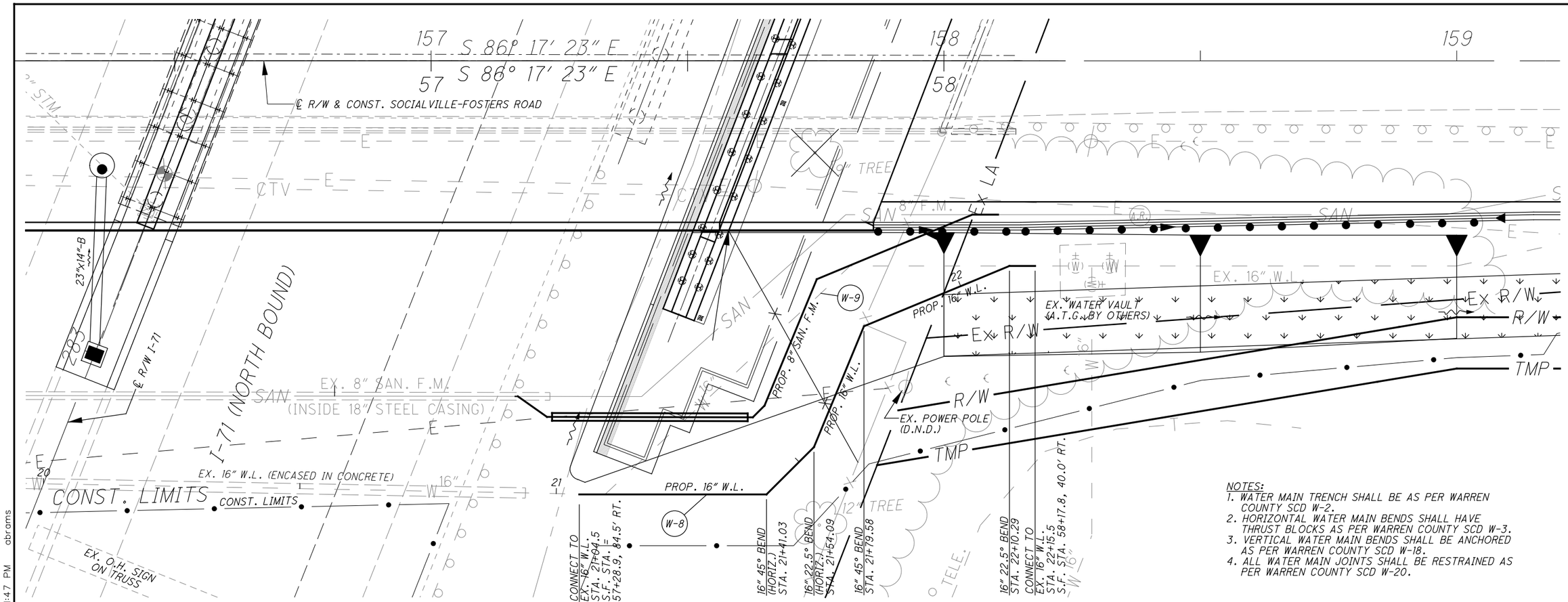

NOTES:
1. WATER MAIN TRENCH SHALL BE AS PER WARREN COUNTY SCD W-2.
2. HORIZONTAL WATER MAIN BENDS SHALL HAVE THRUST BLOCKS AS PER WARREN COUNTY SCD W-3.
3. VERTICAL WATER MAIN BENDS SHALL BE ANCHORED AS PER WARREN COUNTY SCD W-18.
4. ALL WATER MAIN JOINTS SHALL BE RESTRAINED AS PER WARREN COUNTY SCD W-20.

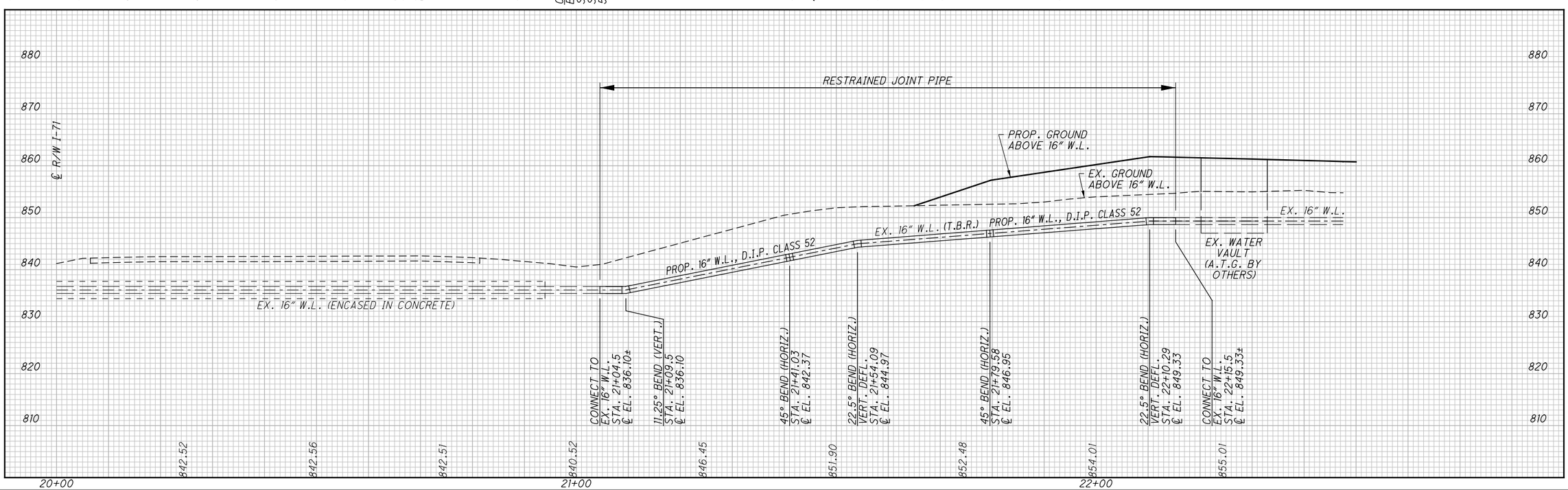

HORIZONTAL SCALE IN FEET 0 5 10 20

CALCULATED EJT
CHECKED REN

PLAN AND PROFILE 16" WATER MAIN RELOCATION STA. 20+00 TO STA. 22+50

WAR-71-2.54

H:\2014\14240\ODOT\WAR\12345\roadway\sheets\12345GP002-WAT-16.dgn 11/10/2015 1:21:47 PM abrams

REF. NO.	SHEET NO.	STATION TO STATION		SIDE	202 PIPE REMOVED, UNDER 24" (SANITARY) FT	202 PIPE REMOVED, UNDER 24" (WATER) FT		503 COFFERDAMS AND EXCAVATION BRACING, AS PER PLAN LS		611 8" CONDUIT, TYPE B, DIP ANSI CLASS 53, MECHANICAL JOINTS AND FITTINGS FT	611 MANHOLE, RECONSTRUCTED TO GRADE, AS PER PLAN EACH		638 SPECIAL - 18" STEEL CASING PIPE FT	638 12" WATER MAIN DIP ANSI CLASS 52, MECHANICAL JOINTS AND FITTINGS FT	638 16" X 12" TAPPING SLEEVE, VALVE AND VALVE BOX EACH	638 16" WATER MAIN DIP ANSI CLASS 52, MECHANICAL JOINTS AND FITTINGS FT		638 WATER WORK MISC.: CAP AND PLUG 12" WATER MAIN EACH	638 WATER WORK MISC.: BLOWOFF EACH
FM-1	69C	10+85.7 TO 12+00.5	FORCE MAIN	LT	120														
FM-2	69C	10+94 TO 11+32	FORCE MAIN	CL				LS					38						
FM-3	69C	10+85.7 TO 12+00.5	FORCE MAIN	CL						126									
FM-4	69C	12+28	FORCE MAIN	CL							1								
W-10	69D	10+00 TO 13+35.9	WATER LINE	CL										340	1			1	1
W-11	69E	21+04.5 TO 22+15.5	WATER LINE	CL												112			
W-12	69E	21+04.5 TO 22+15.5	WATER LINE	LT		120													
TOTALS CARRIED TO GENERAL SUMMARY					120	120		LS		126	1		38	340	1	112		1	1

CALCULATED EJT
CHECKED REN

UTILITY RELOCATION SUBSUMMARY

WAR-71-2.54

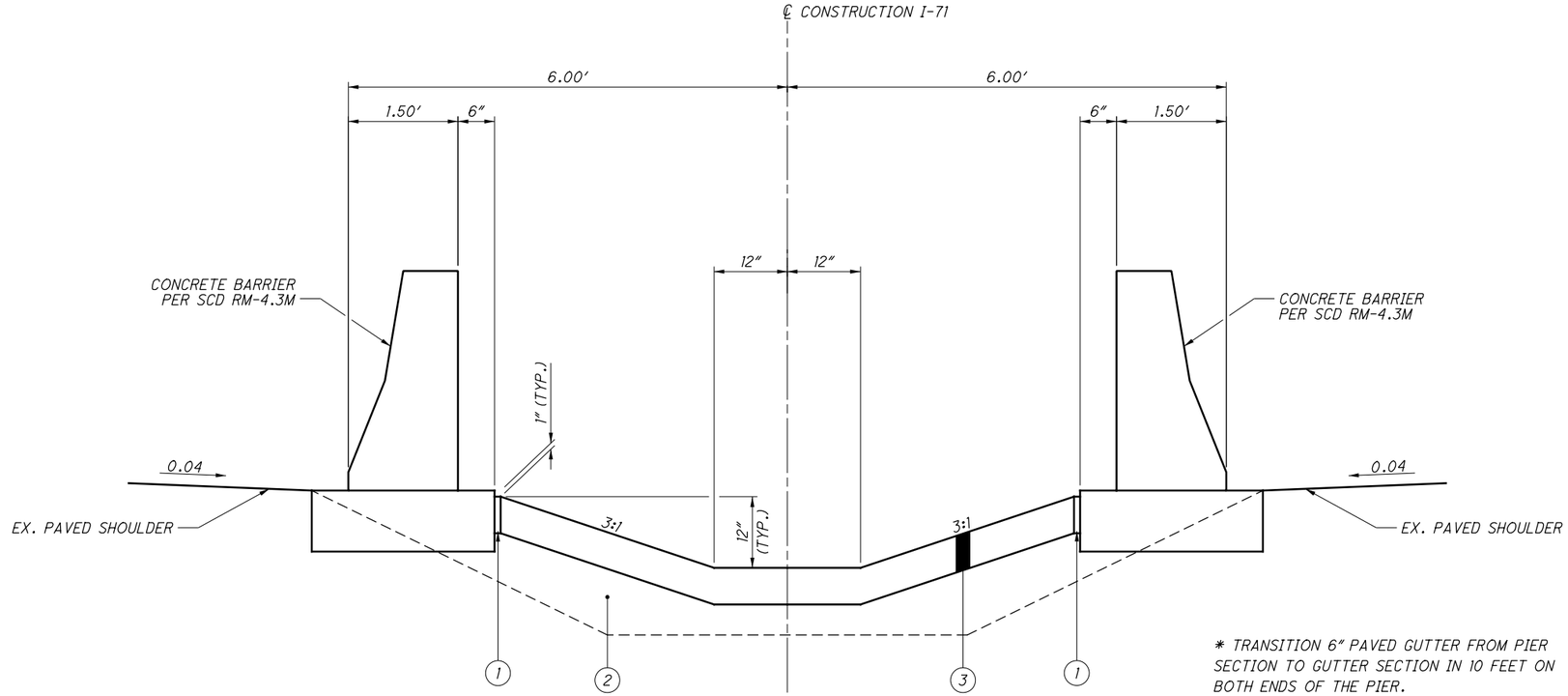

* TRANSITION 6″ PAVED GUTTER FROM PIER SECTION TO GUTTER SECTION IN 10 FEET ON BOTH ENDS OF THE PIER.

6″ PAVED GUTTER DETAIL
STA. 282+95.00 TO STA. 286+29.18 = 34.18 FT. *
STA. 283+99.68 TO STA. 284+09.68 = 10.00 FT. *

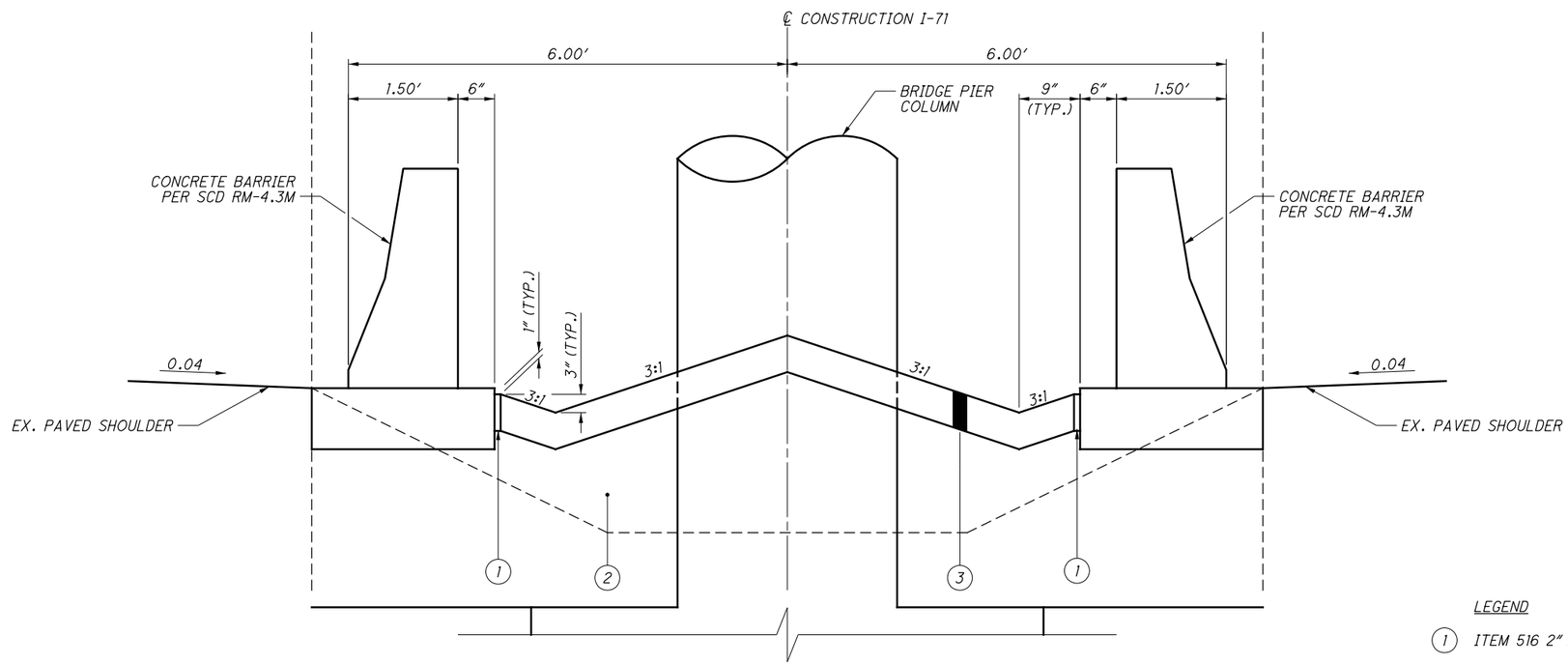

PIER SECTION
STA. 283+29.18 TO STA. 283+99.68 = 70.50 FT.

LEGEND

1. ITEM 516 2″ MIN. PREFORMED EXPANSION JOINT FILLER
2. ITEM 203 EMBANKMENT
3. ITEM 601 PAVED GUTTER MISC.: 6″ CONCRETE GUTTER

HORIZONTAL SCALE IN FEET 0 10 20 40

CALCULATED EJT
CHECKED REN

MISCELLANEOUS DETAILS

WAR-71-2.54

SHEET NO.	LOCATION	STATION FROM	STATION TO	SIDE	CODE	SIZE	620 REBOUNDABLE TUBULAR PYLON, AS PER PLAN	630 SIGN, FLAT SHEET	630 REMOVAL OF GROUND MOUNTED POST SUPPORT AND DISPOSAL	630 REMOVAL OF GROUND MOUNTED SIGN AND REERECTION	630 REMOVAL OF GROUND MOUNTED SIGN AND DISPOSAL	630 GROUND MOUNTED SUPPORT NO. 3 POST	630 GROUND MOUNTED SUPPORT NO. 4 POST	630 GROUND MOUNTED SUPPORT NO. 6 POST	630 SIGN POST REFLECTOR	644 CHANELIZING LINE, 8"	644 CENTER LINE (SOLID DASHED)	644 CENTER LINE (DOUBLE YELLOW)	644 CROSSWALK LINE	644 DOTTED LINE, 8"	644 LANE ARROW	644 LANE LINE, 4"	644 ISLAND MARKING	644 STOP LINE	644 EDGE LINE, 4" (WHITE)	644 EDGE LINE, 4" (YELLOW)	644 WORD ON PAVEMENT, 72"	644 TRANSVERSE / DIAGONAL LINE (WHITE)	644 TRANSVERSE / DIAGONAL LINE (YELLOW)	644 YIELD LINE	646 LANE LINE, 4"	646 CENTER LINE
							EA	SF	EACH	EACH	EACH	FT	FT	FT	EACH	FT	MILE	MILE	FT	FT	EACH	MILE	SF	FT	MILE	MILE	EACH	FT	FT	FT	MILE	MILE
75	SOCIALVILLE-FOSTERS ROAD	49+85	44+00	LT								13			1																		
75	SOCIALVILLE-FOSTERS ROAD	45+00		RT	W2-6	36"x36"		9						14.7	1																		
75	SOCIALVILLE-FOSTERS ROAD	45+00		RT	SPECIAL	30"x12"		2.5																									
75	SOCIALVILLE-FOSTERS ROAD	45+00		RT	W13-1P	24"x24"		4																									
75	SOCIALVILLE-FOSTERS ROAD	45+50	47+50	LT/RT													0.057																
75	SOCIALVILLE-FOSTERS ROAD	47+50	48+75	LT/RT																						0.047							
75	SOCIALVILLE-FOSTERS ROAD	45+85		CL																	1												
75	SOCIALVILLE-FOSTERS ROAD	46+00		RT	R3-8-MODIFIED	60"x36"		15				15.5,15.5			2																		
75	SOCIALVILLE-FOSTERS ROAD	46+15		CL																	1												
75	SOCIALVILLE-FOSTERS ROAD	46+70	48+75	LT																								271					
75	SOCIALVILLE-FOSTERS ROAD	46+70	48+75	LT																					0.039								
75	SOCIALVILLE-FOSTERS ROAD	47+00		LT								14.5			1																		
75	SOCIALVILLE-FOSTERS ROAD	47+00	47+50	LT/RT														0.019											64				
75	SOCIALVILLE-FOSTERS ROAD	47+00		CL																			57										
75	SOCIALVILLE-FOSTERS ROAD	47+00		RT								14.5			1																		
75	SOCIALVILLE-FOSTERS ROAD	47+20	48+75	RT												156																	
75	SOCIALVILLE-FOSTERS ROAD	47+50	47+00	LT					1	2																							
75	SOCIALVILLE-FOSTERS ROAD	47+50	47+50	CL	R4-7	24"x30"		5				13			1																		
75	SOCIALVILLE-FOSTERS ROAD	47+50	47+00	RT					1	2																							
75	SOCIALVILLE-FOSTERS ROAD	48+45	48+45	RT																	2												
76	SOCIALVILLE-FOSTERS ROAD	48+75	49+60	RT												193																	
76	SOCIALVILLE-FOSTERS ROAD	48+75	49+60	RT																								68					
76	SOCIALVILLE-FOSTERS ROAD	48+75	49+85	LT/RT																						0.042							
76	SOCIALVILLE-FOSTERS ROAD	48+75	50+00	LT																					0.026			191					
76	SOCIALVILLE-FOSTERS ROAD	49+17	50+19	LT																107													
76	SOCIALVILLE-FOSTERS ROAD	49+40		RT																							1			11			
76	SOCIALVILLE-FOSTERS ROAD	49+48		RT																							1			11			
76	SOCIALVILLE-FOSTERS ROAD	49+45		RT	R1-2	36"		3.9				13.1			1																		
76	SOCIALVILLE-FOSTERS ROAD	49+45		RT	R6-2R	24"x30"		5																									
76	SOCIALVILLE-FOSTERS ROAD	49+49		RT	R1-2	36"		3.9				13.1			1																		
76	SOCIALVILLE-FOSTERS ROAD	49+49		RT	R6-2R	24"x30"		5																									
76	SOCIALVILLE-FOSTERS ROAD	49+52		LT	D3-H6A	120"x18"		15				11.3,11.3			2																		
76	SOCIALVILLE-FOSTERS ROAD	49+53	49+72	LT/RT																								121					
76	SOCIALVILLE-FOSTERS ROAD	49+54	50+12	RT																					0.014								
76	SOCIALVILLE-FOSTERS ROAD	49+75	49+85	LT/RT												69																	
76	SOCIALVILLE-FOSTERS ROAD	49+77		LT																	1												
76	SOCIALVILLE-FOSTERS ROAD	49+85	44+00	LT					1	1																							
76	SOCIALVILLE-FOSTERS ROAD	49+60	50+00	RT			6																										
76	SOCIALVILLE-FOSTERS ROAD	50+40	50+95	RT			6																										
76	SOCIALVILLE-FOSTERS ROAD	49+99	53+00	RT												310																	
76	SOCIALVILLE-FOSTERS ROAD	50+13		LT	R6-4A	48"x24"		8				9.5,9.5			2																		
76	SOCIALVILLE-FOSTERS ROAD	50+19		RT	R6-4A	48"x24"		8				9.5,9.5			2																		
76	SOCIALVILLE-FOSTERS ROAD	50+30		LT					1		1																						
76	SOCIALVILLE-FOSTERS ROAD	51+29	51+90	LT																								51					
76	SOCIALVILLE-FOSTERS ROAD	50+37	51+07	RT																					0.014								
76	SOCIALVILLE-FOSTERS ROAD	50+70		LT	R6-4A	48"x24"		8				9.5,9.5			2																		
76	SOCIALVILLE-FOSTERS ROAD	50+98	51+34	LT/RT																								118					
76	SOCIALVILLE-FOSTERS ROAD	50+98	53+00	RT																						0.038							
76	SOCIALVILLE-FOSTERS ROAD	50+98	51+16	LT/RT												69																	
76	SOCIALVILLE-FOSTERS ROAD	51+03		LT					2		2																						
76	SOCIALVILLE-FOSTERS ROAD	51+06		LT																	1												
76	SOCIALVILLE-FOSTERS ROAD	51+13	53+00	LT																						0.037							
76	SOCIALVILLE-FOSTERS ROAD	51+27	51+89	LT												154																	
	SUBTOTAL						12	92.3	6	5	3	191.8	0	14.7	17	951	0.057	0.019	0	107	6	0.000	57	0	0.093	0.164	2	820	64	22	0	0

CALCULATED DCK
CHECKED EJT

SIGNING AND PAVEMENT MARKING SUBSUMMARY

WAR-71-2.54

SHEET NO.	LOCATION	STATION FROM	STATION TO	SIDE	CODE	SIZE	620 REBOUNDABLE TUBULAR PYLON, AS PER PLAN	630 SIGN, FLAT SHEET	630 REMOVAL OF GROUND MOUNTED POST SUPPORT AND DISPOSAL	630 REMOVAL OF GROUND MOUNTED SIGN AND REERECTION	630 REMOVAL OF GROUND MOUNTED SIGN AND DISPOSAL	630 GROUND MOUNTED SUPPORT NO. 3 POST	630 GROUND MOUNTED SUPPORT NO. 4 POST	630 GROUND MOUNTED SUPPORT NO. 6 POST	630 SIGN POST REFLECTOR	644 CHANELIZING LINE, 8"	644 CENTER LINE (SOLID DASHED)	644 CENTER LINE (DOUBLE YELLOW)	644 CROSSWALK LINE	644 DOTTED LINE, 8"	644 LANE ARROW	644 LANE LINE, 4"	644 ISLAND MARKING	644 STOP LINE	644 EDGE LINE, 4" (WHITE)	644 EDGE LINE, 4" (YELLOW)	644 WORD ON PAVEMENT, 72"	644 TRANSVERSE / DIAGONAL LINE (WHITE)	644 TRANSVERSE / DIAGONAL LINE (YELLOW)	644 YIELD LINE	646 LANE LINE, 4"	646 CENTER LINE
							EA	SF	EACH	EACH	EACH	FT	FT	FT	EACH	FT	MILE	MILE	FT	FT	EACH	MILE	SF	FT	MILE	MILE	EACH	FT	FT	FT	MILE	MILE
76	SOCIALVILLE-FOSTERS ROAD	51+31		RT	D3-H6A	120"x18"		15				11.3,11.3			2																		
76	SOCIALVILLE-FOSTERS ROAD	51+37		LT	R1-2	36"		3.9				13.1			1																		
76	SOCIALVILLE-FOSTERS ROAD	51+37		LT	R6-2R	24"x30"		5																									
76	SOCIALVILLE-FOSTERS ROAD	51+40		LT																							1			11			
76	SOCIALVILLE-FOSTERS ROAD	51+40		LT	R1-2	36"		3.9				13.1			1																		
76	SOCIALVILLE-FOSTERS ROAD	51+40		LT	R6-2R	24"x30"		5																									
76	SOCIALVILLE-FOSTERS ROAD	51+45		LT																							1			11			
76	SOCIALVILLE-FOSTERS ROAD	51+85		CL	W11-2	36"x36"		9					14.8		1																		
76	SOCIALVILLE-FOSTERS ROAD	51+85		CL	W16-7PR	24"x12"		2																									
76	SOCIALVILLE-FOSTERS ROAD	51+85		RT	W11-2	36"x26"		9					14.8		1																		
76	SOCIALVILLE-FOSTERS ROAD	51+85		RT	W16-7PL	24"x12"		2																									
76	SOCIALVILLE-FOSTERS ROAD	51+92	51+92	RT/LT															190														
76	SOCIALVILLE-FOSTERS ROAD	51+98		CL	W11-2	36"x36"		9					14.8		1																		
76	SOCIALVILLE-FOSTERS ROAD	51+98		CL	W16-7PR	24"x12"		2																									
76	SOCIALVILLE-FOSTERS ROAD	51+98		LT	W11-2	36"x36"		9					14.8		1																		
76	SOCIALVILLE-FOSTERS ROAD	51+98		LT	W16-7PL	24"x12"		2																									
76	SOCIALVILLE-FOSTERS ROAD	52+02	52+25	LT																								2					
76	SOCIALVILLE-FOSTERS ROAD	52+02	53+00	LT												120																	
76	SOCIALVILLE-FOSTERS ROAD	52+50		LT																	1												
76	SOCIALVILLE-FOSTERS ROAD	52+60		LT																	1												
76	SOCIALVILLE-FOSTERS ROAD	52+92	52+92	LT					1		1																						
76	INNOVATION WAY	29+40		LT																	1												
76	INNOVATION WAY	29+55		LT																	1												
76	INNOVATION WAY	30+38	31+40	RT																102													
76	INNOVATION WAY	30+62	31+50	RT																								101					
76	INNOVATION WAY	30+65	31+50	RT																					0.019								
76	INNOVATION WAY	30+73	31+10	LT/RT																								107					
76	INNOVATION WAY	30+74	31+50	RT																						0.015							
76	INNOVATION WAY	30+74	30+92	LT/RT												65																	
76	INNOVATION WAY	30+82		LT																	1												
76	INNOVATION WAY	30+90	31+50	LT																						0.014							
76	INNOVATION WAY	31+06	31+06	RT	D3-H6A	72"x18"		9				11.3,11.3			2																		
76	INNOVATION WAY	31+12		LT	R1-2	36"		3.9				13.1			1																		
76	INNOVATION WAY	31+12		LT	R6-2R	24"x30"		5																									
76	INNOVATION WAY	31+15		LT																							1			11			
76	INNOVATION WAY	31+20		LT																							1			11			
76	INNOVATION WAY	31+38		RT	R4-7	24"x30"		5				13			1																		
76	INNOVATION WAY	31+20		LT	R1-2	36"		3.9				13.1			1																		
76	INNOVATION WAY	31+20		LT	R6-2R	24"x30"		5																									
76	INNOVATION WAY	31+15	31+50	LT																								43					
77	SOCIALVILLE-FOSTERS ROAD	53+00	53+08	LT/RT																						0.003							
77	SOCIALVILLE-FOSTERS ROAD	53+00	54+07	LT/RT												214																	
77	SOCIALVILLE-FOSTERS ROAD	53+08	55+00	LT/RT																									256				
77	SOCIALVILLE-FOSTERS ROAD	53+07.5	53+07.5	LT	R4-7	24"x30"		5				13			1																		
77	SOCIALVILLE-FOSTERS ROAD	53+08	58+25	LT/RT														0.086															0.110
77	SOCIALVILLE-FOSTERS ROAD	53+50		RT	R2-1	36"x48"		12				14.5			1																		
77	SOCIALVILLE-FOSTERS ROAD	54+00		LT	R3-8-MODIFIED	60"x36"		15				15.5,15.5			2																		
77	SOCIALVILLE-FOSTERS ROAD	54+07	58+25	LT/RT																		0.049										0.110	
77	SOCIALVILLE-FOSTERS ROAD	55+00		LT	W2-6	36"x36"		9						14.7	1																		
77	SOCIALVILLE-FOSTERS ROAD	55+00		LT	SPECIAL	30"x12"		2.5																									
77	SOCIALVILLE-FOSTERS ROAD	55+00		LT	W13-1P	24"x24"		4																									
SUBTOTAL							0	156	1	0	1	169.1	59.2	14.7	18	399	0.000	0.086	190	102	5	0.049	0	0	0.019	0.032	4	253	256	44	0.11	0.11

CALCULATED DCK
CHECKED EJT

SIGNING AND PAVEMENT MARKING SUBSUMMARY

WAR-71-2.54

SHEET NO.	LOCATION	STATION FROM	STATION TO	SIDE	CODE	SIZE	620 REBOUNDABLE TUBULAR PYLON, AS PER PLAN	630 SIGN, FLAT SHEET	630 REMOVAL OF GROUND MOUNTED POST SUPPORT AND DISPOSAL	630 REMOVAL OF GROUND MOUNTED SIGN AND REERECTION	630 REMOVAL OF GROUND MOUNTED SIGN AND DISPOSAL	630 GROUND MOUNTED SUPPORT NO. 3 POST	630 GROUND MOUNTED SUPPORT NO. 4 POST	630 GROUND MOUNTED SUPPORT NO. 6 POST	630 SIGN POST REFLECTOR	644 CHANELIZING LINE, 8"	644 CENTER LINE (SOLID DASHED)	644 CENTER LINE (DOUBLE YELLOW)	644 CROSSWALK LINE	644 DOTTED LINE, 8"	644 LANE ARROW	644 LANE LINE, 4"	644 ISLAND MARKING	644 STOP LINE	644 EDGE LINE, 4" (WHITE)	644 EDGE LINE, 4" (YELLOW)	644 WORD ON PAVEMENT, 72"	644 TRANSVERSE / DIAGONAL LINE (WHITE)	644 TRANSVERSE / DIAGONAL LINE (YELLOW)	644 YIELD LINE	646 LANE LINE, 4"	646 CENTER LINE
							EA	SF	EACH	EACH	EACH	FT	FT	FT	EACH	FT	MILE	MILE	FT	FT	EACH	MILE	SF	FT	MILE	MILE	EACH	FT	FT	FT	MILE	MILE
78	SOCIALVILLE-FOSTERS ROAD	58+25	61+10	LT/RT														0.108															
78	SOCIALVILLE-FOSTERS ROAD	58+25	63+00	LT/RT																		0.180											
78	SOCIALVILLE-FOSTERS ROAD	61+10	63+00	LT/RT													0.064	0.008															
78	SOCIALVILLE-FOSTERS ROAD	61+33		RT					1		1																						
78	SOCIALVILLE-FOSTERS ROAD	61+80		CL																	1												
78	SOCIALVILLE-FOSTERS ROAD	62+30		CL																	1												
78	SOCIALVILLE-FOSTERS ROAD	62+77		LT					1	1		14.5																					
78	SOCIALVILLE-FOSTERS ROAD	62+80	63+00	LT/RT																									30				
78	SOCIALVILLE-FOSTERS ROAD	62+80	63+00	LT/RT														0.008															
79	SOCIALVILLE-FOSTERS ROAD	63+00	63+75	LT/RT																									77				
79	SOCIALVILLE-FOSTERS ROAD	63+00	63+75	LT/RT														0.028															
79	SOCIALVILLE-FOSTERS ROAD	63+75	65+30	LT														0.029															
79	SOCIALVILLE-FOSTERS ROAD	63+00	63+91	RT																		0.017											
79	SOCIALVILLE-FOSTERS ROAD	63+00	65+30	LT																		0.044											
79	SOCIALVILLE-FOSTERS ROAD	63+75		RT					1		1																						
79	SOCIALVILLE-FOSTERS ROAD	63+75		RT	R3-8B	48"x30"		10				13,13			2																		
79	SOCIALVILLE-FOSTERS ROAD	63+91	65+30	RT												278																	
79	SOCIALVILLE-FOSTERS ROAD	63+91		CL/RT																	2												
79	SOCIALVILLE-FOSTERS ROAD	64+50		CL/RT																							2						
79	SOCIALVILLE-FOSTERS ROAD	64+97		CL/RT																	2												
79	SOCIALVILLE-FOSTERS ROAD	65+30		LT/RT																				40									
79	SOCIALVILLE-FOSTERS ROAD	65+43		RT																													
79	SOCIALVILLE-FOSTERS ROAD	65+52		LT																													
79	SOCIALVILLE-FOSTERS ROAD	66+29	66+26	RT																													
79	SOCIALVILLE-FOSTERS ROAD	66+35		CL																													
	COLUMBIA ROAD	4+40		LT/RT																				10									
	COLUMBIA ROAD	4+55		RT																				14									
79	COLUMBIA ROAD	4+44		LT																													
79	COLUMBIA ROAD	4+46		LT																													
79	COLUMBIA ROAD	5+44		LT																													
79	COLUMBIA ROAD	5+46		RT																													
79	COLUMBIA ROAD	5+50		LT																				23									
79	COLUMBIA ROAD	5+65		LT																				10									
79	COLUMBIA ROAD	5+88		LT																	1												
79	COLUMBIA ROAD	5+50	7+00	LT												150																	
79	COLUMBIA ROAD	6+88		LT																	1												
79	COLUMBIA ROAD	7+10		LT	R3-8B	48"x30"		10				13,13			2																		
79	COLUMBIA ROAD	7+35		LT					1		1																						
79	COLUMBIA ROAD	7+62	10+00	RT					1	1		14.5			1																		
SUBTOTAL							0	20	5	2	3	81	0	0	5	428	0.064	0.181	0	0	8	0.241	0	97	0.000	0.000	2	0	107	0	0	0

CALCULATED DCK
CHECKED EJT

SIGNING AND PAVEMENT MARKING SUBSUMMARY

WAR-71-2.54

SHEET NO.	LOCATION	STATION FROM	STATION TO	SIDE	CODE	SIZE	620 REBOUNDABLE TUBULAR PYLON, AS PER PLAN	630 SIGN, FLAT SHEET	630 REMOVAL OF GROUND MOUNTED POST SUPPORT AND DISPOSAL	630 REMOVAL OF GROUND MOUNTED SIGN AND REERECTION	630 REMOVAL OF GROUND MOUNTED SIGN AND DISPOSAL	630 GROUND MOUNTED SUPPORT NO. 3 POST	630 GROUND MOUNTED SUPPORT NO. 4 POST	630 GROUND MOUNTED SUPPORT NO. 6 POST	630 SIGN POST REFLECTOR	644 CHANELIZING LINE, 8"	644 CENTER LINE (SOLID DASHED)	644 CENTER LINE (DOUBLE YELLOW)	644 CROSSWALK LINE	644 DOTTED LINE, 8"	644 LANE ARROW	644 LANE LINE, 4"	644 ISLAND MARKING	644 STOP LINE	644 EDGE LINE, 4" (WHITE)	644 EDGE LINE, 4" (YELLOW)	644 WORD ON PAVEMENT, 72"	644 TRANSVERSE / DIAGONAL LINE (WHITE)	644 TRANSVERSE / DIAGONAL LINE (YELLOW)	644 YIELD LINE	646 LANE LINE, 4"	646 CENTER LINE
							EA	SF	EACH	EACH	EACH	FT	FT	FT	EACH	FT	MILE	MILE	FT	FT	EACH	MILE	SF	FT	MILE	MILE	EACH	FT	FT	FT	MILE	MILE
80	INNOVATION WAY	31+50	31+91	LT												82																	
80	INNOVATION WAY	32+01	32+70	LT												69																	
80	INNOVATION WAY	31+50	31+91	LT																								14					
80	INNOVATION WAY	31+80		RT	R4-7	24"x30"		5				13			1																		
80	INNOVATION WAY	31+90		RT	W11-2	36"x36"		9						14.8	1																		
80	INNOVATION WAY	31+90		RT	W16-7PR	24"x12"		2																									
80	INNOVATION WAY	31+90		RT	W11-2	36"x36"		9						14.8	1																		
80	INNOVATION WAY	31+90		RT	W16-7PL	24"x12"		2																									
80	INNOVATION WAY	31+98		LT/RT															170														
80	INNOVATION WAY	31+50	33+30	RT																					0.032								
80	INNOVATION WAY	31+50	33+30	RT																								162					
80	INNOVATION WAY	31+50	33+30	LT/RT																						0.068							
80	INNOVATION WAY	32+05		LT	W11-2	36"x36"		9						14.8	1																		
80	INNOVATION WAY	32+05		LT	W16-7PR	24"x12"		2																									
80	INNOVATION WAY	32+05		RT	W11-2	36"x36"		9						14.8	1																		
80	INNOVATION WAY	32+05		RT	W16-7PL	24"x12"		2																									
80	INNOVATION WAY	32+33		LT																	2												
80	INNOVATION WAY	32+93		RT					1	1		14.5			1																		
80	INNOVATION WAY	33+00		LT	R3-8-MODIFIED	60"x36"		15				15.5,15.5			2																		
80	INNOVATION WAY	33+95		LT	W2-6	36"x36"		9						14.7	1																		
80	INNOVATION WAY	33+95		LT	SPECIAL	30"x12"		2.5																									
80	INNOVATION WAY	33+95		LT	W13-1P	24"x24"		4																									
80	INNOVATION WAY	32+65		CL	R4-7	30"x24"		5				13			1																		
80	INNOVATION WAY	32+70	34+20	LT/RT														0.038															
80	INNOVATION WAY	32+70	33+50	LT/RT																									40				
80	INNOVATION WAY	33+30	34+20	RT												90																	
80	INNOVATION WAY	33+65		CL																							1						
80	INNOVATION WAY	34+15		CL																	1												
SUBTOTAL FROM SHEET THIS SHEET							0	84.5	1	1	0	71.5	0	73.9	10	241	0.000	0.038	170	0	3	0.000	0	0	0.032	0.068	1	176	40	0	0	0
SUBTOTAL FROM SHEET 71							12	92.3	6	5	3	191.8	0	14.7	17	951	0.057	0.019	0	107	6	0.000	57	0	0.093	0.164	2	820	64	22	0	0
SUBTOTAL FROM SHEET 72							0	156	1	0	1	169.1	59.2	14.7	18	399	0.000	0.086	190	102	5	0.049	0	0	0.019	0.032	4	253	256	44	0.110	0.110
SUBTOTAL FROM SHEET 73							0	20	5	2	3	81	0	0	5	428	0.064	0.181	0	0	8	0.241	0	97	0.000	0.000	2	0	107	0	0	0
TOTALS FROM SIGNING AND PAVEMENT MARKING SUBSUMMARY SHEETS							12	353	13	8	7	513.4	59.2	103	50	2019	0.121	0.324	360	209	22	0.290	57	97	0.144	0.264	9	1249	467	66	0.110	0.110
TOTALS CARRIED TO GENERAL SUMMARY							12	353	13	8	7	514	60	104	50	2019	0.45		360	209	22	0.29	57	97	0.41		9	1716		66	0.110	0.110

CALCULATED DCK
CHECKED EJT

SIGNING AND PAVEMENT MARKING SUBSUMMARY

WAR-71-2.54

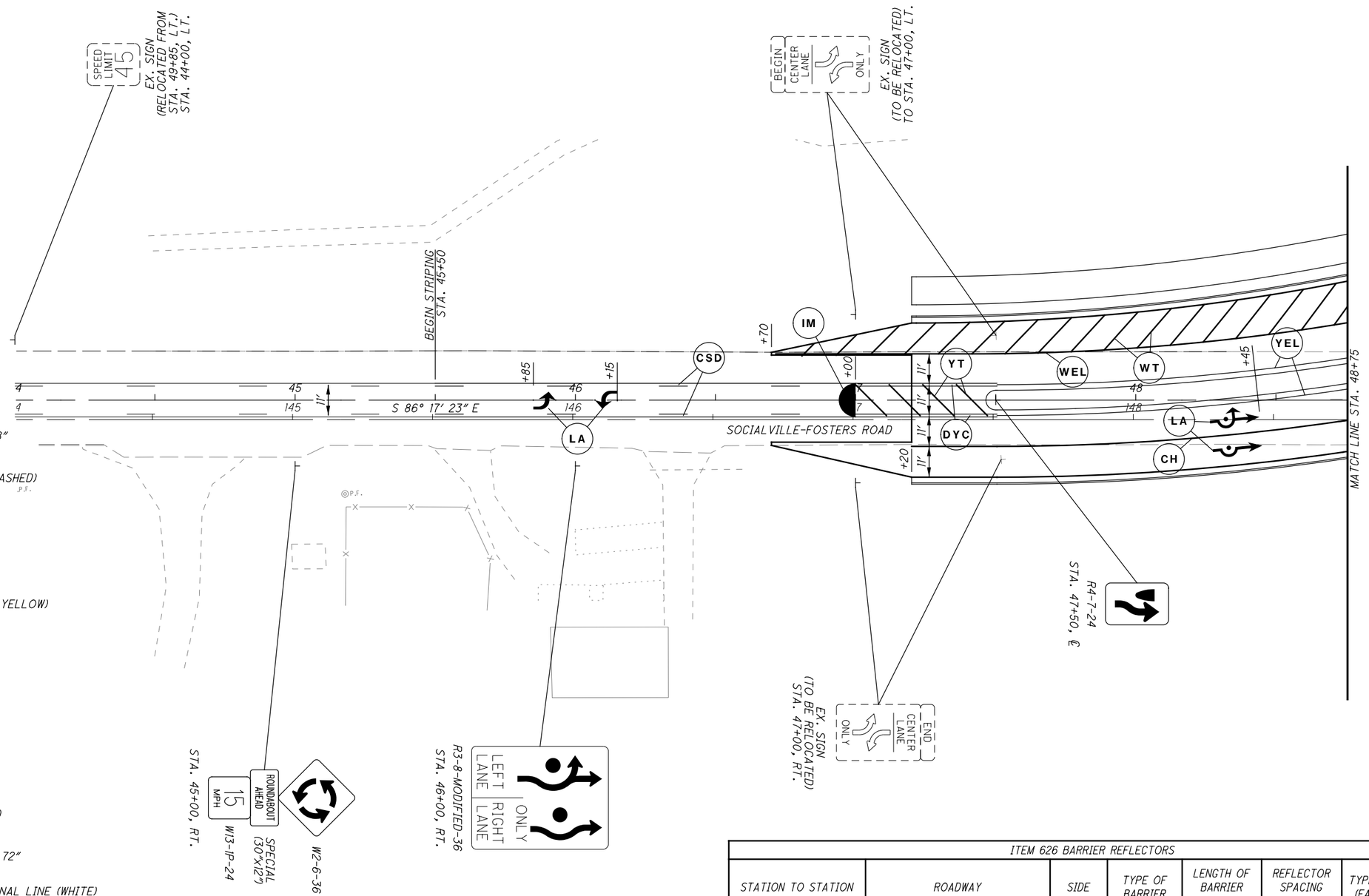

LEGEND

- (CH) ITEM 644 - CHANNELIZING LINE, 8"
- (CSD) ITEM 644 - CENTERLINE (SOLID DASHED)
- (CW) ITEM 644 - CROSSWALK LINE
- (DL) ITEM 644 - DOTTED LINE, 8"
- (DYC) ITEM 644 - CENTERLINE (DOUBLE YELLOW)
- (LA) ITEM 644 - LANE ARROW
- (LL) ITEM 644 - LANE LINE, 4"
- (IM) ITEM 644 - ISLAND MARKING
- (SL) ITEM 644 - STOP LINE
- (WEL) ITEM 644 - EDGE LINE, 4" (WHITE)
- (WP) ITEM 644 - WORD ON PAVEMENT, 72"
- (WT) ITEM 644 - TRANSVERSE / DIAGONAL LINE (WHITE) (12' C/C, 45 DEG.)
- (YEL) ITEM 644 - EDGE LINE, 4" (YELLOW)
- (YL) ITEM 644 - YIELD LINE
- (YT) ITEM 644 - TRANSVERSE / DIAGONAL LINE (YELLOW) (12' C/C, 45 DEG.)

ITEM 626 BARRIER REFLECTORS

STATION TO STATION	ROADWAY	SIDE	TYPE OF BARRIER	LENGTH OF BARRIER (FEET)	REFLECTOR SPACING (FEET)	TYPE A2 (EACH)	TYPE B2 (EACH)
52+56.71 TO 55+31.71	S/F ROAD	LT	GUARDRAIL	275	100	4	
55+31.71 TO 58+10.35	S/F ROAD	LT	CONCRETE	278.64	100		4
58+10.35 TO 59+60.35	S/F ROAD	LT	GUARDRAIL	150	100	3	
52+55.30 TO 55+05.30	S/F ROAD	RT	GUARDRAIL	250	100	4	
55+05.30 TO 57+83.93	S/F ROAD	RT	CONCRETE	278.63	100		4
57+83.93 TO 60+08.93	S/F ROAD	RT	GUARDRAIL	225	100	3	
49+30 TO 27+00	S/F ROAD / INNOVATION WAY	RT/LT	GUARDRAIL	300	100	4	
TOTAL						18	8
TOTAL TO GENERAL SUMMARY						26	

HORIZONTAL SCALE IN FEET 0 10 20 40

CALCULATED EJT
CHECKED REN

SIGNING AND PAVEMENT MARKING PLANS
STA. 44+50 TO STA. 48+75

WAR-71-2.54

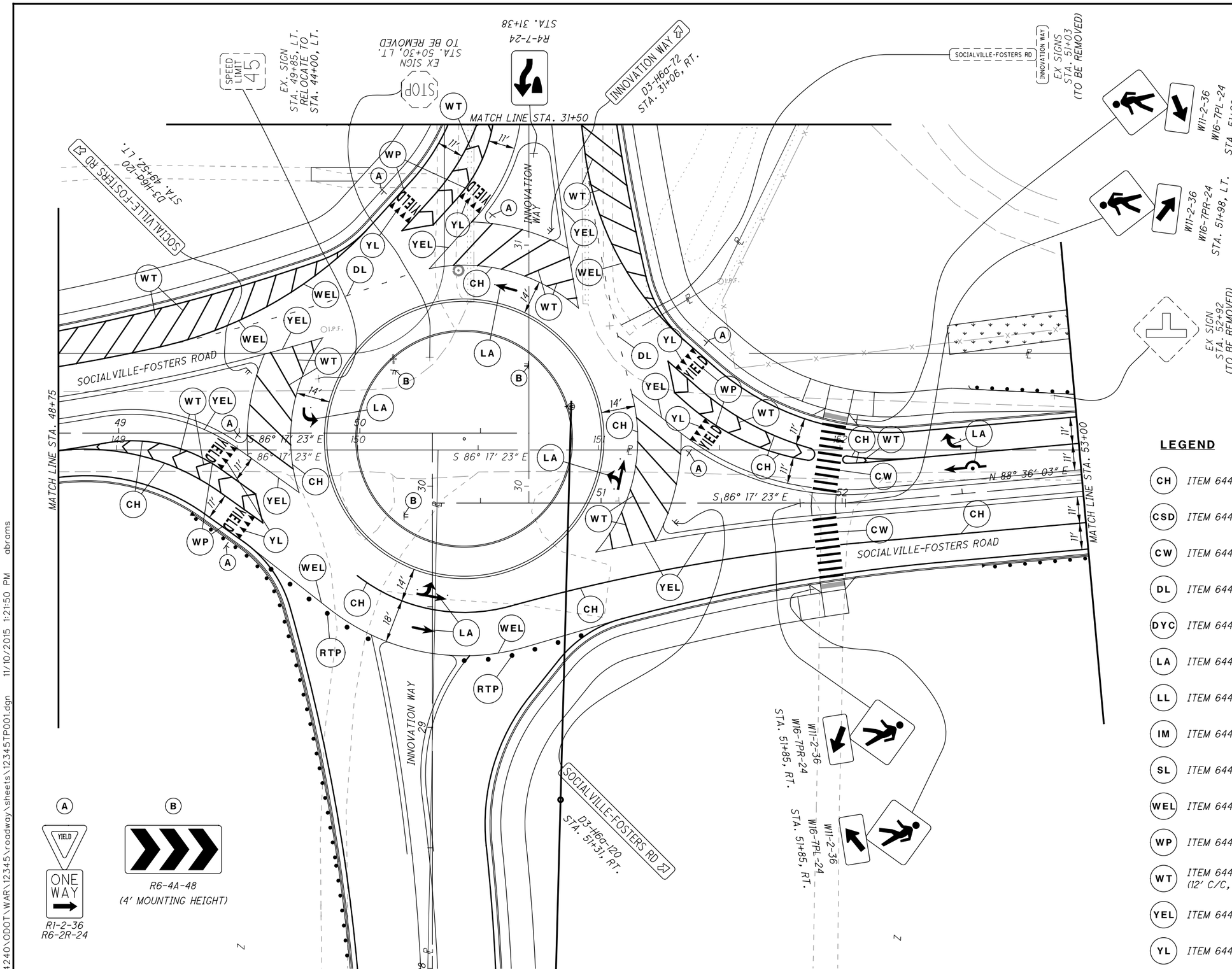

LEGEND

- CH — ITEM 644 - CHANNELIZING LINE, 8"
- CSD — ITEM 644 - CENTERLINE (SOLID DASHED)
- CW — ITEM 644 - CROSSWALK LINE
- DL — ITEM 644 - DOTTED LINE, 8"
- DYC — ITEM 644 - CENTERLINE (DOUBLE YELLOW)
- LA — ITEM 644 - LANE ARROW
- LL — ITEM 644 - LANE LINE, 4"
- IM — ITEM 644 - ISLAND MARKING
- SL — ITEM 644 - STOP LINE
- WEL — ITEM 644 - EDGE LINE, 4" (WHITE)
- WP — ITEM 644 - WORD ON PAVEMENT, 72"
- WT — ITEM 644 - TRANSVERSE / DIAGONAL LINE (WHITE) (12' C/C, 45 DEG.)
- YEL — ITEM 644 - EDGE LINE, 4" (YELLOW)
- YL — ITEM 644 - YIELD LINE
- YT — ITEM 644 - TRANSVERSE / DIAGONAL LINE (YELLOW) (12' C/C, 45 DEG.)
- RTP — ITEM 620 - REBOUNDABLE TUBULAR PYLON, AS PER PLAN

HORIZONTAL SCALE IN FEET 0 10 20 40

CALCULATED EJT
CHECKED REN

SIGNING AND PAVEMENT MARKING PLANS
STA. 48+75 TO STA. 53+00

WAR-71-2.54

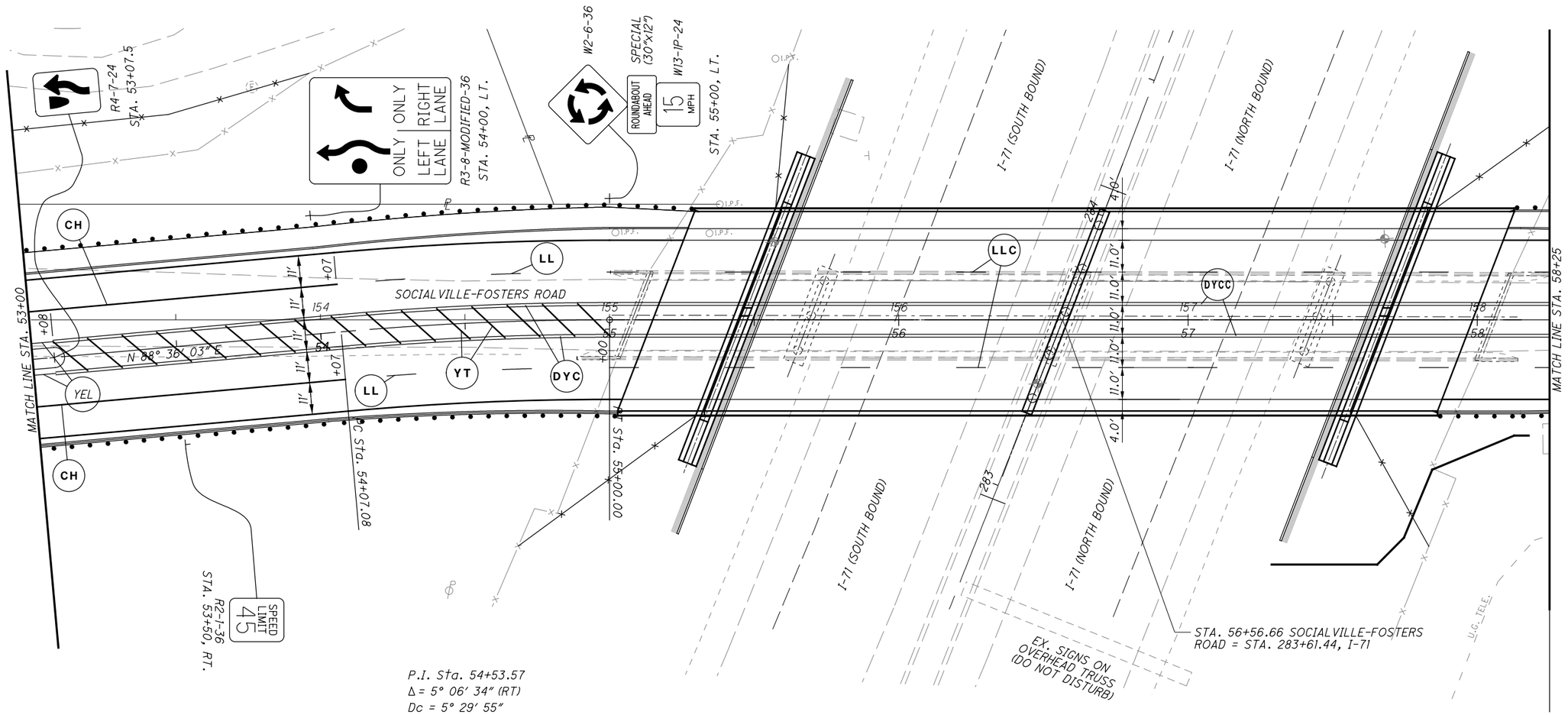

P.I. Sta. 54+53.57
Δ = 5° 06′ 34″ (RT)
Dc = 5° 29′ 55″
R = 1,042.00′
T = 46.49′
L = 92.92′
E = 1.04′
C = 92.89′
C.B. = S 88° 50′ 40″ E

LEGEND

CH	ITEM 644 - CHANNELIZING LINE, 8″	SL	ITEM 644 - STOP LINE
CSD	ITEM 644 - CENTERLINE (SOLID DASHED)	WEL	ITEM 644 - EDGE LINE, 4″ (WHITE)
CW	ITEM 644 - CROSSWALK LINE	WP	ITEM 644 - WORD ON PAVEMENT, 72″
DL	ITEM 644 - DOTTED LINE, 8″	WT	ITEM 644 - TRANSVERSE / DIAGONAL LINE (WHITE) (12′ C/C, 45 DEG.)
DYC	ITEM 644 - CENTERLINE (DOUBLE YELLOW)	YEL	ITEM 644 - EDGE LINE, 4″ (YELLOW)
LA	ITEM 644 - LANE ARROW	YL	ITEM 644 - YIELD LINE
LL	ITEM 644 - LANE LINE, 4″	YT	ITEM 644 - TRANSVERSE / DIAGONAL LINE (YELLOW) (12′ C/C, 45 DEG.)
IM	ITEM 644 - ISLAND MARKING	DYCC	ITEM 646 - CENTERLINE (DOUBLE YELLOW) (CONCRETE)
		LLC	ITEM 646 - LANE LINE, 4″ (CONCRETE)

HORIZONTAL SCALE IN FEET 0 10 20 40

CALCULATED EJT
CHECKED REN

SIGNING AND PAVEMENT MARKING PLANS
STA. 53+00 TO 58+25

WAR-71-2.54

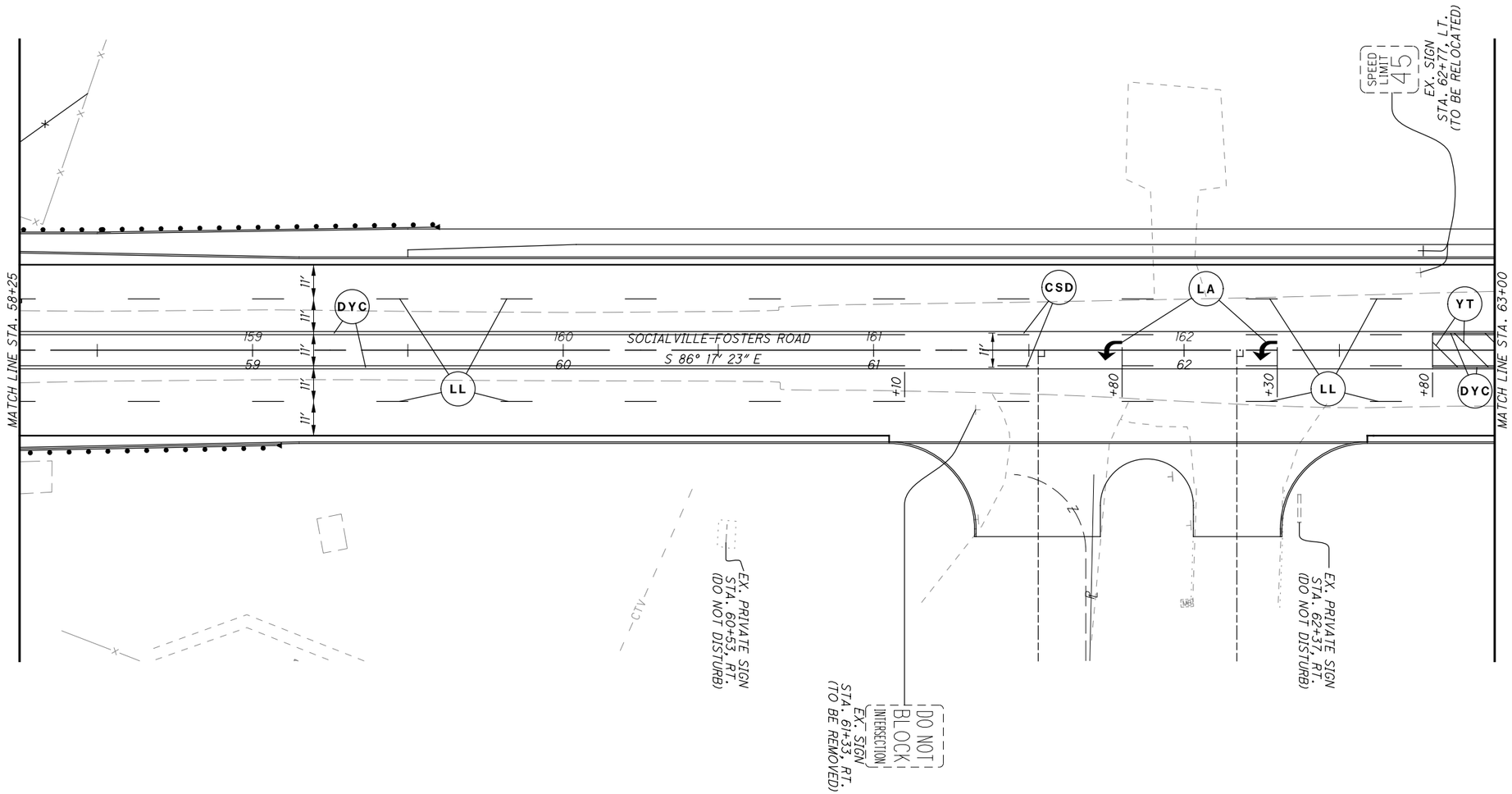

LEGEND

CH	ITEM 644 - CHANNELIZING LINE, 8"
CSD	ITEM 644 - CENTERLINE (SOLID DASHED)
CW	ITEM 644 - CROSSWALK LINE
DL	ITEM 644 - DOTTED LINE, 8"
DYC	ITEM 644 - CENTERLINE (DOUBLE YELLOW)
LA	ITEM 644 - LANE ARROW
LL	ITEM 644 - LANE LINE, 4"
IM	ITEM 644 - ISLAND MARKING
SL	ITEM 644 - STOP LINE
WEL	ITEM 644 - EDGE LINE, 4" (WHITE)
WP	ITEM 644 - WORD ON PAVEMENT, 72"
WT	ITEM 644 - TRANSVERSE / DIAGONAL LINE (WHITE) (12' C/C, 45 DEG.)
YEL	ITEM 644 - EDGE LINE, 4" (YELLOW)
YL	ITEM 644 - YIELD LINE
YT	ITEM 644 - TRANSVERSE / DIAGONAL LINE (YELLOW) (12' C/C, 45 DEG.)

N

0 10 20 40
HORIZONTAL SCALE IN FEET

CALCULATED EJT
CHECKED REN

SIGNING AND PAVEMENT MARKING PLANS
STA. 58+25 TO STA. 63+00

WAR-71-2.54

LEGEND

- CH — ITEM 644 - CHANNELIZING LINE, 8"
- CSD — ITEM 644 - CENTERLINE (SOLID DASHED)
- CW — ITEM 644 - CROSSWALK LINE
- DL — ITEM 644 - DOTTED LINE, 8"
- DYC — ITEM 644 - CENTERLINE (DOUBLE YELLOW)
- LA — ITEM 644 - LANE ARROW
- LL — ITEM 644 - LANE LINE, 4"
- IM — ITEM 644 - ISLAND MARKING
- SL — ITEM 644 - STOP LINE
- WEL — ITEM 644 - EDGE LINE, 4" (WHITE)
- WP — ITEM 644 - WORD ON PAVEMENT, 72"
- WT — ITEM 644 - TRANSVERSE / DIAGONAL LINE (WHITE) (12' C/C, 45 DEG.)
- YEL — ITEM 644 - EDGE LINE, 4" (YELLOW)
- YL — ITEM 644 - YIELD LINE
- YT — ITEM 644 - TRANSVERSE / DIAGONAL LINE (YELLOW) (12' C/C, 45 DEG.)

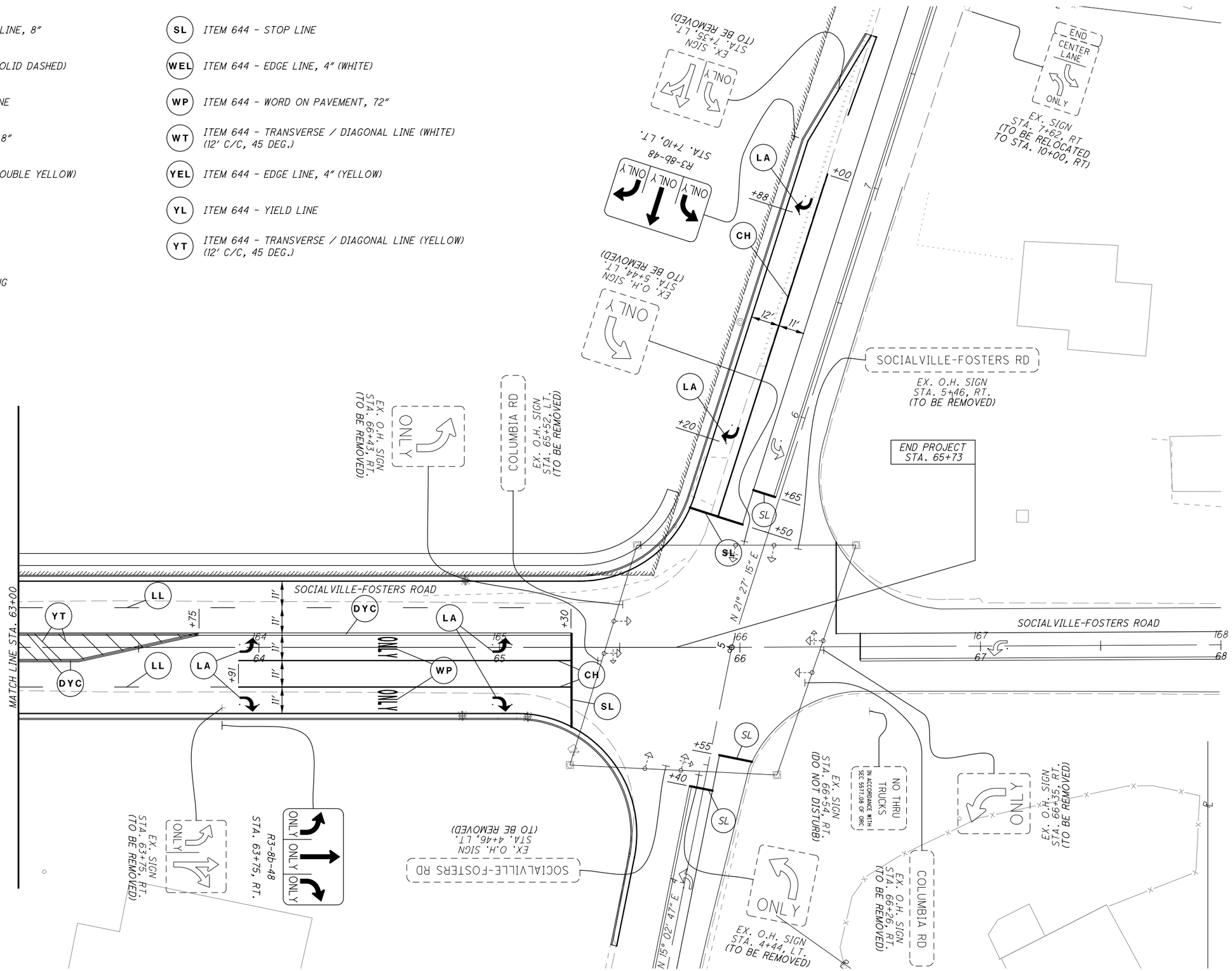

NOTES

1. FOR PROPOSED INTERSECTION SIGNING, SEE SHEET __.

CALCULATED EJT
CHECKED REN

SIGNING AND PAVEMENT MARKING PLANS
STA. 63+00 TO STA. 68+00

WAR-71-2.54

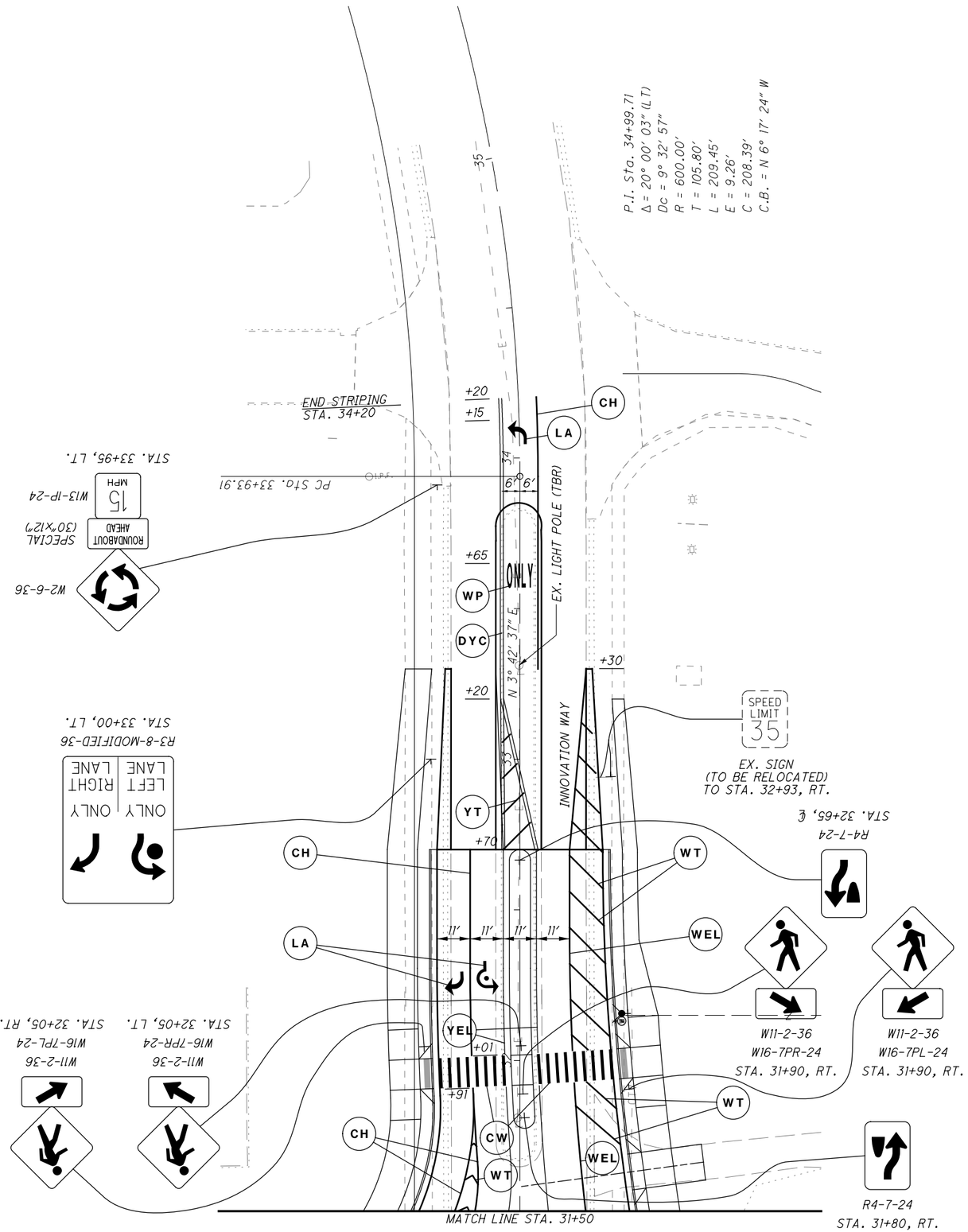

LEGEND

- CH — ITEM 644 - CHANNELIZING LINE, 8"
- CSD — ITEM 644 - CENTERLINE (SOLID DASHED)
- CW — ITEM 644 - CROSSWALK LINE
- DL — ITEM 644 - DOTTED LINE, 8"
- DYC — ITEM 644 - CENTERLINE (DOUBLE YELLOW)
- LA — ITEM 644 - LANE ARROW
- LL — ITEM 644 - LANE LINE, 4"
- IM — ITEM 644 - ISLAND MARKING
- SL — ITEM 644 - STOP LINE
- WEL — ITEM 644 - EDGE LINE, 4" (WHITE)
- WP — ITEM 644 - WORD ON PAVEMENT, 72"
- WT — ITEM 644 - TRANSVERSE / DIAGONAL LINE (WHITE) (12' C/C, 45 DEG.)
- YEL — ITEM 644 - EDGE LINE, 4" (YELLOW)
- YL — ITEM 644 - YIELD LINE
- YT — ITEM 644 - TRANSVERSE / DIAGONAL LINE (YELLOW) (12' C/C, 45 DEG.)

HORIZONTAL SCALE IN FEET 0 10 20 40

CALCULATED EJT
CHECKED REN

SIGNING AND PAVEMENT MARKING PLANS
STA. 28+00 TO STA. 33+50

WAR-71-2.54

SHEET NUMBER												PARTICIPATION		ITEM	ITEM EXT.	GRAND TOTAL	UNIT	DESCRIPTION	SEE SHEET NO.
								82	84	86									
																		TRAFFIC SIGNAL	
									973					625	25400	973	FT	CONDUIT, 2", 725.04	
									10					625	25500	10	FT	CONDUIT, 3", 725.04	
									7					625	25600	7	FT	CONDUIT, 4", 725.04	
									973					625	29000	973	FT	TRENCH	
									8					625	30700	8	EACH	PULL BOX, 725.08, 18"	
									1					625	30706	1	EACH	PULL BOX, 725.08, 24"	
									9					625	31510	9	EACH	PULL BOX REMOVED	
									6					625	32000	6	EACH	GROUND ROD	
									973					625	36000	973	FT	PLASTIC CAUTION TAPE	
									2					632	05007	2	EACH	VEHICULAR SIGNAL HEAD, LED, YELLOW, 3 SECTION, 12" LENS, 1-WAY, POLYCARBONATE, WITH BACKPLATE, AS PER PLAN	
									6					632	05087	6	EACH	VEHICULAR SIGNAL HEAD, LED, YELLOW, 5 SECTION, 12" LENS, 1-WAY, POLYCARBONATE, WITH BACKPLATE, AS PER PLAN	
									8					632	25000	8	EACH	COVERING OF VEHICULAR SIGNAL HEAD	
									21					632	26500	21	EACH	DETECTOR LOOP	
									404					632	30200	404	FT	MESSENGER WIRE, 7 STRAND, 3/8" DIAMETER WITH ACCESSORIES	
									404					632	30600	404	FT	TETHER WIRE, WITH ACCESSORIES	
									2277					632	40700	2277	FT	SIGNAL CABLE, 7 CONDUCTOR, NO. 14 AWG	
									4					632	64000	4	EACH	STRAIN POLE FOUNDATION	
									5639					632	65200	5639	FT	LOOP DETECTOR LEAD-IN CABLE	
									159					632	68200	159	FT	POWER CABLE, 2 CONDUCTOR, NO. 6 AWG	
									60					632	69500	60	FT	SERVICE CABLE, 2 CONDUCTOR, NO. 6 AWG	
									1					632	70000	1	EACH	POWER SERVICE	
									1					632	70400	1	EACH	CONDUIT RISER, 2", DIAMETER	
									3					632	82800	3	EACH	STRAIN POLE, TYPE TC-81.10, DESIGN 8	
									1					632	83000	1	EACH	STRAIN POLE, TYPE TC-81.10, DESIGN 10	
								1						632	90101	1	EACH	REMOVAL OF TRAFFIC SIGNAL INSTALLATION, AS PER PLAN	
									1					633	01681	1	EACH	CONTROLLER UNIT, TYPE 2070L, WITH CABINET, TYPE 332, AS PER PLAN	
									1					633	67000	1	EACH	CABINET RISER	
									1					633	67100	1	EACH	CABINET FOUNDATION	
									1					633	67200	1	EACH	CONTROLLER WORK PAD	
									1					633	75000	1	EACH	UNINTERRUPTIBLE POWER SUPPLY (UPS), 1000 WATT	
																		TRAFFIC CONTROL	
										8				630	79000	8	EACH	SIGN HANGER ASSEMBLY, SPAN WIRE	
										4				630	79500	4	EACH	SIGN SUPPORT ASSEMBLY, POLE MOUNTED	
										60				630	80100	60	SF	SIGN, FLAT SHEET	
										4				630	80500	4	EACH	SIGN, DOUBLE FACED, STREET NAME	
									8					630	87400	8	EACH	REMOVAL OF OVERHEAD MOUNTED SIGN AND DISPOSAL	

CALCULATED JDC
CHECKED TJF

TRAFFIC SIGNAL GENERAL SUMMARY

WAR-71-2.54

POWER SUPPLY FOR TRAFFIC SIGNALS

ELECTRIC POWER SHALL BE OBTAINED FROM DUKE ENERGY AT THE LOCATION INDICATED ON THE PLANS. POWER SUPPLIED SHALL BE 120 VOLTS.

STRAIN POLE FOUNDATION ELEVATIONS

ELEVATIONS SHOWN IN THE PLANS FOR STRAIN POLE FOUNDATIONS ARE FOR COMPUTATIONAL PURPOSES ONLY. THE ACTUAL ELEVATION OF THE FOUNDATION SHALL BE IN ACCORDANCE WITH SCD TC-21.20 PROVIDED THE EXISTING SLOPE IS LESS THAN 6:1.

AT LOCATIONS WHERE THE EXISTING SLOPE IS 6:1 OR GREATER, THE BURIED DEPTH OF FOUNDATION, AS SHOWN IN SCD TC-21.20 SHALL APPLY TO THE LOW SIDE OF THE SLOPE. THE TOP OF THE FOUNDATION SHALL BE SET 2 INCHES ABOVE THE EXISTING SURFACE ON THE HIGH SIDE OF THE SLOPE. THE ADDITIONAL DEPTH OF FOUNDATION NECESSARY TO MEET THESE REQUIREMENTS SHALL BE ADDED TO THE FORMED TOP.

GUARANTEE

THE CONTRACTOR SHALL GUARANTEE THAT THE TRAFFIC CONTROL SYSTEM INSTALLED AS PART OF THIS CONTRACT SHALL OPERATE SATISFACTORILY FOR A PERIOD OF 90 DAYS FOLLOWING COMPLETION OF THE 10-DAY PERFORMANCE TEST. IN THE EVENT OF UNSATISFACTORY OPERATION THE CONTRACTOR SHALL CORRECT FAULTY INSTALLATIONS, MAKE REPAIRS AND REPLACE DEFECTIVE PARTS WITH NEW PARTS OF EQUAL OR BETTER QUALITY. EQUIPMENT, MATERIAL AND LABOR COSTS INCURRED IN CORRECTING AN UNSATISFACTORY OPERATION DUE TO POOR WORKMANSHIP OR DEFECTIVE EQUIPMENT SHALL BE BORNE BY THE CONTRACTOR.

CUSTOMARY MANUFACTURER'S GUARANTEES FOR ALL ITEMS SHALL BE TURNED OVER TO THE ENGINEER FOLLOWING ACCEPTANCE OF THE EQUIPMENT.

THE COST OF GUARANTEEING SATISFACTORY OPERATION OF THE TRAFFIC CONTROL SYSTEM WILL BE INCIDENTAL TO THE PROJECT AND INCLUDED IN THE UNIT COST OF EACH ITEM.

MAINTENANCE OF TRAFFIC SIGNAL/FLASHER INSTALLATION

THE CONTRACTOR SHALL BE RESPONSBLE FOR MAINTAINING TRAFFIC SIGNAL/FLASHER INSTALLATIONS WITHIN THE PROJECT UNDER THE FOLLOWING CONDITIONS:

a) EXISTING SIGNAL/FLASHER INSTALLATIONS WHICH THE PLANS REQUIRE THE CONTRACTOR TO ADJUST, MODIFY, ADD ONTO OR REMOVE, OR WHICH THE CONTRACTOR ACTUALLY ADJUSTS, MODIFIES OR OTHERWISE DISTURBS. THE CONTRACTOR SHALL BE RESPONSIBLE FOR THE ENTIRE INSTALLATION (AT AN INTERSECTION) FROM THE TIME HIS OPERATIONS FIRST DISTURB THE INSTALLATION UNTIL THE INSTALLATION HAS BEEN SUBSEQUENTLY REMOVED OR MODIFIED AND THE WORK ACCEPTED.

b) NEW OR REUSED SIGNAL/FLASHER INSTALLATIONS OR DEVICES, INSTALLED BY THE CONTRACTOR. THE CONTRACTOR SHALL BE RESPONSBILE FOR MAINTENANCE OF THESE FROM THE TIME OF INSTALLATION UNTIL THE WORK IS ACCEPTED.

THE CONTRACTOR SHALL CORRECT AS QUICKLY AS POSSIBLE ALL OUTAGES OR MALFUNCTIONS. HE SHALL PROVIDE THE MAINTAINING AGENCY AND THE ENGINEER SUCH ADDRESSES AND PHONE NUMBERS WHERE HIS MAINTENANCE FORCES CAN BE CONTACTED. THE CONTRACTOR SHALL PROVIDE ONE OR MORE PERSONS TO RECEIVE ALL CALLS AND DISPATCH THE NECESSARY MAINTENANCE FORCES TO CORRECT OUTAGES. SUCH A PERSON OR PERSONS MAY BE USED TO PERFORM OTHER DUTIES AS LONG AS PROMPT ATTENTION IS GIVEN TO THESE CALLS AND A PERSON IS READILY AVAILABLE CONTINUOUSLY 24 HOURS A DAY, 7 DAYS A WEEK. ALL LAMP OUTAGES, CABLE OUTAGES, ELECTRICAL FAILURES, EQUIPMENT MALFUNCTIONS AND MIS-ALIGNED SIGNAL HEADS SHALL BE CORRECTED TO THE SATISFACTION OF THE ENGINEER WITH THE SIGNAL BACK TO SERVICE WITHIN FOUR HOURS AFTER THE CONTRACTOR HAS BEEN NOTIFIED OF THE OUTAGE.

IN THE EVENT NEW SIGNALS ARE DAMAGED PRIOR TO ACCEPTANCE, ALL DAMAGED EQUIPMENT EXCEPT POLES AND CONTROL EQUIPMENT SHALL BE REPLACED BY THE CONTRACTOR TO THE SATISFACTION OF THE ENGINEER WITH THE SIGNAL BACK IN SERVICE WITHIN 8 HOURS AFTER THE CONTRACTOR'S NOTIFICATION OF THE OUTAGE. THE CONTRACTOR SHALL ARRANGE FOR FULL TRAFFIC CONTROL UNTIL THE SIGNAL IS BACK IN OPERATION.

IF POLES AND/OR CONTROL EQUIPMENT ARE DAMAGED AND MUST BE REPLACED, THE CONTRACTOR SHALL MAKE TEMPORARY REPAIRS AS NECESSARY TO BRING THE SIGNAL BACK INTO FULL OPERATION WITHIN THE ALLOWED 8-HOUR PERIOD, AND SHALL MAKE PERMANENT REPAIRS OR REPLACEMENT AS SOON THEREAFTER AS POSSIBLE.

NONE OF THE ABOVE SHALL BE CONSTRUED AS COLLECTIVE OR CONSECUTIVE OUTAGE TIME PERIODS AT ANY ONE LOCATION. THAT IS, WHERE MORE THAN ONE OUTAGE OCCURS AT ANY ONE LOCATION THEN THE ALLOTTED TIME LIMIT SHALL BE FOR THE WORST SINGLE OUTAGE.

WHERE OUTAGES ARE THE DIRECT RESULT OF A VEHICLE ACCIDENT, THE RESPONSE OF THE CONTRACTOR SHALL BE AS OUTLINED ABOVE. THE CONTRACTOR SHALL BE RESPONSIBLE FOR COLLECTION OF ANY COMPENSATION FOR THIS WORK FROM THOSE PARTIES RESPONSIBLE FOR THE DAMAGE.

WHERE THE CONTRACTOR HAS FAILED TO, OR CANNOT RESPOND TO, AN OUTAGE OR SIGNAL EQUIPMENT MALFUNCTION, AT THESE LOCATIONS WITHIN HIS RESPONSIBILITY, WITHIN PERIODS AS SPECIFIED ABOVE, THE ENGINEER MAY INVOKE THE PROVISIONS OF SECTION 105.15 AND ANY SUBSEQUENT BILLINGS TO THE STATE OR THE COUNTY FOR POLICE SERVICES AND MAINTENANCE SERVICES BY COUNTY FORCES SHALL BE DEDUCTED FROM MONIES DUE OR TO BECOME DUE THE CONTRACTOR IN ACCORDANCE WITH THE PROVISIONS OF SECTION 105.15.

THE CONTRACTOR SHALL PROVIDE THE MAINTENANCE SERVICE ENTIRELY WITH HIS FORCES.

THE CONTRACTOR SHALL BE RESPONSIBLE FOR ANY DAMAGE TO ANY TRAFFIC SIGNAL COMPONENTS REQUIRED TO BE HANDLED DURING THE RELOCATION OF POLES AND REVISIONS TO THE SIGNAL SYSTEM.

WHEN A TRAFFIC SIGNAL MUST BE TAKEN OUT OF SERVICE BY THE CONTRACTOR, DUE TO CONSTRUCTION PROCEDURES, THIS OUTAGE SHALL NOT EXCEED FOUR HOURS AND SHALL NOT INCLUDE THE HOURS OF 7 A.M. TO 9 A.M. AND 3 P.M. TO 6 P.M. ANY SIGNALIZED INTERSECTION, WHERE THE SIGNAL IS OUT OF SERVICE DUE TO CONSTRUCTION PROCEDURES, OR DUE TO AN OUTAGE OR MALFUNCTION OF EQUIPMENT AS DESCRIBED ABOVE, SHALL BE PROTECTED BY OFF-DUTY COUNTY POLICE, HIRED BY THE CONTRACTOR.

ANY VEHICULAR TRAFFIC SIGNAL HEAD, EITHER NEW OR EXISTING WHICH WILL BE OUT OF OPERATION SHALL BE COVERED IN THE MANNER DESCRIBED IN 632.25.

ALL COSTS RESULTING FROM THE ABOVE REQUIREMENTS SHALL BE CONSIDERED TO BE INCLUDED IN THE LUMP SUM PRICE BID FOR ITEM 614, MAINTAINING TRAFFIC.

ITEM 632 REMOVAL OF TRAFFIC SIGNAL INSTALLATION, AS PER PLAN

TRAFFIC SIGNAL INSTALLATIONS, INCLUDING SIGNAL HEADS, CABLE, MESSENGER WIRE, STRAIN POLES, CABINET, CONTROLLER, WOODEN LIGHT POLES, FLASHERS, ETC., SHALL BE REMOVED IN ACCORDANCE WITH C&MS 632.26 AND AS INDICATED ON THE PLANS. REMOVED ITEMS SHALL BE STORED ON THE PROJECT FOR SALVAGE BY THE WARREN COUNTY ENGINEER'S OFFICE IN ACCORDANCE WITH THE FOLLOWING LISTING;

1) ALL CONTENTS OF THE CONTROLLER CABINET.

IN THE EVENT THE ITEMS STORED ON THE PROJECT FOR SALVAGE BY THE LOCAL AGENCY ARE NOT REMOVED, THE CONTRACTOR SHALL, WHEN DIRECTED BY THE ENGINEER IN WRITING, REMOVE AND DISPOSE OF THE ITEMS AT NO ADDITIONAL COST TO THE PROJECT.

PAYMENT WILL BE MADE AT THE CONTRACT UNIT PRICE BID PER EACH OF ITEM 632 REMOVAL OF TRAFFIC SIGNAL INSTALLATION, AS PER PLAN.

ITEM 632 VEHICULAR SIGNAL HEAD, LED, YELLOW, 3 SECTION, 12" LENS, 1-WAY, WITH BACKPLATE, AS PER PLAN

IN ADDITION TO THE REQUIREMENTS OF CMS 632 AND 732, THE SIGNAL HEADS SHALL BE ERECTED IN ACCORDANCE WITH STANDARD CONSTRUCTION DRAWING TC-85.20 (10/18/13). EACH SIGNAL FACE SHALL BE ORIENTED TO ITS TRAFFIC APPROACH AND LOCKED IN PLACE BY A 3-PRONG DEVICE INCORPORATED IN THE SIGNAL HOUSING AND SUPPORT HARDWARE IF MOUNTED ON SPAN WIRES. ITEM 732.01 IS MODIFIED FOR THE PROJECT AS FOLLOWS:

IN ADDITION TO ITEM 632.06 AND ITEM 732.01, VEHICULAR SIGNAL HEADS SHALL BE MANUFACTURED OF POLYCARBONATE MATERIAL AND MODIFIED FOR THIS PROJECT AS FOLLOWS:

1. THE EXTERIOR COLORS SHALL BE FEDERAL YELLOW.

2. TUNNEL VISORS OPEN AT THE BOTTOM SHALL BE FURNISHED FOR SIGNAL HEADS.

3. SIGNAL HEAD LAMPS SHALL BE FURNISHED IN ALL SIGNAL HEAD SECTIONS AND SHALL CONFORM TO ODOT ITEM 732.041.

4. PIPE, SPACERS, AND FITTINGS SHALL FORM WATERPROOF FITTINGS. THE MATERIAL SHALL BE GALVANIZED STEEL AND PAINTED WITH 2 COATS OF FEDERAL YELLOW ENAMEL PAINT.

5. THE BOTTOM OF THE SIGNAL HEADS FOR THE SAME APPROACH SHALL BE MOUNTED AT A MINIMUM HEIGHT OF 16 FEET (DISTANCE BETWEEN THE BOTTOM OF SIGNAL HEAD TO PAVEMENT). DROP PIPES (STEEL) OR ADJUSTABLE SIGNAL HANGERS MAY BE REQUIRED IF THE ELEVATION OF ADJACENT SIGNAL HEADS ON THE SAME APPROACH DIFFER MORE THAN 12 INCHES.

ALL SIGNAL HEADS SHALL BE ERECTED WITH BALANCE ADJUSTERS AND POSITIONED SO THE FIXTURES HANG PLUMB AND/OR THE SIGNAL HEAD IS CORRECTLY AMED AT APPROACHING TRAFFIC.

LED, LIGHT EMITTING DIODE, SIGNAL LAMP UNITS SHALL MEET THE REQUIREMENTS OF ODOT SUPPLEMENTAL SPECIFICATIONS 872. ALL LAMP UNITS SHALL BE THE 12 INCH SIZE. LED SIGNAL LAMP UNITS SHALL BE PROVIDED FOR THE FOLLOWING LENS TYPES: CIRCULAR RED, CIRCULAR YELLOW, CIRCULAR GREEN, YELLOW ARROW, AND GREEN ARROW.

THE CONTRACTOR SHALL PROVIDE THE ENGINEER, IN WRITING, THE LED MANUFACTURER NAME, SERIAL NUMBER, PART NUMBER, DESCRIPTION OF LAMP, AND DATE OF MANUFACTURER FOR ALL LED UNITS TO BE USED IN THE TRAFFIC SIGNAL HEADS PRIOR TO INSTALLATION, FOR ACCEPTANCE AND WARRANTY PURPOSES. THE INFORMATION SHALL BE SENT TO THE FOLLOWING LOCATION:

WARREN COUNTY ENGINEER'S OFFICE
ATTN: GREG CARMACK
105 MARKEY ROAD
LEBANON, OHIO 45036

PAYMENT WILL BE MADE AT THE CONTRACT UNIT PRICE BID PER EACH OF ITEM 632 VEHICULAR SIGNAL HEAD, LED, YELLOW, 3 SECTION, 12" LENS, 1-WAY, WITH BACKPLATE, AS PER PLAN.

ITEM 633 CONTROLLER UNIT, TYPE 2070L, WITH CABINET, TYPE 332, AS PER PLAN

THE CONTRACTOR SHALL HAVE AN ELECTRONIC SHOP AND SHALL TEST ALL EQUIPMENT PRIOR TO INSTALLATION. THE ENGINEER SHALL BE NOTIFIED 24 HOURS IN ADVANCE OF THE TESTS TO HAVE A REPRESENTATIVE AVAILABLE FOR OBSERVATION. TESTING OF THE CONFLICT MONITOR AND TBC/COORDINATION PANEL SHALL BE DONE BY THE CONTRACTOR BEFORE INSTALLING THESE ITEMS OF EQUIPMENT IN THE INTERSECTION CONTROLLER CABINETS. SOFTWARE AND FIRMWARE SHALL BE LOADED ON THE CONTROLLER AND CHECKED FOR CORRECT OPERATION OF TIMING PLANS AND PHASING SCHEMES.

TESTING OF COMPONENTS BY THE CONTRACTOR FOR PROPER OPERATION SHALL INCLUDE THE FOLLOWING MINIMUM REQUIREMENTS:

1. TERMINAL SCREWS TIGHTENED.
2. CORRECT TERMINAL JUMPERS.
3. FAN & THERMOSTAT OPERATION.
4. DOOR CLOSER SWITCH OPERATION.
5. FORCE HARDWARE CONFLICTS FOR ALL PHASE COMBINATIONS VERIFY STOP TIMING AND CONFLICT INDICATION.
6. GFI RECEPTACLE TEST.
7. POLICE PANEL OPERATION.
8. MAINTENANCE PANEL OPERATION.
9. DETECTORS.
10. TEST FOR PHASE OPERATION, SEQUENCE AND INTERNAL LENGTH ON MIN RECALL, MAX RECALL AND NO CALL.
11. SHELVES,MOUNTING.
12. ALL PANELS, MOUNTING.
13. ATSI CONFLICT MONITOR TEST TO DOCUMENT THE CONFLICT MONITOR OPERATION. THE TEST RESULTS ARE TO BE LOGGED AND FURNISHED TO THE ENGINEER.
14. PROPER FLASH SEQUENCE.
15. AUXILIARY EQUIPMENT OPERATION.
16. CABINET LAMP.
17. SIGNAL OUTPUTS ARE TO BE TESTED WHILE CONNECTED TO A MIN 60 WATT LOAD ON EACH SIGNAL INDICATION.
18. PREEMPTION.

REPAIRS/CORRECTIONS, IF REQUIRED, SHALL BE MADE BY THE CONTRACTOR AND RECORDED BEFORE INSTALLATION. THE ENGINEER SHALL ALSO BE NOTIFIED OF ANY PROBLEMS. THE CONTROLLER IS TO OPERATE WITHOUT THE APPERANCE OF PROBLEMS ON MINIMUM RECALL OF ALL MINOR PHASES FOR 48 HOURS WITH FULL LOAD ON EACH OUTPUT. (NOTE THAT TESTING ALSO REQUIRES OPERATION WITH DETECTORS IN A NO CALL AND CALL TO MAXIMUM CONFIGURATION).

A WRITTEN REPORT STATING THE CABINET INTERSECTION NUMBER, DATE AND TIME OF TEST, SIGNED OFF BY THE TECHNICIAN WHO PERFORMED THE TESTS, SHALL BE SUBMITTED THE ENGINEER UPON SUCCESSFUL COMPLETION OF THE ABOVE TESTS. THE SUCCESSFUL TESTING SHALL BE DEMONSTRATED TO THE ENGINEER PRIOR TO INSTALLATION IF REQUESTED.

THE CONTROLLER AND ALL RELATED COMPONENTS SHALL BE IN PERFECT WORKING ORDER AND READY FOR INSTALLATION/ OPERATION AT THE SPECIFIED INTERSECTION AS A RESULT OF THE WORK DESCRIBED IN THIS ITEM. THE COST FOR THE CONTROLLER AND CABINET TESTING SHALL BE INCLUDED IN THE PRICE OF THE CONTROLLER INSTALLED, COMPLETE.

PAYMENT WILL BE MADE AT THE CONTRACT UNIT PRICE BID PER EACH OF ITEM 633 CONTROLLER UNIT, TYPE 2070L, WITH CABINET, TYPE 332, AS PER PLAN

GROUNDING AND BONDING

THE REQUIREMENTS OF THE CONSTRUCTION AND MATERIAL SPECIFICATIONS (CMS) AND THE TC SERIES OF STANDARD CONSTRUCTION DRAWINGS ARE MODIFIED AS FOLLOWS:

1. ALL METALLIC PARTS CONTAINING ELECTRICAL CONDUCTORS SHALL BE PERMANENTLY JOINED TO FORM AN EFFECTIVE GROUND FAULT CURRENT PATH BACK TO THE GROUNDED CONDUCTOR IN THE POWER SERVICE DISCONNECT SWITCH.
   - A. PROVIDE AN EQUIPMENT GROUNDING CONDUCTOR IN METALLIC CONDUITS (725.04) IN ADDITION TO THE CONDUCTORS SPECIFIED AND BOND THE CONDUIT TO THIS GROUNDING CONDUCTOR.
   - B. WHEN AN EQUIPMENT GROUNDING CONDUCTOR IS REQUIRED IN PLASTIC CONDUIT (725.05), THE INSTALLATION SHALL INCLUDE A SEPARATE EQUIPMENT GROUNDING CONDUCTOR IN ADDITION TO THE CONDUCTORS SPECIFIED.
   - C. METALLIC CONDUIT CARRYING THE LOOP WIRES FROM IN THE PAVEMENT TO THE PULL BOX SPLICE LOCATION WILL ONLY BE BONDED AT THE PULL BOX END, AND WILL NOT CONTAIN AN EQUIPMENT GROUNDING CONDUCTOR.
   - D. IF MULTIPLE CONDUIT RUNS BEGIN AND END AT THE SAME POINTS, ONLY ONE EQUIPMENT GROUNDING CONDUCTOR IS REQUIRED.
   - E. IF AN EQUIPMENT GROUNDING CONDUCTOR IS NEEDED IN CONDUIT BETWEEN SIGNALIZED INTERSECTIONS FOR UNDERGROUND INTERCONNECT CABLE, THE GROUNDING SYSTEM FOR EACH SIGNALIZED INTERSECTION WILL BE SEPARATED ABOUT MIDWAY BETWEEN THE INTERSECTIONS.
   - F. THE MESSENGER WIRE AT SIGNALIZED INTERSECTIONS WILL BE USED AS THE CONDUCTIVE PATH FROM CORNER TO CORNER IF CONDUIT IS NOT PROVIDED UNDER THE ROADWAY. WHEN CONDUIT CONNECTS THE CORNERS OF AN INTERSECTION, AN EQUIPMENT GROUNDING CONDUCTOR SHALL BE USED IN THE CONDUIT.

2. CONDUITS.
   - A. THE 725.04 CONDUIT SHALL HAVE GROUNDING BUSHINGS INSTALLED AT ALL TERMINATION POINTS. THE BUSHING MATERIAL SHALL BE COMPATIBLE WITH GALVANIZED STEEL CONDUIT AND THE GROUNDING LUG MATERIAL SHALL BE COMPATIBLE FOR USE WITH COPPER WIRE. THREADED OR COMPRESSION TYPE BUSHINGS MAY BE USED.
   - B. THE 725.05 CONDUIT SHALL HAVE THE INSIDE AND OUTSIDE DIAMETERS OF THE CONDUIT DEBURRED AT ALL TERMINATION POINTS.
   - C. BOTH ENDS OF METALLIC CONDUIT SHALL BE BONDED TO THE EQUIPMENT GROUNDING CONDUCTORS.
   - D. METALLIC CONDUIT MAY BE BONDED TO METALLIC BOXES THROUGH THE USE OF CONDUIT FITTINGS UL APPROVED FOR THIS TYPE OF CONNECTION, WITH THE BOX BONDED TO THE EQUIPMENT GROUNDING CONDUCTOR.

3. WIRE FOR GROUNDING AND BONDING.
   - A. USE INSULATED, COPPER WIRE FOR THE EQUIPMENT GROUNDING CONDUCTOR. BONDING JUMPERS IN BOXES AND ENCLOSURES MAY BE BARE OR INSULATED COPPER WIRE. WIRE SIZE SHALL BE AS FOLLOWS:
     - I. USE 4 AWG BETWEEN THE POWER SERVICE AND SUPPORTS, POLES, PEDESTALS, CONTROLLER OR FLASHER CABINETS.
     - II. USE A MINIMUM 8 AWG BETWEEN LOOP DETECTOR PULL BOXES AND THE FIRST CONDUIT THAT REQUIRES A LARGER SIZE AS SPECIFIED IN 3.A.I ABOVE.
     - III. USE A MINIMUM 8 AWG BETWEEN THE "PREPARE TO STOP WHEN FLASHING" INSTALLATION (INCLUDING SUPPORT) AND THE FIRST CONDUIT THAT REQUIRES A LARGER SIZE AS SPECIFIED IN 3.A.I ABOVE.
     - IV. THE INSULATION SHALL BE GREEN OR GREEN WITH YELLOW STRIPE(S). FOR 4 AWG OR LARGER, INSULATION MAY ALSO BE BLACK WITH GREEN TAPE/LABELS INSTALLED AT ALL ACCESS POINTS.
   - B. IN A HIGHWAY LIGHTING SYSTEM, THE EQUIPMENT GROUNDING CONDUCTOR SHALL BE THE SAME WIRE SIZE AS THE DUCT CABLE OR DISTRIBUTION CABLE CIRCUIT CONDUCTORS, WITH THE MINIMUM CONDUCTOR SIZE OF 4 AWG. BONDING JUMPERS WILL BE MINIMUM SIZE 4 AWG.

4. GROUND ROD.
   - A. A ¾ INCH SCHEDULE 40 PVC CONDUIT WILL BE USED IN FOUNDATIONS AND CONCRETE WALLS FOR THE GROUNDING CONDUCTOR (GROUND WIRE) RACEWAY TO THE GROUND ROD. SHOULD METALLIC CONDUIT BE USED, BOTH ENDS OF THE CONDUIT SHALL BE BONDED TO THE GROUNDING CONDUCTOR.
   - B. THE TYPICAL GROUNDING CONDUCTOR (GROUND WIRE) SHALL BE 4 AWG INSULATED, COPPER.

5. THE GREEN CONDUCTOR IN SIGNAL CABLES (CONDUCTOR #4) SHALL NOT BE USED TO SUPPLY POWER TO A SIGNAL INDICATION. IT WILL BE CONNECTED TO THE SIGNAL BODY AS AN EQUIPMENT GROUND IN ALUMINUM HEADS AND IT WILL BE UNUSED IN PLASTIC HEADS. UNUSED CONDUCTORS SHALL BE GROUNDED IN THE CABINET. TYPICAL USE OF CONDUCTORS IS AS FOLLOWS:

COND. NO.	COLOR	VEHICLE SIGNAL	PEDESTRIAN SIGNAL
1	BLACK	GREEN BALL	#1 WALK
2	WHITE	AC NEUTRAL	AC NEUTRAL
3	RED	RED BALL	#1 DW/FDW
4	GREEN	EQUIPMENT GROUND	EQUIPMENT GROUND
5	ORANGE	YELLOW BALL	#2 DW/FDW
6	BLUE	GREEN ARROW	#2 WALK
7	WHITE/BLACK STRIPE	YELLOW ARROW	NOT USED

6. POWER SERVICE AND DISCONNECT SWITCH.
   - A. AT THE POWER SERVICE LOCATION, THE GROUNDING CONDUCTOR (GROUND WIRE) FROM THE DISCONNECT SWITCH NEUTRAL (AC-) BAR TO THE GROUND ROD SHALL BE A CONTINUOUS, UNSPLICED CONDUCTOR. IF SPLICED, IT SHALL BE AN EXOTHERMIC WELD BUTT SPLICE.
   - B. THE SERVICE NEUTRAL (AC-) SHALL ONLY BE CONNECTED TO GROUND AT THE PRIMARY POWER SERVICE DISCONNECT SWITCH.
     - I. NEMA CONTROLLER CABINETS: IF A POWER SERVICE DISCONNECT SWITCH IS LOCATED BEFORE THE CONTROLLER CABINET, THE NEUTRAL (AC-) AND THE GROUNDING BARS IN THE CONTROLLER CABINET SHALL NOT BE CONNECTED TOGETHER AS SHOWN IN NEMA TS-2, FIGURE 5-4.
     - II. IF SECONDARY DISCONNECT SWITCHES ARE CONNECTED AFTER THE PRIMARY DISCONNECT SWITCH, THE NEUTRAL (AC-) SHALL ONLY BE GROUNDED AT THE PRIMARY SWITCH. EQUIPMENT GROUNDING CONDUCTORS SHALL BE BROUGHT TO THE PRIMARY SWITCH, BUT SHALL BE GROUNDED AT BOTH SECONDARY AND PRIMARY SWITCHES.

7. PAYMENT - ALL MATERIALS AND WORK REQUIRED TO COMPLETE THE EFFECTIVE GROUND FAULT CURRENT PATH SYSTEM ARE INCIDENTAL TO THE CONDUCTORS INSTALLED BY CONTRACT.

633 UNINTERRUPTIBLE POWER SUPPLY, AS PER PLAN

IN ADDITION TO THE REQUIREMENTS OF C&MS 633 AND 733, THE CONTRACTOR SHALL FURNISH, INSTALL AND TEST UNINTERRUPTIBLE POWER SUPPLY (UPS) STATUS INDICATOR LAMPS THAT ALLOW MAINTENANCE PERSONNEL AND LAW ENFORCEMENT TO QUICKLY ASSESS WHETHER A TRAFFIC SIGNAL CABINET IS BEING POWERED BY A UPS. A 1-INCH WATERPROOF NEMA 4X OR IP66 LAMP WITH A DOMED RED LENS SHALL BE USED TO INDICATE THE CABINET IS OPERATING UNDER UPS BACKUP POWER (THE "BACKUP" OPERATING CONDITION). THIS LAMP SHALL BE WIRED USING MINIMUM 20GA STRANDED, INSULATED HOOKUP WIRE TO THE STATUS RELAY OUTPUTS OF THE UPS. THE WIRES SHALL BE TERMINATED BY LUGS AT THE DISPLAY END AND PERMANENTLY LABELED "BACKUP POWER STATUS DISPLAY," WITH WIRE POLARITY INDICATED. THIS ITEM INCLUDES PROGRAMMING THE UPS STATUS RELAY OUTPUTS TO PRODUCE THE LAMP STATUS DISPLAYS. THE STATUS DISPLAY SHALL BE SOLID 100% DUTY CYCLE (NOT FLASHING). THE LAMP SHALL BE PLACED IN THE UPS CABINET WALL (NOT THE ROOF) IN SUCH A MANNER AS TO BE SEALED FROM WATER INTRUSION AND VISIBLE FROM A VEHICLE AT THE STOP LINE IN THE CLOSEST LANE OF AT LEAST ONE APPROACH TO THE SIGNALIZED INTERSECTION. THE OPERATING VOLTAGE OF THE LED LAMP SHALL BE 120V AC.

EX. PB3: EX. PULL BOX, 18",
TYPE 725.08
STA. 64+19, 22.5' RT.
TO BE REMOVED

PB2: PULL BOX, 18",
TYPE 725.08
64+89.5, 42' RT.

EX. PB2: EX. PULL BOX, 18",
TYPE 725.08
STA. 65+18, 24' RT.
TO BE REMOVED

EX. P1: STRAIN POLE,
TYPE TC-81.10
STA. 65+29.5, 49' RT.
TO BE REMOVED

PB1: PULL BOX, 24",
TYPE 725.08
65+31.5, 58.5' RT.

CONTROLLER: GROUND MOUNTED,
W/ FOUNDATION & WORK PAD
STA. 65+31.5, 54' RT.

EX. CONTROLLER
W/ FOUNDATION & WORK PAD
STA. 65+32, 43' RT.
TO BE REMOVED

EX. PB1: EX. PULL BOX, 24",
TYPE 725.08
STA. 65+33.5, 46' RT.
TO BE REMOVED

P1: STRAIN POLE,
TYPE TC-81.10, DESIGN 8
STA. 65+36.5, 54' RT.

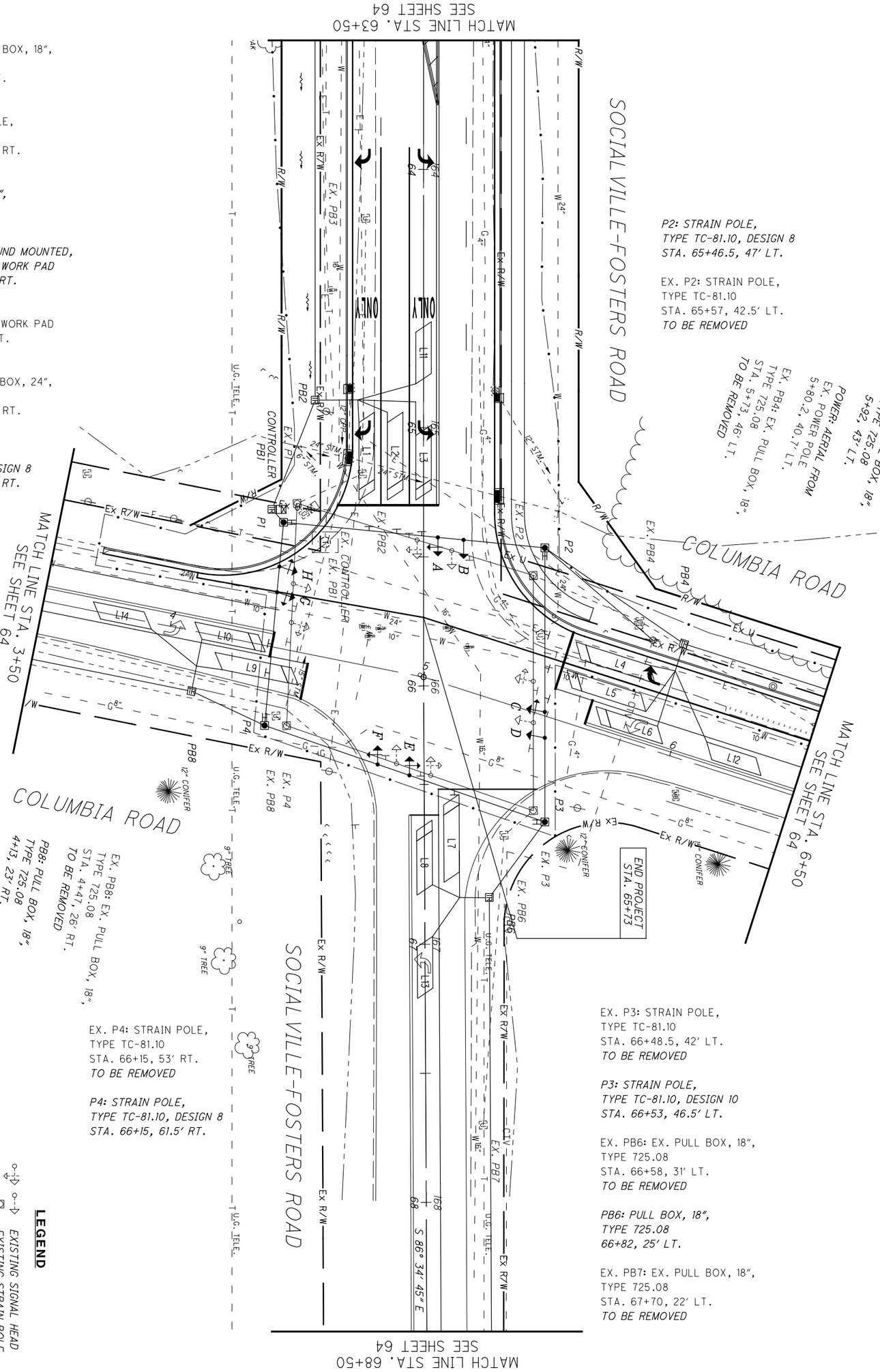

P2: STRAIN POLE,
TYPE TC-81.10, DESIGN 8
STA. 65+46.5, 47' LT.

EX. P2: STRAIN POLE,
TYPE TC-81.10
STA. 65+57, 42.5' LT.
TO BE REMOVED

POWER: AERIAL FROM
EX. POWER POLE
5+80.2, 40.7' LT.

EX. PB4: EX. PULL BOX, 18",
TYPE 725.08
STA. 5+73, 46' LT.
TO BE REMOVED

PB4: PULL BOX, 18",
TYPE 725.08
5+62, 43' LT.

EX. P3: STRAIN POLE,
TYPE TC-81.10
STA. 66+48.5, 42' LT.
TO BE REMOVED

P3: STRAIN POLE,
TYPE TC-81.10, DESIGN 10
STA. 66+53, 46.5' LT.

EX. PB6: EX. PULL BOX, 18",
TYPE 725.08
STA. 66+58, 31' LT.
TO BE REMOVED

PB6: PULL BOX, 18",
TYPE 725.08
66+82, 25' LT.

EX. PB7: EX. PULL BOX, 18",
TYPE 725.08
STA. 67+70, 22' LT.
TO BE REMOVED

EX. PB8: EX. PULL BOX, 18",
TYPE 725.08
STA. 4+47, 26' RT.
TO BE REMOVED

PB8: PULL BOX, 18",
TYPE 725.08
4+13, 23' RT.

EX. P4: STRAIN POLE,
TYPE TC-81.10
STA. 66+15, 53' RT.
TO BE REMOVED

P4: STRAIN POLE,
TYPE TC-81.10, DESIGN 8
STA. 66+15, 61.5' RT.

LEGEND

- EXISTING SIGNAL HEAD
- EXISTING STRAIN POLE
- EXISTING PULL BOX
- EXISTING CONTROLLER
- PROPOSED SIGNAL HEAD
- PROPOSED STRAIN POLE
- PROPOSED PULL BOX
- PROPOSED CONTROLLER

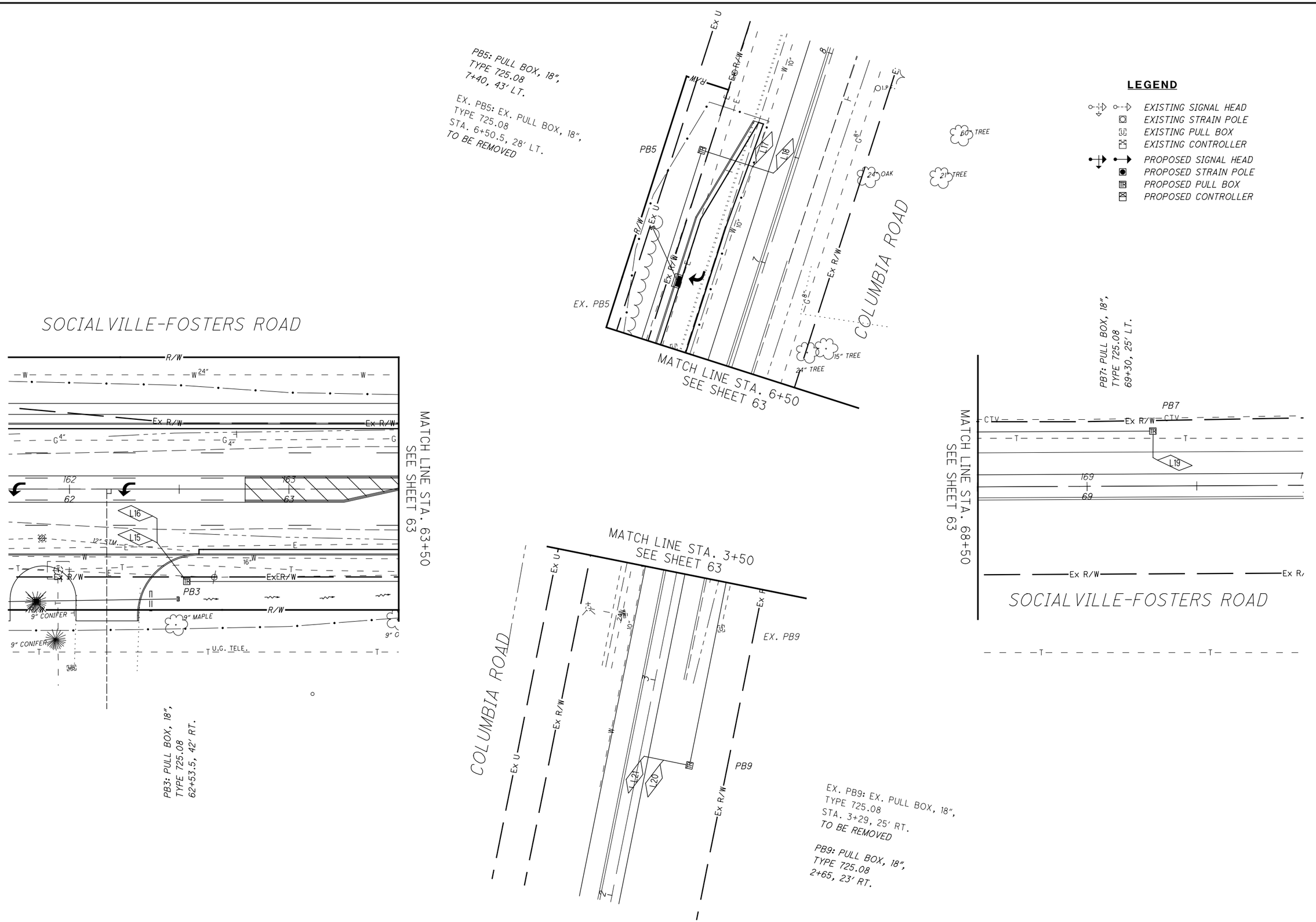
PB5: PULL BOX, 18",
TYPE 725.08
7+40, 43' LT.
EX. PB5: EX. PULL BOX, 18",
TYPE 725.08
STA. 6+50.5, 28' LT.
TO BE REMOVED
PB5
EX. PB5
Ex U
R/W
Ex R/W
COLUMBIA ROAD
MATCH LINE STA. 6+50
SEE SHEET 63
24" OAK
60" TREE
21" TREE
15" TREE
24" TREE
LEGEND
EXISTING SIGNAL HEAD
EXISTING STRAIN POLE
EXISTING PULL BOX
EXISTING CONTROLLER
PROPOSED SIGNAL HEAD
PROPOSED STRAIN POLE
PROPOSED PULL BOX
PROPOSED CONTROLLER
HORIZONTAL SCALE IN FEET
0 10 20 40
CALCULATED JDC
CHECKED TJF
TRAFFIC SIGNAL PLAN
WAR-71-2.54
85
137
SOCIALVILLE-FOSTERS ROAD
R/W
Ex R/W
MATCH LINE STA. 63+50
SEE SHEET 63
PB3
9" CONIFER
9" MAPLE
U.G. TELE.
PB3: PULL BOX, 18",
TYPE 725.08
62+53.5, 42' RT.
PB7: PULL BOX, 18",
TYPE 725.08
69+30, 25' LT.
PB7
MATCH LINE STA. 68+50
SEE SHEET 63
SOCIALVILLE-FOSTERS ROAD
MATCH LINE STA. 3+50
SEE SHEET 63
COLUMBIA ROAD
EX. PB9
PB9
EX. PB9: EX. PULL BOX, 18",
TYPE 725.08
STA. 3+29, 25' RT.
TO BE REMOVED
PB9: PULL BOX, 18",
TYPE 725.08
2+65, 23' RT.
H:\2014\14240\ODOT\WAR\12345\signals\sheets\12345GP002.dgn 11/10/2015 1:21:53 PM obrams

POLE NUMBER	COMBINATION POLE	LOCATION		PEDESTAL	DESIGN NUMBER	POLE HEIGHT (Feet)	TOP OF FOUNDATION ELEV.	SPAN WIRE ATTACHMENT HT.	INDEX LINE ANGLE (DEG.) (CENTER OF HANDHOLE)	ORIENTATION ANGLE FROM INDEX LINE (DEGREES)								
		STATION	OFFSET							PEDESTRIAN SIGNAL	PEDESTRIAN PUSHBUTTON	CONTROLLER	POWER SERVICE	CABLE ENTRANCE	LUMINAIRE BRACKET	S4 (STREET NAME)	2" CONDUIT ELL	4" CONDUIT ELL	2" CAPPED CONDUIT ELL (FOR FUTURE USE)
P1	NO	65+36.5	54' RT	-	8	30'	-	27'	180°	- / -	- / -	-	-	-	-	180°	-	50°	-
P2	NO	65+46.5	47' LT	-	8	30'	-	27'	180°	- / -	- / -	-	-	40°	-	90°	35°	-	-
P3	NO	66+53	46.5' LT	-	10	30'	-	27'	180°	- / -	- / -	-	-	-	-	180°	25°	-	-
P4	NO	66+15	61.5' RT	-	8	30'	-	27'	180°	- / -	- / -	-	-	-	-	90°	125°	-	-

TYPE TC-81.10 STRAIN POLE

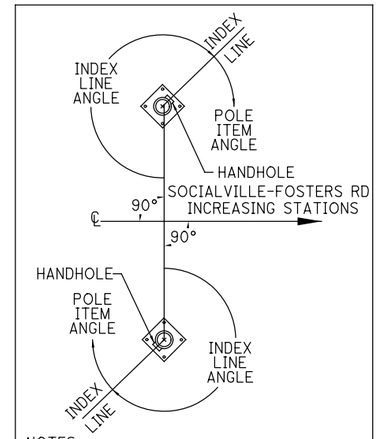

NOTES:
1) ALL ANGLES ARE MEASURED CLOCKWISE.
2) INDEX LINE FOR PEDESTAL & STRAIN POLE IS CENTER OF HANDHOLE.

ORIENTATION ANGLE

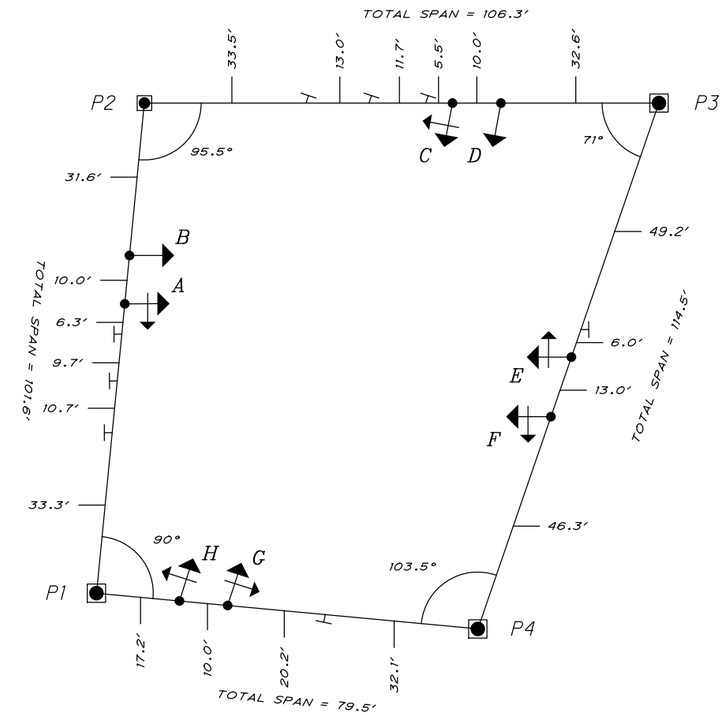

SPAN DIAGRAM

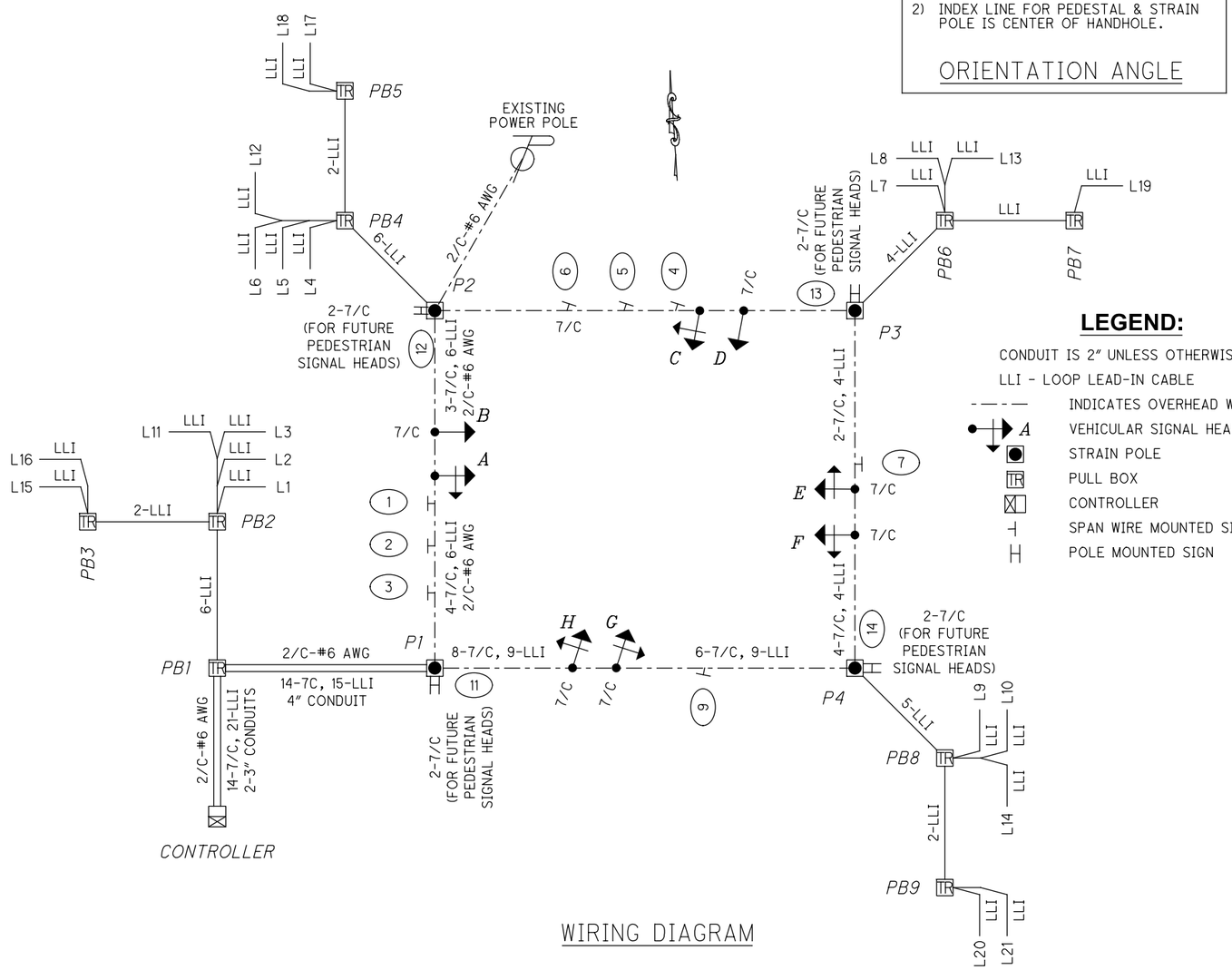

WIRING DIAGRAM

LEGEND:

CONDUIT IS 2" UNLESS OTHERWISE NOTED
LLI - LOOP LEAD-IN CABLE
INDICATES OVERHEAD WIRING
VEHICULAR SIGNAL HEAD
STRAIN POLE
PULL BOX
CONTROLLER
SPAN WIRE MOUNTED SIGN
POLE MOUNTED SIGN

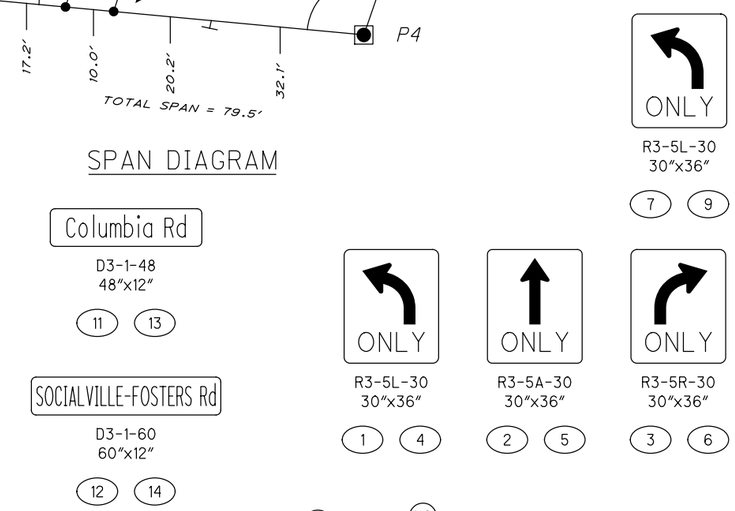

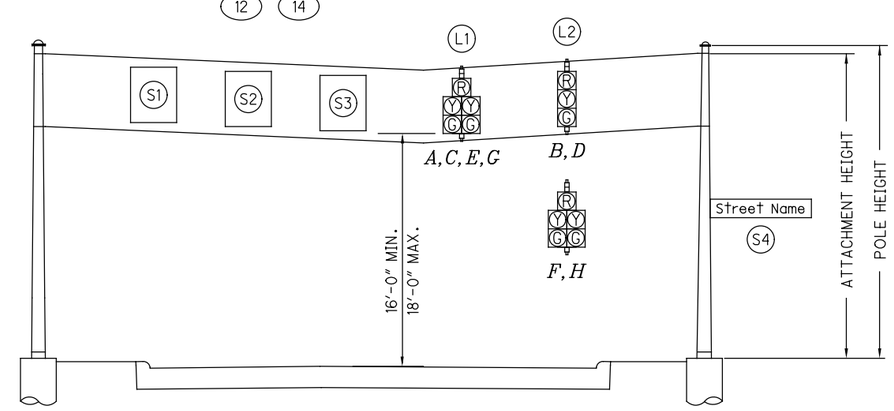

TYPICAL SIGNAL ELEVATION

CALCULATED JDC
CHECKED TJF

TRAFFIC SIGNAL DETAILS

WAR-71-2.54

FUNCTION	ϕ1	ϕ2	ϕ3	ϕ4	ϕ5	ϕ6	ϕ7	ϕ8
INITIAL GREEN	-	-	-	-	-	-	-	-
MINIMUM GREEN	5.0	5.0	5.0	5.0	5.0	5.0	5.0	5.0
VEHICLE EXTENSION	2.0	2.0	2.0	2.0	2.0	2.0	2.0	2.0
MAXIMUM GREEN	12.0	38.0	15.0	40.0	12.0	33.0	17.0	30.0
PEDESTRIAN WALK	-	-	-	-	-	-	-	-
PEDESTRIAN CLEARANCE	-	-	-	-	-	-	-	-
VEHICLE YELLOW CLEARANCE	4.5	4.5	4.5	4.5	4.5	4.5	4.5	4.5
VEHICLE ALL RED CLEARANCE	2.0	2.0	2.5	2.5	2.0	2.0	2.5	2.5
RECALL	OFF	MIN.	OFF	OFF	OFF	MIN.	OFF	OFF
MEMORY	OFF	ON	OFF	OFF	OFF	ON	OFF	OFF

SIGNAL TIMING CHART

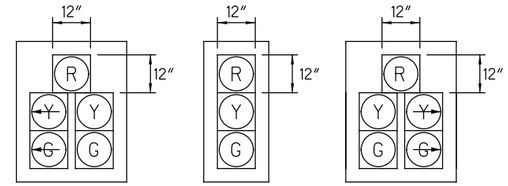

POLYCARBONATE
VEHICULAR SIGNAL HEADS
WITH BACKPLATE
LED

FIELD WIRING HOOK-UP CHART

SIGNAL HEAD	INDICATION	FIELD TERMINAL	FLASH	SIGNAL HEAD	INDICATION	FIELD TERMINAL	FLASH
A (WBLT)	R	ϕ6 R	Y	F (EBRT)	R	ϕ2 R	Y
	Y	ϕ6 Y			Y	ϕ2 Y	
	G	ϕ6 G			G	ϕ2 G	
	←Y	ϕ1 Y	X		←Y	ϕ3 Y	X
	←G	ϕ1 G			←G	ϕ3 G	
B (WB)	R	ϕ6 R	Y	G (SBLT)	R	ϕ4 R	R
	Y	ϕ6 Y			Y	ϕ4 Y	
	G	ϕ6 G			G	ϕ4 G	
C (NBLT)	R	ϕ8 R	R		←Y	ϕ7 Y	
	Y	ϕ8 Y			←G	ϕ7 G	
	G	ϕ8 G		H (SBRT)	R	ϕ4 R	R
	←Y	ϕ3 Y			Y	ϕ4 Y	
	←G	ϕ3 G			G	ϕ4 G	
D (NB)	R	ϕ8 R	R		←Y	ϕ5 Y	
	Y	ϕ8 Y			←G	ϕ5 G	
	G	ϕ8 G					
E (EBLT)	R	ϕ2 R	Y				
	Y	ϕ2 Y					
	G	ϕ2 G					
	←Y	ϕ5 Y	X				
	←G	ϕ5 G					

FIELD WIRING HOOK-UP CHART

LOOP	SIZE	TURNS	MODE	DELAY	PHASE	REMARK	INHIBITED DELAY	LOCATION 1st† FRONT CORNER	LOCATION 2nd FRONT CORNER
L1	6X30	3+3	PRESENCE	10.0	ϕ2	POWERHEAD	ϕ2	STA. 65+24, 3′ LT	STA. 65+28, 3′ RT
L2	6X30	3+3	PRESENCE	-	ϕ2	POWERHEAD	-	STA. 65+24, 8′ RT	STA. 65+28, 14′ RT
L3	6X25	3+3	PRESENCE	3.0	ϕ2	POWERHEAD	ϕ2	STA. 65+24, 19′ RT	STA. 65+28, 25′ RT
L4	6X30	3+3	PRESENCE	10.0	ϕ4	POWERHEAD	ϕ4	STA. 5+52, 31′ LT	STA. 5+56, 25′ LT
L5	6X30	3+3	PRESENCE	-	ϕ4	POWERHEAD	-	STA. 5+52, 20′ LT	STA. 5+56, 14′ LT
L6	6X25	3+3	PRESENCE	3.0	ϕ4	POWERHEAD	ϕ4	STA. 5+67, 10′ LT	STA. 5+71, 4′ LT
L7	6X30	3+3	PRESENCE	10.0	ϕ6	POWERHEAD	ϕ6	STA. 66+42, 13.5′ LT	STA. 66+46, 7.5′ LT
L8	6X25	3+3	PRESENCE	3.0	ϕ6	POWERHEAD	ϕ6	STA. 66+52, 3′ LT	STA. 66+56, 3′ RT
L9	6X30	3+3	PRESENCE	10.0	ϕ8	POWERHEAD	ϕ8	STA. 4+34, 3.5′ LT	STA. 4+38, 2.5′ RT
L10	6X25	3+3	PRESENCE	3.0	ϕ8	POWERHEAD	ϕ8	STA. 4+49, 6.5′ RT	STA. 4+53, 12.5′ RT
L11	6X20	3	PRESENCE	3.0	ϕ5	RECTANGULAR	ϕ5	STA. 64+79, 19′ RT	STA. 64+83, 25′ RT
L12	6X20	3	PRESENCE	3.0	ϕ7	RECTANGULAR	ϕ7	STA. 6+12, 10′ LT	STA. 6+16, 4′ LT
L13	6X20	3	PRESENCE	3.0	ϕ1	RECTANGULAR	ϕ1	STA. 66+97, 3′ LT	STA. 67+01, 3′ RT
L14	6X20	3	PRESENCE	3.0	ϕ3	RECTANGULAR	ϕ3	STA. 4+04, 6.5′ RT	STA. 4+08, 12.5′ RT
L15	8X16	4	PULSE	-	ϕ2	ANGULAR	-	STA. 62+30, 22′ RT	
L16	8X16	4	PULSE	-	ϕ2	ANGULAR	-	STA. 62+30, 11′ RT	
L17	8X16	4	PULSE	-	ϕ4	ANGULAR	-	STA. 7+50, 16.5′ LT	
L18	8X16	4	PULSE	-	ϕ4	ANGULAR	-	STA. 7+50, 6.5′ LT	
L19	8X16	4	PULSE	-	ϕ6	ANGULAR	-	STA. 69+40, 10.5′ LT	
L20	8X16	4	PULSE	-	ϕ8	ANGULAR	-	STA. 2+55, 8.5′ RT	
L21	8X16	4	PULSE	-	ϕ8	ANGULAR	-	STA. 2+55, 0.5′ RT	

LOOP DETECTOR CHART

SIGNAL DIRECTION	SIGNAL HEAD	ϕ5 & ϕ1				ϕ1 & ϕ6				ϕ5 & ϕ2				ϕ2 & ϕ6				ϕ3 & ϕ7				ϕ3 & ϕ8				ϕ7 & ϕ4				ϕ4 & ϕ8				FLASH	DWELL
		R/W		CLEAR		R/W		CLEAR		R/W		CLEAR		R/W		CLEAR		R/W		CLEAR		R/W		CLEAR		R/W		CLEAR		R/W		CLEAR			
NORTHBOUND	C	R	R	R	R	R	R	R	R	R	R	R	R	R	R	R	R	R/~~G~~	R/~~G~~	R/~~Y~~	R③	G/~~G~~	G/~~G~~	G/~~Y~~	G	R	R	R	R	G	G	Y	R	R	R
	D	R	R	R	R	R	R	R	R	R	R	R	R	R	R	R	R	R	R	R	R	G	G	G	G	R	R	R	R	G	G	Y	R	R	R
EASTBOUND	E	R/~~G~~	R/~~G~~	R/~~Y~~	R②	R	R	R	R	G/~~G~~	G/~~G~~	G/~~Y~~	G	G	G	Y	R	R	R	R	R	R	R	R	R	R	R	R	R	R	R	R	R	Y	G
	F	R	R	R	R	R	R	R	R	G/~~G~~	G/~~G~~	G/~~Y~~	G	G	G	Y	R	R/~~G~~	R/~~G~~	R/~~Y~~	R⑥	R/~~G~~	R/~~G~~	R/~~Y~~	R	R	R	R	R	R	R	R	R	Y	G
WESTBOUND	A	R/~~G~~	R/~~G~~	R/~~Y~~	R①	G/~~G~~	G/~~G~~	G/~~Y~~	G	R	R	R	R	G	G	Y	R	R	R	R	R	R	R	R	R	R	R	R	R	R	R	R	R	Y	G
	B	R	R	R	R	G	G	G	G	R	R	R	R	G	G	Y	R	R	R	R	R	R	R	R	R	R	R	R	R	R	R	R	R	Y	G
SOUTHBOUND	G	R	R	R	R	R	R	R	R	R	R	R	R	R	R	R	R	R/~~G~~	R/~~G~~	R/~~Y~~	R④	R	R	R	R	G/~~G~~	G/~~G~~	G/~~Y~~	G	G	G	Y	R	R	R
	H	R/~~G~~	R/~~G~~	R/~~Y~~	R⑤	R	R	R	R	R/~~G~~	R/~~G~~	R/~~Y~~	R	R	R	R	R	R	R	R	R	R	R	R	R	G/~~G~~	G/~~G~~	G/~~Y~~	G	G	G	Y	R	R	R

① IF ϕ1 & ϕ6 NEXT THEN R/~~G~~
② IF ϕ5 & ϕ2 NEXT THEN R/~~G~~
③ IF ϕ3 & ϕ8 NEXT THEN R/~~G~~
④ IF ϕ7 & ϕ4 NEXT THEN R/~~G~~
⑤ IF ϕ5 & ϕ2 NEXT THEN R/~~G~~
⑥ IF ϕ3 & ϕ8 NEXT THEN R/~~G~~

SIGNAL SEQUENCE CHART

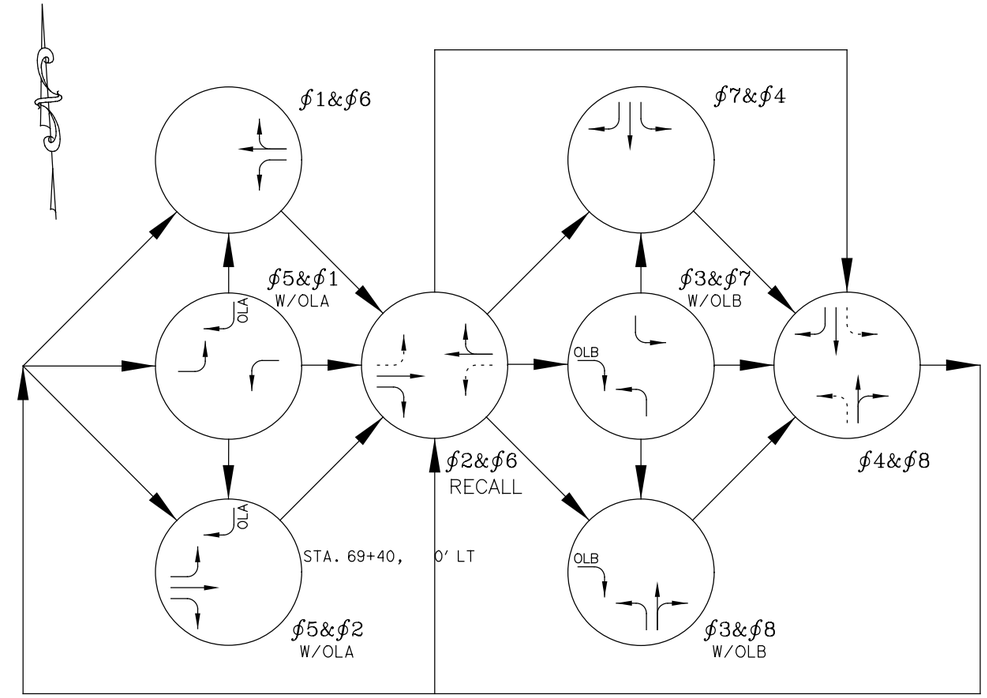

PHASING DIAGRAM

CALCULATED JDC
CHECKED TJF

TRAFFIC SIGNAL DETAILS

WAR-71-2.54

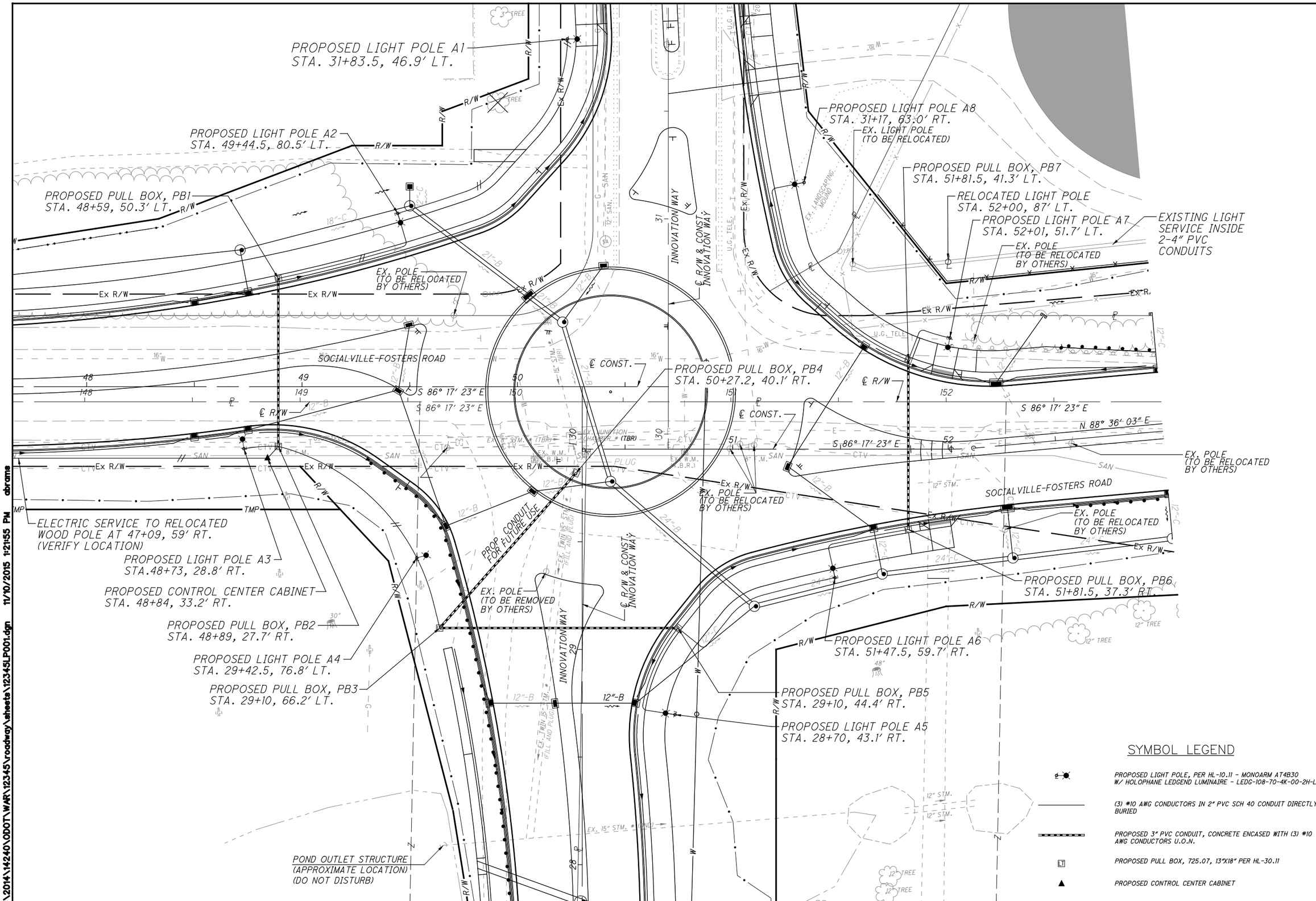

N

HORIZONTAL SCALE IN FEET
0 10 20 40

CALCULATED NSS
CHECKED REN

LIGHTING PLAN

WAR-71-2.54

SPECIFICATIONS

THESE NOTES ARE SUPPLEMENTAL TO ITEMS 625 AND 725 OF THE STATE OF OHIO DEPARTMENT OF TRANSPORTATION CONSTRUCTION AND MATERIAL SPECIFICATIONS. REFERENCE SHALL BE MADE TO STANDARD CONSTRUCTION DRAWINGS LISTED ON THE TITLE SHEET OF THESE PLANS.

ITEM 625 - POWER SERVICE, AS PER PLAN

IN ADDITION TO THE REQUIREMENTS OF THE ODOT'S CONSTRUCTION AND MATERIAL SPECIFICATIONS, POWER SERVICE SHALL BE AS FOLLOWS:

THE POWER SUPPLYING AGENCY FOR THIS PROJECT IS:

DUKE ENERGY
139 EAST 4TH ST, 467 ANNEX
CINCINNATI, OH 45202

POWER SUPPLIED SHALL BE 120/240 VOLT, SINGLE PHASE, 3 WIRE, GROUNDED NEUTRAL. THE CONTRACTOR SHALL BE RESPONSIBLE FOR ANY CHARGES MADE BY THE POWER COMPANY IN CONJUNCTION WITH THE SERVICE REQUIRED FOR THIS PROJECT. THE ELECTRICAL ENERGY ACCOUNT SHALL BE ESTABLISHED IN THE NAME OF THE MAINTAINING AGENCY NOTED IN THE PLANS.

ITEM 625 - LUMINAIRE, CONVENTIONAL, SOLID STATE (LED), AS PER PLAN

ALL LUMINAIRES SHALL BE MANUFACTURED BY HOLOPHANE, CATALOG NUMBER: LEDG 108 70 4K 00 2H L3, OR ENGINEER APPROVED EQUAL.

CIRCUIT VOLTAGE FOR ALL LUMINAIRES SHALL BE 240V, SINGLE PHASE.

ACCESSORIES FOR A COMPLETE UNIT INCLUDE BUT MAY NOT BE LIMITED TO: LAMP AND HARDWARE FOR MOUNTING.

LUMINAIRE SHALL BE COBRA-HEAD, TYPE III, 240W, LED, 240V.

ITEM 625 - LIGHT POLE, CONVENTIONAL, AS PER PLAN

THE LIGHT POLE SHALL BE CONVENTIONAL TYPE, OF THE MONOARM DESIGN PER HL-10.11. 30' IN HEIGHT WITH A 4' ARM WITH 2.5' OF UPSWEEP. THE POLE SHALL BE MOUNTED ON A TRANSFORMER BASE PER HL-10.13. THE LIGHT POLE SHALL HAVE A BLACK POWDER COATING. THE CONTRACTOR SHALL SUBMIT THE SPECIFICATION FOR THE BLACK POWDER COATING TO THE COUNTY FOR APPROVAL.

ACCESSORIES FOR A COMPLETE UNIT INCLUDE BUT MAY NOT BE LIMITED TO: ARM, BRACKET, TRANSFORMER BASE AND ALL REQUIRED HARDWARE.

ITEM 625 - LIGHT POLE FOUNDATION, CONVENTIONAL, AS PER PLAN

PROVIDE A 3/4" SCHEDULE 40 PVC CONDUIT AS A RACEWAY FOR THE GROUNDING CONDUCTOR TO THE GROUNDING ROD. TYPICAL GROUNDING CONDUCTOR SHALL BE #4 INSULATED COPPER.

ACCESSORIES FOR A COMPLETE UNIT INCLUDE BUT MAY NOT BE LIMITED TO: ANCHOR BOLTS, CONDUIT ELBOWS AND GROUNDING CONDUCTOR.

ITEM 625 - CONTROL CENTER CABINET, COMPLETE, AS PER PLAN

PROVIDE A 240V CONTROL CABINET, TO BE MOUNTED ON A COMMON FRAME WITH THE ELECTRIC METER AS PER HL-40.20. ENCLOSURE SHALL BE NEMA 4X STAINLESS STEEL. CONTROL CABINET SHALL INCLUDE A 30A 3-POLE DISCONNECT SWITCH FUSED AT 30A, A 30A 3-POLE 600V CONTACTOR WITH A 120V COIL, SEPARATE 10A FUSE FOR THE CONTROL CIRCUIT (VERIFY FUSE SIZE PER CONTROL CIRCUIT LOAD), AN INTERNAL HAND-OFF-AUTO SWITCH, AN EXTERNAL PHOTO-CELL FOR AUTOMATIC LIGHT CONTROL AND A SOLID NEUTRAL BUS. PROVIDE WITH A GROUND ROD AND #4 GROUNDING WIRE.CONCRETE LIGHT POLE FOUNDATIONS SHALL BE PROVIDED AS PER HL-20.11. PROVIDE WITH ANCHOR BOLTS AND CONDUIT ELBOWS, NUMBERED PER PLAN.

PHOTOELECTRIC RELAY SHALL BE CADMIUM SULPHIDE WITH LOCKING TYPE RECEPTACLE, POLE MOUNTED 120 V OPERATION. THE TURN ON AND OFF LEVELS SHALL BE ADJUSTABLE.

ACCESSORIES FOR A COMPLETE UNIT INCLUDE BUT MAY NOT BE LIMITED TO: FRAME AND FOUNDATION, SUPPORT FOR THE PHOTOCELL.

ITEM 625 - CONDUIT

PVC CONDUIT SHALL MEET THE REQUIREMENTS OF ODOT SPEC. ITEM 725.05, EXCEPT THAT THE CONDUIT SHALL BE SCHEDULE 40 AS PER 725.051.

ITEM 625 - CONDUIT, 3", 725.051, AS PER PLAN

CONDUIT SHALL BE CONCRETE ENCASED USING CLASS QC1 CONCRETE PER CMS 499.

ITEM 625 - PLASTIC CAUTION TAPE, AS PER PLAN

THE LOCATION OF UNDERGROUND CONDUIT AND BURIED ELECTRICAL CABLES SHALL BE MARKED BY THE USE OF A CONTINUOUS IDENTIFYING TAPE PLACED ABOVE THE CONCRETE CASING, UNDER THE PAVEMENT. THE IDENTIFYING TAPE SHALL BE AN INERT MATERIAL, APPROXIMATELY 6 INCHES WIDE COMPOSED OF POLYETHYLENE PLASTIC, HIGHLY RESISTANT TO ALKALIS, ACIDS, OR OTHER CHEMICAL COMPONENTS LIKELY TO BE ENCOUNTERED IN SOILS. THE TAPE SHALL BE BRIGHT RED WITH IDENTIFYING PRINTING "ELECTRIC" IN BLACK LETTERS, ONE SIDE ONLY. TAPE SHALL BE SUPPLIED IN CONTINUOUS ROLLS WITH THE IDENTIFYING LETTERING REPEATED CONTINUOUSLY THE FULL LENGTH OF THE TAPE. IDENTIFYING TAPE SHALL BE BURIED ON THE ELECTRIC LINE TRENCH WITH ONE STRIP APPROXIMATELY 6 TO 10 INCHES BELOW THE FINAL FINISHED GRADE. THE TAPE SHALL BE PLACED IN THE TRENCH WITH THE PRINTED SIDE UP AND SHALL BE ESSENTIALLY PARALLEL WITH THE FINISHED SURFACE. THE CONTRACTOR SHALL TAKE NECESSARY PRECAUTIONS TO INSURE THAT THE TAPE IS NOT PULLED, DISTORTED, OR OTHERWISE MISPLACED IN COMPLETING THE TRENCH BACKFILL. THE TAPE SHALL BE PAID FOR PER FOOT OF ITEM SPECIAL - PLASTIC CAUTION TAPE, AS PER PLAN.

PAYMENT FOR ABOVE ITEMS

PAYMENT FOR ABOVE ITEMS, COMPLETE, AS PER PLAN AND SPECIFICATIONS WILL BE MADE AT THE CONTRACT UNIT PRICE BID FOR EACH COMPLETE UNIT AND SHALL INCLUDE ALL LABOR, MATERIALS, TOOLS, EQUIPMENT AND INCIDENTALS TO FURNISH AND INSTALL THE UNIT, TESTED AND ACCEPTED.

ITEM 625 LIGHTING MISC.: RELOCATE EXISTING LIGHT POLE

BEFORE ANY WORK IS DONE, POWER TO THE EXISTING LIGHT POLE SHALL BE DEACTIVATED. THE EXISTING LIGHT POLE AND LUMINAIRE SHALL BE CAREFULLY REMOVED FROM ITS FOUNDATION AND STORED FOR REUSE AT ITS NEW LOCATION. THE EXISTING LIGHT POLE FOUNDATION SHALL BE REMOVED AND DISPOSED OF.

A NEW LIGHT POLE FOUNDATION SHALL BE CONSTRUCTED AS PER THE DETAIL ON THIS SHEET. THE EXISTING LIGHT POLE SHALL BE ATTACHED TO THE NEWLY BUILT LIGHT POLE FOUNDATION AND THE UNDERGROUND POWER LINES RECONNECTED. AFTER CONSTRUCTION IS COMPLETE, RE-ACTIVATE POWER TO THE LIGHT POLE AND TEST THE LIGHT POLE AS PER 625.

THE ABOVE MATERIAL AND WORK INCLUDING ANY NECESSARY CONDUIT AND WIRING SHALL BE PAID FOR UNDER ITEM 625 LIGHTING MISC.: RELOCATE EXISTING LIGHT POLE.

ESTIMATE OF QUANTITIES

ITEM	ITEM EXT.	QUANTITY	UNIT	DESCRIPTION
625	00450	16	EACH	CONNECTION, FUSED PULL APART
625	00480	9	EACH	CONNECTION, UNFUSED, PERMANENT
625	10491	8	EACH	LIGHT POLE, CONVENTIONAL, AS PER PLAN (SINGLE ALUMINUM ROADWAY ARM)
625	14501	8	EACH	LIGHT POLE FOUNDATION, AS PER PLAN
625	23306	3255	FOOT	NO. 10 AWG 600 VOLT DISTRIBUTION CABLE
625	23400	320	FOOT	NO. 10 AWG POLE AND BRACKET CABLE (600V)
625	25408	725	FOOT	CONDUIT, 2", 725.051
625	25505	360	FOOT	CONDUIT, 3", 725.051, AS PER PLAN
625	26253	8	EACH	LUMINAIRE, CONVENTIONAL, SOLID STATE, (LED), AS PER PLAN
625	29000	725	FOOT	TRENCH
625	29400	360	FOOT	TRENCH IN PAVED AREA
625	30700	7	EACH	PULL BOX, 18", 725.08
625	32000	9	EACH	GROUND ROD
625	34001	1	EACH	POWER SERVICE, AS PER PLAN
625	34451	1	EACH	CONTROL CENTER CABINET, COMPLETE, AS PER PLAN
625	36001	1085	FOOT	PLASTIC CAUTION TAPE, AS PER PLAN
625	98000	1	EACH	LIGHTING MISC.: RELOCATE EXISTING LIGHT POLE

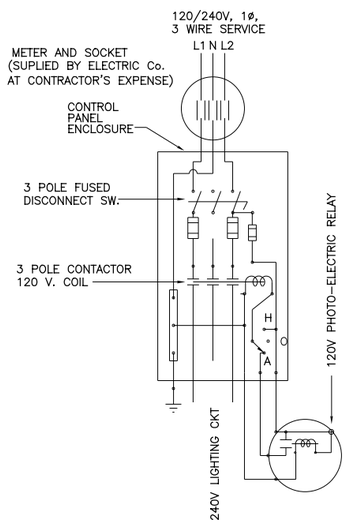

CONTROL PANEL WIRING DIAGRAM

NOT TO SCALE

CONTROL PANEL DATA								
POWER SERVICE	CONNECTED LOAD (KVA)	ENCLOSURE RATING (AMPS)	SERVICE ENTRANCE CABLE SIZE (AWG)	CIRCUIT				MAINTAINING AGENCY
				VOLTAGE	IDENTITY	LOAD (AMPS)	FUSE SIZE (AMPS)	
LCP-1 1 PH, 3W 120/240V,	1.92	30	#2	240V, 1ø	A	8	30	WARREN COUNTY

LUMINAIRE				
MANUFACTURER	MODEL	SPEC LINE	LUMENS	WATTS
HOLOPHANE	LEDGEND ROADWAY	LEDG 108 70 4K 00 2H L3	14834	237.5

MOUNTING					
STYLE	SUPPORTING HEIGHT	POLE HEIGHT	ARM LENGTH	ARM UPSWEEP	TRANSFORMER BASE
MONOARM PER HL-10.11	32.5'	30'	4'	2.5'	15"

PROPOSED ILLUMINANCE CRITERIA ON THE PAVEMENT				
AVG	MAX	MIN	MAX/MIN	AVG/MIN
1.2 FC	3.0 FC	0.4 FC	7.5:1	3.0:1

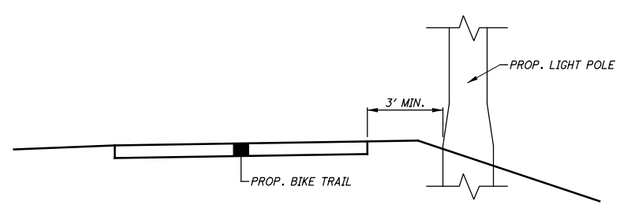

LIGHT POLE CLEARANCE DETAIL

STREET LIGHT FOUNDATION NOTES

1. CONCRETE SHALL BE CLASS C.
2. REBARS SHALL BE EPOXY COATED GRADE 60.
3. PLACE A GROUND ROD AS PER ODOT SCD HL-20.11 AND HL-60.11

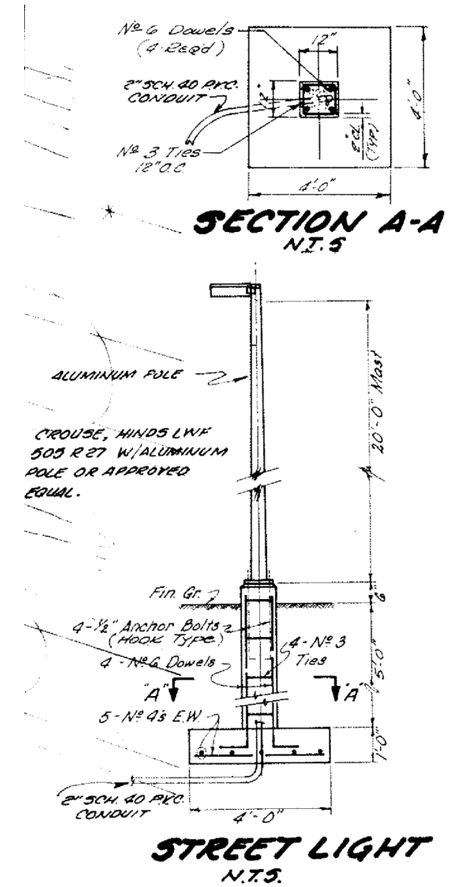

RELOCATED LIGHT DETAIL

CALCULATED NSS
CHECKED REN

LIGHTING NOTES, DETAILS AND QUANTITIES

WAR-71-2.54

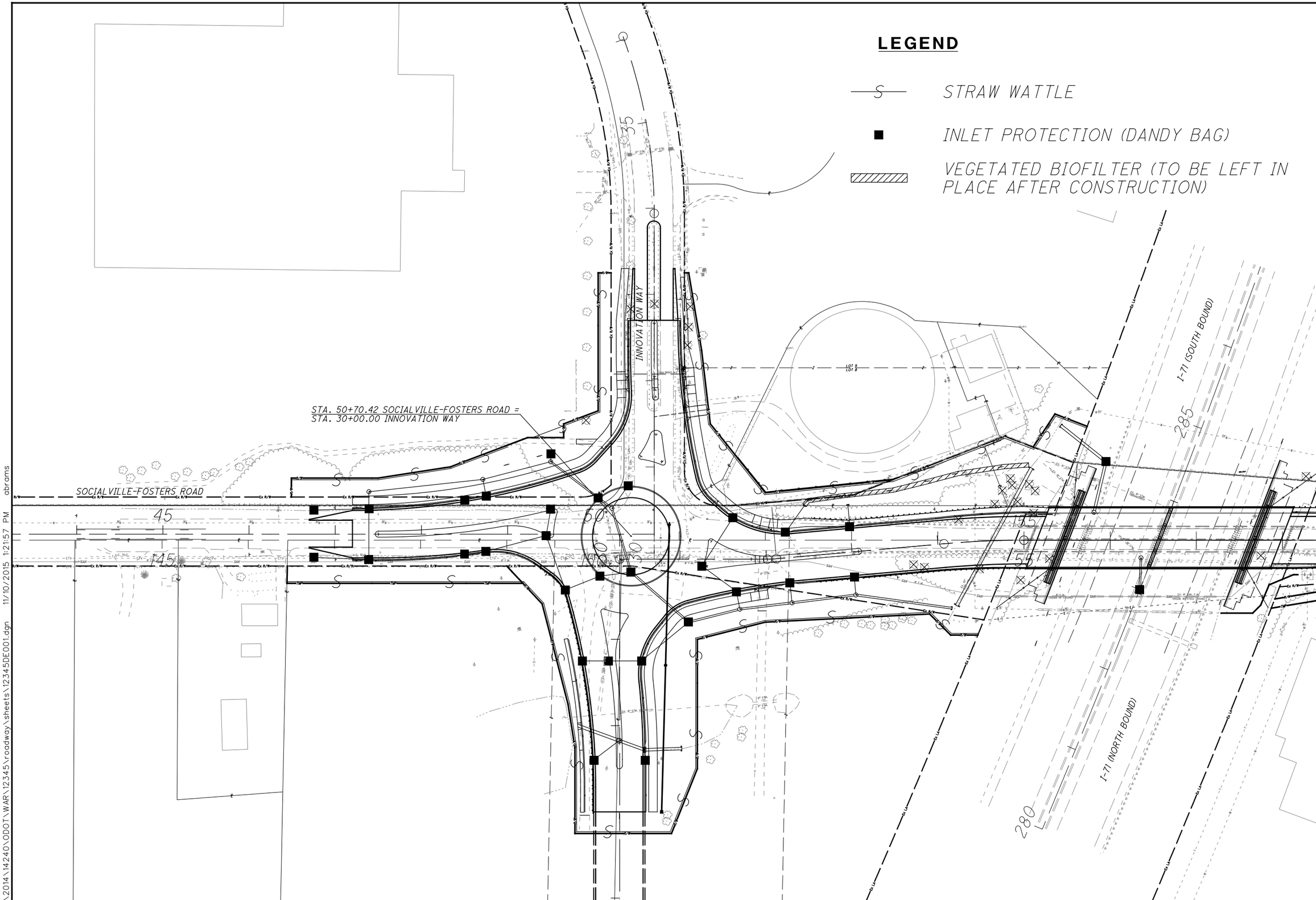

CALCULATED EJT
CHECKED REN

STORM WATER POLLUTION PREVENTION PLAN

WAR-71-2.54

H:\2014\14240\ODOT\WAR\12345\roadway\sheets\12345DE001.dgn 11/10/2015 1:21:57 PM abrams

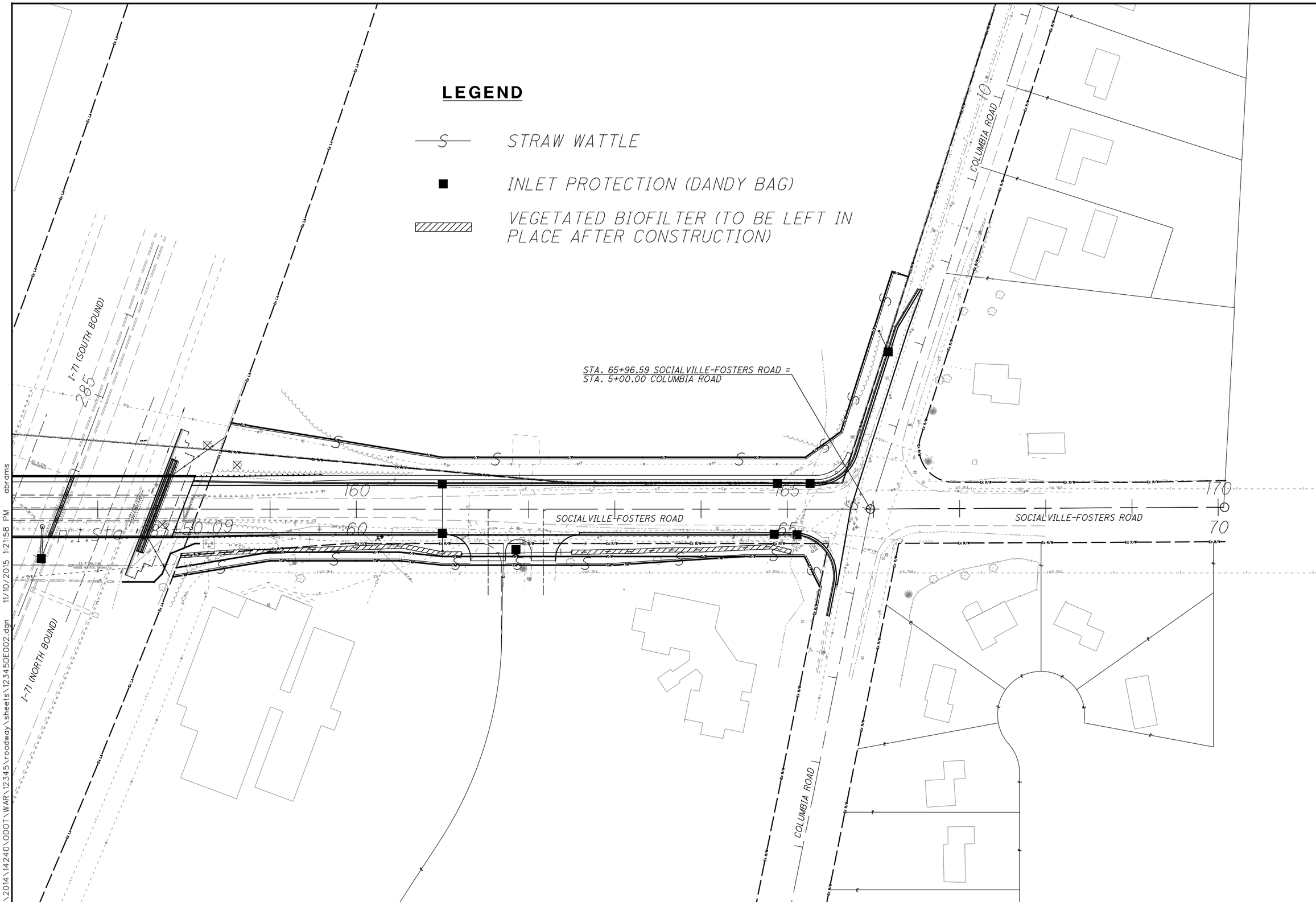

HORIZONTAL SCALE IN FEET
0 50 100 200

CALCULATED EJT
CHECKED REN

STORM WATER POLLUTION PREVENTION PLAN

WAR-71-2.54

EROSION CONTROL LEGEND

PROPOSED	DESCRIPTION
—S—S—	STRAW WATTLE
	STRAW BALE DITCH CHECK
DB	DANDY BAG INLET FILTER

SEDIMENT & EROSION CONTROL NARRATIVE

PLAN DESIGNER:	CT CONSULTANTS 7965 N. HIGH ST. SUITE 340 COLUMBUS, OHIO 43235 PHONE: (614) 885-1700 FAX: (614) 885-1701
OWNER/DEVELOPER:	WARREN COUNTY ENGINEER 210 WEST MAIN STREET LEBANON, OHIO 45036 PHONE: (513) 695-3301
PROJECT DESCRIPTION:	REPLACEMENT OF BRIDGE OVER I-71, WIDENING OF SOCIALVILLE-FOSTERS ROAD TO FIVE LANES, ADDITION OF A TWO LANE ROUNDABOUT AT INNOVATION WAY AND TRAFFIC SIGNAL IMPROVEMENTS AT COLUMBIA ROAD.
EXISTING SITE CONDIITONS:	EXISTING SITE DRAINS TO EXISTING FREEWAY AND ROADWAY DITCHES.
ADJACENT AREAS:	THIS SITE IS AN URBAN AREA WHICH PASSES THROUGH A FREEWAY CORRIDOR AND IS SURROUNDED BY VARIOUS INSTITUTIONS.
DISTURBED ACREAGE:	6.70 ACRES
CRITICAL AREAS:	ALL DRAINAGE DITCHES, CULVERTS, STORM SEWERS AND PONDS SHALL REMAIN SEDIMENT FREE DURING CONSTRUCTION.
EROSION AND SEDIMENT CONTROLS MEASURES:	SITE RUNOFF SHALL BE CONTROLLED BY STRAW WATTLES AT THE TOE OF SLOPES, STRAW BALES AT CULVERT INLETS AND DRAINAGE DITCHES, DANDY BAGS AT STORM INLETS, AND TEMPORARY SEEDING AND MULCHING AS NEEDED.
PERMANENT:	THIS SITE WILL BE STABILIZED WITH VEGETATED BIOFILTERS AND SEEDING AND MULCHING.

QUANTITIES (TO GENERAL NOTES)

ITEM 832 EROSION CONTROL	48,461 EACH

QUANTITIES (FOR INFORMATION ONLY)

INLET PROTECTION (DANDY BAGS)	34 EACH
STRAW BALE DITCH CHECK	11 EACH
STRAW WATTLE	4200 FT
SEDIMENT BASINS	235 CY
CONSTRUCTION ENTRANCE	2 EACH
CONSTRUCTION SEEDING AND MULCHING	20000 SY

EROSION & SEDIMENTATION CONTROL NOTES

1. SILTATION AND EROSION SHALL BE CONTROLLED BY MINIMIZING THE TIME THE SITE IS DENUDED BY TEMPORARY SEEDING, PERMANENT SEEDING, AND THE USE OF VARIOUS MECHANICAL MEASURES. THESE DEVICES ARE TO BE MAINTAINED THROUGHOUT THE CONSTRUCTION PHASE OF THIS PROJECT. ONCE THE SITE AREA HAS BEEN STABILIZED, THE MECHANICAL MEASURES SHALL BE REMOVED WITH THE APPROVAL OF THE OWNER'S REPRESENTATIVE.

2. ALL MEASURES SHALL BE MAINTAINED UNTIL ALL CONSTRUCTION UNDER THE CONTRACT HAS BEEN COMPLETED AND ACCEPTED BY THE OWNER. MAINTENANCE SHALL INCLUDE ALL REPAIRS TO THOSE AREAS AND MEASURES DAMAGED BY EROSION, CONSTRUCTION EQUIPMENT, WEATHER, FIRE, AND/OR OTHER CAUSES INCLUDING "ACTS OF GOD."

3. THE TEMPORARY CONSTRUCTION ENTRANCES SHALL BE MAINTAINED IN A STATE THAT SHALL PREVENT TRACKING OR FLOW OF MUD ONTO THE PUBLIC RIGHT-OF-WAY. THIS WILL BE ACCOMPLISHED BY USE OF A GRAVEL CONSTRUCTION ENTRANCE, AND THE REPAIR AND/OR CLEANOUT OF ANY DEVICES USED TO TRAP THE SEDIMENT. ANY MATERIALS SPILLED, DROPPED, OR TRACKED FROM THE CONSTRUCTION SITE ONTO THE ROADWAYS OR INTO THE STORM SYSTEM MUST BE REMOVED IMMEDIATELY.

4. SEDIMENT DEPOSITS IN SEDIMENT TRAP SHALL BE REMOVED AND THE MEASURES RESTORED TO THEIR ORIGINAL DESIGN PRIOR TO THE SEDIMENT OBTAINING THE ONE-HALF DESIGN HEIGHT OF THE DEVICE. ALL SEDIMENT MATERIAL SHALL BE DISPOSED OF BY AN ACCEPTABLE MEANS. ANY SEDIMENT DEPOSITS REMAINING IN PLACE AFTER THE MEASURES ARE NO LONGER REQUIRED SHALL BE PREPARED TO CONFORM TO THE FINAL GRADING PLANS, SEEDED AND MULCHED. SEDIMENT BASNIS SHALL BE AS PER S.S. 832 AND SCD DM-4.3.

5. TOPSOIL SHALL BE REMOVED FROM PROPOSED RIGHT-OF WAY, MOUNDING AND EMBANKMENT AREAS PRIOR TO CONSTRUCTION OF PAVEMENT, MOUNDING, AND EMBANKMENT AREA. TOPSOIL SHALL BE STOCKPILED FOR RESPREADING AS DIRECTED BY OWNER.

6. THE CONTRACTOR SHALL NOT DISTURB AREAS OUTSIDE CONSTRUCTION LIMITS, OTHER THAN SHOWN ON THE PLAN, UNLESS AUTHORIZED BY THE PROPERTY OWNER.

7. STRAW BALE BARRIERS AND WATTLES SHALL BE INSPECTED IMMEDIATELY AFTER EACH RAINFALL AND AT LEAST DAILY DURING PROLONGED RAINFALL.

8. CLOSE ATTENTION SHALL BE PAID TO THE REPAIR OF STRAW WATTLES, DAMAGED BALES, END RUNS AND UNDERCUTTING BENEATH BALES.

9. NECESSARY REPAIRS TO BARRIERS OR REPLACEMENT OF BALES, OR WATTLES SHALL BE ACCOMPLISHED PROMPTLY.

10. ANY SEDIMENT DEPOSITS REMAINING IN PLACE AFTER THE STRAW BALE, OR WATTLE BARRIER IS NO LONGER REQUIRED SHALL BE DRESSED TO CONFORM TO THE EXISTING GRADE, PREPARED AND SEEDED.

SEQUENCE OF CONSTRUCTION

1. INSTALL STRAW WATTLES AND BALES AROUND SITE AS SHOWN ON PLANS AND IN THE DETAIL BELOW.
2. INSTALL CONSTRUCTION ENTRANCE STABILIZATION.
3. CLEAN SITE AS NEEDED FOR CONSTRUCTION.
4. CONSTRUCT BRIDGE, ROADWAY AND OTHER IMPROVEMENTS.
5. REMOVE CONSTRUCTION ENTRANCE STABILIZATION.
6. REMOVE STRAW BALES AND WATTLES AT ALL LOCATIONS AFTER FINAL LANDSCAPING AND SEEDING HAS BEEN COMPLETED AND GROUNDCOVER ON UNPAVED AREAS IS ESTABLISHED.

GENERAL LAND CONSERVATION NOTES

NO DISTURBED AREA WILL BE DENUDED FOR MORE THAN 21 DAYS IF IT IS TO REMAIN DORMANT FOR MORE THAN 45 DAYS, UNLESS AUTHORIZED BY THE GOVERNING JURISDICTION'S INSPECTOR. PERMANENT OR TEMPORARY SOIL STABILIZATION SHALL BE APPLIED TO THE DISTURBED AREAS WITHIN 7 DAYS AFTER FINAL GRADE IS REACHED ON ANY PORTION OF THE SITE.

ALL STRUCTURAL EROSION AND SEDIMENT CONTROL PRACTICES SHALL BE PLACED PRIOR TO OR AS THE FIRST STEP IN GRADING FOR ALL SITES.

ALL STORM SEWER SERVICE TRENCHES SHALL BE MULCHED AND SEEDED WITHIN 7 DAYS AFTER BACKFILL, IF INSTALLATION IS THROUGH STABILIZED AREAS. ALL TEMPORARY DIVERSIONS, SEDIMENT BASIN EMBANKMENTS AND EARTH STOCKPILES SHALL BE SEEDED AND MULCHED FOR TEMPORARY VEGETATIVE COVER WITHIN 7 DAYS AFTER GRADING. STRAW, HAY MULCH OR EQUIVALENT IS REQUIRED.

ANY DISTURBED AREA NOT STABILIZED WITH SEEDING, PAVING OR BUILT ON BY OCTOBER 1ST, OR AREAS DISTURBED AFTER THAT DATE, SHALL BE MULCHED IMMEDIATELY WITH HAY OR STRAW AT THE RATE OF 2 TONS PER ACRE AND OVER-SEEDED BY OCTOBER 1ST.

AT THE COMPLETION OF CONSTRUCTION, ALL TEMPORARY SEDIMENT CONTROLS SHALL BE REMOVED AND ALL DENUDED AREAS SHALL BE STABILIZED.

ALL AREAS SHALL BE SEEDED BY OCTOBER 1ST.

PERMANENT FINAL VEGETATION AND DRAINAGE STRUCTURES SHALL BE INSTALLED AS SOON AS GRADING IS COMPLETE.

MAINTENANCE NOTES

ALL EROSION AND SEDIMENT CONTROL MEASURES WILL BE CHECKED BY THE OWNER'S REPRESENTATIVE WEEKLY AND WITHIN 24 HOURS AFTER EACH RAINFALL TO ASSURE THAT THE MEASURES ARE FUNCTIONING ADEQUATELY. SEDIMENT THAT IS COLLECTED WILL BE DISTRIBUTED ON THE PROTECTED PORTION OF THE SITE AND STABILIZED. ALL STOCKPILES OF EARTH AND TOPSOILS WILL BE PROTECTED WITH TEMPORARY SEEDING OR OTHER MEANS TO PREVENT EROSION.

CONSTRUCTION ROAD STABILIZATION / CONSTRUCTION ENTRANCES

BOTH TEMPORARY AND PERMANENT ROADS AND PARKING AREAS MAY REQUIRE PERIODIC TOP DRESSING WITH NEW GRAVEL. SEEDED AREAS ADJACENT TO THE ROADS AND PARKING AREAS SHOULD BE CHECKED PERIODICALLY TO ENSURE THAT A VIGOROUS STAND OF VEGETATION IS MAINTAINED. ROADSIDE DITCHES AND OTHER DRAINAGE STRUCTURES SHOULD BE CHECKED REGULARLY TO ENSURE THAT THEY DO NOT BECOME CLOGGED WITH SILT OR OTHER DEBRIS.

STRAW WATTLE

STRAW WATTLES AND SEDIMENT BARRIERS SHALL BE INSPECTED IMMEDIATELY AFTER RAINFALL AND REPAIRS SHALL BE MADE IMMEDIATELY. SHOULD THE BARRIER DECOMPOSE OR BECOME INEFFECTIVE PRIOR TO THE END OF THE EXPECTED USABLE LIFE AND THE BARRIER IS STILL NEEDED, THE BARRIER SHALL BE REPLACED PROMPTLY. SEDIMENT DEPOSITS SHOULD BE REMOVED AFTER EACH STORM EVENT. THEY MUST BE REMOVED WHEN DEPOSITS REACH APPROXIMATELY ONE-HALF OF THE HEIGHT OF THE BARRIER. ANY SEDIMENT DEPOSITS REMAINING IN-PLACE AFTER THE FILTER BARRIER IS NO LONGER REQUIRED SHALL BE DRESSED TO CONFORM WITH THE EXISTING GRADE, PREPARED AND SEEDED.

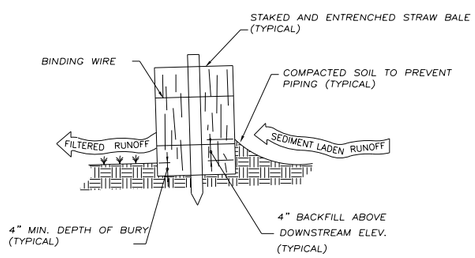

CROSS-SECTION

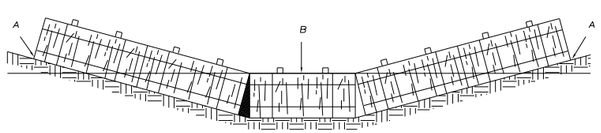

POINTS A SHOULD BE HIGHER THAN POINT B

BARRIER IN A DRAINAGEWAY

TYPICAL STRAW BALE BARRIER

NOT TO SCALE

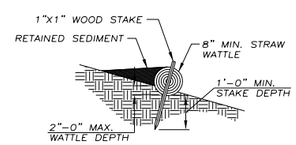

STRAW WATTLE

NTS

NOTES:

THE WATTLE SHALL BE A STRAW-FILLED TUBE OF FLEXIBLE NETTING MATERIAL EXHIBITING THE FOLLOWING PROPERTIES. IT SHALL BE A MACHINE-PRODUCED TUBE OF COMPACTED RICE STRAW THAT IS CERTIFIED WEED FREE FORAGE AND SHALL BE PRODUCED BY A MANUFACTURER WHOSE PRINCIPAL BUSINESS IS WATTLE MANUFACTURING. THE NETTING SHALL CONSIST OF SEAMLESS, HIGH DENSITY POLYETHYLENE AND ETHYL VINYL ACETATE AND CONTAIN ULTRA VIOLET INHIBITORS.

STRAW WATTLES MAY REQUIRE MAINTENANCE TO ENSURE THAT THE STAKES ARE HOLDING AND THE WATTLES ARE STILL IN CONTACT WITH THE SOIL.

STRAW WATTLE SHALL BE PLACED ALONG THE RIGHT OF WAY LINES EXCEPT FOR PAVEMENT CROSSINGS.

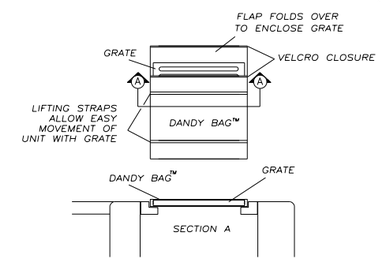

INSTALLATION: STAND GRATE ON END. PLACE DANDY BAG OVER GRATE. ROLL GRATE OVER SO THAT OPEN END IS UP. PULL UP SLACK. TUCK FLAP IN. PRESS VELCRO STRIPS TOGETHER. BE SURE END OF GRATE IS COMPLETELY COVERED BY FLAP OR DANDY BAG WILL NOT WORK PROPERLY. HOLDING HANDLES, CAREFULLY PLACE DANDY BAG WITH GRATE INSERTED INTO CATCH BASIN FRAME.

MAINTENANCE: WITH A STIFF BRISTLE BROOM OR SQUARE POINT SHOVEL REMOVE SILT & OTHER DEBRIS OFF SURFACE AFTER EACH EVENT. REMOVE FINE MATERIAL FROM INSIDE ENVELOPE AS NEEDED.

DANDY BAG INLET FILTER

NOT TO SCALE

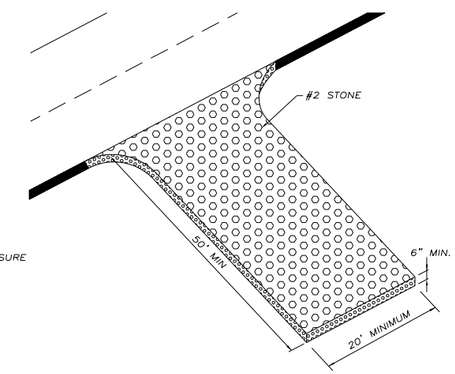

GRAVEL CONSTRUCTION ENTRANCE

NOT TO SCALE

NOTES:

1. MAINTENANCE: TOP DRESSING OF ADDITIONAL STONE SHALL BE APPLIED AS CONDITIONS DEMAND. MUD SPILLED, DROPPED, WASHED OR TRACKED AWAY ONTO PUBLIC ROADS, OR ANY SURFACE WHERE RUNOFF IS NOT CHECKED BY SEDIMENT CONTROLS SHALL BE REMOVED IMMEDIATELY. CLEAN UP AND REMOVAL SHALL BE ACCOMPLISHED BY SCRAPING AND SWEEPING.

2. CONSTRUCTION ENTRANCES SHALL NOT BE RELIED UPON TO REMOVE MUD FROM VEHICLES AND PREVENT OFF-SITE TRACKING OF MUD. VEHICLES THAT ENTER AND LEAVE THE CONSTRUCTION SITE SHALL BE RESTRICTED FROM MUDDY AREAS.

3. WHEN CONSTRUCTION HAUL ROAD IS NO LONGER NEEDED, THE CONTRACTOR SHALL REMOVE THE AGGREGATE AND RESTORE THE SURROUNDING GRADE TO ITS ORIGINAL ELEVATION OR AS SHOWN ON THE PLANS.

4. CONTRACTOR TO COORDINATE WITH OWNER AND PROJECT ENGINEER THE LOCATION OF THE TEMPORARY CONSTRUCTION ENTRANCE DRIVE.

CALCULATED EJT
CHECKED REN

STORMWATER POLLUTION PREVENTION PLAN

WAR-71-2.54

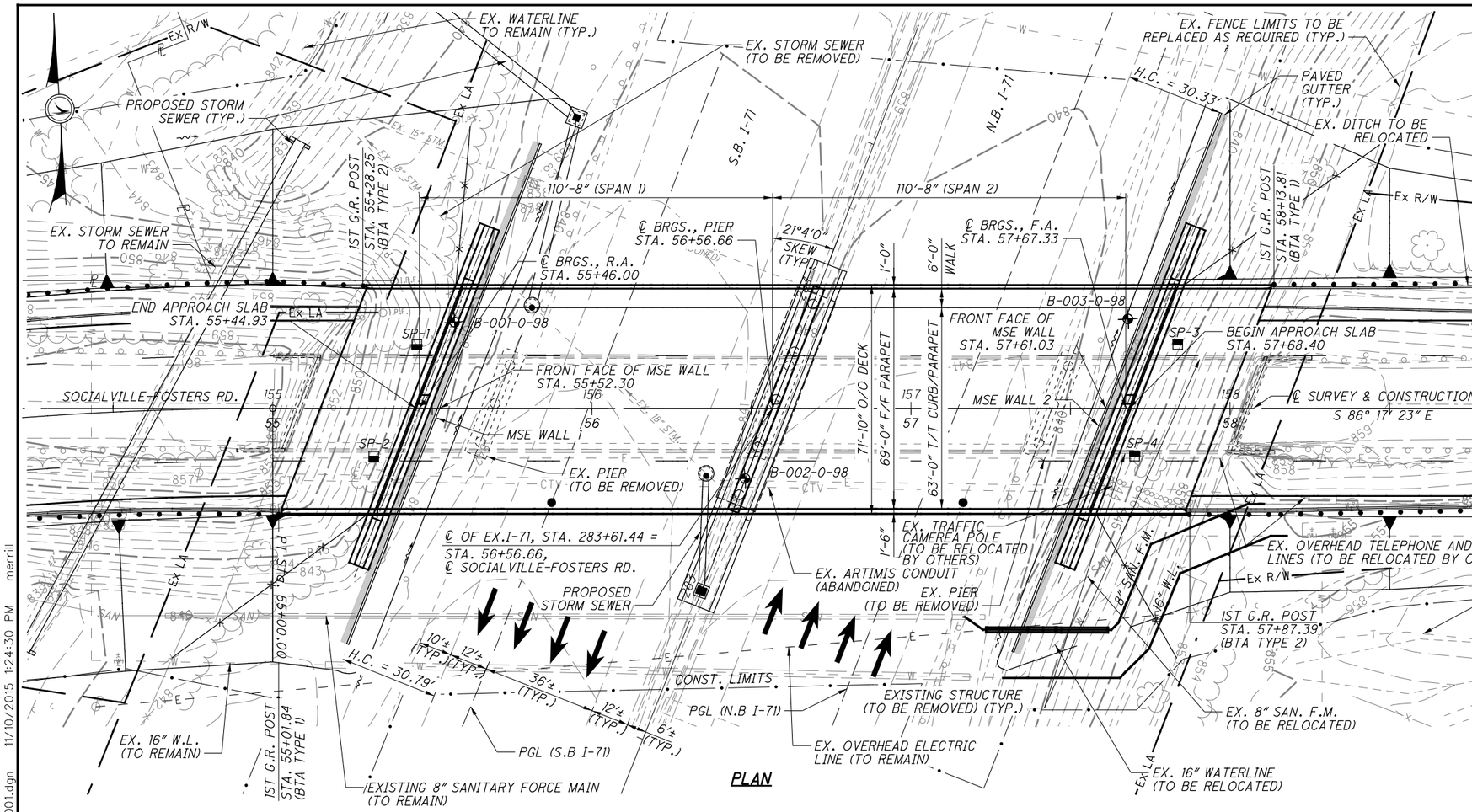

PLAN

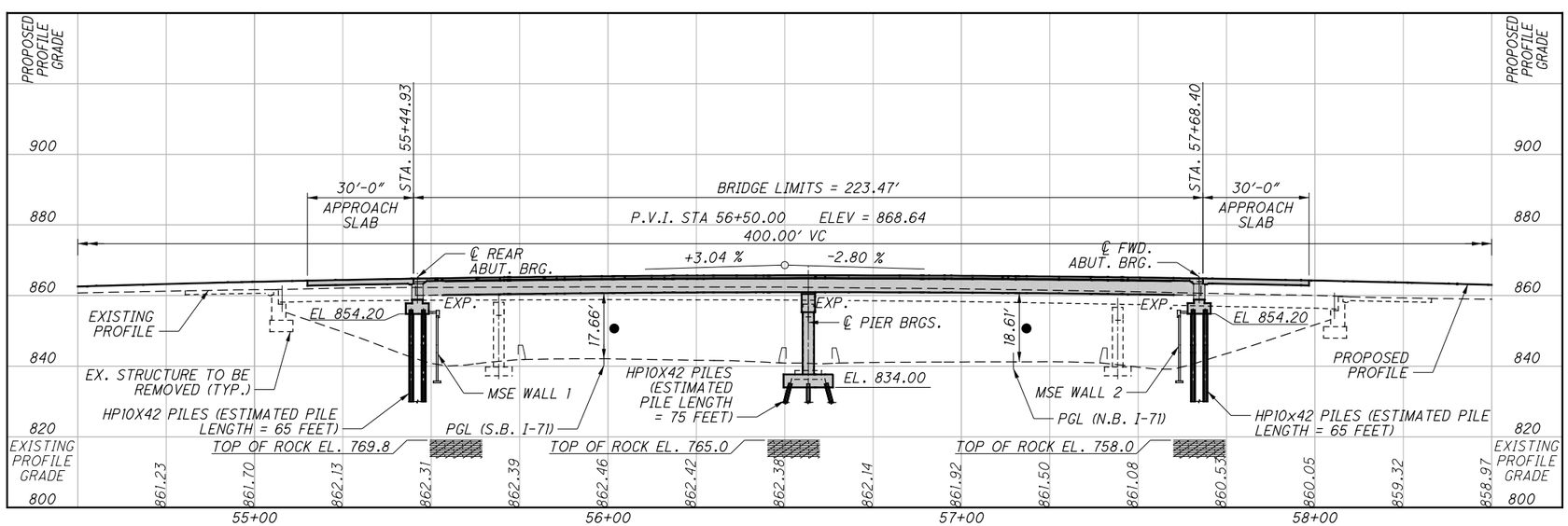

PROFILE ALONG CENTERLINE OF SURVEY & CONSTRUCTION

BENCHMARK DATA

BM #2 STA. 58+98.17, ELEV. 856.78 OFFSET 85.13' RT.

FOR ADDITIONAL BENCHMARK INFORMATION. SEE ROADWAY PLAN SHEET 2/137

NOTES

EARTHWORK LIMITS SHOWN ARE APPROXIMATE. ACTUAL SLOPES SHALL CONFORM TO PLAN CROSS SECTIONS.

DESIGN TRAFFIC:

2016 ADT = 11,032 2016 ADTT = 552
2036 ADT = 18,080 2036 ADTT = 904
DIRECTIONAL DISTRIBUTION = 0.61

LEGEND

- BORING LOCATION
- SETTLEMENT PLATFORM
- 17'-0" REQUIRED MINIMUM VERTICAL CLEARANCE
- ACTUAL MINIMUM VERTICAL CLEARANCE (SEE PROFILE)
- H.C. - HORIZONTAL CLEARANCE

EXISTING STRUCTURE

TYPE: 4 SPAN CONTINUOUS STEEL BEAM BRIDGE WITH REINFORCED CONCRETE DECK AND SUBSTRUCTURES.

SPANS: 61'-3"±/87'-6"±/87'-6"±/61'-3"± (C/C BRGS.)
ROADWAY: 24'-0" ± F/F 2'-3" WIDE SAFETY CURB
LOADING: CF 130 (57)
SKEW: 21°04' ± L.F.
APPROACH SLABS: AS-1-54 MODIFIED (25'-0" LONG)
ALIGNMENT: TANGENT
CROWN: 0.0156± FT./FT.
WEARING SURFACE: MICROSILICA MODIFIED CONCRETE OVERLAY
STRUCTURAL FILE NUMBER: 8301808
DATE BUILT: 1964
DISPOSITION: EXISTING STRUCTURE TO BE REMOVED

PROPOSED STRUCTURE

TYPE: TWO SPAN CONTINUOUS COMPOSITE STEEL HYBRID UNCOATED WEATHERING STEEL PLATE GIRDER (ASTM A709, GR 50W/70W) WITH REINFORCED CONCRETE DECK AND SEMI-INTEGRAL ABUTMENTS BEHIND MSE WALLS.

SPANS: 110'-8"/110'-8" C/C BEARINGS
ROADWAY: 63'-0" T/T PARAPET/CURB; 6'-0" SIDEWALK
LOADING: HL-93 AND 60 PSF FUTURE WEARING SURFACE
SKEW: 21°04' L.F.
APPROACH SLABS: 30'-0" LONG (AS-1-81)
ALIGNMENT: TANGENT
CROWN: 0.016 FT/FT
COORDINATES: LATITUDE 39°19'17" N
LONGITUDE 84°17'18" W

DESIGN AGENCY
CT Consultants
engineers architects planners
8415 Beckett Center Drive, West Chester, OH 45255
614.885.7900 www.ctconsultants.com

DESIGNED	DRAWN	REVIEWED	DATE
DMB/JFM	DMB/JFM	REN	11/14
CHECKED	REVISED	STRUCTURE FILE NUMBER	
TAB		8310000	

WARREN COUNTY
STA. 55+44.93
STA. 57+68.40

SITE PLAN
BRIDGE NO. WAR-71-0253
SOCIALVILLE-FOSTERS RD. OVER I-71

WAR-71-2.54

SETTLEMENT PLATFORM LOCATION		
NUMBER	STATION	OFFSET
SP-1	55+45.13	20'-0" LT.
SP-2	55+31.65	15'-0" RT.
SP-3	57+83.61	20'-0" LT.
SP-4	57+70.12	15'-0" RT.

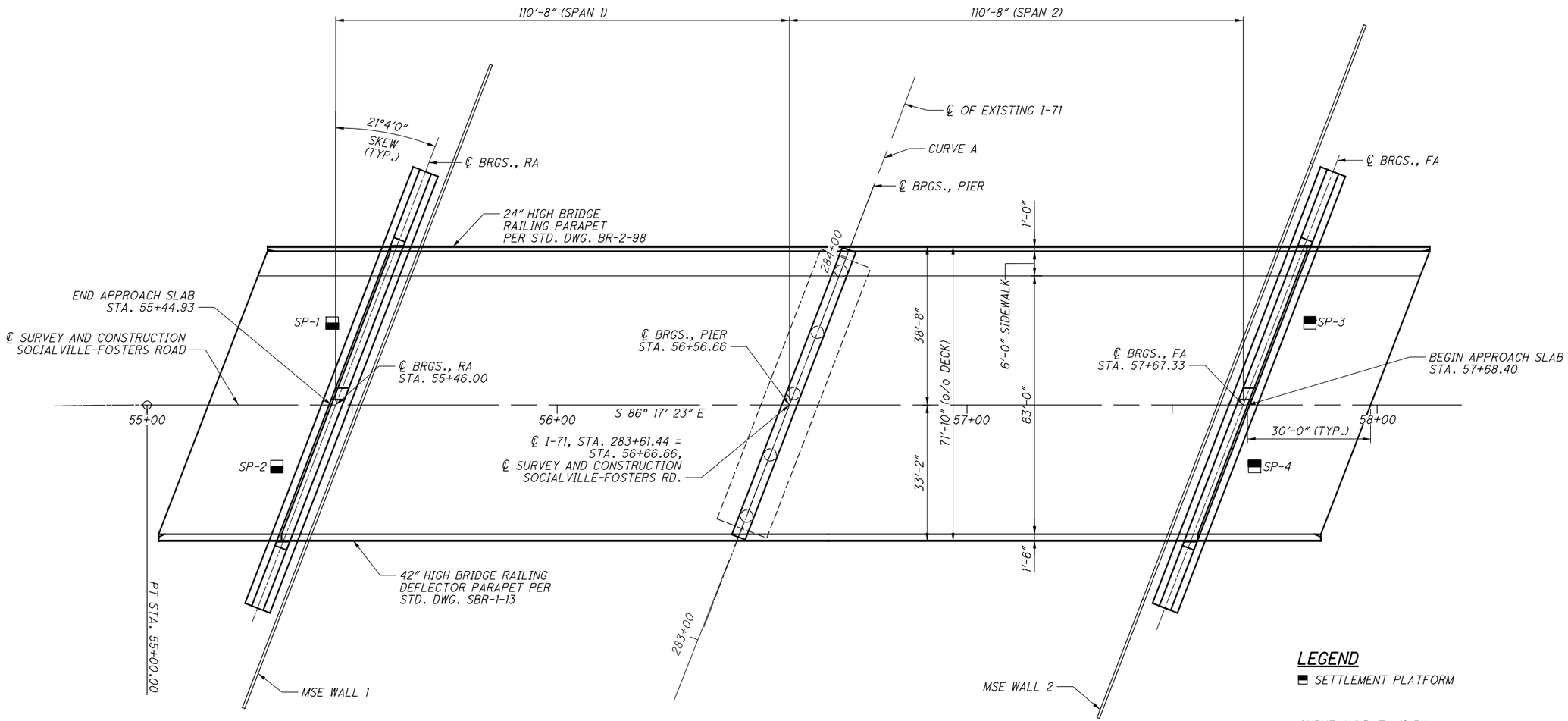

LAYOUT PLAN

LEGEND

SETTLEMENT PLATFORM

CURVE "A" DATA (I-71)
P.I. STA. 283+50.10
Δ = 3° 16' 00" (LT)
Dc = 0° 28' 00"
R = 12,277.67
T = 350.10'
L = 700.00'
E = 4.99'
C.B. = N 24°55' 28.5" E

NOTES:

1. FOR M.S.E. WALL PLANS AND DETAILS, SEE SHEET 6 THRU 11 OF 37.

DESIGN AGENCY
CT Consultants
engineers architects planners
7965 Kidwell Street, Suite 100, Columbus, OH 43235
614.885.7900 www.ctconsultants.com

DESIGNED	DRAWN	REVIEWED	DATE
DMB	DMB/JFM	REN	11/14
CHECKED	REVISED	STRUCTURE FILE NUMBER	
TAB		8310000	

BRIDGE LAYOUT AND GEOMETRY PLAN
BRIDGE NO. WAR-71-0253
SOCIALVILLE-FOSTERS RD. OVER I-71

WAR-71-2.54

STRUCTURE GENERAL NOTES

REFER TO THE FOLLOWING STANDARD BRIDGE DRAWINGS:

AS-1-81 REVISED 01-18-13
BR-2-98 REVISED 07-20-12
GSD-1-96 REVISED 07-19-02
SBR-1-13 REVISED 01-17-14
SICD-1-96 REVISED 07-18-14
SICD-2-14 REVISED 07-18-14
VPF-1-90 REVISED 04-15-11

AND TO THE FOLLOWING SUPPLEMENTAL SPECIFICATIONS:

800 DATED 10-16-15
840 DATED 7-17-15

DESIGN SPECIFICATIONS:

THIS STRUCTURE CONFORMS TO "LRFD BRIDGE DESIGN SPECIFICATIONS" ADOPTED BY AMERICAN ASSOCIATION OF STATE HIGHWAY AND TRANSPORTATION OFFICIALS, 2012, INCLUDING THE 2013 INTERIM SPECIFICATIONS AND THE ODOT BRIDGE DESIGN MANUAL, 2007, EXCEPT AS NOTED ELSEWHERE IN PLANS.

OPERATIONAL IMPORTANCE:

A LOAD MULTIPLIER OF 1.0 HAS BEEN ASSUMED FOR THE DESIGN OF THIS STRUCTURE IN ACCORDANCE WITH THE AASHTO LRFD BRIDGE DESIGN SPECIFICATIONS, ARTICLE 1.3.5 AND THE ODOT BRIDGE DESIGN MANUAL, 2007.

DESIGN LOADING:

HL-93
FUTURE WEARING SURFACE (FWS) OF 0.06 KSF.

DESIGN DATA:

CONCRETE CLASS QC2 - COMPRESSIVE STRENGTH 4.5 KSI (SUPERSTRUCTURE INCLUDING SEMI-INTEGRAL DIAPHRAGMS AND APPROACH SLABS)
CONCRETE CLASS QC1 - COMPRESSIVE STRENGTH 4.0 KSI (SUBSTRUCTURE)

REINFORCING STEEL - ASTM A615 GRADE 60 MINIMUM YIELD STRENGTH 60 KSI (EPOXY COATED)
STRUCTURAL STEEL - ASTM A709 GRADE 50W - YIELD STRENGTH 50 KSI (FOR GIRDER WEBS, BEARING HP SECTIONS, BEARING STIFFENERS AND LOAD PLATES)
STRUCTURAL STEEL - ASTM A709 GRADE HPS70W - YIELD STRENGTH 70 KSI (FOR GIRDER FLANGES)
STEEL H-PILES - ASTM A572 - YIELD STRENGTH 50 KSI

MONOLITHIC WEARING SURFACE:

MONOLITHIC WEARING SURFACE IS ASSUMED, FOR DESIGN PURPOSES, TO BE 1" THICK.

DECK PROTECTION METHOD:

EPOXY COATED REINFORCING STEEL - CMS 709.00
2½" CONCRETE COVER
SEALING OF CONCRETE SURFACES (EPOXY-URETHANE)
HMWM - HIGH MOLECULAR WEIGHT METHACRYLATE

EXISTING STRUCTURE VERIFICATION:

DETAILS AND DIMENSIONS SHOWN ON THESE PLANS PERTAINING TO THE EXISTING STRUCTURE HAVE BEEN OBTAINED FROM PLANS OF THE EXISTING STRUCTURE AND FROM FIELD OBSERVATIONS AND MEASUREMENTS. CONSEQUENTLY, THEY ARE INDICATIVE OF THE EXISTING STRUCTURE AND THE PROPOSED WORK BUT THEY SHALL BE CONSIDERED TENTATIVE AND APPROXIMATE. THE CONTRACTOR IS REFERRED TO CMS SECTIONS 102.05, 105.02, AND 513.04.

BASE CONTRACT BID PRICES UPON A RECOGNITION OF THE UNCERTAINTIES DESCRIBED ABOVE AND UPON A PREBID EXAMINATION OF THE EXISTING STRUCTURE. HOWEVER, THE DEPARTMENT WILL PAY FOR ALL PROJECT WORK BASED UPON ACTUAL DETAILS AND DIMENSIONS WHICH HAVE BEEN VERIFIED IN THE FIELD.

EXISTING STRUCTURE PLANS:

THE ORIGINAL CONSTRUCTION PLANS (PROJECT WAR-1-0.06, FOR BRIDGE NO. WAR-1-0252), BUILT IN 1964, MAY BE EXAMINED AT THE WARREN COUNTY ENGINEER'S OFFICE (ADMINISTRATION AND ENGINEERING), 210 WEST MAIN STREET, LEBANON, OHIO 45036 (TELEPHONE: 513-695-3301)

ITEM 202 STRUCTURE REMOVED, OVER 20 FOOT SPAN, AS PER PLAN:

THE CONTRACTOR SHALL PREPARE AND SUBMIT DEMOLITION PLANS FOR THE REMOVAL OF THE EXISTING BRIDGE IN ACCORDANCE WITH CMS 501.05B. DEMOLITION PLANS SHALL DEMONSTRATE THE FEASIBILITY OF ALL OPERATIONS PROPOSED TO SAFELY REMOVE THE STRUCTURE. PAYMENT FOR ALL WORK ASSOCIATED WITH THE PREPARATION AND SUBMISSION OF THE DEMOLITION PLANS SHALL BE INCLUDED WITH ITEM 202 STRUCTURE REMOVED, OVER 20 FOOT SPAN, AS PER PLAN.

PILE DRIVING CONSTRAINTS:

PILE DRIVING TO THE PLAN ULTIMATE BEARING VALUE MAY NOT BEGIN UNTIL SUFFICIENT EMBANKMENT AND MSE WALL SETTLEMENT HAS OCCURRED AS DOCUMENTED BY MONITORING OF THE SETTLEMENT PLATFORMS. THE CONTRACTOR MAY PARTIALLY DRIVE THE PILES PRIOR TO COMMENCING THE MSE WALL CONSTRUCTION TO AID IN ACHIEVING THE PLAN PILE LOCATION. DRIVING TO THE UBV CANNOT PROCEED UNTIL AFTER THE SETTLEMENT WAITING PERIOD. THE ANTICIPATED WAITING PERIOD TO PERMIT SUFFICIENT EMBANKMENT SETTLEMENT IS 30 DAYS. THE DISTRICT GEOTECHNICAL ENGINEER MAY REDUCE OR EXTEND THE WAITING PERIOD BASED ON THE MAGNITUDE AND RATE OF THE EMBANKMENT SETTLEMENT AS DETERMINED BY MONITORING OF THE SETTLEMENT PLATFORMS. THE SETTLEMENT WAITING PERIOD BEGINS ONCE THE APPROACH EMBANKMENT REACHES THE DESIGN SUBGRADE LEVEL FOR A MINIMUM DISTANCE OF 100 FT. BEHIND EACH ABUTMENT. THE PLANS HAVE PROVISIONS FOR A TEMPORARY WALL SURCHARGE AT THE ABUTMENT LOCATION TO PERMIT PLACEMENT OF EMBANKMENT TO THE DESIGN SUBGRADE LEVEL. BEGIN PILE DRIVING ONLY FOLLOWING TERMINATION OF THE SETTLEMENT MONITORING WAITING PERIOD BY THE DISTRICT GEOTECHNICAL ENGINEER.

FOR TEMPORARY SURCHARGE NOTES, SEE MSE WALL PLANS.

PILES TO BEDROCK:

DRIVE PILES TO REFUSAL ON BEDROCK. THE DEPARTMENT WILL CONSIDER REFUSAL TO BE OBTAINED WHEN THE PILE PENETRATION IS AN INCH OR LESS AFTER RECEIVING AT LEAST 20 BLOWS FROM THE PILE HAMMER. SELECT THE HAMMER SIZE TO ACHIEVE THE REQUIRED DEPTH TO BEDROCK AND REFUSAL.

THE TOTAL FACTORED LOAD IS 253 KIPS PER PILE FOR THE PIER PILES.

PIER PILES:
30-HP10X42 PILES 80 FEET LONG, ORDER LENGTH.

PILE DESIGN LOADS (ULTIMATE BEARING VALUE):

THE ULTIMATE BEARING VALUE IS 182 KIPS PER PILE FOR THE REAR AND FORWARD ABUTMENT PILES.

ABUTMENT PILES:
30-HP10X42 PILES, 70 FT. LONG, ORDER LENGTH (REAR)
30-HP10X42 PILES, 70 FT. LONG, ORDER LENGTH (FORWARD)
1 DYNAMIC LOAD TESTING ITEM

PILES SPLICES:

IN LIEU OF USING THE FULL PENETRATION BUTT WELDS SPECIFIED IN CMS 507.09 TO SPLICE STEEL H-PILES, THE CONTRACTOR MAY USE A MANUFACTURED H-PILE SPLICER. FURNISH SPLICERS FROM THE FOLLOWING MANUFACTURER (OR APPROVED EQUAL):

ASSOCIATED PILE AND FITTING CORPPORATION
8 WOOD HOLLOW RD. PLAZA I
PARSIPPANY, NEW JERSEY 07054

INSTALL AND WELD THE SPLICER TO THE PILE SECTIONS IN ACCORDANCE WITH THE MANUFACTURER'S WRITTEN ASSEMBLY PROCEDURE SUPPLIED TO THE ENGINEER BEFORE THE WELDING IS PERFORMED.

DECK PLACEMENT DESIGN ASSUMPTIONS:

THE FOLLOWING ASSUMPTIONS OF CONSTRUCTION MEANS AND METHODS WERE MADE FOR THE ANALYSIS AND DESIGN OF THE SUPERSTRUCTURE. THE CONTRACTOR IS RESPONSIBLE FOR THE DESIGN OF THE FALSEWORK SUPPORT SYSTEM WITHIN THESE PARAMETERS AND WILL ASSUME RESPONSIBILITY FOR SUPERSTRUCTURE ANALYSIS FOR DEVIATION FROM THESE DESIGN ASSUMPTIONS.

AN EIGHT WHEEL FINISHING MACHINE WITH A MAXIMUM WHEEL LOAD OF 1.46 KIPS FOR A TOTAL MACHINE LOAD OF 11.7 KIPS.
A MINIMUM OUT-TO-OUT WHEEL SPACING AT EACH END OF THE MACHINE OF 103".
A MAXIMUM SPACING OF OVERHANG FALSEWORK BRACKETS OF 48 INCHES.
A MAXIMUM DISTANCE FROM THE CENTERLINE OF THE FASCIA GIRDER TO THE FACE OF THE SAFETY HANDRAIL OF 65"

ITEM 511 - CLASS QC2 CONCRETE WITH QC/QA, SUPERSTRUCTURE, AS PER PLAN:

THIS ITEM CONFORMS TO CMS 511 EXCEPT THAT THE ACCEPTED QUANTITIES SHALL ALSO INCLUDE THE DECK, SEMI-INTEGRAL DIAPHRAGMS, SIDEWALK AND CONCRETE PARAPETS AS SHOWN IN PLANS.

THIS ITEM SHALL CONFORM TO CMS 511 WITH THE FOLLOWING CONDITIONS AND REVISIONS:

THE CLASS QC2 CONCRETE FOR THE SUPERSTRUCTURE SHALL MEET THE FOLLOWING CRITERIA: WATER/CEMENT RATIO = 0.40 MAXIMUM; MICRO-SILICA ADMIXTURE (7% BY WEIGHT OF CEMENT); 2 LBS./C.Y. POLYPROPYLENE FIBERS ¾" (MIN.) SHALL BE ADDED TO THE MIX.

MIX SHALL INCLUDE A MIGRATING CORROSION INHIBITOR AS MANUFACTURED BY AN APPROVED SUPPLIER LISTED ON ODOT'S QUALIFIED APPROVED SUPPLIERS, ITEM 515.15.

THE FIBERS SHALL BE INCORPORATED INTO THE MIX IN SUCH A WAY THAT NO 'BALLING' OCCURS. UPON INSPECTION OF THE MIX AT THE TIME OF PLACEMENT, IF ANY 'BALLING' OCCURS, THE ENGINEER SHALL REJECT THE REMAINDER OF THE LOAD AT ANY TIME DURING THE POUR.

THE BATCH WEIGHTS SHALL BE CORRECTED TO COMPENSATE FOR THE MOISTURE CONTAINED IN THE AGGREGATE AT THE TIME OF USE. A CHEMICAL ADMIXTURE (705.12, TYPE A OR D) SHALL BE USED. THE TRANSIT MIXER CHARGE SHALL BE LIMITED TO ¾ OF ITS RATED CAPACITY OR 6 CUBIC YARDS, WHICHERVER IS SMALLER, UNLESS A LARGER SIZE IS APPROVED BY THE ENGINEER. CONCRETE SUPPLIERS SHOULD RECOGNIZE THAT THE CORROSION INHIBITOR AND ADMIXTURES MAY HAVE AN EFFECT ON STRENGTH, ENTRAINED AIR CONTENT, WORKABILITY, ETC. OF THEIR CONCRETE MIXES. THE CONCRETE SUPPLIERS CHOICE OF ONE OF THESE CORROSION INHIBITORS DOES NOT ALLEVIATE MEETING DESIGN REQUIREMENTS.

APPROACH SLAB, DIAPHRAGM, AND BRIDGE RAILING CONCRETE (WHEN APPLICABLE) IS TO USE THE SAME MIX DESIGN AS THE BRIDGE DECK. THE CONTRACTOR SHOULD BE ADVISED THAT CONCRETE RETARDING AGENTS MAY NEED TO BE ADDED TO OFFSET THE EFFECTS OF THE MIGRATING CORROSION INHIBITOR SELECTED.

ITEM 514 - FIELD PAINTING STRUCTURAL STEEL, INTERMEDIATE COAT, AS PER PLAN AND
ITEM 514 - FIELD PAINTING STRUCTURAL STEEL, FINISH COAT, AS PER PLAN:

IN ORDER TO AVOID STAINING OF ALL SUBSTRUCTURE UNITS, NEW GIRDERS SHALL BE PAINTED ON THE ENDS AT ABUTMENTS AND PIER TO LIMITS SHOWN ON PLANS. THE TOP COAT SHALL BE TINTED TO A COLOR CLOSELY MATCHING FEDERAL STANDARD NO. 595B-20045 OR 595B-20059, THE COLOR OF WEATHERING STEEL.

ITEM 526 - REINFORCED CONCRETE APPROACH SLAB WITH QC/QA (T=17"), AS PER PLAN:

FURNISH APPROACH SLABS CONFORMING TO CMS 526 EXCEPT THAT THE ACCEPTED QUANTITIES SHALL ALSO INCLUDE: PARAPETS AND SIDEWALK CONCRETE, REINFORCING STEEL, JOINT FILLER, JOINT SEALS AND WATERPROOFING ON APPROACH SLABS.

ASBESTOS NOTIFICATION:

AN ASBESTOS SURVEY OF THE SOCIALVILLE-FOSTERS ROAD BRIDGE OVER I-71 SCHEDULED FOR DEMOLITION WAS CONDUCTED BY A CERTIFIED ASBESTOS HAZARD EVALUATION SPECIALIST. THE SURVEY DETERMINED THAT NO ASBESTOS IS PRESENT ON THE BRIDGE STRUCTURE.

A COPY OF THE OHIO ENVIRONMENTAL PROTECTION AGENCY (OEPA) NOTIFICATION OF DEMOLITION AND RENOVATION FORM, PARTIALLY COMPLETED BY THE BRIDGE OWNER, WILL BE PROVIDED TO THE SUCCESSFUL BIDDER. THE CONTRACTOR SHALL COMPLETE AND SIGN THE FORM AND SUBMIT IT TO:

SOUTHWEST OHIO AIR QUALITY AGENCY
AIR QUALITY PROGRAMS
250 WILLIAM HOWARD TAFT ROAD
CINCINNATI, OHIO 45219
ATTN: MR. KEN WILKINS
PH: (513) 946-7743
FAX: (513) 946-7778

AT LEAST TEN (10) WORKING DAYS PRIOR TO THE START OF ANY DEMOLITION AND/OR REHABILITATION, THE CONTRACTOR SHALL PROVIDE A COPY OF THE COMPLETED AND SIGNED FORM TO THE ENGINEER. INFORMATION REQUIRED ON THE FORM WILL INCLUDE: 1) THE CONTRACTOR'S NAME AND ADDRESS, 2) THE SCHEDULED DATES FOR THE START AND COMPLETION OF BRIDGE REMOVAL, AND 3) A DESCRIPTION OF THE PLANNED DEMOLITION WORK AND THE METHOD(S) TO BE USED. THE OEPA FORM IS AVAILABLE FOR INSPECTION AT THE WARREN COUNTY ENGINEER'S OFFICE (ADMINISTRATION AND ENGINEERING), 210 WEST MAIN STREET, LEBANON, OHIO 45036.

H:\2014\14240\ODOT\WAR\12345\structures\WAR071_0253C\sheets\071_0253CGN001.dgn 11/10/2015 1:24:35 PM merrill

DESIGN AGENCY
CT Consultants
engineers architects planners
7965 N. High Street, Suite 340 Columbus, OH 43235
614.885.1700 www.ctconsultants.com

DESIGNED TAB | CHECKED JFM | DRAWN MLF | REVISED | REVIEWED REN | DATE 11/14 | STRUCTURE FILE NUMBER 8310000

GENERAL NOTES - 1
BRIDGE NO. WAR-71-0253
SOCIALVILLE-FOSTERS ROAD OVER I-71

WAR-71-2.54

STRUCTURE GENERAL NOTES (CONTINUED)

ASBESTOS NOTIFICATION (CONT.):

BASIS FOR PAYMENT - THE CONTRACTOR SHALL FURNISH ALL FEES, LABOR, AND MATERIAL NECESSARY TO COMPLETE AND SUBMIT THE OEPA NOTIFICATION FORM. PAYMENT FOR THIS WORK SHALL BE INCLUDED IN ITEM 202 - STRUCTURE REMOVED, OVER 20 FOOT SPAN.

ABBREVIATIONS:

THE FOLLOWING ABBREVIATIONS HAVE BEEN USED THROUGHOUT THESE PLANS TO INDICATE THE DESIGNATIONS CONTAINED IN THE LEGEND BELOW:

ABUT - ABUTMENT
ADT - AVERAGE DAILY TRAFFIC
ADTT - AVERAGE DAILY TRUCK TRAFFIC
& - AND
APP - AS PER PLAN
APPR - APPROACH
APROX. - APPROXIMATELY
ASTM - AMERICAN SOCIETY OF TESTING & MATERIALS
BM - BENCHMARK
B, BOT. - BOTTOM
BRGS., BRG. - BEARINGS
BTA - BRIDGE TERMINAL ASSEMBLY
BTWN., BETW., - BETWEEN
C.J., CJ - CONSTRUCTION JOINT
C/C - CENTER-TO-CENTER
C/L - CENTERLINE
CLR. - CLEAR
C&MS, CMS - CONSTRUCTION & MATERIAL SPECIFICATIONS
CONC. - CONCRETE
CONST., CONSTR. - CONSTRUCTION
CU. YD., CY - CUBIC YARD
CVN - CHARPY V-NOTCH
DIA., ϕ - DIAMETER
DWG. - DRAWING
EA - EACH
E.F., EF - EACH FACE
ELEV., EL. - ELEVATION
EQ. - EQUAL
E.S. - EACH SIDE
EX., EXIST. - EXISTING
EXP. - EXPANSION
F.A., FA - FORWARD ABUTMENT
F.F., FF - FAR FACE
F/F - FACE-TO-FACE
F.S. - FAR SIDE
FT/FT - FOOT PER FOOT
FTG. - FOOTING
FWD. - FORWARD
FWS - FUTURE WEARING SURFACE
INC. - INCREMENT
JT - JOINT
KIPS - KILOPOUNDS
KSF - KIPS PER SQUARE FOOT
KSI - KIPS PER SQUARE INCH
LB - POUND
LF - LEFT FORWARD
LT. - LEFT
MAX. - MAXIMUM
MIN. - MINIMUM
MISC. - MISCELLANEOUS
M.S.E., MSE - MECHANICALLY STABILIZED EARTH
NPCPP - NON-PERFORATED CORRUGATED PLASTIC PIPE
N.F., NF - NEAR FACE
#, NO. - NUMBER
N.S., NS - NEAR SIDE
N.T.S. - NOT TO SCALE
O/O - OUT-TO-OUT
PCPP - PERFORATED CORRUGATED PLASTIC PIPE
P.E.J.F., PEJF - PREFORMED EXPANSION JOINT FILLER
P.G.L., PGL - PROFILE GRADE LINE
PROP. - PROPOSED
PSF - POUND PER SQUARE FOOT
PVI - POINT OF VERTICAL INTERSECT
R - RADIUS
R.A., RA - REAR ABUTMENT
REF. - REFERENCE
REQ'D - REQUIRED
RF - RIGHT FORWARD

ABBREVIATIONS: (CONT'D)

RT. - RIGHT
R/W, ROW - RIGHT OF WAY
SER - SERIES
SH., SHT. - SHEET
SPA. - SPACES
STD. - STANDARD
STA. - STATION
SQ. FT., SF - SQUARE FOOT
SQ. YD., SY - SQUARE YARD
TEMP. - TEMPORARY
T.O.S. - TOE OF SLOPE
T/T - TOE TO TOE
TYP. - TYPICAL
U.N.O. - UNLESS NOTED OTHERWISE
VAR - VARIES
W/ - WITH

DESIGN AGENCY
CT Consultants
CONSULTING ENGINEERS & PLANNERS
7965 N. High Street, Suite 340, Columbus, OH 43235
614.885.1700 www.ctconsultants.com

DESIGNED	DRAWN	REVIEWED	DATE
DMB	DMB	REN	11/14
CHECKED	REVISED	STRUCTURE FILE NUMBER	
TAB		8310000	

GENERAL NOTES - 2
BRIDGE NO. WAR-71-0253
SOCIALVILLE-FOSTERS ROAD OVER I-71

WAR-71-2.54

ESTIMATED BRIDGE QUANTITIES

ITEM	ITEM EXT.	TOTAL	UNITS	DESCRIPTION	ABUTS.	PIER	SUPER.	GENERAL	APP SHT. REF.
202	11003	LS		STRUCTURE REMOVED, OVER 20 FOOT SPAN, AS PER PLAN				LS	
202	22900	160	SY	APPROACH SLAB REMOVED				160	
202	23500	940	SY	WEARING COURSE REMOVED				940	
503	21300	LS		UNCLASSIFIED EXCAVATION				LS	
505	11100	LS		PILE DRIVING EQUIPMENT MOBILIZATION				LS	
507	00100	6,600	FT	STEEL PILES HP10X42, FURNISHED	4,200	2,400			
507	00150	6,150	FT	STEEL PILES HP10X42, DRIVEN	3,900	2,250			
509	10001	208,399	LB	EPOXY COATED REINFORCING STEEL, AS PER PLAN	16,376	34,902	157,121		25
511	21543	656	CY	CLASS QC2 CONCRETE WITH QC/QA, SUPERSTRUCTURE, AS PER PLAN			656		3
511	33500	2	EACH	SEMI-INTEGRAL DIAPHRAGM GUIDE	2				
511	41012	67	CY	CLASS QC1 CONCRETE WITH QC/QA, PIER ABOVE FOOTINGS		67			
511	44112	63	CY	CLASS QC1 CONCRETE WITH QC/QA, ABUTMENT NOT INCLUDING FOOTING	63				
511	46512	290	CY	CLASS QC1 CONCRETE WITH QC/QA, FOOTING	165	125			
512	10100	1185	SY	SEALING OF CONCRETE SURFACES (EPOXY-URETHANE)	275	210	700		
512	10300	100	SY	SEALING CONCRETE BRIDGE DECKS WITH HMWM RESIN			100		
512	33000	25	SY	TYPE 2 WATERPROOFING	25				
513	10281	434,400	LB	STRUCTURAL STEEL MEMBERS, LEVEL 4, AS PER PLAN			434,400		21 , 22
513	20000	9912	EACH	WELDED STUD SHEAR CONNECTORS			9912		
514	00061	3,760	SF	FIELD PAINTING STRUCTURAL STEEL, INTERMEDIATE COAT, AS PER PLAN			3,760		3
514	00067	3,760	SF	FIELD PAINTING STRUCTURAL STEEL, FINISH COAT, AS PER PLAN			3,760		3
514	10000	3	EACH	FINAL INSPECTION REPAIR			3		
516	13900	74	SF	2" PREFORMED EXPANSION JOINT FILLER	74				
516	14020	185	FT	SEMI-INTEGRAL ABUTMENT EXPANSION JOINT SEALER	185				
516	44101	16	EACH	ELASTOMERIC BEARING WITH INTERNAL LAMINATES AND LOAD PLATE (NEOPRENE)	16				
				(12"x1'-8"x2.8232" PAD AND 1'-1"x1'-9"x2 11/16" LOAD PLATE), AS PER PLAN					20
516	44101	8	EACH	ELASTOMERIC BEARING WITH INTERNAL LAMINATES AND LOAD PLATE (NEOPRENE)		8			
				(1'-5"x1'-10"x2.3735" PAD AND 1'-6"x1'-11"x2 1/2" LOAD PLATE), AS PER PLAN					20
517	70000	271	FT	RAILING (TWIN STEEL TUBE)			271		
518	21200	136	CY	POROUS BACKFILL WITH FILTER FABRIC	136				
518	40000	230	FT	6" PERFORATED CORRUGATED PLASTIC PIPE	230				
518	40010	25	FT	6" NON-PERFORATED CORRUGATED PLASTIC PIPE, INCLUDING SPECIALS	25				
523	20000	1	EACH	DYNAMIC LOAD TESTING	1				
526	30011	479	SY	REINFORCED CONCRETE APPROACH SLABS WITH QC/QA (T=17"), AS PER PLAN				479	3 , 35
607	39900	224	FT	VANDAL PROTECTION FENCE, 6' STRAIGHT, COATED FABRIC			224		
607	39930	224	FT	VANDAL PROTECTION FENCE, 12' CURVED, COATED FABRIC			224		

DESIGN AGENCY
CT Consultants
civil engineers architects planners
7965 N. High Street, Suite 360 Columbus, OH 43235
614.885.1700 www.ctconsultants.com

DESIGNED	DRAWN	REVIEWED	DATE
MLF	MLF	REN	11/14
CHECKED	REVISED	STRUCTURE FILE NUMBER	
TAB	-	8310000	

ESTIMATED QUANTITIES
BRIDGE NO. WAR-71-0253
SOCIALVILLE-FOSTERS ROAD OVER I-71

WAR-71-2.54

MSE WALL GENERAL NOTES

SUPPLEMENTAL SPECIFICATIONS
REFER TO THE FOLLOWING SUPPLEMENTAL SPECIFICATION:
SS 840 DATED 07-18-14
SS 878 DATED 10-18-13

DESIGN SPECIFICATIONS:
THIS STRUCTURE CONFORMS TO "LRFD BRIDGE DESIGN SPECIFICATIONS" ADOPTED BY THE AMERICAN ASSOCIATION OF STATE HIGHWAY AND TRANSPORTATION OFFICIALS, 2012, INCLUDING THE 2013 INTERIM SPECIFICATIONS AND THE ODOT BRIDGE DESIGN MANUAL, 2007, EXCEPT AS NOTED ELSEWHERE IN THE PLANS.

LOADINGS CRITERIA:

	R.A.	F.A.
BEARING PRESSURE AT BASE OF REINFORCED SOIL	5,604 PSF	6,364 PSF
FACTORED BEARING RESISTANCE AT BASE OF REINFORCED SOIL	6,932 PSF	9,604 PSF
ESTIMATED SETTLEMENT	1 IN.	1 IN.
VERTICAL DEAD LOAD	6,682 PSF	6,114 PSF
VERTICAL LIVE LOAD	250 PSF	250 PSF
HORIZONTAL LOADS	29.1 K/FT.	30.2 K/FT.

MECHANICALLY STABILIZED EARTH WALL, AS PER PLAN
THE REQUIRED MINIMUM MSE WALL REINFORCING WALL STRAP LENGTH IS 23'-0" AND THE LIMITS OF WHICH ARE SHOWN ON SHEETS 9 AND 10 OF 37. BEYOND THESE LIMITS THE MINIMUM REINFORCING LENGTH REQUIREMENTS OF SS 840 SHALL APPLY.

PAYMENT FOR THE 6" UNREINFORCED PAVED CHANNEL SHALL BE INCLUDED WITH THE MECHANICALLY STABILIZED EARTH WALL, AS PER PLAN.

ITEM SPECIAL - MISC: TEMPORARY SURCHARGE:
DESCRIPTION: THIS ITEM CONSISTS OF DESIGNING, CONSTRUCTING, AND REMOVING A TEMPORARY SURCHARGE AT THE LOCATIONS AND LIMITS SHOWN IN THE PLANS.

AS DIRECTED IN THE PILE DRIVING CONSTRAINTS IN THE BRIDGE PLANS, A TEMPORARY SURCHARGE IS NECESSARY AT THE ABUTMENTS FOR THIS BRIDGE TO MITIGATE EMBANKMENT SETTLEMENT. CONSTRUCT THE TEMPORARY SURCHARGE SO IT EXTENDS VERTICALLY FROM THE ELEVATION OF THE BOTTOM OF THE PROPOSED ABUTMENT FOOTING TO THE PROPOSED ROADWAY SUBGRADE ELEVATION. CONSTRUCT THE TEMPORARY SURCHARGE USING ITEM 203 EMBANKMENT WITH A DRY DENSITY OF AT LEAST 105 PCF AFTER COMPACTION. SUPPORT THE SIDES OF THE TEMPORARY SURCHARGE SO THAT THE TOP OF THE SURCHARGE MATERIAL IS NO MORE THAN 2 FEET (MEASURED HORIZONTALLY) FROM THE BACK FACE OF THE PROPOSED MSE WALLS. CONSTRUCT THE TEMPORARY SURCHARGE SO THAT IT EXTENDS AT LEAST 100 FEET BEHIND EACH ABUTMENT.

PREPARE AND PROVIDE SHOP DRAWINGS AND DESIGN CALCULATIONS FOR THE TEMPORARY SURCHARGE, INCLUDING THE METHOD USED TO SUPPORT THE SIDES OF THE TEMPORARY SURCHARGE AND ALL DETAILS OF THE SUPPORT SYSTEM. ENSURE THE TEMPORARY SURCHARGE DESIGN ACCOMMODATES THE LOCATION AND COMPOSITION OF THE PROPOSED MSE WALLS FOR THE BRIDGE STRUCTURE. HAVE TWO OHIO REGISTERED ENGINEERS SIGN, SEAL, AND DATE THE DRAWINGS AND CALCULATIONS ACCORDING TO C&MS 501.05. SUBMIT THE DRAWINGS AND CALCULATIONS TO THE ENGINEER AT LEAST 30 DAYS BEFORE CONSTRUCTION OF THE TEMPORARY SURCHARGE BEGINS.

REMOVE THE TEMPORARY SURCHARGE AFTER THE CONDITIONS SPECIFIED IN THE PILE DRIVING CONSTRAINTS ARE SATISFIED AND THE ENGINEER AUTHORIZES REMOVAL.

BASIS OF PAYMENT: THE DEPARTMENT WILL PAY FOR ALL LABOR, EQUIPMENT AND MATERIALS NECESSARY TO DESIGN, CONSTRUCT AND REMOVE THE TEMPORARY SURCHARGE AT THE REAR AND FORWARD ABUTMENTS FOR THE BRIDGE AT THE CONTRACT LUMP SUM BID PRICE FOR ITEM SPECIAL- MISC: TEMPORARY SURCHARGE.

ITEM 840 - AESTHETIC SURFACE TREATMENT, AS PER PLAN:

GENERAL: THIS ITEM SHALL INCLUDE THE FURNISHING OF ALL MATERIALS AND THE NECESSARY LABOR TO PROVIDE AN AESTHETIC TREATMENT ON THE FACES OF THE MSE WALLS. THE SURFACE FINISH SHALL BE PATTERN NO. 1301 FROM CUSTOM ROCK FORMLINER, PATTERN NO. 454 FROM GREENSTREAK OR AN APPROVED EQUAL.

FORMLINER MANUFACTURERS:

CUSTOM ROCK FORMLINER
2020 WEST 7th STREET
ST. PAUL, MN 55116
(651)-699-1345
WWW.CUSTOMROCK.COM

GREENSTREAK
3400 TREE COURT INDUSTRIAL BLVD.
ST. LOUIS, MO 63122-6614
1-800-325-9504
WWW.GREENSTREAK.COM

ITEM 840 - AESTHETIC SURFACE TREATMENT, AS PER PLAN CONTINUED:

MOCK-UP: A FULL PRECONSTRUCTION TEST PANEL WILL BE PROVIDED FOR APPROVAL BY THE COUNTY. IF THE TEST PANEL DOES NOT MEET THE APPROVAL OF THE COUNTY, THE RESULTS MAY BE GROUNDS TO REJECT THE PROPOSED MSE WALL PANELS. THE TEST PANEL MUST PASS APPROVAL. FAILURE WILL CONSTITUTE PLACEMENT OF ANOTHER TEST SAMPLE. A FIVE FOOT BY FIVE FOOT TEST SAMPLE SHOULD BE MADE (OR THE SIZE OF THE TYPICAL MSE WALL PANEL). THE MOCK-UP SHALL HAVE THE 1½ INCH ARCHITECTURAL RELIEF. THE SAMPLE SHALL BE OF THE SAME CEMENT, MATERIALS AND AGGREGATE SOURCE THAT WILL BE USED TO MAKE THE MSE WALL PANELS. AFTER APPROVAL, THE CONCRETE TEST SAMPLE SHALL BE REMOVED AND DISPOSED OF BY THE CONTRACTOR.

BASIS OF PAYMENT: ALL AESTHETIC TREATMENT INCLUDING CONCRETE SURFACE FINISH, TEST SAMPLE AND ALL OTHER MATERIALS REQUIRED TO COMPLETE THIS WORK, ACCEPTED SQUARE FOOT QUANTITIES, COMPLETE IN PLACE, WILL BE AT THE CONTRACT UNIT PRICE BID FOR ITEM 840-AESTHETIC SURFACE TREATMENT, AS PER PLAN.

THIS PRICE SHALL BE FULL COMPENSATION FOR ALL MATERIALS, LABOR, EQUIPMENT AND INCIDENTALS NECESSARY TO COMPLETE THIS ITEM AS SPECIFIED.

MSE WALL ESTIMATED QUANTITIES

ITEM	ITEM EXT.	TOTAL	UNITS	DESCRIPTION	MSE WALL 1	MSE WALL 2	APP SHT. REF.
203	20000	24	CY	EMBANKMENT	6	18	
203	35110	728	CY	GRANULAR MATERIAL, TYPE B	364	364	
203	35120	318	CY	GRANULAR MATERIAL, TYPE C	155	163	
SPECIAL	20365000	4	EACH	SPECIAL - SETTLEMENT PLATFORM	2	2	7
512	10100	522	SY	SEALING OF CONCRETE SURFACES (EPOXY-URETHANE)	280	242	
SPECIAL	69098400	LS		SPECIAL - MISC.: TEMPORARY SURCHARGE	LS	LS	
840	20001	5675	SF	MECHANICALLY STABILIZED EARTH WALL, AS PER PLAN	2652	3023	6 & 11
840	21000	4468	CY	WALL EXCAVATION	2214	2254	
840	22000	952	SY	FOUNDATION PREPARATION	465	487	
840	23000	5096	CY	SELECT GRANULAR BACKFILL	2417	2679	
840	23050	255	CY	NATURAL SOIL	127	128	
840	25010	780	FT	6" DRAINAGE PIPE, PERFORATED	377	403	
840	25020	10	FT	6" DRAINAGE PIPE, NON-PERFORATED	5	5	
840	26001	361	FT	CONCRETE COPING, AS PER PLAN	174	187	11
840	27000	5	DAY	ON-SITE ASSISTANCE	-	-	
840	26051	5675	SF	AESTHETIC SURFACE TREATMENT, AS PER PLAN	2652	3023	11
878	25000	LS		INSPECTION AND COMPACTION TESTING OF UNBOUND MATERIALS	LS	LS	

DESIGN AGENCY
CT Consultants
engineers|architects|planners
7965 N. High Street, Suite 340 Columbus, OH 43235
614.885.1700 www.ctconsultants.com

DESIGNED	DRAWN	REVIEWED	DATE
TAB	MLF	REN	11/14
CHECKED	REVISED	STRUCTURE FILE NUMBER	
JFM	-	8310000	

MSE WALL GENERAL NOTES AND ESTIMATED QUANTITIES
BRIDGE NO. WAR-71-0253
SOCIALVILLE-FOSTERS ROAD OVER I-71

WAR-71-2.54

MSE WALL GENERAL NOTES (CONT'D)

ITEM SPECIAL - SETTLEMENT PLATFORMS:

DESCRIPTION: THIS ITEM CONSISTS OF FURNISHING, CONSTRUCTING, AND MAINTAINING SETTLEMENT PLATFORMS AND OBTAINING SETTLEMENT READINGS AS REQUIRED BY THE PLANS OR AS DIRECTED BY THE ENGINEER. AT THE OPTION AND EXPENSE OF THE CONTRACTOR, ADDITIONAL SETTLEMENT PLATFORMS MAY BE INSTALLED AT LOCATIONS APPROVED BY THE ENGINEER. SETTLEMENT READINGS SHALL BE TAKEN WEEKLY DURING CONSTRUCTION AND DURING ANY SPECIFIED WAITING PERIOD. THE READINGS SHALL BE PLOTTED ON GRAPH PAPER PRESENTING DEFORMATION (ON THE NEGATIVE Y-AXIS) AND FILL HEIGHT (ON THE POSITIVE Y-AXIS) VERSUS TIME (ON THE X-AXIS). IN ORDER TO CREATE THE GRAPH, USE THE SETTLEMENT PLATFORM SPREADSHEET LOCATED AT HTTP://WWW.DOT.STATE.OH.US/DIVISIONS/PRODMGT/GEOTECHNICAL/GEOTECHNICAL_DOCUMENTS/BLANK_SETTLEMENT_READING_PLOTS-ENGLISH.XLS IN THE OGE WEBSITE PUBLICATIONS AND DOCUMENTS SECTION. A COPY OF EACH CUMULATIVE PLOT SHALL BE SENT TO THE DISTRICT GEOTECHNICAL ENGINEER AFTER EACH SETTLEMENT READING IS RECORDED.

THE DEPARTMENT WILL CONSIDER VIBRATING WIRE SETTLEMENT MONITORING PLATFORMS IN LIEU OF THE CONVENTIONAL SETTLEMENT PLATFORMS. THE CONTRACTOR SHOULD PROVIDE DETAILS OF THE PROPOSED VIBRATING WIRE SETTLEMENT PLATFORMS AS WELL AS DESIGN DRAWINGS OF THE PROPOSED PLATFORM AND CABLING LAYOUT TO THE ENGINEER AT LEAST 30 DAYS PRIOR TO CONSTRUCTION. THE DEPARTMENT WILL REQUIRE 10 WORKING DAYS FOR REVIEW AND APPROVAL. THE DESIGN DRAWINGS SHOULD ILLUSTRATE THE PROPOSED SETTLEMENT VIBRATING WIRE SETTLEMENT PLATFORM LOCATIONS WITH ALL EXISTING AND PROPOSED SITE FEATURES TO VERIFY THE PROPOSED CABLING WILL NOT CONFLICT WITH EXSITING FACILITIES, PROPOSED FACILITIES OR UTILITIES. NO ADDITIONAL PAYMENT WILL BE PROVIDED IF THE CONTRACTOR ELECTS TO UTILIZE VIBRATING WIRE SETTLEMENT PLATFORMS.

MATERIALS: SOUND LUMBER SUCH AS 19MM (3/4-INCH) EXTERIOR GRADE PLYWOOD SHALL BE USED FOR THE BASE. THE PIPE SHALL BE 64MM (2-1/2-INCH) STANDARD BLACK PIPE WITH THREADED FITTINGS AS SHOWN ON THE PLANS. A STEEL PLATE 915MM X 915MM X 3.2MM (36" X 36" X 1/8") MAY BE SUBSTITUTED FOR THE LUMBER FOR THE PLATFORMS, AT THE CONTRACTOR'S OPTION.

THE CONTRACTOR MAY UTILIZE VIBRATING WIRE SETTLEMENT MONITOR DEVICES IN LIEU OF THE SETTLEMENT PLATFORMS AT NO ADDITIONAL COST TO THE PROJECT. THE CONTRACTOR MUST SUBMIT THE PROPOSED VIBRATING WIRE SETTLEMENT MONITORING EQUIPMENT AND METHODS TO THE DISTRICT GEOTECHNICAL ENGINEER FOR APPROVAL PRIOR TO ORDER MATERIALS OR FIELD INSTALLATION.

CONSTRUCTION METHODS: THE PLATFORM SHALL CONFORM TO THE DETAILS SHOWN ON THE PLANS. THE PLATFORM SHALL BE SET ON A LEVEL SURFACE. THE PIPE SHALL BE FIRMLY SECURED TO THE PLATFORM AND SHALL BE MAINTAINED IN A PLUMB POSITION DURING THE PLACEMENT OF THE EMBANKMENT. THE PIPE SHALL BE MARKED AT INTERVALS TO FACILITATE MEASUREMENT OF THE DEPTH OF FILL. THE CONTRACTOR SHALL STOP WORK IN ANY LOCATION WHERE THE SETTLEMENT PLATFORM HAS BEEN DISTURBED OR DAMAGED. PLATFORMS OR PIPES DAMAGED OR DISPLACED DURING CONSTRUCTION SHALL BE RESTORED TO THEIR PROPER CONDITION AT THE CONTRACTOR'S EXPENSE.

PRIOR TO PAVING, THE TOP OF THE SETTLEMENT PLATFORM PIPE SHALL BE CUT OFF 600MM (TWO FEET) BELOW THE FINISHED SURFACE OF THE SUBGRADE OR FINISHED GROUND SURFACE, WHICHEVER IS APPLICABLE.

METHOD OF MEASUREMENT: THE NUMBER OF SETTLEMENT PLATFORMS TO BE PAID FOR SHALL BE THE ACTUAL NUMBER OF SETTLEMENT PLATFORMS COMPLETED, MAINTAINED, AND ACCEPTED BY THE ENGINEER.

BASIS OF PAYMENT: PAYMENT SHALL BE MADE AT THE CONTRACT UNIT PRICE EACH FOR "ITEM SPECIAL - SETTLEMENT PLATFORMS" WHICH IS COMPENSATION FOR CONSTRUCTING MAINTAINING, AND MONITORING THE SETTLEMENT PLATFORMS INCLUDING FURNISHING ALL LABOR, EQUIPMENT, MATERIALS, AND INCIDENTALS NECESSARY TO COMPLETE THE WORK. PAYMENT SHALL NOT BE MADE FOR SETTLEMENT PLATFORMS WHICH BECOME USELESS DUE TO DAMAGE CAUSED BY THE CONTRACTOR'S OPERATIONS.

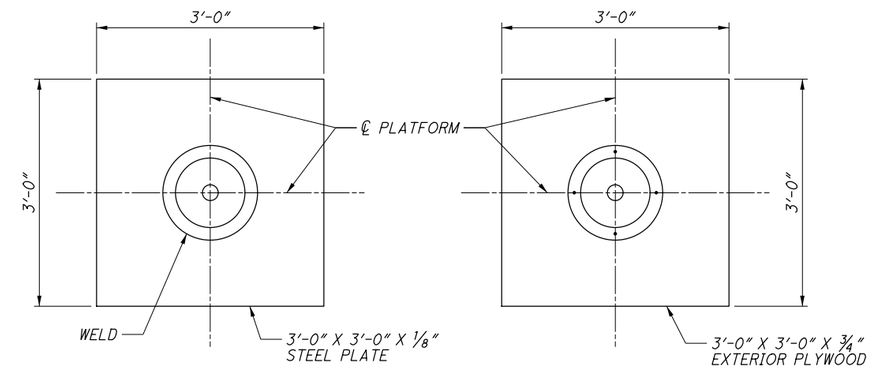

PLAN

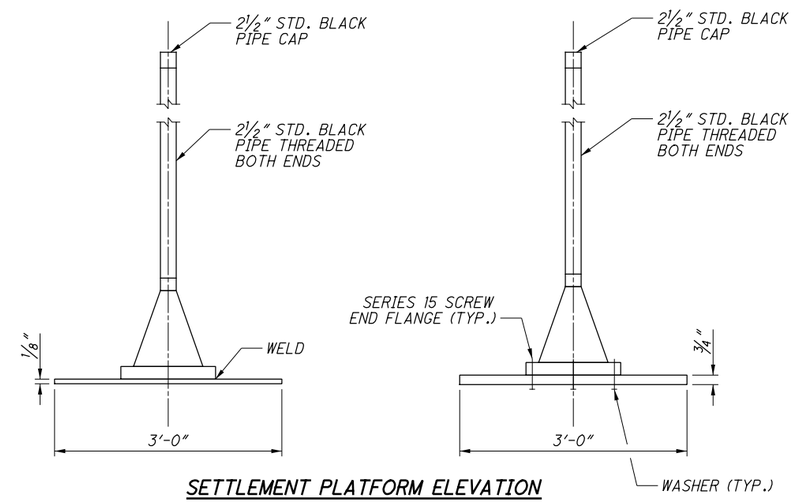

SETTLEMENT PLATFORM ELEVATION

SETTLEMENT PLATFORM NOTES:

1. SETTLEMENT PLATES SHALL BE PLACED AT THE LOCATIONS INDICATED UNLESS OTHERWISE DIRECTED BY THE ENGINEER.
2. CONTRACTOR HAS OPTION OF USING EITHER STEEL OR PLYWOOD PLATFORM BASE.
3. CONTRACTOR SHALL FURNISH MATERIALS AND LABOR TO EXTEND PIPE UP THROUGH ENTIRE FILL.
4. SETTLEMENT PLATFORMS SHALL BE ANCHORED BY STAKES DRIVEN AT EACH CORNER TO PREVENT OVERTURNING.
5. PAYMENT WILL BE MADE AT THE CONTRACT UNIT PRICE PER EACH FOR "ITEM SPECIAL - SETTLEMENT PLATFORMS".
6. SEE BRIDGE LAYOUT AND GEOMETRY PLAN FOR LOCATION OF SETTLEMENT PLATFORMS.

DESIGN AGENCY
CT Consultants
civil engineers architects planners
7965 N. High Street, Suite 340 Columbus, OH 43235
614.885.1700 www.ctconsultants.com

DESIGNED	DRAWN	REVIEWED	DATE
TAB	MLF	REN	11/14
CHECKED	REVISED	STRUCTURE FILE NUMBER	
TAB		8310000	

MSE WALL GENERAL NOTES - 2
BRIDGE NO. WAR-71-0253
SOCIALVILLE-FOSTERS ROAD OVER I-71

WAR-71-2.54

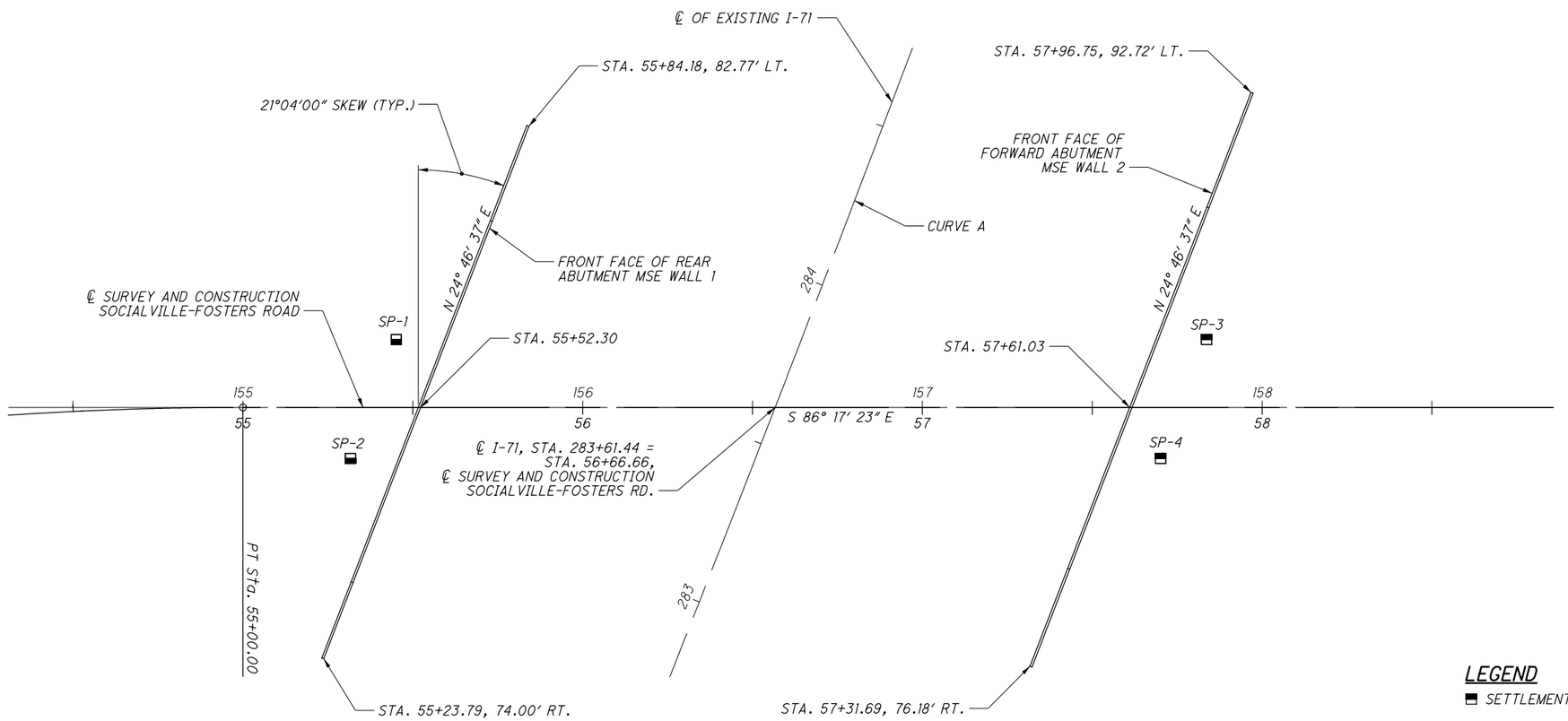

WALL SCHEMATIC PLAN

(ALL STATIONS GIVEN ABOUT FRONT FACE OF MSE WALL AND WITH RESPECT TO ℄ SOCIALVILLE-FOSTERS ROAD)

LEGEND

▬ SETTLEMENT PLATFORM

CURVE "A" DATA
P.I. STA. 283+50.10
Δ = 3° 16′ 00″ (LT)
Dc = 0° 28′ 00″
R = 12,277.67
T = 350.10′
L = 700.00′
E = 4.99′
C.B. = N 24° 55′ 28.5″ E

NOTES:

1. FOR SETTLEMENT PLATFORM LOCATION TABLE, SEE SHEET 7 OF 37.
2. FOR MSE WALL 1, PLAN AND ELEVATION, SEE SHEET 9 OF 37.
3. FOR MSE WALL 2, PLAN AND ELEVATION, SEE SHEET 10 OF 37.
4. FOR MSE WALL SECTIONS AND MISCELLANEOUS DETAILS, SEE SHEET 11 OF 37.
5. FOR LOCATION OF SETTLEMENT PLATFORMS, SEE SHEET 2 OF 37.

DESIGN AGENCY
CT Consultants
engineers|architects|planners
7965 N. High Street, Suite 200, Columbus, OH 43235
614.885.7900 www.ctconsultants.com

DESIGNED	DRAWN	REVIEWED	DATE
JFM	JFM	REN	11/14
CHECKED	REVISED	STRUCTURE FILE NUMBER	
TAB		8310000	

MSE WALL SCHEMATIC PLAN
BRIDGE NO. WAR-71-0253
SOCIALVILLE-FOSTERS RD. OVER I-71

WAR-71-2.54

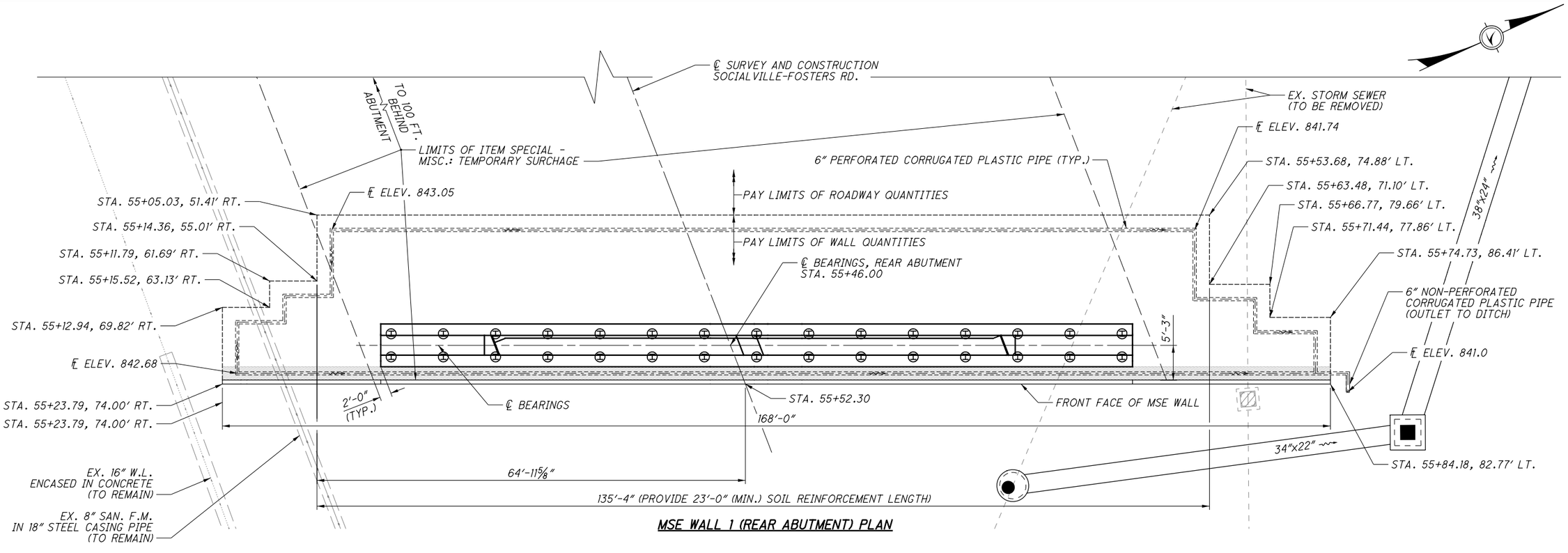

MSE WALL 1 (REAR ABUTMENT) PLAN

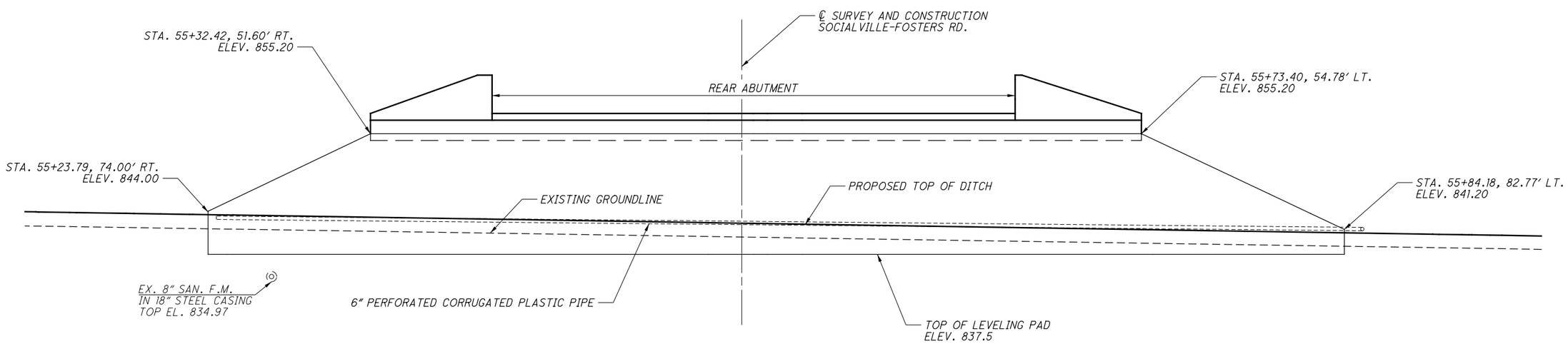

MSE WALL 1 (REAR ABUTMENT) ELEVATION

(STATIONS AND OFFSETS SHOWN AT WALL MEASURED TO FRONT FACE OF MSE WALL)

NOTES:

1. FOR BRIDGE GENERAL NOTES, SEE SHEETS 2 AND 3 OF 37.
2. FOR MSE WALL GENERAL NOTES, SEE SHEETS 6 AND 7 OF 37.

DESIGN AGENCY
CT Consultants
engineers|architects|planners
7965 N. High St., Suite 200, Columbus, OH 43235
614.885.7900 www.ctconsultants.com

DESIGNED	DRAWN	REVIEWED	DATE
JFM	JFM	REN	11/14
CHECKED	REVISED	STRUCTURE FILE NUMBER	
TAB		8310000	

REAR ABUTMENT MSE WALL 1
BRIDGE NO. WAR-71-0253
SOCIALVILLE-FOSTERS RD. OVER I-71

WAR-71-2.54

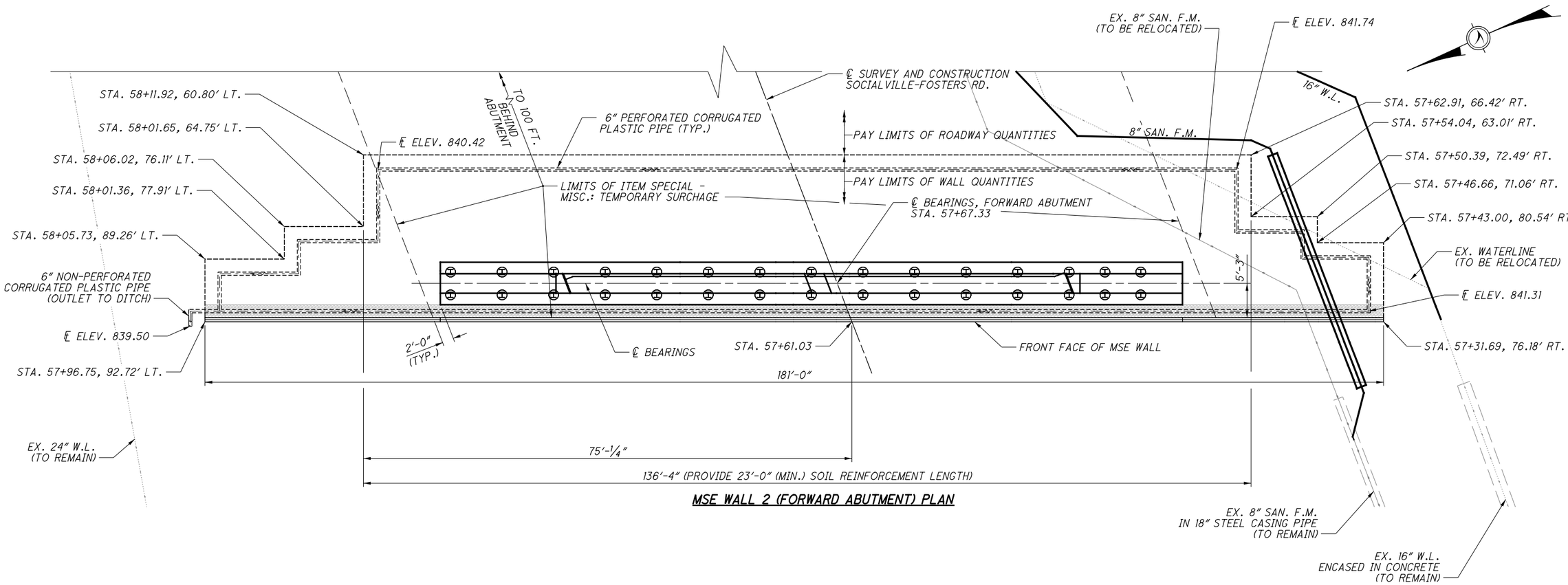

MSE WALL 2 (FORWARD ABUTMENT) PLAN

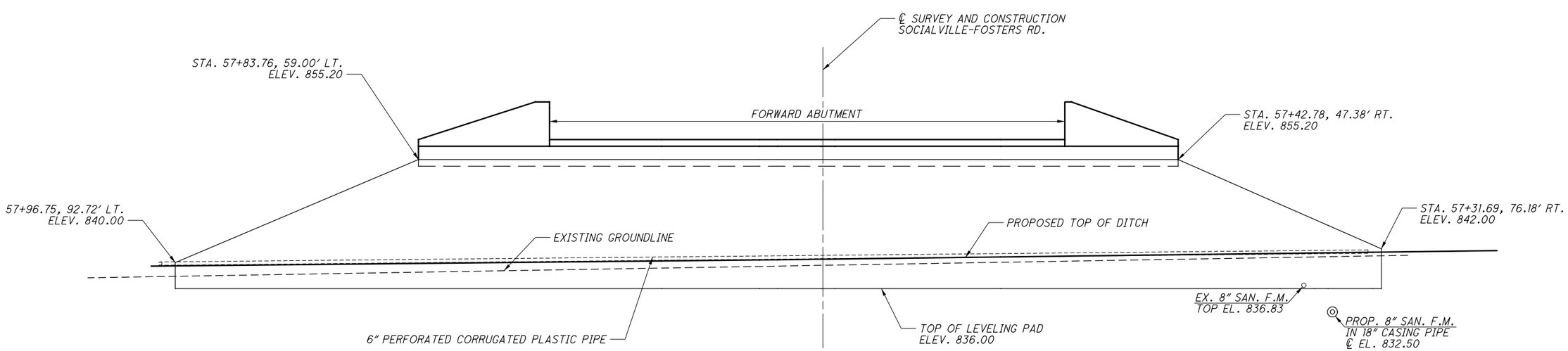

MSE WALL 2 (FORWARD ABUTMENT) ELEVATION

(STATIONS AND OFFSETS SHOWN AT WALL MEASURED TO FRONT FACE OF MSE WALL)

NOTES:

1. FOR BRIDGE GENERAL NOTES, SEE SHEETS 2 AND 3 OF 37.
2. FOR MSE WALL GENERAL NOTES, SEE SHEETS 6 AND 7 OF 37.

DESIGN AGENCY
CT Consultants
engineers | architects | planners
7965 N. High St., Suite 100, Worthington, OH 43235
614.885.7900 www.ctconsultants.com

DESIGNED	DRAWN	REVIEWED	DATE
JFM	JFM	REN	11/14
CHECKED	REVISED	STRUCTURE FILE NUMBER	
TAB		8310000	

FORWARD ABUTMENT MSE WALL 2
BRIDGE NO. WAR-71-0253
SOCIALVILLE-FOSTERS RD. OVER I-71

WAR-71-2.54

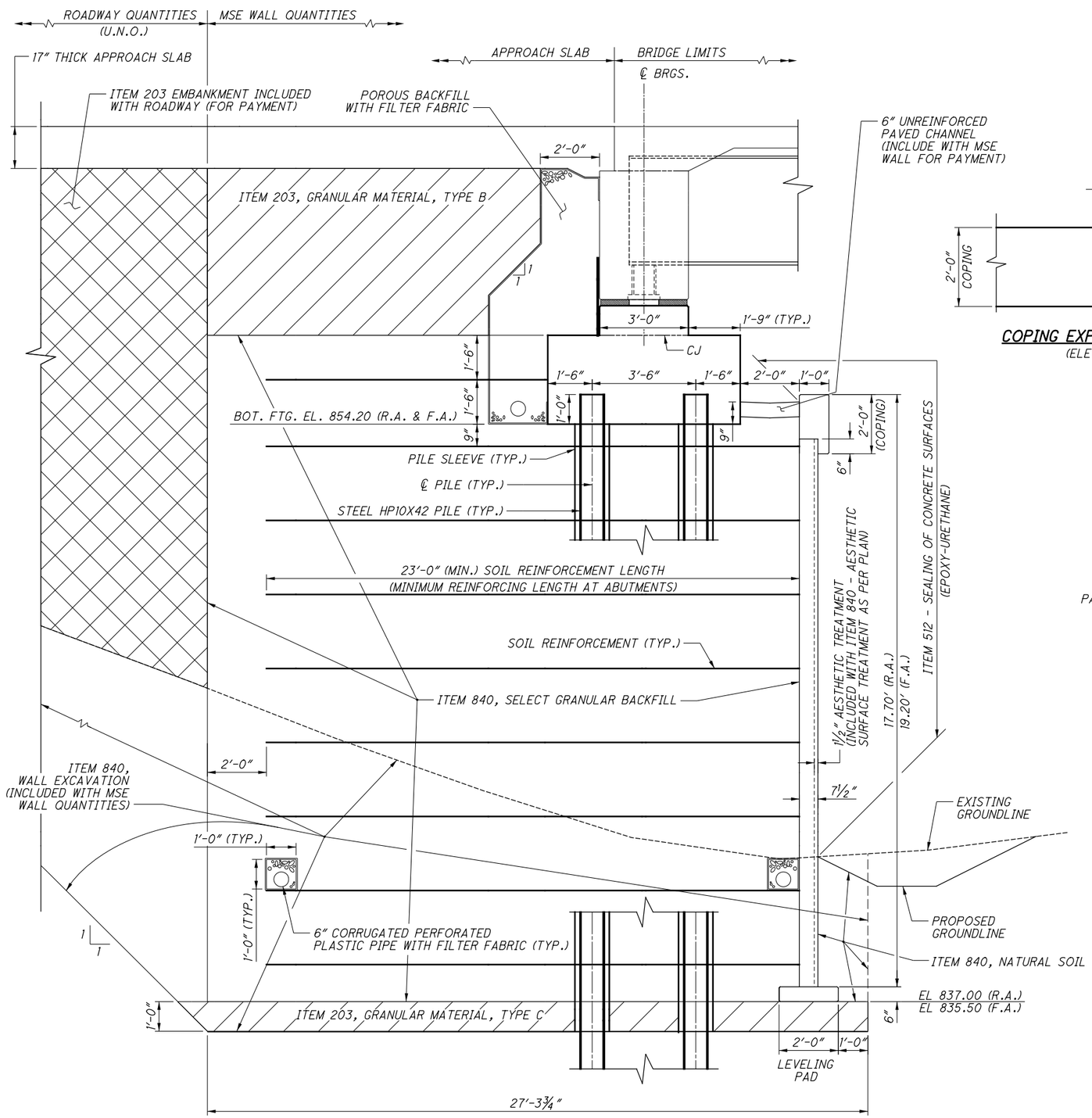

TYPICAL ABUTMENT SECTION

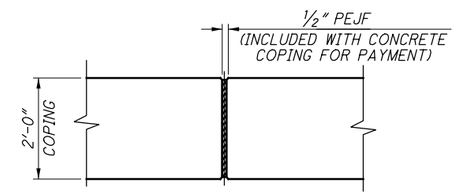

COPING EXPANSION JOINT
(ELEVATION)

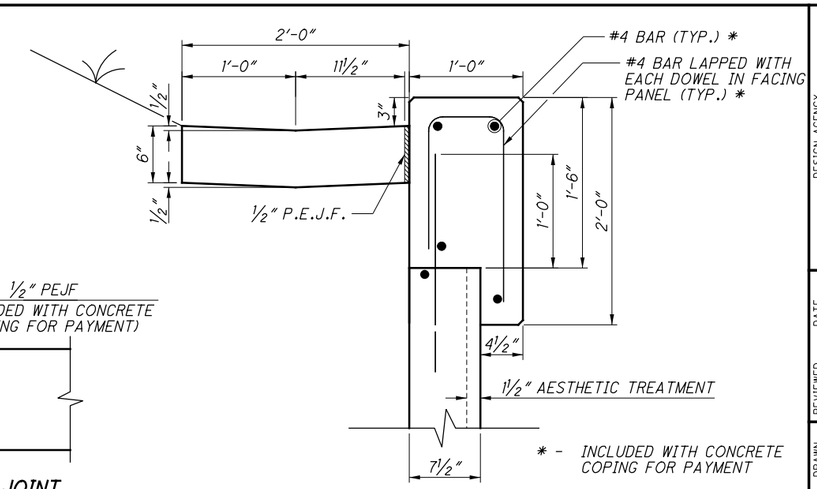

COPING DETAIL OUTSIDE ABUTMENT LIMITS

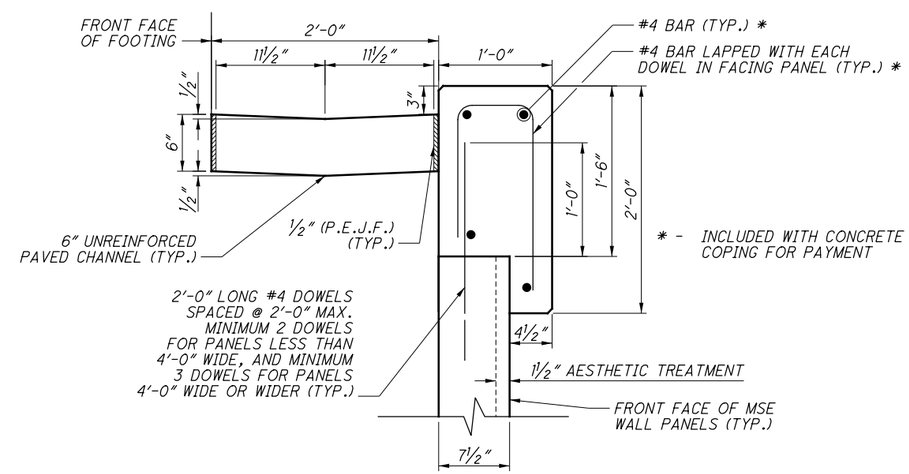

COPING DETAIL AT ABUTMENT

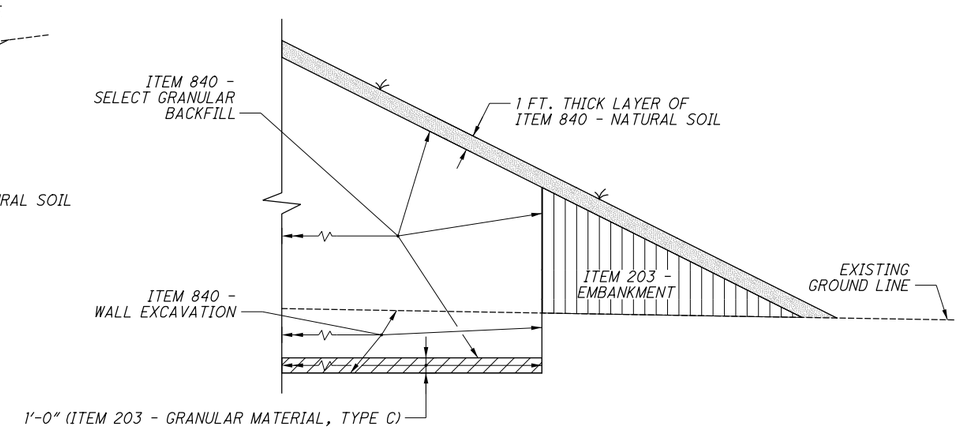

TRANSVERSE SECTION BEYOND LIMITS OF MSE WALL EMBANKMENT

DESIGN AGENCY
CT Consultants
engineers|architects|planners
8415 Beaver Creek Blvd., Suite 100, Mentor, OH 44060
614.885.7900 www.ctconsultants.com

DESIGNED	DRAWN	REVIEWED	DATE
JFM	MLF	REN	11/14
CHECKED	REVISED	STRUCTURE FILE NUMBER	
TAB	—	8310000	

MSE WALL DETAILS
BRIDGE NO. WAR-71-0253
SOCIALVILLE-FOSTERS RD. OVER I-71

WAR-71-2.54

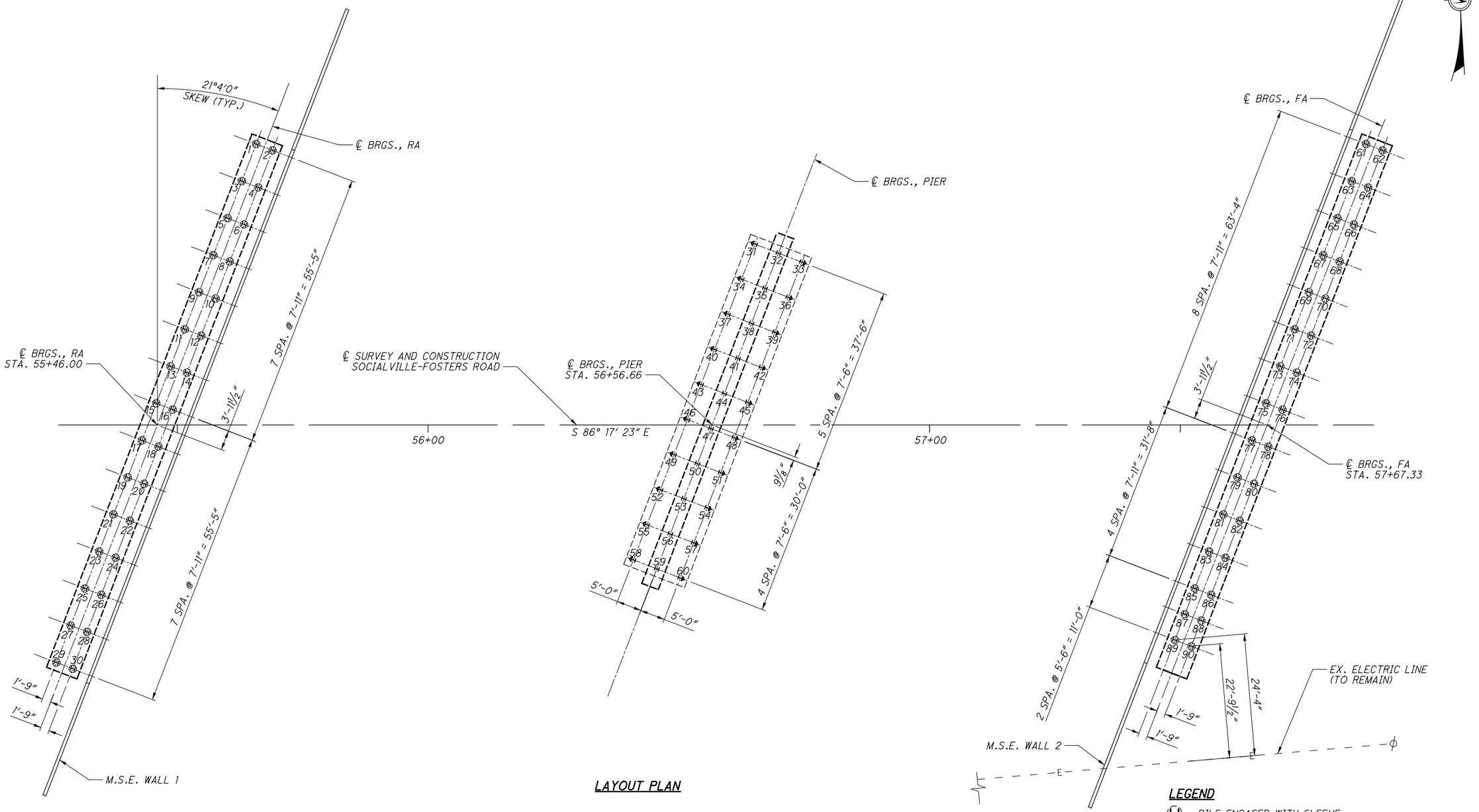

LAYOUT PLAN

LEGEND

- PILE ENCASED WITH SLEEVE
- PILE BATTERED 4V:1H, IN THE DIRECTION OF ARROW
- INDICATES VERTICAL PILE
- # - PILE NUMBER

NOTES:

1. ALL PILES SHALL BE STEEL HP10x42.
2. THE EXISTING PIER FOOTING IS NOT SHOWN AS IT SHALL BE REMOVED BEFORE PROPOSED PIER CONSTRUCTION.

DESIGN AGENCY
CT Consultants
engineers|architects|planners
7965 Kilgour Place, Dublin, Columbus, OH 43235
614.885.7900 www.ctconsultants.com

DESIGNED	DRAWN	REVIEWED	DATE
DMB	DMB/JFM	REN	11/14
CHECKED	REVISED	STRUCTURE FILE NUMBER	
TAJ		8310000	

FOUNDATION LAYOUT PLAN

BRIDGE NO. WAR-71-0253
SOCIALVILLE-FOSTERS RD. OVER I-71

WAR-71-2.54

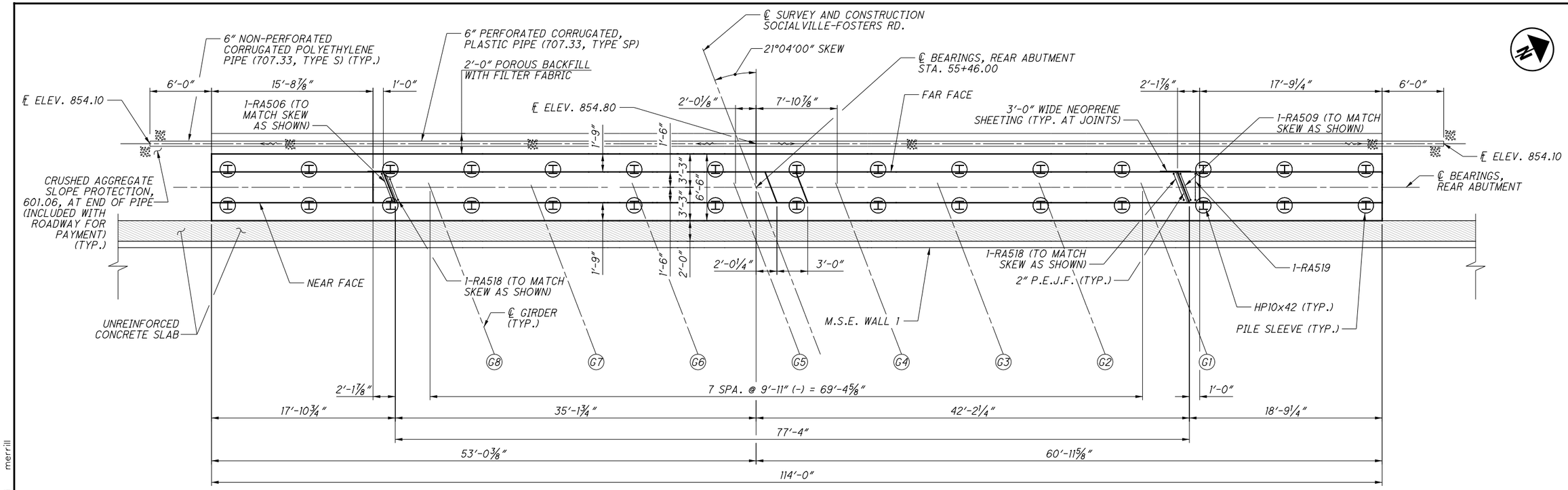

PLAN VIEW

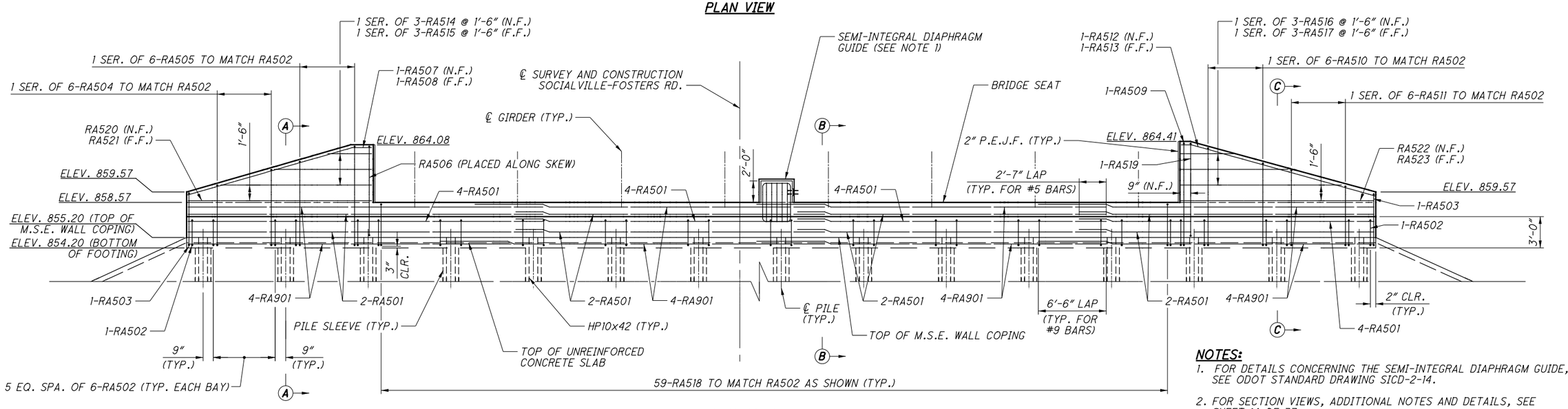

ELEVATION

NOTES:

1. FOR DETAILS CONCERNING THE SEMI-INTEGRAL DIAPHRAGM GUIDE, SEE ODOT STANDARD DRAWING SICD-2-14.
2. FOR SECTION VIEWS, ADDITIONAL NOTES AND DETAILS, SEE SHEET 14 OF 37.
3. FOR DETAILS CONCERNING THE CRUSHED AGGREGATE SLOPE PROTECTION AT THE END OF THE PIPE, SEE ODOT STANDARD DRAWING A-1-69.
4. FOR M.S.E. WALL PLANS AND DETAILS, SEE SHEETS 6 THRU 11 OF 37.
5. FOR ABUTMENT DIAPHRAGM DETAILS, SEE SHEET 25 OF 37.
6. FOR REINFORCEMENT SCHEDULE, SEE SHEET 36 OF 37.
7. FOR PILE LAYOUT PLAN, SEE SHEET 12 OF 37.
8. THE 2" P.E.J.F. SHALL EXTEND FROM THE TOP OF THE BEAM SEAT TO THE TOP OF THE WINGWALL.

DESIGN AGENCY
CT Consultants
engineers|architects|planners
5500 New Albany Road, Columbus, OH 43235
614.865.7900 www.ctconsultants.com

DESIGNED	DRAWN	REVIEWED	DATE
JFM	JFM	REN	11/14
CHECKED	REVISED	STRUCTURE FILE NUMBER	
TAB		8310000	

REAR ABUTMENT PLAN AND ELEVATION
BRIDGE NO. WAR-71-0253
SOCIALVILLE-FOSTERS RD. OVER I-71

WAR-71-2.54

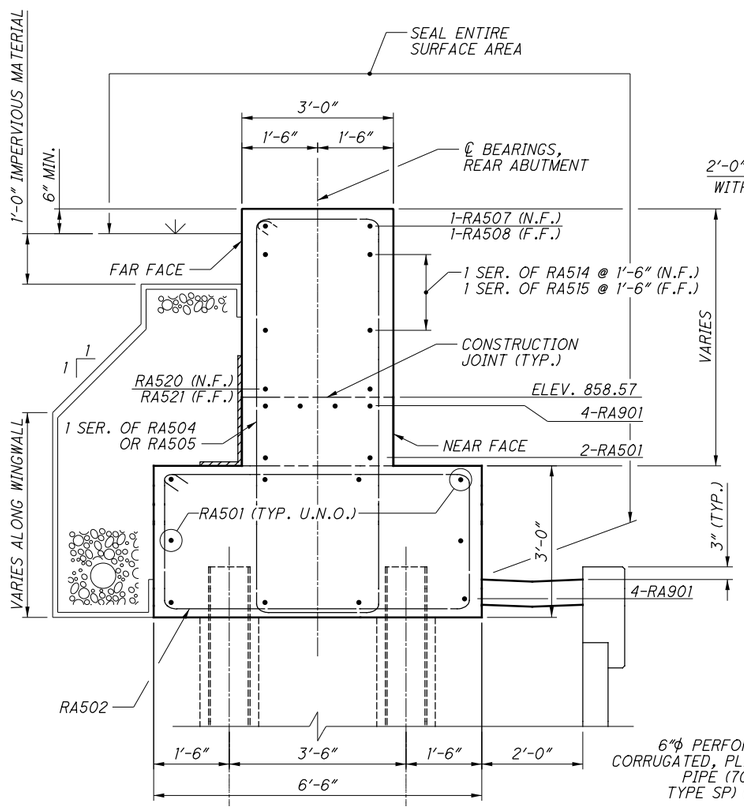

SECTION A-A

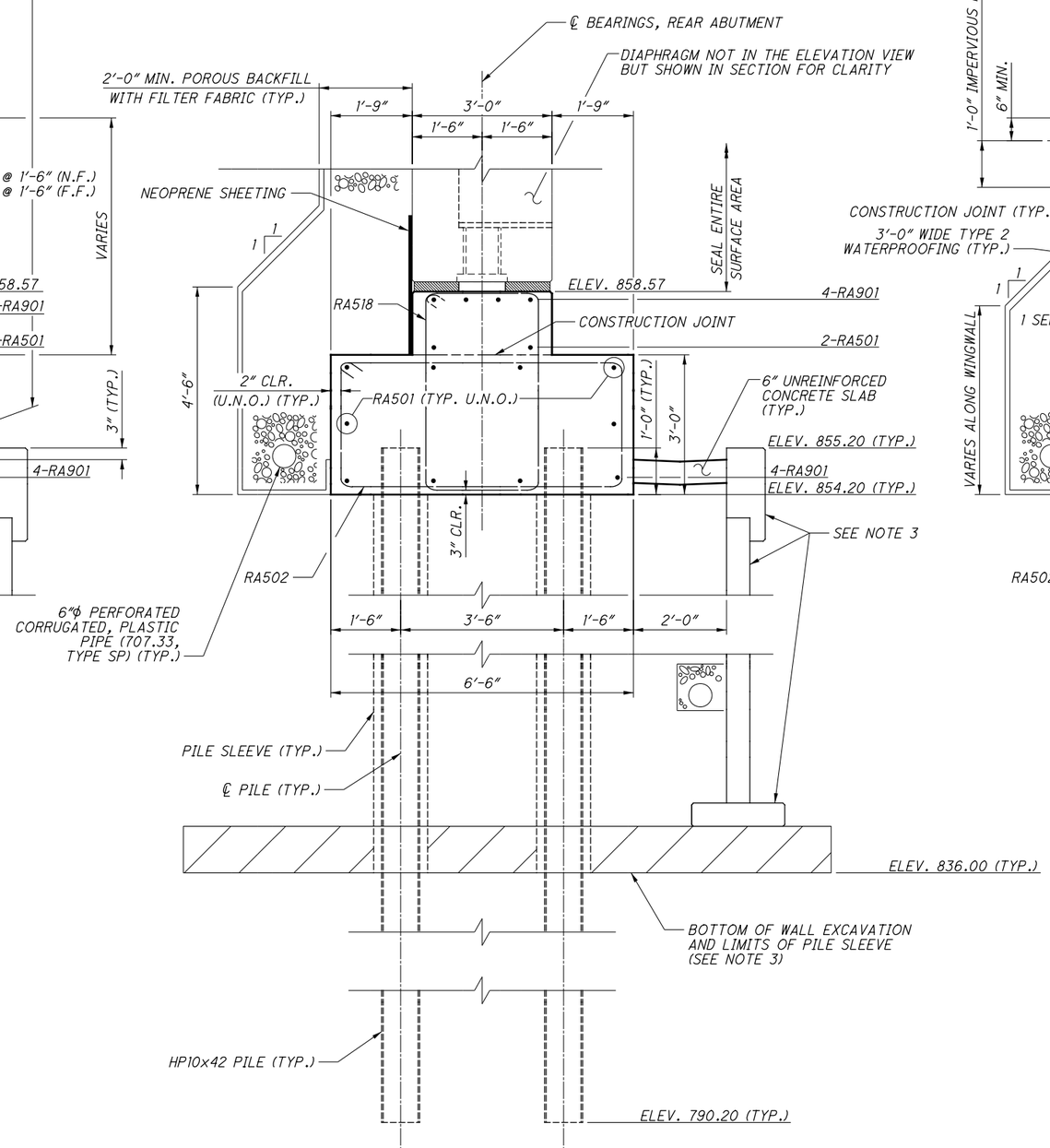

SECTION B-B

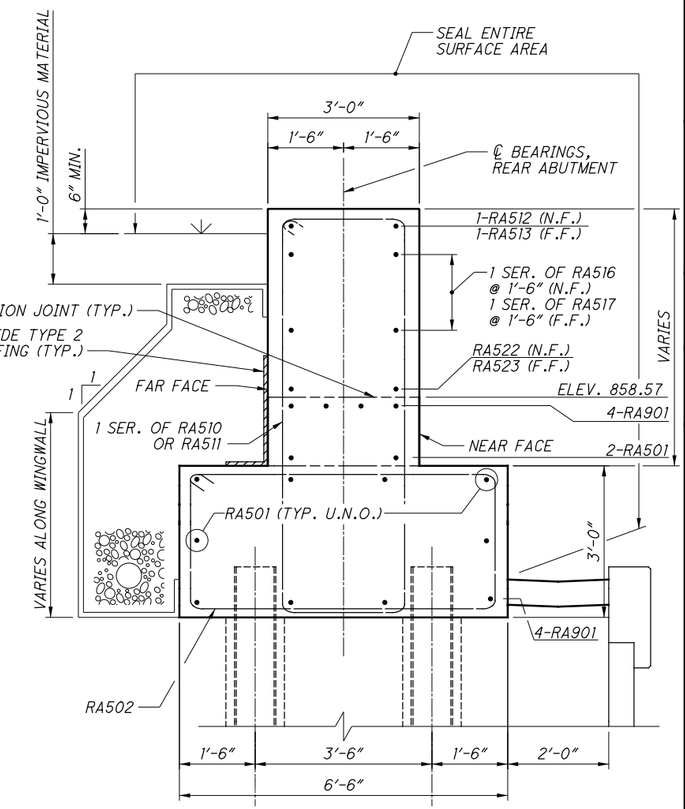

SECTION C-C

NOTES:

1. FOR REAR ABUTMENT PLAN AND ELEVATION VIEW, SEE SHEET 13 OF 37.
2. FOR SECTION CUT LOCATIONS A-A, B-B, C-C AND ADDITIONAL NOTES AND DETAILS, SEE SHEET 13 OF 37.
3. FOR M.S.E. WALL PLANS AND DETAILS, SEE SHEETS 6 THRU 11 OF 37.
4. FOR ABUTMENT DIAPHRAGM DETAILS, SEE SHEET 25 OF 37.
5. FOR REINFORCEMENT SCHEDULE, SEE SHEET 36 OF 37.
6. FOR PILE LAYOUT PLAN, SEE SHEET 12 OF 37.

DESIGN AGENCY
CT Consultants
engineers|architects|planners
7965 N. High Street, Suite 200, Columbus, OH 43235
614.885.7900 www.ctconsultants.com

DESIGNED	DRAWN	REVIEWED	DATE
JFM	JFM	REN	11/14
CHECKED	REVISED	STRUCTURE FILE NUMBER	
TAB		8310000	

REAR ABUTMENT AND WINGWALL SECTIONS

BRIDGE NO. WAR-71-0253
SOCIALVILLE-FOSTERS RD. OVER I-71

WAR-71-2.54

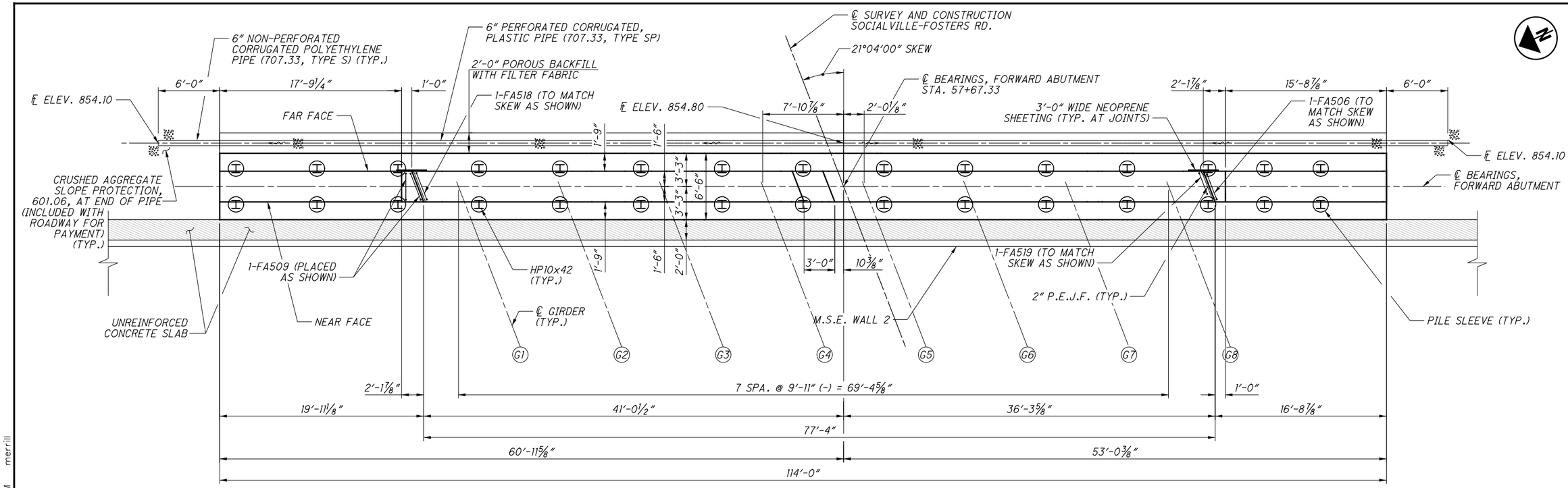

PLAN VIEW

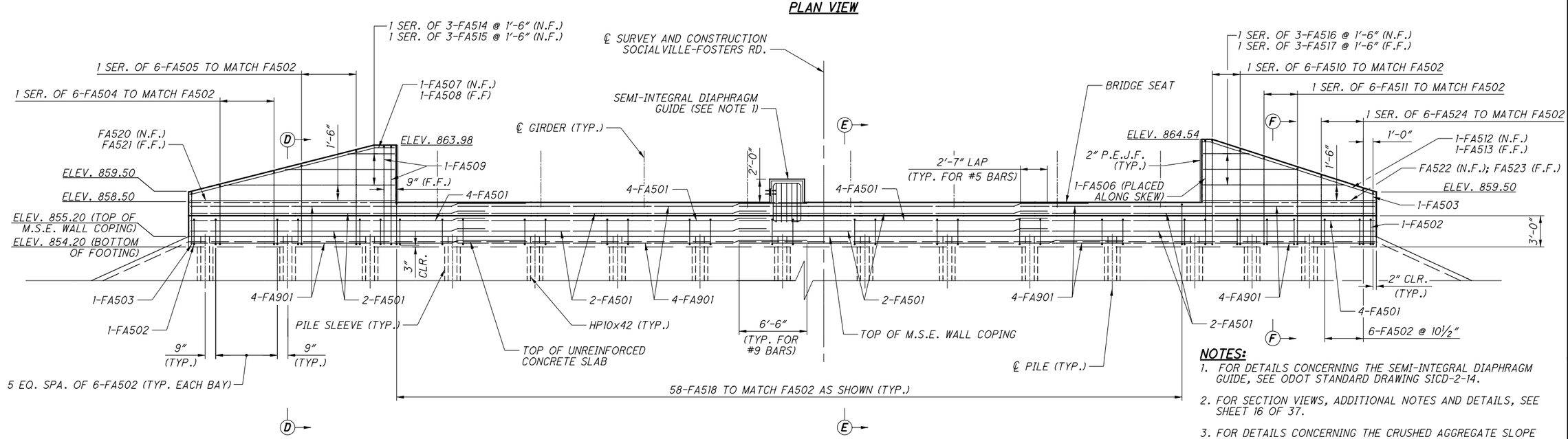

ELEVATION

NOTES:

1. FOR DETAILS CONCERNING THE SEMI-INTEGRAL DIAPHRAGM GUIDE, SEE ODOT STANDARD DRAWING SICD-2-14.
2. FOR SECTION VIEWS, ADDITIONAL NOTES AND DETAILS, SEE SHEET 16 OF 37.
3. FOR DETAILS CONCERNING THE CRUSHED AGGREGATE SLOPE PROTECTION AT THE END OF THE PIPE, SEE ODOT STANDARD DRAWING A-1-69.
4. FOR M.S.E. WALL PLANS AND DETAILS, SEE SHEETS 6 THRU 11 OF 37.
5. FOR ABUTMENT DIAPHRAGM DETAILS, SEE SHEET 25 OF 37.
6. FOR REINFORCEMENT SCHEDULE, SEE SHEET 36 OF 37.
7. FOR PILE LAYOUT PLAN, SEE SHEET 12 OF 37.
8. THE 2" P.E.J.F. SHALL EXTEND FROM THE TOP OF THE BEAM SEAT TO THE TOP OF THE WINGWALL.

DESIGN AGENCY
CT Consultants
engineers|architects|planners
7965 N. High St., Suite 200, Worthington, OH 43235
614.885.7900 www.ctconsultants.com

DESIGNED	DRAWN	REVIEWED	DATE
JFM	JFM	REN	11/14
CHECKED	REVISED	STRUCTURE FILE NUMBER	
TAB		8310000	

FORWARD ABUTMENT PLAN AND ELEVATION
BRIDGE NO. WAR-71-0253
SOCIALVILLE-FOSTERS RD. OVER I-71

WAR-71-2.54

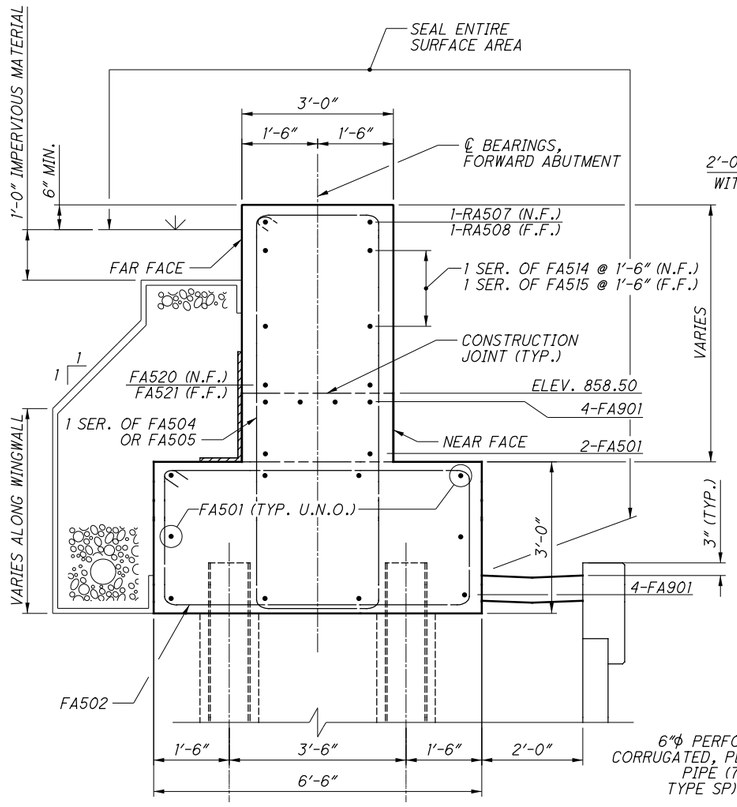

SECTION D-D

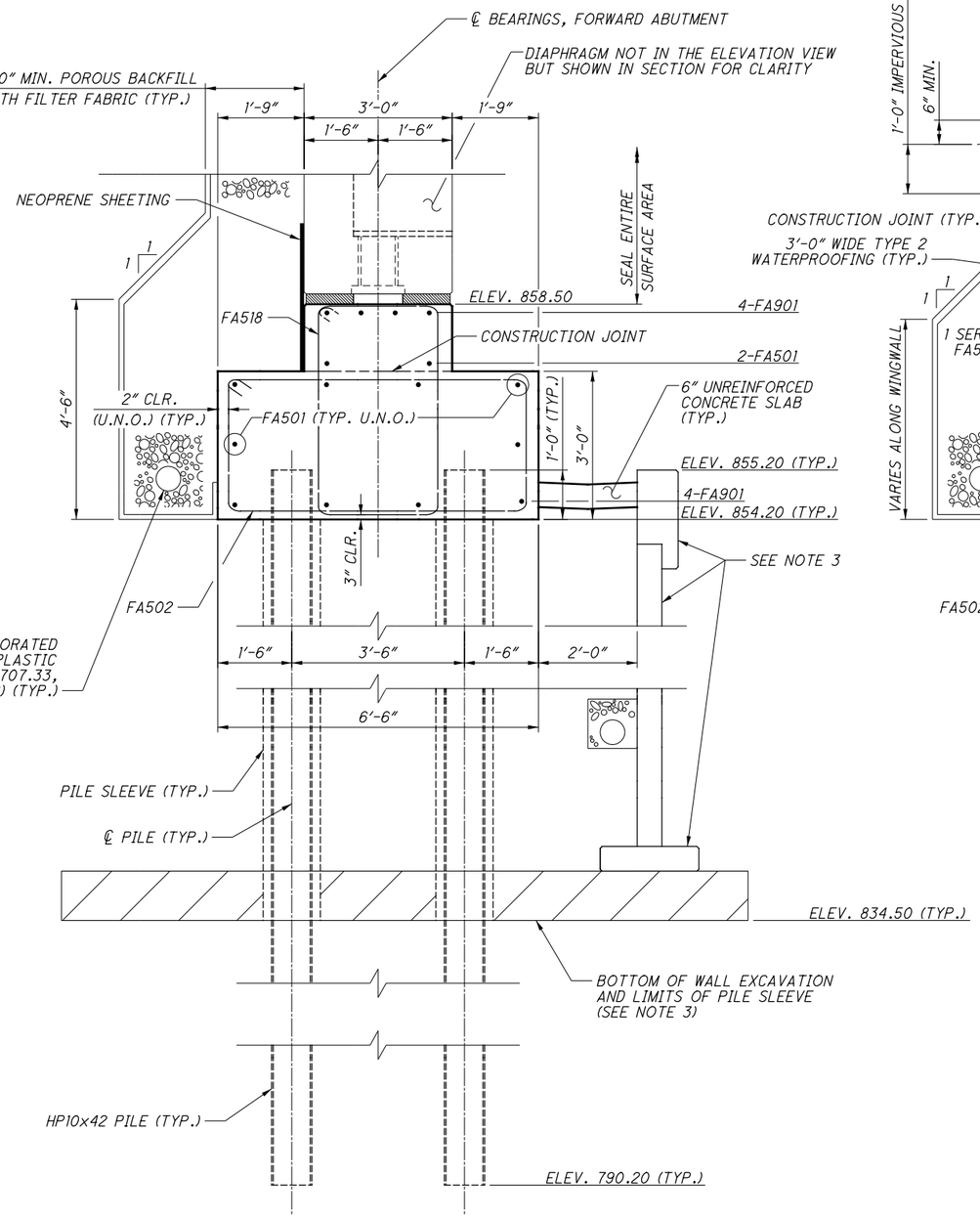

SECTION E-E

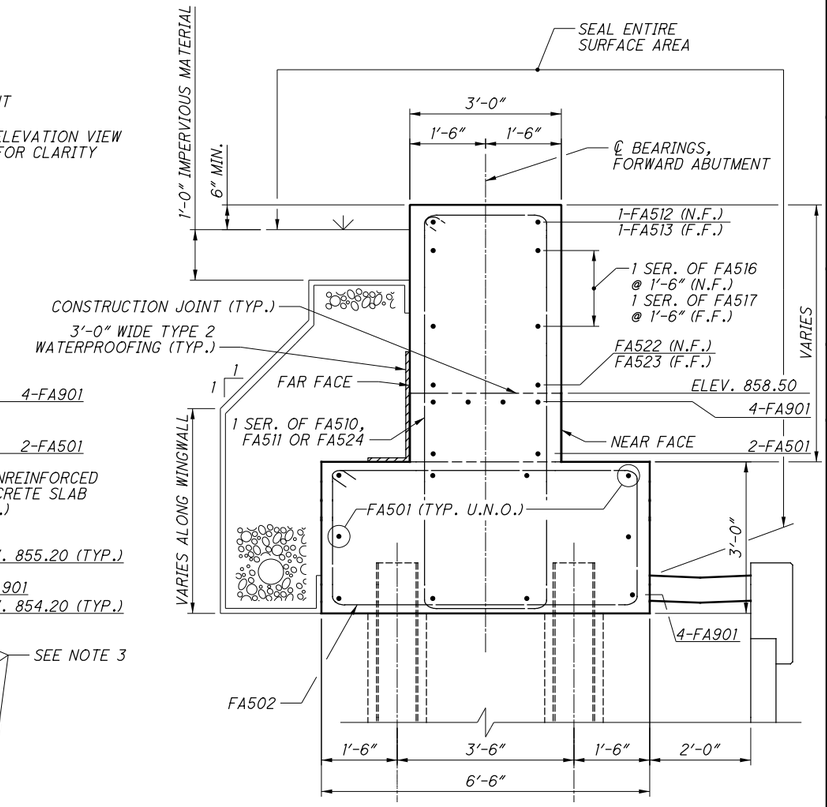

SECTION F-F

NOTES:

1. FOR FORWARD ABUTMENT PLAN AND ELEVATION VIEW, SEE SHEET 15 OF 37.
2. FOR SECTION CUT LOCATIONS D-D, E-E, F-F AND ADDITIONAL NOTES AND DETAILS, SEE SHEET 15 OF 37.
3. FOR M.S.E. WALL PLANS AND DETAILS, SEE SHEETS 6 THRU 11 OF 37.
4. FOR ABUTMENT DIAPHRAGM DETAILS, SEE SHEET 25 OF 37.
5. FOR REINFORCEMENT SCHEDULE, SEE SHEET 36 OF 37.
6. FOR PILE LAYOUT PLAN, SEE SHEET 12 OF 37.

DESIGN AGENCY
CT Consultants
engineers|architects|planners
7965 N. High St., Suite 200, Columbus, OH 43235
614.885.7900 www.ctconsultants.com

DESIGNED	DRAWN	REVIEWED	DATE
JFM	JFM	REN	11/14
CHECKED	REVISED	STRUCTURE FILE NUMBER	
TAB		8310000	

FORWARD ABUTMENT AND WINGWALL SECTIONS

BRIDGE NO. WAR-71-0253
SOCIALVILLE-FOSTERS RD. OVER I-71

WAR-71-2.54

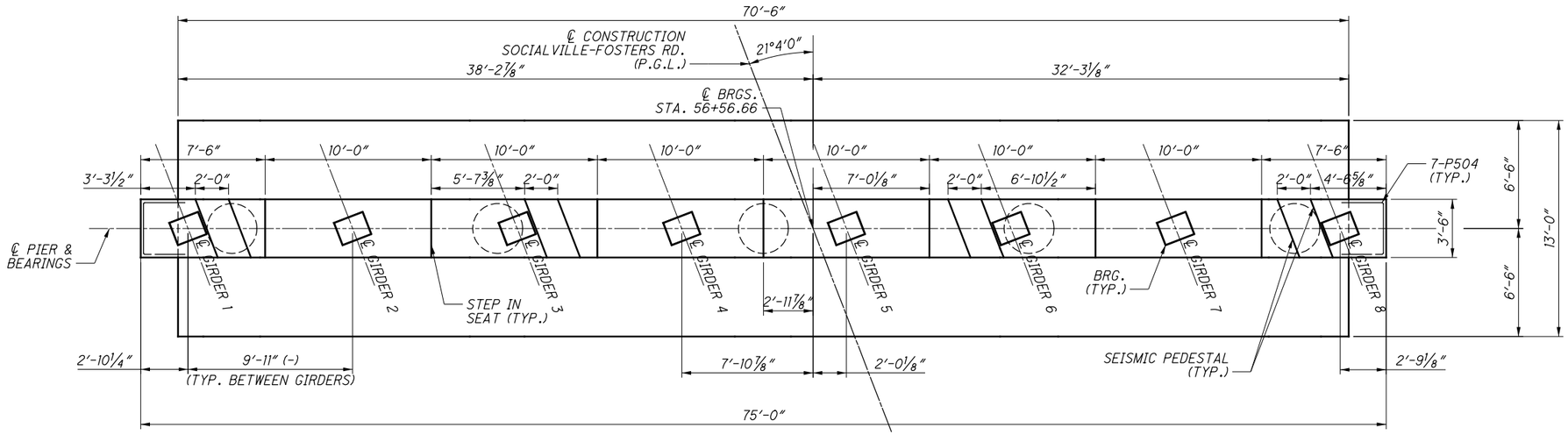

PLAN

NOTES:

1. FOR PIER CAP AND COLUMN DETAILS, SEE SHEET 18 OF 37.
2. FOR LAMINATED ELASTOMERIC BEARING DETAILS AND NOTES, SEE SHEET 19 AND 20 OF 37.
3. FOR SEISMIC PEDESTALS DETAILS, SEE SHEET 18 OF 37.
4. SEAL ENTIRE SURFACE OF COLUMNS ABOVE GROUND PER ITEM 513 - SEALING OF CONCRETE SURFACES (EPOXY-URETHANE).
5. SPIRAL REINFORCEMENT SHALL EXTEND MIN. OF 2" INTO PIER CAP.
6. FOR PILE LAYOUT, SEE SHEET 12 OF 37.

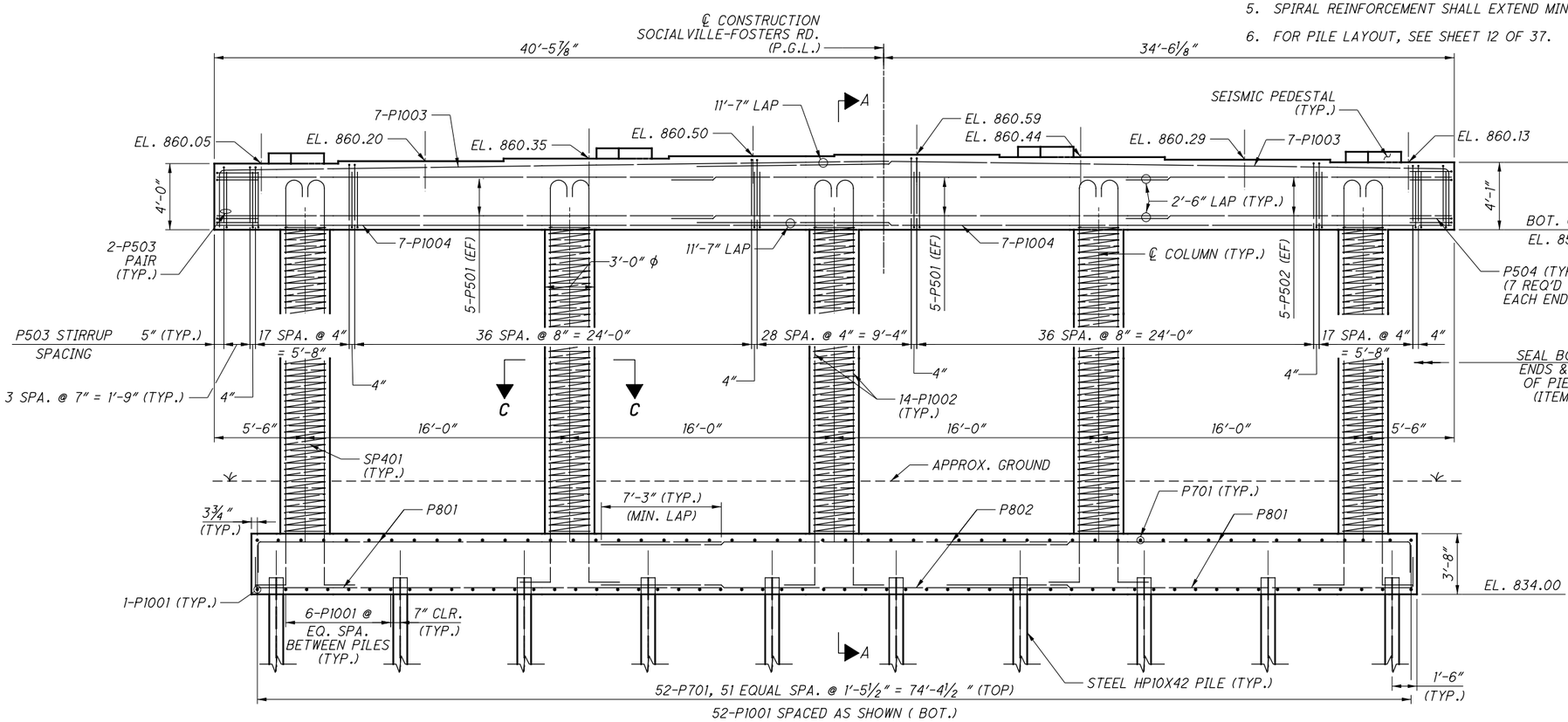

ELEVATION

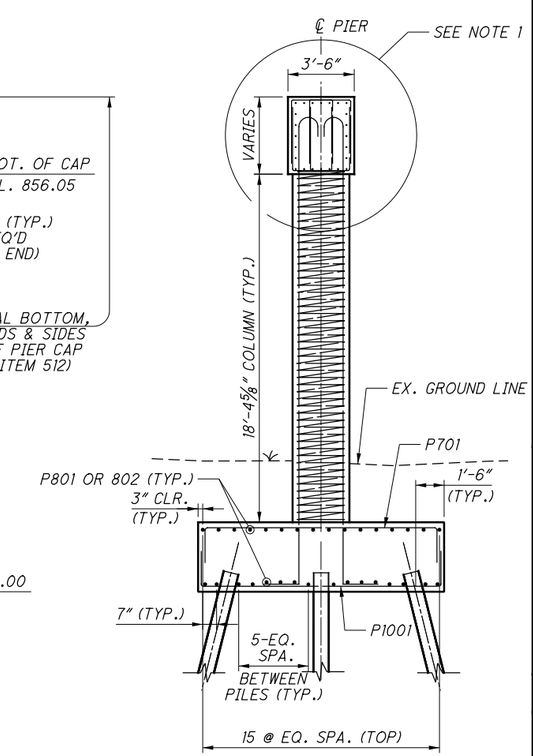

SECTION A-A

DESIGN AGENCY
CT Consultants
engineers architects planners
7965 N. High Street, Suite 340 Columbus, OH 43235
614.885.1700 www.ctconsultants.com

DESIGNED	DRAWN	REVIEWED	DATE
DMB	DMB	REN	11/14
CHECKED	REVISED	STRUCTURE FILE NUMBER	
TAB		8310000	

PIER DETAILS I
BRIDGE NO. WAR-71-0253
SOCIALVILLE-FOSTERS ROAD OVER I-71

WAR-71-2.54

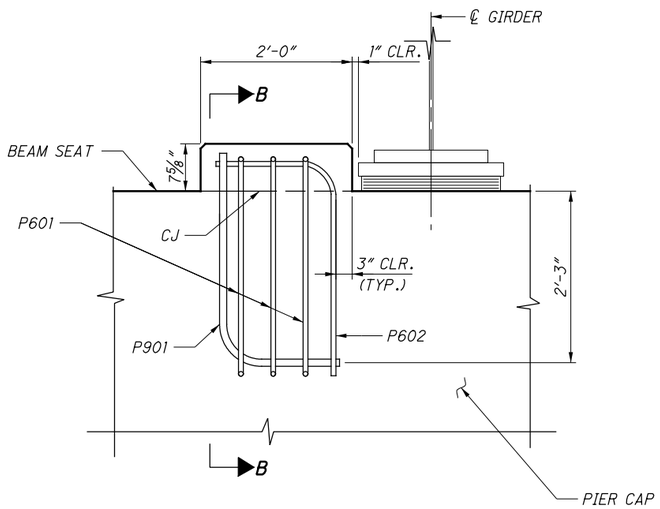

FRONT VIEW OF SEISMIC PEDESTAL
(REINFORCING IN PIER CAP NOT SHOWN FOR CLARITY)

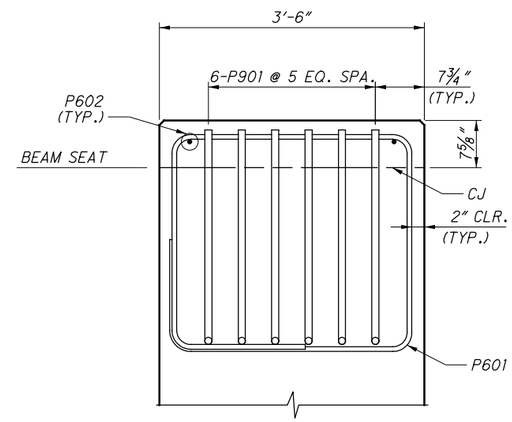

SECTION B-B

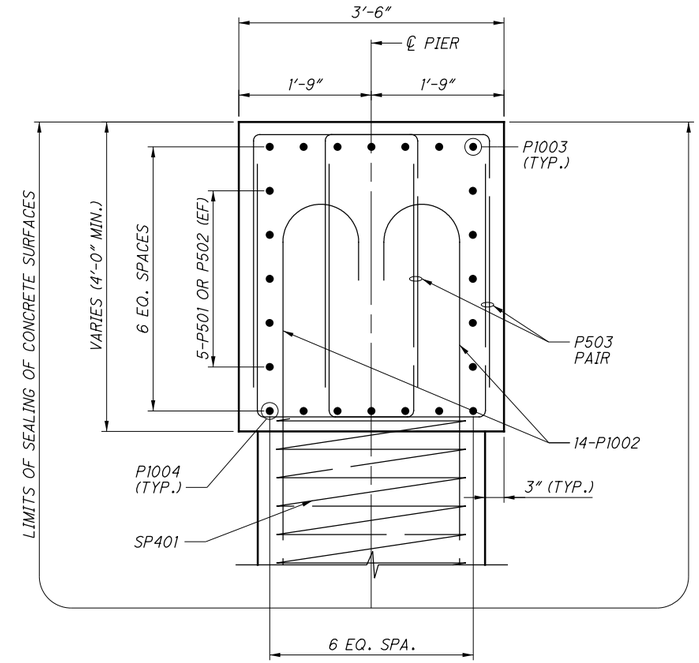

SECTION A-A

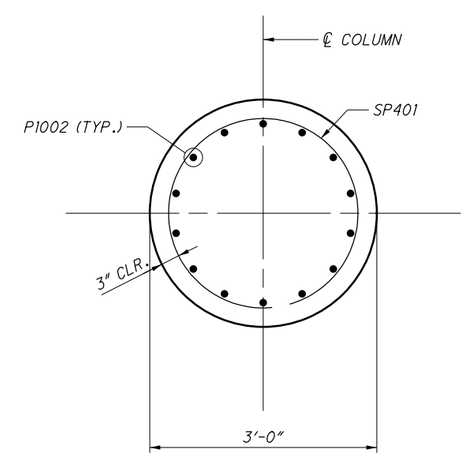

SECTION C-C

NOTES:

1. FOR GENERAL PIER PLAN AND ELEVATION, SEE SHEET 17 OF 37.
2. FOR LAMINATED ELASTOMERIC BEARING DETAILS AND NOTES, SEE SHEET 19 AND 20 OF 37.
3. FOR SEISMIC PEDESTALS, THE LOCATION OF THE MAIN REINFORCEMENT IN THE PIER CAP MAY BE ADJUSTED HORIZONTALLY 1"± TO ACCOMODATE THE P901 BARS. FOR LOCATIONS OF SEISMIC PEDESTALS, SEE SHEET 17 OF 37.
4. SEAL ENTIRE SURFACE OF COLUMNS ABOVE GROUND PER ITEM 513 - SEALING OF CONCRETE SURFACES (EPOXY-URETHANE).
5. FOR ADDITIONAL NOTES AND DETAILS, SEE ODOT STANDARD DRAWING A-1-69.

DESIGN AGENCY
CT Consultants
engineers/architects/planners
7965 N. High Street, Suite 360 Columbus, OH 43235
614.885.1700 www.ctconsultants.com

DESIGNED	DRAWN	REVIEWED	DATE
DMB	DMB	REN	11/14
CHECKED	REVISED	STRUCTURE FILE NUMBER	
TAB		8310000	

PIER DETAILS II
BRIDGE NO. WAR-71-0253
SOCIALVILLE-FOSTERS ROAD OVER I-71

WAR-71-2.54

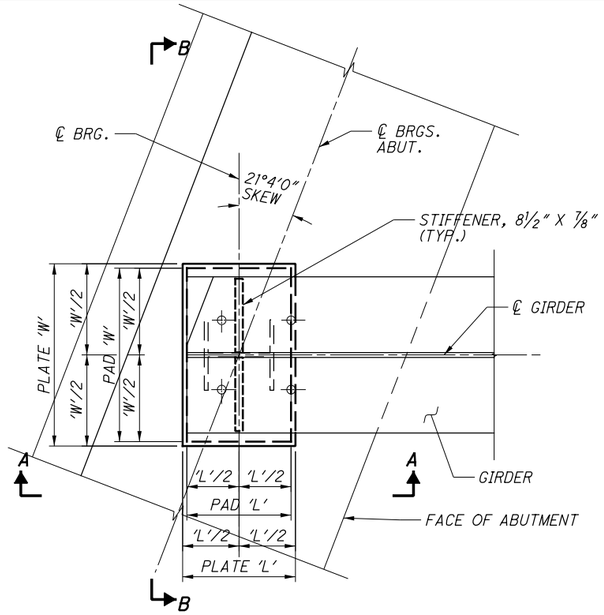

PLAN - ABUTMENT BEARING

(REAR ABUTMENT SHOWN, FORWARD ABUTMENT SIMILAR BUT OPPOSITE)

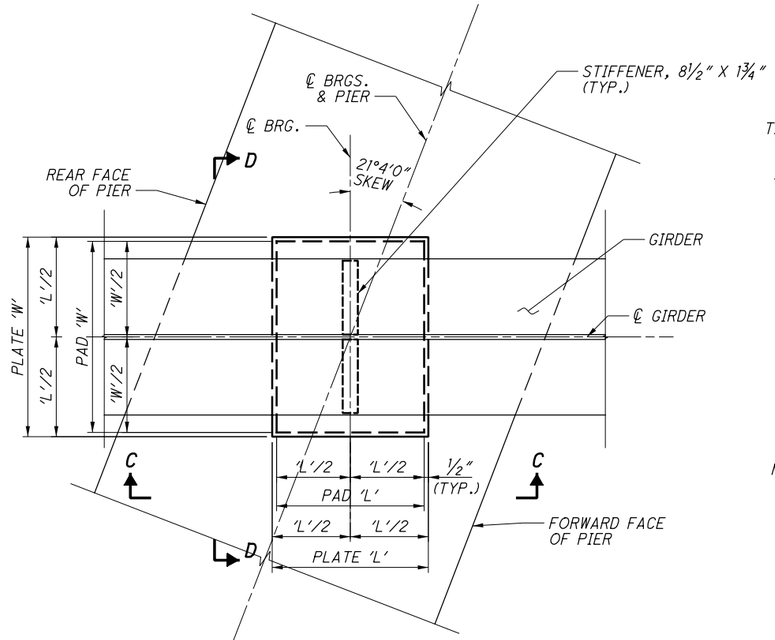

PLAN - PIER BEARING

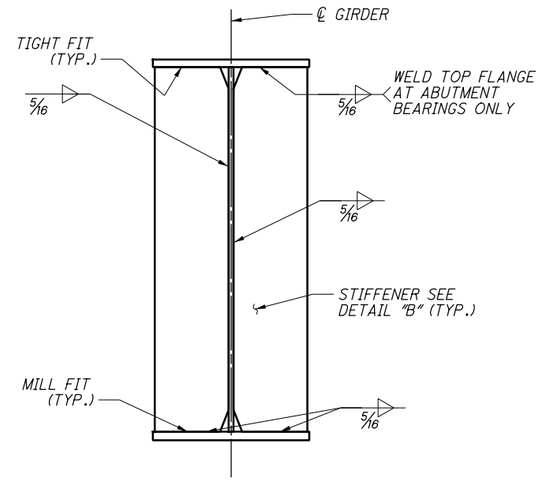

BEARING STIFFENER DETAIL

DETAIL B

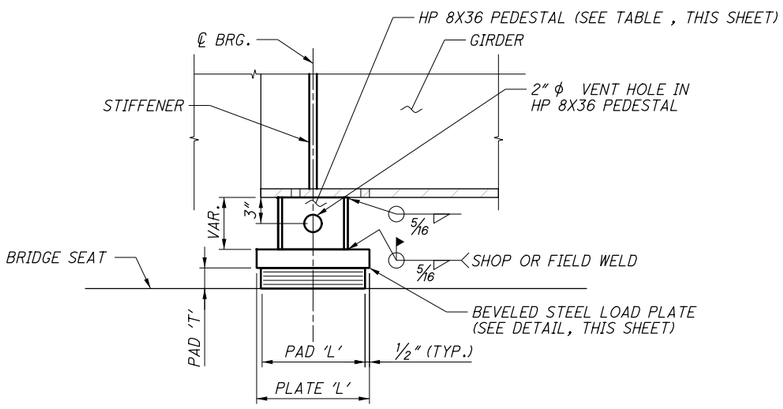

VIEW A-A

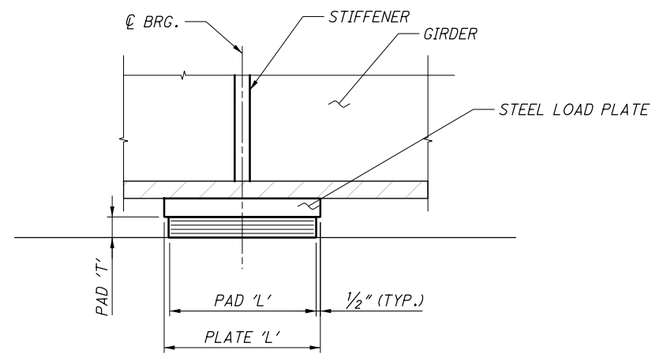

VIEW C-C

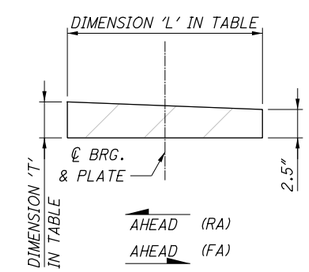

LOAD PLATE BEVELING DETAIL

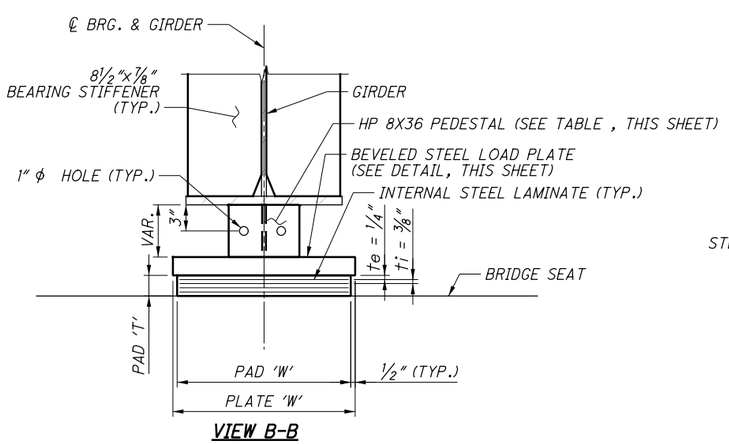

VIEW B-B

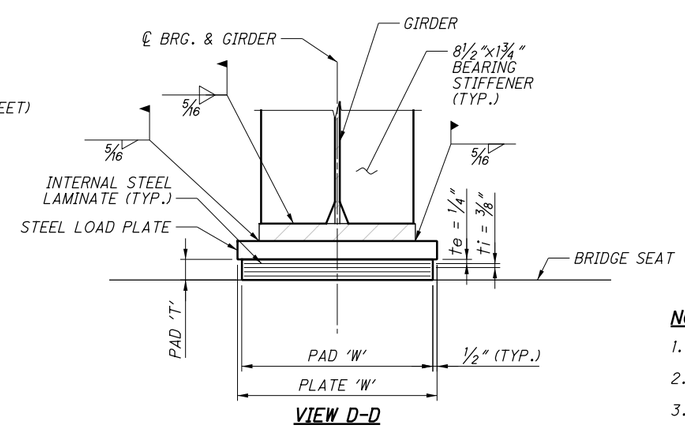

VIEW D-D

HP PEDESTAL HEIGHT TABLE (INCHES)		
GIRDER	REAR ABUTMENT	FORWARD ABUTMENT
G1	9 13/16	6
G2	10 15/16	8½
G3	12 1/16	11 1/16
G4	13 3/16	13½
G5	13 9/16	15¼
G6	11 1/16	14 3/16
G7	8 9/16	13
G8	6	11⅞

NOTES:

1. FOR BEARING NOTES AND TABLE, SEE SHEET 20 OF 37.
2. FOR FRAMING PLAN, SEE SHEET 21 OF 37.
3. FOR SUPERSTRUCTURE DETAILS, SEE SHEETS 22 OF 37.

DESIGN AGENCY
CT Consultants
civil engineers architects planners
7965 N. High Street, Suite 340 Columbus, OH 43235
614.885.1700 www.ctconsultants.com

DESIGNED	DRAWN	REVIEWED	DATE
DMB	DMB	REN	11/14
CHECKED	REVISED	STRUCTURE FILE NUMBER	
JFM		8310000	

BEARING DETAILS I
BRIDGE NO. WAR-71-0253
SOCIALVILLE-FOSTERS ROAD OVER I-71

WAR-71-2.54

BEARING TABLE																
LOCATION	BEARING TYPE	NO. OF BRGS.	ELASTOMERIC PAD SIZE			NO. OF STEEL LAMINATES 0.0747 THICK (14 GAGE)	EXTERNAL PAD LAYER THICKNESS		INTERNAL PAD LAYER THICKNESS		STEEL LOAD PLATE SIZE			UNFACTORED LOADS (KIPS)		
			L (IN.)	W (IN.)	T (IN.)		(te)	NO.	(ti)	NO.	L (IN.)	W (IN.)	T (IN.)	DL	LL	TOTAL LOADS
REAR ABUT.	EXP.	8	12	20	2.8232	6	0.25	2	0.375	5	13	21	2 11/16	121	78	199
PIER	EXP.	8	17	22	2.3735	5	0.25	2	0.375	4	18	23	2 1/2	294	159	453
FWD. ABUT.	EXP.	8	12	20	2.8232	6	0.25	2	0.375	5	13	21	2 11/16	121	78	199

NOTES:

1. BASIS OF PAYMENT:

   THE UNIT PRICE BID SHALL INCLUDE ALL MATERIALS (BEARING, SOLE PLATES, LOAD PLATES, HP SHAPES, ETC.), LABOR, TESTING, AND INCIDENTALS NECESSARY TO FURNISH AND INSTALL LAMINATED ELASTOMERIC BEARINGS.

2. ELASTOMERIC BEARINGS:

   THE ELASTOMER SHALL HAVE A HARDNESS OF 50 DUROMETER. THE BEARINGS WERE DESIGNED IN ACCORDANCE WITH, SECTION 14.7.6 (METHOD A) OF THE AASHTO LRFD BRIDGE DESIGN SPECIFICATIONS. THE LONG-TERM COMPRESSION PROOF LOAD TEST (AASHTO STANDARD SPECIFICATIONS FOR HIGHWAY BRIDGES, DIVISION II, SECTION 18.7.2.6) IS NOT REQUIRED.

3. LOAD PLATES:

   STEEL LOAD PLATES SHALL BE ASTM A709, GRADE 50 WEATHERING STEEL ACCORDING TO 711.01. VULCANIZE THE STEEL LOAD PLATES TO THE ELASTOMER DURING THE MOULDING PROCESS.

DESIGN AGENCY
CT Consultants
engineers/architects/planners
7965 N. High Street, Suite 340, Columbus, OH 43235
614.885.1700 www.ctconsultants.com

DESIGNED	DRAWN	REVIEWED	DATE
DMB	DMB	REN	11/14
CHECKED	REVISED	STRUCTURE FILE NUMBER	
JFM		8310000	

BEARING DETAILS II
BRIDGE NO. WAR-71-0253
SOCIALVILLE-FOSTERS ROAD OVER I-71

WAR-71-2.54

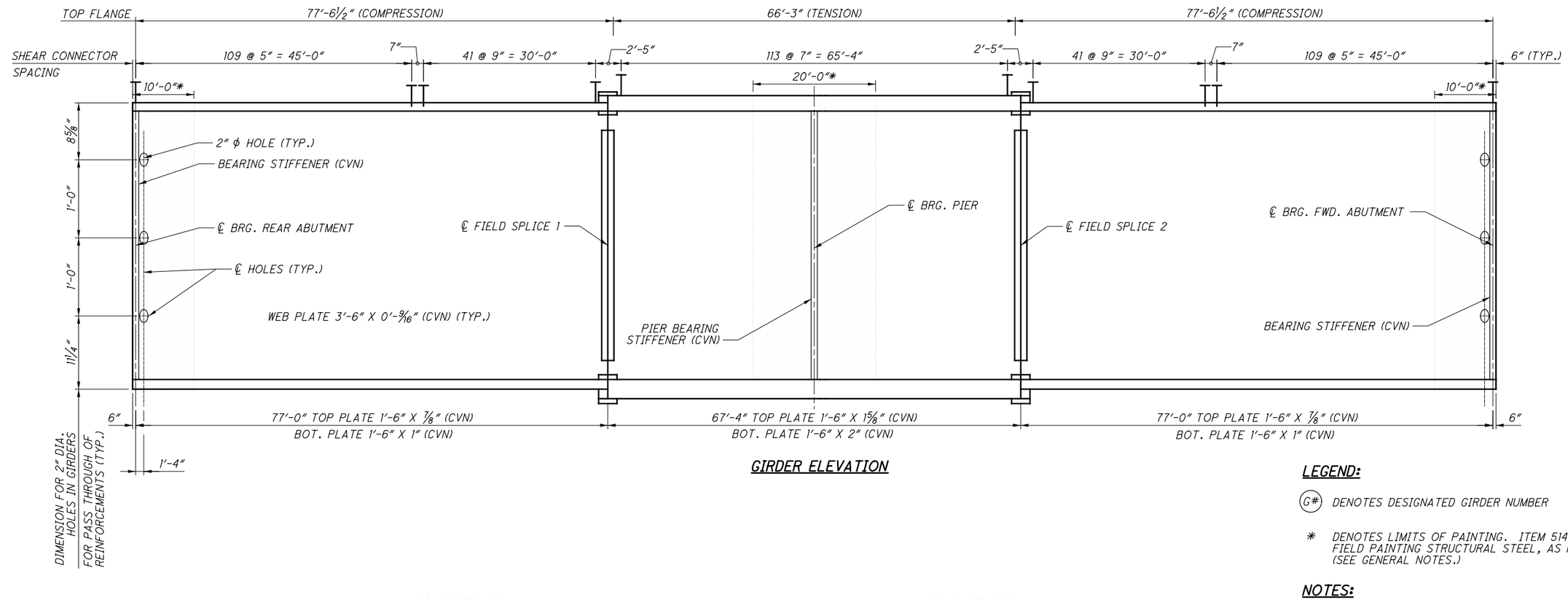

GIRDER ELEVATION

LEGEND:

(G#) DENOTES DESIGNATED GIRDER NUMBER

* DENOTES LIMITS OF PAINTING. ITEM 514 - FIELD PAINTING STRUCTURAL STEEL, AS PER PLAN. (SEE GENERAL NOTES.)

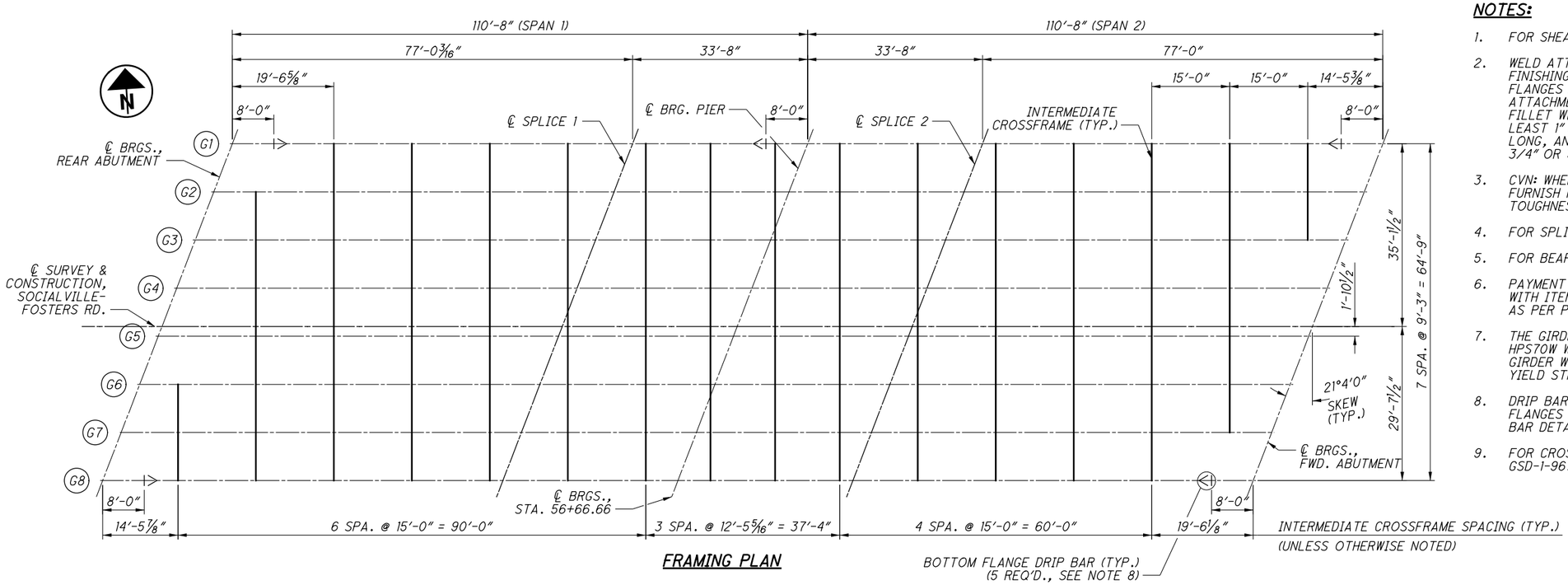

FRAMING PLAN

NOTES:

1. FOR SHEAR STUD DETAIL, SEE SHEET 22 OF 37.
2. WELD ATTACHMENT OF SUPPORTS FOR CONCRETE DECK FINISHING MACHINE TO AREAS OF THE FASCIA STRINGER FLANGES DESIGNATED "COMPRESSION". DO NOT WELD ATTACHMENTS TO AREAS DESIGNATED "TENSION". FILLET WELDS TO COMPRESSION FLANGES SHALL BE AT LEAST 1" FROM EDGE OF FLANGE, BE NO MORE THAN 2" LONG, AND BE AT LEAST 1/4" FOR THICKNESSES UP TO 3/4" OR 5/16" FOR GREATER THAN 3/4" THICK.
3. CVN: WHERE A SHAPE OR PLATE IS DESIGNATED (CVN), FURNISH MATERIAL THAT MEETS THE MINIMUM NOTCH TOUGHNESS REQUIREMENTS AS SPECIFIED IN 711.01.
4. FOR SPLICE DETAILS, SEE SHEET 22 OF 37.
5. FOR BEARING STIFFENER DETAILS, SEE SHEET 19 OF 37.
6. PAYMENT FOR BEARING STIFFENERS TO BE INCLUDED WITH ITEM 513 - STRUCTURAL STEEL MEMBERS, LEVEL 3, AS PER PLAN.
7. THE GIRDER FLANGES SHALL BE ASTM A709 GRADE HPS70W WITH A YIELD STRENGTH OF 70 KSI. THE GIRDER WEB SHALL BE ASTM A709 GRADE 50W WITH A YIELD STRENGTH OF 50 KSI.
8. DRIP BARS SHALL BE INSTALLED ON BOTTOM OF GIRDER FLANGES AT LOCATION SHOWN ON THE PLAN. FOR DRIP BAR DETAILS, SEE SHEET 22 OF 37.
9. FOR CROSSFRAME DETAILS, SEE ODOT STD. DWG. GSD-1-96.

DESIGN AGENCY
CT Consultants
engineers|architects|planners
7965 N. High St., Suite 100, Columbus, OH 43235
614.885.7900 www.ctconsultants.com

DESIGNED	DRAWN	REVIEWED	DATE
MLF	MLF	REN	11/14
CHECKED	REVISED	STRUCTURE FILE NUMBER	
JFM		8310000	

GIRDER ELEVATION AND FRAMING PLAN
BRIDGE NO. WAR-71-0253
SOCIALVILLE-FOSTERS RD. OVER I-71

WAR-71-2.54

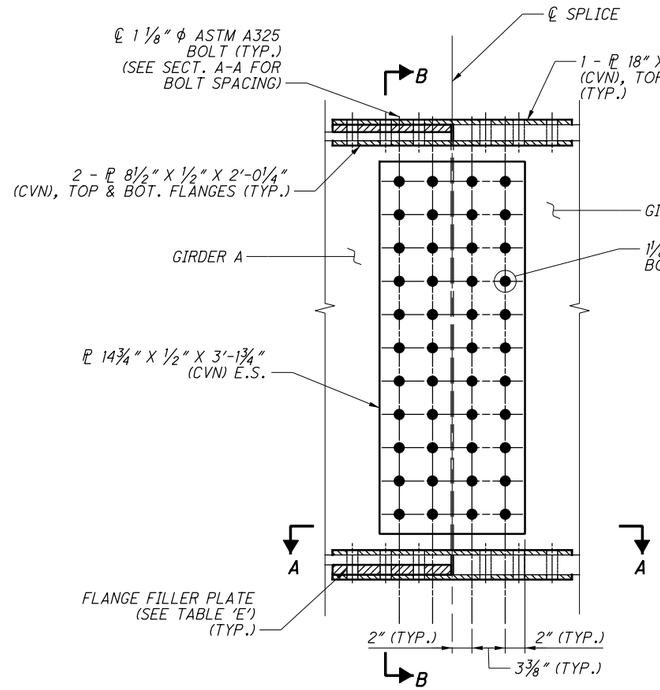

SPLICE DETAIL

(SPLICE 1 SHOWN & SPLICE 2 OPPOSITE HAND)

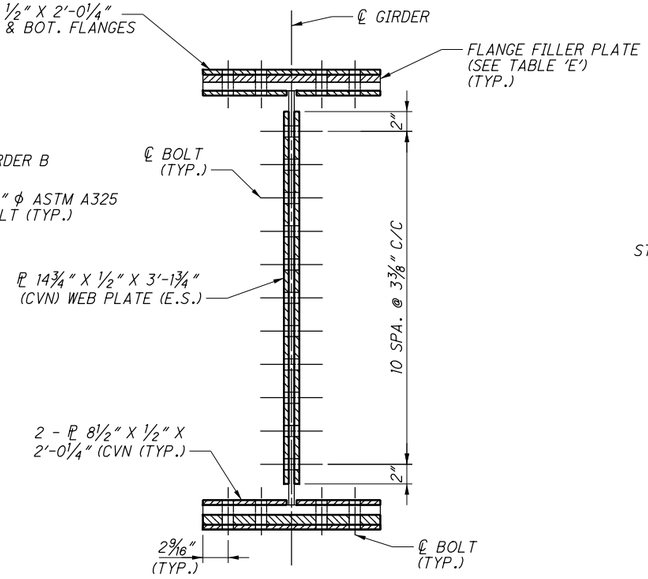

SECTION B-B

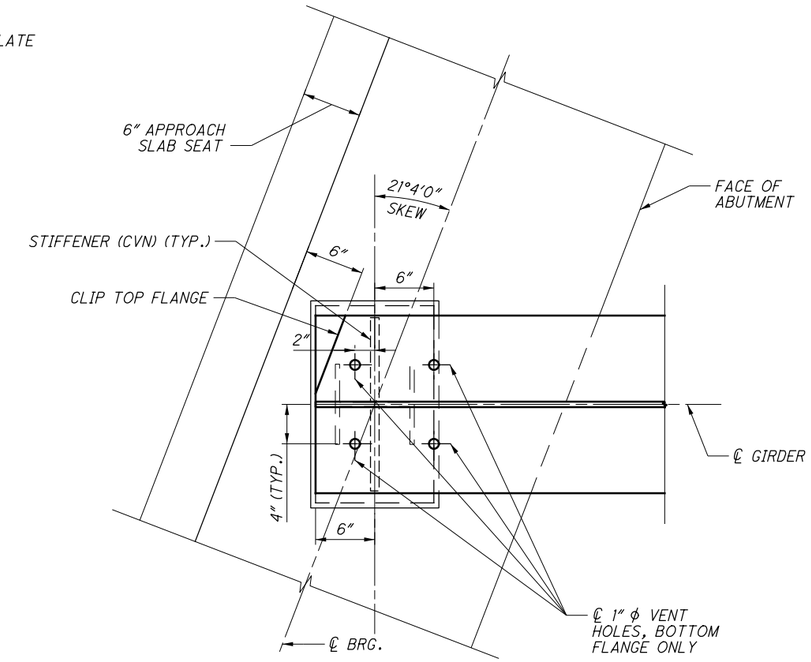

PLAN - TYPICAL BEAM END DETAIL

(REAR ABUTMENT SHOWN, FORWARD ABUTMENT SIMILAR BUT OPPOSITE)

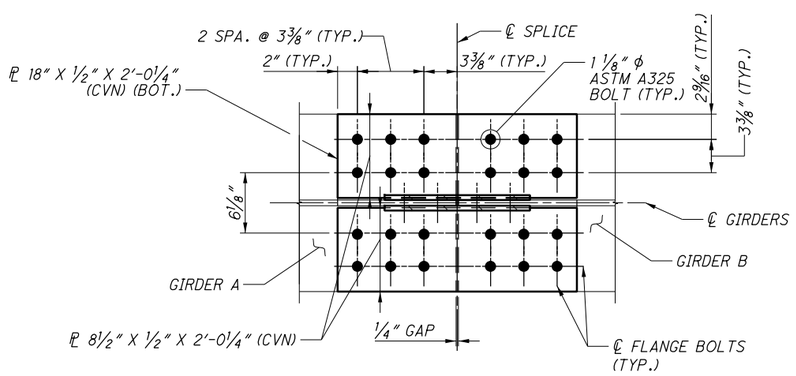

SECTION A-A

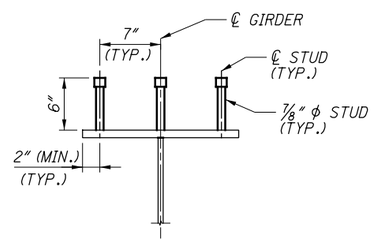

SHEAR STUD DETAIL

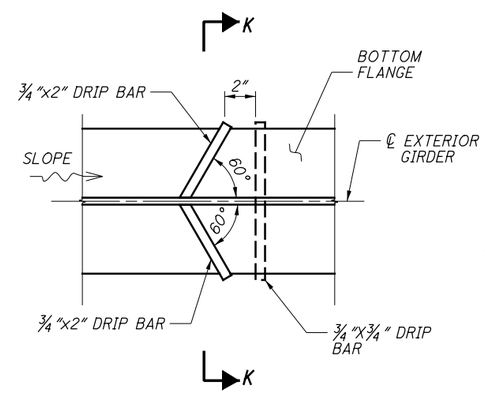

DRIP BAR DETAIL

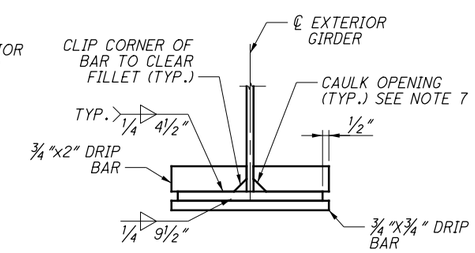

SECTION K

(SEE NOTES 7 & 8)

NOTES:

1. BOLTS SHALL BE 1 1/8" DIA. ASTM A325 TYPE III, HIGH STRENGTH BOLTS.
2. ON ALL FIELD SPLICES, BOLT HEADS SHALL BE PLACED ON THE OUTSIDE FACE OF THE EXTERIOR BEAM AND ON THE BOTTOM OF THE BOTTOM FLANGE PLATES AND TOP OF THE TOP FLANGE PLATES.
3. FOR BEARING DETAILS, SEE SHEETS 19 & 20 OF 37.
4. WHERE A SHAPE OR PLATE IS DESIGNATED (CVN), FURNISH MATERIAL THAT MEETS THE MINIMUM NOTCH TOUGHNESS REQUIREMENTS AS SPECIFIED IN 711.01.
5. ALL PLATES USED IN THE GIRDER SPLICES SHALL BE ASTM A709 GRADE 70W HIGH PERFORMANCE STEEL.
6. FOR BEARING STIFFENER DETAILS, SEE SHEET 19 OF 37.
7. FOR THE DRIP BARS, CAULK UNWELDED MATING SURFACES WITH TWO COMPONENT, 100% SOLIDS NON-SAG, NON-SHRINK EPOXY CAPABLE OF FILLING VOIDS UP TO 1/2" WIDE. PAYMENT TO BE INCLUDED WITH ITEM 513, STRUCTURAL STEEL MEMBERS, LEVEL 4, AS PER PLAN.
8. FOR DRIP BARS, ONLY WELD THE UPSLOPE SIDE OF THE DRIP PLATE TO FLANGE. SEE FRAMING PLAN (SHEET 21 OF 37) FOR LOCATION OF DRIP BARS.

TABLE E

LOCATION	GIRDER A	GIRDER B	FLANGE FILLER PLATE
TOP FLANGE	ℙ 18X7/8 (CVN)	ℙ 18X1 5/8 (CVN)	18"X 3/4"X 12"
BOTTOM FLANGE	ℙ 18X1 (CVN)	ℙ 18X2 (CVN)	18"X 1"X 12"
WEB	ℙ 42X9/16 (CVN)	ℙ 42X9/16 (CVN)	NONE

DESIGN AGENCY
CT Consultants
civil/structural/transportation planners
7965 N. High Street, Suite 360, Columbus, OH 43235
614.885.1700 www.ctconsultants.com

DESIGNED	DRAWN	REVIEWED	DATE
DMB	DMB	REN	11/14
CHECKED	REVISED	STRUCTURE FILE NUMBER	
JFM		8310000	

SUPERSTRUCTURE DETAILS I

BRIDGE NO. WAR-71-0253

SOCIALVILLE-FOSTERS ROAD OVER I-71

WAR-71-2.54

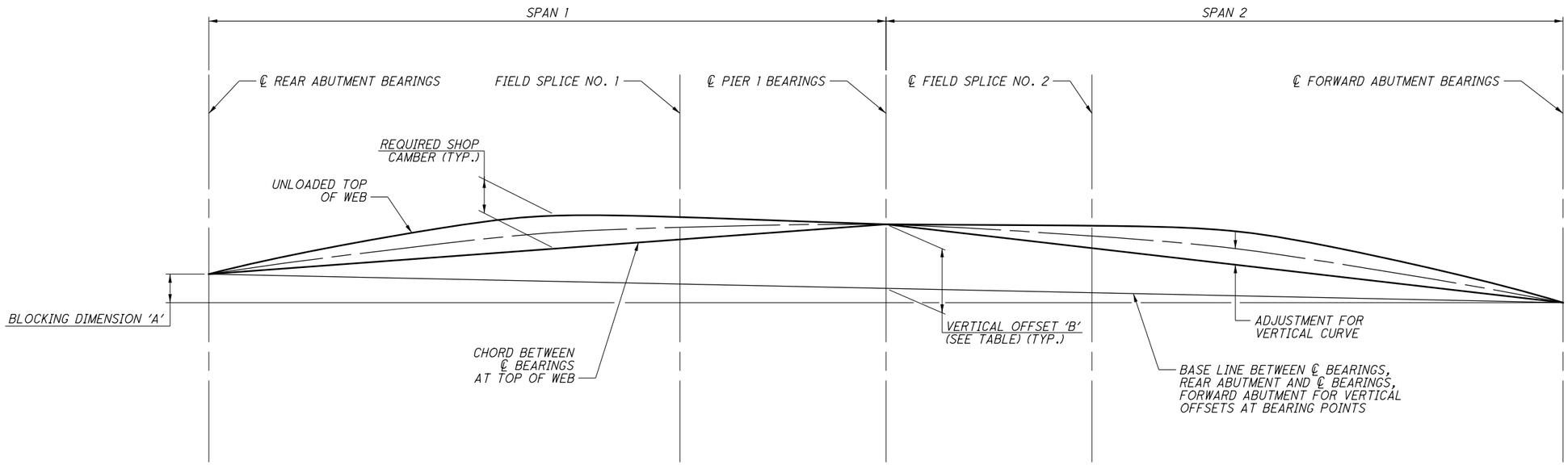

CAMBER DIAGRAM

(GIRDER 1 SHOWN, OTHER GIRDERS SIMILAR)
(DIAGRAM NOT TO SCALE)

BLOCKING DIMENSION 'A' (INCHES)	
GIRDER 1	4 5/8
GIRDER 2	3 1/4
GIRDER 3	1 7/8
GIRDER 4	1/2
GIRDER 5	-7/8
GIRDER 6	-2 1/4
GIRDER 7	-3 5/8
GIRDER 8	-5

VERTICAL OFFSETS AT BEARING POINTS (INCHES)								
BEARING POINT	GIRDER 1	GIRDER 2	GIRDER 3	GIRDER 4	GIRDER 5	GIRDER 6	GIRDER 7	GIRDER 8
REAR ABUTMENT	0	0	0	0	0	0	0	0
PIER 1 DIMENSION 'B'	10 1/2	10 1/2	10 1/2	10 1/2	10 1/2	10 1/2	10 1/2	10 1/2
FORWARD ABUTMENT	0	0	0	0	0	0	0	0

NOTES:

1. NEGATIVE VALUES FOR DEFLECTIONS INDICATE DEFLECTIONS UPWARD. NEGATIVE VALUES FOR VERTICAL CURVE ADJUSTMENT AND TOTAL REQUIRED SHOP CAMBER INDICATE VALUES BELOW THE CHORD LINE.
2. DEFLECTIONS AND ADJUSTMENT FOR VERTICAL CURVES ARE GIVEN TO THE NEAREST 1/16th INCH.
3. FOR CAMBER TABLES, SEE SHEET 24 OF 37.

DESIGN AGENCY
CT Consultants
engineering/architecture/planners
7965 N. High Street, Suite 340 Columbus, OH 43235
614.885.1700 www.ctconsultants.com

DESIGNED	DRAWN	REVIEWED	DATE
JFM	JFM	REN	11/14
CHECKED	REVISED	STRUCTURE FILE NUMBER	
TAB		8310000	

CAMBER DIAGRAM
BRIDGE NO. WAR-71-0253
SOCIALVILLE-FOSTERS ROAD OVER I-71

WAR-71-2.54

		SPAN 1										SPAN 2									
GIRDER 1	SPAN LOCATION	0.1	0.2	0.3	0.4	0.5	0.6	F.S. 1	0.7	0.8	0.9	0.1	0.2	0.3	F.S. 2	0.4	0.5	0.6	0.7	0.8	0.9
	DEFLECTION DUE TO WEIGHT OF STEEL	3/16	3/8	1/2	9/16	1/2	7/16	5/16	1/4	1/8	1/16	1/16	1/8	1/4	5/16	7/16	1/2	9/16	1/2	3/8	3/16
	DEFLECTION DUE TO REMAINING DEAD LOAD	1	1 3/4	2 5/16	2 1/2	2 5/16	1 15/16	1 5/16	1 5/16	11/16	3/16	3/16	11/16	1 5/16	1 5/16	1 15/16	2 5/16	2 1/2	2 5/16	1 3/4	1
	ADJUSTMENT REQUIRED FOR VERTICAL CURVE	15/16	1 11/16	2 1/4	2 9/16	2 11/16	2 9/16	2 1/4	2 1/4	1 11/16	15/16	15/16	1 11/16	2 1/4	2 1/4	2 9/16	2 11/16	2 9/16	2 1/4	1 11/16	15/16
	REQUIRED SHOP CAMBER	2 1/8	3 13/16	5 1/16	5 5/8	5 1/2	4 15/16	3 7/8	3 13/16	2 1/2	1 3/16	1 3/16	2 1/2	3 13/16	3 7/8	4 15/16	5 1/2	5 5/8	5 1/16	3 13/16	2 1/8
GIRDER 2		SPAN 1										SPAN 2									
	SPAN LOCATION	0.1	0.2	0.3	0.4	0.5	0.6	F.S. 1	0.7	0.8	0.9	0.1	0.2	0.3	F.S. 2	0.4	0.5	0.6	0.7	0.8	0.9
	DEFLECTION DUE TO WEIGHT OF STEEL	3/16	3/8	1/2	9/16	1/2	7/16	5/16	1/4	1/8	1/16	1/16	1/8	1/4	5/16	7/16	1/2	9/16	1/2	3/8	3/16
	DEFLECTION DUE TO REMAINING DEAD LOAD	1	1 3/4	2 5/16	2 1/2	2 5/16	1 15/16	1 5/16	1 5/16	11/16	3/16	3/16	11/16	1 5/16	1 5/16	1 15/16	2 5/16	2 1/2	2 5/16	1 3/4	1
	ADJUSTMENT REQUIRED FOR VERTICAL CURVE	15/16	1 11/16	2 1/4	2 9/16	2 11/16	2 9/16	2 1/4	2 1/4	1 11/16	15/16	15/16	1 11/16	2 1/4	2 1/4	2 9/16	2 11/16	2 9/16	2 1/4	1 11/16	15/16
	REQUIRED SHOP CAMBER	2 1/8	3 13/16	5 1/16	5 5/8	5 1/2	4 15/16	3 7/8	3 13/16	2 1/2	1 3/16	1 3/16	2 1/2	3 13/16	3 7/8	4 15/16	5 1/2	5 5/8	5 1/16	3 13/16	2 1/8
GIRDER 3		SPAN 1										SPAN 2									
	SPAN LOCATION	0.1	0.2	0.3	0.4	0.5	0.6	F.S. 1	0.7	0.8	0.9	0.1	0.2	0.3	F.S. 2	0.4	0.5	0.6	0.7	0.8	0.9
	DEFLECTION DUE TO WEIGHT OF STEEL	3/16	3/8	1/2	9/16	1/2	7/16	5/16	1/4	1/8	1/16	1/16	1/8	1/4	5/16	7/16	1/2	9/16	1/2	3/8	3/16
	DEFLECTION DUE TO REMAINING DEAD LOAD	1	1 3/4	2 5/16	2 1/2	2 5/16	1 15/16	1 5/16	1 5/16	11/16	3/16	3/16	11/16	1 5/16	1 5/16	1 15/16	2 5/16	2 1/2	2 5/16	1 3/4	1
	ADJUSTMENT REQUIRED FOR VERTICAL CURVE	15/16	1 11/16	2 1/4	2 9/16	2 11/16	2 9/16	2 1/4	2 1/4	1 11/16	15/16	15/16	1 11/16	2 1/4	2 1/4	2 9/16	2 11/16	2 9/16	2 1/4	1 11/16	15/16
	REQUIRED SHOP CAMBER	2 1/8	3 13/16	5 1/16	5 5/8	5 1/2	4 15/16	3 7/8	3 13/16	2 1/2	1 3/16	1 3/16	2 1/2	3 13/16	3 7/8	4 15/16	5 1/2	5 5/8	5 1/16	3 13/16	2 1/8
GIRDER 4		SPAN 1										SPAN 2									
	SPAN LOCATION	0.1	0.2	0.3	0.4	0.5	0.6	F.S. 1	0.7	0.8	0.9	0.1	0.2	0.3	F.S. 2	0.4	0.5	0.6	0.7	0.8	0.9
	DEFLECTION DUE TO WEIGHT OF STEEL	3/16	3/8	1/2	9/16	1/2	7/16	5/16	1/4	1/8	1/16	1/16	1/8	1/4	5/16	7/16	1/2	9/16	1/2	3/8	3/16
	DEFLECTION DUE TO REMAINING DEAD LOAD	1	1 3/4	2 5/16	2 1/2	2 5/16	1 15/16	1 5/16	1 5/16	11/16	3/16	3/16	11/16	1 5/16	1 5/16	1 15/16	2 5/16	2 1/2	2 5/16	1 3/4	1
	ADJUSTMENT REQUIRED FOR VERTICAL CURVE	15/16	1 11/16	2 1/4	2 9/16	2 11/16	2 9/16	2 1/4	2 1/4	1 11/16	15/16	15/16	1 11/16	2 1/4	2 1/4	2 9/16	2 11/16	2 9/16	2 1/4	1 11/16	15/16
	REQUIRED SHOP CAMBER	2 1/8	3 13/16	5 1/16	5 5/8	5 1/2	4 15/16	3 7/8	3 13/16	2 1/2	1 3/16	1 3/16	2 1/2	3 13/16	3 7/8	4 15/16	5 1/2	5 5/8	5 1/16	3 13/16	2 1/8
GIRDER 5		SPAN 1										SPAN 2									
	SPAN LOCATION	0.1	0.2	0.3	0.4	0.5	0.6	F.S. 1	0.7	0.8	0.9	0.1	0.2	0.3	F.S. 2	0.4	0.5	0.6	0.7	0.8	0.9
	DEFLECTION DUE TO WEIGHT OF STEEL	3/16	3/8	1/2	9/16	1/2	7/16	5/16	1/4	1/8	1/16	1/16	1/8	1/4	5/16	7/16	1/2	9/16	1/2	3/8	3/16
	DEFLECTION DUE TO REMAINING DEAD LOAD	1	1 3/4	2 5/16	2 1/2	2 5/16	1 15/16	1 5/16	1 5/16	11/16	3/16	3/16	11/16	1 5/16	1 5/16	1 15/16	2 5/16	2 1/2	2 5/16	1 3/4	1
	ADJUSTMENT REQUIRED FOR VERTICAL CURVE	15/16	1 11/16	2 1/4	2 9/16	2 11/16	2 9/16	2 1/4	2 1/4	1 11/16	15/16	15/16	1 11/16	2 1/4	2 1/4	2 9/16	2 11/16	2 9/16	2 1/4	1 11/16	15/16
	REQUIRED SHOP CAMBER	2 1/8	3 13/16	5 1/16	5 5/8	5 1/2	4 15/16	3 7/8	3 13/16	2 1/2	1 3/16	1 3/16	2 1/2	3 13/16	3 7/8	4 15/16	5 1/2	5 5/8	5 1/16	3 13/16	2 1/8
GIRDER 6		SPAN 1										SPAN 2									
	SPAN LOCATION	0.1	0.2	0.3	0.4	0.5	0.6	F.S. 1	0.7	0.8	0.9	0.1	0.2	0.3	F.S. 2	0.4	0.5	0.6	0.7	0.8	0.9
	DEFLECTION DUE TO WEIGHT OF STEEL	3/16	3/8	1/2	9/16	1/2	7/16	5/16	1/4	1/8	1/16	1/16	1/8	1/4	5/16	7/16	1/2	9/16	1/2	3/8	3/16
	DEFLECTION DUE TO REMAINING DEAD LOAD	1	1 3/4	2 5/16	2 1/2	2 5/16	1 15/16	1 5/16	1 5/16	11/16	3/16	3/16	11/16	1 5/16	1 5/16	1 15/16	2 5/16	2 1/2	2 5/16	1 3/4	1
	ADJUSTMENT REQUIRED FOR VERTICAL CURVE	15/16	1 11/16	2 1/4	2 9/16	2 11/16	2 9/16	2 1/4	2 1/4	1 11/16	15/16	15/16	1 11/16	2 1/4	2 1/4	2 9/16	2 11/16	2 9/16	2 1/4	1 11/16	15/16
	REQUIRED SHOP CAMBER	2 1/8	3 13/16	5 1/16	5 5/8	5 1/2	4 15/16	3 7/8	3 13/16	2 1/2	1 3/16	1 3/16	2 1/2	3 13/16	3 7/8	4 15/16	5 1/2	5 5/8	5 1/16	3 13/16	2 1/8
GIRDER 7		SPAN 1										SPAN 2									
	SPAN LOCATION	0.1	0.2	0.3	0.4	0.5	0.6	F.S. 1	0.7	0.8	0.9	0.1	0.2	0.3	F.S. 2	0.4	0.5	0.6	0.7	0.8	0.9
	DEFLECTION DUE TO WEIGHT OF STEEL	3/16	3/8	1/2	9/16	1/2	7/16	5/16	1/4	1/8	1/16	1/16	1/8	1/4	5/16	7/16	1/2	9/16	1/2	3/8	3/16
	DEFLECTION DUE TO REMAINING DEAD LOAD	1	1 3/4	2 5/16	2 1/2	2 5/16	1 15/16	1 5/16	1 5/16	11/16	3/16	3/16	11/16	1 5/16	1 5/16	1 15/16	2 5/16	2 1/2	2 5/16	1 3/4	1
	ADJUSTMENT REQUIRED FOR VERTICAL CURVE	15/16	1 11/16	2 1/4	2 9/16	2 11/16	2 9/16	2 1/4	2 1/4	1 11/16	15/16	15/16	1 11/16	2 1/4	2 1/4	2 9/16	2 11/16	2 9/16	2 1/4	1 11/16	15/16
	REQUIRED SHOP CAMBER	2 1/8	3 13/16	5 1/16	5 5/8	5 1/2	4 15/16	3 7/8	3 13/16	2 1/2	1 3/16	1 3/16	2 1/2	3 13/16	3 7/8	4 15/16	5 1/2	5 5/8	5 1/16	3 13/16	2 1/8
GIRDER 8		SPAN 1										SPAN 2									
	SPAN LOCATION	0.1	0.2	0.3	0.4	0.5	0.6	F.S. 1	0.7	0.8	0.9	0.1	0.2	0.3	F.S. 2	0.4	0.5	0.6	0.7	0.8	0.9
	DEFLECTION DUE TO WEIGHT OF STEEL	3/16	3/8	1/2	9/16	1/2	7/16	5/16	1/4	1/8	1/16	1/16	1/8	1/4	5/16	7/16	1/2	9/16	1/2	3/8	3/16
	DEFLECTION DUE TO REMAINING DEAD LOAD	1	1 3/4	2 5/16	2 1/2	2 5/16	1 15/16	1 5/16	1 5/16	11/16	3/16	3/16	11/16	1 5/16	1 5/16	1 15/16	2 5/16	2 1/2	2 5/16	1 3/4	1
	ADJUSTMENT REQUIRED FOR VERTICAL CURVE	15/16	1 11/16	2 1/4	2 9/16	2 11/16	2 9/16	2 1/4	2 1/4	1 11/16	15/16	15/16	1 11/16	2 1/4	2 1/4	2 9/16	2 11/16	2 9/16	2 1/4	1 11/16	15/16
	REQUIRED SHOP CAMBER	2 1/8	3 13/16	5 1/16	5 5/8	5 1/2	4 15/16	3 7/8	3 13/16	2 1/2	1 3/16	1 3/16	2 1/2	3 13/16	3 7/8	4 15/16	5 1/2	5 5/8	5 1/16	3 13/16	2 1/8

NOTES:

1. NEGATIVE VALUES FOR DEFLECTIONS INDICATE DEFLECTIONS UPWARD. NEGATIVE VALUES FOR VERTICAL CURVE ADJUSTMENT AND TOTAL REQUIRED SHOP CAMBER INDICATE VALUES BELOW THE CHORD LINE.
2. DEFLECTIONS AND ADJUSTMENT FOR VERTICAL CURVES ARE GIVEN TO THE NEAREST 1/16th INCH.
3. FOR CAMBER DIAGRAM, SEE SHEET 23 OF 37.

DESIGN AGENCY
CT Consultants
engineers/architects/planners
7965 N. High Street, Suite 360, Columbus, OH 43235
614.885.1700 www.ctconsultants.com

DESIGNED	DRAWN	REVIEWED	DATE
JFM	JFM	REN	11/14
CHECKED	REVISED	STRUCTURE FILE NUMBER	
TAB		8310000	

CAMBER AND DEFLECTION TABLES
BRIDGE NO. WAR-71-0253
SOCIALVILLE-FOSTERS ROAD OVER I-71

WAR-71-2.54

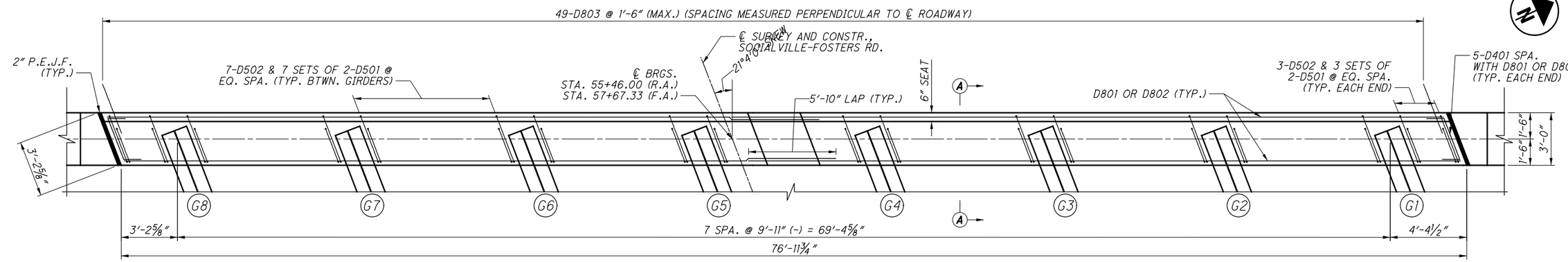

PLAN

(R.A. SHOWN, F.A. SIMILAR BUT OPPOSITE)

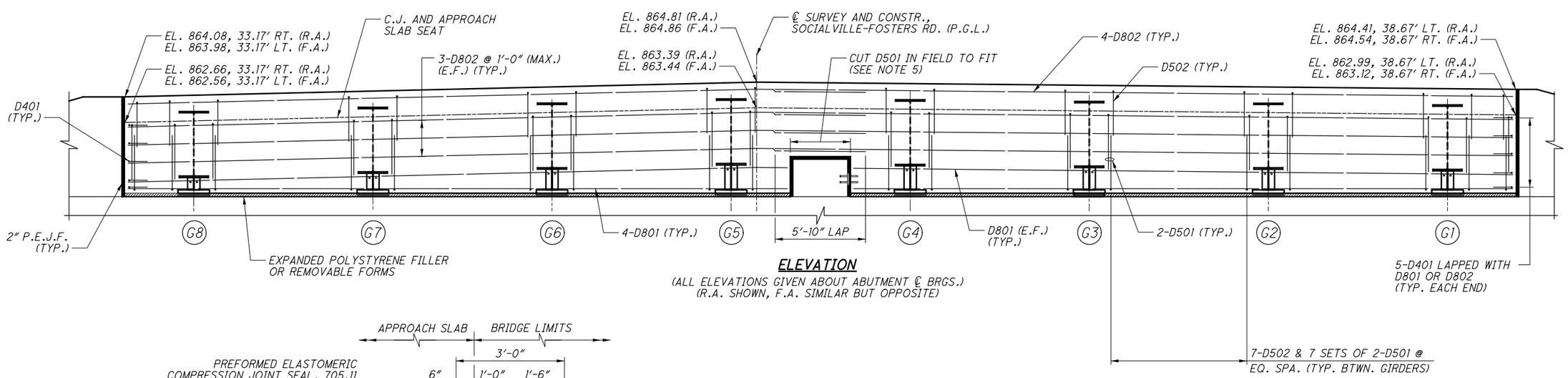

ELEVATION

(ALL ELEVATIONS GIVEN ABOUT ABUTMENT ℄ BRGS.)
(R.A. SHOWN, F.A. SIMILAR BUT OPPOSITE)

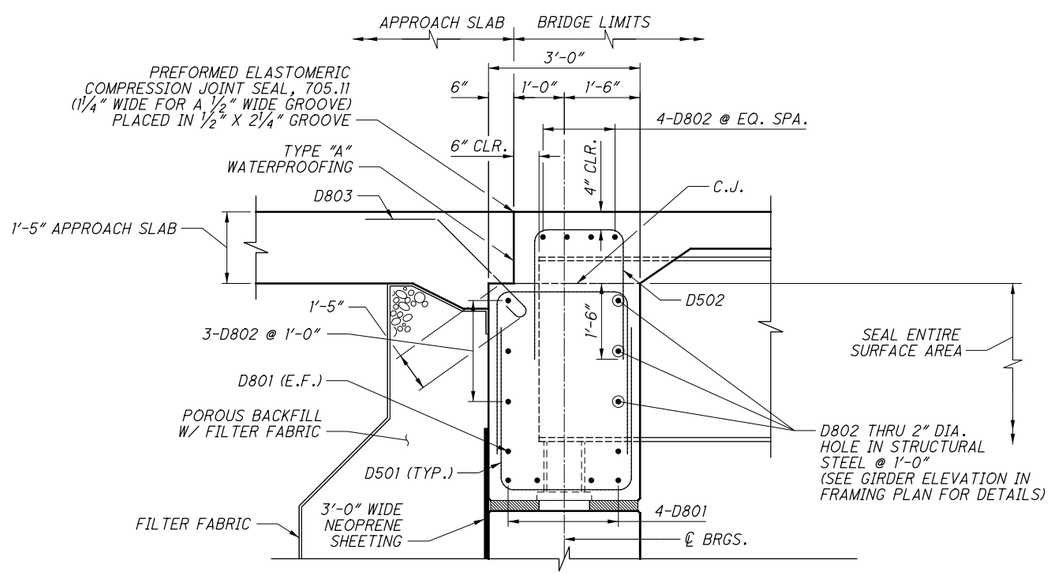

SECTION A-A

(R.A. SHOWN, F.A. SIMILAR BUT OPPOSITE)

NOTES:

1. FOR ABUTMENT PLAN AND ELEVATION, SEE SHEETS 13 AND 15 OF 37.
2. THE 2" P.E.J.F. SHALL EXTEND FROM THE BEAM SEAT TO THE TOP OF THE WING WALL.
3. FOR REINFORCEMENT SCHEDULE, SEE SHEET 37 OF 37.
4. FOR ADDITIONAL ABUTMENT DETAILS, SEE ODOT STANDARD DRAWING SICD-1-96.
5. WHERE REINFORCING STEEL MAY REQUIRE FIELD CUTTING TO BE PROPERLY FITTED, DAMAGED EPOXY COATING AREAS SHALL BE CLEANED AND REPAIRED IN ACCORDANCE TO THE CMS 509.09 BEFORE CONCRETE PLACEMENT. PAYMENT SHALL BE INCLUDED WITH ITEM 509, EPOXY COATED REINFORCING STEEL.
6. FOR FRAMING PLAN, SEE SHEET 21 OF 37.

DESIGN AGENCY
CT Consultants
engineers|architects|planners
7965 N. High St., Suite 200, Columbus, OH 43235
614.885.7900 www.ctconsultants.com

DESIGNED	DRAWN	REVIEWED	DATE
MLF	MLF	REN	11/14
CHECKED	REVISED	STRUCTURE FILE NUMBER	
JFM		8310000	

ABUTMENT DIAPHRAGM DETAILS
BRIDGE NO. WAR-71-0253
SOCIALVILLE-FOSTERS RD. OVER I-71

WAR-71-2.54

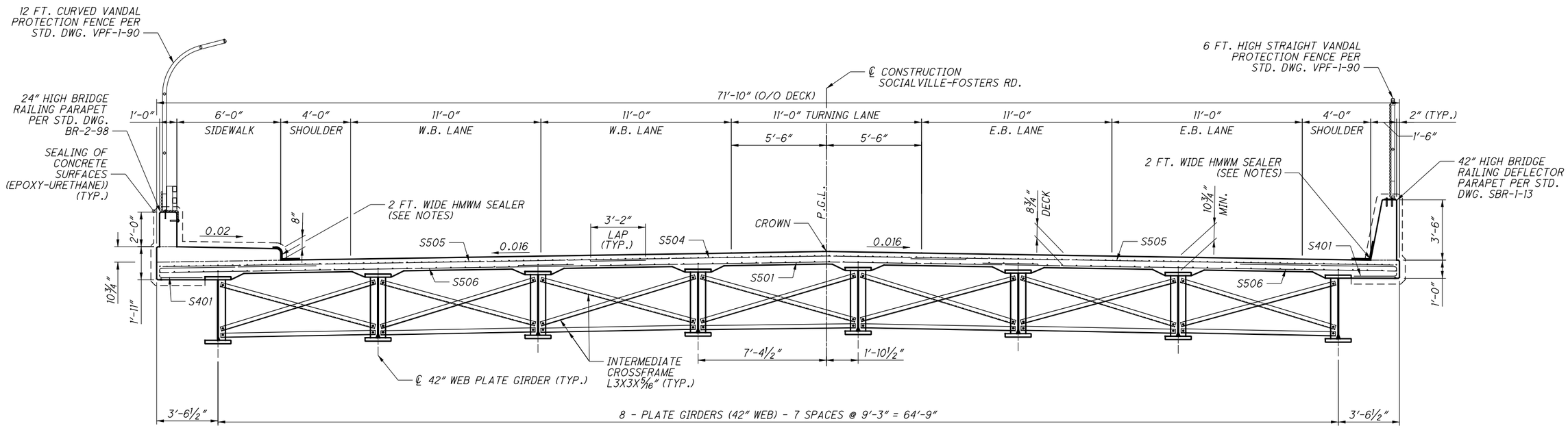

TRANSVERSE SECTION
(LOOKING UP STATION)

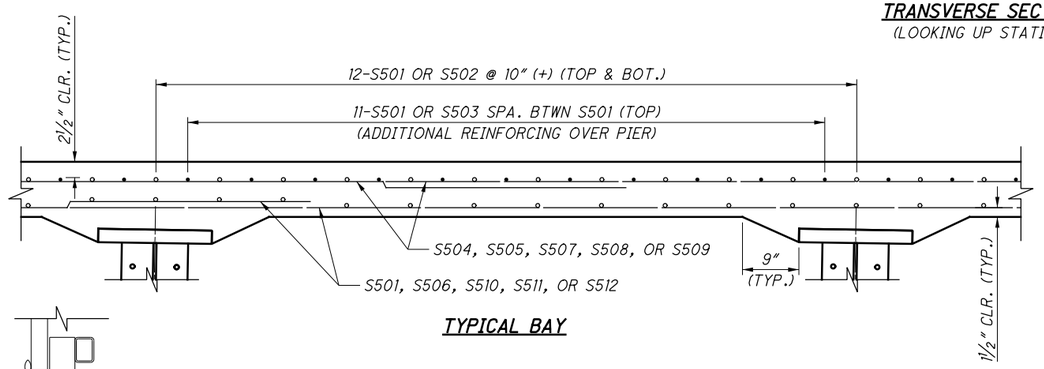

TYPICAL BAY

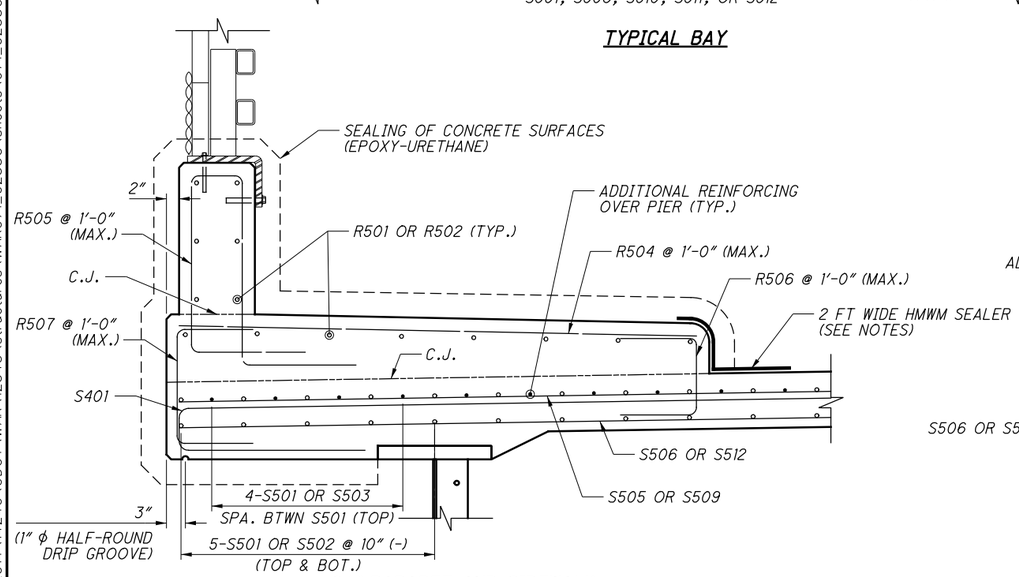

24" PARAPET AND SIDEWALK

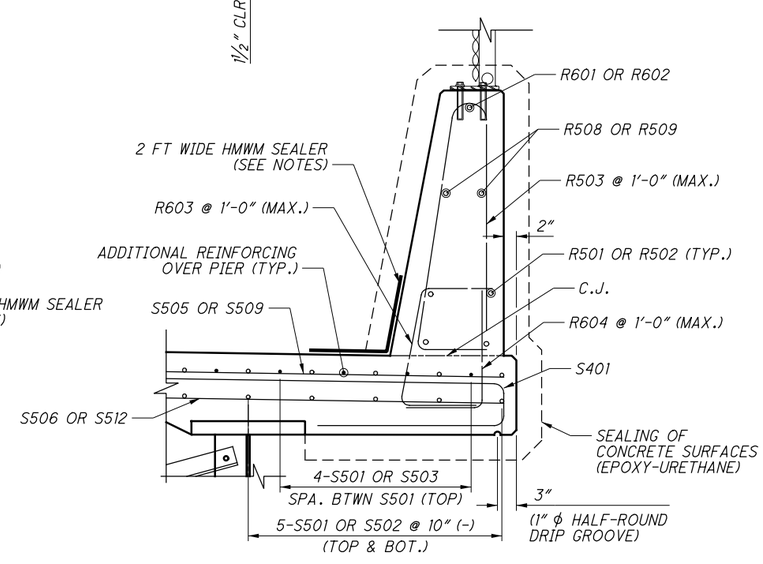

42" PARAPET

NOTES:

1. FOR DECK PLAN SEE SHEET 27 OF 37.
2. FOR RAILING, VANDAL FENCE POST, AND CONTROL JOINT LAYOUT, SEE SHEET 27 OF 37.
3. FOR REINFORCEMENT SCHEDULE, SEE SHEET 37 OF 37.
4. HIGH MOLECULAR WEIGHT METHACRYLATE (HMWM) SEALER SHOWN IN SECTION AND AT LOCATIONS SPECIFIED, SHALL BE INCLUDED IN PRICE BID FOR ITEM 512 - SEALING OF CONCRETE BRIDGE DECKS WITH HMWM RESIN.
5. FOR GIRDER AND SHEAR STUD DETAILS, SEE SHEET 21 AND 22 OF 37.
6. FOR SCREED ELEVATIONS, TOP OF HAUNCH AND FINAL DECK SURFACE ELEVATIONS, SEE SHEETS 30 THRU 34 OF 37.
7. DECK SLAB CONCRETE QUANTITY: THE ESTIMATED QUANTITY OF DECK SLAB CONCRETE IS BASED ON THE CONSTANT DECK SLAB THICKNESS, AS SHOWN, PLUS THE QUANTITY OF CONCRETE THAT FORMS EACH GIRDER HAUNCH. THE ESTIMATE ASSUMES A CONSTANT HAUNCH THICKNESS OF 2½" INCHES AND A CONSTANT HAUNCH WIDTH OUTSIDE THE EDGE OF EACH GIRDER FLANGE OF 9 INCHES. DEVIATE FROM THIS HAUNCH THICKNESS AS NECESSARY TO PLACE THE DECK SURFACE AT THE FINISHED GRADE. THE ALLOWABLE TOLERANCE FOR THE HAUNCH WIDTH OUTSIDE THE EDGE OF EACH GIRDER FLANGE IS ± 3 INCHES.

   THE HAUNCH THICKNESS WAS MEASURED AT THE CENTERLINE OF THE GIRDER, FROM THE SURFACE OF THE DECK TO THE BOTTOM OF THE TOP FLANGE MINUS THE DECK SLAB THICKNESS. THE AREA OF ALL EMBEDDED STEEL PLATES HAS BEEN DEDUCTED FROM THE HAUNCH QUANTITY IN ACCORDANCE WITH 511.24.
8. STAY-IN-PLACE FORMS SHALL NOT BE USED.
9. APPROACH SLAB CONCRETE SHALL NOT BE PLACED IN THE SAME POUR AS THE DECK CONCRETE.

DESIGN AGENCY
CT Consultants
engineers|architects|planners
7965 Kenwood Road, Cincinnati, OH 45236
614.365.7700 www.ctconsultants.com

DESIGNED	DRAWN	REVIEWED	DATE
MLF	MLF	JFM	11/14
CHECKED	REVISED	STRUCTURE FILE NUMBER	
JFM		8310000	

BRIDGE TRANSVERSE SECTION
BRIDGE NO. WAR-71-0253
SOCIALVILLE-FOSTERS RD. OVER I-71

WAR-71-2.54

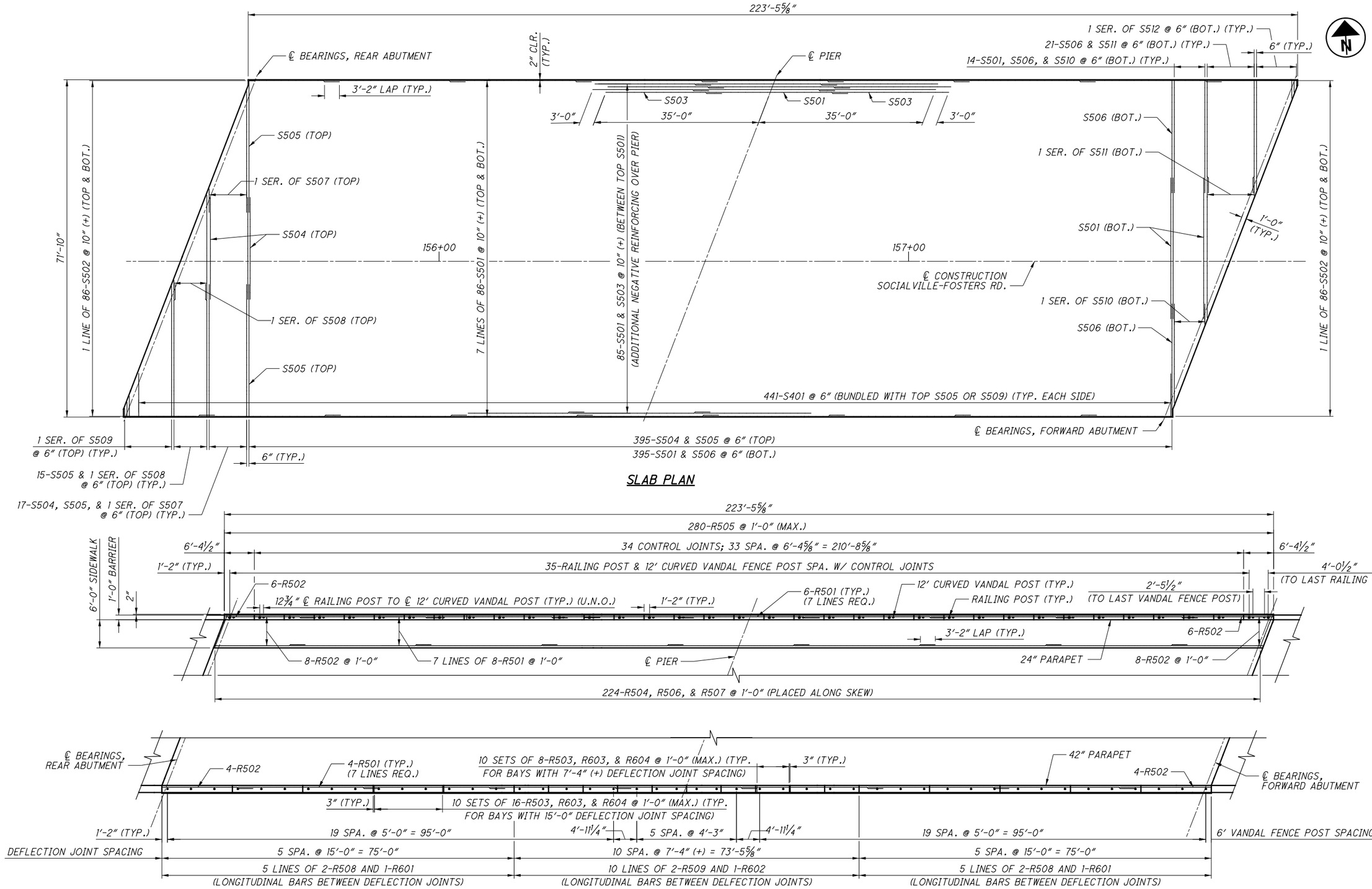

SLAB PLAN

PARAPET AND SIDEWALK REINFORCING PLAN

NOTES:

1. FOR TRANSVERSE SECTION AND PARAPET REINFORCING, SEE SHEET 26 OF 37.
2. FOR TYPICAL BRIDGE PARAPET ELEVATIONS, SEE SHEETS 28 AND 29 OF 37.
3. FOR REINFORCEMENT SCHEDULE, SEE SHEET 37 OF 37.

DESIGN AGENCY
CT Consultants
engineers | architects | planners
7965 N. High St., Suite 100, Columbus, OH 43235
614.885.7900 www.ctconsultants.com

DESIGNED	DRAWN	REVIEWED	DATE
MLF	MLF	REN	11/14
CHECKED	REVISED	STRUCTURE FILE NUMBER	
JFM		8310000	

DECK PLAN
BRIDGE NO. WAR-71-0253
SOCIALVILLE-FOSTERS RD. OVER I-71

WAR-71-2.54

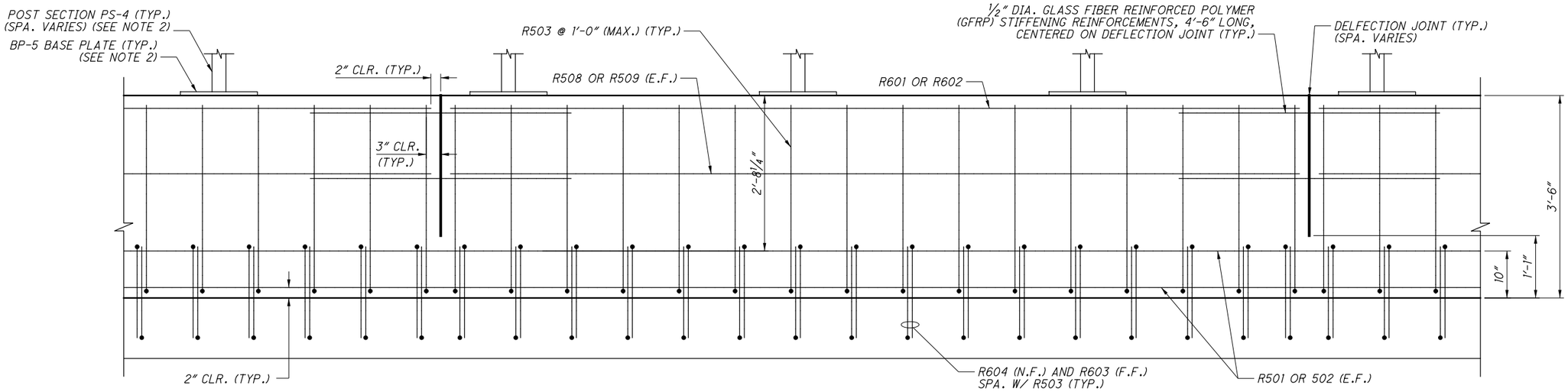

42" HIGH BRIDGE RAILING DEFLECTOR PARAPET ELEVATION

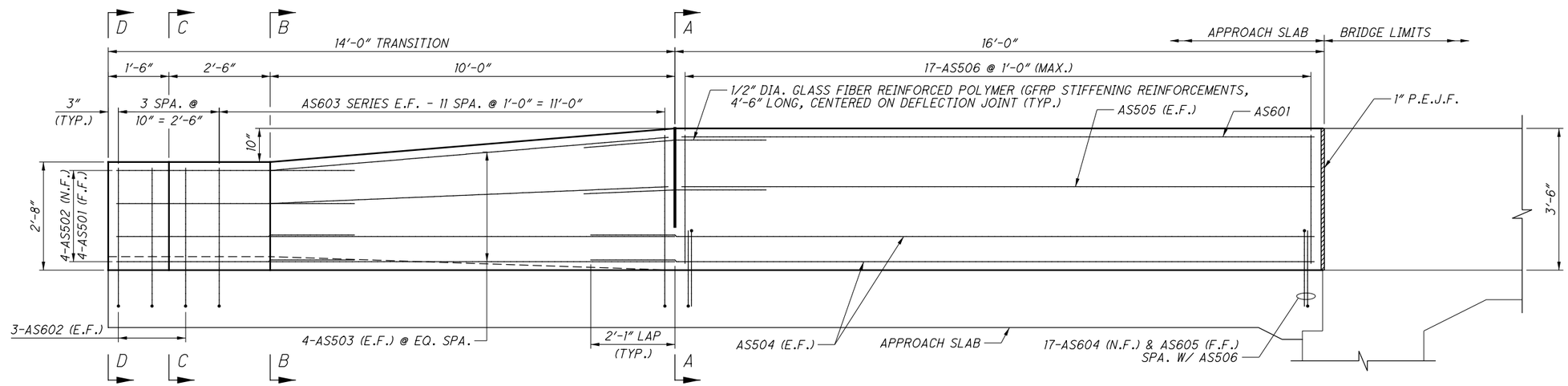

42" HIGH APPROACH SLAB RAILING DEFLECTOR PARAPET ELEVATION

(WEST APPROACH SLAB PARAPET SHOWN, EAST APPROACH SLAB PARAPET SIMILAR)

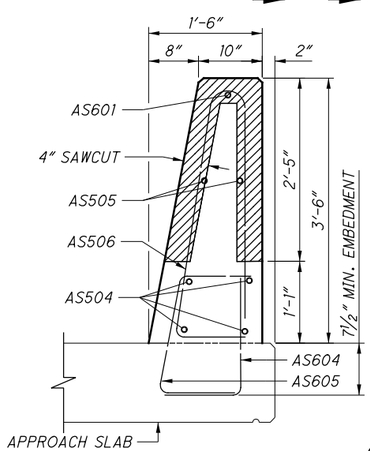

SECTION A-A

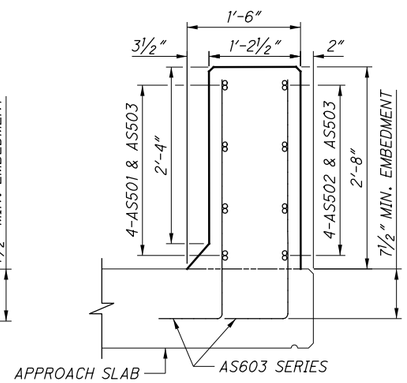

SECTION B-B

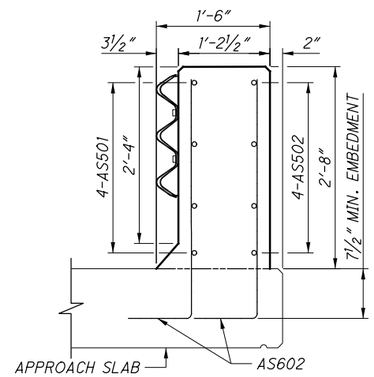

SECTION C-C

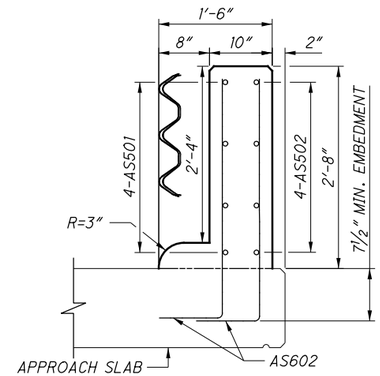

SECTION D-D

NOTES:

1. FOR FURTHER PARAPET DETAILS, REFER TO STANDARD DRAWING SBR-1-13.
2. FOR VANDAL PROTECTION FENCE DETAILS, REFER TO STANDARD DRAWING VPF-1-90.
3. BRIDGE TERMINAL ASSEMBLY NOT SHOWN. REFER TO STANDARD CONSTRUCTION DRAWINGS MGS-3.1 AND MGS-3.2 FOR DETAILS. SEE THE SITE PLAN, SHEET 1 OF 37, FOR TYPE OF BRIDGE TERMINAL ASSEMBLIES TO BE USED AND THEIR RESPECTIVE LOCATIONS.
4. FOR TRANSVERSE SECTION, SEE SHEET 26 OF 37.
5. FOR PLAN VIEW, SEE SHEET 27 OF 37.
6. FOR REINFORCEMENT SCHEDULE, SEE SHEET 37 OF 37.

DESIGN AGENCY
CT Consultants
engineers|architects|planners
7965 N. High St., Suite 200, Columbus, OH 43235
614.885.7700 www.ctconsultants.com

DESIGNED	DRAWN	REVIEWED	DATE
MLF	MLF	REN	11/14
CHECKED	REVISED	STRUCTURE FILE NUMBER	
JFM		8310000	

PARAPET DETAILS - 1
BRIDGE NO. WAR-71-0253
SOCIALVILLE-FOSTERS RD. OVER I-71

WAR-71-2.54

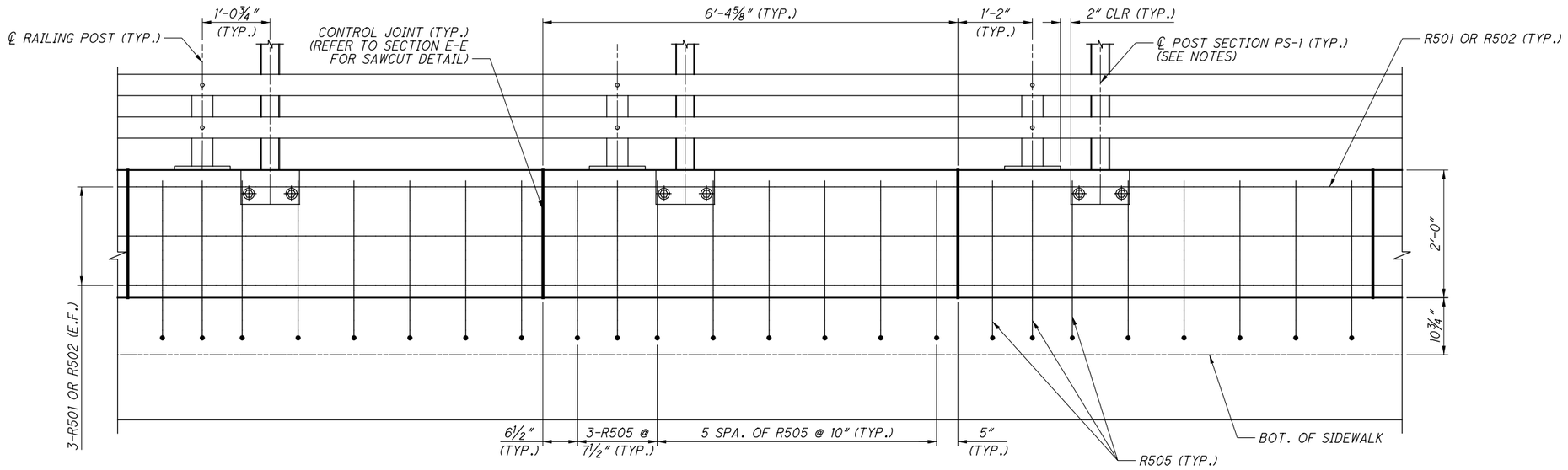

24" HIGH BRIDGE RAILING PARAPET ELEVATION
(LOOKING NORTH)

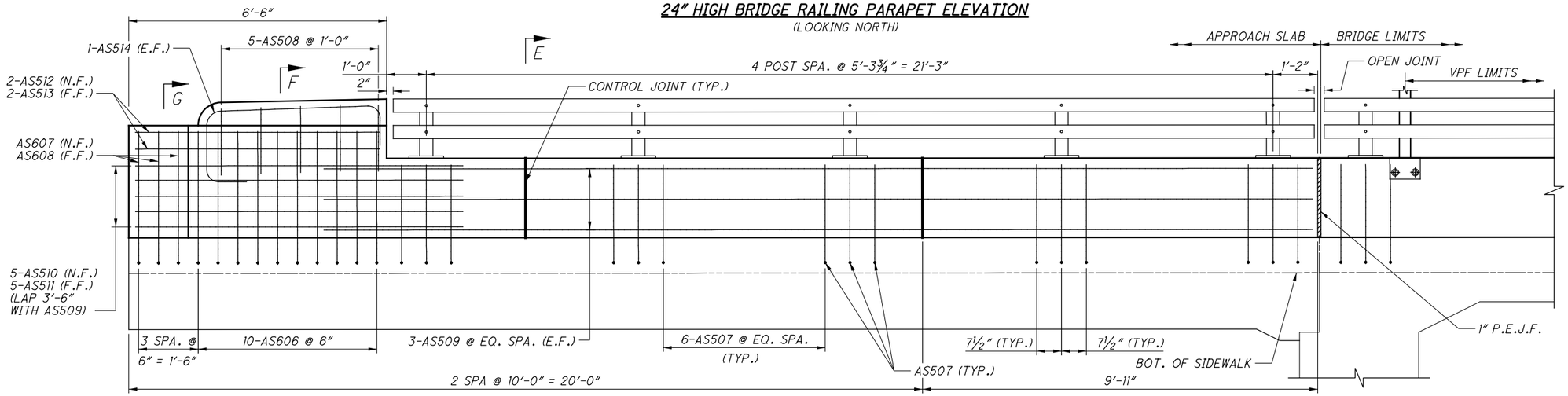

24" HIGH APPROACH RAILING PARAPET ELEVATION
(WEST APPROACH SLAB RAILING SHOWN, EAST APPROACH SLAB RAILING SIMILAR)

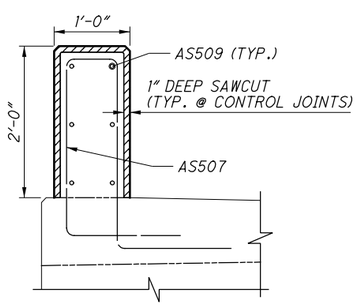

SECTION E-E
(HANDRAIL NOT SHOWN FOR CLARITY)

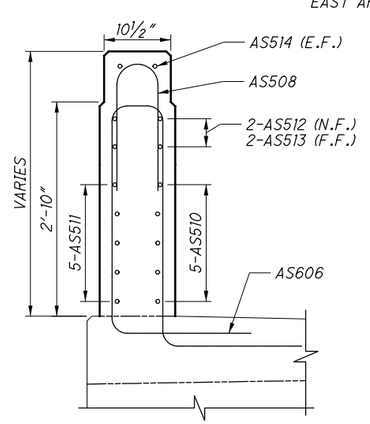

SECTION F-F

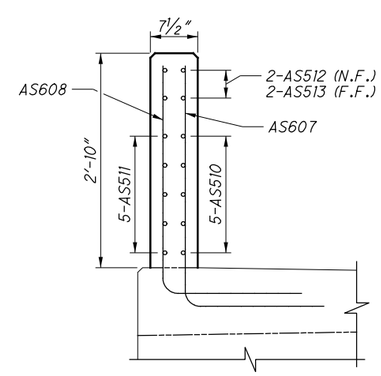

SECTION G-G

NOTES:

1. FOR FURTHER PARAPET AND RAILING DETAILS, REFER TO STANDARD DRAWING BR-2-98.
2. FOR VANDAL PROTECTION FENCE DETAILS, REFER TO STANDARD DRAWING VPF-1-90.
3. BRIDGE TERMINAL ASSEMBLY NOT SHOWN. REFER TO STANDARD CONSTRUCTION DRAWINGS MGS-3.1 AND MGS-3.2 FOR DETAILS. SEE THE SITE PLAN, SHEET 1 OF 37, FOR TYPE OF BRIDGE TERMINAL ASSEMBLIES TO BE USED AND THEIR RESPECTIVE LOCATIONS.
4. FOR TRANSVERSE SECTION, SEE SHEET 26 OF 37.
5. FOR PLAN VIEW, SEE SHEET 27 OF 37.
6. FOR REINFORCEMENT SCHEDULE, SEE SHEET 37 OF 37.

DESIGN AGENCY
CT Consultants
engineers|architects|planners
7965 N. High St., Suite 200, Columbus, OH 43235
614.885.7700 www.ctconsultants.com

DESIGNED	DRAWN	REVIEWED	DATE
MLF	MLF	REN	11/14
CHECKED	REVISED	STRUCTURE FILE NUMBER	
JFM		8310000	

PARAPET DETAILS - 2
BRIDGE NO. WAR-71-0253
SOCIALVILLE-FOSTERS RD. OVER I-71

WAR-71-2.54

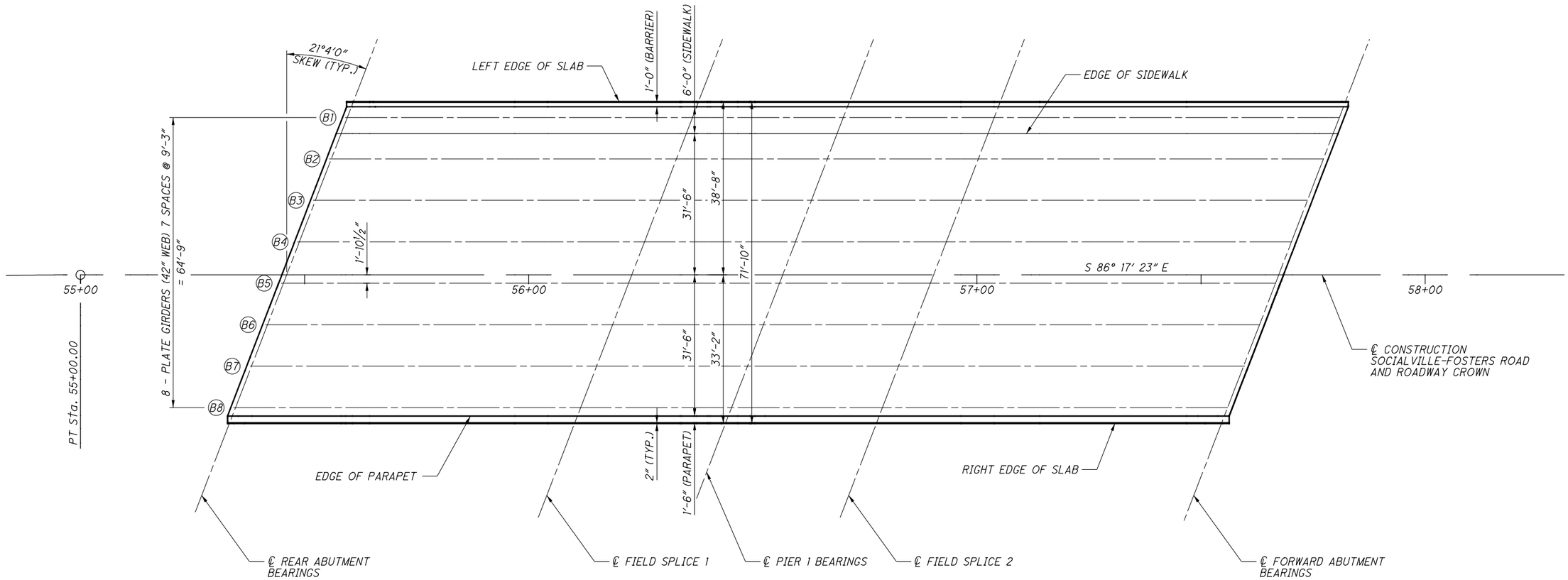

PLAN VIEW

NOTES:

1. FINAL DECK SURFACE ELEVATIONS SHOWN REPRESENT THE DECK SURFACE LOCATION AFTER ALL ANTICIPATED DEAD LOAD DEFLECTIONS HAVE OCCURRED. FOR FINAL DECK SURFACE ELEVATION TABLES, SEE SHEET 30 OF 37.
2. FOR TRANSVERSE SECTION, SEE SHEET 26 OF 37.

DESIGN AGENCY
CT Consultants
engineers|architects|planners
7965 N. High Street, Suite 360, Columbus, OH 43235
614.885.1700 www.ctconsultants.com

DESIGNED	DRAWN	REVIEWED	DATE
JFM	JFM	REN	11/14
CHECKED	REVISED	STRUCTURE FILE NUMBER	
TAB		8310000	

FINAL DECK SURFACE ELEVATIONS DIAGRAM
BRIDGE NO. WAR-71-0253
SOCIALVILLE-FOSTERS ROAD OVER I-71

WAR-71-2.54

LOCATION	LEFT EDGE OF SLAB		GIRDER 1		EDGE OF SIDEWALK		GIRDER 2		GIRDER 3		GIRDER 4		CROWN AND ℄ CONST.	
	STATION	ELEVATION	STATION	ELEVATION	STATION	ELEVATION	STATION	ELEVATION	STATION	ELEVATION	STATION	ELEVATION	STATION	ELEVATION
℄ REAR ABUT BEARINGS	55+60.89	864.41	55+59.53	864.45	55+58.13	864.49	55+55.97	864.55	55+52.40	864.64	55+48.84	864.73	55+46.00	864.81
0.1	55+71.96	864.56	55+70.60	864.60	55+69.20	864.64	55+67.03	864.70	55+63.47	864.80	55+59.91	864.90	55+57.07	864.98
0.2	55+83.03	864.69	55+81.66	864.74	55+80.27	864.78	55+78.10	864.84	55+74.54	864.95	55+70.97	865.05	55+68.13	865.13
0.3	55+94.09	864.81	55+92.73	864.85	55+91.33	864.89	55+89.17	864.96	55+85.60	865.07	55+82.04	865.18	55+79.20	865.27
0.4	56+05.16	864.90	56+03.80	864.95	56+02.40	864.99	56+00.23	865.07	55+96.67	865.18	55+93.11	865.30	55+90.27	865.39
0.5	56+16.23	864.98	56+14.86	865.03	56+13.47	865.07	56+11.30	865.15	56+07.74	865.27	56+04.17	865.39	56+01.33	865.49
0.6	56+27.29	865.04	56+25.93	865.09	56+24.53	865.14	56+22.37	865.22	56+18.80	865.35	56+15.24	865.47	56+12.40	865.57
FIELD SPLICE NUMBER 1	56+37.89	865.08	56+36.53	865.13	56+35.13	865.18	56+32.97	865.26	56+29.40	865.40	56+25.84	865.53	56+23.00	865.63
0.7	56+38.36	865.08	56+37.00	865.13	56+35.60	865.18	56+33.43	865.27	56+29.87	865.40	56+26.31	865.53	56+23.47	865.64
0.8	56+49.43	865.10	56+48.06	865.16	56+46.67	865.21	56+44.50	865.30	56+40.94	865.44	56+37.37	865.58	56+34.53	865.68
0.9	56+60.49	865.11	56+59.13	865.16	56+57.73	865.22	56+55.57	865.31	56+52.00	865.46	56+48.44	865.60	56+45.60	865.71
CL PIER 1 BEARINGS	56+71.56	865.09	56+70.20	865.15	56+68.80	865.21	56+66.63	865.31	56+63.07	865.46	56+59.51	865.61	56+56.67	865.72
0.1	56+82.63	865.06	56+81.26	865.12	56+79.87	865.19	56+77.70	865.28	56+74.14	865.44	56+70.57	865.60	56+67.73	865.72
0.2	56+93.69	865.01	56+92.33	865.08	56+90.93	865.14	56+88.77	865.24	56+85.20	865.41	56+81.64	865.57	56+78.80	865.69
0.3	57+04.76	864.95	57+03.39	865.01	57+02.00	865.08	56+99.83	865.18	56+96.27	865.35	56+92.71	865.52	56+89.86	865.65
FIELD SPLICE NUMBER 2	57+05.22	864.94	57+03.86	865.01	57+02.46	865.08	57+00.29	865.18	56+96.73	865.35	56+93.17	865.52	56+90.33	865.65
0.4	57+15.82	864.86	57+14.46	864.93	57+13.06	865.00	57+10.90	865.11	57+07.33	865.28	57+03.77	865.46	57+00.93	865.59
0.5	57+26.89	864.76	57+25.53	864.83	57+24.13	864.90	57+21.96	865.01	57+18.40	865.19	57+14.84	865.37	57+12.00	865.51
0.6	57+37.96	864.64	57+36.59	864.71	57+35.20	864.79	57+33.03	864.90	57+29.47	865.09	57+25.90	865.27	57+23.06	865.42
0.7	57+49.02	864.50	57+47.66	864.58	57+46.26	864.66	57+44.10	864.77	57+40.53	864.96	57+36.97	865.15	57+34.13	865.30
0.8	57+60.09	864.35	57+58.72	864.43	57+57.33	864.50	57+55.16	864.62	57+51.60	864.82	57+48.04	865.02	57+45.19	865.17
0.9	57+71.15	864.18	57+69.79	864.25	57+68.39	864.33	57+66.23	864.46	57+62.66	864.66	57+59.10	864.86	57+56.26	865.02
℄ FORWARD ABUTMENT BEARINGS	57+82.22	863.98	57+80.86	864.07	57+79.46	864.15	57+77.29	864.28	57+73.73	864.48	57+70.17	864.69	57+67.33	864.86

LOCATION	GIRDER 5		GIRDER 6		GIRDER 7		GIRDER 8		EDGE OF PARAPET		RIGHT EDGE OF SLAB	
	STATION	ELEVATION	STATION	ELEVATION	STATION	ELEVATION	STATION	ELEVATION	STATION	ELEVATION	STATION	ELEVATION
℄ REAR ABUT BEARINGS	55+45.28	864.76	55+41.72	864.56	55+38.15	864.35	55+34.59	864.14	55+33.87	864.09	55+33.22	864.08
0.1	55+56.34	864.94	55+52.78	864.74	55+49.22	864.53	55+45.65	864.33	55+44.93	864.28	55+44.29	864.27
0.2	55+67.41	865.09	55+63.85	864.90	55+60.29	864.70	55+56.72	864.50	55+56.00	864.46	55+55.36	864.45
0.3	55+78.48	865.23	55+74.91	865.04	55+71.35	864.85	55+67.79	864.65	55+67.07	864.61	55+66.42	864.61
0.4	55+89.54	865.35	55+85.98	865.17	55+82.42	864.98	55+78.85	864.79	55+78.13	864.75	55+77.49	864.75
0.5	56+00.61	865.45	55+97.05	865.27	55+93.49	865.09	55+89.92	864.91	55+89.20	864.87	55+88.56	864.87
0.6	56+11.68	865.54	56+08.11	865.36	56+04.55	865.19	56+00.99	865.01	56+00.27	864.98	55+99.62	864.97
FIELD SPLICE NUMBER 1	56+22.28	865.60	56+18.72	865.43	56+15.15	865.26	56+11.59	865.09	56+10.87	865.06	56+10.22	865.05
0.7	56+22.74	865.60	56+19.18	865.44	56+15.62	865.27	56+12.05	865.10	56+11.33	865.06	56+10.69	865.06
0.8	56+33.81	865.65	56+30.25	865.49	56+26.69	865.33	56+23.12	865.16	56+22.40	865.13	56+21.76	865.12
0.9	56+44.88	865.68	56+41.31	865.53	56+37.75	865.37	56+34.19	865.21	56+33.47	865.18	56+32.82	865.17
CL PIER 1 BEARINGS	56+55.94	865.69	56+52.38	865.54	56+48.82	865.39	56+45.25	865.24	56+44.53	865.21	56+43.89	865.21
0.1	56+67.01	865.69	56+63.45	865.54	56+59.88	865.40	56+56.32	865.25	56+55.60	865.22	56+54.96	865.22
0.2	56+78.08	865.67	56+74.51	865.53	56+70.95	865.39	56+67.39	865.24	56+66.66	865.22	56+66.02	865.22
0.3	56+89.14	865.63	56+85.58	865.49	56+82.02	865.36	56+78.45	865.22	56+77.73	865.19	56+77.09	865.19
FIELD SPLICE NUMBER 2	56+89.60	865.62	56+86.04	865.49	56+82.48	865.36	56+78.91	865.22	56+78.19	865.19	56+77.55	865.19
0.4	57+00.21	865.57	56+96.65	865.44	56+93.08	865.31	56+89.52	865.18	56+88.80	865.15	56+88.15	865.16
0.5	57+11.27	865.49	57+07.71	865.37	57+04.15	865.24	57+00.58	865.12	56+99.86	865.09	56+99.22	865.10
0.6	57+22.34	865.39	57+18.78	865.28	57+15.21	865.16	57+11.65	865.04	57+10.93	865.02	57+10.29	865.02
0.7	57+33.41	865.28	57+29.84	865.17	57+26.28	865.06	57+22.72	864.95	57+21.99	864.92	57+21.35	864.93
0.8	57+44.47	865.15	57+40.91	865.05	57+37.35	864.94	57+33.78	864.83	57+33.06	864.81	57+32.42	864.82
0.9	57+55.54	865.00	57+51.98	864.91	57+48.41	864.81	57+44.85	864.70	57+44.13	864.68	57+43.48	864.69
℄ FORWARD ABUTMENT BEARINGS	57+66.60	864.84	57+63.04	864.74	57+59.48	864.65	57+55.91	864.55	57+55.19	864.53	57+54.55	864.54

NOTES:

1. FOR FINAL DECK SURFACE ELEVATION PLAN AND NOTES, SEE SHEET 30 OF 37.

DESIGN AGENCY
CT Consultants
engineers architects planners
7965 N. High Street, Suite 360 Columbus, OH 43235
614.885.1700 www.ctconsultants.com

DESIGNED	DRAWN	REVIEWED	DATE
JFM	JFM	REN	11/14
CHECKED	REVISED	STRUCTURE FILE NUMBER	
TAB		8310000	

FINAL DECK SURFACE ELEVATIONS
BRIDGE NO. WAR-71-0253
SOCIALVILLE-FOSTERS ROAD OVER I-71

WAR-71-2.54

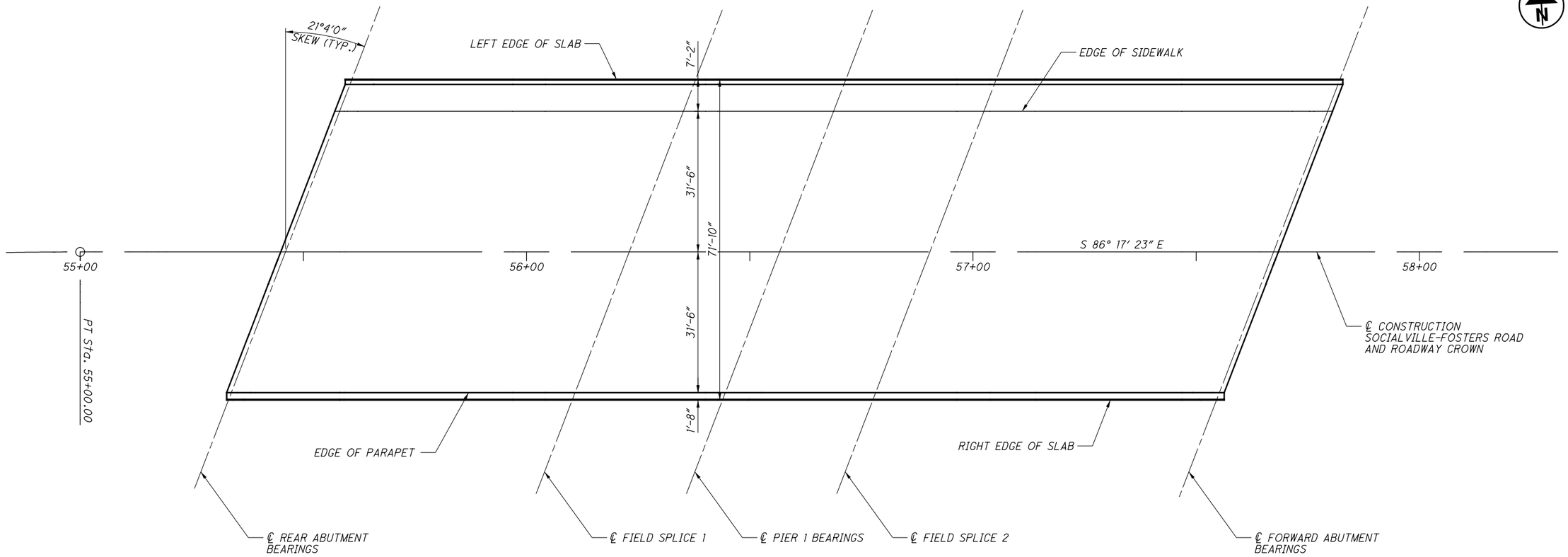

PLAN VIEW

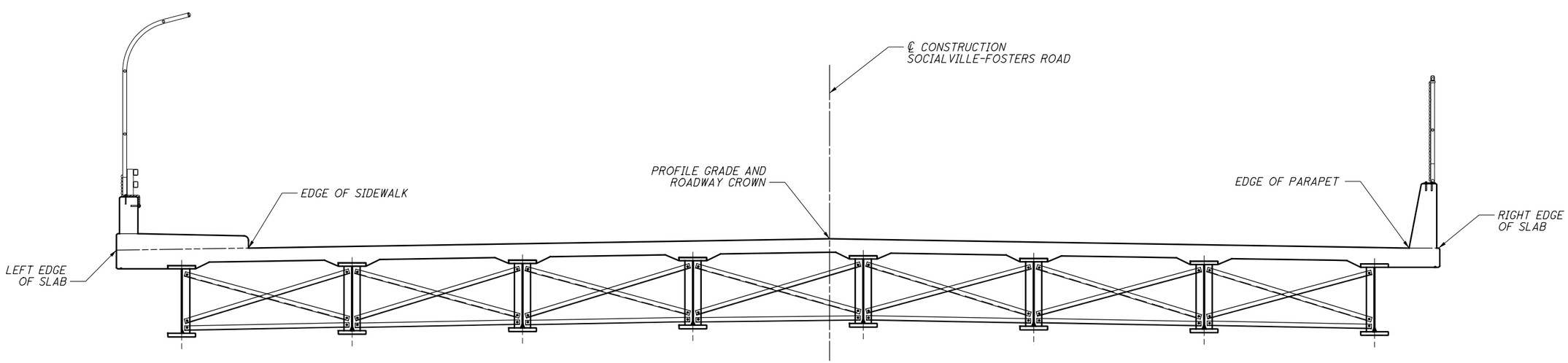

TYPICAL CROSS SECTION

NOTES:

1. FOR SCREED TABLES, SEE SHEET 33 OF 37.

DESIGN AGENCY
CT Consultants
engineers architects planners
7965 N. High Street, Suite 340 Columbus, OH 43235
614.885.1700 www.ctconsultants.com

DESIGNED	DRAWN	REVIEWED	DATE
JFM	JFM	REN	11/14
CHECKED	REVISED	STRUCTURE FILE NUMBER	
TAB		8310000	

SCREED DIAGRAMS
BRIDGE NO. WAR-71-0253
SOCIALVILLE-FOSTERS ROAD OVER I-71

WAR-71-2.54

LOCATION		℄ REAR ABUTMENT BEARINGS	0.1	0.2	0.3	0.4	0.5	0.6	FIELD SPLICE NUMBER 1	0.7	0.8	0.9	℄ PIER 1 BEARINGS
LEFT EDGE OF SLAB	STATION	55+60.89	55+71.96	55+83.03	55+94.09	56+05.16	56+16.23	56+27.29	56+37.89	56+38.36	56+49.43	56+60.49	56+71.56
	SCREED ELEVATION	864.41	864.64	864.84	865.00	865.11	865.17	865.20	865.19	865.19	865.16	865.12	865.09
EDGE OF SIDEWALK	STATION	55+58.13	55+69.20	55+80.27	55+91.33	56+02.40	56+13.47	56+24.53	56+35.13	56+35.60	56+46.67	56+57.73	56+68.80
	SCREED ELEVATION	864.49	864.72	864.93	865.09	865.20	865.27	865.30	865.29	865.29	865.27	865.24	865.21
CROWN AND ℄ CONSTRUCTION	STATION	55+46.00	55+57.07	55+68.13	55+79.20	55+90.27	56+01.33	56+12.40	56+23.00	56+23.47	56+34.53	56+45.60	56+56.67
	SCREED ELEVATION	864.81	865.06	865.28	865.46	865.60	865.68	865.73	865.75	865.75	865.74	865.73	865.72
EDGE OF PARAPET	STATION	55+33.87	55+44.93	55+56.00	55+67.07	55+78.13	55+89.20	56+00.27	56+10.87	56+11.33	56+22.40	56+33.47	56+44.53
	SCREED ELEVATION	864.09	864.37	864.61	864.81	864.96	865.07	865.13	865.17	865.17	865.19	865.19	865.21
RIGHT EDGE OF SLAB	STATION	55+33.22	55+44.29	55+55.36	55+66.42	55+77.49	55+88.56	55+99.62	56+10.22	56+10.69	56+21.76	56+32.82	56+43.89
	SCREED ELEVATION	864.08	864.35	864.60	864.80	864.95	865.06	865.13	865.16	865.17	865.18	865.19	865.21

LOCATION		0.1	0.2	0.3	FIELD SPLICE NUMBER 2	0.4	0.5	0.6	0.7	0.8	0.9	℄ FORWARD ABUTMENT BEARINGS
LEFT EDGE OF SLAB	STATION	56+82.63	56+93.69	57+04.76	57+05.22	57+15.82	57+26.89	57+37.96	57+49.02	57+60.09	57+71.15	57+82.22
	SCREED ELEVATION	865.08	865.07	865.06	865.06	865.02	864.96	864.85	864.70	864.50	864.26	863.98
EDGE OF SIDEWALK	STATION	56+79.87	56+90.93	57+02.00	57+02.46	57+13.06	57+24.13	57+35.20	57+46.26	57+57.33	57+68.39	57+79.46
	SCREED ELEVATION	865.20	865.20	865.19	865.19	865.16	865.10	865.00	864.85	864.65	864.42	864.15
CROWN AND ℄ CONSTRUCTION	STATION	56+67.73	56+78.80	56+89.86	56+90.33	57+00.93	57+12.00	57+23.06	57+34.13	57+45.19	57+56.26	57+67.33
	SCREED ELEVATION	865.74	865.75	865.76	865.76	865.75	865.71	865.63	865.50	865.32	865.10	864.86
EDGE OF PARAPET	STATION	56+55.60	56+66.66	56+77.73	56+78.19	56+88.80	56+99.86	57+10.93	57+21.99	57+33.06	57+44.13	57+55.19
	SCREED ELEVATION	865.24	865.27	865.30	865.30	865.31	865.29	865.23	865.12	864.96	864.76	864.53
RIGHT EDGE OF SLAB	STATION	56+54.96	56+66.02	56+77.09	56+77.55	56+88.15	56+99.22	57+10.29	57+21.35	57+32.42	57+43.48	57+54.55
	SCREED ELEVATION	865.24	865.27	865.30	865.30	865.31	865.29	865.23	865.12	864.97	864.77	864.54

NOTES:

1. SCREED ELEVATIONS SHOWN REPRESENT THE THEORETICAL DECK SURFACE LOCATION PRIOR TO DEFLECTION CAUSED BY DECK PLACEMENT AND OTHER ANTICIPATED DEAD LOADS.
2. FOR LOCATION OF SCREED POINTS IN THE PLAN AND ELEVATION VIEW, SEE SHEET 32 OF 37.

DESIGN AGENCY
CT Consultants
CONSULTING ENGINEERS PLANNERS
7965 N. High Street, Suite 340, Columbus, OH 43235
614.885.1700 www.ctconsultants.com

DESIGNED	DRAWN	REVIEWED	DATE
JFM	JFM	REN	11/14
CHECKED	REVISED	STRUCTURE FILE NUMBER	
TAB		8310000	

SCREED ELEVATIONS
BRIDGE NO. WAR-71-0253
SOCIALVILLE-FOSTERS ROAD OVER I-71

WAR-71-2.54

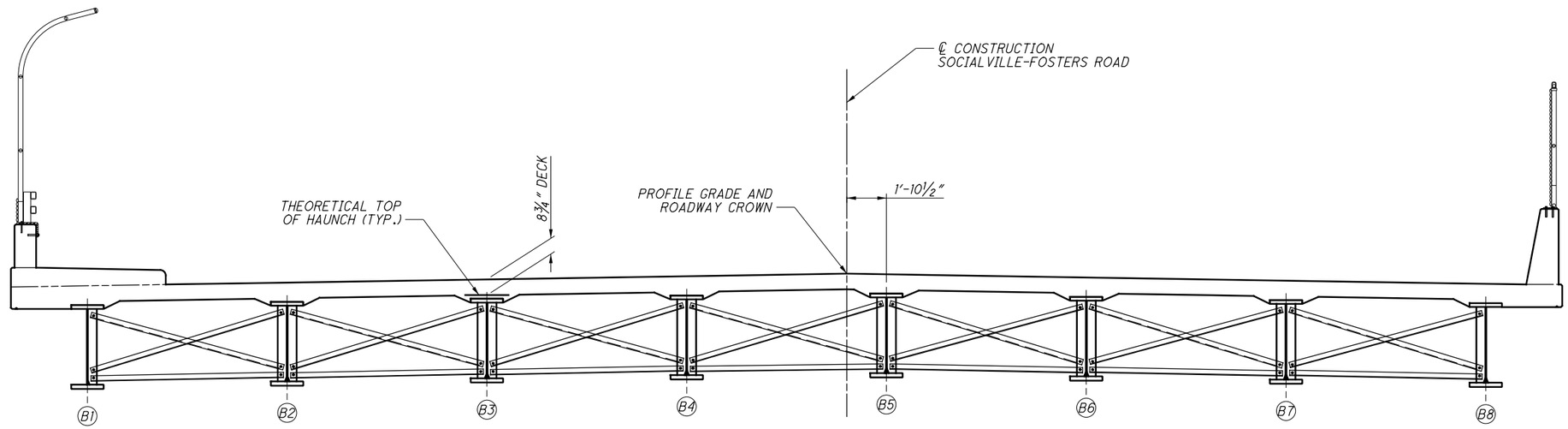

TYPICAL CROSS SECTION
(LOOKING UPSTATION)

LOCATION		℄ REAR ABUTMENT BEARINGS	0.1	0.2	0.3	0.4	0.5	0.6	FIELD SPLICE NUMBER 1	0.7	0.8	0.9
BEAM 1	STATION	55+59.53	55+70.60	55+81.66	55+92.73	56+03.80	56+14.86	56+25.93	56+36.53	56+37.00	56+48.06	56+59.13
	ELEVATION	863.72	863.95	864.15	864.31	864.43	864.49	864.52	864.51	864.51	864.48	864.45
BEAM 2	STATION	55+55.97	55+67.03	55+78.10	55+89.17	56+00.23	56+11.30	56+22.37	56+32.97	56+33.43	56+44.50	56+55.57
	ELEVATION	863.82	864.06	864.26	864.43	864.54	864.62	864.65	864.65	864.65	864.63	864.60
BEAM 3	STATION	55+52.40	55+63.47	55+74.54	55+85.60	55+96.67	56+07.74	56+18.80	56+29.40	56+29.87	56+40.94	56+52.00
	ELEVATION	863.91	864.16	864.37	864.54	864.66	864.74	864.78	864.78	864.78	864.77	864.74
BEAM 4	STATION	55+48.84	55+59.91	55+70.97	55+82.04	55+93.11	56+04.17	56+15.24	56+25.84	56+26.31	56+37.37	56+48.44
	ELEVATION	864.00	864.25	864.47	864.65	864.78	864.86	864.90	864.91	864.91	864.90	864.89
BEAM 5	STATION	55+45.28	55+56.34	55+67.41	55+78.48	55+89.54	56+00.61	56+11.68	56+22.28	56+22.74	56+33.81	56+44.88
	ELEVATION	864.03	864.29	864.51	864.69	864.83	864.92	864.97	864.98	864.98	864.98	864.97
BEAM 6	STATION	55+41.72	55+52.78	55+63.85	55+74.91	55+85.98	55+97.05	56+08.11	56+18.72	56+19.18	56+30.25	56+41.31
	ELEVATION	863.83	864.09	864.32	864.50	864.64	864.74	864.79	864.81	864.82	864.82	864.81
BEAM 7	STATION	55+38.15	55+49.22	55+60.29	55+71.35	55+82.42	55+93.49	56+04.55	56+15.15	56+15.62	56+26.69	56+37.75
	ELEVATION	863.62	863.88	864.12	864.31	864.46	864.56	864.62	864.65	864.65	864.65	864.66
BEAM 8	STATION	55+34.59	55+45.65	55+56.72	55+67.79	55+78.85	55+89.92	56+00.99	56+11.59	56+12.05	56+23.12	56+34.19
	ELEVATION	863.41	863.68	863.92	864.12	864.27	864.38	864.44	864.47	864.48	864.49	864.50

LOCATION		℄ PIER 1 BEARINGS	0.1	0.2	0.3	FIELD SPLICE NUMBER 2	0.4	0.5	0.6	0.7	0.8	0.9	℄ FORWARD ABUTMENT BEARINGS
BEAM 1	STATION	56+70.20	56+81.26	56+92.33	57+03.39	57+03.86	57+14.46	57+25.53	57+36.59	57+47.66	57+58.72	57+69.79	57+80.86
	ELEVATION	864.42	864.41	864.41	864.39	864.39	864.36	864.30	864.19	864.04	863.84	863.61	863.34
BEAM 2	STATION	56+66.63	56+77.70	56+88.77	56+99.83	57+00.29	57+10.90	57+21.96	57+33.03	57+44.10	57+55.16	57+66.23	57+77.29
	ELEVATION	864.58	864.57	864.57	864.56	864.56	864.54	864.48	864.38	864.24	864.04	863.81	863.55
BEAM 3	STATION	56+63.07	56+74.14	56+85.20	56+96.27	56+96.73	57+07.33	57+18.40	57+29.47	57+40.53	57+51.60	57+62.66	57+73.73
	ELEVATION	864.73	864.73	864.73	864.73	864.73	864.71	864.66	864.57	864.43	864.24	864.01	863.76
BEAM 4	STATION	56+59.51	56+70.57	56+81.64	56+92.71	56+93.17	57+03.77	57+14.84	57+25.90	57+36.97	57+48.04	57+59.10	57+70.17
	ELEVATION	864.88	864.88	864.90	864.90	864.90	864.89	864.84	864.75	864.62	864.44	864.22	863.96
BEAM 5	STATION	56+55.94	56+67.01	56+78.08	56+89.14	56+89.60	57+00.21	57+11.27	57+22.34	57+33.41	57+44.47	57+55.54	57+66.60
	ELEVATION	864.97	864.98	864.99	865.00	865.00	865.00	864.96	864.87	864.75	864.57	864.36	864.11
BEAM 6	STATION	56+52.38	56+63.45	56+74.51	56+85.58	56+86.04	56+96.65	57+07.71	57+18.78	57+29.84	57+40.91	57+51.98	57+63.04
	ELEVATION	864.82	864.83	864.86	864.87	864.87	864.87	864.83	864.76	864.64	864.47	864.26	864.02
BEAM 7	STATION	56+48.82	56+59.88	56+70.95	56+82.02	56+82.48	56+93.08	57+04.15	57+15.21	57+26.28	57+37.35	57+48.41	57+59.48
	ELEVATION	864.66	864.69	864.72	864.74	864.74	864.74	864.71	864.64	864.52	864.36	864.16	863.92
BEAM 8	STATION	56+45.25	56+56.32	56+67.39	56+78.45	56+78.91	56+89.52	57+00.58	57+11.65	57+22.72	57+33.78	57+44.85	57+55.91
	ELEVATION	864.51	864.54	864.57	864.60	864.60	864.61	864.59	864.52	864.41	864.25	864.05	863.83

NOTES:

1. FOR PLAN VIEW, SEE SHEET 21 OF 37.
2. TOP OF HAUNCH ELEVATIONS SHOWN REPRESENT THE THEORETICAL LOCATION OF THE BOTTOM OF THE DECK ABOVE THE BEAM HAUNCH PRIOR TO DEFLECTIONS CAUSED BY DECK PLACEMENT AND OTHER ANTICIPATED DEAD LOADS.

DESIGN AGENCY
CT Consultants
civil engineers architects planners
7965 N. High Street, Suite 360 Columbus, OH 43235
614.885.1700 www.ctconsultants.com

DESIGNED	DRAWN	REVIEWED	DATE
JFM	JFM	REN	11/14
CHECKED	REVISED	STRUCTURE FILE NUMBER	
TAB		8310000	

TOP OF HAUNCH ELEVATIONS
BRIDGE NO. WAR-71-0253
SOCIALVILLE-FOSTERS ROAD OVER I-71

WAR-71-2.54

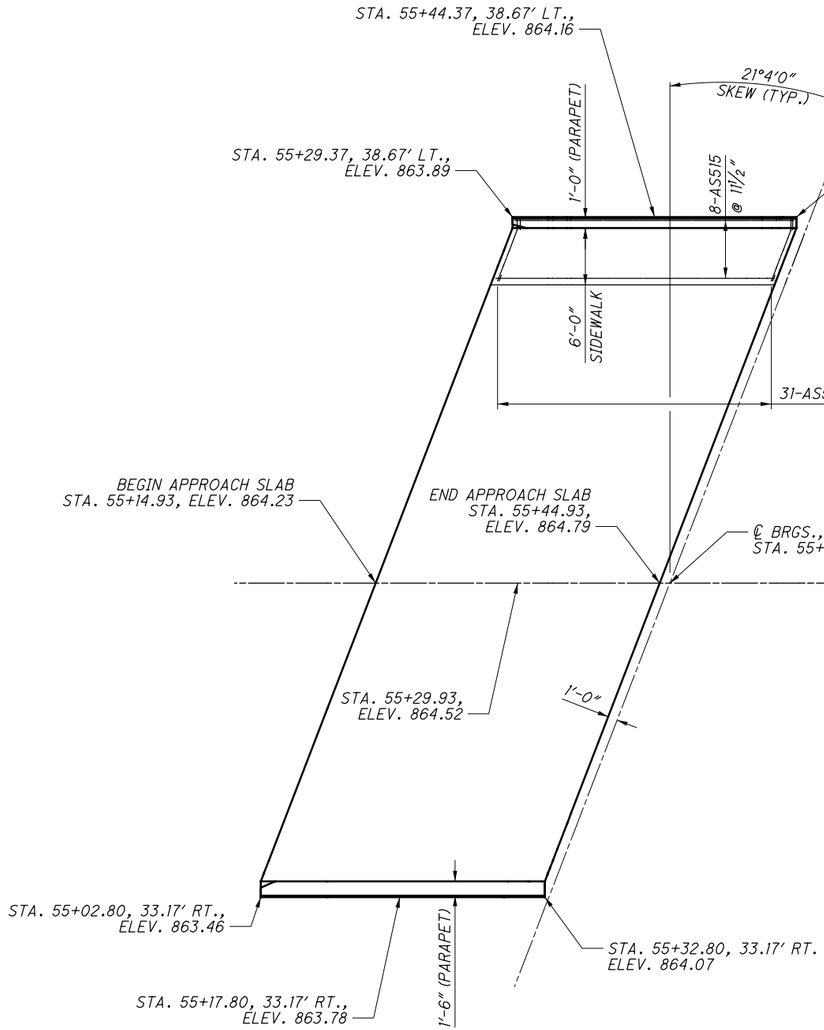

REAR APPROACH SLAB PLAN

(ELEVATIONS GIVEN AT TOP OF SLAB)

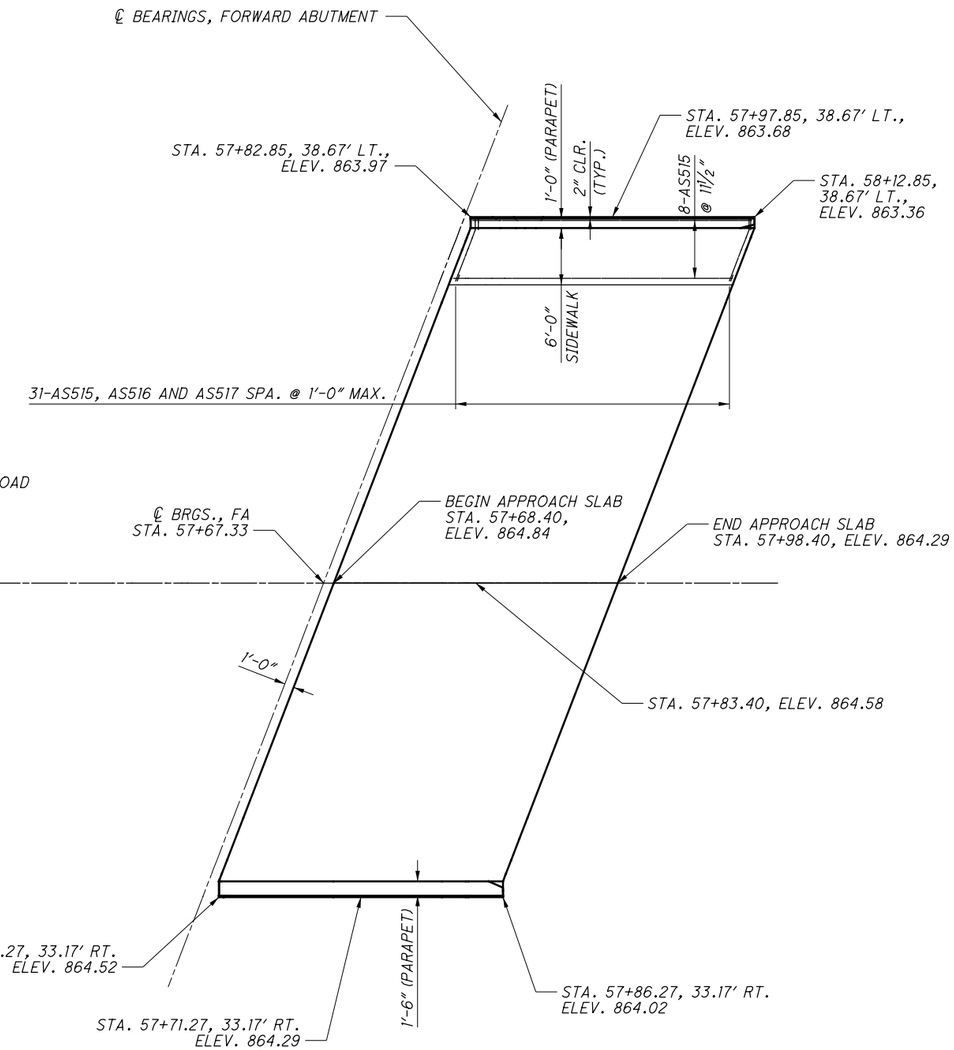

FORWARD APPROACH SLAB PLAN

(ELEVATIONS GIVEN AT TOP OF SLAB)

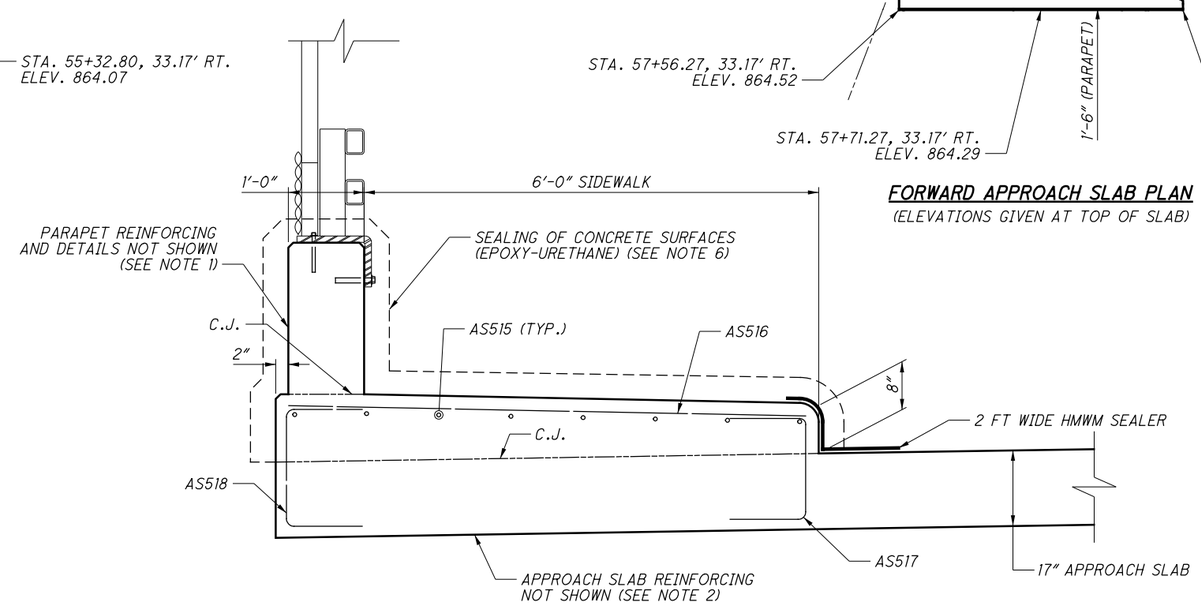

APPROACH SLAB SIDEWALK DETAIL

NOTES:

1. FOR PARAPET REINFORCING AND TRANSITION DETAILS, FOR BOTH LEFT AND RIGHT SIDE OF APPROACH SLAB, SEE SHEET 35 THRU 37.
2. FOR ADDITIONAL APPROACH SLAB DETAILS AND NOTES, SEE ODOT STANDARD DRAWING AS-1-81.
3. FOR REINFORCING SCHEDULE, SEE SHEET 37 OF 37.
4. FOR REINFORCING THAT IS EXTENDED INTO THE APPROACH SLAB FROM THE ABUTMENT, SEE SHEET 25 OF 37.
5. DETAILS INCLUDING REINFORCEMENTS SHOWN ARE IN ADDITION TO TYPICAL APPROACH SLAB DETAIL AND REINFORCEMENT PER BRIDGE STANDARD DRAWING AS-1-81. ALL WORK AND QUANTITIES SHOWN SHALL BE INCLUDED IN THE UNIT BID PRICE PER SQUARE YARD FOR ITEM 526 - REINFORCED CONCRETE APPROACH SLABS WITH QC/QA (T=17"), AS PER PLAN. SEE GENERAL NOTES.
6. SEAL SIDEWALK IN ACCORDANCE WITH CMS 512.02.G.1.g. PAYMENT INCLUDED WITH ITEM 512, SEALING OF CONCRETE SURACES (EPOXY-URETHANE).
7. APPROACH SLAB CONCRETE SHALL NOT BE PLACED IN THE SAME POUR AS THE DECK CONCRETE.

DESIGN AGENCY
CT Consultants
engineers|architects|planners
7965 N. High St., Suite 200, Columbus, OH 43235
614.885.7900 www.ctconsultants.com

DESIGNED	DRAWN	REVIEWED	DATE
JFM	JFM	REN	11/14
CHECKED	REVISED	STRUCTURE FILE NUMBER	
TAB		8310000	

APPROACH SLAB PLAN AND DETAILS
BRIDGE NO. WAR-71-0253
SOCIALVILLE-FOSTERS RD. OVER I-71

WAR-71-2.54

MARK	NUMBER TOTAL	LENGTH	WEIGHT	TYPE	DIMENSIONS A	B	C	D	E	R	INC
REAR ABUTMENT REINFORCING											
RA501	32	30'-5"	1015	STR							
RA502	86	18'-2"	1630	3	6'-2"	2'-7"					
RA503	2	15'-10"	33	3	2'-8"	4'-11"					
	1 SR	17'-2"				5'-7"					
RA504	OF	TO	119	3	2'-8"	TO					0'-4 1/2"
	6	20'-10"				7'-5"					
	1 SR	21'-8"				7'-10"					
RA505	OF	TO	145	3	2'-8"	TO					0'-3 3/4"
	6	24'-10"				9'-5"					
RA506	1	23'-8"	25	3	2'-10"	8'-8"					
RA507	1	18'-1"	19	19	1'-11"	15'-6"	4'-6"				
RA508	1	17'-0"	18	19	0'-10"	15'-6"	4'-6"				
RA509	1	25'-10"	27	3	2'-10"	9'-9"					
	1 SR	21'-4"				7'-8"					
RA510	OF	TO	144	3	2'-8"	TO					0'-4 1/4"
	6	24'-10"				9'-5"					
	1 SR	17'-4"				5'-8"					
RA511	OF	TO	119	3	2'-8"	TO					0'-4"
	6	20'-8"				7'-4"					
RA512	1	19'-1"	20	19	0'-10"	17'-7"	4'-10"				
RA513	1	20'-0"	22	19	2'-0"	17'-7"	4'-10"				
	1 SR	4'-7"									
RA514	OF	TO	31	STR							5'-3"
	3	15'-1"									
	1 SR	3'-6"									
RA515	OF	TO	27	STR							5'-3"
	3	14'-0"									
	1 SR	4'-10"									
RA516	OF	TO	33	STR							5'-6 1/2"
	3	15'-11"									
	1 SR	5'-11"									
RA517	OF	TO	36	STR							5'-6 1/2"
	3	17'-0"									
RA518	61	13'-10"	880	3	2'-8"	3'-11"					
RA519	1	23'-6"	25	3	2'-8"	8'-9"					
RA520	1	17'-6"	18	STR							
RA521	1	16'-4"	17	STR							
RA522	1	18'-5"	19	STR							
RA523	1	19'-7"	20	STR							
RA901	32	33'-4"	3627	STR							
		SUB-TOTAL	8068	LBS							

MARK	NUMBER TOTAL	LENGTH	WEIGHT	TYPE	DIMENSIONS A	B	C	D	E	R	INC
FORWARD ABUTMENT REINFORCING											
FA501	32	30'-5"	1015	STR							
FA502	92	18'-2"	1743	3	6'-2"	2'-7"					
FA503	2	15'-8"	33	3	2'-8"	4'-10"					
	1 SR	16'-10"				5'-5"					
FA504	OF	TO	116	3	2'-8"	TO					0'-4"
	6	20'-2"				7'-1"					
	1 SR	20'-8"				7'-4"					
FA505	OF	TO	140	3	2'-8"	TO					0'-4 1/4"
	6	24'-2"				9'-1"					
FA506	1	26'-8"	28	3	2'-10"	10'-2"					
FA507	1	20'-1"	21	19	1'-11"	17'-7"	4'-6"				
FA508	1	19'-0"	20	19	0'-10"	17'-7"	4'-6"				
FA509	2	24'-8"	51	3	2'-8"	9'-4"					

MARK	NUMBER TOTAL	LENGTH	WEIGHT	TYPE	DIMENSIONS A	B	C	D	E	R	INC
FORWARD ABUTMENT REINFORCING CONTINUED											
	1 SR	23'-10"				8'-11"					
FA510	OF	TO	155	3	2'-8"	TO					0'-2 1/2"
	6	25'-10"				9'-11"					
	1 SR	20'-2"				7'-1"					
FA511	OF	TO	135	3	2'-8"	TO					0'-3 1/4"
	6	22'-10"				8'-5"					
FA512	1	17'-1"	18	19	0'-10"	15'-6"	5'-0"				
FA513	1	18'-2"	19	19	1'-11"	15'-6"	5'-0"				
	1 SR	7'-1"									
FA514	OF	TO	37	STR							4'-10 1/2"
	3	16'-10"									
	1 SR	6'-0"									
FA515	OF	TO	34	STR							4'-10 1/2"
	3	15'-9"									
	1 SR	4'-11"									
FA516	OF	TO	30	STR							4'-8"
	3	14'-3"									
	1 SR	6'-0"									
FA517	OF	TO	33	STR							4'-8"
	3	15'-4"									
FA518	59	13'-8"	841	3	2'-8"	3'-10"					
FA519	1	25'-2"	26	3	2'-4"	9'-11"					
FA520	1	19'-7"	20	STR							
FA521	1	18'-5"	19	STR							
FA522	1	16'-4"	17	STR							
FA523	1	17'-6"	18	STR							
	1 SR	16'-6"				5'-3"					
FA524	OF	TO	112	3	2'-8"	TO					0'-3 1/2"
	6	19'-4"				6'-8"					
FA901	32	33'-4"	3627	STR							
		SUB-TOTAL	8308	LBS							

MARK	NUMBER TOTAL	LENGTH	WEIGHT	TYPE	DIMENSIONS A	B	C	D	E	R	INC
PIER REINFORCING											
SP401	5	18'-7"	1359	27	0'-4 1/2"	2'-6"	18'-7"				
P501	20	30'-0"	626	STR							
P502	10	19'-8"	205	STR							
P503	592	8'-7"	5300	2	3'-4"	2'-2"	3'-4"				
P504	14	7'-10"	114	2	2'-6"	3'-1"	2'-6"				
P601	12	13'-4"	240	33	3'-4"	2'-9"					
P602	8	4'-2"	50	1	1'-7"	2'-9"					
P701	52	15'-9"	1674	2	1'-10"	12'-6"	1'-10"				
P801	64	29'-9"	5084	1	1'-10"	28'-2"					
P802	32	28'-2"	2407	STR							
P901	24	4'-1"	333	1	1'-7"	2'-9"					
P1001	56	15'-6"	3735	2	1'-10"	12'-6"	1'-10"				
P1002	70	27'-10"	8384	18	24'-10"	0'-0"	1'-10"				
P1003	14	46'-4"	2791	1	3'-6"	43'-2"					
P1004	14	43'-2"	2600	STR							
		SUB-TOTAL	34902	LBS							

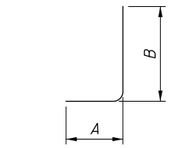

TYPE-1

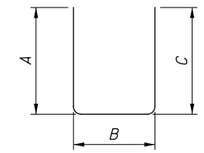

TYPE-2

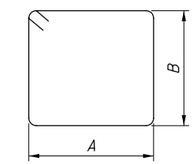

TYPE-3

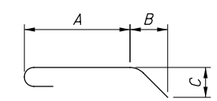

TYPE-18

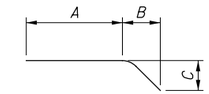

TYPE-19

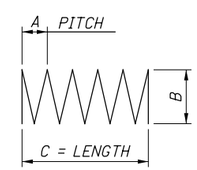

TYPE-27

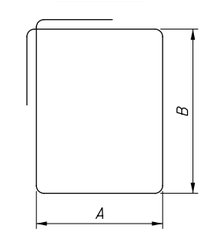

TYPE-33

NOTES:

1. FOR THE REINFORCING NOTES, SEE SHEET 38 OF 38.

DESIGN AGENCY
CT Consultants
engineers | architects | planners
7965 N. High St., Suite 200, Worthington, OH 43235
614.885.7900 www.ctconsultants.com

DESIGNED	DRAWN	REVIEWED	DATE
JFM	JFM	REN	11/14
CHECKED	REVISED	STRUCTURE FILE NUMBER	
MLF		8310000	

REINFORCING SCHEDULE 1 OF 2

BRIDGE NO. WAR-71-0253
SOCIALVILLE-FOSTERS RD. OVER I-71

WAR-71-2.54

MARK	NUMBER TOTAL	LENGTH	WEIGHT	TYPE	DIMENSIONS A	B	C	D	E	R	INC
SLAB REINFORCING											
S401	882	12′-0″	7070	2	9′-0 ½″	0′-8 ¼″	2′-5 ½″				
S501	1712	30′-0″	53568	STR							
S502	344	19′-3″	6907	STR							
S503	170	24′-8″	4374	STR							
S504	429	21′-8″	9694	STR							
S505	854	28′-1″	25014	STR							
S506	860	23′-11″	21453	STR							
	2 SR	5′-0″									
S507	OF	TO	545	STR							1′-3 ½″
	17	25′-9″									
	2 SR	4′-0″									
S508	OF	TO	409	STR							1′-3 ½″
	15	22′-2″									
	2 SR	1′-8″									
S509	OF	TO	641	STR							1′-3 ½″
	21	27′-7″									
	2 SR	4′-2″									
S510	OF	TO	369	STR							1′-3 ½″
	14	21′-1″									
	2 SR	3′-9″									
S511	OF	TO	734	STR							1′-3 ½″
	21	29′-9″									
	2 SR	1′-2″									
S512	OF	TO	458	STR							1′-3 ½″
	18	23′-3″									
		SUB-TOTAL	131236	LBS							

MARK	NUMBER TOTAL	LENGTH	WEIGHT	TYPE	DIMENSIONS A	B	C	D	E	R	INC
BRIDGE PARAPETS AND SIDEWALK REINFORCING											
R501	126	30′-0″	3943	STR							
R502	36	19′-3″	723	STR							
R503	240	7′-4″	1836	23	0′-11″	3′-3″	3′-0″			0′-2 ¾″	
R504	224	6′-10″	1596	STR							
R505	280	8′-0″	2336	30	1′-6″	0′-8″	2′-6″	2′-4″			
R506	224	2′-10″	662	2	1′-0″	1′-0 ¾″	1′-0″				
R507	224	3′-4″	779	2	1′-0″	1′-7″	1′-0″				
R508	20	14′-8″	306	STR							
R509	20	7′-0″	146	STR							
R601	10	14′-8″	220	STR							
R602	10	7′-0″	105	STR							
R603	240	3′-3″	1172	28	1′-6 ½″	1′-0″					
R604	240	2′-5″	871	1	1′-0″	1′-6 ½″					
		SUB-TOTAL	14695	LBS							

MARK	NUMBER TOTAL	LENGTH	WEIGHT	TYPE	DIMENSIONS A	B	C	D	E	R	INC
REAR AND FORWARD APPROACH SLAB PARAPETS AND SIDEWALK REINFORCING											
AS501	8	5′-8″	47	25	1′-10″	2′-5″	1′-4 ¼″	0′-1 ½″	0′-5″		
AS502	8	5′-8″	47	STR							
AS503	16	10′-0″	167	STR							
AS504	8	18′-0″	150	STR							
AS505	4	15′-8″	65	STR							
AS506	34	7′-4″	260	23	0′-11″	3′-3″	3′-0″			0′-2 ¾″	
AS507	62	8′-0″	517	30	1′-6″	0′-8″	2′-6″	2′-4″			
AS508	10	4′-2″	43	24	0′-6 ½″	1′-8″				0′-3 ¼″	
AS509	12	25′-0″	313	STR							
AS510	10	8′-2″	85	19	6′-10″	1′-4″	0′-4″				
AS511	10	8′-3″	86	STR							
AS512	4	6′-0″	25	19	4′-8″	1′-4″	0′-4″				
AS513	4	6′-2″	26	STR							
AS514	4	7′-7″	32	31	1′-11″	0′-1″	4′-5″			0′-4 ¼″	

MARK	NUMBER TOTAL	LENGTH	WEIGHT	TYPE	DIMENSIONS A	B	C	D	E	R	INC
REAR AND FORWARD APPROACH SLAB PARAPETS AND SIDEWALK REINFORCING CONTINUED											
AS515	16	29′-6″	492	STR							
AS516	62	6′-8″	431	STR							
AS517	62	4′-3″	275	2	1′-6″	1′-6″	1′-6″				
AS518	62	4′-6″	291	2	1′-6″	1′-9″	1′-6″				
AS601	2	15′-8″	47	STR							
AS602	12	4′-0″	72	1	1′-0″	3′-1 ½″					
	2 SR	3′-10″				3′-0″					
AS603	OF	TO	156	1	1′-0″	TO					0′-1″
	12	4′-10″				4′-0″					
AS604	34	2′-5″	123	1	1′-0″	1′-6 ½″					
AS605	34	3′-1″	157	29	0′-11″	1′-0″	1′-6 ½″	0″			
AS606	20	9′-11″	295	30	1′-10″	0′-8″	3′-2″	3′-0″			
AS607	6	4′-10″	44	1	1′-10″	3′-2″					
AS608	6	4′-8″	42	1	1′-10″	3′-0″					
		SUB-TOTAL	4288*	LBS							

* - REAR AND FORWARD APPROACH SLAB SIDEWALK REINFORCING = 4288 LBS INCLUDED IN ITEM 526 REINFORCED CONCRETE APPROACH SLABS WITH QA/QA (T=17″), AS PER PLAN FOR PAYMENT

MARK	NUMBER TOTAL	LENGTH	WEIGHT	TYPE	DIMENSIONS A	B	C	D	E	R	INC
REAR ABUTMENT DIAPHRAGM REINFORCING											
D401	10	4′-4″	29	28	2′-6″	1′-0″					
D501	110	9′-7″	1099	2	3′-6″	2′-10″	3′-6″				
D502	55	7′-3″	416	2	2′-7″	2′-4″	2′-7″				
D801	12	36′-7″	1172	STR							
D802	20	41′-3″	2203	STR							
D803	49	5′-2″	676	18	3′-0″	1′-0″	1′-0″				
		SUB-TOTAL	5595	LBS							

MARK	NUMBER TOTAL	LENGTH	WEIGHT	TYPE	DIMENSIONS A	B	C	D	E	R	INC
FORWARD ABUTMENT DIAPHRAGM REINFORCING											
D401	10	4′-4″	29	28	2′-6″	1′-0″					
D501	110	9′-7″	1099	2	3′-6″	2′-10″	3′-6″				
D502	55	7′-3″	416	2	2′-7″	2′-4″	2′-7″				
D801	12	36′-7″	1172	STR							
D802	20	41′-3″	2203	STR							
D803	49	5′-2″	676	18	3′-0″	1′-0″	1′-0″				
		SUB-TOTAL	5595	LBS							

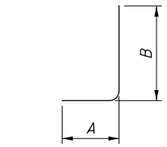

TYPE-1

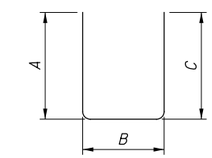

TYPE-2

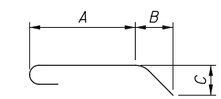

TYPE-18

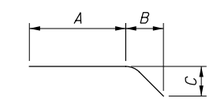

TYPE-19

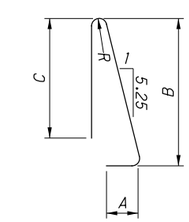

TYPE-23

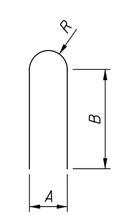

TYPE-24

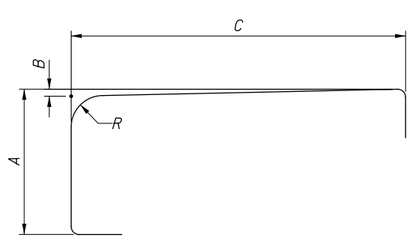

TYPE-31

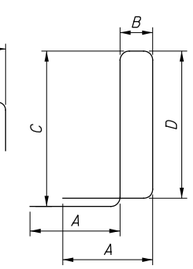

TYPE-30

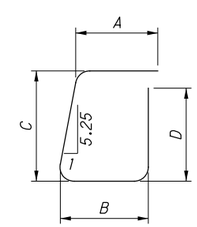

TYPE-29

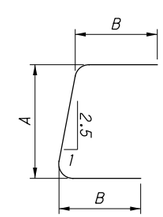

TYPE-28

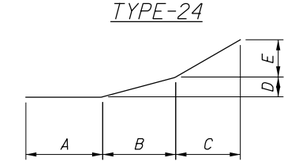

TYPE-25

NOTES:

1. THE BAR SIZE NUMBER IS SPECIFIED ON THE PLANS IN THE BAR MARK COLUMN. THE FIRST DIGIT WHERE THREE DIGITS ARE USED, AND THE FIRST TWO DIGITS WHERE FOUR ARE USED, INDICATES THE BAR SIZE NUMBER. BAR DIMENSIONS SHOWN ARE OUT TO OUT UNLESS OTHERWISE INDICATED. R INDICATES INSIDE RADIUS, UNLESS OTHERWISE NOTED. "STD." WRITTEN IN PLACE OF A DIMENSION INDICATES A STANDARD BEND AT THE END OF THE BAR.

2. ALL REINFORCING STEEL SHALL BE EPOXY COATED.

DESIGN AGENCY
CT Consultants
engineers | architects | planners
7965 N. High St., Suite 100, Worthington, OH 43235
614.885.7900 www.ctconsultants.com

DESIGNED	DRAWN	REVIEWED	DATE
MLF	JFM	REN	11/14
CHECKED	REVISED	STRUCTURE FILE NUMBER	
JFM		8310000	

REINFORCING SHEET 2 OF 2
BRIDGE NO. WAR-71-0253
SOCIALVILLE-FOSTERS RD. OVER I-71

WAR-71-2.54

RIGHT OF WAY LEGEND SHEET
WAR-71-2.54
SOCIALVILLE-FOSTERS ROAD

MONUMENT LEGEND

- EXISTING R/W MONUMENT BOX
- PROPOSED R/W MONUMENT BOX
- EXISTING CONCRETE MONUMENT
- PROPOSED CONCRETE MONUMENT
- RAILROAD SPIKE FOUND
- RAILROAD SPIKE SET
- I.P.F. IRON PIN FOUND
- I.P.F. IRON PIN FOUND W/ ID CAP
- I.P.S. IRON PIN SET W/ ID CAP
- P.F. IRON PIPE FOUND
- P.S. IRON PIPE SET
- P.K.F. P.K. NAIL FOUND
- P.K.S. P.K. NAIL SET

STRUCTURE KEY

- RESIDENTIAL
- COMMERCIAL
- OUT-BUILDING

UTILITY OWNERS

POWER	DUKE ENERGY ELECTRIC 139 EAST FOURTH STREET, ROOM 467A CINCINNATI, OHIO 45202 (513) 287-2685 ATTN: TROY DITTMER		
TELEPHONE	CINCINNATI BELL 201 EAST FOURTH STREET ROOM 103-1100 CINCINNATI, OHIO 45202 (513) 397-9071 ATTN: RICHARD RAYLE	AT&T TRANSMISSION 59806 WILCOX PLACE DUBLIN, OHIO (614) 760-8320 ATTN: GREG DELEW	CENTURY LINK 20 N. MECHANIC ST. LEBANON, OHIO 45036 (513) 933-3502 ATTN: VIC BATES
GAS	DUKE ENERGY GAS 139 EAST FOURTH STREET, ROOM 467A CINCINNATI, OHIO 45202 (513) 287-4415 ATTN: ETHAN POPE		
CABLE TV	TIME WARNER CABLE 11252 CORNELL PARK DRIVE CINCINNATI, OHIO 45242 (513) 386-5483 ATTN: JIM O'REILLY		
WATER	WARREN COUNTY WATER & SEWER WARREN COUNTY GOVERNMENT CENTER, 1ST FLOOR 406 JUSTICE DRIVE LEBANON, OHIO 45036 (513) 695-1193 ATTN: CHRIS BRAUSCH	CINCINNATI WATER 4747 SPRING GROVE ROAD CINCINNATI, OHIO 45232 (513) 557-5799 ATTN: JOHN HUNSEDER	
SANITARY	WARREN COUNTY WATER & SEWER WARREN COUNTY GOVERNMENT CENTER, 1ST FLOOR 406 JUSTICE DRIVE LEBANON, OHIO 45036 (513) 695-1193 ATTN: CHRIS BRAUSCH	CITY OF MASON 6000 MASON-MONTGOMERY ROAD MASON, OHIO, 45040 (513) 229-8520 ATTN: KURT SEILER	
STORM	CITY OF MASON 6000 MASON-MONTGOMERY ROAD MASON, OHIO, 45040 (513) 229-8520 ATTN: KURT SEILER		
TRAFFIC	ODOT, DISTRICT 8 505 SOUTH S.R. 741 LEBANON, OHIO 45036 (513) 932-3030		

THE LOCATION OF THE UNDERGROUND UTILITIES SHOWN ON THE PLANS ARE OBTAINED FROM THE OWNER OF THE UTILITIES AS REQUIRED BY SECTION 153.64 O.R.C.

CONVENTIONAL SYMBOLS

County Line
Township Line
Section Line
Corporation Line or
Fence Line (Ex) (Pr)
Center Line
Right of Way (Ex) Ex R/W
Right of Way (Pr) R/W
Standard Highway Ease.(Ex) Ex SH
Temporary Right of Way TMP
Channel Ease. (Pr) CH
Utility Ease. (Ex) Ex U
Railroad or
Guardrail (Ex) (Pr)
Construction Limits
Edge of Pavement (Ex)
Edge of Pavement (Pr)
Edge of Shoulder (Ex)
Edge of Shoulder (Pr)

Ditch / Creek (Ex)
Ditch / Creek (Pr)
Tree Line (Ex)
Ownership Hook Symbol , Example
Property Line Symbol , Example
Break Line Symbol , Example
Tree (Pr) , Tree (Ex) , Shrub (Ex)
Tree (Remove) , Shrub (Remove)
Evergreen (Ex) , Stump
Evergreen (Remove) , Stump (Remove)
Wetland (Pr) , Grass (Pr) , Aerial Target
Post (Ex) , Mailbox (Ex) , Mailbox (Pr)
Light (Ex) , Telephone Marker (Ex)
Fire Hydrant (Ex) , Water Meter (Ex)
Water Valve (Ex) , Utility Valve Unknown (Ex.)
Telephone Pole (Ex) , Power Pole (Ex)
Light Pole (Ex)

DEERFIELD TOWNSHIP &
CITY OF MASON
SECTIONS 21 & 22,
TOWN 4, RANGE 2
WARREN COUNTY, OHIO

INDEX OF SHEETS:

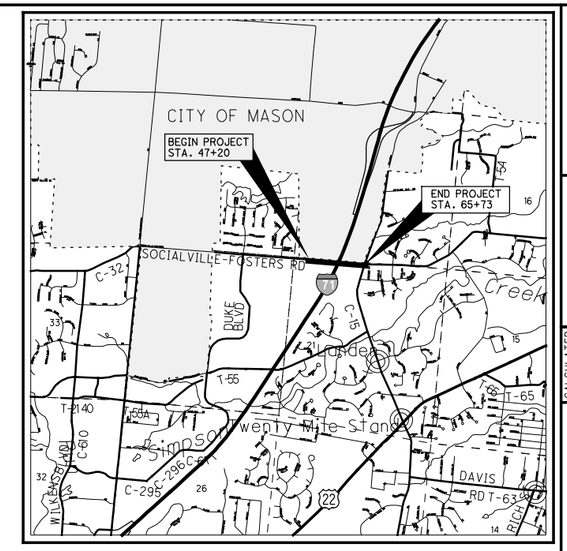

LOCATION MAP

LATITUDE: 39°19'17" LONGITUDE: 84°17'18"

SCALE IN MILES
0 1/2 1 1.5 2

PORTION TO BE IMPROVED
INTERSTATE HIGHWAY
FEDERAL ROUTES
STATE ROUTES
COUNTY & TOWNSHIP ROADS
OTHER ROADS

BASIS FOR BEARINGS:

BEARINGS SHOWN HEREON HAVE BEEN DETERMINED FROM OBSERVATIONS TO THE CONTROL STATIONS ESTABLISHED FOR THIS PROJECT AND ARE COMPATIBLE WITH THOSE OBTAINED WHEN PROJECTED ONTO THE OHIO STATE PLANE.

VERTICAL CONTROL HAS BEEN ESTABLISHED BY COMPARING GPS OBSERVED OTHOMETRIC HEIGHTS TO VALUES OBTAINED BY CONVENTIONAL DIFFERENTIAL LEVELING METHODS AND ADJUSTING ACCORDINGLY. ELEVATIONS ARE EXPRESSED IN TERMS OF NAVD88(CORS96).

PROJECT DESCRIPTION

THIS PROJECT ENTAILS THE REPLACEMENT OF THE SOCIALVILLE-FOSTERS ROAD BRIDGE OVER I-71, THE WIDENING OF SOCIALVILLE-FOSTERS ROAD TO 5 LANES, THE ADDITION OF A TWO-LANE ROUNDABOUT AT INNOVATION WAY AND TRAFFIC SIGNAL IMPROVEMENTS AT COLUMBIA ROAD.

PROJECT CONTROL

STATE PLANE GRID OHIO SOUTH ZONE, NAD83
PROJECT ADJUSTMENT FACTOR 1 (ONE)

PLANS PREPARED BY:

FIRM NAME : CT CONSULTANTS, INC
R/W DESIGNER: KEITH SMITH
R/W REVIEWER: DARRELL PLUMMER
FIELD REVIEWER: RALPH NORMAN
PRELIMINARY FIELD REVIEW DATE: 5-20-2014
TRACINGS FIELD REVIEW DATE: 10-23-2014
OWNERSHIP UPDATED BY: KEITH SMITH
DATE COMPLETED: 11-13-2014
PLAN COMPLETION DATE: 11-14-2014

I, Darrell B. Plummer, P. S. have conducted a survey of the existing conditions for the Warren County Engineer on 3-27-2014. The results of that survey are contained herein. The horizontal coordinates expressed herein are based on the Ohio State Plane Coordinate System, South Zone on NAD 83 (2011) datum. The Project Coordinates (US Survey feet) are relative to State Plane Grid Coordinates (meters or US Survey feet) by a Project Adjustment Factor multiplier of 1. As a part of this project I have reestablished the locations of the existing property lines and centerline of existing Right of Way for property takes contained herein. All of my work contained herein was conducted in accordance with Ohio Administrative Code 4733-37 commonly known as "A Minimum Standards for Boundary Surveys in the State of Ohio" unless noted. The words I and my as used herein are to mean either myself or someone working under my direct supervision.

Darrell B. Plummer, Professional Land Surveyor No. 7595 Date:

SURVEYORS SEAL

FEDERAL PROJECT NO.
PID NO.
CALCULATED KAS
CHECKED DBP

RIGHT OF WAY LEGEND SHEET

WAR-71-2.54

WAR-71-2.54
SOCIALVILLE-FOSTERS ROAD

DEERFIELD TOWNSHIP &
CITY OF MASON
SECTIONS 21 & 22,
TOWN 4, RANGE 2
WARREN COUNTY, OHIO

RIGHT OF WAY COORDINATE TABLE

℄ of EXIST. R/W SOCIALVILLE-FOSTERS RD.		PROJECT COORDINATES SEE SURVEY CERTIFCATION		MONUMENTS TO BE SET DURING CONSTRUCTION		
STATION	OFFSET	NORTH (Y)	EAST (X)	MON. ASSY.	REF. MON.	DESCRIPTION
146+50.00	50.00' LT.	486421.32	1461647.44			INT. EX. R/W & PROP. R/W
146+50.00	72.00' LT.	486443.27	1461648.86			ANGLE PT. IN PROP. R/W
147+50.60	72.00' LT.	486436.76	1461749.25			ANGLE PT. IN PROP. R/W
148+34.34	85.00' LT.	486444.32	1461833.65			ANGLE PT. IN PROP. R/W
149+00.00	30.00' RT.	486325.31	1461891.74			INT. EX. R/W & PROP. R/W
151+64.43	99.48' LT.	486437.41	1462163.99			INT. EX. ℄ & PROP. R/W
152+00.00	55.00' LT.	486390.72	1462196.61			ANGLE PT. IN PROP. R/W
152+00.00	95.00' RT.	486241.03	1462186.90			ANGLE PT. IN PROP. R/W
153+47.71	70.00' LT.	486396.13	1462344.98			INT. EX. R/W & PROP. R/W
153+90.48	85.48' RT.	486238.21	1462377.59			ANGLE PT. IN PROP. R/W
154+15.00	110.00' RT.	486212.15	1462400.48			ANGLE PT. IN PROP. R/W
154+46.47	110.00' RT.	486210.11	1462431.88			INT. EX. R/W & PROP. R/W
155+10.65	107.83' LT.	486423.34	1462510.02			INT. EX. R/W & PROP. R/W
155+36.01	146.31' LT.	486460.09	1462537.82			ANGLE PT. IN PROP. R/W
155+73.35	132.03' LT.	486443.42	1462574.16			INT. EX. R/W & PROP. R/W
157+91.12	68.15' RT	486229.58	1462778.51			INT. EX. R/W & PROP. R/W
158+55.05	100.00' LT.	486393.23	1462853.19			INT. EX. R/W & PROP. R/W
159+00.00	50.00' RT.	486240.64	1462888.34			ANGLE PT. IN PROP. R/W
160+50.00	50.00' RT.	486230.93	1463038.03			ANGLE PT. IN PROP. R/W
161+00.00	60.00' LT.	486337.47	1463095.04			ANGLE PT. IN PROP. R/W
161+00.00	55.00' RT.	486222.71	1463087.60			ANGLE PT. IN PROP. R/W
161+70.58	55.00' RT.	486218.14	1463158.03			INT. EX. ℄ & PROP. R/W
165+20.00	55.00' RT.	486195.53	1463506.72			ANGLE PT. IN PROP. R/W
165+21.00	60.00' LT.	486310.22	1463515.16			ANGLE PT. IN PROP. R/W
165+62.29	89.72' LT.	486337.21	1463558.29			ANGLE PT. IN PROP. R/W
165+81.34	83.62' LT.	486329.89	1463576.91			INT. EX. R/W & PROP. R/W
4+00.00	40.00' LT.	486159.27	1463522.12			INT. EX. R/W & PROP. R/W
26+75.00	52.00' LT.	486010.85	1461950.53			INT. EX. R/W & PROP. R/W
26+75.00	4.41' LT.	486007.77	1461998.02			INT. EX. ℄ & PROP. R/W
26+75.00	60.00' RT.	486003.60	1462062.29			ANGLE PT. IN PROP. R/W
27+50.00	90.00' RT.	486076.50	1462097.08			ANGLE PT. IN PROP. R/W
27+75.00	52.00' LT.	486110.64	1461957.00			ANGLE PT. IN PROP. R/W
28+25.00	60.00' LT.	486161.05	1461952.25			ANGLE PT. IN PROP. R/W
29+00.00	90.00' RT.	486226.19	1462106.79			ANGLE PT. IN PROP. R/W
29+41.07	90.00' LT.	486278.81	1461929.83			ANGLE PT. IN PROP. R/W
31+50.00	65.00' RT.	486474.69	1462137.94			ANGLE PT. IN PROP. R/W
31+65.00	65.00' LT.	486498.07	1462009.18			ANGLE PT. IN PROP. R/W
32+35.00	55.00' RT.	486560.16	1462133.46			ANGLE PT. IN PROP. R/W
33+25.00	65.00' LT.	486657.74	1462019.54			ANGLE PT. IN PROP. R/W
33+25.00	50.00' LT.	486656.77	1462034.50			ANGLE PT. IN PROP. R/W
33+25.00	35.00' RT.	486651.27	1462119.33			INT. EX. R/W & PROP. R/W
33+25.00	40.00' RT.	486650.94	1462124.32			INT. EX. R/W & PROP. R/W
TOTAL CARRIED TO GENERAL SUMMARY SHEET						

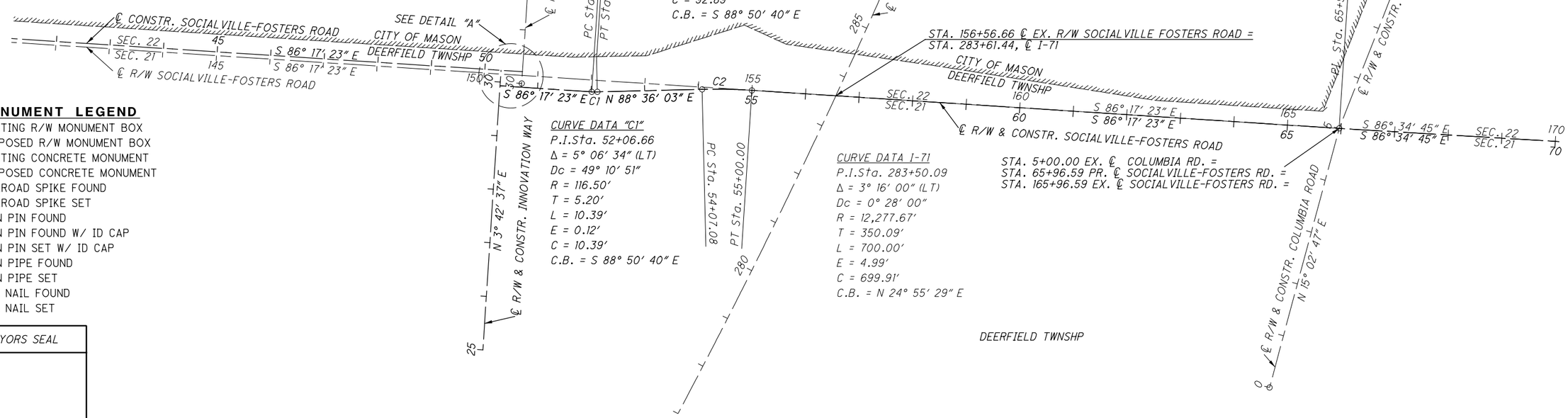

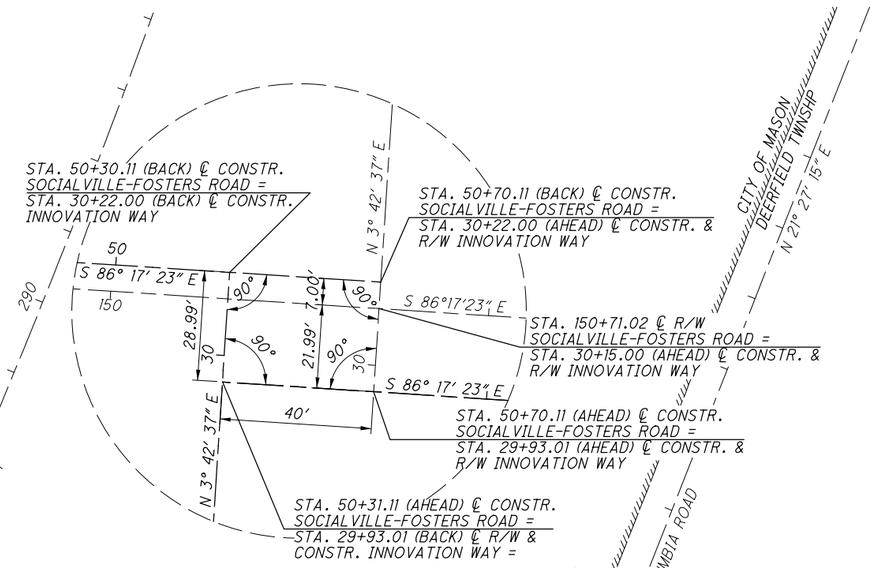

DETAIL A

MONUMENT LEGEND

- EXISTING R/W MONUMENT BOX
- PROPOSED R/W MONUMENT BOX
- EXISTING CONCRETE MONUMENT
- PROPOSED CONCRETE MONUMENT
- RAILROAD SPIKE FOUND
- RAILROAD SPIKE SET
- I.R.F. IRON PIN FOUND
- I.R.F. IRON PIN FOUND W/ ID CAP
- I.R.S. IRON PIN SET W/ ID CAP
- P.F. IRON PIPE FOUND
- P.S. IRON PIPE SET
- P.K.F. P.K. NAIL FOUND
- P.K.S. P.K. NAIL SET

SURVEYORS SEAL

RECEIVED _____, 20___
RECORDED _____, 20___
BOOK _____ PAGE _____

COUNTY RECORDER

I, Darrell B. Plummer, P. S. have conducted a survey of the existing conditions for the Warren County Engineer on 3-27-2014. The results of that survey are contained herein. The horizontal coordinates expressed herein are based on the Ohio State Plane Coordinate System, South Zone on NAD 83 (2011) datum. The Project Coordinates (US Survey feet) are relative to State Plane Grid Coordinates (meters or US Survey feet) by a Project Adjustment Factor multiplier of 1. As a part of this project I have reestablished the locations of the existing property lines and centerline of existing Right of Way for property takes contained herein. All of my work contained herein was conducted in accordance with Ohio Administrative Code 4733-37 commonly known as "A Minimum Standards for Boundary Surveys in the State of Ohio" unless noted. The words I and my as used herein are to mean either myself or someone working under my direct supervision.

_____
Darrell B. Plummer, Professional Land Surveyor No. 7595 Date: _____

NOTE:

THE EXISTING R/W WIDTH AND LOCATION WERE DETERMINED USING ODOT R/W PLANS, SURVEY RECORDS, SUBDIVISION PLATS AND WARREN COUNTY RECORDS.

BASIS FOR BEARINGS:

BEARINGS SHOWN HEREON HAVE BEEN DETERMINED FROM OBSERVATIONS TO THE CONTROL STATIONS ESTABLISHED FOR THIS PROJECT AND ARE COMPATIBLE WITH THOSE OBTAINED WHEN PROJECTED ONTO THE OHIO STATE PLANE.

VERTICAL CONTROL HAS BEEN ESTABLISHED BY COMPARING GPS OBSERVED OTHOMETRIC HEIGHTS TO VALUES OBTAINED BY CONVENTIONAL DIFFERENTIAL LEVELING METHODS AND ADJUSTING ACCORDINGLY. ELEVATIONS ARE EXPRESSED IN TERMS OF NAVD88(CORS96).

HORIZONTAL SCALE IN FEET 0 50 100 200

PID NO.

R/W DESIGNER KAS
R/W REVIEWER DBP

CENTERLINE PLAT

WAR-71-2.54

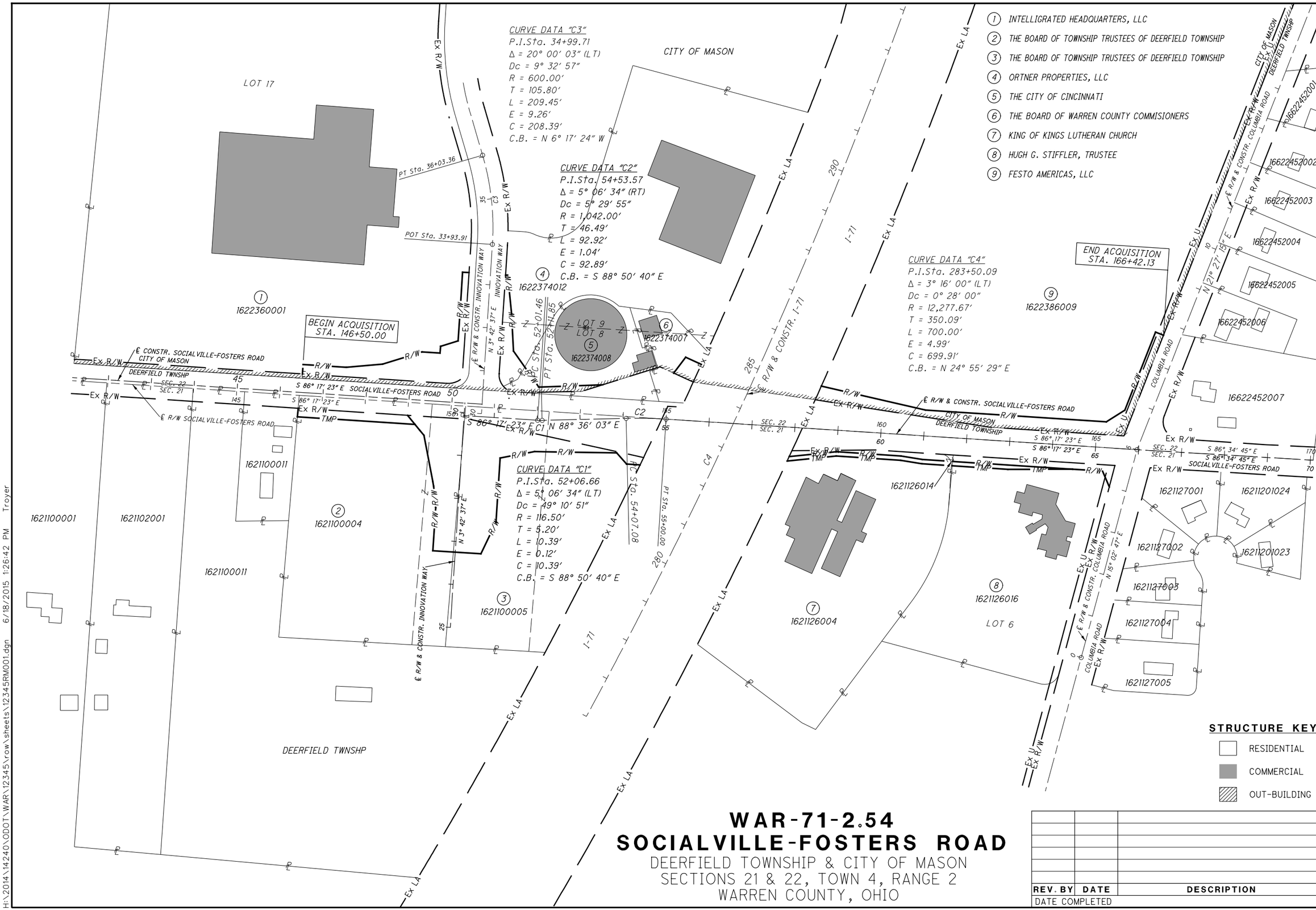

H:\2014\14240\ODOT\WAR\12345\row\sheets\12345RM001.dgn 6/18/2015 1:26:42 PM Troyer

TOTAL NUMBER OF:
9 OWNERSHIPS 0 TOTAL TAKES
9 PARCELS 0 OWNERSHIP W/ STRUCTURES INVOLVED

NET RESIDUE = RECORD AREA-TOTAL PRO-NET TAKE

GRANTEE:
ALL RIGHT OF WAY ACQUIRED IN THE NAME OF WARREN COUNTY UNLESS OTHERWISE SHOWN.

ALL AREAS IN ACRES

PARCEL NO.	OWNER	SHEET NO.	OWNERS RECORD	AUDITOR'S PARCEL	RECORD AREA	TOTAL P.R.O.	GROSS TAKE	P.R.O. IN TAKE	NET TAKE	STRUC-TURE	NET RESIDUE LEFT	NET RESIDUE RIGHT	TYPE FUND	REMARKS	AS ACQUIRED BOOK	AS ACQUIRED PAGE
SH-1	INTELLIGRATED HEADQUARTERS,LLC	5-6	O.R.V. 5186, PAGE 770	1622360001	22.939	0.000	0.458	0.000	0.458	NO	22.481		COUNTY	ROADWAY WIDENING, SIDEWALK CONSTRUCTION, DITCH WORK,		
			O.R.V. 5505, PAGE 562											AND GRADING. TREES REMOVED.		
														LOT 17 KINGS ISLAND TECHNICAL CENTER BLOCK E		
														P.B. 86, PG. 78		
SH-2	THE BOARD OF TOWNSHIP TRUSTEES	5-6, 10	O.R.V. 4125, PAGE 643	1621100004	4.000	0.213	0.041	0.000	0.041	NO		3.959	COUNTY	ROADWAY WIDENING		
	OF DEERFIELD TOWNSHIP		O.R.V. 4125, PAGE 646		1.009	0.054	0.444		0.444	NO		0.565				
T-2		5-6		1621100004	4.000	0.213	0.121	0.000	0.121	NO			COUNTY	GRADING		
SH-3	THE BOARD OF TOWNSHIP TRUSTEES	6-7, 10	O.R.V. 4125, PAGE 643	1621100005	2.500	0.192	0.742	0.000	0.742	NO		1.758	COUNTY	ROADWAY WIDENING, STORM SEWER		
	OF DEERFIELD TOWNSHIP				1.951	0.429	0.097		0.097			1.854		AND SIDEWALK CONSTRUCTION.		
SH-4	ORTNER PROPERTIES, LLC	6-7	O.R.V. 5447, PAGE 84	1622374012	5.813	0.000	0.155	0.000	0.155	NO	5.658		COUNTY	ROADWAY WIDENING, SIDEWALK AND DRIVEWAY CONSTRUCTION		
														AND GRADING. FENCE, TREES AND LIGHT POLE REMOVED.		
														PART OF LOTS 8 AND 9 KINGS ISLAND TECHNICAL CENTER		
														BLOCK B P.B. 18, PG. 1		
SH-5	THE CITY OF CINCINNATI	6-7	O.R.V. 1990, PAGE 69	1622374008	1.3152	0.187	0.093	0.000	0.093	NO	1.2222		COUNTY	ROADWAY WIDENING, SIDEWALK CONSTRUCTION		
														AND DITCH WORK.		
														PART OF LOT 8 KINGS ISLAND TECHNICAL CENTER		
														BLOCK B P.B. 18, PG. 1		
SH-6	WARREN COUNTY COMMISIONERS	7	O.R.V. 1990, PAGE 67	1622374007	0.5126	0.127	0.047	0.000	0.047	NO	0.4656		COUNTY	STORM SEWER OUTLET.		
														TREES REMOVED.		
														PART OF LOT 8 KINGS ISLAND TECHNICAL CENTER		
														BLOCK B P.B. 18, PG. 1		
SH-7	KING OF KINGS LUTHERAN CHURCH	7-8	O.R.V. 3249, PAGE 286	1621126004	5.000	0.000	0.083	0.000	0.083	NO		4.917	COUNTY	DRIVEWAY CONSTRUCTION AND DITCH WORK.		
			O.R.V. 418, PAGE 304	1621126014	0.0066	0.000	0.004	0.000	0.004	NO		0.0026		TREES AND FIRE HYDRANT REMOVED		
														PART OF LOT 1 COLUMBIA MEADOWS P.B. 12, PG. 17		
T-7		7-8		1621126004	5.000	0.000	0.087	0.000	0.087	NO			COUNTY	GRADING		
				1621126014	0.0066	0.000	0.001	0.000	0.001	NO						
SH-8	HUGH G. STIFFLER, TRUSTEE	8-9	O.R.V. 1796, PAGE 339	1621126016	4.1466	0.000	0.139	0.000	0.139	NO		4.0076	COUNTY	DRIVEWAY CONSTRUCTION AND DITCH WORK.		
														TREES REMOVED.		
														LOT 6 REPLAT OF PART OF LOT 1 AND ALL OF LOT 2		
														COLUMBIA MEADOWS P.B. 20, PG. 18		
T-8		8-9		1621126016	4.1466	0.000	0.047	0.000	0.047	NO			COUNTY	GRADING		
SH-9	FESTO AMERICAS, LLC	8-9	O.R.V. 5855, PAGE 264	1622386009	40.8258	0.000	0.557	0.000	0.557	NO	40.2688		COUNTY	ROADWAY WIDENING AND GRADING		
														TREES REMOVED.		

NOTES:
1. ALL TEMPORARY PARCELS TO BE OF 12 MONTH DURATION.
2. UNDER NO CIRCUMSTANCES ARE TEMPORARY EASEMENTS TO BE USED FOR STORAGE OF MATERIAL OR EQUIPMENT BY THE CONTRACTOR UNLESS NOTED OTHERWISE.

TYPES OF TITLE LEGEND:
SH = STANDARD HIGHWAY EASEMENT
T = TEMPORARY

FEDERAL PROJECT NO.
PID NO.
STATE JOB NO.
R/W DESIGNER KAS
R/W REVIEWER DBP

SUMMARY OF ADDITIONAL RIGHT OF WAY

WAR-71-2.54

WAR-71-2.54
SOCIALVILLE-FOSTERS ROAD
DEERFIELD TOWNSHIP & CITY OF MASON
SECTIONS 21 & 22, TOWN 4, RANGE 2
WARREN COUNTY, OHIO

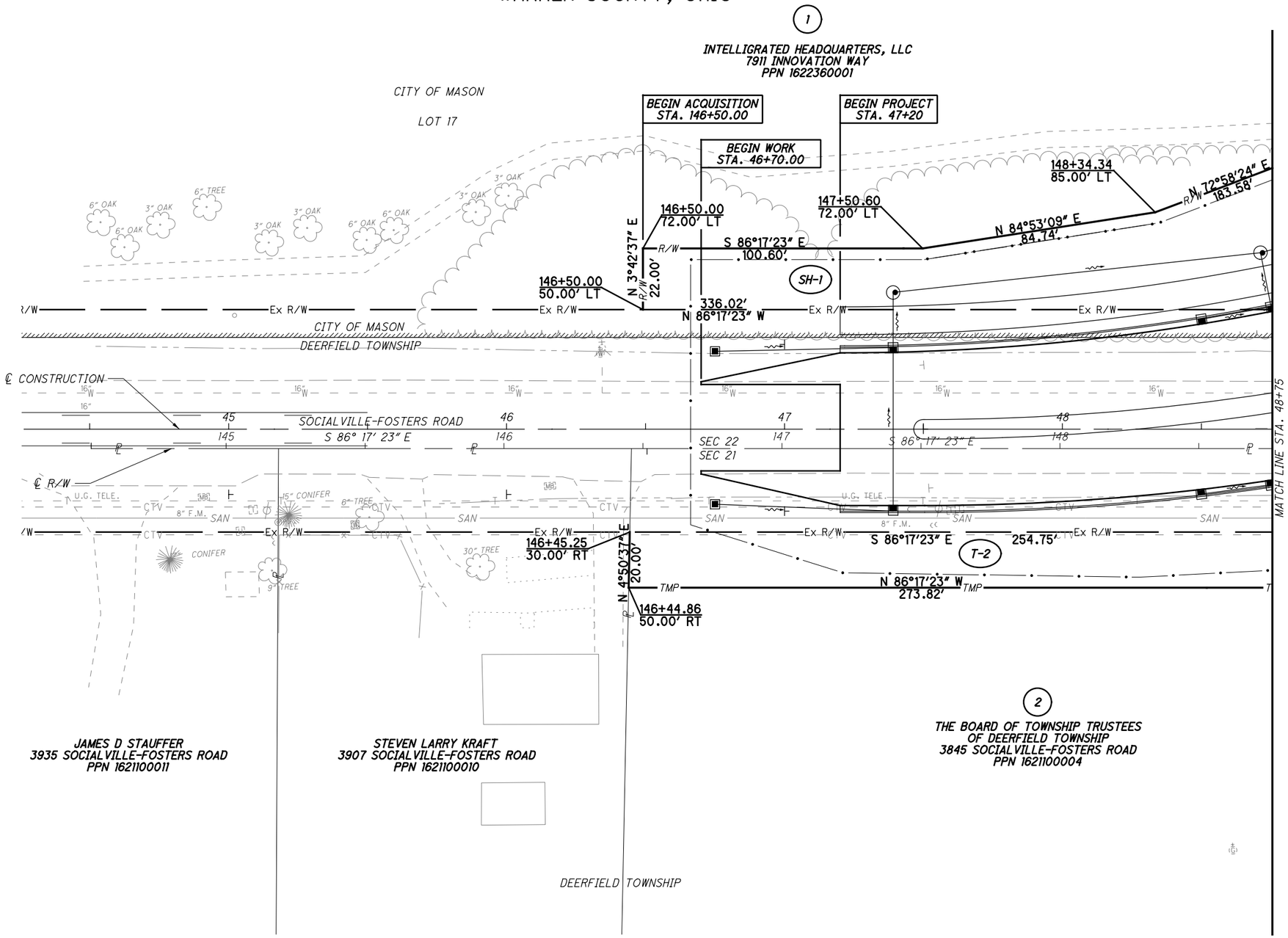

HORIZONTAL SCALE IN FEET
0 10 20 40

PID NO.

R/W DESIGNER KAS
R/W REVIEWER DBP

RIGHT OF WAY PLAN SHEET
STA. 44+50 TO STA. 48+75

WAR-71-2.54

5 / 10

132 / 137

H:\2014\14240\ODOT\WAR\12345\row\sheets\12345RT000.dgn 6/18/2015 1:26:48 PM Troyer

WAR-71-2.54
SOCIALVILLE-FOSTERS ROAD
DEERFIELD TOWNSHIP & CITY OF MASON
SECTIONS 21 & 22, TOWN 4, RANGE 2
WARREN COUNTY, OHIO

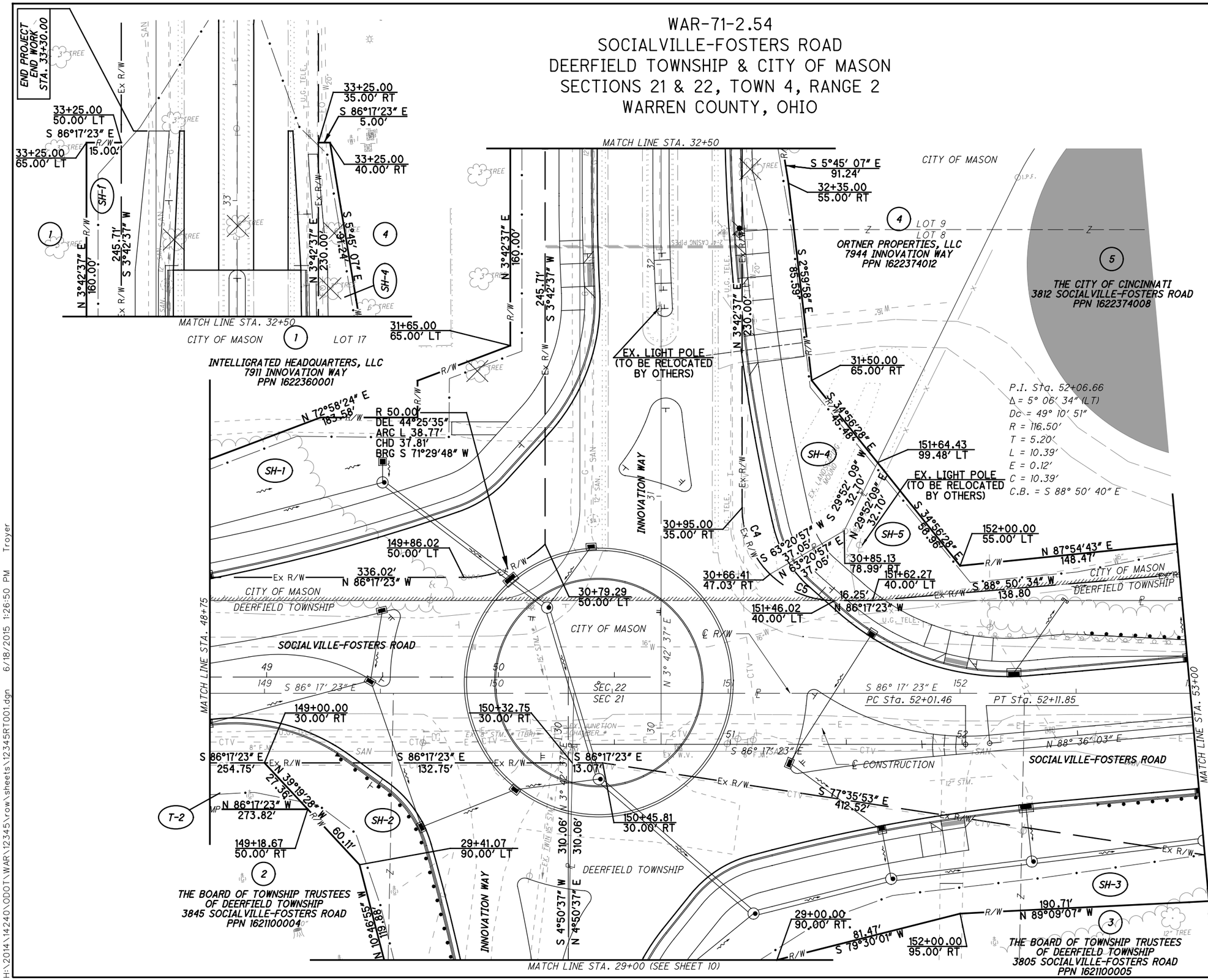

HORIZONTAL SCALE IN FEET
0 10 20 40

PID NO.

R/W DESIGNER KAS
R/W REVIEWER DBP

RIGHT OF WAY PLAN SHEET
STA. 47+50 TO STA. 53+00

WAR-71-2.54

6 / 10

133 / 137

H:\2014\14240\ODOT\WAR\12345\row\sheets\12345RT001.dgn 6/18/2015 1:26:50 PM Troyer

WAR-71-2.54
SOCIALVILLE-FOSTERS ROAD
DEERFIELD TOWNSHIP & CITY OF MASON
SECTIONS 21 & 22, TOWN 4, RANGE 2
WARREN COUNTY, OHIO

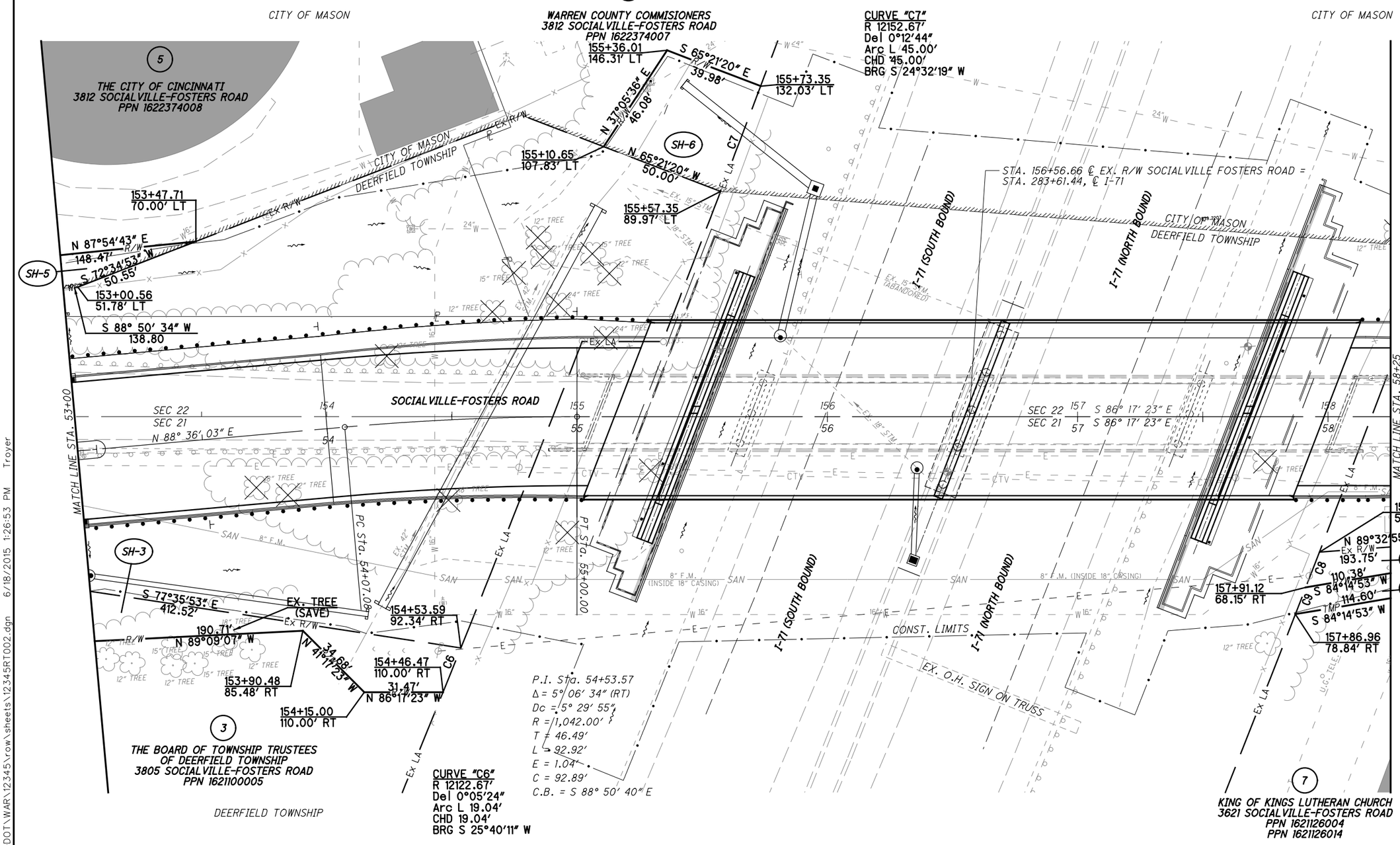

HORIZONTAL SCALE IN FEET 0 10 20 40

PID NO.

R/W DESIGNER KAS
R/W REVIEWER DBP

RIGHT OF WAY PLAN SHEET
STA. 53+00 TO STA. 58+25

WAR-71-2.54

WAR-71-2.54
SOCIALVILLE-FOSTERS ROAD
DEERFIELD TOWNSHIP & CITY OF MASON
SECTIONS 21 & 22, TOWN 4, RANGE 2
WARREN COUNTY, OHIO

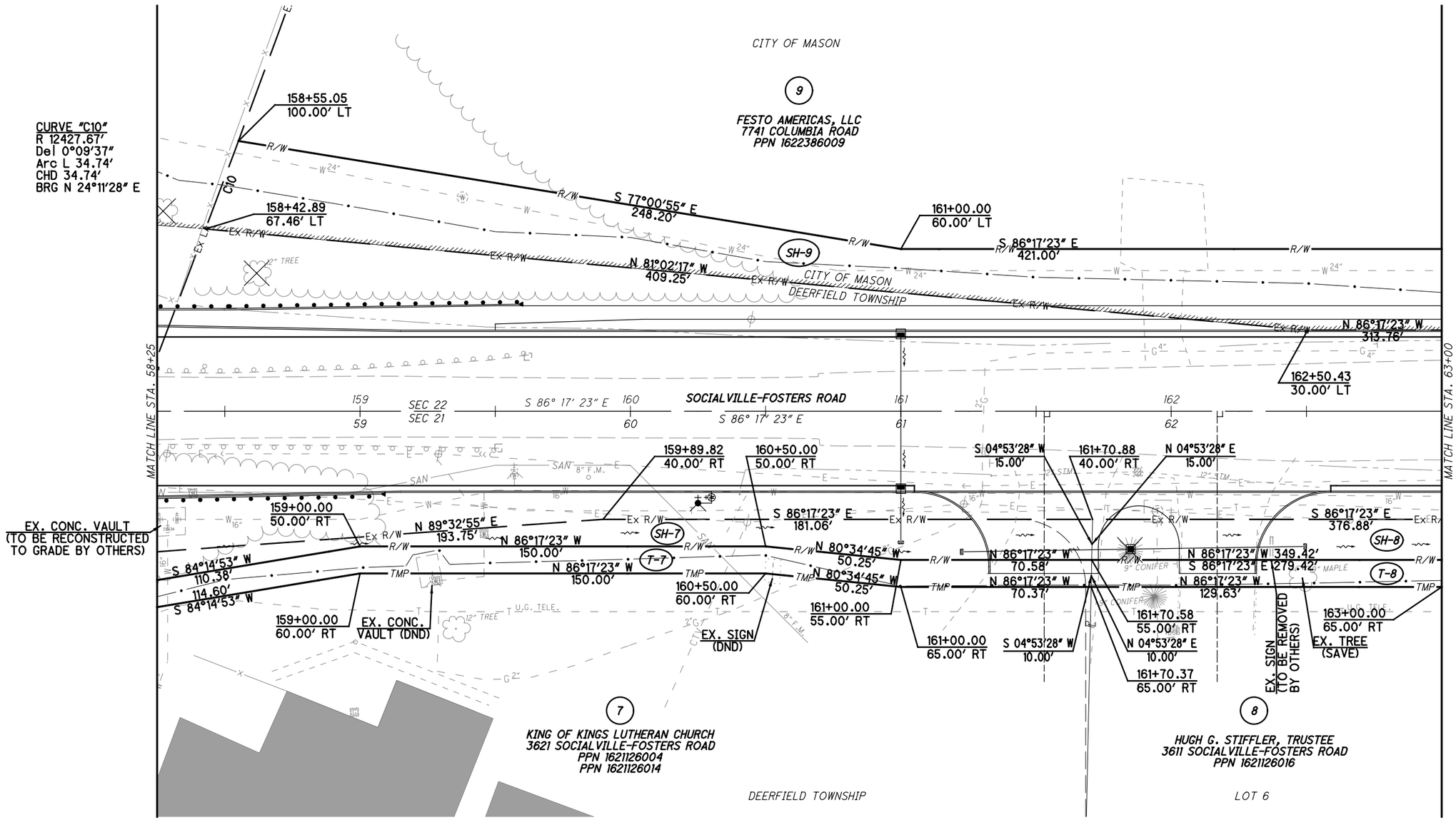

HORIZONTAL SCALE IN FEET
0 10 20 40

PID NO.

R/W DESIGNER KAS
R/W REVIEWER DBP

RIGHT OF WAY PLAN SHEET
STA. 58+25 TO STA. 63+00

WAR-71-2.54

WAR-71-2.54
SOCIALVILLE-FOSTERS ROAD
DEERFIELD TOWNSHIP & CITY OF MASON
SECTIONS 21 & 22, TOWN 4, RANGE 2
WARREN COUNTY, OHIO

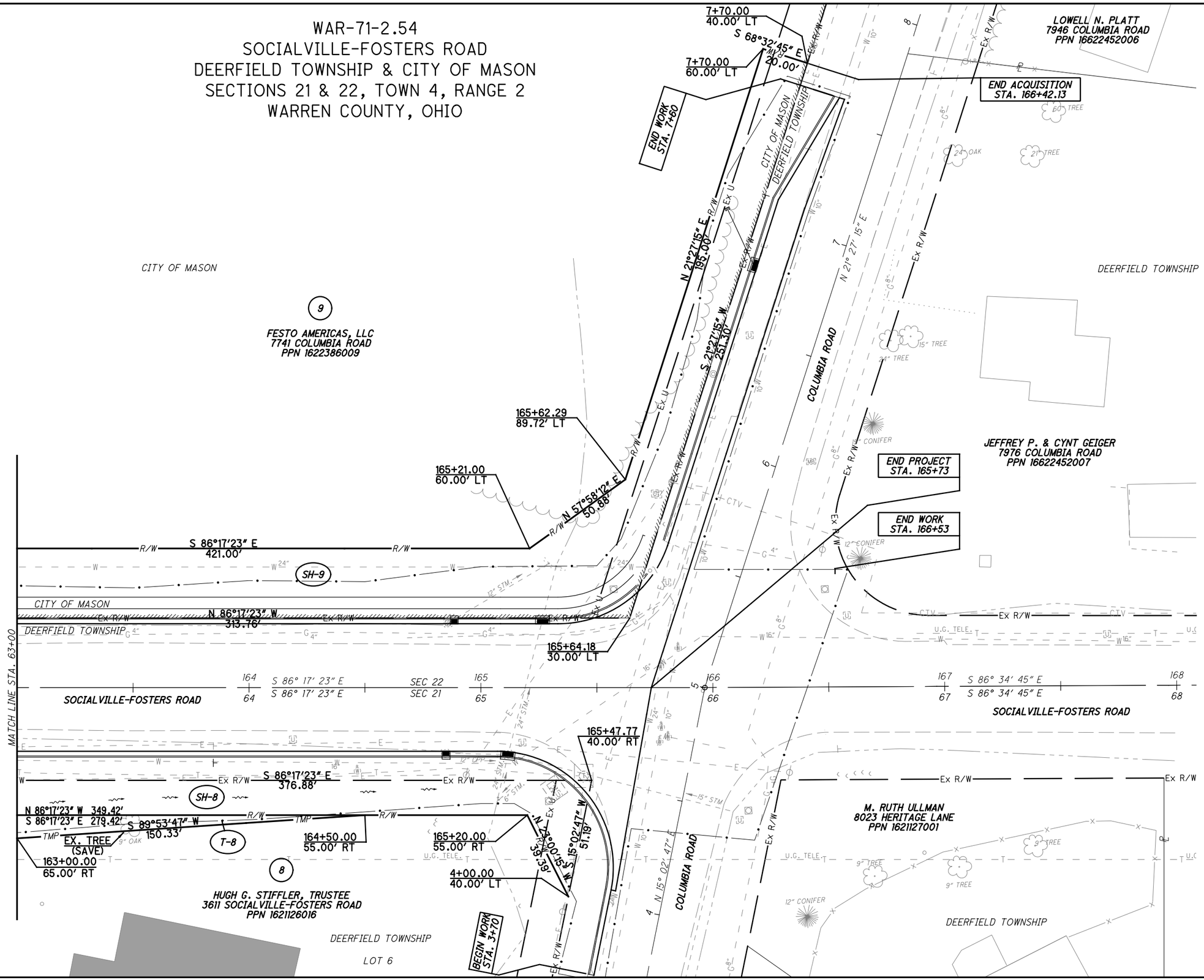

HORIZONTAL SCALE IN FEET
0 10 20 40

PID NO.

R/W DESIGNER KAS
R/W REVIEWER DBP

RIGHT OF WAY PLAN SHEET
STA. 63+00 TO STA. 68+00

WAR-71-2.54

9 / 10

136
137

H:\2014\14240\ODOT\WAR\12345\row\sheets\12345RT004.dgn 6/18/2015 1:27:05 PM Troyer

WAR-71-2.54
SOCIALVILLE-FOSTERS ROAD
DEERFIELD TOWNSHIP & CITY OF MASON
SECTIONS 21 & 22, TOWN 4, RANGE 2
WARREN COUNTY, OHIO

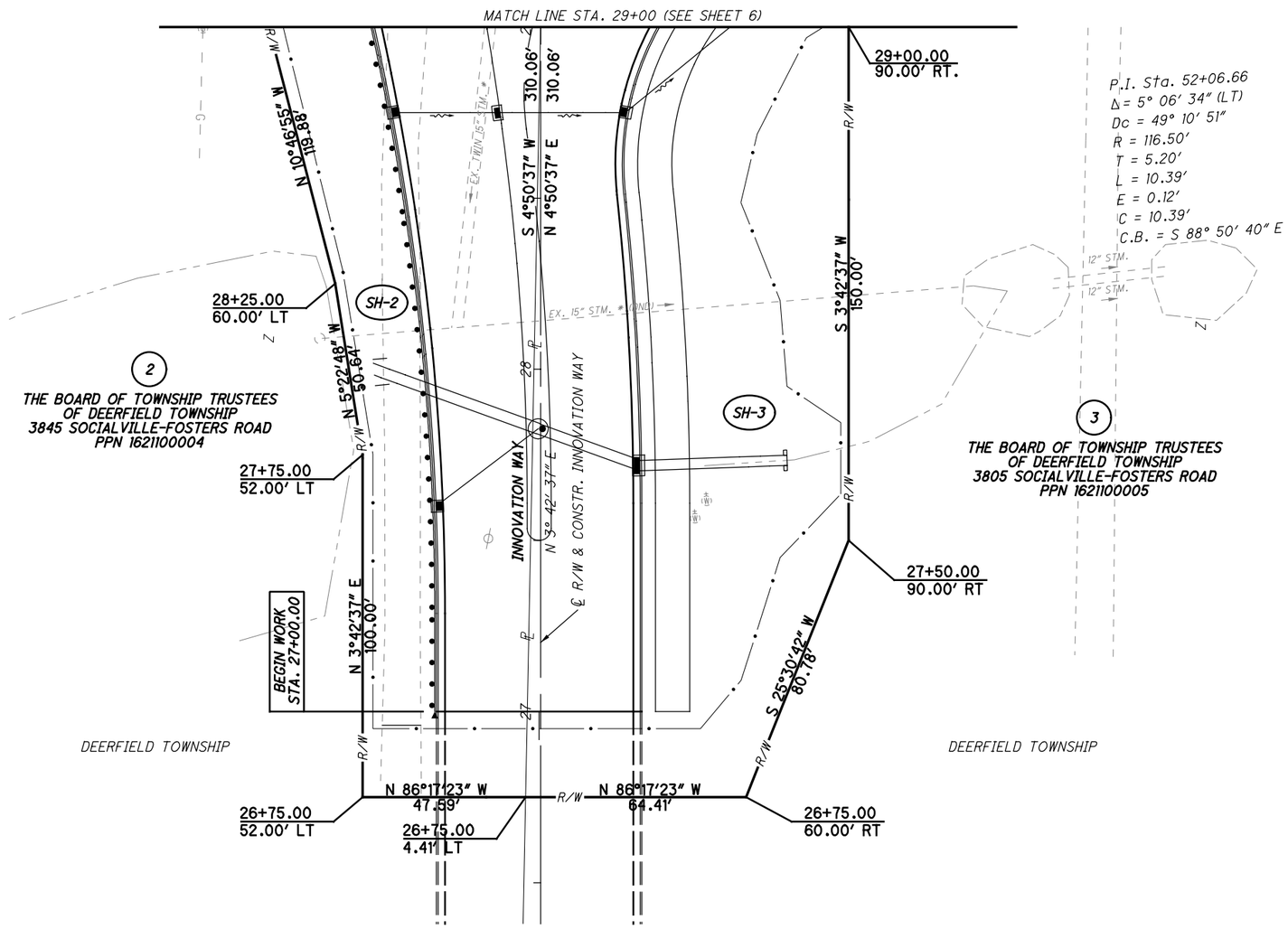

HORIZONTAL SCALE IN FEET
0 10 20 40

PID NO.

R/W DESIGNER KAS
R/W REVIEWER DBP

RIGHT OF WAY PLAN SHEET
STA. 27+00 TO STA. 29+00

WAR-71-2.54

10/10

137/137

H:\2014\14240\ODOT\WAR\12345\row\sheets\12345RT005.dgn 6/18/2015 1:27:08 PM Troyer

ITEM 614, MAINTAINING TRAFFIC (I.R. 71)

PHASE A MAINTENANCE OF TRAFFIC ON I.R. 71 IS FOR DEMOLITION OF FORWARD AND REAR BRIDGE PIERS AND IS NOT INTENDED FOR FORWARD AND REAR BRIDGE ABUTMENT CONSTRUCTION.

ITEM 614, WORK ZONE IMPACT ATTENUATOR FOR 24" WIDE HAZARDS (UNIDIRECTIONAL)

THIS ITEM SHALL CONSIST OF FURNISHING AND INSTALLING A NON-GATING IMPACT ATTENUATOR. FURNISH AN IMPACT ATTENUATOR FROM THE OFFICE OF ROADWAY ENGINEERING'S APPROVED LIST FOR WORK ZONE IMPACT ATTENUATORS, FROM THE ROADWAY STANDARDS WEB PAGE FOR ROADWAY STANDARDS APPROVED PRODUCTS

INSTALLATION SHALL BE AT THE LOCATIONS SPECIFIED IN THE PLANS IN ACCORDANCE WITH THE MANUFACTURER'S SPECIFICATIONS.

THE CONTRACTOR SHALL REPAIR OR REPLACE A DAMAGED UNIT WITHIN 24 HOURS OF A DAMAGING IMPACT.

WHEN BI DIRECTIONAL DESIGNS ARE SPECIFIED, THE CONTRACTOR SHALL SUPPLY APPROPRIATE TRANSITIONS.

WHEN GATING IMPACT ATTENUATORS ARE DESIRED, THE CONTRACTOR SHALL SUBMIT DOCUMENTATION TO THE ENGINEER FOR ACCEPTANCE.

THE COSTS FOR THE ADDITIONAL BARRIER REQUIRED FOR A GATING IMPACT ATTENUATOR SHALL BE INCLUDED IN THE COST OF THE GATING IMPACT ATTENUATOR.

PAYMENT FOR THE ABOVE WORK SHALL BE MADE AT THE UNIT BID AND SHALL BE MADE AT THE UNIT PRICE BID AND SHALL INCLUDE ALL LABOR, TOOLS, EQUIPMENT AND MATERIALS NECESSARY TO CONSTRUCT AND MAINTAIN A COMPLETE AND FUNCTIONAL IMPACT ATTENUATOR SYSTEM, INCLUDING ALL RELATED BACKUPS, TRANSITIONS, LEVELING PADS, HARDWARE AND GRADING, NOT SEPARATELY SPECIFIED, AS REQUIRED BY THE MANUFACTURER.

BARRIER DELINEATION

BARRIER REFLECTORS AND OBJECT MARKERS SHALL BE INSTALLED ON ALL PORTABLE BARRIER (PB) USED FOR TRAFFIC CONTROL AND ON PERMANENT CONCRETE BARRIER (INCLUDING BRIDGE PARAPETS) LOCATED WITHIN 5 FEET OF THE EDGE OF THE ADJACENT TRAVEL LANE.

BARRIER REFLECTORS SHALL CONFORM TO C&MS 626, EXCEPT THAT THE SPACING SHALL BE AS PER TRAFFIC SCD MT-101.70. OBJECT MARKERS AND THEIR INSTALLATION SHALL CONFORM TO C&MS 614.03 AND SCD MT-101.70. WHEN THE PB CONTAINS GLARE SCREEN, ONE SET OF THREE VERTICAL STRIPES OF SHEETING SHALL BE CONSDERED EQUIVALENT TO AN OBJECT MARKER, ONE-WAY.

INCREASED BARRIER DELINEATION, AS SPECIFIED HEREIN, SHALL BE INSTALLED ON ALL PB AND CONCRETE BARRIER LOCATION WITHIN 5 FEET OF THE EDGE OF THE TRAVELED LANE ALONG TAPERS AND TRANSITION AREAS AND ALONG CURVES (OUTSIDE ONLY) WITH DEGREE OF CURVATURE GREATER THAN OR EQUAL TO 3 DEGREES.

THE INCREASED BARRIER DELINEATION SHALL CONSIST OF EITHER DELINEATION PANELS OR THE TRIPLE STACKING OF WORK ZONE BARRIER REFLECTORS.

BARRIER DELINEATION (CONT.)

DELINEATION PANELS SHALL CONSIST OF PANELS OF DELINEATION, APPROXIMATELY 34 INCHES LONG AND 6 INCHES WIDE AND SHALL BE "CRIMPED" PANELS SHALL BE INSTALLED AND SPACED PER TRAFFIC SCD MT-101-70.

TRIPLE-STAKCED BARRIER REFLECTORS SHALL CONSIST OF ALIGNING THREE BARRIER REFLECTORS VERTICALLY, AT LOCATIONS WHERE A SINGLE BARRIER REFLECTOR WOULD BE OTHERWISE ATTACHED. THERE SHALL BE NO OPEN SPACE BETWEEN THE ADJACENT BARRIER REFLECTORS. THE TRIPLE-STACKED BARRIER REFLECTORS SHALL CONFORM TO C&MS 626, EXCEPT THAT THEY SHALL BE SPACED AND ALIGNED PER TRAFFIC SCD MT-101.70.

THE FOLLOWING ESTIMATED QUANTITIES HAVE BEEN INLCUDED IN THE PLANS AND CARRIED TO THE GENERAL SUMMARY:

ITEM 614, BARRIER REFLECTOR, TYPE B 28 EACH

PAYMENT SHALL BE FULL COMPENSATION FOR ALL MATERIAL, LABOR, INCIDENTALS AND EQUIPMENT NECESSARY FOR FURNISHING, INSTALLING, MAINTAINING AND REMOVING EACH OF THE ABOVE ITEMS.

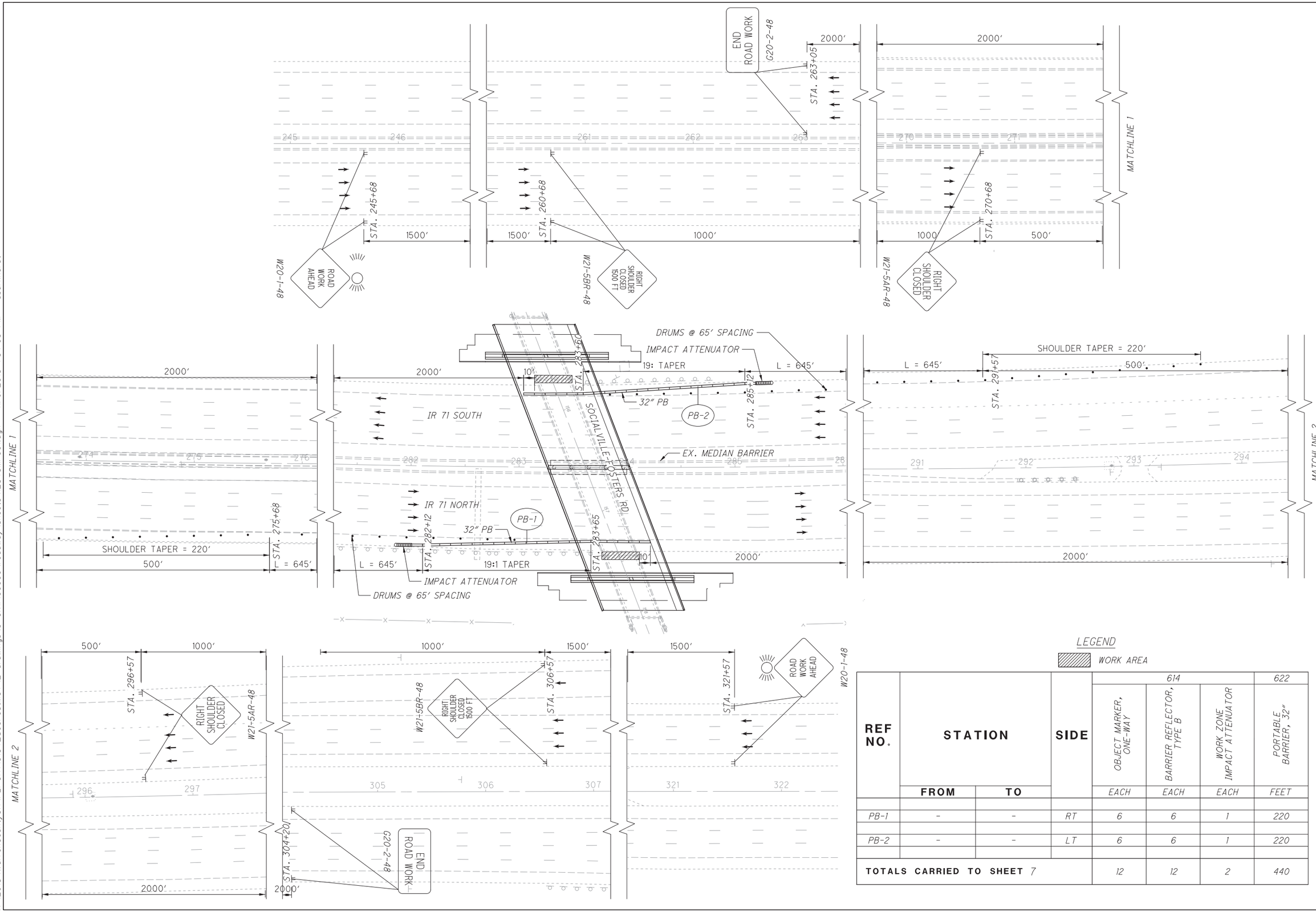

REF NO.	STATION FROM	STATION TO	SIDE	614 OBJECT MARKER, ONE-WAY	614 BARRIER REFLECTOR, TYPE B	614 WORK ZONE IMPACT ATTENUATOR	622 PORTABLE BARRIER, 32"
				EACH	EACH	EACH	FEET
PB-1	-	-	RT	6	6	1	220
PB-2	-	-	LT	6	6	1	220
TOTALS CARRIED TO SHEET 7				12	12	2	440

CALCULATED ATB
CHECKED SAM

HORIZONTAL SCALE IN FEET 0 20 40 80

MAINTENANCE OF TRAFFIC - PHASE A
MAINLINE IR 71

WAR-71-2.54

2/7

X:\2015\WarrenCountyOH\PEI-OHT15134_SocFostMOT\2 drawings\5 Civil\00000\roadway\sheets\12345MP001.dgn 11/6/2015 1:34:05 PM aburkhardt

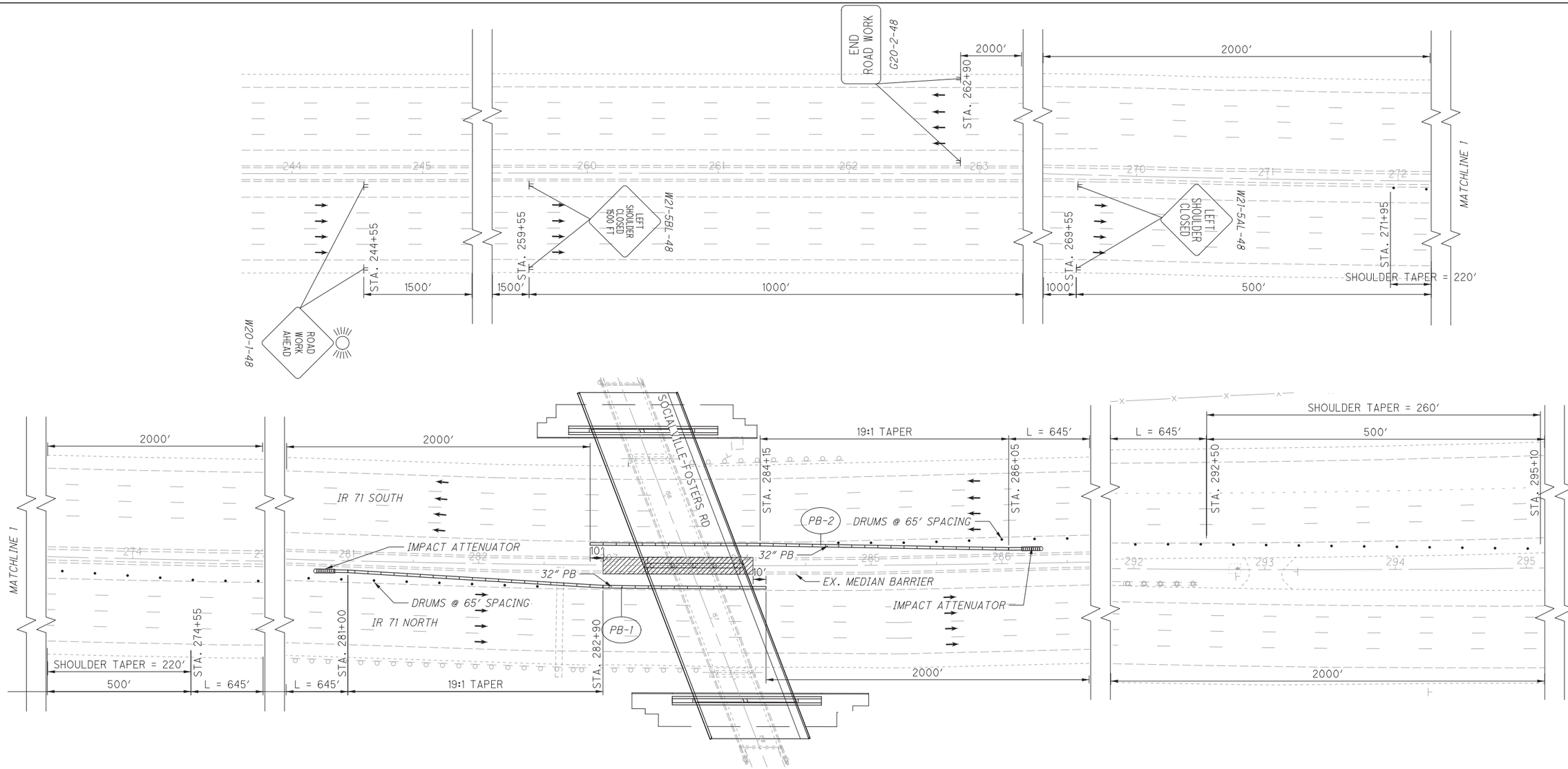

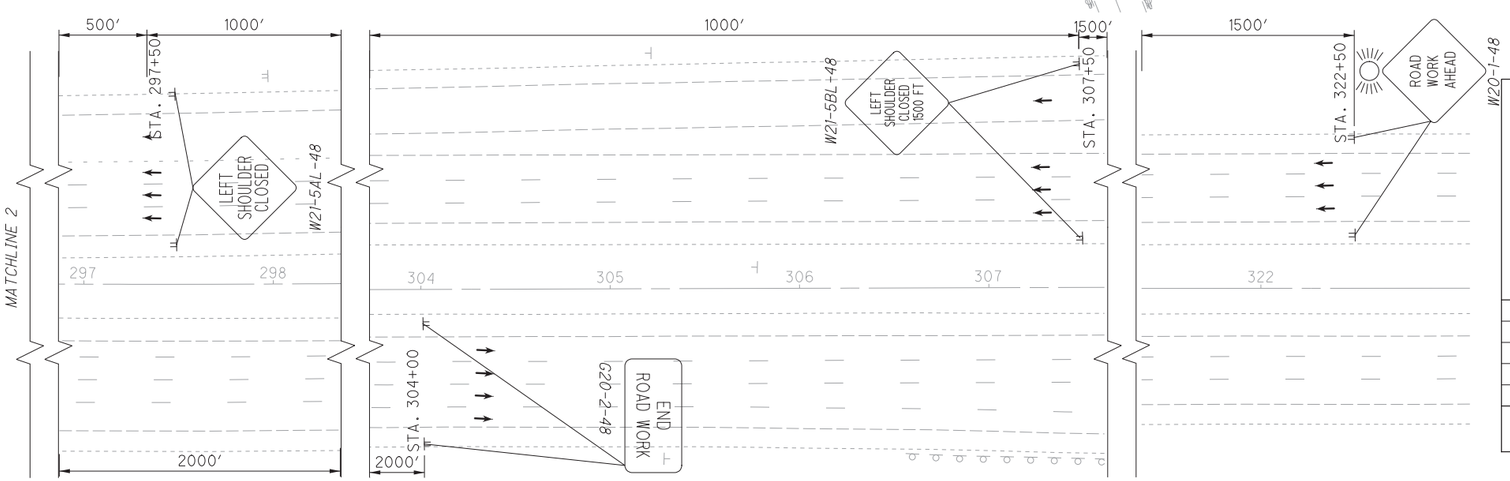

LEGEND

WORK AREA

REF NO.	STATION FROM	STATION TO	SIDE	614 OBJECT MARKER, ONE-WAY	614 BARRIER REFLECTOR, TYPE B	614 WORK ZONE IMPACT ATTENUATOR	622 PORTABLE BARRIER, 32″
				EACH	EACH	EACH	FEET
PB-1	-	-	RT	8	8	1	330
PB-2	-	-	LT	8	8	1	330
TOTALS CARRIED TO SHEET 7				16	16	2	660

N

0 20 40 80
HORIZONTAL SCALE IN FEET

CALCULATED ATB
CHECKED SAM

MAINTENANCE OF TRAFFIC - PHASE B
MAINLINE IR 71

WAR-71-2.54

3/7

X:\2015\WarrenCountyOH\PEI-OHT15134_SocFostMOT\2 drawings\5 Civil\00000\roadway\sheets\12345MP002.dgn 11/6/2015 1:35:22 PM aburkhardt

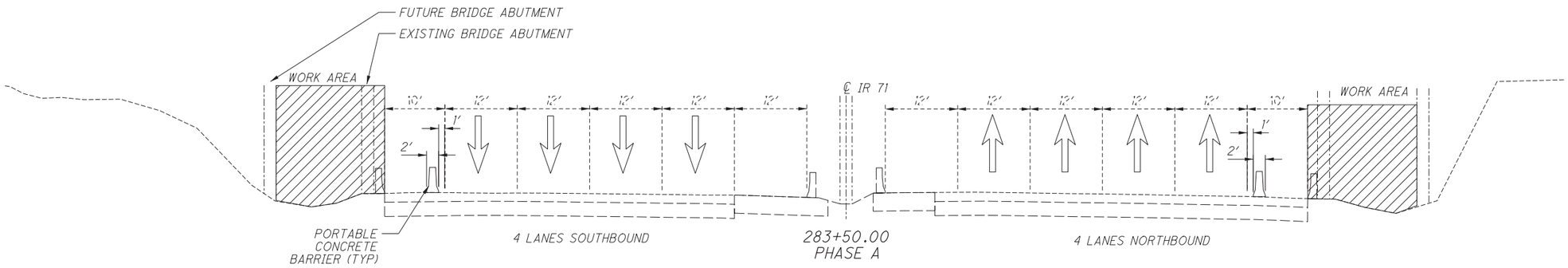

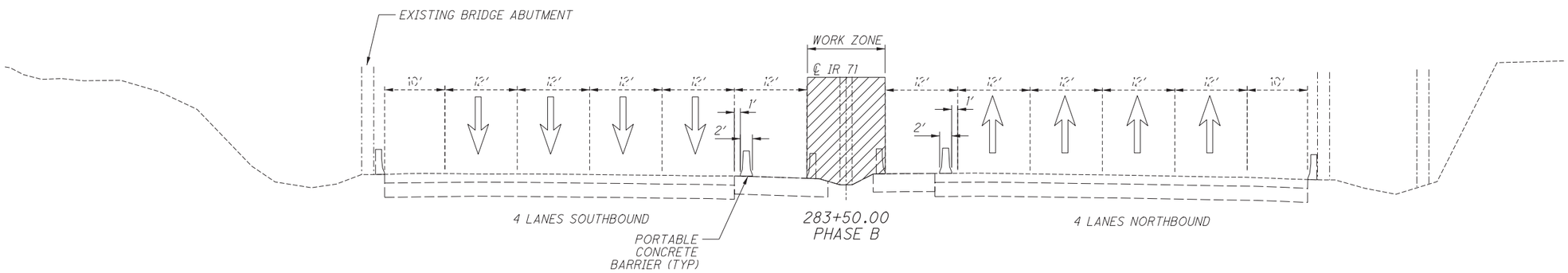

HORIZONTAL SCALE IN FEET

CALCULATED ATB
CHECKED SAM

MAINTENANCE OF TRAFFIC
TYPICAL SECTIONS - MAINLINE IR 71

WAR-71-2.54

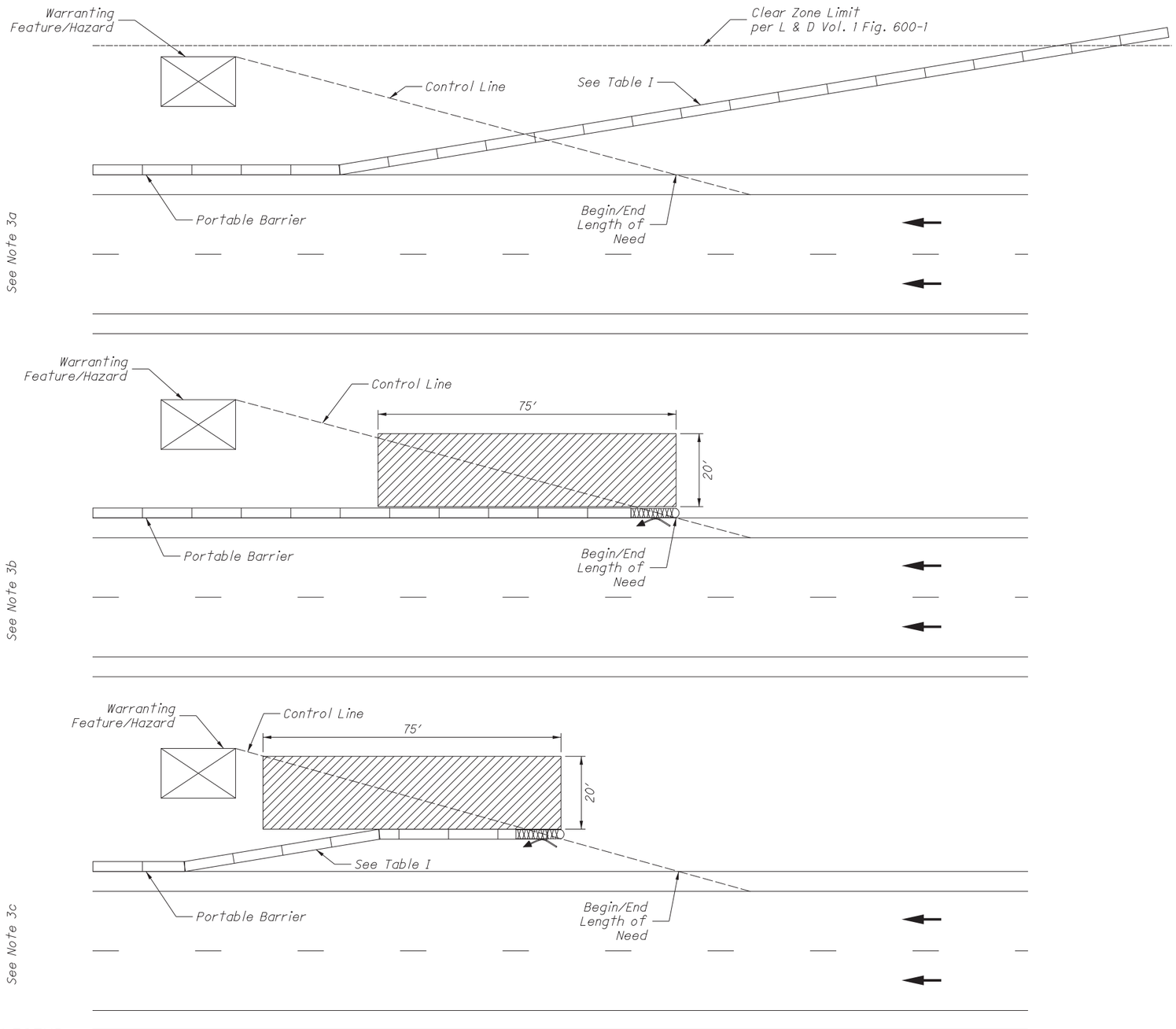

LEGEND

- RECOVERY AREA
- PORTABLE BARRIER
- NON-GATING IMPACT ATTENUATOR
- DIRECTION OF TRAVEL

NOTES:

1. Attenuators shall be installed per the manufacturer's specifications.

2. Recovery area shall have slopes 3:1 or flatter and be free of workers, hazards, equipment, drop-offs, and material storage.

3. The Contractor shall select one of the three acceptable options for terminating portable barrier:

   a) Terminate flared section of portable barrier outside clear zone with tapered end only where cross slopes are 10:1 or flatter.
   b) Terminate portable barrier with an impact attenuator. A non-gating attenuator may be included in the length of need measurement.
   c) Flare a section of portable barrier to the length of need control line and terminate with an impact attenuator. A non-gating impact attenuator may be included in the flared section of portable barrier.

4. The Contractor shall submit documentation to the Engineer, 2 weeks prior to implementation, for acceptance when:

   a) Deviating from the three acceptable options for terminating portable barrier.

      Documentation shall explain any deviations and verify that the recovery area fulfills the manufacturer's specifications and Note 2.

   b) Using a gating impact attenuator in lieu of a non-gating impact attenuator.

      The gating impact attenuator length shall not be included as part of the length of need or recovery area requirements. Additional portable barrier will need to be added. The additional cost for the additional barrier required for a gating impact attenuator shall be included in the cost of the gating impact attenuator.

      Documentation shall verify that the extended recovery area fulfills the manufacturer's specifications and and Note 2.

5. Gating impact attenuators shall not be used in gore locations or within the clear zone between bi-directional traffic.

TABLE I

SPEED LIMIT (MPH)	PB FLARE RATE MINIMUM
25	8:1
30	8:1
35	9:1
40	10:1
45	12:1
50	14:1
55	16:1
60	18:1
65	19:1
70	20:1

OFFICE OF ROADWAY ENGINEERING

DESIGNED | REVIEWED

REVISION DATE 7-19-2013 | CHECKED

PIS NUMBER 2010175

PLAN INSERT SHEET

IMPACT ATTENUATOR PLACEMENT

WAR-71-2.54

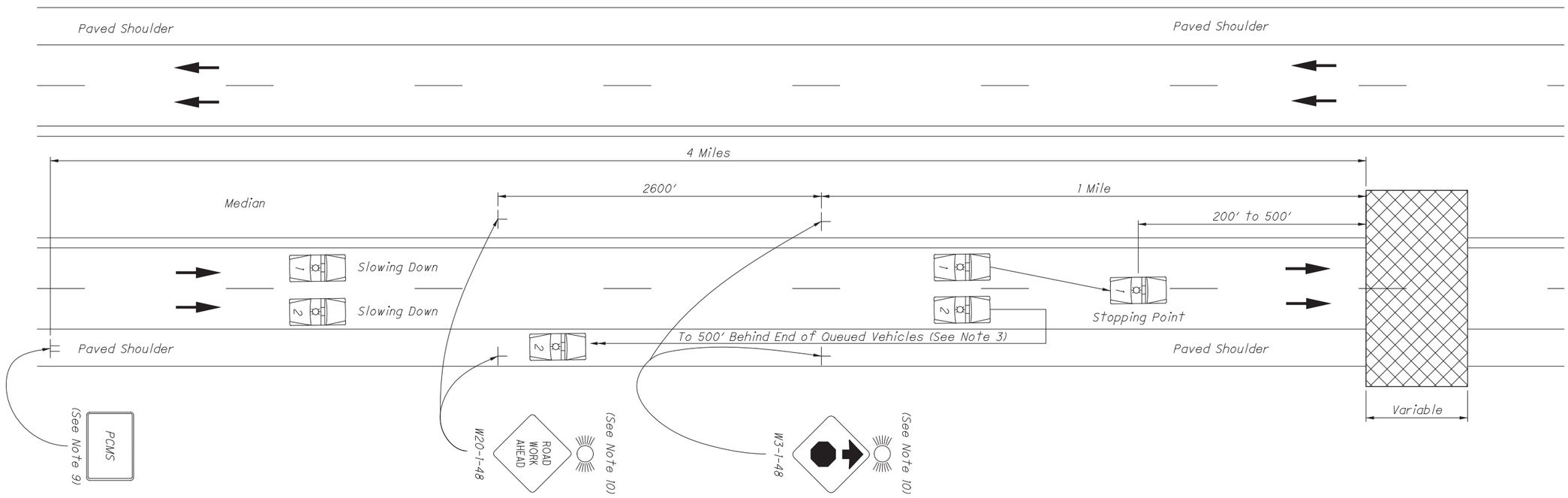

NOTES:

1. This type of highway closure shall be used for all construction, maintenance and utility operations when the duration of closure will not exceed 15 minutes.

2. A minimum of two law enforcement officers with patrol cars per direction shall be provided to block traffic and pace motorists to a stop. The number of patrol cars shall equal the number of lanes closed on the highway.

3. Patrol cars, with lights flashing, should enter the stream of traffic at approximately 3 miles before the point of closure. At approximately 2 miles before the point of closure, they should begin the gradual slow down. Traffic shall be brought to a complete stop a safe distance, between 200' and 500', from the work area. This slowing operation shall take no more than 10 minutes. After traffic has been stopped, one patrol car shall travel along the roadway shoulder 500' behind the end of the queued vehicles.

4. The Contractor shall not begin work until traffic has been brought to a complete stop.

5. All entrance ramps located between the stopped traffic and the work area shall be closed.

6. After the highway has been closed and reopened via this procedure, both of the following requirements shall have been met before implementation of another short duration closure, except with the approval of the Engineer:

   a) A minimum period of 15 minutes shall have elapsed; and

   b) The queued traffic shall have dissipated.

7. The time frame for stopping traffic shall be specified.

8. The public shall be given advance notice of the upcoming closure by providing portable changeable message signs at the site in advance of the scheduled closing. Closure information should also be provided to the Engineer.

9. An ODOT-approved portable changeable message sign shall be provided during operation. The message sign shall be placed approximately 4 miles in advance of the closure or as directed by the Engineer. The message shall be ROAD CLOSED AHEAD (2 sec.), PREPARE TO STOP (2 sec.).

10. The Contractor shall erect and maintain 48" ROAD WORK AHEAD and Stop Ahead signs on each side of the highway. Each sign shall be equipped with one Type A flashing warning light and one flare. There shall be one flare at each sign on both sides of the roadway. The flare shall be replaced if it burns out.

LEGEND

- WORK AREA
- PATROL CAR
- DIRECTION OF TRAFFIC

THIS DRAWING REPLACES PIS 209960 DATED 07-20-2012.

OFFICE OF ROADWAY ENGINEERING

DESIGNED | REVIEWED

REVISION DATE 07-18-2014 | CHECKED

PLAN INSERT SHEET

SHORT-DURATION CLOSURE OF MULTI-LANE DIVIDED HIGHWAY

WAR-71-2.54

SHEET NO.	PHASE	614 OBJECT MARKER, ONE-WAY	614 BARRIER REFLECTOR, TYPE B	614 WORK ZONE IMPACT ATTENUATOR	614 LAW ENFORCEMENT OFFICER WITH PATROL CAR FOR ASSISTANCE	614 PORTABLE CHANGEABLE MESSAGE SIGN		622 PORTABLE BARRIER, 32"
		EACH	EACH	EACH	HOUR	SIGN MONTH		FEET
2	A	12	12	2				440
3	B	16	16	2				660
6	1A				100			
6	1A					12		
TOTALS CARRIED TO GENERAL SUMMARY		28	28	4	100	12		1100

CALCULATED ATB
CHECKED SAM

MAINTENANCE OF TRAFFIC SUBSUMMARY

WAR-71-2.54

WATERMAIN SHALL BE INSTALLED IN A SEPARATE TRENCH FROM THE SANITARY SEWER AND SHALL BE A MINIMUM DISTANCE OF 10' MEASURED HORIZONTALLY FROM THE SANITARY SEWER.

BACKFILL AND RESTORATION OF PAVEMENT MUST CONFORM TO THE APPLICABLE WARREN COUNTY ENGINEER OR ODOT SPECIFICATION(S).

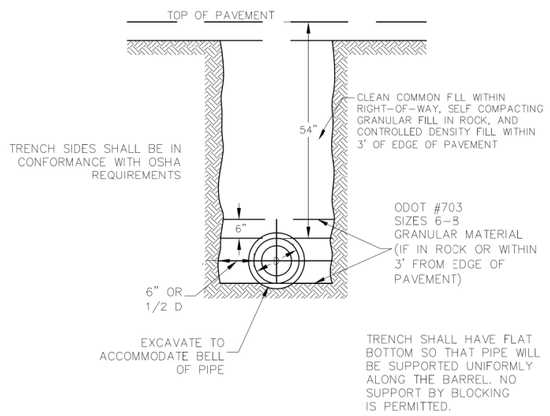

WATERMAIN TRENCH DETAIL

APPROVED/REVISED	WARREN COUNTY STANDARD DETAILS DEPARTMENT OF WATER & SEWER	STANDARD NUMBER
JUNE, 2012		W-2

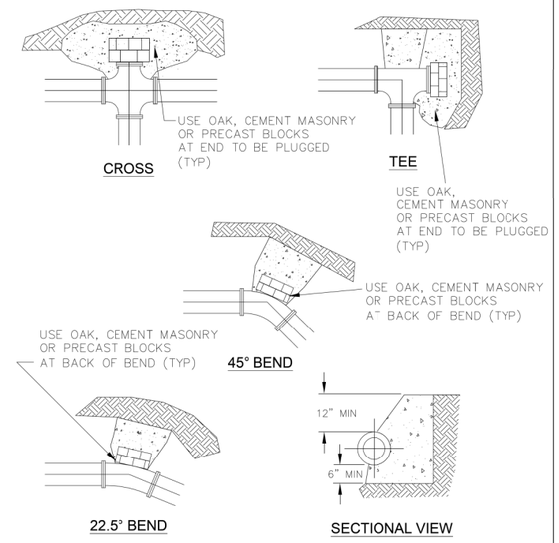

NOTE:
BEARING AREA TO BE DETERMINED BASED ON SOIL TYPE & WORKING PRESSURE.
THRUST BLOCKS TO BE USED AT ALL BENDS 22.5° OR GREATER.
THRUST BLOCKS TO BE POURED AGAINST FIRM UNDISTURBED SOIL. USE CLASS "C" CONCRETE.
90° BENDS SHALL NOT BE PERMITTED.

THRUST BLOCK DETAILS

APPROVED/REVISED	WARREN COUNTY STANDARD DETAILS DEPARTMENT OF WATER & SEWER	STANDARD NUMBER
JUNE, 2012		W-3

W.M.	F.H. BURIAL DEPTH
6"	4'-6"
8"	4'-6"
10"	5'-0"
12"	5'-0"
16"	5'-6"
18"	5'-6"
20"	5'-6"

ALL FIRE HYDRANTS AND HYDRANT VALVES MUST OPEN LEFT.

ALL HYDRANTS TO BE 5 1/4" BRONZE TO BRONZE SEAT

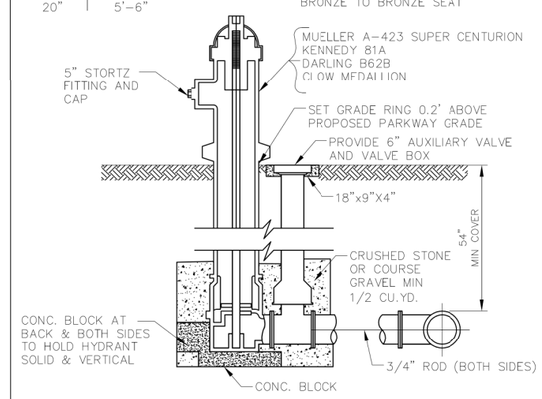

1. ALL VALVES MUST BE RESILIENT SEATED.
2. APPROVED VALVE TYPES: CLOW, DRESSER & AMERICAN DARLING. MUST CONFORM TO AWWA C509.
3. RODDING SHALL NOT BE REQ'D IF ANCHOR FLANGES (SPOOLS) ARE USED.
4. HYDRANTS TO BE EQUIPPED WITH PRE-ATTACHED 4.5" NS" PUMPER CONNECTION WITH A 5" STORTZ FITTING AND CAP.

HYDRANT SETTING

APPROVED/REVISED	WARREN COUNTY STANDARD DETAILS DEPARTMENT OF WATER & SEWER	STANDARD NUMBER
JUNE, 2012		W-8

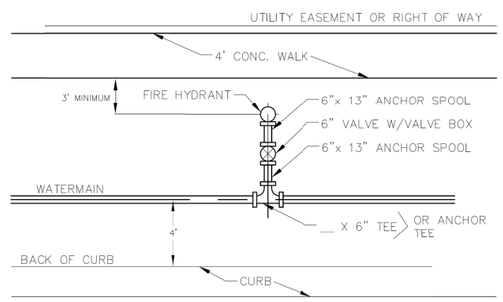

STREET

NOTES:
1. HYDRANT, VALVE, BEND & TEE TO BE CLOSE COUPLED (USE RESTRAINED JOINTS).
2. HYDRANT AND VALVE MUST BE A MINIMUM OF 3' FROM ANY PAVED SURFACE.
3. ALL VALVES MUST BE RESILIENT SEATED.
4. APPROVED VALVE TYPES: CLOW, DRESSER & AMERICAN DARLING. MUST CONFORM TO AWWA C509.
5. RODDING SHALL NOT BE REQ'D IF ANCHOR FLANGES (SPOOLS) ARE USED.
6. HYDRANTS TO BE EQUIPPED WITH PRE-ATTACHED 4.5" NST PUMPER CONNECTION WITH A 5" STORTZ FITTING AND CAP.

FIRE HYDRANT ARRANGEMENT

APPROVED/REVISED	WARREN COUNTY STANDARD DETAILS DEPARTMENT OF WATER & SEWER	STANDARD NUMBER
JUNE, 2012		W-9

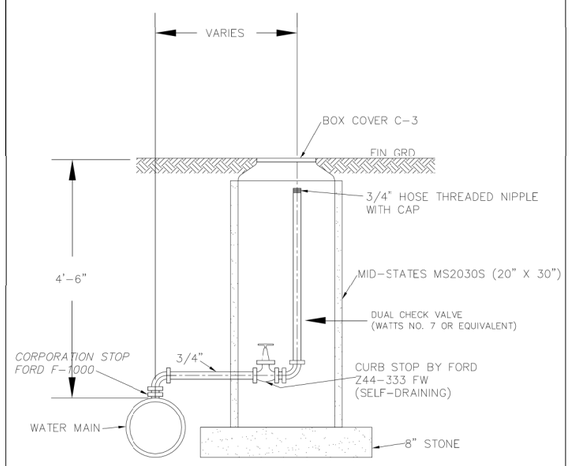

BLOWOFF DETAIL

APPROVED/REVISED	WARREN COUNTY STANDARD DETAILS DEPARTMENT OF WATER & SEWER	STANDARD NUMBER
MARCH, 2008		W-16

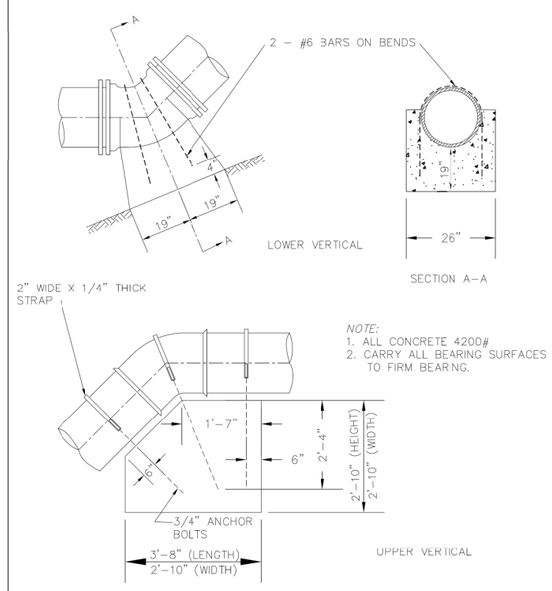

NOTE:
1. ALL CONCRETE 4200#
2. CARRY ALL BEARING SURFACES TO FIRM BEARING.

ANCHORS & BUTTRESSES FOR VERTICAL BENDS

APPROVED/REVISED	WARREN COUNTY STANDARD DETAILS DEPARTMENT OF WATER & SEWER	STANDARD NUMBER
MARCH, 2008		W-18

CALCULATED EJT
CHECKED REN

WARREN COUNTY STANDARD CONSTRUCTION DRAWINGS

WAR-71-2.54

1/2

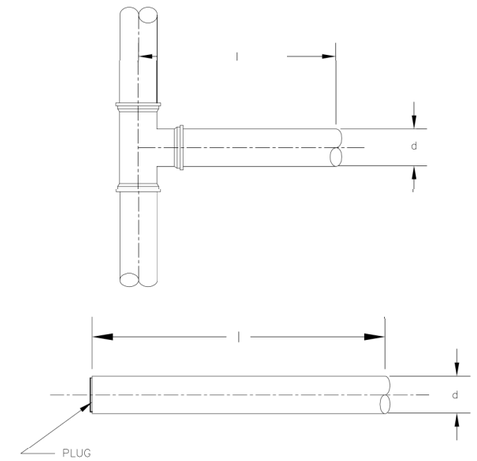

MINIMUM 54' OF RESTRAINED JOINT PIPE (RJP) IS REQUIRED BEFORE AND AFTER ALL BENDS. REFER TO TABLE BELOW.

TABLE
REQUIRED LENGTH OF RESTRAINED JOINTS
d–DIAMETER OF PIPE
l–LENTH OF PIPE

d	4"	6"	8"	10"	12"	16"	20"	24"
l	54'	54'	54'	54'	66'	98'	125'	145'

REQUIRED RESTRAINED JOINTS – DEAD END VALVES, PLUGS, CAPS & TEES

APPROVED/REVISED	WARREN COUNTY STANDARD DETAILS DEPARTMENT OF WATER & SEWER	STANDARD NUMBER
JUNE, 2012		W-20

SEWER PIPE SIZE – CARRIER PIPE SIZE (O.D.)–THICKNESS

8"	18"	3/8"
10"	20"	3/8"
12"	24"	1/2"
15"	24"	1/2"
18"	30"	1/2"
21"	30"	1/2"
24"	36"	1/2"

SO THAT PIPE WILL BE CENTERED IN CARRIER PIPE, THE FOLLOWING INFORMATION IS NEEDED:

1. TYPE & O.D. OF PIPE
2. TYPE OF JOINT/RESTRAINT
3. TYPE & I.D. OF CASING
4. 2 SPACERS PER LENGTH OF PIPE (18") (SEE STANDARD PLACEMENT BELOW)

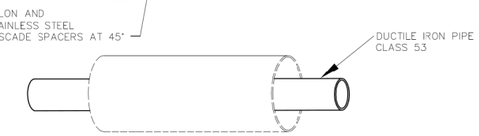

NOTE:

1. RESTRAINED JOINT TO BE USED WITHIN LIMITS OF CASING.
2. SEAL END OF CASING WITH RUBBER BOOT OR BRICK AND MORTAR.
3. CASING SPACERS TO BE USED THRU CARRIER PIPE.

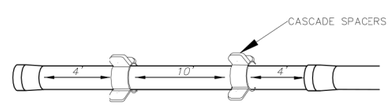

RECOMMENDED STANDARD PLACEMENT

SEWER IN CASING

APPROVED/REVISED	WARREN COUNTY STANDARD DETAILS DEPARTMENT OF WATER & SEWER	STANDARD NUMBER
JUNE, 2012		S-9

NOTE: Top of casting shall be at finished grade at paved locations (roadways and parking lots) and at developed lots. In undeveloped lots, top of casting to be a mirimum of 12" above finished grade or as shown on plan.

MANHOLE SHALL CONFORM TO ASTM SPECIFICATION C478

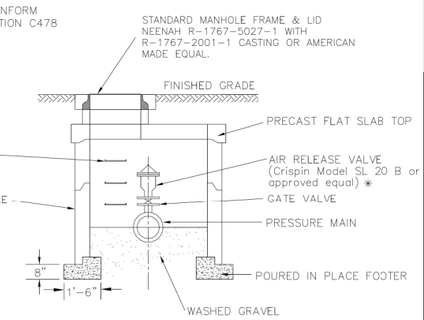

NOTE: IN WET AREAS SEAL BOTTOM WITH POURED CONCRETE BASE OR PRECAST MANHOLE BASE.

ADJUST TO FINISH GRADE PRECAST CONC COLLARS– 12" MAX ADJUSTMENT

* Model no. may vary depending on application.

WATERTIGHT GASKETS ARE REQUIRED AT ALL JOINTS (ASTM C–443 FOR RUBBER TYPE GASKET JOINTS.

AIR RELEASE VALVE ASSEMBLY

APPROVED/REVISED	WARREN COUNTY STANDARD DETAILS DEPARTMENT OF WATER & SEWER	STANDARD NUMBER
MARCH, 2008		S-17

FORCEMAIN SHALL BE INSTALLED IN A SEPARATE TRENCH FROM ANY WATERMAIN AND SHALL BE A MINIMUM DISTANCE OF 10' MEASURED HORIZONTALLY FROM THE WATERMAIN

BACKFILL AND RESTORATION OF PAVEMENT MUST CONFORM TO THE APPLICABLE WARREN COUNTY ENGINEER OR ODOT SPECIFICATION

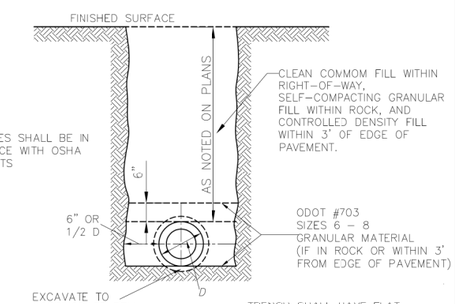

TRENCH SHALL HAVE FLAT BOTTOM SO THAT PIPE WILL BE SUPPORTED UNIFORMLY ALONG THE BARREL. NO SUPPORT BY BLOCKING IS PERMITTED.

FORCEMAIN TRENCH DETAIL

APPROVED/REVISED	WARREN COUNTY STANDARD DETAILS DEPARTMENT OF WATER & SEWER	STANDARD NUMBER
JUNE, 2012		S-21

CALCULATED EJT
CHECKED REN

WARREN COUNTY STANDARD CONSTRUCTION DRAWINGS

WAR-71-2.54