IRONTON RUSSELL BRIDGE

Mainspan Inspection and Maintenance Manual

SFN: 4401263

City of Ironton, Ohio and City of Russell, Kentucky



Submitted to *ODOT District 9*
August 2020

Prepared by
AECOM

OHIO DEPARTMENT OF TRANSPORTATION

TABLE OF CONTENTS

1 INTRODUCTION 5

1.1 Objective of Manual 5
1.2 General Description 5
1.3 Limits of Applicability 5
1.4 Units 6
1.5 Bridge Location and Identification 6
1.6 Design Criteria 6
1.7 Design Specifications 6
1.7.1 Special Design Specifications 7
1.7.2 Construction Specifications 7
1.7.3 Supplemental Specifications and Standard Drawings 7
1.7.4 Special Provisions 7
1.7.5 Design Method 8
1.7.6 Dead Loads 8
1.7.7 Live Loads 8
1.7.8 Wind Loads 8
1.7.9 Thermal Effects 9
1.7.10 Creep and Shrinkage Effects 9
1.7.11 Vessel Collision Loads 9
1.7.12 Earthquake Loads 9
1.7.13 Ice Loads 9
1.7.14 Stream Flow 9
1.7.15 Future Inspection Traveler 9
1.7.16 Dimensions and Elevations 10
1.7.17 Scour Depth Assumption 10
1.7.18 Design Data 10
1.7.19 Post-Tensioning 10
1.7.20 Stay Cables 11
1.7.21 Item 898 – QC/QA Concrete, Class QSC3, (Cable Stayed Superstructure) 11
1.7.22 Item 898 – QC/QA Concrete, Class QSC3, (Pier 2, Tower 3, Tower 4, Pier 5) Unit Substructure, As Per Plan 11
1.7.23 Deck Protection Method 11
1.7.24 Drilled Shafts 11
1.7.25 Miscellaneous Metals 12
1.7.26 Bearings 12
1.7.27 As-Built Changes from Design Plans 12

2 CONSTRUCTION DETAILS AND RECOMMENDED INSPECTION REQUIREMENTS 13

2.1 Superstructure 13
2.1.1 Concrete Barriers 13
2.1.2 Steel Railing 13
2.1.3 Wearing Surface 13
2.1.4 Deck Slab 15
2.1.5 Drainage System 15
2.1.6 Edge Girders 15
2.1.7 Floor Beams 15
2.1.8 Diaphragms 16

2.2 Stay Cable System 16
2.2.1 HDPE Pipes 18
2.2.2 Strands 18
2.2.3 Friction Dampers 18
2.2.4 Steel Guide Pipes 19
2.2.5 Anchorages 19
2.3 Substructure 19
2.3.1 Tower Legs 20
2.3.2 Tower Struts 20
2.3.3 Tower Cable Anchorage Boxes 20
2.3.4 Tower Doors and Hardware 21
2.3.5 Tower Ladders and Platforms 21
2.3.6 Pier 2 and Pier 5 22
2.3.7 Footing Caps 22
2.3.8 Drilled Shafts 22
2.4 Bearings 22
2.5 Expansion Joints 23
2.5.1 Modular Expansion Joint 23
2.5.2 Strip-Seal Expansion Joint 23
2.6 Electrical Systems 23
2.6.1 Aesthetic Lighting 23
2.6.2 Navigation Lighting 23
2.6.3 Aviation Beacons 23
2.6.4 Interior Lighting and Power 24
2.7 Lightning Protection System 24
2.8 Surveys 24
2.8.1 Deck 24
2.8.2 Towers 25
2.8.3 Channel Sounding 26
2.8.4 Bridge Health Monitoring System 26

3 RECOMMENDED MAINTENANCE AND REPAIR PROCEDURES 27

3.1 Roadway Deck Overlay 27
3.2 Bridge Bearings 27
3.3 Expansion Joints 28
3.4 Cable Stay System 28

4 RECOMMENDED EXTREME EVENT INCIDENT MANAGEMENT PROCEDURES 29

4.1 Severed Cable 29
4.2 Major Winter Storm 29
4.3 Vehicular Fire 29
4.4 Vessel Impact 30
4.5 Earthquake 30
4.6 Snowplow Damage 30
4.7 Barrier Collision 30

5 BRIDGE LOAD RATING 31

APPENDICES

Appendix A Record Drawings

A.1 Design Plans
A.2 As-Builts
A.3 Select RFIs

Appendix B Select Construction Data

B.1 Construction Manual
B.2 Stay Cable Inspection and Maintenance Manual
B.3 Stay Liftoff Analysis at End of Construction
B.4 Stay Liftoff Analysis at End of Construction – Pylon Calcs
B.5 Friction Damper Installation Manual
B.6 Ladder Safety Device

Appendix C Select Construction Photos

Appendix D Inspection Forms

1 INTRODUCTION

1.1 Objective of Manual

The objective of this manual is to provide guidelines for the inspection and maintenance of the Ironton Russell Cable-Stayed Bridge. It is intended that the information presented in this manual will provide the State a tool that will assist them in carrying out their responsibility of preserving this bridge in a structurally safe and serviceable condition. It is specifically noted that this is not a manual on how to perform bridge inspections or bridge maintenance. This manual is provided to address the special inspection and maintenance requirements particular to this cable-stayed bridge and is intended to serve as a compliment to State and National bridge inspection and maintenance practices.

Bridge inspectors shall be experienced, competent, and fully trained in Ohio and National Bridge Inspection Standards inspection procedures. The bridge is considered a Major/Complex Bridge by the ODOT Manual of Bridge Inspection; therefore, inspections and personnel qualifications should meet the ODOT Major/Complex Bridge criteria. Inspection of the bridge will involve safety hazards including, but not limited to height, confined space, electricals, and working over water. As a predecessor to any inspections, safety plans should be prepared and submitted to the appropriate parties.

Maintenance activities not included herein are those common to general bridge preventative maintenance, such as washing of deicing salts and clearing of debris and vegetation. Refer to the Ohio Bridge Maintenance Manual for additional information. Any maintenance activity beyond general bridge preservation should be completed under the direction of an engineer who specializes in the design of cable-stayed bridges.

1.2 General Description

The Ironton Russell Bridge (Bridge No. LAW-93-0.00, formally named the Oakley C. Collins Memorial Bridge) spans the Ohio River connecting Ironton, Ohio to Russell, Kentucky. It consists of three cable-stayed main spans (370’-0” - 900’-0” – 370’-0”), with two continuous steel multi-girder spans on the Kentucky approach and four curved steel continuous multi-girder spans on the Ohio approach. The bridge carries two lanes of traffic, with additional turn lanes at each approach. Construction of the bridge began in March of 2012 and the bridge opened to traffic on November 23, 2016.

1.3 Limits of Applicability

The provisions of this manual apply exclusively to the main span unit of the Ironton Russell Bridge which consists of three cable supported spans. The approach spans located on either side of the Ohio River are mutually excluded.

Over the life of this bridge it may be necessary to replace some of the structural elements due to fatigue, damage or environmental deterioration. The replacement of these components would be done using specialized engineering methods and procedures beyond the scope of this manual.

1.4 Units

Unless stated otherwise all values referred to in this manual are U.S. customary units.

1.5 Bridge Location and Identification

The Ironton Russell Cable-Stayed Bridge location and identification is as follows:

Bridge	Ironton Russell / Oakley C. Collins Memorial Cable-Stayed Bridge
Location	Ohio River (between Ironton, Ohio and Russell, Kentucky)
Bridge Coordinates	38°31'25"N 82°41'42"W
Route Number	State Route 93
Owner & Maintaining Agency	ODOT (contact information below)
Federal Project Number	E040 (653)
Bridge Designer	AECOM (formally URS)
Bridge Contractor	Brayman Construction Corporation
Stay Cable Supplier	Structural Technologies / VSL
Joint Supplier	Watson Bowman
Construction Engineer	FINLEY Engineering Group, Inc.

ODOT District 9 Complex
650 Eastern Avenue
P.O. Box 467
Chillicothe, Ohio 45601
Primary Phones: 740-773-2691 or 888-819-8501
Primary Fax: 740-775-4889

ODOT Lawrence County Traffic Control & Routine Maintenance
450 Commerce Drive
Ironton, Ohio 45638
740-532-1636 (office)

1.6 Design Criteria

The design criteria were created for the Ironton Russell Cable-Stayed Bridge in order to define loads, analysis methods, and material specifications which are not explicitly specified in the AASHTO LRFD Bridge Design Specifications. The design criteria used in the final design are shown below. For additional information, see the record drawings located in Appendix A and the select construction located in Appendix B.

1.7 Design Specifications

- "LRFD Bridge Design Specifications" adopted by the American Association of State Highway and Transportation Officials, 4th Edition, 2007, including the 2009 Interim Specification
- ODOT Bridge Design Manual, 2007.
- AASHTO Guide Specifications and Commentary for Vessel Collision Design of Highway Bridges, 1991
- CEB/FIP Model Code for Concrete Structures, 1990 Edition, (for time dependent behavior of concrete)

- Post-Tensioning Institute Recommendations for Stay Cable Design, Testing and Installation, Fifth Edition, 2007
- AASHTO Guide Specification for Bridge Temporary Works

1.7.1 Special Design Specifications

- The deck and transverse floor beams required the use of a three-dimensional model using the finite element design method with plate bending elements to analyze the structure. The program used for structural analysis was GTStrudl.
- The main span unit global system required the use of a three-dimensional model with beam bending elements with six degrees of freedom at each end to analyze the structure. For the original design, the program used for structural analysis was Midas.

1.7.2 Construction Specifications

- State of Ohio Department of Transportation Construction and Material Specifications, January 1, 2010
- Project Special Provisions

1.7.3 Supplemental Specifications and Standard Drawings

- 800 - January 21, 2011
- 840 - October 15, 2010
- 847 - April 15, 2011
- 898 - January 21, 2011
- Reference to Standard Drawings
    - AS-1-81 Revised 7-19-2002
    - EXJ-4-87 Revised 7-19-2002
    - EXJ-6-06 Revised 1-20-2006
    - GSD-1-96 Revised 7-19-2002
    - VPF-1-90 Revised 4-15-2011

1.7.4 Special Provisions

- No. 1 May 6, 2011 - Concrete and Segment Production for Cable Stayed Structure
- No. 2 May 6, 2011 – Stay Cables
- No. 3 May 6, 2011 – Viscous Damping Devices
- No. 4 May 6, 2011 – Post-Tensioning
- No. 5 December 12, 2011 – Mass Concrete
- No. 6 May 6, 2011 – Elastomeric Bearings
- No. 7 May 6, 2011 – Ladders, Platforms and Access Doors
- No. 8 May 6, 2011 – Drilled Shafts for Testing
- No. 9 May 6, 2011 – Crosshole Sonic Logging (CSL) Tests for Drilled Shafts
- No. 10 May 6, 2011 – Lateral Load Testing of Drilled Shafts
- No. 11 May 6, 2011 – Osterberg Cell Load Testing of Drilled Shafts
- No. 12 May 6, 2011 – Structure Power Service
- No. 13 May 6, 2011 – Structure Grounding and Lightning Protection System
- No. 14 May 6, 2011 – River Navigation Lighting System
- No. 15 May 6, 2011 – Inspection Lighting and Power System
- No. 16 May 6, 2011 – Aesthetic Lighting System
- No. 17 May 6, 2011 – Raised Relief Images on MSE Retaining Wall

- No. 18 May 6, 2011 – Commemorative Plaque
- No. 19 May 6, 2011 – Work in Navigable Waterways
- No. 20 May 6, 2011 – Construction Access
- No. 21 May 6, 2011 – Levee Access
- No. 22 May 6, 2011 – Water Transportation for the Engineer
- No. 23 May 6, 2011 – Progress Photographs
- No. 24 May 6, 2011 – Bridge Health Monitoring and Instrumentation
- No. 25 October 10, 2011 – Modular Expansion Joint
- No. 26 November 15, 2011 – Permit Conditions (added by ODOT)
- No. 27 January 29, 2015 – Falcon Nesting Boxes
- No. 28 February 6, 2015 – Falcon and Traffic Cameras

1.7.5 Design Method

- The following components are designed as partially prestressed elements and are allowed to crack under service loads: transverse floor beams, edge girders, deck and columns of Piers 2 and 5.
- Post-tensioning primary and secondary effects are considered as permanent loads and are included under all load conditions.
- Effects from stay cable stressing operations are considered as permanent loads and are included under all load conditions.
- Stay cables are designed for service loads.
- A 1.05 load modifier has been assumed for the design of this structure in accordance with the AASHTO LRFD Bridge Design Specifications, Section 1.3.5 and the ODOT Bridge Design Manual, 2007.

1.7.6 Dead Loads

- Unit weights of materials in accordance with AASHTO LRFD Section 3.5.1 with the following additions (with reinforcement):
  - Reinforced Concrete 150 PCF
  - Cable Stayed Superstructure Concrete 155 PCF
  - Seal Concrete 145 PCF
- Utility Allowance 32 PLF
- Concrete Barrier Plus Metal Railing (Per Barrier) 390 PLF
- Future Wearing Surface 0 PSF
- Initial Wearing Surface 30 PSF
- Stay-In-Place Forms (initial design) (see Section 1.6.28) 0 PSF
- Continuous Rails for Future Inspection Traveler 100 PLF
- Light Poles 140 LBS/Each

1.7.7 Live Loads

- HL-93 Live Load

1.7.8 Wind Loads

- All load cases shown are quasi-static individual wind loading cases at service level to replicate the wind buffeting response. All forces include mean wind loads, gust response and inertial loads due to the bridge's dynamic response.
- Loads indicated for the completed structure correspond to a 100-year, one-hour average wind velocity of 68.9 MPH at the reference elevation at the bridge deck level.

- Loads indicated for the construction stages correspond to a 20-year, one-hour average wind velocity of 61.5 MPH at the reference elevation located at bridge deck level.
- Skew angles between those shown have been evaluated by summing the components of the longitudinal and transverse cases at the skew angle.
- See Sheets 10-11/365 of the design plans (Appendix A) for wind loading diagrams.

1.7.9 Thermal Effects

- Mean Temperature: 60 degrees F
- Coefficient of thermal expansion: 6.0E-06/F (concrete)
- Uniform Temperature Rise and Fall:
  - Temperature Rise (Typical Unless Noted Otherwise) = 35 Degrees F
  - Temperature Fall (Typical Unless Noted Otherwise) = 45 Degrees F
- Temperature Differential:
  - Non-linear temperature gradient on superstructure according to AASHTO LRFD Section 3.12.3, Zone 3.

1.7.10 Creep and Shrinkage Effects

- Relative humidity: 70 Percent

1.7.11 Vessel Collision Loads

- An equivalent static vessel collision force of 6161 kips for Pier 2, Tower 3 and Tower 4 (fully loaded tow) is applied at EL. 537.3 in a direction parallel to the river flow.
- An equivalent static vessel collision force of 3080 kips for Pier 2, Tower 3 and Tower 4 (fully loaded tow) is applied at EL. 537.3 in a direction perpendicular to the river flow.

1.7.12 Earthquake Loads

- Earthquake loads and design in accordance with AASHTO LRFD Bridge Design Specifications and the ODOT Bridge Design Manual, 2007.
- Seismic Performance Category A and Horizontal Acceleration of 0.05G.

1.7.13 Ice Loads

- Provisions of AASHTO LRFD Section 3.9 apply 3 inches of ice with an effective ice strength of 400 psi acting at EL. 515.8. Ice thickness determined based on historical information and methodology provided by USACE.

1.7.14 Stream Flow

- 100-year flood flow: 6.2 FPS.

1.7.15 Future Inspection Traveler

- The main span unit from Pier 2 to Pier 5 has been designed to accommodate the addition of an inspection traveler in the future. Floor beams have been provided with anchor bolt embedments to support future rails for the traveler.
- Design of main span unit included in the following loads:
  - Continuous Rails 100 PLF
  - Traveler Self Weight 17 KIPS

- Live Load on traveler 9 KIPS
- Traveler Inertial Load During Operations 5 KIPS
- Wind on Traveler While Parked: Transverse 2 KIPS
- Wind on Traveler While Parked: Longitudinal 14 KIPS
- Wind on Traveler During Operation: Transverse 0.3 KIPS
- Wind on Traveler During Operation: Longitudinal 3 KIPS

1.7.16 Dimensions and Elevations

- All dimensions are measured horizontally and vertically unless noted otherwise.
- Vertical Datum according to NGVD 1929.
- Horizontal Datum coordinates are based on the Rectangular State Plane coordinate system, NAD 1927.
- All dimensions, angles and elevations are shown for 60 degrees Fahrenheit after all long-term deflections and movements have occurred.

1.7.17 Scour Depth Assumption

- The soil overburden plus the rock to the following elevation is considered to be scourable:
  - Pier 2 EL. 475.4
  - Tower 3 EL. 473.6
  - Tower 4 EL. 473.1

1.7.18 Design Data

- Concrete Class QSC3 – Compressive Strength 6.5 KSI (Superstructure)
- Concrete Class QSC3 – Compressive Strength 6.5 KSI (Substructure)
- Concrete Class QSC1 – Compressive Strength 4.0 KSI (Footings)
- Concrete Class QSC2 – Compressive Strength 4.5 KSI (Drilled Shafts, See Note 1)
- Reinforcing Steel – Minimum Yield Strength 60 KSI.
- Spiral reinforcement may be plain bars, ASTM A82 or A615.
- All reinforcing steel and couplers shall be epoxy coated except bursting steel for post-tensioning anchorages shall be galvanized.

1.7.19 Post-Tensioning

- Post-Tensioning strand: ASTM A416, Grade 270, Low Relaxation Strand.
- Post-Tensioning bars: ASTM A722, Grade 150, Type II.
- Design is based on the following initial tendon stresses and tendon characteristics:
  - Strands:
    - Stand Diameter 0.60”
    - Wobble Coefficient (K) 0.0002/FT.
    - Friction Coefficient 0.25
    - Anchor Set 0.25”
    - Maximum Jacking Stress 0.8 f’s
    - Maximum Stress at Anchorage After Seating 0.7 f’s
    - Maximum Stress at Other Locations After Seating 0.83 F*y <=0.74f’s
    - Apparent Modulus of Elasticity 28,000 KSI
  - Bars:
    - Wobble Coefficient (K) 0.0002/FT.
    - Friction Coefficient 0.30

Anchor Set	0.0”
Maximum Jacking Stress	0.9 Fpy
Maximum Stress at Anchorage After Seating	0.7 f’s
Apparent Modulus of Elasticity	29,000 KSI

- All post-tensioning tendons are placed in corrugated plastic ducts.

1.7.20 Stay Cables

- Stay cables are comprised of 0.62” diameter low-relaxation weldless seven-wire strand conforming to the requirements of ASTM A416, Grade 270.
- The strands shall be greased or waxed and individually sheathed in hi-density polyethylene. The entire stay cable will then be encased in an ungrouted hi-density polyethylene outer pipe.

1.7.21 Item 898 – QC/QA Concrete, Class QSC3, (Cable Stayed Superstructure)

- The work of this item is be per the ODOT Supplemental Specification 898 and meets the following mix design requirements:
  - Specified Compressive Strength, F’C = 6500 PSI.
  - Design Permeability, PD < 1500 Coulombs.
  - Coarse Aggregate Size No: 8

1.7.22 Item 898 – QC/QA Concrete, Class QSC3, (Pier 2, Tower 3, Tower 4, Pier 5) Unit Substructure, As Per Plan

- The work of this item is per the ODOT Supplemental Specification 898 and meets the following mix design requirements:
  - Specified Compressive Strength, F’C = 6500 PSI.
  - Design Permeability, PD < 1500 Coulombs.
  - Coarse Aggregate Size No: 8
- This item is used for Pier 2, Tower 3, Tower 4 and Pier 5, above footing.

1.7.23 Deck Protection Method

- Main span unit:
  - Epoxy coated reinforcing steel and bar couplers.
  - 1 ¼” min. micro-silica concrete overlay.

1.7.24 Drilled Shafts

- The maximum factored load to be supported by each drilled shaft at each substructure unit is shown in the following table. This load is resisted by side resistance within a portion of the bedrock socket and by tip resistance. The factored resistance developed by side resistance, and the factored resistance provided by the drilled shaft tip are as shown in the table below.

SUBSTRUCTURE UNIT	DIAMETER OF DRILLED SHAFT	DIAMETER OF ROCK SOCKET	MAX. FACTORED LOAD, KIPS	FACTORED RESISTANCE DEVELOPED BY DRILLED SHAFT TIP (Φ = 0.50)	FACTORED RESISTANCE DEVELOPED BY SIDE RESISTANCE (Φ = 0.50)
PIER NO. 2	8'-6"	8'-0"	4,336	7,008	7,534
TOWER NO. 3	8'-6"	8'-0"	9,934	7,008	6,593
TOWER NO. 4	8'-6"	8'-0"	10,000	7,008	4,597
PIER NO. 5	8'-6"	8'-0"	2,202	7,008	2,274

1.7.25 Miscellaneous Metals

- Ladders, platforms and miscellaneous metals: ASTM A709 Grade 36.
- Doors, hatches and hardware: galvanized or of stainless-steel materials.
- Expansion joints: ASTM A709, Grade 50, metalized.

1.7.26 Bearings

- Elastomeric bearing pads as specified in the plans

1.7.27 As-Built Changes from Design Plans

Prior to construction, the contractor made several notable alterations to the original design of the bridge through value engineering and RFIs. Further details can be found in the as-built drawings and RFIs located in Appendix A and the select construction data included in Appendix B. The RFIs included are those that resulted in a notable change to the design plans. For complete details of all changes during construction, the reader should refer to the remaining RFIs and final approved shop drawings, on file with ODOT. A summary of the notable contractor changes includes:

- The stay anchor blocks were precast, rather than cast-in-place as designed.
- The side span floor beams were precast, rather than cast-in-place as designed.
- The side spans were built on falsework prior to installation of the stay cables, rather than built out from the towers in conjunction with the stay cable installation.
- Stay-in-place forms were used for the side span deck segments.
- The shape of the main span floor beams was changed to have a variable thickness web.
- Each tower cable anchorage box was separated into four spliced sections rather than three as designed.
- Guide deviators were added to the deck level guide pipe of 101 of 120 stays in order to correct misalignment of the stays and allow for proper assembly of the friction dampers.

2 CONSTRUCTION DETAILS AND RECOMMENDED INSPECTION REQUIREMENTS

This section highlights the construction details for each main structural element of the bridge and also provides inspection recommendations relative to general design and service conditions for the elements under consideration. Table 2.1 provides a summary of the recommended frequencies for inspections and the remainder of this section discusses the intent and requirements for each inspection. The frequency and content of the inspections should be adjusted to include more frequent and/or more comprehensive investigations when conditions warrant, in the opinion of the Maintenance Engineer. These as-needed adjustments to the inspection program will provide for the continued safety and serviceability of the structure. See the ODOT Manual of Bridge Inspection for additional information on inspection types, frequencies, and requirements. Inspection forms are included in Appendix D. Information on the condition history of the bridge can be obtained from the ODOT inspection reports and district files.

2.1 Superstructure

In general, the superstructure is composed of a concrete framing system made of post-tensioned edge girders, floor beams, and deck. As noted in Section 1.6.6, these superstructure components are designed as partially prestressed elements. Thus, they are allowed to crack at service level and may exhibit generally small, well distributed cracking. The inspection of these elements should in general adhere to policies and procedures employed in conventional concrete structures. Those elements requiring special attention, such as stay cables and stay anchorages are noted in subsequent sections.

2.1.1 Concrete Barriers

The concrete barriers should be inspected for vehicular collision and for evidence of cracking and spalling. Inspection techniques should be employed consistent with standard inspection practices.

2.1.2 Steel Railing

The galvanized steel railing mounted to the concrete barriers should be inspected for weathering, with particular attention given to the base plate connection anchoring the balusters to the concrete barriers. The galvanized steel tubing constituting the railing should also be inspected for weathering and fit. Inspection techniques should be employed consistent with standard inspection practices.

2.1.3 Wearing Surface

This structure utilizes a micro-silica concrete wearing surface. The wearing surface provides two distinct functions; first, it provides a mechanism for achieving an acceptable deck profile and second, it provides corrosion protection of the structural deck slab. As a mechanism for controlling the deck profile, the depth of the wearing surface was varied in construction order to achieve an acceptable riding surface. The wearing surface of the Ironton-Russell Cable Stayed Bridge varies with a minimum depth of 1-1/4”.

Any future adjustments to the riding surface of the bridge that would significantly increase these thicknesses requires evaluation of the design by a qualified engineer. As a provision for providing a protective layer for the structural deck slab, it is imperative that the wearing surface be maintained to an optimal service condition. The structural deck slab cannot be replaced, consequently; it is the function of the wearing surface to provide a protective barrier that will prevent chloride penetration into the structural deck slab. The wearing surface should be inspected for cracks, spalls, delamination, and chloride penetration.

Table 2.1 – Recommended Inspection Frequencies

	Inspection Item (Section in Manual)	Initial	Monthly*	6 Month*	12 Month	24 Month	60 Month
1.0	Superstructure:						
1.1	Concrete Barriers (2.1.1)	V	V	V	V		
1.2	Steel Railings (2.1.2)	V	V	V	V		
1.3	Wearing Surface (2.1.3)	H			V	H	
1.4	Deck Slab (2.1.4)	H			V	H	
1.5	Drainage System (2.1.5)	V	V	V	V		
1.6	Edge Girders (2.1.6)	H			V	H	
1.7	Floor Beams (2.1.7)	H			V	H	
1.8	Diaphragms (2.1.8)	H			V	H	
2.0	Stay Cable System:						
2.1	HDPE Cable Pipes (2.2.1)	H				V	
2.2	Strands (2.2.2)	See Section 2.2.2					
2.3	Friction Dampers (2.2.3)	See Section 2.2.3					
2.4	Steel Guide Pipes (2.2.4)	H			V	H	
2.5	Anchorages (2.2.5)	H			V	H	
3.0	Substructure:						
3.1	Tower Legs (2.3.1)	H			V	V	
3.2	Tower Struts (2.3.2)	H			V	V	
3.3	Tower Cable Anchorage Boxes (2.3.3)	H			V	H	
3.4	Tower Doors and Hardware (2.3.4)	H		V	V	H	
3.5	Tower Ladders and Platforms (2.3.5)	H			V	H	
3.6	Pier 2 and Pier 5 (2.3.6)	H			V	H	
3.7	Footing Caps (2.3.7)	U					U
3.8	Drilled Shafts (2.3.8)	U					U
4.0	Bearings:						
4.1	Tower Elastomeric Bearings (2.4)	H			V	H	
4.2	Tower Shim Packs (2.4)	H			V	H	
5.0	Joints:						
5.1	Modular Expansion Joint (2.5.1)	V		V	V		
5.2	Strip-Seal Expansion Joint (2.5.2)	V		V	V		
6.0	Electrical Systems:						
6.1	Aesthetic Lighting (2.6.1)	H		V	V		H
6.2	Navigation Lighting (2.6.2)	H	V	V	H		
6.3	Aviation Beacons (2.6.3)	H	V	V	H		
6.4	Interior Lighting and Power (2.6.4)	H			V		H
7.0	Lightning Protection System: (2.7)	H		V	H		
8.0	Surveys:						
8.1	Deck (2.8.1)	S					S
8.2	Towers (2.8.2)	S					S
8.3	Channel Sounding (2.8.3)	S					S

Notes:

*Inspections are routine maintenance oriented and do not require the use of trained bridge inspectors.

V – Visual Inspection. May be completed with the use of binoculars, drone, or other similar device. Hands-On required when distress is noted.

H – Hands-On Inspection. Requires arm's-length access. Suggested access methods provided in subsequent sections.

U – Underwater Inspection

S - Survey

2.1.4 Deck Slab

The structural deck slab is a 9” thick cast-in-place slab that is reinforced with mild steel and longitudinal post-tensioning. The underside of the deck should be inspected for evidence of cracking, spalling and/or delamination. Inspection techniques and procedures consistent with general concrete structures should be sufficient for addressing structural requirements. Inspection access is by Under Bridge Inspection Truck (UBIT) from the deck level. Stay-in-place deck forms are present on Spans 3 and 5, preventing direct inspection of the deck underside concrete. These SIP forms should be inspected for corrosion, section loss, and evidence of water seeping through the deck. The structural deck slab is an axial load carrying member; thus, any significant spalling resulting in loss of section should be promptly repaired.

2.1.5 Drainage System

The drainage system is composed of scuppers located along the lengths of the upstream and downstream curb lines. The scuppers have a grated inlet at the deck level which connects to steel tubing through the deck on the inside face of the edge girders. Ponding water around the drainage inlets can lead to advanced deterioration of the superstructure, thus debris should not be allowed to accumulate in or around the scuppers. Inspections should note any signs of debris accumulation, as well as deterioration or malfunctioning of the drainage system.

2.1.6 Edge Girders

The two concrete edge girders are located on the sides of the deck slab and extend along the entire length of the superstructure. The edge girders are reinforced with mild steel and longitudinal post-tensioning. The edge girders are similar to conventional concrete beams, with the exception that they carry axial loads in addition to resisting flexural bending. The edge girders are considered redundant by virtue of the redundancy provided by the stay cables. The edge girders should be inspected with techniques consistent with standard inspection practices for concrete beams. Attention should be given to the anchor blisters. Crack propagation around the blister could indicate an unexpected change in the force demand of the cable. The edge girders should also be observed for sag or geometric discontinuities as this could also indicate a change in the demand on the stay cables. Inspection access is by UBIT from the deck level.

2.1.7 Floor Beams

The floor beams span between the edge girders and support the upper structural deck while providing stability for the edge girders. The side span floor beams are precast, while the main span floor beams are cast-in-place. The floor beams are reinforced with mild steel and longitudinal post-tensioning in the webs. The post-tensioning anchors are located on the outside faces of the edge girders. The floor beams should be inspected with techniques consistent with standard inspection practices for concrete beams. Inspection access is by UBIT from the deck level.

2.1.8 Diaphragms

The diaphragms are located at Pier 2 and Pier 5 and serve as integral rigid connections between the superstructure and the respective substructure elements. The diaphragms are cast-in-place concrete reinforced with mild steel, as well as vertical and horizontal post-tensioning. The vertical post-tensioning extends through the diaphragms and pier columns; loops in the footings; and has anchors on the top surface of the diaphragms, near and under the expansion joints. The horizontal post-tensioning extends across the width of the diaphragms and is located over the pier columns and near the diaphragm faces adjacent to the first floor beams. The anchors for the horizontal post-tensioning are on the upstream and downstream faces of the diaphragms. On the diaphragm faces opposite the first floorbeams, there are three stay cable anchors on the left and right sides. The diaphragms should be inspected with techniques consistent with standard inspection practices for concrete members. Inspection access is by UBIT from the deck level.

2.2 Stay Cable System

The stay cables consist of 0.62” diameter low-relaxation 7 wire strands conforming to ASTM A416, Grade 270 requirements. Each strand is greased and individually sheathed in high density polyethylene. Each stay is comprised of 14 to 33 bundled strands encased in an ungrouted high density polyethylene (HDPE) pipe. The individually greased and sheathed strands accompanied with the HDPE encasement pipe comprise a two-layer corrosion protection system. For additional information for the stay cable system, including inspection procedures and frequencies, see Stay Cable Inspection and Maintenance Manual (Appendix B.2). See Figures 2.1 and 2.2 below for the general configuration of the stay cable components.

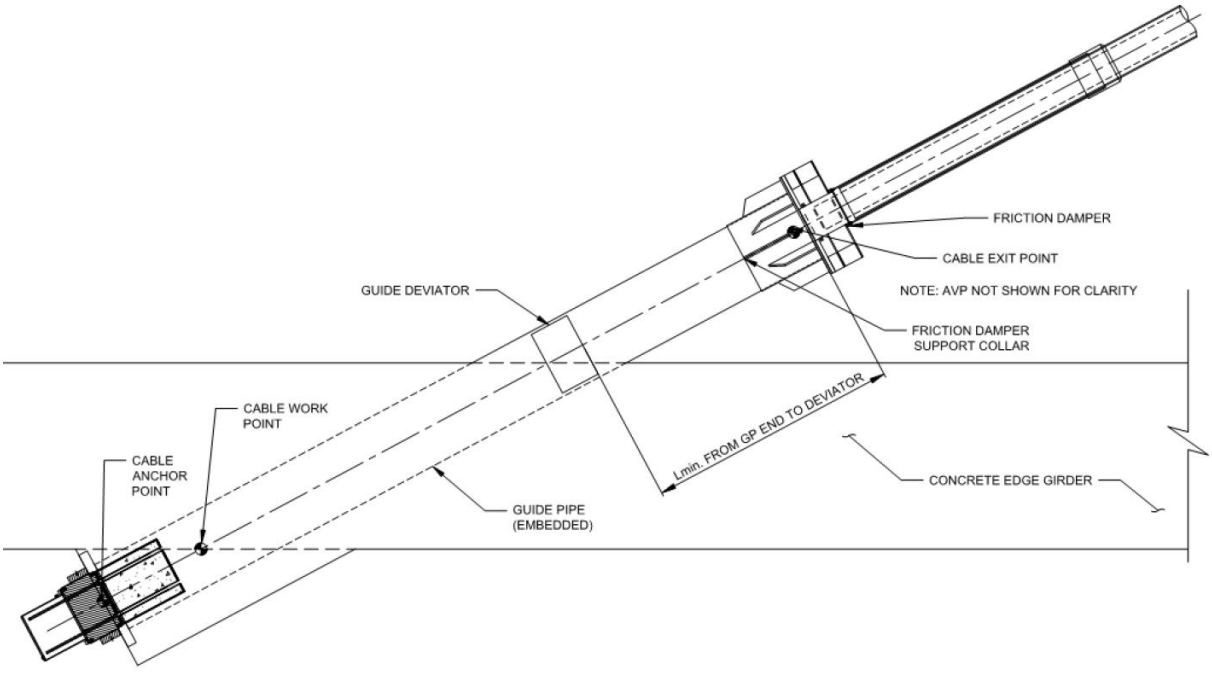

Figure 2.1 – Stay Cable Components at Deck Level (Friction Damper Cover and Anti-Vandilism Pipe Not Shown)

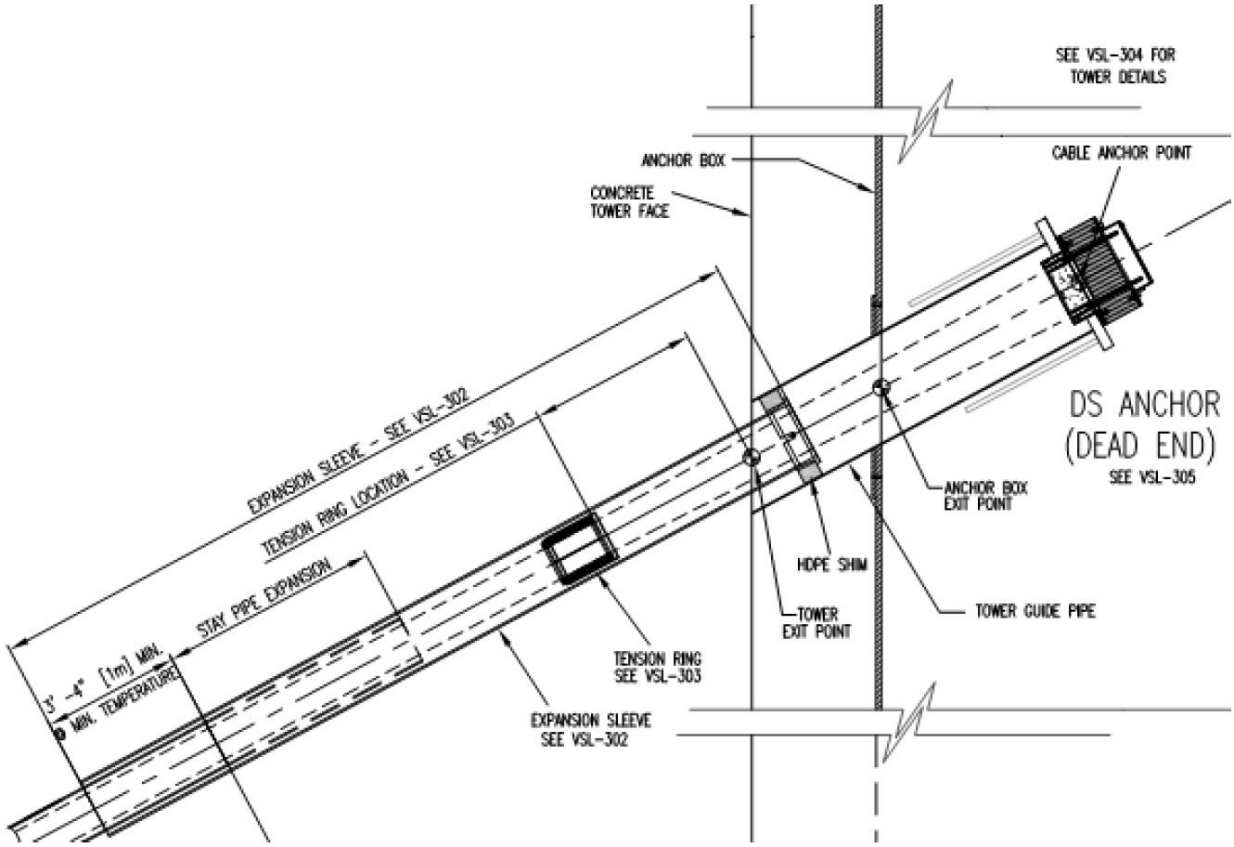

Figure 2.2 – Stay Cable Components at Tower Level

Inspection of the stay cable system shall include but not be limited to the following:

- Inspection for longitudinal or transverse cracking or excessive bulging in the HDPE sheathing.
- Inspection for cable alignment irregularities including waviness or excessive sag. Cable sag can be estimated through optical devices or photographic imaging techniques. Cable angles can be measured with an inclinometer.
- Inspection for damage to connections between guide pipes and cable sheathing.
- Inspection for evidence of moisture exiting anchorage components.
- Inspection of friction dampers per manufacturer's recommendations.
- Inspection for loss of integrity of the HDPE pipes, including for damage to the pipe welds.
- Inspection for build-up of debris on or near the stay cable components.

The cable forces at the end of construction are shown in Appendix B.3. If inspections indicate that the force in the cables may be changing from the as-built condition beyond the anticipated changes due to creep and shrinkage, then the force in the cables may be determined by either performing a lift-off test or a force vibration test to calculate actual cable forces. Either test will require a specialty contractor to perform the tests. See Appendix B.2 for further details. The cable components outside the towers and along the cable lengths can be accessed with an aerial lift or using rope access techniques. The cable

components inside the towers can be accessed from the ladders and platforms within each tower leg, via tower access doors located at deck level. The cable components at the deck level can be accessed on foot and with a UBIT.

2.2.1 HDPE Pipes

The HDPE pipes provide the first layer of a two-layer corrosion protection system. The HDPE pipe itself is comprised of two layers: an inner black layer and outer white layer; along with a white helical rib. The HDPE sheathing must be free of cracks, splits, or excessive bulging. Consequently, periodic inspection is required in order to assure the integrity of the system. See Stay Cable Inspection and Maintenance Manual (Appendix B.2) for additional information on manufacturer's inspection recommendations.

2.2.2 Strands

The high strength steel wire which makes up the stay system is susceptible to various forms of corrosion, if protections are breached. However, the individual strands which make up the stay cable cannot be readily inspected due to their encasement within the HDPE pipe. Therefore, routine inspections of the stay cable should concentrate on inspection of the exterior condition of the stay for any signs of failure of the corrosion protection system, such as damage to the HDPE pipe.

Inspection devices are available which use ultrasonic or magnetic induction techniques to verify strand integrity. Sections of the HDPE pipe may be removed to permit direct inspection of the greased and sheathed strands. However, this type of inspection would compromise the corrosion protection system and is only warranted when inspection of the exterior stay indicates potential problems. See Stay Cable Inspection and Maintenance Manual (Appendix B.2) for additional information on manufacturer's inspection recommendations.

2.2.3 Friction Dampers

Cable oscillation is a primary cause contributing to the reduced fatigue life cycle of stay cables. Although the static strength of cable wire is high, the comparative fatigue strength is low. Dampers are a device used to control cable oscillation and therefore must be periodically inspected according to the manufacturer's recommendations (see Friction Damper provider listed below). See Friction Damper Installation Manual (Appendix B.5) for manufacturer's inspection recommendations. The friction damper is located near the bottom of each cable, at the top of the guide pipe and below the friction damper cover and anti-vandalism pipe.

Structural Technologies (VSL)
10150 Old Columbia Rd
Columbia, MD 21046
(410)850-7000
structuraltechnologies.com

2.2.4 Steel Guide Pipes

The steel guide pipes provide a transition region between the stay cables and the anchorage zones. Although the guide pipes are for the most part inaccessible for inspection since they are encased in either the walls of the upper tower legs or within the web of the edge girder, the portions of the guide pipes which protrude from the tower legs and edge girder surfaces can be inspected for cracks, splits and other imperfections which may compromise the corrosive protection boundary layer provided by the guide pipes. Furthermore, the alignment between the stay cables and their entrance and exit points located at the interface between the stay cable and steel guide pipes can be monitored to ensure that no abrupt deflection change occurs between the guide pipes and the stay cables. A deflection in the alignment between the stay cables and the guide pipes could indicate change in tension within the stay cable. An abrupt deflection between the stay cable and the guide pipes could also indicate unwarranted wearing within the anchorage zone. See Stay Cable Inspection and Maintenance Manual (Appendix B.2) for additional information on manufacturer's inspection recommendations.

2.2.5 Anchorages

The stay cable anchorages connect the stay cables to the towers and to the edge girder anchor blocks. The dead-end anchorage is located in the upper tower legs. The live end anchorage is located in the edge girders. Sealing caps provide access to the inner workings of the stay cable anchorage system and must be periodically inspected. Removal of sealing caps is warranted if noticeable change in the tension of the stay cable has been detected, or if evidence that the corrosive protection boundary layer has been compromised. Sealing caps should be inspected to ensure that they are free of cracks, splits and or other defects which may limit their ability to provide adequate seal against intrusive weathering agents. If circumstances warrant, sealing caps can be removed and an endoscopic inspection preformed on the inner components of the anchorage system in order to access potential damage.

The anchorages have been injected with a flexible polymerized filler to provide corrosion protection of the strands in the anchorage zones. Where anchorage patterns are not entirely filled with stressed strands, the remaining holes have been closed with "dummy" strands to prevent water intrusion into the strands and to seal the anchorages for filler injection. These dummy strands only extend approximately 2" beyond the end of the guide pipe and are color coded to indicate they are not part of the stressed strands. Anchorages should be inspected for presence of moisture, integrity of the filler material, strand end corrosion, strand wedge corrosion and slippage, and corrosion and deformation of the guide pipe ends. See Stay Cable Inspection and Maintenance Manual (Appendix B.2) for additional information on manufacturer's inspection recommendations.

2.3 Substructure

The substructure units consist of Pier 2, Tower 3, Tower 4, and Pier 5. The towers are exclusive to the cable-stay spans, while the piers are shared with the Ohio and Kentucky approach spans.

2.3.1 Tower Legs

The tower legs are cast-in-place conventionally reinforced hollow box elements. In the transverse direction, the inclined legs form a frame which resists applied forces through a combination of axial force and bending action. The leg elements are subjected to relatively small transverse bending forces since the primary load path is conducted through axial tension and compression members. The longitudinal forces are transmitted through bending of the leg elements.

The tower legs should be inspected for cracks, spalls and other signs of deterioration in a manner consistent with conventional reinforced concrete substructure elements. The exteriors of the towers can be accessed using rope access techniques, or an aerial lift on the portions above deck and a UBIT on the portions below deck. The interiors of the hollow tower legs can be accessed from the inspection platforms and ladders present in each tower, via tower access doors located at deck level.

The tower interiors are non-permit required confined spaces, and all personnel accessing these areas should follow the requirements of OSHA 1910.146 and all other applicable standards and regulations. The towers should not be entered if lightening is forecasted and when the towers are occupied, occupants should take care to monitor for the presence of lightening in the area and immediately exit the towers if lightening is detected.

2.3.2 Tower Struts

The tower struts are cast-in-place concrete elements located below the superstructure. Their primary function is to resist tension forces resulting from the direction change in the inclined tower legs just beneath the deck level. The tower struts act as tension ties and are therefore mildly reinforced and post-tensioned. In addition, the struts provide reaction points for the superstructure segment through the elastomeric bearings. Each web of the struts has four longitudinal tendons, two on each web face, located near mid-depth of the webs. The tendon anchorages are located on the outside faces of the towers, at the tower inclination points. The struts should be inspected for cracks, spalls, and other signs of deterioration in a manner consistent with post-tensioned concrete elements. Inspection access is by UBIT from the deck level.

2.3.3 Tower Cable Anchorage Boxes

The steel tower cable anchorage boxes are located at the top of each tower leg interior and connected to the tower concrete with embedded shear stud connectors. The anchorage boxes include welded web and stiffener plates connecting the cable anchorage bearing plates to the box side plates, as well as steel guide pipes through the tower concrete. Each tower leg contains four anchorage box sections which are connected with bolted splices.

While the protective coating on the anchorage boxes was designed to be hot-dip galvanizing, some of the boxes were damaged from thermal stresses induced during the galvanizing process. The damage on the boxes included distorted plates and tears in welds and base metal. The boxes were repaired by heat straightening the distorted plates and welding the

tears. The welds and base metal were subsequently tested with nondestructive testing and the repairs were coated with cold galvanizing. As a result of the first group of boxes being damaged during galvanizing, the coating on the remining boxes was changed to cold-applied metalizing. The table below shows a summary of the anchorage boxes, the protective coatings, and which boxes were repaired due to damage during galvanizing.

TOWER	LEG	BOX*	COATING	NOTES
Tower 3	Downstream	All	Hot-Dip Galvanizing	Damage repaired.
	Upstream	1	Hot-Dip Galvanizing	Damage repaired.
		2	Metalizing	N/A
		3	Metalizing	N/A
		4	Hot-Dip Galvanizing	Damage repaired.
Tower 4	Both	All	Metalizing	N/A

*Boxes are numbered 1-4 from bottom to top in each tower leg.

The function of the anchorage boxes is to support the anchorages of each cable stay, connect the stay cable anchorages to the concrete towers, and to provide openings for the cable stays through the tower concrete. The interiors of the anchorage boxes can be inspected from the inspection ladders and platforms within each tower leg. The front, side, and rear plates of each anchorage box are considered fracture critical members, as are the cable anchorage web, bearing, and stiffener plates. The tower cable anchorage boxes should be inspected for loss of protective coating, corrosion, section loss, cracks, pack rust around plates, and deterioration of connection elements in a manner consistent with steel box members. Fracture critical members of the anchorage boxes should also be inspected for cracks and other signs of fatigue in a manner consistent with fracture critical inspection standards.

2.3.4 Tower Doors and Hardware

Lockable access doors are provided into each of the tower legs at the deck level. A total of four sets of door keys are available, with one set held by the District 9 Bridge Engineer, one set held by the Lawrence County Maintenance Garage, and the other two sets held by the ODOT bridge inspectors. If someone outside of ODOT needs access inside the towers, these individuals can grant them access. The tower door keys should not be lent out. The doors and their hardware should be inspected for signs of vandalism and for corrosion. Repair measures should be undertaken on an as need basis.

2.3.5 Tower Ladders and Platforms

Ladders and platforms are provided from the tower web wall to the top of the tower in each of the tower legs. All ladders and platforms are galvanized and should therefore be relatively maintenance free. These elements, and especially connections to supporting elements, should be inspected to ensure their continued structural integrity and be monitored for corrosion and repaired as required.

All ladders equipped with fall arrest systems should be inspected and maintained in accordance with the manufacture’s recommendations. See Appendix B.6 for information on the ladder safety device.

2.3.6 Pier 2 and Pier 5

Pier 2 and Pier 5 are rigidly connected to the superstructure via the end diaphragms and serve as hold-down elements for the cable-stay tail spans. The piers are cast-in-place concrete reinforced with mild steel, as well as vertical post-tensioning. See Section 2.1.7 for additional information. The piers rest on footings supported by drilled shafts. Piers 2 and 5 should be inspected for cracks, spalls, and other signs of deterioration in a manner consistent with post-tensioned concrete elements. Inspection access is by UBIT from the deck level.

2.3.7 Footing Caps

The footings for the towers and piers serve as caps to connect the drilled shaft foundations to the tower legs and pier columns. The footings are reinforced concrete with mild steel and the pier footings contain the loops for the pier vertical post-tensioning. The Pier 5 footing is buried and inaccessible for inspection, however, the tower footings and Pier 2 footings can be inspected via underwater inspection. These footings should be inspected in a manner consistent with inspection of typical reinforced concrete foundations.

2.3.8 Drilled Shafts

All substructure units are supported on 8’-6” diameter drilled shafts with 8’-0” diameter rock sockets. The steel casings for the drilled shafts at the towers and Pier 2 were left in place, while the steel casings for the drilled shafts at Pier 5 were removed. The Pier 5 drilled shafts are buried and inaccessible for inspection, however, the upper portions of the tower drilled shafts and Pier 2 drilled shafts can be inspected via underwater inspection. These drilled shafts should be inspected in a manner consistent with inspection of typical drilled shaft foundations. See Section 2.9.3 for additional information on scour around the drilled shafts.

2.4 Bearings

Laminated reinforced elastomeric bearing pads provide a vertical reaction point for the superstructure at the tower locations. These bearings are seated on the tower struts and permit rotation of the superstructure relative to the substructure in both the longitudinal and transverse directions. The Tower 3 bearings include PTFE discs between the bearing and the superstructure to permit lateral movement, while the Tower 4 bearings are fixed to both the superstructure and substructure. Longitudinal restraint is provided at Tower 4 via stainless steel bearing shim packs between the edge girder bearing blocks and tower shear keys.

The elastomeric bearings are designed to be in a neutral position (vertical) at 60 degrees Fahrenheit. Temperature change and other lateral loadings such as wind and braking forces impart loads onto the bearings causing them to deform. Elastomeric bearings should be inspected for signs of deterioration, delamination and distress in a manner consistent with current practice. While the Tower 3 PTFE disks are recessed into steel plates and difficult to inspect, they should be inspected for proper seating on the steel plates and for excessive movement or rotation. The Tower 4 shim packs should be inspected for wear and abrasion. Inspection access is by UBIT from the deck level.

2.5 Expansion Joints

2.5.1 Modular Expansion Joint

The modular expansion joint at Pier 5 accommodates translational movements between the main span unit and the Ohio approach spans. The joint should be inspected for any damage, deterioration, or abnormal performance. The neoprene seals should be inspected for foreign objects which could puncture the seal or restrict movement. If necessary, the neoprene seals may be removed to permit inspection of the internal workings of the joint assembly. To ensure the life of the joint system, care should be taken to not have paints, solvents, or grease to come in contact with the steel slide surfaces. In the event that loud banging noises are being transmitted from the joint system in response to vehicular traffic, immediately notify the manufacturer.

2.5.2 Strip-Seal Expansion Joint

The strip-seal expansion joint at Pier 2 accommodates movements between the main span unit and the Kentucky approach spans. The joint should be inspected for any damage, deterioration, or abnormal performance in a manner consistent with a normal strip-seal expansion joint. The strip-seal glands should be inspected for objects which could puncture the seal or restrict movement.

2.6 Electrical Systems

2.6.1 Aesthetic Lighting

Aesthetic lightning consists of floodlight illumination of the stay cables and towers. Luminaries should be inspected for proper operation and orientation. Exposed conduits should be inspected for any damage. Brackets supporting the luminaires are galvanized steel and should be inspected for any signs of corrosion and repaired as necessary.

2.6.2 Navigation Lighting

The navigation lights must be in continual operation. They should be inspected for proper operation on a frequent basis. Navigation lights are accessible from deck level by use of a pivot mount and retrieval chain.

2.6.3 Aviation Beacons

The aviation beacons are located on the tops of each tower and must be in continual operation. They should be inspected for proper operation on a frequent basis. Access to the aviation beacon is through a hatch at the top of the towers, accessible from the tower inspection platforms inside the tower legs. It should be noted that no handrails have been provided around the perimeter of the tower top; consequently, workers should tie-off and take necessary safety precautions when entering this area.

2.6.4 Interior Lighting and Power

The interior tower lighting and power should be inspected for functioning luminaries and receptacles. Exposed conduit should be inspected for damage and repaired as necessary.

2.7 Lightning Protection System

The lightning protection system consists of conductors along the length of each tower leg interior which loop at the tops of the towers and are grounded in the tower drilled shafts. Air terminals are tied to the conductors and mounted on the tops of the towers, adjacent to the aviation beacons. All bolted connections to structural members as well as cable to cable connections and terminals shall be inspected. Check all mechanical connections and re-torque any loose bolts to a minimum of 15 ft-lbs. Apply conductive gel to any re-torqued connections in order to enhance conductivity. Replace any components which fail during the re-tightening procedure.

2.8 Surveys

2.8.1 Deck

The survey to establish the deck profile at the curb lines provides a relatively quick and inexpensive diagnostic tool for accessing the overall structure performance. Any unexpected deflections may be indicative of problems with the stay cables, bearings, anchorages, etc. and the survey results can provide the Engineer with an indicator as to where to look for problems if unexpected deflections occur. Future surveys should be compared to the initial survey, as well as any subsequent surveys, to identify any trends in the structure's behavior. Future surveys should be taken at the same monument points and similar ambient temperature as the initial survey.

The expected superstructure vertical deflections with temperature change were determined in accordance with the AASHTO LRFD Bridge Design Specifications, 8th Edition and are provided below. Figure 2.3 graphs the deflection with uniform temperature, while Figure 2.4 graphs the deflection with temperature gradient. The Temperature Positive (TP) represents a 35 degree F temperature rise and Temperature Negative (TN) represents a 45 degree F temperature fall. Positive values represent upward deflection and negative values represent downward deflection. Deflections beyond these amounts should be evaluated by an engineer familiar with the design and behavior of cable stayed bridges.

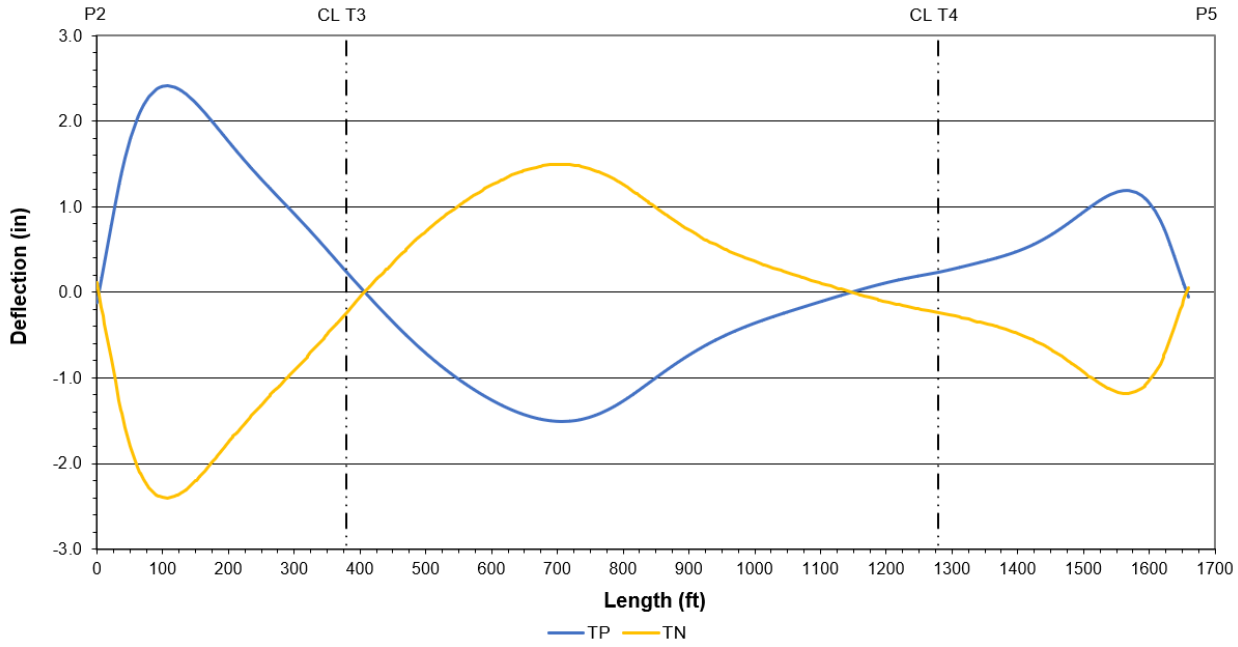

Figure 2.3 – Superstructure Vertical Deflections due to Uniform Temperature

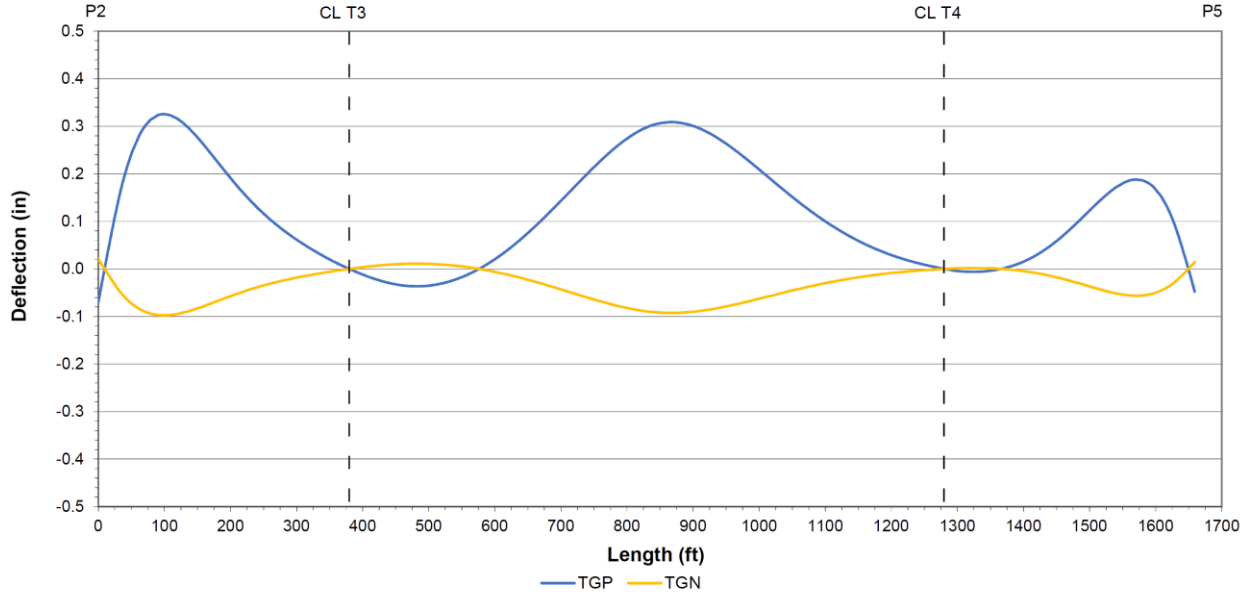

Figure 2.4 – Superstructure Vertical Deflections due to Temperature Gradient

2.8.2 Towers

Similar to the deck survey, the plumbness of the towers provides a gage for accessing the overall structure performance. If the towers are found to be more than 1/800 out-of-plumb, additional investigation should be conducted to determine the root cause.

2.8.3 Channel Sounding

The purpose of channel sounding is to identify any changes in the channel that may adversely impact the bridge. Channel sounding records should be kept and compared over time in order to track changes to the channel bottom. Scour depth assumptions for each main span substructure are shown in the design plans and referenced in Section 1 of this manual. Scour below these elevations should be monitored and mitigated at the direction of the District 9 Bridge Engineer.

2.8.4 Bridge Health Monitoring System

The bridge is equipped with a system of sensors and data acquisition equipment to collect scientific measurements of design and maintenance parameters and to monitor the performance of the bridge. This system includes strain gauges, tilt meters, multiplexers, and data loggers, as well as associated power supplies, communications interfaces, cabling and junction boxes, installed in various locations throughout the superstructure, towers and piers. The system was designed by the University of Cincinnati Infrastructure Institute. Additional information on the system can be obtained by contacting the District 9 Bridge Engineer.

3 RECOMMENDED MAINTENANCE AND REPAIR PROCEDURES

3.1 Roadway Deck Overlay

The roadway wearing surface provided is a variable thickness rigid micro-silica concrete overlay. The intent of the wearing surface is to provide protection for the structural deck as well as create a smooth riding surface. In order to maintain continued serviceability of the structural deck, maintenance and/or repairs should be conducted in a timely fashion on any portion of the wearing surface with a poor condition state. Typical maintenance and repairs for the overlay may include sealing and replacement as defined in the ODOT BDM.

With normal performance, it is likely that the current rigid micro-silica concrete overlay will need to be replaced in 10-15 years. No allowance is provided in the design for future additional overlay weight. Replacement of the deck overlay should be preceded by removal of existing overlay material to avoid any net increase of load on the structure. A sacrificial wearing surface of ½" has been considered in the design of the deck. Thus, when the overlay is replaced, approximately ¼" of the deck may be removed in preparation for the new overlay. Overlay replacements beyond two repair cycles require specialized engineering considerations.

3.2 Bridge Bearings

Tears or splits in the elastomer material are not considered to be stress related unless accompanied by excessive horizontal deformation of the pad. All tears or splits that penetrate the elastomer regardless of how small, should be filled in order to protect the reinforcing plates from corrosion. The filler material should be selected to produce a compatible 50 Durometer Hardness similar to the original material. Deep tears or signs of corrosion of the steel plates indicate the need to replace the bearing assembly.

Excessive bulging of the sides of the bearing may indicate an insufficient bond between the steel plates and the elastomeric material. The excessive bulging should be monitored from inspection to inspection and if the bulging appears to be propagating, then the bearing assembly should be replaced.

The elastomeric bearings located at the towers may be replaced by removing the bolts that connect the bearings to the sole plates. The edge girders shall be jacked vertically the minimal amount necessary to release load from the bearings and facilitate their removal. The PTFE discs located at the Tower 3 bearings are adhered to the bearing top plates and must be replaced along with the elastomeric bearings. Prior to replacing the bearings, a bearing replacement plan should be developed which includes the proposed jack type, number of jacks, removal and replacement procedures, and maintenance of traffic. For design bearing loads, see table shown below.

DESIGN BEARING LOADS (kips)					
LOCATION	DEAD LOAD	MAX. LIVE LOAD	MIN. LIVE LOAD	MAX. TOTAL LOAD	MIN. TOTAL LOAD
Tower 3	307	170	-22	477	285
Tower 4	302	170	-22	472	280

3.3 Expansion Joints

The Pier 2 strip seal expansion joint is rated for a maximum movement of up to 3.5”. The Pier 5 modular expansion joint is rated for a maximum movement of up to 11.375”. Routine maintenance should include cleaning and removal of any foreign materials which could adversely affect proper joint operation and to retighten loose nuts and bolts. If water infiltration is detected within the joint, then the neoprene seals between the opening may need to be replaced or repaired. Prior to any corrective repair action, excluding the removal of foreign debris and standard cleaning procedures, contact the joint manufacturer.

3.4 Cable Stay System

Due to the challenges and difficulties regarding the replacement of a stay cable, the primary role of the maintenance inspector is one of prevention, especially with regard to moisture control. Realistically, there are only a few components of the cable stay system that the maintenance engineer could practically repair. They are as follows:

- HDPE Cable Sheathing
- Retrofitting for Cable Vibration Control

There are two widely accepted systems for repairing extensively cracked or split HDPE Sheathing.

- *Elastomeric Wrap* installed with an automatic wrapping device with a 50% overlap and heat fused to shrink the wrap against the cable.
- *Two-Piece HDPE* that snaps together to form a cover for the original pipe.

Any planned stay cable repairs and/or replacements will require specialized engineering submittals to outline the repair process and coordinate maintenance of traffic. Stays can be repaired and/or replaced strand-by-strand in order to mitigate structural effects during repair/replacement. See Stay Cable Inspection and Maintenance Manual (Appendix B.2) for additional information on manufacturer’s maintenance recommendations.

4 RECOMMENDED EXTREME EVENT INCIDENT MANAGEMENT PROCEDURES

This section describes the critical inspections that need to be performed after the occurrence of a major incident. These inspections are in addition to the scheduled maintenance inspections detailed in Section 2. Based on observations made during these incident inspections, the frequency and content of the scheduled inspections may be adjusted to include more frequent and/or more comprehensive investigations when the Maintenance Engineer deems it necessary. The main scope of incident management focuses on identifying the expected distress associated with a particular incident. However, the repair of these distresses is generally covered in Section 3 of this manual.

4.1 Severed Cable

The bridge was designed to resist vehicular traffic immediately after the occurrence of a severed single cable. However, as soon as practical, the bridge segment associated with the severed cable should have traffic limited to one lane shifted away from the damage. This traffic restriction should be maintained until the cable is replaced and stressed to its recommended values. In addition, both the superstructure anchorage region and the tower head anchorage region should be inspected for localized distress and/or damage. During periods of restricted traffic conveyance, convoys of military vehicles and/or oversized loads should be prohibited. The necessary procedure for cable replacement is discussed in Section 3.4 of this manual.

4.2 Major Winter Storm

The bridge was designed to adequately resist gale force winds produced by strong winter storms; however, damage may occur indirectly from these events as a result of errant vessels, flying debris, or the increase of wind surface areas due to icing resulting in increased wind forces. After the occurrence of such an incidence, all bridge bearings, expansion joints, dampening systems, and stays should be fully inspected and repaired or replaced if under the opinion of the Maintenance Engineer conditions warrant. All navigational systems and aircraft warning lights must be inspected and repaired if inoperable.

Ice accumulating on stay cables and subsequently falling onto the travel lanes has been an issue on other bridges around the country and there may be rare events that affect the Ironton-Russell Bridge.

In these unique situations related to excessive wind or falling ice, it may be prudent to restrict and potentially stop traffic on the bridge until the wind subsides and/or threat of falling ice passes with warming temperatures.

4.3 Vehicular Fire

In the event of a vehicle fire, cables near the incidence must be inspected for damage and replaced if the Maintenance Engineer deems it necessary. It is recommended that the bridge be closed to traffic during this emergency inspection. No fire-retardant materials were considered in the design of the stay cables; consequently, the outer HDPE stay pipe and the cables friction damper system should be inspected for damage. If damage to the stay cable's outer protective layer is detected, the protective coating on the interior strands should also

be inspected. The deck within the vicinity of the incidence should be inspected for sag which could indicate strand relaxation within the affected area.

4.4 Vessel Impact

Vessel impact was a design consideration for this structure. Vessel impact is considered an extreme event load condition, and as such some damage to the structure could result. This damage could affect the serviceability of the structure, therefore, after the occurrence of such an event all structural elements in the vicinity of the incidence should be thoroughly inspected. In addition, all bridge bearings, expansion joints, stay cables and damping systems should also be inspected. Any observed damage should be evaluated by the Maintenance Engineer as to whether the condition creates a serviceability issue or impacts the ultimate strength of the element in question. If the damage is deemed a serviceability issue, repairs can proceed as outlined in Section 3 of this manual. However, if the damage evaluation concludes that the ultimate strength of an element in question has been reduced and has compromised the structural integrity of the bridge, then vehicular traffic should be restricted on the effected portions of the structure until all necessary repairs have been made.

4.5 Earthquake

This bridge was designed to satisfy Seismic Performance Category “A” events. In the aftermath of a seismic incidence all bridge bearings and expansion joints should be inspected for failures and permanent movement. In addition, all cable anchorages, tower legs, tower struts and foundation elements should be inspected for distress.

4.6 Snowplow Damage

The integral wearing surface is a critical element of the bridge deck system, although the wearing surface is not considered a structural component with regard to resisting load; it does however provide corrosion protection for the structural deck from chloride penetration. The structural deck component cannot be replaced; therefore, it is imperative that the wearing surface be well maintained and routinely inspected to insure the lasting serviceability of the structural deck. If the wearing surface is damaged by a snowplow, maintenance repairs should be conducted in a timely manner as directed by the Maintenance Engineer.

Snowplow damage to barriers or expansion joints should be repaired in accordance with recommendations in Section 3.

4.7 Barrier Collision

After a barrier collision incident, the barriers should be inspected for cracked and/or spalled concrete and repaired if necessary, in accordance with Section 3.

5 BRIDGE LOAD RATING

For the initial load rating, reference AECOM “Ironton Russell Bridge, Mainspan Initial Load Rating Report”, 2020. As part of the initial load rating, an Excel based tool was created for rating an arbitrary permit vehicle with up to 25 axles; reference AECOM “Ironton Russel Bridge, Mainspan Load Rating, User Guide: Permit Vehicle Rating Tool”, 2020.

Appendix A – Record Drawings

A.1 Design Plans

A.2 As-Builts

A.3 Select RFIs

A.1 Design Plans

STATE OF OHIO
DEPARTMENT OF TRANSPORTATION

LAW-93-0.00

RECONSTRUCTION OF EXISTING SEPARATED CROSSING WITH THE CSX RAILROAD AND THE NS RAILWAY

CITY OF IRONTON, OHIO
LAWRENCE COUNTY, OHIO

CITY OF RUSSELL, KENTUCKY
GREENUP COUNTY, KENTUCKY

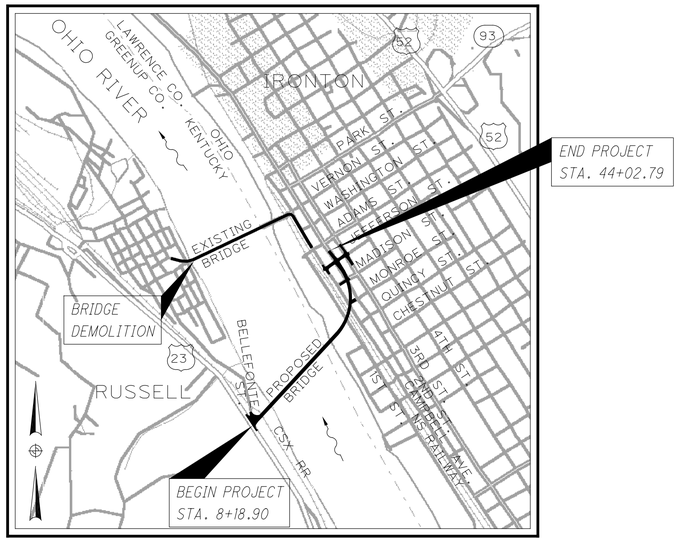

LOCATION MAP

LATITUDE: 38°31'25" N LONGITUDE: 82°41'14" W (REAR BRIDGE LIMIT)

SCALE IN MILES
0 0.25 0.50 0.75 1

PORTION TO BE IMPROVED
INTERSTATE & DIVIDED HIGHWAY
UNDIVIDED STATE & FEDERAL ROUTES
OTHER ROADS

DESIGN DESIGNATION SR 93

CURRENT ADT (2008)	10,300
DESIGN YEAR ADT (2036)	14,430
DESIGN HOURLY VOLUME (2036)	1,620
DIRECTIONAL DISTRIBUTION	50%
TRUCKS (24 HOUR B&C)	4%
DESIGN SPEED	40 MPH
LEGAL SPEED	35 MPH
DESIGN FUNCTIONAL CLASSIFICATION:	URBAN MINOR ARTERIAL
NHS PROJECT	NO

SEE SHEET 2 FOR ADDITIONAL DESIGN DESIGNATION INFORMATION

DESIGN EXCEPTIONS

DESIGN FEATURES	APPROVAL DATE	SHEET NO.
VERTICAL ALIGNMENT (GRADE BREAK)	5-24-11	89

INDEX OF SHEETS

TITLE SHEETS	1-2	CROSS SECTIONS - MONROE ST.	139
SCHEMATIC PLANS & REFERENCES	3-5	SUPERELEVATION TABLE	140
TYPICAL SECTIONS	6-15	INTERSECTION DETAILS	141-144
GENERAL NOTES	16-25, 25A, 25B, 26	PAVEMENT & GUARDRAIL - KENTUCKY	145-157
MAINTENANCE OF TRAFFIC	27-47	DRIVEWAY & PARKING AREA DETAILS	158-161
CONTRACTOR ACCESS PLAN	48	RETAINING WALL - JEFFERSON & CAMPBELL	162
GENERAL SUMMARY	49-53	STORM SEWER DETAILS	163-173
SUBSUMMARIES	54-64	STORM SEWER DETAILS - KENTUCKY	174-197
PROJECT SITE PLANS	65-66	SANITARY & WATER WORK	198-207
PLAN & PROFILE - 93C	67-81	TRAFFIC CONTROL	208-231
PLAN & PROFILE - USR 23	82-84	TRAFFIC SIGNALS	232-259
PLAN & PROFILE - CAMPBELL AVE.	85-86	LIGHTING PLANS	260-344
PLAN - 3RD ST.	87	REVEGETATION PLANS	345-347
PROFILE - 3RD ST.	88	DEMOLITON - EXISTING BRIDGE & APPROACH	348-370
PROFILE - JEFFERSON ST.	89	MSE WALL PLANS	371-387
CROSS SECTION LAYOUT SHEET	90	STRUCTURES (20 FOOT AND OVER) BRIDGE NO. LAW-93-0.00	388-752
CROSS SECTIONS - 93C	91-120	FENCE PLAN	753
CROSS SECTIONS - USR 23	121-125	RIGHT OF WAY	754-788
CROSS SECTIONS - CAMPBELL AVE.	126-129	RAILROAD SUPPLEMENTAL SITE PLANS	
CROSS SECTIONS - 3RD ST.	130-133	STRUCTURE FOUNDATION EXPLORATION	
CROSS SECTIONS - JEFFERSON ST.	134-138		

PROJECT DESCRIPTION

CONSTRUCTION OF A NEW BRIDGE OVER THE OHIO RIVER, THE CSX, AND THE NS, HAVING CABLE-STAYED MAIN SPANS AND GIRDER APPROACH SPANS. THE WORK INCLUDES INTERSECTION RECONSTRUCTION IN RUSSELL, KENTUCKY AND IRONTON, OHIO AND RELATED ROADWAY, DRAINAGE, UTILITY, MAINTENANCE OF TRAFFIC, TRAFFIC CONTROL, TRAFFIC SIGNAL, LIGHTING, AND RETAINING WALL WORK. ALSO INCLUDED IS DEMOLITION OF AN EXISTING BRIDGE APPROXIMATELY ONE-HALF MILE DOWNSTREAM. THE PROJECT LENGTH IS 0.69 MILES.
FOR EARTH DISTURBED AREAS SEE SHEET 2

2010 SPECIFICATIONS

EXCEPT WHERE NOTED IN THE PLANS, THE STANDARD SPECIFICATIONS OF THE STATE OF OHIO, DEPARTMENT OF TRANSPORTATION, INCLUDING CHANGES AND SUPPLEMENTAL SPECIFICATIONS LISTED IN THE PROPOSAL SHALL GOVERN THIS IMPROVEMENT.

NO.	REVISIONS	DATE	REV. BY
1	ADDED SHEET 25A	11/11	BKL
2	ADDED SHEET 25B	12/11	BKL
3	STANDARD CONSTRUCTION DRAWING ADDED	1/12	SCC
4	SUPPLEMENTAL SPEDIFICATIONS ADDED	8/15	VMF

I HEREBY APPROVE THESE PLANS AND DECLARE THAT THE MAKING OF THIS IMPROVEMENT WILL NOT REQUIRE THE CLOSING TO TRAFFIC OF SR 93 (RIVER CROSSING) AND THAT PROVISIONS FOR THE MAINTENANCE AND SAFETY OF TRAFFIC WILL BE AS SET FORTH ON THE PLANS AND ESTIMATES. IMPROVEMENTS MADE ON CAMPBELL AVENUE, 2ND STREET, 3RD STREET, AND JEFFERSON STREET IN IRONTON WILL REQUIRE PART-TIME CLOSING TO TRAFFIC AS NOTED ON SHEETS 41-47 AND DETOURS WILL BE PROVIDED AS INDICATED ON THE PLANS.

APPROVED _____
DATE _____ DISTRICT DEPUTY DIRECTOR

APPROVED _____
DATE _____ DIRECTOR, DEPARTMENT OF TRANSPORTATION

OHIO
UNDERGROUND UTILITIES
CONTACT BOTH SERVICES
CALL TWO WORKING DAYS
BEFORE YOU DIG
CALL
1-800-362-2764
(TOLL FREE)
OHIO UTILITIES PROTECTION SERVICE
NON-MEMBERS
MUST BE CALLED DIRECTLY
OIL & GAS PRODUCERS PROTECTIVE SERVICE CALL: **1-800-929-0988**

KENTUCKY
BEFORE YOU DIG
CALL 1-800-752-6007 TOLL FREE A MINIMUM OF TWO AND NO MORE THAN TEN BUSINESS DAYS PRIOR TO EXCAVATION FOR INFORMATION ON THE LOCATION OF EXISTING UNDERGROUND UTILITIES WHICH SUBSCRIBE TO THE BEFORE-U-DIG (BUD) SERVICE. COORDINATE EXCAVATION WITH ALL UTILITY OWNERS AND THOSE WHO DO NOT SUBSCRIBE TO BUD.

ENGINEER'S SEAL:

SEE NEXT SHEET

PLAN PREPARED BY:
URS CORPORATION
36 EAST SEVENTH ST., SUITE 2300
CINCINNATI, OHIO 45202

STANDARD CONSTRUCTION DRAWINGS

BP-1.1	7-28-00	F-1.1	4-16-10	RM-1.1	1-21-11	HL-10.11	4-17-09	MT-35.10	4-20-01	TC-21.20	4-15-11	TC-81.10	1-21-11	800	10-21-11
BP-2.1	7-18-08			RM-3.1	10-15-10	HL-10.12	10-15-10	MT-95.31	7-17-09	TC-22.10	1-19-01	TC-81.21	1-21-11	802	4-15-11
BP-2.2	7-18-08	GR-1.1	7-16-04	RM-4.2	10-15-10	HL-10.13	10-16-09	MT-95.32	7-17-09	TC-22.20	1-21-11	TC-82.10	1-21-11	819/919	4-17-15* 1-17-14
BP-2.3	7-16-04	GR-2.1	1-16-04	RM-4.3	10-16-09	HL-20.11	1-19-07	MT-96.11	1-16-09	TC-41.10	10-19-07	TC-83.10	1-19-07	832	5-5-09
BP-3.1	10-19-07	GR-2.3	4-18-03	RM-4.5	10-16-09	HL-20.14	10-16-09	MT-96.20	10-15-10	TC-41.15	1-16-09	TC-83.20	1-21-11	836	4-15-05
BP-4.1	7-16-04	GR-3.1	10-16-09	RM-4.6	4-16-10	HL-30.11	10-16-09	MT-96.26	1-16-09	TC-41.20	1-19-01	TC-84.20	1-21-11	839	4-20-07
BP-5.1	7-28-00	GR-3.2	10-16-09			HL-30.21	1-19-07	MT-97.11	10-15-10	TC-41.30	1-19-07	TC-84.21	1-19-07	840	10-15-10
BP-7.1*	4-16-10	GR-4.2	1-19-07			HL-30.22	4-17-09	MT-98.20	7-17-09	TC-41.40	7-16-04	TC-85.10	10-16-09	847	4-15-11
		GR-5.1	4-16-10			HL-30.31	4-17-09	MT-98.21	7-17-09	TC-41.41	1-21-11	TC-85.20	10-15-10	878	7-15-11
CB-1.1	7-15-05	GR-5.2	4-16-10			HL-30.32	4-17-09	MT-98.22	7-17-09	TC-41.50	1-19-07	TC-85.21	1-21-11	888	4-15-11
CB-2.1	7-15-05	GR-5.3	4-16-10	AS-1-81	7-19-02	HL-30.33	4-17-09	MT-98.28	7-17-09	TC-42.10	1-19-07			895	10-15-10
CB-2.2	7-15-05			BR-2-98	7-19-02	HL-40.10	1-19-07	MT-99.20	1-16-09	TC-42.20	1-21-11			898	1-21-11
CB-3.2	7-15-05	HW-1.1	7-30-07	EXJ-4-87	7-19-02	HL-50.21	1-19-07	MT-101.60	4-17-09	TC-52.10	1-19-07			902	7-16-10
DM-1.1	1-21-11	HW-2.1	7-30-07	GSD-1-96	7-19-02	HL-60.11	1-19-07	MT-101.70	4-15-11	TC-52.20	1-19-07			939	4-18-08
DM-1.2	10-21-05	HW-2.2	7-30-07	VPF-1-90	4-15-11			MT-101.90	1-16-09	TC-61.30	4-16-10			977	4-17-09
DM-1.4	4-21-06							MT-105.10	1-16-09	TC-71.10	1-21-11			995	10-15-10
DM-3.1	7-19-02	LA-1.2	1-16-09	BP-2.4	7-16-04			MT-110.10	1-16-09	TC-73.10	1-19-01				
DM-4.1	1-21-11							MT-120.00	1-16-09						
DM-4.3	4-17-09	MH-1.1	7-19-02												
DM-4.4	4-17-09	MH-1.2	1-20-06												

SUPPLEMENTAL SPECIFICATIONS

SPECIAL PROVISIONS
SEE NEXT SHEET

* FOR QUANTITY CONSISTENCY THE APRIL 16, 2010 VERSION WAS USED FOR THIS PROJECT.

FEDERAL PROJECT NO. E040 (653)
PID NO. 81595
CONSTRUCTION PROJECT NO. LAW-93-0.00
RAILROAD INVOLVEMENT CSX TRANSPORTATION INC. NORFOLK SOUTHERN CORP.

J:\Project\OA\ODOT\15005112 Ironton Russell\LAW\81595\roadway\sheets\81595GT001.dgn - 8/18/2015 3:08:07 PM - amanda_beiting

DESIGN DESIGNATION

	US 23	BELLEFONTE ST (KY SR 244)	JEFFERSON ST	CAMPBELL AVE
CURRENT ADT (2008)	21,700	2,600	4,932	3,177
DESIGN YEAR ADT (2036)	25,900	3,560	6,350	4,050
DESIGN HOURLY VOLUME (2036)	2,890	420	700	460
DIRECTIONAL DISTRIBUTION	50%	55%	60%	70%
TRUCKS (24 HOUR B&C)	3%	2%	3%	1%
DESIGN SPEED	45 MPH	35 MPH	25 MPH	25 MPH
LEGAL SPEED	45 MPH	30 MPH	25 MPH	25 MPH
DESIGN FUNCTIONAL CLASSIFICATION:	ARTERIAL	COLLECTOR	COLLECTOR	COLLECTOR

SPECIAL PROVISIONS

1. CONCRETE AND SEGMENT PRODUCTION FOR CABLE STAYED STRUCTURE	MAY 6, 2011
2. STAY CABLES	MAY 6, 2011
3. VISCOUS DAMPING DEVICES	MAY 6, 2011
4. POST TENSIONING	MAY 6, 2011
5. MASS CONCRETE	MAY 6, 2011
6. ELASTOMETRIC BEARINGS	MAY 6, 2011
7. LADDERS, PLATFORMS, AND ACCESS DOORS	MAY 6, 2011
8. DRILLED SHAFTS FOR TESTING	MAY 6, 2011
9. CROSSHOLE SONIC LOGGING (CSL) TESTS FOR DRILLED SHAFTS	MAY 6, 2011
10. LATERAL LOAD TESTING OF DRILLED SHAFTS	MAY 6, 2011
11. OSTERBERG CELL LOAD TESTING OF DRILLED SHAFTS	MAY 6, 2011
12. STRUCTURE POWER SERVICE	MAY 6, 2011
13. STRUCTURE GROUNDING AND LIGHTNING PROTECTION SYSTEM	MAY 6, 2011
14. RIVER NAVIGATION LIGHTING SYSTEM	MAY 6, 2011
15. INSPECTION LIGHTING AND POWER SYSTEM	MAY 6, 2011
16. AESTHETIC LIGHTING SYSTEM	MAY 6, 2011
17. RAISED RELIEF IMAGES ON MSE RETAINING WALL	MAY 6, 2011
18. COMMEMORATIVE PLAQUE	MAY 6, 2011
19. WORK IN NAVIGABLE WATERWAYS	MAY 6, 2011
20. CONSTRUCTION ACCESS	MAY 6, 2011
21. LEVEE ACCESS	MAY 6, 2011
22. WATER TRANSPORTATION FOR THE ENGINEER	MAY 6, 2011
23. PROGRESS PHOTOGRAPHS	MAY 6, 2011
24. BRIDGE HEALTH MONITORING AND INSTRUMENTATION	MAY 6, 2011
25. MODULAR EXPANSION JOINT	OCT. 10, 2011
26. PERMIT CONDITIONS	NOV. 15, 2011

STATE ROUTE 93 (LAW-93-0.00)

DURING THE DEVELOPMENT OF THE PLAN SET AND CONSTRUCTION CONTRACT DOCUMENTS, THE PROJECT AND ROUTE WAS REFERENCED AS LAW-93C-0.00 OR 93C. SINCE THE PREPARATION OF PLAN AND CONTRACT DOCUMENTS, ODOT HAS JOURNALIZED THE ROADWAY AS STATE ROUTE 93. SHEETS 1 THRU 4 OF THE PLAN SET HAVE BEEN REVISED TO REFLECT THE CURRENT ROUTE DESIGNATION. THE REMAINING PLAN SHEETS AND OTHER CONTRACT DOCUMENTS STILL REFERENCE THE ROUTE AS 93C. ALL REFERENCES TO 93C IN THE PLAN SET AND CONTRACT DOCUMENTS SHALL MEAN STATE ROUTE 93.

ABBREVIATIONS

ABBREVIATIONS IN ADDITION TO THOSE LISTED IN 101.02.

AA	ANCHOR ASSEMBLY
ABUT.	ABUTMENT
ACT.	ACTUAL
AH	AHEAD (RELATIVE TO STATIONING)
BELL.	BELLEFONTE STREET
BK	BACK (RELATIVE TO STATIONING)
BRG.	BEARING
BTA	BRIDGE TERMINAL ASSEMBLY
CMP	CORRUGATED METAL PIPE
COMM.	COMMERCIAL
CONC.	CONCRETE
CONST.	CONSTRUCTION
CONSTR.	CONSTRUCTION
DEMO.	DEMOLITION
DESC.	DESCRIPTION
DR.	DRIVEWAY
EOP	EDGE OF PAVEMENT EXCLUDING SHOULDER
EQ.	EQUATION
ESMT.	EASEMENT
FAA	FEDERAL AVIATION ADMINISTRATION
GR	GUARDRAIL
HT.	HEIGHT
LT	LEFT (RELATIVE TO STATIONING)
M/L	MATCH LINE
MSL	MEAN SEA LEVEL
NTS	NOT TO SCALE
PCB	PORTABLE CONCRETE BARRIER
PROP.	PROPOSED
RT	RIGHT (RELATIVE TO STATIONING)
R/W	RIGHT OF WAY
RCP	REINFORCED CONCRETE PIPE
REF.	REFERENCE
RNDG.	ROUNDING
SAN.	SANITARY
Se	SEEDING
SH	STANDARD HIGHWAY EASEMENT (RIGHT OF WAY)
SHDR.	SHOULDER
SLM	STRAIGHT LINE MILEAGE
STM.	STORM
SW	SEWER EASEMENT (RIGHT OF WAY)
T/R	TOP OF RAIL ELEVATION
TELE	TELEPHONE
TEMP.	TEMPORARY
TRANS.	TRANSITION
TYP.	TYPICAL
UNK.	UNKNOWN
VAR.	VARIES
VERT.	VERTICAL
W/	WITH
W/O	WITHOUT
WZ	WORK ZONE

PROJECT DATA	NEW CONSTRUCTION		BRIDGE DEMOLITION	
	KY	OH	OH	KY
PROJECT EARTH DISTURBED AREA:	2.7 ACRES	7.0 ACRES	1.0 ACRES	0.6 ACRES
ESTIMATED CONTRACTOR EARTH DISTRUBED AREA:	3.3 ACRES	3.1 ACRES	1.6 ACRES	0.5 ACRES
NOTICE OF INTENT EARTH DISTURBED AREA:	6.0 ACRES	10.1 ACRES	2.6 ACRES	1.1 ACRES

ROADWAY, MAINT. OF TRAFFIC, EXISTING BRIDGE ROADWAY DEMOLITION	TRAFFIC CONTROL, & TRAFFIC SIGNALS	SANITARY SEWER & WATER WORK	LIGHTING	EXISTING BRIDGE DEMOLITION, & MSE WALL	STRUCTURE: PART KY APPROACH PART MAINSPAN	STRUCTURE: PART KY APPROACH PART MAINSPAN	STRUCTURE: OHIO APPROACH
Shts. 1 - 197, 345 - 347, 362 - 370, 753	Shts. 208 - 259	Shts. 198 - 207	Shts. 260 - 344	Shts. 348 - 361, 371 - 387	Shts. 388 - 401, 407 - 422, 435 - 455, 457, 465 - 508, 644 - 645, 665 - 674	Shts. 402 - 406, 423 - 434, 456, 458 - 464, 509 - 633J, 646 - 664, 675 - 693	Shts. 694 - 752
ENGINEER'S SEAL:	ENGINEER'S SEAL:	ENGINEER'S SEAL:	ENGINEER'S SEAL:	ENGINEER'S SEAL:	ENGINEER'S SEAL:	ENGINEER'S SEAL:	ENGINEER'S SEAL:
STATE OF OHIO, STEPHEN C. CURLESS, 43785, REGISTERED, PROFESSIONAL ENGINEER	STATE OF OHIO, PAUL A. SLONE, E-66422, REGISTERED, PROFESSIONAL ENGINEER	STATE OF OHIO, MARK A. GEORGE, E-63972, REGISTERED, PROFESSIONAL ENGINEER	STATE OF OHIO, DAVID BALS, E-63798, REGISTERED, PROFESSIONAL ENGINEER	STATE OF OHIO, BIPIN K. LAPASIA, 41058, REGISTERED, PROFESSIONAL ENGINEER	STATE OF OHIO, MICHAEL JOHN ZWICK, 59572, REGISTERED, PROFESSIONAL ENGINEER	STATE OF OHIO, STEVEN L. STROH, E-62970, REGISTERED, PROFESSIONAL ENGINEER	STATE OF OHIO, JOHN HOLLENBAUGH, 42128, REGISTERED, PROFESSIONAL ENGINEER
SIGNED: Stephen C Curless	SIGNED: Paul A Slone	SIGNED: Mark A George	SIGNED: David Bals	SIGNED: Bipin K Lapasia	SIGNED: Michael J Zwick	SIGNED: Steven L Stroh	SIGNED: John T Hollenbaugh
DATE: 5/6/11	DATE: 5-6-11	DATE: 5/6/11	DATE: 5/6/11	DATE: May 6, 2011	DATE: May 6, 2011	DATE: 5/6/2011	DATE: 5/6/11

NOTE:
SEE ALSO PREVIOUS SHEET.

TITLE SHEET - PAGE 2
ADDITIONAL DATA

LAW-93-0.00

J:\Project\OA\ODOT\15005112 Ironton Russell\LAW\81595\roadway\sheets\81595GT002.dgn - 3/23/2012 10:14:04 AM - jon_wanstrath

MONUMENTS TO BE SET DURING CONSTRUCTION		
STATION (℄ R/W SR 93)	DIST. FROM ℄ R/W	ITEM 604 MONUMENT ASSEMBLY
POT STA. 7+88.65	0.00′	1
POT STA. 8+71.13	0.00′	1
POT STA. 9+47.43	351.36′ LT.	1
PT STA. 39+93.62	0.00′	1
POT STA. 41+83.79	0.00′	1
POT STA. 45+73.79	0.00′	1
TOTALS CARRIED TO GENERAL SUMMARY		6

NOTE:

CENTERLINE MONUMENTS AND REFERENCE MONUMENTS ARE TO BE INSTALLED AT THE LOCATIONS AS PLATTED AND RECORDED IN PLAT BOOK 11, PAGE 78 OF THE LAWRENCE COUNTY RECORDS. ALL MONUMENTS ARE TO BE INSTALLED UNDER THE DIRECT SUPERVISION OF A SURVEYOR REGISTERED IN THE STATE OF OHIO PER STANDARD CONSTRUCTION DRAWING RM 1.1 (REV. 7-15-11).

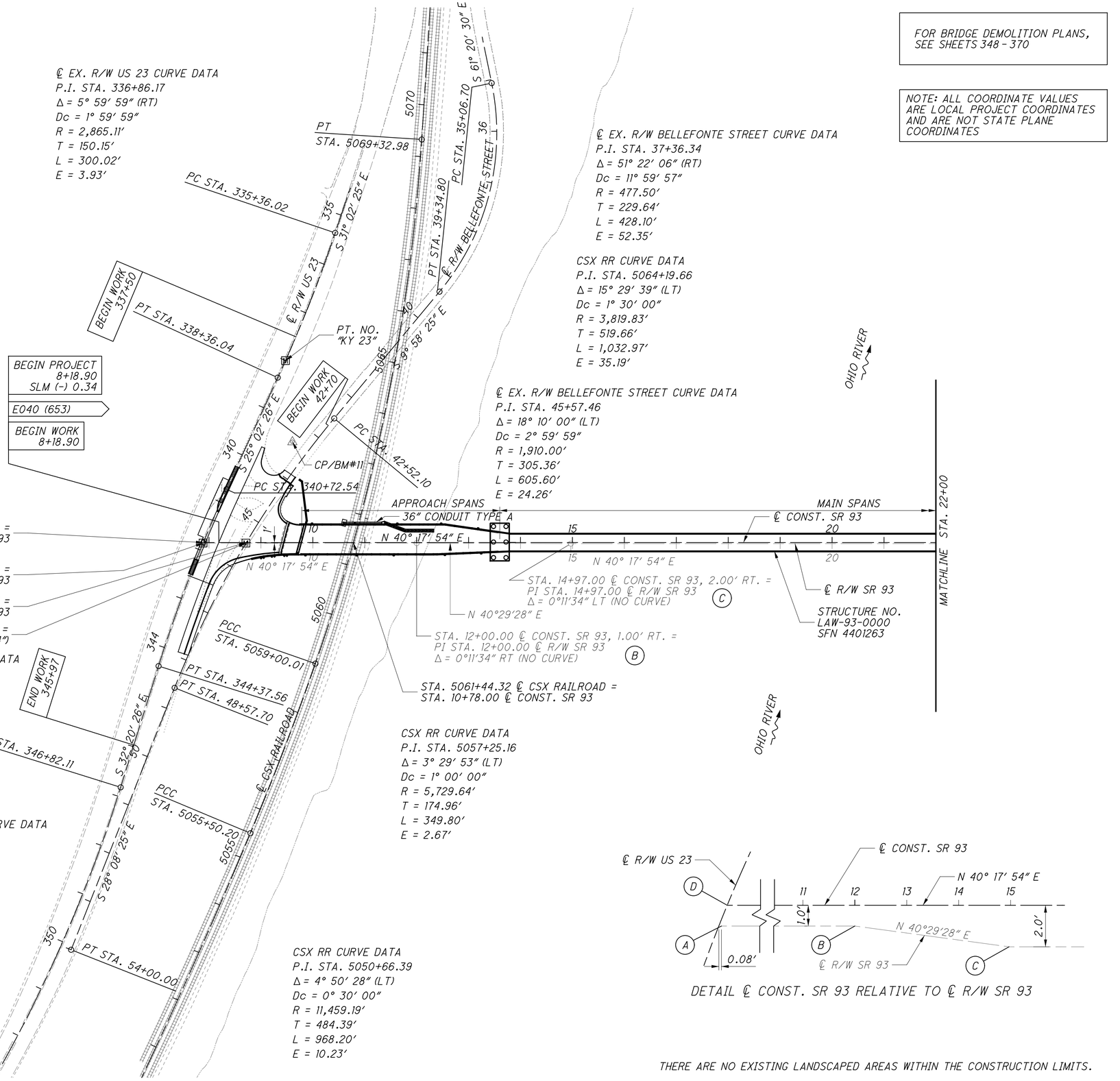

CONTROL POINT/BENCHMARK #11
DESC.: ⅝″ REBAR FOUND WITH "E.L. ROBINSON" CAP
N: 190914.10
E: 1946229.04
ELEV: 597.50

1. NORTHEASTERLY CORNER OF STONE TOPPED BRICK PLANTER AROUND SIGN "WELCOME TO DOWNTOWN RUSSELL KENTUCKY"
2. MAG NAIL SET 1′ UP ON NORTHWEST SIDE OF SIGNAL POLE WITH CONTROL BOX.
3. MAG NAIL SET 1′ UP ON SOUTHWEST SIDE OF PP# 1124-8063

DETAIL ℄ CONST. SR 93 RELATIVE TO ℄ R/W SR 93

THERE ARE NO EXISTING LANDSCAPED AREAS WITHIN THE CONSTRUCTION LIMITS.

HORIZONTAL SCALE IN FEET
0 50 100 200
CALCULATED BLW
CHECKED SCC

SCHEMATIC PLAN

LAW-93-0.00

J:\Project\OJODOT\15005112 Ironton Russell\LAW\81595\roadway\sheets\81595GB001.dgn - 7/28/2011 11:26:21 AM - jon_wanstrath

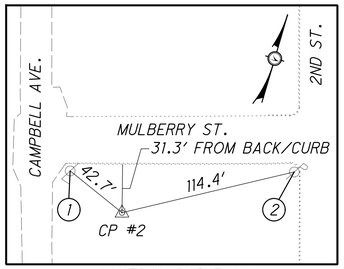

CONTROL POINT #2
DESC.: 5/8" REBAR WITH
"URS CONTROL POINT" CAP
N: 191862.96
E: 1948446.94
ELEV: 546.76

(1) LIGHT POLE - 112401-131

(2) POWER POLE - 112401-85

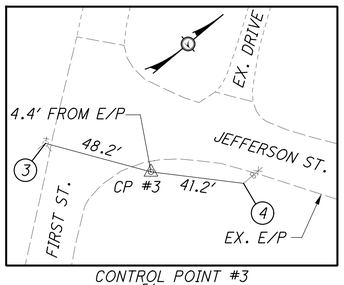

CONTROL POINT #3
DESC.: 5/8" REBAR WITH
"URS CONTROL POINT" CAP
N: 193276.34
E: 1947356.75
ELEV: 548.95

(3) FIRE HYDRANT

(4) RAILROAD CROSSING GATE

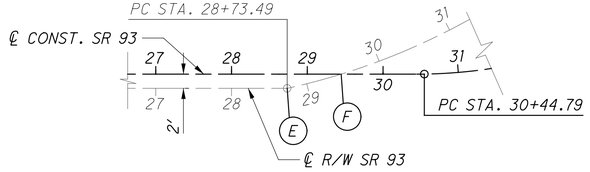

DETAIL ℄ CONST. SR 93 RELATIVE TO ℄ R/W SR 93
(NOT TO SCALE)

NORFOLK & SOUTHERN
RR CURVE DATA
P.I. STA. 586+70.01
Δ = 1° 35' 00" (RT)
Dc = 0° 50' 00"
R = 6,875.55'
T = 95.01'
L = 190.00'
E = 0.66'

FOR BRIDGE DEMOLITION PLANS,
SEE SHEETS 348 - 370

NOTE: ALL COORDINATE VALUES
ARE LOCAL PROJECT COORDINATES
AND ARE NOT STATE PLANE
COORDINATES

END PROJECT
44+02.79
SLM 0.35
EOAO (653)

PT STA. 587+65.00

PC STA. 585+75.00

WASHINGTON ST

2ND ST

3RD ST

END WORK
44+09

℄ CONST. CAMPBELL AVE
N 32° 30' 37" W

POT Sta. 45+73.78

℄ CONST. SR 93
N 32° 30' 37" W

ADAMS ST

PI STA. 39+00
Δ = 2°26'46" RT
NO CURVE

PI STA. 37+75
Δ = 2°26'46" LT
NO CURVE

BEGIN WORK
2+67

END WORK
39+00

℄ CONST. 3RD ST
N 32° 30' 37" W

END WORK
51+87

N 34° 57' 23" W

CP #3

STA. 5SR 93+50.45 ℄ NORFOLK & SOUTHERN RY =
STA. 2+46.49 ℄ CONST. & R/W JEFFERSON ST

STA. 36+79.18 ℄ CONST. CAMPBELL AVE =
STA. 3+02.50 ℄ CONST. & R/W JEFFERSON ST

STA. 41+83.78 ℄ CONST. & R/W SR 93 =
STA. 4+76.50 ℄ CONST. & R/W JEFFERSON ST
(PT. NO. "CL040")

STA. 52+00.00 ℄ CONST. 3RD ST =
STA. 6+81.77 ℄ CONST. & R/W JEFFERSON ST

℄ CONST. & R/W JEFFERSON ST
N 57° 29' 23" E

END WORK
8+59

BEGIN WORK
34+50

STA. 33+45.94 ℄ CONST. CAMPBELL AVE =
STA. 5+02.50 ℄ R/W MADISON ST

℄ CONST. SR SR 93 CURVE DATA
P.I. STA. 35+24.08
Δ = 72° 48' 31" (LT)
Dc = 8° 48' 53"
R = 650.00'
T = 479.30'
L = 825.99'
E = 157.60'

PT STA. 38+70.77

STA. 29+99.94 ℄ CONST. CAMPBELL AVE =
STA. 7+02.50 ℄ R/W MONROE ST

EQUATION:
STA 40+00.00 AH ℄ CONST. & R/W SR SR 93
STA 40+45.75 BK ℄ CONST. SR SR 93=

℄ R/W MADISON ST
N 57° 29' 24" E

BEGIN WORK
48+98

℄ R/W 2ND ST
N 32° 30' 37" W

℄ CONST. CAMPBELL AVE
N 32° 30' 37" W

PT STA. 39+93.62 ℄ R/W SR 93 =
STA. 40+39.36 BK ℄ CONST. SR 93

STA. 48+66.76 ℄ CONST. 3RD STREET =
STA. 8+81.77 ℄ R/W MADISON STREET

STA. 6+82.50 ℄ R/W MADISON STREET =
STA. 13+46.00 ℄ R/W 2ND STREET

STA. 6+76.50 ℄ R/W MADISON STREET =
STA. 38+96.29 ℄ CONST. SR 93

SLM (-) 0.00	SLM (+) 0.00

26+12.53 ℄ R/W SR 93
26+13.34 ℄ CONST. SR 93

℄ R/W SR 93 CURVE DATA
P.I. STA. 35+23.47
D = 72° 48' 31" (LT)
Dc = 6° 30' 00"
R = 881.47'
T = 649.98'
L = 1,120.13'
E = 213.73'

PC STA. 30+44.79

72" CONDUIT
TYPE C

℄ R/W
SR 93

APPROACH SPANS

MAIN SPANS
℄ CONST. SR 93
N 40° 17' 54" E

2'

MATCHLINE STA. 22+00

N 40° 17' 54" E
℄ R/W SR 93

STRUCTURE NO.
LAW-93-0000
SFN 4401263

OHIO RIVER

COMMONWEALTH
OF KENTUCKY
STATE OF OHIO

City of Ironton
Corp. Limits

OHIO RIVER

℄ NORFOLK &
SOUTHERN RAILWAY

N 32° 30' 37" W

℄ R/W MONROE ST
N 57° 29' 23" E

STA. 8+82.50 ℄ R/W MONROE STREET =
STA. 10+00.00 ℄ R/W 2ND

STA. 7+92.00 ℄ R/W MONROE STREET =
STA. 35+35.64 ℄ CONST. SR 93

STA. 28+77.79 ℄ CONST. CAMPBELL AVENUE =
STA. 33+83.86 ℄ CONST. SR 93

STA. 573+24.68 ℄ NORFOLK & SOUTHERN RR =
STA. 33+06.36 ℄ CONST. SR 93

(E) PC STA. 28+73.49 ℄ R/W SR 93 =
STA. 28+73.49, 2.00' RT ℄ CONST. SR 93

(F) STA. 29+32.83 ℄ CONST. SR 93=
STA. 29+32.88 ℄ R/W SR 93

FIRST ST

CAMPBELL AVE

2ND ST

3RD ST

QUINCY ST

CONTROL POINT #2
(ON MULBERRY ST.)

HORIZONTAL
SCALE IN FEET
0 50 100 200

CALCULATED BLW
CHECKED SCC

SCHEMATIC PLAN

LAW-93-0.00

4
788

J:\Project\OA\ODOT\150051112 Ironton Russell\LAW\81595\roadway\sheets\81595GB002.dgn - 7/28/2011 11:26:23 AM - jon_wanstrath

NOTE:

1. LOCAL PROJECT COORDINATES HAVE BEEN USED FOR THIS PROJECT, NOT STATE PLANE COORDINATES.

2. POINTS A,B,C,D,E & F CORRESPOND WITH SAME POINTS ON SCHEMATIC PLANS.

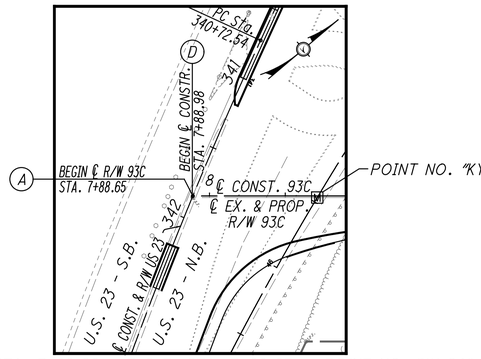

P.O.B. STA. 7+88.98
℄ CONSTRUCTION
N: 190657.678
E: 1946265.965

P.O.T. STA. 7+88.65
℄ EX. & PROP. R/W
N: 190656.776
E: 1946266.512

POINT NO. "KY 24"
STA. 8+71.13
N: 190719.683
E: 1946319.858

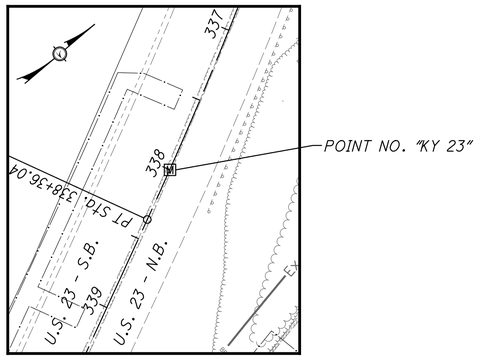

POINT NO. "KY 23"
STA. 9+47.43, 351.36' LT.
N: 191005.124
E: 1946101.229

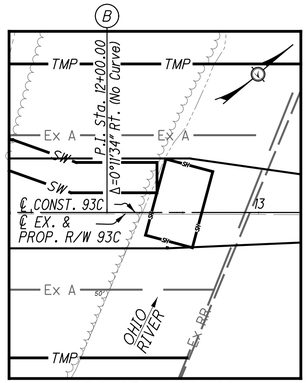

P.I. STA. 12+00.00
℄ EX. & PROP. R/W
N: 190970.505
E: 1946532.559

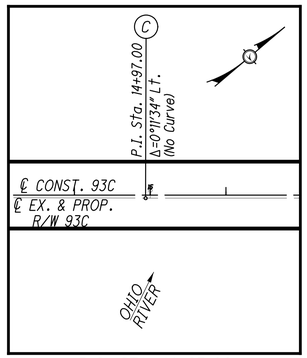

P.C. STA. 14+97.00
℄ EX. & PROP. R/W
N: 191196.376
E: 1946725.411

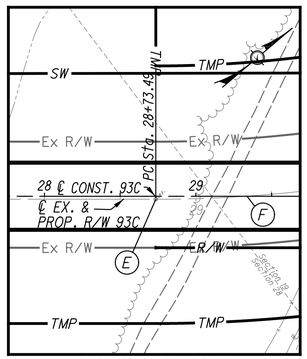

P.C. STA. 28+73.49
℄ EX. & PROP. R/W
N: 192246.204
E: 1947615.680

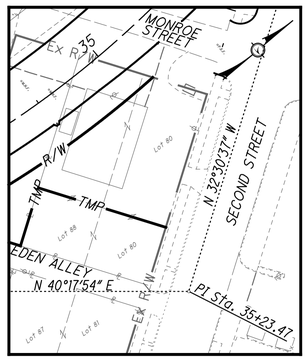

P.I. STA. 35+23.47
℄ EX. & PROP. R/W
N: 192741.935
E: 1948036.067

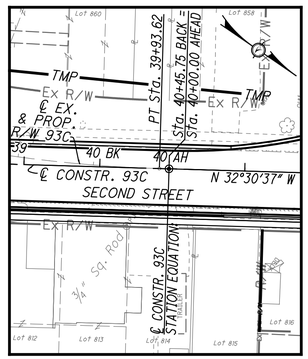

P.T. STA. 39+93.62
℄ EX. & PROP. R/W
N: 193290.061
E: 1947686.735

STATION EQUATION
STA. 40+45.75 (BK) =
STA. 40+00.00 (AH)
N: 193295.446
E: 1947683.303

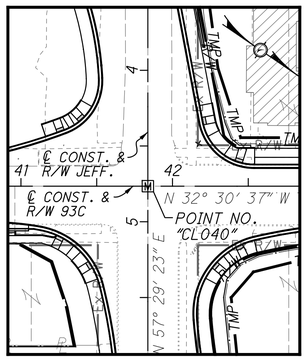

POINT NO. "CL040"
STA. 41+83.79
N: 193450.432
E: 1947584.527

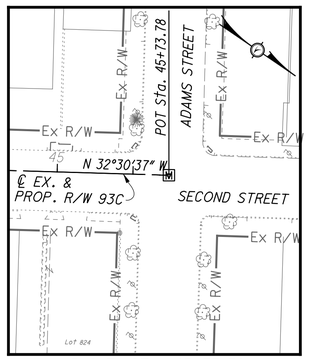

P.O.T. STA. 45+73.79
℄ EX. & PROP. R/W
N: 193779.313
E: 1947374.925

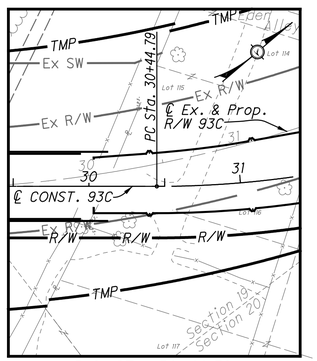

P.C. STA. 30+44.79
℄ CONSTRUCTION
N: 192378.148
E: 1947724.948

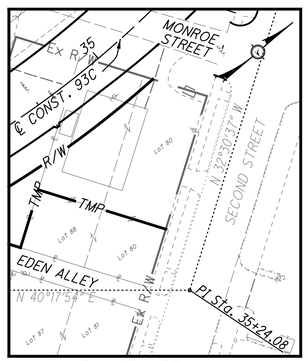

P.I. STA. 35+24.08
℄ CONSTRUCTION
N: 192743.701
E: 1948034.942

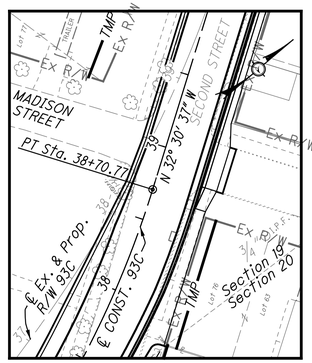

P.T. STA. 38+70.77
℄ CONSTRUCTION
N: 193147.890
E: 1947777.344

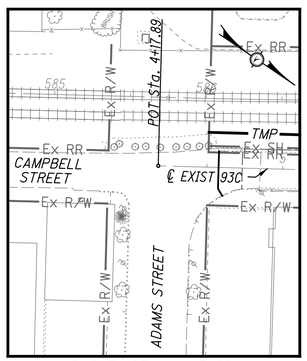

P.O.T. STA. 4+17.89
℄ EXIST CAMPBELL AVE.
N: 193680.040
E: 1947219.156

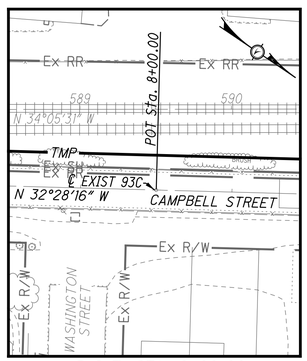

P.O.T. STA. 8+00.00
℄ EXIST CAMPBELL AVE.
N: 194002.412
E: 1947014.011

HORIZONTAL SCALE IN FEET
0 25 50 100

CALCULATED SCC
CHECKED DS

CENTERLINE REFERENCES

LAW-93-0.00

J:\Project\OA\ODOT\15005112 Ironton Russell\LAW\81595\roadway\sheets\81595GM001.dgn - 7/28/2011 11:26:26 AM - jon_wanstrath

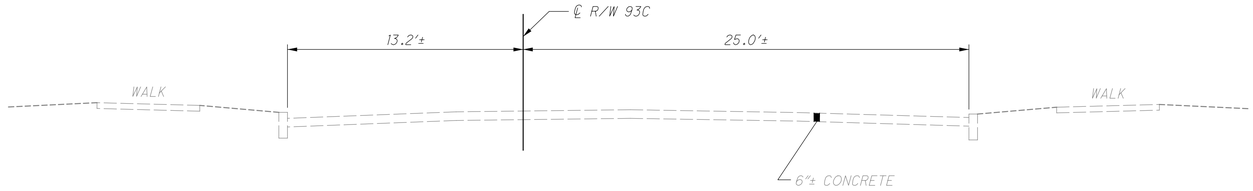

2ND STREET
STA. 40+50± 93C

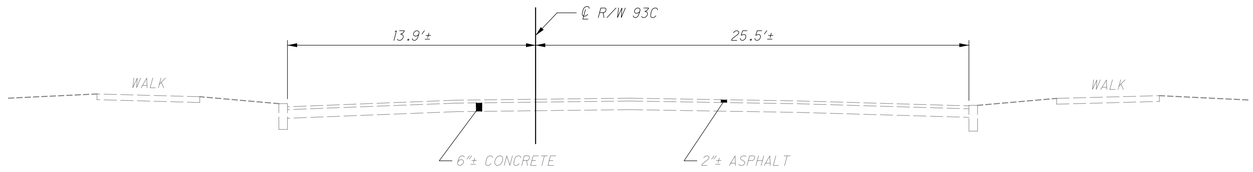

2ND STREET
STA. 43+00± 93C

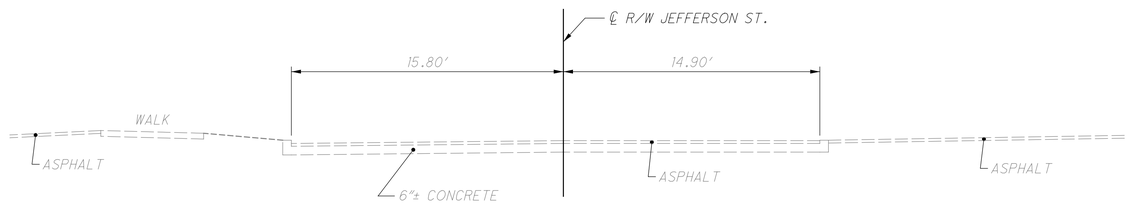

JEFFERSON STREET
STA. 4+00±

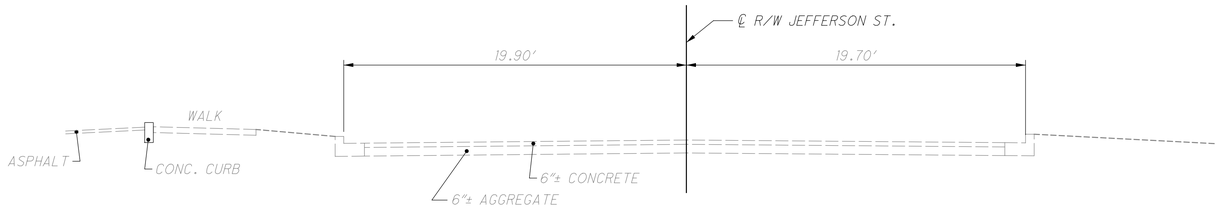

JEFFERSON STREET
STA. 6+00±

CALCULATED JRW
CHECKED SCC

TYPICAL SECTIONS - EXISTING

LAW-93-0.00

J:\Project\O\ODOT\15005112 Ironton Russell\LAW\81595\roadway\sheets\81595GY001.dgn - 4/25/2011 6:51:51 AM - jon_wanstrath

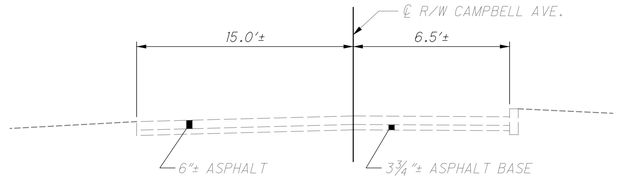

CAMPBELL AVENUE
STA. 30+23± (@ MONROE)

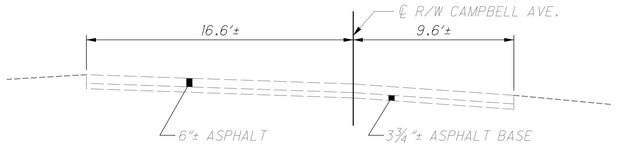

CAMPBELL AVENUE
STA. 36+50± (@ JEFFERSON)

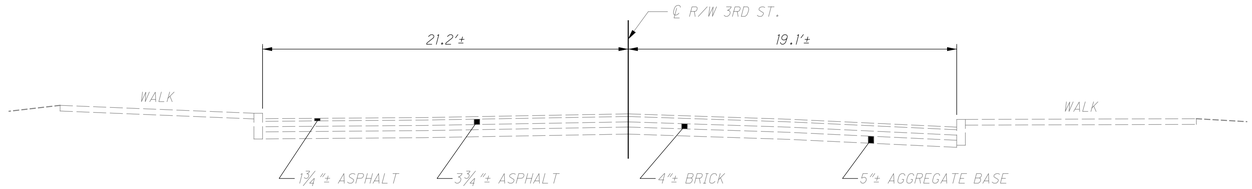

3RD STREET
STA. 52+37±

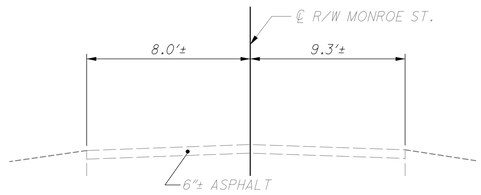

MONROE STREET
STA. 7+90±

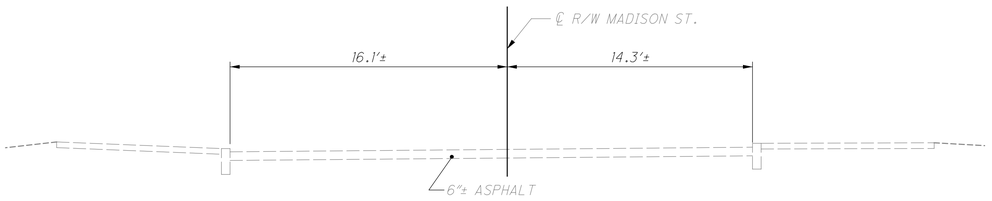

MADISON STREET
STA. 7+15±

CALCULATED JRW
CHECKED SCC

TYPICAL SECTIONS - EXISTING

LAW-93-0.00

7
788

J:\Project\OA\ODOT\15005112 Ironton Russell\LAW\81595\roadway\sheets\81595GY002.dgn - 4/25/2011 6:51:52 AM - jon_wanstrath

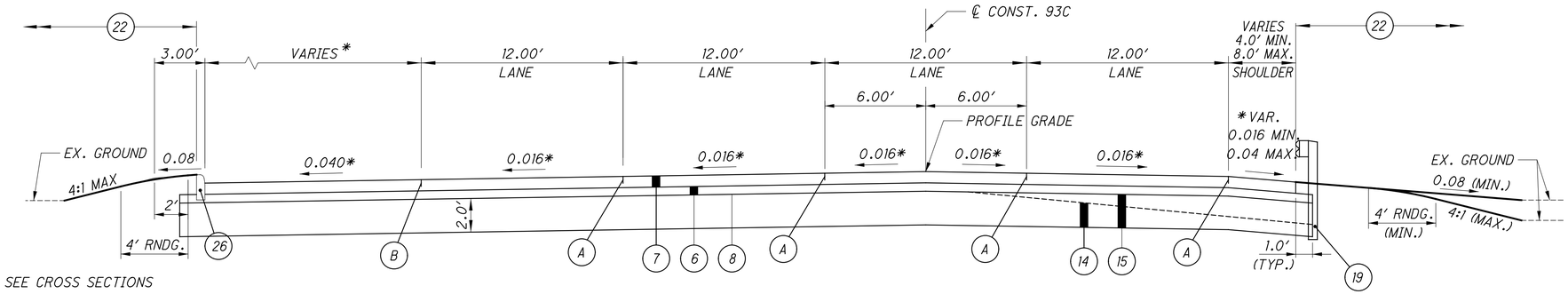

93C NORMAL SECTION

STA. 8+18.90 TO STA. 9+43.88

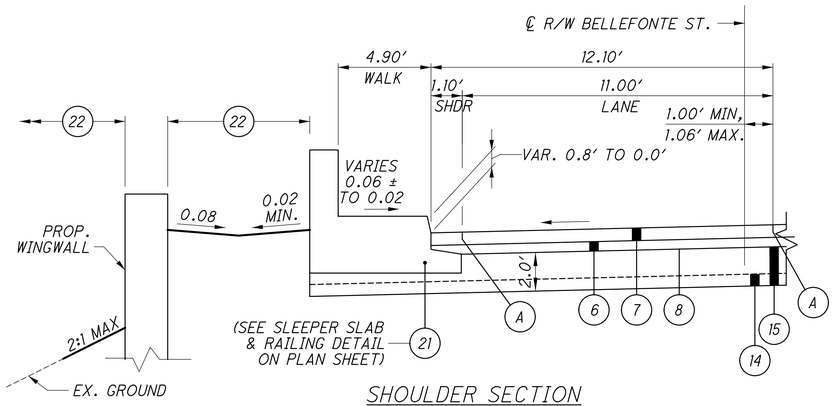

SHOULDER SECTION

BELLEFONTE STA. 43+88.4± TO STA. 44+03.55
LOOKING SOUTHWARD

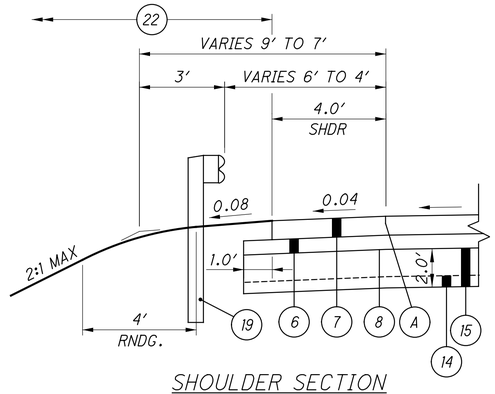

SHOULDER SECTION

BELLEFONTE STA. 44+03.55 TO 93C STA. 9+43.88
LOOKING SOUTHEASTWARD

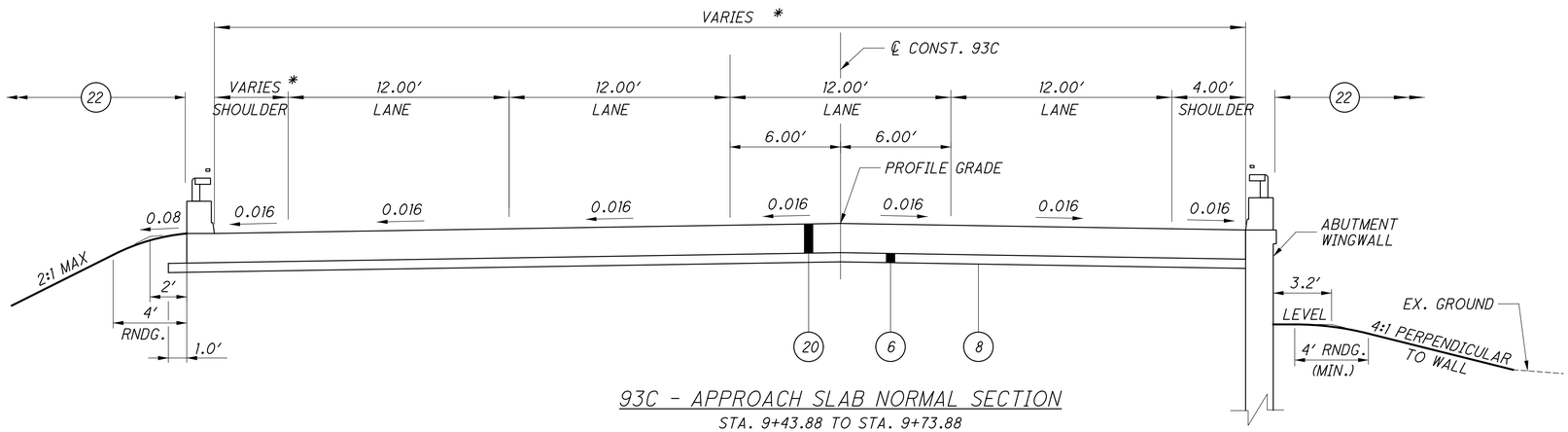

93C - APPROACH SLAB NORMAL SECTION

STA. 9+43.88 TO STA. 9+73.88

ITEM LEGEND

1	448	1¼" ASPHALT CONCRETE SURFACE COURSE, TYPE 1, PG64-22
2	407	TACK COAT FOR INTERMEDIATE COURSE @ 0.04 GAL/SY
3	448	1¾" ASPHALT CONCRETE INTERMEDIATE COURSE, TYPE 2, PG64-22
4	301	3" ASPHALT CONCRETE BASE, PG64-22
5	408	PRIME COAT, APPLIED AT THE RATE OF 0.4 GAL/SY
6	304	6" AGGREGATE BASE
7	888	PORTLAND CEMENT CONCRETE PAVEMENT, 8" THICK (REINFORCED PER 451)
8	204	SUBGRADE COMPACTION & PROOF ROLLING
9	609	COMBINATION CURB AND GUTTER, TYPE 2
9A	609	COMBINATION CURB AND GUTTER, TYPE 2, AS PER PLAN
10	609	CURB, TYPE 6
11	608	4" CONCRETE WALK
12	605	6" BASE PIPE UNDERDRAINS WITH FABRIC WRAP, 707.31 OR 707.41
13	605	AGGREGATE DRAINS
14	204	EXCAVATION OF SUBGRADE
15	204	GRANULAR MATERIAL, TYPE B
16	204	GEOTEXTILE FABRIC, 712.09, TYPE D
17	304	8" AGGREGATE BASE
18	606	GUARDRAIL, TYPE 5
19	606	GUARDRAIL, MISC.: GUARDRAIL - STEEL W BEAM - SINGLE FACE, PER KY STD. DWG. RBR-001
20	526	REINFORCED CONCRETE APPROACH SLABS (T=17"), AS PER PLAN (SEE STRUCTURE PLANS)
21	511	CLASS C CONCRETE, AS PER PLAN
22	659	SEEDING AND MULCHING (SEE REVEGETATION PLANS)
23	301	6" ASPHALT CONCRETE BASE, PG64-22
24	407	TACK COAT @ 0.10 GAL/SY
25	609	MEDIAN, MISC.: MOUNTABLE MEDIAN TYPE 2, PER KY STD. DWG. RPM-011
26	609	CURB, MISC.: STANDARD HEADER CURB, PER KY STD. DWG. RPM-100

A	LONGITUDINAL JOINT WITH TIE BARS
B	LONGITUDINAL JOINT WITHOUT TIE BARS

* SEE INTERSECTION DETAILS

REFERENCES	SHEETS
STRUCTURES INDEX	388
INTERSECTION DETAIL	141

CALCULATED JRW CHECKED SCC

TYPICAL SECTIONS - 93C

LAW-93-0.00

J:\Project\O\ODOT\15005112 Ironton Russell\LAW\81595\roadway\sheets\81595GY003.dgn - 3/23/2012 10:14:05 AM - jon_wanstrath

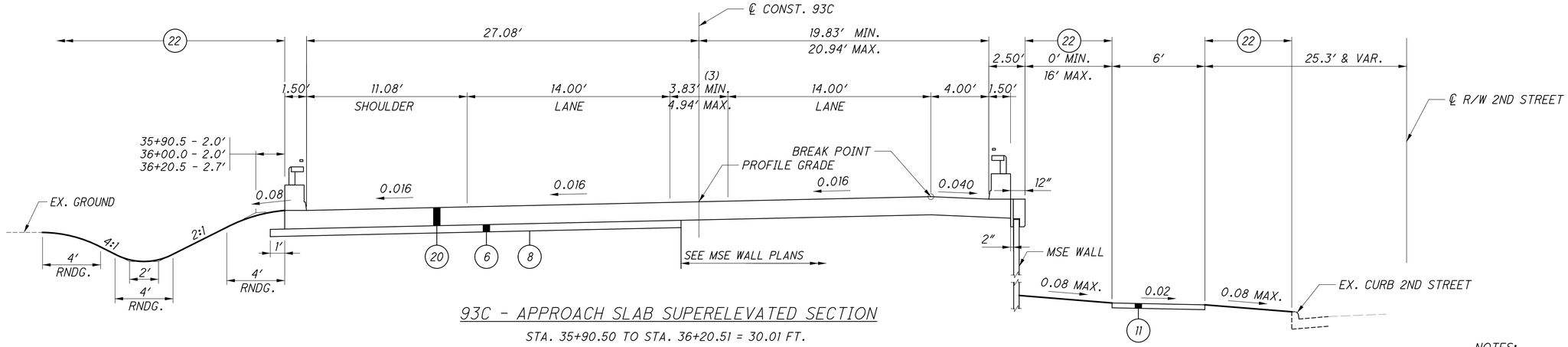

93C - APPROACH SLAB SUPERELEVATED SECTION

STA. 35+90.50 TO STA. 36+20.51 = 30.01 FT.

SIDEWALK SECTION

STA. 35+90 TO STA. 36+23

NOTES:

(1) TRANSITION CROSS SLOPE FROM 0.016 @ 38+40.77 TO 0.000 @ 39+00.77

(2) NOT USED

(3) TRANSITION PAINTED MEDIAN FROM 0.0′ @ 34+86.77 TO 12.0′ @ 38+10.77

(4) TRANSITION LANE WIDTH FROM 14.0′ @ 38+40.77 TO 12.0′ @ 39+00.77

(5) TRANSITION SHOULDER WIDTH FROM 11.08′ @ 37+60.44 TO 4.00 @ 38+70.77

* SEE INTERSECTION DETAILS

OMIT TIE BARS BETWEEN SLEEPER SLAB AND PAVEMENT.

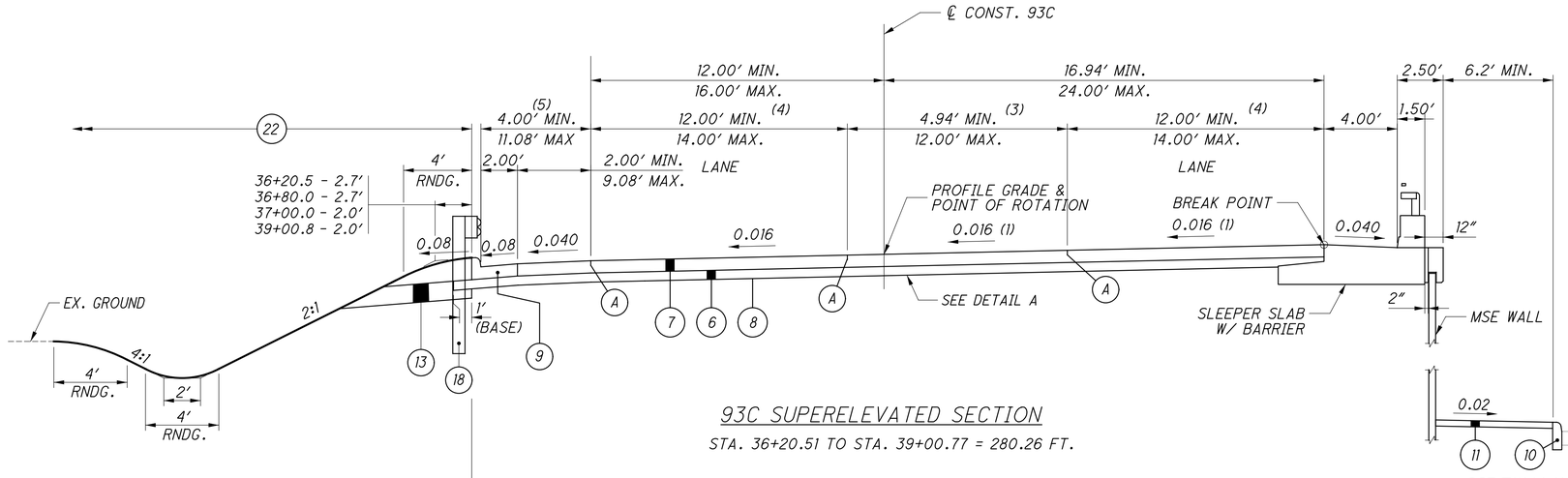

93C SUPERELEVATED SECTION

STA. 36+20.51 TO STA. 39+00.77 = 280.26 FT.

SIDEWALK SECTION

STA. 36+23 TO STA. 36+50

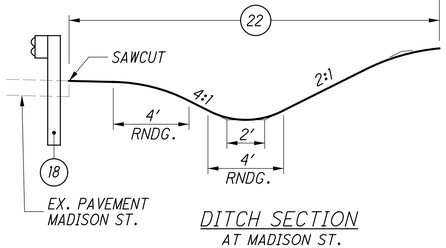

DITCH SECTION

AT MADISON ST.

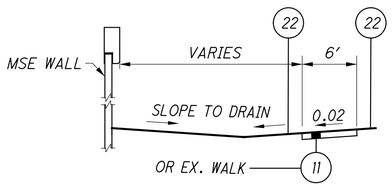

SIDEWALK SECTION

STA. 36+50 TO STA. 37+81

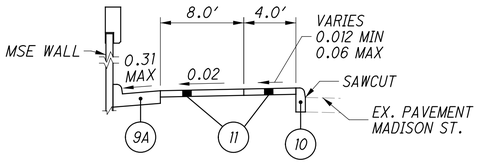

SIDEWALK SECTION

STA. 38+67 TO STA. 39+27

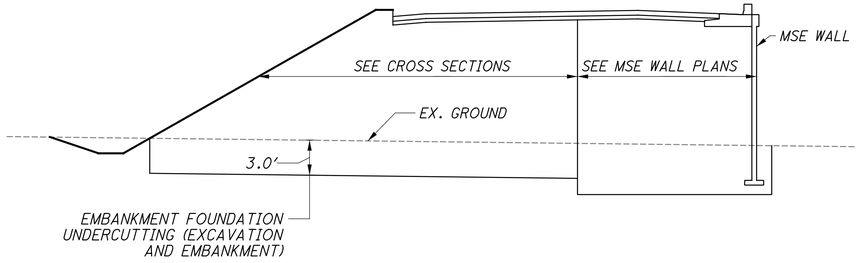

DETAIL A - UNDERCUTTING

STA. 35+82.91 TO STA. 40+37.00

(NOT TO SCALE)

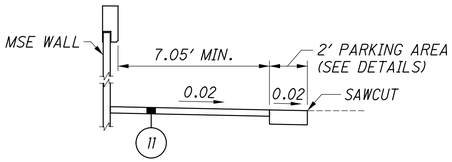

SIDEWALK SECTION

STA. 37+81 TO STA. 38+67

REFERENCES	SHEETS
LEGEND	8
STRUCTURES INDEX	388
INTERSECTION DETAILS	142
MSE WALL & SLEEPER SLAB	371-387
93C CROSS SECTIONS	91-120

CALCULATED JRW CHECKED SCC

TYPICAL SECTIONS - 93C

LAW-93-0.00

J:\Project\OA\ODOT\15005112 Ironton Russell\LAW\81595\roadway\sheets\81595GY004.dgn - 4/25/2011 6:51:54 AM - jon_wanstrath

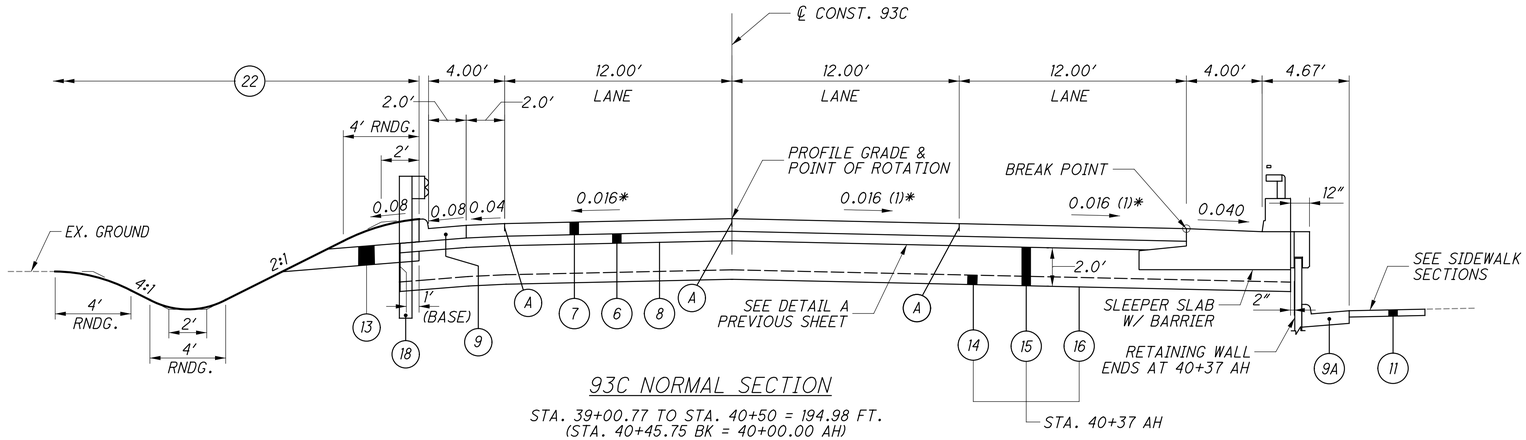

93C NORMAL SECTION

STA. 39+00.77 TO STA. 40+50 = 194.98 FT.
(STA. 40+45.75 BK = 40+00.00 AH)

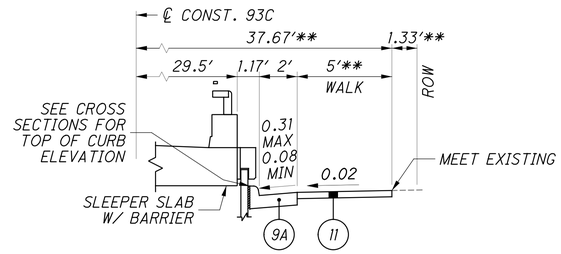

SIDEWALK SECTION

STA. 39+27 TO STA. 40+37 AHEAD

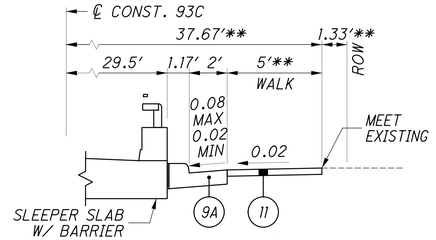

SIDEWALK SECTION

STA. 40+37 AHEAD TO STA. 40+96

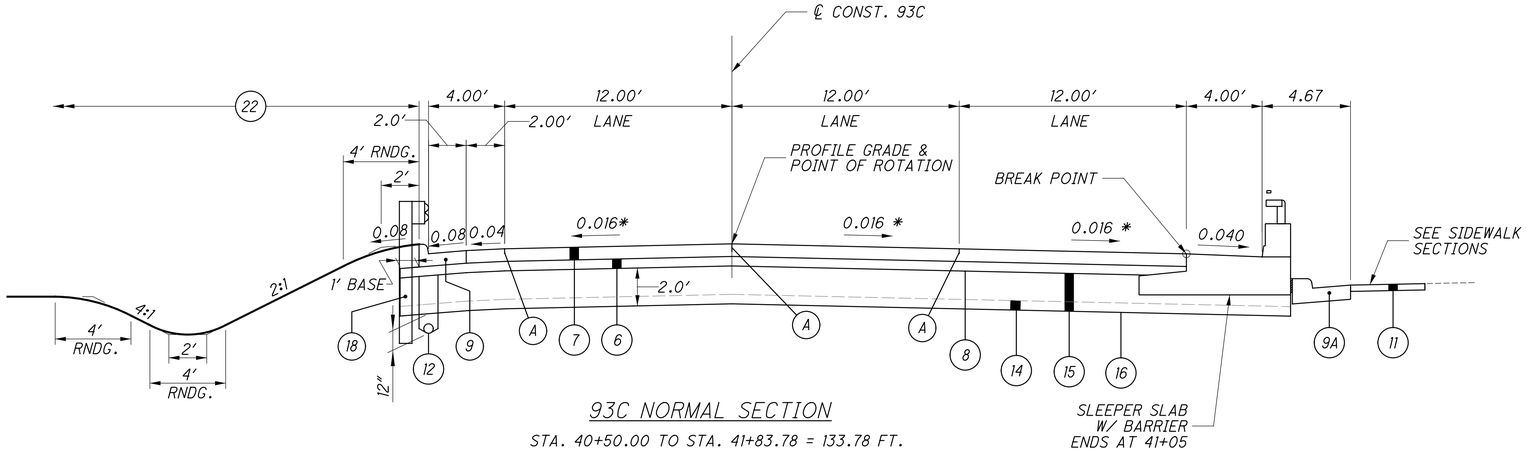

93C NORMAL SECTION

STA. 40+50.00 TO STA. 41+83.78 = 133.78 FT.

NOTE: WHEN UNDERDRAIN IS NOT CONCURRENT WITH GUARDRAIL, CONSTRUCT AS DETAILED ON TYPICAL SECTION 93C STA. 41+83.78 TO STA. 43+48.30.

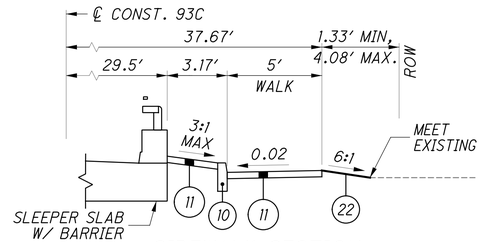

SIDEWALK SECTION

STA. 40+96 TO STA. 41+05

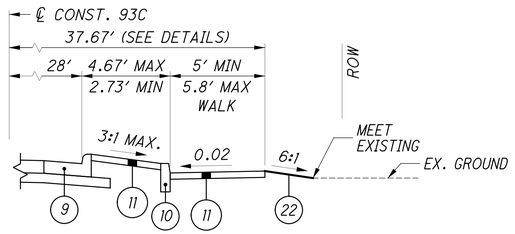

SIDEWALK SECTION

STA. 41+05 TO STA. 41+83.78

(1) TRANSITION FROM 0.000 @ 39+00.77 TO 0.016 @ 39+60.77

* SEE INTERSECTION DETAILS

** SIDEWALK TO MEET EXISTING BUILDING

OMIT TIE BARS BETWEEN SLEEPER SLAB AND PAVEMENT.

REFERENCES	SHEETS
LEGEND	8
INTERSECTION DETAILS	142
MSE WALL & SLEEPER SLAB	371-387

CALCULATED JRW
CHECKED SCC

TYPICAL SECTIONS - 93C

LAW-93-0.00

J:\Project\ODOT\15005112 Ironton Russell\LAW\81595\roadway\sheets\81595GY005.dgn - 4/25/2011 6:51:55 AM - jon_wanstrath

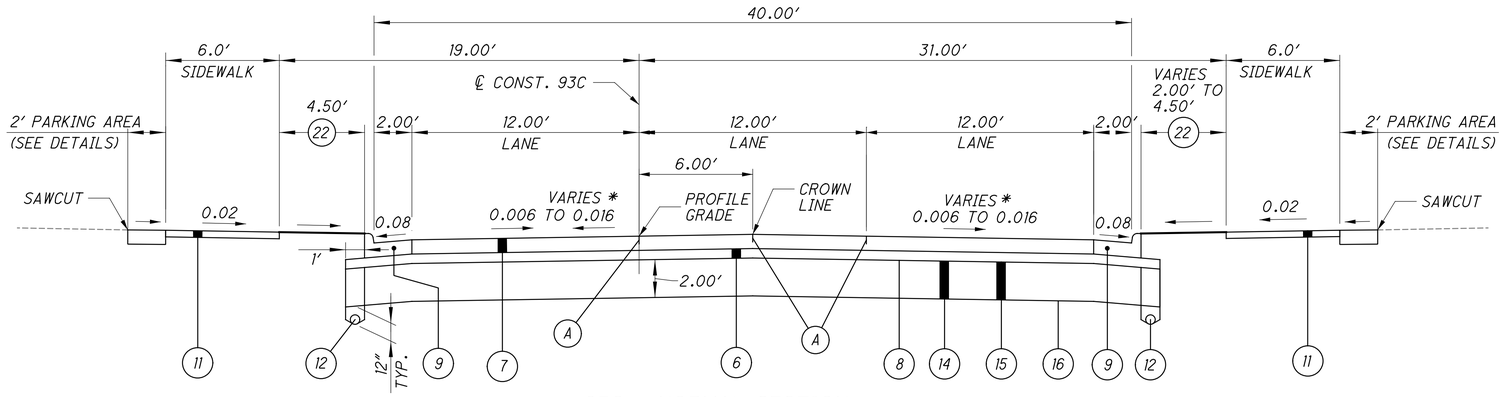

93C - NORMAL SECTION

STA. 41+83.78 TO STA. 43+48.30 = 164.52 FT.

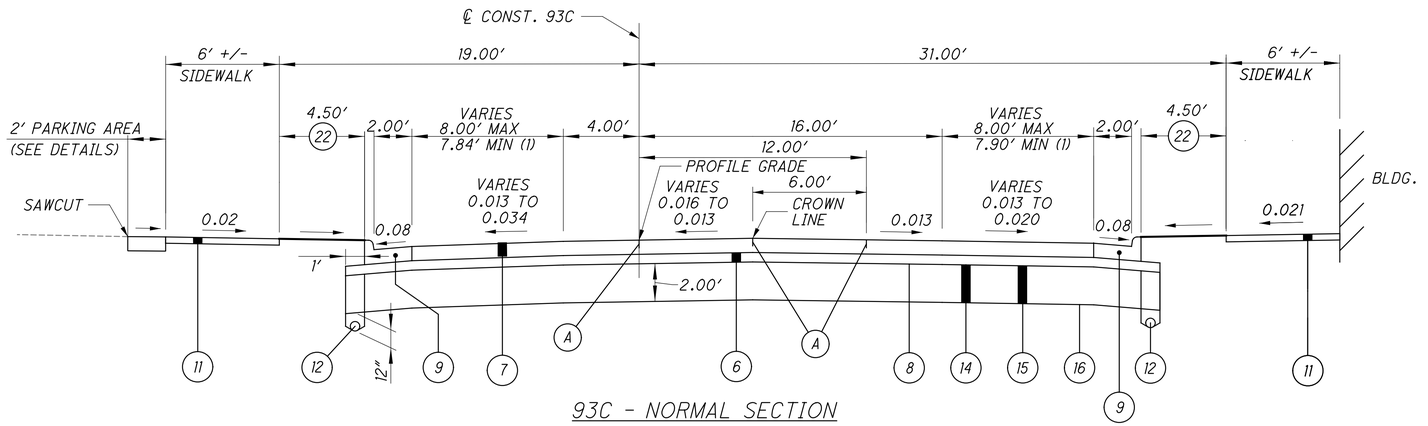

93C - NORMAL SECTION

STA. 43+48.30 TO STA. 44+02.79 = 54.49 FT.
FOR LANE WIDTHS SEE PAVEMENT MARKING PLAN

NOTES

(1) TRANSITION WIDTH FROM STA. 43+75.79 TO STA. 44+02.79

* SEE INTERSECTION DETAILS

REFERENCES	SHEETS
LEGEND	8
INTERSECTION DETAILS	142
PAVEMENT MARKING PLAN	223-225

CALCULATED JRW CHECKED SCC

TYPICAL SECTIONS - 93C

LAW-93-0.00

J:\Project\O\ODOT\15005112 Ironton Russell\LAW\81595\roadway\sheets\81595GY006.dgn - 4/25/2011 6:51:56 AM - jon_wanstrath

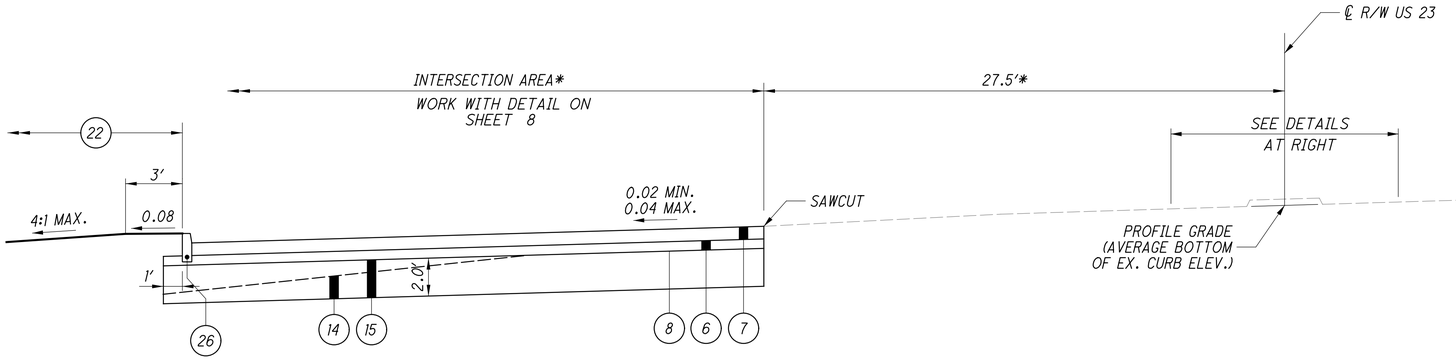

US 23 LEFT SIDE

STA. 339+70.00 TO STA. 342+54.18 = 284.18 FT.

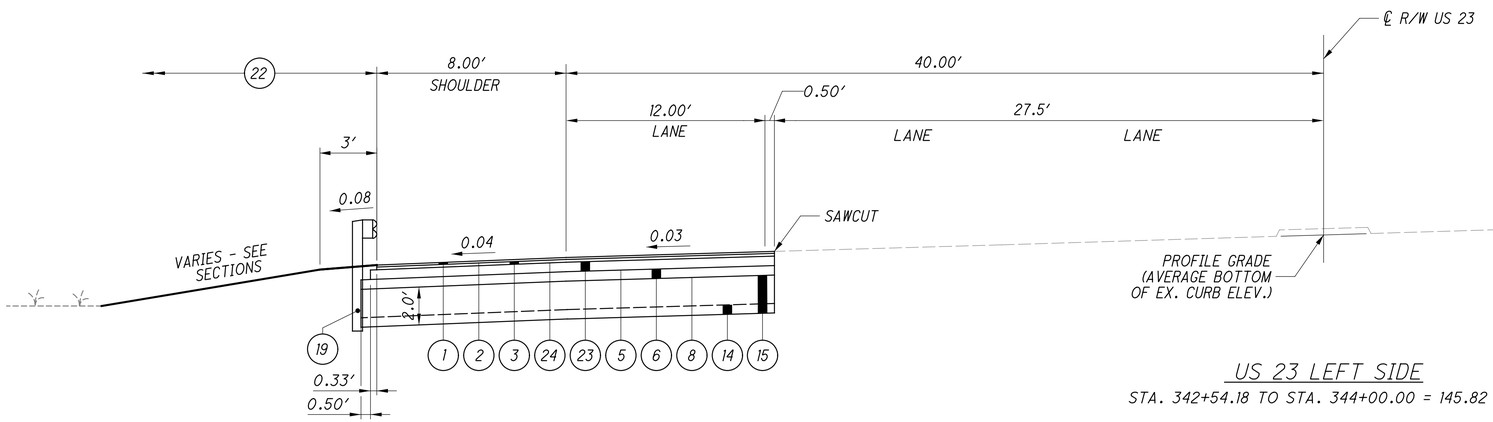

US 23 LEFT SIDE

STA. 342+54.18 TO STA. 344+00.00 = 145.82 FT.

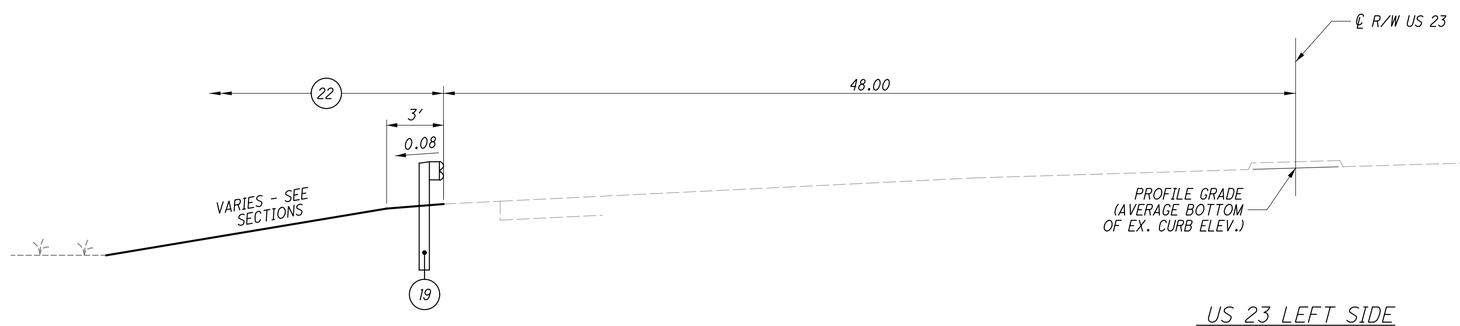

US 23 LEFT SIDE

STA. 344+00.00 TO STA. 345+56.34 = 156.34 FT.

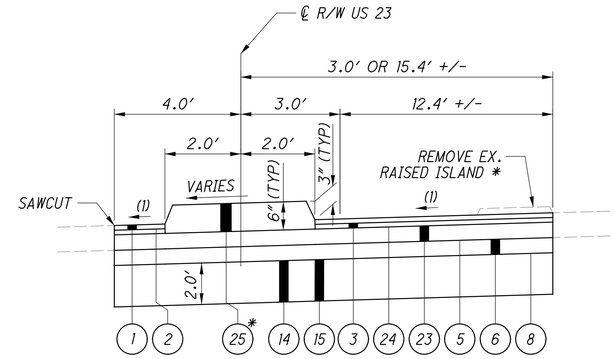

US 23 MEDIAN

STA. 340+25 TO STA. 341+75

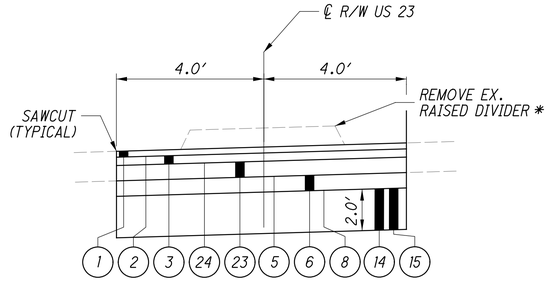

US 23 MEDIAN

STA. 341+75 TO STA. 342+20

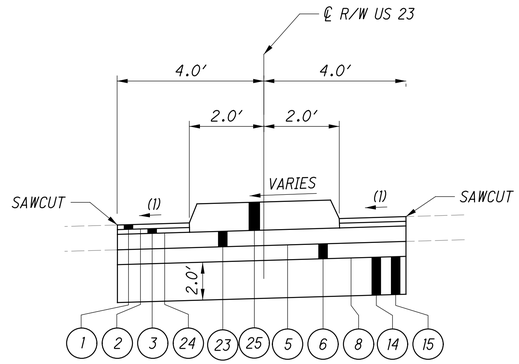

US 23 MEDIAN

STA. 342+20 TO STA. 342+50

NOTES

(1) - MATCH EXISTING SLOPE

* SEE INTERSECTION DETAILS

REFERENCES	SHEETS
LEGEND	8
INTERSECTION DETAILS	141

CALCULATED JRW
CHECKED SCC

TYPICAL SECTIONS - US 23

LAW-93-0.00

12
788

J:\Project\OUODOT\15005112 Ironton Russell\LAW\81595\roadway\sheets\81595GY007.dgn - 4/25/2011 6:51:57 AM - jon_wanstrath

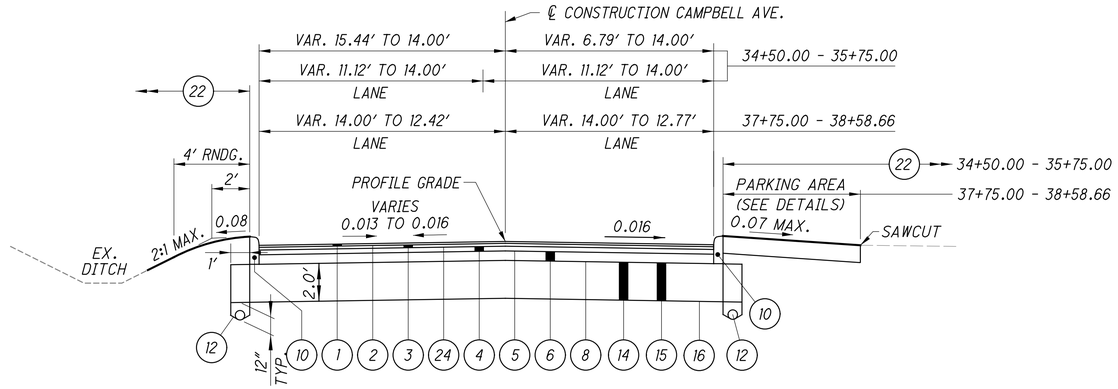

CAMPBELL AVENUE NORMAL SECTION

STA. 34+50.00 TO STA. 35+75.00 = 125.00 FT.
STA. 37+75.00 TO STA. 38+58.66 = 83.66 FT.

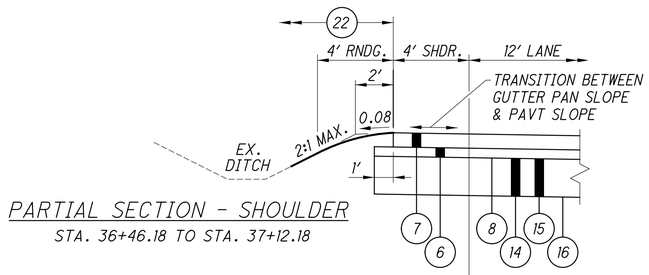

PARTIAL SECTION - SHOULDER

STA. 36+46.18 TO STA. 37+12.18

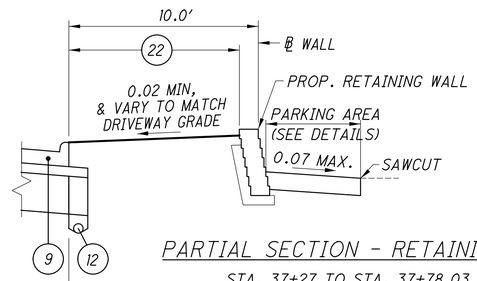

PARTIAL SECTION - RETAINING WALL

STA. 37+27 TO STA. 37+78.03

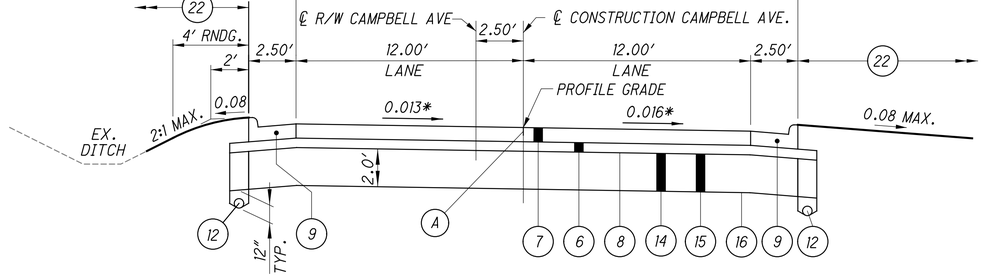

CAMPBELL AVENUE SUPERELEVATED SECTION

STA. 35+75.00 TO STA. 37+75.00 = 200.00 FT.

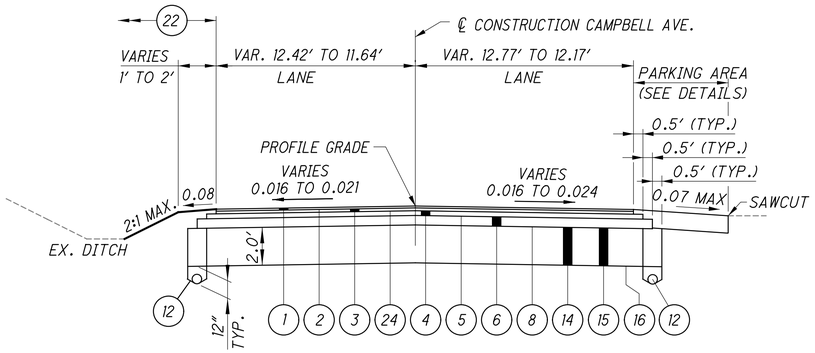

CAMPBELL AVENUE NORMAL SECTION

STA. 38+58.66 TO STA. 39+00.00 = 41.34 FT.

NOTES

* SEE INTERSECTION DETAIL

REFERENCES	SHEETS
LEGEND	8
INTERSECTION DETAILS	143
DRIVEWAY & PARKING AREA DETAILS	159-160
RETAINING WALL	162

CALCULATED JRW
CHECKED SCC

TYPICAL SECTIONS - CAMPBELL AVE

LAW-93-0.00

13
788

J:\Project\OV\ODOT\15005112 Ironton Russell\LAW\81595\roadway\sheets\81595GY009.dgn - 4/25/2011 6:51:58 AM - jon_wanstrath

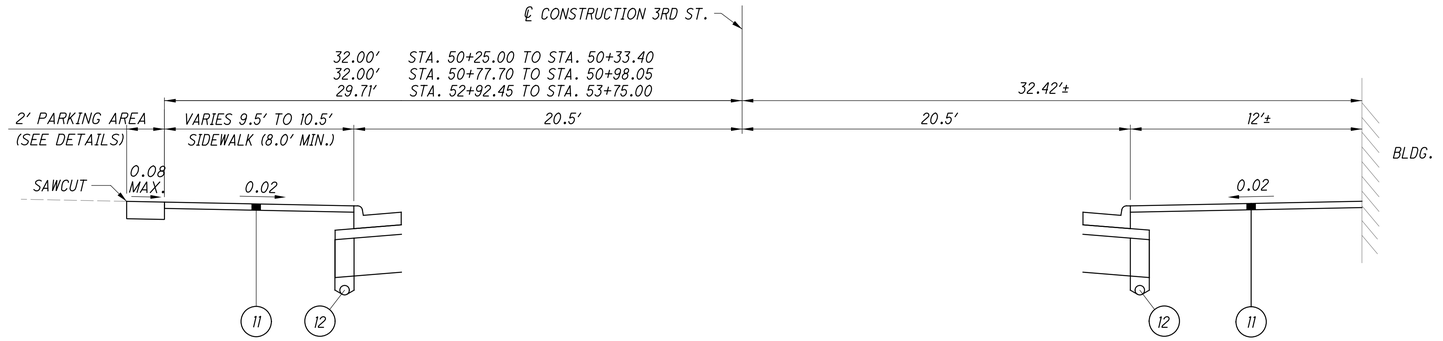

LEFT PARTIAL SECTION W/O BUILDING

RIGHT PARTIAL SECTION W/ BUILDING

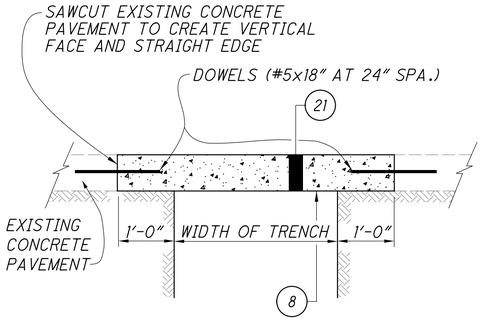

PIPE SIZE	WIDTH OF TRENCH
6″, 10″	2′-10″
12″	3′-0″

CONCRETE PAVEMENT RESTORATION OVER TRENCH

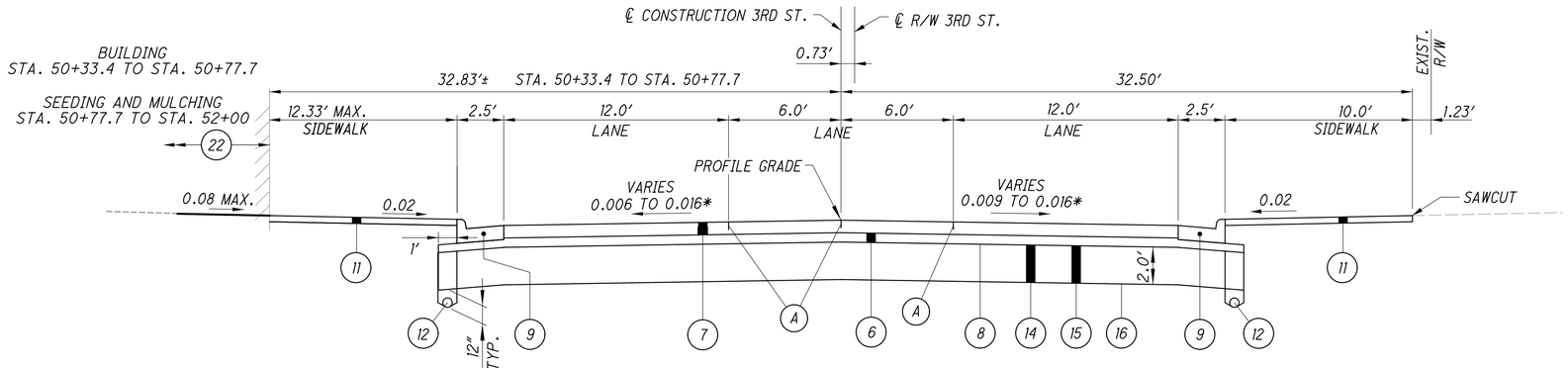

3RD STREET NORMAL SECTION

STA. 50+25.00 TO STA. 53+75.00 = 350.00 FT.

SEAL EDGES IN ACCORDANCE WITH ODOT 401.15. ALL COSTS SHALL BE INCLUDED IN THE UNIT PRICE BID FOR ASPHALT CONCRETE ODOT 448

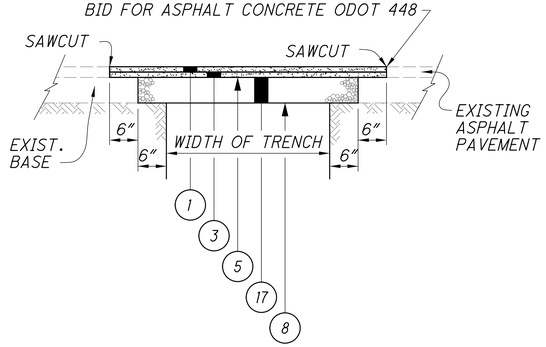

ASPHALT PAVEMENT RESTORATION OVER TRENCH

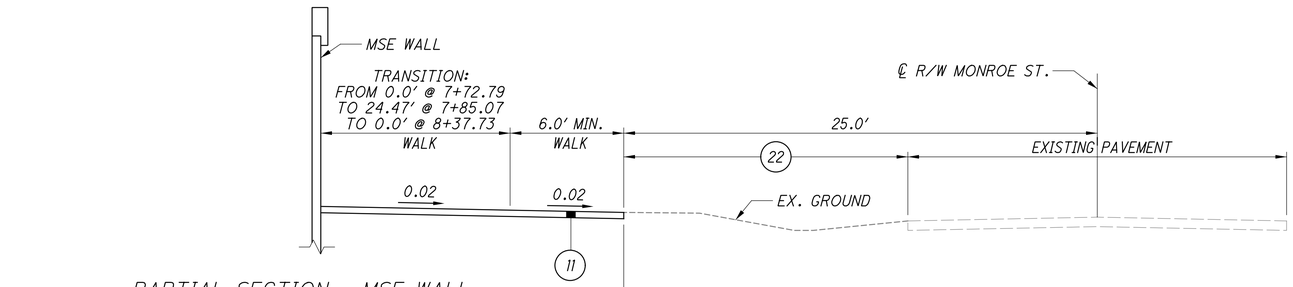

PARTIAL SECTION - MSE WALL

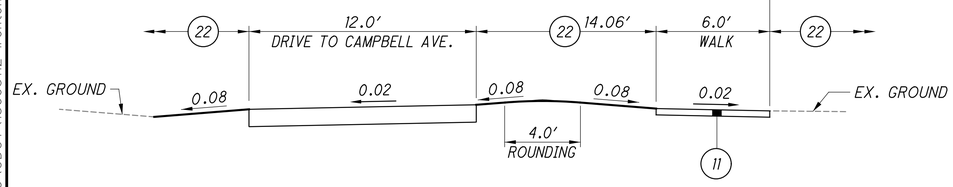

PARTIAL SECTION - DRIVEWAY

MONROE STREET

STA. 7+09.60 TO STA. 8+64.30 = 154.70 FT.

NOTES

* SEE INTERSECTION DETAILS

REFERENCES	SHEETS
LEGEND	8
INTERSECTION DETAILS	144
DRIVEWAY & PARKING AREA DETAILS	159-160

CALCULATED JRW CHECKED SCC

TYPICAL SECTIONS - 3RD STREET & MONROE STREET

LAW-93-0.00

14 788

J:\Project\O\ODOT\15005112 Ironton Russell\LAW\81595\roadway\sheets\81595GY010.dgn - 4/25/2011 6:51:59 AM - jon_wanstrath

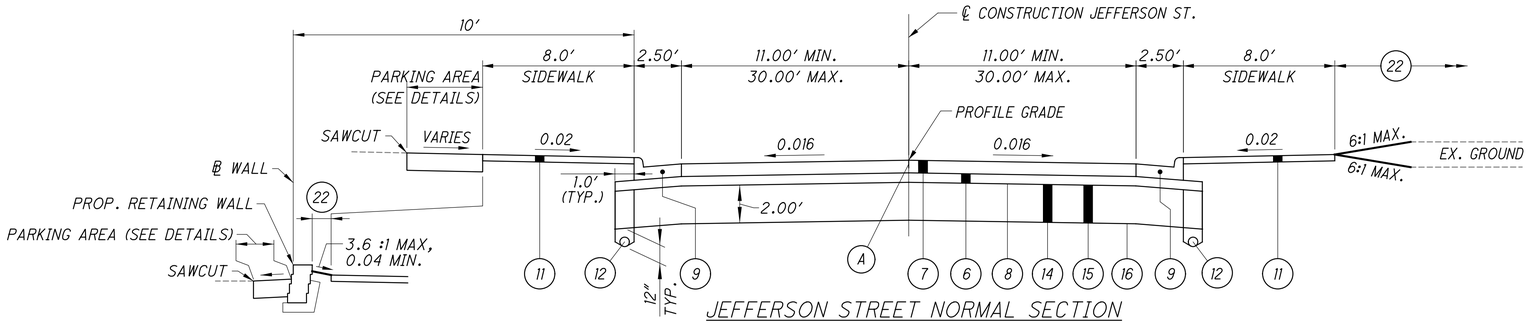

PARTIAL SECTION - RETAINING WALL

STA. 3+18 TO STA. 3+84.49

JEFFERSON STREET NORMAL SECTION

STA. 2+67.00 TO STA. 6+81.77 = 414.77 FT.

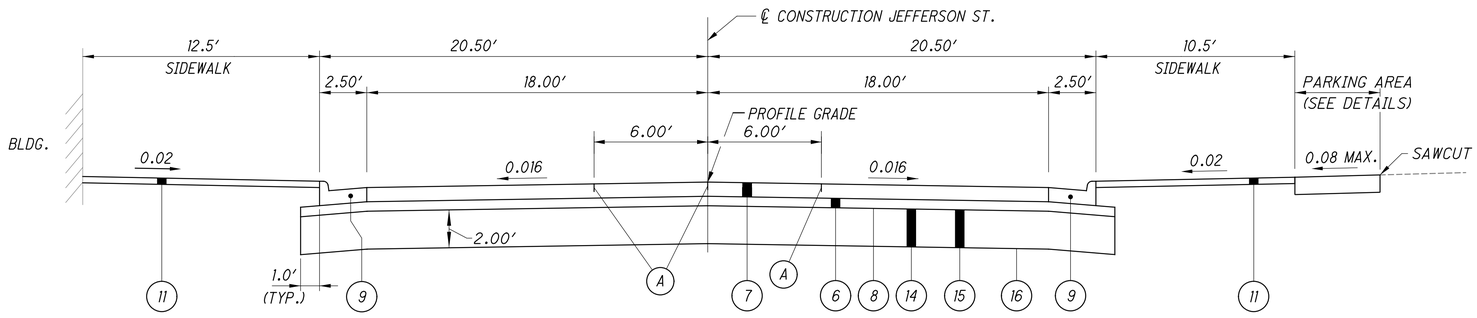

JEFFERSON STREET NORMAL SECTION

STA. 6+81.77 TO STA. 7+21.77 = 40.00 FT.

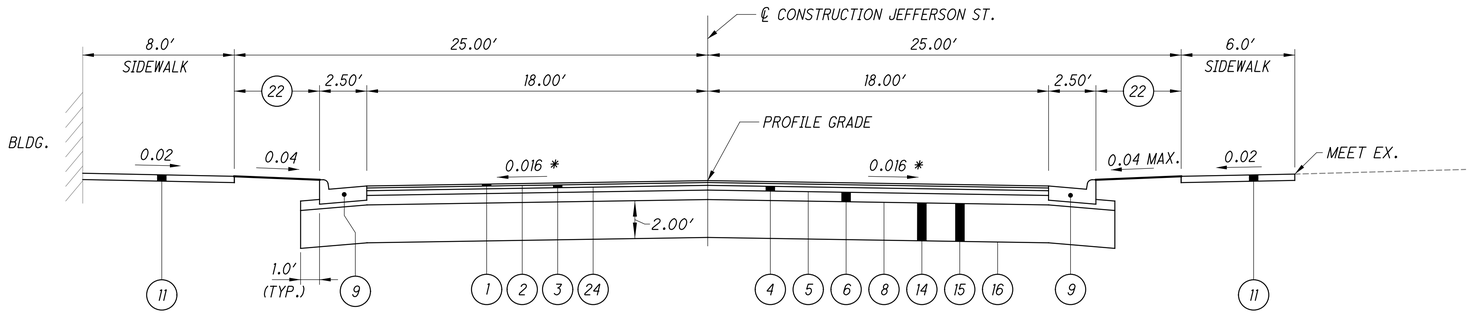

JEFFERSON STREET NORMAL SECTION

STA. 7+21.77 TO STA. 8+10.00 = 88.23 FT.

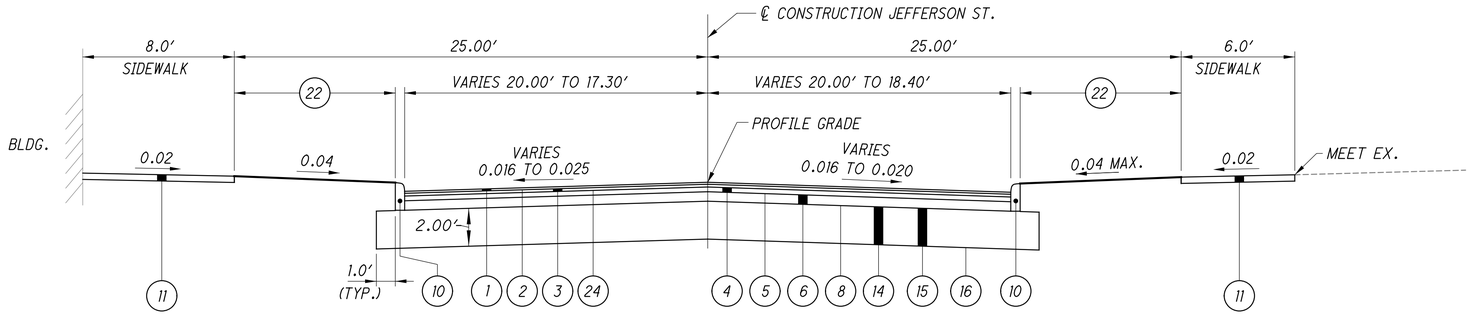

JEFFERSON STREET NORMAL SECTION

STA. 8+10.00 TO STA. 8+50.00 = 40.00 FT.

NOTES

* SEE INTERSECTION DETAILS.

FOR LANE WIDTHS SEE PAVEMENT MARKING PLAN.

REFERENCES	SHEETS
LEGEND	8
INTERSECTION DETAILS	142-144
DRIVEWAY & PARKING AREA DETAILS	159-160
RETAINING WALL	162

CALCULATED JRW CHECKED SCC

TYPICAL SECTIONS - JEFFERSON STREET

LAW-93-0.00

15 788

J:\Project\OA\ODOT\15005112 Ironton Russell\LAW\81595\roadway\sheets\81595GY008.dgn - 4/25/2011 6:52:00 AM - jon_wanstrath

GENERAL

ROUNDING

THE ROUNDING AT SLOPE BREAKPOINTS SHOWN ON THE TYPICAL SECTIONS APPLY TO ALL CROSS-SECTIONS EVEN THOUGH OTHERWISE SHOWN.

UTILITIES

LISTED BELOW ARE ALL UTILITIES LOCATED WITHIN THE PROJECT CONSTRUCTION LIMITS TOGETHER WITH THEIR RESPECTIVE OWNERS:

OHIO UTILITY OWNERS	
GAS	COLUMBIA GAS OF OHIO ATTN: MR. GARY SULLIVAN P.O. BOX 14241 LEXINGTON, KY 40512 (859) 288-0225
WATER	CITY OF IRONTON ATTN: MR. MARK WHITE P.O. BOX 704 IRONTON, OH 45638-0704 (740) 532-3412
ELECTRIC	AMERICAN ELECTRIC POWER (AEP) ATTN: MS. PAULA BELL 12333 KEVIN AVE. ASHLAND, KY 41102 (614) 883-6831
CABLE	TIME WARNER CABLE ATTN: MR. ROD FROST 225 RUSSELL ROAD ASHLAND, KY 41101 (606) 326-6803
TELEPHONE	AT&T OHIO ATTN: MS. SANDI RANDOLPH 3935 NORTHPOINTE DRIVE ZANESVILLE, OH 43701 (740) 454-3455
SANITARY	CITY OF IRONTON ATTN: MR. JOHN HASKINS 18 NORTH FOURTH STREET IRONTON, OH 45638-0704 (740) 532-8425

KENTUCKY UTILITY OWNERS	
GAS	COLUMBIA GAS OF KENTUCKY ATTN: MR. RUSS RYAN 121 9TH STREET ASHLAND, KY 41101 (606) 324-7155
WATER	CITY OF RUSSELL ATTN: PAUL MOORE P.O. BOX 394 RUSSELL, KY 41169-0394 (606) 836-9666
ELECTRIC	KENTUCKY POWER COMPANY ATTN: MR. DON CANFIELD 12333 KEVIN AVE. ASHLAND, KY 41102 (606) 327-1476
CABLE	ADELPHIA ATTN: MR. DENNIS MEADOWS 225 RUSSELL ROAD ASHLAND, KY 41101 (606) 329-6255
TELEPHONE	WINDSTREAM KENTUCKY EAST, LLC ATTN: MR. RALPH BROWN 619 15TH STREET ASHLAND, KY 41101 (606) 329-6255
SANITARY	GREENUP CO. ENVIRONMENTAL COMMISSION ATTN: MR. BRUCE WARD 367 VERNON ST. (KY ROUTE 244) RUSSELL, KY 41169-0471 (606) 836-4600

THE LOCATION OF THE UNDERGROUND UTILITIES SHOWN ON THE PLANS ARE AS OBTAINED FROM THE OWNERS AS REQUIRED BY SECTION 153.64 O.R.C.

UTILITIES ON NORFOLK SOUTHERN PROPERTY

"ONE CALL" SERVICES DO NOT LOCATE BURIED RAILROAD SIGNAL AND COMMUNICATIONS LINES. THE CONTRACTOR SHALL CONTACT THE RAILROAD'S REPRESENTATIVE 2 DAYS IN ADVANCE OF WORK AT THOSE PLACES WHERE EXCAVATION, PILE DRIVING, OR HEAVY LOADS MAY DAMAGE RAILROAD UNDERGROUND LINES ON RAILROAD PROPERTY. UPON REQUEST FROM THE CONTRACTOR OR AGENCY, RAILROAD SIGNAL FORCES WILL LOCATE AND PAINT MARK OR FLAG RAILROAD UNDERGROUND SIGNAL, COMMUNICATION, AND POWER LINES IN THE AREA TO BE DISTURBED FOR THE CONTRACTOR.

THE CONTRACTOR SHALL AVOID EXCAVATION OR OTHER DISTURBANCE OF THESE LINES WHICH ARE CRITICAL TO THE SAFETY OF THE RAILROAD AND THE PUBLIC. IF DISTURBANCE OR EXCAVATION IS REQUIRED NEAR A BURIED RAILROAD SIGNAL, COMMUNICATION, OR POWER LINE, THE LINE SHALL BE POTHOLED MANUALLY WITH CAREFULL HAND EXCAVATION BY THE CONTRACTOR, AND PROTECTED BY THE CONTRACTOR DURING THE COURSE OF THE DISTURBANCE UNDER THE SUPERVISION AND DIRECTION OF A RAILROAD SIGNAL REPRESENTATIVE. THE CONTRACTOR MAY REQUEST THE NAME AND PHONE NUMBER OF THE AFOREMENTIONED RAILROAD CONTACT FROM MS. RHONDA A. MOORE (PHONE: 404-529-1436).

CONSTRUCTION NOISE

ACTIVITIES AND LAND USE ADJACENT TO THIS PROJECT MAY BE AFFECTED BY CONSTRUCTION NOISE. IN ORDER TO MINIMIZE ANY ADVERSE CONSTRUCTION NOISE IMPACTS, DO NOT OPERATE POWER-OPERATED CONSTRUCTION-TYPE DEVICES BETWEEN THE HOURS OF 9 PM AND 6 AM. IN ADDITION, DO NOT OPERATE AT ANY TIME ANY DEVICE IN SUCH A MANNER THAT THE NOISE CREATED SUBSTANTIALLY EXCEEDS THE NOISE CUSTOMARILY AND NECESSARILY ATTENDANT TO THE REASONABLE AND EFFICIENT PERFORMANCE OF SUCH EQUIPMENT.

ELEVATION DATUM

ALL ELEVATIONS ARE BASED UPON U.S.G.S. NGVD 29 DATUM.

WORK LIMITS

THE WORK LIMITS SHOWN ON THESE PLANS ARE FOR PHYSICAL CONSTRUCTION ONLY. PROVIDE THE INSTALLATION AND OPERATION OF ALL WORK ZONE TRAFFIC CONTROL AND WORK ZONE TRAFFIC CONTROL DEVICES REQUIRED BY THESE PLANS WHETHER INSIDE OR OUTSIDE THESE WORK LIMITS.

CLEARING AND GRUBBING

PROPOSED BRIDGE BACK OF 93C STATION 30+00, US 23, AND BELLEFONTE ST.: THE DEPARTMENT HAS NOT MARKED INDIVIDUAL TREES AND STUMPS FOR REMOVAL. UNLESS SPECIFICALLY DESIGNATED AS "DO NOT DISTURB" IN THE PLANS, REMOVE ALL TREES AND STUMPS WITHIN THE CONSTRUCTION LIMITS.

PROPOSED BRIDGE AHEAD OF 93C STATION 30+00, IRONTON STREETS, AND DEMOLITION: REMOVE ALL TREES AND STUMPS SPECIFICALLY MARKED FOR REMOVAL WITHIN THE CONSTRUCTION LIMITS.

THE WORK WILL BE PAID UNDER THE LUMP SUM BID FOR ITEM 201, CLEARING AND GRUBBING. THE FOLLOWING IS AN APPROXIMATE ESTIMATE OF THE NUMBER OF TREES AND STUMPS TO BE REMOVED.

SIZES	NO. TREES	NO. STUMPS	TOTAL
18"	160	0	160
30"	70	0	70
48"	10	0	10
60"	1	0	1

BENCHING OF FOUNDATION SLOPES

ALTHOUGH CROSS SECTIONS DO NOT SHOW BENCHING OF THE EMBANKMENT FOUNDATIONS, NO WAIVER OF THE SPECIFICATIONS IS INTENDED. BENCH ALL SLOPED EMBANKMENT AREAS AS SET FORTH IN 203.05. NO ADDITIONAL PAYMENT WILL BE MADE FOR BENCHING REQUIRED UNDER THE PROVISIONS OF 203.05

MONUMENTS ASSEMBLIES

CONSTRUCT MONUMENT ASSEMBLIES IN ACCORDANCE WITH THE DETAILS SHOWN ON THE STANDARD CONSTRUCTION DRAWINGS AND AT THE LOCATIONS SHOWN ON SHEET NO. 5

AIRWAY/HIGHWAY CLEARANCE FOR AIRPORTS AND HELIPORTS

THIS PROJECT HAS BEEN IDENTIFIED AS BEING WITHIN THE INFLUENCE AREA OF A PUBLIC USE AIRPORT OR HELIPORT. THE PROJECT HAS BEEN PERMITTED BY FAA FOR THE HEIGHT OF 301 FEET, WHICH IS THE PEEMANENT HEIGHT OF THE TWO TOWERS. IF ANY TEMPORARY STRUCTURES OR CONSTRUCTION EQUIPMENT WILL EXCEED THIS HEIGHT, FURTHER COORDINATION WITH THE FEDERAL AVIATION ADMINISTRATION (FAA), KENTUCKY AIRPORT ZONING COMMISSION AND ODOT OFFICE OF AVIATION, WILL BE NECESSARY PRIOR TO ERECTING SUCH TEMPORARY STRUCTURES OR OPERATING SUCH EQUIPMENT ON THE PROJECT. THE CONTRACTOR WILL BE REQUIRED TO FILE A NEW FAA FORM 7460-1, ADVISING THE FAA THAT AERONAUTICAL STUDY NO. 2005-ASO-1509 IS BEING RESUBMITTED AND THAT AN ALTERATION TO THE ORIGINAL SUBMISSION IS REQUESTED.

COPIES OF THE ALTERATION AND FORM 7460-1 SHALL BE FORWARDED TO THE KENTUCKY AIRPORT ZONING COMMISSION AND THE ODOT OFFICE OF AVIATION. NO TEMPORARY STRUCTURES OR CONSTRUCTION EQUIPMENT SHALL EXCEED THE PERMISSIBLE HEIGHT, UNTIL A COPY OF THE FAA APPROVAL AND KENTUCKY AIRPORT ZONING COMMISSION PERMIT AND ODOT OFFICE OF AVIATION PERMIT HAVE BEEN FURNISHED TO THE PROJECT ENGINEER.

FAA APPROVAL MAY TAKE UP TO 45 DAYS. ALL SUBMISSIONS SHALL BE DIRECTED TO THESE OFFICES:

THE FEDERAL AVIATION
SOUTHERN REGIONAL OFFICE AIR
TRAFFIC DIVISION, ASO-520 1701
COLUMBIA AVE. COLLEGE PARK,
GA 30337

ATTN: MIKE BLAICH
404-305-5585

EXPRESS PROCESSING CENTER
THE FEDERAL AVIATION ADMINISTRATION
SOUTHWEST REGIONAL OFFICE
AIR TRAFFIC AIRSPACE BRANCH ASW-520
2601 MEACHAN BLVD.
FORT WORTH, TX 76137-4298

KENTUCKY AIRPORT ZONING COMMISSION
200 MERO ST.
FRANKFORT, KY 40622

REF: AJ-045-DWU-10-088

ATTN: JOHN HOULIHAN, ADMINISTRATOR
502-564-4480

OHIO DEPARTMENT OF TRANSPORTATION
OFFICE OF AVIATION
2829 WEST DUBLIN-GRANVILLE ROAD
COLUMBUS, OHIO 43235
614-387-2346

PROTECTION OF RIGHT-OF-WAY LANDSCAPING

PRIOR TO BEGINNING WORK, THE CONTRACTOR, THE PROJECT ENGINEER, AND A REPRESENTATIVE OF THE MAINTAINING AGENCY WILL REVIEW AND RECORD ALL LANDSCAPING ITEMS WITHIN THE RIGHT OF WAY (BOTH WITHIN AND OUTSIDE THE CONSTRUCTION LIMITS). A RECORD OF THIS REVIEW WILL BE KEPT IN THE PROJECT ENGINEER'S FILES. PRIOR TO FINAL ACCEPTANCE, A FINAL REVIEW OF LANDSCAPING ITEMS WILL BE MADE.

RESTRICT ALL ACTIVITIES, EQUIPMENT STORAGE, AND STAGING TO WITHIN THE CONSTRUCTION LIMITS.

SUBMIT A WRITTEN REQUEST TO THE PROJECT ENGINEER TO USE ANY AREA OUTSIDE THESE LIMITS. THE DOCUMENT SUBMITTED MUST CLEARLY IDENTIFY THE AREA AND EXPLAIN THE PROPOSED USE AND RESTORATION OF THE AREA. EXCEPT AS APPROVED BY THE ENGINEER, USE OF THESE AREAS FOR DISPOSAL OF WASTE MATERIAL AND CONSTRUCTION DEBRIS, EXCAVATION OF BORROW MATERIAL, AND PLACEMENT OF PORTABLE PLANTS IS PROHIBITED. THE REQUEST MUST BE APPROVED, IN WRITING, BEFORE THE CONTRACTOR HAS PERMISSION TO USE THE AREA.

ANY ITEMS DAMAGED BEYOND THE CONSTRUCTION LIMITS AS DEFINED ABOVE WILL BE REPLACED IN KIND OR AS APPROVED BY THE PROJECT ENGINEER.

CALCULATED AMD
CHECKED SCC

GENERAL NOTES

LAW-93-0.00

J:\Project\0\ODOT\15005112 Ironton Russell\LAW\81595\roadway\sheets\81595GN001.dgn - 11/4/2011 10:39:05 AM - jon_wanstrath

GENERAL

ITEM 204 - SUBGRADE COMPACTION AND PROOF ROLLING

CONSTRUCT THE SUBGRADE AS FOLLOWS AND IN THE FOLLOWING SEQUENCE:

1. SHAPE THE SUBGRADE TO WITHIN 0.2 OF A FOOT OF THE PLAN SUBGRADE ELEVATION. IF THERE IS UNSUITABLE MATERIAL IN A SHALLOW FILL LOCATION, THEN REMOVE AND REPLACE THE UNSUITABLE MATERIAL ACCORDING TO STEP 2 PRIOR TO CONSTRUCTING THE SHALLOW FILL AND SHAPING THE SUBGRADE.

2. REMOVE AND REPLACE UNSUITABLE SOIL (A-4b, A-2-5, A-5, A-7-5, AND SOIL WITH A LIQUID LIMIT GREATER THAN 65) AND ANY COAL, SHALE, OR ROCK WHICH NEEDS TO BE REMOVED ACCORDING TO 204.05. THESE MATERIALS ARE TO BE REMOVED PRIOR TO PROOF ROLLING. THE LIMITS ARE SHOWN ON THE CROSS SECTIONS AS UNSUITABLE SUBGRADE. THE QUANTITIES FOR REMOVING THE UNSUITABLE SUBGRADE ARE PAID UNDER ITEM 204 EXCAVATION OF SUBGRADE.

3. CONSTRUCT AND COMPACT THE SUBGRADE ACCORDING TO 204.03.

4. PROOF ROLL THE COMPACTED SUBGRADE ACCORDING TO 204.06 TO DETERMINE THE ACTUAL LIMITS OF UNDERCUTS AND TO VERIFY THE UNIFORMITY OF THE SUBGRADE COMPACTION. THE APPROXIMATE LIMITS OF THE UNDERCUTS ARE SHOWN ON THE CROSS SECTIONS AS UNDERCUTS.

5. THE ENGINEER WILL IDENTIFY THE ACTUAL LOCATIONS OF UNDERCUTS BASED ON THE PROOF ROLLING RESULTS AND VISUAL OBSERVATIONS. THE ENGINEER WILL THEN ADJUST THE AREA AND DEPTH OF THE EXCAVATION SHOWN IN THE PLANS USING THE GUIDANCE PROVIDED IN THE CONSTRUCTION INSPECTION MANUAL OF PROCEDURES. THE QUANTITIES FOR REMOVING THE UNDERCUT SOIL ARE PAID FOR UNDER ITEM 204 EXCAVATION OF SUBGRADE.

6. UNDERCUT AS DIRECTED BY THE ENGINEER AND REPLACE WITH SPECIFIED MATERIALS ACCORDING TO 204.07. THE UNDERCUTS WILL EXTEND 18 INCHES BEYOND THE EDGE OF THE SURFACE OF THE PAVEMENT, PAVED SHOULDERS, OR PAVED MEDIANS.

7. PROOF ROLL THE UNDERCUT AREAS ACCORDING TO 204.06 TO VERIFY THE UNDERCUT STABILITY.

8. FINE GRADE THE SUBGRADE TO THE SPECIFIED GRADE.

CALCULATED AMD
CHECKED SCC

GENERAL NOTES

LAW-93-0.00

J:\Project\O\ODOT\15005112 Ironton Russell\LAW\81595\roadway\sheets\81595GN011.dgn - 4/25/2011 6:52:02 AM - jon_wanstrath

ITEM 203, EMBANKMENT, AS PER PLAN

PLACE AND COMPACT EMBANKMENT MATERIAL IN 6-INCH LIFTS FOR THE CONSTRUCTION OF THE APPROACH EMBANKMENT BETWEEN STA. 9+00 AND THE REAR ABUTMENT AND BETWEEN THE FORWARD ABUTMENT MSE WALL AND STA. 37+00.

ITEM 606 - ANCHOR ASSEMBLY, TYPE B

THIS ITEM SHALL CONSIST OF FURNISHING AND INSTALLING EITHER OF THE FOLLOWING GUARDRAIL END TERMINALS, OR AN APPROVED EQUAL AS LISTED ON ROADWAY ENGINEERING'S WEB PAGE AT WWW.DOT.STATE.OH.US/DRRC/ UNDER ROADSIDE SAFETY DEVICES FOR APPROVED GUARDRAIL END TREATMENTS:

1. THE SRT-350, GUARDRAIL END TERMINAL AS MANUFACTURED BY TRINITY INDUSTRY, 1170 N. STATE STREET, GIRARD, OHIO 44420 (TELEPHONE: 330-545-4373).

   THE LENGTH OF THE SRT-350 SYSTEM IS CONSIDERED TO BE 37'-6", INCLUSIVE OF THREE 12'-6" LONG RAIL ELEMENTS. INSTALLATION SHALL BE AT THE LOCATIONS SPECIFIED IN THE PLANS, IN ACCORDANCE WITH THE MANUFACTURER'S SPECIFICATIONS AS DETAILED ON THE FOLLOWING PRE-APPROVED SHOP DRAWINGS:

DWG. #	DRAWING NAME	DWG./REV. DATE	ODOT APPROVAL DATE
SS444 SS444M	SLOTTED RAIL TERMINAL POST LAYOUT AND ERECTION DETAILS SRT-350 (12.5, 8 POST)	7/12/99 REV. 1 7/12/99	8/27/99
SS425M	SLOTTED RAIL TERMINAL SRT-350 POST LAYOUT AND ERECTION DETAILS (12.5, 9 POST)	6/21/97 REV. 1	3/6/98

2. THE FLEAT-350 MANUFACTURED BY ROAD SYSTEMS, INC., 2516 MALLORY LANE, STOW, OHIO, 44224, (TELEPHONE: 330-346-0721).

   THE LENGTH OF THE FLEAT-350 IS CONSIDERED TO BE 37'-6" INCLUSIVE OF THREE 12'-6" LONG RAIL ELEMENTS. INSTALLATION SHALL BE AT THE LOCATIONS SPECIFIED IN THE PLANS, IN ACCORDANCE WITH THE MANUFACTURER'S SPECIFICATIONS AS DETAILED ON THE FOLLOWING PRE-APPROVED SHOP DRAWINGS:

DWG. NO.	DRAWING NAME	DWG./REV. DATE	ODOT APPROVAL DATE
FLT-M	FLARED ENERGY ABSORBING TERMINAL (FLEAT-350) ASSEMBLY	4/16/98	7/31/98
FLT HINGED CRT	FLARED ENERGY ABSORBING TERMINAL (POSTS 1 AND 2 ARE STEEL HINGED)	5/04/06	5/23/06
FLT-SP	FLARED ENERGY ABSORBING TERMINAL (A SEVEN-POST OPTION USING STANDARD STEEL POSTS)	3/30/09	3/04/09

REFER TO THE MANUFACTURER'S INSTRUCTION REGARDING THE INSTALLATION OF, AND THE GRADING AROUND, THE FOUNDATION TUBES AND GROUND STRUT. THE TOP OF ANY FOUNDATION TUBE SHOULD BE LESS THAN 4-INCHES ABOVE THE GROUND. THE PLACEMENT OF THE FOUNDATION TUBES SHOULD BE AN APPROPRIATE DEPTH BELOW THE LEVEL LINE IN ORDER TO MAINTAIN THE FINISHED GUARDRAIL HEIGHT OF 27-3/4-INCHES FROM THE EDGE OF THE SHOULDER.

ON-SITE GRADING IS REQUIRED IF THE TOP OF THE FOUNDATION TUBES OR TOP OF THE GROUND STRUT DOES PROJECT MORE THAN 4-INCHES ABOVE THE GROUND LINE.

THE FACE OF THE TYPE B IMPACT HEAD SHALL BE COVERED WITH TYPE G REFLECTIVE SHEETING, PER CMS 730.19: APPROXIMATELY 36" W X 12" H FOR THE SRT-350 AND 14" W X 20" H FOR THE FLEAT.

PAYMENT FOR THE ABOVE WORK SHALL BE MADE AT THE UNIT PRICE BID FOR ITEM 606, ANCHOR ASSEMBLY, TYPE B, EACH, AND SHALL INCLUDE ALL LABOR, TOOLS, EQUIPMENT AND MATERIALS NECESSARY TO CONSTRUCT A COMPLETE AND FUNCTIONAL ANCHOR ASSEMBLY SYSTEM, INCLUDING REFLECTIVE SHEETING AND ALL RELATED HARDWARE, GRADING, EMBANKMENT AND EXCAVATION NOT SEPARATELY SPECIFIED, AS REQUIRED BY THE MANUFACTURER.

CONNECTION BETWEEN EXISTING AND PROPOSED GUARDRAIL

WHEN IT IS NECESSARY TO SPLICE PROPOSED GUARDRAIL TO EXISTING GUARDRAIL, ONLY THE EXISTING GUARDRAIL SHALL BE CUT, DRILLED, OR PUNCHED. THE CONNECTION SHALL BE MADE USING A "W-BEAM RAIL SPLICE" AS SHOWN IN AASHTO M 180. PAYMENT SHALL BE INCLUDED IN THE CONTRACT PRICE FOR THE RESPECTIVE GUARDRAIL ITEMS.

GUARDRAIL DOUBLE BLOCKOUTS

AT LOCATIONS ALONG 93C LEFT SIDE BETWEEN STATIONS 36+22 AND 40+50 WHERE THE OFFSET OF THE PRESSURE RELIEF JOINT SLEEPER SLAB OR A CATCH BASIN BACK WALL INTERFERES WITH PLACEMENT OF A GUARD RAIL POST, USE DOUBLE BLOCKOUTS AS SHOWN IN SECTION C-C OF SCD GR-2.3. THE COST OF MATERIALS AND LABOR TO INSTALL THE ADDITIONAL BLOCKOUTS SHALL BE INCLUDED IN THE PRICE BID FOR ITEM 606, GUARDRAIL, TYPE 5.

FENCE AND GATES

FENCE AND GATES SHALL BE IN ACCORDANCE WITH ITEM 607 AND THE STANDARD DRAWINGS, EXCEPT AS NOTED HEREIN. FENCE AND GATE SHALL BE INSTALLED USING 96-INCH FENCE FABRIC. POSTS SHALL HAVE A LENGTH OF 10'-8" AND SHALL BE CONCRETE-ENCASED. THE CONCRETE ENCASEMENT DIAMETER SHALL BE 24 INCHES.

THE LENGTHS OF FENCE SHOWN IN THE PLANS ARE HORIZONTAL DIMENSIONS. MEASUREMENTS OF FINAL QUANTITIES WILL BE IN ACCORDANCE WITH ITEM 607.

PAYMENT FOR THE ABOVE SHALL BE AT THE UNIT PRICE BID FOR ITEM 607, FENCE, TYPE CL, AS PER PLAN, 8', AND FOR ITEM 607, GATE, TYPE CL, AS PER PLAN, 8'.

PORTIONS OF STRUCTURE REMOVED, BELLEFONTE STREET WALL

REMOVE A PORTION OF THE TOP OF THE LEFT WINGWALL OF THE BELLEFONTE STREET FORWARD ABUTMENT AS REQUIRED TO ALLOW CLEARANCE UNDER THE PROPOSED SUBGRADE AND UNDER PROPOSED GUARDRAIL POSTS. ESTIMATED REMOVAL DIMENSIONS ARE 50 FEET LONG, 3+/- FEET HIGH, AND 1+/- FOOT THICK. ALSO INCLUDED ARE ANY REMOVALS REQUIRED FOR PROPOSED WINGWALL CONSTRUCTION.

REMOVE EXISTING PIPE RAILING FULL LENGTH OF WALL. WHERE TOP OF EXISTING WALL REMAINS, SAWCUT RAILING POST FLUSH WITH TOP OF CONCRETE AND FILL EXPOSED VOID WITH NON SHRINK, NONMETALLIC GROUT CONFORMING TO 705.20. EXISTING PIPE RAILING REMOVAL AND GROUT INSTALLATION ARE INCIDENTAL TO PORTIONS OF STRUCTURE REMOVED.

THE FOLLOWING ESTIMATED QUANTITY IS CARRIED TO THE GENERAL SUMMARY FOR THIS WORK.
ITEM 202, PORTIONS OF STRUCTURE REMOVED 6 CU YD

ITEM 511, CLASS C CONCRETE, AS PER PLAN

THE REINFORCED CONCRETE SLEEPER SLAB AND RAILING SHALL BE PER CMS 511 - CLASS C CONCRETE. PAYMENT FOR THIS ITEM SHALL INCLUDE CURING COAT PER CMS 206 AND SEALING OF CONCRETE SURFACES PER CMS 512.

ITEM SPECIAL - FILL AND PLUG EXISTING CONDUIT

THIS ITEM SHALL CONSIST OF THE CONSTRUCTION OF BULKHEADS IN AN EXISTING CONDUIT AND FILLING THE AREA THUS SEALED OFF WITH LEAN GROUT, ITEM 613, SAND OR OTHER MATERIAL APPROVED BY THE ENGINEER.

BULKHEADS SHALL BE LOCATED AT THE LIMITS OF THE AREA TO BE FILLED AS INDICATED ON THE PLANS. THE BULKHEADS SHALL CONSIST OF BRICK OR CONCRETE MASONRY WITH A MINIMUM THICKNESS OF 12 INCHES.

THE FILL MATERIAL SHALL BE PUMPED INTO PLACE, OR PLACED BY OTHER MEANS APPROVED BY THE ENGINEER, SO THAT, AFTER SETTLEMENT, AT LEAST 90 PERCENT OF THE CROSS-SECTIONAL AREA OF THE CONDUIT, FOR ITS ENTIRE LENGTH, SHALL BE FILLED. THE LENGTH OF FILLED AND PLUGGED CONDUIT TO BE PAID FOR SHALL BE THE ACTUAL NUMBER OF FEET (MEASURED ALONG THE CENTERLINE OF EACH CONDUIT FROM OUTER FACE TO OUTER FACE OF BULKHEADS) FILLED AND PLUGGED AS DESCRIBED ABOVE.

IN LIEU OF FILLING AND PLUGGING THE EXISTING CONDUIT, THE PIPE MAY BE CRUSHED AND BACKFILLED IN ACCORDANCE WITH THE PROVISIONS OF 203, OR IT MAY BE REMOVED. THE LENGTH, MEASURED AS PROVIDED ABOVE, SHALL BE PAID FOR AT THE CONTRACT PRICE PER FOOT FOR ITEM SPECIAL, FILL AND PLUG EXISTING CONDUIT.

CONSTRUCTION ACCESS

PROVIDE CONSTRUCTION ACCESS WITHOUT THE USE OF A RAILROAD GRADE CROSSING. ALTHOUGH NOT SPECIFICALLY DEFINED, IT IS INTENDED THAT CONSTRUCTION ACCESS TO THE REAR ABUTMENT BE FROM US 23, THAT CONSTRUCTION ACCESS TO PIER 1 AND A TEMPORARY KENTUCKY DOCK BE FROM BELLEFONTE STREET ADJACENT TO THE CSX RAILROAD TRACKS, AND THAT CONSTRUCTION ACCESS TO A TEMPORARY OHIO DOCK BE FROM FIRST STREET.

THE ESTIMATED SURFACE AREA OF CRUSHED AGGREGATE AT THE REAR ABUTMENT IS 1000 SQ YD, AT PIER 1 & THE KY DOCK IS 3000 SQ YD, AND AT THE OHIO DOCK IS 1000 SQ YD. WHEN NO LONGER REQUIRED, THE ACCESS ROADS SHALL BE REMOVED AND THE GROUND AND VEGETATION SHALL BE RESTORED AS INDICATED IN THE RIPARIAN ZONE REVEGETATION PLANS.

THE FOLLOWING ESTIMATED QUANTITIES ARE CARRIED TO THE GENERAL SUMMARY FOR THIS WORK AND SHALL INCLUDE ALL EQUIPMENT, MATERIALS, AND LABOR, UNLESS ITEMIZED ELSEWHERE IN THE PLANS.

ITEM 203, EXCAVATION	9,000 CU YD
ITEM 203, EMBANKMENT	9,000 CU YD
ITEM 622, PORTABLE CONCRETE BARRIER, 32"	1,320 FOOT
ITEM 410, TRAFFIC COMPACTED SURFACE, TYPE A OR B	3,300 TON
ITEM 659, SEEDING AND MULCHING, CLASS 3C	6,000 SQ YD

STREAM CHANNEL EXCAVATION

STREAM CHANNEL EXCAVATION WITHIN "WATERS OF THE US" IS SUBJECT TO US ARMY CORPS OF ENGINEERS (USACE) REGULATORY JURISDICTION AND WILL REQUIRE AUTHORIZATION BY THE USACE VIA THE WATERWAY PERMITTING PROCESS (404/401). IN ACCORDANCE WITH THE APPLICABLE WATERWAY PERMITS (404/401) STREAM CHANNEL EXCAVATION CAN NOT EXCEED THE QUANTITIES AND/OR SURFACE AREA THAT HAS BEEN PERMITTED. THE WATERWAY PERMITS ARE ATTACHED TO THE CONSTRUCTION PLANS AS SPECIAL PROVISIONS AND WILL BE AVAILABLE IN THE PROJECT CONSTRUCTION OFFICE.

TAKE ALL PRECAUTIONS NECESSARY TO PREVENT ANY INCIDENTAL DISCHARGES ASSOCIATED WITH THE EXCAVATION AND HAULING OF MATERIAL FROM THE STREAM CHANNEL. THIS PERTAINS TO ANY EXCAVATION OPERATIONS SUCH AS FOUNDATION PIER OR ABUTMENT EXCAVATION, CHANNEL CLEANOUT, EXCAVATION FOR ROCK CHANNEL PROTECTION, AND REMOVAL OF ANY TEMPORARY FILL ASSOCIATED WITH CONSTRUCTION OPERATIONS.

TEMPORARY CONSTRUCTION FILL

ANY TEMPORARY CONSTRUCTION ACCESS FILL WITHIN "WATERS OF THE US" (E.G., STREAMS, WETLANDS) SUBJECT TO US ARMY CORPS OF ENGINEERS (USACE) REGULATORY JURISDICTION WILL REQUIRE AUTHORIZATION BY THE USACE PRIOR TO THE PLACEMENT OF TEMPORARY FILL VIA THE WATERWAY PERMITTING PROCESS (404/401). ALL TEMPORARY CONSTRUCTION ACCESS FILLS SHOULD BE CONSTRUCTED IN ACCORDANCE WITH THE APPLICABLE WATERWAY PERMITS (404/401) AND SHOULD NOT EXCEED THE QUANTITIES AND/OR SURFACE AREA OF TEMPORARY FILL THAT HAS BEEN PERMITTED. ADDITIONALLY, SOME TEMPORARY CONSTRUCTION ACCESS FILLS MAY ONLY BE ALLOWED IN SPECIFIC LOCATIONS, PER THE WATERWAY PERMITS (404/401) AND/OR OTHER ENVIRONMENTAL COMMITMENTS, AND SHOULD BE CONSTRUCTED IN ACCORDANCE WITH ANY SUCH LOCATIONAL RESTRICTIONS TO AVOID ENVIRONMENTALLY SENSITIVE AREAS. THE WATERWAY PERMITS ARE ATTACHED TO THE CONSTRUCTION PLANS AS SPECIAL PROVISIONS AND ARE TO BE AVAILABLE IN THE PROJECT CONSTRUCTION OFFICE.

CALCULATED AMD CHECKED SCC

GENERAL NOTES

LAW-93-0.00

J:\Project\O\ODOT\15005112 Ironton Russell\LAW\81595\roadway\sheets\81595GN002.dgn - 4/25/2011 6:52:03 AM - jon_wanstrath

J:\Project\O\ODOT\15005112 Ironton Russell\LAW\81595\roadway\sheets\81595GN003.dgn - 4/25/2011 6:52:05 AM - jon_wanstrath

EROSION CONTROL

SEEDING AND MULCHING

THE FOLLOWING QUANTITIES ARE PROVIDED TO PROMOTE GROWTH AND CARE OF PERMANENT SEEDED AREAS:

659, SOIL ANALYSIS TEST	*2 EACH*
659, COMMERCIAL FERTILIZER	*5.00 TON*
659, LIME	*7.58 ACRE*

SEEDING AND MULCHING SHALL BE APPLIED TO ALL AREAS OF EXPOSED SOIL BETWEEN THE RIGHT-OF-WAY LINES, AND WITHIN THE CONSTRUCTION LIMITS FOR AREAS OUTSIDE THE RIGHT-OF-WAY LINES COVERED BY WORK AGREEMENT, SEWER EASEMENT, OR SLOPE EASEMENT, AND INCLUDING AREAS COVERED BY RIPARIAN ZONE REVEGETATION. QUANTITY CALCULATIONS FOR SEEDING AND MULCHING ARE BASED ON THESE LIMITS. FOR ADDITIONAL ESTIMATED QUANTITIES, SEE SHEETS 345 - 347 .

SODDING

THE FOLLOWING QUANTITIES ARE PROVIDED TO PROMOTE GROWTH AND CARE OF PERMANENT SODDED AREAS:

659, SOIL ANALYSIS TEST	*1 EACH*
659, TOPSOIL	*56 CU YD*
659, COMMERCIAL FERTILIZER	*1.00 TON*
659, LIME	*1.00 ACRE*
659, WATER	*15 M GAL*
660, SODDING, UNSTAKED	*500 SQ YD*

THE ABOVE QUANTITIES HAVE BEEN CARRIED TO THE GENERAL SUMMARY.

WATER QUALITY

POST CONSTRUCTION STORM WATER TREATMENT

THIS PLAN UTILIZES STRUCTURAL BEST MANAGEMENT PRACTICES (BMP'S) FOR POST CONSTRUCTION STORM WATER TREATMENT. SEE ALSO THE PROJECT SITE PLANS ON SHEETS 65 , 66 , 365, AND 366.

MANUFACTURED WATER QUALITY STRUCTURE

THIS PLAN UTILIZES A MANUFACTURED WATER QUALITY STRUCTURE FOR WATER QUALITY TREATMENT. AREAS HAVE BEEN SHOWN IN THE PLANS FOR PLACEMENT OF AN OFF-LINE SYSTEM. PAYMENT FOR THIS DEVICE SHALL BE MADE AT THE CONTRACT UNIT PRICE FOR ITEM 895, MANUFACTURED WATER QUALITY STRUCTURE, TYPE 3.

DRAINAGE

CROSSINGS AND CONNECTIONS TO EXISTING PIPES AND UTILITIES

WHERE PLANS PROVIDE FOR A PROPOSED CONDUIT TO BE CONNECTED TO, OR CROSS OVER OR UNDER AN EXISTING SEWER OR UNDERGROUND UTILITY, THE CONTRACTOR SHALL LOCATE THE EXISTING PIPES OR UTILITIES BOTH AS TO LINE AND GRADE BEFORE STARTING TO LAY THE PROPOSED CONDUIT.

IF IT IS DETERMINED THAT THE ELEVATION OF THE EXISTING CONDUIT, OR EXISTING APPURTENANCE TO BE CONNECTED, DIFFERS FROM THE PLAN ELEVATION OR RESULTS IN A CHANGE IN THE PLAN CONDUIT SLOPE, THE ENGINEER SHALL BE NOTIFIED BEFORE STARTING CONSTRUCTION OF ANY PORTION OF THE PROPOSED CONDUIT WHICH WILL BE AFFECTED BY THE VARIANCE IN THE EXISTING ELEVATIONS.

IF IT IS DETERMINED THAT THE PROPOSED CONDUIT WILL INTERSECT AN EXISTING SEWER OR UNDERGROUND UTILITY IF CONSTRUCTED AS SHOWN ON THE PLAN, THE ENGINEER SHALL BE NOTIFIED BEFORE STARTING CONSTRUCTION OF ANY PORTION OF THE PROPOSED CONDUIT WHICH WOULD BE AFFECTED BY THE INTERFERENCE WITH AN EXISTING FACILITY.

PAYMENT FOR ALL THE OPERATIONS DESCRIBED ABOVE SHALL BE INCLUDED IN THE CONTRACT PRICE FOR THE PERTINENT 603 CONDUIT ITEM.

UNRECORDED UNTREATED NON-STORMWATER DRAINAGE

FURNISH NO CONTINUANCE FOR ANY UNRECORDED UNTREATED NON-STORMWATER DRAINAGE SUCH AS UNTREATED SEPTIC, UNTREATED WASTEWATER, UNTREATED CURTAIN/GRADIENT DRAINS, AND UNTREATED FOUNDATION FLOOR DRAINS DISTURBED BY THE WORK. PLUG ANY UNRECORDED UNTREATED NON-STORMWATER DRAINAGE WITH CLASS C CONCRETE AT THE RIGHT OF WAY LINE. PAYMENT FOR PLUGGING SHALL BE INCLUDED IN THE CONTRACT PRICE FOR THE PERTINENT 202 OR 203 ITEM

UNRECORDED TREATED NON-STORMWATER DRAINAGE

FURNISH A CONTINUANCE FOR ALL UNRECORDED TREATED NON-STORMWATER DRAINAGE, SUCH AS TREATED SEPTIC, TREATED WASTEWATER, TREATED CURTAIN/GRADIENT DRAINS, AND TREATED FOUNDATION FLOOR DRAINS DISTURBED BY THE WORK. FURNISH EITHER AN OPEN CONTINUANCE OR AN UNOBSTRUCTED CONTINUANCE BY CONNECTING A CONDUIT THROUGH THE CURB OR INTO A DRAINAGE STRUCTURE. THE LOCATION, TYPE, SIZE AND GRADE OF THE NEEDED CONDUIT TO REPLACE OR EXTEND AN EXISTING DRAIN WILL BE DETERMINED BY THE ENGINEER. ALL SUCH CONTINUANCE REQUIRES A RIGHT OF WAY USE PERMIT. A CONTINUANCE MAY ALSO REQUIRE A NPDES PERMIT FROM THE OHIO ENVIRONMENTAL PROTECTION AGENCY. REPORT ALL CONTINUANCE TO THE LOCAL HEALTH DEPARTMENT.

WHERE MAKING A CONNECTION INTO A HIGHWAY DRAINAGE CONDUIT, AN INSPECTION WELL SHALL BE PROVIDED IN ACCORDANCE WITH STANDARD CONSTRUCTION DRAWING DM-3.1.

THE FOLLOWING ESTIMATED QUANTITIES HAVE BEEN INCLUDED IN THE GENERAL SUMMARY FOR USE AS DIRECTED BY THE ENGINEER IN MAKING THE ABOVE CONTINUANCE:

603, 6" CONDUIT, TYPE C	*100 FT.*
604, INSPECTION WELL	*2 EACH*

ITEM 603 - CONDUIT BORED OR JACKED

WHERE IT IS SPECIFIED THAT A CONDUIT BE INSTALLED BY THE METHOD OF BORING OR JACKING, NO TRENCH EXCAVATION SHALL BE CLOSER THAN 25 FEET TO THE NEAREST CSX RAIL OR 10 FEET TO THE NEAREST NORFOLK SOUTHERN RAIL.

PROVIDE A 1.156 INCH UNGALVANIZED CASING PIPE CONFORMING TO 748.06 THAT HAS JOINTS WITH A CIRCUMFERENCIAL FULLY PENETRATING B-U4B WELD THAT IS PERFORMED BY AN ODOT-APPROVED FIELD WELDER. THE INSTALLED CASING PIPE IS THE STORM WATER CONVEYANCE CARRIER UNLESS OTHERWISE SPECIFIED IN THE PLANS. HYDROSTATIC TESTING IS NOT REQUIRED FOR THE CASING PIPE.

ITEM 603 - CONDUIT UNDER RAILROAD

THE STATE SHALL PAY TO THE RAIL COMPANY ALL COSTS FOR WATCHMEN OR FLAGGERS DEEMED NECESSARY BY THE RAIL COMPANY, OR OCCASIONED BY THE OPERATIONS OF THE CONTRACTOR, OR ANY SUB-CONTRACTOR, IN CARRYING FORWARD THE INSTALLATION OF PIPE OR CONDUIT UNDER THE RAILROAD PER THE PLAN. THE COSTS FOR WATCHMEN OR FLAGGERS REQUIRED BY AN ALTERNATE METHOD OF INSTALLATION SHALL BE PAID TO THE RAIL COMPANY BY THE CONTRACTOR. THE COSTS FOR WATCHMEN OR FLAGGERS OCCASIONED BY THE NEGLIGENCE OF THE CONTRACTOR, OR ANY SUB-CONTRACTOR, IN CONNECTION WITH THE INSTALLATION OF THE PIPE OR CONDUIT SHALL BE PAID BY THE CONTRACTOR.

TRACK SUPPORTS REQUIRED BY THE RAIL COMPANY IN CONNECTION WITH THE INSTALLATION OF THE PIPE OR CONDUIT PER THE PLAN SHALL BE INCLUDED IN THE COMPANY FORCE ACCOUNT WORK AND PAID BY THE STATE. THE COST OF ANY TRACK SUPPORTS REQUIRED BY AN ALTERNATE METHOD OF INSTALLATION OF THE PIPE OR CONDUIT SHALL BE SHALL BE PAID TO THE RAIL COMPANY BY THE CONTRACTOR.

THE CONTRACTOR SHALL SECURE APPROVAL OF HIS OPERATIONS FROM THE STATE AND THE RAIL COMPANY. THE RAIL COMPANY WILL PERFORM AN ENGINEERING REVIEW OF METHODS OF OPERATIONS AND ENGINEERING SUPERVISION OF CONSTRUCTION WITHOUT COST TO THE CONTRACTOR.

PRIOR TO BIDDING, THE CONTRACTOR SHALL COORDINATE WITH THE RAIL COMPANY TO AGREE UPON THE REQUIREMENTS OF WATCHMEN AND FLAGGERS TO PROTECT RAILROAD TRAFFIC DURING THE CONTRACTOR'S OPERATIONS. THE CONTRACTOR SHALL EXECUTE A BOND IN FAVOR OF BOTH THE STATE AND THE COMPANY AS REQUIRED BY SECTION 5525.16 OF THE REVISED CODE OF OHIO.

THE CONTRACTOR SHALL CO-OPERATE WITH THE RAILROAD OFFICIALS CONCERNING WORK ADJACENT TO RAILROAD TRACKS, IN ORDER TO AVOID DELAY TO, OR INTERFERENCE WITH RAILROAD TRAFFIC. THE MINIMUM TIME FOR NOTIFICATION TO NORFOLK SOUTHERN FOR ARRANGEMENT OF FLAGGING PROTECTION SHOULD BE 30 DAYS IN ADVANCE OF CONSTRUCTION OPERATIONS WITHIN THE NORFOLK SOUTHERN RIGHT OF WAY.

CONDUIT EXCAVATION NEAR RAILROAD

THE CONTRACTOR SHALL SUBMIT TO THE ENGINEER AND THE RAILWAY DETAILED EXCAVATION PLANS, TEMPORARY SHORING PLANS AND CALCULATIONS ALL PREPARED AND SIGNED BY AN OHIO REGISTERED PROFESSIONAL ENGINEER SHOWING SIZES OF ALL TEMPORARY SHORING STRUCTURAL MEMBERS, DETAILS OF CONNECTIONS, AND EMBEDMENT DEPTH. THE PLANS SHALL INCLUDE A PLAN VIEW SHOWING ALL THE PROPOSED EXCAVATIONS AND THE DISTANCES FROM THE CENTERLINE OF THE TRACK. THE PLANS AND CALCULATIONS MUST BE APPROVED BY THE RAILWAY AND THE ENGINEER BEFORE EXCAVATION BEGINS.

REVIEW OF DRAINAGE FACILITIES

BEFORE ANY WORK IS STARTED ON THE PROJECT AND AGAIN BEFORE FINAL ACCEPTANCE BY THE STATE, REPRESENTATIVES OF THE STATE AND THE CONTRACTOR, ALONG WITH LOCAL REPRESENTATIVES, SHALL MAKE AN INSPECTION OF ALL EXISTING SEWERS WHICH ARE TO REMAIN IN SERVICE AND WHICH MAY BE AFFECTED BY THE WORK. THE CONDITION OF THE EXISTING CONDUITS AND THEIR APPURTENANCE SHALL BE DETERMINED FROM FIELD OBSERVATIONS. RECORDS OF THE INSPECTION SHALL BE KEPT IN WRITING BY THE STATE.

ALL NEW CONDUITS, INLETS, CATCH BASINS, AND MANHOLES CONSTRUCTED AS A PART OF THE PROJECT SHALL BE FREE OF ALL FOREIGN MATTER AND IN A CLEAN CONDITION BEFORE THE PROJECT WILL BE ACCEPTED BY THE STATE.

ALL EXISTING SEWERS INSPECTED INITIALLY BY THE ABOVE MENTIONED PARTIES SHALL BE MAINTAINED AND LEFT IN A CONDITION REASONABLY COMPARABLE TO THAT DETERMINED BY THE ORIGINAL INSPECTION. ANY CHANGE IN THE CONDITION RESULTING FROM THE CONTRACTOR'S OPERATIONS SHALL BE CORRECTED BY THE CONTRACTOR TO THE SATISFACTION OF THE ENGINEER.

PAYMENT FOR ALL OPERATIONS DESCRIBED ABOVE SHALL BE INCLUDED IN THE CONTRACT PRICE FOR THE PERTINENT 603 CONDUIT ITEMS.

CALCULATED AMD | CHECKED SCC

GENERAL NOTES

LAW-93-0.00

DRAINAGE (CONTINUED)

UNRECORDED STORM WATER DRAINAGE

FURNISH A CONTINUANCE FOR ALL UNRECORDED STORM WATER DRAINAGE, SUCH AS ROOF DRAINS, FOOTER DRAINS, OR YARD DRAINS, DISTURBED BY THE WORK. FURNISH EITHER AN OPEN CONTINUANCE OR AN UNOBSTRUCTED CONTINUANCE BY CONNECTING A CONDUIT THROUGH THE CURB OR INTO A DRAINAGE STRUCTURE. THE LOCATION, TYPE, SIZE AND GRADE OF THE NEEDED CONDUIT TO REPLACE OR EXTEND AN EXISTING DRAIN WILL BE DETERMINED BY THE ENGINEER. ALL SUCH CONTINUANCE REQUIRES A RIGHT OF WAY USE PERMIT.

THE FOLLOWING CONDUIT TYPES MAY BE USED: 707.33, 707.41 NON-PERFORATED, 707.42, 707.43, 707.45, 707.46, 707.47, 707.51, 707.52 SDR35.

THE FOLLOWING ESTIMATED QUANTITIES HAVE BEEN INCLUDED IN THE GENERAL SUMMARY FOR USE AS DIRECTED BY THE ENGINEER FOR THE WORK NOTED ABOVE:

603, 6" CONDUIT, TYPE B, FOR DRAINAGE CONNECTION	100 FT.
603, 6" CONDUIT, TYPE C, FOR DRAINAGE CONNECTION	100 FT.
603, 6" CONDUIT, TYPE E, FOR DRAINAGE CONNECTION	100 FT.
603, 6" CONDUIT, TYPE F, FOR DRAINAGE CONNECTION	100 FT.

UNRECORDED ACTIVE SANITARY SEWER CONNECTIONS

FURNISH A CONTINUANCE FOR ALL UNRECORDED ACTIVE SANITARY SEWER CONNECTIONS SUCH AS SANITARY, WASTEWATER, CURTAIN/GRADIENT DRAINS, AND FOUNDATION FLOOR DRAINS DISTURBED BY THE WORK. FURNISH AN UNOBSTRUCTED CONTINUANCE OF THE UNRECORDED ACTIVE SANITARY SEWER CONNECTIONS TO THE SATISFACTION OF THE ENGINEER. ALL SUCH CONTINUANCE REQUIRES A RIGHT OF WAY USE PERMIT. ALL SANITARY AND SANITARY WASTEWATER CONTINUANCE MAY ALSO REQUIRE A NPDES PERMIT FROM THE OHIO ENVIRONMENTAL PROTECTION AGENCY. REPORT ALL CONTINUANCE TO THE LOCAL HEALTH DEPARTMENT.

THE FOLLOWING CONDUIT TYPES MAY BE USED: 707.42, 707.43, 707.44, 707.45, 707.46, 707.47, 707.51, 707.52 SDR35, 706.01, 706.02, OR 706.08 WITH JOINTS AS PER 706.11 OR 706.12.

THE FOLLOWING ESTIMATED QUANTITIES HAVE BEEN INCLUDED IN THE GENERAL SUMMARY FOR USE AS DIRECTED BY THE ENGINEER FOR THE WORK NOTED ABOVE:

603, 6" CONDUIT, TYPE B, FOR SANITARY	100 FT.
603, 6" CONDUIT, TYPE C, FOR SANITARY	100 FT.

MANHOLES, CATCH BASINS AND INLETS REMOVED OR ABANDONED

ALL CASTINGS SHALL BE CAREFULLY REMOVED AND STORED WITHIN THE RIGHT OF WAY FOR SALVAGE BY STATE/CITY FORCES.

PAYMENT FOR ALL OF THE ABOVE SHALL BE INCLUDED IN THE CONTRACT PRICE FOR THE PERTINENT 202 ITEM.

FLOOD WATER CONTAINMENT

EXERCISE CARE TO ENSURE THAT AT NO TIME DOES CONSTRUCTION ACTIVITY OR NEGLIGENT LACK THEREOF CAUSE OR ALLOW RIVER FLOOD WATER TO PASS UNDER OR THROUGH THE LEVEE, EXCEPT AS CONTAINED WITHIN THE PROPOSED SEWER UP TO THE PROPOSED GATE VALVE.

THE CONTRACTOR SHALL ALSO SUBMIT TO THE ENGINEER THE METHODS AND OPERATIONS TO INSTALL THE CASING PIPE UNDER THE FLOOD LEVEE. THE ENGINEER SHALL SUBMIT THE CONTRACTOR'S INFORMATION TO THE U.S. ARMY CORPS OF ENGINEERS, ICW PROGRAM MANAGER, FOR REVIEW AND COMMENT. INSTALLATION OF THE CASING PIPE SHALL NOT BEGIN UNTIL THE CONTRACTOR RECEIVES APPROVAL FROM THE U.S. ARMY CORPS OF ENGINEERS THROUGH THE ENGINEER.

PAVEMENT

PAVEMENT RESTORATION FOR PIPE INSTALLATIONS

THE FOLLOWING QUANTITY HAS BEEN PROVIDED FOR PAVEMENT RESTORATION FOLLOWING INSTALLATION OF PIPES UNDER ITEM 603.

ITEM 448, 1¼" ASPHALT CONCRETE SURFACE COURSE, TYPE 1, PG64-22	18	CU. YD.
ITEM 448, 1¾" ASPHALT CONCRETE INTERMEDIATE COURSE, TYPE 2, PG64-22	23	CU. YD.
ITEM 408, PRIME COAT	170	GALLON
ITEM 304, 8" AGGREGATE BASE	75	CU. YD.
ITEM 204, SUBGRADE COMPACTION	330	SQ. YD.

PAVEMENT RESTORATION WIDTH INCLUDES THE TRENCH WIDTH PLUS ONE FOOT ON EACH SIDE OF THE TRENCH. SEE DETAIL ON SHEET 15 FOR TRENCH WIDTH FORMULA AND CALCULATION.

PROVIDE ANY MATERIALS USED OUTSIDE THE LIMITS STATED ABOVE AT NO ADDITIONAL COST.

PAVEMENT RESTORATION FOR DRAINAGE STRUCTURE INSTALLATIONS

THE FOLLOWING QUANTITY IS PROVIDED FOR PAVEMENT RESTORATION FOLLOWING INSTALLATION OF ITEM 604 DRAINAGE STRUCTURES.

ITEM 448, ASPHALT CONCRETE SURFACE COURSE, TYPE 1, PG64-22	2	CU. YD.
ITEM 448, ASPHALT CONCRETE INTERMEDIATE COURSE, TYPE 2, PG64-22	2	CU. YD.
ITEM 408, PRIME COAT	9	GALLON
ITEM 304, 8" AGGREGATE BASE	6	CU. YD.
ITEM204, SUBGRADE COMPACTION	22	SQ. YD.

PAVEMENT RESTORATION IS BASED ON A WIDTH OF TWO FEET AROUND THE PERIMETER OF THE DRAINAGE STRUCTURE.

PROVIDE ANY MATERIALS USED OUTSIDE THE LIMITS STATED ABOVE AT NO ADDITIONAL COST.

PAVEMENT RESTORATION FOR MONUMENT ASSEMBLY INSTALLATIONS

THE FOLLOWING QUANTITY IS PROVIDED FOR PAVEMENT RESTORATION FOLLOWING INSTALLATION OF ITEM 604 MONUMENT ASSEMBLIES.

ITEM 301 ASPHALT CONCRETE BASE, PG64-22 — 5 CU. YDS.

THE ABOVE QUANTITY IS BASED ON A 301 THICKNESS OF 11 INCHES AND A WIDTH OF TWO FEET AROUND THE PERIMETER OF THE MONUMENT ASSEMBLIES.

PROVIDE ANY MATERIALS USED OUTSIDE THE LIMITS STATED ABOVE AT NO ADDITIONAL COST.

CONTRACTION AND/OR EXPANSION JOINTS

ALTHOUGH SPECIFIC LOCATIONS OF CERTAIN CONTRACTION AND EXPANSION JOINTS HAVE BEEN DETAILED ON THIS PLAN, NO WAIVER OF THE SPECIFICATIONS IS INTENDED. IN ALL CASES, THE PROVISION OF EXPANSION JOINTS AT ALL MAJOR STRUCTURES INCLUDING THE MAXIMUM SPACING BETWEEN CONTRACTION JOINTS IS IN ACCORDANCE WITH STANDARD CONSTRUCTION DRAWING BP-2.2 AND THE SPECIFICATIONS.

ITEM SPECIAL-PRESSURE RELIEF JOINT, TYPE A

THE PRESSURE RELIEF JOINT SHALL BE IN ACCORDANCE WITH STANDARD CONSTRUCTION DRAWING BP-2.3 EXCEPT THAT THE PAY LENGTH SHALL BE AS FOLLOWS: AT THE REAR ABUTMENT, MEASURE FROM THE LEFT EDGE OF SHOULDER TO THE RIGHT TOE OF BARRIER. AT THE FORWARD ABUTMENT, MEASURE FROM THE LEFT BACK OF CURB TO THE RIGHT EDGE OF PAVEMENT.

ITEM 609, COMBINATION CURB AND GUTTER, TYPE 2, AS PER PLAN

CONSTRUCT THIS ITEM IN ACCORDANCE WITH SCD BP-5.1, COMBINATION CURB AND GUTER, TYPE 2, EXCEPT AS NOTED HEREIN. MODIFY THE GUTTER PAN CROSS SLOPE AND MODIFY THE CURB THICKNESS AS INDICATED ON SHEETS 9 AND 10 . ALL MATERIALS, EQUIPMENT, AND LABOR FOR THIS WORK SHALL BE INCLUDED IN THE UNIT PRICE BID FOR COMBINATION CURB AND GUTTER, TYPE 2, AS PER PLAN.

DRAINAGE

STORM SEWER WORK IN RAILROAD RIGHT-OF-WAY

THE REQUIREMENTS OF THIS NOTE ARE SPECIFICALLY FOR:

1. THE STORM SEWER WORK TO BE CONSTRUCTED WITHIN THE CSX TRANSPORTATION INC.'S RIGHT-OF-WAY / PROPERTY. THESE REQUIREMENTS PERTAIN TO THE STORM SEWER CONDUIT, CASING PIPE AND MANHOLES FROM STA 10+60.00, 38.00' LT, STRUCTURE 62-D TO STA 11+33.00, 38.00' LT, STRUCTURE 63-D.
2. THE STORM SEWER WORK TO BE CONSTRUCTED WITHIN THE NORFOLK SOUTHERN RAILWAY COMPANY'S RIGHT-OF-WAY / PROPERTY. THESE REQUIREMENTS PERTAIN TO THE STORM SEWER CONDUIT, CASING PIPE AND MANHOLES FROM STORM SEWER STA 31+29.51, 82.48' LT, STRUCTURE 74-D TO STA 34+25.54, 47.89' LT, STRUCTURE 46-D.

REFER TO THE SPECIAL CLAUSES IN THE PROPOSAL FOR ADDITIONAL REQUIREMENTS REGARDING WORK ABOVE, ON OR UNDER RAILROAD PROPERTY. THE REQUIREMENTS PROVIDED IN THE PROPOSAL, PLANS, PROFILES, GENERAL NOTES, BRIDGE GENERAL NOTES, AND ODOT CONSTRUCTION AND MATERIALS SPECIFICATIONS SHALL GOVERN THE WORK TO BE PERFORMED. IN ADDITION TO THESE REQUIREMENTS THE CONTRACTOR SHALL PROVIDE A LETTER, CALCULATIONS, SHOP DRAWINGS, WORK SEQUENCE, SCHEDULE AND OTHER RELATED OR PERTINENT DOCUMENTATION STAMPED AND SIGNED BY A REGISTERED PROFESSIONAL ENGINEER IN THE STATE OF OHIO AND THE COMMONWEALTH OF KENTUCKY, AS APPROPRIATE FOR EACH LOCATION THAT INDICATES THE FOLLOWING:

1. THE MANHOLES, STORM SEWER AND CASING PIPE SHALL MEET THE PIPE LOADING REQUIREMENTS FOR RAILROADS, REFERRED TO AS E-80 LOAD.
2. THE CONSTRUCTION METHODS AND MATERIALS ASSOCIATED WITH OR INCIDENTAL TO THIS WORK SHALL CONFORM TO AMERICAN RAILWAY ENGINEERING AND MAINTENANCE-OF-WAY ASSOCIATION (AREMA), CURRENT MANUAL FOR RAILWAY ENGINEERING RECOMMENDED PRACTICE.
3. THE CONSTRUCTION METHODS AND MATERIALS ASSOCIATED WITH OR INCIDENTAL TO THIS WORK SHALL CONFORM TO NORFOLK SOUTHERN RAILWAY COMPANY'S, PERMIT, MATERIALS AND CONSTRUCTION SPECIFICATIONS, GUIDELINES, STANDARDS, AND DETAILS REQUIREMENTS.
4. THE CONSTRUCTION METHODS AND MATERIALS ASSOCIATED WITH OR INCIDENTAL TO THIS WORK SHALL CONFORM TO CSX TRANSPORTATION, INC.'S PERMIT, MATERIALS AND CONSTRUCTION SPECIFICATIONS, GUIDELINES, STANDARDS, AND DETAILS REQUIREMENTS.

NO MATERIALS SHALL BE ORDERED UNTIL THE LETTER, CALCULATIONS, SHOP DRAWINGS, WORK SEQUENCE, SCHEDULE AND OTHER RELATED OR PERTINENT DOCUMENTATION PROVIDED BY THE CONTRACTOR'S ENGINEER HAS BEEN REVIEWED AND APPROVED BY NORFOLK SOUTHERN RAILWAY COMPANY, CSX TRANSPORTATION, INC., AND ODOT. ALL COSTS ASSOCIATED WITH THIS WORK SHALL BE INCLUDED IN THE UNIT BID PRICE FOR THE FOLLOWING PAY ITEMS:

CSX TRANSPORTATION, INC. RIGHT-OF-WAY:

ITEM 602 MASONRY MISC.: KENTUCKY SLOPED AND FLARED HEADWALL, PER KY STD. DWG. RDH-020
ITEM 603 CONDUIT, MISC.: KENTUCKY 24" CIRCULAR REINFORCED CONCRETE PIPE, PER KY STD. DWG. RDI-001 (CLASS B, 706.02, 1250 D-LOAD)
ITEM 603 CONDUIT, MISC.: BORE AND JACK PIPE 36 IN
ITEM 604 INLET MISC.: KENTUCKY DROP BOX INLET TYPE 1, PER KY STD. DWG. RDB-001

NORFOLK SOUTHERN RAILWAY COMPANY RIGHT-OF-WAY:

ITEM 603 CONDUIT, MISC.: 84" STEEL PIPE ENCASEMENT, BORED OR JACKED
ITEM 603 60" CONDUIT, TYPE B, 1750 D-LOAD
ITEM 604 MANHOLE, NO. 3, E-80 LOAD

PAVEMENT

ITEM SPECIAL-PRESSURE RELIEF JOINT, TYPE B

THE PRESSURE RELIEF JOINT SHALL BE IN ACCORDANCE WITH STANDARD CONSTRUCTION DRAWING BP-2.4.

CALCULATED AMD CHECKED SCC

GENERAL NOTES

LAW-93-0.00

J:\Project\O\ODOT\15005112 Ironton Russell\LAW\81595\roadway\sheets\81595GN004.dgn - 1/6/2012 5:06:17 PM - jon_wanstrath

ITEM SPECIAL - SETTLEMENT PLATFORM

DESCRIPTION:
THIS ITEM CONSISTS OF FURNISHING AND CONSTRUCTING SETTLEMENT PLATFORMS, AND OBTAINING SETTLEMENT READINGS FROM THE SETTLEMENT PLATFORMS AS REQUIRED BY THE PLANS OR AS DIRECTED BY THE ENGINEER. A COMPLETED COPY OF THE SETTLEMENT READINGS SHALL BE SENT TO THE OFFICE OF STRUCTURAL ENGINEERING, CENTRAL OFFICE (ATTN: FOUNDATION ENGINEER).

LOCATION:
TWO SETTLEMENT PLATFORMS TO BE PROVIDED AT THE FOLLOWING LOCATIONS:

STA.36+00, 15 FT. RIGHT
STA.37+60, 20 FT. LEFT

MATERIALS:
¾" EXTERIOR GRADE PLYWOOD OR A ⅛" THICK STEEL PLATE (MIN. THICKNESS) SHALL BE USED FOR THE BASE. THE PIPE SHALL BE STANDARD BLACK PIPE WITH THREADED FITTINGS AS SHOWN ON THE PLANS. THE INSIDE DIAMETER OF THE PIPE SHALL NOT BE LESS THAN 3½" AND THE WALL THICKNESS OF THE PIPE SHALL NOT BE LESS THAN 3/16".
VIBRATING WIRE SETTLEMENT CELLS CAN BE USED AS AN ALTERNATIVE TO THE PLATFORMS SHOWN ON THIS SHEET.
THIS SETTLEMENT PLATFORM SHALL BE INSTALLED AND UTILIZED AS PER THE MANUFACTURERS SPECIFICATIONS.

CONSTRUCTION METHODS:
THE 36"x36" PLATFORM SHALL CONFORM TO THE DETAILS SHOWN ON THE PLANS. THE PLATFORM SHALL BE SET ON A LEVEL SURFACE AT ELEVATION 540.00. THE PIPE SHALL BE FIRMLY SECURED TO THE PLATFORM AND SHALL BE MAINTAINED IN A PLUMB POSITION DURING THE PLACEMENT OF THE EMBANKMENT. THE PIPE SHALL BE MARKED AT ONE FOOT INTERVALS TO FACILITATE MEASUREMENT OF THE DEPTH OF FILL. SETTLEMENT PLATFORMS SHALL BE ANCHORED BY STAKES DRIVEN AT EACH CORNER TO PREVENT OVERTURNING. THE CONTRACTOR SHALL STOP WORK IN ANY LOCATION WHERE A SETTLEMENT PLATFORM HAS BEEN DISTURBED OR DAMAGED. PLATFORMS OR PIPES DAMAGED OR DISPLACED DURING CONSTRUCTION SHALL BE RESTORED TO THEIR PROPER CONDITION AT THE CONTRACTOR'S EXPENSE.

JUST BEFORE PLACING THE ROADWAY PAVEMENT, READINGS SHALL BE OBTAINED AND THE TOP OF SETTLEMENT PLATFORM PIPES SHALL BE CUT OFF 2 FEET BELOW THE FINISHED SURFACE OF THE GROUND. FILL THE PIPE WITH SAND PRIOR TO ABANDONING THE PIPE.

THE PURPOSE OF THIS WORK IS TO BE CAPABLE OF DETERMINING THE ELEVATION OF THE CENTER OF THE BURIED PLATE AT ANY POINT IN TIME.

* THE PIPE MUST REMAIN SECURELY ATTACHED TO THE PLATE.
* THE PIPE MUST STAY VERTICAL THROUGHOUT CONSTRUCTION, CENTER THE STEEL PIPE IN A PLASTIC SLEEVE. THE PLASTIC PIPE SHALL BE AT LEAST 12" LARGER IN DIAMETER THAN THE STEEL PIPE.
* ELEVATION OF THE PLATE CAN BE OBTAINED BY A ROD THROUGH THE PIPE OR BY A TARGET ON THE PIPE.
* DATA MUST BE COLLECTED AT REASONABLE INTERVALS, TWICE PER WEEK (MINIMUM) OR AFTER THE COMPLETION OF EACH 2 FT. OF EMBANKMENT.
* DATA MUST ALSO BE RECORDED, DOCUMENTING THE DATE AND ELEVATION OF EACH 2 FT. OF COMPLETED EMBANKMENT AND AT COMPLETION OF APPLYING THE ABUTMENT AND SUPERSTRUCTURE LOADS.

THE IRONTON APPROACH BRIDGE DECK, THE CAST-IN-PLACE CONCRETE FACING ON THE WIRE-FACED MSE WALLS, THE TOP PRECAST MSE WALL PANEL, THE MSE WALL COPING, THE IRONTON APPROACH SLAB, SLEEPER SLAB & BARRIER, AND THE IRONTON APPROACH PAVEMENT SHALL NOT BE PLACED UNTIL AFTER ALL APPRECIABLE SETTLEMENT HAS OCCURRED AS DETERMINED FROM THE DATA OBTAINED BY RECORDING AND PLOTTING THE LOAD/TIME/DEFORMATION RELATIONSHIPS. ADDITIONALLY, THE CONSTRUCTION OF THE ELEMENTS MENTIONED IN THIS PARAGRAPH SHALL PROCEED IN STAGES AS DIRECTED BY THE ENGINEER.

METHOD OF MEASUREMENT:
THE NUMBER OF SETTLEMENT PLATFORMS TO BE PAID FOR SHALL BE THE ACTUAL NUMBER OF SETTLEMENT PLATFORMS COMPLETED, MAINTAINED, AND ACCEPTED BY THE ENGINEER.

BASIS OF PAYMENT:
PAYMENT SHALL BE MADE AT THE CONTRACT UNIT PRICE PER EACH "ITEM SPECIAL - SETTLEMENT PLATFORM" WHICH IS COMPENSATION FOR CONSTRUCTING, MAINTAINING AND MONITORING THE SETTLEMENT PLATFORMS INCLUDING FURNISHING ALL LABOR, EQUIPMENT, MATERIALS, AND INCIDENTALS NECESSARY TO COMPLETE THIS WORK. PAYMENT SHALL NOT BE MADE FOR SETTLEMENT PLATFORMS WHICH BECOME USELESS DUE TO DAMAGE CAUSED BY THE CONTRACTOR'S OPERATIONS.

AN ESTIMATED QUANTITY OF 2 EACH ITEM SPECIAL - SETTLEMENT PLATFORM HAS BEEN CARRIED TO THE GENERAL SUMMARY FOR THIS PURPOSE.

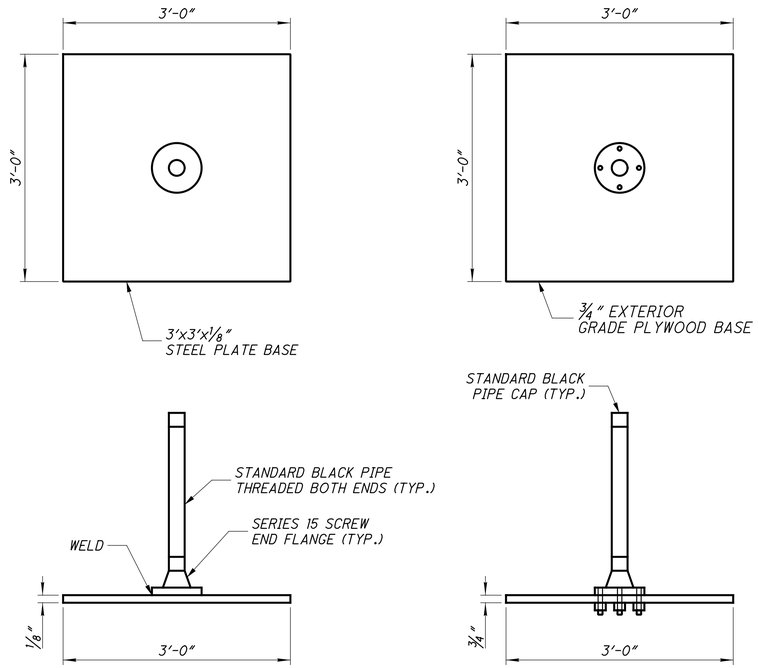

SETTLEMENT PLATFORM DETAILS
NO SCALE
PLASTIC SLEEVE NOT SHOWN

CALCULATED SCC
CHECKED BKL

GENERAL NOTES - SETTLEMENT PLATFORM

LAW-93-0.00

J:\Project\OVODOT\15005112 Ironton Russell\LAW\81595\roadway\sheets\81595GN005.dgn - 4/25/2011 6:52:07 AM - jon_wanstrath

PROJECT NO. LAW-93-0.00
BRIDGE NO. LAW-93-0.00 WALL NO. _____ FWD. ABUT.
SETTLEMENT PLATFORM/REFERENCE HUB NO. _____
STATION & OFFSET: _____

DATE AND TIME	NO. OF DAYS	ELEV. OF FILL OR EXISITING GROUND	HEIGHT OF FILL IN FEET	ELEV. OF SETTLEMENT PLATFORM OR REF. HUB	SETTLEMENT (FEET)	SETTLEMENT (INCHES)

J:\Project\O\ODOT\15005112 Ironton Russell\LAW\81595\roadway\sheets\81595GN007.dgn - 4/25/2011 6:52:09 AM - jon_wanstrath

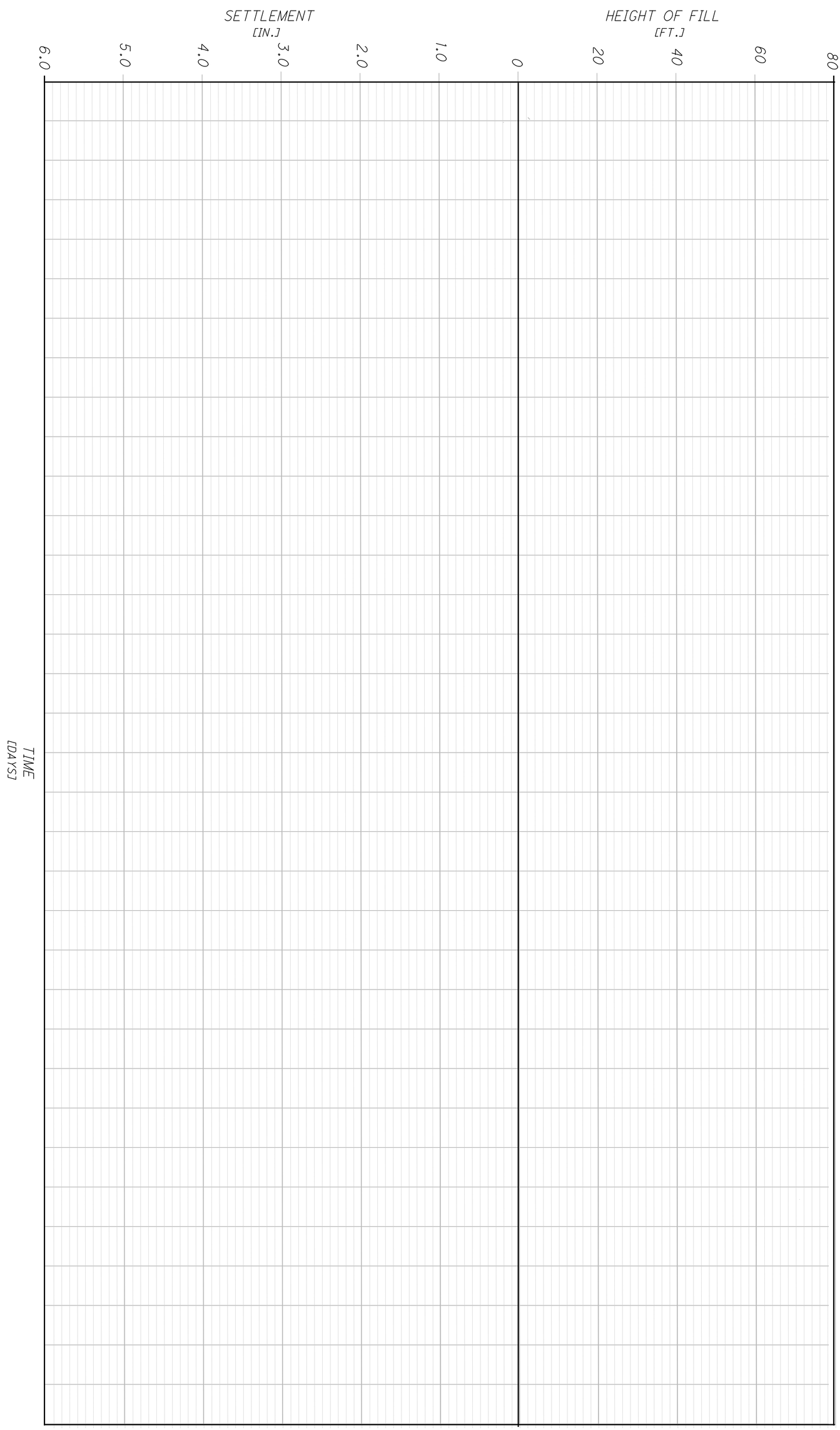

23 / 7888	LAW-93-0.00	GENERAL NOTES - SETTLEMENT PLATFORM

CALCULATED

CHECKED

ENVIRONMENTAL COMMITMENTS

THE FOLLOWING ENVIRONMENTAL COMMITMENTS HAVE BEEN MADE FOR THIS PROJECT. COMMITMENTS WHICH REQUIRE NO ACTION FROM THE CONTRACTOR ARE PROVIDED FOR INFORMATIONAL PURPOSES ONLY.

NO WORK SHALL BE PREFORMED WITHIN THE WATER UNTIL THE ACOE AND CG PERMITS HAVE BEEN OBTAINED.

MUSSEL RELOCATION NEW BRIDGE

ENVIROMENTAL COMMITMENTS:

PRIOR TO ANY WORK IN THE OHIO RIVER TO CONSTRUCT THE NEW IRONTON-RUSSELL BRIDGE THE CONTRACTOR SHALL HIRE A U.S. FISH AND WILDLIFE SERVICE (USFWS) APPROVED PROFESSIONAL MALACOLOGIST TO PERFORM A MUSSEL SURVEY AND RELOCATION (IF NECESSARY) IN ACCORDANCE WITH CURRENT USFWS PROTOCOLS. USFWS MAY BE CONTACTED FOR PROTOCOLS AND THE MOST UP TO DATE LIST OF PROFESSIONAL MALACOLOGIST'S APPROVED FOR WORK IN OHIO AT:

U.S. FISH AND WILDLIFE SERVICE
OHIO FIELD OFFICE (ROFO)
4625 MORSE ROAD, SUITE 104
COLUMBUS, OHIO 43230
614-416-8993

THE MUSSEL SURVEY AND RELOCATION IS A TWO-STEP PROCESS THAT NEEDS TO BE CARRIED OUT AS SPECIFIED BY USFWS. (SEE PLAN NOTES ON SHEET 25A FOR SPECIFIC PROTOCOLS)

1) LOCATION OF RELOCATION APPROPRIATE SITE(S)
2) COLLECTION, IDENTIFICATION, AND RELOCATION OF MUSSELS FROM THOSE AREAS THAT MAY BE IMPACTED BY THE PROJECT.

THE MUSSEL SURVEY AND RELOCATION MUST TAKE PLACE AS CLOSE TO THE BRIDGE CONSTRUCTION TIMEFRAME AS POSSIBLE, GENERALLY WITHIN 6 MONTHS PRIOR TO CONSTRUCTION.

A MUSSEL SURVEY WAS CONDUCTED IN 2010 BY ODOT AND LOW DENSITIES OF EIGHT SPECIES OF MUSSELS WERE FOUND THROUGHOUT THE PROJECT STUDY AREA. TWO SPECIES FOUND ARE LISTED ON THE OHIO ENDANGERED SPECIES LIST AND TWO SPECIES FOUND ARE ON THE KENTUCKY ENDANGERED SPECIES LIST.

THE CONTRACTOR SHALL COORDINATE WITH ODOT DURING ALL PHASES OF THE MUSSEL SURVEY AND RELOCATION, PROVIDING A WRITTEN, BOUND REPORT OF THE SURVEY FINDINGS AND A REPORT OF THE RELOCATION WORK. THE CONTRACTOR SHALL NOTIFY ODOT TWO WEEKS PRIOR TO PERFORMING THE SURVEY WORK SO THAT ODNR AND KSNPC (OHIO AND KENTUCKY NATURAL RESOURCE AGENCIES) CAN BE ON-SITE DURING THE SURVEY, IF THEY DESIRE.

ALL SPECIES OF MUSSEL COLLECTED SHALL BE RELOCATED TO A SAFE AND SUITABLE HABITAT LOCATION OUTSIDE THE PROJECT IMPACT AREA.

ALL REQUIRED SUBSEQUENT SURVIVAL MONITORING AND/OR REPORTS ARE PART OF THIS CONTRACT.

THE DEPARTMENT WILL PAY FOR ALL WORK DESCRIBED LABOR, AND ANY MATERIALS AT THE LUMP SUM PRICE BID FOR:

ITEM SPECIAL-MISC.: MUSSEL SURVEY AND RELOCATION (NEW BRIDGE)

MUSSEL RELOCATION EXISTING BRIDGE

ENVIROMENTAL COMMITMENTS:

PRIOR TO ANY WORK IN THE OHIO RIVER TO DEMOLISH THE EXISTING IRONTON-RUSSELL BRIDGE, THE CONTRACTOR SHALL HIRE A U.S. FISH AND WILDLIFE SERVICE (USFWS) APPROVED PROFESSIONAL MALACOLOGIST TO PERFORM A MUSSEL SURVEY AND RELOCATION (IF NECESSARY) IN ACCORDANCE WITH CURRENT USFWS PROTOCOLS. USFWS MAY BE CONTACTED FOR PROTOCOLS AND THE MOST UP TO DATE LIST OF PROFESSIONAL MALACOLOGIST'S APPROVED FOR WORK IN OHIO AT:

U.S. FISH AND WILDLIFE SERVICE
OHIO FIELD OFFICE (ROFO)
4625 MORSE ROAD, SUITE 104
COLUMBUS, OHIO 43230
614-416-8993

THE MUSSEL SURVEY AND RELOCATION IS A TWO-STEP PROCESS THAT NEEDS TO BE CARRIED OUT AS SPECIFIED BY USFWS. (SEE PLAN NOTES ON SHEET 25A FOR SPECIFIC PROTOCOLS)

1) LOCATION OF RELOCATION APPROPRIATE SITE(S)
2) COLLECTION, IDENTIFICATION, AND RELOCATION OF MUSSELS FROM THOSE AREAS THAT MAY BE IMPACTED BY THE PROJECT.

THE MUSSEL SURVEY AND RELOCATION MUST TAKE PLACE AS CLOSE TO THE BRIDGE DEMOLITION TIMEFRAME AS POSSIBLE, GENERALLY WITHIN 6 MONTHS PRIOR TO DEMOLITION.

A MUSSEL SURVEY WAS CONDUCTED IN 2010 BY ODOT AND LOW DENSITIES OF EIGHT SPECIES OF MUSSELS WERE FOUND THROUGHOUT THE PROJECT STUDY AREA. TWO SPECIES FOUND ARE LISTED ON THE OHIO ENDANGERED SPECIES LIST AND TWO SPECIES FOUND ARE ON THE KENTUCKY ENDANGERED SPECIES LIST.

THE CONTRACTOR SHALL COORDINATE WITH ODOT DURING ALL PHASES OF THE MUSSEL SURVEY AND RELOCATION, PROVIDING A WRITTEN, BOUND REPORT OF THE SURVEY FINDINGS AND A REPORT OF THE RELOCATION WORK. THE CONTRACTOR SHALL NOTIFY ODOT TWO WEEKS PRIOR TO PERFORMING THE SURVEY WORK SO THAT ODNR AND KSNPC (OHIO AND KENTUCKY NATURAL RESOURCE AGENCIES) CAN BE ON-SITE DURING THE SURVEY, IF THEY DESIRE.

ALL SPECIES OF MUSSEL COLLECTED SHALL BE RELOCATED TO A SAFE AND SUITABLE HABITAT LOCATION OUTSIDE THE PROJECT IMPACT AREA.

ALL REQUIRED SUBSEQUENT SURVIVAL MONITORING AND/OR REPORTS ARE PART OF THIS CONTRACT. THE DEPARTMENT WILL PAY FOR ALL WORK DESCRIBED LABOR, AND ANY MATERIALS AT THE LUMP SUM PRICE BID FOR:

ITEM SPECIAL- MISC.: MUSSEL SURVEY AND RELOCATION. (EXISTING BRIDGE)

AVOIDANCE AND MINIMIZATION OF POTENTIAL IMPACTS TO MUNICIPAL DRINKING WATER SOURCES.

1.1 INTRODUCTION

THIS PROJECT IS LOCATED IN THE IMMEDIATE VICINITY OF THE SOURCES OF TWO PUBLIC DRINKING WATER SUPPLIES THAT SERVE THE COMMUNITIES OF IRONTON, OHIO AND RUSSELL, KENTUCKY. WATER IS WITHDRAWN FROM THE OHIO RIVER AT INTAKES LOCATED AT RIVER MILE 327.0 FOR IRONTON AND AT RIVER MILE 327.5 FOR RUSSELL. THE IRONTON INTAKE IS LESS THAN 1,800 FEET DOWNSTREAM OF THE NEW BRIDGE LOCATION AND LESS THAN 200 FEET UPSTREAM OF THE EXISTING BRIDGE. THE RUSSELL INTAKES IS APPROXIMATELY 4,500 FEET DOWNSTREAM OF THE NEW BRIDGE LOCATION AND 1,800 FEET DOWNSTREAM OF THE EXISTING BRIDGE.

THE CONTRACTOR SHALL AVOID AND MINIMIZE POTENTIAL IMPACTS TO THESE DRINKING WATER SOURCES AT ALL TIMES. AT A MINIMUM, THE CONTRACTOR SHALL IMPLEMENT THE FOLLOWING PROTECTION MEASURES.

1.2 EMERGENCY RESPONSE CONTINGENCY PLAN

THE CONTRACTOR SHALL CERTIFY IN WRITING TO THE ENGINEER WITHIN TWO WEEKS AFTER CONTRACT EXECUTION AND PRIOR TO ANY WORK WITHIN OR OVER THE OHIO RIVER THAT AN EMERGENCY RESPONSE CONTINGENCY PLAN (ERCP) HAS BEEN PREPARED. THE ERCP SHALL INCLUDE, BUT IS NOT LIMITED TO, SPILL CONTAINMENT; FUEL STORAGE AND TRANSPORT; AND SPILL RESPONSE.

THE ERCP SHALL INCLUDE THE FOLLOWING INFORMATION: ANY ACTIVITY THAT HAS ADDED OR EXPECTED TO ADD POLLUTANTS TO THE OHIO RIVER WHICH MAY THREATEN TO CONTAMINATE THE PUBLIC WATER SUPPLIES SHALL BE REPORTED TO: THE IRONTON PUBLIC WATER SYSTEM AT 740-532-3412; THE RUSSELL PUBLIC WATER SYSTEM AT 606-836-6644; AND THE OHIO RIVER VALLEY WATER SANITATION COMMISSION (ORSANCO) AT 1-800-733-0174. SUCH ACTIVITIES INCLUDE BUT AT NOT LIMITED TO EARTH DISTURBANCE ACTIVITIES, DISTURBANCE OF THE OHIO RIVER BOTTOM, AND THE RELEASE OF HAZARDOUS/TOXIC MATERIALS. THE CONTRACTOR SHALL IMMEDIATELY TAKE STEPS TO MITIGATE ANY RELEASE OF HAZARDOUS/TOXIC MATERIALS. IF THE SPILL IS A REPORTABLE AMOUNT, THE CONTRACTOR SHALL CONTRACT A HAZARDOUS MATERIAL RESPONSE TEAM FOR CLEAN UP OF THE SPILL. THE CONTRACTOR SHALL BE PREPARED TO PROVIDE DETAILED INFORMATION RELATIVE TO THE TYPE AND QUANTITY OF MATERIAL RELEASED INTO THE RIVER.

THE ERCP SHALL BE UTILIZED DURING ALL CONSTRUCTION AND DEMOLITION OCCURRING ON THE PROJECT. THE CONTRACTOR SHALL MAKE THE ERCP AVAILABLE AT THE PROJECT SITE. IN ADDITION, THE CONTRACTOR SHALL BE SOLELY RESPONSIBLE FOR INFORMING ALL SUBCONTRACTORS AND OTHER AGENTS OF THE PROCEDURES DESCRIBED IN THE ERCP.

1.3 BASIS OF PAYMENT

THE CONTRACTOR SHALL FURNISH ALL THE LABOR, EQUIPMENT, AND MATERIALS NECESSARY TO PROPERLY DEVELOP AND COMPLY WITH THE EMERGENCY RESPONSE CONTINGENCY PLAN. THIS ITEM SHALL NOT INCLUDE COSTS INCURRED BY THE CONTRACTOR TO MITIGATE ANY RELEASE OF HAZARDOUS/ TOXIC MATERIALS SINCE THE CONTRACTOR IS SOLELY RESPONSIBLE FOR ANY SUCH RELEASE. PAYMENT FOR THIS WORK SHALL BE MADE AT THE CONTRACT PRICE AS A LUMP SUM ITEM.

ITEM SPECIAL-MISC.: EMERGENCY RESPONSE CONTINGENCY PLAN LUMP SUM

MONITORING WELLS

THERE ARE TWO KNOWN GROUNDWATER MONITORING WELLS LOCATED WITHIN THE PROJECT LIMITS AT THE FOLLOWING LOCATIONS:

THIRD ST. STA. 50+43 / 19.65' RT

JEFFERSON ST. STA, 8+24 / 22.86' RT

THESE GROUNDWATER MONITORING WELLS ARE CURRENTLY ACTIVE AND SHALL NOT BE DISTURBED BY THE CONTRACTOR UNLESS OTHERWISE DIRECTED BY THE ENGINEER.

THE CONTRACT INCLUDES THE FOLLOWING BID ITEM AS AN ALLOWANCE IF ADJUSTMENT OR RECONSTRUCTION OF THE MONITORING WELLS IS REQUIRED.

ITEM 690 SPECIAL - GROUND WATER MONITORING WELL RECONSTRUCTION

IT IS ANTICIPATED THAT THE MONITORING WELLS COULD BE ELIGIBLE FOR ABANDONMENT DURING 2011.

THE CONTRACTOR SHALL CONTACT THE ADMINISTRATOR FOR THE MONITORING WELLS TO DETERMINE THE STATUS OF THE MONITORING WELLS AT THE TIME OF CONSTRUCTION. THE ADMINISTRATOR FOR THE MONITORING WELLS IS AS FOLLOWS:

TAMI TALALAS ROBERTS

URS CORPORATION
1375 EUCLID AVENUE, SUITE 600
CLEVELAND, OHIO 44115-1808
EMAIL: TAMI.TALALAS@URS.COM
TEL: 216.622.2400
DIRECT: 216.622.2461
FAX: 216.622.2464

BASED ON THE INFORMATION PROVIDED BY THE ADMINISTRATOR, ONE OR BOTH OF THE MONITORING WELLS MAY BE ABANDONED OR RECONSTRUCTED IN PLACE IF NECESSARY AS DIRECTED BY THE ENGINEER.

CONTRACTOR RESPONSIBILITIES

ENVIRONMENTAL COMMITMENTS:

THE ENVIRONMENTAL COMMITMENTS ARE LISTED AS OVERALL PROJECT REQUIREMENTS. THE CONTRACTOR IS RESPONSIBLE TO CONSTRUCT THE PROJECT IN ACCORDANCE WITH THE SPECIFIC PROJECT WORK ITEMS LISTED FOR PAYMENT IN THE GENERAL SUMMARY. THE CONTRACTOR IS ALSO REQUIRED TO PERFORM THE WORK IN ACCORDANCE WITH THE PERMIT REQUIREMENTS INCLUDED IN THE PROPOSAL AND SPECIAL PROVISIONS. SPECIFIC CONTRACTOR ITEMS INCLUDE, BUT ARE NOT LIMITED TO:

ITEM 201 - CLEARING AND GRUBBING - BAT TREE REMOVAL LIMITATIONS
ITEM SPECIAL - MISC.: EMERGENCY RESPONSE CONTINGENCY PLAN
ITEM 601 - SLOPE AND CHANNEL PROTECTION
ITEM 659 - SEEDING AND MULCHING
ITEM 832 - TEMPORARY SEDIMENT AND EROSION CONTROL
ITEM 630 - SIGN, FLAT SHEET - "RUSSELL DOWNTOWN"
ITEM SPECIAL - GROUND WATER MONITORING WELL RECONSTRUCTION
ITEM SPECIAL - STRUCTURE, MISC.: BRIDGE COMMEMORATIVE PLAQUE

GEOLOGY, SOILS, AND EROSION

ENVIRONMENTAL COMMITMENTS:

EROSION CONTROL MEASURES ARE INCORPORATED INTO THE FINAL DESIGN PLANS. COMPLIANCE WITH ODOT'S "CONSTRUCTION AND MATERIAL SPECIFICATIONS" (2010) WILL MINIMIZE IMPACTS TO THE SURROUNDING ENVIRONMENT DURING CONSTRUCTION, AS WELL AS, DURING OPERATION AND MAINTENANCE OF THE BRIDGE.

REVEGETATE ALL DISTURBED AREAS TO PREVENT ACCELERATED EROSION

RIPARIAN ZONES WILL BE REVEGETATED IMMEDIATELY FOLLOWING CONSTRUCTION ACTIVITIES, IN ACCORDANCE WITH THE RIPARIAN ZONE REVEGITATION PLANS

CALCULATED AMD
CHECKED SCC

GENERAL NOTES - ENVIRONMENTAL

LAW-93-0.00

J:\Project\O\ODOT\15005112 Ironton Russell\LAW\81595\roadway\sheets\81595GN008.dgn - 12/7/2011 1:25:14 PM - jon_wanstrath

FLOODPLAINS

ENVIRONMENTAL COMMITMENTS:

DURING FINAL DESIGN OF THE REPLACEMENT STRUCTURE, A DETAILED HYDRAULIC ANALYSIS WILL BE CONDUCTED TO ASSESS FINAL IMPACTS TO THE 100-YEAR FLOOD AND FLOODWAY OF THE OHIO RIVER FOR THE FINAL BRIDGE PIER LOCATIONS AND CONFIGURATIONS. FLOODPLAIN ENCROACHMENTS WILL BE COORDINATED WITH AND REVIEWED BY THE CITIES OF IRONTON AND RUSSELL, THE STATE OF OHIO, THE COMMONWEALTH OF KENTUCKY, FEMA, AND THE ARMY CORPS OF ENGINEERS (ACOE), AS REQUIRED. ALL PERTINENT LOCAL, STATE AND FEDERAL PERMIT APPLICATIONS WILL BE PREPARED AND SUBMITTED TO THE APPROPRIATE AGENCIES TO OBTAIN APPROVAL AND REQUIRED PERMITS FOR CONSTRUCTION. IN ADDITION, A U.S. COAST GUARD PERMIT APPLICATION WILL BE SUBMITTED TO OBTAIN APPROVAL FOR THE PIER LOCATIONS, STRUCTURE SIZE AND NAVIGATION CLEARANCES.

THE KENTUCKY DIVISION OF WATER REQUIRES A FLOODPLAIN CONSTRUCTION PERMIT PRIOR TO THE CONSTRUCTION OF A BRIDGE OR OTHER OBSTRUCTION ACROSS OR ALONG ANY STREAM OR IN THE FLOODWAY OF ANY STREAM. PERMITS ARE REQUIRED FOR CONSTRUCTION ACTIVITIES IN DESIGNATED 100-YEAR FLOODPLAINS.

STREAMS, RIVERS, AND WATER BODIES

ENVIRONMENTAL COMMITMENTS:

A SECTION 402 NATIONAL POLLUTANT DISCHARGE ELIMINATION SYSTEM (NPDES) PERMIT REGARDING POINT SOURCE DISCHARGES IS MANDATED BY SECTION 401 OF THE CLEAN WATER ACT OF 1977 (CWA). CURRENTLY, OHIO EPA REGULATIONS REQUIRE A NPDES PERMIT IF MORE THAN ONE ACRE OF DISTURBANCE WILL OCCUR AS A RESULT OF THE PROPOSED PROJECT THUS, A NPDES PERMIT IS REQUIRED.

THE KENTUCKY DIVISION OF WATER IS THE ADMINISTERING AGENCY FOR THE NPDES PROGRAM. KENTUCKY'S PROGRAM IS ENTITLED THE KENTUCKY POLLUTANT DISCHARGE ELIMINATION SYSTEM (KPDES), AND PERMIT APPLICATIONS ARE HANDLED THROUGH THE KENTUCKY DIVISION OF WATER. A KPDES PERMIT FOR STORMWATER DISCHARGES IS REQUIRED FOR CONSTRUCTION PROJECTS THAT DISTURB MORE THAN ONE ACRES OF LAND THUS; A KPDES PERMIT IS REQUIRED.

AN EROSION AND SEDIMENTATION CONTROL PLAN (E&SCP) WILL BE PREPARED DURING FINAL DESIGN IN ORDER TO BEST INTEGRATE THE BEST MANAGEMENT PRACTICES (BMP) WITH THE DESIGN PROCESS. POTENTIAL WATER QUALITY IMPACTS DURING CONSTRUCTION WOULD BE TEMPORARY. COMPLIANCE WITH ODOT'S "CONSTRUCTION AND MATERIAL SPECIFICATIONS" (2010) WILL LEAD TO MINIMIZATION OF IMPACTS TO WATER QUALITY DURING CONSTRUCTION AS WELL AS DURING OPERATION AND MAINTENANCE OF THE BRIDGE.

THE PROJECT WOULD BE IN COMPLIANCE WITH REQUIREMENTS OF THE WATER POLLUTION CONTROL ACT OF 1972, AS AMENDED BY THE CWA OF 1977. PERMIT REQUIREMENTS AUTHORIZED BY THE CWA INCLUDE A SECTION 404 PERMIT FOR DREDGE AND FILL MATERIAL IN WATERS OF THE UNITED STATES. IN CONJUNCTION WITH THE SECTION 404 PERMIT, A SECTION 10 PERMIT WILL ALSO BE REQUIRED FROM THE HUNTINGTON DISTRICT ACOE IN ACCORDANCE WITH THE RIVERS AND HARBORS ACT OF 1899 AND THE GENERAL BRIDGE ACT OF 1946 FOR THE OBSTRUCTION OF A NAVIGABLE WATERWAY.

SECTION 401 WATER QUALITY CERTIFICATION IS REQUIRED IN OHIO AND KENTUCKY. THE ACOE CANNOT PERMIT AN ACTIVITY UNTIL THE SECTION 401 WATER QUALITY CERTIFICATION IS APPROVED BY THE OHIO EPA AND THE KENTUCKY DIVISION OF WATER ISSUES THE SECTION 401 PERMIT FOR KENTUCKY.

CONSTRUCT ALL COFFERDAMS, CAUSEWAYS AND TEMPORARY CROSSINGS OR IN STREAM PLACEMENTS SUCH AS SCOUR PROTECTION FROM ROCK CLEAN FILL AND OTHER APPROVED MATERIALS.

IMPACTS TO WATERWAY USERS

ENVIRONMENTAL COMMITMENTS:

ODOT WILL OBTAIN THE FEDERAL BRIDGE PERMIT UNDER SECTION 9 OF THE RIVERS AND HARBORS ACT OF 1899 AND THE GENERAL BRIDGE ACT OF 1946. A BRIDGE PERMIT INCLUDES THE APPROVED BRIDGE PROJECT PLANS, INCLUDING PIER LOCATIONS, VERTICAL CLEARANCES, ETC). SECTION 9 IS AUTHORIZED BY THE USCG AND IS REQUIRED FOR ANY INDIVIDUAL, PARTNERSHIP, CORPORATION, OR LOCAL, STATE, OR FEDERAL LEGISLATIVE BODY, AGENCY, OR AUTHORITY PLANNING TO CONSTRUCT OR MODIFY A BRIDGE OR CAUSEWAY ACROSS A NAVIGABLE WATERWAY OF THE UNITED STATES. THE WORK PERFORMED IN THE OHIO RIVER WILL BE COORDINATED THROUGH THE USCG TO AVOID IMPACTS TO NAVIGATION AND TO INSURE APPROPRIATE SAFETY AND WARNING PROCEDURES ARE IMPLEMENTED FOR THE PROJECT DURING CONSTRUCTION OF THE NEW BRIDGE AND DEMOLITION OF THE EXISTING STRUCTURE.

UNDER THE REQUIREMENTS OF THE VARIOUS PERMIT REVIEWS AND AUTHORIZATIONS, SHORT-TERM IMPACTS RELATED TO CONSTRUCTION AND DEMOLITION WILL BE MITIGATED THROUGH THE USE OF THE INDUSTRY'S BEST MANAGEMENT PRACTICES (BMP'S).

THE SIZE AND AMOUNT OF TIME WORKING IN THE OHIO RIVER SHOULD BE MINIMIZED, WHERE PRACTICABLE AND FEASIBLE.

WILDLIFE AND THREATENED AND ENDANGERED SPECIES

ENVIRONMENTAL COMMITMENTS:

THE POTENTIAL FOR EROSION AND SEDIMENTATION DURING CONSTRUCTION WILL BE MINIMIZED BY IMPLEMENTATION OF BMP'S AND THE EXISTING CHANNEL SURFACE WILL BE RESTORED TO ITS' ORIGINAL CONDITION. ADDITIONALLY, IN ACCORDANCE WITH THE SUGGESTIONS OF THE US FISH AND WILDLIFE SERVICE AND THE KENTUCKY DEPARTMENT OF FISH AND WILDLIFE RESOURCES, CONTROL OF SILT AND SEDIMENT DURING CONSTRUCTION WILL BE IMPLEMENTED TO THE EXTENT POSSIBLE.

ALL HAZARDOUS MATERIALS (E.G. PETROLEUM) SHALL BE STORED AT LEAST 100 FEET FROM THE OHIO RIVER AND ITS TRIBUTARIES. CONSTRUCTION CONTRACTORS SHALL MONITOR WEATHER AND RIVER STAGES TO ALLOW REMOVAL OF ANY HAZARDOUS MATERIALS FROM THE FLOODPLAIN IN THE EVENT THAT POTENTIAL FLOODING IS ANTICIPATED. THE USFWS SHALL BE NOTIFIED IMMEDIATELY IN THE EVENT OF HAZARDOUS MATERIALS SPILLS.

IMPACTS ASSOCIATED WITH EROSION AND SEDIMENTATION CAUSED BY DEMOLITION AND CONSTRUCTION ACTIVITIES WILL BE MINIMIZED BY IMPLEMENTATION OF BEST MANAGEMENT PRACTICES (BMPS). AN EROSION AND SEDIMENT CONTROL PLAN UTILIZING BMPS WILL BE IMPLEMENTED THROUGHOUT THE DURATION OF CONSTRUCTION/DEMOLITION WORK TO PREVENT ADVERSE SEDIMENTATION EFFECTS TO WATER QUALITY AND AQUATIC/TERRESTRIAL HABITATS IN THE PROJECT AREA. THIS EROSION AND SEDIMENT CONTROL PLAN WILL BE DEVELOPED BY THE PROJECT CONTRACTOR IN COMPLIANCE WITH GUIDELINES LISTED IN THE GENERAL NOTES SECTION OF THE DESIGN PLANS AND ODOT'S 2010 CONSTRUCTION AND MATERIALS SPECIFICATIONS - ITEMS 601 (SLOPE AND CHANNEL PROTECTION), ITEMS 659 (SEEDING AND MULCHING), AND ITEMS 832 (TEMPORARY EROSION AND SEDIMENT CONTROL). ODOT WILL DISCUSS THE IMPORTANCE OF PROPER IMPLEMENTATION OF THE EROSION AND SEDIMENT CONTROL PLAN WITH THE CONTRACTOR AT THE PRE-CONSTRUCTION MEETING.

THESE CONTROLS WILL BE IN PLACE BEFORE, DURING, AND AFTER CONSTRUCTION AND AN INSPECTOR WILL BE PRESENT AT THE PROJECT SITE TO MONITOR CONSTRUCTION ACTIVITIES (INCLUDING CLEARING AND GRUBBING ACTIVITIES) TO ENSURE THE EROSION AND SEDIMENT CONTROL PLAN IS BEING IMPLEMENTED AND TO IDENTIFY ANY PROJECT-RELATED IMPACTS FROM SCOURING AND SEDIMENTATION. FOLLOWING CONSTRUCTION, THE DESIGN PLANS INCLUDE A RIPARIAN ZONE RE-VEGETATION PLAN, A SEEDING AND RE-VEGETATION PLAN FOR THE KENTUCKY SIDE OF THE PROJECT, A SEEDING AN RE-VEGETATION PLAN FOR THE OHIO SIDE OF THE PROJECT, AND A DEMOLITION SEEDING PLAN FOR BOTH THE OHIO AND KENTUCKY SIDES. ODOT WILL KEEP THE USFWS APPRISED OF THE CONSTRUCTION SCHEDULE FOR THE PROJECT AND USFWS WILL BE GIVEN THE OPPORTUNITY TO CONDUCT PERIODIC SITE VISITS TO ENSURE THAT THE SITE IS BEING MONITORED AND THAT ALL BMPS ARE IMPLEMENTED AND FUNCTIONING PROPERLY.

THE USE OF PESTICIDES, HERBICIDES, OR SALINE SOLUTIONS SHOULD BE AVOIDED, WHEN POSSIBLE. WHEN NECESSITY DICTATES, THEY WILL BE USED IN ACCORDANCE WITH ALL PRODUCT LABELS AND ENVIRONMENTAL REGULATIONS AND THEIR USE KEPT TO A MINIMUM.

AREAS USED FOR REFUELING, PETROLEUM/OIL/LUBRICANT STORAGE, OR HAZARDOUS MATERIAL STORAGE WILL HAVE APPROPRIATE EROSION/SEDIMENT CONTROL STRUCTURES AND BIOREMEDIATION AREAS SURROUNDING THE SITE IN PLACE BEFORE USE. ALL WASTE MATERIALS THAT HAVE THE POTENTIAL TO LEACH CHEMICALS WILL BE COLLECTED AND STORED IN APPROPRIATE COVERED WASTE CONTAINERS. WASTE CONTAINERS SHALL BE REMOVED FROM THE PROJECT SITE ON A SUFFICIENTLY FREQUENT BASIS AS TO NOT ALLOW WASTES TO BECOME A SOURCE OF POLLUTION. ALL PERSONNEL WILL BE INSTRUCTED REGARDING THE CORRECT PROCEDURE FOR WASTE DISPOSAL. WASTES WILL BE DISPOSED IN ACCORDANCE WITH APPROPRIATE REGULATIONS.

CONTINGENCY PLANS FOR EMERGENCY RESPONSE (I.E., SPILL CONTROL) WILL BE INCORPORATED INTO PROJECT DESIGN FOR IMPLEMENTATION DURING CONSTRUCTION. HAZARDOUS AND/OR TOXIC MATERIALS WILL NOT BE STORED OR STOCKPILED NEAR THE OHIO RIVER. STAGING AREAS WOULD BE CONTAINED AND MADE AS SMALL AS POSSIBLE WITHOUT JEOPARDIZING THE SAFETY OF THE CONSTRUCTION TEAM.

BRIDGE AND PIER CONSTRUCTION:

A) THE CONTRACTOR IS REQUIRED TO PROVIDE THE ENGINEER WITH CURRENT WORKING DRAWINGS THAT IDENTIFY ALL CHANGES AND REVISIONS RELATED TO DEMOLITION PLANNING, DRAINAGE ITEMS INCLUDING THE NPDES STORM WATER POLLUTION PREVENTION PLAN. THE CONTRACTOR IS REQUIRED TO SPECIFICALLY IDENTIFY EACH ITEM OF WORK INVOLVING DRAINAGE, IN-WATER WORK, SEDIMENT AND EROSION ON THE CONSTRUCTION BASE LINE SCHEDULE AND ALL MONTHLY UPDATES.

B) IN ADDITION TO REQUIREMENTS OF SUPPLEMENTAL SPECIFICATION 832 THE CONTRACTOR IS REQUIRED TO:

I) THE CONTRACTOR IS REQUIRED TO IDENTIFY ALL SURFACE WATER OUTLETS THAT DISCHARGE SURFACE WATER TO THE OHIO RIVER. EACH OUTLET IS REQUIRED TO BE CLEARLY IDENTIFIED ON THE STORM WATER POLLUTION PREVENTION PLAN AND IDENTIFIED IN THE FIELD WITH A MAINTAINED SURVEY LATH. ENSURE THAT ALL EROSION AND SEDIMENT CONTROL MEASURES ARE INSTALLED AND FUNCTIONING PRIOR TO THE INITIATION OF ANY EARTH DISTURBING ACTIVITIES IN THE WATERSHED.

II) THE CONTRACTOR'S CPESC PE STORM WATER DESIGNER IS REQUIRED TO INCLUDE AND SPECIFICALLY IDENTIFY IN HIS MONTHLY SWPPP UPDATE REPRESENTATIVE COLOR PHOTOGRAPHS OF THE CONSTRUCTION EFFORT AND EROSION AND SEDIMENT CONTROL MEASURES. THE CONTRACTOR IS REQUIRED TO PROVIDE BOUND MONTHLY REPORTS TO THE ENGINEER AND 2 BOUND COPIES TO OES FOR COORDINATION WITH USFWS

III) IN ADDITION TO THE REPORTING REQUIREMENTS DESCRIBED IN SS 832, THE CONTRACTOR'S CPESC PE STORM WATER DESIGNER IS REQUIRED TO DESCRIBE THE AMOUNT OF THE PROPOSED CONSTRUCTION THAT HAS BEEN COMPLETED AND ANY REMEDIAL ACTIONS THAT HAVE BEEN TAKEN TO CONTROL SEDIMENTATION AND/OR STABILIZE THE SITE.

IV) THE CONTRACTOR IS REQUIRED TO SPECIFICALLY NOTIFY AND DOCUMENT ON A MONTHLY BASIS ALL ODOT CONTRACTOR PERSONNEL AND SUBCONTRACTORS OF THE STATUS OF THE ENVIRONMENTAL CONTROLS, THE CONTRACTORS ENVIRONMENTAL RESPONSIBILITIES AND THE REQUIREMENTS OF ENVIRONMENTAL NOTES WITHIN THE CONTRACT DOCUMENTS.

LISTED BATS

IN AN EFFORT TO MINIMIZE POTENTIAL IMPACTS TO ROOSTING BATS, SEASONAL CUTTING RESTRICTIONS WILL LIMIT THE CUTTING OF TIMBER TO THE PERIOD BETWEEN 15 OCTOBER AND 31 MARCH, THEREBY ASSURING THAT NO ROOSTING BATS ARE PRESENT DURING TREE REMOVAL.

PRIOR TO DEMOLITION OF THE EXISTING BRIDGE, THE STRUCTURE WILL BE SURVEYED FOR THE PRESENCE OF LISTED BATS. IF THE DEMOLITION IS TO BE INITIATED DURING SPRING MIGRATION (MARCH 15 TO MAY 15) OR FALL MIGRATION (AUGUST 15 TO NOVEMBER 15), THE SURVEY WILL BE PERFORMED ON THE DAY DEMOLITION WORK IS SCHEDULED TO BEGIN TO ENSURE NO BATS ARE ROOSTING ON THE BRIDGE. IF DEMOLITION IS INITIATED BETWEEN MAY 15 AND AUGUST 15, THE SURVEY WILL BE PERFORMED WITHIN 15 DAYS OF THE START OF DEMOLITION WORK. IF DEMOLITION OCCURS DURING HIBERNATION (NOVEMBER 15 TO MARCH 15), NO SURVEY WILL BE CONDUCTED UNLESS DEMOLITION ACTIVITIES EXTEND BEYOND THE HIBERNATION PERIOD AND INTO THE SPRING MIGRATION PERIOD. IF ANY LISTED BAT SPECIES ARE OBSERVED USING THE BRIDGE AS A TEMPORARY ROOST SITE, ODOT WILL CONTACT USFWS FOR GUIDANCE ON AN APPROPRIATE CONTINGENCY PLAN.

CALCULATED AMD
CHECKED SCC

GENERAL NOTES - ENVIRONMENTAL

LAW-93-0.00

J:\Project\OV\ODOT\15005112 Ironton Russell\LAW\81595\roadway\sheets\81595GN009.dgn - 12/7/2011 1:25:15 PM - jon_wanstrath

MUSSEL SURVEY AND RELOCATION PLAN

A) IN AN EFFORT TO MITIGATE POTENTIAL PROJECT IMPACTS TO MUSSELS (INCLUDING STATE OR FEDERALLY LISTED MUSSELS), AN EXTENSIVE MUSSEL SURVEY AND RELOCATION WILL BE CONDUCTED PRIOR TO PROJECT CONSTRUCTION OF THE PROPOSED BRIDGE WITHIN THE IMPACT ZONE. A SECOND SURVEY AND RELOCATION EFFORT WILL TAKE PLACE WITHIN THE IMPACT FOOTPRINT OF THE EXISTING BRIDGE JUST PRIOR TO REMOVAL. ALL MUSSELS COLLECTED WILL BE RELOCATED TO A SAFE AND SUITABLE HABITAT LOCATION OUTSIDE OF THE PROJECT IMPACT AREA.

B) IN GENERAL, THE MUSSEL SURVEY AND RELOCATION PLAN WILL INCLUDE:

I) MEASURES TO MAXIMIZE THE SUCCESS RELOCATION OF NATIVE MUSSELS.
II) MEASURES TO SURVEY AND REMOVE NATIVE MUSSELS EMBEDDED IN THE SUBSTRATES OF THE PROJECT AREA.
III) MEASURES TO HANDLE HOLD AND TRANSPORT NATIVE MUSSELS TO THE RELOCATION SITE.
IV) DELINEATION OF THE PROPOSED RELOCATION SITE.

C) PRIOR TO COMMENCEMENT OF MUSSEL RELOCATION ACTIVITIES, SURVEY AND RELOCATION PLANS WILL BE DESIGNED AND SUBMITTED FOR APPROVAL TO ENGINEER FOR COORDINATION WITH ODOT-OES AND THE USFWS (COLUMBUS, OHIO AND FRANKFORT, KENTUCKY FIELD OFFICES) AND WITH ODNR AND KDFWR. THE MUSSEL RELOCATION ACTIVITIES, SURVEY AND RELOCATION PLANS SHALL BE SUBMITTED TO ODOT-OES NO LESS THAN 21 DAYS PRIOR TO THE START OF THE ACTIVITY. NO WORK SHALL TAKE PLACE UNTIL THE CONTRACTOR PREPARED MUSSEL SURVEY AND RELOCATION PLAN IS APPROVED IN WRITING BY USFWS (COLUMBUS AND KENTUCKY FIELD OFFICES), THE OHIO DEPARTMENT OF NATURAL RESOURCES (ODNR) AND THE KENTUCKY DEPARTMENT OF FISH AND WILDLIFE RESOURCES (KDFWR).

D) THE CONTRACTOR SHALL NOTIFY THE THE ENGINEER AND ODOT-OES IN WRITING AT LEAST FOUR WORKING DAYS IN ADVANCE OF THE ANTICIPATED DATE THAT THE APPROVED MUSSEL SALVAGE WILL COMMENCE FOR COORDINATION WITH USFWS (OH & KY), ODNR-DOW AND KDFWR.

E) MUSSEL SURVEY AND RELOCATION ACTIVITIES SHALL OCCUR NO MORE THAN SIX MONTHS PRIOR TO PROPOSED CONSTRUCTION/DEMOLITION ACTIVITIES. THE EXCEPTION TO THIS WOULD BE WHEN IN-STREAM WORK IS EXPECTED TO OCCUR IN THE MONTHS OF APRIL OR MAY. UNDER THESE CIRCUMSTANCES, THE MUSSEL RELOCATIONS WOULD LIKELY OCCUR IN THE FALL PRIOR TO CONSTRUCTION ACTIVITIES (WHICH MAY BE GREATER THAN SIX MONTHS OUT), WHEN WATER CONDITIONS ARE MORE CONDUCIVE TO SURVEYS/RELOCATION EFFORTS AND ARE SAFER FOR RELOCATED MUSSELS.

F) MUSSEL SURVEY PROTOCOLS:

I) SURVEYS SHALL BE CONDUCTED THROUGHOUT THE DIRECT IMPACT AREA OF THE BRIDGE DEMOLITION SITE AND WITHIN THE LIKELY SCOUR AREAS AROUND PROPOSED PIERS (AND CONSTRUCTION COFFERDAMS) AS WELL AS ANY OTHER AREAS WHERE DISTURBANCE TO RIVER BED SUBSTRATES IS ANTICIPATED. THE TWO IMPACT AREAS SHALL BE ADEQUATELY MARKED PRIOR TO INITIATING THE MUSSEL SALVAGE. THE MARKING CAN BE DONE WITH PHYSICAL MARKERS (E.G., UNDERWATER STAKES AND/OR BUOYS WITH WEIGHTS), GLOBAL POSITIONING SYSTEM (GPS) LOCATIONS, OR A COMBINATION OF THESE TWO METHODS. ALTERNATIVE METHODS CAN BE PROPOSED TO THE SERVICE AND MAY BE IMPLEMENTED UPON THE WRITTEN APPROVAL OF THE SERVICE.

II) THE MUSSEL SALVAGE SHALL BE MONITORED DAILY BY ONE OR MORE EXPERIENCED AND PROPERLY PERMITTED MUSSEL BIOLOGISTS AND RELATED SALVAGE STAFF. ALL PERSONNEL ASSIGNED TO PARTICIPATE IN THE MUSSEL SALVAGE SHALL BE ADEQUATELY TRAINED AND EXPERIENCED IN THE SALVAGE METHODS THAT WILL BE USED.

III) ALL MUSSELS ENCOUNTERED DURING THE SURVEY SHALL BE IDENTIFIED TO SPECIES AND MEASURED. SEX SHALL BE DETERMINED WHEN POSSIBLE FROM EXTERNAL SEXUAL DIMORPHISM. ALL RELOCATED MUSSELS SHALL BE MARKED WITH AN INDIVIDUAL IDENTIFICATION NUMBER UTILIZING AN ENGRAVING INSTRUMENT, TAKING CARE NOT TO ENGRAVE THE NUMBER THROUGH THE MUSSEL'S SHELL.

IV) THE MUSSEL SURVEY MUST BE CONDUCTED AT A TIME WHEN AT LEAST 50.8 CENTIMETERS (20 IN) OF VISIBILITY IN THE OHIO RIVER AT THE AFFECTED SITE IS PRESENT AT THE SURFACE IN ORDER TO AID IN THE LOCATION OF MUSSELS.

V) DIVERS SHALL USE OVERLAPPING PARALLEL TRANSECTS TO SEARCH FOR MUSSELS IN THE SUBSTRATE OF THE TWO AREAS WHERE EFFECTS ON LISTED MUSSELS ARE EXPECTED TO OCCUR. TRANSECTS WILL BE BROKEN INTO 10-METER SEGMENTS IN WHICH ALL MUSSEL COLLECTED IN EACH 10-METER SEGMENT WILL BE PLACED IN A MESH BAG AND SENT TO A BOAT ON THE RIVER'S SURFACE FOR IDENTIFICATION AND PROCESSING BY AN EXPERIENCED MUSSEL BIOLOGIST. ALL TRANSECTS AND SEGMENTS WILL BE UNIQUELY NUMBERED OR OTHERWISE IDENTIFIED ACCORDING TO THE IMPACT AREA FROM WHICH THE MUSSELS WERE COLLECTED TO ENSURE THAT COLLECTIONS ARE COMPLETED WITHIN THE AFFECTED AREAS. SEARCHES WITHIN THE FOOTPRINTS OF THE PIERS FOR BOTH THE PROPOSED AND EXISTING STRUCTURES SHOULD BE VERY INTENSIVE, INCLUDING SIGNIFICANT GRUBBING OF THE SUBSTRATE WITHIN THAT AREA, TO ENSURE THAT ALL LISTED MUSSELS THAT COULD POSSIBLY BE FOUND ARE FOUND. THIS WILL MINIMIZE DIRECT MORTALITY OF LISTED MUSSELS WITHIN THE FOOTPRINT OF THE PIERS, WHICH WILL BE DEWATERED AND FILLED DURING CONSTRUCTION OF THE PROPOSED STRUCTURE AND DEWATERED, CORE-DRILLED, AND BLASTED DURING DEMOLITION OF THE EXISTING STRUCTURE.

VI) ALL MUSSELS COLLECTED DURING THE SALVAGE EFFORT SHALL BE HELD IN (A) MESH COLLECTION BAGS AND SUBMERGED IN THE RIVER OR (B) MESH COLLECTION BAGS WITHIN AN AERATED COOLER OR TUB THAT CONTAINS A PUMP TO ENSURE A FRESH SUPPLY OF RIVER WATER WHILE BEING IDENTIFIED AND PROCESSED AT THE COLLECTION SITE. FURTHER, COLLECTED MUSSELS SHALL BE HELD IN THE MESH COLLECTION BAGS WITHIN AN AERATED COOLER OR TUB THAT CONTAINS AN AERATION PUMP TO ENSURE A FRESH SUPPLY OF RIVER WATER WHILE BEING TRANSPORTED FROM THE COLLECTION SITE TO THE REINTRODUCTION SITE. ONCE AT THE REINTRODUCTION SITE, THE MUSSELS SHALL BE HELD IN THE MESH COLLECTION BAGS AND IN RIVER WATER WHILE BEING PREPARED FOR RELEASE WITHIN THE REINTRODUCTION SITE.

VII) THE NUMBER OF MESH COLLECTION BAGS, AERATED COOLERS OR TUBS, AND PUMPS SHALL BE SUFFICIENT TO ENSURE THAT ALL MUSSELS RECEIVE ADEQUATE WATER AND DISSOLVED OXYGEN (DO) SUPPLIES. ADDITIONAL OR BACK-UP SYSTEMS (E.G., AERATION PUMPS) SHOULD BE AVAILABLE IN THE CASE OF EQUIPMENT FAILURES TO LIMIT THE PROBABILITY OF MUSSEL MORTALITY. FOR COLLECTED MUSSELS HELD IN COOLERS OR TUBS, DO CONCENTRATIONS MUST BE GREATER THAN 6.0 MG/L AND MUST BE MONITORED EVERY HOUR DURING THE COLLECTION AND EVERY SIX HOURS DURING OFF-HOURS IF MUSSELS ARE BEING HELD AFTER COLLECTION. IF DO CONCENTRATIONS FALL BELOW 6.0 MG/L, ADDITIONAL AERATION OR OTHER REASONABLE STEPS MUST BE TAKEN TO LIMIT STRESS AND POTENTIAL MORTALITY TO THE COLLECTED MUSSELS. FOR COLLECTED MUSSELS HELD IN COOLERS OR TUBS, WATER TEMPERATURE MUST BE MONITORED EVERY HOUR DURING THE COLLECTION AND EVERY SIX HOURS DURING OFF-HOURS IF MUSSELS ARE BEING HELD AFTER COLLECTION. IF WATER TEMPERATURES EXCEED THE CURRENT SURFACE TEMPERATURE OF THE RIVER, THE WATER MUST BE CHANGED OR REPLENISHED WITH RIVER WATER. ALL MUSSELS SHOULD BE CONSTANTLY COVERED WITH WATER BETWEEN THE TIME THEY ARE COLLECTED AND THE TIME THEY ARE PLACED AT THE REINTRODUCTION SITE.

VIII) REMOVE ALL ZEBRA MUSSELS THOROUGHLY FROM EQUIPMENT AND MUSSELS COLLECTED DURING THE SURVEY.

G) MUSSEL RELOCATION PROTOCOLS:

I) THE RELOCATION SITE WILL BE SELECTED THAT HAS SUBSTRATES SIMILAR TO THE SOURCE SITE AND, IF POSSIBLE, SHOULD BE NEARBY (GREENUP POOL) IN THE OHIO RIVER. IF A SUITABLE RELOCATION SITE WITHIN THE OHIO RIVER, GREENUP POOL IS NOT AVAILABLE, THE RELOCATION SITE WILL BE WITHIN THE UPPER OHIO RIVER BASIN, AS NEARBY AS POSSIBLE. ANY RELOCATION SITE OUTSIDE THE OHIO RIVER, GREENUP POOL WILL REQUIRE A FISH SURVEY TO SHOW POTENTIAL FISH HOSTS ARE AVAILABLE.

II) RELOCATION SHOULD BE CONDUCTED DURING SPRING OR AUTUMN WHEN AIR TEMPERATURES ARE BETWEEN 12 - 28°C AND WATER TEMPERATURE IS BETWEEN 15 - 23°C. LIVE MUSSELS SHOULD HAVE AERIAL EXPOSURE OF LESS THAN 4 HOURS BETWEEN REMOVAL FROM THE SOURCE AND RE-ESTABLISHMENT AT THE RELOCATION SITE AND SHOULD NEVER BE ALLOWED TO DRY. IF POSSIBLE, MUSSELS SHOULD BE RELOCATED INTO AN AREA KNOWN TO CONTAIN LIVING POPULATIONS OF LIVE MUSSELS (IN SITU REFUGIA) WITHIN THE GREENUP POOL.

III) THE RELOCATION SITE WILL BE ADEQUATELY MARKED PRIOR TO INITIATING THE MUSSEL SALVAGE. THE MARKING CAN BE DONE WITH PHYSICAL MARKERS (E.G., UNDERWATER STAKES AND/OR BUOYS WITH WEIGHTS), GLOBAL POSITIONING SYSTEM (GPS) LOCATIONS, OR A COMBINATION OF THESE TWO METHODS. ALTERNATIVE METHODS CAN BE PROPOSED TO THE SERVICE AND MAY BE IMPLEMENTED UPON THE WRITTEN APPROVAL OF THE SERVICE. THE RELOCATION SITE SHALL BE LOCATED UPSTREAM OF THE PROJECT AREA IN A LOCATION THAT CONTAINS SUITABLE SUBSTRATE FOR MUSSELS AND IS NOT BEING OBVIOUSLY IMPACTED BY ADJACENT LAND USES. THE SERVICE MUST APPROVE THE RELOCATION SITE PRIOR TO ITS USE IN THE MUSSEL SALVAGE.

IV) WRITTEN NOTIFICATION TO THE ENGINEER FOR COORDINATION WITH OES, USFWS AND ODNR-DOW IS REQUIRED SHOULD ANY FEDERALLY LISTED MUSSEL BE LOCATED DURING THE MUSSEL SURVEY. THE NOTIFICATION WILL INCLUDE THE SPECIES OF MUSSEL AND THE NUMBER OF INDIVIDUALS LOCATED.

V) LISTED MUSSELS ARE (A) NOT HELD MORE THAN THREE HOURS BEFORE BEING TRANSPORTED TO THE REINTRODUCTION SITE, (B) HAND-PLACED WITHIN THE SUBSTRATE WITH THE POSTERIOR END OF EACH MUSSEL PROTRUDING SLIGHTLY (I.E., NO MORE THAN 50 PERCENT OF THE SHELL EXPOSED) FROM THE SUBSTRATE, AND (C) PLACED IN A LOOSE AGGREGATION, THE BOUNDARIES OF WHICH WILL BE MARKED WITH STEEL STAKES AND GPS POINT SO THAT THE FEDERALLY LISTED MUSSELS CAN BE RELOCATED AND MONITORED AT TWO MONTHS AND ONE YEAR AFTER RELOCATION EFFORTS HAVE BEEN COMPLETED.

MONITORING PLAN:

A) A MONITORING REPORT SHALL BE SUBMITTED TO THE ENGINEER AND ODOT-OES FOR COORDINATION WITH THE USFWS (OH & KY), ODNR DOW, AND KDFWR AT THE COMPLETION OF THE INITIAL MUSSEL RELOCATION FOR THE BRIDGE CONSTRUCTION. THE REPORT SHALL INCLUDE:

I) INFORMATION ON THE NUMBERS AND SEXES (IF APPLICABLE) OF INDIVIDUALS COLLECTED BY SPECIES, TRANSECT, AND TRANSECT SEGMENT,

II) DISSOLVED OXYGEN LEVELS AND WATER TEMPERATURES COLLECTED DURING THE TIMES THAT MUSSELS WERE HANDLED, AND

III) SUMMARY INFORMATION ON TRANSPORT TIMES FOR RELOCATED MUSSELS, INCLUDING INFORMATION ON NON-LISTED AND LISTED MUSSELS (AS APPLICABLE). THE REPORT SHALL ALSO CONTAIN REPRESENTATIVE PHOTOGRAPHS OF THE SALVAGE EFFORT AND THE RELOCATION AREA.

IV) REPRESENTATIVE PHOTOGRAPHS OF THE SALVAGE EFFORT AND THE RELOCATION AREA.

V) A LOCATION MAP OF THE RELOCATION SITE CLEARLY MARKED WITH LONGITUDE AND LATITUDE COORDINATES

B) THE MONITORING REPORT WILL BE UPDATED AND SUBMITTED TO ENGINEER AND OES FOR COORDINATION WITH USFWS (OH & KY), ODNR DOW, AND KDFWR 2 MONTHS AFTER THE INITIAL MUSSEL RELOCATION AND 1 YEAR FROM THE INITIAL MUSSEL RELOCATION. THE UPDATED MONITORING PLAN WILL INCLUDE:

I) DISCUSSION OF THE MATERIALS AND METHODS UTILIZED,

II) MAPS OF THE RELOCATION AREA,

III) STREAM GAUGE DATA,

IV) PHOTOGRAPHS OF REPRESENTATIVE MUSSELS AND,

V) STATUS OF THE RELOCATED MUSSELS

VI) PROJECT INSPECTION:

PROJECT INSPECTION:

THE ODOT AND FHWA SHALL CONDUCT A SITE INSPECTION WITH THE SERVICE DURING THE MUSSEL SALVAGE EFFORT. ODOT WILL KEEP THE USFWS APPRISED OF THE CONSTRUCTION SCHEDULE FOR THE PROJECT AND USFWS WILL BE GIVEN THE OPPORTUNITY TO CONDUCT PERIODIC SITE VISITS TO ENSURE THAT THE SITE IS BEING MONITORED AND THAT ALL BMPS ARE IMPLEMENTED AND FUNCTIONING PROPERLY.

NOTIFICATION:

THE CONTRACTOR SHALL UPON LOCATING ANY DEAD, INJURED, OR SICK INDIVIDUAL OF AN ENDANGERED SPECIES NOTIFY THE THE ENGINEER AND ODOT-OES IN WRITING WITHIN 2 WORKING DAYS FOR COORDINATION WITH USFWS (OH & KY), ODNR-DOW AND KDFWR.

CARE SHOULD BE TAKEN IN HANDLING SICK OR INJURED INDIVIDUALS AND IN THE PRESERVATION OF SPECIMENS IN THE BEST POSSIBLE STATE FOR LATER ANALYSIS OF CAUSE OF DEATH OR INJURY. PRESERVATION OF SUCH SPECIMENS SHOULD BE DONE IN ETHANOL. THE USFWS WILL ADVISE THE CONTRACTOR IF THE SPECIMENS MUST BE RETAINED OR IF AN ALTERNATIVE MEANS OF DISPOSITION IS REQUIRED.

TAKE STATEMENT:

USFWS HAS DETERMINED THAT NO MORE THAN 6 FANSHELL, 6 PINK MUCKET, 6 SHEEPNOSE, AND 6 SNUFFBOX AND 13.9 ACRES OF MUSSEL HABITAT WILL BE INCIDENTALLY TAKEN. IF, DURING THE COURSE OF THE ACTION, THIS LEVEL OF INCIDENTAL TAKE IS EXCEEDED, SUCH INCIDENTAL TAKE REPRESENTS NEW INFORMATION REQUIRING RE-INITIATION OF CONSULTATION AND REVIEW OF THE REASONABLE AND PRUDENT MEASURES PROVIDED. THE CONTRACTOR SHALL IMMEDIATELY PROVIDE NOTIFICATION AND AN EXPLANATION OF THE CAUSES OF THE TAKING TO THE THE ENGINEER AND ODOT-OES IN WRITING FOR COORDINATION WITH USFWS (OH & KY), ODNR-DOW AND KDFWR.

CALCULATED AMD
CHECKED SCC

GENERAL NOTES - ENVIRONMENTAL

LAW-93-0.00

J:\Project\O\ODOT\15005112 Ironton Russell\LAW\81595\roadway\sheets\81595GN012.dgn - 12/7/2011 1:25:16 PM - jon_wanstrath

PEREGRINE FALCONS

A KNOWN PEREGRINE FALCON NEST IS LOCATED ON THE EXISTING IRONTON-RUSSELL BRIDGE AND HAS BEEN ON THIS STRUCTURE FOR OVER 10 YEARS. PEREGRINE FALCONS ARE PROTECTED AS A STATE THREATENED SPECIES AND UNDER THE FEDERAL MIGRATORY BIRD TREATY ACT OF 1918. THE OHIO DEPARTMENT OF NATURAL RESOURCES, DIVISION OF WILDLIFE (ODNR-DOW) AND THE U.S. FISH AND WILDLIFE (USFWS) MUST BE PRESENT AT THE PRE-CONSTRUCTION MEETING FOR THE NEW BRIDGE TO DISCUSS POSSIBLE INTERACTIONS WITH THE PEREGRINE FALCON, AND AVOIDANCE AND MINIMIZATION TECHNIQUES THAT ODNR, ODOT, AND THE CONTRACTOR CAN EMPLOY TOGETHER TO REDUCE THE LIKELIHOOD OF IMPACTING THE BIRDS. THE CONTRACTORS SHOULD BE AWARE THAT THE BIRDS CAN BE TERRITORIAL AND ALSO CLEARLY BE ADVISED THAT TAKE OF THIS ANIMAL IS A STATE AND FEDERAL VIOLATION; NO FORCE OR DETERRENTS SHOULD BE USED AGAINST THE BIRDS. SHOULD THE CONTRACTOR ENCOUNTER A PEREGRINE FALCON DURING THE CONSTRUCTION OF THE NEW BRIDGE, THE CONTRACTOR MUST IMMEDIATELY NOTIFY THE PROJECT ENGINEER. WITHIN 24 HOURS, THE PROJECT ENGINEER WILL NOTIFY ODNR-DOW WILDLIFE RESEARCH BIOLOGIST, JENNIFER NORRIS, AT 740-747-2525 EXT: 26 OR MOBILE 419-602-3141. ENCOUNTERS INCLUDE, BUT ARE NOT LIMITED TO, FALCONS SHOWING AGGRESSIVE BEHAVIOR TOWARDS WORKERS CONSTRUCTING THE BRIDGE, OR ANY ATTEMPTS THE FALCONS MAY MAKE TO NEST ON THE BRIDGE STRUCTURE DURING CONSTRUCTION, AND THE PRESENCE OF ANY FALCONS ON THE BRIDGE STRUCTURE WHEN CONSTRUCTION ACTIVITIES MAY PUT THEM IN HARMS WAY. ODOT AND ODNR-DOW WILL AGREE ON COURSE OF ACTION IF THE CONSTRUCTION ACTIVITIES ARE LIKELY TO IMPACT THE FALCON.

THE PROJECT REQUIRES THE PLACEMENT OF A NESTING BOX OR PLATFORM FOR THE STATE THREATENED PEREGRINE FALCON ON THE NEW BRIDGE. THE TYPE OF BOX OR PLATFORM AND LOCATION SHALL BE APPROVED BY THE OHIO DEPARTMENT OF NATURAL RESOURCES, DIVISION OF WILDLIFE PRIOR TO PLACEMENT. ODNR-DOW WILDLIFE RESEARCH BIOLOGIST, JENNIFER NORRIS, SHOULD BE CONTACTED AT 740-747-2525 EXT: 26 TO DISCUSS TYPE AND PLACEMENT OF THE NESTING PLATFORM.

A KNOWN PEREGRINE FALCON NEST IS LOCATED ON THE EXISTING IRONTON-RUSSELL BRIDGE AND HAS BEEN ON THIS STRUCTURE FOR OVER 10 YEARS. PEREGRINE FALCONS ARE PROTECTED AS A STATE THREATENED SPECIES AND UNDER THE FEDERAL MIGRATORY BIRD TREATY ACT OF 1918. DEMOLITION SHOULD ONLY OCCUR FROM SEPTEMBER 1 TO FEBRUARY 1. THE OHIO DEPARTMENT OF NATURAL RESOURCES, DIVISION OF WILDLIFE (ODNR-DOW) MUST BE PRESENT AT THE PRE-CONSTRUCTION MEETING FOR THE DEMOLITION OF THE EXISTING BRIDGE TO DISCUSS POSSIBLE INTERACTIONS WITH THE PEREGRINE FALCON, AND AVOIDANCE AND MINIMIZATION TECHNIQUES THAT ODNR, ODOT, AND THE CONTRACTOR CAN EMPLOY TOGETHER TO REDUCE THE LIKELIHOOD OF IMPACTING THE BIRDS. SHOULD THE CONTRACTOR ENCOUNTER A PEREGRINE FALCON DURING THE DEMOLITION, THE CONTRACTOR MUST IMMEDIATELY NOTIFY THE PROJECT ENGINEER. WITHIN 24 HOURS, THE PROJECT ENGINEER WILL NOTIFY ODNR-DOW WILDLIFE RESEARCH BIOLOGIST, JENNIFER NORRIS, AT 740-747-2525 EXT: 26 OR MOBILE 419-602-3141. ENCOUNTERS INCLUDE, BUT ARE NOT LIMITED TO, FALCONS SHOWING AGGRESSIVE BEHAVIOR TOWARDS WORKERS DEMOLISHING THE BRIDGE, ANY ATTEMPTS THE FALCONS MAY MAKE TO NEST ON THE BRIDGE STRUCTURE DURING DEMOLITION, AND THE PRESENCE OF ANY FALCONS ON THE BRIDGE STRUCTURE WHEN DEMOLITION ACTIVITIES MAY PUT THEM IN HARMS WAY. ODOT AND ODNR-DOW WILL AGREE ON COURSE OF ACTION IF THE DEMOLITION ACTIVITIES ARE LIKELY TO IMPACT THE FALCON. THE CONTRACTORS SHOULD BE AWARE THAT THE BIRDS CAN BE TERRITORIAL AND ALSO CLEARLY BE ADVISED THAT TAKE OF THIS ANIMAL IS A STATE AND FEDERAL VIOLATION; NO FORCE OR DETERRENTS SHOULD BE USED AGAINST THE BIRDS.

MUNICIPAL, INDUSTRIAL, AND HAZARDOUS WASTE

ENVIRONMENTAL COMMITMENTS:

THERE IS A POSSIBILITY OF ENCOUNTERING REGULATED SUBSTANCES ON THE PROPERTIES DURING CONSTRUCTION. IF ENCOUNTERED, APPROPRIATE REMEDIAL MEASURES WILL BE INCORPORATED INTO THE PROJECT. SEE SHEET 26

THE CONTRACTOR SHALL DESIGN AND DEVELOP A CONTINGENCY PLAN FOR EMERGENCY RESPONSE (I.E., SPILL CONTROL) TO BE IMPLEMENTED DURING CONSTRUCTION. THIS WOULD INCLUDE THE SUGGESTION OF NOT STORING OR STOCKPILING HAZARDOUS/TOXIC MATERIALS NEAR THE OHIO RIVER. STAGING AREAS SHOULD BE CONTAINED AND MADE AS SMALL AS POSSIBLE WITHOUT JEOPARDIZING THE SAFETY OF THE CONSTRUCTION TEAM.

SOCIAL ENVIRONMENT:

LAND USE AND GROWTH TRENDS

ENVIRONMENTAL COMMITMENTS:

DIRECTIONAL SIGNS SHALL BE USED TO GUIDE MOTORISTS TRAVELING FROM OHIO TO KENTUCKY TO THE DESTINATION POINTS AND SHOPPING OPPORTUNITIES TO BE FOUND IN THE DOWNTOWN RUSSELL BUSINESS COMMUNITY. (SIGNS ARE INCLUDED IN SIGNING PLAN ON SHEET 223.)

POPULATION AND HOUSING/RESIDENTIAL RELOCATIONS

ENVIRONMENTAL COMMITMENTS:

IN ACCORDANCE WITH THE UNIFORM RELOCATION ASSISTANCE AND ACQUISITION POLICIES ACT OF 1970, AS AMENDED IN 1987 (PUBLIC LAW 91-646 AND PUBLIC LAW 100-17), RELOCATION OF ANY INDIVIDUALS, FAMILIES OR BUSINESSES DISPLACED BY THIS PROJECT WILL BE COMPLETED IN A TIMELY AND HUMANE FASHION.

ECONOMY AND EMPLOYMENT/BUSINESS RELOCATIONS

ENVIRONMENTAL COMMITMENTS:

RELOCATION ASSISTANCE - DURING THE FINAL DESIGN PHASE OF PROJECT DEVELOPMENT, EFFORTS WILL BE UNDERTAKEN TO BETTER DEFINE THE LIMITS OF THE DISTURBED AREA FOR THE PROPOSED PROJECT. THE DETERMINATION OF STRIP TAKES, LOSS OF ON STREET PARKING AND LOSS OF ACCESS WILL BE MORE ACCURATELY DEFINED AT THAT TIME AND ANY RESULTING DISPLACEMENTS WILL BE IDENTIFIED. ALL DISPLACEMENTS IDENTIFIED DURING BOTH PRELIMINARY AND FINAL DESIGN WILL BE ADDRESSED IN ACCORDANCE WITH THE PROVISIONS OF THE UNIFORM RELOCATION ASSISTANCE AND ACQUISITION POLICIES ACT OR 1970, AS AMENDED IN 1987.

VISUAL RESOURCES

ENVIRONMENTAL COMMITMENTS:

MITIGATION MEASURES FOR VISUAL IMPACTS ASSOCIATED WITH THE CONSTRUCTION OF A REPLACEMENT BRIDGE UPSTREAM OF THE EXISTING CROSSING WOULD BE IMPLEMENTED IN ACCORDANCE WITH SECTION 106 (36 CFR 800). MITIGATION MEASURES COULD INCLUDE COLORS, TEXTURES AND DIVERSITY OF MATERIALS TO BLEND THE STRUCTURE INTO ITS ENVIRONMENT. LANDSCAPING AND OTHER VISUAL TREATMENTS COULD BE INCLUDED IN THE DESIGN OF THE IRONTON TOUCHDOWN TO SOFTEN THE TRANSITION FROM THE LARGE BRIDGE AND APPROACHES TO THE CITY STREETS AND COMMERCIAL DEVELOPMENT. ALL MITIGATION MEASURES WOULD NEED TO BE BALANCED WITH ANY MITIGATION MEASURES STIPULATED AS PART OF THE SECTION 106 REVIEW, CONCERNS FOR INITIAL COST OF CONSTRUCTION, AS WELL AS FUTURE MAINTENANCE COSTS.

ENVIRONMENTAL JUSTICE

ENVIRONMENTAL COMMITMENTS:

DURING FINAL DESIGN: THE OUTREACH PROGRAMS WILL CONTINUE TO ACTIVELY SOLICIT INPUT FROM AND FACILITATE A DIALOG WITH, LEADERS FROM THE MINORITY AND LOW-INCOME COMMUNITY AND CITIZEN GROUPS WHEN DEVELOPING MITIGATION MEASURES THAT WOULD AVOID, REDUCE, OR OFFSET INDIRECT EFFECTS AND ADDRESS ENVIRONMENTAL JUSTICE CONCERNS.

HISTORICAL RESOURCES

ENVIRONMENTAL COMMITMENTS:

IN COMPLIANCE WITH 36 CFR 800.6(B)(2) AND THE DEPARTMENT OF TRANSPORTATION, FEDERAL HIGHWAY ADMINISTRATION PROGRAMMATIC SECTION 4(F) EVALUATION AND APPROVAL FOR FHWA PROJECTS THAT NECESSITATE THE USE OF HISTORIC BRIDGES, THE ADVERSE EFFECT WOULD BE MITIGATED IN CONSULTATION WITH THE OSHPO, THE KHC, THE ACHP, THE FHWA AND ANY OTHER IDENTIFIED CONSULTING PARTIES. DOCUMENTATION AND A MEMORANDUM OF AGREEMENT (MOA), AS SPECIFIED 36 CFR 800.11(E) (F) HAS BEEN PREPARED. STIPULATIONS OF THE MOA REFLECT THE CONSULTATION PROCESS BETWEEN THE PARTICIPATING AGENCIES AND CONSULTING PARTIES. MEASURES TO MINIMIZE AND MITIGATE THE ADVERSE EFFECTS, AS OUTLINED IN THE MOA, INCLUDE COMMEMORATIVE PLAQUES, AND HISTORIC AMERICAN ENGINEERING RECORD (HAER) DOCUMENTATION OF THE EXISTING IRONTON-RUSSELL BRIDGE.

SECTION 4(F) HISTORY/ARCHITECTURE

ENVIRONMENTAL COMMITMENTS:

IN COMPLIANCE WITH 36 CFR 800.6(B)(2) AND 36 CFR 800.11(E)(F), ODOT HAS PREPARED, IN CONSULTATION WITH PARTICIPATING AGENCIES AND CONSULTING PARTIES, A MEMORANDUM OF AGREEMENT (MOA). MEASURES TO MINIMIZE AND MITIGATE THE ADVERSE EFFECTS, AS OUTLINED IN THE MOA, INCLUDE COMMEMORATIVE PLAQUES, AND HISTORIC AMERICAN ENGINEERING RECORD (HAER) DOCUMENTATION OF THE EXISTING IRONTON-RUSSELL BRIDGE.

PENDING IMPLEMENTATION OF THE MOA, AND IN COMPLIANCE WITH THE DEPARTMENT OF TRANSPORTATION, FEDERAL HIGHWAY ADMINISTRATION PROGRAMMATIC SECTION 4(F) EVALUATION AND APPROVAL FOR FHWA PROJECTS THAT NECESSITATE THE USE OF HISTORIC BRIDGES, A PRELIMINARY SECTION 4(F) EVALUATION FOR IMPACT ON THE IRONTON-RUSSELL BRIDGE (SFN 4401255) HAS BEEN PREPARED.

CONSTRUCTION IMPACTS

SHORT-TERM IMPACTS

ENVIRONMENTAL COMMITMENTS:

WATER QUALITY IMPACTS WERE ASSESSED FOR SURFACE WATER, GROUNDWATER, AND PUBLIC WATER SUPPLIES. WATER QUALITY IMPACTS WOULD LIKELY BE CONFINED TO THE TEMPORARY INFLUX OF SEDIMENT LADEN SURFACE RUNOFF DURING CONSTRUCTION. COMPLIANCE WITH OHIO DOT'S "CONSTRUCTION AND MATERIAL SPECIFICATIONS" (2010) WILL ASSURE THE MINIMIZATION OF IMPACTS TO THE SURROUNDING ENVIRONMENT DURING CONSTRUCTION AS WELL AS DURING OPERATION AND MAINTENANCE OF THE BRIDGE. NO LONG-TERM IMPACTS ARE EXPECTED.

THE CONTRACTOR SHALL DESIGN AND DEVELOP A CONTINGENCY PLAN FOR EMERGENCY RESPONSE (IE., SPILL CONTROL) FOR IMPLEMENTATION DURING CONSTRUCTION, INCLUDING NOT STORING OR STOCKPILING HAZARDOUS/TOXIC MATERIALS NEAR THE OHIO RIVER. STAGING AREAS WOULD BE CONTAINED AND MADE AS SMALL AS POSSIBLE WITHOUT JEOPARDIZING THE SAFETY OF THE CONSTRUCTION TEAM.

THE SIZE AND AMOUNT OF TIME WORKING IN THE OHIO RIVER WOULD BE MINIMIZED WHERE PRACTICABLE AND FEASIBLE.

COORDINATION WOULD ALSO BE CONDUCTED WITH THE RAILROADS TO DETERMINE THEIR REQUIREMENTS DURING DEMOLITION AND CONSTRUCTION.

CALCULATED AMD
CHECKED SCC

GENERAL NOTES - ENVIRONMENTAL

LAW-93-0.00

25B
788

J:\Project\OA\ODOT\15005112 Ironton Russell\LAW\81595\roadway\sheets\81595GN013.dgn - 12/7/2011 1:25:18 PM - jon_wanstrath

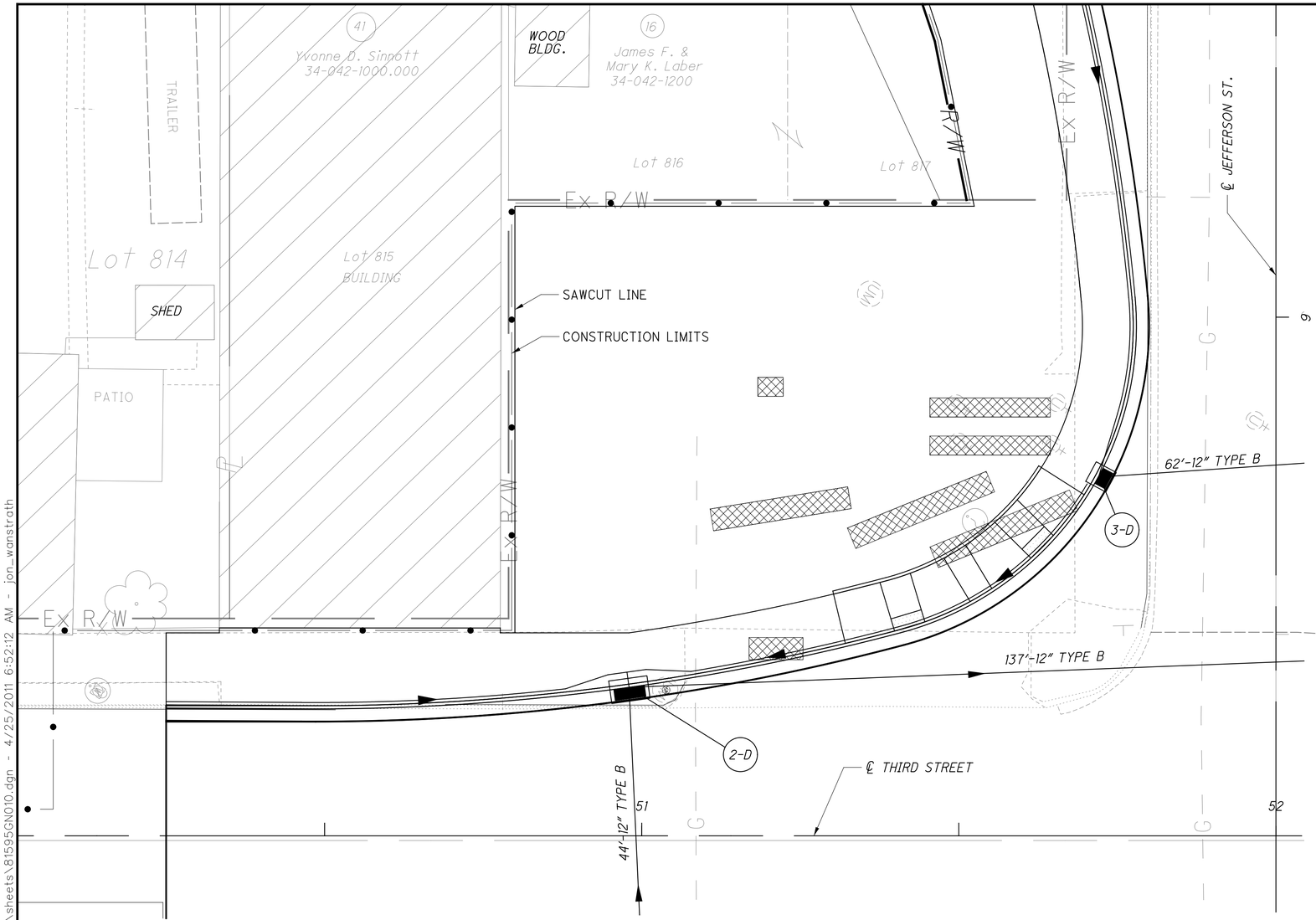

- DENOTES POTENTIAL UNDERGROUND STORAGE TANK

SITE SPECIFIC HEALTH AND SAFETY PLAN (SSHSP)

THE CONTRACTOR SHALL CERTIFY IN WRITING TO THE ENGINEER WITHIN TWO WEEKS AFTER CONTRACT EXECUTION THAT THE CONTRACTOR HAS PREPARED A SSHSP IN ACCORDANCE WITH OSHA 29 CFR PART 1910.120 FOR OPERATIONS INVOLVING HAZARDOUS SUBSTANCES WITHIN THE AFOREMENTIONED LIMITS. THE CONTRACTOR SHALL MAKE THE SSHSP AVAILABLE AT THE PROJECT SITE. COPIES OF THE ENVIRONMENTAL STUDIES ARE AVAILABLE FOR EXAMINATION IN THE OFFICE OF CONTRACTS AND THE ODOT DISTRICT 9, OFFICE OF PLANNING. THIS INFORMATION MAY BE USED BY THE CONTRACTOR TO DEVELOP THE SSHSP.

POSSIBLE UNDERGROUND STORAGE TANKS

ENVIRONMENTAL STUDIES HAVE INDICATED THAT SEVEN UNDERGROUND STORAGE TANKS (UST'S) ARE LOCATED ON PARCEL 17 LOCATED AT THE SOUTHWEST CORNER OF 3RD STREET AND JEFFERSON STREET. THE CONTRACTOR SHALL REMOVE THESE AND ANY OTHER UST'S ENCOUNTERED ON THIS PARCEL OF LAND IN ACCORDANCE WITH ITEM 202.08 OF ODOT'S CONSTRUCTION AND MATERIAL SPECIFICATION.

ITEM 202 - REGULATED UNDERGROUND STORAGE TANK REMOVED 7 EACH

ITEM SPECIAL - WORK INVOLVING PETROLEUM CONTAMINATED SOIL

THE CONTRACTOR SHALL PROVIDE TESTING OF ALL MATERIAL EXCAVATED TO REMOVE THE TANKS ACCORDING TO THE REQUIREMENTS OF THE AGENCIES NAMED IN ITEM 202.08. THE INSPECTOR SHALL FIELD-SCREEN THE EXCAVATED MATERIAL FOR PETROLEUM CONTAMINATION USING AN ORGANIC VAPOR ANALYZER (OVA). AT THE DISCRETION OF THE ENGINEER, THE EXCAVATED MATERIAL, WHICH EXHIBITS PETROLEUM CONTAMINATION, SHALL BE STOCKPILED AND SEGREGATED WHILE SAMPLES OF THE MATERIAL ARE ANALYZED BY AN INDEPENDENT ANALYTICAL LABORATORY. FIELD-SCREENING RESULTS AND VISUAL OBSERVATION WILL BE THE BASIS FOR SEGREGATING EXCAVATED MATERIAL. SOIL SAMPLES SHALL TO BE TESTED FOR BTEX (BENZENE, TOLUENE, ETHYL BENZENE, & XYLENE) BY METHOD 8020 AND TPH BY METHOD 8015. IF THE BTEX AND/OR TPH LEVELS EXCEED LEVELS SET FORTH BY THE OHIO EPA PETROLEUM CONTAMINATED SOIL POLICY, THE MATERIAL SHALL BE TREATED AS PETROLEUM CONTAMINATERD SOIL.

IF MATERIAL EXCAVATED FROM AROUND THE UST'S ARE FOUND TO CONTAIN PETROLEUM CONTAMINATED SOIL (PCS) THE CONTRACTOR SHALL BE RESPONSIBLE FOR OBTAINING ALL NECESSARY PERMITS AND APPROVALS AND TO TRANSPORT THE MATERIAL TO A LICENSED (BY THE LOCAL HEALTH DEPARTMENT) AND PERMITTED (BY THE OHIO ENVIRONMENTAL PROTECTION AGENCY) SOLID WASTE FACILITY OR A PETROLEUM CONTAMINATED SOIL REMEDIATION FACILITY FOR PROPER DISPOSAL OR REMEDIATION. PRIOR TO DISPOSAL, THE CONTRACTOR SHALL CONTACT THE PROPOSED FACILITY TO DETERMINE THE ADDITIONAL TESTING REQUIRED FOR DISPOSAL OR REMEDIATION AT THAT FACILITY. THE PRICES FOR THESE TESTS ARE TO BE INCLUDED IN THE ABOVE PAY ITEM. THE WORK INVOLVED IN THIS PAY ITEM INCLUDES DEVELOPING AND COMPLYING WITH A SITE SPECIFIC HEALTH AND SAFETY PLAN; HANDLING, STORAGE, TESTING (FOR DISPOSAL OR REMEDIATION); AND DISPOSAL OR REMEDIATION OF PCS. WHEN DIRECTED BY THE PROPOSED FACILITY, THE CONTRACTOR SHALL HAVE AN INDEPENDENT LABORATORY COLLECT SAMPLES AND TEST THE EXCAVATED OR STORED MATERIALS FOR PCS DISPOSAL OR REMEDIATION APPROVAL.

TEMPORARY STORAGE OF CONTAMINATED SOILS

ALL EXCAVATED MATERIAL, WHICH IS DETERMINED TO BE POTENTIALLY CONTAMINATED WITH PETROLEUM SUBSTANCES, SHALL BE STOCKPILED IN AN AREA PROVIDED BY THE CONTRACTOR AND APPROVED BY THE ENGINEER. THE CONTRACTOR SHALL STOCKPILE THE MATERIAL IN A LEAKPROOF, COVERED CONTAINER PROVIDED BY THE CONTRACTOR. THE MATERIAL SHALL REMAIN ON-SITE UNTIL ANALYTICAL RESULTS ARE RECEIVED BY THE ENGINEER.

AS AN ALTERNATE, THE ENGINEER MAY PERMIT TEMPORARY STORAGE OF SUSPECTED CONTAMINATED SOILS ON AN IMPERMEABLE MEMBRANE. THE MEMBRANE SHOULD BE SURROUNDED BY BALES OF STRAW TO PREVENT THE SUSPECT SOILS FROM COMING IN CONTACT WITH THE ORIGINAL SOILS. AN IMPERMEABLE MEMBRANE SHALL BE PLACED OVER THE STOCKPILE TO PREVENT CONTACT WITH PRECIPITATION AND/OR SURFACE RUN-OFF.

ALL TRANSPORT VEHICLES USED FOR THE MOVEMENT OF REGULATED SOILS AND/OR WATER SHALL MEET APPLICABLE LOCAL, STATE, AND FEDERAL REQUIREMENTS. THE CONTRACTOR SHALL MAINTAIN RECORDS (SUCH AS DAILY LOGS, LANDFILL TICKETS, MANIFESTS, ETC.) THAT DOCUMENT THE SOURCE, MOVEMENT, AND DESTINATION OF EACH TRUCKLOAD OF CONTAMINATED SOIL. ONE COPY OF EACH OF THESE RECORDS SHALL BE SUBMITTED TO THE ENGINEER.

PAYMENT

THE CONTRACTOR SHALL FURNISH ALL THE LABOR, EQUIPMENT, AND MATERIALS NECESSARY TO PROPERLY DEVELOP AND COMPLY WITH A SSHSP, EXCAVATE, STORE, TEST (FOR DISPOSAL), TRANSPORT, AND DISPOSE OF CONTAMINATED MATERIALS, REMOVAL OF UNDERGROUND STORAGE TANKS, INCLUDING ANY REQUIRED APPROVALS OR FEES WITHIN THE LIMITS IDENTIFIED ABOVE. PAYMENT FOR THIS WORK SHALL BE MADE AT THE CONTRACT PRICES BID PER TON AND PER REGULATED UNDERGROUND STORAGE TANK. WORK INVOLVING HAZARDOUS WASTE SHALL BE PAID FOR IN ACCORDANCE WITH SECTION 109.04 OF ODOT'S CMS.

THE FOLLOWING ESTIMATED QUANTITIES HAVE BEEN INCLUDED IN THE GENERAL SUMMARY FOR THE WORK NOTED ABOVE:

ITEM 690 SPECIAL - WORK INVOLVING PETROLEUM CONTAMINATED SOIL 100 TON

HORIZONTAL SCALE IN FEET
0 5 10 20

CALCULATED AMD
CHECKED SCC

REMOVAL OF UNDERGROUND STORAGE TANKS AND PETROLEUM-CONTAMINATED SOIL

LAW-93-0.00

26
788

J:\Project\0\ODOT\15005112 Ironton Russell\LAW\81595\roadway\sheets\81595GN010.dgn - 4/25/2011 6:52:12 AM - jon_wanstrath

ITEM 614, MAINTAINING TRAFFIC

A MINIMUM OF ONE 10 FOOT LANE OF TRAFFIC IN EACH DIRECTION SHALL BE MAINTAINED AT ALL TIMES BY USE OF THE EXISTING PAVEMENT, THE COMPLETED PAVEMENT, ITEM 615 PAVEMENT FOR MAINTAINING TRAFFIC, ITEM 615 ROADS FOR MAINTAINING TRAFFIC, THE EXISTING STRUCTURE, THE COMPLETED STRUCTURE AND TEMPORARY SURFACES USING ITEMS 410 AND 614.

LENGTH AND DURATION OF LANE CLOSURES AND RESTRICTIONS SHALL BE AT THE APPROVAL OF THE ENGINEER. IT IS THE INTENT TO MINIMIZED THE IMPACT TO THE TRAVELING PUBLIC. LANE CLOSURES OR RESTRICTIONS OVER SEGMENTS OF THE PROJECT IN WHICH NO WORK IS ANTICIPATED WITHIN A RESONABLE TIME FRAME, AS DETERMINED BY THE ENGINEER, SHALL NOT BE PERMITTED. THE LEVEL OF UTILIZATION OF MAINTENANCE OF TRAFFIC DEVICES SHALL BE COMMENSURATE WITH THE WORK IN PROGRESS.

BEFORE THE WORK BEGINS, THE CONTRACTOR SHALL SUBMIT TO THE ENGINEER THE NAMES AND TELEPHONE NUMBERS OF THE PERSON OR PERSONS WHO CAN BE CONTACTED (24) HOURS PER DAY BY THE OHIO DEPARTMENT OF TRANSPORTATION, AND ALL INTERESTED POLICIES AGENCIES. THIS PERSON OR PERSONS SHALL BE RESPONSIBLE FOR PLACING OR REPLACING NECESSARY TRAFFIC CONTROL DEVICES IN ACCORDANCE WITH THE OHIO MANUAL OF UNIFORM CONTROL DEVICES.

THE CONTRACTOR WILL ADVISE THE DISTRICT PUBLIC INFORMATION OFFICER AT (740)773-2691, OR FAX (740)779-2530 SEVEN (7) DAYS PRIOR TO THE START OF CONSTRUCTION ACTIVITIES. THE PROJECT ENGINEER WILL PROVIDE ASSISTANCE/CLARIFICATION FOR ANY QUESTIONS.

IN ORDER FOR ODOT AND KYTC TO PROPERLY ROUTE OVERSIZED PERMIT LOADS, THE CONTRACTOR SHALL PROVIDE THE DISTRICT 9 CONSTRUCTION ENGINEER WITH THE DATE HE PLANS TO PLACE THE LANE RESTRICTIONS INTO EFFECT IN NOT LESS THAN 21 DAYS IN ADVANCE OF THE SCHEDULED DATE.

MAINTAIN ACCESS TO ADJACENT PRIVATE PROPERTY AND BUSINESSES AT ALL TIMES.

RAILROAD TRAFFIC SHALL BE MAINTAINED AT ALL TIMES. CONTRACTOR SHALL NOT ENTER INTO THE ENVELOPE ESTABLISHED BY THE FOLLOWING CLEARANCES WHICH SHALL BE MAINITAINED AT ALL TIMES:

VERTICAL CLEARANCE: 23' ABOVE THE TOP OF HIGHEST RAIL UNLESS NOTED OTHERWISE

HORIZONTAL CLEARANCE: 13' HORIZONTALLY ON BOTH SIDES FROM THE CENTER OF EACH TRACK UNLESS NOTED OTHERWISE

SEE PROPOSAL FOR ADDITIONAL SPECIAL REQUIREMENTS WHEN WORKING ON, OVER, OR UNDER RAILROAD PROPERTY.

OHIO RIVER TRAFFIC SHALL BE MAINTAINED AT ALL TIMES IN ACCORDANCE WITH THE COAST GUARD PERMIT REQUIREMENTS AND NAVIGATION LIGHTING REQUIREMENTS.

NOTICE OF CLOSURE SIGNS, AS DETAILED IN THESE PLANS, SHALL BE ERECTED BY THE CONTRACTOR AT LEAST ONE WEEK IN ADVANCE OF THE SCHEDULED ROAD CLOSURE. THE SIGNS SHALL BE ERECTED ON THE RIGHT-HAND SIDE OF THE ROAD FACING TRAFFIC. THEY SHALL BE PLACED SO AS NOT TO INTERFERE WITH THE VISIBILITY OF ANY OTHER TRAFFIC CONTROL SIGNS. THEY SHOULD BE ERECTED AT THE POINT OF CLOSURE.

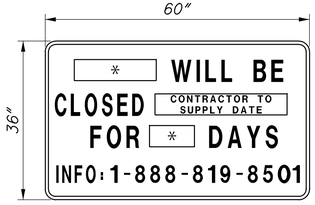

W20-H13

*STREET NAME & DAYS FURNISHED BY CONTRACTOR

THE FOLLOWING ESTIMATED QUANTITIES HAVE BEEN INCLUDED IN THE GENERAL SUMMARY FOR USE AS DETERMINED BY THE ENGINEER FOR THE MAINTENANCE OF TRAFFIC.

ITEM 410, TRAFFIC COMPACTED SURFACE, TYPE A OR B	50 TON
ITEM 614, ASPHALT CONCRETE FOR MAINTAINING TRAFFIC	50 CU. YD.
ITEM 616, WATER	50 M. GAL

THE CONTRACTOR SHALL PROVIDE, ERECT AND MAINTAIN STANDARD 48 X 30 INCH ROAD CLOSED SIGNS, SIGN SUPPORTS, BARRICADES AND LIGHTS, AS DETAILED IN SCD MT-101.60 AT THE LOCATIONS SHOWN IN THE PLANS DURING PERIODS IN WHICH THE AFFECTED ROADS ARE CLOSED TO TRAFFIC.

THE CONTRACTOR SHALL NOTIFY THE ENGINEER IN WRITING A MINIMUM OF TEN (10) DAYS IN ADVANCE OF THE ANTICIPATED DATE FOR EACH STREET CLOSURE. THE CONTRACTOR SHALL ERECT, MAINTAIN AND REMOVE WHEN NO LONGER NEEDED THE DETOUR SIGNING FOR THE STREET CLOSURES. THE FOLLOWING QUANTITY IS PROVIDED FOR ALL DETOUR SIGNING AS DETAILED:

ITEM 614 DETOUR SIGNING	LUMP SUM

ALL WORK AND TRAFFIC CONTROL DEVICES SHALL BE IN ACCORDANCE WITH CMS 614 AND OTHER APPLICABLE PORTIONS OF THE SPECIFICATIONS, AS WELL AS THE OHIO MANUAL OF UNIFORM TRAFFIC CONTROL DEVICES. PAYMENT FOR ALL LABOR, EQUIPMENT AND MATERIALS SHALL BE INCLUDED IN THE LUMP SUM CONTRACT PRICE FOR ITEM 614, MAINTAINING TRAFFIC, UNLESS SEPARATELY ITEMIZED IN THE PLAN. ITEM 614, MAINTAINING TRAFFIC SHALL INCLUDE 1 SPECIAL FLASHING ARROW PANEL AS SHOWN IN THE MAINTENANCE OF TRAFFIC PLANS.

SEQUENCE OF CONSTRUCTION

THE KENTUCKY PHASE SEQUENCE AND THE OHIO PHASE SEQUENCE AS DESCRIBED BELOW EACH MAY PROCEED CONCURRENTLY AND INDEPENDENTLY. HOWEVER, DO NOT BEGIN THE EXISTING BRIDGE DEMOLITION PHASE UNTIL THE PROPOSED BRIDGE IS PERMANENTLY OPEN TO TRAFFIC. THE PROPOSED ROADWAY AND STRUCTURE SHALL BE OPEN TO TRAFFIC BY JUNE 30, 2015. THIS DATE SHALL BE CONSIDERED TO CONSTITUTE AN INTERIM COMPLETION DATE AND DISINCENTIVES SHALL BE ASSESSED AT THE RATE OF $15,000.00 PER DAY FOR EACH CALENDAR DAY THAT ALL LANES ARE NOT OPEN AND AVAILABLE TO TRAFFIC.

CONSECUTIVE CALENDAR DAYS LISTED FOR EACH OF THE VARIOUS ACTIVITIES/CLOSURES NOTED BELOW SHALL BE CONSIDERED THE SPECIFIED LIMIT FOR EACH ACTIVITY/CLOSURE. A DISINCENTIVE SHALL BE ASSESSED IN THE AMOUNT OF $1,900 PER DAY FOR EACH CALENDAR DAY THE ROADWAY REMAINS CLOSED TO TRAFFIC BEYOND THE SPECIFIED LIMIT.

KENTUCKY PHASE SEQUENCE

PHASE 1A
- BELLEFONTE STREET: MAINTAIN ONE LANE OF TRAFFIC IN EACH DIRECTION.
- US 23: MAINTAIN ALL SB LANES, AND ALTERNATELY MAINTAIN MINIMUM TWO NB LANES WITHOUT NB EXIT RAMP (NOT SHOWN) OR MINIMUM ONE NB LANE WITH NB EXIT RAMP.
- TRAFFIC SIGNAL: NO CHANGE TO EXISTING OPERATION.

ALONG US 23 EAST SIDE OF ROAD BETWEEN STA. 340+60 AND STA. 341+60, REPLACE EXISTING CURBS AND TRAFFIC ISLANDS WITH TEMPORARY PAVEMENT. ALONG THE US 23 NB EXIT RAMP BETWEEN BELLEFONTE STREET STA. 43+88 AND 50+05, PLACE TEMPORARY PAVEMENT. CONSTRUCT THE US 23 NB RIGHT TURN LANE. PORTIONS OF STORM CONDUIT UNDER PAVEMENT MAY BE INSTALLED AND TEMPORARILY CAPPED.
- US 23: SHIFT NB EXIT TRAFFIC FROM THE RAMP TO THE NB RIGHT TURN LANE AND CLOSE THE RAMP.

PHASE 1B
- BELLEFONTE STREET: MAINTAIN ONE LANE OF TRAFFIC IN EACH DIRECTION.
- US 23: MAINTAIN TWO LANES OF THRU TRAFFIC PLUS ONE TURN LANE IN EACH DIRECTION.
- TRAFFIC SIGNAL: INSTALL DIAGONAL SPAN WIRE BETWEEN EXISTING POLE THAT SERVES THE CONTROLLER AND EXISTING POLE ON US 23 RIGHT APPROXIMATE STA 341+35. MOVE EXISTING SOUTHBOUND US 23 LEFT TURN HEAD ONTO THIS NEW SPAN. MOVE OR INSTALL ANCHORS ON EXISTING POLES AS NEEDED. REMOVE EXISTING UTILITY POLE ON KY 244 LEFT APPROXIMATE STA 44+00. SIGNAL PHASING REMAINS THE SAME AS IN PHASE 1A. MOVE THE SOUTHBOUND LEFT-TURN LANE STOPBAR TO THE NORTH IN ORDER TO GET A MINIMUM OF 40' BETWEEN THE STOP BAR AND THE RELOCATED LEFT TURN TRAFFIC SIGNAL HEAD.

BEGIN STORM SEWER CONSTRUCTION, EXCEPT FOR THE TRENCH DRAIN AT MAINLINE STA. 8+90 LEFT. BEGIN BRIDGE CONSTRUCTION AND CONTINUE BRIDGE CONSTRUCTION THROUGH SUBSEQUENT PHASES. COMPLETE THE REAR ABUTMENT AND WINGWALLS. COMPLETE APPROACH PAVEMENT AND GUARDRAIL GENERALLY RIGHT OF A LINE 30' LEFT OF MAINLINE CENTERLINE. INSTALL THE PROPOSED TRAFFIC SIGNAL SYSTEM AND THE TEMPORARY TWO-WAY ONE-LANE SIGNALS AND KEEP INACTIVE. PORTIONS OF STORM CONDUIT UNDER PAVEMENT MAY BE INSTALLED AND TEMPORARILY CAPPED.

PHASE 1C (PORTIONS NOT SHOWN)
- BELLEFONTE STREET: MAINTAIN ONE LANE OF TRAFFIC IN EACH DIRECTION.
- US 23: MAINTAIN MINIMUM ONE LANE OF THRU TRAFFIC PLUS ONE TURN LANE IN EACH DIRECTION.
- TRAFFIC SIGNAL: DIAGONAL SPAN BETWEEN EXISTING POLES REMOVED. THE REMAINING EXISTING SPANS STAY. TRAFFIC SIGNAL PHASING REMAINS THE SAME AS IN PHASE 1B. THE ENGINEER WILL INCREASE ALL-RED CLEARANCES AND REVIEW THE CYCLE LENGTH AND PHASE SPLITS.

EXPEDITIOUSLY COMPLETE THE PROPOSED US 23 STORM SEWERS, PAVEMENT, AND MEDIAN AHEAD OF STA. 341+20. ACTIVATE THE PROPOSED SIGNAL.

PHASE 2
- BELLEFONTE STREET: MAINTAIN ONE LANE OF TRAFFIC IN EACH DIRECTION, EXCEPT FOR A PERIOD NOT TO EXCEED 45 CONSECUTIVE CALENDAR DAYS MAINTAIN TWO-WAY ONE-LANE TRAFFIC USING THE EXISTING SB LANE.
- US23: MAINTAIN MINIMUM TWO LANES OF THRU TRAFFIC PLUS ONE TURN LANE IN EACH DIRECTION.
- TRAFFIC SIGNAL: INSTALL TEMPORARY TRAFFIC SIGNAL ON BELLEFONTE STA 42+70. INSTALL VIDEO DETECTION UNIT ON TEMPORARY POLE. RE-PHASE THE TRAFFIC SIGNAL USING THE NEW PERMANENT CONTROLLER AND NEW TRAFFIC SIGNAL. INSTALL OVERLAP A, OVERLAP B AND OVERLAP C AS SHOWN ON THE PLANS. THE ENGINEER WILL REVIEW THE ALL-RED CLEARANCES AND OTHER FEATURES OF THE TRAFFIC SIGNAL OPERATION.

CONSTRUCT THE EAST SIDE OF BELLEFONTE STREET PAVEMENT, CURB, SHOULDER, AND RAILING

PHASE 3
- BELLEFONTE STREET: MAINTAIN ONE LANE OF TRAFFIC IN EACH DIRECTION, EXCEPT FOR A PERIOD NOT TO EXCEED 45 CONSECUTIVE CALENDAR DAYS MAINTAIN TWO-WAY ONE-LANE TRAFFIC USING THE PROPOSED NB LANE.
- US 23: MAINTAIN ALL SB LANES AND MINIMUM ONE NB THRU LANE AND ONE NB TURN LANE.
- TRAFFIC SIGNAL: TRAFFIC SIGNAL PHASING DOES NOT CHANGE. USE EXISTING SPAN FOR THE CONFIRMATION SIGNALS, OVERLAP A. REMOVE TEMPORARY SIGNALS FOR OVERLAP B AND OVERLAP C. THE ENGINEER WILL REVIEW THE ALL-RED CLEARANCES AND OTHER FEATURES OF THE TRAFFIC SIGNAL OPERATION.

CONSTRUCT THE REMAINDER OF THE BELLEFONTE STREET INTERSECTION

PHASE 4 (NOT SHOWN)
- BELLEFONTE STREET: OPEN TO FINAL TRAFFIC PATTERN, EXCEPT PROHIBIT BRIDGE TRAFFIC.
- US 23: OPEN TO FINAL TRAFFIC PATTERN, EXCEPT PROHIBIT BRIDGE TRAFFIC.

CONSTRUCT REMAINDER OF PROJECT, INCLUDING THE US 23 MEDIAN AND THE OHIO APPROACH.
- MAINLINE: OPEN PROPOSED BRIDGE TO TRAFFIC.

OHIO PHASE SEQUENCE

CAMPBELL AVENUE, SECOND STREET, AND THIRD STREET SHALL NOT BE ALL CLOSED AT THE SAME TIME. TWO OF THE THREE SHALL BE OPEN AT ANY TIME.

PHASE 1A
- FIRST STREET: MAINTAIN MINIMUM ONE LANE FOR TWO-WAY TRAFFIC. REOPEN TO ORIGINAL TRAFFIC PATTERN WHEN THE STORM SEWER UNDER FIRST STREET IS BACKFILLED.
- CAMPBELL AVENUE BETWEEN STA. 28+30 AND STA. 36+60: ESTABLISH DETOUR AND CLOSE TO TRAFFIC.
- MADISON STREET BACK OF STA. 6+50: CLOSE TO TRAFFIC.
- MONROE STREET BACK OF STA. 8+50: CLOSE TO TRAFFIC.

CONSTRUCT THE MAIN STORM SEWER FROM THE RIVER TO JEFFERSON STREET, INCLUDING THE WATER QUALITY STRUCTURE. BEGIN BRIDGE CONSTRUCTION AND CONTINUE BRIDGE CONSTRUCTION THROUGH SUBSEQUENT PHASES.
- CAMPBELL AVENUE BACK OF STA. 30+20 & MONROE STREET: REOPEN TO TRAFFIC WHEN THE STORM SEWER UNDER THE STREETS IS BACKFILLED.

PHASE 1B
- JEFFERSON STREET: MAINTAIN MINIMUM ONE LANE OF TRAFFIC IN EACH DIRECTION.
- CAMPBELL AVENUE BETWEEN STA. 30+20 AND STA. 36+60: KEEP CLOSED TO TRAFFIC. BETWEEN STA. 36+90 AND STA. 39+00, MAINTAIN ONE LANE OF TRAFFIC IN EACH DIRECTION, EXCEPT FOR A PERIOD NOT TO EXCEED 15 CONSECUTIVE CALENDAR DAYS ESTABLISH DETOUR AND CLOSE TO TRAFFIC.
- MADISON STREET BACK OF STA. 6+50: KEEP CLOSED TO TRAFFIC.

CONSTRUCT THE STORM SEWER AND RETAINING WALL WEST OF JEFFERSON STREET BACK OF SECOND STREET, AND CONSTRUCT CAMPBELL AVENUE AHEAD OF STA. 36+90. COMPLETE RECONSTRUCTION OF ADJACENT PARKING LOT AND DRIVEWAYS, AND VACATE FOR PRIVATE OWNER'S FULL USE.

PHASE 1C
- JEFFERSON STREET BETWEEN STA. 2+30 AND STA. 4+50, MAINTAIN ONE LANE OF TRAFFIC IN EACH DIRECTION, EXCEPT FOR A PERIOD NOT TO EXCEED 15 CONSECUTIVE CALENDAR DAYS ESTABLISH DETOUR AND CLOSE TO TRAFFIC.
- CAMPBELL AVENUE BETWEEN STA. 30+20 AND STA. 36+60: KEEP CLOSED TO TRAFFIC. BETWEEN STA. 36+60 AND STA. 36+90, MAINTAIN ONE LANE OF TRAFFIC IN EACH DIRECTION, EXCEPT FOR A PERIOD NOT TO EXCEED 15 CONSECUTIVE CALENDAR DAYS ESTABLISH DETOUR AND CLOSE TO TRAFFIC.
- MADISON STREET BACK OF STA. 6+50: KEEP CLOSED TO TRAFFIC.

CONSTRUCT JEFFERSON STREET BETWEEN THE GRADE CROSSING AND STA. 4+20, AND CONSTRUCT REMAINDER OF CAMPBELL AVENUE. APPLY TEMPORARY PAVEMENT AT JEFFERSON AVENUE STA. 4+20 TO MEET EXISTING.
- JEFFERSON STREET: OPEN TO TRAFFIC.
- CAMPBELL AVENUE: OPEN TO TRAFFIC.
- MADISON STREET BACK OF STA. 6+10: OPEN TO TRAFFIC.

PHASE 2
- JEFFERSON STREET BETWEEN STA. 5+20 AND STA. 8+60: MAINTAIN ONE LANE OF TRAFFIC IN EACH DIRECTION, EXCEPT FOR A PERIOD NOT TO EXCEED 30 CONSECUTIVE CALENDAR DAYS ESTABLISH DETOUR AND CLOSE TO TRAFFIC.
- THIRD STREET BETWEEN STA. 50+20 AND STA. 53+80: MAINTAIN ONE LANE OF TRAFFIC IN EACH DIRECTION, EXCEPT FOR A PERIOD NOT TO EXCEED 30 CONSECUTIVE CALENDAR DAYS ESTABLISH DETOUR AND CLOSE TO TRAFFIC.
- MADISON STREET BETWEEN STA. 6+10 AND STA. 6+50: CONTINUE TRAFFIC CLOSURE.

CONSTRUCT JEFFERSON STREET AHEAD OF STA. 5+42, AND CONSTRUCT THIRD STREET. COMPLETE RECONSTRUCTION OF ADJACENT PARKING LOT AND DRIVEWAYS, AND VACATE FOR PRIVATE OWNER'S FULL USE.
- JEFFERSON STREET: OPEN TO TRAFFIC.
- THIRD STREET: OPEN TO TRAFFIC.

CALCULATED VMF
CHECKED PAS

MAINTENANCE OF TRAFFIC
GENERAL NOTES

LAW-93-0.00

J:\Project\OA\ODOT\15005112 Ironton Russell\LAW\81595\mot\sheets\81595MN001.dgn - 3/23/2012 10:14:06 AM - jon_wanstrath

PHASE 3
- SECOND STREET BETWEEN SECOND STREET STA. 10+80 & MAINLINE STA. 41+30, CLOSE TO TRAFFIC. BETWEEN STA. 41+30 AND STA. 44+10, MAINTAIN ONE LANE OF TRAFFIC IN EACH DIRECTION, EXCEPT FOR A PERIOD NOT TO EXCEED 30 CONSECUTIVE CALENDAR DAYS ESTABLISH DETOUR AND CLOSE TO TRAFFIC.
- JEFFERSON STREET BETWEEN STA. 3+50 AND STA. 6+30: MAINTAIN ONE LANE OF TRAFFIC IN EACH DIRECTION, EXCEPT FOR A PERIOD NOT TO EXCEED 30 CONSECUTIVE CALENDAR DAYS ESTABLISH DETOUR AND CLOSE TO TRAFFIC.
- MADISON STREET BETWEEN STA. 6+10 AND STA. 7+50: CLOSE TO TRAFFIC.

CONSTRUCT MAINLINE MSE WALLS, EMBANKMENT, AND DRAINAGE. COMPLETE MAINLINE CONSTRUCTION AHEAD OF STA. 41+15. COMPLETE RECONSTRUCTION OF ADJACENT PARKING LOT AND DRIVEWAYS, AND VACATE FOR PRIVATE OWNER'S FULL USE.
- SECOND STREET (MAINLINE): OPEN TO TRAFFIC AHEAD OF STA. 41+30, EXCEPT PROHIBIT BRIDGE TRAFFIC.
- JEFFERSON STREET: OPEN TO TRAFFIC, EXCEPT PROHIBIT BRIDGE TRAFFIC.

PHASE 4
- SECOND STREET (MAINLINE) BACK OF STA. 41+30: KEEP CLOSED TO TRAFFIC.
- MADISON STREET BETWEEN STA. 6+10 AND STA. 7+50: KEEP CLOSED TO TRAFFIC.

BACK OF MAINLINE STA. 41+15, CONSTRUCT REMAINDER OF PROJECT, INCLUDING THE KENTUCKY APPROACH.
- * MAINLINE: OPEN PROPOSED BRIDGE TO TRAFFIC.

BOTH KENTUCKY AND OHIO DEMOLITION PHASE (AFTER PROPOSED BRIDGE IS OPEN TO TRAFFIC)
- EXISTING BRIDGE AND APPROACHES BETWEEN ADAMS STREET IN IRONTON, OH AND ETNA STREET IN RUSSELL, KY: CLOSE TO TRAFFIC.
- PUBLIC STREETS IN BOTH OHIO AND KENTUCKY: MAINTAIN TRAFFIC USING FLAGGERS AS NEEDED.

CONSTRUCT PROPOSED CURBS, WALK, AND TRAFFIC CONTROL DEVICES. DEMOLISH THE EXISTING BRIDGE AND APPROACHES PER DEMOLITION PLANS.

PLACEMENT OF ASPHALT CONCRETE

TWO-WAY TRAFFIC SHALL BE MAINTAINED AT ALL TIMES EXCEPT THAT ONE-WAY TRAFFIC WILL BE PERMITTED FOR MINIMUM PERIODS OF TIME CONSISTENT WITH THE REQUIREMENTS OF THE SPECIFICATIONS FOR PROTECTION OF COMPLETED ASPHALT CONCRETE COURSES.

ITEM 615, PAVEMENT FOR MAINTAINING TRAFFIC, AS PER PLAN

PAVEMENT FOR MAINTAINING TRAFFIC, AS PER PLAN SHALL CONSIST OF 3" ITEM 301 ASPHALT CONCRETE BASE OVER 6" ITEM 304 AGGREGATE BASE.

TRENCH FOR WIDENING

TRENCH EXCAVATION FOR BASE WIDENING SHALL BE ONLY ON ONE SIDE OF THE PAVEMENT AT A TIME. THE OPEN TRENCH SHALL BE ADEQUATELY MAINTAINED AND PROTECTED WITH DRUMS OR BARRICADES AT ALL TIMES. PLACEMENT OF PROPOSED SUBBASE AND BASE MATERIAL SHALL FOLLOW AS CLOSELY AS POSSIBLE BEHIND EXCAVATION OPERATIONS. THE LENGTH OF WIDENING TRENCH WHICH IS OPEN AT ANY ONE TIME SHALL BE HELD TO A MINIMUM AND SHALL AT ALL TIMES BE SUBJECT TO APPROVAL OF THE ENGINEER. SEE SCD MT-101.90, DROP-OFFS IN WORK ZONES, FOR DETAILS.

OVERNIGHT TRENCH CLOSING

THE BASE WIDENING SHALL BE COMPLETED TO A DEPTH OF NO MORE THAN 1.5 INCHES BELOW THE EXISTING PAVEMENT BY THE END OF EACH WORK DAY. NO TRENCH SHALL BE LEFT OPEN OVERNIGHT EXCEPT FOR A SHORT LENGTH (25 FEET OR LESS) OF A WORK SECTION AT THE END OF THE TRENCH. IN CASE WORK MUST BE SUSPENDED BECAUSE OF INCLEMENT WEATHER OR OTHER REASONS, THE TRENCH FOR THE UNCOMPLETED BASE WIDENING SHALL BE BACKFILLED AT THE DIRECTION OF THE ENGINEER.

DUST CONTROL

THE CONTRACTOR SHALL FURNISH AND APPLY WATER FOR DUST CONTROL AS DIRECTED BY THE ENGINEER. THE FOLLOWING ESTIMATED QUANTITY HAS BEEN INCLUDED FOR DUST CONTROL PURPOSES:

ITEM 616, WATER ..... 100 M. GAL

WORK ZONE MARKINGS AND SIGNS

THE FOLLOWING ESTIMATED QUANTITIES HAVE BEEN CARRIED TO THE GENERAL SUMMARY FOR USE AT LOCATIONS IDENTIFIED BY THE ENGINEER FOR WORK ZONE PAVEMENT MARKINGS AND SIGNS PER THE REQUIREMENTS OF CMS 614.04 AND 614.11.

ITEM 614, WORK ZONE MARKING SIGN ..... 4 EACH
ITEM 614, WORK ZONE LANE LINE, CLASS I, 642 PAINT ..... 0.50 MILE
ITEM 614, WORK ZONE CENTER LINE, CLASS I, 642 PAINT ..... 0.50 MILE
ITEM 614, WORK ZONE EDGE LINE, CLASS I, 642 PAINT ..... 1.00 MILE
ITEM 614, WORK ZONE CHANNELIZING LINE, CLASS I, 642 PAINT ..... 1000 FOOT
ITEM 614, WORK ZONE DOTTED LINE, CLASS I, 642 PAINT ..... 200 FOOT
ITEM 614, WORK ZONE STOP LINE, CLASS I, 642 PAINT ..... 200 FOOT

ITEM 614, REPLACEMENT DRUM

DRUMS FURNISHED BY THE CONTRACTOR IN ACCORDANCE WITH THE REQUIREMENTS OF THE PLANS, SPECIFICATIONS AND PROPOSAL WHICH BECOME DAMAGED BY TRAFFIC FOR REASONS BEYOND THE CONTROL OF THE CONTRACTOR SHALL BE REPLACED IN KIND WHEN ORDERED BY THE ENGINEER. REPLACEMENT DRUMS SHALL BE NEW. PAYMENT FOR THE NEW DRUMS SHALL BE MADE AT THE CONTRACT PRICE PER EACH FOR ITEM 614, REPLACEMENT DRUM, AND SHALL INCLUDE THE COST OF REMOVING AND DISPOSING OF THE DAMAGED DRUM, AND PROVIDING AND MAINTAINING THE REPLACEMENT DRUM IN ACCORDANCE WITH THE CONTRACT REQUIREMENTS FOR THE ORIGINAL DRUM. AN ESTIMATED QUANTITY OF 10 EACH HAS BEEN PROVIDED IN THE GENERAL SUMMARY.

ITEM 614, BARRIER REFLECTORS AND OBJECT MARKERS

BARRIER REFLECTORS AND OBJECT MARKERS SHALL BE INSTALLED ON ALL PORTABLE CONCRETE BARRIER USED FOR TRAFFIC CONTROL. BARRIER REFLECTORS, OBJECT MARKERS AND THEIR INSTALLATION SHALL CONFORM TO CMS626, EXCEPT THAT THE SPACING SHALL BE 10 FEET. AN ESTIMATED QUANTITY OF 100 EACH OF ITEM 614 BARRIER REFLECTOR, TYPE B AND 100 EACH OF ITEM 614 OBJECT MARKER, ONE-WAY HAVE BEEN PROVIDED AND CARRIED TO THE GENERAL SUMMARY.

FLOODLIGHTING US 23 INTERSECTION

FLOODLIGHTING OF THE WORK SITE AT THE US 23 INTERSECTION FOR OPERATIONS CONDUCTED DURING NIGHTTIME PERIODS SHALL BE ACCOMPLISHED SO THAT THE LIGHTS DO NOT CAUSE GLARE TO THE DRIVERS ON THE ROADWAY. TO ENSURE THE ADEQUACY OF THE FLOODLIGHT PLACEMENT, THE CONTRACTOR AND THE ENGINEER SHALL DRIVE THROUGH THE WORK SITE EACH NIGHT WHEN THE LIGHTING IS IN PLACE AND OPERATIVE PRIOR TO COMMENCING ANY WORK. IF GLARE IS DETECTED, THE LIGHT PLACEMENT AND SHIELDING SHALL BE ADJUSTED TO THE SATISFACTION OF THE ENGINEER BEFORE WORK PROCEEDS. PAYMENT FOR ALL LABOR, EQUIPMENT AND MATERIALS SHALL BE INCLUDED IN THE LUMP SUM CONTRACT PRICE FOR ITEM 614, MAINTAINING TRAFFIC.

ITEM 614, WORK ZONE IMPACT ATTENUATOR (UNIDIRECTIONAL) (FOR 24" WIDE HAZARDS)

THIS ITEM SHALL CONSIST OF FURNISHING, INSTALLING AND MOVING ONE OF THE FOLLOWING IMPACT ATTENUATORS:
1. THE QUADGUARD CZ, (24 INCHES WIDE SIX-BAY) WORK ZONE IMPACT ATTENUATOR MANUFACTURED BY ENERGY ABSORPTION SYSTEMS, INC., 35 EAST WACKER DRIVE, CHICAGO, IL 60601 (TELEPHONE: 312-467-6750).

THE LENGTH OF THE SIX-BAY QUADGUARD CZ IS 20'-9". INSTALLATION SHALL BE AT THE LOCATIONS SPECIFIED IN THE PLANS, IN ACCORDANCE WITH THE MANUFACTURER'S SPECIFICATIONS AS DETAILED ON THE FOLLOWING PRE-APPROVED SHOP DRAWINGS:

DRAWING NUMBER	DRAWING NAME	DRAWING/ REVISION DATE	ODOT APPROVAL DATE
QSCZCVR-T4	QUADGUARD CZ SYSTEM FOR CONSTRUCTION ZONES	5/13/99 REV. J	8/27/99
35-40-10	QUADGUARD SYSTEM CONCRETE PAD, CZ, QG	11/19/97 REV. D	8/27/99
35-40-16	QUADGUARD SYSTEM BACKUP ASSEMBLY, CZ, QG	7/30/99 REV. F	8/27/99
354051Z	QUADGUARD CZ SYSTEM NOSE ASSEMBLY, CZ, QG, 24, 30, 36	5/17/99	8/27/99
35-40-18	TRANSITION ASSEMBLY, 4 OFFSET, QG	6/25/99 REV. F	8/27/99
35400260	QUADGUARD SYSTEM PCMB ANCHOR ASSEMBLY	11/19/97 REV. C	8/27/99

2. THE TRACC (TRINITY ATTENUATING CRASH CUSHION) MANUFACTURED BY TRINITY INDUSTRY, 1170 N. STATE STREET, GIRARD, OHIO 44420 (TELEPHONE: 330-545-4373).

THE TRACC IS 21'-0" LONG AND 2'-7" WIDE. INSTALLATION SHALL BE AT THE LOCATIONS SPECIFIED IN THE PLANS, IN ACCORDANCE WITH THE MANUFACTURER'S SPECIFICATIONS AS DETAILED ON THE FOLLOWING PRE-APPROVED SHOP DRAWINGS:

DRAWING NUMBER	DRAWING NAME	DRAWING/ REVISION DATE	ODOT APPROVAL DATE
SS450	CRASH-CUSHION ATTENUATING ELEVATION & SECTIONS	3/12/99 REV. 1 TERMINAL PLAN	8/27/99
SS455	TRACC TRANSITION TO W-BEAM MEDIAN BARRIER PLAN, ELEVATION & SECTIONS	2/18/99	8/27/99
SS461	TRACC TRANSITION TO CONCRETE SAFETY SHAPE BARRIER PLAN, ELEVATION & SECTIONS	6/30/99 REV. 1	8/27/99
SS462	TRACC TRANSITION TO CONCRETE BARRIER SINGLE SLOPE PLAN, ELEVATION & SECTIONS	6/30/99	8/27/99

3. THE BARRIER SYSTEMS, INC. TAU-II IMPACT ATTENUATOR, DISTRIBUTED BY ROAD SYSTEMS, INC., SALES SUPPORT, 2183 ELM TRACE, AUSTINTOWN, OH 44515, (TELEPHONE 330-799-9291).

THE TAU-II FOR THIS NOTE IS A PARALLEL 8-BAY UNIT 24' LONG AND 35" WIDE. INSTALLATION SHALL BE AT THE LOCATIONS SPECIFIED IN THE PLANS, IN ACCORDANCE WITH THE MANUFACTURER'S SPECIFICATIONS AS DETAILED ON THE FOLLOWING PRE-APPROVED SHOP DRAWINGS:

DRAWING NUMBER	DRAWING NAME	DRAWING/ REVISION DATE	ODOT APPROVAL DATE
A040416	UNIVERSAL TAU-II PARTS LIST	4/22/04	10/16/04
A040420	UNIVERSAL TAU-II FOUNDATION, FLUSH MOUNT BACKSTOP	4/28/04	10/16/04
A040105	UNIVERSAL TAU-II FOUNDATION, PCB BACKSTOP (REFERENCED ON A04020)	1/07/04	10/16/04
B040239	APPLICATION, FLUSH MOUNT BACKSTOP (TYPICAL FOR PARALLEL 60 MPH UNIT)	4/21/04	10/16/04

THE CONTRACTOR SHALL REPAIR OR REPLACE A DAMAGED UNIT WITHIN 24 HOURS OF A DAMAGING IMPACT.

WHEN BIDIRECTIONAL DESIGNS ARE SPECIFIED, THE CONTRACTOR SHALL SUPPLY APPROPRIATE TRANSITIONS. PAYMENT FOR THE ABOVE WORK SHALL BE MADE AT THE UNIT PRICE BID AND SHALL INCLUDE ALL LABOR, TOOLS, EQUIPMENT AND MATERIALS NECESSARY TO CONSTRUCT AND MAINTAIN A COMPLETE AND FUNCTIONAL IMPACT ATTENUATOR SYSTEM, INCLUDING ALL RELATED BACKUPS, TRANSITIONS, LEVELING PADS, HARDWARE AND GRADING, NOT SEPARATELY SPECIFIED, AS REQUIRED BY THE MANUFACTURER. AN ESTIMATED QUANTITY OF 2 EACH HAS BEEN PROVIDED AND CARRIED TO THE GENERAL SUMMARY.

CALCULATED VMF CHECKED PAS

MAINTENANCE OF TRAFFIC
GENERAL NOTES

LAW-93-0.00

J:\Project\O\ODOT\15005112 Ironton Russell\LAW\81595\mot\sheets\81595MN002.dgn - 4/25/2011 6:52:15 AM - jon_wanstrath

FULLY-ACTUATED OPERATION OF WORK ZONE TRAFFIC SIGNAL

THE WORK ZONE SIGNAL CONTROL REQUIRED FOR THIS PROJECT AND SHOWN ON SHEETS 29, 31, 33, 35 & 37 AND SCDS MT- 96.11, 96.20 AND 96.26 SHALL BE FULLY TRAFFIC-ACTUATED AND OPERATE IN A MANNER SIMILAR TO THAT DESCRIBED IN SECTION 733.02 OF THE CONSTRUCTION AND MATERIAL SPECIFICATIONS.

THE INITIAL CONTROLLER TIMING AT US 23 AND BELLEFONTE SHALL REMAIN AS IT EXISTS CURRENTLY. PHASE CHANGING IS INDICATED ON THE SHEETS LISTED ABOVE. THE SIGNALS AT JEFFERSON ST. AND SECOND ST. AND JEFFERSON AND THIRD ST. WILL OPERATE WITH PROPOSED SIGNAL TIMING SHOWN ON SHEETS 271-274.

THE CONTRACTOR SHALL ALSO DESIGN, FURNISH, INSTALL AND MAINTAIN A TRAFFIC DETECTOR ON EACH TRAFFIC APPROACH WHICH WILL RELIABLY DETECT ALL LEGAL TRAFFIC APPROACHING (BUT NOT LEAVING) THE SIGNAL AS IT PASSES OR WAITS IN THE DESIGNATED DETECTOR ZONE SHOWN IN THE PLANS. DETECTOR DESIGNS WHICH DO NOT PROVIDE RELIABLE DETECTION, FREE FROM FALSE CALLS, SHALL BE IMMEDIATELY REPLACED BY THE CONTRACTOR.

PAYMENT IS INCIDENTAL TO THE LUMP SUM BID FOR ITEM 614, MAINTAINING TRAFFIC.

LIGHTING

LIGHTING SHALL BE PROVIDED AT EACH END OF THE LANE CLOSURE FOR THE CLOSING OF ONE LANE OF A TWO-LANE HIGHWAY.

LIGHTING SHALL BE BY CONVENTIONAL METHODS, WITH LUMINAIRE ARMS ATTACHED TO THE SIGNAL SUPPORTS. AREA ILLUMINATION SHALL BE PROVIDED BY USING 150 WATT MINIMUM HIGH PRESSURE SODIUM LUMINARIES OR 250 WATT MINIMUM MERCURY LUMINARIES. THE MINIMUM HEIGHT OF THE LUMINAIRE SHALL BE 27 FT FROM THE GROUND SURFACE.

PAYMENT FOR LIGHTING SHALL INCLUDE DELIVERY, ERECTION, MAINTENANCE AND REMOVAL AS CALLED FOR IN THE PLANS. PAYMENT SHALL BE PER EACH, ITEM 614 WORK ZONE LIGHTING SYSTEM. AN ESTIMATED QUANTITY OF 3 EACH HAS BEEN PROVIDED AND CARRIED TO THE GENERAL SUMMARY.

ITEM 614, PORTABLE CHANGEABLE MESSAGE SIGN, AS PER PLAN

THE PORTABLE CHANGEABLE MESSAGE SIGN (PCMS) SHOWN IN MAINTENANCE OF TRAFFIC KY PHASE 1C SHALL BE PROVIDED BY THE KENTUCKY TRANSPORTATION CABINET (KYTC). CONTACT THE ENGINEERING SUPPORT MANAGER AT THE KYTC DISTRICT NINE FLEMINSBURG OFFICE AT (606) 845-2551 THIRTY (30) DAYS IN ADVANCE OF PHASE 1C IMPEMENTATION.

THE PROBABLE PCMS LOCATIONS AND WORK LIMITS FOR THOSE LOCATIONS ARE SHOWN ON THE MAINTENANCE OF TRAFFIC PLAN. PLACEMENT, OPERATION, MAINTENANCE AND ALL ACTIVATION OF THE SIGNS BY THE CONTRACTOR SHALL BE AS DIRECTED BY THE ENGINEER. THE PCMS SHALL BE LOCATED IN A HIGHLY VISIBLE POSITION YET PROTECTED FROM TRAFFIC. THE CONTRACTOR SHALL, AT THE DIRECTION OF THE ENGINEER, RELOCATE THE PCMS TO IMPROVE VISIBILITY OR ACCOMMODATE CHANGED CONDITIONS. WHEN NOT IN USE, THE PCMS SHALL BE TURNED OFF. ADDITIONALLY, WHEN NOT IN USE FOR EXTENDED PERIODS OF TIME, THE PCMS SHALL BE TURNED, FACING AWAY FROM ALL TRAFFIC, AND SHALL DISPLAY ONE OR MORE TYPE G YELLOW RETROREFLECTIVE SHEETING SURFACES OF 9-INCH BY 15-INCH MINIMUM SIZE FACING TRAFFIC.

THE PCMS UNIT SHALL BE MAINTAINED IN GOOD WORKING ORDER BY THE CONTRACTOR IN ACCORDANCE WITH THE PROVISIONS OF CMS 614.07. THE CONTRACTOR SHALL, PRIOR TO ACTIVATING THE UNIT, MAKE ARRANGEMENTS, WITH KYTC FOR THE PCMS, TO ASSURE PROMPT SERVICE IN THE EVENT OF FAILURE. ANY FAILURE SHALL NOT RESULT IN THE SIGN BEING OUT OF SERVICE FOR MORE THAN 12 HOURS, INCLUDING WEEKENDS. FAILURE TO COMPLY MAY RESULT IN AN ORDER TO STOP WORK AND OPEN ALL TRAFFIC LANES AND/OR IN THE DEPARTMENT TAKING APPROPRIATE ACTION TO SAFELY CONTROL TRAFFIC. THE ENTIRE COST TO CONTROL TRAFFIC, ACCRUED BY THE DEPARTMENT DUE TO THE CONTRACTOR'S NONCOMPLIANCE, WILL BE DEDUCTED FROM MONEYS DUE, OR TO BECOME DUE THE CONTRACTOR ON HIS CONTRACT.

THE CONTRACTOR SHALL BE RESPONSIBLE FOR 24-HOUR-PER-DAY OPERATION AND MAINTENANCE OF THESE SIGNS ON THE PROJECT FOR THE DURATION OF THE PHASES WHEN THE PLAN REQUIRES THEIR USE.

PAYMENT FOR THE ABOVE DESCRIBED ITEM SHALL BE AT THE CONTRACT UNIT PRICE. PAYMENT SHALL INCLUDE ALL LABOR, MATERIALS, EQUIPMENT, FUELS, LUBRICATING OILS, SOFTWARE, HARDWARE AND INCIDENTALS TO PERFORM THE ABOVE DESCRIBED WORK.

ITEM 614, PORTABLE CHANGEABLE MESSAGE SIGN, AS PER PLAN: 366 DAYS

ITEM 614 - WORK ZONE RAISED PAVEMENT MARKERS ON CONCRETE SURFACES

RAISED PAVEMENT MARKERS IN WORK ZONES, INSTALLED ON CONCRETE SURFACES, SHALL BE ITEM 614 WORK ZONE RAISED PAVEMENT MARKERS. WZRPMS ARE INTENDED FOR USE ONLY DURING THE NON-SNOWPLOWING SEASON. WZRPMS SHALL NOT BE PROVIDED DURING THE SNOW-PLOWING SEASON.

THE SNOW-PLOWING SEASON SHALL RUN FROM OCTOBER 15 THROUGH MARCH 31.

WHERE A TEMPORARY ALIGNMENT WILL REMAIN IN USE THROUGH THE WINTER, THE WZRPMS SHALL BE REMOVED PRIOR TO THE BEGINNING OF THE SNOW-PLOWING SEASON AND REPLACED APPROXIMATELY APRIL 1, OR AS OTHERWISE DETERMINED BY THE ENGINEER.

THIS ITEM SHALL INCLUDE PURCHASE, INSTALLATION AND REMOVAL OF ITEM 614 WORK ZONE RAISED PAVEMENT MARKERS

AN ESTIMATED QUANTITY OF 100 EACH OF ITEM 614 WORK ZONE RAISED PAVEMENT MARKER HAS BEEN PROVIDED AND CARRIED TO THE GENERAL SUMMARY.

ITEM 614 - LAW ENFORCEMENT OFFICER WITH PATROL CAR FOR ASSISTANCE DURING CONSTRUCTION OPERATIONS

USE OF LAW ENFORCEMENT OFFICERS (LEOS) BY CONTRACTORS OTHER THAN THE USES SPECIFIED BELOW WILL NOT BE PERMITTED AT PROJECT COST. LEOS SHOULD NOT BE USED WHERE THE OMUTCD INTENDS THAT FLAGGERS BE USED.

IN ADDITION TO THE REQUIREMENTS OF CMS 614 AND THE OMUTCD, A UNIFORMED LEO WITH AN OFFICIAL PATROL CAR (CAR WITH TOP-MOUNTED EMERGENCY FLASHING LIGHTS AND COMPLETE MARKINGS OF THE APPROPRIATE LAW ENFORCEMENT AGENCY) SHALL BE PROVIDED FOR THE FOLLOWING TRAFFIC CONTROL TASKS:

- DURING THE ENTIRE ADVANCE PREPARATION AND CLOSURE SEQUENCE WHERE COMPLETE BLOCKAGE OF TRAFFIC IS REQUIRED.
- DURING A TRAFFIC SIGNAL INSTALLATION WHEN IMPACTING THE NORMAL FUNCTION OF THE SIGNAL OR THE FLOW OF TRAFFIC OR WHEN TRAFFIC NEEDS TO BE DIRECTED THROUGH AN ENERGIZED TRAFFIC SIGNAL CONTRARY TO THE SIGNAL DISPLAY (E.G., DIRECTING MOTORISTS THROUGH A RED LIGHT).
- FOR LANE CLOSURES: DURING INITIAL SET-UP PERIODS, TEAR DOWN PERIODS, SUBSTANTIAL SHIFTS OF A CLOSURE POINT OR WHEN NEW LANE CLOSURE ARRANGEMENTS ARE INITIATED FOR LONG-TERM LANE CLOSURES/SHIFTS (FOR THE FIRST AND LAST DAY OF MAJOR CHANGES IN TRAFFIC CONTROL SETUP). IN GENERAL, LEOS SHOULD BE POSITIONED AT THE POINT OF LANE RESTRICTION OR ROAD CLOSURE AND TO MANUALLY CONTROL TRAFFIC MOVEMENTS THROUGH INTERSECTIONS IN WORK ZONES.

LEOS SHOULD NOT FORGO THEIR TRAFFIC CONTROL RESPONSIBILITIES TO APPREHEND MOTORISTS FOR ROUTINE TRAFFIC VIOLATIONS. HOWEVER, IF A MOTORIST'S ACTIONS ARE CONSIDERED TO BE RECKLESS, THEN PURSUIT OF THE MOTORIST IS APPROPRIATE.

THE LEOS WORK AT THE DIRECTION OF THE CONTRACTOR. THE CONTRACTOR IS RESPONSIBLE FOR SECURING THE SERVICES OF THE LEOS WITH THE APPROPRIATE AGENCIES AND COMMUNICATING THE INTENTIONS OF THE PLANS WITH RESPECT TO DUTIES OF THE LEOS. THE ENGINEER SHALL HAVE FINAL CONTROL OVER THE LEOS' DUTIES AND PLACEMENT, AND WILL RESOLVE ANY ISSUES THAT MAY ARISE BETWEEN THE TWO PARTIES. THE CONTRACTOR SHALL MAKE ARRANGEMENTS FOR THESE SERVICES WITH THE APPLICABLE AGENCY:

RUSSELL POLICE DEPARTMENT
P.O. BOX 394
RUSSELL, KY 41169
(606) 836-3822

IRONTON POLICE DEPARTMENT
301 S. 3RD STREET
IRONTON, OH 45638
(740) 532-2338

THE LEO SHALL REPORT IN TO THE CONTRACTOR PRIOR TO THE START OF THE SHIFT, IN ORDER TO RECEIVE INSTRUCTIONS REGARDING SPECIFIC WORK ASSIGNMENTS DURING HIS/HER SHIFT. THE LEO IS EXPECTED TO STAY AT THE PROJECT SITE FOR THE ENTIRE DURATION OF HIS/HER SHIFT. THE LEO SHALL REPORT TO THE CONTRACTOR AT THE END OF HIS/HER SHIFT. ONCE THE LEO HAS COMPLETED THE DUTIES DESCRIBED ABOVE AND STILL HAS TIME REMAINING ON HIS/HER SHIFT, THE LEO MAY BE ASKED TO PATROL THROUGH THE WORK ZONE (WITH FLASHING LIGHTS OFF) OR BE PLACED AT A LOCATION TO DETER MOTORISTS FROM SPEEDING. SHOULD IT BE NECESSARY TO LEAVE THE PROJECT SITE, THE LEO SHALL NOTIFY THE ENGINEER.

THE CONTRACTOR SHALL PROVIDE THE LEO WITH A TWO-WAY COMMUNICATION DEVICE WHICH SHALL BE RETURNED TO THE CONTRACTOR AT THE END OF HIS/HER SHIFT.

LEOS WITH PATROL CAR REQUIRED BY THE TRAFFIC MAINTENANCE TASKS ABOVE SHALL BE PAID FOR ON A UNIT PRICE (HOURLY) BASIS UNDER ITEM 614, LAW ENFORCEMENT OFFICER WITH PATROL CAR FOR ASSISTANCE. THE FOLLOWING ESTIMATED QUANTITIES HAVE BEEN CARRIED TO THE GENERAL SUMMARY.

ITEM 614, LAW ENFORCEMENT OFFICER WITH PATROL CAR FOR ASSISTANCE 100 HOURS

THE HOURS PAID SHALL INCLUDE ANY MINIMUM SHOW-UP TIME REQUIRED BY THE LAW ENFORCEMENT AGENCY INVOLVED.

CALCULATED VMF
CHECKED PAS

MAINTENANCE OF TRAFFIC
GENERAL NOTES

LAW-93-0.00

29
788

J:\Project\OA\ODOT\15005112 Ironton Russell\LAW\81595\mot\sheets\81595MN003.dgn - 4/25/2011 6:52:16 AM - jon_wanstrath

REF. NO.	SHEET NO.	STATION TO STATION	614 WORK ZONE EDGE LINE, CLASS I, 642 PAINT	614 WORK ZONE CHANNELIZING LINE, CLASS I, 642 PAINT	614 WORK ZONE DOTTED LINE, CLASS I, 642 PAINT	614 WORK ZONE STOP LINE, CLASS I	614 WORK ZONE CENTER LINE, CLASS I, 642 PAINT	614 WORK ZONE TRANSVERSE/DIAGONAL LINE, CLASS I, 642 PAINT		615 PAVEMENT FOR MAINTAINING TRAFFIC, AS PER PLAN		622 PORTABLE CONCRETE BARRIER, 32"								
			MILE	FT	FT	FT	MILE	FT		SY YD		FT								
EL-1	31	43+88 to 50+05	0.12																	
EL-2	31	45+00 to 48+00	0.06																	
CH-1	31	47+90 to 49+90		200																
EL-3	31	341+05 to 346+05	0.09																	
EL-4	31	44+95 to 45+70	0.01																	
EL-5	31	346+02 to 355+00	0.17																	
DL-1	31	346+02 to 348+12			210															
DL-2	31	349+60 to 355+60			600															
	31	340+50 to 344+00								523										
	31	345+00																		
	31	45+38 to 48+84										350								
SL-1	33	341 +30				14														
SL-2	33	340+05				12														
EL-6	33	43+90 to 47+95	0.09																	
CH-2	33	341+60 to 344+00		240																
	33	43+90 to 49+90										650								
SL-3	35	342+15				24														
EL-7	35	43+90 to 48+80	0.09																	
CH-3	35	336+50 to 339+80		330																
CH-4	35	342+15 to 344+00		185																
EY-1	35	342+15 to 355+00	0.25																	
DL-3	35	349+60 to 355+60			600															
	35	43+90 to 45+90										200								
CH-5	37	44+25 to 45+25		205																
CL-1	37	45+00 to 45+30					0.01													
DL-4	37	44+75 to 46+00			125															
EY-2	37	339+75 to 341+20	0.03																	
SL-4	37	342+20				38														
SL-5	37	341+20				24														
SL-6	37	341+10				13														
SL-7	37	42+30				11														
EL-8	37	43+32 to 48+75	0.11																	
CH-6	37	342+25 to 344+90		265																
EY-3	37	339+75 to 341+15	0.02																	
EY-4	37	342+20 to 344+80	0.05																	
EY-5	37	342+20 to 347+60	0.1																	
TY-1	37	342+20 to 345+00						100												
CH-7	37	339+75 to 341+75		200																
	37	44+50																		
	37	44+50 to 45+75										130								
EL-9	39	43+80 to 336+75	0.16																	
EL-10	39	43+80 to 48+80	0.1																	
CH-8	39	339+75 to 342+75		250																
SL-8	39	340+75				12														
CH-9	39	342+20 to 345+80		362																
CH-10	39	342+20 to 345+80		360																
DL-5	39	345+75 to 347+40			165															
	39	44+80 to 45 + 50										70								
	39	44+50 to 45+30										150								
	41											400								
TOTALS CARRIED TO GENERAL SUMMARY			1.45	2597	1700	148	0.01	100		523		1950								

CALCULATED WFM
CHECKED VMF

MAINTENANCE OF TRAFFIC - SUBSUMMARY

LAW-93-0.00

J:\Project\O\ODOT\15005112 Ironton Russell\LAW\81595\mot\sheets\81595MS001.dgn - 4/25/2011 6:52:17 AM - jon_wanstrath

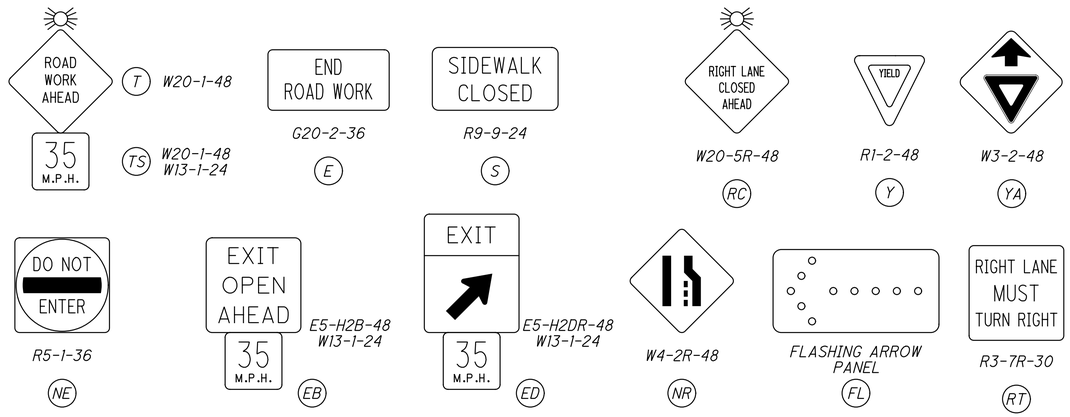

WZ EDGE LINE CURVE DATA				
PT.	℄ REF.	STATION	OFFSET	DESC.
A	BELLEFONTE	45+11.60	66.7′	PC
B	BELLEFONTE	44+62.72	45.8′	RAD. PT
C	BELLEFONTE	44+93.30	0.9′	PT

LEGEND

- CURRENT PHASE WORK AREA
- PAVEMENT FOR MAINTAINING TRAFFIC
- TRAFFIC DIRECTION
- XXXXX PAINT REMOVAL
- CH-_ CHANNELIZING LINE
- EL-_ EDGE LINE, WHITE
- DL- DOTTED LINE

ALL PAVEMENT MARKINGS PLACED ON A FINAL SURFACE ARE TO BE ITEM 614, WORK ZONE -----, CLASS I, 642 PAINT

FOR EXISTING SIGNING SEE SIGNING PLANS

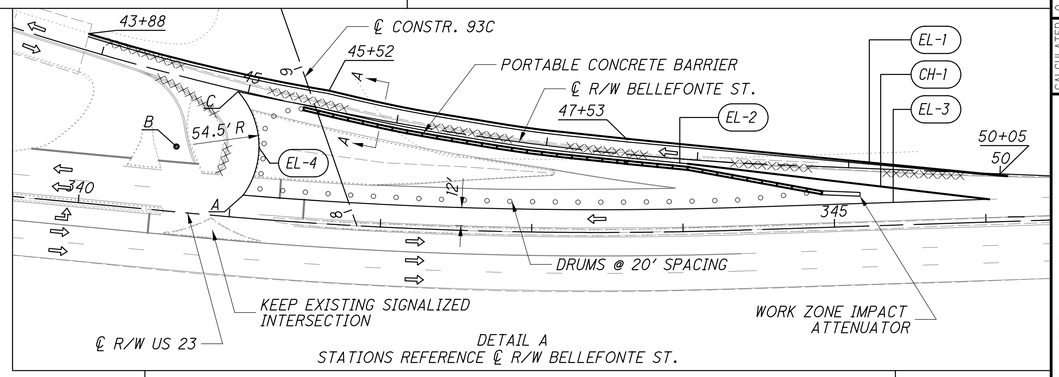

DETAIL A
STATIONS REFERENCE ℄ R/W BELLEFONTE ST.

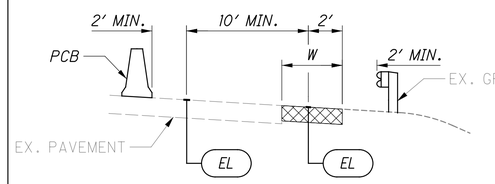

SECTION A-A

BELLEFONTE STATION	ADDITIONAL TEMP. PAVT. WIDTH
43+88	0′
45+52	8′
47+53	8′
50+05	0′

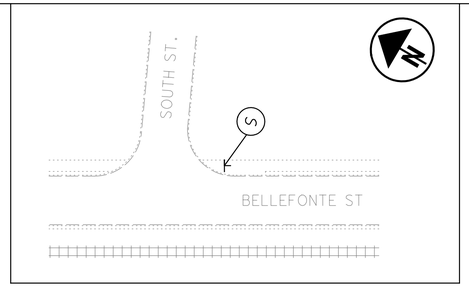

FOR ADDITIONAL INFORMATION SEE STANDARD DRAWINGS:
MT-95.31
MT-98.20
MT-98.21

HORIZONTAL SCALE IN FEET
0 25 50 100

CALCULATED WFM CHECKED VMF

MAINTENANCE OF TRAFFIC
KY PHASE 1A PLAN

LAW-93-0.00

31
788

J:\Project\O\ODOT\15005112 Ironton Russell\LAW\81595\mot\sheets\81595MP211.dgn - 4/25/2011 6:52:19 AM - jon_wanstrath

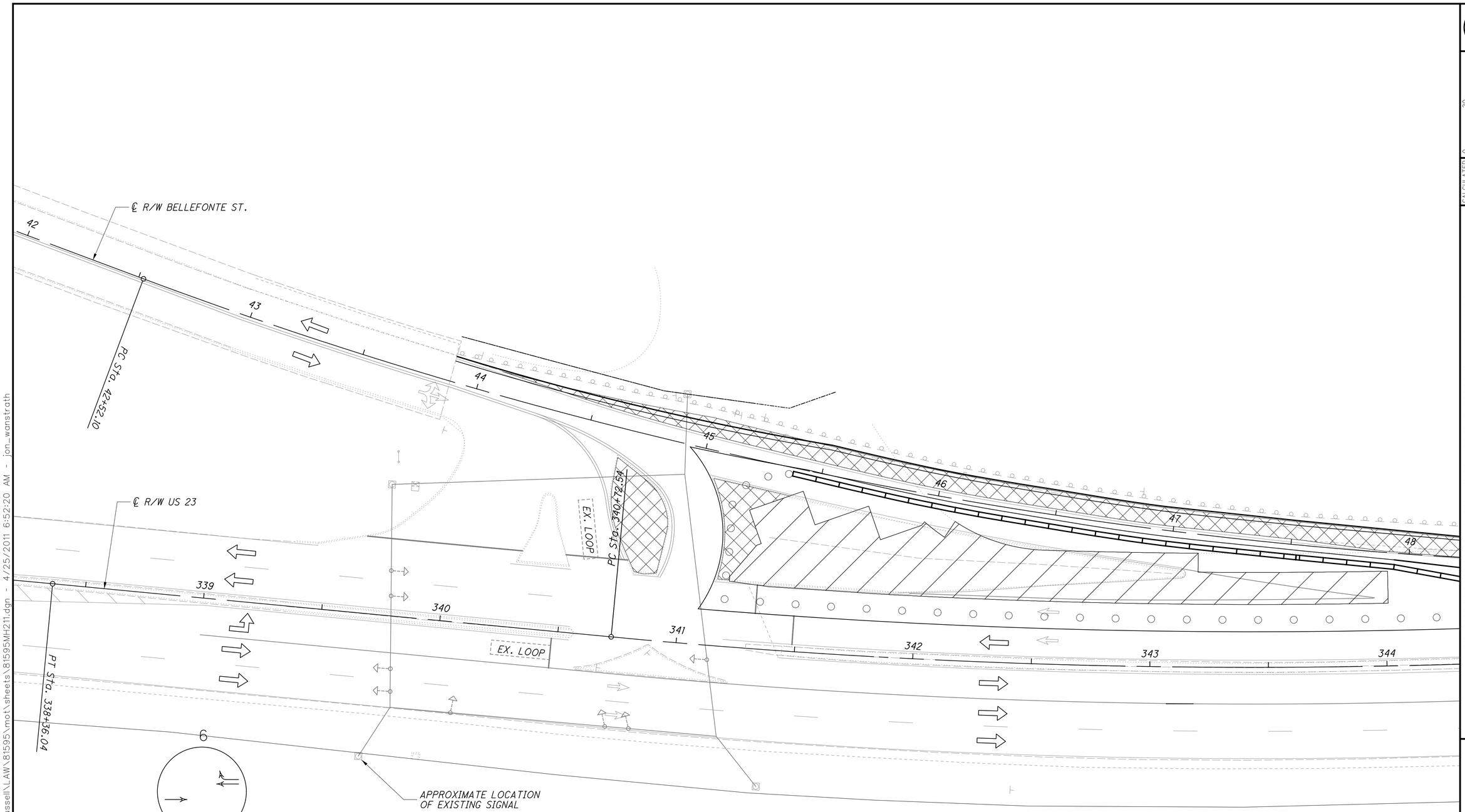

PHASE 1A TRAFFIC SIGNAL NOTES:

- NO CHANGE TO EXISTING SIGNAL OPERATION.

HORIZONTAL SCALE IN FEET
0 10 20 40

CALCULATED WFM
CHECKED VMF

MAINTENANCE OF TRAFFIC PLAN
KY PHASE 1A SIGNAL

LAW-93-0.00

J:\Project\OA\ODOT\15005112 Ironton Russell\LAW\81595\mot\sheets\81595MH211.dgn - 4/25/2011 6:52:20 AM - jon_wanstrath

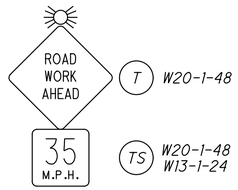

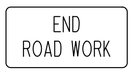

G20-2-36

E



R9-9-24

S



D3-1-VAR
W16-6PR-24

6R

WZ EDGE LINE CURVE DATA				
PT.	℄ REF.	STATION	OFFSET	DESC.
A	BELLEFONTE	43+88.21	-10.0′	PI
B	BELLEFONTE	44+70.93	-5.9′	PC
C	BELLEFONTE	44+67.58	42.0′	RAD. PT
D	BELLEFONTE	45+06.44	14.6′	PRC
E	US 23	341+54.77	-88.0′	RAD. PT
F	US 23	341+54.77	-40.0′	PRC
G	US 23	344+00.00	-40.0′	PT

LEGEND

- CURRENT PHASE WORK AREA
- PREVIOUS PHASE COMPLETED CONSTRUCTION
- TRAFFIC DIRECTION
- XXXXX PAINT REMOVAL
- EL- EDGE LINE, WHITE
- CH- CHANNELIZING LINE
- SL- STOP LINE

ALL PAVEMENT MARKINGS PLACED ON A FINAL SURFACE ARE TO BE ITEM 614, WORK ZONE -----, CLASS I, 642 PAINT

FOR EXISTING SIGNING SEE SIGNING PLANS

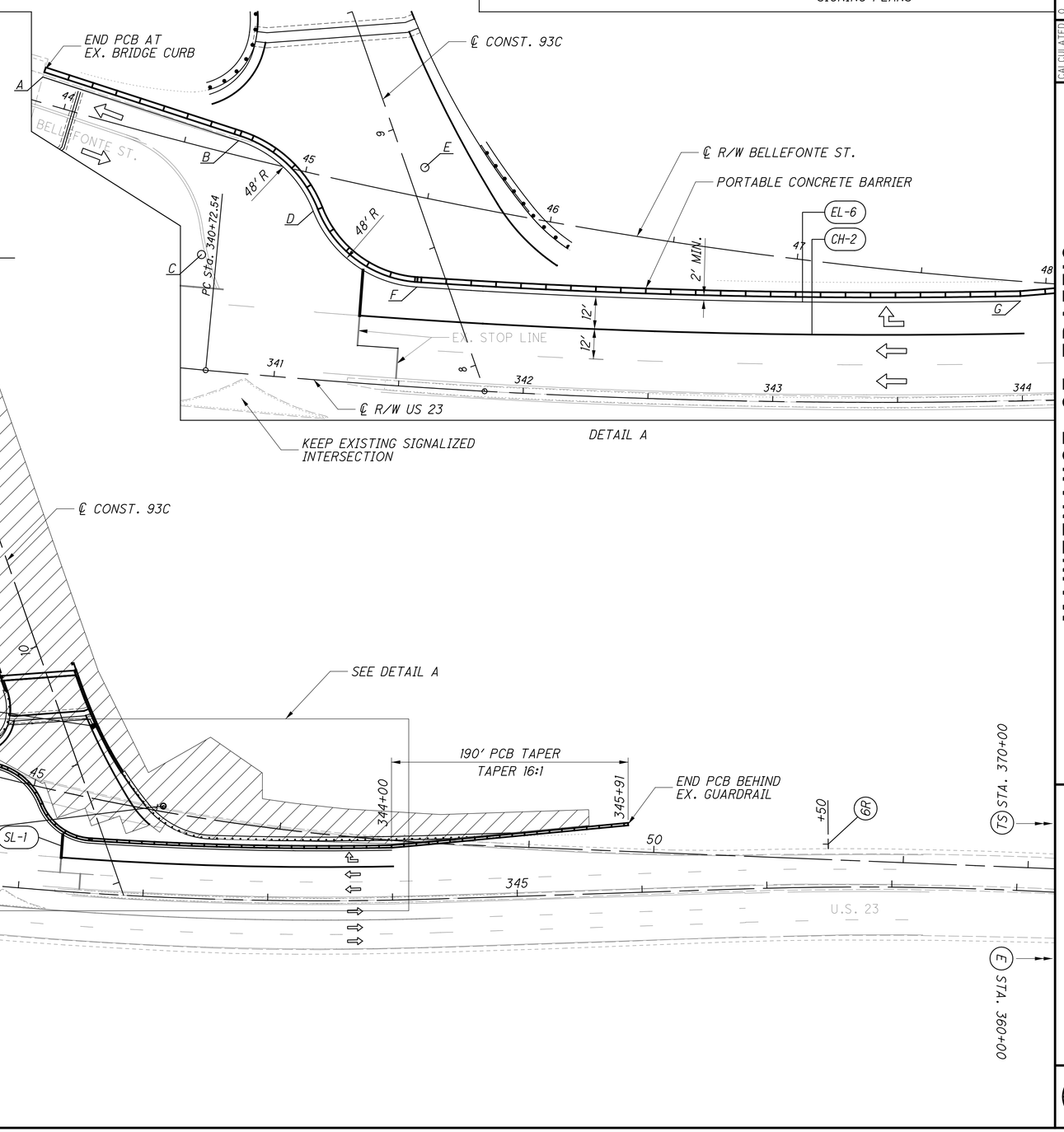

HORIZONTAL SCALE IN FEET
0 25 50 100

CALCULATED WFM
CHECKED VMF

MAINTENANCE OF TRAFFIC
KY PHASE 1B PLAN

LAW-93-0.00

33
788

J:\Project\O\ODOT\15005112 Ironton Russell\LAW\81595\mot\sheets\81595MP212.dgn - 4/25/2011 6:52:22 AM - jon_wanstrath

℄ CONSTR. 93C

℄ R/W BELLEFONTE ST.

℄ R/W US 23

42

43

44

45

46

47

48

339

340

341

342

343

344

PC Sta. 42+52.10

PT Sta. 338+36.04

PC Sta. 340+72.54

EX. LOOP

TEMP. LOOP

EXISTING POLE LOCATION TO REMAIN

NEW TEMPORARY DIAGONAL SPAN

EXISTING POLE LOCATION TO REMAIN

EXISTING POLE LOCATION TO REMAIN

SEE SHEET 242 FOR PROPOSED SIGNAL LAYOUT DETAILS

T1

T2

T3

TEMPORARY SIGNAL HEADS

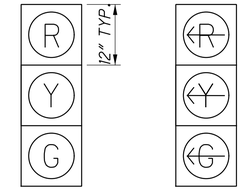

ALL INDICATIONS L.E.D.

ALL PROPOSED SIGNALS (FOR FINAL DESIGN) DETAILED ON SHEET 242

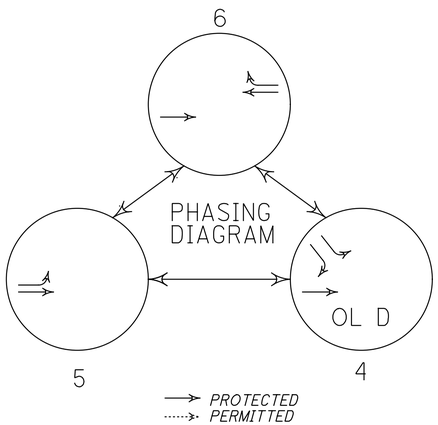

PHASE 1B TRAFFIC SIGNAL NOTES:

- *INSTALL PROPOSED SIGNAL POLES AND SPAN. INSTALL PROPOSED SIGNAL HEADS AS SHOWN. SEE SHEET 242 FOR PROPOSED SIGNAL HEAD DETAILS.*
- *PROPOSED SIGNAL HEADS AND TEMPORARY SIGNALS T1 AND T2 SHOULD BE COVERED.*
- *REMOVE EXISTING SIGNAL POLE ON KY 244 LEFT APPROXIMATELY STA. 44+90.*
- *SIGNAL PHASING REMAINS THE SAME AS PHASE 1A. MOVE SOUTHBOUND LEFT TURN LANE STOP BAR TO THE NORTH.*
- *INSTALL TEMPORARY LOOP.*

HORIZONTAL SCALE IN FEET
0 10 20 40

CALCULATED WFM
CHECKED VMF

MAINTENANCE OF TRAFFIC PLAN
KY PHASE 1B SIGNAL

LAW-93-0.00

J:\Project\0\ODOT\15005112 Ironton Russell\LAW\81595\mot\sheets\81595MH212.dgn - 4/25/2011 6:52:23 AM - jon_wanstrath

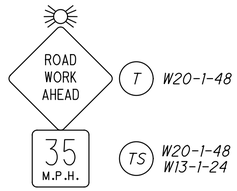

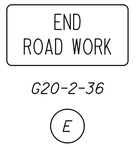



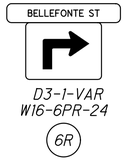









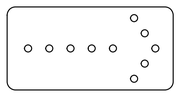

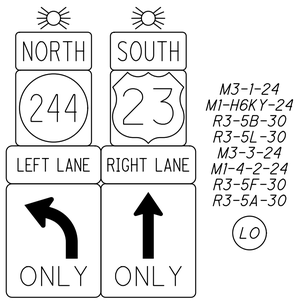

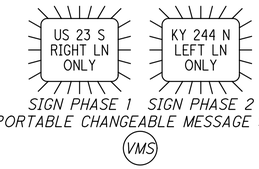

WZ EDGE LINE CURVE DATA				
PT.	℄ REF	STATION	OFFSET	DESC.
A	BELLEFONTE	44+71.04	-5.9′	PI
B	BELLEFONTE	45+33.26	-5.0′	PC
C	BELLEFONTE	45+31.84	43.0′	RAD. PT
D	BELLEFONTE	45+67.44	11.3′	PRC
E	US 23	342+14.46	-88.0′	RAD. PT
F	US 23	342+14.46	-40.0′	PT

LEGEND

- CURRENT PHASE WORK AREA
- ISLAND TO BE REMOVED FLUSH WITH EXISTING PAVEMENT
- PREVIOUS PHASE COMPLETED CONSTRUCTION
- TRAFFIC DIRECTION
- PAINT REMOVAL
- EL- EDGE LINE, WHITE
- EY- EDGE LINE, YELLOW
- CH- CHANNELIZING LINE
- SL- STOP LINE
- DL- DOTTED LINE

ALL PAVEMENT MARKINGS PLACED ON A FINAL SURFACE ARE TO BE ITEM 614, WORK ZONE -----, CLASS I, 642 PAINT

FOR EXISTING SIGNS SEE SIGNING PLANS

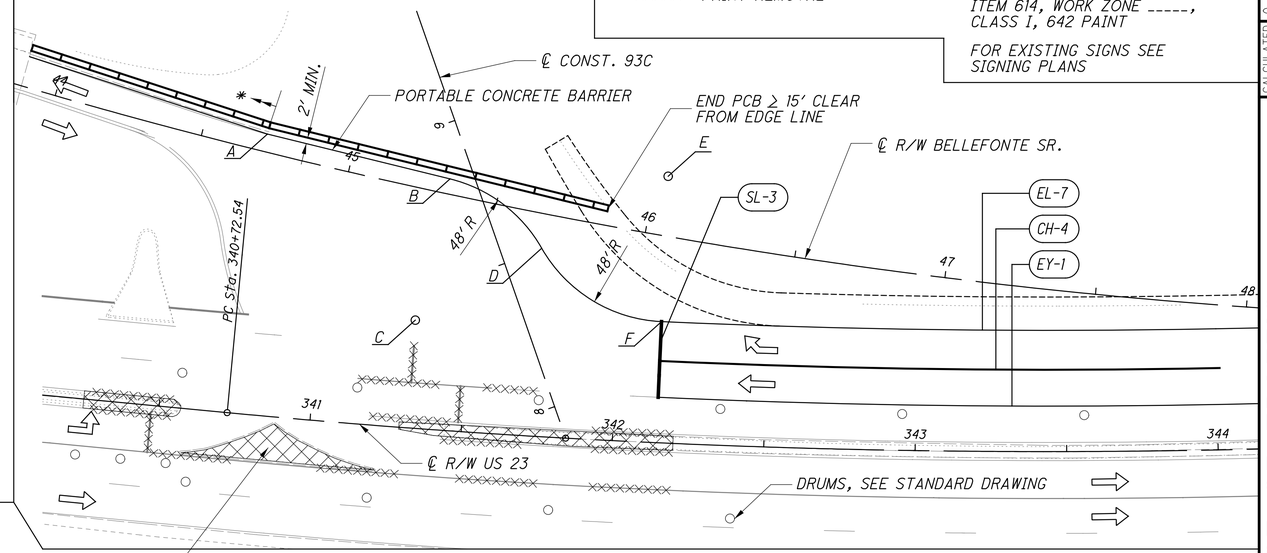

DETAIL A

* PORTABLE CONCRETE BARRIER SAME AS THE PREVIOUS PHASE

END EXISTING SIGNAL
BEGIN PROPOSED SIGNAL
FOLLOW SCD MT-120.00 (SB US 23 ONLY)

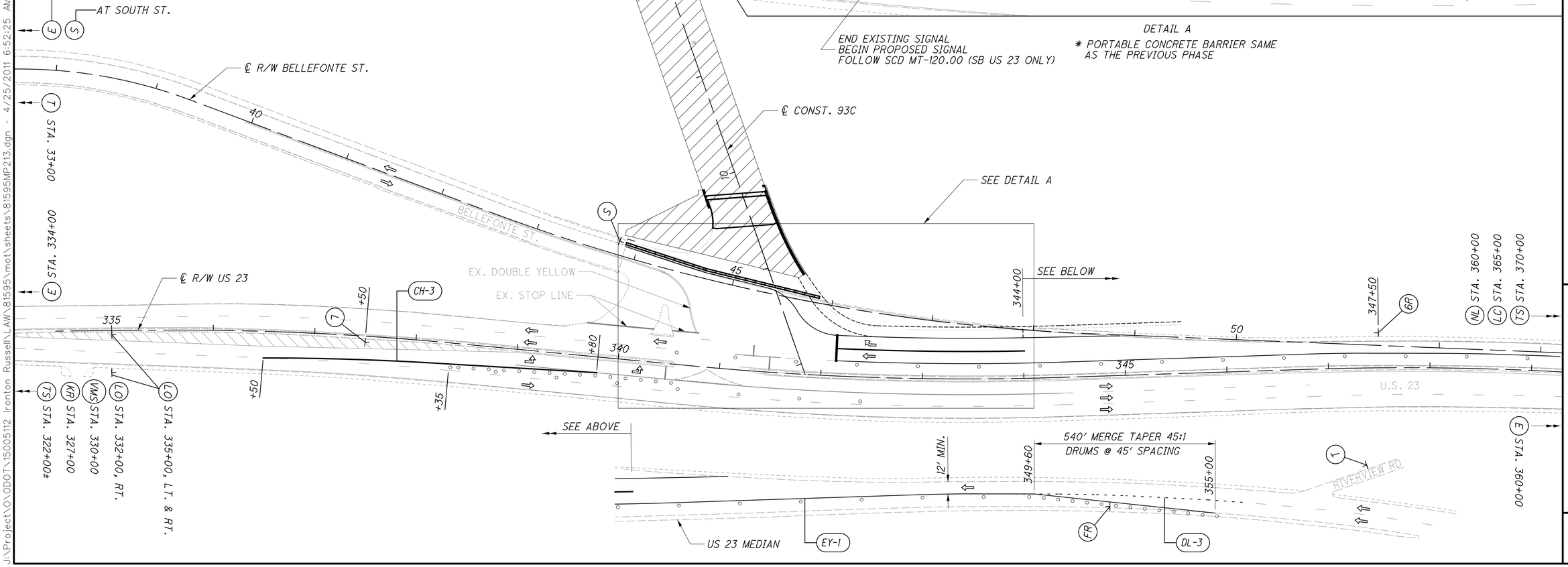

J:\Project\OA\ODOT\15005112 Ironton Russell\LAW\81595\mot\sheets\81595MP213.dgn - 4/25/2011 6:52:25 AM - jon_wanstrath

HORIZONTAL SCALE IN FEET
0 25 50 100

CALCULATED WFM
CHECKED VMF

MAINTENANCE OF TRAFFIC
KY PHASE 1C PLAN

LAW-93-0.00

35
788

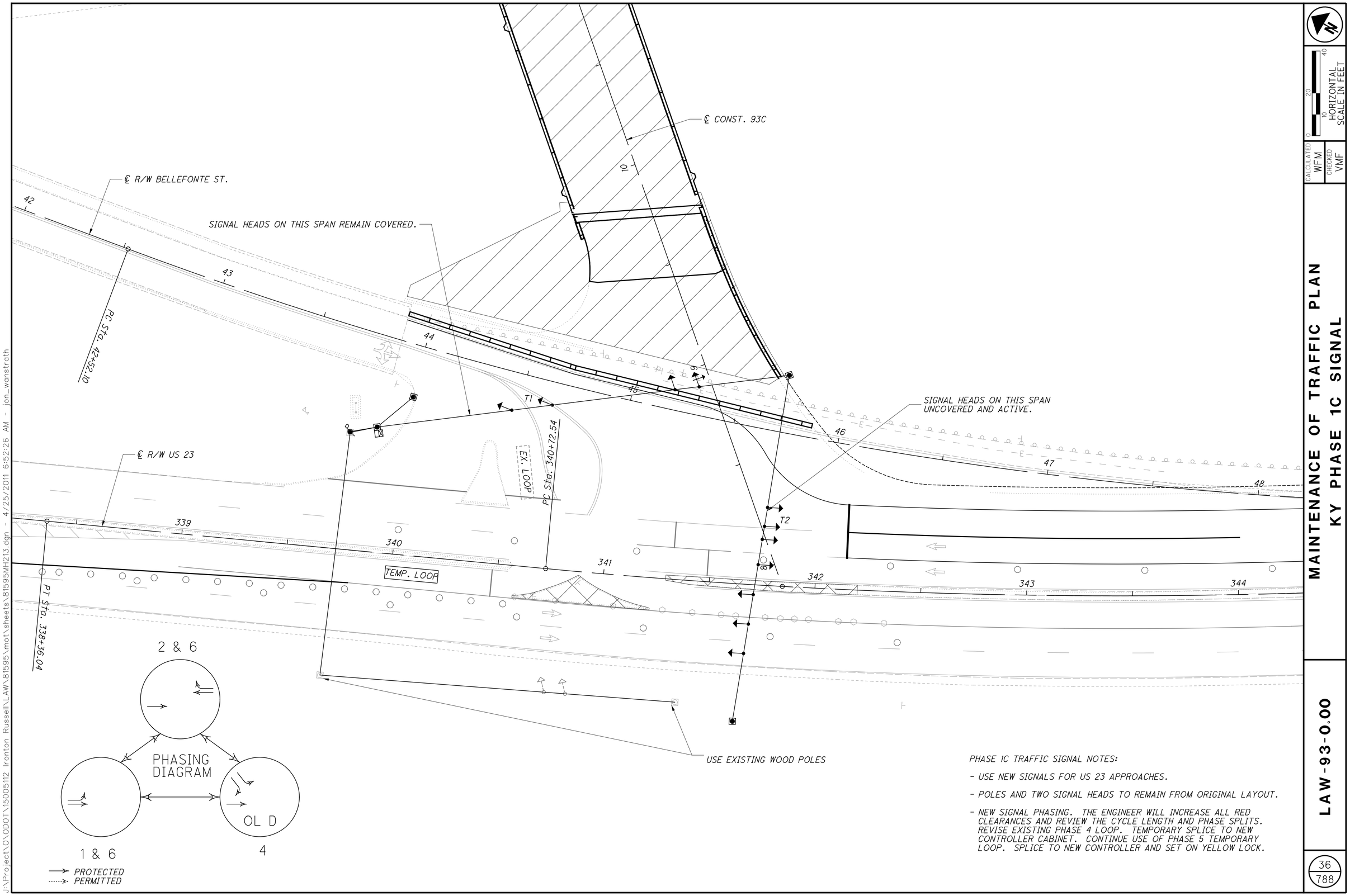

PHASE 1C TRAFFIC SIGNAL NOTES:

- USE NEW SIGNALS FOR US 23 APPROACHES.
- POLES AND TWO SIGNAL HEADS TO REMAIN FROM ORIGINAL LAYOUT.
- NEW SIGNAL PHASING. THE ENGINEER WILL INCREASE ALL RED CLEARANCES AND REVIEW THE CYCLE LENGTH AND PHASE SPLITS. REVISE EXISTING PHASE 4 LOOP. TEMPORARY SPLICE TO NEW CONTROLLER CABINET. CONTINUE USE OF PHASE 5 TEMPORARY LOOP. SPLICE TO NEW CONTROLLER AND SET ON YELLOW LOCK.

HORIZONTAL SCALE IN FEET
0 10 20 40

CALCULATED WFM
CHECKED VMF

MAINTENANCE OF TRAFFIC PLAN
KY PHASE 1C SIGNAL

LAW-93-0.00

J:\Project\O\ODOT\15005112 Ironton Russell\LAW\81595\mot\sheets\81595MH213.dgn - 4/25/2011 6:52:26 AM - jon_wanstrath

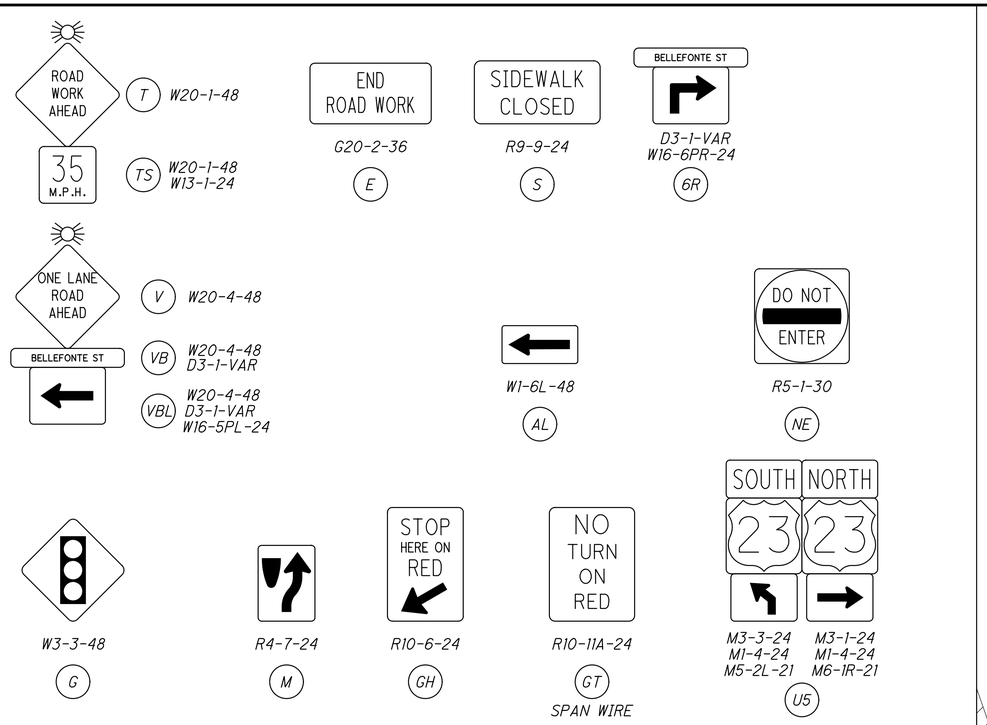

WZ EDGE LINE CURVE DATA			
PT.	STATION*	OFFSET	DESC.
A	43+30.00	-11.2′	PI
B	43+80.00	3.2′	PI
C	44+27.87	6.3′	PI
D	44+60.11	14.3′	PC
E	44+72.22	-32.2	RAD. PT
F	45+02.62	5.2′	PRC
G	45+31.84	43.0′	RAD. PT
H	45+33.26	-5.0′	PCC

WZ CHANNELIZING LINE CURVE DATA			
I	45+09.54	54.8′	PI
J	44+32.87	67.4′	PC
K	43+84.45	44.1′	RAD. PT
L	44+34.91	24.4	PT

* STATIONS REFERENCE ℄ R/W BELLEFONTE ST.

LEGEND

- CURRENT PHASE WORK AREA
- PREVIOUS PHASE COMPLETED CONSTRUCTION
- TRAFFIC DIRECTION
- PAINT REMOVAL
- EL- EDGE LINE, WHITE
- EY- EDGE LINE, YELLOW
- CL- CENTER LINE, DOUBLE, SOLID
- CH- CHANNELIZING LINE
- SL- STOP LINE
- TY- TRANSVERSE DIAGONAL LINE (YELLOW)
- DL- DOTTED LINE

ALL PAVEMENT MARKINGS PLACED ON A FINAL SURFACE ARE TO BE ITEM 614, WORK ZONE ____, CLASS I, 740.06, TYPE I

FOR EXISTING SIGNS SEE SIGNING PLANS

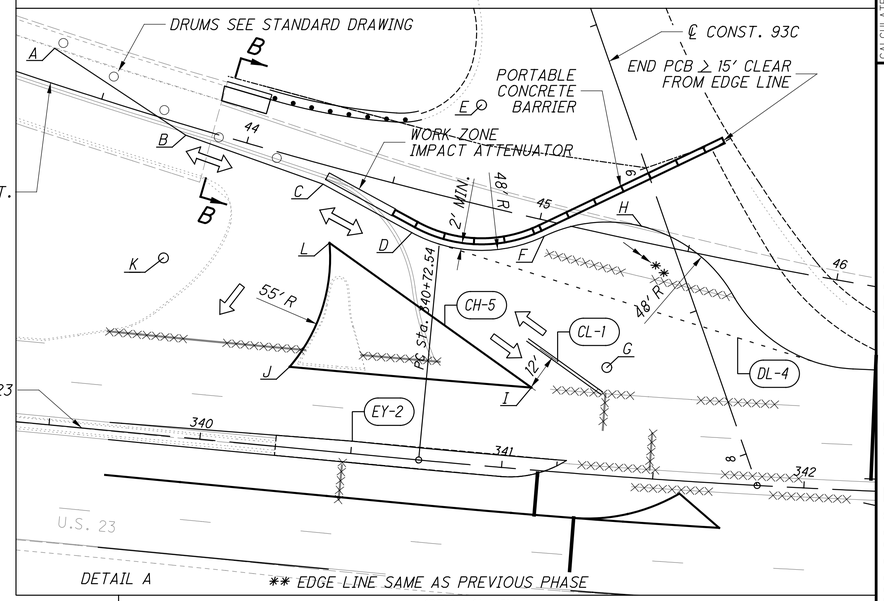

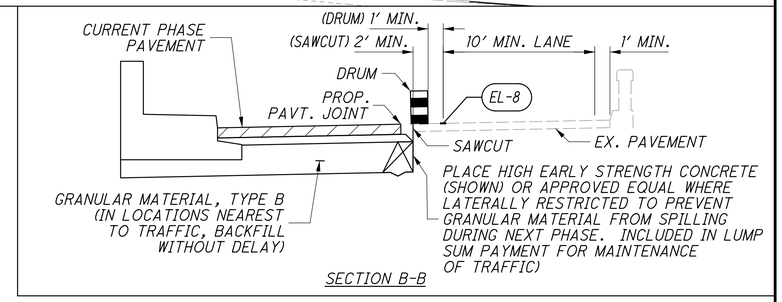

SECTION B-B

J:\Project\OJODOT\15005112 Ironton Russell\LAW\81595\mot\sheets\81595MP220.dgn - 4/25/2011 6:52:28 AM - jon_wanstrath

HORIZONTAL SCALE IN FEET 0 25 50 100

CALCULATED WFM CHECKED VMF

MAINTENANCE OF TRAFFIC KY PHASE 2 PLAN

LAW-93-0.00

37 788

℄ CONST. 93C

℄ R/W BELLEFONTE ST.

INSTALL TEMPORARY WOOD POLES AND SIGNAL HEADS.

TEMPORARY SIGNAL HEADS FOR OVERLAP C

T9

T8

T7

T6

42

43

44

45

46

47

48

PC Sta. 42+52.10

INSTALL TEMPORARY WOOD POLES AND TEMP. VIDEO CAMERA FOR DETECTION

T1

OVERLAP A

PC Sta. 340+72.54

INSTALL TEMPORARY SIGNAL HEADS FOR OVERLAP B

℄ R/W US 23

339

340

341

342

343

344

T4

T2

T5

T3

PT Sta. 338+96.04

EXISTING POLE TO REMAIN FOR PHASE 3.

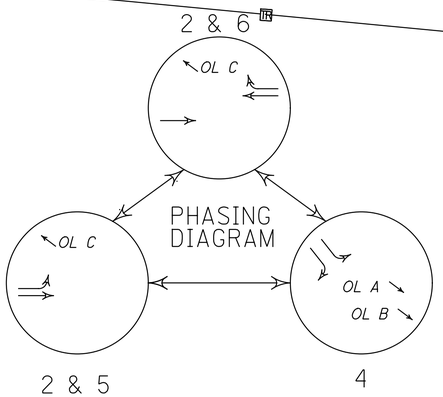

OL A = OL B = PHASE 4
OL C = PHASE 6

TEMPORARY SIGNAL HEADS

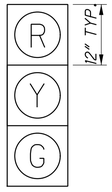

T1-T9

ALL INDICATIONS L.E.D.

T1 AND T2 INSTALLED IN PREVIOUS PHASES.
ALL PROPOSED SIGNALS (FOR FINAL DESIGN) DETAILED ON SHEET 242

OVERLAP PHASE TIMING

WAPITI TABLE 2	
OLA GREEN	6.0
OLA YELLOW	3.6
OLA RED	4.0
OLB GREEN	11.0
OLB YELLOW	3.6
OLB RED	4.0
OLC GREEN	10.0
OLC YELLOW	3.6
OLC RED	2.0

PHASE 2 TRAFFIC SIGNAL NOTES:

- INSTALL TEMPORARY TRAFFIC SIGNALS ON KY 244 STA. 42+70.
- INSTALL VIDEO DETECTION ON TEMPORARY POLE.
- INSTALL PERMANENT LOOPS TO BEGIN USE. DETAILED ON SHEETS 242 &243.
- NEW PERMANENT CONTROLLER SHALL BE USED. INSTALL OVERLAPS A, B AND C AS SHOWN ON PLAN. THE ENGINEER WILL REVIEW ALL RED CLEARANCES AND OTHER SIGNAL OPERATION FEATURES.

HORIZONTAL SCALE IN FEET
0 10 20 40

CALCULATED WFM
CHECKED VMF

MAINTENANCE OF TRAFFIC PLAN
KY PHASE 2 SIGNAL

LAW-93-0.00

38
788

J:\Project\O\ODOT\15005112 Ironton Russell\LAW\81595\mot\sheets\81595MH220.dgn 4/25/2011 6:52:29 AM - jon_wanstrath

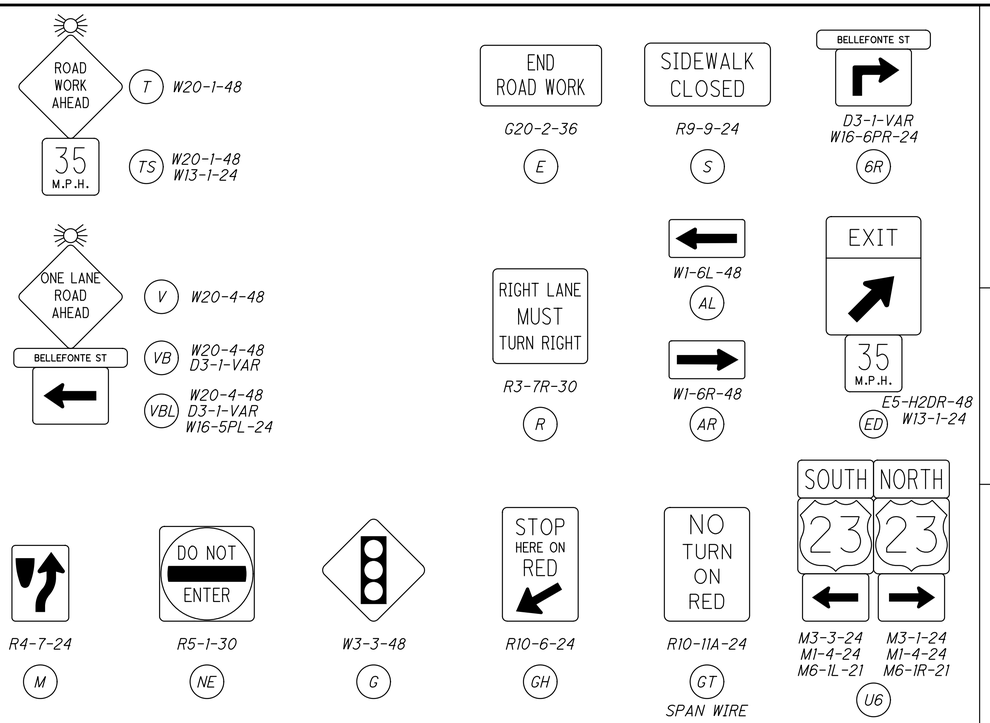

WZ EDGE LINE CURVE DATA				WZ EDGE LINE CURVE DATA			
PT.	STATION*	OFFSET	DESC.	PT.	STATION*	OFFSET	DESC.
A	42+50.00	14.2′	PI	J	45+44.19	49.9′	PI
B	43+80.00	0.0′	PI	K	43+88.21	-10.0′	PI
C	44+29.05	0.4′	PI	L	44+03.55	-9.9′	PC
D	44+74.79	-5.9′	PI	M	43+85.48	-209.2′	RAD. PT
E	44+99.39	-9.9′	PI	N	44+51.00	-18.9′	PT
F	45+08.33	-9.1′	PI	O	44+87.91	-37.6′	PC
G	45+18.66	-7.3′	PC	P	44+14.90	-16.4′	RAD. PT
H	45+14.53	16.3′	RAD. PT	Q	45+60.57	-23.0′	PT
I	45+37.99	12.1′	PT				

* STATIONS REFERENCE ℄ R/W BELLEFONTE ST.

LEGEND

- CURRENT PHASE WORK AREA
- PREVIOUS PHASE COMPLETED CONSTRUCTION
- TRAFFIC DIRECTION
- PAINT REMOVAL
- EL- EDGE LINE, WHITE
- CH- CHANNELIZING LINE
- ST- STOP LINE
- DL- DOTTED LINE

ALL PAVEMENT MARKINGS PLACED ON A FINAL SURFACE ARE TO BE ITEM 614, WORK ZONE -----, CLASS I, 642 PAINT

FOR EXISTING SIGNS SEE SIGNING PLAN

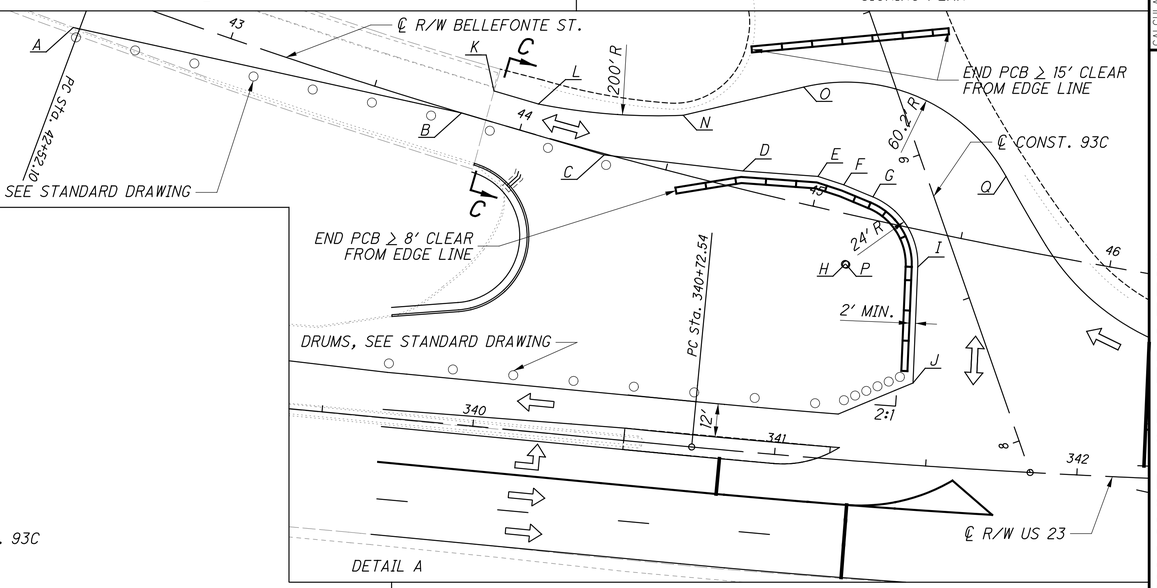

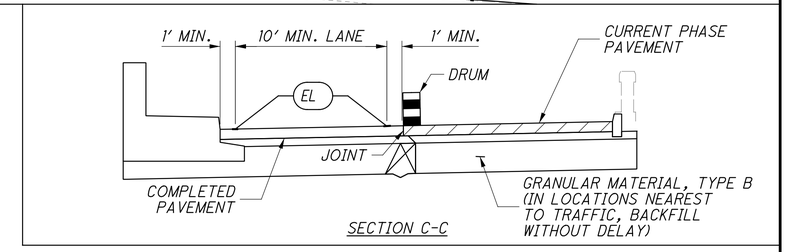

J:\Project\OJODOT\15005112 Ironton Russell\LAW\81595\mot\sheets\81595MP230.dgn - 4/25/2011 6:52:30 AM - jon_wanstrath

HORIZONTAL SCALE IN FEET
0 25 50 100

CALCULATED WFM
CHECKED VMF

MAINTENANCE OF TRAFFIC KY PHASE 3 PLAN

LAW-93-0.00

℄ CONST. 93C

℄ R/W BELLEFONTE ST.

SPAN AND SIGNAL CONFIGURATION REMAINS THE SAME AS PHASE 2.

RELOCATE T1 AND ADD A SECOND TEMPORARY SIGNAL HEAD TO ALIGN WITH LANE SHIFT. SIGNALS SERVE OL A.

PC Sta. 42+52.10

PROPOSED FINAL SIGNALS CAN BE INSTALLED, BUT SHALL REMAIN COVERED.

T10

PC Sta. 340+72.54

℄ R/W US 23

PT Sta. 338+36.04

T12

T11

INSTALL TEMPORARY SIGNAL HEADS FOR OVERLAP B ON TEMPORARY SPAN.

42 43 44 46 47 48 339 340 341 342 343 344

10' 9' 8'

TEMPORARY SIGNAL HEADS

R
Y
G
12" TYP.

ALL

ALL INDICATIONS L.E.D.

T1 -T9 INSTALLED IN PREVIOUS PHASES.
T1 RELOCATED. ALL PROPOSED SIGNALS (FOR FINAL DESIGN) DETAILED ON SHEET 242

OVERLAP PHASE TIMING

WAPITI TABLE 2	
OLA GREEN	7.3
OLA YELLOW	3.6
OLA RED	2.6
OLB GREEN	15.3
OLB YELLOW	3.6
OLB RED	2.6
OLC GREEN	14.7
OLC YELLOW	3.6
OLC RED	2.0

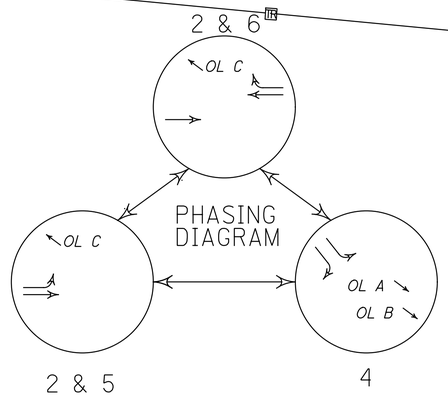

OL A = OL C = PHASE 4

PHASE 3 TRAFFIC SIGNAL NOTES:

- PHASING REMAINS THE SAME AS PHASE 2. THE ENGINEER WILL REVIEW ALL RED CLEARANCES AND OTHER SIGNAL OPERATION FEATURES.
- INSTALL TEMPORARY SIGNALS ON TEMORARY SPAN TO THE RIGHT OF US 23 TO FORM OVERLAP B, SERVING AS CONFIRMATION SIGNALS.

HORIZONTAL SCALE IN FEET
0 10 20 40

CALCULATED WFM
CHECKED VMF

MAINTENANCE OF TRAFFIC PLAN
KY PHASE 3 SIGNAL

LAW-93-0.00

40
788

J:\Project\OV\ODOT\15005112 Ironton Russell\LAW\81595\mot\sheets\81595MH230.dgn - 4/25/2011 6:52:32 AM - jon_wanstrath

ROAD WORK AHEAD W20-1-48 (T)

ROAD CLOSED AHEAD W20-3-48 (A)

DETOUR AHEAD W20-2-48 (D)

END ROAD WORK G20-2-36 (E)

SIDEWALK CLOSED USE OTHER SIDE R9-10L-24 (SL)

SIDEWALK CLOSED R9-9-24 (S)

SIDEWALK CLOSED USE OTHER SIDE R9-10R-24 (SR)

ROAD CLOSED / DETOUR R11-2-48 M4-10L-48 (CL)

ROAD CLOSED R11-2-48 (C)

ROAD CLOSED TO THRU TRAFFIC / DETOUR R11-4-60 M4-10R-48 (BR)

OM-3L-12 (XL)

OM-3R-12 (XR)

ONE LANE ROAD AHEAD W20-4-48 (V)

YIELD TO ONCOMING TRAFFIC R1-2-36 R1-2a-24 (W)

END DETOUR M4-8A-24 (ED)

ROAD CLOSED / DETOUR R11-2-48 M4-10R-48 (CR)

CAMPBELL AVE DETOUR D3-1-VAR M4-9L-30 (IL)

CAMPBELL AVE DETOUR D3-1-VAR M4-8-30 (I)

CAMPBELL AVE DETOUR D3-1-VAR M4-9R-30 (IR)

LEGEND

CURRENT PHASE WORK AREA

DETOUR ROUTES

GATES AND BARRICADES - SEE STANDARD DRAWING MT-101.60

TYPE 'A' WARNING LIGHT

NOTES

* 200' PREFERRED, 100' MINIMUM (TYPICAL).
FOR EXISTING SIGNS AND PAVEMENT MARKINGS SEE TRAFFIC CONTROL SHEETS.

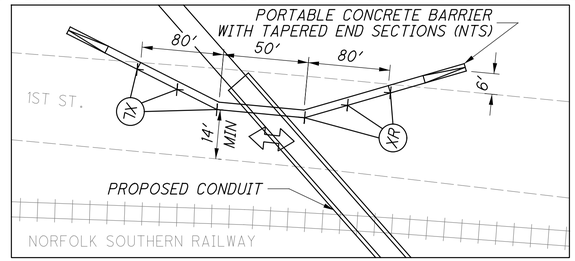

DETAIL A

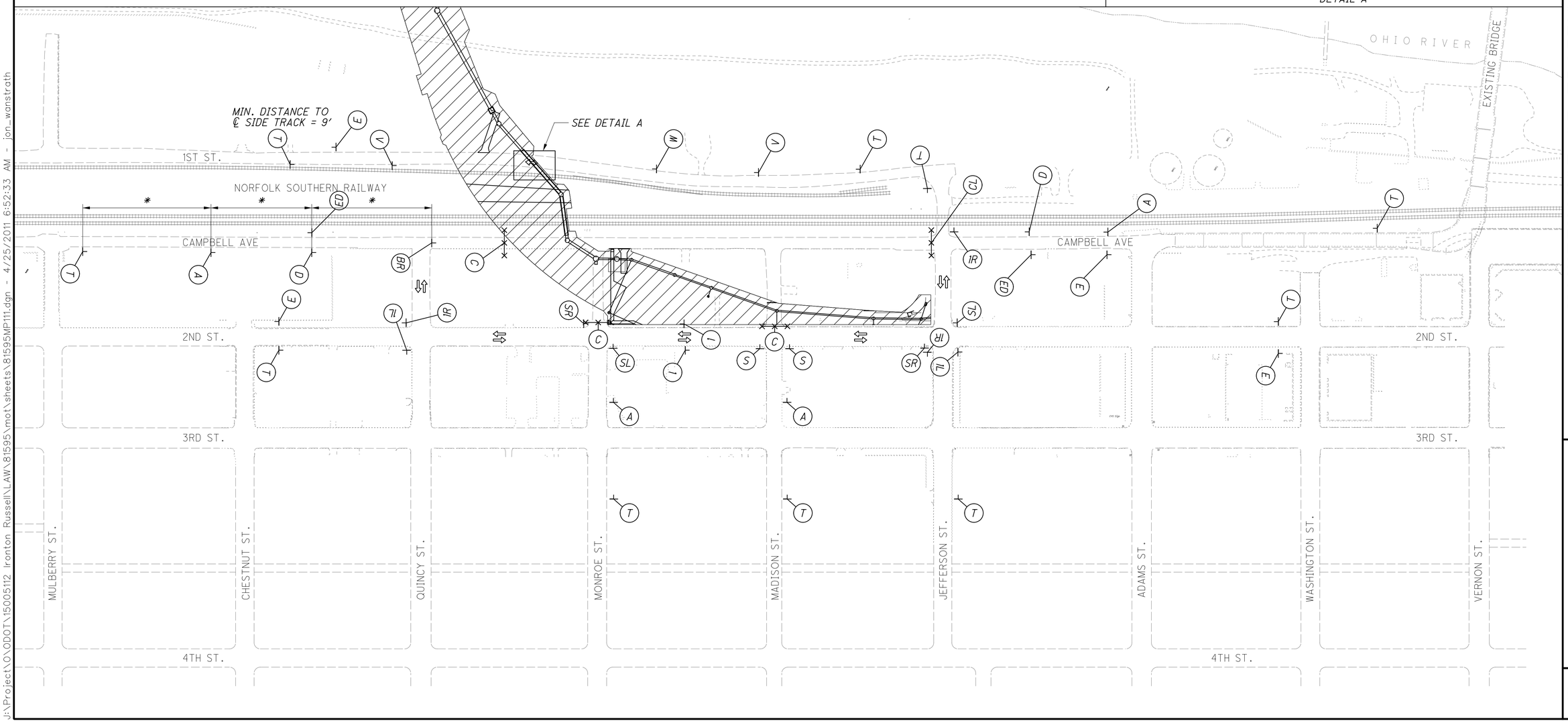

MAINTENANCE OF TRAFFIC
OHIO PHASE 1A PLAN

HORIZONTAL SCALE IN FEET
0 50 100 200

CALCULATED WFM
CHECKED VMF

LAW-93-0.00

41
788

J:\Project\OA\ODOT\15005112 Ironton Russell\LAW\81595\mot\sheets\81595MP111.dgn - 4/25/2011 6:52:33 AM - jon_wanstrath

ROAD WORK AHEAD — W20-1-48 (T)

ROAD CLOSED AHEAD — W20-3-48 (A)

DETOUR AHEAD — W20-2-48 (D)

END ROAD WORK — G20-2-36 (E)

SIDEWALK CLOSED USE OTHER SIDE — R9-10L-24 (SL)

SIDEWALK CLOSED — R9-9-24 (S)

SIDEWALK CLOSED USE OTHER SIDE — R9-10R-24 (SR)

ROAD CLOSED TO THRU TRAFFic / DETOUR — R11-4-60, M4-10L-48 (BL)

ROAD CLOSED — R11-2-48 (C)

ROAD CLOSED / DETOUR — R11-2-48, M4-10R-48 (CR)

CAMPBELL AVE / DETOUR — D3-1-VAR, M4-9L-30 (1L)

CAMPBELL AVE / DETOUR — D3-1-VAR, M4-8-30 (1)

CAMPBELL AVE / DETOUR — D3-1-VAR, M4-9R-30 (1R)

ROAD CLOSED / DETOUR — R11-2-48, M4-10L-48 (CL)

END DETOUR — M4-8A-24 (ED)

JEFFERSON ST. / DETOUR — D3-1-VAR, M4-9R-30 (5R)

LEGEND

- CURRENT PHASE WORK AREA
- PREVIOUS PHASE COMPLETED CONSTRUCTION
- DETOUR ROUTES
- GATES AND BARRICADES - SEE STANDARD DRAWING MT-101.60
- TYPE 'A' WARNING LIGHT

NOTES

* 200' PREFERRED, 100' MINIMUM (TYPICAL).

FOR EXISTING SIGNS AND PAVEMENT MARKINGS SEE TRAFFIC CONTROL SHEETS.



HORIZONTAL SCALE IN FEET: 0, 50, 100, 200

CALCULATED WFM

CHECKED VMF

MAINTENANCE OF TRAFFIC
OHIO PHASE 1B PLAN

LAW-93-0.00

42
788

J:\Project\ODOT\15005112 Ironton Russell\LAW\81595\mot\sheets\81595MP112.dgn - 4/25/2011 6:52:34 AM - jon_wanstrath

LEGEND

- CURRENT PHASE WORK AREA
- PREVIOUS PHASE COMPLETED CONSTRUCTION
- DETOUR ROUTES
- GATES AND BARRICADES - SEE STANDARD DRAWING MT-101.60
- TYPE 'A' WARNING LIGHT

HORIZONTAL SCALE IN FEET
0 50 100 200

CALCULATED WFM
CHECKED VMF

MAINTENANCE OF TRAFFIC
OHIO PHASE 1C PLAN

LAW-93-0.00

J:\Project\OA\ODOT\15005112 Ironton Russell\LAW\81595\mot\sheets\81595MP114.dgn - 4/25/2011 6:52:35 AM - jon_wanstrath

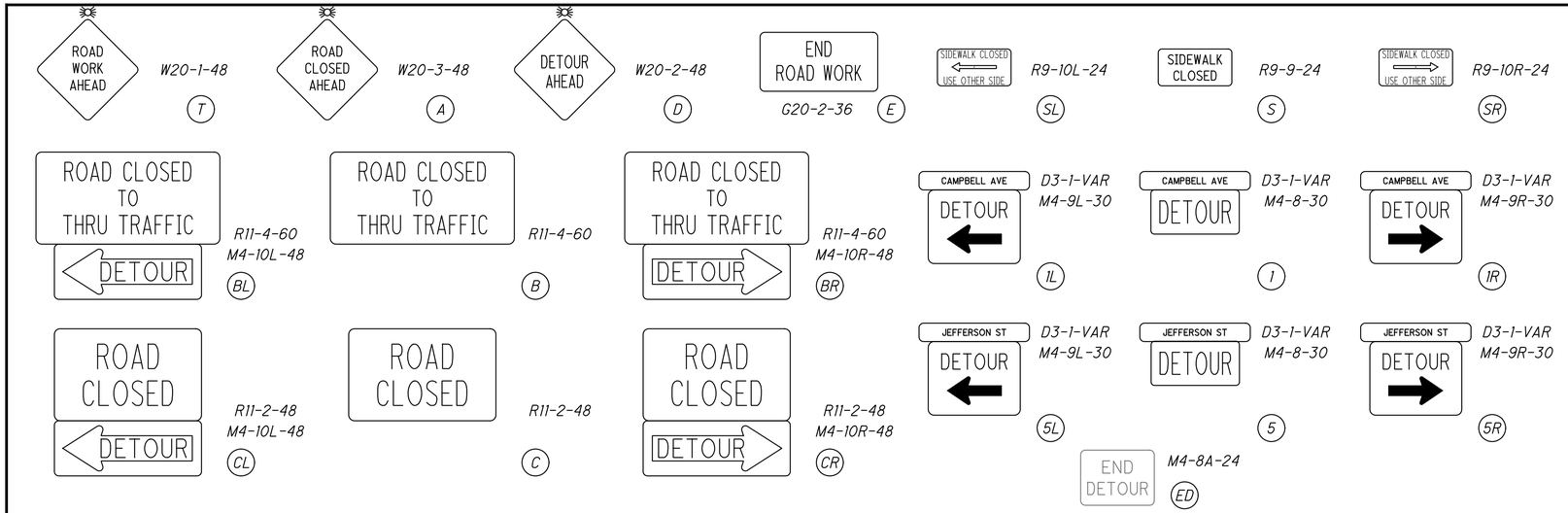

LEGEND

- CURRENT PHASE WORK AREA
- PREVIOUS PHASE COMPLETED CONSTRUCTION
- DETOUR ROUTES
- GATES AND BARRICADES - SEE STANDARD DRAWING MT-101.60
- TYPE 'A' WARNING LIGHT

NOTES

* 200' PREFERRED, 100' MINIMUM (TYPICAL)

FOR EXISTING SIGNS AND PAVEMENT MARKINGS SEE TRAFFIC CONTROL SHEETS.

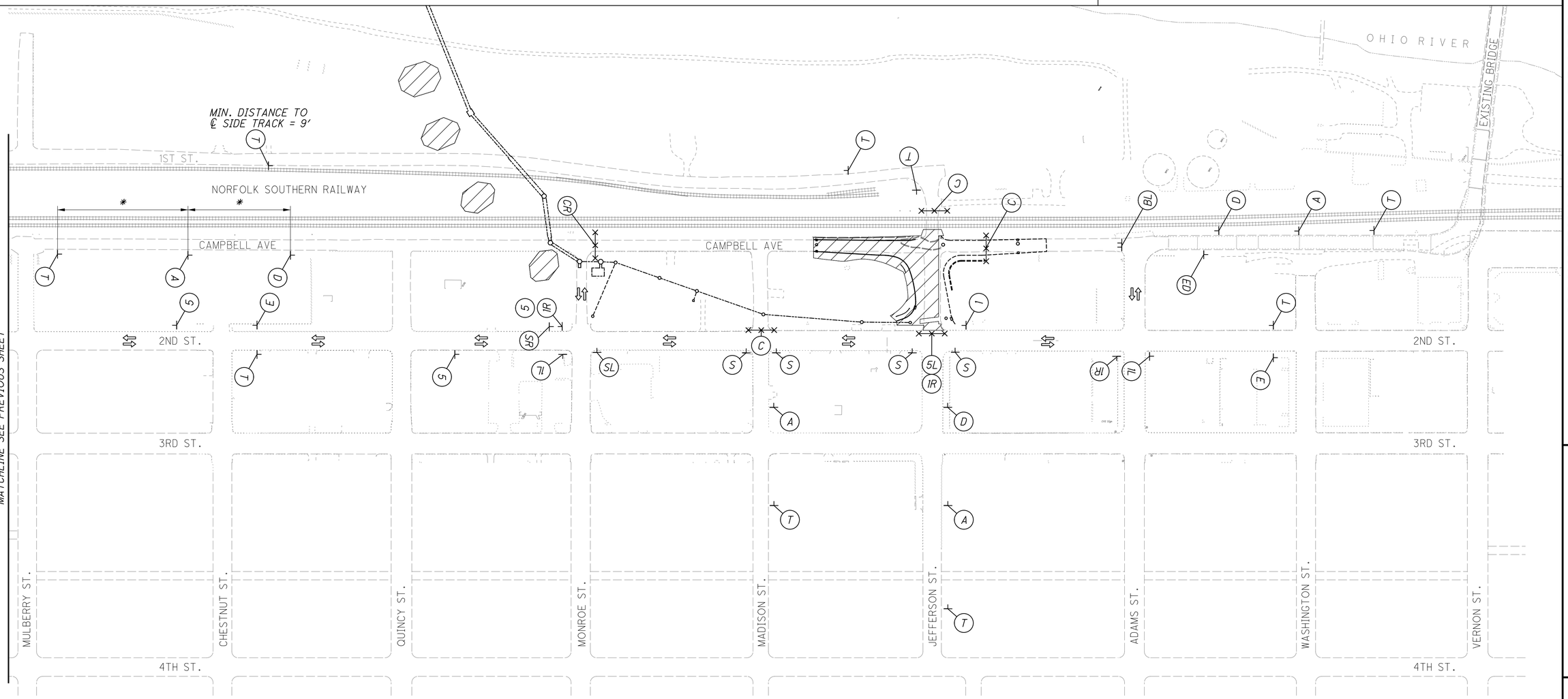

CALCULATED WFM
CHECKED VMF

HORIZONTAL SCALE IN FEET
0 50 100 200

MAINTENANCE OF TRAFFIC
OHIO PHASE 1C PLAN

LAW-93-0.00

44
788

J:\Project\OhDOT\15005112 Ironton Russell\LAW\81595\mot\sheets\81595MP113.dgn - 4/25/2011 6:52:37 AM - jon_wanstrath

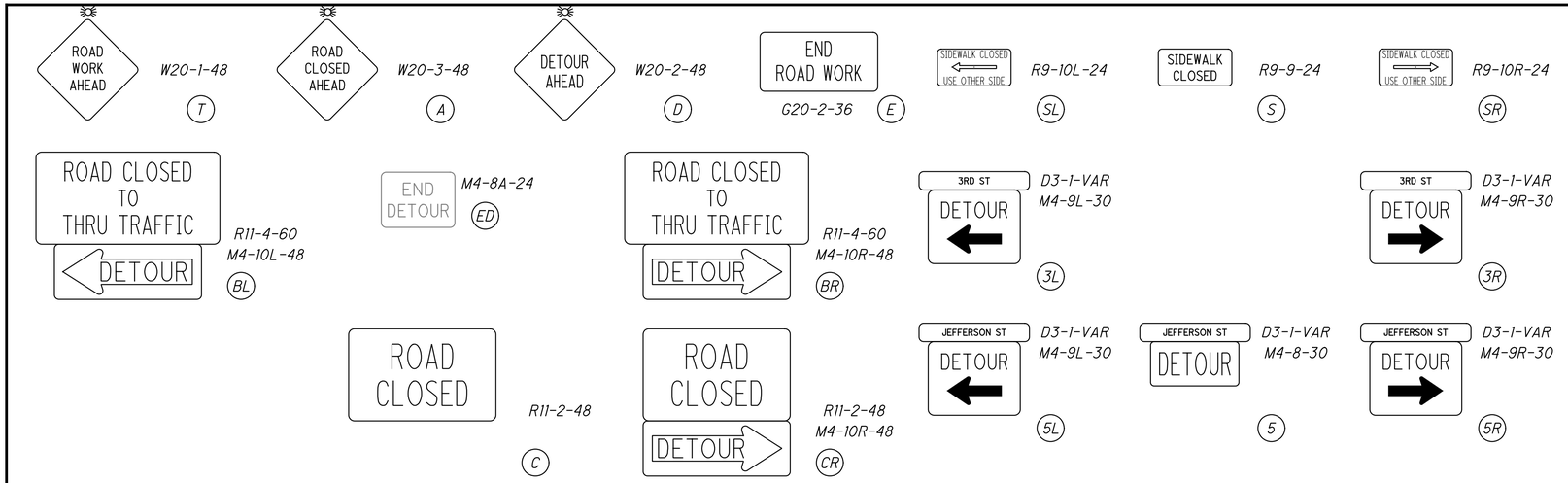

LEGEND

- CURRENT PHASE WORK AREA
- PREVIOUS PHASE COMPLETED CONSTRUCTION
- DETOUR ROUTES
- GATES AND BARRICADES - SEE STANDARD DRAWING MT-101.60
- TYPE 'A' WARNING LIGHT

NOTES

* 200' PREFERRED, 100' MINIMUM (TYPICAL).
FOR EXISTING SIGNING AND PAVEMENT MARKINGS SEE TRAFFIC CONTROL SHEETS.

** TEMPORARY PAVEMENT MARKINGS SHOWN SHALL MATCH FINAL MARKINGS AS SHOWN ON SHEET 222 . DRUMS SHALL BE USED TO BLOCK LANES WHERE MOVEMENT IS TEMPORARILY PROHIBITED.

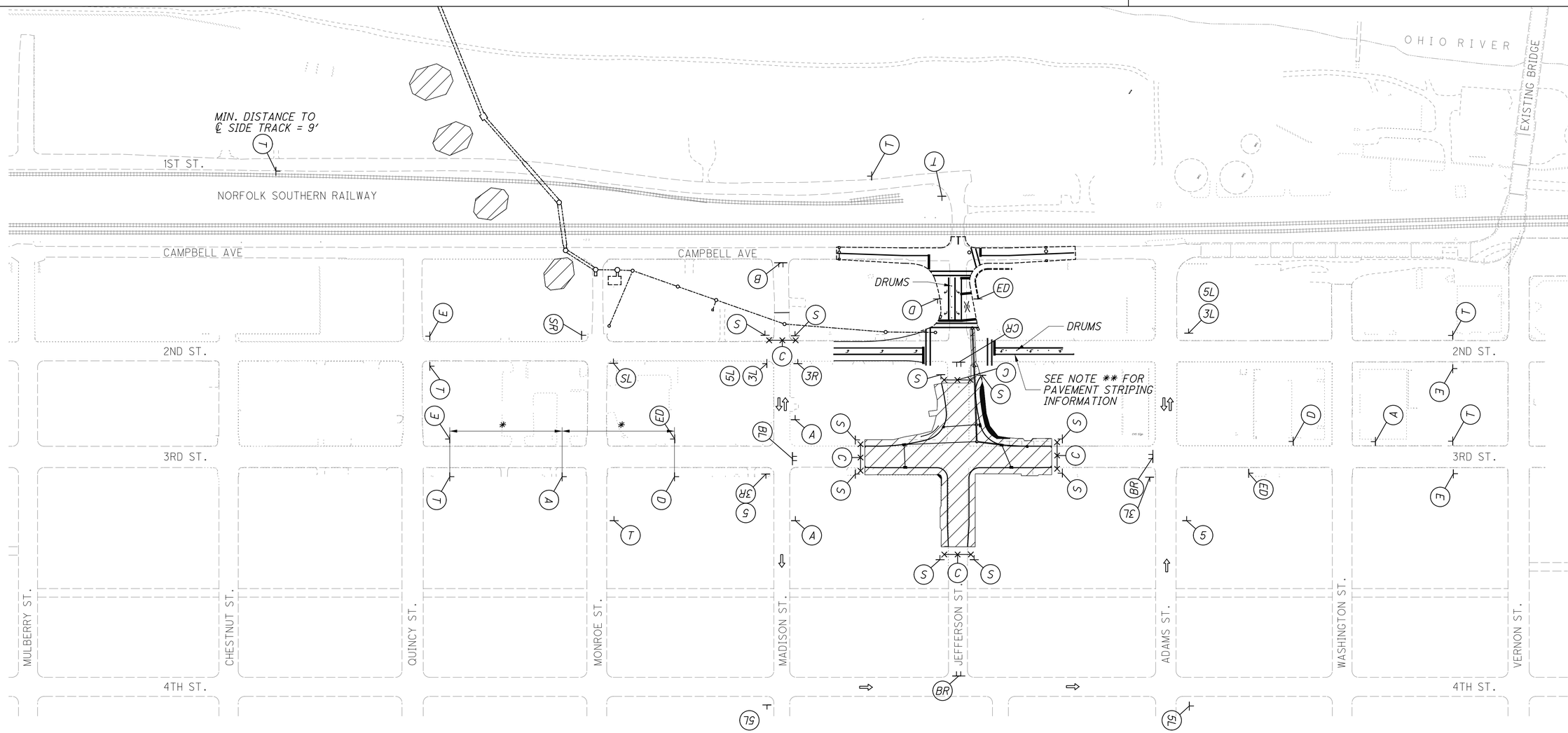

HORIZONTAL SCALE IN FEET
0 50 100 200

CALCULATED WFM
CHECKED VMF

MAINTENANCE OF TRAFFIC
OHIO PHASE 2 PLAN

LAW-93-0.00

45
788

J:\Project\O\ODOT\15005112 Ironton Russell\LAW\81595\mot\sheets\81595MP120.dgn - 4/25/2011 6:52:38 AM - jon_wanstrath

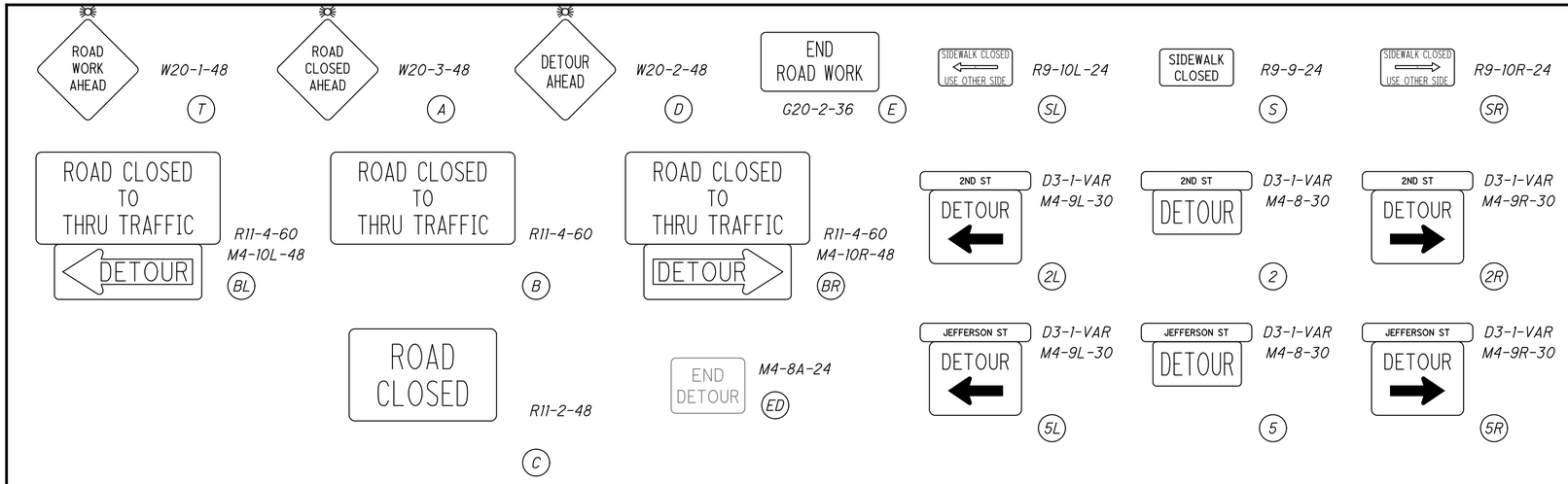

LEGEND

- CURRENT PHASE WORK AREA
- PREVIOUS PHASE COMPLETED CONSTRUCTION
- DETOUR ROUTES
- GATES AND BARRICADES - SEE STANDARD DRAWING MT-101.60
- TYPE 'A' WARNING LIGHT

NOTES

* 200' PREFERRED, 100' MINIMUM (TYPICAL).
FOR EXISTING SIGNING AND PAVEMENT MARKINGS SEE TRAFFIC CONTROL SHEETS.

** TEMPORARY PAVEMENT MARKINGS SHOWN SHALL MATCH FINAL MARKINGS AS SHOWN ON SHEET 222 . DRUMS SHALL BE USED TO BLOCK LANES WHERE MOVEMENT IS TEMPORARILY PROHIBITED.

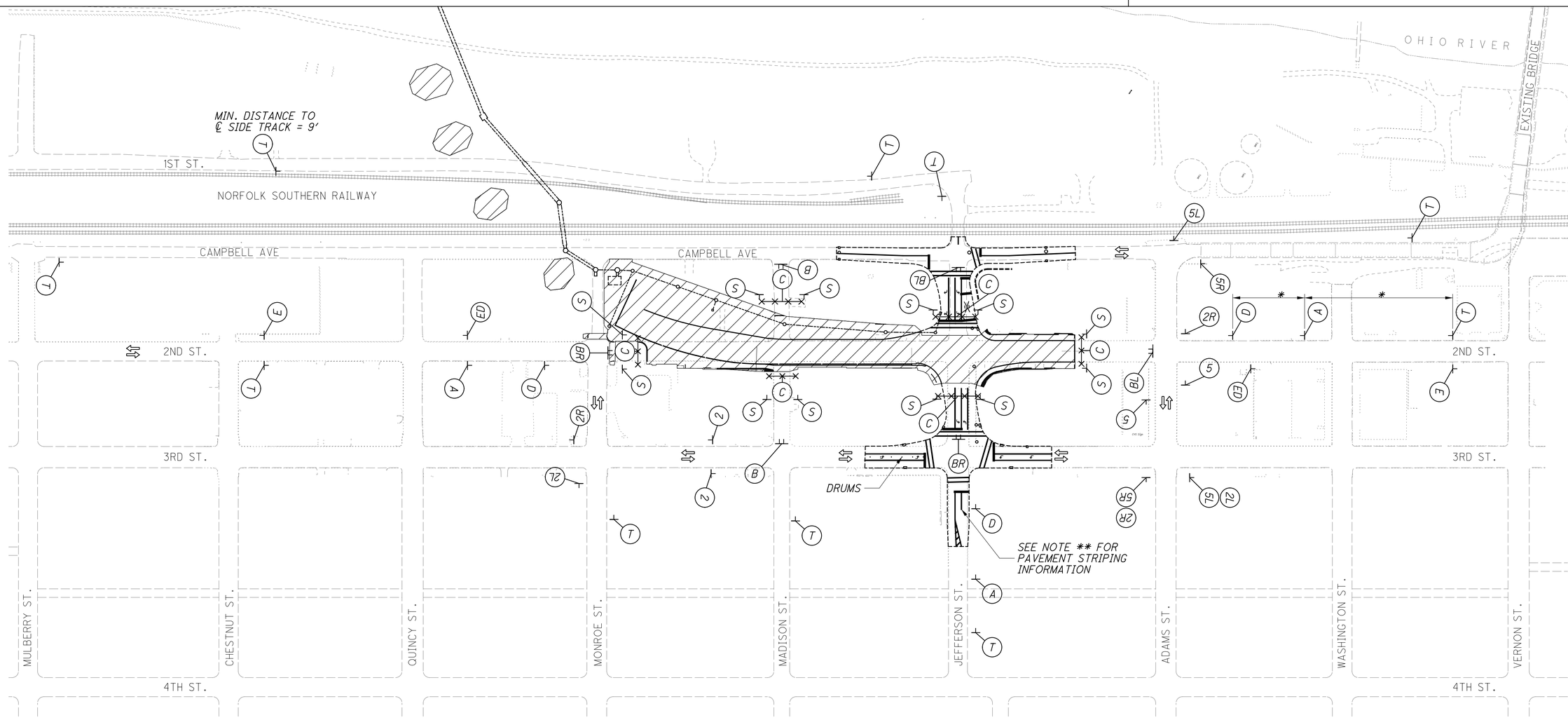

HORIZONTAL SCALE IN FEET
0 50 100 200

CALCULATED WFM
CHECKED VMF

MAINTENANCE OF TRAFFIC
OHIO PHASE 3 PLAN

LAW-93-0.00

J:\Project\ODOT\15005112 Ironton Russell\LAW\81595\mot\sheets\81595MP130.dgn - 4/25/2011 6:52:40 AM - jon_wanstrath

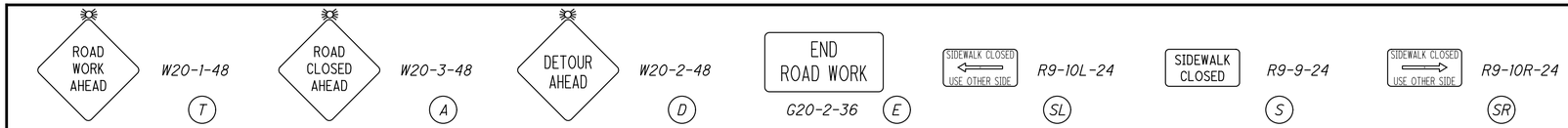

LEGEND

- CURRENT PHASE WORK AREA
- PREVIOUS PHASE COMPLETED CONSTRUCTION
- DETOUR ROUTES
- GATES AND BARRICADES - SEE STANDARD DRAWING MT-101.60
- TYPE 'A' WARNING LIGHT

NOTES

* 200' PREFERRED, 100' MINIMUM (TYPICAL).
FOR EXISTING SIGNING AND PAVEMENT MARKINGS SEE TRAFFIC CONTROL SHEETS.

** TEMPORARY PAVEMENT MARKINGS SHOWN SHALL MATCH FINAL MARKINGS AS SHOWN ON SHEET 222 . DRUMS SHALL BE USED TO BLOCK LANES WHERE MOVEMENT IS TEMPORARILY PROHIBITED.

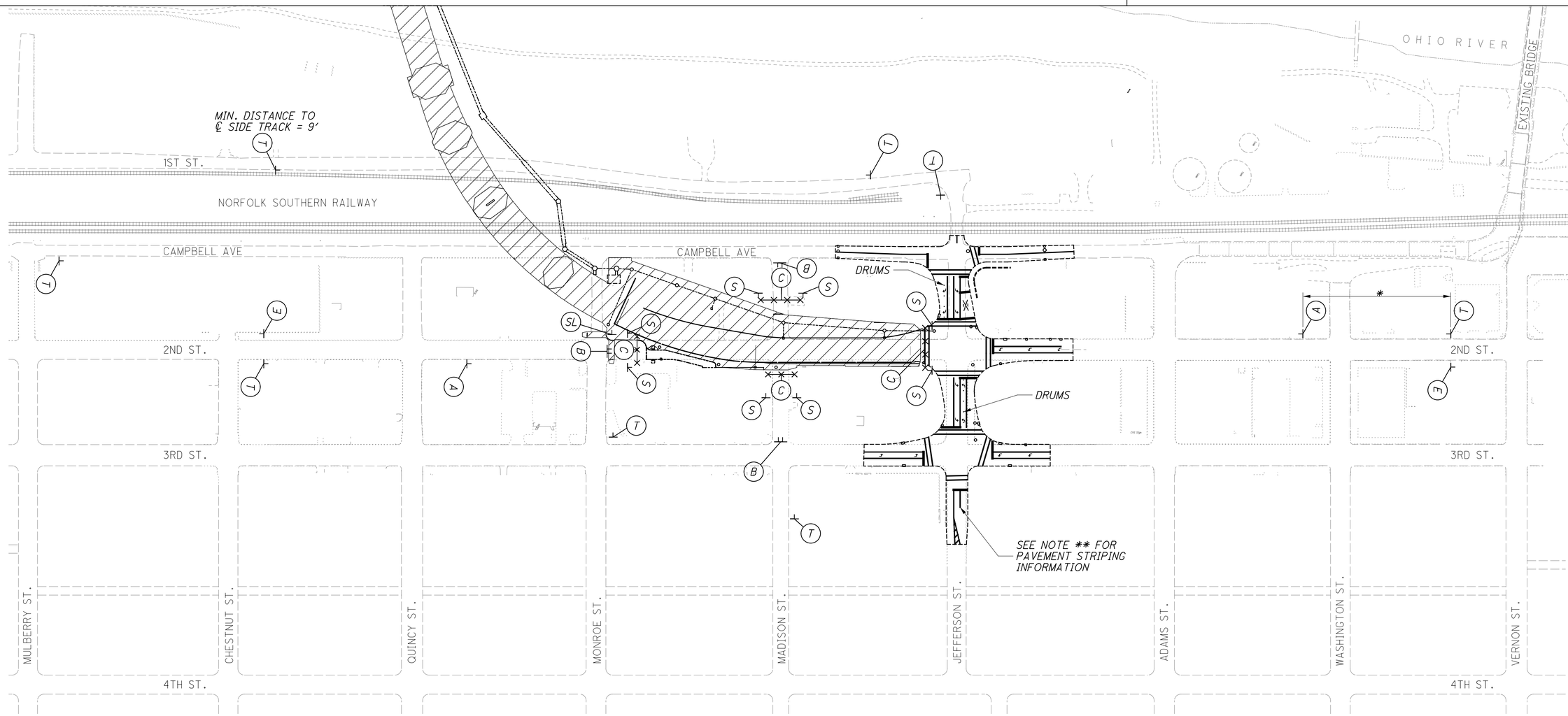

HORIZONTAL SCALE IN FEET
0 50 100 200

CALCULATED WFM
CHECKED VMF

MAINTENANCE OF TRAFFIC
OHIO PHASE 4 PLAN

LAW-93-0.00

47
788

J:\Project\O\ODOT\15005112 Ironton Russell\LAW\81595\mot\sheets\81595MP140.dgn - 4/25/2011 6:52:42 AM - jon_wanstrath

Link to 279-004-001
KY Riverbank As Built

Link to 279-003-001
OH Riverbank As-Built

OHIO RIVER

DO NOT DISTURB RIVER BANK

DO NOT DISTURB SANITARY FORCE MAIN

MATCHLINE STA. 35+00 SEE INSET

PROTECTIVE FENCE

MATCHLINE STA. 5070+35 SEE INSET

36+63
120'

37+50
100'

38+50
70'

36+28
99'

POSSIBLE CONTRACTOR ACCESS SHOWN FOR ESTIMATING WIDTH 24'±, GRADE 8%±

POSSIBLE CONTRACTOR ACCESS SHOWN FOR ESTIMATING WIDTH 16'±, GRADE 16%±

℄ CONST. 93C

15

94'

℄ CSX RAILROAD

℄ R/W BELLEFONTE ST.

℄ R/W US 23

PC Sta. 42+33.20

PT Sta. 39+34.80

PT Sta. 338+36.04

PC Sta. 505+90.01

PT Sta. 48+57.70

5065

5060

5070

12' MIN. TO PCB

PT Sta. 5069+32.98

15' OFFSET FROM NORMAL POOL TO LIMIT OF FENCE

FOR PIER DETAILS SEE STRUCTURE PLANS

FOR DRAINAGE DETAILS SEE SHEETS 163-197

PROTECTIVE FENCE

PIER NO. 1

DO NOT DISTURB SANITARY FORCE MAIN

POSSIBLE CONTRACTOR ACCESS FROM US 23 SHOWN FOR ESTIMATING, WIDTH 16'±, GRADE 12%±

45

340

10

LEGEND

- PROPOSED CONTRACTOR STAGING AREA
- PROPOSED CONTRACTOR ACCESS ROAD
- PROTECTIVE FENCE
- R/W — PROPOSED RIGHT OF WAY
- SW — SEWER EASEMENT
- TMP — TEMPORARY EASEMENT
- Ex R/W — EXISTING RIGHT OF WAY
- Ex RR — EXISTING RAILROAD RIGHT OF WAY

HORIZONTAL SCALE IN FEET
0 25 50 100

CALCULATED SCC
CHECKED DLW

CONTRACTOR ACCESS PLAN
KENTUCKY
LAW-93-0.00

DO NOT DISTURB SANITARY FORCE MAIN

MATCHLINE STA. 35+00 SEE ABOVE

℄ R/W BELLEFONTE ST.

GATED ACCESS STA. 33+00±

℄ CSX RAILROAD

MATCHLINE STA. 5070+35 SEE ABOVE

FENCE OFFSET 25' MIN. FROM CENTER OF NORTHERLY TRACK

PCB OFFSET 12' MIN. FROM CENTER OF NORTHERLY TRACK

SECTION A-A

25' MIN.
12' MIN.
℄ NORTHERLY TRACK
PCB
16'±
FIBER OPTIC DEPTH APPROXIMATE
CONTRACTOR ACCESS ROAD
PROTECTIVE FENCE

NOTES:

CONTRACTOR SHALL SUBMIT ACCESS PLAN TO ODOT AND CSXT FOR APPROVAL.

ALL WORK MUST BE PERFORMED WITHIN THE LIMITS OF TEMPORARY EASEMENTS OR R/W AS SHOWN.

WHEN NOT IN USE, CONTRACTOR ACCESS SHALL BE GATED AND SECURED TO PREVENT UNAUTHORIZED ACCESS.

SEE R/W PLANS FOR ADDITIONAL INFORMATION ON R/W AND EASEMENT LIMITS.

THE CONTRACTOR SHALL NOT FOUL THE TRACKS OR RESTRICT RAIL OPERATIONS OR THE USE OF CSXT FACILITIES AT ANY TIME.

SHOULD CSXT REQUIRE ACCESS TO ANY PORTION OF THE RAILROAD PROPERTY FOR ANY PURPOSE DURING CONSTRUCTION PERIOD, THE CONTRACTOR SHALL PROVIDE UNIMPEDED ACCESS FOR CSXT PERSONNEL OR EQUIPMENT.

NO VEHICLES OR EQUIPMENT SHALL CROSS THE TRACKS AT ANY LOCATION.

WHEN NO LONGER NEEDED FOR CONSTRUCTION OF THIS PROJECT THE CSXT PROPERTY SHALL BE RESTORED TO ITS EXISTING CONDITION AND REVEGETATED AS SHOWN ON SHEET 346 TO CSXT SATISFACTION.

ANY GRADING BY THE CONTRACTOR TO ACCOMMODATE ACCESS MUST PROVIDE FOR STORMWATER DRAINAGE AWAY FROM THE TRACKS.

ALL WORK ON CSXT PROPERTY MUST BE COORDINATED WITH CSXT DURING CONSTRUCTION

A MINIMUM OF 12 FT MUST BE PROVIDED BETWEEN THE CENTER OF THE NORTHERLY TRACK AND THE PORTABLE CONCRETE BARRIER (PCB) AT ALL TIMES. THE CONTRACTOR SHALL MAINTAIN THE PCB AT ALL TIME DURING CONSTRUCTION.

A MINIMUM OF 25 FT MUST BE PROVIDED BETWEEN A PROTECTIVE FENCE AND THE CENTERLINE OF THE NORTHERLY TRACK, ENCLOSING THE CONTRACTOR STAGING AREA AT ALL TIMES. ALL CONTRACTOR ACTIVITIES IN THE STAGING AREA SHALL BE WITHIN THE LIMITS OF THE PROTECTIVE FENCE.

THE CONTRACTOR SHALL SUBMIT DETAILED PROCEDURES FOR CONSTRUCTION OF THE BRIDGE TO CSXT FOR APPROVAL IN ACCORDANCE WITH CSXT'S CONSTRUCTION SUBMISSION CRITERIA

AN ENCROACHMENT PERMIT WILL BE REQUIRED FOR THE ACCESS FROM BELLEFONTE ST. (KY 244) TO THE RR PROPERTY. THE CONTRACTOR SHALL GET THIS FROM KYTC.

J:\Project\OA\ODOT\15005112 Ironton Russell\LAW\81595\mot\sheets\81595MM001.dgn - 5/6/2011 9:30:03 AM - jon.wanstrath

SHEET NUMBER												FUNDING		ITEM	ITEM EXT.	GRAND TOTAL	UNIT	DESCRIPTION	SEE SHEET NO.
3, 16-25	54	55	56	57	58	59	64	91-139	158			MB	TE						
																		ROADWAY	
LUMP												LUMP		201	11000	LUMP		CLEARING AND GRUBBING	16
6												6		202	11300	6	CU YD	PORTIONS OF STRUCTURE REMOVED	18
		902	1454	1597		1214			24			5191		202	23000	5191	SQ YD	PAVEMENT REMOVED	
	2261	18	1722	1746	1562	2914			277			10500		202	23010	10500	SQ YD	PAVEMENT REMOVED, ASPHALT	
						1613						1613		202	24000	1613	SQ YD	BRICK BASE REMOVED	
		2856	4001	3508	479	8136						18980		202	30000	18980	SQ FT	WALK REMOVED	
	42											42		202	30800	42	SQ YD	TRAFFIC ISLAND REMOVED	
	73											73		202	30900	73	SQ YD	PORTION OF TRAFFIC ISLAND REMOVED	
	733	446	501	309	106	642						2737		202	32000	2737	FT	CURB REMOVED	
				169		504						673		202	32500	673	FT	CURB AND GUTTER REMOVED	
				50		58						108		202	32600	108	FT	GUTTER REMOVED	
			241	241		164						646		202	35100	646	FT	PIPE REMOVED, 24" AND UNDER	
	554											554		202	38000	554	FT	GUARDRAIL REMOVED	
			1	1		1						3		202	58000	3	EACH	MANHOLE REMOVED	20
	2		6	4		2						14		202	58300	14	EACH	CATCH BASIN OR INLET REMOVED	20
		1										1		202	58600	1	EACH	CATCH BASIN OR INLET ABANDONED	20
7												7		202	67000	7	EACH	REGULATED UNDERGROUND STORAGE TANK REMOVED	26
	192					268						460		SPECIAL	20270000	460	FT	FILL AND PLUG EXISTING CONDUIT	18
		378			41							419		202	75000	419	FT	FENCE REMOVED	
					2							2		202	75250	2	EACH	GATE REMOVED	
9000								6722	378			16100		203	10000	16100	CU YD	EXCAVATION	
9000								10414				19414		203	20000	19414	CU YD	EMBANKMENT	
								5571				5571		203	20001	5571	CU YD	EMBANKMENT, AS PER PLAN	18
2												2		SPECIAL	20365000	2	EACH	SETTLEMENT PLATFORM	21
352								13902		2019		16273		204	10000	16273	SQ YD	SUBGRADE COMPACTION	
								7101				7101		204	13000	7101	CU YD	EXCAVATION OF SUBGRADE	
								7259				7259		204	30010	7259	CU YD	GRANULAR MATERIAL, TYPE B	
6												6		204	45000	6	HOUR	PROOF ROLLING	16
								8325				8325		204	50000	8325	SQ YD	GEOTEXTILE FABRIC	
	14.7											14.7		511	46201	14.7	CU YD	CLASS C CONCRETE, AS PER PLAN	18
6												6		604	38500	6	EACH	MONUMENT ASSEMBLY	3
		221.46	272.53									493.99		606	13000	493.99	FT	GUARDRAIL, TYPE 5	18
			1									1		606	26000	1	EACH	ANCHOR ASSEMBLY, TYPE B	18
	2	1										3		606	35000	3	EACH	BRIDGE TERMINAL ASSEMBLY, TYPE 1	
	525											525		606	98000	525	FT	GUARDRAIL, MISC.: KENTUCKY GUARDRAIL - STEEL W BEAM - SINGLE FACE, PER KY STD. DWG. RBR-001	154-157
	1											1		606	98100	1	EACH	GUARDRAIL, MISC.: KENTUCKY GUARDRAIL CONNECTOR TO BRIDGE END TYPE A, PER KY STD. DWG. RBC-001, RBC-002, RBC-003	150-152
		140										140		607	20001	140	FT	FENCE, TYPE CL, AS PER PLAN, 8'	18
		2										2		607	50901	2	EACH	GATE, TYPE CL, AS PER PLAN, 8'	18
		3678	2180	3146	1300	8129						18433		608	10000	18433	SQ FT	4" CONCRETE WALK	
		85										85		608	52020	85	SQ FT	CURB RAMP, TYPE A2	
		3										3		608	52120	3	EACH	CURB RAMP, TYPE A2	
				8	3	8						19		608	52140	19	EACH	CURB RAMP, TYPE B2	
	1											1		608	52144	1	EACH	CURB RAMP, TYPE B3	

FUNDING LEGEND: MB = MAJOR BRIDGE
TE = TRANSPORTATION ENHANCEMENT

CALCULATED AMD
CHECKED SCC

GENERAL SUMMARY

LAW-93-0.00

J:\Project\0\ODOT\15005112 Ironton Russell\LAW\81595\roadway\sheets\81595GG001.dgn - 7/28/2011 11:26:28 AM - jon_wanstrath

SHEET NUMBER												FUNDING		ITEM	ITEM EXT.	GRAND TOTAL	UNIT	DESCRIPTION	SEE SHEET NO.
16-25A	54	60	61	63	65-66	162	345	346	347			MB	TE						
												FOR FUNDING LEGEND SEE SHEET 49							
						324						324		SPECIAL	61050010	324	SQ FT	RETAINING WALL, MISC. : CONCRETE BLOCK WALL	162
	14											14		620	60500	14	EACH	REMOVAL OF REBOUNDABLE TUBULAR PYLON	
LUMP												LUMP		878	25000	LUMP		INSPECTION AND COMPACTION TESTING OF UNBOUND MATERIALS	
100												100		SPECIAL	69065016	100	TON	WORK INVOLVING PETROLEUM CONTAMINATED SOIL	26
2												2		SPECIAL	69065310	2	EACH	GROUND WATER MONITORING WELL RECONSTRUCTION	24
LUMP												LUMP		SPECIAL	69098400	LUMP		MISC.: EMERGENCY RESPONSE CONTINGENCY PLAN	24
LUMP												LUMP		SPECIAL	69098400	LUMP		MISC.: MUSSEL SURVEY AND RELOCATION (NEW BRIDGE)	24
LUMP												LUMP		SPECIAL	69098400	LUMP		MISC.: MUSSEL SURVEY AND RELOCATION (EXISTING BRIDGE)	24
																		EROSION CONTROL	
		379										379		601	11000	379	SQ YD	RIPRAP USING 6" REINFORCED CONCRETE SLAB	
		69										69		601	21070	69	SQ YD	TIED CONCRETE BLOCK MAT, TYPE 3	
		44										44		601	51000	44	CU YD	CHANNEL PROTECTION, MISC.: KENTUCKY CHANNEL LINING, CLASS III, PER KY STD. DWG. RDD-040	185
		46										46		616	10000	46	M GAL	WATER	18
3												3		659	00100	3	EACH	SOIL ANALYSIS TEST	
56							1575	1093	1361			4085		659	00300	4085	CU YD	TOPSOIL	
									5770			5770		659	00500	5770	SQ YD	SEEDING AND MULCHING, CLASS 1	
								6187	4864			11051		659	00510	11051	SQ YD	SEEDING AND MULCHING, CLASS 2	
								3716	1622			5338		659	00530	5338	SQ YD	SEEDING AND MULCHING, CLASS 3B	
6000							14318					20318		659	00540	20318	SQ YD	SEEDING AND MULCHING, CLASS 3C	
							716	501	620			1837		659	14000	1837	SQ YD	REPAIR SEEDING AND MULCHING	
							716	501	620			1837		659	15000	1837	SQ YD	INTER-SEEDING	
6.00												6		659	20000	6	TON	COMMERCIAL FERTILIZER	
8.58												8.58		659	31000	8.58	ACRE	LIME	
15							80	56	69			220		659	35000	220	M GAL	WATER	
								23	28			51		659	40000	51	M SQ FT	MOWING	
500												500		660	30000	500	SQ YD	SODDING UNSTAKED	
							1719						1719	661	20040	1719	EACH	DECIDUOUS SHRUB, 2' HEIGHT, VIBURNUM DENTATUM ARROWWOOD	
							1719						1719	661	20040	1719	EACH	DECIDUOUS SHRUB, 2' HEIGHT, ILEX VERTICILLATA WINTERBERRY	
							1719						1719	661	20040	1719	EACH	DECIDUOUS SHRUB, 2' HEIGHT, ARONIA MEANOCARPA BLACK CHOKEBERRY	
							21					21		662	30000	21	M GAL	LANDSCAPE WATERING	
					LUMP							LUMP		832	15000	LUMP		STORM WATER POLLUTION PREVENTION PLAN (OHIO)	66
					LUMP							LUMP		832	15000	LUMP		STORM WATER POLLUTION PREVENTION PLAN (KENTUCKY)	65
					25000							25000		832	30000	25000	EACH	EROSION CONTROL (OHIO)	66
					25000							25000		832	30000	25000	EACH	EROSION CONTROL (KENTUCKY)	65
																		DRAINAGE	
			17									17		602	20001	17	CU YD	CONCRETE MASONRY, AS PER PLAN	169
			2									2		602	98200	2	CU YD	MASONRY, MISC.: KENTUCKY SLOPED AND FLARED HEADWALL, PER KY STD. DWG. RDH-020	186
				170								170		603	00510	170	FT	6" CONDUIT, TYPE F FOR UNDERDRAIN OUTLETS	
100												100		603	00900	100	FT	6" CONDUIT, TYPE B, FOR DRAINAGE CONNECTION	20
100												100		603	00900	100	FT	6" CONDUIT, TYPE B, FOR SANITARY	20
100												100		603	01100	100	FT	6" CONDUIT, TYPE C	19
100												100		603	01100	100	FT	6" CONDUIT, TYPE C, FOR DRAINAGE CONNECTION	20

CALCULATED AMD
CHECKED JRW

GENERAL SUMMARY

LAW-93-0.00

J:\Project\O\ODOT\15005112 Ironton Russell\LAW\81595\roadway\sheets\81595GG002.dgn - 3/23/2012 10:14:07 AM - jon_wanstrath

SHEET NUMBER												FUNDING		ITEM	ITEM EXT.	GRAND TOTAL	UNIT	DESCRIPTION	SEE SHEET NO.
16-25	61	62	63	173								MB	TE						
												FOR FUNDING LEGEND SEE SHEET 49							
100												100		603	01100	100	FT	6" CONDUIT, TYPE C, FOR SANITARY	20
100												100		603	01400	100	FT	6" CONDUIT, TYPE E, FOR DRAINAGE CONNECTION	20
100												100		603	01500	100	FT	6" CONDUIT, TYPE F, FOR DRAINAGE CONNECTION	20
	774											774		603	04400	774	FT	12" CONDUIT, TYPE B	
	446											446		603	04400	446	FT	12" CONDUIT, TYPE B, 1250 D-LOAD	
	538											538		603	04600	538	FT	12" CONDUIT, TYPE C	
	47											47		603	05200	47	FT	12" CONDUIT, TYPE F	
	99											99		603	07400	99	FT	18" CONDUIT, TYPE B	
				40								40		603	07600	40	FT	18" CONDUIT, TYPE C	173
	32											32		603	08900	32	FT	21" CONDUIT, TYPE B	
	182											182		603	10400	182	FT	24" CONDUIT, TYPE B	
	164											164		603	13400	164	FT	30" CONDUIT, TYPE B	
	404											404		603	13600	404	FT	30" CONDUIT, TYPE C	
	41											41		603	16400	41	FT	36" CONDUIT, TYPE B, 1250 D-LOAD	
	90											90		603	16600	90	FT	36" CONDUIT, TYPE C	
	29											29		603	16600	29	FT	36" CONDUIT, TYPE C, 1250 D-LOAD	
	78											78		603	23800	78	FT	60" CONDUIT, TYPE B, 1250 D-LOAD	
	307											307		603	23800	307	FT	60" CONDUIT, TYPE B, 1750 D-LOAD	20
	60											60		603	26400	60	FT	72" CONDUIT, TYPE C	
	224											224		603	96600	224	FT	CONDUIT, BORED OR JACKED: TYPE C 72"	168
		143										143		603	98300	143	FT	CONDUIT, MISC.:KENTUCKY 15" CIRCULAR RIENFORCED CONCRETE PIPE, PER KY STD. DWG. RDI-001 (CLASS B, 706.02, 1250 D-LOAD)	187-193
		43										43		603	98300	43	FT	CONDUIT, MISC.:KENTUCKY 15" HIGH DENSITY POLYETHYLENE PIPE, PER KY STD. DWG. RDI-001 (CLASS C, 707.33)	187-193
		309										309		603	98300	309	FT	CONDUIT, MISC.:KENTUCKY 18" CIRCULAR RIENFORCED CONCRETE PIPE, PER KY STD. DWG. RDI-001 (CLASS B, 706.02, 1250 D-LOAD)	187-193
		138										138		603	98300	138	FT	CONDUIT, MISC.:KENTUCKY 18" HIGH DENSITY POLYETHYLENE PIPE, PER KY STD. DWG. RDI-001 (CLASS C, 707.33)	187-193
		73										73		603	98300	73	FT	CONDUIT, MISC.:KENTUCKY 24" CIRCULAR RIENFORCED CONCRETE PIPE, PER KY STD. DWG. RDI-001 (CLASS B, 706.02, 1250 D-LOAD)	187-193
		73										73		603	98300	73	FT	CONDUIT, MISC.: BORE AND JACK PIPE-36 IN	19
		197										197		603	98300	197	FT	CONDUIT, MISC.: 84" STEEL PIPE ENCASEMENT, BORED OR JACKED	19
		7										7		604	00400	7	EACH	CATCH BASIN, NO. 3	
		15										15		604	00800	15	EACH	CATCH BASIN, NO. 3A	
		2										2		604	02000	2	EACH	CATCH BASIN, NO. 6	
		1										1		604	02400	1	EACH	CATCH BASIN, NO. 7	
		1										1		604	04500	1	EACH	CATCH BASIN, NO. 2-2B	
		1										1		604	10100	1	EACH	INLET, SIDE DITCH	
		1										1		604	22500	1	EACH	INLET, MISC.: KENTUCKY CURB BOX INLET TYPE A, PER KY STD. DWG. RDB-270	177-180
		1										1		604	22500	1	EACH	INLET, MISC.: KENTUCKY DROP BOX INLET TYPE 1, PER KY STD. DWG. RDB-001	174
		2										2		604	22500	2	EACH	INLET, MISC.: KENTUCKY DROP BOX INLET TYPE 10, PER KY STD. DWG. RDB-010	175
		20										20		604	31500	20	EACH	MANHOLE, NO. 3	
		2										2		604	31500	2	EACH	MANHOLE, NO. 3, E-80 LOAD	
				1								1		604	31501	1	EACH	MANHOLE, NO. 3, AS PER PLAN	173
		2										2		604	32500	2	EACH	MANHOLE, MISC.: KENTUCKY MANHOLE TYPE A, PER KY STD. DWG. RDM-001	194
		1										1		604	32500	1	EACH	MANHOLE, MISC.: KENTUCKY MANHOLE TYPE B, PER KY STD. DWG. RDM-005	195
2												2		604	37000	2	EACH	INSPECTION WELL	19
		1										1		604	98000	1	EACH	DRAINAGE STRUCTURE, MISC.: SLUICE GATE	169
		1										1		604	98000	1	EACH	DRAINAGE STRUCTURE, MISC.: GATE WELL	168
		108										108		604	98100	108	FT	DRAINAGE STRUCTURE, MISC.: KENTUCKY DROP BOX INLET TYPE 12A, PER KY STD. DWG. RDB-012	176
			437									437		605	13410	437	FT	6" UNCLASSIFIED PIPE UNDERDRAINS WITH FABRIC WRAP, 707.31 OR 707.41	
			1813									1813		605	14020	1813	FT	6" BASE PIPE UNDERDRAINS WITH FABRIC WRAP, 707.31 OR 707.41	
			112									112		605	31100	112	FT	AGGREGATE DRAINS	
				1								1		895	10030	1	EACH	MANUFACTURED WATER QUALITY STRUCTURE, TYPE 3	19, 173

CALCULATED AMD
CHECKED JRW

GENERAL SUMMARY

LAW-93-0.00

J:\Project\O\ODOT\15005112 Ironton Russell\LAW\81595\roadway\sheets\81595GG003.dgn - 1/6/2012 5:06:18 PM - jon_wanstrath

SHEET NUMBER												FUNDING		ITEM	ITEM EXT.	GRAND TOTAL	UNIT	DESCRIPTION	SEE SHEET NO.
54	55	56	57	58	59	64	158	16-25				MB	TE						
												FOR FUNDING LEGEND SEE SHEET 49						PAVEMENT	
						3079						3079		255	20000	3079	FT	FULL DEPTH PAVEMENT SAWING	
						201		5				206		301	46000	206	CU YD	ASPHALT CONCRETE BASE, PG64-22	
						2309	415	81				2805		304	20000	2805	CU YD	AGGREGATE BASE	
						178						178		407	10000	178	GALLON	TACK COAT	
						71	47					118		407	14000	118	GALLON	TACK COAT FOR INTERMEDIATE COURSE	
						736	454	179				1369		408	10000	1369	GALLON	PRIME COAT	
							49					49		448	46024	49	CU YD	ASPHALT CONCRETE INTERMEDIATE COURSE, TYPE 2, PG64-22 (DRIVEWAYS)	
						86		25				111		448	46050	111	CU YD	ASPHALT CONCRETE INTERMEDIATE COURSE, TYPE 2, PG64-22	
						61		20				81		448	47020	81	CU YD	ASPHALT CONCRETE SURFACE COURSE, TYPE 1, PG64-22	
							34					34		448	48020	34	CU YD	ASPHALT CONCRETE SURFACE COURSE, TYPE 1, PG64-22 (DRIVEWAYS)	
						110						110		SPECIAL	45130000	110	FT	PRESSURE RELIEF JOINT, TYPE A	20
							363					363		452	12000	363	SQ YD	8" NON-REINFORCED CONCRETE PAVEMENT	
	220	334	555	407	968							2484		609	12000	2484	FT	COMBINATION CURB AND GUTTER, TYPE 2	
		275										275		609	12001	275	FT	COMBINATION CURB AND GUTTER, TYPE 2, AS PER PLAN	20
	68	61	124	468	172							893		609	26000	893	FT	CURB, TYPE 6	
48												48		609	96000	48	SQ YD	MEDIAN, MISC.: KENTUCKY MOUNTABLE MEDIAN TYPE 2, PER KY STD. DWG. RPM-011	145
92												92		609	98000	92	FT	CURB, MISC.: KENTUCKY STANDARD HEADER CURB, PER KY STD. DWG. RPM-100	146
58												58		609	98000	58	FT	CURB, MISC.: KENTUCKY ISLAND HEADER CURB TYPE 1, PER KY STD. DWG. RPM-100	146
						10831						10831		888	01200	10831	SQ YD	PORTLAND CEMENT CONCRETE PAVEMENT, 8" THICK (REINFORCED PER 451)	
						36						36		SPECIAL	45131000	36	FT	PRESSURE RELIEF JOINT, TYPE B	20
																		WATER WORK	
																		FOR WATER WORK ESTIMATED QUANTITIES	200
																		SANITARY SEWER	
																		FOR SANITARY SEWER ESTIMATED QUANTITIES	200
																		LIGHTING	
																		FOR LIGHTING ESTIMATED QUANTITIES	259-261
																		TRAFFIC CONTROL	
																		FOR TRAFFIC CONTROL ESTIMATED QUANTITIES	209
																		TRAFFIC SIGNALS	
																		FOR TRAFFIC SIGNAL ESTIMATED QUANTITIES	233-234
																		RETAINING WALLS	
																		FOR MSE WALL ESTIMATED QUANTITIES	374
																		BUILDING DEMOLITION	
	1											1		202	56100	1	EACH	BUILDING DEMOLISHED, PARCEL 24, 1 STORY COMMERCIAL	55
																		STRUCTURES (20 FOOT AND OVER)	
																		FOR ESTIMATED QUANTITIES FOR DEMOLITON	352
																		FOR ESTIMATED QUANTITIES FOR BRIDGE NO. LAW-93C-0000	392-393

CALCULATED AMD
CHECKED SCC

GENERAL SUMMARY

LAW-93-0.00

J:\Project\O\ODOT\15005112 Ironton Russell\LAW\81595\roadway\sheets\81595GG004.dgn - 1/5/2012 4:02:07 PM - jon_wanstrath

SHEET NUMBER												FUNDING		ITEM	ITEM EXT.	GRAND TOTAL	UNIT	DESCRIPTION	SEE SHEET NO.
27-29	30	18										MB	TE						
												FOR FUNDING LEGEND SEE SHEET 49							
																		MAINTENANCE OF TRAFFIC	
50		3300										3350		410	22000	3350	TON	TRAFFIC COMPACTED SURFACE, TYPE A OR B	
100												100		614	11110	100	HOUR	LAW ENFORCEMENT OFFICER WITH PATROL CAR FOR ASSISTANCE	29
2												2		614	12346	2	EACH	WORK ZONE IMPACT ATTENUATOR (UNIDIRECTIONAL) (FOR 24" WIDE HAZARDS) (45 MPH)	28
LUMP												LUMP		614	12420	LUMP		DETOUR SIGNING	
4												4		614	12460	4	EACH	WORK ZONE MARKING SIGN	
10												10		614	12600	10	EACH	REPLACEMENT DRUM	28
3												3		614	12740	3	EACH	WORK ZONE LIGHTING SYSTEM	29
100												100		614	12800	100	EACH	WORK ZONE RAISED PAVEMENT MARKER	29
50												50		614	13000	50	CU YD	ASPHALT CONCRETE FOR MAINTAINING TRAFFIC	
100												100		614	13300	100	EACH	BARRIER REFLECTOR, TYPE B	28
100												100		614	13350	100	EACH	OBJECT MARKER, ONE WAY	28
366												366		614	18401	366	DAY	PORTABLE CHANGEABLE MESSAGE SIGN, AS PER PLAN	29
0.5												0.5		614	20100	0.5	MILE	WORK ZONE LANE LINE, CLASS I, 642 PAINT	
0.5	0.01											0.51		614	21100	0.51	MILE	WORK ZONE CENTER LINE, CLASS I, 642 PAINT	
1	1.45											2.45		614	22100	2.45	MILE	WORK ZONE EDGE LINE, CLASS I, 642 PAINT	
1000	2597											3597		614	23200	3597	FT	WORK ZONE CHANNELIZING LINE, CLASS I, 642 PAINT	
200	1700											1900		614	24200	1900	FT	WORK ZONE DOTTED LINE, CLASS I, 642 PAINT	
	100											100		614	25200	100	FT	WORK ZONE TRANSVERSE/DIAGONAL LINE, CLASS I, 642 PAINT	
200	148											348		614	26000	348	FT	WORK ZONE STOP LINE, CLASS I	
												LUMP		615	10000	LUMP		ROADS FOR MAINTAINING TRAFFIC	
	523											523		615	35001	523	SQ YD	PAVEMENT FOR MAINTAINING TRAFFIC, AS PER PLAN	28
150												150		616	10000	150	M GAL	WATER	
	1950	1320										3270		622	40020	3270	FT	PORTABLE CONCRETE BARRIER, 32"	
												LUMP		SPECIAL	10000300	LUMP		PREMIUM ON RAILROAD'S PROTECTIVE PUBLIC LIABILITY AND PROPERTY DAMAGE LIABILITY INSURANCE	27
LUMP												LUMP		614	11000	LUMP		MAINTAINING TRAFFIC	
												48		619	16020	48	MONTH	FIELD OFFICE, TYPE C	
												LUMP		623	10000	LUMP		CONSTRUCTION LAYOUT STAKES	
												LUMP		624	10000	LUMP		MOBILIZATION	

CALCULATED WFM
CHECKED PAS

GENERAL SUMMARY

LAW-93-0.00

J:\Project\O\ODOT\15005112 Ironton Russell\LAW\81595\roadway\sheets\81595GG005.dgn - 12/15/2011 10:37:20 AM - jon_wanstrath

SUBSUMMARY

CALCULATED AMD
CHECKED SCC

REF. NO.	SHEET NO.	STATION TO STATION		202							511	606			608	609			620	
		FROM	TO	PAVEMENT REMOVED, ASPHALT	TRAFFIC ISLAND REMOVED	PORTION OF TRAFFIC ISLAND REMOVED	CURB REMOVED	CATCH BASIN OR INLET REMOVED	GUARDRAIL REMOVED	SPECIAL - FILL AND PLUG EXISTING CONDUIT	CLASS C CONCRETE, AS PER PLAN	BRIDGE TERMINAL ASSEMBLY, TYPE 1	GUARDRAIL, MISC.: KENTUCKY GUARDRAIL - STEEL W BEAM - SINGLE FACE, PER KY STD. DWG. RBR-001	GUARDRAIL, MISC.: KENTUCKY GUARDRAIL CONNECTOR TO BRIDGE END TYPE A, PER KY STD. DWG. RBC-001, RBC-002, RBC-003	CURB RAMP, TYPE B3	MEDIAN, MISC.: KENTUCKY MOUNTABLE MEDIAN TYPE 2, PER KY STD. DWG. RPM-011	CURB, MISC.: KENTUCKY STANDARD HEADER CURB, PER KY STD. DWG. RPM-100	CURB, MISC.: KENTUCKY ISLAND HEADER CURB TYPE 1, PER KY STD. DWG. RPM-100	REMOVAL OF REBOUNDABLE TUBULAR PYLON	
				SQ YD	SQ YD	SQ YD	FT	EACH	FT	FT	CU YD	EACH	FT	EACH	EACH	SQ YD	FT	FT	EACH	
R-1	67	340+25	340+56			14														
R-2	67	340+58	341+23		42															
R-3	67	340+25	341+23	83																
R-4	67	341+30	342+50			59														
R-5	67	340+25	342+50																14	
R-6	67	339+70	43+90				74													
R-7	67	44+30	44+50	36			88													
R-8	67	44+64	47+14	590			571													
R-9	67	43+79	47+90	1552																
R-11	67	43+90	49+45						554											
R-12	67	341+43						1		33										
R-13	67	341+28						1		159										
GR-1	67	44+04	9+75										122							
GR-2	67	8+82	345+56										403							
BT-1	67	44+04												1						
BT-2	67	8+82										1								
BT-3	67	9+75										1								
CM-1	67	340+25	341+00													34				
CM-2	67	342+20	342+50													14				
C-1	67	339+70 LT	43+89 RT														92			
C-2	67	8+51 RT	8+82 RT															33		
C-25	67	44+04 LT	44+29 LT															25		
CS-1	67	43+88 LT	44+04 LT								14.7				1					
TOTALS CARRIED TO GENERAL SUMMARY				2261	42	73	733	2	554	192	14.7	2	525	1	1	48	92	58	14	

LAW-93-0.00

J:\Project\O\ODOT\15005112 Ironton Russell\LAW\81595\roadway\sheets\81595GS001.dgn - 11/16/2011 12:39:12 PM - jon_wanstrath

REF. NO.	SHEET NO.	STATION TO STATION		202							606		607		608			609			
				PAVEMENT REMOVED	PAVEMENT REMOVED, ASPHALT	WALK REMOVED	CURB REMOVED	CATCH BASIN OR INLET ABANDONED	FENCE REMOVED	BUILDING DEMOLISHED, PARCEL 24, 1 STORY COMMERCIAL	GUARDRAIL, TYPE 5	BRIDGE TERMINAL ASSEMBLY, TYPE 1	FENCE, TYPE CL, AS PER PLAN, 8'	GATE, TYPE CL, AS PER PLAN, 8'	4" CONCRETE WALK	CURB RAMP, TYPE A2	CURB RAMP, TYPE A2	COMBINATION CURB AND GUTTER, TYPE 2	CURB, TYPE 6		
		FROM	TO	SQ YD	SQ YD	SQ FT	FT	EACH	FT	EACH	FT	EACH	FT	EACH	SQ FT	SQ FT	EACH	FT	FT		
R-13A	76	29+76 RT	32+18 LT						378												
F-1	76	30+78	31+43										140								
G-1	76	31+29												2							
R-14	78	34+68								1											
R-15	78	7+61 LT MONROE	38+50 LT			2083															
R-16	78	37+25 RT	37+77			336															
R-17	78	11+99 2ND	12+12 2ND	12																	
R-18	78	12+27 2ND	12+39 2ND		18																
R-19	78	37+94	38+50			359															
R-20	78	36+35	38+50				428														
R-21	78	36+35	38+50	836																	
R-22	78	12+28 2ND	12+42 2ND	54																	
R-23	78	37+16						1													
GR-3	78	36+20	38+50								221.46										
BT-4	78	36+20										1									
W-1	78	7+10 MONROE	11+02 2ND												2549						
W-2	78	11+15 2ND	12+99 2ND												1129						
CR-1	78	30+28 CAMPBELL					6										1				
CR-2	78	8+54 MONROE				45	6									48					
CR-3	78	8+54 MONROE															1				
CR-4	78	10+28 2ND															1				
CR-5	78	10+28 2ND				33	6									37					
C-3	78	36+22	38+50															220			
C-4	78	8+51 LT MONROE	10+31 LT 2ND																23		
C-5	78	10+78 LT 2ND	10+93 RT 2ND																45		
TOTALS CARRIED TO GENERAL SUMMARY				902	18	2856	446	1	378	1	221.46	1	140	2	3678	85	3	220	68		

CALCULATED AMD
CHECKED SCC

SUBSUMMARY

LAW-93-0.00

J:\Project\ODOT\15005112 Ironton Russell\LAW\81595\roadway\sheets\81595GS002.dgn - 4/25/2011 6:52:51 AM - jon_wanstrath

REF. NO.	SHEET NO.	STATION TO STATION		202							606		608	609							
				PAVEMENT REMOVED, ASPHALT	PAVEMENT REMOVED	WALK REMOVED	CURB REMOVED	PIPE REMOVED, 24" AND UNDER	MANHOLE REMOVED	CATCH BASIN OR INLET REMOVED	GUARDRAIL, TYPE 5	ANCHOR ASSEMBLY, TYPE B	4" CONCRETE WALK	COMBINATION CURB AND GUTTER, TYPE 2	COMBINATION CURB AND GUTTER, TYPE 2, AS PER PLAN	CURB, TYPE 6					
		FROM	TO	SQ YD	SQ YD	SQ FT	FT	FT	EACH	EACH	FT	EACH	SQ FT	FT	FT	FT					
R-24	80	38+50	38+81			234															
R-25	80	38+50	38+81				40														
R-26	80	38+50	38+82			232															
R-27	80	38+50	38+82				49														
R-29	80	39+12	40+87 AH			1273															
R-30	80	39+12	40+81 AH				219														
R-31	80	39+12	41+20 AH			2174															
R-32	80	39+12	39+50				54														
R-33	80	39+50	39+97		29																
R-34	80	39+97	40+34 AH				83														
R-35	80	40+30	40+08 AH		14																
R-36	80	40+25 AH	40+58 AH	47	11																
R-37	80	40+55 AH	41+03 AH				47														
R-38	80	40+84 AH	41+16 AH	169	33																
R-39	80	41+03 AH	41+20 AH		12																
R-40	80	41+11 AH	41+20 AH			88															
R-41	80	41+11 AH	41+20 AH				9														
R-42	80	38+50	41+20 AH	1506	1355																
R-43	80	38+59	39+31					174	1	4											
R-44	80	38+64	39+31					67		2											
GR-4	80	38+84	39+09								25										
GR-5	80	38+50	40+88 AH								247.53										
BT-5	80	40+88 AH										1									
W-3	80	38+50	41+20 AH										2108								
W-3A	80	40+96	41+23										72								
C-8	80	38+50	41+20 AH											318							
C-9	80	38+81	39+12													32					
C-10	80	38+67	40+96 AH												275						
C-11	80	40+96	41+20 AH													29					
C-12	80	41+05 AH	41+20 AH											16							
TOTALS CARRIED TO GENERAL SUMMARY				1722	1454	4001	501	241	1	6	272.53	1	2180	334	275	61					

CALCULATED AMD
CHECKED SCC

SUBSUMMARY

LAW-93-0.00

J:\Project\O\ODOT\15005112 Ironton Russell\LAW\81595\roadway\sheets\81595GS003.dgn - 4/25/2011 6:52:52 AM - jon_wanstrath

REF. NO.	SHEET NO.	STATION TO STATION		202									608		609							
		FROM	TO	PAVEMENT REMOVED, ASPHALT	PAVEMENT REMOVED	WALK REMOVED	CURB REMOVED	CURB AND GUTTER REMOVED	GUTTER REMOVED	PIPE REMOVED, 24" AND UNDER	MANHOLE REMOVED	CATCH BASIN OR INLET REMOVED	4" CONCRETE WALK	CURB RAMP, TYPE B2	COMBINATION CURB AND GUTTER, TYPE 2	CURB, TYPE 6					
				SQ YD	SQ YD	SQ FT	FT	FT	FT	FT	EACH	EACH	SQ FT	EACH	FT	FT					
R-45	81	41+20	41+66	91		507															
R-46	81	41+20	41+68				8	40	8												
R-48	81	41+20	41+23		1																
R-49	81	41+20	41+64			284															
R-50	81	41+23	41+65				28	48	12												
R-51	81	42+02	44+03			1520															
R-52	81	42+00	44+03				103	28	12												
R-53	81	42+03	44+03				133	53	18												
R-54	81	42+03	44+03			1197															
R-55	81	41+50	42+30							83	1	2									
R-56	81	41+50	41+76							27		1									
R-57	81	41+76	42+30							54		1									
R-58	81	4+74 JEFFERSON	5+50 JEFFERSON							77											
R-59	81	41+20	44+03	1655	1481																
R-60	81	5+14 JEFFERSON	5+50 JEFFERSON				37														
R-61	81	42+30	42+56		13																
R-62	81	42+83	43+09		14																
R-63	81	43+46	43+68		9																
R-64	81	43+73	43+92		9																
R-65	81	42+31	42+55		26																
R-66	81	42+78	43+00		22																
R-67	81	43+27	43+47		22																
W-4	81	4+00 JEFFERSON	4+42 JEFFERSON										456	2		31					
W-5	81	5+10 JEFFERSON	5+50 JEFFERSON										398	2		18					
W-6	81	42+11	44+03										1088	2		35					
W-7	81	42+15	44+03										1204	2		35					
C-7	81	41+20	41+54												59						
C-8	81	41+20	41+24													5					
C-9	81	41+20	41+56												58						
C-10	81	42+11	44+03												232						
C-11	81	42+15	44+03												206						
TOTALS CARRIED TO GENERAL SUMMARY				1746	1597	3508	309	169	50	241	1	4	3146	8	555	124					

CALCULATED AMD
CHECKED SCC

SUBSUMMARY

LAW-93-0.00

J:\Project\O\ODOT\15005112 Ironton Russell\LAW\81595\roadway\sheets\81595GS004.dgn - 4/25/2011 6:52:53 AM - jon_wanstrath

REF. NO.	SHEET NO.	STATION TO STATION		202					608		609										
		FROM	TO	PAVEMENT REMOVED, ASPHALT	WALK REMOVED	CURB REMOVED	FENCE REMOVED	GATE REMOVED	4" CONCRETE WALK	CURB RAMP, TYPE B2	COMBINATION CURB AND GUTTER, TYPE 2	CURB, TYPE 6									
				SQ YD	SQ FT	FT	FT	EACH	SQ FT	SQ FT	FT	FT									
R-68	86	34+50	39+00	1562																	
R-69	86	34+50	35+36			86															
R-70	86	3+20	4+00		479																
R-71	86	38+22					41	2													
R-72	86	38+80	39+00			20															
W-8	86	3+29	4+00						579	1		17									
W-9	86	3+18	4+00						721	2		32									
C-12	86	34+50	35+75									125									
C-13	86	34+50	35+75									125									
C-14	86	35+75	36+47								72										
C-15	86	37+12	37+75								63										
C-16	86	37+75	38+59									84									
C-17	86	35+75 CAMPBELL	4+00								128										
C-18	86	37+75 CAMPBELL	4+00								144										
C-19	86	37+75	38+59									85									
TOTALS CARRIED TO GENERAL SUMMARY				1562	479	106	41	2	1300	3	407	468									

CALCULATED AMD
CHECKED SCC

SUBSUMMARY

LAW-93-0.00

J:\Project\O\ODOT\15005112 Ironton Russell\LAW\81595\roadway\sheets\81595GS005.dgn - 4/25/2011 6:52:54 AM - jon_wanstrath

REF. NO.	SHEET NO.	STATION TO STATION		202										608		609				
		FROM	TO	PAVEMENT REMOVED, ASPHALT	PAVEMENT REMOVED	BRICK BASE REMOVED	WALK REMOVED	CURB REMOVED	CURB AND GUTTER REMOVED	GUTTER REMOVED	PIPE REMOVED, 24" AND UNDER	MANHOLE REMOVED	CATCH BASIN OR INLET REMOVED	FILL AND PLUG EXISTING CONDUIT	4" CONCRETE WALK	CURB RAMP, TYPE B2	COMBINATION CURB AND GUTTER, TYPE 2	CURB, TYPE 6			
				SQ YD	SQ YD	SQ YD	SQ FT	FT	FT	FT	FT	EACH	EACH	FT	SQ FT	EACH	FT	FT			
R-73	87	50+25	51+63					80		58											
R-74	87	50+80	51+68	720	73																
R-75	87	50+25	5+80 JEFFERSON RT				1870														
R-76	87	5+50	6+61 RT					24	98												
R-77	87	5+50	6+61 LT				1012														
R-78	87	5+50	6+61 LT					103	114												
R-79	87	52+22	53+75					132													
R-80	87	52+46	52+67		21																
R-81	87	52+67	53+75		44		583														
R-82	87	50+25	50+43		8																
R-83	87	50+43	7+05 JEFFERSON RT					135													
R-84	87	50+25	8+50 JEFFERSON		18		2009														
R-85	87	7+05 RT	8+50 RT					10	146												
R-86	87	8+50 JEFFERSON	53+75 RT				2662														
R-87	87	7+05 LT	8+50 LT						146												
R-88	87	52+19	53+75					158													
R-89	87	53+14	53+45		34																
R-90	87	50+25	53+75	1613		1613															
	87	5+50	6+53		435																
	87	7+05	8+50	581	581																
R-91	87	51+78	52+24								46	1	2								
R-92	87	5+50	6+67								118										
R-93	87	6+67	9+34											268							
W-10	87	50+25	5+50 JEFFERSON												2050	2		40			
W-11	87	5+50 JEFFERSON	53+75												1389	2		33			
W-12	87	50+25	8+50 JEFFERSON												2216	2		19			
W-13	87	8+50 JEFFERSON	53+75												2474	2					
C-20	87	50+25	5+50 JEFFERSON														234				
C-21	87	5+50 JEFFERSON	53+75														224				
C-22	87	50+25	8+10 JEFFERSON														255				
C-23	87	8+10 JEFFERSON	53+75														255				
C-24	87	8+10	8+50															80			
TOTALS CARRIED TO GENERAL SUMMARY				2914	1214	1613	8136	642	504	58	164	1	2	268	8129	8	968	172			

CALCULATED AMD
CHECKED SCC

SUBSUMMARY

LAW-93-0.00

J:\Project\O\ODOT\15005112 Ironton Russell\LAW\81595\roadway\sheets\81595GS006.dgn - 4/25/2011 6:52:55 AM - jon_wanstrath

REF. NO.	SHEET NO.	STATION TO STATION		601			616															
				RIPRAP USING 6" REINFORCED CONCRETE SLAB	TIED CONCRETE BLOCK MAT, TYPE 3	CHANNEL PROTECTION, MISC.: KENTUCKY CHANNEL LINING, CLASS III, PER KY STD. DWG. RDD-040	WATER															
		FROM	TO	SQ YD	SQ YD	CU YD	M GAL															
EC-1	69	11+38	12+33			44																
EC-2	74	27+78	28+11		69																	
EC-3	74	28+14		12																		
EC-4	74	29+25	29+90	367																		
	18						46															
TOTALS CARRIED TO GENERAL SUMMARY				379	69	44	46															

CALCULATED AMD
CHECKED SCC

EROSION SUBSUMMARY

LAW-93-0.00

J:\Project\O\ODOT\15005112 Ironton Russell\LAW\81595\roadway\sheets\81595GS007.dgn - 4/25/2011 6:52:56 AM - jon_wanstrath

PLAN PROFILE SHEET NO.	602		603																			
	CONCRETE MASONRY, AS PER PLAN	MASONRY MISC.: KENTUCKY SLOPED AND FLARED HEADWALL, PER KY STD. DWG. RDH-020	12" CONDUIT, TYPE B	12" CONDUIT, TYPE B, 1250 D-LOAD	12" CONDUIT, TYPE C	12" CONDUIT, TYPE F	18" CONDUIT, TYPE B	21" CONDUIT, TYPE B	24" CONDUIT, TYPE B	30" CONDUIT, TYPE B	30" CONDUIT, TYPE C	36" CONDUIT, TYPE B, 1250 D-LOAD	36" CONDUIT, TYPE C	36" CONDUIT, TYPE C, 1250 D-LOAD	60" CONDUIT, TYPE B, 1250 D-LOAD	60" CONDUIT, TYPE B, 1750 D-LOAD	72" CONDUIT, TYPE C	CONDUIT, BORED OR JACKED: TYPE C 72"				
	CU YD	CU YD	FT	FT	FT	FT	FT	FT	FT	FT	FT	FT	FT	FT	FT	FT	FT	FT				
69		2																				
74	17																60	224				
76																307						
78			29		470	47					213	41	90	29	78							
80					68						191											
81			265				52		72	164												
85			22																			
86			113	446																		
87			345				47	32	110													
TOTALS CARRIED TO GENERAL SUMMARY	17	2	774	446	538	47	99	32	182	164	404	41	90	29	78	307	60	224				

CALCULATED AMD
CHECKED SCC

DRAINAGE SUBSUMMARY

LAW-93-0.00

J:\Project\OV\ODOT\15005112 Ironton Russell\LAW\81595\drainage\sheets\81595DS001.dgn - 1/6/2012 5:06:19 PM - jon_wanstrath

PLAN PROFILE SHEET NO.	603							604															
	CONDUIT, MISC.:KENTUCKY 15" CIRCULAR RIENFORCED CONCRETE PIPE, PER KYSTD. DWG. RD1-001 (CLASS B, 706.02, 1250 D-LOAD)	CONDUIT, MISC.:KENTUCKY 15" HIGH DENSITY POLYETHYLENE PIPE, PER KYSTD. DWG. RD1-001 (CLASS C, 707.33)	CONDUIT, MISC.:KENTUCKY 18" CIRCULAR RIENFORCED CONCRETE PIPE, PER KYSTD. DWG. RD1-001 (CLASS B, 706.02, 1250 D-LOAD)	CONDUIT, MISC.:KENTUCKY 18" HIGH DENSITY POLYETHYLENE PIPE, PER KYSTD. DWG. RD1-001 (CLASS C, 707.33)	CONDUIT, MISC.:KENTUCKY 24" CIRCULAR RIENFORCED CONCRETE PIPE, PER KYSTD. DWG. RD1-001 (CLASS B, 706.02, 1250 D-LOAD)	CONDUIT, MISC.: BORE AND JACK PIPE-36 IN	CONDUIT, MISC.: 84" STEEL PIPE ENCASEMENT, BORED OR JACKED	CATCH BASIN, NO. 3	CATCH BASIN, NO. 3A	CATCH BASIN, NO. 6	CATCH BASIN, NO. 7	CATCH BASIN, NO. 2-2B	INLET, SIDE DITCH	INLET, MISC.: KENTUCKY CURB BOX INLET TYPE A, PER KY STD. DWG. RDB-270	INLET, MISC.: KENTUCKY DROP BOX INLET TYPE 1, PER KY STD. DWG. RDB-001	INLET, MISC.: KENTUCKY DROP BOX INLET TYPE 10, PER KY STD. DWG. RDB-010	MANHOLE, NO. 3	MANHOLE, NO. 3, E-80 LOAD	MANHOLE, MISC.: KENTUCKY MANHOLE TYPE A, PER KY STD. DWG. RDM-001	MANHOLE, MISC.: KENTUCKY MANHOLE TYPE B, PER KY STD. DWG. RDM-005	DRAINAGE STRUCTURE, MISC.: SLUICE GATE	DRAINAGE STRUCTURE, MISC.: GATE WELL	DRAINAGE STRUCTURE MISC.: KENTUCKY DROP BOX INLET TYPE 12A, PER KY STD. DWG. RDB-012
	FT	FT	FT	FT	FT	FT	FT	EACH	EACH	EACH	EACH	EACH	EACH	EACH	EACH	EACH	EACH	EACH	EACH	EACH	EACH	EACH	FT
67	143	43	309	138										1		2			2	1			108
69					73	73									1								
74																	1						
76							197										1	2			1	1	
78									2			1	1				7						
80									3	1	1						3						
81								3	3	1							3						
85									2								1						
86									2								2						
87								4	3								2						
TOTALS CARRIED TO GENERAL SUMMARY	143	43	309	138	73	73	197	7	15	2	1	1	1	1	1	2	20	2	2	1	1	1	108

CALCULATED AMD
CHECKED SCC

DRAINAGE SUBSUMMARY

LAW-93-0.00

J:\Project\O\ODOT\15005112 Ironton Russell\LAW\81595\drainage\sheets\81595DS002.dgn - 6/20/2011 10:41:39 AM - jon_wanstrath

PLAN PROFILE SHEET NO.	603	605																						
	6" CONDUIT, TYPE F FOR UNDERDRAIN OUTLETS	6" UNCLASSIFIED PIPE UNDERDRAINS WITH FABRIC WRAP, 707.31 OR 707.41	6" BASE PIPE UNDERDRAINS WITH FABRIC WRAP, 707.31 OR 707.41	AGGREGATE DRAINS																				
	FT	FT	FT	FT																				
78				63																				
80				49																				
81																								
2-UD	20	20	112																					
3-UD	20	40	174																					
4-UD			61																					
5-UD	10	10	190																					
86																								
6-UD	10	10	182																					
7-UD	20	65	123																					
8-UD	10	10	248																					
9-UD	20	65	205																					
87																								
10-UD	10	51	181																					
11-UD	10	40	177																					
12-UD	20	41	102																					
13-UD	20	85	58																					
TOTALS CARRIED TO GENERAL SUMMARY	170	437	1813	112																				

CALCULATED AMD
CHECKED SCC

DRAINAGE SUBSUMMARY

LAW-93-0.00

63
788

J:\Project\O\ODOT\15005112 Ironton Russell\LAW\81595\drainage\sheets\81595DS003.dgn - 4/25/2011 6:52:58 AM - jon_wanstrath

SHEET NO.	204 SUBGRADE COMPACTION	255 FULL DEPTH PAVEMENT SAWING	301 ASPHALT CONCRETE BASE, PG64-22	304 AGGREGATE BASE	407 TACK COAT	407 TACK COAT FOR INTERMEDIATE COURSE	408 PRIME COAT	448 ASPHALT CONCRETE INTERMEDIATE COURSE, TYPE 2, PG64-22	448 ASPHALT CONCRETE SURFACE COURSE, TYPE 1, PG64-22	SPEC - 451 PRESSURE RELIEF JOINT, TYPE A	888 PORTLAND CEMENT CONCRETE PAVEMENT, 8" THICK (REINFORCED PER 451)		SPEC - 451 PRESSURE RELIEF JOINT, TYPE B
	SQ YD	FT	CU YD	CU YD	GALLON	GALLON	GALLON	CU YD	CU YD	FT	SQ YD		FT
67 & 84		862											
CONCRETE PAVEMENT	2148			358							2145		
APPR. SLAB & P.R. JOINT	196			33						65			36
ISLANDS	228		38	38	18	7	91	9	6				
342+54.18 AHEAD	341		56	57	33	13	133	16	11				
76		134											
78		227											
CONCRETE PAVEMENT	1153			202							1135		
APPR. SLAB & P.R. JOINT	41			7						45			
80		222											
CONCRETE PAVEMENT	1539			256							1415		
81		425											
CONCRETE PAVEMENT	2450			409							2234		
85 & 86		333											
CONCRETE PAVEMENT	1440			240							1275		
ASPH. PAVEMENT W/CURB	667		50	99	60	24	238	29	21				
ASPH. PAVEMENT W/O CURB	122		10	20	11	5	50	5	4				
87		876											
CONCRETE PAVEMENT	2934			489							2627		
ASPHALT PAVEMENT	643		47	101	56	22	224	27	19				
TOTALS CARRIED TO GENERAL SUMMARY	13902	3079	201	2309	178	71	736	86	61	110	10831		36

CALCULATED AMD
CHECKED SCC

PAVEMENT SUBSUMMARY

LAW-93-0.00

J:\Project\OA\ODOT\15005112 Ironton Russell\LAW\81595\roadway\sheets\81595GS008.dgn - 1/5/2012 4:02:08 PM - jon_wanstrath

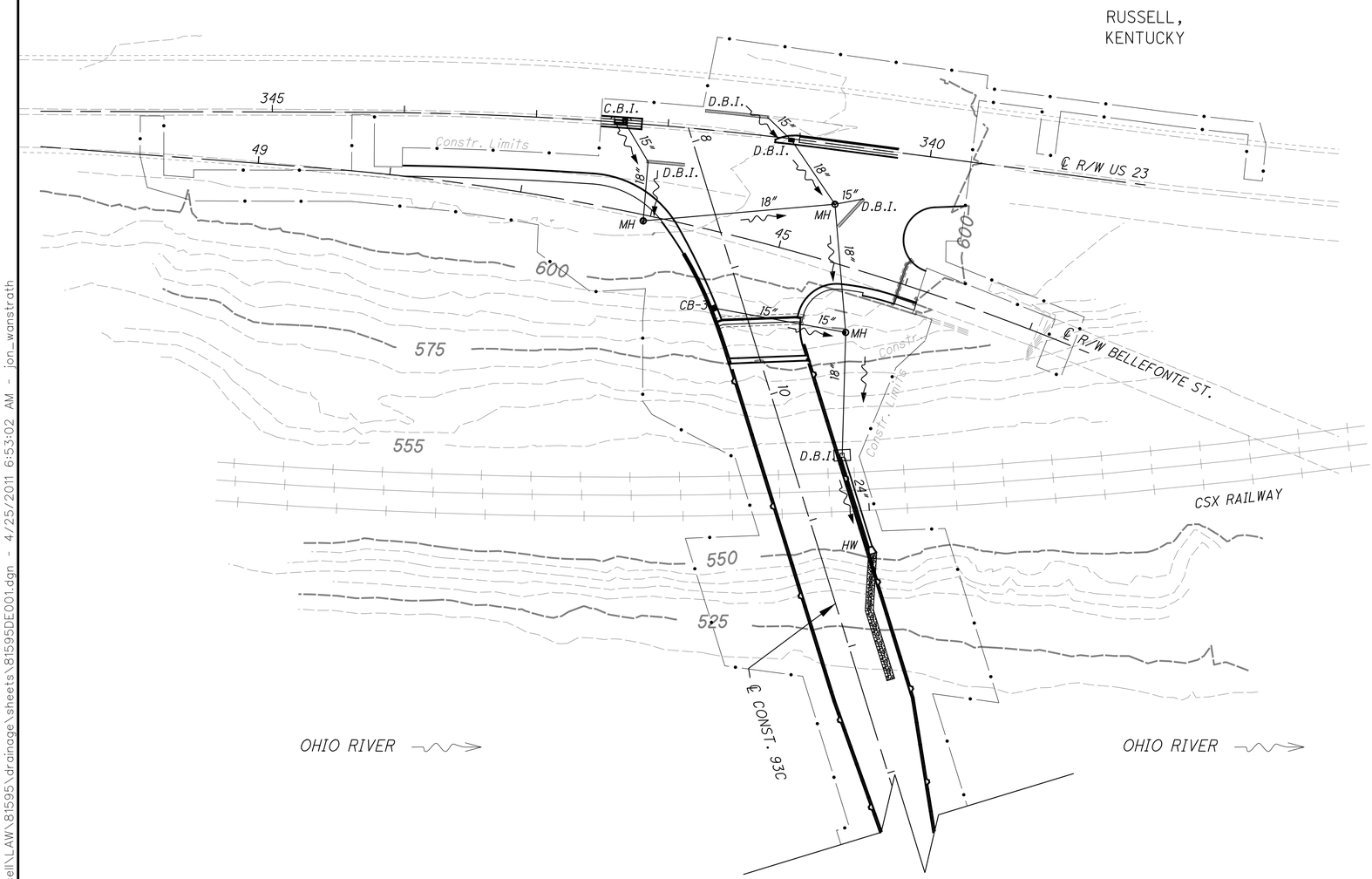

PROJECT DATA

	KENTUCKY
TOTAL AREA (RIGHT-OF-WAY):	8.6 ACRES
PROJECT EARTH DISTURB AREA:	2.7 ACRES
ESTIMATED CONTRACTOR EARTH DISTURBED AREA:	3.3 ACRES
NOTICE OF INTENT EARTH DISTURBED AREA:	6.0 ACRES
IMPERVIOUS (PAVED) AREA FOR PRE-CONSTRUCTION SITE:	0.9 ACRES
IMPERVIOUS (PAVED) AREA FOR POST CONSTRUCTION SITE:	1.1 ACRES
RUNOFF COEFFICIENT FOR PRE-CONSTRUCTION SITE:	SEE NOTES THIS SHEET
RUNOFF COEFFICIENT FOR POST CONSTRUCTION SITE:	

SEE ALSO SOIL SURVEYS OF LAWRENCE COUNTY, OHIO AND GREENUP COUNTY, KENTUCKY.

HORIZONTAL SCALE IN FEET
0 25 50 100

CALCULATED REH
CHECKED SCC

ITEM 832 - STORM WATER POLLUTION PREVENTION PLAN

THE STORM WATER POLLUTION PREVENTION PLAN SHALL BE PREPARED FOR BOTH KENTUCKY AND OHIO AREAS OF THE PROJECT. THE PROVISIONS OF CMS 832 SHALL APPLY TO BOTH KENTUCKY AND OHIO AREAS OF THE PROJECT.

GENERAL NOTES

THIS PROJECT SITE PLAN (2 SHEETS) APPLIES TO NEW CONSTRUCTION ONLY. SEE DEMOLITION PROJECT SITE PLAN (2 SHEETS) FOR WORK APPLICABLE TO REMOVAL OF EXISTING BRIDGE.

THE PROJECT CONSISTS OF REPLACEMENT OF BRIDGE (LAW-93-0.00) ON OHIO 93C OVER CSX RAILWAY, NORFOLK SOUTHERN RAILWAY, CAMPBELL AVENUE AND OHIO RIVER. THE PROPOSED WORK INCLUDES INTERSECTION RECONSTRUCTION, CONSTRUCTION OF A NEW STORM SEWER, AND RELATED DRAINAGE AND ROADWAY WORK INCLUDING TRAFFIC CONTROL AND MAINTENANCE OF TRAFFIC. THE PROJECT LENGTH ON 93C IS 0.69 MILE.

THE EXISTING SITE CAN BE DESCRIBED AS URBAN IN THE KENTUCKY AND OHIO REGIONS, RESPECTIVELY.

DRAINAGE AREA VALUES AND RUNOFF COEFFICIENTS SHOWN ON THE PLANS REPRESENT POST CONSTRUCTION SITE CONDITIONS. DUE TO THE NATURE OF THIS PROJECT, THE PRE-CONSTRUCTION VALUES FOR EACH AREA ARE APPROXIMATELY THE SAME. EXISTING DRAINAGE FEATURES HAVE BEEN REPLACED IN-KIND. PROPOSED DRAINAGE ITEMS HAVE BEEN PLACED TO COLLECT THE EXISTING DRAINAGE INFRASTRUCTURE.

CATCH BASIN, INLET OR MANHOLE INLET PROTECTION, DITCH CHECKS AND BALE FILTER DIKES, ETC. SHALL BE CONSTRUCTED AS PER STANDARD CONSTRUCTION DRAWINGS DM-4.3 AND DM-4.4.

USGS QUADRANT NO. 38082-E6-TF-024
IRONTON, OHIO
*LATITUDE 38°31'25" N
*LONGITUDE 82°41'14" W

*LONGITUDE AND LATITUDE TO APPROXIMATE PROPOSED REAR BRIDGE LIMIT.
IMMEDIATE RECEIVING WATERS - OHIO RIVER
SUBSEQUENT RECEIVING WATERS - MISSISSIPPI RIVER
SOIL DATA - SEE SOIL PROFILES.

QUANTITIES CARRIED TO THE GENERAL SUMMARY

ITEM 832 - STORM WATER POLLUTION PREVENTION PLAN		LUMP
ITEM 832 - EROSION CONTROL	25,000	EACH

PROJECT SITE PLAN
KENTUCKY

LAW-93-0.00

J:\Project\OV\ODOT\15005112 Ironton Russell\LAW\81595\drainage\sheets\81595DE001.dgn - 4/25/2011 6:53:02 AM - jon_wanstrath

GENERAL NOTES

THIS PROJECT SITE PLAN (2 SHEETS) APPLIES TO NEW CONSTRUCTION ONLY. SEE DEMOLITION PROJECT SITE PLAN (2 SHEETS) FOR WORK APPLICABLE TO REMOVAL OF EXISTING BRIDGE.

THE PROJECT CONSISTS OF REPLACEMENT OF BRIDGE (LAW-93-0.00) ON OHIO 93C OVER CSX RAILWAY, NORFOLK SOUTHERN RAILWAY, CAMPBELL AVENUE AND OHIO RIVER. THE PROPOSED WORK INCLUDES INTERSECTION RECONSTRUCTION, CONSTRUCTION OF A NEW STORM SEWER, AND RELATED DRAINAGE AND ROADWAY WORK INCLUDING TRAFFIC CONTROL AND MAINTENANCE OF TRAFFIC. THE PROJECT LENGTH ON 93C IS 0.69 MILE.

THE EXISTING SITE CAN BE DESCRIBED AS URBAN IN THE KENTUCKY AND OHIO REGIONS, RESPECTIVELY.

DRAINAGE AREA VALUES AND RUNOFF COEFFICIENTS SHOWN ON THE PLANS REPRESENT POST CONSTRUCTION SITE CONDITIONS. DUE TO THE NATURE OF THIS PROJECT, THE PRE-CONSTRUCTION VALUES FOR EACH AREA ARE APPROXIMATELY THE SAME. EXISTING DRAINAGE FEATURES HAVE BEEN REPLACED IN-KIND. PROPOSED DRAINAGE ITEMS HAVE BEEN PLACED TO COLLECT THE EXISTING DRAINAGE INFRASTRUCTURE.

CATCH BASIN, INLET OR MANHOLE INLET PROTECTION, DITCH CHECKS AND BALE FILTER DIKES, ETC. SHALL BE CONSTRUCTED AS PER STANDARD CONSTRUCTION DRAWINGS DM-4.3 AND DM-4.4.

USGS QUADRANT NO. 38082-E6-TF-024
IRONTON, OHIO
*LATITUDE 38°31'25" N
*LONGITUDE 82°41'14" W

*LONGITUDE AND LATITUDE TO APPROXIMATE PROPOSED CENTERLINE AT THE PROPOSED REAR BRIDGE LIMIT.
IMMEDIATE RECEIVING WATERS - OHIO RIVER
SUBSEQUENT RECEIVING WATERS - MISSISSIPPI RIVER
SOIL DATA - SEE SOIL PROFILES.

QUANTITIES CARRIED TO GENERAL SUMMARY

ITEM 832 - STORM WATER POLLUTION PREVENTION PLAN		LUMP
ITEM 832 - EROSION CONTROL	25,000	EACH

PROJECT DATA

	OHIO
TOTAL AREA (RIGHT-OF-WAY):	8.2 ACRES
PROJECT EARTH DISTURB AREA:	7.0 ACRES
ESTIMATED CONTRACTOR EARTH DISTURBED AREA:	3.1 ACRES
NOTICE OF INTENT EARTH DISTURBED AREA:	10.1 ACRES
IMPERVIOUS (PAVED) AREA FOR PRE-CONSTRUCTION SITE:	3.7 ACRES
IMPERVIOUS (PAVED) AREA FOR POST CONSTRUCTION SITE:	3.5 ACRES
RUNOFF COEFFICIENT FOR PRE-CONSTRUCTION SITE:	SEE NOTES THIS SHEET
RUNOFF COEFFICIENT FOR POST CONSTRUCTION SITE:	

SEE ALSO SOIL SURVEYS OF LAWRENCE COUNTY, OHIO AND GREENUP COUNTY, KENTUCKY.

ITEM 832 - STORM WATER POLLUTION PREVENTION PLAN

THE STORM WATER POLLUTION PREVENTION PLAN SHALL BE PREPARED FOR BOTH KENTUCKY AND OHIO AREAS OF THE PROJECT. THE PROVISIONS OF CMS 832 SHALL APPLY TO BOTH KENTUCKY AND OHIO AREAS OF THE PROJECT.

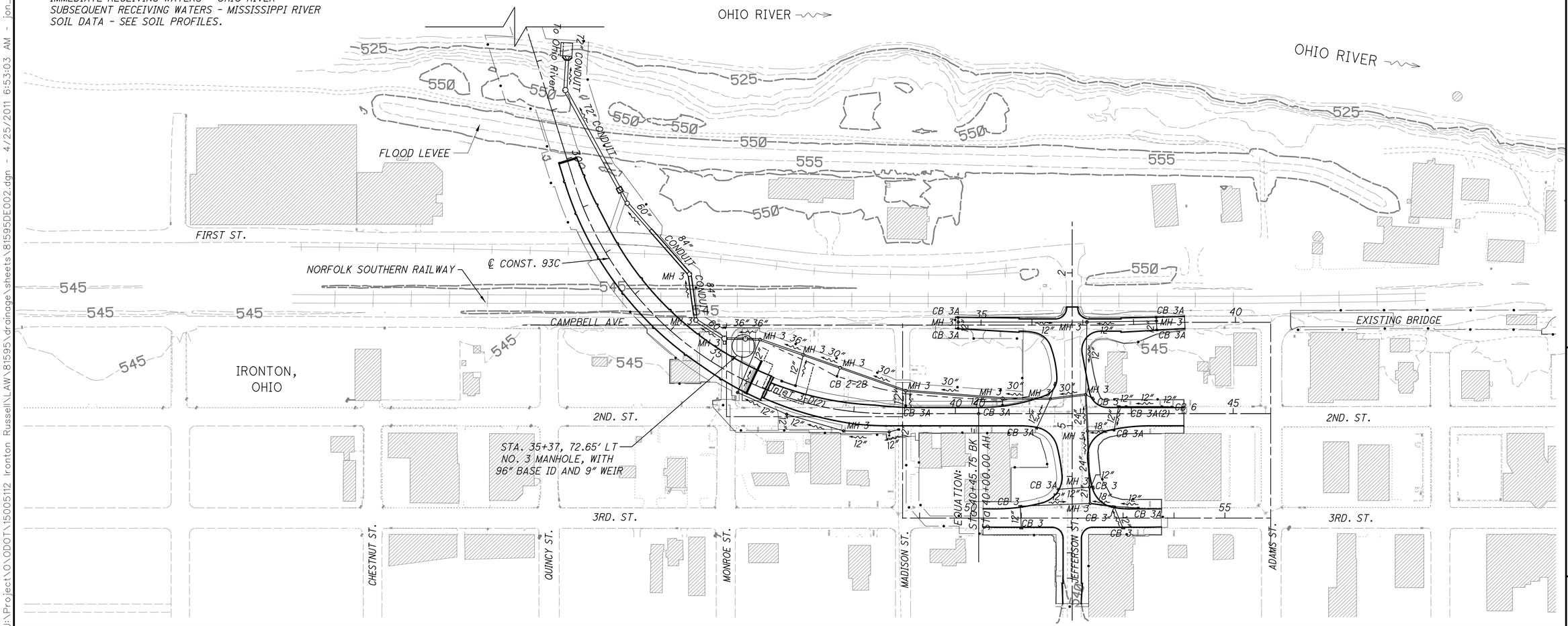

HORIZONTAL SCALE IN FEET
0 50 100 200

CALCULATED REH
CHECKED SCC

PROJECT SITE PLAN
OHIO

LAW-93-0.00

66
788

J:\Project\O\ODOT\15005112 Ironton Russell\LAW\81595\drainage\sheets\81595DE002.dgn - 4/25/2011 6:53:03 AM - jon_wanstrath

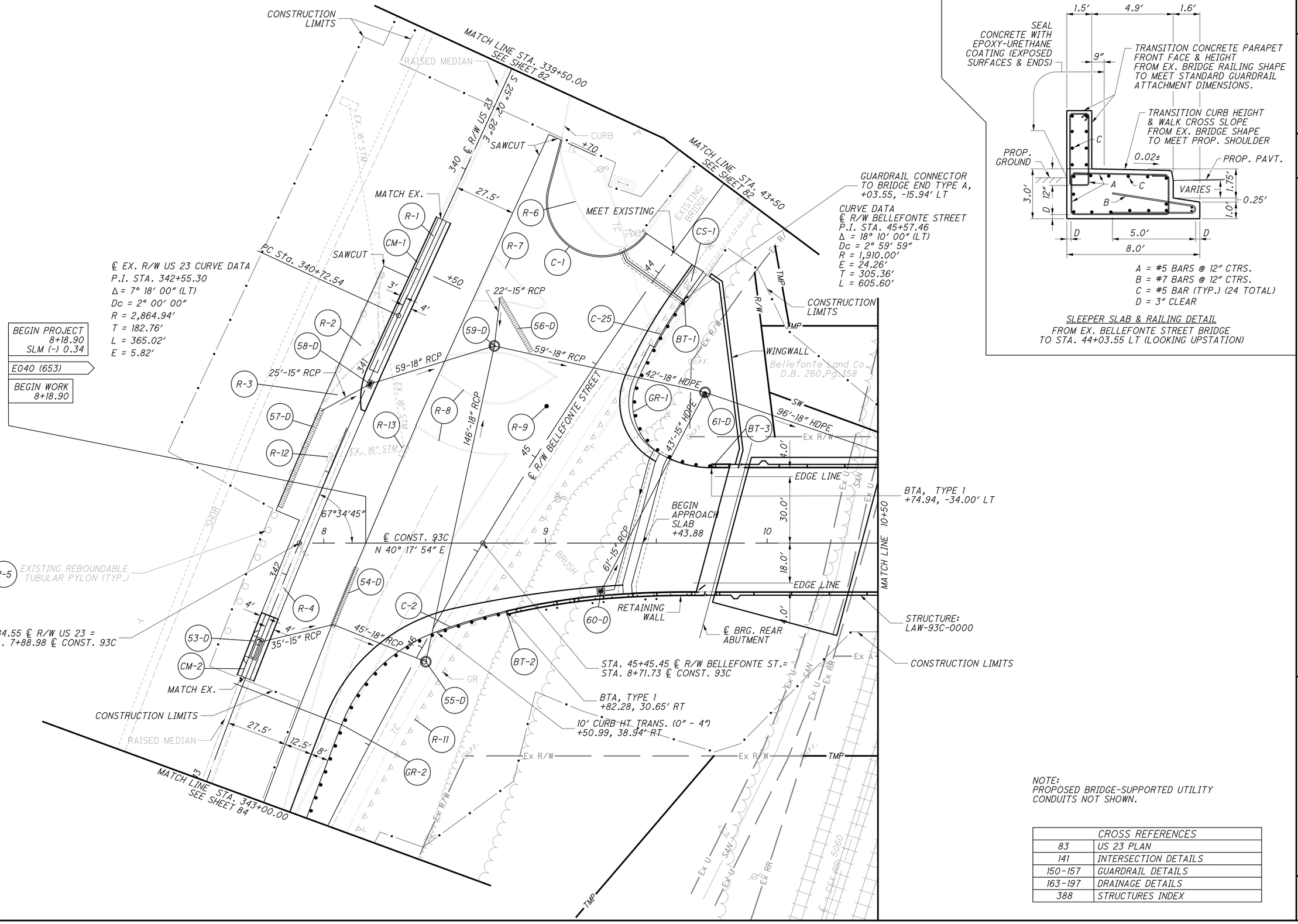

NOTE:
PROPOSED BRIDGE-SUPPORTED UTILITY CONDUITS NOT SHOWN.

CROSS REFERENCES	
83	US 23 PLAN
141	INTERSECTION DETAILS
150-157	GUARDRAIL DETAILS
163-197	DRAINAGE DETAILS
388	STRUCTURES INDEX

PLAN - 93C
BEGIN WORK TO STA. 10+50

LAW-93-0.00

67
788

J:\Project\O\ODOT\15005112 Ironton Russell\LAW\81595\roadway\sheets\81595GP001.dgn - 4/25/2011 6:53:06 AM - jon_wanstrath

NOTE: PROPOSED BRIDGE-SUPPORTED UTILITY CONDUITS NOT SHOWN.

CALCULATED BLW
CHECKED SCC

PROFILE - 93C
BEGIN WORK TO STA. 10+50

LAW-93-0.00

J:\Project\O\ODOT\15005112 Ironton Russell\LAW\81595\roadway\sheets\81595GF001.dgn - 4/25/2011 6:53:08 AM - jon_wanstrath

CSX RR CURVE DATA
P.I. STA. 5057+25.16
Δ = 3° 29′ 53″ (LT)
Dc = 1° 00′ 00″
R = 5,729.64′
T = 174.96′
L = 349.80′
E = 2.67′

BEGIN 7:1 EOP TAPER +54.04, 30′ LT
BEGIN SHOULDER TAPER +54.32, 34′ LT

CLASS III CHANNEL LINING
D=1′, MT=1.5′, W=6′, D50=9″

73′-36″ CASING PIPE, BORED OR JACKED UNDER RAILROAD

73′ - PROP. 24″ RCP

62-D
63-D
EC-1

EDGE LINE

℄ CONST. 93C
N 40° 17′ 54″ E

℄ PIER 1
℄ PIER 2

CONSTRUCTION LIMITS

OHIO RIVER

MATCH LINE 10+50
MATCH LINE 14+50

STA. 5061+44.32 ℄ CSX RAILROAD =
STA. 10+78.00 ℄ CONST. 93C

CSX Transportation

BEGIN 7:1 EOP TAPER +18.00, 18′ RT
BEGIN SHOULDER TAPER +39.61, 22′ RT
END TAPERS +80.00, 12′ RT & LT

STRUCTURE:
LAW-93C-0000

CROSS REFERENCES	
163-197	DRAINAGE DETAILS
388	STRUCTURES INDEX

HORIZONTAL SCALE IN FEET
0 10 20 40

CALCULATED JNR
CHECKED SCC

PLAN - 93C
STA. 10+50 TO STA. 14+50

LAW-93-0.00

69
788

J:\Project\OV\ODOT\15005112 Ironton Russell\LAW\81595\roadway\sheets\81595GP002.dgn - 4/25/2011 6:53:10 AM - jon_wanstrath

599.50 599.00 598.50 598.00 597.50 597.05 596.69 596.42 596.25 596.17 596.19 596.30 596.50 596.75 597.00 597.25 597.50

P.V.I. STA. 12+50.00
ELEV = 595.50
K = 66.7
200.00' VC

PROFILE GRADE LINE

+1.00 %

-2.00 %

+1.00 %

STRUCTURE: LAW-93C-0000
LIMITS = 2616.62'

BOTTOM OF EDGE GIRDER
(BLISTERS/CAPS NOT SHOWN)

BOTTOM OF BEAM

℄ PIER 1 STA. 11+21

℄ PIER 2 STA. 13+60

+78.00 ℄ CSX RR

MIN. VERTICAL CLEARANCE 23.0' REQ'D, 33.3' ACTUAL

T/R ELEV = 555.25

EX. FIBER OPTIC

STORM SEWER (LEFT)
(SEE DRAINAGE DETAILS)

100- YEAR FLOOD
545.50

NORMAL POOL
515.80

600 595 590 585 580 575 570 565 560 555 550 545 540 535 530 525 520 515

552.83 553.62 632.92 622.99 615.80

11+00 12+00 13+00 14+00

Link to 279-002-000
CSX RR As-Built

PROFILE - 93C
STA. 10+50 TO STA. 14+50

CALCULATED BLW
CHECKED SCC

LAW-93-0.00

70
788

J:\Project\ODOT\15005112 Ironton Russell\LAW\81595\roadway\sheets\81595GF002.dgn - 4/25/2011 6:53:11 AM - jon_wanstrath

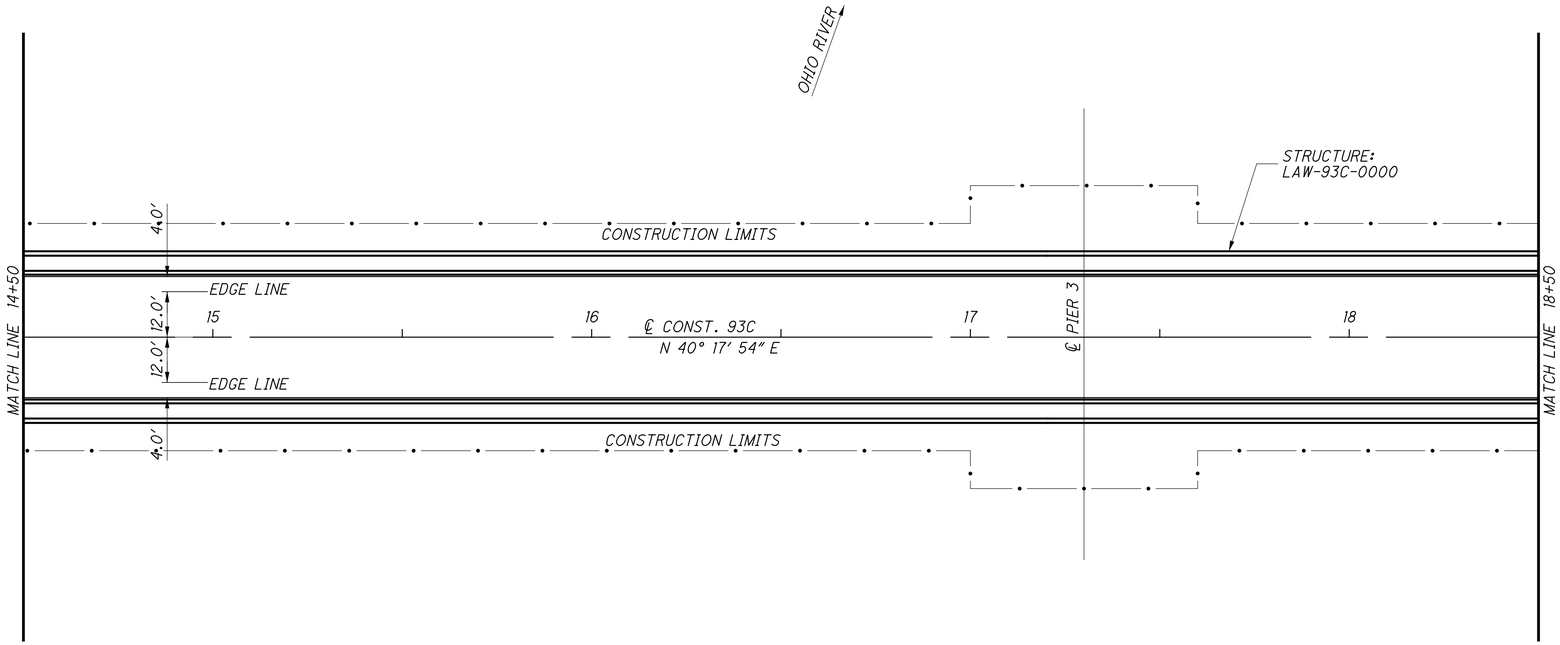

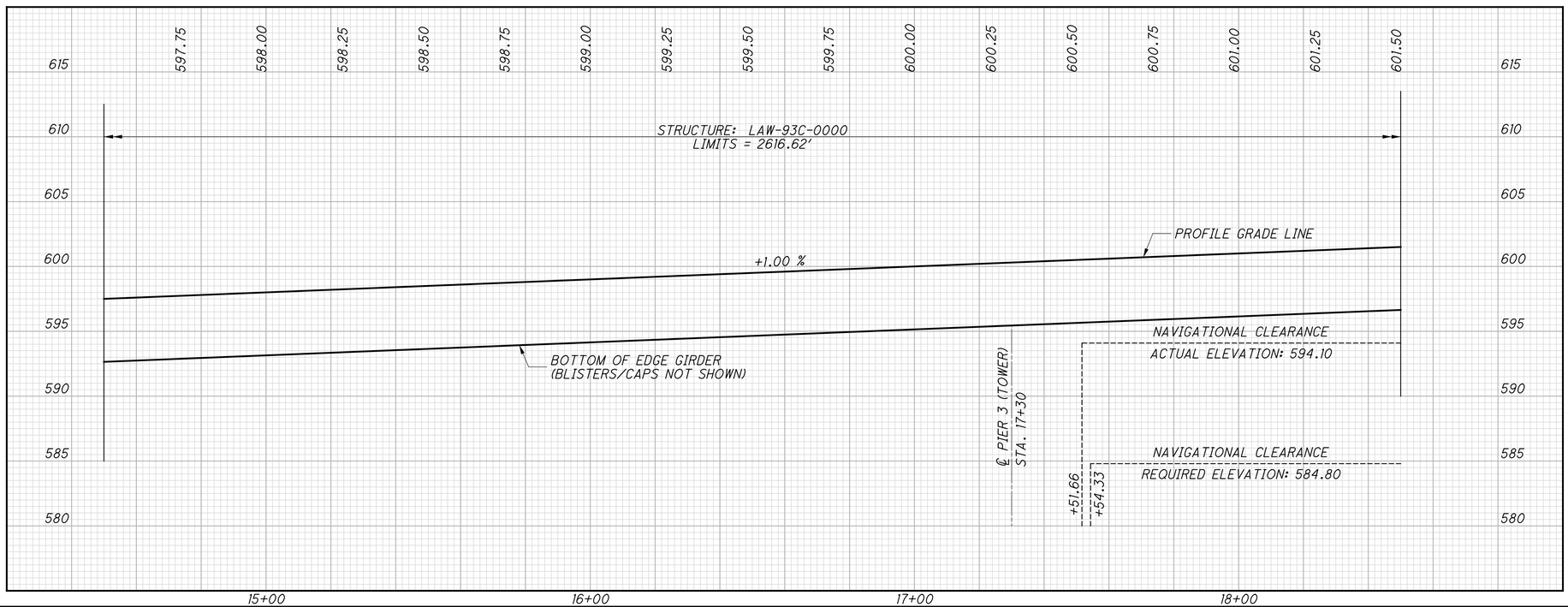

CROSS REFERENCES	
388	STRUCTURES INDEX

HORIZONTAL SCALE IN FEET
0 10 20 40

CALCULATED BLW
CHECKED SCC

PLAN AND PROFILE - 93C
STA. 14+50 TO STA. 18+50

LAW-93-0.00

J:\Project\OV\ODOT\15005112 Ironton Russell\LAW\81595\roadway\sheets\81595GP003.dgn - 4/25/2011 6:53:12 AM - jon_wanstrath

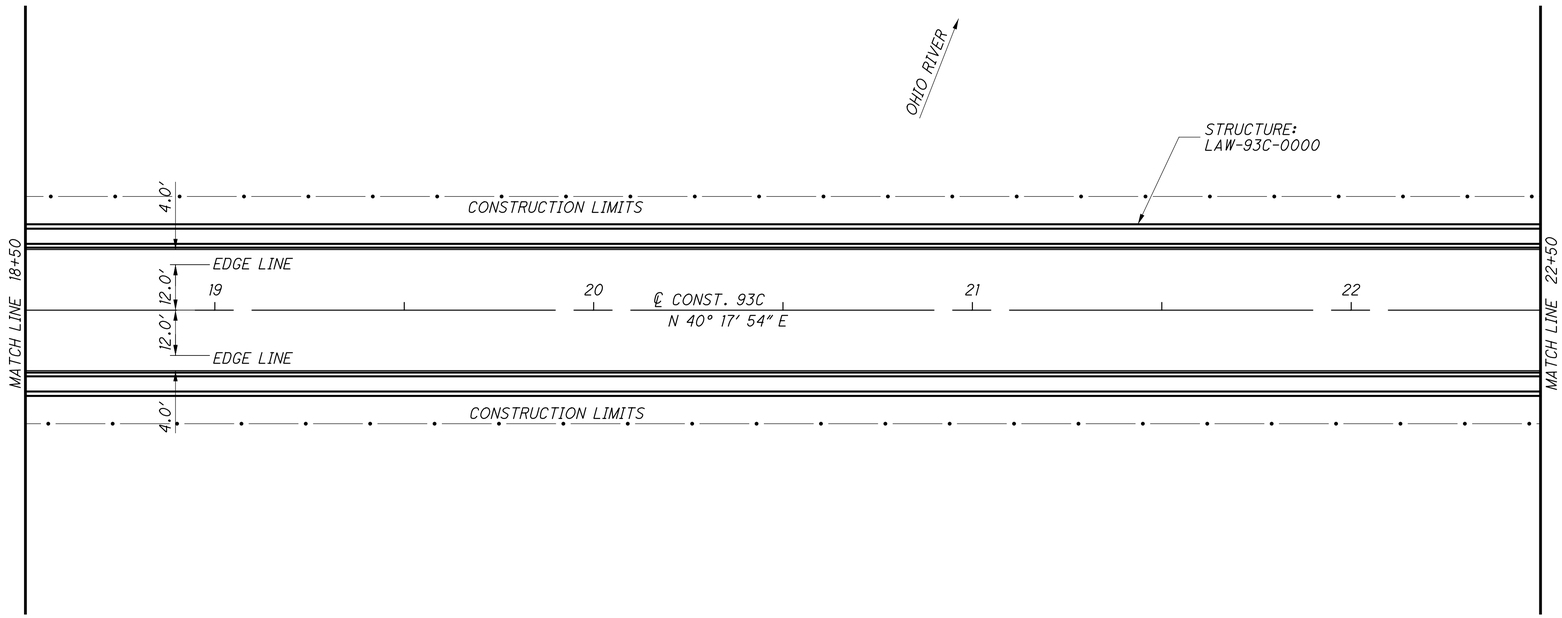

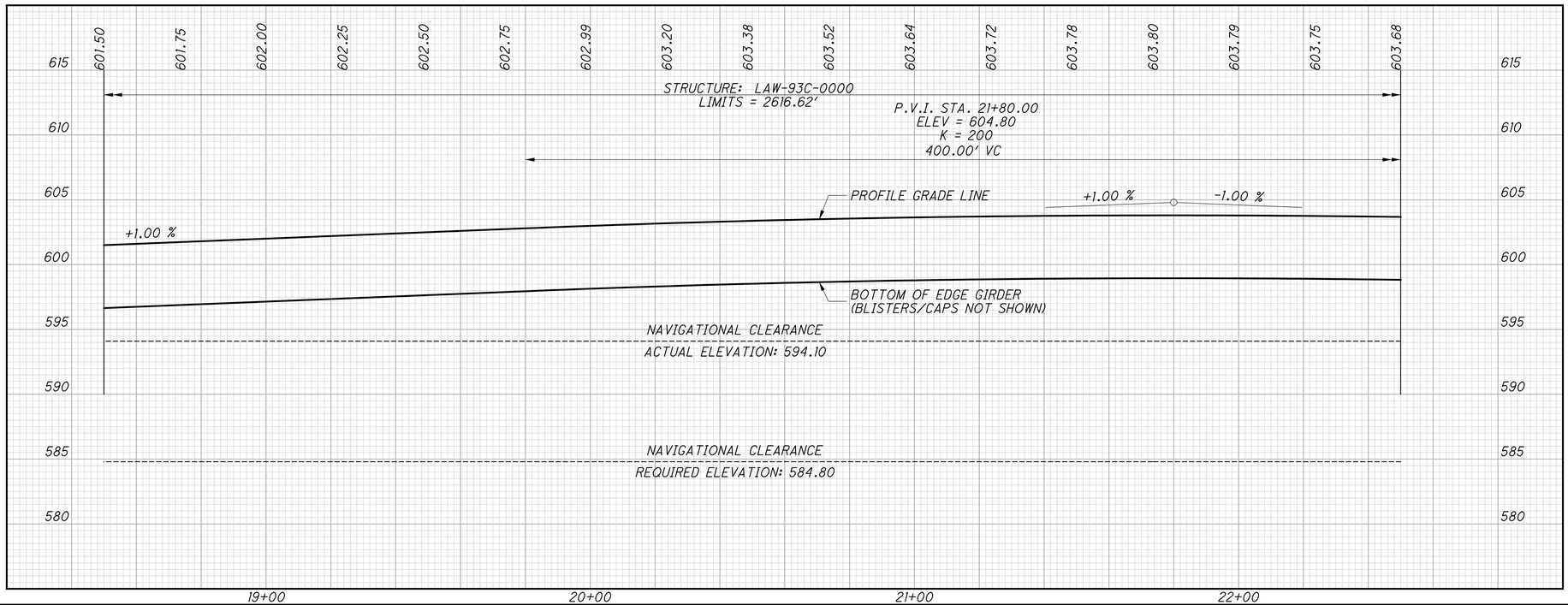

CROSS REFERENCES	
388	STRUCTURES INDEX

HORIZONTAL SCALE IN FEET
0 10 20 40

CALCULATED BLW
CHECKED SCC

PLAN AND PROFILE - 93C
STA. 18+50 TO STA. 22+50

LAW-93-0.00

J:\Project\ODOT\15005112 Ironton Russell\LAW\81595\roadway\sheets\81595GP004.dgn - 4/25/2011 6:53:13 AM - jon_wanstrath

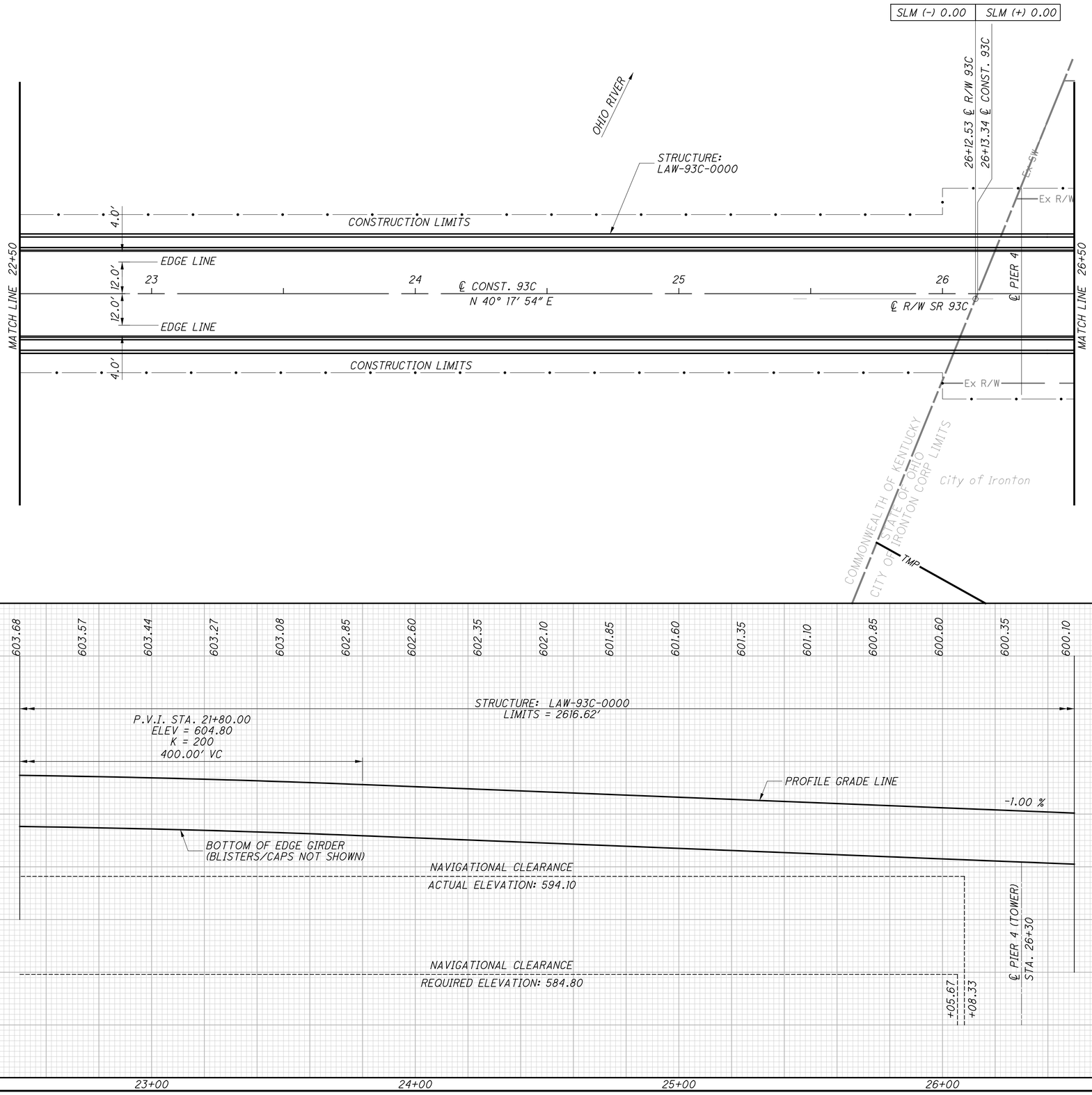

CROSS REFERENCES	
388	STRUCTURES INDEX

HORIZONTAL SCALE IN FEET
0 10 20 40

CALCULATED BLW
CHECKED SCC

PLAN AND PROFILE - 93C
STA. 22+50 TO STA. 26+50

LAW-93-0.00

J:\Project\0\ODOT\15005112 Ironton Russell\LAW\81595\roadway\sheets\81595GP005.dgn - 4/25/2011 6:53:14 AM - jon_wanstrath

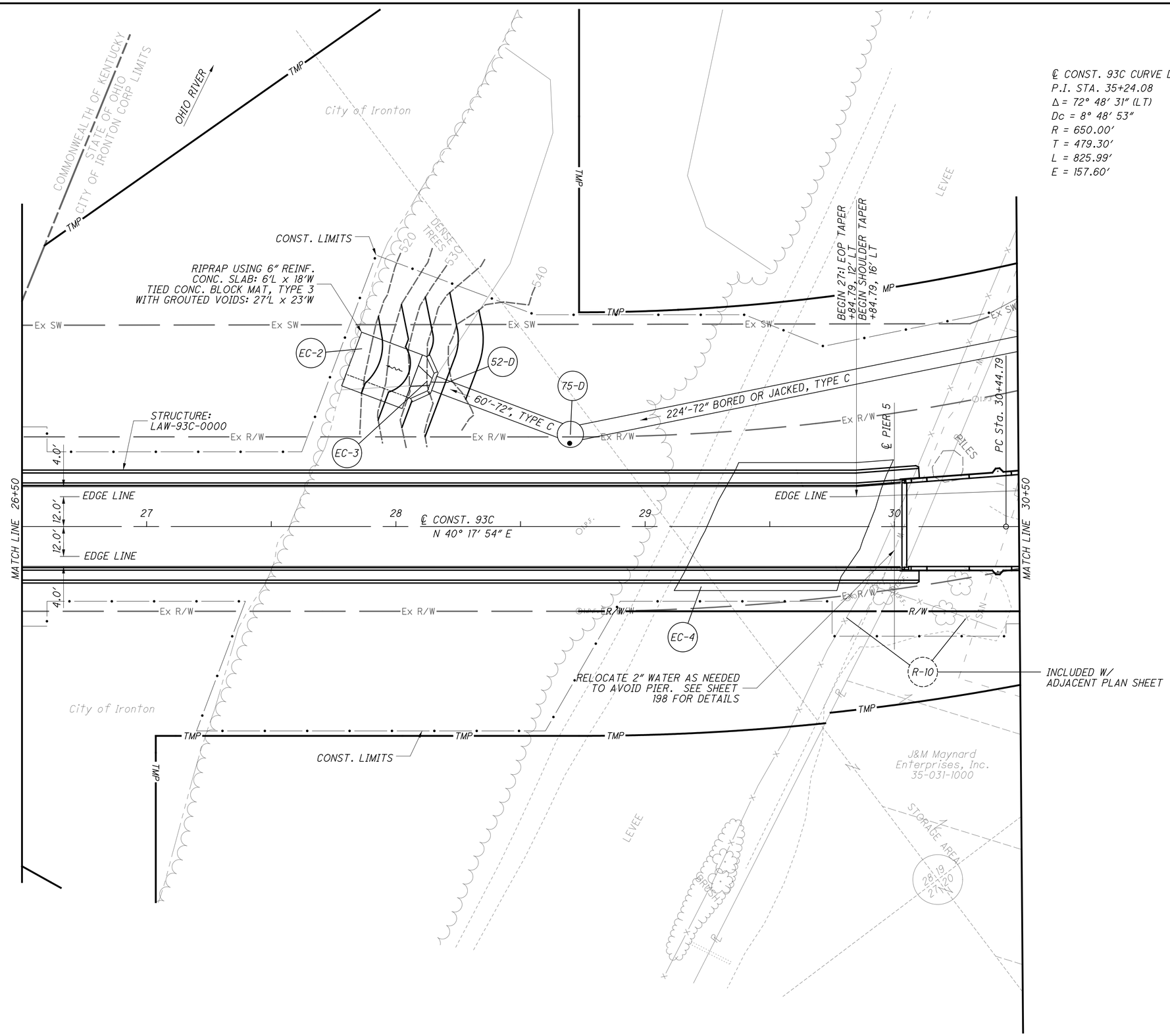

℄ CONST. 93C CURVE DATA
P.I. STA. 35+24.08
Δ = 72° 48' 31" (LT)
Dc = 8° 48' 53"
R = 650.00'
T = 479.30'
L = 825.99'
E = 157.60'

CROSS REFERENCES	
140	SUPERELEVATION TABLE
163-173	DRAINAGE DETAILS
388	STRUCTURES INDEX

HORIZONTAL SCALE IN FEET
0 10 20 40

CALCULATED AMD
CHECKED SCC

PLAN - 93C
STA. 26+50 TO STA. 30+50

LAW-93-0.00

74
788

J:\Project\O\ODOT\15005112 Ironton Russell\LAW\81595\roadway\sheets\81595GP006.dgn - 12/5/2011 3:55:00 PM - jon_wanstrath

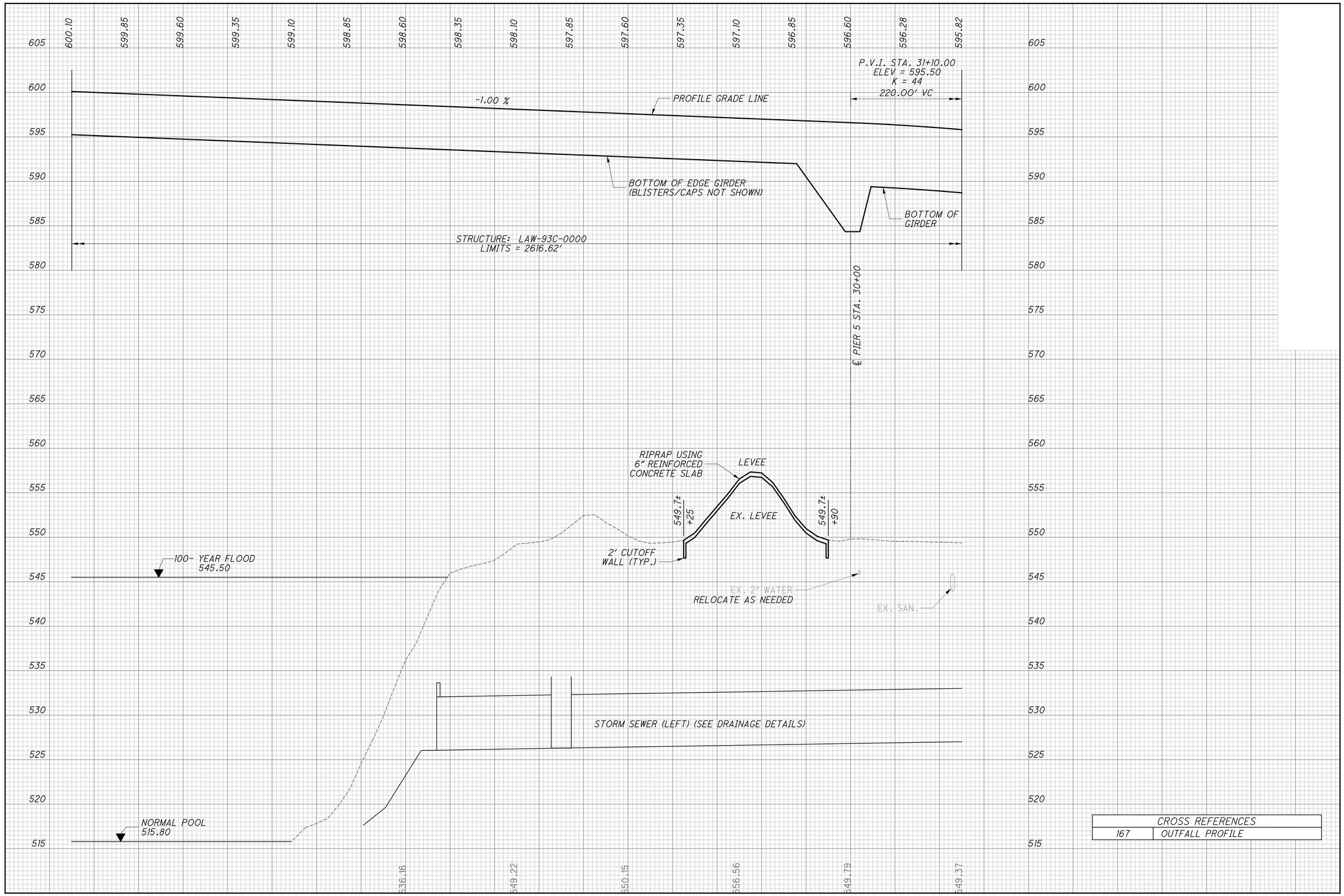

CROSS REFERENCES	
167	OUTFALL PROFILE

CALCULATED BLW
CHECKED SCC

PROFILE - 93C
STA. 26+50 TO STA. 30+50

LAW-93-0.00

J:\Project\ODOT\15005112 Ironton Russell\LAW\81595\roadway\sheets\81595GF006.dgn - 12/5/2011 4:26:01 PM - jon_wanstrath

℄ CONST. 93C CURVE DATA
P.I. STA. 35+24.08
Δ = 72° 48′ 31″ (LT)
Dc = 8° 48′ 53″
R = 650.00′
T = 479.30′
L = 825.99′
E = 157.60′

BENCHMARK DATA
BM #2 - RAILROAD SPIKE SET STA. 31+41.4, 189.2′ LT. FROM ℄ R/W SR 93 N: 192547.17 E: 1947581.16 ELEV: 552.52
SET 2′ UP ON WEST SIDE OF POWER POLE LOCATED ON THE WEST SIDE OF A NORTH/SOUTH FENCE AND 185′ SOUTH OF SOUTHWEST CORNER OF STEEL BUILDING (KEYWAY AUTOMOTIVE).

BM#2
CONST. LIMITS
END 27:1 EOP TAPER +32.79, 16′ LT
MATCH LINE 30+50
END SHDR. TAPER +58.89, 27.08′ LT
186′ -60″ TYPE B
116′ -84″ CASING PIPE UNDER RR
81′-84″ CASING PIPE UNDER RR
91′-60″ TYPE B
30′ -60″ TYPE B
℄ PIER 6
℄ PIER 7
℄ PIER 8
℄ CONST. 93C
℄ CONSTR. - CAMPBELL AVENUE
℄ NORFOLK SOUTHERN RR
MATCH LINE 34+50
EDGE LINE
FIRST ST.
QUINCY ST.
CURB
ASPHALT
BRUSH
BLDG
J&M Maynard Enterprises, Inc. 35-031-1000
Norfolk Southern Corp. 30-095-9019
R.A.C. II, Ltd. 35-022-1400
Bob Clyse Oldsmobile, Inc. 35-022-1500
STA. 28+77.79 ℄ CONSTRUCTION CAMPBELL AVE. = STA. 33+83.86 ℄ CONST. 93C
STA. 573+24.68 ℄ NORFOLK & SOUTHERN RY = STA. 33+06.36 ℄ CONST. 93C

NOTE:
WORK WITHIN THE NS RIGHT OF WAY MAY REQUIRE A NS FLAGGER TO BE PRESENT FOR PROTECTION OF THE NS TRACKS.

CROSS REFERENCES	
140	SUPERELEVATION TABLE
158	DRIVEWAY/PARKING SUBSUMMARY
159-161	DRIVEWAY/PARKING DETAILS
163-173	DRAINAGE DETAILS
198-207	SANITARY & WATER WORK
388	STRUCTURES INDEX
753	FENCE PLAN

HORIZONTAL SCALE IN FEET
0 10 20 40
CALCULATED AMD
CHECKED JRW

PLAN - 93C
STA. 30+50 TO STA. 34+50

LAW-93-0.00

76
788

J:\Project\OJODOT\15005112 Ironton Russell\LAW\81595\roadway\sheets\81595GP007.dgn - 7/28/2011 1:11:44 PM - jon_wanstrath

595.82 595.21 594.46 593.57 592.54 591.37 590.05 588.60 587.10 585.60 584.10 582.60 581.10 579.60 578.10 576.60 575.10

STRUCTURE: LAW-93C-0000
LIMITS = 2616.62'

P.V.I. STA. 31+10.00
ELEV = 595.50
K = 44
220.00' VC

-1.00 %

-6.00 %

-6.00 %

PROFILE GRADE LINE

BOTTOM OF GIRDER

℄ PIER 6 STA. 31+14

MIN. VERT. CLEAR. 14.5' REQ'D, 34.1' ACTUAL

MIN. VERT. CLEAR. 23.0' REQ'D, 31.2' ACTUAL

℄ PIER 7 STA. 32+58

MIN.VERT.CLEAR. 23.0' REQ'D, 23.8' ACTUAL

MIN.VERT.CLEAR. 14.5' REQ'D, 25.4' ACTUAL

℄ PIER 8 STA. 34+44

+06.36 ℄ NS RY

+83.86 ℄ CONSTR. CAMPBELL AVE.

NS RY
T/R ELEV
= 550.04

T/R ELEV
= 549.37

T/R ELEV
= 549.50

FIRST ST

PARKING AREA

EX. T

EX. WATER

EX. WATER

EX.

STORM SEWER (LEFT)
(SEE DRAINAGE DETAILS)

STORM SEWER (LEFT)
(SEE DRAINAGE DETAILS)

605 600 595 590 585 580 575 570 565 560 555 550 545 540 535 530

549.37 548.92 548.91 549.37 548.34 548.56 544.15 544.85 545.23

31+00 32+00 33+00 34+00

Link to 279-001-000
NS RR As-Built

CROSS REFERENCES	
158	DRIVEWAY/PARKING DETAILS
159-161	DRIVEWAY/PARKING DETAILS
163-173	DRAINAGE DETAILS

PROFILE - 93C
STA. 30+50 TO STA. 34+50

CALCULATED BLW
CHECKED SCC

LAW-93-0.00

J:\Project\O\ODOT\15005112 Ironton Russell\LAW\81595\roadway\sheets\81595GF007.dgn - 4/25/2011 6:53:20 AM - jon_wanstrath

℄ CONST. 93C CURVE DATA
P.I. STA. 35+24.08
Δ = 72° 48′ 31″ (LT)
Dc = 8° 48′ 53″
R = 650.00′
T = 479.30′
L = 825.99′
E = 157.60′

PLACEMENT AREA FOR WATER QUALITY STRUCTURE, TYPE 3

STA. 29+99.94 ℄ CONST. CAMPBELL AVE = STA. 7+02.50 ℄ R/W MONROE ST.

67′-60″ TYPE B

RESTORE EXISTING DRAINAGE AND CURB

11′-60″ TYPE B

MATCH LINE 34+50

EDGE LINE

GRAVEL

4.0′

12.0′

16.0′

11.08′

R/W

R-14

R.A.C. II, LTD.
35-022-1401
1-STORY COMMERCIAL

ASPHALT

BEGIN 324:12 EOP TAPER +86.77 12′ RT

STA. 7+92.00 ℄ R/W MONROE STREET = STA. 35+35.64 ℄ CONST. 93C

CONST. LIMITS

SIGN

CR-2

CR-1

CR-3

CR-4

CR-5

DR-2

44-D

45-D

43-D

73-D

41-D

40-D

39-D

38-D

37-D

36-D

71-D

72-D

W-1

W-2

R-15

C-3

C-4

C-5

GR-3

R-22

R-23

R-20

R-21

R-19

R-18

R-16

R-17

℄ CONSTR. CAMPBELL AVE.
N 32° 30′ 37″ W

℄ - NORFOLK SOUTHERN RR 577

576

Ex RR

EX. 12″ WATER

EX. 6″ WATER

CURB

DRIVE

+51 ℄ COMM. DR. W=12′ L=47.9′

MATCH LINE SEE SHEET 85

32+00

UPPER: 6′-12″ TYPE C
MIDDLE: 47′-12″ TYPE F, 707.05 TYPE C OR 707.21
LOWER: 12′-12″ TYPE C

BEGIN SHOULDER TAPER

BEGIN 15:1 EOP TAPER

CONST. LIMITS

Norfolk Southern Corp.
30-095-9019

29′-36″ TYPE C

TMP

R/W

Ex R/W

90°0′0″

90′-36″ TYPE C

77′-30″ TYPE C

136′-30″ TYPE C

℄ DITCH

GRASS

SAWCUT

20′-12″ TYPE C

+60.49
27.083′ LT

40.71′ 16′ LT

SHOULDER TAPER
RATE VARIES (TANGENT)

℄ BRG. FWD. ABUTMENT
END APPROACH SLAB +20.51

41′-36″ TYPE B

13′-12″ TYPE C

COMB. C&G TYPE 2
+21.93, 25.08 LT

29′-12″ TYPE B

℄ CONST. 93C

106′ 12″ TYPE C

116′-12″ TYPE C

7′-12″ TYPE C

90′-12″ TYPE C

CONST. LIMITS

END 324:12 EOP TAPER
+10.77 24′ RT

EX. 10″ WATER TO BE REMOVED

BM#3

+18 15′R

+50

+81

+193
18.61′ RT.

℄ R/W MONROE STREET
N 57° 29′ 23″ E

℄ R/W 2ND STREET
N 32°30′37″ W

90°0′0″

CURB, TYPE 6
+51.20, -17.73 LT

CURB, TYPE 6
+31.00, -17.43 LT

STA. 8+82.50 ℄ R/W MONROE STREET = STA. 10+00.00 ℄ R/W 2ND STREET

EXISTING CURB RAMPS
2ND ST & MONROE ST: NONE

SLOPE GRASS AREA TO DRAIN

MATCH LINE 38+50

R.A.C. II, LTD.
35-022-1401
1-STORY COMMERCIAL

Laber Family Limited Partnership
34-057-0600.000

Karen L. Marshall, Trustee
34-057-0700.000

1-STORY COMMERCIAL

STORAGE

10″ VCP

8″ VCP

4″ GAS

8″ PVC

4″ CURB

WALK

DRIVE

48

TABULATION OF CURB AND WALK ALONG FACE OF MSE WALL 1

93C STATION	GROUND AT WALL ELEV.	WALK W. EDGE ELEV.	WALK WIDTH @ 0.02	WALK E. EDGE ELEV.	GUTTER ELEV.	DIST. FROM PT. A	SLOPE FROM PT. A	PT. A ELEV.	POINT A DESCRIPTION
35+83	543.40	543.40	8.0′	543.24				543.24±	EX. MONROE ST. FRONT/WALK
36+00	543.93	543.13	6.0′	543.01				543.01±	EX. 2ND ST. FRONT/WALK
36+35		542.56	8.3′	542.39	541.89			541.89±	EX. 2ND ST. GUTTER
36+50		542.79	11.3′	542.56	542.06			542.06±	EX. 2ND ST. PAVEMENT
36+79		542.68	10.7′	542.47	541.97	8.5′	0.02	541.80	PROP. ℄ DRIVEWAY AT C.B.
37+00	SAME	542.66	7.1′	542.52	542.02	6.0′	0.02	541.90	PROP. ℄ DRIVEWAY
37+25	AS	542.79	6.3′	542.66	542.16	6.0′	0.02	542.04	PROP. ℄ DRIVEWAY
37+50	WALK	542.93	6.9′	542.79	542.29	6.0′	0.02	542.17	PROP. ℄ DRIVEWAY
37+75	W. EDGE	543.08	8.1′	542.92	542.42	6.0′	0.02	542.30	PROP. ℄ DRIVEWAY
38+00		542.67	11.9′	542.43				542.43±	EX. PARKING LOT SURFACE
38+25		542.50	9.1′	542.32				542.32±	EX. PARKING LOT SURFACE
38+50		542.35	7.8′	542.19				542.19±	EX. PARKING LOT SURFACE

CURB RAMPS

℄	STATION	OFFSET	SIDE	TYPE
CAMPBELL	30+27.94	7.10′	RT	A2
MONROE	8+54.20	18.20′	RT	A2
MONROE	8+54.20	17.21′	LT	A2
2ND	10+28.00	17.44′	LT	A2
2ND	10+27.28	18.75′	RT	A2

STATION OFFSET IS AT ℄ RAMP AT FACE OF CURB

BENCHMARK DATA

BM #3 - CHISELED "+"
STA. 35+59.0, 100.7′ RT.
FROM ℄ R/W SR 93
N: 192889.37
E: 1947922.88
ELEV: 544.63

SET ON NORTH BOLT OF "DARLING" FIRE HYDRANT AT NORTHWEST CORNER OF MONROE/SECOND ST.

NOTES:

PROPOSED BRIDGE-SUPPORTED UTILITY CONDUITS NOT SHOWN.

WORK WITHIN THE NS RIGHT OF WAY MAY REQUIRE A NS FLAGGER TO BE PRESENT FOR PROTECTION OF THE NS TRACKS.

CROSS REFERENCES	
140	SUPERELEVATION TABLE
158	DRIVEWAY/PARKING SUBSUMMARY
159-161	DRIVEWAY/PARKING DETAILS
163-173	DRAINAGE DETAILS
198-207	SANITARY & WATER WORK
371-387	MSE WALL DETAILS
388	STRUCTURES INDEX

HORIZONTAL SCALE IN FEET
0 10 20 40

CALCULATED AMD CHECKED JRW

PLAN - 93C
STA. 34+50 TO STA. 38+50

LAW-93-0.00

78
788

J:\Project\OU\ODOT\15005112 Ironton Russell\LAW\81595\roadway\sheets\81595GP008.dgn - 7/28/2011 1:11:46 PM - jon_wanstrath

575.10 573.60 572.10 570.60 569.10 567.60 566.10 564.60 563.10 561.60 560.12 558.71 557.36 556.07 554.85 553.69 552.59

600 595 590 585 580 575 570 565 560 555 550 545 540 535 530 525 520

STRUCTURE: LAW-93C-0000
LIMITS = 2616.62'

BRIDGE LIMIT STA. 35+90.50

APPROACH SLAB

P.V.I. STA. 38+58.50
ELEV = 550.59
K = 99
360.00' VC

-6.00 %

PRESSURE RELIEF JOINT

BOTTOM OF GIRDER

SUBGRADE

MIN.VERT.CLEAR.14.5' REQD, 19.2' ACT.

+35.64 ℄ R/W MONROE ST.

MSE WALL 2

℄ BRG. FWD. ABUT.
STA. 35+88

SEE MSE WALL PLANS

EMBANKMENT, AS PER PLAN

EMBANKMENT

-6.00 %

EX. 4" GAS
EX. GAS
EX. 10" WATER
TO BE REMOVED

EX. 6" SAN.

BOTTOM OF UNDERCUT

WATER
EX. 15" STM.
EX. 6" WATER
EX. WATER
EX. WATER

542.00

STORM SEWER (RIGHT) (SEE DRAINAGE DETAILS)

PROP. 12" STM
STORM SEWER (LEFT) (SEE DRAINAGE DETAILS)

EX. WATER
TO BE REMOVED

PROP. 12" STM

545.23 543.76 542.67 543.40 543.14 543.04 542.07 542.05 542.00

35+00 36+00 37+00 38+00

CROSS REFERENCES	
163-173	DRAINAGE DETAILS

CALCULATED BLW
CHECKED SCC

PROFILE - 93C
STA. 34+50 TO STA. 38+50

LAW-93-0.00

J:\Project\O\ODOT\15005112 Ironton Russell\LAW\81595\roadway\sheets\81595GF008.dgn - 4/25/2011 6:53:23 AM - jon_wanstrath

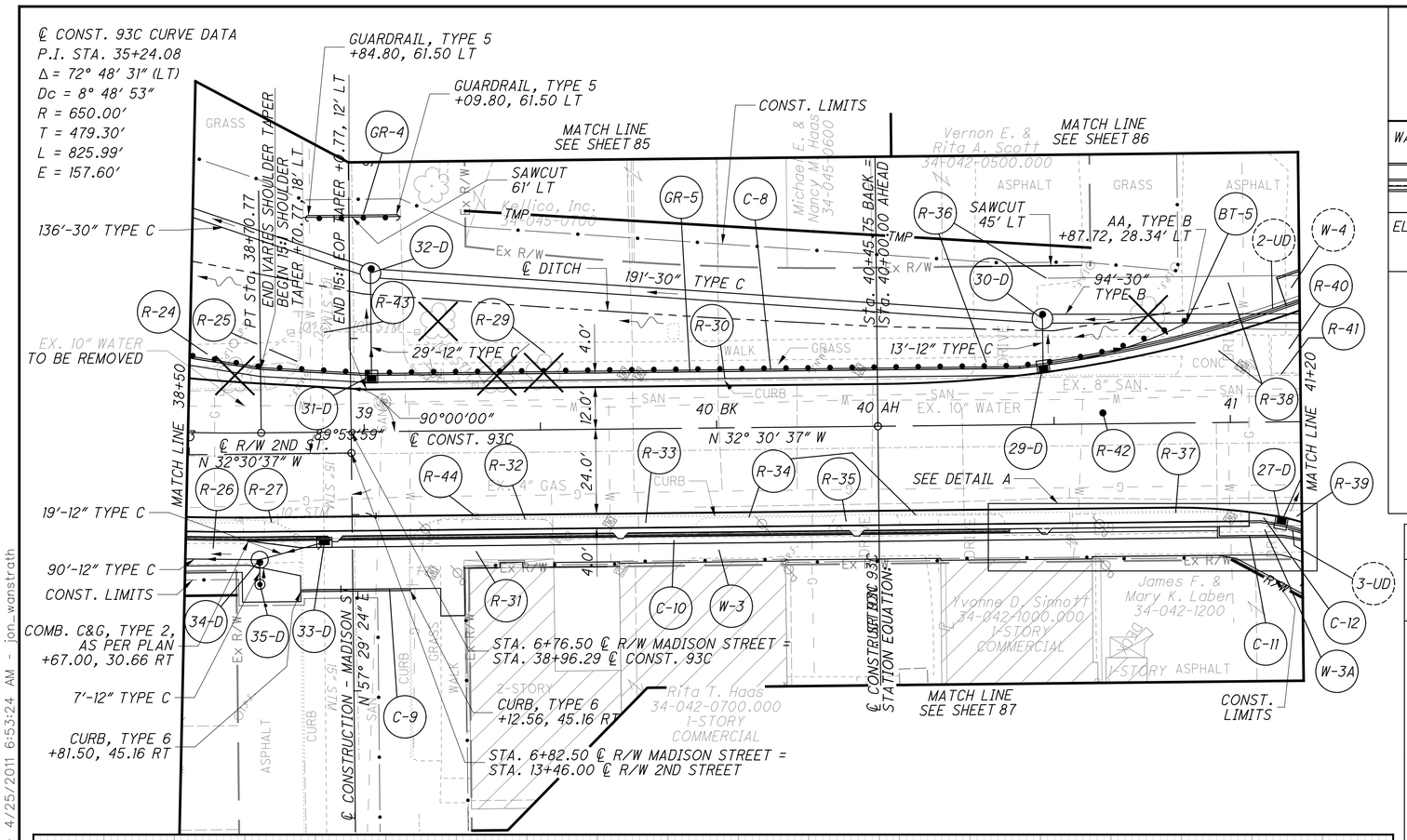
℄ CONST. 93C CURVE DATA
P.I. STA. 35+24.08
Δ = 72° 48′ 31″ (LT)
Dc = 8° 48′ 53″
R = 650.00′
T = 479.30′
L = 825.99′
E = 157.60′
GUARDRAIL, TYPE 5 +84.80, 61.50 LT
GUARDRAIL, TYPE 5 +09.80, 61.50 LT
CONST. LIMITS
MATCH LINE SEE SHEET 85
MATCH LINE SEE SHEET 86
MATCH LINE SEE SHEET 87
136′-30″ TYPE C
END VARIES SHOULDER TAPER BEGIN 15:1 SHOULDER TAPER +70.77, 18′ LT
PT Sta. 38+70.77
END 15:1 EOP TAPER +70.77, 12′ LT
SAWCUT 61′ LT
SAWCUT 45′ LT
TMP
Ex R/W
℄ DITCH
191′-30″ TYPE C
94′-30″ TYPE B
AA, TYPE B +87.72, 28.34′ LT
13′-12″ TYPE C
29′-12″ TYPE C
EX. 10″ WATER TO BE REMOVED
MATCH LINE 38+50
MATCH LINE 41+20
Sta. 40+45.75 BACK = Sta. 40+00.00 AHEAD
℄ R/W 2ND ST.
N 32°30′37″ W
℄ CONST. 93C
90°00′00″
89°59′59″
40 BK
40 AH
N 32° 30′ 37″ W
SEE DETAIL A
19′-12″ TYPE C
90′-12″ TYPE C
CONST. LIMITS
COMB. C&G, TYPE 2, AS PER PLAN +67.00, 30.66 RT
7′-12″ TYPE C
CURB, TYPE 6 +81.50, 45.16 RT
STA. 6+76.50 ℄ R/W MADISON STREET = STA. 38+96.29 ℄ CONST. 93C
CURB, TYPE 6 +12.56, 45.16 RT
STA. 6+82.50 ℄ R/W MADISON STREET = STA. 13+46.00 ℄ R/W 2ND STREET
℄ CONSTRUCTION - MADISON ST
N 57° 29′ 24″ E
℄ CONST/℄ R/W STATION EQUATIONS
Vernon E. & Rita A. Scott 34-042-0500.000
Kallico, Inc. 34-045-0700
Michael E. & Nancy M. Haas 34-045-0600
Rita T. Haas 34-042-0700.000 1-STORY COMMERCIAL
Yvonne D. Simnott 34-042-1000.000 1-STORY COMMERCIAL
James F. & Mary K. Laben 34-042-1200
1-STORY ASPHALT
2-STORY
GRASS
ASPHALT
CONC
EX. 8″ SAN.
EX. 10″ WATER
EX. 4″ GAS
EX. 12″ GAS
EX. 10″ STM
EX. 8″ STM
EX. 6″ STM
EX. 24″ STM
EX. 18″ STM
EX. 15″ STM
EX. 12″ STM

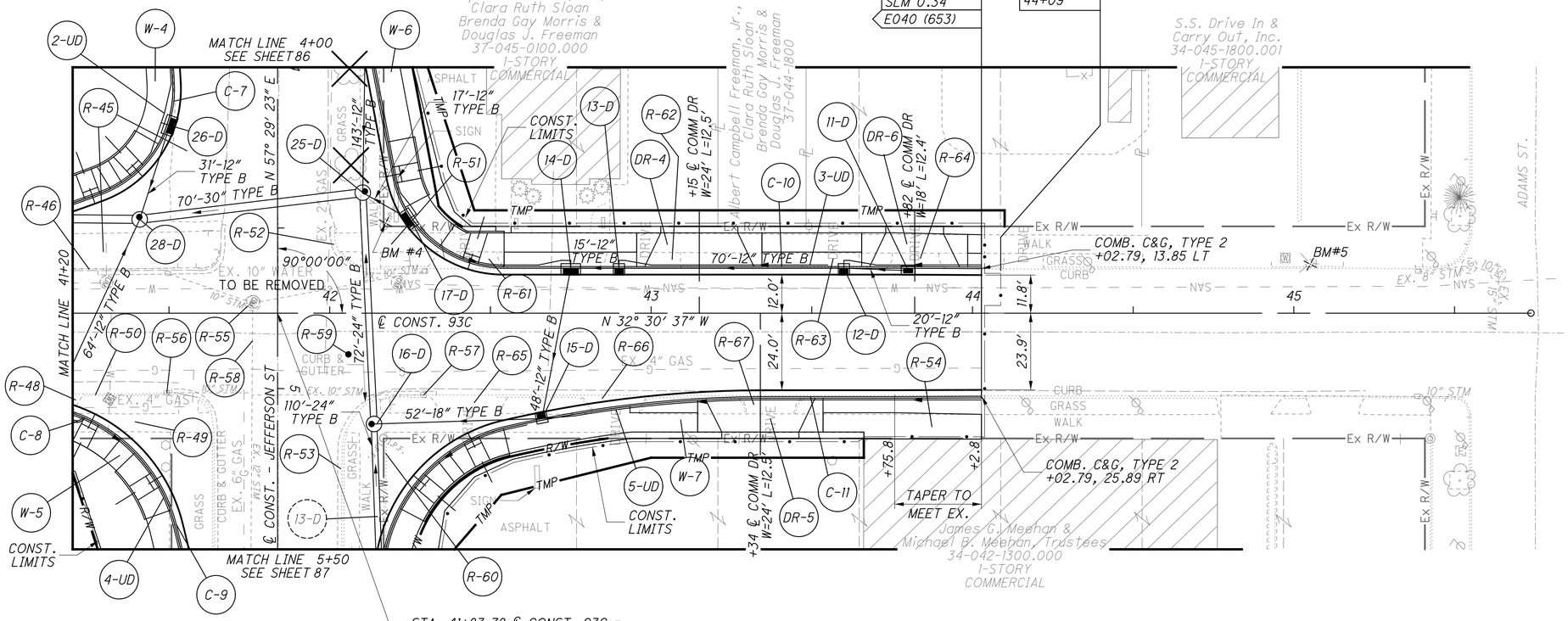

EXISTING CURB RAMPS
2ND ST & JEFFERSON ST: 8 EACH

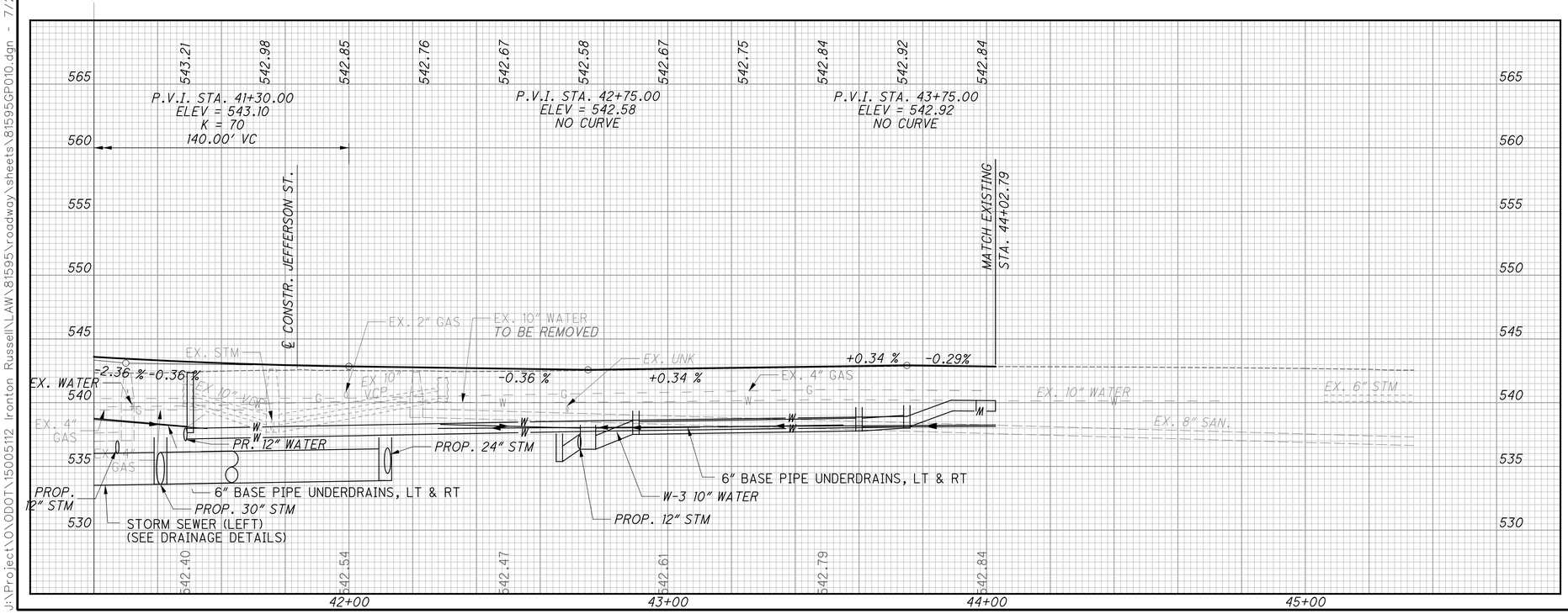

BENCHMARK DATA
BM#4 - CHISELED SQUARE STA. 42+17.4, 28.0' LT. FROM ℄ R/W & CONST. SR 93 N: 193463.69 E: 1947542.88 ELEV: 543.49
SET ON SOUTHEAST CORNER OF TOP OF CURB AROUND KFC SIGN AT NORTHWEST CORNER OF JEFFERSON/ SECOND ST.

BENCHMARK DATA
BM#5 - CHISELED "+" STA. 45+05.1, 15.2' LT. FROM ℄ R/W & CONST. SR 93 N: 193713.21 E: 1947399.01 ELEV: 545.05
SET ON NORTH BOLT "DARLING" FIRE HYDRANT AT THE SOUTHWEST CORNER OF ADAMS/SECOND ST.

CROSS REFERENCES	
89	JEFFERSON ST. PROFILE
142	INTERSECTION DETAIL
158	DRIVEWAY/PARKING SUBSUMMARY
159-161	DRIVEWAY/PARKING DETAILS
163-173	DRAINAGE DETAILS
198-207	SANITARY & WATER WORK

HORIZONTAL SCALE IN FEET
0 10 20 40

CALCULATED AMD
CHECKED JRW

PLAN AND PROFILE - 93C - STA. 41+20 AH. PLAN - JEFFERSON ST. - STA. 4+00 TO STA. 5+50

LAW-93-0.00

81
788

J:\Project\0\ODOT\15005112 Ironton Russell\LAW\81595\roadway\sheets\81595GP010.dgn - 7/28/2011 1:11:48 PM - jon_wanstrath

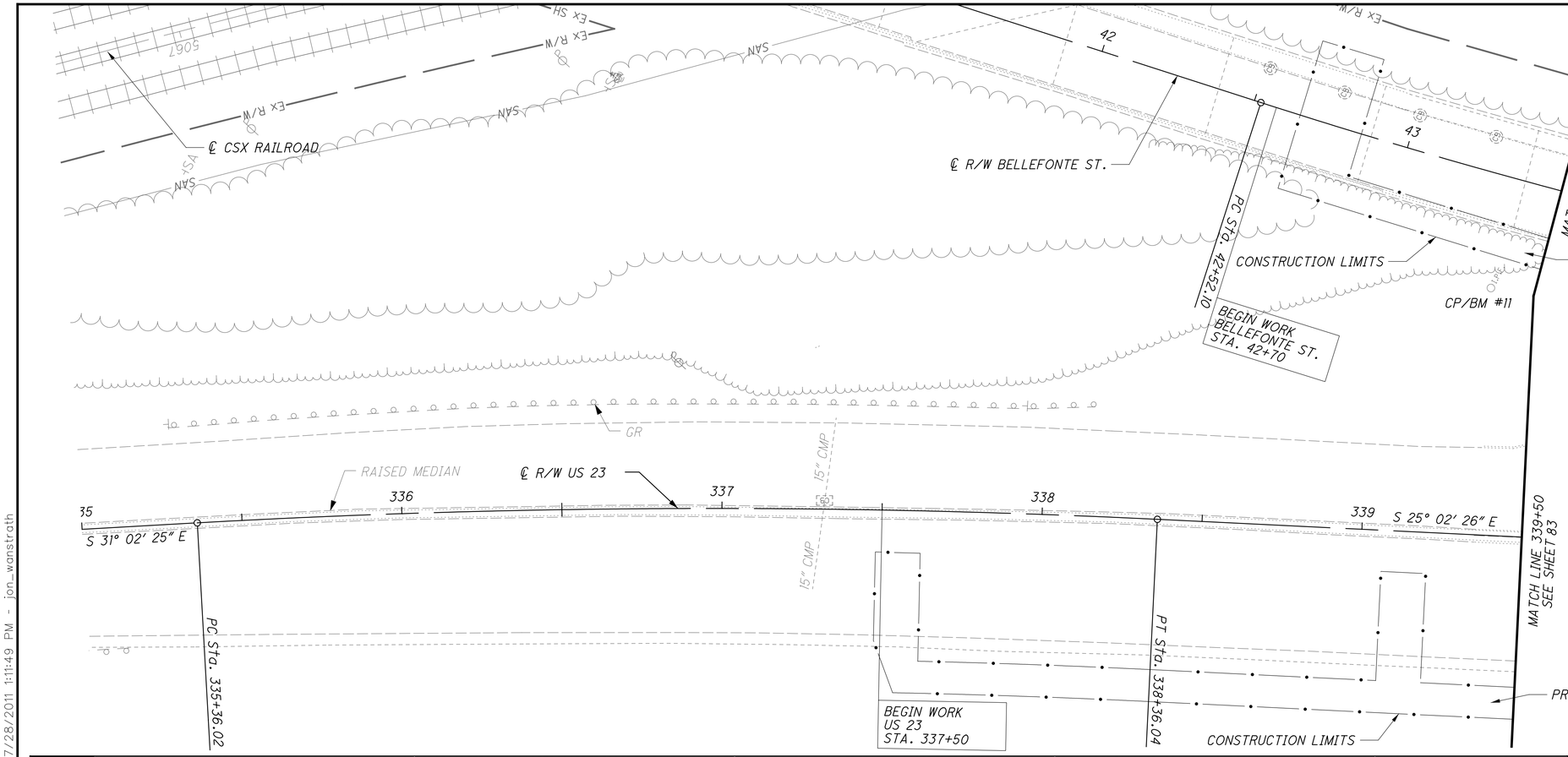

CONTROL POINT/BENCHMARK DATA
CP/BM #11 - 5/8" REBAR FOUND STA. 339+36.57, 77.26' LT. FROM ℄ R/W US 23 N: 190914.10 E: 1946229.04 ELEV: 597.50
FOR DETAIL SEE SCHEMATIC PLAN, SHEET 3

CURVE DATA
℄ R/W US 23

P.I. Sta = 336+86.17
Δ = 5° 59' 59" (RT)
Dc = 1° 59' 59"
R = 2,865.11'
T = 150.15'
L = 300.02'
E = 3.93'

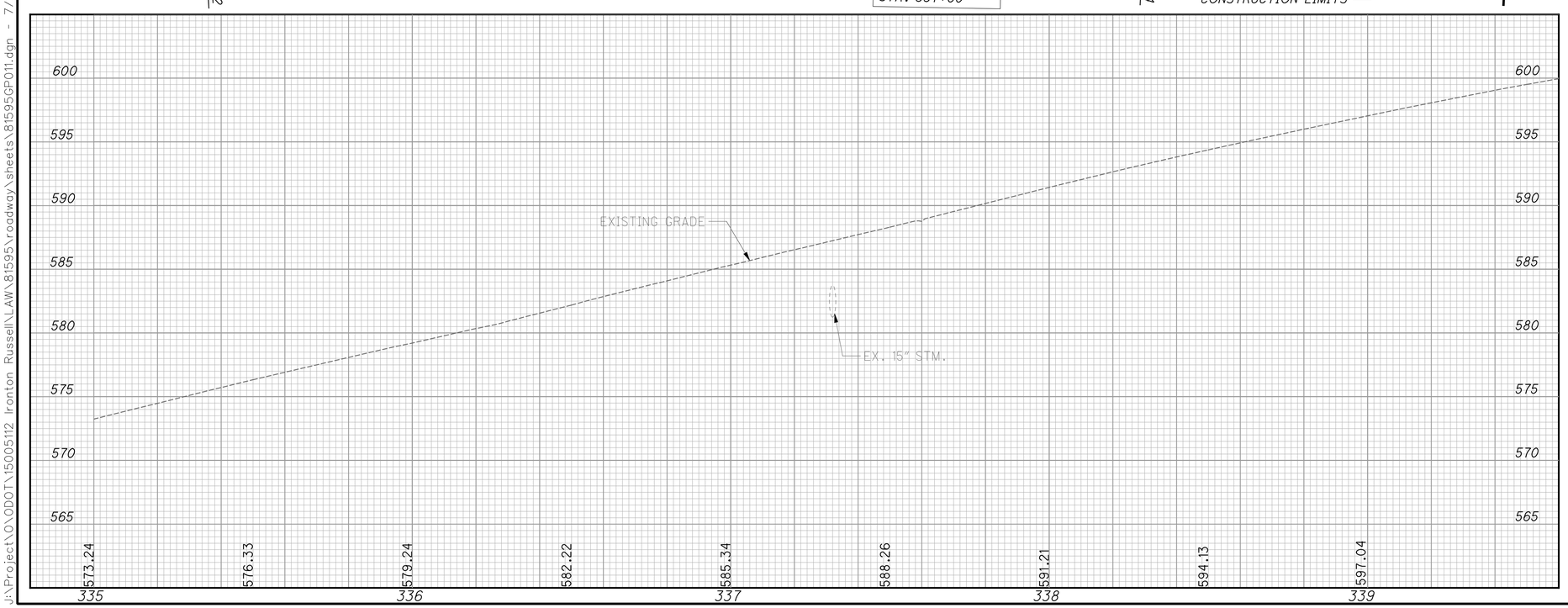

CROSS REFERENCES	
141	INTERSECTION DETAILS
242-243	US 23 TRAFFIC SIGNALS

NOTE:
ELEVATIONS GIVEN ARE THE AVERAGE MEDIAN GUTTER

HORIZONTAL SCALE IN FEET 0 10 20 40

CALCULATED AMD
CHECKED SCC

PLAN AND PROFILE - US 23
STA. 335+00 TO STA. 339+50

LAW-93-0.00

J:\Project\O\ODOT\15005112 Ironton Russell\LAW\81595\roadway\sheets\81595GP011.dgn - 7/28/2011 1:11:49 PM - jon_wanstrath

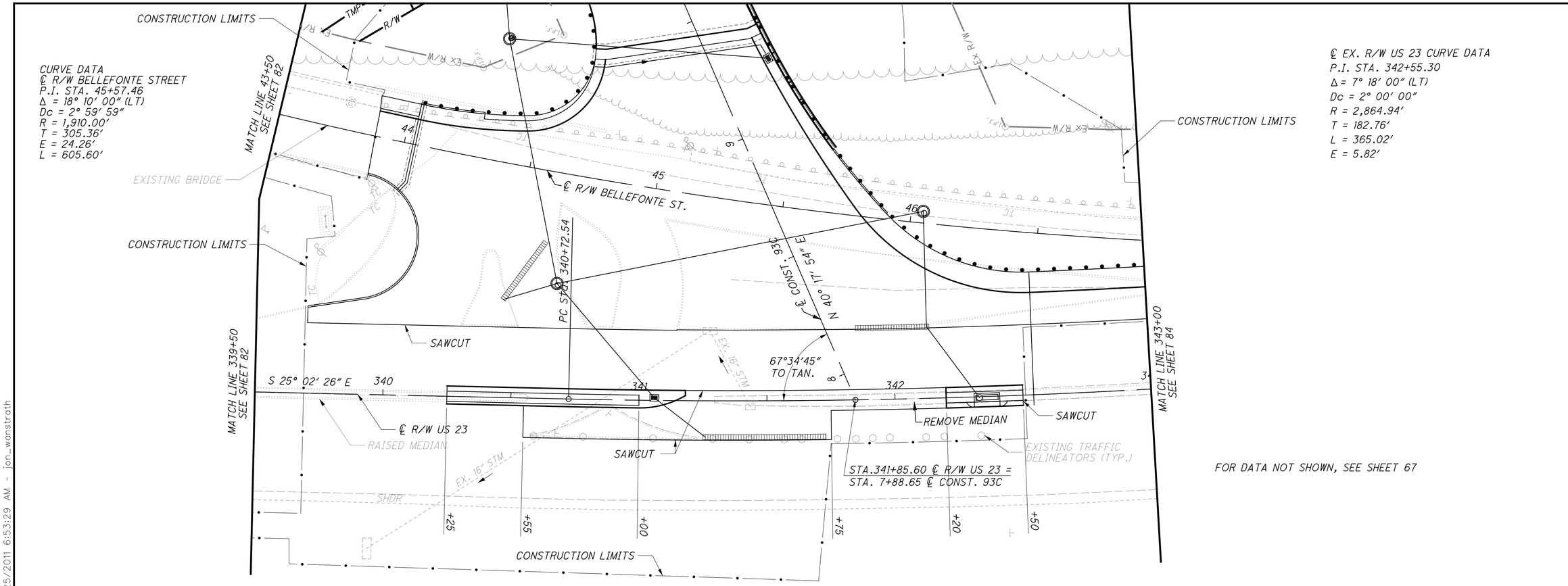

FOR DATA NOT SHOWN, SEE SHEET 67

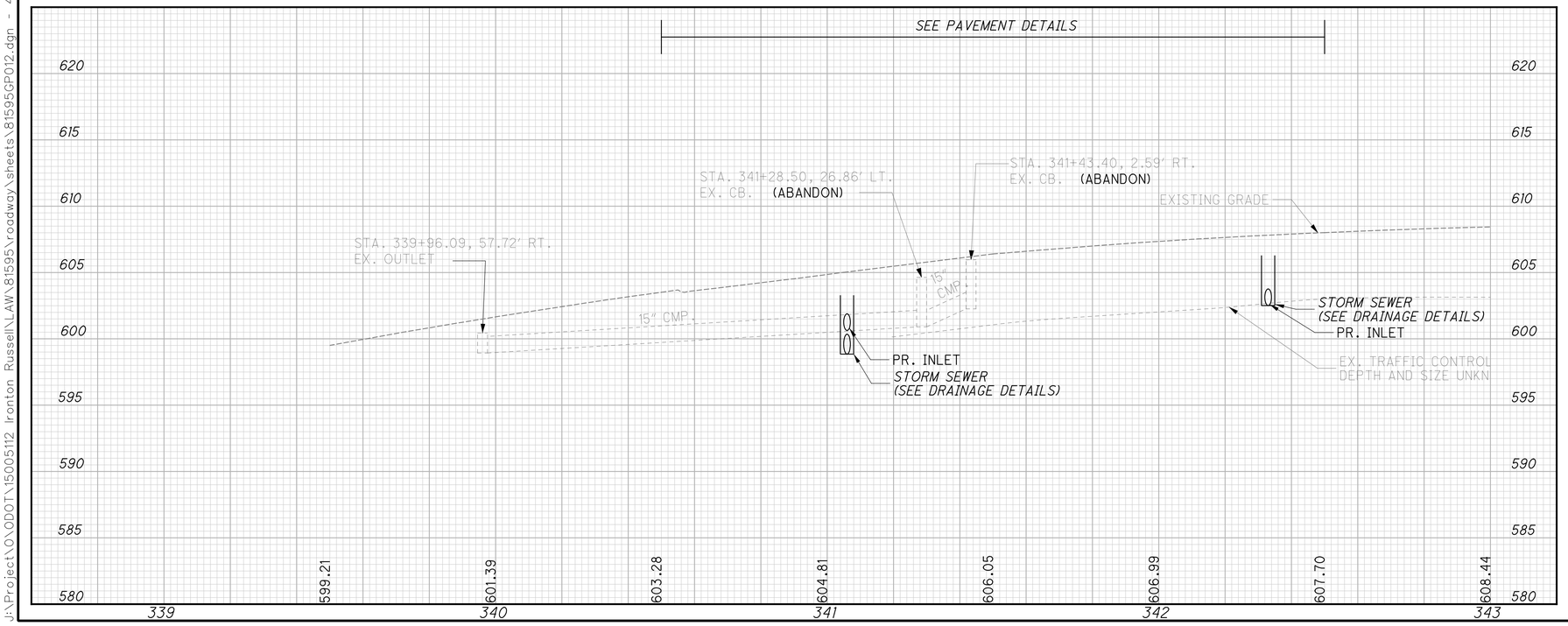

DATA AND QUANTITIES ARE INCLUDED
WITH PLAN SHEET 67

NOTE:
ELEVATIONS GIVEN ARE THE AVERAGE MEDIAN GUTTER

CROSS REFERENCES	
13	PAVEMENT TRENCH DETAILS
67	93C PLAN
141	INTERSECTION DETAILS
150-157	GUARDRAIL DETAILS
163-197	DRAINAGE DETAILS
388	STRUCTURES INDEX

HORIZONTAL SCALE IN FEET
0 10 20 40

CALCULATED AMD
CHECKED SCC

PLAN AND PROFILE - US 23
STA. 339+50 TO STA. 343+00

LAW-93-0.00

J:\Project\O\ODOT\15005112 Ironton Russell\LAW\81595\roadway\sheets\81595GP012.dgn - 4/25/2011 6:53:29 AM - jon_wanstrath

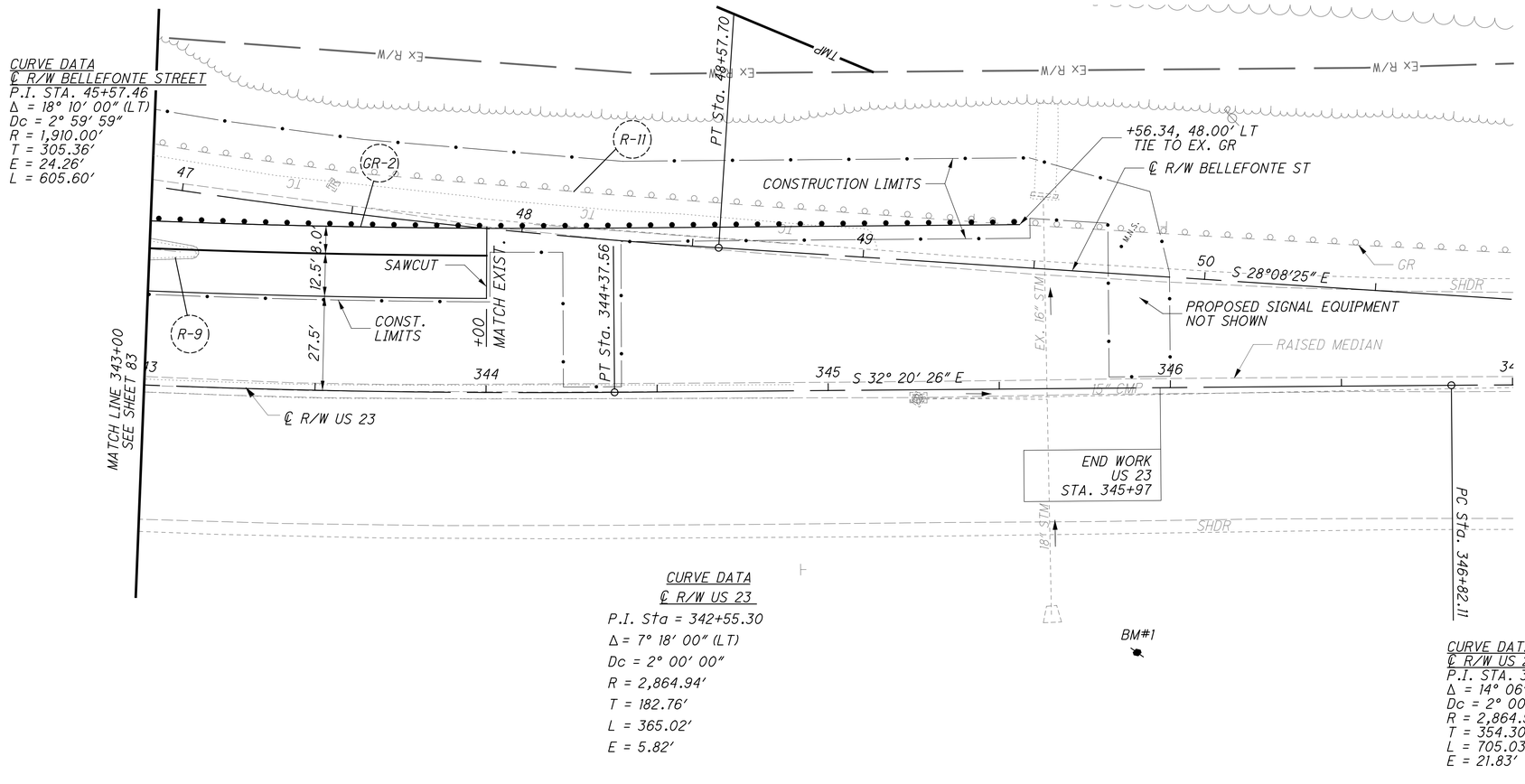

BENCHMARK DATA
BM #1 - RAILROAD SPIKE SET STA. 345+89.6, 77.3′ RT. FROM ℄ R/W US 23 N: 190268.37 E: 1946407.72 ELEV: 605.39
SET 2′ UP ON EAST SIDE OF POWER/TELE. POLE # 1124-806. 32′ WEST OF WEST EDGE OF PAVEMENT & ±500′ SOUTH OF INTERSECTION OF BELLEFONTE & US 23.

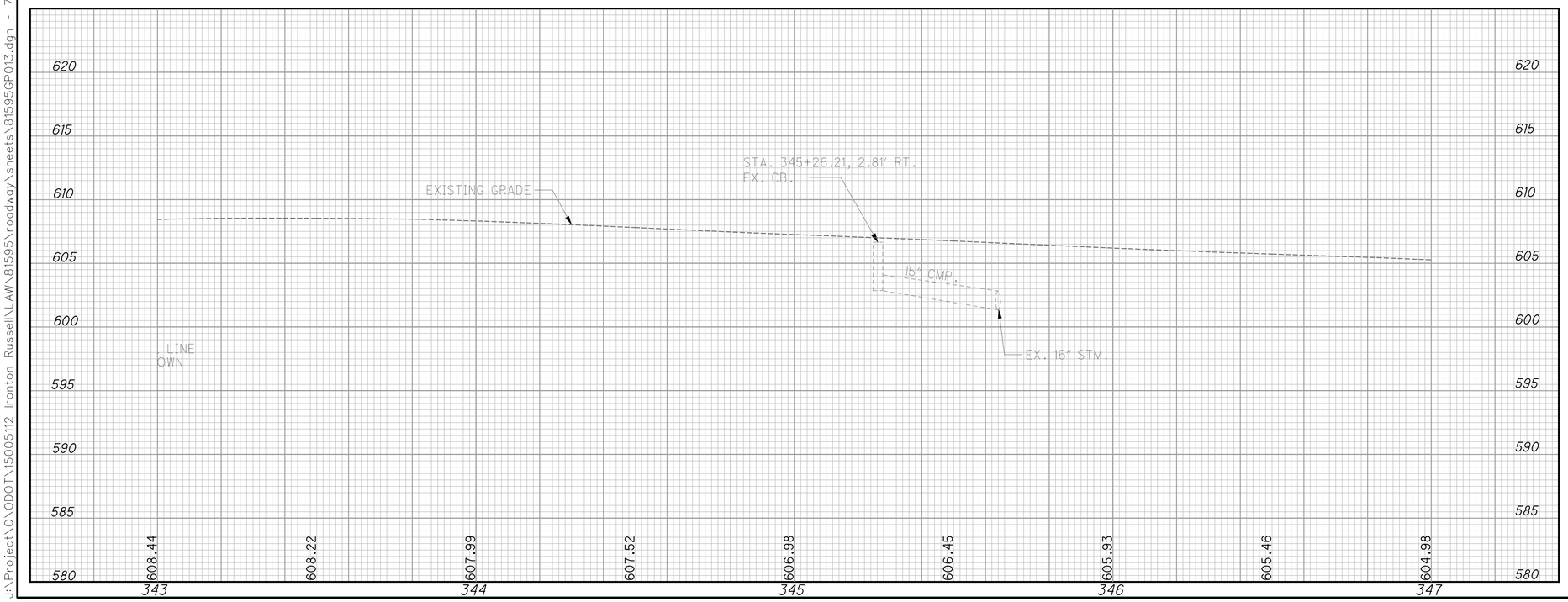

INDICATES INCLUDED WITH PLAN SHEET 67

CROSS REFERENCES	
150-157	GUARDRAIL DETAILS

NOTE:
ELEVATIONS GIVEN ARE THE AVERAGE MEDIAN GUTTER

HORIZONTAL SCALE IN FEET
0 10 20 40

CALCULATED AMD
CHECKED JRW

PLAN AND PROFILE - US 23
STA. 343+00 TO STA. 347+00

LAW-93-0.00

84
788

J:\Project\O\ODOT\15005112 Ironton Russell\LAW\81595\roadway\sheets\81595GP013.dgn - 7/28/2011 1:11:51 PM - jon_wanstrath

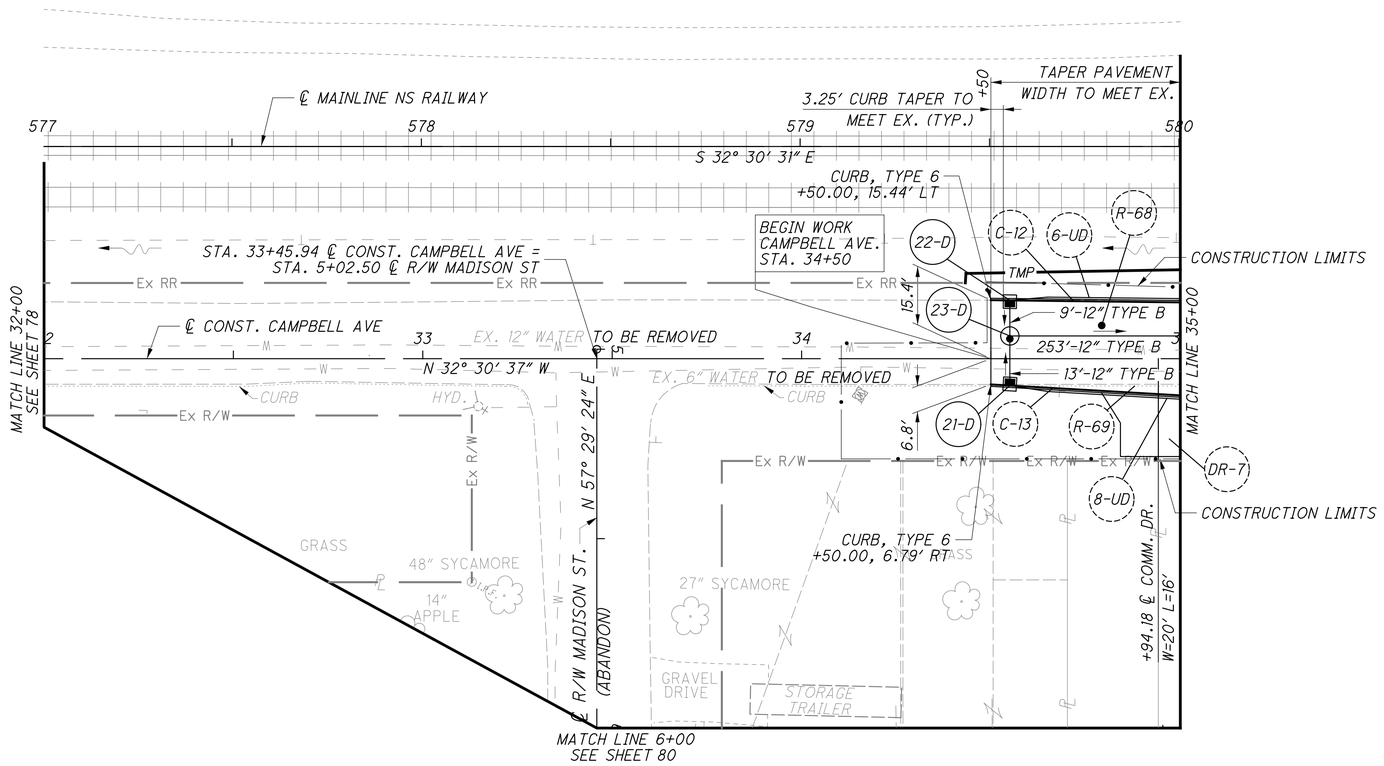

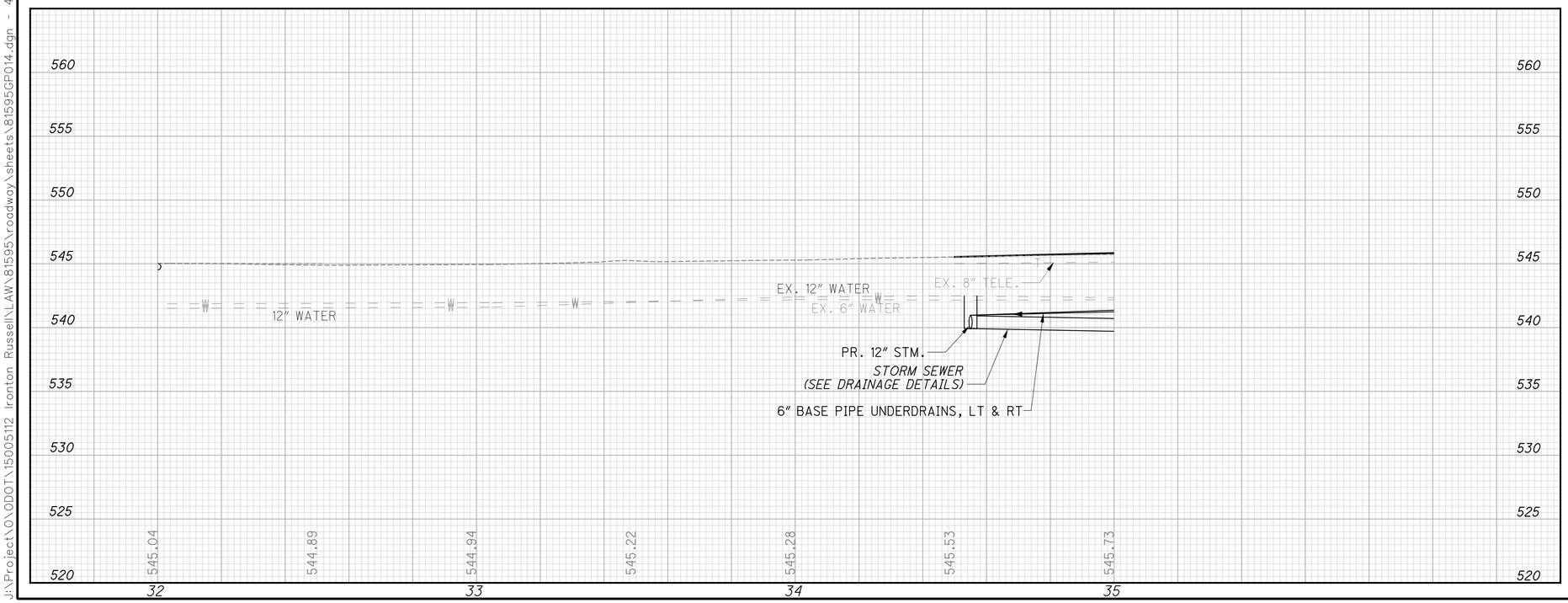

NOTE:
WORK WITHIN THE NS RIGHT OF WAY MAY REQUIRE A NS FLAGGER TO BE PRESENT FOR PROTECTION OF THE NS TRACKS.

CROSS REFERENCES	
163-173	DRAINAGE DETAILS
198-207	WATER WORK

HORIZONTAL SCALE IN FEET
0 10 20 40

CALCULATED AMD
CHECKED JRW

PLAN AND PROFILE - CAMPBELL AVE.
STA. 32+00 TO STA. 35+00

LAW-93-0.00

J:\Project\O\ODOT\15005112 Ironton Russell\LAW\81595\roadway\sheets\81595GP014.dgn - 4/25/2011 6:53:31 AM - jon_wanstrath

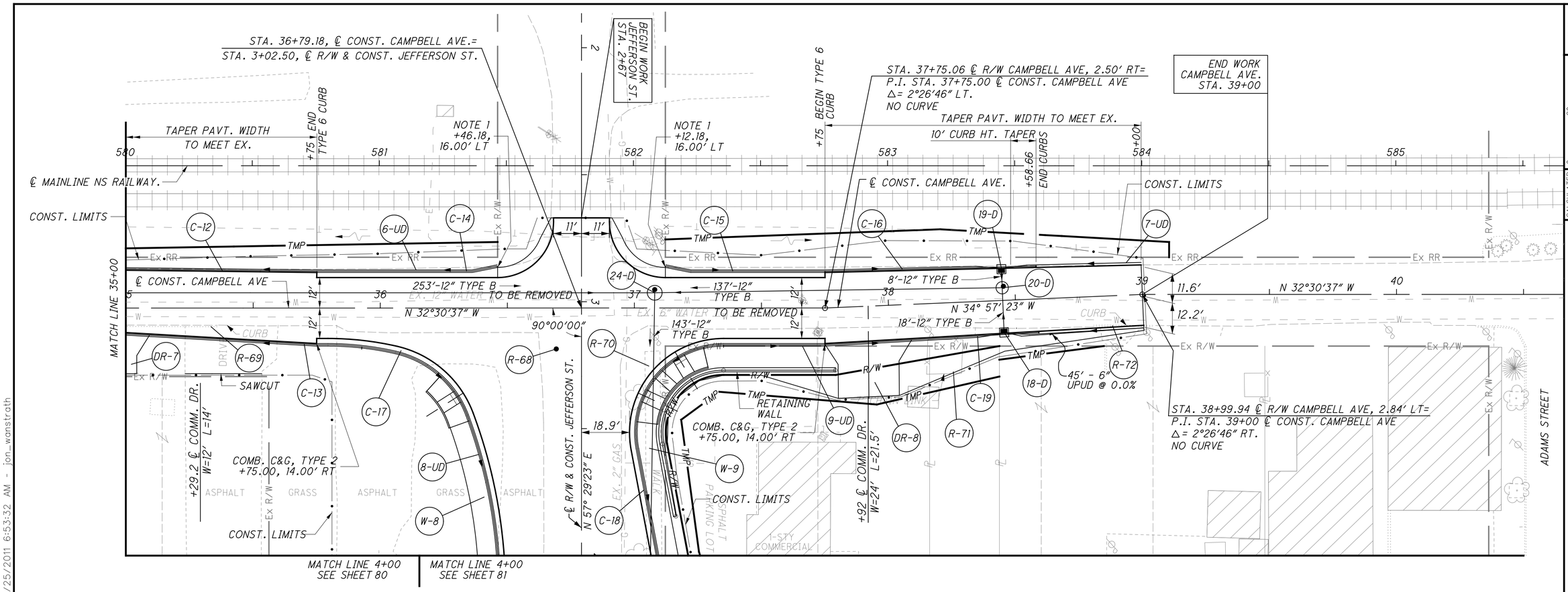

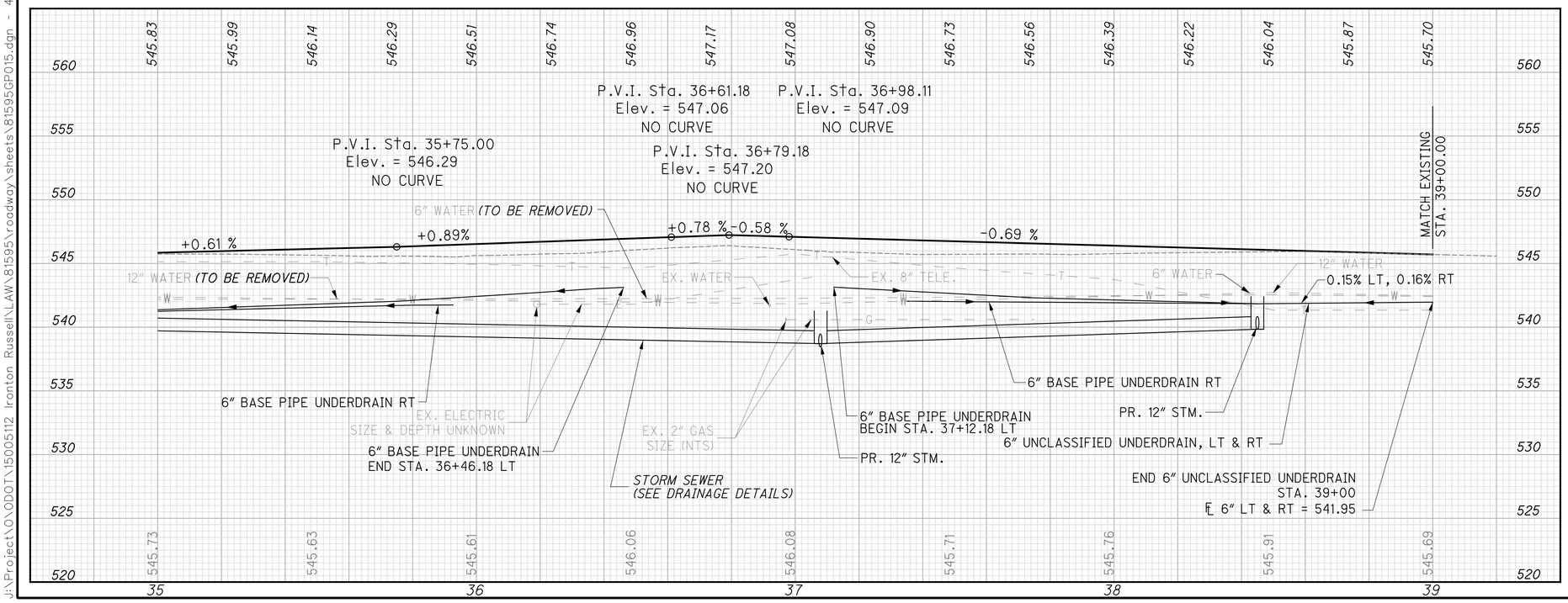

NOTE 1:
TRANSITION COMBINED CURB & GUTTER IN 10' FROM 6" CURB HT & 2' PAN WIDTH TO 0" CURB HT & 4' PAN WIDTH.

NOTE:
WORK WITHIN THE NS RIGHT OF WAY MAY REQUIRE A NS FLAGGER TO BE PRESENT FOR PROTECTION OF THE NS TRACKS AND GATE/SIGNALS.

CROSS REFERENCES	
89	JEFFERSON ST. PROFILE
143	INTERSECTION DETAIL
158	DRIVEWAY/PARKING SUBSUMMARY
159-161	DRIVEWAY/PARKING DETAILS
162	RETAINING WALL
163-173	DRAINAGE DETAILS
198-207	WATER WORK

HORIZONTAL SCALE IN FEET
0 10 20 40
CALCULATED AMD
CHECKED JRW

PLAN & PROF. - CAMPBELL AVE. - STA. 35+00 AH.
PLAN - JEFFERSON ST. - STA. 4+00 BACK

LAW-93-0.00

86
788

J:\Project\OA\ODOT\15005112 Ironton Russell\LAW\81595\roadway\sheets\81595GP015.dgn - 4/25/2011 6:53:32 AM - jon_wanstrath

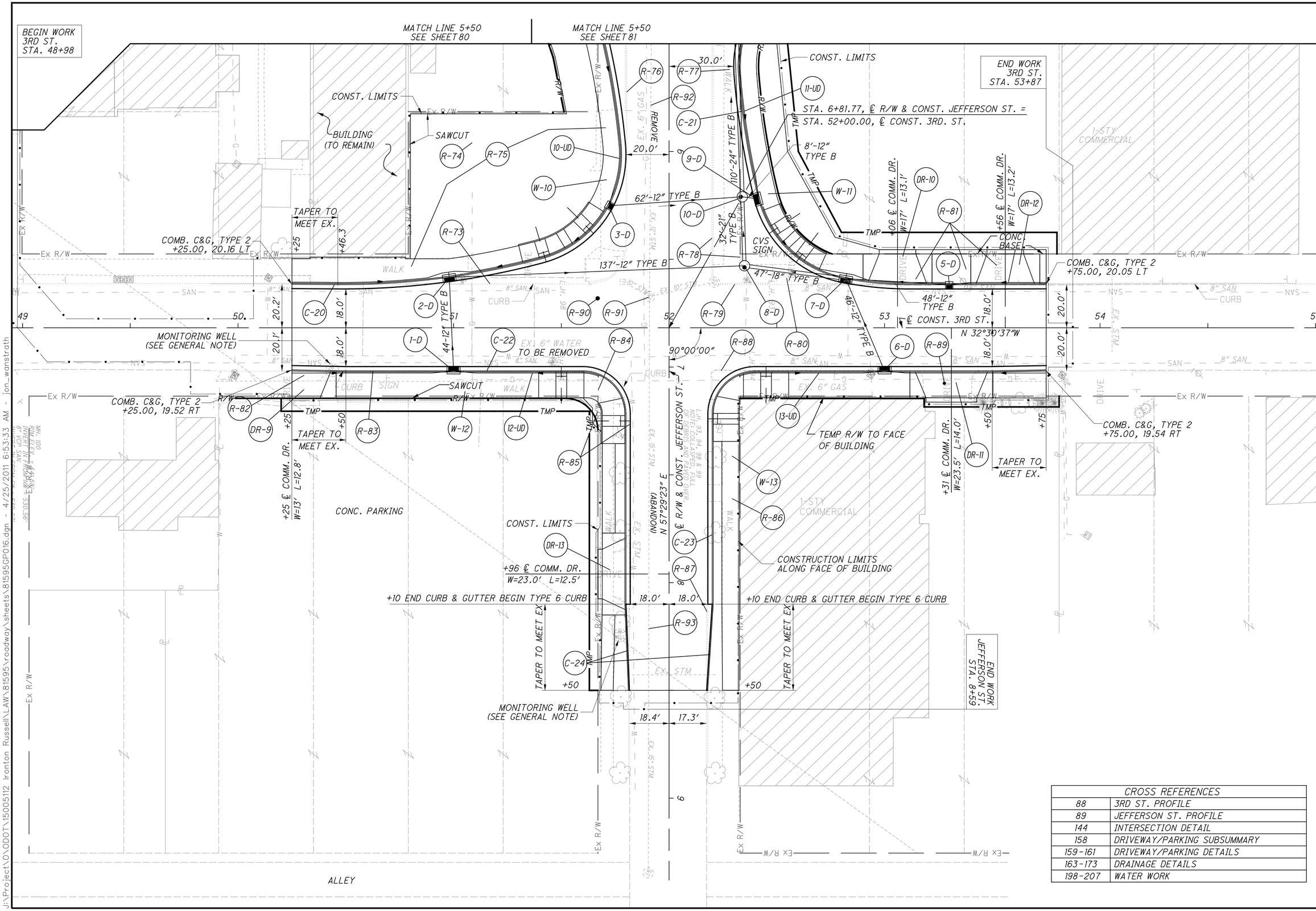

CROSS REFERENCES	
88	3RD ST. PROFILE
89	JEFFERSON ST. PROFILE
144	INTERSECTION DETAIL
158	DRIVEWAY/PARKING SUBSUMMARY
159-161	DRIVEWAY/PARKING DETAILS
163-173	DRAINAGE DETAILS
198-207	WATER WORK

HORIZONTAL SCALE IN FEET

CALCULATED AMD
CHECKED JRW

PLAN - 3RD ST. - STA. 49+00 TO STA. 55+00
PLAN - JEFFERSON ST. - STA. 5+50 AHEAD

LAW-93-0.00

J:\Project\O\ODOT\15005112 Ironton Russell\LAW\81595\roadway\sheets\81595GP016.dgn - 4/25/2011 6:53:33 AM - jon_wanstrath

J:\Project\O\ODOT\15005112 Ironton Russell\LAW\81595\roadway\sheets\81595GF017.dgn - 4/25/2011 6:53:35 AM - jon_wanstrath

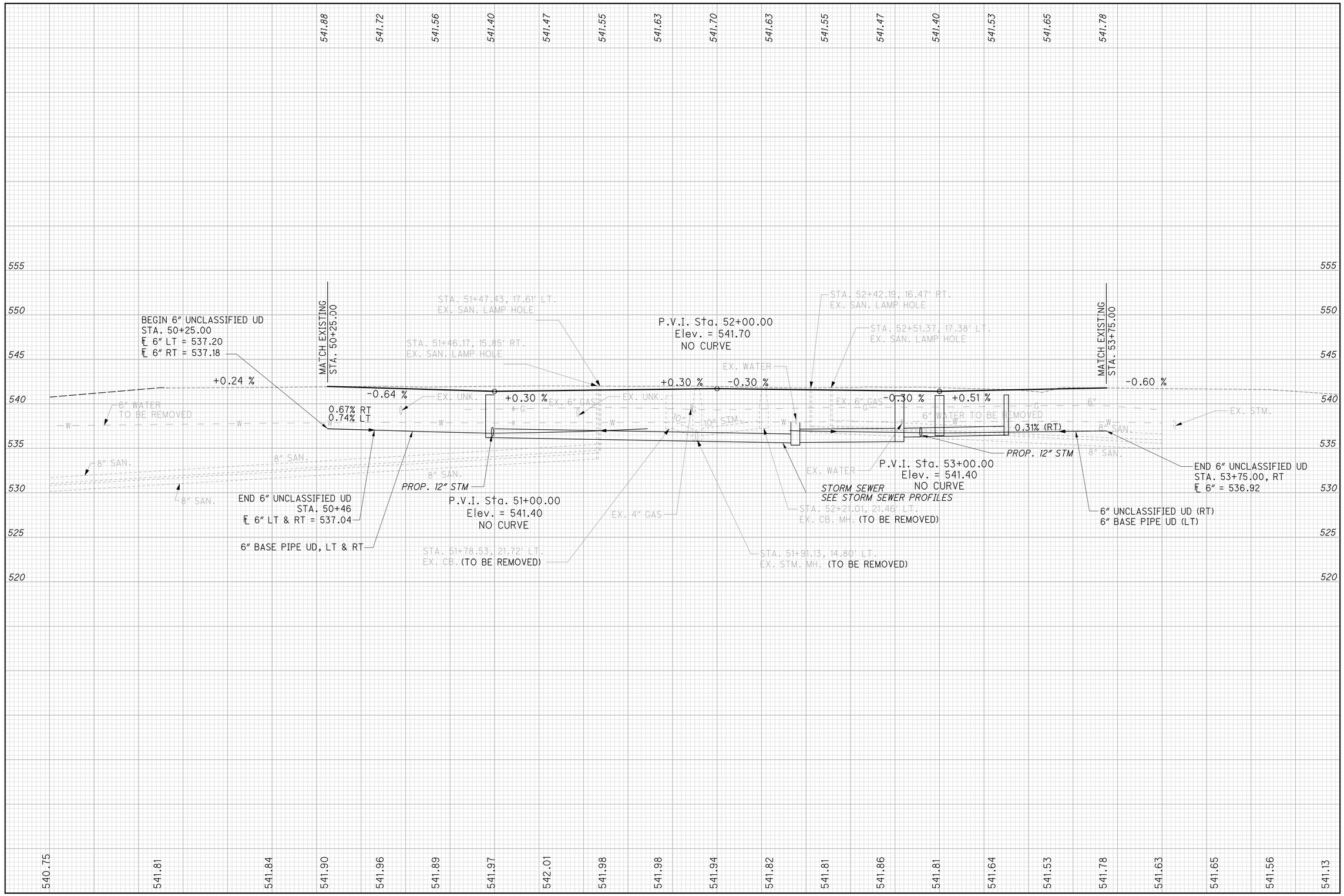

PROFILE - 3RD STREET
STA. 49+00 TO STA. 54+80

CALCULATED

CHECKED SCC

LAW-93-0.00

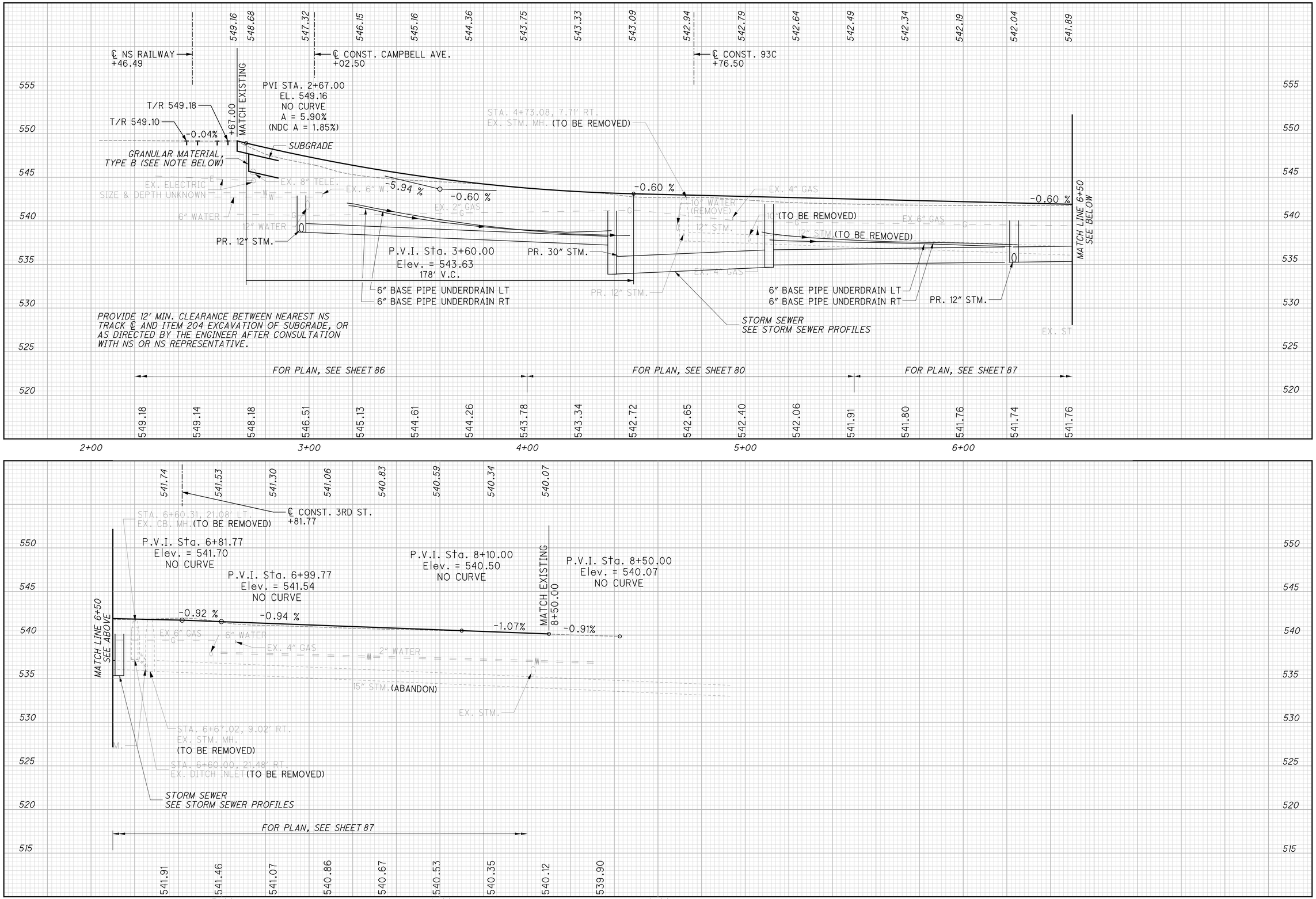

CALCULATED

CHECKED SCC

PROFILE - JEFFERSON STREET
STA. 2+00 TO STA. 9+00

LAW-93-0.00

J:\Project\O\ODOT\15005112 Ironton Russell\LAW\81595\roadway\sheets\81595GF016.dgn - 4/25/2011 6:53:36 AM - jon_wanstrath

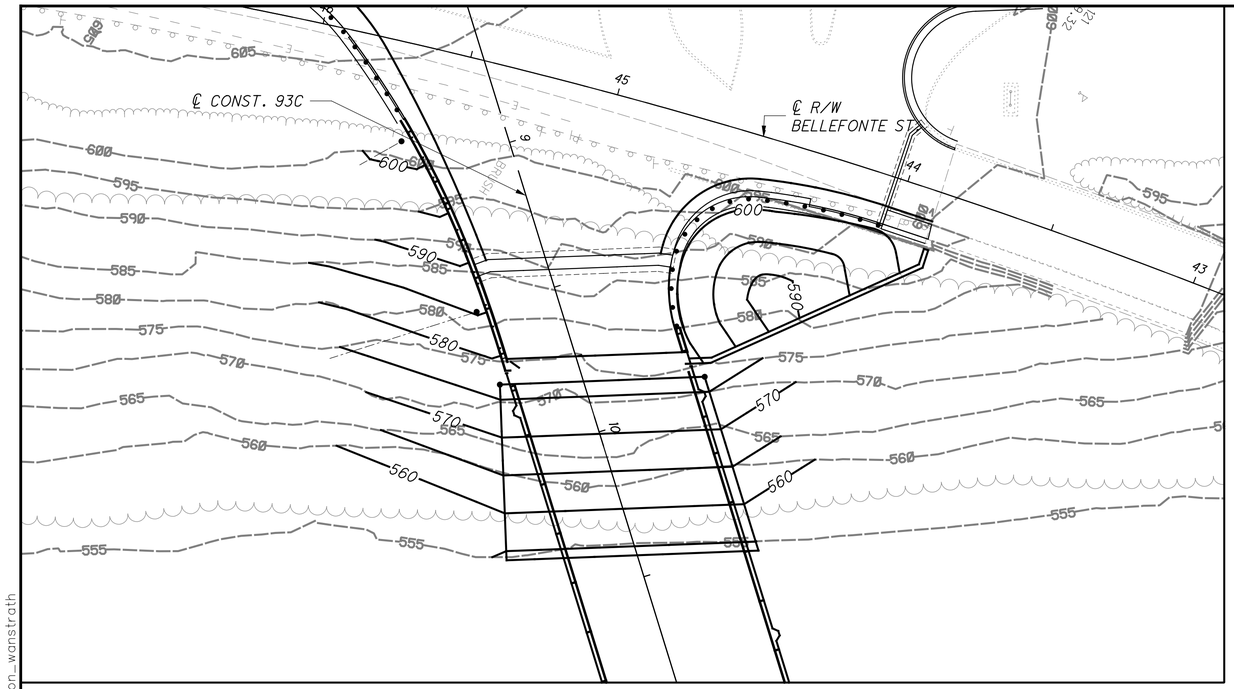

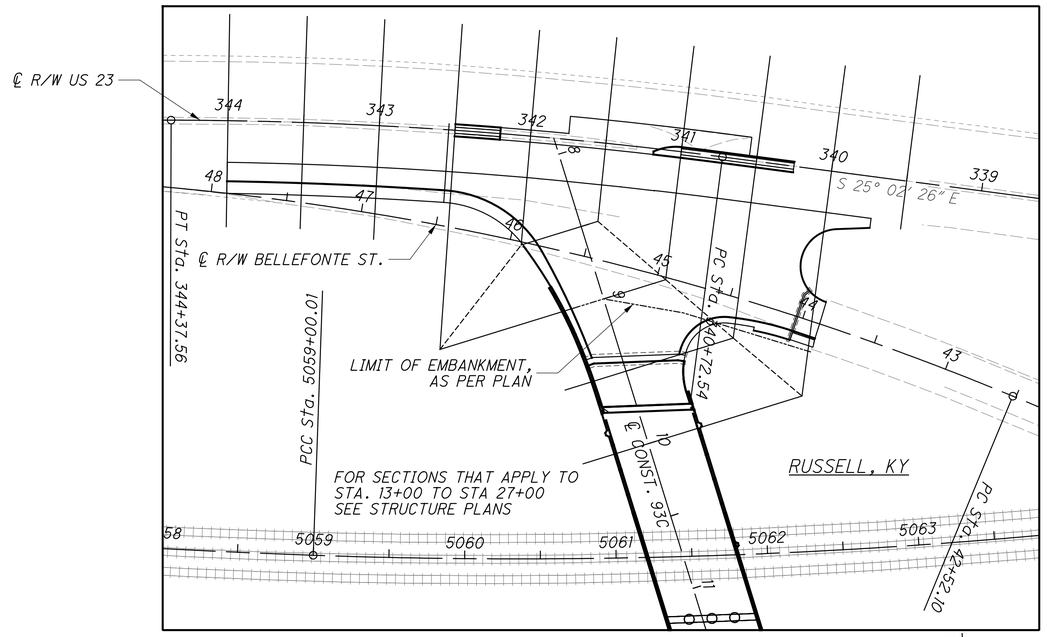

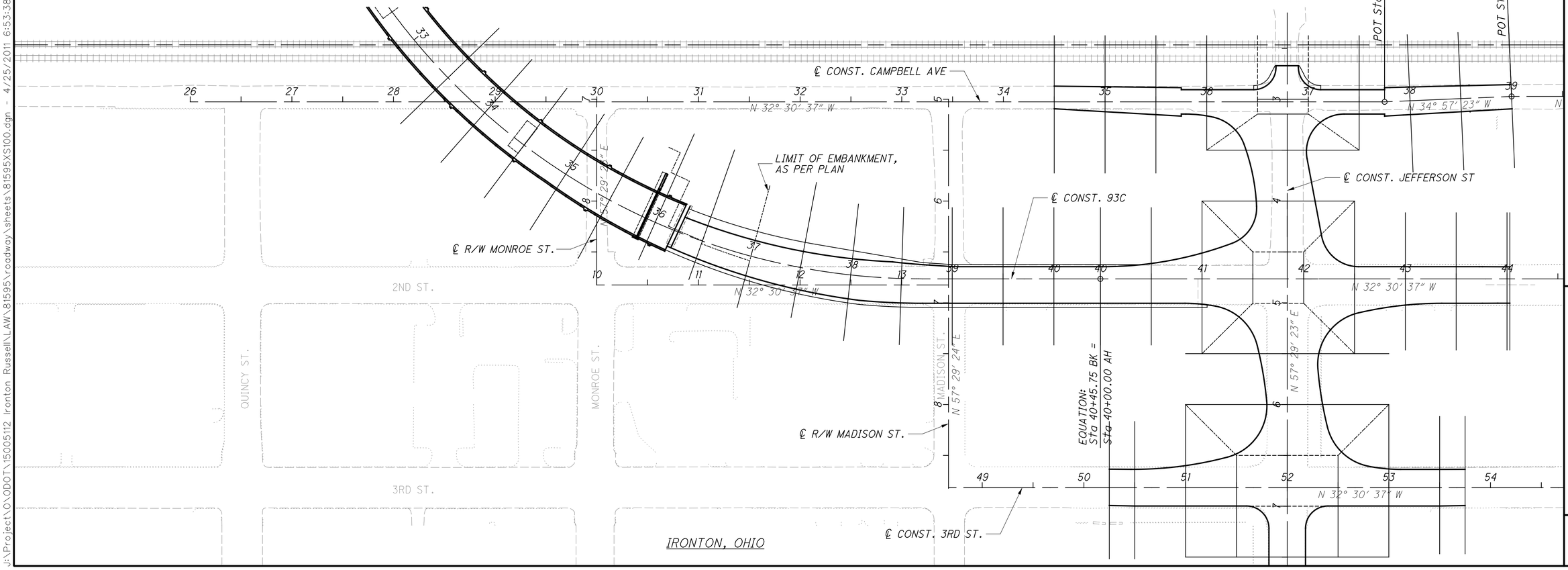

HORIZONTAL SCALE IN FEET
0 25 50 100

CALCULATED JRW
CHECKED SCC

CROSS SECTION LAYOUT

LAW-93-0.00

90
788

J:\Project\OV\ODOT\15005112 Ironton Russell\LAW\81595\roadway\sheets\81595XS100.dgn - 4/25/2011 6:53:38 AM - jon_wanstrath

J:\Project\OA\ODOT\15005112 Ironton Russell\LAW\81595\roadway\sheets\81595XS001.dgn - 4/25/2011 6:53:39 AM - jon_wanstrath

SEEDING	
END WIDTH	SQ. YDS.

FOR SEEDING QUANTITIES SEE SHEET 346

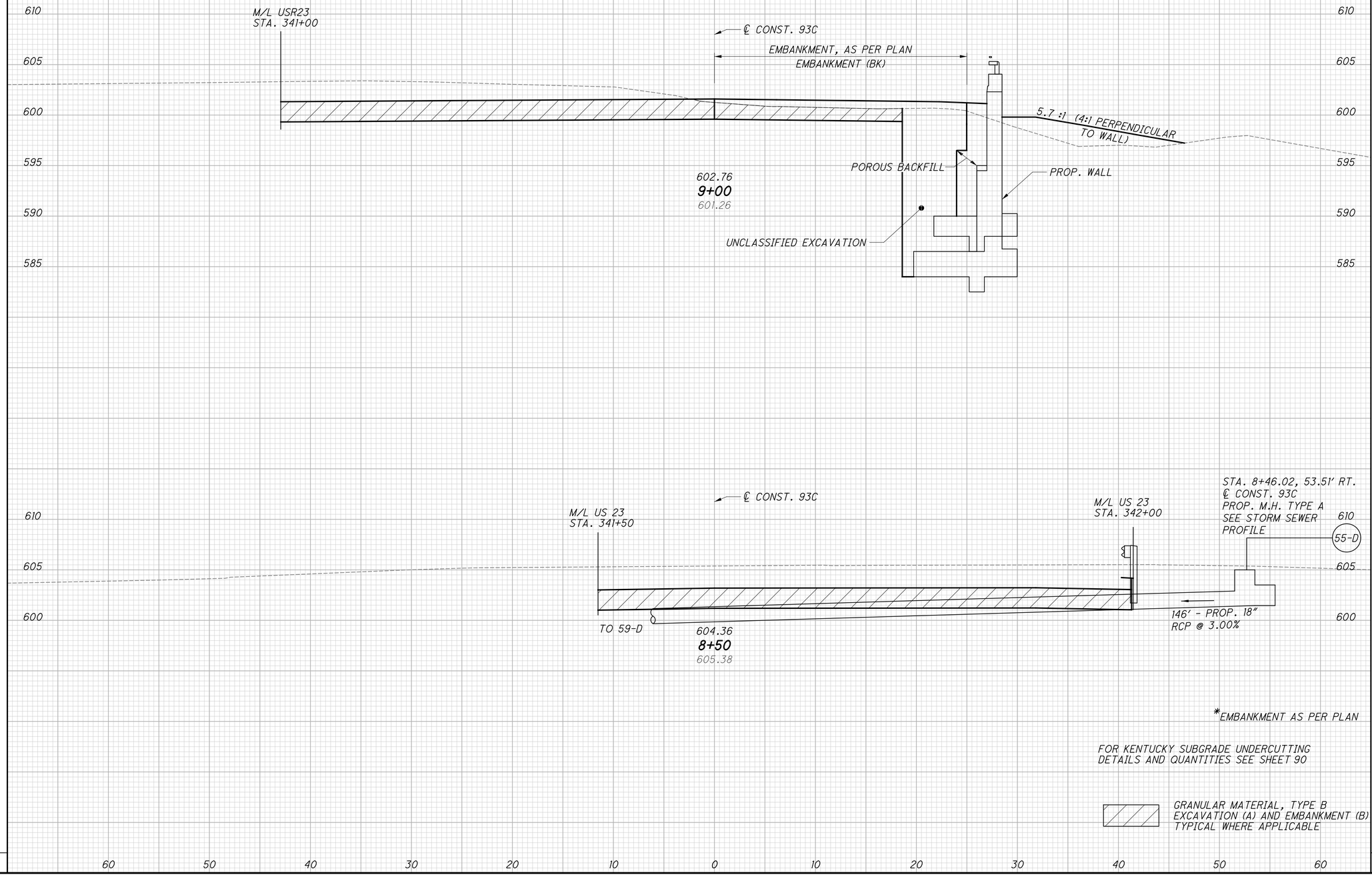

*EMBANKMENT AS PER PLAN

FOR KENTUCKY SUBGRADE UNDERCUTTING DETAILS AND QUANTITIES SEE SHEET 90

GRANULAR MATERIAL, TYPE B
EXCAVATION (A) AND EMBANKMENT (B)
TYPICAL WHERE APPLICABLE

END AREA		VOLUME	
CUT	FILL	CUT	FILL
111^{A}	111^{B}		
63	44		
	97*		
		201^{A}	201^{B}
		170	41
106^{A}	106^{B}		
120	0		
		201^{A}	201^{B}
		170	41

CALCULATED AMD
CHECKED JRW

CROSS SECTIONS - 93C
STA. 8+50.00 TO STA. 9+00.00

LAW-93-0.00

Link to 279-000-000
Drainage Structures
As-Built

℄ CONST. 93C

STA. 10+42.60
END REINFORCED CONCRETE SLAB

MATCHLINE +40
SEE BELOW

3.6 :1

EX SW

EX R/W

9.7 :1

574.26

RIPRAP USING 6" REINFORCED CONCRETE SLAB

570.26

566.82

3.6 :1

18" CONDUIT

600.50
10+00
566.91

MATCHLINE +45
SEE INSET ABOVE

STA. 9+83.00
BEGIN REINFORCED CONCRETE SLAB

MATCHLINE +45
SEE BELOW

4.2 :1
(4:1 PERPENDICULAR TO WALL)

STA. 9+25, 21.65' RT.
PROP. D.B.I. TYPE 10
SEE STORM SEWER
PROFILES

60-D

STA. 9+81.00
EMBANKMENT, AS PER PLAN (BK)
EMBANKMENT (AH)

MATCHLINE USR23
STA. 340+50

61-D

STA. 9+72, 68.00' LT.
PROP. M.H. TYPE B WITH BEEHIVE GRATE
EQUIV. TO NEENAH R-2560-E1
SEE STORM SEWER PROFILE

℄ CONST. 93C

SLOPE 2:1 MAX. FROM
SHOULDER P.I. TO DRAIN

61' - PROP. 15" RCP @ 2.0%

PROP. WALL

POROUS BACKFILL

EMBANKMENT, AS PER PLAN

*EMBANKMENT AS PER PLAN

33' - PROP. 15" HDPE @ 45.0%

BENCHING REQUIRED,
BUT NOW SHOWN

10' - PROP. 15"
HDPE @ 2.0%

4.2 :1
(4:1 PERPENDICULAR TO WALL)

MATCHLINE +45
SEE INSET ABOVE

601.51
9+50
585.71

STA. 9+00.00

FOR SEEDING QUANTITIES SEE SHEET 346

SEEDING END WIDTH	SEEDING SQ. YDS.	END AREA CUT	END AREA FILL	VOLUME CUT	VOLUME FILL
		0	471		
				0	1040
		0	1945*		
				0	1696*
				0	562
		0	1009*		
		0	135		
				59	1024*
		63	97*		2720*
				59	1602

CALCULATED AMD
CHECKED JRW

CROSS SECTIONS - 93C
STA. 9+50.00 TO STA. 10+00.00

LAW-93-0.00

92
788

J:\Project\O\ODOT\15005112 Ironton Russell\LAW\81595\roadway\sheets\81595XS002.dgn - 4/25/2011 6:53:40 AM - jon_wanstrath

SEEDING	
END WIDTH	SQ. YDS.

END AREA	
CUT	FILL

VOLUME	
CUT	FILL

CALCULATED AMD

CHECKED JRW

℄ CONST. 93C

EX R/W

EX RR

EX A

554.9

RIPRAP 9.7 :1

553.8

18" CONDUIT

599.50
10+50
552.83

EXISTING RAILS

605 600 595 590 585 580 575 570 565 560 555 550

60 50 40 30 20 10 0 10 20 30 40 50 60

FOR SEEDING QUANTITIES SEE SHEET 346

CROSS SECTIONS - 93C
STA. 10+50.00

LAW-93-0.00

93
788

J:\Project\ODOT\15005112 Ironton Russell\LAW\81595\roadway\sheets\81595XS003.dgn - 4/25/2011 6:53:41 AM - jon_wanstrath

SEEDING	
END WIDTH	SQ. YDS.

END AREA		VOLUME	
CUT	FILL	CUT	FILL

CALCULATED AMD

CHECKED JRW

605 600 595 590 585 580 575 570 565 560 555 550

℄ CONST. 93C

EX A

SW

SW

EX A

EXISTING RAILS

24" CONDUIT IN
36" CASING PIPE

598.50
11+00
553.62

60 50 40 30 20 10 0 10 20 30 40 50 60

FOR SEEDING QUANTITIES SEE SHEET 346

CROSS SECTIONS - 93C
STA. 11+00.00

LAW-93-0.00

J:\Project\O\ODOT\15005112 Ironton Russell\LAW\81595\roadway\sheets\81595XS004.dgn - 4/25/2011 6:53:42 AM - jon_wanstrath

SEEDING	
END WIDTH	SQ. YDS.

END AREA		VOLUME	
CUT	FILL	CUT	FILL
40	0		
		19	0
40	0		
0	0		
		19	0

BEGIN DITCH 11+37.83

STA. 11+00.00

FOR SEEDING QUANTITIES SEE SHEET 346

CALCULATED AMD

CHECKED JRW

CROSS SECTIONS - 93C

STA. 11+50.00

LAW-93-0.00

95
788

J:\Project\O\ODOT\15005112 Ironton Russell\LAW\81595\roadway\sheets\81595XS005.dgn - 4/25/2011 6:53:43 AM - jon_wanstrath

SEEDING	
END WIDTH	SQ. YDS.

END AREA		VOLUME	
CUT	FILL	CUT	FILL
18	0		
		22	0
18	0		
		54	0
40	0		
		76	0

CALCULATED AMD
CHECKED JRW

CROSS SECTIONS - 93C
STA. 12+00.00

LAW-93-0.00

96
788

FOR SEEDING QUANTITIES SEE SHEET 346

J:\Project\ODOT\15005112 Ironton Russell\LAW\81595\roadway\sheets\81595XS006.dgn - 4/25/2011 6:53:44 AM - jon_wanstrath

SEEDING	
END WIDTH	SQ. YDS.

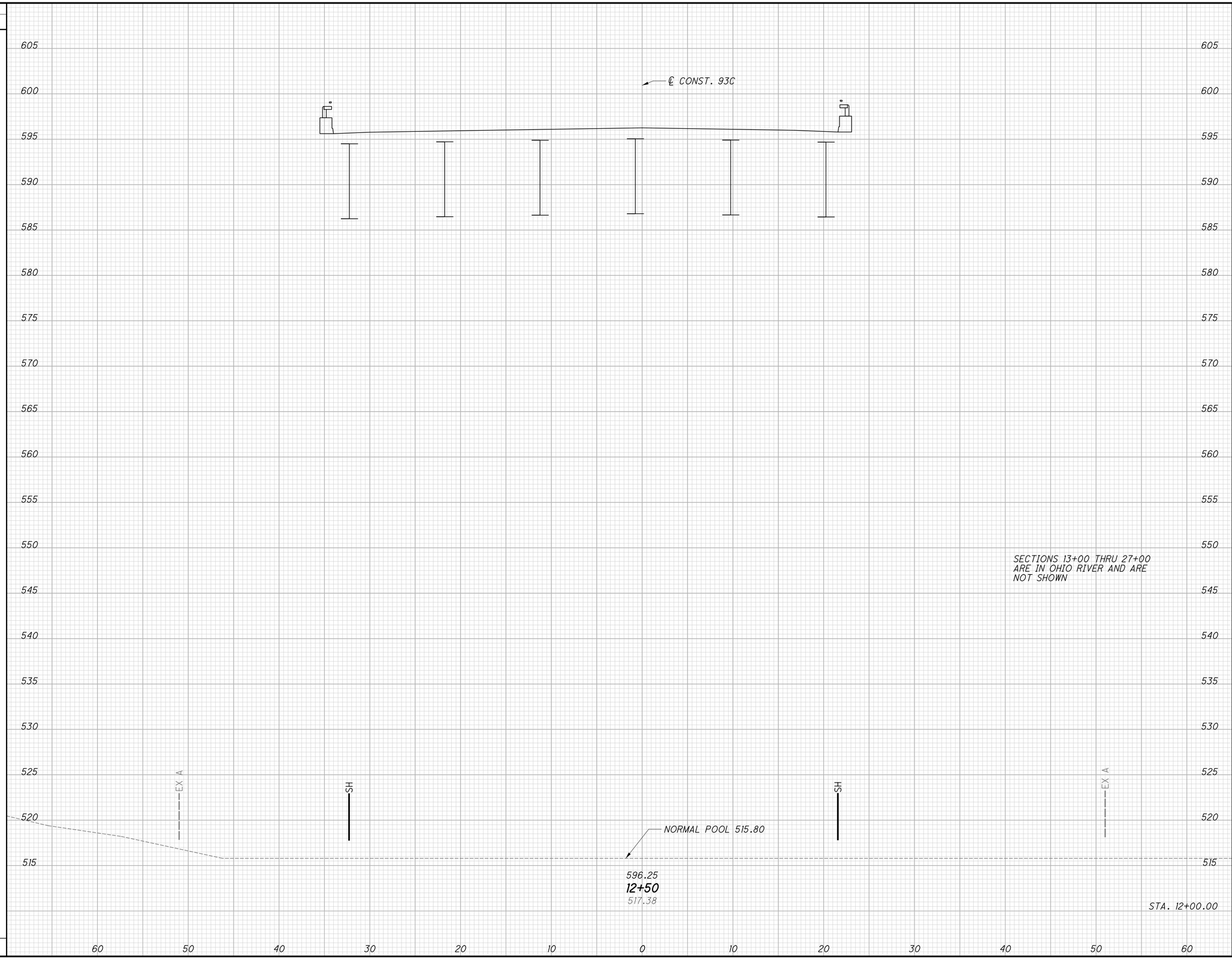

END AREA		VOLUME	
CUT	FILL	CUT	FILL
0	0		
		11	0
18	0		
		11	0

STA. 12+00.00

FOR SEEDING QUANTITIES SEE SHEET 346

CALCULATED AMD
CHECKED JRW

CROSS SECTIONS - 93C
STA. 12+50.00

LAW-93-0.00

97
788

J:\Project\OVODOT\15005112 Ironton Russell\LAW\81595\roadway\sheets\81595XS007.dgn - 4/25/2011 6:53:45 AM - jon_wanstrath

SEEDING	
END WIDTH	SQ. YDS.

END AREA	
CUT	FILL

VOLUME	
CUT	FILL
0	0

CALCULATED AMD

CHECKED JRW

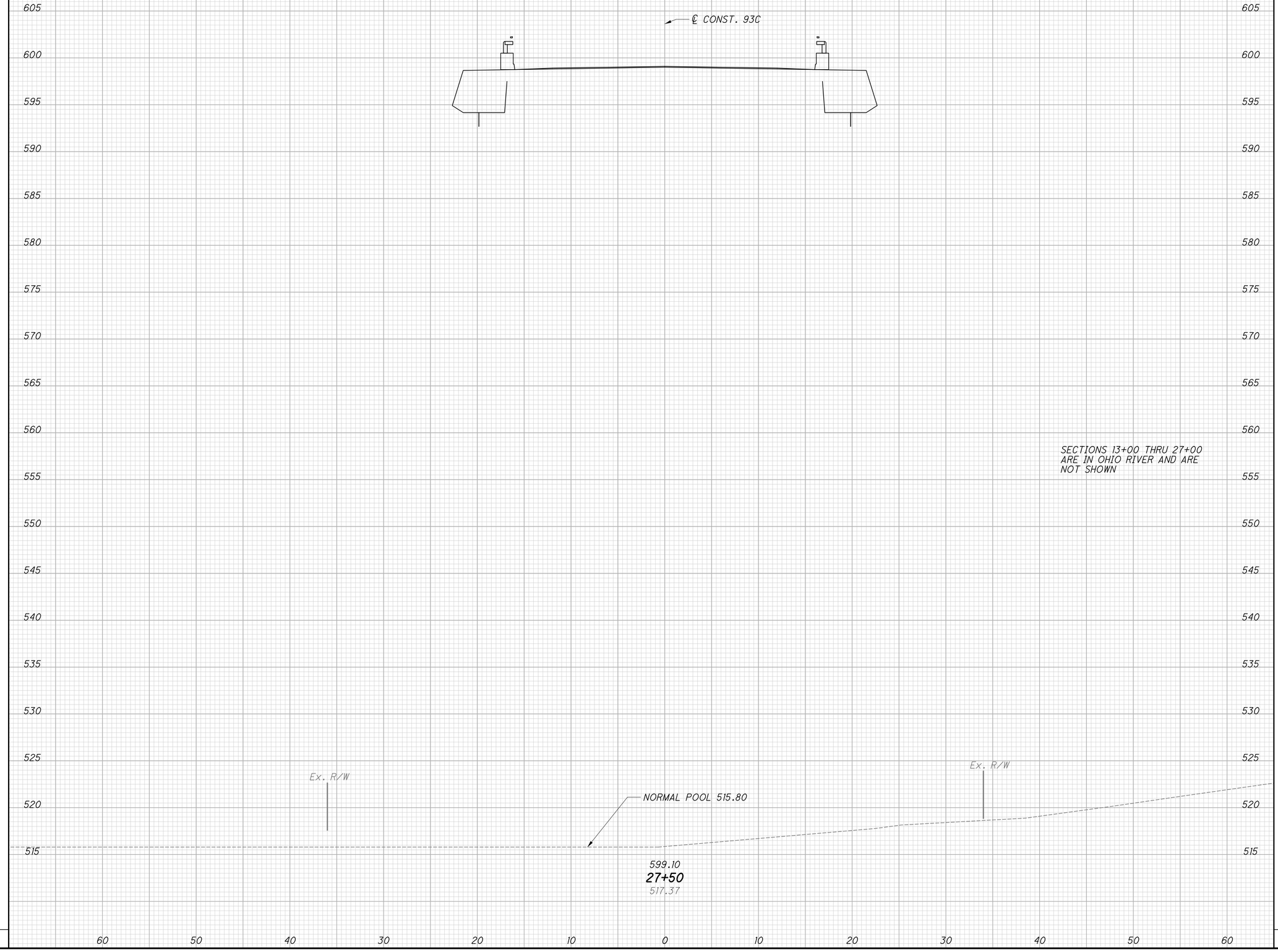

FOR SEEDING QUANTITIES SEE SHEET 347

CROSS SECTIONS - 93C
STA. 27+50.00

LAW-93-0.00

J:\Project\ODOT\15005112 Ironton Russell\LAW\81595\roadway\sheets\81595XS008.dgn - 4/25/2011 6:53:45 AM - jon_wanstrath

SEEDING	
END WIDTH	SQ. YDS.

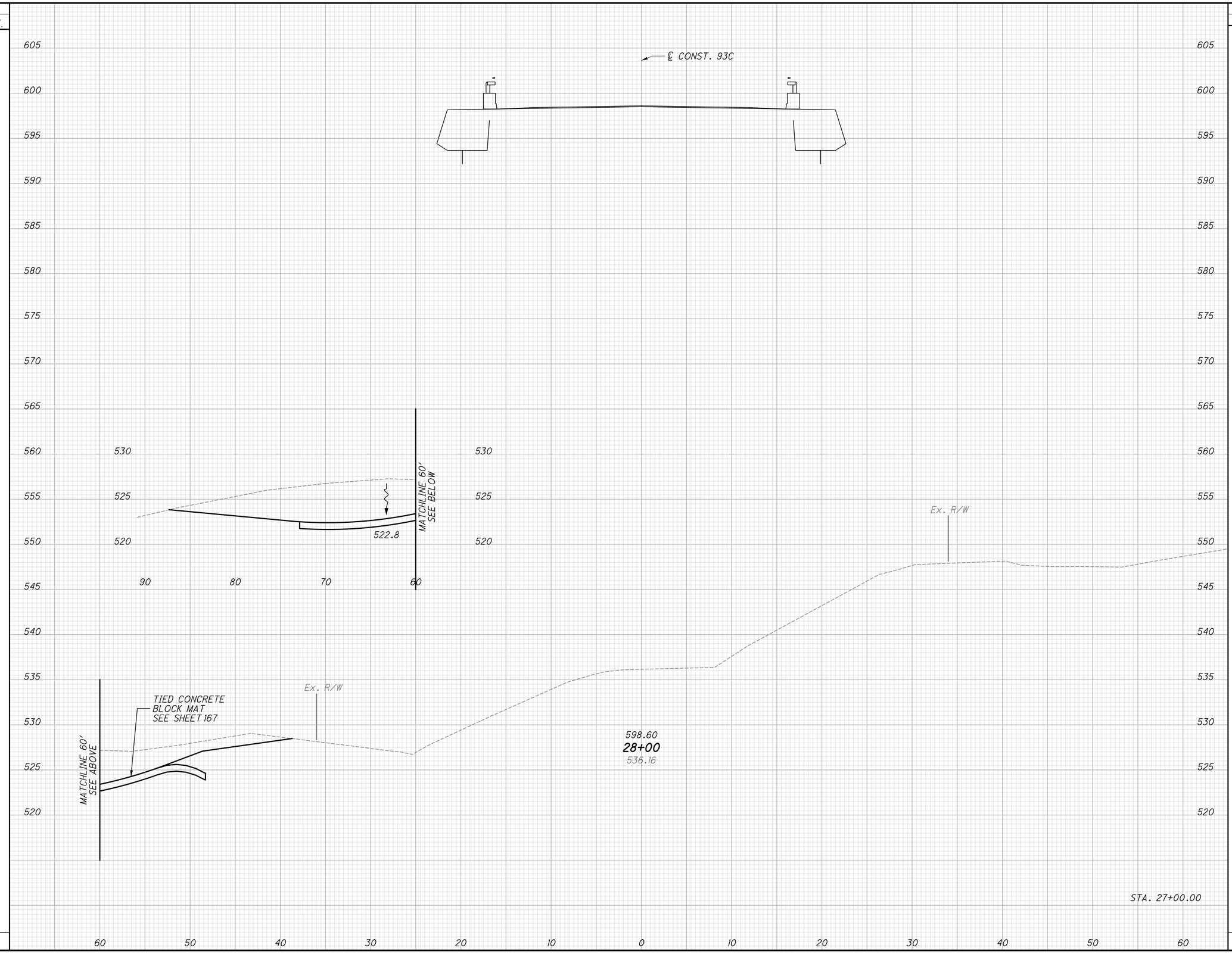

END AREA		VOLUME	
CUT	FILL	CUT	FILL
140	0		
0	0	130	0
		130	0

CALCULATED AMD
CHECKED JRW

CROSS SECTIONS - 93C
STA. 28+00.00

LAW-93-0.00

99
788

FOR SEEDING QUANTITIES SEE SHEET 347

J:\Project\OA\ODOT\15005112 Ironton Russell\LAW\81595\roadway\sheets\81595XS009.dgn - 4/25/2011 6:53:46 AM - jon_wanstrath

SEEDING	
END WIDTH	SQ. YDS.

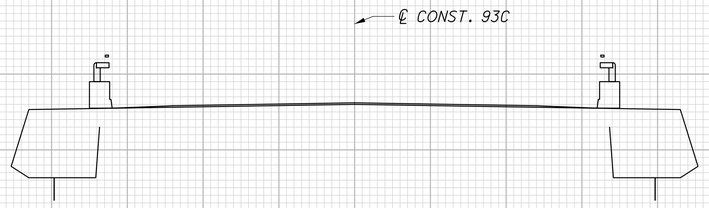

END AREA		VOLUME	
CUT	FILL	CUT	FILL
0	0		
140	0		
		130	0
		130	0

CALCULATED AMD
CHECKED JRW

CROSS SECTIONS - 93C
STA. 28+50.00

LAW-93-0.00

100
788

FOR SEEDING QUANTITIES SEE SHEET 347

J:\Project\O\ODOT\15005112 Ironton Russell\LAW\81595\roadway\sheets\81595XS010.dgn - 4/25/2011 6:53:47 AM - jon_wanstrath

SEEDING	
END WIDTH	SQ. YDS.

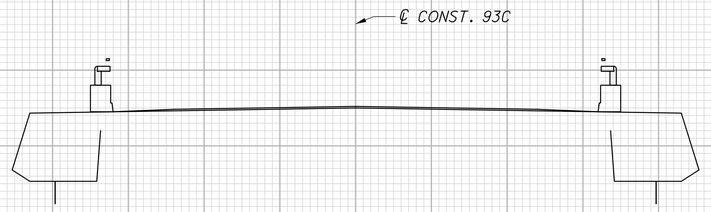

END AREA		VOLUME	
CUT	FILL	CUT	FILL
0	0		
0	0		
		0	0
0	0		
		0	0

CALCULATED AMD
CHECKED JRW

CROSS SECTIONS - 93C
STA. 29+00.00

LAW-93-0.00

101
788

FOR SEEDING QUANTITIES SEE SHEET 347

J:\Project\O\ODOT\15005112 Ironton Russell\LAW\81595\roadway\sheets\81595XS011.dgn - 4/25/2011 6:53:53 AM - jon_wanstrath

SEEDING	
END WIDTH	SQ. YDS.

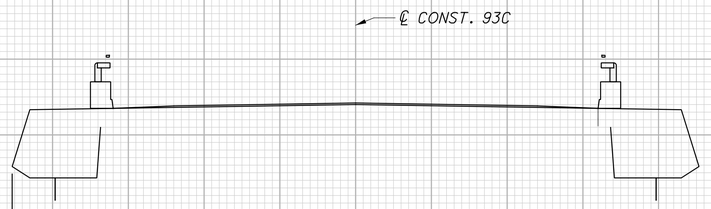

END AREA		VOLUME	
CUT	FILL	CUT	FILL
26	0		
0	0		
		24	0
		24	0

CALCULATED AMD
CHECKED JRW

CROSS SECTIONS - 93C
STA. 29+50.00

LAW-93-0.00

FOR SEEDING QUANTITIES SEE SHEET 347

J:\Project\O\ODOT\15005112 Ironton Russell\LAW\81595\roadway\sheets\81595XS012.dgn - 4/25/2011 6:53:54 AM - jon_wanstrath

SEEDING	
END WIDTH	SQ. YDS.

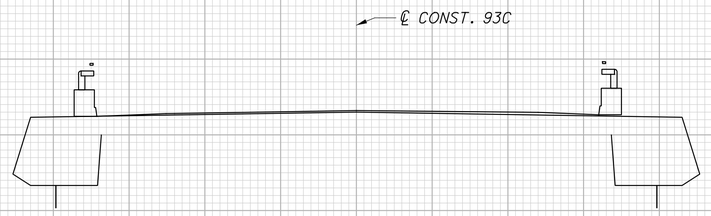

PIER NOT SHOWN

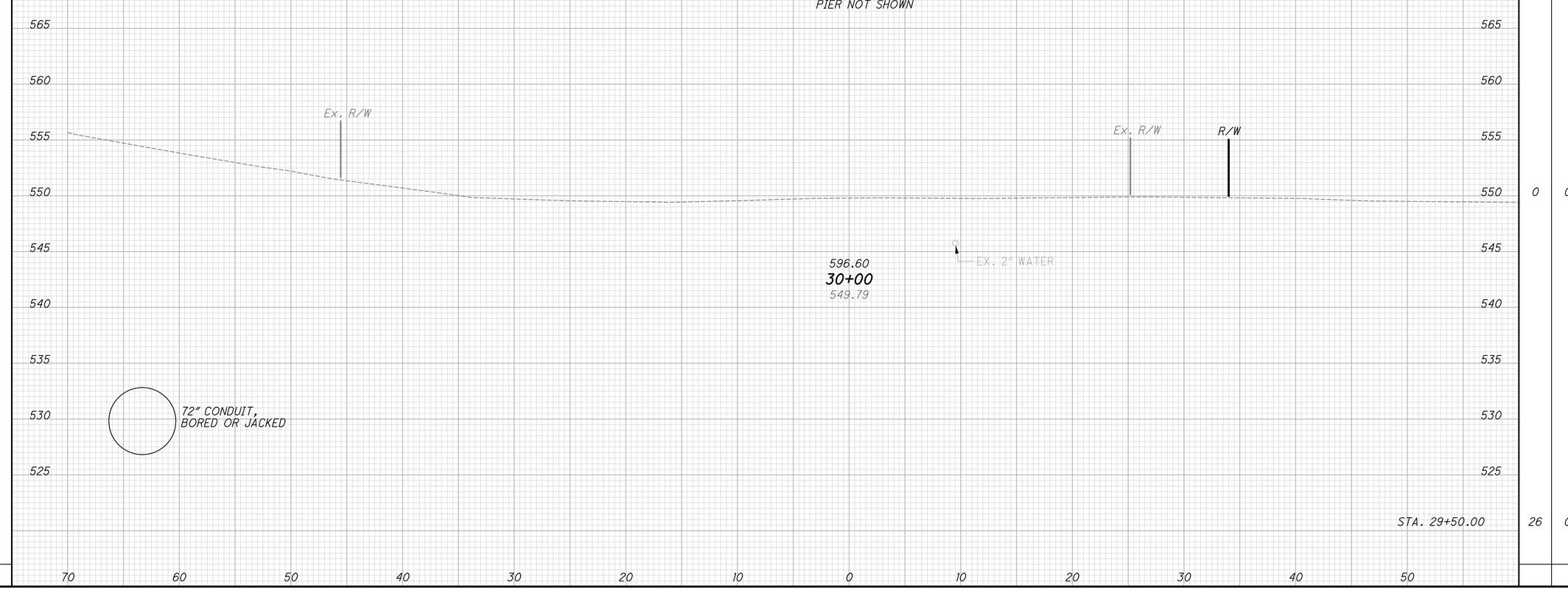

FOR SEEDING QUANTITIES SEE SHEET 347

END AREA		VOLUME	
CUT	FILL	CUT	FILL
0	0		
		24	0
26	0		
		24	0

CALCULATED AMD
CHECKED JRW

CROSS SECTIONS - 93C
STA. 30+00.00

LAW-93-0.00

103
788

J:\Project\O\ODOT\15005112 Ironton Russell\LAW\81595\roadway\sheets\81595XS013.dgn - 4/25/2011 6:53:55 AM - jon_wanstrath

SEEDING	
END WIDTH	SQ. YDS.

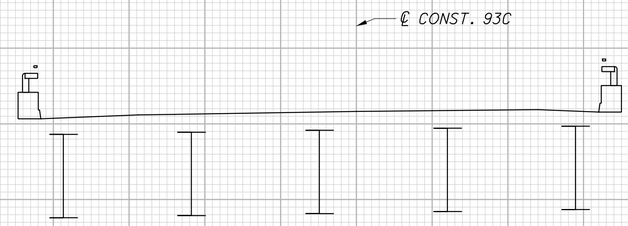

STA. 35+50.65, 14.45 LT
EX. SANITARY STRUCTURE
COVER EL. = 549.65
INV. IN (NW) 6" = 547.68
INV. OUT (SE) 6" = 547.78
INV. IN (SW) 4" = 547.28

Ex. R/W

Ex. R/W

R/W

EX. 6" SANITARY

EX. 4" SANITARY

595.82
30+50
549.37

EX. 6" SANITARY

72" CONDUIT,
BORED OR JACKED

FOR SEEDING QUANTITIES SEE SHEET 347

END AREA		VOLUME	
CUT	FILL	CUT	FILL
		0	0

CALCULATED AMD
CHECKED JRW

CROSS SECTIONS - 93C
STA. 30+50.00

LAW-93-0.00

104
788

J:\Project\O\ODOT\15005112 Ironton Russell\LAW\81595\roadway\sheets\81595XS014.dgn - 4/25/2011 6:53:55 AM - jon_wanstrath

SEEDING	
END WIDTH	SQ. YDS.

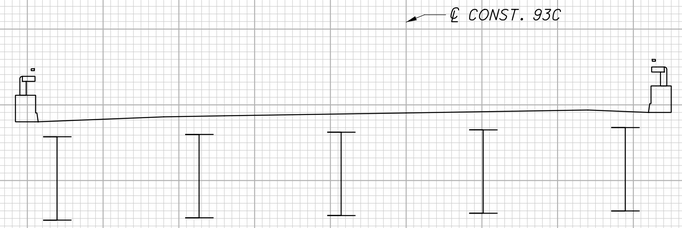

600 595 590 585 580 575 570 565 560 555 550 545 540 535 530 525

Ex. R/W

Ex. R/W

R/W

Temp E

594.46
31+00
548.92

FOR SEEDING QUANTITIES SEE SHEET 347

TE
LL

60" CONDUIT

72" CONDUIT,
BORED OR JACKED

70 60 50 40 30 20 10 0 10 20 30 40 50

END AREA		VOLUME	
CUT	FILL	CUT	FILL
		0	0

CALCULATED AMD
CHECKED JRW

CROSS SECTIONS - 93C
STA. 31+00.00

LAW-93-0.00

105
788

J:\Project\O\ODOT\15005112 Ironton Russell\LAW\81595\roadway\sheets\81595XS015.dgn - 4/25/2011 6:53:56 AM - jon_wanstrath

SEEDING	
END WIDTH	SQ. YDS.

END AREA		VOLUME	
CUT	FILL	CUT	FILL
		0	0

CALCULATED AMD

CHECKED JRW

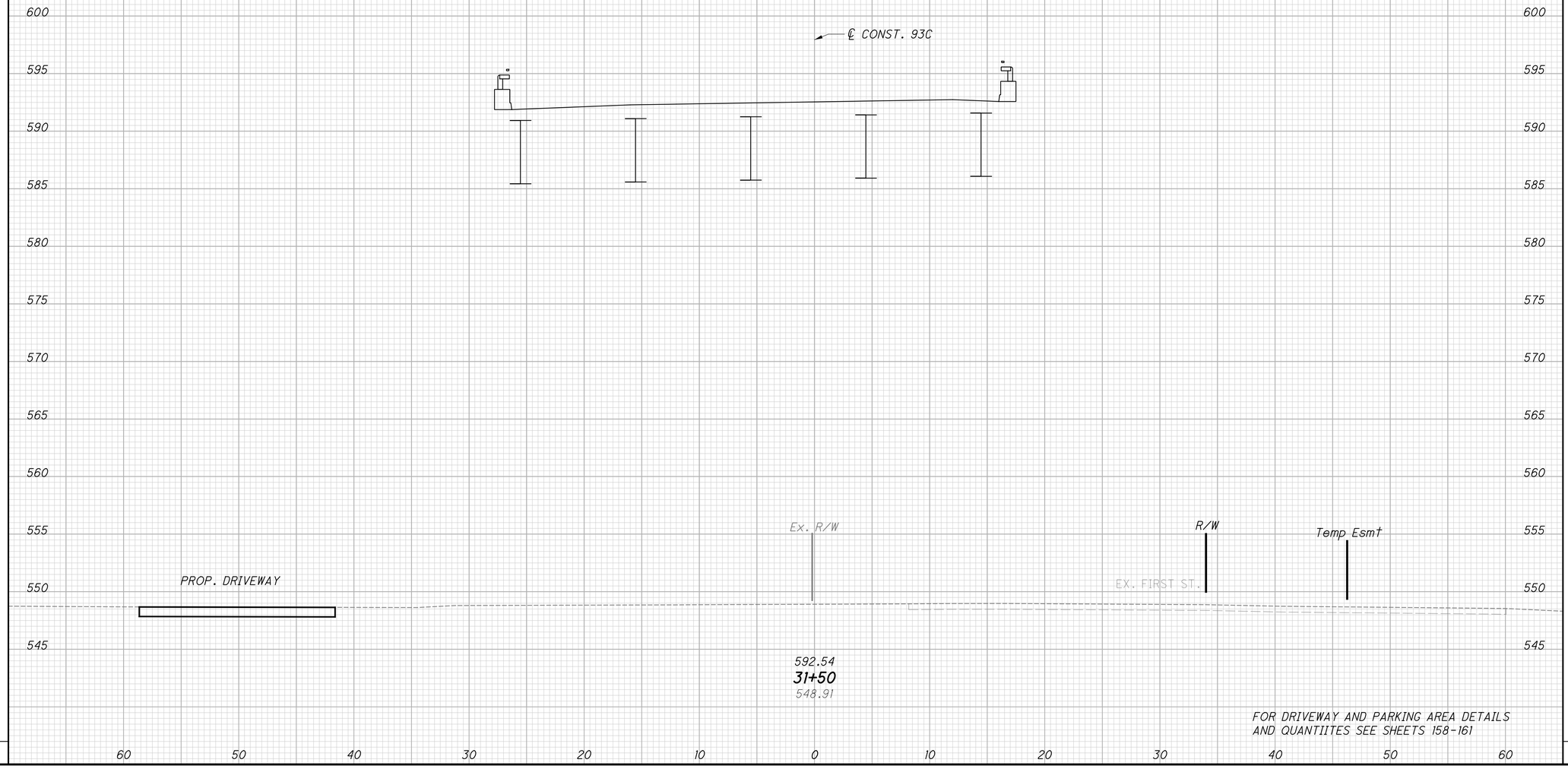

FOR SEEDING QUANTITIES SEE SHEET 347

FOR DRIVEWAY AND PARKING AREA DETAILS AND QUANTIITES SEE SHEETS 158-161

CROSS SECTIONS - 93C
STA. 31+50.00

LAW-93-0.00

J:\Project\O\ODOT\15005112 Ironton Russell\LAW\81595\roadway\sheets\81595XS016.dgn - 4/25/2011 6:53:57 AM - jon_wanstrath

SEEDING	
END WIDTH	SQ. YDS.

END AREA		VOLUME	
CUT	FILL	CUT	FILL
		0	0

CALCULATED AMD

CHECKED JRW

CROSS SECTIONS - 93C

STA. 32+00.00

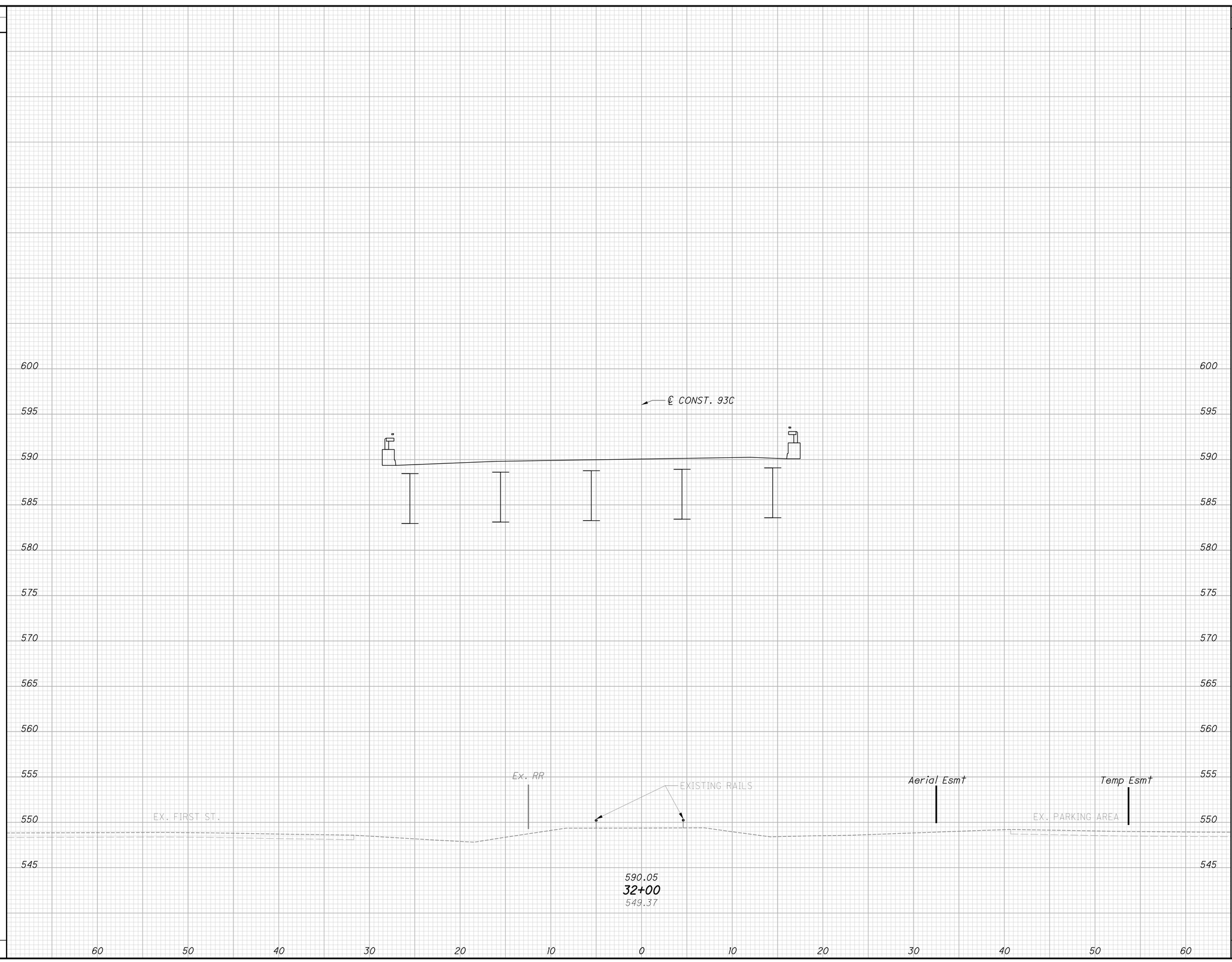

FOR SEEDING QUANTITIES SEE SHEET 347

LAW-93-0.00

107
788

J:\Project\ODOT\15005112 Ironton Russell\LAW\81595\roadway\sheets\81595XS017.dgn - 4/25/2011 6:53:58 AM - jon_wanstrath

SEEDING	
END WIDTH	SQ. YDS.

END AREA		VOLUME	
CUT	FILL	CUT	FILL
		0	0

CALCULATED AMD

CHECKED JRW

CROSS SECTIONS - 93C

STA. 32+50.00

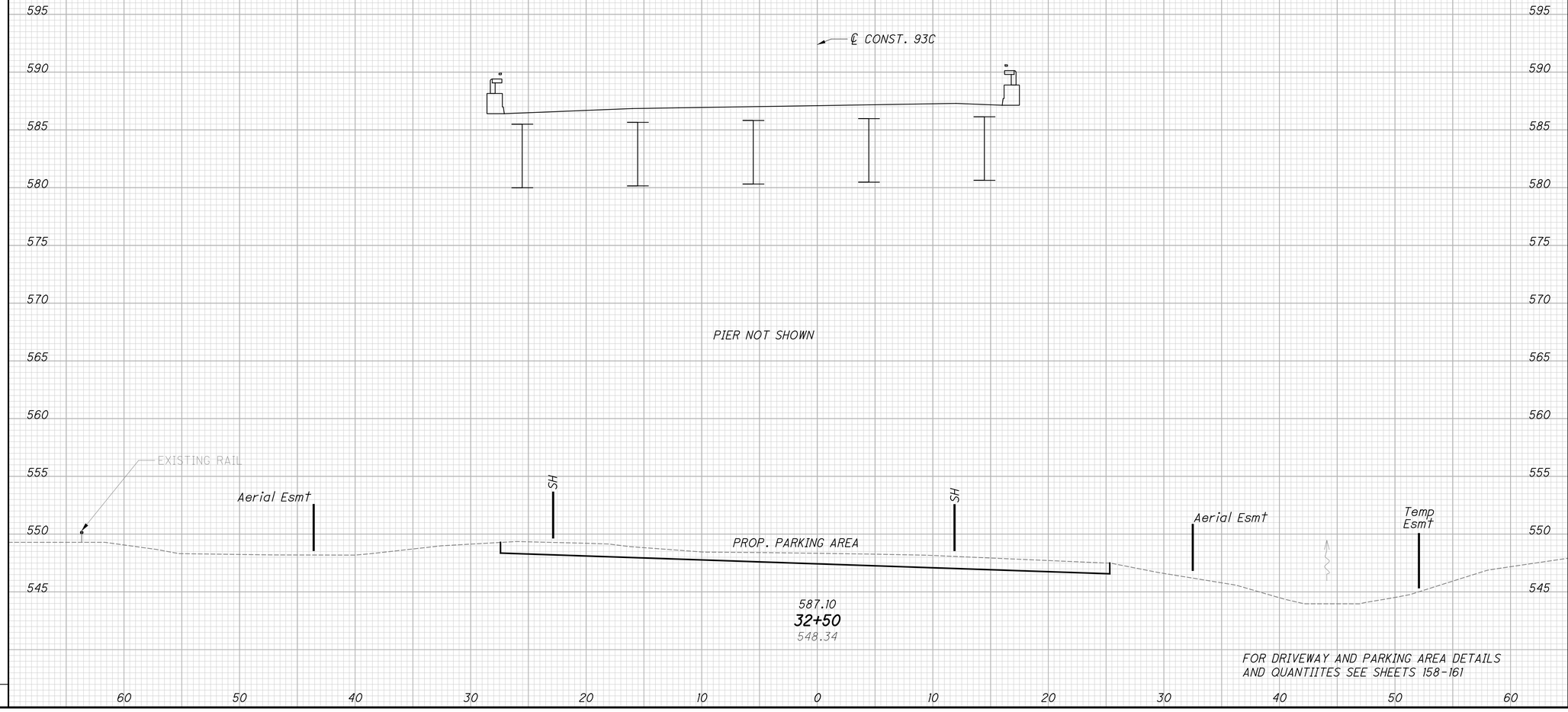

FOR SEEDING QUANTITIES SEE SHEET 347

LAW-93-0.00

J:\Project\ODOT\15005112 Ironton Russell\LAW\81595\roadway\sheets\81595XS018.dgn - 4/25/2011 6:53:59 AM - jon_wanstrath

SEEDING	
END WIDTH	SQ. YDS.

END AREA		VOLUME	
CUT	FILL	CUT	FILL
		0	0

CALCULATED AMD

CHECKED JRW

CROSS SECTIONS - 93C

STA. 33+00.00

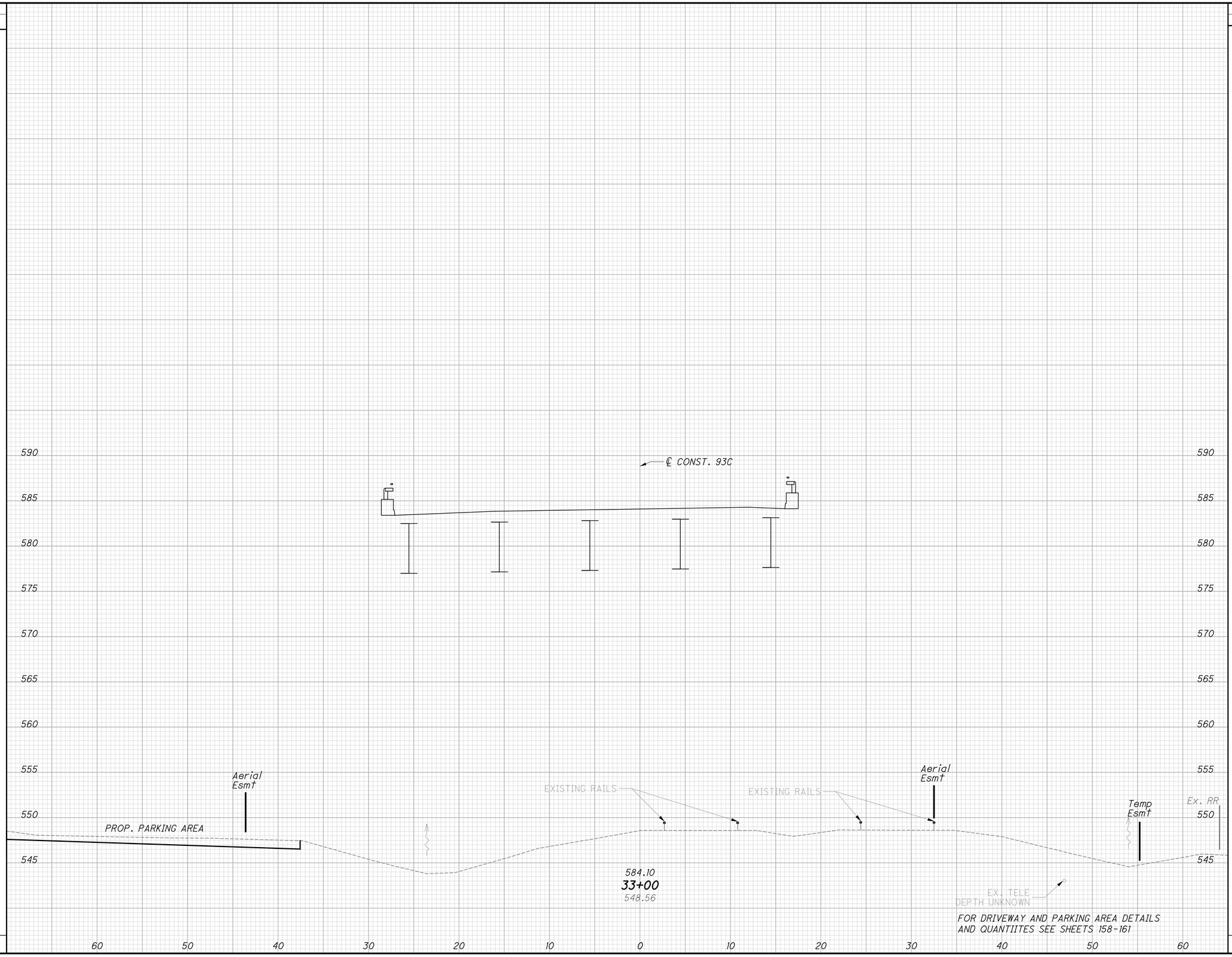

FOR SEEDING QUANTITIES SEE SHEET 347

FOR DRIVEWAY AND PARKING AREA DETAILS AND QUANTIITES SEE SHEETS 158-161

LAW-93-0.00

109
788

J:\Project\ODOT\15005112 Ironton Russell\LAW\81595\roadway\sheets\81595XS019.dgn - 4/25/2011 6:54:00 AM - jon_wanstrath

SEEDING	
END WIDTH	SQ. YDS.

END AREA		VOLUME	
CUT	FILL	CUT	FILL
		0	0

CALCULATED AMD
CHECKED JRW

590
585
580
575
570
565
560
555
550
545
540

℄ CONST. 93C

Aerial Esmt

EXISTING RAILS

EXISTING RAILS

EX. TELE
DEPTH UNKNOWN

Ex. RR

CAMPBELL AVE.

EX. R/W

EX. 12" WATER

EX. 6" WATER

581.10
33+50
544.15

60 50 40 30 20 10 0 10 20 30 40 50 60

FOR SEEDING QUANTITIES SEE SHEET 347

J:\Project\ODOT\15005112 Ironton Russell\LAW\81595\roadway\sheets\81595XS020.dgn - 4/25/2011 6:54:01 AM - jon_wanstrath

CROSS SECTIONS - 93C
STA. 33+50.00

LAW-93-0.00

110
788

SEEDING	
END WIDTH	SQ. YDS.

Link to 279-000-000
Drainage Structures
As-Built

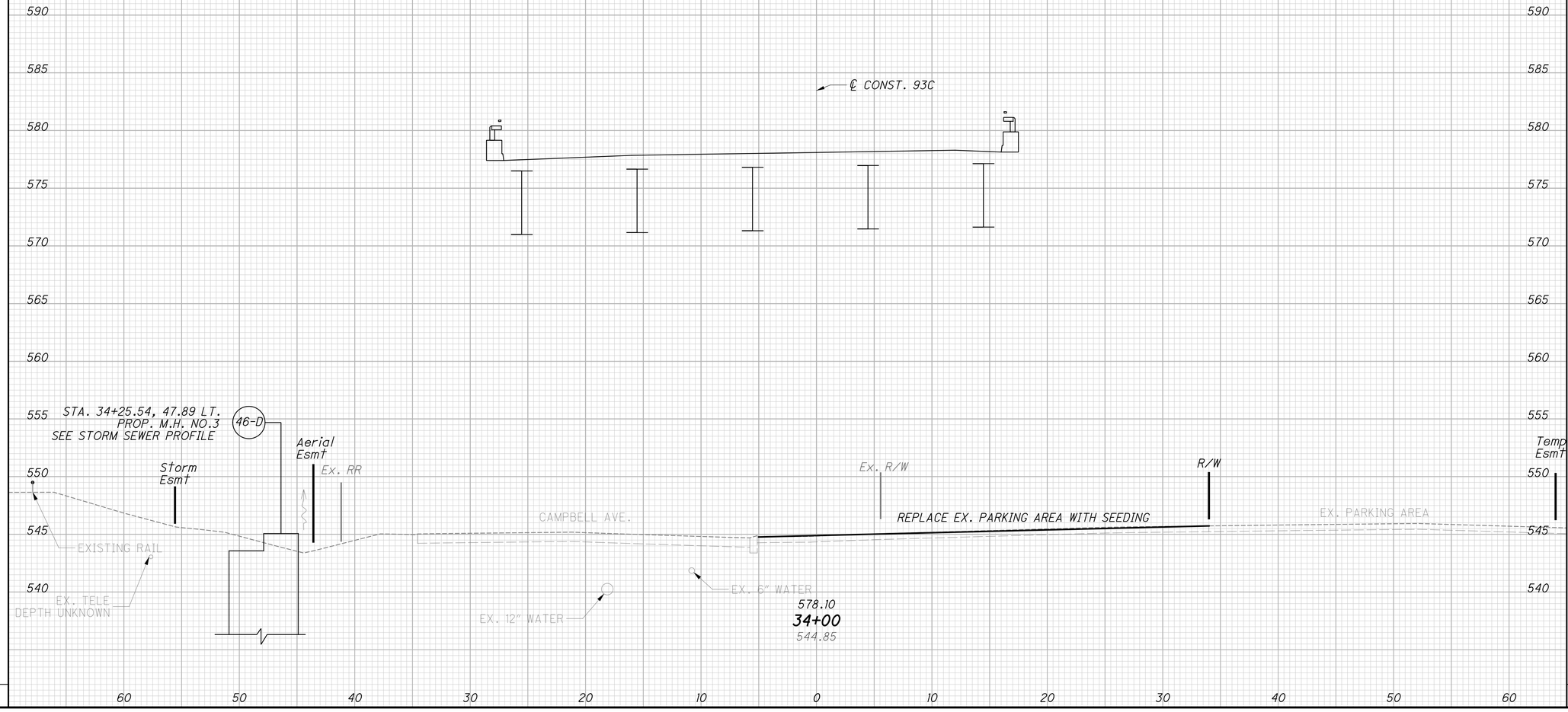

FOR SEEDING QUANTITIES SEE SHEET 347

END AREA		VOLUME	
CUT	FILL	CUT	FILL
		0	0

CALCULATED AMD
CHECKED JRW

CROSS SECTIONS - 93C
STA. 34+00.00

LAW-93-0.00

111
788

J:\Project\ODOT\15005112 Ironton Russell\LAW\81595\roadway\sheets\81595XS021.dgn - 4/25/2011 6:54:02 AM - jon_wanstrath

SEEDING	
END WIDTH	SQ. YDS.

END AREA	
CUT	FILL

VOLUME	
CUT	FILL
0	0

CALCULATED AMD

CHECKED JRW

CROSS SECTIONS - 93C

STA. 34+50.00

LAW-93-0.00

112
788

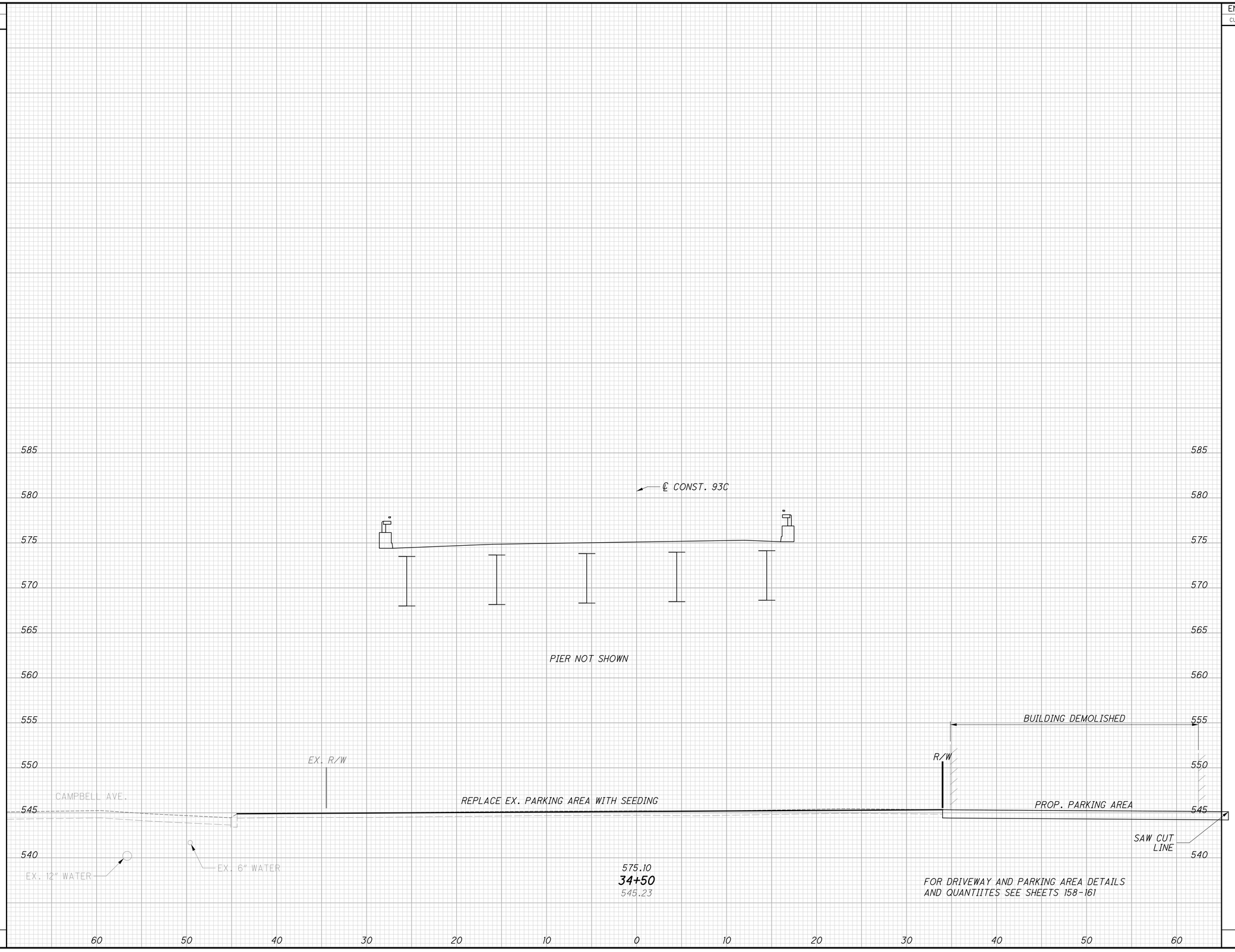

FOR SEEDING QUANTITIES SEE SHEET 347

J:\Project\OJODOT\15005112 Ironton Russell\LAW\81595\roadway\sheets\81595XS022.dgn - 4/25/2011 6:54:03 AM - jon_wanstrath

SEEDING	
END WIDTH	SQ. YDS.

END AREA	
CUT	FILL

VOLUME	
CUT	FILL
0	0

CALCULATED AMD

CHECKED JRW

Link to 279-000-000
Drainage Structures
As-Built

STA. 35+66.48, 86.07' LT.
PROP. M.H. NO. 3
SEE STORM SEWER PROFILE
43-D

℄ CONST. 93C

MATCHLINE +65 SEE BELOW

MATCHLINE +65 SEE ABOVE

Ex. R/W

PROP. SIDEWALK
(SEE MONROE CROSS SECTIONS)

STA. 35+74.00, 28.00' RT.
PROP. M.H. NO. 3
SEE STORM SEWER PROFILE
39-D

MONROE. ST.

569.10
35+50
542.67

575 570 565 560 555 550 545 540 535

555 550 545 540

80 70

575 570 565 560 555 550 545 540

580 575 570 565 560 555 550 545 540

℄ CONST. 93C

STA. 34+98.08, 51.84' LT.
PROP. M.H. NO. 3
SEE STORM SEWER PROFILE
45-D

MONROE. ST.

EX. R/W

REPLACE EX. PARKING AREA WITH SEEDING

BUILDING DEMOLISHED

R/W

PROPOSED PARKING AREA

SAW CUT LINE

EX. 15" STORM

572.10
35+00
543.76

FOR DRIVEWAY AND PARKING AREA DETAILS
AND QUANTIITES SEE SHEETS 158-161

FOR SEEDING QUANTITIES SEE SHEET 347

60 50 40 30 20 10 0 10 20 30 40 50 60

CROSS SECTIONS - 93C
STA. 35+00.00 TO STA. 35+50.00

LAW-93-0.00

113
788

J:\Project\ODOT\15005112 Ironton Russell\LAW\81595\roadway\sheets\81595XS023.dgn - 4/25/2011 6:54:03 AM - jon_wanstrath

SEEDING	
END WIDTH	SQ. YDS.

Link to RFI058 As-Built

Link to 279-009-000
93C Cross Sections
As-Built

Link to 279-000-000
Drainage Structures
As-Built

STA. 36+45.00, 27.08' LT.
PROP. C.B. NO. 3A
TOP OF GRATE EL. 562.58
PROP. 12" (72D) EL. 559.09

71-D

PROP. GRADE ABOVE STORM SEWER

72-D

STA. 36+75.00, 27.08' LT.
PROP. C.B. NO. 3A
TOP OF GRATE EL. 560.78
PROP. 12" (71D) EL. 557.35
PROP. 12" (73D) EL. 551.96

29' - PROP. 12" TYPE B @ 6.00%

STORM SEWER PROFILE
(71-D TO 72-D)

72-D STA. 36+75.00, 27.08' LT.
PROP. C.B. NO. 3A
SEE INSET

℄ CONST. 93C

STA. 36+50 AHD.

STA. 36+50 BK.

STA. 36+77.66, 38.4' RT.
PROP. INLET, SIDE DITCH
TOP OF GRATE EL. 541.30
PROP. 12" (38D) EL. 536.39

37-D

FACE OF WALL

73-D STA. 36+71.05, 89.37' LT.
PROP. M.H. NO. 3
SEE STORM SEWER PROFILE

MASONRY COLLAR

5'

2:1

47' - PROP. 12" TYPE F, 707.05 TYPE C OR 707.21

3.0%

6' -PROP. 12" TYPE C @ 3.0%

41%

LIMITS OF SELECT GRANULAR BACKFILL (AHEAD)

LIMITS OF SELECT GRANULAR BACKFILL (BACK)

STA. 36+75.00, 32.00' RT.
PROP. M.H. NO. 3
SEE STORM SEWER PROFILE

38-D

7'-PROP. 12" TYPE C @ 1.7%

Ex. R/W

3:1

2:1

541.5

5'

12' -PROP. 12" TYPE C @ 3.0%

3.0%

MASONRY COLLAR

EX. 2ND ST.

11%±

5%±

563.10
36+50
543.14

EX. 10" WATER

*EMBANKMENT AS PER PLAN

202 - PAVEMENT REMOVED

EMBANKMENT FOUNDATION UNDERCUTTING EXCAVATION (A) AND EMBANKMENT (B)

71-D STA. 36+45.00, 27.08' LT.
PROP. C.B. NO. 3A
SEE INSET

℄ CONST. 93C

FACE OF WALL

2:1

Ex. R/W

3:1

2:1

542.2

LIMITS OF SELECT GRANULAR BACKFILL

BEGIN EARTHWORK
STA. 35+94.45
EMBANKMENT AS PER PLAN

566.10
36+00
543.40

STA. 35+82 BEGIN EMBANKMENT FOUNDATION UNDERCUTTING (EXCAVATION AND EMBANKMENT)

BEGIN EARTHWORK
STA. 35+82 EMBANKMENT
FOUNDATION UNDERCUTTING

12" STORM

90 80 70 60 50 40 30 20 10 0 10 20 30

FOR SEEDING QUANTITIES SEE SHEET 347

END AREA		VOLUME	
CUT	FILL	CUT	FILL
213A	213B		
19	984*		
204A	204B		
19	928*		
244A	244B		
38	979*		
59A	59B		
22	129*		
22	129*		
59A	59B		
		39A	39B
		5	27*
			1006*
		283A	283B
		43	0

CALCULATED AMD
CHECKED JRW

CROSS SECTIONS - 93C
STA. 36+00.00 TO STA. 36+50.00

LAW-93-0.00

114
788

J:\Project\O\ODOT\15005112 Ironton Russell\LAW\81595\roadway\sheets\81595XS024.dgn - 4/25/2011 6:54:04 AM - jon_wanstrath

SEEDING	
END WIDTH	SQ. YDS.

Link to 279-009-000
93C Cross Sections
As-Built

Link to 279-000-000
Drainage Structures
As-Built

41-D STA. 37+58.94, 81.89' LT.
PROP. M.H. NO. 3
SEE STORM SEWER PROFILE

40-D STA. 37+55.32, 64.15' LT.
PROP. C.B. NO. 2-2B
TOP OF GRATE EL. 539.69
PROP.12" (41D) EL. 537.69

℄ CONST. 93C

FACE OF WALL

M/L +40
SEE BELOW

LIMITS OF SELECT
GRANULAR BACKFILL

2:1

3:1

11%±

2ND STREET

542.05

540.1

20' - PROP. 12"
TYPE C @ 2.0%

EX. 6" SAN.

557.36
37+50
542.07

EX. 10" WATER

EX. 4" GAS

M/L +40
SEE ABOVE

12" STORM

5%±

2%±

MASONRY
COLLAR

4' - 6" TYPE B
@ 0.5%

STA. 37+32.70, 50.07 RT
SANITARY PROP. M.H. NO. 3
COVER EL. = 542.46
INV. EL. = 537.43

℄ CONST. 93C

FACE OF WALL

LIMITS OF SELECT
GRANULAR BACKFILL

2:1

3:1

2:1

540.9

11%±

2ND STREET

541.5

5%±

EX. WALK

EX. 4" GAS

MEET EX. WALK
55.4' RIGHT

EX. 10" WATER

560.12
37+00
543.04

END EMBANKMENT, AS PER PLAN

12" STORM

*EMBANKMENT AS PER PLAN

202 - PAVEMENT REMOVED

EMBANKMENT FOUNDATION UNDERCUTTING
EXCAVATION (A) AND EMBANKMENT (B)

STA. 36+50.00 AH

END AREA		VOLUME	
CUT	FILL	CUT	FILL
189^A	193^B		
43	690		
		363^A	367^B
		70	1410
	832		
203^A	203^B		
32	832*		
		386^A	386^B
		48	1682*
			1682*
213^A	213^B		
19	984*		
		749^A	753^B
		118	1410

CALCULATED AMD
CHECKED JRW

CROSS SECTIONS - 93C
STA. 37+00.00 TO STA. 37+50.00

LAW-93-0.00

115
788

FOR SEEDING QUANTITIES SEE SHEET 347

J:\Project\O\ODOT\15005112 Ironton Russell\LAW\81595\roadway\sheets\81595XS025.dgn - 4/25/2011 6:54:05 AM - jon_wanstrath

SEEDING	
END WIDTH	SQ. YDS.

STA. 39+11.26, 33.00 LT
SANITARY PROP. M.H. NO. 3
COVER EL. = 542.95
INV. IN EL = 535.37
INV. OUT EL = 535.27

STA. 39+02.25, 45.00' LT.
PROP. M.H. NO. 3
SEE STORM SEWER PROFILE
32-D

31-D
STA. 39+02.25, 16.00' LT.
PROP. C.B. NO. 3A
TOP OF GRATE EL. 550.02
PROP. 12" (32-D) EL. 539.50

33-D
STA. 38+88.35, 30.63' RT.
PROP. C.B. NO. 6
SEE STORM SEWER PROFILE

℄ CONST. 93C

FACE OF WALL

STA. 39+03.30, 35.27 RT
SANITARY PROP. M.H. NO. 3
COVER EL. = 542.05
INV. IN EL = 533.90
INV. OUT EL = 533.80

LIMITS OF SELECT GRANULAR BACKFILL

REPLACE PAVEMENT WITH SEEDING
SAWCUT
MADISON ST.
2:1
3:1
541.0
FILL & ABANDON
EX. STORM M.H.
RIM EL. = 542.31
INV. 15" = 536.49
EX. SAN M.H.
RIM EL. = 542.41
INV. 10" = 534.83
EX. 15" STORM
EX. 10" WATER
EX. 10" SAN SLOPE UNKNOWN
EX. 4" GAS
PROP. 8" SAN
29' - PROP. 12" TYPE C @ 3.00%
69' - PROP. 10" @ 2.0%
550.58
39+00
542.34

202 - PAVEMENT REMOVED

EMBANKMENT FOUNDATION UNDERCUTTING EXCAVATION (A) AND EMBANKMENT (B)

℄ CONST. 93C

FACE OF WALL

34-D
STA. 38+70.00, 36.00' RT.
PROP. M.H. NO. 3
SEE STORM SEWER PROFILE

LIMITS OF SELECT GRANULAR BACKFILL

Ex. R/W
Temp. Ease.

35-D
STA. 38+70.00, 43.00' RT.
PROP. C.B. NO. 7
TOP OF GRATE EL. 541.46
PROP. 12" (34D) EL. 538.29

SAW CUT LINE

2:1
3:1
540.7
2ND STREET
552.59
38+50
542.00
EX. 10" WATER
EX. 4" GAS
7' - PROP. 12" TYPE C @ 1.0%
PROP. 30" STORM (TYP.)

STA. 38+00.00 AHD.

Link to 279-000-000
Drainage Structures
As-Built

Link to 279-009-000
93C Cross Sections
As-Built

Link to RFI058 As-Built

℄ CONST. 93C

Ex. R/W
Temp. Ease.
STA. 38+00.00 BK.

36-D
STA. 37+85.00, 40.00' RT.
PROP. M.H. NO. 3
SEE STORM SEWER PROFILE

FACE OF WALL

LIMITS OF SELECT GRANULAR BACKFILL (AHEAD)
LIMITS OF SELECT GRANULAR BACKFILL (BACK)

SAW CUT LINE

2:1
3:1
540.35
2ND STREET
EX. 4" GAS
EX. 10" WATER (TO BE REMOVED)
554.85
38+00
542.05

FOR PAVEMENT REPLACEMENT SEE PARKING AREA DETAILS

STA. 37+50.00

FOR DRIVEWAY AND PARKING AREA DETAILS AND QUANTITIES SEE SHEETS 158-161

FOR SEEDING QUANTITIES SEE SHEET 347

END AREA		VOLUME	
CUT	FILL	CUT	FILL
147 A	147 B		
11	297		
		283 A	295 B
		33	682
158 A	171 B		
24	439		
		317 A	339 B
		48	965
184 A	195 B		
28	603		
172 A	180 B		
28	543		
		335 A	346 B
		66	1142
189 A	193 B		
43	690		
		935 A	980 B
		147	2789

CALCULATED AMD
CHECKED JRW

CROSS SECTIONS - 93C
STA. 38+00.00 TO STA. 39+00.00

LAW-93-0.00

116
788

J:\Project\ODOT\15005112 Ironton Russell\LAW\81595\roadway\sheets\81595XS026.dgn - 6/20/2011 10:41:40 AM - jon_wanstrath

Link to 279-000-000
Drainage Structures
As-Built

STA. 40+37 AH END EMBANKMENT
FOUNDATION UNDERCUTTING
(EXCAVATION AND EMBANKMENT)

BEGIN GRANULAR MATERIAL, TYPE B

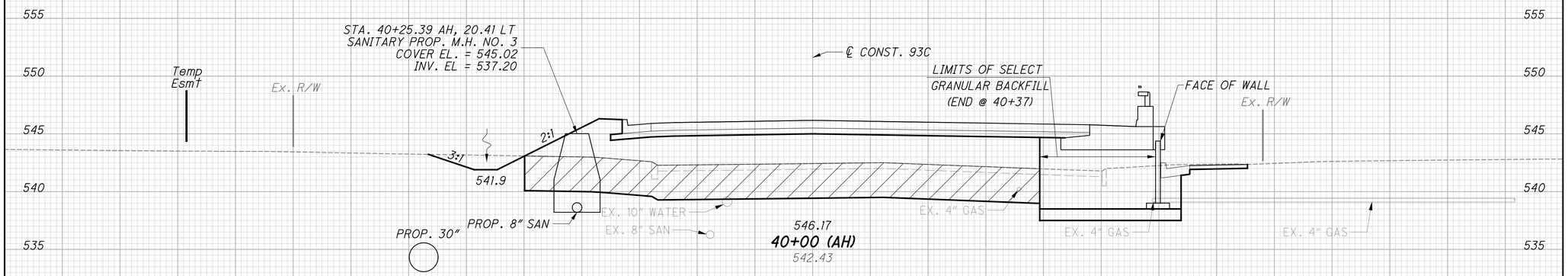

STATION EQ. - STA. 40+45.75 BACK=
STA. 40+00.00 AHEAD

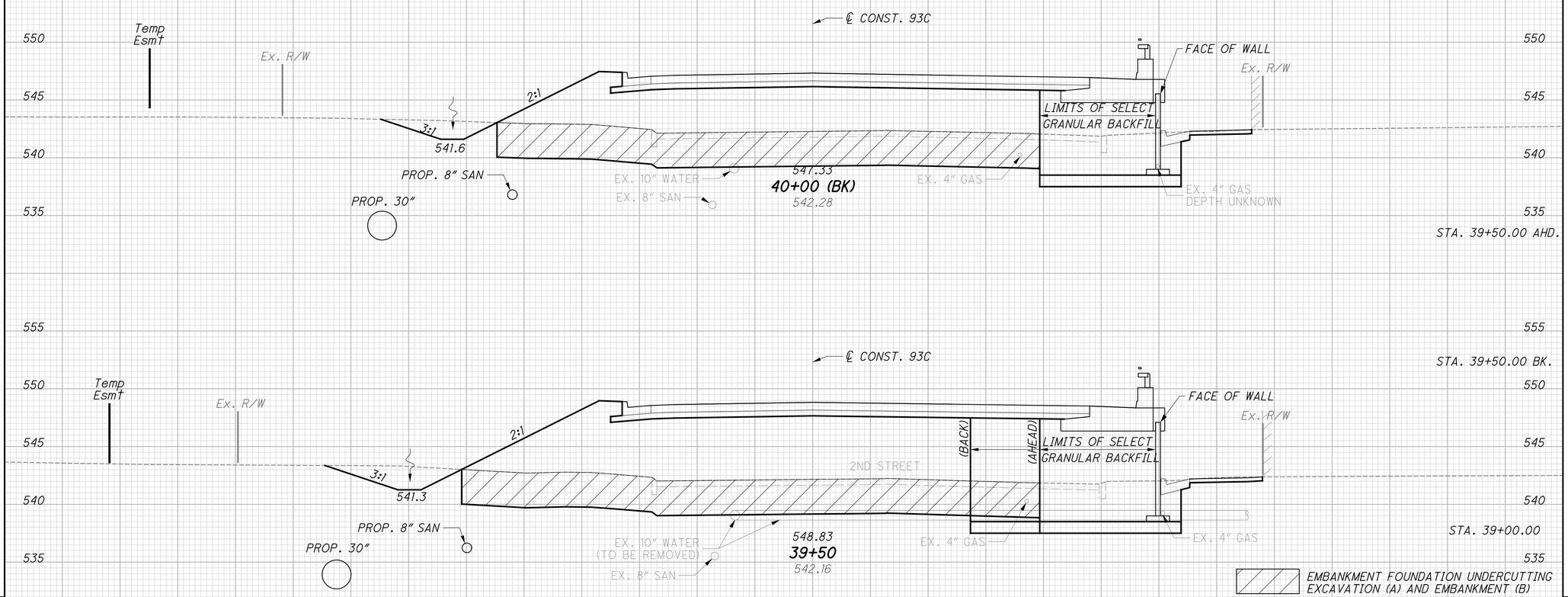

EMBANKMENT FOUNDATION UNDERCUTTING
EXCAVATION (A) AND EMBANKMENT (B)

SEEDING END WIDTH	SEEDING SQ. YDS.

END AREA CUT	END AREA FILL	VOLUME CUT	VOLUME FILL
134^{A}	134^{B}		
9	108		
		234^{A}	234^{B}
		20	232
142^{A}	142^{B}		
12	165		
		272^{A}	272^{B}
		25	380
151^{A}	151^{B}		
15	245		
133^{A}	133^{B}		
15	212		
		260^{A}	260^{B}
		25	472
147^{A}	147^{B}		
11	297		
		766^{A}	766^{B}
		70	1084

CALCULATED AMD
CHECKED JRW

CROSS SECTIONS - 93C
STA. 39+50.00 TO STA. 40+00.00 (AH)

LAW-93-0.00

117
788

FOR SEEDING QUANTITIES SEE SHEET 347

J:\Project\O\ODOT\15005112 Ironton Russell\LAW\81595\roadway\sheets\81595XS027.dgn - 4/25/2011 6:54:07 AM - jon_wanstrath

SEEDING	
END WIDTH	SQ. YDS.

Link to 279-000-000
Drainage Structures
As-Built

Link to 279-009-000
93C Cross Sections
As-Built

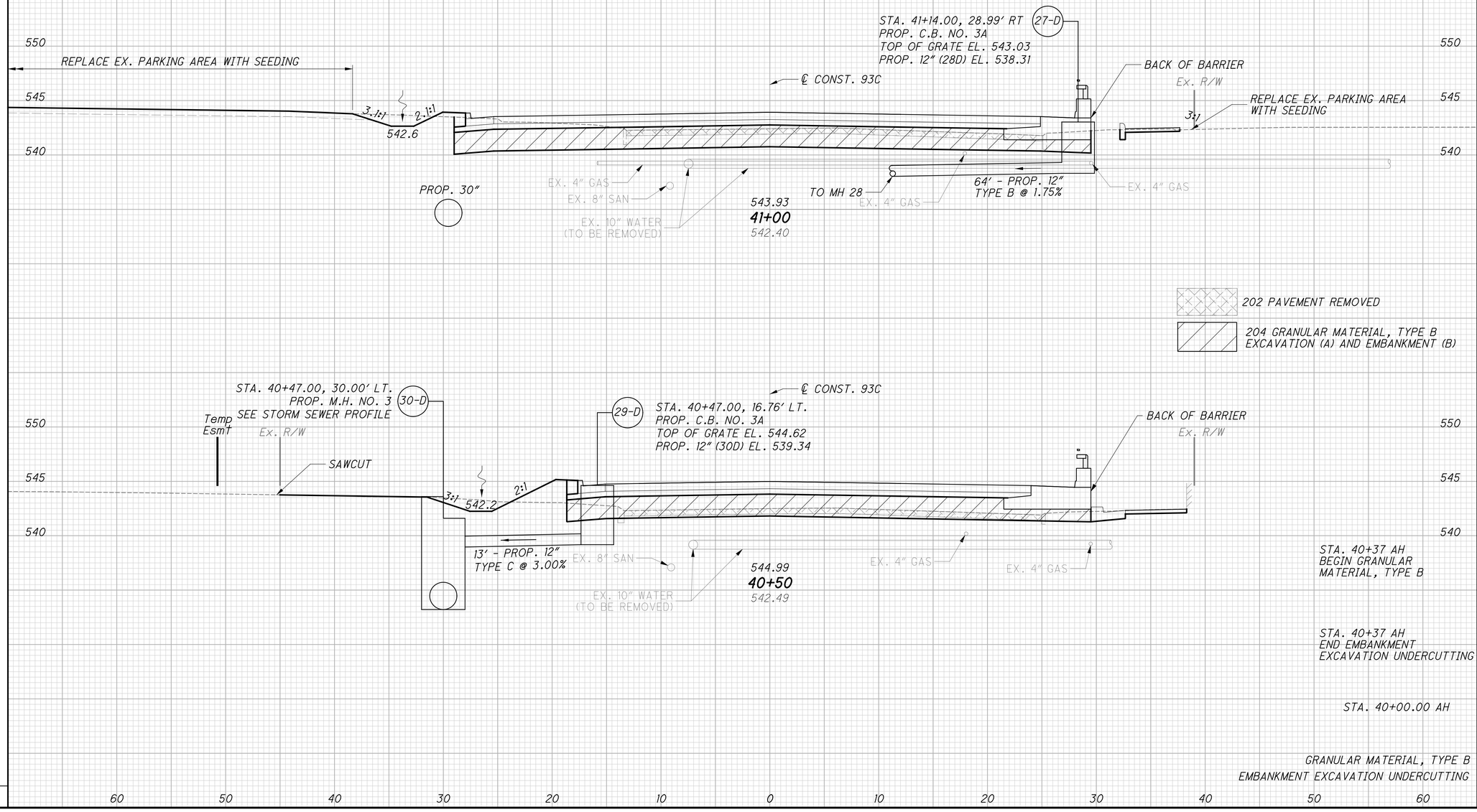

END AREA		VOLUME	
CUT	FILL	CUT	FILL
93 A	110 B		
15	15		
		217 A	251 B
		24	77
141 A	161 B		
10	68		
		68 A	78 B
		5	33
141 A	161 B		
10	68		
134 A	134 B		
9	108		
		183 A	183 B
134 A	134 B	13	148
9	108		
		285 A	329 B
		183 A	183 B
		42	258

STA. 40+37 AH
BEGIN GRANULAR
MATERIAL, TYPE B

STA. 40+37 AH
END EMBANKMENT
EXCAVATION UNDERCUTTING

STA. 40+00.00 AH

GRANULAR MATERIAL, TYPE B
EMBANKMENT EXCAVATION UNDERCUTTING

FOR SEEDING QUANTITIES SEE SHEET 347

CALCULATED AMD
CHECKED JRW

CROSS SECTIONS - 93C
STA. 40+50.00 TO STA. 41+00.00

LAW-93-0.00

J:\Project\O\ODOT\15005112 Ironton Russell\LAW\81595\roadway\sheets\81595XS028.dgn - 4/25/2011 6:54:08 AM - jon_wanstrath

SEEDING	
END WIDTH	SQ. YDS.

Link to 279-000-000
Drainage Structures
As-Built

Link to 279-009-000
93C Cross Sections As-Built

℄ CONST. 93C

550 / 545 / 540 / 535 / 530

AHEAD

PAVED PARKING LOT

Temp Esmt

EX. R/W

SAW CUT LINE

14-D STA. 42+75.00, 14.00′ LT.
PROP. C.B. NO. 3
SEE STORM SEWER PROFILE

10″ WATER (TO BE REMOVED)
8″ SAN.
EX. 4″ GAS

10″ WATER

48′ - PROP. 12″
TYPE B @ 0.98%

542.67
42+50
542.52

15-D STA. 42+66.00, 32.82′ RT.
PROP. C.B. NO. 3A
SEE STORM SEWER PROFILE

EX. R/W

R/W

Temp Esmt

SAW CUT LINE

REPLACE PARKING LOT PAVEMENT
SEE TYPICAL SECTION

STA. 4+39.00, 26.50′ LT.
℄ CONST. JEFFERSON ST.
PROP. M.H. NO. 3
SEE STORM SEWER PROFILE

25-D

M/L JEFFERSON ST.
STA. 4+52.50

STA. 42+29.56, 13.34′ LT.
EX. CB. (TO BE REMOVED)
TOP OF GRATE EL. 541.98
℄ 10″ (SE) EL. 540.34

STA. 42+21.14, 9.44′ LT.
EX. SAN. MH. ADJUST TO GRADE
TOP OF COVER EL. 542.39
℄ 8″ (NW) EL. 538.84

M/L JEFFERSON ST.
STA, 5+00.00

16-D STA. 42+13.78, 34.50′ RT.
℄ CONST. 93C
PROP. M.H. NO. 3
SEE STORM SEWER PROFILE

FROM MH 24

143′ - PROP. 12″
TYPE B @ 1.05%

10″ WATER

10″ WATER

EX. 4″ GAS

FROM MH 10

110′ - PROP. 24″
TYPE B @ 0.30%

72′ - PROP. 24″
TYPE B @ 0.40%

542.85
42+00
542.60

STA. 42+29.30, 25.18′ RT.
EX. CB. (TO BE REMOVED)
TOP OF GRATE EL. 541.93
℄ 10″ (SE) EL. 540.08

EX. R/W

M/L JEFFERSON ST.
STA. 4+50.00

M/L JEFFERSON ST.
STA. 5+00.00

STA. 41+40.87. 29.17′ LT.
PROP. M.H. NO. 3
SEE STORM SEWER PROFILE

28-D

STA. 41+49.40, 24.46′ RT.
EX. CB. (TO BE REMOVED)
TOP OF GRATE EL. 541.42
℄ 10″ (SE) EL. 539.71

10″ WATER (TO BE REMOVED)

31′ - PROP. 12″
TYPE B @ 1.48%

FROM 27-D

10″ STM.

12″ STM. (TO BE REMOVED)

EX. 4″ GAS

EX. 4″ GAS

12″ WATER

10″ WATER

26-D STA. 4+18.00, 33.93′ RT
℄ CONST. JEFFERSON ST.
PROP. C.B. NO. 3
SEE JEFFERSON ST. CROSS SECTIONS

543.21
41+50
542.49

STA. 41+49.71, 12.63′ LT.
EX. CB. (TO BE REMOVED)
TOP OF GRATE EL. 542.05
℄ 10″ (NE) EL. 539.92

STA. 41+76.08, 3.42′ LT.
EX. STM. MH. (TO BE REMOVED)
TOP OF COVER EL. 542.65
℄ 10″ (SW) EL. 538.26
℄ 10″ (NW) EL. 538.28
℄ 12″ (NE) EL. 537.67

202 - PAVEMENT REMOVED

204 GRANULAR MATERIAL, TYPE B
EXCAVATION (A) AND EMBANKMENT (B)

FOR DRIVEWAY AND PARKING AREA DETAILS
AND QUANTIITES SEE SHEETS 158-161

STA. 41+00.00

SHEET TOTAL

FOR SEEDING QUANTITIES SEE SHEET 347

50 40 30 20 10 0 10 20 30 40 50

END AREA		VOLUME	
CUT	FILL	CUT	FILL
106^A 45	106^B 2		
		192^A 64	192^B 2
101^A 20	101^B 0		
		179^A 26	188^B 0
92^A 8	101^B 0		
		170^A 22	196^B 14
93^A 15	110^B 5		
		541^A	576^B
		112	16

CALCULATED AMD
CHECKED JRW

CROSS SECTIONS - 93C
STA. 41+50.00 TO STA. 42+50.00

LAW-93-0.00

119
788

J:\Project\O\ODOT\15005112 Ironton Russell\LAW\81595\roadway\sheets\81595XS029.dgn - 4/25/2011 6:54:09 AM - jon_wanstrath

SEEDING

END WIDTH	SQ. YDS.

Link to 279-000-000
Drainage Structures
As-Built

Link to 279-009-000
93C Cross Sections
As-Built

℄ CONST. 93C

Temp Esmt | EX. R/W | EX. R/W | BLDG.

11-D STA. 43+80.00, 13.98' LT.
PROP. C.B. NO. 6
SEE STORM SEWER PROFILE

SAW CUT LINE | EX. 10" WATER | 8" SAN. | 10" WATER | BACK | EX. 4" GAS

542.84
44+02.79
542.84

END PROP. PAVEMENT
MATCH EXISTING

TOTALS CARRIED TO SHEET NO. 49
204 GEOTEXTILE FABRIC 1971 SY

MEET EX. 26.8' LT 543.17±
8' @ 2%
4.4' @ 5.7%

+82 ℄ DRIVE,
W = 18' L = 12.4'

Temp Esmt | EX. R/W | EX. R/W | Temp Esmt

12-D STA. 43+60.00, 14.00' LT.
PROP. C.B. NO. 3A
SEE STORM SEWER PROFILE

SAW CUT LINE | SAW CUT LINE | 10" WATER | 8" SAN. | 10" WATER | EX. 4" GAS

542.84
43+50
542.87

4.5' @ 6.7%
8' @ 2%
MEET EX. 39.0' RT 543.05±

+34 ℄ DRIVE,
W = 24' L = 12.5'

Temp Esmt | EX. R/W | 13-D STA. 42+90.00, 14.00' LT.
PROP. C.B. NO. 3A
SEE STORM SEWER PROFILE | EX. R/W | Temp Esmt

PAVED PARKING LOT

SAW CUT LINE

REPLACE PARKING LOT PAVEMENT
SEE TYPICAL SECTION

10" WATER | 8" SAN. | 10" WATER (TO BE REMOVED) | EX. 4" GAS

542.67
43+00
542.68

202 - PAVEMENT REMOVED

204 GRANULAR MATERIAL, TYPE B EXCAVATION (A) AND EMBANKMENT (B)

2' @ 2%
4' @ 2.1%
6.5' @ 8.3%
MEET EX. 27.0' LT 543.19±

+15 ℄ DRIVE,
W = 24' L = 12.5'

FOR DRIVEWAY AND PARKING AREA DETAILS AND QUANTIITES SEE SHEETS 158-161

STA. 42+50.00

FOR SEEDING QUANTITIES SEE SHEET 347

50 40 30 20 10 0 10 20 30 40 50

END AREA CUT	END AREA FILL	VOLUME CUT	VOLUME FILL
			5334*
		4231 A	4370 B
		1392	7193
		1971	SY
86 A	86 B		
35	1		
		168 A	168 B
		70	3
86 A	86 B		
36	2		
		163 A	163 B
		66	4
90 A	90 B		
35	2		
		182 A	182 B
		81	4
106 A	106 B		
49	2		
		513 A	513 B
		217	11

SHEET TOTAL

CALCULATED AMD
CHECKED JRW

CROSS SECTIONS - 93C
STA. 43+00.00 TO STA. 44+02.80

LAW-93-0.00

120
788

J:\Project\ODOT\15005112 Ironton Russell\LAW\81595\roadway\sheets\81595XS030.dgn - 4/25/2011 6:54:10 AM - jon_wanstrath

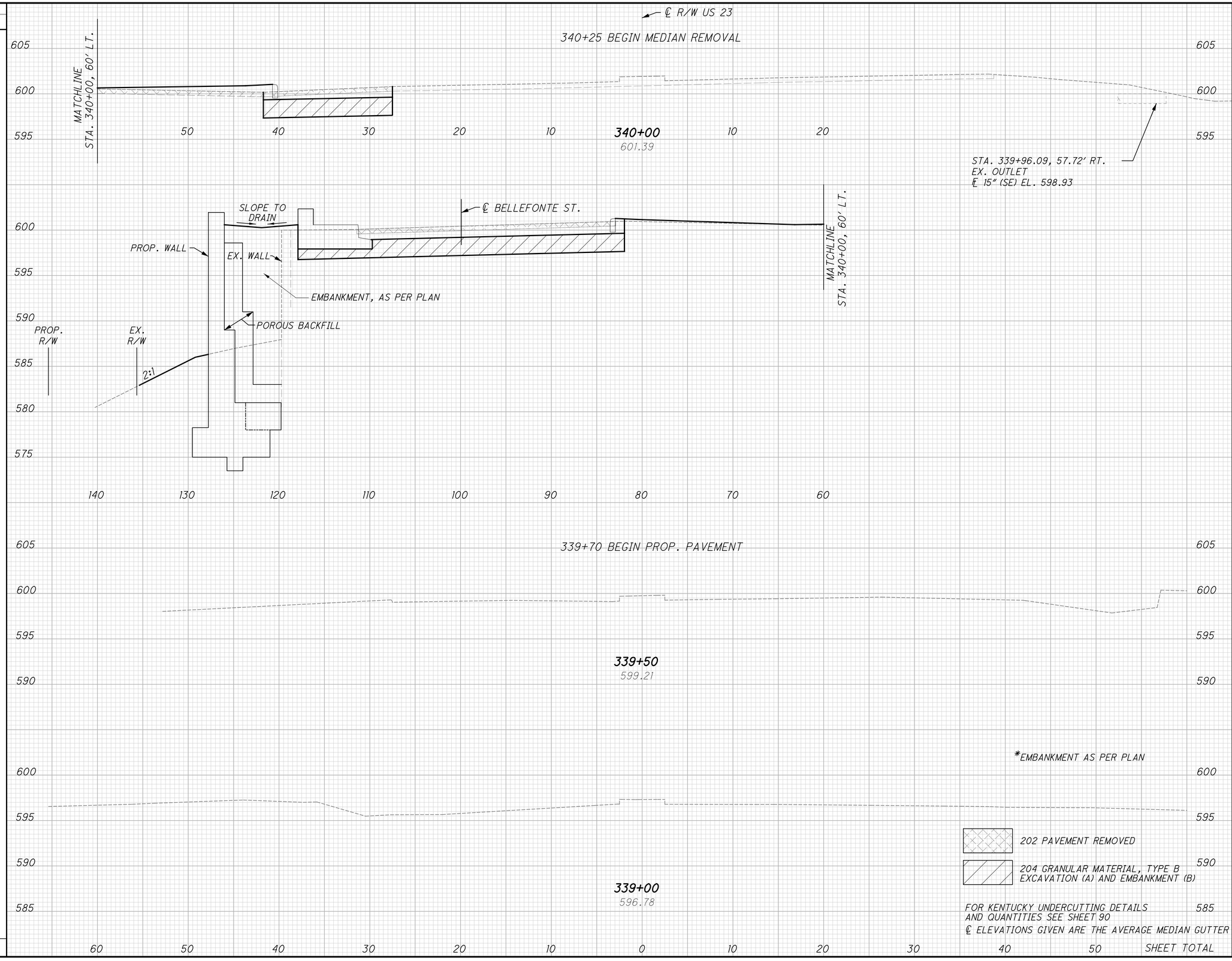

SEEDING END WIDTH	SEEDING SQ. YDS.	END AREA CUT	END AREA FILL	VOLUME CUT	VOLUME FILL
		64A	64B		
		45	13		
			70*		
				60A	60B
				42	12
					65*
		0	0		
					65*
				60A	60B
				42	12

FOR SEEDING QUANTITIES SEE SHEET 346

CALCULATED AMD
CHECKED JRW

CROSS SECTIONS - US 23
STA. 339+00 TO STA. 340+00

LAW-93-0.00

J:\Project\O\ODOT\15005112 Ironton Russell\LAW\81595\roadway\sheets\81595XS031.dgn - 4/25/2011 6:54:11 AM - jon_wanstrath

SEEDING	
END WIDTH	SQ. YDS.

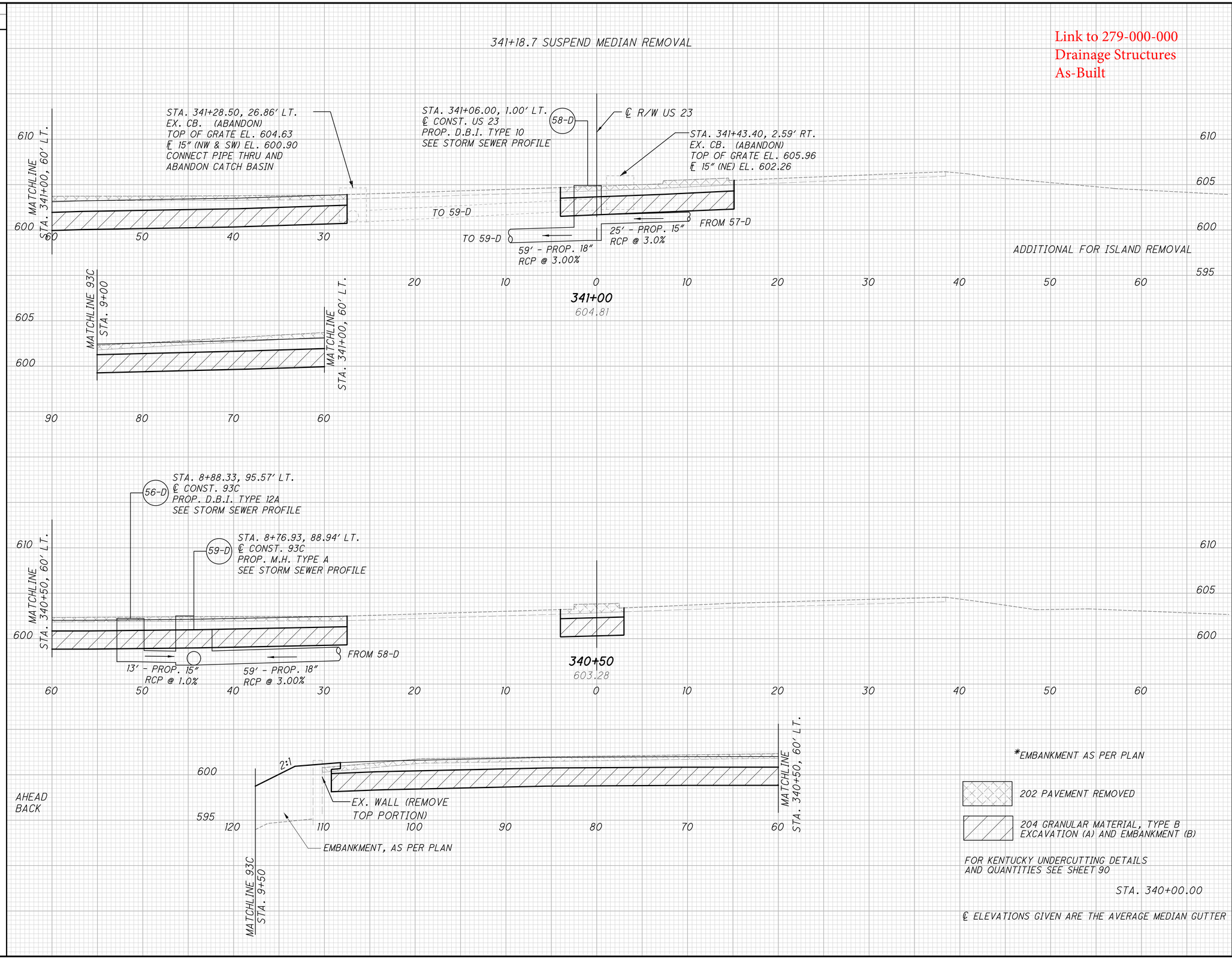

END AREA		VOLUME	
CUT	FILL	CUT	FILL
152^{A}	152^{B}		
67	0		
178^{A}	178^{B}		
70	0		
	35*		
64^{A}	64^{B}	306^{A}	306^{B}
42	13	127	0
	70*		33*
		224^{A}	224^{B}
		104	12
			65*
			98*
		530^{A}	530^{B}
		231	12

CALCULATED AMD
CHECKED JRW

CROSS SECTIONS - US 23
STA. 340+50 TO STA. 341+00

LAW-93-0.00

122
788

FOR SEEDING QUANTITIES SEE SHEET 346

J:\Project\OA\ODOT\15005112 Ironton Russell\LAW\81595\roadway\sheets\81595XS032.dgn - 4/25/2011 6:54:12 AM - jon_wanstrath

Link to 279-000-000
Drainage Structures
As-Built

SEEDING	
END WIDTH	SQ. YDS.

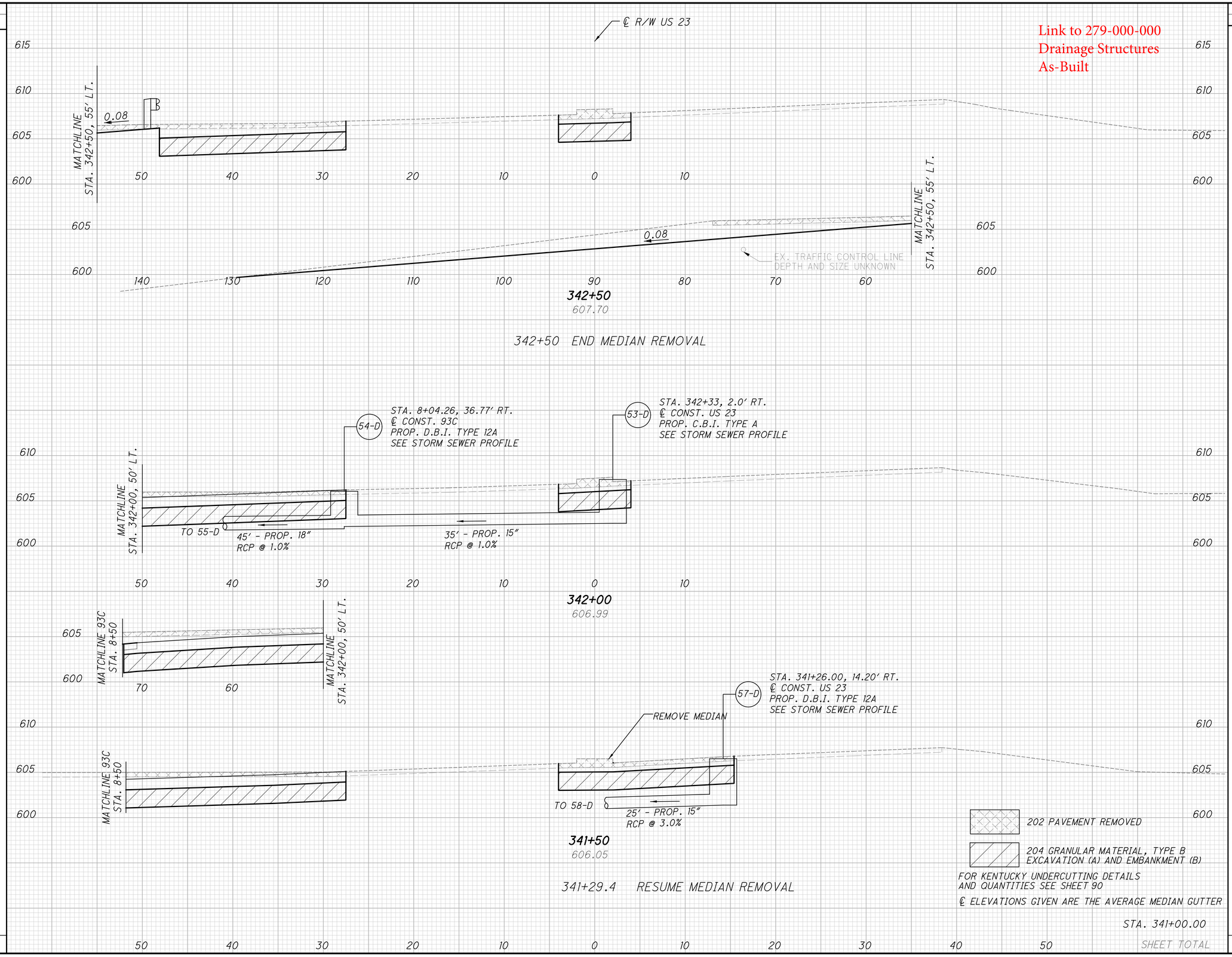

END AREA		VOLUME	
CUT	FILL	CUT	FILL
58 A 94	58 B 0		
		151 A 139	151 B 0
105 A 56	105 B 0		
		179 A 78	179 B 0
88 A 28	88 B 0		
		223 A 88	223 B 0
152 A 67	152 B 0	553 A	553 B
		305	0

CALCULATED AMD
CHECKED JRW

CROSS SECTIONS US 23
STA. 341+50 TO STA. 342+50

LAW-93-0.00

123
788

FOR SEEDING QUANTITIES SEE SHEET 346

J:\Project\OA\ODOT\15005112 Ironton Russell\LAW\81595\roadway\sheets\81595XS033.dgn - 4/25/2011 6:54:13 AM - jon_wanstrath

SEEDING	
END WIDTH	SQ. YDS.

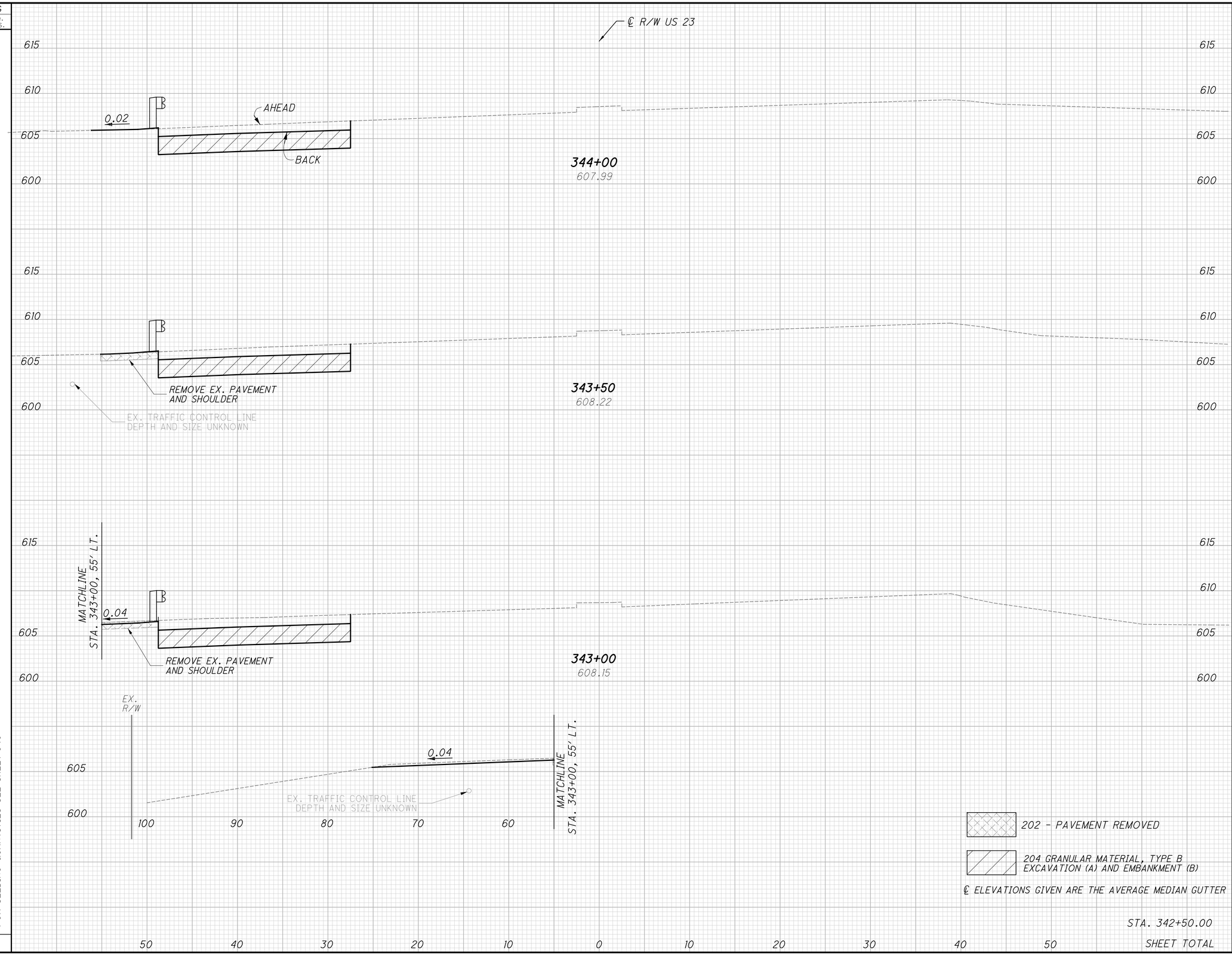

END AREA		VOLUME	
CUT	FILL	CUT	FILL
43^A	43^B		
20	0		
		80^A	80^B
		37	5
43^A	43^B		
20	5		
		80^A	80^B
		43	9
43^A	43^B		
26	4		
		94^A	94^B
		112	4
58^A	58^B		
94	0	254^A	254^B
		192	18

CALCULATED AMD
CHECKED JRW

CROSS SECTIONS - US 23
STA. 343+00 TO STA. 344+00

LAW-93-0.00

124
788

FOR SEEDING QUANTITIES SEE SHEET 346

J:\Project\ODOT\15005112 Ironton Russell\LAW\81595\roadway\sheets\81595XS034.dgn - 4/25/2011 6:54:14 AM - jon_wanstrath

J:\Project\OV\ODOT\15005112 Ironton Russell\LAW\81595\roadway\sheets\81595XS035.dgn - 4/25/2011 6:54:15 AM - jon_wanstrath

SEEDING	
END WIDTH	SQ. YDS.

FOR SEEDING QUANTITIES SEE SHEET 346

℄ R/W US 23

GUARDRAIL END STA. 345+56.34

TOTALS CARRIED TO SHEET NO. 49

STA. 345+63.23, 56.00' LT.
EX. HW.
℄ 18" (SW) EL. 600.05

EX. CONC. RIPRAP

STA. 345+64.62, 66.32' RT.
EX. DITCH INLET
TOP OF GRATE EL. 604.53
℄ 18" (NE) EL. 602.85

345+50
606.45

STA. 345+26.21, 2.81' RT.
EX. CB.
TOP OF GRATE EL. 606.65
℄ 15" (SE) EL. 602.56

345+00
606.98

MATCH EXISTING STA. 344+00.00

344+50
607.52

℄ ELEVATIONS GIVEN ARE THE AVERAGE MEDIAN GUTTER

615 / 610 / 605 / 600 / 595

50 40 30 20 10 0 10 20 30 40 50

END AREA		VOLUME		
CUT	FILL	CUT	FILL	
			169*	
		792	42	
0	0			
		0	0	
0	0			
		0	0	
0	0			
		19	0	
20	0			AHEAD STA. 344+00.00
		19	0	SHEET TOTAL

CALCULATED AMD
CHECKED JRW

CROSS SECTIONS - US 23
STA. 344+50 TO STA. 345+50

LAW-93-0.00

125
788

Link to 279-000-000
Drainage Structures
As-Built

℄ CONST. CAMPBELL AVE.

EX. R/W
Temp Esmt
EX. 8" TELE.
12:1
SAWCUT
PROP. 12" STORM
EX. 12" WATER (TO BE REMOVED)
546.14
35+50
545.63
EX. 6" WATER (TO BE REMOVED)
16" WATER

3:1 12:1
12:1
545.83
35+00
545.73
16.0' @ 5.1%
MEET EX. 25.9' RT 545.0'±
+94.18 ℄ ASPHALT DR
W=20.0' L=16.0'

STA. 34+55, 15.42' LT.
PROP. C.B. NO. 3A
TOP OF GRATE EL.545.47
PROP. 12" (23D) EL. 540.05
PROP. 6" (11UD) EL. 541.63
22-D
STA. 34+55, 6.00' LT.
PROP. M.H. NO. 3
SEE STORM SEWER PROFILE
23-D
21-D
STA. 34+55.00, 7.06' RT.
PROP. C.B. NO. 3A
TOP OF GRATE EL.544.97
PROP. 12" (23D) EL. 540.05
PROP. 6" (10UD) EL. 541.13
9'-PROP. 12" TYPE B @ 1.44%
13'-PROP. 12" TYPE B @ 1.00%
545.53
34+50
545.53
BEGIN PROP. PAVEMENT MATCH EXISTING

202 - PAVEMENT REMOVED
204 GRANULAR MATERIAL, TYPE B EXCAVATION (A) & EMBANKMENT (B)

FOR DRIVEWAY AND PARKING AREA DETAILS AND QUANTIITES SEE SHEETS 158-161

550 / 545 / 540 / 535

50 40 30 20 10 0 10 20 30 40 50

SHEET TOTAL

SEEDING	
END WIDTH	SQ. YDS.

FOR SEEDING QUANTITIES SEE SHEET 347

END AREA		VOLUME	
CUT	FILL	CUT	FILL
60 A	60 B		
9	6		
56 A	56 B		
15	5		
51 A	51 B		
14	3		
		108 A	108 B
		23	11
		100 A	100 B
		27	8
		208 A	208 B
		50	19

CALCULATED AMD
CHECKED JRW

CROSS SECTIONS - CAMPBELL AVE.
STA. 34+50 TO STA. 35+50

LAW-93-0.00

126
788

J:\Project\O\ODOT\15005112 Ironton Russell\LAW\81595\roadway\sheets\81595XS036.dgn - 4/25/2011 6:54:16 AM - jon_wanstrath

Link to 279-000-000
Drainage Structures
As-Built

Link to 279-007-000
Campbell Cross Sections
As-Built

℄ CONST. CAMPBELL AVE.

STA. 37+08.00, 6.00' LT.
PROP. M.H. NO. 3
SEE STORM SEWER PROFILE
24-D

M/L JEFFERSON ST.
STA. 3+14.50

EX. 8" TELE.
EX. ELEC.
SIZE & DEPTH UNKNOWN
6" WATER
EX. 6" WATER
(TO BE REMOVED)
16" WATER
143' - PROP. 12"
TYPE B @ 1.05%
EX. 12" WATER
(TO BE REMOVED)

547.08
37+00
546.08
RESUME EARTHWORK

M/L JEFFERSON ST.
STA. 3+14.50

EX. 8" TELE.
EX. ELEC.
SIZE & DEPTH UNKNOWN
EX. 12" WATER
(TO BE REMOVED)
EX. 6" WATER
(TO BE REMOVED)
16" WATER

546.96
36+50
546.06
PROP. 12" STORM
SUSPEND EARTHWORK

Temp
Esmt
EX.
R/W
3:1
12:1
EX. 8" TELE.
EX. 12" WATER
(TO BE REMOVED)
EX. 6" WATER
(TO BE REMOVED)
16" WATER
12" WATER

546.51
36+00
545.61
PROP. 12" STORM

STA. 35+75.00
BEGIN CONCRETE
PAVEMENT

202 - PAVEMENT REMOVED
204 GRANULAR MATERIAL, TYPE B
EXCAVATION (A) & EMBANKMENT (B)

STA. 35+50.00

SHEET TOTAL

SEEDING		END AREA		VOLUME	
END WIDTH	SQ. YDS.	CUT	FILL	CUT	FILL
		53 A	66 B		
		5	1		
				0 A	0 B
				0	0
		48 A	59 B		
		5	1		
				96 A	115 B
				10	15
		55 A	65 B		
		5	15		
				107 A	116 B
				13	20
		60 A	60 B		
		9	6		
				203 A	231 B
				23	35

CALCULATED AMD
CHECKED JRW

CROSS SECTIONS - CAMPBELL AVE.
STA. 36+00 TO STA. 37+00

LAW-93-0.00

127
788

FOR SEEDING QUANTITIES SEE SHEET 347

J:\Project\OVODOT\15005112 Ironton Russell\LAW\81595\roadway\sheets\81595XS037.dgn - 4/25/2011 6:54:16 AM - jon_wanstrath

SEEDING

END WIDTH	SQ. YDS.

Link to 279-000-000
Drainage Structures
As-Built

Link to 279-007-000
Campbell Cross Sections
As-Built

℄ CONST. CAMPBELL AVE.

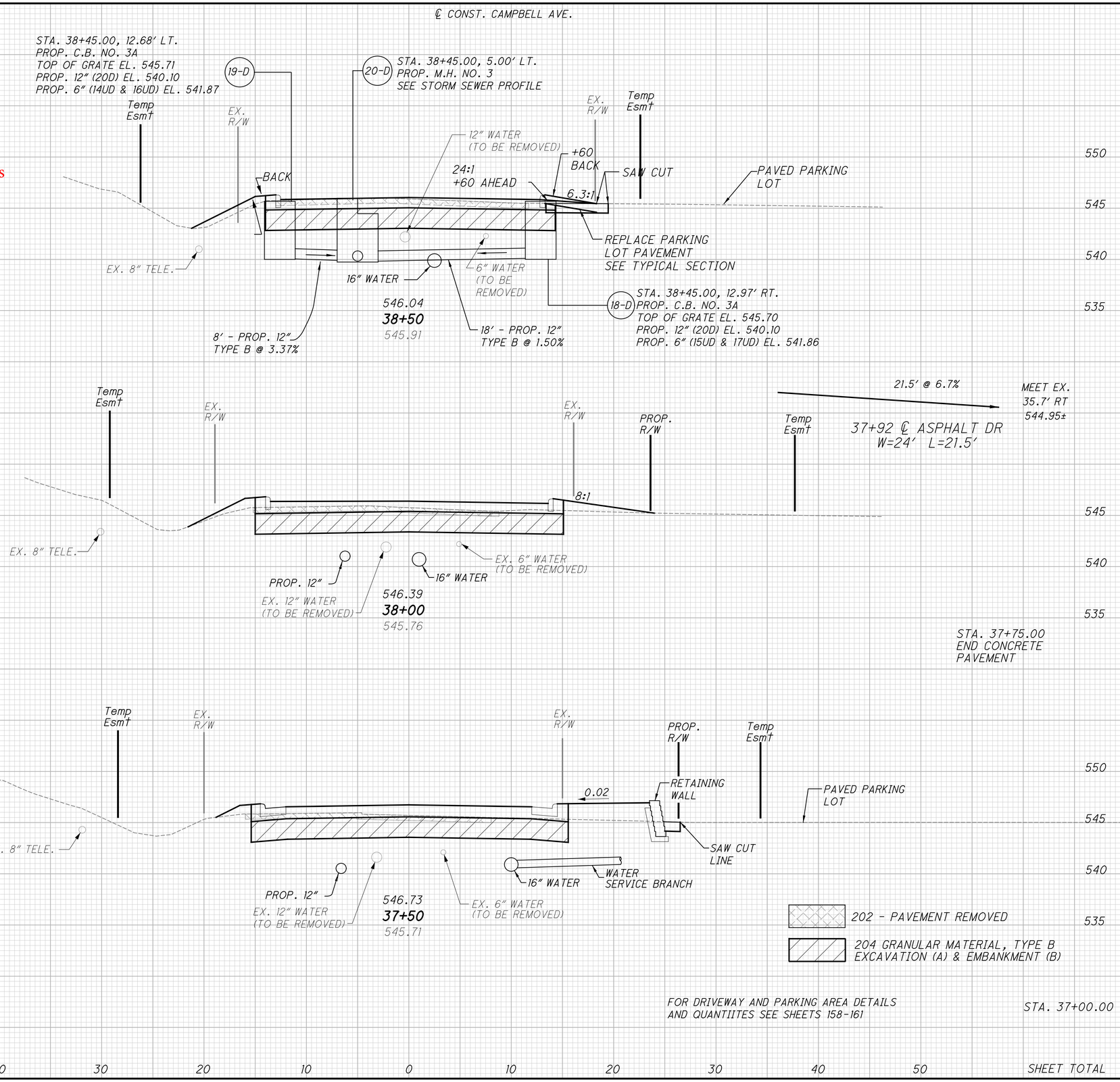

END AREA CUT	END AREA FILL	VOLUME CUT	VOLUME FILL
57A 11	57B 7		
		107A 13	110B 17
58A 3	61B 11		
		107A 5	114B 27
57A 2	62B 18		
		102A 7	119B 18
53A 5	66B 1		
		316A 25	343B 62

CALCULATED AMD
CHECKED JRW

CROSS SECTIONS - CAMPBELL AVE.
STA. 37+50 TO STA. 38+50

LAW-93-0.00

128
788

FOR SEEDING QUANTITIES SEE SHEET 347

J:\Project\O\ODOT\15005112 Ironton Russell\LAW\81595\roadway\sheets\81595XS038.dgn - 4/25/2011 6:54:17 AM - jon_wanstrath

SEEDING	
END WIDTH	SQ. YDS.

Link to 279-007-000
Campbell Cross Sections
As-Built

℄ CONST. CAMPBELL AVE.

TOTALS CARRIED
TO SHEET NO. 49

204 GEOTEXTILE FABRIC

EX. R/W

EX. R/W

550
545
540
535

40+00
545.08

EX. R/W

EX. R/W

6" WATER

12" WATER

39+50
545.41

Temp Esmt

EX. R/W

EX. R/W

SAW CUT LINE

REPLACE PARKING LOT PAVEMENT SEE TYPICAL SECTION

EX. 8" TELE.

6" WATER (TO BE REMOVED STA. 38+86 BACK)

12" WATER (TO BE REMOVED STA. 38+90 BACK)

545.70
39+00
545.69

12" WATER

END PROP. PAVEMENT
MATCH EXISTING

202 - PAVEMENT REMOVED

204 GRANULAR MATERIAL, TYPE B
EXCAVATION (A) & EMBANKMENT (B)

STA. 38+50.00

FOR DRIVEWAY AND PARKING AREA DETAILS
AND QUANTIITES SEE SHEETS 158-161

50 40 30 20 10 0 10 20 30 40 50

FOR SEEDING QUANTITIES SEE SHEET 347

END AREA		VOLUME	
CUT	FILL	CUT	FILL
		827 A	882 B
		122	125
		1328	SY
		51 A	51 B
		14	2
		57 A	57 B
		11	7
		100 A	100 B
		24	9
		100 A	100 B
		24	9

SHEET TOTAL

CALCULATED AMD
CHECKED JRW

CROSS SECTIONS - CAMPBELL AVE.
STA. 39+00 TO STA. 40+00

LAW-93-0.00

129
788

J:\Project\O\ODOT\15005112 Ironton Russell\LAW\81595\roadway\sheets\81595XS039.dgn - 4/25/2011 6:54:18 AM - jon_wanstrath

SEEDING	
END WIDTH	SQ. YDS.

END AREA		VOLUME	
CUT	FILL	CUT	FILL

CALCULATED AMD
CHECKED JRW

CROSS SECTIONS - 3RD ST.
STA. 48+25 TO STA. 49+50

℄ CONST. 3RD ST.

Exist. R/W

Exist. R/W

545
540
535

6" WATER

6" WATER

EX. 8" SAN.

EX. 8" SAN.

49+50
540.81

STA. 48+87.93, 20.10' LT.
EX. CB. (DO NOT DISTURB)
TOP OF GRATE EL. 540.42
℄ 8" (SE) EL. 537.78

6" WATER

6" WATER

EX. 8" SAN.

EX. 8" SAN.

49+00
540.75

STA. 48+58.50, 8.02' LT.
EX. STM. MH. (DO NOT DISTURB)
TOP OF COVER EL. 541.47
℄ 8" (SW) EL. 536.12
℄ 8" (NW) EL. 536.14
℄ 15" (NE & SW) EL. 535.55

48+85.00

STA. 48+66.18, 16.09' RT.
EX. SAN. LAMP HOLE (DO NOT DISTURB)
TOP OF COVER EL. 541.09
℄ 8" (NW) EL. 529.66
℄ 10" (SW & NE) EL. 529.66

STA. 48+45.61, 20.18' LT.
EX. CB. (DO NOT DISTURB)
TOP OF GRATE EL. 540.48
℄ 8" STM. (NE) EL. 537.63

15" STM.

15" STM.

10" SAN.

10" SAN.

STA. 48+66.70, 16.38' LT.
EX. SAN. MH. (DO NOT DISTURB)
TOP OF COVER EL. 541.58
℄ 8" (NW) EL. 530.56
℄ 10" (SW & NE) EL. 530.07

48+50
540.59

6" WATER

48+25.00
540.61

530

SHEET TOTAL

50 40 30 20 10 0 10 20 30 40 50

FOR SEEDING QUANTITIES SEE SHEET 347

J:\Project\OUODOT\15005112 Ironton Russell\LAW\81595\roadway\sheets\81595XS040.dgn - 4/25/2011 6:54:19 AM - jon_wanstrath

LAW-93-0.00

130
788

SEEDING	
END WIDTH	SQ. YDS.

Link to 279-000-000
Drainage Structures
As-Built

Link to 279-006-000
3rd Street Cross Sections
As-Built

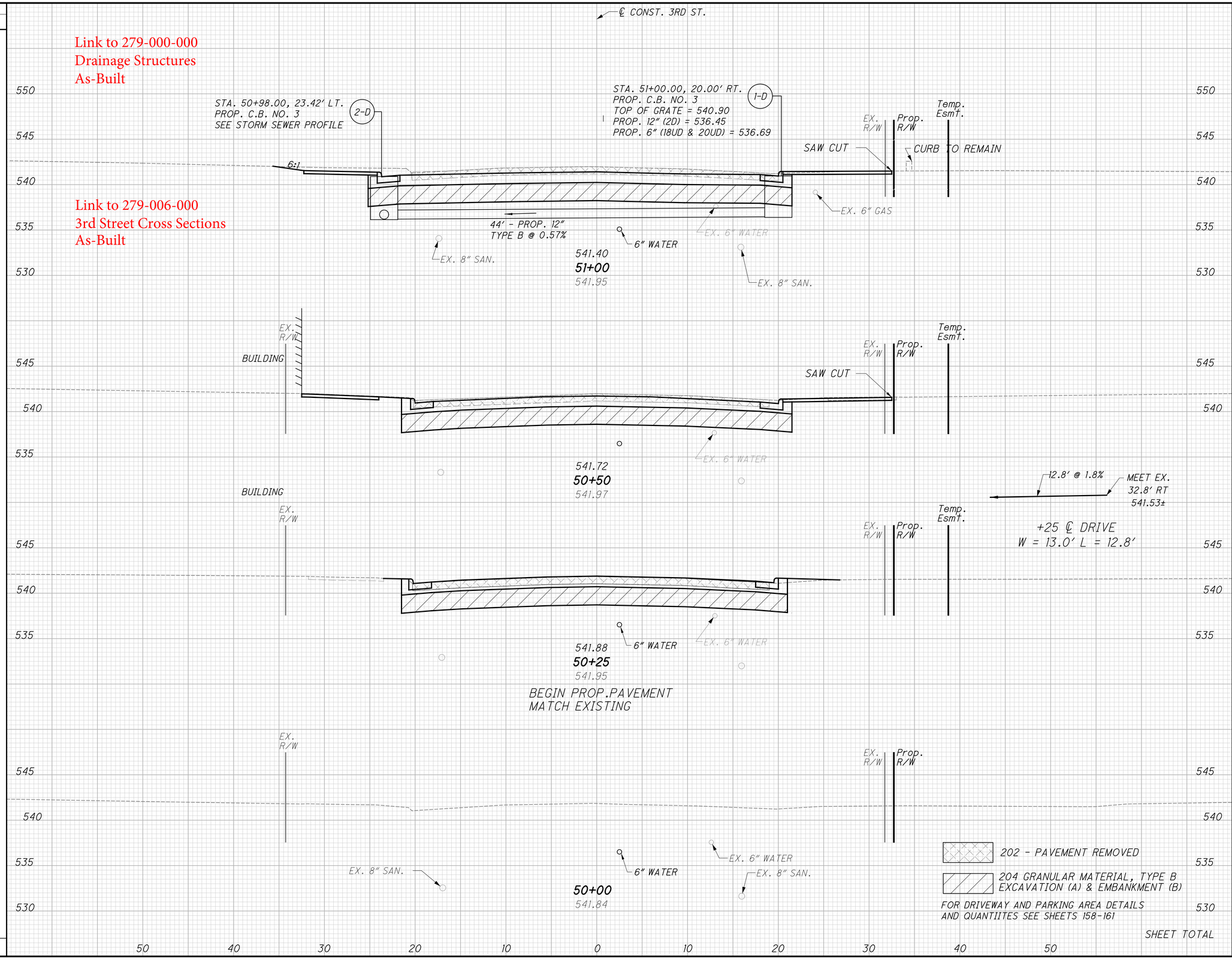

END AREA	
CUT	FILL
94^{A} 50	94^{B} 3
87^{A} 27	87^{B} 4
86^{A} 17	86^{B} 3
249^{A} 93	249^{B} 11

VOLUME	
CUT	FILL
168^{A} 72	168^{B} 7
81^{A} 21	81^{B} 4

CALCULATED AMD
CHECKED JRW

CROSS SECTIONS - 3RD ST.
STA. 50+00 TO STA. 51+00

LAW-93-0.00

131
788

FOR SEEDING QUANTITIES SEE SHEET 347

J:\Project\ODOT\15005112 Ironton Russell\LAW\81595\roadway\sheets\81595XS041.dgn - 4/25/2011 6:54:20 AM - jon_wanstrath

Link to 279-000-000
Drainage Structures
As-Built

Link to 279-006-000
3rd Street Cross Sections
As-Built

℄ CONST. 3RD ST.

EX. R/W

Temp Esmt

BUILDING

545 / 540 / 535 / 530

PROP. 18″

STA. 52+51.37, 17.38′ LT.
EX. SAN. LAMP HOLE
ADJUST TO GRADE

EX. 6″ WATER
6″ WATER

541.55
52+50
541.79

EX. 8″ SAN.

EX. 6″ GAS

STA. 52+42.19, 16.47′ RT.
EX. SAN. LAMP HOLE
ADJUST TO GRADE

STA. 52+35.00, 28.77′ LT.
℄ CONST. THIRD ST.
PROP. M.H. NO. 3
8-D
SEE STORM SEWER PROFILE

M/L JEFFERSON ST.
STA. 6+50.00

M/L JEFFERSON ST.
STA. 7+00.77

550 / 545 / 540 / 535 / 530

12″ STM (TO BE REMOVED)

32′ - PROP. 21″
TYPE B @ 0.31%

PROP. 18″
FROM CB 7

PROP. 12″
FROM CB 2

STA. 51+90.98, 14.75′ LT.
EX. STM. MH
(TO BE REMOVED)
TOP OF COVER EL. 541.75
℄ 10″ (NW) EL. 536.39
℄ 10″ (S) EL. 536.33
℄ 12″ (SW) EL. 535.84
℄ 15″ (NE) EL. 535.84

EX. 6″ WATER
6″ WATER

541.70
52+00
541.94

EX. 6″ GAS
2″ WATER

15″ STM ABANDON

550 / 545 / 540 / 535 / 530

EX. R/W

Prop. R/W

Temp Esmt

6:1

SAW CUT

EX. 6″ GAS

6″ WATER
6″ WATER
EX. 6″ WATER

12″ WATER

PROP. 12″

541.55
51+50
541.97

STA. 51+47.43, 17.61′ LT.
EX. SAN. LAMP HOLE
ADJUST TO GRADE

STA. 51+46.17, 15.85′ RT.
EX. SAN. LAMP HOLE
ADJUST TO GRADE

202 - PAVEMENT REMOVED

204 GRANULAR MATERIAL, TYPE B
EXCAVATION (A) & EMBANKMENT (B)

STA. 51+00.00

FOR DRIVEWAY AND PARKING AREA DETAILS
AND QUANTIITES SEE SHEETS 158-161

SHEET TOTAL

SHEET TOTAL 50 40 30 20 10 0 10 20 30 40 50

FOR SEEDING QUANTITIES SEE SHEET 347

SEEDING	
END WIDTH	SQ. YDS.

END AREA		VOLUME	
CUT	FILL	CUT	FILL
130^{A}	130^{B}		
71	3		
		225^{A}	225^{B}
		88	3
112^{A}	112^{B}		
24	0		
117^{A}	117^{B}		
53	3		
		213^{A}	213^{B}
		72	3
		196^{A}	196^{B}
		96	6
94^{A}	94^{B}		
50	3		
		634^{A}	634^{B}
		256	12

CALCULATED AMD
CHECKED JRW

CROSS SECTIONS - 3RD ST.
STA. 51+50 TO STA. 52+50

LAW-93-0.00

132
788

J:\Project\0\ODOT\15005112 Ironton Russell\LAW\81595\roadway\sheets\81595XS042.dgn - 4/25/2011 6:54:21 AM - jon_wanstrath

Link to 279-006-000
3rd Street Cross Sections
As-Built

Link to 279-000-000
Drainage Structures
As-Built

SEEDING	
END WIDTH	SQ. YDS.

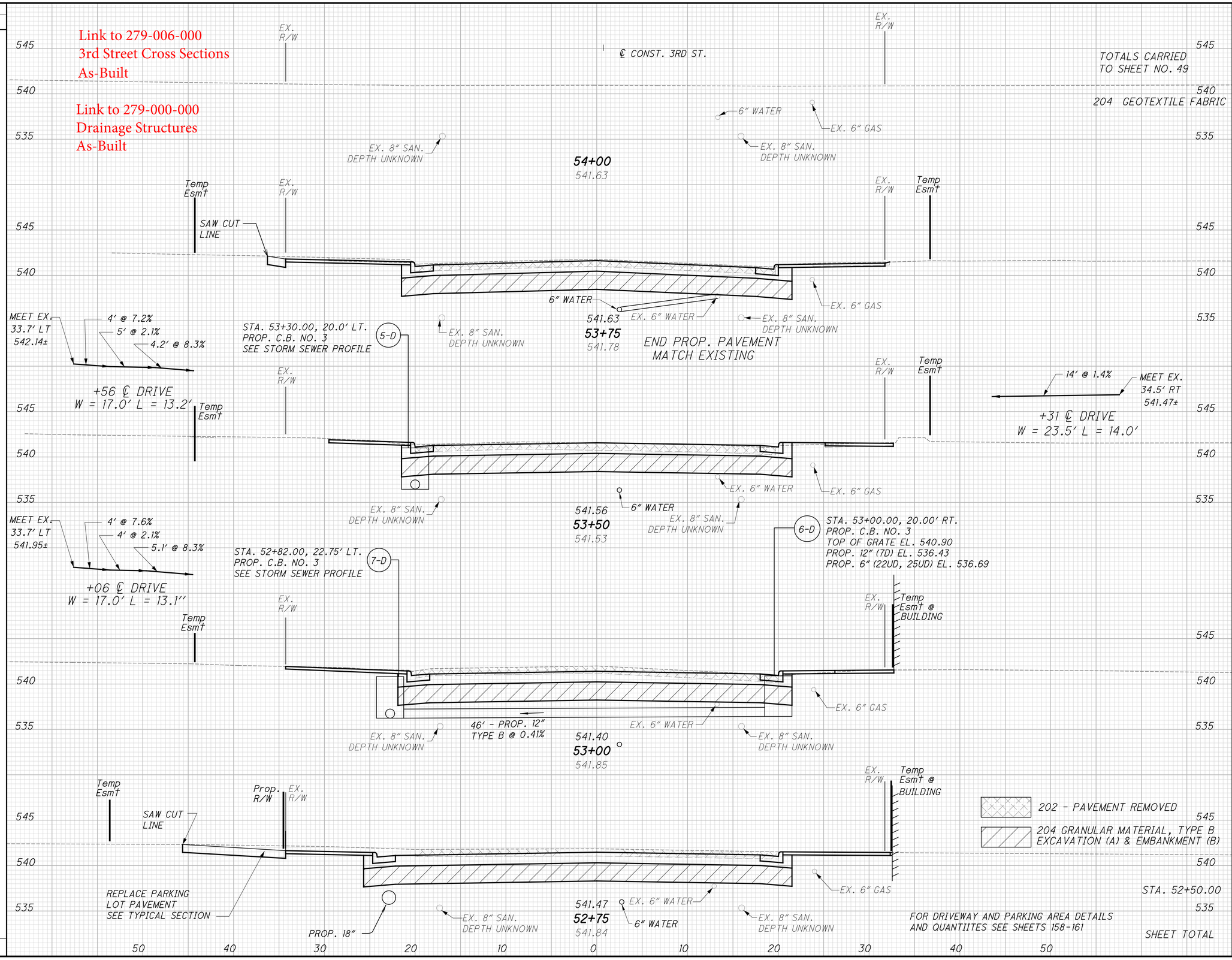

END AREA		VOLUME	
CUT	FILL	CUT	FILL
		1314[A]	1314[B]
		530	40
		1829	SY
86[A]	86[B]		
28	3		
		80[A]	80[B]
		24	4
86[A]	86[B]		
22	4		
		161[A]	161[B]
		56	7
87[A]	87[B]		
38	3		
		85[A]	85[B]
		43	3
95[A]	95[B]		
53	3		
		105[A]	105[B]
		58	3
130[A]	130[B]		
71	3		
		431[A]	431[B]
		181	17

CALCULATED AMD
CHECKED JRW

CROSS SECTIONS - 3RD ST.
STA. 52+75 TO STA. 54+00

LAW-93-0.00

133
788

FOR SEEDING QUANTITIES SEE SHEET 347

J:\Project\O\ODOT\15005112 Ironton Russell\LAW\81595\roadway\sheets\81595XS043.dgn - 4/25/2011 6:54:22 AM - jon_wanstrath

Link to 279-000-000
Drainage Structures
As-Built

Link to 279-008-000
Jefferson Cross Sections
As-Built

℄ CONST. JEFFERSON ST.

M/L CAMPBELL AVE
STA. 37+00.00

M/L CAMPBELL AVE
STA. 36+50.00

EX. 2" GAS
WATER
546.62
3+14.50
545.54
16" WATER
12" WATER

STA. 37+08.00, 6.00' LT.
℄ CONST. CAMPBELL ST.
PROP. M.H. NO. 3
SEE STORM SEWER PROFILE
24-D

EX. 2" GAS
EX. 6" WATER
WATER
253' - PROP. 12" @ 0.48%
FROM 23-D
547.32
3+00
546.51
EX. 12" WATER
EX. 6" WATER

STA. 2+88
BEGIN UNDERCUT

549.16
2+67
549.16
EX. 6" WATER
EX. 2" GAS
+72.4 OR AS DIRECTED
BEGIN GRANULAR MATERIAL,
TYPE B
BEGIN PROP. PAVEMENT
MATCH EX. RR CROSSING

202 - PAVEMENT REMOVED
204 GRANULAR MATERIAL, TYPE B
EXCAVATION (A) & EMBANKMENT (B)

FOR SEEDING QUANTITIES SEE SHEET 347

SEEDING	
END WIDTH	SQ. YDS.

END AREA		VOLUME	
CUT	FILL	CUT	FILL
75^A	100^B		
0	0		
100^A	100^B		
5	0		
100^A	100^B		
28	0		
		47^A	54^B
		2	0
		45^A	45^B
		8	0
		92^A	99^B
		10	0

CALCULATED AMD
CHECKED JRW

CROSS SECTIONS - JEFFERSON ST.
STA. 2+00 TO STA. 3+00

LAW-93-0.00

134
788

J:\Project\OA\ODOT\15005112 Ironton Russell\LAW\81595\roadway\sheets\81595XS044.dgn - 4/25/2011 6:54:23 AM - jon_wanstrath

SEEDING	
END WIDTH	SQ. YDS.

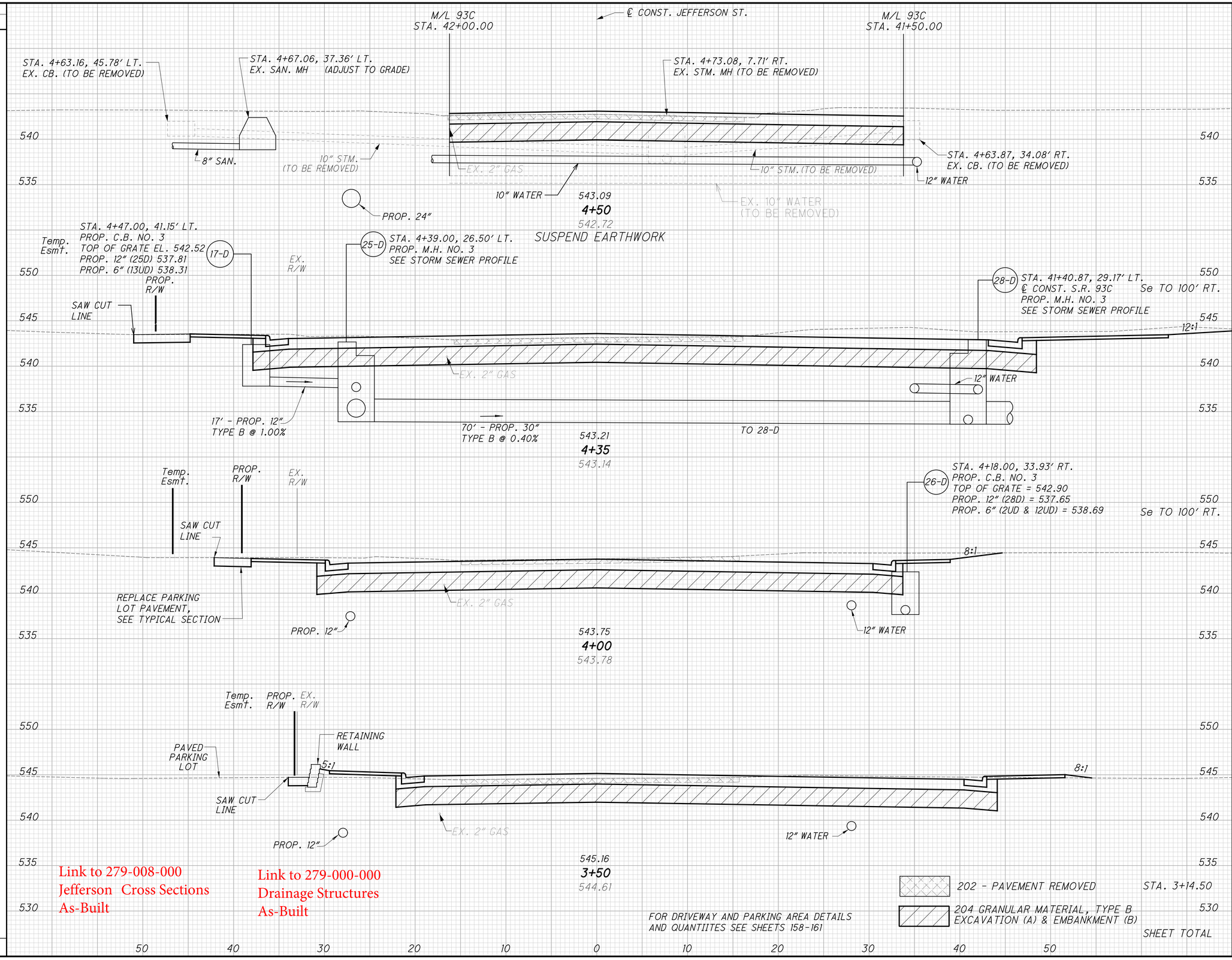

Link to 279-008-000
Jefferson Cross Sections
As-Built

Link to 279-000-000
Drainage Structures
As-Built

FOR DRIVEWAY AND PARKING AREA DETAILS AND QUANTIITES SEE SHEETS 158-161

FOR SEEDING QUANTITIES SEE SHEET 347

END AREA		VOLUME	
CUT	FILL	CUT	FILL
100^{A}	100^{B}		
40^{A}	0^{B}		
		76^{A}	76^{B}
		46	1
173^{A}	173^{B}		
125	3		
		197^{A}	197^{B}
		149	4
130^{A}	130^{B}		
104	3		
		244^{A}	244^{B}
		145	9
133^{A}	133^{B}		
52	6		
		137^{A}	154^{B}
		35	4
75^{A}	100^{B}		
0	0		
		654^{A}	671^{B}
		375	18

CALCULATED AMD
CHECKED JRW

CROSS SECTIONS - JEFFERSON ST.
STA. 3+50 TO STA. 4+50

LAW-93-0.00

135
788

J:\Project\ODOT\15005112 Ironton Russell\LAW\81595\roadway\sheets\81595XS045.dgn - 4/25/2011 6:54:24 AM - jon_wanstrath

SEEDING	
END WIDTH	SQ. YDS.

℄ CONST. JEFFERSON ST.

STA. 6+22.00, 41.55' LT. (9-D)
PROP. C.B. NO. 3A
TOP OF GRATE EL. 541.28
PROP. 12" (10D) 536.32
PROP. 6" (4UD) 537.07

(10-D) STA. 6+21.00, 34.00' LT.
PROP. M.H. NO. 3
SEE STORM SEWER PROFILE

STA. 6+25.00, 27.91' RT
PROP. C.B. NO. 3A
TOP OF GRATE EL. 541.45 (3-D)
PROP. 12" (10D) EL. 536.37
PROP. 6" (3UD) EL. 537.28

Temp Esmt | Prop. R/W | Ex. R/W | SAW CUT LINE | 24:1

8' - PROP. 12" TYPE B @ 4.00%

62' - PROP. 12" TYPE B @ 0.60%

542.19
6+00
541.76

EX. 6" GAS | 12" STM. (REMOVE) | 12" WATER

Link to 279-000-000
Drainage Structures
As-Built

Link to 279-008-000
Jefferson Cross Sections
As-Built

Temp Esmt | EXIST. PAVED PARKING LOT | Prop. R/W | Exist. R/W | EX. R/W | Prop. R/W | SAW CUT LINE

REPLACE PARKING LOT PAVEMENT SEE TYPICAL SECTION

PROP. 24"

542.49
5+50
541.91

EX. 6" GAS | 12" STM. (REMOVE) | 12" WATER

STA. 5+01.68, 45.52' LT.
EX. CB. (TO BE REMOVED)

FROM 15-D

STA. 42+13.79, 34.50' LT (16-D)
℄ CONST. S.R. 93C
PROP. M.H. NO. 3
SEE STORM SEWER PROFILE

M/L 93C
STA. 42+00.00

M/L 93C
STA. 41+50.00

10" STM. (TO BE REMOVED) | EX. 6" GAS | 10" STM. (TO BE REMOVED) | 12" STM. (REMOVE) | 12" WATER

STA. 5+00.96, 34.39'LT.
EX. CB. (TO BE REMOVED)

542.79
5+00
542.40

RESUME EARTHWORK

202 - PAVEMENT REMOVED

204 GRANULAR MATERIAL, TYPE B
EXCAVATION (A) & EMBANKMENT (B)

FOR DRIVEWAY AND PARKING AREA DETAILS AND QUANTIITES SEE SHEETS 158-161

FOR SEEDING QUANTITIES SEE SHEET 347

545 / 540 / 535 / 530

50 40 30 20 10 0 10 20 30 40 50

END AREA		VOLUME	
CUT	FILL	CUT	FILL
123^A	123^B		
53	7		
		237^A	237^B
		89	10
132^A	132^B		
43	3		
215^A	215^B		
61	3		
100^A	100^B		
22	0		
452^A	452^B		
150	13		

SHEET TOTAL

CALCULATED AMD | CHECKED JRW

CROSS SECTIONS - JEFFERSON ST. STA. 5+00 TO STA. 6+00

LAW-93-0.00

136
788

J:\Project\OA\ODOT\15005112 Ironton Russell\LAW\81595\roadway\sheets\81595XS046.dgn - 4/25/2011 6:54:25 AM - jon_wanstrath

SEEDING	
END WIDTH	SQ. YDS.

Link to 279-000-000
Drainage Structures
As-Built

℄ CONST. JEFFERSON ST.

EX. R/W

BUILDING

EX. R/W

Temp. Esmt.

SAW CUT

EX CURB

6" WATER

EX. WATER

15" STM. (ABANDON)

541.33
7+21.77
541.11

545
540
535
530

M/L 3RD ST.
STA. 52+50

M/L 3RD ST.
STA. 51+50

8" SAN.

EX. 6" GAS

6" WATER

EX. WATER

6" WATER

15" STM. (ABANDON)

541.53
7+00.77
541.45
RESUME EARTHWORK

STA. 6+97.62, 53.83' RT.
EX. SAN. LAMP HOLE
ADJUST TO GRADE
TOP OF COVER EL. UNK
℄ 8" (SE) EL. UNK
FULL OF DEBRIS, COLLAPSED
& PAVED OVER

8" SAN.

STA. 6+98.24, 42.19' LT.
EX. SAN. LAMP HOLE
ADJUST TO GRADE
TOP OF COVER EL. UNK
℄ 8" (NW) EL. UNK
FULL OF DEBRIS, COLLAPSED
& PAVED OVER

STA. 52+35.00, 28.77' LT
℄ CONST. 3RD STREET
PROP. M.H. NO. 3
SEE STORM SEWER PROFILES

8-D

STA. 6+60.31, 21.08' LT.
EX. STM. MH W/GRATE LID (TO BE REMOVED)
TOP OF GRATE EL. 541.60
℄ 10" (SE) EL. 537.24

STA. 6+60.00, 21.48' RT.
EX. CB (TO BE REMOVED)
TOP OF GRATE EL. 540.89
℄ 10" (N) EL. 537.19

202 - PAVEMENT REMOVED

204 GRANULAR MATERIAL, TYPE B
EXCAVATION (A) & EMBANKMENT (B)

8" SAN.

12" WATER

6" WATER

FROM 7-D

47' - PROP. 18"
TYPE B @ 0.30%

137' - PROP. 12"
TYPE B @ 0.44%

FROM 2-D

10" STM.
(TO BE REMOVED)

EX. 6" GAS

10" STM.
(TO BE REMOVED)

8" SAN.

STA. 6+64.39, 51.37' LT.
EX. SAN. LAMP HOLE
ADJUST TO GRADE
TOP OF COVER EL. UNK
℄ 8" (NW) EL. UNK
FULL OF DEBRIS, COLLAPSED
& PAVED OVER

541.91
6+50.00
541.78
SUSPEND EARTHWORK

STA. 6+67.02, 9.02' RT.
EX. STM. MH
(TO BE REMOVED)
TOP OF COVER EL. 541.75
℄ 10" (NW) EL. 536.39
℄ 10" (S) EL. 536.33
℄ 12" (SW) EL. 535.84
℄ 15" (NE) EL. EL. 535.84

STA. 6+64.16, 52.57' RT.
EX. SAN. LAMP HOLE
ADJUST TO GRADE
TOP OF COVER EL. UNK
℄ 8" (SE) EL. UNK
FULL OF DEBRIS, COLLAPSED
& PAVED OVER

STA. 6+00.00

FOR DRIVEWAY AND PARKING AREA DETAILS
AND QUANTIITES SEE SHEETS 158-161

SHEET TOTAL

50 40 30 20 10 0 10 20 30 40 50

END AREA		VOLUME	
CUT	FILL	CUT	FILL
87^A	87^B		
21	5		
		112^A	112^B
		25	2
200^A	200^B		
43	0		
		306^A	306^B
		185	9
224^A	224^B		
157	3		
123^A	123^B		
53	7		
418^A	418^B		
210	11		

CALCULATED AMD
CHECKED JRW

CROSS SECTIONS - JEFFERSON ST. STA. 6+50 TO STA. 7+21.77

LAW-93-0.00

137
788

FOR SEEDING QUANTITIES SEE SHEET 347

J:\Project\O\ODOT\15005112 Ironton Russell\LAW\81595\roadway\sheets\81595XS047.dgn - 4/25/2011 6:54:25 AM - jon_wanstrath

SEEDING	
END WIDTH	SQ. YDS.

℄ CONST. JEFFERSON ST.

TOTALS CARRIED TO SHEET NO. 49

204 GEOTEXTILE FABRIC

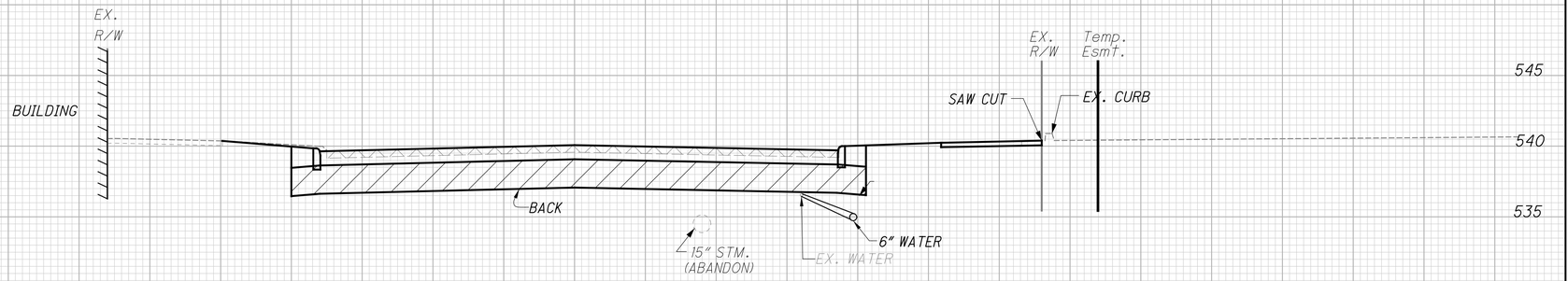

540.07
8+50
540.07

END PROP. PAVEMENT MATCH EXISTING

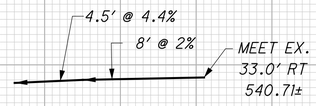

+96 ℄ DRIVE
W = 23' L = 12.5'

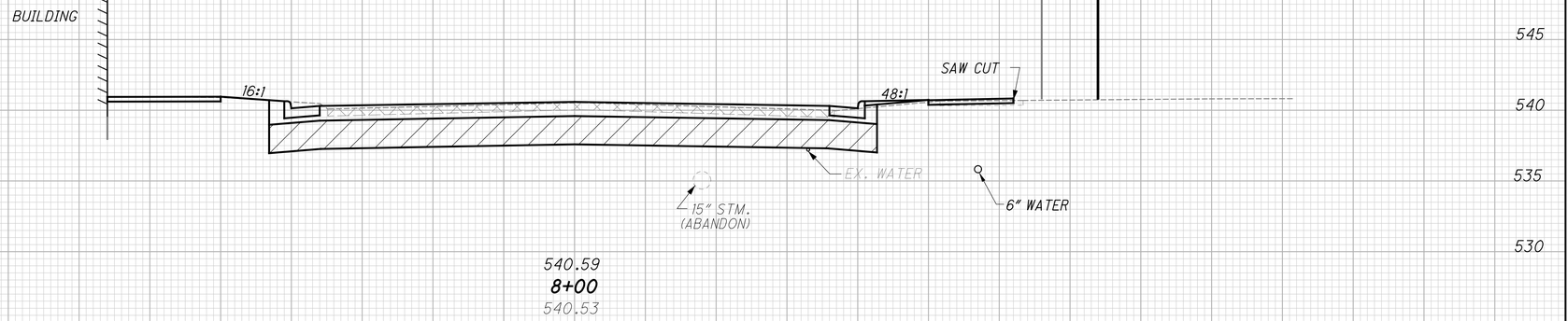

540.59
8+00
540.53

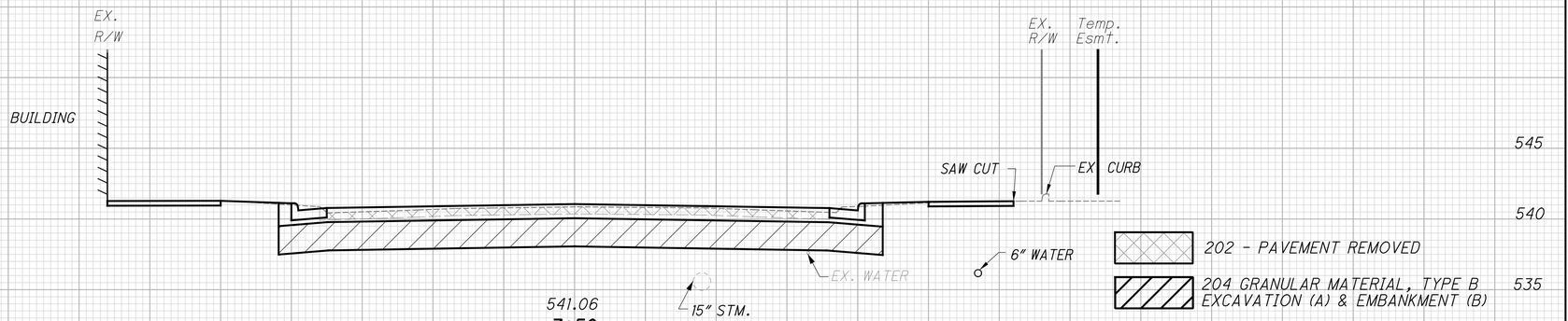

541.06
7+50
540.86

202 - PAVEMENT REMOVED

204 GRANULAR MATERIAL, TYPE B EXCAVATION (A) & EMBANKMENT (B)

STA. 7+21.77

FOR DRIVEWAY AND PARKING AREA DETAILS AND QUANTIITES SEE SHEETS 158-161

50 40 30 20 10 0 10 20 30 40 50

FOR SEEDING QUANTITIES SEE SHEET 347

END AREA		VOLUME	
CUT	FILL	CUT	FILL
		A 2023	B 2047
		860	62
		3197	SY
82 A 25	82 B 5		
		156 A 46	156 B 8
86 A 24	86 B 3		
		160 A 45	160 B 7
86 A 24	86 B 4		
		91 A 24	91 B 5
87 A 21	87 B 5		
		407 A	407 B
		115	20

CALCULATED AMD
CHECKED JRW

CROSS SECTIONS - JEFFERSON ST. STA. 7+50 TO STA. 8+50

LAW-93-0.00

138
788

J:\Project\OJODOT\15005112 Ironton Russell\LAW\81595\roadway\sheets\81595XS048.dgn - 4/25/2011 6:54:26 AM - jon_wanstrath

Link to 279-000-000
Drainage Structures
As-Built

℄ R/W MONROE ST.

MEET 93C
STA. 36+00

PROP. SIDEWALK

EX. 10" STM.

EX. 10" WATER

EX. 12" WATER

STA. 8+68.87, 15.01' RT.
EX. STM. M.H.

EX. 10" STM.

STA. 8+64.92, 33.99' LT.
EX. CATCH BASIN (DO NOT DISTURB)
TOP OF GRATE EL. 541.63
℄ 10" (S.E.) EL. 539.99
℄ 8" (S.) EL. 540.01

STA. 8+64.77, 35.54' RT.
(DO NOT DISTURB) EX. CATCH BASIN
TOP OF GRATE EL. 541.60
℄ 8" (W.) EL. 539.22
℄ 10" (N.W.) EL. 539.41

8+50
542.44

EX.
R/W

LIMITS OF SELECT
GRANULAR BACKFILL

FACE OF WALL

PROP. SIDEWALK

0.02

39-D
STA. 35+74.00, 28.00' RT
℄ CONST. 93C
PROP. M.H. NO. 3
SEE STORM SEWER PROFILE

FROM 38D

EX. 12" WATER

15" STM.

8+00
543.34

45-D
STA. 34+98.08, 51.84' LT
℄ CONST. 93C
PROP. M.H. NO. 3
SEE STORM SEWER PROFILE

STA.35+37.24, 72.65' LT.
℄ CONST. 93C
PROP. M.H. NO. 3, AS PER PLAN
SEE STORM SEWER PROFILE
44-D

Ex.
R/W

EX.
R/W

℄ DWY

0.08 0.02 0.08 0.08 0.02

PROP. SIDEWALK

EX. 12" WATER

15" STM.

WEIR
WALL

FROM 43-D

PROP. 36"

PROP. 36"

PROP. 60"

PROP. 60" STUB
FOR FUTURE CONNECTION

TO 46-D

7+25
543.90

PROP. SIDEWALK

EX. 12" WATER

15" STM.

7+07.10 BEGIN WORK
544.66

FOR DRIVEWAY AND PARKING AREA DETAILS
AND QUANTIITES SEE SHEETS 158-161

545 540 535 550 530

50 40 30 20 10 0 10 20 30 40 50

FOR SEEDING QUANTITIES SEE SHEET 347

SEEDING	
END WIDTH	SQ. YDS.

END AREA		VOLUME	
CUT	FILL	CUT	FILL
		113	10

CALCULATED AMD
CHECKED SCC

CROSS SECTIONS - MONROE ST.
STA. 7+00 TO STA. 8+50

LAW-93-0.00

139
788

J:\Project\OV\ODOT\15005112 Ironton Russell\LAW\81595\roadway\sheets\81595XS049.dgn - 4/25/2011 6:54:27 AM - jon_wanstrath

SUPERELEVATION TABLE

PI STA. 35+24.08 | Dc = 8° 48′ 53″

LEFT SIDE					CENTERLINE CONTROL		RIGHT SIDE					REMARKS
EDGE ELEVATION	TRANSITION RATE	ELEVATION CORRECTION	CROSS SLOPE	WIDTH	STATION	PROFILE GRADE	WIDTH	CROSS SLOPE	ELEVATION CORRECTION	TRANSITION RATE	EDGE ELEVATION	
596.91		-0.19	-0.0160	12.00	29+50.00	597.10	12.00	-0.0160	-0.19		596.91	
596.66		-0.19	-0.0160	12.00	29+75.00	596.85	12.00	-0.0160	-0.19		596.66	
596.56		-0.19	-0.0160	12.00	29+84.79	596.75	12.00	-0.0160	-0.19	▲	596.56	NC
596.40		-0.20	-0.0160	12.56	30+00.00	596.60	12.00	-0.0099	-0.12		596.48	
596.07		-0.22	-0.0160	13.48	30+24.79	596.28	12.00	-0.0000	-0.00	2%:1	596.28	LEVEL
595.70		-0.23	-0.0160	14.22	30+44.79	595.92	12.00	0.0080	0.10		596.02	PC
595.59		-0.23	-0.0160	14.42	30+50.00	595.82	12.00	0.0101	0.12		595.94	
595.24		-0.24	-0.0160	14.96	30+64.79	595.48	12.00	0.0160	0.19	▼	595.67	FS
594.97		-0.25	-0.0160	15.34	30+75.00	595.21	12.00	0.0160	0.19		595.40	
594.44		-0.26	-0.0160	16.00	30+92.79	594.69	12.00	0.0160	0.19		594.89	
594.21		-0.26	-0.0160	16.00	31+00.00	594.46	12.00	0.0160	0.19		594.66	
593.32		-0.26	-0.0160	16.00	31+25.00	593.57	12.00	0.0160	0.19		593.77	
592.29		-0.26	-0.0160	16.00	31+50.00	592.54	12.00	0.0160	0.19		592.74	
591.11		-0.26	-0.0160	16.00	31+75.00	591.37	12.00	0.0160	0.19		591.56	
589.80		-0.26	-0.0160	16.00	32+00.00	590.05	12.00	0.0160	0.19		590.25	
588.34		-0.26	-0.0160	16.00	32+25.00	588.60	12.00	0.0160	0.19		588.79	
586.84		-0.26	-0.0160	16.00	32+50.00	587.10	12.00	0.0160	0.19		587.29	
585.34		-0.26	-0.0160	16.00	32+75.00	585.60	12.00	0.0160	0.19		585.79	
583.84		-0.26	-0.0160	16.00	33+00.00	584.10	12.00	0.0160	0.19		584.29	
582.34		-0.26	-0.0160	16.00	33+25.00	582.60	12.00	0.0160	0.19		582.79	
580.84		-0.26	-0.0160	16.00	33+50.00	581.10	12.00	0.0160	0.19		581.29	
579.34		-0.26	-0.0160	16.00	33+75.00	579.60	12.00	0.0160	0.19		579.79	
577.84		-0.26	-0.0160	16.00	34+00.00	578.10	12.00	0.0160	0.19		578.29	
576.34		-0.26	-0.0160	16.00	34+25.00	576.60	12.00	0.0160	0.19		576.79	
574.84		-0.26	-0.0160	16.00	34+50.00	575.10	12.00	0.0160	0.19		575.29	
573.34		-0.26	-0.0160	16.00	34+75.00	573.60	12.00	0.0160	0.19		573.79	
572.64		-0.26	-0.0160	16.00	34+86.77	572.89	12.00	0.0160	0.19		573.09	
571.84		-0.26	-0.0160	16.00	35+00.00	572.10	12.49	0.0160	0.20		572.30	
570.34		-0.26	-0.0160	16.00	35+25.00	570.60	13.42	0.0160	0.21		570.81	
568.84		-0.26	-0.0160	16.00	35+50.00	569.10	14.34	0.0160	0.23		569.33	
567.34		-0.26	-0.0160	16.00	35+75.00	567.60	15.27	0.0160	0.24		567.84	
565.84		-0.26	-0.0160	16.00	36+00.00	566.10	16.19	0.0160	0.26		566.36	
564.34		-0.26	-0.0160	16.00	36+25.00	564.60	17.12	0.0160	0.27		564.87	
562.84		-0.26	-0.0160	16.00	36+50.00	563.10	18.05	0.0160	0.29		563.39	
561.34		-0.26	-0.0160	16.00	36+75.00	561.60	18.97	0.0160	0.30		561.90	
559.87		-0.26	-0.0160	16.00	37+00.00	560.12	19.90	0.0160	0.32		560.44	
558.45		-0.26	-0.0160	16.00	37+25.00	558.71	20.82	0.0160	0.33		559.04	
557.10		-0.26	-0.0160	16.00	37+50.00	557.36	21.75	0.0160	0.35		557.71	
555.81		-0.26	-0.0160	16.00	37+75.00	556.07	22.68	0.0160	0.36		556.43	
554.59		-0.26	-0.0160	16.00	38+00.00	554.85	23.60	0.0160	0.38		555.22	
554.08		-0.26	-0.0160	16.00	38+10.77	554.34	24.00	0.0160	0.38		554.72	
553.43		-0.26	-0.0160	16.00	38+25.00	553.69	24.00	0.0160	0.38		554.07	
552.73		-0.26	-0.0160	16.00	38+40.77	552.99	24.00	0.0160	0.38	▲	553.37	FS
552.34		-0.25	-0.0160	15.38	38+50.00	552.59	24.00	0.0135	0.32		552.91	
551.50		-0.22	-0.0160	14.00	38+70.77	551.72	24.00	0.0080	0.19		551.91	PT
551.33		-0.22	-0.0160	13.72	38+75.00	551.55	24.00	0.0069	0.16		551.72	
550.36		-0.19	-0.0160	12.00	39+00.77	550.55	24.00	-0.0000	-0.00	15%:1	550.55	LEVEL
549.48		-0.19	-0.0160	12.00	39+25.00	549.67	24.00	-0.0065	-0.16		549.52	
548.63		-0.19	-0.0160	12.00	39+50.00	548.83	24.00	-0.0131	-0.32		548.51	
548.29		-0.19	-0.0160	12.00	39+60.77	548.48	24.00	-0.0160	-0.38	▼	548.10	NC
547.85		-0.19	-0.0160	12.00	39+75.00	548.04	24.00	-0.0160	-0.38		547.66	
547.13		-0.19	-0.0160	12.00	40+00.00	547.33	24.00	-0.0160	-0.38		546.94	

SUPERELEVATION TABLE

LEFT SIDE					CENTERLINE CONTROL		RIGHT SIDE					REMARKS
EDGE ELEVATION	TRANSITION RATE	ELEVATION CORRECTION	CROSS SLOPE	WIDTH	STATION	PROFILE GRADE	WIDTH	CROSS SLOPE	ELEVATION CORRECTION	TRANSITION RATE	EDGE ELEVATION	

CALCULATED BLW | CHECKED SCC

SUPERELEVATION TABLE
93C - PI STA. 35+24.08

LAW-93-0.00

140
788

J:\Project\O\ODOT\15005112 Ironton Russell\LAW\81595\roadway\sheets\81595GE001.dgn - 4/25/2011 6:54:28 AM - jon_wanstrath

℄ EX. R/W US 23 CURVE DATA
P.I. STA. 342+55.30
Δ = 7° 18′ 00″ (LT)
Dc = 2° 00′ 00″
R = 2,864.94′
T = 182.76′
L = 365.02′
E = 5.82′

* 10′ TRANSITION CURB HEIGHT FROM 0″ TO 6″

POINT	93C STATION	OFFSET
(A)	8+35.00	32.00′ LT
(B)	9+02.60	70.91′ LT
(C)	9+33.40	98.79′ LT
(D)	9+57.10	131.86′ LT

LEGEND
(1) LONGITUDINAL JOINT W/ TIE BARS
(2) LONGITUDINAL JOINT W/O TIE BARS
(3) CONTRACTION JOINT
(4) EXPANSION JOINT
X.XX PROPOSED ELEV. +600′

HORIZONTAL SCALE IN FEET
0 5 10 20

CALCULATED BLW CHECKED SCC

INTERSECTION DETAIL
93C AND US 23

LAW-93-0.00

141
788

J:\Project\OV\ODOT\15005112 Ironton Russell\LAW\81595\roadway\sheets\81595ci004.dgn - 4/25/2011 6:54:30 AM - jon_wanstrath

STA. 7+88.98 ℄ CONST. 93C = STA. 341+84.55 ℄ R/W US 23
MEET EX. MEDIAN
SAWCUT
CONCRETE MEDIAN
REMOVE EX. RAISED ISLANDS REPLACE WITH FLUSH SURFACE
FLOW LINE NEAR CB
PC Sta. 340+72.54
67°34′45″ TO TAN.
31°11′04″ 35′ RADIUS POINT 8+51.59, 64.60′ LT L = 19.05′
SAWCUT
MEET EX. MEDIAN
℄ R/W US 23
S 25° 02′ 26″ E
CONCRETE MEDIAN
RESUME SAWCUT
EDGE OF EX. ISLAND TO BE REMOVED
SUSPEND SAWCUT
BUTT JOINT
EOP
8′ SHDR
342+54.18, 40′ LT
2824.94′ R
ASPHALT SHDR. CONCRETE SHDR.
56°36′21″ 80′ RADIUS POINT 8+75.22, 107.74′ RT L = 79.04′
BEGIN CURB
8+58.09, 29.60′ RT
6.88′ @ 0.04
STA. 8+71.73 ℄ CONST. 93C = STA. 45+45.45 ℄ R/W BELLEFONTE STREET
5.72′ @ 0.04
4.95′ @ 0.04
4.34′ @ 0.03
9°21′ 500′ RADIUS POINT 9+65.16, 518′ RT L = 81.61′
FLOW LINE NEAR CB
℄ CONST. 93C N 40° 17′ 54″ E
9+38.87 18.69′ RT
℄ CONST. 93C
APPROACH SLAB
PRESSURE RELIEF JOINT, TYPE A
2′ (TYP.)
9+46.41 38.94′ LT
9+53.25 34.95′ LT
9°05′ 50′ RADIUS POINT 9+74.94, 80′ LT L = 7.93′
78°22′32″ 30′ RADIUS POINT 9+63.53, 63.58′ LT L = 41.04′
12°27′13″ 200′ RADIUS POINT 44+05.28, 209.94′ LT L = 43.47′
44+47.03 13.82′ LT
44+103.55 9.99′ LT
4′ SHDR
BEGIN CURB
6′ SHDR
339+91.77 37.19′ LT
599.81
599.69 MEET EX. CURB
BUTT JOINT
599.98 MEET EX. BRIDGE CURB
℄ R/W BELLEFONTE ST.
0.46 F/C
159°22′44″ 25′ RADIUS POINT 43+88.78, 39.75′ RT L = 69.54′
℄ PRESSURE RELIEF JOINT, TYPE B STA. 44+03.97 BELLEFONTE
43+88.78 14.75′ RT
0.54 MEET EX. BRIDGE CURB
BUTT JOINT
1.00′RT

CURB RAMP, TYPE B3			
℄	STATION	OFFSET	SIDE
BELLEFONTE	44+03.55	13.49	LT.

℄ EX R/W BELLEFONTE STREET CURVE DATA
P.I. STA. 45+57.46
Δ = 18° 10′ 00″ (LT)
Dc = 2° 59′ 59″
R = 1,910.00′
T = 305.36′
L = 605.60′
E = 24.26′

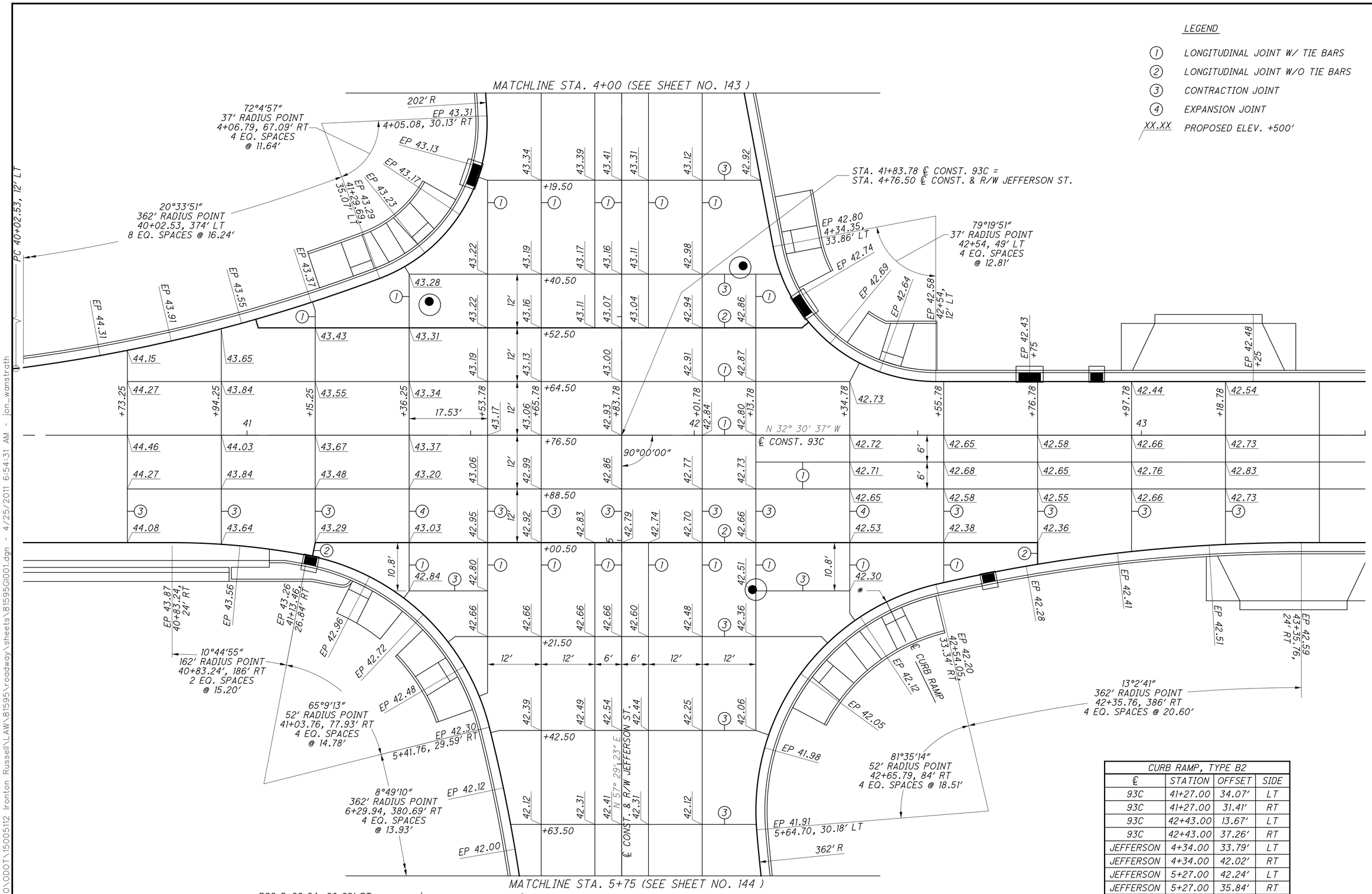

CURB RAMP, TYPE B2			
℄	STATION	OFFSET	SIDE
93C	41+27.00	34.07'	LT
93C	41+27.00	31.41'	RT
93C	42+43.00	13.67'	LT
93C	42+43.00	37.26'	RT
JEFFERSON	4+34.00	33.79'	LT
JEFFERSON	4+34.00	42.02'	RT
JEFFERSON	5+27.00	42.24'	LT
JEFFERSON	5+27.00	35.84'	RT

* LOCATION OF STATION OFFSET FOR CURB RAMPS (TYP.)

HORIZONTAL SCALE IN FEET 0 5 10 20

CALCULATED BLW
CHECKED SCC

INTERSECTION DETAIL 93C AND JEFFERSON ST.

LAW-93-0.00

J:\Project\O\ODOT\15005112 Ironton Russell\LAW\81595\roadway\sheets\81595G1001.dgn - 4/25/2011 6:54:31 AM - jon_wanstrath

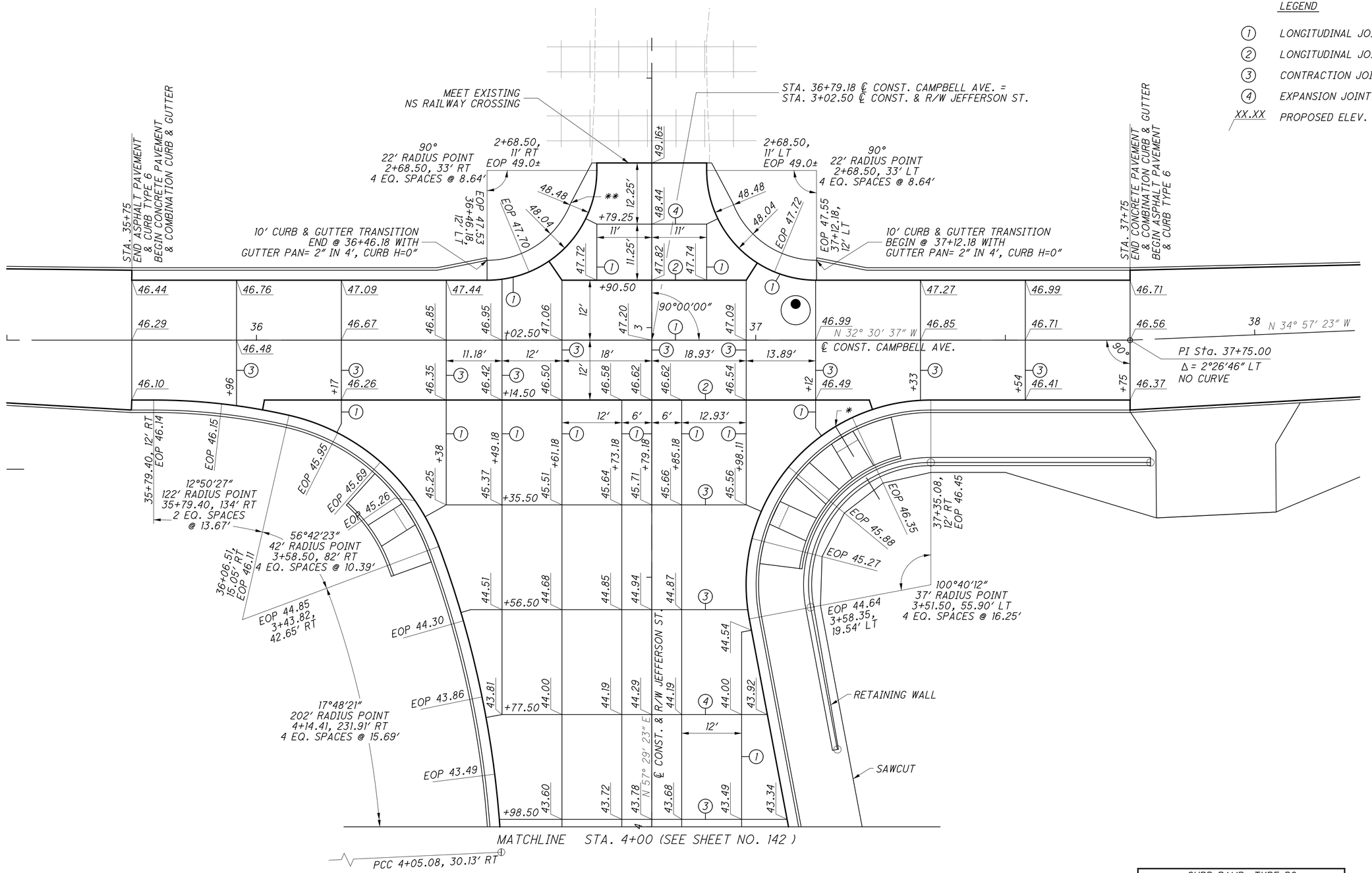

CURB RAMP, TYPE B2			
℄	STATION	OFFSET	SIDE
CAMPBELL	37+16.00	17.30'	RT
JEFFERSON	3+36.00	22.30'	LT
JEFFERSON	3+36.00	46.54'	RT

* LOCATION OF STATION OFFSET FOR CURB RAMPS (TYP.)

** STA. 2+75 TAPER SHOULDER TO MEET EXISTING (TYPICAL LT. & RT) SHOULDER CROSS SLOPE SAME AS PAVEMENT.

HORIZONTAL SCALE IN FEET 0 5 10 20

CALCULATED BLW CHECKED SCC

INTERSECTION DETAIL CAMPBELL AVE. AND JEFFERSON ST.

LAW-93-0.00

143 788

J:\Project\OA\ODOT\15005112 Ironton Russell\LAW\81595\roadway\sheets\81595GI002.dgn - 4/25/2011 6:54:32 AM - jon_wanstrath

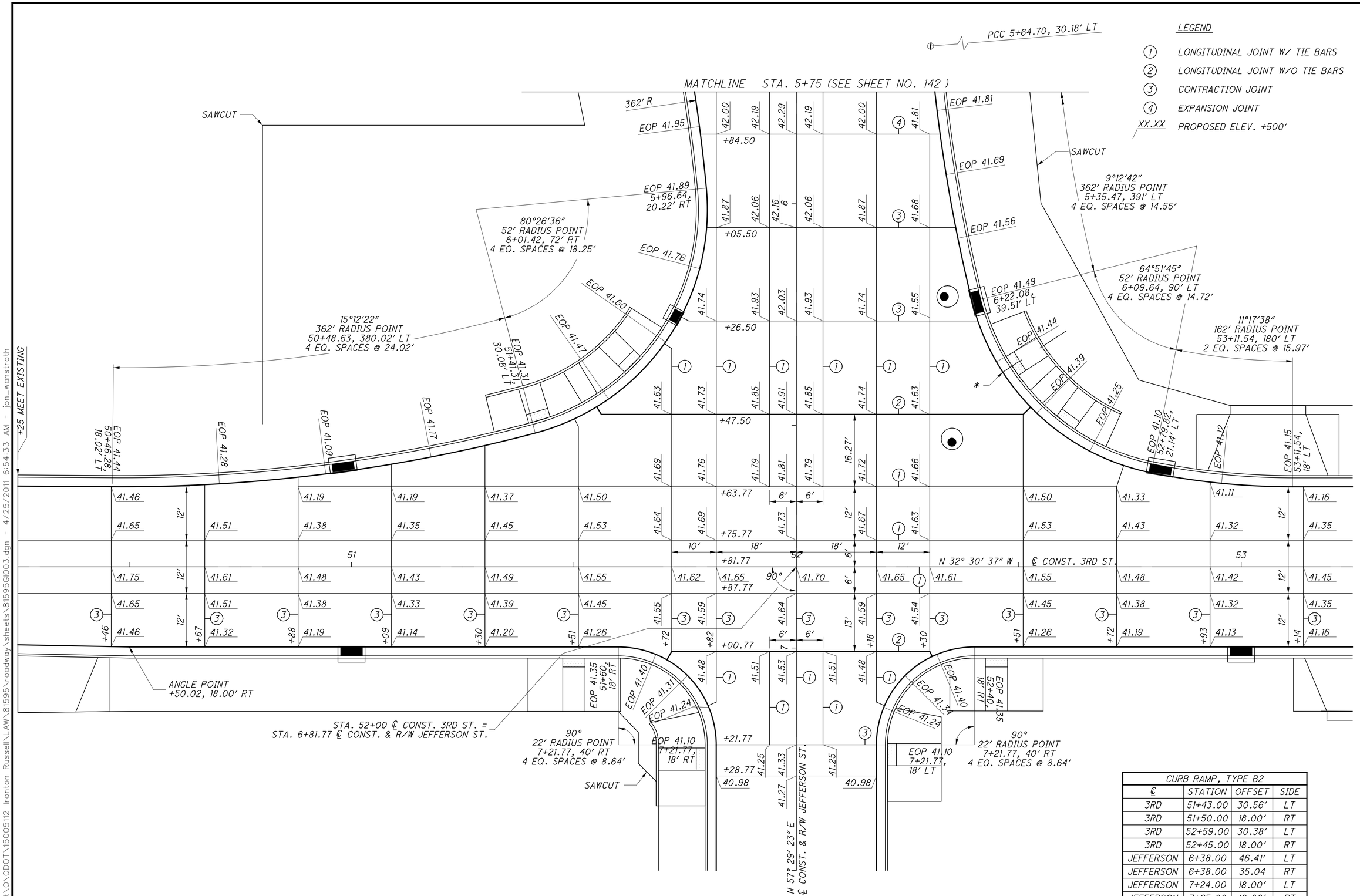

CURB RAMP, TYPE B2			
℄	STATION	OFFSET	SIDE
3RD	51+43.00	30.56'	LT
3RD	51+50.00	18.00'	RT
3RD	52+59.00	30.38'	LT
3RD	52+45.00	18.00'	RT
JEFFERSON	6+38.00	46.41'	LT
JEFFERSON	6+38.00	35.04	RT
JEFFERSON	7+24.00	18.00'	LT
JEFFERSON	7+25.00	18.00'	RT

* LOCATION OF STATION OFFSET FOR CURB RAMPS (TYP.)

HORIZONTAL SCALE IN FEET
0 5 10 20

CALCULATED BLW
CHECKED SCC

INTERSECTION DETAIL
3RD ST. AND JEFFERSON ST.

LAW-93-0.00

J:\Project\O\ODOT\15005112 Ironton Russell\LAW\81595\roadway\sheets\81595GI003.dgn - 4/25/2011 6:54:33 AM - jon_wanstrath

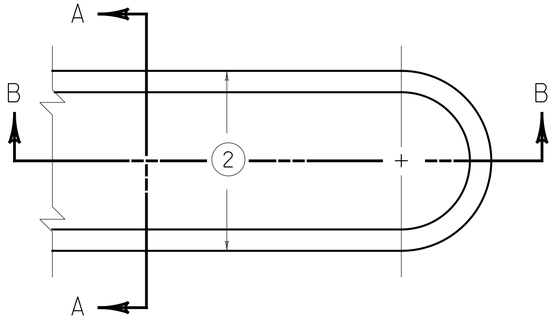

PLAN VIEW
MOUNTABLE MEDIAN

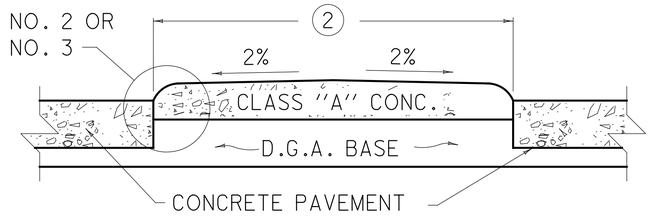

SECTION A-A

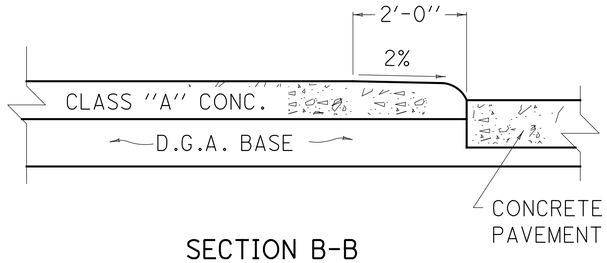

SECTION B-B
MOUNTABLE MEDIAN
WITH RIGID PAVEMENT
(TYPE 1 & TYPE 1A)

NOTES

1. THE UNIT BID PER SQUARE YARD SHALL BE: MOUNTABLE MEDIAN TYPE ★.
   ★ = 1 OR 1A OR 2 OR 2A OR 3 OR 3A OR 4 OR 5.
   (THE LETTER ''A'' DENOTES LIP CURB, NO. 3)
2. SEE PLANS FOR CONSTANT OR VARIABLE WIDTH DIMENSIONS.
3. DEPTH OF CONCRETE SHALL BE SHOWN ELSEWHERE ON THE PLANS, (MIN. OF 6'').

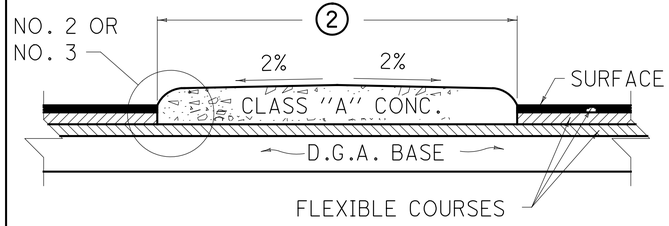

SECTION A-A

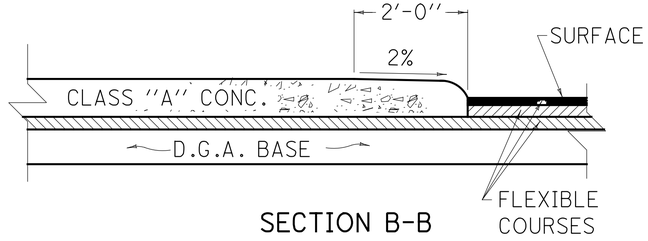

SECTION B-B
MOUNTABLE MEDIAN
WITH FLEXIBLE PAVEMENT
(TYPE 2 & TYPE 2A)

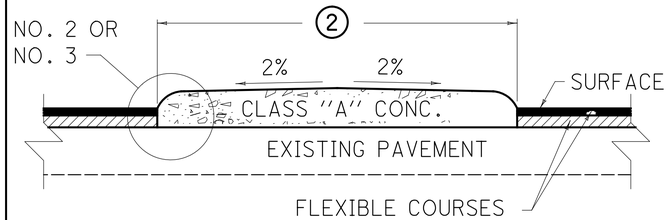

SECTION A-A

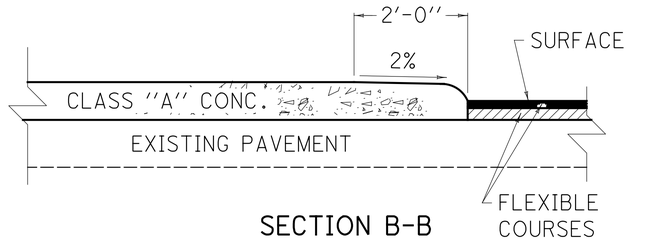

SECTION B-B
MOUNTABLE MEDIAN
ON EXISTING PAVEMENT
(TYPE 3 & TYPE 3A)

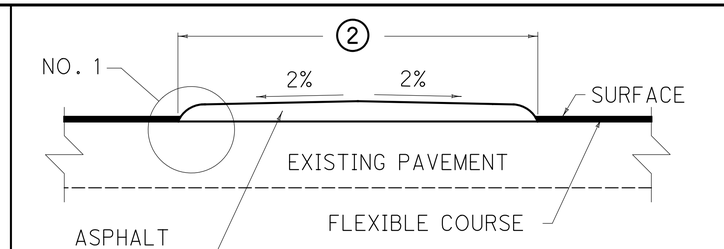

SECTION A-A

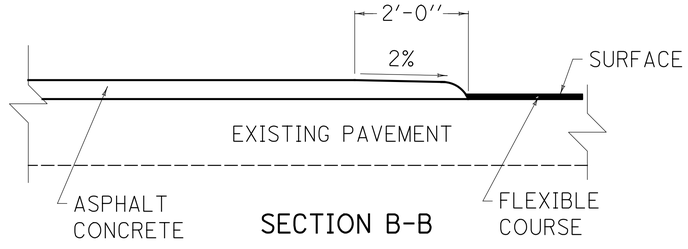

SECTION B-B
MOUNTABLE MEDIAN
ON EXISTING PAVEMENT
(TYPE 4)

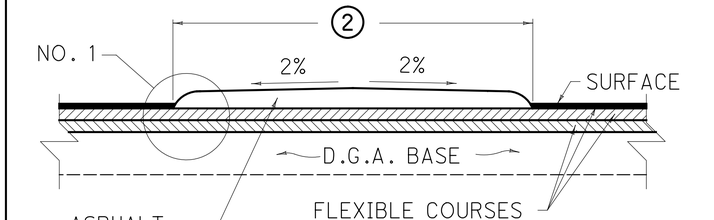

SECTION A-A

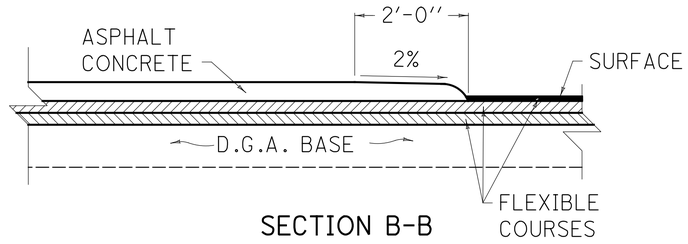

SECTION B-B
MOUNTABLE MEDIAN
WITH FLEXIBLE PAVEMENT
(TYPE 5)

NO. 1

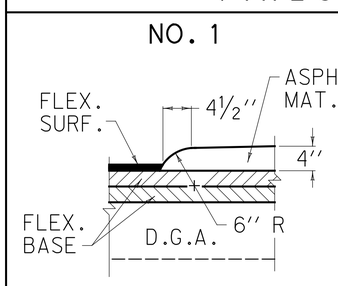

NO. 2

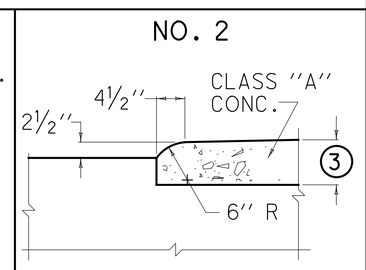

NO. 3

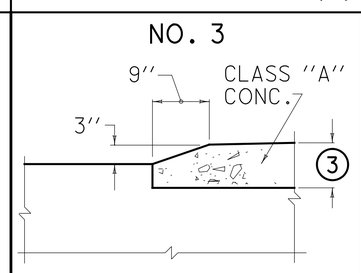

KENTUCKY STANDARD DRAWING RPM-011
MOUNTABLE MEDIAN

CALCULATED
CHECKED

LAW-93-0.00

J:\Project\OVODOT\15005112 Ironton Russell\LAW\81595\roadway\sheets\Updated and Reformatted KY SD\81595RPM011SD.dgn - 4/25/2011 6:54:35 AM - jon_wanstrath

STANDARD CURB & GUTTER

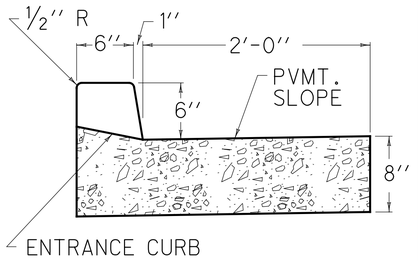

BARRIER CURB & GUTTER

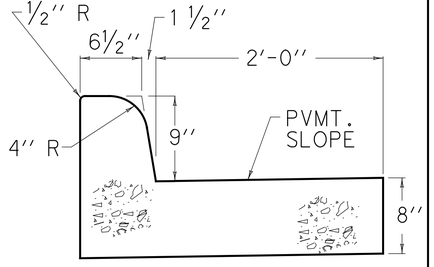

LIP CURB & GUTTER

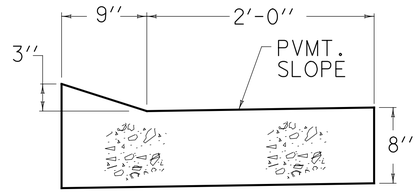

ISLAND CURB & GUTTER

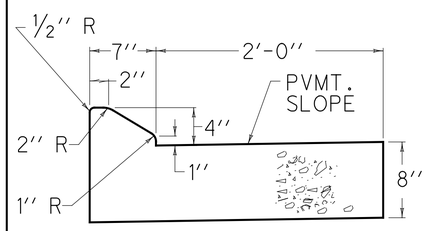

① STANDARD INTEGRAL CURB

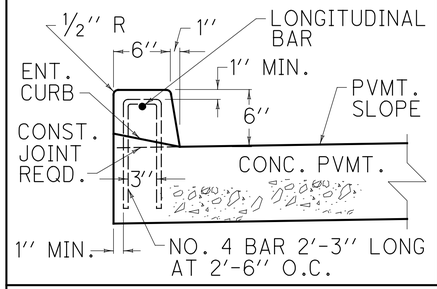

BARRIER INTEGRAL CURB

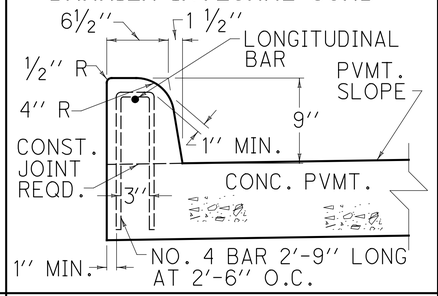

LIP INTEGRAL CURB

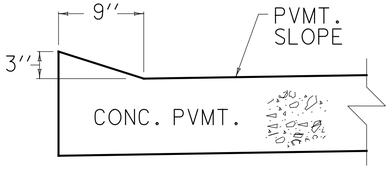

CONST. JOINT NOT PERMITTED

ISLAND INTEGRAL CURB

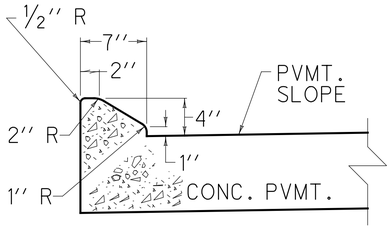

CONST. JOINT NOT PERMITTED

STANDARD HEADER CURB

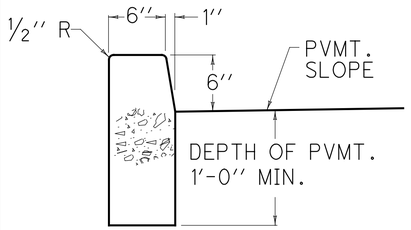

BARRIER HEADER CURB

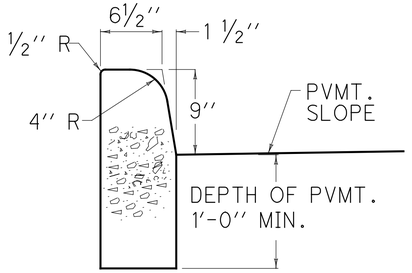

LIP HEADER CURB

ISLAND HEADER CURB TYPE 1

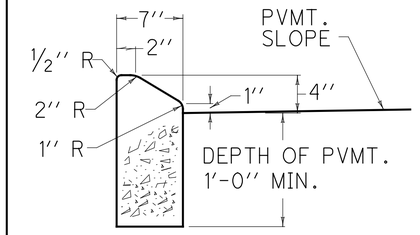

ISLAND HEADER CURB TYPE 2

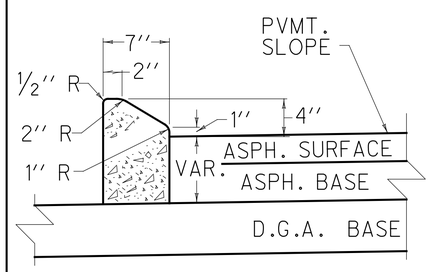

② STANDARD INTEGRAL CURB

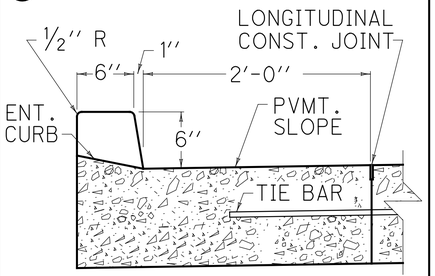

VALLEY GUTTER

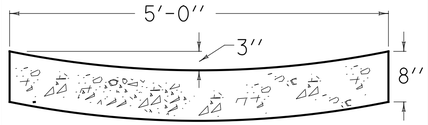

ASPHALT WEDGE CURB

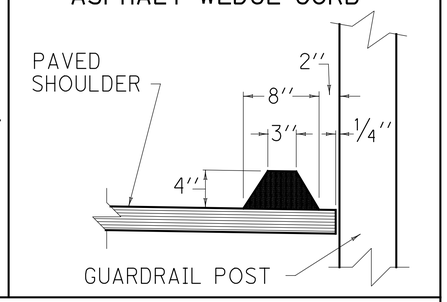

÷ NOTES ÷

ALL INTEGRAL CURBS SHOWING REINFORCING STEEL SHALL BE CAST SEPARATELY FROM THE PAVEMENT AND THE REINFORCEMENT SHALL CONSIST SOLELY OF NO. 4 BARS AS DETAILED ON THIS DRAWING. ON CONSTRUCTION CARE SHOULD BE TAKEN SO THAT NO REINFORCEMENT BARS ARE CLOSER THAN 3'' TO THE CENTER OF THE SAWED TRANSVERSE JOINT.

①② THE CONTRACTOR HAS THE OPTION OF CONSTRUCTING THE STANDARD INTEGRAL CURB AS DETAILED IN EITHER ① OR ② . IF ② IS CHOSEN A LONGITUDINAL CONSTRUCTION JOINT SHALL BE REQUIRED AND THE REMAINING PAVEMENT AND CURB SHALL BE CONSTRUCTED MONOLITHIC WITHOUT A HORIZONTAL CONSTRUCTION JOINT AND ACCOMPANYING REINFORCING STEEL.

CALCULATED | CHECKED

KENTUCKY STANDARD DRAWING RPM-100
CURB AND GUTTER, CURBS, AN VALLEY GUTTER

LAW-93-0.00

146
788

J:\Project\0\ODOT\15005112 Ironton Russell\LAW\81595\roadway\sheets\Updated and Reformatted KY SD\81595RPM100SD.dgn - 4/25/2011 6:54:36 AM - jon_wanstrath

DETAIL (1)

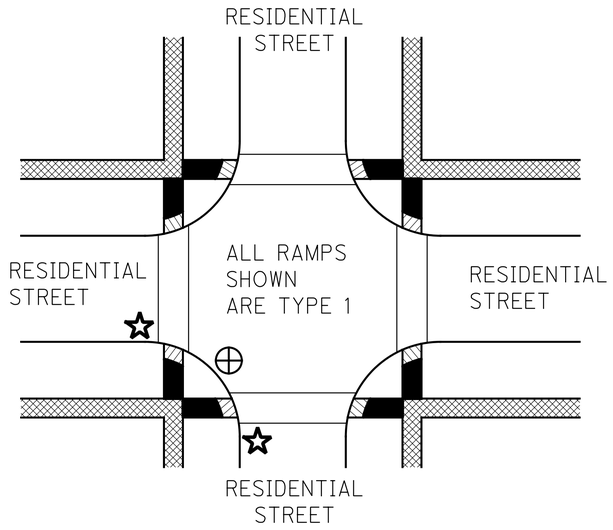

NORMAL TREATMENT IN RESIDENTIAL AREA

DETAIL (3)

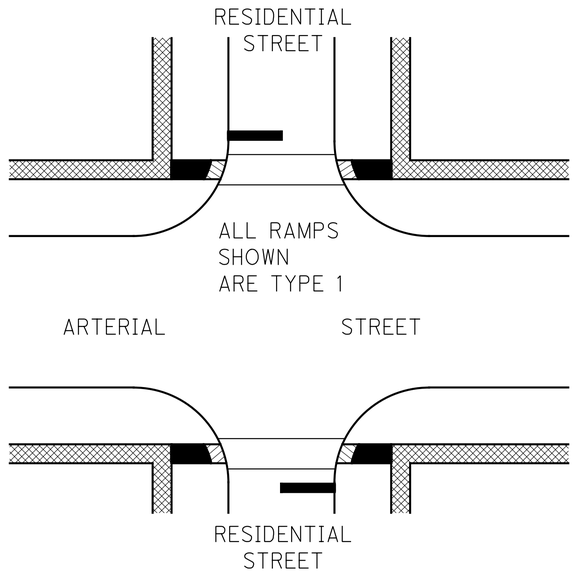

NO TRAFFIC SIGNAL WITH
HEAVY TRAFFIC ON ARTERIAL

DETAIL (5)

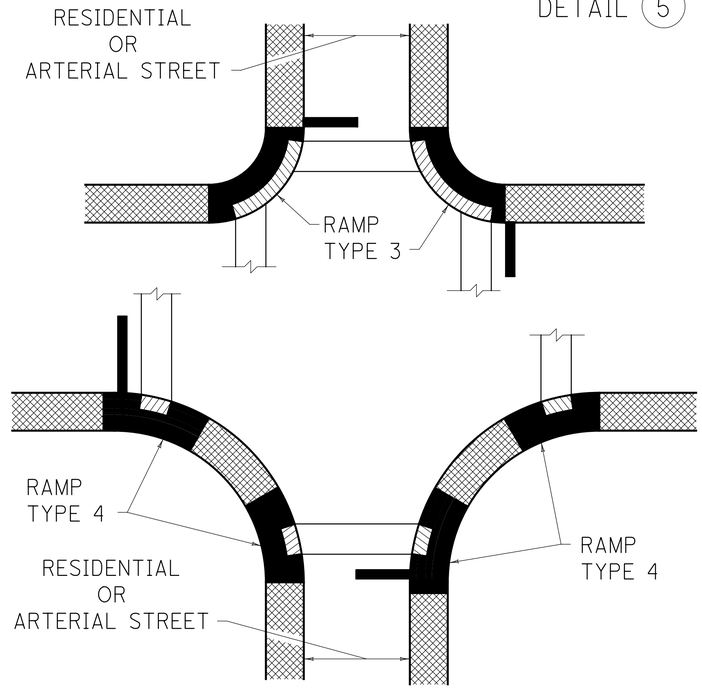

SIDEWALK ADJACENT TO CURB
LARGE AND SMALL RADII

DETAIL (2)

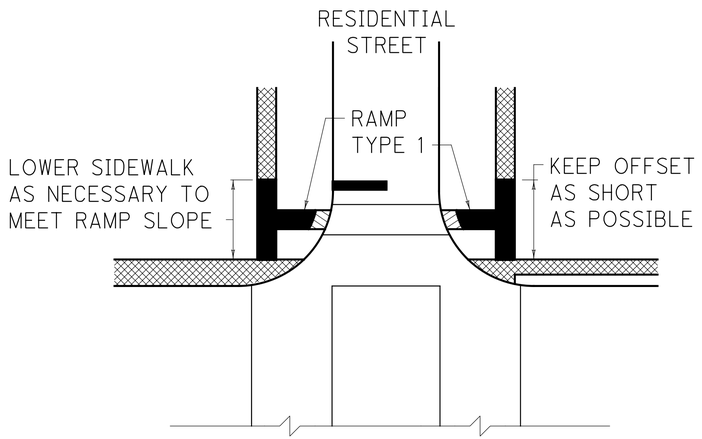

MAY BE USED ONLY WHERE TRAFFIC IS LOW
AND WHERE OTHER FEATURES MAKE
DETAIL (1) IMPRACTICAL.

DETAIL (4)

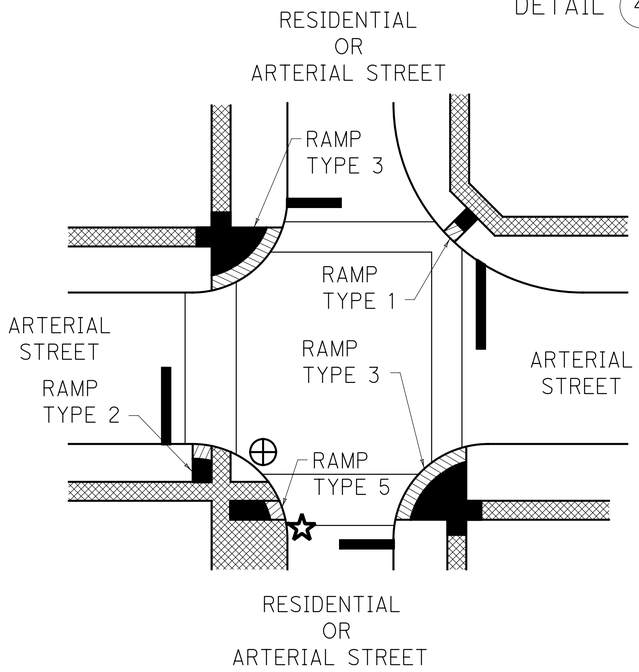

SIGNALIZED INTERSECTION
TYPICAL RAMP TREATMENTS

LEGEND

- DETECTABLE WARNINGS
- SIDEWALK
- SIDEWALK RAMPS
- CROSSWALK
- STOP LINE MARKING
- PERFERRED LOCATION OF DRAINAGE INLET (TYPICAL)
- ALTERNATE LOCATION OF DRAINAGE INLET (TYPICAL)

USE WITH CUR. STD. DRAWINGS:
RPM-170 - SEE SHEET 148
RGX-040 - SEE SHEET 149

KENTUCKY STANDARD DRAWING RPM-160
TYPICAL INSTALLATIONS FOR SIDEWALK RAMPS

LAW-93-0.00

J:\Project\LO\ODOT\15005112 Ironton Russell\LAW\81595\roadway\sheets\Updated and Reformatted KY SD\81595RPM160SD.dgn - 4/25/2011 6:54:37 AM - jon_wanstrath

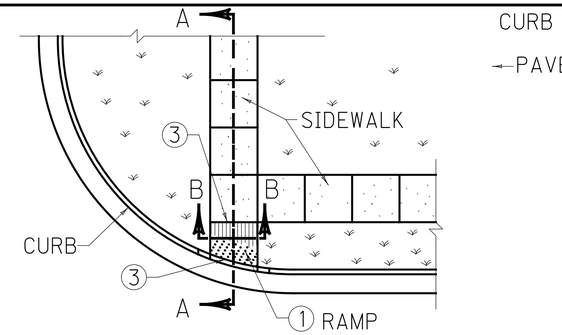

PLAN VIEW

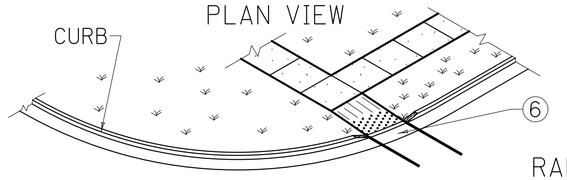

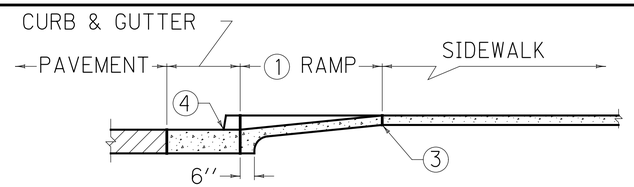

SECTION A-A

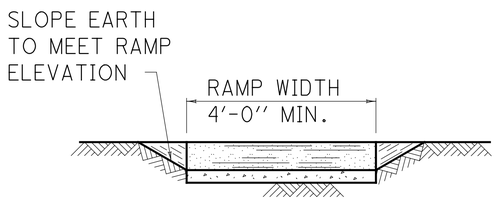

SECTION B-B

RAMP TYPE 1

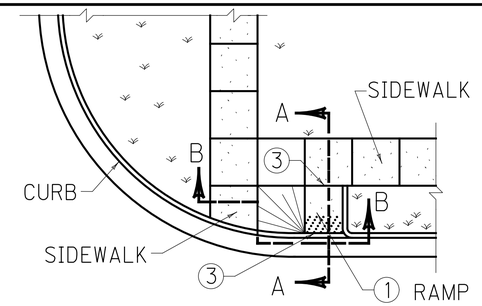

PLAN VIEW

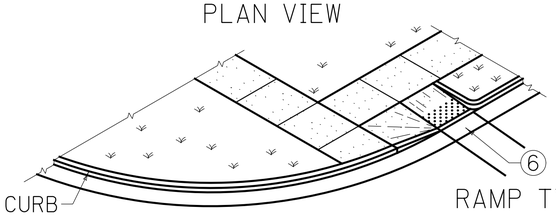

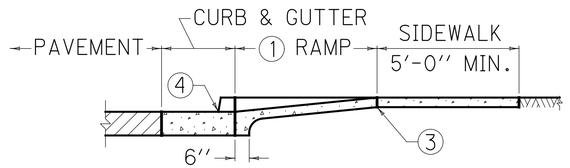

SECTION A-A

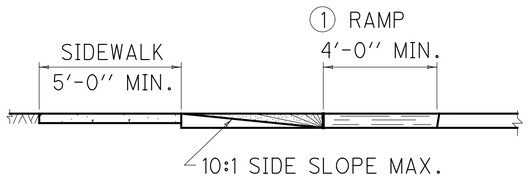

SECTION B-B

RAMP TYPE 2

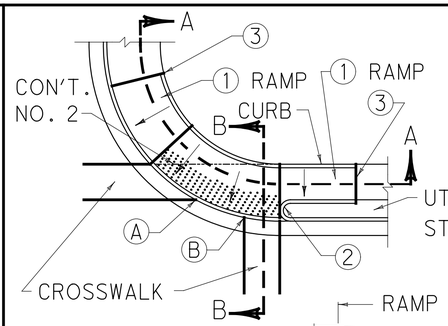

PLAN VIEW

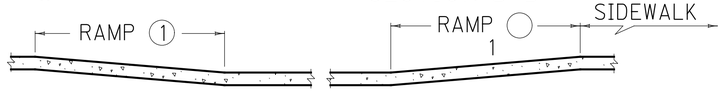

SECTION A-A

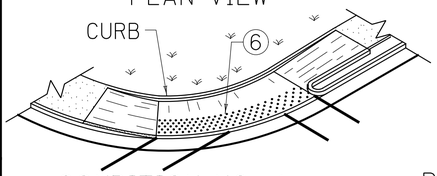

CONDITION NO. 1

RAMP TYPE 3

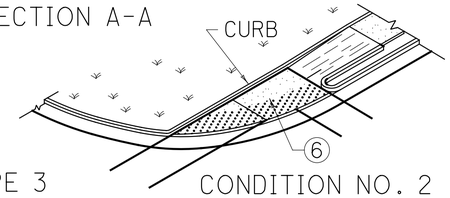

CONDITION NO. 2

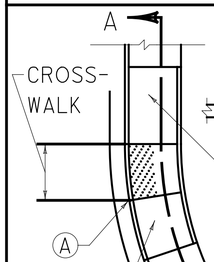

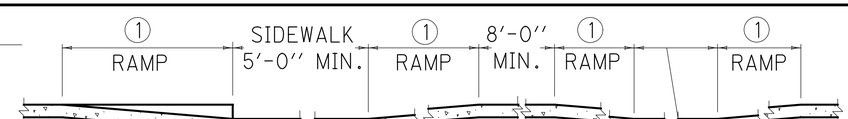

SECTION A-A

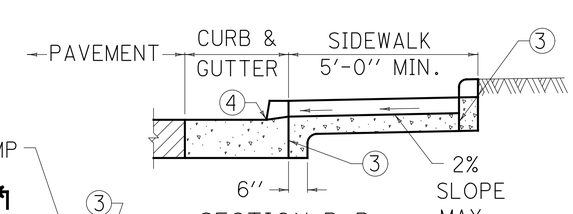

SECTION B-B

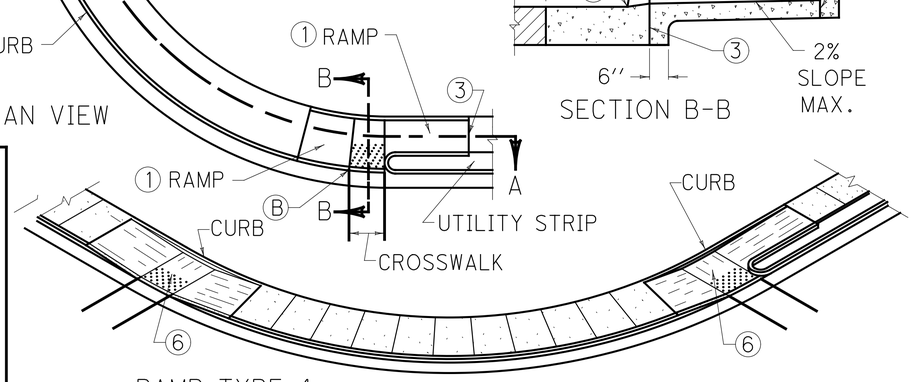

PLAN VIEW

RAMP TYPE 4

NOTES

~~RAMPS SHALL BE PAID PER SQ. YARD OF 4'' CONC. SIDEWALK AND THE UNIT PRICE SHALL INCLUDE ALL MATERIALS, FORMS, CURB BEHIND RAMP AND LANDING, AND INCIDENTALS NECESSARY FOR CONSTRUCTION.~~

THE RAMP SHALL BE CONSTRUCTED OF CLASS ''A'' CONCRETE. A BROOM FINISH OR EQUAL NON-SKID FINISH IS REQUIRED. DETECTABLE WARNINGS SHALL BE INCIDENTAL TO SIDEWALK CONSTRUCTION.

THE NORMAL GUTTER LINE SHALL BE MAINTAINED THROUGH THE AREA OF THE RAMP.

RAMPS SHOULD BE LOCATED WITHIN MARKED LIMITS OF CROSSWALKS.

USE RAMP TYPE 3 WHEN POINT A TO B IS LESS THAN 20 FEET.

USE RAMP TYPE 4 WHEN POINT A TO B IS 20 FEET OR MORE.

(1) CURB RAMP GRADE SHALL NOT EXCEED 12:1, CROSS SLOPE SHALL NOT EXCEED 2%

(2) CURB RETURN REQUIRED WHEN UTILITY STRIP IS 4 FEET OR GREATER. FOR UTILITY STRIPS LESS THAN 4 FEET, THE AREA IS TO BE SURFACED WITH SIDEWALK WITHIN THE RAMP.

(3) ½'' EXPANSION JOINT AT BACK OF CURB LINE AND AT SIDEWALK LINE.

(4) NO BUMP PERMITTED. SAME SLOPE AS RAMP AND NOT TO EXCEED 1'' IN HEIGHT. RAMPS SHALL BE CONSTRUCTED SO THAT WATER WILL NOT ACCUMULATE ON WALKING SURFACES.

5. ALL SIDEWALK RAMPS REQUIRE DETECTABLE WARNINGS.

(6) LANDINGS WILL PROVIDE A LEVEL AREA (LESS THAN 2% GRADE OR CROSS SLOPE) AT APPROXIMATE STREET ELEVATION. A 4 FOOT SQUARE LEVEL LANDING IS THE REQUIRED MINIMUM.

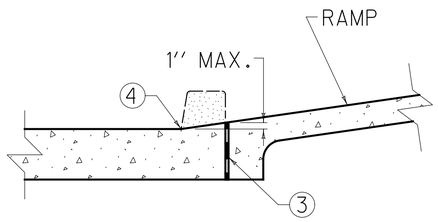

DROP CURB FOR RAMP

USE WITH CUR. STD. DRAWINGS.
RPM-160 - SEE SHEET 147
RGX-040 - SEE SHEET 149

KENTUCKY STANDARD DRAWING RPM-170
SIDEWALK RAMPS

KENTUCKY

LAW-93-0.00

J:\Project\O\ODOT\15005112 Ironton Russell\LAW\81595\roadway\sheets\Updated and Reformatted KY SD\81595RPM170SD.dgn - 4/25/2011 6:54:38 AM - jon_wanstrath

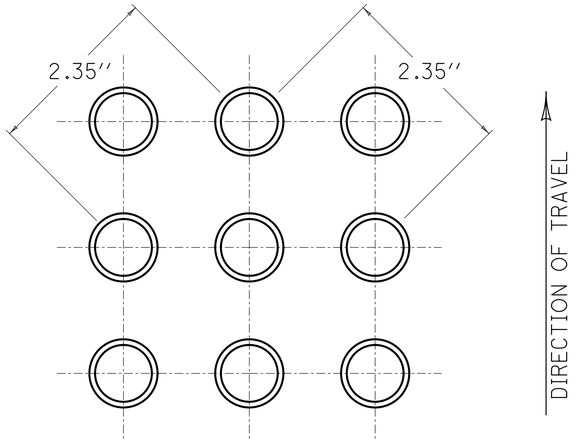

SQUARE PATTERN (PARALLEL ALIGNMENT)

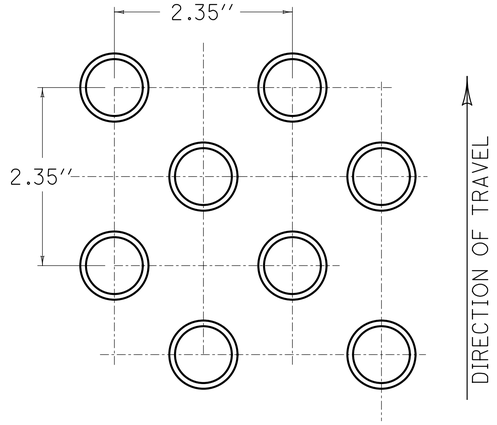

SQUARE PATTERN (DIAGONAL ALIGNMENT)

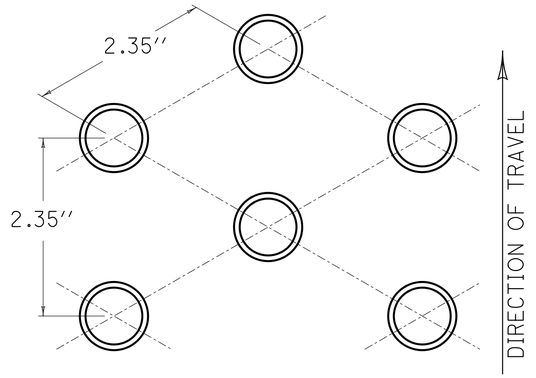

TRIANGULAR PATTERN

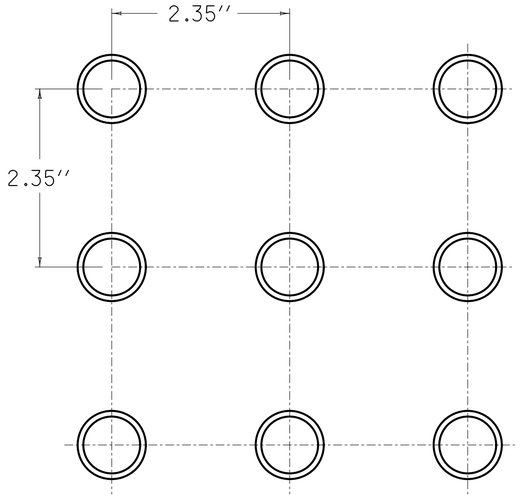

SQUARE PATTERN

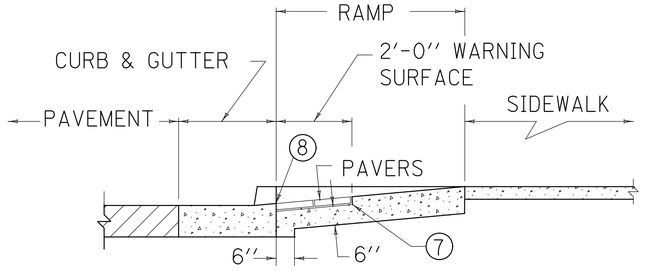

TYPICAL DETECTABLE WARNING INSTALLATION

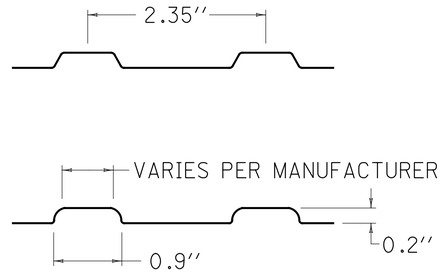

TRUNCATED DOME PROFILE

NOTES

1. LANDINGS WILL PROVIDE A LEVEL AREA (LESS THAN 2% GRADE OR CROSS SLOPE) AT APPROXIMATE STREET ELEVATION. A 4 FOOT SQUARE LEVEL LEVEL LANDING IS THE REQUIRED MINIMUM.
2. ALL SIDEWALK RAMPS REQUIRE DETECTABLE WARNINGS.
3. ANY DRIVEWAY 24' OR GREATER REQUIRES ADA SIDEWALK TREATMENTS WITH DETECTABLE WARNINGS WHICH WILL BE INCIDENTAL TO THE ENTRANCE CONSTRUCTION.
4. DETECTABLE WARNINGS SHALL BE INCIDENTAL TO SIDEWALK CONSTRUCTION.
5. PAVERS SHALL BE CONCRETE WITH A MINIMUM THICKNESS OF 2''.
6. PAVERS SHALL BE A COLOR HOMOGENOUS THROUGHOUT THE PAVER, THAT COLOR SHALL CONTRAST VISUALLY WITH THE ADJOINING SURFACES, EITHER LIGHT-ON-DARK OR DARK-ON-LIGHT. THE DEPARTMENT WILL ALLOW EITHER YELLOW OR RED AS COLORS.

⑦ PAVERS TO BE SET IN MORTAR.

⑧ DETECTABLE WARNING SURFACE BEGINS AT BACK OF CURB.

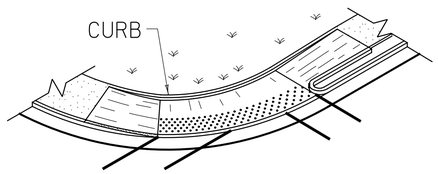

TYPICAL PLACEMENT
PARALLEL CURB RAMPS

USE WITH CUR. STD. DRAWINGS.
RPM-160 - SEE SHEET 147
RPM-170 - SEE SHEET 148

KENTUCKY STANDARD DRAWING RGX-040
TRUNCATED DOMES

LAW-93-0.00

149
788

J:\Project\0\ODOT\15005112 Ironton Russell\LAW\81595\roadway\sheets\Updated and Reformatted KY SD\81595RGX040SD.dgn - 4/25/2011 6:54:40 AM - jon_wanstrath

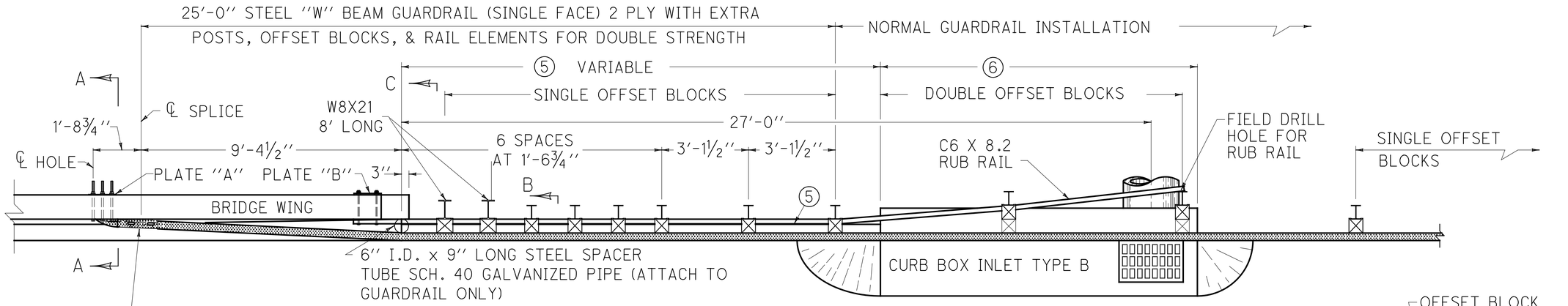

PLAN VIEW

÷ NOTES ÷

1. GENERAL
   a. SEE CUR. STD. DWGS. IN THE RBB, RBI, RBR, AND RPM-SERIES FOR OTHER RELATED GUARDRAIL DETAILS AND BRIDGE PLANS FOR BRIDGE WING DETAIL.
   b. SEE CUR. STD. DWG. RDB-SERIES FOR CURB BOX INLET TYPE B.
   c. GUARDRAIL CONNECTOR TO BRIDGE END TYPE A IS REQUIRED ON BOTH BRIDGE ENDS OF AN UNDIVIDED HIGHWAY AND ONLY ON THE APPROACH BRIDGE ENDS OF A DIVIDED HIGHWAY. GUARDRAIL CONNECTOR TO BRIDGE END TYPE A-1 IS REQUIRED ON THE EXIT END OF A DIVIDED HIGHWAY.
2. MATERIAL REQUIREMENTS
   ALL HARDWARE SHALL BE GALVANIZED. (AASHTO M-232)
   ⅝'' STEEL PLATE ''A'' (AASHTO M-270)
   ⅞'' HEX HEAD BOLTS OR STEEL THREADED RODS (LENGTH AS SHOWN)
   ⅞'' HEAVY HEX NUTS (⅞'' THICK) (AASHTO M-291)
   ⅞'' FLAT WASHERS (3⁄16'' THICK) (AASHTO M-293)
   ⅞'' BEVELED WASHERS (5⁄16'' MEAN THICKNESS) (AASHTO M-293)
   BOTH THE BOLT AND THREADED ROD SHALL HAVE A MINIMUM OF 50,000 LBS. TENSILE STRENGTH AT THEIR NARROWEST POINT.
3. CONSTRUCTION METHODS
   a. BACK-UP PLATES ARE NOT REQUIRED WITHIN 2 PLY GUARDRAIL SECTION.
   b. ELIMINATE EXTRA OFFSET BLOCKS WHEN CURB BOX INLET TYPE B IS NOT REQUIRED.
   c. HOLES TO BE FORMED THROUGH BRIDGE WING WITH 1'' I.D. PLASTIC PIPE FOR ⅞'' BOLTS AND ¾'' I.D. PLASTIC PIPE FOR ⅝'' BOLTS, PIPE SHALL REMAIN IN PLACE.
   d. ELIMINATE EXTRA POSTS, OFFSET BLOCKS, RUB RAIL, ONE PLY OF RAIL ELEMENTS AND OTHER INCIDENTALS WHICH ARE IN ADDITION TO NORMAL INSTALLATION OF STEEL BEAM GUARDRAIL USED IN CONSTRUCTION OF DOUBLE STRENGTH RAIL WHEN GUARDRAIL CONNECTOR TO BRIDGE END TYPE A-1 IS REQUIRED.
4. METHOD OF MEASUREMENT AND BASIS OF PAYMENT
   a. GUARDRAIL CONNECTOR TO BRIDGE END TYPE A SHALL BE PAID FOR AT THE CONTRACT UNIT PRICE EACH, AND INCLUDES: TERMINAL SECTION NO. 2; ALL ITEMS WHICH ARE IN ADDITION TO THE NORMAL INSTALLATION OF STEEL BEAM GUARDRAIL (EXTRA POSTS, OFFSET BLOCKS, RAIL ELEMENTS, HARDWARE, RUB RAIL, ETC.) , AND OTHER INCIDENTALS NECESSARY TO COMPLETE THE INSTALLATION AS DETAILED.
   b. GUARDRAIL CONNECTOR TO BRIDGE END TYPE A-1 SHALL BE PAID FOR AT THE CONTRACT UNIT PRICE EACH, WHICH INCLUDES TERMINAL SECT. NO. 2 AND ALL OTHER INCIDENTALS NECESSARY TO COMPLETE THE INSTALLATION.
   c. STEEL ''W'' BEAM GUARDRAIL (SINGLE FACE) AND ISLAND CURB ARE SEPARATE BID ITEMS WHICH ARE ALWAYS REQUIRED. CURB BOX INLET TYPE B IS A SEPARATE BID ITEM THAT WILL BE USED WHEN REQUIRED FOR BRIDGE END DRAINAGE.
   d. THE PLASTIC PIPE AND COST OF FORMING SHALL BE INCLUDED IN THE UNIT PRICE BID FOR BRIDGE SUPERSTRUCTURE CONCRETE.

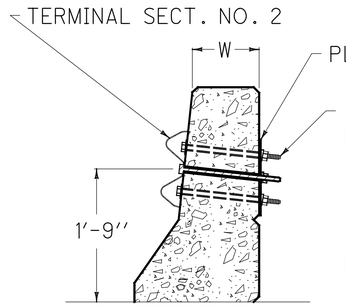

SECTION A-A

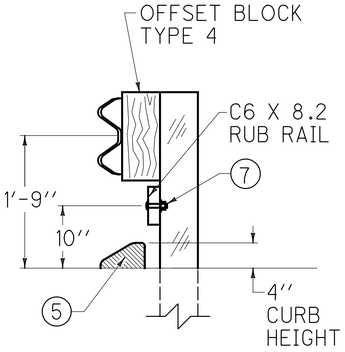

SECTION B-B

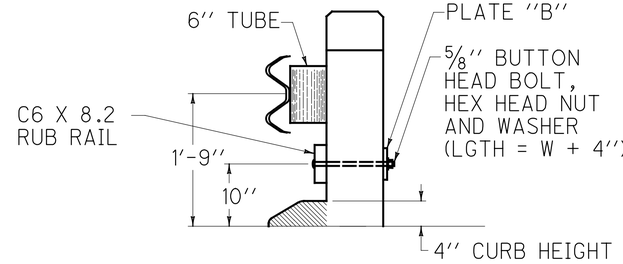

SECTION C-C

⑤ ISLAND CURB. TRANSITION FROM ISLAND CURB SHAPE TO SHAPE ON BRIDGE WING WITHIN 7'-3''. LENGTH OF CURB VARIABLE (22'-3'' WHEN L=5'-0'') (17'-3'' WHEN L=10'-0'') (12'-3'' WHEN L=15'-0'') (7'-3'' WHEN L=20'-0''). ON APPROACH END CONSTRUCT 25'-0'' OF ISLAND CURB EVEN WHEN CURB BOX INLET TYPE B IS NOT REQUIRED.

⑥ 6'-4'' WHEN L=5'-0''
11'-4'' WHEN L=10'-0'' ☆
16'-4'' WHEN L=15'-0''
21'-4'' WHEN L=20'-0''

⑦ ⅝'' X 3½'' BUTTON HEAD BOLT, HEX HEAD NUT.

8 CURB NOT REQUIRED ON TRAILING END UNLESS NEEDED FOR DRAINAGE.

☆ 10'-0'' LENGTH IS USED MOST FREQUENTLY.

L EQUALS THROAT LENGTH OF BOX.

KENTUCKY STANDARD DRAWING RBC-001
GUARDRAIL CONNECTOR TO BRIDGE END TYPE A AND A-1

LAW-93-0.00

150
788

J:\Project\0\ODOT\15005112 Ironton Russell\LAW\81595\roadway\sheets\Updated and Reformatted KY SD\81595RBC001SD.dgn - 4/25/2011 6:54:41 AM - jon_wanstrath

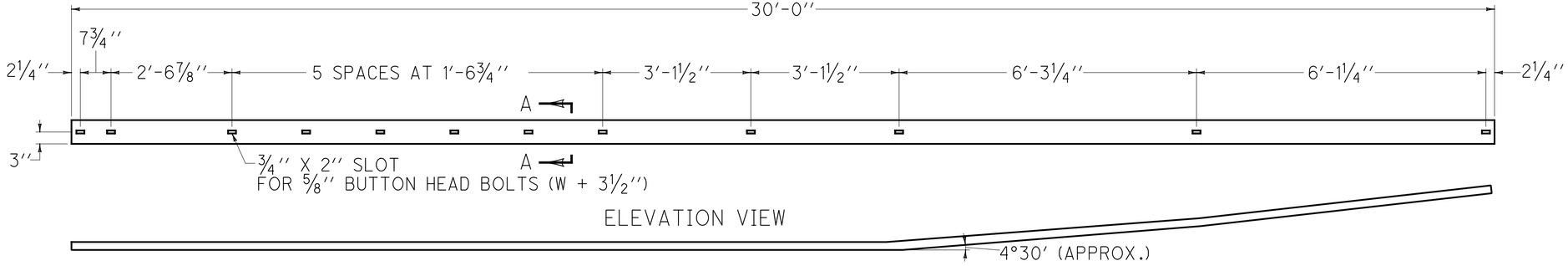

C6 X 8.2 RUB RAIL

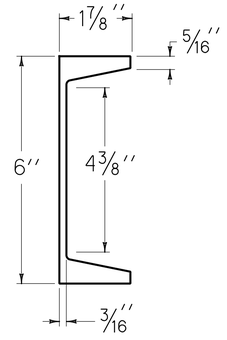

SECTION A-A

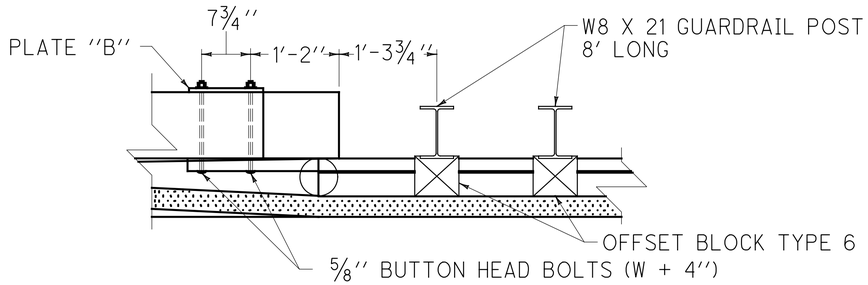

RUB RAIL

RUB RAIL
ATTACHED TO
CONCRETE PARAPET

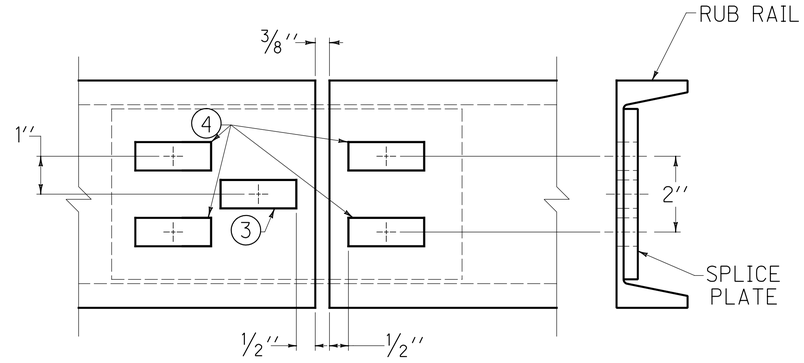

RUB RAIL SPLICE (TYP.)

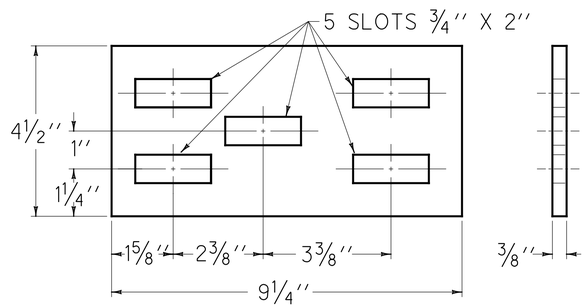

RUB RAIL SPLICE PLATE

÷ NOTES ÷

1. RUB RAIL IS DETAILED AS ONE CONTINUOUS PIECE, A SPLICE IS PERMITTED PROVIDING IT IS DONE AT A GUARDRAIL POST. SEE ''RUB RAIL SPLICE'' DETAIL.
2. MATERIAL REQUIREMENTS

   ALL HARDWARE SHALL BE GALVANIZED. (AASHTO M-232)

   ⅝'' STEEL PLATE ''B'' (AASHTO M-270)

   ⅜'' STEEL PLATE ''RUB RAIL SPLICE PLATE'' (AASHTO M-270)

   ⅝'' BUTTON HEAD BOLTS (AASHTO M-180)

   ⅝'' HEAVY HEX NUTS (⅝'' THICK) (AASHTO M-291)

   ⅝'' FLAT WASHERS (⅛'' THICK) (AASHTO M-293)

   C6 X 8.2 RUB RAIL (AASHTO M160 AND M270)
   GRADE 36, GALVANIZED ACCORDING TO AASHTO M111 AFTER PUNCHING AND CUTTING ARE COMPLETE.

③ THIS SLOT FOR BOLTING RAIL AND SPLICE PLATE TO GUARDRAIL POST WITH A ⅝'' X 3½'' BUTTON HEAD BOLT AND HEX HEAD NUT.

④ THESE SLOTS FOR BOLTING RAIL TO SPLICE PLATE WITH A ⅝'' X 1½'' BUTTON HEAD BOLT AND HEX HEAD NUT.

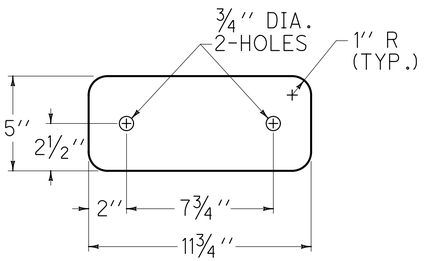

⅝'' STEEL PLATE ''B''

KENTUCKY STANDARD DRAWING RBC-002
GUARDRAIL CONNECTOR TO BRIDGE END TYPE A AND A-1 COMPONENTS

LAW-93-0.00

J:\Project\O\ODOT\15005112 Ironton Russell\LAW\81595\roadway\sheets\Updated and Reformatted KY SD\81595RBC002SD.dgn - 4/25/2011 6:54:42 AM - jon_wanstrath

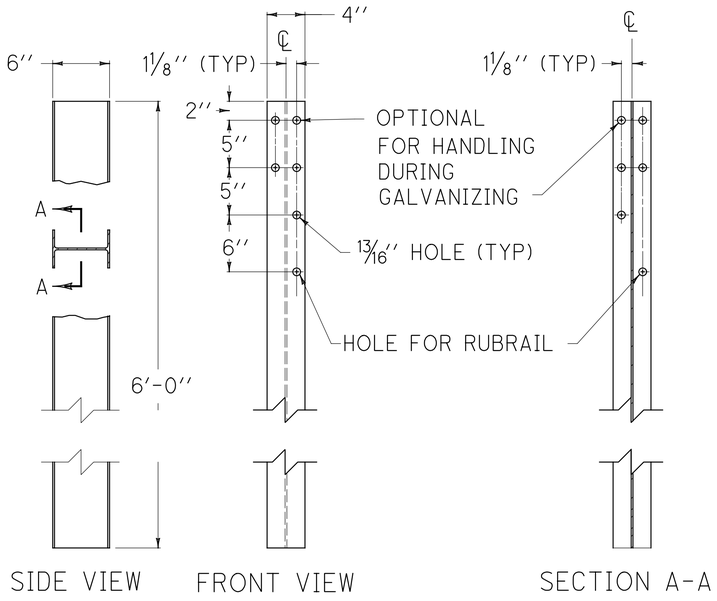

W6 X 9.0 STEEL GUARDRAIL POST
(USED WITH C6 X 8.2 RUB RAIL)

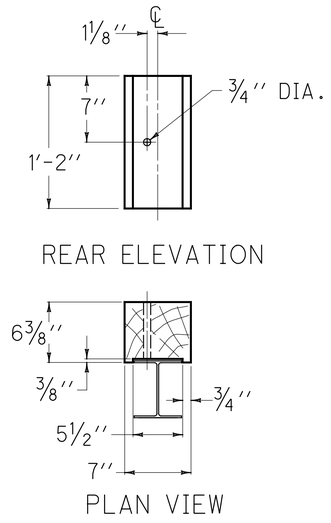

OFFSET BLOCK TYPE 6
(TIMBER)
(FOR USE WITH W8 X 21 STEEL POST ONLY)

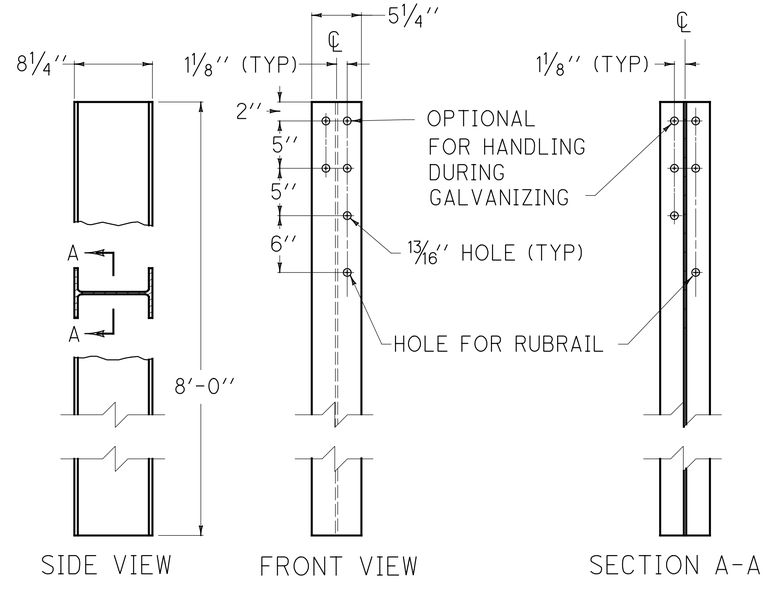

W8 X 21 STEEL GUARDRAIL POST

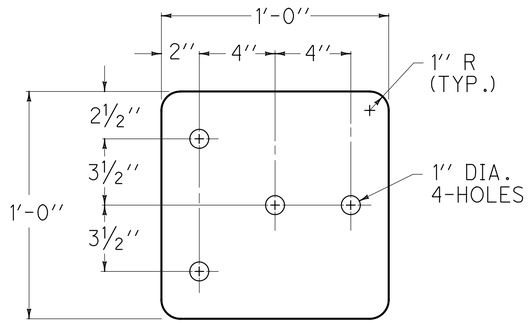

⅝'' STEEL PLATE ''A''

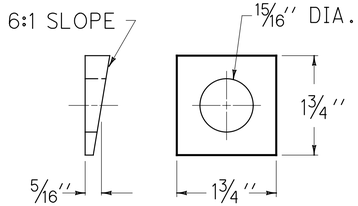

BEVELED WASHER

KENTUCKY STANDARD DRAWING RBC-003
GUARDRAIL CONNECTOR TO BRIDGE END TYPE A AND A-1 COMPONENTS

LAW-93-0.00

J:\Project\0\ODOT\15005112 Ironton Russell\LAW\81595\roadway\sheets\Updated and Reformatted KY SD\81595RBC003SD.dgn - 4/25/2011 6:54:43 AM - jon_wanstrath

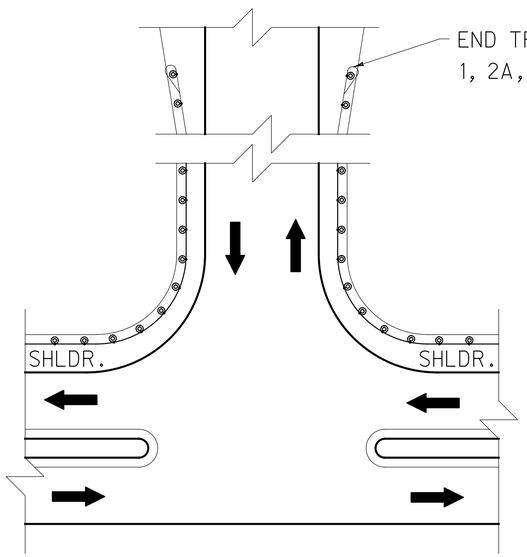

APPROACH ROADS

NOTES

1. FOR END TREATMENT TYPE 4A USE CUR. STD. DWG. RBR-035 FOR OFFSETS.
2. THE MINIMUM LENGTH OF GUARDRAIL, INCLUDING THE END TREATMENT, PRECEDING A FIXED OBJECT IS 200 FEET: (LENGTH MAY BE REDUCED SHOULD FIELD CONDITIONS WARRANT).

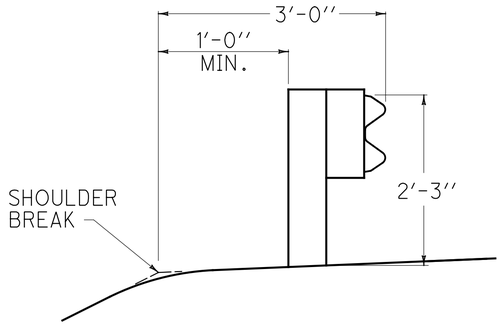

NORMAL GUARDRAIL INSTALLATION

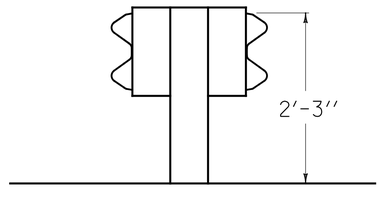

TYPICAL DOUBLE FACE
GUARDRAIL INSTALLATION

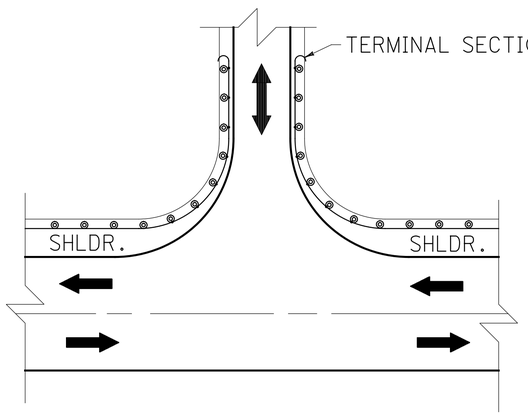

ENTRANCES

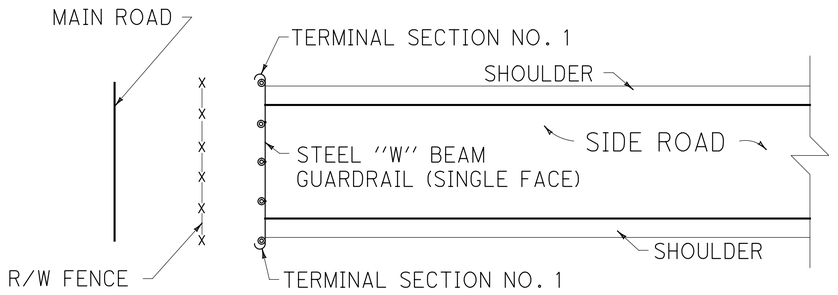

GUARDRAIL USED AS A BARRICADE

KENTUCKY STANDARD DRAWING RBI-001
TYPICAL GUARDRAIL INSTALLATIONS

LAW-93CO.00

153
788

J:\Project\OVODOT\15005112 Ironton Russell\LAW\81595\roadway\sheets\Updated and Reformatted KY SD\81595RBI001SD.dgn - 4/25/2011 6:54:44 AM - jon_wanstrath

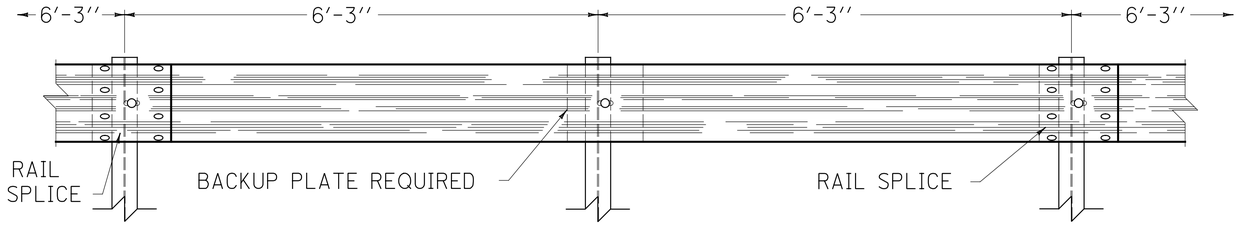

ELEVATION VIEW

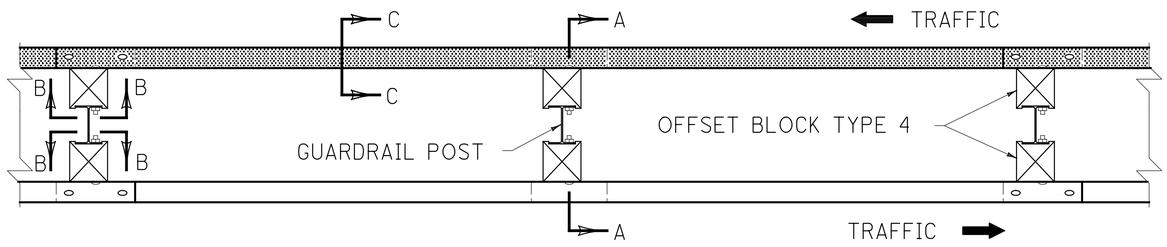

PLAN VIEW
(DOUBLE FACE RAIL OR SINGLE FACE RAIL)

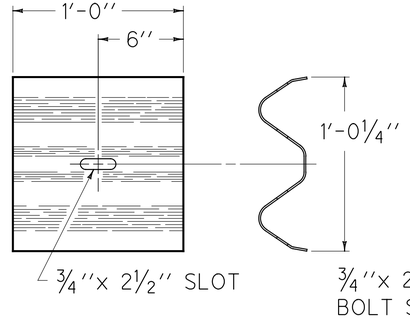

BACK-UP PLATE

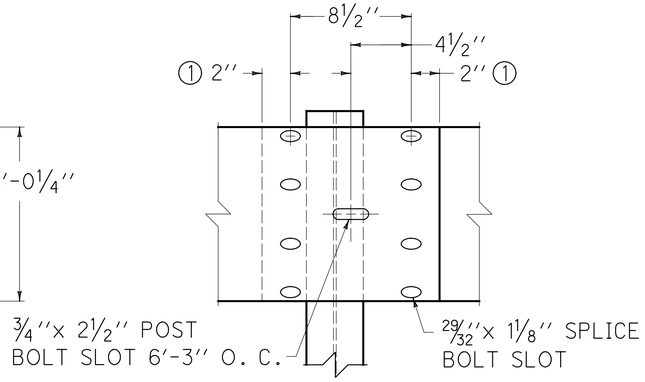

RAIL SPLICE 2◯

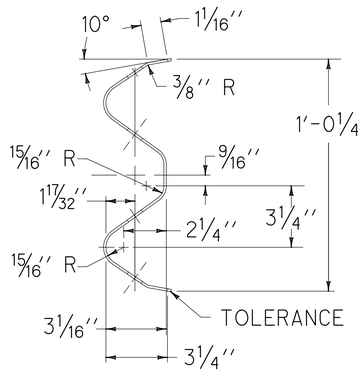

SECTION C-C
(RAIL CORRUGATED
SHEET STEEL BEAM)

NOTES

THE CONTRACT UNIT PRICE BID SHALL BE:
GUARDRAIL-STEEL W BEAM-SINGLE FACE - FOOT
OR
GUARDRAIL-STEEL W BEAM-DOUBLE FACE - FOOT

DIMENSIONAL TOLERANCES NOT SHOWN OR IMPLIED ARE INTENDED TO BE THOSE CONSISTENT WITH THE PROPER FUNCTIONING OF THE PART, INCLUDING ITS APPEARANCE AND ACCEPTED MANUFACTURING PRACTICES.

THE RAIL ELEMENT SHALL COMPLY WITH AASHTO M-180 -CLASS A, TYPE II.

ALL LAPS SHALL BE PLACED IN THE DIRECTION OF TRAFFIC FLOW.

① TOLERANCE + 1 1/4'', -1/4''

② 8 -5/8''x 1 1/4'' LONG BUTTON HEAD BOLTS AND HEX HEAD RECESS NUTS REQUIRED FOR EACH RAIL SPLICE.

③ LENGTH EQUALS POST AND BLOCK WIDTH PLUS: 2'' FOR BOLT OR 2 1/4'' FOR THREADED ROD.

④ GALVANIZED STEEL 10d COMMON COATED NAIL (DRIVE NAIL AT THE TOP OR BOTTOM CENTER OF BLOCK AND POST AFTER BOLT IS INSTALLED).

⑤ 5/8''x 3◯STEEL THREADED ROD AND TWO (2) HEX HEAD NUTS OR 5/8''x 3◯BUTTON OR HEX HEAD BOLT AND HEX HEAD NUT.

⑥ 5/8''x8'' BUTTON HEAD BOLT, HEX HEAD RECESS NUT AND ONE 5/8'' ROUND WASHER (TYP.). BOLT SHALL HAVE A MINIMUM THREAD LENGTH OF 2''.

▨ REQUIRED FOR DOUBLE RAIL

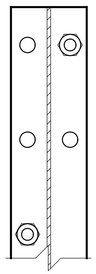

SECTION B-B

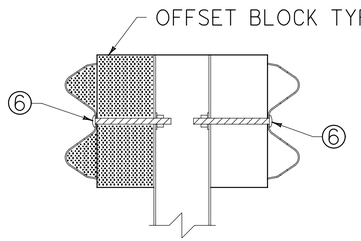

SECTION A-A
DOUBLE FACE RAIL WITH
STEEL POST (W6x9)
(TIMBER OFFSET BLOCK)

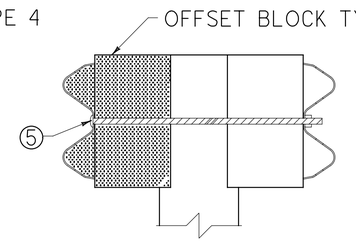

SECTION A-A
DOUBLE FACE RAIL WITH
ROUND TIMBER POST

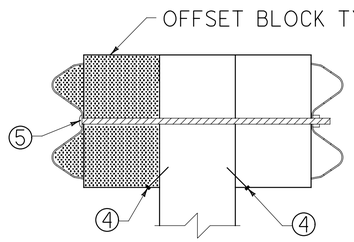

SECTION A-A
DOUBLE FACE RAIL WITH
TIMBER POST

USE WITH CUR. STD. DRAWINGS,
RBI-001 - SEE SHEET 153
RBR-010 - SEE SHEET 155
RBR-015 - SEE SHEET 156
RBR-016 - SEE SHEET 157
RDI-035 - SEE SHEET 192
RDI-045 - SEE SHEET 193

KENTUCKY STANDARD DRAWING RBR-001
STEEL BEAM GUARDRAIL ("W"-BEAM)

LAW-93-0.00

154
788

J:\Project\0\ODOT\15005112 Ironton Russell\LAW\81595\roadway\sheets\Updated and Reformatted KY SD\81595RBR001SD.dgn - 4/25/2011 6:54:45 AM - jon_wanstrath

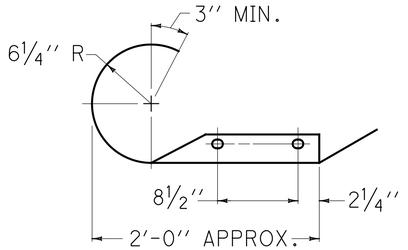

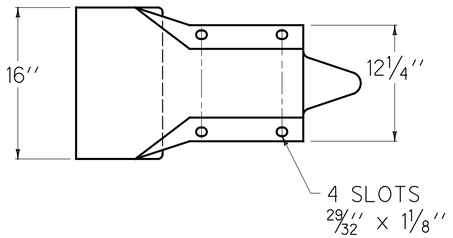

TERMINAL SECTION NO. 1

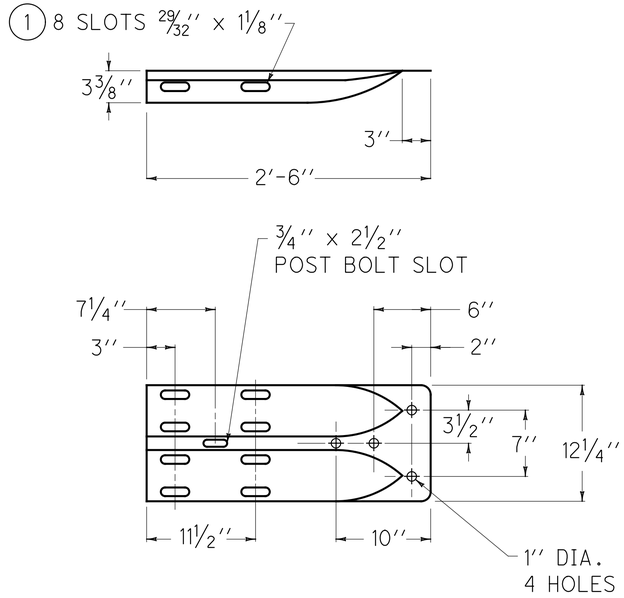

TERMINAL SECTION NO. 2

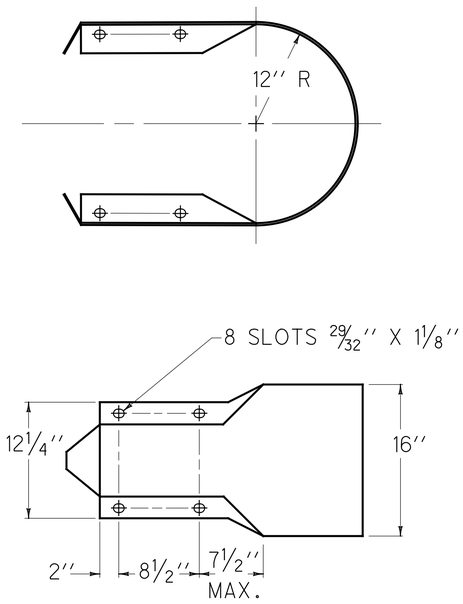

TERMINAL SECT. NO. 3

NOTES

TERMINAL SECTIONS SHALL BE ~~PAID FOR AT THE CONTRACT UNIT PRICE BID EACH COMPLETE AND INSTALLED, EXCEPT WHEN~~ INCIDENTAL TO OTHER BID ITEMS.

TERMINAL SECTIONS SHALL COMPLY WITH AASHTO M-180 AS FOLLOWS:

a. TERMINAL SECTIONS NO. 1, 3, -CLASS A OR B, TYPE 2
b. TERMINAL SECTION NO. 2-CLASS B, TYPE 2

(1) WHEN SLOTTED HOLES ARE EXPOSED (8) EIGHT RECTANGULAR FLAT WASHERS SHALL BE REQUIRED-2'' SPLICE BOLTS ARE TO BE USED IF NEEDED.

KENTUCKY STANDARD DRAWING RBR-010
GUARDRAIL TERMINAL SECTIONS

LAW-93-0.00

155
788

J:\Project\0\ODOT\15005112 Ironton Russell\LAW\81595\roadway\sheets\Updated and Reformatted KY SD\81595RBR010SD.dgn - 4/25/2011 6:54:46 AM - jon_wanstrath

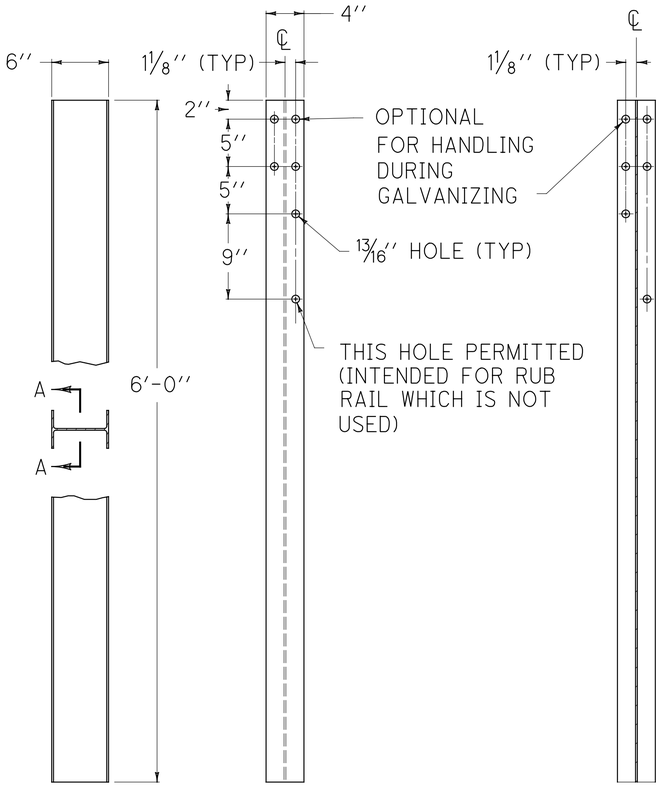

÷ W6 X 9.0 STEEL POST ①

NOTES

① W6 X 8.5 IS AN ACCEPTABLE ALTERNATE.

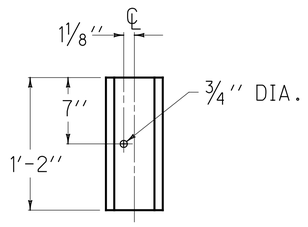

REAR ELEVATION

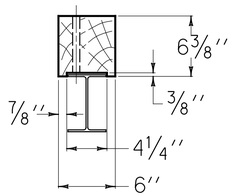

PLAN VIEW

OFFSET BLOCK TYPE 4
(TIMBER)
(FOR USE WITH STEEL POST ONLY)

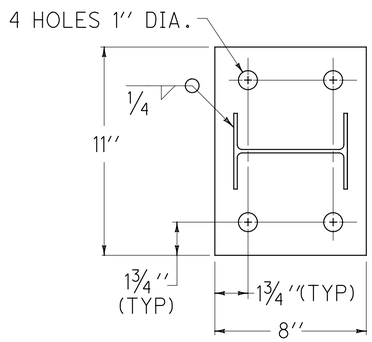

PLAN VIEW

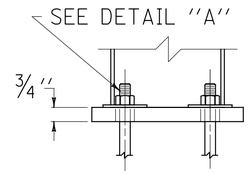

SIDE VIEW
ANCHOR PLATE

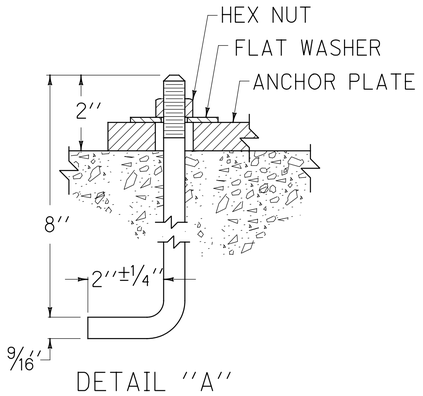

DETAIL ''A''

KENTUCKY STANDARD DRAWING RBR-015
GUARDRAIL POSTS

LAW-93-0.00

156
788

J:\Project\0\ODOT\15005112 Ironton Russell\LAW\81595\roadway\sheets\Updated and Reformatted KY SD\81595RBR015SD.dgn - 4/25/2011 6:54:47 AM - jon_wanstrath

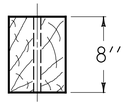

PLAN VIEW

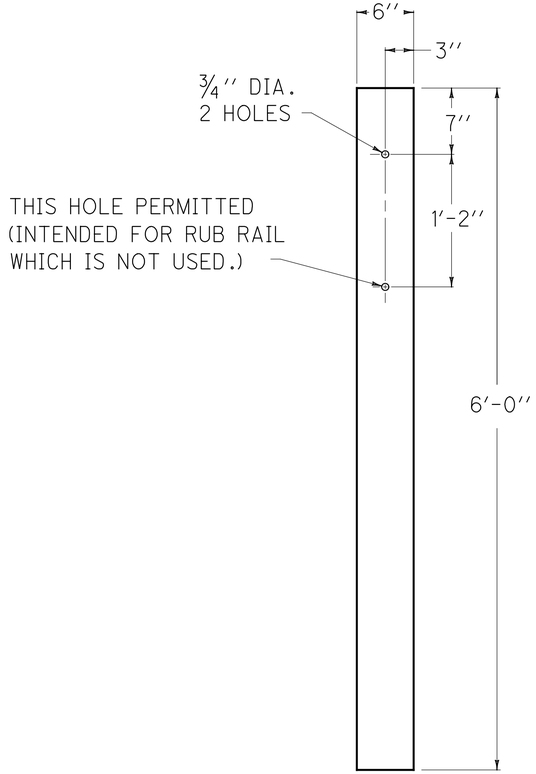

FRONT ELEVATION
6''x8'' TIMBER POST

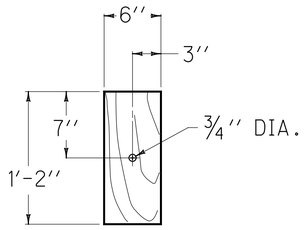

FRONT ELEVATION
OFFSET BLOCK TYPE 3
(6'' X 8'' TIMBER)
(FOR USE WITH RECTANGULAR
AND ROUND POSTS)

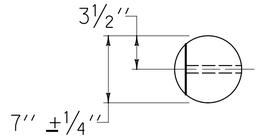

PLAN VIEW

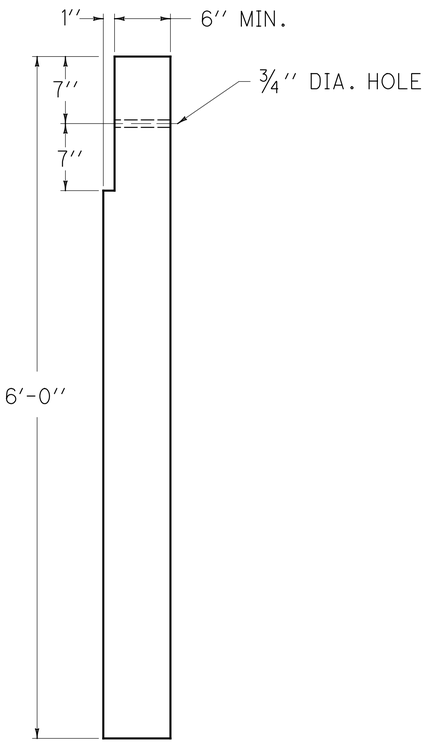

7'' ROUND TIMBER POST
(SINGLE FACE RAIL)

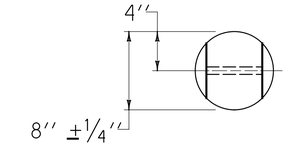

PLAN VIEW

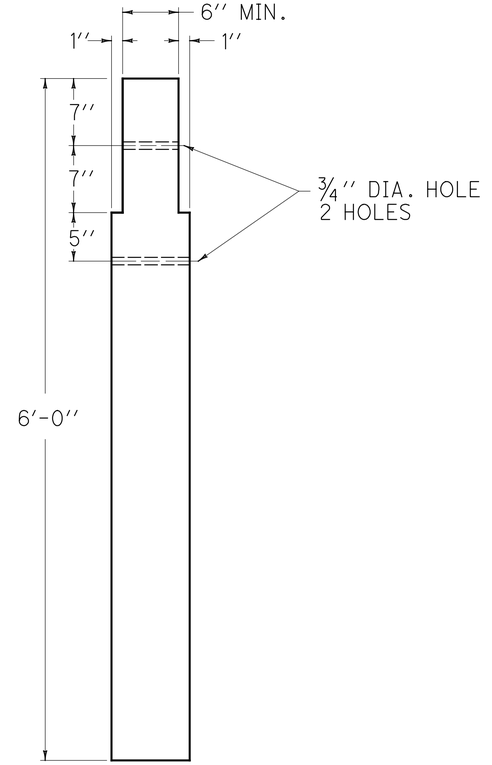

8'' ROUND TIMBER POST
(DOUBLE FACE RAIL)

KENTUCKY STANDARD DRAWING RBR-016
GUARDRAIL POSTS

LAW-93-0.00

157
788

J:\Project\O\ODOT\15005112 Ironton Russell\LAW\81595\roadway\sheets\Updated and Reformatted KY SD\81595RBR016SD.dgn - 4/25/2011 6:54:48 AM - jon_wanstrath

SHEET NO.	REFERENCE NO.	STATION	SIDE	DRIVE TYPE	PROPOSED LENGTH "L"	WIDTH "W"	CONCRETE LENGTH "C"	ASPHALT LENGTH "A"	EXISTING TYPE	CADD GENERATED SURFACE AREA (CONCRETE AND ASPHALT) (EXCLUDING CURB)	202		203	204	452	304	407	408	448	448	609
											PAVEMENT REMOVED	PAVEMENT REMOVED, ASPHALT	EXCAVATION	SUBGRADE COMPACTION	8" NON-REINFORCED CONCRETE PAVEMENT	AGGREGATE BASE	TACK COAT FOR INTERMEDIATE COURSE	PRIME COAT	ASPHALT CONCRETE INTERMEDIATE COURSE, TYPE 2, PG64-22 (DRIVEWAYS)	ASPHALT CONCRETE SURFACE COURSE, TYPE 1, PG64-22 (DRIVEWAYS)	CURB, TYPE 6
					FT.	FT.	FT.	FT.		SQ. FT.	SQ YD	SQ YD	CU YD	SQ YD	SQ YD	CU YD	GALLON	GALLON	CU YD	CU YD	FT
		93C																			
76	DR-1	31+70 (FIRST ST.)	L	E	83.0	12.0'			N/A	1043			26	116		32					
81	DR-4	43+15	L	A	12.5	24.0	10.5	2.0	ASPHALT	458		10	9	51	45	0.2	2	20.3	0.3	0.2	
81	DR-5	43+34	R	A	12.5	24.0	10.5	2.0	ASPHALT	454		10	9	51	45	0.2	2	20.3	0.3	0.2	
81	DR-6	43+82	L	A	12.4	18.0	10.4	2.0	ASPHALT	381		10	7	43	38	1	1.7	17	0.2	0.2	
		JEFFERSON ST.																			
87	DR-13	7+96	R	A	12.5	23.0	12.5		CONCRETE	446	10		8	50	50						
		CAMPBELL AVE.																			
78	DR-2	30+51	R	B	47.9	12.0		47.9	N/A	615			16	69		16.0	2.8	27.3	3.3	2.4	
85	DR-7	34+94.18	R	B	16.0	20.0		16.0	N/A	360			7	40		8.9	3.0	16.0	1.9	1.4	
86	DR-8	37+92	R	B	21.5	24.0		21.5	ASPHALT	556		13	10	62		14.0	2.5	24.7	3.0	2.2	
		3RD ST.																			
87	DR-9	50+25	R	A (PART WIDTH)	12.8	13.0	12.8		CONCRETE	256	10		5	29	29						
87	DR-10	53+06	L	A	15.7	17.0	13.7	2.0	ASPHALT	465		10	9	52	48	0.9	2.1	20.7	0.2	0.1	
87	DR-11	53+31	R	A	14.0	23.5	12.0	2.0	ASPHALT	509		10	10	57	52	1.2	2.3	22.6	0.3	0.2	
87	DR-12	53+56	L	A	15.8	17.0	13.8	2.0	ASPHALT	475		10	9	53	49	0.9	2.1	21.1	0.2	0.1	
		PARKING AREAS																			
		93C																			
161	1	32+00.43 TO 33+78.76	R/L						AGG.	6094			149	678		188					
161	2	34+35.01 TO 35+18.61	R						ASPHALT	2227		17	39	248		56	10	99	13	9	
161	3	37+81.34 TO 38+81.50	R						ASPHALT	331		88	6	37		9	1.5	14.7	2	2	
161	4	42+45.00 TO 43+66.19	R						ASPHALT	200		7	3	23		5	0.9	8.9	2	1	
161	5	42+56.44 TO 44+02.79	L						ASPHALT	214		7	4	24		6	1	9.5	2	1	
		JEFFERSON ST.																			
161	6	3+35.07 TO 4+51.00	L						ASPHALT	414		10	8	46		11	1.8	18.4	3	2	
161	7	5+25.16 TO 6+47.50	L						ASPHALT	1311		36	22	146		33	5.8	58.3	8	6	
161	8	7+14.27 TO 7+30.00	R						CONCRETE	57	4		1	7	7						
		3RD ST.																			
161	9	52+77.00 TO 53+75.00	L						ASPHALT	187		10	3	21		5	0.8	8.4	2	1	
		CAMPBELL AVE.																			
161	10	37+16.76 TO 37+79.11	R						ASPHALT	234		10	4	26		6	1	10.4	2	1	
158	11	38+02.76 TO 39+00.60	R						ASPHALT	807		19	14	90		21	3.6	35.9	5	4	
TOTALS CARRIED TO GENERAL SUMMARY											24	277	378	2019	363	415	47	454	49	34	

CALCULATED AMD
CHECKED SSC

DRIVEWAYS AND PARKING AREAS SUBSUMMARY

LAW-93-0.00

J:\Project\O\ODOT\15005112 Ironton Russell\LAW\81595\roadway\sheets\81595GD004.dgn - 4/25/2011 6:54:49 AM - jon_wanstrath

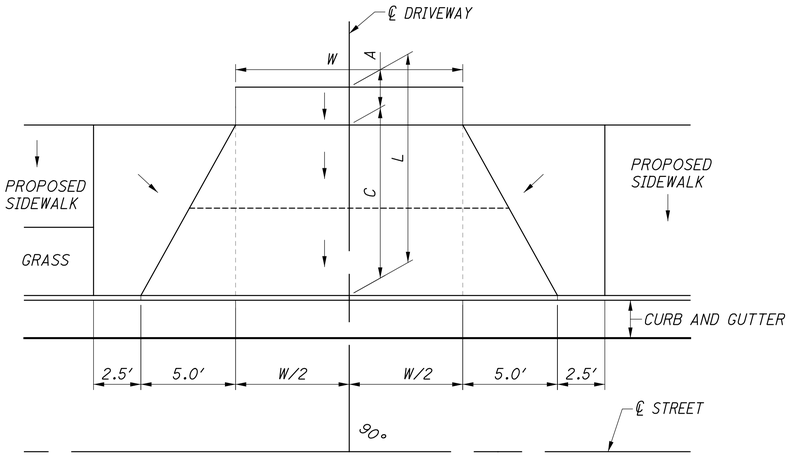

TYPE A

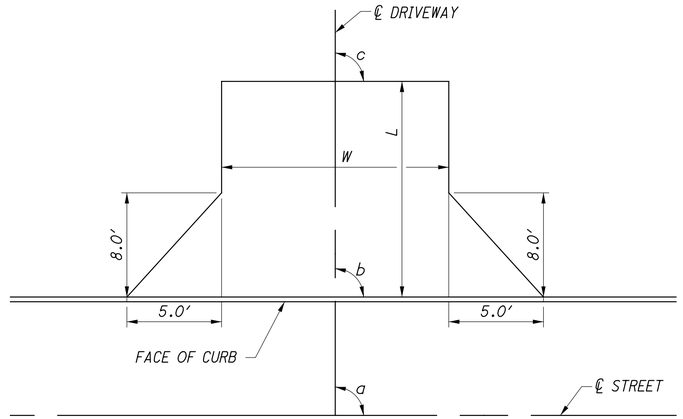

STREET	STATION	a	b	c
CAMPBELL	37+92	88°	87°	88°
CAMPBELL	34+94.18	90°	93°	90°
CAMPBELL	30+51	90°	90°	90°

TYPE B

LEGEND

(1)	448	1¼" ASPHALT CONCRETE SURFACE COURSE, TYPE 1, PG64-22 (DRIVEWAYS)
(2)	448	1¾" ASPHALT CONCRETE INTERMEDIATE COURSE, TYPE 2, PG64-22 (DRIVEWAYS)
(3)	304	8" AGGREGATE BASE
(4)	407	TACK COAT FOR INTERMEDIATE COURSE AT A RATE OF 0.04 GAL./S.Y.
(4A)	408	PRIME COAT, APPLIED AT THE RATE OF 0.4 GAL./S.Y.
(5)	452	8" NON-REINFORCED CONCRETE PAVEMENT

NOTE:
SAW CUT EXISTING ASPHALT AND CONCRETE PAVEMENTS FOR REMOVAL. COST INCLUDED IN ITEM 202 OR 203.

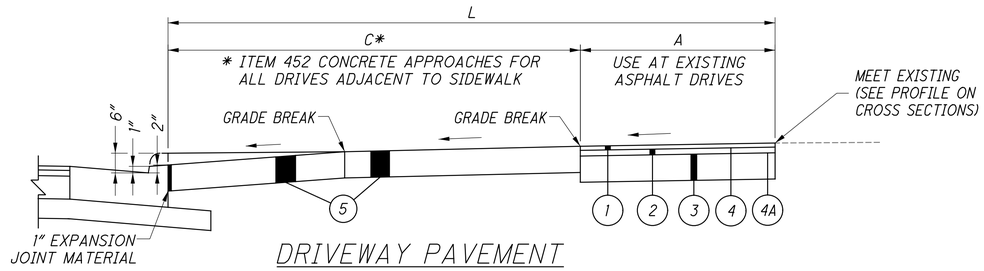

DRIVEWAY PAVEMENT

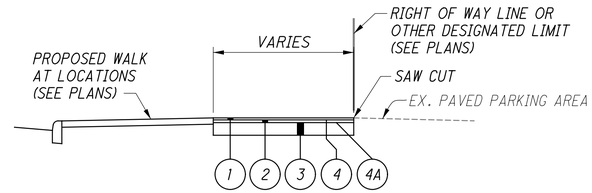

TYPICAL PAVED PARKING AREA REPLACEMENT
EXCEPT AS SHOWN IN TABULATION

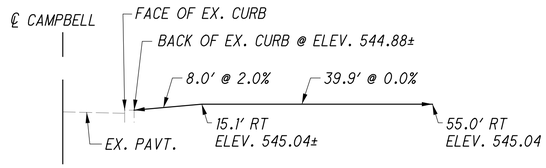

PROFILE - CAMPBELL STA. 30+51.00
FOR DRIVEWAY TYPES A & B PROFILES NOT SHOWN, SEE CROSS SECTIONS

CALCULATED JRW
CHECKED SCC

DRIVEWAYS AND PARKING AREAS
DRIVEWAY DETAILS

LAW-93-0.00

159
788

J:\Project\O\ODOT\15005112 Ironton Russell\LAW\81595\roadway\sheets\81595GD001.dgn - 4/25/2011 6:54:50 AM - jon_wanstrath

DRIVEWAY PLANS

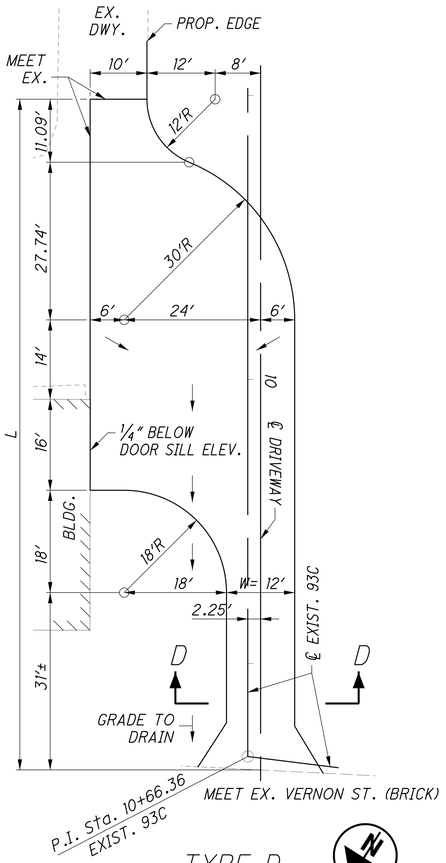

TYPE D

INCLUDED WITH DEMOLITION PLANS. SEE SHEETS 362 & 367.

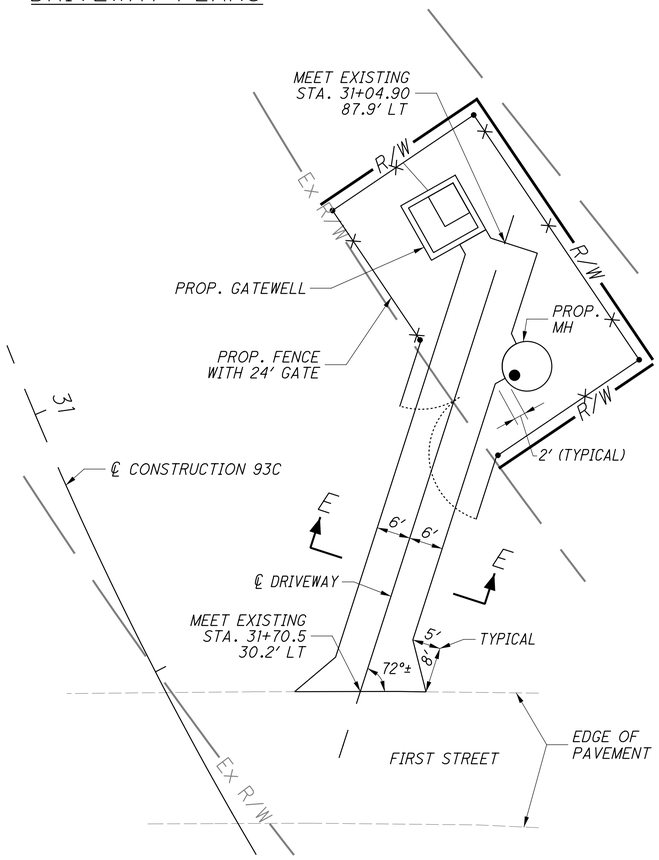

TYPE E

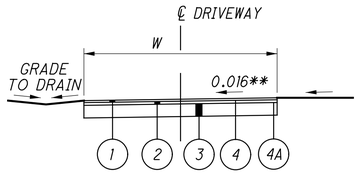

** EXCEPT MODIFY AS REQUIRED TO SLOPE TO DRAIN

SECTION D-D

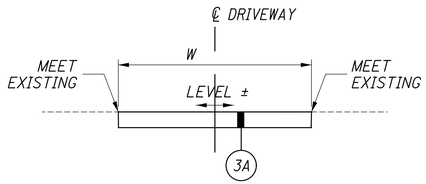

SECTION E-E

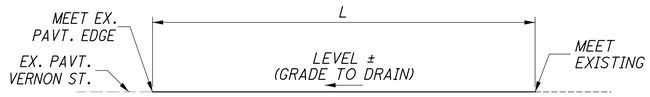

PROFILE - VERNON ST. DRIVEWAY



PROFILE - FIRST STREET DRIVEWAY

LEGEND

(1)	448	1¼" ASPHALT CONCRETE SURFACE COURSE, TYPE 1, PG64-22 (DRIVEWAYS)
(2)	448	1¾" ASPHALT CONCRETE INTERMEDIATE COURSE, TYPE 2, PG64-22 (DRIVEWAYS)
(3)	304	8" AGGREGATE BASE
(3A)	304	10" AGGREGATE BASE
(4)	407	TACK COAT FOR INTERMEDIATE COURSE AT A RATE OF 0.04 GAL./S.Y.
(4A)	408	PRIME COAT, APPLIED AT THE RATE OF 0.4 GAL./S.Y.
(5)	452	8" NON-REINFORCED CONCRETE PAVEMENT

NOTE:
SAW CUT EXISTING ASPHALT AND CONCRETE PAVEMENTS FOR REMOVAL. COST INCLUDED IN ITEM 202 OR 203.

CALCULATED JRW
CHECKED SCC

DRIVEWAYS AND PARKING AREAS
DRIVEWAY DETAILS

LAW-93-0.00

J:\Project\OVODOT\15005112 Ironton Russell\LAW\81595\roadway\sheets\81595GD002.dgn - 4/25/2011 6:54:51 AM - jon_wanstrath

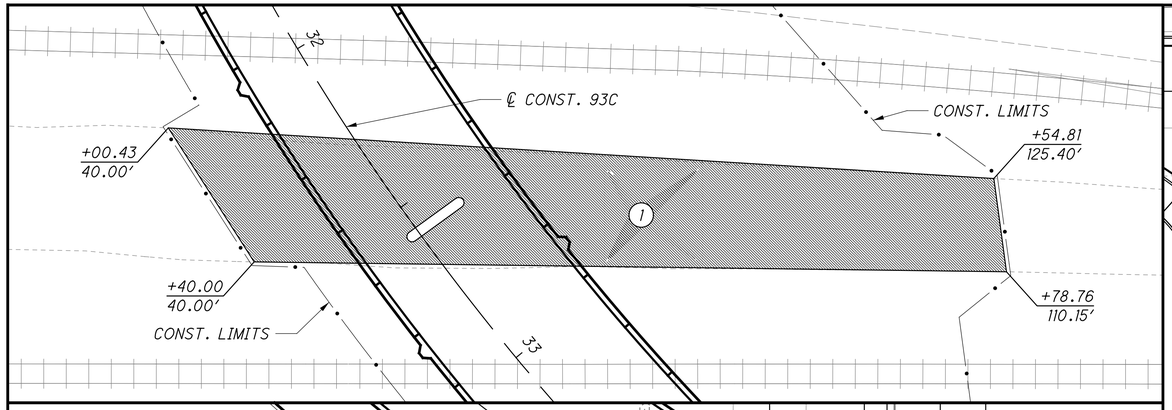

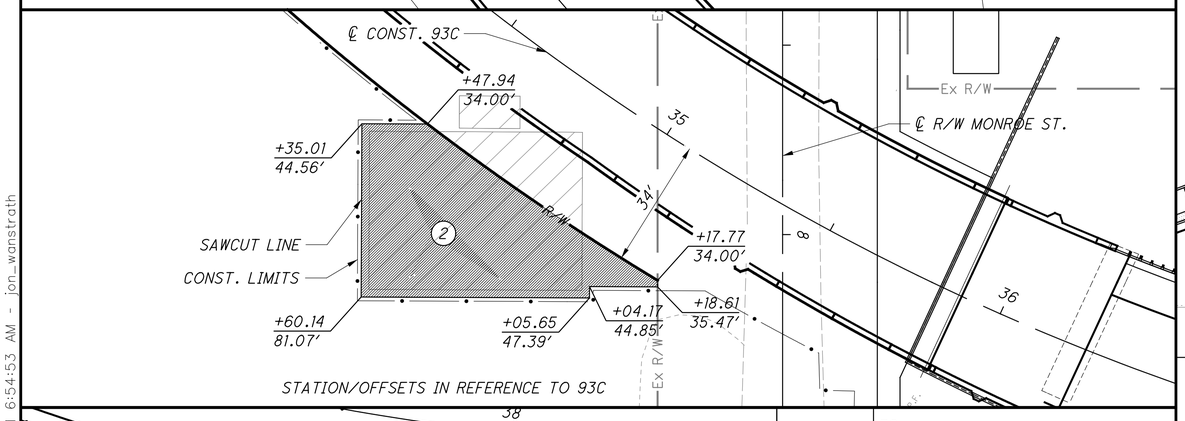

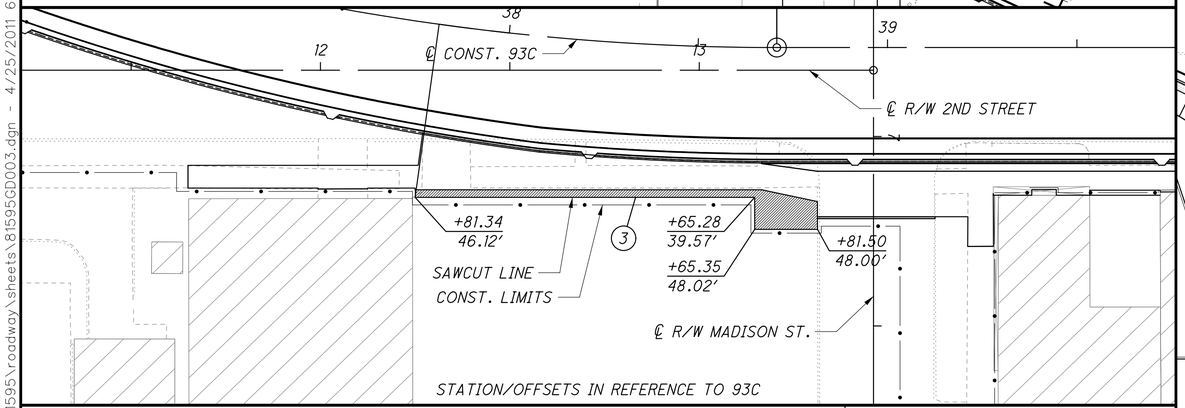

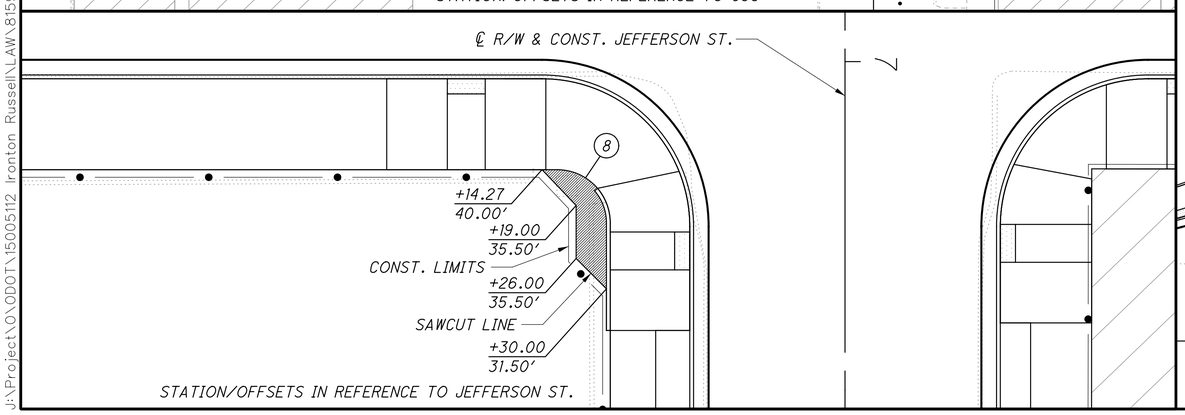

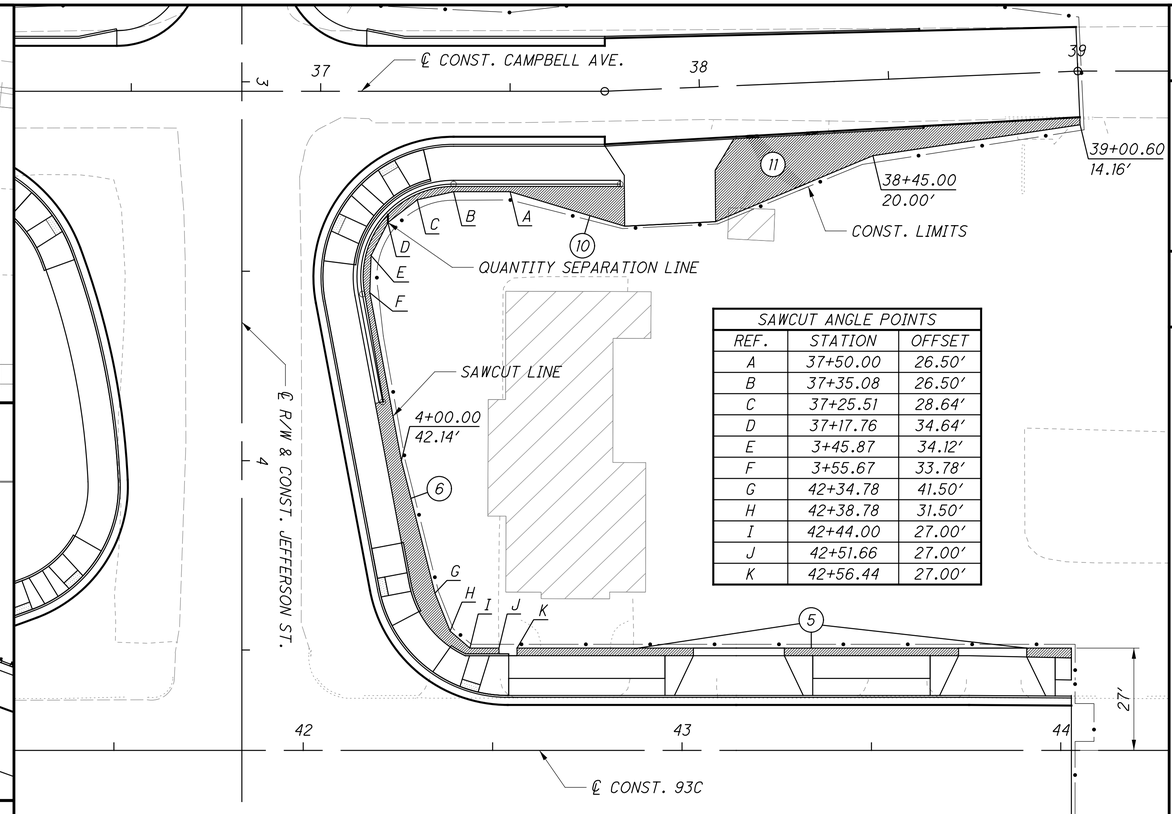

SAWCUT ANGLE POINTS

REF.	STATION	OFFSET
A	37+50.00	26.50′
B	37+35.08	26.50′
C	37+25.51	28.64′
D	37+17.76	34.64′
E	3+45.87	34.12′
F	3+55.67	33.78′
G	42+34.78	41.50′
H	42+38.78	31.50′
I	42+44.00	27.00′
J	42+51.66	27.00′
K	42+56.44	27.00′

PARKING AREAS
FOR PARKING AREA SUBSUMMARY SEE SHEET 158

HORIZONTAL SCALE IN FEET
0 10 20 40

CALCULATED JRW
CHECKED SCC

DRIVEWAYS AND PARKING AREAS
PARKING AREA DETAILS

LAW-93-0.00

161
788

J:\Project\O\ODOT\15005112 Ironton Russell\LAW\81595\roadway\sheets\81595GD003.dgn - 4/25/2011 6:54:53 AM - jon_wanstrath

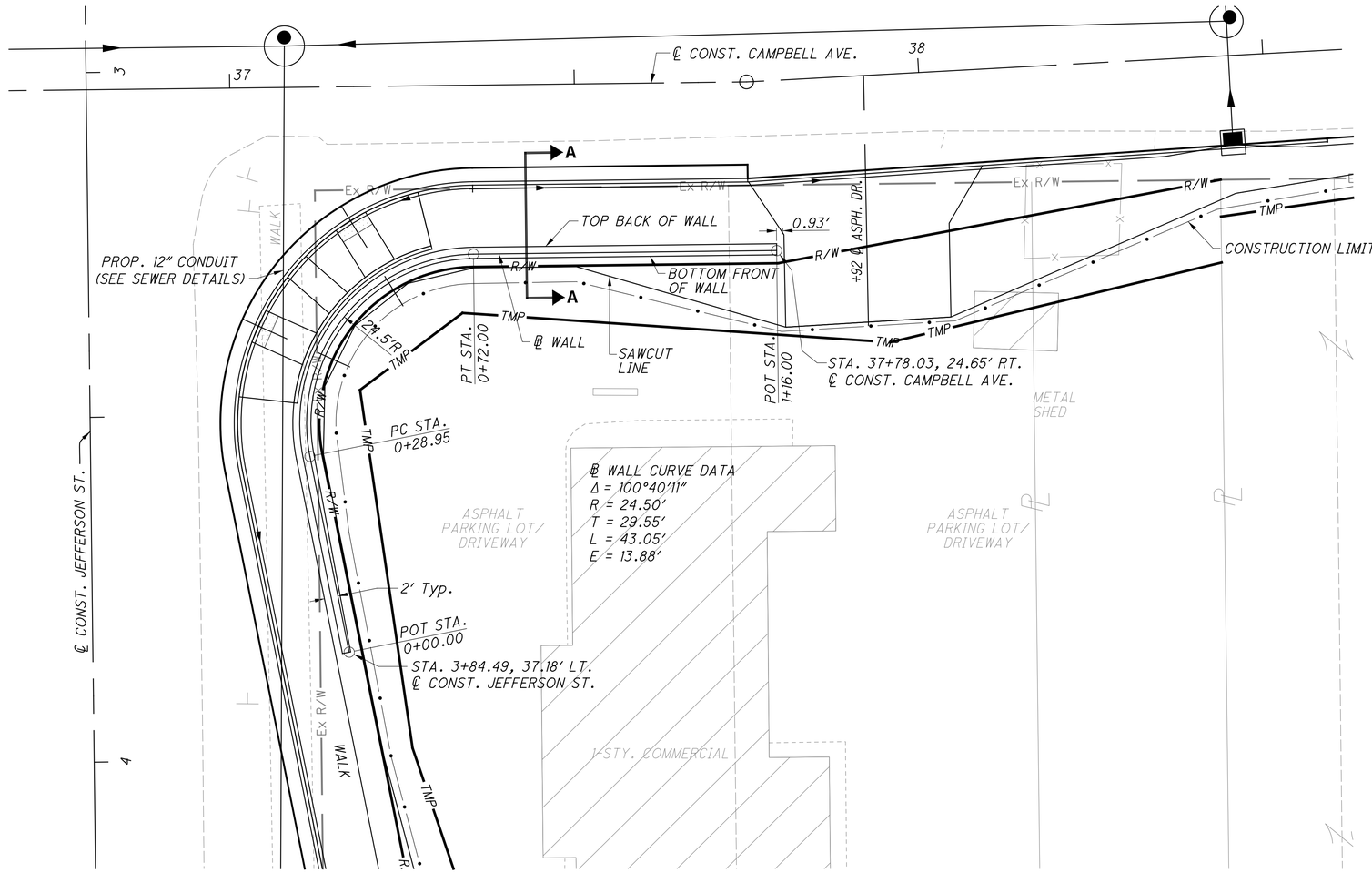

PLAN

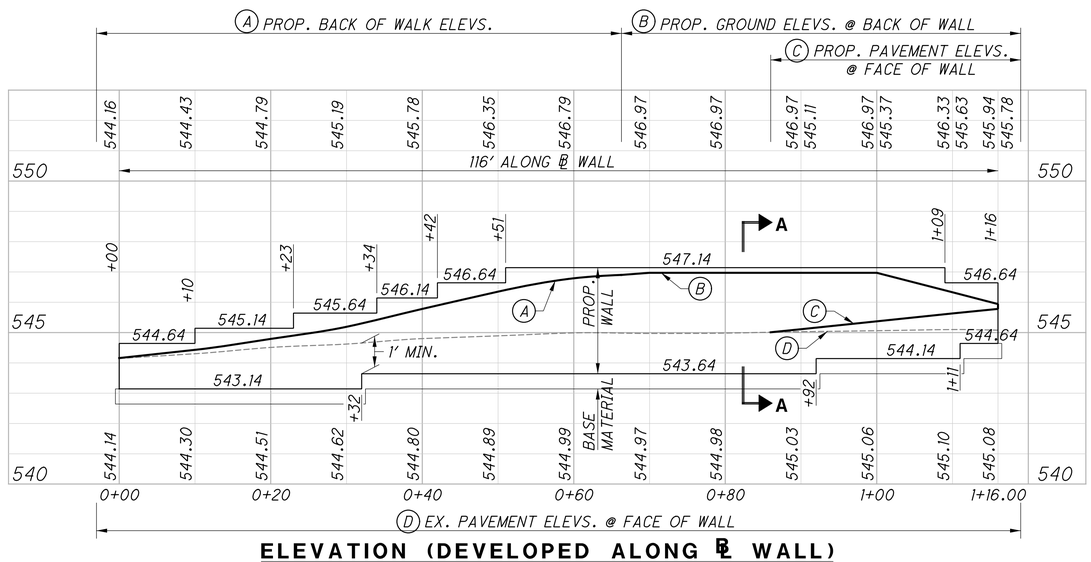

ELEVATION (DEVELOPED ALONG ℄ WALL)

STATIONS OF STEPS MAY BE ADJUSTED SEVERAL INCHES TO REDUCE BLOCK CUTTING.

IN AREAS OF CURVATURE/ ALIGNMENT ADJUSTMENT, TRIM ONE OR BOTH SIDES OF BLOCKS AS NECESSARY FOR TIGHT FIT.

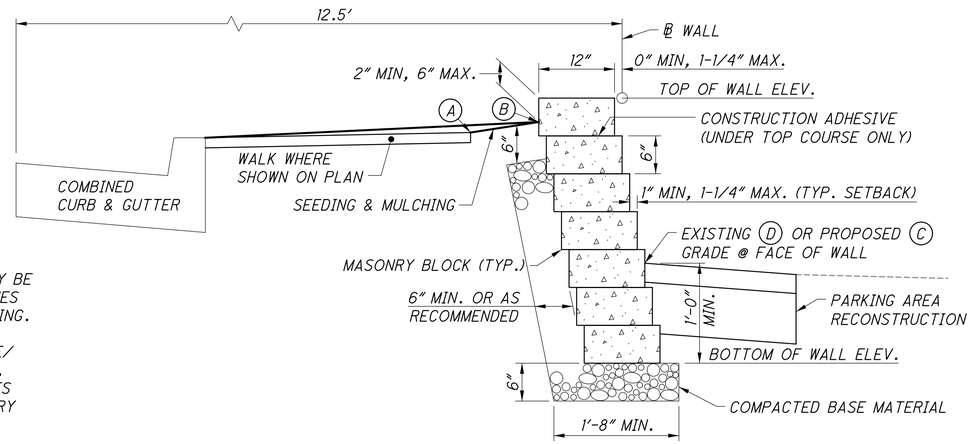

SECTION A-A

ITEM SPECIAL - RETAINING WALL, MISC.:
CONCRETE BLOCK WALL

FURNISH THE RETAINING WALL BLOCKS FROM ONE OF THE FOLLOWING MANUFACTURERS OR AN APPROVED EQUAL:

ANCHOR WALL SYSTEMS
5959 BAKER ROAD, SUITE 390
MINNETONKA, MN 55345
(952) 933-8855
www.anchorwall.com

PAVESTONE
8479 BROADWELL RD.
CINCINNATI, OH 45244
(513) 474-3783
www.pavestone.com

KEYSTONE RETAINING WALL SYSTEMS, INC.
4444 WEST 78th ST.
MINNEAPOLIS, MN 55435
www.keystonewalls.com

THE RETAINING WALL BLOCKS SHALL BE SOLID CONCRETE MASONRY; HOLLOW CONCRETE BLOCK SHALL NOT BE USED. THE COLOR OF THE STONE SHALL BE RED OR RED MIX.

THE INSTALLATION OF THE RETAINING WALL SHALL BE PER MANUFACTURER RECOMMENDATION.

ITEM 610 - RETAINING WALL MISC.: CONCRETE BLOCK WALL WILL BE PAID FOR AT THE CONTRACT SQ. FT. PRICE. THE DEPARTMENT WILL DETERMINE THE AREA OF THE WALL SYSTEM FROM PLAN DIMENSIONS USING A LENGTH MEASURED ALONG THE WORK POINT (BASELINE) AND A HEIGHT FROM THE BOTTOM OF THE SOLID CONCRETE MASONRY BLOCK TO THE TOP OF THE SOLID CONCRETE MASONRY BLOCK. THE WORK SHALL INCLUDE ALL LABOR, MATERIALS, EQUIPMENT AND INCIDENTALS REQUIRED TO COMPLETE THIS ITEM. EXCAVATION, COMPACTED BASE MATERIAL, SOLID CONCRETE MASONRY BLOCK, CONSTRUCTION ADHESIVE, AND BACKFILL ARE INCLUDED IN THIS ITEM FOR PAYMENT. THE FOLLOWING QUANTITY HAS BEEN CARRIED TO THE GENERAL SUMMARY:

ITEM 638 SPECIAL - RETAINING WALL, MISC.: CONCRETE BLOCK WALL ---------- 324 SQ FT

HORIZONTAL SCALE IN FEET
0 5 10 20

CALCULATED REH
CHECKED SCC

RETAINING WALL - JEFFERSON & CAMPBELL

LAW-93-0.00

J:\Project\O\ODOT\15005112 Ironton Russell\LAW\81595\roadway\sheets\81595WP001.dgn - 4/25/2011 6:54:54 AM - jon_wanstrath

OHIO RIVER

FOR QUANTITIES SEE SHEET 61

℄ CONST. 93C

PC Sta. 30+44.79

84" CASING UNDER RAILROAD

SEE SHEET 173

PLACEMENT AREA FOR WATER QUALITY STRUCTURE, TYPE 3 SEE SHEET 173

℄ R/W US 23

PT Sta. 344+37.56

PCC Sta. 5059+00.01

RUSSELL, KENTUCKY

℄ R/W BELLEFONTE ST.

PC Sta. 40+72.54

PC Sta. 42+52.10

CONST. 93C

℄ NS RAILWAY

POT Sta. 37+75.00

POT Sta. 39+00.00

CAMPBELL AVE 34

℄ CONST. CAMPBELL AVE.

N 32° 30' 37" W

N 57° 29' 24" E

N 34° 57' 23" W

S 25° 02' 26" E

2ND ST.

MONROE ST.

MADISON ST.

6 JEFFERSON ST.5

3RD ST.

EQUATION:
Sta 40+45.75 BK =
Sta 40+00.00 AH

IRONTON, OHIO

LEGEND

- CATCH BASIN
- MANHOLE

HORIZONTAL SCALE IN FEET
0 25 50 100

CALCULATED JDP
CHECKED SCC

DRAINAGE SCHEMATIC

LAW-93-0.00

163
788

J:\Project\OVODOT\15005112 Ironton Russell\LAW\81595\drainage\sheets\81595DB001.dgn - 4/25/2011 6:54:56 AM - jon_wanstrath

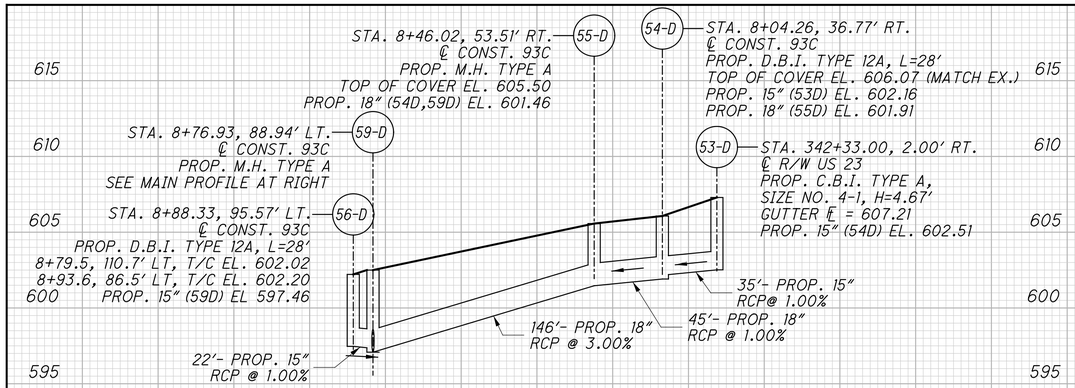

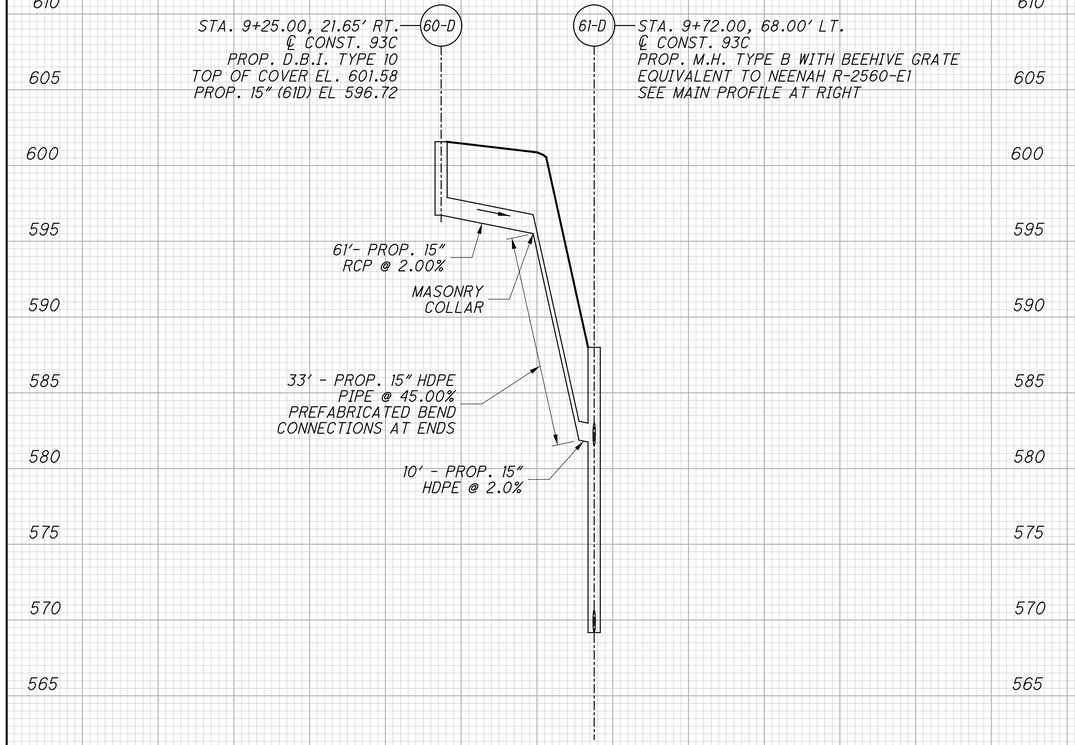

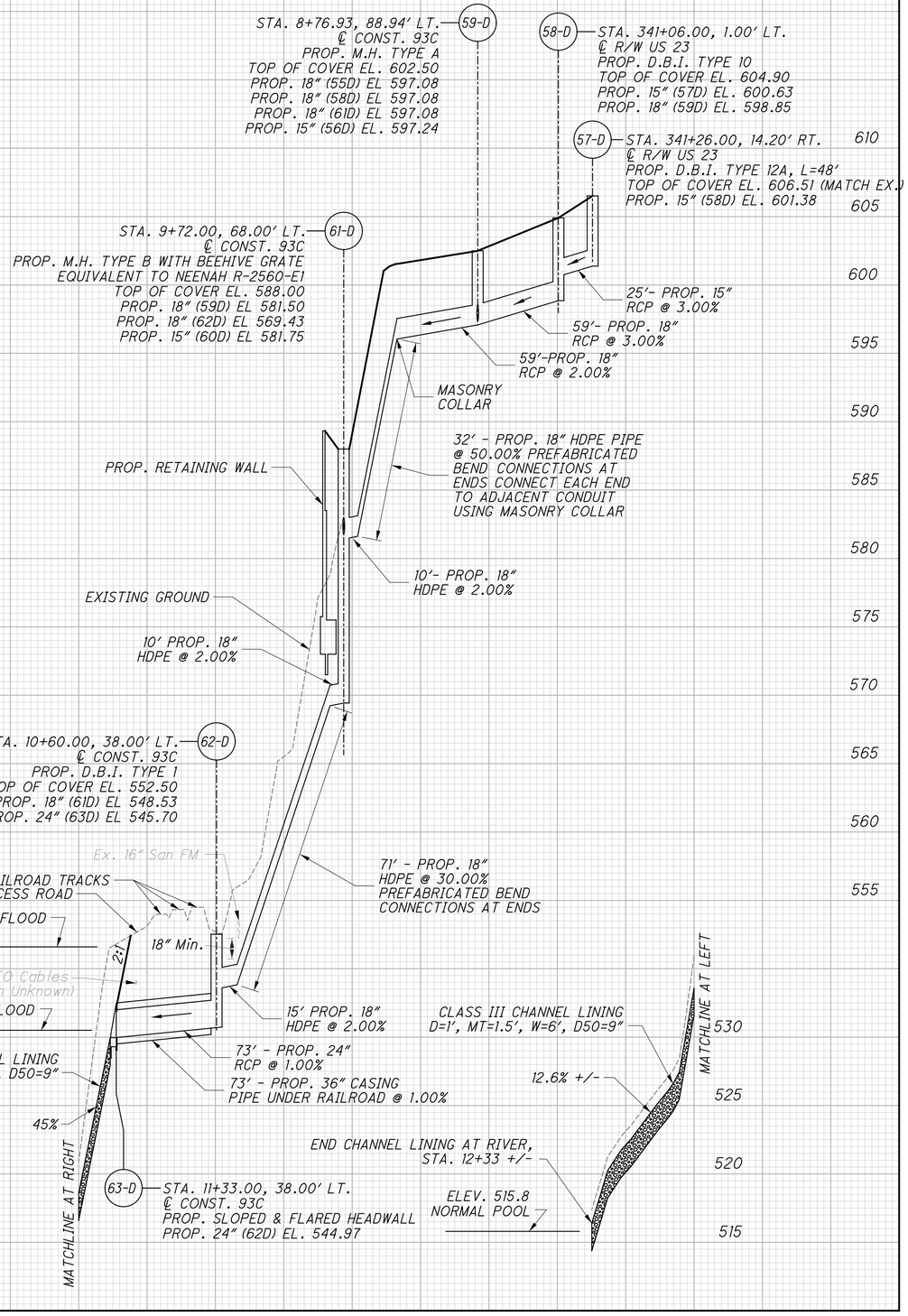

Link to 279-000-000
Drainage Structures
As-Built

CALCULATED JDP
CHECKED SCC

STORM SEWER PROFILES
KENTUCKY

LAW-93-0.00

J:\Project\0\ODOT\15005112 Ironton Russell\LAW\81595\drainage\sheets\81595DF003.dgn - 4/25/2011 6:54:57 AM - jon_wanstrath

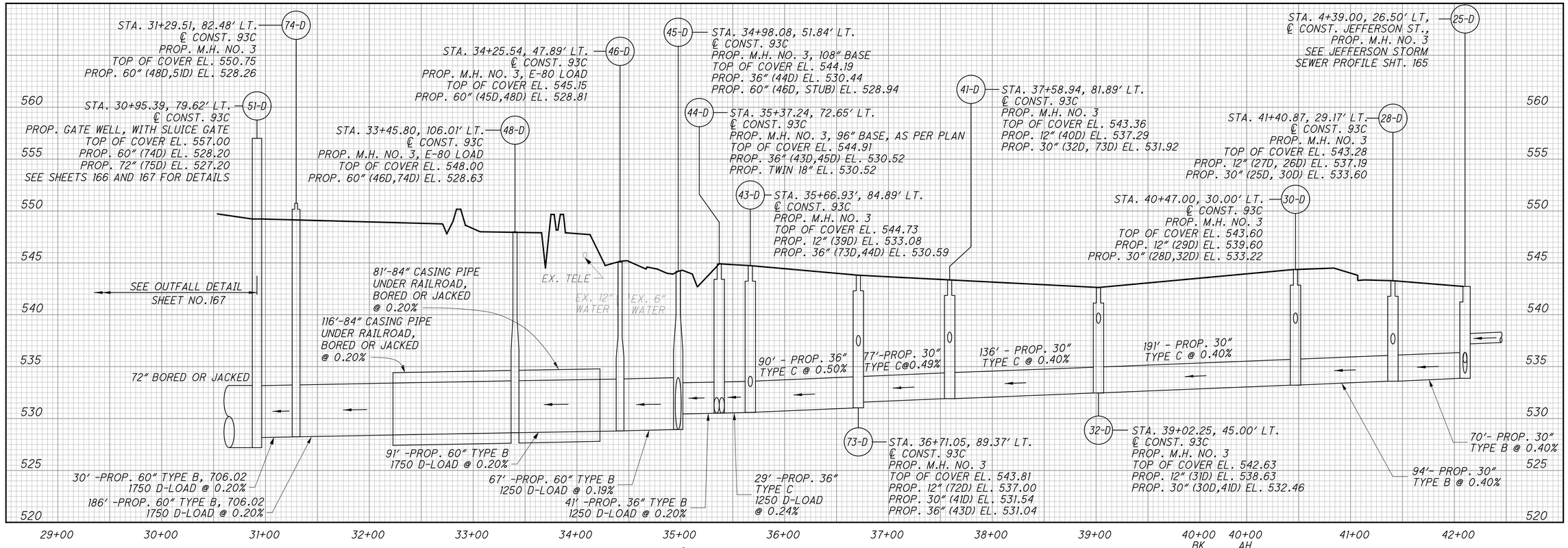

℄ CONST. 93C - LEFT PROFILE

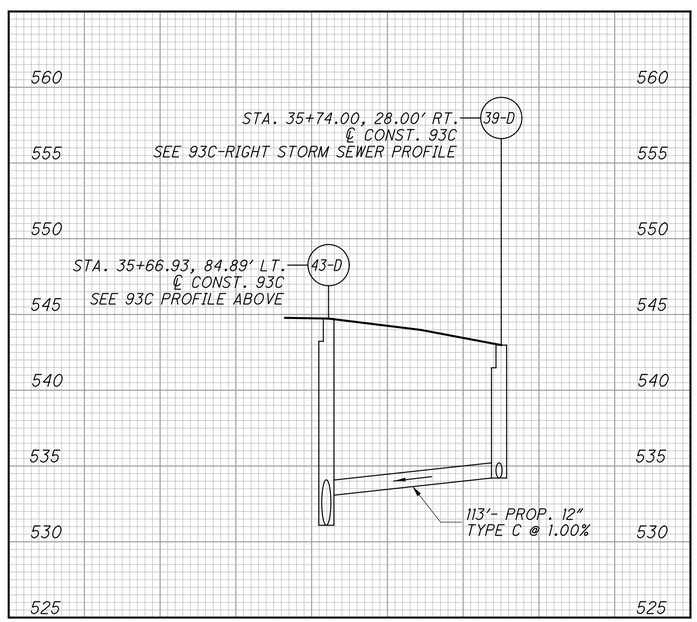

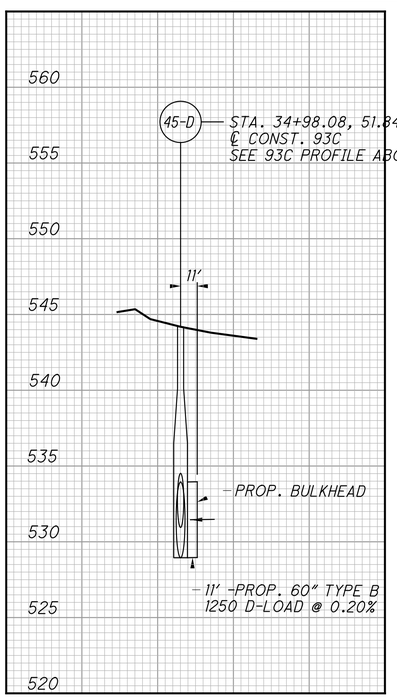

STUB PARALLEL TO MONROE ST.

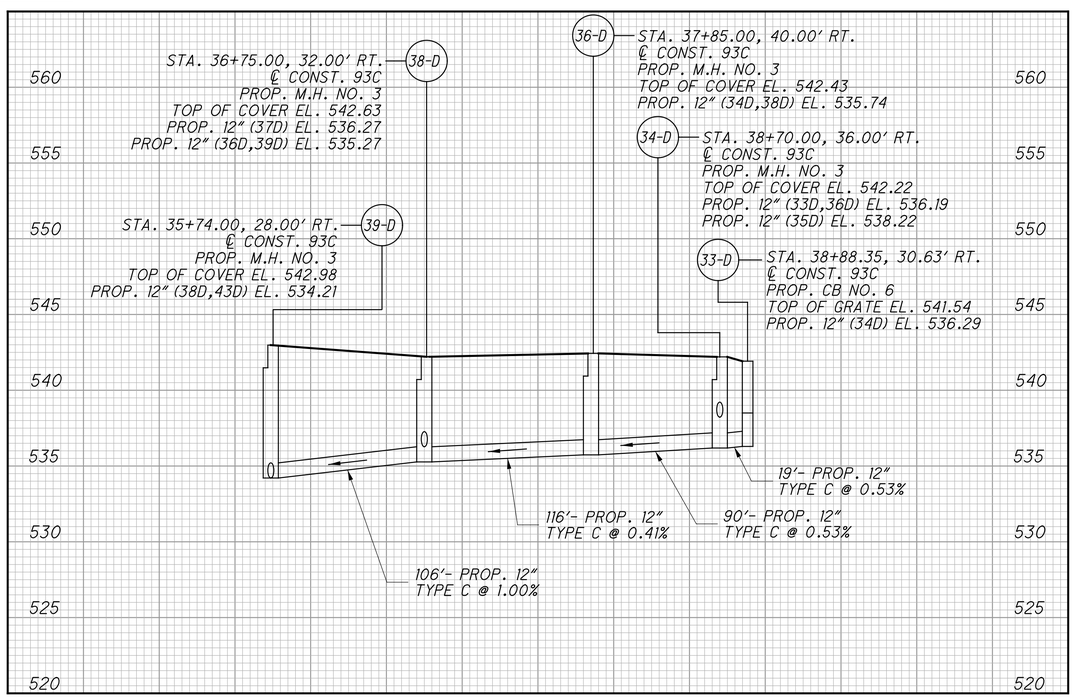

℄ CONST. 93C - RIGHT PROFILE

Link to 279-000-000
Drainage Structures
As-Built

J:\Project\OVODOT\15005112 Ironton Russell\LAW\81595\drainage\sheets\81595DF001.dgn - 1/6/2012 5:06:20 PM - jon_wanstrath

CALCULATED JDP CHECKED SCC

STORM SEWER PROFILES 93C

LAW-93-0.00

165
788

Link to 279-000-000
Drainage Structures
As-Built

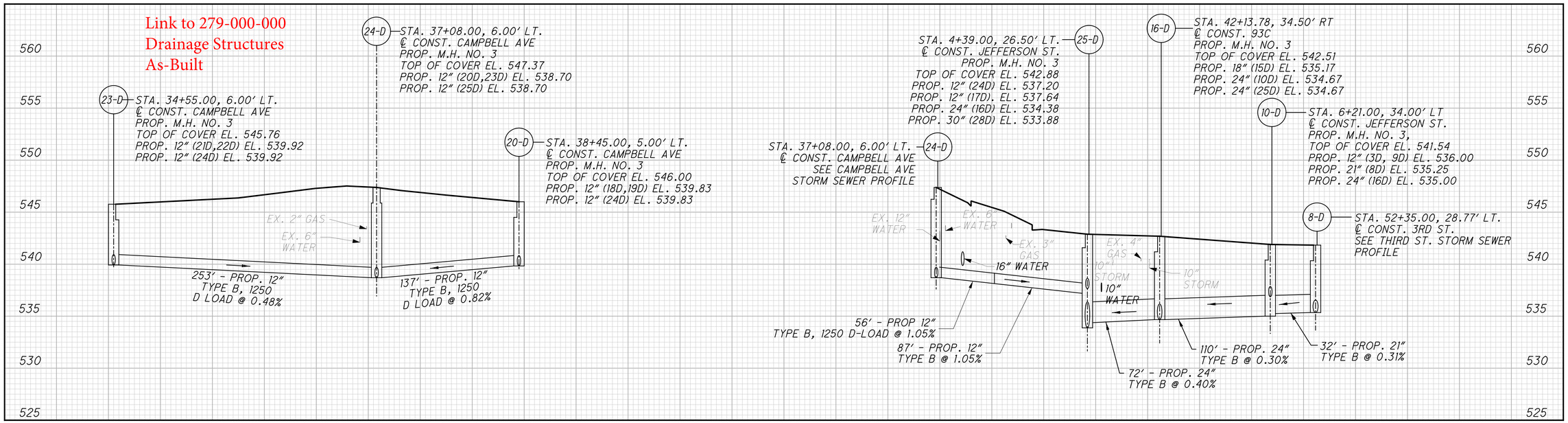

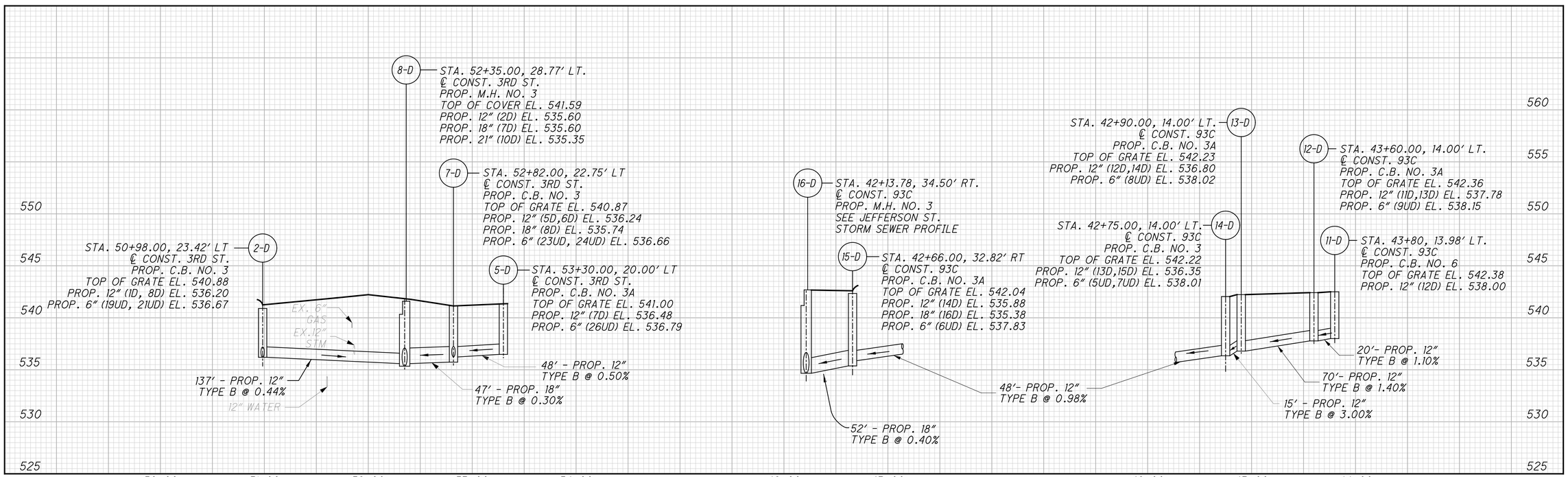

CALCULATED JDP
CHECKED SCC

STORM SEWER PROFILES
93C, CAMPBELL AVE, 3RD ST, & JEFFERSON ST

LAW-93-0.00

J:\Project\OV\ODOT\15005112 Ironton Russell\LAW\81595\drainage\sheets\81595DF002.dgn - 4/25/2011 6:54:59 AM - jon_wanstrath

J:\Project\OXODOT\15005112 Ironton Russell\LAW\81595\drainage\sheets\81595DD006.dgn - 4/25/2011 6:55:00 AM - jon_wanstrath

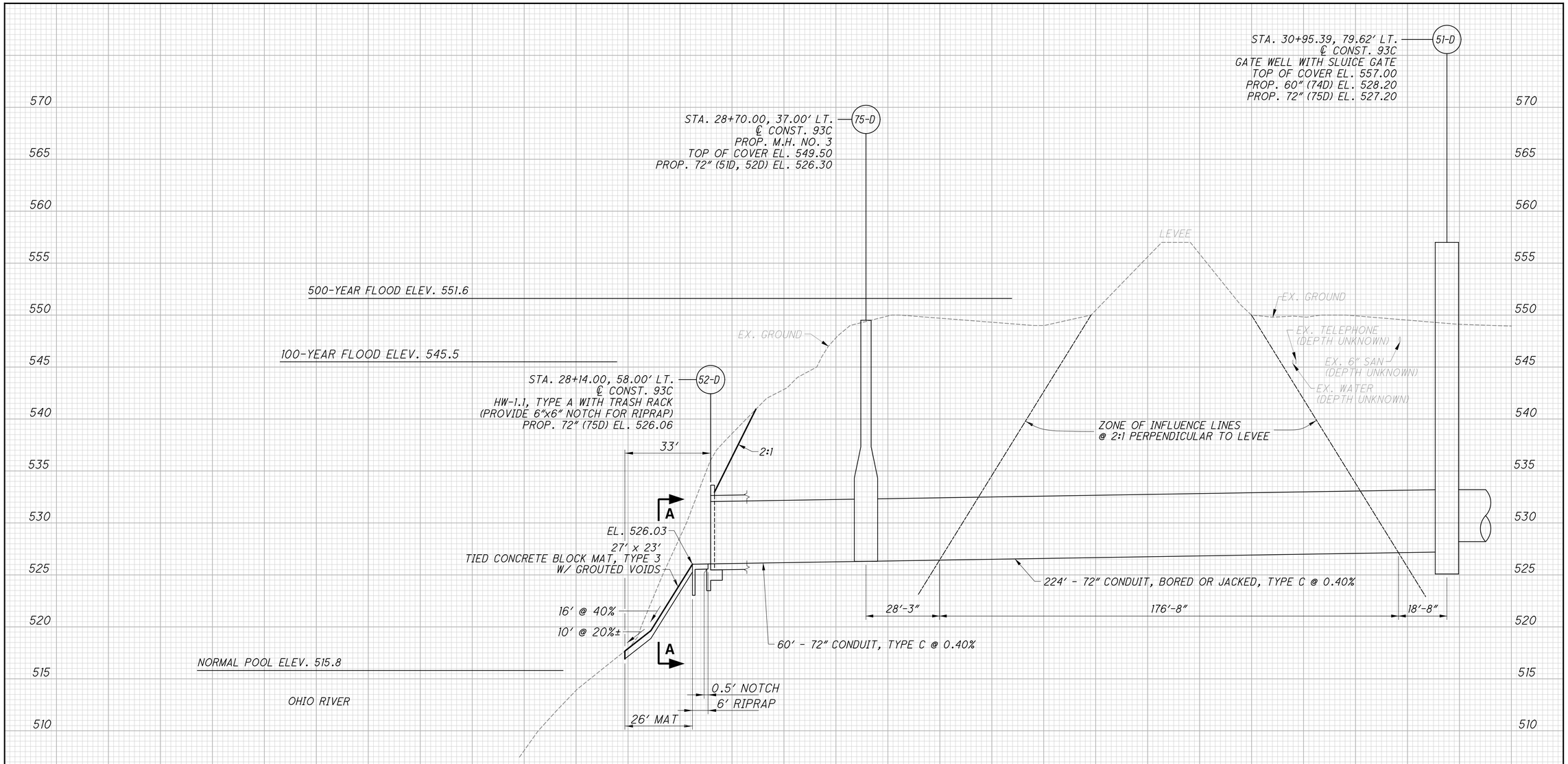

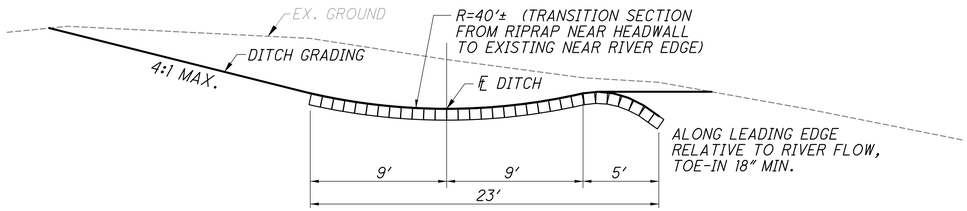

SECTION A-A
SHOWN NEAR CENTER OF MAT

Link to 279-000-000
Drainage Structures
As-Built

CALCULATED JDP
CHECKED SCC

OUTFALL SEWER PROFILE

LAW-93-0.00

ITEM 603 - CONDUIT BORED OR JACKED, 72"

WHERE IT IS SPECIFIED THAT A CONDUIT BE INSTALLED BY THE METHOD OF BORING OR JACKING, NO TRENCH EXCAVATION SHALL BE WITHIN THE ZONE OF INFLUENCE AS INDICATED ON SHEET 167 . PROVIDE A 0.50 INCH UNGALVANIZED CASING PIPE CONFORMING TO 748.06 THAT HAS JOINTS WITH A CIRCUMFERENTIAL FULLY PENETRATING B-U4B WELD THAT IS PERFORMED BY AN ODOT APPROVED FIELD WELDER.

IRONTON FLOOD LEVEE SPECIAL REQUIREMENTS

A. IF EXCAVATION FOR THE JACKING PIT FOR THE 72" CASING PIPE VIOLATES A ZONE OF INFLUENCE LINE DESCENDING ON A LINE 2 HORIZONTAL TO 1 VERTICAL PERPENDICULAR FROM THE TOE OF THE LEVEE, EXCAVATION FOR THE GATE WELL CONSTRUCTION MUST BE SHORED IN A MANNER THAT DOES NOT ALLOW MOVEMENT OF ADJACENT LEVEE SLOPES. SHORING MAY BE DONE BY EITHER INTERNALLY-BRACED OR ANCHORED WALLS, BUT THE CONSTRUCTION CONTRACTOR SHALL ENLIST A REGISTERED PROFESSIONAL ENGINEER TO DESIGN THE EXCAVATION BRACING SYSTEM. ALL DRAWINGS AND CALCULATIONS SHALL BE STAMPED AND SUBMITTED TO THE DISTRICT PROJECT ENGINEER FOR REVIEW PRIOR TO EXCAVATION.

B. FLOOD PROTECTION FOR THE INTERIOR OF THE FLOOD LEVEE DURING THE FINAL 50 FEET OF THE BORING AND JACKING OPERATION AND THE GATEWELL CONSTRUCTION SHALL BE AS FOLLOWS:

1) BEGINNING SEVEN CALENDAR DAYS PRIOR TO THE EXPECTED TIME OF INSTALLATION OF THE 72" CONDUIT TO WITHIN 50 FEET OF THE OUTLET LOCATION, THE CONTRACTOR SHALL BEGIN DAILY CONTACT WITH THE ARMY CORPS OF ENGINEERS, WATER MANAGEMENT TEAM TO OBTAIN A FORECAST OF THE PROJECTED WATER SURFACE ELEVATION PRIOR TO AND DURING CONSTRUCTION OF THE LAST 50 FEET OF THE CONDUIT. CONTACT WITH THE WATER MANAGEMENT TEAM IS AS FOLLOWS:

U.S. ARMY CORPS OF ENGINEERS, GREAT LAKES AND OHIO RIVER
ATTN: WATER MANAGEMENT TEAM
P.O. BOX 1159
CINCINNATI, OHIO 45201-1159
513-684-6259

THE CONTRACTOR SHALL OBTAIN AND SUBMIT DAILY (7:00 AM) THE RIVER STAGE HEIGHT TO THE WATER MANAGEMENT TEAM BEGINNING SEVEN CALENDAR DAYS PRIOR TO AND DURING CONSTRUCTION OF THE LAST 50 FEET OF CONDUIT. PROVIDE THE STAGE HEIGHT READING FROM THE EXISTING GAUGE THAT IS LOCATED APPROXIMATELY 100 FEET UPSTREAM OF THE EXISTING S.R. 93 BRIDGE. THE ARMY CORPS OF ENGINEERS WILL GENERATE A FORECAST OF THE RIVER HEIGHT. EACH DAY, THAT DAY'S STAGE HEIGHT READING AND WATER MANAGEMENT TEAM FORECAST SHALL BE PROVIDED TO THE ENGINEER IN WRITING. THE CONTRACTOR SHALL ENSURE THAT THE INSTALLATION OF THE FINAL 50 FEET OF THE 72" CONDUIT, EQUIPMENT REMOVAL, AND HIGH PRESSURE PIPE PLUG INSTALLATION WILL BE ACCOMPLISHED DURING A TIME THAT THE FORECASTED WATER SURFACE WILL BE BELOW THE OUTLET INVERT OF THE CONDUIT.

2) WITHIN 24 HOURS FOLLOWING COMPLETION OF THE BORING OR JACKING OPERATION AND REMOVAL OF EQUIPMENT, A HIGH PRESSURE PIPE PLUG, SIZED SPECIFICALLY FOR A 72" OPENING, SHALL BE INSTALLED IN THE CASING PIPE TO PROTECT THE INTERIOR OF THE FLOOD LEVEE AREA UNTIL THE GATEWELL AND SLUICE GATE HAVE BEEN ACCEPTED AS FUNCTIONAL FOR FLOOD PROTECTION. THE PIPE PLUG SHALL BE CAPABLE OF WITHSTANDING A 23 FOOT HEAD MEASURED FROM THE CENTER ELEVATION OF THE PIPE. A SECOND, IDENTICAL HIGH PRESSURE PIPE PLUG SHALL BE STORED AT THE SITE OF THE GATE WELL FOR IMMEDIATE INSTALLATION SHOULD THE INSTALLED PIPE PLUG SHOW SIGNS OF FAILURE TO PERFORM AS REQUIRED.

C. PRIOR TO BEGINNING CONSTRUCTION OF THE 60" OUTFALL SEWER UPSTREAM OF THE GATE WELL, THE GATE WELL, SLUICE GATE, OUTFALL HEADWALL AND EROSION PROTECTION DOWN TO THE WATER LEVEL OF THE RIVER SHALL BE COMPLETE.

D. THE EXCAVATION SHALL BE BACKFILLED ACCORDING TO THE REQUIREMENTS AND SPECIFICATIONS OF ITEM 203.

E. THE CONSTRUCTION CONTRACTOR SHALL BE REQUIRED TO SUBMIT ALL INFORMATION AND PROPOSALS FOR THE ABOVE ITEMS AS PART OF HIS EXCAVATION PLAN FOR REVIEW AND APPROVAL BY THE ENGINEER PRIOR TO CONSTRUCTION OF THE JACKING PIT AND GATE WELL.

THE CONTRACTOR SHALL ALSO SUBMIT TO THE ENGINEER HIS METHOD OF OPERATIONS TO INSTALL THE 72" CONDUIT UNDER THE FLOOD LEVEE. THE ENGINEER SHALL SUBMIT THE CONTRACTOR'S INFORMATION TO THE U.S.A.C.O.E. FOR APPROVAL AND COMMENT. INSTALLATION OF THE 72" CONDUIT SHALL NOT BEGIN UNTIL THE CONTRACTOR RECEIVES APPROVAL OF THE U.S.A.C.O.E. THROUGH THE ENGINEER.

THIS FLOOD LEVEE PROTECTION WORK SHALL BE INCLUDED WITH ITEM 603 - CONDUIT BORED OR JACKED, 72" FOR PAYMENT.

ITEM - 604 DRAINAGE STRUCTURE, MISC.: GATEWELL

THIS ITEM OF WORK SHALL CONSIST OF CONSTRUCTING THE STRUCTURE DETAILED ON SHEETS 170 - 172 INCLUDING THE FURNISHING AND INSTALLATION OF HATCH, LADDER, FALL PREVENTION DEVICE AND HANDRAILS. FURNISHING AND INSTALLATION OF THE SLUICE GATE WILL BE PAID SEPARATELY.

THE THIMBLE TO BE POURED INTO THE WALL SHALL BE PROVIDED BY THE MANUFACTURER OF THE SLUICE GATE.

THE HATCH SHALL BE A HALLIDAY PRODUCTS MODEL NO. H2C7260 OR APPROVED EQUAL HAVING AN OPENING THAT WILL ACCOMODATE A 60" SLUICE GATE & FRAME (71½"x14") TO PERMIT INSTALLATION, REMOVAL AND FUTURE MAINTENANCE.

THE LADDER SHALL BE GALVANIZED STEEL OR ALUMINUM LADDER RATED FOR AT LEAST 400 POUND LOAD AND SHALL BE ATTACHED TO THE GATEWELL WALL AND BOTTOM SLAB USING REMOVABLE FASTENERS. THE LADDER SHALL BE EQUIPPED WITH FALL PREVENTION SYSTEM SUCH AS SAFE-T-CLIMB OR AN APPROVED EQUAL MEETING ALL APPLICABLE OSHA AND ANSI REQUIREMENTS.

THE HANDRAIL MOUNTED ON TOP OF THE GATEWELL SHALL BE 3'-6" HIGH GALVANIZED STEEL OR ALUMINUM RAILING MEETING ALL APPLICABLE OSHA AND ANSI REQUIREMENTS AND SHALL BE EQUIPPED WITH AN ENTRY GATE. THE HANDRAIL SHALL BE FABRICATED AND INSTALLED IN A MANNER WHICH WILL ACCOMODATE THE OPERATION OF THE SLUICE GATE.

THE CONTRACTOR SHALL SUBMIT THE SHOP DRAWINGS FOR THE HATCH, LADDER WITH FALL PREVENTION DEVICE AND THE HANDRAIL INCLUDING THEIR DESIGN AND SPECIFICATION TO THE ENGINEER FOR APPROVAL. THESE ITEMS SHALL NOT BE FABRICATED AND INSTALLED IN PLACE PRIOR TO OBTAINING THE APPROVAL.

PAYMENT FOR THIS ITEM SHALL BE MADE UNDER THE UNIT PRICE BID FOR ITEM 604 DRAINAGE STRUCTURE, MISC.: GATEWELL, WHICH PRICE AND PAYMENT SHALL CONSTITUTE FULL COMPENSATION FOR ALL EXCAVATION, BACKFILL, FURNISHING AND INSTALLATION OF ALL MATERIALS, ALL FORMING, SHOP DRAWINGS AND THE FURNISHING OF ALL TOOLS, EQUIPMENT, LABOR AND INCIDENTALS NECESSARY TO COMPLETE THIS ITEM OF WORK IN PLACE.

CALCULATED BKL
CHECKED SCC

OUTFALL SEWER GENERAL NOTES

OUTFALL

LAW-93-0.00

168
788

J:\Project\O\ODOT\15005112 Ironton Russell\LAW\81595\drainage\sheets\81595DD003.dgn - 4/25/2011 6:55:01 AM - jon_wanstrath

ITEM 604 DRAINAGE STRUCTURE, MISC.: SLUICE GATE

1. ALL ASPECTS OF THE GATE DESIGN, MATERIAL SPECIFICATIONS, FABRICATION, INSPECTION, SHIPMENT, INSTALLATION, AND FIELD TESTING SHALL BE ACCORDING TO AWWA C560, LATEST REVISION, STANDARD FOR CAST-IRON SLUICE GATES. ALL SPECIFICATION SECTIONS LISTED BELOW REFER TO THE ABOVE AWWA STANDARD

2. THE SLUICE GATE SHALL BE SIZED FOR A 60" OPENING AND BE OF THE CONVENTIONAL TYPE.

3. THE CONTRACTOR SHALL FURNISH AN ACTUATOR STAND TO BE USED WITH A CRANK OPERATED ACTUATION.

4. SIX SETS OF THE INFORMATION LISTED IN SECTION 4.2 SHALL BE SUBMITTED TO THE ENGINEER FOR APPROVAL PRIOR TO THE MANUFACTURE OF THE SLUICE GATE. THE REQUIREMENTS OF THE ABOVE SECTION INCLUDES BUT IS NOT LIMITED TO THE FOLLOWING:

   - CERTIFIED DRAWINGS CLEARLY SHOWING ALL DIMENSIONS OF THE DISC AND GUIDES, WALL THIMBLE, FRAME, SEALS, OPERATING STEM, STEM GUIDES, ANCHOR BOLTS, STEM COUPLINGS, FLOORSTAND, CRANK, AND PIPE COVER.

   - GENERAL CONSTRUCTION AND MATERIALS

   - ILLUSTRATED CATALOG DATA AND PARTS SCHEDULES

5. THE CONTRACTOR SHALL FURNISH TO THE ENGINEER, AN AFFIDAVIT OF COMPLIANCE PER SECTION 6.3.

6. PER SECTION 4.3.2, RECORDS OF COMPLIANCE WITH ALL TESTING REQUIREMENTS AND PROCEDURES SHALL BE FURNISHED TO THE ENGINEER.

7. THE SLUICE GATE SHALL BE MANUFACTURED TO WITHSTAND A SEATING HEAD OF 23 FEET AND AN UNSEATING HEAD OF 12 FEET MEASURED FROM THE WATER SURFACE TO THE CENTERLINE OF THE GATE.

8. AN "E" SHAPED THIMBLE SHALL BE USED FOR THE GATE MOUNTING, SHALL BE 60" IN DIAMETER AND SHALL BE 12" LONG.

9. THE OPERATING STEM SHALL BE OF THE RISING TYPE.

10. SHOP LEAKAGE TESTS SHALL BE CONDUCTED PER SECTIONS 4.5.2.2.

11. THE ENGINEER SHALL HAVE THE INSPECTION AND REJECTION AUTHORITY SPECIFIED IN SECTION 5.1.

12. MATERIALS SHALL BE AS FOLLOWS:

DESCRIPTION	ASTM DESIGNATION
IRON CASTINGS FOR WALL THIMBLE, FRAME, DISC, GUIDES, STEM GUIDES, FLOORSTANDS, AND OTHER ITEMS	A-126, CLASS-B
BRONZE CASTINGS FOR WEDGES, THRUST NUT, LIFT NUT, AND COUPLINGS	B-584, C86500
BRONZE FOR SEAT FACINGS IN FRAME AND DISC	B-21, C46400
BRONZE TONGUE AND GUIDE LINERS	B98, C65500
STAINLESS STEEL FOR THE STEM	A-276, TYPE 304
STAINLESS STEEL FOR FASTENERS	A-276, TYPE 304

PAYMENT

PAYMENT FOR THE SLUICE GATE SHALL BE AT THE CONTRACT PRICE BID PER EACH DRAINAGE STRUCTURE MISC.: SLUICE GATE WHICH PRICE AND PAYMENT SHALL BE COMPLETE COMPENSATION FOR FURNISHING A SLUICE GATE AND APPURTENANCES AS SPECIFIED ABOVE, INSTALLING AND TESTING THE SLUICE GATE, AND FURNISHING ALL TOOLS, LABOR, EQUIPMENT AND INCIDENTALS NECESSARY TO COMPLETE THIS ITEM IN PLACE.

ITEM 602 - CONCRETE MASONRY, AS PER PLAN

IN ADDITION TO THE REQUIREMENTS UNDER ITEM 602, THIS ITEM SHALL INCLUDE THE FABRICATION AND PLACEMENT OF THE TRASH RACK PER THE DETAILS AND THE FURNISHING OF ALL TOOLS, EQUIPMENT, LABOR AND INCIDENTALS NECESSARY TO ATTACH THE TRASH RACK TO THE HW-1.1 HEADWALL. THE TRASH RACK SHALL BE ASTM A709, GRADE 50 STRUCTURAL STEEL FABRICATED IN ACCORDANCE WITH CMS 513 AND SHALL BE GALVANIZED AFTER FABRICATION PER CMS 711.02.

PAYMENT FOR THIS ITEM SHALL BE MADE UNDER THE CUBIC YARD PRICE BID FOR ITEM 602 CONCRETE MASONRY, AS PER PLAN, WHICH PRICE AND PAYMENT SHALL CONSTITUTE FULL COMPENSATION FOR CONSTRUCTION OF THE HEADWALL AND THE FURNISHING AND PLACEMENT OF THE TRASH RACK INCLUDING THE FURNISHING OF ALL TOOLS, EQUIPMENT, LABOR AND INCIDENTALS NECESSARY TO COMPLETE THIS ITEM OF WORK IN PLACE.

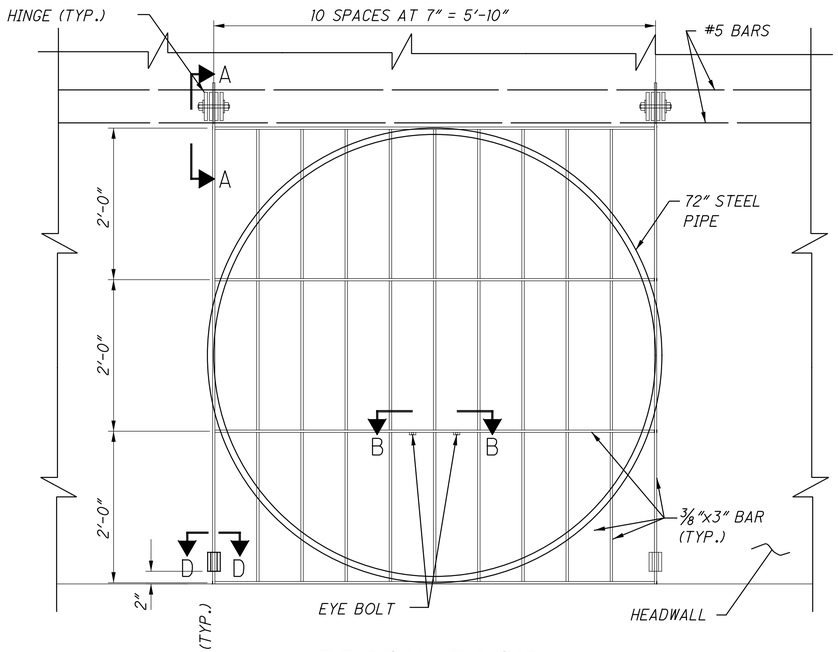

TRASH RACK

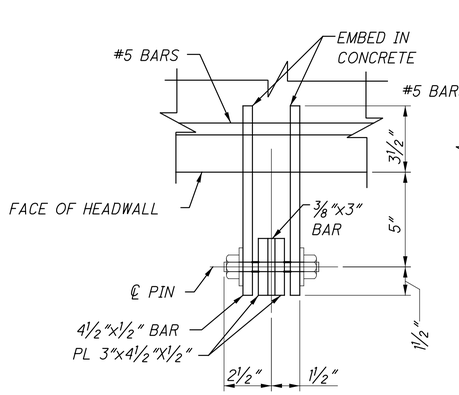

PLAN

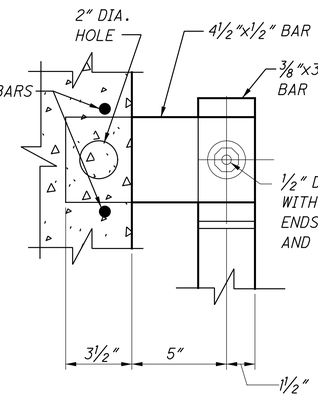

VIEW A-A

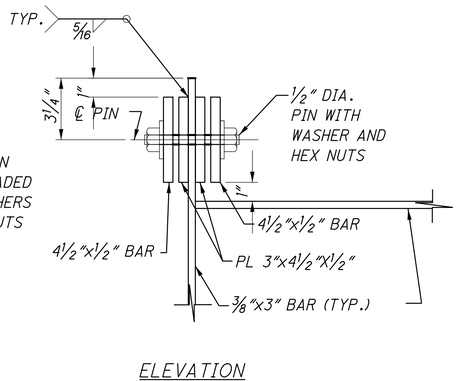

ELEVATION

HINGE DETAIL

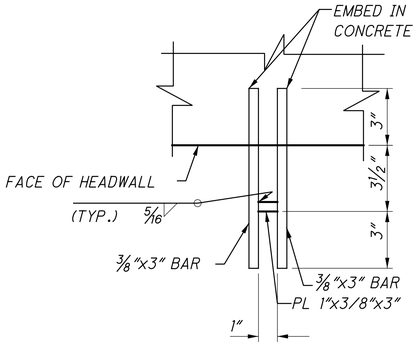

VIEW D-D

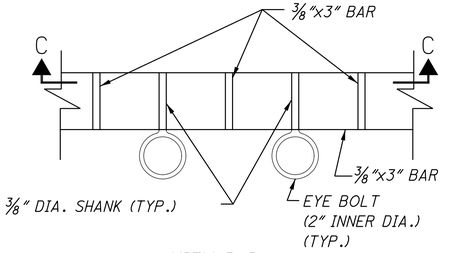

VIEW B-B

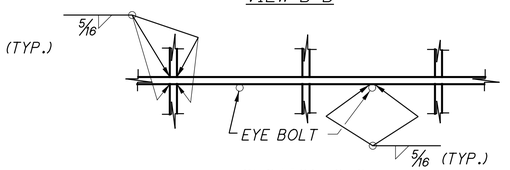

SECTION C-C

CALCULATED JDP
CHECKED SCC

OUTFALL SEWER GENERAL NOTES AND DETAILS

LAW-93-0.00

D:\DGN\09722055120\HWEELA36B.PRV 36B95\drainage\sheets\81595DD004.dgn - 4/25/2011 6:55:03 AM - jon_wanstrath

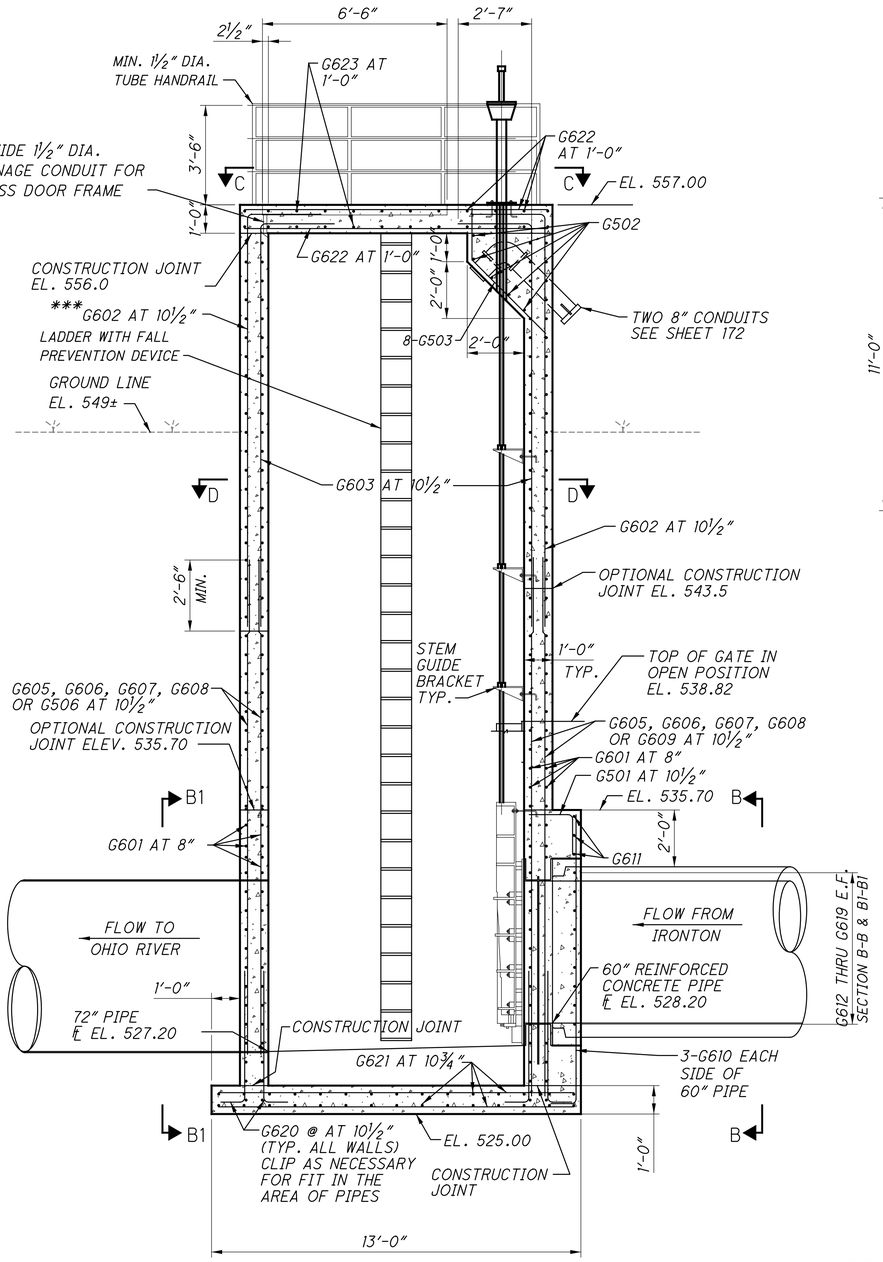

SECTION A-A

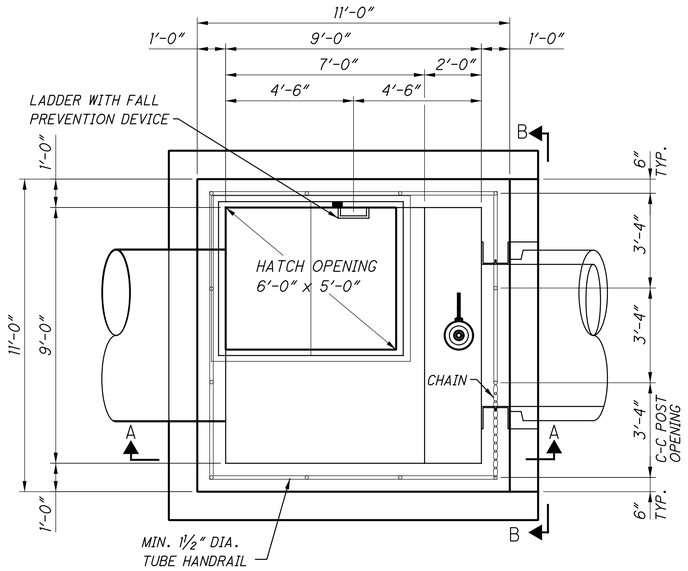

PLAN

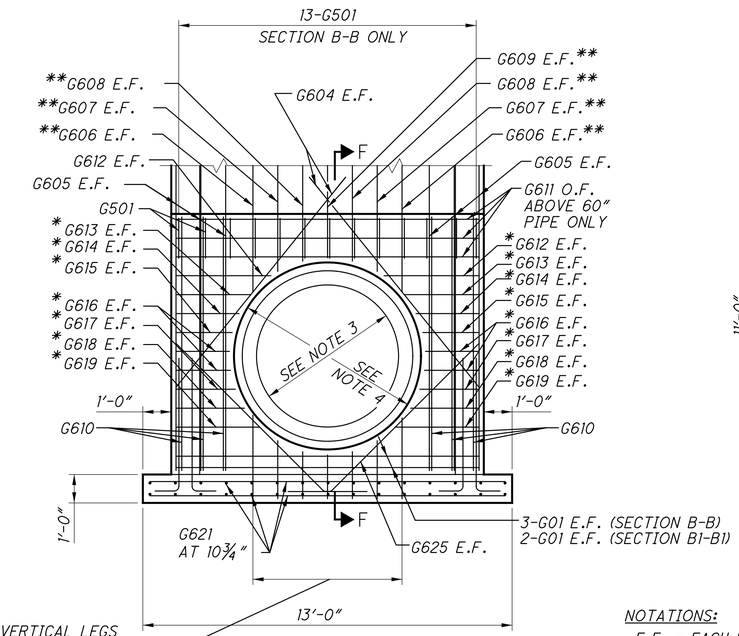

SECTION B-B

(SECTION B1-B1 SIMILAR, EXCEPT AS NOTED)

NOTES:

* THESE BARS REPLACED BY G601 ON OTHER TWO SIDES WITHOUT PIPE

** THESE BARS REPLACED BY G605 ON OTHER TWO SIDES WITHOUT PIPE

*** CUT OR TURN AS REQUIRED FOR TOP HATCH

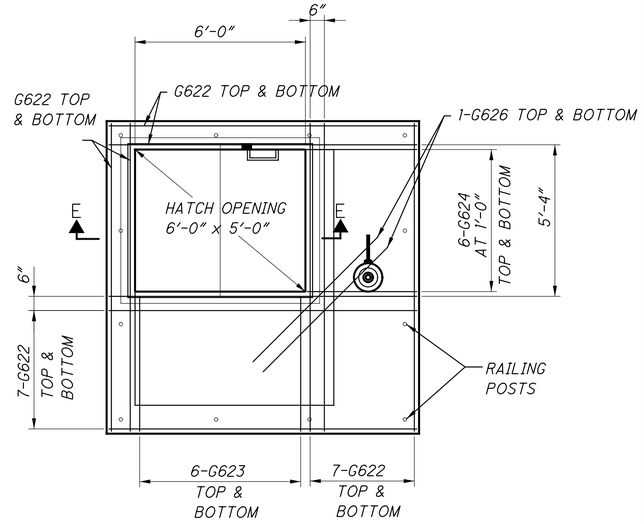

VIEW C-C

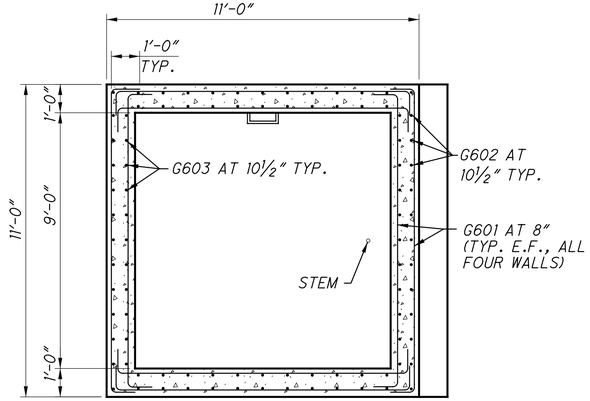

SECTION D-D

171

NOTATIONS:

E.F. - EACH FACE
E.W. - EACH WAY
O.F. - OUTSIDE FACE

NOTES:

1. FOR SECTIONS E-E AND F-F SEE SHEET 171 .
2. SEE SHEETS 167 THRU 172 FOR LOCATION OF GATEWELL (STRUCTURE 51D), DETAILS & NOTES, DRAINAGE PIPES AND SLUICE GATE.
3. PIPE DIAMETER 60" SECTION B-B AND 72" SECTION B1-B1.
4. OPENING IN WALL 79" SECTION B-B AND PIPE DIAMETER PLUS 2" FOR SECTION B1-B1.

CALCULATED BKL
CHECKED SCC

GATE WELL DETAILS

LAW-93-0.00

170
788

J:\Project\O\ODOT\15005112 Ironton Russell\LAW\81595\drainage\sheets\81595DD001.dgn - 4/25/2011 6:55:04 AM - jon_wanstrath

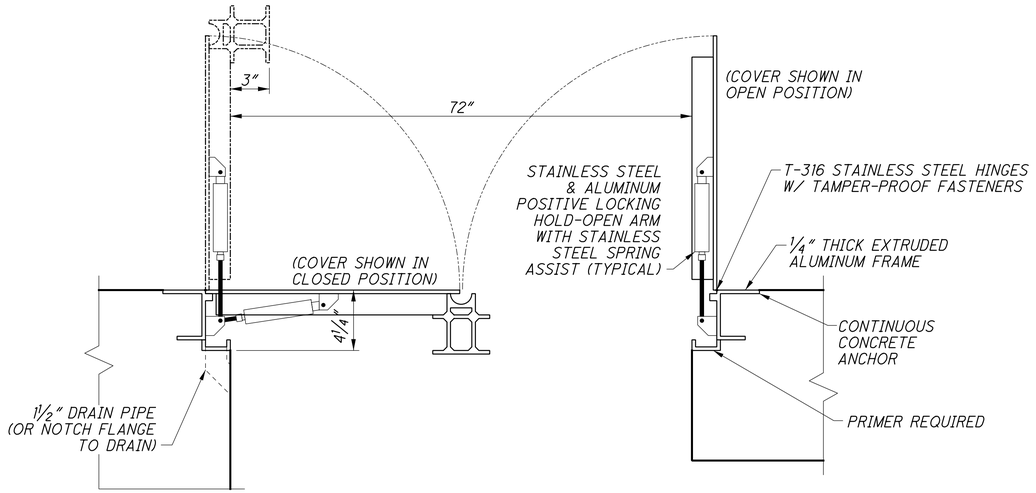

SECTION E-E
HATCH DETAIL

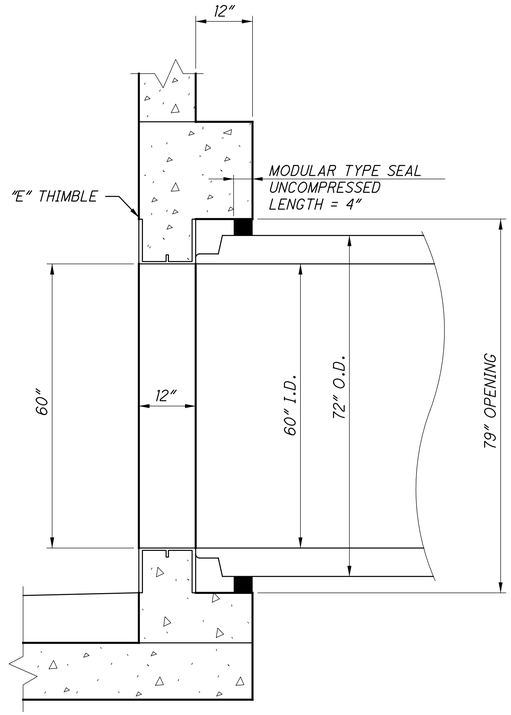

SECTION F-F
DETAIL 60" PIPE CONNECTION
(NOT APPLICABLE FOR 72" PIPE)

GATE WELL — CALCULATED --- DATE 10/09 — CHECKED --- DATE 10/09

MARK	TOTAL	LENGTH	TYPE	A	B	WEIGHT (LBS.)
G501	13	3'-2"	1	1'-8"	1'-8"	43
G502	5	10'-8"	STR			56
G503	8	5'-3"	2	1'-8"	2'-8"	44
G601	324	12'-3"	3	12"	10'-8"	5961
G602	48	15'-7"	1	2'-7"	13'-2"	1124
G603	44	14'-11"	1	2'-7"	12'-6"	986
G604	8	9'-6"	STR			114
G605	64	19'-9"	STR			1899
G606	8	13'-2"	STR			158
G607	8	12'-10"	STR			154
G608	8	12'-6"	STR			150
G609	4	12'-4"	STR			74
G610	6	10'-11"	1	1'-0"	10'-1"	99
G611	3	12'-10"	3	1'-3"	10'-8"	58
G612	8	4'-2"	1	12"	3'-4"	50
G613	8	3'-6"	1	12"	2'-8"	42
G614	8	3'-0"	1	12"	2'-2"	36
G615	8	2'-9"	1	12"	1'-11"	33
G616	16	2'-8"	1	12"	1'-10"	64
G617	8	2'-11"	1	12"	2'-1"	35
G618	8	3'-3"	1	12"	2'-5"	39
G619	8	3'-9"	1	12"	2'-11"	45
G620	92	4'-2"	1	12"	3'-4"	576
G621	60	12'-6"	STR			1127
G622	36	10'-8"	STR			577
G623	12	4'-6"	STR			81
G624	12	3'-9"	STR			68
G625	8	8'-8"	2	1'-6"	5'-2"	104
G626	4	6'-0"	STR			36
					TOTAL	13833

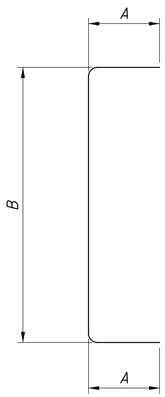

TYPE 3

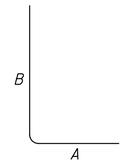

TYPE 1

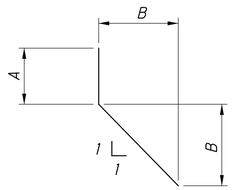

TYPE 2

CALCULATED BKL
CHECKED SCC

GATE WELL DETAILS

LAW-93-0.00

171
788

J:\Project\O\ODOT\15005112 Ironton Russell\LAW\81595\drainage\sheets\81595DD002.dgn - 4/25/2011 6:55:05 AM - jon_wanstrath

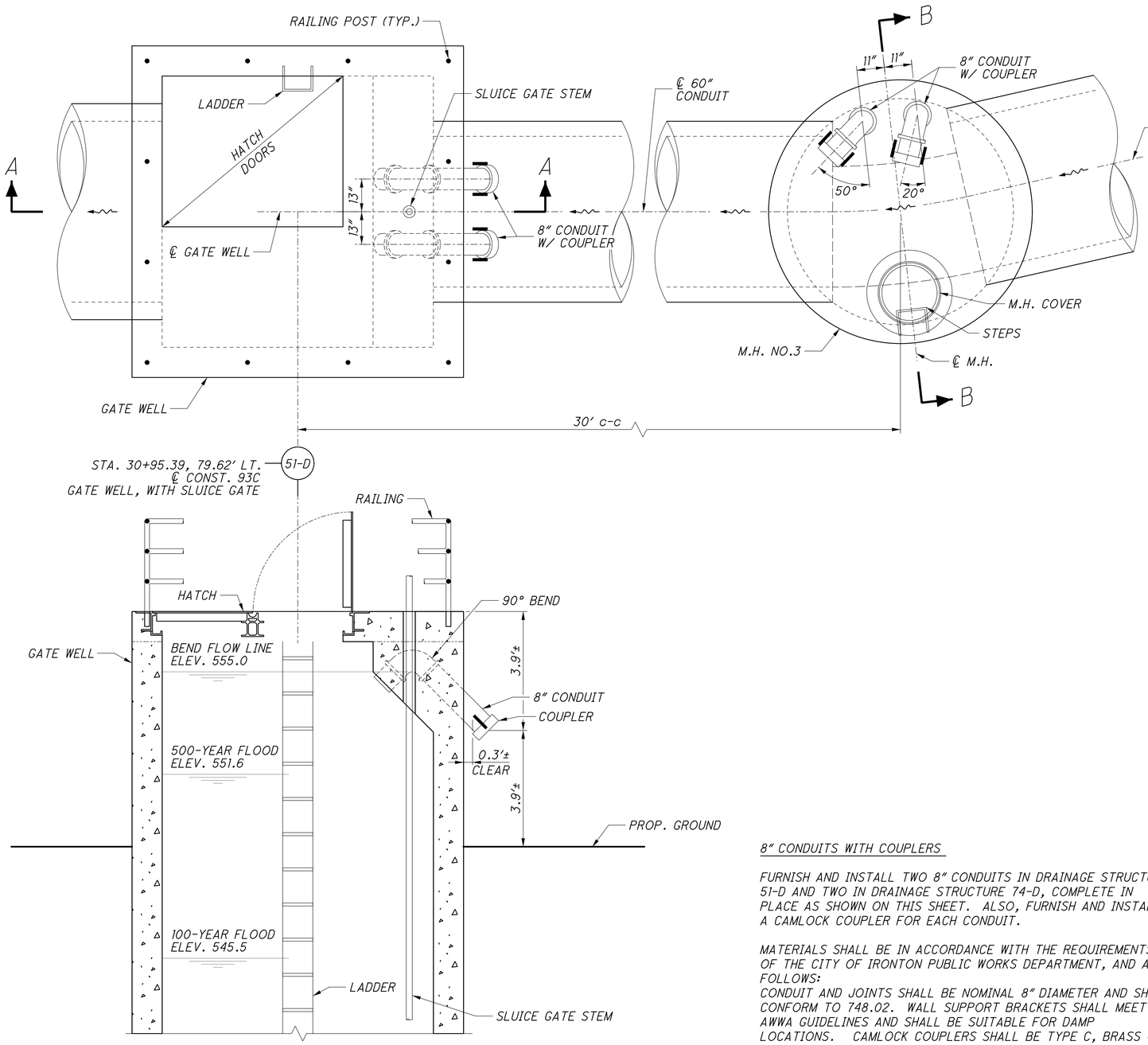

SECTION A-A

8" CONDUITS WITH COUPLERS

FURNISH AND INSTALL TWO 8" CONDUITS IN DRAINAGE STRUCTURE 51-D AND TWO IN DRAINAGE STRUCTURE 74-D, COMPLETE IN PLACE AS SHOWN ON THIS SHEET. ALSO, FURNISH AND INSTALL A CAMLOCK COUPLER FOR EACH CONDUIT.

MATERIALS SHALL BE IN ACCORDANCE WITH THE REQUIREMENTS OF THE CITY OF IRONTON PUBLIC WORKS DEPARTMENT, AND AS FOLLOWS:
CONDUIT AND JOINTS SHALL BE NOMINAL 8" DIAMETER AND SHALL CONFORM TO 748.02. WALL SUPPORT BRACKETS SHALL MEET AWWA GUIDELINES AND SHALL BE SUITABLE FOR DAMP LOCATIONS. CAMLOCK COUPLERS SHALL BE TYPE C, BRASS OR BRONZE.

ALL MATERIALS, EQUIPMENT, AND LABOR TO PERFORM THIS WORK SHALL BE INCLUDED IN THE PRICE BID FOR THE PERTINENT DRAINAGE STRUCTURE.

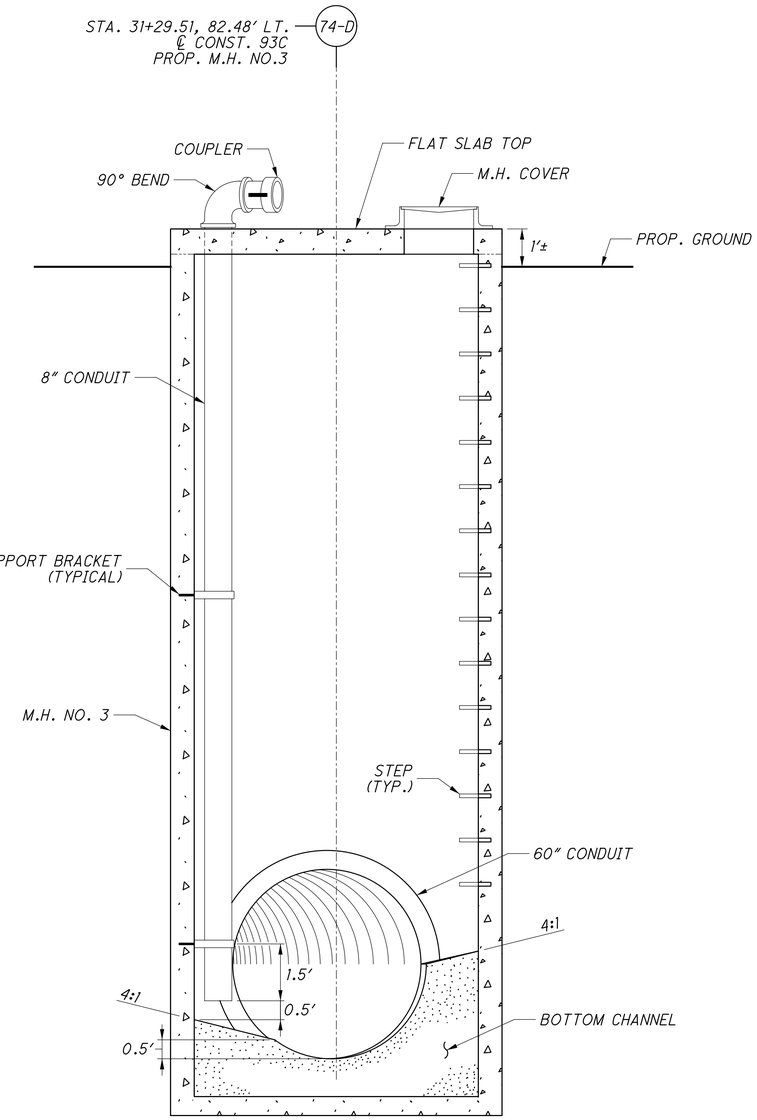

SECTION B-B

LOOKING UPSTREAM

HORIZONTAL SCALE IN FEET
0 1 2 4

CALCULATED SCC
CHECKED

DRAINAGE DETAILS CONDUITS WITH COUPLERS

LAW-93-0.00

172
788

J:\Project\O\ODOT\15005112 Ironton Russell\LAW\81595\drainage\sheets\81595DD007.dgn - 4/25/2011 6:55:06 AM - jon_wanstrath

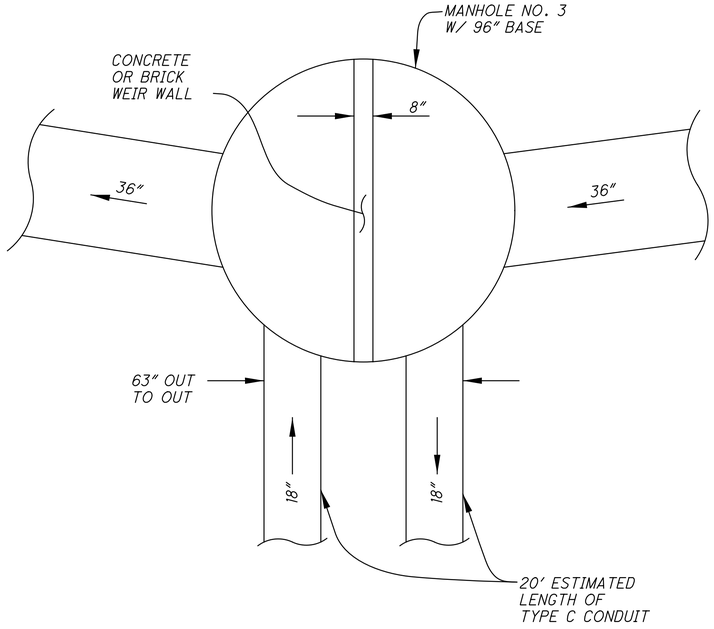

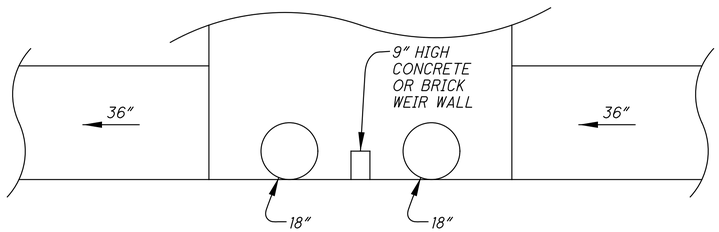

MANHOLE, NO. 3, AS PER PLAN

FOR DETAILS NOT SHOWN, SEE SCD MH-1.2

MANUFACTURED WATER QUALITY STRUCTURE

THIS PLAN UTILIZES A MANUFACTURED WATER QUALITY STRUCTURE FOR WATER QUALITY TREATMENT. AN AREA HAS BEEN SHOWN IN THE PLAN FOR FINAL PLACEMENT OF THE STRUCTURE IN AN OFF-LINE CONFIGURATION. THE MANUFACTURER SHALL INSTRUCT THE CONTRACTOR OF FINAL PLACEMENT OF THE STRUCTURE WITHIN THE RESERVED AREA SHOWN IN THE PLANS. A NO. 3 MANHOLE WITH A 9-INCH HIGH CONCRETE OR BRICK DIVERSION WEIR HAS BEEN PROVIDED FOR WATER QUALITY FLOW DIVERSION TO THE MANUFACTURED SYSTEM. PROVIDE CONNECTION BETWEEN THE NO. 3 MANHOLE AND THE STRUCTURE WITH TWO (2) EIGHTEEN (18)-INCH CONDUITS AS REQUIRED BY THE MANUFACTURER.

THE FOLLOWING QUANTITIES ARE CARRIED TO THE GENERAL SUMMARY, AND PAYMENT FOR THIS DEVICE SHALL BE MADE AT THE CONTRACT UNIT PRICE FOR ITEMS:

895, MANUFACTURED WATER QUALITY STRUCTURE, TYPE 3	1 EACH
604, MANHOLE, NO. 3, AS PER PLAN	1 EACH
603, 18" CONDUIT, TYPE C	40 FT.

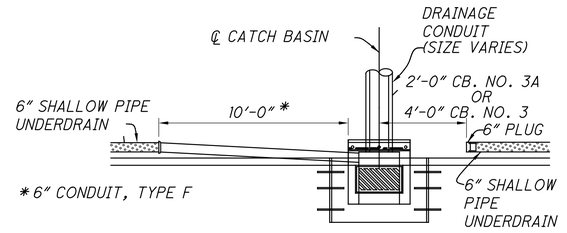

TYPE 1: OUTLETTING UNDERDRAIN INTO CATCH BASIN NO.3/3A

(WITH STORM PIPE OUTLETTING INTO SIDE/SIDES OF STRUCTURE)

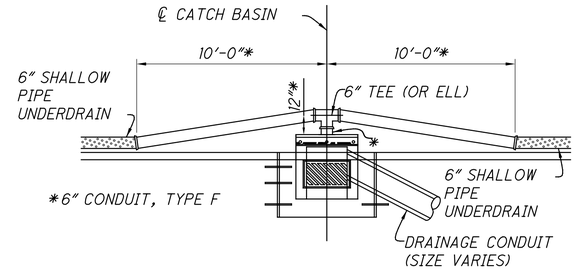

TYPE 2: OUTLETTING UNDERDRAIN INTO CATCH BASIN NO.3/3A

(WITH STORM PIPE OUTLETTING INTO SIDE/SIDES OF STRUCTURE)

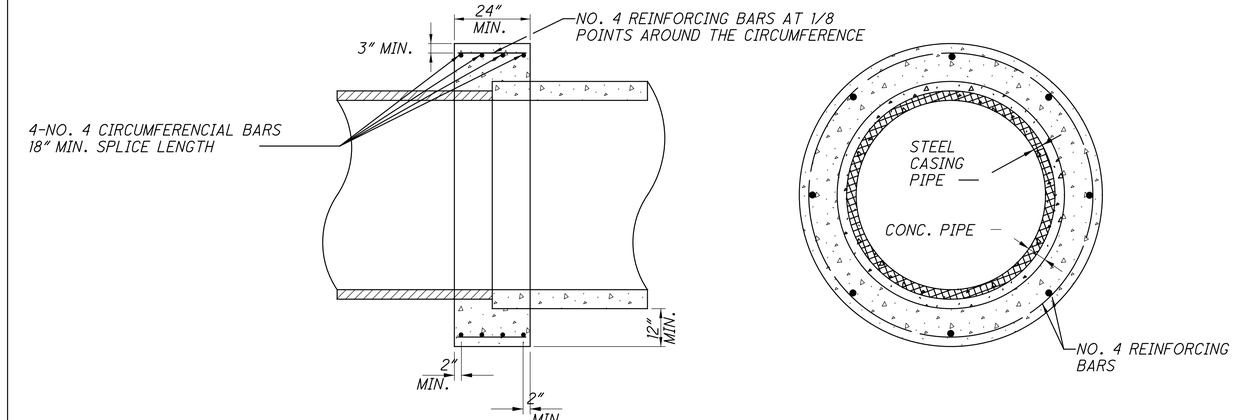

PAYMENT FOR THE MASONRY COLLAR, INCLUDING REINFORCEMENT SHALL BE INCLUDED IN THE UNIT PRICE BID FOR THE RESPECTIVE PIPE PAY ITEMS.

MASONRY COLLAR

CALCULATED AMD
CHECKED SCC

DRAINAGE DETAILS

LAW-93-0.00

J:\Project\O\ODOT\15005112 Ironton Russell\LAW\81595\drainage\sheets\81595DD005.dgn - 4/25/2011 6:55:07 AM - jon_wanstrath

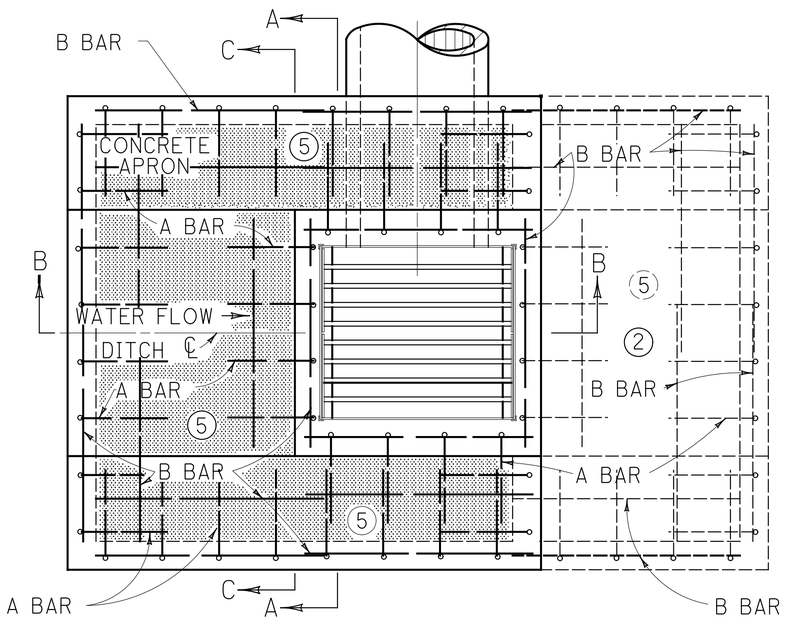

PLAN VIEW

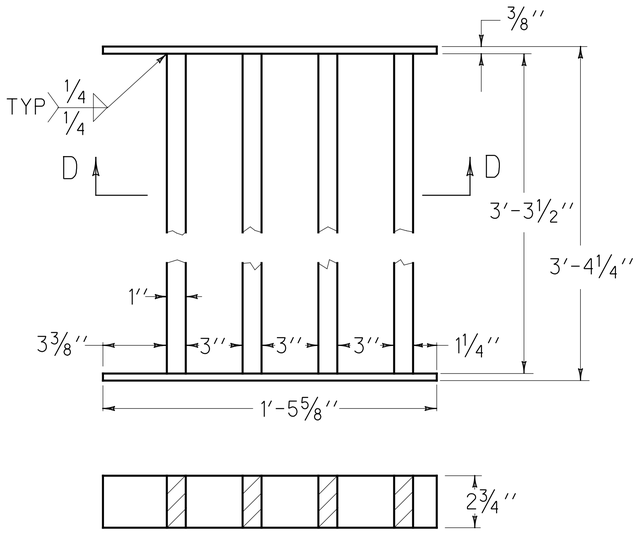

SECTION D-D
DETAIL OF GRATE
(TWO REQUIRED)

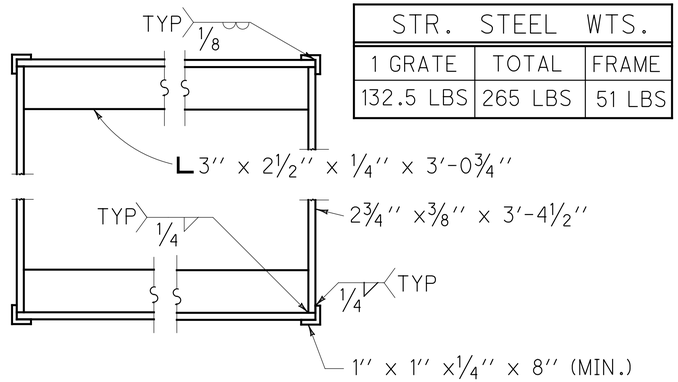

DETAIL OF FRAME

STR. STEEL WTS.		
1 GRATE	TOTAL	FRAME
132.5 LBS	265 LBS	51 LBS

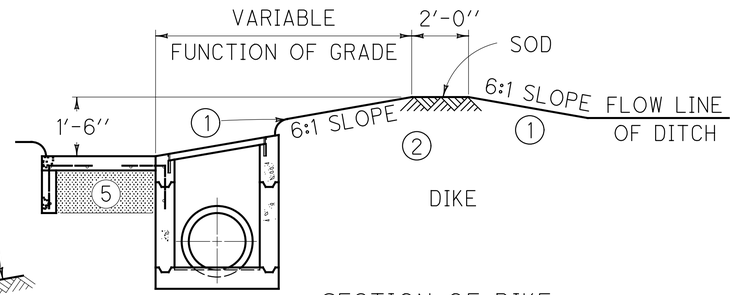

DIKE

SECTION B-B

A BAR DETAIL

SECTION A-A

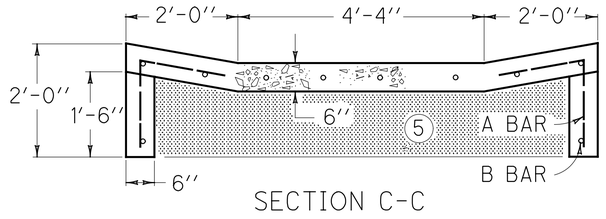

SECTION C-C

BILL OF REINFORCEMENT

BAR	NO. OF BARS	SIZE	LENGTH	APPROX. SPACING
A	40 OR 56	#5	3'-0''	1'-0'' C TO C
B	25 OR 40	#4	4'-0''	AS SHOWN

NOTE: PRIMARY USE (ROADSIDE DITCH LOCATION)

NOTES

BASIS OF PAYMENT

~~DOWNSTREAM DIKE COMPLETE AND IN PLACE IS INCLUDED IN THE CONTRACT UNIT PRICE OF THE INLET. SODDING IS NOT INCLUDED.~~

CONSTRUCTION REQUIREMENTS

(1) 6:1 SLOPES ARE WITH REFERENCE TO DITCH GRADE.
(2) WHEN A BOX INLET IS PLACED IN A SAG, OMIT THE EARTH DIKE AND LONGITUDINAL SLOPE OF THE GRATE, AND PROVIDE A CONCRETE APRON ON EACH SIDE OF THE INLET.
(3) RATE OF INCREASE OR DECREASE 0.36 CU. YD. PER FOOT IN HEIGHT.
(4) DEDUCT APPROX. 0.1 CU. YD. OF CONCRETE PER PIPE.
(5) ▨ COMPACT THIS VOLUME WITH D.G.A. BASE OR GRAVEL BASE AND INCLUDE IN THE UNIT PRICE OF THE BOX.

APPROX. QUANTITIES

TYPE	CONCRETE 3'-9'' (3) BOX	REINF. STEEL
SAG	4.4 CU. YD. (4)	282 LBS
GRADE	3.4 CU. YD. (4)	192 LBS

KENTUCKY STANDARD DRAWING RDB-001
DROP BOX INLET TYPE 1

LAW-93-0.00

174
788

J:\Project\KYDOT\15005112 Ironton Russell\LAW\81595\roadway\sheets\Updated and Reformatted KY SD\81595RDB001SD.dgn - 4/25/2011 6:55:08 AM - jon_wanstrath

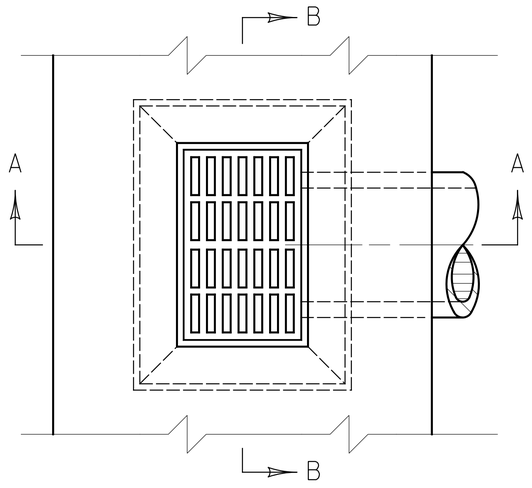

PLAN VIEW

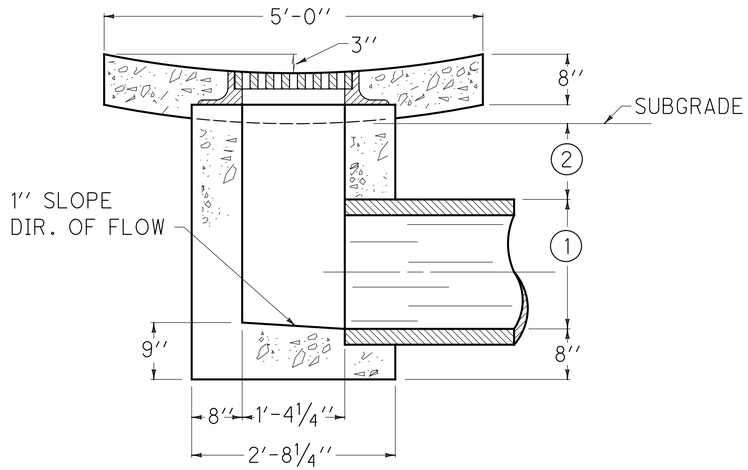

SECTION A-A

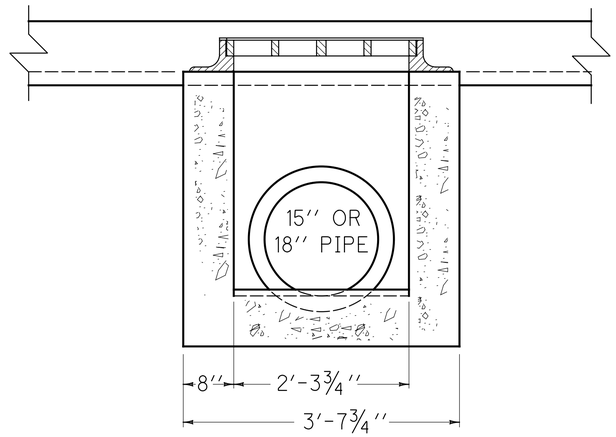

SECTION B-B

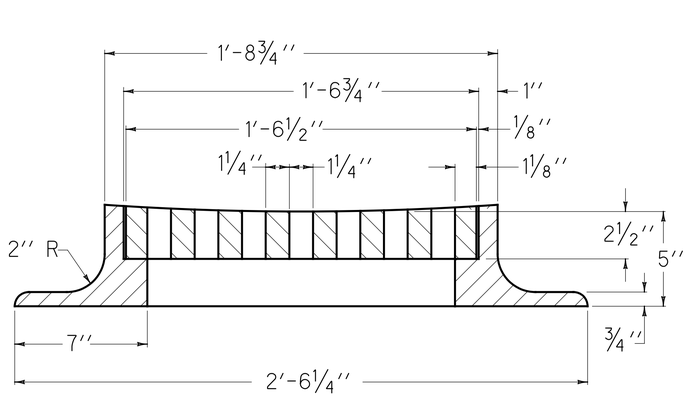

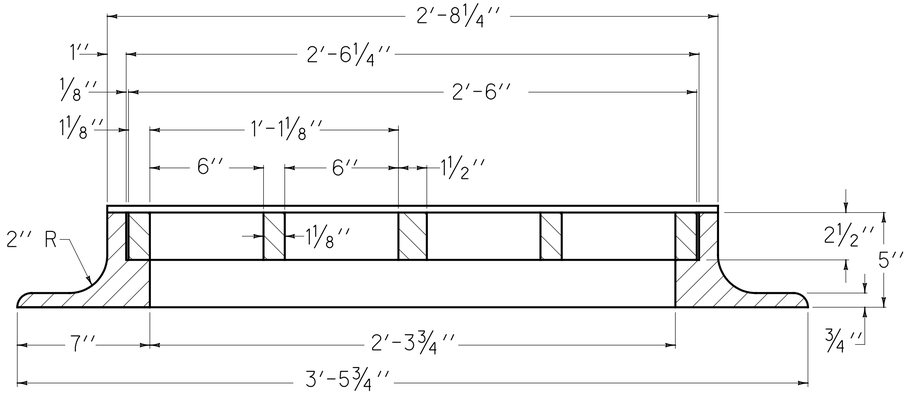

SECTIONAL VIEW OF FRAME AND GRATE

NOTES

PRIMARY USE: VALLEY GUTTER LOCATION

CONSTRUCT VALLEY GUTTER IN ACCORDANCE WITH CURRENT STD. DWG. RPM-100.
SEE SHEET - 196

(1) 1′-5¼″ FOR 15″ PIPE
1′-8½″ FOR 18″ PIPE

(2) 1′-0″ MINIMUM COVER BELOW SUBGRADE.

APPROX. CONCRETE QUANTITIES

PIPE SIZE	MIN. HEIGHT	CU. YDS. CONC.
15″	3′-4″	0.90
18″	3′-8″	0.97

APPROXIMATE WEIGHTS
FRAME 365 LBS.
GRATE 185 LBS.

NO DEDUCTIONS HAVE BEEN MADE FOR PIPE.

KENTUCKY STANDARD DRAWING RDB-010
DROP BOX INLET TYPE 10

LAW-93-0.00

J:\Project\O\ODOT\15005112 Ironton Russell\LAW\81595\roadway\sheets\Updated and Reformatted KY SD\81595RDB010SD.dgn - 4/25/2011 6:55:11 AM - jon_wanstrath

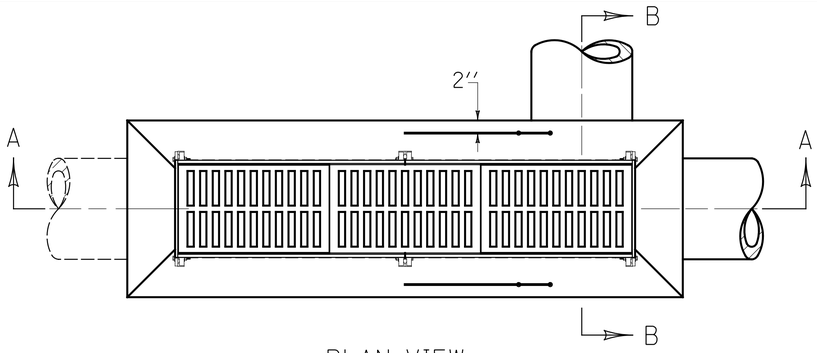

PLAN VIEW

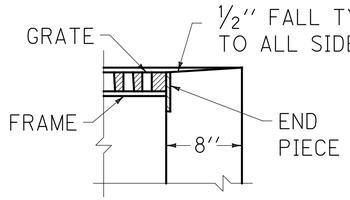

DETAIL ''A''

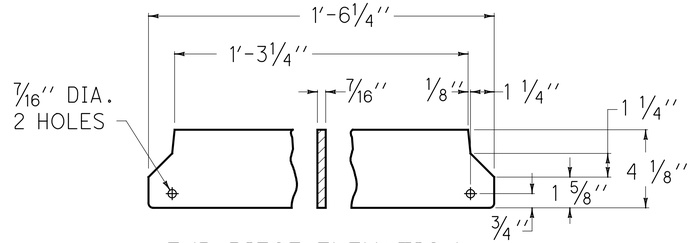

END PIECE ELEVATION

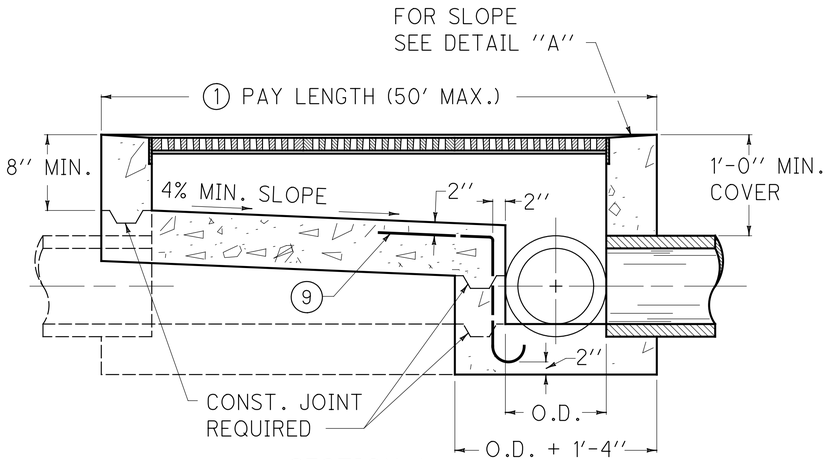

SECTION A-A

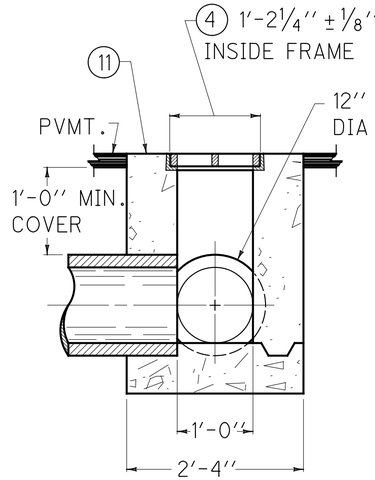

SECTION B-B

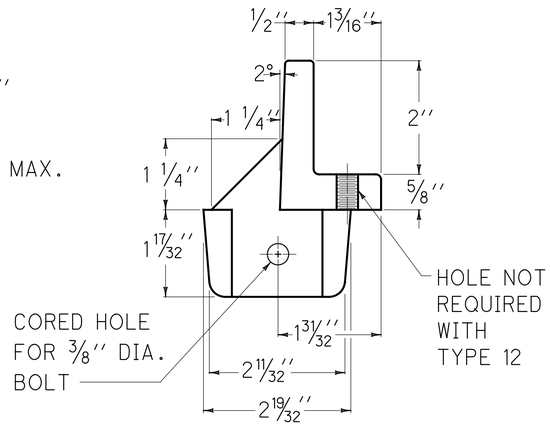

FRAME ELEVATION

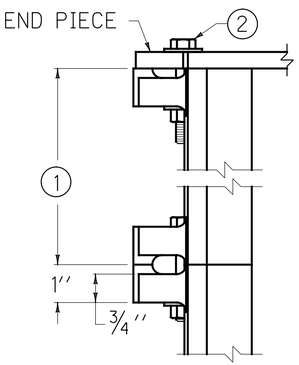

FRAME & END PIECE
PLAN VIEW

VARIATIONS OF
DRAINAGE PATTERNS

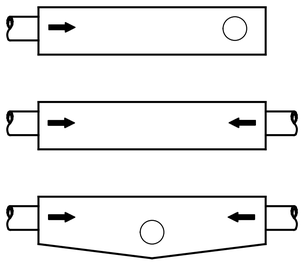

COMBINATIONS OF THE
ABOVE MAY BE REQUIRED
(SEE PIPE SECTIONS FOR
APPROPRIATE DETAILS)

NOTES

THE BID ITEM PER FOOT SHALL BE: ''DROP BOX INLET TYPE 12A ''. ☆

☆ 12 WHEN THE GRATES ARE NOT TO BE BOLTED TO THE FRAME.
12A WHEN THE GRATES ARE TO BE BOLTED TO THE FRAME.

① THE UNIT LENGTHS ARE 3'-0'' FOR THE FRAMES AND 1'-11⅞'' FOR THE GRATES AND ARE TO BE CONSTRUCTED IN MULTIPLE LENGTHS OF 6'-0'' FOR TYPE 12 INLET.
THE UNIT LENGTHS ARE 2'-0'' FOR THE FRAMES AND 1'-11⅞'' FOR THE GRATES AND ARE TO BE CONSTRUCTED IN MULTIPLE LENGTHS OF 2'-0'' FOR TYPE 12A INLET.

② THE FRAME AND END PIECES SHALL BE ASSEMBLED WITH ⅜'' X 2½'' HEX HEAD BOLTS, NUTS AND FLAT WASHERS (COMMERCIAL QUALITY).

③ WHEN DROP BOX INLET TYPE 12A IS A BID ITEM, THE GRATES SHALL BE BOLTED TO THE FRAME WITH FOUR ⅜''-16 X 2'' STAINLESS STEEL HEX BOLTS AND FLAT WASHERS (COMMERCIAL QUALITY).

④ THIS IS A CONTROL DIMENSION TO PREVENT FRAME FROM SPREADING.

5. THE WALLS AND BASE OF THE STRUCTURE SHALL BE 8'' THICK.

6. SEE PIPE SECTIONS IN THE PLANS FOR FLOW LINE ELEVATIONS, PIPE SIZES, AND OTHER PERTINENT DETAILS.

7. SECURITY DEVICES ARE REQUIRED FOR TYPE 12 ONLY.

8. APPROXIMATE WEIGHT OF CASTINGS:
FRAME 15 LBS. PER FOOT (BOTH SIDES)
GRATE 50 LBS. PER FOOT

⑪ TOP SLOPE OF INLET SHALL BE CONSTRUCTED TO MATCH SLOPE OF ADJACENT PAVEMENT.

12. THESE GRATES ARE BICYCLE FRIENDLY.

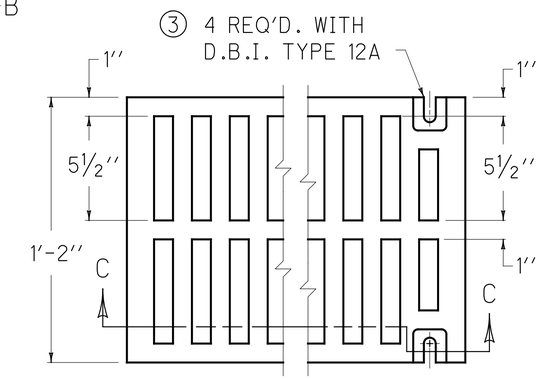

GRATE PLAN VIEW

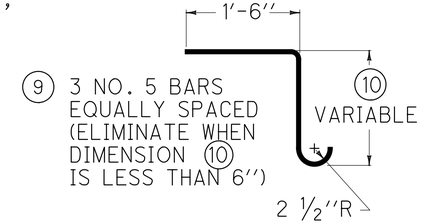

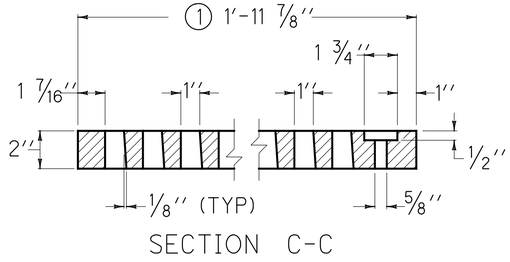

SECTION C-C

KENTUCKY STANDARD DRAWING RDB-012
DROP BOX INLET TYPE 12 OR 12A

LAW-93-0.00

176
788

J:\Project\0\ODOT\15005112 Ironton Russell\LAW\81595\roadway\sheets\Updated and Reformatted KY SD\81595RDB012SD.dgn - 4/25/2011 6:55:12 AM - jon_wanstrath

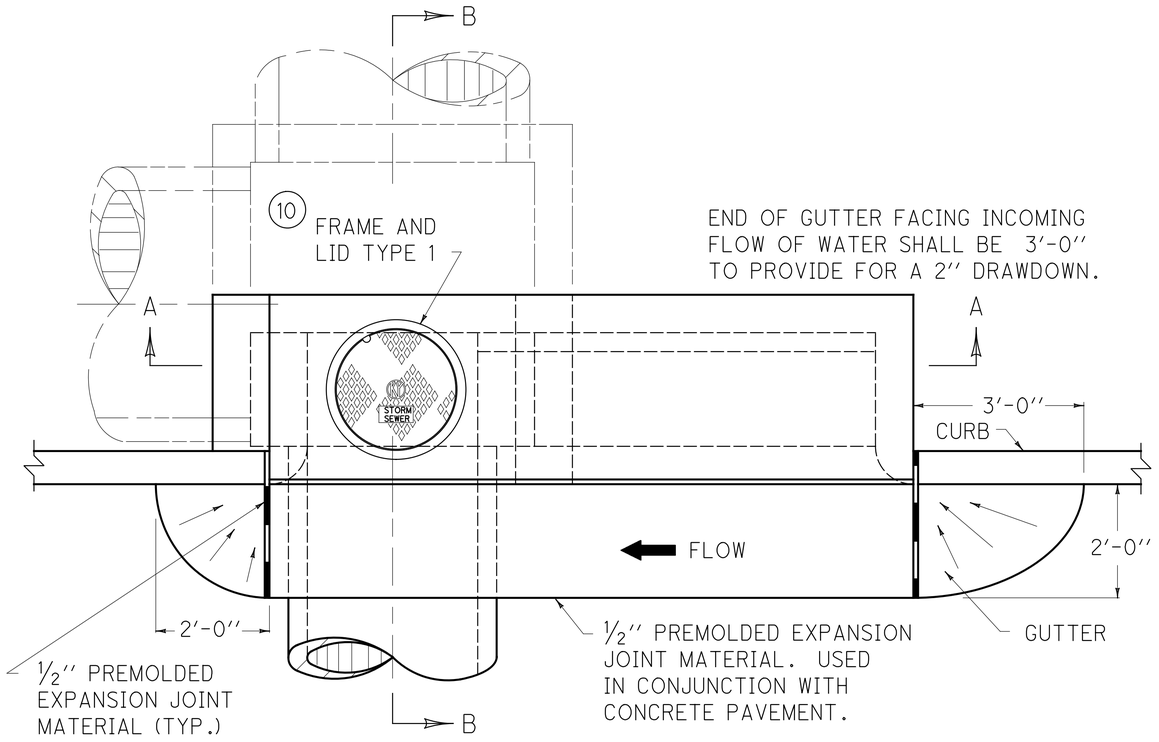

PLAN VIEW

NOTES

1. INLET SHALL BE CONSTRUCTED IN TWO PHASES (BOTTOM AND TOP)
   BID ITEM: CURB BOX INLET TYPE A ( )△
   △ (B) = BOTTOM PHASE ONLY, △ (T) = TOP PHASE ONLY
   NO SUFFIX INDICATES COMPLETE INLET.
2. SEE CUR. STD. DWG. RDB-271, RDB-272, RDB-273, RDB-400, RDB-410 AND RDB-420 FOR STEEL PATTERN, DIMENSIONS AND QUANTITIES.
3. ALL WALLS, SLABS AND GUTTERS ARE 8″ THICK UNLESS OTHERWISE INDICATED.

(4) 2′-0″ DESIRED COVER, 1′-0″ MINIMUM COVER.

(5) SPALLS OR CRUSHED STONE AROUND END OF 4″ OR 6″ PIPE FOR SUBGRADE DRAINAGE.

(6) 2″ MINIMUM DRAWDOWN.

(7) GUTTER CROSS SLOPE.

(8) FLOW LINE (2″ BELOW NORMAL GUTTERLINE ELEVATION).

(9) LID MAY BE RAISED OR LOWERED IF APPROVED BY THE ENGINEER.

(10) SEE CUR. STD. DWG. RDM-100 FOR FRAME AND LID TYPE 1.

11. NOTE: ″†″ IS CONCRETE PIPE WALL THICKNESS OR METAL PIPE CORRUGATION DEPTH.

(12) MINIMUM HEIGHTS
   H = Z + 1′-8″ FOR STANDARD CURB
   H = Z + 1′-10″ FOR ISLAND CURB
   H = Z + 1′-5″ FOR BARRIER CURB

(13) CHAMBER MAY BE SHIFTED TO ROADWAY SIDE OF BOX PROVIDED THERE IS 1′-0″ MINIMUM COVER BETWEEN SUBGRADE ELEVATION AND TOP OF PIPE.

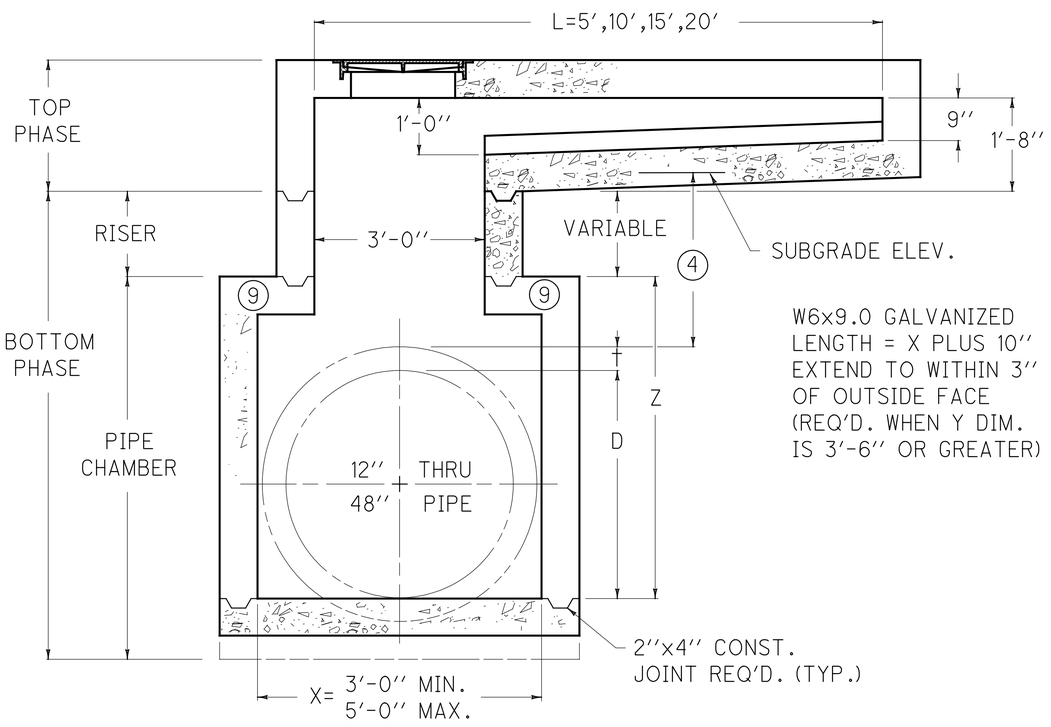

SECTION A-A

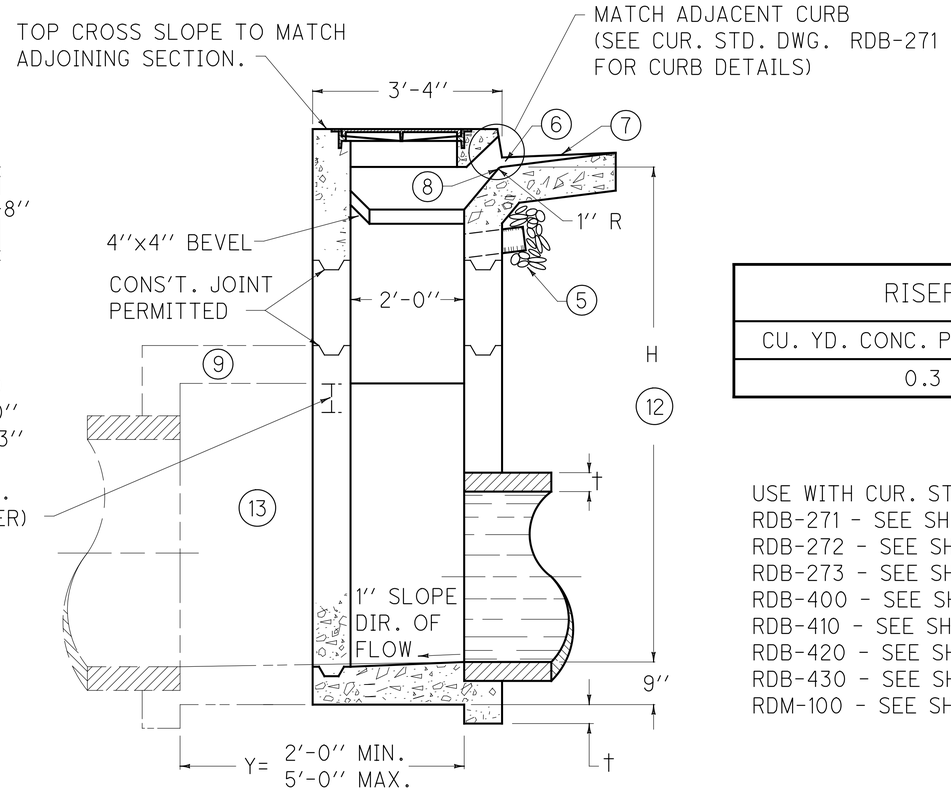

SECTION B-B

RISER
CU. YD. CONC. PER FT. HT.
0.3

USE WITH CUR. STD. DRAWINGS,
RDB-271 - SEE SHEET 178
RDB-272 - SEE SHEET 179
RDB-273 - SEE SHEET 180
RDB-400 - SEE SHEET 181
RDB-410 - SEE SHEET 182
RDB-420 - SEE SHEET 183
RDB-430 - SEE SHEET 184
RDM-100 - SEE SHEET 196

KENTUCKY STANDARD DRAWING RDB-270
CURB BOX INLET TYPE A (DETAIL DRAWING)

LAW-93-0.00

J:\Project\O\ODOT\15005112 Ironton Russell\LAW\81595\roadway\sheets\Updated and Reformatted KY SD\81595RDB270SD.dgn - 4/25/2011 6:55:13 AM - jon_wanstrath

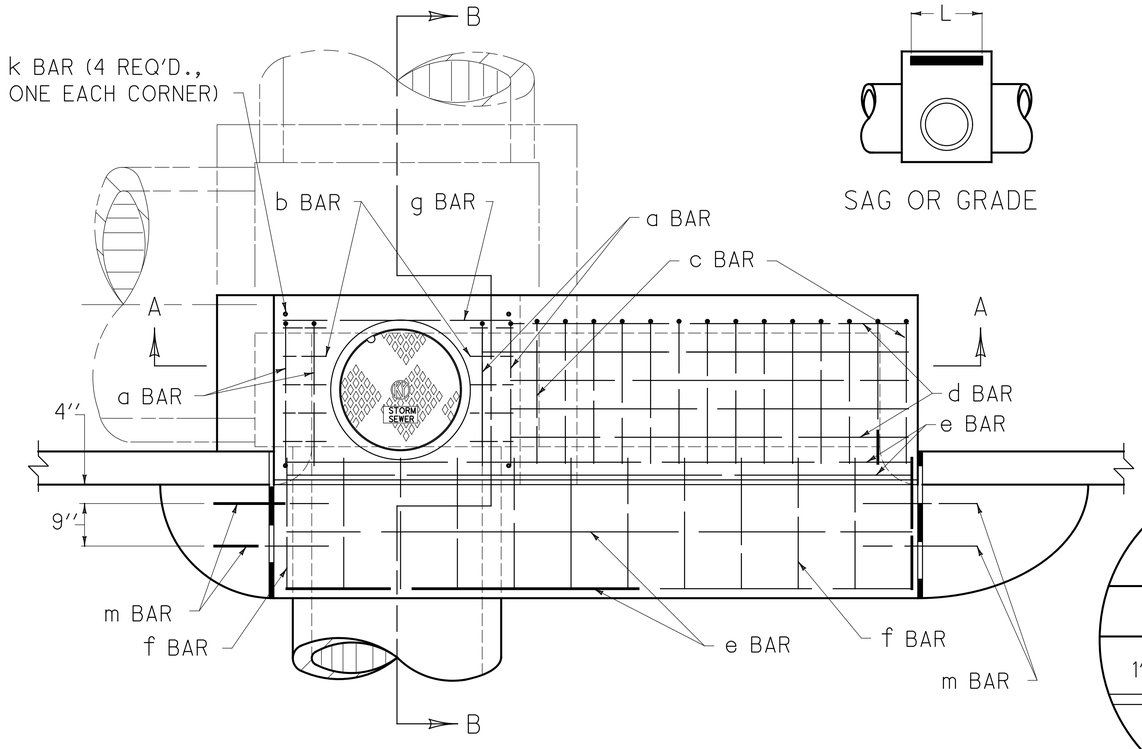

PLAN VIEW

SAG OR GRADE

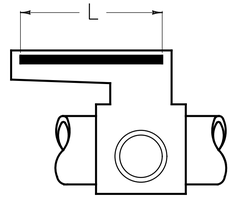

GRADE

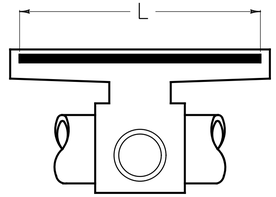

SAG

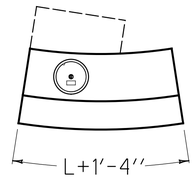

CURVE LAYOUT

÷ NOTES ÷

1. SEE CURRENT STD. DWG. RDB-273 FOR LID REINFORCEMENT.
2. e, f, AND g BARS SPACED 1'-0'' O.C. ALL OTHER BARS SPACED 6'' O.C. EXCEPT WHERE OTHERWISE SPECIFIED.
3. PLACE ALL STEEL REINFORCEMENT 2'' FROM INSIDE OF INLET WALL EXCEPT WHERE OTHERWISE SPECIFIED.

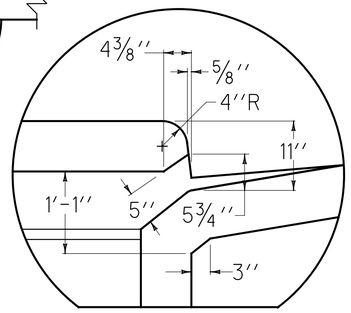

BARRIER CURB

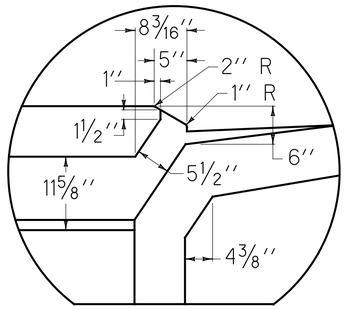

ISLAND CURB

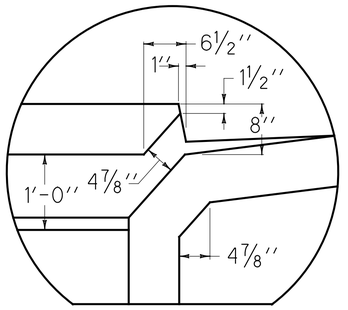

STANDARD CURB

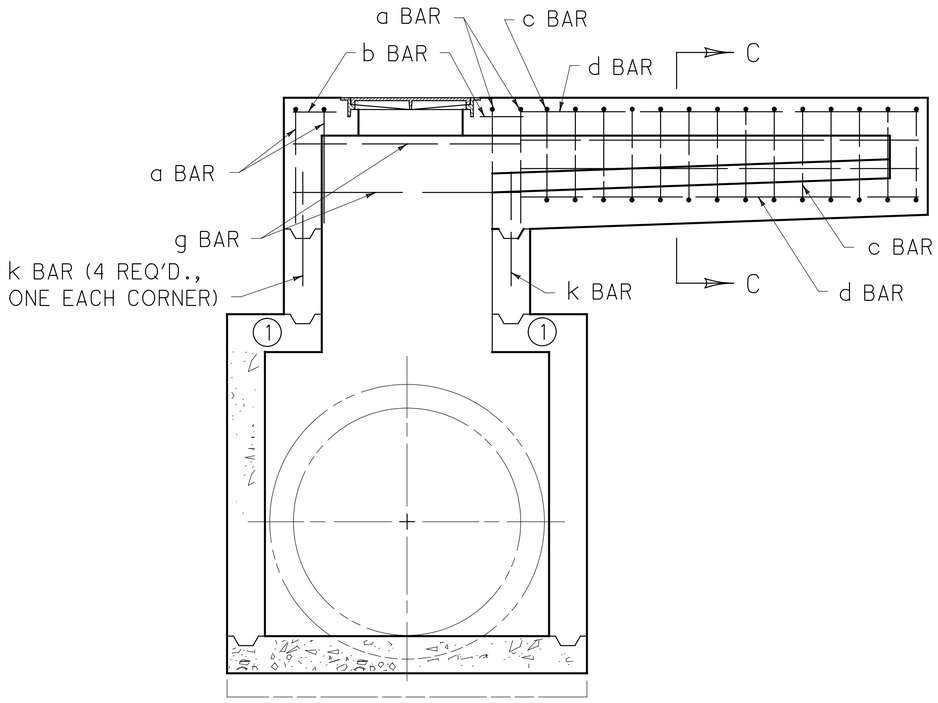

SECTION A-A

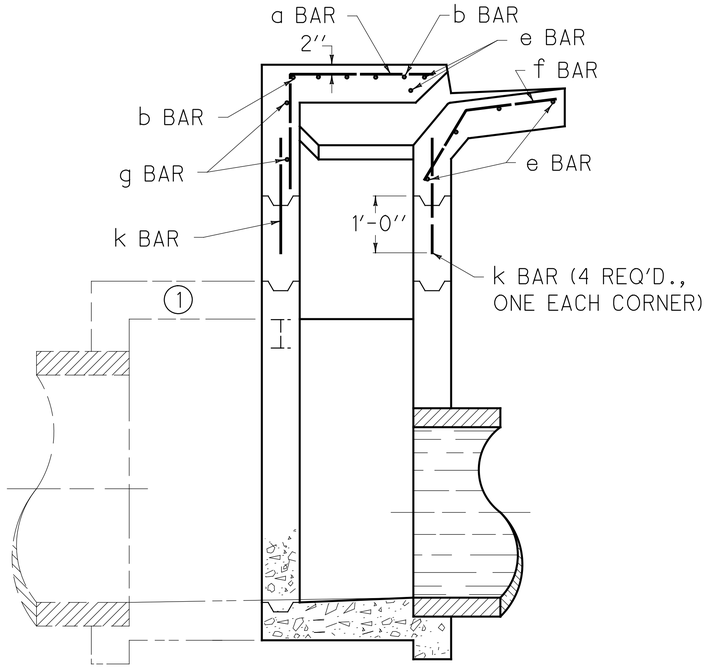

SECTION B-B

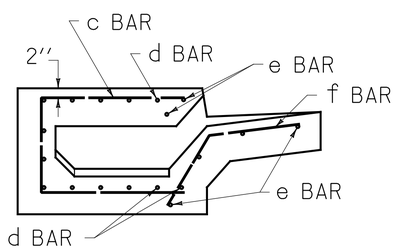

SECTION C-C

USE WITH CUR. STD. DRAWINGS,
RDB-270 - SEE SHEET 177
RDB-272 - SEE SHEET 179
RDB-273 - SEE SHEET 180
RDB-400 - SEE SHEET 181
RDB-410 - SEE SHEET 182
RDB-420 - SEE SHEET 183
RDB-430 - SEE SHEET 184
RDM-100 - SEE SHEET 196

KENTUCKY STANDARD DRAWING RDB-271
CURB BOX INLET TYPE A (STEEL DRAWING)

LAW-93-0.00

178
788

J:\Project\0\ODOT\15005112 Ironton Russell\LAW\81595\roadway\sheets\Updated and Reformatted KY SD\81595RDB271SD.dgn - 4/25/2011 6:55:14 AM - jon_wanstrath

DIMENSIONS AND ESTIMATE OF QUANTITIES (TOP PHASE)

③SIZE NO.		THROAT "L"	CONC.	NO. 5 STEEL BARS																				LBS.
				BAR a		BAR b		BAR c		BAR d ④		BAR d ⑤		BAR e		BAR f		BAR g		BAR k ①		BAR m		
GRADE	SAG	FT.	CU. YD.	QTY.	LIN. FT.	QTY.	LIN. FT.	QTY.	LIN. FT.	QTY.	LIN. FT.	QTY.	LIN. FT.	QTY.	LIN. FT.	QTY.	LIN. FT.	QTY.	LIN. FT.	QTY.	LIN. FT.	QTY.	LIN. FT.	
1	5	5'-0"	1.4	4	4'-6"	10	0'-9"	4	6'-7"	13	2'-0"	26	1'-0"	6	6'-0"	7	3'-0"	2	4'-0"	4	2'-0"	4	2'-0"	165
2	6	10'-0"	2.7					14			7'-0"		3'-6"		11'-0"	12								349
3	7	15'-0"	3.9					24			12'-0"		6'-0"		16'-0"	17								532
4	8	20'-0"	5.1					34			17'-0"		8'-6"		21'-0"	22								716

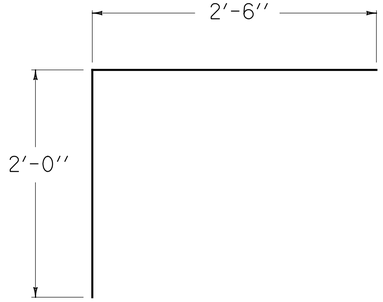

a BAR

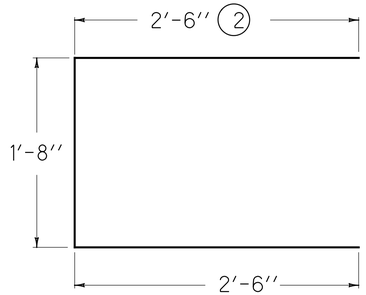

c BAR

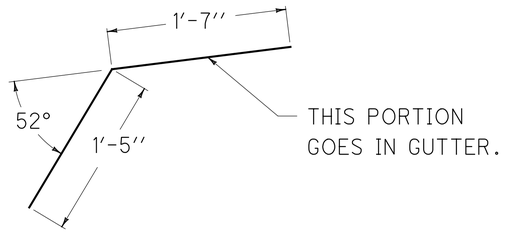

f BAR

÷NOTES÷

① USE k BARS ONLY IN CONJUNCTION WITH THE RISER.
② 2'-3" FOR ISLAND CURB.
③ INLETS ARE SHOWN ON PLANS AS "CURB BOX INLET TYPE A". FOLLOWING THIS ON THE PLANS ARE TWO NUMBERS AND A BOX HEIGHT. USE SECOND NUMBER WITH THIS CHART.
④ THIS SET OF d BARS ARE TO BE USED ONLY WHEN THE BOX INLET IS BUILT ON GRADE.
⑤ THIS SET OF d BARS ARE TO BE USED ONLY WHEN THE BOX INLET IS BUILT IN A SAG.
6. b, d, e, g, k, AND m BARS ARE ALL STRAIGHT BARS.
7. THE ENGINEER MAY REQUIRE ADDITIONAL REINFORCEMENT TO ELIMINATE SETTLEMENT OF ADJOINING SIDEWALK WHEN APPLICABLE. THIS WORK SHALL BE INCIDENTAL TO THE COST OF THE CURB BOX.

USE WITH CUR. STD. DRAWINGS,
RDB-270 - SEE SHEET 177
RDB-271 - SEE SHEET 178
RDB-273 - SEE SHEET 180
RDB-400 - SEE SHEET 181
RDB-410 - SEE SHEET 182
RDB-420 - SEE SHEET 183
RDB-430 - SEE SHEET 184
RDM-100 - SEE SHEET 196

KENTUCKY STANDARD DRAWING RDB-272
CURB BOX INLET TYPE A (TOP PHASE TABLES)

LAW-93-0.00

J:\Project\0\ODOT\15005112 Ironton Russell\LAW\81595\roadway\sheets\Updated and Reformatted KY SDs\81595RDB272SD.dgn - 4/25/2011 6:55:15 AM - jon_wanstrath

REINFORCEMENT STEEL FOR 8'' LID

SIZE		NO. 5 STEEL BARS								LBS.
		BAR s		BAR †		BAR u		BAR v		
X	Y	QTY.	LIN. FT.	QTY.	LIN. FT.	QTY.	LIN. FT.	QTY.	LIN. FT.	
3'-0''	2'-0''	-	-	-	-	-	-	-	-	7
	2'-6''	4	3'-6''	6	4'-0''	-	-	14	0'-10''	59
	3'-0''		4'-0''	8					1'-4''	77
	3'-6''		4'-6''	10					1'-10''	94
	4'-0''		5'-0''	12					2'-4''	112
	4'-6''		5'-6''	14					2'-10''	130
	5'-0''		6'-0''	16					3'-4''	147
3'-6''	2'-0''	4	3'-0''	4	4'-6''	-	-	-	-	38
	2'-6''		3'-6''	6				14	0'-10''	62
	3'-0''		4'-0''	8					1'-4''	81
	3'-6''		4'-6''	10					1'-10''	100
	4'-0''		5'-0''	12					2'-4''	118
	4'-6''		5'-6''	14					2'-10''	137
	5'-0''		6'-0''	16					3'-4''	156
4'-0''	2'-0''	8	3'-0''	4	5'-0''	20	0'-10''	-	-	70
	2'-6''		3'-6''	6				14	0'-10''	97
	3'-0''		4'-0''	8					1'-4''	119
	3'-6''		4'-6''	10					1'-10''	141
	4'-0''		5'-0''	12					2'-4''	163
	4'-6''		5'-6''	14					2'-10''	185
	5'-0''		6'-0''	16					3'-4''	207
4'-6''	2'-0''	8	3'-0''	4	5'-6''	20	1'-1''	-	-	78
	2'-6''		3'-6''	6				14	0'-10''	105
	3'-0''		4'-0''	8					1'-4''	128
	3'-6''		4'-6''	10					1'-10''	151
	4'-0''		5'-0''	12					2'-4''	174
	4'-6''		5'-6''	14					2'-10''	197
	5'-0''		6'-0''	16					3'-4''	220
5'-0''	2'-0''	12	3'-0''	4	6'-0''	20	1'-4''	-	-	97
	2'-6''		3'-6''	6				14	0'-10''	127
	3'-0''		4'-0''	8					1'-4''	154
	3'-6''		4'-6''	10					1'-10''	180
	4'-0''		5'-0''	12					2'-4''	207
	4'-6''		5'-6''	14					2'-10''	233
	5'-0''		6'-0''	16					3'-4''	259

÷NOTES÷

1. IN ADDITION TO THE CHARTED STEEL, FOUR L BARS ARE REQUIRED IN THE LID AND ARE INCLUDED IN THE TOTALS.
2. CONCRETE QUANTITIES FOR LID ARE INCLUDED ON ''DIMENSIONS AND ESTIMATE OF QUANTITIES (PIPE CHAMBER)'', SEE CUR. STD. DWG. RDB-410.
3. REINFORCEMENT SHALL HAVE A CLEAR DISTANCE OF 2'' FROM THE OUTSIDE FACE UNLESS OTHERWISE SHOWN.

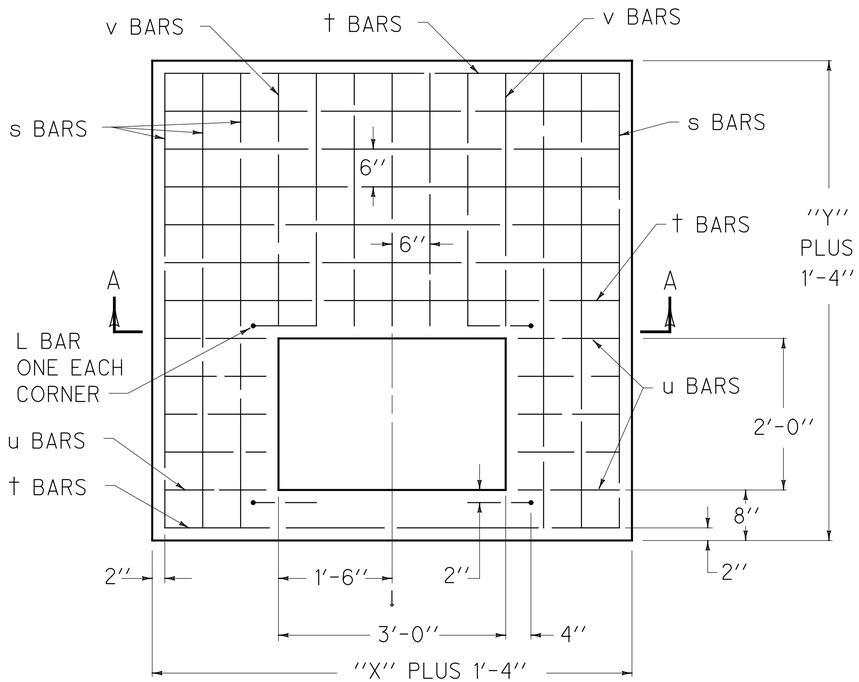

DETAIL OF 8'' LID
PLAN VIEW

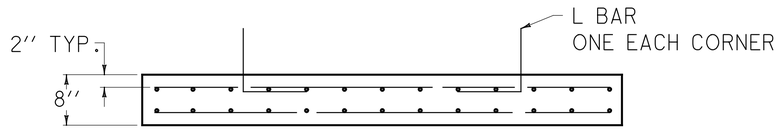

SECTION A-A

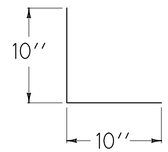

L BAR DETAIL

USE WITH CUR. STD. DRAWINGS,
RDB-270 - SEE SHEET 177
RDB-271 - SEE SHEET 178
RDB-272 - SEE SHEET 179
RDB-400 - SEE SHEET 181
RDB-410 - SEE SHEET 182
RDB-420 - SEE SHEET 183
RDB-430 - SEE SHEET 184
RDM-100 - SEE SHEET 196

KENTUCKY STANDARD DRAWING RBD-273
CURB BOX INLET TYPE A (DETAIL & BAR CHART FOR 8* LID)

LAW-93-0.00

J:\Project\O\ODOT\15005112 Ironton Russell\LAW\81595\roadway\sheets\Updated and Reformatted KY SD\81595RDB273SD.dgn - 4/25/2011 6:55:15 AM - jon_wanstrath

ADDITIONAL STEEL REQUIREMENTS FOR RISER

(WHEN H = 8′ TO 15′)

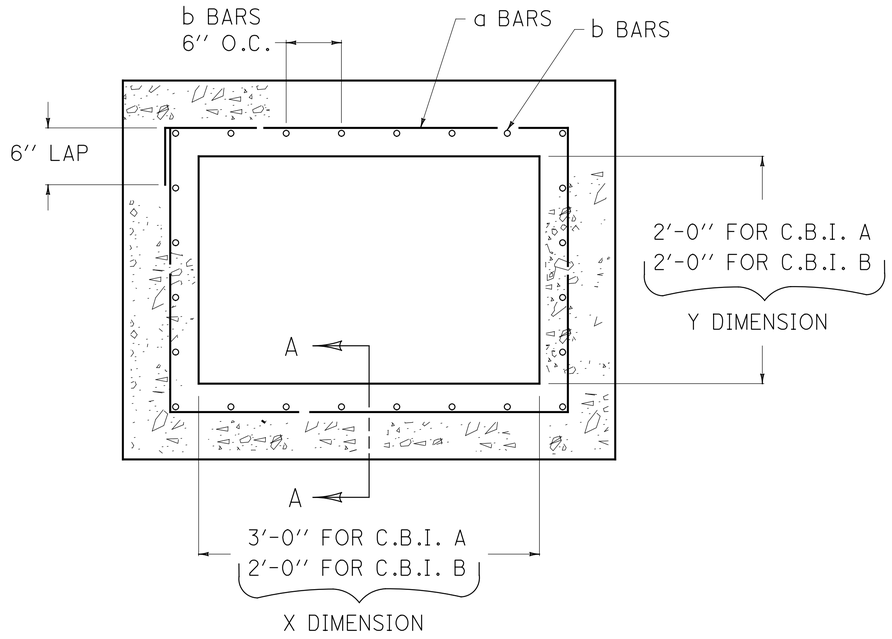

NOTES

ALL REINFORCEMENT SHALL BE NO. 5 STEEL BARS.

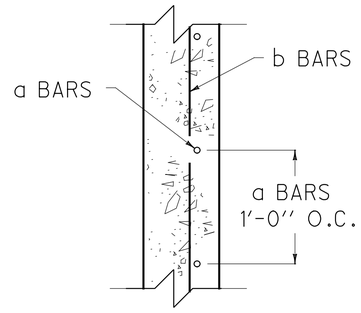

SECTION A-A
CURB BOX INLET TYPE A
AND
CURB BOX INLET TYPE B

① APPROXIMATE QUANTITIES PER ONE FOOT IN HEIGHT	
C.B.I. A	C.B.I. B
LBS. STEEL	LBS. STEEL
38	31

① USE WHEN H EXCEEDS 8′-0′′

(USE WITH C.B.I. A & C.B.I. B
WHEN H = 8′ TO 15′)

KENTUCKY STANDARD DRAWING RDB-400
BOX INLET RISER

LAW-93-0.00

181
788

J:\Project\OA\ODOT\15005112 Ironton Russell\LAW\81595\roadway\sheets\Updated and Reformatted KY SD\81595RDB400SD.dgn - 4/25/2011 6:55:16 AM - jon_wanstrath

DIMENSIONS AND ESTIMATE OF QUANTITIES
(PIPE CHAMBER)

INLET SIZE ④			PIPE		Z	CONCRETE	
NO. ⑥	X	Y	MAX. DIA.	LOCATION	①	CU. YD. ① ②	Q ③
1	2′-0″	2′-0″	12″	X OR Y	2′-2″	0.9	0.3
2	3′-0″					1.1	
3	2′-0″		15″		2′-5″	0.9	
4	3′-0″					1.2	
5	2′-0″		18″		2′-9″	1.0	
6	3′-0″					1.3	
7	2′-0″	2′-6″	21″	Y	3′-0″	1.2	
8	2′-6″	2′-0″		X			
9		2′-6″		X OR Y		1.4	
10	3′-0″	2′-0″		X			
11		2′-6″		X OR Y		1.5	
12	2′-0″	2′-0″	24″	Y	3′-3″	1.3	
13	2′-6″			X			
14		2′-6″		X OR Y		1.5	
15	3′-0″	2′-0″		X		1.4	
16		2′-6″		X OR Y		1.6	
17	2′-0″	3′-0″	27″	Y	3′-6″	1.5	
18	2′-6″					1.7	
19	3′-0″	2′-0″		X		1.5	
20		2′-6″				1.7	
21		3′-0″		X OR Y		1.9	0.4
22	2′-0″	3′-6″	30″	Y	4′-1″		0.3
23	2′-6″					2.1	0.4
24	3′-0″					2.3	
25	3′-6″	2′-0″		X	3′-10″	1.8	0.3
26		2′-6″				2.0	
27		3′-0″				2.2	0.4
28		3′-6″		X OR Y	4′-1″	2.5	
29	2′-0″		33″	Y	4′-4″	2.0	0.3
30	2′-6″					2.2	0.4
31	3′-0″					2.4	
32	3′-6″	2′-0″		X	4′-1″	1.9	0.3
33		2′-6″				2.1	0.4
34		3′-0″				2.3	
35		3′-6″		X OR Y	4′-4″	2.6	
36	2′-0″	4′-0″	36″	Y	4′-7″	2.2	
37	2′-6″					2.5	
38	3′-0″					2.7	
39	3′-6″					2.9	
40	4′-0″	2′-0″		X	4′-4″	2.1	
41		2′-6″				2.4	
42		3′-0″				2.6	
43		3′-6″			4′-7″	2.9	
44		4′-0″		X OR Y		3.2	0.5
45	2′-0″	4′-6″	42″	Y	5′-2″	2.6	
46	2′-6″					2.9	0.4
47	3′-0″					3.2	

INLET SIZE ④			PIPE		Z	CONCRETE	
NO. ⑥	X	Y	MAX. DIA.	LOCATION	①	CU. YD. ① ②	Q ③
48	3′-6″	4′-6″	42″	Y	5′-2″	3.4	0.5
49	4′-0″					3.7	
50	4′-6″	2′-0″		X	4′-11″	2.5	0.4
51		2′-6″				2.8	
52		3′-0″				3.0	
53		3′-6″			5′-2″	3.4	0.5
54		4′-0″				3.5	
55		4′-6″		X OR Y		3.9	
56	2′-0″	5′-0″	48″	Y	5′-8″	3.0	0.4
57	2′-6″					3.3	
58	3′-0″					3.6	0.5
59	3′-6″					3.9	
60	4′-0″					4.2	
61	4′-6″					4.5	
62	5′-0″	2′-0″		X	5′-5″	2.9	0.4
63		2′-6″				3.2	
64		3′-0″				3.5	0.5
65		3′-6″			5′-8″	3.9	
66		4′-0″				4.2	
67		4′-6″				4.5	
68		5′-0″		X OR Y		4.7	0.6

NOTES

① BASED ON Z AS EQUAL TO D+†+12″ WHEN ″Y″ DIMENSION IS LESS THAN 3′-6″. BASED ON Z AS EQUAL TO D+†+15″ WHEN ″Y″ DIMENSION IS 3′-6″ OR GREATER.

② SEE REFERENCE CHART FOR QUANTITIES TO DEDUCT FOR PIPE.

③ Q = CU. YD. PER FOOT INCREASE OR DECREASE WHEN Z VARIES.

④ SEE THE FOLLOWING CUR. STD. DWGS. FOR STEEL PATTERN AND DIMENSIONS:
CURB BOX INLET TYPE A - RDB-270 AND RDB-271
~~CURB BOX INLET TYPE B - RDB-280 AND RDB-281~~

5. SEE CUR. STD. DWGS. RDB-400 AND RDB-420 FOR REINFORCEMENT IN PIPE CHAMBER AND RISER WHEN H = 8′-0″ OR GREATER.

⑥ INLETS ARE SHOWN ON PLANS AS CURB BOX INLET TYPE ″A″ OR CURB BOX INLET TYPE ″B″. FOLLOWING THIS ON THE PLANS ARE TWO NUMBERS AND A BOX HEIGHT. USE FIRST NUMBER WITH THIS CHART.

REFERENCE CHART

DIA. OF PIPE	C.B.I. TYPE A		C.B.I. TYPE B		CONCRETE TO DEDUCT FOR EACH PIPE
	PIPE ON ″X″ SIDE OF INLET	PIPE ON ″Y″ SIDE OF INLET	PIPE ON ″X″ SIDE OF INLET	PIPE ON ″Y″ SIDE OF INLET	CUBIC YARDS
0	3′-0″	2′-0″	2′-0″	2′-0″	-
12″					0.1
15″-18″					
21″-24″		2′-6″	2′-6″	2′-6″	
27″		3′-0″	3′-0″	3′-0″	0.2
30″-33″	3′-6″	3′-6″	3′-6″	3′-6″	
36″	4′-0″	4′-0″	4′-0″	4′-0″	0.3
42″	4′-6″	4′-6″	4′-6″	4′-6″	0.4
48″	5′-0″	5′-0″	5′-0″	5′-0″	0.5

USE WITH CUR. STD. DRAWINGS,
RDB-270 - SEE SHEET 177
RDB-271 - SEE SHEET 178
RDB-272 - SEE SHEET 179
RDB-273 - SEE SHEET 180
RDB-400 - SEE SHEET 181
RDB-420 - SEE SHEET 183
RDB-430 - SEE SHEET 184
RDM-100 - SEE SHEET 196

USE THIS DRAWING FOR BOTTOM PHASE AND COMPLETE INLET WITH C.B.I. A AND C.B.I. B.

KENTUCKY STANDARD DRAWING RDB-410
BOX INLET PIPE CHAMBER

LAW-93-0.00

J:\Project\OV\ODOT\15005112 Ironton Russell\LAW\81595\roadway\sheets\Updated and Reformatted KY SD\81595RDB410SD.dgn - 4/25/2011 6:55:17 AM - jon_wanstrath

① ADDITIONAL STEEL REINFORCEMENT REQUIREMENTS

(PIPE CHAMBER, H = 8′ TO 15′)

SIZE ②		NO. 5 STEEL BARS									
		③ BAR n		④ BAR p		BAR q		BAR r		LBS. ⑤	
X	Y	QTY.	LIN. FT.	QTY.	LIN. FT.	QTY.	LIN. FT.	QTY.	LIN. FT.	TOTAL	⑥
2′-0″	2′-0″	20	6′-0″	7	10′-2″	4	2′-6″	4	2′-6″	220	31
	2′-6″	22			11′-2″		3′-0″	5		245	35
	3′-0″	24			12′-2″		3′-6″	6		269	38
	3′-6″	26			13′-2″		4′-0″	7		294	41
	4′-0″	28			14′-2″		4′-6″	8		318	44
	4′-6″	30			15′-2″		5′-0″	9		343	47
	5′-0″	32			16′-2″		5′-6″	10		367	50
2′-6″	2′-0″	22	6′-0″	7	11′-2″	5	2′-6″	4	3′-0″	245	35
	2′-6″	24			12′-2″		3′-0″	5		270	38
	3′-0″	26			13′-2″		3′-6″	6		296	41
	3′-6″	28			14′-2″		4′-0″	7		321	44
	4′-0″	30			15′-2″		4′-6″	8		347	47
	4′-6″	32			16′-2″		5′-0″	9		373	50
	5′-0″	34			17′-2″		5′-6″	10		398	53
3′-0″	2′-0″	24	6′-0″	7	12′-2″	6	2′-6″	4	3′-6″	268	38
	2′-6″	26			13′-2″		3′-0″	5		295	41
	3′-0″	28			14′-2″		3′-6″	6		321	44
	3′-6″	30			15′-2″		4′-0″	7		348	47
	4′-0″	32			16′-2″		4′-6″	8		374	50
	4′-6″	34			17′-2″		5′-0″	9		401	53
	5′-0″	36			18′-2″		5′-6″	10		427	57
3′-6″	2′-0″	26	6′-0″	7	13′-2″	7	2′-6″	4	4′-0″	293	41
	2′-6″	28			14′-2″		3′-0″	5		320	44
	3′-0″	30			15′-2″		3′-6″	6		348	47
	3′-6″	32			16′-2″		4′-0″	7		376	50
	4′-0″	34			17′-2″		4′-6″	8		404	53
	4′-6″	36			18′-2″		5′-0″	9		431	56
	5′-0″	38			19′-2″		5′-6″	10		459	60
4′-0″	2′-0″	28	6′-0″	7	14′-2″	8	2′-6″	4	4′-6″	317	44
	2′-6″	30			15′-2″		3′-0″	5		346	47
	3′-0″	32			16′-2″		3′-6″	6		374	50
	3′-6″	34			17′-2″		4′-0″	7		404	53
	4′-0″	36			18′-2″		4′-6″	8		432	56
	4′-6″	38			19′-2″		5′-0″	9		460	60
	5′-0″	40			20′-2″		5′-6″	10		490	63
4′-6″	2′-0″	30	6′-0″	7	15′-2″	9	2′-6″	4	5′-0″	342	47
	2′-6″	32			16′-2″		3′-0″	5		371	50
	3′-0″	34			17′-2″		3′-6″	6		401	53
	3′-6″	36			18′-2″		4′-0″	7		431	56
	4′-0″	38			19′-2″		4′-6″	8		460	60
	4′-6″	40			20′-2″		5′-0″	9		490	63
	5′-0″	42			21′-2″		5′-6″	10		519	66

SIZE ②		NO. 5 STEEL BARS									
		③ BAR n		④ BAR p		BAR q		BAR r		LBS. ⑤	
X	Y	QTY.	LIN. FT.	QTY.	LIN. FT.	QTY.	LIN. FT.	QTY.	LIN. FT.	TOTAL	⑥
5′-0″	2′-0″	32	6′-0″	7	16′-2″	10	2′-6″	4	5′-6″	367	50
	2′-6″	34			17′-2″		3′-0″	5		398	53
	3′-0″	36			18′-2″		3′-6″	6		427	56
	3′-6″	38			19′-2″		4′-0″	7		459	60
	4′-0″	40			20′-2″		4′-6″	8		490	63
	4′-6″	42			21′-2″		5′-0″	9		519	66
	5′-0″	44			22′-2″		5′-6″	10		551	69

NOTES

① BASED ON ″Z″ AS EQUAL TO 6′-0″.
② SEE CURRENT STD. DWG. RDB-270 ~~AND RDB-280~~ FOR LOCATION AND DIMENSIONS.
③ LENGTH OF n BAR IS ALWAYS SAME AS ″Z″ DIMENSION.
④ ADD OR SUBTRACT ONE p BAR PER EVEN FOOT VARIANCE FROM 6′-0″ Z.
⑤ NO DEDUCTIONS HAVE BEEN MADE FOR PIPE.
⑥ ADD OR SUBTRACT LBS. STEEL PER FT. VARIANCE FROM 6′-0″ Z.
7. REINFORCEMENT SHALL HAVE A CLEAR DISTANCE OF 2″ FROM THE FACE UNLESS OTHERWISE SHOWN.

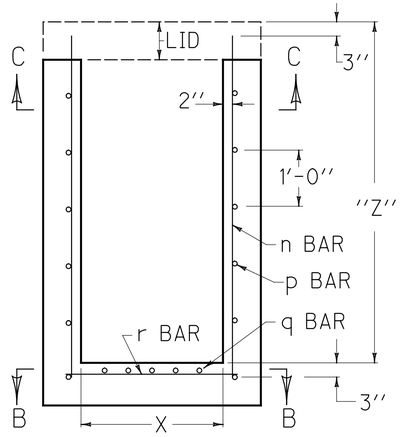

SECTION A-A

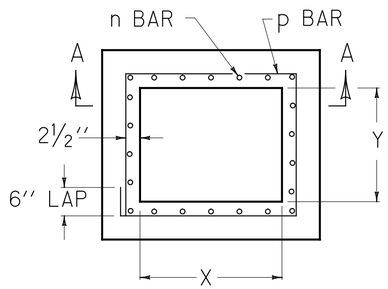

SECTION C-C

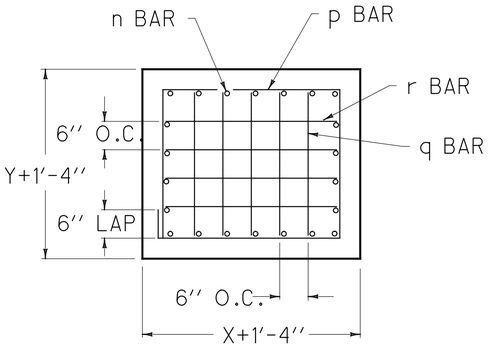

SECTION B-B

(USE WITH C.B.I. A and C.B.I. B WHEN H = 8′ to 15′)

USE WITH CUR. STD. DRAWINGS,
RDB-270 - SEE SHEET 177
RDB-271 - SEE SHEET 178
RDB-272 - SEE SHEET 179
RDB-273 - SEE SHEET 180
RDB-400 - SEE SHEET 181
RDB-410 - SEE SHEET 182
RDB-430 - SEE SHEET 184
RDM-100 - SEE SHEET 196

KENTUCKY STANDARD DRAWING RDB-420
BOX INLET PIPE CHAMBER (ADDITIONAL STEEL)

LAW-93-0.00

183
788

J:\Project\0\ODOT\15005112 Ironton Russell\LAW\81595\roadway\sheets\Updated and Reformatted KY SD\81595RDB420SD.dgn - 4/25/2011 6:55:18 AM - jon_wanstrath

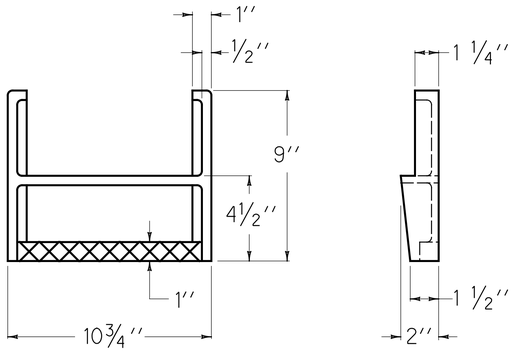

STEP TYPE NO. 1

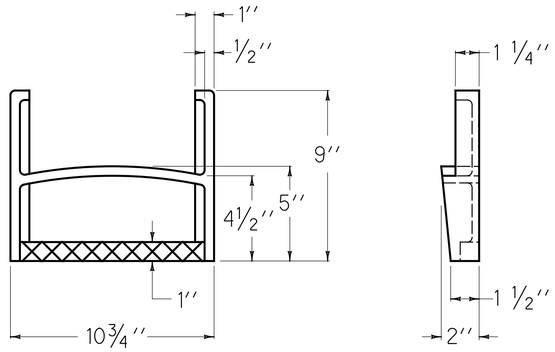

STEP TYPE NO. 2

NOTES

1. STEPS SHALL BE ASPHALT COATED CAST IRON OR POLYPROPYLENE PLASTIC COATED STEEL ROD OR OF A TYPE AND SIZE APPROVED BY THE ENGINEER.
2. STEPS SHALL BE SPACED APPROXIMATELY 12'' TO 16'' O.C. VERTICALLY SO AS TO FORM A CONTINUOUS LADDER.
3. STEPS SHALL BE REQUIRED IN MANHOLES WHEN THE STRUCTURE IS 4 FEET AND GREATER IN DEPTH. (MEASURE FROM FLOW LINE OF LOWEST PIPE TO TOP OF STRUCTURE).
4. THE TREADS OF ALL STEPS SHALL HAVE ANTI-SKID PROPERTIES FOR HAND AND FOOT GRIPS.

MANHOLE:

USE TYPE 1 OR TYPE 3 STEPS FOR MANHOLE PIPE CHAMBER AND STEP TYPE 2 OR TYPE 4 FOR MANHOLE TOWER.

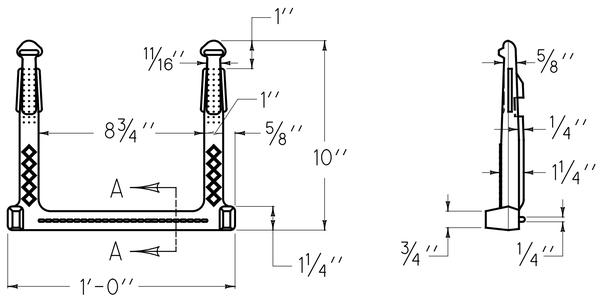

STEP TYPE NO. 3

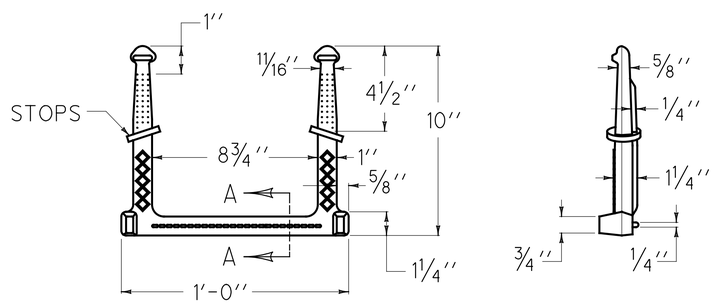

STEP TYPE NO. 4

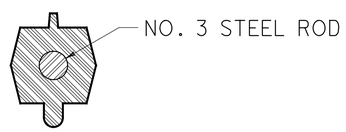

SECTION A-A

KENTUCKY STANDARD DRAWING RDB-430

MANHOLE STEPS

LAW-93-0.00

184
788

J:\Project\OV\ODOT\15005112 Ironton Russell\LAW\81595\roadway\sheets\Updated and Reformatted KY SD\81595RDB430SD.dgn - 4/25/2011 6:55:19 AM - jon_wanstrath

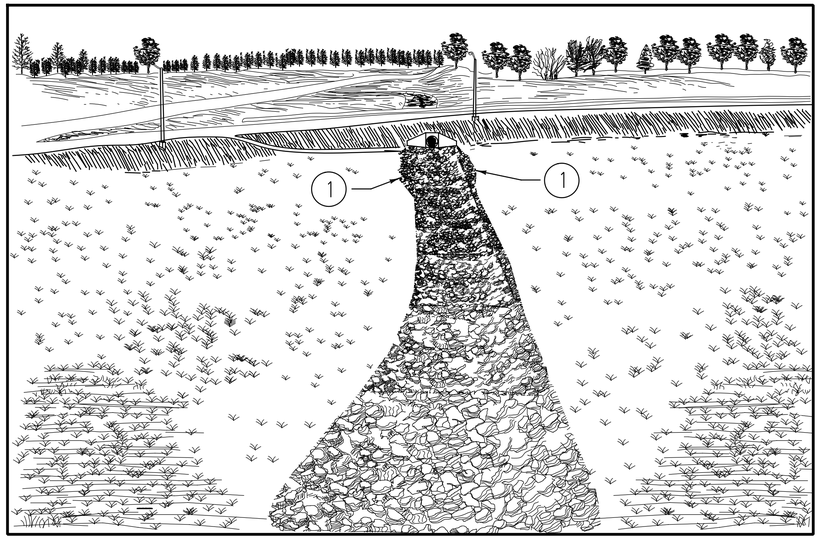

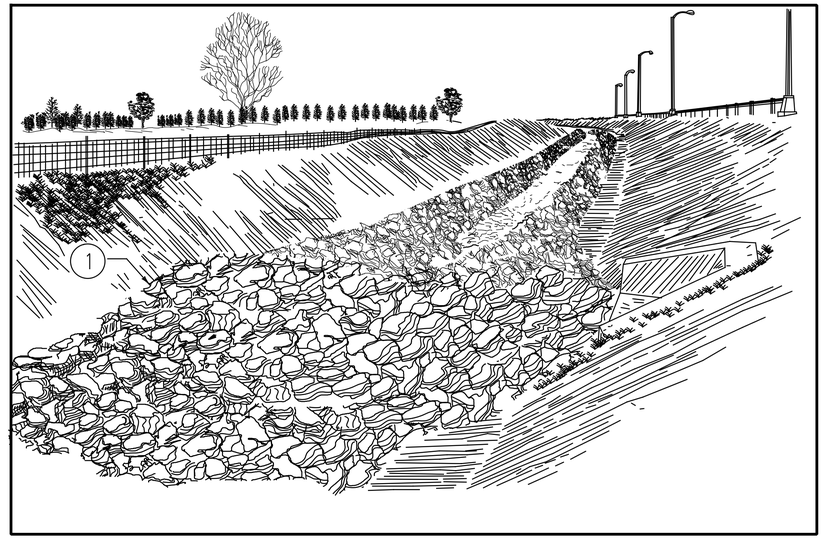

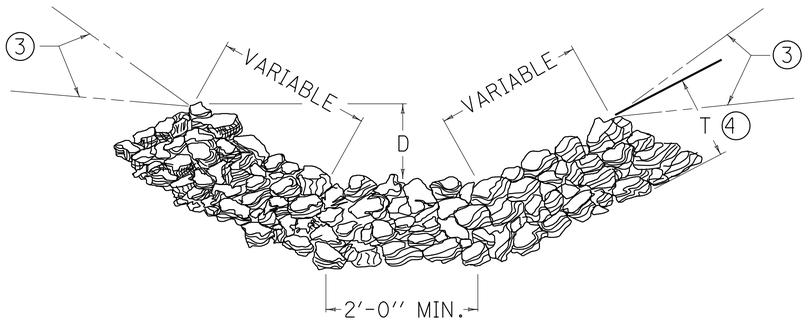

TYPICAL SECTION

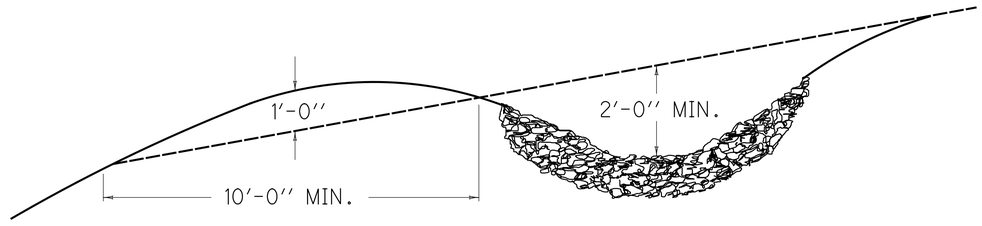

TYPICAL INTERCEPTOR DITCH

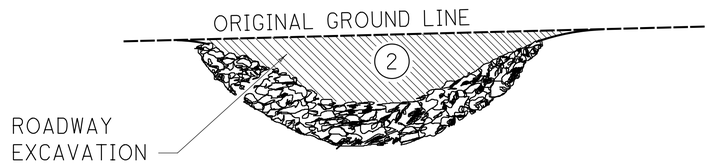

NOTES

~~CHANNEL LINING WILL BE PAID FOR AT THE CONTRACT UNIT PRICE PER TON FOR EACH CLASS.~~
CHANNEL LINING WILL NOT BE REQUIRED IN THE BOTTOM OF THE DITCH WHERE SOLID ROCK IS ENCOUNTERED.
CHANNEL LINING ESTIMATED ON THE BASIS OF 0.50 TON PER SQ. YD. PER FOOT OF DEPTH.
(1) WIDEN CHANNEL LINING NEAR OUTLET END OF STRUCTURE AS DIRECTED BY THE ENGINEER.
(2) FROM THE TOP OF THE LINING TO THE ORIGINAL GROUNDLINE.
(3) ALTERNATE LOCATION OF GROUNDLINE.
(4) 15'' MIN. CLASS II, OR 24'' MIN. CLASS III.
5. D = DEPTH TO PROTECT, T = THICKNESS, (SEE PLAN NOTES FOR THESE VALUES)

KENTUCKY STANDARD DRAWING RDD-040
CHANNEL LINING CLASS II AND III

LAW-93-0.00

J:\Project\OVODOT\15005112 Ironton Russell\LAW\81595\roadway\sheets\Updated and Reformatted KY SD\81595RDD040SD.dgn - 4/25/2011 6:55:22 AM - jon_wanstrath

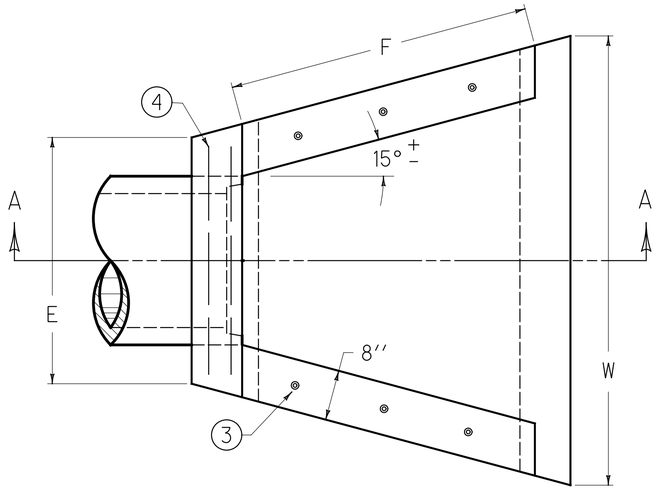

PLAN VIEW

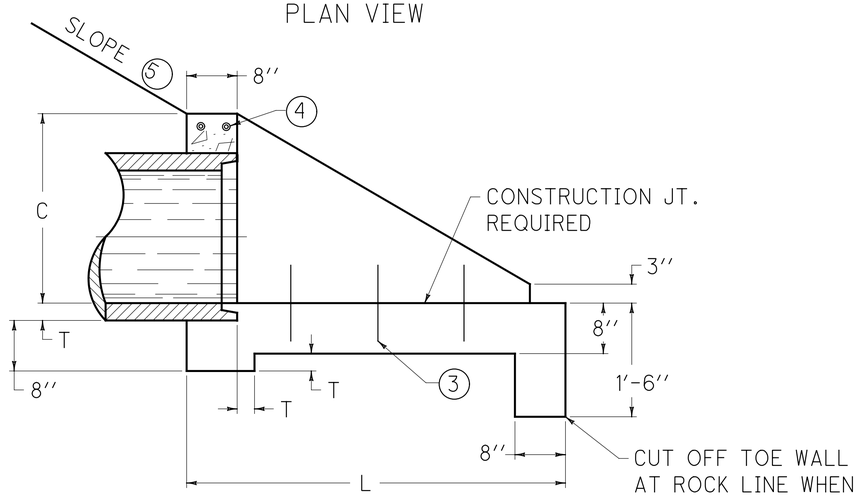

SECTION A-A

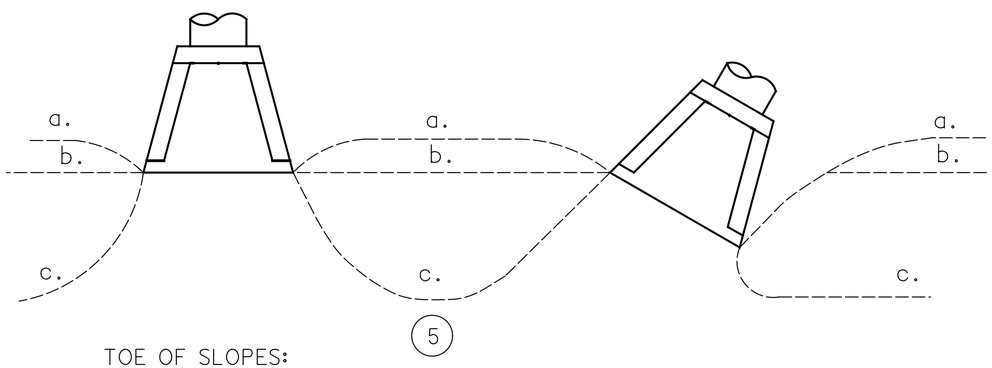

5

TOE OF SLOPES:
- a. STEEPER THAN 2:1
- b. 2:1
- c. FLATTER THAN 2:1

PIPE		DIMENSIONS						CLASS A CONC	REINF STEEL
DIA. OR EQUIV. DIA.	SHAPE (9)	C	E	F	L	W	T	C. Y.	LBS.
12''	◯	1'-9''	2'-6''	2'-3''	3'-6''	4'-0''	2''	0.58	7
15''	◯	2'-0''	2'-9''	2'-9''	4'-0''	4'-9''	2¼''	0.75	
	⬭	1'-9''	3'-0''	2'-6''	3'-6''	4'-9''		0.68	8
18''	◯	2'-3''	3'-0''	3'-6''	4'-6''	5'-3''	2½''	0.93	
	⬭	2'-0''	3'-6''	3'-0''	4'-0''	5'-6''	2¾''	0.89	
	⬭								
21''	◯	2'-6''	3'-3''	4'-0''	5'-0''	6'-0''		1.14	
	⬭	2'-3''	3'-0''	3'-6''	4'-6''	6'-0''		1.07	9
24''	◯	2'-9''	3'-6''	4'-6''	5'-6''	6'-6''	3''	1.35	8
	⬭	2'-6''	4'-0''	4'-0''	5'-0''	6'-9''	3¼''	1.30	9
	⬭								
27''	◯	3'-0''	3'-9''	5'-0''	6'-0''	7'-0''		1.57	
	⬭	2'-9''	4'-6''	4'-3''	5'-3''	7'-3''	3½''	1.51	10

NOTES

1. DIMENSIONS AND QUANTITIES ARE BASED ON CONCRETE PIPE AND WILL VARY INSIGNIFICANTLY FOR CORRUGATED METAL PIPE.
2. REINFORCING STEEL : MINIMUM GRADE 40, BARS EVENLY SPACED.

(3) 6 - NO. 4 x 1'-0'' DOWEL BARS.

(4) 2 - NO. 4 x (E DIMENSION MINUS 4'').

(5) SLOPES SHALL BE WARPED TO FIT HEADWALL WHEN PIPE IS SKEWED AND/OR NORMAL SLOPE VARIES FROM 2:1.

6. VOLUME DISPLACED BY PIPE COMPUTED USING INSIDE DIAMETER OF PIPE.
7. WING ANGLES AND/OR DIMENSIONS MAY BE ALTERED DURING CONSTRUCTION TO ACCOMMODATE FLOW OF WATER.
8. APRON BETWEEN WINGS SHALL BE SLOPED IN DIRECTION OF FLOW EQUAL TO SLOPE OF PIPE. FRONT FACE OF HEADWALL SHALL REMAIN VERTICAL.

(9) HEADWALLS ARE FOR CIRCULAR, ARCH, AND HORIZONTAL ELLIPTICAL 12''- 27'' EQUIVALENT PIPE SIZES. SEE CURRENT STD. DWG. RDI-016, FOR NON-CIRCULAR PIPE EQUIVALENT SIZES.

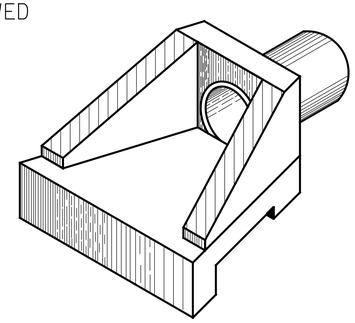

ISOMETRIC VIEW

KENTUCKY STANDARD DRAWING RDH-020
SLOPED & FLARED HEADWALLS FOR 12" TO 27" PIPE

LAW-93-0.00

J:\Project\0\ODOT\15005112 Ironton Russell\LAW\81595\roadway\sheets\Updated and Reformatted KY SD\81595RDH020SD.dgn - 4/25/2011 6:55:27 AM - jon_wanstrath

PIPE DIA. (IN)	PIPE TYPE	CIRCULAR PIPE COVER HEIGHTS IN FEET					
		2-5	5-10	10-15	15-20	20-25	25-30
12 & 15	2⅔'' x ½''CSPHS (1)	16 GA.					
	2⅔'' x ½''CSPLS (1)	16 GA.					
	2⅔'' x ½''CAPHS	16 GA.					
	PVC (11)	SMOOTH WALL (SOLID WALL)					
	HDPE (11)						FF
	RCP (12)						
18	2⅔'' x ½''CSPHS (1)	16 GA.					
	2⅔'' x ½''CSPLS (1)	16 GA.					
	2⅔'' x ½''CAPHS	16 GA.					
	SRS (1)	16 GA.					
	SRA	16 GA.					
	PVC (11)	RIBBED (PROFILE WALL)					
	HDPE (11)						FF
	RCP (12)						

PIPE DIA. (IN)	PIPE TYPE	CIRCULAR PIPE COVER HEIGHTS IN FEET											
		2-5	5-10	10-15	15-20	20-25	25-30	30-35	35-40	40-45	45-50	50-55	55-60	60-65
21	2⅔'' x ½''CSPHS (1)	16 GA.												
	2⅔'' x ½''CSPLS (1)	16 GA.					10 GA.							
	2⅔'' x ½''CAPHS	16 GA.												
	SRS (1)	16 GA.												
	SRA	16 GA.				14 GA.								
	PVC (11)	RIBBED (PROFILE WALL)												
	HDPE (11)					FF								
	RCP (12)													
24 (6)	2⅔'' x ½''CSPHS (1)	16 GA.											14 GA.	
	2⅔'' x ½''CSPLS (1)	16 GA.				10 GA.								
	2⅔'' x ½''CAPHS	16 GA.							14 GA.			12 GA.		
	SRS (1)	16 GA.							14 GA.			12 GA.		
	SRA	16 GA.			14 GA.		12 GA.			10 GA.				
	PVC (11)	RIBBED (PROFILE WALL)												
	HDPE (11)					FF								
	RCP (12)													

2-5	5-10	10-15	15-20	20-25	25-30	30-35	35-40	40-45	45-50	50-55	55-60	60-65

NOTES

(1) GAGES FOR CORRUGATED STEEL PIPE ITEMS SHOWN ARE BASED ON ALUMINUM-COATED TYPE 2 STEEL AS PER AASHTO M-274. ALUMINUM COATED TYPE 2 STEEL IS ONLY PERMITTED IN Ph RANGES OF 5 TO 9

2. WHEN CORRUGATED STEEL PIPE IS ZINC COATED (GALVANIZED) THE GAGE SHALL BE ONE GAGE HEAVIER THAN SHOWN IN THE TABLES.
3. CSP, CAP, SRS AND SRA ARE SHOWN IN GAGE.
4. MAXIMUM COVER HEIGHT MEASURED FROM TOP OF PIPE TO SUBGRADE ELEVATION SHALL GOVERN GAGE OF PIPE TO BE USED FOR ENTIRE LENGTH OF PIPE INSTALLATION.
5. MINIMUM COVER HEIGHTS FOR PIPE SHALL BE 2 FEET. GAGE OF PIPE FOR COVER HEIGHTS LESS THAN 2 FEET SHALL BE THAT SHOWN FOR COVER HEIGHTS OF 30 FEET (SEE STD. SPECIFICATIONS FOR BACKFILL). HDPE AND PVC SHALL NOT BE PERMITTED FOR COVER HEIGHTS LESS THAN 2 FEET.

(6) 24'' DIA. PIPE IS MINIMUM SIZE FOR COVER HEIGHTS FROM 30 FEET TO 65 FEET.

7. MINIMUM COVER HEIGHT FOR ENTRANCE PIPE SHALL BE 0.5 FEET.
8. GAGE OF ENTRANCE PIPE FOR COVER HEIGHTS LESS THAN 2 FEET SHALL MEET THE FOLLOWING REQUIREMENTS:
   a. GAGE OF CSP SHALL BE THAT SHOWN FOR HEIGHTS OF 30 FEET.
   b. GAGE OF CAP SHALL BE ONE GAGE HEAVIER THAN SHOWN IN THE TABLE.
9. ALL CIRCULAR STRUCTURAL PLATE SHALL BE 5% VERTICALLY ELONGATED.
10. SEE CURRENT STANDARD DRAWING RDI-035 FOR COATINGS, LININGS AND PAVINGS FOR NON-STRUCTURAL PIPE.

(11) PVC AND HDPE PIPE ARE NOT PERMITTED ON THE NATIONAL HIGHWAY SYSTEM OR FOR STORM SEWER INSTALLATIONS.

(12) SEE DETAIL SHEET ''PIPE BEDDING FOR CULVERTS, ENTRANCE, AND STORM SEWER REINFORCED CONC. PIPE'' AND DETAIL SHEET ''PIPE BEDDING TRENCH CONDITION REINFORCED CONC. PIPE'' FOR RCP COVER HEIGHT AND BEDDING REQUIREMENTS.

LEGEND

CSPHS: CORRUGATED STEEL PIPE WITH HELICAL LOCK SEAM OR HELICAL WELDED SEAM (HELICAL CORR.)

CSPLS: CORRUGATED STEEL PIPE WITH LONGITUDINAL RIVETED OR SPOT WELDED SEAM (ANNULAR CORR.)

CAPHS: CORRUGATED ALUMINUM ALLOY PIPE WITH HELICAL LOCK SEAM (HELICAL CORR.)

HDPE: HIGH DENSITY POLYETHYLENE PIPE

PVC: POLYVINYL CHLORIDE

SRS: SPIRAL RIB STEEL

SRA: SPIRAL RIB ALUMINUM

RCP: CIRCULAR REINFORCED CONCRETE PIPE

FF: FLOWABLE FILL REQUIRED

12'' PIPE - 24'' PIPE

USE WITH CUR. STD. DRAWINGS,
RDI-020 - SEE SHEET 188
RDI-021 - SEE SHEET 189
RDI-025 - SEE SHEET 190
RDI-026 - SEE SHEET 191
RDI-035 - SEE SHEET 192
RDI-045 - SEE SHEET 193

KENTUCKY STANDARD DRAWING RDI-001

CULVERT, ENTRANCE & STORM SEWER PIPE TYPES & COVER HEIGHTS

LAW-93-0.00

J:\Project\0\ODOT\15005112 Ironton Russell\LAW\81595\roadway\sheets\Updated and Reformatted KY SD\81595RDI001SD.dgn - 4/25/2011 6:55:27 AM - jon_wanstrath

STEP 1

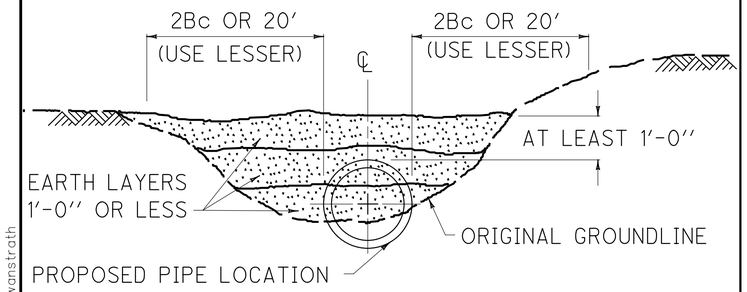

a. IF THE ORIGINAL GROUNDLINE IS AT LEAST 1'-0'' ABOVE TOP OF PROPOSED PIPE FOR WIDTH OF 2Bc OR 20' (WHICHEVER IS LESS) ON EACH SIDE OF THE PIPE, GO DIRECTLY TO ''STEP 2''.

b. IF ORIGINAL GROUNDLINE IS NOT AT LEAST 1'-0'' ABOVE TOP OF PROPOSED PIPE, COMPACT EMBANKMENT IN LAYERS 1'-0'' OR LESS TO ELEVATION AND WIDTH SHOWN. ▨ MEET DENSITY REQUIREMENTS FOR PROPOSED EMBANKMENT .

STEP 2

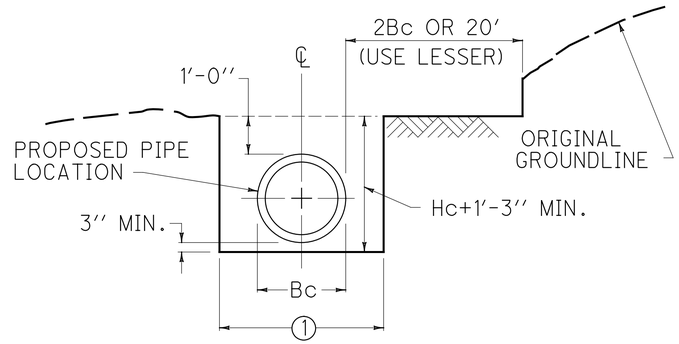

a. EXCAVATE TO WITHIN 1'-0'' ABOVE TOP OF PROPOSED PIPE A WIDTH OF 2Bc OR 20' (USE LESSER) ON EACH SIDE OF PIPE.

b. EXCAVATE TRENCH TO WIDTH AND DEPTH SHOWN.

① Bc + 24'' FOR PIPE 36'' DIA. OR LESS.
Bc + 48'' FOR PIPE GREATER THAN 36'' DIA.

ROCK FOUNDATION DETAILS

STEP 3

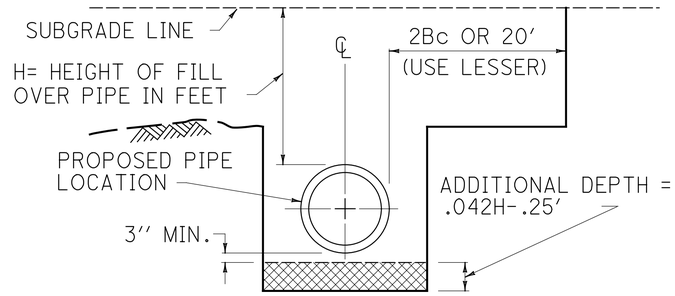

a. IF ROCK FOUNDATION IS NOT ENCOUNTERED, GO DIRECTLY TO ''STEP 4''.

b. IF ROCK FOUNDATION IS ENCOUNTERED, EXCAVATE TRENCH ADDITIONAL DEPTH USING FORMULA GIVEN. THIS ADDITIONAL DEPTH ▩ SHALL BE A MIN. OF 4'' AND SHALL NOT EXCEED 24''

c. BACKFILL ADDITIONAL EXCAVATION AREA WITH COMPACTED BEDDING MATERIAL IN LAYERS 6'' OR LESS.

STEP 4

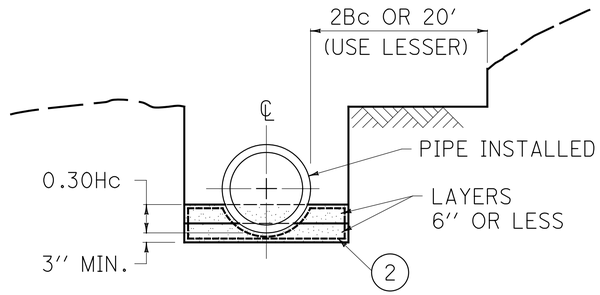

a. COMPACT BEDDING IN TRENCH IN LAYERS 6'' OR LESS TO WIDTH AND ELEVATION SHOWN. ▨

b. EXCAVATE A GROOVE IN THE COMPACTED BEDDING TO CONFORM TO THE OUTSIDE OF THE PIPE. AFTER EXCAVATION OF THE GROOVE, APPROXIMATELY 4'' OF BEDDING SHOULD REMAIN BELOW THE OUTSIDE INVERT OF THE PIPE. THE CRADLE SHALL BE GAGED FOR SHAPE AND SLOPE BY STRIKING OR DRAWING A TEMPLATE THROUGH THE GROOVE IMMEDIATELY BEFORE PLACING EACH SECTION OF PIPE.

c. INSTALL PIPE AT CORRECT ALIGNMENT AND ELEVATION. RECOMPACT ANY LOOSE BEDDING DISTURBED DURING INSTALLATION.

② WRAP BEDDING MATERIAL IN GEOTEXTILE FABRIC WHEN THE STANDARD SPECIFICATIONS SPECIFIES.

STEP 5

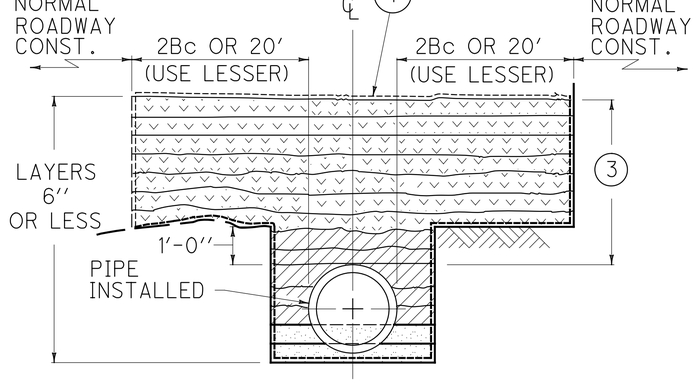

③ 4'-0'' REQUIRED FOR CONSTRUCTION LOADING IF COVER HEIGHT PERMITS.

a. COMPACT REQUIRED BACKFILL MATERIAL IN LAYERS 6'' OR LESS TO 1'-0'' ABOVE TOP OF PIPE. ▨

b. COMPACT REQUIRED BACKFILL MATERIAL TO ELEV. ③ ABOVE TOP OF PIPE IN LAYERS OF 6'' OR LESS. ▨

c. PROCEED WITH NORMAL ROADWAY CONSTRUCTION.

④ WRAP BEDDING MATERIAL IN GEOTEXTILE FABRIC WHEN THE STANDARD SPECIFICATIONS SPECIFIES.

÷ PIPE SHAPES ÷

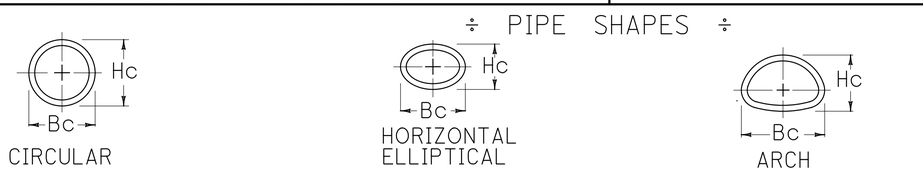

FOR TRENCH CONDITIONS
SEE CUR. STD. DWG. RDI-025
SEE SHEET - 190

KENTUCKY STANDARD DRAWING RDI-020

PIPE BEDDING FOR CULVERTS, ENTRANCE AND STORM SEWER PIPE

LAW-93-0.00

188
788

J:\Project\0\ODOT\15005112 Ironton Russell\LAW\81595\roadway\sheets\Updated and Reformatted KY SD\81595RDI020SD.dgn - 4/25/2011 6:55:28 AM - jon_wanstrath

STEP 1

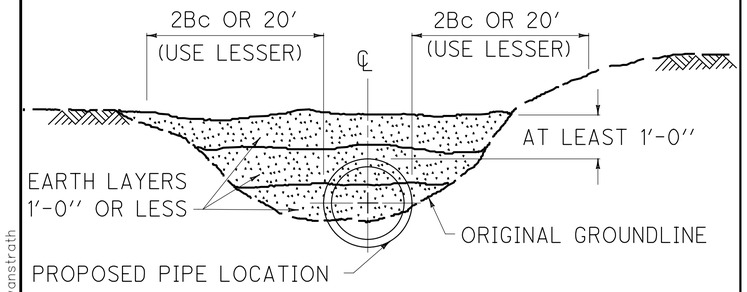

a. IF THE ORIGINAL GROUNDLINE IS AT LEAST 1'-0'' ABOVE TOP OF PROPOSED PIPE FOR WIDTH OF 2Bc OR 20' (WHICHEVER IS LESS) ON EACH SIDE OF THE PIPE, GO DIRECTLY TO ''STEP 2''.

b. IF ORIGINAL GROUNDLINE IS NOT AT LEAST 1'-0'' ABOVE TOP OF PROPOSED PIPE, COMPACT EMBANKMENT IN LAYERS 1'-0'' OR LESS TO ELEVATION AND WIDTH SHOWN. ▨ MEET DENSITY REQUIREMENTS FOR PROPOSED EMBANKMENT .

STEP 2

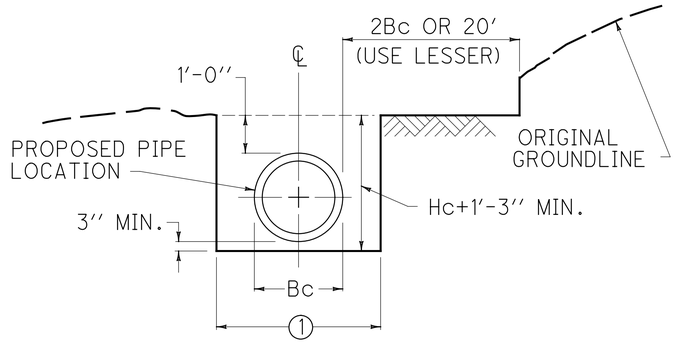

a. EXCAVATE TO WITHIN 1'-0'' ABOVE TOP OF PROPOSED PIPE A WIDTH OF 2Bc OR 20' (USE LESSER) ON EACH SIDE OF PIPE.

b. EXCAVATE TRENCH TO WIDTH AND DEPTH SHOWN.

① Bc + 24'' FOR PIPE 36'' DIA. OR LESS.
Bc + 48'' FOR PIPE GREATER THAN 36'' DIA.

STEP 3

ROCK FOUNDATION DETAILS

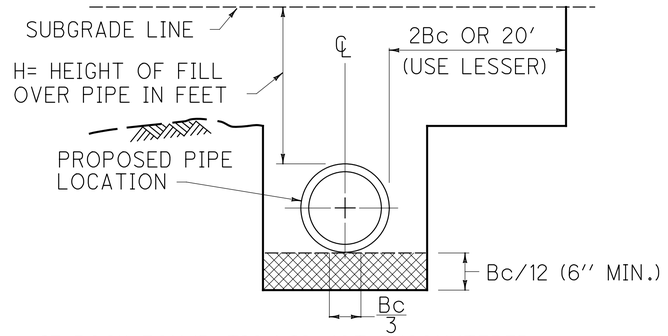

a. IF ROCK FOUNDATION IS NOT ENCOUNTERED, GO DIRECTLY TO ''STEP 4''.

b. IF ROCK FOUNDATION IS ENCOUNTERED, EXCAVATE TRENCH DEPTH USING FORMULA GIVEN. THIS DEPTH ▨ SHALL BE A MIN. OF 6'' AND SHALL NOT EXCEED 24''.

c. BACKFILL WITH COMPACTED BEDDING MATERIAL IN LAYERS 6'' OR LESS LEAVING Bc/3 UNCOMPACTED IN THE FINAL LAYER.

STEP 4

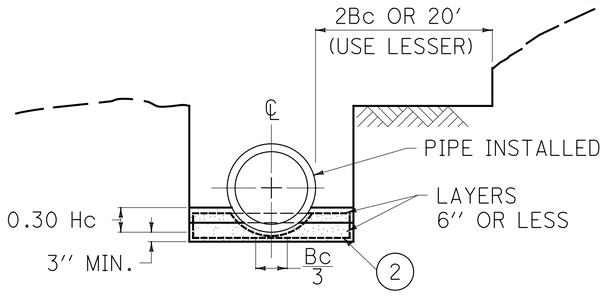

a. UNCOMPACTED 4'' BEDDING IN SUBTRENCH. FOR TYPE 1 INSTALLATION COMPACT BEDDING IN LAYERS 6'' OR LESS TO AN ELEVATION 0.30 Hc. ▨
LEAVE CENTER THIRD OF OUTSIDE PIPE DIA. (Bc/3) BEDDING UNCOMPACTED.

b. EXCAVATE A GROOVE IN THE COMPACTED BEDDING TO CONFORM TO THE OUTSIDE OF THE PIPE. AFTER EXCAVATION OF THE GROOVE, A MINIMUM 3'' OF BEDDING SHOULD REMAIN BELOW THE OUTSIDE INVERT OF THE PIPE. THE CRADLE SHALL BE GAGED FOR SHAPE AND SLOPE BY STRIKING OR DRAWING A TEMPLATE THROUGH THE GROOVE IMMEDIATELY BEFORE PLACING EACH SECTION OF PIPE.

c. INSTALL PIPE AT CORRECT ALIGNMENT AND ELEVATION. RECOMPACT ANY LOOSE BEDDING DISTURBED DURING INSTALLATION.

② WRAP BEDDING MATERIAL IN GEOTEXTILE FABRIC WHEN THE STANDARD SPECIFICATIONS SPECIFIES.

STEP 5

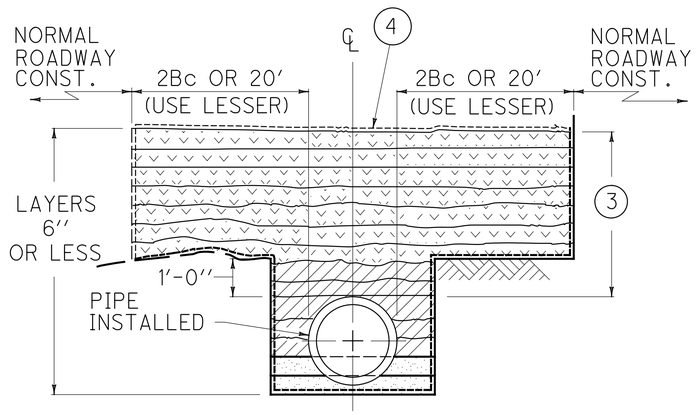

③ 4'-0'' REQUIRED FOR CONSTRUCTION LOADING.

a. COMPACT REQUIRED BACKFILL MATERIAL IN LAYERS 6'' OR LESS TO 1'-0'' ABOVE TOP OF PIPE. ▨

b. COMPACT REQUIRED BACKFILL MATERIAL TO ELEV. ③ ABOVE TOP OF PIPE IN LAYERS OF 6'' OR LESS. ▨

c. PROCEED WITH NORMAL ROADWAY CONSTRUCTION.

④ WRAP BEDDING MATERIAL IN GEOTEXTILE FABRIC WHEN THE STANDARD SPECIFICATIONS SPECIFIES.

MAX. COVER HEIGHT		
CLASS	TYPE 1	TYPE 4
III	25'	9'
IV	38'	15'
V	57'	23'

2' OF COVER OR LESS	
CLASS	PIPE DIA.
V	12''-15''-18''
IV	21''-24''
III	27'' & LARGER

÷ PIPE SHAPES ÷



NOTE:

10' MAXIMUM COVER HEIGHT FOR HORIZONTAL ELLIPTICAL CLASS HE III PIPE.

COVER HEIGHTS EXCEEDING THOSE SHOWN IN TABLES REQUIRE SPECIAL DESIGNS.

~~FOR TYPE 4 INSTALLATION PLACE EMBANKMENT MATERIAL ACCORDING TO SECTION 701.03.06A OF THE CURRENT SPEC. BOOK.~~

~~FOR TYPE 1 INSTALLATION, WHEN THE TOP OF PIPE IS NOT WITHIN ONE PIPE DIAMETER OF THE SUBGRADE, INSTALL ACCORDING TO SECTION 701.03.06A OF THE CURRENT SPEC. BOOK.~~

SEE SHEET 190
FOR TRENCH CONDITIONS

KENTUCKY STANDARD DRAWING RDI-021

PIPE BEDDING FOR CULVERTS, ENTRANCE, AND STORM SEWER REINFORCED CONCRETE PIPE

LAW-93-0.00

J:\Project\OVODOT\15005112 Ironton Russell\LAW\81595\roadway\sheets\Updated and Reformatted KY SD\81595RDI021SD.dgn - 4/25/2011 6:55:29 AM - jon_wanstrath

STEP 1

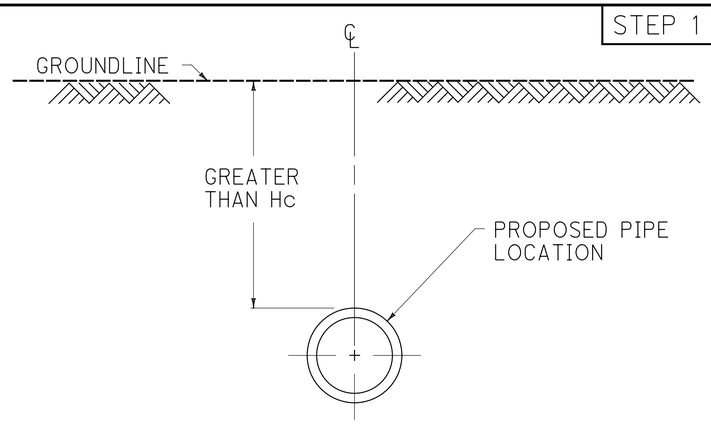

a. TRENCH CONDITION IS WHEN GROUNDLINE ELEVATION IS GREATER THAN Hc ABOVE TOP OF PROPOSED PIPE.

NOTE:
GROUNDLINE MAY BE (a) EXISTING OR ORIGINAL
(b) EXCAVATED SURFACE OR
(c) EMBANKMENT SURFACE.

STEP 2

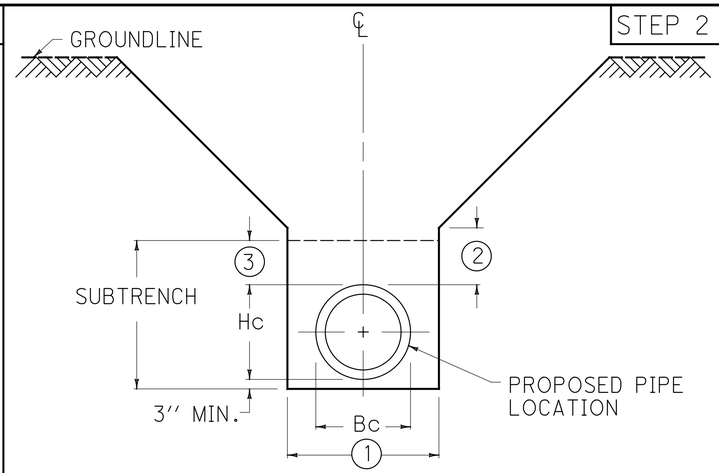

a. EXCAVATE SUBTRENCH TO WIDTH AND DEPTH SHOWN.
b. TRENCH WALLS MAY BE CONSTRUCTED VERTICAL. FOR ILLUSTRATION PURPOSES THE DETAIL DEPICTS A SLOPING WALL TRENCH. WHICHEVER METHOD IS USED, THE TRENCH WALLS SHALL REMAIN SYMMETRICAL ABOUT THE CENTERLINE OF THE PIPE.

① Bc + 24'' FOR PIPE 36'' DIA. OR LESS.
Bc + 48'' FOR PIPE GREATER THAN 36'' DIA.

② SLOPING OF TRENCH WALLS MAY BEGIN AT ANY ELEVATION GREATER THAN 1'-0'' ABOVE TOP OF PIPE. THE SUBTRENCH SHALL ALWAYS BE REQUIRED.

③ 1'-0'' MINIMUM TO Hc MAXIMUM.

STEP 3

ROCK FOUNDATION DETAILS

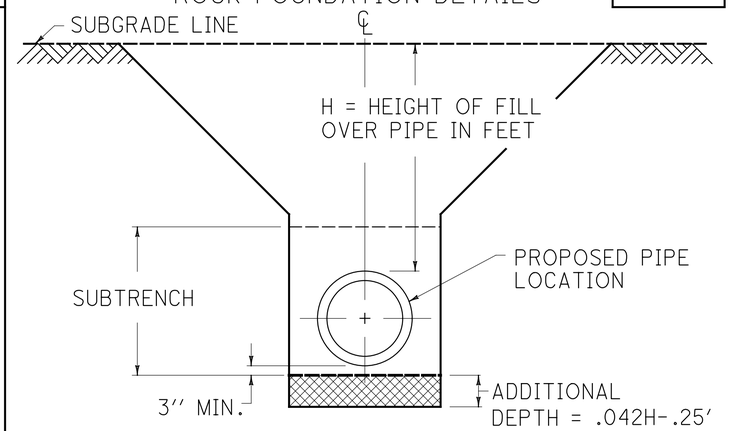

a. IF ROCK FOUNDATION IS NOT ENCOUNTERED, GO DIRECTLY TO ''STEP 4''.
b. IF ROCK FOUNDATION IS ENCOUNTERED, EXCAVATE TRENCH ADDITIONAL DEPTH USING FORMULA GIVEN. THIS ADDITIONAL DEPTH ▨ SHALL BE A MIN. OF 4'' AND SHALL NOT EXCEED 24''
c. BACKFILL ADDITIONAL EXCAVATION AREA WITH COMPACTED BEDDING MATERIAL IN LAYERS 6'' OR LESS.

STEP 4

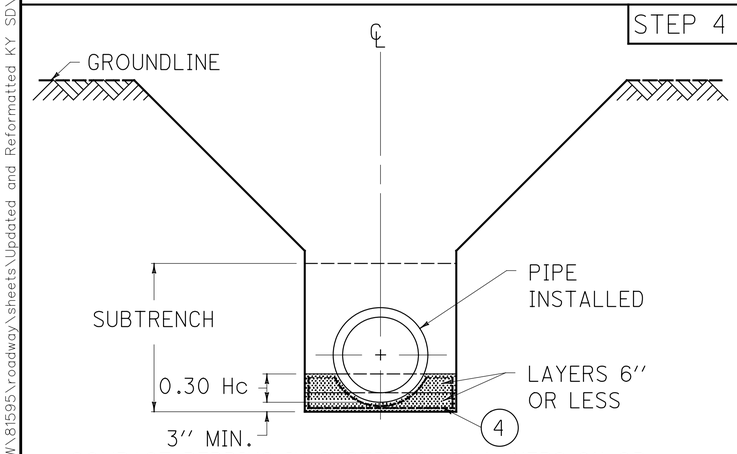

a. COMPACT BEDDING IN SUBTRENCH IN LAYERS 6'' OR LESS TO WIDTH AND ELEVATION SHOWN. ▨
b. EXCAVATE A GROOVE IN THE COMPACTED BEDDING TO CONFORM TO THE OUTSIDE OF THE PIPE. AFTER EXCAVATION OF THE GROOVE, APPROXIMATELY 4'' OF BEDDING SHOULD REMAIN BELOW THE OUTSIDE INVERT OF THE PIPE. THE CRADLE SHALL BE GAGED FOR SHAPE AND SLOPE BY STRIKING OR DRAWING A TEMPLATE THROUGH THE GROOVE IMMEDIATELY BEFORE PLACING EACH SECTION OF PIPE.
c. INSTALL PIPE AT CORRECT ALIGNMENT AND ELEVATION. RECOMPACT ANY LOOSE BEDDING DISTURBED DURING INSTALLATION.

④ WRAP BEDDING MATERIAL IN GEOTEXTILE FABRIC WHEN THE STANDARD SPECIFICATIONS SPECIFIES.

STEP 5

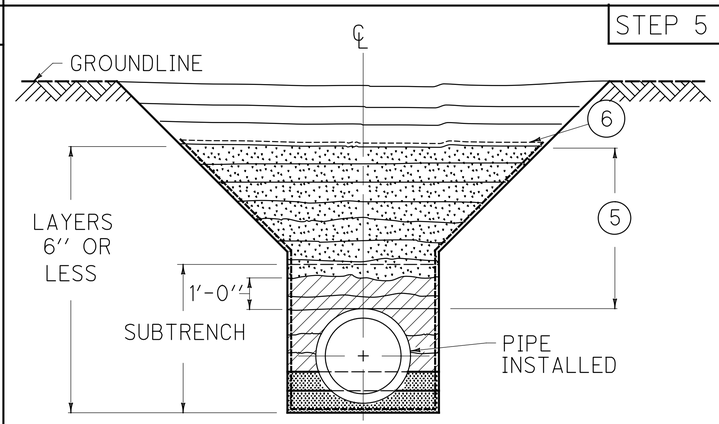

⑤ 4'-0'' REQUIRED FOR CONSTRUCTION LOADING IF COVER HEIGHT PERMITS.

a. COMPACT REQUIRED BACKFILL MATERIAL IN LAYERS 6'' OR LESS TO 1'-0'' ABOVE TOP OF PIPE. ▨
b. IN A UNIFORM SYMMETRICAL MANNER COMPACT REQUIRED BACKFILL MATERIAL TO ELEVATION ⑤ ABOVE TOP OF PIPE IN LAYERS OF 6'' OR LESS. ▩
c. PROCEED WITH TRENCH BACKFILL IN A SYMMETRICAL MANNER IN LAYERS 1'-0'' OR LESS TO THE ORIGINAL GROUND AS DEFINED IN STEP 1.

⑥ WRAP BEDDING MATERIAL IN GEOTEXTILE FABRIC WHEN THE STANDARD SPECIFICATIONS SPECIFIES.

÷ PIPE SHAPES ÷

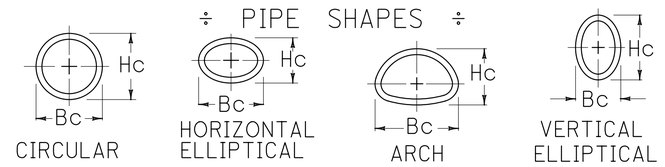

NOTE:
~~FOR CLASSES AND GAGES OF PIPE SEE CURRENT STANDARD DRAWINGS RDI 001 THRU RDI 008 AND RDI 011 AND RDI 012.~~

KENTUCKY STANDARD DRAWING RDI-025
PIPE BEDDING TRENCH CONDITION

LAW-93-0.00

190
788

J:\Project\0\ODOT\15005112 Ironton Russell\LAW\81595\roadway\sheets\Updated and Reformatted KY SD\81595RDI025SD.dgn - 4/25/2011 6:55:30 AM - jon_wanstrath

STEP 1

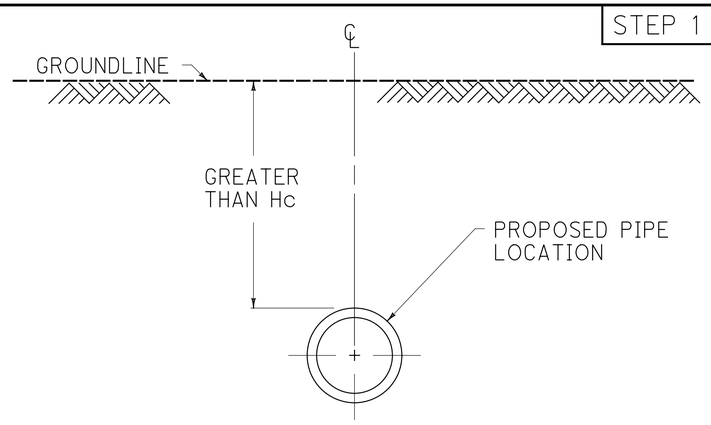

a. TRENCH CONDITION IS WHEN GROUNDLINE ELEVATION IS GREATER THAN Hc ABOVE TOP OF PROPOSED PIPE.

NOTE:
GROUNDLINE MAY BE (a) EXISTING OR ORIGINAL
(b) EXCAVATED SURFACE OR
(c) EMBANKMENT SURFACE.

STEP 2

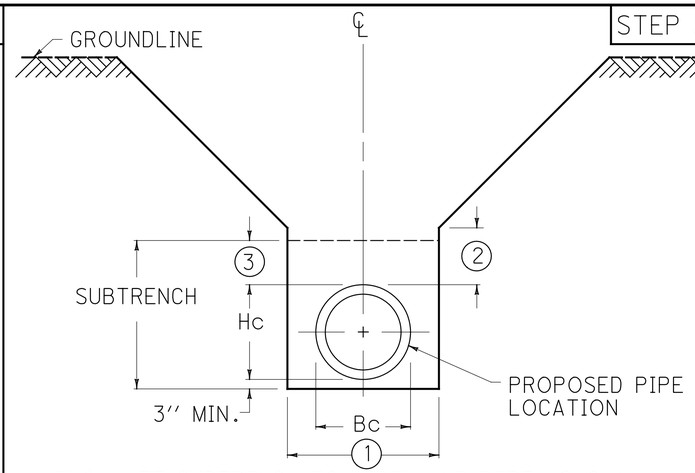

a. EXCAVATE SUBTRENCH TO WIDTH AND DEPTH SHOWN.
b. TRENCH WALLS MAY BE CONSTRUCTED VERTICAL. FOR ILLUSTRATION PURPOSES THE DETAIL DEPICTS A SLOPING WALL TRENCH. WHICHEVER METHOD IS USED, THE TRENCH WALLS SHALL REMAIN SYMMETRICAL ABOUT THE CENTERLINE OF THE PIPE.

① Bc + 24" FOR PIPE 36" DIA. OR LESS.
Bc + 48" FOR PIPE GREATER THAN 36" DIA.

② SLOPING OF TRENCH WALLS MAY BEGIN AT ANY ELEVATION GREATER THAN 1'-0" ABOVE TOP OF PIPE. THE SUBTRENCH SHALL ALWAYS BE REQUIRED.

③ 1'-0" MINIMUM TO Hc MAXIMUM.

STEP 3

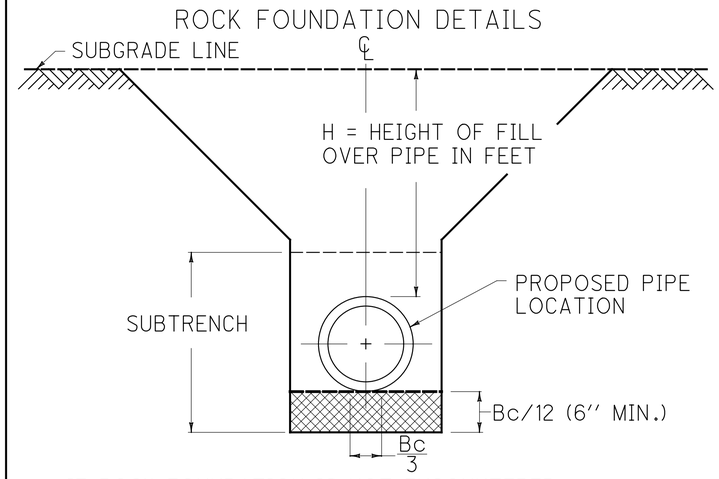

a. IF ROCK FOUNDATION IS NOT ENCOUNTERED, GO DIRECTLY TO "STEP 4".
b. IF ROCK FOUNDATION IS ENCOUNTERED, EXCAVATE TRENCH DEPTH USING FORMULA GIVEN. THIS DEPTH ▨ SHALL BE A MIN. OF 6" AND SHALL NOT EXCEED 24"
c. BACKFILL WITH COMPACTED BEDDING MATERIAL IN LAYERS 6" OR LESS LEAVING Bc/3 UNCOMPACTED IN THE FINAL LAYER.

STEP 4

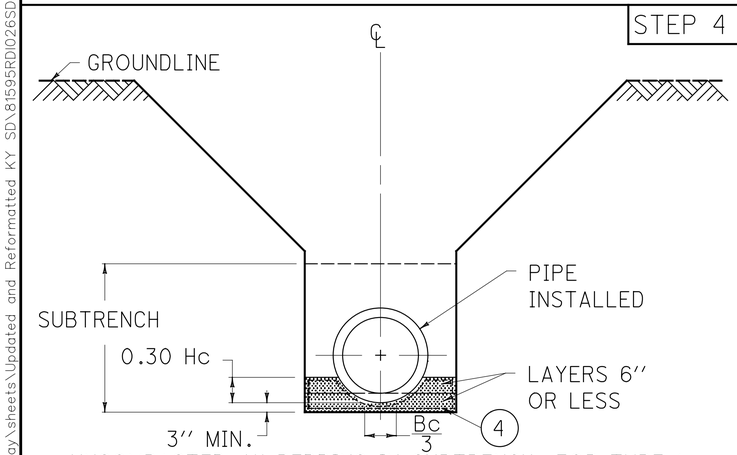

a. UNCOMPACTED 4" BEDDING IN SUBTRENCH. FOR TYPE 1 INSTALLATION COMPACT BEDDING IN LAYERS 6" OR LESS TO AN ELEVATION 0.30 Hc. ▨
LEAVE CENTER THIRD OF OUTSIDE PIPE DIA. (Bc/3) BEDDING UNCOMPACTED.
b. EXCAVATE A GROOVE IN THE BEDDING TO CONFORM TO THE OUTSIDE OF THE PIPE. AFTER EXCAVATION OF THE GROOVE, A MINIMUM 3" OF BEDDING SHOULD REMAIN BELOW THE OUTSIDE INVERT OF THE PIPE. THE CRADLE SHALL BE GAGED FOR SHAPE AND SLOPE BY STRIKING OR DRAWING A TEMPLATE THROUGH THE GROOVE IMMEDIATELY BEFORE PLACING EACH SECTION OF PIPE.
c. INSTALL PIPE AT CORRECT ALIGNMENT AND ELEVATION. RECOMPACT ANY LOOSE BEDDING DISTURBED DURING INSTALLATION.

④ WRAP BEDDING MATERIAL IN GEOTEXTILE FABRIC WHEN THE STANDARD SPECIFICATIONS SPECIFIES.

STEP 5

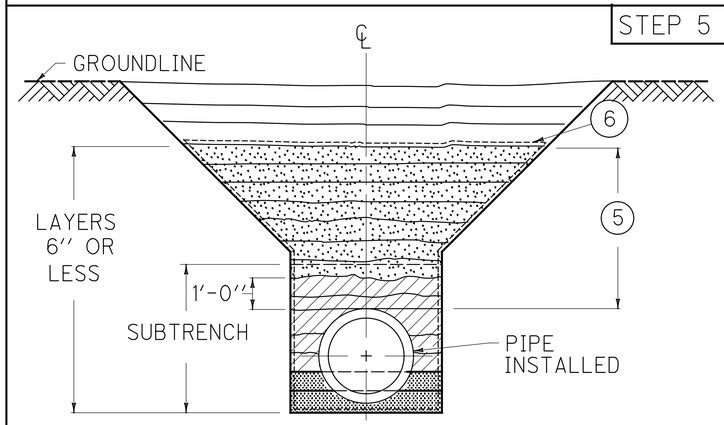

⑤ 4'-0" REQUIRED FOR CONSTRUCTION LOADING.

a. COMPACT REQUIRED BACKFILL MATERIAL IN LAYERS 6" OR LESS TO 1'-0" ABOVE TOP OF PIPE. ▨
b. IN A UNIFORM SYMMETRICAL MANNER COMPACT REQUIRED BACKFILL MATERIAL TO ELEVATION ⑤ ABOVE TOP OF PIPE IN LAYERS OF 6" OR LESS. ▩
c. PROCEED WITH TRENCH BACKFILL IN A SYMMETRICAL MANNER IN LAYERS 1'-0" OR LESS TO THE ORIGINAL GROUND AS DEFINED IN STEP 1.

⑥ WRAP BEDDING MATERIAL IN GEOTEXTILE FABRIC WHEN THE STANDARD SPECIFICATIONS SPECIFIES.

MAX. COVER HEIGHT		
CLASS	TYPE 1	TYPE 4
III	25'	9'
IV	38'	15'
V	57'	23'

2' OF COVER OR LESS	
CLASS	PIPE DIA.
V	12"-15"-18"
IV	21"-24"
III	27" & LARGER

NOTE:
10' MAXIMUM COVER HEIGHT FOR HORIZONTAL ELLIPTICAL CLASS HE III PIPE.
COVER HEIGHTS EXCEEDING THOSE SHOWN IN TABLES REQUIRE SPECIAL DESIGNS.
~~FOR TYPE 4 INSTALLATION PLACE EMBANKMENT MATERIAL ACCORDING TO SECTION 701.03.06A OF CURRENT SPEC. BOOK.~~
~~FOR TYPE 1 INSTALLATION, WHEN THE TOP OF PIPE IS NOT WITHIN ONE PIPE DIAMETER OF THE SUBGRADE, INSTALL ACCORDING TO SECTION 701.03.06A OF THE CURRENT SPEC. BOOK.~~

÷ PIPE SHAPES ÷

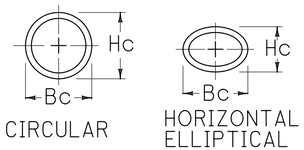

KENTUCKY STANDARD DRAWING RDI-026
PIPE BEDDING TRENCH CONDITION REINFORCED CONC. PIPE

LAW-93-0.00

191
788

J:\Project\O\ODOT\15005112 Ironton Russell\LAW\81595\roadway\sheets\Updated and Reformatted KY SD\81595RDI026SD.dgn - 4/25/2011 6:55:32 AM - jon_wanstrath

PIPE MATERIAL	pH RANGE ③					
	(ACID) L (< 5)		M (5 - 9) ④		(BASE) H (> 9)	
	COATING	PAVING	COATING	PAVING	COATING	PAVING
STEEL GALVANIZED	P	I	BP	I	P	I
ALUMINUM-COATED TYPE 2 STEEL	-	-	HB	I	-	-
ALUMINUM ALLOY	B	I	HB	I	B	I
REINFORCED CONCRETE	-	EP	-	-	-	EP
PLASTIC	-	-	-	-	-	-

HB - HALF ASPHALT COATED
B - FULLY ASPHALT COATED
BP - FULLY ASPHALT COATED OR POLYMERIC COATED
P - POLYMERIC COATED (PRECOATED GALVANIZED)
EP - EXTRA PROTECTION
I - PAVED INVERT

NOTES

1. EXCEPTIONS FOR STORM SEWERS:
   a. ANNULAR CORRUGATED PIPE SHALL BE FULLY LINED.
   b. HELICAL CORRUGATED PIPE > 24'' DIA. SHALL BE FULLY LINED.
   c. HELICAL CORRUGATED PIPE < 24'' DIA. SHALL NOT REQUIRE COATING, PAVING, OR LINING.
   d. SPIRAL RIB PIPE SHALL NOT REQUIRE COATING, PAVED INVERT, OR LINING.
2. EXCEPTIONS FOR ENTRANCE PIPE:
   a. COATINGS REQUIRED FOR LOW pH LEVELS.
   b. PAVED INVERTS SHALL NOT BE REQUIRED FOR ENTRANCE PIPE.
   c. ENTRANCE PIPE GREATER THAN 30'' DIA. SHALL BE CULVERT PIPE.

③ L = LOW pH RANGE (ACID)
M = MEDIUM pH RANGE
H = HIGH pH RANGE (BASE)

④ ALUMINUM COATED TYPE 2 STEEL IS ONLY PERMITTED IN Ph RANGES OF 5 TO 9

KENTUCKY STANDARD DRAWING RDI-035
COATINGS, LININGS AND PAVINGS FOR NON-STRUCTURAL PLATE PIPE

LAW-93-0.00

192
788

J:\Project\0\ODOT\15005112 Ironton Russell\LAW\81595\roadway\sheets\Updated and Reformatted KY SD\81595RDI035SD.dgn - 4/25/2011 6:55:33 AM - jon_wanstrath

NOTES

~~(1) JUNCTION BOX PERMITTED, HOWEVER, SHALL BE INCIDENTAL TO THE WORK IF USED (SEE CURRENT STD. DWG. RDX-001)~~

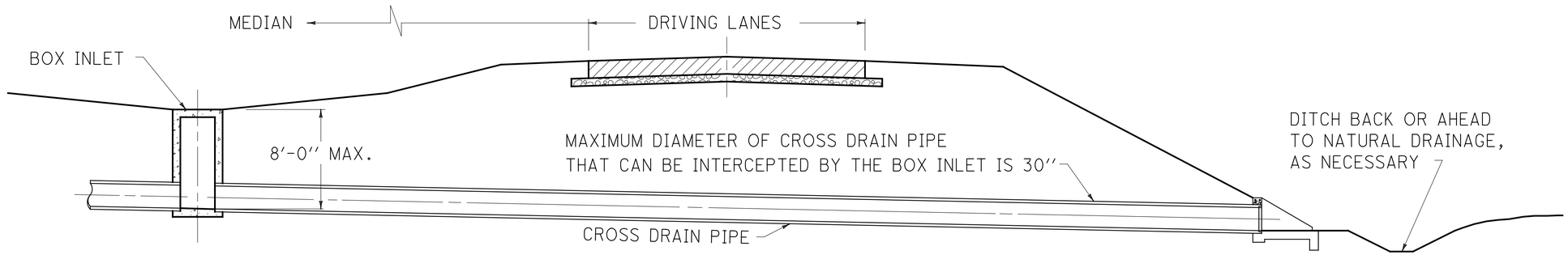

TYPICAL WHEN CROSS DRAINAGE PIPE IS 30″ OR LESS
IN DIAMETER AND FILL IS 8′-0″ OR LESS IN DEPTH

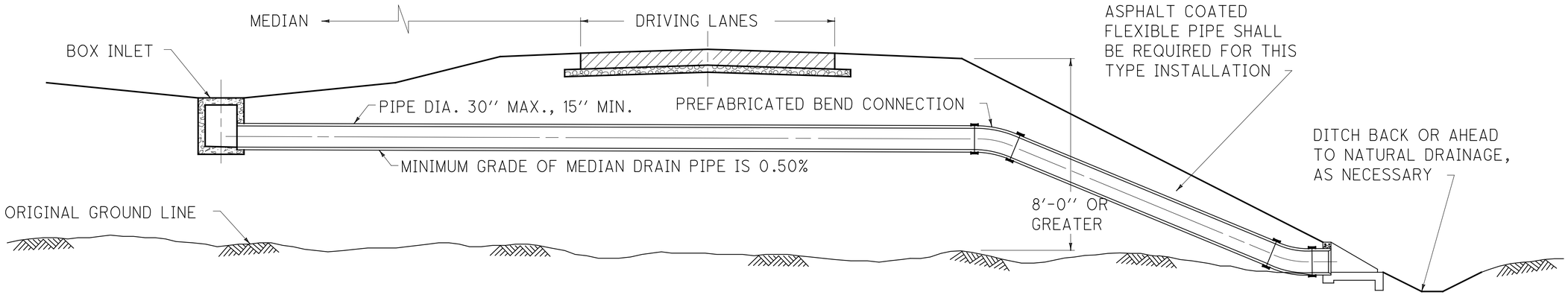

TYPICAL WHEN CROSS DRAINAGE PIPE IS 30″ OR LESS
IN DIAMETER AND FILL IS MORE THAN 8′-0″ IN DEPTH

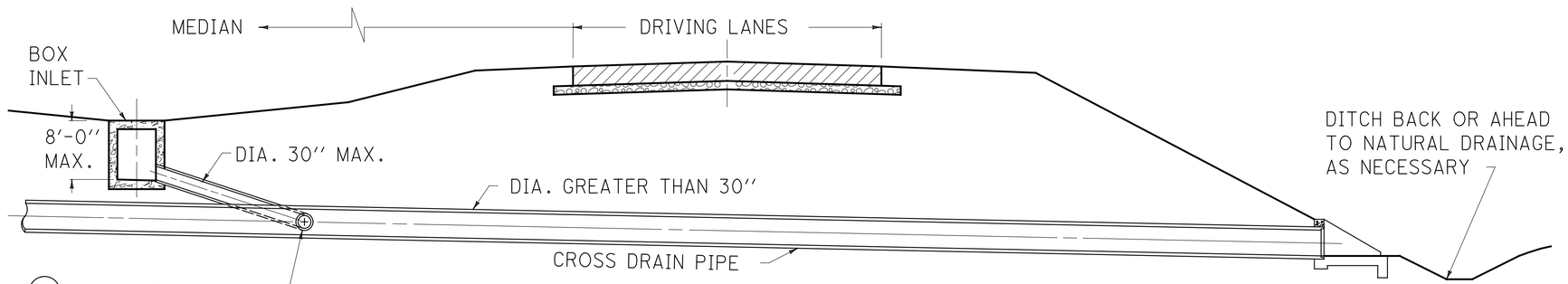

TYPICAL WHEN CROSS DRAINAGE PIPE IS
GREATER THAN 30″ IN DIAMETER

KENTUCKY STANDARD DRAWING RDI-045
TYPICAL MEDIAN DRAIN INSTALLATIONS

LAW-93-0.00

193
788

J:\Project\0\ODOT\15005112 Ironton Russell\LAW\81595\roadway\sheets\Updated and Reformatted KY SD\81595RDI045SD.dgn - 4/25/2011 6:55:34 AM - jon_wanstrath

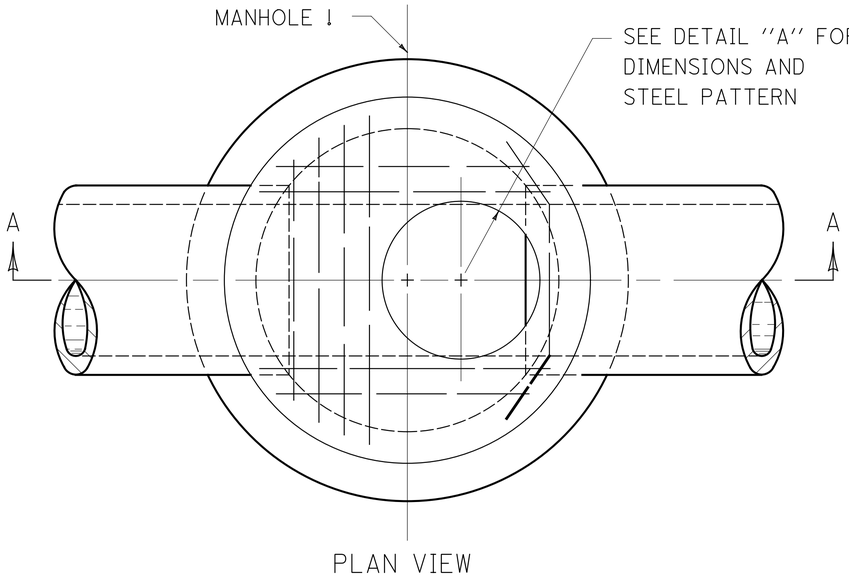

PLAN VIEW

NOTES

1. SEE CURRENT STD. DWG. RDM-105 FOR CASTINGS TO BE USED IN TRAFFIC AREAS AND CURRENT STD. DWG. RDM-100 FOR CASTINGS TO BE USED IN NON-TRAFFIC AREAS.
2. THE RISER SECTION MAY BE PRECAST CONCRETE PIPE OR CAST-IN-PLACE CONCRETE. A CONCENTRIC CAST-IN-PLACE CONE OR PRECAST CONCRETE CONE MAY BE PERMITTED, PROVIDED HEIGHT LIMITATIONS WOULD PERMIT.
3. THE MAXIMUM SIZE OF INTERCEPTED PIPE SHALL BE 27''.
4. COVER OVER HIGHEST PIPE, EXCLUSIVE OF PAVEMENT, SHALL BE 2'-0''.
5. CAST-IN-PLACE CONCRETE MANHOLES SHALL HAVE 8'' THICK WALLS.
6. SEE PROPOSAL NOTES OR STANDARD SPECIFICATIONS FOR ADDITIONAL REQUIREMENTS.
7. SEE CURRENT STD. DWG. RDB-430 FOR STEP TYPE, SPACING AND DETAIL.

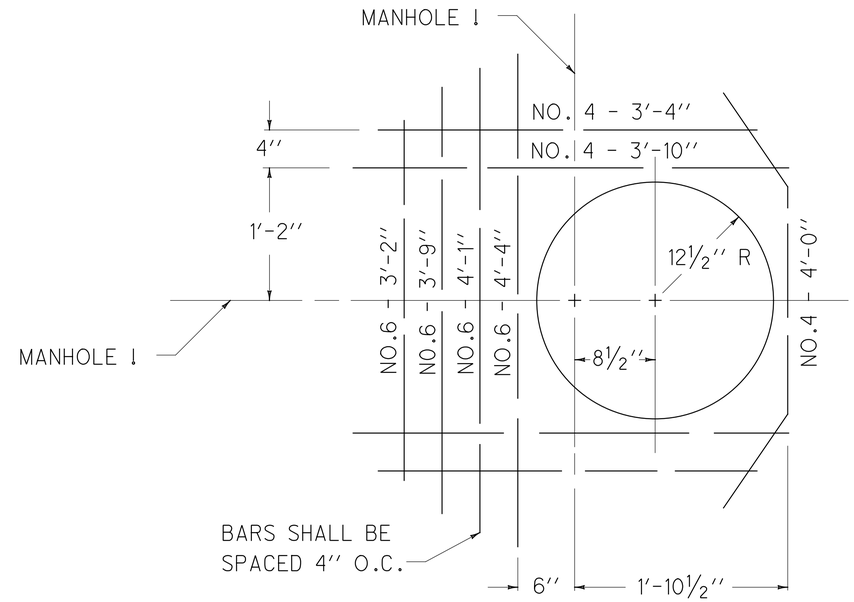

DETAIL ''A''
DIMENSIONS AND
STEEL PATTERN

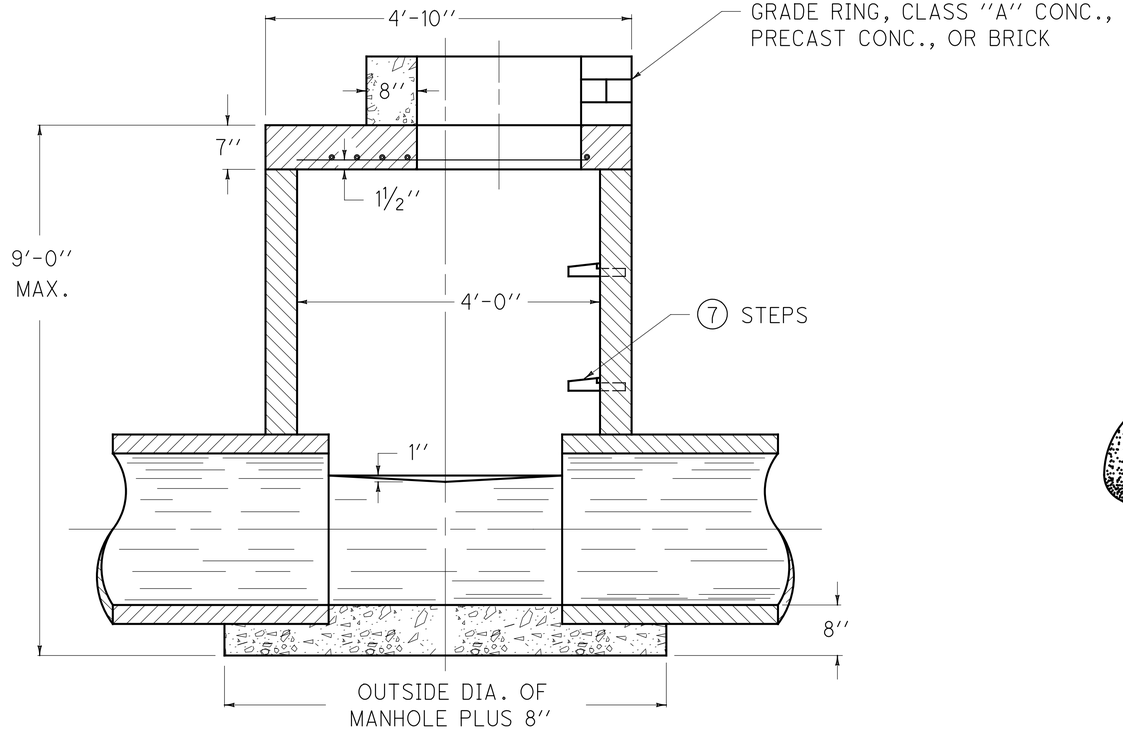

SECTION A-A

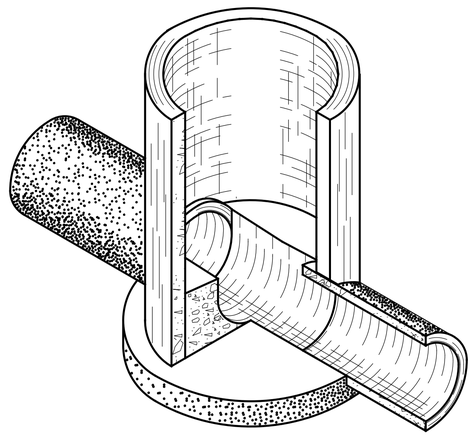

ISOMETRIC OF BASE

USE WITH CUR. STD. DRAWINGS,
RDB-430 - SEE SHEET 184
RDM-100 - SEE SHEET 196
RDM-105 - SEE SHEET 197

KENTUCKY STANDARD DRAWING RDM-001
MANHOLE TYPE A

LAW-93-0.00

194
788

J:\Project\LAW\ODOT\15005112 Ironton Russell\LAW\81595\roadway\sheets\Updated and Reformatted KY SD\81595RDM001SD.dgn - 4/25/2011 6:55:35 AM - jon_wanstrath

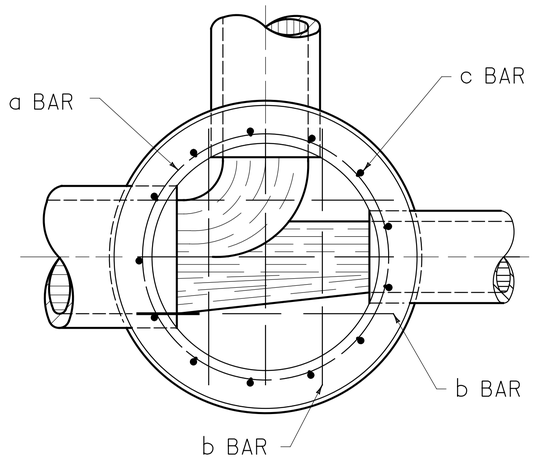

SECTION A-A

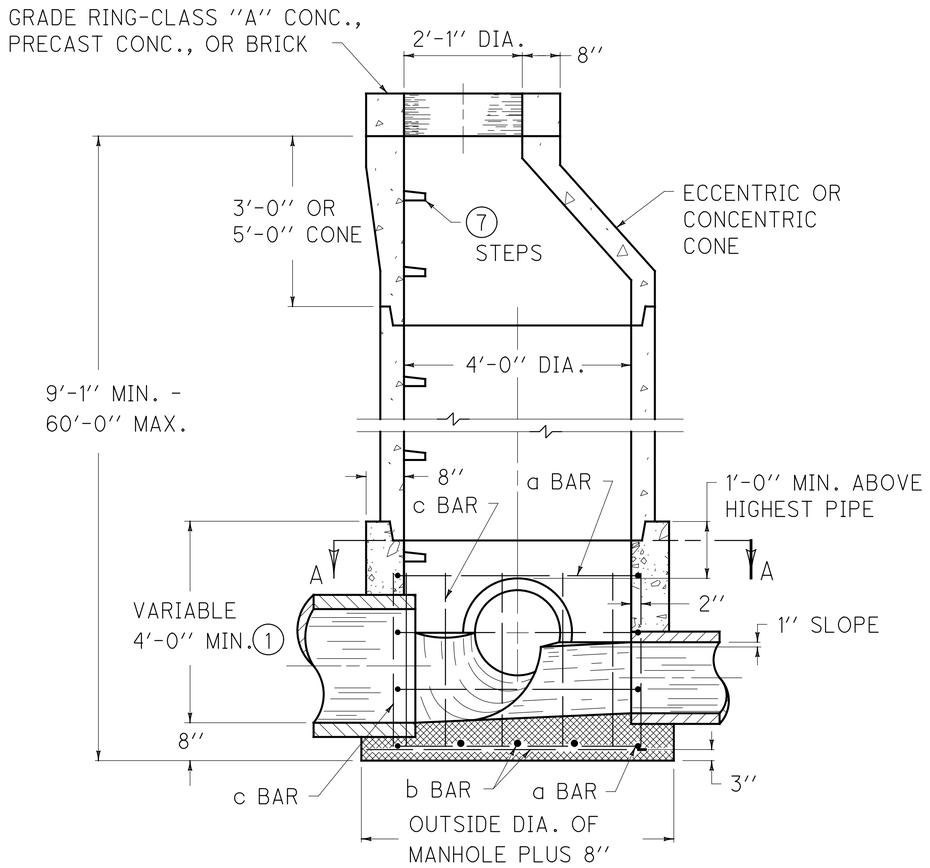

SECTIONAL ELEVATION

NOTES

SEE CURRENT STD. DWG. RDM-105 FOR CASTINGS TO BE USED IN TRAFFIC AREAS AND CURRENT STD. DWG. RDM-100 FOR CASTINGS TO BE USED IN NON-TRAFFIC AREAS. THE MANHOLE MAY BE PRECAST CONCRETE PIPE SECTIONS OR CAST-IN-PLACE CONCRETE ⑤.

① WHEN THE MANHOLE HEIGHT IS 25'-1" OR GREATER A CAST-IN-PLACE BASE WILL BE REQUIRED AS DETAILED. ▨ THIS PORTION OF CAST-IN-PLACE BASE ALWAYS REQUIRED. REINFORCEMENT BARS ARE NOT REQUIRED WHEN MANHOLE HEIGHT IS LESS THAN 12'-0".

② THE NUMBER OF BARS DEPEND UPON HEIGHT OF BASE.

③ LENGTH OF BARS DEPEND UPON HEIGHT. BAR LOCATIONS SHALL BE BENT AND/OR SHIFTED TO MISS PIPE.

4. SEE PROPOSAL NOTES OR STANDARD SPECIFICATIONS FOR ADDITIONAL REQUIREMENTS.

⑤ CAST-IN-PLACE MANHOLE LIMITATIONS: FROM 9'-1" TO 16'-0" USE 8" WALL THICKNESS, FROM 16'-1" TO 25'-0" USE 12" THICK WALLS.

6. THE MAXIMUM SIZE OF INTERCEPTED PIPE SHALL BE 27".

⑦ SEE CURRENT STD. DWG. RDB-430 FOR STEP TYPE, SPACING AND DETAILS.

STEEL REINFORCEMENT

NO. 4 BAR	QTY.	LENGTH	SPACING	TYPE
a	②	13'-8"	APPROX. 1'-0" O.C.	CIR. 4'-4" DIA.
b	6	4'-6"		STR.
c	13	③		STR.

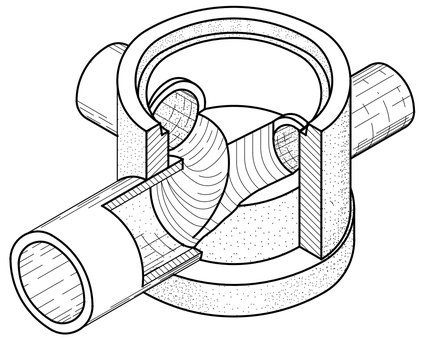

ISOMETRIC OF BASE

USE WITH CUR. STD. DRAWINGS,
RDB-430 - SEE SHEET 184
RDM-100 - SEE SHEET 196
RDM-105 - SEE SHEET 197

KENTUCKY STANDARD DRAWING RDM-005
MANHOLE TYPE B

LAW-93-0.00

195
788

J:\Project\0\ODOT\15005112 Ironton Russell\LAW\81595\roadway\sheets\Updated and Reformatted KY SD\81595RDM005SD.dgn - 4/25/2011 6:55:36 AM - jon_wanstrath

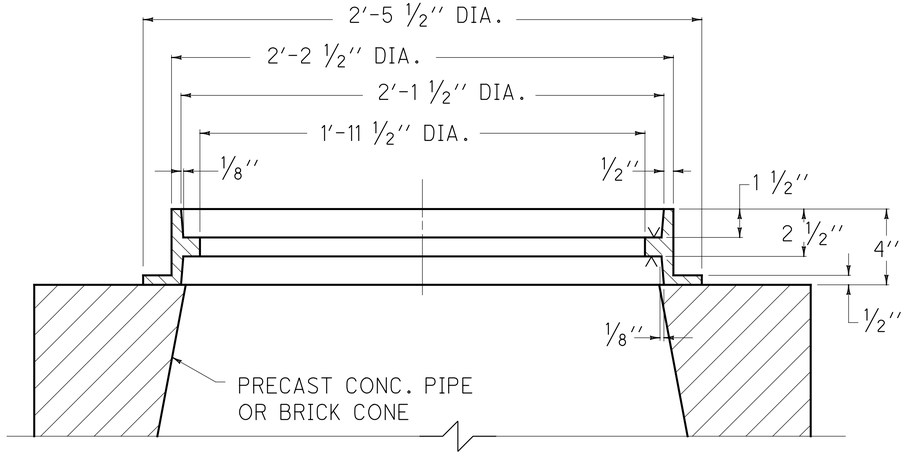

SECTION OF FRAME
WHEN USED WITH MANHOLES

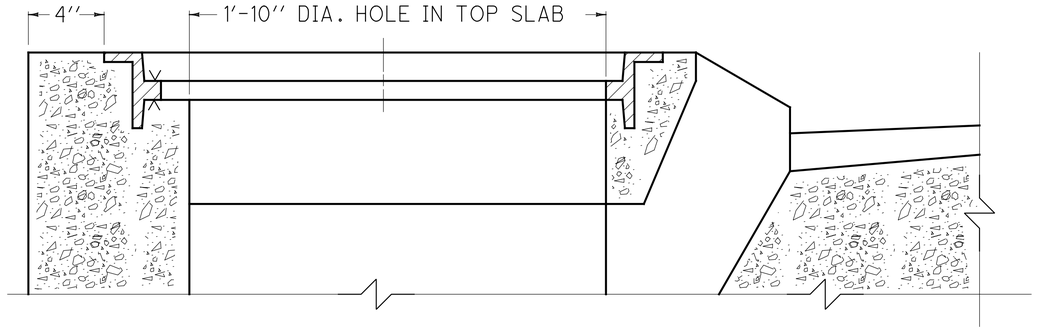

SECTION OF FRAME WHEN
USED WITH CURB BOX INLET

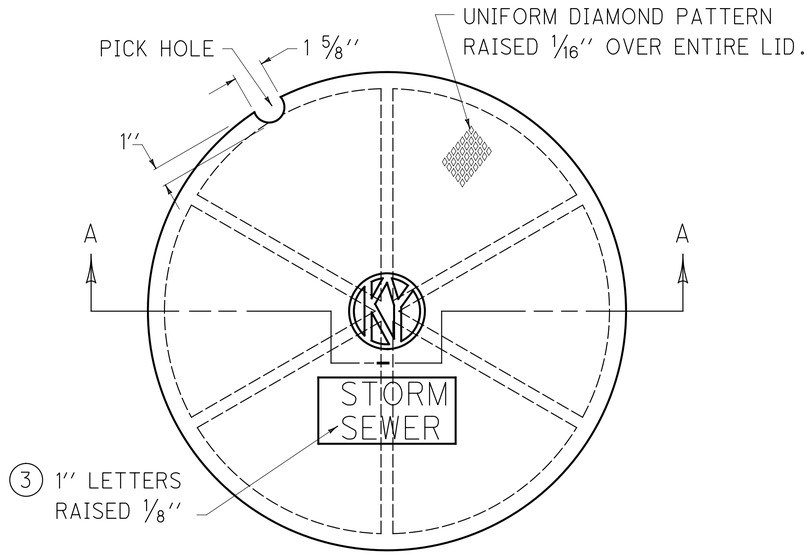

PLAN VIEW

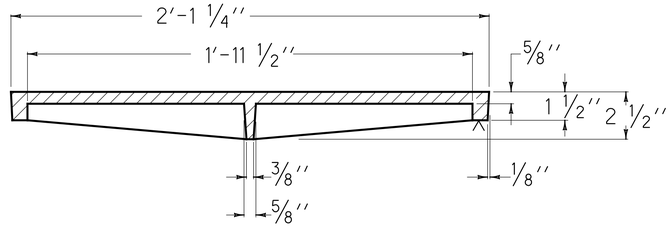

SECTION A-A

NOTES

1. THE FRAME IS REVERSIBLE AND IS TO BE USED ON MANHOLES IN NON-VEHICULAR TRAFFIC AREAS, AND ON BOX INLETS AS SPECIFIED.
2. APPLICATIONS SHOWN ARE FOR ILLUSTRATION PURPOSES ONLY.
3. VARIATION IN LID LETTERING (SEE PIPE SUMMARY) DENOTES SEWER TYPES:
   (A) STORM SEWER
   (B) SANITARY SEWER
   (C) SANITARY AND STORM SEWER
4. THE ''KY'' SYMBOL SHALL APPEAR ON ALL LIDS.

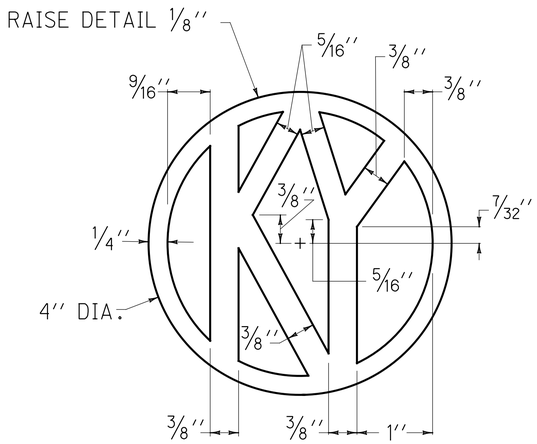

DETAIL OF ''KY''

APPROX. WEIGHT	
FRAME	90 LBS.
LID	116 LBS.

KENTUCKY STANDARD DRAWING RDM-100
FRAME AND LID TYPE 1

LAW-93-0.00

196
788

J:\Project\OA\ODOT\15005112 Ironton Russell\LAW\81595\roadway\sheets\Updated and Reformatted KY SD\81595RDM100SD.dgn - 4/25/2011 6:55:37 AM - jon_wanstrath

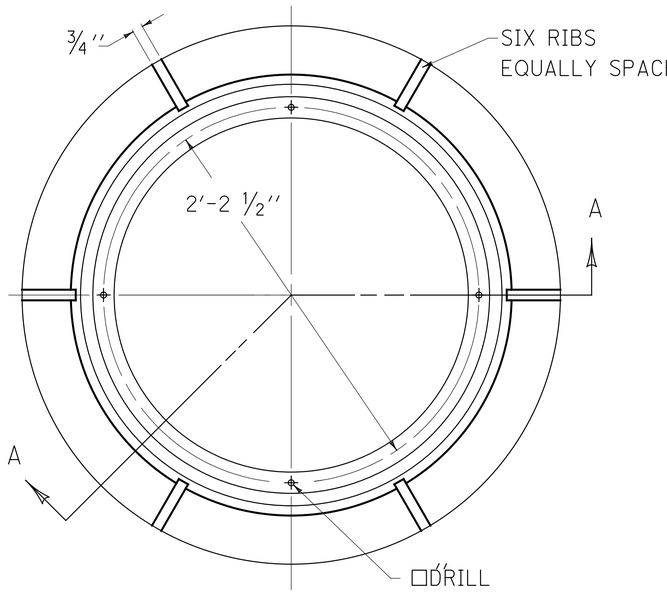

PLAN VIEW

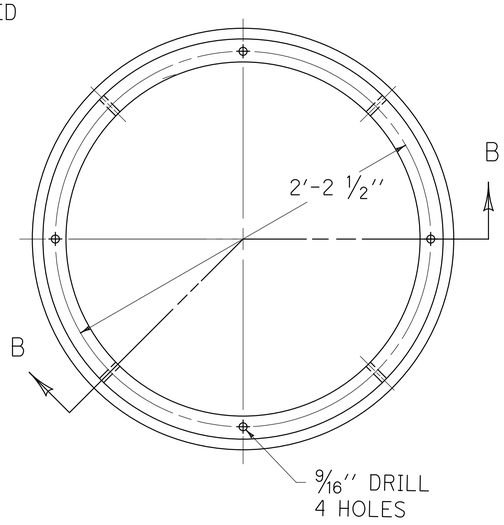

PLAN VIEW

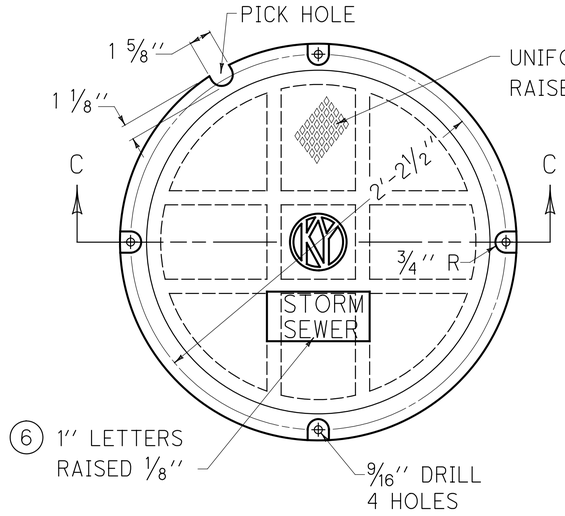

PLAN VIEW

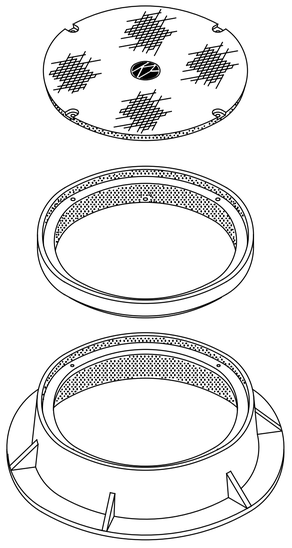

ISOMETRIC
EXPLODED VIEW

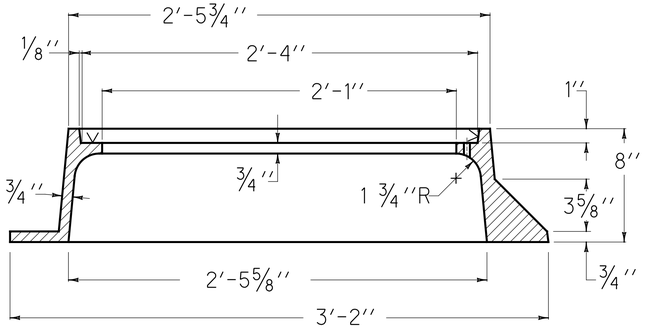

FRAME
SECTION A-A

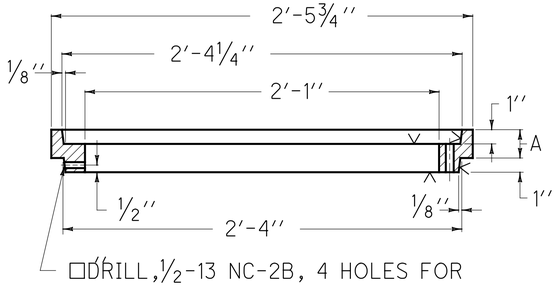

ADJUSTING RING
SECTION B-B

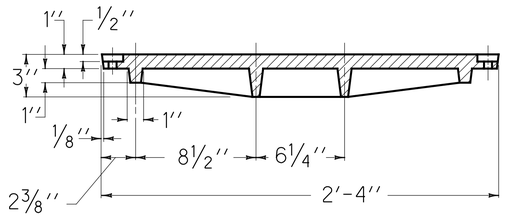

LID
SECTION C-C

DIMENSION A (8)
1 1/2''
2''
2 1/2''
3''

APPROX. WEIGHT	
FRAME	270 LBS.
LID	240 LBS.

÷ NOTES ÷

1. THE LID SHALL BE FASTENED WITH 1/2-13 NC-2Ax2 HEXAGON CAP SCREW. WHEN THE ADJUSTING RING IS USED ADD DIMENSION (A) SHOWN IN SECTION B-B TO THE LENGTH OF THE CAP SCREW.
2. THE CAP SCREWS AND SET SCREWS SHALL BE STAINLESS STEEL, TYPES 302, 304, AND 430 CONFORMING TO ASTM A276.
3. MANUFACTURER'S TOLERANCES WILL BE ACCEPTED ON ALL DIMENSIONS.
4. ADJUSTING RINGS WHEN REQUIRED SHALL BE PAID FOR AT THE CONTRACT UNIT PRICE EACH AND SHALL INCLUDE THE NECESSARY HEX HEAD BOLTS AND SET SCREWS.
5. THE '' v '' DENOTES MACHINED SURFACE.
6. VARIATION IN LID LETTERING (SEE PIPE SUMMARY) DENOTES SEWER TYPE:
   (A) STORM SEWER
   (B) SANITARY SEWER
   (C) SANITARY AND STORM SEWER
7. THE ''KY'' SYMBOL SHALL APPEAR ON ALL LIDS.
8. NET HEIGHT OF ADJUSTING RING (AS SPECIFIED IN CONTRACT).
9. FRAME AND LID TYPE 2 SHALL BE USED IN VEHICULAR TRAFFIC AREAS.

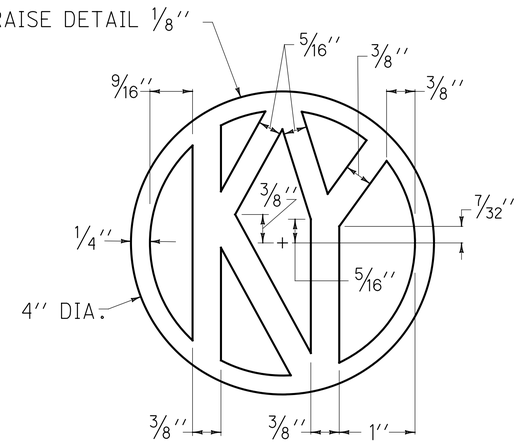

DETAIL OF ''KY'' SYMBOL

KENTUCKY STANDARD DRAWING RDM-105
FRAME AND LID TYPE 2

LAW-93-0.00

197
788

J:\Project\KYDOT\15005112 Ironton Russell\LAW\81595\roadway\sheets\Updated and Reformatted KY SD\81595RDM105SD.dgn - 4/25/2011 6:55:38 AM - jon_wanstrath

WATER WORK

ITEM 638 - 6" FIRE HYDRANT

FIRE HYDRANTS SHALL BE AMERICAN DARLING MK 73-2 MODEL MANUFACTURED BY AMERICAN FLOW CONTROL PER CITY OF IRONTON STANDARDS OR AN APPROVED EQUAL. PROPOSED FIRE HYDRANT SHALL BE APPROVED BY THE CITY OF IRONTON.

ITEM 638 WATER WORK, WATER MAIN POLYVINYL CHLORIDE PIPE JOINTS AND FITTINGS, AWWA CLASS 150 VARIABLE SIZES

THIS ITEM SHALL CONSIST OF FURNISHING AND INSTALLATION OF POLYVINYL CHLORIDE (PVC) WATER MAIN OF THE SIZE SPECIFIED IN THE PLANS IN ACCORDANCE WITH AWWA CLASS 150 AND SECTION 638 OF THE STANDARD SPECIFICATIONS. ALL BENDS OR OTHER FITTINGS ARE INCIDENTAL TO THE INSTALLATION OF THE WATER MAIN UNLESS OTHERWISE NOTED.

ITEM 638 1" POLYETHYLENE SERVICE BRANCH

THIS ITEM ASSUMES ALL SERVICE BRANCHES SHALL BE 1" POLYETHYLENE. THE SERVICE BRANCH SIZE FOR EACH PROPERTY SERVED SHALL BE FIELD VERIFIED BY THE CONTRACTOR AND CONFIRMED WITH THE CITY OF IRONTON PRIOR TO FURNISHING MATERIALS OR INSTALLATION OF SERVICE. SOME PROPERTIES MAY BE SERVED BY A SMALLER SIZE.

ITEM 638 METER, SETTING, STOP AND CHAMBER

WATER METERS SHALL BE MANUFACTURED BY HERSEY METER COMPANY AND SHALL BE AUTOMATED METER READING COMPATIBLE. COORDINATE METER INSTALLATION WITH THE CITY OF IRONTON. SEE TYPICAL SERVICE LINE INSTALLATION DETAIL FOR INFORMATION.

ITEM 202 METER VAULT REMOVED

WATER METERS AND VAULTS TO BE REMOVED SHALL BECOME THE PROPERTY OF THE CONTRACTOR AND SHALL BE DISPOSED OF PROPERLY IN ACCORDANCE WITH THE STANDARD SPECIFICATIONS.

SPECIAL CUT AND PLUGGING EXISTING WATER MAIN AND BRANCHES

AT POINT OF ABANDONMENT, CUT A MAXIMUM OF 12" OF PIPE UNLESS OTHERWISE DIRECTED BY THE ENGINEER.

APPLICATION

A. DO NOT BEGIN CUT, PLUG AND ABANDONMENT/REMOVAL OPERATIONS UNTIL REPLACEMENT WATER LINE HAS BEEN CONSTRUCTED, DISINFECTED AND TESTED AND SERVICE LINES HAVE BEEN TRANSFERRED TO THE REPLACEMENT WATER LINE.

B. INSTALL PIPE PLUG, CLAMPS, AND CONCRETE REACTION BLOCKS WHERE SHOWN ON THE DRAWINGS OR AS DIRECTED BY THE ENGINEER.

C. WATER MAIN TO BE ABANDONED SHALL NOT BE CUT OR PLUGGED OTHER THAN AT SUPPLY WATER LINES OR AS SHOWN ON THE DRAWINGS.

D. AFTER WATER MAIN HAS BEEN CUT AND PLUGGED, CHECK FOR OTHER SOURCES FEEDING THE ABANDONED SECTION OF WATER LINE. IF SOURCES ARE FOUND, NOTIFY THE ENGINEER IMMEDIATELY, CUT AND PLUG OTHER POINT OF FEED AS DIRECTED BY THE ENGINEER.

E. PLUG OR CAP ENDS OR OPENINGS IN ABANDONED WATER LINES IN A MANNER APPROVED BY THE ENGINEER AND THE CITY OF IRONTON.

F. REMOVE AND DISPOSE OF SUBSURFACE PIPE WHERE SHOWN INCLUDING METERS, SERVICE BRANCHES, VALVE BOXES, HYDRANTS ETC. AS SHOWN IN THE DRAWINGS. VALVE BOXES MAY BE FILLED WITH CONCRETE AFTER REMOVING CAP UNLESS OTHERWISE DIRECTED BY THE ENGINEER.

METHOD OF MEASUREMENT

QUANTITY TO BE MEASURED FOR PAYMENT SHALL BE THE NUMBER OF LOCATIONS TO BE CUT AND PLUGGED AS SHOWN ON THE DRAWINGS WITHOUT REGARD TO SIZE OR DEPTH. EXISTING WATER LINES VARY IN SIZE WITH A MAXIMUM DIAMETER OF 12".

BASIS OF PAYMENT

UNIT PRICE BID SHALL INCLUDE THE COST OF EXCAVATION, CUTTING, DEWATERING, NECESSARY FITTINGS, REMOVAL OF PIPE AND FITTINGS, BACKFILL, AND FURNISHING ALL LABOR, MATERIALS AND EQUIPMENT NECESSARY TO COMPLETE THE WORK IN ACCORDANCE WITH THE SPECIFICATIONS AND AS INDICATED IN THE PLANS.

WATERWORK LEGEND

- EXISTING WATER MAIN
- PROPOSED WATER MAIN
- EXISTING METER AND CHAMBER
- PROPOSED METER AND CHAMBER
- EXISTING GATE VALVE AND VALVE BOX
- PROPOSED GATE VALVE AND VALVE BOX
- TAPPING SADDLE AND CORPORATION STOP
- EXISTING FIRE HYDRANT
- PROPOSED FIRE HYDRANT
- PROPOSED TEE
- PROPOSED ELBOW

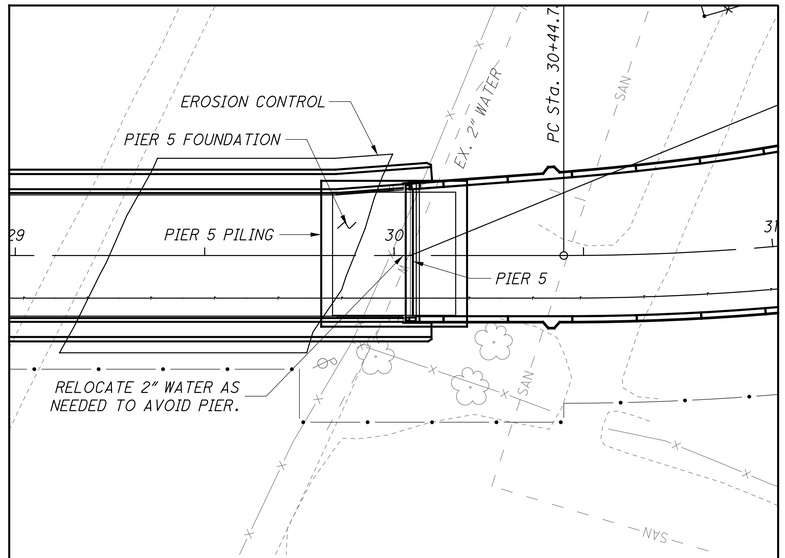

2" WATER RELOCATION AT PIER 5

NOTE:

CONTRACTOR SHALL RELOCATE EXISTING 2" COPPER WATER LINE TO AVOID PIER NUMBER 5. THE WATER LINE SHALL BE RELOCATED A MINIMUM OF 10 FT FROM THE PROPOSED FOUNDATION SHORING FOR THE PIER. THE LOCATION OF THE WATERLINE SHALL BE APPROVED BY THE ENGINEER. THE CONTRACTOR SHALL ADVISE THE ENGINEER A MINIMUM OF 30 DAYS PRIOR TO THIS WORK TO COORDINATE ANY SERVICE DISRUPTIONS WITH THE WATER LINE OWNER. THE PLANS INCLUDE AN ALLOWANCE FOR REPLACEMENT OF 100 LINEAR FEET OF 2" COPPER SERVICE BRANCH IN ACCORDANCE WITH SECTION 638 OF THE CMS. ALL VALVES, FITTINGS, THRUST BLOCKS AND OTHER APPURTENANCES SHALL BE INCIDENTAL TO THIS ITEM.

CALCULATED AMD
CHECKED DLW

GENERAL NOTES & DETAILS - WATER WORK - LAW-93-0.00

198
788

J:\Project\O\ODOT\15005112 Ironton Russell\LAW\81595\utilities\sheets\81595UN001.dgn - 12/5/2011 3:55:02 PM - jon_wanstrath

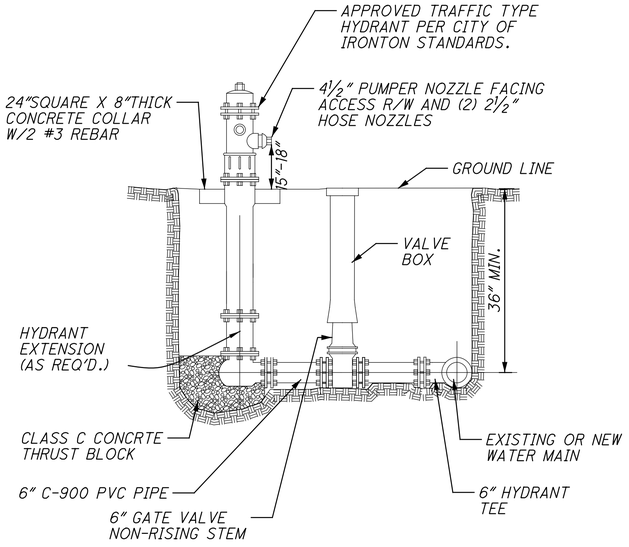

TYPICAL FIRE HYDRANT ASSEMBLY

NOTE:
1. HYDRANT SHALL BE INSTALLED PLUMB AND TRUE.
2. HYDRANT SHALL BE PAINTED CARNIVAL RED FROM THE FACTORY.
3. HEEL TO REST ON UNDISTURBED SOIL.
4. HYDRANT ASSEMBLY MUST BE RESTRAINED TO TEE.
5. ALL FITTINGS TO BE MECHANICAL JOINT.
6. ENTIRE ASSEMBLY TO BE MECHANICALLY RESTRAINED.

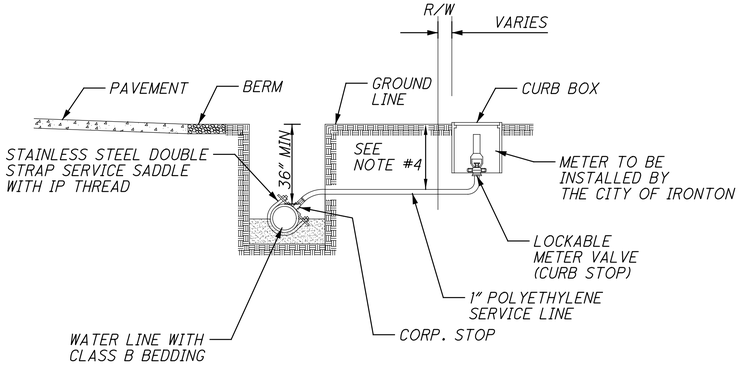

NOTE:
1. BLUE 10 GAUGE THHN WIRE SHALL BE ATTACHED TO THE SERVICE LINE.
2. WHERE SERVICES UNDER PAVEMENT ARE REQUIRED, THE POLYETHYLENE TUBING SHALL BE INSTALLED WITHIN SCHEDULE 40 PVC CASING PIPE.
3. 1" & ¾" METER SIZES SHALL REQUIRE A LOCKABLE METER VALVE. (CURB STOP)
4. MINIMUM COVER IN UNPAVED AREAS 18". IN PAVED AREAS OR PLANNED ROADWAYS OR SWALES, MIN COVER SHALL BE 36".

TYPICAL SERVICE LINE INSTALLATION

NOTE:
BASED ON 150 P.S.I. STATIC PRESSURE PLUS A.W.W.A. WATER HAMMER. ALL BEARING SURFACES TO BE CARRIED TO UNDISTURBED GROUND.

TYPE	SIZE	90° BENDS			45° BENDS			22-1/2° BENDS			11-1/4° BENDS			TEES	
		A	B	V (CU YD)	A	B	V (CU YD)	A	B	V (CU YD)	A	B	V (CU YD)	A	B
2000P.S.F. SOIL	4"	10"	10"	0.17	8"	8"	0.11	4"	4"	0.04	4"	4"	0.04	9"	9"
	6"	15"	15"	0.36	11"	11"	0.21	6"	9"	0.06	6"	9"	0.06	11"	13"
	10"	24"	24"	0.94	18"	18"	0.56	9"	11"	0.10	9"	11"	0.10	20"	20"
	12"	30"	30"	1.44	22"	22"	0.80	12"	18"	0.22	12"	18"	0.22	21"	26"
	16"	36"	36"	2.12	30"	30"	1.51	18"	24"	0.38	18"	24"	0.38	28"	35"

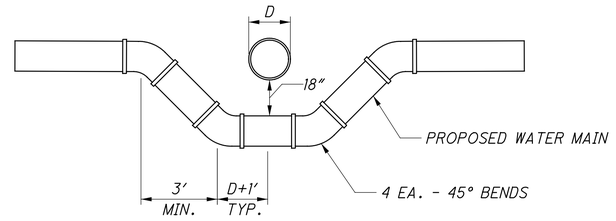

TYPICAL WATER MAIN LOWERING

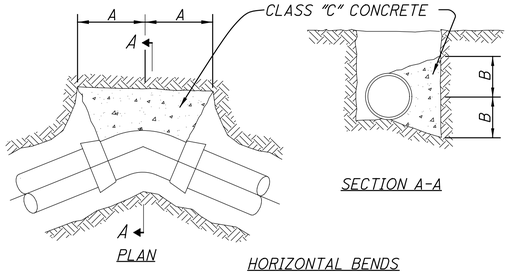

HORIZONTAL BENDS

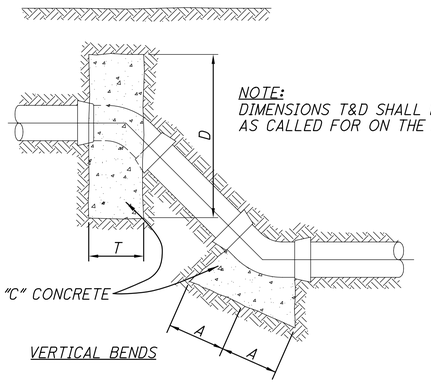

NOTE:
DIMENSIONS T&D SHALL BE AS CALLED FOR ON THE PLANS.

VERTICAL BENDS

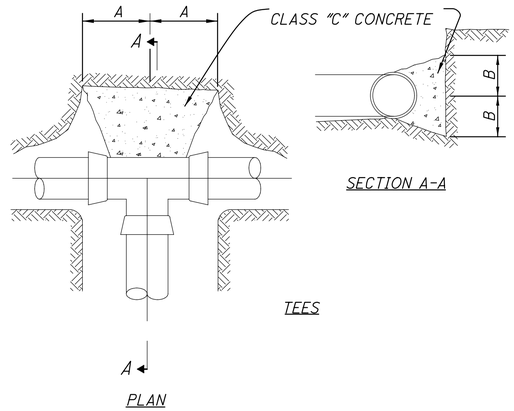

TEES

TYPICAL THRUST BLOCK DETAILS

CALCULATED AMD
CHECKED DLW

WATER WORK DETAILS

LAW-93-0.00

199
788

J:\Project\O\ODOT\15005112 Ironton Russell\LAW\81595\utilities\sheets\81595UD001.dgn - 4/25/2011 6:55:40 AM - jon_wanstrath

SHEET NUMBER												FUNDING		ITEM	ITEM EXT.	GRAND TOTAL	UNIT	DESCRIPTION	SEE SHEET NO.
201	198											MAJOR BRIDGE							
																		WATER WORK	
8												8		202	75600	8	EACH	METER VAULT REMOVED	
2673												2673		202	98200	2673	FT	REMOVAL MISC.: WATERLINE	
849												849		638	01100	849	FT	6" WATER MAIN POLYVINYL CHLORIDE PIPE AND FITTINGS, AWWA CLASS 150	
255												255		638	02300	255	FT	10" WATER MAIN POLYVINYL CHLORIDE PIPE AND FITTINGS, AWWA CLASS 150	
363												363		638	02900	363	FT	12" WATER MAIN POLYVINYL CHLORIDE PIPE AND FITTINGS, AWWA CLASS 150	
427												427		638	03380	427	FT	16" WATER MAIN POLYVINYL CHLORIDE PIPE AND FITTINGS, AWWA CLASS C905	
	100											100		638	05100	100	FT	2" COPPER SERVICE BRANCH	198
832												832		638	05400	832	FT	1" POLYETHYLENE SERVICE BRANCH	
8												8		638	07800	8	EACH	6" GATE VALVE AND VALVE BOX	
2												2		638	08000	2	EACH	10" GATE VALVE AND VALVE BOX	
3												3		638	08100	3	EACH	12" GATE VALVE AND VALVE BOX	
2												2		638	08102	2	EACH	16" GATE VALVE AND VALVE BOX	
2												2		638	08900	2	EACH	6" CUTTING-IN SLEEVE, VALVE AND VALVE BOX	
2												2		638	09200	2	EACH	12" CUTTING-IN SLEEVE, VALVE AND VALVE BOX	
3												3		638	10200	3	EACH	6" FIRE HYDRANT	
1												1		638	10600	1	EACH	FIRE HYDRANT AND GATE VALVE REMOVED AND RESET	
9												9		638	11100	9	EACH	METER AND CHAMBER REMOVED AND RESET	
7												7		638	11200	7	EACH	METER, SETTING, STOP AND CHAMBER	198
7												7		SPECIAL	63830400	7	EACH	PLUGGING EXISTING WATER MAIN AND BRANCHES	
7												7		638	98000	7	EACH	WATER WORK, MISC.: TAPPING SADDLE AND CORPORATION STOP	
																		SANITARY SEWER	
4												4		603	98300	4	FT	CONDUIT, MISC.: 6" CONDUIT, TYPE B, POLYVINYL CHLORIDE SANITARY PIPE	
160												160		603	98300	160	FT	CONDUIT, MISC.: 8" CONDUIT, TYPE B, POLYVINYL CHLORIDE SANITARY PIPE	
69												69		603	98300	69	FT	CONDUIT, MISC.: 10" CONDUIT, TYPE B, POLYVINYL CHLORIDE SANITARY PIPE	
4												4		604	31500	4	EACH	MANHOLE, NO. 3	

CALCULATED AMD
CHECKED DLW

SANITARY AND WATER GENERAL SUMMARY

LAW-93-0.00

200
788

J:\Project\O\ODOT\15005112 Ironton Russell\LAW\81595\utilities\sheets\81595UG001.dgn - 12/5/2011 3:55:03 PM - jon_wanstrath

SANITARY AND WATER WORK - SUBSUMMARY

CALCULATED AMD
CHECKED DLW

REF NO.	SHEET NO.	STATION TO STATION		202			638													
				METER VAULT REMOVED	REMOVAL MISC.:WATERLINE	6" FIRE HYDRANT	6" WATER MAIN POLYVINYL CHLORIDE PIPE JOINTS & FITTINGS AWWA CLASS 150	10" WATER MAIN POLYVINYL CHLORIDE PIPE JOINTS AND FITTINGS AWWA CLASS 150	12" WATER MAIN PLOYVINYL CHLORIDE PIPE JOINTS AND FITTINGS AWWA CLASS 150	16" WATER MAIN POLYVINYL CHLORIDE PIPE JOINTS AND FITTINGS AWWA CLASS 150	1" POLYETHYLENE SERVICE BRANCH	6" GATE VALVE AND VALVE BOX	10" GATE VALVE AND VALVE BOX	12" GATE VALVE AND VALVE BOX	16" GATE VALVE AND VALVE BOX	METER, SETTING, STOP AND CHAMBER	METER AND CHAMBER REMOVED AND RESET	WATER WORK, MISC.: TAPPING SADDLE & CORP. STOP	6" CUTTING-IN SLEEVE, VALVE AND VALVE BOX	12" CUTTING-IN SLEEVE, VALVE AND VALVE BOX
		FROM	TO	EACH	FT	EACH	FT	FT	FT	FT	FT	EACH	EACH	EACH	EACH	EACH	EACH	EACH	EACH	EACH
W-1	202,205	7+22 (MAD. ST.)	8+50 (MAD. ST.)			1	128					1				1				
W-2	203-205	4+50 (JEFF ST.)	6+85 (JEFF ST.)			1			235			1		1		1				
W-3	203	41+49 (93C)	44+03 (93C)					255					2							
W-4	203-204	3+22 (JEFF ST.)	4+50 (JEFF ST.)						128					1						
W-5	204	34+76 (CAMP.)	35+90 (CAMP.)							114										1
W-6	204	35+90 (CAMP.)	37+06 (CAMP.)			1				116		1			2	1				
W-6A	204	2+90 (JEFF ST.)	3+22 (JEFF ST.)				32					2								
W-7	204	37+06 (CAMP.)	37+97 (CAMP.)							94										
W-8	204	37+97 (CAMP.)	38+99 (CAMP.)							103										1
W-9	205	8+50 (MAD. ST)	49+17 (3RD ST.)				48					1								
W-10	205	49+18 (3RD ST.)	53+82 (3RD ST.)				468					1						2	1	
W-11	205	6+85 (JEFF ST.)	8+54 (JEFF ST.)				173					1				1			1	
	202	10+13 (2ND ST.)	12+05 (2ND ST.)								194						1	1		
	202	10+14 (2ND ST.)	12+48 (2ND ST.)								236						1	1		
	202	7+18 (MAD. ST.)	7+22 (MAD. ST.)								5						1			
	202	39+24 (93C)	39+70 (93C)								57						1			
	203	40+56 (93C)	41+49 (93C)								93						1	1		
	205	49+82 (3RD ST.)									20						1	1		
	205	50+15 (3RD ST.)									26						1	1		
	205	52+93 (3RD ST.)									21						1			
	204	37+70 (CAMP.)									15						1			
	204	34+19 (CAMP.)									30					1				
	204	34+66 (CAMP.)									30					1				
	204	3+57 (JEFF ST.)									105					1				
R-1	203	41+00 (93C)		1																
R-2	204	41+31 (93C)		1																
R-3	205	49+47 (3RD ST.)		3																
R-4	205	50+00 (3RD ST.)		1																
R-5	205	52+35 (3RD ST.)		1																
R-6	205	52+84 (3RD ST.)		1																
	202-205				2673															
TOTALS CARRIED TO GENERAL SUMMARY				8	2673	3	849	255	363	427	832	8	2	3	2	7	9	7	2	2

REF NO.	SHEET NO.	STATION TO STATION		SPEC-638	638					603			604			
				SPECIAL - PLUGGING EXISTING WATER MAIN AND BRANCHES	FIRE HYDRANT AND GATE VALE REMOVED AND RESET		REF NO.	SHEET NO.	STATION TO STATION	CONDUIT, MISC.: 6" CONDUIT, TYPE B, POLYVINYL CHLORIDE SANITARY PIPE	CONDUIT, MISC.: 8" CONDUIT, TYPE B, POLYVINYL CHLORIDE SANITARY PIPE	CONDUIT, MISC.: 10" CONDUIT, TYPE B, POLYVINYL CHLORIDE SANITARY PIPE	MANHOLE, NO. 3			
		FROM	TO	EACH	EACH				FROM TO	FT	FT	FT	EACH			
W-12	202	10+17 (2ND ST.)		1			S-1	202	37+32 (93C)	4			1			
W-13	202	12+48 (2ND ST.)		1			S-2	202	39+11 (93C)				1			
W-14	202	12+98 (2ND ST.)		1			S-3	202	6+44 (MAD ST.) 7+12 (MAD ST.)			69				
W-15	202	6+18 (MAD ST.)		1			S-4	202	39+03 (93C)				1			
W-16	203	43+76 (93C)		1			S-5	202-203	39+11 (93C) 40+25 (93C)		160					
W-17	205	50+25 (3RD ST.)		1			S-6	203	40+25 (93C)				1			
W-18	205	53+75 (3RD ST.)		1												
	205	7+57 (JEFF ST.)			1											
TOTALS CARRIED TO GENERAL SUMMARY				7	1					4	160	69	4			

LAW-93-0.00

201
788

J:\Project\0\ODOT\15005112 Ironton Russell\LAW\81595\utilities\sheets\81595US001.dgn - 4/25/2011 6:55:47 AM - jon_wanstrath

CROSS REFERENCES	
207	MADISON WATER WORK PROFILE
14	TRENCH DETAIL
163-173	DRAINAGE DETAILS
142	INTERSECTION DETAIL
80	93C ROADWAY PLAN SHEET

(S-3) = 69 LF 10" SANITARY AT 2.0%

(S-5) = 160 LF 8" SANITARY AT 1.15%

HORIZONTAL SCALE IN FEET 0 10 20 40

CALCULATED AMD CHECKED DLW

SANITARY & WATER WORK PLAN & PROFILE
93C - STA. 35+00 TO STA. 39+75
LAW-93-0.00

202 / 788

PROPOSED STRUCTURE LAW-93-0.00

℄ R/W MONROE ST.

℄ R/W MADISON ST N 57° 29' 24" E

PROP. SANITARY MH +11.26, 33.00 LT
COVER EL= 543.11
INVERT IN EL= 535.37
INVERT OUT EL= 535.27

12" TYPE B

12" TYPE C & 12" TYPE C OR 707.05 TYPE C OR 707.41

12" TYPE C

30" TYPE C

ABANDON EX. SANITARY

CONSTRUCTION LIMITS

CUT & PLUG EX WATER

REMOVE WATERLINE

PT Sta 38+70.77

EX HYDRANT TO REMAIN

CUT & PLUG 10" EX WATER

238 LF SERVICE BRANCH

194 LF SERVICE BRANCH

6" TAPPING SADDLE & CORPORATION STOP

SECOND ST.

MONROE ST.

DRIVE

EX. 10" WATER TO BE REMOVED

REMOVE WATERLINE

REMOVE METER CUT & PLUG EX WATER

℄ R/W 2ND ST. N 32°30'37" W

89°59'59"

90°00'00" N 32° 37' W ℄ CONST. 93C

STA. 6+76.50 ℄ R/W MADISON STREET = STA. 38+96.29 ℄ CONST. 93C

STA. 6+82.50 ℄ R/W MADISON STREET = STA. 13+46.00 ℄ R/W 2ND STREET

MATCH LINE STA. 39+75

REMOVE WATERLINE

METER & CHAMBER REMOVE & RESET

54 LF SERVICE BRANCH

6" PLUG WATER MAIN

METER & CHAMBER REMOVE & RESET

FIRE HYDRANT 6"

5 LF SERVICE BRANCH

6" WATER

MATCH LINE STA. 7+50 SEE SHEET 205

PROP. SANITARY MH +03.30, 35.27 RT
COVER EL=542.05
INVERT IN EL=533.90
INVERT OUT EL=533.80

PROP. SANITARY MH +32.70, 50.07 RT
COVER EL=542.46
INVERT EL (EAST)=537.43
(CUT & PLUG PIPE WEST OF MH)

METER & CHAMBER REMOVE & RESET

CONSTRUCTION LIMITS

CUT & PLUG EX WATER

METER & CHAMBER REMOVE & RESET

6" GATE VALVE & VALVE BOX

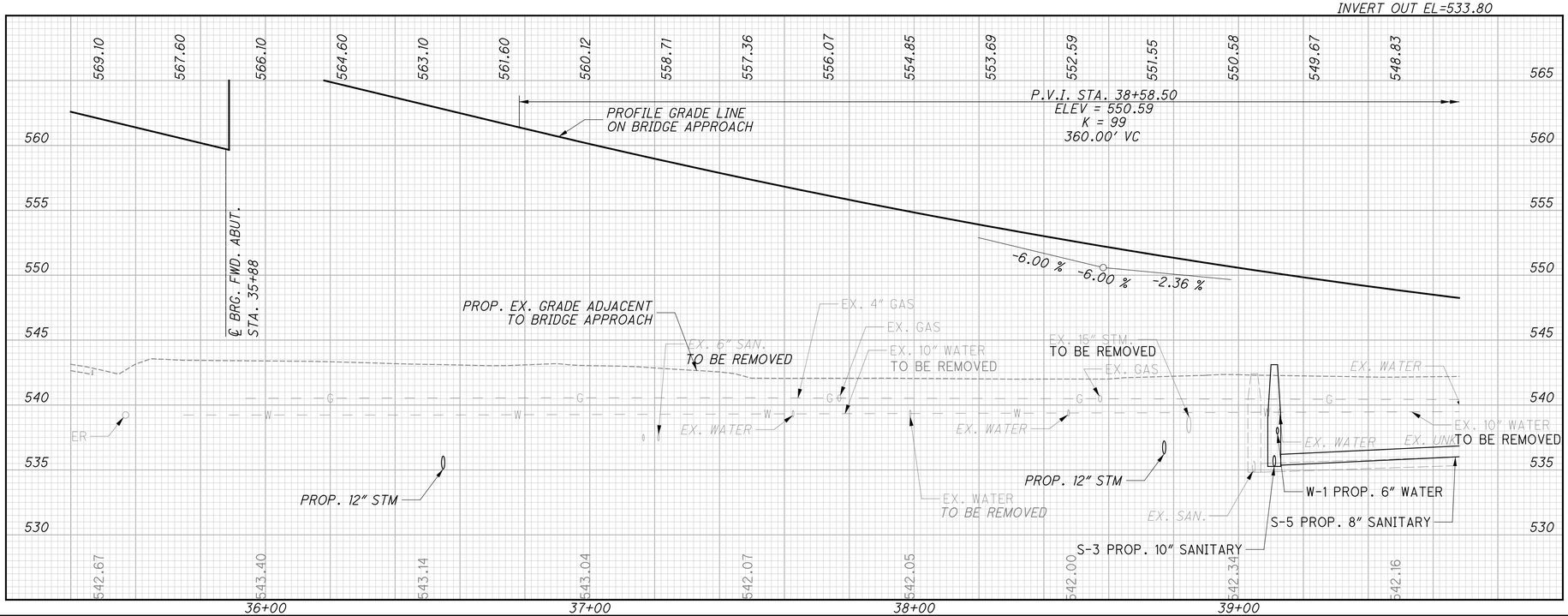

Link to 279-013-000
Campbell Waterline
As-Built

J:\Project\O\ODOT\15005112 Ironton Russell\AW\81595\utilities\sheets\81595UP001.dgn - 4/25/2011 6:55:49 AM - ion_wanstrath

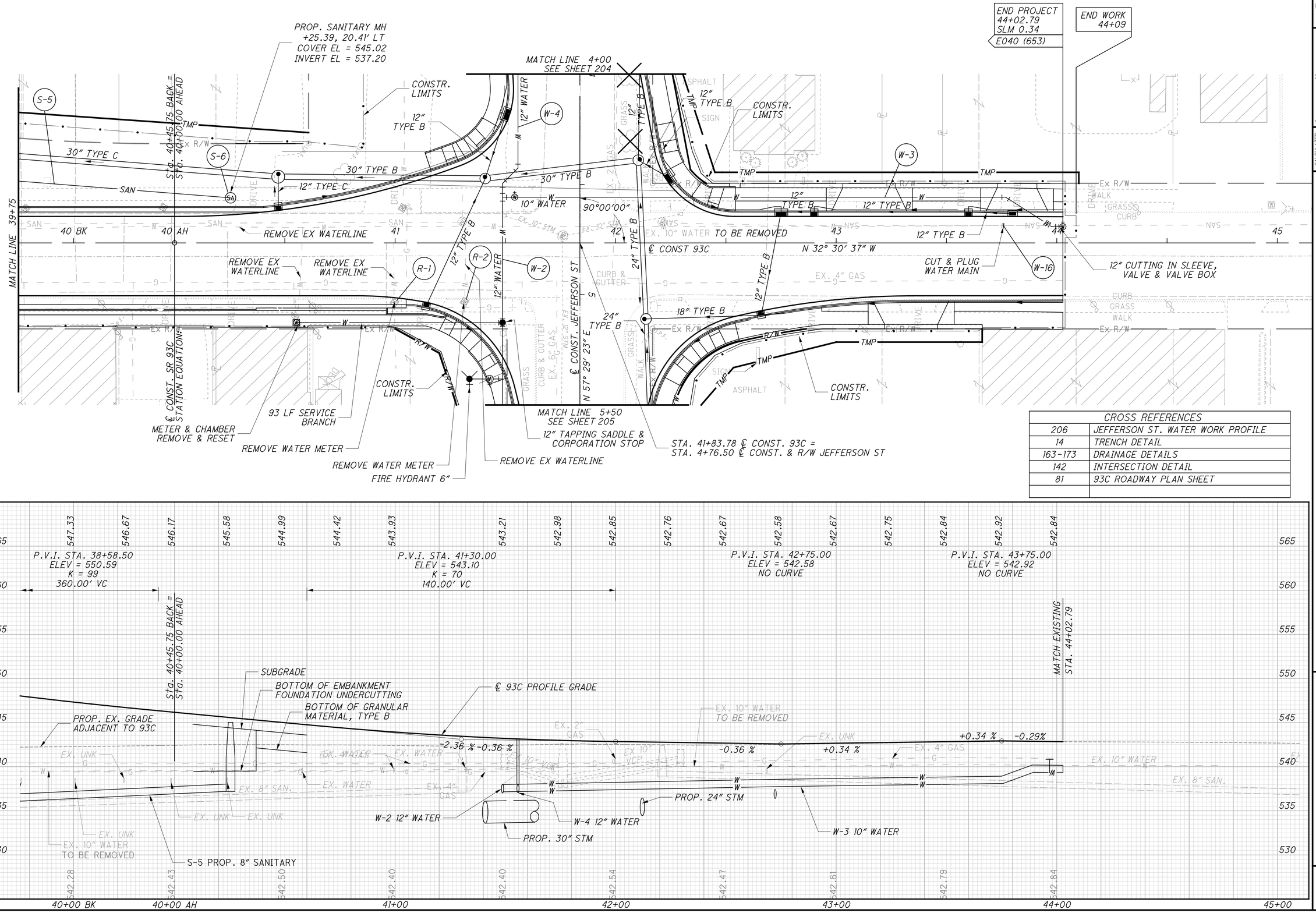

CROSS REFERENCES	
206	JEFFERSON ST. WATER WORK PROFILE
14	TRENCH DETAIL
163-173	DRAINAGE DETAILS
142	INTERSECTION DETAIL
81	93C ROADWAY PLAN SHEET

HORIZONTAL SCALE IN FEET

CALCULATED AMD CHECKED DLW

SANITARY & WATER WORK PLAN & PROFILE
93C - STA. 39+75 TO END WORK

LAW-93-0.00

203
788

J:\Project\O\ODOT\15005112 Ironton Russell\LAW\81595\utilities\sheets\81595UP002.dgn - 4/25/2011 6:55:51 AM - jon_wanstrath

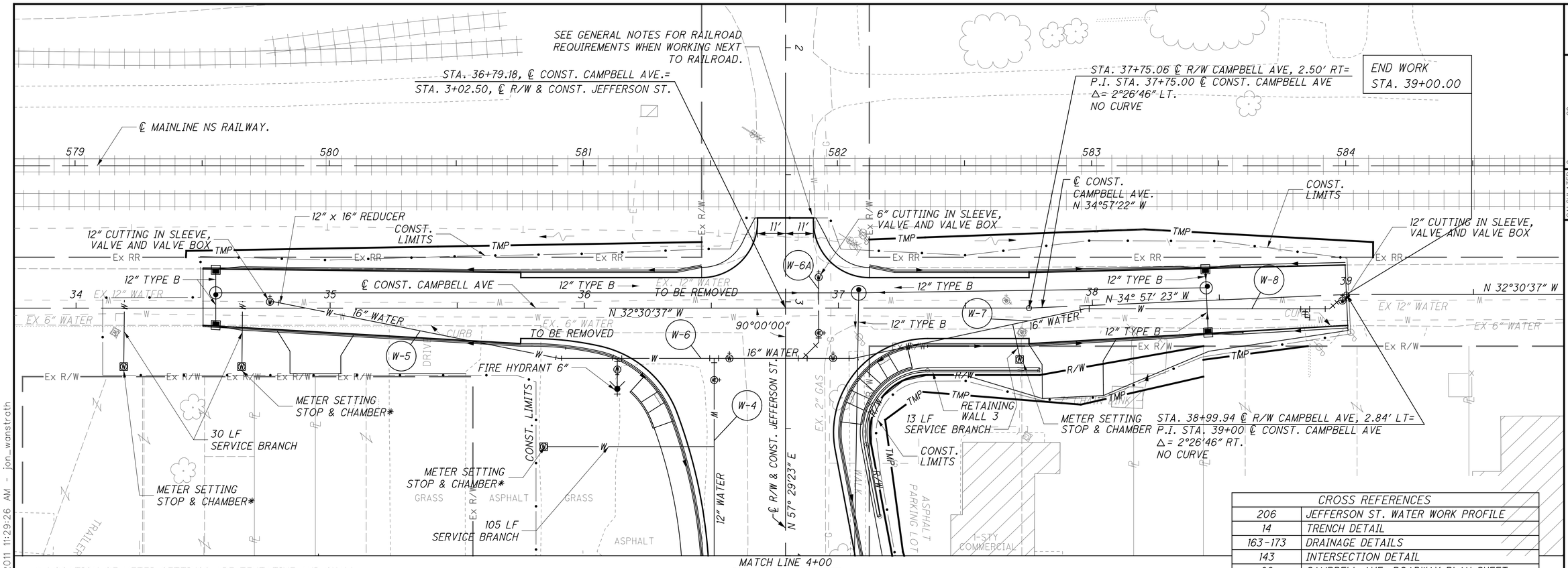

* LOCATION OF METER SETTINGS ARE TENTATIVE AND SHALL BE AS DIRECTED BY THE ENGINEER.

CROSS REFERENCES	
206	JEFFERSON ST. WATER WORK PROFILE
14	TRENCH DETAIL
163-173	DRAINAGE DETAILS
143	INTERSECTION DETAIL
86	CAMPBELL AVE. ROADWAY PLAN SHEET

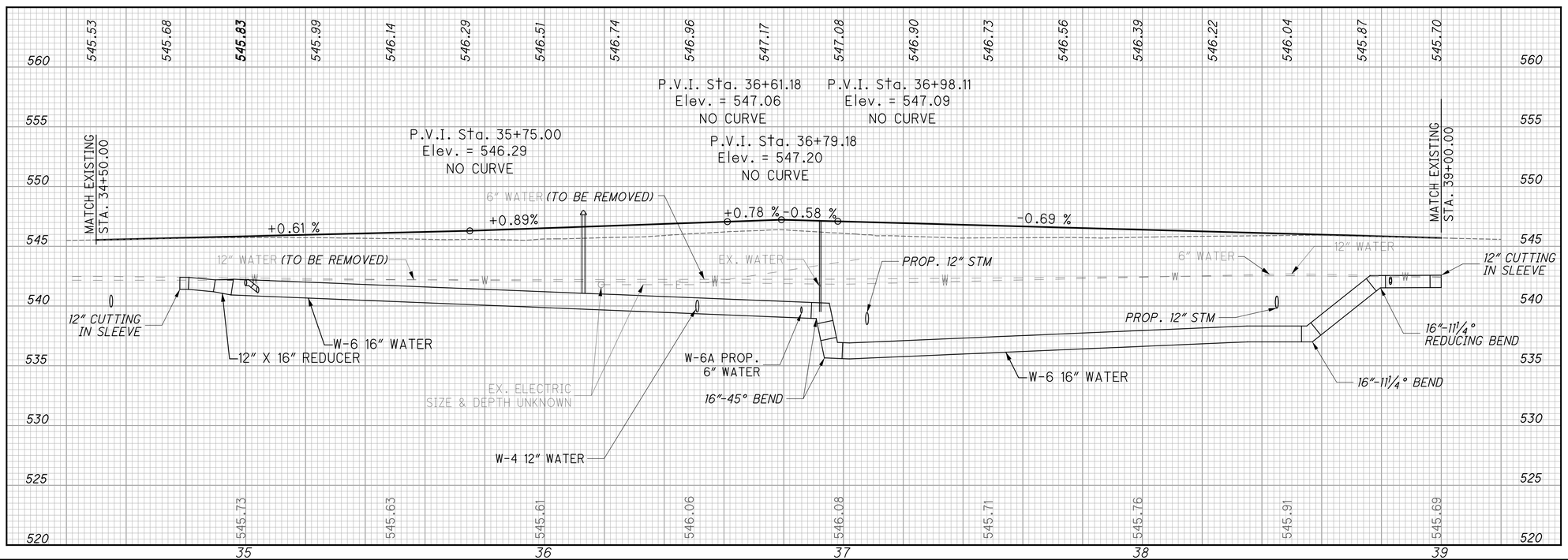

HORIZONTAL SCALE IN FEET 0 10 20 40

CALCULATED AMD CHECKED DLW

SANITARY & WATER WORK PLAN & PROFILE
CAMPBELL AVE - STA. 34+50 TO STA. 39+00

LAW-93-0.00

J:\Project\O\ODOT\15005112 Ironton Russell\LAW\81595\utilities\sheets\81595UP003.dgn - 5/23/2011 11:29:26 AM - jon_wanstrath

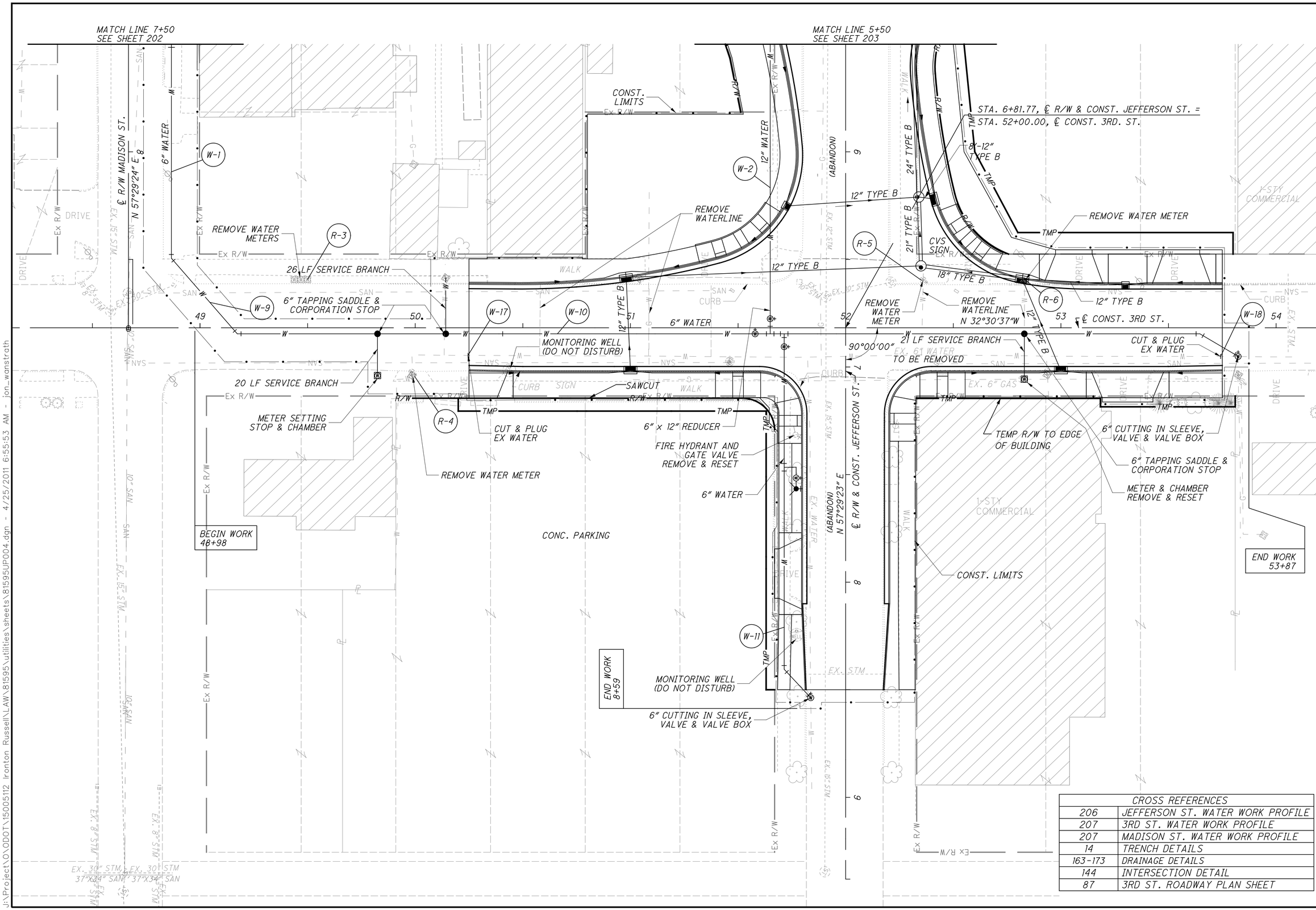

CROSS REFERENCES	
206	JEFFERSON ST. WATER WORK PROFILE
207	3RD ST. WATER WORK PROFILE
207	MADISON ST. WATER WORK PROFILE
14	TRENCH DETAILS
163-173	DRAINAGE DETAILS
144	INTERSECTION DETAIL
87	3RD ST. ROADWAY PLAN SHEET

HORIZONTAL SCALE IN FEET 0 10 20 40

CALCULATED AMD
CHECKED DLW

SANITARY AND WATER WORK PLAN
3RD ST. - STA. 48+50 TO STA. 54+00

LAW-93-0.00

J:\Project\O\ODOT\15005112 Ironton Russell\LAW\81595\utilities\sheets\81595UP004.dgn - 4/25/2011 6:55:53 AM - jon_wanstrath

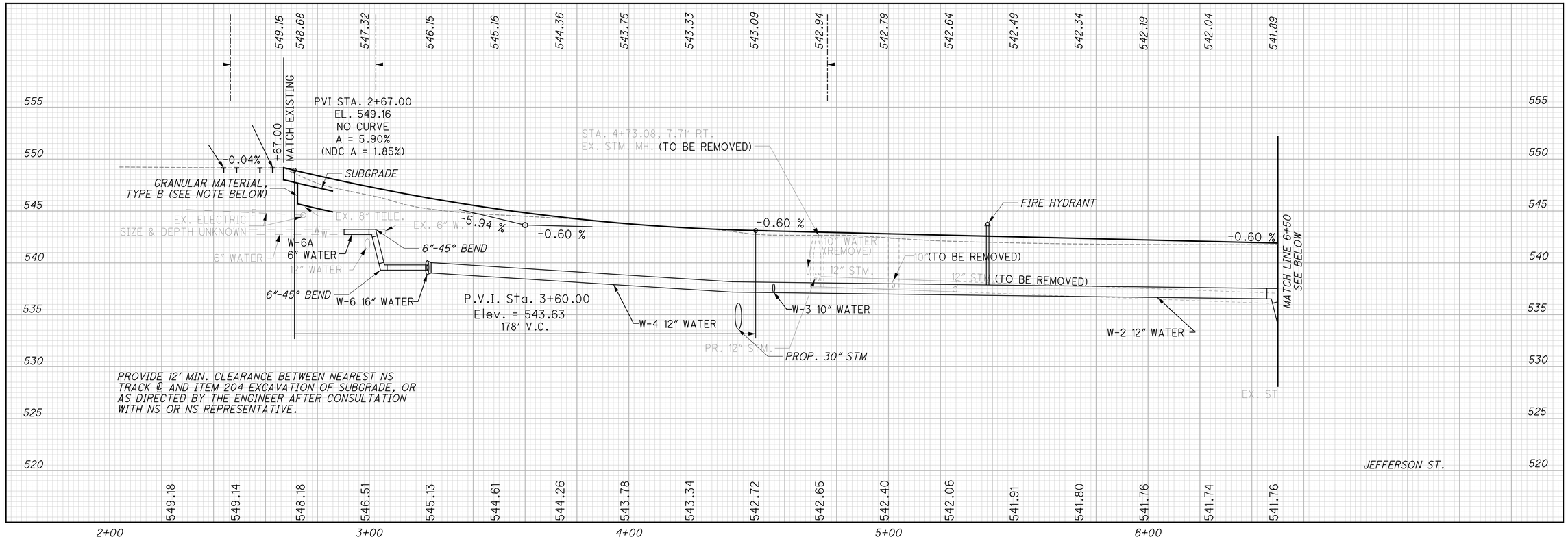

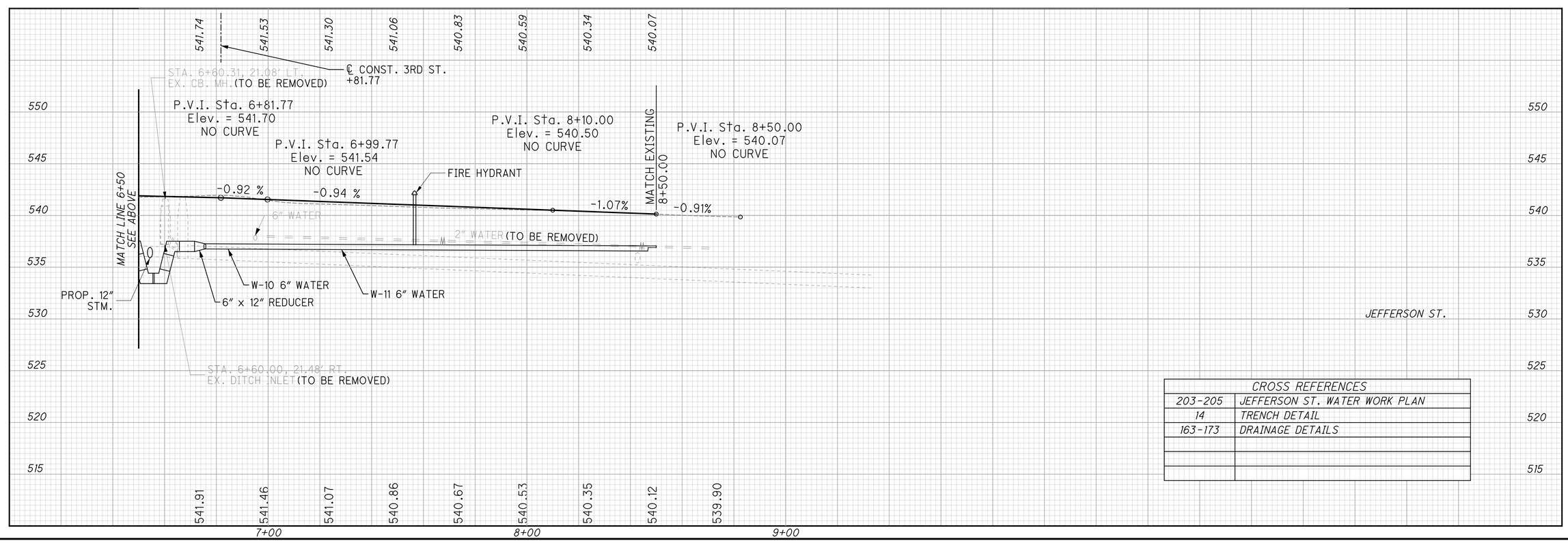

CROSS REFERENCES	
203-205	JEFFERSON ST. WATER WORK PLAN
14	TRENCH DETAIL
163-173	DRAINAGE DETAILS

CALCULATED JRW
CHECKED DLW

WATER WORK PROFILE
JEFFERSON ST. - STA. 2+00 TO STA. 9+38

LAW-93-0.00

206
788

J:\Project\ODOT\15005112 Ironton Russell\LAW\81595\utilities\sheets\81595UF005.dgn - 4/25/2011 6:55:55 AM - jon_wanstrath

CROSS REFERENCES	
202-205	MADISON ST. WATER WORK PLAN
205	3RD ST. WATER WORK PLAN
14	TRENCH DETAIL
163-173	DRAINAGE DETAILS

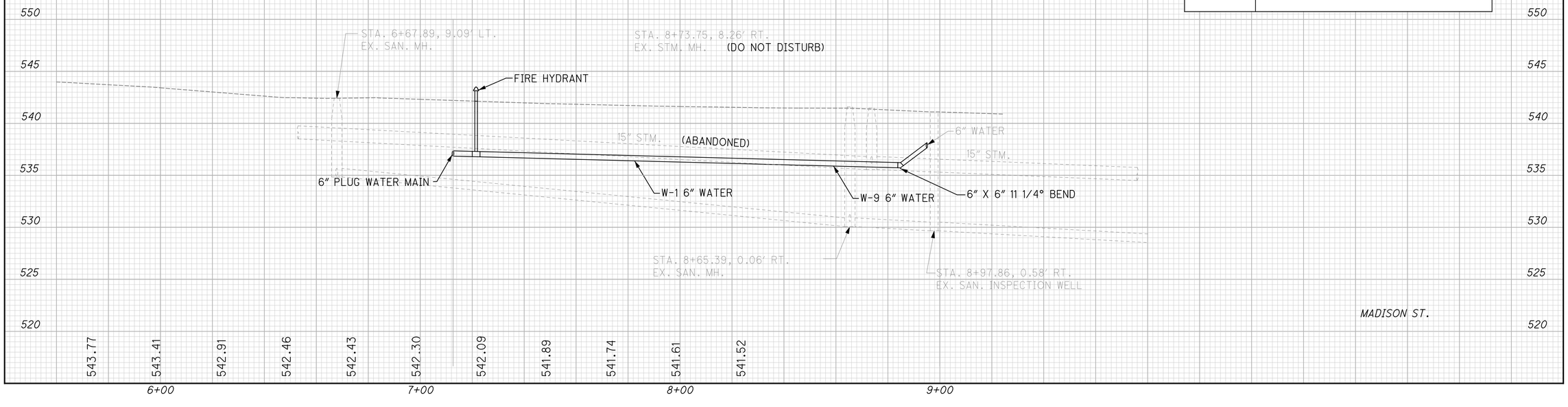

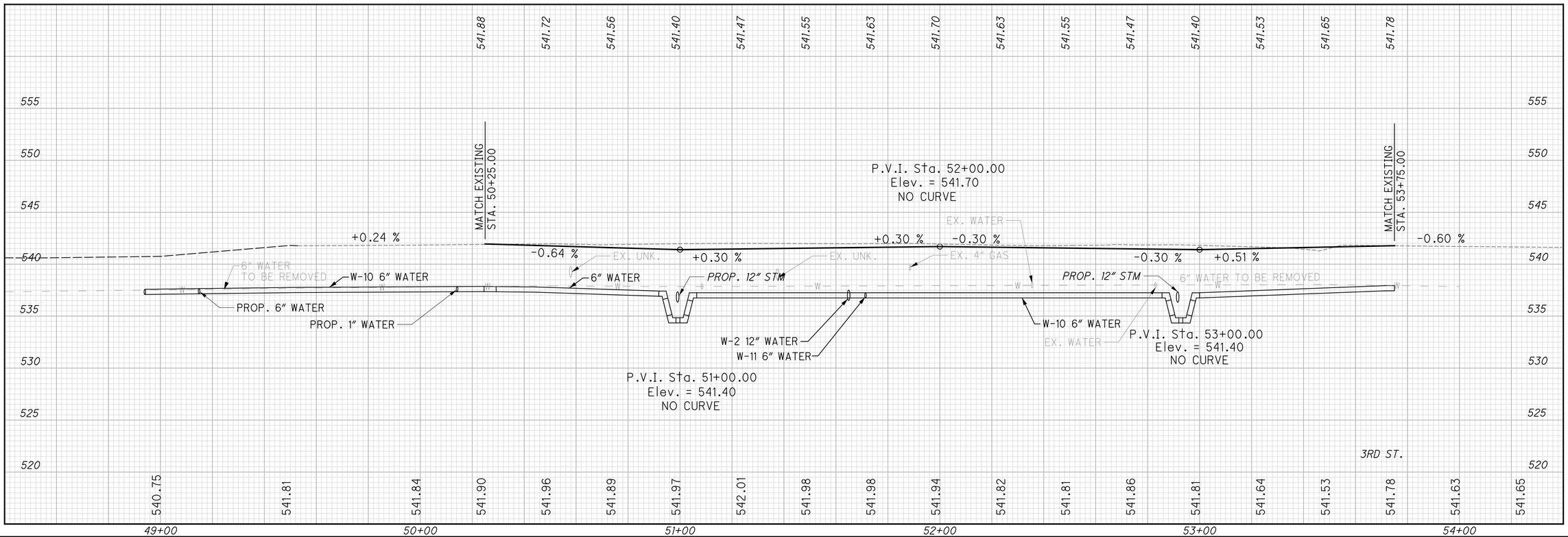

CALCULATED JRW
CHECKED DLW

WATER WORK PROFILES
MADISON ST. AND 3RD ST.

LAW-93-0.00

207
788

J:\Project\O\ODOT\15005112 Ironton Russell\LAW\81595\utilities\sheets\81595UF006.dgn - 4/25/2011 6:55:56 AM - jon_wanstrath

ITEM 630, TYPE TC-15.115, AS PER PLAN

OVERHEAD SIGN SUPPORT, TYPE TC-15.115 SHALL BE MODIFIED AS SHOWN IN THE PLANS. SIGN(S) ELEVATION IS SHOWN ON SHEET 231. THE ATTACHMENT TO THE STRUCTURE IS DETAILED ON SHEET 480 . THE MODIFICATION SHALL CONSIST OF
1. ATTACHING THE TRUSS USING BRACKETS DETAILED ON SHEET LISTED ABOVE.
2. PAY ITEM WILL EXCLUDE SUPPORT POLES AND FOUNDATIONS

PAYMENT WILL BE AT THE CONTRACT UNIT PRICE FOR THE THE OVERHEAD SIGN SUPPORT, INCLUDING ALL NECESSARY MATERIAL, PARTS, EQUIPMENT AND LABOR, USING THE DESIGNATION: 630 EACH - OVERHEAD SIGN SUPPORT, TYPE TC-15.115, AS PER PLAN.

ITEM 644, LANE ARROW, AS PER PLAN

LANE ARROW, AS PER PLAN IS DETAILED ON SHEET 221.
THE LANE ARROW SHALL BE LAID OUT AS DETAILED. THE MATERIAL WILL FOLLOW CMS SPECIFICATION 644 FOR THERMOPLASTIC PAVEMENT MARKING.

ITEM 645, LANE ARROW, TYPE A3, AS PER PLAN

LANE ARROW, TYPE A3, AS PER PLAN IS DETAILED ON SHEET 221. THE LANE ARROW SHALL BE LAID OUT AS DETAILED. THE MATERIAL WILL FOLLOW CMS SPECIFICATION 645 FOR PREFORMED PAVEMENT MARKING, TYPE A (PERMANENT MARKINGS).

CALCULATED VMF
CHECKED PAS

TRAFFIC CONTROL - GENERAL NOTES

LAW-93-0.00

J:\Project\O\ODOT\15005112 Ironton Russell\LAW\81595\traffic\sheets\81595TN001.dgn - 4/25/2011 6:55:57 AM - jon_wanstrath

SHEET NUMBER												FUNDING		ITEM	ITEM EXT.	GRAND TOTAL	UNIT	DESCRIPTION	SEE SHEET NO.
213	214	215	216	217	218	219	210	211	212			MAJOR BRIDGE							
																		TRAFFIC	
51.0	12.0		63.5	26.0	113.5	62.5						328.5		630	02100	328.5	FT	GROUND MOUNTED SUPPORT, NO. 2 POST	
57.0	146.0	117.0	44.0	77.0	125.5	136.5						703.0		630	03100	703.0	FT	GROUND MOUNTED SUPPORT, NO. 3 POST	
		1										1		630	66501	1	EACH	OVERHEAD SIGN SUPPORT, TYPE TC-15.115, AS PER PLAN	208
2	2											4		630	79000	4	EACH	SIGN HANGER ASSEMBLY, SPAN WIRE	
			2		2							4		630	79100	4	EACH	SIGN HANGER ASSEMBLY, MAST ARM	
2			5	12	4	1						24		630	79500	24	EACH	SIGN SUPPORT ASSEMBLY, POLE MOUNTED	
		5	3									8		630	79600	8	EACH	SIGN SUPPORT ASSEMBLY, BRIDGE MOUNTED, TYPE 1	
	2	2	3									7		630	79604	7	EACH	SIGN SUPPORT ASSEMBLY, BRIDGE MOUNTED, TYPE 2	
143.5	159.5	165.9	165.0	150.2	154.6	110.2						1048.8		630	80100	1048.8	SQ FT	SIGN, FLAT SHEET	
		180.0										180.00		630	81200	180.00	SQ FT	SIGN ERECTED, EXTRUSHEET	
					4	4						8		630	84900	8	EACH	REMOVAL OF GROUND MOUNTED SIGN AND DISPOSAL	
						2						2		630	85100	2	EACH	REMOVAL OF GROUND MOUNTED SIGN AND REERECTION	
			14.0	40.0		40.0						94.0		630	08510	94.0	FT	STREET NAME SIGN SUPPORT, NO. 2 POST	
2	6	3	7	5	3	5						31		630	86002	31	EACH	REMOVAL OF GROUND MOUNTED POST SUPPORT AND DISPOSAL	
4						2						6		630	87400	6	EACH	REMOVAL OF OVERHEAD MOUNTED SIGN AND DISPOSAL	
2	6	3	7	5	2	2						27		630	87500	27	EACH	REMOVAL OF POLE MOUNTED SIGN AND DISPOSAL	
							1.50					1.50		644	00100	1.50	MILE	EDGE LINE	
							0.74					0.74		644	00200	0.74	MILE	LANE LINE	
							0.37					0.37		644	00300	0.37	MILE	CENTER LINE	
							917.00					917.00		644	00400	917.00	FT	CHANNELIZING LINE	
								87				87		644	00500	87	FT	STOP LINE	
								41				41		644	00600	41	FT	CROSSWALK LINE	
								667				667		644	00700	667	FT	TRANSVERSE/DIAGONAL LINE	
								189				189		644	00900	189	SQ FT	ISLAND MARKING	
									6			6		644	01301	6	EACH	LANE ARROW, AS PER PLAN	208
									149			149		644	01510	149	FT	DOTTED LINE, 6"	
									2666			2666		644	30000	2666	FT	REMOVAL OF PAVEMENT MARKING	
							1.276					1.28		645	00110	1.28	MILE	EDGE LINE, TYPE A3	
							0.922					0.92		645	00310	0.92	MILE	CENTER LINE, TYPE A3	
							1663					1663.00		645	00410	1663.00	FT	CHANNELIZING LINE, TYPE A3	
								337				337		645	00510	337	FT	STOP LINE, TYPE A3	
								1232				1232		645	00610	1232	FT	CROSSWALK LINE, TYPE A3	
								810				810		645	00710	810	FT	TRANSVERSE/DIAGONAL LINE, TYPE A3	
								427				427		645	00910	427	SQ FT	ISLAND MARKING, TYPE A3	
								1				1		645	01010	1	EACH	RAILROAD SYMBOL MARKING, TYPE A3	
									27			27		645	01310	27	EACH	LANE ARROW, TYPE A3	
									3			3		645	01311	3	EACH	LANE ARROW, TYPE A3, AS PER PLAN	208
									393			393		645	01480	393	FT	DOTTED LINE, 4", TYPE A3	

CALCULATED AJB
CHECKED VMF

TRAFFIC CONTROL - GENERAL SUMMARY

LAW-93-0.00

SHEET NO.	REFERENCE NO.	LOCATION	STATION FROM	STATION TO	SIDE	644 EDGE LINE (WHITE) MILE	644 EDGE LINE (YELLOW) MILE	644 LANE LINE MILE	644 CENTER LINE MILE	644 CHANNELIZING LINE FT	645 EDGE LINE (WHITE) MILE	645 CENTER LINE, TYPE A3 MILE	645 CHANNELIZING LINE, TYPE A3 FT
220	EL-1	US 23	334+70	339+50	LT.	0.09							
220	EL-2	US 23	334+70	355+00	RT.	0.43					0.02		
221	EL-3	US 23	341+62	355+00	LT.	0.24					0.63		
221	EL-4	93.C	09+33	41+23	LT.						0.62		
221	EL-5	93.C	09+00	41+18	RT.								
220	EY-1	US 23	334+70	341+22	LT.		0.12						
220	EY-2	US 23	336+50	341+22	RT.		0.13						
221	EY-3	US 23	342+20	355+00	LT.		0.24						
221	EY-4	US 23	342+20	355+00	RT.		0.24						
220	LL-1	US 23	334+70	341+32	LT.			0.13					
220	LL-2	US 23	334+70	341+73	RT.			0.13					
221	LL-3	US 23	342+22	355+00	LT.			0.24					
221	LL-4	US 23	342+51	355+00	RT.			0.24					
221	CL-1	BELLEFONTE ST.	42+30	44+10	CL							0.04	
221	CL-2	93.C	09+60	41+18	CL							0.61	
221	CL-3	93.C	12+18	13+80	RT./LT.							0.07	
222	CL-4	93.C	34+86	38+71	RT./LT.							0.07	
222	CL-5	93.C	42+52	44+00	RT.				0.03			0.03	
222	CL-6	93.C	44+00	45+34	RT.				0.03			0.00	
222	CL-7	JEFFERSON ST.	02+67	02+81	CL							0.00	
222	CL-8	JEFFERSON ST.	03+45	04+25	LT.							0.02	
222	CL-9	JEFFERSON ST.	05+36	06+29	LT.							0.02	
222	CL-10	JEFFERSON ST.	07+47	09+38	RT.				0.04				
222	CL-11	JEFFERSON ST.	08+00	09+38	RT./LT.				0.03				
222	CL-12	CAMPBELL AVE.	34+50	36+24	RT./LT.				0.02			0.01	
222	CL-13	CAMPBELL AVE.	31+21	39+00	CL				0.02			0.01	
222	CL-14	THIRD ST.	45+50	48+38	LT.				0.06				
222	CL-15	THIRD ST.	45+50	47+88	RT./LT.				0.05				
222	CL-16	THIRD ST.	48+98	51+37	LT.				0.03			0.02	
222	CL-17	THIRD ST.	52+67	55+56	RT.				0.04			0.02	
222	CL-18	THIRD ST.	54+22	55+56	RT./LT.				0.03				
222	CL-19	MONROE ST.	08+21	09+44	CL				0.02				
220	CH-1	US 23	336+50	341+25	RT.					476			
221	CH-2	US 23	342+22	344+80	LT.					224			33
221	CH-3	US 23	340+35	340+80	LT.								137
221	CH-4	93.C	09+60	12+45	LT.								285
221	CH-5	93.C	09+60	12+10	LT.								250
222	CH-6	93.C	39+00	41+18	RT.								264
222	CH-7	93.C	42+52	43+80	CL								128
222	CH-8	JEFFERSON ST.	03+45	04+25	RT.								160
222	CH-9	JEFFERSON ST.	05+36	06+29	LT.								93
222	CH-10	JEFFERSON ST.	05+36	06+29	RT.								93
222	CH-11	JEFFERSON ST.	07+47	07+80	LT.					33			
222	CH-12	THIRD ST.	48+08	48+38	RT.					30			
222	CH-13	THIRD ST.	48+98	51+37	RT.					127			112
222	CH-14	THIRD ST.	52+67	54+02	LT.					27			108
SUBTOTAL						0.76	0.74	0.74	0.37	917	1.28	0.92	1663
TOTALS CARRIED TO GENERAL SUMMARY						1.50		0.74	0.37	917	1.28	0.92	1663

CALCULATED AJB
CHECKED PAS

PAVEMENT MARKING SUBSUMMARY

LAW-93-0.00

210
788

J:\Project\ODOT\15005112 Ironton Russell\LAW\81595\traffic\sheets\81595TS001.dgn - 4/25/2011 6:55:59 AM - jon_wanstrath

SHEET NO.	REFERENCE NO.	LOCATION	STATION FROM	STATION TO	SIDE	644 STOP LINE FT	644 CROSSWALK LINE FT	644 TRANSVERSE/DIAGONAL LINE (YELLOW) FT	644 ISLAND MARKING SQ FT	645 STOP LINE, TYPE A3 FT	645 CROSSWALK LINE, TYPE A3 FT	645 TRANSVERSE/DIAGONAL LINE (WHITE) FT	645 TRANSVERSE/DIAGONAL LINE (YELLOW) FT	645 ISLAND MARKING, TYPE A3 SQ FT	645 RAILROAD SYMBOL MARKING, TYPE A3 EACH
221	SL-1	US 23	341+12	341+25	RT.	38									
221	SL-2	US 23	342+22	342+22	LT.	24				19					
221	SL-3	BELLEFONTE ST.	45+90	45+90	RT.					14					
221	SL-4	93.C	09+60	09+60	RT./LT.					39					
222	SL-5	93.C	41+18	41+18	RT.					28					
222	SL-6	93.C	42+52	42+52	RT./LT.					25					
222	SL-7	JEFFERSON ST.	03+45	03+45	LT.					14					
222	SL-8	JEFFERSON ST.	04+25	04+25	RT./LT.					42					
222	SL-9	JEFFERSON ST.	05+36	05+36	LT.					32					
222	SL-10	JEFFERSON ST.	06+29	06+29	RT./LT.					32					
222	SL-11	JEFFERSON ST.	07+47	07+47	RT./LT.	25									
222	SL-12	CAMPBELL AVE.	36+24	36+24	RT.					24					
222	SL-13	CAMPBELL AVE.	37+21	37+21	LT.					12					
222	SL-14	THIRD ST.	21+37	21+37	RT./LT.					24					
222	SL-15	THIRD ST.	72+67	72+67	RT./LT.					32					
222	CW-1	JEFFERSON ST.	02+88	03+40	RT./LT.						216				
222	CW-2	JEFFERSON ST.	04+30	05+31	RT./LT.						584				
222	CW-3	JEFFERSON ST.	06+34	07+29	RT./LT.		41				432				
221	TL-1	US 23	340+35	340+80	LT.							132			
222	TL-2	93.C	29+84	38+71	LT.							251			
220	TY-1	US 23	334+70	336+50	RT.			99							
221	TY-2	US 23	342+20	352+00	RT.			185							
221	TY-3	93.C	12+18	13+80	RT./LT.								78		
222	TY-4	93.C	34+86	38+71	RT.								272		
222	TY-5	93.C	44+02	45+34	RT.			77					77		
222	TY-6	JEFFERSON ST.	08+00	09+38	RT./LT.			79							
222	TY-7	THIRD ST.	45+50	47+88	RT./LT.			150							
222	TY-8	THIRD ST.	54+22	55+56	RT./LT.			77							
221	IM-1	US 23	340+99	341+16	LT.									56	
221	IM-2	US 23	341+15	341+36	LT.									268	
221	IM-3	US 23	341+25	341+73	RT.				189						
221	IM-4	US 23	341+85	342+22	LT.									103	
222	RR-1	JEFFERSON ST.	03+73	04+25	LT.										1
SUBTOTAL						87	41	667	189	337	1232	383	427	427	1
TOTALS CARRIED TO GENERAL SUMMARY						87	41	667	189	337	1232	810		427	1

CALCULATED AJB
CHECKED PAS

PAVEMENT MARKING SUBSUMMARY

LAW-93-0.00

J:\Project\O\ODOT\15005112 Ironton Russell\LAW\81595\traffic\sheets\81595TS002.dgn - 4/25/2011 6:55:59 AM - jon_wanstrath

SHEET NO.	REFERENCE NO.	LOCATION	STATION FROM	STATION TO	SIDE	644 DOTTED LINE 6" (WHITE) FT	644 LANE ARROW, AS PER PLAN EACH	644 REMOVAL OF PAVEMENT MARKING FT		645 LANE ARROW, TYPE A3 EACH	645 LANE ARROW, TYPE A3, AS PER PLAN EACH	645 DOTTED LINE (WHITE) FT	645 DOTTED LINE ((YELLOW) FT
220		US 23	336+72	336+72	RT.		1						
220		US 23	337+72	337+72	RT.		1						
220		US 23	338+72	338+72	RT.		1						
221		US 23	340+72	340+72	RT.		1						
221		US 23	342+62	342+62	LT.		1						
220		US 23	344+62	344+62	LT.		1						
220		93.C	10+00	10+00	RT./LT.					2	1		
220		93.C	11+00	11+00	RT./LT.					2	1		
220		93.C	12+00	12+00	RT./LT.					2			
220		93.C	12+10	12+10	LT.						1		
222		93.C	39+10	39+10	RT.					1			
222		93.C	40+25	40+25	RT.					1			
222		93.C	40+44	40+44	RT.					1			
222		93.C	41+08	41+08	RT.					1			
222		93.C	42+62	42+62	RT.					1			
222		93.C	43+17	43+17	RT.					1			
222		93.C	43+73	43+73	RT.					1			
222		JEFFERSON ST.	03+75	03+75	RT./LT.					2			
222		JEFFERSON ST.	04+15	04+15	RT./LT.					2			
222		JEFFERSON ST.	05+46	05+46	LT.					1			
222		JEFFERSON ST.	05+53	05+53	RT./LT.					1			
222		JEFFERSON ST.	06+12	06+12	LT.					1			
222		JEFFERSON ST.	06+19	06+19	RT./LT.					1			
222		THIRD ST.	49+95	49+95	RT./LT.					1			
222		THIRD ST.	50+61	50+61	RT./LT.					1			
222		THIRD ST.	51+27	51+27	RT./LT.					1			
222		THIRD ST.	52+77	52+77	RT./LT.					1			
222		THIRD ST.	53+34	53+34	RT./LT.					1			
222		THIRD ST.	53+94	53+94	RT./LT.					1			
221	DL-1	US 23/93.C	342+50	09+60	RT./LT.	149						282	
221	DY-1	93.C	08+17	08+37	LT.								32
221	DY-2	BELLEFONTE ST.	44+10	44+86	RT.								79
220	RM-1	US 23	334+70	339+00	RT.			439					
220	RM-2	US 23	334+70	339+00	RT.			430					
221	RM-3	US 23	340+47	340+47	RT.			13					
221	RM-4	US 23	341+32	341+49	LT.			24					
221	RM-5	US 23	341+14	341+59	LT.			45					
221	RM-6	US 23	341+19	342+20	RT./LT.			178					
221	RM-7	US 23	341+25	342+20	RT.			96					
221	RM-8	US 23	341+65	342+20	LT.			55					
221	RM-9	US 23	339+00	344+47	RT.			540					
221	RM-10	US 23	344+47	346+82	RT.			245					
222	RM-11	93.C	44+02	45+34	CL			132					
222	RM-12	THIRD ST.	45+50	48+38	CL			288					
222	RM-13	THIRD ST.	53+75	55+56	CL			181					
SUBTOTAL						149	6	2666		27	3	282	111
TOTALS CARRIED TO GENERAL SUMMARY						149	6	2666		27	3	393	

CALCULATED AJB
CHECKED PAS

PAVEMENT MARKING SUBSUMMARY

LAW-93-0.00

J:\Project\O\ODOT\15005112 Ironton Russell\LAW\81595\traffic\sheets\81595TS003.dgn - 12/15/2011 9:31:09 AM - jon_wanstrath

SHEET NO.	REFERENCE NO.	LOCATION	STATION	SIDE	CODE	SIZE (INCHES)	630 SIGN, FLAT SHEET SQ FT	GROUND MOUNTED SUPPORT, NO. 3 POST FT	GROUND MOUNTED SUPPORT, NO. 2 POST FT	REMOVAL OF OVERHEAD MOUNTED SIGN AND DISPOSAL EACH	REMOVAL OF GROUND MOUNTED SIGN AND DISPOSAL EACH	SIGN SUPPORT ASSEMBLY, POLE MOUNTED EACH	SIGN HANGER ASSEMBLY, SPAN WIRE EACH	REMOVAL OF GROUND MOUNTED POST SUPPORT AND DISPOSAL EACH
223	S-1	CL R/W US 23	335+50	RT.	M3-1-24	24" x 12"	2.0	15.0-15.5						
					M1-5KY-30	30" x 24"	5.0							
					M5-1L-21	21" x 15"	2.2							
					M4-5-24	24" x 12"	2.0							
					M1-4-2-24	24" x 24"	4.0							
					M5-1L-21	21" x 15"	2.2							
					M4-5-24	24" x 12"	2.0							
					M1-5-2-24	24" x 24"	4.0							
					M5-1L-21	21" x 15"	2.2							
223	S-2		338+50	RT.	D1-H4-72	72" x 12"	6.0	13.0-13.5						
					D1-H4-72	72" x 12"	6.0							
					D1-H4-72	72" x 12"	6.0							
223	S-3		339+00	LT.	M3-1-24	24" x 12"	2.0		13.0					
					M1-4-2-24	24" x 24"	4.0							
223	S-4		340+20	RT.	Existing					3				
223	S-5		340+59	CL	Existing						1			1
223	S-6		340+77	CL	Existing					1				
223	S-7		340+80	CL	R4-7-24	18" x 24"	3.0		12.0					
223	S-8		340+80	RT.	R5-1-30	30" x 30"	6.3		12.5					
223	S-9		340+86	CL	Existing						1			1
223	S-10		341+50	RT.	M3-1-24	24" x 12"	2.0					1		
					M1-5KY-30	30" x 24"	5.0							
					M6-2LX-21	21" x 15"	2.2							
					M4-5-24	24" x 12"	2.0							
					M1-4-2-24	24" x 24"	4.0							
					M6-1I-21	21" x 15"	2.2							
					M4-5-24	24" x 12"	2.0							
					M1-5-2-24	24" x 24"	4.0							
					M6-1I-21	21" x 15"	2.2							
					M3-3-24	24" x 12"	2.0							
					M1-4-2-24	24" x 24"	4.0							
					M6-3-21	21" x 15"	2.2							
					D1-H4-48	48" x24"	8.0							
					D1-H4-48	48" x24"	8.0							
223	S-11	CL Const. S. R. 93C	7+35	RT.	M3-3-24	24" x 12"	2.0					1		
					M1-4-2-24	24" x 24"	4.0							
					M6-1L-21	21" x 15"	2.2							
					M3-1-24	24" x 12"	2.0							
					M1-4-2-24	24" x 24"	4.0							
					M6-1R-21	21" x 15"	2.2							
223	S-12	CL Const. S. R. 93C	7+35	CL	D9-2-24	24" x 24"	4.0		13.5					
					M6-1L-21	21" x 15"	2.2							
223	S-13	CL R/W US 23	341+70	CL	R10-10L-24	18" x 24"	3.0						1	
223	S-14		341+75	LT.	R10-11A-24	18" x 24"	3.0						1	
223	S-15		342+22	LT.	R5-1-30	30" x 30"	6.3							
TOTALS CARRIED TO GENERAL SUMMARY							143.5	57.0	51.0	4	2	2	2	2

CALCULATED WFM
CHECKED PAS

SIGNING SUBSUMMARY

LAW-93-0.00

213
788

J:\Project\ODOT\15005112 Ironton Russell\LAW\81595\traffic\sheets\81595TS004.dgn - 4/25/2011 6:56:01 AM - jon_wanstrath

SHEET NO.	REFERENCE NO.	LOCATION	STATION	SIDE	CODE	SIZE (INCHES)	630 SIGN, FLAT SHEET	GROUND MOUNTED SUPPORT, NO. 3 POST	GROUND MOUNTED SUPPORT, NO. 2 POST	REMOVAL OF GROUND MOUNTED SIGN AND DISPOSAL	SIGN HANGER ASSEMBLY, SPAN WIRE	SIGN SUPPORT ASSEMBLY, BRIDGE MOUNTED, TYPE 2	REMOVAL OF GROUND MOUNTED POST SUPPORT AND DISPOSAL
							SQ FT	FT	FT	EACH	EACH	EACH	EACH
223	S-16	CL R/W US 23	342+22	LT.	D1-H4-48	48" x24"	8.0	17-17.5-18-18.5					
					D1-H4-48	48" x24"	8.0						
					M3-1-24	24" x 12"	2.0						
					M1-4-2-24	24" x24"	4.0						
					M6-3-21	21" x 15"	2.2						
					M3-1-24	24" x 12"	2.0						
					M1-5KY-30	24" x24"	4.0						
					M6-2R-21	21" x 15"	2.2						
					M4-5-24	24" x 12"	2.0						
					M1-4-2-24	24" x24"	4.0						
					M6-1R-21	21" x 15"	2.2						
					M4-5-24	24" x 12"	2.0						
					M1-5-2-24	24" x24"	4.0						
					M6-1R-21	21" x 15"	2.2						
223	S-17		342+45	CL	R4-7-24	18" x 24"	3.0		12.0				
223	S-18		342+44	RT.	Existing					1			1
223	S-19	CL R/W BELLEFONTE ST.	41+70	RT.	D1-H4-72	72" x 12"	6.0						
					D1-H4-72	72" x 12"	6.0					1	
					D1-H4-72	72" x 12"	6.0						
223	S-20		42+52	LT.	R2-1-24	24" x 30"	5.0					1	
223	S-21		43+82	RT.	M4-5-24	24" x 12"	2.0	15.0-15.0-15.0-15.0					
					M1-4-2-24	24" x24"	4.0						
					M6-1L-21	21" x 15"	2.2						
					M4-5-24	24" x 12"	2.0						
					M1-5-2-24	24" x24"	4.0						
					M6-1L-21	21" x 15"	2.2						
					M3-3-24	24" x 12"	2.0						
					M1-4-2-24	24" x24"	4.0						
					M6-2R-21	21" x 15"	2.2						
					M3-1-24	24" x 12"	2.0						
					M1-4-2-24	24" x24"	4.0						
					M6-2RX-21	21" x 15"	2.2						
223	S-22		44+00	LT.	Existing					1			1
223	S-23		44+00	RT.	Existing					1			1
223	S-24		44+05	LT.	M3-1-24	24" x 12"	2.0	15.0					
					M1-5KY-30	30" x 24"	5.0						
					D10-1-10	10" x 18"	1.3						
223	S-25		44+35	RT.	R10-11A-24	24" x 30"	5.0				1		
223	S-26		44+50	LT.	Existing					1			1
223	S-27	CL Const. S. R. 93C	8+95	LT.	R10-11A-24	24" x 30"	5.0				1		
223	S-28		9+02	RT.	Existing					1			1
223	S-29		9+10	LT.	Existing					1			1
223	S-30		9+55	LT.	M3-3-24	24" x 12"	2.0						
					M1-4-2-24	24" x24"	4.0						
					M6-1L-21	21" x 15"	2.2						
					M3-1-24	24" x 12"	2.0						
					M1-4-2-24	24" x24"	4.0						
					M6-1R-21	21" x 15"	2.2						
					M3-1-24	24" x 12"	2.0						
					M1-5KY-30	30" x 24"	5.0						
					M6-2RX-21	21" x 15"	2.2						
					D1-H4-48	48" x24"	8.0						
TOTALS CARRIED TO GENERAL SUMMARY							159.5	146.0	12	6	2	2	6

CALCULATED WFM
CHECKED PAS

SIGNING SUBSUMMARY

LAW-93-0.00

214
788

J:\Project\OA\ODOT\15005112 Ironton Russell\LAW\81595\traffic\sheets\81595TS005.dgn - 4/25/2011 6:56:02 AM - jon_wanstrath

SHEET NO.	REFERENCE NO.	LOCATION	STATION	SIDE	CODE	SIZE (INCHES)	630 SIGN, FLAT SHEET SQ FT	630 SIGN ERECTED, EXTRUSHEET SQ FT	630 GROUND MOUNTED SUPPORT, NO. 3 POST FT	630 REMOVAL OF GROUND MOUNTED SIGN AND DISPOSAL EACH	630 SIGN SUPPORT ASSEMBLY, BRIDGE MOUNTED, TYPE 2 EACH	630 SIGN SUPPORT ASSEMBLY, BRIDGE MOUNTED, TYPE 1 EACH	630 REMOVAL OF GROUND MOUNTED POST SUPPORT AND DISPOSAL EACH	630 OVERHEAD SIGN SUPPORT, TYPE TC-15.115, AS PER PLAN EACH
223	S-31	CL Const. S. R. 93C	9+60	RT.	M4-5-24	24" x 12"	2.0		17.0					
					M1-4--2-24	24" x 24"	4.0							
					M4-5-24	24" x 12"	2.0							
					M1-4--2-24	24" x 24"	4.0							
224	S-40	CL R/W US 23	343+00	LT.	Existing					1			1	
224	S-41		343+50	RT.	M3-3-24	24" x 12"	2.0		14.0					
					M1-4-2-24	24" x 24"	4.0							
224	S-42		344+30	LT.	W8-13-36	36" x 36"	9.0		15.0					
224	S-43		345+45	LT.	Existing					1			1	
224	S-44		346+30	RT.	D1-4H-72	72" x 12"	6.0		13.0-13.0					
					D1-4H-72	72" x 12"	6.0							
				LT.	D1-4H-72	72" x 12"	6.0							
224	S-45		348+20	LT.	M3-1-24	24" x 12"	2.0		15.0-15.0-15.0					
					M1-5KY-30	30" x 24"	5.0							
					M5-2R-21	21" x 15"	2.2							
					M4-5-24	24" x 12"	2.0							
					M1-4-2-24	24" x 24"	4.0							
					M5-1R-21	21" x 15"	2.2							
					M4-5-24	24" x 12"	2.0							
					M1-5-2-24	24" x 24"	4.0							
					M5-1R-21	21" x 15"	2.2							
224	S-46		349+30	LT.	Existing					1			1	
225	S-50	CL Const. S. R. 93C	11+15	RT.	R2-1-24	24" x 30"	5.0					1		
225	S-51		11+30	LT.	D1-4H-72	72" x 12"	6.0							
					D1-4H-72	72" x 12"	6.0					1		
					D1-4H-72	72" x 12"	6.0							
225	S-52		12+40	RT.	I-3-30	30" x 24"	5.0					1		
225	S-53		12+50	LT.	R3-H8CQ2-54	54" x 30"	11.3					1		
225	S-54		13+60	LT.	M3-3-24	24" x 12"	2.0							
					M1-4-2-24	24" x 24"	4.0							
					M5-1L-21	21" x 15"	2.2							
					M3-1-24	24" x 12"	2.0							
					M1-4-2-24	24" x 24"	4.0				1			
					M5-1R-21	21" x 15"	2.2							
					M3-1-24	24" x 12"	2.0							
					M1-5KY-30	30" x 24"	5.0							
					M5-1R-21	21" x 15"	2.2							
225	S-55		15+50	LT.	R16-H2-36	36" x 48"	12.0				1			
226	S-60		19+40	LT.	M2-1-21	21" x 15"	2.2							
					M1-4-2-24	24" x 24"	4.0							
					M2-1-21	21" x 15"	2.2							
					M1-5KY-30	30" x 24"	5.0							
226	S-61		26+25	CL	WELCOME OH		ODOT	36					1	
226	S-62		26+25	CL	WELCOME KY		KYTC	144						
226	S-63		30+00	LT.	I-3-30	30" x 24"	5.0					1		
TOTALS CARRIED TO GENERAL SUMMARY							165.9	180.0	117.0	3	2	5	3	1

CALCULATED WFM
CHECKED PAS

SIGNING SUBSUMMARY

LAW-93-0.00

J:\Project\OV\ODOT\15005112 Ironton Russell\LAW\81595\traffic\sheets\81595TS006.dgn - 4/25/2011 6:56:03 AM - jon_wanstrath

SIGNING SUBSUMMARY

CALCULATED WFM
CHECKED PAS

SHEET NO.	REFERENCE NO.	LOCATION	STATION	SIDE	CODE	SIZE (INCHES)	630														
							SIGN, FLAT SHEET	GROUND MOUNTED SUPPORT, NO. 3 POST	GROUND MOUNTED SUPPORT, NO. 2 POST	REMOVAL OF GROUND MOUNTED SIGN AND DISPOSAL	SIGN SUPPORT ASSEMBLY, BRIDGE MOUNTED, TYPE 2	SIGN SUPPORT ASSEMBLY, BRIDGE MOUNTED, TYPE 1	STREET NAME SIGN SUPPORT, NO. 2 POST	SIGN HANGER ASSEMBLY, MAST ARM	SIGN SUPPORT ASSEMBLY, POLE MOUNTED	REMOVAL OF GROUND MOUNTED POST SUPPORT AND DISPOSAL					
							SQ FT	FT	FT	EACH	EACH	EACH	FT	EACH	EACH	EACH					
227	S-70	CL Const. S. R. 93C	33+00	LT.	R8-7-30	30" x 24"	5.0				1										
227	S-71	▼	36+25	LT.	R8-7-30	30" x 24"	5.0				1										
227	S-72		36+50	RT.	R16-H2-36	36" x 48"	12.0				1										
227	S-73	CL Const. 2ND ST.	8+00	RT.	W14-2-30	30" x 30"	6.3	15.0													
					W16-9P-24	24" x 12"	2.0														
227	S-74		9+61	RT.	R1-1-30	30" x 30"	4.9		13.0												
					R1-3-12	12" x 6"	0.5														
227	S-75		10+36	RT.	W14-2-30	30" x 30"	6.3		14.0												
227	S-76		10+36	LT.	R1-1-30	30" x 30"	4.9		13.0												
					R1-3-12	12" x 6"	0.5														
227	S-77		10+50	LT.	R7-1-12	12" x 18"	1.5		11.5												
227	S-78	▼	11+02	LT.	OM4-1-18	18" x 18"	2.3		12.0												
227	S-79	CL R/W MONROE ST.	7+22	LT.	D3-1-VAR	30" x 12"	2.5						14								
					D3-1-VAR	30" x 12"	2.5														
					R1-1-30	30" x 30"	4.9														
227	S-80		8+48	RT.	R1-3-12	12" x 6"	0.5														
227	S-81	▼	9+16	LT.	R1-3-12	12" x 6"	0.5														
228	S-88	CL Const. Campbell Ave.	36+50	RT.	Existing					1						1					
228	S-89	CL Const. 2nd St.	13+80	LT.	Existing					1						1					
228	S-90	CL Const. S.R. 93C	38+65	RT.	R3-H8BH-36	36" X 24"	6.0					1									
228	S-91		39+10	LT.	M-5-24	24" x 12"	2.0														
					M1-4-2-24	24" x 24"	4.0					1									
228	S-92		40+10 AH	LT.	R2-4-24	24" x 30"	5.0					1									
228	S-93		41+33	LT.	M3-2-24	12" x 24"	2.0														
					R14-1-24	24" x 18"	3.0														
					M6-1L-21	21" x 15"	2.2														
					M4-5-24	24" x 12"	2.0														
					M1-4-2-24	24" x 24"	4.0														
					M6-3-21	21" x 15"	2.2														
228	S-94		41+33	LT.	D3-1-VAR	24" x 12"	2.0								2						
					D3-1-VAR	36" x 12"	3.0														
228	S-95		42+18	RT.	Existing					1						1					
228	S-96		42+24	LT.	Existing					1						1					
228	S-97		42+32	LT.	D1-H4-48	48" x 12"	4.0								1						
228	S-98		42+38	RT.	D3-1-VAR	24" x 12"	2.0								2						
					D3-1-VAR	36" x 12"	3.0														
228	S-99	▼	42+38	RT.	M4-5-24	24" x 12"	2.0														
					M1-4-2-24	24" x 24"	4.0														
					M6-3-21	21" x 15"	2.2														
					M4-5-24	24" x 12"	2.0														
					M1-5-2-24	24" x 24"	4.0														
					M6-3-21	21" x 15"	2.2														
					M3-4-24	12" x 24"	2.0														
					R14-1-24	24" x 18"	3.0														
					M6-3-21	21" x 15"	2.2														
					M3-2-24	12" x 24"	2.0														
					R14-1-24	24" x 18"	3.0														
					M6-1R-21	21" x 15"	2.2														
228	S-100	CL R/W MADISON ST.	5+30	RT.	W14-2-30	30" x 30"	6.3	14.5													
228	S-101		6+15	CL	OM 4-1-18	18" x 18"	2.3														
					OM 4-1-18	18" x 18"	2.3														
					OM 4-1-18	18" x 18"	2.3														
228	S-102		6+42	RT.	Existing					1						1					
228	S-103		7+20	LT.	Existing					1						1					
228	S-104		7+20	CL	OM 4-1-18	18" x 18"	2.3														
					OM 4-1-18	18" x 18"	2.3														
					OM 4-1-18	18" x 18"	2.3														
228	S-105	▼	8+40	LT.	W14-2-30	30" x 30"	6.3	14.5													
228	S-106	CL Const. JEFFERSON ST.	3+20	LT.	Existing					1						1					
TOTALS CARRIED TO GENERAL SUMMARY							165.0	44.0	63.5	7	3	3	14	2	5	7					

LAW-93-0.00

J:\Project\O\ODOT\15005112 Ironton Russell\LAW\81595\traffic\sheets\81595TS007.dgn - 4/25/2011 6:56:04 AM - jon_wanstrath

SHEET NO.	REFERENCE NO.	LOCATION	STATION	SIDE	CODE	SIZE (INCHES)	630 SIGN, FLAT SHEET SQ FT	GROUND MOUNTED SUPPORT, NO. 3 POST FT	GROUND MOUNTED SUPPORT, NO. 2 POST FT	REMOVAL OF GROUND MOUNTED SIGN AND DISPOSAL EACH	STREET NAME SIGN SUPPORT, NO. 2 POST FT	SIGN SUPPORT ASSEMBLY, POLE MOUNTED EACH	REMOVAL OF GROUND MOUNTED POST SUPPORT AND DISPOSAL EACH
228	S-107	CL Const. JEFFERSON ST	3+45	LT.	R1-1-30	30" x 30"	4.9						
					R1-3-12	12" x 6"	0.5						
					R10-7-24	24" x 30"	5.0					1	
228	S-108		3+70	RT.	R3-7R-30	30" x30"	6.3	18.0					
					M4-5-24	24" x 12"	2.0						
					M1-4-2-24	24" x 24"	4.0						
					M6-1R-21	21" x 15"	2.2						1
228	S-109		3+92	LT.	Existing					1			
228	S-110		4+05	LT.	W10-1-36	36" dia.	0.8	14.0					
228	S-111		4+29	RT.	D1-H4-1L-48	48" x 12"	4.0					1	
228	S-112		4+42	LT.	M4-5-24	24" x 12"	2.0					4	
					M1-4-2-24	24" x 24"	4.0						
					M6-1L-21	21" x 15"	2.2						
					M4-5-24	24" x 12"	2.0						
					M1-4-2-24	24" x 24"	4.0						
					M6-1R-21	21" x 15"	2.2						
					M4-5-24	24" x 12"	2.0						
					M1-5-2-24	24" x 24"	4.0						
					M6-1R-21	21" x 15"	2.2						
					M3-4-24	24" x 12"	2.0						
					R14-1-24	24" x 18"	3.0						
					M6-1R-21	21" x 15"	2.2						
228	S-113		4+51	RT.	Existing					1			1
228	S-114		5+16	LT.	Existing					1			1
228	S-115		5+27	RT.	M4-5-24	24" x 12"	2.0					5	
					M1-4-2-24	24" x 24"	4.0						
					M6-1L-21	21" x 15"	2.2						
					M4-5-24	24" x 12"	2.0						
					M1-5-2-24	24" x 24"	4.0						
					M6-1L-21	21" x 15"	2.2						
					M3-4-24	24" x 12"	2.0						
					R14-1-24	24" x 18"	3.0						
					M6-1L-21	21" x 15"	2.2						
					M3-2-24	24" x 12"	2.0						
					R14-1-24	24" x 18"	3.0						
					M6-3-21	21" x 15"	2.2						
					M4-5-24	24" x 12"	2.0						
					M1-4-2-24	24" x 24"	4.0						
					M6-1R-21	21" x 15"	2.2						
228	S-116		5+34	LT.	D1-H4-1L-48	48" x 12"	4.0					1	
228	S-117	CL Const. CAMPBELL AVE.	34+20	RT.	W3-1-36	36" x 36"	9.0	15.5					
228	S-118		34+70	RT.	Existing					1			1
228	S-119		35+20	RT.	W10-2L-30	30" x 30"	6.3	15.5					
228	S-120		35+50	RT.	R7-1-12	12" x 18"	1.5		13.0				
228	S-121		35+50	LT.	R7-1-12	12" x 18"	1.5		13.0				
228	S-122		36+22	RT.	D3-1-VAR	36" x 12"	3.0				20.0		
					D3-1-VAR	36" x 12"	3.0						
					R1-1-30	30" x 30"	4.9						
					R1-3-12	12" x 6"	0.5						
228	S-123		37+07	RT.	Existing					1			1
228	S-124		37+25	RT.	D3-1-VAR	36" x 12"	3.0				20.0		
					D3-1-VAR	36" x 12"	3.0						
					R1-1-30	30" x 30"	4.9						
					R1-3-12	12" x 6"	0.5						
228	S-125	CL Const. JEFFERSON ST	3+45	RT.	R9-3A-30	30" x 30"	4.9	14.0					
TOTALS CARRIED TO GENERAL SUMMARY							150.2	77.0	26.0	5	40.0	12	5

CALCULATED WFM
CHECKED PAS

SIGNING SUBSUMMARY

LAW-93-0.00

J:\Project\ODOT\15005112 Ironton Russell\LAW\81595\traffic\sheets\81595TS008.dgn - 4/25/2011 6:56:05 AM - jon_wanstrath

SHEET NO.	REFERENCE NO.	LOCATION	STATION	SIDE	CODE	SIZE (INCHES)	630 SIGN, FLAT SHEET SQ FT	GROUND MOUNTED SUPPORT, NO. 3 POST FT	GROUND MOUNTED SUPPORT, NO. 2 POST FT	REMOVAL OF GROUND MOUNTED SIGN AND DISPOSAL EACH	SIGN HANGER ASSEMBLY, MAST ARM EACH	SIGN SUPPORT ASSEMBLY, POLE MOUNTED EACH	REMOVAL OF POLE MOUNTED SIGN AND DISPOSAL EACH	REMOVAL OF GROUND MOUNTED POST SUPPORT AND DISPOSAL EACH
229	S-130	CL Const. 93C	44+00	LT.	M4-13-24	24" x 12"	2.0	21.0						
					M1-4-2-24	24" x 24"	4.0							
					M6-3-21	24" x 12"	2.0							
					M3-2-24	24" x 12"	2.0							
					R14-1-24	24" x 18"	3.0							
					M5-1L-21	21" x 15"	2.2							
229	S-131		43+60	RT.	R2-1-24	24" x 30"	5.0		13.5					
229	S-132		44+00	LT.	Not Used	N/A								
229	S-133		44+00	RT.	R7-1-12	12" x 18"	1.5		12.5					
229	S-134		44+40	LT.	R7-1-12	12" x 18"	1.5		12.5					
229	S-135		45+43	RT.	Existing					1				
229	S-136		45+43	LT.	M4-13-24	24" x 12"	2.0					1		
					M1-4-2-24	24" x 24"	4.0							
					M6-3-21	24" x 12"	2.0							
					R14-1-24	24" x 18"	3.0							
					M6-3-21	21" x 15"	2.2							
229	S-137		45+57	RT.	D1-H4-1L-48	48" x 12"	4.0				1			
229	S-138	CL Const. 2ND STREET	45+94	LT.	D1-H4-1L-48	48" x 12"	4.0				1			
229	S-139		45+97	RT.	M4-13-24	24" x 12"	2.0					1		
					M1-4-2-24	24" x 24"	4.0							
					M6-3-21	21" x 15"	2.2							
					M4-13-24	24" x 12"	2.0							
					M1-5-2-24	24" x 24"	4.0							
					M6-3-21	21" x 15"	2.2							
					R14-1-24	24" x 18"	3.0							
					M6-3-21	21" x 15"	2.2							
229	S-140		46+07	LT.	Existing								1	
229	S-141		PARK AVE.	RT.	M4-13-24	24" x 12"	2.0					1		
					M1-4-2-24	24" x 24"	4.0							
					M6-1R-21	21" x 15"	2.2							
					M4-13-24	24" x 12"	2.0							
					M1-5-2-24	24" x 24"	4.0							
					M6-1R-21	21" x 15"	2.2							
229	S-142	CL Const. 93C	45+99	RT.	W1-1AL-30	30" x 30"	6.3					1		
					W13-1-18	18" x 18"	2.3							
229	S-143	CL Const. CAMPBELL AVE.	37+75	LT.	R7-1-12	12" x 18"	1.5		12.5					
229	S-144		37+75	RT.	R7-1-12	12" x 18"	1.5		12.5					
229	S-145		38+50	LT.	W10-2R-30	30" x 30"	6.3	14.5						
229	S-146		39+00	RT.	Existing								1	
229	S-147		39+35	RT.	W1-1AR-30	30" x 30"	6.3	16.0						
					W13-1-18	18" x 18"	2.3							
229	S-148		40+42	LT.	Existing					1				1
229	S-149		42+75	LT.	W1-6L-48	48" x 24	8.0	2-13.0						
230	S-160	CL Const. 3RD STREET	46+90	LT.	R7-1-12	12" x 18"	1.5		12.5					
230	S-161		46+90	RT.	R7-1-12	12" x 18"	1.5		12.5					
230	S-162		48+95	RT.	R3-H8BH-36	36" x 30"	7.5	13.5						
230	S-163		49+95	RT.	M4-5-24	24" x 12"	2.0	18.5						
					M1-4-2-24	24" x 24"	4.0							
					M5-1L-21	21" x 15"	2.2							
					R14-1-24	24" x 18"	3.0							
					M5-1L-21	21" x 15"	2.2							
230	S-164		50+25	LT.	R7-1-12	12" x 18"	1.5		12.5					
230	S-165		50+75	LT.	M3-2-24	24" x 12"	2.0	16.0						
					M4-3-24	24" x 12"	2.0							
					M1-4-2-24	24" x 24"	4.0							
					R4-1-24	24" x 18"	3.0							
230	S-166		50+60	RT.	R7-1-12	12" x 18"	1.5		12.5					
230	S-167		51+08	RT.	Existing					1				1
230	S-168		51+49	RT.	Existing					1				1
TOTALS CARRIED TO GENERAL SUMMARY							154.6	125.5	113.5	4	2	4	2	3

CALCULATED WFM
CHECKED PAS

SIGNING SUBSUMMARY

LAW-93-0.00

J:\Project\ODOT\15005112 Ironton Russell\LAW\81595\traffic\sheets\81595TS009.dgn - 4/25/2011 6:56:06 AM - jon_wanstrath

SHEET NO.	REFERENCE NO.	LOCATION	STATION	SIDE	CODE	SIZE (INCHES)	630 SIGN, FLAT SHEET (SQ FT)	630 GROUND MOUNTED SUPPORT, NO. 3 POST (FT)	630 GROUND MOUNTED SUPPORT, NO. 2 POST (FT)	630 REMOVAL OF OVERHEAD MOUNTED SIGN AND DISPOSAL (EACH)	630 REMOVAL OF GROUND MOUNTED SIGN AND DISPOSAL (EACH)	630 STREET NAME SIGN SUPPORT, NO. 2 POST (FT)	630 SIGN SUPPORT ASSEMBLY, POLE MOUNTED (EACH)	630 REMOVAL OF POLE MOUNTED SIGN AND DISPOSAL (EACH)	630 REMOVAL OF GROUND MOUNTED POST SUPPORT AND DISPOSAL (EACH)	630 REMOVAL OF GROUND MOUNTED SIGN AND REERECTION (EACH)					
230	S-169	CL Const. JEFFERSON ST	6+34	RT.	D3-1-VAR	36" x 12"	3.0					20.0										
230	S-170		6+10	RT.	R14-1-24	24" x 18"	3.0	14.5														
					M6-1R-21	21" x 15"	2.2															
230	S-171		6+23	RT.	Existing					1				1								
230	S-172		5+57	RT.	R3-H8BH-36	36" x 30"	7.5	13.5														
230	S-173		7+23	RT.	Existing						1.00				1							
230	S-174		7+50	RT.	W11-8-30	30" x 30"	6.3	14.5														
230	S-175		8+40	RT.	R7-1-12	12" x 18"	1.5		12.5													
230	S-176		5+50	LT.	Existing					1.00					1							
230	S-177		5+60	LT.	M4-5-24	12" x 24"	2.0	19.0-19.0														
					M1-4-2-24	24" x 24"	4.0															
					M5-1L-21	21" x 15"	2.2															
					M4-5-24	12" x 24"	2.0															
					M1-4-2-24	24" x 24"	4.0															
					M5-1L-21	21" x 15"	2.2															
					M4-5-24	12" x 24"	2.0															
					M1-5-2-24	24" x 24"	4.0															
					M5-1R-21	21" x 15"	2.2															
					M3-4-24	12" x 24"	2.0															
					R14-1-24	24" x 18"	3.0															
					M5-1R-21	21" x 15"	2.0															
230	S-178	▼	6+10	LT.	R3-H8BH-36	36" x 30"	7.5	13.5														
230	S-179	CL Const. 3RD STREET	50+00	LT.	M4-5-24	12" x 24"	2.0															
					M1-4-2-24	24" x 24"	4.0															
					M6-1L-21	21" x 15"	2.2						1									
					R14-1-24	24" x 18"	3.0															
					M6-1L-21	21" x 15"	2.2															
230	S-180	CL Const. JEFFERSON ST	7+26	LT.	D3-1-VAR	36" x 12"	3.0					20.0										
					D3-1-VAR	24" x 12"	2.0															
230	S-181	▼	7+30	LT.	Existing						1				1							
230	S-182		8+00	LT.	R3-H8BH-36	36" x 30"	7.5	13.5														
230	S-183		8+40	LT.	R7-1-12	12" x 18"	1.5		12.5													
230	S-184	CL Const. 3RD STREET	52+63	LT.	Existing									1								
230	S-185		52+85	LT.	M4-5-24	24" x 12"	2.0	15.5														
					M1-4-2-24	24" x 24"	4.0															
					M6-1R-21	21" x 15"	2.2															
230	S-186		52+70	RT.	Existing						1				1							
230	S-187		52+90	RT.	R7-1-12	12" x 18"	1.5		12.5													
230	S-188		53+39	LT.	Existing						1				1							
230	S-189		53+70	RT.	Existing											1						
230	S-190		54+05	LT.	R3-H8BH-36	36" x 30"	7.5	13.5														
230	S-191		54+20	RT.	R7-1-12	12" x 18"	1.5		12.5													
230	S-192		54+50	LT.	R7-1-12	12" x 18"	1.5		12.5													
230	S-193		50+43	RT.	Existing											1						
		▶																				
TOTALS CARRIED TO GENERAL SUMMARY							110.2	136.5	62.5	2	4	40.0	1	2	5	2						

CALCULATED WFM
CHECKED PAS

SIGNING SUBSUMMARY

LAW-93-0.00

J:\Project\0\ODOT\15005112 Ironton Russell\LAW\81595\traffic\sheets\81595TS010.dgn - 4/25/2011 6:56:07 AM - jon_wanstrath

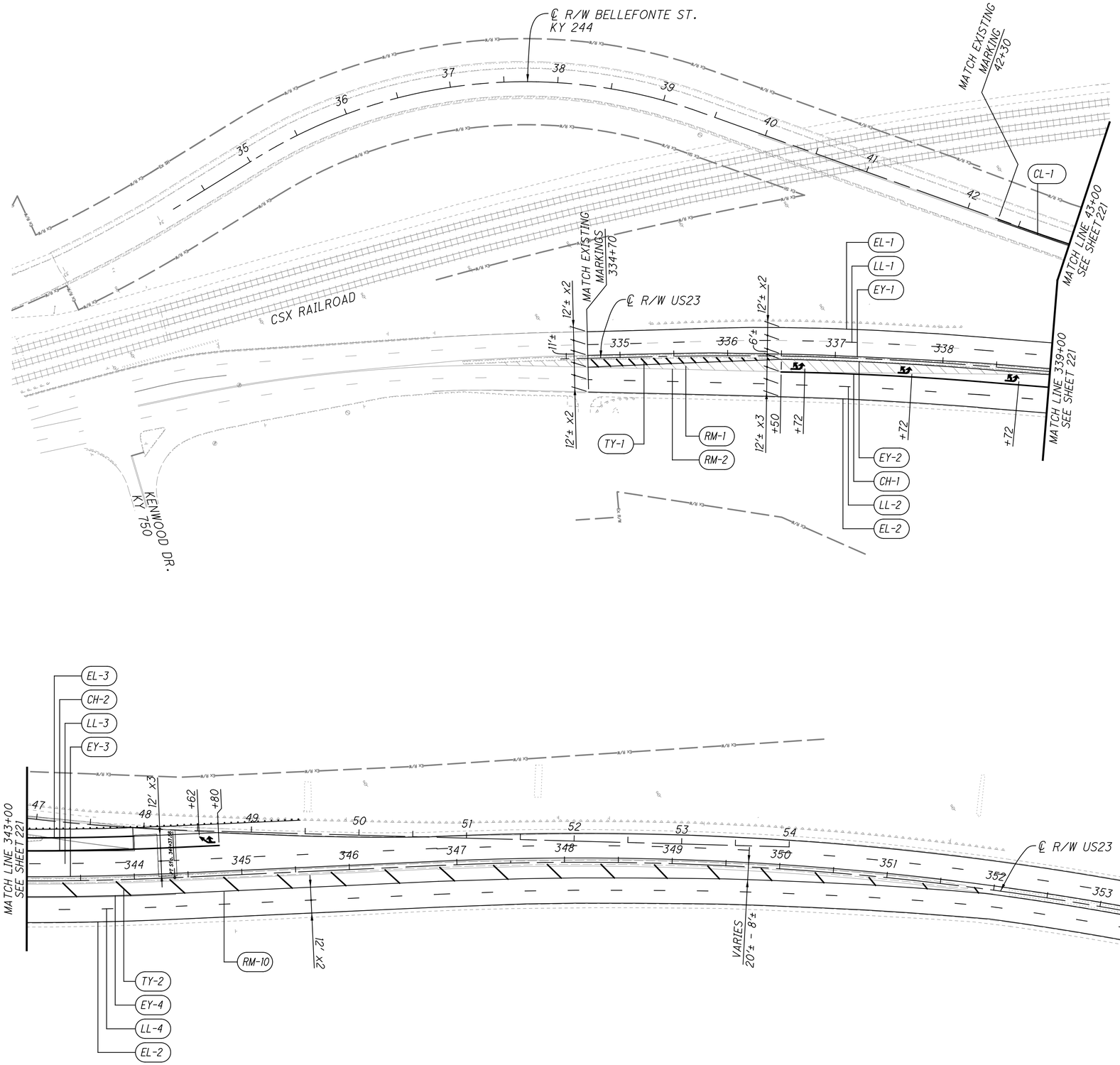

LEGEND

EL	645	EDGE LINE (WHITE)
EY	645	EDGE LINE (YELLOW)
LL	645	LANE LINE
CL	645	CENTER LINE, DOUBLE, SOLID
CH	645	CHANNELIZING LINE
SL	645	STOP LINE
CW	645	CROSSWALK LINE
TL	645	TRANSVERSE/DIAGONAL LINE (WHITE)
TY	645	TRANSVERSE/DIAGONAL LINE (YELLOW)
IM	645	ISLAND MARKING (WHITE)
RR	645	RAILROAD SYMBOL MARKING
⬅	645	LANE ARROW
ONLY	645	WORD ON PAVEMENT, 72 INCH
DL	645	DOTTED LINE (4" WHITE)
DY	645	DOTTED LINE (4" YELLOW)
RM	644	REMOVAL OF PAVEMENT MARKING
		EXISTING LANE ARROWS
⇦		DIRECTION OF TRAVEL

FOR PAVEMENT MARKING QUANTITIES
SEE SHEETS 210 - 212 .

HORIZONTAL SCALE IN FEET
0 25 50 100

CALCULATED AJB
CHECKED VMF

PAVEMENT MARKING PLAN
KENTUCKY - USR 23 & BELLEFONTE

LAW-93-0.00

220
788

J:\Project\OA\ODOT\15005112 Ironton Russell\LAW\81595\traffic\sheets\81595TP003.dgn - 4/25/2011 6:56:08 AM - jon_wanstrath

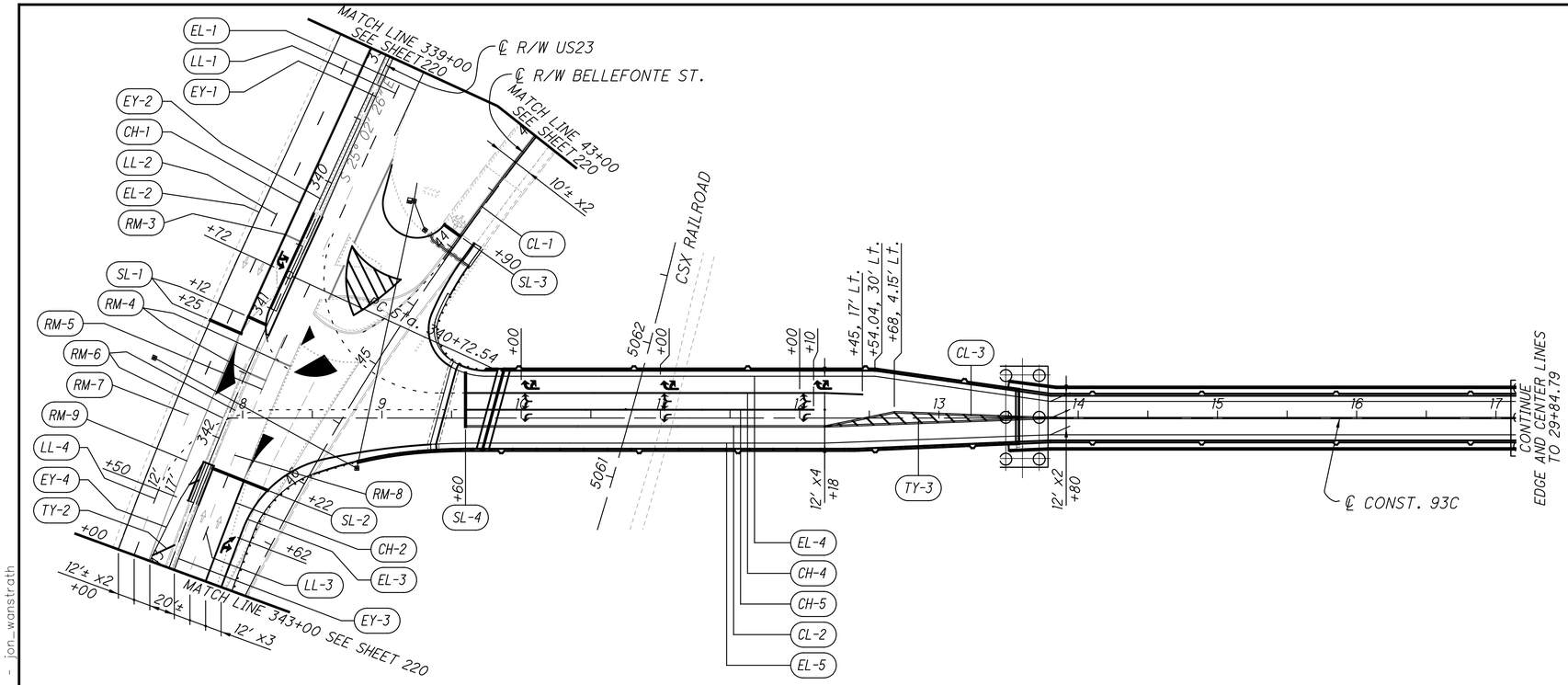

LEGEND

EL	64X	EDGE LINE (WHITE)
EY	64X	EDGE LINE (YELLOW)
LL	64X	LANE LINE
CL	64X	CENTER LINE, DOUBLE, SOLID
CH	64X	CHANNELIZING LINE
SL	64X	STOP LINE
CW	64X	CROSSWALK LINE
TL	64X	TRANSVERSE/DIAGONAL LINE (WHITE)
TY	64X	TRANSVERSE/DIAGONAL LINE (YELLOW)
IM	64X	ISLAND MARKING (WHITE)
RR	64X	RAILROAD SYMBOL MARKING
⬅	64X	LANE ARROW
DL	64X	DOTTED LINE (4" WHITE)
DY	64X	DOTTED LINE (4" YELLOW)
RM	64X	REMOVAL OF PAVEMENT MARKING
		EXISTING LANE ARROWS
		DIRECTION OF TRAVEL
		SIGNALIZED INTERSECTION
		PROPOSED CONTROLLER
		PROPOSED SIGNAL POLE

** PAVEMENT MARKINGS WILL BE ITEM 644 OR ITEM 645 AS SHOWN IN THE PAVEMENT MARKING SUBSUMMARY. ITEM 645 SHALL BE USED ON PORTLAND CONCRETE SURFACES AND ITEM 644 SHALL BE USED ON ASPHALT CONCRETE SURFACES.

FOR PAVEMENT MARKING QUANTITIES SEE SHEETS 210 - 212 .

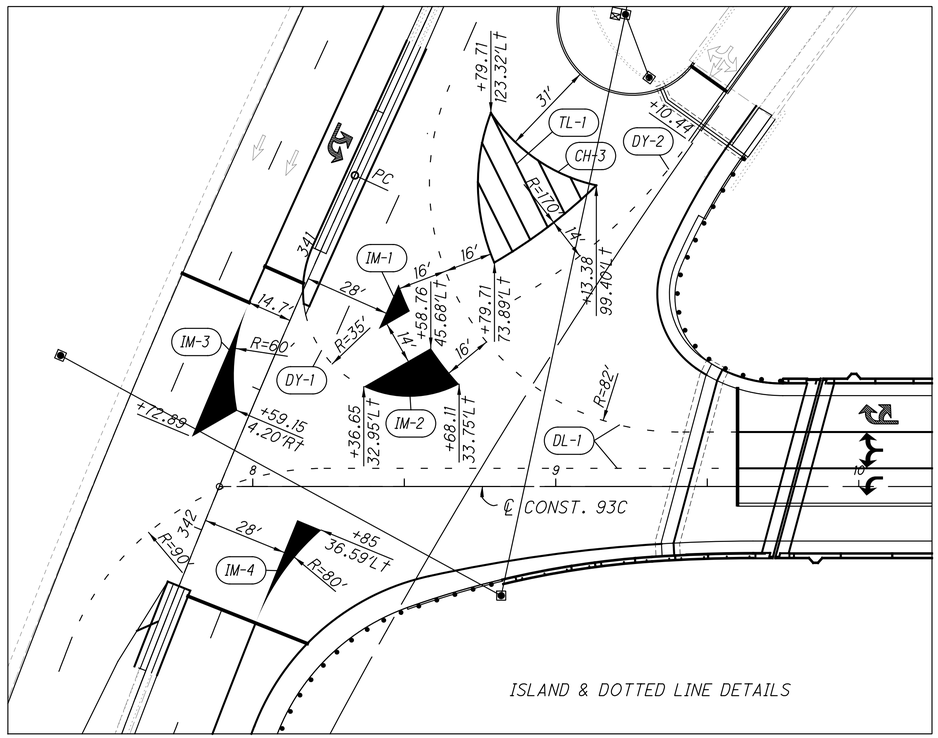

ISLAND & DOTTED LINE DETAILS

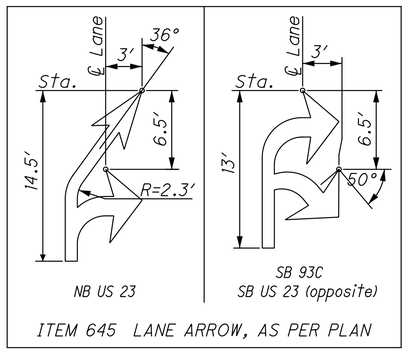

ITEM 645 LANE ARROW, AS PER PLAN

J:\Project\OA\ODOT\15005112 Ironton Russell\LAW\81595\traffic\sheets\81595TP001.dgn - 4/25/2011 6:56:11 AM - jon_wanstrath

HORIZONTAL SCALE IN FEET
0 25 50 100

CALCULATED AJB
CHECKED VMF

PAVEMENT MARKING PLAN
KENTUCKY - INTERSECTION & 93C

LAW-93-0.00

221
788

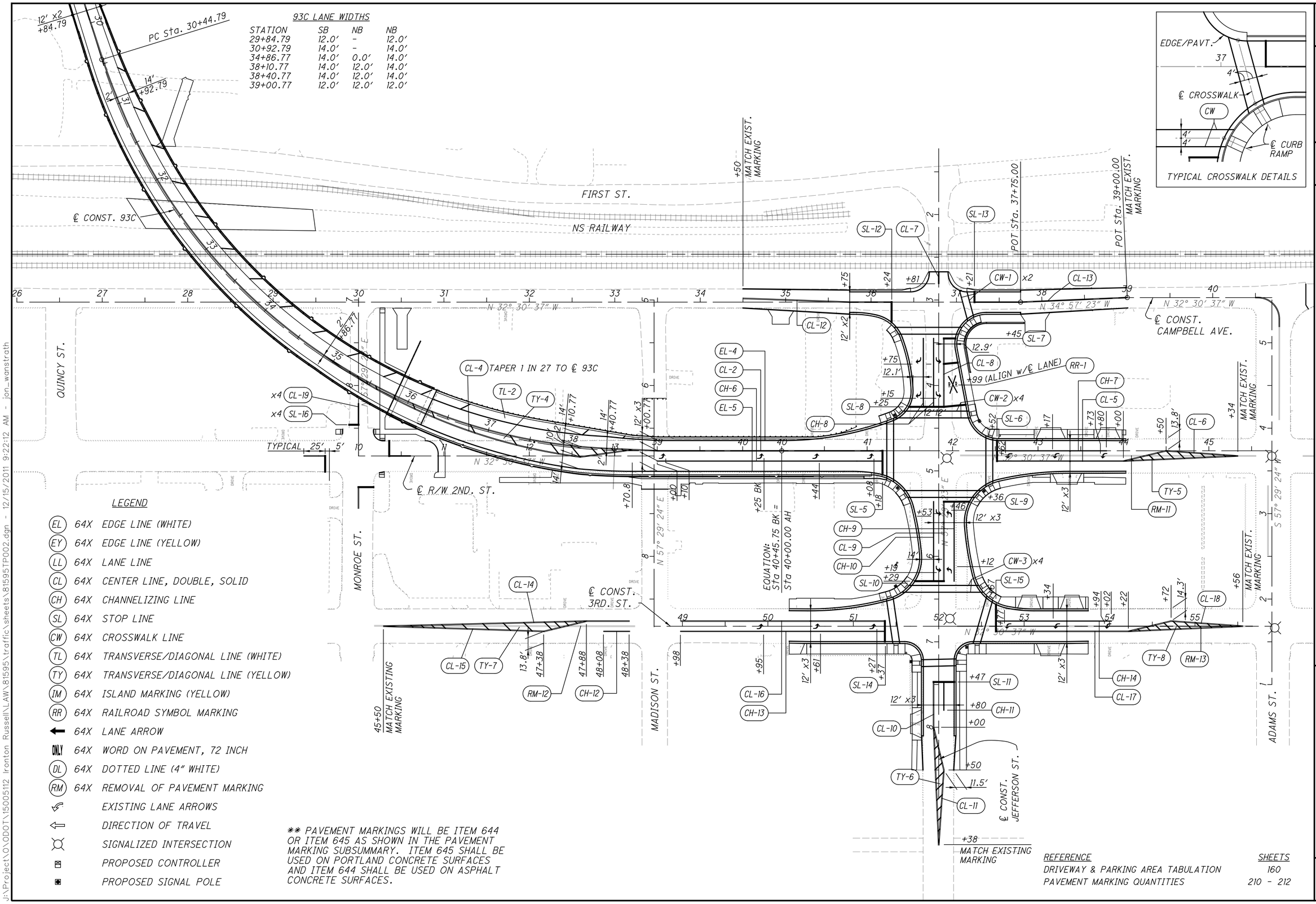

93C LANE WIDTHS

STATION	SB	NB	NB
29+84.79	12.0'	-	12.0'
30+92.79	14.0'	-	14.0'
34+86.77	14.0'	0.0'	14.0'
38+10.77	14.0'	12.0'	14.0'
38+40.77	14.0'	12.0'	14.0'
39+00.77	12.0'	12.0'	12.0'

LEGEND

EL	64X	EDGE LINE (WHITE)
EY	64X	EDGE LINE (YELLOW)
LL	64X	LANE LINE
CL	64X	CENTER LINE, DOUBLE, SOLID
CH	64X	CHANNELIZING LINE
SL	64X	STOP LINE
CW	64X	CROSSWALK LINE
TL	64X	TRANSVERSE/DIAGONAL LINE (WHITE)
TY	64X	TRANSVERSE/DIAGONAL LINE (YELLOW)
IM	64X	ISLAND MARKING (YELLOW)
RR	64X	RAILROAD SYMBOL MARKING
←	64X	LANE ARROW
ONLY	64X	WORD ON PAVEMENT, 72 INCH
DL	64X	DOTTED LINE (4" WHITE)
RM	64X	REMOVAL OF PAVEMENT MARKING
		EXISTING LANE ARROWS
		DIRECTION OF TRAVEL
		SIGNALIZED INTERSECTION
		PROPOSED CONTROLLER
		PROPOSED SIGNAL POLE

** PAVEMENT MARKINGS WILL BE ITEM 644 OR ITEM 645 AS SHOWN IN THE PAVEMENT MARKING SUBSUMMARY. ITEM 645 SHALL BE USED ON PORTLAND CONCRETE SURFACES AND ITEM 644 SHALL BE USED ON ASPHALT CONCRETE SURFACES.

REFERENCE	SHEETS
DRIVEWAY & PARKING AREA TABULATION	160
PAVEMENT MARKING QUANTITIES	210 - 212

HORIZONTAL SCALE IN FEET 0 25 50 100

CALCULATED AJB
CHECKED VMF

PAVEMENT MARKING PLAN
OHIO

LAW-93-0.00

J:\Project\O\ODOT\15005112 Ironton Russell\LAW\81595\traffic\sheets\81595TP002.dgn - 12/15/2011 9:22:12 AM - jon_wanstrath

J:\Project\O\ODOT\15005112 Ironton Russell\LAW\81595\traffic\sheets\81595TM001.dgn - 4/25/2011 6:56:15 AM - jon_wanstrath

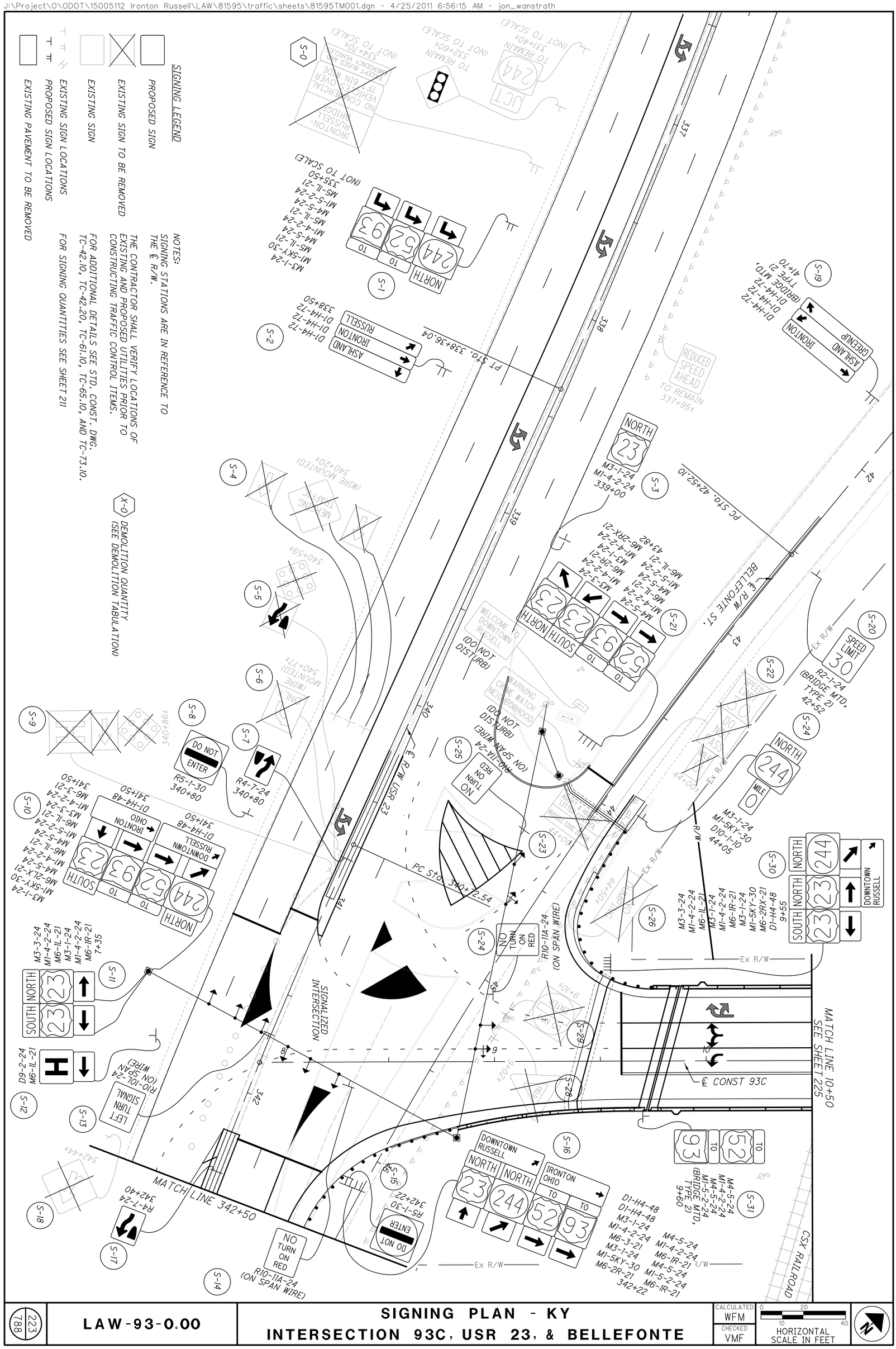
SIGNING LEGEND
PROPOSED SIGN
EXISTING SIGN TO BE REMOVED
EXISTING SIGN
EXISTING SIGN LOCATIONS
PROPOSED SIGN LOCATIONS
EXISTING PAVEMENT TO BE REMOVED
(X-0) DEMOLITION QUANTITY (SEE DEMOLITION TABULATION)
NOTES:
SIGNING STATIONS ARE IN REFERENCE TO THE ℄ R/W.
THE CONTRACTOR SHALL VERIFY LOCATIONS OF EXISTING AND PROPOSED UTILITIES PRIOR TO CONSTRUCTING TRAFFIC CONTROL ITEMS.
FOR ADDITIONAL DETAILS SEE STD. CONST. DWG. TC-42.10, TC-42.20, TC-61.10, TC-65.10, AND TC-73.10.
FOR SIGNING QUANTITIES SEE SHEET 211
℄ R/W USR 23
℄ R/W BELLEFONTE ST.
℄ CONST 93C
PC Sta. 42+52.10
PT Sta. 338+36.04
PC Sta. 341+72.54
SIGNALIZED INTERSECTION
MATCH LINE 342+50
MATCH LINE 10+50 SEE SHEET 225
CSX RAILROAD
REDUCED SPEED AHEAD TO REMAIN 337+95±
TO REMAIN 332+60± (NOT TO SCALE)
TO REMAIN 331+40± (NOT TO SCALE)
IRONTON-RUSSELL BRIDGE NO COMMERCIAL VEHICLES OVER 7T EXCEPT BUSES AND EMERGENCY VEHICLES (NOT TO SCALE)
WELCOME TO DOWNTOWN RUSSELL (DO NOT DISTURB)
WARNING CAMERA WATCH NEIGHBORHOOD (DO NOT DISTURB) (ON SPAN WIRE)
WITHIN A CIRCLE
DO NOT ENTER R5-1-30 340+80
R4-7-24 340+80
NO TURN ON RED R10-11A-24 (ON SPAN WIRE)
LEFT TURN SIGNAL R10-10L-24 (ON SPAN WIRE)
SPEED LIMIT 30 R2-1-24 (BRIDGE MTD, TYPE 2) 42+52
DI-H4-72 DI-H4-72 (BRIDGE MTD, TYPE 2) 41+70
ASHLAND IRONTON GREENUP
ASHLAND IRONTON RUSSELL DI-H4-72 DI-H4-72 DI-H4-72 338+50
NORTH 23 M3-1-24 M1-4-2-24 339+00
NORTH 244 MILE 0 M3-1-24 M1-5KY-30 D10-1-10 44+05
SOUTH NORTH 23 23 DOWNTOWN RUSSELL
SOUTH 23 NORTH 23 244 IRONTON OHIO TO 52 TO 93
NORTH 244 TO 52 TO 93
SOUTH 244 NORTH 23 TO 52 TO 93
DOWNTOWN RUSSELL IRONTON OHIO
M3-1-24 M1-5KY-30 M6-2RX-21 M1-4-2-24 M6-IL-21 M6-IR-21 M4-5-24 M1-4-2-24 M6-IR-21 M4-5-24 M1-5-2-24 M6-IR-21 M4-5-24 (BRIDGE MTD, TYPE 2) 9+60
M3-3-24 M1-4-2-24 M6-IL-21 M3-1-24 M1-4-2-24 M6-IR-21 M3-1-24 M1-5KY-30 M6-2R-21 D1-H4-48 9+55
M3-1-24 M1-5KY-30 M6-2RX-21 M1-4-2-24 M6-IL-21 M6-IR-21 M4-5-24 M1-4-2-24 M6-IR-21 M4-5-24 M1-5-2-24 M6-IR-21 M4-5-24 (BRIDGE MTD, TYPE 2) 43+82
M3-1-24 M1-5KY-30 M6-2R-21 M1-4-2-24 M6-IL-21 M6-IR-21 M4-5-24 M1-4-2-24 M6-IR-21 M4-5-24 M1-5-2-24 M6-IR-21 M4-5-24 (BRIDGE MTD, TYPE 2) 342+22
D1-H4-48 D1-H4-48 341+50
M3-3-24 M1-4-2-24 M6-IL-21 M3-1-24 M1-4-2-24 M6-IR-21 M3-1-24 M1-5KY-30 M6-2R-21 M1-4-2-24 M6-IL-21 M6-IR-21 M4-5-24 M1-4-2-24 M6-IR-21 M4-5-24 M1-5-2-24 M6-IR-21 M4-5-24 (BRIDGE MTD, TYPE 2) 341+50
M3-1-24 M1-5KY-30 M6-2RX-21 M1-4-2-24 M6-IL-21 M6-IR-21 M4-5-24 M1-4-2-24 M6-IR-21 M4-5-24 M1-5-2-24 M6-IR-21 M4-5-24 (BRIDGE MTD, TYPE 2) 43+82

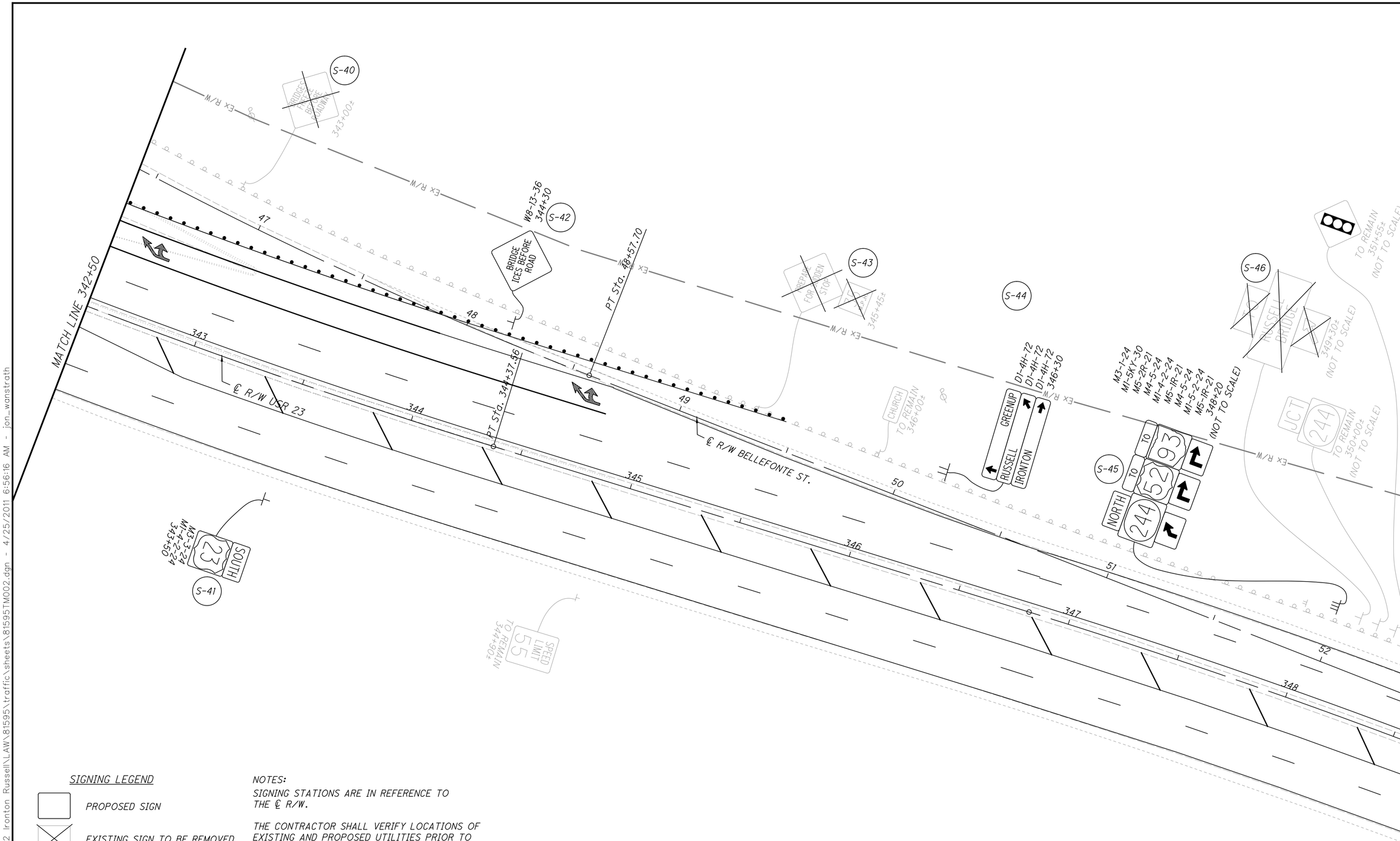

SIGNING LEGEND

- PROPOSED SIGN
- EXISTING SIGN TO BE REMOVED
- EXISTING SIGN
- EXISTING SIGN LOCATIONS
- PROPOSED SIGN LOCATIONS

NOTES:

SIGNING STATIONS ARE IN REFERENCE TO THE ℄ R/W.

THE CONTRACTOR SHALL VERIFY LOCATIONS OF EXISTING AND PROPOSED UTILITIES PRIOR TO CONSTRUCTING TRAFFIC CONTROL ITEMS.

FOR ADDITIONAL DETAILS SEE STD. CONST. DWG. TC-42.10, TC-42.20, TC-61.10, TC-65.10, AND TC-73.10.

FOR SIGNING QUANTITIES SEE SHEET 210

HORIZONTAL SCALE IN FEET 0 10 20 40

CALCULATED WFM
CHECKED VMF

SIGNING PLAN - KY
USR 23 STA. 342+50 AHEAD

LAW-93-0.00

J:\Project\O\ODOT\15005112 Ironton Russell\LAW\81595\traffic\sheets\81595TM002.dgn - 4/25/2011 6:56:16 AM - jon_wanstrath

SIGNING LEGEND

PROPOSED SIGN

EXISTING SIGN TO BE REMOVED

EXISTING SIGN

EXISTING SIGN LOCATIONS

PROPOSED SIGN LOCATIONS

NOTES:

SIGNING STATIONS ARE IN REFERENCE TO THE ℄ R/W.

THE CONTRACTOR SHALL VERIFY LOCATIONS OF EXISTING AND PROPOSED UTILITIES PRIOR TO CONSTRUCTING TRAFFIC CONTROL ITEMS.

FOR ADDITIONAL DETAILS SEE STD. CONST. DWG. TC-42.10, TC-42.20, TC-61.10, TC-65.10, AND TC-73.10.

FOR SIGNING QUANTITIES SEE SHEET 211

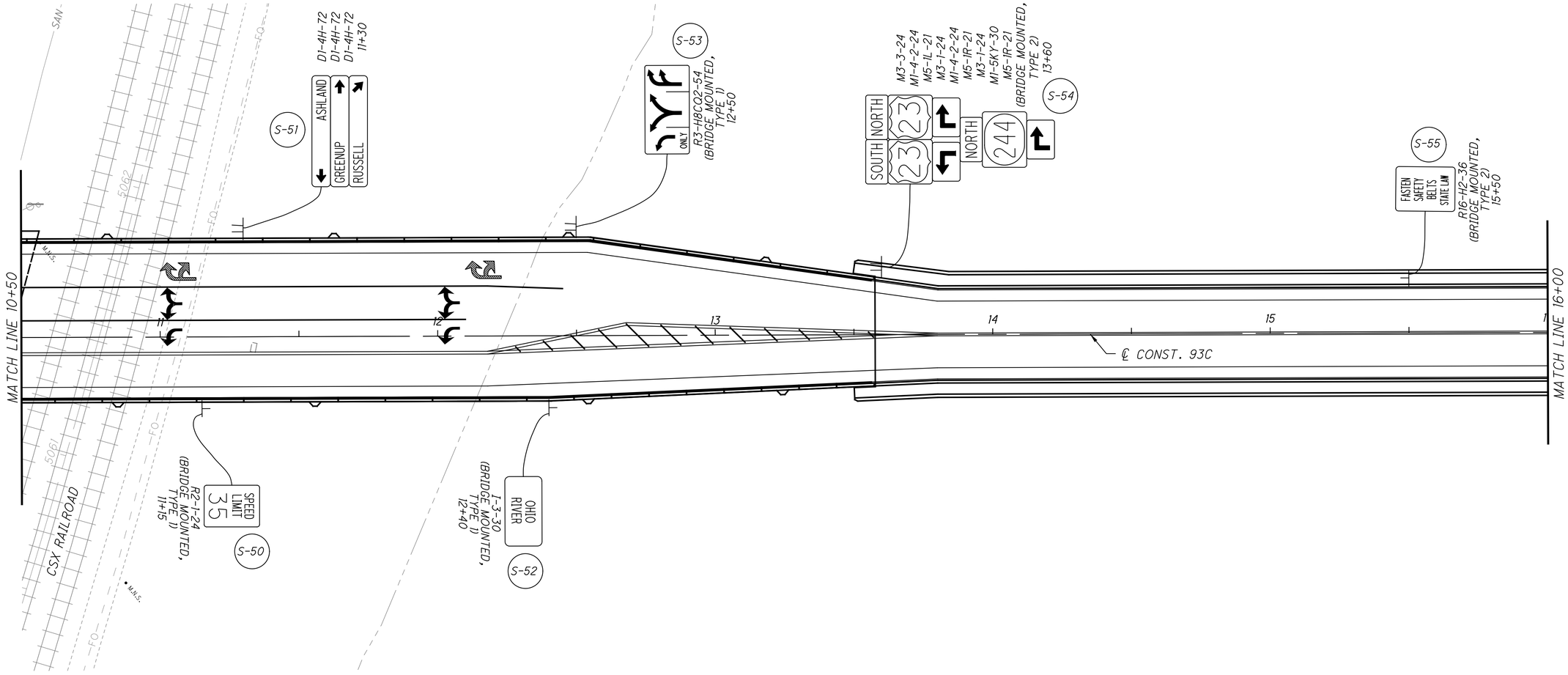

HORIZONTAL SCALE IN FEET
0 10 20 40

CALCULATED WFM
CHECKED VMF

SIGNING PLAN - KY
93C STA. 10+50 TO STA. 16+00

LAW-93-0.00

225
788

J:\Project\O\ODOT\15005112 Ironton Russell\LAW\81595\traffic\sheets\81595TM003.dgn - 4/25/2011 6:56:17 AM - jon_wanstrath

SIGNING LEGEND

PROPOSED SIGN

EXISTING SIGN TO BE REMOVED

EXISTING SIGN

EXISTING SIGN LOCATIONS

PROPOSED SIGN LOCATIONS

NOTES:

SIGNING STATIONS ARE IN REFERENCE TO THE ℄ R/W.

THE CONTRACTOR SHALL VERIFY LOCATIONS OF EXISTING AND PROPOSED UTILITIES PRIOR TO CONSTRUCTING TRAFFIC CONTROL ITEMS.

FOR ADDITIONAL DETAILS SEE STD. CONST. DWG. TC-42.10, TC-42.20, TC-61.10, TC-65.10, AND TC-73.10.

FOR SIGNING QUANTITIES SEE SHEET 211

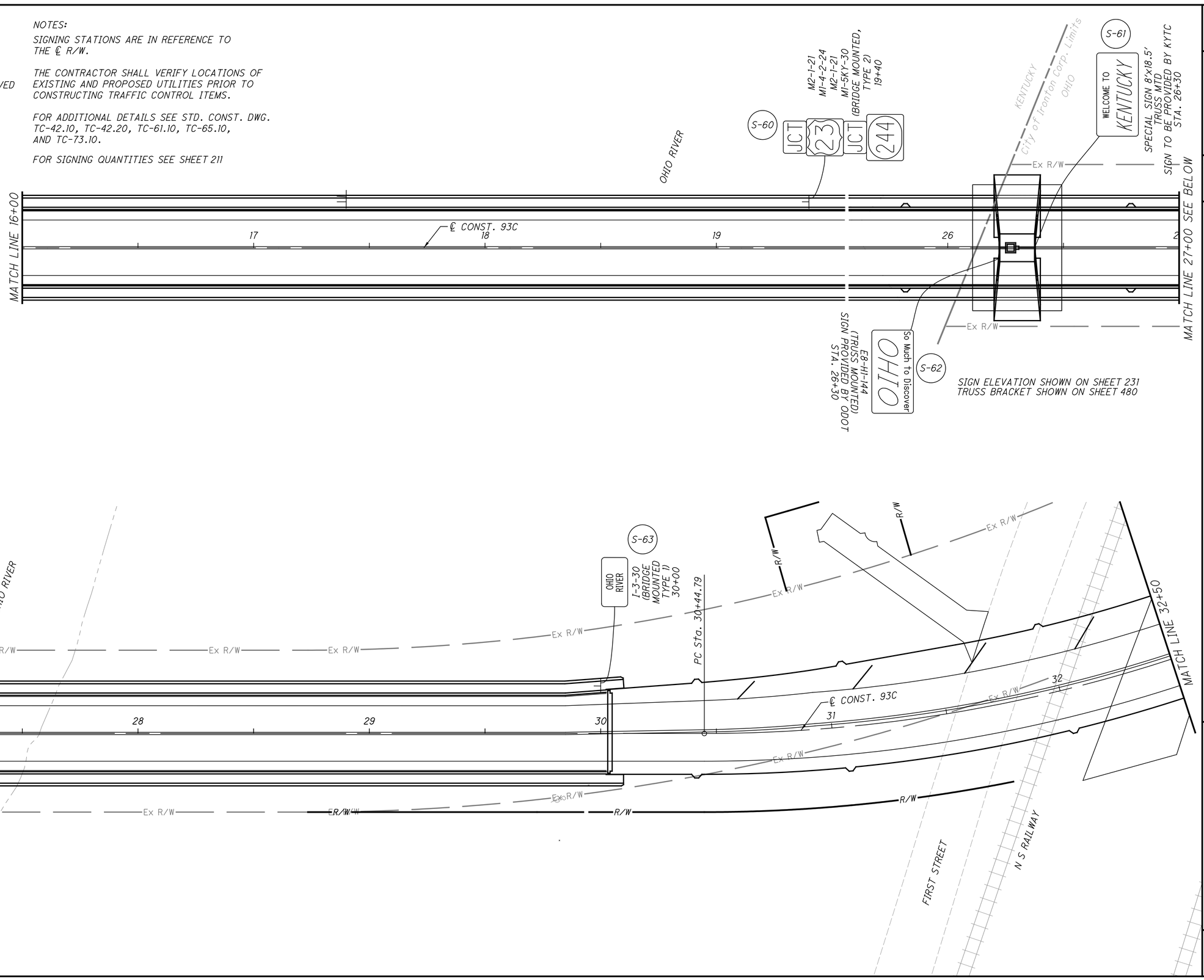

SIGNING PLAN - KY & OHIO
93C STA. 16+00 TO STA. 32+50

LAW-93-0.00

HORIZONTAL SCALE IN FEET
0 10 20 40

CALCULATED WFM
CHECKED VMF

226
788

J:\Project\O\ODOT\15005112 Ironton Russell\LAW\81595\traffic\sheets\81595TM004.dgn - 4/25/2011 6:56:19 AM - jon_wanstrath

SIGNING LEGEND

PROPOSED SIGN

EXISTING SIGN TO BE REMOVED

EXISTING SIGN

EXISTING SIGN LOCATIONS

PROPOSED SIGN LOCATIONS

NOTES:

SIGNING STATIONS ARE IN REFERENCE TO THE ℄ R/W.

THE CONTRACTOR SHALL VERIFY LOCATIONS OF EXISTING AND PROPOSED UTILITIES PRIOR TO CONSTRUCTING TRAFFIC CONTROL ITEMS.

FOR ADDITIONAL DETAILS SEE STD. CONST. DWG. TC-42.10, TC-42.20, TC-61.10, TC-65.10, AND TC-73.10.

FOR SIGNING QUANTITIES SEE SHEET 211

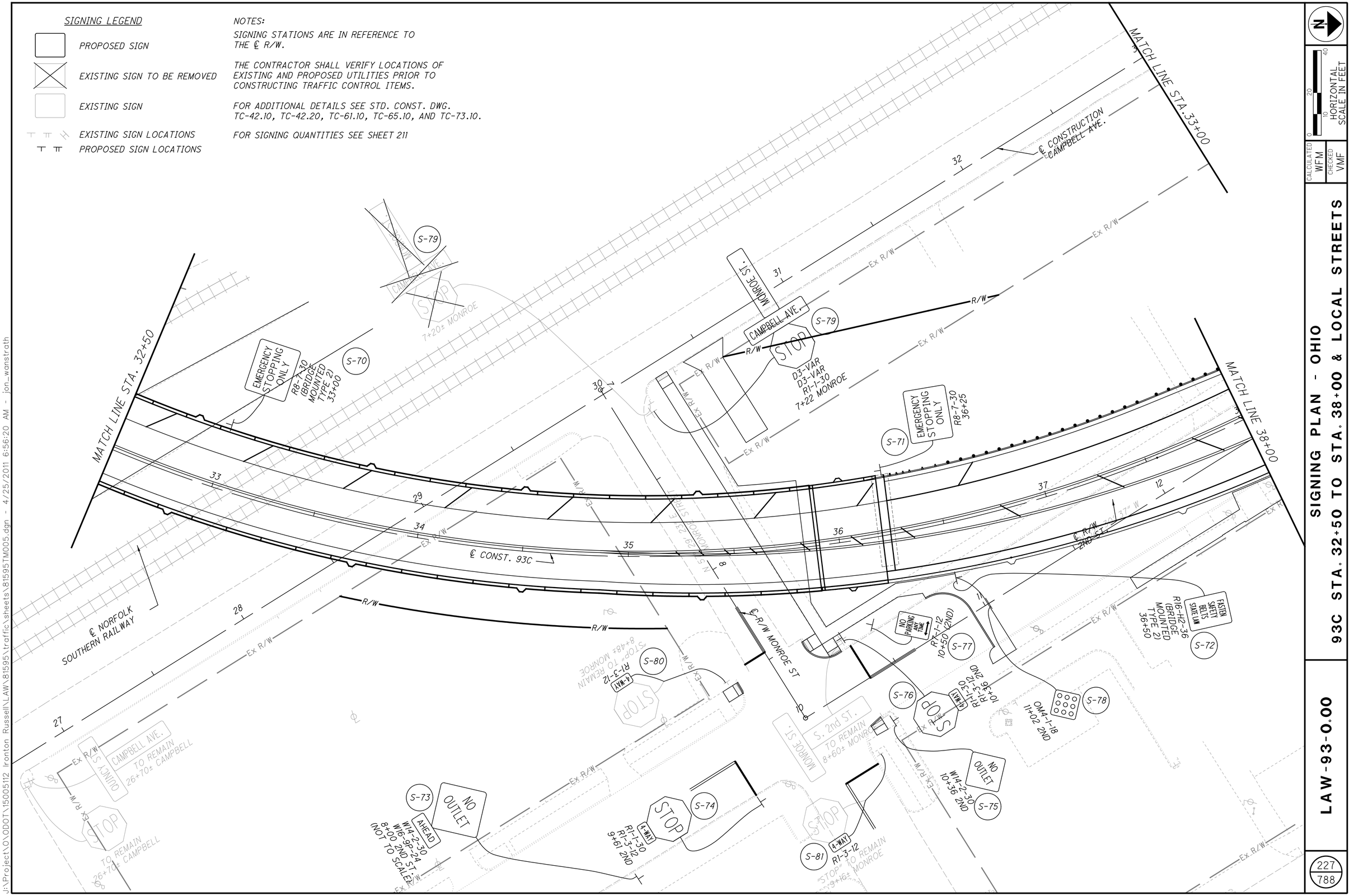

SIGNING PLAN - OHIO

93C STA. 32+50 TO STA. 38+00 & LOCAL STREETS

LAW-93-0.00

CALCULATED WFM

CHECKED VMF

HORIZONTAL SCALE IN FEET 0 10 20 40

227
788

J:\Project\OH\ODOT\15005112 Ironton Russell\LAW\81595\traffic\sheets\81595TM005.dgn - 4/25/2011 6:56:20 AM - jon_wanstrath

SIGNING LEGEND

PROPOSED SIGN

EXISTING SIGN TO BE REMOVED

EXISTING SIGN

EXISTING SIGN LOCATIONS

PROPOSED SIGN LOCATIONS

NOTES:

SIGNING STATIONS ARE IN REFERENCE TO THE ℄ R/W.

THE CONTRACTOR SHALL VERIFY LOCATIONS OF EXISTING AND PROPOSED UTILITIES PRIOR TO CONSTRUCTING TRAFFIC CONTROL ITEMS.

FOR ADDITIONAL DETAILS SEE STD. CONST. DWG. TC-42.10, TC-42.20, TC-61.10, TC-65.10, AND TC-73.10.

FOR SIGNING QUANTITIES SEE SHEET 211

EXISTING CROSSBUCK, LIGHTS, BELL, AND GATE (EACH SIDE)

℄ NORFOLK SOUTHERN RAILWAY

MATCH LINE 33+00

MATCH LINE 37+50

MATCH LINE 38+00

MATCH LINE 42+50

MATCH LINE 5+40 SEE SHEET 230

℄ R/W CONST. CAMPBELL AVE.

℄ CONST. 93C

℄ CONST. SR 93C STATION EQUATION: Sta. 40+45.75 BACK = Sta. 40+00.00 AHEAD

℄ R/W MADISON ST.

℄ R/W JEFFERSON ST.

PT Sta. 38+70.77

CAMPBELL AVE.

JEFFERSON ST.

S. 2nd ST.

RUSSELL, KY

SIGNALIZED INTERSECTION

DRIVE

Ex R/W

R/W

S-88 S-89 S-90 S-91 S-92 S-93 S-94 S-95 S-96 S-97 S-98 S-99 S-100 S-101 S-102 S-103 S-104 S-105 S-106 S-107 S-108 S-109 S-110 S-111 S-112 S-113 S-114 S-115 S-116 S-117 S-118 S-119 S-120 S-121 S-122 S-123 S-124 S-125

W14-2-30 5+30 OUTLET

OM4-I-18 6+15 GUARDRAIL MOUNTED

PT Sta. 38+70.77 6+42±

STOP TO REMAIN 5+13±

M3-1-36 34+20

W10-2L-30 35+20

R7-1-12 35+50 NO PARKING ANYTIME

D3-1-VAR D3-1-VAR R1-1-30 R1-3-12 36+22

STOP 3-WAY 3+20±

DO NOT BLOCK INTERSECTION R1-1-30 R1-3-12 R10-7-24 3+45 LIGHT POLE MOUNTED

W10-1-36 4+05

R9-3A-30 3+35

R3-7R-30 M1-4-2-24 M6-1R-21 3+70

D1-H4-1L-48 4+29 (POLE MOUNTED)

RIGHT LANE MUST TURN RIGHT

TO 23 EAST TRUCK ROUTE

TO 23 WEST TRUCK ROUTE

M3-12-24 R14-1-24 M6-1L-21 (ARM MOUNTED) 4+19

M4-5-24 M1-4-2-24 M6-3-21 (ARM MOUNTED) 4+33

D3-1-VAR D3-1-VAR R1-3-12 37+25

37+07±

S. 2nd ST. 13+80±

TO 23 M4-5-24 M1-4-2-24 39+10

SPEED LIMIT 35 R2-1-24 40+10

TO 23 52 93 WEST TRUCK ROUTE

M4-5-24 M1-4-2-24 M6-1L-21

M4-5-24 M1-4-2-24 M6-1R-21 (ARM MOUNTED) 4+42

M3-4-24 R14-1-24 M6-1R-21

RUSSELL, KY D1-H4-48 (POLE MOUNTED) 42+32

42+24±

RUSSELL, KY D1-H4-1L-48 (POLE MOUNTED) 5+34

JEFFERSON ST. D3-1-VAR D3-1-VAR (POLE MTD.) 42+38

S. 2nd ST.

M4-5-24 M1-4-2-24 M6-3-21 (ARM MOUNTED) 42+38

M3-4-24 R14-1-24 M6-1R-21

TO 52 93 WEST EAST TRUCK ROUTE TRUCK ROUTE

M4-5-24 M4-5-24 M3-4-24 M1-4-2-24 M1-5-2-24 R14-1-24 M6-3-21 M6-3-21 M6-1R-21 (ARM MOUNTED) 42+38

R3-H8BH-36 (BRIDGE MOUNTED TYPE II) 38+65 ONLY

OM4-I-18 7+20

W14-2-30 8+40 NO OUTLET (NOT TO SCALE)

HORIZONTAL SCALE IN FEET 0 10 20 40

CALCULATED WFM CHECKED VMF

SIGNING PLAN - OHIO

93C STA. 38+00 TO STA. 42+50 & LOCAL STREETS

LAW-93-0.00

228 788

J:\Project\OA\ODOT\15005112 Ironton Russell\LAW\81595\traffic\sheets\81595TM006.dgn - 4/25/2011 6:56:21 AM - jon_wanstrath

SIGNING LEGEND

PROPOSED SIGN

EXISTING SIGN TO BE REMOVED

EXISTING SIGN

EXISTING SIGN LOCATIONS

PROPOSED SIGN LOCATIONS

X-0 DEMOLITION QUANTITY (SEE DEMOLITION PLANS) SHOWN FOR REFERENCE. QUANTITIES INCLUDED IN DEMOLITION PLANS.

NOTES:

SIGNING STATIONS ARE IN REFERENCE TO THE ℄ R/W.

THE CONTRACTOR SHALL VERIFY LOCATIONS OF EXISTING AND PROPOSED UTILITIES PRIOR TO CONSTRUCTING TRAFFIC CONTROL ITEMS.

FOR ADDITIONAL DETAILS SEE STD. CONST. DWG. TC-42.10, TC-42.20, TC-61.10, TC-65.10, AND TC-73.10.

FOR SIGNING QUANTITIES SEE SHEETS 217 & 217 .

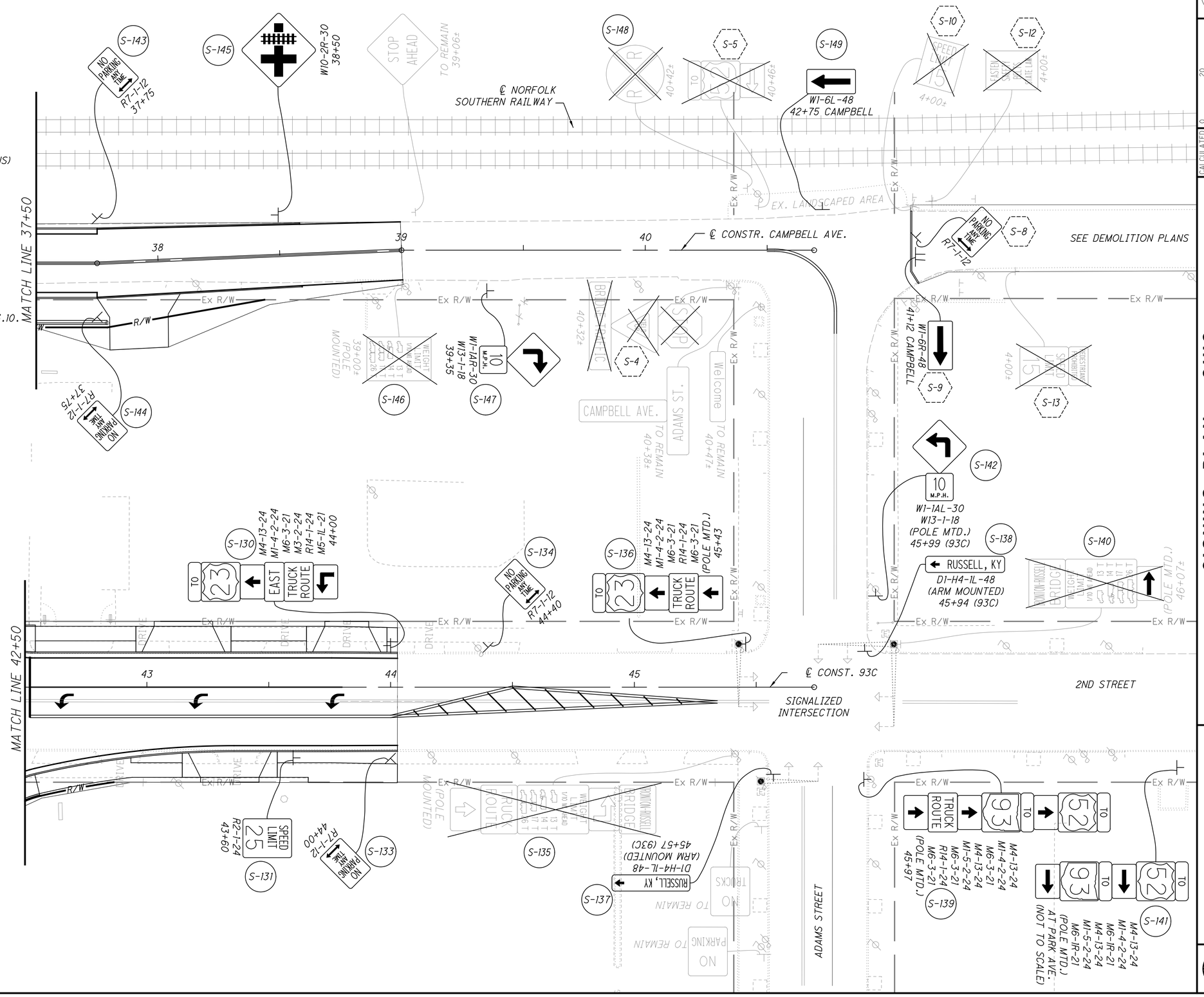

HORIZONTAL SCALE IN FEET
0 10 20 40

CALCULATED WFM
CHECKED VMF

SIGNING PLAN - OHIO
93C STA. 42+50 AHEAD & LOCAL STREETS
LAW-93-0.00

229
788

J:\Project\OA\ODOT\15005112 Ironton Russell\LAW\81595\traffic\sheets\81595TM007.dgn - 4/25/2011 6:56:22 AM - jon_wanstrath

SIGNING LEGEND

PROPOSED SIGN

EXISTING SIGN TO BE REMOVED

EXISTING SIGN

EXISTING SIGN LOCATIONS

PROPOSED SIGN LOCATIONS

NOTES:

SIGNING STATIONS ARE IN REFERENCE TO THE ℄ R/W.

THE CONTRACTOR SHALL VERIFY LOCATIONS OF EXISTING AND PROPOSED UTILITIES PRIOR TO CONSTRUCTING TRAFFIC CONTROL ITEMS.

FOR ADDITIONAL DETAILS SEE STD. CONST. DWG. TC-42.10, TC-42.20, TC-61.10, TC-65.10, AND TC-73.10.

FOR SIGNING QUANTITIES SEE SHEET 211

MATCH LINE 5+40 SEE SHEET 228

℄ R/W 3RD ST.

℄ CONSTR. 3RD ST.

SIGNALIZED 52 INTERSECTION

℄ CONSTR. JEFFERSON ST.

S-160 NO PARKING ANY TIME R7-1-12 46+90 (NOT TO SCALE)

S-161 NO PARKING ANY TIME R7-1-12 46+90 NOT TO SCALE)

S-162 ONLY R3-H8BH-36 48+95

S-163 TRUCK ROUTE 23 TO R14-1-24 M5-1L-21 M5-1L-21 M4-5-24 M1-4-2-24 M5-1L-21 49+95

S-164 NO PARKING ANY TIME R7-1-12 50+25

S-165 EAST BUSINESS 52 TRUCK ROUTE M3-2-24 M4-3-24 M1-4-2-24 R14-1-24 50+75

S-166 NO CRUISING ZONE RE-ERECT 51+00 50+43± NO PARKING ANY TIME R7-1-12 50+60

S-167 NO PARKING 51+69±

S-168 TRUCK ROUTE 51+49±

S-169 S. 3rd ST. JEFFERSON ST. D3-1-VAR D3-1-VAR 6+34 POLE MTD.

S-170 R14-1-24 M6-1R-21 6+10 TRUCK ROUTE

S-171 STOP R1-1-30 6+23±

S-172 ONLY R3-H8BH-36 5+57

S-173 TRUCK ROUTE 7+23±

S-174 W11-8-30 7+50

S-175 NO PARKING ANY TIME R7-1-12 8+40

S-176 TRUCK ROUTE 5+50

S-177 TO 23 TO 52 M4-5-24 M1-4-2-24 M5-1L-21 M4-5-24 M1-4-2-24 M5-1R-21 TO 93 WEST TRUCK ROUTE M4-5-24 M1-4-2-24 M5-1R-21 M3-4-24 R14-1-24 M5-1R-21 5+60

S-178 ONLY R3-H8BH-36 6+10

S-179 TRUCK ROUTE TO 23 M4-5-24 M1-4-2-24 M6-1L-21 R14-1-24 M6-1L-21 (POLE MTD.) 50+00

S-180 S. 3rd ST. JEFFERSON ST. D3-1-VAR D3-1-VAR 7+26

S-181 STOP R1-1-30 7+30±

S-182 ONLY R3-H8BH-36 8+00

S-183 NO PARKING ANY TIME R7-1-12 8+40

S-184 EAST BUSINESS 52 (POLE MOUNTED) 52+63±

S-185 TO 23 M4-5-24 M1-4-2-24 M6-1R-21 52+85

S-187 NO PARKING ANY TIME R7-1-12 52+90

S-188 NO PARKING 53+39±

S-189 NO CRUISING ZONE RE-ERECT 53+70 53+59±

S-190 ONLY R3-H8BH-36 54+05

S-191 NO PARKING ANY TIME R7-1-12 54+20

S-192 NO PARKING ANY TIME R7-1-12 54+50

HORIZONTAL SCALE IN FEET 0 10 20 40

CALCULATED WFM CHECKED VMF

SIGNING PLAN - OHIO

JEFFERSON STA. 5+40 AHEAD & 3RD ST.

LAW-93-0.00

230 788

J:\Project\OV\ODOT\15005112 Ironton Russell\LAW\81595\traffic\sheets\81595TM008.dgn - 4/25/2011 6:56:24 AM - jon_wanstrath

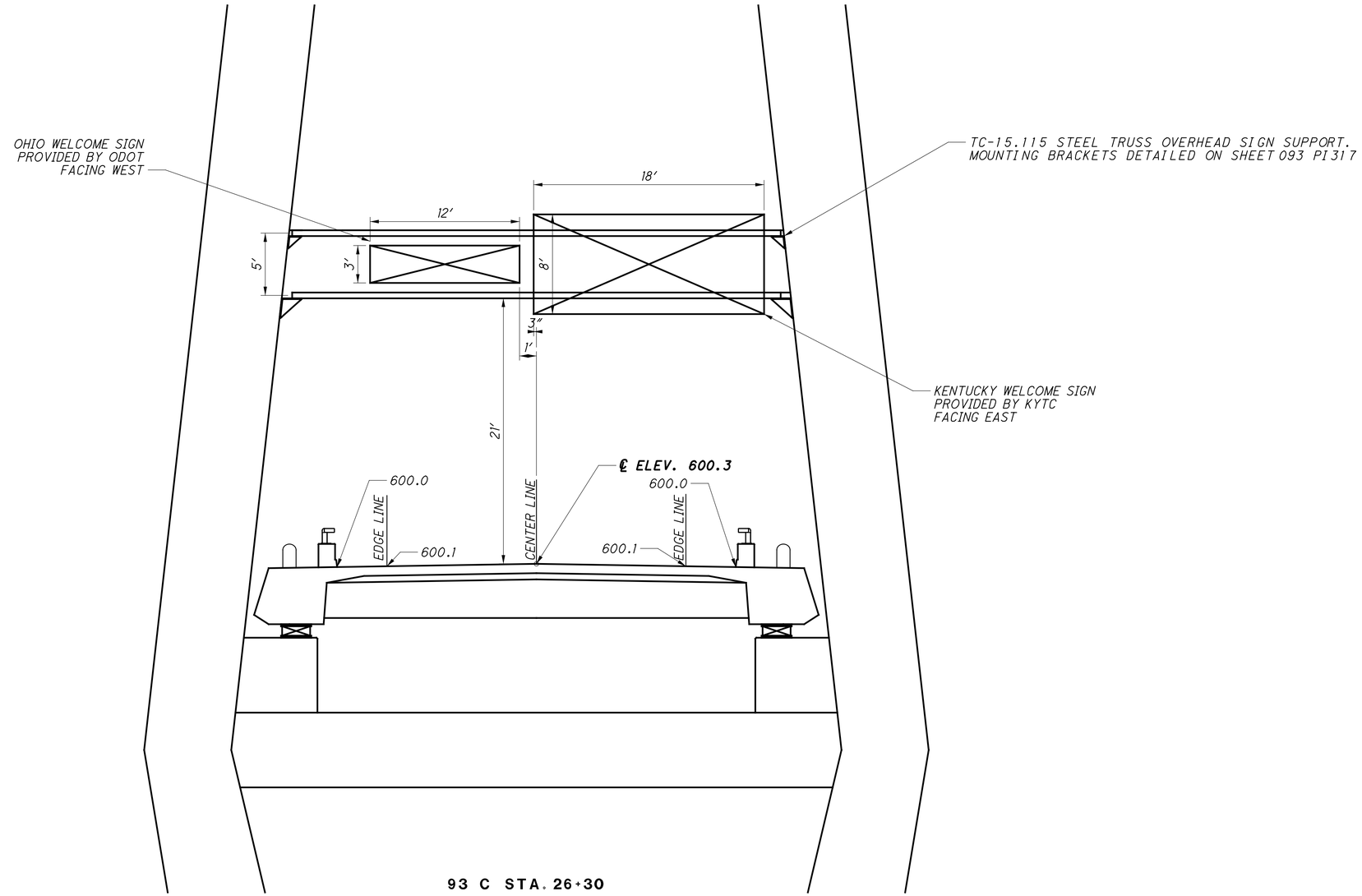

93 C STA. 26+30
WESTBOUND

CALCULATED BER
CHECKED VMF

TRAFFIC CONTROL - SIGN ELEVATION

LAW-93-0.00

J:\Project\O\ODOT\15005112 Ironton Russell\LAW\81595\traffic\sheets\81595TE001.dgn - 4/25/2011 6:56:25 AM - jon_wanstrath

POWER SUPPLY FOR TRAFFIC SIGNALS

ELECTRIC POWER SHALL BE OBTAINED FROM THE AEP / OHIO POWER AT THE LOCATIONS INDICATED ON THE PLANS. POWER SUPPLIED SHALL BE 120/240 VOLTS.

STRAIN POLE FOUNDATION ELEVATIONS

ELEVATIONS SHOWN IN THE PLANS FOR STRAIN POLE FOUNDATIONS ARE FOR COMPUTATIONAL PURPOSES ONLY. THE ACTUAL ELEVATION OF THE FOUNDATION SHALL BE IN ACCORDANCE WITH SCD TC-21.20 PROVIDED THE EXISTING SLOPE IS LESS THAN 6:1.

AT LOCATIONS WHERE THE EXISTING SLOPE IS 6:1 OR GREATER, THE BURIED DEPTH OF FOUNDATION, AS SHOWN IN SCD TC-21.20 SHALL APPLY TO THE LOW SIDE OF THE SLOPE. THE TOP OF THE FOUNDATION SHALL BE SET 2 INCHES ABOVE THE EXISTING SURFACE ON THE HIGH SIDE OF THE SLOPE. THE ADDITIONAL DEPTH OF FOUNDATION NECESSARY TO MEET THESE REQUIREMENTS SHALL BE ADDED TO THE FORMED TOP.

ITEM 632, POWER SERVICE, AS PER PLAN

POWER SERVICE SHALL BE AS PER CMS ITEM 632 AND SCD TC-83.10 WITH THE FOLLOWING EXCEPTIONS:

1. THE METER BASE MOUNTING HEIGHT SHALL BE NO MORE THAN 5 FEET HIGH TO THE CENTER OF THE METER BASE FROM THE GROUND.

2. THE CONTRACTOR SHALL SUPPLY THE NECESSARY METER BASES.

3. ALL POWER SERVICES SHALL BE METERED. THE METER SHALL HAVE A LEVER OPERATED BYPASS.

DISCONNECT SWITCH ENCLOSURES FURNISHED IN ACCORDANCE WITH CMS ITEM 632, POWER SERVICE, AS PER PLAN, SHALL INCLUDE A PADLOCK EQUAL TO MASTER NO. 4BKA OR WILSON BOHANNON 660, WITH LOCK BODY OF BRONZE OR BRASS AND KEYING SHALL BE TO THE STATE MASTER.

THE CONTRACTOR SHALL CONTACT THE METER SECTION OF THE POWER COMPANY FOR INFORMATION REGARDING THE METER BASE INSTALLATION PRIOR TO ORDERING POLES. THE CONTRACTOR WILL BE RESPONSIBLE FOR REQUESTING AND SCHEDULING ANY INSPECTIONS THE POWER COMPANY MAY REQUIRE FOR THE POWER SERVICE HOOK UP. THE CONTRACTOR SHALL BE RESPONSIBLE TO CONTACT THE POWER COMPANY FOR THE ELECTRICAL SERVICE CONNECTION. UNDER NO CIRCUMSTANCES SHALL THE CONTRACTOR SPLICE POWER CABLE INTO THE POWER COMPANY'S CIRCUITS. THE VOLTAGE SUPPLIED SHALL BE NOMINALLY 120 VOLTS. THE CONTRACTOR IS RESPONSIBLE FOR OBTAINING ANY NECESSARY PERMITS AND THE PAYING OF ALL FEES. THE CONTRACTOR SHALL PAY ALL POWER CHARGES UNTIL THE SIGNAL IS ACCEPTED BY THE MAINTAINING AGENCY.

ITEM 632, VEHICULAR SIGNAL HEAD, (LED), YELLOW, BY TYPE, (W/ BACKPLATE), AS PER PLAN

1

IN ADDITION TO THE REQUIREMENTS OF CMS 632 AND 732, THE FOLLOWING REQUIREMENTS SHALL ALSO APPLY:

SIGNAL SECTIONS:
1. SIGNAL HEADS AND VISORS SHALL BE CONSTRUCTED OF POLYCARBONATE PLASTIC AND MEET ITE SPECIFICATIONS.
2. PIPE, SPACERS AND FITTINGS CONSTRUCTED OF POLYCARBONATE PLASTIC MAY BE USED IN LIEU OF GALVANIZED STEEL OR ALUMINUM.
3. PROPER EXTERIOR COLORS SHALL BE OBTAINED BY USE OF COLORED PLASTIC MATERIAL RATHER THAN PAINTING.

MOUNTING HARDWARE:
1. ALL SIGNAL HEADS SHALL BE RIGIDLY MOUNTED TO THE MAST ARM WITH THE YELLOW LENS LOCATED IN FRONT OF THE MAST ARM.
2. ALL UPPER SIGNAL SUPPORT HARDWARE AND PIPING UP TO AND INCLUDING THE WIRE INLET FITTING SHALL BE FERROUS METAL FOR SIGNAL DISPLAYS OF TWO OR MORE SECTIONS.
3. THE ENTRANCE FITTING SHALL BE OF THE TRI-STUD DESIGN WITH SERRATED RINGS IN ORDER TO ACHIEVE POSITIVE LOCKING.

THE DEPARTMENT WILL MEASURE "VEHICULAR SIGNAL HEAD, LED, YELLOW, BY TYPE, AS PER PLAN" BY THE NUMBER OF COMPLETE UNITS FURNISHED AND INSTALLED, AND WILL INCLUDE ALL SUPPORT AND MOUNTING HARDWARE, DISCONNECT HANGERS, CLOSURE CAPS, DIMMERS, AND LAMPS AS SPECIFIED.

1

ITEM 632, PEDESTRIAN SIGNAL HEAD, (LED), (COUNTDOWN), TYPE D2, AS PER PLAN

IN ADDITION TO THE REQUIREMENTS OF CMS 632 AND 732, THE FOLLOWING REQUIREMENTS SHALL ALSO APPLY:

1. SIGNAL HEADS AND VISORS SHALL BE CONSTRUCTED OF POLYCARBONATE PLASTIC AND MEET ITE SPECIFICATIONS.
2. PIPE, SPACERS AND FITTINGS CONSTRUCTED OF POLYCARBONATE PLASTIC MAY BE USED IN LIEU OF GALVANIZED STEEL OR ALUMINUM.
3. PROPER EXTERIOR COLORS SHALL BE OBTAINED BY USE OF COLORED PLASTIC MATERIAL RATHER THAN PAINTING.

THE DEPARTMENT WILL MEASURE "PEDESTRIAN SIGNAL HEAD, (LED), (COUNTDOWN), TYPE D2, AS PER PLAN" BY THE NUMBER OF COMPLETE UNITS FURNISHED AND INSTALLED, AND WILL INCLUDE ALL SUPPORT AND MOUNTING HARDWARE, CLOSURE CAPS, AND LAMPS AS SPECIFIED.

GROUNDING AND BONDING

THE REQUIREMENTS OF THE CONSTRUCTION AND MATERIAL SPECIFICATIONS (CMS) AND THE TC SERIES OF STANDARD CONSTRUCTION DRAWINGS ARE MODIFIED AS FOLLOWS:

1. ALL METALLIC PARTS CONTAINING ELECTRICAL CONDUCTORS SHALL BE PERMANENTLY JOINED TO FORM AN EFFECTIVE GROUND FAULT CURRENT PATH BACK TO THE GROUNDED CONDUCTOR IN THE POWER SERVICE DISCONNECT SWITCH.

   A. PROVIDE AN EQUIPMENT GROUNDING CONDUCTOR IN METALLIC CONDUITS (725.04) IN ADDITION TO THE CONDUCTORS SPECIFIED AND BOND THE CONDUIT TO THIS GROUNDING CONDUCTOR.
   B. WHEN AN EQUIPMENT GROUNDING CONDUCTOR IS REQUIRED IN PLASTIC CONDUIT (725.05), THE INSTALLATION SHALL INCLUDE A SEPARATE EQUIPMENT GROUNDING CONDUCTOR IN ADDITION TO THE CONDUCTORS SPECIFIED.
   C. METALLIC CONDUIT CARRYING THE LOOP WIRES FROM IN THE PAVEMENT TO THE PULL BOX SPLICE LOCATION WILL ONLY BE BONDED AT THE PULL BOX END, AND WILL NOT CONTAIN AN EQUIPMENT GROUNDING CONDUCTOR.
   D. IF MULTIPLE CONDUIT RUNS BEGIN AND END AT THE SAME POINTS, ONLY ONE EQUIPMENT GROUNDING CONDUCTOR IS REQUIRED.
   E. IF AN EQUIPMENT GROUNDING CONDUCTOR IS NEEDED IN CONDUIT BETWEEN SIGNALIZED INTERSECTIONS FOR UNDERGROUND INTERCONNECT CABLE, THE GROUNDING SYSTEM FOR EACH SIGNALIZED INTERSECTION WILL BE SEPARATED ABOUT MIDWAY BETWEEN THE INTERSECTIONS.
   F. THE MESSENGER WIRE AT SIGNALIZED INTERSECTIONS WILL BE USED AS THE CONDUCTIVE PATH FROM CORNER TO CORNER IF CONDUIT IS NOT PROVIDED UNDER THE ROADWAY. WHEN CONDUIT CONNECTS THE CORNERS OF AN INTERSECTION, AN EQUIPMENT GROUNDING CONDUCTOR SHALL BE USED IN THE CONDUIT.

2. CONDUITS.
   A. THE 725.04 CONDUIT SHALL HAVE GROUNDING BUSHINGS INSTALLED AT ALL TERMINATION POINTS. THE BUSHING MATERIAL SHALL BE COMPATIBLE WITH GALVANIZED STEEL CONDUIT AND THE GROUNDING LUG MATERIAL SHALL BE COMPATIBLE FOR USE WITH COPPER WIRE. THREADED OR COMPRESSION TYPE BUSHINGS MAY BE USED.
   B. THE 725.05 CONDUIT SHALL HAVE THE INSIDE AND OUTSIDE DIAMETERS OF THE CONDUIT DEBURRED AT ALL TERMINATION POINTS.
   C. BOTH ENDS OF METALLIC CONDUIT SHALL BE BONDED TO THE EQUIPMENT GROUNDING CONDUCTOR.
   D. METALLIC CONDUIT MAY BE BONDED TO METALLIC BOXES THROUGH THE USE OF CONDUIT FITTINGS UL APPROVED FOR THIS TYPE OF CONNECTION, WITH THE BOX BONDED TO THE EQUIPMENT GROUNDING CONDUCTOR.

3. WIRE FOR GROUNDING AND BONDING.
   A. USE INSULATED, COPPER WIRE FOR THE EQUIPMENT GROUNDING CONDUCTOR. BONDING JUMPERS IN BOXES AND ENCLOSURES MAY BE BARE OR INSULATED COPPER WIRE. WIRE SIZE SHALL BE AS FOLLOWS:
      I. USE 4 AWG BETWEEN THE POWER SERVICE AND SUPPORTS, POLES, PEDESTALS, CONTROLLER OR FLASHER CABINETS.
      II. USE A MINIMUM 8 AWG BETWEEN LOOP DETECTOR PULL BOXES AND THE FIRST CONDUIT THAT REQUIRES A LARGER SIZE AS SPECIFIED IN 3.A.I ABOVE.
      III. USE A MINIMUM 8 AWG BETWEEN THE *PREPARE TO STOP WHEN FLASHING*INSTALLATION (INCLUDING SUPPORT) AND THE FIRST CONDUIT THAT REQUIRES A LARGER SIZE AS SPECIFIED IN 3.A.I ABOVE.
      IV. THE INSULATION SHALL BE GREEN OR GREEN WITH YELLOW STRIPE(S). FOR 4 AWG OR LARGER, INSULATION MAY ALSO BE BLACK WITH GREEN TAPE/LABELS INSTALLED AT ALL ACCESS POINTS.
   B. IN A HIGHWAY LIGHTING SYSTEM, THE EQUIPMENT GROUNDING CONDUCTOR SHALL BE THE SAME WIRE SIZE AS THE DUCT CABLE OR DISTRIBUTION CABLE CIRCUIT CONDUCTORS, WITH THE MINIMUM CONDUCTOR SIZE OF 4 AWG. BONDING JUMPERS WILL BE MINIMUM SIZE 4 AWG.

4. GROUND ROD.
   A. A 3/4 INCH SCHEDULE 40 PVC CONDUIT WILL BE USED IN FOUNDATIONS AND CONCRETE WALLS FOR THE GROUNDING CONDUCTOR (GROUND WIRE) RACEWAY TO THE GROUND ROD. SHOULD METALLIC CONDUIT BE USED, BOTH ENDS OF THE CONDUIT SHALL BE BONDED TO THE GROUNDING CONDUCTOR.
   B. THE TYPICAL GROUNDING CONDUCTOR (GROUND WIRE) SHALL BE 4 AWG INSULATED, COPPER.

5. THE GREEN CONDUCTOR IN SIGNAL CABLES (CONDUCTOR #4) SHALL NOT BE USED TO SUPPLY POWER TO A SIGNAL INDICATION. IT WILL BE CONNECTED TO THE SIGNAL BODY AS AN EQUIPMENT GROUND IN ALUMINUM HEADS AND IT WILL BE UNUSED IN PLASTIC HEADS. UNUSED CONDUCTORS SHALL BE GROUNDED IN THE CABINET. TYPICAL USE OF CONDUCTORS IS AS FOLLOWS:

COND. NO	COLOR	VEHICLE SIGNAL	PEDESTRIAN SIGNAL
1	BLACK	GREEN BALL	#1 WALK
2	WHITE	AC NEUTRAL	AC NEUTRAL
3	RED	RED BALL	#1 DW/FDW
4	GREEN	EQUIPMENT GROUND	EQUIPMENT GROUND
5	ORANGE	YELLOW BALL	#2 DW/FDW
6	BLUE	GREEN ARROW	#2 WALK
7	WHITE/BLACK STRIPE	YELLOW ARROW	NOT USED

6. POWER SERVICE AND DISCONNECT SWITCH.
   A. AT THE POWER SERVICE LOCATION, THE GROUNDING CONDUCTOR (GROUND WIRE) FROM THE DISCONNECT SWITCH NEUTRAL (AC-) BAR TO THE GROUND ROD SHALL BE A CONTINUOUS, UNSPLICED CONDUCTOR. IF SPLICED, IT SHALL BE AN EXOTHERMIC WELD BUTT SPICE.
   B. THE SERVICE NEUTRAL (AC-) SHALL ONLY BE CONNECTED TO GROUND AT THE PRIMARY POWER SERVICE DISCONNECT SWITCH.
      I. NEMA CONTROLLER CABINETS: IF A POWER SERVICE DISCONNECT SWITCH IS LOCATED BEFORE THE CONTROLLER CABINET, THE NEUTRAL (AC-) AND THE GROUNDING BARS IN THE CONTROLLER CABINET SHALL NOT BE CONNECTED TOGETHER AS SHOWN IN NEMA TS-2, FIGURE 5-4.
      II. IF SECONDARY DISCONNECT SWITCHES ARE CONNECTED AFTER THE PRIMARY DISCONNECT SWITCH, THE NEUTRAL (AC-) SHALL ONLY BE GROUNDED AT THE PRIMARY SWITCH. EQUIPMENT GROUNDING CONDUCTORS SHALL BE BROUGHT TO THE PRIMARY SWITCH, BUT SHALL BE GROUNDED AT BOTH SECONDARY AND PRIMARY SWITCHES.

7. PAYMENT - ALL MATERIALS AND WORK REQUIRED TO COMPLETE THE EFFECTIVE GROUND FAULT CURRENT PATH SYSTEM ARE INCIDENTAL TO THE CONDUCTORS INSTALLED BY CONTRACT.

ITEM 633 CONTROLLER UNIT, TYPE TS2/A1, WITH CABINET, TYPE TS2, AS PER PLAN

AS OF FEBRUARY 2011, THREE TRAFFIC SIGNAL CONTROLLER UNITS HAVE BEEN APPROVED FOR USE WITH RAILROAD PREEMPTION FOR ODOT. THESE UNITS AND POSSIBLE INTERFACES ARE INDICATED IN THE FOLLOWING TABLE:

CONTROLLER UNIT	RELAY INTERFACE	SOLID STATE INTERFACE	IEEE 1570 INTERFACE
2070l WITH CITY OF LA TSCP V	YES (WITH C11)	YES (WITH C11)	YES
ECONOLITE ASC/3	YES	YES	NO
SEIMENS WITH SEPAC	YES	YES	NO

ANY OTHER CONTROLLER UNIT PROPOSED FOR USE WITH RAILROAD PREEMPTION MUST BE PROVIDED TO ODOT FOR EXTENSIVE TESTING PRIOR TO CONSIDERATION. THE CONTROLLER UNIT MUST INCLUDE ALL EQUIPMENT NECESSARY TO FULLY EXERCISE ALL OF THE PREEMPTION FUNCTIONS.

FURNISH A CABINET SIZE THAT PROVIDES AMPLE SPACE FOR HOUSING THE CONTROLLER UNIT AND ALL ASSOCIATED ELECTRICAL DEVICES FURNISHED WITH IT, TOGETHER WITH ANY OTHER AUXILIARY DEVICES AND RAILROAD PREEMPTION EQUIPMENT THAT ARE SPECIFIED.

NO.	REVISIONS	DATE	REV. BY
1	PAY ITEMS REVISED	3/13	PAS

CALCULATED AJB | CHECKED VMF

TRAFFIC SIGNAL GENERAL NOTES - OHIO

LAW-93-0.00

J:\Project\O\ODOT\15005112 Ironton Russell\LAW\81595\signals\sheets\81595GN001.dgn - 8/18/2015 3:08:11 PM - amanda_beiting

J:\Project\O\ODOT\15005112 Ironton Russell\LAW\81595\signals\sheets\81595CN002.dgn - 8/18/2015 3:08:12 PM - amanda_belting

1

MAINTENANCE OF TRAFFIC SIGNAL/FLASHER INSTALLATION

THE CONTRACTOR SHALL BE RESPONSIBLE FOR MAINTAINING TRAFFIC SIGNAL/FLASHER INSTALLATIONS WITHIN THE PROJECT UNDER THE FOLLOWING CONDITIONS:
1. EXISTING SIGNAL/FLASHER INSTALLATIONS WHICH THE PLANS REQUIRE THE CONTRACTOR TO ADJUST, MODIFY, ADD ONTO OR REMOVE, OR WHICH THE CONTRACTOR ACTUALLY ADJUSTS, MODIFIES OR OTHERWISE DISTURBS. THE CONTRACTOR SHALL BE RESPONSIBLE FOR THE ENTIRE INSTALLATION (AT AN INTERSECTION) FROM THE TIME HIS OPERATIONS FIRST DISTURB THE INSTALLATION UNTIL THE INSTALLATION HAS BEEN SUBSEQUENTLY REMOVED OR MODIFIED AND THE WORK IS ACCEPTED.
2. NEW OR REUSED SIGNAL/FLASHER INSTALLATIONS OR DEVICES, INSTALLED BY THE CONTRACTOR. THE CONTRACTOR SHALL BE RESPONSIBLE FOR MAINTENANCE OF THESE FROM THE TIME OF INSTALLATION UNTIL THE WORK IS ACCEPTED.

THE CONTRACTOR SHALL CORRECT AS QUICKLY AS POSSIBLE ALL OUTAGES OR MALFUNCTIONS. HE SHALL PROVIDE THE MAINTAINING AGENCY AND THE ENGINEER SUCH ADDRESSES AND PHONE NUMBERS WHERE HIS MAINTENANCE FORCES CAN BE CONTACTED. THE CONTRACTOR SHALL PROVIDE ONE OR MORE PERSONS TO RECEIVE ALL CALLS AND DISPATCH THE NECESSARY MAINTENANCE FORCES TO CORRECT OUTAGES. SUCH A PERSON OR PERSONS MAY BE USED TO PERFORM OTHER DUTIES AS LONG AS PROMPT ATTENTION IS GIVEN TO THESE CALLS AND A PERSON IS READILY AVAILABLE CONTINUOUSLY 24 HOURS A DAY, 7 DAYS A WEEK. ALL LAMP OUTAGES, CABLE OUTAGES, ELECTRICAL FAILURES, EQUIPMENT MALFUNCTIONS AND MISALIGNED SIGNAL HEADS SHALL BE CORRECTED TO THE SATISFACTION OF THE ENGINEER WITH THE SIGNAL BACK TO SERVICE WITHIN FOUR HOURS AFTER THE CONTRACTOR HAS BEEN NOTIFIED OF THE OUTAGE.

IN THE EVENT NEW SIGNALS ARE DAMAGED PRIOR TO ACCEPTANCE, ALL DAMAGED EQUIPMENT EXCEPT POLES AND CONTROL EQUIPMENT SHALL BE REPLACED BY THE CONTRACTOR TO THE SATISFACTION OF THE ENGINEER WITH THE SIGNAL BACK IN SERVICE WITHIN 8 HOURS AFTER THE CONTRACTOR'S NOTIFICATION OF THE OUTAGE. THE CONTRACTOR SHALL ARRANGE FOR FULL TRAFFIC CONTROL UNTIL THE SIGNAL IS BACK IN OPERATION.

IF POLES AND/OR CONTROL EQUIPMENT ARE DAMAGED AND MUST BE REPLACED, THE CONTRACTOR SHALL MAKE TEMPORARY REPAIRS AS NECESSARY TO BRING THE SIGNAL BACK INTO FULL OPERATION WITHIN THE ALLOWED 8-HOUR PERIOD, AND SHALL MAKE PERMANENT REPAIRS OR REPLACEMENT AS SOON THEREAFTER AS POSSIBLE.

NONE OF THE ABOVE SHALL BE CONSTRUED AS COLLECTIVE OR CONSECUTIVE OUTAGE TIME PERIODS AT ANY ONE LOCATION. THAT IS, WHERE MORE THAN ONE OUTAGE OCCURS AT ANY ONE LOCATION THEN THE ALLOTTED TIME LIMIT SHALL BE FOR THE WORST SINGLE OUTAGE.

WHERE OUTAGES ARE THE DIRECT RESULT OF A VEHICLE ACCIDENT THE RESPONSE OF THE CONTRACTOR SHALL BE AS OUTLINED ABOVE. THE CONTRACTOR SHALL BE RESPONSIBLE FOR COLLECTION OF ANY COMPENSATION FOR THIS WORK FROM THOSE PARTIES RESPONSIBLE FOR THE DAMAGE.

WHERE THE CONTRACTOR HAS FAILED TO, OR CANNOT RESPOND TO, AN OUTAGE OR SIGNAL EQUIPMENT MALFUNCTION, AT THESE LOCATIONS WITHIN HIS RESPONSIBILITY, WITHIN PERIODS AS SPECIFIED ABOVE, THE ENGINEER MAY INVOKE THE PROVISIONS OF SECTION 105.15 AND ANY SUBSEQUENT BILLINGS TO THE STATE, THE CITY OF RUSSELL, KENTUCKY, OR THE CITY OF IRONTON, OHIO, FOR POLICE SERVICES AND MAINTENANCE SERVICES BY CITY FORCES SHALL BE DEDUCTED FROM MONIES DUE OR TO BECOME DUE THE CONTRACTOR IN ACCORDANCE WITH PROVISIONS OF SECTION 105.15.

THE CONTRACTOR SHALL PROVIDE THE MAINTENANCE SERVICE ENTIRELY WITH HIS FORCES OR HE MAY CHOOSE TO ENTER INTO A COOPERATIVE UNDERSTANDING WITH THE LOCAL MAINTAINING AGENCY TO PROVIDE THE MAINTENANCE. THE CONTRACTOR SHALL INFORM THE ENGINEER, IN WRITING, OF THE MAINTENANCE METHOD SELECTED.

THE CONTRACTOR SHALL BE RESPONSIBLE FOR ANY DAMAGE TO ANY TRAFFIC SIGNAL COMPONENTS REQUIRED TO BE HANDLED DURING THE RELOCATION OF POLES AND REVISIONS TO THE SIGNAL SYSTEM. WHEN A TRAFFIC SIGNAL MUST BE TAKEN OUT OF SERVICE BY THE CONTRACTOR, DUE TO CONSTRUCTION PROCEDURES, THIS OUTAGE SHALL NOT EXCEED ___ HOURS AND SHALL NOT INCLUDE THE HOURS OF ___ TO ___. ANY SIGNALIZED INTERSECTION, WHERE THE SIGNAL IS OUT OF SERVICE DUE TO CONSTRUCTION PROCEDURES, OR DUE TO AN OUTAGE OR MALFUNCTION OF EQUIPMENT AS DESCRIBED ABOVE, SHALL BE PROTECTED, BY THE CONTRACTOR, BY THE INSTALLATION OF TEMPORARY "STOP" SIGNS, EXCEPT FOR THE US23 AND BELLEFONTE STREET INTERSECTION WHICH SHALL BE PROTECTED BY OFF-DUTY CITY OF RUSSELL POLICE, HIRED BY THE CONTRACTOR.

ANY VEHICULAR TRAFFIC SIGNAL HEAD, EITHER NEW OR EXISTING WHICH WILL BE OUT OF OPERATION SHALL BE COVERED IN THE MANNER DESCRIBED IN 632.25.

THE CONTRACTOR SHALL MAINTAIN COMPLETE RECORDS OF MALFUNCTIONS INCLUDING:
1. TIME OF NOTIFICATION OF MALFUNCTION;
2. TIME OF WORK CREWS ARRIVAL TO CORRECT THE MALFUNCTION;
3. ACTIONS TAKEN TO CORRECT THE MALFUNCTION, INCLUDING A LIST OF PARTS REPAIRED OR REPLACED;
4. A DIAGNOSIS OF REASON FOR THE MALFUNCTION AND PROBABILITY OF REOCCURRENCE;
5. TIME OF COMPLETION OF THE REPAIR AND SYSTEM RESTORED TO FULL SERVICE.

A COPY OF THESE RECORDS SHALL BE PROVIDED TO THE ENGINEER WITHIN THREE (3) WORKING DAYS FOLLOWING COMPLETION OF EACH REPAIR.

ALL COSTS RESULTING FROM THE ABOVE REQUIREMENTS SHALL BE CONSIDERED TO BE INCLUDED IN THE LUMP SUM PRICE BID FOR ITEM 614, MAINTAINING TRAFFIC.

NO.	REVISIONS	DATE	REV. BY
1	REMOVED NOTE	8/15	VMF

CALCULATED AJB
CHECKED VMF

TRAFFIC SIGNAL GENERAL NOTES - OHIO

LAW-93-0.00

ITEM 632, SIGNALIZATION, MISC.: VITAL INDUCTIVE LOOP PROCESSOR

THIS ITEM OF WORK CONSISTS OF SUPPLYING, INSTALLING, PROGRAMMING AND TESTING THE EQUIPMENT AND MATERIALS NECESSARY TO CREATE A SELF-CHECKING INDUCTIVE LOOP DETECTION SYSTEM OF AT LEAST FOUR AVAILABLE CHANNELS.

SUPPLY A VITAL INDUCTIVE LOOP PROCESSOR UNIT AND PREFORMED OR DISCRETE-WIRE PAVEMENT LOOPS AS DESCRIBED IN BELOW.

DESCRIPTION

A. THE PURPOSE OF THIS SPECIFICATION IS TO SET FORTH THE OPERATION AND DESIGN REQUIREMENTS NECESSARY TO PROVIDE AN INDUCTIVE LOOP PROCESSOR SYSTEM FOR USE IN SAFETY CRITICAL APPLICATIONS. THIS DEVICE IS TYPICALLY USED TO PROVIDE DETECTION IN SITUATIONS SUCH AS QUEUE DETECTORS ADJACENT TO RAILROAD GRADE CROSSING, WHERE A VERY HIGH DEGREE OF LOOP RELIABILITY IS CRUCIAL.

B. THE WORD VITAL IMPLIES THAT THE CIRCUITRY IS SELF-CHECKING AND ALWAYS REVERTS TO A KNOWN (FAIL-SAFE) STATE UPON FAILURE. THIS IS ACCOMPLISHED BY MEANS OF AN AC-COUPLED OUTPUT THAT REQUIRES CONTINUOUS UPDATING FROM THE MICROPROCESSOR IN ORDER TO MAINTAIN A GIVEN OUTPUT STATE. SHOULD THE ICROPROCESSOR FAIL TO CONTINUOUSLY FOLLOW ITS PROPER EXECUTION STEPS, THE OUTPUT SHALL REVERT TO A KNOWN FAILURE STATE.

GENERAL

A. ENSURE THE INDUCTIVE LOOP PROCESSOR MONITORS AND ANALYZES SIGNALS AT LEAST FOUR INDEPENDENT CHANNELS CONNECTED TO ONE OR MORE INDUCTIVE LOOPS EACH EQUIPPED WITH AN INDEPENDENT CHECK LOOP.

B. ENSURE AN OCCUPIED/UNOCCUPIED SIGNAL AS WELL AS HEALTH STATUS IS GENERATED FOR EACH LOOP FOR INTERNAL PROCESSING.

C. ENSURE THE VITAL LOOP PROCESSOR CONTINUOUSLY MONITORS AND UPDATES THE DETECTION PARAMETERS OF FOUR INDEPENDENT LOOP CIRCUITS. ENSURE THE LOOP PROCESSOR WILL NOT "DE-TUNE" OR LOSE SENSITIVITY AND CAN MAINTAIN THE PRESENCE OF A VEHICLE AS LONG AS IT REMAINS IN THE LOOP DETECTION ZONE.

D. ENSURE THE FOUR LOOP CHANNELS PROVIDE CONSISTENT AND RELIABLE DETECTION OF HIGH-BED TRAILERS THROUGHOUT A LONG DETECTION ZONE AT LEAST 6'X30'

E. ENSURE THE EFFECTS OF ENVIRONMENTAL TRACKING ARE MINIMIZED TO RETAIN PREDICTABLE DETECTION AND DROPOUT POINTS WHEN A VEHICLE ENTERS OR EXITS THE DETECTION ZONE.

F. ENSURE THE LOOP PROCESSOR PERIODICALLY ACTIVATES EACH CHECK LOOP SIMULATING THE PRESENCE OF A VEHICLE WITHIN THE DETECTION LOOP. ENSURE THAT IF THE INDUCTANCE CHANGE GENERATED DURING THE CHECK CYCLE OF ANY LOOP DOES NOT MATCH A STORED REFERENCE VALUE, THE PROCESSOR DISPLAYS A MESSAGE INDICATING A FAILURE OF THAT PARTICULAR LOOP.

G. ENSURE THE LOOP PROCESSOR MAKES USE OF A SEQUENTIAL SCANNING TECHNIQUE TO ELIMINATE PICKUP FROM ADJACENT LOOPS.

H. ENSURE THE LOOP PROCESSOR MUST BE CAPABLE OF SEQUENTIALLY SCANNING UP TO SIXTEEN LOOP CHANNELS BY INTERCONNECTION TO UP TO THREE ADDITIONAL LOOP PROCESSORS VIA A SYNC FUNCTION. ENSURE A COMPLETE 16 LOOP SCAN SEQUENCE TAKES LESS THAN 500 MS.

I. ENSURE INPUT/OUTPUT MAPPING ALLOWS THE USER TO ASSIGN THE INPUTS (LOOP, VITAL, AND/OR HEALTH) TO THE VITAL OUTPUTS. ENSURE THE VITAL OUTPUT OF ONE LOOP PROCESSOR CAN BE CONNECTED TO A VITAL INPUT OF ANOTHER LOOP PROCESSOR, ALLOWING TWO PROCESSORS TO SHARE MONITORING DUTIES OF THE SAME LOOPS.

INPUTS AND OUTPUTS

A. ENSURE FOUR ISOLATED VITAL INPUTS ARE PROVIDED TO PERMIT THE INCLUSION OF VARIOUS LOGIC ELEMENTS WITHIN THE INTERNAL PROCESSING EQUATIONS.

B. ENSURE THE INTERNAL LOOP OCCUPANCY BITS AND THE AUXILIARY INPUTS CAN BE LOGICALLY COMBINED AND MAPPED TO CONTROL EIGHT VITAL OUTPUTS; FOUR MAIN VITAL OUTPUTS AND FOUR AUXILIARY VITAL OUTPUTS.

C. ENSURE THE MAIN VITAL OUTPUTS CAN BE CONTROLLED BY ANY COMBINATION OF THE FOUR LOOPS AND/OR THE FOUR VITAL INPUTS.

D. ENSURE THE AUXILIARY VITAL OUTPUTS CAN BE CONTROLLED BY ANY COMBINATION OF THE FOUR LOOPS, THE FOUR VITAL INPUTS AND/OR THE HEALTH STATUS OF EACH LOOP INPUT.

E. ENSURE A LOOP FAILURE WILL DEACTIVATE THE VITAL OUTPUT THAT THE LOOP STATUS INPUT AND/OR LOOP HEALTH STATUS INPUT IS PROGRAMMED TO CONTROL.

F. ENSURE THE CHECK LOOP CIRCUITS ARE PROGRAMMED TO PERIODICALLY SIMULATE A VEHICLE WITHIN THE LOOP DETECTION AREAS AS A MEANS OF VERIFYING LOOP INTEGRITY.

G. ENSURE THE VITAL OUTPUTS UTILIZE AC COUPLED DRIVE CIRCUITRY. EACH OUTPUT IS FULLY ISOLATED FROM EARTH GROUND, LOGIC GROUND, DC NEGATIVE AND ALL OTHER OUTPUTS THROUGH TRANSFORMER ISOLATION. ENSURE THE ASSERTED OUTPUT SHALL BE 12VDC NOMINAL WITH 200MA MINIMUM COMPLIANCE.

H. ENSURE THE VITAL INPUTS ARE CONTINUOUSLY MONITORED AND TESTED TO VALIDATE THEY ARE IN THE CORRECT STATE. EACH INPUT IS FULLY ISOLATED FROM EARTH GROUND, LOGIC GROUND, DC NEGATIVE AND ALL OTHER INPUTS THROUGH OPTICAL ISOLATION.

I. ENSURE ALL ELECTRICAL CONNECTIONS TO THE LOOP PROCESSOR ARE MADE VIA A MIL 26482 SERIES CIRCULAR CONNECTOR WITH GOLD PLATED PINS.

PROGRAMMING

A. ENSURE PROGRAMMING DATA ELEMENTS CAN BE ENTERED OR VIEWED ADDRESSED EITHER THROUGH THE FRONT PANEL OF THE LOOP PROCESSOR OR VIA A SERIAL PORT TO A PERSONAL COMPUTER. SOFTWARE TO ACCESS THE SERIAL PORT FOR PROGRAMMING SHALL BE AVAILABLE AT NO ADDITIONAL COST.

B. ENSURE THAT SITE-SPECIFIC PROGRAM PARAMETERS ARE CONTAINED IN A MEMORY MODULE THAT ATTACHES TO A SEPARATE FRONT PANEL CONNECTOR.

C. ENSURE THAT IF A LOOP PROCESSOR REQUIRES REPLACEMENT, THE REPLACEMENT UNIT IS CONNECTED AND THE MEMORY MODULE IS INSERTED FROM THE UNIT BEING REPLACED. ENSURE THE NEW UNIT WILL AUTOMATICALLY LOAD ITSELF WITH THE INFORMATION THAT WAS CONTAINED IN THE MEMORY MODULE.

LOOP WIRE

A. ENSURE ALL WIRE UTILIZED FOR LOOP PROCESSOR HOME-RUN (OR LEAD-IN) AND THE LOOP ITSELF SHALL UTILIZE CROSS-LINKED POLYETHYLENE INSULATED CONDUCTOR.

B. LOOP WIRE MAY BE EITHER SINGLE CONDUCTOR OR JACKETED MULTI-CONDUCTOR CABLE.

C. ENSURE JACKETED CABLES SHALL UTILIZE A MINIMUM .040 DIAMETER OUTER CROSS-LINKED POLYETHYLENE JACKET.

D. ENSURE PRE-FORMED LOOPS, IF USED, SHALL UTILIZE A FACTORY BUILT SPLICE CAVITY.

E. ENSURE MINIMUM WIRE SIZE SHALL BE 16 AWG TINNED COPPER CONDUCTORS.

F. ENSURE THAT WHERE LOOPS ARE INSTALLED IN UNCONSOLIDATED SURFACES OR RAIL APPLICATIONS, JACKETED LOOP CABLES MUST BE USED. IN ADDITION, A SUPPLEMENTAL OUTER JACKET CONSTRUCTED OF ELEXAR 8451 TPE MATERIAL WITH A MINIMUM O.D. OF .195 SHALL BE PROVIDED.

ELECTRICAL

A. ENSURE ELECTRICAL INPUTS, OUTPUTS AND SUPPLY VOLTAGE SHALL CONFORM TO AREMA COMMUNICATION AND SIGNAL MANUAL PART 1.5.15 (RECOMMENDED PRACTICE FOR ELECTRICAL INTERFACES BETWEEN SIGNAL, TRAIN CONTROL AND GRADE CROSSING EQUIPMENT).

B. ENSURE ALL CONNECTIONS TO EXTERNAL SAFETY CRITICAL APPARATUS AND DC POWER, WHERE SAFETY IS ASSURED BY PHYSICAL ISOLATION BETWEEN CONNECTORS, SHOULD CONFORM TO AREMA COMMUNICATION AND SIGNAL MANUAL PARTS IN SECTION 14.1 (RECOMMENDED WIRE CONNECTORS, TERMINALS).

ENVIRONMENTAL

A. ENSURE SYSTEM SHALL CONFORM TO AREMA COMMUNICATION AND SIGNAL MANUAL PART 11.5.1 (RECOMMENDED ENVIRONMENTAL REQUIREMENTS FOR ELECTRICAL AND ELECTRONIC RAILROAD SIGNAL SYSTEM EQUIPMENT), CLASS C WAYSIDE BUNGALOWS AND INSTRUMENT CASES.

ENCLOSURE

A. ENSURE SYSTEM SHOULD BE HOUSED IN A METAL ENCLOSURE SUITABLE FOR SHELF, BACKBOARD, OR ELECTRONIC INDUSTRIES ALLIANCE (EIA) RACK MOUNTING IN A TRAFFIC SIGNAL CABINET.

WARRANTY

A. PROVIDE A WRITTEN FULL-REPLACEMENT WARRANTY STATEMENT COVERING MANUFACTURING DEFECTS FOR A PERIOD OF TWO (2) YEARS, MINIMUM, AND A LIMITED (REPAIR/REPLACE) WARRANTY FOR FIVE (5) YEARS, BEGINNING ON THE DATE OF ACCEPTANCE TO THE PROJECT.

PLACE THE PROCESSOR ENCLOSURE INSIDE THE TRAFFIC SIGNAL CABINET AS SHOWN IN THE PLANS. WIRE ONE OR MORE VITAL OUTPUTS FROM THE PROCESSOR INTO THE CABINET TO PRODUCE THE FLASHING OR RELATED OPERATION CALLED FOR IN THE PLANS. INSTALL PREFORMED OR (IF APPROVED BY THE ENGINEER) DISCRETE-WIRE LOOPS IN THE PAVEMENT; NOTE THAT SINCE EACH LOOP SLOT CONTAINS TWO INDEPENDENT LOOPS, TWO LOOP LEAD-IN CABLES WILL BE REQUIRED FOR THE HOME RUN BACK TO THE SIGNAL CABINET AT EACH FINISHED LOOP LOCATION. OTHER THAN THE PRESENCE OF TWO LOOPS IN THE SLOT, CONSTRUCTION SHALL BE IDENTICAL TO THE STANDARD ODOT 632 CONSTRUCTION ITEM DETECTOR LOOP.

TEST THE COMPLETE INSTALLATION AND ITS ABILITY TO CREATE THE TRAFFIC SIGNAL CONDITION CALLED FOR IN THE PLANS IF A LOOP FAILURE IS DETECTED, TO THE SATISFACTION OF ODOT INSPECTION PERSONNEL.

DELIVER A WRITTEN REPORT DESCRIBING THE INTERNAL PROGRAMMING OF THE LOOP PROCESSOR UNIT, INCLUDING THE FINAL, ACCEPTED PROGRAM CHECKSUM VALUES.

THE DEPARTMENT WILL MEASURE VITAL INDUCTIVE LOOP PROCESSOR BY THE NUMBER OF EACH, INSTALLED, PROGRAMMED, AND TESTED AS DESCRIBED ABOVE.

INCLUDE IN THE COST OF THIS ITEM THE PROCESSOR UNIT ITSELF, WIRES FOR CONNECTION OF THE PROCESSOR UNIT TO THE TRAFFIC SIGNAL CONTROLLER AND ANY OTHER EQUIPMENT, AND ALL ASSOCIATED SELF-CHECKING PAVEMENT LOOPS, AS SHOWN IN THE PLANS (SEE SHEET 247 FOR DETAILS ON THE 2-PLC PREFORMED LOOPS). CONDUIT, PULL BOXES, SPLICE KITS AND LOOP LEAD-IN WIRE ASSOCIATED WITH THIS ITEM SHALL BE PAID FOR SEPARATELY AS DISTINCT CONSTRUCTION ITEMS.

NO.	REVISIONS	DATE	REV. BY
1	SHEET ADDED	4/15	VMF
2	BID ITEM REVISED	8/15	VMF

CALCULATED AJB CHECKED VMF

TRAFFIC SIGNAL GENERAL NOTES - OHIO

LAW-93-0.00

233A
788

J:\Projects\ODOT\15095112_Kreitzer_Russell\LAW\81595\signals\sheets\81595GN002a.dgn 8/19/2015 3:09:13 PM vmarsh baileyg

SHEET NUMBER												FUNDING		ITEM	ITEM EXT.	GRAND TOTAL	UNIT	DESCRIPTION	SEE SHEET NO.
236	237	238	239	240	241							MAJOR BRIDGE							
																		TRAFFIC SIGNAL (OHIO)	
		60		60								120		625	25010	120	FT	CONDUIT, 3/4", 725.05	
		60		30								90		625	25102	90	FT	CONDUIT, 1", 725.05	
		75										75		625	25402	75	FT	CONDUIT, 2", 725.05	
		960		635								1595		625	25502	1595	FT	CONDUIT, 3", 725.05	
		880		555								1435		625	29000	1435	FT	TRENCH	
		11		7								18		625	30706	18	EACH	PULL BOX, 725.08, 24"	
		6		7								13		625	32000	13	EACH	GROUND ROD	
	2	6		7								13		632	04913	13	EACH	VEHICULAR SIGNAL HEAD, (LED) YELLOW, 3-SECTION, 12" LENS, 1-WAY, WITH BACKPLATE, AS PER PLAN (POLYCARBONATE)	232
		2		1								3		632	04923	3	EACH	VEHICULAR SIGNAL HEAD, (LED) YELLOW, 5-SECTION, 12" LENS, 1-WAY, WITH BACKPLATE, AS PER PLAN (POLYCARBONATE)	232
		8		6								14		632	20131	14	EACH	PEDESTRIAN SIGNAL HEAD (LED) , COUNTDOWN, TYPE D2, AS PER PLAN	232
		8		8								16		632	25000	16	EACH	COVERING OF VEHICULAR SIGNAL HEAD	
		8		6								14		632	25010	14	EACH	COVERING OF PEDESTRIAN SIGNAL HEAD	
	2	8		6								14		632	26000	2 14	EACH	PEDESTRIAN PUSHBUTTON	
		12		9								21		632	26500	21	EACH	DETECTOR LOOP 3	
		12		9								21		632	27004	21	EACH	LOOP DETECTOR UNIT 4	
		1		1								1		632	90400	1	EACH	SIGNALIZATION, MISC.: VITAL INDUCTIVE LOOP PROCESSOR	233A
		1182		1051								2233		632	40500	2233	FT	SIGNAL CABLE, 5 CONDUCTOR, NO. 14 AWG	
			637		1744							2381		632	40700	2381	FT	SIGNAL CABLE, 7 CONDUCTOR, NO. 14 AWG	
			431									431		632	53202	431	FT	INTERCONNECT CABLE, 6 PAIR, NO. 19 AWG, SOLID, REA (PE-39)	
	A	4			3							7		632	64010	7	EACH	SIGNAL SUPPORT FOUNDATION	
			1		3							4		632	64020	4	EACH	PEDESTAL FOUNDATION	
			2434		1916							4350		632	65200	4350	FT	LOOP DETECTOR LEAD-IN CABLE	
			79									79		632	67300	79	FT	POWER CABLE, 3 CONDUCTOR, NO. 8 AWG	
			1									1		632	70001	1	EACH	POWER SERVICE, AS PER PLAN	232
					1							1		632	75002	1	EACH	SIGNAL SUPPORT, TYPE TC-81.21 DESIGN 3 POLE, WITH MAST ARMS TC-81.21, DESIGN 1 AND DESIGN 1	
					1							1		632	80202	1	EACH	SIGNAL SUPPORT, TYPE TC-81.21, DESIGN 2	
			1									1		632	80402	1	EACH	SIGNAL SUPPORT, TYPE TC-81.21, DESIGN 4	
			3		1							4		632	80502	4	EACH	SIGNAL SUPPORT, TYPE TC-81.21, DESIGN 11	
			1		3							4		632	89900	4	EACH	PEDESTAL, 8', TRANSFORMER BASE	
					1							1		632	90100	1	EACH	REMOVAL OF TRAFFIC SIGNAL INSTALLATION	
			1		1							2		633	01501	2	EACH	CONTROLLER UNIT, TYPE TS2/A1, WITH CABINET, TYPE TS2, AS PER PLAN	232
			1		1							2		633	75000	2	EACH	UNINTERRUPTIBLE POWER SUPPLY (UPS), 1000 WATT	
			1		1							2		633	67000	2	EACH	CABINET RISER	
			1		1							2		633	67100	2	EACH	CABINET FOUNDATION 1	
			1		1							2		633	67200	2	EACH	CONTROLLER WORK PAD 4	
					1							1		819	10000	1	EACH	RAILROAD PREEMPTION INTERFACE	
																		TRAFFIC SIGNAL (KENTUCKY)	
50												50		625	25920	50	FT	CONDUIT, MISC.: CONDUIT-3/4 IN., AS PER KENTUCKY STANDARD DETAIL SHEETS: SIGNAL BID ITEMS, GENERAL NOTES, CONTROLLER CABINET DETAIL, TRAFFIC SIGNAL JUNCTION BOX DETAILS & CONDUIT INSTALLATION IN EX. LOCATIONS DETAILS	249-251, 253, 256, 257
110												110		625	25920	110	FT	CONDUIT, MISC.: CONDUIT-1 IN., AS PER KENTUCKY STANDARD DETAIL SHEETS: SIGNAL BID ITEMS, GENERAL NOTES, CONTROLLER CABINET DETAIL, TRAFFIC SIGNAL JUNCTION BOX & CONDUIT INSTALLATION IN EX. LOCATIONS DETAILS	249-251, 253, 256, 257
897												897		625	25920	897	FT	CONDUIT, MISC.: CONDUIT-2 IN., AS PER KENTUCKY STANDARD DETAIL SHEETS: SIGNAL BID ITEMS, GENERAL NOTES, CONTROLLER CABINET DETAIL, TRAFFIC SIGNAL JUNCTION BOX & CONDUIT INSTALLATION IN EX. LOCATIONS DETAILS	249-251, 253, 256, 257
920												920		625	29700	920	FT	TRENCH, MISC.: TRENCHING AND BACKFILLING, AS PER KENTUCKY STANDARD DETAIL SHEETS: SIGNAL BID ITEMS & GENERAL NOTES	249-251
6												6		625	31600	6	EACH	PULL BOX, MISC.: JUNCTION BOX TYPE B, AS PER KENTUCKY STANDARD DETAIL SHEETS: SIGNAL BID ITEMS, GENERAL NOTES, TRAFFIC SIGNAL JUNCTION BOX & CONDUIT INSTALLATION IN EX. LOCATIONS DETAILS	249-251, 256, 257

Link to 279-011-001
KYTC Signals

NO.	REVISIONS	DATE	REV. BY
A	PAY ITEM QUANTITY REVISED	12/11	BKL
1	PAY ITEMS ADDED	5/13	PAS
2	PAY ITEMS ADDED/REVISED	5/13	PAS
3	PAY ITEMS REVISED	4/15	VMF
4	PAY ITEMS ADDED/REVISED	8/15	VMF

CALCULATED AJB
CHECKED VMF

TRAFFIC SIGNAL - GENERAL SUMMARY

LAW-93-0.00

J:\Project\0\ODOT\15005112 Ironton Russell\LAW\81595\signals\sheets\81595CG001.dgn 8/18/2015 3:08:14 PM - amanda_beiting

SHEET NUMBER												FUNDING		ITEM	ITEM EXT.	GRAND TOTAL	UNIT	DESCRIPTION	SEE SHEET NO.
236	237											MAJOR BRIDGE							
																		TRAFFIC SIGNAL (KENTUCKY) CONTINUED	
8												8		632	04000	8	EACH	VEHICULAR SIGNAL HEAD, MISC.: SIGNAL-3 SECTION 12 IN, AS PER KENTUCKY STANDARD DETAIL SHEETS: SIGNAL BID ITEMS, GENERAL NOTES, POLE BASE/SIGNAL HEAD DETAILS & LED SIGNALS	249-251, 255, 259
2												2		632	04000	2	EACH	VEHICULAR SIGNAL HEAD, MISC.: SIGNAL-5 SECTION 12 IN, AS PER KENTUCKY STANDARD DETAIL SHEETS: SIGNAL BID ITEMS, GENERAL NOTES, POLE BASE/SIGNAL HEAD DETAILS & LED SIGNALS	249-251, 255, 259
205												205		632	30500	205	FT	MESSENGER WIRE, MISC.: MESSENGER-10800 LB, AS PER KENTUCKY STANDARD DETAIL SHEETS: SIGNAL BID ITEMS, GENERAL NOTES, & POLE BASE/SIGNAL HEAD DETAILS	249-251, 255
198												198		632	30500	198	FT	MESSENGER WIRE, MISC.: MESSENGER-15400 LB, AS PER KENTUCKY STANDARD DETAIL SHEETS: SIGNAL BID ITEMS, GENERAL NOTES, & POLE BASE/SIGNAL HEAD DETAILS	249-251, 255
703												703		632	43300	703	FT	SIGNAL CABLE, MISC.: CABLE-NO. 14/5C, AS PER KENTUCKY STANDARD DETAIL SHEETS: SIGNAL BID ITEMS, GENERAL NOTES, & POLE BASE/SIGNAL HEAD DETAILS	249-251, 255
396												396		632	43300	396	FT	SIGNAL CABLE, MISC.: CABLE-NO. 14/7C, AS PER KENTUCKY STANDARD DETAIL SHEETS: SIGNAL BID ITEMS, GENERAL NOTES, & POLE BASE/SIGNAL HEAD DETAILS	249-251, 255
1												1		632	83600	1	EACH	STRAIN POLE, MISC.:STEEL STRAIN POLE 26', AS PER KENTUCKY STANDARD DETAIL SHEETS: SIGNAL BID ITEMS, GENERAL NOTES, & POLE BASE/SIGNAL HEAD DETAILS	249-251, 255
2												2		632	83600	2	EACH	STRAIN POLE, MISC.:STEEL STRAIN POLE 32', AS PER KENTUCKY STANDARD DETAIL SHEETS: SIGNAL BID ITEMS, GENERAL NOTES, & POLE BASE/SIGNAL HEAD DETAILS	249-251, 255
1												1		632	83600	1	EACH	STRAIN POLE, MISC.:STEEL STRAIN POLE 38', AS PER KENTUCKY STANDARD DETAIL SHEETS: SIGNAL BID ITEMS, GENERAL NOTES, & POLE BASE/SIGNAL HEAD DETAILS	249-251, 255
4	(1)											4		632	90400	4	EACH	SIGNALIZATION, MISC.:TRAFFIC SIGNAL POLE BASE, AS PER KENTUCKY STANDARD DETAIL SHEETS: SIGNAL BID ITEMS, GENERAL NOTES, & POLE BASE/SIGNAL HEAD DETAILS	249-251, 255
2												2		632	90400	2	EACH	SIGNALIZATION, MISC.:STOP BAR RADAR DETECTION, TYPE A-INSTALL, AS PER KENTUCKY STANDARD DETAIL SHEETS: SIGNAL BID ITEMS & GENERAL NOTES	249-251
	1370											1370		632	90500	1370	FT	SIGNALIZATION, MISC.:LOOP WIRE, AS PER KENTUCKY STANDARD DETAIL SHEETS: SIGNAL BID ITEMS, GENERAL NOTES, & LOOP DETAILS	249-251, 254
	2966											2966		632	90500	2966	FT	SIGNALIZATION, MISC.: LEAD-IN WIRE, AS PER KENTUCKY STANDARD DETAIL SHEETS: SIGNAL BID ITEMS, GENERAL NOTES, & LOOP DETAILS	249-251, 254
	554											554		632	90500	554	FT	SIGNALIZATION, MISC.: LOOP SAW SLOT AND FILL, AS PER KENTUCKY STANDARD DETAIL SHEETS: SIGNAL BID ITEMS, GENERAL NOTES, & LOOP DETAILS	249-251, 254
	1											1		632	90400	1	EACH	SIGNALIZATION, MISC.:ELECTRICAL SERVICE, AS PER KENTUCKY STANDARD DETAIL SHEETS: SIGNAL BID ITEMS & CONTROLLER CABINET DETAIL	249, 253
	6	(2)									(2)	6		632	90400	6	(2) EACH	SIGNALIZATION, MISC.: GROUND ROD, AS PER KENTUCKY STANDARD DETAIL SHEETS: SIGNAL BID ITEMS, GENERAL NOTES, CONTROLLER CABINET DETAIL, & POLE BASE/SIGNAL HEAD DETAILS	249-251, 253, 255
	1											1		632	90400	1	EACH	SIGNALIZATION, MISC.:REMOVE SIGNAL EQUIPMENT, AS PER KENTUCKY STANDARD DETAIL SHEETS: SIGNAL BID ITEMS, GENERAL NOTES, 170 ATC CONTROLLER SPECIFICATIONS, & CONTROLLER CABINET DETAILS	249-253
	1											1		633	99000	1	EACH	CONTROLLER ITEM, MISC.: SIGNAL CONTROLLER-TYPE 170, AS PER KENTUCKY STANDARD DETAIL SHEETS: SIGNAL BID ITEMS, GENERAL NOTES, 170 ATC CONTROLLER SPECIFICATIONS, & CONTROLLER CABINET DETAILS	249-253

NO.	REVISIONS	DATE	REV. BY
1	RADAR DETECTION ADDED VIDEO DETECTION ITEMS REMOVED	5/13	PAS
2	GROUND RODS ADJUSTED	3/15	JGC

CALCULATED AJB
CHECKED VMF

TRAFFIC SIGNAL - GENERAL SUMMARY

LAW-93-0.00

235
788

J:\Project\OVODOT\15005112 Ironton Russell\LAW\81595\signals\sheets\81595CG002.dgn - 8/18/2015 3:08:15 PM - amanda_beiting

SHEET NO.	REFERENCE NO. FROM	REFERENCE NO. TO	LOCATION	STATION FROM	STATION TO	SIDE	625 CONDUIT-3/4 IN. FT	625 CONDUIT-1 IN. FT	625 CONDUIT-2 IN. FT	625 TRENCHING AND BACKFILLING FT	625 JUNCTION BOX-TYPE B EACH	632 SIGNAL-3 SECTION 12 IN EACH	632 SIGNAL-5 SECTION 12 IN EACH	632 MESSENGAR WIRE-10800 LB FT	632 MESSENGAR WIRE-15400 LB FT	632 CABLE-NO. 14/5C FT	632 CABLE-NO. 14/7C FT	632 STEEL STRAIN POLE 26' EACH	632 STEEL STRAIN POLE 32' EACH	632 STEEL STRAIN POLE 38' EACH	632 POLE BASE EACH	632 RADAR DETECTION-INSTALL EACH	1
242	CONTROLLER		US 23	339+88		LT.	10			5													
242	POLE A		US 23	341+82		LT.	10			5										1	1	1	
242	POLE B		US 23	341+65		RT.	10			5									1		1		
242	POLE C		US 23	339+87		LT.	10			5									1		1		
242	POLE D		US 23	340+03		LT.	10			5								1			1	1	
242	EOP	JB #1	US 23	337+58		RT.		20		14													
242	EOP	JB #2	US 23	339+16		RT.		20		14													
242	EOP	JB #3	US 23	341+39	341+55	RT.		30		21													
242	EOP	JB #4	US 23	344+27		LT.		15		7													
242	EOP	JB #5	US 23	345+86		LT.		25		18													
242	CONTROLLER	POLE C	US 23	339+88	339+87	LT.			40	5													
242	JB #1	JB #2	US 23	337+58	339+16	RT.			162	154													
242	JB #2	JB #3	US 23	339+16	341+55	RT.			245	240													
242	JB #3	POLE B	US 23	341+55	341+65	RT.			25	17													
242	POLE A	JB #6	US 23	341+82	341+86	LT.			15	6													
242	JB #6	JB #4	US 23	341+86	344+27	LT.			245	239													
242	JB #4	JB #5	US 23	344+27	345+86	LT.			165	160													
242	POLE C	POLE D	US 23	339+87	340+03	LT.								24									
242	POLE C	POLE A	US 23	339+87	341+82	LT.						2	2		198								
242	POLE A	POLE B	US 23	341+82	341+65	LT./RT.						6		167									
242	ELECTRICAL SERVICE	POLE C	US 23	339+75	339+87	LT.								14									
242	JB #1		US 23	337+58		RT.					1												
242	JB #2		US 23	339+16		RT.					1												
242	JB #3		US 23	341+55		RT.					1												
242	JB #4		US 23	344+27		LT.					1												
242	JB #5		US 23	345+86		LT.					1												
242	JB #6		US 23	341+86		LT.					1												
242																							
242	CONTROLLER	SH #7	US 23	339+88	340+68	LT.										140							
242	CONTROLLER	SH #9	US 23	339+88	341+38	LT.										210							
242	CONTROLLER	SH #2	US 23	339+88	341+72	LT.										353							
242	CONTROLLER	SH #5	US 23	339+88	341+68	LT./RT.											396						
242	CONTROLLER	POLE C	US 23	339+88	339+87	LT.																	
242	POLE C	POLE D	US 23	339+87	340+03	LT.																	
TOTALS CARRIED TO GENERAL SUMMARY							50	110	897	920	6	8	2	205	198	703	396	1	2	1	4	2	

NO.	REVISIONS	DATE	REV. BY
1	RADAR DETECTION ADDED VIDEO DETECTION ITEMS REMOVED	5/13	PAS

CALCULATED AJB
CHECKED VMF

TRAFFIC SIGNALS - SUBSUMMARY

LAW-93-0.00

J:\Project\O\ODOT\15005112 Ironton Russell\LAW\81595\signals\sheets\81595CS001.dgn - 8/18/2015 3:08:17 PM - amanda_beiting

SHEET NO.	REFERENCE NO. FROM	REFERENCE NO. TO	LOCATION	STATION FROM	STATION TO	SIDE	632 LOOP WIRE FT	632 LEAD-IN WIRE FT	632 LOOP SAW SLOT AND FILL FT	632 ELECTRICAL SERVICE EACH	632 GROUND ROD EACH	633 REMOVE SIGNAL EQUIPMENT EACH	633 SIGNAL CONTROLLER-TYPE 170 EACH
242	L1		US 23	337+52	337+58	RT.	132		54				
242	L2		US 23	337+52	337+58	RT.	108		42				
242	L3		US 23	339+10	339+16	RT.	132		54				
242	L4		US 23	339+10	339+16	RT.	108		42				
242	L5		US 23	340+92	341+12	RT.	336		132				
242	L6		US 23	344+27	344+33	LT.	132		54				
242	L7		US 23	344+27	344+33	LT.	152		65				
242	L8		US 23	345+86	345+80	LT.	124		50				
242	L9		US 23	345+86	345+80	LT.	146		61				
242	CONTROLLER	JB #1	US 23	339+88	337+58	RT./LT.		812					
242	CONTROLLER	JB #2	US 23	339+88	339+16	RT./LT.		650					
242	CONTROLLER	JB #3	US 23	339+88	341+55	RT./LT.		405					
242	CONTROLLER	JB #4	US 23	339+88	344+27	LT.		467					
242	CONTROLLER	JB #5	US 23	339+88	345+86	LT.		632					
242	CONTROLLER		US 23	339+88		LT.					1		1
242	POLE A		US 23	341+82		LT.					1	1	
242	POLE B		US 23	341+65		RT.					1		
242	POLE C		US 23	339+87		LT.					2		
242	POLE D		US 23	340+03		LT.					1		
242	ELECTRICAL SERVICE		US 23	339+75		LT.				1			
242			US 23									1	
TOTALS CARRIED TO GENERAL SUMMARY							1370	2966	554	1	6	1	1

CALCULATED AJB
CHECKED VMF

TRAFFIC SIGNALS - SUBSUMMARY

LAW-93-0.00

NO.	REVISIONS	DATE	REV. BY
1	GROUND RODS CHANGED	3/15	JGC

237
788

J:\Project\OUODOT\15005112 Ironton Russell\LAW\81595\signals\sheets\81595SS002.dgn - 8/18/2015 3:08:18 PM - amanda_beiting

SHEET NO.	REFERENCE NO. FROM	REFERENCE NO. TO	LOCATION	STATION FROM	STATION TO	SIDE	625 CONDUIT, 3/4", 725.05 FT	625 CONDUIT, 1", 725.05 FT	625 CONDUIT, 2", 725.05 FT	625 CONDUIT, 3", 725.05 FT	625 TRENCH FT	625 PULL BOX, 725.08, 24" EACH	625 GROUND ROD (1) EACH	632 VEHICULAR SIGNAL HEAD, (LED) YELLOW, 3-SECTION, 12" LENS, 1-WAY, WITH BACKPLATE, AS PER PLAN (POLYCARBONATE) EACH	632 VEHICULAR SIGNAL HEAD, (LED) YELLOW, 5-SECTION, 12" LENS, 1-WAY, WITH BACKPLATE, AS PER PLAN (POLYCARBONATE) EACH	632 PEDESTRIAN SIGNAL HEAD (LED), (COUNTDOWN), TYPE D2, AS PER PLAN EACH	632 COVERING OF VEHICULAR SIGNAL HEAD EACH	632 COVERING OF PEDESTRIAN SIGNAL HEAD EACH	632 PEDESTRIAN PUSHBUTTON EACH	632 DETECTOR LOOP EACH	632 LOOP DETECTOR UNIT (3) EACH	632 SIGNAL CABLE, 5 CONDUCTOR, NO. 14 AWG FT
245	PB #2	SHOULDER	93.C	40+93	40+93	RT.		15			13										
245	PB #5	CURB	93.C	41+42	41+51	LT.		15			12										
245	CURB	PB #7	93.C	42+16	42+23	RT.		10			9										
245	CURB	PB #8	93.C	42+61	42+62	LT.		20			16										
245	POWER SERVICE	PB #1	JEFFERSON ST.	6+10	5+98	RT.			55		21										
245	PB #1	CONTROLLER	JEFFERSON ST.	5+98	5+84	RT.			20	35	14										
245	CONTROLLER	PB #2	JEFFERSON ST./93.C	5+84	41+46	RT.				60	24										
245	PB #2	PB #3	93.C	41+46	41+30	RT.				50	42										
245	PB #2	PB #9	93.C	41+46	42+23	RT.				85	77										
245	PB #3	POLE D	93.C	41+30	41+36	RT.				15	8										
245	PB #3	PB #4	93.C	41+30	40+93	RT.				50	43										
245	PB #3	PB #5	93.C	41+30	41+39	RT./LT.				115	108										
245	PB #5	POLE E	93.C	41+39	41+32	LT.				25	19										
245	PB #5	PB #6	93.C	41+39	41+42	LT.				25	20										
245	PB #9	POLE C	93.C	42+23	42+37	RT.				50	42										
245	POLE C	PB # 8	93.C	42+37	42+56	RT.				30	23										
245	PB # 8	PB #7	93.C	42+56	42+56	RT/LT.				70	62										
245	PB #7	POLE B	93.C	42+56	42+55	LT.				15	10										
245	PB # 7	POLE A	93.C	42+56	42+31	LT.				40	35										
245	PB #5	PB #17	93.C/CAMPBELL ST.	41+39	36+25	RT./LT.				120	112										
245	PB #2	PB #18	93.C	41+46	39+69	RT.				175	170	(2)									
245	PB #1		JEFFERSON ST.	5+98		RT.						1									
245	PB #2		93.C	40+93		RT.						1									
245	PB #3		93.C	41+30		RT.						1									
245	PB #4		93.C	41+39		LT.						1									
245	PB #5		93.C	41+42		LT.						1									
245	PB #6		93.C	41+46		RT.						1									
245	PB #7		93.C	42+23		LT.						1									
245	PB #8		93.C	42+56		LT.						1									
245	PB #9		93.C	42+62		RT.						1									
245	PB #17		CAMPBELL ST.	36+25		LT.						1									
245	PB #18		93.C	39+69		RT.						1	(2)								
245	CONTROLLER		JEFFERSON ST.	5+84		RT.	10						1								
245	POLE A		93.C	42+31		LT.	10						1	1	1	1	2	1	1		
245	POLE B		93.C	42+55		LT.	10						1			1		1	1		
245	POLE C		93.C	42+37		RT.	10						1	2		2	2	2	2		
245	POLE D		93.C	41+36		RT.	10						1	1	1	2	2	2	2		
245	POLE E		93.C	41+32		LT.	10						1	2		2	2	2	2		
245	L1		93.C	42+52	42+77	LT.														1	1
245	L2		93.C	42+52	42+77	RT.														1	1
245	L3		JEFFERSON ST.	5+36	5+60	LT.														1	1
245	L4		JEFFERSON ST.	5+36	5+60	LT.														1	1
245	L5		93.C	40+94	41+18	RT.														1	1
245	L6		93.C	40+94	41+18	RT.														1	1
245	L7		JEFFERSON ST.	4+01	4+25	RT.														1	1
245	L8		JEFFERSON ST.	4+01	4+25	RT.														1	1
245	L9		JEFFERSON ST.	4+01	4+25	RT./LT.														1	1
245	L10		93.C	39+64	39+46	RT.														1	1
245	L11		93.C	39+64	39+46	RT.														1	1
245	L12		JEFFERSON ST.	6+19	6+37	LT.														1	1
245	CONTROLLER	POLE A	JEFFERSON ST./93.C	5+84	42+31	RT./LT.															
245	CONTROLLER	POLE B	JEFFERSON ST./93.C	5+84	42+55	RT./LT.															
245	CONTROLLER	POLE C	JEFFERSON ST./93.C	5+84	42+37	RT./LT.															
245	CONTROLLER	POLE D	JEFFERSON ST./93.C	5+84	41+36	RT./LT.															
245	CONTROLLER	POLE E	JEFFERSON ST./93.C	5+84	41+32	RT./LT.															
245	CONTROLLER	HEAD 6	JEFFERSON ST./93.C	5+84	41+60	RT./LT.															
TOTALS CARRIED TO GENERAL SUMMARY							60	60	75	960	880	11	6	6	2	8	8	8	8	12	12	1182

NO.	REVISIONS	DATE	REV. BY
1	PAY ITEMS REVISED	3/13	PAS
2	PAY ITEMS ADDED	3/13	PAS
3	PAY ITEMS ADDED	4/15	VMF

CALCULATED AJB
CHECKED VMF

TRAFFIC SIGNALS - SUBSUMMARY

LAW-93-0.00

238
788

J:\Project\O\ODOT\15005112 Kostka Russell\LAW\81595\signals\sheets\81595CS003.dgn - 8/18/2015 3:08:19 PM - gpgonda_beiting

TRAFFIC SIGNALS - SUBSUMMARY

CALCULATED AJB | CHECKED VMF

SHEET NO.	REFERENCE NO. FROM	REFERENCE NO. TO	LOCATION	STATION FROM	STATION TO	SIDE	632 SIGNAL CABLE, 7 CONDUCTOR, NO. 14 AWG (FT)	632 INTERCONNECT CABLE, 6 PAIR, NO. 19 AWG, SOLID, REA (PE-39) (FT)	632 SIGNAL SUPPORT FOUNDATION (1) (EACH)	632 PEDESTAL FOUNDATION (EACH)	632 LOOP DETECTOR LEAD-IN CABLE (FT)	632 POWER CABLE, 3 CONDUCTOR, NO. 8 AWG (FT)	632 POWER SERVICE, AS PER PLAN (EACH)	632 SIGNAL SUPPORT, TYPE TC-81.21, DESIGN 2 (EACH)	632 SIGNAL SUPPORT, TYPE TC-81.21, DESIGN 4 (EACH)	632 SIGNAL SUPPORT, TYPE TC-81.21, DESIGN 11 (EACH)	632 PEDESTAL, 8', TRANSFORMER BASE (EACH)	632 REMOVAL OF TRAFFIC SIGNAL INSTALLATION (EACH)	633 CONTROLLER UNIT, TYPE TS2/A1, WITH CABINET, TYPE TS2, AS PER PLAN (EACH)	633 UNINTERRUPTIBLE POWER SUPPLY (UPS), 1000 WATT (EACH)	633 CABINET RISER (2) (EACH)	633 CABINET FOUNDATION (EACH)	633 CONTROLLER WORK PAD (EACH)
245	CONTROLLER	HEAD 1	JEFFERSON ST./93.C	5+84	42+31	RT./LT.	371																
245	CONTROLLER	HEAD A	JEFFERSON ST./93.C	5+84	42+31	RT./LT.	350																
245	CONTROLLER	HEAD 3	JEFFERSON ST./93.C	5+84	42+37	RT./LT.	231																
245	CONTROLLER	HEAD C	JEFFERSON ST./93.C	5+84	42+37	RT./LT.	179																
245	CONTROLLER	HEAD 5	JEFFERSON ST./93.C	5+84	41+36	RT./LT.	168																
245	CONTROLLER	HEAD F	JEFFERSON ST./93.C	5+84	41+36	RT./LT.	110																
245	CONTROLLER	HEAD 7	JEFFERSON ST./93.C	5+84	41+32	RT./LT.	293																
245	CONTROLLER	HEAD G	JEFFERSON ST./93.C	5+84	41+32	RT./LT.	234																
245	PB #5	PB #17	93.C/CAMPBELL ST.	41+39	36+25	RT./LT.		431															
245	CONTROLLER	L1	JEFFERSON ST./93.C	5+84	42+52	RT./LT.					272												
245	CONTROLLER	L2	JEFFERSON ST./93.C	5+84	42+52	RT./LT.					289												
245	CONTROLLER	L3	JEFFERSON ST./93.C	5+84	5+36	RT./LT.					127												
245	CONTROLLER	L4	JEFFERSON ST./93.C	5+84	5+36	RT./LT.					137												
245	CONTROLLER	L5	JEFFERSON ST./93.C	5+84	40+94	RT./LT.					143												
245	CONTROLLER	L6	JEFFERSON ST./93.C	5+84	40+94	RT./LT.					154												
245	CONTROLLER	L7	JEFFERSON ST./93.C	5+84	4+01	RT./LT.					234												
245	CONTROLLER	L8	JEFFERSON ST./93.C	5+84	4+01	RT./LT.					246												
245	CONTROLLER	L9	JEFFERSON ST./93.C	5+84	4+01	RT./LT.					258												
245	CONTROLLER	L10	93.C	41+41	39+69	RT.					257												
245	CONTROLLER	L11	93.C	41+41	39+69	RT.					257	(3)											
245	CONTROLLER	L12	JEFFERSON ST./93.C	5+84	4+01	RT./LT.					60												
245	POWER SERVICE	PB #1	JEFFERSON ST.	6+10	5+98	RT.						56											
245	PB #1	CONTROLLER	JEFFERSON ST.	5+98	5+84	RT.						23											
245	POWER SERVICE		JEFFERSON ST.	6+10		RT.							1										
245	POLE A		93.C	42+31		LT.			1							1							
245	POLE B		93.C	42+55		LT.				1							1						
245	POLE C		93.C	42+37		RT.			1						1								
245	POLE D		93.C	41+36		RT.			1							1							
245	POLE E		93.C	41+32		LT.			1							1							
245			JEFFERSON ST./93.C															1					
245	CONTROLLER		JEFFERSON ST.	5+84		RT.													1	1	1	1	1
TOTALS CARRIED TO GENERAL SUMMARY							637	431	4	1	2434 (3)	79	1	0	1	3	1	1	1	1	1	1	1

NO.	REVISIONS	DATE	REV. BY
1	PAY ITEMS ADDED	12/11	BKL
2	PAY ITEMS ADDED/REVISED	5/13	PAS
3	PAY ITEMS ADDED	5/13	PAS

LAW-93-0.00

239
788

J:\Project\OhDOT\15005112 Ironton Russell\LAW\81595\signals\sheets\81595SS004.dgn - 8/18/2015 3:08:20 PM - amanda.beiting

SHEET NO.	REFERENCE NO. FROM	REFERENCE NO. TO	LOCATION	STATION FROM	STATION TO	SIDE	625 CONDUIT, 3/4", 725.05	625 CONDUIT, 1", 725.05	625 CONDUIT, 2", 725.05	625 CONDUIT, 3", 725.05	625 TRENCH	625 PULL BOX, 725.08, 24"	625 GROUND ROD	632 VEHICULAR SIGNAL HEAD, (LED) YELLOW, 3-SECTION, 12" LENS, 1-WAY, WITH BACKPLATE, AS PER PLAN (POLYCARBONATE)	632 VEHICULAR SIGNAL HEAD, (LED) YELLOW, 5-SECTION, 12" LENS, 1-WAY, WITH BACKPLATE, AS PER PLAN (POLYCARBONATE)	632 PEDESTRIAN SIGNAL HEAD (LED), (COUNTDOWN), TYPE D2, AS PER PLAN	632 COVERING OF VEHICULAR SIGNAL HEAD	632 COVERING OF PEDESTRIAN SIGNAL HEAD	632 PEDESTRIAN PUSHBUTTON	632 DETECTOR LOOP	632 LOOP DETECTOR UNIT 2	632 SIGNALIZATION, MISC.: VITAL INDUCTIVE LOOP PROCESSOR	SIGNAL CABLE, 5 CONDUCTOR, NO. 14 AWG
							FT	FT	FT	FT	FT	EACH	EACH	EACH	EACH	EACH	EACH	EACH	EACH	EACH	EACH	FT
247	PB #1	CURB	JEFFERSON ST.	5+98	6+00	RT.		15			13											
247	PB #10	CURB	93.C	51+11	51+11	RT.		5			12											
247	PB #15	CURB	93.C	52+88	52+88	LT.		5			9											
247	PB #16	CURB	JEFFERSON ST.	7+69	7+70	LT.		5			16											
247	PB #1	PB #11	JEFFERSON ST./93.C	5+98	51+59	RT./LT.				75	31											
247	PB #11	POLE F	93.C	51+59	51+50	LT.				20	15											
247	PB #11	PB #14	93.C	51+59	52+55	LT.				105	99											
247	PB #11	PB #12	93.C	51+59	51+75	LT./RT.				95	90											
247	PB #12	PB #10	93.C	51+75	51+11	RT.				75	66											
247	PB #12	POLE E	93.C	51+75	51+62	RT.				25	16											
247	PB #12	POLE D	93.C	51+75	51+68	RT.				20	14											
247	PB #12	PB #13	93.C	51+75	52+27	RT.				60	54											
247	PB #13	PB #16	93.C/JEFFERSON ST.	52+27	7+69	RT./LT.				70	62											
247	PB #13	POLE C	93.C	52+27	52+24	RT.				15	7											
247	PB #13	POLE B	93.C	52+27	52+33	RT.				15	6											
247	PB #14	POLE A	93.C	52+55	52+60	LT.				15	7											
247	PB #14	PB #15	93.C	52+55	52+88	LT.				45	38											
247	PB #10		93.C	51+11		RT.						1										
247	PB #11		93.C	51+59		LT.						1										
247	PB #12		93.C	51+75		RT.						1										
247	PB #13		93.C	52+27		RT.						1										
247	PB #14		93.C	52+55		LT.						1										
247	PB #15		93.C	52+88		LT.						1										
247	PB #16		JEFFERSON ST.	7+69		LT.						1										
247	CONTROLLER		93.C	51+65		LT.							1									
247	POLE A		93.C	52+60		LT.	10						1			1		1	1			
247	POLE B		93.C	52+33		RT.	10						1	3	1	1	4	1	1			
247	POLE C		93.C	52+24		RT.	10						1			1		1	1			
247	POLE D		93.C	51+68		RT.	10						1	2		1	2	1	1			
247	POLE E		93.C	51+62		RT.	10						1			1		1	1			
247	POLE F		93.C	51+50		LT.	10						1	2		1	2	1	1			
247	L1		93.C	42+52	42+28	LT.														1	1	
247	L2		93.C	42+52	42+28	LT./RT.														1	1	
247	L3		JEFFERSON ST.	5+36	5+60	LT.														1	1	
247	L4		JEFFERSON ST.	5+36	5+60	LT./RT.														1	1	
247	L5		93.C	41+42	41+18	LT./RT.														1	1	
247	L6		93.C	41+42	41+18	RT.														1	1	
247	L7		JEFFERSON ST.	4+01	4+25	LT./RT.														1	1	
247	L8		JEFFERSON ST.	4+01	4+25	RT.														1	1	
247	L9		93.C	50+92	50+74	RT.														1	1	
247	DOL1/DOL2 3		JEFFERSON ST.	5+47	5+29	LT./RT.													1			1
247	CONTROLLER	POLE A	JEFFERSON ST./93.C	5+84	52+60	RT./LT.																175
247	CONTROLLER	POLE B	JEFFERSON ST./93.C	5+84	52+33	RT./LT.																224
247	CONTROLLER	POLE C	JEFFERSON ST./93.C	5+84	52+24	RT./LT.																225
247	CONTROLLER	POLE D	JEFFERSON ST./93.C	5+84	51+68	RT./LT.																173
247	CONTROLLER	POLE E	JEFFERSON ST./93.C	5+84	51+62	RT./LT.																175
247	CONTROLLER	POLE F	JEFFERSON ST./93.C	5+84	51+50	RT./LT.																79
TOTALS CARRIED TO GENERAL SUMMARY							60	30	0	635	555	7	7	7	1	6	8	6	6	9 1	9	1 3	1051

NO.	REVISIONS	DATE	REV. BY
1	PAY ITEMS REVISED	3/13	PAS
2	PAY ITEMS ADDED	3/13	PAS
3	PAY ITEMS REVISED	8/15	VMF

CALCULATED AJB
CHECKED VMF

TRAFFIC SIGNALS - SUBSUMMARY

LAW-93-0.00

J:\Project\O\ODOT\15005112 Ironton Russell\LAW\81595\signals\sheets\81595CS005.dgn - 8/18/2015 3:08:21 PM - amanda_belting

SHEET NO.	REFERENCE NO. FROM	REFERENCE NO. TO	LOCATION	STATION FROM	STATION TO	SIDE	SIGNAL CABLE, 7 CONDUCTOR, NO. 14 AWG	SIGNAL SUPPORT FOUNDATION	PEDESTAL FOUNDATION	LOOP DETECTOR LEAD-IN CABLE	SIGNAL SUPPORT, TYPE TC-81.21 DESIGN 3 POLE, WITH MAST ARMS TC-81.21, DESIGN 1 AND DESIGN 1	SIGNAL SUPPORT, TYPE TC-81.21, DESIGN 2	SIGNAL SUPPORT, TYPE TC-81.21, DESIGN 11	1 PEDESTAL, 8', TRANSFORMER BASE	REMOVAL OF TRAFFIC SIGNAL INSTALLATION	CONTROLLER UNIT, TYPE TS2/A1, WITH CABINET TYPE TS2, AS PER PLAN (633)	UNINTERRUPTIBLE POWER SUPPLY (UPS), 1000 WATT	CABINET RISER	CABINET FOUNDATION	CONTROLLER WORK PAD	RAILROAD PREEMPTION INTERFACE (819)		
							FT	EACH	EACH	FT	EACH	EACH	EACH	EACH	EACH	EACH	EACH	EACH	EACH	EACH	EACH	EACH	
247	CONTROLLER	L1	JEFFERSON ST./93.C	5+84	42+52	RT./LT.				211													
247	CONTROLLER	L2	JEFFERSON ST./93.C	5+84	42+52	RT./LT.				226													
247	CONTROLLER	L3	JEFFERSON ST./93.C	5+84	5+36	RT./LT.				285													
247	CONTROLLER	L4	JEFFERSON ST./93.C	5+84	5+36	RT./LT.				300													
247	CONTROLLER	L5	JEFFERSON ST./93.C	5+84	41+42	RT./LT.				232													
247	CONTROLLER	L6	JEFFERSON ST./93.C	5+84	41+42	RT./LT.				243													
247	CONTROLLER	L7	JEFFERSON ST./93.C	5+84	4+01	RT./LT.				43													
247	CONTROLLER	L8	JEFFERSON ST./93.C	5+84	4+01	RT./LT.				53													
247	CONTROLLER	L9	JEFFERSON ST./93.C	51+65	51+11	RT./LT.				193													
1 247	CONTROLLER	DQL1	JEFFERSON ST./93.C	51+65	5+68	RT./LT.				65													
247	CONTROLLER	DQL2	JEFFERSON ST./93.C	51+65	5+68	RT./LT.				65													
247	POLE A		93.C	52+60		LT.			1					1									
247	POLE B		93.C	52+33		RT.		1			1												
247	POLE C		93.C	52+24		RT.			1					1									
247	POLE D		93.C	51+68		RT.		1					1										
247	POLE E		93.C	51+62		RT.			1					1									
247	POLE F		93.C	51+50		LT.		1				1											
247			JEFFERSON ST./93.C												1								
1 247	CONTROLLER		93.C	51+65		LT.										1	1	1	1	1	1		
247	CONTROLLER	HEAD B	JEFFERSON ST./93.C	5+84	52+60	RT./LT.	192																
247	CONTROLLER	HEAD 1	JEFFERSON ST./93.C	5+84	52+33	RT./LT.	277																
247	CONTROLLER	HEAD 4	JEFFERSON ST./93.C	5+84	52+06	RT./LT.	285																
247	CONTROLLER	HEAD D	JEFFERSON ST./93.C	5+84	52+24	RT./LT.	274																
247	CONTROLLER	HEAD 5	JEFFERSON ST./93.C	5+84	51+94	RT./LT.	234																
247	CONTROLLER	HEAD E	JEFFERSON ST./93.C	5+84	51+68	RT./LT.	232																
247	CONTROLLER	HEAD 7	JEFFERSON ST./93.C	5+84	51+50	RT./LT.	154																
247	CONTROLLER	HEAD G	JEFFERSON ST./93.C	5+84	51+50	RT./LT.	96																
TOTALS CARRIED TO GENERAL SUMMARY							1744	3	3	1916	1	1	1	3	1	1	1	1	1	1	1		

NO.	REVISIONS	DATE	REV. BY
1	PAY ITEMS ADDED/REVISED	5/13	PAS
2	PAY ITEMS ADDED	5/13	PAS

CALCULATED AJB
CHECKED VMF

TRAFFIC SIGNALS - SUBSUMMARY

LAW-93-0.00

241
788

J:\Project\O\ODOT\15005112 Ironton Russell\LAW\81595\signals\sheets\81595CS006.dgn - 8/18/2015 3:08:22 PM Commando_beiting

SIGNAL HEADS

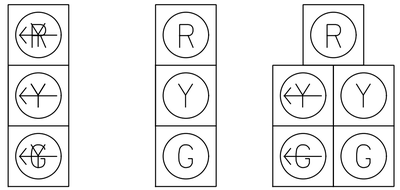

HEAD # 3 | HEADS # 1, 2, 4-6, 8, & 10 | HEADS # 7 & 9

ALL INDICATIONS L.E.D.

STEEL STRAIN POLES

POLE	HEIGHT	SPAN	ATT. HT.	CALC. SERV. MOMENT	SAG
A	38′	A-B	30′	230 KIP-FT	5%
		A-C	28′		
B	32′	B-A	30′	213 KIP-FT	5%
C	32′	C-A	28′	56 KIP-FT	5%
D	26′	N/A	24′	15 KIP-FT	5%

SPAN DETAIL

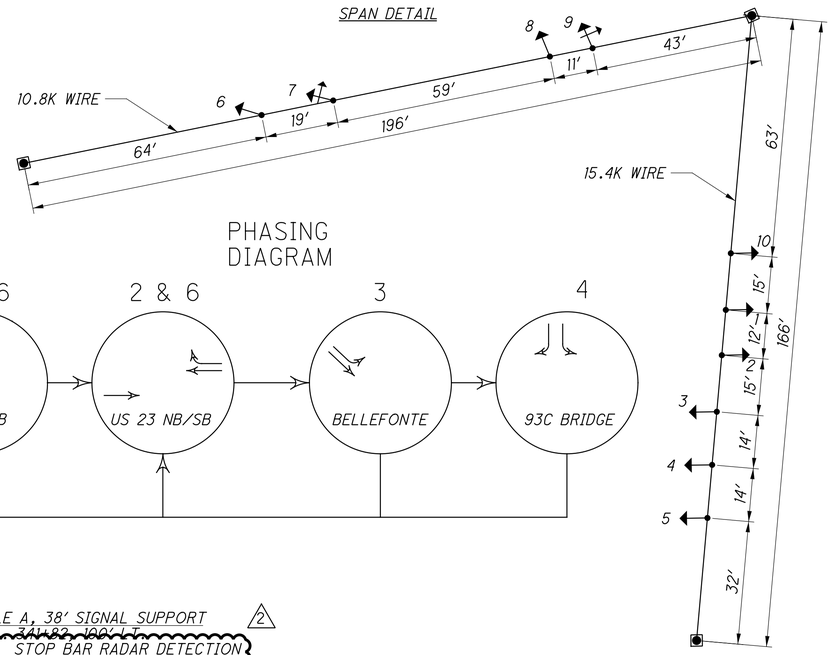

PHASING DIAGRAM

LEGEND

- CONTROLLER
- STEEL STRAIN POLE
- PEDESTAL POLE
- PULL BOX-18″
- PEDESTRIAN DETECTOR
- SIGNAL HEAD
- PEDESTRIAN HEAD
- EXTENSION LOOP DETECTOR
- 2″ RIGID STEEL CONDUIT
- POLE-MOUNTED STOP BAR RADAR DETECTION

NO.	REVISIONS	DATE	REV. BY
1	ADDED TABLE	2/13	PAS
2	CHANGED VIDEO TO RADAR DETECTION	5/13	PAS

HORIZONTAL SCALE IN FEET: 0, 10, 20, 40

CALCULATED VMF | CHECKED PAS

TRAFFIC SIGNAL PLAN
BELLEFONTE ST. AT US 23

LAW-93-0.00

242
788

J:\Project\O\ODOT\15005112 Ironton Russell\LAW\81595\signals\sheets\81595CP001.dgn - 5/31/2013 10:20:41 AM - jon_wanstrath

J:\Project\OV\ODOT\15005112 Ironton Russell\LAW\81595\signals\sheets\81595CP002.dgn - 4/25/2011 6:56:39 AM - jon_wanstrath

LEGEND

- PULL BOX-18″
- EXTENSION LOOP DETECTOR
- 2″ RIGID STEEL CONDUIT

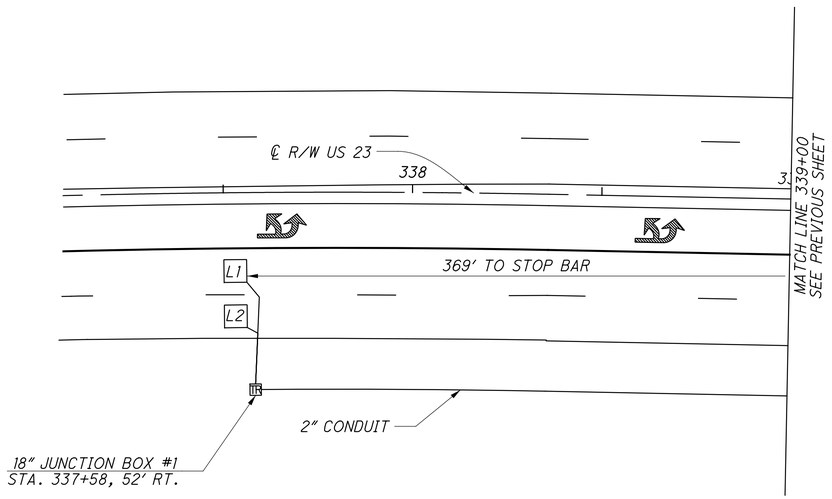

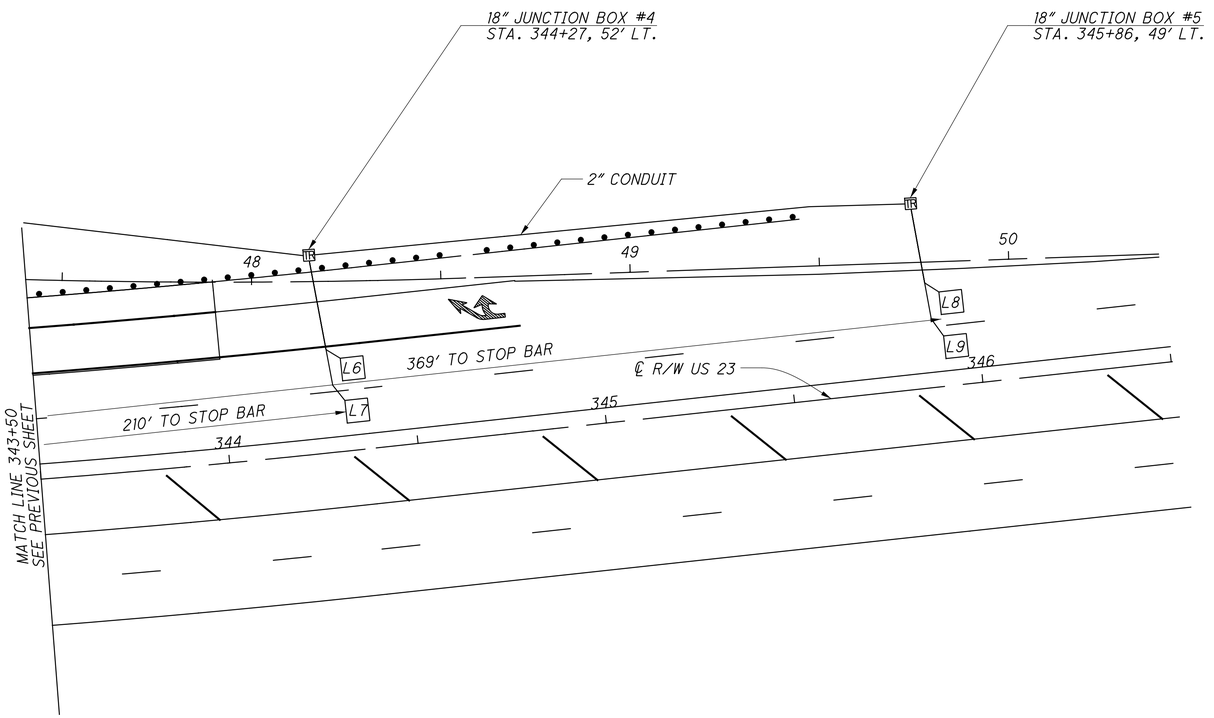

HORIZONTAL SCALE IN FEET
0 10 20 40

CALCULATED VMF
CHECKED PAS

TRAFFIC SIGNAL PLAN
BELLEFONTE ST. AT US 23

LAW-93-0.00

WIRE SCHEDULE (KYTC)			
CABLE	ORIGIN	ENDING	CONNECTING
1-#14/7C	CONTROLLER	SH 2	SH 1 & 2
1-#14/7C	CONTROLLER	SH 5	SH 3,4 & 5
1-#14/7C	CONTROLLER	SH 9	SH 8 & 9
1-#14/7C	CONTROLLER	SH 7	SH 6 & 7
2-#14/1 PAIR	CONTROLLER	JB 1	LOOPS 1 & 2
2-#14/1 PAIR	CONTROLLER	JB 2	LOOPS 3 & 4
1-#14/1 PAIR	CONTROLLER	JB 3	LOOP 5
2-#14/1 PAIR	CONTROLLER	JB 4	LOOPS 6 & 7
2-#14/1 PAIR	CONTROLLER	JB 5	LOOPS 8 & 9

LOOP SCHEDULE (KYTC)									
LOOP	PHASE	SLOT	CHANNEL	SIZE	NO. OF TURNS	DISTANCE FROM STOP BAR	PULSE OR PRESENCE	CALLING RELAY	DELAY (SEC)
L1	6	J-2	1	6'x6'	3	369'	PULSE	STD	0.0
L2	6	J-2	2	6'x6'	3	369'	PULSE	STD	0.0
L3	6	J-3	1	6'x6'	3	210'	PULSE	STD	0.0
L4	6	J-3	2	6'x6'	3	210'	PULSE	STD	0.0
L5	1	I-1	1	6'x30'	2	0'	PRESENCE	STD	5.0
L6	2	I-2	1	6'x6'	3	210'	PULSE	STD	0.0
L7	2	I-2	2	6'x6'	3	210'	PULSE	STD	0.0
L8	2	I-3	1	6'x6'	3	369'	PULSE	STD	0.0
L9	2	I-3	2	6'x6'	3	369'	PULSE	STD	0.0
RADAR	3	I-4	1	N/A	N/A	0'	PRESENCE	STD	5.0
RADAR	4	I-5	1	N/A	N/A	0'	PRESENCE	STD	5.0

1

ACTUATED TRAFFIC SIGNAL CONTROLLER TIMING CHART

Intersection US 23 AT BELLEFONTE AT 93C

Maintaining Agency ODOT

START UP								
START IN: Y/R FLASH	DUAL ENTRY 0							
TIME FOR FLASH OR ALL RED:	REST IN RED: RING 1 0 RING 2 0							
FIRST PHASE(S): *2 & *6	OVERLAP				A	B	C	D
COLOR DISPLAYED 0 GREEN; 0 YELLOW	PHASES							
INTERVAL OR FEATURE	CONTROLLER MOVEMENT NO.							
INTERSECTION MOVEMENT	1	2	3	4	5	6	7	8
MINIMUM GREEN (INITIAL) (SEC)	6	30	8	10		30		
ADDED INITIAL *(SEC/ACTUATION)								
MAXIMUM INITIAL (SEC)								
PASSAGE TIME (PRESET GAP) (SEC)	3.0	2.4	3.5	3.5		2.4		
TIME BEFORE REDUCTION *(SEC)								
MINIMUM GAP *(SEC)								
TIME TO REDUCE *(SEC)								
MAXIMUM GREEN I (SEC)	20	90	35	40		90		
MAXIMUM GREEN II (SEC)								
YELLOW CHANGE (SEC)	3.6	4.3	3.6	3.6		4.3		
ALL RED CLEARANCE (SEC)	3.5	2.1	5.6	5.5		2.1		
WALK (SEC)								
PEDESTRIAN CLEARANCE (SEC)								
RECALL — MAXIMUM (ON/OFF)								
RECALL — MINIMUM (ON/OFF)	OFF	ON	OFF	OFF		ON		
RECALL — PEDESTRIAN (ON/OFF)								
MEMORY (ON/OFF)								
CALL TO NON ACTUATED — NO. 1								
CALL TO NON ACTUATED — NO. 2								

NO.	REVISIONS	DATE	REV. BY
1	CHANGED VIDEO TO RADAR DETECTION	5/13	PAS

CALCULATED VMF

CHECKED PAS

TRAFFIC SIGNAL PLAN DETAILS
BELLEFONTE ST. AT US 23

LAW-93-0.00

244
788

J:\Project\0\ODOT\15005112 Ironton Russell\LAW\81595\signals\sheets\81595CP003.dgn - 5/31/2013 10:20:42 AM - jon_wanstrath

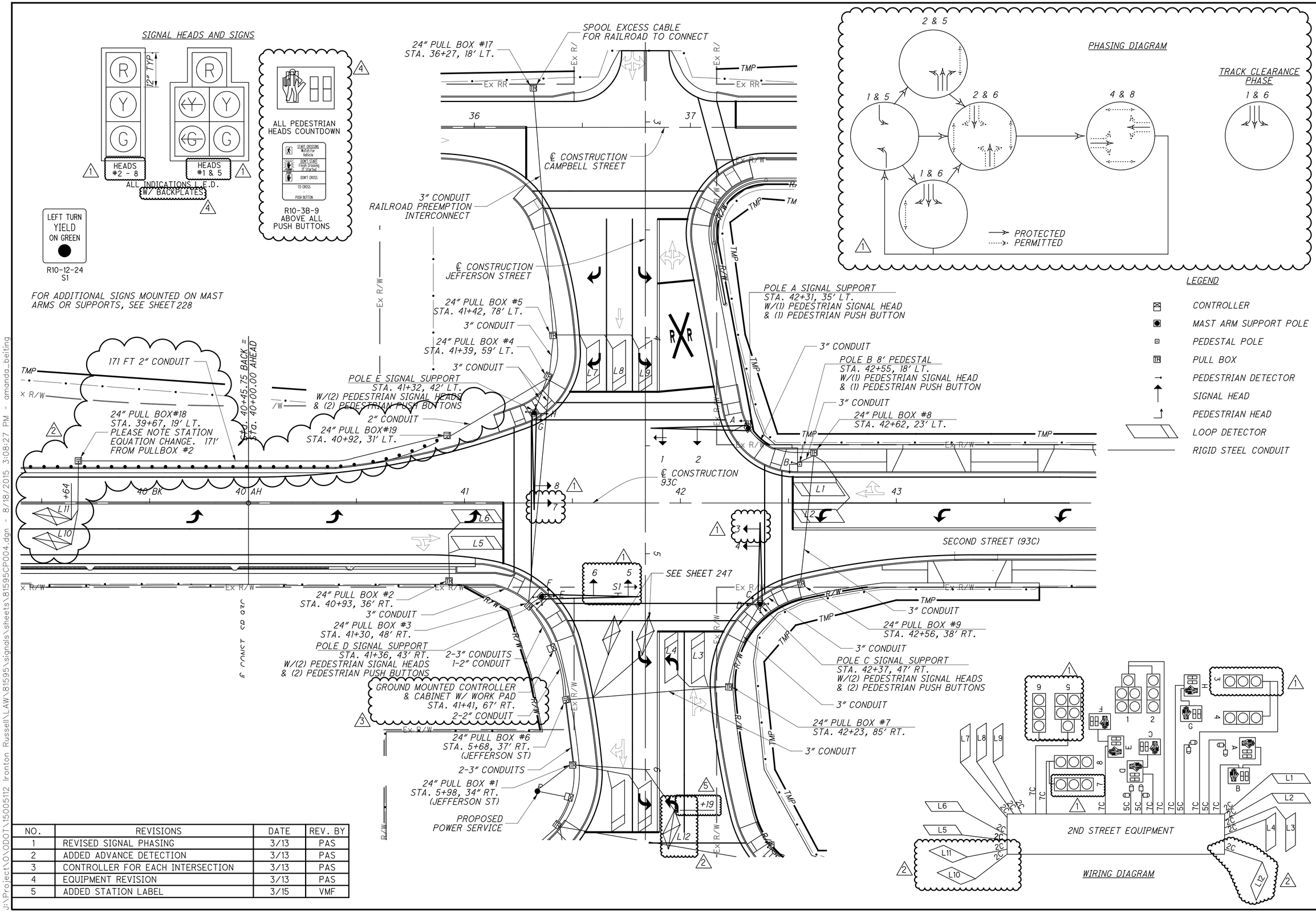

NO.	REVISIONS	DATE	REV. BY
1	REVISED SIGNAL PHASING	3/13	PAS
2	ADDED ADVANCE DETECTION	3/13	PAS
3	CONTROLLER FOR EACH INTERSECTION	3/13	PAS
4	EQUIPMENT REVISION	3/13	PAS
5	ADDED STATION LABEL	3/15	VMF

HORIZONTAL SCALE IN FEET 0 10 20 40

CALCULATED VMF
CHECKED PAS

TRAFFIC SIGNAL PLAN
SECOND ST. AT JEFFERSON ST.

LAW-93-0.00

J:\Project\O\ODOT\15005112 Ironton Russell\LAW\81595\signals\sheets\81595CP004.dgn - 8/18/2015 3:08:27 PM - amanda_beiting

SIGNAL SUPPORT MOUNTING DETAIL

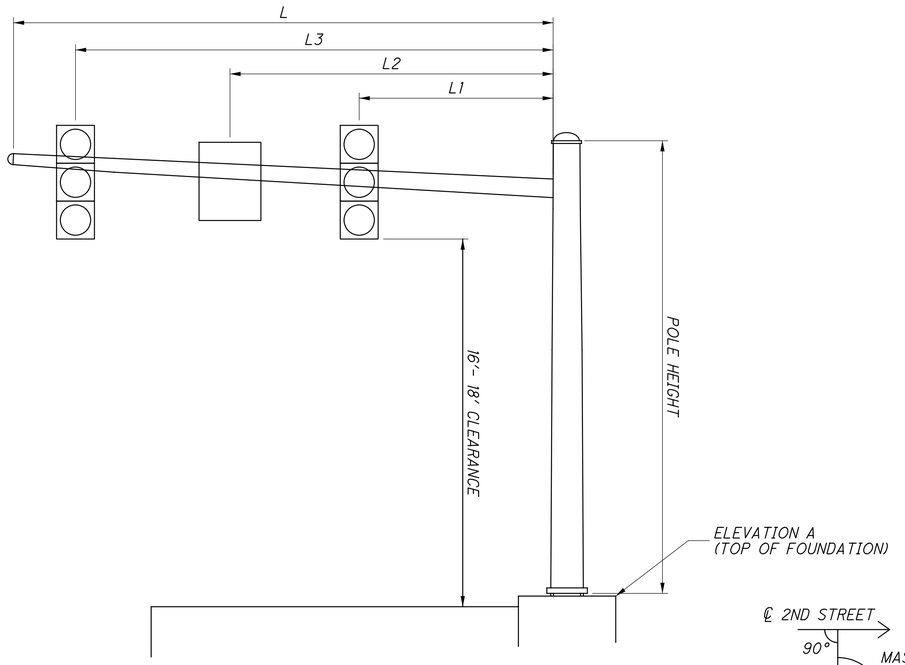

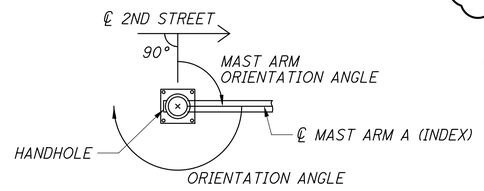

ACTUATED TRAFFIC SIGNAL CONTROLLER TIMING CHART
Intersection: JEFFERSON ST. AT SECOND ST.
Maintaining Agency: ODOT

START UP			X				X		
RAILROAD PREEMPT CLEARANCE:							X		
START IN: Y / R FLASH		DUAL ENTRY 4 & 8							
TIME FOR FLASH OR ALL RED: 60 SEC		REST IN RED: RING 1 O RING 2 O							
FIRST PHASES(S): 2 & 6		OVERLAP				A	B	C	D
COLOR DISPLAYED: X GREEN; O YELLOW		PHASES							
INTERVAL OR FEATURE		CONTROLLER MOVEMENT NO.							
INTERSECTION MOVEMENT		1	2	3	4	5	6	7	8
MINIMUM GREEN (INITIAL) (SEC)		8	15		15	8	15		15
ADDED INITIAL *(SEC/ACTUATION)									
MAXIMUM INITIAL (SEC)									
PASSAGE TIME (PRESET GAP) (SEC)		3	3		3	3	3		3
TIME BEFORE REDUCTION (SEC)									
MINIMUM GAP (SEC)									
TIME TO REDUCE (SEC)									
MAXIMUM GREEN I (SEC)		25	40		*50	25	*50		*50
MAXIMUN GREEN II (SEC)									
YELLOW CHANGE (SEC)		3.6	3.6		3.6	3.6	3.6		3.6
ALL RED CLEARANCE (SEC)		2.5	1.5		2.1	2.5	1.5		2.1
WALK (SEC)			7		7		7		7
PEDESTRIAN CLEARANCE (SEC)			21		23		23		15
RECALL	MAXIMUM (ON/OFF)								
	MINIMUM (ON/OFF)	OFF	ON	OFF	OFF	OFF	ON	OFF	OFF
	PEDESTRIAN (ON/OFF)	OFF	OFF	OFF	OFF	OFF	OFF	OFF	OFF
MEMORY (ON/OFF)									
CALL TO NON ACTUATED	NO. 1								
	NO. 2								

1

* OUTPUT FROM VITAL LOOP PROCESSOR SHOULD ASSERT RAILROAD PREEMPTION INPUT FOR EACH CONTROLLER (SECOND STREET AND THIRD STREET). THE TRACK CLEARANCE GREEN MINIMUM TIME FOR PHASE 6 SHOULD BE 20 SECONDS. THE CONFLICTING GREEN MAX I FOR PHASES 4 & 8 SHOULD BE 10 SECONDS.

FIELD WIRING HOOK-UP CHART

Signal Head #	Indication	Field Terminal	Flash	Signal Head #	Indication	Field Terminal	Flash
1 (WB LT)	R	ph 2 R	R	BC (NORTH)	W	ph 2 PED R	OUT
	Y	ph 2 Y			DW	ph 2 PED G	
	G	ph 2 G		DE (EAST)	W	ph 8 PED R	OUT
	◀Y	ph 5 Y			DW	ph 8 PED G	
	◀G	ph 5 G		FG (SOUTH)	W	ph 6 PED R	OUT
2 (WB) (TH+RT)	R	ph 2 R	R		DW	ph 6 PED G	
	Y	ph 2 Y		AH (WEST)	W	ph 4 PED R	OUT
	G	ph 2 G			DW	ph 4 PED G	
3, 4 (NB)	R	ph 8 R	R				
	Y	ph 8 Y					
	G	ph 8 G		VEHICULAR OVERLAPS			
5, 6 (EB)	R	ph 6 R	R				
	Y	ph 6 Y					
	G	ph 6 G		PED PHASES			
7, 8 (SB)	R	ph 4 R	R	PH 2 PED = LS 13		PH 6 PED = LS 15	
	Y	ph 4 Y		PH 4 PED = LS 14		PH 8 PED = LS 16	
	G	ph 4 G					

1

SUPPORT NO.	DESIGN NO.	SIGNAL SUPPORT TYPE TC-81.21 POLE HEIGHT (FT)	L (FT)	L1 (FT)	L2 (FT)	L3 (FT)	ELEVATION A
A	11	23	45	24	N/A	40	543.1
C	4	23	38	27	N/A	35	542.5
D	11	23	45	24	35	40	543.1
E	11	23	45	34	N/A	42	543.6

SUPPORT NO.	MAST ARM A ANGLE (Deg.)	ORIENTATION ANGLE (Deg.) FROM MAST ARM A: MAST ARM B	PEDESTRIAN SIGNAL	PEDESTRIAN BUTTON	POWER SERVICE	HANDHOLE	CABLE ENTRANCE 12" FROM TOP
A	90	N/A	0	90	N/A	180	0
C	0	N/A	0/270	90/180	N/A	180	0
D	90	N/A	0/270	90/180	N/A	180	0
E	0	N'A	0/270	90/180	N'A	180	0

TRAFFIC SIGNAL DETECTORS

LOOP DESIGNATION	SIZE (FT)	SHAPE	PULSE OR PRESENCE	CALLING RELAY	LOOP DELAY DATA: DELAY (SEC)	LOOP DELAY DATA: INHIBIT DELAY DURING GREEN (PHASE)	3 CONNECT TO DETECTOR UNIT #	1 ASSOCIATED CONTROLLER MOVEMENT NO.
L1	6x20	Slanted Powerhead	Presence	STD	5.0	-	1	4
L2	6x20	Slanted Powerhead	Presence	STD	5.0	-	1	4
L3	6x20	Slanted Powerhead	Presence	STD	5.0	-	2	2
L4	6x20	Slanted Powerhead	Presence	STD	5.0	-	2	5
L5	6x20	Slanted Powerhead	Presence	STD	5.0	-	3	8
L6	6x20	Slanted Powerhead	Presence	STD	5.0	-	3	8
L7	6x20	Slanted Powerhead	Presence	STD	10.0	6.0	4	6
L8	6x20	Slanted Powerhead	Presence	STD	5.0	-	4	6
L9	6x20	Slanted Powerhead	Presence	STD	5.0	-	5	1
L10	8x18	Angular Design	Pulse	STD	-	-	5	8
L11	8x18	Angular Design	Pulse	STD	-	-	6	8
L12	8x18	Angular Design	Pulse	STD	-	-	6	6

2

NO.	REVISIONS	DATE	REV. BY
1	REVISED SIGNAL PHASING	3/13	PAS
2	ADDED ADVANCE DETECTION	3/13	PAS
3	ADDED TIMING INFORMATION	5/15	VMF

CALCULATED VMF
CHECKED PAS

SIGNAL PLAN DETAILS
TRAFFIC SIGNAL AT JEFFERSON ST. & SECOND ST.

LAW-93-0.00

J:\Project\O\ODOT\15005112 Ironton Russell\LAW\81595\signals\sheets\81595CP005.dgn - 8/18/2015 3:08:28 PM - amanda_beiting

SIGNAL HEADS AND SIGNS

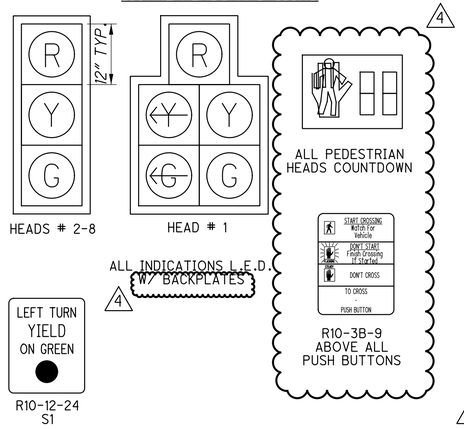

FOR ADDITIONAL SIGNS MOUNTED ON MAST ARMS AND SUPPORTS, SEE SHEET 230

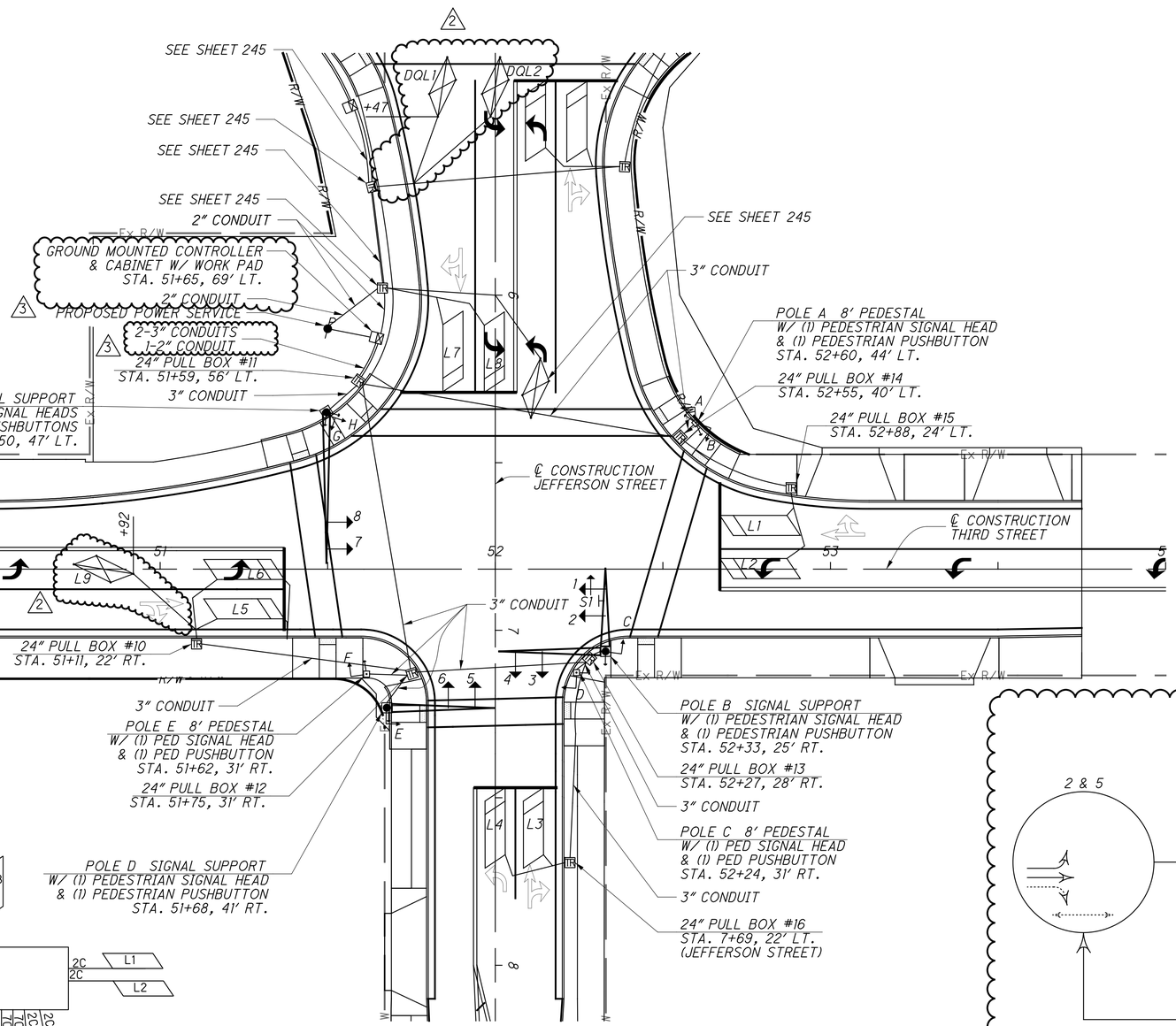

LEGEND

- CONTROLLER
- MAST ARM SUPPORT POLE
- PEDESTAL POLE
- PULL BOX
- PEDESTRIAN DETECTOR
- SIGNAL HEAD
- PEDESTRIAN HEAD
- LOOP DETECTOR
- 3" RIGID STEEL CONDUIT

PHASING DIAGRAM

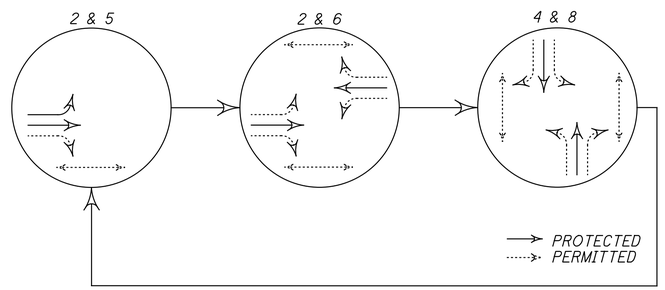

TRACK CLEARANCE PHASE

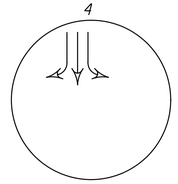

NO.	REVISIONS	DATE	REV. BY
1	REVISED SIGNAL PHASING	3/13	PAS
2	ADDED ADVANCE DETECTION	3/13	PAS
3	CONTROLLER FOR EACH INTERSECTION	3/13	PAS
4	EQUIPMENT REVISION	3/13	PAS

HORIZONTAL SCALE IN FEET
0 10 20 40

CALCULATED VMF
CHECKED PAS

TRAFFIC SIGNAL PLAN
THIRD ST. AT JEFFERSON ST.

LAW-93-0.00

247
788

J:\Project\O\ODOT\15005112 Ironton Russell\LAW\81595\signals\sheets\81595CP006.dgn - 8/18/2015 3:08:29 PM - amanda_beiting

SIGNAL SUPPORT MOUNTING DETAIL

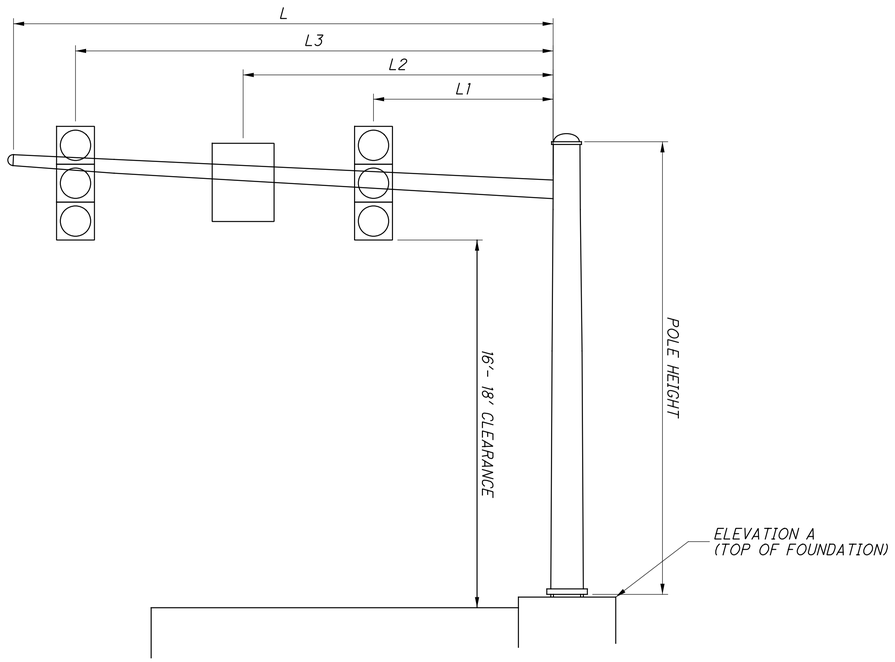

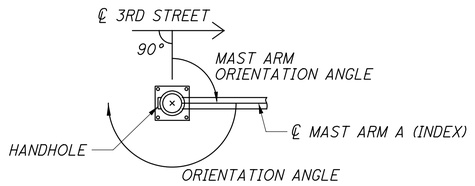

2

ACTUATED TRAFFIC SIGNAL CONTROLLER TIMING CHART
Intersection: JEFFERSON ST. AT THIRD ST.
Maintaining Agency: CITY OF IRONTON

START UP				X			X			
RAILROAD PREEMPT CLEARANCE:						X				
START IN: Y / R FLASH			DUAL ENTRY 4 & 8							
TIME FOR FLASH OR ALL RED:			REST IN RED: RING 1 O RING 2 O							
FIRST PHASES(S): &			OVERLAP				A	B	C	D
COLOR DISPLAYED: O GREEN; O YELLOW			PHASES				2 & 3	3 & 6		
INTERVAL OR FEATURE			CONTROLLER MOVEMENT NO.							
INTERSECTION MOVEMENT			1	2	3	4	5	6	7	8
MINIMUM GREEN (INITIAL)		(SEC)		15		15	8	15		15
ADDED INITIAL		*(SEC/ACTUATION)								
MAXIMUM INITIAL		(SEC)								
PASSAGE TIME (PRESET GAP)		(SEC)		3		3	3	3		3
TIME BEFORE REDUCTION		(SEC)								
MINIMUM GAP		(SEC)								
TIME TO REDUCE		(SEC)								
MAXIMUM GREEN I		(SEC)		*10		*50	25	*10		50
MAXIMUN GREEN II		(SEC)								
YELLOW CHANGE		(SEC)		3.6		3.6	3.6	3.6		3.6
ALL RED CLEARANCE		(SEC)		1.5		2.1	2.5	1.5		2.1
WALK		(SEC)		7		7		7		7
PEDESTRIAN CLEARANCE		(SEC)		21		23		23		15
RECALL	MAXIMUM	(ON/OFF)								
	MINIMUM	(ON/OFF)	OFF	ON	OFF	OFF	OFF	ON	OFF	OFF
	PEDESTRIAN	(ON/OFF)	OFF	OFF	OFF	OFF	OFF	OFF	OFF	OFF
MEMORY		(ON/OFF)								
CALL TO NON ACTUATED	NO. 1									
	NO. 2									

* OUTPUT FROM VITAL LOOP PROCESSOR SHOULD ASSERT RAILROAD PREEMPTION INPUT FOR EACH CONTROLLER (SECOND STREET AND THIRD STREET). THE TRACK CLEARANCE GREEN MINIMUM TIME FOR PHASE 4 SHOULD BE 20 SECONDS. THE CONFLICTING GREEN MAX I FOR PHASES 2 & 6 SHOULD BE 10 SECONDS.

TRAFFIC SIGNAL DETECTORS

LOOP DESIGNATION	SIZE (FT)	SHAPE	PULSE OR PRESENCE	CALLING RELAY	DELAY (SEC)	CONNECT TO DETECTOR UNIT #	ASSOCIATED CONTROLLER MOVEMENT NO.
L1	6x20	Slanted Powerhead	Presence	STD	5.0	1	6
L2	6x20	Slanted Powerhead	Presence	STD	5.0	1	6
L3	6x20	Slanted Powerhead	Presence	STD	5.0	2	4
L4	6x20	Slanted Powerhead	Presence	STD	5.0	2	4
L5	6x20	Slanted Powerhead	Presence	STD	5.0	3	2
L6	6x20	Slanted Powerhead	Presence	STD	5.0	3	5
L7	6x20	Slanted Powerhead	Presence	STD	5.0	4	4
L8	6x20	Slanted Powerhead	Presence	STD	5.0	4	4
L9	8x18	Angular Design	Pulse	STD	-	5	5
**DQL1	8x18	Preformed Loops	Presence	STD	15.0	5	RRPE
**DQL2	8x18	Preformed Loops	Presence	STD	15.0	6	RRPE

1

* USE PREFORMED LOOPS WITH CHECK LOOP, RENO PLC. PLACE THE PLC PREFORMED LOOP IN THE PROPER POSITION AND ORIENTATION ON TOP OF THE CONCRETE REINFORCING STEEL. ROUTE THE LEAD-IN CABLE TO THE DESIRED TERMINATION POINT. CUT AN APPROPRIATE NUMBER OF ½" POLY INSERT TEES AS SHOWN IN FIGURE 1. CUT AN EQUAL NUMBER OF LENGTHS OF ⅜" REBAR. USE THE TEES, REBAR AND NYLON CABLE TIES TO HOLD THE LOOP CABLE IN PLACE. SEE FIGURE 2. THE LEAD-IN CABLE CAN BE TIED DIRECTLY TO THE CONCRETE REINFORCING STEEL. POUR THE CONCRETE MAKING CERTAIN NOT TO DISTURB THE LOOP CABLE.

NOTES:
1. THE REBAR SHOULD BE CUT LONG ENOUGH TO ALLOW IT TO BE DRIVEN FIRMLY INTO THE GROUND TO HOLD THE TEE SECURELY AT THE CORRECT HEIGHT ABOVE THE CONCRETE REINFORCING STEEL.
2. SPACING OF THE TEE / REBAR SUPPORTS SHOULD BE SUCH THAT NO MORE THAN 2 FEET OF CABLE IS UNSUPPORTED.
3. IF THE THICKNESS OF THE CONCRETE SLAB AND/OR THE DEPTH OF THE REINFORCING STEEL BELOW THE TOP OF THE SLAB IS SUCH THAT THE MINIMUM DIMENSIONS SHOWN IN FIGURE 2 CANNOT BE ACHIEVED, CONTACT TECHNICAL SUPPORT AT RENO A & E FOR GUIDANCE.

SUPPORT NO.	SIGNAL SUPPORT TYPE TC-81.21 DESIGN NO.	POLE HEIGHT (FT)	L (FT)	L1 (FT)	L2 (FT)	L3 (FT)	ELEVATION A
B	3	23	25	11	N/A	19	541.8
			32	19	N/A	27	
D	11	23	45	33	38	41	541.6
F	2	23	32	18	N/A	26	542.0

SUPPORT NO.	MAST ARM A ANGLE (Deg.)	ORIENTATION ANGLE (Deg.) FROM MAST ARM A: MAST ARM B	PEDESTRIAN SIGNAL	PEDESTRIAN BUTTON	POWER SERVICE	HANDHOLE	CABLE ENTRANCE 12" FROM TOP
C	0	270	0	90	N/A	180	0/270
E	90	N/A	0	90	N/A	180	0
G	0	N/A	0/270	0/270	N/A	180	0

FIELD WIRING HOOK-UP CHART

Signal Head #	Indication	Field Terminal	Flash
1 (NB LT)	R	OLA R	R
	Y	OLA Y	
	G	OLA G	
	◀Y	ph 5 Y	
	◀G	ph 5 G	
2 (NB) (TH+RT)	R	OLA R	R
	Y	OLA Y	
	G	OLA G	
3 & 4 (WB)	R	ph 4 R	R
	Y	ph 4 Y	
	G	ph 4 G	
5 & 6 (EB)	R	ph 4 R	R
	Y	ph 4 Y	
	G	ph 4 G	
7 & 8 (SB)	R	OLB R	R
	Y	OLB Y	
	G	OLB G	

Signal Head #	Indication	Field Terminal	Flash
BC (NORTH)	W	ph 4 PED R	OUT
	DW	ph 4 PED G	
DE (EAST)	W	ph 2 PED R	OUT
	DW	ph 2 PED G	
FG (SOUTH)	W	ph 4 PED R	OUT
	DW	ph 4 PED G	
HA (WEST)	W	ph 6 PED R	OUT
	DW	ph 6 PED G	
VEHICULAR OVERLAPS			
OLA = LS 9 OLB = LS 10		OLC = LS 11	
PED PHASES			
PH 2 PED = LS 13 PH 4 PED = LS 14		PH 6 PED = LS 15 PH 8 PED = LS 16	

NO.	REVISIONS	DATE	REV. BY
1	REVISED ADVANCE DETECTION	3/13	PAS
2	REVISED TIMING INFORMATION	4/15	VMF

CALCULATED VMF
CHECKED PAS

TRAFFIC SIGNAL PLAN DETAILS
THIRD ST. AT JEFFERSON ST.

LAW-93-0.00

248
788

J:\Project\O\ODOT\15005112 Ironton Russell\LAW\81595\signals\sheets\81595CP007.dgn - 8/18/2015 3:08:31 PM - amanda_beiting

KENTUCKY BID ITEM NOTES

THE STANDARD SPECIFICATIONS FOR ROAD AND BRIDGE CONSTRUCTION, CURRENT EDITION, AND OTHER SPECIAL NOTES AND SPECIFICATIONS WILL APPLY ON THIS PROJECT.

CONDUIT SHALL INCLUDE FURNISHING AND INSTALLING SPECIFIED CONDUIT IN ACCORDANCE WITH SPECIFICATIONS. THIS ITEM INCLUDES CONDUIT FITTINGS, EXPANSION JOINTS, CLAMPS, AND WEATHERHEADS.

JUNCTION BOX SHALL INCLUDE FURNISHING AND INSTALLING SPECIFIED JUNCTION BOX IN ACCORDANCE WITH THE SPECIFICATIONS. THIS ITEM INCLUDES CONCRETE (IF REQUIRED), #57 AGGREGATE, AND BACKFILLING AND RESTORATION OF DISTURBED AREAS TO THE SATISFACTION OF THE RESIDENT ENGINEER.

TRENCHING AND BACKFILLING SHALL INCLUDE EXCAVATION, BACKFILLING, AND THE RESTORATION OF DISTURBED AREAS TO ORIGINAL CONDITION. INCIDENTAL TO THIS ITEM SHALL BE FURNISHING AND INSTALLING UNDERGROUND UTILITY WARNING TAPE (IF REQUIRED).

WIRE OR CABLE SHALL INCLUDE FURNISHING AND INSTALLING SPECIFIED WIRE OR CABLE WITHIN CONDUIT, SAW SLOT, OR OVERHEAD AS INDICATED ON THE DETAIL SHEETS. INCIDENTAL TO THIS ITEM SHALL BE THE FURNISHING AND INSTALLING OF SPLICE BOOTS, CABLE RINGS OR OTHER HARDWARE REQUIRED FOR INSTALLING CABLE. THE CONTRACTOR SHALL INSTALL ALL CABLE OR WIRE RUNS SPLICE-FREE FROM THE CONTROLLER TO EACH LOOP WIRE, SIGNAL HEAD, PEDESTRIAN HEAD/DETECTOR, CAMERA, BLANKOUT SIGN AND AUDIBLE PEDESTRIAN HEAD/DETECTOR THE CABLE OR WIRE IS FEEDING. EXCEPTIONS TO THIS MUST BE APPROVED BY THE ENGINEER OR AS SPECIFIED ON THE PLANS.

STEEL STRAIN POLE SHALL INCLUDE FURNISHING AND INSTALLING STEEL STRAIN POLE AND ALL NECESSARY HARDWARE AS SPECIFIED ON THE DETAIL SHEETS. THIS ITEM INCLUDES FURNISHING ANCHOR BOLTS TO BE INSTALLED UNDER THE BID ITEM "TRAFFIC SIGNAL POLE BASE."

TRAFFIC SIGNAL POLE BASE SHALL INCLUDE EXCAVATION, FURNISHING AND PLACING CONCRETE, REINFORCING STEEL, GROUND ROD(S) AND GROUND WIRE(S), BACKFILLING AND RESTORING DISTURBED AREAS TO THE SATISFACTION OF THE ENGINEER. INCIDENTAL TO THIS ITEM SHALL BE INSTALLING ANCHOR BOLTS AND SPARE CONDUITS FURNISHED UNDER OTHER BID ITEMS AND AS SPECIFIED ON THE DETAIL SHEETS.

MESSENGER SHALL INCLUDE FURNISHING AND INSTALLING SPECIFIED MESSENGER CABLE FOR SPANS. INCIDENTAL TO THIS ITEM SHALL BE FURNISHING AND INSTALLING ASSOCIATED HARDWARE INCLUDING DEAD ENDS, BOLTS AND WASHERS.

LOOP SAW SLOT AND FILL SHALL INCLUDE SAWING, CLEANING AND FILLING INDUCTION LOOP SAW SLOT WITH LOOP SEALANT MATERIAL.

SIGNAL SHALL INCLUDE FURNISHING AND INSTALLING SPECIFIED LED SIGNAL INDICATIONS, MOUNTING BRACKETS (IF REQUIRED) AND CONNECTION TO SIGNAL CONDUCTORS.

SIGNAL CONTROL TYPE 170 SHALL INCLUDE FURNISHING AND INSTALLING A 170 CONTROLLER AND CABINET AS SPECIFIED ON THE DETAIL SHEETS. THIS ITEM SHALL INCLUDE CONSTRUCTING THE CONCRETE BASE OR MOUNTING CABINET TO POLE, PROVIDING ELECTRICAL SERVICE AND THE CONNECTION OF SIGNALS AND DETECTORS. INCIDENTAL TO THIS ITEM SHALL BE FURNISHING AND INSTALLING INDUCTION LOOP AMPLIFIERS, PEDESTRIAN ISOLATORS, LOAD SWITCHES, MODEL 400 MODEM CARD, ELECTRICAL SERVICE CONDUCTORS, ELECTRICAL SERVICE CONDUIT, FUSED CUTOUT, GROUND RODS, ANY NECESSARY POLE MOUNTING HARDWARE AND ELECTRICAL INSPECTION FEES.

TEMPORARY SIGNAL SHALL INCLUDE FURNISHING, INSTALLING AND MAINTAINING NECESSARY SIGNAL EQUIPMENT (TO INCLUDE POLES, CABLES, WIRES, SIGNAL HEADS, CONTROLLER, CABINET, LOOPS, ETC.) AS INDICATED ON THE PLANS UNTIL NO LONGER NEEDED. THESE MATERIALS ARE NOT INCLUDED IN THE LIST OF QUANTITIES.

REMOVE SIGNAL EQUIPMENT SHALL INCLUDE THE REMOVAL OF ALL SIGNAL EQUIPMENT NOT TO BE REUSED. CONTROL EQUIPMENT AND SIGNAL HEADS SHALL BE RETURNED TO THE DEPARTMENT OF HIGHWAYS AS DIRECTED BY THE ENGINEER. ALL OTHER EQUIPMENT AND MATERIALS SHALL BE DISPOSED OF BY THE CONTRACTOR OFF THE PROJECT.

1 STOP BAR RADAR DETECTION, TYPE A SHALL CONSIST OF POLE MOUNTED RADAR SENSOR, SENSOR MOUNTING BRACKET, SENSOR CABLES, INTERFACE BOXES, LEAD-IN CABLE, AND CONTROLLER INTERFACE ASSEMBLY. THIS SHALL ALSO INCLUDE ONE SPARE OF THE FOLLOWING: RADAR SENSOR, INTERFACE BOXES, LEAD-IN CABLE, AND CONTROLLER INTERFACE ASSEMBLY. THIS PAY ITEM SHALL INCLUDE ALL MATERIALS AND LABOR REQUIRED TO PROVIDE A FUNCTIONAL DETECTION SYSTEM.

THE CONTRACTOR SHALL BE RESPONSIBLE FOR PICKING UP INSTALL ITEMS FROM THE FRANKFORT POLE YARD AND DELIVERING THESE ITEMS TO THE SITE. THE CONTRACTOR SHALL CONTACT FRANKFORT POLE YARD PERSONNEL (502-564-3820) AND ARRANGE TO PICK UP INSTALL ITEMS A MINIMUM OF TWO (2) WORKING DAYS PRIOR TO ARRIVAL. FAILURE TO PROVIDE POLE YARD PERSONNEL THIS ADVANCE NOTICE COULD RESULT IN LONG DELAYS OR REFUSAL TO DISTRIBUTE EQUIPMENT UPON ARRIVAL.

TEMPORARY RELOCATION OF SIGNAL HEADS SHALL INCLUDE THE MOVING OF ALL AFFECTED TRAFFIC SIGNALS TO A NEW LOCATION. THIS ITEM ALSO INCLUDES ALL NECESSARY CABLE AND SPLICING HARDWARE (IF REQUIRED) NEEDED TO ATTACH THE TRAFFIC SIGNALS AT THE NEW LOCATION.

CONTRACTOR SHALL CONTACT ALL UTILITY COMPANIES AND THE DISTRICT UTILITY AGENT BEFORE ANY HOLES ARE DUG OR POLES SET TO INSURE PROPER CLEARANCE AND SHIELDING FROM EXISTING OR PROPOSED UTILITY LINES.

CONTRACTOR SHALL LABEL ALL LOOP ENDS AND CABLES INSIDE THE CABINET AS DESIGNATED ON THE PLANS. PAYMENT FOR THIS SHALL BE INCIDENTAL TO THE COST OF THE PROJECT.

CONTRACTOR SHALL BE RESPONSIBLE FOR PAYMENT OF ELECTRIC SERVICE FOR ALL SIGNALS AND WILL BE RESPONSIBLE FOR A SET OF ACCEPTABLE AS-BUILT PLANS. THE KENTUCKY TRANSPORTATION CABINET WILL ASSUME RESPONSIBILITY FOR PAYMENT OF ELECTRIC SERVICE WHEN THE PROJECT IS CALLED COMPLETE AND ALL TESTING HAS BEEN COMPLETED. PAYMENT FOR THIS ITEM SHALL BE INCIDENTAL TO THE COST OF THE PROJECT.

GROUND RODS SHALL HAVE A RESISTANCE TO GROUND NOT TO EXCEED 25 OHMS. WHERE THE RESISTANCE IS GREATER THAN 25 OHMS, TWO OR MORE GROUND RODS CONNECTED IN PARALLEL SHALL BE USED.

NO.	REVISIONS	DATE	REV. BY
1	RADAR DETECTION SPECIFICATIONS ADDED VIDEO DETECTION SPECIFICATIONS DELETED	5/13	PAS

KENTUCKY STANDARD DRAWING
SIGNAL BID ITEMS NOTES

LAW-93-0.00

J:\Project\0\ODOT\15005112 Ironton Russell\LAW\81595\signals\sheets\81595KSU001.dgn - 5/31/2013 10:20:43 AM - jon_wanstrath

GENERAL NOTES

THIS WORK SHALL CONSIST OF FURNISHING (WHEN SPECIFIED) AND INSTALLING ALL MATERIALS NECESSARY FOR TRAFFIC SIGNAL INSTALLATION(S).

THE WORK SHALL BE PERFORMED IN ACCORDANCE WITH THE CURRENT EDITIONS OF:

1. PLANS AND STANDARD DETAIL SHEETS
2. KENTUCKY DEPARTMENT OF HIGHWAYS STANDARD SPECIFICATIONS FOR ROAD AND BRIDGE CONSTRUCTION
3. KENTUCKY DEPARTMENT OF HIGHWAYS, STANDARD DRAWINGS
4. NATIONAL FIRE PROTECTION ASSOCIATION (NFPA) 70: NATIONAL ELECTRICAL CODE,
5. INSTITUTE OF ELECTRICAL AND ELECTRONIC ENGINEERS (IEEE), NATIONAL ELECTRICAL SAFETY CODE
6. MANUAL ON UNIFORM TRAFFIC CONTROL DEVICES
7. STANDARDS OF THE UTILITY COMPANY SERVING THE INSTALLATION

THE TRAFFIC SIGNAL PLANS INDICATE THE EXTENT AND GENERAL ARRANGEMENT OF THE PROPOSED SIGNAL INSTALLATION AND ARE FOR GENERAL GUIDANCE. ANY COMMISSION OR OMISSION SHOWN OR IMPLIED SHALL NOT BE CAUSE FOR DEVIATION FROM THE INTENT OF THE PLANS AND SPECIFICATIONS. IF ANY MODIFICATIONS OF THE PLANS OR SPECIFICATIONS ARE CONSIDERED NECESSARY BY THE CONTRACTOR, DETAILS OF SUCH MODIFICATIONS AND THE REASONS, THEREFORE, SHALL BE SUBMITTED IN WRITING TO THE ENGINEER FOR WRITTEN APPROVAL PRIOR TO BEGINNING SUCH MODIFIED WORK.

THE CONTRACTOR SHALL CONTACT ALL UTILITY COMPANIES AND THE DISTRICT UTILITY AGENT PRIOR TO BEGINNING CONSTRUCTION TO INSURE PROPER CLEARANCE AND SHIELDING FROM EXISTING AND PROPOSED UTILITIES. THE CONTRACTOR SHALL USE ALL POSSIBLE CARE IN EXCAVATING ON THIS PROJECT SO AS NOT TO DISTURB ANY EXISTING UTILITIES WHETHER SHOWN ON THE PLANS OR NOT SHOWN ON THE PLANS. ELEVATIONS AND LOCATIONS OF EXISTING UTILITIES ARE APPROXIMATE ONLY. ANY UTILITIES DISTURBED OR DAMAGED BY THE CONTRACTOR DURING CONSTRUCTION SHALL BE REPLACED OR REPAIRED TO ORIGINAL CONDITION BY THE CONTRACTOR AT NO COST TO THE DEPARTMENT. IF NECESSARY TO AVOID EXISTING UTILITIES, THE CONTRACTOR SHALL HAND DIG AREAS WHERE POLES OR CONDUIT CROSS UTILITIES.

CONTRACTOR SHALL MAKE AN INSPECTION OF THE PROJECT SITE PRIOR TO SUBMITTING A BID AND SHALL BE THOROUGHLY FAMILIARIZED WITH EXISTING CONDITIONS. SUBMISSION OF A BID WILL BE CONSIDERED AN AFFIRMATION OF THIS INSPECTION HAVING BEEN COMPLETED.

MATERIALS - GENERAL

ALL MATERIALS SHALL BE APPROVED PRIOR TO BEING UTILIZED. THE CONTRACTOR SHALL SUBMIT FOR MATERIAL APPROVAL AN ELECTRONIC FILE OF DESCRIPTIVE LITERATURE, DRAWINGS AND ANY REQUESTED DESIGN DATA FOR THE PROPOSED MATERIALS. AFTER APPROVAL, NO SUBSTITUTIONS OF ANY APPROVED MATERIALS MAY BE MADE WITHOUT THE WRITTEN APPROVAL OF THE ENGINEER.

MATERIALS - WIRE AND CABLE

ALL WIRE AND CABLE SHALL BE PLAINLY MARKED IN ACCORDANCE WITH THE PROVISIONS OF THE NATIONAL ELECTRICAL CODE.

GROUNDING CONDUCTORS SHALL BE 4 AWG, SOLID, BARE, COPPER UNLESS OTHERWISE SPECIFIED.

SERVICE ENTRANCE CONDUCTORS SHALL BE 6 AWG, STRANDED, COPPER, TYPE USE-2.

SIGNAL CABLES SHALL BE 14 AWG, STRANDED, COPPER WITH THE NUMBER OF CONDUCTORS INDICATED, AND SHALL CONFORM TO IMSA 19-1.

LOOP WIRE SHALL BE 14 AWG, STRANDED, COPPER AND CONFORM TO IMSA SPEC 51-7.

LOOP LEAD-IN CABLE SHALL BE 14 AWG, STRANDED, COPPER, PAIRED CONDUCTORS, ELECTRICALLY SHIELDED AND CONFORM TO IMSA 19-2.

MATERIALS - CONDUIT

CONDUIT SHALL BE RIGID STEEL, BE GALVANIZED INSIDE AND OUT, AND SHALL CONFORM TO THE UNDERWRITER'S LABORATORIES REQUIREMENTS FOR RIGID METALLIC CONDUIT.

MATERIALS - CONCRETE

UNLESS OTHERWISE SPECIFIED, ALL CONCRETE SHALL BE CLASS A.

MATERIALS - GROUNDING

GROUND RODS SHALL BE COMPOSITE SHAFTS CONSISTING OF A COPPER EXTERIOR INSEPARABLY MOLTEN WELDED TO A STEEL CORE. GROUND RODS SHALL HAVE A MINIMUM DIAMETER OF 5/8 INCH, A MINIMUM LENGTH OF 8 FEET, AND SHALL BE MANUFACTURED FOR THE SOLE PURPOSE OF PROVIDING ELECTRICAL GROUNDING. GROUND RODS SHALL BE EQUIPPED WITH COPPER OR BRONZE CLAMPS.

MATERIALS - MESSENGER/GUY/TETHER CABLE

MESSENGER/GUY/TETHER CABLE SHALL CONSIST OF "CLASS A", ZINC-COATED, HIGH-STRENGTH STEEL OF THE SPECIFIED STRENGTH AND EXTRA GALVANIZED PER ASTM A475-03.

MATERIALS - ANCHOR AND ANCHOR ROD

ROCK ANCHORS SHALL BE 53" LONG WITH EYE TYPE TRIPLEYE(REG TM) AND EXPANDABLE. ALL OTHER ANCHORS SHALL BE OF THE EXPANDABLE TYPE, WITH A MINIMUM AREA OF 135 SQUARE INCHES.

ALL ANCHOR RODS, UNLESS OTHERWISE SPECIFIED SHALL BE 7 FEET MINIMUM LENGTH, 5/8 INCHES MINIMUM DIAMETER, AND SHALL BE OF DOUBLE-EYE DESIGN.

MATERIALS - STEEL STRAIN POLES, MAST ARM POLES, AND BASES

POLE SHALL BE ANCHOR-BASED, HOT-DIPPED GALVANIZED INSIDE AND OUT. THE POLE SHALL BE DESIGNED TO SUPPORT THE SPECIFIED FORCES WHEN THEY ARE APPLIED ACROSS THE DIAGONAL OF THE BOLT CIRCLE. POLES SHALL BE FURNISHED COMPLETE WITH FULLY GALVANIZED ANCHOR BOLTS AND HARDWARE.

MAST ARM POLES SHALL BE OF MONOTUBE DESIGN SIMILAR TO THE ONE DEPICTED ON THE STANDARD DETAIL SHEET. POLES AND ARMS SHALL BE ASTM A 595, GRADE A OR B, ASTM A 572, GRADE 65, OR ASTM A 53. BASE PLATES SHALL BE ASTM GRADE 36 OR 50. POLE, BASE PLATE, AND ALL ASSOCIATED HARDWARE SHALL BE GALVANIZED PER ASTM A 123 OR A 153.

FOR MAST ARM POLES, CONTRACTOR SHALL NOTIFY POLE MANUFACTURER OF ALL EXTRA HOLES NECESSARY FOR ATTACHMENT OF SIGNAL EQUIPMENT (PEDESTRIAN SIGNALS, PEDESTRIAN DETECTORS, SUPPLEMENTAL SIGNAL HEADS, SIGNS, CAMERAS, ETC.).

POLE DIAMETER AND WALL THICKNESS SHALL BE CALCULATED IN ACCORDANCE WITH THE AMERICAN ASSOCIATION OF STATE HIGHWAY AND TRANSPORTATION OFFICIALS (AASHTO) STANDARD SPECIFICATIONS FOR STRUCTURAL SUPPORTS FOR HIGHWAY SIGNS, LUMINAIRES AND TRAFFIC SIGNALS, CURRENT EDITION. FOR MAST ARM POLES, FATIGUE CLASSIFICATION SHALL BE CATEGORY II (WITH GALLOPING AND NATURAL WIND GUSTS, TABLE 11-1) WITH 25 YEAR DESIGN LIFE FROM(TABLE 3-3).

ANCHOR BOLTS SHALL CONFORM TO AASHTO M 134 GRADE 55. ANCHOR BOLTS AND ALL ASSOCIATED HARDWARE SHALL BE FULLY GALVANIZED PER ASTM A 153. POLES SHALL BE FURNISHED WITH A MINIMUM OF FOUR (4) FULLY GALVANIZED ANCHOR BOLTS FOR STEEL STRAIN POLES AND A MINIMUM OF SIX (6) FULLY GALVANIZED ANCHOR BOLTS FOR MAST ARM POLES. EACH ANCHOR BOLT SHALL BE FURNISHED WITH ONE (1) NUT, TWO (2) WASHERS, ONE (1) LOCK WASHER, AND ONE (1) LEVELING NUT.

POLES SHALL INCLUDE TWO, 2 INCH BLIND HALF COUPLINGS INSTALLED 3 FEET FROM TOP OF POLE.

STEEL STRAIN POLES SHALL BE FURNISHED WITH TWO (2) POLE CLAMP ASSEMBLIES SUITABLE FOR ATTACHING MESSENGER CABLE. EACH CLAMP ASSEMBLY SHALL INCLUDE A MINIMUM OF ONE (1) ½ INCH BOLT (SHALL BE ASTM STANDARD WITH A MINIMUM TENSILE LOAD OF 17,050 LBS). ALL POLE HARDWARE SHALL BE HOT-DIPPED GALVANIZED.

POLES SHALL BE FURNISHED WITH ONE (1) 11 INCH X 5 INCH HANDHOLE AND COVER TO ALLOW ACCESS AT THE BOTTOM OF THE POLE. THERE SHALL BE A GALVANIZED STEEL HANDHOLE COVER THAT IS SECURED WITH STAINLESS STEEL SCREWS OR SOME TYPE OF DEVICE TO KEEP THE RESTRAINING STRAP FROM SPINNING.

A COPPER, STAINLESS STEEL OR BRASS GROUNDING LUG SHALL BE INSTALLED 180 DEGREES FROM THE HANDHOLE OPENING AND SHALL BE ACCESSIBLE FROM THE HANDHOLE.

STEEL STRAIN POLES SHALL BE PERMANENTLY LABELED ON THE OUTSIDE WITH MANUFACTURER, THE HEIGHT, MINIMUM STRINGING TENSION AT YIELD, ORDER NUMBER, AND MAXIMUM DEFLECTION RATE.

MASTARM POLES SHALL BE PERMANENTLY LABELED ON THE OUTSIDE WITH MANUFACTURER, MOMENT, AND ORDER NUMBER.

STEEL REINFORCEMENT SHALL HAVE A MINIMUM YIELD STRENGTH OF 60,000 PSI.

CONSTRUCTION METHODS - WIRING

ALL WIRING SHALL CONFORM TO THE PROVISIONS OF THE NATIONAL ELECTRICAL CODE. EACH WIRE/CABLE IN THE CONTROLLER CABINET SHALL BE AFFIXED WITH A PERMANENT IDENTIFICATION LABEL. EACH SPLICE BETWEEN LOOP WIRE AND LOOP LEAD-IN SHALL BE AFFIXED WITH A PERMANENT IDENTIFICATION LABEL. PAYMENT FOR THIS SHALL BE INCIDENTAL TO THE COST OF THE WIRE/CABLE.

CONSTRUCTION METHODS - WIRING COLOR CODES

5-CONDUCTOR THREE SECTION HEADS

CONNECTION	COLOR
RED SIGNAL	RED
YELLOW SIGNAL	ORANGE
GREEN SIGNAL	GREEN
NEUTRAL	WHITE
NOT USED	BLACK

7-CONDUCTOR FIVE SECTION HEADS

CONNECTION	COLOR
RED BALL	RED
YELLOW BALL	ORANGE
YELLOW ARROW	WHITE/TRACER
GREEN BALL	GREEN
GREEN ARROW	BLUE
NEUTRAL	WHITE
NOT USED	BLACK

5-CONDUCTOR PED SIGNAL AND BUTTON

CONNECTION	COLOR
WALK	GREEN
DONT WALK	RED
BUTTON	BLACK
BUTTON	ORANGE
NOT USED	WHITE

CONSTRUCTION METHODS - CONDUIT INSTALLATION

RIGID STEEL CONDUIT ENCASEMENT SHALL BE PROVIDED FOR ALL CONDUCTORS EXCEPT FOR OVERHEAD INSTALLATIONS, WHERE CONDUCTORS ARE RUN INSIDE POLES OR CABINETS AND INDUCTION LOOP CONDUCTORS SEALED WITHIN PAVEMENTS. ALL CONDUIT INSTALLATIONS SHALL CONFORM TO THE PROVISIONS OF THE NATIONAL ELECTRICAL CODE.

ALL CONDUIT ENDS SHALL BE REAMED TO REMOVE BURRS AND SHARP EDGES. DAMAGED PORTIONS OF THE GALVANIZED SURFACES AND UNTREATED THREADS RESULTING FROM FIELD CUTS SHALL BE PAINTED WITH A RUST INHIBITIVE PAINT.

CONDUIT BENDS SHALL HAVE A RADIUS OF NOT LESS THAN 12 TIMES THE NOMINAL DIAMETER OF THE CONDUIT.

CONDUIT WHICH WILL NOT BE SUBJECTED TO REGULAR PRESSURE FROM TRAFFIC SHALL BE LAID TO A DEPTH OF NOT LESS THAN 18 INCHES BELOW FINISHED GRADE. ON CROSSINGS UNDER ROADWAY SURFACES AND SHOULDERS, THE CONDUIT SHALL BE PLACED AT A DEPTH OF NOT LESS THAN 24 INCHES BELOW GRADE.

AFTER THE CONDUIT HAS BEEN INSTALLED AND PRIOR TO BACKFILLING, THE CONDUIT INSTALLATION SHALL BE INSPECTED AND APPROVED BY THE ENGINEER.

WHEN BACKFILLING TRENCHES, THE BACKFILL MATERIAL SHALL BE PLACED AND COMPACTED IN LIFTS OF 9 INCHES OR LESS. ANY AREA DISTURBED AS A RESULT OF THE CONTRACTOR'S OPERATIONS SHALL BE RESTORED TO THE SATISFACTION OF THE ENGINEER.

CONSTRUCTION METHODS - SPLICING

THIS NOTE DESCRIBES THE SPLICING PROCESS (IF REQUIRED) AND IS NOT INTENDED TO GRANT PERMISSION TO SPLICE. PERMISSION TO SPLICE SHALL BE DETERMINED BY THE DIVISION OF TRAFFIC OPERATIONS AND THE LOCATIONS SHALL BE SHOWN ON THE LAYOUT SHEET. IF SPLICING IS NEEDED BUT NOT SHOWN ON THE LAYOUT SHEET, THE CONTRACTOR SHALL RECEIVE PRIOR WRITTEN APPROVAL FROM THE DIVISION OF TRAFFIC OPERATIONS.

ALL UNDERGROUND SPLICES SHALL BE MADE WITH BUTT SPLICES. BUTT SPLICES SHALL BE COPPER AND OF THE CORRECT WIRE RANGE. BUTT SPLICES SHALL BE COVERED WITH A 3M MASTIC PAD OR APPROVED EQUAL AND TAPED WITH A 3M BRAND #33 ELECTRICAL TAPE OR APPROVED EQUAL. MASTIC PAD MUST COVER AT LEAST 3 INCHES PAST EACH END OF BUTT SPLICE. UNDERGROUND SPLICES INCLUDE SPLICES IN JUNCTION BOXES, TRANSFORMER BASES, POLE BASES AND PEDESTAL BASES. EACH CONDUCTOR, INCLUDING THE GROUND, SHALL BE ENCASED IN A SEPARATE SPLICE KIT. COST FOR SPLICING SHALL BE INCIDENTAL TO THE COST OF THE WIRE/CABLE.

CONSTRUCTION METHODS - PAINTING

UNTREATED OR DAMAGED PORTIONS OF THE GALVANIZED SURFACE OF POLES AND CONDUIT SHALL BE PAINTED WITH A RUST INHIBITIVE PAINT.

CONSTRUCTION METHODS - LOOP INSTALLATION

UNSHIELDED LOOP WIRE (FROM 14 AWG/1 PAIR CABLE OR FIELD TERMINAL CONNECTION IN CABINET TO LOOP) SHALL BE TWISTED WITH THREE TO FIVE TURNS PER FOOT BEFORE PLACEMENT IN SAW SLOT, CONDUIT, JUNCTION BOX, OR CABINET.

LOOPS SHALL BE EXTENDED SPLICE-FREE TO THE CONTROLLER, POLE, PEDESTAL OR JUNCTION BOX. LOOP WIRES SHOWN AS EXTENDED TO POLES, PEDESTALS, OR JUNCTION BOXES SHALL BE SPLICED INTO LOOP LEAD-IN CABLE AT THE BOXES, POLES, OR PEDESTALS. LOOP LEAD-IN CABLE SHALL BE EXTENDED SPLICE-FREE FROM POLE OR JUNCTION BOX TO CONTROLLER. SPLICES, WHEN PERMITTED, SHALL CONFORM TO SPLICING NOTE AND BE PLACED TO MINIMIZE POSSIBILITY OF WATER INTRUSION.

FOR ALL PROJECTS INVOLVING NEW ASPHALT PAVEMENT, TRAFFIC LOOPS SHALL BE INSTALLED IN THE BASE COURSE OF ASPHALT PAVEMENT BEFORE THE FINAL SURFACE IS CONSTRUCTED. THE ELECTRICAL CONTRACTOR SHALL COORDINATE THE INSTALLATION OF TRAFFIC LOOPS WITH THE PAVING CONTRACTOR AND THE RESIDENT ENGINEER.

ALL NON-SHRINK GROUT SHALL CONFORM TO THE REQUIREMENTS OF THE KENTUCKY STANDARD SPECIFICATIONS FOR ROAD AND BRIDGE CONSTRUCTION, CURRENT EDITION.

KENTUCKY STANDARD DRAWING
SIGNAL GENERAL NOTES

LAW-93-0.00

J:\Project\0\ODOT\15005112 Ironton Russell\LAW\81595\signals\sheets\81595KGN001.dgn - 4/25/2011 6:56:48 AM - jon_wanstrath

CONSTRUCTION METHODS - SYSTEM GROUNDING AND BONDING

ALL CONDUITS, POLES, PEDESTALS, AND CONTROLLER CABINETS SHALL BE BONDED TO GROUND RODS AND THE ELECTRICAL SYSTEM GROUND TO FORM A COMPLETE GROUNDED SYSTEM.

ALL GROUND RODS SHALL BE SEPARATED BY A MINIMUM OF 6 FEET. TOP OF GROUND ROD SHALL BE A MINIMUM OF 3 INCHES BELOW FINISHED GRADE.

CONSTRUCTION METHODS - STEEL STRAIN & MAST ARM POLES AND BASES

CONTRACTOR SHALL USE HEAT SHRINK TAPE OR VINYL TO WRAP ALL WIRES WHERE THEY PASS THROUGH HOLES. CONTRACTOR SHALL DEBURR HOLES AND PROVIDE A GROMMET AT EACH OPENING.

STEEL REINFORCEMENT AND ANCHOR BOLTS SHALL BE ADEQUATELY SUPPORTED IN THE PROPER POSITIONS SO NO MOVEMENT OCCURS DURING CONCRETE PLACEMENT. WELDING OF ANCHOR BOLTS TO THE REINFORCING CAGE IS UNACCEPTABLE, TEMPLATES SHALL BE USED.

TOP NUTS SHALL BE TIGHTENED TO ONE-SIXTH TURN BEYOND SNUG-TIGHT. SNUG-TIGHT IS DEFINED AS THE CONDITION WHERE THE NUT IS IN FULL CONTACT WITH THE BASE PLATE. IT IS ASSUMED THAT THE FULL EFFORT OR A WORKMAN ON A 12-INCH WRENCH RESULTS IN A SNUG-TIGHT CONDITION.

DRILLED SHAFT DEPTH SHALL BE BASED ON THE SOIL CONDITIONS ENCOUNTERED DURING DRILLING, THE FINISHED GRADE SLOPE AT THE SITE, AND THE SPECIFIED SERVICE MOMENT AT THE BASE OF THE POLE. FINAL SERVICE MOMENT SHALL BE PROVIDED BY THE POLE MANUFACTURER AND SHALL NOT BE LESS THAN THE MOMENT SPECIFIED IN THE PLANS.

IF ROCK IS ENCOUNTERED DURING DRILLING OPERATIONS AND CONFIRMED BY THE RESIDENT ENGINEER TO BE OF SOUND QUALITY, THE SHAFT IS ONLY REQUIRED TO BE FURTHER ADVANCED INTO THE ROCK BY THE LENGTH OF ROCK SOCKET SHOWN IN THE POLE BASE CHART ON THE POLE BASE/SIGNAL HEAD STANDARD DETAIL SHEET. THE TOTAL LENGTH OF THE SHAFT NEED NOT BE LONGER THAN THAT OF SOIL ALONE. BOTH LONGITUDINAL REBAR LENGTH AND NUMBER OF TIES OR SPIRAL LENGTH SHALL BE ADJUSTED ACCORDINGLY.

THE CONTRACTOR MAY PROPOSE A SHORTER DEPTH FOR THE DRILLED SHAFT. IF SO, THE CONTRACTOR SHALL PROVIDE, FOR KYTC'S REVIEW AND APPROVAL, A DETAILED COLUMN DESIGN WITH INDIVIDUAL SITE SPECIFIC SOIL AND ROCK ANALYSIS PERFORMED AND APPROVED BY A REGISTERED PROFESSIONAL ENGINEER.

SPIRAL REINFORCEMENT MAY BE SUBSTITUTED FOR TIES. IF SPIRAL REINFORCEMENT IS USED, ONE AND ONE-HALF CLOSED COILS SHALL BE PROVIDED AT EACH END OF EACH SPIRAL UNIT. SPLICES FOR SPIRALS SHALL BE MADE WITH A MINIMUM OF ONE AND ONE-HALF TURNS OF THE SPIRAL.

DRILLED SHAFT LENGTHS SHOWN IN THE POLE BASE CHART ON THE POLE BASE/SIGNAL HEAD STANDARD DETAIL SHEET ARE BASED ON TWO SUBSURFACE CONDITIONS, SOIL OR ROCK. SOIL SHALL BE, AT A MINIMUM, A COHESIVE, MEDIUM-STIFF CLAY. ROCK SHALL BE SOUND AND REMAIN INTACT DURING DRILLING. SUBSURFACE CONDITIONS CONSISTING OF VERY SOFT CLAY OR VERY LOOSE SATURATED SAND WILL RESULT IN SOIL PARAMETERS WEAKER THAN THOSE ASSUMED FOR THE DRILLED SHAFT LENGTHS SHOWN IN THE POLE BASE CHART ON THE POLE BASE/SIGNAL HEAD STANDARD DETAIL SHEET. IF THESE WEAKER THAN ASSUMED SOIL CONDITIONS ARE ENCOUNTERED AT THE SITE, THE ENGINEER SHALL CONSULT WITH THE KYTC GEOTECHNICAL BRANCH, WHICH MAY RECOMMEND AN ALTERNATE FOUNDATION DEPTH OR DIAMETER. PAYMENT FOR ADDITIONAL MATERIALS WILL BE BASED ON THE CONTRACTORS BID PRICE FOR TRAFFIC SIGNAL POLE BASE AND MEASURED BY CUBIC YARD.

THE BOTTOM OF THE DRILLED HOLE SHALL BE FIRM AND THOROUGHLY CLEANED SO NO LOOSE OR COMPRESSIBLE MATERIALS ARE PRESENT AT THE TIME OF CONCRETE PLACEMENT. IF THE DRILLED HOLE CONTAINS STANDING WATER, THE CONCRETE SHALL BE PLACED USING A TREMIE TO DISPLACE WATER. CONTINUOUS CONCRETE FLOW WILL BE REQUIRED TO INSURE FULL DISPLACEMENT OF ANY WATER.

EXPOSED PORTIONS OF CONCRETE SHALL BE FORMED TO CREATE A SMOOTH FINISHED SURFACE. ALL FORMING SHALL BE REMOVED UPON COMPLETION OF CONSTRUCTION.

ACCEPTANCE REQUIREMENTS

PRIOR TO FINAL INSPECTION OF THE SIGNAL INSTALLATION, THE CONTRACTOR SHALL PROVIDE, AT NO EXTRA COST, AN ACCEPTABLE AND COMPLETE SET OF REPRODUCIBLE AS-BUILT DRAWINGS WHICH SHOW THE ARRANGEMENT AND LOCATION OF ALL EQUIPMENT (I.E., JUNCTION BOXES, CONDUITS, SPARE CONDUITS, ETC.) AND CIRCUITS.

AFTER THE INSTALLATION IS COMPLETED THE CONTRACTOR SHALL, IN THE PRESENCE OF THE ENGINEER, CONDUCT AN OPERATIONAL TEST DEMONSTRATING THAT THE SYSTEM OPERATES IN ACCORDANCE WITH THE PLANS AND SPECIFICATIONS.

INDUCTION LOOP CONDUCTORS SHALL TEST FREE OF SHORTS AND UNAUTHORIZED GROUNDS AND SHALL HAVE AN INSULATING RESISTANCE OF AT LEAST ONE HUNDRED MEGOHMS WHEN TESTED WITH A 500 VOLT DIRECT CURRENT POTENTIAL IN A REASONABLY DRY ATMOSPHERE BETWEEN CONDUCTORS AND GROUND.

GROUND RODS SHALL HAVE A RESISTANCE TO GROUND NOT TO EXCEED 25 OHMS. IF THE RESISTANCE TO GROUND IS GREATER THAN 25 OHMS, TWO OR MORE GROUND RODS CONNECTED IN PARALLEL SHALL BE INSTALLED.

THE CONTRACTOR SHALL BE RESPONSIBLE FOR OBTAINING ANY AND ALL ELECTRICAL INSPECTIONS, MEMBERSHIPS, METER BASES AND ANY OTHER REQUIREMENTS BY THE UTILITIES SERVING THE INSTALLATION AND PAYING ALL FEES REQUIRED.

1

MATERIALS - STOP BAR RADAR DETECTION, TYPE A, AS PER PLAN

POLE MOUNTED SENSOR SHALL CONSIST OF AN INTEGRATED SENSOR AND ANTENNA INSIDE A UL746C ENCLOSURE. SENSOR SHALL PROVIDE DETECTION OF MOVING VEHICLES AS WELL AS PRESENCE DETECTION OF STOPPED VEHICLES. SENSOR SHALL WEIGH LESS THAN 5 LBS, CONSUME LESS THAN 9 WATTS OF POWER AND OPERATE FROM 9-28 VDC. SENSOR SHALL DETECT VEHICLES USING A MATRIX OF RADARS OPERATING IN THE K-BAND. ANTENNA SHALL PROVIDE A VERTICAL 65 DEGREE 6DB BEAM WIDTH AND A 90 DEGREE HORIZONTAL FIELD OF VIEW. SENSOR SHALL BE SUPPLIED WITH A PRE-WIRED PIGTAIL THAT CONNECTS TO A MIL-C-26482 CONNECTOR. SENSOR BACK PLATE SHALL ACCOMMODATE 360 DEGREES OF ROTATION. SENSOR SHALL BE WAVETRONIX WX-SS-225 OR APPROVED EQUAL.

SENSOR MOUNTING BRACKET SHALL PROVIDE ADJUSTMENT OF PAN AND TILT. MOUNT SHALL BE CONSTRUCTED OF ALUMINUM, UTILIZE 316 STAINLESS STEEL HARDWARE AND BE POWDER COATED. MOUNT SHALL SUPPORT UP TO 15 LBS. INTERFACE BOX SHALL PROVIDE A WEATHERPROOF NEMA 4, 4X SPLICE POINT BETWEEN SENSOR PIGTAIL AND LEAD-IN CABLE. INTERFACE BOX SHALL BE SUPPLIED WITH AN INSULATION DISPLACEMENT CONNECTOR COLOR CODED TO MATCH THE CABLES USED. INTERFACE BOX SHALL INCLUDE CABLE SEALS ON THE BOTTOM TO PROVIDE WATER RESISTANCE AND HARDWARE FOR BANDING TO STEEL STRAIN POLES.

LEAD-IN CABLE SHALL BE A 6 CONDUCTOR, SHIELDED RS-485 CABLE SUPPLIED BY THE SENSOR MANUFACTURER. CABLE SHALL PROVIDE POWER AND COMMUNICATIONS TO THE SENSOR. CABLE SHALL BE COLOR CODED TO MATCH THE CONTROLLER INTERFACE MODULES AND SPLICE CONNECTORS. CABLE SHALL BE SUPPLIED ON A SINGLE SPOOL.

CONTROLLER INTERFACE ASSEMBLY SHALL INCLUDE A PREASSEMBLED SURGE PROTECTION, POWER SUPPLY AND CONNECTOR ASSEMBLY DESIGNED TO MOUNT IN A 19 IN RACK AND INTERFACE TO TWO SENSORS. RACK ASSEMBLY SHALL BE DESIGNED TO FIT THE MODEL 336 CABINET ASSEMBLY AND SHALL ALLOW FOR THE REAR CABINET DOOR TO BE CLOSED WITHOUT INTERFERING WITH THE HARDWARE. CONTROLLER INTERFACE ASSEMBLY SHALL BE A WAVETRONIX WX-SS-B03-0003 OR APPROVED EQUAL. CONTROLLER INTERFACE ASSEMBLY SHALL BE SUPPLIED WITH TWO, 2 CHANNEL DETECTOR RACK CARDS FOR USE IN A MODEL 332 DETECTOR RACK AND ALL ASSOCIATED CABLING FOR SETUP AND OPERATION.

CONSTRUCTION METHODS - STOP BAR RADAR DETECTION

RADAR PRESENCE DETECTOR SHALL BE INSTALLED AND WIRED IN ACCORDANCE WITH THE MANUFACTURER 5/32 S INSTRUCTIONS. AFTER THE DETECTOR IS INSTALLED AND BEFORE THE DETECTOR IS POWERED ON, THE CONTRACTOR SHALL COORDINATE WITH CENTRAL OFFICE TRAFFIC TO SCHEDULE A TIME TO PERFORM THE DETECTOR SETUP. THE CONTRACTOR SHALL DOUBLE CHECK TO VERIFY THAT ALL WIRING IS CORRECTLY INSTALLED AND CONNECTED BEFORE SCHEDULING THE SETUP WORK. REPRESENTATIVES FROM KYTC AND/OR THE MANUFACTURER OR SALES REPRESENTATIVE WILL ASSIST WITH SETUP AND CALIBRATION. THE CONTRACTOR SHALL PROVIDE A BUCKET TRUCK AND OPERATORS AT THIS TIME FOR FINAL AIMING OF THE SENSORS. THE CONTRACTOR SHALL PROVIDE INDIVIDUALS CAPABLE OF OPERATING THE SETUP SOFTWARE AND LEARNING THE SETUP PROCESS SO THAT FUTURE INSTALLATIONS MAY BE COMPLETED WITHOUT ASSISTANCE FROM OTHERS.

NO.	REVISIONS	DATE	REV. BY
1	RADAR DETECTION SPECIFICATIONS ADDED	5/13	PAS

KENTUCKY STANDARD DRAWING
SIGNAL GENERAL NOTES

LAW-93-0.00

SPECIFICATIONS FOR MODEL 170 ATC CONTROLLER

THE ATC CHASSIS SHALL CONFORM TO THE STANDARDS DEVELOPED BY "TRAFFIC SIGNAL CONTROL EQUIPMENT SPECIFICATIONS," OREGON DEPARTMENT OF TRANSPORTATION, LATEST EDITION.

THE CHASSIS SHALL BE CONSTRUCTED OF .080 ALUMINUM BY NUMERICALLY CONTROLLED PRODUCTION EQUIPMENT TO GUARANTEE PERFECTLY MATCHED ASSEMBLIES. A PRINTED CIRCUIT MOTHERBOARD ASSEMBLY SHALL PROVIDE RELIABLE INTERCONNECT BETWEEN THE MODULES THAT PLUG INTO IT. WHILE A SEPARATE DAUGHTER BOARD SHALL PROVIDECONNECTIVITY BETWEEN THE MOTHERBOARD AND THE I/O
MODULES. THE REAR OF THE CHASSIS SHALL SUPPORT THE T-1 TERMINAL BLOCK AND C1, C2,C20,C30, AND C40 CONNECTORS. A HINGED FRONT PANEL SHALL BE HELD IN PLACE BY TWO THUMBSCREWS AND A LATCH.

THE HC11 CPU BOARD SHALL REPLACE THE 68360 MICROPROCESSOR IN THE 170 ATC CHASSIS. IT SHALL PROVIDE 128K EPROM AND 32K ZRAM. LIGHT EMITTING DIODE (LED) INDICATIONS SHALL BE USED TO INDICATE PROPER OPERATIONS. ALL POWER SUPPLIES SHALL BE TRANSORB PROTECTED ON THE BOARD. THE HC11 CPU SHALL BE USED FOR ALL APPLICATIONS THAT THE ORIGINAL 6800 PROCESSOR PROVIDE FOR 170 CONTROLLERS INCLUDING THE ABILITY TO RUN WAPITI W4IKS SOFTWARE. THE MPU SHALL OPERATE AT A CRYSTAL FREQUENCY OF 8 MHZ.

THE FRONT PANEL SHALL BE THE STANDARD 170E HINGED FRONT PANEL, HELD IN PLACE BY (4) THUMBSCREWS. THE PROM MODULE SLOT SHALL BE COVERED BY A BLANK PLATE.

ALL INTEGRATED CIRCUITS SHALL BE SOCKET MOUNTED.

SOCKETS SHALL HAVE MACHINED BERYLLIUM COPPER CONTACTS WITH GOLD PLATING.

CONTROLLERS SHALL BE SUPPLIED WITHOUT SOFTWARE. ONE 128K EPROM SHALL BE SUPPLIED WITH THE CONTROLLER. EPROMS SHALL BE PROGRAMMED BY THE CENTRAL OFFICE ELECTRONIC SHOP.

CONTROLLERS SHALL BE WARRANTED FOR A PERIOD OF 1 YEAR OR FOR THE MANUFACTURERS STANDARD WARRANTY, WHICHEVER IS GREATER.

SPECIFICATIONS FOR MODEL 200 LOAD SWITCHES

MODEL 200 LOAD SWITCHES SHALL CONFORM TO "TRAFFIC SIGNAL CONTROL EQUIPMENT SPECIFICATIONS," CALIFORNIA DEPARTMENT OF TRANSPORTATION, LATEST EDITION.

LOAD SWITCHES MAY EMPLOY DISCRETE COMPONENTS OR RELAY MODULES. A SINGLE POTTED CIRCUIT ASSEMBLY IS NOT ACCEPTABLE. LOAD SWITCHES SHALL HAVE OUTPUTS RATED AT 15 AMPS CONTINUOUS. LOAD SWITCH INDICATORS SHALL DISPLAY THE STATUS OF THE INPUT SIGNAL TO THE SWITCH.

SPECIFICATIONS FOR MODEL 204 FLASHERS

MODEL 204 FLASHERS SHALL CONFORM TO "TRAFFIC SIGNAL CONTROL EQUIPMENT SPECIFICATIONS," CALIFORNIA DEPARTMENT OF TRANSPORTATION, LATEST EDITION. FLASHERS MAY EMPLOY DISCRETE COMPONENTS OR RELAY MODULES. A SINGLE POTTED CIRCUIT ASSEMBLY IS NOT ACCEPTABLE. FLASHERS SHALL HAVE OUTPUTS RATED AT 15 AMPS CONTINUOUS.

SPECIFICATIONS FOR MODEL 210 CONFLICT MONITORS

SPECIFICATIONS FOR MODEL 210 CONFLICT MONITOR SHALL CONFORM TO "TRAFFIC SIGNAL CONTROL EQUIPMENT SPECIFICATIONS", CALIFORNIA DEPARTMENT OF TRANSPORTATION, LATEST EDITION, AS WELL AS THE FOLLOWING REQUIREMENTS:

ANY DARK SIGNAL HEAD (I.E. LOSS OF SIGNAL OUTPUT TO FIELD TERMINALS) SHALL CAUSE THE MONITOR TO TRIP.

THE GREEN, YELLOW AND RED INDICATIONS FOR EACH PHASE SHALL BE BROUGHT INTO THE MONITOR INDIVIDUALLY AND SHALL BE MONITORED SEPARATELY WITH RESPECT TO A LOSS OF SIGNAL ON ANY OF THE THREE INPUTS PER CHANNEL.

THE MONITOR SHALL ALLOW EARLY DETECTION OF A CONFLICT CAUSED BY A CONTINUED GREEN SIGNAL AFTER THE YELLOW SIGNAL IS ENERGIZED, OR A YELLOW SIGNAL WHICH STAYS ENERGIZED AFTER THE RED IS ENERGIZED. THE FAULT TIMERS SHALL START IMMEDIATELY INSTEAD OF WAITING FOR ANOTHER CONFLICTING SIGNAL. THIS SHALL PRECLUDE THE PRESENTATION OF A CONFLICTING SIGNAL DISPLAY AT THE INTERSECTION.

DURING THE "ALL RED" CLEARANCE PERIOD (IF USED) THE MONITOR SHALL CHECK ALL INPUTS FOR FAULTY SIGNAL DISPLAY AND SHALL REACT TO THESE FAULTY INDICATIONS DURING THE ALL RED CLEARANCE PERIOD. DURING THIS PERIOD THE ONLY INPUTS THAT SHOULD BE ACTIVE WOULD BE THE REDS. THE MONITOR SHALL DETECT ANY FAULTS SUCH AS RED/GREEN, RED/YELLOW AND GREEN/RED/YELLOW.

THE MONITOR SHALL BE CAPABLE OF MONITORING FOR INCORRECT SIGNALS APPLIED AT THE FIELD TERMINALS OF EACH VEHICULAR MOVEMENT (GREEN, YELLOW, RED). SHOULD A VOLTAGE BE PRESENT ON MORE THAN ONE, OR NONE, OF THE INPUTS (GREEN, YELLOW, RED) OF A CHANNEL, THE UNIT SHALL
BEGIN TIMING THE DURATION OF THIS CONDITION. IF THIS CONDITION EXISTS FOR LESS THAN 700 MILLISECONDS, THE UNIT WILL NOT TRIGGER. IF THE CONDITION LASTS FOR MORE THAN 1000 MILLISECONDS, THE UNIT WILL TRIGGER. THE UNIT MAY OR MAY NOT TRIGGER IF THE CONDITION EXISTS FOR
MORE THAN 700 MILLISECONDS OR LESS THAN 1000 MILLISECONDS.

WHEN THE UNIT TRIGGERS, IT SHALL CAUSE THE OUTPUT RELAY CONTACTS TO TRANSFER. THESE CONTACTS SHALL REMAIN IN THE STATE UNTIL THE UNIT IS RESET BY THE ACTIVATION OF THE PANEL CONTROL, OR THE ACTIVATION OF THE EXTERNAL RESET INPUT. POWER INTERRUPTION SHALL NOT RESET THE CONFLICT MONITOR WHEN IT HAS BEEN TRIGGERED BY DETECTION OF A FAULTY LOAD SWITCH OUTPUT AS INDICATED ABOVE.

THE MINIMUM INDICATORS SHALL BE AS FOLLOWS:

1. AC POWER - SHALL BE ILLUMINATED WHEN AC+ EXCEEDS 103 (+/- 2) VAC, WILL BLINK WHEN AC+ FALLS BELOW 98 (+/- 2) VAC.

2. DC POWER - SHALL ILLUMINATE IF THE 24 VDC INPUT EXCEEDS MINIMUM THRESHOLD VOLTAGE.

3. WATCH DOG ERROR - SHALL ILLUMINATE WHEN A WATCH DOG ERROR IS DETECTED.

4. CONFLICT - SHALL ILLUMINATE WHEN A CONFLICT HAS BEEN DETECTED BY THE MONITOR.

5. PC AJAR - SHALL ILLUMINATE WHEN THE PROGRAM BOARD IS NOT INSTALLED OR NOT SEATED CORRECTLY.

6. RED FAIL - SHALL ILLUMINATE WHEN A RED FAILURE HAS BEEN DETECTED.

7. SWITCH FAIL - SHALL ILLUMINATE WHEN A FAULTY LOAD SWITCH HAS BEEN DETECTED BY THE MONITOR.

8. YELLOW FAIL - SHALL ILLUMINATE WHEN A SHORT OR MISSING YELLOW CYCLE IS DETECTED.

9. THE MONITOR SHALL INCLUDE STATUS INDICATORS. THESE INDICATORS (ONE PER CHANNEL) SHALL ILLUMINATE WHEN A PROCEED SIGNAL IS PRESENT ON THE CORRESPONDING CHANNEL DURING NORMAL OPERATION. IF THE UNIT TRIPS DUE TO A CONFLICT, THE SIGNAL STATUS SHALL LOCK UP AND DISPLAY THE STATUS OF EACH CHANNEL AT THE TIME THE CONFLICT OCCURRED. SHOULD THE MONITOR TRIP DUE TO THE ABSENCE OF RED OR A FAULTY LOAD SWITCH OUTPUT, THE SIGNAL STATUS INDICATORS SHALL DISPLAY THE CHANNEL(S) WHICH IS (ARE) AT FAULT.

IF THE MONITOR DETECTS A LOAD SWITCH FAULT CONDITION, THE SWITCH FAIL INDICATOR SHALL BE ILLUMINATED AND THE SIGNAL STATUS WILL DISPLAY THE EXACT CHANNEL OF THE LOAD SWITCH THAT FAILED.

AFTER A POWER OUTAGE, BEFORE WHICH THERE WAS A FAULT, THE MONITOR SHALL CORRECTLY SHOW THE PREVIOUS FAULT. THIS WILL INCLUDE FAULT TYPE AND CHANNEL WHICH WAS IN ERROR.

THE MONITOR SHALL INCORPORATE A FRONT PANEL LED TEST.

THE MONITOR SHALL TRIP IF THE YELLOW INTERVAL DURING ANY PHASE SEQUENCE IS LESS THAN THREE SECONDS.

THE MONITOR SHALL INCLUDE MEANS TO SEND FAULT AND CHANNEL STATUS TO THE CONTROLLER. WATCHDOG AND STOP TIME SIGNALS SHALL BE USED TO COMMUNICATE THE INFORMATION IN ACCORDANCE WITH THE PROTOCOL USED BY WAPITI MICRO SYSTEMS W4IKS SOFTWARE SO THAT NO ADDITIONAL SIGNALS OR CABLES SHALL BE REQUIRED.

MONITORS SHALL BE WARRANTED FOR A PERIOD OF 1 YEAR OR FOR THE MANUFACTURERS STANDARD WARRANTY, WHICHEVER IS GREATER. THE WARRANTY PERIOD SHALL BEGIN ON THE DATE THE MONITORS ARE RECEIVED BY THE KENTUCKY TRANSPORTATION CABINET. TEN (10) SETS OF DOCUMENTATION SHALL BE INCLUDED WITH THE ORDER. EACH DOCUMENTATION PACKAGE SHALL INCLUDE AN OPERATIONS MANUAL, THEORY OF OPERATION, AND SCHEMATIC. EACH UNIT SHALL HAVE A PERMANENT LABEL OR STAMP INDICATING THE DATE OF SHIPMENT.

SPECIFICATIONS FOR CABINETS

SPECIFICATIONS FOR CABINETS SHALL CONFORM TO "TRAFFIC SIGNAL CONTROL EQUIPMENT SPECIFICATIONS," CALIFORNIA DEPARTMENT OF TRANSPORTATION, LATEST EDITION.

BASE MOUNTED CABINETS SHALL BE MODEL 332. POLE MOUNTED CABINETS SHALL BE MODEL 336.

ALL CABINETS SHALL BE CONSTRUCTED OF ALUMINUM AND SHALL BE SUPPLIED UNPAINTED. CABINETS SHALL BE EQUIPPED WITH CONFLICT MONITORS, FLASHERS, FLASH TRANSFER RELAYS, AND ALL EQUIPMENT REQUIRED FOR OPERATION AS SHOWN ON THE DETAIL SHEETS.

ALL CABINETS SHALL INCLUDE AN INSTALLED FLUORESCENT FRONT AND BACK LIGHT.

CABINETS SHALL BE FITTED WITH A PDA-2 POWER DISTRIBUTION ASSEMBLY. CIRCUIT BREAKERS USED IN THE PDA-2 ASSEMBLY SHALL HAVE TAB TYPE TERMINAL CONNECTIONS. 10-32 STUD TYPE CONNECTIONS ARE NOT ACCEPTABLE. CABINETS SHALL BE EQUIPPED WITH AN EDCO SHA12-10 OR APPROVED EQUAL SURGE PROTECTOR. THE SHA12-10 UNIT SHALL BE INSTALLED IN AN ENCLOSURE WITHIN THE CABINET. PRINTED CIRCUIT WIRING SHALL NOT BE USED TO CONNECT LOAD SWITCH SOCKETS. DETECTOR LOOPS SHALL CONNECT DIRECTLY TO INDIVIDUAL TERMINAL BLOCKS POSITIONED IN BACK OF EACH INPUT FILE SLOT. SIDE MOUNTED TERMINAL BLOCKS AND ASSOCIATED WIRING FOR LOOPS SHALL NOT BE INSTALLED.

PEDESTRIAN YELLOW LOADSWITCH OUTPUTS SHALL NOT BE CONNECTED TO THE CONFLICT MONITOR CARD-EDGE CONNECTOR.

IT SHALL BE POSSIBLE TO REMOVE THE INNER RACK BY REMOVING NO MORE THAN 8 EASILY ACCESSIBLE MOUNTING BOLTS AND DISCONNECTING ONE MOLEX TYPE PLUG.

ONE SET OF CABINET PRINTS AND MANUAL SHALL BE SUPPLIED WITH EACH CABINET.

SPECIFICATIONS FOR MODEL 400 MODEMS

SPECIFICATIONS FOR MODEL 400 MODEMS SHALL CONFORM TO "TRAFFIC SIGNAL CONTROL EQUIPMENT SPECIFICATIONS," CALIFORNIA DEPARTMENT OF TRANSPORTATION, LATEST EDITION.

MODEMS SHALL HAVE THE FOLLOWING FRONT MOUNTED LED INDICATORS:

TRANSMIT DATA - XMT
RECEIVE DATA - RCV
REQUEST TO SEND - RTS
CLEAR TO SEND - CTS
RECEIVE CARRIER - CAR

TIMING SHALL BE DIP SWITCH ADJUSTABLE WITH THE FOLLOWING SETTINGS:

RTS-CTS	6/12 +/-2 MS
CAR DELAY	4/8 +/- 2 MS
SOFT CARRIER TURNOFF	5/10 +/-2 MS
RECEIVER SQUELCH	3/6.5 +/-2 MS

MODEMS SHALL PROVIDE AN ANTI-STREAMING MODE WHICH WILL STOP TRANSMISSION WHEN THE MODEM ENCOUNTERS A RTS SIGNAL HELD FOR MORE THAN 7 SECONDS. THIS MODE SHALL BE ENABLED/DISABLED BY A DIP SWITCH.

SPECIFICATIONS FOR LOOP DETECTORS

LOOP AMPLIFIERS SHALL BE SELF-TUNING. MANUAL TUNING BY ANY MEANS IS NOT ACCEPTABLE. DETECTORS SHALL REACH FULL SENSITIVITY WITHIN 10 SECONDS OF THE APPLICATION OF POWER.

ALL INTEGRATED CIRCUITS SHALL BE SOCKET MOUNTED. SOCKETS SHALL HAVE MACHINED BERYLLIUM COPPER CONTACTS WITH GOLD PLATING. SURFACE MOUNTED TECHNOLOGY CAN BE SUBSTITUTED FOR SOCKET MOUNTED.

AMPLIFIERS SHALL SEQUENTIALLY SCAN EACH CHANNEL TO ELIMINATE CROSSTALK BETWEEN LOOP SYSTEMS. IT SHALL BE POSSIBLE TO OPERATE THE AMPLIFIER WITH ALL CHANNELS CONNECTED TO THE SAME LOOP. LOOP AMPLIFIERS SHALL INCORPORATE A SINGLE LSI SIGNAL PROCESSING INTEGRATED CIRCUIT. ANY CUSTOM OR PROGRAMMED INTEGRATED CIRCUIT USED SHALL BE READILY AVAILABLE FROM THE MANUFACTURER. DETECTOR UNITS SHALL SELECT SENSITIVITY LEVELS, FREQUENCY OF OPERATION, PULSE OR PRESENCE MODES, AND RESET ON A PER CHANNEL BASIS. ALL SETTINGS SHALL BE CAPABLE OF BEING PROGRAMMED FROM THE FRONT PANEL. LOOP AMPLIFIERS SHALL OPERATE WITH A LOOP LEAD-IN OF AT LEAST 1000 FEET. LOOP AMPLIFIERS SHALL TUNE TO A LOOP SYSTEM OF 20 TO 2500 MICROHENRIES (+/- 3%), PROVIDE 9 OR MORE LEVELS OF SENSITIVITY AND 8 OR MORE FREQUENCY SETTINGS. EACH CHANNEL SHALL CONTINUE TO OPERATE WITH A SINGLE POINT SHORT TO GROUND ON THE LOOP OR LOOP LEAD-IN. EACH CHANNEL SHALL AUTOMATICALLY RECOVER FROM INTERMITTENT OPENS OR MULTIPLE SHORTS TO GROUND. AN INTERMITTENT OPEN SHALL BE STORED IN AN OPEN LOOP MEMORY. THE CHANNEL INDICATOR LIGHT SHALL DISPLAY AN OPEN LOOP CONDITION, SHORT CIRCUIT CONDITION, OR 25% STEP CHANGE IN INDUCTANCE. AMPLIFIERS SHALL HAVE A BACKLIT LIQUID CRYSTAL DISPLAY INDUCTANCE LEVEL, SENSITIVITY LEVEL AND FREQUENCY SETTING. PRESENCE MODE SHALL PROVIDE A CALL HOLD TIME OF AT LEAST 4 MINUTES WITH A TYPICAL CALL HOLD TIME OF 2 HOURS. IN PULSE MODE THE MINIMUM PULSE SHALL BE 125 MILLISECONDS. AMPLIFIERS SHALL HAVE A MINIMUM RANGE OF 1 TO 63 SECONDS IN 1 SECOND INCREMENTS FOR CALL DELAY AND A MINIMUM RANGE OF 0 TO 15.75 SECONDS WITH MAXIMUM INCREMENTS OF .25 SECONDS FOR CALL EXTENSION. EACH CHANNEL SHALL HAVE THE CAPABILITY OF BEING TURNED OFF.

DETECTORS SHALL BE WARRANTED FOR A PERIOD OF 1 YEAR OR FOR THE MANUFACTURER'S STANDARD WARRANTY, WHICHEVER IS GREATER.

KENTUCKY STANDARD DRAWING
170 ATC CONTROLLER SPECIFICATIONS

LAW-93-0.00

252
788

J:\Project\O\ODOT\15005112 Ironton Russell\LAW\81595\signals\sheets\81595KGN002.dgn - 4/25/2011 6:56:51 AM - jon_wanstrath

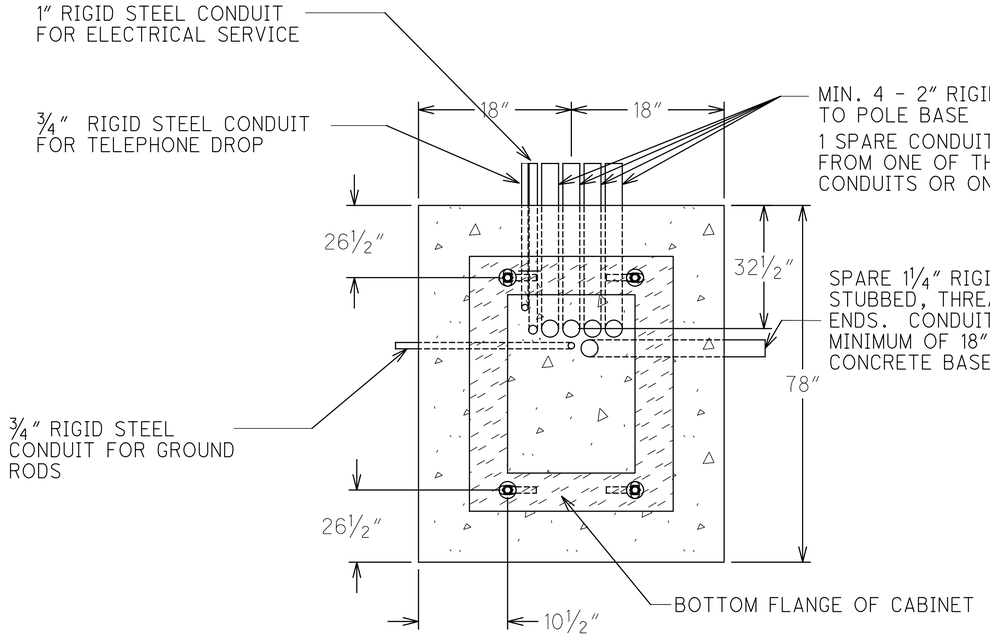

NOTE TO CONTRACTOR:
FOR BASE MOUNTED CABINETS THE CONTRACTOR MAY, AT NO ADDITIONAL COST TO THE TRANSPORTATION CABINET, INSTALL THE SERVICE WIRES IN FLEXIBLE CONDUIT FROM THE DISCONNECT TO THE 1″ RIGID STEEL CONDUIT IN POLE BASE. CONTRACTOR SHALL USE PROPER CONNECTIONS FOR TRANSITION FROM FLEXIBLE TO RIGID STEEL CONDUIT. FLEX CONDUIT SHALL NOT BLOCK HAND HOLE OR ACCESS TO GROUNDING SYSTEM.

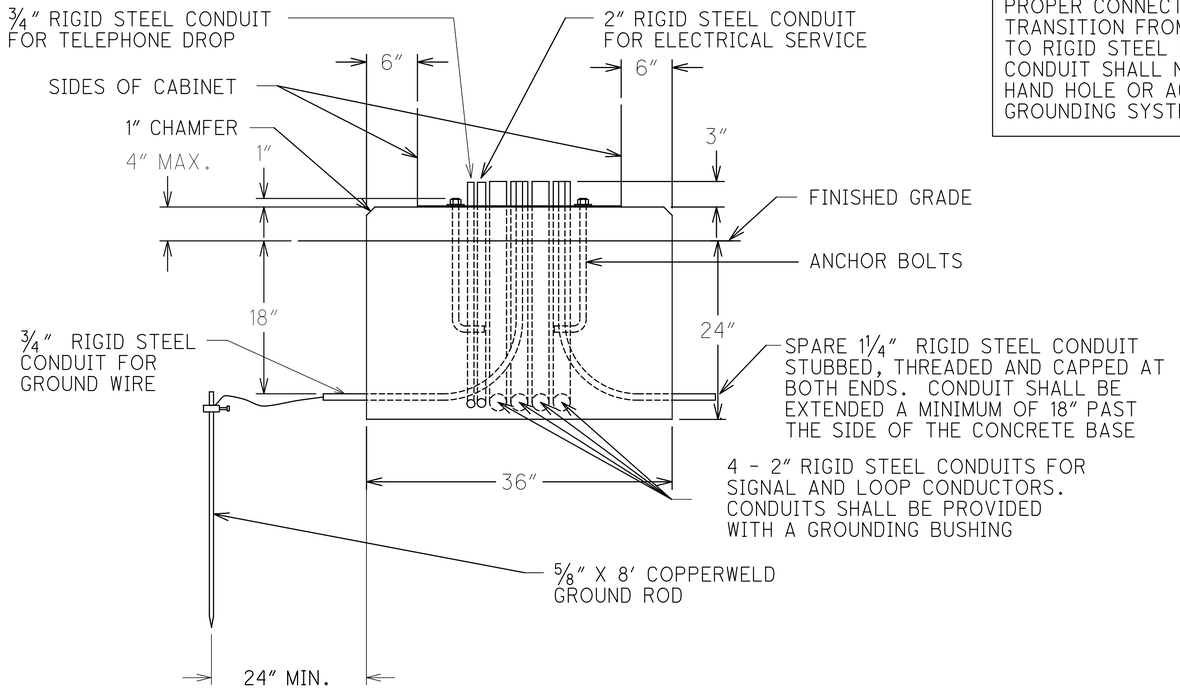

BASE MOUNTED 170 CABINET DETAIL

KENTUCKY STANDARD DRAWING
CONTROLLER CABINET DETAIL

LAW-93-0.00

253
788

J:\Project\0\ODOT\15005112 Ironton Russell\LAW\81595\signals\sheets\81595KCA001.dgn - 4/25/2011 6:56:52 AM - jon_wanstrath

LOOP WIRES SHALL BE ENCAPSULATED WITH LOOP SEALANT PER MANUFACTURER'S INSTRUCTIONS. ALL LOOP SEALANT SHALL BE COVERED WITH A CONTINUOUS LAYER OF BACKER ROD. BACKER ROD SHALL BE INSTALLED SUCH THAT NO VOIDS ARE PRESENT BETWEEN LOOP SEALANT AND BACKER ROD. FILL REMAINING SAW SLOT WITH NON-SHRINK GROUT PER MANUFACTURER'S INSTRUCTIONS. IF LOOP IS INSTALLED AFTER FINAL SURFACE HAS BEEN APPLIED, INSTALL ½" OF LOOP SEALANT ON TOP OF NON-SHRINK GROUT. LOOP SEALANT SHALL BE STOPPED ⅛" BELOW FINISHED SURFACE.

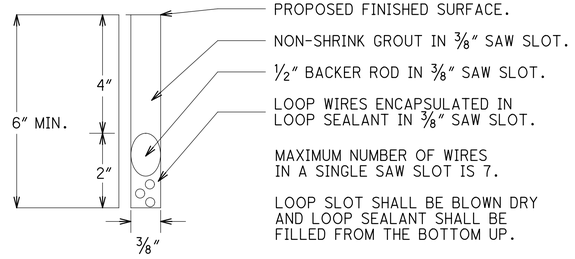

SAW SLOT DETAIL FOR NON PREFORMED

PREFORMED LOOPS SHALL BE CONSTRUCTED WITH ⅜" HEAVY DUTY REINFORCED RUBBER HOSE(CLASS A OIL RESISANT). THE TEE SHALL BE CONSTRUCTED OF HEAVY DUTY HIGH TEMPERATURE SYNTHETIC RUBBER. STANDARD WIRE SHALL BE WATER RATED #16 THWN.



PREFORMED LOOP CROSS SECTION

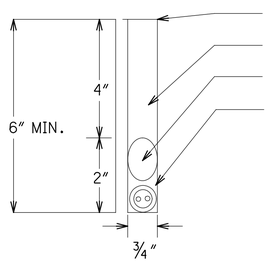

ASPHALT SAW SLOT DETAIL FOR PREFORMED

*Use detail if concrete is four inches or less

NOTE:
FOR ALL PROJECTS INVOLVING NEW ASPHALT PAVEMENT, TRAFFIC LOOPS SHALL BE INSTALLED IN THE BASE COURSE OF ASPHALT PAVEMENT JUST BEFORE FINAL SURFACE IS CONSTRUCTED. THE ELECTRICAL CONTRACTOR SHALL COORDINATE THE INSTALLATION OF TRAFFIC LOOPS WITH THE PAVING CONTRACTOR AND THE RESIDENT ENGINEER.

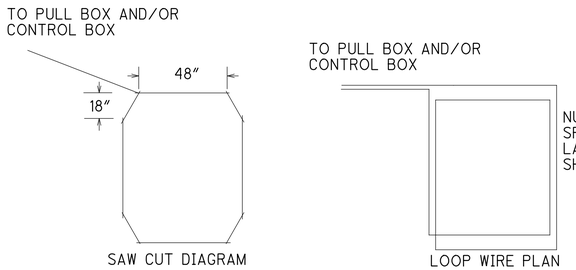

STANDARD LOOP

*ALL 6'x6' LOOPS SHALL BE STANDARD

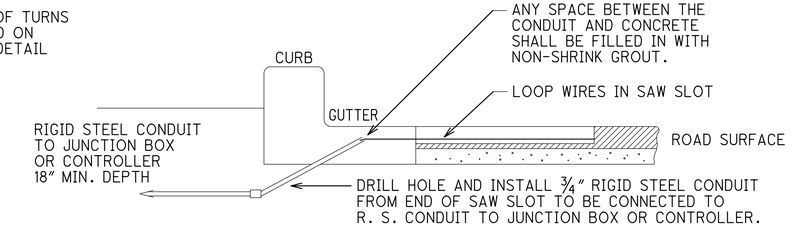

LOOP WIRE TRANSITION - CONCRETE CURB

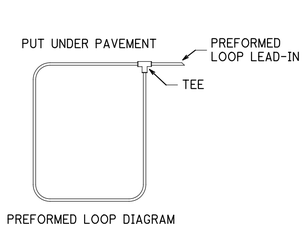

STANDARD PREFORMED LOOP

*ALL LOOPS THAT ARE NOT QUADRAPOLES SHALL BE STANDARD AND HAVE 3 TURNS

LOOP LEAD-IN WIRES SHALL BE TWISTED WITH THREE TO FIVE TURNS PER FOOT UNTIL TERMINATED AT FIELD CONNECTIONS IN THE CABINET OR CONNECTED TO SHIELDED CABLE.

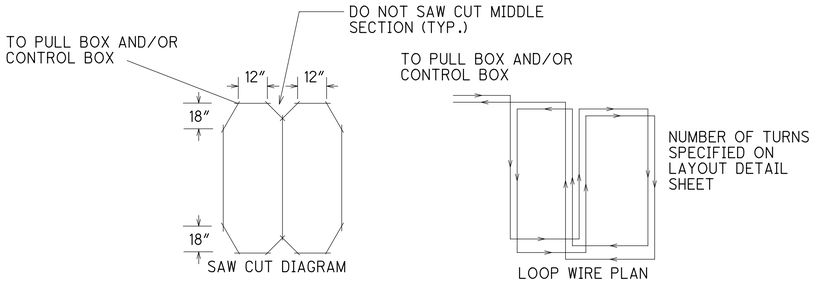

QUADRAPOLE LOOP

*ALL 6'x30' LOOPS SHALL BE QUADRAPOLE

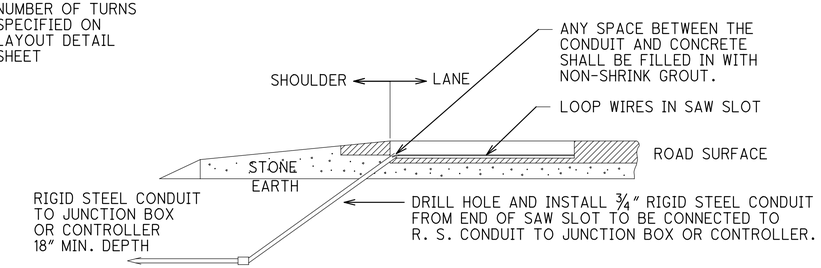

LOOP WIRE TRANSITION - FLAT SHOULDER

PREFORMED LOOP LEAD-IN SHALL BE TWISTED WITH THREE TO FIVE TURNS PER FOOT UNTIL TERMINATED AT FIELD CONNECTIONS IN THE CABINET OR CONNECTED TO SHIELDED CABLE.

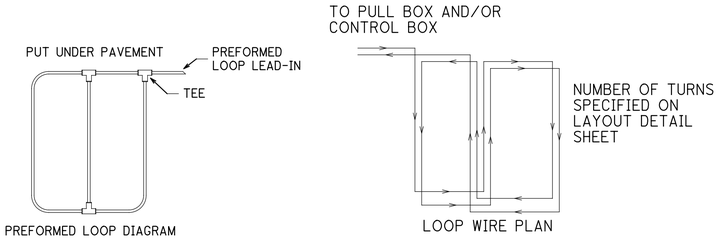

QUADRAPOLE PREFORMED LOOP

*ALL 6'x30' LOOPS SHALL BE QUADRAPOLE AND SHALL HAVE A 2-4-2 CONFIGURATION

KENTUCKY STANDARD DRAWING
LOOP DETAILS

LAW-93-0.00

254
788

J:\Project\OVODOT\15005112 Ironton Russell\LAW\81595\signals\sheets\81595KLP001.dgn - 4/25/2011 6:56:53 AM - jon_wanstrath

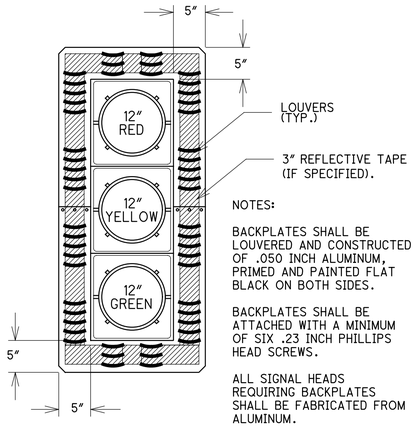

NOTES:

BACKPLATES SHALL BE LOUVERED AND CONSTRUCTED OF .050 INCH ALUMINUM, PRIMED AND PAINTED FLAT BLACK ON BOTH SIDES.

BACKPLATES SHALL BE ATTACHED WITH A MINIMUM OF SIX .23 INCH PHILLIPS HEAD SCREWS.

ALL SIGNAL HEADS REQUIRING BACKPLATES SHALL BE FABRICATED FROM ALUMINUM.

BACKPLATE DETAIL

JOHNNYBALLS OR STRAIN ISOLATORS SHALL NOT BE USED ON THE ATTACHMENT OF THE SPAN WIRE TO THE POLE.

STRANDVISE SHALL BE RELIABLE #5202L OR APPROVED EQUAL.

INSTALL MESSENGER THROUGH STRAND VISE AND BEND MESSENGER AT EXIT POINT.

MESSENGER SHALL EXTEND 8″ TO 10″ BEYOND THE STRAND VISE YOKE.

THERE SHALL BE A SEPARATE COLLAR USED FOR EACH SPAN.

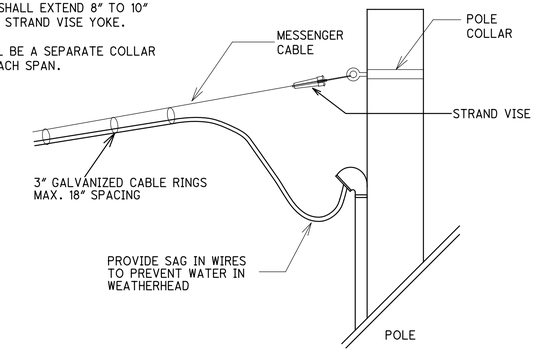

SPAN WIRE DETAIL

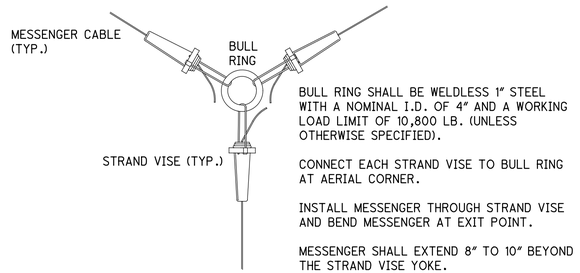

BULL RING SHALL BE WELDLESS 1″ STEEL WITH A NOMINAL I.D. OF 4″ AND A WORKING LOAD LIMIT OF 10,800 LB. (UNLESS OTHERWISE SPECIFIED).

CONNECT EACH STRAND VISE TO BULL RING AT AERIAL CORNER.

INSTALL MESSENGER THROUGH STRAND VISE AND BEND MESSENGER AT EXIT POINT.

MESSENGER SHALL EXTEND 8″ TO 10″ BEYOND THE STRAND VISE YOKE.

DROP BOX
AERIAL CORNER DETAIL

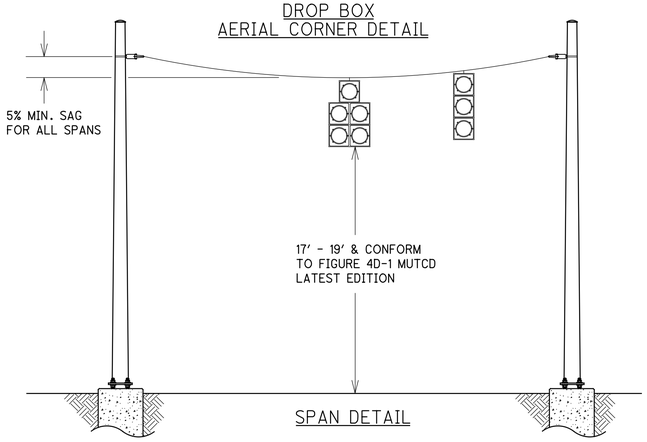

SPAN DETAIL

NOTE: SERVICE WIRES SHALL BE INSTALLED ON THE OUTSIDE OF THE POLE IN A 1″ RIGID STEEL CONDUIT WITH A WEATHERHEAD OR IN FLEXIBLE CONDUIT WITHIN THE STEEL STRAIN POLE, AS DETAILED ON THE CABINET BASE DETAIL SHEET.

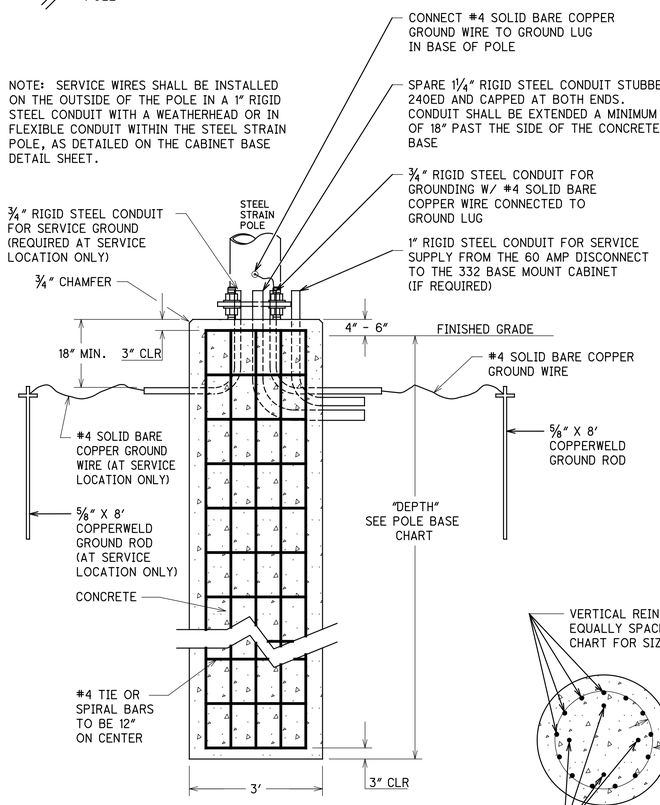

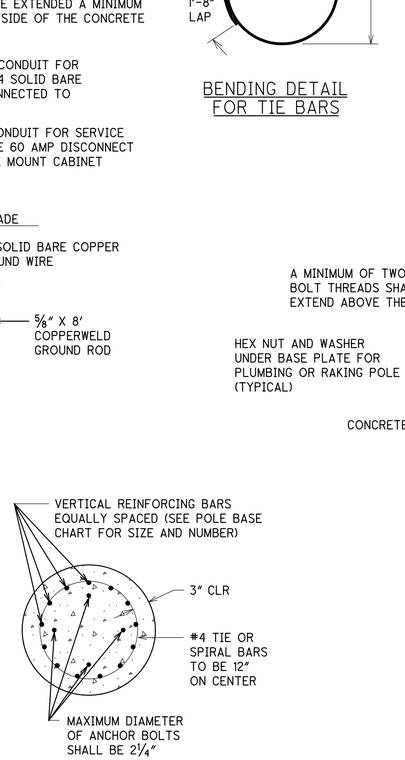

STEEL STRAIN POLE BASE DETAIL

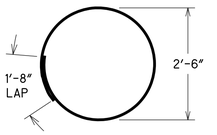

BENDING DETAIL
FOR TIE BARS

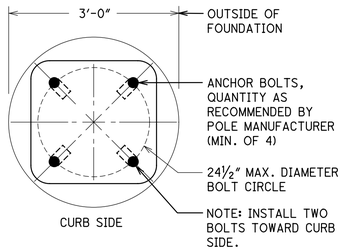

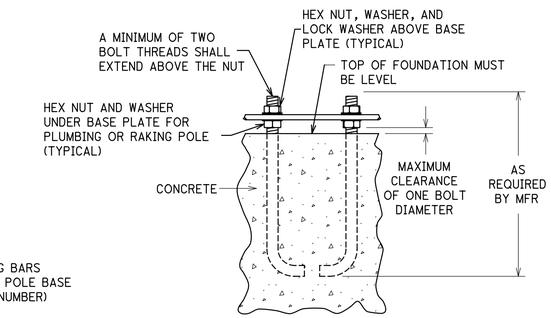

NOTE:
THE KYTC/DESIGNER WILL PROVIDE THE MAXIMUM MOMENT (FT. KIPS) FOR EACH POLE. THE CONTRACTOR SHALL DETERMINE THE SLOPE AT EACH POLE LOCATION AND SHALL DETERMINE POLE BASE SIZE ACCORDING TO THE POLE BASE CHART BELOW. IN DETERMINING THE BASE SIZE THE CONTRACTOR SHALL NOT USE A MAXIMUM MOMENT LESS THAN THE MOMENT PROVIDED BY THE KYTC/DESIGNER.

POLE BASE CHART*

MAXIMUM SERVICE FORCES	DRILLED SHAFT DATA								
MAX SERVICE MOMENT (ft-kips)	DIAMETER (inches)	DEPTH (feet)				VERTICAL BARS		TIES OR SPIRAL	
		< 2:1 GROUND SLOPE		2:1 GROUND SLOPE		SIZE	TOTAL	SIZE	SPACING OR PITCH
		SOIL	ROCK	SOIL	ROCK				
< 40.0	36.0	10.0	6.0	12.0	6.0	#8	13	#4	12″
40.0 TO 69.9	36.0	12.0	6.0	15.0	6.0	#8	13	#4	12″
70.0 TO 99.9	36.0	14.0	6.0	17.0	6.0	#8	13	#4	12″
100.0 TO 149.9	36.0	16.0	6.0	18.0	6.0	#8	13	#4	12″
150.0 TO 199.9	36.0	18.0	6.0	21.0	6.0	#8	13	#4	12″
200.0 TO 299.9	36.0	21.0	7.0	24.0	7.0	#8	13	#4	12″
300.0 TO 400.0	36.0	23.0	7.0	26.0	7.0	#8	18	#4	12″

KENTUCKY STANDARD DRAWING
POLE BASE/SIGNAL HEAD DETAILS

LAW-93-0.00

255
788

J:\Project\0\ODOT\15005112 Ironton Russell\LAW\81595\signals\sheets\81595KMA001.dgn - 4/25/2011 6:56:54 AM - jon_wanstrath

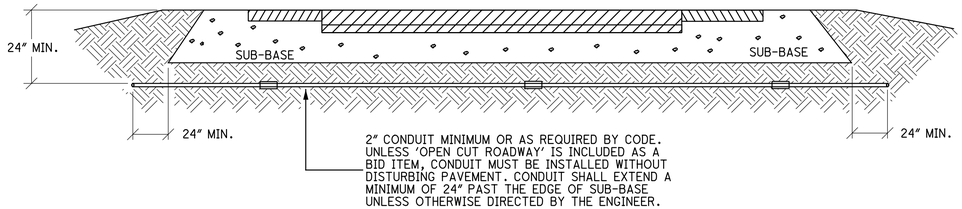

CONDUIT INSTALLATION UNDER EXISTING PAVEMENT DETAIL

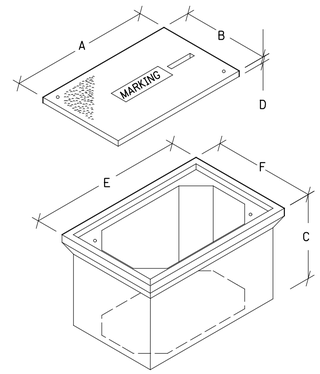

JUNCTION BOX SHALL MEET OR EXCEED ANSI/SCTE 77-2002, TIER 15 AND SHALL BE INSTALLED FLUSH WITH THE FINISHED GRADE AS SHOWN.

JUNCTION BOX FOR TRAFFIC SIGNAL INSTALLATIONS SHALL BE MARKED "TRAFFIC." JUNCTION BOX FOR LIGHTING INSTALLATIONS SHALL BE MARKED "LIGHTING." COVERS SHALL BE ATTACHED WITH A MINIMUM OF TWO ⅜" STAINLESS STEEL HEX BOLTS.

WHERE REQUIRED, JUNCTION BOX SHALL BE ORIENTED SUCH THAT THE DIMENSIONS COMPLY WITH THE NATIONAL ELECTRICAL CODE.

JUNCTION BOX DIMENSIONS (NOMINAL)						
	A	B	C	D	E	F
TYPE A	23"	14"	27"	2"	25"	15"
TYPE B	18"	11"	12"	1¾" *	20"	13"
TYPE C	36"	24"	30"	3"	38"	26"

* MINIMUM
NOTE: STACKABLE BOXES ARE PERMITTED

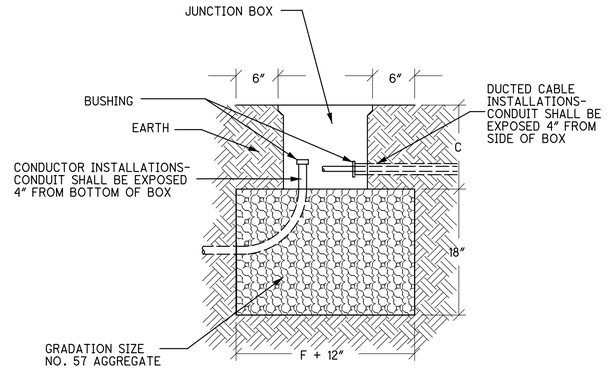

JUNCTION BOX

CONTRACTOR SHALL INSTALL UNDERGROUND UTILITY WARNING TAPE ABOVE CONDUIT AND/OR DUCTED CABLE AS SHOWN. THE TAPE SHALL BE 6" WIDE BY 7.0 MILS (NOMINAL) THICK, HAVE A MINIMUM TENSILE STRENGTH OF 600 POUNDS PER 6" WIDTH, AND BE COLOR CODE IMPREGNATED WITH ALKALI AND ACID STABLE, LEAD-FREE, ORGANIC PIGMENTS SUITABLE FOR DIRECT BURIAL. THE TAPE SHALL ALSO BE ULTRAVIOLET COLORFAST AND NON-DISTORTING WITH NO ELONGATION. THE TAPE SHALL INCLUDE BLACK LETTERING/SYMBOLS ON A RED BACKGROUND THAT CONFORMS TO THE APWA-ULCC NATIONAL COLOR CODE. THE TAPE SHALL CONTINUOUSLY READ, "CAUTION: ELECTRIC LINE BURIED BELOW" ALTERNATING WITH A 'NO DIGGING' SYMBOL.

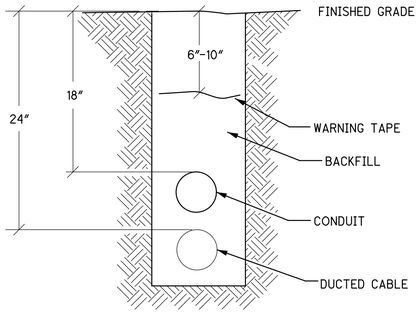

DEPTHS SHOWN FOR CONDUIT AND DUCTED CABLE ARE MINIMUMS. CONTRACTOR SHALL PLACE AND COMPACT BACKFILL IN 9" MAXIMUM LIFTS AND RETORE DISTURBED AREA TO THE SATISFACTION OF THE ENGINEER,

CONDUIT, DUCTED CABLE, AND WARNING TAPE TRENCH

SPLICE BOX SHALL BE FABRICATED FROM MINIMUM 12 GAUGE STEEL AND GALVANIZED AFTER FABRICATION. BOXES SHALL HAVE NO KNOCKOUTS AND SHALL BE PROVIDED WITH A PLATE COVER WITH A WEATHER RESISTANT GASKET AND A MINIMUM OF FOUR SCREWS FOR ATTACHING THE PLATE COVER TO THE BOX. CABLE CLAMPS SHALL BE PROVIDED FOR CABLES ENTERING AND EXITING THE BOX.

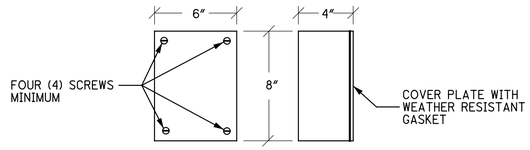

SPLICE BOX

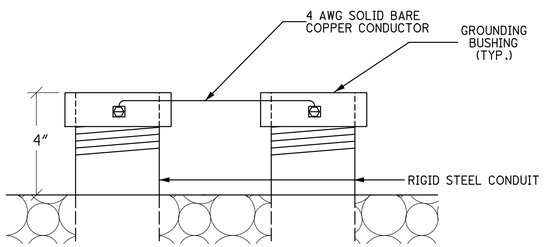

JUNCTION BOX GROUNDING DETAIL

WHEN SHOWN ON THE PLANS, THE LOCATION OF UNDERGROUND CIRCUITS SHALL BE MARKED BY A CONCRETE SLAB MARKER. EACH MARKER SHALL EXTEND APPROXIMATELY 1" ABOVE THE FINISHED GRADE. THE WORD "LIGHTING", APPROPRIATE CIRCUIT NUMBERS AND DIRECTIONAL ARROWS SHALL BE IMPRESSED ON EACH SLAB. THE MARKINGS SHALL BE APPROXIMATELY 4" HIGH BY 3" WIDE WITH THE STROKE ½" WIDE BY ¼" DEEP.

EACH CABLE RUN SHALL BE MARKED AT APPROXIMATELY EVERY 300 FEET ALONG THE CABLE RUN BETWEEN JUNCTION BOXES AND LIGHT POLES, WITH AN ADDITIONAL MARKER AT EACH CHANGE OF DIRECTION AND AT EACH END OF THE CONDUIT CROSSING A ROADWAY (IF NO JUNCTION BOX IS PRESENT). CABLE MARKERS SHALL BE INSTALLED IMMEDIATELY ABOVE THE CABLE.

MARKERS SHALL BE PRE-CAST. DO NOT POUR MARKERS IN PLACE OR CHISEL LETTERS IN CONCRETE. SUBSTITUTION OF RURAL RIGHT-OF-WAY MARKERS IS NOT ALLOWED.

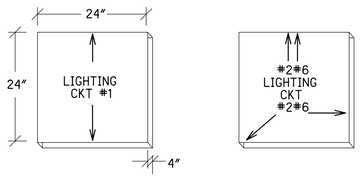

CONCRETE CABLE MARKERS

KENTUCKY STANDARD DRAWING

TRAFFIC SIGNAL JUNCTION BOX AND CONDUIT DETAILS

LAW-93-0.00

256
788

J:\Project\OVODOT\15005112 Ironton Russell\LAW\81595\signals\sheets\81595KJB001.dgn - 4/25/2011 6:56:55 AM - jon_wanstrath

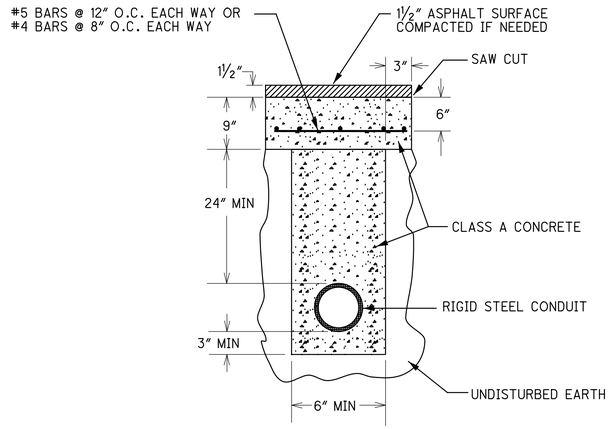

OPEN CUT PAVEMENT DETAIL

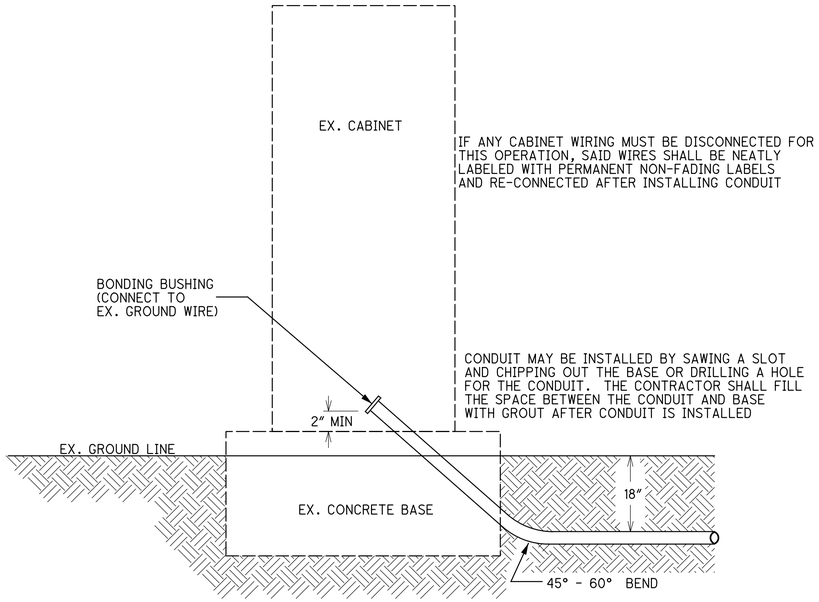

CONDUIT INSTALLATION IN EX. CABINET BASE

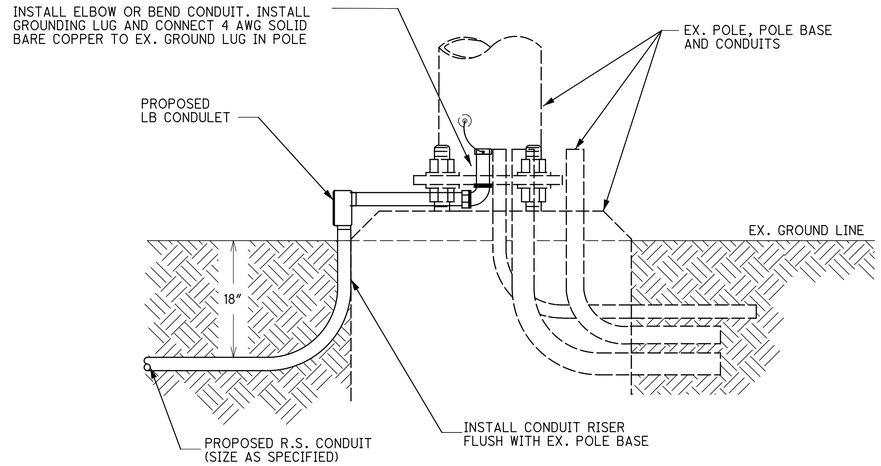

CONDUIT INSTALLATION IN EX. POLE BASE

KENTUCKY STANDARD DRAWING

CONDUIT INSTALLATIONS IN EXISTING LOCATIONS

LAW-93-0.00

J:\Project\OA\ODOT\15005112 Ironton Russell\LAW\81595\signals\sheets\81595KSP001.dgn - 4/25/2011 6:56:57 AM - jon_wanstrath

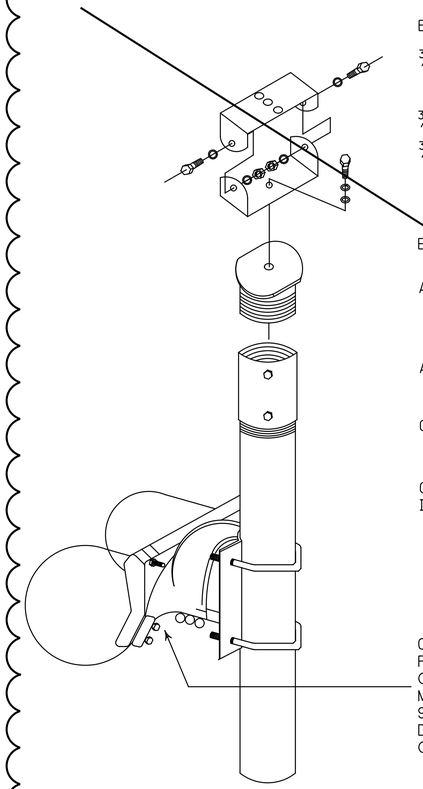

BRACKET, FEMALE, BURLE CAMERA MOUNT

3/8" HEX HEAD BOLT, 16 X 1"

3/8 " FLAT WASHER

3/8" HEX NUT, 16 X 1"

3/8" HEX HEAD BOLT, 16 X 1"

3/8 " SPLIT LOCK WASHER, STAINLESS

3/8 " FLAT WASHER

EXTENDED BRACKET, MALE

ADAPTER, 1 1/2"-11NPS X 3/8"-16NC

ALUMINUM NOTCHED COUPLING

CLAMP CABLE-84"

GUSSETED TUBE WITH VINYL INSERT. 1 1/2 " X 74"

CLAMP KIT - CABLE MOUNT
PELCO ASTRO - BRAC AB-3009-84 OR APPROVED EQUAL. CLAMP KIT MUST BE CAPABLE OF ROTATING 90 DEGREES FOR MOUNTING DIRECTLY TO STEEL STRAIN POLES OR WOOD POLES.

CAMERA MOUNT AND BRACKET PARTS

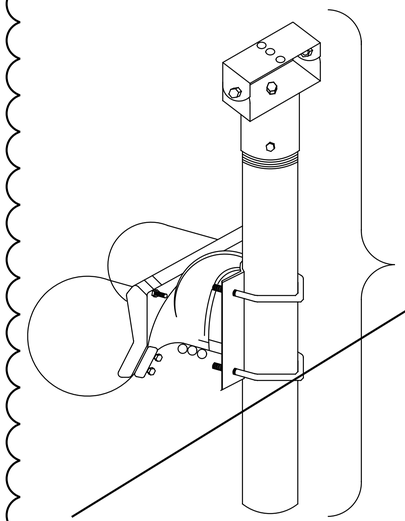

TILT AND PAN EXTENDED SENSOR BRACKET, CABLE MOUNT. PELCO AB-0164 74-84 OR APPROVED EQUAL. CLAMP MUST BE CAPABLE OF ROTATING 90 DEGREES FOR MOUNTING DIRECTLY TO STEEL STRAIN POLES OR WOOD POLES.

CAMERA MOUNT AND BRACKET ASSEMBLY

POWER CABLE SHALL BE AT LEAST A 3 CONDUCTOR WITH A MINIMUM OF 18 GAUGE CONDUCTORS. CONDUCTORS SHALL BE STRANDED COPPER WITH THE FOLLOWING COLOR CODE:

BLACK - HOT
WHITE - NEUTRAL
GREEN - GROUND (IF POSSIBLE)

COAXIAL CABLE SHALL BE BELDEN 8281, RG-59/U TYPE OR APPROVED EQUAL.

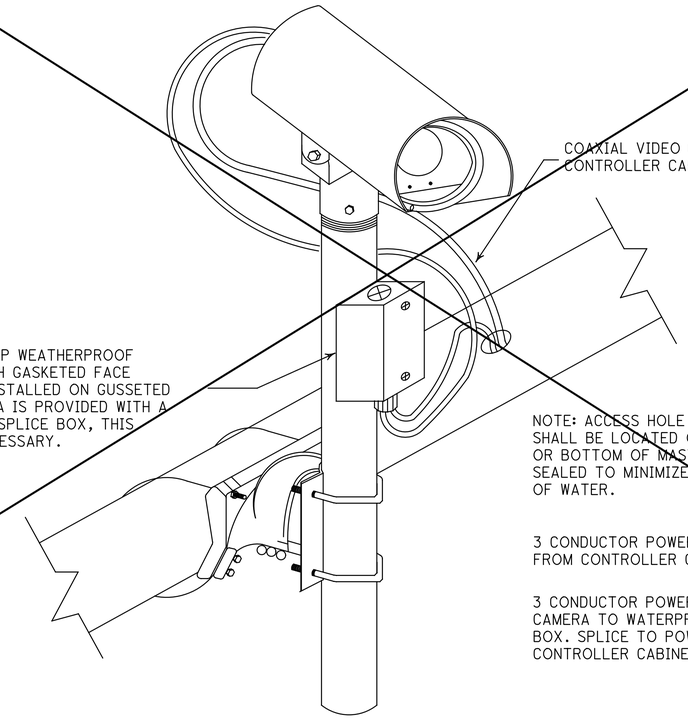

COAXIAL VIDEO CABLE FROM CONTROLLER CABINET

4" X 2" X 2" DEEP WEATHERPROOF SPLICE BOX WITH GASKETED FACE PLATE TO BE INSTALLED ON GUSSETED TUBE. IF CAMERA IS PROVIDED WITH A WEATHERPROOF SPLICE BOX, THIS BOX IS NOT NECESSARY.

NOTE: ACCESS HOLE FOR CABLE SHALL BE LOCATED ON BACK SIDE OR BOTTOM OF MAST ARM AND SEALED TO MINIMIZE INTRUSION OF WATER.

3 CONDUCTOR POWER CABLE FROM CONTROLLER CABINET

3 CONDUCTOR POWER CABLE FROM CAMERA TO WATERPROOF JUNCTION BOX. SPLICE TO POWER CABLE FROM CONTROLLER CABINET

MAST ARM CAMERA INSTALLATION

NOTE: ALL CABLE MOUNT CLAMP KITS MUST BE CAPABLE OF ROTATING 90 DEGREES TO ADAPT TO STEEL STRAIN POLE AND WOOD POLE APPLICATIONS.

VIDEO DETECTOR SHALL BE DESIGNED TO REPLACE A MODEL 222 LOOP AMPLIFIER IN THE INPUT FILE OF A TYPE 170 MODEL 332 OR 336 TRAFFIC SIGNAL CONTROLLER CABINET. IT SHALL HAVE 24 DETECTOR ZONES PER CAMERA CONFIGURATION. EACH ZONE SHALL HAVE THE ABILITY TO BE SET UP FOR ENTRY, EXIT, DELAYED, AND EXTEND DETECTION. DETECTION ZONES SHALL HAVE THE ABILITY TO BE ADDED AND ORDERED TOGETHER TO PROVIDE PHASE INPUTS. VIDEO DETECTOR SHALL INCLUDE A TWO INPUT/OUTPUT EXPANSION MODULE THROUGH EITHER A DB9 MALE OR RJ-45 INTERCONNECTION. PROCESSOR AND EXPANSION MODULE SHALL OPERATE AT 24 VDC NOMINAL. IT SHALL HAVE A DB9 MALE FOR RS 232 INTERFACE WHICH WILL BE USED FOR SOFTWARE UPGRADES AND/OR REMOTE OPERATION. IT SHALL HAVE AT LEAST 4 OUTPUTS AND THE ABILITY TO REASSIGN FOR THE USE OF EXPANSION BOARDS. CONTRACTOR SHALL PROVIDE ONE MOUSE OR KEYPAD AND ONE VIDEO MONITOR FOR EACH INDIVIDUAL INTERSECTION FOR SETUP AND CALIBRATION OF DETECTION ZONES ON A VIDEO MONITOR.

VIDEO DETECTOR ENVIRONMENTAL REQUIREMENTS:

TEMPERATURE	-34 TO +74 DEGREES C
HUMIDITY	0% TO 95% NON-CONDENSING

VIDEO CAMERA

CAMERA SHALL BE MONOCHROME CCD IMAGER WHICH OPERATES ON 115 VAC, 60 HZ AND PROVIDES NTSC VIDEO SIGNALS. THERE SHALL BE SEPARATE CONNECTORS FOR THE VIDEO (BNC) AND THE POWER SUPPLY TO THE CAMERA. CAMERA SHALL HAVE A MINIMUM RESOLUTION OF 350(V) X 500(H). CAMERA SHALL HAVE AN AUTO IRIS LENS. AUTO IRIS SHALL BE TIME DAMPED ANC CONTROLLED BY SCENE LUMINANCE. THE CAMERA SHALL PROVIDE USABLE VIDEO WITH A LIGHT RANGE OF 0.5 LUX TO 10,000 LUX. THE CAMERA'S SENSITIVITY SHALL BE AT LEAST 0.4 LUX. THE CAMERA SHALL BE PROVIDED WITH A SUITABLE ENCLOSURE THAT MAY BE NON PRESSURIZED OR PRESSURIZED. IT SHALL INCLUDE AN INTERNAL, THERMOSTATICALLY CONTROLLED HEATER. THE CAMERA SHALL INCLUDE A SUNSHIELD AND MOUNTING BRACKET. THE MOUNTING BRACKET SHALL BE PELCO OR APPROVED EQUAL (SEE DETAILS THIS SHEET) ADAPTABLE AND SHALL BE ABLE TO BE MOUNTED TO A STEEL STRAIN POLE OR A MAST ARM POLE. CAMERA LENS SHALL BE ADJUSTABLE WITH THE ABILITY TO FOCUS AND ZOOM. A MOTORIZED LENS SHALL DO THIS FUNCTION. CAMERA LENS SHALL INCLUDE A LENS ADJUSTMENT MODULE THAT WILL BE ABLE TO FASTEN TO THE BACK OF THE CAMERA HOUSING. THIS MODULE SHALL HAVE THE CAPABILITY TO BE USED WITH A VIDEO MONITOR. CONTRACTOR SHALL PROVIDE ONE ADJUSTMENT MODULE PER INTERSECTION FOR ZOOMING AND FOCUSING CAMERAS.

VIDEO CAMERA ENVIRONMENTAL REQUIREMENTS:

TEMPERATURE	-35 TO +60 DEGREES C
HUMIDITY	0% TO 100%
VIBRATION	AT LEAST 0.5G, 3 AXES, 5-30 HZ

SURGE PROTECTOR REQUIREMENTS:

PEAK SURGE CURRENT 8X20 US	5KA
TECHNOLOGY	HYBRID SOLID STATE
ATTENUATION	0.1DB @ 10 MHZ
RESPONSE TIME	LESS THAN 1 NANOSECOND
PROTECTION	LINE TO GROUND
SHIELD TO GROUND - (ISOLATED SHIELD MODELS)	
CLAMP VOLTAGE	SELECTABLE
CONNECTORS	BNC
IMPEDANCE	50 TO 75 OHMS
TEMPERATURE	-40 TO +85 DEGREES C
HUMIDITY	0% TO 95% NON-CONDENSING

THE VIDEO DETECTION SYSTEM SHALL BE ODETICS VANTAGE EDGE OR TRAFICON VIP 3.1 OR APPROVED EQUAL.

THE MONITOR SHALL HAVE A MINIMUM SIZE OF 9" AND SHALL INCLUDE A CABLE (6') FOR CONNECTION TO THE PROCESSOR UNIT. CABLE SHALL HAVE PROPER CONNECTIONS (BNC OR RCA) FOR CONNECTION FROM MONITOR TO MODULE. MONITOR SHALL OPERATE ON 115 VAC, 60 HZ.

1

NO.	REVISIONS	DATE	REV. BY
1	DETAILS/SHEET OMITTED	5/13	PAS

KENTUCKY STANDARD DRAWING
VIDEO DETECTION DETAIL

LAW-93-0.00

258
788

J:\Project\0\ODOT\15005112 Ironton Russell\LAW\81595\signals\sheets\81595KSP002.dgn - 5/31/2013 10:20:46 AM - jon_wanstrath

General

Contrary to section 835.05.03 of the Kentucky Standard Specifications for Road and Bridge Construction, this specification provides minimum design and performance requirements for Light Emitting Diode (LED) modules for use in all traffic control signal heads.

The specification refers to the standards "Vehicle Traffic Control Signal Heads", "VTCSH Part 2: Light Emitting Diode (LED) Vehicle Signal Modules (Interim)" and "Pedestrian Traffic Control Signal Indications" from the ITE Publication "Equipment and Material Standards of the Institute of Transportation Engineers", Chapters 2, 2A and 3. In the event of a specification conflict, requirements of this specification supersede requirements of the ITE specification Chapters 2, 2A and 3.

Physical and Mechanical Requirements

Each module shall consist of an assembly that utilizes LEDs as the light source in vehicular or pedestrian signal sections. The LEDs shall utilize AlInGaP (Aluminum indium gallium phosphorus) technology for red, yellow and orange indications and InGaN (Indium Gallium Nitride) for green and white indications, and shall be rated for 100,000 hours of continuous operation over a temperature range of -40°C to +74°C. The modules shall be rated for a minimum life of 72 months. The LED module shall be designed to provide a uniform light output throughout its life. Modules shall meet all parameters of this specification throughout this 72-month period.

Each module shall have the manufacturer's name, trademark, model number, serial number, date of manufacture (month-year), and lot number permanently marked on the back of the module. Rated voltage and rated power in watts and volt-amperes shall also be permanently marked on the back of the modules.

If a specific mounting orientation is required for any module, that module shall have prominent and permanent marking(s) for correct indexing and orientation within a signal housing. The markings shall consist of an up arrow or the word "UP" or "TOP".

LED signal modules shall be designed to be compatible with vehicular, programmable view, and pedestrian signal housings built to the requirements of ITE's "Vehicle Traffic Control Signal Heads" (VTCSH) and "Pedestrian Traffic Control Signal Indications" standards. Each module shall be a single, self-contained, sealed unit, and shall be capable of being retrofitted into an existing housing for incandescent fixtures without removing the existing lamp reflector. The exception to this is for the programmable view signal head, which shall connect directly in the existing electrical receptacle after the dimming option, including its resistor, is disconnected Each module shall be installed within the door frame of vehicular or pedestrian signal housings without modification to the door frame. Installation of the module within the door frame shall not require special tools. The LED vehicular and pedestrian signal modules shall be sealed in the door frame with a one-piece EPDM (ethylene propylene rubber) gasket to provide a weatherproof seal. The maximum weight of a module shall be 1.8 kg (4 lbs.). Modules shall be capable of withstanding the hosedown test in Section 6.7 of NEMA 250-1991 for Type 4 enclosures. Modules will be tested within a standard traffic signal housing.

Modules displaying 12-inch arrows shall meet applicable specifications contained within VTCSH Section 9.00 for arrow lenses.

Modules for pedestrian signals shall conform to the applicable requirements of Pedestrian Traffic Control Signal Indications. The module shall be designed to display both the UPRAISED HAND and WALKING PERSON symbols and, when specified, a countdown display. The UPRAISED HAND and WALKING PERSON symbols shall be designed so that the entire areas comprising the symbols appear illuminated. For pedestrian signals without a countdown display, the symbols shall be the side by side configuration. For pedestrian signals with a countdown display, the symbols shall overlay one another beside two 7-segment digits. The countdown digits shall be made up of two rows of LED's.The units shall not have any external attachments or options that will allow the mode to be changed from counting the clearance cycle, to the full walk/don't walk cycle.The countdown height and width shall be at least 9 inches by 6.5 inches. The countdown display shall re-program itself if it detects any increase or decrease of the pedestrian timing. The countdown display shall recognize preemption events and temporarily modify the crossing cycle accordingly. The pedestrian signal module shall be secured to the pedestrian signal housing and shall include the "egg crate" on the front of the pedestrian signal.

Electrical Requirements

The modules shall be operationally compatible with traffic signal controllers, cabinets and accessories manufactured to the California Department of Transportation (Caltrans) Traffic Signal Control Equipment Specifications, January 1989 Edition.

Maximum power consumption requirements for each indication are as follows (in Watts):

	Red		Yellow		Green	
Temperature (Celsius)	25	74	25	74	25	74
12 Inch Circular	11	17	22	25	13	13
12 Inch Arrow	9	12	10	12	11	11
8 Inch Circular	6	6	13.5	13.5	7	7
Programmable view	11	11	15	15	11	11
	Portland Orange Hand		Portland Orange Countdown		White Walking Person	
Pedestrian Signals, 16" X 18"	9.5		-		8.2	
Countdown Pedestrian Signals, 16" X 18"	10		4		12	

The modules shall operate from a 60 Hz +/- 3 Hz AC line over a voltage ranging from 95 volts to 135 volts. All parameters shall be measured at a nominal operating voltage of 120 VAC. The LED circuitry shall prevent perceptible flicker to the unaided eye caused by fluctuations of line voltage over the voltage range specified above. The modules shall be designed and constructed so that the failure of a single LED will not result in the loss of additional LEDs.

Each LED signal module shall be designed so that there is no noticeable light output when connected to rated voltage through an impedance of 15 Kohm (either resistive or capacitive). The signal module shall be designed so that, under normal operation, an AC voltage of no greater than 10 volts RMS shall be developed across the unit when it is connected in series with any value of impedance greater than 15 Kohms and for any applied AC voltage between 95 and 135 volts RMS that is connected across this series combination. In addition, the signal module shall be designed so that the voltage across the module shall reduce in value to less than 10 volts RMS within 100 msec when the module is switched off by any solid state switch or switch pack having an impedance of 15 Kohms or greater.

Optical Requirements

The lens of the module shall be integral to the unit, made of plastic or glass, shall be convex (circular only) with a smooth outer surface, and specifically designed to reduce sun reflections (sun phantom) by having a sloped face (circular only). The optical assembly shall diffuse the light output and provide uniform illumination across the entire surface of circular lenses and the visible portion of arrow. To ensure even illumination, 12" circular modules shall consist of a minimum of 100 LEDs for the green, yellow and red indications. 8" circular modules shall consist of a minimum of 30 LEDs for each indication. Individual LEDs shall not be visible to the observer of any single indication (circular and arrow only). The lens may be tinted or may use transparent film or materials with similar characteristics to enhance ON/OFF contrasts. The use of tinting or other materials to enhance ON/OFF contrasts shall not affect chromaticity and shall be uniform across the face of the lens. The LED traffic signal module lens shall be UV stabilized and shall be capable of withstanding ultraviolet (direct sunlight) exposure for a minimum period of 72 months without exhibiting evidence of deterioration. If a polymeric lens is used, a surface coating or chemical surface treatment shall be used to provide front surface abrasion resistance.

Photometric Requirements

Modules displaying 12" arrow indications shall provide a minimum luminous intensity output of 10,000 candelas/m2 for the red arrow and 15,500 candelas/m2 for the green and yellow arrows throughout the rated life over the operating temperature range.

Modules displaying pedestrian signal indications shall provide a minimum luminous intensity output of 3,750 candelas/m2 for the UPRAISED HAND symbol and 5,300 candelas/m2 for the WALKING PERSON symbol throughout the rated life over the operating temperature range. Modules displaying programmable view indications shall provide a minimum luminous intensity output of 314 Cd/m2 for the red, amber, and green throughout the rated life over the operating temperature range.

Minimum Expanded View Luminous Intensity Values (Candelas) for Circular Indications:

Vertical Angle* (Degrees)	Horizontal Angle (Left/Right) (Degrees)	8-Inch Circular Red	8-Inch Circular Yellow/ Green	12-Inch Circular Red	12-Inch Circular Yellow/ Green
-17.5	2.5 17.5	4 1	8 3	10 3	20 7
-12.5	2.5 17.5	8 6	16 11	20 14	41 27
-7.5	2.5 17.5	22 8	43 16	54 20	108 41
-2.5	2.5 17.5	88 23	132 46	220 58	441 115
2.5	2.5 17.5	133 25	267 48	339 77	678 154
7.5	2.5 17.5	101 41	202 81	226 89	452 178
12.5	2.5 17.5	37 20	73 41	50 34	101 69
17.5	2.5 17.5	16 9	32 16	22 22	44 44
22.5	2.5 17.5	4 3	8 6	10 7	20 14

* Positive vertical angles are below the horizontal.

Quality Control

The LED signal manufacturer's quality management system shall be ISO 9002 registered. All LED modules shall be supplied by the same manufacturer. The following production quality control tests shall be performed on each new module prior to shipment. Before any measurements are made, the unit shall be energized at the rated voltage for a 30-minute burn-in period at an ambient temperature of +65°C. Following the burn-in period, the initial luminous intensity shall be measured. A single point measurement with a correlation to the intensity requirement of Section 1.04 of VTCSH for circular indications may be used. The current flow and power factor shall also be determine. Units found to have parameters outside the ranges allowed by this specification shall be rejected.

Prior to packaging for shipment, each module shall be visually inspected for any exterior physical damage or assembly anomalies. Careful attention shall be paid to the surface of the lens to ensure there are no scratches, abrasions, cracks, chips, discoloration or other defects. Careful attention shall be paid to the sealing mechanism of the lens to the module.

Quality Assurance

Combatibility with a controller unit, conflict monitor and load switch will be tested by connecting the module under test to the output of a standard load switch connected to a variable AC voltage supply with the output of the load switch in the off state. The AC voltage developed across each LED module so connected shall not exceed 10 Vrms as the input to the LED module is varied from 95 Vrms to 135 Vrms.

Warranty

The manufacturer or vendor shall provide a written warranty that the LED modules furnished will perform in accordance with the requirements of the specifications for a minimum of 72 months from date of acceptance by the KYTC. A written warranty against defects in materials and/or workmanship shall also be furnished. Modules that fall within the warranty period will be returned to the supplier and replacement modules shall be provided at no cost to the KYTC.

KENTUCKY STANDARD DRAWING
LED SIGNALS

LAW-93-0.00

259
788

J:\Project\O\ODOT\15005112 Ironton Russell\LAW\81595\signals\sheets\81595KSP003.dgn - 4/25/2011 6:56:59 AM - jon_wanstrath

SHEET NUMBER											FUNDING			ITEM	ITEM EXT.	GRAND TOTAL	UNIT	DESCRIPTION	SEE SHEET NO.
8	24	39	55								MB	TE	TW						
																		NAVIGATION LIGHTING SYSTEM (SEE SPECIAL PROVISIONS)	
	6										6			625	00500	6	EACH	CONNECTOR KIT, TYPE II	
	6										6			625	00600	6	EACH	CONNECTOR KIT, TYPE III	
	1,850										1,850			625	25300	1,850	FT	CONDUIT, 1-1/2", 725.04	
	5,850										5,850			625	23304	5,850	FT	NO. 8 AWG 600 VOLT DISTRIBUTION CABLE	
	6										6			625	29940	6	EACH	BARRIER JUNCTION BOX	
	6										6			625	29901	6	EACH	JUNCTION BOX, AS PER PLAN (6"x6"x4" NEMA 4 CAST IRON)	25
	30										30			625	25100	30	FT	CONDUIT 1", 725.04	
	18										18			625	23308	18	FT	DISTRIBUTION CABLE MISC.: 3/C #16 "SO" CORD	
	6										6			625	98000	6	EACH	LIGHTING, MISC.: NAVIGATION LIGHTING FIXTURES	
	LUMP										LUMP			625	98200	LUMP		LIGHTING MISC.: TEMPORARY NAVIGATION LIGHTING	
																		AVIATION OBSTRUCTION BEACON SYSTEM	
	LUMP										LUMP			625	98200	LUMP		LIGHTING, MISC.: AVIATION OBSTRUCTION BEACON SYSTEM	25
																		AESTHETIC LIGHTING SYSTEM (SEE SPECIAL PROVISIONS)	
			136									136		625	00500	136	EACH	CONNECTOR KIT, TYPE II	
			136									136		625	00600	136	EACH	CONNECTOR KIT, TYPE III	
			3,338									3,338		625	25300	3,338	FT	CONDUIT, 1-1/2", 725.04	
			19,722									19,722		625	22990	19,722	FT	NO. 6 AWG 600 VOLT DISTRIBUTION CABLE	
			4,137									4,137		625	23304	4,137	FT	NO. 8 AWG 600 VOLT DISTRIBUTION CABLE	
			140									140		625	29901	140	EACH	JUNCTION BOX, AS PER PLAN (18"x12"x8" SURFACE MTD CAST IRON)	59-62
			136									136		625	98000	136	EACH	LIGHTING, MISC.: AESTHETIC LIGHTING FIXTURE TYPE AA - (400 WATTS)	61
			680									680		625	25100	680	FT	CONDUIT 1", 725.04	
			136									136		625	29901	136	EACH	JUNCTION BOX, AS PER PLAN	59
			12									12		625	00480	12	EACH	CONNECTION, UNFUSED PERMANENT	
		LUMP									LUMP			625	98200	LUMP		STRUCTURE GROUNDING AND LIGHTING PROTECTION SYSTEM (SEE SPECIAL PROVISIONS)	
																		LIGHTNING, MISC.: STRUCTURE GROUNDING AND LIGHTNING PROTECTION SYSTEM	
																		BRIDGE HEALTH MONITORING SYSTEM (SEE SPECIAL PROVISIONS)	
210											210			625	23304	210	FT	NO. 8 AWG 600 VOLT DISTRIBUTION CABLE	
4425											4,425			625	23306	4,425	FT	NO. 10 AWG 600 VOLT DISTRIBUTION CABLE	
288											288			625	23410	288	FT	NO. 12 AWG POLE AND BRACKET CABLE	
108											108			625	25920	108	FT	CONDUIT, MISC.: 1" LIQUIDTIGHT FLEXIBLE CONDUIT, AS PER PLAN	5
1534											1,534			625	25100	1,534	FT	CONDUIT, 1" 725.04	
231											231			625	25920	231	FT	CONDUIT, MISC.: 2" LIQUIDTIGHT FLEXIBLE CONDUIT, AS PER PLAN	5
3447											3,447			625	25401	3,447	FT	CONDUIT, 2", 725.04, AS PER PLAN	5
106											106			625	25403	106	FT	CONDUIT, 2", 724.05, AS PER PLAN (SCHEDULE 40)	5
828											828			625	25403	828	FT	CONDUIT, 2", 725.05, AS PER PLAN (SCHEDULE 80)	5
37											37			625	98000	37	EACH	LIGHTING, MISC.: PULL BOX, CAST IRON 6" X 6" X 4", AS PER PLAN	5
17											17			625	98000	17	EACH	LIGHTING, MISC.: PULL BOX, CAST IRON 8" X 8" X 6", AS PER PLAN	5
13											13			625	98000	13	EACH	LIGHTING, MISC.: RECEPTACLE WITH BACKBOX - 15A, 120VAC	5
2											2			625	98000	2	EACH	LIGHTING, MISC.: DATA CABINET 24" X 24" X 72"	
35											35			625	98000	35	EACH	LIGHTING, MISC.: JUNCTION BOX, NEMA 4X (MODIFIED FOR CABLE ENTRY)	

FUNDING LEGEND: MB = MAJOR BRIDGE; TE = TRANSPORTATION ENHANCEMENT; TW = TIME WARNER CABLE

CALCULATED BLW CHECKED JRK

ELECTRICAL GENERAL SUMMARY (1) - LIGHTING

LAW-93-0.00

1 / 85

260 / 788

J:\Project\OA\ODOT\150051112 Ironton Russell\LAW\81595\lighting\sheets\81595LG001.dgn - 7/28/2011 8:17:05 AM - jon_wanstrath

SHEET NUMBER											FUNDING			ITEM	ITEM EXT.	GRAND TOTAL	UNIT	DESCRIPTION	SEE SHEET NO.
7	26	66									MB	TE	TW						
											FOR FUNDING LEGEND SEE SHEET 1								
																		LIGHTING - POWER SERVICE (SEE SPECIAL PROVISIONS)	
2											2			625	25930	2	EACH	CONDUIT, MISC.: WEATHERHEAD	
52											52			625	25602	52	FT	CONDUIT, 4", 725.05	
30											30			625	25502	30	FT	CONDUIT, 3", 725.05	
923											923			625	29000	923	FT	TRENCH	
2											2			625	34001	2	EACH	POWER SERVICE, AS PER PLAN	19
190													190	625	25802	190	FT	CONDUIT,CONCRETE ENCASED, 4", 725.05	
270											270			625	25802	270	FT	CONDUIT,CONCRETE ENCASED, 3", 725.05	
420											420			625	25802	420	FT	CONDUIT,CONCRETE ENCASED, 2-1/2", 725.05	
11,504											11,504			625	23308	11,504	FT	DISTRIBUTION CABLE MISC.: NO. 250 KCMIL 600 VOLT DISTRIBUTION CABLE	
2,901											2,901			625	23000	2,901	FT	NO. 4 AWG 600 VOLT DISTRIBUTION CABLE	
6											6			625	30706	6	EACH	PULL BOX, 725.08, 24"	
3													3	625	25930	3	EACH	CONDUIT, MISC.: 4" EXPANSION/DEFLECTION FITTING, AS PER PLAN	4
2											2			625	25930	2	EACH	CONDUIT, MISC.: 3" EXPANSION/DEFLECTION FITTING, AS PER PLAN	4
14											14			625	25930	14	EACH	CONDUIT, MISC.: 2-1/2" EXPANSION/DEFLECTION FITTING, AS PER PLAN	4
24													24	625	25920	24	FT	CONDUIT, MISC.: 4" LIQUIDTIGHT FLEXIBLE CONDUIT, AS PER PLAN	4
18											18			625	25920	18	FT	CONDUIT, MISC.: 3" LIQUIDTIGHT FLEXIBLE CONDUIT, AS PER PLAN	4
12											12			625	25920	12	FT	CONDUIT, MISC.: 2 1/2" LIQUIDTIGHT FLEXIBLE CONDUIT, AS PER PLAN	4
2,565													2,565	625	25600	2,565	FT	CONDUIT, 4", 725.04	
788											788			625	25500	788	FT	CONDUIT, 3", 725.04	
4,628											4,628			625	25404	4,628	FT	CONDUIT, 2-1/2", 725.04	
12											12			625	29901	12	EACH	JUNCTION BOX, AS PER PLAN (24" x 24" x 10", NEMA 4X, S.S.)	10-15
6													6	625	29901	6	EACH	JUNCTION BOX, AS PER PLAN (36" x 24" x 10", NEMA 4X, S.S.)	10-15
923											923			625	36000	923	FT	PLASTIC CAUTION TAPE	
																		LIGHTING - TOWER INSPECTION LIGHTING AND RECEPTACLES (SEE SPECIAL PROVISIONS)	
	168										168			625	23308	168	FT	DISTRIBUTION CABLE MISC.: NO. 250 KCMIL 600 VOLT DISTRIBUTION CABLE	
	42										42			625	23000	42	FT	NO. 4 AWG 600 VOLT DISTRIBUTION CABLE	
	5,354										5,354			625	23304	5,354	FT	NO. 8 AWG 600 VOLT DISTRIBUTION CABLE	
	928										928			625	23306	928	FT	NO. 10 AWG 600 VOLT DISTRIBUTION CABLE	
	1,374										1,374			625	23308	1,374	FT	DISTRIBUTION CABLE MISC.: NO. 12 AWG 600 VOLTS DISTRIBUTION CABLE	
	1,970										1,970			625	25000	1,970	FT	CONDUIT 3/4", 725.04	
	42										42			625	25404	42	FT	CONDUIT 2-1/2", 725.04	
	2										2			625	29901	2	EACH	JUNCTION BOX, AS PER PLAN (NEMA 3R 6" x 6" x 4")	36
	2										2			625	98000	2	EACH	LIGHTING MISC.: PANELBOARDS 225A 480/277V-3PH-4W (CONTROL CENTER)	
	4										4			625	98000	4	EACH	LIGHTING MISC.: COMBINATION TRANSFORMER/PANELBOARD 10KVA	
	2										2			625	98000	2	EACH	LIGHTING MISC.: LOW VOLTAGE LIGHTING RELAY PANEL	
	66										66			625	98000	66	EACH	LIGHTING MISC.: INSPECTION LIGHTING, 4'-0" FLUORESCENT VAPORTIGHT	
	8										8			625	98000	8	EACH	LIGHTING MISC.: TOGGLE SWITCH, 20A, 277 VOLT PILOT LIGHT W/ WP COVER	
	64										64			625	98000	64	EACH	LIGHTING MISC.: DUPLEX GFCI RECEPTACLE, 20A, 120 VOLT, W/WP COVER	
	2										2			625	98000	2	EACH	LIGHTING MISC.: HOIST RECEPTACLE, 20A, 120 VOLT	
	2										2			625	98000	2	EACH	LIGHTING MISC.: PHOTOCELL	
																		LIGHTING - MAIN AND APPROACH SPAN	
		74										74		625	00500	74	EACH	CONNECTOR KIT, TYPE II	
		74										74		625	00600	74	EACH	CONNECTOR KIT, TYPE III	
		67										67		625	10481	67	EACH	LIGHT POLE, DECORATIVE, AS PER PLAN (12'-0")	67
		268										268		625	10620	268	EACH	LIGHT POLE ANCHOR BOLTS, MISC.: FOR PILASTER MOUNTED LIGHT POLE	
		22,134										22,134		625	22990	22,134	FT	NO. 6 AWG 600 VOLT DISTRIBUTION CABLE	
		2,551										2,551		625	23410	2,551	FT	NO. 12 AWG POLE AND BRACKET CABLE	
		6,306										6,306		625	25300	6,306	FT	CONDUIT, 1-1/2", 725.04	
		74										74		625	27551	74	EACH	LUMINAIRE DECORATIVE, AS PER PLAN	67
		69										69		625	29940	69	EACH	BARRIER JUNCTION BOX	
		6										6		625	25930	6	EACH	CONDUIT MISC: 1-1/2" EXPANSION/DEFLECTION FITTING, AS PER PLAN	4
		3										3		625	00480	3	EACH	CONNECTION, UNFUSED PERMANENT	
		488										488		625	29000	488	FT	TRENCH	
		7										7		625	10481	7	EACH	LIGHT POLE, DECORATIVE, AS PER PLAN (14'-6")	67
		7										7		625	32000	7	EACH	GROUND ROD	
		7										7		625	14000	7	EACH	LIGHT POLE FOUNDATION, 24"x6' DEEP	
		488										488		625	36000	488	FT	PLASTIC CAUTION TAPE	

CALCULATED BLW CHECKED JRK

ELECTRICAL GENERAL SUMMARY (2) - LIGHTING

LAW-93-0.00

J:\Project\O\ODOT\15005112 Ironton Russell\LAW\81595\lighting\sheets\81595LG002.dgn - 7/28/2011 8:17:06 AM - jon_wanstrath

SHEET NUMBER	FUNDING			ITEM	ITEM EXT.	GRAND TOTAL	UNIT	DESCRIPTION	SEE SHEET NO.
79	MB	TE	TW						
	FOR FUNDING LEGEND SEE SHEET 1							LIGHTING - CITY OF IRONTON	
22		22		625	00500	22	EACH	CONNECTOR KIT, TYPE II	
22		22		625	00600	22	EACH	CONNECTOR KIT, TYPE III	
22		22		625	14000	22	EACH	LIGHT POLE FOUNDATION, 24" x 6' DEEP	
4,071		4,071		625	23308	4,071	FT	DISTRIBUTION CABLE, MISC.: NO. 8 AWG 5000 VOLT DISTRIBUTION CABLE	
429		429		625	25500	429	FT	CONDUIT, 3", 725.04	
748		748		625	23410	748	FT	NO. 12 AWG POLE AND BRACKET CABLE	
802		802		625	25300	802	FT	CONDUIT, 1-1/2", 725.04	
1,232		1,232		625	29000	1,232	FT	TRENCH	
22		22		625	32000	22	EACH	GROUND ROD	
22		22		625	10481	22	EACH	LIGHT POLE DECORATIVE, AS PER PLAN (STERNBERG)	80
22		22		625	27551	22	EACH	LUMINAIRE, DECORATIVE, AS PER PLAN (STERNBERG)	80
1		1		625	30706	1	EACH	PULL BOX, 725.08, 24"	
1,232		1,232		625	36000	1,232	FT	PLASTIC CAUTION TAPE	

CALCULATED BLW
CHECKED JRK

ELECTRICAL GENERAL SUMMARY (3)

LIGHTING - ELEC

LAW-93-0.00

3 / 85

262
788

J:\Project\O\ODOT\15005112 Ironton Russell\LAW\81595\lighting\sheets\81595LG003.dgn - 12/7/2011 9:43:38 AM - jon_wanstrath

GENERAL NOTES:

1. THE TELEPHONE SUPPLYING COMPANY FOR THE HEALTH MONITORING SYSTEM SERVICE WILL BE:

   WINDSTREAM KENTUCKY EAST
   619 15TH STREET
   ASHLAND, KY 41101
   (606) 329-6255
   CONTACT: RALPH BROWN

2. THE CABLE TELEVISION SUPPLYING COMPANY WILL BE:

   TIME WARNER CABLE
   225 RUSSEL ROAD
   ASHLAND, KY 41101
   (606) 326-6803 / (606) 232-1272
   CONTACT: ROD FROST

3. FOR ONE-LINE DIAGRAM OF THE POWER DISTRIBUTION SYSTEM FOR THE BRIDGE ELECTRICAL/LIGHTING SYSTEM SEE SHEET 18/85.

4. FOR ONE-LINE DIAGRAM OF THE AESTHETIC LIGHTING, NAVIGATION AND ROADWAY LIGHTING SYSTEMS SEE SHEETS 74/85 THRU 76/85.

5. ALL OF THE ELECTRICAL TESTS NOTED IN SECTION 625.19 OF THE OHIO DEPARTMENT OF TRANSPORTATION, CONSTRUCTION AND MATERIAL SPECIFICATIONS WILL BE APPLICABLE TO ALL LIGHTING AND ELECTRICAL SYSTEMS INDICATED ON THESE DRAWINGS AND DESCRIBED HEREIN.

ITEM 625 - CONDUIT EXPANSION AND DEFLECTION

EXPANSION FITTINGS SHALL BE OZ TYPE AX, CROUSE HINDS TYPE XJG, APPLETON TYPE AX, OR EQUAL APPROVED BY THE ENGINEER. EACH EXPANSION FITTING SHALL PROVIDE EITHER 4 OR 8 INCHES (100 TO 200 MILLIMETERS) TOTAL MOVEMENT AS SPECIFIED BY THE PLAN DETAILS AND SHALL HAVE AN EXTERNAL COPPER BONDING JUMPER, UNLESS SPECIFIED BY THE PLAN DETAILS.

DEFLECTION COUPLINGS SHALL BE OZ TYPE DX, CROUSE HINDS TYPE XD, APPLETON TYPE DF, OR EQUAL APPROVED BY THE ENGINEER. EACH DEFLECTION COUPLING SHALL HAVE AND EXTERNAL COPPER BONDING JUMPER, UNLESS SPECIFIED OTHERWISE BY THE PLAN DETAILS.

EACH EXPANSION FITTING SHALL HAVE A COPPER EXTERNAL BONDING JUMPER.

ITEM 625 - LIQUID TIGHT CONDUIT

FLEXIBLE GALVNANIZED STEEL CONDUIT WITH WATERPROOF PVC JACKET. LISTED AND LABELED AS DEFINED IN NFPA 70 ARTICLE 100 AND MARKED FOR INTENDED USE.

FLEXIBLE CONDUITS SHALL BE DELIKON TYPE YF-706, SOUTHWIRE TYPE UL OR EQUAL APPROVED BY THE ENGINEER.

ITEM 625 - POWER SERVICE, AS PER PLAN

IN ADDITION TO THE REQUIREMENTS OF THE SPECIFICATIONS, THE FOLLOWING IS ADDED:

THE POWER SUPPLYING AGENCIES FOR THIS PROJECT ARE:

KENTUCKY POWER COMPANY
12333 KEVIN AVENUE
ASHLAND, KY 41102
(606) 327-1476
CONTACT: DON CANFIELD

AEP, OHIO
12333 KEVIN AVENUE
ASHLAND, KY 41102
(606) 883-6831
CONTACT: LEE GRIFFITH

THE CONTRACTOR SHALL BE RESPONSIBLE FOR ANY CHARGES MADE BY THE POWER COMPANY FOR WORK BY THE COMPANY IN CONJUNCTION WITH THE ESTABLISHMENT OF THE REQUIRED SERVICE.

PAYMENT WILL BE MADE AT THE UNIT BID PRICE FOR EACH CMS ITEM 625, "POWER SERVICE, AS PER PLAN" WHICH SHALL BE FULL COMPENSATION FOR ALL LABOR, MATERIALS AND INCIDENTALS REQUIRED TO COMPLETE THIS ITEM IN A SATISFACTORY AND WORKMANLIKE MANNER.

THIS WORK SHALL CONSIST OF FURNISHING AND INSTALLING ALL MATERIALS, EQUIPMENT, LABOR, AND INCIDENTALS COMPLETE AND IN PLACE IN ACCORDANCE WITH 625, HL-40.10, AS DETAILED IN THE PLANS AND AS CONTAINED HEREIN.

THE POWER SUPPLIES FOR LIGHTING THE BRIDGE PORTION (CONTROL CENTER "X" & "Y") OF THIS PROJECT SHALL BE A SUB-DISTRIBUTION (PANELS LP-A & LP-B) OF THE POWER PROVIDED ELSEWHERE TO PIERS 4 & 5. (SEE SHEETS 27/85 TO 30/85 FOR DETAILS). THE POWER SUPPLY SHALL BE 277/480 VOLT, THREE-PHASE, FOUR-WIRE SERVICE.

ITEM 625 - TRENCHING

TRENCH SHALL BE AS PER 625.13. IN ADDITION, ALL TRENCHING IN PAVED AREAS SHALL BE PERFORMED PRIOR TO THE PLACEMENT OF PAVEMENT.

ITEM 625 - EXPANSION FITTING AND GROUNDS

THE EXPANSION FITTINGS AND GROUNDS SHOWN ARE NOT TO BE CONSIDERED COMPLETE IN NUMBER OR MORE THAN APPROXIMATE IN LOCATION.

ITEM 625 - STRUCTURE GROUNDING SYSTEM

THIS ITEM OF WORK SHALL CONSIST OF PROVIDING GROUND RODS AND GROUNDING CONDUCTOR RISER CABLES EMBEDDED IN THE PIERS TO THE STRUCTURE SUPPORT BEAMS AND PROVIDING GROUNDING CONNECTIONS FOR CONDUITS EMBEDDED IN THE STRUCTURE. IN ADDITION, PROVIDE BONDING JUMPERS AROUND STRUCTURE SUPPORT BEAM SPLICES AND HINGES ACROSS EXPANSION JOINTS. BOND PARALLEL BRIDGE SECTIONS TOGETHER.

THE LIGHTING PROTECTION SYSTEM THAT IS INSTALLED ON TOP OF, INSIDE OF EACH TOWER AND TO EACH STAY CABLE SHALL BE CONNECTED TO THE GROUNDING SYSTEM AS SHOWN ON PLAN.

PAYMENT WILL BE MADE AT THE UNIT PRICE BID FOR EACH ITEM 625 "STRUCTURE GROUNDING SYSTEM" AND SHALL BE FULL COMPENSATION FOR ALL LABOR, MATERIALS, AND INCIDENTALS REQUIRED TO COMPLETE THE WORK.

ITEM 625 - CONDUIT ON STRUCTURES

EXPANSION FITTINGS FOR CONDUIT ON STRUCTURES SHALL BE OZ TYPE AX, CROUSE HINDS TYPE XJ-4, APPLETON TYPE XJ-4, OR EQUAL APPROVED BY THE ENGINEER.

EACH EXPANSION FITTING SHALL HAVE A COPPER EXTERNAL BONDING JUMPER.

ITEM 625 - PLASTIC CAUTION TAPE

ALL LOCATIONS OF UNDERGROUND DUCT CABLE OR NONMETALLIC CONDUIT SHALL BE MARKED BY THE USE OF A CONTINUOUS IDENTIFYING TAPE BURIED IN THE TRENCH ABOVE THE LINE. THE IDENTIFYING TAPE SHALL BE AN INERT MATERIAL, APPROXIMATELY 6" WIDE, COMPOSED OF POLYETHYLENE PLASTIC, HIGHLY RESISTANT TO ALKAUS, ACIDS OR OTHER CHEMICAL COMPOUNDS LIKELY TO BE ENCOUNTERED IN SOILS. THE TAPE SHALL BE BRIGHT RED WITH IDENTIFYING PRINTING "ELECTRIC" IN BLACK LETTERS, ONE SIDE ONLY. TAPE SHALL BE SUPPLIED IN CONTINUOUS ROLLS WITH THE IDENTIFYING LETTERING REPEATED CONTINUOUSLY THE FULL LENGTH OF THE TAPE. IDENTIFYING TAPE SHALL BE BURIED IN THE ELECTRIC LINE TRENCH WITH ONE STRIP PLACED APPROXIMATELY DOWN THE CENTERLINE AND LOCATED APPROXIMATELY 6 TO 10 INCHES BELOW THE FINAL FINISHED GRADE. THE TAPE SHALL BE PLACED IN THE TRENCH WITH THE PRINTED SIDE UP AND SHALL BE ESSENTIALLY PARALLEL WITH THE FINISHED SURFACE. THE CONTRACTOR SHALL TAKE NECESSARY PRECAUTIONS TO INSURE THAT THE TAPE IS NOT PULLED, DISTORTED, OR OTHERWISE MISPLACED IN COMPLETING THE TRENCH BACKFILL. THE TAPE SHALL BE PAID FOR PER LINEAR FOOT OF "ITEM SPECIAL - PLASTIC CAUTION TAPE" COMPLETE AND IN PLACE.

ITEM 625 - HIGH VOLTAGE TEST

A HIGH VOLTAGE TEST, AS DESCRIBED IN 625.19, SHALL BE PERFORMED ON ALL DISTRIBUTION CABLE AND DUCT CABLE SYSTEMS TO BE INSTALLED ON THIS PROJECT. TEST SHALL BE PERFORMED ONE AT EACH CONTROL CENTER.

CALCULATED BLW | CHECKED SAC

LIGHTING - ELECTRICAL
GENERAL NOTES

LAW-93-0.00

4 / 85

263
788

J:\Project\O\ODOT\15005112 Ironton Russell\LAW\81595\lighting\sheets\81595LN301.dgn - 5/5/2011 3:33:06 PM - brian_wallace

GENERAL NOTES:

1. THE TELEPHONE SUPPLYING COMPANY FOR THE HEALTH MONITORING SYSTEM SERVICE WILL BE:

   WINDSTREAM KENTUCKY EAST
   619 15TH STREET
   ASHLAND, KY 41101
   (606) 329-6255
   CONTACT: RALPH BROWN

ITEM 625 - CONDUIT EXPANSION AND DEFLECTION

EXPANSION FITTINGS SHALL BE OZ GEDNEY TYPE AX, CROUSE HINDS TYPE XJG, APPLETON TYPE AX, OR EQUAL APPROVED BY THE ENGINEER. EACH EXPANSION FITTING SHALL PROVIDE EITHER 4 OR 8 INCHES (100 TO 200 MILLIMETERS) TOTAL MOVEMENT AS SPECIFIED BY THE PLAN DETAILS AND SHALL HAVE AN EXTERNAL COPPER BONDING JUMPER, UNLESS SPECIFIED BY THE PLAN DETAILS.

DEFLECTION COUPLINGS SHALL BE OZ GEDNEY TYPE DX, CROUSE HINDS TYPE XD, APPLETON TYPE DF, OR EQUAL APPROVED BY THE ENGINEER. EACH DEFLECTION COUPLING SHALL HAVE AND EXTERNAL COPPER BONDING JUMPER, UNLESS SPECIFIED OTHERWISE BY THE PLAN DETAILS.

EACH EXPANSION FITTING SHALL HAVE A COPPER EXTERNAL BONDING JUMPER.

ITEM 625 - LIQUIDTIGHT FLEXIBLE CONDUIT

FLEXIBLE GALVNANIZED STEEL CONDUIT WITH WATERPROOF PVC JACKET. LISTED AND LABELED AS DEFINED IN NFPA 70 ARTICLE 100 AND MARKED FOR INTENDED USE.

FLEXIBLE CONDUITS SHALL BE DELIKON TYPE YF-706, SOUTHWIRE TYPE UL OR EQUAL APPROVED BY THE ENGINEER.

ITEM 625 - EXPANSION FITTING AND GROUNDS

THE EXPANSION FITTINGS AND GROUNDS SHOWN ARE NOT TO BE CONSIDERED COMPLETE IN NUMBER OR MORE THAN APPROXIMATE IN LOCATION.

ITEM 625 - CONDUIT ON STRUCTURES

EXPANSION FITTINGS FOR CONDUIT ON STRUCTURES SHALL BE OZ GEDNEY TYPE AX, CROUSE HINDS TYPE XJ-4, APPLETON TYPE XJ-4, OR EQUAL APPROVED BY THE ENGINEER.

EACH EXPANSION FITTING SHALL HAVE A COPPER EXTERNAL BONDING JUMPER.

ITEM 625 - CONDUIT, MISC.: FOR HEALTH MONITORING SYSTEM, AS PER PLAN

CONDUIT FOR HEALTH MONITORING SYSTEM SHALL INCLUDE INSTALLATION OF PULL WIRES. AFTER COMPLETION OF THE INSTALLATION OF ALL DATA CABLES, AT LEAST ONE PULL WIRE SHALL REMAIN EXTENDING FROM PULL BOX TO PULL BOX FOR THE FUTURE INSTALLATION OF ADDITIONAL DATA CABLES IF REQUIRED.

ITEM 625 - LIGHTING, MISC.: PULL BOX, CAST IRON 6" X 6" X 4", AS PER PLAN

PULL BOXES MEETING THE REQUIREMENTS OF NEMA 4 MINIMUM, SUITABLE FOR USE INDOORS OR OUTDOORS, OR WHERE THEY WOULD BE SUBJECTED TO RAIN, DRIPPING OR SPLASHING OF WATER, AND HOSE DIRECTED WATER. BOXES SHALL BE OZ GEDNEY TYPE YS-060604, CROUSE HINDS TYPE WAB060604, APPLETON TYPE WYS-060604 OR EQUAL APPROVED BY THE ENGINEER.

ITEM 625 - LIGHTING, MISC.: PULL BOX, CAST IRON 8" X 8" X 6", AS PER PLAN

PULL BOXES MEETING THE REQUIREMENTS OF NEMA 4 MINIMUM, SUITABLE FOR USE INDOORS OR OUTDOORS, OR WHERE THEY WOULD BE SUBJECTED TO RAIN, DRIPPING OR SPLASHING OF WATER, AND HOSE DIRECTED WATER. BOXES SHALL BE OZ GEDNEY TYPE YS-080806, CROUSE HINDS TYPE WAB080806, APPLETON TYPE WYS-080806 OR EQUAL APPROVED BY THE ENGINEER.

ITEM 625 - LIGHTING, MISC.: RECEPTACLE WITH BACKBOX - 15A, 120VAC, AS PER PLAN

AN 120VAC RECEPTACLE SHALL BE INSTALLED IN THE LOWER LEFT SIDE OF SPECIAL BOXES AND IN DATA CABINETS AS DETAILED ON SHEET 85.

CALCULATED BLW | CHECKED WHC

LIGHTING - BRIDGE HEALTH MONITORING SYSTEM
GENERAL NOTES

LAW-93-0.00

5 / 85

264
788

J:\Project\OA\ODOT\15005112 Ironton Russell\LAW\81595\lighting\sheets\81595LN501.dgn - 5/5/2011 3:33:13 PM - brian_wallace

POWER SERVICE SUB-SUMMARY (1)

CALCULATED BLW
CHECKED KAP

625

REF. NO.	SHEET NO.	STATION TO STATION		SIDE	LENGTH	CONDUIT MISC.: WEATHERHEAD	CONDUIT, 4", 725.05	CONDUIT, 3", 725.05	TRENCH	POWER SERVICE, AS PER PLAN	CONDUIT, CONCRETE ENCASED, 4", 725.05	CONDUIT, CONCRETE ENCASED, 3", 725.05	CONDUIT, CONCRETE ENCASED, 2-1/2", 725.05	DISTRIBUTION CABLE, MISC.:NO. 250 KCMIL 600 VOLT DISTRIBUTION CABLE	NO 4 AWG 600 VOLT DISTRIBUTION CABLE	PULL BOX, 725.08, 24"	CONDUIT, MISC.: 4" EXPANSION/ DEFLECTION FITTING, AS PER PLAN	CONDUIT, MISC.: 3" EXPANSION/ DEFLECTION FITTING, AS PER PLAN	CONDUIT, MISC.: 2-1/2" EXPANSION/ DEFLECTION FITTING, AS PER PLAN	CONDUIT, MISC.: 4" LIQUID TIGHT FLEXIBLE CONDUIT, AS PER PLAN	CONDUIT, MISC.: 3" LIQUID TIGHT FLEXIBLE CONDUIT, AS PER PLAN	CONDUIT, MISC.: 2-1/2" LIQUID TIGHT FLEXIBLE CONDUIT, AS PER PLAN	CONDUIT, 4", 725.04	CONDUIT, 3", 725.04	CONDUIT, 2-1/2", 725.04	JUNCTION BOX, AS PER PLAN (24"x24"x10" NEMA 4X, SS)	JUNCTION BOX, AS PER PLAN (36"x24"x10" NEMA 4X, SS)	PLASTIC CAUTION TAPE
		FROM	TO			EACH	FT	FT	FT	EACH	FT	FT	FT	FT	FT	EACH	EACH	EACH	EACH	FT	FT	FT	FT	FT	FT	EACH	EACH	FT
	9	KENTUCKY ELECT SERVICE	WOOD SERVICE POLE	RT																								
	9	WOOD SERVICE POLE		RT	26	1	26							140	35													
	9	WOOD SERVICE POLE	SERVICE DISC SW & METER	RT	15				15		30			100	25													15
	9	SERVICE DISC SW & METER		RT						1																		
	9	SERVICE DISC SW & METER	ABUTMENT	RT	115								230	480	120													
	9	ABUTMENT		RT										48	12				2			12						
	9	ABUTMENT	10+50	RT	75									320	80										150			
	10	10+50	11+50	RT	100									420	105										200			
	10	11+50		RT										16	4											1		
	10	11+50	13+57	RT	207									848	212										414			
	10	13+57		RT															2									
	10	13+57	14+50	RT	93									392	98										186			
	11	14+50	14+75	RT	25									120	30										50			
	11	14+75		RT										16	4											1		
	11	14+75	17+17	RT	242									988	247										484			
	11	17+17		RT										16	4											1		
	11	17+17	17+17	RT	15									80	20										30			
	11	17+17	17+25	RT	8									48	12					12					16			
	11	17+25		RT										16	4											1		
	11	17+25	17+25	RT	8									52	13										16			
	11	17+25	PANEL LP-A	RT	20									100	25										20			
	9	KENTUCKY TELE SERVICE	WOOD SERVICE POLE	RT																								
	9	WOOD SERVICE POLE		RT	10			10																				
	9	WOOD SERVICE POLE	TELE PULL BOX	RT	20			20	20																			20
	9	TELE PULL BOX		RT												1												
	9	TELE PULL BOX	ABUTMENT	RT	120							120																
	9	ABUTMENT		RT														1			6							
	9	ABUTMENT	10+50	RT	75																			75				
	10	10+50	11+54	RT	104																			104				
	10	11+54		RT																						1		
	10	11+54	13+57	RT	203																			203				
	10	13+57		RT														1			6							
	10	13+57	14+50	RT	93																			93				
	11	14+50	14+79	RT	29																			29				
	11	14+79		RT																						1		
	11	14+79	17+38	RT	259																			259				
	11	17+38		RT																						1		
	11	17+38	17+38	RT	17																			17				
	11	17+38	17+34	RT	4																			4				
	11	17+34		RT																						1		
	11	17+34	17+34	RT	4																6			4				
	9	TIME WARNER CABLE TV	WOOD SERVICE POLE	RT																								
	9	WOOD SERVICE POLE		RT	10																							
	9	WOOD SERVICE POLE	CABLE TV PULL BOX	RT	30				30																			30
	9	CABLE TV PULL BOX		RT												1												
	9	CABLE TV PULL BOX	ABUTMENT	RT	130				130		130																	130
	9	ABUTMENT		RT													1			6								
	9	ABUTMENT	10+50	RT	75																			75				
	10	10+50	11+58	RT	108																			108				
	10	11+58		RT																						1		
	10	11+58	13+55	RT	197																			197				
	10	13+55		RT													1			6								
	10	13+55	14+50	RT	95																			95				
	11	14+50	14+83	RT	33																			33				
	11	14+83		RT																						1		
	11	14+83	17+59	RT	276																			276				
	11	17+59	18+50	RT	91																			91				
	12	18+50	21+55	RT	305																			305				
TOTALS CARRIED TO SHEET 7						1	26	30	195	1	160	120	230	4200	1050	2	2	2	4	24	18	12	1180	788	1566	8	2	195

LIGHTING - POWER

LAW-93-0.00

6 / 85

265
788

J:\Project\O\ODOT\15005112 Ironton Russell\LAW\81595\lighting\sheets\81595LS001.DGN - 5/5/2011 3:33:20 PM - brian_wallace

REF. NO.	SHEET NO.	STATION TO STATION		SIDE	LENGTH	625																							
		FROM	TO			CONDUIT MISC.: WEATHERHEAD	CONDUIT, 4", 725.05	CONDUIT, 3", 725.05	TRENCH	POWER SERVICE, AS PER PLAN	CONDUIT, CONCRETE ENCASED, 4", 725.05	CONDUIT, CONCRETE ENCASED, 3", 725.05	CONDUIT, CONCRETE ENCASED, 2-1/2", 725.05	DISTRIBUTION CABLE, MISC.:NO. 250 KCMIL 600 VOLT DISTRIBUTION CABLE	NO 4 AWG 600 VOLT DISTRIBUTION CABLE	PULL BOX, 725.08, 24"	CONDUIT, MISC.: 4" EXPANSION/ DEFLECTION FITTING, AS PER PLAN	CONDUIT, MISC.: 3" EXPANSION/ DEFLECTION FITTING, AS PER PLAN	CONDUIT, MISC.: 2-1/2" EXPANSION/ DEFLECTION FITTING, AS PER PLAN	CONDUIT, MISC.: 4" LIQUID TIGHT FLEXIBLE CONDUIT, AS PER PLAN	CONDUIT, MISC.: 3" LIQUID TIGHT FLEXIBLE CONDUIT, AS PER PLAN	CONDUIT, MISC.: 2-1/2" LIQUID TIGHT FLEXIBLE CONDUIT, AS PER PLAN	CONDUIT, 4", 725.04	CONDUIT, 3", 725.04	CONDUIT, 2-1/2", 725.04	JUNCTION BOX, AS PER PLAN (24"X24"X10" NEMA 4X, SS)	JUNCTION BOX, AS PER PLAN (36"X24"X10" NEMA 4X, SS)	PLASTIC CAUTION TAPE
						EACH	FT	FT	FT	FT	FT	FT	FT	FT	EACH	EACH	EACH	EACH	EACH	FT	FT	FT	FT	FT	FT	FT	EACH	EACH	FT
	12	21+55		RT																								1	
	12	21+55	22+50	RT	95																			95					
	13	22+50	26+25	RT	375																			475					
	13	26+25		RT																								1	
	13	26+25	26+50	RT	25																			25					
	14	26+50	29+54	RT	304																			304					
	14	29+54		RT																								1	
	14	29+54	30+00	RT	46																			46					
	14	30+00		RT												1		6											
	14	30+00	30+50	RT	50																			50					
	15	30+50	34+40	RT	390																			390					
	15	34+40		RT																								1	
	17	OHIO ELECT SERVICE	WOOD SERVICE POLE	RT																									
	17	WOOD SERVICE POLE		RT	26	1	26							140	35														
	17	WOOD SERVICE POLE	SERVICE DISC SW & METER	RT	15				15		30			100	25														15
	17	SERVICE DISC SW & METER		RT						1																			
	17	SERVICE DISC SW & METER	40+95	RT	95				95				190	400	100														95
	17	40+95		RT												1													
	17	40+95	40+95	RT/LT	75				75			150		320	80														75
	17	40+95		LT												1													
	17	40+95	40+00	LT	95				95					400	100												190		95
	16	40+00	39+50	LT	50				50					220	55												100		50
	16	39+50		LT												1													
	16	39+50	36+42	LT	308				308					1252	313												616		308
	16	36+42		LT												1													
	16	36+42	35+95	LT/RT	90				90					380	95												180		90
	16	35+95		RT															2										
	16	35+95	35+50	RT	45									100	50												90		
	15	35+50	33+00	RT	250									1020	255												500		
	15	33+00		RT																								1	
	15	33+00	30+50	RT	250									1020	255												500		
	14	30+50	30+00	RT	50									220	55												100		
	14	30+00		RT															2										
	14	30+00	29+50	RT	50									220	55												100		
	14	29+50		RT																								1	
	14	29+50	26+50	RT	300									1220	305												600		
	13	26+50	26+43	RT	17									108	27												34		
	13	26+43		RT																								1	
	13	26+43	26+43	LT	15									100	25												30		
	13	26+43	26+32	LT	11									84	21												22		
	13	26+32		LT																								1	
		SUB-TOTALS	THIS SHEET			1	26	0	728	1	30	150	190	7304	1851	4	1	0	10	0	0	0	1385	0	3062	4	4	728
		SUB-TOTALS	SHEET 6			1	26	30	195	1	160	120	230	4200	1050	2	2	2	4	24	18	12	1180	788	1566	8	2	195
		TOTALS CARRIED TO GENERAL SUMMARY				2	52	30	923	2	190	270	420	11504	2901	6	3	2	14	24	18	12	2565	788	4628	12	6	923

J:\Project\ODOT\15005112 Ironton Russell\LAW\81595\lighting\sheets\81595LS002.dgn - 5/5/2011 3:33:27 PM - brian_wallace

CALCULATED FGW
CHECKED JRK

LIGHTING - POWER SERVICE SUB-SUMMARY (2)

LAW-93-0.00

7 / 85

266
788

REF. NO.	SHEET NO.	STATION TO STATION		SIDE	LENGTH	625																											
		FROM	TO			NO. 8 AWG 600 VOLT DISTRIBUTION CABLE	NO. 10 AWG 600 VOLT DISTRIBUTION CABLE	NO. 12 AWG POLE AND BRACKET CABLE	CONDUIT, MISC.: 1" LIQUIDTIGHT FLEXIBLE CONDUIT, AS PER PLAN	CONDUIT, 1" 725.04	CONDUIT, MISC.: 2" LIQUIDTIGHT FLEXIBLE CONDUIT, AS PER PLAN	CONDUIT, 2", 725.04, AS PER PLAN	CONDUIT, 2", 724.05, AS PER PLAN (SCHEDULE 40)	CONDUIT, 2", 725.05, AS PER PLAN (SCHEDULE 80)	LIGHTING, MISC.: PULL BOX, CAST IRON 6" X 6" X 4", AS PER PLAN	LIGHTING, MISC.: PULL BOX, CAST IRON 8" X 8" X 6", AS PER PLAN	LIGHTING, MISC.: RECEPTACLE WITH BACKBOX - 15A, 120VAC	LIGHTING, MISC.: DATA CABINET 24" X 24" X 72"	LIGHTING, MISC.: JUNCTION BOX, NEMA 4X (MODIFIED FOR CABLE ENTRY)													
						FT	FT	FT	FT	FT	FT	FT	FT	FT	EACH	EACH	EACH	EACH	EACH													
		PROJECT																															
		WEB PLATE GAGES (2 PAIRS PER STAY)		RT					108						36																		
	33	DATA CABINET #1 - KY TOWER (TOWER #3)		RT														1															
	33	DATA CABINET #2 - OH TOWER (TOWER #4)		RT														1															
J10	27	DATA CABINET #1	JUNCTION BOX J10	RT							6			14					1															
10R	27	DATA CABINET #1	INTERMEDIATE J-BOX 10R	RT							6			25		1																	
J8	27	DATA CABINET #1	JUNCTION BOX J8	RT							6			125					1															
J17B	11	DATA CABINET #1	JUNCTION BOX J17B	RT							6	19							1															
J17A	11	DATA CABINET #1	JUNCTION BOX J17A	RT				2			6	19					1		1															
J9	27	DATA CABINET #1	JUNCTION BOX J9	RT/LT							6	72							1															
9L	27	JUNCTION BOX J9	INTERMEDIATE J-BOX 9L	LT							6			45		1																	
J7	27	JUNCTION BOX J8	JUNCTION BOX J7	RT							6			31					1															
8R	27	JUNCTION BOX J7	INTERMEDIATE J-BOX 8R	RT							6			3		1																	
J6	27	INTERMEDIATE J-BOX 8R	JUNCTION BOX J6	RT							6			30					1															
J5	27	JUNCTION BOX J6	JUNCTION BOX J5	RT							6			10					1															
2R	27	JUNCTION BOX J5	INTERMEDIATE J-BOX 2R	RT							6			21		1																	
6R	27	INTERMEDIATE J-BOX 2R	INTERMEDIATE J-BOX 6R	RT							6			10		1																	
J4	27	INTERMEDIATE J-BOX 6R	JUNCTION BOX J4	RT							6			8					1															
J2	28	JUNCTION BOX J4	JUNCTION BOX J2	RT							6			3					1															
J3	28	JUNCTION BOX J2	JUNCTION BOX J3	RT							6			2					1															
J1	27	JUNCTION BOX J2	JUNCTION BOX J1	RT/LT							6			28					1															
1LA	29	JUNCTION BOX J1	INTERMEDIATE J-BOX 1LA	LT							6			9		1																	
1LB	29	INTERMEDIATE J-BOX 1LA	INTERMEDIATE J-BOX 1LB	LT							6			25		1																	
J16A	11	JUNCTION BOX J17A	JUNCTION BOX J16A	RT			525	2		164	6	164					1		1															
J15A	10	JUNCTION BOX J16A	JUNCTION BOX J15A	RT			456	2		142	6	142					1		1															
J18A	12	JUNCTION BOX J17A	JUNCTION BOX J18A	RT			726	2		232	6	232					1		1															
J19A	12	JUNCTION BOX J18A	JUNCTION BOX J19A	RT			660	2		210	6	210					1		1															
J16B	11	JUNCTION BOX J17B	JUNCTION BOX J16B	RT							6	164							1															
J15B	10	JUNCTION BOX J16B	JUNCTION BOX J15B	RT							6	142							1															
J27	10	JUNCTION BOX J15B	JUNCTION BOX J27	RT								31							1															
J24	10	JUNCTION BOX J27	JUNCTION BOX J24	RT								55							1															
J25	10	JUNCTION BOX J24	JUNCTION BOX J25									2							1															
P2T	46	JUNCTION BOXES J25/J24	INTERMEDIATE J-BOX P2T								1	12				1																	
P2M	46	INTERMEDIATE J-BOX P2T	INTERMEDIATE J-BOX P2M								1		38			1																	
P2B	46	INTERMEDIATE J-BOX P2M	INTERMEDIATE J-BOX P2B								1		38			1																	
J19B	12	JUNCTION BOX J17B	JUNCTION BOX J19B	RT								441							1															
	49	PANEL RP-A1	DATA CABINET #1	RT				135		40							2																
	49	PANEL RP-A1	INTERMEDIATE PWR J-BOX	RT		105				25																							
J14	30	DATA CABINET #2	JUNCTION BOX J14	RT							6			14					1															
12R	30	DATA CABINET #2	INTERMEDIATE J-BOX 12R	RT							6			213		1																	
J21B	13	DATA CABINET #2	JUNCTION BOX J21B	RT							6	19							1															
J21A	13	DATA CABINET #2	JUNCTION BOX J21A	RT				2			6	20					1		1															
14R	30	DATA CABINET #2	INTERMEDIATE J-BOX 14R	RT							6			28		1																	
J13	30	DATA CABINET #2	JUNCTION BOX J13	RT/LT							6			70					1															
13L	30	JUNCTION BOX J13	INTERMEDIATE J-BOX 13L	LT							6			45		1																	
J12	30	INTERMEDIATE J-BOX 12R	JUNCTION BOX J12	RT							6			20					1															
J11	30	JUNCTION BOX J12	JUNCTION BOX J11	RT/LT							6			29					1															
11L	13	JUNCTION BOX J11	INTERMEDIATE J-BOX 11L	LT							6			20		1																	
J20A	13	JUNCTION BOX J21A	JUNCTION BOX J20A	RT			963	2		311	6	311					1		1															
J19A	14	JUNCTION BOX J20A	JUNCTION BOX J19A	RT								150																					
J22A	14	JUNCTION BOX J21A	JUNCTION BOX J22A	RT			636	2		202	6	202					1		1															
J23A	13	JUNCTION BOX J22A	JUNCTION BOX J23A	RT			459	2		143	6	143					1		1															
J19B	14	JUNCTION BOX J21B	JUNCTION BOX J19B	RT								461																					
J22B	14	JUNCTION BOX J21B	JUNCTION BOX J22B	RT								202							1															
J23B	14	JUNCTION BOX J22B	JUNCTION BOX J23B	RT								143							1															
J28	14	JUNCTION BOX J23B	JUNCTION BOX J28	RT								31							1															
J26	14	JUNCTION BOX J28	JUNCTION BOX J26	RT								55							1															
P5T	47	JUNCTION BOX J26	INTERMEDIATE J-BOX P5T									5				1																	
P5M	47	INTERMEDIATE J-BOX P5T	INTERMEDIATE J-BOX P5M										15			1																	
P5B	47	INTERMEDIATE J-BOX P5M	INTERMEDIATE J-BOX P5B										15			1																	
	49	PANEL RP-B2	DATA CAB #2	RT				135		40							2																
	49	PANEL RP-B2	INTERMEDIATE PWR J-BOX	RT		105				25					1																		
TOTALS CARRIED TO GENERAL SUMMARY						210	4425	288	108	1534	231	3447	106	828	37	17	13	2	35														

Link to RFI092 As-Built

CALCULATED BLW CHECKED WHC

LAW-93-0.00 LIGHTING - BRIDGE HEALTH MONITORING SYS. SUB-SUMMARY

8 / 85

267 / 788

J:\Project\OhDOT\15005112 Ironton Russell\LAW\81595\lighting\sheets\81595LS501.dgn - 5/5/2011 3:33:34 PM - brian_wallace

1-3" CONCRETE ENCASED PVC TELEPHONE CONDUIT (REFER TO ODOT SCD HL-30.22)

1-4" CONCRETE ENCASED PVC CONDUIT FOR CABLE TELEVISION COORDINATE INSTALLATION REQUIREMENTS WITH CABLE TV COMPANY (REFER TO ODOT SCD HL-30.22)

BEGIN PROJECT 8+18.90 SLM (-) 0.34

E040 (653)

BEGIN WORK 8+18.90

STA. 341+84.55 ℄ R/W US 23= STA. 7+88.98 ℄ CONSTRUCTION S.R. 93C

CONCRETE PULLBOX, 24" (REFER TO ODOT SCD HL-30.11) PROVIDE COVER WITH "CABLE TELEVISION" NOTED ON COVER. LOCATE IN FIELD DURING CONSTRUCTION. (SEE NOTE 4)

EXISTING OVERHEAD TELEPHONE SERVICE

277/480V 3PH, 4 WIRE OVERHEAD FROM KENTUCKY POWER CO. KENTUCKY POWER CO. TO EXTEND SERVICE TO WOOD POLE.

4-RIGID GALVANIZED STEEL CONDUITS SUPPORTED ON TOP OF CROSS CHANNELS
- 2-2½" CONDUITS FOR ELECTRICAL(ONE FEEDER & ONE SPARE TO KENTUCKY TOWER)
- 1-4" CONDUIT FOR CABLE TELEVISION
- 1-3" CONDUIT FOR TELEPHONE (BRIDGE HEALTH MONITORING SYSTEM)

INTERFACE UNDERGROUND CONDUITS WITH CONDUITS SUPPORTED ON TOP OF CROSS CHANNELS LOCATED ON THE APPROACH SPAN AND IN ABUTMENT. REFER TO DETAILS SHEET 19/85

2-2½" CONCRETE ENCASED PVC ELECTRICAL CONDUIT (REFER TO ODOT SCD HL-30.22)

2-2½" PVC CONDUITS, EXTEND ONE CONDUIT UP THE LENGTH OF THE POLE AND PROVIDE WEATHERHEAD. ALLOW 10 FEET OF TAILS FOR CONNECTION BY KENTUCKY POWER CO. STUB UP SECOND CONDUIT AT BASE OF POLE, 1 FOOT ABOVE FINISHED GRADE AND CAP WATERTIGHT

PROPOSED SIGNAL/SERVICE POLE

3" TELEPHONE CONDUIT EXTEND TO WOOD SERVICE POLE AND TERMINATE 10 FEET ABOVE FINISH GRADE

GROUND MOUNTED DISCONNECT & METER (SEE SHEET 19/85 FOR DETAILS)

CONCRETE PULLBOX, 24" (REFER TO ODOT SCD HL-30.11) PROVIDE COVER WITH "TELEPHONE" NOTED ON COVER. (SEE NOTE 1)

MATCH LINE STA. 10+50 S.R. 93C

LEGEND

- E — ELECTRICAL JUNCTION BOX
- T — TELEPHONE JUNCTION BOX
- TV — CABLE TELEVISION JUNCTION BOX

Link to 195-001-000
VECP 3 As-Built

NOTES:

1. EXACT LOCATION OF JUNCTION BOX TO BE DETERMINED BY TELEPHONE COMPANY & ENGINEER DURING CONSTRUCTION. COORDINATE WITH TELEPHONE COMPANY AND ENGINEER.
2. FOR AESTHETIC LIGHTING PLAN SEE SHEETS 56/85 AND 57/85 .
3. FOR ROADWAY LIGHTING PLAN SEE SHEETS 69/85 THROUGH 71/85 .
4. EXACT LOCATION OF PULL BOX TO BE DETERMINED BY CABLE TELEVISION COMPANY & ENGINEER DURING CONSTRUCTION. COORDINATE WITH CABLE TELEVISION COMPANY AND ENGINEER.

HORIZONTAL SCALE IN FEET 0 10 20 40

CALCULATED BLW CHECKED SAC

LIGHTING - POWER SITE PLAN (1)
STA. 7+88.65 TO STA. 10+50.00

LAW-93-0.00

9 / 85

268 / 788

J:\Project\O\ODOT\15005112 Ironton Russell\LAW\81595\lighting\sheets\81595LP301.dgn - 5/5/2011 3:35:13 PM - brian_wallace

NOTES:

1. FOR AESTHETIC LIGHTING PLAN SEE SHEETS 56/85 AND 57/85 .
2. FOR ROADWAY LIGHTING PLAN SEE SHEETS 69/85 THROUGH 71/85 .
3. FOR BRIDGE HEALTH MONITORING SYSTEM JUNCTION BOX PLACEMENT DETAILS AT PIER 2 SEE SHEET 46/85 .
4. PROVIDE SUFFICIENT SLACK CABLE IN JUNCTION BOX TO ALLOW FOR 24" OF EXPANSION AND CONTRACTION AT ABUTMENT.
5. PROVIDE A 2" WATERTIGHT FLEXIBLE METAL CONDUIT FROM A MINIMUM OF 6" EMBEDMENT IN CONCRETE, WHERE THE GAGE CABLES COME TOGETHER AND CONTINUE TO THE HEALTH MONITORING SYSTEM JUNCTION BOXES FOR TERMINATION.

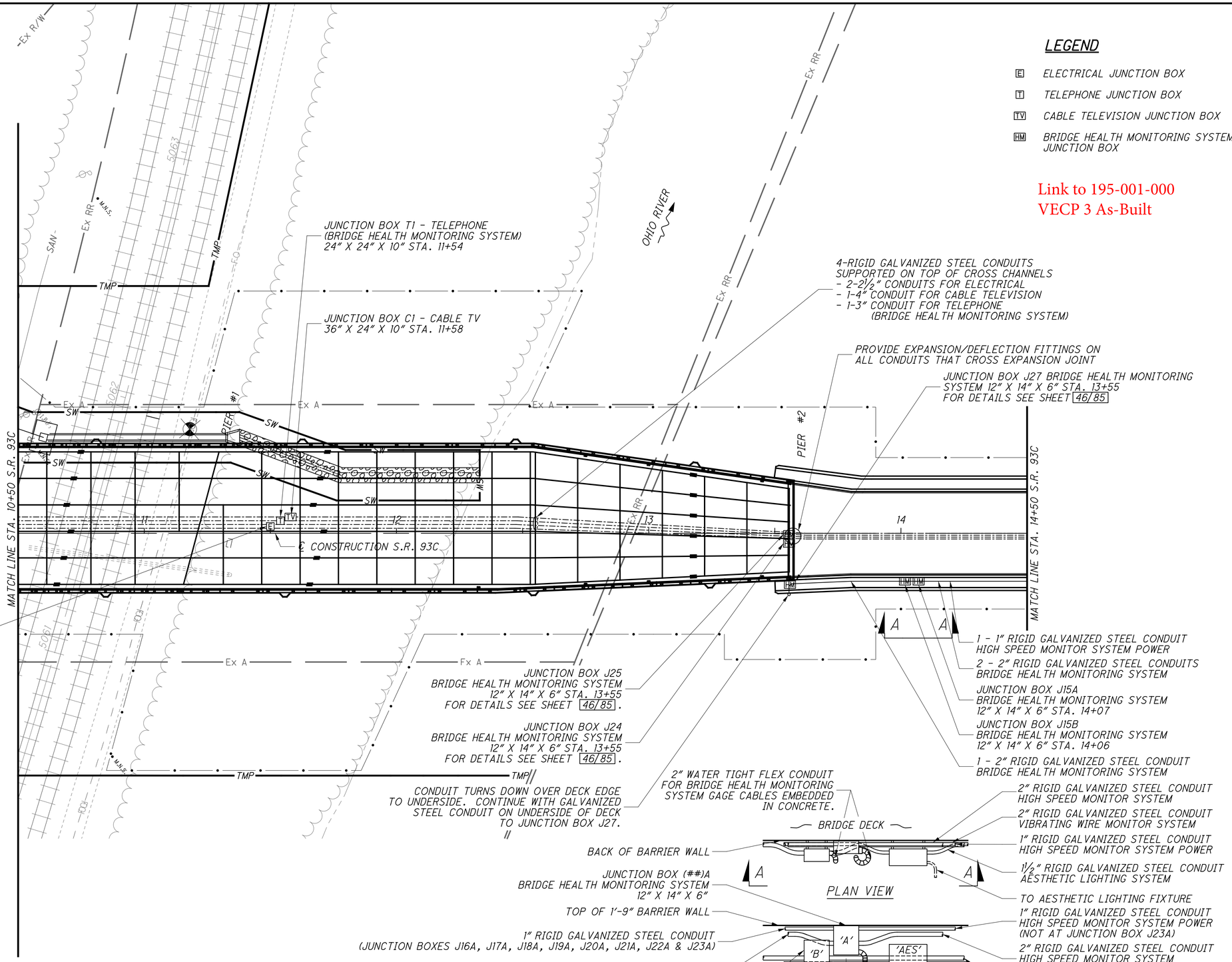

JUNCTION BOX PLACEMENT DETAIL
BRIDGE HEALTH MONITORING SYSTEM
SCALE: ½" = 1'-0"

LEGEND

- E — ELECTRICAL JUNCTION BOX
- T — TELEPHONE JUNCTION BOX
- TV — CABLE TELEVISION JUNCTION BOX
- HM — BRIDGE HEALTH MONITORING SYSTEM JUNCTION BOX

Link to 195-001-000
VECP 3 As-Built

HORIZONTAL SCALE IN FEET
0 10 20 40

CALCULATED BLW
CHECKED SAC

LIGHTING - POWER SITE PLAN (2)
STA. 10+50.00 TO STA. 14+50.00

LAW-93-0.00

10 / 85

269
788

J:\Project\O\ODOT\15005112 Ironton Russell\LAW\81595\lighting\sheets\81595LP302.dgn - 5/5/2011 3:35:52 PM - brian_wallace

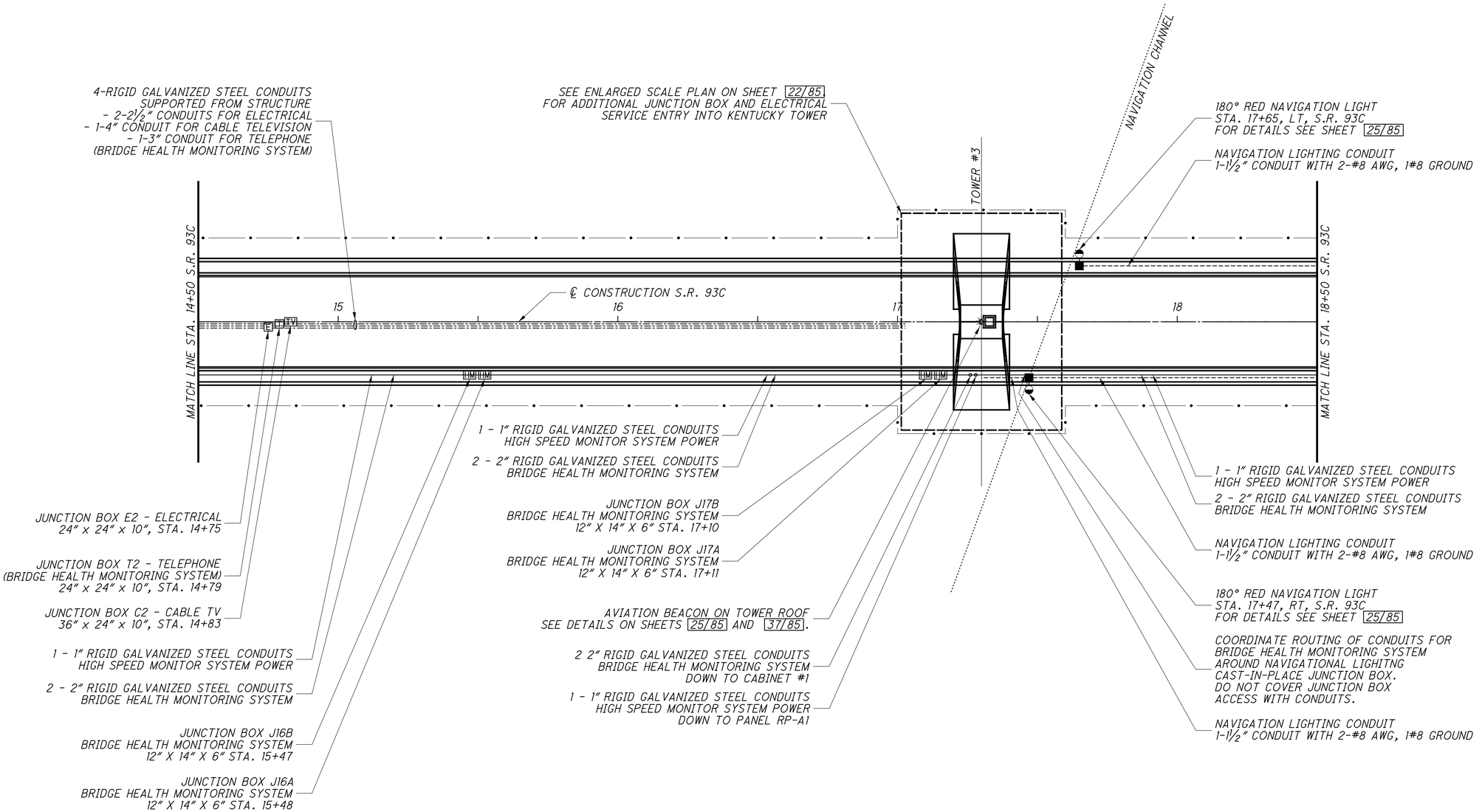

LEGEND

- E — ELECTRICAL JUNCTION BOX
- T — TELEPHONE JUNCTION BOX
- TV — CABLE TELEVISION JUNCTION BOX
- HM — BRIDGE HEALTH MONITORING SYSTEM JUNCTION BOX
- ◒ — 180° RED NAVIGATION LIGHT
- ● — 360 GREEN NAVIGATION LIGHT
- ☼ — AVIATION BEACON

Link to 195-001-000
VECP 3 As-Built

NOTES:

1. FOR AESTHETIC LIGHTING PLAN SEE SHEETS 56/85 AND 57/85.
2. FOR ROADWAY LIGHTING PLAN SEE SHEETS 69/85 THROUGH 71/85.
3. FOR TOWER INSPECTION LIGHTING/RECEPTACLE PLAN SEE SHEET 28/85 AND 29/85.
4. FOR BRIDGE HEALTH MONITORING SYSTEM JUNCTION BOX PLACEMENT DETAIL SEE SHEET 10/85.
5. PROVIDE A 2" WATERTIGHT FLEXIBLE METAL CONDUIT FROM A MINIMUM OF 6" EMBEDMENT IN CONCRETE, WHERE THE GAGE CABLES COME TOGETHER AND CONTINUE TO THE HEALTH MONITORING SYSTEM JUNCTION BOXES FOR TERMINATION.

HORIZONTAL SCALE IN FEET
0 10 20 40
CALCULATED BLW
CHECKED SAC

LIGHTING - POWER SITE PLAN (3)
STA. 14+50.00 TO STA. 18+50.00

LAW-93-0.00

11 / 85

270
788

J:\Project\OJODOT\15005112 Ironton Russell\LAW\81595\lighting\sheets\81595LP303.dgn - 5/5/2011 3:36:26 PM - brian_wallace

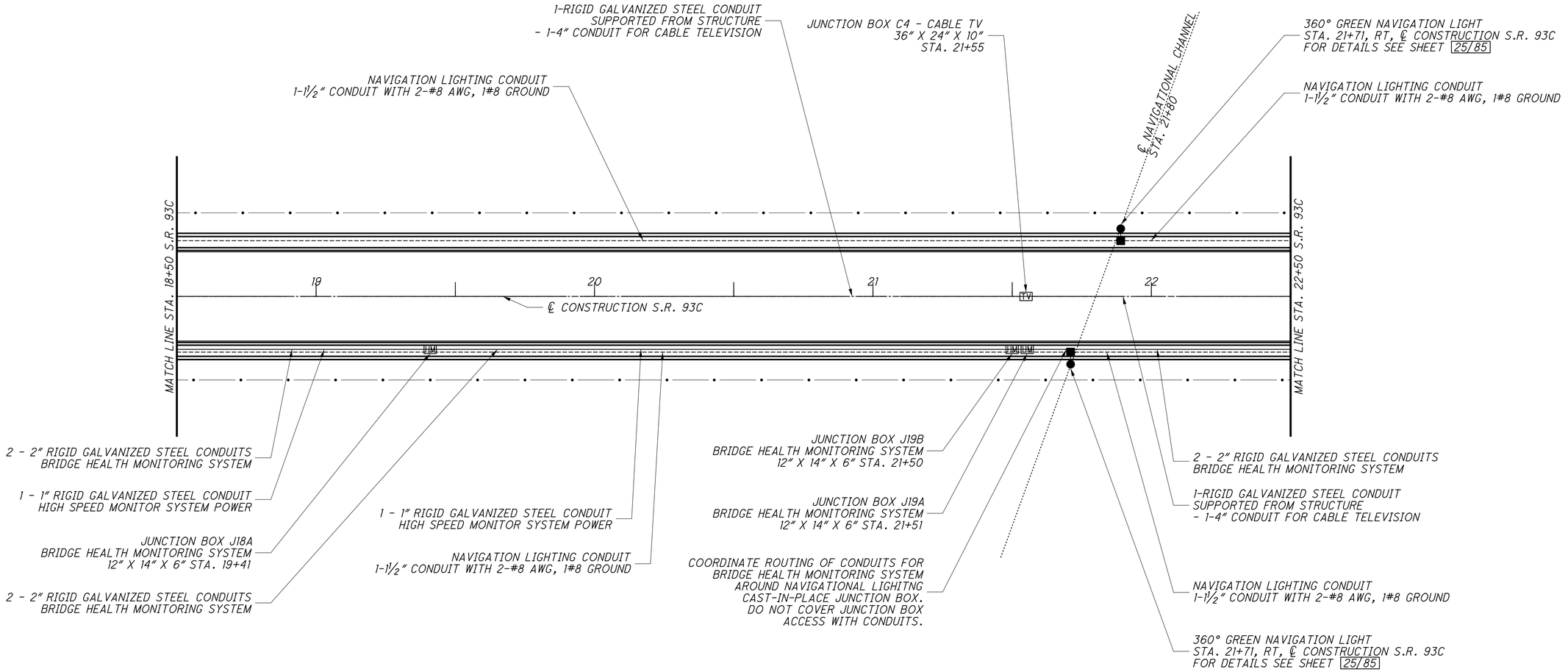

LEGEND

- E — ELECTRICAL JUNCTION BOX
- T — TELEPHONE JUNCTION BOX
- TV — CABLE TELEVISION JUNCTION BOX
- HM — BRIDGE HEALTH MONITORING SYSTEM JUNCTION BOX
- ◒ — 180° RED NAVIGATION LIGHT
- ● — 360 GREEN NAVIGATION LIGHT
- ☼ — AVIATION BEACON

Link to 195-001-000
VECP 3 As-Built

NOTES:

1. FOR AESTHETIC LIGHTING PLAN SEE SHEETS 56/85 AND 57/85 .
2. FOR ROADWAY LIGHTING PLAN SEE SHEETS 69/85 THROUGH 71/85 .
3. FOR BRIDGE HEALTH MONITORING SYSTEM JUNCTION BOX PLACEMENT DETAIL SEE SHEET 10/85 .
4. PROVIDE A 2" WATERTIGHT FLEXIBLE METAL CONDUIT FROM A MINIMUM OF 6" EMBEDMENT IN CONCRETE, WHERE THE GAGE CABLES COME TOGETHER AND CONTINUE TO THE HEALTH MONITORING SYSTEM JUNCTION BOXES FOR TERMINATION.

HORIZONTAL SCALE IN FEET
0 10 20 40

CALCULATED BLW
CHECKED SAC

LIGHTING - POWER SITE PLAN (4)
STA. 18+50.00 TO STA. 22+50.00

LAW-93-0.00

12 / 85

271
788

J:\Project\OA\ODOT\15005112 Ironton Russell\LAW\81595\lighting\sheets\81595LP304.dgn - 5/5/2011 3:37:02 PM - brian_wallace

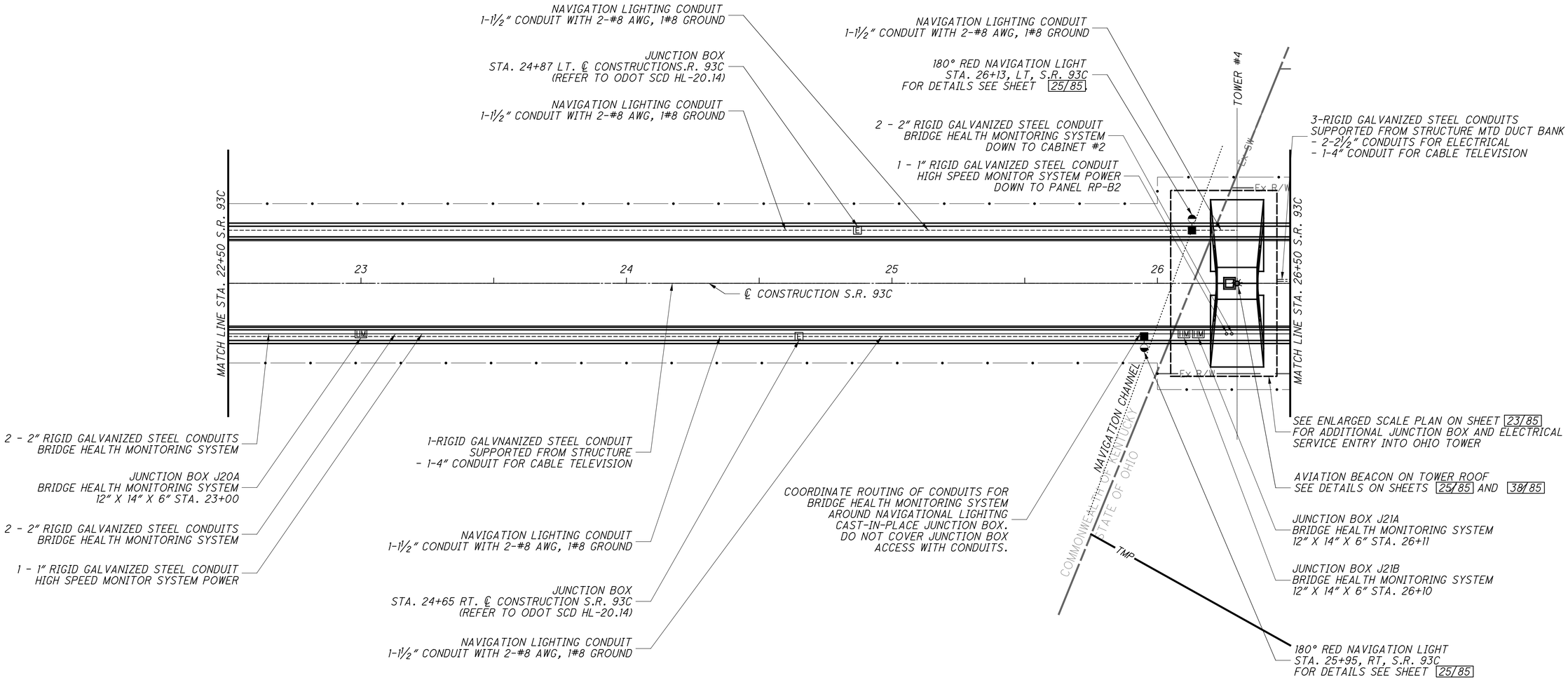

LEGEND

- E — ELECTRICAL JUNCTION BOX
- T — TELEPHONE JUNCTION BOX
- TV — CABLE TELEVISION JUNCTION BOX
- HM — BRIDGE HEALTH MONITORING SYSTEM JUNCTION BOX
- ◒ — 180° RED NAVIGATION LIGHT
- ● — 360 GREEN NAVIGATION LIGHT
- ☼ — AVIATION BEACON

Link to 195-001-000
VECP 3 As-Built

NOTES:

1. FOR AESTHETIC LIGHTING PLAN SEE SHEETS 56/85 AND 57/85 .
2. FOR ROADWAY LIGHTING PLAN SEE SHEETS 69/85 THROUGH 71/85 .
3. FOR TOWER INSPECTION LIGHTING/RECEPTACLE PLAN SEE SHEET 28/85 AND 29/85 .
4. FOR BRIDGE HEALTH MONITORING SYSTEM JUNCTION BOX PLACEMENT DETAIL SEE SHEET 10/85.
5. PROVIDE A 2" WATERTIGHT FLEXIBLE METAL CONDUIT FROM A MINIMUM OF 6" EMBEDMENT IN CONCRETE, WHERE THE GAGE CABLES COME TOGETHER AND CONTINUE TO THE HEALTH MONITORING SYSTEM JUNCTION BOXES FOR TERMINATION.

HORIZONTAL SCALE IN FEET
0 10 20 40
CALCULATED BLW
CHECKED SAC

LIGHTING - POWER SITE PLAN (5)
STA. 22+50.00 TO STA. 26+50.00

LAW-93-0.00

13/85

272
788

J:\Project\O\ODOT\15005112 Ironton Russell\LAW\81595\lighting\sheets\81595LP305.dgn - 5/5/2011 3:37:35 PM - brian_wallace

NOTES:

1. FOR AESTHETIC LIGHTING PLAN SEE SHEETS 56/85 AND 57/85 .
2. FOR ROADWAY LIGHTING PLAN SEE SHEETS 69/85 THROUGH 71/85 .
3. FOR BRIDGE HEALTH MONITORING SYSTEM JUNCTION BOX PLACEMENT DETAIL SEE SHEET 10/85.
4. PROVIDE A 2" WATERTIGHT FLEXIBLE METAL CONDUIT FROM A MINIMUM OF 6" EMBEDMENT IN CONCRETE, WHERE THE GAGE CABLES COME TOGETHER AND CONTINE TO THE HEALTH MONITORING SYSTEM JUNCTION BOXES FOR TERMINATION.

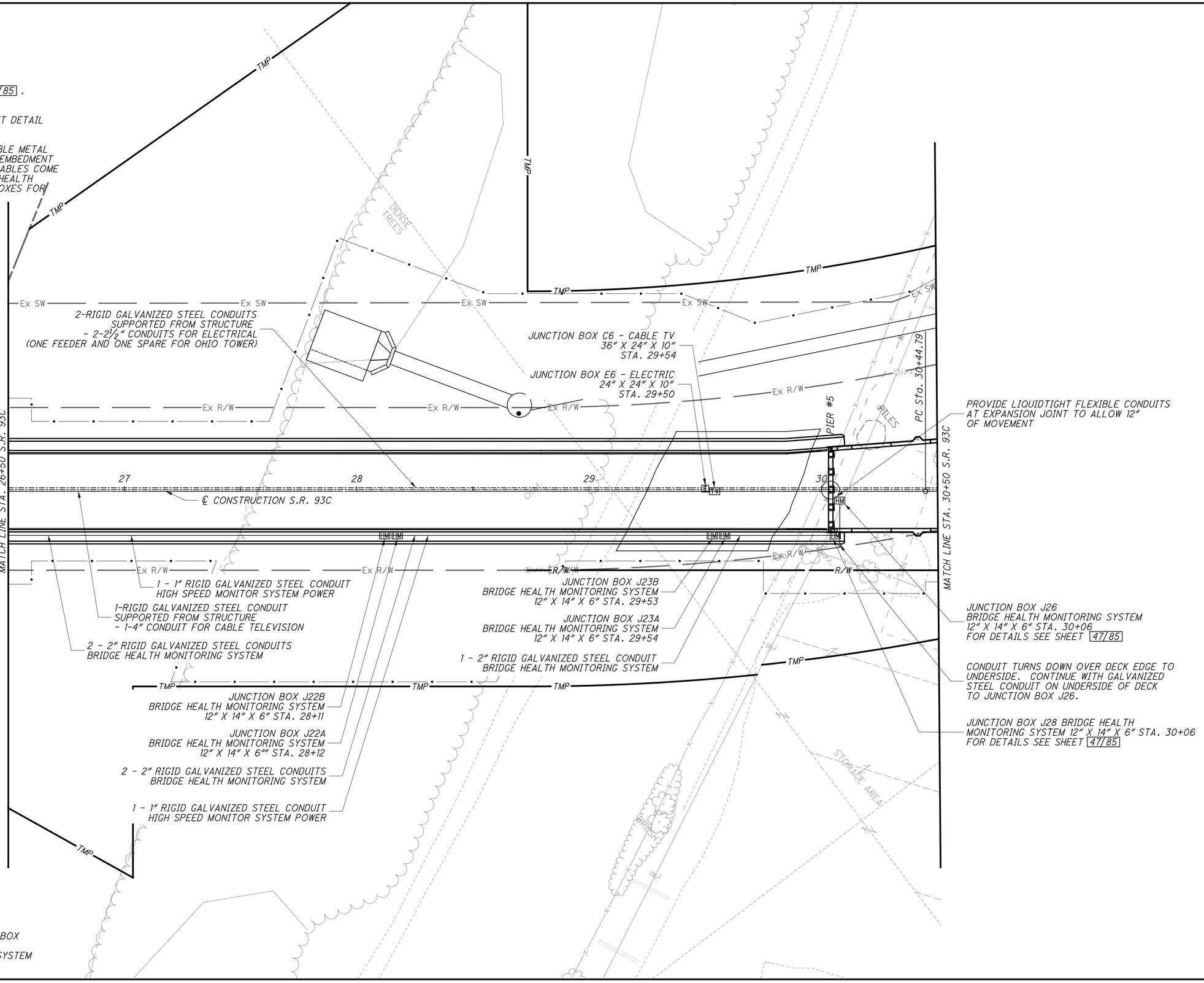

Link to 195-001-000
VECP 3 As-Built

LEGEND

- E — ELECTRICAL JUNCTION BOX
- T — TELEPHONE JUNCTION BOX
- TV — CABLE TELEVISION JUNCTION BOX
- HM — BRIDGE HEALTH MONITORING SYSTEM JUNCTION BOX

HORIZONTAL SCALE IN FEET
0 10 20 40

CALCULATED BLW
CHECKED SAC

LIGHTING - POWER SITE PLAN (6)
STA. 26+50.00 TO STA. 30+50.00

LAW-93-0.00

14/85

273/788

J:\Project\O\ODOT\15005112 Ironton Russell\LAW\81595\lighting\sheets\81595LP306.dgn - 5/5/2011 3:38:15 PM - brian_wallace

2-RIGID GALVANIZED STEEL CONDUITS
SUPPORTED FROM STRUCTURE
-2-2½" CONDUITS FOR ELECTRICAL
(ONE FEEDER AND ONE SPARE FOR OHIO TOWER)

JUNCTION BOX E5 - ELECTRICAL
24"x24"x10"
STA. 32+55 LT

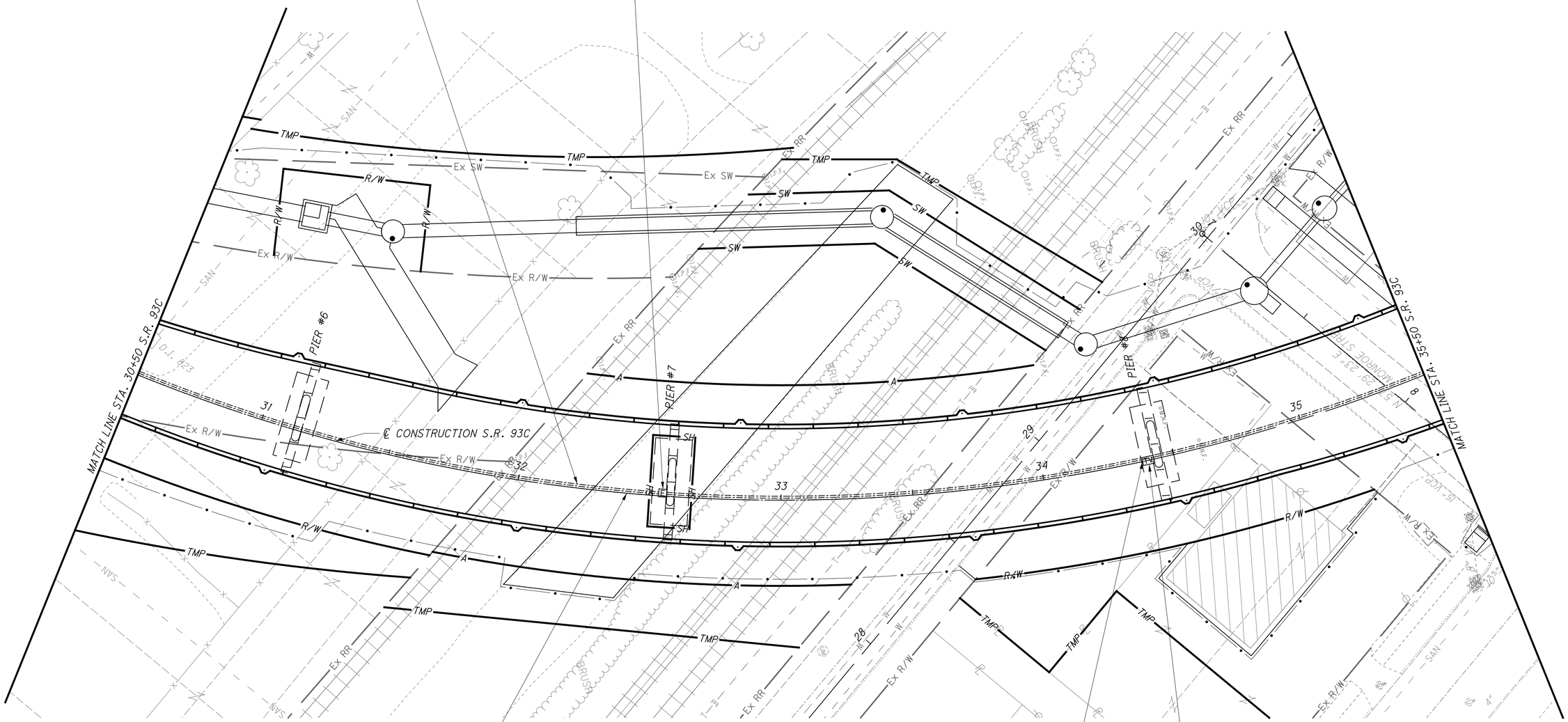

1-RIGID GALVANIZED STEEL CONDUIT
SUPPORTED FROM STRUCTURE
- 1-4" CONDUIT FOR CABLE TELEVISION

JUNCTION BOX C7 - CABLE TV
36"x24"x10"
STA. 34+40

ROUTE CONDUIT FOR CABLE TELEVISION ALONG
PIER NO. 8. 2' BELOW BOTTOM OF DECK. EXACT
LOCATION OF CONDUIT STUB DOWN TO BE DETERMINED
BY CABLE TELEVISION COMPANY DURING CONSTRUCTION.
COORDINATE WITH CABLE TELEVISION COMPANY.

LEGEND

- E — ELECTRICAL JUNCTION BOX
- T — TELEPHONE JUNCTION BOX
- TV — CABLE TELEVISION JUNCTION BOX

Link to 195-001-000
VECP 3 As-Built

HORIZONTAL SCALE IN FEET
0 10 20 40

CALCULATED BLW
CHECKED SAC

LIGHTING- POWER SITE PLAN (7)
STA. 30+50.00 TO STA. 35+50.00

LAW-93-0.00

15 / 85

274
788

J:\Project\OA\ODOT\15005112 Ironton Russell\LAW\81595\lighting\sheets\81595LP307.dgn 5/5/2011 3:38:48 PM - brian_wallace

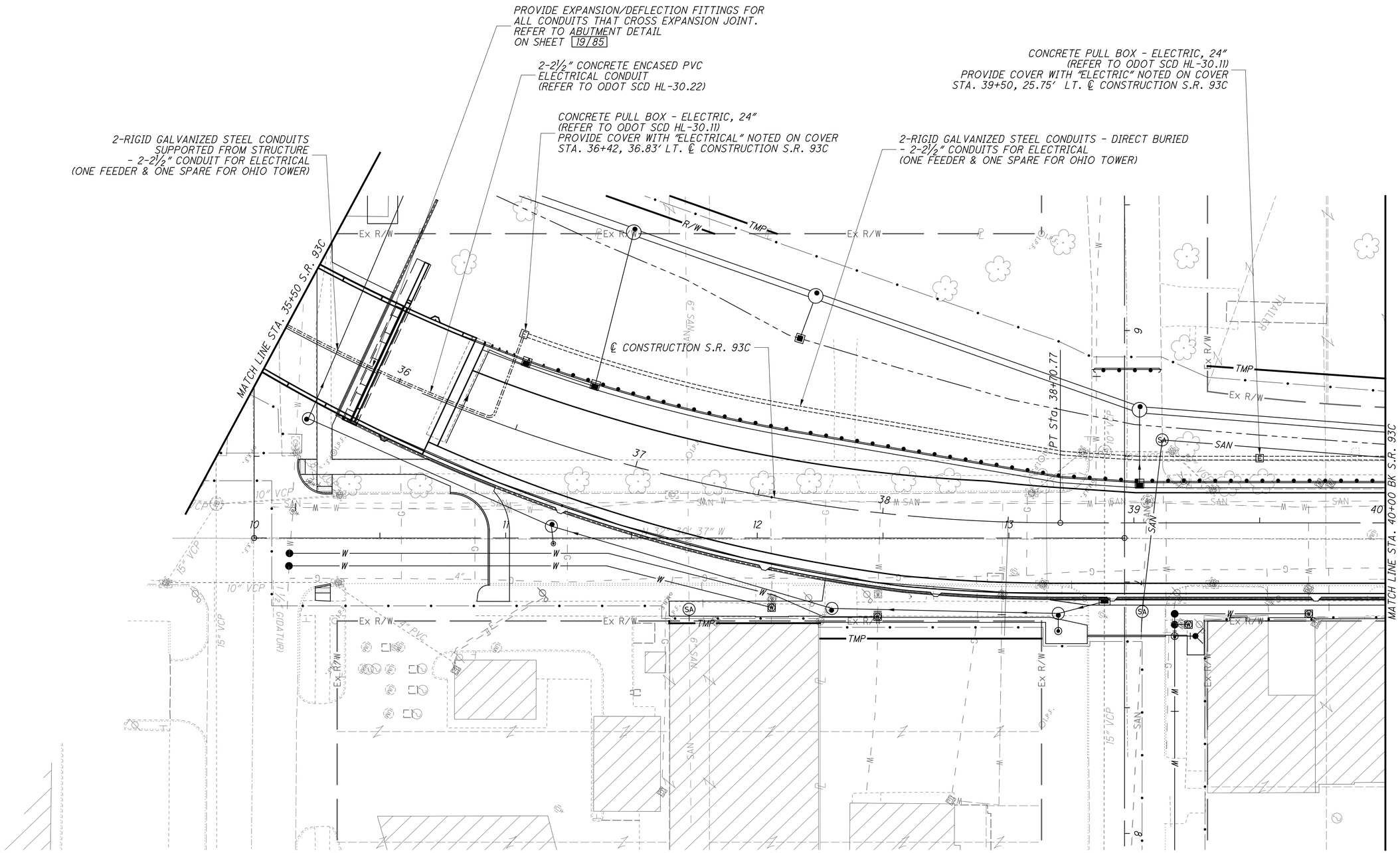

LEGEND

- E ELECTRICAL JUNCTION BOX
- T TELEPHONE JUNCTION BOX
- TV CABLE TELEVISION JUNCTION BOX

Link to 195-001-000
VECP 3 As-Built

HORIZONTAL SCALE IN FEET 0 10 20 40

CALCULATED BLW
CHECKED SAC

LIGHTING - POWER SITE PLAN (8)
STA. 35+50.00 TO STA. 40+00.00

LAW-93-0.00

J:\Project\O\ODOT\15005112 Ironton Russell\LAW\81595\lighting\sheets\81595LP308.dgn - 5/5/2011 3:39:24 PM - brian_wallace

CONCRETE PULLBOX, 24", STA. 40+95
(REFER TO ODOT SCD HL-30.11)
PROVIDE COVER WITH "ELECTRIC"
NOTED ON COVER.

2 - RIGID GALVANIZED STEEL DIRECT BURIED CONDUITS
2-2½" CONDUIT FOR ELECTRICAL
(ONE FEEDER & ONE SPARE FOR OHIO TOWER)

2-3" CONCRETE ENCASED, PVC CONDUITS
FOR ELECTRICAL SERVICE
(REFER TO ODOT SCD HL-30.22)

2-2½" CONCRETE ENCASED, PVC CONDUITS
FOR ELECTRICAL SERVICE
(REFER TO ODOT SCD HL-30.22)

Sta. 40+45.75 BACK =
Sta. 40+00.00 AHEAD

BK 40 AH

℄ CONSTRUCTION S.R. 93C

℄ CONST. SR 93C
STATION EQUATION:

MATCH LINE STA. 40+00 BK S.R. 93C

CONC. PULLBOX, 24", STA. 40+95
(REFER TO ODOT SCD HL-30.11)
PROVIDE COVER WITH "ELECTRIC"
NOTED ON COVER.

GROUND MOUNTED DISCONNECT & METER
(SEE SHEET 19/85 FOR DETAILS)

2-4" CONCRETE ENCASED PVC CONDUITS,
EXTEND ONE CONDUIT UP THE LENGTH
OF THE POLE AND PROVIDE WEATHERHEAD.
ALLOW 10 FEET OF TAILS FOR
CONNECTION BY AEP POWER CO.
STUB UP SECOND CONDUIT AT BASE
OF POLE, 1 FOOT ABOVE FINISHED
GRADE AND CAP WATERTIGHT

EXISTING ELECTRIC (OHIO POWER)
SERVICE POLE

277/480V 3PH, 4-WIRE OVERHEAD ELECTRIC
SERVICE. AEP SHALL EXTEND
SERVICE TO WOOD POLE

℄ CONSTRUCTION-RAM JEFFERSON STREET

℄ CONSTRUCTION THIRD STREET

Lamp Hole

LEGEND

- E ELECTRICAL JUNCTION BOX
- T TELEPHONE JUNCTION BOX
- TV CABLE TELEVISION JUNCTION BOX

Link to 3in Traffic Conduits As-Built

Link to RFI056 As-Built

HORIZONTAL SCALE IN FEET
0 10 20 40

CALCULATED BLW
CHECKED SAC

LIGHTING - POWER SITE PLAN(9)
STA. 40+00.00 TO STA. 43+50.00

LAW-93-0.00

17 / 85

276
788

J:\Project\ODOT\15005112 Ironton Russell\LAW\81595\lighting\sheets\81595LP309.dgn - 5/5/2011 3:39:56 PM - brian_wallace

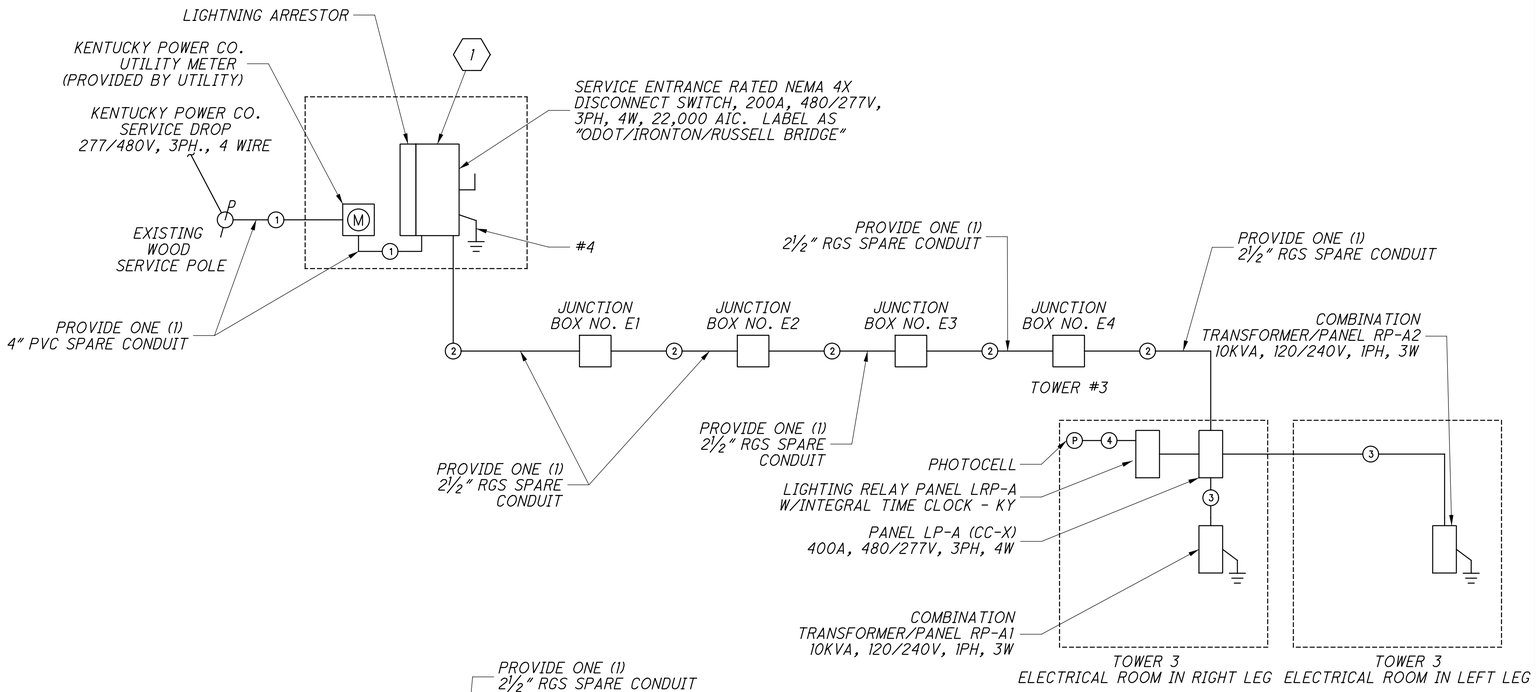

CONDUIT/WIRE SCHEDULE

◯ #	# OF * PARALLEL RUNS	# OF COND PER CONDUIT	PHASE CONDUCTOR SIZE	NEUTRAL CONDUCTOR	GROUND SIZE	CONDUIT SIZE
1	1	4	250kCMIL	250kCMIL	-	4"
2	1	4	250kCMIL	250kCMIL	4	2-1/2"
3	1	2	8	-	10	3/4"
4	1	2	12	12	12	3/4"
5	1	4	3	3	8	1-1/2""

NOTES

1. CONDUCTOR SIZES SHOWN SHALL BE USED FOR FEEDERS AND BRANCH CIRCUITS DOWNSTREAM OF A SERVICE DISCONNECT ONLY.
2. NUMBER OF CONDUCTORS PER CONDUIT SHOWN DOES NOT INCLUDE GROUND CONDUCTORS.
3. CONDUIT SIZES SHOWN ARE BASED ON 40% FILL MAXIMUM.
4. ANY FEEDERS USING DIFFERENT INSTALLATION CRITERIA THAN THOSE NOTED FOR THIS SCHEDULE SHALL BE MODIFIED, FURNISHED AND INSTALLED TO COMPLY WITH NEC.

GENERAL NOTES

1. REFER TO SHEETS 20/85 AND 21/85 FOR PANELBOARD SCHEDULES.
2. UTILITY METERING EQUIPMENT TO BE FURNISHED AND INSTALLED BY POWER COMPANY.

CODED NOTES:

1. INSTALL SERVICE ENTRANCE DISCONNECT SWITCH ADJACENT TO METER, AND SERVICE POLE. REFER TO SCD HL-40.20 AND DETAILS SHEET 19/85 .
2. INSTALL SERVICE ENTRANCE DISCONNECT SWITCH AND SERVICE ENTRANCE RATED CONTROL CENTER ADJACENT TO ASSOCIATED UTILITY METER, NEAR SERVICE POLE. REFER TO SCD HL-40.20 AND DETAILS SHEET 19/85.
3. SERVICE ENTRANCE RATED, FUSED, 3-POLE DISCONNECT SWITCH PROVIDED WITH CONTROL CENTER FOR CITY OF IRONTON STREET LIGHTING.

CALCULATED BLW CHECKED KAP

LIGHTING - POWER ONE-LINE DIAGRAM

LAW-93-0.00

18 / 85

277 / 788

J:\Project\OV\ODOT\15005112 Ironton Russell\LAW\81595\lighting\sheets\81595LC001.dgn - 5/5/2011 3:40:05 PM - brian_wallace

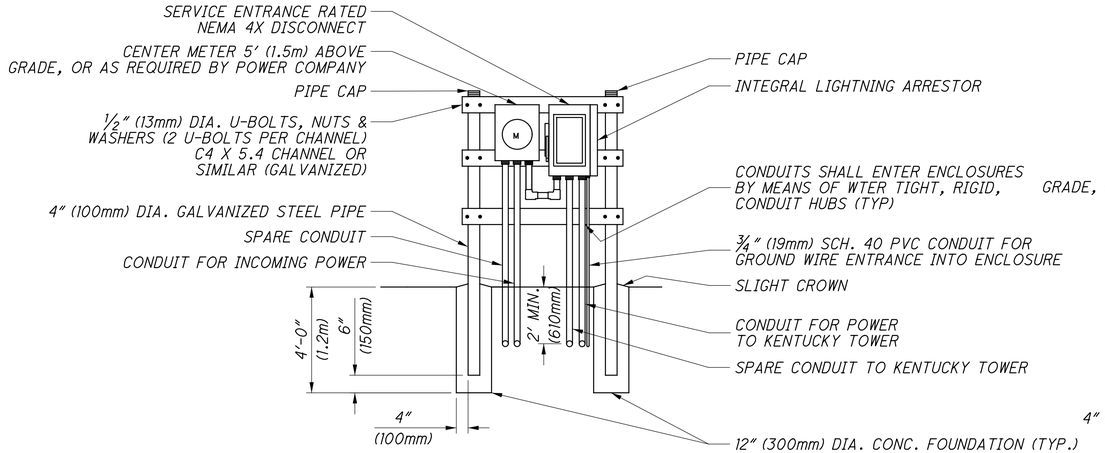

FRONT VIEW

GROUND MOUNTED SERVICE PEDESTAL (KENTUCKY SIDE)

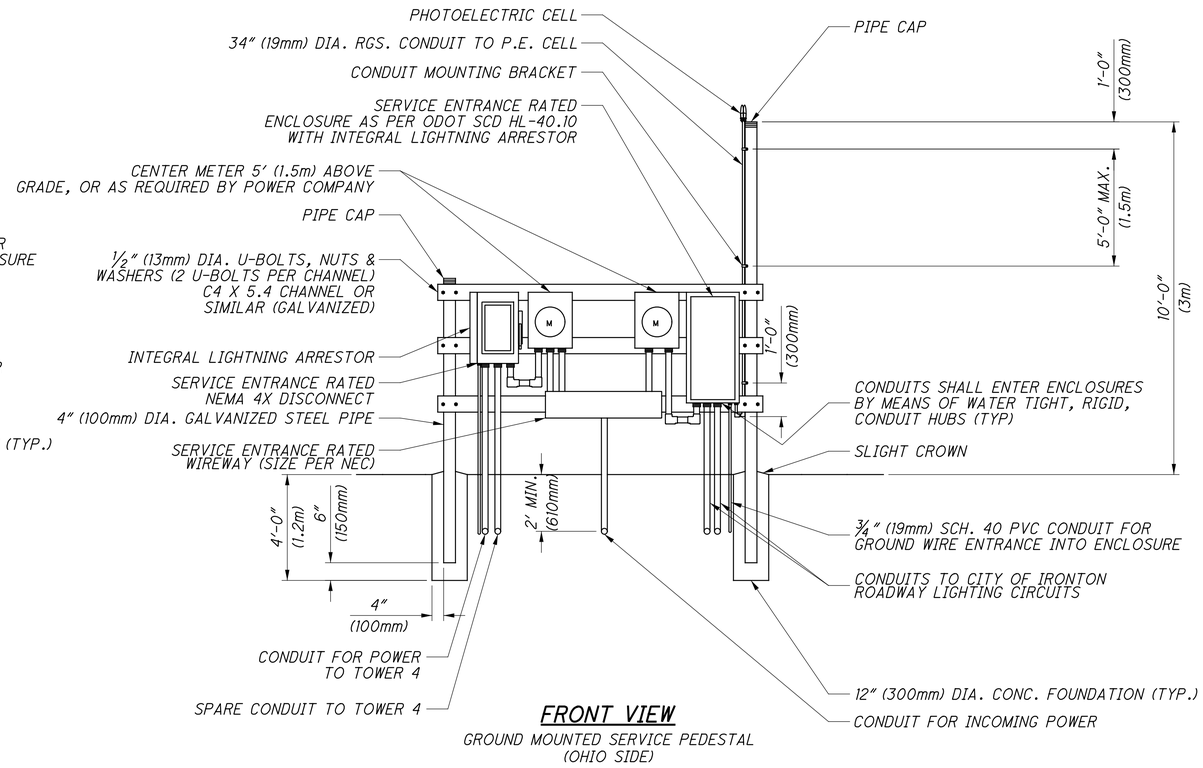

FRONT VIEW

GROUND MOUNTED SERVICE PEDESTAL (OHIO SIDE)

NOTES

1. LOCATION OF THE GROUND MOUNTED SERVICE PEDESTALS, FOUNDATION, SIZE, NUMBER AND DIRECTION OF CONDUIT RUNS SHALL BE AS SHOWN ON THE ELECTRICAL POWER PLANS, SHEETS 9/85 AND 17/85 WHERE REQUIRED & SUBJECT TO THE APPROVAL OF THE ENGINEER.
2. GROUNDING FACILITIES SHALL BE INSTALLED IN ACCORDANCE WITH NEC REQUIREMENTS.
3. TERMINATE ALL CONDUITS WHEN ENTERING ENCLOSURES WITH LOCKNUT & BONDING BUSHINGS. ALL OTHER CONDUITS SHALL BE PROVIDED WITH BONDING BUSHINGS. ALL CONDUITS TO BE BONDED WITH STRANDED BARE COPPER GROUND WIRE, REFER TO SHEET 18/85 FOR GROUND SIZE.

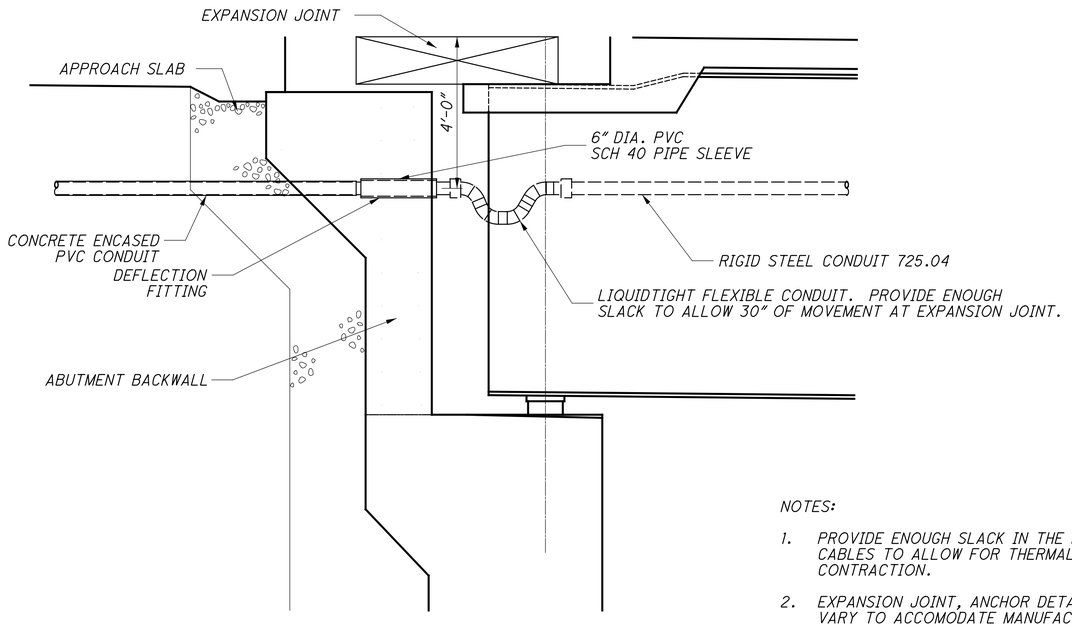

REAR ABUTMENT SECTION

(KENTUCKY APPROACH)

NOTES:

1. PROVIDE ENOUGH SLACK IN THE ELECTRICAL CONDUIT AND CABLES TO ALLOW FOR THERMAL EXPANSION AND CONTRACTION.
2. EXPANSION JOINT, ANCHOR DETAILS AND LOCATION MAY VARY TO ACCOMODATE MANUFACTURE DETAILS.
3. PROVIDE ADDITIONAL EXPANSION/DEFLECTION FITTINGS AS PER MANUFACTURER'S RECOMMENDATIONS.

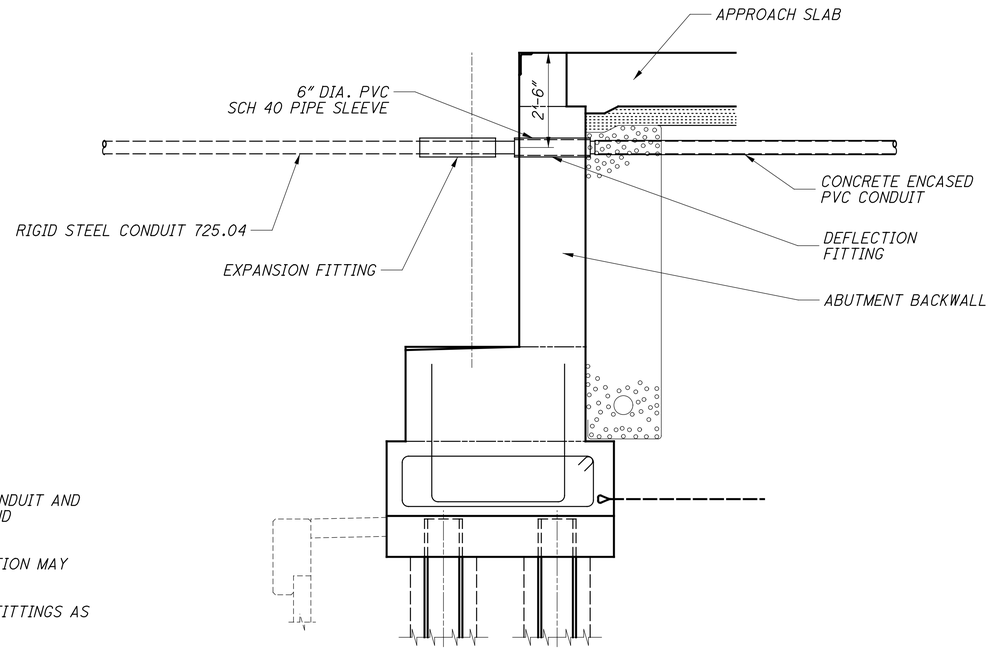

FORWARD ABUTMENT SECTION

(OHIO APPROACH)

Link to RFI061 As-Built

Link to RFI 164 As-Built

CALCULATED BLW CHECKED KAP

POWER SERVICE AND ABUTMENT DETAILS

LIGHTING - POWER

LAW-93-0.00

19/85

278
788

J:\Project\0\ODOT\15005112 Ironton Russell\LAW\81595\lighting\sheets\81595LM001.dgn - 5/5/2011 3:40:32 PM - brian_wallace

PANEL DESIGNATION:	LP-A	480 /277 VOLTS 3 PHASE 4 WIRE						SURFACE MTD x			
ROOM NAME OR #:	ELEC. RM.	AMPS = 225 MAIN BKR x									
FLOOR:	FIRST							NEMA TYPE ENCLOSURE 3R			
FED FROM:	KY PWR CO.	25,000 AIC									

CKT NO	LOAD DESCRIPTION	KVA A	KVA B	KVA C	AMP/ POLE	AMP/ POLE	KVA A	KVA B	KVA C	LOAD DESCRIPTION	CKT NO
1	LIGHTING - ROADWAY (CKT-A)	2.6			30/1	20/1	0.5			TOWER PLATFORM LIGHTS	2
3	LIGHTING - ROADWAY (CKT-B)		2.8		30/1	20/1		0.5		TOWER PLATFORM LIGHTS	4
5	LIGHTING - AESTHETIC			4.3	30/1	20/1				SPARE	6
7	LIGHTING - AESTHETIC	3.9			30/1	20/1				SPARE	8
9	LIGHTING - AESTHETIC		4.3		30/1	20/1				SPARE	10
11	LIGHTING - AESTHETIC			3.9	30/1	20/1				SPARE	12
13	LIGHTING - AESTHETIC	3.9			30/1	20/1				SPARE	14
15	LIGHTING - AESTHETIC		4.3		30/1	20/1				SPARE	16
17	LIGHTING - AESTHETIC			3.9	30/1	40/2			1.7	MINI PWR ZONE (XFMR RP-A1)	18
19	LIGHTING - AESTHETIC	4.3			30/1		3.3				20
21	LIGHTING RELAY PANEL LRP-A		1.0		20/1	40/2		1.8		MINI PWR ZONE (XFMR RP-A2)	22
23	SPARE				20/1				1.1		24
	SUBTOTAL KVA	14.7	12.4	12.1			3.8	2.3	2.8	SUBTOTAL KVA	
	TOTAL CONNECTED KVA	18.5	14.7	14.8	48.0					TOTAL CONNECTED AMPS	57.8
	TOTAL DEMAND KVA				48.0					TOTAL DEMAND AMPS	57.8

PANEL DESIGNATION:	RP-A1	240 /120 V 1 PH 3 WIRE						SURFACE MTD x			
ROOM NAME OR #:	ELEC. RM	AMPS= 100 MCB x									
FLOOR:	TOWER							NEMA TYPE ENCLOSURE 3R			
FED FROM:	LP-A										

CKT NO	LOAD DESCRIPTION	KVA A	KVA B	AMP/ POLE	AMP/ POLE	KVA A	KVA B	LOAD DESCRIPTION	CKT NO
1	NAVIGATION LIGHTING - RIGHT SIDE	0.50		20/1	20/1	1.00		HOIST	2
3	AVATION LIGHTING - TOWER 3		0.60	20/1	20/1		0.50	BRIDGE HEALTH MONITORING SYSTEM CABINET #1	4
5	TOWER RECEPTACLES	0.72		20/1	20/1	0.50		BRIDGE HEALTH MONITORING SYSTEM CABINET #1	6
7	TOWER RECEPTACLES		1.08	20/1	20/1		0.90	BRIDGE HMS HIGH SPEED FOIL LOGGER PWR	8
9	TOWER RECEPTACLES	1.08		20/1	20/1	0.22		BRIDGE HMS HEATER & LIGHTING	10
	SUBTOTAL KVA	2.3	1.7			1.7	1.4	SUBTOTAL KVA	
	TOTAL CONNECTED KVA	4.0	3.1	7.1				TOTAL CONNECTED AMPS	29.6
	TOTAL DEMAND KVA			7.1				TOTAL DEMAND AMPS	29.6

PANEL DESIGNATION:	RP-A2	240 /120 V 1 PH 3 WIRE						SURFACE MTD x			
ROOM NAME OR #:	ELEC. RM	AMPS= 100 MCB x									
FLOOR:	TOWER							NEMA TYPE ENCLOSURE 3R			
FED FROM:	LP-A										

CKT NO	LOAD DESCRIPTION	KVA A	KVA B	AMP/ POLE	AMP/ POLE	KVA A	KVA B	LOAD DESCRIPTION	CKT NO
1	TOWER RECEPTACLES	1.08		20/1	20/1	0.00		SPARE	2
3	TOWER RECEPTACLES		1.08	20/1	20/1			SPARE	4
5	TOWER RECEPTACLES	0.72		20/1	20/1			SPARE	6
7	SPARE			20/1	20/1			SPARE	8
9	SPARE			20/1	20/1			SPARE	10
	SUBTOTAL KVA	1.8	1.1			0.0	0.0	SUBTOTAL KVA	
	TOTAL CONNECTED KVA	1.8	1.1	2.9				TOTAL CONNECTED AMPS	12.0
	TOTAL DEMAND KVA			2.9				TOTAL DEMAND AMPS	12.0

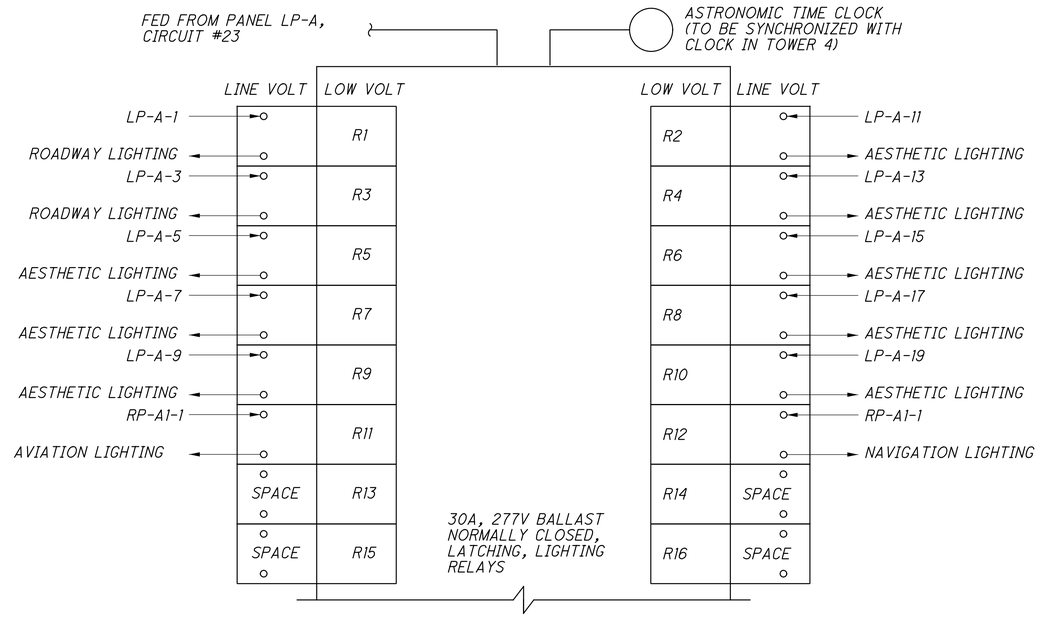

LRP-A : RELAY PANEL - KY

Link to RFI115 As-Built

NOTES

1. RP-A1 AND RP-A2 SHALL EACH BE A 10KVA, 1PH, 3W, NEMA 3R, PANEL/TRANSFORMER ASSEMBLY (SQUARE-D MINI-POWER ZONE OR APPROVED EQUAL) WITH A 120/240V SECONDARY. PROVIDE WITH A MINIMUM 25,000 AIC INTERUPTING RATING 40A, PRIMARY, 60A SECONDADARY OVER CURRENT PROTECTION. PANELBOARD SHALL HAVE CAPACITY FOR (10) 1-POLE BREAKERS. SEE PANELBOARD SCHEDULES ABOVE FOR CIRCUIT INFORMATION.

CALCULATED BLW CHECKED KAP

LIGHTING - PANELBOARD SCHEDULES (1)

LAW-93-0.00

20/85

279/788

J:\Project\O\ODOT\15005112 Ironton Russell\LAW\81595\lighting\sheets\81595LM002.dgn - 5/5/2011 3:40:39 PM - brian_wallace

PANEL DESIGNATION:	LP-B	480 /277 VOLTS 3 PHASE 4 WIRE	SURFACE MTD X
ROOM NAME OR #:	ELEC. RM.	AMPS = 225 MAIN BKR X	
FLOOR:	FIRST		NEMA TYPE ENCLOSURE 3R
FED FROM:	AEP -OHIO	25,000 AIC	

CKT NO	LOAD DESCRIPTION	KVA A	KVA B	KVA C	AMP/ POLE	AMP/ POLE	KVA A	KVA B	KVA C	LOAD DESCRIPTION	CKT NO
1	LIGHTING - ROADWAY (CKT-C)	2.6			30/1	20/1	0.5			TOWER PLATFORM LIGHTS	2
3	LIGHTING - ROADWAY (CKT-D)		2.8		30/1	20/1		0.5		TOWER PLATFORM LIGHTS	4
5	LIGHTING - AESTHETIC			4.3	30/1	20/1				SPARE	6
7	LIGHTING - AESTHETIC	3.9			30/1	20/1				SPARE	8
9	LIGHTING - AESTHETIC		4.3		30/1	20/1				SPARE	10
11	LIGHTING - AESTHETIC			3.9	30/1	20/1				SPARE	12
13	LIGHTING - AESTHETIC	3.9			30/1	20/1				SPARE	14
15	LIGHTING - AESTHETIC		4.3		30/1	20/1				SPARE	16
17	LIGHTING - AESTHETIC			3.9	30/1	40/2			1.7	MINI PWR ZONE (XFMR RP-B1)	18
19	LIGHTING - AESTHETIC	4.3			30/1		3.3				20
21	LIGHTING RELAY PANEL LRP-B		1.0		20/1	40/2		1.8		MINI PWR ZONE (XFMR RP-B2)	22
23	SPARE				20/1				1.1		24
	SUBTOTAL KVA	14.7	12.4	12.1			3.8	2.3	2.8	SUBTOTAL KVA	
	TOTAL CONNECTED KVA	18.5	14.7	14.8	48.0					TOTAL CONNECTED AMPS	57.8
	TOTAL DEMAND KVA				48.0					TOTAL DEMAND AMPS	57.8

PANEL DESIGNATION:	RP-B1	240 /120 V 1 PH 3 WIRE	SURFACE MTD X
ROOM NAME OR #:	ELEC. RM	AMPS= 100 MCB X	
FLOOR:	TOWER		NEMA TYPE ENCLOSURE 3R
FED FROM:	LP-B		

CKT NO	LOAD DESCRIPTION	KVA A	KVA B	AMP/ POLE	AMP/ POLE	KVA A	KVA B	LOAD DESCRIPTION	CKT NO
1	NAVIGATION LIGHTING - RIGHT SIDE	0.50		20/1	20/1	1.00		HOIST	2
3	AVATION LIGHTING - TOWER 4		0.60	20/1	20/1			SPARE	4
5	TOWER RECEPTACLES	0.72		20/1	20/1			SPARE	6
7	TOWER RECEPTACLES		1.08	20/1	20/1			SPARE	8
9	TOWER RECEPTACLES	1.08		20/1	20/1			SPARE	10
	SUBTOTAL KVA	2.3	1.7			1.0	0.0	SUBTOTAL KVA	
	TOTAL CONNECTED KVA	3.3	1.7	5.0				TOTAL CONNECTED AMPS	20.8
	TOTAL DEMAND KVA			5.0				TOTAL DEMAND AMPS	20.8

PANEL DESIGNATION:	RP-B2	240 /120 V 1 PH 3 WIRE	SURFACE MTD X
ROOM NAME OR #:	ELEC. RM	AMPS= 100 MCB X	
FLOOR:	TOWER		NEMA TYPE ENCLOSURE 3R
FED FROM:	LP-B		

CKT NO	LOAD DESCRIPTION	KVA A	KVA B	AMP/ POLE	AMP/ POLE	KVA A	KVA B	LOAD DESCRIPTION	CKT NO
1	TOWER RECEPTACLES	1.08		20/1	20/1	0.50		BRIDGE HEALTH MONITORING SYSTEM CABINET #2	2
3	TOWER RECEPTACLES		1.08	20/1	20/1		0.50	BRIDGE HEALTH MONITORING SYSTEM CABINET #2	4
5	TOWER RECEPTACLES	0.72		20/1	20/1	0.72		BRIDGE HMS HIGH SPEED FOIL LOGGER PWR	6
7	SPARE			20/1	20/1		0.22	BRIDGE HMS CAB HEATER & LIGHTING	8
9	SPARE			20/1	20/1			SPARE	10
	SUBTOTAL KVA	1.8	1.1			1.2	0.7	SUBTOTAL KVA	
	TOTAL CONNECTED KVA	3.0	1.8	4.8				TOTAL CONNECTED AMPS	20.1
	TOTAL DEMAND KVA			4.8				TOTAL DEMAND AMPS	20.1

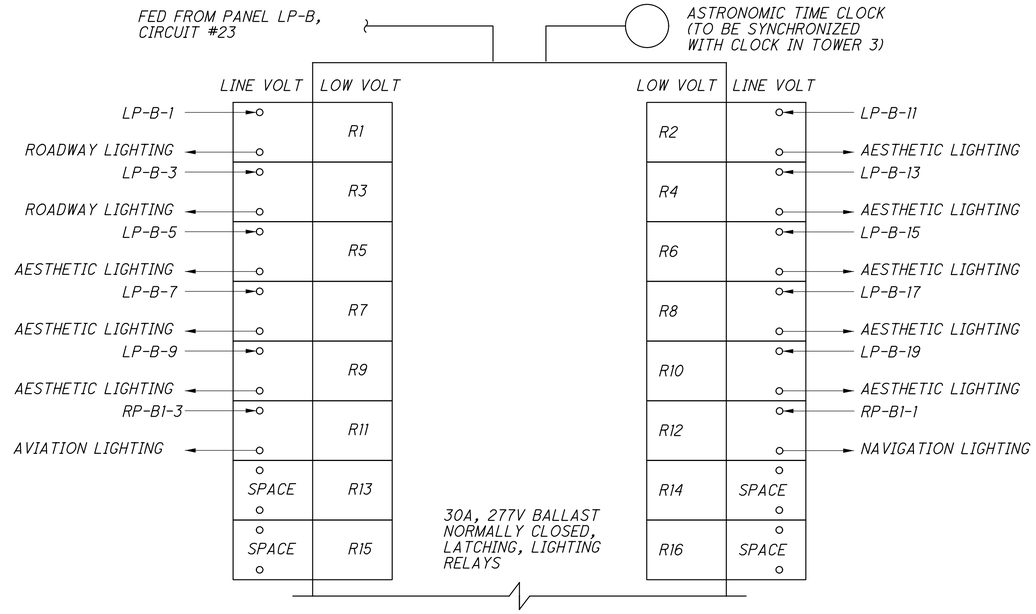

LRP-B : RELAY PANEL - OH

NOTES

1. RP-B1 AND RP-B2 SHALL EACH BE A 10KVA, 1PH, 3W, NEMA 3R, PANEL/TRANSFORMER ASSEMBLY (SQUARE-D MINI-POWER ZONE OR APPROVED EQUAL) WITH A 120/240V SECONDARY. PROVIDE WITH A MINIMUM 25,000 AIC INTERUPTING RATING 40A, PRIMARY, 60A SECONDADARY OVER CURRENT PROTECTION. PANELBOARD SHALL HAVE CAPACITY FOR (10) 1-POLE BREAKERS. SEE PANELBOARD SCHEDULES ABOVE FOR CIRCUIT INFORMATION.

CALCULATED BLW CHECKED KAP

LIGHTING - PANELBOARD SCHEDULES (2)

LAW-93-0.00

21 / 85

280 / 788

J:\Project\O\ODOT\15005112 Ironton Russell\LAW\81595\lighting\sheets\81595LM003.dgn - 5/5/2011 3:40:48 PM - brian_wallace

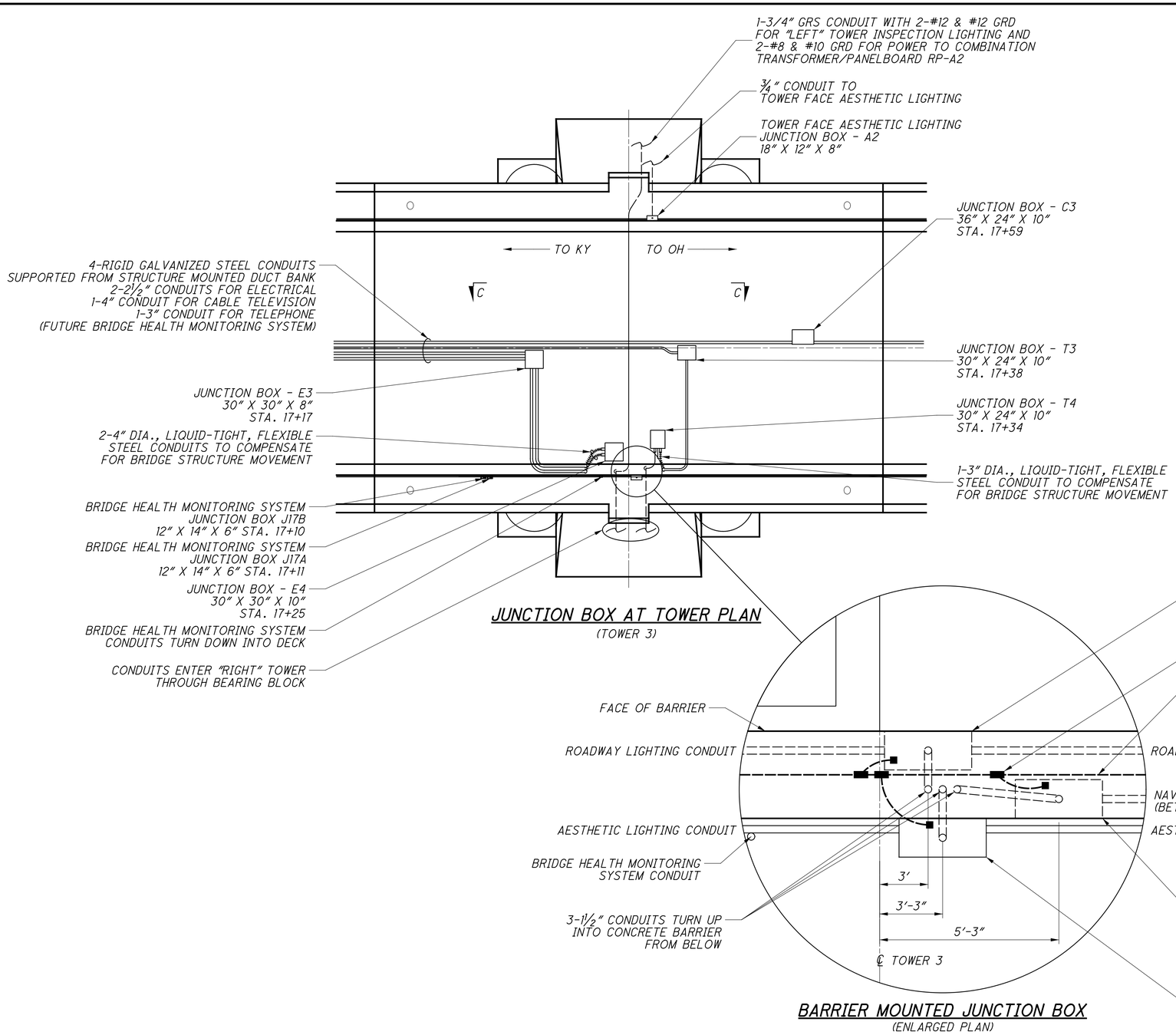

JUNCTION BOX AT TOWER PLAN

(TOWER 3)

BARRIER MOUNTED JUNCTION BOX

(ENLARGED PLAN)

NOTES

1. FOR SECTION C-C, SEE SHEET 34/85

HORIZONTAL SCALE IN FEET
0 4 8 16

CALCULATED BLW
CHECKED JRK

LIGHTING - POWER JUNCTION BOX DETAILS/ CONDUIT ROUTING AT CONCRETE BARRIER (1)

LAW-93-0.00

22/85

281/788

J:\Project\O\ODOT\15005112 Ironton Russell\LAW\81595\lighting\sheets\81595LM004.dgn - 5/5/2011 3:40:56 PM - brian_wallace

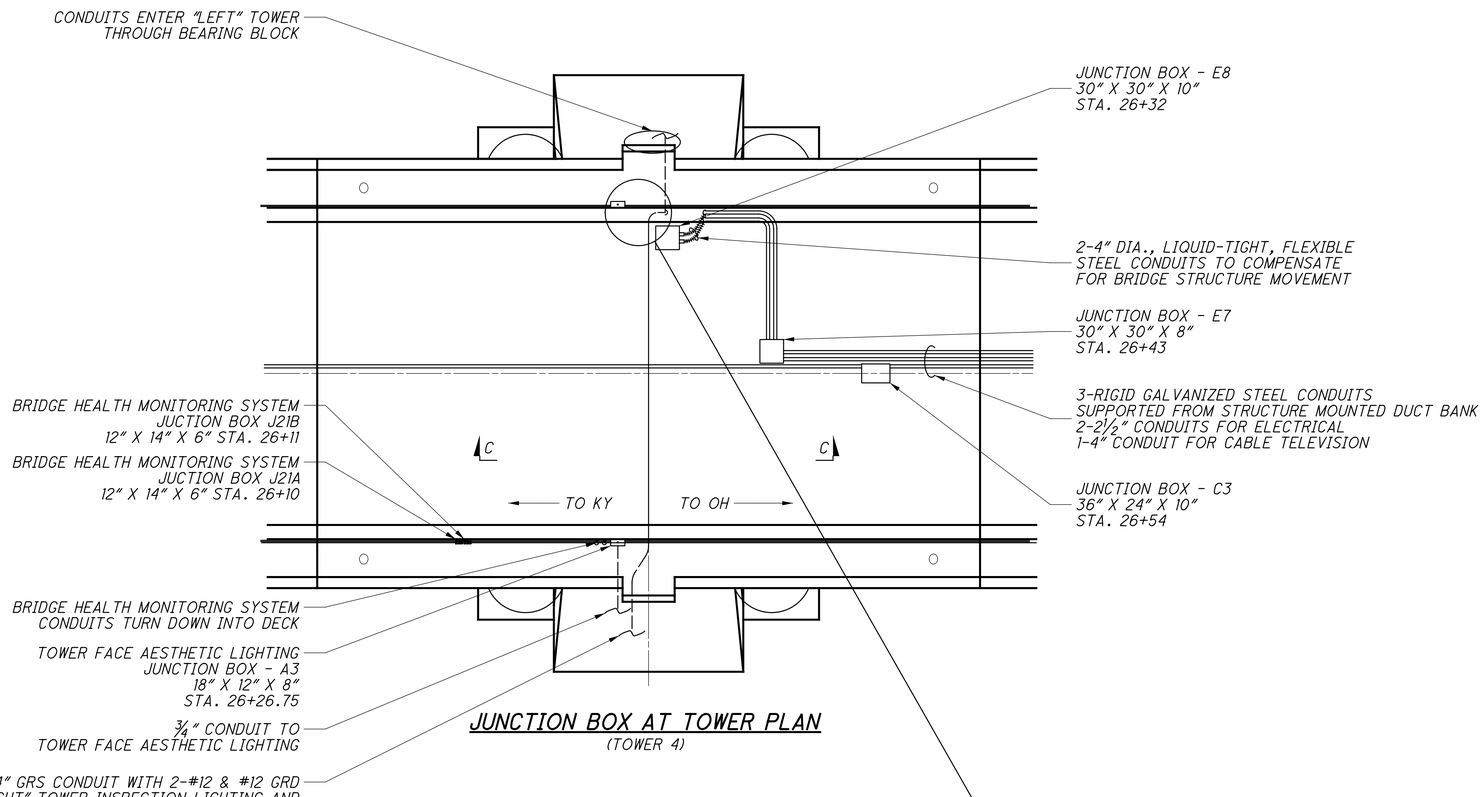

JUNCTION BOX AT TOWER PLAN
(TOWER 4)

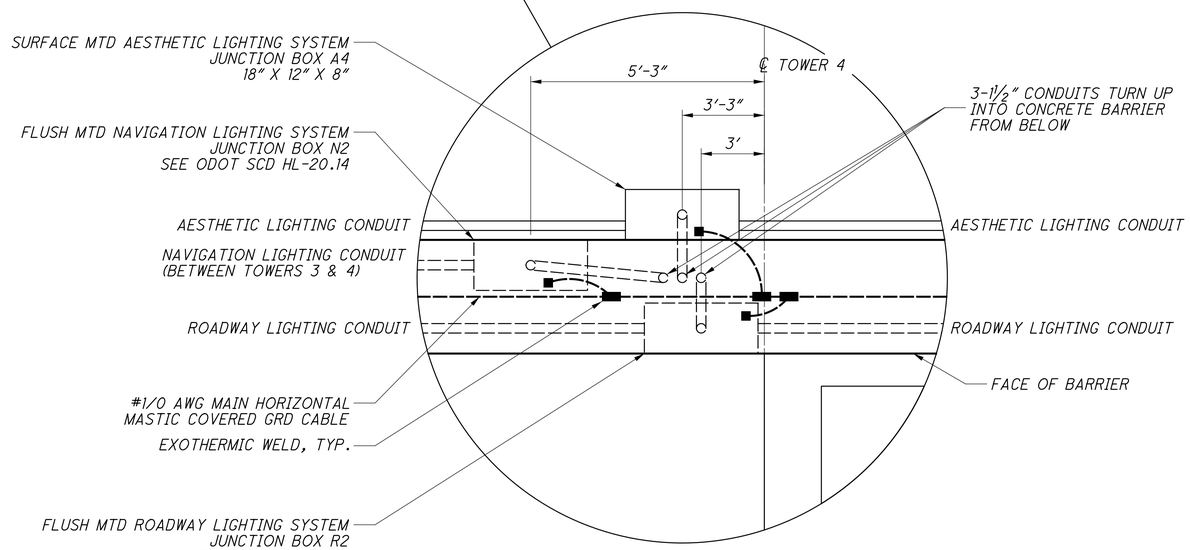

BARRIER MOUNTED JUNCTION BOX
(ENLARGED PLAN)

NOTES
1. FOR SECTION C-C, SEE SHEET 34/85

HORIZONTAL SCALE IN FEET
0 4 8 16

CALCULATED BLW
CHECKED JRK

LIGHTING - POWER JUNCTION BOX DETAILS/ CONDUIT ROUTING AT CONCRETE BARRIER (2)

LAW-93-0.00

23/85

282/788

J:\Project\O\ODOT\15005112 Ironton Russell\LAW\81595\lighting\sheets\81595LM005.dgn - 5/5/2011 3:41:04 PM - brian_wallace

REF. NO.	SHEET NO.	STATION TO STATION		SIDE	LENGTH	625																							
		FROM	TO			CONNECTOR KIT, TYPE II EACH	CONNECTOR KIT, TYPE III EACH	CONDUIT, 1-1/2", 725.04 FT	NO. 8 AWG 600 VOLT DISTRIBUTION CABLE FT	BARRIER JUNCTION BOX EACH	JUNCTION BOX, AS PER PLAN 16"X6"X4" NEMA 4 CAST IRON) EACH	CONDUIT 1", 725.04 FT	DISTRIBUTION CABLE MISC.: 3/C #16 "SO" CORD FT	LIGHTING, MISC.: NAVIGATION LIGHTING FIXTURES EACH	LIGHTING MISC.: TEMPORARY NAVIGATION LIGHTING LUMP	LIGHTING, MISC.: AVIATION OBSTRUCTION BEACON SYSTEM LUMP													
	11	PANEL LP-A	RELAY PANEL LRP-A	RT	25			25	105																				
	11	RELAY PANEL LRP-A	JB-N1	RT	35			35	135																				
	11	JB-N1		RT																									
	11	JB-N1	17+47.00	RT	17			17	81																				
	11	17+47.00		RT		1	1			1	1	5	3	1															
	12	17+47.00	21+71.00	RT	424			424	1302																				
	12	21+71.00		RT		1	1			1	1	5	3	1															
	13	21+71.00	25+95.00	RT	424			424	1302																				
	13	25+95.00		RT		1	1			1	1	5	3	1															
	13	PANEL LP-B	RELAY PANEL LRP-B	LT	25			25	105																				
	13	RELAY PANEL LRP-B	JB-N2	LT	35			35	135																				
	13	JB-N2		LT																									
	13	JB-N2	26+13.00	LT	17			17	81																				
	13	26+13.00		LT		1	1			1	1	5	3	1															
	12	26+13.00	21+71.00	LT	442			442	1356																				
	12	21+71.00		LT		1	1			1	1	5	3	1															
	11	21+71.00	17+65.00	LT	406			406	1248																				
	11	17+65.00		LT		1	1			1	1	5	3	1															
		NAVIGATION LIGHTING													LUMP														
		AVIATION OBSTRUCTION BEACON SYSTEM														LUMP													
		TOTALS CARRIED TO GENERAL SUMMARY				6	6	1850	5850	6	6	30	18	6	LUMP	LUMP													

CALCULATED BLW
CHECKED JRK

LIGHTING - NAVIGATION LIGHTING SUB-SUMMARY

LAW-93-0.00

24 / 85

283
788

J:\Project\OV\ODOT\15005112 Ironton Russell\LAW\81595\lighting\sheets\81595LS301.dgn - 5/5/2011 3:41:11 PM - brian_wallace

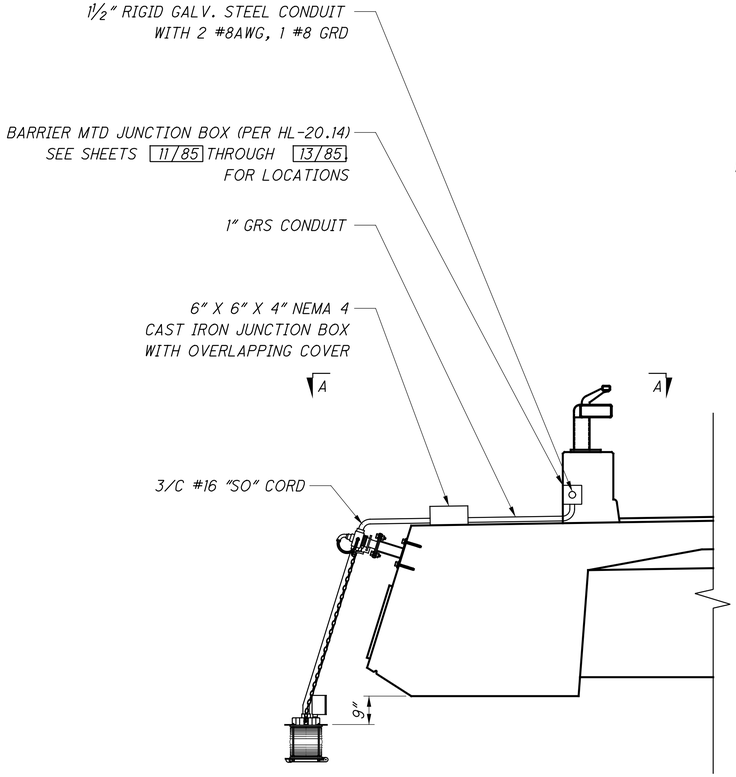

NAVIGATION LIGHT MOUNTING DETAIL (TYP.)

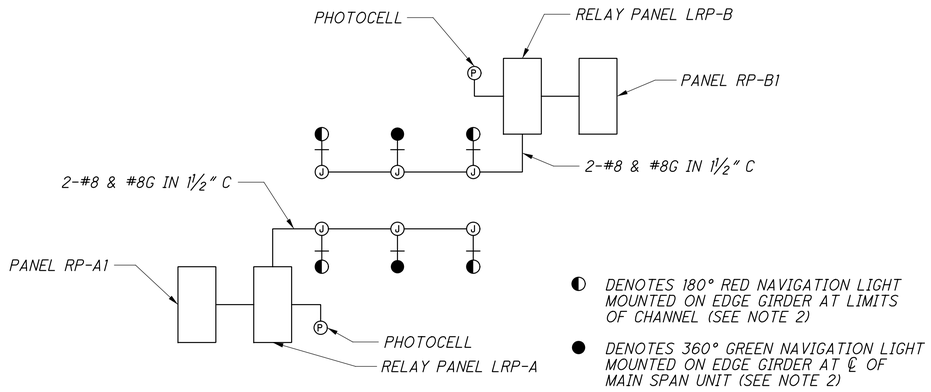

NAVIGATION CONTROL DETAIL

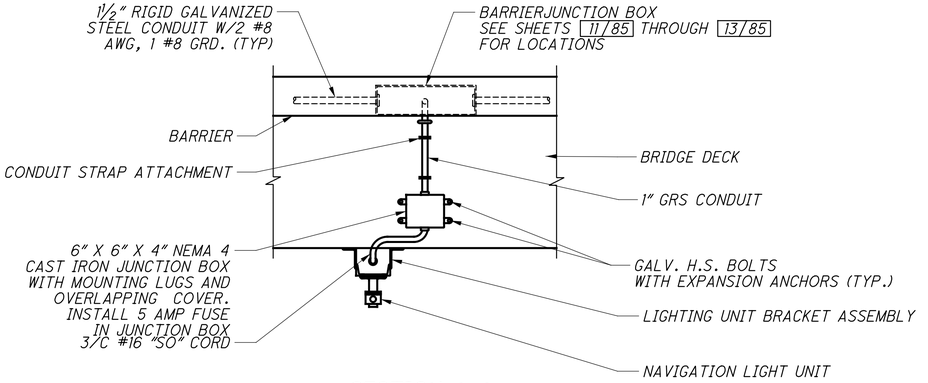

SECTION A-A

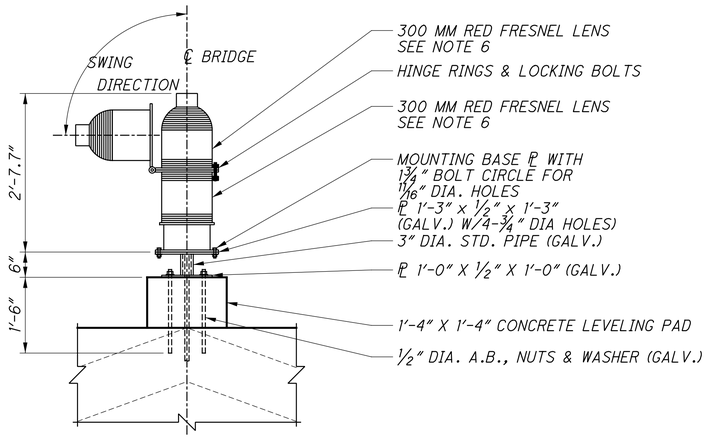

AVIATION BEACON DETAIL

GENERAL NOTES

1. GENERAL: THE NAVIGATION LIGHT SYSTEM SHALL COMPLY WITH THE LATEST EDITION OF THE CODE OF FEDERAL REGULATIONS: NAVIGATION AND NAVIGABLE WATERS, CFR 33 PART 118, BRIDGE LIGHTING AND OTHER SIGNALS. THE INSTALLATION SHALL COMPLY WITH THE LATEST EDITION OF THE NATIONAL ELECTRIC CODE (NEC).

2. ITEM SPECIAL: LIGHTING, MISC: NAVIGATION LIGHTING

   WHEN SHOWN ON THE PLANS CONTRACTOR SHALL INSTALL NAVIGATION LIGHTS. INSTALLATIONS SHALL INCLUDE ALL EQUIPMENT, LABOR, AND MATERIALS NECESSARY TO SATISFACTORY COMPLETE THE ITEM. PAYMENT FOR ITEM SHALL BE MADE UNDER ITEM SPECIAL: LIGHTING MISC: NAVIGATION LIGHTING.

   FIXTURES SHALL BE:

   180° RED NAVIGATION: B&B ROADWAY, MODEL CM; EDKO, MODEL 1-P OR APPROVED EQUAL

   360° GREEN NAVIGATION: B&B ROADWAY, MODEL CC; EDKO, MODEL 6-PSU OR APPROVED EQUAL

   LAMPS: L.E.D., 8 WATTS, 100,000 HOURS @ 120 VOLTS

3. RED NAVIGATION LIGHT (CHANNEL MARGIN LIGHT, MODEL CM): THE FIXTURE SHALL BE 180°, 7° STANDARD MARINE TEMPERED FRESNEL TYPE. THE FIXTURE SHALL BE EQUIPPED WITH A PIVOT MOUNT, AND RETRIEVAL CHAIN, SO THAT WHEN THE BASE IS MOUNTED OUTSIDE OF THE EDGE GIRDER, THE LIGHT CAN BE SERVICED BY REACHING OVER THE BRIDGE EDGE. THE FIXTURE SHALL HAVE AN AUTOMATIC LATCH THAT SHALL BE CAPABLE OF HOLDING THE FIXTURE SECURELY IN THE DOWN POSITION AND IN THE SERVICE POSITION.

4. GREEN NAVIGATION LIGHT (CENTER CHANNEL LIGHT, MODEL CC): THE FIXTURE SHALL BE 360°, 7° STANDARD MARINE TEMPERED FRESNEL TYPE. THE FIXTURE SHALL BE EQUIPPED WITH A PIVOT MOUNT AND RETRIEVAL CHAIN, SO THAT WHEN THE BASE IS MOUNTED OUTSIDE OF THE EDGE GIRDER, THE LIGHT CAN BE SERVICED BY REACHING OVER THE BRIDGE EDGE. THE FIXTURE SHALL HAVE AN AUTOMATIC LATCH THAT SHALL BE CAPABLE OF HOLDING THE FIXTURE SECURELY IN THE DOWN POSITION AND IN THE SERVICE POSITION.

5. PHOTOCELL SHALL FACE NORTHERN SKY: INITIAL SETTINGS SHALL BE "ON" AT 35 FOOT-CANDLES AND "OFF" AT 58 FOOT-CANDLES. PHOTOCELL SHALL BE HOUSED IN A WEATHERPROOF ENCLOSURE AND FAILSAFE "ON".

6. ITEM SPECIAL: LIGHTING, MISC: AVIATION LIGHTING WITH MOUNTING BRACKET:

   WHEN SHOWN ON THE PLANS CONTRACTOR SHALL INSTALL AVIATION LIGHTS. INSTALLATIONS SHALL INCLUDE ALL EQUIPMENT, LABOR, AND MATERIALS NECESSARY TO SATISFACTORY COMPLETE THE ITEM. PAYMENT FOR ITEM SHALL BE MADE UNDER ITEM SPECIAL: LIGHTING MISC: AVIATION LIGHTING WITH MOUNTING BRACKET.

   AVIATION FIXTURE: ALL AVIATION FIXTURES SHALL HAVE DUAL LAMPS. FIXTURE SHALL BE:

   AVIATION BEACON: COOPER CROUSE-HINDS, FCB SERIES, CATALOG #44660B; ITL, LLC, MODEL BCN-0300 OR APPROVED EQUAL

   LAMPS: TYPE "C", INCANDESCENT, 620 WATTS, 3,000 HOURS @ 120 VOLTS.

CALCULATED BLW CHECKED SAC

LIGHTING - NAVIGATION/AVIATION LIGHTING DETAILS

LAW-93-0.00

25/85

284
788

J:\Project\OVODOT\15005112 Ironton Russell\LAW\81595\lighting\sheets\81595LD301.dgn - 5/5/2011 3:41:27 PM - brian_wallace

REF. NO.	SHEET NO.	STATION TO STATION FROM	TO	SIDE	LENGTH	DISTRIBUTION CABLE, MISC.: NO. 250 KCMIL 600 VOLT DISTRIBUTION CABLE FT	NO. 4 AWG 600 VOLT DISTRIBUTION CABLE FT	NO. 8 AWG 600 VOLT DISTRIBUTION CABLE FT	NO. 10 AWG 600 VOLT DISTRIBUTION CABLE FT	DISTRIBUTION CABLE, MISC.: NO. 12 AWG 600 VOLT DISTRIBUTION CABLE FT	CONDUIT 3/4", 725.04 FT	CONDUIT 2-1/2", 725.04 EACH	JUNCTION BOX, AS PER PLAN (NEMA 3R, 6" x 6" x 4") EACH	LIGHTING MISC.: PANELBOARD 225A 480/277V-3PH-4W (CONTROL CENTER) EACH	LIGHTING MISC.: COMBINATION TRANSFORMER/ PANELBOARD 10KVA EACH	LIGHTING MISC.: LOW VOLTAGE LIGHTING RELAY PANEL EACH	LIGHTING MISC.: INSPECTION LIGHTING 4'-0" FLUORESCENT VAPORTIGHT EACH	LIGHTING MISC.: TOGGLE SWITCH 20A, 277 V PILOT LIGHT W/ WP COVER EACH	LIGHTING MISC.: DUPLEX GFCI RECEPTACLE 20A, 120 VOLT W/ WP COVER EACH	LIGHTING MISC.: HOIST RECEPTACLE 20A, 120 VOLT EACH	LIGHTING MISC.: PHOTOCELL EACH
	11	LEFT BELOW STRUT LEVEL PLATFORM		LT					141	120	67						2		2			
	11	RIGHT BELOW STRUT LEVEL PLATFORM		LT					141	120	67						2		2			
	11	LEFT STRUT LEVEL ELECTRICAL ROOM		LT					12	75	24						1	1	1			
	11	RIGHT STRUT LEVEL ELECTRICAL ROOM		LT		84	21	12	61	75	57	21	1	1		1	1	1	1		1	
	11	LEFT DECK LEVEL ELECTRICAL ROOM		LT				28	32		41				1		1	1	1			
	11	RIGHT DECK LEVEL ELECTRICAL ROOM		LT				360	17	42	48				1		1	1	1			
	11	LEFT TOWER LEG		LT				618			196						11		11			
	11	RIGHT TOWER LEG		LT				1,482			392						11		11			
	11	TOP OF TOWER LEFT		LT													1		1			
	11	TOP OF TOWER RIGHT		LT				57		75	43						2		1	1		
	11	RIGHT TOWER	LEFT TOWER	LT/RT				120	60	180	50											
	13	LEFT BELOW STRUT LEVEL PLATFORM		RT					141	120	67						2		2			
	13	RIGHT BELOW STRUT LEVEL PLATFORM		RT					141	120	67						2		2			
	13	LEFT STRUT LEVEL ELECTRICAL ROOM		RT		84	21	12	61	75	57	21	1	1		1	1	1	1		1	
	13	RIGHT STRUT LEVEL ELECTRICAL ROOM		RT					12	75	24						1	1	1			
	13	LEFT DECK LEVEL ELECTRICAL ROOM		RT				360	17	42	48				1		1	1	1			
	13	RIGHT DECK LEVEL ELECTRICAL ROOM		RT				28	32		41				1		1	1	1			
	13	LEFT TOWER LEG		RT				1,482			392						11		11			
	13	RIGHT TOWER LEG		RT				618			196						11		11			
	13	TOP OF TOWER LEFT		RT				57		75	43						2		1	1		
	13	TOP OF TOWER RIGHT		RT													1		1			
	13	RIGHT TOWER	LEFT TOWER	LT/RT				120	60	180	50											
TOTALS CARRIED TO GENERAL SUMMARY						168	42	5354	928	1374	1970	42	2	2	4	2	66	8	64	2	2	

625

CALCULATED BLW
CHECKED SAC

LIGHTING - TOWER INSPECTION LIGHTING AND RECEPTACLES SUB-SUMMARY

LAW-93-0.00

26/85

285
788

J:\Project\O\ODOT\15005112 Ironton Russell\LAW\81595\lighting\sheets\81595LS003.DGN - 5/5/2011 3:41:35 PM - brian_wallace

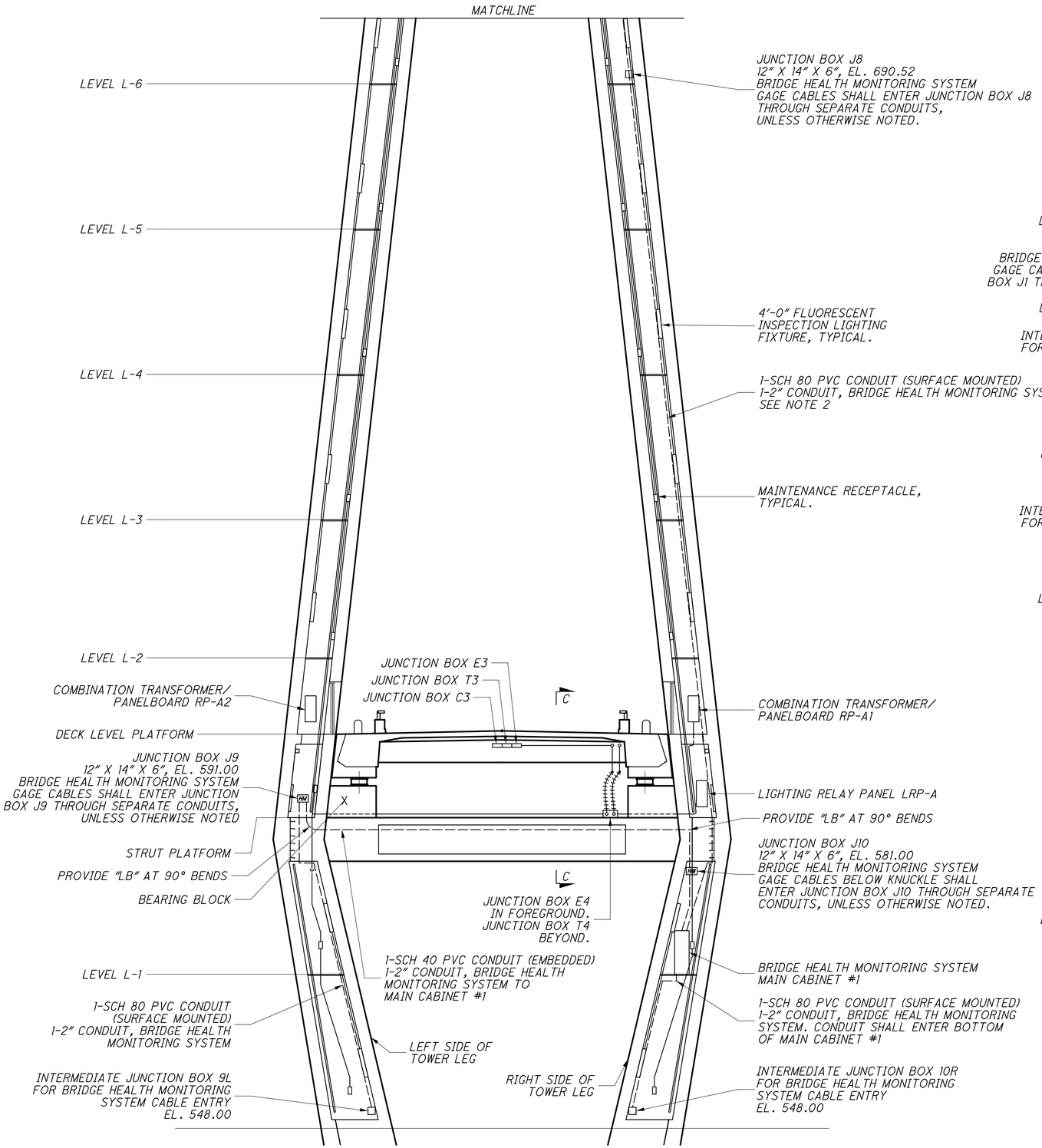

TOWER 3

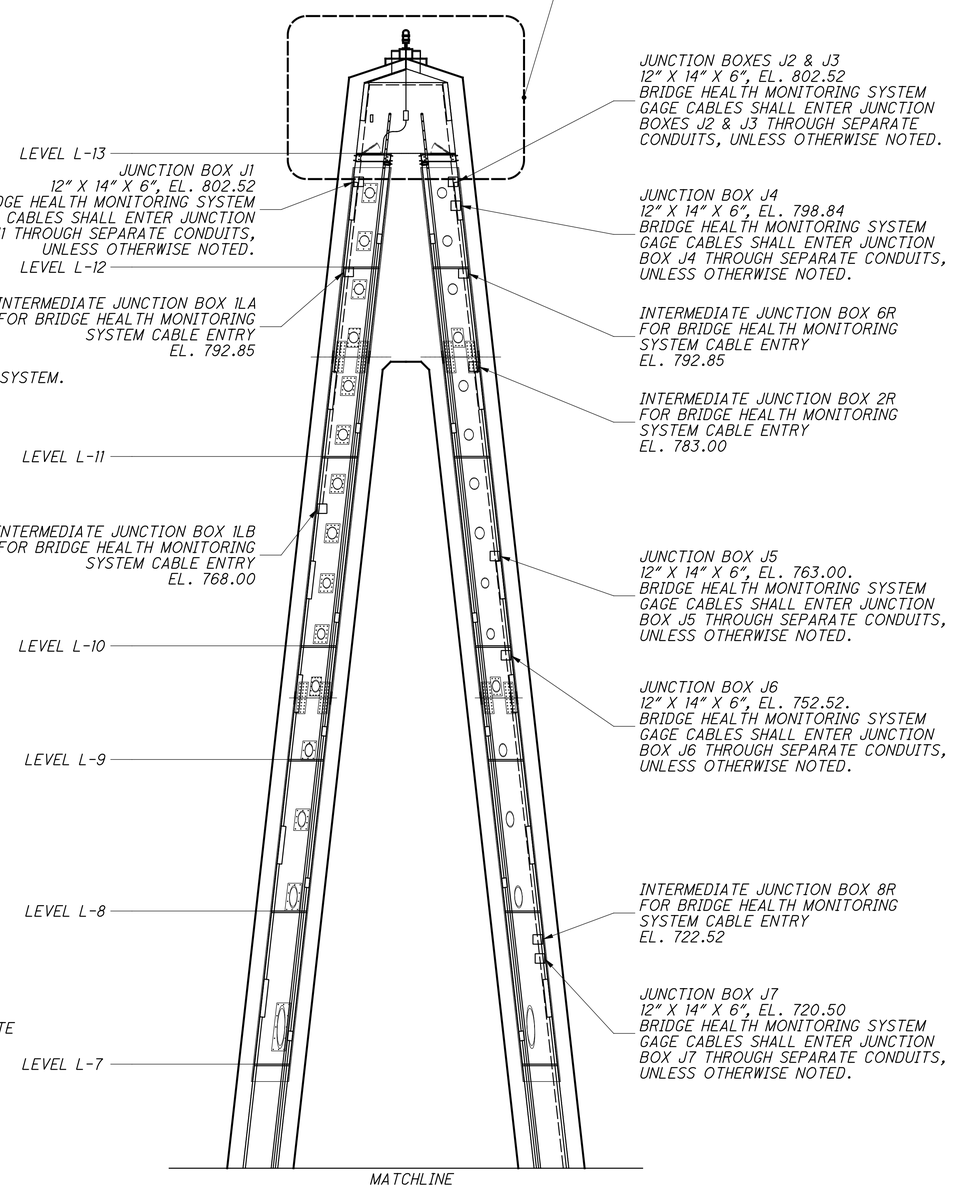

NOTES

1. FOR SECTION C-C, SEE SHEET 34/85
2. CONTRACTOR SHALL PROVIDE A 12" X 12" X 8" PULLBOX WITH VERTICAL STRAIN RELEIF AT THE MID POINT WHERE THE BRIDGE HEALTH MONITORING SYSTEM CABLING EXCEEDS 100' IN A CONTINUOUS RUN BETWEEN JUNCTION BOXES AND OR CABINETS.

Link to 195-001-000
VECP 3 As-Built

CALCULATED BLW | CHECKED JRK

LIGHTING - TOWER INSPECTION LIGHTING AND RECEPTACLES
PLATFORM DETAILS - TOWER 3

LAW-93-0.00

27/85

286
788

J:\Project\O\ODOT\15005112 Ironton Russell\LAW\81595\lighting\sheets\81595LD001.dgn - 5/5/2011 3:41:59 PM - brian_wallace

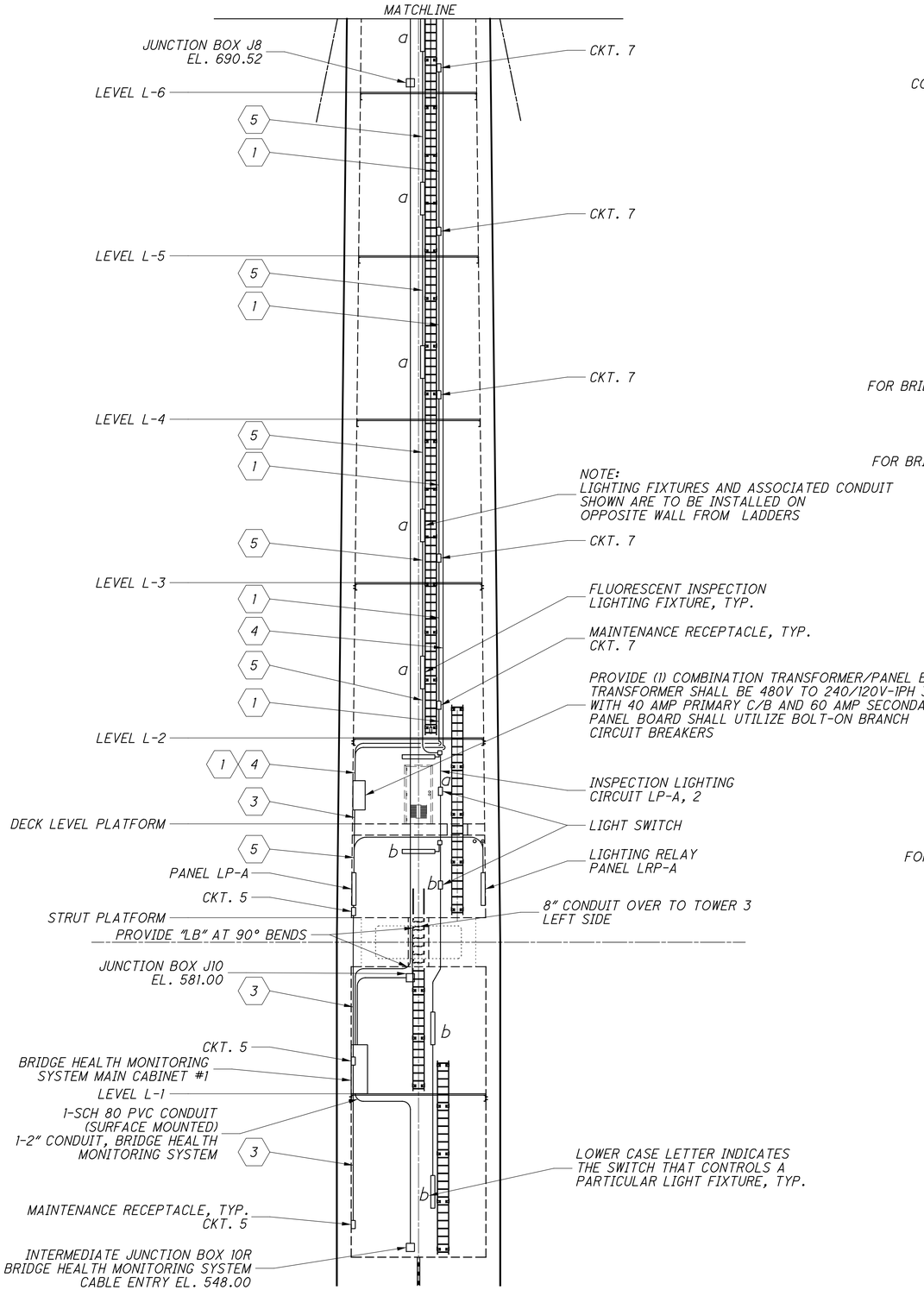

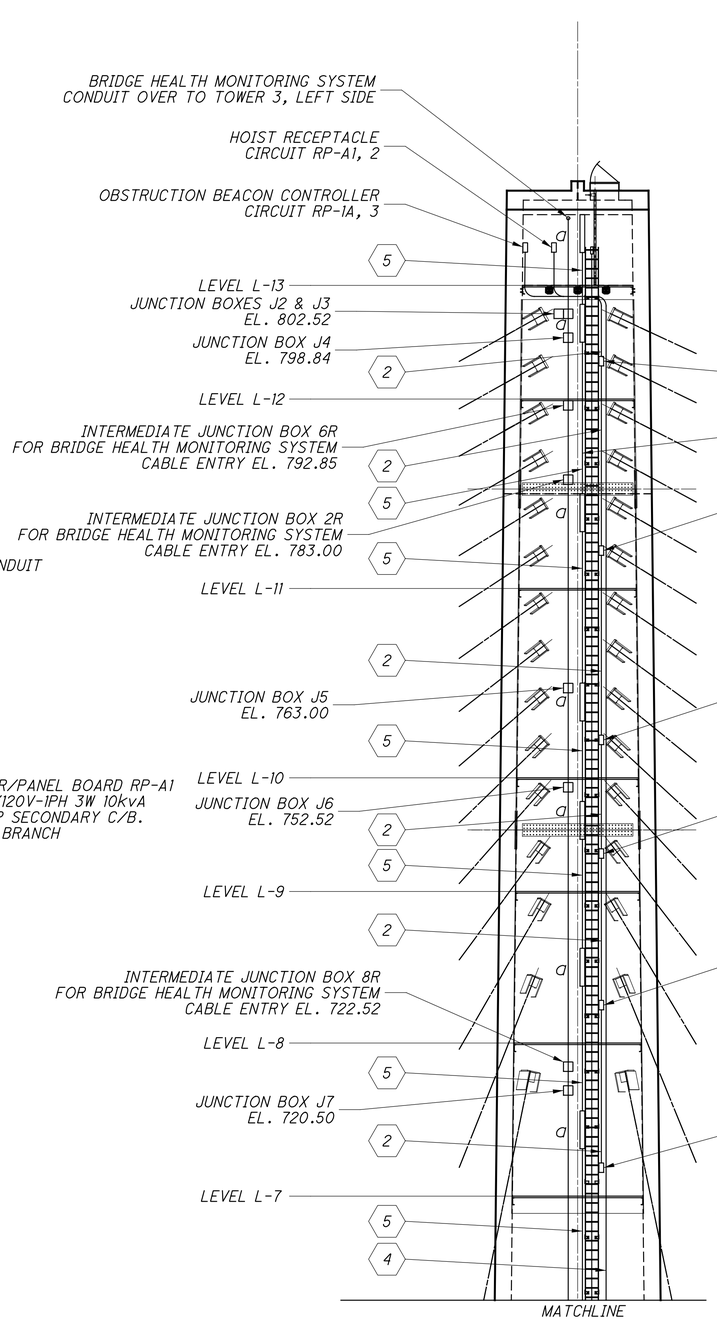

CODED NOTES

1. PROVIDE 4-#8 & #8 GRD IN ¾" GRS CONDUIT FOR MAINTENANCE RECEPTACLES. (CIRCUITS RP-A1, 7 & 9)
2. PROVIDE 2-#8 & #8 GRD IN ¾" GRS CONDUIT FOR MAINTENANCE RECEPTACLES. (CIRCUIT RP-A1, 9)
3. PROVIDE 2-#10 & #10 GRD IN ¾" GRS CONDUIT FOR MAINTENANCE RECEPTACLES. (CIRCUITS RP-A1, 5)
4. PROVIDE 4-#8 & #8 GRD IN ¾" GRS CONDUIT FOR HOIST AND OBSTRUCTION LIGHT. (CIRCUITS RP-A1, 2 & 3)
5. PROVIDE 2-#12 & #12 GRD IN ¾" GRS CONDUIT FOR INSPECTION LIGHTING. (CIRCUITS LP-A, 2)

GENERAL NOTES

1. ALL MAINTENANCE RECEPTACLES INSTALLED WITHIN THE BRIDGE TOWER SHALL BE 20A, 120V GFCI, WEATHER RESISTANT WITH CLEAR, IN USE WEATHERPROOF COVER.
2. ALL LIGHT SWITCHES SHALL BE 20A, 277/120V, SPST, INTERNALLY ILLUMINATED (AMBER). PROVIDE ALL LIGHT SWITCHES WITH CLEAR, IN USE WEATHERPROOF COVER.
3. INSPECTION LIGHTING FIXTURE SHALL BE 4'-0", 2-LAMP FLUORESCENT VAPORTIGHT WITH 2-4100k, 32W T-8 LAMPS, FIBER GLASS REINFORCED POLYESTER HOUSING, 277V BALLAST, AND PRISMATIC, 100% DR HIGH IMPACT LENS. BASIS OF DESIGN IS COOPER LIGHTING #VT2232-DR-100-277VGLEB8. OTHER ACCEPTABLE MANUFACTURERS ARE LITHONIA AND DAY-BRITE.

TOWER 3 - RIGHT SIDE

(VIEW LOOKING NORTH)

CALCULATED BLW
CHECKED JRK

LIGHTING - TOWER INSPECTION LIGHTING AND RECEPTACLE PLATFORM DETAILS - TOWER 3 - RIGHT SIDE

LAW-93-0.00

28 / 85

287
788

J:\Project\O\ODOT\15005112 Ironton Russell\LAW\81595\lighting\sheets\81595LD002.dgn - 5/5/2011 3:42:12 PM - brian_wallace

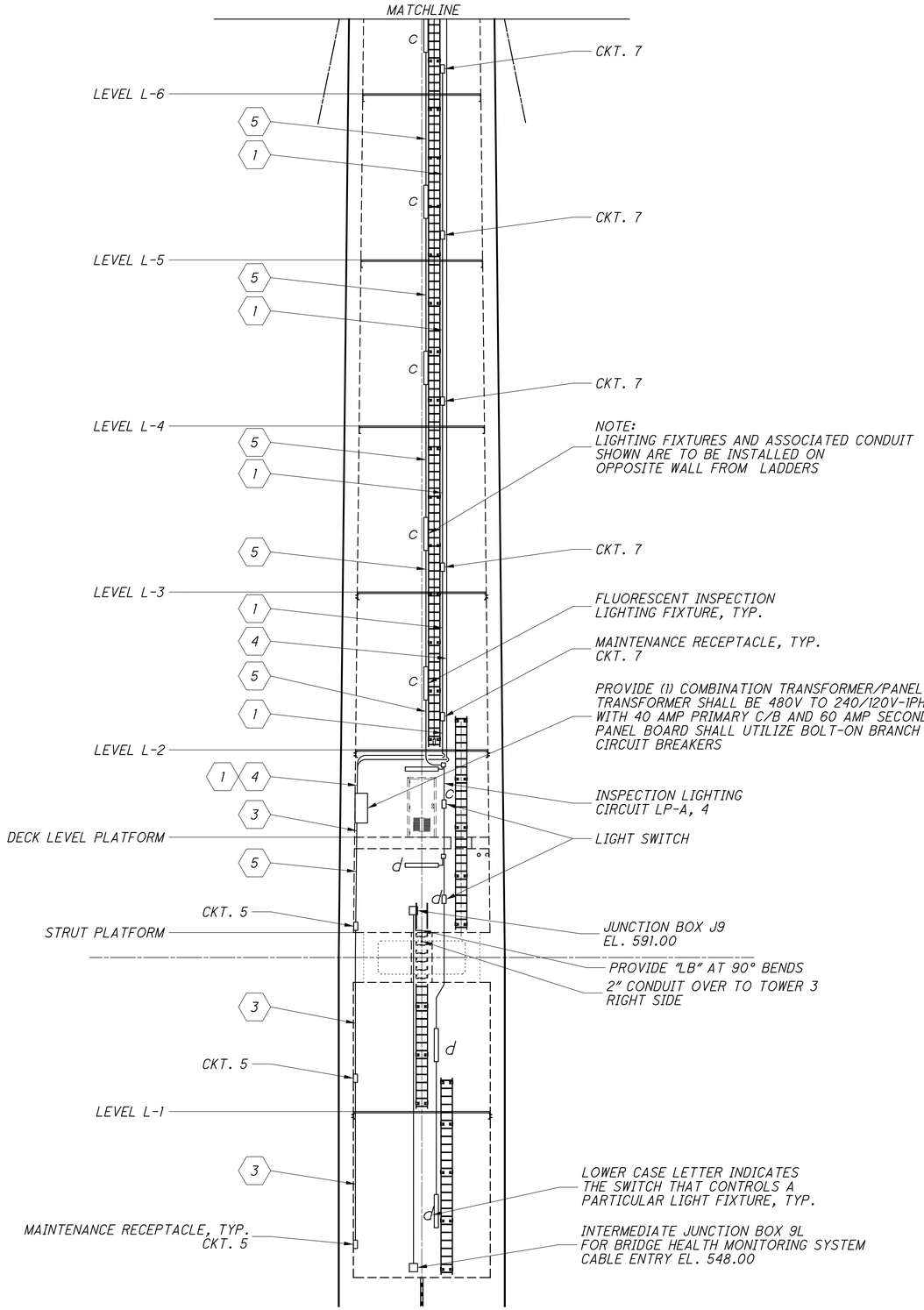

TOWER 3 - LEFT SIDE
(VIEW LOOKING NORTH)

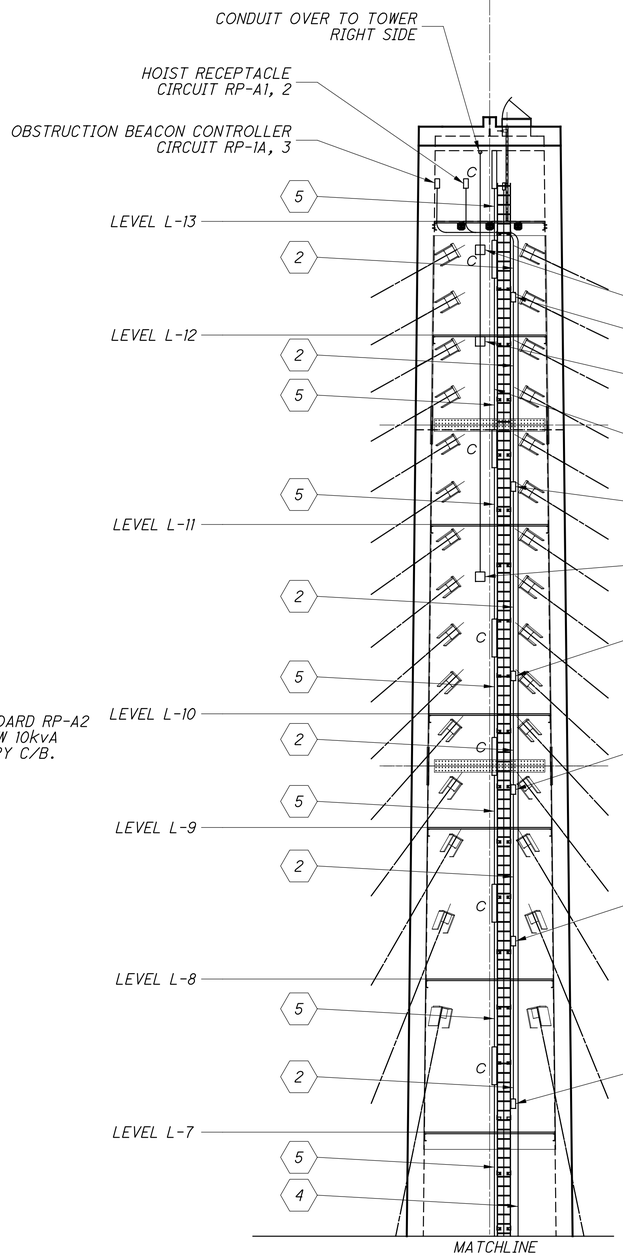

CODED NOTES

1. PROVIDE 4-#8 & #8 GRD IN ¾" GRS CONDUIT FOR MAINTENANCE RECEPTACLES. (CIRCUITS RP-A2, 7 & 9)
2. PROVIDE 2-#8 & #8 GRD IN ¾" GRS CONDUIT FOR MAINTENANCE RECEPTACLES. (CIRCUIT RP-A2, 9)
3. PROVIDE 2-#10 & #10 GRD IN ¾" GRS CONDUIT FOR MAINTENANCE RECEPTACLES. (CIRCUITS RP-A2, 5)
4. PROVIDE 4-#8 & #8 GRD IN ¾" GRS CONDUIT FOR HOIST AND OBSTRUCTION LIGHT. (CIRCUITS RP-A2, 2 & 3)
5. PROVIDE 2-#12 & #12 GRD IN ¾" GRS CONDUIT FOR INSPECTION LIGHTING. (CIRCUITS LP-A, 4)

GENERAL NOTES

1. ALL MAINTENANCE RECEPTACLES INSTALLED WITHIN THE BRIDGE TOWER SHALL BE 20A, 120V GFCI, WEATHER RESISTANT WITH CLEAR, IN USE WEATHERPROOF COVER.
2. ALL LIGHT SWITCHES SHALL BE 20A, 277/120V, SPST, INTERNALLY ILLUMINATED (AMBER). PROVIDE ALL LIGHT SWITCHES WITH CLEAR, IN USE WEATHERPROOF COVER.
3. INSPECTION LIGHTING FIXTURE SHALL BE 4'-0", 2-LAMP FLUORESCENT VAPORTIGHT WITH 2-4100k, 32W T-8 LAMPS, FIBER GLASS REINFORCED POLYESTER HOUSING, 277V BALLAST, AND PRISMATIC, 100% DR HIGH IMPACT LENS. BASIS OF DESIGN IS COOPER LIGHTING #VT2232-DR-100-277VGLEB8. OTHER ACCEPTABLE MANUFACTURERS ARE LITHONIA AND DAY-BRITE.

CALCULATED BLW
CHECKED JRK

LIGHTING - TOWER INSPECTION LIGHTING AND RECEPTACLE PLATFORM DETAILS - TOWER 3 - LEFT SIDE

LAW-93-0.00

29 / 85

288
788

J:\Project\ODOT\15005112 Ironton Russell\LAW\81595\lighting\sheets\81595LD003.dgn - 5/5/2011 3:42:20 PM - brian_wallace

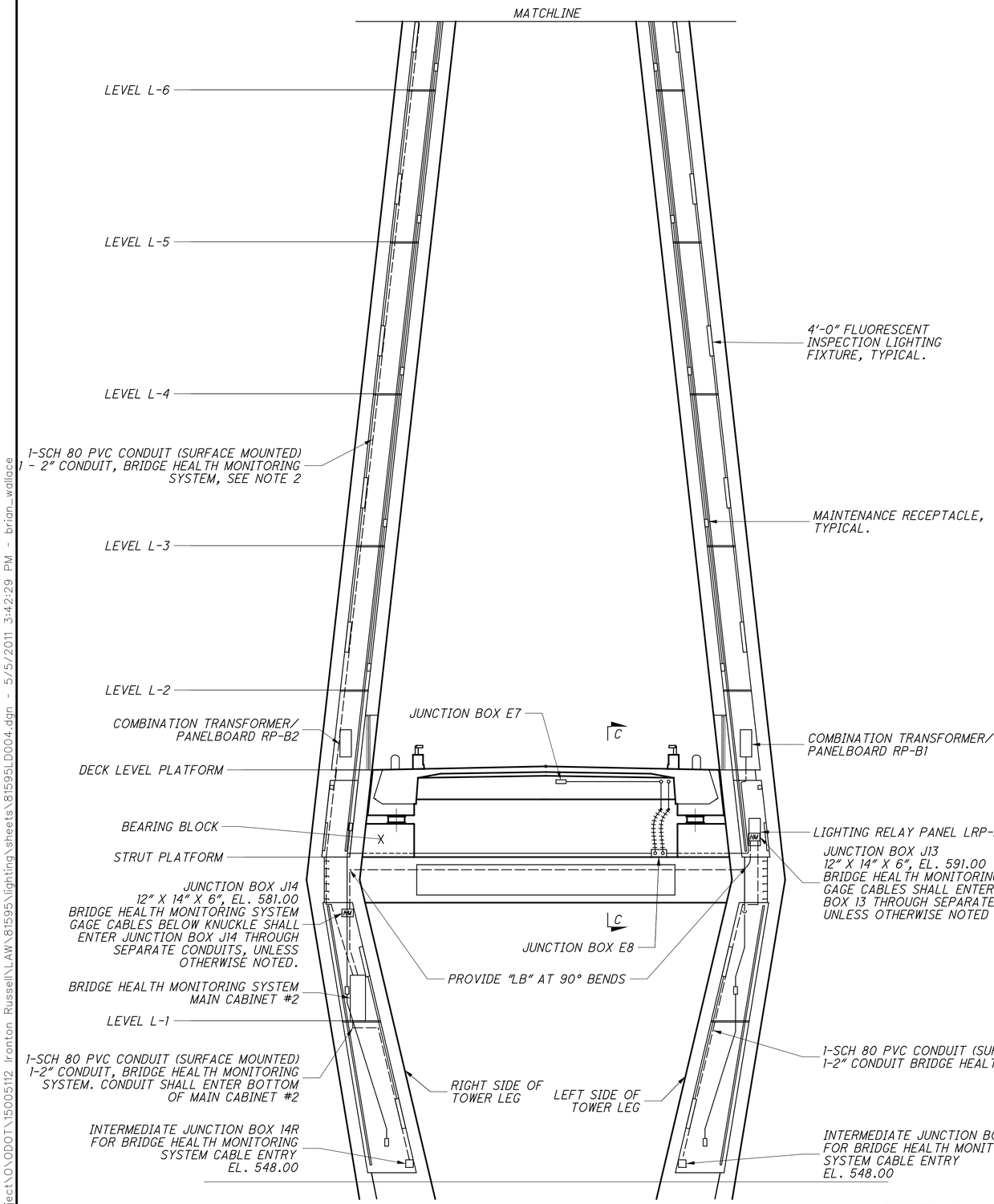

TOWER 4

(LOOKING BACK STATION)

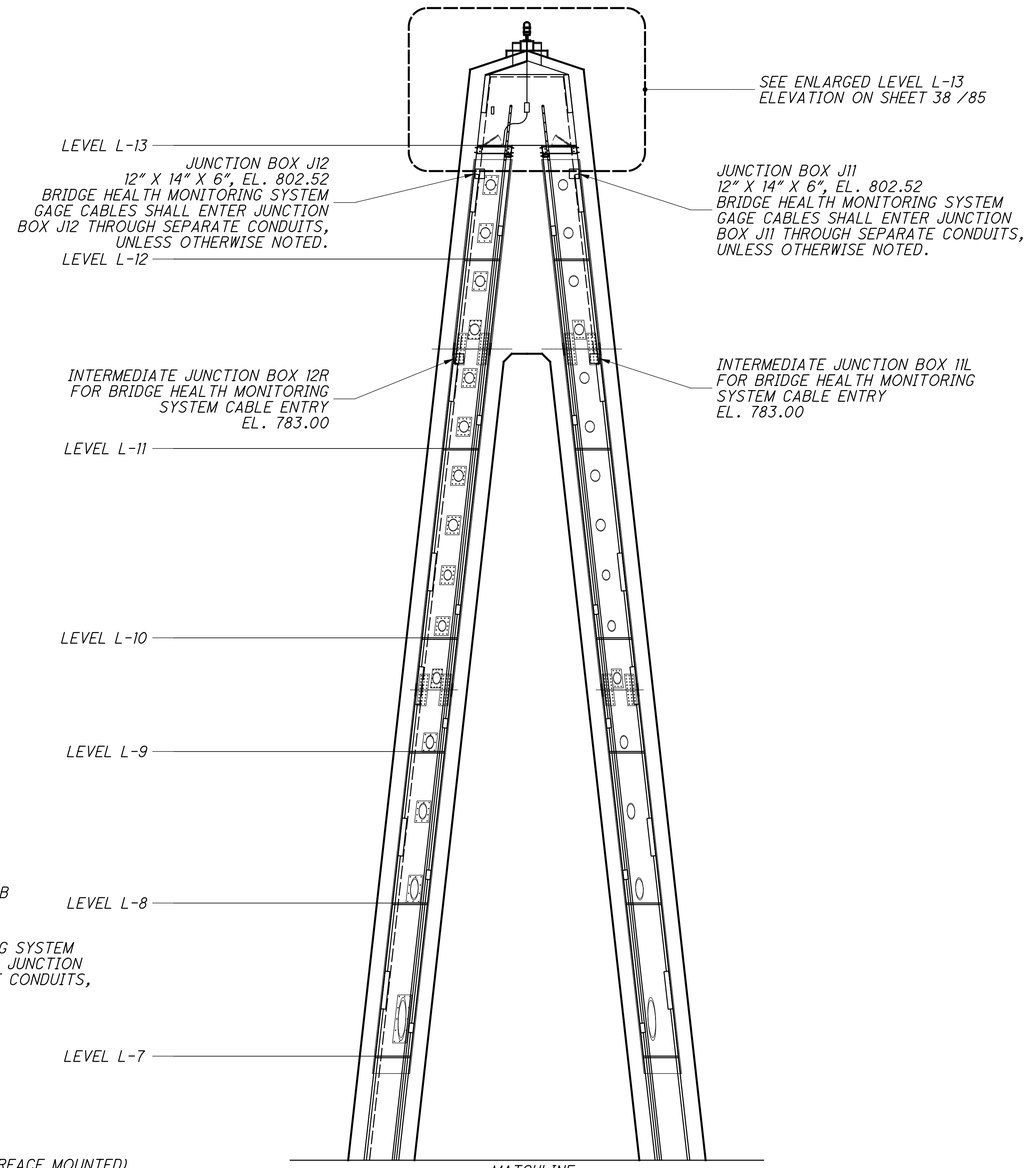

NOTES

1. FOR SECTION C-C, SEE SHEET 35/85
2. CONTRACTOR SHALL PROVIDE A 12" X 12" X 8" PULLBOX WITH VERTICAL STRAIN RELEIF AT THE MID POINT WHERE THE BRIDGE HEALTH MONITORING SYSTEM CABLING EXCEEDS 100' IN A CONTINUOUS RUN BETWEEN JUNCTION BOXES AND OR CABINETS.

CALCULATED BLW | CHECKED JRK

LIGHTING - TOWER INSPECTION LIGHTING AND RECEPTACLES PLATFORM DETAILS - TOWER 4

LAW-93-0.00

30 / 85

289
788

J:\Project\ODOT\15005112 Ironton Russell\LAW\81595\lighting\sheets\81595LD004.dgn - 5/5/2011 3:42:29 PM - brian_wallace

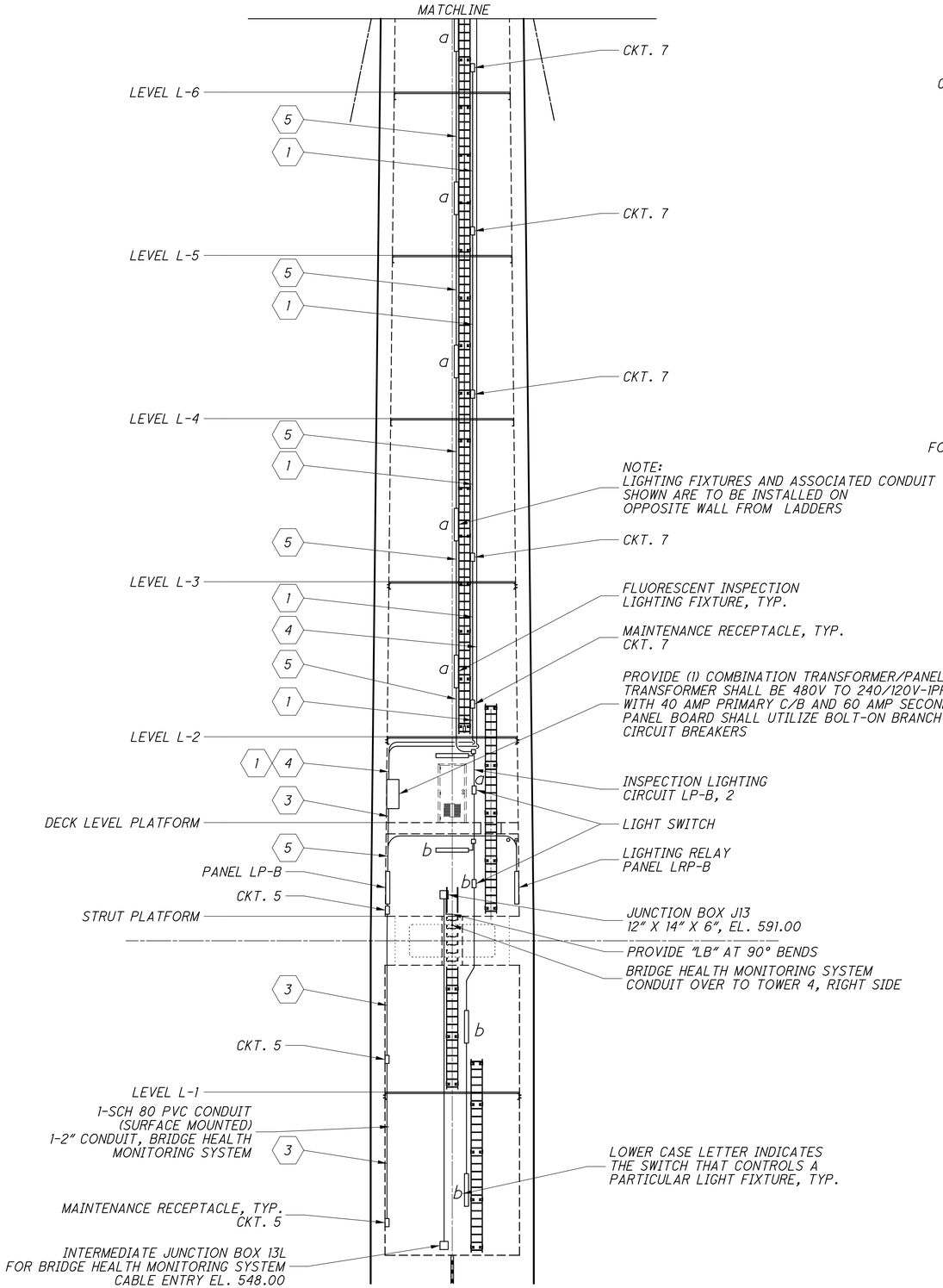

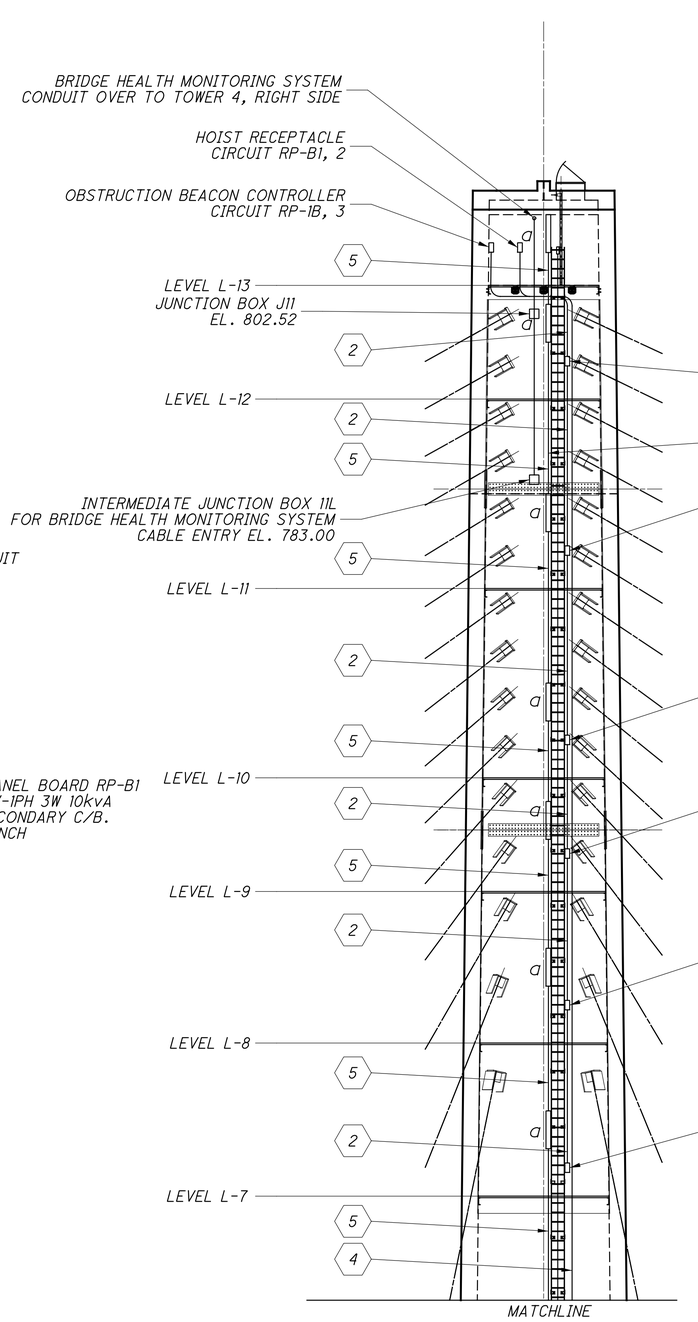

CODED NOTES

1. PROVIDE 4-#8 & #8 GRD IN ¾" GRS CONDUIT FOR MAINTENANCE RECEPTACLES. (CIRCUITS RP-B1, 7 & 9)
2. PROVIDE 2-#8 & #8 GRD IN ¾" GRS CONDUIT FOR MAINTENANCE RECEPTACLES. (CIRCUIT RP-B1, 9)
3. PROVIDE 2-#10 & #10 GRD IN ¾" GRS CONDUIT FOR MAINTENANCE RECEPTACLES. (CIRCUITS RP-B1, 5)
4. PROVIDE 4-#8 & #8 GRD IN ¾" GRS CONDUIT FOR HOIST AND OBSTRUCTION LIGHT. (CIRCUITS RP-B1, 2 & 3)
5. PROVIDE 2-#12 & #12 GRD IN ¾" GRS CONDUIT FOR INSPECTION LIGHTING. (CIRCUITS LP-B, 2)

GENERAL NOTES

1. ALL MAINTENANCE RECEPTACLES INSTALLED WITHIN THE BRIDGE TOWER SHALL BE 20A, 120V GFCI, WEATHER RESISTANT WITH CLEAR, IN USE WEATHERPROOF COVER.
2. ALL LIGHT SWITCHES SHALL BE 20A, 277/120V, SPST, INTERNALLY ILLUMINATED (AMBER). PROVIDE ALL LIGHT SWITCHES WITH CLEAR, IN USE WEATHERPROOF COVER.
3. INSPECTION LIGHTING FIXTURE SHALL BE 4'-0", 2-LAMP FLUORESCENT VAPORTIGHT WITH 2-4100k, 32W T-8 LAMPS, FIBER GLASS REINFORCED POLYESTER HOUSING, 277V BALLAST, AND PRISMATIC, 100% DR HIGH IMPACT LENS. BASIS OF DESIGN IS COOPER LIGHTING #VT2232-DR-100-277VGLEB8. OTHER ACCEPTABLE MANUFACTURERS ARE LITHONIA AND DAY-BRITE.

TOWER 4 - LEFT SIDE

(VIEW LOOKING NORTH)

CALCULATED BLW | CHECKED JRK

LIGHTING - TOWER INSPECTION LIGHTING AND RECEPTACLE PLATFORM DETAILS - TOWER 4 - LEFT SIDE

LAW-93-0.00

31 / 85

290 / 788

J:\Project\0\ODOT\15005112 Ironton Russell\LAW\81595\lighting\sheets\81595LD005.dgn - 5/5/2011 3:42:41 PM - brian_wallace

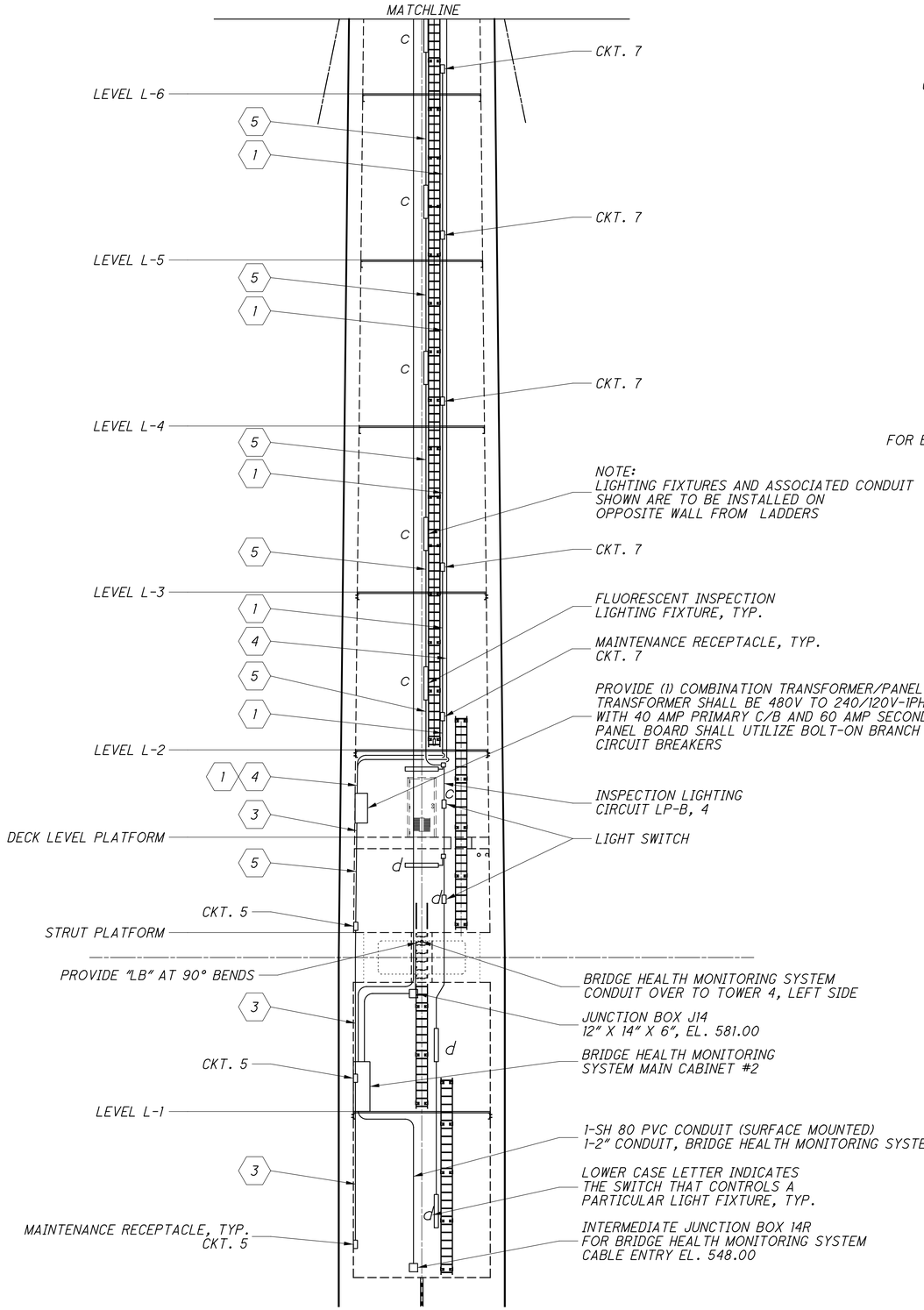

TOWER 4 - RIGHT SIDE
(VIEW LOOKING NORTH)

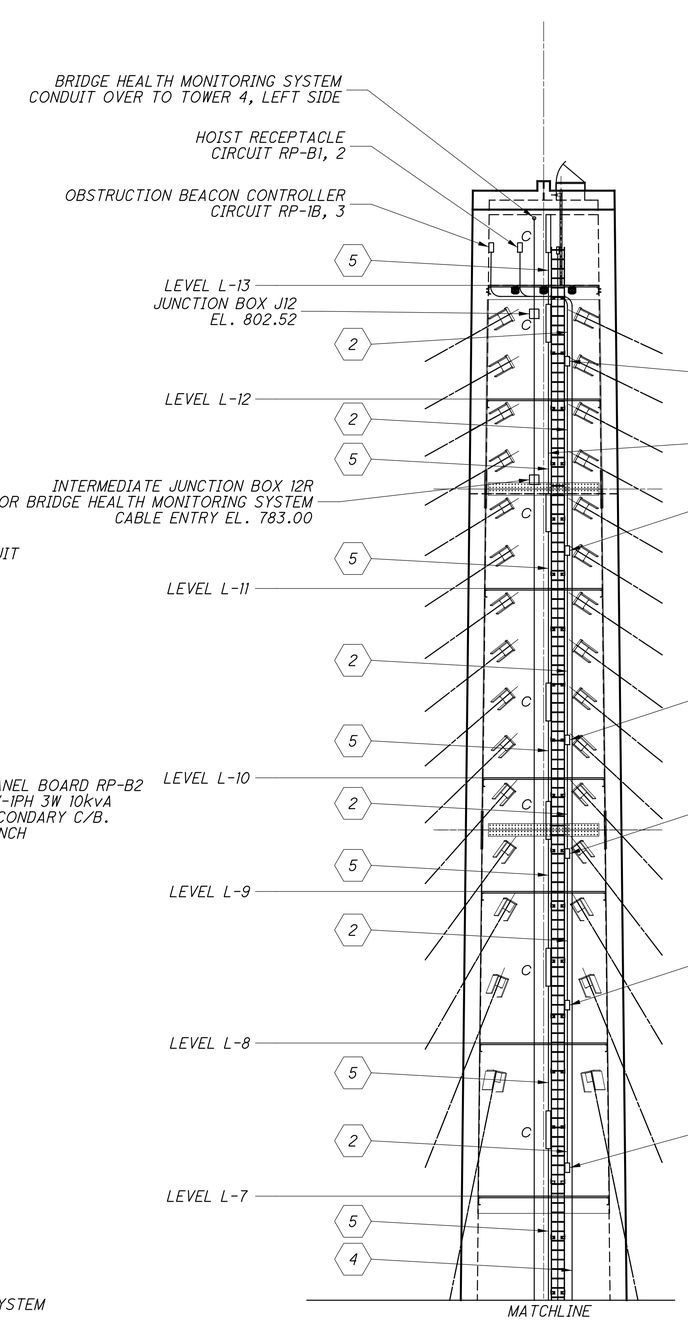

CODED NOTES

1. PROVIDE 4-#8 & #8 GRD IN ¾" GRS CONDUIT FOR MAINTENANCE RECEPTACLES. (CIRCUITS RP-B2, 7 & 9)
2. PROVIDE 2-#8 & #8 GRD IN ¾" GRS CONDUIT FOR MAINTENANCE RECEPTACLES. (CIRCUIT RP-B2, 9)
3. PROVIDE 2-#10 & #10 GRD IN ¾" GRS CONDUIT FOR MAINTENANCE RECEPTACLES. (CIRCUITS RP-B2, 5)
4. PROVIDE 4-#8 & #8 GRD IN ¾" GRS CONDUIT FOR HOIST AND OBSTRUCTION LIGHT. (CIRCUITS RP-B2, 2 & 3)
5. PROVIDE 2-#12 & #12 GRD IN ¾" GRS CONDUIT FOR INSPECTION LIGHTING. (CIRCUITS LP-B, 4)

GENERALNOTES

1. ALL MAINTENANCE RECEPTACLES INSTALLED WITHIN THE BRIDGE TOWER SHALL BE 20A, 120V GFCI, WEATHER RESISTANT WITH CLEAR, IN USE WEATHERPROOF COVER.
2. ALL LIGHT SWITCHES SHALL BE 20A, 277/120V, SPST, INTERNALLY ILLUMINATED (AMBER). PROVIDE ALL LIGHT SWITCHES WITH CLEAR, IN USE WEATHERPROOF COVER.
3. INSPECTION LIGHTING FIXTURE SHALL BE 4'-0", 2-LAMP FLUORESCENT VAPORTIGHT WITH 2-4100k, 32W T-8 LAMPS, FIBER GLASS REINFORCED POLYESTER HOUSING, 277V BALLAST, AND PRISMATIC, 100% DR HIGH IMPACT LENS. BASIS OF DESIGN IS COOPER LIGHTING #VT2232-DR-100-277VGLEB8. OTHER ACCEPTABLE MANUFACTURERS ARE LITHONIA AND DAY-BRITE.

CALCULATED BLW
CHECKED JRK

LIGHTING - TOWER INSPECTION LIGHTING AND RECEPTACLE PLATFORM DETAILS - TOWER 4 - RIGHT SIDE

LAW-93-0.00

32/85

291
788

J:\Project\O\ODOT\15005112 Ironton Russell\LAW\81595\lighting\sheets\81595LD006.dgn - 5/5/2011 3:42:51 PM - brian_wallace

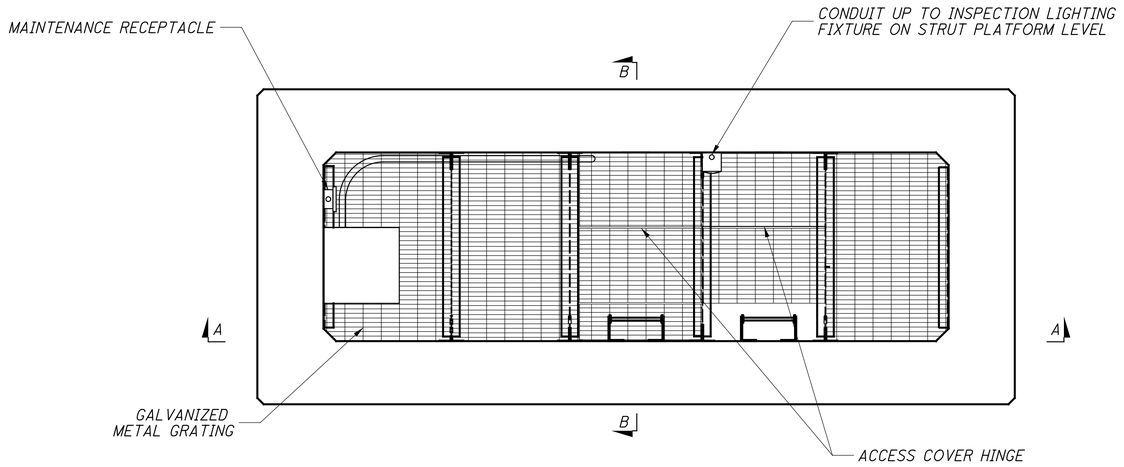

PLAN AT PLATFORM LEVEL L-1

NOTE:

1. TOWER 3 SHOWN, TOWER 4 SIMILAR.

2. REFER TO SHEET 40/85 AND 49/85 FOR GROUNDING OF MAIN DATA CABINET ON PLATFORM LEVEL-1

Link to RFI082 As-Built

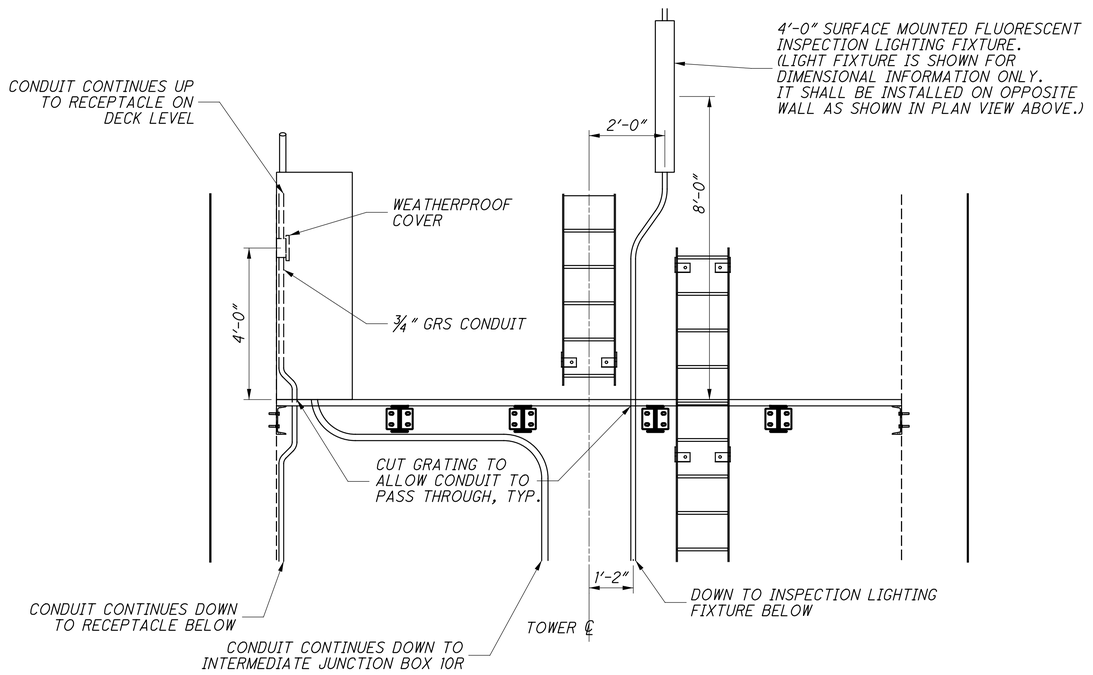

SECTION A-A

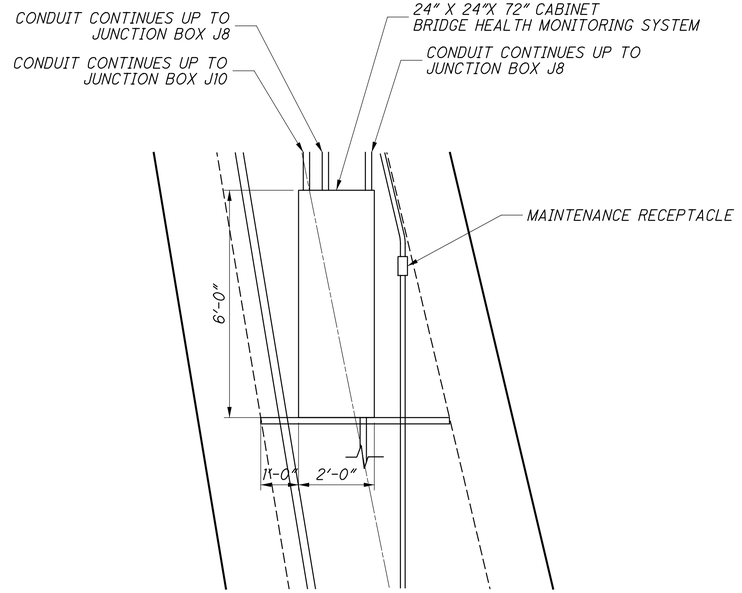

SECTION B-B

CALCULATED BLW
CHECKED JRK

LIGHTING - TOWER INSPECTION LIGHTING, RECEPTACLES AND PLATFORM DETIALS - MISCELLANEOUS DETAILS (1)

LAW-93-0.00

33/85

292
788

J:\Project\O\ODOT\15005112 Ironton Russell\LAW\81595\lighting\sheets\81595LD007.dgn - 5/5/2011 3:43:03 PM - brian_wallace

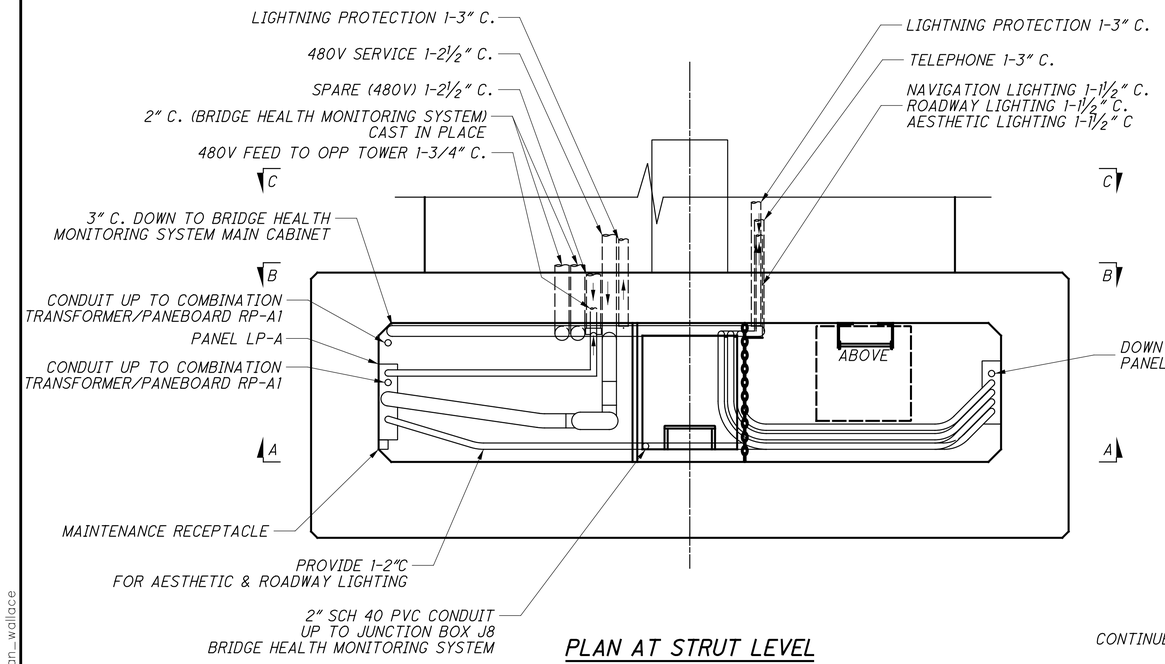

PLAN AT STRUT LEVEL

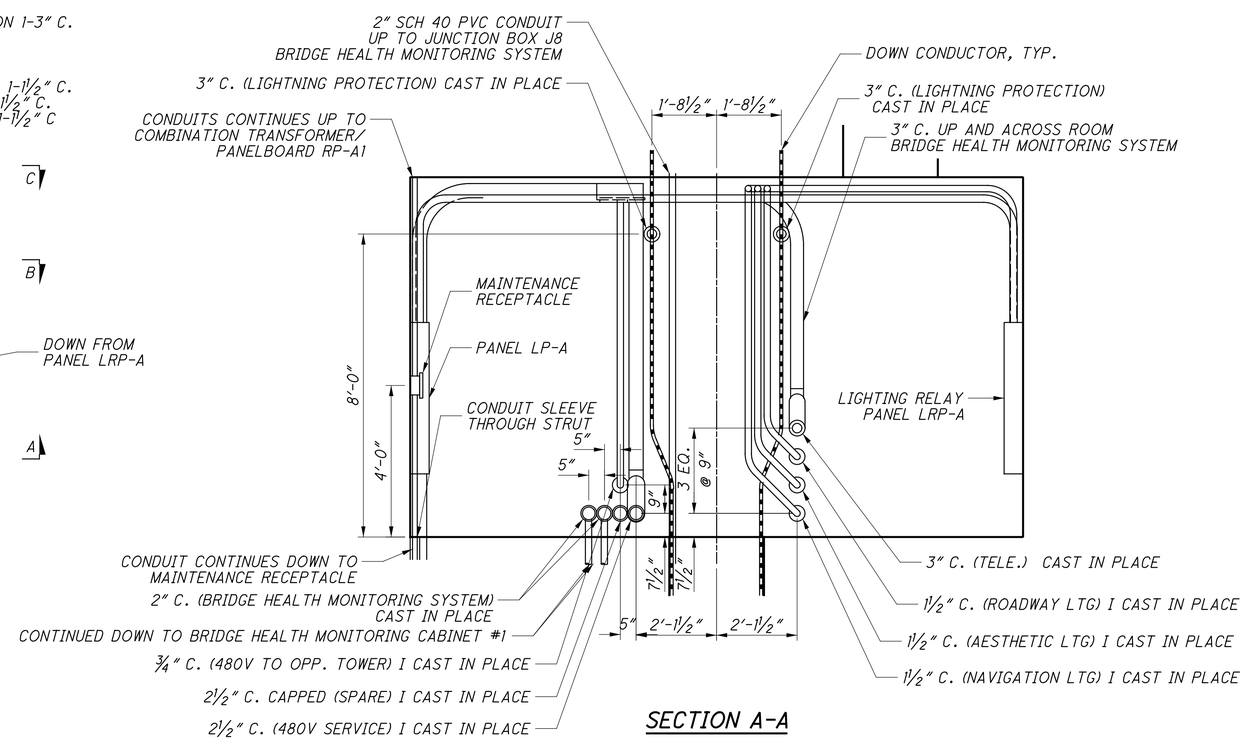

SECTION A-A

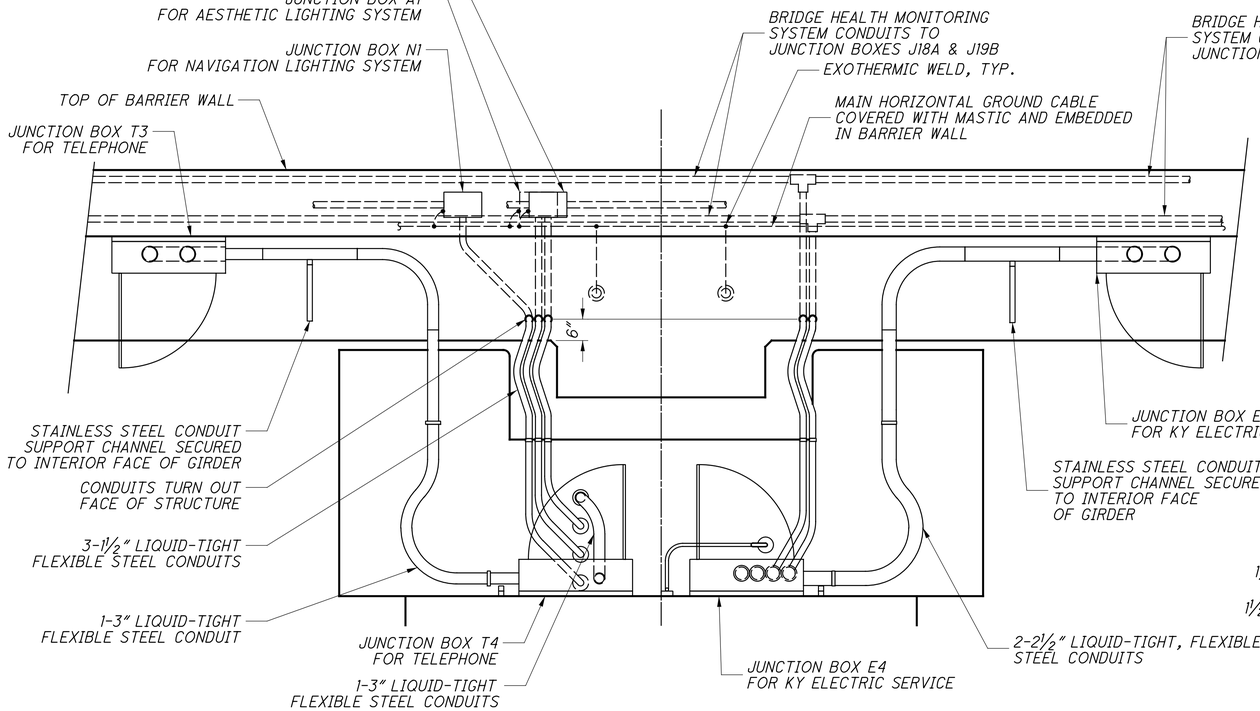

SECTION C-C

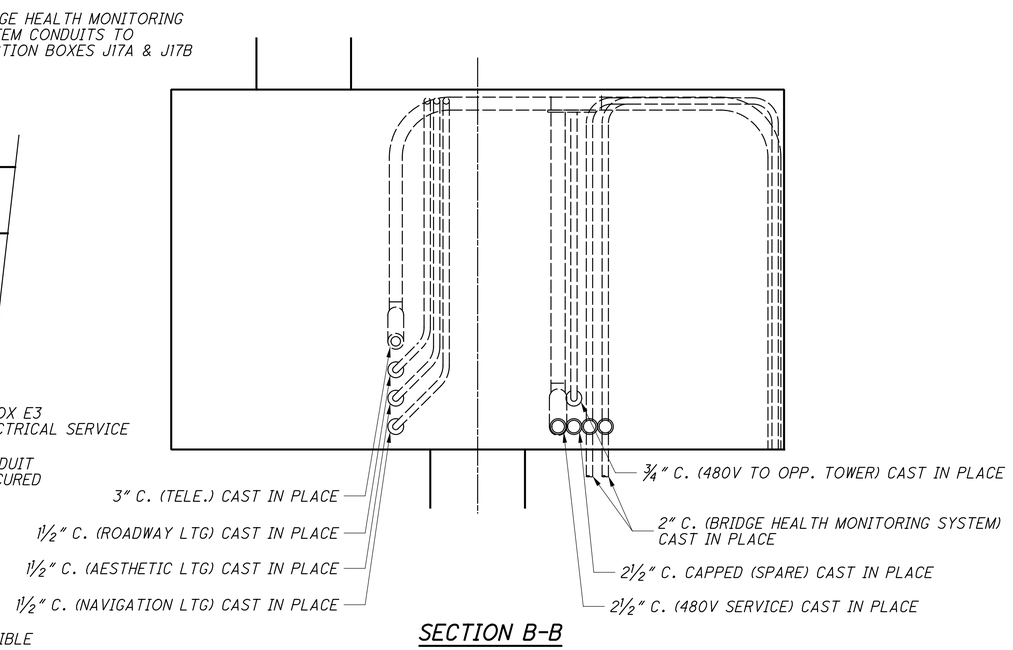

SECTION B-B

CALCULATED BLW
CHECKED JRK

LIGHTING - TOWER INSPECTION LIGHTING, RECEPTACLES AND PLATFORM DETAILS TOWER 3 - MISCELLANEOUS DETAILS (2)

LAW-93-0.00

34/85

293
788

J:\Project\OJODOT\15005112 Ironton Russell\LAW\81595\lighting\sheets\81595LD008.dgn - 5/5/2011 3:43:12 PM - brian_wallace

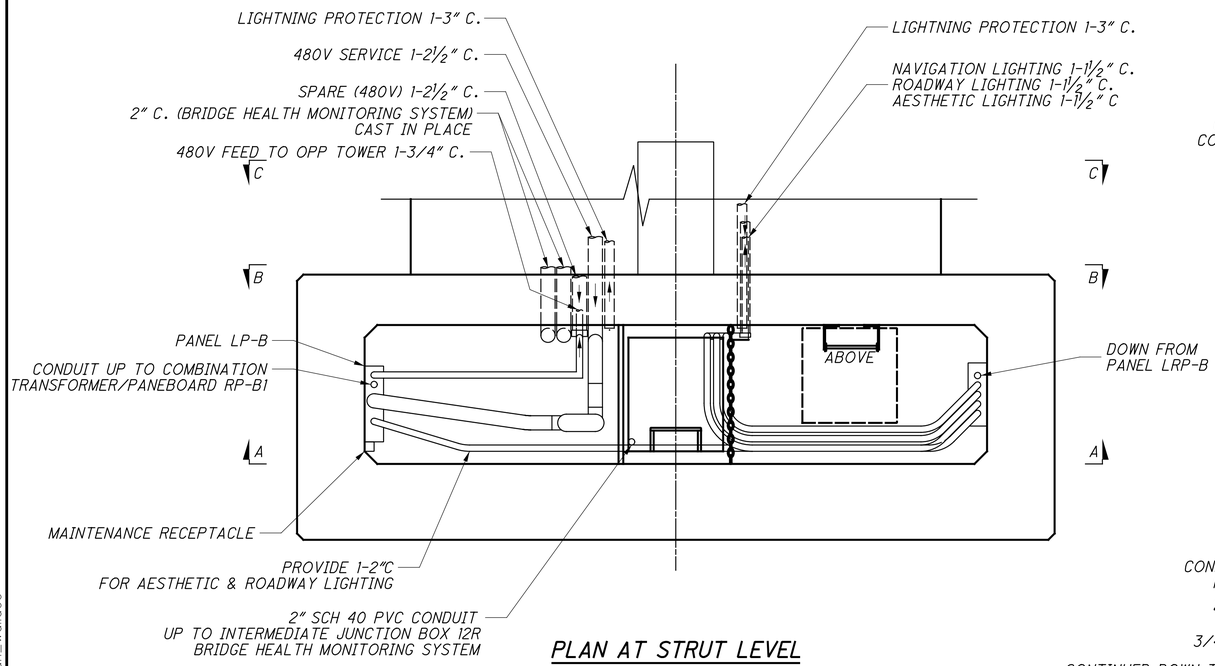

PLAN AT STRUT LEVEL

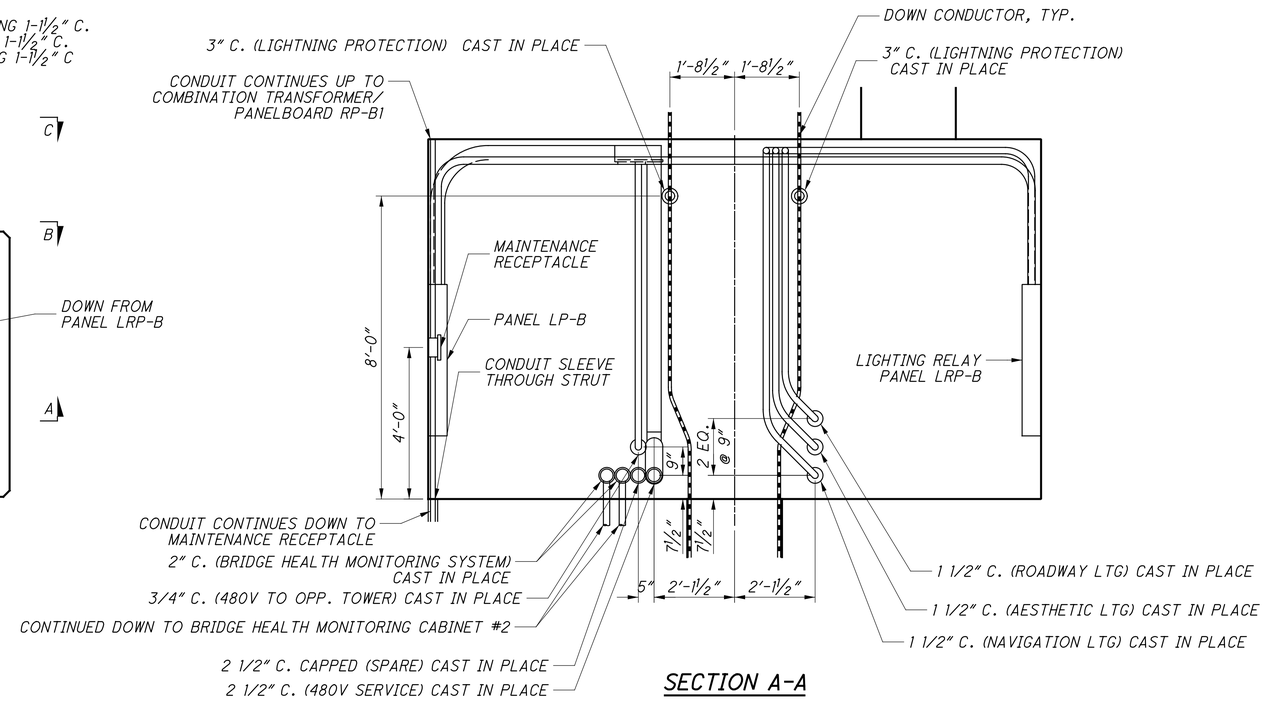

SECTION A-A

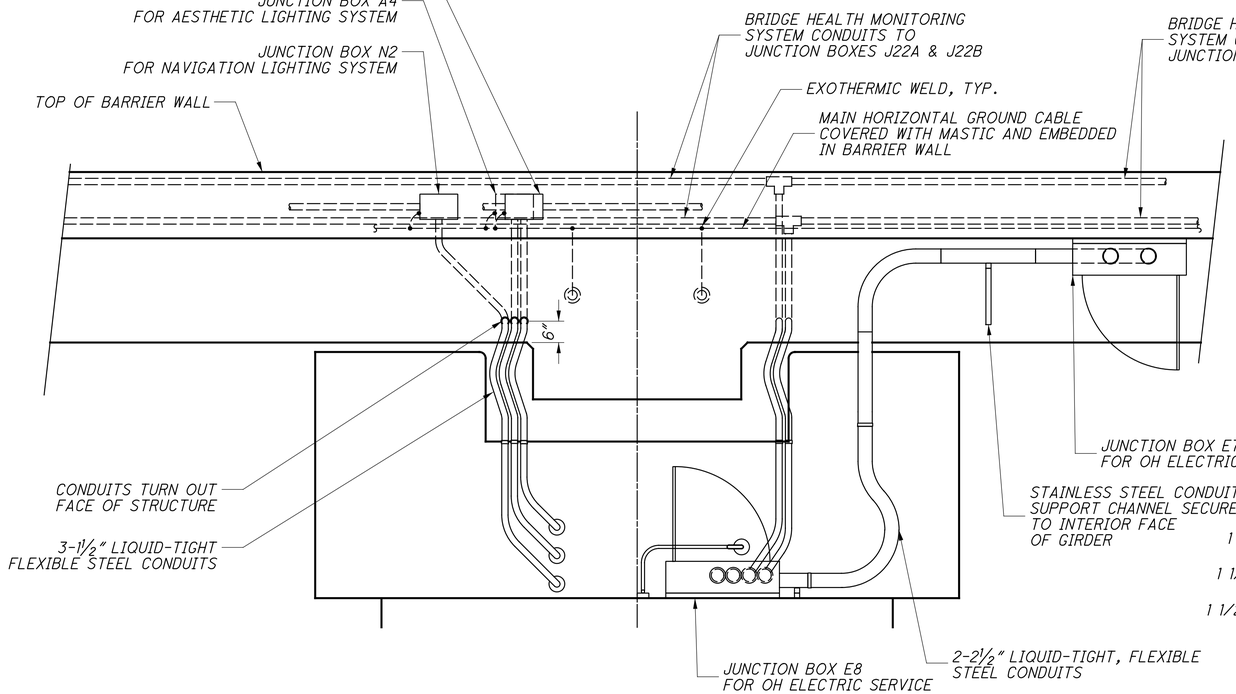

SECTION C-C

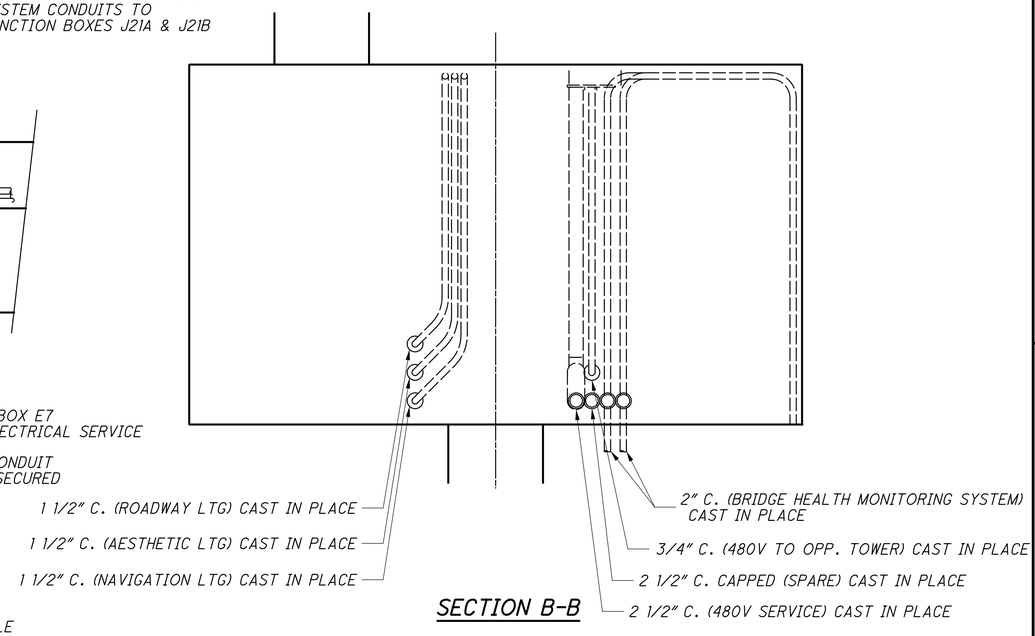

SECTION B-B

CALCULATED BLW | CHECKED JRK

LIGHTING - TOWER INSPECTION LIGHTING, RECEPTACLES AND PLATFORM DETAILS TOWER 4 - MISCELLANEOUS DETAILS (3)

LAW-93-0.00

35/85

294/788

J:\Project\O\ODOT\15005112 Ironton Russell\LAW\81595\lighting\sheets\81595LD009.dgn - 5/5/2011 3:43:19 PM - brian_wallace

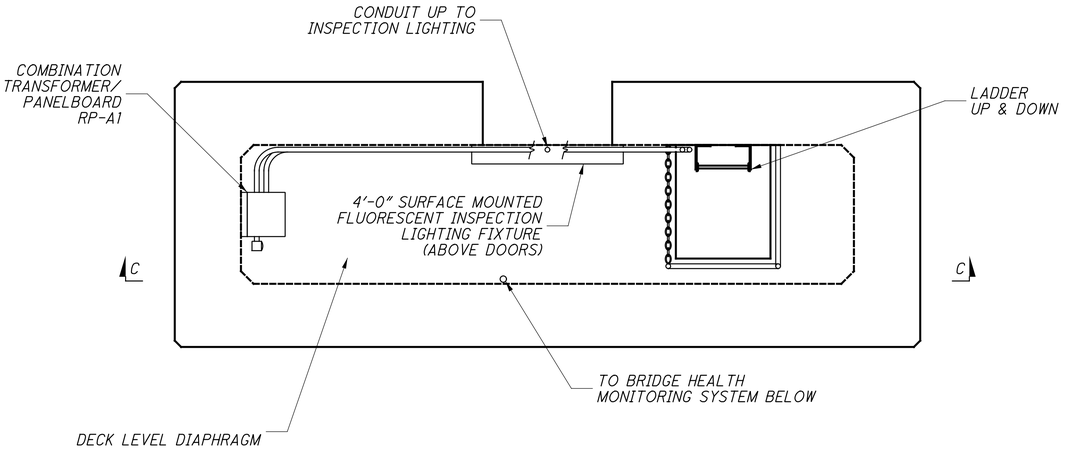

PLAN AT PLATFORM DECK LEVEL

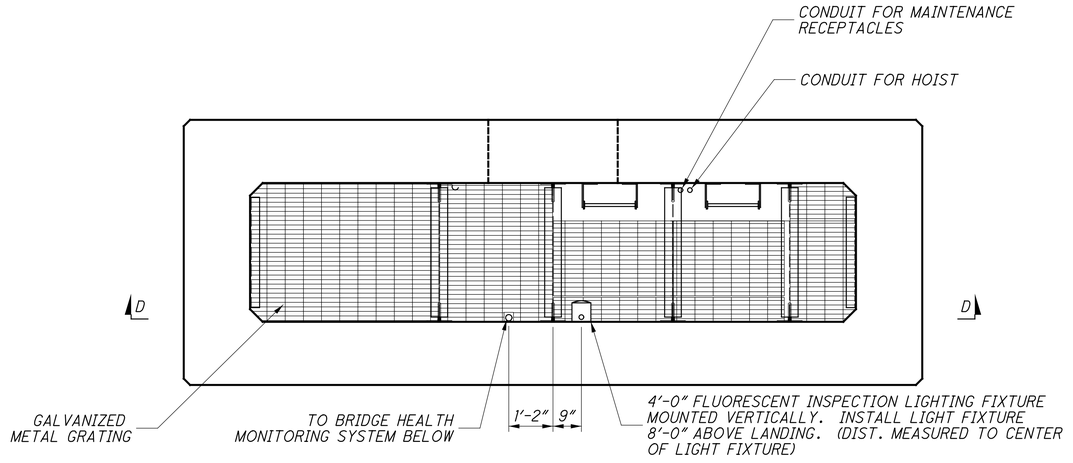

PLAN AT PLATFORM LEVEL L-2

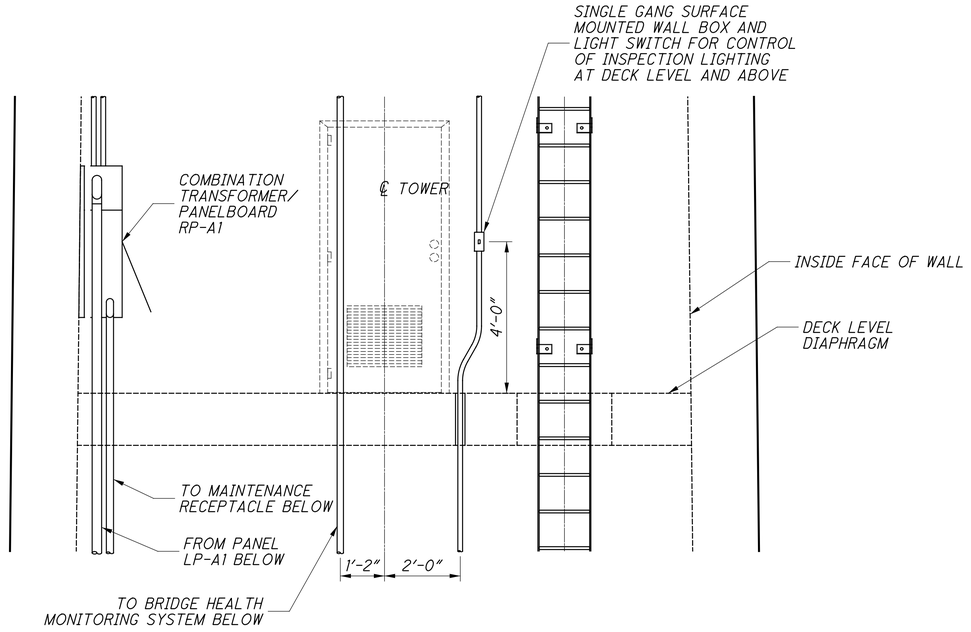

SECTION C-C

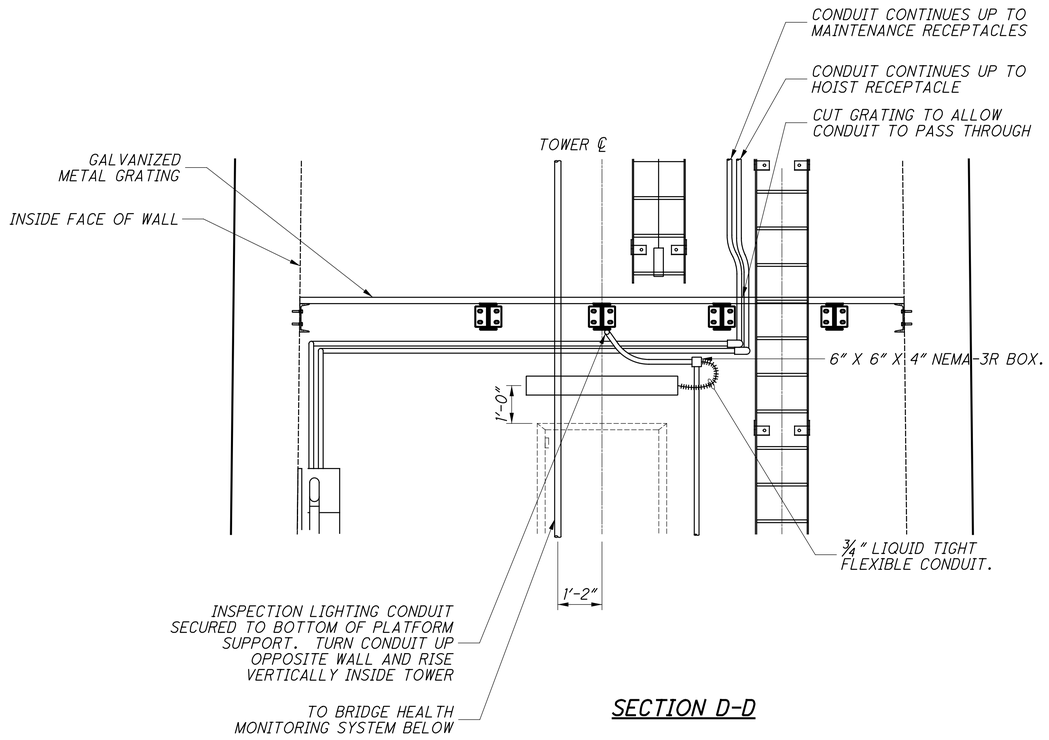

SECTION D-D

NOTE:

1. TOWER 3 SHOWN, TOWER 4 SIMILAR.

CALCULATED BLW | CHECKED JRK

LIGHTING - TOWER INSPECTION LIGHTING, RECEPTACLES AND PLATFORM DETAILS- MISCELLANEOUS DETAILS (4)

LAW-93-0.00

36/85

295/788

J:\Project\OJODOT\15005112 Ironton Russell\LAW\81595\lighting\sheets\81595LD010.dgn - 5/5/2011 3:43:42 PM - brian_wallace

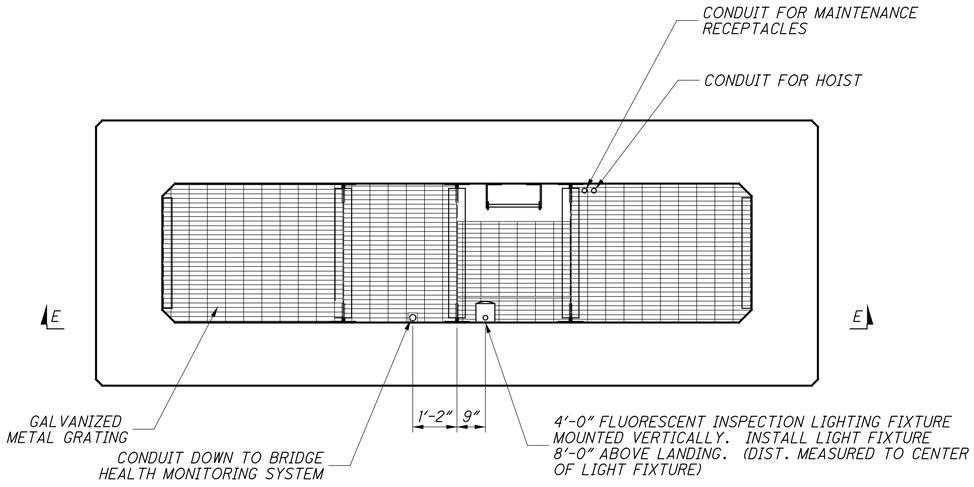

PLAN AT PLATFORM LEVEL L-3 THRU L-6

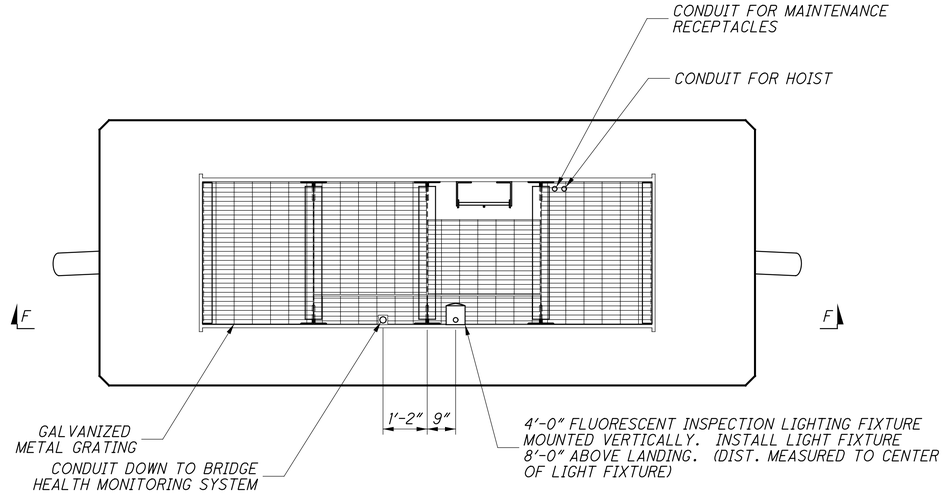

PLAN AT PLATFORM LEVEL L-7 THRU L-12

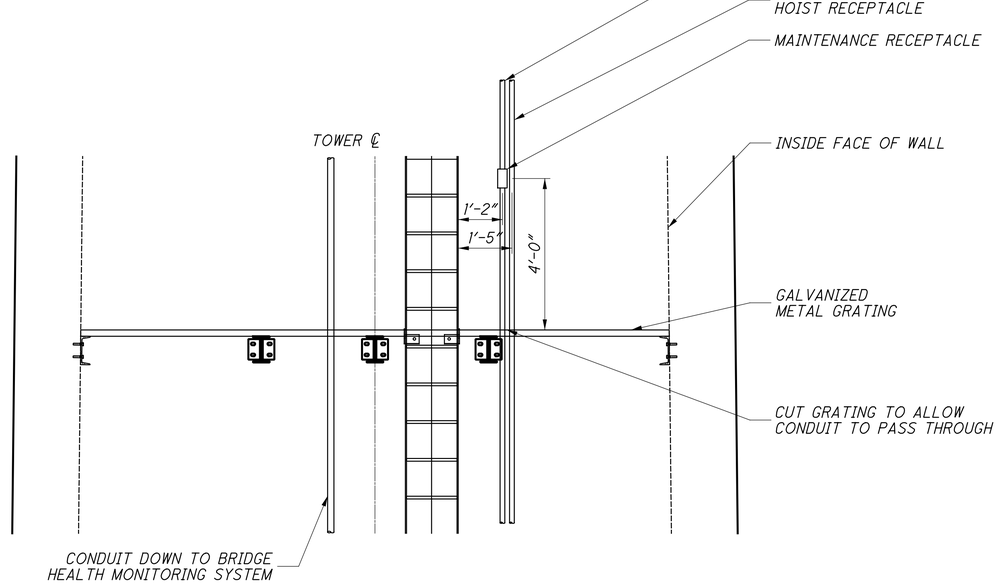

SECTION E-E

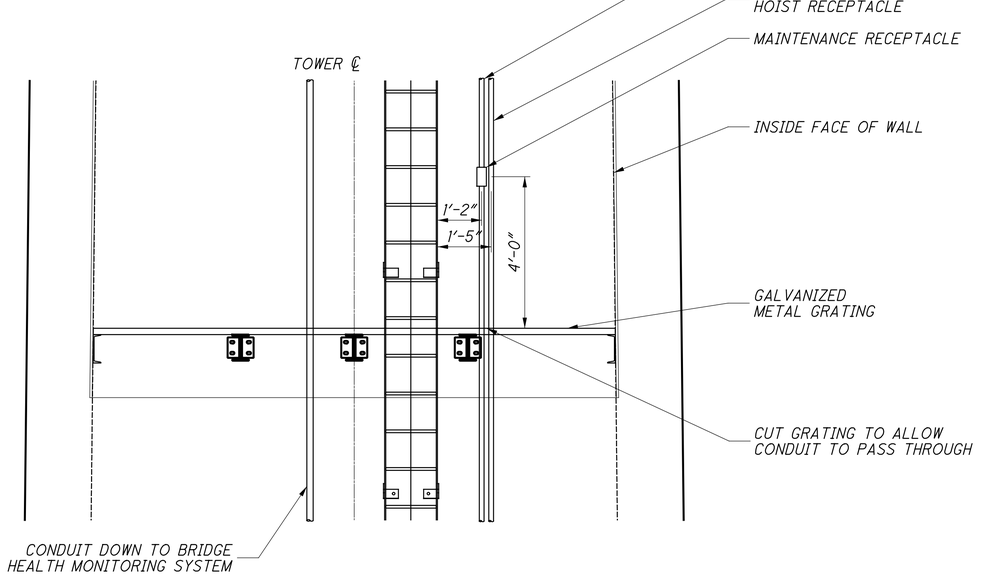

SECTION F-F

NOTE:

1. TOWER 3 SHOWN, TOWER 4 SIMILAR.

CALCULATED BLW | CHECKED KAP

LIGHTING - TOWER INSPECTION LIGHTING, RECEPTACLES AND PLATFORM DETAILS- MISCELLANEOUS DETAILS (5)

LAW-93-0.00

37 / 85

296
788

J:\Project\O\ODOT\15005112 Ironton Russell\LAW\81595\lighting\sheets\81595LD011.dgn - 5/5/2011 3:43:54 PM - brian_wallace

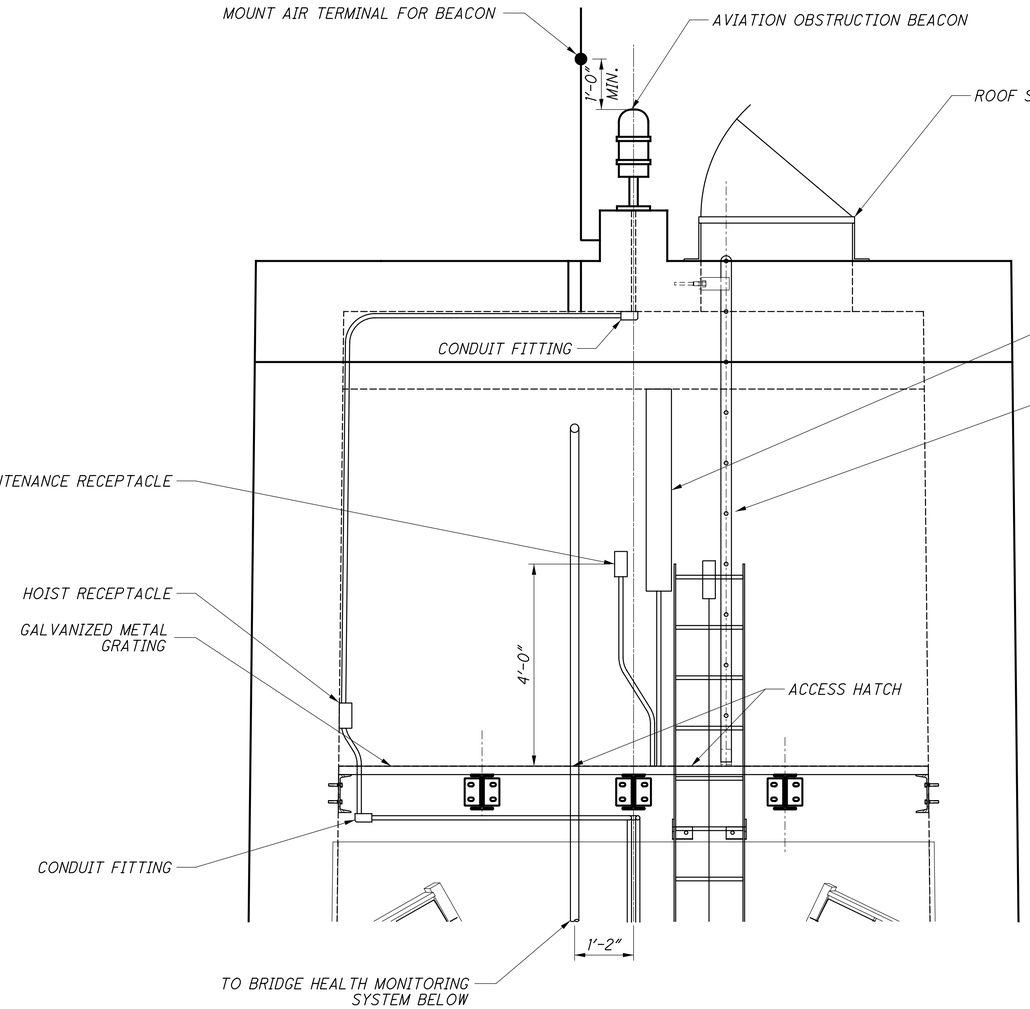

SECTION A-A

ELEVATION - TOWER TOP

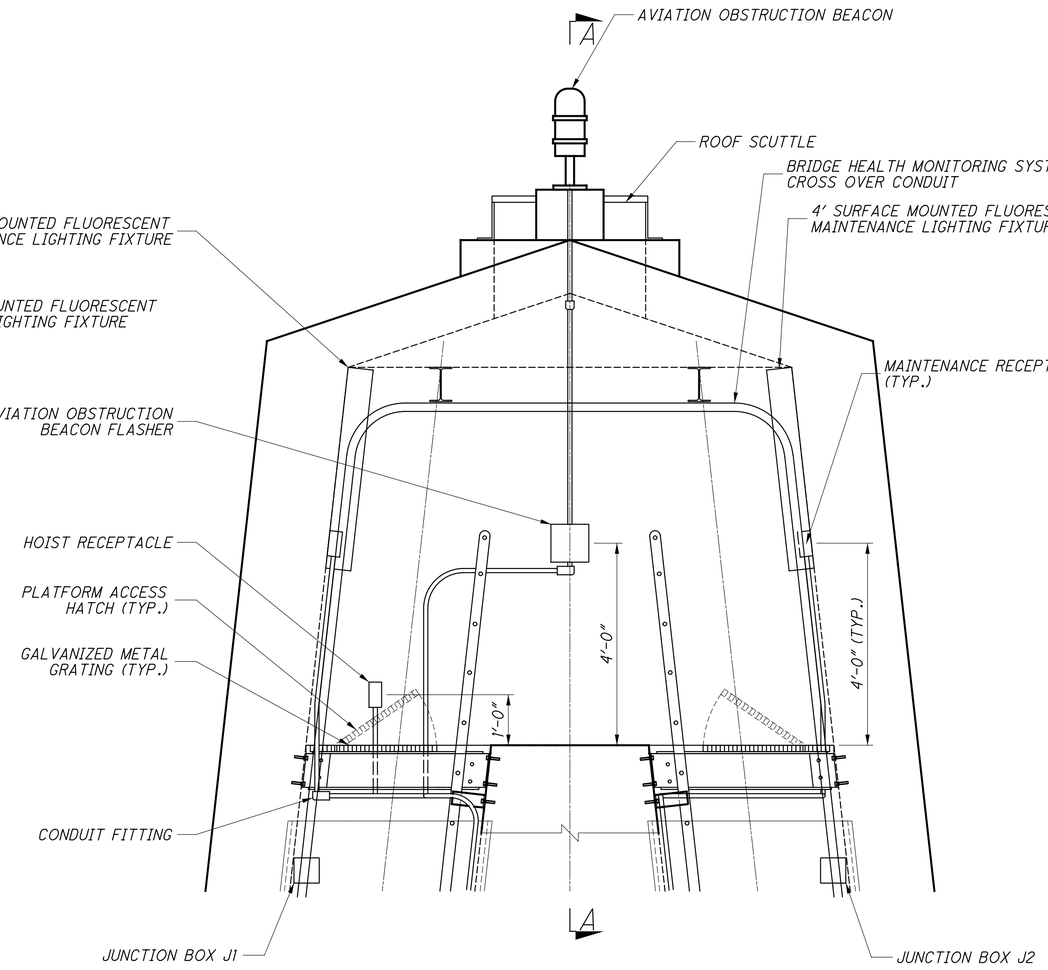

ELEVATION - LEVEL L-13

NOTES

1. TOWER 3 SHOWN, TOWER 4 IS SIMILAR.

LIGHTING - TOWER INSPECTION LIGHTING, RECEPTACLES AND PLATFORM DETAILS - MISCELLANEOUS DETAILS (6)

CALCULATED BLW | CHECKED KAP

LAW-93-0.00

38 / 85

297
788

J:\Project\ODOT\15005112 Ironton Russell\LAW\81595\lighting\sheets\81595LD012.dgn - 5/5/2011 3:44:02 PM - brian_wallace

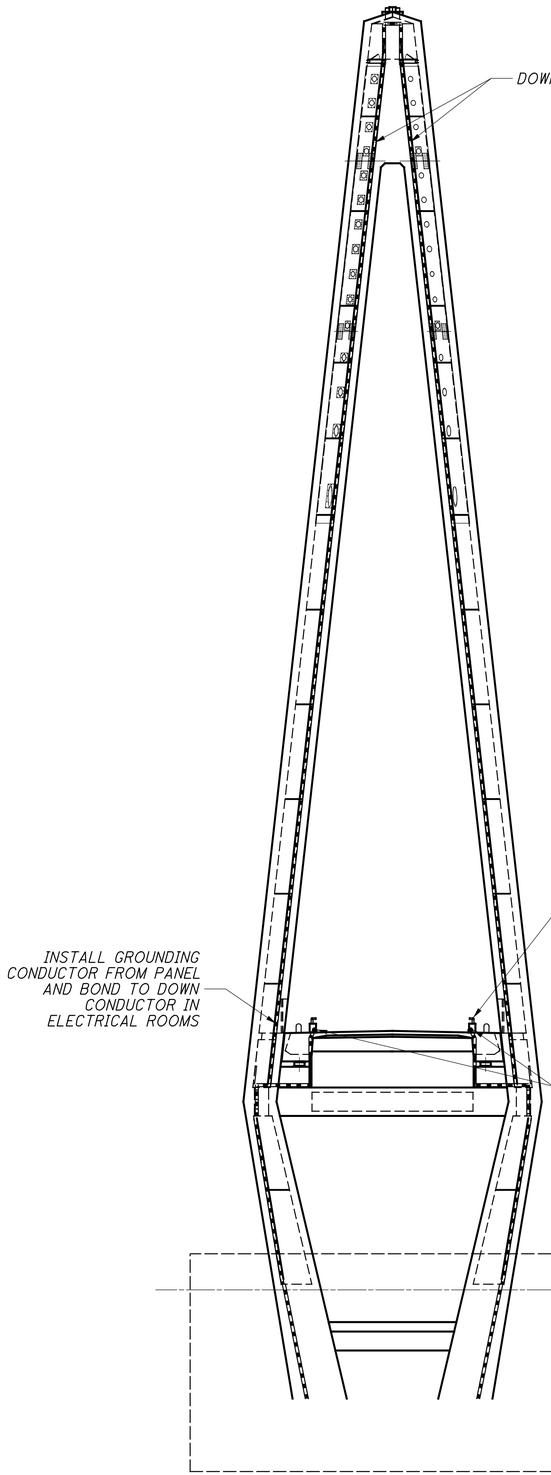

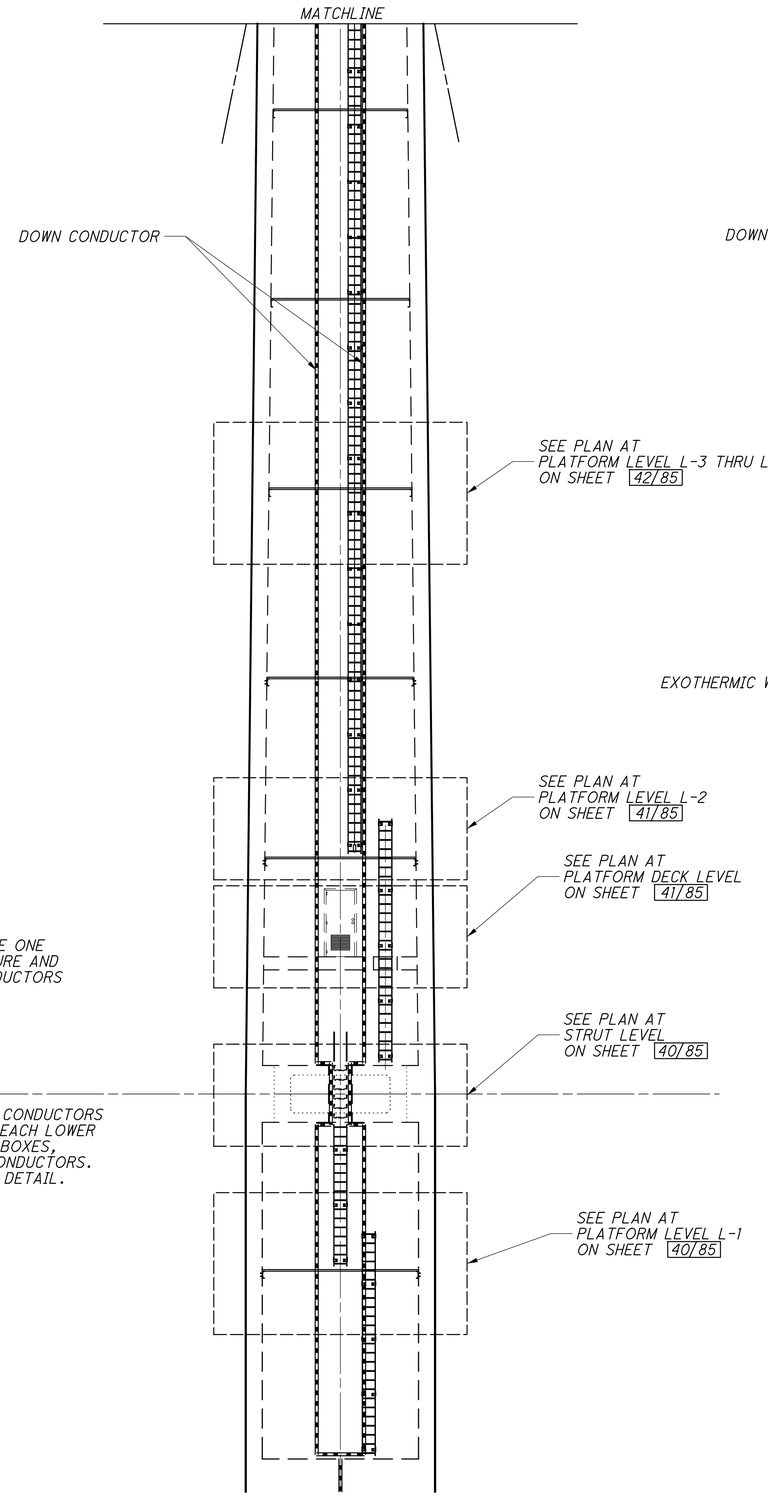

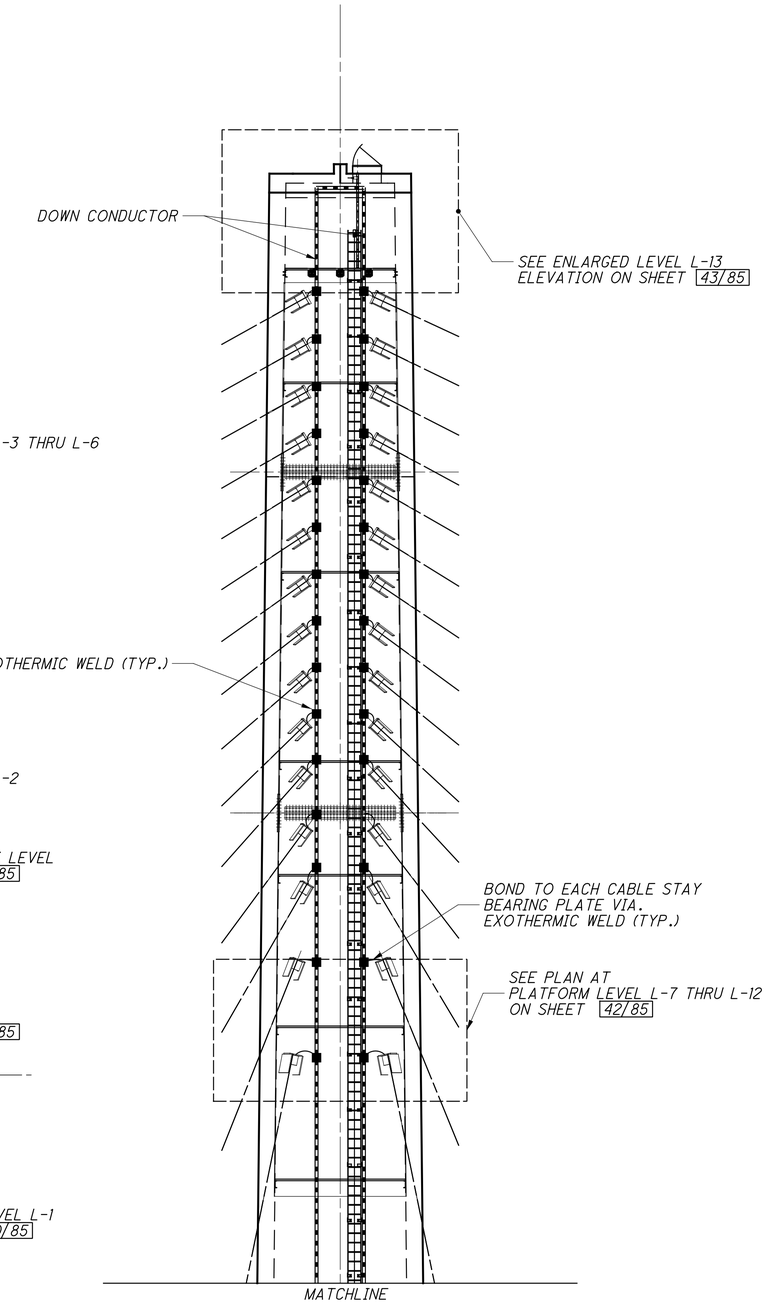

NOTES

1. KENTUCKY TOWER SHOWN, OHIO TOWER SIMILAR

CALCULATED BLW
CHECKED KAP

LIGHTING - STRUCTURE GROUNDING AND LIGHTNING PROTECTION SYSTEM (1)

LAW-93-0.00

39/85

298
788

J:\Project\OVODOT\15005112 Ironton Russell\LAW\81595\lighting\sheets\81595LD401.dgn - 5/5/2011 3:44:10 PM - brian_wallace

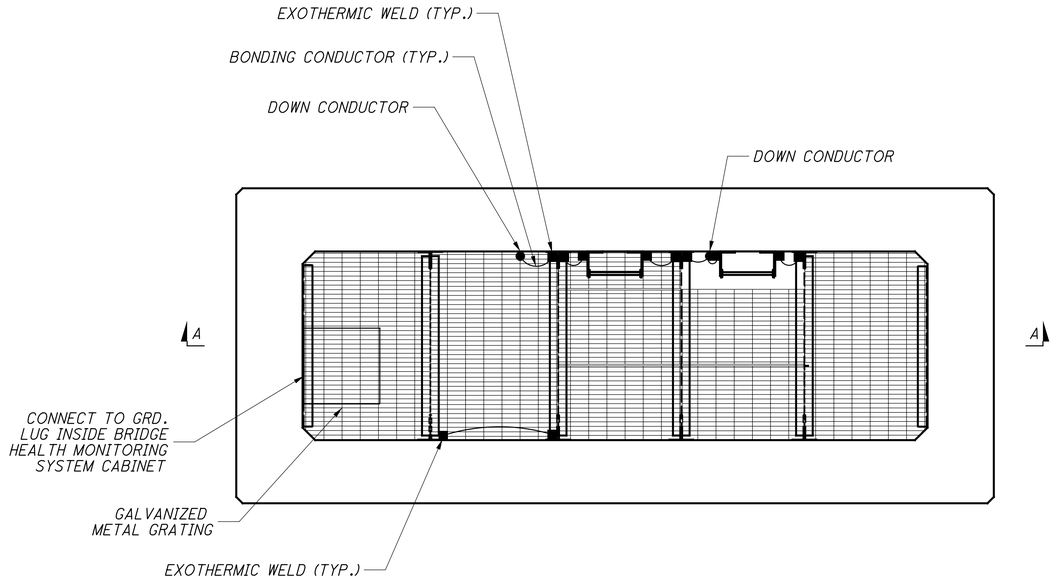

PLAN AT PLATFORM LEVEL L-1

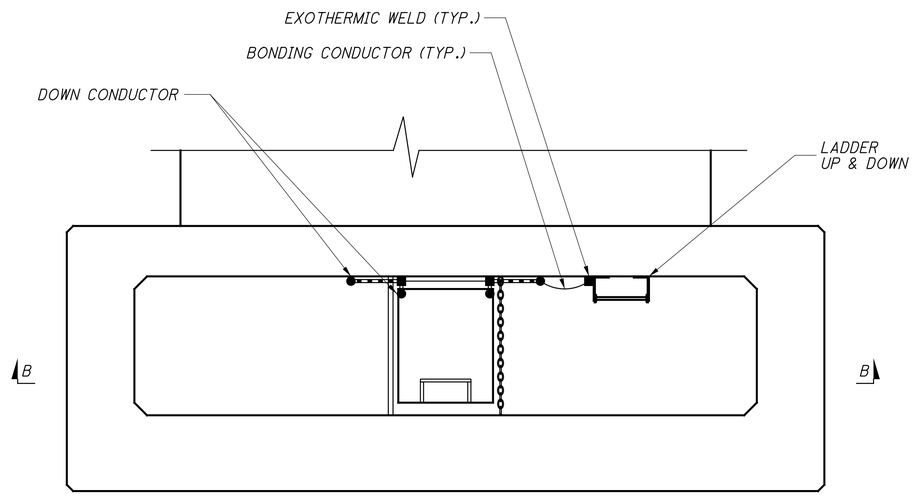

PLAN AT STRUT PLATFORM

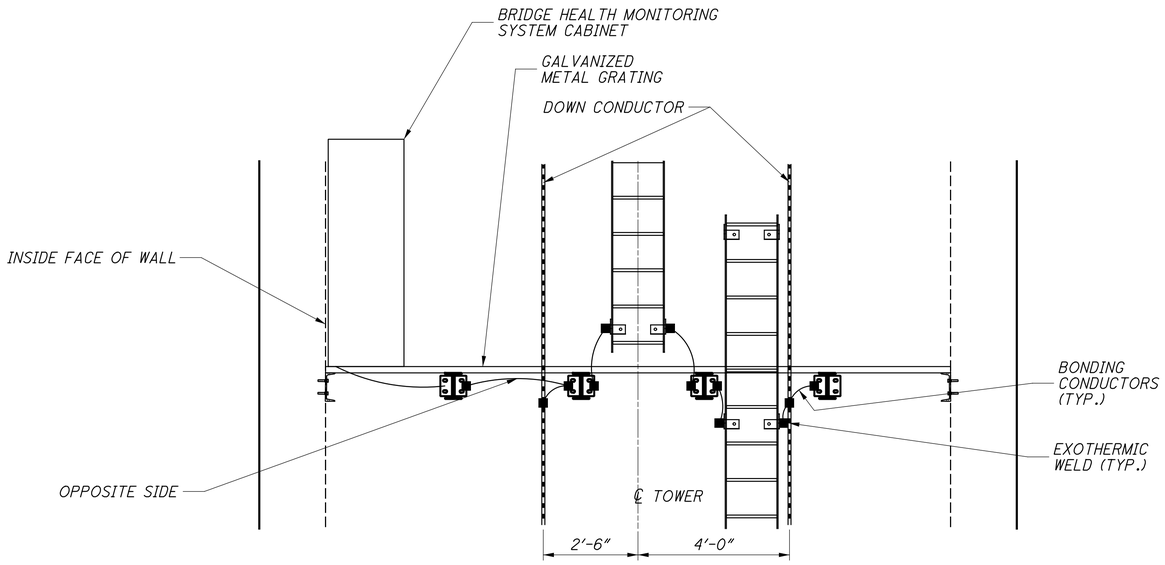

SECTION A-A

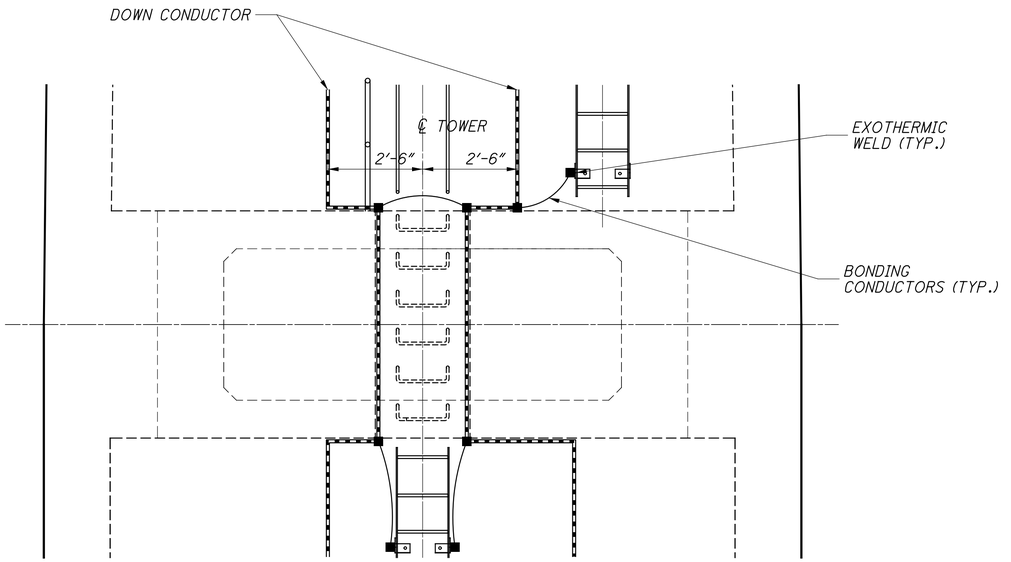

SECTION B-B

NOTES

1. KENTUCKY TOWER SHOWN, OHIO TOWER SIMILAR

CALCULATED BLW | CHECKED KAP

LIGHTING - STRUCTURE GROUNDING AND LIGHTNING PROTECTION SYSTEM (2)

LAW-93-0.00

40 / 85

299
788

J:\Project\O\ODOT\15005112 Ironton Russell\LAW\81595\lighting\sheets\81595LD402.dgn - 5/5/2011 3:44:20 PM - brian_wallace

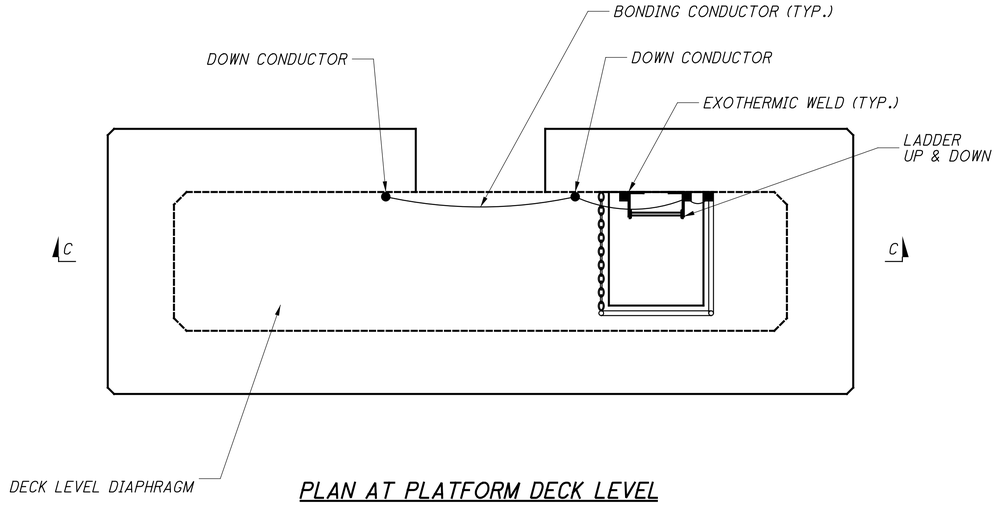

PLAN AT PLATFORM DECK LEVEL

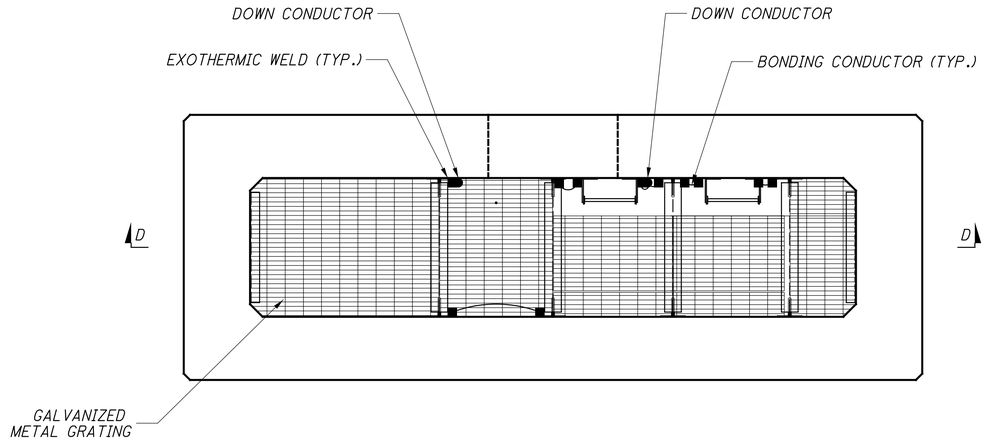

PLAN AT PLATFORM LEVEL L-2

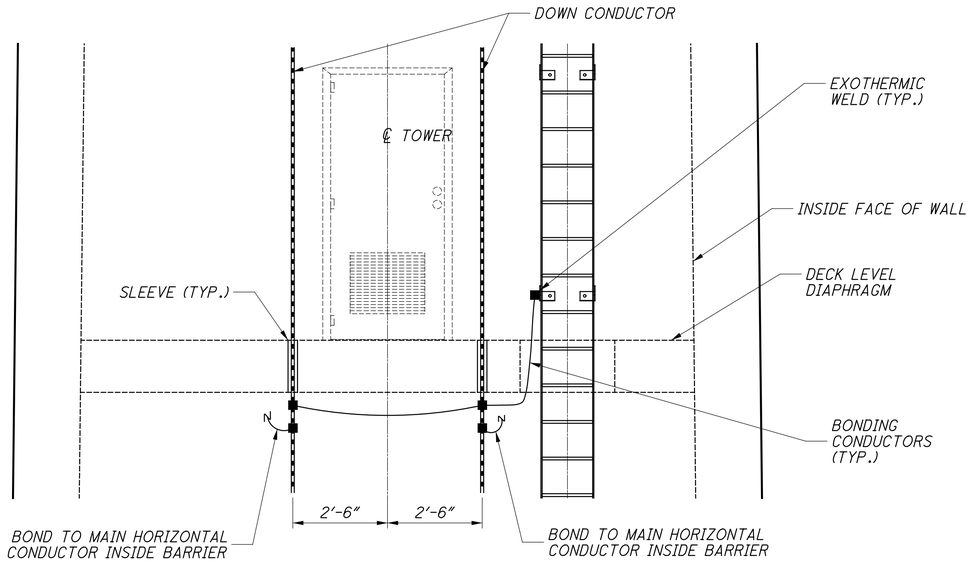

SECTION C-C

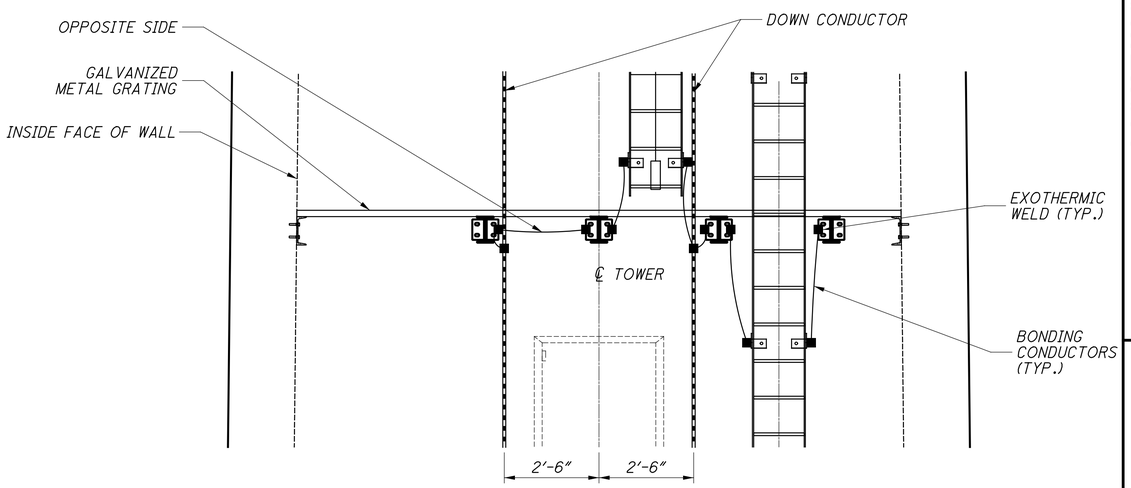

SECTION D-D

Link to RFI083 As-Built

NOTES

1. KENTUCKY TOWER SHOWN, OHIO TOWER SIMILAR

CALCULATED BLW
CHECKED KAP

LIGHTING - LIGHTNING

LAW-93-0.00

41 / 85

300
788

J:\Project\O\ODOT\15005112 Ironton Russell\LAW\81595\lighting\sheets\81595LD403.dgn - 5/5/2011 3:44:28 PM - brian_wallace

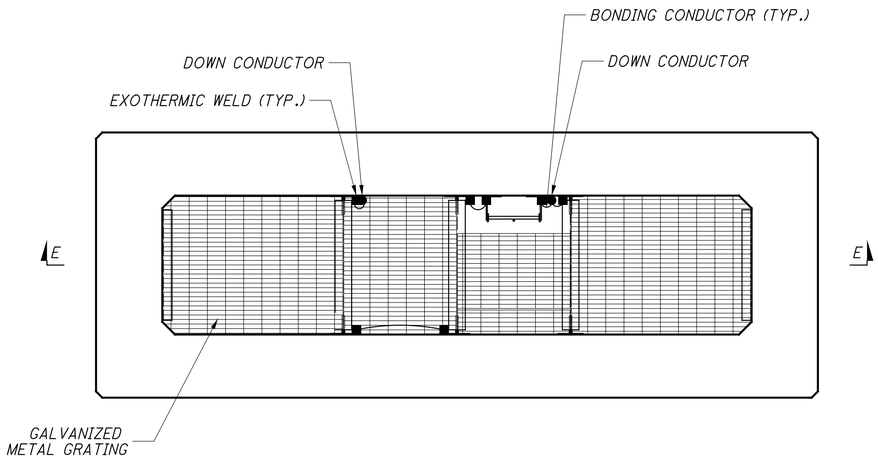

PLAN AT PLATFORM LEVEL L-3 THRU L-6

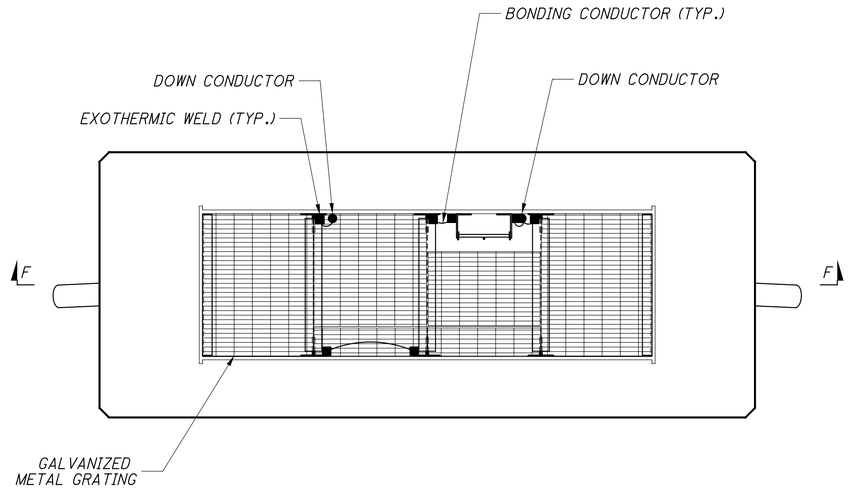

PLAN AT PLATFORM LEVEL L-7 THRU L-12

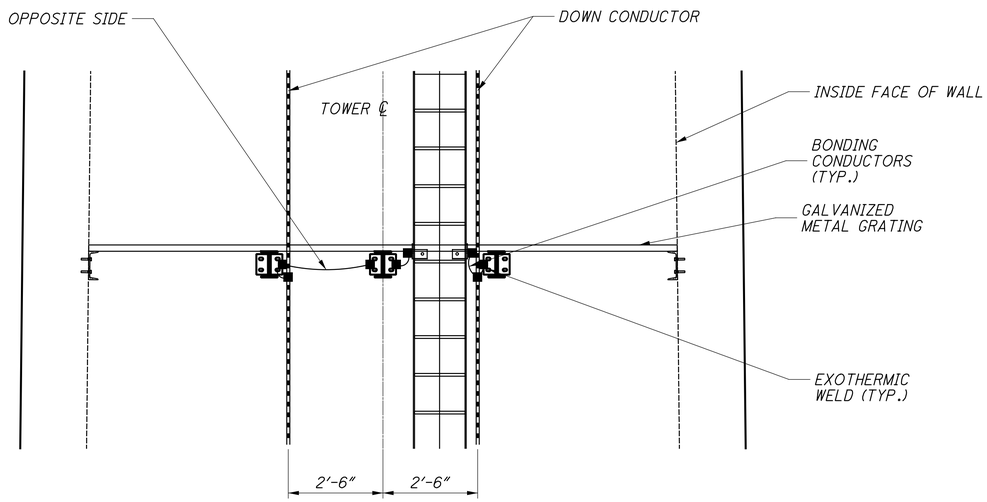

SECTION E-E

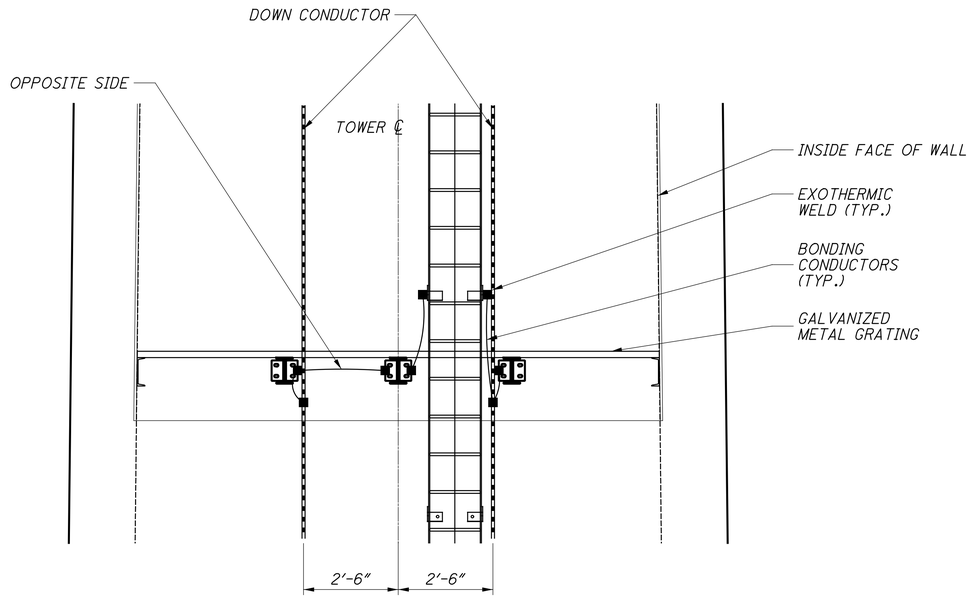

SECTION F-F

NOTES

1. KENTUCKY TOWER SHOWN, OHIO TOWER SIMILAR

CALCULATED BLW
CHECKED KAP

LIGHTING - STRUCTURE GROUNDING AND LIGHTNING PROTECTION SYSTEM (4)

LAW-93-0.00

42 / 85

301
788

J:\Project\O\ODOT\15005112 Ironton Russell\LAW\81595\lighting\sheets\81595LD404.dgn - 5/5/2011 3:44:36 PM - brian_wallace

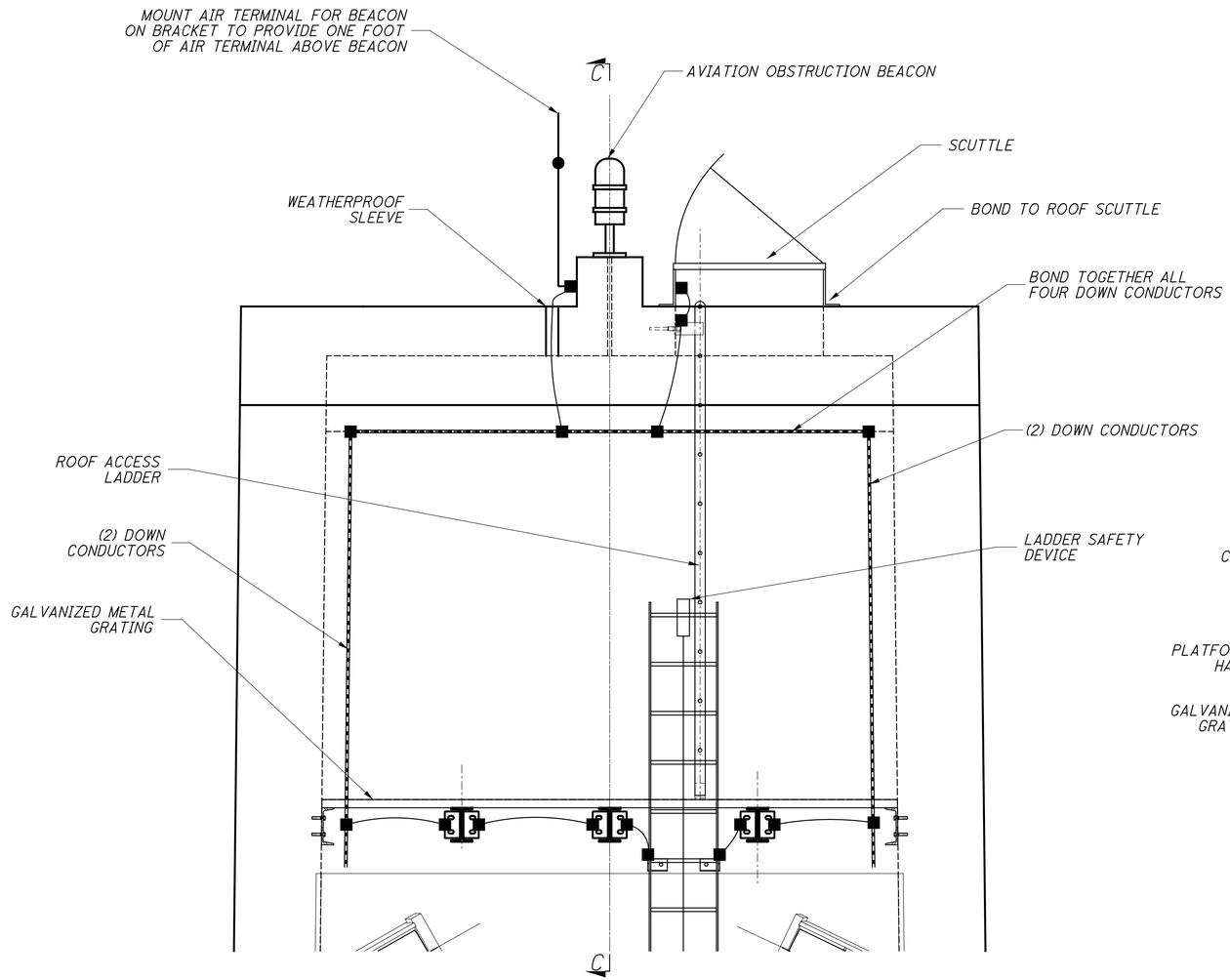

ELEVATION - LEVEL L-13

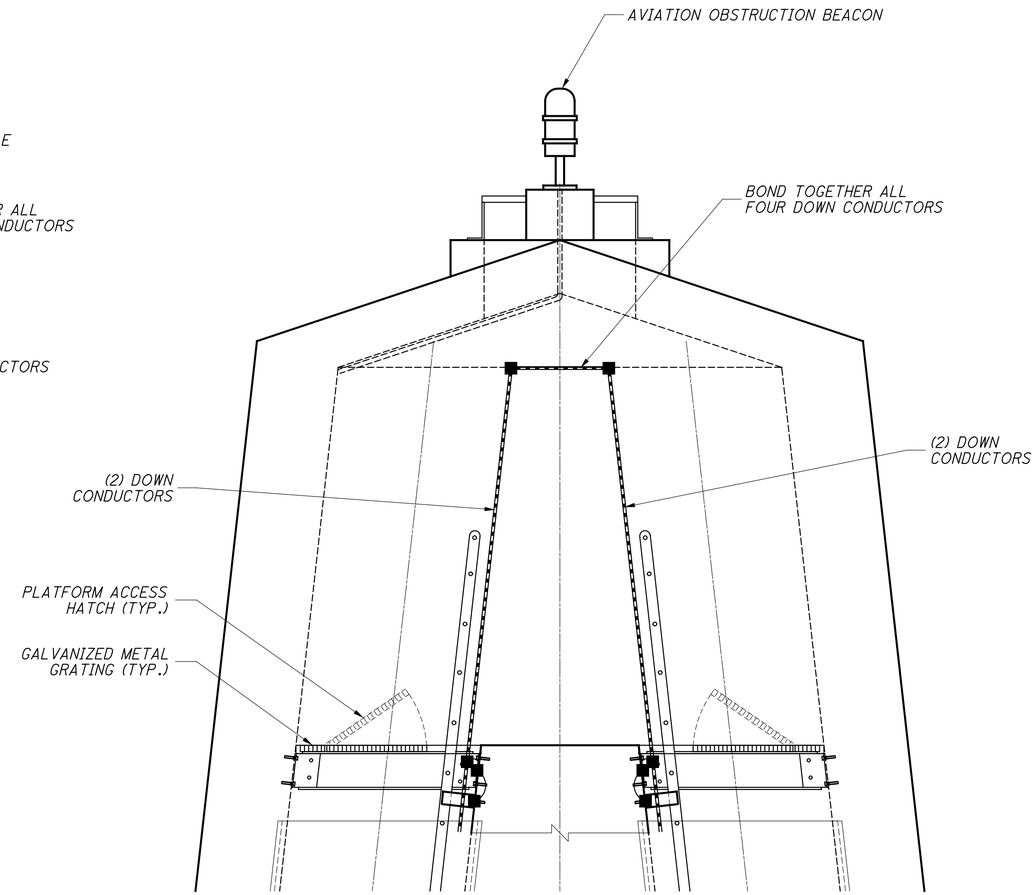

SECTION B-B
ELEVATION - LEVEL L-13

NOTES
1. KENTUCKY TOWER SHOWN, OHIO TOWER SIMILAR

CALCULATED BLW
CHECKED KAP

LIGHTING - STRUCTURE GROUNDING AND LIGHTNING PROTECTION SYSTEM (5)

LAW-93-0.00

43/85

302
788

J:\Project\O\ODOT\15005112 Ironton Russell\LAW\81595\lighting\sheets\81595LD405.dgn - 5/5/2011 3:44:43 PM - brian_wallace

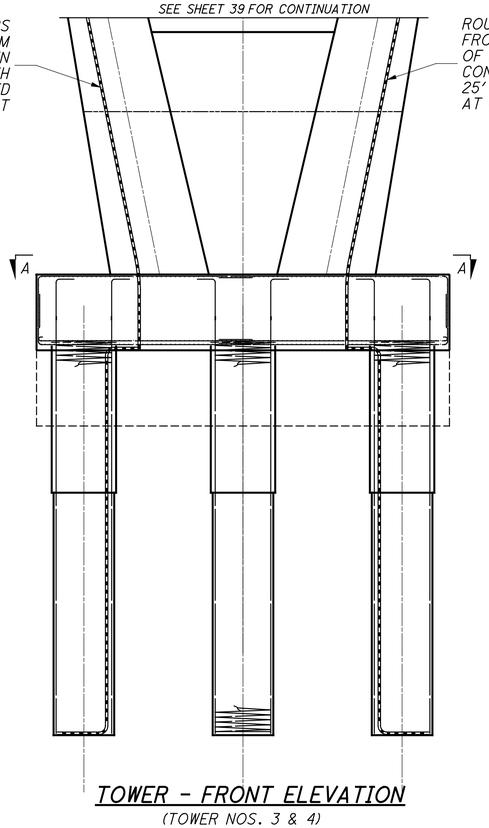

TOWER - FRONT ELEVATION
(TOWER NOS. 3 & 4)

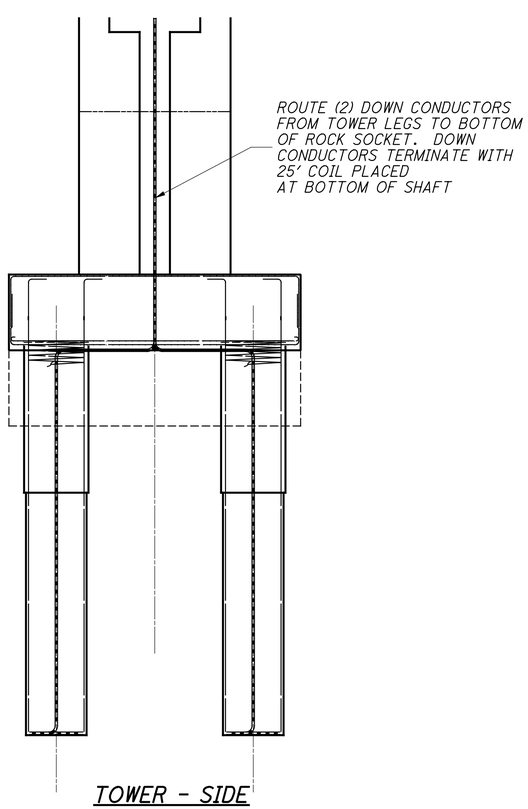

TOWER - SIDE
(TOWER NOS. 3 & 4)

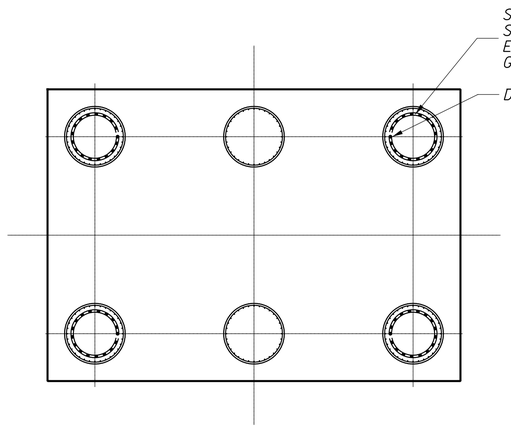

SECTION A-A
TOWER FOUNDATION

BRIDGE SOCKET GROUNDING ELECTRODE DETAILS

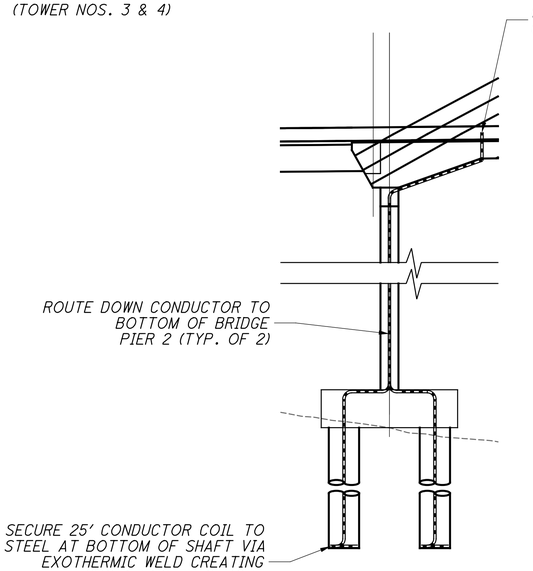

PIER NO. 2
(PIER NOS. 1 & 5 SIMILAR)

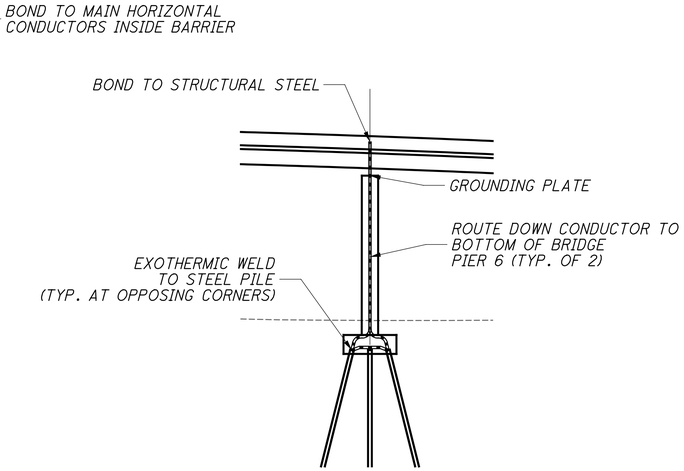

PIER NO. 6
(PIER NOS. 7 & 8 SIMILAR)
SEE SHEET 45/85 FOR ADDITIONAL DETAILS

BRIDGE PIER GROUNDING ELECTRODE DETAILS

NOTES

1. PROVIDE LIGHTNING PROTECTION SYSTEM IN ACCORDANCE WITH NFPA 780 AND UL 96A FOR CLASS II STRUCTURES.
2. ALL LIGHTNING PROTECTION COMPONENTS SHALL CONFORM TO UL 96.
3. MAIN AND DOWN CONDUCTORS SHALL BE #1/0 AWG STRANDED INSULATED COPPER CABLE. SECURE LIGHTNING PROTECTION SYSTEM CONDUCTORS ON MAXIMUM 3 FT. INTERVALS USING APPROVED SUPPORT STRAPS.
4. AIR TERMINALS SHALL BE ½IN. DIAMETER BY 24 IN. LONG SOLID COPPER, NICKEL TIPPED. LOCATE TO PROJECT 1 FT. MINIMUM ABOVE OBJECTS TO BE PROTECTED. AIR TERMINAL BASES SHALL BE CAST BRONZE AND BOLTED PRESSURE CONNECTORS.
5. MAIN CONDUCTOR CONNECTIONS TO AIR TERMINALS SHALL BE VIA BOLTED PRESSURE CONNECTORS. ALL OTHER CONNECTIONS SHALL BE EXOTHERMIC WELDS UNLESS OTHERWISE NOTED.
6. PROVIDE EXPOXY SET ANCHORS TO SECURE AIR TERMINAL BASES AND CONDUCTOR SUPPORT STRAPS TO BRIDGE STRUCTURE.
7. SEAL ALL SLEEVE PENETRATIONS VIA LIBERAL APPLICATION OF SILICON CAULK CONFORMING TO FEDERAL SPECIFICATION TT-S-001543A, OR APPROVED EQUAL. MOUND SILICON CAULK AT EXTERIOR SLEEVE PENETRATIONS TO SHED WATER.
8. ALL CONDUIT SLEEVES SHALL BE 1 ¼IN. SCHEDULE 80 PVC.
9. BOND LIGHTNING PROTECTION DOWN CONDUCTORS TO ELECTRIC SERVICE GROUND.
10. MAXIMUM 90 DEGREE BEND FOR ALL CONDUCTORS.

CALCULATED BLW
CHECKED KAP

LIGHTING - STRUCTURE GROUNDING AND LIGHTNING PROTECTION SYSTEM (6)

LAW-93-0.00

303
788

J:\Project\OVODOT\15005112 Ironton Russell\LAW\81595\lighting\sheets\81595LD406.dgn - 5/5/2011 3:44:58 PM - brian_wallace

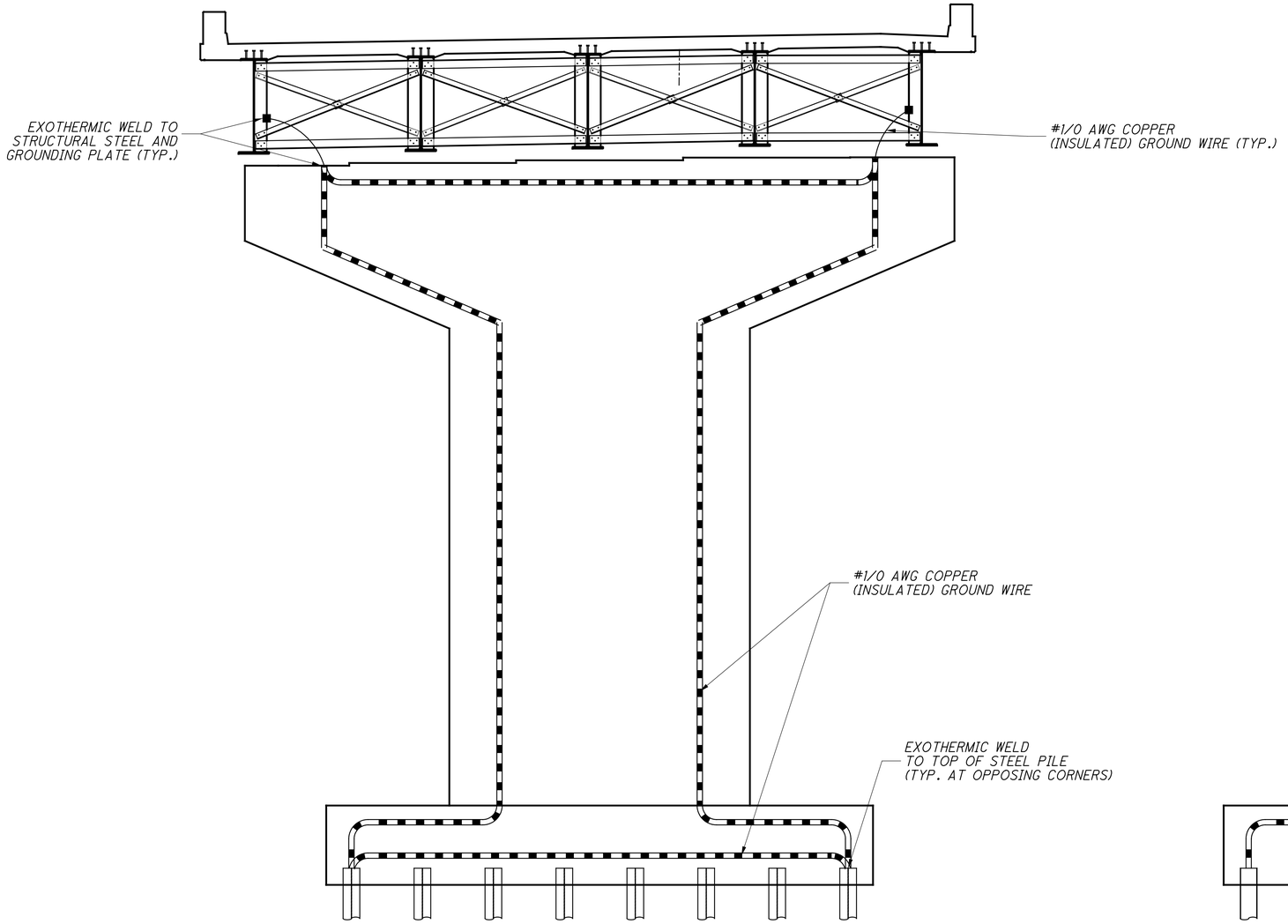

ELEVATION - PIER 6
(PIER NOS. 7, 8 & 9 SIMILAR)

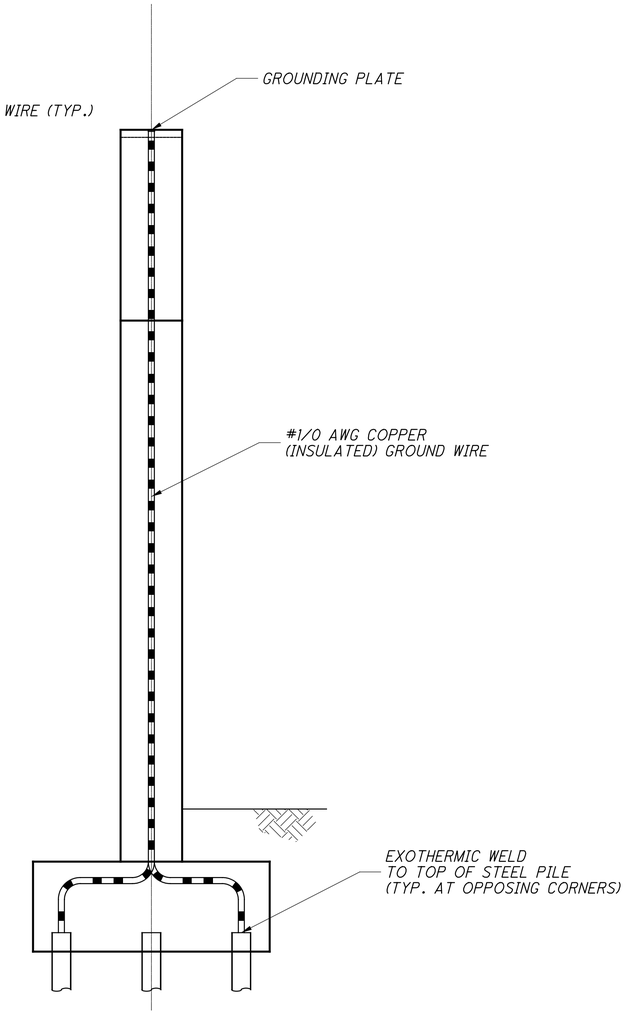

SIDE - PIER 6
(PIER NOS. 7, 8 & 9 SIMILAR)

APPROACH SPAN PIER GROUNDING DETAIL

LIGHTING - STRUCTURE GROUNDING AND LIGHTNING PROTECTION SYSTEM (7)

CALCULATED BLW
CHECKED BLW

LAW-93-0.00

45 / 85

304
788

J:\Project\OVODOT\15005112 Ironton Russell\LAW\81595\lighting\sheets\81595LD407.dgn - 5/5/2011 3:45:09 PM - brian_wallace

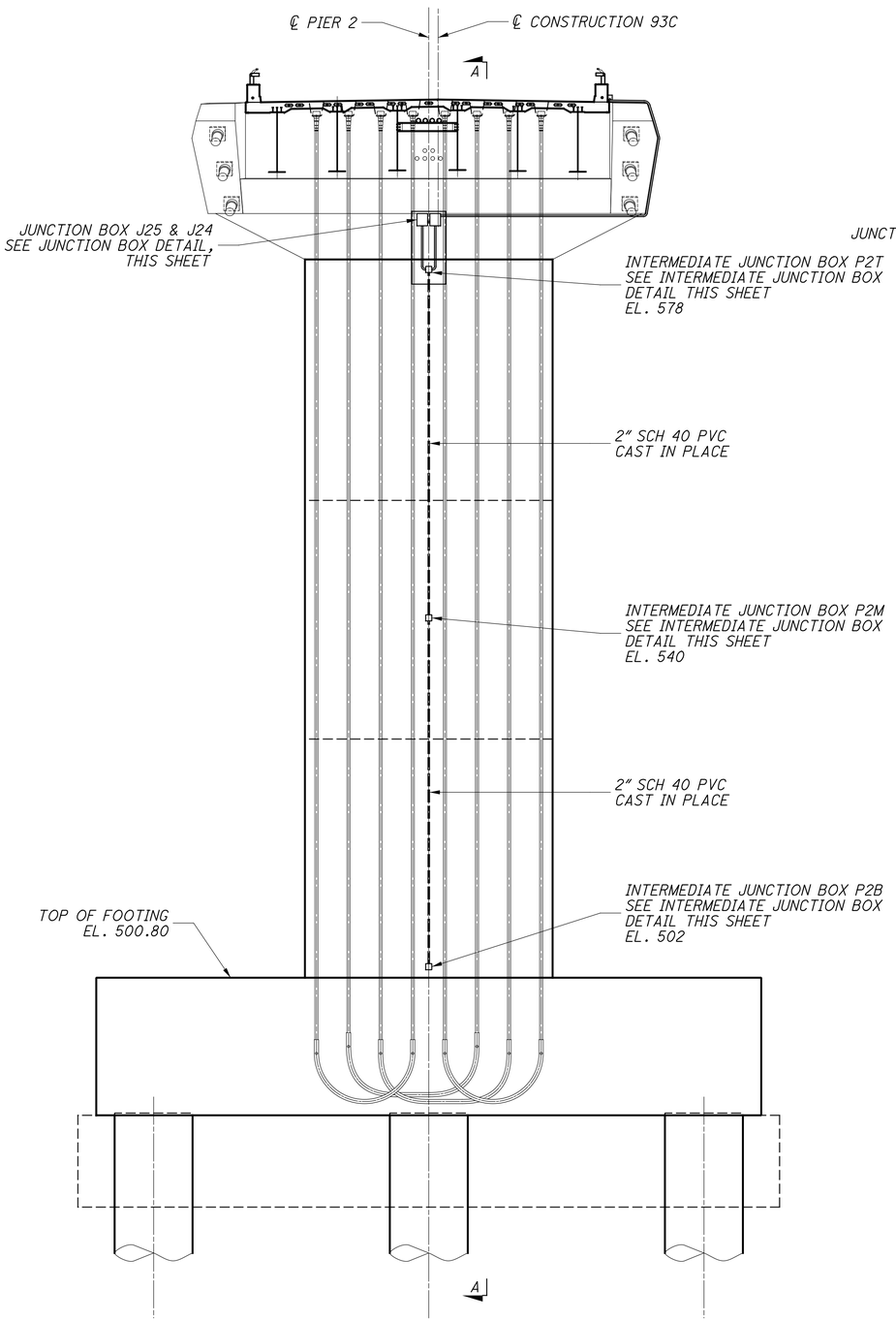

ELEVATION - PIER 2

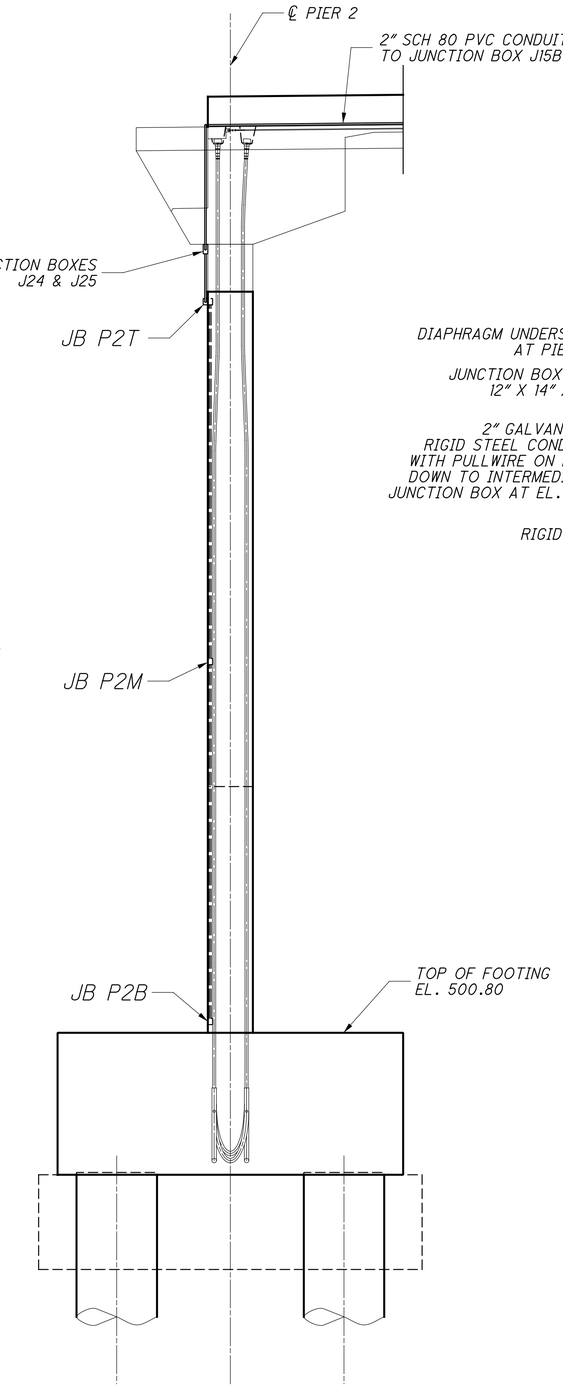

SECTION A-A

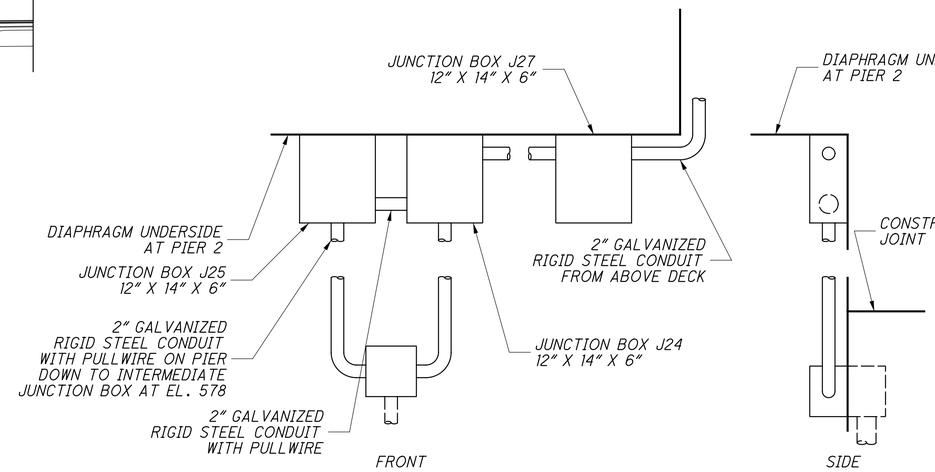

JUNCTION BOX - DETAIL

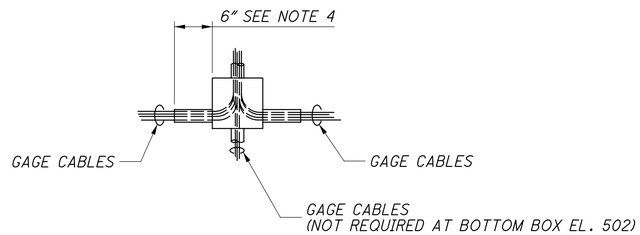

INTERMEDIATE JUNCTION BOX - DETAIL

NOTES:

1. INTERMEDIATE JUNCTION BOXES SHALL BE C.I.P. NEMA 4 CAST IRON 8" X 8" X 6".
2. EMBEDDED CONDUIT SHALL BE C.I.P. 2" SCH 40 PVC.
3. ALL EMBEDDED GAGE CABLES SHALL BE ROUTED PER HEALTH MONITORING SYSTEM ENGINEER'S DETAIL AND SHALL ENTER INTERMEDIATE JUNCTION BOXES FROM SIDE GAGES ARE ON. UNLESS OTHERWISE NOTED, SEE DETAIL THIS SHEET.
4. PROVIDE A 2" WATERTIGHT FLEXIBLE METAL CONDUIT FROM A MINIMUM OF 6" EMBEDMENT IN CONCRETE, WHERE THE GAGE CABLES COME TOGETHER, TO THE HEALTH MONITORING SYSTEM. TYPICAL FROM EACH SIDE.

PIER 2 HEALTH MONITORING SYSTEM DETAIL

HORIZONTAL SCALE IN FEET
0 4 8 16
CALCULATED BLW
CHECKED WHC

LIGHTING - BRIDGE HEALTH MONITORING SYSTEM
PIER DETAILS (1)

LAW-93-0.00

46 / 85

305
788

J:\Project\O\ODOT\15005112 Ironton Russell\LAW\81595\lighting\sheets\81595LD501.dgn - 5/5/2011 3:45:23 PM - brian_wallace

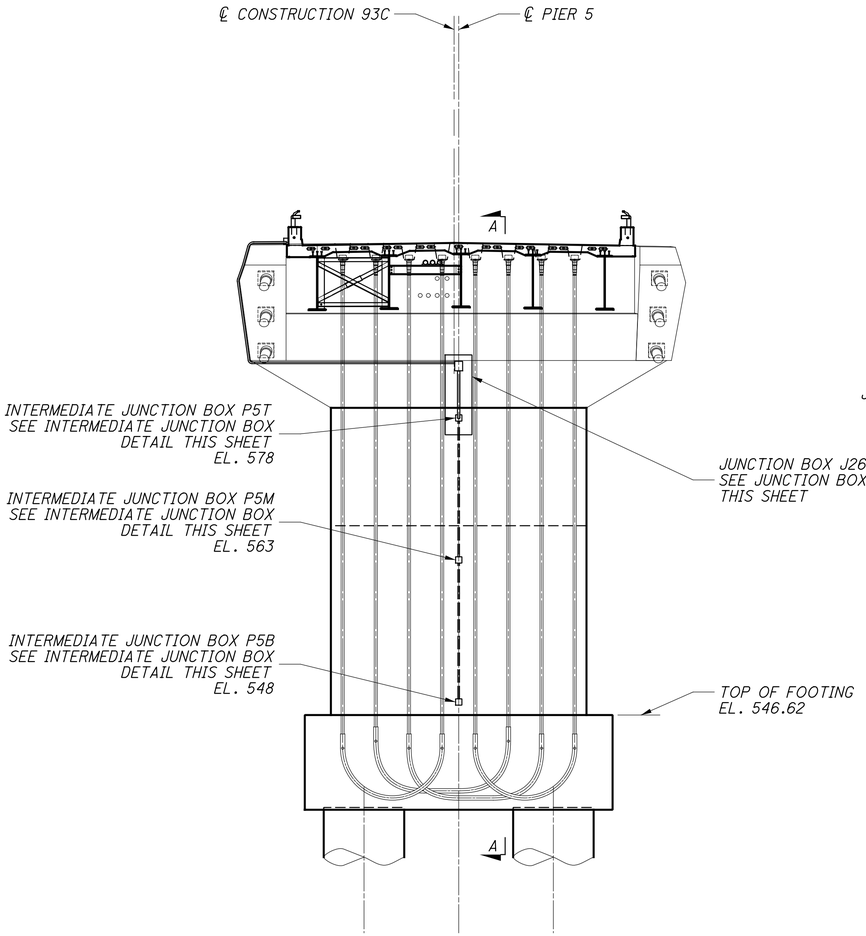

ELEVATION - PIER 5
(LOOKING BACK STATION)

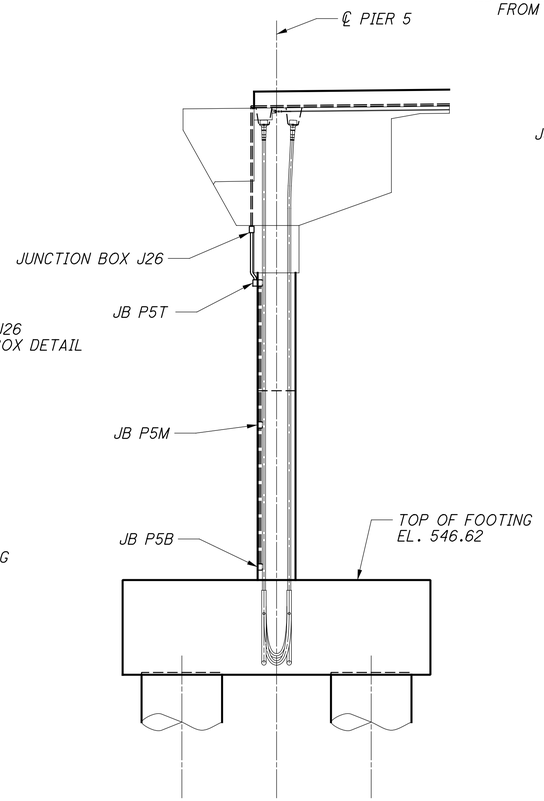

SECTION A-A

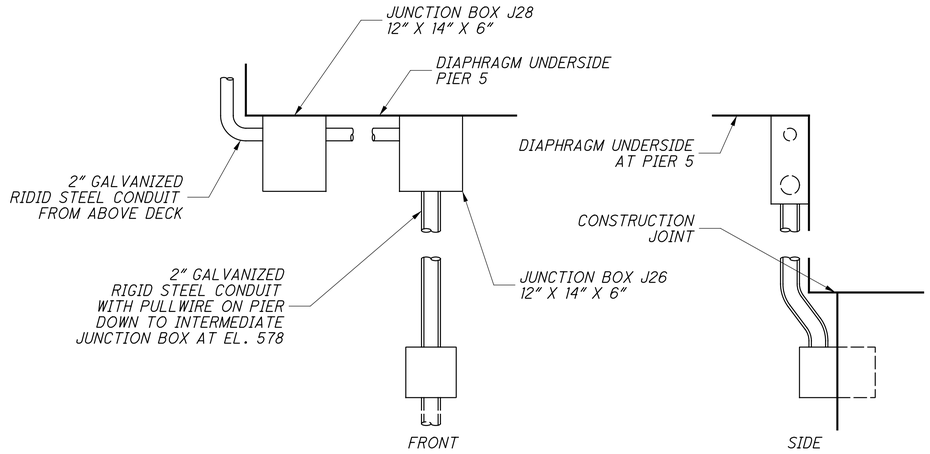

JUNCTION BOX - DETAIL

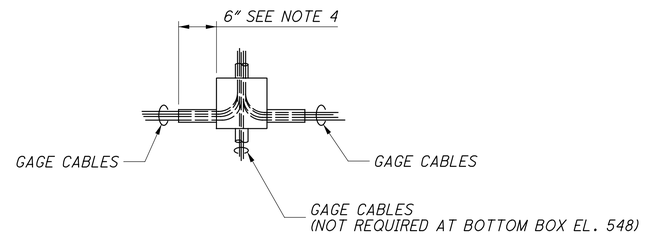

INTERMEDIATE JUNCTION BOX - DETAIL

PIER 5 HEALTH MONITORING SYSTEM DETAIL

Link to Pier 5
Instrumentation As-Built

NOTES:

1. INTERMEDIATE JUNCTION BOXES SHALL BE C.I.P. NEMA 4 CAST IRON 8" X 8" X 6".
2. EMBEDDED CONDUIT SHALL BE C.I.P. 2" SCH 40 PVC.
3. ALL EMBEDDED GAGE CABLES SHALL BE ROUTED PER HEALTH MONITORING SYSTEM ENGINEER'S DETAIL AND SHALL ENTER INTERMEDIATE JUNCTION BOXES FROM SIDE GAGES ARE ON. UNLESS OTHERWISE NOTED, SEE DETAIL THIS SHEET.
4. PROVIDE A 2" WATERTIGHT FLEXIBLE METAL CONDUIT FROM A MINIMUM OF 6" EMBEDMENT IN CONCRETE, WHERE THE GAGE CABLES COME TOGETHER, TO THE HEALTH MONITORING SYSTEM.

HORIZONTAL SCALE IN FEET
0 4 8 16

CALCULATED BLW
CHECKED WHC

LIGHTING - BRIDGE HEALTH MONITORING SYSTEM
PIER 5 DETAILS (2)

LAW-93-0.00

47 / 85

306
788

J:\Project\OA\ODOT\15005112 Ironton Russell\LAW\81595\lighting\sheets\81595LD502.dgn - 5/5/2011 3:45:31 PM - brian_wallace

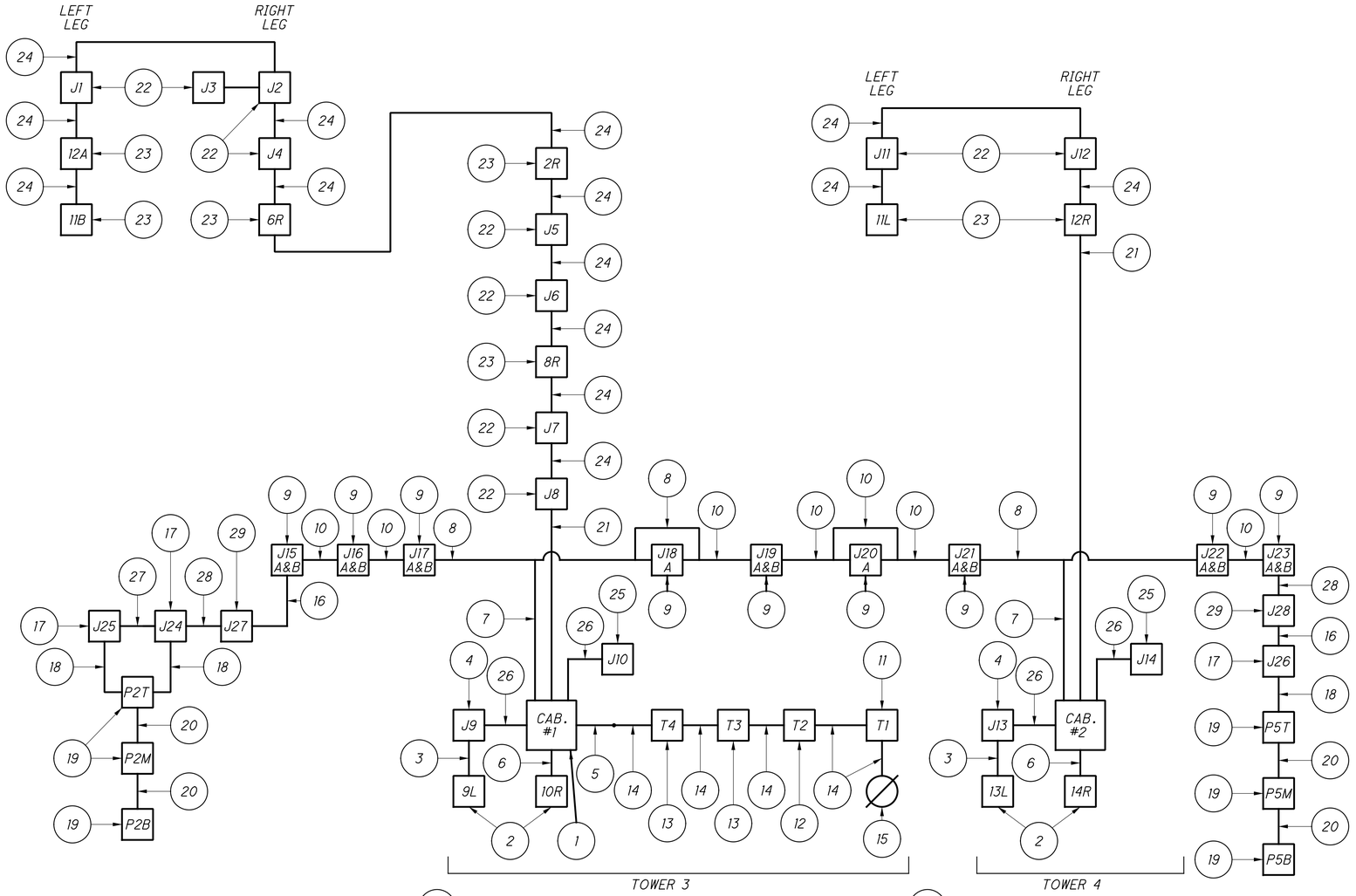

NOTES:

1. COORDINATE THIS SHEET WITH THE SPECIAL PROVISIONS FOR THE "SUPPORT OF INSTRUMENTATION AND TESTING OF SUPERSTRUCTURE".
2. THE SINGLE LINE DIAGRAM REPRESENTS THE PERMANENT INSTALLATION. FOR TEMPORARY AND INTERIM PHASING OF MONITORING SYSTEM DURING CONSTRUCTION, SEE THE SPECIAL PROVISIONS.
3. UPSTREAM SIDE CONDUITS SHALL BE 2-2" GRS, INSTALLED ON THE PARAPET.
4. UNLESS OTHERWISE NOTED, ALL CONDUIT IN TOWERS SHALL BE PVC AND ALL CONDUIT ON EXTERIOR, BARRIER AND PIERS SHALL BE GALVANIZED RIGID STEEL (GRS).
5. COORDINATE THIS SHEET WITH 49/85 FOR CONDUIT INSTALLATION FOR POWER OUTLETS IN JUNCTION BOXES.
6. ALL CONDUITS SHALL BE FURNISHED AND INSTALLED WITH PULL WIRES.
7. "URT" DENOTES UNIVERSITY OF CINCINNATI RESEARCH TEAM.

(1) MAIN DATA SYSTEM CABINET (24" x 24" x 72") LOCATED IN RIGHT SIDE OF TOWER 3. (SEE SHEET 33/85) SIMILAR TO TOWER 4, CABINET #2.

(2) INTERMEDIATE PULL BOX (8" x 8" x 6") NEMA 4 - COORDINATE EXACT LOCATIONS WITH URT (TO BE INSTALLED NEAR LOWER STRUT AND AT BASE OF EACH TOWER, EACH LEG). (SEE SHEETS 27/85 AND 30/85)

(3) 2" PVC CONDUIT BETWEEN 8" x 8" x 6" INTERMEDIATE PULL BOX AND 12" x 14" x 6" PULL BOX LOCATED ON INTERIOR SOUTH FACE OF TOWER BASE. (SEE SHEET 27/85 AND 30/85)

(4) 12" x 14" x 6" PULL BOX LOCATED ON INTERIOR SOUTH FACE OF LEFT LEG, STRUT LEVEL AT TOWER BASE. COORDINATE EXACT LOCATION WITH URT. (SEE SHEETS 27/85 AND 30/85)

(5) 3" PVC CONDUIT - EXTEND FROM SLEEVE AT STRUT LEVEL DOWN TO MAIN CABINET #1 IN TOWER 3. (SEE SHEET 34/85)

(6) 2" PVC CONDUIT BETWEEN 8" x 8" x 6" INTERMEDIATE PULL BOX AND MAIN CABINET #1 LOCATED ON LEVEL L-1 OF TOWER 3. (SEE SHEET 27/85 SIMILAR FOR TOWER 4, CABINET #2 ON SHEET 30/85)

(7) 2-2" GRS CONDUITS BETWEEN TEES AND MAIN CABINETS #1 & #2. (SEE SHEETS 34/85 AND 35/85)

(8) 2-2" GRS CONDUITS BETWEEN TEES AND JUNCTION BOXES. ONE CONDUIT TO EACH. (SEE SHEETS 11/85 AND 13/85)

(9) 12" x 14" x 6" BOXES LOCATED ON BARRIER WALL AT DECK LEVEL. TWO BOXES AT SEVEN LOCATIONS AND ONE BOX AT TWO LOCATIONS. COORDINATE EXACT LOCATIONS WITH URT. (SEE SHEETS 10/85 THROUGH 14/85)

(10) 2-2" GRS CONDUITS BETWEEN JUNCTION BOXES. ONE CONDUIT TO EACH. (SEE SHEETS 10/85 THROUGH 14/85)

(11) TELEPHONE PULL BOX T1. COORDINATE LOCATION WITH SHEET 10/85.

(12) TELEPHONE PULL BOX T2. COORDINATE LOCATION WITH SHEET 11/85.

(13) TELEPHONE PULL BOXES T3 AND T4. COORDINATE LOCATIONS WITH SHEET 22/85.

(14) 3" GRS CONDUIT FOR TELEPHONE SERVICE. (SEE SHEETS 9/85 THROUGH 11/85, 22/85)

(15) WOOD SERVICE POLE FOR ELECTRIC AND TELEPHONE SERVICE. COORDINATE WITH SHEET 9/85.

(16) 1-2" GRS CONDUIT OVER EDGE OF DECK FROM END PULL BOX TO PULL BOX ON UNDERSIDE OF DECK. (SEE SHEETS 46/85 AND 47/85)

(17) 12" x 14" x 6" PULL BOX LOCATED ON PIER FACING INLAND MOUNTED AS CLOSE TO BOTTOM OF DECK AS POSSIBLE, UON. (SEE SHEETS 46/85 AND 47/85)

(18) 2" GRS CONDUIT FROM PULL BOX ON PIER TO CIP INTERMEDIATE PULL BOX IN PIER. (SEE SHEETS 46/85 AND 47/85)

(19) 8" x 8" x 6" INTERMEDIATE PULL BOX CIP IN PIER. COORDINATE EXACT LOCATIONS WITH URT. (SEE SHEETS 46/85 AND 47/85)

(20) 2" PVC CONDUIT CIP IN PIER BETWEEN INTERMEDIATE PULL BOXES. (SEE SHEETS 46/85 AND 47/85)

(21) 2" PVC CONDUIT UP FROM DATA CABINET TO JUNCTION BOX IN TOWER. (SEE SHEETS 27/85 AND 30/85)

(22) 12" x 14" x 6" PULL BOX MOUNTED ON OUTSIDE WALL OF TOWER AT ELEVATIONS INDICATED ON PLANS. COORDINATE EXACT LOCATION WITH URT. (SEE SHEET 27/85 THROUGH 32/85)

(23) 8" x 8" x 6" INTERMEDIATE PULL BOX MOUNTED ON OUTSIDE WALL OF TOWER AT ELEVATIONS INDICATED ON PLANS. COORDINATE EXACT LOCATIONS WITH URT. (SEE SHEETS 27/85 THROUGH 32/85)

(24) 2" PVC CONDUIT BETWEEN PULL BOXES AND JUNCTION BOXES. (SEE SHEETS 27/85 THROUGH 32/85)

(25) 12" x 14" x 6" PULL BOX LOCATED ON INTERIOR SOUTH FACE OF RIGHT LEG, LEVEL L-1 OF TOWER BASE. COORDINATE EXACT LOCATION WITH URT. (SEE SHEETS 27/85 AND 30/85)

(26) 2" PVC CONDUIT BETWEEN 8" x 8" x 6" JUNCTION BOX AND MAIN CABINET #1 LOCATED ON LEVEL L-1 OF TOWER 3. SIMILAR FOR TOWER 4. (SEE SHEET 27/85 AND 30/85)

(27) 2" GRS CONDUIT BETWEEN PULL BOXES. (SEE SHEET 46/85)

(28) 1-2" GRS CONDUIT FROM PULL BOX AT OUTSIDE EDGE OF DECK TO PULL BOX MOUNTED ON PIER. (SEE SHEETS 46/85 AND 47/85).

(29) 12" X 14" X 6" PULL BOX MOUNTED TO UNDERSIDE OF DECK AT OUTSIDE EDGE OF DECK. (SEE SHEETS 46/85 AND 47/85)

CALCULATED BLW
CHECKED SAC

LIGHTING - BRIDGE HEALTH MONITORING SYSTEM
INSTRUMENTATION ONE LINE DIAGRAM (1)

LAW-93-0.00

48/85

307
788

J:\Project\0\ODOT\15005112 Ironton Russell\LAW\81595\lighting\sheets\81595LB501.dgn - 5/5/2011 3:45:40 PM - brian_wallace

(1) POWER OUTLET IN "A" JUNCTION BOX AT INSTRUMENTED CROSS-SECTIONS LOCATIONS.

(2) 6" X 6" X 4" PULL BOX FOR SPLICING OF POWER OUTLET CIRCUITS, POWER OUTLETS NOT REQUIRED.

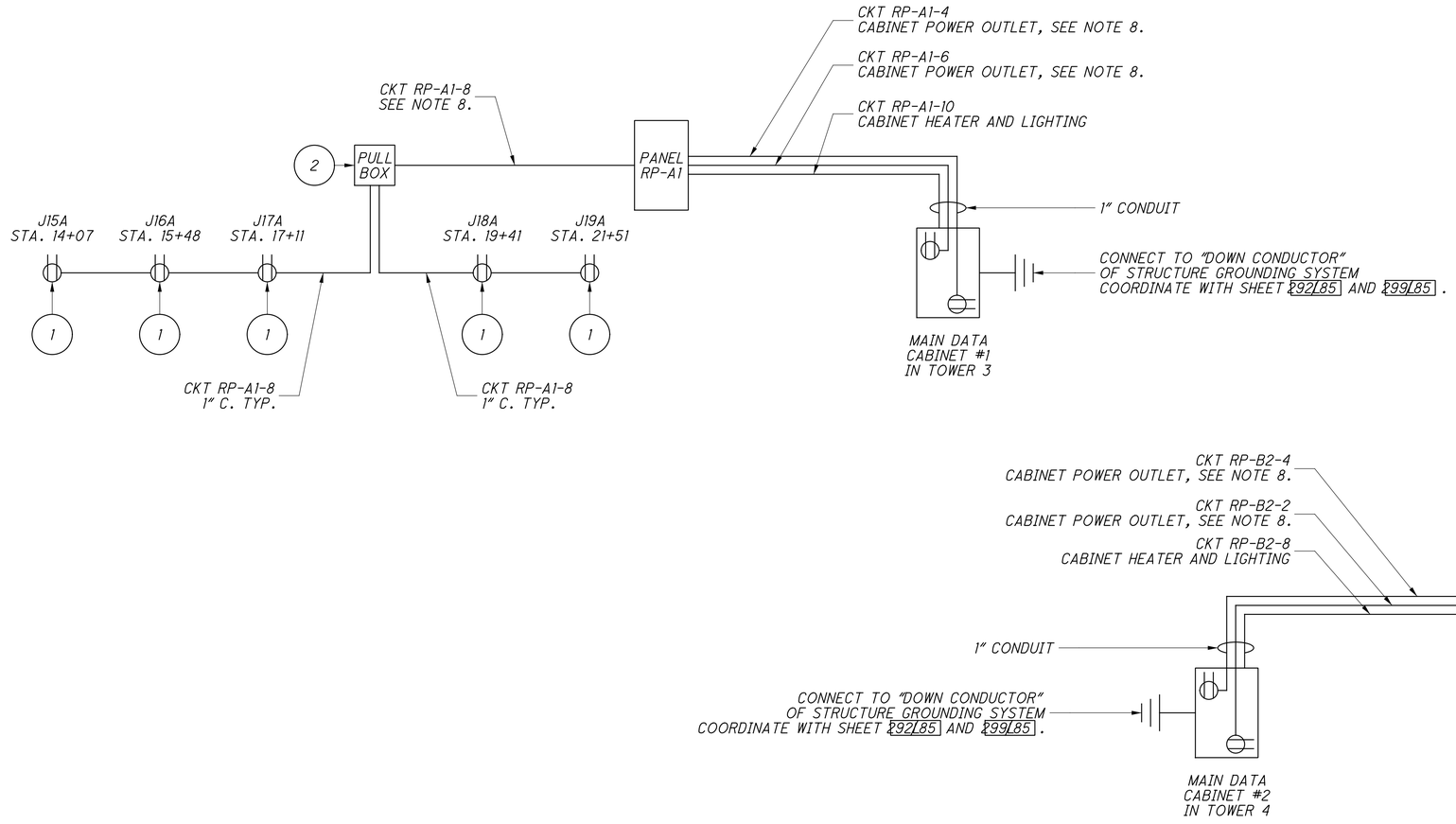

NOTES:

1. ALL POWER OUTLET CIRCUITS SHALL BE AWG 2-#8, W/#10 GRD FROM POWER PANEL TO BRIDGE DECK BARRIER WALL JUNCTION BOX.
2. ALL DATA CABINET CIRCUITS SHALL BE AWG 2-#12, W/#12 GRD.
3. SEE SHEET 20/85 AND 21/85 FOR PANEL SCHEDULES.
4. COORDINATE THIS SHEET WITH 48/85.
5. ALL INFORMATION SHOWN ON THIS SHEET IS PRESENTED DIAGRAMMATICALLY AND ALL EQUIPMENT LOCATION REQUIREMENTS NEED TO BE COORDINATED WITH THE UNIVERSITY OF CINCINNATI RESEARCH TEAM.
6. COORDINDATE THIS SHEET WITH THE SPECIAL PROVISION FOR "SUPPORT OF INSTRUMENTATION AND TESTING OF SUPERSTRUCTURE".
7. ALL CONDUIT LOCATED ON BARRIER IS 1" DIA. GRS UNLESS NOTED OTHERWISE.
8. ALL POWER OUTLETS LOCATED IN THE 12" X 14" X 6" JUNCTION BOXES, SHALL BE CONNECTED TO THE SAME PANELBOARD CIRCUIT. PROVIDE 2 POWER OUTLETS IN THE DATA CONTROL CABINET, ON TWO DIFFERENT PANELBOARD PHASES. ONE OUTLET MUST BE CONNECTED TO SAME PHASE AS THE JUNCTION BOX POWER OUTLETS. COORDINATE WITH THE UNIVERSITY OF CINCINNATI RESEARCH TEAM.

CALCULATED BLW | CHECKED SAC

LIGHTING - BRIDGE HEALTH MONITORING SYSTEM INSTRUMENTATION ONE LINE DIAGRAM (2)

LAW-93-0.00

J:\Project\O\ODOT\15005112 Ironton Russell\LAW\81595\lighting\sheets\81595LB502.dgn - 5/5/2011 3:45:49 PM - brian_wallace

REF. NO.	SHEET NO.	STATION TO STATION		SIDE	LENGTH	625																								
		FROM	TO			CONNECTOR KIT, TYPE II	CONNECTOR KIT, TYPE III	CONDUIT 1-1/2", 725.04	NO. 6 AWG 600 VOLT DISTRIBUTION CABLE	NO. 8 AWG 600 VOLT DISTRIBUTION CABLE	JUNCTION BOX, AS PER PLAN (18"x12"x8" SURFACE MTD CAST IRON)	LIGHTING MISC.: AESTHIETIC LIGHTING FIXTURE TYPE AA, (400 WATT)	CONDUIT 1", 725.04	JUNCTION BOX, AS PER PLAN	CONNECTION, UNFUSED PERMENANT														
						EACH	EACH	FT	FT	FT	EACH	EACH	FT	EACH	EACH															
1	56	13+94.17		LT		1	1				1	1	5	1																
	56	13+94.17	14+21.95	LT	28			28	68	34																				
2	56	14+21.95		LT		1	1				1	1	5	1																
	56	14+21.95	14+49.71	LT	28			28	68	34																				
3	56	14+49.71		LT		1	1				1	1	5	1																
	56	14+49.71	14+77.44	LT	28			28	67	34																				
4	56	14+77.44		LT		1	1				1	1	5	1																
	56	14+77.44	15+05.14	LT	28			28	67	34																				
5	56	15+05.14		LT		1	1				1	1	5	1																
	56	15+05.14	15+32.80	LT	28			28	67	34																				
6	56	15+32.80		LT		1	1				1	1	5	1																
	56	15+32.80	15+60.43	LT	28			28	67	34																				
7	56	15+60.43		LT		1	1				1	1	5	1																
	56	15+60.43	15+88.02	LT	28			28	67	34																				
8	56	15+88.02		LT		1	1				1	1	5	1																
	56	15+88.02	16+15.59	LT	28			28	67	34																				
9	56	16+15.59		LT		1	1				1	1	5	1																
	56	16+15.59	16+43.10	LT	28			28	134	34																				
10	56	16+43.10		LT		1	1				1	1	5	1																
	56	16+43.10	16+68.55	LT	25			25	126	31																				
11	56	16+68.55		LT		1	1				1	1	5	1																
	56	16+68.55	16+70.55	LT	2			2	32	8																				
12	56	16+70.55		LT		1	1				1	1	5	1																
	56	16+70.55	16+95.92	LT	25			25	125	31																				
13	56	16+95.92		LT		1	1				1	1	5	1																
	56	16+95.92	16+97.92	LT	2			2	32	8																				
14	56	16+97.92		LT		1	1				1	1	5	1																
	56	16+97.92	JB-A2	LT	30			30	144	36																				
JB-A2	56	JB-A2		LT							1				3															
	56	JB-A2	17+23.00	LT	20			20	52	26																				
15	56	17+23.00		LT		1	1				1	1	5	1																
	56	17+23.00	17+30.00	LT	7			7	26	13																				
16	56	17+30.00		LT		1	1				1	1	5	1																
	56	17+30.00	17+37.00	LT	7			7	26	13																				
17	56	17+37.00		LT		1	1				1	1	5	1																
	56	JB-A2	17+62.08	LT	22				112																					
18	56	17+62.08		LT		1	1				1	1	5	1																
	56	17+62.08	17+64.08	LT	2			2	48	8																				
19	56	17+64.08		LT		1	1				1	1	5	1																
	56	17+64.08	17+90.42	LT	26			26	194	32																				
20	56	17+90.42		LT		1	1				1	1	5	1																
	56	17+90.42	17+92.42	LT	2			2	48	8																				
21	56	17+92.42		LT		1	1				1	1	5	1																
	56	17+92.42	18+18.83	LT	26			26	194	32																				
22	56	18+18.83		LT		1	1				1	1	5	1																
	56	18+18.83	18+47.32	LT	28			28	207	34																				
23	56	18+47.32		LT		1	1				1	1	5	1																
	56	18+47.32	18+75.86	LT	29			29	207	35																				
24	56	18+75.86		LT		1	1				1	1	5	1																
	56	18+75.86	19+04.43	LT	29			29	207	35																				
25	56	19+04.43		LT		1	1				1	1	5	1																
	56	19+04.43	19+33.03	LT	29			29	208	35																				
26	56	19+33.03		LT		1	1				1	1	5	1																
	56	19+33.03	19+61.68	LT	29			29	277	35																				
TOTALS CARRIED TO SHEET 55						26	26	567	2939	723	27	26	130	26	3															

CALCULATED FGW CHECKED KAP

LIGHTING - ASETHETIC LIGHTING SUB-SUMMARY (1)

LAW-93-0.00

50/85

309
788

J:\Project\O\ODOT\15005112 Ironton Russell\LAW\81595\lighting\sheets\81595LS201.DGN - 5/5/2011 3:45:57 PM - brian_wallace

LIGHTING - ASETHETIC LIGHTING SUB-SUMMARY (2)

CALCULATED FGW | CHECKED KAP

LAW-93-0.00

625

REF. NO.	SHEET NO.	STATION TO STATION FROM	STATION TO STATION TO	SIDE	LENGTH	CONNECTOR KIT, TYPE II EACH	CONNECTOR KIT, TYPE III EACH	CONDUIT 1-1/2", 725.04 FT	NO. 6 AWG 600 VOLT DISTRIBUTION CABLE FT	NO. 8 AWG 600 VOLT DISTRIBUTION CABLE FT	JUNCTION BOX, AS PER PLAN (18"x12"x8" SURFACE MTD CAST IRON) EACH	LIGHTING MISC.: AESTHIETIC LIGHTING FIXTURE TYPE AA, (400 WATT) EACH	CONDUIT 1", 725.04 FT	JUNCTION BOX, AS PER PLAN EACH	CONNECTION, UNFUSED PERMENANT EACH
27	56	19+61.68		LT		1	1				1	1	5	1	
	56	19+61.68	19+90.35	LT	29			29	277	35					
28	56	19+90.35		LT		1	1				1	1	5	1	
	56	19+90.35	20+19.04	LT	29			29	278	35					
29	56	20+19.04		LT		1	1				1	1	5	1	
	56	20+19.04	20+47.76	LT	29			29	278	35					
30	56	20+47.76		LT		1	1				1	1	5	1	
	56	20+47.76	20+76.51	LT	29			29	278	35					
31	56	20+76.51		LT		1	1				1	1	5	1	
	56	20+76.51	21+05.27	LT	29			29	278	35					
32	56	21+05.27		LT		1	1				1	1	5	1	
	56	21+05.27	21+34.06	LT	29			29	278	35					
33	56	21+34.06		LT		1	1				1	1	5	1	
	56	21+34.06	21+62.86	LT	29			29	278	35					
34	56	21+62.86		LT		1	1				1	1	5	1	
	56	21+62.86	21+97.14	LT	34			34	322	40					
35	56	21+97.14		LT		1	1				1	1	5	1	
	56	21+97.14	22+25.94	LT	29			29	348	35					
36	56	22+25.94		LT		1	1				1	1	5	1	
	56	22+25.94	22+54.73	LT	29			29	348	35					
37	56	22+54.73		LT		1	1				1	1	5	1	
	56	22+54.73	22+83.49	LT	29			29	348	35					
38	57	22+83.49		LT		1	1				1	1	5	1	
	57	22+83.49	23+12.24	LT	29			29	348	35					
39	57	23+12.24		LT		1	1				1	1	5	1	
	57	23+12.24	23+40.96	LT	29			29	347	35					
40	57	23+40.96		LT		1	1				1	1	5	1	
	57	23+40.96	23+69.65	LT	29			29	347	35					
41	57	23+69.65		LT		1	1				1	1	5	1	
	57	23+69.65	23+98.32	LT	29			29	347	35					
42	57	23+98.32		LT		1	1				1	1	5	1	
	57	23+98.32	24+26.97	LT	29			29	346	35					
43	57	24+26.97		LT		1	1				1	1	5	1	
	57	24+26.97	24+55.57	LT	29			29	415	35					
44	57	24+55.57		LT		1	1				1	1	5	1	
	57	24+55.57	24+84.14	LT	29			29	415	35					
45	57	24+84.14		LT		1	1				1	1	5	1	
	57	24+84.14	25+12.68	LT	29			29	414	35					
46	57	25+12.68		LT		1	1				1	1	5	1	
	57	25+12.68	25+41.17	LT	28			28	414	34					
47	57	25+41.17		LT		1	1				1	1	5	1	
	57	25+41.17	25+67.58	LT	26			26	389	32					
48	57	25+67.58		LT		1	1				1	1	5	1	
	57	25+67.58	25+69.58	LT	2			2	96	8					
49	57	25+69.58		LT		1	1				1	1	5	1	
	57	25+69.58	25+95.92	LT	26			26	388	32					
50	57	25+95.92		LT		1	1				1	1	5	1	
	57	25+95.92	25+97.92	LT	2			2	96	8					
51	57	25+97.92		LT		1	1				1	1	5	1	
	57	25+97.92	JB-A4	LT	30			30	X	36					
JB-A4	57	JB-A4		LT											
TOTALS CARRIED TO SHEET 55						25	25	666	7673	816	25	25	125	25	0

J:\Project\O\ODOT\15005112 Ironton Russell\LAW\81595\lighting\sheets\81595LS202.DGN - 5/5/2011 3:46:06 PM - brian_wallace

REF. NO.	SHEET NO.	STATION TO STATION		SIDE	LENGTH	625																							
		FROM	TO			CONNECTOR KIT, TYPE II	CONNECTOR KIT, TYPE III	CONDUIT 1-1/2", 725.04	NO. 6 AWG 600 VOLT DISTRIBUTION CABLE	NO. 8 AWG 600 VOLT DISTRIBUTION CABLE	JUNCTION BOX, AS PER PLAN (18"x12"x8" SURFACE MTD CAST IRON)	LIGHTING MISC.: AESTHIETIC LIGHTING FIXTURE TYPE AA, (400 WATT)	CONDUIT 1", 725.04	JUNCTION BOX, AS PER PLAN	CONNECTION, UNFUSED PERMENANT													
						EACH	EACH	FT	FT	FT	EACH	EACH	FT	EACH	EACH														
52	57	26+23.00		LT		1	1				1	1	5	1															
	57	26+23.00	26+30.00	LT	7			7	26	13																			
53	57	26+30.00		LT		1	1				1	1	5	1															
	57	26+30.00	26+37.00	LT	7			7	26	13																			
54	57	26+37.00		LT		1	1				1	1	5	1															
	57	26+37.00	RELAY PNL LRP-B	LT	20			20	52	26																			
	57	RELAY PNL LRP-B	PANEL LP-B	LT	25			25	62	31																			
	57	RELAY PNL LRP-B	JB-A4	LT	35			35	164	41																			
JB-A4	57	JB-A4		LT							1				3														
	57	JB-A4	26+62.08	LT	30			30	144	36																			
55	57	26+62.08		LT		1	1				1	1	5	1															
	57	26+62.08	26+64.08	LT	2			2	32	8																			
56	57	26+64.08		LT		1	1				1	1	5	1															
	57	26+64.08	26+89.45	LT	25			25	125	31																			
57	57	26+89.45		LT		1	1				1	1	5	1															
	57	26+89.45	26+91.45	LT	2			2	32	8																			
58	57	26+91.45		LT		1	1				1	1	5	1															
	57	26+91.45	27+16.90	LT	25			25	126	31																			
59	57	27+16.90		LT		1	1				1	1	5	1															
	57	27+16.90	27+44.41	LT	28			28	67	34																			
60	57	27+44.41		LT		1	1				1	1	5	1															
	57	27+44.41	27+71.98	LT	28			28	67	34																			
61	57	27+71.98		LT		1	1				1	1	5	1															
	57	27+71.98	27+99.57	LT	28			28	67	34																			
62	57	27+99.57		LT		1	1				1	1	5	1															
	57	27+99.57	28+27.20	LT	28			28	67	34																			
63	57	28+27.20		LT		1	1				1	1	5	1															
	57	28+27.20	28+54.86	LT	28			28	67	34																			
64	57	28+54.86		LT		1	1				1	1	5	1															
	57	28+54.86	28+82.56	LT	28			28	67	34																			
65	57	28+82.56		LT		1	1				1	1	5	1															
	57	28+82.56	29+10.29	LT	28			28	67	34																			
66	57	29+10.29		LT		1	1				1	1	5	1															
	57	29+10.29	29+38.05	LT	28			28	68	34																			
67	57	29+38.05		LT		1	1				1	1	5	1															
	57	29+38.05	29+65.83	LT	28			28	68	34																			
68	57	29+65.83		LT		1	1				1	1	5	1															
TOTALS CARRIED TO SHEET 55						17	17	428	1395	542	18	17	85	17	3														

CALCULATED FGW CHECKED KAP

LIGHTING - AESTHETIC LIGHTING SUB-SUMMARY (3)

LAW-93-0.00

52 / 85

311
788

J:\Project\O\ODOT\15005112 Ironton Russell\LAW\81595\lighting\sheets\81595LS203.DGN - 5/5/2011 3:46:13 PM - brian_wallace

REF. NO.	SHEET NO.	STATION TO STATION		SIDE	LENGTH	625																								
		FROM	TO			CONNECTOR KIT, TYPE II	CONNECTOR KIT, TYPE III	CONDUIT 1-1/2", 725.04	NO. 6 AWG 600 VOLT DISTRIBUTION CABLE	NO. 8 AWG 600 VOLT DISTRIBUTION CABLE	JUNCTION BOX, AS PER PLAN (18"x12"x8" SURFACE MTD CAST IRON)	LIGHTING MISC.: AESTHIETIC LIGHTING FIXTURE TYPE AA, (400 WATT)	CONDUIT 1", 725.04	JUNCTION BOX, AS PER PLAN	CONNECTION, UNFUSED PERMENANT														
						EACH	EACH	FT	FT	FT	EACH	EACH	FT	EACH	EACH															
69	56	13+94.17		RT		1	1				1	1	5	1																
	56	13+94.17	14+21.95	RT	28			28	68	34																				
70	56	14+21.95		RT		1	1				1	1	5	1																
	56	14+21.95	14+49.71	RT	28			28	68	34																				
71	56	14+49.71		RT		1	1				1	1	5	1																
	56	14+49.71	14+77.44	RT	28			28	67	34																				
72	56	14+77.44		RT		1	1				1	1	5	1																
	56	14+77.44	15+05.14	RT	28			28	67	34																				
73	56	15+05.14		RT		1	1				1	1	5	1																
	56	15+05.14	15+32.80	RT	28			28	67	34																				
74	56	15+32.80		RT		1	1				1	1	5	1																
	56	15+32.80	15+60.43	RT	28			28	67	34																				
75	56	15+60.43		RT		1	1				1	1	5	1																
	56	15+60.43	15+88.02	RT	28			28	67	34																				
76	56	15+88.02		RT		1	1				1	1	5	1																
	56	15+88.02	16+15.59	RT	28			28	67	34																				
77	56	16+15.59		RT		1	1				1	1	5	1																
	56	16+15.59	16+43.10	RT	28			28	67	34																				
78	56	16+43.10		RT		1	1				1	1	5	1																
	56	16+43.10	16+68.55	RT	25			25	126	31																				
79	56	16+68.55		RT		1	1				1	1	5	1																
	56	16+68.55	16+70.55	RT	2			2	32	8																				
80	56	16+70.55		RT		1	1				1	1	5	1																
	56	16+70.55	16+95.92	RT	25			25	125	31																				
81	56	16+95.92		RT		1	1				1	1	5	1																
	56	16+95.92	16+97.92	RT	2			2	32	8																				
82	56	16+97.92		RT		1	1				1	1	5	1																
	56	16+97.92	JB-A1	RT	30			30	144	36																				
JB-A1	56	JB-A1		RT							1				3															
	56	JB-A1	RELAY PANEL LRP-A		35			35	164																					
	56	RELAY PANEL LRP-A	PANEL LP-A		25				124																					
	56	RELAY PANEL LRP-A	17+23.00	RT	20			20	52	26																				
83	56	17+23.00		RT		1	1				1	1	5	1																
	56	17+23.00	17+30.00	RT	7			7	26	13																				
84	56	17+30.00		RT		1	1				1	1	5	1																
	56	17+30.00	17+37.00	RT	7			7	26	13																				
85	56	17+37.00		RT		1	1				1	1	5	1																
	56	JB-A1	17+62.08	RT	30			30	432	36																				
86	56	17+62.08		RT		1	1				1	1	5	1																
	56	17+62.08	17+64.08	RT	2			2	96	8																				
87	56	17+64.08		RT		1	1				1	1	5	1																
	56	17+64.08	17+90.42	RT	26			26	388	32																				
88	56	17+90.42		RT		1	1				1	1	5	1																
	56	17+90.42	17+92.42	RT	2			2	96	8																				
89	56	17+92.42		RT		1	1				1	1	5	1																
	56	17+92.42	18+18.83	RT	26			26	389	32																				
90	56	18+18.83		RT		1	1				1	1	5	1																
	56	18+18.83	18+47.32	RT	28			28	414	34																				
91	56	18+47.32		RT		1	1				1	1	5	1																
	56	18+47.32	18+75.86	RT	29			29	414	35																				
92	56	18+75.86		RT		1	1				1	1	5	1																
	56	18+75.86	19+04.43	RT	29			29	415	35																				
93	56	19+04.43		RT		1	1				1	1	5	1																
	56	19+04.43	19+33.03	RT	29			29	415	35																				
94	56	19+33.03		RT		1	1				1	1	5	1																
TOTALS CARRIED TO SHEET 55						26	26	604	4517	725	27	26	130	26	3															

CALCULATED FGW CHECKED KAP

LIGHTING - AESTHETIC LIGHTING SUB-SUMMARY (4)

LAW-93-0.00

53 / 85

312 / 788

J:\Project\O\ODOT\15005112 Ironton Russell\LAW\81595\lighting\sheets\81595LS204.DGN - 5/5/2011 3:46:21 PM - brian_wallace

REF. NO.	SHEET NO.	STATION TO STATION		SIDE	LENGTH	625																								
		FROM	TO			CONNECTOR KIT, TYPE II	CONNECTOR KIT, TYPE III	CONDUIT 1-1/2", 725.04	NO. 6 AWG 600 VOLT DISTRIBUTION CABLE	NO. 8 AWG 600 VOLT DISTRIBUTION CABLE	JUNCTION BOX, AS PER PLAN (18"x12"x8" SURFACE MTD CAST IRON)	LIGHTING MISC.: AESTHIETIC LIGHTING FIXTURE TYPE AA, (400 WATT)	CONDUIT 1", 725.04	JUNCTION BOX, AS PER PLAN	CONNECTION, UNFUSED PERMENANT														
						EACH	EACH	FT	FT	FT	EACH	EACH	FT	EACH	EACH															
	56	19+33.03	19+61.68	RT	29			29	89	35																				
95	56	19+61.68		RT		1	1				1	1	5	1																
	56	19+61.68	19+90.35	RT	29			29	89	35																				
96	56	19+90.35		RT		1	1				1	1	5	1																
	56	19+90.35	20+19.04	RT	29			29	89	35																				
97	56	20+19.04		RT		1	1				1	1	5	1																
	56	20+19.04	20+47.76	RT	29			29	89	35																				
98	56	20+47.76		RT		1	1				1	1	5	1																
	56	20+47.76	20+76.51	RT	29			29	89	35																				
99	56	20+76.51		RT		1	1				1	1	5	1																
	56	20+76.51	21+05.27	RT	29			29	89	35																				
100	56	21+05.27		RT		1	1				1	1	5	1																
	56	21+05.27	21+34.06	RT	29			29	89	35																				
101	56	21+34.06		RT		1	1				1	1	5	1																
	56	21+34.06	21+62.86	RT	29			29	89	35																				
102	56	21+62.86		RT		1	1				1	1	5	1																
	56	21+62.86	21+97.14	RT	34			34	94	40																				
103	56	21+97.14		RT		1	1				1	1	5	1																
	56	21+97.14	22+25.94	RT	29			29	77	35																				
104	56	22+25.94		RT		1	1				1	1	5	1																
	56	22+25.94	22+54.73	RT	29			29	77	35																				
105	56	22+54.73		RT		1	1				1	1	5	1																
	57	22+54.73	22+83.49	RT	29			29	77	35																				
106	57	22+83.49		RT		1	1				1	1	5	1																
	57	22+83.49	23+12.24	RT	29			29	77	35																				
107	57	23+12.24		RT		1	1				1	1	5	1																
	57	23+12.24	23+40.96	RT	29			29	77	35																				
108	57	23+40.96		RT		1	1				1	1	5	1																
	57	23+40.96	23+69.65	RT	29			29	77	35																				
109	57	23+69.65		RT		1	1				1	1	5	1																
	57	23+69.65	23+98.32	RT	29			29	77	35																				
110	57	23+98.32		RT		1	1				1	1	5	1																
	57	23+98.32	24+26.97	RT	29			29	65	35																				
111	57	24+26.97		RT		1	1				1	1	5	1																
	57	24+26.97	24+55.57	RT	29			29	65	35																				
112	57	24+55.57		RT		1	1				1	1	5	1																
	57	24+55.57	24+84.14	RT	29			29	65	35																				
113	57	24+84.14		RT		1	1				1	1	5	1																
	57	24+84.14	25+12.68	RT	29			29	65	35																				
114	57	25+12.68		RT		1	1				1	1	5	1																
	57	25+12.68	25+41.17	RT	28			28	64	34																				
115	57	25+41.17		RT		1	1				1	1	5	1																
	57	25+41.17	25+67.58	RT	26			26	62	32																				
116	57	25+67.58		RT		1	1				1	1	5	1																
	57	25+67.58	25+69.58	RT	2			2	38	8																				
117	57	25+69.58		RT		1	1				1	1	5	1																
	57	25+69.58	25+95.92	RT	26			26	62	32																				
118	57	25+95.92		RT		1	1				1	1	5	1																
	57	25+95.92	25+97.92	RT	2			2	38	8																				
119	57	25+97.92		RT		1	1				1	1	5	1																
TOTALS CARRIED TO SHEET 55						25	25	665	1865	815	25	25	125	25	0															

CALCULATED FGW CHECKED KAP

LIGHTING - AESTHETIC LIGHTING SUB-SUMMARY (5)

LAW-93-0.00

J:\Project\O\ODOT\15005112 Ironton Russell\LAW\81595\lighting\sheets\81595LS205.dgn - 5/5/2011 3:46:30 PM - brian_wallace

REF. NO.	SHEET NO.	STATION TO STATION FROM	TO	SIDE	LENGTH	625 CONNECTOR KIT, TYPE II EACH	CONNECTOR KIT, TYPE III EACH	CONDUIT 1-1/2", 725.04 FT	NO. 6 AWG 600 VOLT DISTRIBUTION CABLE FT	NO. 8 AWG 600 VOLT DISTRIBUTION CABLE FT	JUNCTION BOX, AS PER PLAN (18"x12"x8" SURFACE MTD CAST IRON) EACH	LIGHTING MISC.: AESTHETIC LIGHTING FIXTURE TYPE AA, (400 WATT) EACH	CONDUIT 1", 725.04 FT	JUNCTION BOX, AS PER PLAN EACH	CONNECTION, UNFUSED PERMENANT EACH
		26+04.00	JB-A3	RT	30			30	144	36					
JB-A3	57	JB-A3		RT							1				3
	57	JB-A3	26+23.00	RT	30			30	72	36					
120	57	26+23.00		RT		1	1				1	1	5	1	
	57	26+23.00	26+30.00	RT	7			7	26	13					
121	57	26+30.00		RT		1	1				1	1	5	1	
	57	26+30.00	26+37.00	RT	7			7	26	13					
122	57	26+37.00		RT		1	1				1	1	5	1	
	57	JB-A3	26+62.08	RT	30			30	144	36					
123	57	26+62.08		RT		1	1				1	1	5	1	
	57	26+62.08	26+64.08	RT	2			2	32	8					
124	57	26+64.08		RT		1	1				1	1	5	1	
	57	26+64.08	26+89.45	RT	25			25	125	31					
125	57	26+89.45		RT		1	1				1	1	5	1	
	57	26+89.45	26+91.45	RT	2			2	32	8					
126	57	26+91.45		RT		1	1				1	1	5	1	
	57	26+91.45	27+16.90	RT	25			25	126	31					
127	57	27+16.90		RT		1	1				1	1	5	1	
	57	27+16.90	27+44.41	RT	28			28	67	34					
128	57	27+44.41		RT		1	1				1	1	5	1	
	57	27+44.41	27+71.98	RT	28			28	67	34					
129	57	27+71.98		RT		1	1				1	1	5	1	
	57	27+71.98	27+99.57	RT	28			28	67	34					
130	57	27+99.57		RT		1	1				1	1	5	1	
	57	27+99.57	28+27.20	RT	28			28	67	34					
131	57	28+27.20		RT		1	1				1	1	5	1	
	57	28+27.20	28+54.86	RT	28			28	67	34					
132	57	28+54.86		RT		1	1				1	1	5	1	
	57	28+54.86	28+82.56	RT	28			28	67	34					
133	57	28+82.56		RT		1	1				1	1	5	1	
	57	28+82.56	29+10.29	RT	28			28	67	34					
134	57	29+10.29		RT		1	1				1	1	5	1	
	57	29+10.29	29+38.05	RT	28			28	68	34					
135	57	29+38.05		RT		1	1				1	1	5	1	
	57	29+38.05	29+65.83	RT	28			28	68	34					
136	57	29+65.83		RT		1	1				1	1	5	1	
		SUB-TOTALS	THIS SHEET			17	17	408	1,333	516	18	17	85	17	3
		SUB-TOTALS	SHEET 50			26	26	567	2,939	723	27	26	130	26	3
		SUB-TOTALS	SHEET 51			25	25	666	7,673	816	25	25	125	25	0
		SUB-TOTALS	SHEET 52			17	17	428	1,395	542	18	17	85	17	3
		SUB-TOTALS	SHEET 53			26	26	604	4,517	725	27	26	130	26	3
		SUB-TOTALS	SHEET 54			25	25	665	1,865	815	25	25	125	25	0
TOTALS CARRIED TO GENERAL SUMMARY						136	136	3,338	19,722	4,137	140	136	680	136	12

CALCULATED FGW CHECKED KAP

LIGHTING - AESTHETIC LIGHTING SUB-SUMMARY (6)

LAW-93-0.00

55 / 85

314
788

J:\Project\ODOT\15005112 Ironton Russell\LAW\81595\lighting\sheets\81595LS206.dgn - 5/5/2011 3:46:38 PM - brian_wallace

LEGEND

- AESTHETIC LUMINAIRE
- XX — LUMINAIRE NUMBER
- STAY CABLE
- FIXTURE TYPE / FIXTURE NO. / CIRCUIT PANEL & NUMBER / FIXTURE LOCATION
  - 69 — TYPE AA LP-A-5 — STA. 13+83.25, 20.33 RT

NOTES

1. FOR RACEWAYS SEE SHEET 61/85
2. FOR PANELBOARD SCHEDULES SEE SHEETS 20/85 AND 21/85

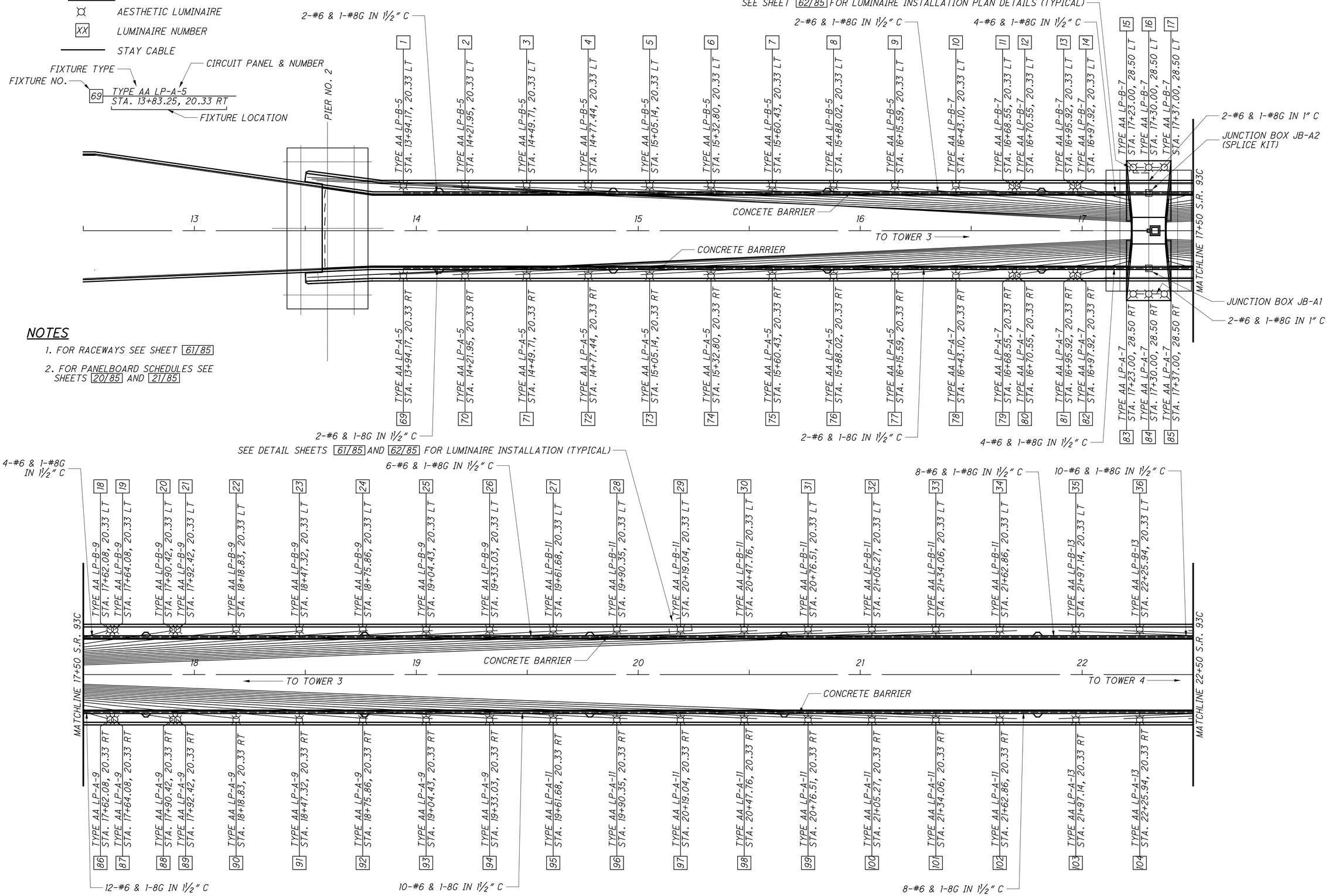

| | | |

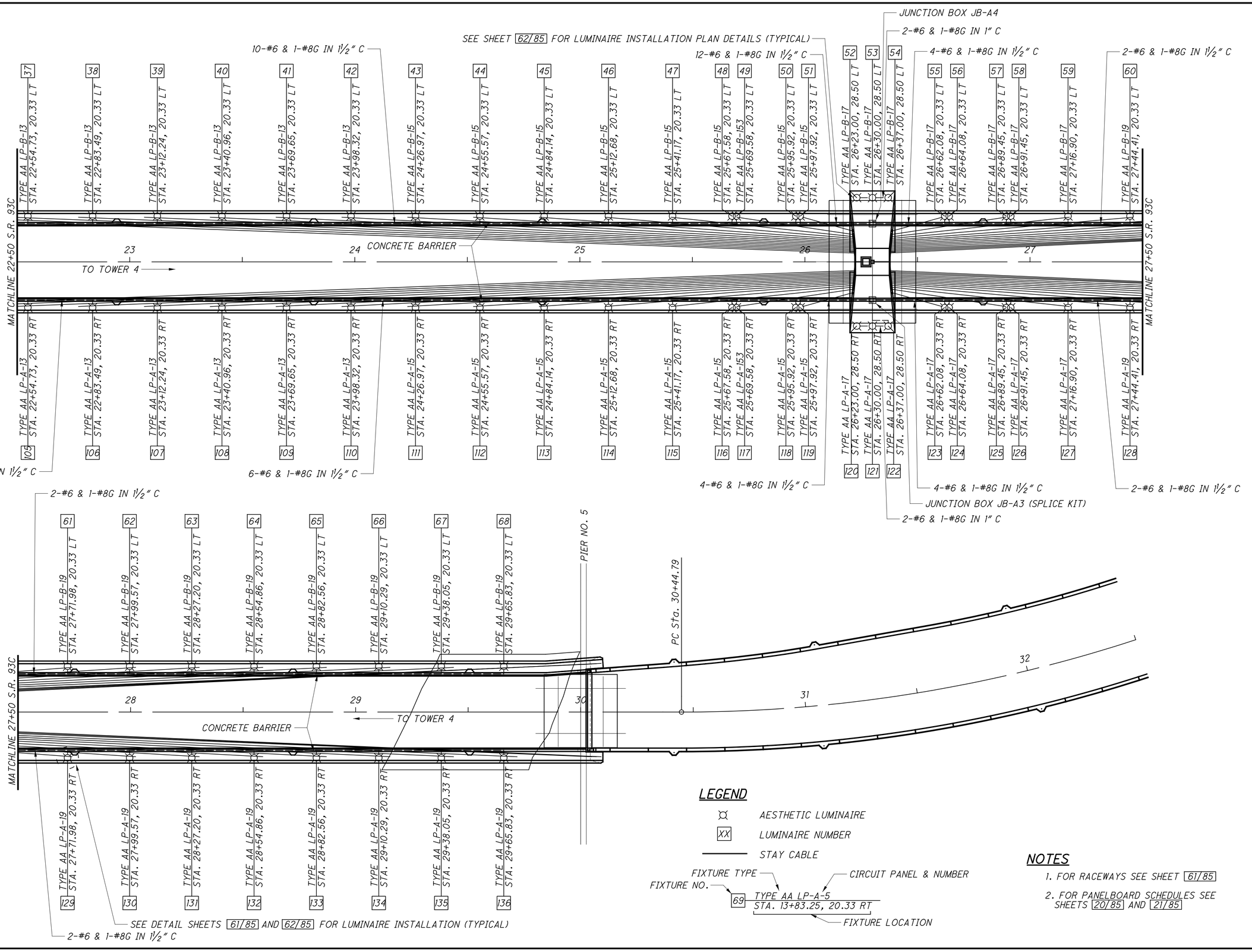

J:\Project\O\ODOT\15005112 Ironton Russell\LAW\81595\lighting\sheets\81595LP202.dgn - 5/5/2011 3:48:10 PM - brian_wallace

LUMINAIRE NUMBER	LUMINAIRE	TYPE	LOAD	CABLE NUMBER	AIMING AXIS
1	400W M.H. WITH 3 X 4 DISTRIBUTION	1	480W	1	ALIGN TO CABLE
2	400W M.H. WITH 3 X 4 DISTRIBUTION	1	480W	2	ALIGN TO CABLE
3	400W M.H. WITH 3 X 4 DISTRIBUTION	1	480W	3	ALIGN TO CABLE
4	400W M.H. WITH 3 X 4 DISTRIBUTION	1	480W	4	ALIGN TO CABLE
5	400W M.H. WITH 3 X 4 DISTRIBUTION	1	480W	5	ALIGN TO CABLE
6	400W M.H. WITH 3 X 4 DISTRIBUTION	1	480W	6	ALIGN TO CABLE
7	400W M.H. WITH 3 X 4 DISTRIBUTION	1	480W	7	ALIGN TO CABLE
8	400W M.H. WITH 3 X 4 DISTRIBUTION	1	480W	8	ALIGN TO CABLE
9	400W M.H. WITH 3 X 4 DISTRIBUTION	1	480W	9	ALIGN TO CABLE
10	400W M.H. WITH 3 X 4 DISTRIBUTION	1	480W	10	ALIGN TO CABLE
11	400W M.H. WITH 3 X 4 DISTRIBUTION	1	480W	11	ALIGN TO CABLE
12	400W M.H. WITH 3 X 4 DISTRIBUTION	1	480W	11	90 DEGREES
13	400W M.H. WITH 3 X 4 DISTRIBUTION	1	480W	12	ALIGN TO CABLE
14	400W M.H. WITH 3 X 4 DISTRIBUTION	1	480W	12	90 DEGREES
15	400W M.H. WITH 3 X 4 DISTRIBUTION	1	480W	W. KY. TWR.	90 DEGREES
16	400W M.H. WITH 3 X 4 DISTRIBUTION	1	480W	W. KY. TWR.	90 DEGREES
17	400W M.H. WITH 3 X 4 DISTRIBUTION	1	480W	W. KY. TWR.	90 DEGREES
18	400W M.H. WITH 3 X 4 DISTRIBUTION	1	480W	13	90 DEGREES
19	400W M.H. WITH 3 X 4 DISTRIBUTION	1	480W	13	ALIGN TO CABLE
20	400W M.H. WITH 3 X 4 DISTRIBUTION	1	480W	14	90 DEGREES
21	400W M.H. WITH 3 X 4 DISTRIBUTION	1	480W	14	ALIGN TO CABLE
22	400W M.H. WITH 3 X 4 DISTRIBUTION	1	480W	15	ALIGN TO CABLE
23	400W M.H. WITH 3 X 4 DISTRIBUTION	1	480W	16	ALIGN TO CABLE
24	400W M.H. WITH 3 X 4 DISTRIBUTION	1	480W	17	ALIGN TO CABLE
25	400W M.H. WITH 3 X 4 DISTRIBUTION	1	480W	18	ALIGN TO CABLE
26	400W M.H. WITH 3 X 4 DISTRIBUTION	1	480W	19	ALIGN TO CABLE
27	400W M.H. WITH 3 X 4 DISTRIBUTION	1	480W	20	ALIGN TO CABLE
28	400W M.H. WITH 3 X 4 DISTRIBUTION	1	480W	21	ALIGN TO CABLE
29	400W M.H. WITH 3 X 4 DISTRIBUTION	1	480W	22	ALIGN TO CABLE
30	400W M.H. WITH 3 X 4 DISTRIBUTION	1	480W	23	ALIGN TO CABLE
31	400W M.H. WITH 3 X 4 DISTRIBUTION	1	480W	24	ALIGN TO CABLE
32	400W M.H. WITH 3 X 4 DISTRIBUTION	1	480W	25	ALIGN TO CABLE
33	400W M.H. WITH 3 X 4 DISTRIBUTION	1	480W	26	ALIGN TO CABLE
34	400W M.H. WITH 3 X 4 DISTRIBUTION	1	480W	27	ALIGN TO CABLE
35	400W M.H. WITH 3 X 4 DISTRIBUTION	1	480W	28	ALIGN TO CABLE
36	400W M.H. WITH 3 X 4 DISTRIBUTION	1	480W	29	ALIGN TO CABLE
37	400W M.H. WITH 3 X 4 DISTRIBUTION	1	480W	30	ALIGN TO CABLE
38	400W M.H. WITH 3 X 4 DISTRIBUTION	1	480W	31	ALIGN TO CABLE
39	400W M.H. WITH 3 X 4 DISTRIBUTION	1	480W	32	ALIGN TO CABLE
40	400W M.H. WITH 3 X 4 DISTRIBUTION	1	480W	33	ALIGN TO CABLE
41	400W M.H. WITH 3 X 4 DISTRIBUTION	1	480W	34	ALIGN TO CABLE
42	400W M.H. WITH 3 X 4 DISTRIBUTION	1	480W	35	ALIGN TO CABLE
43	400W M.H. WITH 3 X 4 DISTRIBUTION	1	480W	36	ALIGN TO CABLE
44	400W M.H. WITH 3 X 4 DISTRIBUTION	1	480W	37	ALIGN TO CABLE
45	400W M.H. WITH 3 X 4 DISTRIBUTION	1	480W	38	ALIGN TO CABLE
46	400W M.H. WITH 3 X 4 DISTRIBUTION	1	480W	39	ALIGN TO CABLE
47	400W M.H. WITH 3 X 4 DISTRIBUTION	1	480W	40	ALIGN TO CABLE
48	400W M.H. WITH 3 X 4 DISTRIBUTION	1	480W	41	ALIGN TO CABLE
49	400W M.H. WITH 3 X 4 DISTRIBUTION	1	480W	41	90 DEGREES
50	400W M.H. WITH 3 X 4 DISTRIBUTION	1	480W	42	ALIGN TO CABLE
51	400W M.H. WITH 3 X 4 DISTRIBUTION	1	480W	42	90 DEGREES
52	400W M.H. WITH 3 X 4 DISTRIBUTION	1	480W	W. OH. TWR.	90 DEGREES
53	400W M.H. WITH 3 X 4 DISTRIBUTION	1	480W	W. OH. TWR.	90 DEGREES
54	400W M.H. WITH 3 X 4 DISTRIBUTION	1	480W	W. OH. TWR.	90 DEGREES
55	400W M.H. WITH 3 X 4 DISTRIBUTION	1	480W	43	90 DEGREES
56	400W M.H. WITH 3 X 4 DISTRIBUTION	1	480W	43	ALIGN TO CABLE
57	400W M.H. WITH 3 X 4 DISTRIBUTION	1	480W	44	90 DEGREES
58	400W M.H. WITH 3 X 4 DISTRIBUTION	1	480W	44	ALIGN TO CABLE
59	400W M.H. WITH 3 X 4 DISTRIBUTION	1	480W	45	ALIGN TO CABLE
60	400W M.H. WITH 3 X 4 DISTRIBUTION	1	480W	46	ALIGN TO CABLE
61	400W M.H. WITH 3 X 4 DISTRIBUTION	1	480W	47	ALIGN TO CABLE
62	400W M.H. WITH 3 X 4 DISTRIBUTION	1	480W	48	ALIGN TO CABLE
63	400W M.H. WITH 3 X 4 DISTRIBUTION	1	480W	49	ALIGN TO CABLE
64	400W M.H. WITH 3 X 4 DISTRIBUTION	1	480W	50	ALIGN TO CABLE
65	400W M.H. WITH 3 X 4 DISTRIBUTION	1	480W	51	ALIGN TO CABLE
66	400W M.H. WITH 3 X 4 DISTRIBUTION	1	480W	52	ALIGN TO CABLE
67	400W M.H. WITH 3 X 4 DISTRIBUTION	1	480W	53	ALIGN TO CABLE
68	400W M.H. WITH 3 X 4 DISTRIBUTION	1	480W	54	ALIGN TO CABLE

LUMINAIRE NUMBER	LUMINAIRE	TYPE	LOAD	CABLE NUMBER	AIMING AXIS
69	400W M.H. WITH 3 X 4 DISTRIBUTION	1	480W	55	ALIGN TO CABLE
70	400W M.H. WITH 3 X 4 DISTRIBUTION	1	480W	56	ALIGN TO CABLE
71	400W M.H. WITH 3 X 4 DISTRIBUTION	1	480W	57	ALIGN TO CABLE
72	400W M.H. WITH 3 X 4 DISTRIBUTION	1	480W	58	ALIGN TO CABLE
73	400W M.H. WITH 3 X 4 DISTRIBUTION	1	480W	59	ALIGN TO CABLE
74	400W M.H. WITH 3 X 4 DISTRIBUTION	1	480W	60	ALIGN TO CABLE
75	400W M.H. WITH 3 X 4 DISTRIBUTION	1	480W	61	ALIGN TO CABLE
76	400W M.H. WITH 3 X 4 DISTRIBUTION	1	480W	62	ALIGN TO CABLE
77	400W M.H. WITH 3 X 4 DISTRIBUTION	1	480W	63	ALIGN TO CABLE
78	400W M.H. WITH 3 X 4 DISTRIBUTION	1	480W	64	ALIGN TO CABLE
79	400W M.H. WITH 3 X 4 DISTRIBUTION	1	480W	65	ALIGN TO CABLE
80	400W M.H. WITH 3 X 4 DISTRIBUTION	1	480W	65	90 DEGREES
81	400W M.H. WITH 3 X 4 DISTRIBUTION	1	480W	66	ALIGN TO CABLE
82	400W M.H. WITH 3 X 4 DISTRIBUTION	1	480W	66	90 DEGREES
83	400W M.H. WITH 3 X 4 DISTRIBUTION	1	480W	E. KY. TWR.	90 DEGREES
84	400W M.H. WITH 3 X 4 DISTRIBUTION	1	480W	E. KY. TWR.	90 DEGREES
85	400W M.H. WITH 3 X 4 DISTRIBUTION	1	480W	E. KY. TWR.	90 DEGREES
86	400W M.H. WITH 3 X 4 DISTRIBUTION	1	480W	67	90 DEGREES
87	400W M.H. WITH 3 X 4 DISTRIBUTION	1	480W	67	ALIGN TO CABLE
88	400W M.H. WITH 3 X 4 DISTRIBUTION	1	480W	68	90 DEGREES
89	400W M.H. WITH 3 X 4 DISTRIBUTION	1	480W	68	ALIGN TO CABLE
90	400W M.H. WITH 3 X 4 DISTRIBUTION	1	480W	69	ALIGN TO CABLE
91	400W M.H. WITH 3 X 4 DISTRIBUTION	1	480W	70	ALIGN TO CABLE
92	400W M.H. WITH 3 X 4 DISTRIBUTION	1	480W	71	ALIGN TO CABLE
93	400W M.H. WITH 3 X 4 DISTRIBUTION	1	480W	72	ALIGN TO CABLE
94	400W M.H. WITH 3 X 4 DISTRIBUTION	1	480W	73	ALIGN TO CABLE
95	400W M.H. WITH 3 X 4 DISTRIBUTION	1	480W	74	ALIGN TO CABLE
96	400W M.H. WITH 3 X 4 DISTRIBUTION	1	480W	75	ALIGN TO CABLE
97	400W M.H. WITH 3 X 4 DISTRIBUTION	1	480W	76	ALIGN TO CABLE
98	400W M.H. WITH 3 X 4 DISTRIBUTION	1	480W	77	ALIGN TO CABLE
99	400W M.H. WITH 3 X 4 DISTRIBUTION	1	480W	78	ALIGN TO CABLE
100	400W M.H. WITH 3 X 4 DISTRIBUTION	1	480W	79	ALIGN TO CABLE
101	400W M.H. WITH 3 X 4 DISTRIBUTION	1	480W	80	ALIGN TO CABLE
102	400W M.H. WITH 3 X 4 DISTRIBUTION	1	480W	81	ALIGN TO CABLE
103	400W M.H. WITH 3 X 4 DISTRIBUTION	1	480W	82	ALIGN TO CABLE
104	400W M.H. WITH 3 X 4 DISTRIBUTION	1	480W	83	ALIGN TO CABLE
105	400W M.H. WITH 3 X 4 DISTRIBUTION	1	480W	84	ALIGN TO CABLE
106	400W M.H. WITH 3 X 4 DISTRIBUTION	1	480W	85	ALIGN TO CABLE
107	400W M.H. WITH 3 X 4 DISTRIBUTION	1	480W	86	ALIGN TO CABLE
108	400W M.H. WITH 3 X 4 DISTRIBUTION	1	480W	87	ALIGN TO CABLE
109	400W M.H. WITH 3 X 4 DISTRIBUTION	1	480W	88	ALIGN TO CABLE
110	400W M.H. WITH 3 X 4 DISTRIBUTION	1	480W	89	ALIGN TO CABLE
111	400W M.H. WITH 3 X 4 DISTRIBUTION	1	480W	90	ALIGN TO CABLE
112	400W M.H. WITH 3 X 4 DISTRIBUTION	1	480W	91	ALIGN TO CABLE
113	400W M.H. WITH 3 X 4 DISTRIBUTION	1	480W	92	ALIGN TO CABLE
114	400W M.H. WITH 3 X 4 DISTRIBUTION	1	480W	93	ALIGN TO CABLE
115	400W M.H. WITH 3 X 4 DISTRIBUTION	1	480W	94	ALIGN TO CABLE
116	400W M.H. WITH 3 X 4 DISTRIBUTION	1	480W	95	ALIGN TO CABLE
117	400W M.H. WITH 3 X 4 DISTRIBUTION	1	480W	95	90 DEGREES
118	400W M.H. WITH 3 X 4 DISTRIBUTION	1	480W	96	ALIGN TO CABLE
119	400W M.H. WITH 3 X 4 DISTRIBUTION	1	480W	96	90 DEGREES
120	400W M.H. WITH 3 X 4 DISTRIBUTION	1	480W	E. OH. TWR.	90 DEGREES
121	400W M.H. WITH 3 X 4 DISTRIBUTION	1	480W	E. OH. TWR.	90 DEGREES
122	400W M.H. WITH 3 X 4 DISTRIBUTION	1	480W	E. OH. TWR.	90 DEGREES
123	400W M.H. WITH 3 X 4 DISTRIBUTION	1	480W	97	90 DEGREES
124	400W M.H. WITH 3 X 4 DISTRIBUTION	1	480W	97	ALIGN TO CABLE
125	400W M.H. WITH 3 X 4 DISTRIBUTION	1	480W	98	90 DEGREES
126	400W M.H. WITH 3 X 4 DISTRIBUTION	1	480W	98	ALIGN TO CABLE
127	400W M.H. WITH 3 X 4 DISTRIBUTION	1	480W	99	ALIGN TO CABLE
128	400W M.H. WITH 3 X 4 DISTRIBUTION	1	480W	100	ALIGN TO CABLE
129	400W M.H. WITH 3 X 4 DISTRIBUTION	1	480W	101	ALIGN TO CABLE
130	400W M.H. WITH 3 X 4 DISTRIBUTION	1	480W	102	ALIGN TO CABLE
131	400W M.H. WITH 3 X 4 DISTRIBUTION	1	480W	103	ALIGN TO CABLE
132	400W M.H. WITH 3 X 4 DISTRIBUTION	1	480W	104	ALIGN TO CABLE
133	400W M.H. WITH 3 X 4 DISTRIBUTION	1	480W	105	ALIGN TO CABLE
134	400W M.H. WITH 3 X 4 DISTRIBUTION	1	480W	106	ALIGN TO CABLE
135	400W M.H. WITH 3 X 4 DISTRIBUTION	1	480W	107	ALIGN TO CABLE
136	400W M.H. WITH 3 X 4 DISTRIBUTION	1	480W	108	ALIGN TO CABLE

NOTES:

1. SEE SHEETS 56/85 AND 57/85 FOR LUMINAIRE LOCATION
2. EACH LUMINAIRE SHALL BE INSTALLED ON 2" TENON, MOUNTED ON A BASE PLATE ATTACHED TO THE JUNCTION BOX COVER . SEE SHEET 61/85 FOR MOUNTING DETAILS

CALCULATED BLW
CHECKED KAP

LIGHTING - AESTHETIC LIGHTING FIXTURE SCHEDULE

LAW-93-0.00

58/85

317
788

J:\Project\ODOT\15005112 Ironton Russell\LAW\81595\lighting\sheets\81595LM201.dgn - 5/5/2011 3:48:21 PM - brian_wallace

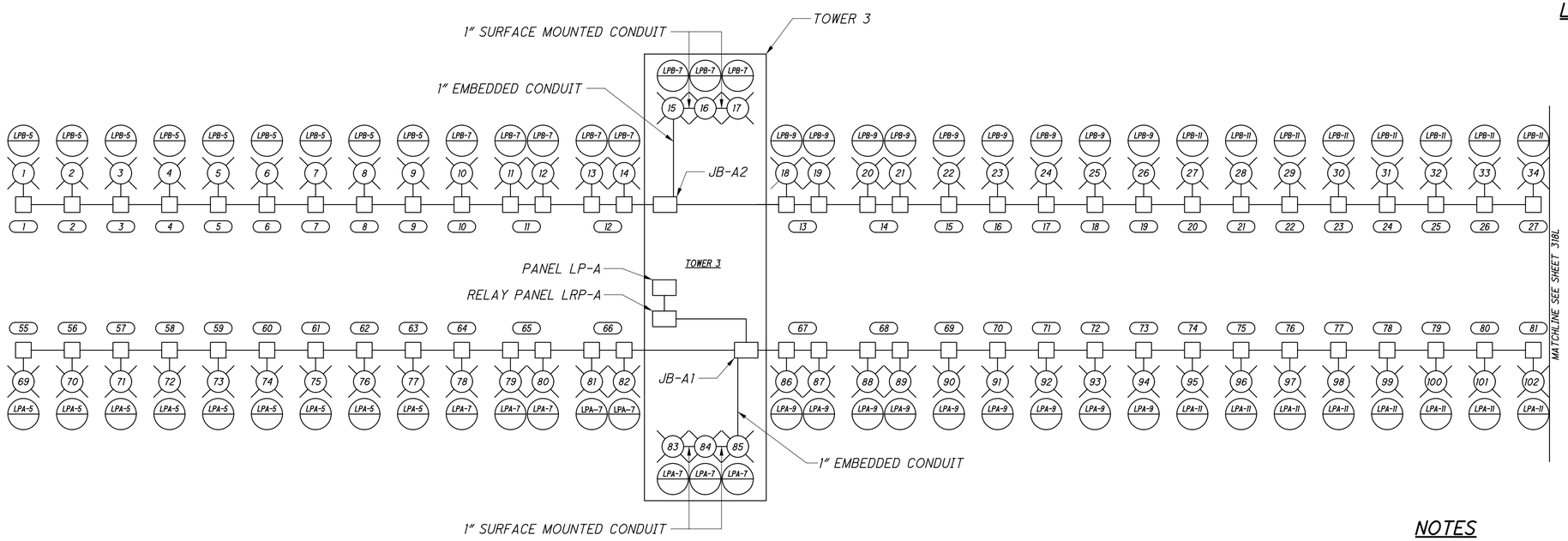

LEGEND

- 18" X 12" X 8" SURFACE MTD NEMA 4X JUNCTION BOX ON BRIDGE DECK BEHIND CONCRETE BARRIER.
- (XX) AESTHETIC LIGHT FIXTURE, XX = SPECIFIC FIXTURE IDENTIFICATION NUMBER
- (XX) PANEL-CIRCUIT NUMBER
- 1-1/2" SURFACE MTD CONDUIT ON DECK BEHIND CONCRETE BARRIER
- (XX) STAY CABLE NUMBER

NOTES

1. EACH LUMINAIRE SHALL BE INSTALLED ON A CAST ALUMINUM JUNCTION BOX WITH COVER AND TENON. SEE SHEETS 61/85 AND 62/85 FOR MOUNTING DETAILS.
2. LUMINAIRES ARE SET ADJACENT TO EACH CABLE STAY. SEE SHEETS 61/85 AND 62/85.
3. LUMINAIRES (15-17 & 83-85) ON EACH SIDE OF THE TOWER 3 ARE AIMING UP AT THE TOWER 3.
4. LUMINAIRES (52-54 & 120-122) ON EACH SIDE OF THE TOWER 4 ARE AIMING UP AT THE TOWER 4.
5. LUMINAIRES (12, 14, 18, 20, 80, 82, 86 & 88) ARE SET IN FRONT OF THE CABLES (11, 12, 13, 14, 65, 66, 67 & 68). THEY WILL BE MOUNTED IN FRONT OF THE CABLES AIMING AT THE TOWER 3.
6. LUMINAIRES (49, 51, 55, 57, 117, 119, 123, 125) ARE SET IN FRONT OF THE CABLES (41, 42, 43, 44, 95, 96, 97 & 98). THEY WILL BE MOUNTED IN FRONT OF THE CABLES AIMING AT THE TOWER 4.
7. PROVIDE #8 GROUND WIRE IN LIGHTING CIRCUIT CONDUITS.
8. PROVIDE 10 AMP FUSES FOR EACH LUMINAIRE.
9. SEE LIGHTING PLAN ON SHEETS 61/85 AND 62/85 FOR LUMINAIRE AND JUNCTION BOX LOCATIONS.
10. SEE SCHEDULE SHEET 58/85 FOR LUMINAIRE AIMING.
11. SEE SHEET 21/85 AND 21/85 FOR PANELBOARD SCHEDULES.
12. LUMINAIRES SHALL BE A 400W PULSE START MH FLOODLIGHT, AIMABLE, DIE-CASE ALUMINUM HOUSING, 3/16" THICK "BLUE" TEMPERED GLASS LENS, WET LOCATION LISTED. LUMINAIRES SHALL BE HADCO #C6204-277-WHITE OR APPROVED EQUAL. EACH LUMINAIRE SHALL BE PROVIDED WITH A CAST ALUMINUM JUNCTION BOX WITH COVER AND TENON. JUNCTION BOX SHALL BE HADCO #CA6204 OR APPROVED EQUAL.

CALCULATED BLW
CHECKED SAC

AESTHETIC LIGHTING ONE-LINE DIAGRAM (1)

LIGHTING - AESTHETIC

LAW-93-0.00

59/85

318
788

J:\Project\OVODOT\15005112 Ironton Russell\LAW\81595\lighting\sheets\81595LC201.dgn - 3/23/2012 10:14:09 AM - jon_wanstrath

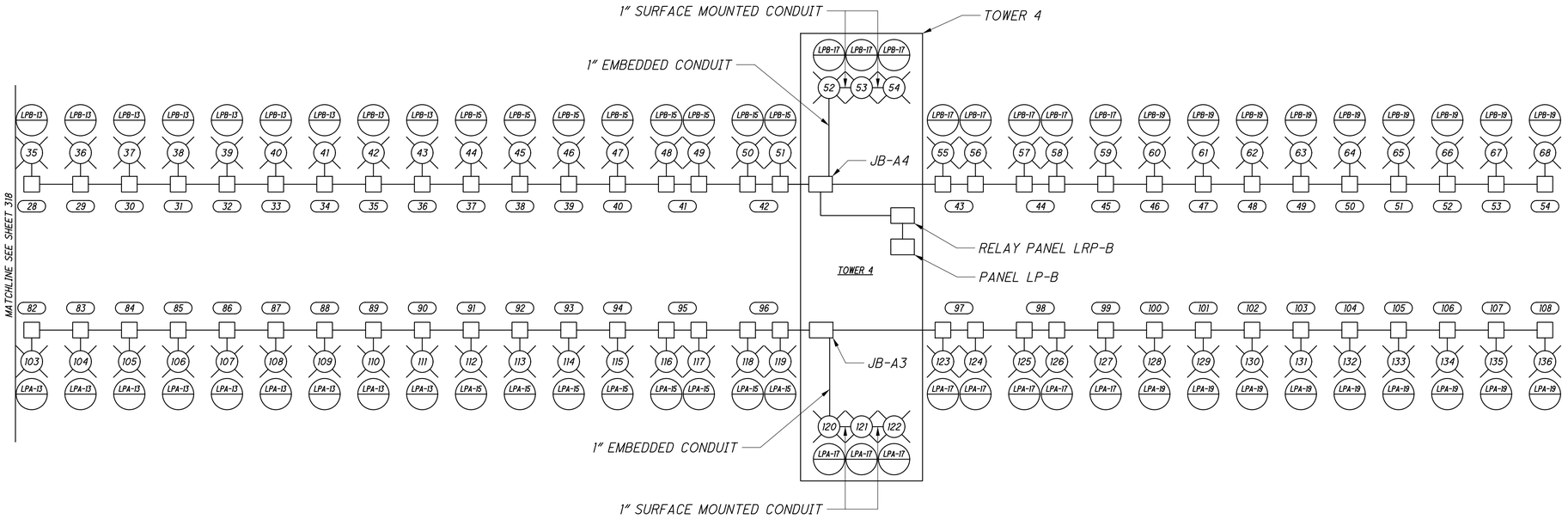

LEGEND

- 18" X 12" X 8" SURFACE MTD NEMA 4X JUNCTION BOX ON BRIDGE DECK BEHIND CONCRETE BARRIER.
- XX — AESTHETIC LIGHT FIXTURE, XX = SPECIFIC FIXTURE IDENTFICATION NUMBER
- XX — PANEL - CIRCUIT NUMBER
- 1-1/2" SURFACE MTD CONDUIT ON DECK BEHIND CONCRETE BARRIER
- XX — STAY CABLE NUMBER

NOTES

1. EACH LUMINAIRE SHALL BE INSTALLED ON A CAST ALUMINUM JUNCTION BOX WITH COVER AND TENON. SEE SHEETS 61/85 AND 62/85 FOR MOUNTING DETAILS.
2. LUMINAIRES ARE SET ADJACENT TO EACH CABLE STAY. SEE SHEETS 61/85 AND 62/85.
3. LUMINAIRES (15-17 & 83-85) ON EACH SIDE OF THE TOWER 3 ARE AIMING UP AT THE TOWER 3.
4. LUMINAIRES (52-54 & 120-122) ON EACH SIDE OF THE TOWER 4 ARE AIMING UP AT THE TOWER 4.
5. LUMINAIRES (12, 14, 18, 20, 80, 82, 86 & 88) ARE SET IN FRONT OF THE CABLES (11, 12, 13, 14, 65, 66, 67 & 68). THEY WILL BE MOUNTED IN FRONT OF THE CABLES AIMING AT THE TOWER 3.
6. LUMINAIRES (49, 51, 55, 57, 117, 119, 123, 125) ARE SET IN FRONT OF THE CABLES (41, 42, 43, 44, 95, 96, 97 & 98). THEY WILL BE MOUNTED IN FRONT OF THE CABLES AIMING AT THE TOWER 4.
7. PROVIDE #8 GROUND WIRE IN LIGHTING CIRCUIT CONDUITS.
8. PROVIDE 10 AMP FUSES FOR EACH LUMINAIRE.
9. SEE LIGHTING PLAN ON SHEETS 61/85 AND 62/85 FOR LUMINAIRE AND JUNCTION BOX LOCATIONS.
10. SEE SCHEDULE SHEET 58/85 FOR LUMINAIRE AIMING.
11. SEE SHEET 20/85 AND 21/85 FOR PANELBOARD SCHEDULES.
12. LUMINAIRES SHALL BE A 400W PULSE START MH FLOODLIGHT, AIMABLE, DIE-CASE ALUMINUM HOUSING, 3/16" THICK "BLUE" TEMPERED GLASS LENS, WET LOCATION LISTED. LUMINAIRES SHALL BE HADCO #C6204-277-WHITE OR APPROVED EQUAL. EACH LUMINAIRE SHALL BE PROVIDED WITH A CAST ALUMINUM JUNCTION BOX WITH COVER AND TENON. JUNCTION BOX SHALL BE HADCO #CA6204 OR APPROVED EQUAL.

CALCULATED BLW CHECKED SAC

LIGHTING - AESTHETIC LIGHTING ONE-LINE DIAGRAM (2)

LAW-93-0.00

60/85

319
788

J:\Project\O\ODOT\15005112 Ironton Russell\LAW\81595\lighting\sheets\81595LC202.dgn - 3/23/2012 10:14:10 AM - jon_wanstrath

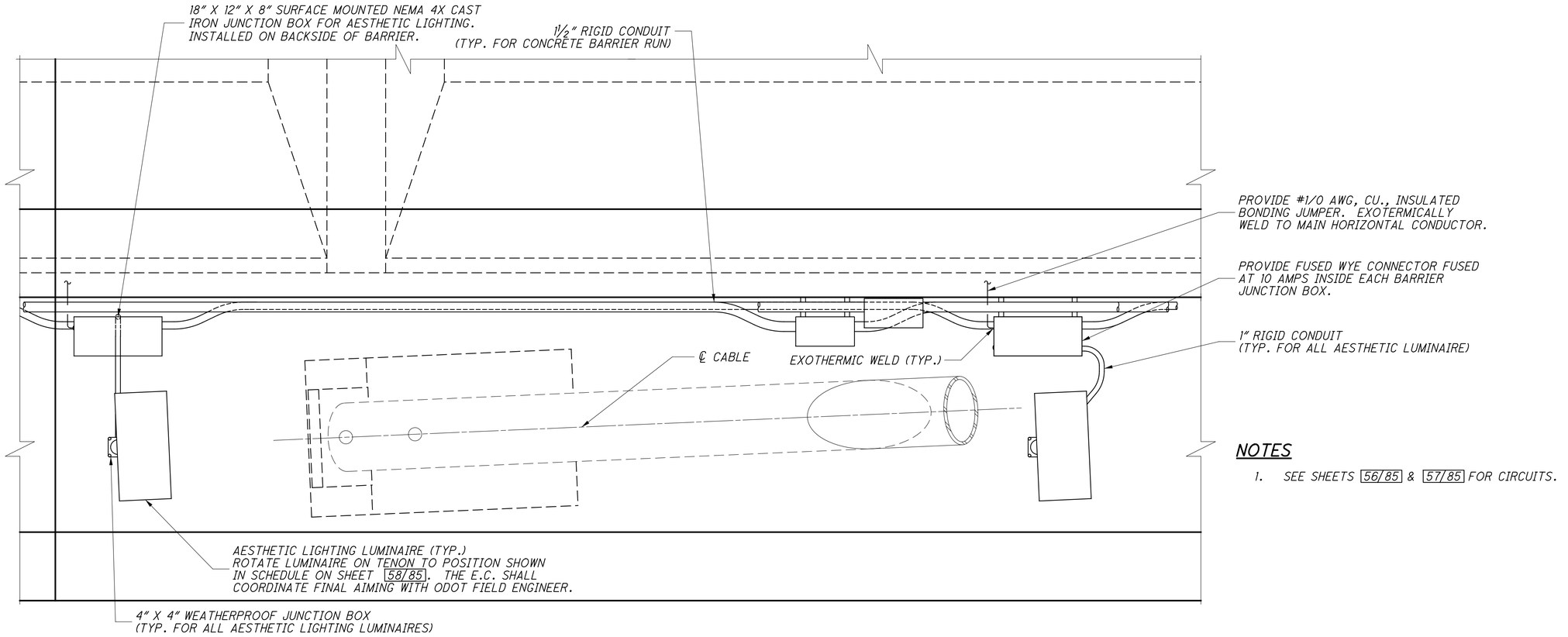

NOTES

1. SEE SHEETS 56/85 & 57/85 FOR CIRCUITS.

PLAN

DETAIL - PART PLAN
LUMINAIRE INSTALLATION DETAIL (TYP.)

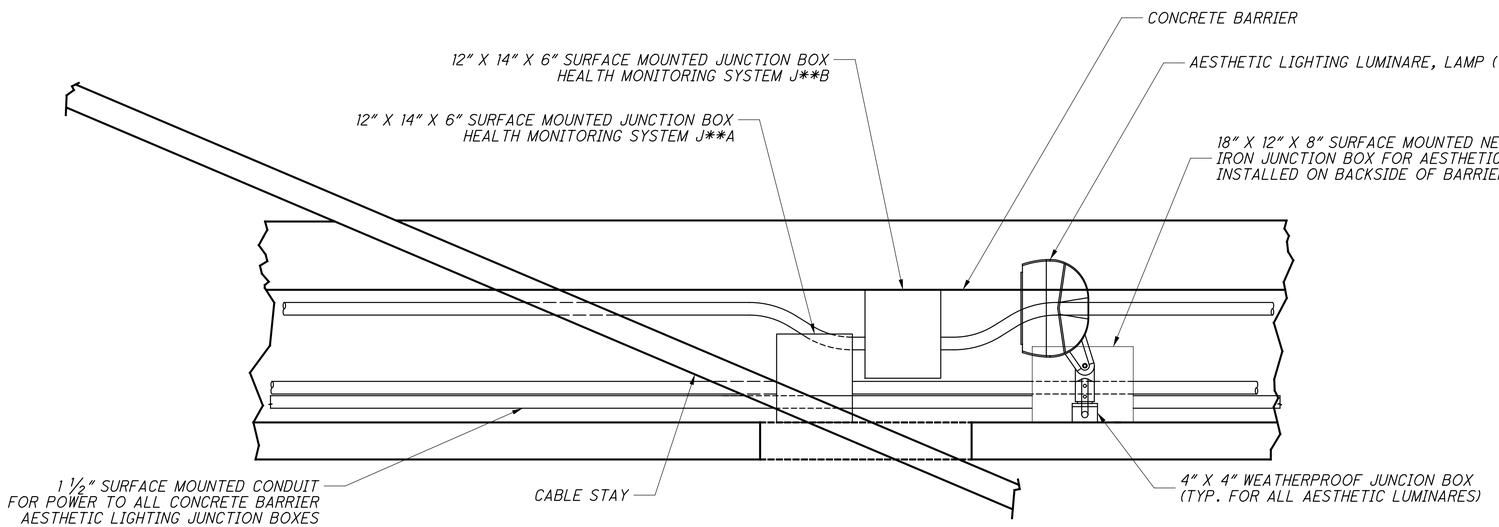

NOTES

1. 4" X 4" WEATHERPROOF JUNCTION BOXES SHALL BE SECURED TO CONCRETE SUPERSTRUCTURE USING 4-1/4" DIAMETER POST-DRILLED ADHESIVE ANCHORS WITH 3" MAXIMUM AND 2.5" MINIMUM EMBEDMENT DEPTH. ANCHOR BOLT SHALL BE CORROSION RESISTANT.

AESTHETIC FLOOD LIGHT MOUNTING DETAILS

CALCULATED BLW
CHECKED SAC

LAW-93-0.00 LIGHTING - AESTHETIC LIGHTING DETAILS (1)

61/85

320
788

J:\Project\OA\ODOT\15005112 Ironton Russell\LAW\81595\lighting\sheets\81595LD201.dgn - 5/5/2011 3:48:49 PM - brian_wallace

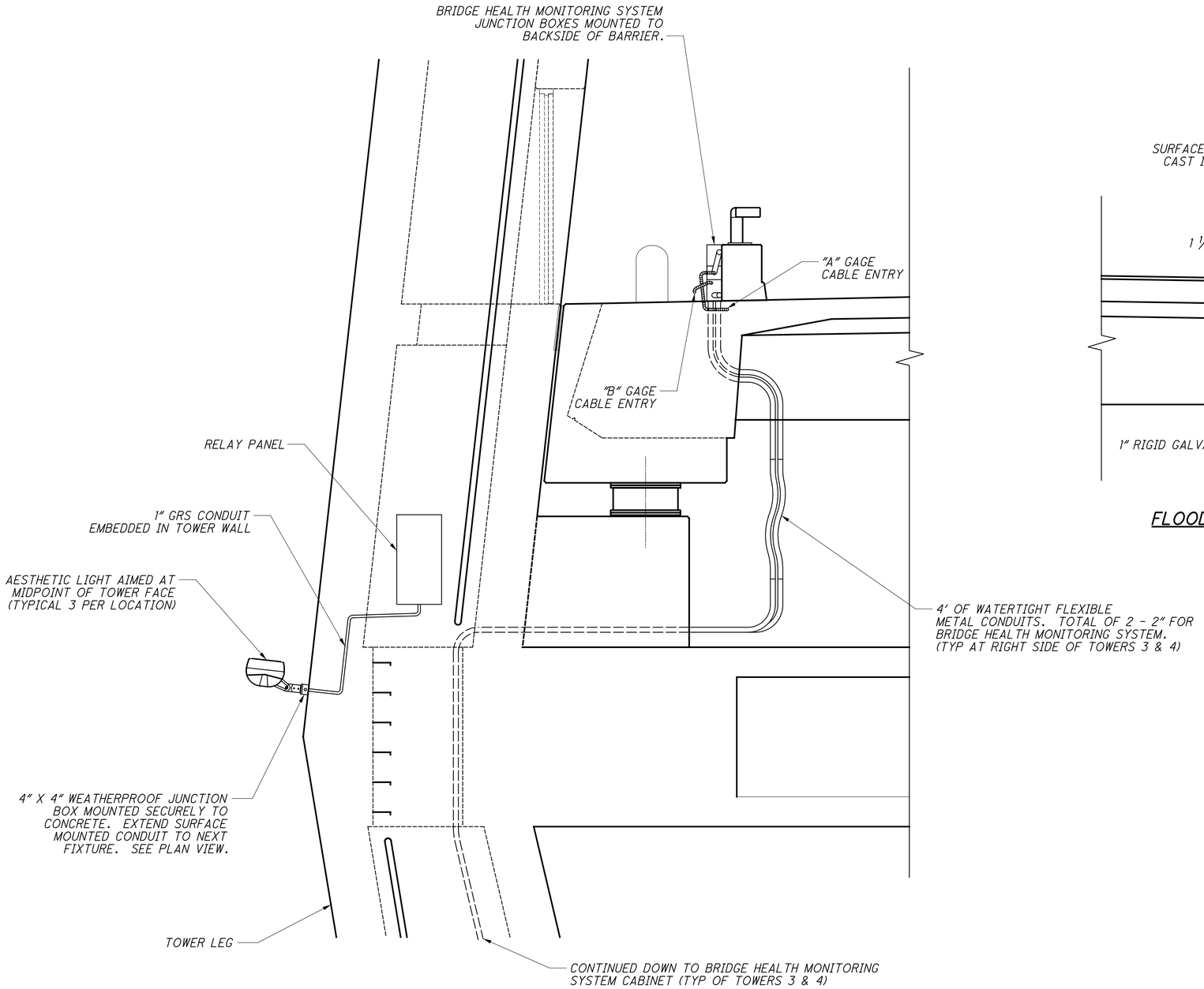

FLOOD LIGHT MOUNTING AT TOWER (TYP.)

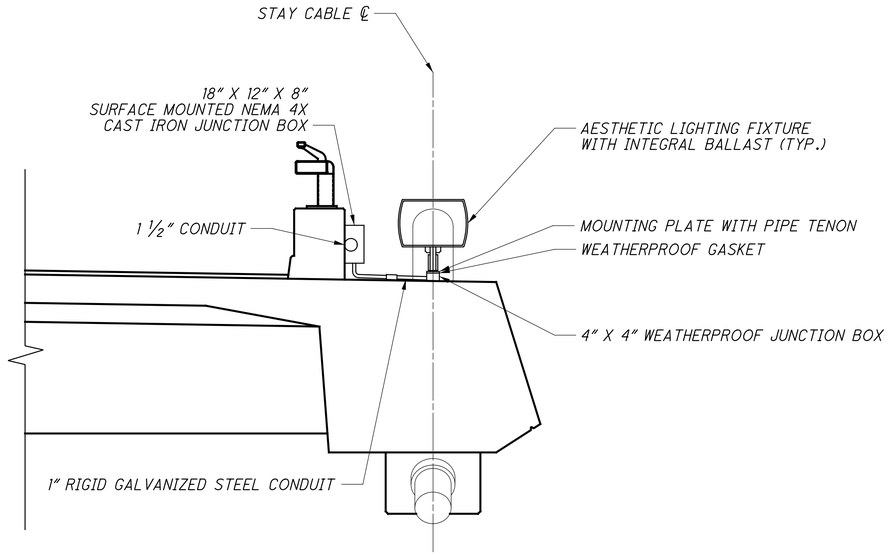

FLOOD LIGHT MOUNTING DETAIL (TYP.)

CALCULATED BLW CHECKED SAC

LIGHTING - AESTHETIC LIGHTING DETAILS (2)

LAW-93-0.00

62 / 85

321
788

J:\Project\O\ODOT\15005112 Ironton Russell\LAW\81595\lighting\sheets\81595LD202.dgn - 5/5/2011 3:49:01 PM - brian_wallace

REF. NO.	SHEET NO.	STATION TO STATION				SIDE	LENGTH	625																						
		FROM	BL	TO	BL			CONNECTOR KIT, TYPE II	CONNECTOR KIT, TYPE III	LIGHT POLE, MISC.: DECORATIVE, 12'-0"	LIGHT POLE ANCHOR BOLTS, MISC.: FOR PILASTER MOUNTED LIGHT POLE	NO. 6 AWG 600 VOLT DISTRIBUTION CABLE	NO. 12 AWG POLE AND BRACKET CABLE	CONDUIT 1-1/2", 725.04	LUMINAIRE, DECORATIVE, AS PER PLAN	BARRIER JUNCTION BOX	CONDUIT MISC.: 1-1/2" EXPANSION/DEFLECTION FITTING, AS PER PLAN	CONNECTION, UNFUSED PERMENANT										
								EACH	EACH	EACH	EACH	FT	FT	FT	EACH	EACH	EACH	EACH										
XA-1	69	09+85.75	93C			RT		1	1	1	4		34		1	1														
A-1	69	09+85.75	93C	10+84.75	93C	RT	99					312		99																
XA-2	69	10+84.75	93C			RT		1	1	1	4		34		1	1														
A-2	69	10+84.75	93C	11+55.75	93C	RT	71					228		71																
XA-3	69	11+55.75	93C			RT		1	1	1	4		34		1	1														
A-3	69	11+55.75	93C	12+54.26	93C	RT	99					311		99																
XA-4	69	12+54.26	93C			RT		1	1	1	4		34		1	1														
A-4	69	12+54.26	93C	13+24.27	93C	RT	70					225		70																
XA-5	69	13+24.27	93C			RT		1	1	1	4		34		1	1														
A-5	69	13+24.27	93C	14+10.25	93C	RT	86					273		86			1													
XA-6	69	14+10.25	93C			RT		1	1	1	4		34		1	1														
A-6	69	14+10.25	93C	14+88.75	93C	RT	79					251		79																
XA-7	69	14+88.75	93C			RT		1	1	1	4		34		1	1														
A-7	69	14+88.75	93C	15+85.25	93C	RT	97					305		97																
XA-8	69	15+85.25	93C			RT		1	1	1	4		34		1	1														
A-8	69	15+85.25	93C	16+81.75	93C	RT	97					305		97																
XA-9	69	16+81.75	93C			RT		1	1	1	4		34		1	1														
A-9	69	16+81.75	93C	JB-R1	93C	RT	55					180		55																
JB-R1	69	JB-R1	93C			RT										1		3												
	69	JB-R1	93C	RELAY PANEL LRP-A	93C	RT	30					175		30																
	69	RELAY PANEL LRP-A	93C	PANEL LP-A		RT	25					150		25																
A-10	70	JB-R1	93C	17+78.25	93C	RT	45					250		45																
XA-10	70	17+78.25	93C			RT		1	1	1	4		34		1	1														
A-11	70	17+78.25	93C	18+76.75	93C	RT	99					518		99																
XA-11	70	18+76.75	93C			RT		1	1	1	4		34		1	1														
A-12	70	18+76.75	93C	19+78.25	93C	RT	102					533		102																
XA-12	70	19+78.25	93C			RT		1	1	1	4		34		1	1														
A-13	70	19+78.25	93C	20+65.75	93C	RT	88					463		88																
XA-13	70	20+65.75	93C			RT		1	1	1	4		34		1	1														
A-14	70	20+65.75	93C	21+80.00	93C	RT	114					596		114																
XA-14	70	21+80.00	93C			RT		1	1	1	4		34		1	1														
A-15	70	21+80.00	93C	22+94.25	93C	RT	114					596		114																
XA-15	70	22+94.25	93C			RT		1	1	1	4		34		1	1														
A-16	70	22+94.25	93C	23+81.75	93C	RT	88					463		88																
XA-16	70	23+81.75	93C			RT		1	1	1	4		34		1	1														
A-17	70	23+81.75	93C	24+83.25	93C	RT	102					533		102																
XA-17	70	24+83.25	93C			RT		1	1	1	4		34		1	1														
A-18	70	24+83.25	93C	25+81.75	93C	RT	99					518		99																
XA-18	70	25+81.75	93C			RT		1	1	1	4		34		1	1														
TOTALS CARRIED TO SHEET 66								18	18	18	72	7,181	612	1,655	18	19	1	3												

CALCULATED BLW
CHECKED KAP

LIGHTING - MAIN AND APPROACH SPAN
ROADWAY LIGHTING SUB-SUMMARY (1)

LAW-93-0.00

63 / 85

322
788

J:\Project\OhioDOT\15005112 Ironton Russell\LAW\81595\lighting\sheets\81595LS101.DGN - 5/5/2011 3:49:09 PM - brian_wallace

REF. NO.	SHEET NO.	STATION TO STATION				SIDE	LENGTH	625																						
		FROM	BL	TO	BL			CONNECTOR KIT, TYPE II	CONNECTOR KIT, TYPE III	LIGHT POLE MISC.: DECORATIVE, 12'-0"	LIGHT POLE ANCHOR BOLTS, MISC.: FOR PILASTER MOUNTED LIGHT POLE	NO. 6 AWG 600 VOLT DISTRIBUTION CABLE	NO. 12 AWG POLE AND BRACKET CABLE	CONDUIT 1-1/2", 725.04	LUMINAIRE, DECORATIVE, AS PER PLAN	BARRIER JUNCTION BOX	CONDUIT MISC.: 1-1/2" EXPANSION/DEFLECTION FITTING, AS PER PLAN	CONNECTION, UNFUSED PERMENANT											
								EACH	EACH	EACH	EACH	FT	FT	FT	EACH	EACH	EACH	EACH											
XB-19	71	40+45.00	93C			RT		1	1	1	4		34		1	1														
B-19	71	40+45.00	93C	40+39.41	93C	RT	52					171		52																
XB-18	71	40+39.41	93C			RT		1	1	1	4		34		1	1														
B-18	71	40+39.41	93C	39+72.41	93C	RT	67					216		67																
XB-17	71	39+72.41	93C			RT		1	1	1	4		34		1	1														
B-17	71	39+72.41	93C	38+91.41	93C	RT	81					258		81																
XB-16	71	38+91.41	93C			RT		1	1	1	4		34		1	1														
B-16	71	38+91.41	93C	38+23.41	93C	RT	68					219		68																
XB-15	71	38+23.41	93C			RT		1	1	1	4		34		1	1														
B-15	71	38+23.41	93C	37+55.41	93C	RT	68					219		68																
XB-14	71	37+55.41	93C			RT		1	1	1	4		34		1	1														
B-14	71	37+55.41	93C	36+78.50	93C	RT	77					246		77																
XB-13	71	36+78.50	93C			RT		1	1	1	4		34		1	1														
B-13	71	36+78.50	93C	36+03.33	93C	RT	75					241		75																
XB-12	71	36+03.33	93C			RT		1	1	1	4		34		1	1														
B-12	71	36+03.33	93C	35+34.00	93C	RT	69					223		69			1													
XB-11	71	35+34.00	93C			RT		1	1	1	4		34		1	1														
B-11	71	35+34.00	93C	34+51.00	93C	RT	83					264		83																
XB-10	71	34+51.00	93C			RT		1	1	1	4		34		1	1														
B-10	71	34+51.00	93C	33+72.00	93C	RT	79					252		79																
XB-9	71	33+72.00	93C			RT		1	1	1	4		34		1	1														
B-9	71	33+72.00	93C	32+84.00	93C	RT	88					279		88																
XB-8	71	32+84.00	93C			RT		1	1	1	4		34		1	1														
B-8	71	32+84.00	93C	32+02.00	93C	RT	82					261		82																
XB-7	71	32+02.00	93C			RT		1	1	1	4		34		1	1														
B-7	71	32+02.00	93C	31+06.50	93C	RT	96					302		96																
XB-6	71	31+06.50	93C			RT		1	1	1	4		34		1	1														
B-6	71	31+06.50	93C	30+41.50	93C	RT	65					210		65																
XB-5	71	30+41.50	93C			RT		1	1	1	4		34		1	1														
B-5	71	30+41.50	93C	29+49.75	93C	RT	92					290		92			1													
XB-4	71	29+49.75	93C			RT		1	1	1	4		34		1	1														
B-4	71	29+49.75	93C	28+71.25	93C	RT	79					251		79																
XB-3	71	28+71.25	93C			RT		1	1	1	4		34		1	1														
B-3	71	28+71.25	93C	27+74.75	93C	RT	97					305		97																
XB-2	71	27+74.75	93C			RT		1	1	1	4		34		1	1														
B-2	70	27+74.75	93C	26+78.25	93C	RT	97					305		97																
XB-1	70	26+78.25	93C			RT		1	1	1	4		34		1	1														
B-1	70	26+78.25	93C	25+81.75	93C	RT	97					305		97																
TOTALS CARRIED TO SHEET 66								19	19	19	76	4,814	646	1,510	19	19	2	0											

CALCULATED BLW
CHECKED KAP

LIGHTING - MAIN AND APPROACH SPAN
ROADWAY LIGHTING SUB-SUMMARY (2)

LAW-93-0.00

64 / 85

323
788

J:\Project\OA_ODOT\15005112 Ironton Russell\LAW\81595\lighting\sheets\81595LS102.DGN - 5/5/2011 3:49:16 PM - brian_wallace

REF. NO.	SHEET NO.	STATION TO STATION				SIDE	LENGTH	625																						
								CONNECTOR KIT, TYPE II	CONNECTOR KIT, TYPE III	LIGHT POLE, MISC.: DECORATIVE, 12'-0"	LIGHT POLE ANCHOR BOLTS, MISC.: FOR PILASTER MOUNTED LIGHT POLE	NO. 6 AWG 600 VOLT DISTRIBUTION CABLE	NO. 12 AWG POLE AND BRACKET CABLE	CONDUIT 1-1/2", 725.04	LUMINAIRE, DECORATIVE, AS PER PLAN	BARRIER JUNCTION BOX	CONDUIT MISC.: 1-1/2" EXPANSION/DEFLECTION FITTING, AS PER PLAN	CONNECTION, UNFUSED PERMENANT											
		FROM	BL	TO	BL			EACH	EACH	EACH	EACH	FT	FT	FT	EACH	EACH	EACH	EACH											
YC-1	69	09+98.40	93C			LT		1	1	1	4		34		1	1													
C-1	69	09+98.40	93C	10+81.00	93C	LT	83					263		83															
YC-2	69	10+81.00	93C			LT		1	1	1	4		34		1	1													
C-2	69	10+81.00	93C	11+62.75	93C	LT	82					260		82															
YC-3	69	11+62.75	93C			LT		1	1	1	4		34		1	1													
C-3	69	11+62.75	93C	12+47.25	93C	LT	85					269		85															
YC-4	69	12+47.25	93C			LT		1	1	1	4		34		1	1													
C-4	69	12+47.25	93C	13+19.33	93C	LT	72					231		72															
YC-5	69	13+19.33	93C			LT		1	1	1	4		34		1	1													
C-5	69	13+19.33	93C	14+10.25	93C	LT	91					288		91			1												
YC-6	69	14+10.25	93C			LT		1	1	1	4		34		1	1													
C-6	69	14+10.25	93C	14+88.75	93C	LT	79					251		79															
YC-7	69	14+88.75	93C			LT		1	1	1	4		34		1	1													
C-7	69	14+88.75	93C	15+85.25	93C	LT	97					305		97															
YC-8	69	15+85.25	93C			LT		1	1	1	4		34		1	1													
C-8	69	15+85.25	93C	16+81.75	93C	LT	97					305		97															
YC-9	69	16+81.75	93C			LT		1	1	1	4		34		1	1													
C-9	69	16+81.75	93C	17+78.25	93C	LT	97					305		97															
YC-10	70	17+78.25	93C			LT		1	1	1	4		34		1	1													
C-10	70	17+78.25	93C	18+76.75	93C	LT	99					311		99															
YC-11	70	18+76.75	93C			LT		1	1	1	4		34		1	1													
C-11	70	18+76.75	93C	19+78.25	93C	LT	102					320		102															
YC-12	70	19+78.25	93C			LT		1	1	1	4		34		1	1													
C-12	70	19+78.25	93C	20+65.75	93C	LT	88					278		88															
YC-13	70	20+65.75	93C			LT		1	1	1	4		34		1	1													
C-13	70	20+65.75	93C	21+80.00	93C	LT	114					358		114															
YC-14	70	21+80.00	93C			LT		1	1	1	4		34		1	1													
C-14	70	21+80.00	93C	22+94.25	93C	LT	114					358		114															
YC-15	70	22+94.25	93C			LT		1	1	1	4		34		1	1													
C-15	70	22+94.25	93C	23+81.75	93C	LT	88					278		88															
YC-16	70	23+81.75	93C			LT		1	1	1	4		34		1	1													
C-16	70	23+81.75	93C	24+83.25	93C	LT	102					320		102															
YC-17	70	24+83.25	93C			LT		1	1	1	4		34		1	1													
C-17	70	24+83.25	93C	25+81.75	93C	LT	99					311		99															
YC-18	70	25+81.75	93C			LT		1	1	1	4		34		1	1													
C-18	70	25+81.75	93C	JB-R2	93C	LT	45					150		45															
JB-R2	70	JB-R2	93C			LT										1													
	70	JB-R2	93C	RELAY PANEL LRP-B	93C	LT	30					175		30															
	70	RELAY PNL LRP-B	93C	PANEL LP-B	93C	LT	25					150		25															
TOTALS CARRIED TO SHEET 66								18	18	18	72	5,480	612	1,683	18	19	1	0											

CALCULATED BLW
CHECKED KAP

LIGHTING - MAIN AND APPROACH SPAN
ROADWAY LIGHTING SUB-SUMMARY (3)

LAW-93-0.00

65 / 85

324
788

J:\Project\OA_ODOT\15005112 Ironton Russell\LAW\81595\lighting\sheets\81595LS103.DGN - 5/5/2011 3:49:24 PM - brian_wallace

REF. NO.	SHEET NO.	STATION TO STATION				SIDE	LENGTH	625																				
		FROM	BL	TO	BL			CONNECTOR KIT, TYPE II	CONNECTOR KIT, TYPE III	LIGHT POLE, MISC.: DECORATIVE, 12'-0"	LIGHT POLE ANCHOR BOLTS, MISC.: FOR PILASTER MOUNTED LIGHT POLE	NO. 6 AWG 600 VOLT DISTRIBUTION CABLE	NO. 12 AWG POLE AND BRACKET CABLE	CONDUIT 1-1/2", 725.04	LUMINAIRE, DECORATIVE, AS PER PLAN	BARRIER JUNCTION BOX	CONDUIT MISC.: 1-1/2" EXPANSION/DEFLECTION FITTING, AS PER PLAN	CONNECTION, UNFUSED PERMENANT	TRENCH	LIGHT POLE, MISC.: DECORATIVE, 14'-6" AS PER PLAN	GROUND ROD	LIGHT POLE FOUNDATION, 24" x 6' DEEP	PLASTIC CAUTION TAPE				
								EACH	EACH	EACH	EACH	FT	FT	FT	EACH	EACH	EACH	EACH	FT	EACH	EACH	EACH	FT				
YD-19	71	40+45.00	93C			LT		1	1				39		1					1	1	1					
D-19	71	40+45.00	93C	40+39.41	93C	LT	52					171		52					52				52				
YD-18	71	40+39.41	93C			LT		1	1				39		1					1	1	1					
D-18	71	40+39.41	93C	39+72.41	93C	LT	67					216		67					67				67				
YD-17	71	39+72.41	93C			LT		1	1				39		1					1	1	1					
D-17	71	39+72.41	93C	38+91.41	93C	LT	81					258		81					81				81				
YD-16	71	38+91.41	93C			LT		1	1				39		1					1	1	1					
D-16	71	38+91.41	93C	38+23.41	93C	LT	68					219		68					68				68				
YD-15	71	38+23.41	93C			LT		1	1				39		1					1	1	1					
D-15	71	38+23.41	93C	37+55.41	93C	LT	68					219		68					68				68				
YD-14	71	37+55.41	93C			LT		1	1				39		1					1	1	1					
D-14	71	37+55.41	93C	36+78.50	93C	LT	77					246		77					77				77				
YD-13	71	36+78.50	93C			LT		1	1				39		1					1	1	1					
D-13	71	36+78.50	93C	36+03.33	93C	LT	75					241		75					75				75				
YD-12	71	36+03.33	93C			LT		1	1	1	4		34		1	1											
D-12	71	36+03.33	93C	35+34.00	93C	LT	69					223		69			1										
YD-11	71	35+34.00	93C			LT		1	1	1	4		34		1	1											
D-11	71	35+34.00	93C	34+49.00	93C	LT	85					270		85													
YD-10	71	34+49.00	93C			LT		1	1	1	4		34		1	1											
D-10	71	34+49.00	93C	33+72.00	93C	LT	77					246		77													
YD-9	71	33+72.00	93C			LT		1	1	1	4		34		1	1											
D-9	71	33+72.00	93C	32+84.00	93C	LT	88					279		88													
YD-8	71	32+84.00	93C			LT		1	1	1	4		34		1	1											
D-8	71	32+84.00	93C	31+97.00	93C	LT	87					276		87													
YD-7	71	31+97.00	93C			LT		1	1	1	4		34		1	1											
D-7	71	31+97.00	93C	31+06.50	93C	LT	91					287		91													
YD-6	71	31+06.50	93C			LT		1	1	1	4		34		1	1											
D-6	71	31+06.50	93C	30+41.50	93C	LT	65					210		65													
YD-5	71	30+41.50	93C			LT		1	1	1	4		34		1	1											
D-5	71	30+41.50	93C	29+49.75	93C	LT	92					290		92			1										
YD-4	71	29+49.75	93C			LT		1	1	1	4		34		1	1											
D-4	71	29+49.75	93C	28+71.25	93C	LT	79					251		79													
YD-3	71	28+71.25	93C			LT		1	1	1	4		34		1	1											
D-3	71	28+71.25	93C	27+74.25	93C	LT	97					306		97													
YD-2	71	27+74.25	93C			LT		1	1	1	4		34		1	1											
D-2	70	27+74.25	93C	26+78.25	93C	LT	96					303		96													
YD-1	70	26+78.25	93C			LT		1	1	1	4		34		1	1											
JB-R2	70	26+78.25	93C	JB-R2	93C	LT	45					150		45													
		SUB-TOTALS		THIS SHEET				19	19	12	48	4,659	681	1,458	19	12	2	0	488	7	7	7	488				
		SUB-TOTALS		SHEET 63				18	18	18	72	7,181	612	1,655	18	19	1	3									
		SUB-TOTALS		SHEET 64				19	19	19	76	4,814	646	1,510	19	19	2	0									
		SUB-TOTALS		SHEET 65				18	18	18	72	5,480	612	1,683	18	19	1	0									
TOTALS CARRIED TO GENERAL SUMMARY								74	74	67	268	22,134	2,551	6,306	74	69	6	3	488	7	7	7	488				

CALCULATED BLW
CHECKED KAP

LIGHTING - MAIN AND APPROACH SPAN
ROADWAY LIGHTING SUB-SUMMARY (4)

LAW-93-0.00

66 / 85

325
788

J:\Project\O\ODOT\15005112 Ironton Russell\LAW\81595\lighting\sheets\81595LS104.DGN - 5/5/2011 3:49:31 PM - brian_wallace

WORK LIMITS

THE WORK LIMITS FOR THE LIGHTING PORTION OF THIS PROJECT ARE FOR THE PHYSICAL CONSTRUCTION OF THE LIGHTING ITEMS LISTED. THE CONTRACTOR SHALL COORDINATE HIS WORK WITH THE PRIME CONTRACTOR AND THE MAINTENANCE OF TRAFFIC PLANS SO AS TO LIMIT ANY ADDITIONAL CLOSURES.

ITEM 625 - LIGHT POLE, DECORATIVE, AS PER PLAN

THIS ITEM SHALL INCLUDE ALL LABOR AND MATERIALS NECESSARY TO FURNISH AND INSTALL A DECORATIVE LIGHT POLE IN ACCORDANCE WITH 625, AS DETAILED IN THE PLANS AND DESCRIBED HEREIN.

THE 12-FOOT OR 14 1/2-FOOT TALL DECORATIVE POST SHALL BE ALUMINUM, ONE PIECE CONSTRUCTION. THE 17 1/2-INCH DIAMETER CAST ALUMINUM TALL DECORATIVE FLUTED BASE SHALL BE CONSTRUCTED WITH A 5-INCH DIAMETER ALUMINUM SHAFT. THE MODEL SHALL BE STERNBERG "KENILWORTH" (531XXFP5/XXX/XX/VG), ANTIQUE STREET LAMPS "CENTRAL PARK" (PX CP18 XX F5 ANVG), OR APPROVED EQUAL.

THE POLE FACTORY FINISH SHALL BE "VERDE GREEN" COLOR MATCHING THAT OF THE EXISTING DECORATIVE POLES IN THE CITY OF IRONTON.

FOUR, 3/4-INCH, HOT-DIPPED GALVANIZED "L" TYPE ANCHOR BOLTS SHALL BE PROVIDED WITH THE POST FOR ANCHORAGE, WHERE REQUIRED. A DOOR SHALL BE PROVIDED FOR WIRING AND ANCHOR BOLT ACCESS. IT SHALL BE SECURED WITH TAMPER PROOF, STAINLESS STEEL HARDWARE. POST WILL BE PROVIDED WITH GROUNDING STUD MOUNTED ON THE BASE FLOOR OPPOSITE THE ACCESS DOOR.

ITEM 625 - LAMPS

HIGH PRESSURE SODIUM LAMPS SHALL BE GENERAL ELECTRIC "LUCALOX," OSRAM SYLVANIA "LUMALUX," PHILIPS "CEREMALUX," OR EQUAL APPROVED BY THE ENGINEER.

ITEM 625 - LIGHT POLE ANCHOR BOLTS, MISC.: SET FOR PILASTER MOUNTED LIGHT POLE

WHEN A LIGHT POLE IS MOUNTED ON A PILASTER ON A BRIDGE PARAPET OR ON A RETAINING WALL, THE REQUIRED ANCHOR BOLTS MAY DIFFER IN LENGTH AND/OR SHAPE FROM THOSE REQUIRED WHEN THE POLE IS MOUNTED ON A CAST-IN-PLACE DRILLED SHAFT FOUNDATION. THE COST DIFFERENTIAL FOR FURNISHING SUCH BOLTS IS INCLUDED HEREIN.

IN ADDITION, THERE IS NO FOUNDATION CONSTRUCTION ITEM IN WHICH TO INCLUDE THE SETTING OF THE ANCHOR BOLTS. THUS, THE SETTING OF THE ANCHOR BOLTS INTO THE PILASTER IS ALSO PART OF THIS WORK.

PAYMENT WILL BE MADE AT EACH SUCH POLE LOCATION AT THE UNIT PRICE BID FOR EACH CMS "ITEM 625 - LIGHT POLE ANCHOR BOLTS, MISC.: SET FOR PILASTER MOUNTED LIGHT POLE" AND SHALL BE FULL COMPENSATION FOR FURNISHING AND PLACING THE SET OF ANCHOR BOLTS REQUIRED.

ITEM 625 - LUMINAIRE DECORATIVE, AS PER PLAN

THIS ITEM SHALL INCLUDE ALL LABOR AND MATERIALS NECESSARY TO FURNISH AND INSTALL AN ORNAMENTAL POST TOP LUMINAIRE IN ACCORDANCE WITH 625, AS DETAILED IN THESE PLANS, AND AS DESCRIBED HEREIN.
THE LUMINAIRE SHALL BE A TRADITIONAL ACORN FIXTURE COMPRISING OF A DECORATIVE CAST ALUMINUM FITTER, CAST BALLAST HOUSING ASSEMBLY AND POLYCARBONATE OR ACRYLIC CLEAR TEXTURED ACORN GLOBE. IT SHALL BE APPOINTED WITH A CAST ALUMINUM DECORATIVE FOUR-VANE FINIAL. THE LUMINAIRE SHALL BE GENERAL ELECTRIC "AMERICANA" (AM9F07S5XX1HAAFGRNX), HOLOPHANE "ACRYLIC WASHINGTON POSTLITE" (AW070HP48N3XXX), STERNBERG "OLD TOWN" (A850A/508PT/XX/XX/100HPS480/RE3G/VG), OR APPROVED EQUAL. THE HIGH PRESSURE SODIUM LAMP SHALL BE 70 WATTS, UNLESS NOTED OTHERWISE.

ITEM 625 - LUMINAIRE DECORATIVE, AS PER PLAN (CONT'D)

THE OPTICAL SYSTEM SHALL CONSIST OF PRECISELY MOLDED THERMAL RESISTANCE BOROSILICATE GLASS REFRACTOR AND TOP REFLECTOR WITH A TYPE III DISTRIBUTION.

THE LUMINAIRE BODY FACTORY FINISH SHALL BE "VERDE GREEN" COLOR MATCHING THAT OF THE DECORATIVE LUMINAIRES IN THE CITY OF IRONTON.

ITEM 625 - LIGHT POLE FOUNDATION, 24" X 6' DEEP, AS PER PLAN

FOUNDATION FOR LIGHT POLES NOT INSTALLED TO STRUCTURES SHALL BE CONSTRUCTED IN ACCORDANCE WITH ODOT SDC HL-20.11.

J:\Project\O\ODOT\15005112 Ironton Russell\LAW\81595\lighting\sheets\81595LN101.dgn - 5/5/2011 3:49:38 PM - brian_wallace

CALCULATED BLW
CHECKED SAC

LIGHTING - MAIN AND APPROACH SPAN
ROADWAY LIGHTING GENERAL NOTES (1)

LAW-93-0.00

ITEM 625 - LIGHT POLE PAINTING

THE PAINTING OF LIGHT POLES SHALL BE A FIVE-PART PROCESS CONSISTING OF A TWO-PART SURFACE PREPARATION FOLLOWED BY A THREE-COAT PAINT SYSTEM.

THE CONTRACTOR SHALL TAKE ALL NECESSARY PRECAUTIONS TO COMPLY WITH POLLUTION LAWS, RULES OR REGULATIONS OF FEDERAL, STATE OR LOCAL AGENCIES. THE MATERIALS AND WORK SPECIFIED CAN BE HAZARDOUS TO THE HEALTH OF THE APPLICATOR IF THE MANUFACTURER'S INSTRUCTIONS ARE NOT FOLLOWED. THE CONTRACTOR SHALL FOLLOW THE DATA SHEET AND THE LABEL ON THE PAINT CONTAINERS. THESE PRECAUTIONS SHALL INCLUDE THE USE OF RESPIRATORS AND EYE AND SKIN PROTECTION AS SPECIFIED. THE CONTRACTOR SHALL ALSO INSURE THAT HIS OPERATIONS AND LOCATIONS WILL NOT ENDANGER OR ADVERSELY AFFECT THE PUBLIC IN GENERAL. THE ENGINEER SHALL BE NOTIFIED 24 HOURS PRIOR TO ANY CLEANING OR COATING OPERATIONS SO THAT INSPECTION SERVICES CAN BE PROVIDED.

THE PROPOSED CLEANING AND COATING OPERATIONS SHALL BE PERFORMED ONLY WHEN THE AMBIENT TEMPERATURE IS 50 DEGREES FARENHEIT (10 DEGREES CENTIGRADE) OR ABOVE. THE TWO-PART SURFACE PREPARATION SYSTEM SHALL CONSIST OF A SOLVENT CLEANING FOLLOWED BY AN ABRASIVE BLAST CLEANING.

SURFACE PREPARATION SHALL BE DONE UNDER THE CONDITIONS OF TEMPERATURE AND HUMIDITY SPECIFIED BY THE MANUFACTURER OF THE EPOXY-PRIME COAT MATERIAL TO BE APPLIED IMMEDIATELY AFTER THE PREPARATION OPERATIONS.

EXISTING, WEATHERED, GALVANIZED STEEL SHALL BE PREPARED FOR COATING BY A SOLVENT CLEANING CONFORMING TO SPECIFIED SP-1 PUBLISHED BY THE STEEL STRUCTURES PAINTING COUNCIL (SSPC) FOLLOWED BY A COMMERCIAL BLAST CLEANING (SSPC-SP6).

NEW, UNWEATHERED, GALVANIZED STEEL SHALL BE PREPARED FOR COATING BY A SOLVENT CLEANING (SSPC-SP1) FOLLOWED BY A BRUSH-OFF BLAST CLEANING (SSPC-SP7).

THE PRIME COAT SHALL BE APPLIED BEFORE THE PREPARED SURFACE DEGRADES FROM THE PRESCRIBED STANDARDS. IN EVERY CASE, THE SURFACE SHALL BE COATED WITH EPOXY PRIME COAT ON THE SAME DAY AS THE SURFACE PREPARATION.

THE THREE-COAT PAINT SYSTEM SHALL CONSIST OF AN EPOXY PRIME COAT, AN EPOXY INTERMEDIATE COAT AND A URETHANE TOP COAT, WITH EACH COAT BEING A DIFFERENT COLOR.

PAINT SHALL NOT BE APPLIED WHEN THE RELATIVE HUMIDITY IS GREATER THAN 85 PERCENT. PAINT SHALL NOT BE APPLIED WHEN THE STEEL SURFACE TEMPERATURE IS LESS THAN 5 DEGREES FARENHEIT (3 DEGREES CENTIGRADE) ABOVE THE DEW POINT. PAINT SHALL NOT BE APPLIED TO WET, DAMP, FROSTED OR ICE-COATED SURFACES, NOR SHALL IT BE APPLIED DURING RAIN, FOG OR MIST.

BEFORE EACH COATING IS APPLIED, IT SHALL BE MIXED WITH AN APPROVED POWER MECHANICAL MIXER TO A UNIFORM CONSISTENCY WHICH SHALL BE MAINTAINED DURING ITS APPLICATION. THINNING OF PAINT IS STRICTLY PROHIBITED. PAINT NOT CAPABLE OF BEING APPLIED AS SPECIFIED SHALL NOT BE USED.

ITEM 625 - LIGHT POLE PAINTING (CONT'D)

EACH COAT SHALL BE APPLIED IN A WORKMANLIKE MANNER AS A CONTINUOUS FILM OF UNIFORM THICKNESS WHICH IS FREE OF HOLIDAYS, PORES, RUNS OR SAGS. ALL COATS SHALL BE APPLIED BY BRUSH. THE COATING SHALL PENETRATE ALL JOINTS AND CONNECTIONS.

THE PRIME COAT SHALL CONSIST OF THE APPLICATION OF ONE COAT OF AN EPOXY PRIMER. THE TOTAL DRY FILM THICKNESS OF THIS COAT SHALL BE BETWEEN 1.5 TO 2.0 MILS (38 TO 50 MICROMETERS). MATERIAL NOT CAPABLE OF BEING APPLIED AS SPECIFIED SHALL NOT BE USED. IF MORE THAN ONE PASS IS NECESSARY TO OBTAIN THE REQUIRED THICKNESS, THE COST SHALL BE BORNE BY THE CONTRACTOR. THE COLOR OF THIS COAT SHALL BE NOTICEABLY DIFFERENT FROM THE BASE MATERIAL AND OTHER PROPOSED COATS. THE MANUFACTURER SHALL VERIFY THE COATING MATERIAL FOR THE PRIME COAT.

THE EPOXY PRIME COAT SHALL IN ALL CASES BE APPLIED OVER SURFACES THAT WERE PREPARED EARLIER THAT SAME DAY.

THE INTERMEDIATE COAT SHALL CONSIST OF THE APPLICATION ON ONE COAT OF EPOXY. THE TOTAL DRY FILM THICKNESS OF THIS COAT SHALL NOT BE LESS THAN 6 MILS (150 MICROMETERS). MATERIAL NOT CAPABLE OF BEING APPLIED AS SPECIFIED SHALL NOT BE USED. IF MORE THAN ONE PASS IS NECESSARY TO OBTAIN THE REQUIRED THICKNESS, THAT COST SHALL BE BORNE BY THE CONTRACTOR.

AT LEAST TWENTY-FOUR HOURS, BUT NO MORE THAN THREE DAYS, SHALL ELAPSE AFTER THE APPLICATION OF THE EPOXY PRIME COAT AND BEFORE THE APPLICATION OF THE EPOXY INTERMEDIATE COAT. SURFACES SHALL IN ALL CASES BE CLEAN BEFORE THE INTERMEDIATE COAT IS APPLIED. THE MANUFACTURER SHALL VERIFY THE COATING MATERIAL FOR THE INTERMEDIATE COAT.

THE TOP COAT SHALL CONSIST OF THE APPLICATION OF ONE COAT OF URETHANE TO SUPPORT SECTIONS. THE TOTAL DRY FILM THICKNESS OF THIS COAT SHALL NOT BE LESS THAN 1.5 MILS (38 MICROMETERS). MATERIAL NOT CAPABLE OF BEING APPLIED AS SPECIFIED SHALL NOT BE USED. IF MORE THAN ONE PASS IS NECESSARY TO OBTAIN THE REQUIRED THICKNESS, THAT COST SHALL BE BORNE BY THE CONTRACTOR.

AT LEAST TWENTY-FOUR HOURS, BUT NO MORE THAN THREE DAYS, SHALL ELAPSE AFTER THE APPLICATION OF THE EPOXY INTERMEDIATE COAT AND BEFORE THE APPLICATION OF THE URETHANE TOP COAT. SURFACE SHALL IN ALL CASES BE CLEAN BEFORE THE TOP COAT IS APPLIED. THE MANUFACTURER SHALL VERIFY THE COATING MATERIAL FOR THE TOP COAT.

ITEM 625 - LIGHT POLE PAINTING (CONT'D)

PAINTED ITEMS SHALL BE CAREFULLY HANDLED AND STORED TO PREVENT ANY SCRAPING, MARRING OR OTHER DAMAGE TO THE PAINTED SURFACES. THE COATING MATERIALS USED SHALL BE THOSE LISTED FROM ONE OF THE FOLLOWING MANUFACTURERS OR EQUAL AS APPROVED BY THE ENGINEER:

AMERON (714) 256-7755
201 NORTH BERRY STREET, BREA, CALIFORNIA 92821

PRIME COAT - AMERCOAT 71
INTERMEDIATE COAT - AMERLOCK 400
TOP COAT - AMERCOAT 450 HS

THE GLIDDEN COMPANY (800) 634-0015
15885 WEST SPRAGUE RD., STRONGSVILLE, OH 44136

PRIME COAT - GLID-GUARD CORROSION RESISTANT HS EPOXY NO. 5465
INTERMEDIATE COAT - GLID-GUARD CORROSION RESISTANT HS EPOXY NO. 5466
TOP COAT - GLID-THANE II POLYURETHANE 6200 SERIES

PORTER PAINT COMPANY 502) 588-9200
400 SOUTH THIRTEENTH STREET, LOUISVILLE, KY 40203

PRIME COAT - PORTER PAINTS MCR 4300
INTERMEDIATE COAT - PORTER PAINTS MCR 4300
TOP COAT - PORTER PAINTS HYTHANE

POLY-CARB, INC. (440) 248-1223
33095 BAINBRIDGE ROAD, CLEVELAND, OH 44139

PRIME COAT - MARK-60 ULTRAPOX
INTERMEDIATE COAT - MARK-60 ULTRAPOX
TOP COAT - MARK-73 ULTRAKOTE

SHERWIN WILLIAMS CO. (440) 461-3310
761 BETA DRIVE #2, CLEVELAND, OH 44143

PRIME COAT - TILE-CLAD II HI-BUILD PRIMER
INTERMEDIATE COAT - HI-SOLIDS CATALYZED EPOXY
TOP COAT - HI-BUILD ALIPHATIC POLYURETHANE ENAMEL

ALL THREE COATS OF THE SYSTEM SHALL BE MANUFACTURED BY THE SAME COMPANY TO INSURE COMPATIBILITY AMONG COATS.

PRIOR TO USE, THE CONTRACTOR SHALL SUBMIT TO THE DIRECTOR COPIES OF THE MANUFACTURER'S CERTIFIED TEST DATA SHOWING THAT THE MATERIAL COMPLIES WITH THE REQUIREMENTS OF THIS SPECIFICATION. THE TEST DATA SHALL INCLUDE THE BRAND NAME OF THE PAINT, NAME OF THE MANUFACTURER, NUMBER OF THE LOT TESTED AND DATE OF MANUFACTURE. ODOT RESERVES THE RIGHT TO SAMPLE AND TEST DELIVERED LOTS FOR COMPLIANCE.

IF DURING TRANSPORTATION, ERECTION, INSTALLATION OF POLES AND HARDWARE OR AT ANYTIME BEFORE FINAL ACCEPTANCE, THE PAINTED SURFACES ARE SCRATCHED OR MARRED IN ANY MANNER, THE CONTRACTOR SHALL BE REQUIRED TO APPLY "TOUCH-UP" PAINT OF THE SAME TYPE AS SPECIFIED ABOVE TO THE AFFECTED AREAS.

ANCHOR BOLT COVERS OR COVER BASES SHALL ALSO BE PAINTED ACCORDINGLY.

PAYMENT WILL BE MADE AT THE CONTRACT BID PRICE FOR EACH POLE PAINTED AND SHALL BE FULL COMPENSATION FOR ALL LABOR MATERIALS AND EQUIPMENT REQUIRED TO PAINT THE POLE, BRACKET ARM AND TRANSFORMER BASE (IF USED).

CALCULATED BLW
CHECKED SAC

LIGHTING - MAIN AND APPROACH SPAN
ROADWAY LIGHTING GENERAL NOTES (2)

LAW-93-0.00

68 / 85

327
788

J:\Project\O\ODOT\15005112 Ironton Russell\LAW\81595\lighting\sheets\81595LN102.dgn - 5/5/2011 3:49:47 PM - brian_wallace

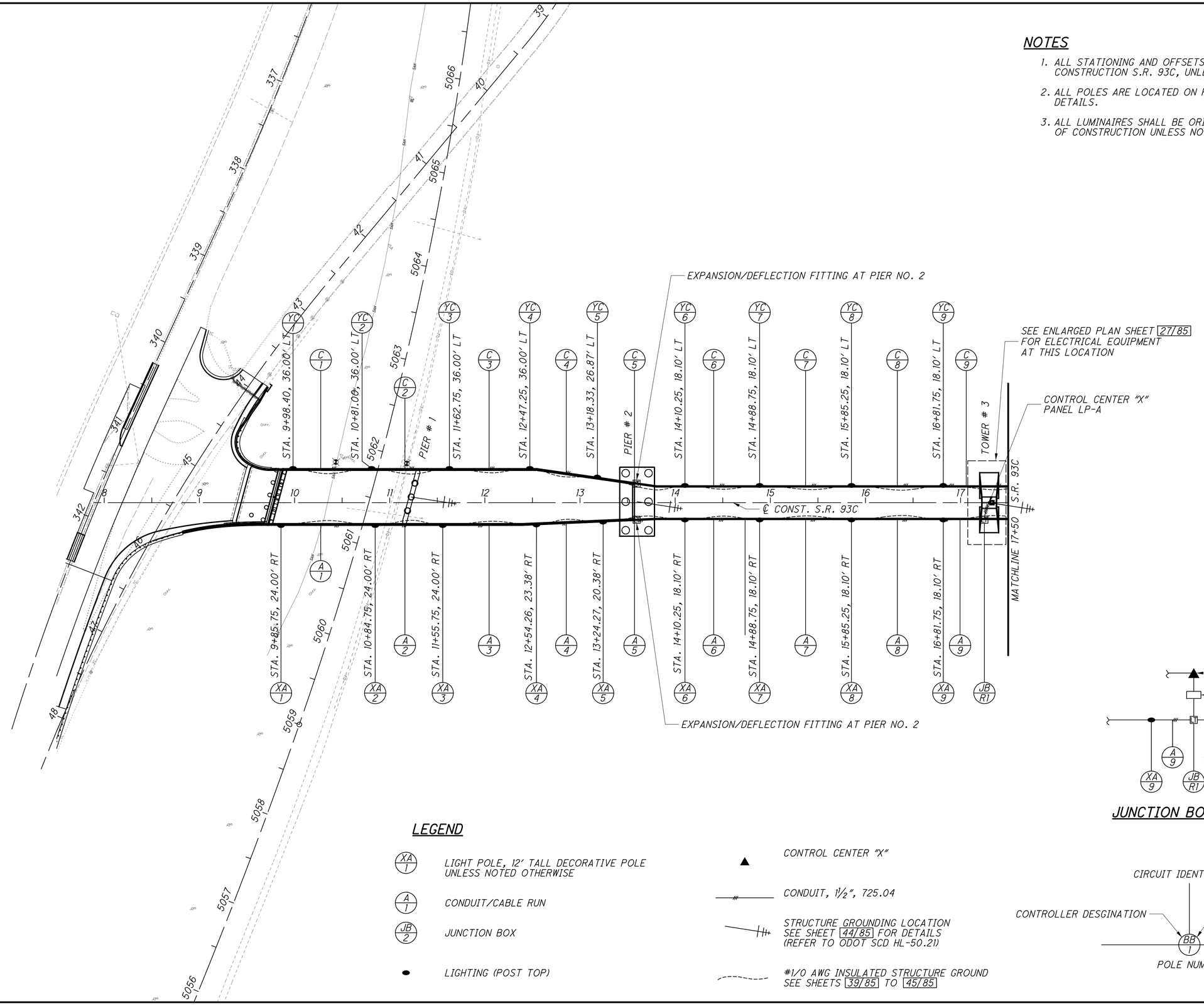

NOTES

1. ALL STATIONING AND OFFSETS ARE FROM THE ℄ OF CONSTRUCTION S.R. 93C, UNLESS NOTED OTHERWISE.
2. ALL POLES ARE LOCATED ON PILASTERS AS PER STRUCTURE DETAILS.
3. ALL LUMINAIRES SHALL BE ORIENTED PERPENDICULAR TO THE ℄ OF CONSTRUCTION UNLESS NOTED OTHERWISE.

LEGEND

- XA 1 — LIGHT POLE, 12' TALL DECORATIVE POLE UNLESS NOTED OTHERWISE
- A 1 — CONDUIT/CABLE RUN
- JB 2 — JUNCTION BOX
- LIGHTING (POST TOP)
- CONTROL CENTER "X"
- CONDUIT, 1½", 725.04
- STRUCTURE GROUNDING LOCATION SEE SHEET 44/85 FOR DETAILS (REFER TO ODOT SCD HL-50.21)
- #1/0 AWG INSULATED STRUCTURE GROUND SEE SHEETS 39/85 TO 45/85

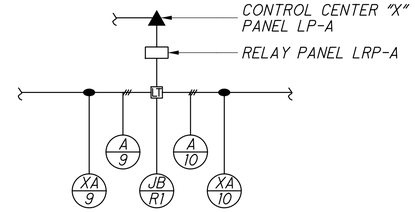

JUNCTION BOX DIAGRAM

HORIZONTAL SCALE IN FEET: 0, 25, 50, 100

CALCULATED BLW | CHECKED SAC

LIGHTING - MAIN AND APPROACH SPAN ROADWAY LIGHTING PLAN (1)

LAW-93-0.00

69/85

328/788

J:\Project\O\ODOT\15005112 Ironton Russell\LAW\81595\lighting\sheets\81595LP101.dgn - 5/5/2011 3:51:16 PM - brian_wallace

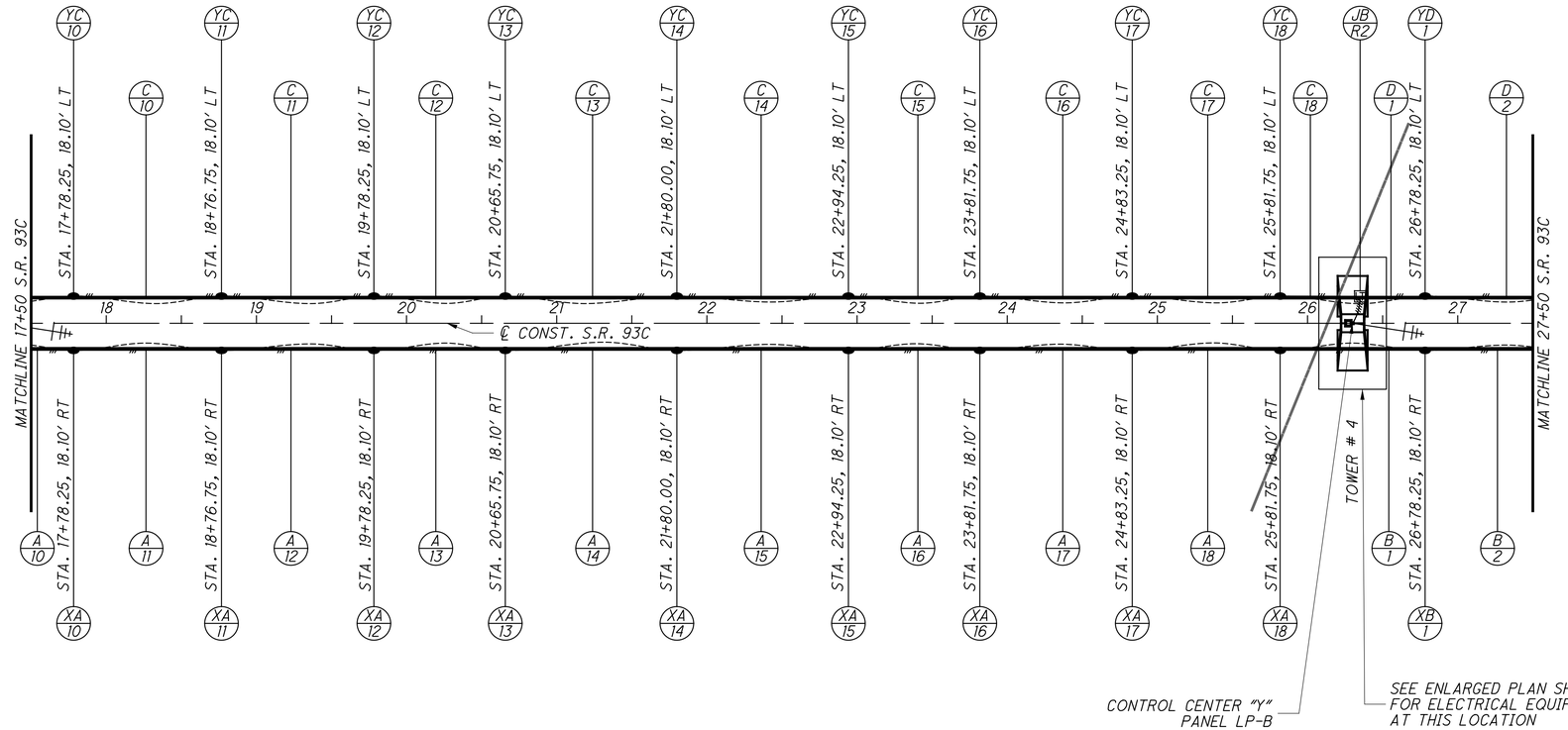

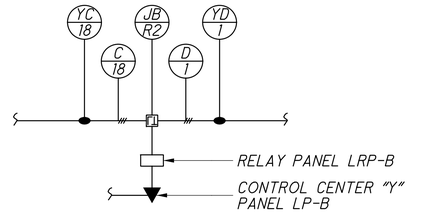

JUNCTION BOX DIAGRAM

LEGEND

- XA/1 — LIGHT POLE, 12' TALL DECORATIVE POLE UNLESS NOTED OTHERWISE
- A/1 — CONDUIT/CABLE RUN
- JB/2 — JUNCTION BOX
- ● — LIGHTING (POST TOP)
- ▲ — CONTROL CENTER "Y"
- CONDUIT, 1½", 725.04
- STRUCTURE GROUNDING LOCATION SEE SHEET 44/85 FOR DETAILS (REFER TO ODOT SCD HL-50.21)
- #1/0 AWG INSULATED STRUCTURE GROUND SEE SHEETS 39/85 TO 45/85

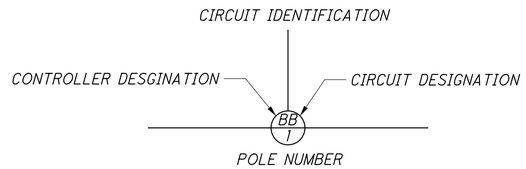

NOTES

1. ALL STATIONING AND OFFSETS ARE FROM THE ℄ OF CONSTRUCTION S.R. 93C, UNLESS NOTED OTHERWISE.
2. ALL POLES ARE LOCATED ON PILASTERS AS PER STRUCTURE DETAILS.
3. ALL LUMINAIRES SHALL BE ORIENTED PERPENDICULAR TO THE ℄ OF CONSTRUCTION UNLESS NOTED OTHERWISE.

HORIZONTAL SCALE IN FEET
0 25 50 100

CALCULATED BLW
CHECKED SAC

LIGHTING - MAIN AND APPROACH SPAN ROADWAY LIGHTING PLAN (2)

LAW-93-0.00

70/85

329
788

J:\Project\O\ODOT\15005112 Ironton Russell\LAW\81595\lighting\sheets\81595LP102.dgn - 5/5/2011 3:51:47 PM - brian_wallace

LEGEND

- (YD 1) LIGHT POLE, 12′ TALL DECORATIVE POLE (ON PILASTER)
- (YD* 13) LIGHT POLE, 14.5′ TALL DECORATIVE POLE (ON GRADE)
- (A 1) CONDUIT/CABLE RUN
- (JB 2) JUNCTION BOX
- LIGHTING (POST TOP)
- CONTROL CENTER "Y"
- CONDUIT, 1½", 725.04
- STRUCTURE GROUNDING LOCATION SEE SHEET 44/85 FOR DETAILS (REFER TO ODOT SCD HL-50.21)
- #1/0 AWG INSULATED STRUCTURE GROUND SEE SHEETS 39/85 TO 45/85

CIRCUIT IDENTIFICATION
CONTROLLER DESGINATION — CIRCUIT DESIGNATION
BB 1
POLE NUMBER

MATCHLINE 27+50 S.R. 93C
STA. 27+74.75, 18.10′ RT
STA. 27+74.25, 18.10′ LT
STA. 28+71.25, 18.10′ RT
STA. 28+71.25, 18.10′ LT
STA. 29+49.75, 18.10′ RT
STA. 29+49.75, 18.10′ LT
PIER # 5
STA. 30+41.50, 18.00′ RT
STA. 30+41.50, 22.21′ LT
STA. 31+06.50, 18.00′ RT
STA. 31+06.50, 27.08′ LT
PIER # 6
STA. 31+97.00, 29.08′ LT
STA. 32+02.00, 18.00′ RT
PIER # 7
STA. 32+84.00, 29.08′ LT
STA. 32+84.00, 18.00′ RT
STA. 33+72.00, 29.08′ LT
STA. 33+72.00, 18.00′ RT
PIER # 8
STA. 34+49.00, 29.08′ LT
STA. 34+51.00, 18.00′ RT
STA. 35+34.00, 19.74′ RT
STA. 36+03.33, 19.74′ RT
STA. 36+03.33, 29.08′ LT
STA. 36+78.50, 25.00′ RT
STA. 37+55.41, 33.58′ LT
STA. 38+23.41, 30.68′ LT
STA. 38+91.41, 23.15′ LT
STA. 39+72.41, 22.50′ LT
STA. 40+39.41, 22.50′ LT
STA. 40+45.00, 23.06′ LT
STA. 40+45.00, 29.92′ RT
STA. 40+39.41, 29.92′ RT
STA. 39+72.41, 29.92′ RT
STA. 38+91.41, 29.92′ RT
STA. 38+23.41, 29.92′ RT
STA. 37+55.41, 27.92′ RT
STA. 36+78.50, 25.00′ RT
STA. 36+03.33, 19.74′ RT
STA. 35+34.00, 19.74′ RT
MATCHLINE 40+75 S.R. 93C
EQUATION: STA 40+45.75 BK = STA 40+00.00 AH
℄ CONST. S.R. 93C
EXPANSION/DEFLECTION FITTING AT PIER NO. 5
EXPANSION/DEFLECTION FITTING AT ABUTMENT
EXPANSION/DEFLECTION FITTING AT PIER NO. 5
EXPANSION/DEFLECTION FITTING AT ABUTMENT

NOTES

1. ALL STATIONING AND OFFSETS ARE FROM THE ℄ OF CONSTRUCTION S.R. 93C, UNLESS NOTED OTHERWISE.
2. ALL POLES ARE LOCATED ON PILASTERS AS PER STRUCTURE DETAILS, UNLESS NOTED OTHERWISE. REFER TO ODOT SCD HL-20.14 FOR MOUNTING DETAILS.
3. ALL LUMINAIRES SHALL BE ORIENTED PERPENDICULAR TO THE ℄ OF CONSTRUCTION UNLESS NOTED OTHERWISE.
4. ALL 14.5′ TALL DECORATIVE POLES ARE LOCATED BEHIND GUARDRAIL. REFER TO SHEET 85/85.

HORIZONTAL SCALE IN FEET
0 25 50 100
CALCULATED BLW
CHECKED SAC

LIGHTING - MAIN AND APPROACH SPAN ROADWAY LIGHTING PLAN (3)

LAW-93-0.00

71/85

330
788

J:\Project\OV\ODOT\15005112 Ironton Russell\LAW\81595\lighting\sheets\81595LP103.dgn - 5/5/2011 3:52:39 PM - brian_wallace

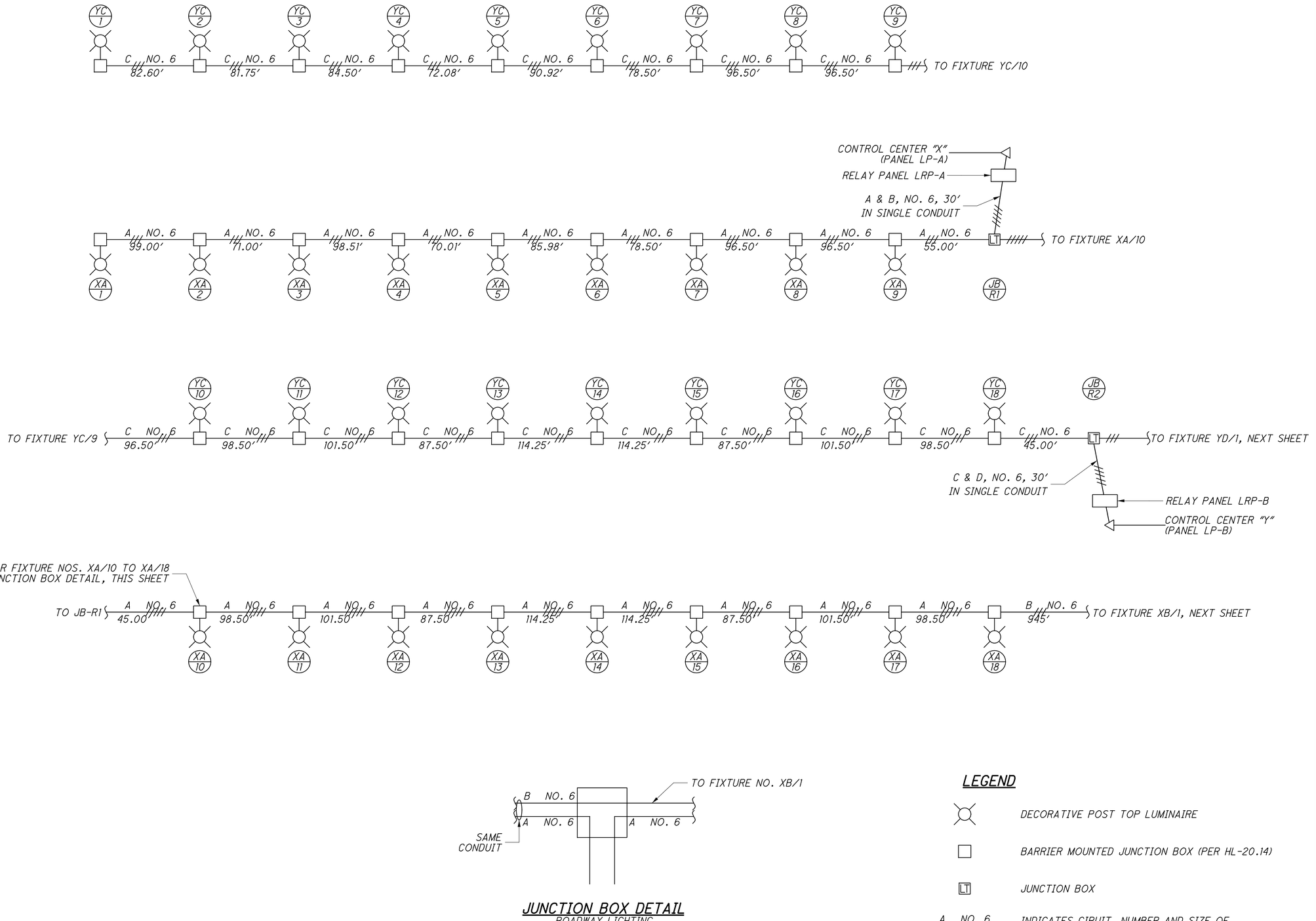

JUNCTION BOX DETAIL

ROADWAY LIGHTING
XA/10 TO XA/18 FIXTURES

LEGEND

- DECORATIVE POST TOP LUMINAIRE
- BARRIER MOUNTED JUNCTION BOX (PER HL-20.14)
- LT — JUNCTION BOX
- A NO. 6 — INDICATES CIRUIT, NUMBER AND SIZE OF INDIVIDUAL CONDUCTORS IN CONDUIT

CALCULATED BLW
CHECKED SAC

LIGHTING - MAIN AND APPROACH SPAN ROADWAY LIGHTING SCHEMATIC (1)

LAW-93-0.00

72/85

331
788

J:\Project\O\ODOT\15005112 Ironton Russell\LAW\81595\lighting\sheets\81595LB101.dgn - 5/5/2011 3:52:47 PM - brian_wallace

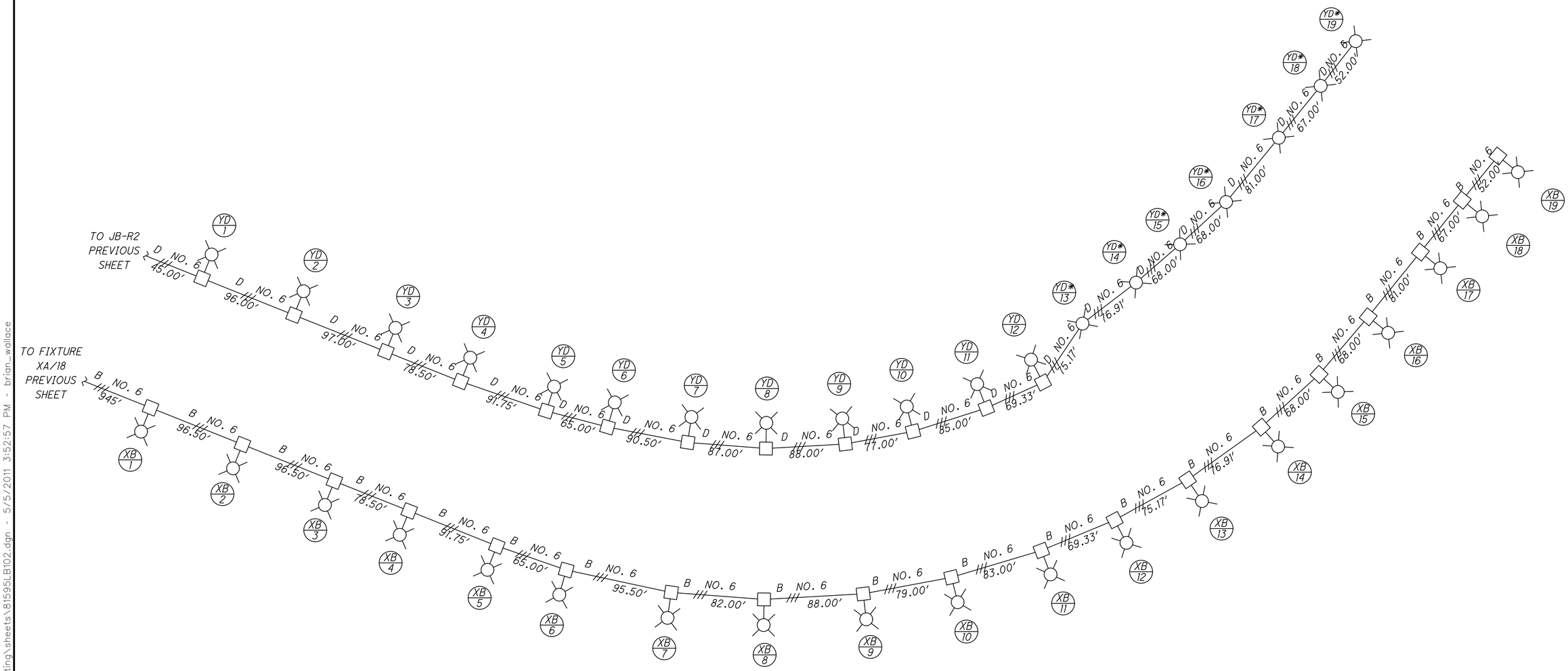

LEGEND

- DECORATIVE POST TOP LUMINAIRE
- BARRIER MOUNTED JUNCTION BOX (PER HL-20.14)
- JT — JUNCTION BOX
- A /// NO. 6 — INDICATES CIRUIT, NUMBER AND SIZE OF INDIVIDUAL CONDUCTORS IN CONDUIT

CALCULATED BLW
CHECKED SAC

LIGHTING - MAIN AND APPROACH SPAN
ROADWAY LIGHTING SCHEMATIC (2)

LAW-93-0.00

73/85

332
788

J:\Project\O\ODOT\15005112 Ironton Russell\LAW\81595\lighting\sheets\81595LB102.dgn - 5/5/2011 3:52:57 PM - brian_wallace

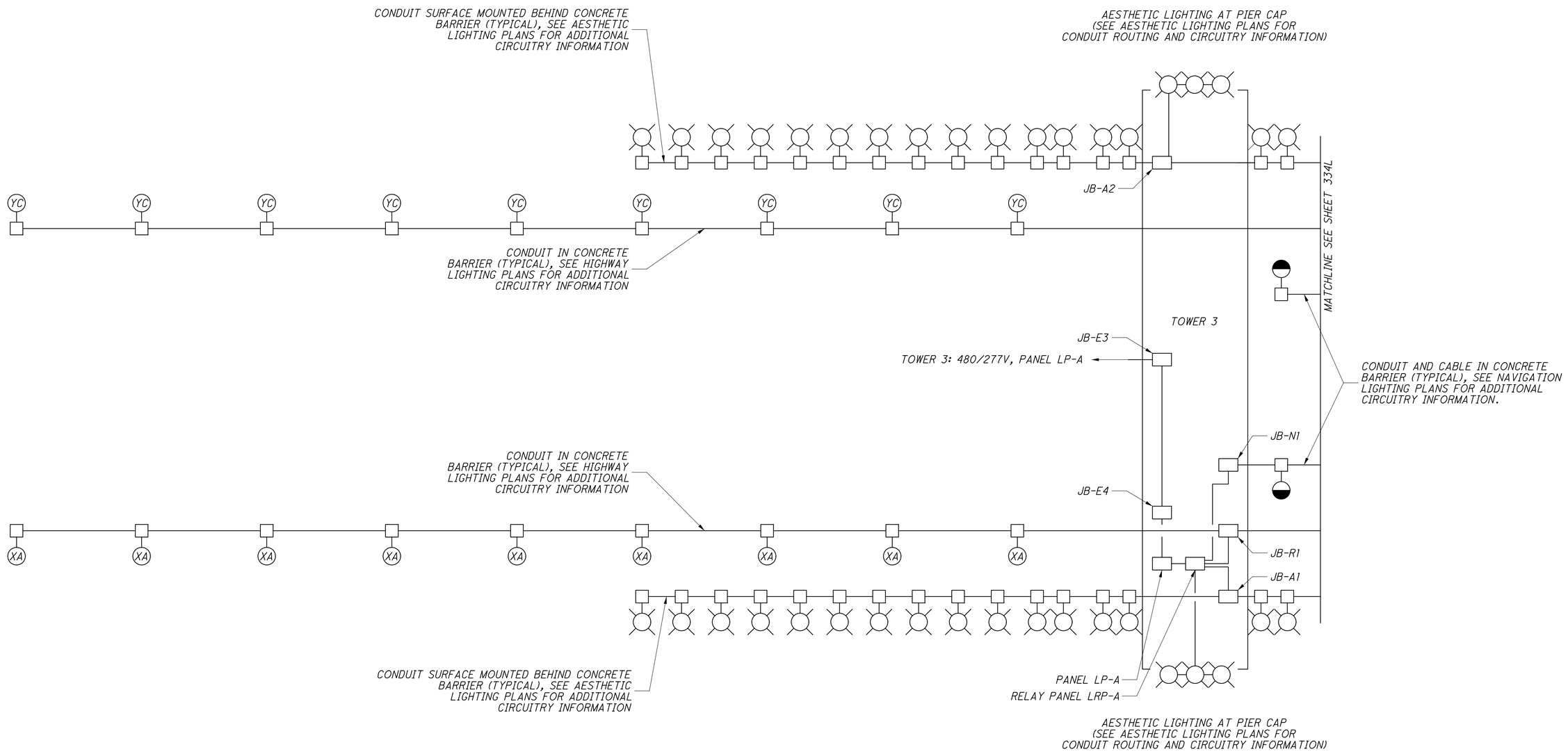

LEGEND

- 18" X 12" X 8", SURFACE MOUNTED JUNCTION BOX ON BRIDGE DECK BEHIND CONCRETE BARRIER WITH STATION LOCATION FROM S.R. 93C BASELINE.
- AESTHETIC LIGHT FIXTURE
- 180 DEGREES, RED NAVIGATION LIGHT
- 360 DEGREES, GREEN NAVIGATION LIGHT

CALCULATED BLW | CHECKED SAC

LIGHTING - MAIN AND APPROACH SPAN
ROADWAY, NAV. & AESTHETIC LTG ONE-LINE DIAGRAM (1)

LAW-93-0.00

74/85

333
788

J:\Project\O\ODOT\15005112 Ironton Russell\LAW\81595\lighting\sheets\81595LC101.dgn - 5/5/2011 3:53:05 PM - brian_wallace

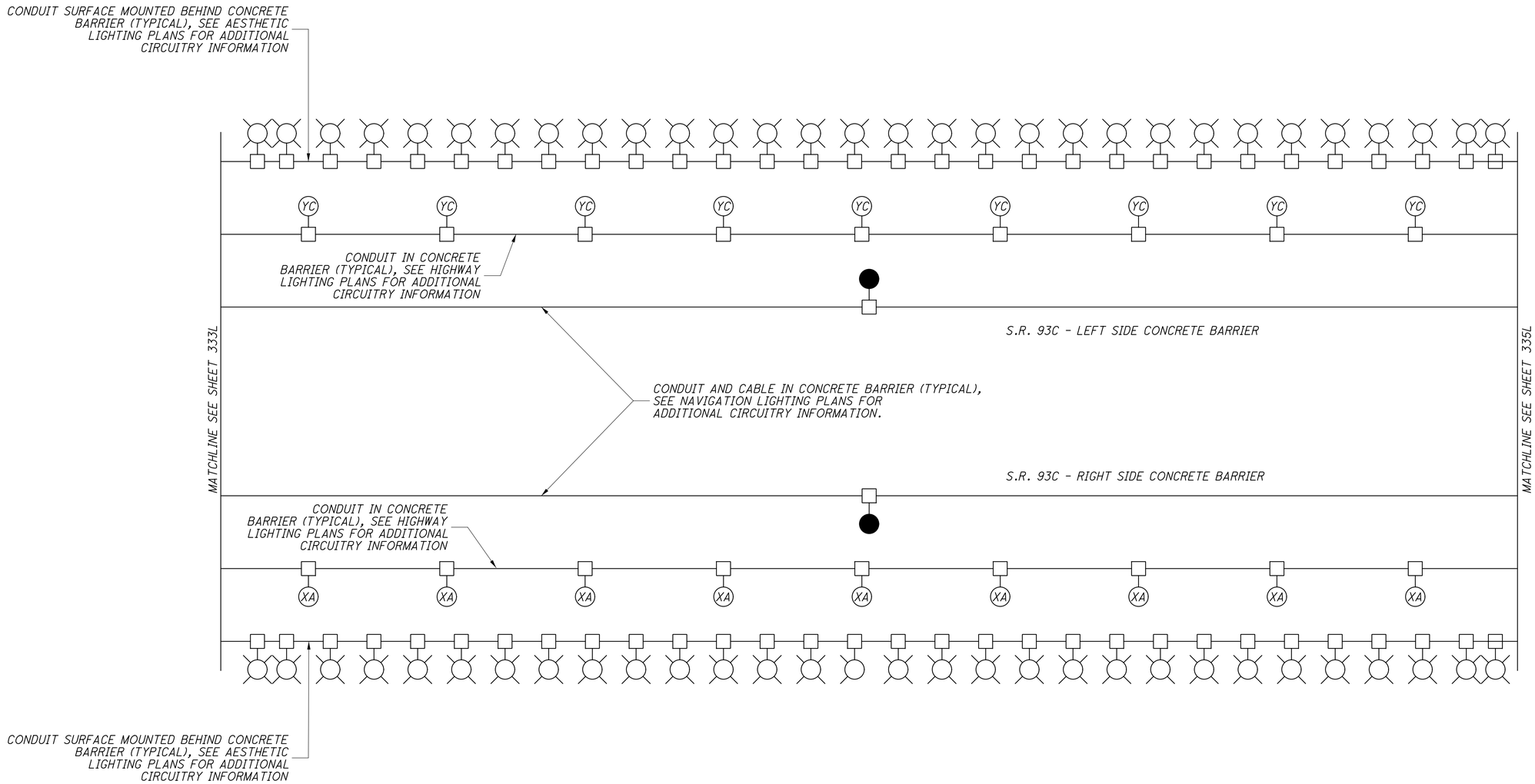

LEGEND

- 18" X 12" X 8", SURFACE MOUNTED JUNCTION BOX ON BRIDGE DECK BEHIND CONCRETE BARRIER WITH STATION LOCATION FROM S.R. 93C BASELINE.
- AESTHETIC LIGHT FIXTURE
- 180 DEGREES, RED NAVIGATION LIGHT
- 360 DEGREES, GREEN NAVIGATION LIGHT

CALCULATED BLW | CHECKED SAC

LIGHTING - MAIN AND APPROACH SPAN
ROADWAY, NAV. & AESTHETIC LTG ONE-LINE DIAGRAM (2)

LAW-93-0.00

J:\Project\O\ODOT\15005112 Ironton Russell\LAW\81595\lighting\sheets\81595LC102.dgn - 5/5/2011 3:53:11 PM - brian_wallace

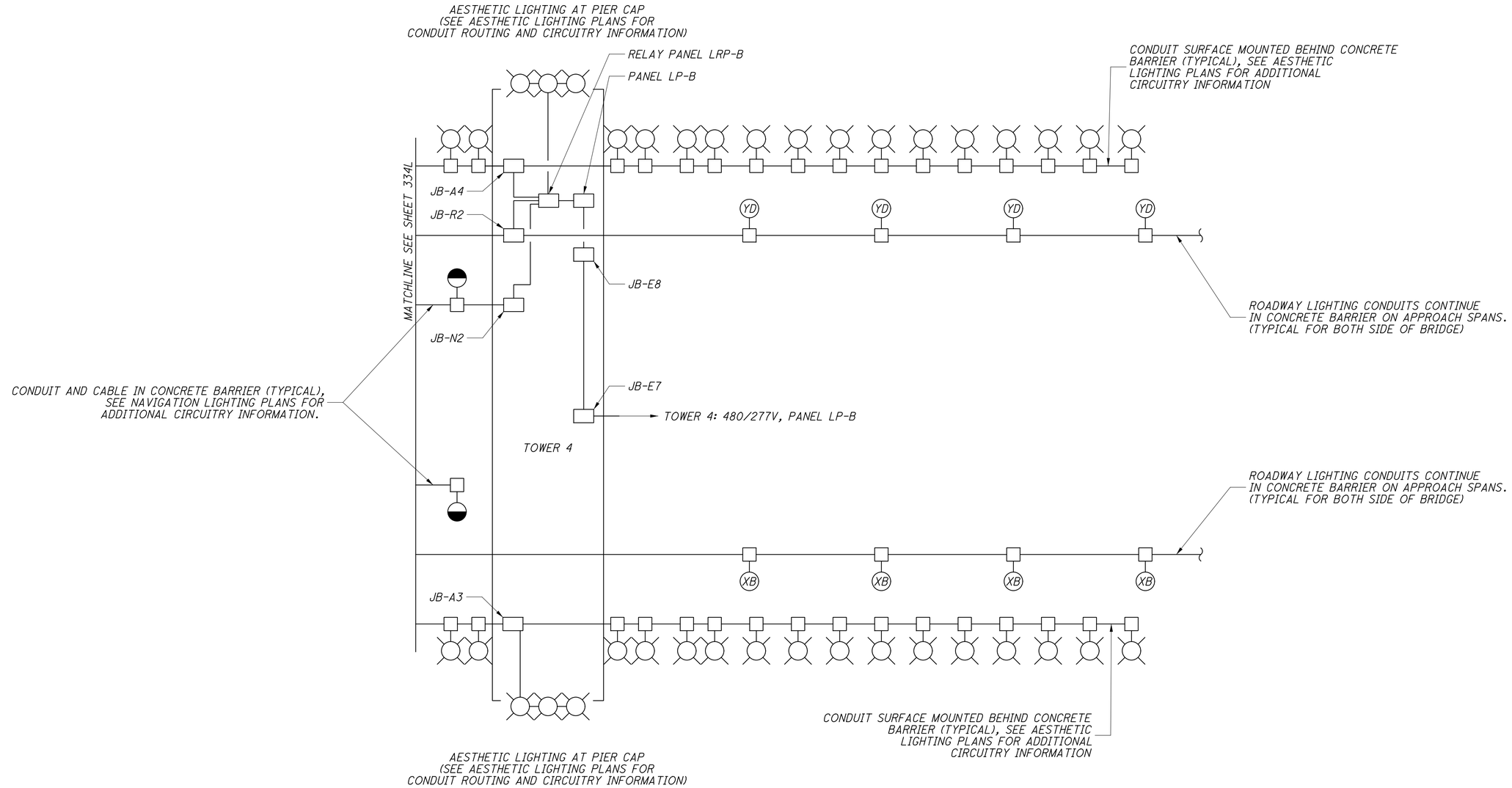

LEGEND

- 18" X 12" X 8", SURFACE MOUNTED JUNCTION BOX ON BRIDGE DECK BEHIND CONCRETE BARRIER WITH STATION LOCATION FROM S.R. 93C BASELINE.
- AESTHETIC LIGHT FIXTURE
- 180 DEGREES, RED NAVIGATION LIGHT
- 360 DEGREES, GREEN NAVIGATION LIGHT

CALCULATED BLW | CHECKED SAC

LIGHTING - MAIN AND APPROACH SPAN
ROADWAY, NAV. & AESTHETIC LTG ONE-LINE DIAGRAM (3)

LAW-93-0.00

J:\Project\ODOT\15005112 Ironton Russell\LAW\81595\lighting\sheets\81595LC103.dgn - 5/5/2011 3:53:19 PM - brian_wallace

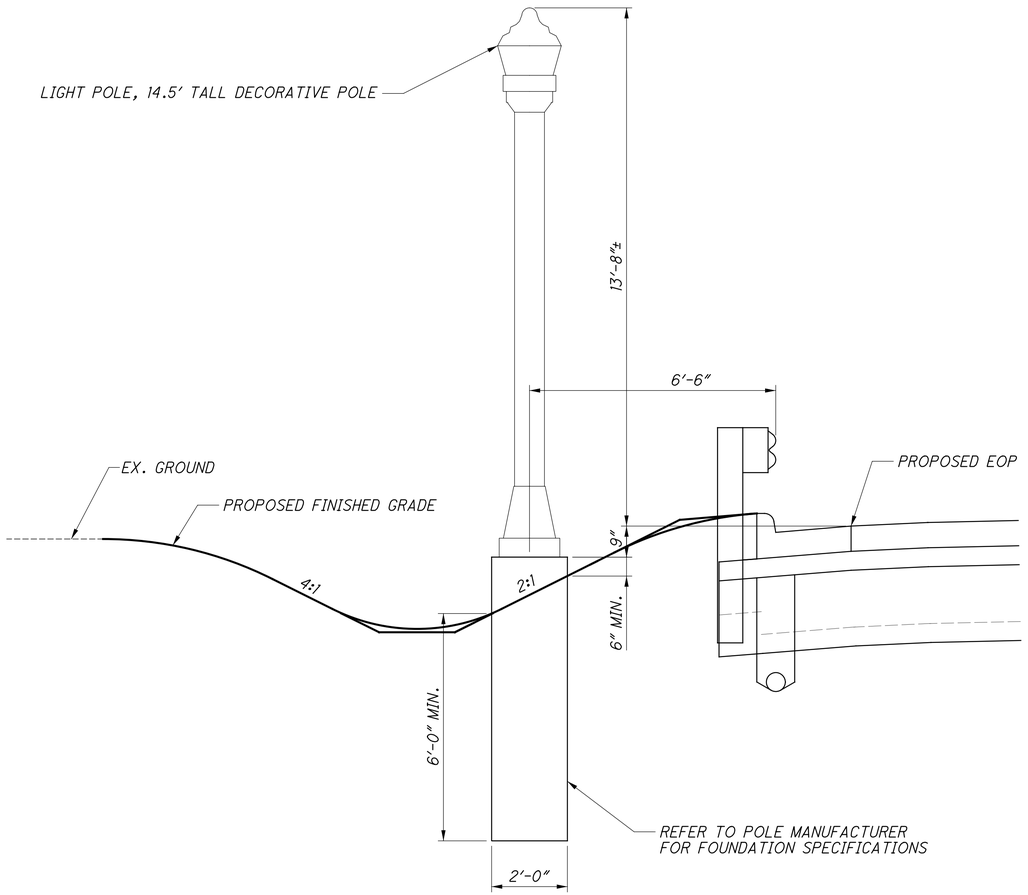

POLE FOUNDATION DETAIL

APPLIES TO POLES LOCATED
IN FORESLOPE BEHIND GUARDRAIL
(REFER TO ODOT SCD HL-20.11)

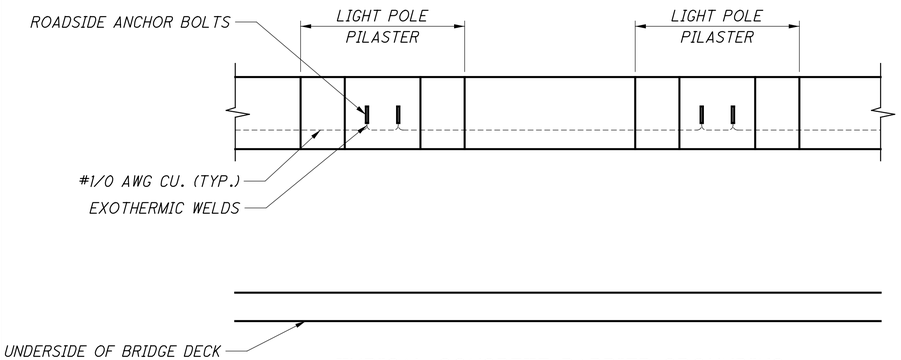

TYPICAL CONCRETE BARRIER GROUNDING

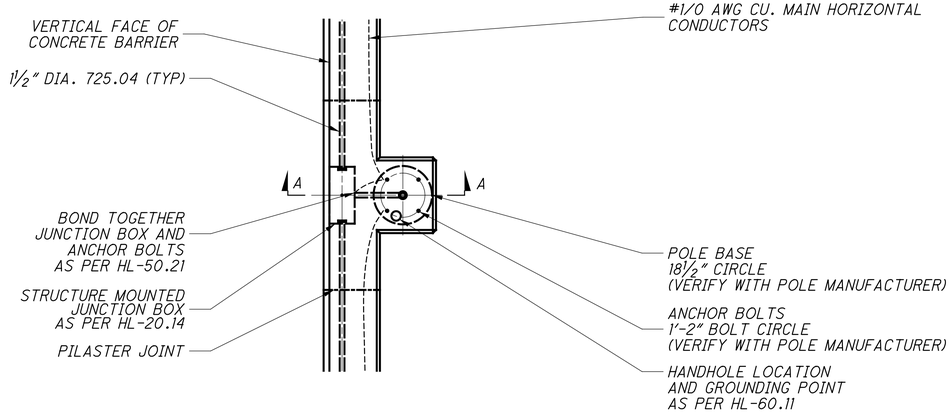

PLAN

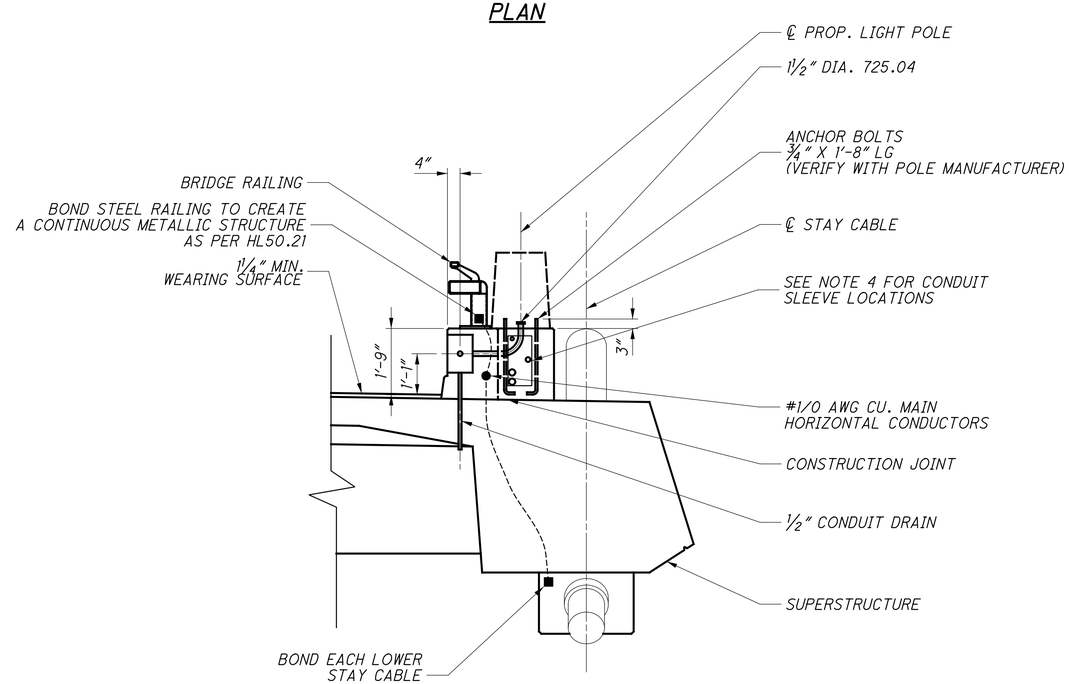

SECTION A-A

LIGHT POLE PILASTER FOR PRECAST BRIDGE
WITH CONCRETE BARRIER AND STEEL RAILING

NOTES

1. ALL JUNCTION BOXES ARE PER HL-20.14 AND 725.10. CAP ALL UNUSED OPENINGS.
2. ALL STRUCTURE GROUNDING PER HL-50.21.
3. FOR APPROACH SPAN PILASTER DETAILS, SEE SHEET 446/788
4. FOR MAIN SPAN PILASTER DETAILS, SEE SHEET 631/788

Link to Lightening
Protect EG RFI As-Built

CALCULATED BLW
CHECKED SAC

LIGHTING - MAIN AND APPROACH SPAN
ROADWAY LIGHTING DETAILS (1)

LAW-93-0.00

77/85

336
788

J:\Project\O\ODOT\15005112 Ironton Russell\LAW\81595\lighting\sheets\81595LD101.dgn - 5/5/2011 3:53:27 PM - brian_wallace

REF. NO.	SHEET NO.	STATION TO STATION				SIDE	LENGTH	625																							
		FROM	BL	TO	BL			CONNECTOR KIT, TYPE II	CONNECTOR KIT, TYPE III	LIGHT POLE FOUNDATION, 24" x 6' DEEP	DISTRIBUTION CABLE, MISC.:NO. 8 AWG 5000 VOLT DISTRIBUTION CABLE	CONDUIT 3", 725.04	NO. 12 AWG POLE AND BRACKET CABLE	CONDUIT 1-1/2", 725.04	TRENCH	GROUND ROD	LIGHT POLE DECORATIVE, AS PER PLAN (STERNBERG)	LUMINAIRE, DECORATIVE, AS PER PLAN (STERNBERG)	PULL BOX, 725.08, 24"	PLASTIC CAUTION TAPE									
								EACH	EACH	EACH	FT	FT	FT	FT	FT	EACH	EACH	EACH	EACH	FT											
ZE-11	82	42+64.00	93C			LT		1	1	1			34			1	1	1													
E-12	82	42+64.00	93C	04+52.50	93C	LT	37				126			37	37					37											
ZE-10	82	04+52.50	JEFF			LT		1	1	1			34			1	1	1													
E-11	82	04+52.50	JEFF	03+95.42	JEFF	LT	57				186			57	57					57											
ZE-9	82	03+95.42	JEFF			LT		1	1	1			34			1	1	1													
E-10	82	03+95.42	JEFF	03+51.48	JEFF	LT	45				150			45	45					45											
ZE-8	82	03+51.48	JEFF			LT		1	1	1			34			1	1	1													
E-9	82	03+51.48	JEFF	37+17.33	JEFF	LT	68				219	68			68					68											
ZE-7	82	37+17.33	CAMP			LT		1	1	1			34			1	1	1													
E-8	82	37+17.33	CAMP	36+46.74	CAMP	LT/RT	74				237	74			74					74											
ZE-6	82	36+46.74	CAMP			LT		1	1	1			34			1	1	1													
E-7	82	36+46.74	CAMP	03+57.00	CAMP	LT/RT	72				231	72			72					72											
ZE-5	82	03+57.00	JEFF			RT		1	1	1			34			1	1	1													
E-6	82	03+57.00	JEFF	04+09.94	JEFF	RT	54				177			54	54					54											
ZE-4	82	04+09.94	JEFF			RT		1	1	1			34			1	1	1													
E-5	82	04+09.94	JEFF	41+10.45	JEFF	RT	54				177			54	54					54											
ZE-3	82	41+10.45	93C			RT		1	1	1			34			1	1	1													
E-4	82	41+10.45	93C	41+10.45	93C	RT	65				210	65			65					65											
ZE-2	82	41+10.45	JEFF			RT		1	1	1			34			1	1	1													
E-3	82	41+10.45	JEFF	05+38.71	JEFF	RT	51				168			51	51					51											
ZE-1	82	05+38.71	JEFF			RT		1	1	1			34			1	1	1													
E-2	82	05+38.71	JEFF	06+00.00	JEFF	RT	67				216			67	67					67											
PB-1	82	06+00.00	JEFF			RT													1												
E,F-1	82	06+00.00	JEFF	06+00.00	JEFF	RT	10				75			10	10					10											
CC-Z	82	06+00.00	JEFF			RT																									
TOTALS CARRIED TO SHEET 79								11	11	11	2,172	279	374	374	654	11	11	11	1	654										

CALCULATED BLW
CHECKED KAP

LIGHTING - CITY OF IRONTON
ROADWAY LIGHTING SUB-SUMMARY (1)

LAW-93-0.00

78 / 85

337
788

J:\Project\ODOT\15005112 Ironton Russell\LAW\81595\lighting\sheets\81595LS105.DGN - 5/5/2011 3:53:34 PM - brian_wallace

REF. NO.	SHEET NO.	STATION TO STATION				SIDE	LENGTH	625																							
		FROM	BL	TO	BL			CONNECTOR KIT, TYPE II	CONNECTOR KIT, TYPE III	LIGHT POLE FOUNDATION, 24" x 6' DEEP	DISTRIBUTION CABLE, MISC.: NO. 8 AWG 5000 VOLT DISTRIBUTION CABLE	CONDUIT 3", 725.04	NO. 12 AWG POLE AND BRACKET CABLE	CONDUIT 1-1/2", 725.04	TRENCH	GROUND ROD	LIGHT POLE DECORATIVE, AS PER PLAN (STERNBERG)	LUMINAIRE, DECORATIVE, AS PER PLAN (STERNBERG)	PULL BOX, 725.08, 24"	PLASTIC CAUTION TAPE									
								EACH	EACH	EACH	FT	FT	FT	FT	FT	EACH	EACH	EACH	EACH	FT											
ZF-11	82	42+64.00	93C			RT		1	1	1			34			1	1	1													
F-12	82	42+64.00	93C	05+43.09	JEFF	RT	55				180			55	55					55											
ZF-10	82	05+43.09	JEFF			LT		1	1	1			34			1	1	1													
F-11	82	05+43.09	JEFF	05+83.02	JEFF	LT	41				138			41	41					41											
ZF-9	82	05+83.02	JEFF			LT		1	1	1			34			1	1	1													
F-10	82	05+83.02	JEFF	06+25.00	JEFF	LT	43				144			43	43					43											
ZF-8	82	06+25.00	JEFF			LT		1	1	1			34			1	1	1													
F-9	82	06+25.00	JEFF	52+78.00	3RD	LT	46				153			46	46					46											
ZF-7	82	52+78.00	3RD			LT		1	1	1			34			1	1	1													
F-8	82	52+78.00	3RD	52+78.00	3RD	LT	50				165	50			50					50											
ZF-6	82	52+78.00	3RD			RT		1	1	1			34			1	1	1													
F-7	82	52+78.00	3RD	07+37.00	3RD	RT	80				255			80	80					80											
ZF-5	82	07+37.00	JEFF			LT		1	1	1			34			1	1	1													
F-6	82	07+37.00	JEFF	07+37.00	3RD	LT/RT	46				153	46			46					46											
ZF-4	82	07+37.00	JEFF			RT		1	1	1			34			1	1	1													
F-5	82	07+37.00	JEFF	51+25.42	JEFF	RT	77				246			77	77					77											
ZF-3	82	51+25.42	3RD			RT		1	1	1			34			1	1	1													
F-4	82	51+25.42	3RD	51+20.89	JEFF	LT/RT	54				177	54			54					54											
ZF-2	82	51+20.89	3RD			LT		1	1	1			34			1	1	1													
F-3	82	51+20.89	3RD	06+19.57	JEFF	LT	63				204			63	63					63											
ZF-1	82	06+19.57	JEFF			RT		1	1	1			34			1	1	1													
F-2	82	06+19.57	JEFF	06+00.00	JEFF	RT	23				84			23	23					23											
		SUB-TOTALS		THIS SHEET				11	11	11	1,899	150	374	428	578	11	11	11	0	578											
		SUB-TOTALS		SHEET 78				11	11	11	2,172	279	374	374	654	11	11	11	1	654											
TOTALS CARRIED TO GENERAL SUMMARY								22	22	22	4,071	429	748	802	1,232	22	22	22	1	1,232											

CALCULATED BLW
CHECKED KAP

LIGHTING - CITY OF IRONTON
ROADWAY LIGHTING SUB-SUMMARY (2)

LAW-93-0.00

79 / 85

338
788

J:\Project\O\ODOT\15005112 Ironton Russell\LAW\81595\lighting\sheets\81595LS106.DGN - 5/5/2011 3:53:41 PM - brian_wallace

WORK LIMITS

THE WORK LIMITS FOR THE LIGHTING PORTION OF THIS PROJECT ARE FOR THE PHYSICAL CONSTRUCTION OF THE LIGHTING ITEMS LISTED. THE CONTRACTOR SHALL COORDINATE HIS WORK WITH THE PRIME CONTRACTOR AND THE MAINTENANCE OF TRAFFIC PLANS SO AS TO LIMIT ANY ADDITIONAL CLOSURES.

ITEM 625 - LIGHT POLE, DECORATIVE, AS PER PLAN

THIS ITEM SHALL INCLUDE ALL LABOR AND MATERIALS NECESSARY TO FURNISH AND INSTALL A DECORATIVE LIGHT POLE IN ACCORDANCE WITH 625, AS DETAILED IN THE PLANS AND DESCRIBED HEREIN.

THE 12-FOOT TALL DECORATIVE POST SHALL BE ALUMINUM, ONE PIECE CONSTRUCTION. THE 17 1/2-INCH DIAMETER CAST ALUMINUM TALL DECORATIVE FLUTED BASE SHALL BE CONSTRUCTED WITH A 5-INCH DIAMETER ALUMINUM SHAFT AND DESIGNED WITH A DECORATIVE CURVED PEDESTAL BOTTOM SECTION AND TRANSITION TO A TWELVE-FLUTE BASE SECTION. THE BASE SHALL BE MADE OF HEAVY WALL CAST ALUMINUM AND ASTM 6061 EXTRUDED ALUMINUM. THE FLOOR SHALL BE CAST INTEGRALLY WITH THE BASE. THE BASE TOP WILL HAVE A DECORATIVE CURVED TRANSITION TO THE SHAFT. THE SHAFT SHALL BE DOUBLE CIRCUMFERENTIALLY WELDED INTERNALLY AND EXTERNALLY TO THE BASE FOR ADDED STRENGTH. THE STRAIGHT FLUTED SHAFT SHALL BE MADE OF ASTM 6061 EXTRUDED ALUMINUM, TEMPERED TO A T6 CONDITION. IT SHALL HAVE A DECORATIVE FLUTED 3-INCH OUTSIDE DIAMETER FLUTED TENON FOR LUMINAIRE MOUNTING. THE SHAFT SHALL BE DOUBLE CIRCUMFERENTIALLY WELDED INTERNALLY AND EXTERNALLY TO THE BASE FOR ADDED STRENGTH. THE MODEL SHALL BE STERNBERG "KENILWORTH" (531XXFP5/XXX/XX/VG), ANTIQUE STREET LAMPS "CENTRAL PARK" (PX CP18 XX F5 ANVG), OR APPROVED EQUAL.

THE POLE FACTORY FINISH SHALL BE "VERDE GREEN" COLOR MATCHING THAT OF THE EXISTING DECORATIVE POLES IN THE CITY OF IRONTON.

FOUR, 3/4-INCH, HOT-DIPPED GALVANIZED "L" TYPE ANCHOR BOLTS SHALL BE PROVIDED WITH THE POST FOR ANCHORAGE. A DOOR SHALL BE PROVIDED FOR WIRING AND ANCHOR BOLT ACCESS. IT SHALL BE SECURED WITH TAMPER PROOF, STAINLESS STEEL HARDWARE. POST WILL BE PROVIDED WITH GROUNDING STUD MOUNTED ON THE BASE FLOOR OPPOSITE THE ACCESS DOOR.

ITEM 625 - LAMPS

HIGH PRESSURE SODIUM LAMPS SHALL BE GENERAL ELECTRIC "LUCALOX," OSRAM SYLVANIA "LUMALUX," PHILIPS "CEREMALUX," OR EQUAL APPROVED BY THE ENGINEER.

ITEM 625 - LUMINAIRE DECORATIVE, AS PER PLAN

THIS ITEM SHALL INCLUDE ALL LABOR AND MATERIALS NECESSARY TO FURNISH AND INSTALL AN ORNAMENTAL POST TOP LUMINAIRE IN ACCORDANCE WITH 625, AS DETAILED IN THESE PLANS, AND AS DESCRIBED HEREIN.
THE LUMINAIRE SHALL BE A TRADITIONAL ACORN FIXTURE COMPRISING OF A DECORATIVE CAST ALUMINUM FITTER, CAST BALLAST HOUSING ASSEMBLY AND POLYCARBONATE OR ACRYLIC CLEAR TEXTURED ACORN GLOBE. IT SHALL BE APPOINTED WITH A CAST ALUMINUM DECORATIVE FOUR-VANE FINIAL. THE LUMINAIRE SHALL BE GENERAL ELECTRIC "AMERICANA" (AM9F07S5XX1HAAFGRNX), HOLOPHANE "ACRYLIC WASHINGTON POSTLITE" (AW070HP48N3XXX), STERNBERG "OLD TOWN" (A850A/508PT/XX/XX/100HPS480/RE3G/VG), OR APPROVED EQUAL. THE HIGH PRESSURE SODIUM LAMP SHALL BE 70 WATTS, EXCEPT FOR THE STERNBERG LUMINAIRE WHICH SHALL UTILIZE A 100 WATT LAMP.

ITEM 625 - LUMINAIRE DECORATIVE, AS PER PLAN (CONT'D)

THE OPTICAL SYSTEM SHALL CONSIST OF PRECISELY MOLDED THERMAL RESISTANCE BOROSILICATE GLASS REFRACTOR AND TOP REFLECTOR WITH A TYPE III DISTRIBUTION.

THE LUMINAIRE BODY FACTORY FINISH SHALL BE "VERDE GREEN" COLOR MATCHING THAT OF THE DECORATIVE LUMINAIRES IN THE CITY OF IRONTON.

ITEM 625 - LIGHT POLE FOUNDATION, 24" X 6' DEEP, AS PER PLAN

FOUNDATION FOR LIGHT POLES NOT INSTALLED TO STRUCTURES SHALL BE CONSTRUCTED IN ACCORDANCE WITH ODOT SDC HL-20.11.

ITEM 625 - POWER SERVICE, AS PER PLAN

IN ADDITION TO THE REQUIREMENTS OF THE SPECIFICATIONS, THE FOLLOWING IS ADDED.

THE POWER SUPPLYING AGENCY FOR THE JEFFERSON STREET ROADWAY LIGHTING PORTION OF THIS PROJECT (CONTROL CENTER "Z") IS:

AEP, OHIO POWER
701 HARDING DRIVE
P.O. BOX 468
CHILLICOTHE, OH 45601
(740) 774-7035
CONTACT: LEE GRIFFITH

THE CONTRACTOR SHALL BE RESPONSIBLE FOR ANY CHARGES MADE BY THE POWER COMPANY FOR WORK BY THE COMPANY IN CONJUNCTION WITH THE ESTABLISHMENT OF THE REQUIRED SERVICE.

ELECTRICAL ENERGY FROM EXISTING POWER SERVICES SHALL CONTINUE TO BE CHARGED TO THE MAINTAINING AGENCY.

POWER SERVICE SHALL BE POLE MOUNTED IN ACCORDANCE WITH ODOT'S STANDARD CONSTRUCTION DRAWINGS (SCD) HL-40.10 AND SHALL INCLUDE A TYPE TC-81.10 DESIGN I, STRAIN POLE AND FOUNDATION IN LIEU OF A WOOD POLE. POLE, ENCLOSURE, CONDUITS AND ALL OTHER MISCELLANEOUS HARDWARE ATTACHED TO THE POLE SHALL BE HOT DIP GALVANIZED AND THEN PAINTED IN ACCORDANCE WITH "LIGHTING GENERAL: PAINT SPECIFICATION" ON SHEET XX/XX. THE FINISH COAT COLOR SHALL MATCH THAT OF THE VERDE GREEN DECORATIVE POLES IN THE CITY OF IRONTON. THE METER BASE SHALL BE EQUIPPED WITH A MANUAL BY-PASS.

PAYMENT SHALL BE MADE AT THE UNIT PRICE BID FOR EACH CMS ITEM 625, "POWER SERVICE, AS PER PLAN" WHICH SHALL BE FULL COMPENSATION FOR ALL LABOR, MATERIALS AND INCIDENTALS REQUIRED TO COMPLETE THIS ITEM IN A SATISFACTORY AND WORKMANLIKE MANNER.

ITEM 625 - POWER SERVICE, AS PER PLAN (CON'TD)

THIS WORK SHALL CONSIST OF FURNISHING AND INSTALLING ALL MATERIALS, EQUIPMENT, LABOR AND INCIDENTALS COMPLETE AND IN PLACE IN ACCORDANCE WITH 625, HL-40.10, AS DETAILED IN THE PLANS AND AS CONTAINED HEREIN.

THE POWER SUPPLY FOR THE CITY OF IRONTON (CONTROL CENTER "Z") SHALL BE A CONTROL CENTER OFF OF JEFFERSON STREET. (SEE SHEET 19/85 FOR DETAILS). THE POWER SUPPLY SHALL BE 277/480 VOLT, THREE-PHASE, FOUR-WIRE.

ITEM 625 - TRENCHING

TRENCH SHALL BE AS PER 625.13. IN ADDITION, ALL TRENCHING IN PAVED AREAS SHALL BE PERFORMED PRIOR TO THE PLACEMENT OF PAVEMENT.

ITEM 625 - EXPANSION FITTING AND GROUNDS

THE EXPANSION FITTINGS AND GROUNDS SHOWN ARE NOT TO BE CONSIDERED COMPLETE IN NUMBER OR MORE THAN APPROXIMATE IN LOCATION.

ITEM 625 - PLASTIC CAUTION TAPE

ALL LOCATIONS OF UNDERGROUND DUCT CABLE OR NONMETALLIC CONDUIT SHALL BE MARKED BY THE USE OF A CONTINUOUS IDENTIFYING TAPE BURIED IN THE TRENCH ABOVE THE LINE. THE IDENTIFYING TAPE SHALL BE AN INERT MATERIAL, APPROXIMATELY 6" WIDE, COMPOSED OF POLYETHYLENE PLASTIC, HIGHLY RESISTANT TO ALKAUS, ACIDS OR OTHER CHEMICAL COMPOUNDS LIKELY TO BE ENCOUNTERED IN SOILS. THE TAPE SHALL BE BRIGHT RED WITH IDENTIFYING PRINTING "ELECTRIC" IN BLACK LETTERS, ONE SIDE ONLY. TAPE SHALL BE SUPPLIED IN CONTINUOUS ROLLS WITH THE IDENTIFYING LETTERING REPEATED CONTINUOUSLY THE FULL LENGTH OF THE TAPE. IDENTIFYING TAPE SHALL BE BURIED IN THE ELECTRIC LINE TRENCH WITH ONE STRIP PLACED APPROXIMATELY DOWN THE CENTERLINE AND LOCATED APPROXIMATELY 6 TO 10 INCHES BELOW THE FINAL FINISHED GRADE. THE TAPE SHALL BE PLACED IN THE TRENCH WITH THE PRINTED SIDE UP AND SHALL BE ESSENTIALLY PARALLEL WITH THE FINISHED SURFACE. THE CONTRACTOR SHALL TAKE NECESSARY PRECAUTIONS TO INSURE THAT THE TAPE IS NOT PULLED, DISTORTED, OR OTHERWISE MISPLACED IN COMPLETING THE TRENCH BACKFILL. THE TAPE SHALL BE PAID FOR PER LINEAR FOOT OF "ITEM SPECIAL - PLASTIC CAUTION TAPE" COMPLETE AND IN PLACE.

ITEM 625 - HIGH VOLTAGE TEST

A HIGH VOLTAGE TEST, AS DESCRIBED IN 625.19, SHALL BE PERFORMED ON ALL DISTRIBUTION CABLE AND DUCT CABLE SYSTEMS TO BE INSTALLED ON THIS PROJECT. TEST SHALL BE PERFORMED ONE AT EACH CONTROL CENTER.

CALCULATED BLW | CHECKED SAC

LIGHTING - CITY OF IRONTON
ROADWAY LIGHTING GENERAL NOTES (1)

LAW-93-0.00

80/85

339
788

J:\Project\0\ODOT\15005112 Ironton Russell\LAW\81595\lighting\sheets\81595LN103.dgn - 12/7/2011 9:43:39 AM - jon_wanstrath

ITEM 625 - LIGHT POLE PAINTING

THE PAINTING OF LIGHT POLES SHALL BE A FIVE-PART PROCESS CONSISTING OF A TWO-PART SURFACE PREPARATION FOLLOWED BY A THREE-COAT PAINT SYSTEM.

THE CONTRACTOR SHALL TAKE ALL NECESSARY PRECAUTIONS TO COMPLY WITH POLLUTION LAWS, RULES OR REGULATIONS OF FEDERAL, STATE OR LOCAL AGENCIES. THE MATERIALS AND WORK SPECIFIED CAN BE HAZARDOUS TO THE HEALTH OF THE APPLICATOR IF THE MANUFACTURER'S INSTRUCTIONS ARE NOT FOLLOWED. THE CONTRACTOR SHALL FOLLOW THE DATA SHEET AND THE LABEL ON THE PAINT CONTAINERS. THESE PRECAUTIONS SHALL INCLUDE THE USE OF RESPIRATORS AND EYE AND SKIN PROTECTION AS SPECIFIED. THE CONTRACTOR SHALL ALSO INSURE THAT HIS OPERATIONS AND LOCATIONS WILL NOT ENDANGER OR ADVERSELY AFFECT THE PUBLIC IN GENERAL. THE ENGINEER SHALL BE NOTIFIED 24 HOURS PRIOR TO ANY CLEANING OR COATING OPERATIONS SO THAT INSPECTION SERVICES CAN BE PROVIDED.

THE PROPOSED CLEANING AND COATING OPERATIONS SHALL BE PERFORMED ONLY WHEN THE AMBIENT TEMPERATURE IS 50 DEGREES FARENHEIT (10 DEGREES CENTIGRADE) OR ABOVE. THE TWO-PART SURFACE PREPARATION SYSTEM SHALL CONSIST OF A SOLVENT CLEANING FOLLOWED BY AN ABRASIVE BLAST CLEANING.

SURFACE PREPARATION SHALL BE DONE UNDER THE CONDITIONS OF TEMPERATURE AND HUMIDITY SPECIFIED BY THE MANUFACTURER OF THE EPOXY-PRIME COAT MATERIAL TO BE APPLIED IMMEDIATELY AFTER THE PREPARATION OPERATIONS.

EXISTING, WEATHERED, GALVANIZED STEEL SHALL BE PREPARED FOR COATING BY A SOLVENT CLEANING CONFORMING TO SPECIFIED SP-1 PUBLISHED BY THE STEEL STRUCTURES PAINTING COUNCIL (SSPC) FOLLOWED BY A COMMERCIAL BLAST CLEANING (SSPC-SP6).

NEW, UNWEATHERED, GALVANIZED STEEL SHALL BE PREPARED FOR COATING BY A SOLVENT CLEANING (SSPC-SP1) FOLLOWED BY A BRUSH-OFF BLAST CLEANING (SSPC-SP7).

THE PRIME COAT SHALL BE APPLIED BEFORE THE PREPARED SURFACE DEGRADES FROM THE PRESCRIBED STANDARDS. IN EVERY CASE, THE SURFACE SHALL BE COATED WITH EPOXY PRIME COAT ON THE SAME DAY AS THE SURFACE PREPARATION.

THE THREE-COAT PAINT SYSTEM SHALL CONSIST OF AN EPOXY PRIME COAT, AN EPOXY INTERMEDIATE COAT AND A URETHANE TOP COAT, WITH EACH COAT BEING A DIFFERENT COLOR.

PAINT SHALL NOT BE APPLIED WHEN THE RELATIVE HUMIDITY IS GREATER THAN 85 PERCENT. PAINT SHALL NOT BE APPLIED WHEN THE STEEL SURFACE TEMPERATURE IS LESS THAN 5 DEGREES FARENHEIT (3 DEGREES CENTIGRADE) ABOVE THE DEW POINT. PAINT SHALL NOT BE APPLIED TO WET, DAMP, FROSTED OR ICE-COATED SURFACES, NOR SHALL IT BE APPLIED DURING RAIN, FOG OR MIST.

BEFORE EACH COATING IS APPLIED, IT SHALL BE MIXED WITH AN APPROVED POWER MECHANICAL MIXER TO A UNIFORM CONSISTENCY WHICH SHALL BE MAINTAINED DURING ITS APPLICATION. THINNING OF PAINT IS STRICTLY PROHIBITED. PAINT NOT CAPABLE OF BEING APPLIED AS SPECIFIED SHALL NOT BE USED.

ITEM 625 - LIGHT POLE PAINTING (CONT'D)

EACH COAT SHALL BE APPLIED IN A WORKMANLIKE MANNER AS A CONTINUOUS FILM OF UNIFORM THICKNESS WHICH IS FREE OF HOLIDAYS, PORES, RUNS OR SAGS. ALL COATS SHALL BE APPLIED BY BRUSH. THE COATING SHALL PENETRATE ALL JOINTS AND CONNECTIONS.

THE PRIME COAT SHALL CONSIST OF THE APPLICATION OF ONE COAT OF AN EPOXY PRIMER. THE TOTAL DRY FILM THICKNESS OF THIS COAT SHALL BE BETWEEN 1.5 TO 2.0 MILS (38 TO 50 MICROMETERS). MATERIAL NOT CAPABLE OF BEING APPLIED AS SPECIFIED SHALL NOT BE USED. IF MORE THAN ONE PASS IS NECESSARY TO OBTAIN THE REQUIRED THICKNESS, THE COST SHALL BE BORNE BY THE CONTRACTOR. THE COLOR OF THIS COAT SHALL BE NOTICEABLY DIFFERENT FROM THE BASE MATERIAL AND OTHER PROPOSED COATS. THE MANUFACTURER SHALL VERIFY THE COATING MATERIAL FOR THE PRIME COAT.

THE EPOXY PRIME COAT SHALL IN ALL CASES BE APPLIED OVER SURFACES THAT WERE PREPARED EARLIER THAT SAME DAY.

THE INTERMEDIATE COAT SHALL CONSIST OF THE APPLICATION ON ONE COAT OF EPOXY. THE TOTAL DRY FILM THICKNESS OF THIS COAT SHALL NOT BE LESS THAN 6 MILS (150 MICROMETERS). MATERIAL NOT CAPABLE OF BEING APPLIED AS SPECIFIED SHALL NOT BE USED. IF MORE THAN ONE PASS IS NECESSARY TO OBTAIN THE REQUIRED THICKNESS, THAT COST SHALL BE BORNE BY THE CONTRACTOR.

AT LEAST TWENTY-FOUR HOURS, BUT NO MORE THAN THREE DAYS, SHALL ELAPSE AFTER THE APPLICATION OF THE EPOXY PRIME COAT AND BEFORE THE APPLICATION OF THE EPOXY INTERMEDIATE COAT. SURFACES SHALL IN ALL CASES BE CLEAN BEFORE THE INTERMEDIATE COAT IS APPLIED. THE MANUFACTURER SHALL VERIFY THE COATING MATERIAL FOR THE INTERMEDIATE COAT.

THE TOP COAT SHALL CONSIST OF THE APPLICATION OF ONE COAT OF URETHANE TO SUPPORT SECTIONS. THE TOTAL DRY FILM THICKNESS OF THIS COAT SHALL NOT BE LESS THAN 1.5 MILS (38 MICROMETERS). MATERIAL NOT CAPABLE OF BEING APPLIED AS SPECIFIED SHALL NOT BE USED. IF MORE THAN ONE PASS IS NECESSARY TO OBTAIN THE REQUIRED THICKNESS, THAT COST SHALL BE BORNE BY THE CONTRACTOR.

AT LEAST TWENTY-FOUR HOURS, BUT NO MORE THAN THREE DAYS, SHALL ELAPSE AFTER THE APPLICATION OF THE EPOXY INTERMEDIATE COAT AND BEFORE THE APPLICATION OF THE URETHANE TOP COAT. SURFACE SHALL IN ALL CASES BE CLEAN BEFORE THE TOP COAT IS APPLIED. THE MANUFACTURER SHALL VERIFY THE COATING MATERIAL FOR THE TOP COAT.

ITEM 625 - LIGHT POLE PAINTING (CONT'D)

PAINTED ITEMS SHALL BE CAREFULLY HANDLED AND STORED TO PREVENT ANY SCRAPING, MARRING OR OTHER DAMAGE TO THE PAINTED SURFACES. THE COATING MATERIALS USED SHALL BE THOSE LISTED FROM ONE OF THE FOLLOWING MANUFACTURERS OR EQUAL AS APPROVED BY THE ENGINEER:

AMERON (714) 256-7755
201 NORTH BERRY STREET, BREA, CALIFORNIA 92821

PRIME COAT - AMERCOAT 71
INTERMEDIATE COAT - AMERLOCK 400
TOP COAT - AMERCOAT 450 HS

THE GLIDDEN COMPANY (800) 634-0015
15885 WEST SPRAGUE RD., STRONGSVILLE, OH 44136

PRIME COAT - GLID-GUARD CORROSION RESISTANT HS EPOXY NO. 5465
INTERMEDIATE COAT - GLID-GUARD CORROSION RESISTANT HS EPOXY NO. 5466
TOP COAT - GLID-THANE II POLYURETHANE 6200 SERIES

PORTER PAINT COMPANY 502) 588-9200
400 SOUTH THIRTEENTH STREET, LOUISVILLE, KY 40203

PRIME COAT - PORTER PAINTS MCR 4300
INTERMEDIATE COAT - PORTER PAINTS MCR 4300
TOP COAT - PORTER PAINTS HYTHANE

POLY-CARB, INC. (440) 248-1223
33095 BAINBRIDGE ROAD, CLEVELAND, OH 44139

PRIME COAT - MARK-60 ULTRAPOX
INTERMEDIATE COAT - MARK-60 ULTRAPOX
TOP COAT - MARK-73 ULTRAKOTE

SHERWIN WILLIAMS CO. (440) 461-3310
761 BETA DRIVE #2, CLEVELAND, OH 44143

PRIME COAT - TILE-CLAD II HI-BUILD PRIMER
INTERMEDIATE COAT - HI-SOLIDS CATALYZED EPOXY
TOP COAT - HI-BUILD ALIPHATIC POLYURETHANE ENAMEL

ALL THREE COATS OF THE SYSTEM SHALL BE MANUFACTURED BY THE SAME COMPANY TO INSURE COMPATIBILITY AMONG COATS.

PRIOR TO USE, THE CONTRACTOR SHALL SUBMIT TO THE DIRECTOR COPIES OF THE MANUFACTURER'S CERTIFIED TEST DATA SHOWING THAT THE MATERIAL COMPLIES WITH THE REQUIREMENTS OF THIS SPECIFICATION. THE TEST DATA SHALL INCLUDE THE BRAND NAME OF THE PAINT, NAME OF THE MANUFACTURER, NUMBER OF THE LOT TESTED AND DATE OF MANUFACTURE. ODOT RESERVES THE RIGHT TO SAMPLE AND TEST DELIVERED LOTS FOR COMPLIANCE.

IF DURING TRANSPORTATION, ERECTION, INSTALLATION OF POLES AND HARDWARE OR AT ANYTIME BEFORE FINAL ACCEPTANCE, THE PAINTED SURFACES ARE SCRATCHED OR MARRED IN ANY MANNER, THE CONTRACTOR SHALL BE REQUIRED TO APPLY "TOUCH-UP" PAINT OF THE SAME TYPE AS SPECIFIED ABOVE TO THE AFFECTED AREAS.

ANCHOR BOLT COVERS OR COVER BASES SHALL ALSO BE PAINTED ACCORDINGLY.

PAYMENT WILL BE MADE AT THE CONTRACT BID PRICE FOR EACH POLE PAINTED AND SHALL BE FULL COMPENSATION FOR ALL LABOR MATERIALS AND EQUIPMENT REQUIRED TO PAINT THE POLE, BRACKET ARM AND TRANSFORMER BASE (IF USED).

CALCULATED BLW | CHECKED SAC

LIGHTING - CITY OF IRONTON
ROADWAY LIGHTING GENERAL NOTES (2)

LAW-93-0.00

81 / 85

340
788

J:\Project\OVODOT\15005112 Ironton Russell\LAW\81595\lighting\sheets\81595LN104.dgn - 5/5/2011 3:53:57 PM - brian_wallace

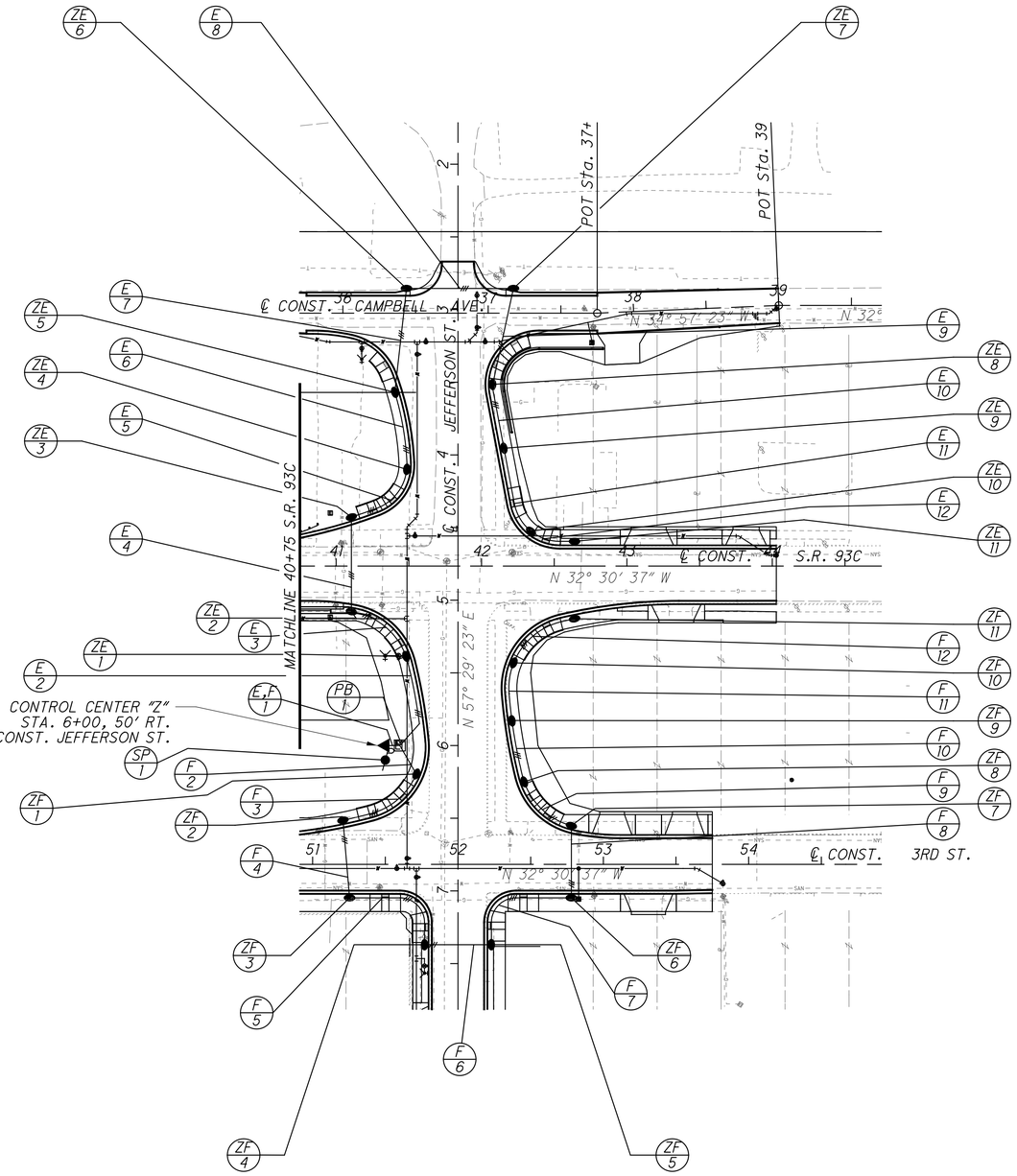

ZE 1 STA. 5+38.71, 35.73' RT ℄ CONST. JEFFERSON ST.
ZE 2 STA. 41+10.45, 31.37' RT ℄ CONST. S.R. 93C
ZE 3 STA. 41+10.45, 33.70' LT ℄ CONST. S.R. 93C
ZE 4 STA. 4+09.94, 35.25' RT ℄ CONST. JEFFERSON ST.
ZE 5 STA. 3+57.00, 43.46' RT ℄ CONST. JEFFERSON ST.
ZE 6 STA. 36+46.74, 17.01' LT ℄ CONST. CAMPBELL AVE.
ZE 7 STA. 37+17.33, 17.00' LT ℄ CONST. CAMPBELL AVE.
ZE 8 STA. 3+51.48, 23.90' LT ℄ CONST. JEFFERSON ST.
ZE 9 STA. 3+95.42, 31.61' LT ℄ CONST. JEFFERSON ST.
ZE 10 STA. 4+52+50, 50.24' LT ℄ CONST. JEFFERSON ST.
ZE 11 STA. 42+64.00, 17.00' LT ℄ CONST. S.R. 93C

PB 1 STA. 6+00.00, 40.00' RT ℄ CONST. JEFFERSON ST.

E,F 1 STA. 6+00.00, 45.00' RT ℄ CONST. JEFFERSON ST.

SP 1 STA. 6+10.00, 50.00' RT ℄ CONST. JEFFERSON ST.

ZF 1 STA. 6+19.57, 28.65' RT ℄ CONST. JEFFERSON ST.
ZF 2 STA. 51+20.89, 30.41' LT ℄ CONST. 3RD ST.
ZF 3 STA.51+25.42, 23.00' RT ℄ CONST. 3RD ST.
ZF 4 STA. 7+37.00, 23.00' RT ℄ CONST. JEFFERSON ST.
ZF 5 STA. 7+37.00, 23.00' LT ℄ CONST. JEFFERSON ST.
ZF 6 STA. 52+78.00, 23.00' RT ℄ CONST. 3RD ST.
ZF 7 STA. 52+78.00, 26.69' LT ℄ CONST. 3RD ST.
ZF 8 STA. 6+25.00, 45.58' LT ℄ CONST. JEFFERSON ST.
ZF 9 STA. 5+83.02, 37.18' LT ℄ CONST. JEFFERSON ST.
ZF 10 STA. 5+43.09, 38.35' LT ℄ CONST. JEFFERSON ST.
ZF 11 STA. 42+64+00, 36.29' RT ℄ CONST. S.R. 93C

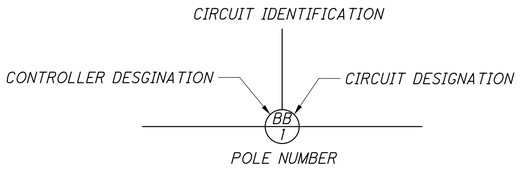

NOTES

1. ALL STATIONING AND OFFSETS ARE FROM THE ℄ OF CONSTRUCTION S.R. 93C, UNLESS NOTED OTHERWISE .
2. ALL LUMINAIRES SHALL BE ORIENTED PERPENDICULAR TO THE ℄ OF CONSTRUCTION UNLESS NOTED OTHERWISE .

LEGEND

- ZE 1 — LIGHT POLE, 12' TALL DECORATIVE POLE
- E,F 1 — CONDUIT/CABLE RUN REFER TO SHEETS 83/85 AND 84/85
- PB 1 — PULL BOX NUMBER
- SP 1 — SERVICE POLE NUMBER
- ● — LIGHTING (POST TOP)
- ▲ — CONTROL CENTER "Z" (SEE SHEET 83/85 FOR DETAILS)
- PULL BOX, 24", 725.08 (AS INDICATED)
- P — SERVICE POLE "Z"

HORIZONTAL SCALE IN FEET
0 25 50 100

CALCULATED BLW
CHECKED SAC

LIGHTING - ROADWAY

LAW-93-0.00

82/85

341
788

J:\Project\OJODOT\15005112 Ironton Russell\LAW\81595\lighting\sheets\81595LP104.dgn - 5/5/2011 3:55:14 PM - brian_wallace

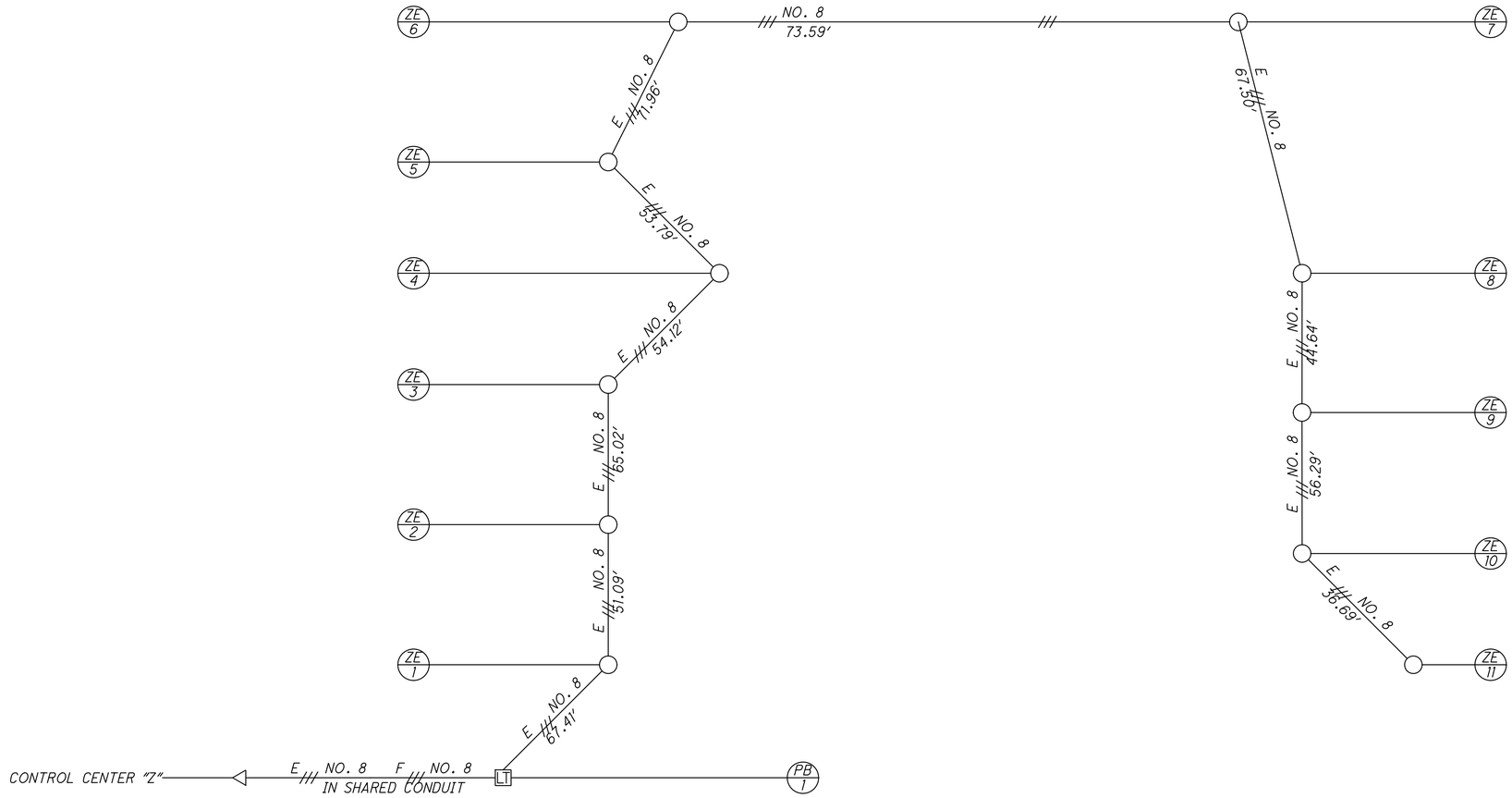

LUMINAIRE ORIENTATION

ZE-1	N 52.1° W
ZE-2	S 71.3° W
ZE-3	N 39.1° E
ZE-4	N 26.9° W
ZE-5	N 51.6° W
ZE-6	N 57.5° E
ZE-7	N 57.5° E
ZE-8	S 32.5° E
ZE-9	S 43.2° E
ZE-10	S 49.7° E
ZE-11	N 57.5° E

POWER SERVICE DATA - CITY OF IRONTON

POWER SERVICE	LINE VOLTAGE (VOLTS)	CONNECTED LOAD (kVA)	SERVICE ENTRANCE CABLE (AWG)	ENCLOSURE RATINGS (Amps)	CIRCUIT NUMBER	CIRCUIT LOAD (Amps)	CIRCUIT BREAKER SIZE (Amps)	CIRCUIT CABLE SIZE (Amps)	MAINTAINING AGENCY
CONTROL CENTER "Z"	277/480 3*, 4-wire	2.83	3	100	E 277V, L-N, A* *A	5.10	20	8	CITY OF IRONTON
					F 277V, L-N, B* *B	5.10	20	8	

NOTE: FOR ADDITIONAL POWER SERVICE DETAILS, SEE STANDARD DRAWINGS.

LEGEND

- ○ DECORATIVE POST TOP LUMINAIRE
- LT PULL BOX, 24", 725.08
- E NO. 8 — INDICATES CIRUIT, NUMBER AND SIZE OF INDIVIDUAL CONDUCTORS IN 1½" CONDUIT

CALCULATED BLW
CHECKED SAC

LIGHTING - CITY OF IRONTON
ROADWAY LIGHTING SCHEMATIC (1)

LAW-93-0.00

83 / 85

342
788

J:\Project\ODOT\15005112 Ironton Russell\LAW\81595\lighting\sheets\81595LB103.dgn - 5/5/2011 3:55:22 PM - brian_wallace

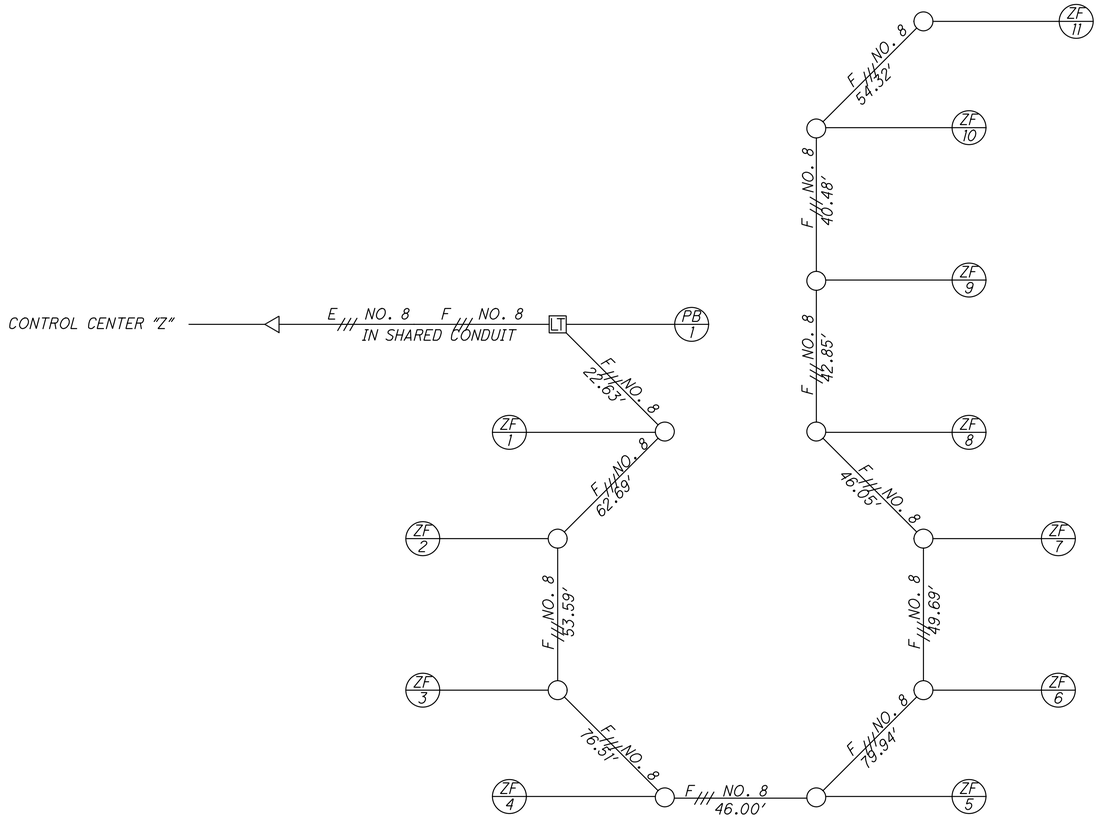

LUMINAIRE ORIENTATION

ZF-1	N 9.8° W
ZF-2	N 45.8° E
ZF-3	S 57.5° W
ZF-4	N 32.5° W
ZF-5	S 32.5° E
ZF-6	S 57.5° W
ZF-7	N 69.7° E
ZF-8	S 46.9° E
ZF-9	S 40.2° E
ZF-10	S 10.8° E
ZF-11	S 45.1° W

POWER SERVICE DATA - CITY OF IRONTON

POWER SERVICE	LINE VOLTAGE (VOLTS)	CONNECTED LOAD (kVA)	SERVICE ENTRANCE CABLE (AWG)	ENCLOSURE RATINGS (Amps)	CIRCUIT NUMBER	CIRCUIT LOAD (Amps)	CIRCUIT BREAKER SIZE (Amps)	CIRCUIT CABLE SIZE (Amps)	MAINTAINING AGENCY
CONTROL CENTER "Z"	277/480 3*, 4-wire	2.83	3	100	E 277V, L-N, A* *A	5.10	20	8	CITY OF IRONTON
					F 277V, L-N, B* *B	5.10	20	8	

NOTE: FOR ADDITIONAL POWER SERVICE DETAILS, SEE STANDARD DRAWINGS.

LEGEND

- ○ DECORATIVE POST TOP LUMINAIRE
- LT PULL BOX, 24", 725.08
- F /// NO. 8 — INDICATES CIRUIT, NUMBER AND SIZE OF INDIVIDUAL CONDUCTORS IN 1½" CONDUIT

CALCULATED BLW
CHECKED SAC

LIGHTING - CITY OF IRONTON
ROADWAY LIGHTING SCHEMATIC (2)

LAW-93-0.00

84/85

343
788

J:\Project\O\ODOT\15005112 Ironton Russell\LAW\81595\lighting\sheets\81595LB104.dgn - 5/5/2011 3:55:29 PM - brian_wallace

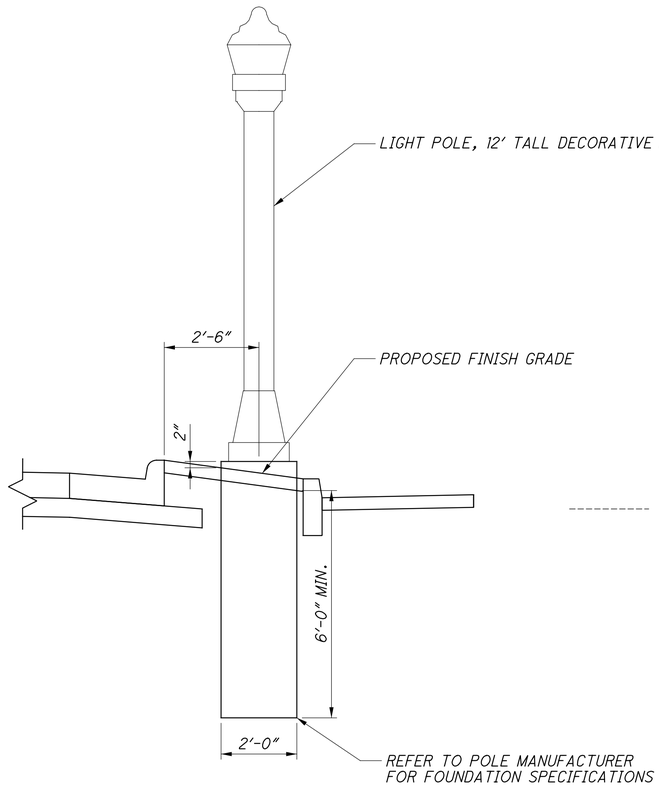

POLE FOUNDATION DETAIL

APPLIES TO STA. 41+10.45, 31.37' RT
(REFER TO ODOT SCD HL-20.11 & HL-20.21)

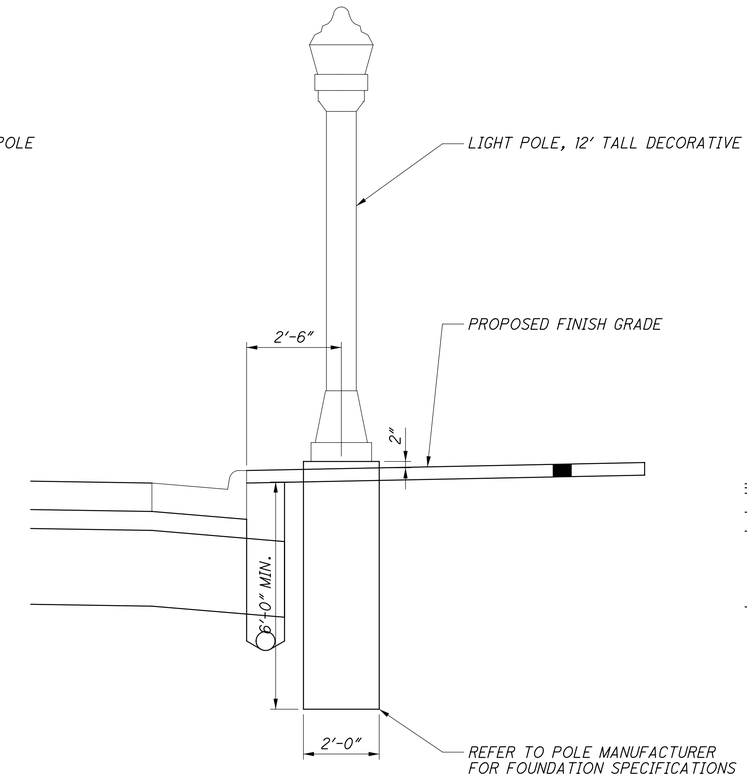

POLE FOUNDATION DETAIL

APPLIES TO LIGHT POLES IN SIDEWALKS
(REFER TO ODOT SCD HL-20.11 & HL-20.21)

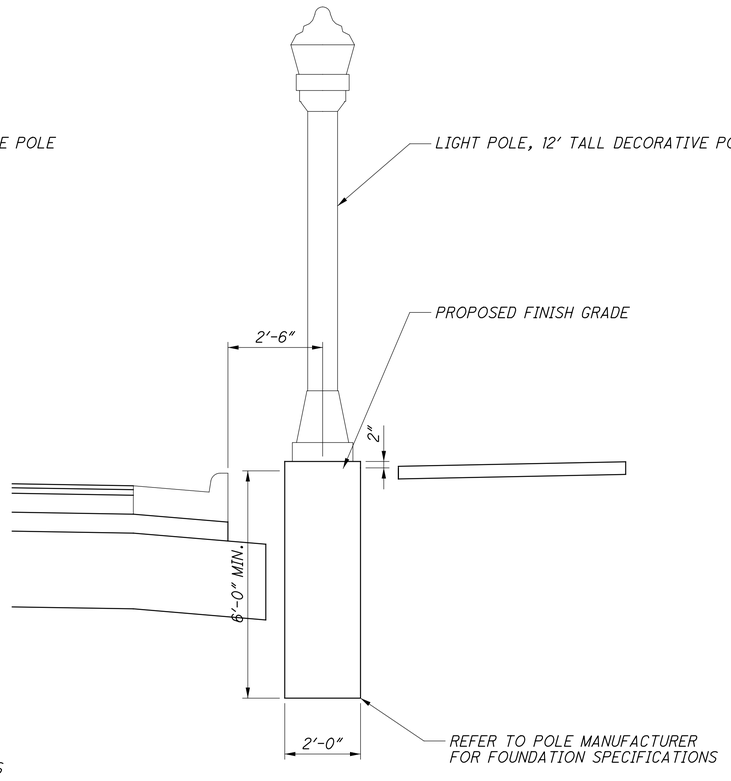

POLE FOUNDATION DETAIL

APPLIES TO LIGHT POLES IN TREE LAWN
(REFER TO ODOT SCD HL-20.11 & HL-20.21)

CALCULATED BLW
CHECKED SAC

LIGHTING - CITY OF IRONTON
ROADWAY LIGHTING DETAILS

LAW-93-0.00

85 / 85

344
788

J:\Project\O\ODOT\15005112 Ironton Russell\LAW\81595\lighting\sheets\81595LD103.dgn - 5/5/2011 3:55:36 PM - brian_wallace

RIPARIAN ZONE RE-VEGETATION PLAN NOTES

1. FINAL GRADING OF SURFACE WILL BE IN ACCORDANCE WITH THE SLOPES AND CONTOURS SHOWN IN THE PLANS. ON SLOPES STEEPER THAN 3:1, DO NOT GRADE SMOOTH BUT LEAVE TRACK MARKS ON THE SLOPE IN SUCH A WAY THAT RAIN WATER WILL BE RETAINED TO SUPPORT PLANT GROWTH.

2. TOPSOIL IN THE RIPARIAN ZONES SHALL BE PLACED FOLLOWING THE PLANTING OF SHRUBS IN ORDER TO PROVIDE A GRID OF SUPPORT FOR THE TOPSOIL ON THE STEEP SLOPES. FOLLOWING TOPSOIL PLACEMENT, PLACE SEEDING AND MULCHING USING CLASS 3C, CROWN VETCH MIXTURE.

3. SHRUB SPECIES FOR THE RIPARIAN ZONES SHOWN ON THE FOLLOWING SHEETS SHALL BE AS NOTED BELOW:

   KENTUCKY - 2.534± ACRES (ZONE 1) - AREA BETWEEN THE CSX ACCESS ROAD AND THE RIVERBANK APPROXIMATELY BELLEFONTE STATION 36+20 TO STATION 45+04.

   ± ARROWWOOD (VIBURNUN DENTATUM)
   ± WINTERBERRY (ILEX VERTICILLATA)
   ± BLACK CHOKEBERRY (ARONIA MEANOCARPA)

   OHIO - 0.424± ACRES (ZONE 2) - AREA WITHIN THE CONSTRUCTION LIMITS BETWEEN THE RIVER BANK AND THE IRONTON FLOOD LEVEE, APPROXIMATELY 93C STATION 27+40 TO STATION 29+25.

   ± ARROWWOOD (VIBURNUN DENTATUM)
   ± WINTERBERRY (ILEX VERTICILLATA)
   ± BLACK CHOKEBERRY (ARONIA MEANOCARPA)

4. IT IS THE INTENT TO PLANT SHRUBS SO THAT THE APPEARANCE IS RANDOM. TO ACCOMPLISH THE DESIRED RANDOMNESS, HORIZONTAL PLANTING LINES MAY BE ONLY APPROXIMATELY STRAIGHT LINES. PLANTINGS ALONG THE HORIZONTAL LINES SHALL BE SUCH THAT THE ALIGNMENT UP THE SLOPES IS RANDOM TO ACHIEVE THE MAXIMUM EROSION PROTECTION POSSIBLE. IN GENERAL, SHRUBS SHOULD BE PLACED AN AVERAGE OF 5 FEET CENTER TO CENTER. PER ITEM 661.06, ALL PLANTINGS SHALL BE AFTER SEPTEMBER 15TH AND PRIOR TO JUNE 1ST.

5. THE INTENT FOR EACH OF THE PLANTING ZONES IS TO GIVE THE APPEARANCE OF A NATURALLY OCCURRING SPACING OF THE SPECIES OF SHRUBS SPECIFIED FOR EACH PLANTING ZONE. CONSEQUENTLY, THE CONTRACTOR SHALL PLANT NO MORE THAN 3 OF ANY ONE SPECIES TOGETHER AT ANY ONE LOCATION WITHIN THE PLANTING ZONE.

RIPARIAN ZONE SUBSUMMARY

ZONE NO.	SHEET NO.	STATION TO STATION		659 TOPSOIL CU YD	659 SEEDING AND MULCHING, CLASS 3C SQ YD	659 WATER MGAL	661 DECIDUOUS SHRUB, 2' HEIGHT, VIBURNUM DENTATUM ARROWWOOD EACH	661 DECIDUOUS SHRUB, 2' HEIGHT, ILEX VERTICILLATA WINTERBERRY EACH	661 DECIDUOUS SHRUB, 2' HEIGHT, ARONIA MEAOCARPA BLACK CHOKEBERRY EACH	662 LANDSCAPE WATERING MGAL	REMARKS
1	346	36+28	45+04	1349	12264	67.88	1472	1472	1472	17.66	BELLEFONTE STATIONING
2	347	27+40	29+25	226	2054	11.37	247	247	247	2.96	93C STATIONING
TOTALS CARRIED TO GENERAL SUMMARY				1575	14318	79.25	1719	1719	1719	20.62	

TYPICAL 50'x50' AREA FOR SHRUBS

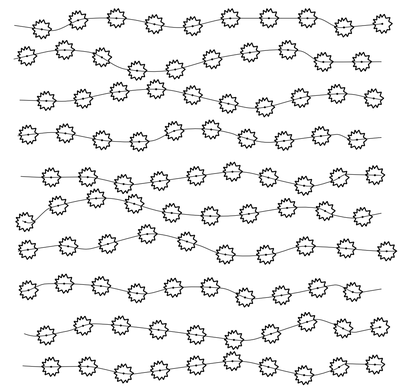

TYPICAL SPACING DETAIL

THE FOLLOWING QUANTITIES HAVE BEEN CARRIED TO THE GENERAL SUMMARY.

EROSION CONTROL

THE FOLLOWING QUANTITIES ARE PROVIDED TO PROMOTE GROWTH AND CARE OF PERMANENT SEEDED AREAS:

659, REPAIR SEEDING AND MULCHING	716 SQ. YD.
659, INTER-SEEDING	716 SQ. YD.

SEEDING AND MULCHING SHALL BE APPLIED TO ALL AREAS OF EXPOSED SOIL BETWEEN THE RIGHT-OF-WAY LINES, AND WITHIN THE CONSTRUCTION LIMITS FOR AREAS OUTSIDE THE RIGHT-OF-WAY LINES COVERS BY WORK AGREEMENT OR SLOPE EASEMENT. QUANTITY CALCULATIONS FOR SEEDING AND MULCHING ARE BASED ON THESE LIMITS.

CALCULATED JRW CHECKED AMD

RIPARIAN ZONE REVEGETATION NOTES & SUBSUMMARY

LAW-93-0.00

345
788

J:\Project\O\ODOT\15005112 Ironton Russell\LAW\81595\landscape\sheets\81595PM001.dgn - 4/25/2011 6:59:06 AM - jon_wanstrath

THE FOLLOWING QUANTITIES HAVE BEEN CARRIED TO THE GENERAL SUMMARY.

EROSION CONTROL

THE FOLLOWING QUANTITIES ARE PROVIDED TO PROMOTE GROWTH AND CARE OF PERMANENT SEEDED AREAS:

659, REPAIR SEEDING AND MULCHING	501 SQ. YD.
659, INTER-SEEDING	501 SQ. YD.
659, WATER	55.45 M. GAL.
659, MOWING	23 M. SQ. FT.

SEEDING AND MULCHING SHALL BE APPLIED TO ALL AREAS OF EXPOSED SOIL BETWEEN THE RIGHT-OF-WAY LINES, AND WITHIN THE CONSTRUCTION LIMITS FOR AREAS OUTSIDE THE RIGHT-OF-WAY LINES COVERED BY WORK AGREEMENT OR SLOPE EASEMENT, AND EXCLUDING AREAS COVERED BY RIPARIAN ZONE VEGETATION. QUANTITY CALCULATIONS FOR SEEDING AND MULCHING ARE BASED ON THESE LIMITS.

LEGEND

- 659 SEEDING AND MULCHING, CLASS 1
- 659 SEEDING AND MULCHING, CLASS 2
- 659 SEEDING AND MULCHING, CLASS 3B
- RIPARIAN ZONE - FOR QUANTITIES SEE SHEET 345

HORIZONTAL SCALE IN FEET: 0, 25, 50, 100

CALCULATED JRW CHECKED AMD

OHIO RIVER
DO NOT DISTURB RIVER BANK
36+63
120'
37+50
100'
38+50
70'
DO NOT DISTURB SANITARY FORCE MAIN
MATCHLINE STA. 35+00 SEE INSET
PC Sta. 35+06.70
MATCHLINE STA. 5070+35 SEE INSET
5070
PT Sta. 5069+32.98
SEEDING SHOWN 32' OFFSET FROM ℄ NEAREST TRACK
℄ CSX RAILROAD
PT Sta. 34+16.03
MATCHLINE STA. 35+00 SEE ABOVE
℄ R/W BELLEFONTE ST.
MATCHLINE STA. 5070+35 SEE ABOVE
℄ CONST. 93C
15
94'
15' OFFSET FROM NORMAL POOL EDGE OF WATER
PC Sta. 39+34.80
5065
PC Sta. 42+52.10
℄ R/W BELLEFONTE ST.
℄ R/W US 23
5060
DO NOT DISTURB SANITARY FORCE MAIN
PT Sta. 38+36.04
340
PC Sta. 340+72.54
45
PCC Sta. 343+00.01
PT Sta. 344+37.56
Sta. 48+57.70
345
50
30'

ITEM 659 SEEDING AND MULCHING SUBSUMMARY									
REF. NO.	C/L REF.	STATION TO STATION		SIDE	CLASS 1 (SQ YD)	CLASS 2 (SQ YD)	CLASS 3B (SQ YD)	TOPSOIL (CU YD)	REMARKS
1	US 23	337+50	342+00	R		1503		166	
2	BELLFONTE ST.	42+65	44+13	L		578		64	
3	BELLFONTE ST.	43+82	44+62	L			327	36	
4	BELLFONTE ST.	42+65	44+62	L			640	71	
5	BELLFONTE ST.	44+48	48+99	L			2749	303	
6	BELLFONTE ST.	45+70	49+90	L/R		2203		243	
7	93C	10+85	11+25	R		143		16	
8	BELLFONTE ST.	32+27	44+08	L/R		1760		194	
TOTALS CARRIED TO GENERAL SUMMARY						6187	3716	1093	

SEEDING AND REVEGETATION PLAN
KENTUCKY

LAW-93-0.00

346
788

J:\Project\OKODOT\15005112 Ironton Russell\LAW\81595\landscape\sheets\81595PP004.dgn - 4/25/2011 6:59:09 AM - jon_wanstroth

ITEM 659 SEEDING AND MULCHING SUBSUMMARY									
REF. NO.	C/L REF.	STATION TO STATION		SIDE	CLASS 1 (SQ YD)	CLASS 2 (SQ YD)	CLASS 3B (SQ YD)	TOPSOIL (CU YD)	REMARKS
17	93C	28+39	31+55	R		1094		121	
18	93C	28+83	32+33	L		2529		279	
19	93C	31+62	31+93	R		43		5	
20	93C	31+81	32+81	L		139		16	
21	93C	31+99	32+29	R		37		5	
22	93C	32+18	33+55	L		190		21	
23	93C	32+40	32+87	R		61		7	
24	93C	32+69	33+78	L		200		22	
25	93C	33+18	33+63	R		59		7	
26	93C	33+45	34+38	L		142		16	
27	MONROE	7+10	8+15	R	1061			117	
28	MONROE	8+21	8+64	R	74			9	
29	MONROE	7+10	8+51	L	226			25	
30	2ND ST.	10+20	12+00	R	69			8	
31	2ND ST.	10+18	10+78	L	75			9	
32	93C	35+83	41+01	L			1622	179	
33	93C	35+20	40+61	L	1927			212	
34	93C	39+13	39+21	R	198			22	
35	JEFFERSON ST.	3+16	4+48	R	1030			114	
36	CAMPBELL AVE.	34+50	35+56	R	172			19	

TABLE CONTINUED BELOW

LEGEND

- 659 SEEDING AND MULCHING, CLASS 1
- 659 SEEDING AND MULCHING, CLASS 2
- 659 SEEDING AND MULCHING, CLASS 3B
- RIPARIAN ZONE FOR QUANTITIES SEE SHEET 345

HORIZONTAL SCALE IN FEET: 0, 25, 50, 100

CALCULATED JRW CHECKED AMD

OHIO RIVER

15' OFFSET FROM NORMAL POOL EDGE OF WATER

25' OFFSET FROM DRIVEWAY

℄ CONST. 93C

PC Sta. 30+44.79

℄ CONST. CAMPBELL AVE.

℄ R/W MONROE ST.

℄ R/W 2ND ST.

℄ R/W MADISON ST.

POT Sta. 40+00.00

EQUATION: Sta 40+45.75 BK = Sta 40+00.00 AH

℄ CONST. JEFFERSON ST.

℄ CONST. 3RD ST.

N 32° 30' 37" W

N 34° 57' 23" W

N 57° 29' 23" E

N 57° 29' 24" E

THE FOLLOWING QUANTITIES HAVE BEEN CARRIED TO THE GENERAL SUMMARY.

EROSION CONTROL

THE FOLLOWING QUANTITIES ARE PROVIDED TO PROMOTE GROWTH AND CARE OF PERMANENT SEEDED AREAS:

659, REPAIR SEEDING AND MULCHING	620 SQ. YD.
659, INTER-SEEDING	620 SQ. YD.
659, WATER	68.53 M. GAL.
659, MOWING	28 M SQ. FT.

SEEDING AND MULCHING SHALL BE APPLIED TO ALL AREAS OF EXPOSED SOIL BETWEEN THE RIGHT-OF-WAY LINES, AND WITHIN THE CONSTRUCTION LIMITS FOR AREAS OUTSIDE THE RIGHT-OF-WAY LINES COVERS BY WORK AGREEMENT OR SLOPE EASEMENT, AND EXCLUDING AREAS COVERED BY RIPARIAN ZONE VEGETATION. QUANTITY CALCULATIONS FOR SEEDING AND MULCHING ARE BASED ON THESE LIMITS.

ITEM 659 SEEDING AND MULCHING SUBSUMMARY CONT'D									
REF. NO.	C/L REF.	STATION TO STATION		SIDE	CLASS 1 (SQ YD)	CLASS 2 (SQ YD)	CLASS 3B (SQ YD)	TOPSOIL (CU YD)	REMARKS
37	CAMPBELL AVE.	34+49	36+67	L		160		18	
38	CAMPBELL AVE.	36+91	39+00	L		210		24	
39	CAMPBELL AVE.	37+08	37+79	R	56			7	
40	93C	42+54	44+03	L	42			5	
41	93C	42+93	44+03	R	33			4	
42	JEFFERSON ST.	5+14	6+50	R	705			78	
43	JEFFERSON ST.	7+36	8+50	R	44			5	
44	JEFFERSON ST.	7+35	8+50	L	58			7	
	TOTALS CARRIED TO GENERAL SUMMARY				5770	4864	1622	1361	

INCLUDES TABLE ABOVE

REVEGETATION PLAN
SEEDING AND REVEGETATION PLAN
OHIO

LAW-93-0.00

J:\Project\OVODOT\15005112 Ironton Russell\LAW\81595\landscape\sheets\81595PP005.dgn 4/25/2011 6:59:11 AM - jon_wanstrath

EXISTING STRUCTURE (IRONTON APPROACH)

TYPE: CONTINUOUS REINFORCED CONCRETE SLAB ON REINFORCED CONCRETE BENTS; STEEL BEAMS WITH CONCRETE FILLED STEEL GRID DECK ON STEEL BENTS; CONCRETE FILLED STEEL GRID DECK ON STEEL STRINGERS AND FLOORBEAMS, CARRIED BY STEEL THROUGH GIRDERS, SUPPORTED ON STEEL BENTS AND REINFORCED CONCRETE PIER.

SPANS: 25'±; 30'±; 2@24'±; 3@30'±; 2@28'-6"±; 2@30'±; 24'±; 30'±; 2@30'-6"±; 71'-10"± 2@56'±

ROADWAY: VARIES 23'-6"± TO 46'-0"± F/F CURB

LOADING: POSTED 26 TONS MAXIMUM

SKEW: NONE

ALIGNMENT: TANGENT AND CURVED

CONDITION: FAIR

WEARING SURFACE: EPOXY AND ASPHALT OVERLAY

YEAR BUILT: 1922 (REHABILITATED 1962, 1984)

STRUCTURE FILE NO.: 4401255

DISPOSITION: TO BE REMOVED

EXISTING STRUCTURE (MAIN SPANS)

TYPE: OPEN AND CONCRETE FILLED STEEL GRID DECK ON STEEL STRINGERS AND FLOORBEAMS, CARRIED BY CANTILEVERED STEEL THROUGH TRUSSES, SUPPORTED ON REINFORCED CONCRETE PIERS.

SPANS: 350'±; 725'±; 350'±; 201'±.

ROADWAY: 20'-9"± F/F CURBS W/3'-9½"± SIDEWALK

LOADING: POSTED 26 TONS MAXIMUM

SKEW: NONE

ALIGNMENT: TANGENT

CONDITION: FAIR

WEARING SURFACE: OPEN STEEL GRID OR EPOXY AND ASPHALT OVERLAY

YEAR BUILT: 1922 (REHABILITATED 1962, 1984)

STRUCTURE FILE NO.: 4401255

DISPOSITION: TO BE REMOVED

EXISTING STRUCTURE (RUSSELL APPROACH)

TYPE: CONTINUOUS REINFORCED CONCRETE SLAB AND STEEL BEAM WITH REINFORCED CONCRETE DECK ON REINFORCED CONCRETE BENTS.

SPANS: 22'-8"±; 3@28'-2"±; 21'-11"±; 30'-6'±

ROADWAY: VARIES 22'-5"± TO 30'-0"± F/F CURB

LOADING: POSTED 26 TONS MAXIMUM

SKEW: NONE

ALIGNMENT: CURVED

CONDITION: FAIR

WEARING SURFACE: EPOXY AND ASPHALT OVERLAY

YEAR BUILT: 1922 (REHABILITATED 1962, 1984)

STRUCTURE FILE NO.: 4401255

DISPOSITION: TO BE REMOVED

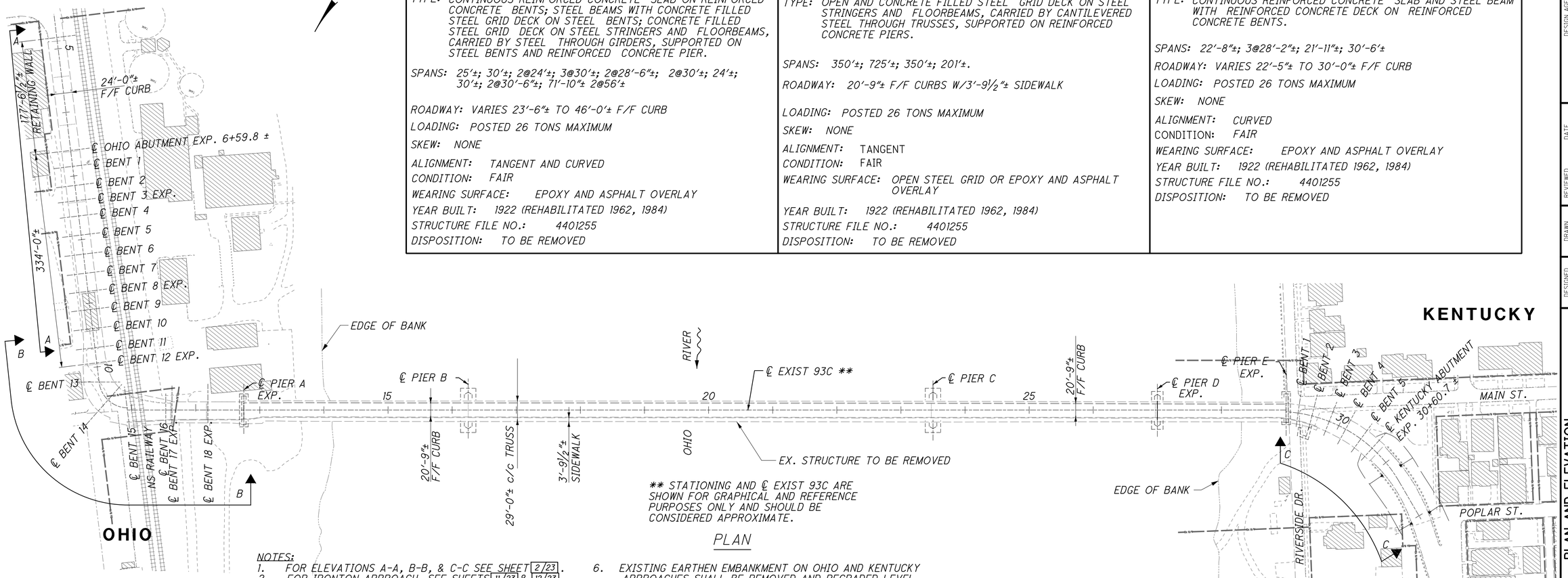

PLAN

NOTES:

1. FOR ELEVATIONS A-A, B-B, & C-C SEE SHEET 2/23.
2. FOR IRONTON APPROACH, SEE SHEETS 11/23 & 12/23.
3. FOR RUSSELL APPROACH, SEE SHEET 13/23.
4. EXISTING IRONTON-RUSSELL BRIDGE STRUCTURE SHALL BE REMOVED TO A MINIMUM OF 1 FT. BELOW GROUND LINE EXCEPT FOR MAIN SPAN PIERS A, B, C, D, & E WHICH SHALL BE REMOVED TO 3 FT. BELOW GROUND LINE OR 3 FT. BELOW MUD LINE.
5. EXISTING RETAINING WALLS SHALL BE REMOVED TO 3 FT. BELOW GROUND.
6. EXISTING EARTHEN EMBANKMENT ON OHIO AND KENTUCKY APPROACHES SHALL BE REMOVED AND REGRADED LEVEL WITH EXISTING GROUND OR AS SHOWN IN PLANS.
7. EXISTING MASONRY STRUCTURES UNDER SPANS 9 AND 10 SHALL BE COMPLETELY REMOVED. MAKE SURE ALL UTILITIES ARE DISCONNECTED PRIOR TO DEMOLITION.
8. CARE SHALL BE TAKEN WHEN WORKING OVER THE NS RAILWAY. ALL PROTECTION SHIELDS SHALL BE DESIGNED TO BE INSTALLED ABOVE THE BOTTOM OF FLOORBEAM ELEVATION.

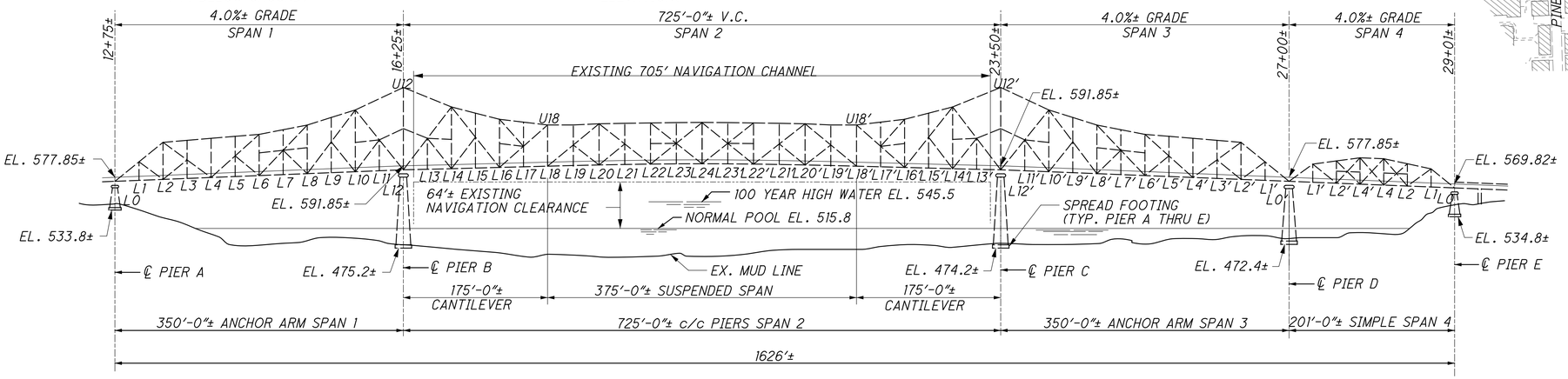

ELEVATION

DESIGN AGENCY
URS
38 EAST 7TH STREET
SUITE 2300
CINCINNATI, OHIO 45202

DESIGNED	DRAWN	REVIEWED	DATE
MJZ	JDP	RWB	02-21-2011
CHECKED	REVISED	STRUCTURE FILE NUMBER	
BER		4401255	

DEMOLITION - PLAN AND ELEVATION

REMOVAL OF BRIDGE NO. LAW-93C-0.00 OVER THE OHIO RIVER

LAW-93-0.00

PID No. 81595

1 / 23

348 / 788

J:\Project\OVODOT\15005112 Ironton Russell\LAW\81595\Structures\LAW093_1111C\sheets\Demolition\093_0000_re001.dgn - 4/27/2011 8:23:40 AM - jon_wanstrath

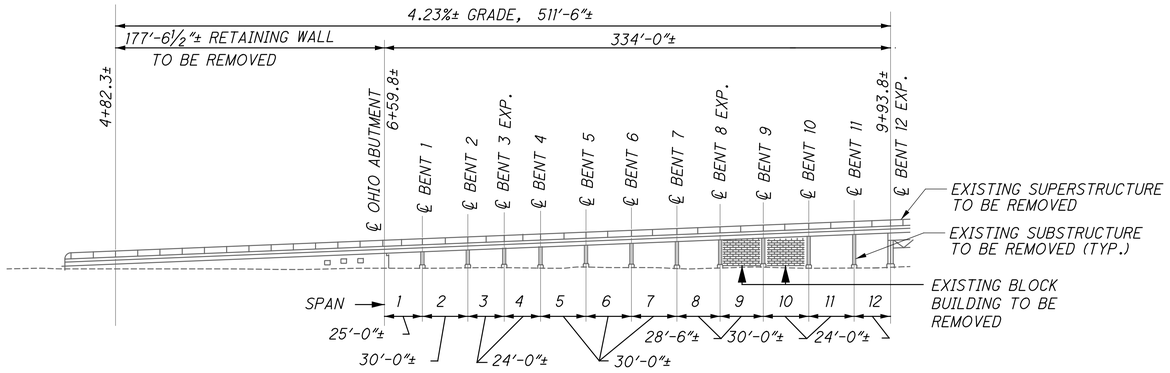

ELEVATION A-A - IRONTON APPROACH

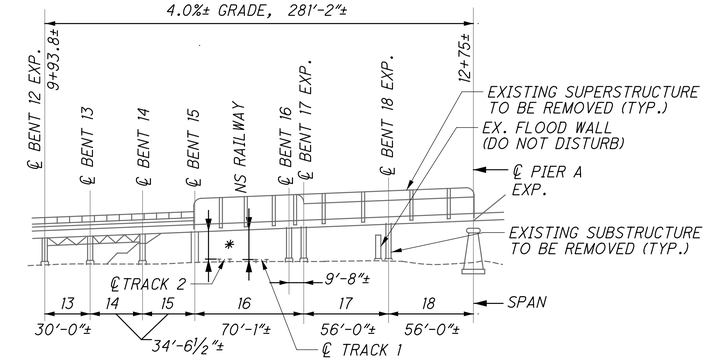

ELEVATION B-B - IRONTON APPROACH

* EXISTING VERTICAL CLEARANCE TO BOTTOM OF FLOOR BEAMS:
TRACK 1 22.01'±
TRACK 2 20.06'±
PROTECTION SHIELDS SHALL BE CONSTRUCTED ABOVE BOTTOM OF FLOOR BEAM ELEVATION.

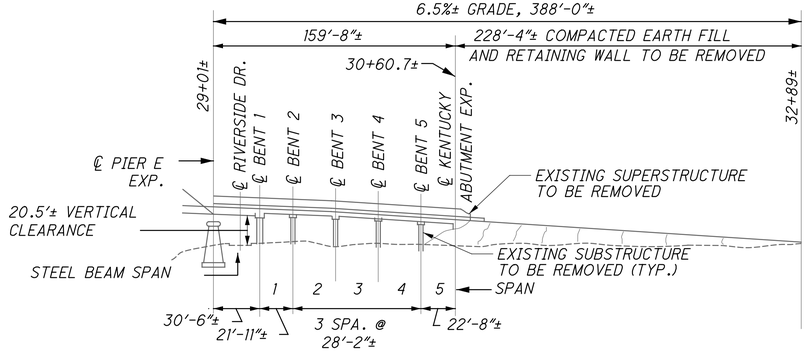

ELEVATION C-C - RUSSELL APPROACH

NOTES:

1. FOR LOCATION OF ELEVATIONS A-A, B-B, AND C-C, SEE SHEET 1/23

DESIGN AGENCY
URS
30 EAST 7TH STREET
SUITE 2300
CINCINNATI, OHIO 45202

DESIGNED	DRAWN	REVIEWED	DATE
MJZ	JDP	RWB	02-21-2011
CHECKED	REVISED	STRUCTURE FILE NUMBER	
BER		4401255	

DEMOLITION-APPROACH SPAN ELEVATIONS
REMOVAL OF BRIDGE NO. LAW-93C-0.00
OVER THE OHIO RIVER

LAW-093-0.00
PID No. 81595

2 / 23

349
788

J:\Project\OV\ODOT\15005112 Ironton Russell\LAW\81595\Structures\LAW093_1111C\sheets\Demolition\093_0000_re002.dgn - 4/27/2011 8:23:41 AM - jon_wanstrath

EXISTING BRIDGE PLANS:

MAY BE VIEWED AT THE ODOT DISTRICT NINE OFFICE, 650 EASTERN AVE., CHILLICOTHE, OHIO. EXISTING PLANS INCLUDE:

1921 ORIGINAL CONSTRUCTION PLANS	WISCONSIN BRIDGE & IRON CO.
1952 TRUSS REHABILITATION	NED L. ASHTON
1962 NEW APPROACH PLANS	NED L. ASHTON
1968 REDECKING ANCHOR ARMS	J.E. GREINER COMPANY
1972 LIGHTING PLANS	RACKOFF ASSOCIATES, INC.
1976 IRONTON APPROACH REHABILITATION	J.E. GREINER COMPANY
1981 DECK & RAILING REPAIR	J.E. GREINER COMPANY
1984 TRUSS REHABILITATION	MOUND STEEL CORP.
2001 TRUSS REHABILITATION	RICHLAND ENGINEERING LIMITED
2002 RESURFACING PROJECT	RICHLAND ENGINEERING LIMITED

UTILITIES

LISTED BELOW ARE ALL UTILITIES LOCATED WITHIN THE PROJECT CONSTRUCTION LIMITS TOGETHER WITH THEIR RESPECTIVE OWNERS:

OHIO UTILITY OWNERS	
GAS	COLUMBIA GAS OF OHIO ATTN: Mr. Gary Sullivan P.O. Box 14241 Lexington, KY 40512 (859) 288-0225
WATER	CITY OF IRONTON ATTN: MR. MARK WHITE P.O. BOX 704 IRONTON, OH 45638-0704 (740) 532-3412
ELECTRIC	AMERICAN ELECTRIC POWER (AEP) ATTN: MR. PAUL PAXTON 850 TECH CENTER DRIVE GAHANNA, OH 43230 (614) 883-6831
CABLE	TIME WARNER CABLE ATTN: MR. ROD FROST 225 RUSSELL ROAD ASHLAND, KY 41101 (606) 326-6803
TELEPHONE	AT&T OHIO ATTN: MS. SANDI RANDOLPH 3935 NORTHPOINTE DRIVE ZANESVILLE, OH 43701 (740) 454-3455
SANITARY	CITY OF IRONTON ATTN: MR. JOHN HASKINS P.O. BOX 704 IRONTON, OH 45638-0704 (740) 532-0198

KENTUCKY UTILITY OWNERS	
GAS	COLUMBIA GAS OF KENTUCKY ATTN: MR. RUSS RYAN 121 9TH STREET ASHLAND, KY 41101 (606) 324-7155
WATER	CITY OF RUSSELL ATTN: PAUL MOORE P.O. BOX 394 RUSSELL, KY 41169-0394 (606) 836-9666
ELECTRIC	KENTUCKY POWER COMPANY ATTN: MR. DON CANFIELD 1701 CENTRAL AVENUE ASHLAND, KY 41101 (606) 327-1476
CABLE	ADELPHIA ATTN: MR. DENNIS MEADOWS 225 RUSSELL ROAD ASHLAND, KY 41101 (606) 329-6255
TELEPHONE	WINDSTREAM KENTUCKY EAST, LLC ATTN: MR. RALPH BROWN 619 15TH STREET ASHLAND, KY 41101 (606) 329-6255
SANITARY	GREENUP CO. ENVIRONMENTAL COMMISSION ATTN: MR. RALPH LARGE P.O. BOX 471 RUSSELL, KY 41169-0471 (606) 836-4600

ALL EXPENSE INVOLVED IN RELOCATING THE AFFECTED UTILITY LINES SHALL BE BORNE BY THE UTILITIES. THE CONTRACTOR AND THE UTILITIES ARE TO COOPERATE BY ARRANGING THEIR WORK IN SUCH A MANNER THAT INCONVENIENCE TO EACH WILL BE HELD TO A MINIMUM.

EXISTING STRUCTURE VERIFICATION:

DETAILS AND DIMENSIONS SHOWN ON THESE PLANS PERTAINING TO THE EXISTING STRUCTURE HAVE BEEN OBTAINED FROM PLANS OF THE EXISTING STRUCTURE AND FROM FIELD OBSERVATION AND MEASUREMENTS. CONSEQUENTLY THEY ARE INDICATIVE OF THE EXISTING STRUCTURE AND THE PROPOSED WORK SHALL BE CONSIDERED TENTATIVE AND APPROXIMATE, AND MUST BE VERIFIED BY THE CONTRACTOR PRIOR TO PURCHASE AND/OR FABRICATION OF ANY MATERIAL. ALL PROJECT WORK SHALL BE BASED UPON ACTUAL DETAILS AND DIMENSIONS VERIFIED BY THE CONTRACTOR IN THE FIELD. THE CONTRACTOR IS REFERRED TO CMS SECTIONS 102.05 AND 105.02.

CONTRACT BID PRICES SHALL BE BASED UPON A RECOGNITION OF THE UNCERTANTIES DESCRIBED ABOVE AND UPON A PREBID EXAMINATION OF THE EXISTING STRUCTURE BY THE CONTRACTOR.

REMOVAL OF EXISTING STRUCTURE:

WHEN NO LONGER NEEDED TO MAINTAIN TRAFFIC, THE EXISTING STRUCTURE SHALL BE REMOVED UPON RECEIVING PERMISSION FROM THE ENGINEER.

SPECIAL RAILROAD REQUIREMENTS

REFER TO THE SPECIAL CLAUSES IN THE PROPOSAL FOR REQUIREMENTS REGARDING WORK ON OR ABOVE RAILWAY PROPERTY.

THE CONTRACTOR SHALL SUBMIT DEMOLITION PLANS, CALCULATIONS AND PROCEDURES PREPARED BY A PROFESSIONAL ENGINEER REGISTERED IN THE STATE OF OHIO TO THE ENGINEER AND THE RAILWAY FOR ALL DEMOLITION WORK ABOVE OR ADJACENT TO THE TRACKS OF THE RAILWAY. THE PLAN AND PROCEDURE SHALL BE IN ACCORDANCE WITH THE NS RAILROAD "GUIDELINES FOR DESIGN OF GRADE SEPARATION STRUCTURES", AND SHALL INDICATE THE METHOD OF PROTECTION FOR THE TRACK STRUCTURE, THE SEQUENCE OF DEMOLITON, AND THE PROCEDURES AND EQUIPMENT TO BE USED. NO DEBRIS SHALL BE ALLOWED TO INTENTIONALLY FALL TO RAILWAY PROPERTY.

DURING REMOVAL OF THE EXISTING STRUCTURE, THE EXISTING VERTICAL CLEARANCES SHALL NOT BE REDUCED. A TEMPORARY MINIMUM HORIZONTAL CLEARANCE OF 13'-0" AS MEASURED FROM THE TRACK CENTERLINE SHALL BE MAINTAINED TO ANY TEMPORARY FALSE WORK, STOCKPILED MATERIALS, OR OTHER OBSTRUCTION WHICH WILL BE LEFT IN PLACE DURING TRAIN MOVEMENTS THROUGH THE JOB SITE.

UPON COMPLETION OF THE WORK ON RAILROAD PROPERTY, THE CONTRACTOR SHALL REQUEST THE ENGINEER TO ARRANGE A FINAL INSPECTION OF THE PROJECT WITH THE RAILWAY'S DIVISION ENGINEER OR HIS AUTHORIZED REPRESENTATIVE.

CLEARING AND GRUBBING

ALTHOUGH THERE ARE NO TREES OR STUMPS SPECIFICALLY MARKED FOR REMOVAL WITHIN THE LIMITS OF THE PROJECT, A LUMP SUM QUANTITY HAS BEEN INCLUDED IN THE GENERAL SUMMARY FOR ITEM 201, CLEARING AND GRUBBING. ALL PROVISIONS AS SET FORTH IN THE SPECIFICATIONS UNDER THIS ITEM SHALL BE INCLUDED IN THE LUMP SUM PRICE BID FOR ITEM 201, CLEARING AND GRUBBING.

CONSTRUCTION NOISE

ACTIVITIES AND LAND USE ADJACENT TO THIS PROJECT MAY BE AFFECTED BY CONSTRUCTION NOISE. IN ORDER TO MINIMIZE ANY ADVERSE CONSTRUCTION NOISE IMPACTS, ANY POWER-OPERATED CONSTRUCTION-TYPE DEVICE SHALL NOT BE OPERATED BETWEEN THE HOURS OF 9 P.M. AND 6 A.M. IN ADDITION, ANY SUCH DEVICE SHALL NOT BE OPERATED AT ANY TIME IN SUCH A MANNER THAT THE NOISE CREATED SUBSTANTIALLY EXCEEDS THE NOISE CUSTOMARILY AND NECESSARILY ATTENDANT TO THE REASONABLE AND EFFICIENT PERFORMANCE OF SUCH EQUIPMENT.

PEREGRINE FALCONS:

A KNOWN PEREGRINE FALCON NEST IS LOCATED ON THE EXISTING IRONTON-RUSSELL BRIDGE AND HAS BEEN ON THIS STRUCTURE FOR OVER 10 YEARS. PEREGRINE FALCONS ARE PROTECTED AS A STATE THREATENED SPECIES AND UNDER THE FEDERAL MIGRATORY BIRD TREATY ACT OF 1918. DEMOLITION SHOULD ONLY OCCUR FROM SEPTEMBER 1 TO FEBRUARY 1. THE OHIO DEPARTMENT OF NATURAL RESOURCES, DIVISION OF WILDLIFE (ODNR-DOW) MUST BE PRESENT AT THE PRE-CONSTRUCTION MEETING FOR THE DEMOLITION OF THE EXISTING BRIDGE TO DISCUSS POSSIBLE INTERACTIONS WITH THE PEREGRINE FALCON, AND AVOIDANCE AND MINIMIZATION TECHNIQUES THAT ODNR, ODOT, AND THE CONTRACTOR CAN EMPLOY TOGETHER TO REDUCE THE LIKELIHOOD OF IMPACTING THE BIRDS. SHOULD THE CONTRACTOR ENCOUNTER A PEREGRINE FALCON DURING THE DEMOLITION, THE CONTRACTOR MUST IMMEDIATELY NOTIFY THE PROJECT ENGINEER. WITHIN 24 HOURS, THE PROJECT ENGINEER WILL NOTIFY ODNR-DOW WILDLIFE RESEARCH BIOLOGIST, JENNIFER NORRIS, AT 740-747-2525 EXT: 26 OR MOBILE 419-602-3141. ENCOUNTERS INCLUDE, BUT ARE NOT LIMITED TO, FALCONS SHOWING AGGRESSIVE BEHAVIOR TOWARDS WORKERS DEMOLISHING THE BRIDGE, ANY ATTEMPTS THE FALCONS MAY MAKE TO NEST ON THE BRIDGE STRUCTURE DURING DEMOLITION, AND THE PRESENCE OF ANY FALCONS ON THE BRIDGE STRUCTURE WHEN DEMOLITION ACTIVITIES MAY PUT THEM IN HARMS WAY. ODOT AND ODNR-DOW WILL AGREE ON COURSE OF ACTION IF THE DEMOLITION ACTIVITIES ARE LIKELY TO IMPACT THE FALCON. THE CONTRACTORS SHOULD BE AWARE THAT THE BIRDS CAN BE TERRITORIAL AND ALSO CLEARLY BE ADVISED THAT TAKE OF THIS ANIMAL IS A STATE AND FEDERAL VIOLATION; NO FORCE OR DETERRENTS SHOULD BE USED AGAINST THE BIRDS.

DEMOLITION GENERAL NOTES CONTINUED: SEE SHEET 4/23

DESIGN AGENCY
URS
38 EAST 7TH STREET
SUITE 2300
CINCINNATI, OHIO 45202

DESIGNED	DRAWN	REVIEWED	DATE
BKL	JDP	RWB	02-21-2011
CHECKED	REVISED	STRUCTURE FILE NUMBER	
MJZ		4401255	

DEMOLITION - GENERAL NOTES (1 OF 2)
REMOVAL OF BRIDGE NO. LAW-93C-0.00
OVER THE OHIO RIVER

LAW-093-0.00
PID No. 81595

J:\Project\O\ODOT\15005112 Ironton Russell\LAW\81595\structures\LAW093_1111C\sheets\Demolition\093_0000_re003.dgn - 11/7/2011 3:35:35 PM - john_corley

ITEM 202 - STRUCTURE REMOVED, OVER 20 FOOT SPAN, AS PER PLAN

1. COORDINATE TEMPORARY ACCESS TO THE WORK SITE WITH THE OHIO DEPARTMENT OF TRANSPORTATION. THE CONTRACTOR MAY CONSTRUCT TEMPORARY ACCESS ROADS AND TEMPORARY DOCKS ON THE KENTUCKY AND OHIO BANKS FOR HIS USE. TEMPORARY DOCKS MUST BE PILE SUPPORTED AND PLACEMENT OF ANY FILL MATERIAL IS NOT ALLOWED.

2. THE CONTRACTOR SHALL REMOVE ALL ELEMENTS OF THE EXISTING BRIDGE INCLUDING PIERS, APPROACH SPANS, TRUSS SPANS, SIDEWALK STAIRWAYS, ABUTMENTS, WINGWALLS AND IRONTON RETAINING WALLS TO THE EXTENT SPECIFIED. THE COST OF DISPOSAL OF DEMOLITION DEBRIS SHALL BE CONSIDERED INCIDENTAL TO DEMOLITION. THE EXISTING IRONTON AND RUSSELL APPROACH PIERS AND FOUNDATION ELEMENTS SHALL BE REMOVED TO A MINIMUM OF 1 FOOT BELOW THE FINISHED GROUND LINE. THE EXISTING MAIN SPAN PIERS AND FOUNDATION ELEMENTS FOR PIERS A, B, C, D AND E SHALL BE REMOVED TO A MINIMUM OF 3 FEET BELOW THE MUDLINE OR FINISHED GROUND LINE.

3. THE EXISTING GARAGE UNDER IRONTON APPROACH SPANS 9 AND 10 IS OWNED BY THE OHIO DEPARTMENT OF TRANSPORTATION AND SHALL BE REMOVED TO A MINIMUM OF 1 FOOT BELOW THE FINISHED GROUND LINE. THE GARAGE TO BE REMOVED CONTAINS ELECTRIC SERVICE. THE CONTRACTOR SHALL VERIFY THAT THE GARAGE HAS BEEN VACATED AND ELECTRIC SERVICE HAS BEEN DISCONNECTED PRIOR TO PROCEEDING WITH DEMOLITION IN THIS AREA.

4. THE CONTRACTOR MAY CONSTRUCT TEMPORARY PIERS WITHIN THE LIMITS OF THE ANCHOR ARM SPANS. TEMPORARY PIERS ARE NOT ALLOWED WITHIN THE LIMITS OF THE MAIN SPAN. NO COFFERDAM CONSTRUCTION IS PERMITTED IN THE CONSTRUCTION OF THE TEMPORARY PIERS. ANY TEMPORARY PIERS CONSTRUCTED IN WATER MUST BE REMOVED TO A MINIMUM OF 3 FEET BELOW THE MUD LINE. ANY TEMPORARY PIERS ON LAND MUST BE REMOVED TO A MINIMUM OF 3 FEET BELOW GROUND ELEVATION.

5. THE CONTRACTOR MAY CONSTRUCT TEMPORARY COFFERDAMS AROUND PIERS B, C, AND D TO AID IN PIER REMOVAL. THE NAVIGATION CHANNEL SHALL REMAIN CLEAR AT ALL TIMES DURING THE CONSTRUCTION OF THE COFFERDAMS. ANY COFFERDAMS CONSTRUCTED IN THE RIVER MUST BE REMOVED TO A MINIMUM OF 3 FEET BELOW THE MUD LINE.

6. EXISTING BRIDGE DEMOLITION SCHEME, MEANS AND METHODS ARE THE RESPONSIBILITY OF THE CONTRACTOR. THE CONTRACTOR MUST SUBMIT A DETAILED DEMOLITION SCHEME FOR THE REVIEW AND APPROVAL BY THE OHIO DEPARTMENT OF TRANSPORTATION, U.S. COAST GUARD, NS RAILWAY AND THE ENGINEER. THE DEMOLITION SCHEME MUST CLEARLY DEMONSTRATE THE FEASIBILITY OF ALL OPERATIONS PROPOSED AND SAFETY OF THE EXISTING STRUCTURE AND ANY TEMPORARY SUPPORTS AND FALSEWORK DURING ALL STAGES OF THE PROPOSED SCHEME. THE DEMOLITION PLANS, COMPUTATIONS AND ANY OTHER MATERIAL SUBMITTED FOR REVIEW MUST BE PREPARED BY A LICENSED PROFESSIONAL ENGINEER IN THE STATE OF OHIO WITH PRIOR EXPERIENCE ON SIMILAR PROJECTS. THE CONTRACTOR MAY NOT START OR PROCEED WITH ANY DEMOLITION ACTIVITY UNTIL ALL COMMENTS BY ODOT AND THE ENGINEER ARE SATISFACTORILY RESOLVED AND THE DEMOLITION SCHEME IS APPROVED. THE CONTRACTOR'S DEMOLITION SCHEME SHALL INCLUDE PLANS FOR THE PROTECTION OF TRAFFIC (VEHICULAR, PEDESTRIAN, RAILROAD, BOAT, ETC.) ADJACENT TO AND/OR UNDER THE STRUCTURE. THESE PLANS SHALL INCLUDE PROVISIONS FOR ANY DEVICES AND STRUCTURES THAT MAY BE NECESSARY TO ENSURE SUCH PROTECTION. TEMPORARY VERTICAL CLEARANCES SPECIFIED ON THE PLANS OR IN THE PROPOSAL SHALL BE MAINTAINED AT ALL TIMES EXCEPT AS OTHERWISE APPROVED BY THE ENGINEER.

7. THE FOLLOWING LIMITATIONS APPLY TO WORK WITHIN THE RIVER AND ON THE RIVER BANKS:

   A) NAVIGATIONAL CHANNEL:

   THE EXISTING NAVIGATIONAL CHANNEL MUST BE KEPT CLEAR AT ALL TIMES. THE CONTRACTOR MUST COORDINATE ANY TEMPORARY INTERRUPTIONS WITH THE U.S. COAST GUARD.

   B) ADVANCE NOTIFICATION:

   THE CONTRACTOR MUST NOTIFY THE U.S. COAST GUARD, U.S. ARMY CORPS OF ENGINEERS, OHIO DEPARTMENT OF NATURAL RESOURCES, NS RAILWAY AND THE MAYORS OF THE CITIES OF IRONTON, OHIO AND RUSSELL, KENTUCKY 45 DAYS PRIOR TO START OF ANY WORK.

8. THE CONTRACTOR MUST COORDINATE REMOVAL AND DISPOSAL OF DEMOLITION DEBRIS WITH THE OHIO DEPARTMENT OF TRANSPORTATION AND OTHER APPLICABLE AGENCIES AND SUBMIT THE REMOVAL AND DISPOSAL PLAN FOR APPROVAL BY THE CONCERNED PARTIES.

9. THE PROPOSED DEMOLITION SCHEME IS FOR THE CONTRACTOR'S INFORMATION ONLY. ADAPTATION OF THE DEMOLITION SCHEME IN WHOLE OR PART IS AT THE CONTRACTOR'S DISCRETION AND BECOMES SOLE RESPONSIBILITY OF THE CONTRACTOR. THE CONTRACTOR MUST VERIFY AND PROVIDE COMPUTATIONS DEMONSTRATING THE SAFETY OF EXISTING BRIDGE ELEMENTS TO BE DEMOLISHED AND ANY TEMPORARY FALSEWORK DURING ALL STAGES OF DEMOLITION. A 133% INCREASE OF ALLOWABLE STRESSES DURING TEMPORARY CONDITIONS IS PERMITTED PER THE ODOT CMS. DESIGN OF FALSEWORK OVER NS RAILROAD SHALL BE IN ACCORDANCE WITH AREMA CHAPTER 8, SECTION 28.

10. THE FOLLOWING ITEMS OF THE EXISTING BRIDGE HAVE BEEN IDENTIFIED TO BE SALVAGED FOR RESEARCH:

    - ONE (1) UPPER PORTION OF VERTICAL TRUSS MEMBER L18-U18 (L18'-U18') INCLUDING THE JOINT AND PIN AT U18 (U18').
    - ONE (1) LOWER PORTION OF VERTICAL TRUSS MEMBER L18-U18 (L18'-U18') INCLUDING THE JOINT AND PIN AT L18 (L18').

    SALVAGE THE LARGEST PORTION OF L18-U18 (L18'-U18') (APPROXIMATELY 4'-0" FROM CENTERLINE OF EACH JOINT) POSSIBLE WITHOUT INTERFERING WITH THE DEMOLITION SCHEME. SEE SHEET 8/23 FOR DETAILS. THE CONTRACTOR SHALL PLACE THE MEMBERS TO BE SALVAGED IN AN ACCESSIBLE AREA WITHIN ODOT RIGHT OF WAY IN OHIO TO BE PICKED UP BY ODOT PERSONNEL. CONTACT MR. GREG BAIRD, ODOT DISTRICT 9, AT (740) 774-8971 TO COORDINATE THE PICK UP OF SALVAGED MEMBERS. THE COST OF CAREFULLY SALVAGING THESE ITEMS SHALL BE INCLUDED IN THE LUMP SUM CONTRACT PRICE BID FOR ITEM 202 - STRUCTURE REMOVED, OVER 20 FOOT SPAN, AS PER PLAN.

11. ODOT SEDIMENT AND EROSION CONTROL SPECIFICATIONS AND ODOT CONSTRUCTION & MATERIALS SPECIFICATIONS SHALL BE FOLLOWED WHERE APPLICABLE. ANY APPLICABLE U.S. ARMY CORPS OF ENGINEERS SPECIFICATIONS SHALL BE FOLLOWED IN ACTIVITIES ON OR AROUND THE FLOOD WALL.

12. RAILROAD TRACKS SHALL BE PROTECTED FROM DAMAGE AND GOOD DRAINAGE WITHIN RAILROAD RIGHT OF WAY SHALL BE MAINTAINED AT ALL TIMES. REFER TO "SPECIAL RAILROAD REQUIREMENTS" GENERAL NOTES FOR ADDITIONAL CRITERIA. A PROTECTION SHIELD SHALL BE ERECTED OVER THE TRACKS TO CATCH FALLING DEBRIS. THE SHIELD SHALL BE SUPPORTED INDEPENDENTLY AND SHALL NOT BE LOWER THAN THE BOTTOM OF THE EXISTING FLOORBEAMS TO MAINTAIN THE EXISTING VERTICAL CLEARANCES. THE CONCRETE FILLED STEEL GRID BRIDGE DECK OVER THE RAILROAD SHALL BE REMOVED BY CUTTING IN SECTIONS AND LIFTING OUT. LARGE PIECES OF DEBRIS SHALL NOT BE ALLOWED TO FALL ON THE PROTECTION SHIELD. INSTALL FILLER FABRIC OVER THE TRACK BALLAST SECTION TO PROTECT IT FROM CONTAMINATION.

13. PAYMENT FOR ALL LABOR, EQUIPMENT AND MATERIALS FOR THE ABOVE SHALL BE INCLUDED IN THE LUMP SUM CONTRACT PRICE FOR ITEM 202, STRUCTURE REMOVED, OVER 20 FOOT SPAN, AS PER PLAN.

14. THE REPRESENTATION OF THE EXISTING BRIDGE IN THE FOLLOWING SHEETS IS SCHEMATIC ONLY. THE CONTRACTOR IS REFERRED TO THE ORIGINAL CONSTRUCTION AND REHABILITATION PLANS FOR DETAILS.

J:\Project\OV\ODOT\15005112 Ironton Russell\LAW\81595\Structures\LAW093_1111C\sheets\Demolition\093_0000_re004.dgn - 4/27/2011 8:23:43 AM - jon_wanstrath

DESIGN AGENCY
URS
36 EAST 7TH STREET
SUITE 2300
CINCINNATI, OHIO 45202

DESIGNED	DRAWN	REVIEWED	DATE
BKL	JDP	RWB	02-21-2011
CHECKED	REVISED	STRUCTURE FILE NUMBER	
MJZ		4401255	

DEMOLITION - GENERAL NOTES (2 OF 2)
REMOVAL OF BRIDGE NO. LAW-93C-0.00
OVER THE OHIO RIVER

LAW-093-0.00
PID No. 81595

ITEM	ITEM EXTENSION	TOTAL QUANTITY	UNITS	DESCRIPTION	KY APPROACH	TRUSS SPAN SUPERSTRUCTURE	OHIO APPROACH	GENERAL	SEE SHEET NUMBER
201	11000	LUMP		CLEARING AND GRUBBING	LUMP	LUMP	LUMP		
202	11003	LUMP		STRUCTURE REMOVED, OVER 20 FOOT SPAN, AS PER PLAN	LUMP	LUMP	LUMP		351
202	11100	16	CU YD	STRUCTURE REMOVED, RETAINING WALL	16				363
202	11300	30	CU YD	PORTIONS OF STRUCTURE REMOVED, RETAINING WALL	30				363
202	23000	805	SQ YD	PAVEMENT REMOVED	728		77		362, 363
202	30000	1071	SQ FT	WALK REMOVED	1071				363
202	32000	496	FT	CURB REMOVED	443		53		362, 363
202	32500	73	FT	CURB AND GUTTER REMOVED	73				
202	35100	46	FT	PIPE REMOVED, 24" AND UNDER	46				363
202	38000	381	FT	GUARDRAIL REMOVED	381				362
203	10000	3359	CU YD	EXCAVATION	2552		807		362, 370
203	20000	28	CU YD	EMBANKMENT	28				370
304	20000	68	CU YD	AGGREGATE BASE			68		362
407	14000	12	GALLON	TACK COAT FOR INTERMEDIATE COURSE			12		362
408	10000	123	GALLON	PRIME COAT			123		362
448	46024	16	CU YD	ASPHALT CONCRETE INTERMEDIATE COURSE, TYPE 2, PG64-22 (DRIVEWAYS)			16		362
448	48020	11	CU YD	ASPHALT CONCRETE SURFACE COURSE, TYPE 1, PG64-22 (DRIVEWAYS)			11		362
503	11100	LUMP		COFFERDAMS AND EXCAVATION BRACING		LUMP			
608	10000	100	SQ FT	4" CONCRETE WALK			100		362
608	98000	1156	SQ FT	WALKWAY, MISC.: SIDEWALK-4 IN CONCRETE	1156				363
608	98200	3	EACH	WALKWAY, MISC.: SIDEWALK RAMP TYPE 1, PER KY STD. DWG. RPM-100	3				363
608	98200	2	EACH	WALKWAY, MISC.: SIDEWALK RAMP TYPE 3, PER KY STD. DWG. RPM-170	2				363
609	26000	30	FT	CURB, TYPE 6			30		362
609	98000	226	FT	CURB, MISC.: STANDARD CURB AND GUTTER, PER KY STD. DWG. RPM-100	226				363
625	31510	1	EACH	PULL BOX REMOVED	1				363
625	75400	8	EACH	LIGHT POLE REMOVED	4		4		362, 363
625	75500	8	EACH	LIGHT POLE FOUNDATION REMOVED	4		4		362, 363
630	02100	37	FT	GROUND MOUNTED SUPPORT, NO. 2 POST			37		362
630	80100	10	SQ FT	SIGN, FLAT SHEET			10		362
630	84900	39	EACH	REMOVAL OF GROUND MOUNTED SIGN AND DISPOSAL	19		20		364
630	86002	22	EACH	REMOVAL OF GROUND MOUNTED POST SUPPORT AND DISPOSAL	11		11		364
630	97800	9	SQ FT	SIGNING, MISC.: SBM ALUM SHEET SIGNS .125 IN, PER KY STD. DETAIL SIGNING SPEC. NOTES	9				364
630	97900	13	FT	SIGNING, MISC.: STEEL POST TYPE 2, PER KY STD. DETAIL SIGNING SPEC. NOTES	13				364
642	30000	54	FT	REMOVAL OF PAVEMENT MARKING	54				364
644	00300	0.01	MILE	CENTER LINE			0.01		362
659	00100	2	EACH	SOIL ANALYSIS TEST	2				369
659	00300	801	CU YD	TOPSOIL	801				369
659	00500	6816	SQ YD	SEEDING AND MULCHING, CLASS 1	6816				369
659	00510	417	SQ YD	SEEDING AND MULCHING, CLASS 2	417				369
659	14000	362	SQ YD	REPAIR SEEDING AND MULCHING	362				369
659	15000	362	SQ YD	INTER-SEEDING	362				369
659	20000	1	TON	COMMERCIAL FERTILIZER	1				369
659	31000	1.49	ACRE	LIME	1.49				369
659	35000	40	M GAL	WATER	40				369
659	40000	16	M SQ FT	MOWING	16				369
832	15000	LUMP		STORM WATER POLLUTION PREVENTION PLAN				LUMP	
832	30000	16500	EACH	EROSION CONTROL				16500	

NOTES:

1. FUNDING FOR ALL DEMOLITION PAY ITEMS SHALL BE INCLUDED IN MAJOR BRIDGE FUNDS.

DESIGN AGENCY
URS
38 EAST 7TH STREET
SUITE 2300
CINCINNATI, OHIO 45202

DESIGNED BKL | DRAWN JRW | CHECKED MJZ | REVIEWED RWB | DATE 02-21-2011 | REVISED | STRUCTURE FILE NUMBER 4401255

DEMOLITION - ESTIMATED QUANTITIES

REMOVAL OF BRIDGE NO. LAW-93C-0.00
OVER THE OHIO RIVER

LAW-093-0.00
PID No. 81595

J:\Project\OVODOT\15005112 Ironton Russell\LAW\81595\Structures\LAW093_1111C\sheets\Demolition\093_0000_re005.dgn - 9/20/2011 9:00:11 AM - jon_wanstrath

▲ SEE ITEM 202 - STRUCTURE REMOVED, OVER 20 FOOT SPAN, AS PER PLAN NOTE #10 ON SHEET 4/23 FOR MEMBERS TO BE SALVAGED FOR RESEARCH. SEE SHEET 8/23 FOR DETAILS.

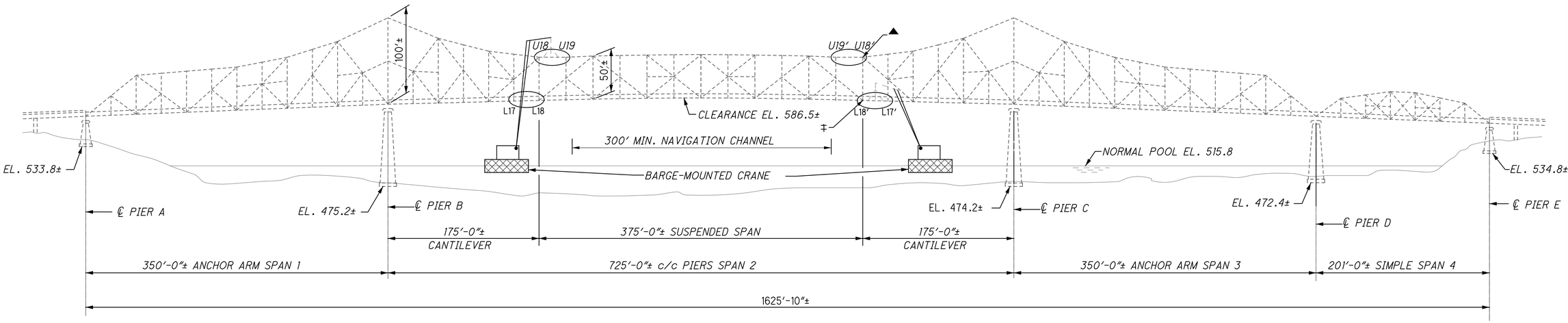

ELEVATION

STEP 1. REMOVE TRUSS MEMBERS U18-U19/U18'-U19' AND L17-L18/L17'-L18' , AS WELL AS ALL LATERAL BRACING, FLOORING, AND PORTALS WITHIN THOSE BAYS. USING BARGE-MOUNTED CRANES, PLACE MEMBERS ON BARGES AS SHOWN. PRIOR TO REMOVING THE SUSPENDED SPAN, THE SIDEWALK AND ROADWAY DECK SHALL BE REMOVED FROM THE SUSPENDED SPAN.

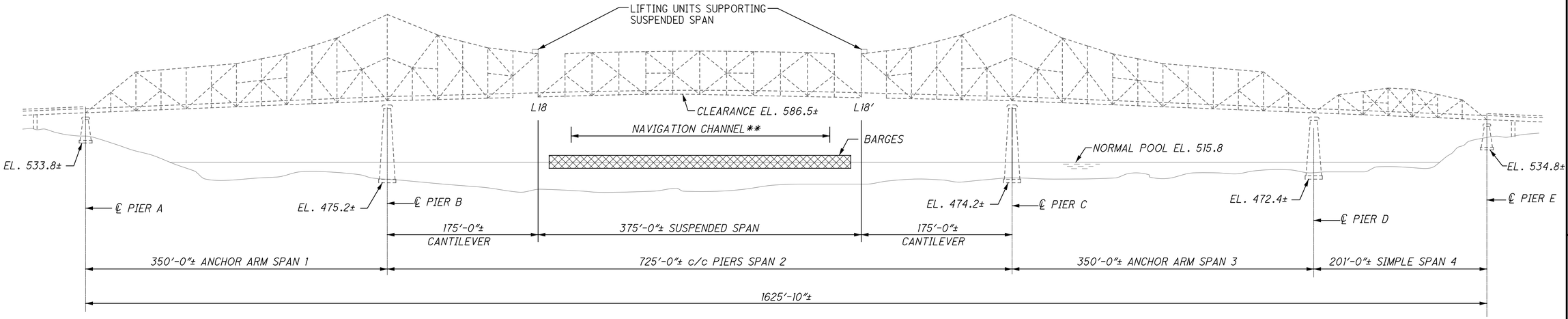

ELEVATION

STEP 2. USING BRIDGE-MOUNTED LIFTING EQUIPMENT PICK UP THE SUSPENDED SPAN, DISCONNECT HANGERS U18-L18/U18'-L18' AT L18/L18', AND LOWER THE SUSPENDED SPAN TO BARGES IN THE RIVER. THE ESTIMATED VERTICAL REACTION IS 317 KIPS AT EACH CORNER OF THE SUSPENDED SPAN FOR A TOTAL OF 1268 KIPS. THIS REACTION INCLUDES TRUSSES, STRINGERS, FLOOR BEAMS, LATERAL BRACING, PORTALS, ETC.

** THE CONTRACTOR MUST COORDINATE ALL INTERRUPTIONS OF THE NAVIGATION CHANNEL WITH THE U.S. COAST GUARD.

J:\Project\0.0DOT\15005112 Ironton Russell\LAW\81595\Structures\LAW093_1111C\sheets\Demolition\093_0000_re009.dgn - 4/27/2011 8:23:45 AM - jon_wanstrath

DESIGN AGENCY
URS
30 EAST 7TH STREET SUITE 2300 CINCINNATI, OHIO 45202

DESIGNED	DRAWN	REVIEWED	DATE
BKL	JDP	RWB	02-21-2011
CHECKED	REVISED	STRUCTURE FILE NUMBER	
MJZ		4401255	

DEMOLITION - SCHEME (1 OF 3)
REMOVAL OF BRIDGE NO. LAW-93-0.00
OVER THE OHIO RIVER

LAW-93-0.00
PID No. 81595

6 / 23

353
788

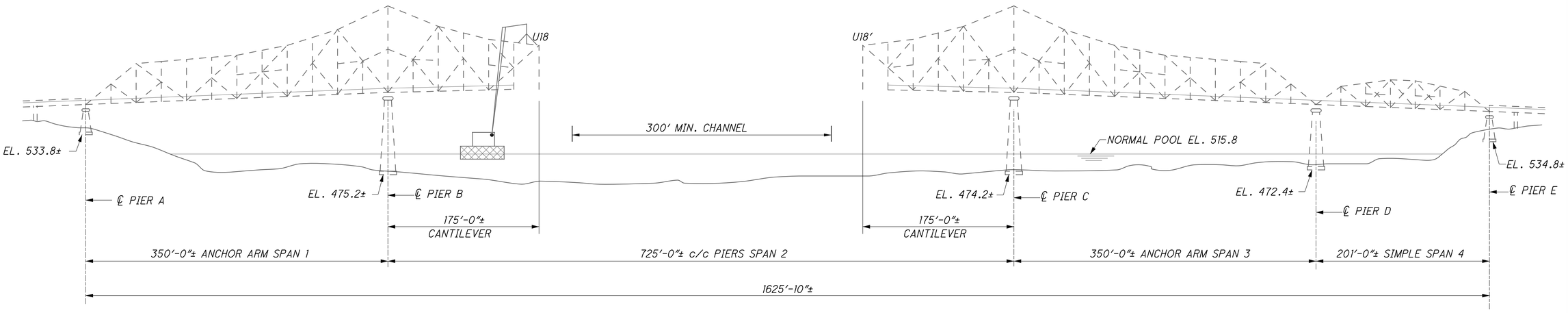

ELEVATION

STEP 3. DISASSEMBLE LATERAL BRACING, FLOORING, PORTALS, AND TRUSSES IN PIECE-WISE FASHION FOR TRUSS CANTILEVERS USING BARGE MOUNTED CRANES (SHOWN) OR TRUCKS AND CRANES ON THE ROADWAY.

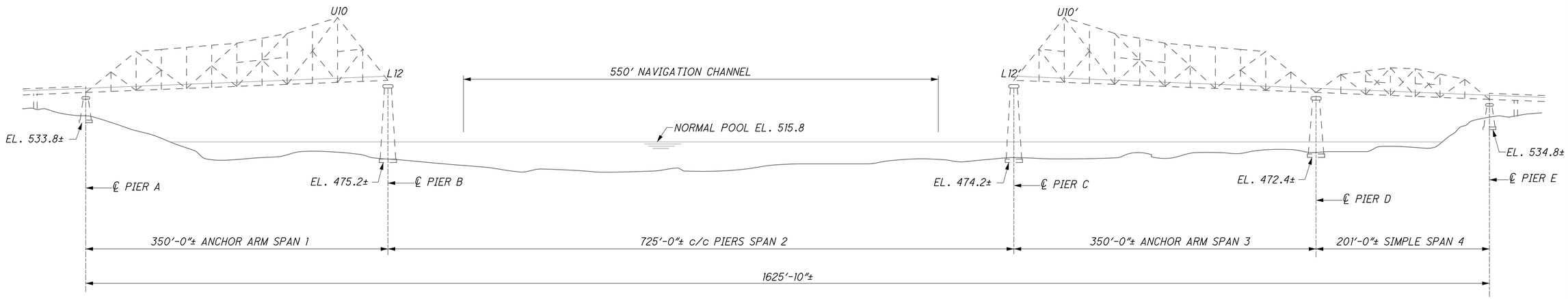

ELEVATION

STEP 4. REMOVE ANCHOR ARM SPANS AND SIMPLE SPAN TRUSS.

DESIGN AGENCY
URS
30 EAST 7TH STREET
SUITE 2300
CINCINNATI, OHIO 45202

DESIGNED	DRAWN	REVIEWED	DATE
BKL	JDP	RWB	02-21-2011
CHECKED	REVISED	STRUCTURE FILE NUMBER	
MJZ		4401255	

DEMOLITION - SCHEME (2 OF 3)
REMOVAL OF BRIDGE NO. LAW-93C-0.00
OVER THE OHIO RIVER

LAW-93-0.00
PID No. 81595

J:\Project\OVODOT\15005112 Ironton Russell\LAW\81595\Structures\LAW093_1111C\sheets\Demolition\093_0000_re010.dgn - 4/27/2011 8:23:46 AM - jon_wanstrath

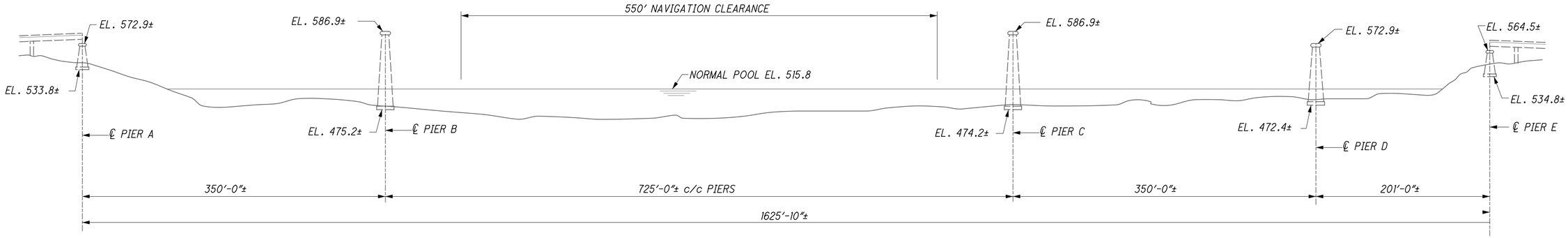

ELEVATION

STEP 5. DEMOLISH RIVER PIERS (B, C & D) TO REQUIRED ELEVATION. PIERS MAY BE CORE-DRILLED AND BLASTED. COFFERDAM CONSTRUCTION IS PERMITTED TO REMOVE PIERS TO REQUIRED ELEVATION. THE NAVIGATION CHANNEL SHALL REMAIN CLEAR AT ALL TIMES DURING THE CONSTRUCTION OF COFFERDAMS.

STEP 6. REMOVE APPROACH SPANS AND PIERS TO REQUIRED ELEVATION. REMOVE IRONTON APPROACH RETAINING WALLS AND ABUTMENT. REMOVE RUSSELL ABUTMENT, RETAINING WALLS AND APPROACH EMBANKMENT AND GRADE IN ACCORDANCE WITH THE PROPOSED CROSS SECTIONS. SEE SHEETS 11/23 TO SHEETS 14/23 FOR DETAILS.

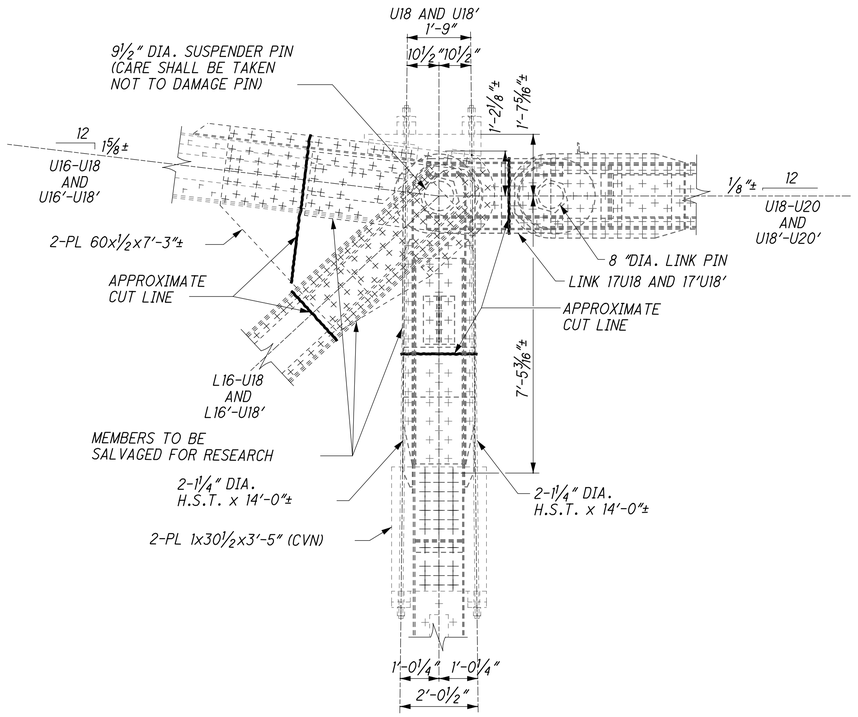

JOINT AT U18 (U18')

L18 AND L18'

JOINT AT L18 (L18')

J:\Project\OA\ODOT\15005112 Ironton Russell\LAW\81595\Structures\LAW093_1111C\sheets\Demolition\093_0000_re011.dgn - 4/27/2011 8:23:47 AM - jon_wanstrath

DESIGN AGENCY
URS
30 EAST 7TH STREET
SUITE 2300
CINCINNATI, OHIO 45202

DESIGNED	DRAWN	REVIEWED	DATE
BKL	JDP	RWB	02-21-2011
CHECKED	REVISED	STRUCTURE FILE NUMBER	
MJZ		4401255	

DEMOLITION- SCHEME (3 OF 3)
REMOVAL OF BRIDGE NO. LAW-93C-0.00
OVER THE OHIO RIVER

LAW-93-0.00
PID No. 81595

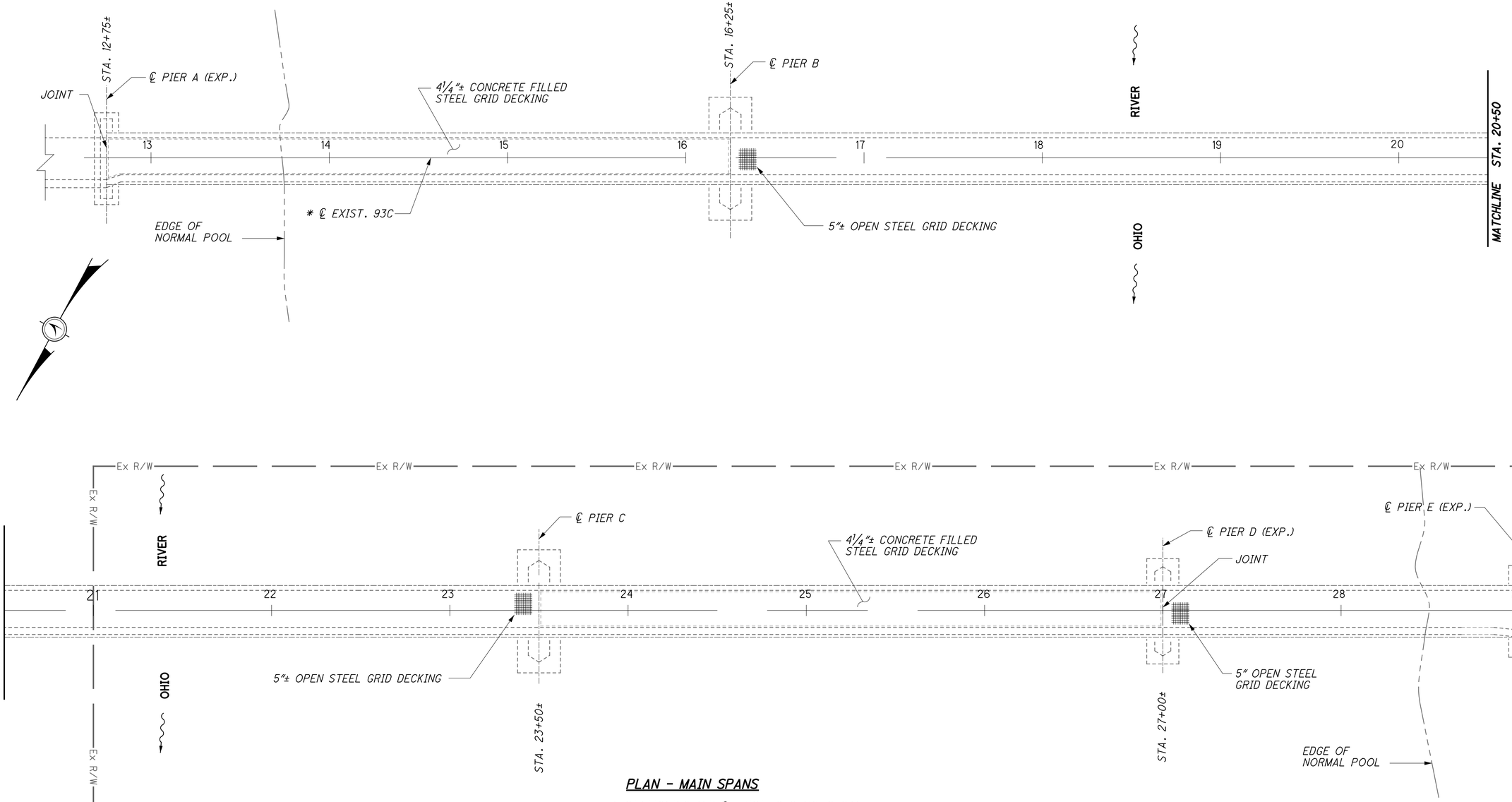

PLAN - MAIN SPANS

* STATIONING AND ℄ EXIST. 93C ARE SHOWN FOR GRAPHICAL AND REFERENCE PURPOSES ONLY AND SHOULD BE CONSIDERED APPROXIMATE.

NOTES

1. FOR TRANSVERSE SECTION, SEE SHEET 10/23

DESIGN AGENCY
URS
30 EAST 7TH STREET
SUITE 2300
CINCINNATI, OHIO 45202

DESIGNED	DRAWN	REVIEWED	DATE
BKL	JDP	RWB	02-21-2011
CHECKED	REVISED	STRUCTURE FILE NUMBER	
MJZ		4401255	

DEMOLITION - PLAN MAIN SPAN
REMOVAL OF BRIDGE NO. LAW-93C-0.00
OVER THE OHIO RIVER

LAW-93-0.00
PID No. 81595

9 / 23

356
788

J:\Project\OV\ODOT\15005112 Ironton Russell\LAW\81595\Structures\LAW093_1111C\sheets\Demolition\093_0000_re012.dgn - 4/27/2011 8:23:48 AM - jon_wanstrath

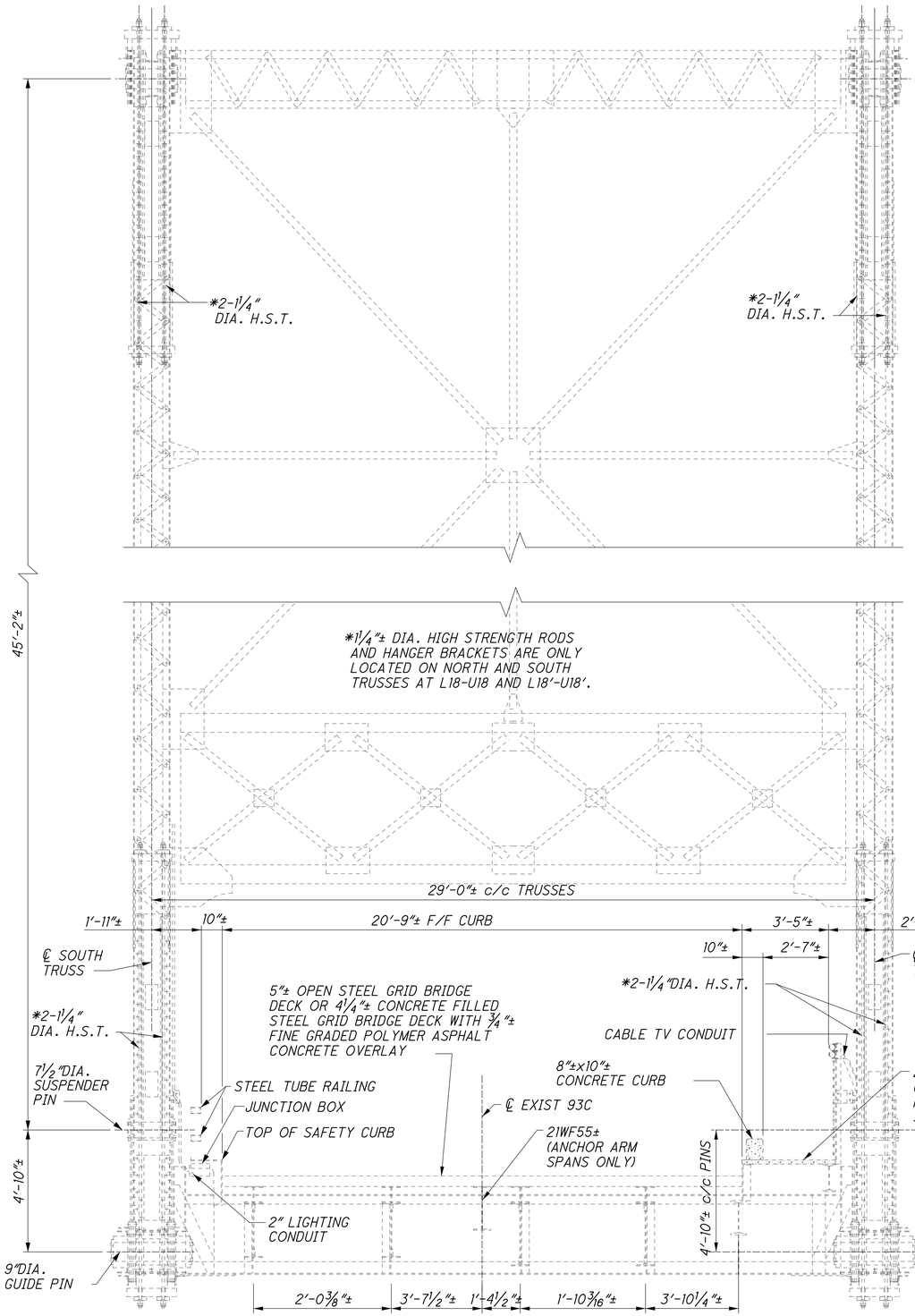

PARTIAL TRANSVERSE SECTION AT L18-U18 AND L18'-U18'

STA. 12+75± TO STA. 29+01±

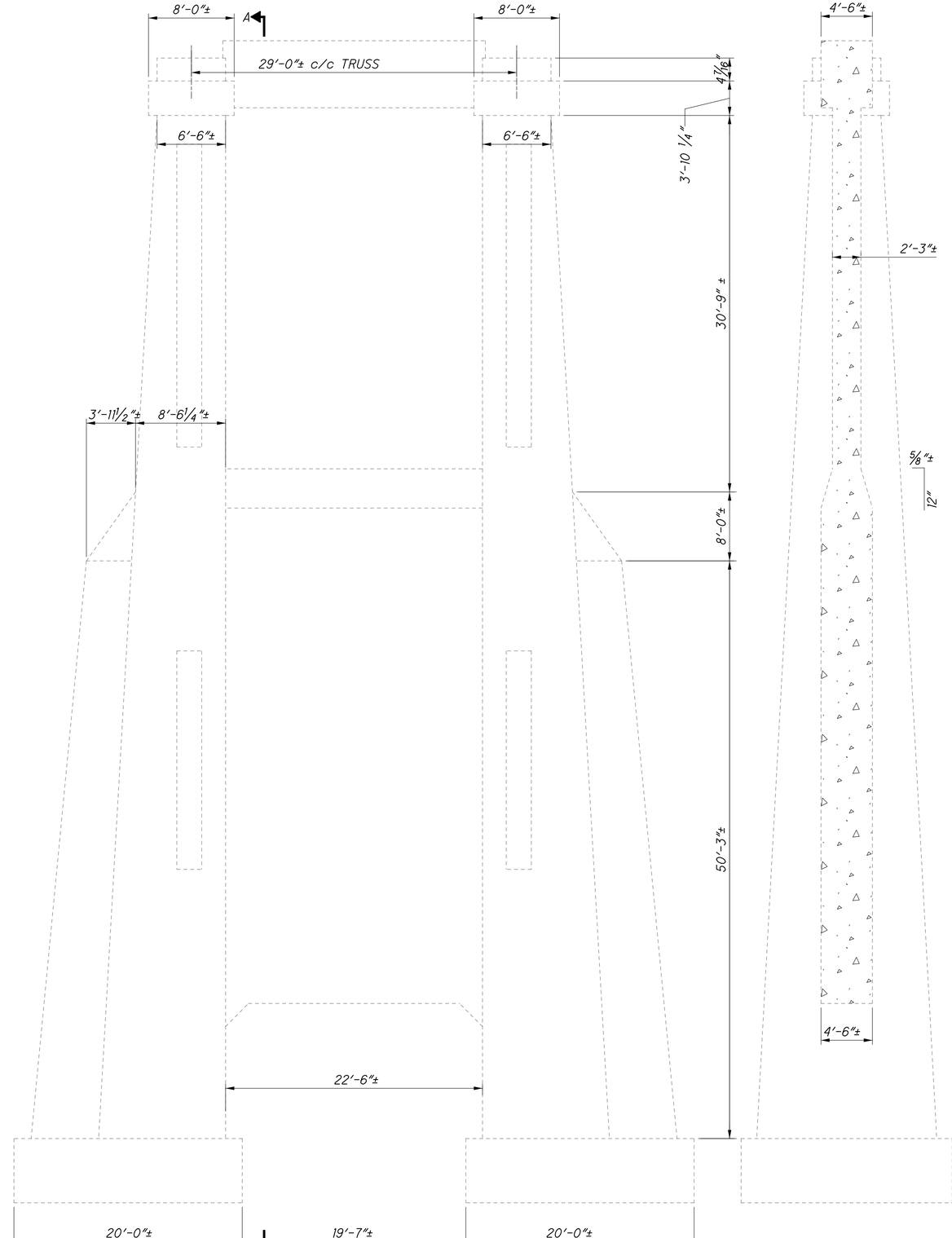

PIER D

(PIERS A, B & C SIMILAR)

SECTION A-A

DESIGN AGENCY
URS
38 EAST 7TH STREET
SUITE 2300
CINCINNATI, OHIO 45202

DESIGNED	DRAWN	REVIEWED	DATE
BKL	JDP	RWB	02-21-2011
CHECKED	REVISED	STRUCTURE FILE NUMBER	
MJZ		4401255	

DEMOLITION TRANSVERSE SECTION & PIER ELEVATION - MAIN SPANS

REMOVAL OF BRIDGE NO. LAW-93C-0.00
OVER THE OHIO RIVER

LAW-93-0.00
PID No. 81595

10 / 23

357
788

J:\Project\OH_ODOT\15005112 Ironton Russell\LAW\81595\Structures\LAW093_1111C\sheets\Demolition\093_0000_re013.dgn - 4/27/2011 8:23:49 AM - jon_wanstrath

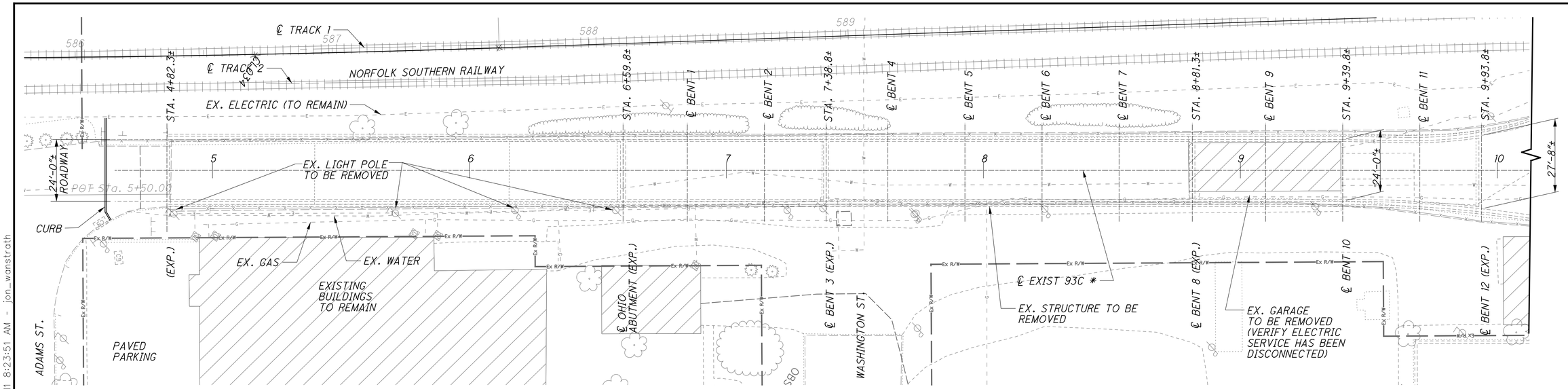

REFERENCES	
SHEET	DESCRIPTION
367/788	ADAMS STREET INTERSECTION

PLAN - IRONTON APPROACH - CONCRETE DECK

* STATIONING AND ℄ EXIST. 93C ARE SHOWN FOR GRAPHICAL AND REFERENCE PURPOSES ONLY AND SHOULD BE CONSIDERED APPROXIMATE.

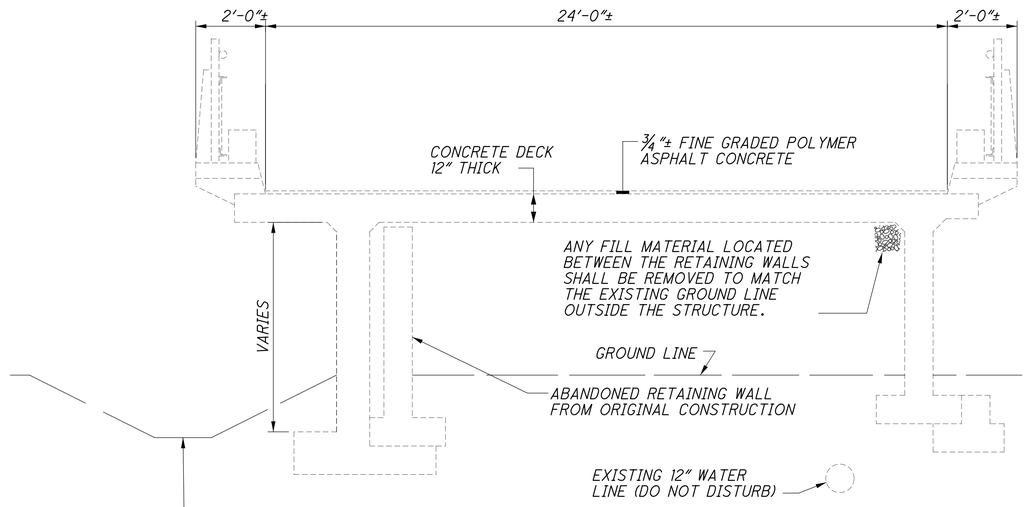

EXISTING TRANSVERSE SECTION

STA. 4+82.3± TO STA. 6+59.8±

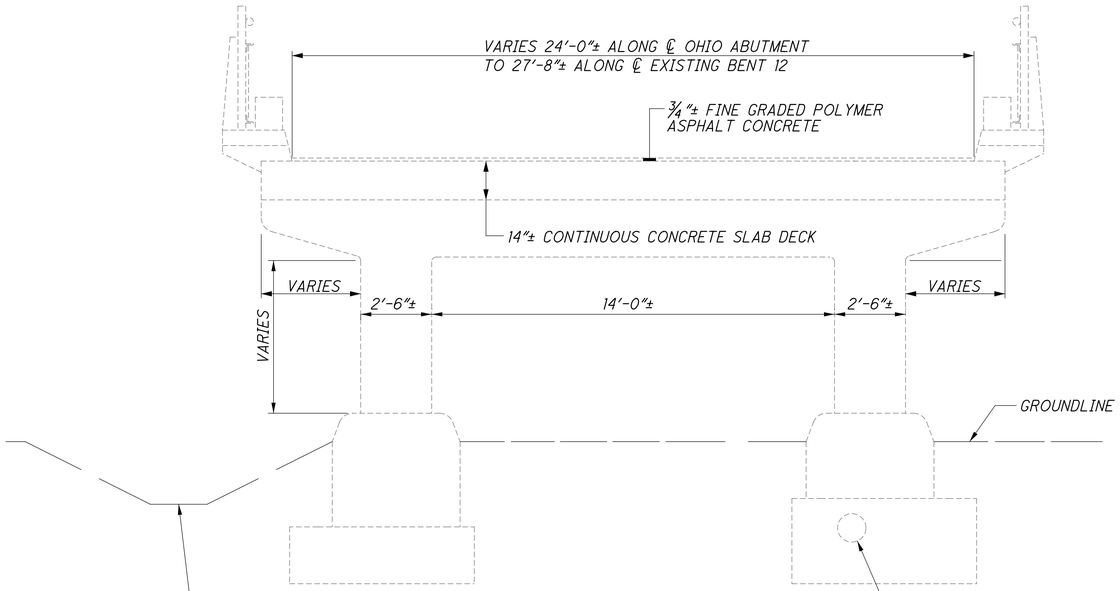

EXISTING TRANSVERSE SECTION

STA. 6+59.8± TO STA. 9+93.8±

DESIGN AGENCY
URS
38 EAST 7TH STREET
SUITE 2300
CINCINNATI, OHIO 45202

DESIGNED	DRAWN	REVIEWED	DATE
MJZ	JDP	RWB	02-21-2011
CHECKED	REVISED	STRUCTURE FILE NUMBER	
BER		4401255	

DEMOLITION PLAN & TRANSVERSE SECTION-OHIO APPROACH (1 OF 2)
REMOVAL OF BRIDGE NO. LAW-93C-0.00
OVER THE OHIO RIVER

LAW-93-0.00
PID No. 81595

11 / 23

358
788

J:\Project\OVODOT\15005112 Ironton Russell\LAW\81595\Structures\LAW093_1111C\sheets\Demolition\093_0000_re006.dgn - 4/27/2011 8:23:51 AM - jon_wanstrath

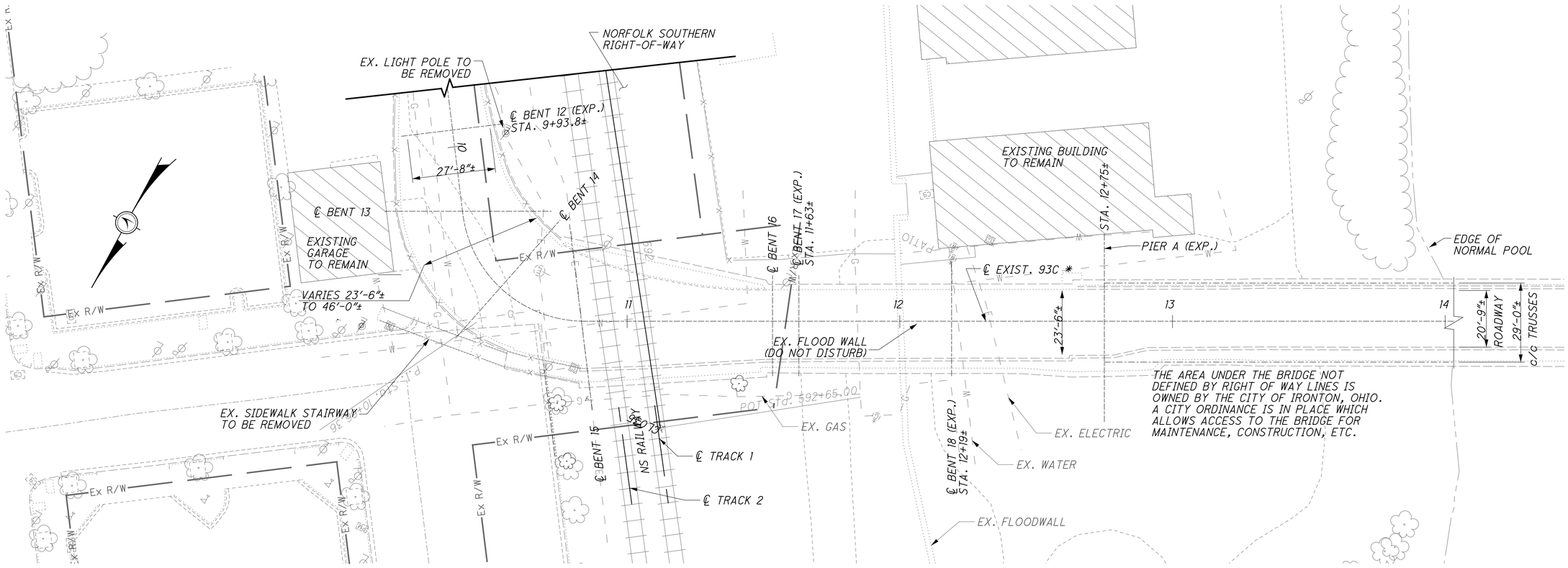

PLAN - IRONTON APPROACH - CONCRETE FILLED STEEL GRID DECK

*STATIONING AND ℄ 93C ARE SHOWN FOR GRAPHICAL AND REFERENCE PURPOSES ONLY AND SHOULD BE CONSIDERED APPROXIMATE.

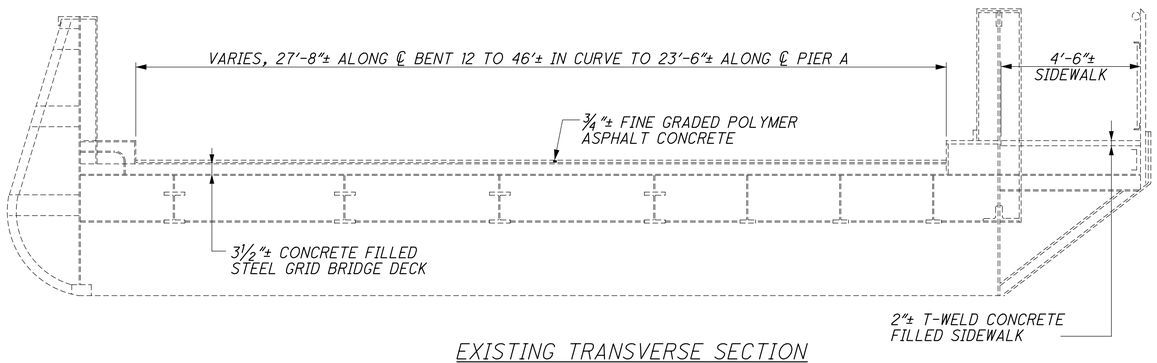

EXISTING TRANSVERSE SECTION

STA. 9+93.8± TO STA. 12+75±

J:\Project\OV\ODOT\15005112 Ironton Russell\LAW\81595\Structures\LAW093_1111C\sheets\Demolition\093_0000_re007.dgn - 4/27/2011 8:23:52 AM - jon_wanstrath

DESIGN AGENCY
URS
38 EAST 7TH STREET
SUITE 2300
CINCINNATI, OHIO 45202

DESIGNED	DRAWN	REVIEWED	DATE
MJZ	JDP	RWB	02-21-2011
CHECKED	REVISED	STRUCTURE FILE NUMBER	
BER		4401255	

DEMOLITION PLAN & TRANSVERSE SECTION-OHIO APPROACH (2 OF 2)
REMOVAL OF BRIDGE NO. LAW-93C-0.00
OVER THE OHIO RIVER

LAW-93-0.00
PID No. 81595

12 / 23

359
788

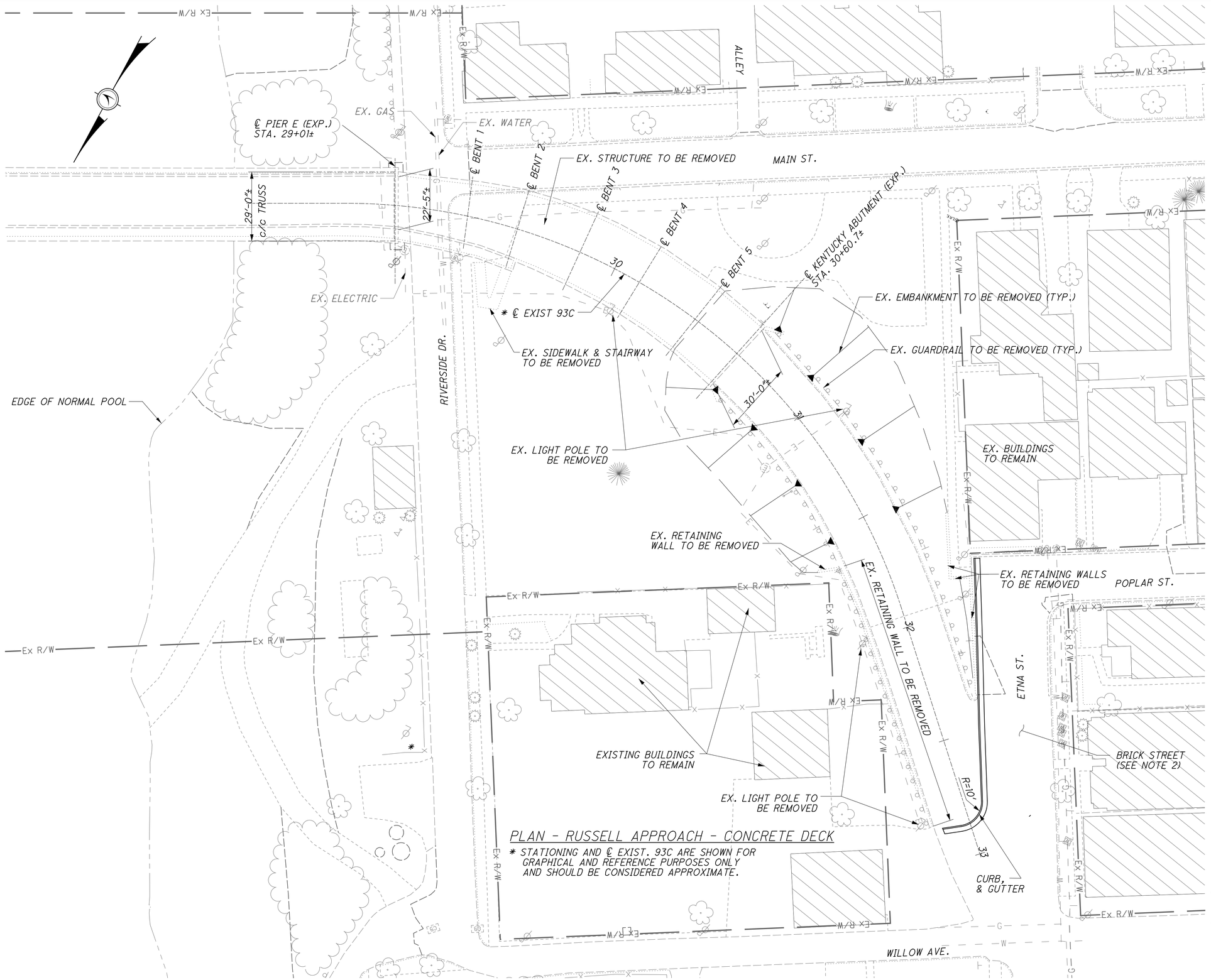

PLAN - RUSSELL APPROACH - CONCRETE DECK

* STATIONING AND ℄ EXIST. 93C ARE SHOWN FOR GRAPHICAL AND REFERENCE PURPOSES ONLY AND SHOULD BE CONSIDERED APPROXIMATE.

NOTES

1. FOR TRANSVERSE SECTION, SEE SHEET 14/23
2. BRICK PAVERS DISTURBED OR BROKEN BY THE CONTRACTOR SHALL BE REPAIRED OR REPLACED AT THE CONTRACTOR'S EXPENSE.

J:\Project\O\ODOT\15005112 Ironton Russell\LAW\81595\Structures\LAW093_1111C\sheets\Demolition\093_0000_re008.dgn - 4/27/2011 8:23:52 AM - jon_wanstrath

DESIGN AGENCY
URS
30 EAST 7TH STREET
SUITE 2300
CINCINNATI, OHIO 45202

DESIGNED	DRAWN	REVIEWED	DATE
MJZ	JDP	RWB	02-21-2011
CHECKED	REVISED	STRUCTURE FILE NUMBER	
BER		4401255	

DEMOLITION PLAN - KENTUCKY APPROACH
REMOVAL OF BRIDGE NO. LAW-93C-0.00
OVER THE OHIO RIVER

LAW-93-0.00
PID No. 81595

13 / 23

360
788

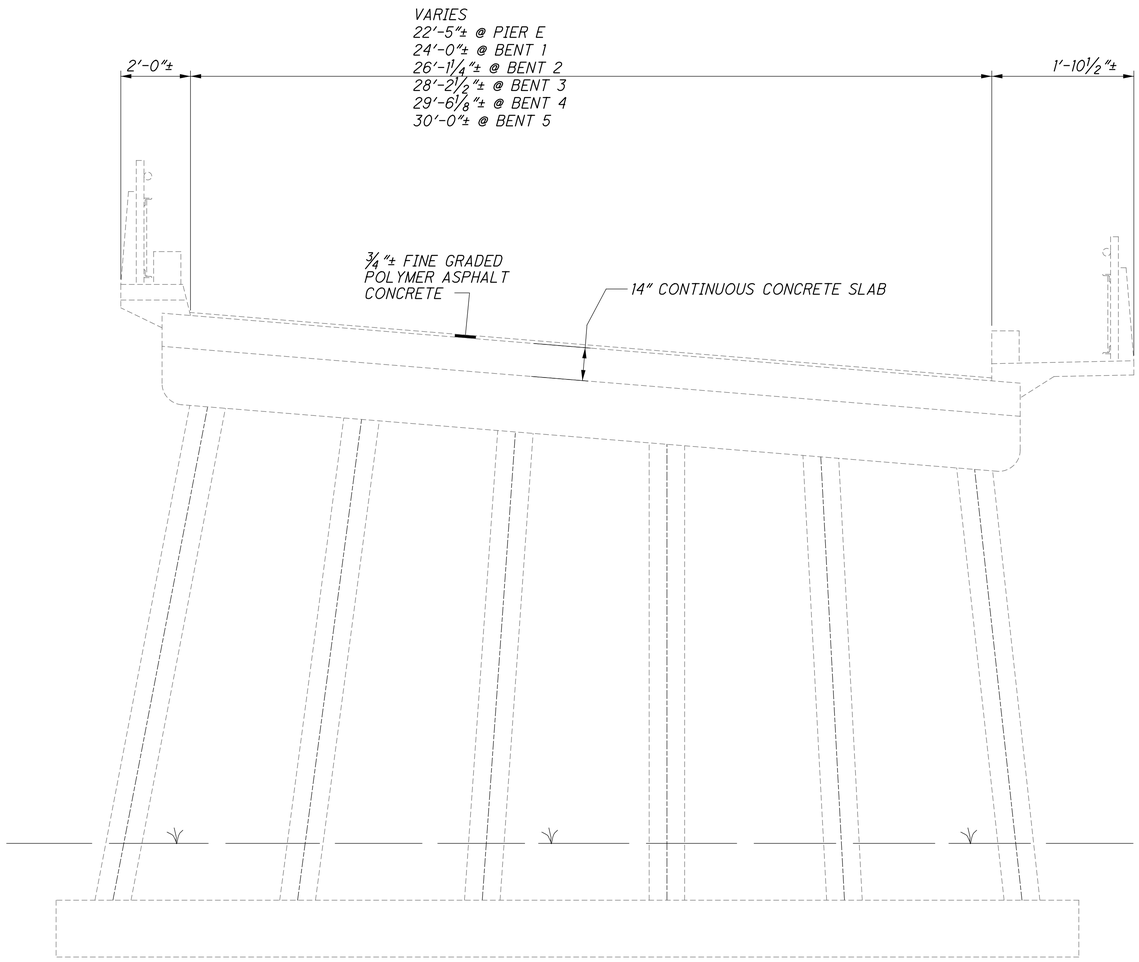

EXISTING TRANSVERSE SECTION
(SHOWN @ BENT 3. BENTS 1, 2, 4 AND 5 SIMILAR)

J:\Project\OV\ODOT\15005112 Ironton Russell\LAW\81595\Structures\LAW093_1111C\streets\Demolition\093_0000_re014.dgn - 4/27/2011 8:23:53 AM - jon_wanstrath

DESIGN AGENCY
URS
36 EAST 7TH STREET
SUITE 2300
CINCINNATI, OHIO 45202

DESIGNED	DRAWN	REVIEWED	DATE
BKL	JDP	RWB	02-21-2011
CHECKED	REVISED	STRUCTURE FILE NUMBER	
MJZ		4401255	

DEMOLITION - TRANSVERSE SECTION - KENTUCKY APPROACH
REMOVAL OF BRIDGE NO. LAW-93C-0.00
OVER THE OHIO RIVER

LAW-93-0.00
PID No. 81595

REF. NO.	SHEET NO.	STATION TO STATION		202		203	304	407	408	448		608	609	625		630				644	
				PAVEMENT REMOVED	CURB REMOVED	EXCAVATION	AGGREGATE BASE	TACK COAT FOR INTERMEDIATE COURSE	PRIME COAT	ASPHALT CONCRETE INTERMEDIATE COURSE, TYPE 2, PG64-22 (DRIVEWAYS)	ASPHALT CONCRETE SURFACE COURSE, TYPE 1, PG64-22 (DRIVEWAYS)	4" CONCRETE WALK	CURB, TYPE 6	LIGHT POLE REMOVED	LIGHT POLE FOUNDATION REMOVED	GROUND MOUNTED SUPPORT, NO. 2 POST	SIGN, FLAT SHEET	REMOVAL OF GROUND MOUNTED SIGN AND DISPOSAL	REMOVAL OF GROUND MOUNTED POST SUPPORT AND DISPOSAL	CENTER LINE	
		FROM	TO	SQ YD	FT	CU YD	CU YD	GALLON	GALLON	CU YD	CU YD	SQ FT	FT	EACH	EACH	FT	SQ FT	EACH	EACH	MILE	
R-1	367	EX. 93C 4+57	6+17	77		712															
R-2	367	EX. 93C 4+61	4+85		53																
R-3	367	EX. 93C 4+86												1	1						
R-4	367	EX. 93C 5+72												1	1						
R-5	367	EX. 93C 6+58												1	1						
R-6	367	EX. 93C 9+99												1	1						
C-1	367	EX. 93C 4+57											30								
CL-1	367	CAMPBELL 4+50	4+75																	0.01	
S-3	367	EX. 93C 4+41																1	1		
S-4	367	CAMPBELL 40+33																3	1		
S-5	367	CAMPBELL 40+46																3	1		
S-7	367	EX. 93C 4+58																4	2		
S-8	367	EX. 93C 4+59														12	1.5				
S-9	367	EX. 93C 4+59														25	8				
S-10	367	EX. 93C 4+66																1	1		
S-11	367	EX. 93C 4+77																4	2		
S-12	367	EX. 93C 4+84																1	1		
S-13	367	EX. 93C 5+00																2	1		
S-14	367	EX. 93C 6+16																1	1		
D-1	367	EX. 93C 9+50	10+70			95	68	12	123	16	11										
W-1	367	EX. 93C 10+55	10+65									100									
TOTALS CARRIED TO ESTIMATED QUANTITIES				77	53	807	68	12	123	16	11	100	30	4	4	37	9.5	20	11	0.01	

CALCULATED AMD
CHECKED JRW

DEMOLITION - ROADWAY SUBSUMMARY

LAW-93-0.00

15 / 23

362
788

J:\Project\O\ODOT\15005112 Ironton Russell\LAW\81595\roadway\sheets\81595XGS001.dgn - 4/27/2011 8:23:54 AM - jon_wanstrath

REF. NO.	SHEET NO.	STATION TO STATION		202								608			609	625					
		FROM	TO	STRUCTURE REMOVED, RETAINING WALL	PORTIONS OF STRUCTURE REMOVED, RETAINING WALL	PAVEMENT REMOVED	WALK REMOVED	CURB REMOVED	CURB AND GUTTER REMOVED	PIPE REMOVED, 24" AND UNDER	GUARDRAIL REMOVED	WALKWAY, MISC.: SIDEWALK-4 IN CONCRETE	WALKWAY, MISC.: SIDEWALK RAMP TYPE 1, PER KY STD. DWG. RPM-100	WALKWAY, MISC.: SIDEWALK RAMP TYPE 3, PER KY STD. DWG. RPM-170	CURB, MISC.: STANDARD CURB AND GUTTER, PER KY STD. DWG. RPM-100	PULL BOX REMOVED	LIGHT POLE REMOVED	LIGHT POLE FOUNDATION REMOVED			
				CU YD	CU YD	SQ YD	SQ FT	FT	FT	FT	FT	SQ FT	EACH	EACH	FT	EACH	EACH	EACH			
R-20	368	29+33	29+68				860														
R-21	368	30+62	32+34								177										
R-22	368	30+62	32+81								204										
R-23	368	30+05															1	1			
R-24	368	31+08														1	1	1			
R-25	368	31+98															1	1			
R-26	368	32+79															1	1			
R-27	368	30+62	32+81			728															
R-28	368	31+93								46											
R-29	368	31+60	31+87				121														
R-30	368	31+78	32+36					27	34												
R-31	368	31+60	32+81		30																
R-32	368	31+61	32+34	16																	
R-33	368	30+62	32+47					178													
R-34	368	30+62	32+36					185													
W-20	368	29+33	29+68					35	39			363		1							
W-21	368	31+60	32+81									668	2								
C-20	368	29+32	29+66												76						
C-21	368	31+79	32+81												128						
CR-20	368	29+30					90	18				96		1	17						
CR-21	368	32+17										29	1		5						
TOTALS CARRIED TO ESTIMATED QUANTITIES				16	30	728	1071	443	73	46	381	1156	3	2	226	1	4	4			

CALCULATED AMD
CHECKED JRW

DEMOLITION - ROADWAY SUBSUMMARY

LAW-93-0.00

16 / 23

363
788

J:\Project\O\ODOT\15005112 Ironton Russell\LAW\81595\roadway\sheets\81595XGS002.dgn - 4/27/2011 8:23:55 AM - jon_wanstrath

REF. NO.	SHEET NO.	STATION TO STATION		630				642														
		FROM	TO	REMOVAL OF GROUND MOUNTED SIGN AND DISPOSAL	REMOVAL OF GROUND MOUNTED POST SUPPORT AND DISPOSAL	SIGNING, MISC.: STEEL POST TYPE 2, PER KY STD. DETAIL SIGNING SPEC. NOTES	SIGNING, MISC.: SBM ALUM SHEET SIGNS .125 IN, PER KY STD. DETAIL SIGNING SPEC. NOTES	REMOVAL OF PAVEMENT MARKING														
				EACH	EACH	SQ FT	FT	FT														
R-35	368	32+31	33+34					54														
S-20	368	31+23		2	2																	
S-21	368	31+42		4	2																	
S-22	368	31+64		3	1																	
S-23	368	31+71		4	2																	
S-24	368	32+11		1	1																	
S-25	368	32+15		3	2																	
S-26	368	32+47		2	1																	
S-27	368	32+75				5	13															
S-28	368	33+32				2																
S-29	368	33+70				2																
TOTALS CARRIED TO ESTIMATED QUANTITIES				19	11	9	13	54														

CALCULATED AMD
CHECKED JRW

DEMOLITION - ROADWAY SUBSUMMARY

LAW-93-0.00

17 / 23

364
788

J:\Project\O\ODOT\15005112 Ironton Russell\LAW\81595\roadway\sheets\81595XGS003.dgn - 4/27/2011 8:23:56 AM - jon_wanstrath

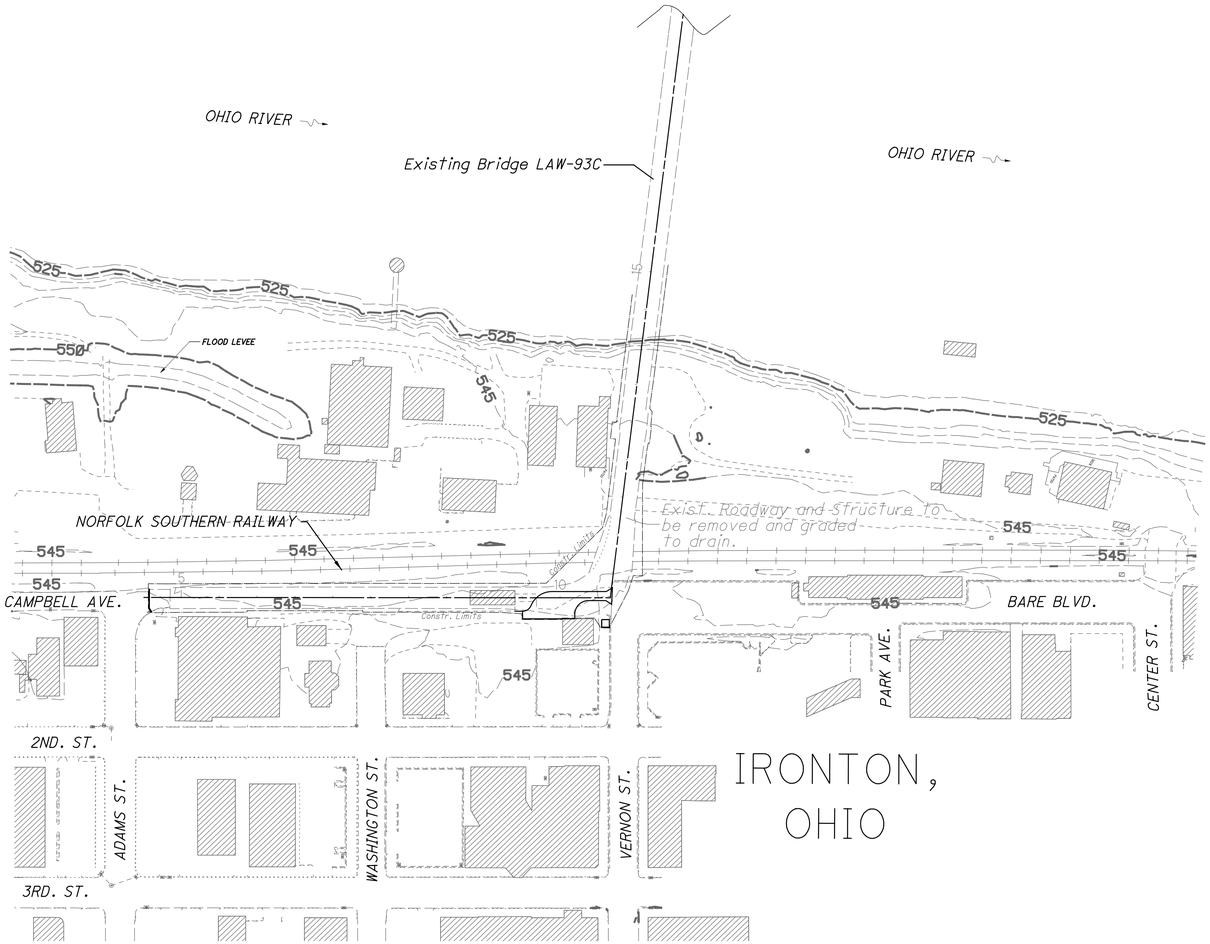

PROJECT DATA

	OHIO
TOTAL AREA (RIGHT-OF-WAY):	1.0 ACRE
PROJECT EARTH DISTURB AREA:	1.0 ACRE
ESTIMATED CONTRACTOR EARTH DISTURBED AREA:	1.6 ACRES
NOTICE OF INTENT EARTH DISTURBED AREA:	2.6 ACRES
IMPERVIOUS (PAVED) AREA FOR PRE-CONSTRUCTION SITE:	0.2 ACRES
IMPERVIOUS (PAVED) AREA FOR POST CONSTRUCTION SITE:	0.1 ACRES
RUNOFF COEFFICIENT FOR PRE-CONSTRUCTION SITE:	SEE NOTES THIS SHEET
RUNOFF COEFFICIENT FOR POST CONSTRUCTION SITE:	

SEE ALSO SOIL SURVEYS OF LAWRENCE COUNTY, OHIO AND GREENUP COUNTY, KENTUCKY.

ITEM 832 - STORM WATER POLLUTION PREVENTION PLAN

THE STORM WATER POLLUTION PREVENTION PLAN SHALL BE PREPARED FOR BOTH KENTUCKY AND OHIO AREAS OF THE PROJECT. THE PROVISIONS OF CMS 832 SHALL APPLY TO BOTH KENTUCKY AND OHIO AREAS OF THE PROJECT.

GENERAL NOTES

THIS PROJECT SITE PLAN (2 SHEETS) APPLIES TO THE REMOVAL OF THE EXISTING BRIDGE. FOR THE CONSTRUCTION OF THE NEW BRIDGE SEE PROJECT SITE PLANS. THE PROJECT CONSISTS OF REMOVAL OF EXISTING BRIDGE (LAW-93-0.00) ON OHIO 93C OVER NORFOLK SOUTHERN RAILWAY AND OHIO RIVER. THE PROPOSED WORK INCLUDES THE REMOVAL OF THE EXISTING BRIDGE, PIERS, ABUTMENTS, ASSOCIATED LIGHTING, APPROACH PAVEMENTS AND EMBANKMENTS. ALSO INCLUDED IS ALL TRAFFIC CONTROL AND MAINTENANCE OF TRAFFIC. THE PROJECT LENGTH IS 0.57 MILE.

THE EXISTING SITE IS DESCRIBED AS URBAN.

THE POST CONTRUCTION DRAINAGE AREAS WILL BE THE SAME AS THE EXISTING. HOWEVER THE RUNOFF COEFFICIENTS WILL BE LESS THAN THE EXISTING DUE TO THE REMOVAL OF PAVEMENTS ON BOTH SIDES OF THE OHIO RIVER. THE KENTUCKY APPROACH WILL ALSO BE LESS DUE TO THE APPROACH EMBANKMENT REMOVAL.

USGS QUADRANT NO. 38082-E6-TF-024
IRONTON, OHIO
*LATITUDE 38°31'25" N
*LONGITUDE 82°41'14" W
*LATITUDE AND LONGITUDE TO APPROXIMATE PROPOSED CENTERLINE AT THE PROPOSED REAR BRIDGE LIMIT.

IMMEDIATE RECEIVING WATERS - OHIO RIVER
SUBSEQUENT RECEIVING WATERS - MISSISSIPPI RIVER
SOIL DATA - SEE SOIL PROFILES.

HORIZONTAL SCALE IN FEET
0 50 100 200

CALCULATED REH
CHECKED SCC

DEMOLITION PROJECT SITE PLAN OHIO

LAW-93-0.00

18 / 23

365
788

J:\Project\OVODOT\15005112 Ironton Russell\LAW\81595\drainage\sheets\81595DE003.dgn - 4/27/2011 8:23:57 AM - jon_warnstrath

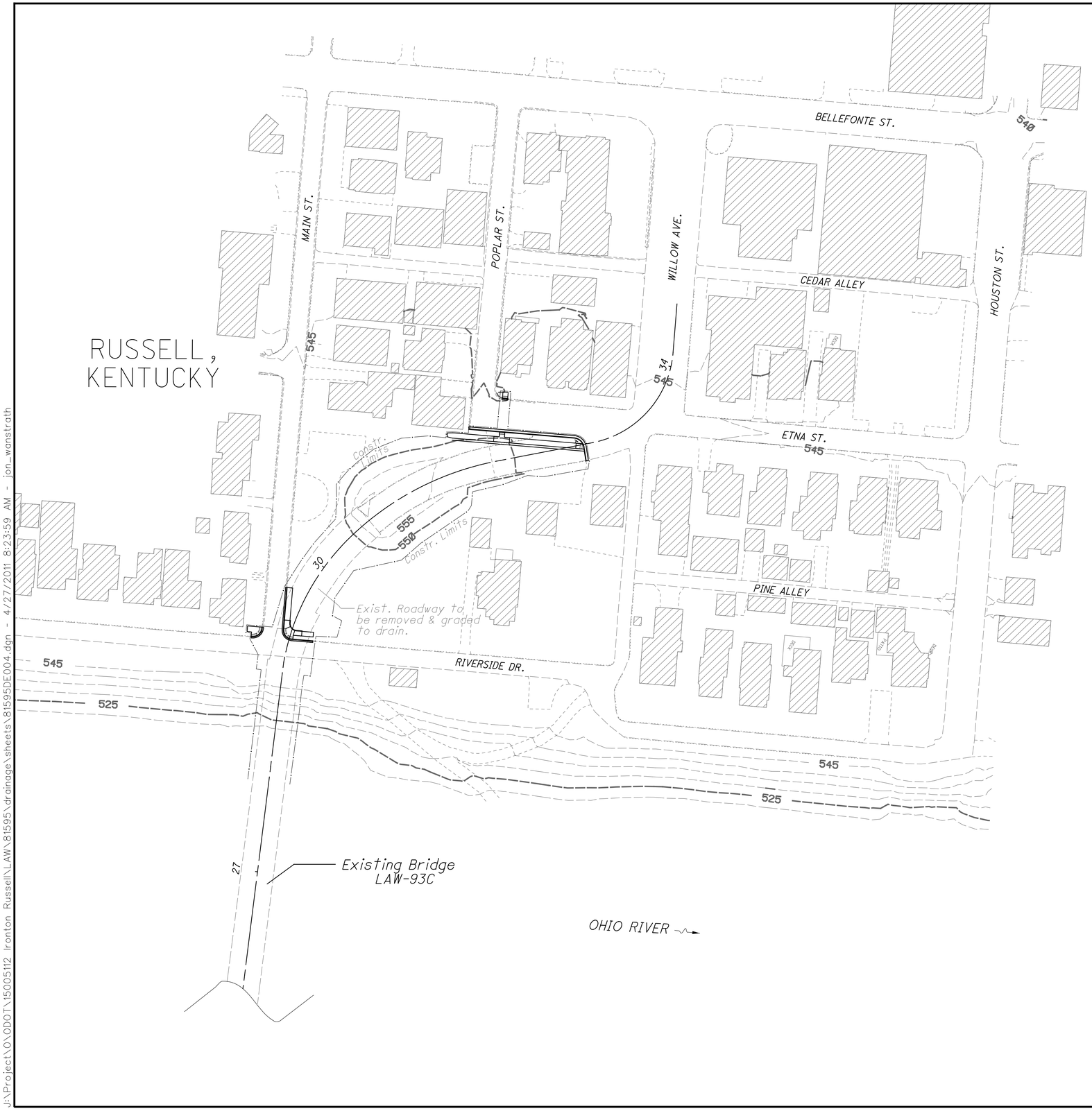

PROJECT DATA

	KENTUCKY
TOTAL AREA (RIGHT-OF-WAY):	2.3 ACRES
PROJECT EARTH DISTURB AREA:	0.6 ACRES
ESTIMATED CONTRACTOR EARTH DISTURBED AREA:	0.5 ACRES
NOTICE OF INTENT EARTH DISTURBED AREA:	1.1 ACRES
IMPERVIOUS (PAVED) AREA FOR PRE-CONSTRUCTION SITE:	0.2 ACRES
IMPERVIOUS (PAVED) AREA FOR POST CONSTRUCTION SITE:	0.1 ACRES
RUNOFF COEFFICIENT FOR PRE-CONSTRUCTION SITE:	SEE NOTES THIS SHEET
RUNOFF COEFFICIENT FOR POST CONSTRUCTION SITE:	

SEE ALSO SOIL SURVEYS OF LAWRENCE COUNTY, OHIO AND GREENUP COUNTY, KENTUCKY.

ITEM 832 - STORM WATER POLLUTION PREVENTION PLAN

THE STORM WATER POLLUTION PREVENTION PLAN SHALL BE PREPARED FOR BOTH KENTUCKY AND OHIO AREAS OF THE PROJECT. THE PROVISIONS OF CMS 832 SHALL APPLY TO BOTH KENTUCKY AND OHIO AREAS OF THE PROJECT.

GENERAL NOTES

THIS PROJECT SITE PLAN (2 SHEETS) APPLIES TO THE REMOVAL OF THE EXISTING BRIDGE. FOR THE CONSTRUCTION OF THE NEW BRIDGE SEE PROJECT SITE PLANS. THE PROJECT CONSISTS OF REMOVAL OF EXISTING BRIDGE (LAW-93-0.00) ON OHIO 93C OVER NORFOLK SOUTHERN RAILWAY AND OHIO RIVER. THE PROPOSED WORK INCLUDES THE REMOVAL OF THE EXISTING BRIDGE, PIERS, ABUTMENTS, ASSOCIATED LIGHTING, APPROACH PAVEMENTS AND EMBANKMENTS. ALSO INCLUDED IS ALL TRAFFIC CONTROL AND MAINTENANCE OF TRAFFIC. THE PROJECT LENGTH IS 0.57 MILE.

THE EXISTING SITE IS DESCRIBED AS URBAN.

THE POST CONTRUCTION DRAINAGE AREAS WILL BE THE SAME AS THE EXISTING. HOWEVER THE RUNOFF COEFFICIENTS WILL BE LESS THAN THE EXISTING DUE TO THE REMOVAL OF PAVEMENTS ON BOTH SIDES OF THE OHIO RIVER. THE KENTUCKY APPROACH WILL ALSO BE LESS DUE TO THE APPROACH EMBANKMENT REMOVAL.

USGS QUADRANT NO. 38082-E6-TF-024
IRONTON, OHIO
*LATITUDE 38°31'25" N
*LONGITUDE 82°41'14" W
*LATITUDE AND LONGITUDE TO APPROXIMATE PROPOSED CENTERLINE AT THE PROPOSED REAR BRIDGE LIMIT.

IMMEDIATE RECEIVING WATERS - OHIO RIVER
SUBSEQUENT RECEIVING WATERS - MISSISSIPPI RIVER
SOIL DATA - SEE SOIL PROFILES.

HORIZONTAL SCALE IN FEET
0 25 50 100

CALCULATED REH
CHECKED SCC

DEMOLITION PROJECT SITE PLAN
KENTUCKY
LAW-93-0.00

19 / 23

366
788

J:\Project\OV\ODOT\15005112 Ironton Russell\LAW\81595\drainage\sheets\81595DE004.dgn - 4/27/2011 8:23:59 AM - jon_warnstrath

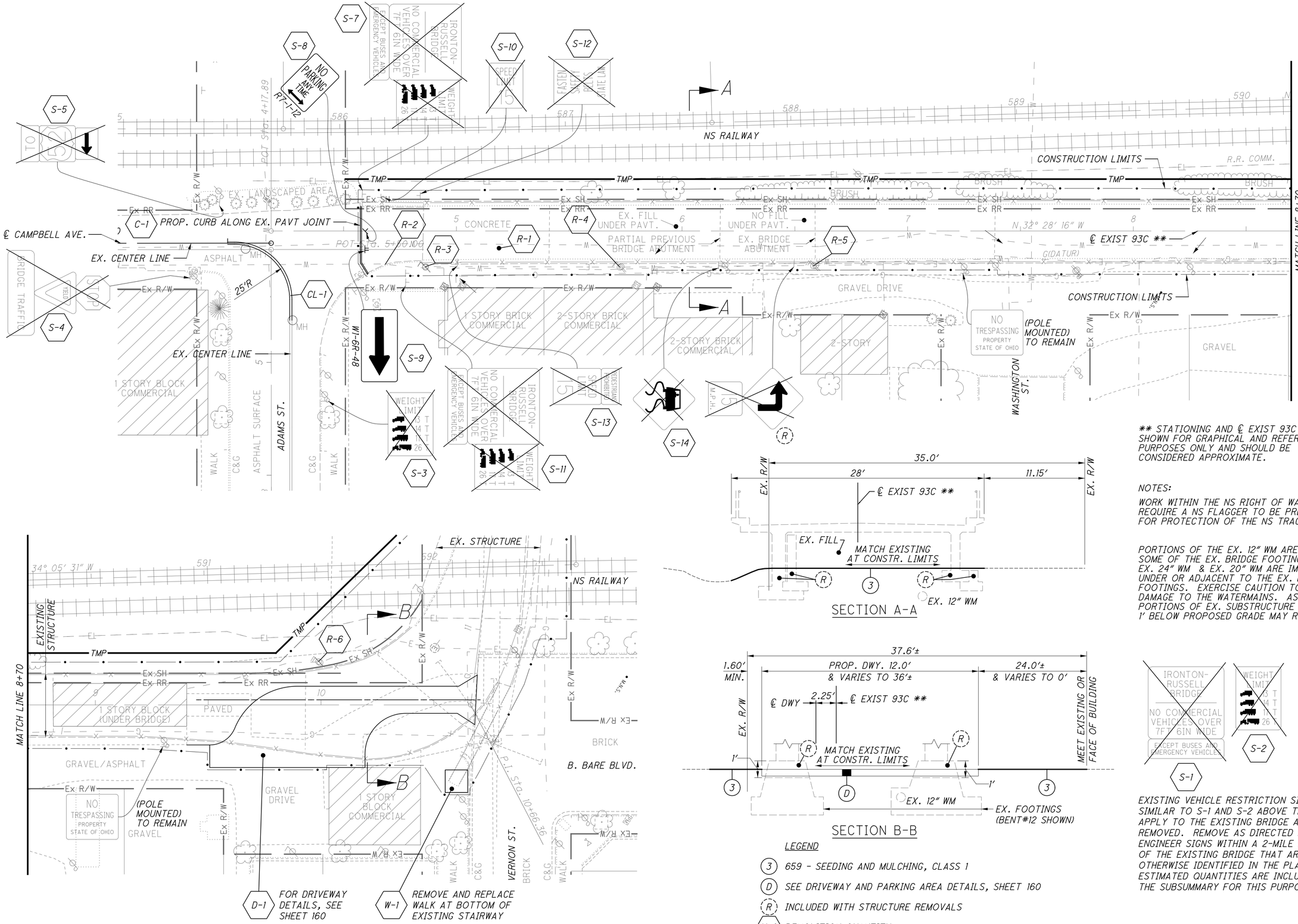

SECTION A-A

SECTION B-B

LEGEND

- (3) 659 - SEEDING AND MULCHING, CLASS 1
- (D) SEE DRIVEWAY AND PARKING AREA DETAILS, SHEET 160
- (R) INCLUDED WITH STRUCTURE REMOVALS
- (X-0) DEMOLITION QUANTITY

*** STATIONING AND ℄ EXIST 93C ARE SHOWN FOR GRAPHICAL AND REFERENCE PURPOSES ONLY AND SHOULD BE CONSIDERED APPROXIMATE.*

NOTES:

WORK WITHIN THE NS RIGHT OF WAY MAY REQUIRE A NS FLAGGER TO BE PRESENT FOR PROTECTION OF THE NS TRACKS.

PORTIONS OF THE EX. 12″ WM ARE ENCASED IN SOME OF THE EX. BRIDGE FOOTINGS, AND THE EX. 24″ WM & EX. 20″ WM ARE IMMEDIATELY UNDER OR ADJACENT TO THE EX. BENT #3 FOOTINGS. EXERCISE CAUTION TO PREVENT DAMAGE TO THE WATERMAINS. AS NECESSARY, PORTIONS OF EX. SUBSTRUCTURE MORE THAN 1′ BELOW PROPOSED GRADE MAY REMAIN.

EXISTING VEHICLE RESTRICTION SIGNS SIMILAR TO S-1 AND S-2 ABOVE THAT APPLY TO THE EXISTING BRIDGE ARE TO BE REMOVED. REMOVE AS DIRECTED BY THE ENGINEER SIGNS WITHIN A 2-MILE RADIUS OF THE EXISTING BRIDGE THAT ARE NOT OTHERWISE IDENTIFIED IN THE PLANS. ESTIMATED QUANTITIES ARE INCLUDED IN THE SUBSUMMARY FOR THIS PURPOSE.

HORIZONTAL SCALE IN FEET
0 10 20 40

CALCULATED AMD
CHECKED SCC

DEMOLITION APPROACH PLAN
ROADWAY - OHIO

LAW-93-0.00

20 / 23

367
788

J:\Project\OV\ODOT\15005112 Ironton Russell\LAW\81595\roadway\sheets\81595XG001.dgn - 4/27/2011 8:24:00 AM - jon_wanstrath

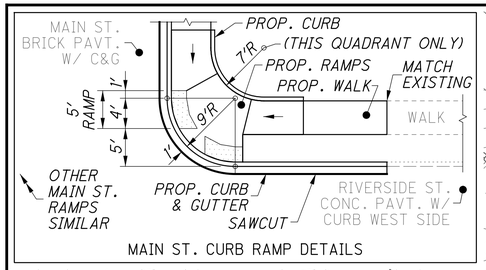

MAIN ST. CURB RAMP DETAILS

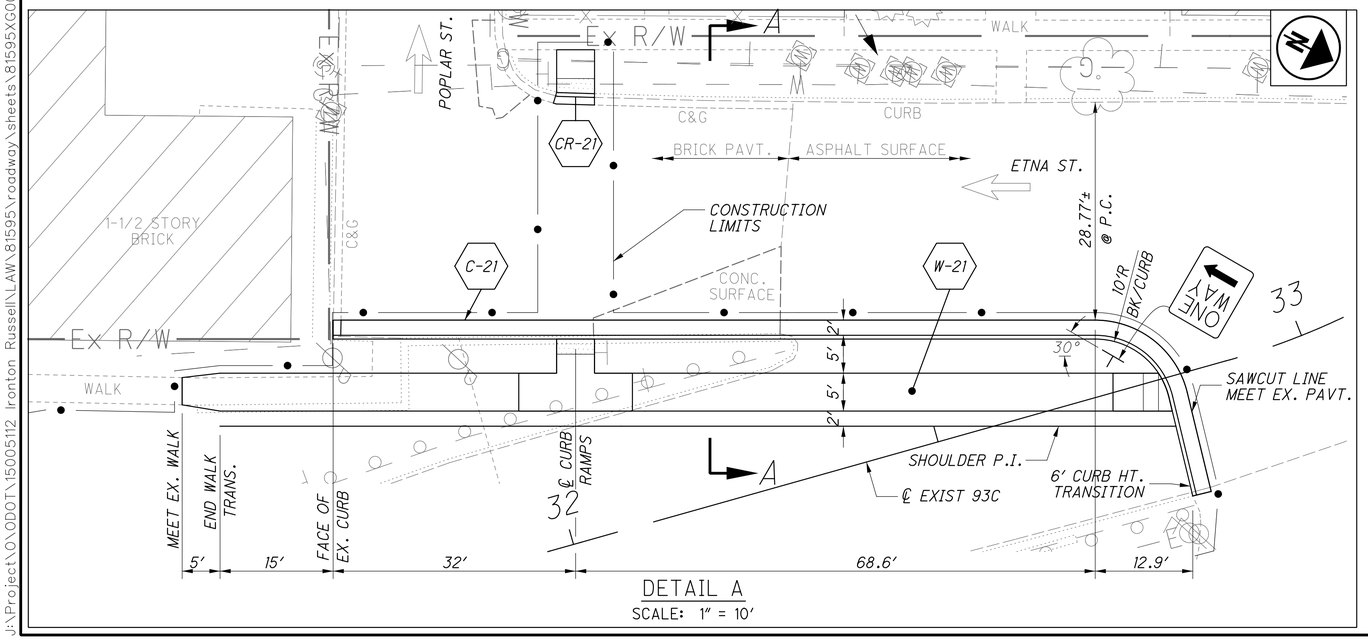

DETAIL A
SCALE: 1" = 10'

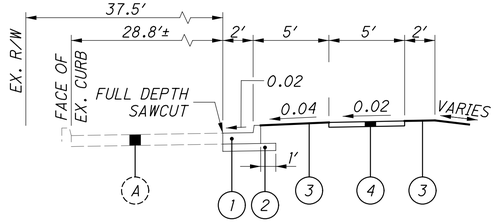

SECTION A-A

(1) 609 - CURB, MISC.: STANDARD CURB AND GUTTER, PER KY. STD. DWG. RPM-100
(2) 304 - 6" AGGREGATE BASE
(3) 659 - SEEDING AND MULCHING, CLASS 1
(4) 608 - WALKWAY, MISC.: SIDEWALK - 4 IN CONCRETE
(A) EX. BRICK, CONCRETE, AND/OR ASPHALT
(R) INCLUDED WITH STRUCTURE REMOVALS
(X-0) DEMOLITION QUANTITY
DIRECTION OF TRAFFIC

** STATIONING AND ℄ EXIST 93C ARE SHOWN FOR GRAPHICAL AND REFERENCE PURPOSES ONLY AND SHOULD BE CONSIDERED APPROXIMATE.

NOTE:
EXISTING RETAINING WALL STA. 31+59 - STA. 32+80, RIGHT - REMOVE PORTION ABOVE FOOTING.
EXISTING RETAINING WALL STA. 31+61 - STA. 32+34, LEFT - REMOVE ENTIRE WALL.

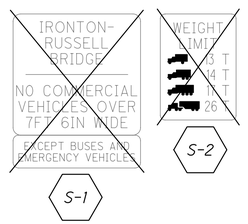

SEE NOTE ON PREVIOUS SHEET FOR REMOVAL OF EXISTING VEHICLE RESTRICTION SIGNS.

HORIZONTAL SCALE IN FEET
0 10 20 40

CALCULATED AMD
CHECKED SCC

DEMOLITION APPROACH PLAN
ROADWAY - KENTUCKY

LAW-93-0.00

21 / 23

368
788

J:\Project\O\ODOT\15005112 Ironton Russell\LAW\81595\roadway\sheets\81595XG002.dgn - 4/27/2011 8:24:02 AM - jon_wanstrath

LEGEND

659 SEEDING AND MULCHING, CLASS 1

659 SEEDING AND MULCHING, CLASS 2

THE FOLLOWING QUANTITIES HAVE BEEN CARRIED TO THE BRIDGE DEMOLITION ESTIMATED QUANTITIES.

ITEM 659 SEEDING AND MULCHING SUBSUMMARY

REF. NO.	C/L REF.	STATION TO STATION		SIDE	CLASS 1 (SQ YD)	CLASS 2 (SQ YD)		TOPSOIL (CU YD)	REMARKS
50	EXISTING 93C	4+52	9+69	R	1199			132	
51	EXISTING 93C	4+56	10+99	L	1299			143	
52	EXISTING 93C	10+20	10+67	R	97			11	
53	EXISTING 93C	10+79	11+05	R	46			5	
54	EXISTING 93C	11+43	11+84	R		143		16	
55	EXISTING 93C	11+38	11+83	L		130		15	
56	EXISTING 93C	12+02	12+33	R		80		9	
57	EXISTING 93C	12+00	12+32	L		64		7	
58	EXISTING 93C	29+01	29+17	R	43			5	
59	EXISTING 93C	29+01	29+14	L	37			5	
60	EXISTING 93C	29+25	29+36	L	4			1	
61	EXISTING 93C	29+31	32+81	R	2385			263	
62	EXISTING 93C	29+31	32+16	L	1646			181	
63	EXISTING 93C	31+73	32+81	L	55			7	
64	EXISTING 93C	32+10	32+23	L	5			1	
TOTALS CARRIED TO ESTIMATED QUANTITIES					6816	417		801	

EROSION CONTROL

THE FOLLOWING QUANTITIES ARE PROVIDED TO PROMOTE GROWTH AND CARE OF PERMANENT SEEDED AREAS:

659, SOIL ANALYSIS TEST	2 EACH
659, REPAIR SEEDING AND MULCHING	362 SQ. YD.
659, INTER-SEEDING	362 SQ. YD.
659, COMMERCIAL FERTILIZER	1.00 TON
659, LIME	1.49 ACRES
659, WATER	40 M. GAL.
659, MOWING	16 M. SQ. FT.

SEEDING AND MULCHING SHALL BE APPLIED TO ALL AREAS OF EXPOSED SOIL BETWEEN THE RIGHT-OF-WAY LINES, AND WITHIN THE CONSTRUCTION LIMITS FOR AREAS OUTSIDE THE RIGHT-OF-WAY LINES COVERS BY WORK AGREEMENT OR SLOPE EASEMENT. QUANTITY CALCULATIONS FOR SEEDING AND MULCHING ARE BASED ON THESE LIMITS FOR DEMOLITION ONLY.

** STATIONING AND ℄ EXIST 93C ARE SHOWN FOR GRAPHICAL AND REFERENCE PURPOSES ONLY AND SHOULD BE CONSIDERED APPROXIMATE.



HORIZONTAL SCALE IN FEET
0 25 50 100

CALCULATED AMD
CHECKED JRW

DEMOLITION - SEEDING PLAN
OHIO & KENTUCKY

LAW-93-0.00

22/23

369/788

J:\Project\O\ODOT\15005112 Ironton Russell\LAW\81595\landscape\sheets\81595PP006.dgn - 4/27/2011 8:24:03 AM - jon_wanstrath

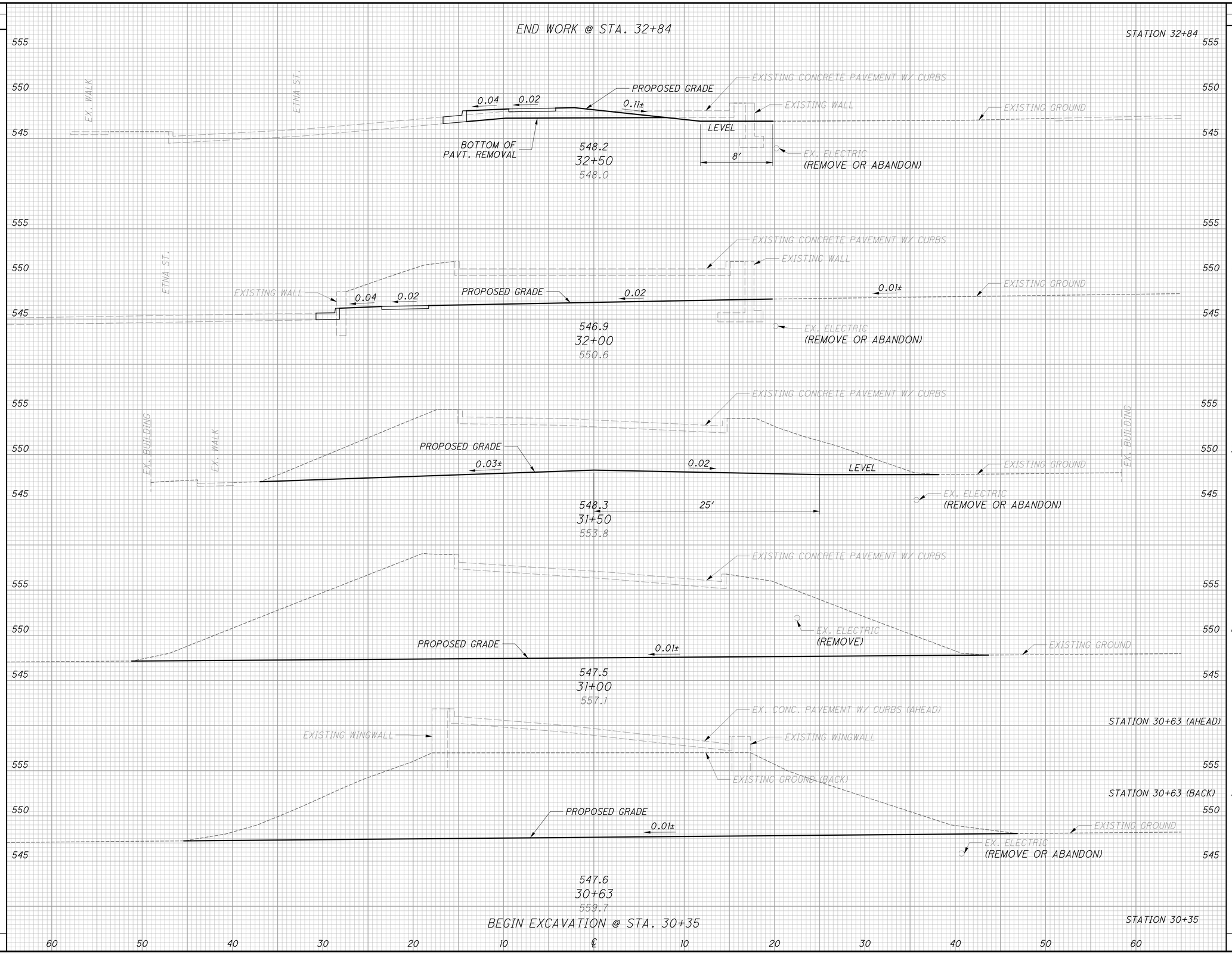

SEEDING END WIDTH	SEEDING SQ. YDS.	END AREA CUT	END AREA FILL	VOLUME CUT	VOLUME FILL
		0	0		
				3	11
		5	18		
				136	17
		141	0		
				418	0
		310	0		
				861	0
		619	0		
				846	0
		616	0		
		556	0		
				288	0
		0	0		
				2552	28

FOR DEMOLITION SEEDING QUANTITIES SEE SHEET 369

CALCULATED AMD
CHECKED SCC

DEMOLITION APPROACH CROSS SECTIONS
ROADWAY - KENTUCKY

LAW-93-0.00

J:\Project\O\ODOT\15005112 Ironton Russell\LAW\81595\roadway\sheets\81595XG003.dgn - 4/27/2011 8:24:05 AM - jon_wanstrath

B.M. NO. 5 OHIO SIDE
STA. 36+22.39, 123.93' RT.,
℄ CONSTRUCTION 93C
CHISELED "□" S. CORNER CONC.
PAD WELCOME SIGN GAS STATION
NE CORN. MONROE/2ND ST.
ELEV. 542.81

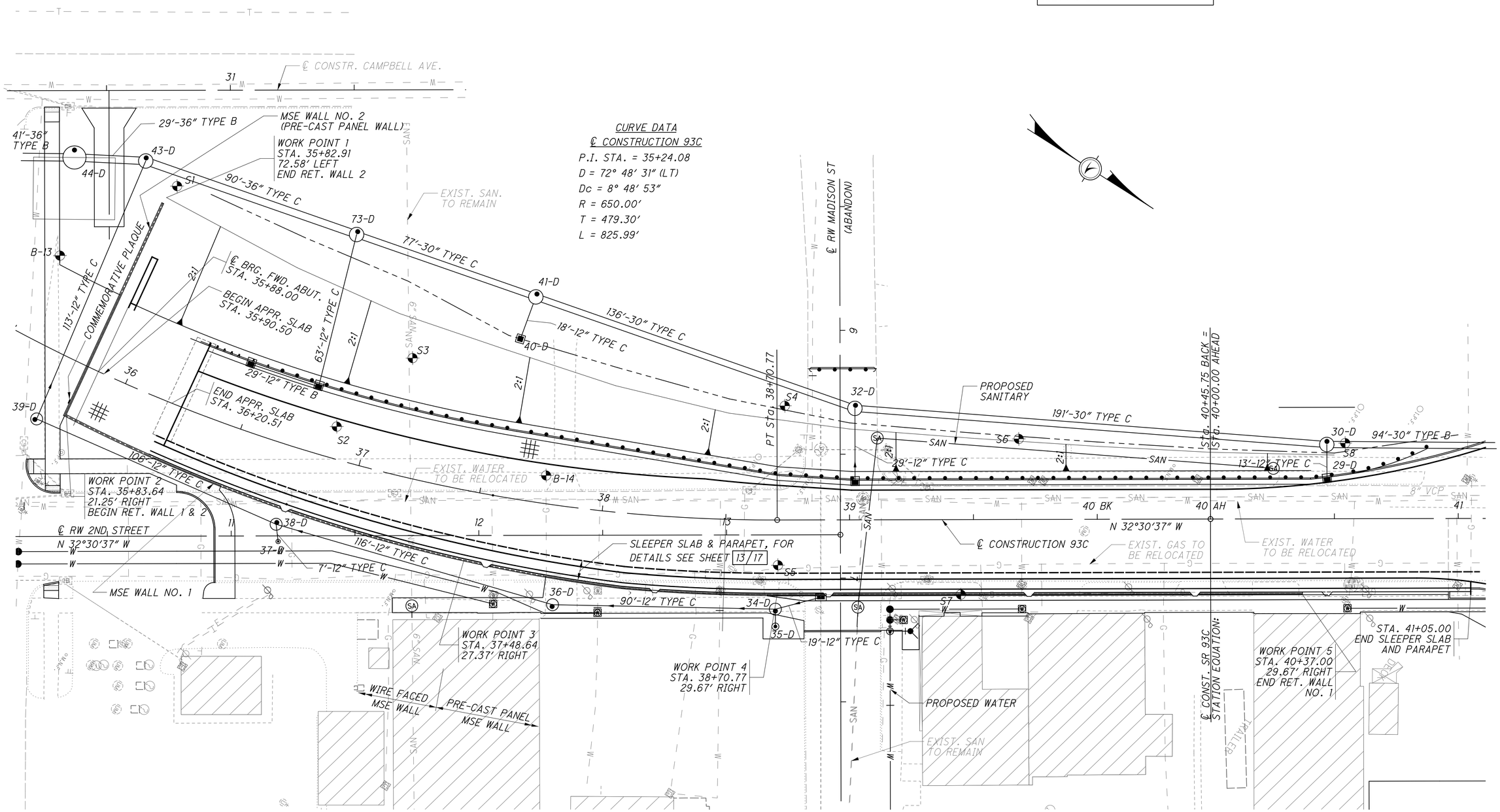

CURVE DATA
℄ CONSTRUCTION 93C
P.I. STA. = 35+24.08
D = 72° 48' 31" (LT)
Dc = 8° 48' 53"
R = 650.00'
T = 479.30'
L = 825.99'

LEGEND

- INDICATES SETTLEMENT PLATFORM
- INDICATES BORING LOCATION

PLAN

NOTES

1. FOR RETAINING WALL ELEVATIONS AND NOTES, SEE SHEETS 8/17 & 9/17.

DESIGN AGENCY
URS
36 EAST 7TH STREET
SUITE 2300
CINCINNATI, OHIO 45202

DESIGNED	DRAWN	REVIEWED	DATE
BKL	GJW	RWB	02-21-2011
CHECKED	REVISED	STRUCTURE FILE NUMBER	
MJZ	NBH	4401263	

MSE WALL - SITE PLAN
BRIDGE NO. LAW-93-0000
IRONTON RUSSEL BRIDGE OVER OHIO RIVER

LAW-93-0.00
PID No. 81595

J:\Project\O\ODOT\15005112 Ironton Russell\LAW\81595\structures\LAW093_1111C\sheets\MSE Wall Plans\81595_001WP001.dgn - 5/6/2011 9:52:54 AM - jon_wanstrath

STANDARD DRAWINGS AND SUPPLEMENTAL SPECIFICATIONS:

REFER TO THE FOLLOWING SUPPLEMENTAL SPECIFICATIONS:

840	DATED 10-15-2010
878	DATED 04-18-2008
898	DATED 01-21-2011

DESIGN DATA

CONCRETE CLASS QSC2 - COMPRESSIVE STRENGTH 4.5 KSI (SUPERSTRUCTURE)
(SLEEPER SLAB AND PARAPETS)
CONCRETE CLASS C - COMPRESSIVE STRENGTH 4.0 KSI (SUBSTRUCTURE)
(CAST-IN-PLACE REINFORCED CONCRETE FACING)
REINFORCING STEEL - MINIMUM YIELD STRENGTH 60 KSI (EPOXY COATED)
STEEL TUBING - MINIMUM YEAILD STRENGTH 46 KSI (GALVANIZED PER 711.02)
ALL OTHER STEEL - MINIMUM YIELD STRENGTH 36 KSI (GALVANIZED PER 711.02)

PROPRIETARY RETAINING WALL DATA:

THE PROPRIETARY WALL SUPPLIER SHALL DESIGN THE INTERNAL STABILITY OF A MECHANICALLY STABILIZED EARTH (MSE) WALL IN ACCORDANCE WITH SS840 TO SUPPORT THE REAR ABUTMENT. THE DESIGN FOR INTERNAL STABILITY SHALL INCLUDE A NOMINAL (I.E. UNFACTORED) HORIZONTAL STRIP LOAD DUE TO FRICTION (FR) FROM THE SUPERSTRUCTURE OF 0.66 K/FT APPLIED PERPENDICULAR TO THE FACE OF WALL AT THE BASE OF THE CONCRETE FOOTING.

HORIZONTAL ABUTMENT LOADS:

THE WALL MANUFACTURER SHALL PROVIDE A SINGLE ROW OF SOIL REINFORCEMENT STRAPS EMBEDDED INTO THE BACK OF THE FORWARD ABUTMENT FOOTING. THE STRAPS SHALL BE DESIGNED TO RESIST THE SUPERSTRUCTURE FRICTION LOADS LISTED IN THE 'PROPRIETARY RETAINING WALL DATA' NOTE ON THIS SHEET IN ADDITION TO EARTH PRESSURE AND LIVE LOAD SURCHARGE ON THE ABUTMENT. THE LIVE LOAD SURCHARGE MAY BE TAKEN AS 3.25 KIPS/FT OF ABUTMENT. TOTAL FACTORED LOAD FROM THE SUPERSTRUCTURE MAY BE TAKEN AS 7.47 KIPS/FT OF ABUTMENT.

RETAINING WALL DESIGN REQUIREMENTS:

THE DESIGN OF THE WALL SHALL BE IN STRICT CONFORMANCE WITH THE "LRFD BRIDGE DESIGN SPECIFICATIONS", ADOPTED BY THE AMERCIAN ASSOCIATION OF STATE HIGHWAY AND TRANSPORTATION OFFICIALS, 4TH EDITION, 2007 INCLUDING 2008 INTERIM SPECIFICATIONS AND THE ODOT BRIDGE DESIGN MANUAL, 2007, AND THE REQUIREMENTS LISTED BELOW:

1. THE DESIGN SHALL MEET ALL PLAN REQUIREMENTS.
2. THE HEIGHT OF THE WALL FOR DESIGN PURPOSES SHALL BE MEASURED FROM THE TOP OF THE LEVELING PAD FOR MSE WALL WITH PRECAST CONCRETE FACING PANELS AND FROM THE TOP OF FOOTER FOR THE WIRE FACED MSE WALL WITH CAST-IN-PLACE CONCRETE MURAL TO THE WORKING POINT.
3. THE WALL SYSTEM SHALL ACCOMMODATE UP TO 1 PERCENT DIFFERENTIAL SETTLEMENT IN THE LONGITUDINAL DIRECTION.
4. THE MINIMUM SURCHARGE TO BE APPLIED IS TWO FEET OF SOIL.

MSE WALL FOUNDATION DATA:

THE MSE WALL, AS DESIGNED, PRODUCES A MAXIMUM SERVICE LOAD PRESSURE OF 4.8 KIPS PER SQUARE FOOT AND A MAXIMUM STRENGTH LOAD PRESSURE OF 6.9 KIPS PER SQUARE FOOT. THE FACTORED BEARING RESISTANCE IS 4.6 KIPS PER SQUARE FOOT.

SETTLEMENT PLATFORMS SHALL BE INSTALLED AT STATION 36+00, 15 FEET RIGHT AND STATION 37+60, 20 FEET LEFT, AT THE BASE OF THE DRAINAGE LAYER. STAGED CONSTRUCTION SHALL BE EMPLOYED BY CONSTRUCTING THE WALL IN 10 FOOT SECTIONS. CONSTRUCTION OF THE NEXT 10 FOOT SECTION CAN BEGIN WHEN IT IS ESTIMATED THAT 90 PERCENT OF THE SETTLEMENT HAS OCCURED.

EMBANKMENT SETTLEMENT:

THE CAST-IN-PLACE CONCRETE FACING ON THE WIRE FACED MSE WALLS SHALL NOT BE PLACED UNTIL AFTER ALL APPRECIABLE SETTLEMENT HAS OCCURED AS DETERMINED FROM SETTLEMENT PLATFORM DATA. SEE ITEM SPECIAL- SETTLEMENT PLATFORM GENERAL NOTE SHEET 21 OF 778. THE PREDICTED SETTLEMENT IS 6 INCHES. THE PREDICTED TIME TO 90% SETTLEMENT IS 1 MONTHS.

PILE DRIVING CONSTRAINTS:

PRIOR TO DRIVING ABUTMENT PILES TO ULTIMATE BEARING VALUE (UBV) OR TO REFUSAL ON BEDROCK, CONSTRUCT THE MSE WALL AND THE BRIDGE APPROACH EMBANKMENT FOR A MINIMUM DISTANCE OF 200' BEHIND THE FORWARD ABUTMENT. THE CONTRACTOR MAY PRE-DRIVE ABUTMENT PILES BEFORE CONSTRUCTING MSE WALLS. PRE-DRIVING CONSISTS OF INSTALLING THE ABUTMENT PILES INTO THE SOIL ONLY AS FAR AS NECESSARY SO THAT THE PILE WILL REMAIN VERTICAL DURING MSE WALL CONSTRUCTION. IF PRE-DRIVING PILES, INSTALL PILE SLEEVES BEFORE CONSTRUCTING THE MSE WALL. AT LEAST THREE FEET OF PILE MUST EXTEND ABOVE THE TOP OF THE PILE SLEEVE TO MEET THE REQUIREMENTS OF CMS 507.09 REGARDING SPLICES. DO NOT DRIVE ABUTMENT PILES TO THE UBV OR TO REFUSAL ON BEDROCK UNTIL AFTER THE ABOVE REQUIRED MSE WALL AND EMBANKMENT HAVE BEEN CONSTRUCTED AND A 92 CALENDAR DAY WAITING PERIOD HAS ELAPSED. THE ENGINEER MAY ADJUST THE LENGTH OF THE WAITING PERIOD BASED ON SETTLEMENT PLATFORM READINGS. AFTER THE SPECIFIED WAITING PERIOD HAS ELAPSED, RE-DRIVE ABUTMENT PILES TO THE UBV OR TO REFUSAL ON BEDROCK. IN ORDER TO REMOVE ANY NEGATIVE SKIN FRICTION THAT HAS DEVELOPED DURING THE WAITING PERIOD, DRIVE EACH ABUTMENT PILE A DISTANCE OF AT LEAST 0.5 INCH.

IF NOT PRE-DRIVING ABUTMENT PILES, INSTALL THE ABUTMENT PILES THROUGH PILE SLEEVES AFTER THE ABOVE REQUIRED MSE WALL AND EMBANKMENT HAVE BEEN CONSTRUCTED AND THE SPECIFIED WAITING PERIOD HAS ELAPSED.

WALL FINISHING CONSTRAINTS:

DO NOT INSTALL COPINGS OR SLEEPER SLABS AND PARAPETS ON TOP OF MSE WALLS UNTIL AFTER THE MSE WALL SETTLEMENT REQUIREMENTS HAVE BEEN MET.

ITEM 898 - QC/QA CONCRETE MISC.: SLEEPER SLAB:

CONCRETE SHALL BE IN ACCORDANCE WITH SUPPLEMENTAL SPECIFICATION 898, QC/QA CONCRETE, CLASS QSC2. THE ACCEPTED QUANTITIES SHALL INCLUDE: CONCRETE, JOINT FILLERS AND JOINT SEALERS. THE DEPARTMENT WILL MEASURE SLEEPER SLAB BY THE NUMBER OF CUBIC YARDS. THE DEPARTMENT WILL INITIALLY PAY THE FULL BID PRICE TO THE CONTRACTOR UPON COMPLETING THE WORK. THE DEPARTMENT WILL CALCULATE THE FINAL ADJUSTED PAYMENT ACCORDING TO 898.17 AND INCLUDE SLEEPER SLAB CONCRETE AND PARAPET CONCRETE IN THE SAME LOT TO DETERMINE FINAL PAY FACTORS.

EXPANSION AND CONTRACTION JOINTS:

LOCATE EXPANSION AND CONTRACTION JOINTS AS SHOWN ON SHEET 12/17 .

SAWCUT 1 1/4" DEEP CONTRACTION JOINTS INTO THE PERIMETER OF THE CONCRETE SLEEPER SLAB AND PARAPET STARTING AT THE ELEVATION OF THE PROPOSED PAVEMENT AND ENDING AT THE ELEVATION OF THE TOP OF MSE WALL. PLACE THE SAWCUTS AT 17 FEET CENTERS AS SHOWN IN THE PLAN. USE AN EDGE GUIDE, FENCE, OR JIG TO ENSURE THAT THE CUT JOINT IS STRAIGHT, TRUE AND ALIGNED ON ALL FACES OF THE PARAPET. THE JOINT WIDTH SHALL BE THE WIDTH OF THE SAW BLADE, A NOMINAL WIDTH OF 1/4 INCH. SEAL THE PERIMETER OF THE CONTRACTION JOINT TO A MINIMUM DEPTH OF 1 INCH WITH A POLYURETHANE OR POLYMERIC MATERIAL CONFORMING TO ASTM C920, TYPE S.

EXPANSION JOINTS SHALL BE FORMED IN THE SLEEPER SLAB AND PARAPET USING 1" PREFORMED EXPANSION JOINT FILLER AT THE LOCATIONS MATCHING THE EXPANSION JOINTS IN THE MSE WALL CAST-IN-PLACE COPING AS SHOWN ON SHEET 12/17 . SEAL THE EXPANSION JOINT TO A MINUMUM DEPTH OF 1 INCH WITH A POLYURETHANE OR POLYMERIC MATERIAL CONFORMING TO ASTM C920, TYPE S.

ITEM 511 - CONCRETE MISC.: 9" MIN. CAST-IN-PLACE REINFORCED CONCRETE FACING:

CONCRETE SHALL BE CLASS C CONCRETE IN ACCORDANCE WITH CMS 511 EXCEPT THAT NUMBER 8 AGGREGATE SHALL BE USED. CONCRETE DEFECTS SHALL BE REPAIRED WITH MORTAR AND FINS AND OTHER IRREGULAR SURFACES SHALL BE REMOVED. A RUBBED FINISH SHALL BE USED TO PROVIDE A UNIFORM SURFACE FINISH. THE SURFACE FINISH FOR THE RAISED RELIEF MURAL SHALL BE IN ACCORDANCE WITH CMS 511.18. REINFORCING STEEL SHALL BE EPOXY COATED IN ACCORDANCE WITH CMS 509.

THE ACCEPTED QUANTITIES SHALL INCLUDE: CONCRETE AND REINFORCING STEEL. THE DEPARTMENT WILL MEASURE BY THE NUMBER OF SQUARE FEET.

PAYMENT FOR ALL LABOR, EQUIPMENT AND MATERIALS SHALL BE INCLUDED IN THE SQUARE FOOT CONTRACT PRICE FOR ITEM 511, CONCRETE MISC.: 9" MIN. CAST-IN-PLACE REINFORCED CONCRETE FACING, UNLESS SEPARATELY ITEMIZED IN THE PLAN.

ITEM 512 - SEALING OF CONCRETE SURFACES, AS PER PLAN, (PERMANENT GRAFFITI PROTECTION):

APPLY A PERMANENT GRAFFITI COATING QUALIFIED ACCORDING TO SUPPLEMENT 1083 THAT IS COMPATIBLE WITH THE CONCRETE SEALER OVER WHICH IT IS APPLIED. APPLY THE GRAFFITI COATING IN ACCORDANCE WITH THE MANUFACTURER'S PRINTED INSTRUCTIONS.

THE CONCRETE DECK SHALL BE PLACED BEFORE THE MSE WALL PANELS, CAST-IN-PLACE REINFORCED CONCRETE FACING AND COPING AT THE FORWARD ABUTMENT ARE SEALED TO ENSURE THE SEALED SURFACES ARE NOT STAINED BY THE WEATHERING STEEL RUST. ANY STAINING ON THE SEALED SURFACES SHALL BE REPLACED TO THE SATISFACTION OF THE ENGINEER.

ITEM 517 - RAILING, MISC.: CONCRETE PARAPET WITH STEEL TUBE RAILS

THIS ITEM SHALL INCLUDE THE FURNISHING OF ALL MATERIALS, EQUIPMENT AND LABOR NECESSARY TO CONSTRUCT THE RAILING AS SHOWN IN THE PLANS AND AS SPECIFIED HEREIN. SEE SHEET 13/17 FOR CONCRETE PARAPET DETAILS. SEE SHEETS 402 AND 403 OF 788 FOR STEEL TUBE RAILS DETAILS.

TUBE SPLICES ARE TO BE LOCATED SO THAT EACH TUBE SEGMENT SHALL BE CONNECTED TO NOT LESS THAN TWO POSTS.

FOR RAILING ON CURVATURES OF 3° OR MORE, SHAPED STRUCTURAL TUBING MAY BE FURNISHED STRAIGHT AND FORCED INTO POSITION IN THE FIELD AND THE TUBE SEGMENTS ARE TO BE ATTACHED TO NO MORE THAN 3 POSTS.

LIGHT POLE PILASTERS SHALL BE INCLUDED UNDER THIS ITEM FOR PAYMENT. SEE SHEET 13/17 FOR LIGHT POLE PILASTER DETAILS.

MATERIAL: FURNISH SHAPED STRUCTURAL TUBING ACCORDING TO 707.10 (ASTM A500, GRADE B), EPOXY COATED REINFORCING STEEL ACCORDING TO 709.00 AND STEEL FOR PLATES ACCORDING TO 711.01.

CONCRETE FOR CONCRETE PARAPET SHALL BE IN ACCORDANCE WITH SUPPLEMENTAL SPECIFICATION 898, QC/QA CONCRETE, CLASS QSC2 AND THE OPTION OF SLIP FORM CONSTRUCTION OF THE PARAPET PER 898.13 AND 511.11 SHALL NOT BE PERMITTED. THE ACCEPTED QUANTITIES SHALL INCLUDE: CONCRETE, REINFORCING STEEL, JOINT FILLERS AND JOINT SEALERS. THE DEPARTMENT WILL INITIALLY PAY THE FULL BID PRICE TO THE CONTRACTOR UPON COMPLETING THE WORK. THE DEPARTMENT WILL CALCULATE THE FINAL ADJUSTED PAYMENT ACCORDING TO 898.17 AND INCLUDE SLEEPER SLAB CONCRETE AND PARAPET CONCRETE IN THE SAME LOT TO DETERMINE FINAL PAY FACTORS.

FASTENERS: FURNISH FASTENERS AS FOLLOWS:

ANCHOR BOLTS SHALL BE 7/8" DIAMETER ANCHORS WITH HEX NUTS AND WASHERS, MINUMUM ULTIMATE CONDITION STRENGTH SHALL BE 46.6 KIPS, WITH A MINIMUM 9" EMBEDMENT LENGTH. ANCHOR BOLTS SHALL BE IN ACCORDANCE WITH ASTM F1554, GRADE 105, TYPE 2A, WITH SUPPLEMENTARY REQUIREMENT S3 FOR PERMANENT GRADE IDENTIFICATION AND SUPPLEMENTARY REQUIREMENT S5 FOR CHARPY IMPACT TESTING. NUTS AND WASHERS SHALL BE AS RECOMMENDED IN ASTM F1554 FOR GRADE 105. ANCHORS SHALL BE INSTALLED WITH A NON-SHRINK, NON-METALLIC GROUT IN ACCORDANCE WITH 705.20.

ALL OTHER BOLTS, HEX NUTS AND WASHERS SHALL CONFORM TO 711.09 (ASTM A325). THE THREAD LENGTH REQUIREMENTS OF A325 MAY BE WAIVED.

GALVANIZING: GALVANIZE ALL SHAPED STRUCTURAL STEEL TUBES, PLATES, HARDWARE AND ACCESSORIES IN ACCORDANCE WITH 711.02. ROUND ALL EXPOSED STRUCTURAL STEEL TUBING ENDS AND PLATE EDGES PRIOR TO GALVANIZING.

METHOD OF MEASUREMENT: THE DEPARTMENT WILL MEASURE THE QUANTITY BY THE NUMBER OF FEET. THE DEPARTMENT WILL MEASURE THE LENGTH OF RAILING BETWEEN THE ENDS OF THE CONCRETE PARAPET.

PAYMENT FOR ALL LABOR, EQUIPMENT AND MATERIALS SHALL BE INCLUDED IN THE FOOT CONTRACT PRICE FOR ITEM 517, RAILING MISC.: CONCRETE PARAPET WITH STEEL TUBE RAILS, UNLESS SEPARATELY ITEMIZED IN THE PLAN.

DESIGN AGENCY
URS
36 EAST 7TH STREET
SUITE 2300
CINCINNATI, OHIO 45202

DESIGNED	DRAWN	REVIEWED	DATE
BKL	AJB	RWB	02-21-2011
CHECKED	REVISED	STRUCTURE FILE NUMBER	
MJZ		4401263	

MSE WALL - GENERAL NOTES (1 OF 2)

BRIDGE NO. LAW-93-0000
IRONTON RUSSEL BRIDGE OVER OHIO RIVER

LAW-93-0.00
PID No. 81595

J:\Project\O\ODOT\15005112 Ironton Russell\LAW\81595\structures\LAW093_1111C\sheets\MSE Wall Plans\81595_001WN001.dgn - 12/20/2011 9:08:11 AM - jon_wanstrath

UTILITY LINES

LISTED BELOW ARE ALL UTILITIES LOCATED WITHIN THE PROJECT CONSTRUCTION LIMITS TOGETHER WITH THEIR RESPECTIVE OWNERS:

OHIO UTILITY OWNERS	
GAS	COLUMBIA GAS OF OHIO ATTN: Mr. Gary Sullivan P.O. Box 14241 Lexington, KY 40512 (859) 288-0225
WATER	CITY OF IRONTON ATTN: MR. MARK WHITE P.O. BOX 704 IRONTON, OH 45638-0704 (740) 532-3412
ELECTRIC	AMERICAN ELECTRIC POWER (AEP) ATTN: MR. PAUL PAXTON 850 TECH CENTER DRIVE GAHANNA, OH 43230 (614) 883-6831
CABLE	TIME WARNER CABLE ATTN: MR. ROD FROST 225 RUSSELL ROAD ASHLAND, KY 41101 (606) 326-6803
TELEPHONE	AT&T OHIO ATTN: MS. SANDI RANDOLPH 3935 NORTHPOINTE DRIVE ZANESVILLE, OH 43701 (740) 454-3455
SANITARY	CITY OF IRONTON ATTN: MR. JOHN HASKINS P.O. BOX 704 IRONTON, OH 45638-0704 (740) 532-0198

KENTUCKY UTILITY OWNERS	
GAS	COLUMBIA GAS OF KENTUCKY ATTN: MR. RUSS RYAN 121 9TH STREET ASHLAND, KY 41101 (606) 324-7155
WATER	CITY OF RUSSELL ATTN: PAUL MOORE P.O. BOX 394 RUSSELL, KY 41169-0394 (606) 836-9666
ELECTRIC	KENTUCKY POWER COMPANY ATTN: MR. DON CANFIELD 1701 CENTRAL AVENUE ASHLAND, KY 41101 (606) 327-1476
CABLE	ADELPHIA ATTN: MR. DENNIS MEADOWS 225 RUSSELL ROAD ASHLAND, KY 41101 (606) 329-6255
TELEPHONE	WINDSTREAM KENTUCKY EAST, LLC ATTN: MR. RALPH BROWN 619 15TH STREET ASHLAND, KY 41101 (606) 329-6255
SANITARY	GREENUP CO. ENVIRONMENTAL COMMISSION ATTN: MR. RALPH LARGE P.O. BOX 471 RUSSELL, KY 41169-0471 (606) 836-4600

THE UTILITIES SHALL BEAR ALL THE EXPENSE INVOLVED IN RELOCATING THE AFFECTED UTILITY LINES. THE CONTRACTOR AND UTILITIES ARE TO COOPERATE BY ARRANGING THEIR WORK IN SUCH A MANNER THAT INCONVENIENCE TO EITHER WILL BE HELD TO A MINIMUM.

ITEM 203 EMBANKMENT, AS PER PLAN

PLACE AND COMPACT ENBANKMENT MATERIAL IN 6 INCH LIFTS FOR THE CONSTRUCTION OF THE APPROACH EMBANKMENT.

ITEM 840 - MECHANICALLY STABILIZING EARTH WALL, AS PER PLAN, (WIRE FACED):

1.0 GENERAL

THIS WORK CONSISTS OF DESIGNING THE INTERNAL STABILITY OF THE WALL; PREPARING SHOP DRAWINGS; AND FABRICATING AND CONSTRUCTING THE WIRE FACED MSE WALLS.

ALL THE MSE WALL DESIGN, FABRICATION, ERECTION AND CONSTRUCTION SHALL BE PER THE ODOT SUPPLEMENTAL SPECIFICATION 840 "MECHANICALLY STABILIZED EARTH WALL" EXCEPT AS MODIFIED IN THE FOLLOWING NOTES AND AS SHOWN ON THESE DRAWINGS.

THE CAST-IN-PLACE REINFORCED CONCRETE FACING INCLUDING THE CIP FOOTING SHALL BE PAID FOR SEPERATELY PER ITEM 511-CONCRETE, MISC.: 9" MIN. CAST-IN-PLACE REINFORCED CONCRETE FACING, AS PER PLAN.

THE RAISED RELIEF FORMS AND THEIR INSTALLATION FOR THE WALL SHALL BE PAID FOR SEPARATELY PER ITEM 511 - CONCRETE, MISC.: RAISED RELIEF IMAGES ON STRUCTURES - APPROACH RETAINING WALL.

2.0 MATERIALS

THE MATERIALS SHALL BE PER 840.03 EXCEPT THAT THE WIRE FACING AND SOIL RETENTION FABRIC SHALL BE PROVIDED INSTEAD OF PRECAST CONCRETE FABRIC PANELS.

2.1 WIRE FACING

THE WIRE FACING SHALL BE WELDED WIRE FABRIC CMS 709.10. THE DESIGN SHALL PROVIDE POSITIVE ANCHORAGE OF THE CAST-IN-PLACE REINFORCED CONCRETE FACING TO THE SOIL REINFORCEMENT.

2.2 SOIL RETENTION FABRIC

THE INSIDE OF THE WIRE FACED MSE WALL SHALL HAVE RETENTION OR FILTER FABRIC PLACED WITHIN THE REINFORCED FILL AS SHOWN IN THE PLANS. RETENTION FABRIC SHALL BE A WOVEN POLYPROPYLENE FABRIC.

3.0 METHOD OF MEASUREMENT

THE METHOD OF MEASUREMENT SHALL BE PER 840.08 EXCEPT AS MODIFIED BELOW.

THE DEPARTMENT WILL MEASURE THE WIRE FACED MSE WALLS BY THE NUMBER OF SQUARE FEET. THE DEPARTMENT WILL DETERMINE THE AREA OF THE WALL SYSTEM FROM PLAN DIMENSIONS USING A LENGTH MEASURED ALONG THE OUTSIDE OF THE WIRE FACING AND A HEIGHT FROM THE BOTTOM OF THE WIRE FACING UNIT TO THE WORKING POINT LINE. THE DEPARTMENT WILL NOT ADJUST PAY QUANTITIES TO ACCOUNT FOR VARIATIONS IN THE BOTTOM OF THE WIRE FACING ELEVATIONS REQUIRED TO ACCOMMODATE PLACEMENT OF THE WIRE FACING.

4.0 BASIS OF PAYMENT

THE BASIS OF PAYMENT SHALL BE PER 840.09 EXCEPT AS MODIFIED BELOW.

PAYMENT FOR MSE WALL INCLUDES WIRE FACING, SOIL RETENTION FABRIC, SOIL REINFORCEMENT, CONNECTION DEVICES, BEARING PADS, JOINT COVERING, PILE SLEEVES, LEVELING PADS, AND OTHER ITEMS WHICH DO NOT HAVE SEPARATE PAY ITEMS BUT ARE NECESSARY TO COMPLETE THE MSE WALL.

ITEM	UNIT	DESCRIPTION
840	SQUARE FOOT	MECHANICALLY STABILIZED EARTH WALL, AS PER PLAN, (WIRE FACED).

MSE WALL LIGHT POLE LOCATION	
STATION	OFFSET
36+78.50	25.02' RT
37+55.41	27.92' RT
38+23.41	29.92' RT
38+91.41	29.92' RT
39+72.41	29.92' RT
40+39.41 BK	29.92' RT
40+45.00 AH	29.92' RT

SETTLEMENT PLATFORMS

TWO SETTLEMENT PLATFORMS ARE TO BE PROVIDED. SEE SHEET 21 OF 788 FOR SPECIAL NOTE AND LOCATION OF THE PLATFORMS.

J:\Project\ODOT\15005112 Ironton Russell\LAW\81595\structures\LAW093_1111C\sheets\MSE Wall Plans\81595_001WN002.dgn - 1/5/2012 2:40:06 PM - jon_wanstrath

DESIGN AGENCY
URS
36 EAST 7TH STREET
SUITE 2300
CINCINNATI, OHIO 45202

DESIGNED	DRAWN	REVIEWED	DATE
BKL	AJB	RWB	02-21-2011
CHECKED	REVISED	STRUCTURE FILE NUMBER	
MJZ		4401263	

MSE WALL - GENERAL NOTES (2 OF 2)
BRIDGE NO. LAW-93-0000
IRONTON RUSSEL BRIDGE OVER OHIO RIVER

LAW-93-0.00
PID No. 81595

ESTIMATED QUANTITIES (RETAINING WALLS)

CALCULATED BKL DATED 5/10
CHECKED JGC DATED 6/10

ITEM	ITEM EXT.	FUNDING		TOTAL	UNIT	DESCRIPTION	RETAINING WALL 1	RETAINING WALL 2	GENERAL	SEE SHEET
		MAJOR BRIDGE	T.E.+							
203	35110	465		465	CU YD	GRANULAR MATERIAL, TYPE B		465		
203	35120	420		420	CU YD	GRANULAR MATERIAL, TYPE C	315	105		
203	20001	351		351	CU YD	EMBANKMENT, AS PER PLAN		351		
503	11100	LUMP		LUMP		COFFERDAMS, CRIBS AND SHEETING			LUMP	
507	98000	319		319	FT	PILING, MISC.: 18" DIAMETER SLEEVES	319			
509	10000	31183		31183	POUND	EPOXY COATED REINFORCING STEEL	31183			
511	71200		2549	2549	SQ FT	CONCRETE, MISC.: RAISED RELIEF IMAGES ON STRUCTURES - APPROACH RETAINING WALL (SEE SPECIAL PROVISION)	2549			
511	71200	3385		3385	SQ FT	CONCRETE, MISC.: 9" MIN. CAST-IN-PLACE REINFORCED CONCRETE FACING	3385			2/17
512	10100	347		347	SQ YD	SEALING OF CONCRETE SURFACES (EPOXY-URETHANE)*	1055	136 △3		
512	10001	924		924	SQ YD	SEALING OF CONCRETE SURFACES, AS PER PLAN (PERMANENT GRAFFITI PROTECTION)	708			2/17
517	76300	543		543	FOOT	RAILING, MISC.: CONCRETE PARAPET WITH STEEL TUBE RAILS	543			2/17
SPECIAL	53000400	2		2	EACH	STRUCTURE MISC.: BRIDGE COMMEMORATIVE PLAQUE (SEE SPECIAL PROVISIONS)			2	
840	20000	5193		5193	SQ FT	MECHANICALLY STABILIZED EARTH WALL	3777	1416		
840	20001	3633		3633	SQ FT	MECHANICALLY STABILIZED EARTH WALL, AS PER PLAN, (WIRE FACED)	3633			3/17
840	21000	2268		2268	CU YD	WALL EXCAVATION	1587	681		
840	22000	1260		1260	SQ YD	FOUNDATION PREPARATION	945	315		
840	23000	4592		4592	CU YD	SELECT GRANULAR BACKFILL	3024	1568		
840	23050	23		23	CU YD	NATURAL SOIL		23		
840	25010	1171 △1	△1	1171	FOOT	6" DRAINAGE PIPE, PERFORATED	983 △1	188		
840	25020	12		12	FOOT	6" DRAINAGE PIPE, NON-PERFORATED	12			
840	26000	610 △1	△1	610	FOOT	CONCRETE COPING	514 △1	96		
840	27000	5		5	DAY	ON SITE ASSISTANCE			5	
△2 ~~840~~	~~28000~~	~~LUMP~~		~~LUMP~~		~~SGB INSPECTION AND COMPACTION TESTING~~			~~LUMP~~	
898	98000	280		280	CU YD	QA/QC CONCRETE MISC.: SLEEPER SLAB	280			

* LIGHT NEUTRAL (FEDERAL COLOR 17778)

+ T.E. = TRANSPORTATION ENHANCEMENT

NO.	REVISIONS	DATE	REV. BY
1	PAY ITEM QUANTITIES REVISED	12/11	BKL
2	PAY ITEM QUANTITY REMOVED	1/12	BKL
3	PAY ITEM QUANTITIES REVISED	12/14	CRK

DESIGN AGENCY
URS
36 EAST 7TH STREET
SUITE 2300
CINCINNATI, OHIO 45202

DESIGNED BKL | CHECKED MJZ
DRAWN AJB | REVISED
REVIEWED RWB | DATE 02-21-2011
STRUCTURE FILE NUMBER 4401263

MSE WALL - ESTIMATED QUANTITIES
BRIDGE NO. LAW-93-0000
IRONTON RUSSELL BRIDGE OVER OHIO RIVER

LAW-93-0.00
PID No. 81595

4/17

374/788

J:\Project\O\ODOT\15005112 Ironton Russell\LAW\81595\structures\LAW093_1111C\sheets\MSE Wall Plans\81595_001WQ003.dgn - 12/9/2014 4:16:20 PM - jon_wanstrath

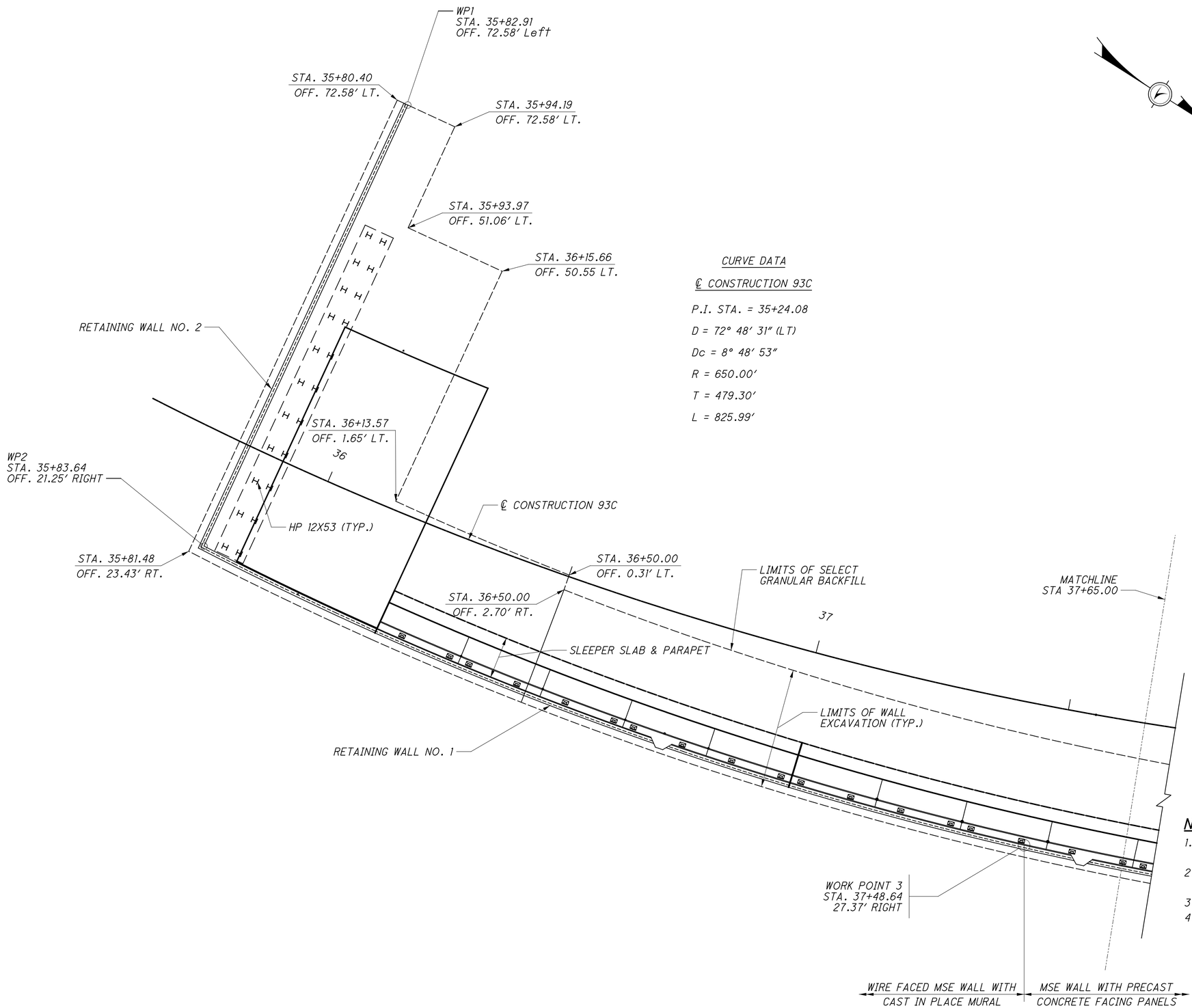

CURVE DATA

℄ CONSTRUCTION 93C

P.I. STA. = 35+24.08

D = 72° 48′ 31″ (LT)

Dc = 8° 48′ 53″

R = 650.00′

T = 479.30′

L = 825.99′

NOTES:

1. *SEE SHEETS 697 & 698 OF 788, FOR LOCATION OF HP 12x53 PILES AT FORWARD ABUTMENT.*
2. *SEE SHEET 12/17 FOR SLEEPER SLAB AND PARAPET DETAILS.*
3. *SEE SHEET 13/17 FOR LIGHT POLE PILASTER DETAILS.*
4. *SEE NOTE 1, SHEET 8/17.*

DESIGN AGENCY
URS
36 EAST 7TH STREET
SUITE 2300
CINCINNATI, OHIO 45202

DESIGNED	DRAWN	REVIEWED	DATE
BKL	TB	RWB	02-21-2011
CHECKED	REVISED	STRUCTURE FILE NUMBER	
MJZ		4401263	

MSE WALL - PLAN (1 OF 3)
BRIDGE NO. LAW-93-0000
IRONTON RUSSEL BRIDGE OVER OHIO RIVER

LAW-93-0.00
PID No. 81595

5 / 17

375
788

J:\Project\O\ODOT\15005112 Ironton Russell\LAW\81595\structures\LAW093_1111C\sheets\MSE Wall Plans\81595_001WP002.dgn - 4/27/2011 8:42:45 AM - jon_wanstrath

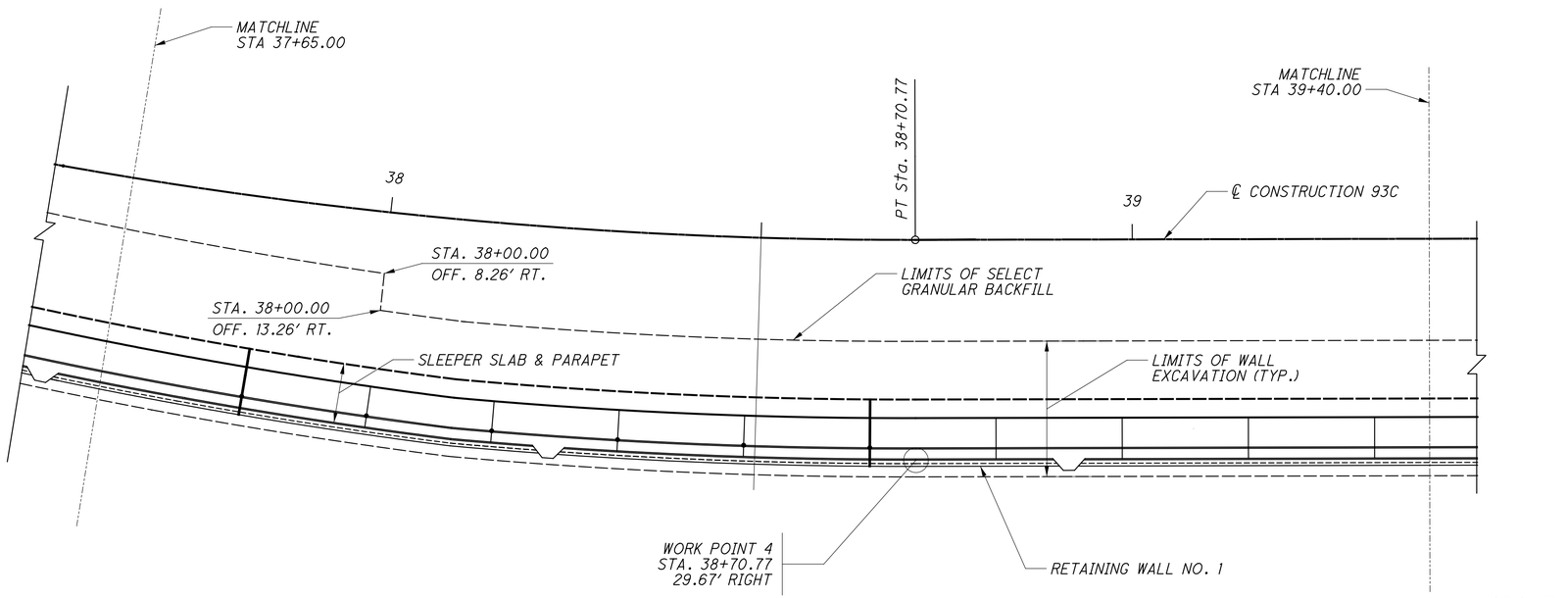

NOTES:

1. SEE SHEET 5/17, FOR NOTES.

DESIGNED BKL	DRAWN TB	REVIEWED RWB	DATE 02-21-2011
CHECKED MJZ	REVISED	STRUCTURE FILE NUMBER 4401263	

DESIGN AGENCY
URS
36 EAST 7TH STREET
SUITE 2300
CINCINNATI, OHIO 45202

MSE WALL - PLAN (2 OF 3)
BRIDGE NO. LAW-93-0000
IRONTON RUSSEL BRIDGE OVER OHIO RIVER

LAW-93-0.00
PID No. 81595

6 / 17

376
788

J:\Project\OA\ODOT\15005112 Ironton Russell\LAW\81595\structures\LAW093_1111C\sheets\MSE Wall Plans\81595_001WP003.dgn - 4/27/2011 8:42:46 AM - jon_wanstrath

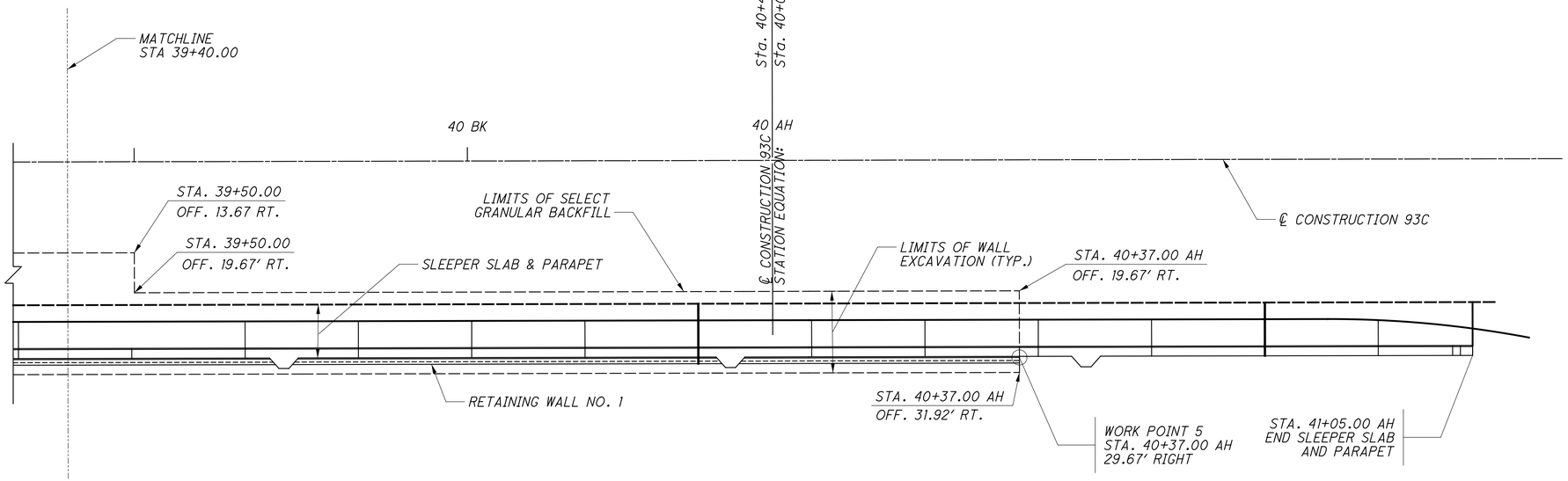

NOTES:

1. SEE SHEET 5/17, FOR NOTES.

DESIGN AGENCY
URS
36 EAST 7TH STREET
SUITE 2300
CINCINNATI, OHIO 45202

DESIGNED	DRAWN	REVIEWED	DATE
BKL	TB	RWB	02-21-2011
CHECKED	REVISED	STRUCTURE FILE NUMBER	
MJZ		4401263	

MSE WALL - PLAN (3 OF 3)
BRIDGE NO. LAW-93-0000
IRONTON RUSSEL BRIDGE OVER OHIO RIVER

LAW-93-0.00
PID No. 81595

7 / 17

377
788

J:\Project\OA\ODOT\15005112 Ironton Russell\LAW\81595\structures\LAW093_1111C\sheets\MSE Wall Plans\81595_001WP004.dgn - 4/27/2011 8:42:47 AM - jon_wanstrath

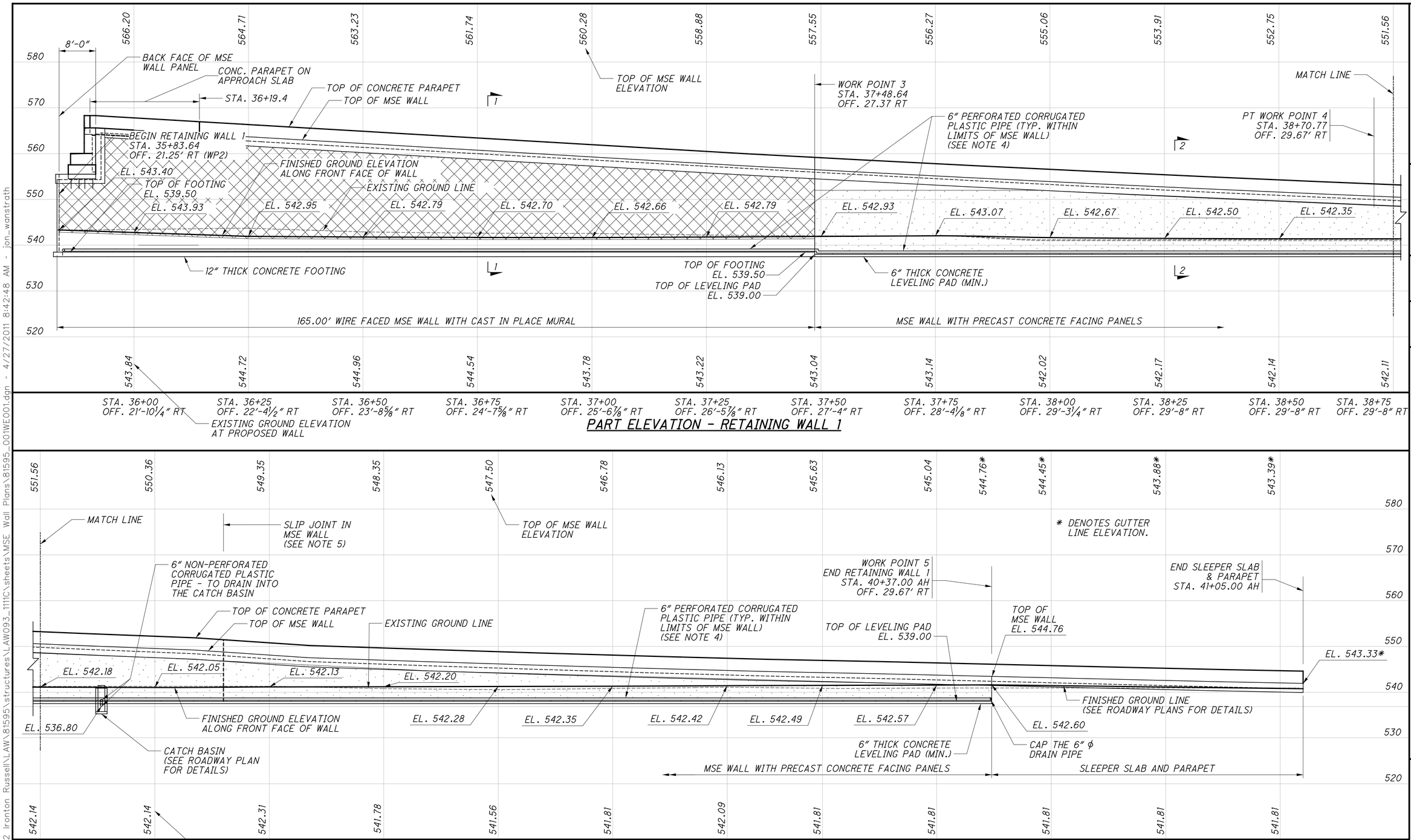

PART ELEVATION - RETAINING WALL 1

PART ELEVATION - RETAINING WALL 1

LEGEND

- INDICATES PRECAST PANEL FACED MSE WALL
- INDICATES WIRE FACED MSE WALL WITH CAST-IN-PLACE CONCRETE MURAL

NOTES

1. ALL STATIONS, OFFSETS & WORKING POINTS ARE REFERENCED TO BACK FACE OF WALL
2. FOR COPING AND CORNER ELEMENT DETAILS, SEE SHEET 9/17.
3. FOR SECTIONS 1-1 & 2-2, SEE SHEET 10/17.
4. SLOPE THE 6" PERFORATED DRAIN PIPE MIN. 1% TO DRAIN INTO THE CATCH BASIN AT STA. 38+88.35.
5. PROVIDE A SLIP JOINT IN MSE WALL AT STA. 39+15.00, ± 20'.

DESIGN AGENCY
URS
36 EAST 7TH STREET
SUITE 2300
CINCINNATI, OHIO 45202

DATE 02-21-2011
REVIEWED RWB
STRUCTURE FILE NUMBER 4401263
DRAWN GJW
REVISED
DESIGNED BKL
CHECKED MJZ

MSE WALL - WALL 1 ELEVATION
BRIDGE NO. LAW-93-0000
IRONTON RUSSEL BRIDGE OVER OHIO RIVER

LAW-93-0.00
PID No. 81595

J:\Project\OVODOT\15005112 Ironton Russell\LAW\81595\structures\LAW093_1111C\sheets\MSE Wall Plans\81595_001WE001.dgn - 4/27/2011 8:42:48 AM - jon_wanstrath

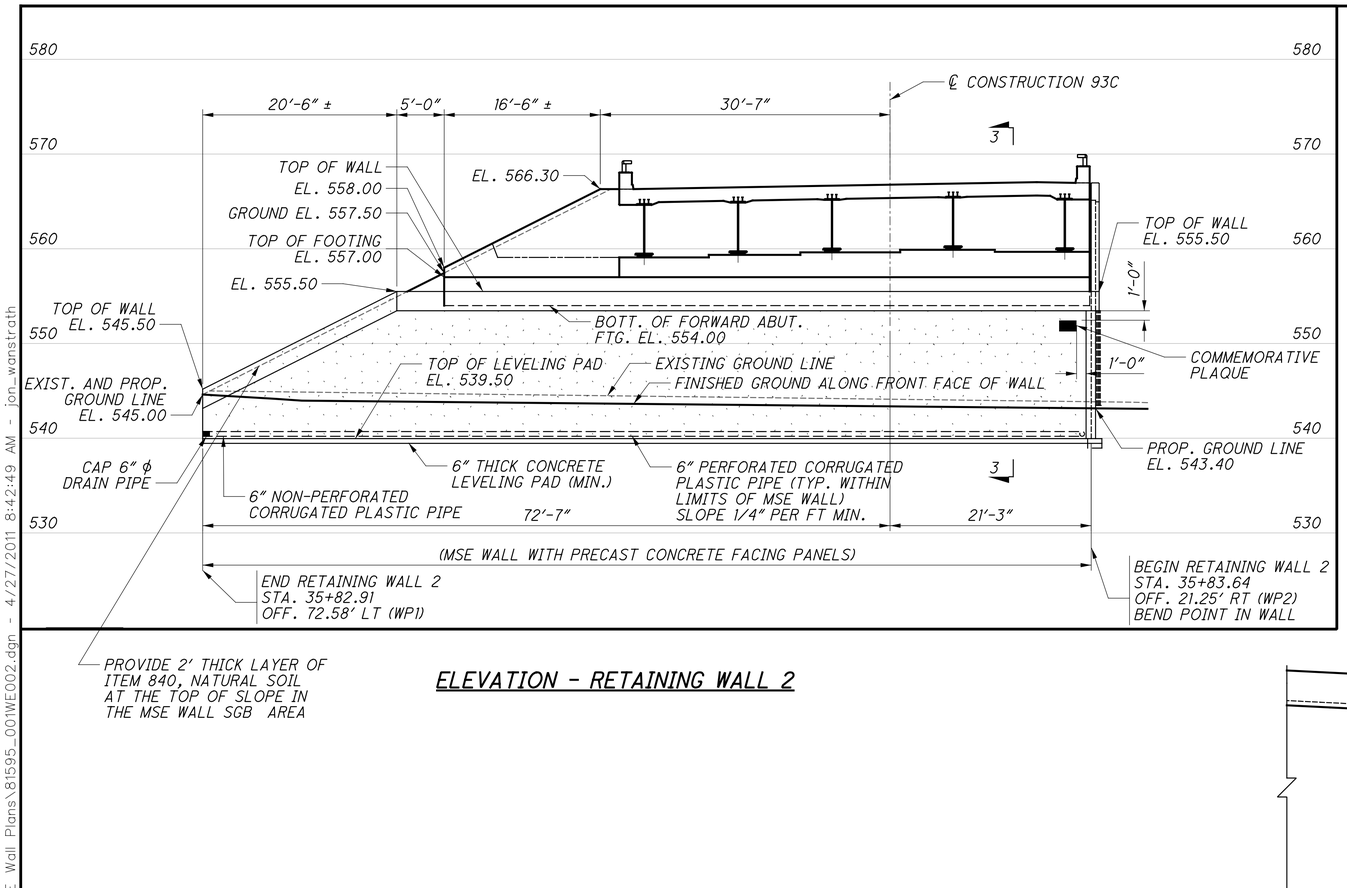

ELEVATION - RETAINING WALL 2

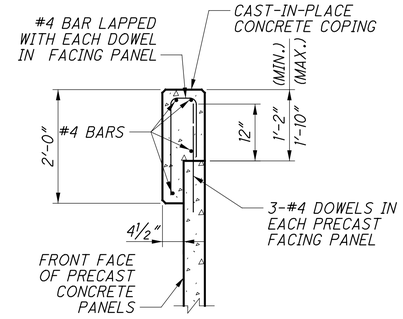

COPING DETAIL

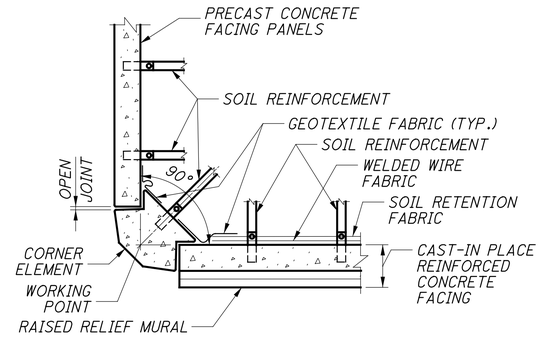

CORNER ELEMENT DETAIL

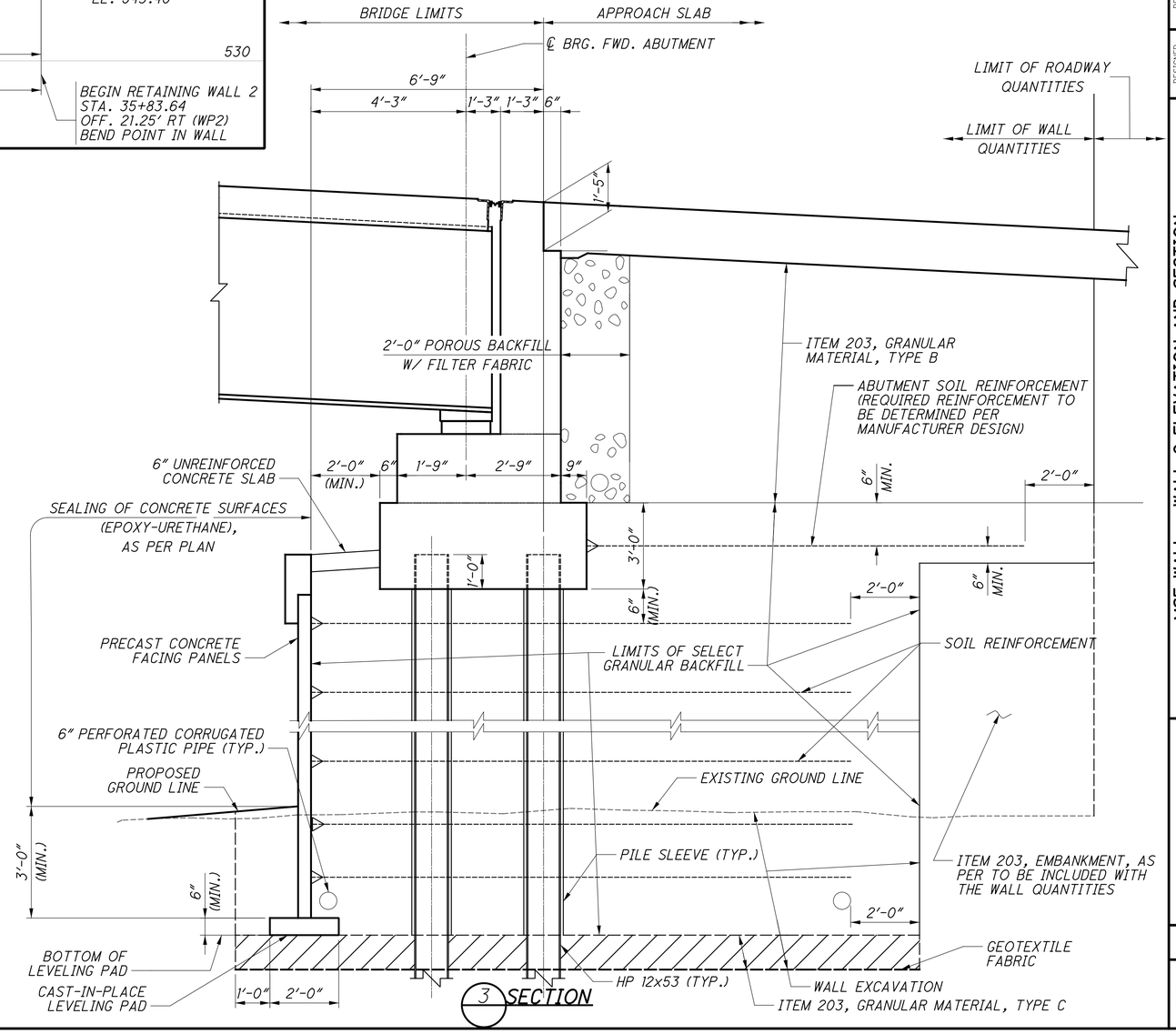

3 SECTION

NOTES

1. ALL STATIONS, OFFSETS & WORKING POINTS ARE REFERENCED TO BACK FACE OF WALL PANELS.
2. FOR DRAINAGE DETAILS, SEE SHEET 10/17 .

DESIGN AGENCY
URS
36 EAST 7TH STREET
SUITE 2300
CINCINNATI, OHIO 45202

DESIGNED	DRAWN	REVIEWED	DATE
BKL	GJW	RWB	02-21-2011
CHECKED	REVISED	STRUCTURE FILE NUMBER	
MJZ		4401263	

MSE WALL - WALL 2 ELEVATION AND SECTION
BRIDGE NO. LAW-93-0000
IRONTON RUSSEL BRIDGE OVER OHIO RIVER

LAW-93-0.00
PID No. 81595

9 / 17

379
788

J:\Project\OVODOT\15005112 Ironton Russell\LAW\81595\structures\LAW093_1111C\sheets\MSE Wall Plans\81595_001WE002.dgn - 4/27/2011 8:42:49 AM - jon_wanstrath

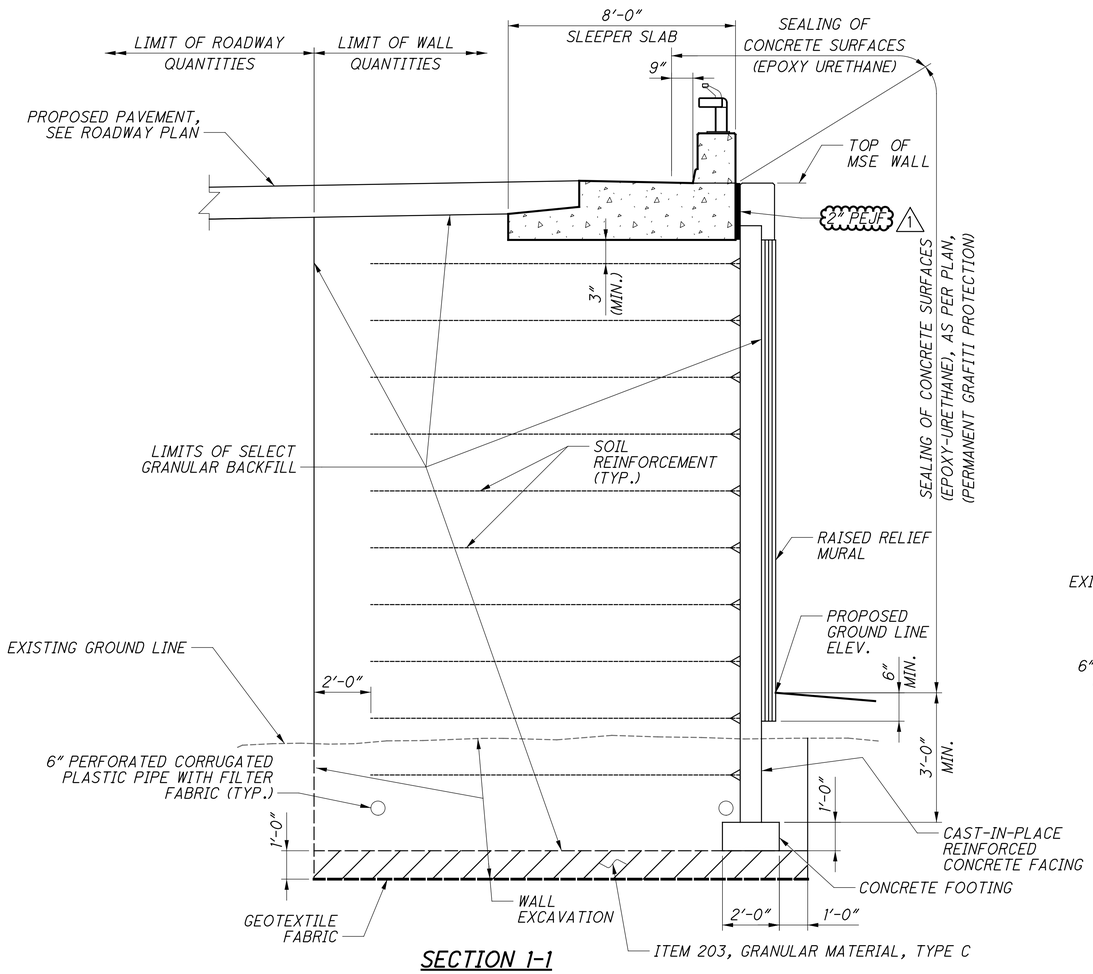

SECTION 1-1

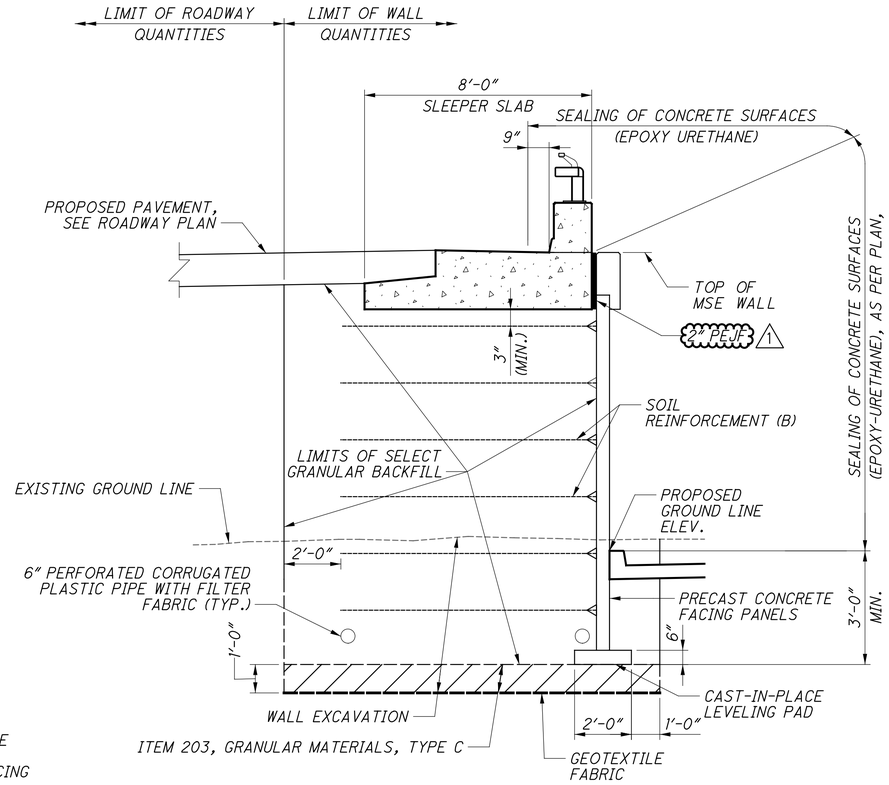

SECTION 2-2

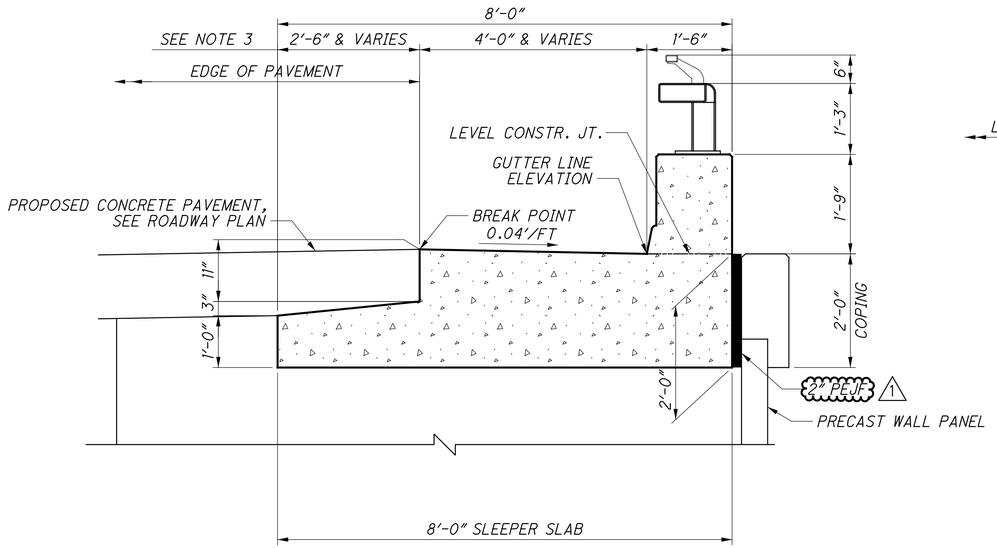

SLEEPER SLAB DETAIL

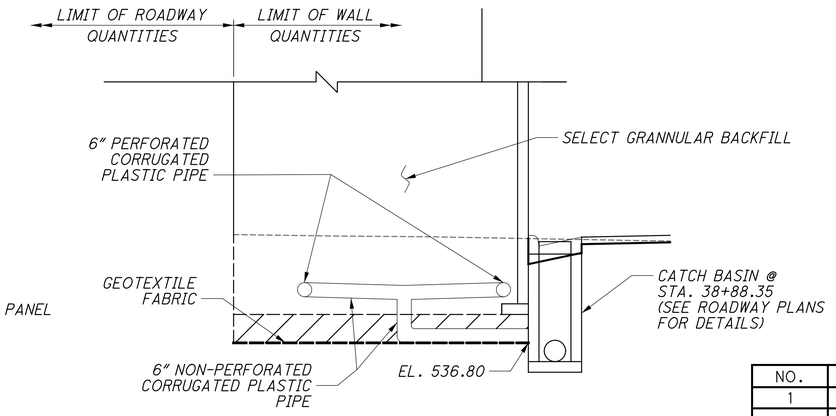

MSE WALL DRAINAGE OUTLET DETAIL

NOTES:
1. SEE SHEET 8/17 FOR LOCATION OF SECTION 1-1, & 2-2.

2. SOIL REINFORCEMENT LENGTH DETERMINED BY WALL SUPPLIER.

NO.	REVISIONS	DATE	REV. BY
1	REVISED CALLOUTS	5/14	CRK

DESIGN AGENCY
URS
36 EAST 7TH STREET
SUITE 2300
CINCINNATI, OHIO 45202

DESIGNED	DRAWN	REVIEWED	DATE
BKL	GJW	RWB	02-21-2011
CHECKED	REVISED	STRUCTURE FILE NUMBER	
MJZ		4401263	

MSE WALL - TYPICAL SECTIONS AND DETAILS
BRIDGE NO. LAW-93-0000
IRONTON RUSSELL BRIDGE OVER OHIO RIVER

LAW-93-0.00
PID No. 81595

10 / 17

380
788

J:\Project\ODOT\15005112 Ironton Russell\LAW\81595\structures\LAW093_1111C\sheets\MSE Wall Plans\81595_001WD001.dgn - 5/1/2014 2:57:40 PM - jon_wanstrath

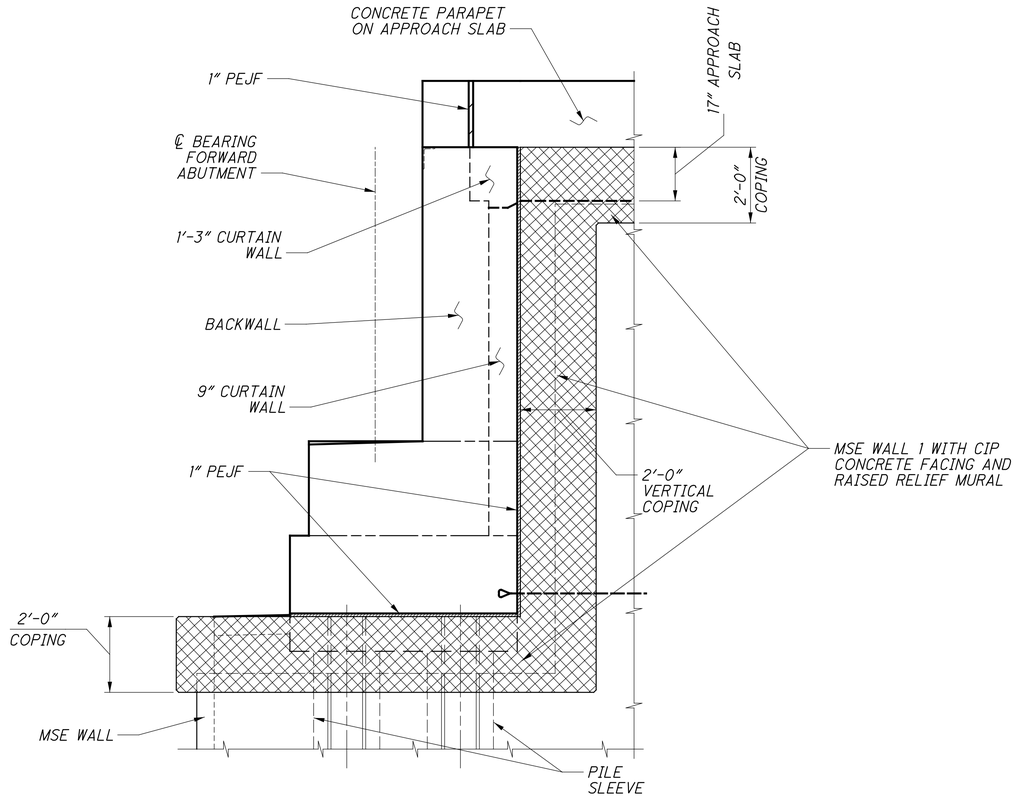

MSE WALL DETAIL AT FORWARD ABUTMENT

J:\Project\OVODOT\15005112 Ironton Russell\LAW\81595\structures\LAW093_1111C\sheets\MSE Wall Plans\81595_001WD004.dgn - 4/27/2011 8:42:52 AM - jon_wanstrath

DESIGN AGENCY
URS
36 EAST 7TH STREET
SUITE 2300
CINCINNATI, OHIO 45202

DESIGNED	DRAWN	REVIEWED	DATE
BKL	AJB	RWB	02-21-2011
CHECKED	REVISED	STRUCTURE FILE NUMBER	
MJZ		4401263	

MSE WALL - DETAILS
BRIDGE NO. LAW-93-0000
IRONTON RUSSEL BRIDGE OVER OHIO RIVER

LAW-93-0.00
PID No. 81595

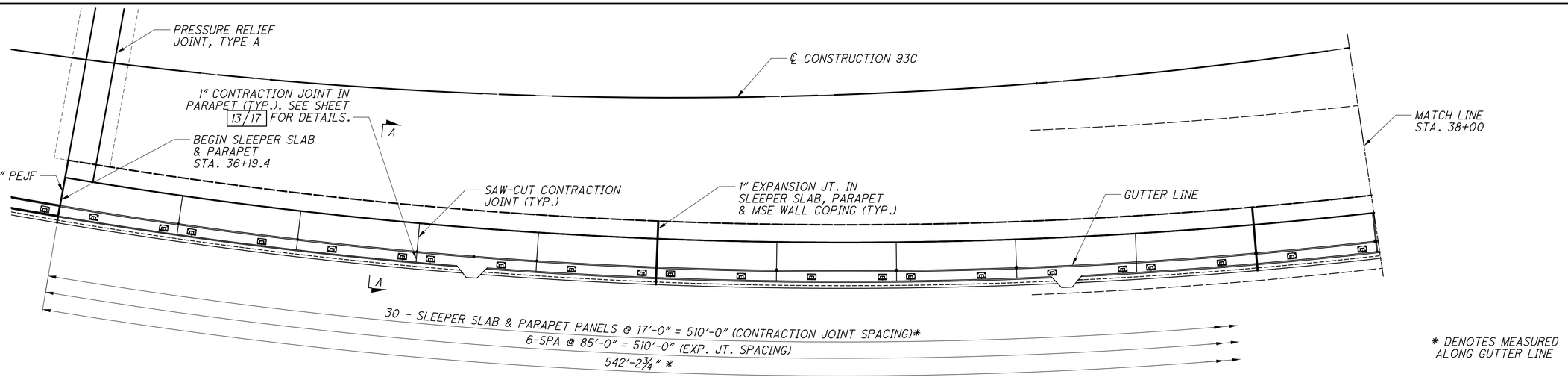

* DENOTES MEASURED ALONG GUTTER LINE

PART PLAN

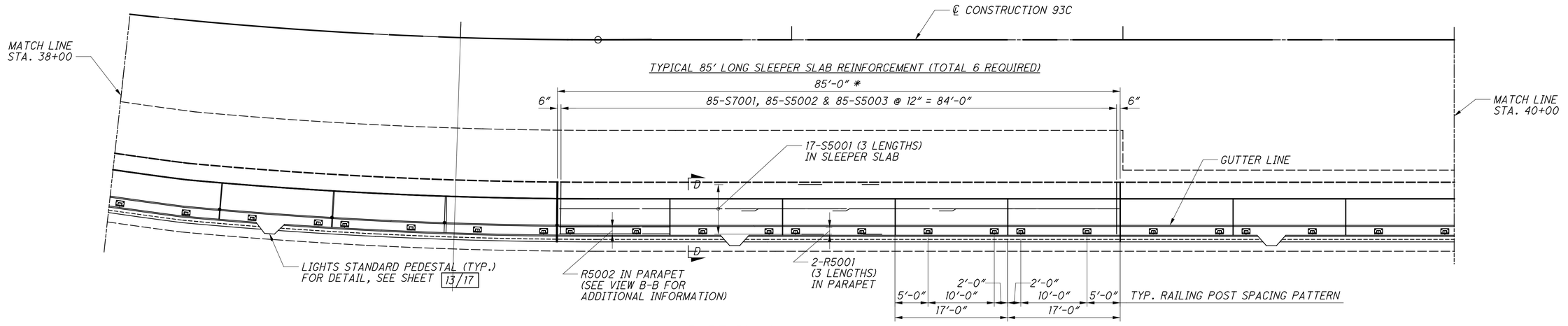

PART PLAN

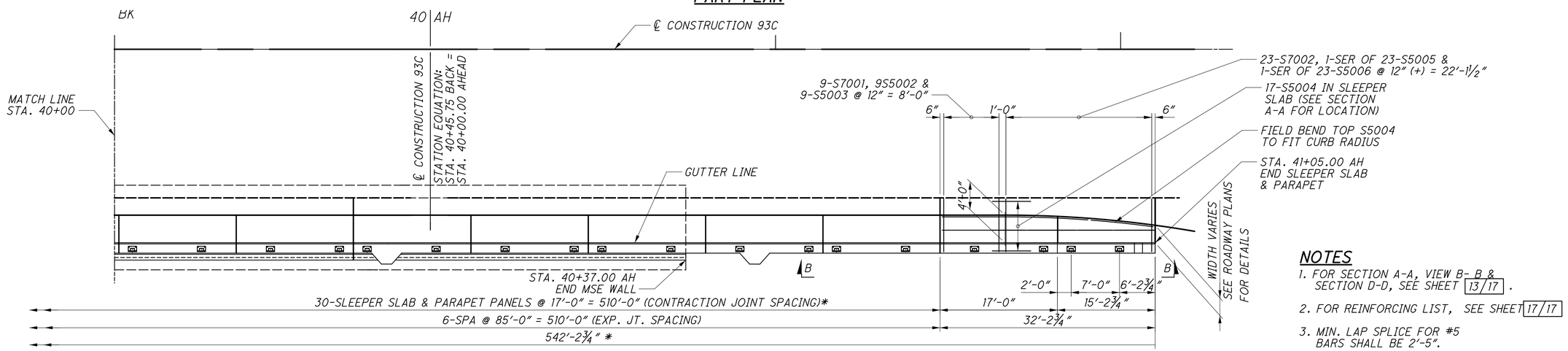

PART PLAN

NOTES

1. FOR SECTION A-A, VIEW B- B & SECTION D-D, SEE SHEET 13/17 .
2. FOR REINFORCING LIST, SEE SHEET 17/17
3. MIN. LAP SPLICE FOR #5 BARS SHALL BE 2'-5".

DESIGN AGENCY
URS
36 EAST 7TH STREET
SUITE 2300
CINCINNATI, OHIO 45202

DESIGNED	DRAWN	REVIEWED	DATE
BKL	CJW	RWB	02-21-2011
CHECKED	REVISED	STRUCTURE FILE NUMBER	
MJZ	NBH	4401263	

MSE WALL - SLEEPER SLAB & PARAPET DETAILS
BRIDGE NO. LAW-93-0000
IRONTON RUSSEL BRIDGE OVER OHIO RIVER

LAW-93-0.00
PID No. 81595

12 / 17

382
788

J:\Project\OhDOT\15005112 Ironton Russell\LAW\81595\structures\LAW093_1111C\sheets\MSE Wall Plans\81595_001WP005.dgn - 4/27/2011 8:42:53 AM - jon_wanstrath

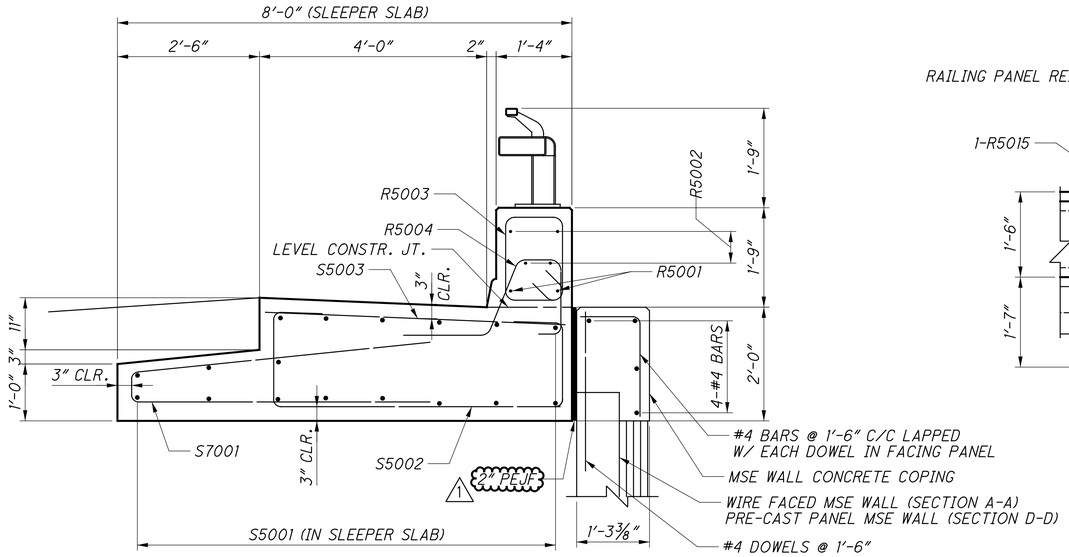

SECTION A-A

(SECTION D-D SIMILAR EXCEPT AS NOTED)

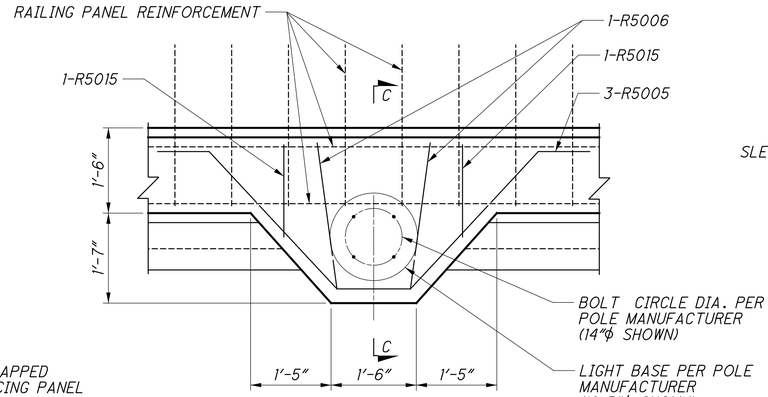

PLAN - LIGHT POLE PILASTER

(7-REQUIRED)

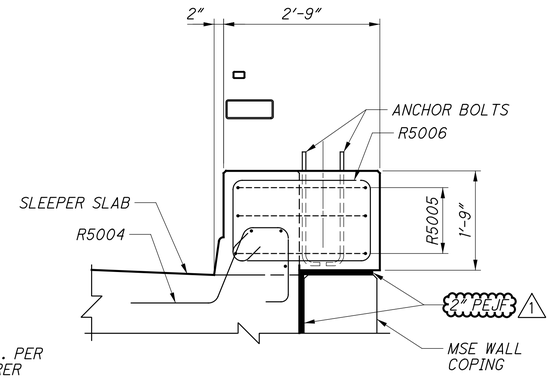

SECTION C-C

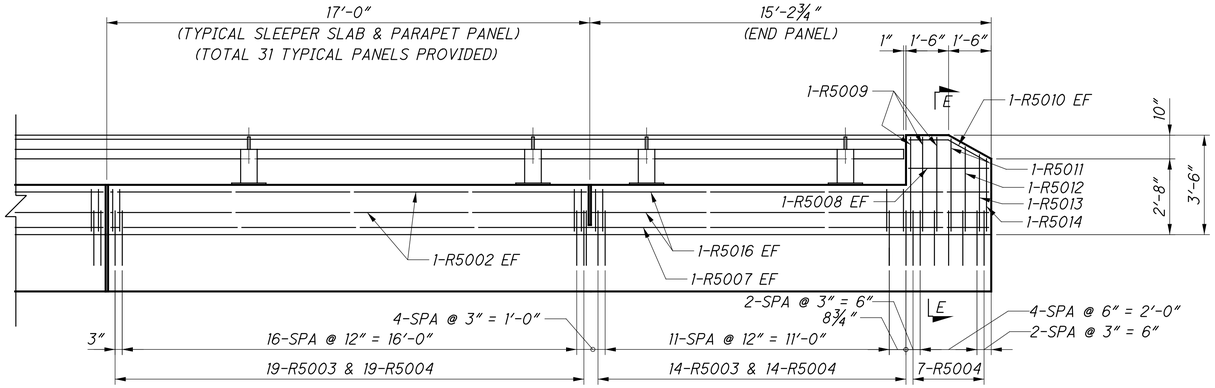

VIEW B-B

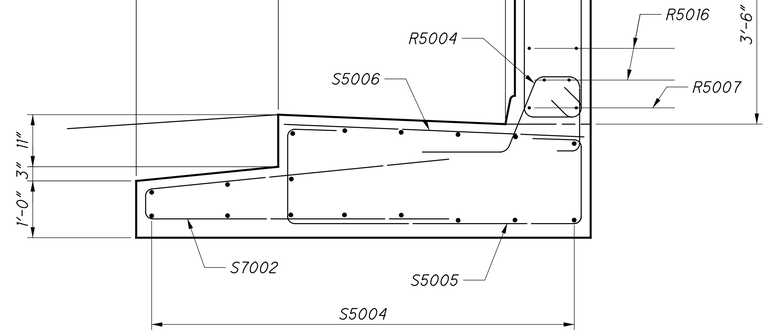

SECTION E-E

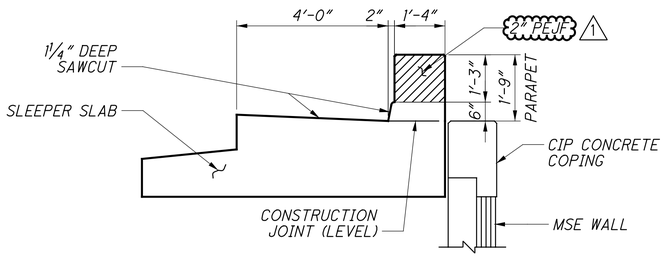

CONTRACTION JOINT DETAIL

(SHOWING SAW CUT IN SLEEPER SLAB & DEFLECTION JOINT IN PARAPET)

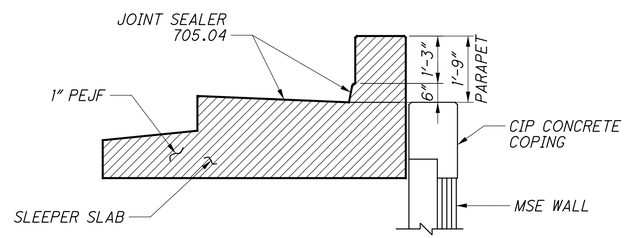

EXPANSION JOINT DETAIL

NO.	REVISIONS	DATE	REV. BY
1	REVISED CALLOUTS	5/14	CRK

NOTES:

1. MIN. REINFORCING STEEL SPLICE LENGTHS SHALL BE 2'-5" FOR #5 BARS.
2. FOR RAISED RELIEF MURAL, SEE SHEET 14/17 .
3. FOR RAILING DETAILS, SEE SHEETS 402 & 403 OF 788.
4. FOR LOCATION OF SECTION A-A, VIEW B-B & SECTION D-D, SEE SHEET 12/17 .

DESIGN AGENCY
URS
36 EAST 7TH STREET
SUITE 2300
CINCINNATI, OHIO 45202

DESIGNED BKL | DRAWN AJB | REVIEWED RWB | DATE 02-21-2011 | STRUCTURE FILE NUMBER 4401263

CHECKED MJZ | REVISED NBH

MSE WALL - SLEEPER SLAB & PARAPET DETAILS

BRIDGE NO. LAW-93-0000

IRONTON RUSSELL BRIDGE OVER OHIO RIVER

LAW-93-0.00

PID No. 81595

J:\Project\OA\ODOT\15005112 Ironton Russell\LAW\81595\structures\LAW093_1111C\sheets\MSE Wall Plans\81595_001WD002.dgn - 5/1/2014 2:57:42 PM - jon_wanstrath

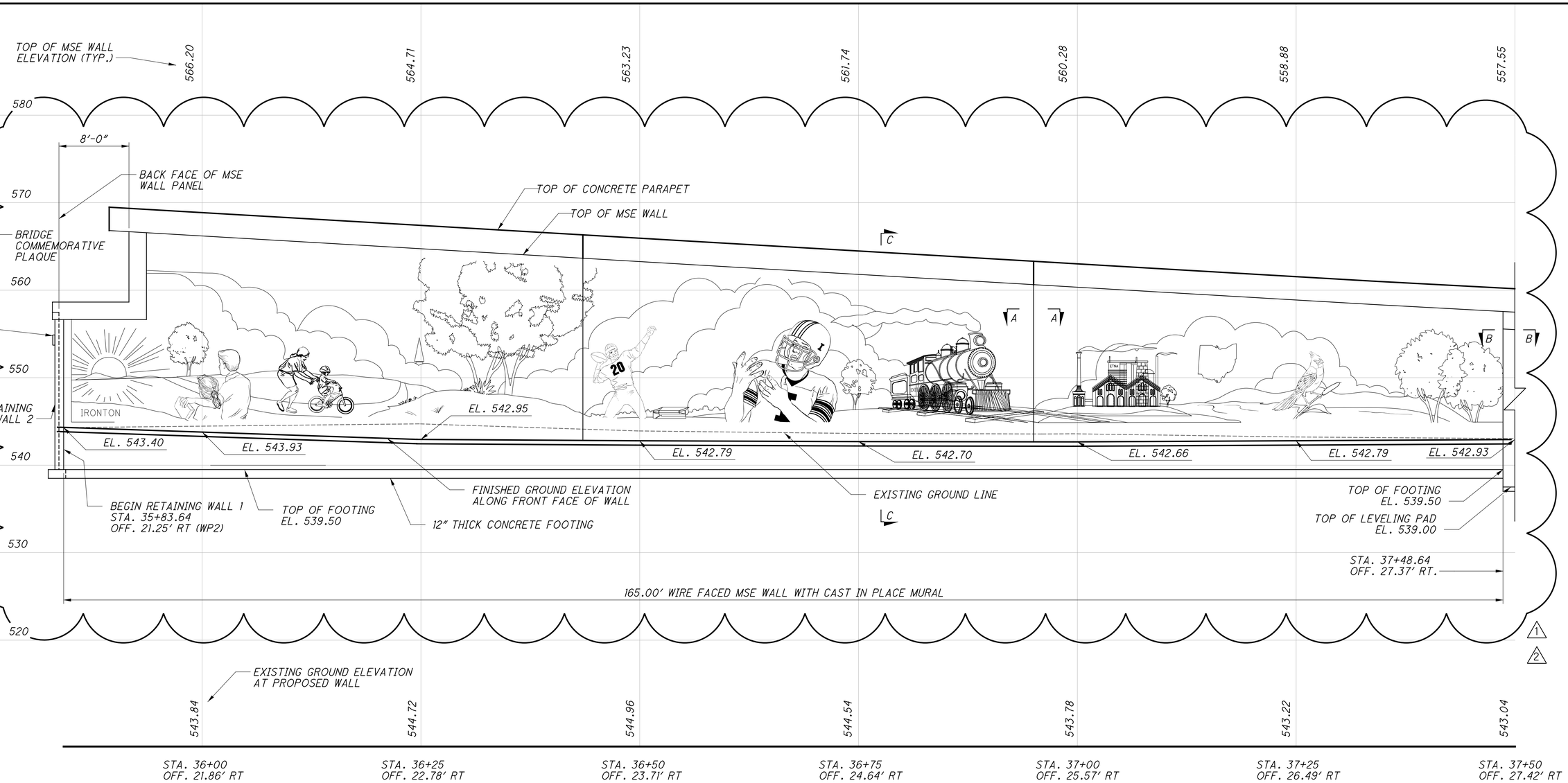

PART ELEVATION - RETAINING WALL 1
(SHOWING RAISED RELIEF MURAL)

Link to RFI100 As-Built

NOTES
1. ALL STATIONS, OFFSETS & WORKING POINTS ARE REFERENCED TO BACK FACE OF WALL.
2. FOR COPING AND CORNER ELEMENT DETAILS, SEE SHEET 9/17.
3. FOR RAILING DETAILS, SEE SHEETS 402 & 403 OF 788.
4. FOR SECTIONS A-A, B-B & C-C, SEE SHEET 15/17.

NO.	REVISIONS	DATE	REV. BY
1	REVISED MURAL PER ODOT MARKUPS	6/12	BKL
2	REVISED MURAL PER ODOT MARKUPS	9/13	BKL

DESIGN AGENCY
URS
36 EAST 7TH STREET
SUITE 2300
CINCINNATI, OHIO 45202

DESIGNED	DRAWN	REVIEWED	DATE
BMV	GJW	RWB	02-21-2011
CHECKED	REVISED	STRUCTURE FILE NUMBER	
MJZ		4401263	

MSE WALL - WALL MURAL (1 OF 2)
BRIDGE NO. LAW-93-0000
IRONTON RUSSELL BRIDGE OVER OHIO RIVER

LAW-93-0.00
PID No. 81595

14 / 17

384
788

J:\Project\OA\ODOT\15005112 Ironton Russell\LAW\81595\structures\LAW093_1111C\sheets\MSE Wall Plans\81595_001WE004.dgn - 9/17/2013 11:15:43 AM - jon_wanstrath

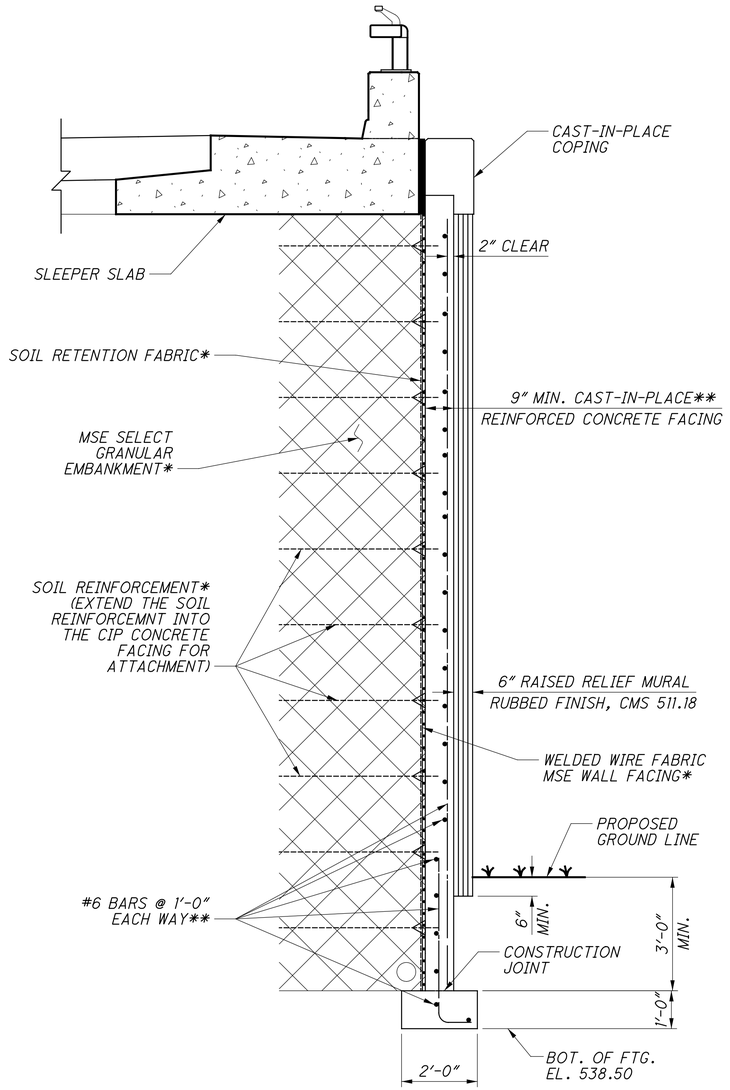

SECTION C-C
(WIRE FACED MSE WALL WITH CIP CONCRETE FACING AND MURAL)

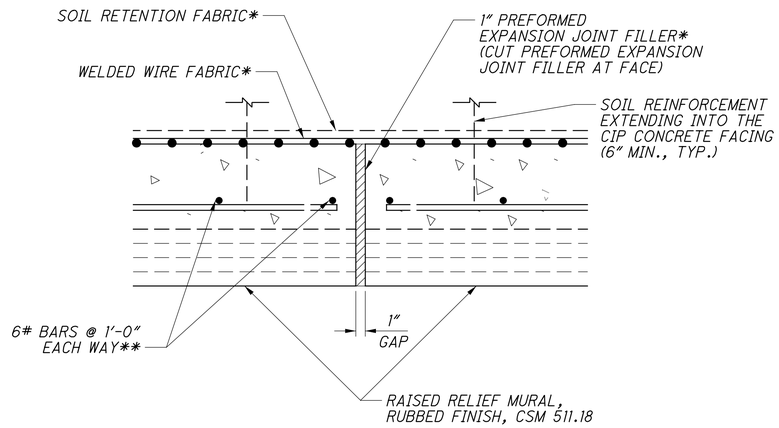

SECTION A-A
EXPANSION JOINT

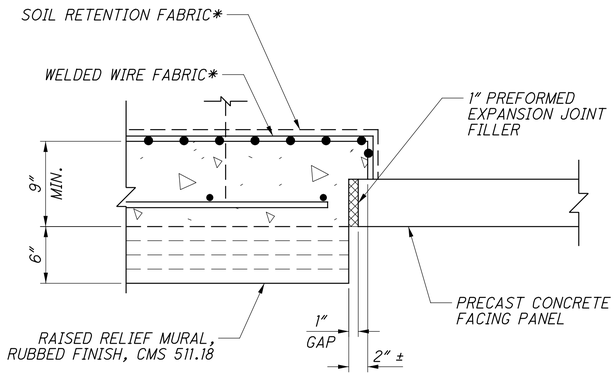

SECTION B-B

* INCLUDED WITH ITEM 840, MECHANICALLY STABILIZED EARTH WALL, AS PER PLAN, (WIRE FACED) FOR PAYMENT.

** THE CONCRETE AND REINFORCING FOR THIS ITEM SHALL BE INCLUDED WITH ITEM 511 - CONCRETE, MISC.: 9" MIN. CAST-IN-PLACE REINFORCED CONCRETE FACING, FOR PAYMENT. THE RAISED RELIEF FORMS AND THEIR INSTALLATION FOR THE WALL SHALL BE PAID FOR SEPARATELY PER ITEM 511 - CONCRETE, MISC.: RAISED RELIEF IMAGES ON STRUCTURES - APPROACH RETAINING WALL.

NOTES:

1. REINFORCING STEEL SPLICE LENGTHS SHALL BE 3'-4" FOR #6 BARS.
2. FOR RAISED RELIEF MURAL, SEE SHEET 14/17 .
3. FOR RAILING DETAILS, SEE SHEETS 402 & 403 OF 788.

DESIGN AGENCY
URS
36 EAST 7TH STREET
SUITE 2300
CINCINNATI, OHIO 45202

DESIGNED	DRAWN	REVIEWED	DATE
BKL	AJB	RWB	02-21-2011
CHECKED	REVISED	STRUCTURE FILE NUMBER	
MJZ		4401263	

MSE WALL - WALL MURAL (2 OF 2)
BRIDGE NO. LAW-93-0000
IRONTON RUSSEL BRIDGE OVER OHIO RIVER

LAW-93-0.00
PID No. 81595

15 / 17

385
788

J:\Project\0\ODOT\15005112 Ironton Russell\LAW\81595\structures\LAW093_1111C\sheets\MSE Wall Plans\81595_001WD003.dgn - 4/27/2011 8:42:58 AM - jon_wanstrath

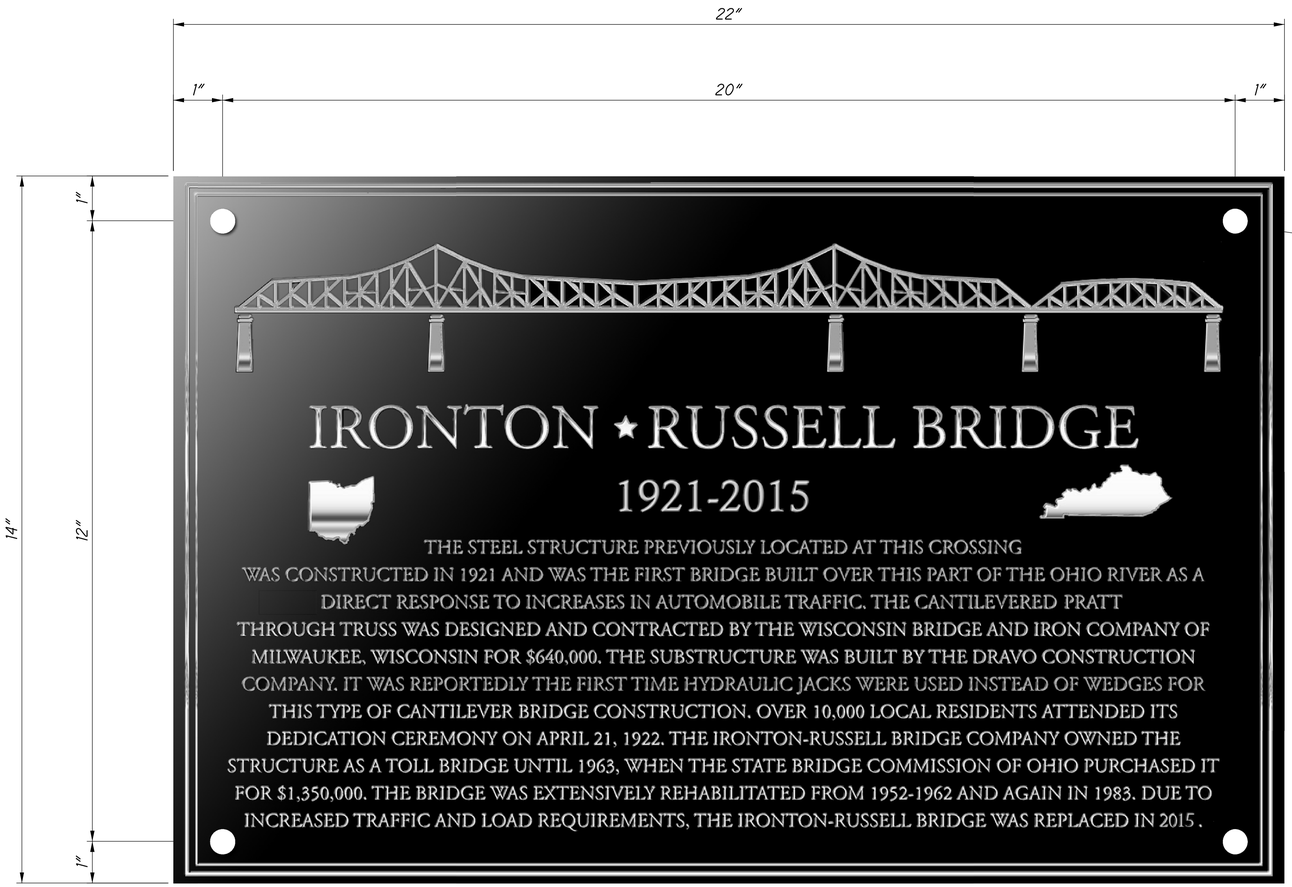

½″ DIA. EXPANSION BOLTS WITH FLAT HEAD AND TORX (TYP.) DRILL OUT THE TORX AFTER INSTALLATION AND APPROVAL BY THE ENGINEER

NOTES

1. PLAQUE DESIGN: THE DRAFT PLAQUE DESIGN IS SHOWN. THE FINAL PLAQUE DESIGN SHALL BE FURNISHED BY ODOT.
2. COMMEMERATIVE PLAQUE LOCATION: SEE SHEET 9/17.
3. ITEM 530, SPECIAL, STRUCTURE MISC.: BRIDGE COMMEMORATIVE PLAQUE (SEE SPECIAL PROVISION).

DESIGN AGENCY
URS
36 EAST 7TH STREET
SUITE 2300
CINCINNATI, OHIO 45202

DESIGNED	DRAWN	REVIEWED	DATE
BKL	AJB	RWB	02-21-2011
CHECKED	REVISED	STRUCTURE FILE NUMBER	
MJZ		4401263	

MSE WALL - BRIDGE COMMEMORATIVE PLAQUE
BRIDGE NO. LAW-93-0000
IRONTON RUSSEL BRIDGE OVER OHIO RIVER

LAW-93-0.00
PID No. 81595

16 / 17

386
788

J:\Project\OV\ODOT\15005112 Ironton Russell\LAW\81595\structures\LAW093_1111C\sheets\MSE Wall Plans\81595_001WE003.dgn - 3/23/2012 10:14:11 AM - jon_wanstrath

MARK	NUMBER	LENGTH	WEIGHT	TYPE	DIMENSIONS						
					A	B	C	D	E	R	INC
MSE WALL - SLEEPER SLAB											
S5001	306	29′-10″	9522	STR							
S5002	519	9′-3″	5007	5	5′-1″	1′-6″	10″				
S5003	519	5′-1″	2752	STR							
S5004	17	31′-9″	563	STR							
S5005	1-SERIES OF 23	9′-8″ TO 8′-2″	214	5	5′-0″ TO 3′-6″	1′-6″	10″				¾″
S5006	1-SERIES OF 23	5′-1″ TO 3′-7″	104	STR							¾″
S7001	519	11′-7″	12288	10	7″	5′-6″	6″	5′-6″			
S7002	23	15′-7″	733	10	9″	7′-0″	6″	7′-0″			
		TOTAL=	31183								
MSE WALL - PARAPET											
R5001*	36	29′-10″	1120	STR							
R5002*	124	16′-6″	2134	STR							
R5003*	603	5′-5″	3407	3	1′-0″	1′-5″					
R5004*	610	6′-0″	3817	39	2′-1″	1′-4″	9″	9″	10″		
R5005*	21	6′-2″	135	21	1′-3″	2′-3″	1′-0″	2′-5″			
R5006*	14	8′-5″	123	3	2′-6″	1′-5″					
R5007*	2	31′-10″	66	STR							
R5008*	2	2′-8″	6	STR							
R5009*	3	8′-11″	28	3	1′-0″	3′-2″					
R5010*	2	2′-10″	6	19	1′-4″	1′-4″	8″				
R5011*	1	8′-5″	9	3	1′-0″	2′-11″					
R5012*	1	7′-11″	8	3	1′-0″	2′-8″					
R5013*	1	7′-5″	8	3	1′-0″	2′-5″					
R5014*	1	7′-1″	7	3	1′-0″	2′-3″					
R5015*	14	6′-7″	96	3	1′-7″	1′-5″					
R5016*	4	14′-9″	62	STR							
		TOTAL=	11032								

* DENOTES REINFORCEMENT TO BE INCIDENTAL TO THE COST OF ITEM 517, RAILING MISC.: CONCRETE PARAPET WITH STEEL TUBE RAILS

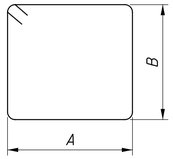

TYPE 3

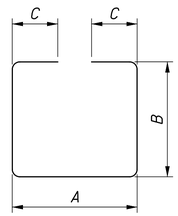

TYPE 5

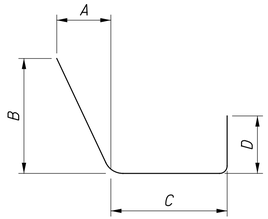

TYPE 10

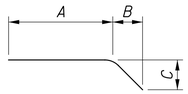

TYPE 19

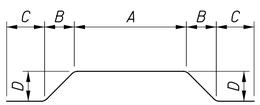

TYPE 21

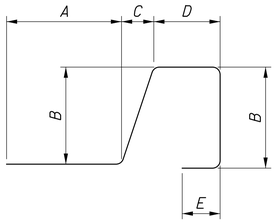

TYPE 39

BAR BENDING DETAILS

BAR MARK LEGEND

AR6004

- AR — PREFIX
- 6004 — NUMBER (1 THRU 999)
- 6 — BAR SIZE (#3 THRU #11, #14 & #18)

NOTES

1. ALL REINFORCING BARS SHALL BE EPOXY COATED.
2. ALL DIMENSIONS ARE OUT TO OUT, EXCEPT WHERE NOTED.
3. STANDARD BENDS ARE TO BE PROVIDED, EXCEPT WHERE NOTED.
4. ALL DIMENSIONS SHOWN ARE FINISHED DIMENSIONS.
5. ABBREVIATIONS USED IN THE BAR LISTS:

   INC = INCREMENT
6. FOR FIELD CUT BARS THE EPOXY COATING SHALL BE REPAIRED AT THE CUT.

DESIGN AGENCY
URS
36 EAST 7TH STREET
SUITE 2300
CINCINNATI, OHIO 45202

DESIGNED	DRAWN	REVIEWED	DATE
BKL	AJB	RWB	02-21-2011
CHECKED	REVISED	STRUCTURE FILE NUMBER	
MJZ		4401263	

MSE WALL - REINFORCING STEEL LIST
BRIDGE NO. LAW-93-0000
IRONTON RUSSEL BRIDGE OVER OHIO

LAW-93-0.00
PID No. 81595

17 / 17

387
788

J:\Project\0\ODOT\15005112 Ironton Russell\LAW\81595\structures\LAW093_1111C\sheets\MSE Wall Plans\81595_001WM001.dgn - 4/27/2011 8:43:02 AM - jon_wanstrath

INDEX OF DRAWINGS

GENERAL DRAWINGS

1 / 365	INDEX OF DRAWINGS (1 OF 3)
2 / 365	INDEX OF DRAWINGS (2 OF 3)
3 / 365	INDEX OF DRAWINGS (3 OF 3)
4 / 365	GENERAL SITE PLAN
5 / 365	GENERAL NOTES (1 OF 7)
6 / 365	GENERAL NOTES (2 OF 7)
7 / 365	GENERAL NOTES (3 OF 7)
8 / 365	GENERAL NOTES (4 OF 7)
9 / 365	GENERAL NOTES (5 OF 7)
10 / 365	GENERAL NOTES (6 OF 7)
11 / 365	GENERAL NOTES (7 OF 7)
12 / 365	ESTIMATED QUANTITIES (1 OF 2)
13 / 365	ESTIMATED QUANTITIES (2 OF 2)
14 / 365	HYDROGRAPHS
15 / 365	BARRIER DETAILS (1 OF 2)
16 / 365	BARRIER DETAILS (2 OF 2)
17 / 365	STANDARD BAR BENDING DETAILS (1 OF 3)
18 / 365	STANDARD BAR BENDING DETAILS (2 OF 3)
19 / 365	STANDARD BAR BENDING DETAILS (3 OF 3)
20 / 365	GENERAL FOUNDATION LAYOUT

KY APPROACH

21 / 365	KY APPROACH - SITE PLAN
22 / 365	KY APPROACH - FOUNDATION LAYOUT
23 / 365	KY APPROACH - REAR ABUTMENT (1 OF 11)
24 / 365	KY APPROACH - REAR ABUTMENT (2 OF 11)
25 / 365	KY APPROACH - REAR ABUTMENT (3 OF 11)
26 / 365	KY APPROACH - REAR ABUTMENT (4 OF 11)
27 / 365	KY APPROACH - REAR ABUTMENT (5 OF 11)
28 / 365	KY APPROACH - REAR ABUTMENT (6 OF 11)
29 / 365	KY APPROACH - REAR ABUTMENT (7 OF 11)
30 / 365	KY APPROACH - REAR ABUTMENT (8 OF 11)
31 / 365	KY APPROACH - REAR ABUTMENT (9 OF 11)
32 / 365	KY APPROACH - REAR ABUTMENT (10 OF 11)
33 / 365	KY APPROACH - REAR ABUTMENT (11 OF 11)
34 / 365	KY APPROACH - PIER 1 REINFORCEMENT
35 / 365	KY APPROACH - PIER 1 DETAILS
36 / 365	KY APPROACH - FRAMING PLAN
37 / 365	KY APPROACH - TYPICAL GIRDER ELEVATION
38 / 365	KY APPROACH - GIRDER DETAILS
39 / 365	KY APPROACH - CROSS FRAME DETAILS
40 / 365	KY APPROACH - FIELD SPLICE DETAILS
41 / 365	KY APPROACH - DEFLECTION & CAMBER (1 OF 2)
42 / 365	KY APPROACH - DEFLECTION & CAMBER (2 OF 2)
43 / 365	KY APPROACH - ERECTION PLAN AND NOTES (1 OF 2)
44 / 365	KY APPROACH - ERECTION PLAN AND NOTES (2 OF 2)
45 / 365	KY APPROACH - CONCRETE BALAST DIAPHRAGMS
46 / 365	KY APPROACH - BEARING DETAILS (1 OF 2)
47 / 365	KY APPROACH - BEARING DETAILS (2 OF 2)
48 / 365	KY APPROACH - PART SLAB PLAN (1 OF 2)
49 / 365	KY APPROACH - PART SLAB PLAN (2 OF 2)
50 / 365	KY APPROACH - SLAB SECTIONS
51 / 365	KY APPROACH - SLAB DETAILS
52 / 365	KY APPROACH - DECK POURING SEQUENCE
53 / 365	KY APPROACH - SCREED ELEVATIONS
54 / 365	KY APPROACH - HAUNCH ELEVATIONS
55 / 365	KY APPROACH - DECK SURFACE ELEVATIONS
56 / 365	KY APPROACH - LEFT PARAPET ELEVATION
57 / 365	KY APPROACH - RIGHT PARAPET ELEVATION
58 / 365	KY APPROACH - PARAPET DETAILS (1 OF 2)
59 / 365	KY APPROACH - PARAPET DETAILS (2 OF 2)
60 / 365	KY APPROACH - EXPANSION JOINT REAR ABUTMENT (1 OF 2)
61 / 365	KY APPROACH - EXPANSION JOINT REAR ABUTMENT (2 OF 2)
62 / 365	KY APPROACH - APPROACH SLAB (1 OF 2)
63 / 365	KY APPROACH - APPROACH SLAB (2 OF 2)
64 / 365	KY APPROACH - REINFORCING STEEL LIST (1 OF 4)
65 / 365	KY APPROACH - REINFORCING STEEL LIST (2 OF 4)
66 / 365	KY APPROACH - REINFORCING STEEL LIST (3 OF 4)
67 / 365	KY APPROACH - REINFORCING STEEL LIST (4 OF 4)

MAIN SPAN

68 / 365	MAIN SPAN - SITE PLAN
69 / 365	CABLE STAYED SUPERSTRUCTURE GEOMETRY
70 / 365	FOUNDATION LAYOUT - MAIN SPAN
71 / 365	PIER 2 GEOMETRY (1 OF 2)
72 / 365	PIER 2 GEOMETRY (2 OF 2)
73 / 365	PIER 2 DRILLED SHAFT & FOOTING DETAILS (1 OF 4)
74 / 365	PIER 2 DRILLED SHAFT & FOOTING DETAILS (2 OF 4)
75 / 365	PIER 2 DRILLED SHAFT & FOOTING DETAILS (3 OF 4)
76 / 365	PIER 2 DRILLED SHAFT & FOOTING DETAILS (4 OF 4)
77 / 365	PIER 2 REINFORCEMENT
78 / 365	TOWER GEOMETRY (1 OF 3)
79 / 365	TOWER GEOMETRY (2 OF 3)
80 / 365	TOWER GEOMETRY (3 OF 3)
81 / 365	TOWER REINFORCEMENT - DRILLED SHAFTS
82 / 365	TOWER REINFORCEMENT - FOOTING
83 / 365	TOWER REINFORCEMENT - SEGMENTS 1, 2, AND 3 (1 OF 2)
84 / 365	TOWER REINFORCEMENT - SEGMENTS 1, 2, AND 3 (2 OF 2)
85 / 365	TOWER REINFORCEMENT - INFILL WALL
86 / 365	TOWER REINFORCEMENT - SEGMENTS 4, 5, AND 6 (1 OF 3)
87 / 365	TOWER REINFORCEMENT - SEGMENTS 4, 5, AND 6 (2 OF 3)
88 / 365	TOWER REINFORCEMENT - SEGMENTS 4, 5, AND 6 (3 OF 3)
89 / 365	TOWER REINFORCEMENT - STRUT DETAILS (1 OF 4)
90 / 365	TOWER REINFORCEMENT - STRUT DETAILS (2 OF 4)
91 / 365	TOWER REINFORCEMENT - STRUT DETAILS (3 OF 4)
92 / 365	TOWER REINFORCEMENT - STRUT DETAILS (4 OF 4)
93 / 365	TOWER REINFORCEMENT - SEGMENTS 7, 8, AND 9 (1 OF 2)
94 / 365	TOWER REINFORCEMENT - SEGMENTS 7, 8, AND 9 (2 OF 2)
95 / 365	TOWER REINFORCEMENT - SEGMENTS 10, 11, AND 12 (1 OF 2)
96 / 365	TOWER REINFORCEMENT - SEGMENTS 10, 11, AND 12 (2 OF 2)
97 / 365	TOWER REINFORCEMENT - SEGMENTS 13, 14, AND 15 (1 OF 2)
98 / 365	TOWER REINFORCEMENT - SEGMENTS 13, 14, AND 15 (2 OF 2)
99 / 365	TOWER REINFORCEMENT - SEGMENTS 16, 17, AND 18 (1 OF 5)
100 / 365	TOWER REINFORCEMENT - SEGMENTS 16, 17, AND 18 (2 OF 5)
101 / 365	TOWER REINFORCEMENT - SEGMENTS 16, 17, AND 18 (3 OF 5)
102 / 365	TOWER REINFORCEMENT - SEGMENTS 16, 17, AND 18 (4 OF 5)
103 / 365	TOWER REINFORCEMENT - SEGMENTS 16, 17, AND 18 (5 OF 5)
104 / 365	TOWER CABLE ANCHOR BOX - LAYOUT
105 / 365	TOWER CABLE ANCHOR BOX - FIELD SECTION 1
106 / 365	TOWER CABLE ANCHOR BOX - FIELD SECTION 2
107 / 365	TOWER CABLE ANCHOR BOX - FIELD SECTION 3
108 / 365	TOWER CABLE ANCHOR BOX - SPLICE DETAILS
109 / 365	TOWER CABLE ANCHOR BOX - SHEAR STUD DETAILS
110 / 365	TOWER CABLE ANCHOR BOX - DETAILS (1 OF 2)
111 / 365	TOWER CABLE ANCHOR BOX - DETAILS (2 OF 2)
112 / 365	TOWER CABLE ANCHOR BOX - GEOMETRY
113 / 365	TOWER LADDER AND PLATFORM LAYOUT
114 / 365	TOWER LADDER AND PLATFORM DETAILS (1 OF 8)
115 / 365	TOWER LADDER AND PLATFORM DETAILS (2 OF 8)
116 / 365	TOWER LADDER AND PLATFORM DETAILS (3 OF 8)
117 / 365	TOWER LADDER AND PLATFORM DETAILS (4 OF 8)
118 / 365	TOWER LADDER AND PLATFORM DETAILS (5 OF 8)
119 / 365	TOWER LADDER AND PLATFORM DETAILS (6 OF 8)
120 / 365	TOWER LADDER AND PLATFORM DETAILS (7 OF 8)
121 / 365	TOWER LADDER AND PLATFORM DETAILS (8 OF 8)
122 / 365	PIER 5 GEOMETRY (1 OF 2)
123 / 365	PIER 5 GEOMETRY (2 OF 2)
124 / 365	PIER 5 DRILLED SHAFT & FOOTING DETAILS (1 OF 3)
125 / 365	PIER 5 DRILLED SHAFT & FOOTING DETAILS (2 OF 3)
126 / 365	PIER 5 DRILLED SHAFT & FOOTING DETAILS (3 OF 3)
127 / 365	PIER 5 REINFORCEMENT
128 / 365	CABLE AND SEGMENT DESIGNATION (1 OF 2)
129 / 365	CABLE AND SEGMENT DESIGNATION (2 OF 2)
130 / 365	FRAMING PLAN AND ELEVATION (1 OF 7)
131 / 365	FRAMING PLAN AND ELEVATION (2 OF 7)
132 / 365	FRAMING PLAN AND ELEVATION (3 OF 7)
133 / 365	FRAMING PLAN AND ELEVATION (4 OF 7)

DESIGN AGENCY
URS
36 EAST 7TH STREET
SUITE 2300
CINCINNATI, OHIO 45202

DESIGNED MJZ
DRAWN JGC
CHECKED
REVIEWED
DATE
REVISED
STRUCTURE FILE NUMBER 4401263

INDEX OF DRAWINGS (1 OF 3)
BRIDGE NO. LAW-93-0000
IRONTON RUSSEL BRIDGE OVER OHIO RIVER

LAW-93-0.00
PID No. 81595

1 / 365

388
788

J:\Project\O\ODOT\15005112 Ironton Russell\LAW\81595\structures\LAW093_1111C\sheets\093_0000_gn001.dgn — 4/29/2011 9:24:04 AM — john_corley

INDEX OF DRAWINGS

MAIN SPAN CON'T.

134 / 365	FRAMING PLAN AND ELEVATION (5 OF 7)
135 / 365	FRAMING PLAN AND ELEVATION (6 OF 7)
136 / 365	FRAMING PLAN AND ELEVATION (7 OF 7)
137 / 365	FLOORBEAM FB1 DETAILS
138 / 365	FLOORBEAM FB2 DETAILS
139 / 365	DECK SLAB POST-TENSIONING LAYOUT (1 OF 2)
140 / 365	DECK SLAB POST-TENSIONING LAYOUT (2 OF 2)
141 / 365	DECK SLAB POST-TENSIONING DETAILS (1 OF 2)
142 / 365	DECK SLAB POST-TENSIONING DETAILS (2 OF 2)
143 / 365	DECK REINFORCEMENT - MAINSPAN (1 OF 2)
144 / 365	DECK REINFORCEMENT - MAINSPAN (2 OF 2)
145 / 365	DECK REINFORCEMENT - SIDESPAN (1 OF 2)
146 / 365	DECK REINFORCEMENT - SIDESPAN (2 OF 2)
147 / 365	DECK REINFORCEMENT - MAINSPAN CLOSURE POUR (1 OF 2)
148 / 365	DECK REINFORCEMENT - MAINSPAN CLOSURE POUR (2 OF 2)
149 / 365	DECK REINFORCEMENT - KY CLOSURE POUR (1 OF 2)
150 / 365	DECK REINFORCEMENT - KY CLOSURE POUR (2 OF 2)
151 / 365	DECK REINFORCEMENT - OH CLOSURE POUR (1 OF 2)
152 / 365	DECK REINFORCEMENT - OH CLOSURE POUR (2 OF 2)
153 / 365	DECK REINFORCEMENT - PIER TABLE (1 OF 2)
154 / 365	DECK REINFORCEMENT - PIER TABLE (2 OF 2)
155 / 365	EDGE GIRDER POST-TENSIONING BAR DETAILS
156 / 365	EDGE GIRDER POST-TENSIONING TENDON DETAILS (1 OF 8)
157 / 365	EDGE GIRDER POST-TENSIONING TENDON DETAILS (2 OF 8)
158 / 365	EDGE GIRDER POST-TENSIONING TENDON DETAILS (3 OF 8)
159 / 365	EDGE GIRDER POST-TENSIONING TENDON DETAILS (4 OF 8)
160 / 365	EDGE GIRDER POST-TENSIONING TENDON DETAILS (5 OF 8)
161 / 365	EDGE GIRDER POST-TENSIONING TENDON DETAILS (6 OF 8)
162 / 365	EDGE GIRDER POST-TENSIONING TENDON DETAILS (7 OF 8)
163 / 365	EDGE GIRDER POST-TENSIONING TENDON DETAILS (8 OF 8)
164 / 365	EDGE GIRDER POST-TENSIONING DETAILS (1 OF 2)
165 / 365	EDGE GIRDER POST-TENSIONING DETAILS (2 OF 2)
166 / 365	EDGE GIRDER POST-TENSIONING REINFORCEMENT DETAILS (1 OF 2)
167 / 365	EDGE GIRDER POST-TENSIONING REINFORCEMENT DETAILS (2 OF 2)
168 / 365	EDGE GIRDER REINFORCEMENT LAYOUT (1 OF 16)
169 / 365	EDGE GIRDER REINFORCEMENT LAYOUT (2 OF 16)
170 / 365	EDGE GIRDER REINFORCEMENT LAYOUT (3 OF 16)
171 / 365	EDGE GIRDER REINFORCEMENT LAYOUT (4 OF 16)
172 / 365	EDGE GIRDER REINFORCEMENT LAYOUT (5 OF 16)
173 / 365	EDGE GIRDER REINFORCEMENT LAYOUT (6 OF 16)
174 / 365	EDGE GIRDER REINFORCEMENT LAYOUT (7 OF 16)
175 / 365	EDGE GIRDER REINFORCEMENT LAYOUT (8 OF 16)
176 / 365	EDGE GIRDER REINFORCEMENT LAYOUT (9 OF 16)
177 / 365	EDGE GIRDER REINFORCEMENT LAYOUT (10 OF 16)
178 / 365	EDGE GIRDER REINFORCEMENT LAYOUT (11 OF 16)
179 / 365	EDGE GIRDER REINFORCEMENT LAYOUT (12 OF 16)
180 / 365	EDGE GIRDER REINFORCEMENT LAYOUT (13 OF 16)
181 / 365	EDGE GIRDER REINFORCEMENT LAYOUT (14 OF 16)
182 / 365	EDGE GIRDER REINFORCEMENT LAYOUT (15 OF 16)
183 / 365	EDGE GIRDER REINFORCEMENT LAYOUT (16 OF 16)
184 / 365	EDGE GIRDER REINFORCEMENT DETAILS (1 OF 10)
185 / 365	EDGE GIRDER REINFORCEMENT DETAILS (2 OF 10)
186 / 365	EDGE GIRDER REINFORCEMENT DETAILS (3 OF 10)
187 / 365	EDGE GIRDER REINFORCEMENT DETAILS (4 OF 10)
188 / 365	EDGE GIRDER REINFORCEMENT DETAILS (5 OF 10)
189 / 365	EDGE GIRDER REINFORCEMENT DETAILS (6 OF 10)
190 / 365	EDGE GIRDER REINFORCEMENT DETAILS (7 OF 10)
191 / 365	EDGE GIRDER REINFORCEMENT DETAILS (8 OF 10)
192 / 365	EDGE GIRDER REINFORCEMENT DETAILS (9 OF 10)
193 / 365	EDGE GIRDER REINFORCEMENT DETAILS (10 OF 10)

MAIN SPAN CON'T.

194 / 365	KY DIAPHRAGM SEGMENT GEOMETRY (1 OF 4)
195 / 365	KY DIAPHRAGM SEGMENT GEOMETRY (2 OF 4)
196 / 365	KY DIAPHRAGM SEGMENT GEOMETRY (3 OF 4)
197 / 365	KY DIAPHRAGM SEGMENT GEOMETRY (4 OF 4)
198 / 365	KY DIAPHRAGM SEGMENT TRANSVERSE POST-TENSIONING (1 OF 2)
199 / 365	KY DIAPHRAGM SEGMENT TRANSVERSE POST-TENSIONING (2 OF 2)
200 / 365	KY DIAPHRAGM SEGMENT REINFORCEMENT (1 OF 9)
201 / 365	KY DIAPHRAGM SEGMENT REINFORCEMENT (2 OF 9)
202 / 365	KY DIAPHRAGM SEGMENT REINFORCEMENT (3 OF 9)
203 / 365	KY DIAPHRAGM SEGMENT REINFORCEMENT (4 OF 9)
204 / 365	KY DIAPHRAGM SEGMENT REINFORCEMENT (5 OF 9)
205 / 365	KY DIAPHRAGM SEGMENT REINFORCEMENT (6 OF 9)
206 / 365	KY DIAPHRAGM SEGMENT REINFORCEMENT (7 OF 9)
207 / 365	KY DIAPHRAGM SEGMENT REINFORCEMENT (8 OF 9)
208 / 365	KY DIAPHRAGM SEGMENT REINFORCEMENT (9 OF 9)
209 / 365	OH DIAPHRAGM SEGMENT GEOMETRY (1 OF 4)
210 / 365	OH DIAPHRAGM SEGMENT GEOMETRY (2 OF 4)
211 / 365	OH DIAPHRAGM SEGMENT GEOMETRY (3 OF 4)
212 / 365	OH DIAPHRAGM SEGMENT GEOMETRY (4 OF 4)
213 / 365	OH DIAPHRAGM SEGMENT TRANSVERSE POST-TENSIONING (1 OF 2)
214 / 365	OH DIAPHRAGM SEGMENT TRANSVERSE POST-TENSIONING (2 OF 2)
215 / 365	OH DIAPHRAGM SEGMENT REINFORCEMENT (1 OF 9)
216 / 365	OH DIAPHRAGM SEGMENT REINFORCEMENT (2 OF 9)
217 / 365	OH DIAPHRAGM SEGMENT REINFORCEMENT (3 OF 9)
218 / 365	OH DIAPHRAGM SEGMENT REINFORCEMENT (4 OF 9)
219 / 365	OH DIAPHRAGM SEGMENT REINFORCEMENT (5 OF 9)
220 / 365	OH DIAPHRAGM SEGMENT REINFORCEMENT (6 OF 9)
221 / 365	OH DIAPHRAGM SEGMENT REINFORCEMENT (7 OF 9)
222 / 365	OH DIAPHRAGM SEGMENT REINFORCEMENT (8 OF 9)
223 / 365	OH DIAPHRAGM SEGMENT REINFORCEMENT (9 OF 9)
224 / 365	STAY CABLE BLISTER GEOMETRY (1 OF 2)
225 / 365	STAY CABLE BLISTER GEOMETRY (2 OF 2)
226 / 365	STAY CABLE BLISTER REINFORCEMENT
227 / 365	STAY CABLE GEOMETRY (1 OF 3)
228 / 365	STAY CABLE GEOMETRY (2 OF 3)
229 / 365	STAY CABLE GEOMETRY (3 OF 3)
230 / 365	STAY CABLE SCHEDULE
231 / 365	STAY CABLE DETAILS (1 OF 3)
232 / 365	STAY CABLE DETAILS (2 OF 3)
233 / 365	STAY CABLE DETAILS (3 OF 3)
234 / 365	FINISH GRADE ELEVATIONS - MAINSPAN UNIT
235 / 365	PIER TABLE SHEAR KEY GEOMETRY (1 OF 4)
236 / 365	PIER TABLE SHEAR KEY GEOMETRY (2 OF 4)
237 / 365	PIER TABLE SHEAR KEY GEOMETRY (3 OF 4)
238 / 365	PIER TABLE SHEAR KEY GEOMETRY (4 OF 4)
239 / 365	PIER TABLE SHEAR KEY REINFORCEMENT - TOWER 3
240 / 365	PIER TABLE SHEAR KEY REINFORCEMENT - TOWER 4
241 / 365	BEARING DETAILS - TOWER 3
242 / 365	BEARING DETAILS - TOWER 4
243 / 365	DRAINAGE DETAILS - MAINSPAN UNIT
244 / 365	LAMP POST BLISTER DETAILS
245 / 365	NAVIGATION LIGHTING
246 / 365	CABLE STAYED ERECTION SEQUENCE (1 OF 11)
247 / 365	CABLE STAYED ERECTION SEQUENCE (2 OF 11)
248 / 365	CABLE STAYED ERECTION SEQUENCE (3 OF 11)
249 / 365	CABLE STAYED ERECTION SEQUENCE (4 OF 11)
250 / 365	CABLE STAYED ERECTION SEQUENCE (5 OF 11)
251 / 365	CABLE STAYED ERECTION SEQUENCE (6 OF 11)
252 / 365	CABLE STAYED ERECTION SEQUENCE (7 OF 11)
253 / 365	CABLE STAYED ERECTION SEQUENCE (8 OF 11)
254 / 365	CABLE STAYED ERECTION SEQUENCE (9 OF 11)
255 / 365	CABLE STAYED ERECTION SEQUENCE (10 OF 11)
256 / 365	CABLE STAYED ERECTION SEQUENCE (11 OF 11)

DESIGN AGENCY
URS
36 EAST 7TH STREET
SUITE 2300
CINCINNATI, OHIO 45202

DESIGNED	DRAWN	REVIEWED	DATE
MJZ	JGC		
CHECKED	REVISED	STRUCTURE FILE NUMBER	4401263

INDEX OF DRAWINGS (2 OF 3)
BRIDGE NO. LAW-93-0000
IRONTON RUSSELL BRIDGE OVER OHIO RIVER

LAW-93-0.00
PID No. 81595

J:\Project\O\ODOT\15005112 Ironton Russell\LAW\81595\structures\LAW093_1111C\sheets\093_0000_gn002.dgn - 4/29/2011 9:24:08 AM - john_corley

INDEX OF DRAWINGS

MAIN SPAN CON'T.

257 / 365 TOWER ERECTION SEQUENCE (1 OF 2)
258 / 365 TOWER ERECTION SEQUENCE (2 OF 2)
259 / 365 CABLE STAYED CAMBER
260 / 365 CABLE STAYED DEFLECTION
261 / 365 PERMANENT LOAD MOMENTS AT END OF CONSTRUCTION (1 OF 2)
262 / 365 PERMANENT LOAD MOMENTS AT END OF CONSTRUCTION (2 OF 2)
263 / 365 BARRIER LAYOUT MAINSPAN UNIT (1 OF 5)
264 / 365 BARRIER LAYOUT MAINSPAN UNIT (2 OF 5)
265 / 365 BARRIER LAYOUT MAINSPAN UNIT (3 OF 5)
266 / 365 BARRIER LAYOUT MAINSPAN UNIT (4 OF 5)
267 / 365 BARRIER LAYOUT MAINSPAN UNIT (5 OF 5)
268 / 365 STRIP SEAL EXPANSION JOINT - PIER 2 (1 OF 2)
269 / 365 STRIP SEAL EXPANSION JOINT - PIER 2 (2 OF 2)
270 / 365 MODULAR EXPANSION JOINT - PIER 5 (1 OF 2)
271 / 365 MODULAR EXPANSION JOINT - PIER 5 (2 OF 2)
272 / 365 BARRIER COVER PLATE DETAILS - PIER 5 (1 OF 2)
273 / 365 BARRIER COVER PLATE DETAILS - PIER 5 (2 OF 2)
274 / 365 TEMPORARY SHEET PILE WALL - PIER 5 (1 OF 3)
275 / 365 TEMPORARY SHEET PILE WALL - PIER 5 (2 OF 3)
276 / 365 TEMPORARY SHEET PILE WALL - PIER 5 (3 OF 3)
277 / 365 REINFORCING STEEL LIST - PIER 2
278 / 365 TOWER 3 (KY) REINFORCING STEEL LIST (1 OF 5)
279 / 365 TOWER 3 (KY) REINFORCING STEEL LIST (2 OF 5)
280 / 365 TOWER 3 (KY) REINFORCING STEEL LIST (3 OF 5)
281 / 365 TOWER 3 (KY) REINFORCING STEEL LIST (4 OF 5)
282 / 365 TOWER 3 (KY) REINFORCING STEEL LIST (5 OF 5)
283 / 365 TOWER 4 (OH) REINFORCING STEEL LIST (1 OF 5)
284 / 365 TOWER 4 (OH) REINFORCING STEEL LIST (2 OF 5)
285 / 365 TOWER 4 (OH) REINFORCING STEEL LIST (3 OF 5)
286 / 365 TOWER 4 (OH) REINFORCING STEEL LIST (4 OF 5)
287 / 365 TOWER 4 (OH) REINFORCING STEEL LIST (5 OF 5)
288 / 365 REINFORCING STEEL LIST - PIER 5
289 / 365 REINFORCING STEEL LIST - CABLE STAYED SUPERSTRUCTURE (1 OF 18)
290 / 365 REINFORCING STEEL LIST - CABLE STAYED SUPERSTRUCTURE (2 OF 18)
291 / 365 REINFORCING STEEL LIST - CABLE STAYED SUPERSTRUCTURE (3 OF 18)
292 / 365 REINFORCING STEEL LIST - CABLE STAYED SUPERSTRUCTURE (4 OF 18)
293 / 365 REINFORCING STEEL LIST - CABLE STAYED SUPERSTRUCTURE (5 OF 18)
294 / 365 REINFORCING STEEL LIST - CABLE STAYED SUPERSTRUCTURE (6 OF 18)
295 / 365 REINFORCING STEEL LIST - CABLE STAYED SUPERSTRUCTURE (7 OF 18)
296 / 365 REINFORCING STEEL LIST - CABLE STAYED SUPERSTRUCTURE (8 OF 18)
297 / 365 REINFORCING STEEL LIST - CABLE STAYED SUPERSTRUCTURE (9 OF 18)
298 / 365 REINFORCING STEEL LIST - CABLE STAYED SUPERSTRUCTURE (10 OF 18)
299 / 365 REINFORCING STEEL LIST - CABLE STAYED SUPERSTRUCTURE (11 OF 18)
300 / 365 REINFORCING STEEL LIST - CABLE STAYED SUPERSTRUCTURE (12 OF 18)
301 / 365 REINFORCING STEEL LIST - CABLE STAYED SUPERSTRUCTURE (13 OF 18)
302 / 365 REINFORCING STEEL LIST - CABLE STAYED SUPERSTRUCTURE (14 OF 18)
303 / 365 REINFORCING STEEL LIST - CABLE STAYED SUPERSTRUCTURE (15 OF 18)
304 / 365 REINFORCING STEEL LIST - CABLE STAYED SUPERSTRUCTURE (16 OF 18)
305 / 365 REINFORCING STEEL LIST - CABLE STAYED SUPERSTRUCTURE (17 OF 18)
306 / 365 REINFORCING STEEL LIST - CABLE STAYED SUPERSTRUCTURE (18 OF 18)

OH APPROACH

307 / 365 OHIO APPROACH SITE PLAN
308 / 365 OHIO APPROACH - GENERAL PLAN
309 / 365 OHIO APPROACH - GEOMETRIC LAYOUT PLAN
310 / 365 OHIO APPROACH - PILING PLAN
311 / 365 OHIO APPROACH - FORWARD ABUTMENT DETAILS (1 OF 2)
312 / 365 OHIO APPROACH - FORWARD ABUTMENT DETAILS (2 OF 2)
313 / 365 OHIO APPROACH - PIER 6 DETAILS
314 / 365 OHIO APPROACH - PIER 6 FOUNDATION PLAN & DETAILS
315 / 365 OHIO APPROACH - PIER 7 DETAILS
316 / 365 OHIO APPROACH - PIER 7 FOUNDATION PLAN & DETAILS
317 / 365 OHIO APPROACH - PIER 8 DETAILS
318 / 365 OHIO APPROACH - PIER 8 FOUNDATION PLAN & DETAILS
319 / 365 OHIO APPROACH - GIRDER LAYOUT CURVE DATA
320 / 365 OHIO APPROACH - FRAMING PLAN - SPAN NO. 6
321 / 365 OHIO APPROACH - FRAMING PLAN - SPAN NO. 7
322 / 365 OHIO APPROACH - FRAMING PLAN - SPAN NO. 8
323 / 365 OHIO APPROACH - FRAMING PLAN - SPAN NO. 9
324 / 365 OHIO APPROACH - GIRDER DETAILS
325 / 365 OHIO APPROACH - GIRDER AND MISCELLANEOUS DETAILS
326 / 365 OHIO APPROACH - INTERMEDIATE AND END CROSS FRAME DETAILS
327 / 365 OHIO APPROACH - FIELD SPLICE DETAILS
328 / 365 OHIO APPROACH - DEFLECTION AND CAMBER (1 OF 2)
329 / 365 OHIO APPROACH - DEFLECTION AND CAMBER (2 OF 2)
330 / 365 OHIO APPROACH - ERECTION PLAN AND NOTES (1 OF 4)
331 / 365 OHIO APPROACH - ERECTION PLAN AND NOTES (2 OF 4)
332 / 365 OHIO APPROACH - ERECTION PLAN AND NOTES (3 OF 4)
333 / 365 OHIO APPROACH - ERECTION PLAN AND NOTES (4 OF 4)
334 / 365 OHIO APPROACH - BEARING DETAILS (1 OF 2)
335 / 365 OHIO APPROACH - BEARING DETAILS (2 OF 2)
336 / 365 OHIO APPROACH - SLAB PLAN - BOTTOM REINFORCING (1 OF 3)
337 / 365 OHIO APPROACH - SLAB PLAN - BOTTOM REINFORCING (2 OF 3)
338 / 365 OHIO APPROACH - SLAB PLAN - BOTTOM REINFORCING (3 OF 3)
339 / 365 OHIO APPROACH - SLAB PLAN - TOP REINFORCING (1 OF 3)
340 / 365 OHIO APPROACH - SLAB PLAN - TOP REINFORCING (2 OF 3)
341 / 365 OHIO APPROACH - SLAB PLAN - TOP REINFORCING (3 OF 3)
342 / 365 OHIO APPROACH - ADDITIONAL BARS OVER PIERS & SLAB OFFSETS
343 / 365 OHIO APPROACH - TRANSVERSE SECTIONS A-A, B-B AND C-C
344 / 365 OHIO APPROACH - TRANSVERSE SECTIONS A-A, B-B AND C-C
345 / 365 OHIO APPROACH - DECK POUR SEQUENCE & MISC. DETAILS
346 / 365 OHIO APPROACH - SCREED ELEVATIONS
347 / 365 OHIO APPROACH - HAUNCH ELEVATIONS
348 / 365 OHIO APPROACH - DECK SURFACE ELEVATIONS (1 OF 2)
349 / 365 OHIO APPROACH - DECK SURFACE ELEVATIONS (2 OF 2)
350 / 365 OHIO APPROACH - PARAPET DETAILS (1 OF 7)
351 / 365 OHIO APPROACH - PARAPET DETAILS (2 OF 7)
352 / 365 OHIO APPROACH - PARAPET DETAILS (3 OF 7)
353 / 365 OHIO APPROACH - PARAPET DETAILS (4 OF 7)
354 / 365 OHIO APPROACH - PARAPET DETAILS (5 OF 7)
355 / 365 OHIO APPROACH - PARAPET DETAILS (6 OF 7))
356 / 365 OHIO APPROACH - PARAPET DETAILS (7 OF 7)
357 / 365 OHIO APPROACH - LIGHTING PILASTER DETAIL
358 / 365 OHIO APPROACH - FORWARD APPROACH SLAB DETAILS
359 / 365 OHIO APPROACH - FORWARD ABUTMENT REINFORCING STEEL LIST
360 / 365 OHIO APPROACH - PIER 6 REINFORCING STEEL LIST
361 / 365 OHIO APPROACH - PIER 7 REINFORCING STEEL LIST
362 / 365 OHIO APPROACH - PIER 8 REINFORCING STEEL LIST
363 / 365 OHIO APPROACH - SUPERSTRUCTURE REINFORCING STEEL LIST
364 / 365 OHIO APPROACH - APPROACH SLAB REINFORCING STEEL LIST
365 / 365 OHIO APPROACH - PARAPET REINFORCING STEEL LIST

DESIGN AGENCY
URS
36 EAST 7TH STREET
SUITE 2300
CINCINNATI, OHIO 45202

DESIGNED	DRAWN	REVIEWED	DATE
MJZ	JGC		
CHECKED	REVISED	STRUCTURE FILE NUMBER	4401263

INDEX OF DRAWINGS (3 OF 3)
BRIDGE NO. LAW-93-0000
IRONTON RUSSEL BRIDGE OVER OHIO RIVER

LAW-93-0.00
PID No. 81595

J:\Project\O\ODOT\15005112 Ironton Russell\LAW\81595\structures\LAW093_1111C\sheets\093_0000_gn003.dgn - 4/29/2011 9:24:11 AM - john_corley

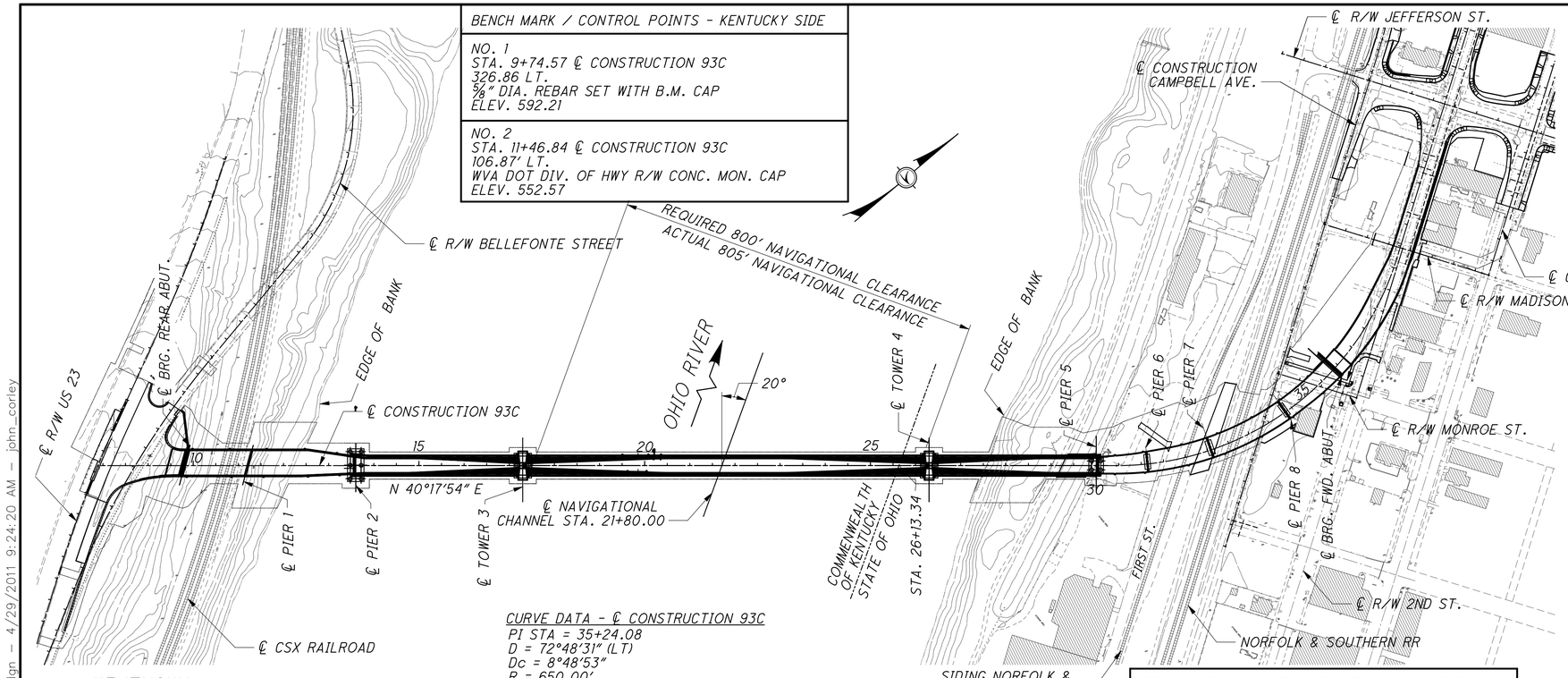

VERTICAL CURVE 1
L = 140'
PI STA 8+90.00
PI ELEV. 602.70
G1 = -4.00%
G2 = -2.00%

VERTICAL CURVE 2
L = 200'
PI STA 12+50.00
PI ELEV. 595.50
G1 =-2.00%
G2 = 1.00%

VERTICAL CURVE 3
L = 400'
PI STA 21+80.00
PI ELEV. 604.80
G1 = 1.00%
G2 = -1.00%

VERTICAL CURVE 4
L = 220'
PI STA 31+10.00
PI ELEV. 595.50
G1 = -1.00%
G2 = -6.00%

VERTICAL CURVE 5
L = 360'
PI STA 38+58.50
PI ELEV. 550.59
G1 = -6.00%
G2 = -2.36%

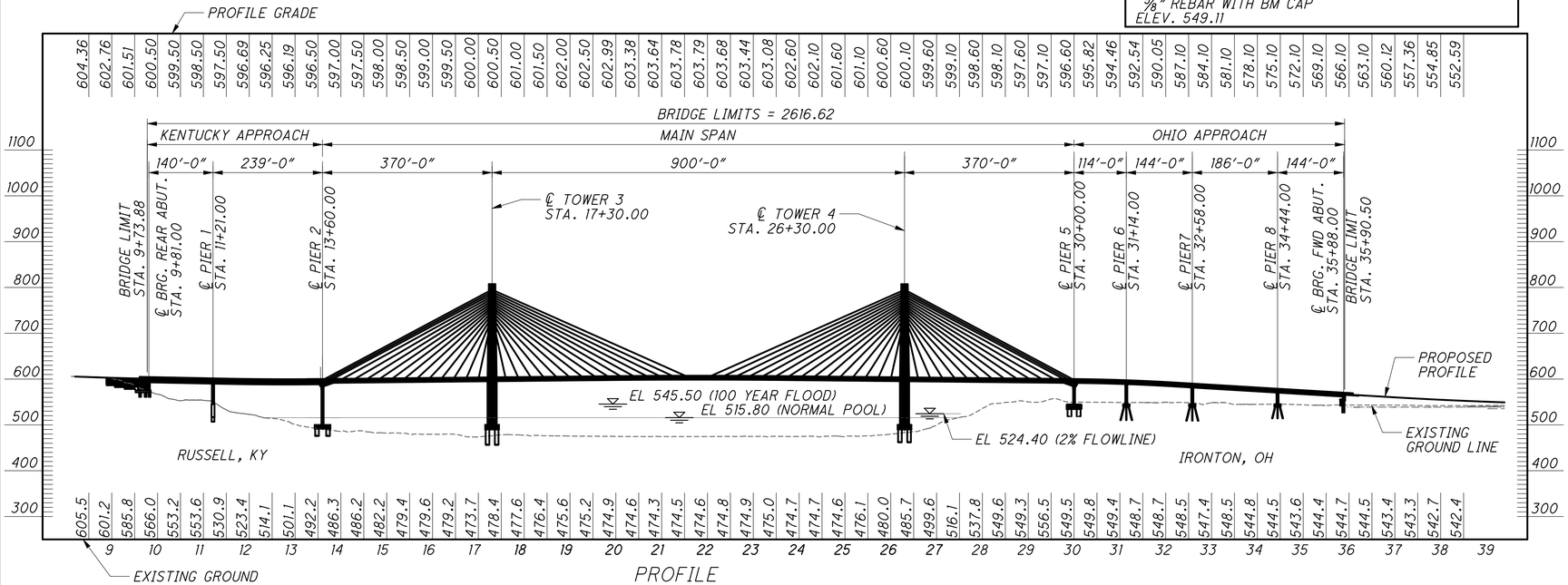

PROFILE

NOTES

1. EARTHWORK LIMITS SHOWN ARE APPROXIMATE. ACTUAL SLOPES SHALL CONFORM TO PLAN CROSS SECTIONS.
2. FOR ADDITIONAL INFORMATION, SEE APPROPRIATE KENTUCKY APPROACH SITE PLAN, MAIN SPAN SITE PLAN, OR OHIO APPROACH SITE PLAN.
3. SEE SHEET 68/365 FOR NAVIGATIONAL CLEARANCE DATA.
4. SEE SHEET 68/365 FOR HYDRAULIC DATA.
5. REFER TO ROADWAY PLANS FOR LOCATION OF ℄ R/W 93C.

DESIGN TRAFFIC:
2008 ADT = 10,300 2008 ADTT = 412
2036 ADT = 14,430 2036 ADTT = 577
DIRECTIONAL DISTRIBUTION = 50%

EXISTING STRUCTURE

TYPE: VARIABLE DEPTH CANTILEVER THROUGH TRUSS AND SIMPLE SPAN THROUGH TRUSS WITH OPEN AND CONCRETE FILLED STEEL GRID DECK (MAINSPAN). CONTINUOUS REINFORCED CONCRETE SLAB AND STEEL BEAM WITH REINFORCED CONCRETE DECK (KY APPROACH). CONTINUOUS REINFORCED CONCRETE SLAB, STEEL BEAMS WITH CONCRETE FILLED STEEL GRID DECK, AND STEEL THROUGH GIRDER WITH CONCRETE FILLED DECK (OH APPROACH).

SPANS (28): 22'-8", 3 @ 28'-2", 21'-11", 30'-6", 201'-0", 350'-0", 725'-0", 350'-0", 2 @ 56'-0", 71'-10", 2 @ 30'-6", 30'-0", 24'-0", 2 @ 30'-0", 2 @ 28'-6", 3 @ 30'-0", 2 @ 24'-0", 30'-0" & 25-0".

ROADWAY: 20'-9½ F/F CURB (MAINSPAN)
VARIES 22'-5" TO 46'-0" F/F CURB (APPROACH SPANS)

LOADING: HS-15 (AFTER MAJOR REHABILITATION IN 1984)

SKEW: NONE

SIDEWALK: 2'-7" (MAINSPAN)

ALIGNMENT: TANGENT (MAINSPAN), CURVED (APPROACHES)

LOCATION: APPROX. 0.45 MILES DOWNSTREAM OF PROPOSED STRUCTURE.

STRUCTURAL FILE NUMBER: 4401255

DATE BUILT: 1922, MAJOR REHABILITATION 1962 & 1984

CONDITION: POOR

DISPOSITION: TO BE REMOVED

PROPOSED MAIN SPAN STRUCTURE

TYPE: THREE SPAN CABLE STAYED WITH REINFORCED CONCRETE EDGE GIRDER SUPERSTRUCTURE (MAINSPAN). CONTINUOUS BENT STEEL PLATE GIRDER SUPERSTRUCTURE (KY APPROACH). CONTINUOUS CURVED STEEL PLATE GIRDER SUPERSTRUCTURE (OH APPROACH). ON REINFORCED CONCRETE SUBSTRUCTURE.

KENTUCKY APPROACH SPANS: 140', 234.71' C/C BEARINGS
MAIN SPANS: 370', 900' & 370' C/C BEARINGS
OHIO APPROACH SPANS: 109.71', 144', 186' & 144' C/C BEARINGS

ROADWAY: VARIES (32'-0" TO 56'-0") MEASURED TOE/TOE OF DEFLECTOR PARAPET

LOADING: HL-93

WEARING SURFACE: MONOLITHIC CONCRETE (APPROACH SPANS)
1¼" MIN. MICRO SILICA MODIFIED CONCRETE OVERLAY (MAIN SPAN)

SKEW: REAR ABUTMENT AND PIER 1: 15 ° LF
PIER 3 TO FWD ABUTMENT: NONE

APPROACH SLABS: AS-1-81 (30' LONG)

ALIGNMENT: TANGENT & CURVE LEFT

CROWN: VARIES, 0.016 FT/FT CROWN TO 0.016 (MAX.) SUPERELEVATED

COORDINATES: LATITUDE 38°31'30" N
LONGITUDE 82°41'10" W

DESIGN AGENCY
URS
36 EAST 7TH STREET
SUITE 2300
CINCINNATI, OHIO 45202

DESIGNED DEJ | DRAWN GJW | REVIEWED RWB | DATE 6-10
CHECKED MJZ | REVISED | STRUCTURE FILE NUMBER 4401263

GREENUP COUNTY, KY
LAWRENCE COUNTY, OH
STA. 9+73.88
STA. 35+90.50

GENERAL SITE PLAN
BRIDGE NO. LAW-93C-0000
IRONTON RUSSELL BRIDGE OVER OHIO RIVER

LAW-93C-0.00
PID No. 81595

4 / 365

391
788

J:\Project\O\ODOT\15005112 Ironton Russell\LAW\81595\structures\LAW093_1111C\sheets\093_0000_sp001.dgn — 4/29/2011 9:24:20 AM — john_corley

1. STANDARD DRAWINGS AND SUPPLEMENTAL SPECIFICATIONS:

REFER TO THE FOLLOWING STANDARD BRIDGE DRAWINGS:

AS-1-81	REVISED	7-19-2002
EXJ-4-87	REVISED	7-19-2002
EXJ-6-06	REVISED	1-20-2006
GSD-1-96	REVISED	7-19-2002
VPF-1-90	REVISED	4-15-2011

AND TO THE FOLLOWING SUPPLEMENTAL SPECIFICATIONS:

800	DATED	01-21-2011
840	DATED	10-15-2010
847	DATED	04-15-2011
898	DATED	01-21-2011

2. DESIGN SPECIFICATIONS:

THIS STRUCTURE CONFORMS TO THE "LRFD BRIDGE DESIGN SPECIFICATIONS" ADOPTED BY THE AMERICAN ASSOCIATION OF STATE HIGHWAY AND TRANSPORTATION OFFICIALS, 4TH EDITION, 2007, INCLUDING THE 2009 INTERM SPECIFICATIONS AND THE ODOT BRIDGE DESIGN MANUAL, 2007.

AASHTO GUIDE SPECIFICATION AND COMMENTARY FOR VESSEL COLLISION DESIGN OF HIGHWAY BRIDGES, 1991.

CEB-FIP MODEL CODE FOR CONCRETE STRUCTURES, 1990 EDITION (FOR TIME DEPENDENT BEHAVIOR OF CONCRETE).

POST-TENSIONING INSTITUTE RECOMMENDATIONS FOR STAY CABLE DESIGN, TESTING AND INSTALLATION, FIFTH EDITION, 2007.

AASHTO GUIDE SPECIFICATION FOR BRIDGE TEMPORARY WORKS.

3. SPECIAL DESIGN SPECIFICATIONS:

MAIN SPAN UNIT STRUCTURE:
THE MAIN SPAN UNIT DECK AND TRANSVERSE FLOOR BEAMS REQUIRED THE USE OF A THREE DIMENSIONAL MODEL USING THE FINITE ELEMENT DESIGN METHOD WITH PLATE BENDING ELEMENTS TO ANALYZE THE STRUCTURE. THE PROGRAM USED FOR STRUCTURAL ANALYSIS WAS GTSTRUDL. THE MAIN SPAN UNIT GLOBAL SYSTEM REQUIRED THE USE OF A THREE DIMENSIONAL MODEL USING FINITE ELEMENTS DESIGN METHOD WITH BEAM BENDING ELEMENTS TO ANALYZE THE STRUCTURE. THE PROGRAM USED FOR STRUCTURAL ANALYSIS WAS MIDAS.

THE FOLLOWING MAIN SPAN COMPONENTS ARE DESIGNED AS PARTIALLY PRESTRESSED ELEMENTS: TRANSVERSE FLOOR BEAMS, EDGE GIRDERS, DECK AND COLUMNS OF PIERS 2 AND 5.

POST-TENSIONING EFFECTS ARE CONSIDERED AS PERMANENT LOADS AND ARE INCLUDED UNDER ALL LOAD CONDITIONS.

EFFECTS FROM STAY CABLE STRESSING OPERATIONS ARE CONSIDERED AS PERMANENT LOADS AND ARE INCLUDED UNDER ALL LOAD CONDITIONS.

OHIO APPROACH:
THIS BRIDGE REQUIRED THE USE OF A TWO DIMENSIONAL MODEL USING THE GRILLAGE DESIGN METHOD TO ANALYZE THE STRUCTURE. THE COMPUTER PROGRAM USED FOR STRUCTURAL ANALYSIS WAS DESCUS I. THE BRIDGE LOAD DISTRIBUTIONS USED IN THIS PROGRAM ARE AS FOLLOWS:

DEAD LOAD DISTRIBUTION: SLAB DEAD LOADS ARE DISTRIBUTED IN RELATION TO GIRDER SPACING. FUTURE WEARING SURFACE, AND RAILING LOADS ARE DISTRIBUTED EQUALLY TO ALL GIRDERS.

LIVE LOAD DISTRIBUTION: THE DESIGN PROGRAM DISTRIBUTED THE LIVE LOADS BASED ON BOTH THE LONGITUDINAL AND THE LATERAL STIFFNESS. THE LIVE LOAD DISTRIBUTION FACTORS VARY ALONG THE LENGTH AND WIDTH OF THE STRUCTURE.

KENTUCKY APPROACH:
THIS BRIDGE REQUIRED THE USE OF A TWO DIMENSIONAL MODEL USING THE GRILLAGE DESIGN METHOD TO ANALYZE THE STRUCTURE. THE COMPUTER PROGRAM USED FOR STRUCTURAL ANALYSIS WAS DESCUS I. THE BRIDGE LOAD DISTRIBUTIONS USED IN THIS PROGRAM ARE AS FOLLOWS:

DEAD LOAD DISTRIBUTION: SLAB DEAD LOADS AND FUTURE WEARING SURFACE ARE DISTRIBUTED IN RELATION TO GIRDER SPACING. RAILING LOADS ARE DISTRIBUTED EQUALLY TO ALL GIRDERS.

LIVE LOAD DISTRIBUTION: LIVE LOADS ARE DISTRIBUTED BASED ON THE LEVER ARM RULE FOR THE WIDEST PART OF THE BRIDGE. THESE DISTRIBUTION FACTORS HAVE BEEN CONSERVATIVELY APPLIED TO THE NARROWER PARTS OF THE BRIDGE.

OPERATIONAL IMPORTANCE:
THE FOLLOWING LOAD MODIFIERS HAVE BEEN ASSUMED FOR THE DESIGN OF THIS STRUCTURE IN ACCORDANCE WITH THE AASHTO LRFD BRIDGE DESIGN SPECIFICATIONS, ARTICLE 1.3.5 AND THE ODOT BRIDGE DESIGN MANUAL, 2007.

MAIN SPAN UNIT STRUCTURE: 1.05
KENTUCKY AND OHIO APPROACH STRUCTURES: 1.00

4. DESIGN LOADING:

DEAD LOADS:
REINFORCED CONCRETE.....150 PCF
CABLE STAYED SUPERSTRUCTURE CONCRETE.....155 PCF
SEAL CONCRETE.....145 PCF
STEEL.....490 PCF
COMPACTED SOIL.....120 PCF

SUPERIMPOSED DEAD LOADS:
UTILITY ALLOWANCE.....32 PLF
CONCRETE BARRIER PLUS METAL RAILING (PER BARRIER)....390 PLF
FUTURE WEARING SURFACE - APPROACH SPANS.....30 PSF
FUTURE WEARING SURFACE - MAIN SPAN UNIT.....0 PSF
INITIAL WEARING SURFACE - APPROACH SPANS.....0 PSF
INITIAL WEARING SURFACE - MAIN SPAN UNIT.....30 PSF
STAY-IN-PLACE FORMS.....0 PSF
CONTINUOUS RAILS FOR FUTURE INSPECTION TRAVELER....100 PLF
LIGHT POLES.....140 LBS/EACH

LIVE LOADS:
HL-93 LIVE LOAD

WIND LOADS:
FOR MAIN SPAN UNIT WIND LOADING DIAGRAMS AND INFORMATION, SEE SHEETS 10/365 & 11/365 .

CONSTRUCTION STAGE WIND REQUIREMENTS:
STABILITY RETURN PERIOD = 1000 YEARS 10-MINUTE AVERAGE WIND SPEED AT DECK LEVEL IS 76.0 MPH.
SERVICE DESIGN RETURN PERIOD = 20 YEARS 1-HOUR AVERAGE WIND SPEED AT DECK LEVEL IS 61.5 MPH.

THERMAL EFFECTS:
FOR MAIN SPAN UNIT STRUCTURE:

MEAN TEMPERATURE: 60 DEGREES F

COEFFICIENT OF THERMAL EXPANSION:
CONCRETE: 6.0E-06/F
STEEL: 6.5E-06/F

UNIFORM TEMPERATURE RISE AND FALL:
TEMPERATURE RISE (TYPICAL UNLESS NOTED OTHERWISE) = 45 DEGREES F
TEMPERATURE FALL (TYPICAL UNLESS NOTED OTHERWISE) = 45 DEGREES F

TEMPERATURE DIFFERENTIAL:
NON-LINEAR TEMPERATURE GRADIENT ON SUPERSTRUCTURE ACCORDING TO AASHTO LRFD SECTION 3.12.3, ZONE 3.

FOR KENTUCKY APPROACH STRUCTURE (STEEL):
UNIFORM TEMPERATURE RISE AND FALL
TEMPERATURE RISE = 60 DEGREES F
TEMPERATURE FALL = 90 DEGREES F

FOR OHIO APPROACH STRUCTURE (STEEL):
UNIFORM TEMPERATURE RISE AND FALL
TEMPERATURE RISE = 60 DEGREES F
TEMPERATURE FALL = 90 DEGREES F

CREEP AND SHRINKAGE EFFECTS:
RELATIVE HUMIDITY: 70 PERCENT
VESSEL COLLISION LOADS:
AN EQUIVALENT STATIC VESSEL COLLISION FORCE OF 6161 KIPS FOR PIER 2, TOWER 3, AND TOWER 4 (FULLY LOADED TOW) IS APPLIED AT ELEVATION 537.3 IN A DIRECTION PARALLEL TO THE RIVER FLOW.

AN EQUIVALENT STATIC VESSEL COLLISION FORCE OF 3080 KIPS FOR PIER 2, TOWER 3 AND TOWER 4 (FULLY LOADED TOW) IS APPLIED AT ELEVATION 537.3 IN A DIRECTION PERPENDICULAR TO THE RIVER FLOW. THIS FORCE SHALL NOT BE APPLIED CONCURRENTLY WITH THE FORCE PARALLEL TO THE RIVER FLOW.
EARTHQUAKE LOADS:
EARTHQUAKE LOADS AND DESIGN IN ACCORDANCE WITH AASHTO LRFD BRIDGE DESIGN SPECIFICATIONS AND THE ODOT BRIDGE DESIGN MANUAL, 2007.

SEISMIC PERFORMANCE CATEGORY A AND HORIZONTAL ACCELERATION OF 0.05G.
ICE LOADS:
PROVISIONS OF AASHTO LRFD SECTION 3.9 APPLY, WITH 3 INCHES OF ICE AND AN EFFECTIVE ICE STRENGTH OF 400 PSI ACTING AT ELEVATION 515.8. ICE THICKNESS DETERMINED BASED ON HISTORICAL INFORMATION AND METHODOLOGY PROVIDED BY USACE.
STREAM FLOW:
100 YEAR FLOOD FLOW: 6.2 FPS.

FUTURE INSPECTION TRAVELER:
THE MAINSPAN UNIT FROM PIER 2 TO PIER 5 HAS BEEN DESIGNED TO ACCOMMODATE THE ADDITION OF AN INSPECTION TRAVELER IN THE FUTURE. FLOOR BEAMS HAVE BEEN PROVIDED WITH ANCHOR BOLT EMBEDMENTS TO SUPPORT FUTURE RAILS FOR THE TRAVELER.

DESIGN OF MAINSPAN UNIT INCLUDED IN THE FOLLOWING LOADS:
CONTINUOUS RAILS.....100 PLF
TRAVELER SELF WEIGHT.....17 KIPS
LIVE LOAD ON TRAVELER.....9 KIPS
TRAVELER INERTIAL LOAD DURING OPERATIONS.....5 KIPS
WIND ON TRAVELER WHILE PARKED: TRANSVERSE.....2 KIPS
LONGITUDINAL.....14 KIPS
WIND ON TRAVELER DURING OPERATION: TRANSVERSE.....0.3 KIPS
LONGITUDINAL...3 KIPS

5. DIMENSIONS AND ELEVATIONS:

ALL DIMENSIONS ARE MEASURED HORIZONTALLY AND VERTICALLY UNLESS NOTED OTHERWISE.

VERTICAL DATUM ACCORDING TO NGVD 1929.

HORIZONTAL DATUM COORDINATES ARE BASED ON THE RECTANGULAR STATE PLANE COORDINATE SYSTEM, NAD 1927.

ALL DIMENSIONS, ANGLES AND ELEVATION ARE SHOWN FOR 60 DEGREES FAHRENHEIT AFTER ALL LONG-TERM DEFLECTIONS AND MOVEMENTS HAVE OCCURRED.

6. SCOUR DEPTH ASSUMPTION:

THE SOIL OVERBURDEN PLUS THE ROCK TO THE FOLLOWING ELEVATION IS CONSIDERED TO BE SCOURABLE:
PIER 2.....= EL. 475.4
TOWER 3...= EL. 473.6
TOWER 4...= EL. 473.1

7. DESIGN DATA:

MAIN SPAN UNIT STRUCTURE:
CONCRETE CLASS QSC3 - COMPRESSIVE STRENGTH 6.5 KSI (SUPERSTRUCTURE)
CONCRETE CLASS QSC3 - COMPRESSIVE STRENGTH 6.5 KSI (SUBSTRUCTURE)
REINFORCING STEEL - MINIMUM YIELD STRENGTH 60 KSI
CONCRETE CLASS QSC1 - COMPRESSIVE STRENGTH 4.0 KSI (FOOTINGS)
CONCRETE CLASS QSC2 - COMPRESSIVE STRENGTH 4.5 KSI (DRILLED SHAFTS, SEE NOTE 39)
SPIRAL REINFORCEMENT MAY BE PLAIN BARS, ASTM A82 OR A615
ALL REINFORCING STEEL AND COUPLERS SHALL BE EPOXY COATED EXCEPT BURSTING STEEL FOR POST-TENSIONING ANCHORAGE'S SHALL BE GALVANIZED.
STRUCTURAL STEEL - ASTM A709 GRADE 50 GALVANIZED, YIELD STRENGTH 50 KSI

KENTUCKY AND OHIO APPROACH SPAN STRUCTURES:
CONCRETE CLASS QSC2 - COMPRESSIVE STRENGTH 4.5 KSI (SUPERSTRUCTURE & APPROACH SLABS)
CONCRETE CLASS QSC1 - COMPRESSIVE STRENGTH 4.0 KSI (SUBSTRUCTURE)
CONCRETE CLASS QSC2 - COMPRESSIVE STRENGTH 4.5 KSI (DRILLED SHAFTS, SEE NOTE 39)
REINFORCING STEEL - MINIMUM YIELD STRENGTH 60 KSI
SPIRAL REINFORCEMENT MAY BE PLAIN BARS, ASTM A82 OR A615
ALL REINFORCING STEEL AND COUPLERS SHALL BE EPOXY COATED.
STRUCTURAL STEEL - ASTM A709 GRADE 50W - YIELD STRENGTH 50 KSI
STEEL H-PILES - ASTM A572 YIELD STRENGTH 50 KSI

8. MAIN SPAN UNIT STRUCTURE POST-TENSIONING:

STRAND SHALL BE IN ACCORDANCE WITH ASTM A416, GRADE 270, LOW RELAXATION.

POST-TENSIONING BARS SHALL BE IN ACCORDANCE WITH ASTM A722, GRADE 150, TYPE II.

DESIGN IS BASED UPON THE FOLLOWING INITIAL TENDON STRESSES AND TENDON CHARACTERISTICS:
STRANDS:
STRAND DIAMETER.....= 0.6"
WOBBLE COEFFICIENT (K).....= 0.0002/FT
FRICTION COEFFICIENT.....= 0.25
ANCHOR SET.....= 0.25"
MAXIMUM JACKING STRESS.....= 0.80 f's
MAXIMUM STRESS AT ANCHORAGE AFTER SEATING.....= 0.70 f's
MAXIMUM STRESS OTHER LOCATIONS AFTER SEATING....= 0.83F'y <= 0.74 f's
APPARENT MODULUS OF ELASTICITY.....= 28,000 KSI
BARS:
WOBBLE COEFFICIENT (K).....= 0.0002/FT
FRICTION COEFFICIENT.....= 0.30
ANCHOR SET.....= 0.0"
MAXIMUM JACKING STRESS.....= 0.90 Fpy
MAXIMUM STRESS AT ANCHORAGE AFTER SEATING.....= 0.70 f's
APPARENT MODULUS OF ELASTICITY.....= 29,000 KSI

ALL PRESTRESSING STEEL SHALL BE SECURED AT THE ENDS BY PERMANENT TYPE ANCHORAGE DEVICES MEETING THE APPROVAL OF THE ENGINEER. THE ANCHORAGE'S SHALL DEVELOP AT LEAST 95 PERCENT OF THE MINIMUM SPECIFIED ULTIMATE TENSILE STRENGTH OF THE PRESTRESSING STEEL, TESTED IN AN UNBONDED STATE, WITHOUT EXCEEDING THE ANTICIPATED SET. THE ANCHORAGE SHALL BE SO ARRANGED THAT THE PRESTRESSING FORCE IN THE TENDON MAY BE VERIFIED PRIOR TO REMOVAL OF THE STRESSING EQUIPMENT.

ANCHORAGE SYSTEMS, BLOCKOUTS AND THEIR DETAILS INCLUDING SPIRAL REINFORCING AT ANCHORS SHALL BE DETERMINED BY THE POST-TENSIONING SYSTEM USED. THE CONTRACTOR SHALL DETERMINE DIMENSIONS AND SHALL ADJUST BLOCKOUTS AND REINFORCING AS REQUIRED.

ALL POST-TENSIONING TENDONS SHALL UTILIZE CORRUGATED PLASTIC DUCTS. A MINIMUM COMPRESSIVE STRENGTH OF 3500 PSI SHALL BE OBTAINED PRIOR TO STRESSING POST-TENSIONING TENDONS, UNLESS NOTED OTHERWISE.

DESIGN AGENCY
URS
36 EAST 7TH STREET
SUITE 2300
CINCINNATI, OHIO 45202

DESIGNED	DRAWN	REVIEWED	DATE
MJZ	JLS	DLJ	6/2010
CHECKED	REVISED	STRUCTURE FILE NUMBER	
BWJ		4401263	

GENERAL NOTES (1 OF 7)

BRIDGE NO. LAW-93-0000
IRONTON RUSSELL BRIDGE OVER OHIO RIVER

LAW-93-0.00
PID No. 81595

J:\Project\OV\ODOT\15005112 Ironton Russell\LAW\81595\structures\LAW093_1111C\sheets\Mainspan\093_0000CGN001.dgn - 12/12/2011 12:24:35 PM - jon_wanstrath

9. POST-TENSIONING TENDON QUANTITIES:

THE FOLLOWING ITEMS ARE BID AS "LUMP". QUANTITIES PROVIDED BELOW ARE FOR INFORMATIONAL PURPOSES ONLY:
SUPERSTRUCTURE STRAND....= 71,730 LBS.
SUPERSTRUCTURE BAR.....= 112,532 LBS.
PIER 2 STRAND.....= 35,592 LBS.
TOWER 3 STRAND.....= 13,780 LBS.
TOWER 4 STRAND.....= 13,780 LBS.
PIER 5 STRAND.....= 19,384 LBS.

10. STAY CABLE:

STAY CABLES SHALL BE COMPRISED OF 0.6" OR 0.62" DIAMETER LOW-RELAXATION WELDLESS SEVEN-WIRE STRAND CONFORMING TO THE REQUIREMENTS OF ASTM A416, GRADE 270.

THE STRANDS SHALL BE GREASED OR WAXED AND INDIVIDUALLY SHEATHED IN HI-DENSITY POLYETHYLENE. THE ENTIRE STAY CABLE WILL THEN BE ENCASED IN AN UNGROUTED HI-DENSITY POLYETHYLENE OUTER PIPE.

STAY CABLE DETAILS AND ACCEPTANCE TESTING SHALL BE IN ACCORDANCE WITH THE SPECIAL PROVISIONS.

11. CONCRETE:

PROVIDE ¾" CHAMFERS ON ALL EDGES, UNLESS NOTED OTHERWISE.

CONSTRUCTION JOINTS WILL BE PERMITTED ONLY AT LOCATIONS INDICATED ON PLANS. ADDITIONAL CONSTRUCTION JOINTS OR ALTERATIONS TO THOSE SHOWN SHALL REQUIRED WRITTEN APPROVAL OF THE ENGINEER.

CASTING OF THE FOLLOWING CONCRETE ELEMENTS SHALL CONFORM TO THE REQUIREMENTS OF MASS CONCRETE SPECIAL PROVISION:

1. ALL SUPERSTRUCTURE AND SUBSTRUCTURE CONCRETE ELEMENTS 4' AND MORE IN THICKNESS, FOR MAIN SPAN AND APPROACH SPAN STRUCTURES

2. ALL DRILLED CAISSONS 6' AND MORE IN DIAMETER.

12. ITEM 898 QC/QA CONCRETE, CLASS QSC2, SUPERSTRUCTURE (APPROACH SLAB) (T=17"), AS PER PLAN:

FURNISH APPROACH SLABS CONFORMING TO CMS 526 EXCEPT CONCRETE SHALL BE IN ACCORDANCE WITH SUPPLEMENTAL SPECIFICATION 898, QC/QA CONCRETE, CLASS QSC2. THE ACCEPTED QUANTITIES SHALL INCLUDE; CONCRETE, REINFORCING STEEL, JOINT FILLERS, JOINT SEALERS, JOINT SEALS, AND WATERPROOFING. THE DEPARTMENT WILL MEASURE APPROACH SLABS BY THE NUMBER OF SQUARE YARDS. THE DEPARTMENT WILL INITIALLY PAY THE FULL BID PRICE TO THE CONTRACTOR UPON COMPLETING THE WORK. THE DEPARTMENT WILL CALCULATE THE FINAL ADJUSTED PAYMENT ACCORDING TO 898.17 AND INCLUDE APPROACH SLAB CONCRETE AND DECK CONCRETE IN THE SAME LOT TO DETERMINE FINAL PAY FACTORS.

13. ITEM 898 QC/QA CONCRETE, CLASS QSC2, SUPERSTRUCTURE (DECK), AS PER PLAN:

THE DEPARTMENT WILL CALCULATE THE FINAL ADJUSTED PAYMENT ACCORDING TO 898.17 AND INCLUDE APPROACH SLAB CONCRETE AND DECK CONCRETE IN THE SAME LOT TO DETERMINE FINAL PAY FACTORS.

14. ITEM 898 QC/QA CONCRETE, CLASS QSC3, (CABLE STAYED SUPERSTRUCTURE)

THE WORK OF THIS ITEM SHALL BE PER THE ODOT SUPPLEMENTAL SPECIFICATION 898 AND SHALL MEET THE FOLLOWING MIX DESIGN REQUIREMENTS:

SPECIFIED COMPRESSIVE STRENGTH, F'C = 6500 PSI.
DESIGN PERMEABILITY, PD < 1500 COULOMBS.
COARSE AGGREGATE SIZE NO: 8

THE DEPARTMENT WILL INITIALLY PAY THE FULL BID PRICE TO THE CONTRACTOR UPON COMPLETION OF THE WORK. THE DEPARTMENT WILL CALCULATE THE FINAL ADJUSTED PAYMENT ACCORDING TO 898.17 AND INCLUDE THE CABLE STAYED SUPERSTRUCTURE, PIER 2, TOWER 3, TOWER 4 AND PIER 5 IN SAME LOT TO DETERMINE FINAL PAY FACTORS.

15. ITEM 898 QC/QA CONCRETE, CLASS QSC3, (PIER 2, TOWER 3, TOWER 4, PIER 5) UNIT SUBSTRUCTURE, AS PER PLAN

THE WORK OF THIS ITEM SHALL BE PER THE ODOT SUPPLEMENTAL SPECIFICATION 898 AND SHALL MEET THE FOLLOWING MIX DESIGN REQUIREMENTS:

SPECIFIED COMPRESSIVE STRENGTH, F'C = 6500 PSI.
DESIGN PERMEABILITY, PD < 1500 COULOMBS.
COARSE AGGREGATE SIZE NO: 8

THIS ITEM IS TO BE USED FOR PIER 2, TOWER 3, TOWER 4, AND PIER 5, ABOVE FOOTING.

THE DEPARTMENT WILL INITIALLY PAY THE FULL BID PRICE TO THE CONTRACTOR UPON COMPLETION OF THE WORK. THE DEPARTMENT WILL CALCULATE THE FINAL ADJUSTED PAYMENT ACCORDING TO 898.17 AND INCLUDE THE CABLE STAYED SUPERSTRUCTURE, PIER 2, TOWER 3, TOWER 4 AND PIER 5 IN SAME LOT TO DETERMINE FINAL PAY FACTORS.

16. CONSTRUCTION JOINTS:

ALL CONSTRUCTION JOINTS (CJ) SHALL BE INTENTIONALLY ROUGHENED TO ¼" AMPLITUDE, UNLESS NOTED OTHERWISE.

17. ITEM 847 MICRO SILICA MODIFIED CONCRETE OVERLAY, AS PER PLAN (1 ¼" THICK):

DESCRIPTION:
THE WORK OF THIS ITEM SHALL BE DONE IN ACCORDANCE WITH THE SUPPLEMENTAL SPECIFICATION 847, EXCEPT MODIFIED AS FOLLOWS: THE STRUCTURAL CONCRETE DECK WITHIN THE LIMITS OF THE ROADWAY SHALL BE PROVIDED WITH AN INTENTIONALLY ROUGHENED SURFACE. REMOVAL OF THE TOP ¼" OF THE SOUND EXISTING CONCRETE SURFACE, AS REQUIRED BY SUPPLEMENT SPECIFICATION 847.18 WILL NOT BE REQUIRED.

LONGITUDINAL CONSTRUCTION JOINTS IN CONCRETE OVERLAY WILL NOT BE PERMITTED. A MAXIMUM OF TWO TRANSVERSE CONSTRUCTION JOINTS WILL BE PERMITTED ON THE MAINSPAN UNIT.

18. DECK PLACEMENT DESIGN ASSUMPTIONS:

APPROACH SPANS:
THE FOLLOWING ASSUMPTIONS OF CONSTRUCTION MEANS AND METHODS WERE MADE FOR THE ANALYSIS AND DESIGN OF THE SUPERSTRUCTURE. THE CONTRACTOR IS RESPONSIBLE FOR THE DESIGN OF THE FALSEWORK SUPPORT SYSTEM WITHIN THESE PARAMETERS AND WILL ASSUME RESPONSIBILITY FOR SUPERSTRUCTURE ANALYSIS FOR DEVIATION FROM THESE DESIGN ASSUMPTIONS.

AN EIGHT WHEEL FINISHING MACHINE WITH A MAXIMUM WHEEL LOAD OF 1.21 KIPS FOR A TOTAL MACHINE LOAD OF 9.68 KIPS.

A MINIMUM OUT-TO-OUT WHEEL SPACING AT EACH END OF THE MACHINE OF 103".

A MAXIMUM SPACING OF OVERHANG FALSEWORK BRACKETS OF 48 IN.

A MAXIMUM DISTANCE FROM THE CENTERLINE OF THE FASCIA GIRDER TO THE FACE OF THE SAFETY HANDRAIL OF 65".

19. DECK PROTECTION METHOD:

EPOXY COATED REINFORCING STEEL.
2½" CONCRETE COVER (APPROACH SPANS).
1¼" MIN. MICRO-SILICA CONCRETE OVERLAY FOR MAIN SPAN UNIT STRUCTURE.

20. MONOLITHIC WEARING SURFACE:

IS ASSUMED, FOR DESIGN PURPOSES, TO BE 1 INCH THICK (FOR APPROACH SPANS).

21. ENVIRONMENTAL COMMITMENTS:

SEE ROADWAY GENERAL NOTE DRAWING NOS. 24/788 THRU 26/788 FOR ENVIRONMENTAL COMMITMENTS AND RESTRICTIONS.

22. SPREAD FOOTINGS ON ROCK:

FOOTINGS FOR REAR ABUTMENT WINGWALLS SHALL EXTEND A MINIMUM OF 3 INCHES INTO BEDROCK OR TO THE ELEVATION SHOWN, WHICHEVER IS LOWER.

23. UTILITY LINES:

THE UTILITIES SHALL BEAR ALL EXPENSE INVOLVED IN RELOCATING THE AFFECTED UTILITY LINES. THE CONTRACTOR AND UTILITY OWNERS ARE TO COOPERATE BY ARRANGING THEIR WORK IN SUCH A MANNER THAT INCONVENIENCE TO EITHER WILL BE HELD TO A MINIMUM. SEE ROADWAY GENERAL NOTES FOR THE LIST OF UTILITY OWNERS WITHIN THE PROJECT LIMITS.

24. FOUNDATION BEARING RESISTANCE:

SPREAD FOOTINGS, AS DESIGNED PRODUCE THE FOLLOWING:

LOCATION	MAXIMUM SERVICE LOAD PRESSURE KIPS/SQ. FT.	MAXIMUM STRENGTH LOAD PRESSURE KIPS/SQ. FT.	FACTORED BEARING RESISTANCE KIPS/SQ. FT.
REAR ABUTMENT, WINGWALL 1	1.474	2.217	22.5
REAR ABUTMENT, WINGWALL 2	1.718	2.558	22.5

25. DRILLED SHAFTS:

THE MAXIMUM FACTORED LOAD TO BE SUPPORTED BY EACH DRILLED SHAFT AT EACH SUBSTRUCTURE UNIT IS SHOWN IN THE FOLLOWING TABLE. THIS LOAD IS RESISTED BY SIDE RESISTANCE WITHIN A PORTION OF THE BEDROCK SOCKET AND ALSO BY TIP RESISTANCE. THE FACTORED RESISTANCE DEVELOPED BY SIDE RESISTANCE, AND THE FACTORED RESISTANCE PROVIDED BY THE DRILLED SHAFT TIP ARE AS SHOWN IN THE TABLE.

SUBSTRUCTURE UNIT	DIAMETER OF DRILLED SHAFT	DIAMETER OF ROCK SOCKET	MAX. FACTORED LOAD, KIPS	FACTORED RESISTANCE DEVELOPED BY DRILLED SHAFT TIP. (ϕ = 0.50)	FACTORED RESISTANCE DEVELOPED BY SIDE RESISTANCE (ϕ = 0.50)
REAR ABUTMENT	4'-0"	3'-6"	1,041	260	943
PIER NO. 1	6'-6"	6'-0"	1,980	2,874	N/A
PIER NO. 2	8'-6"	8'-0"	4,336	7,008	7,534
TOWER NO. 3	8'-6"	8'-0"	9,934	7,008	6,593
TOWER NO. 4	8'-6"	8'-0"	10,000	7,008	4,597
PIER NO. 5	8'-6"	8'-0"	2,202	7,008	2,274

DESIGN AGENCY
URS
36 EAST 7TH STREET
SUITE 2300
CINCINNATI, OHIO 45202

DESIGNED MJZ | DRAWN JLS | REVIEWED DLJ | DATE 6/2010
CHECKED BWJ | REVISED | STRUCTURE FILE NUMBER 4401263

GENERAL NOTES (2 OF 7)
BRIDGE NO. LAW-93-0000
IRONTON RUSSELL BRIDGE OVER OHIO RIVER

LAW-93-0.00
PID No. 81595

J:\Project\O\ODOT\15005112 Ironton Russell\LAW\81595\structures\LAW093_1111C\sheets\Mainspan\093_0000CGN002.dgn - 12/12/2011 3:22:38 PM - jon_wanstrath

26. ITEM 524 DRILLED SHAFTS, 96" DIAMETER, INTO BEDROCK, AS PER PLAN:
ITEM 524 DRILLED SHAFTS MISCELLANEOUS: 102" DIAMETER, ABOVE BEDROCK.

A PROOF CORE SHALL BE DRILLED A MINIMUM OF TWO (2) ROCK SOCKET DIAMETERS BELOW THE PROPOSED TIP ELEVATION AT EACH PRODUCTION AND TEST DRILLED SHAFT LOCATION. THE PROOF CORES SHALL BE DRILLED PRIOR TO EXCAVATION OF THE DRILLED SHAFT BEDROCK SOCKET. NQ SIZE ROCK CORE OR APPROVED EQUAL SHALL BE USED. THE RECOVERED ROCK CORES SHALL BE LABELED AS TO THEIR LOCATION AND DEPTH, WITH PERCENT RECOVERY AND RQD VALUES TABULATED. THE ROCK CORES SHALL BE PLACED IN WOOD BOXES FOR TRANSPORT AND STORAGE.

AN AIRLIFT SHALL BE REQUIRED TO ASSIST IN CLEANING THE BOTTOM OF THE BEDROCK SOCKET. CONCRETE SHALL BE PLACED FOR THE DRILLED SHAFTS BY PUMPING ONLY AS PER 524.13 THE CONVEYANCE PIPE SHALL BE STEEL OR OTHER APPROVED MATERIAL.

CROSSHOLE SONIC LOGGING (CSL) TESTS SHALL BE PREFORMED IN ACCORDANCE WITH THE SPECIAL PROVISIONS.

THE CONCRETE FOR THE DRILLED SHAFT SHALL BE PUMPED. FREE FALL PLACEMENT (524.11) OR TREMIE PLACEMENT (524.12) WILL NOT BE ALLOWED.

NO SEPARATE PAYMENT WILL BE MADE FOR PROOF CORES AND FOR ALL MATERIALS, EQUIPMENT AND LABOR NECESSARY TO COMPLETE THE WORK AS SPECIFIED THE COSTS SHALL BE INCLUDED IN THE CONTRACT UNIT PRICE PER LINEAR FOOT OF ITEMS 524 DRILLED SHAFTS, 96" DIAMETER, INTO BEDROCK, AS PER PLAN.

27. PILES TO BEDROCK:

DRIVE PILES TO REFUSAL ON BEDROCK. THE DEPARTMENT WILL CONSIDER REFUSAL TO BE OBTAINED BY PENETRATING WEAK BEDROCK FOR SEVERAL INCHES TO A MINIMUM RESISTANCE OF 20 BLOWS PER INCH OR BY CONTRACTING STRONG BEDROCK AND THE PILE RECEIVING AT LEAST 20 BLOWS. SELECT THE HAMMER SIZE TO ACHIEVE THE REQUIRED DEPTH TO BEDROCK AND REFUSAL. INSTEAD OF DRIVING TO REFUSAL, THE CONTRACTOR MAY PERFORM DYNAMIC LOAD TESTING ACCORDING TO C&MS 523 TO ESTABLISH A DRIVING CRITERIA FOR EACH PILE TYPE AND CAPACITY. PAYMENT FOR DYNAMIC LOAD TESTING PERFORMED AT THE CONTRACTOR'S OPTION IS INCLUDED IN THE UNIT PRICE PAY ITEM FOR PILES DRIVEN.

SUBSTRUCTURE UNIT	TOTAL FACTORED LOAD KIPS/PILE	NUMBER OF PILES	ORDER LENGTH
PIER NO. 6	380	24	75
PIER NO. 7	380	24	70
PIER NO. 8	380	27	70
FWD ABUTMENT	280	24	85

28. PILE SPLICES:

IN LIEU OF USING THE FULL PENETRATION BUTT WELDS SPECIFIED IN CMS 507.09 TO SPLICE STEEL H-PILES, THE CONTRACTOR MAY USE A MANUFACTURED H-PILE SPLICER. FURNISH SPLICERS FROM FOLLOWING MANUFACTURER:

ASSOCIATED PILE & FITTING CORPORATION
262 RUTHERFORD BLVD.
CLIFTON, NJ 07014

INSTALL AND WELD THE SPLICES TO THE PILE SECTION IN ACCORDANCE WITH THE MANUFACTURE'S WRITTEN ASSEMBLY PROCEDURE SUPPLIED TO THE ENGINEER BEFORE THE WELDING IS PREFORMED.

29. ITEM 503 - COFFERDAMS AND EXCAVATION BRACING, AS PER PLAN:

THE DESIGN SHOWN ON THE PLANS FOR TEMPORARY SUPPORT OF EXCAVATIONS IS ONE REPRESENTATIVE DESIGN THAT MAY BE USED TO CONSTRUCT THE PROJECT. THE CONTRACTOR MAY CONSTRUCT THE DESIGN SHOWN ON THE PLANS OR PREPARE AN ALTERNATE TO SUPPORT THE SIDES OF EXCAVATIONS. ALTERNATE DESIGN SHALL BE IN ACCORDANCE WITH CMS 501.05 AND MEET THE SUBMITTAL REQUIREMENTS OF THIS NOTE. THE CONTRACTOR SHALL BE RESPONSIBLE FOR THE DESIGN AND INSTALLATION OF THE COFFERDAMS FOR CONSTRUCTION OF THE TOWER AND PIERS LOCATED IN THE RIVER. COFFERDAMS SHALL BE DESIGNED FOR A MINIMUM OVERTOPPING FLOOD OF 534.00.

SHEETING SHALL BE DESIGNED TO SUPPORT THE RAILWAY EMBANKMENT AND IRONTON FLOOD LEVEE DURING CONSTRUCTION. THREE (3) SETS OF SHEETING PLANS, WHICH INCLUDE THE INFORMATION DESCRIBED IN THIS NOTE, SHALL BE SUBMITTED TO THE ENGINEER FOR REVIEW BY THE ENGINEER AND/OR THE COE OR THE RAILWAY AT LEAST THIRTY (30) DAYS BEFORE THE ACTUAL WORK IS TO BEGIN. THE PLANS SHALL BE PREPARED AND STAMPED BY AN OHIO REGISTERED PROFESSIONAL ENGINEER.

SHEETING SUBMITTAL'S SHALL INCLUDE AT LEAST THE FOLLOWING:

1. THE SIGNATURE AND NUMBER, OR PROFESSIONAL SEAL, OF THE OHIO REGISTERED PROFESSIONAL ENGINEER WHO PREPARED THE SUBMITTAL.
2. CALCULATIONS OF THE ACTUAL LOADS APPLIED TO THE SHEETING.
3. A DRAWING SHOWING THE LIMITS OF THE SHEETING WITH RESPECT TO THE RAILWAY/FLOOD LEVEE AND PROPOSED STRUCTURES.
4. PHYSICAL DIMENSIONS, MATERIALS, AND FABRICATION DETAILS OF SHEETING, WALERS, BRACING AND ANCHORS AS REQUIRED BY DESIGN.

PAYMENT SHALL BE MADE AT THE LUMP SUM PRICE BID FOR ITEM 503 - COFFERDAMS AND EXCAVATION BRACING, AS PER PLAN. THIS SHALL INCLUDE ALL NECESSARY TOOLS, LABOR, EQUIPMENT AND MATERIALS NECESSARY TO COMPLETE THIS ITEM OF WORK TO THE SATISFACTION OF THE ENGINEER.

30. IRONTON FLOOD LEVEE SPECIAL REQUIREMENTS:

A. EXCAVATION FOR PIER 5 CONSTRUCTION MUST BE SHORED IN A MANNER THAT DOES NOT ALLOW MOVEMENT OF ADJACENT LEVEE SLOPES. SHORING MAY BE DONE BY EITHER INTERNALLY-BRACED OR ANCHORED WALLS, BUT THE CONSTRUCTION CONTRACTOR SHALL ENLIST A REGISTERED PROFESSIONAL ENGINEER REGISTERED IN THE STATE OF OHIO TO DESIGN THE EXCAVATION BRACING SYSTEM. ALL DRAWINGS AND CALCULATIONS SHALL BE STAMPED AND SUBMITTED TO THE CORPS OF ENGINEERS (COE) FOR REVIEW PRIOR TO EXCAVATION.

B. SURFACE WATER ENTERING THE EXCAVATION MUST BE CONTROLLED TO PREVENT DEGRADATION OF FOUNDATION SOILS IN THE EXCAVATIONS OF PIER 5. IF GROUND WATER LEVELS ARE HIGH OR PERCHED WATER IS ENCOUNTERED, DEWATERING MEASURES MUST BE DESIGNED AND IMPLEMENTED DURING CONSTRUCTION OF THIS PIER. THE CONTRACTOR SHALL DETERMINE GROUNDWATER CONDITIONS IN THIS AREA PRIOR TO CONSTRUCTION.

C. THE CONSTRUCTION CONTRACTOR MUST HAVE A NOTIFICATION SYSTEM FOR ADVANCED WARNING OF ANY POTENTIAL FLOODING DURING CONSTRUCTION. GRANULAR MATERIAL MUST BE KEPT ON SITE TO BACKFILL PIER 5 EXCAVATION IF FLOODING IS EMINENT.

D. SHAFTS MUST BE INSTALLED USING METHODS THAT DO NOT RESULT IN STRENGTH LOSS IN SURROUNDING IN SITU SOILS.

E. THE LEVEE THROUGHOUT THIS AREA MUST BE INSPECTED DAILY BY A REGISTERED PROFESSIONAL GEOTECHNICAL ENGINEER DURING PIER 5 CONSTRUCTION. ANY SIGNS OF DISTRESS SUCH AS CRACKING MUST BE REPORTED TO THE CITY OF IRONTON AND U.S. ARMY CORPS OF ENGINEERS, HUNTINGTON DISTRICT, ATTENTION CELRH-OR-E IMMEDIATELY, AND THE CONTRACTOR SHALL IMMEDIATELY CEASE WORK IN THIS EVENT.

F. THE EXCAVATION SHALL BE BACKFILLED WITH EXCAVATED MATERIAL UNLESS IT IS FOUND TO CONTAIN UNSUITABLE MATERIAL SUCH AS ORGANICS OR DEBRIS. SPECIFICATIONS FOR BACKFILLING MUST INCLUDE PLACEMENT, MOISTURE CONTROL, COMPACTION, AND QUALITY CONTROL PROCEDURES.

G. THE CONSTRUCTION CONTRACTOR SHALL BE REQUIRED TO SUBMIT ALL INFORMATION AND PROPOSALS FOR THE ABOVE ITEMS AS PART OF THE EXCAVATION PLAN FOR REVIEW AND APPROVAL BY THE CITY OF IRONTON AND COE PRIOR TO CONSTRUCTION OF PIER 5.

THIS FLOOD LEVEE PROTECTION WORK SHALL BE INCLUDED WITH ITEM 503 - COFFERDAMS AND EXCAVATION BRACING, AS PER PLAN FOR PAYMENT.

31. NORFOLK SOUTHERN RAILROAD SPECIAL REQUIREMENTS:

REFER TO THE SPECIAL CLAUSES IN THE PROPOSAL FOR ADDITIONAL REQUIREMENTS REGARDING WORK ON OR ABOVE RAILROAD PROPERTY.

CONSTRUCTION CLEARANCE:
CONSTRUCTION CLEARANCES SHALL BE MAINTAINED TO ANY TEMPORARY FORM WORK, FALSE WORK, STOCKPILED MATERIALS, OR OTHER OBSTRUCTION WHICH WILL BE LEFT IN PLACE DURING TRAIN MOVEMENTS THROUGH THE JOB SITE.

EXCAVATION REQUIREMENTS:
THE CONTRACTOR SHALL SUBMIT TO THE ENGINEER AND THE RAILWAY DETAILED EXCAVATION PLANS, TEMPORARY SHORING PLANS AND CALCULATIONS ALL PREPARED AND SIGNED BY A REGISTERED PROFESSIONAL ENGINEER SHOWING SIZES OF ALL TEMPORARY SHORING STRUCTURAL MEMBERS, DETAILS OF CONNECTIONS, AND EMBEDMENT DEPTH. THE PLANS SHALL INCLUDE A PLAN VIEW SHOWING ALL THE PROPOSED EXCAVATIONS AND THE DISTANCES FROM THE CENTERLINE OF THE TRACK. THE PLANS MUST BE COMPLETE AND ACCURATELY DESCRIBE THE WORK. THE PLANS AND CALCULATIONS MUST BE APPROVED BY THE RAILWAY AND THE ENGINEER BEFORE EXCAVATION BEGINS.

UPON COMPLETION OF THE WORK ON RAILROAD PROPERTY, THE CONTRACTOR SHALL REQUEST THE ENGINEER TO ARRANGE A FINAL INSPECTION OF THE PROJECT WITH THE RAILWAY'S DIVISION ENGINEER OR HIS AUTHORIZED REPRESENTATIVE.

THIS TRACK PROTECTION WORK SHALL BE INCLUDED WITH ITEM 503 - COFFERDAMS AND EXCAVATION BRACING, AS PER PLAN FOR PAYMENT.

RAILROAD COORDINATION:
THE CONTRACTOR SHALL COORDINATE ALL CONSTRUCTION ACTIVITIES ADJACENT TO AND OVER THE NORFOLK SOUTHERN RAILROAD TRACKS WITH NORFOLK SOUTHERN CORPORATION TO ENSURE THE CONTINUOUS SAFE OPERATION OF THE RAIL TRAFFIC AS A PART OF THE MAINTENANCE OF TRAFFIC ON THIS PROJECT.

THE CONTRACTOR SHALL OBTAIN ADVANCE APPROVAL FROM NORFOLK SOUTHERN CORPORATION FOR CONSTRUCTION ACTIVITIES ADJACENT TO OR OVER THE NORFOLK SOUTHERN RAILROAD TRACKS. THE WRITTEN REQUEST MUST INCLUDE A DETAILED CONSTRUCTION PLAN AND ERECTION SEQUENCE THAT HIGHLIGHTS EQUIPMENT, LIFTING PROCEDURES, CLEARANCES, EXCAVATION LIMITS AND PROPOSED SCHEDULES FOR THE WORK DIRECTLY AFFECTING THE MOVEMENT OF TRAINS. USE NORFOLK SOUTHERN CORPORATION "GUIDELINES FOR DESIGN OF GRADE SEPARATION STRUCTURES, SECTION 1 - OVERHEAD GRADE SEPARATION DESIGN CRITERIA" DATED MARCH 22, 2004 AS A GUIDE FOR ANY TEMPORARY STRUCTURE CONSTRUCTION.

RAILROAD SAFETY RULES:
THE CONTRACTOR SHALL TAKE PROPER PRECAUTIONS TO PROTECT THE PUBLIC AND EMPLOYEES OF NORFOLK SOUTHERN CORPORATION FROM ANY DAMAGES OR INJURIES RESULTING FROM THE CONTRACTOR'S OPERATION.

ALL EMPLOYEES OF THE CONTRACTOR WORKING ON, AROUND OR ABOUT THE NORFOLK SOUTHERN CORPORATION RIGHT-OF-WAY SHALL USE PERSONAL PROTECTIVE EQUIPMENT CONSISTENT WITH THE RAILROAD'S SAFETY RULES. THIS EQUIPMENT SHALL, AS A MINIMUM, INCLUDE A SAFETY HAT, EYE PROTECTION AND 6 INCH MINIMUM HEIGHT LACE-UP, SAFETY TOE SHOES. WHEN CONDITIONS WARRANT, HEARING PROTECTION, FALL PROTECTION AND RESPIRATORY PROTECTION SHALL ALSO BE FURNISHED AND UTILIZED, CONSISTENT WITH OSHA AND FRA REGULATIONS GOVERNING BRIDGE WORKERS SAFETY AND HEALTH.

FLAGMEN:
A NORFOLK SOUTHERN CORPORATION FLAGMAN SHALL BE REQUIRED WHEN WORK IS PERFORMED ON, AROUND OR ABOUT THE NORFOLK SOUTHERN CORPORATION RIGHT-OF-WAY THAT MAY INTERFERE WITH TRAIN OPERATIONS. FLAGMEN SHALL BE PRESENT TO PROTECT THE RAILROAD AND ITS PROPERTY. NORFOLK SOUTHERN CORPORATION OR ITS DESIGNATED REPRESENTATIVE SHALL DETERMINE WHEN FLAGGING PROTECTION IS REQUIRED.

WHEN WORKING ON NORFOLK SOUTHERN CORPORATION RIGHT-OF-WAY OR WITHIN THE SAFETY ZONE SURROUNDING THE ACTIVE TRACKS, THE CONTRACTOR'S EMPLOYEES SHALL PARTICIPATE IN A JOB BRIEFING THAT SHALL BE CONDUCTED BY THE NORFOLK SOUTHERN CORPORATION FLAGMAN. IT SHALL BE THE RESPONSIBILITY OF THE CONTRACTOR'S SUPERVISORY PERSONNEL TO CARRY THROUGH FOR THE ENTIRE WORKDAY ALL OF THE ITEMS DISCUSSED DURING THE SAFETY BRIEFING.

THE COST OF THE FLAGMEN WILL BE INCLUDED IN THE RAILROAD FORCE ACCOUNT WORK.

DESIGN AGENCY
URS
36 EAST 7TH STREET
SUITE 2300
CINCINNATI, OHIO 45202

DESIGNED	DRAWN	REVIEWED	DATE
MJZ	JLS	DLJ	6/2010
CHECKED	REVISED	STRUCTURE FILE NUMBER	
BWJ		4401263	

GENERAL NOTES (3 OF 7)
BRIDGE NO. LAW-93-0000
IRONTON RUSSELL BRIDGE OVER OHIO RIVER

LAW-93-0.00
PID No. 81595

E:\Bridges_XM\Ironton_Russell\LAW\81595\structures\LAW093_0000C\sheets\093_0000CGN003.dgn 4/25/2011 10:09:44 AM john_stahl

32. CONSTRUCTION CLEARANCE:

MAINTAIN A CONSTRUCTION CLEARANCE OF 13 FEET HORIZONTALLY FROM THE CENTER OF TRACKS AND 22 FEET VERTICALLY FROM A POINT LEVEL WITH THE TOP OF THE HIGHER RAIL, AND 6 FEET FROM THE CENTER OF TRACKS, AT ALL TIMES.

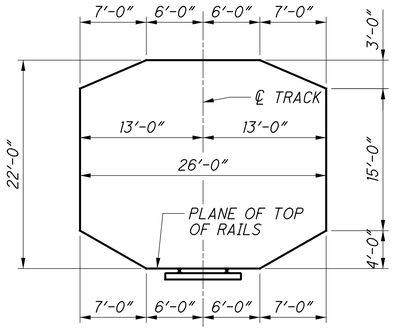

33. RAILROAD AERIAL LINES:

RAILROAD AERIAL LINES WILL BE RELOCATED BY THE RAILROAD. USE ALL PRECAUTIONS NECESSARY TO SEE THAT THE LINES ARE NOT DISTURBED DURING THE CONSTRUCTION STAGE AND COOPERATE WITH THE RAILROAD IN THE RELOCATION OF THESE LINES. THE COST OF THE RELOCATION WILL BE INCLUDED IN THE RAILROAD FORCE ACCOUNT WORKS.

34. ITEM 514 - FIELD PAINTING STRUCTURAL STEEL, INTERMEDIATE COAT, ITEM 514 - FIELD PAINTING STRUCTURAL STEEL, FINISH COAT.

FACIA GIRDERS, SCUPPERS, AND ATTACHMENTS SHALL BE PAINTED THEIR ENTIRE LENGTH. THE TOP COAT COLOR SHALL CLOSELY APPROACH FEDERAL STANDARD NO. 595B - 16405, GRAY.

PAINT THE LAST 10 FEET OF EACH INTERIOR BEAM/GIRDER END ADJACENT TO THE ABUTMENTS, PIER 2 AND PIER 5. INCLUDE ALL CROSS-FRAMES AND OTHER STRUCTURAL STEEL WITHIN THESE LIMITS THAT ARE NOT INCLUDED WITH THE FASCIA GIRDERS. THE PRIME COAT SHALL BE 708.01. THE TOP COAT COLOR SHALL CLOSELY APPROACH FEDERAL STANDARD NO. 595B-20045 OR 20059 (THE COLOR OF WEATHERING STEEL).

35. MISCELLANEOUS METALS:

LADDERS, PLATFORMS AND MISCELLANEOUS METALS SHALL BE IN ACCORDANCE WITH ASTM A709, GRADE 36, GALVANIZED IN ACCORDANCE WITH 711.02.

DOORS, HATCHES AND HARDWARE ARE TO BE OF GALVANIZED IN ACCORDANCE WITH 711.02 OR OF STAINLESS STEEL MATERIALS AS NOTED ON PLANS OR SPECIAL PROVISIONS.

EXPANSION JOINTS SHALL BE IN ACCORDANCE WITH ASTM A709, GRADE 50, METALIZED.

36. ITEM 517 - RAILING, MISC.: CONCRETE PARAPET WITH STEEL TUBE RAILS:

THIS ITEM SHALL INCLUDE THE FURNISHING OF ALL MATERIALS, EQUIPMENT, AND LABOR NECESSARY TO CONSTRUCT THE RAILING AS SHOWN IN THE PLANS AND AS SPECIFIED HEREIN.

SEE SHEETS 15/365 AND 16/365 FOR CONCRETE PARAPET AND STEEL TUBE RAIL DETAILS.

TUBE SPLICES ARE TO BE LOCATED SO THAT EACH TUBE SEGMENT SHALL BE CONNECTED TO NOT LESS THAN TWO POSTS.

FOR RAILING ON CURVATURES OF 3° OR MORE, SHAPED STRUCTURAL TUBING MAY BE FURNISHED STRAIGHT AND FORCED INTO POSITION IN THE FIELD AND THE TUBE SEGMENTS ARE TO BE ATTACHED TO NO MORE THAN 3 POSTS.

LIGHT POLE PILASTERS SHALL BE INCLUDED UNDER THIS ITEM FOR PAYMENT.

SEE SHEETS 59/365 , 244/365 , AND 357/365 FOR LIGHT POLE PILASTER DETAILS.

MATERIAL: FURNISH SHAPED STRUCTURAL TUBING ACCORDING TO 707.10 (ASTM A500, GRADE B), EPOXY COATED REINFORCING STEEL ACCORDING TO 709.00 AND STEEL FOR PLATES ACCORDING TO 711.01.

CONCRETE FOR CONCRETE PARAPET SHALL BE IN ACCORDANCE WITH SUPPLEMENTAL SPECIFICATION 898, QC/QA CONCRETE, CLASS QSC2 AND THE OPTION OF SLIP FORM CONSTRUCTION OF THE PARAPET PER 898.13 AND 511.11 SHALL NOT BE PERMITTED. THE ACCEPTED QUANTITIES SHALL INCLUDE: CONCRETE, REINFORCING STEEL, JOINT FILLERS AND JOINT SEALERS. THE DEPARTMENT WILL INITIALLY PAY THE FULL BID PRICE TO THE CONTRACTOR UPON COMPLETING THE WORK. THE DEPARTMENT WILL CALCULATE THE FINAL ADJUSTED PAYMENT ACCORDING TO 898.17 AND INCLUDE PARAPET CONCRETE AND DECK CONCRETE IN THE SAME LOT TO DETERMINE FINAL PAY FACTORS.

FASTENERS: FURNISH FASTENERS AS FOLLOWS:

ANCHOR BOLTS SHALL BE 7/8" DIAMETER ANCHORS WITH HEX NUTS AND WASHERS, MINIMUM ULTIMATE CONDITION STRENGTH SHALL BE 46.6 KIPS, WITH A MINIMUM 9" EMBEDMENT LENGTH. ANCHOR BOLTS SHALL BE IN ACCORDANCE WITH ASTM F1554, GRADE 105, TYPE 2A, WITH SUPPLEMENTARY REQUIREMENT S3 FOR PERMANENT GRADE IDENTIFICATION AND SUPPLEMENTARY REQUIREMENT S5 FOR CHARPY IMPACT TESTING. NUTS AND WASHERS SHALL BE AS RECOMMENDED IN ASTM F1554 FOR GRADE 105.

ALL OTHER BOLTS, HEX NUTS AND WASHERS SHALL CONFORM TO 711.09 (ASTM A325). THE THREAD LENGTH REQUIREMENTS OF A325 MAY BE WAVED.

GALVANIZING: GALVANIZE ALL SHAPED STRUCTURAL STEEL TUBES, PLATES, HARDWARE, AND ACCESSORIES IN ACCORDANCE WITH 711.02. ROUND ALL EXPOSED STRUCTURAL STEEL TUBING ENDS AND PLATE EDGES PRIOR TO GALVANIZING.

METHOD OF MEASUREMENT: THE DEPARTMENT WILL MEASURE THE QUANTITY BY THE NUMBER OF FEET. THE DEPARTMENT WILL MEASURE THE LENGTH OF RAILING BETWEEN THE ENDS OF THE CONCRETE PARAPET.

PAYMENT FOR ALL LABOR, EQUIPMENT AND MATERIALS SHALL BE INCLUDED IN THE FOOT CONTRACT PRICE FOR ITEM 517, RAILING MISC.: CONCRETE PARAPET WITH STEEL TUBE RAILS, UNLESS SEPARATELY ITEMIZED IN THE PLAN.

37. ITEM 512 - SEALING OF CONCRETE SURFACES, AS PER PLAN:

THIS ITEM INCLUDES THE PAINTING OF CLEARANCE GAUGES ON THE DOWNSTREAM FACE OF TOWER 3 AND THE UPSTREAM FACE OF TOWER 4. ADDITIONALLY, RETRO-REFLECTIVE MATERIAL (2'-0" x 2'-0") SHALL BE APPLIED TO BOTH THE UPSTREAM AND DOWNSTREAM FACES OF TOWER 3 AND TOWER 4. SEE SHEET 79/364 FOR PLACEMENT DETAILS.

THE PAINTED AREAS SHALL RECEIVE TWO (2) COATS OF WHITE PAINT, AS HEREINAFTER PROVIDED, AFTER WHICH GAUGE NUMBERS AND MARKINGS SHALL BE PAINTED THEREON IN TWO (2) COATS OF BLACK. EACH COAT SHALL BE APPLIED WITH A MINIMUM OF TWENTY-FOUR (24) HOURS DRYING TIME PER COAT.

ALL MATERIALS USED FOR PAINTING THE CLEARANCE GAUGE SHALL BE EITHER A VINYL RESIN TYPE OR CHLORINATED NATURAL RUBBER-BASE TYPE PAINT AND SHALL BE GUARANTEED BY THE MANUFACTURER TO BE SUITABLE FOR USE ON MASONRY UNDER SEVERE EXPOSURE AND SUBMERGED IN WATER CONDITIONS. THE CONTRACTOR SHALL SUBMIT DATA SHEETS ON ALL PROPOSES MATERIALS TO THE ENGINEER FOR APPROVAL AT LEAST TWENTY-ONE (21) DAYS PRIOR TO BEGINNING WORK.

UNLESS OTHERWISE PERMITTED BY THE ENGINEER, CONCRETE FORMS SHALL HAVE BEEN REMOVED AT LEAST SIXTY (60) DAYS PRIOR TO THE APPLICATION OF ANY PAINT OR UNDERCOAT TO THE CONCRETE SURFACE TO BE PAINTED. SURFACES TO BE PAINTED SHALL BE PREPARED BY REMOVING ALL DIRT, OIL, OR OTHER FOREIGN SUBSTANCES. PRIOR TO APPLICATION OF THE FIRST COAT, SUCH SURFACES SHALL BE ETCHED WITH APPROXIMATELY TEN PERCENT SOLUTION OF MURIATIC ACID IN WATER, FLUSHED DOWN WITH CLEAR WATER AND ALLOWED TO DRY. THE SURFACES TO BE PAINTED SHALL BE THOROUGHLY DRY BEFORE APPLICATION.

THE FIRST COATS OF WHITE AND GAUGE MARKINGS (BLACK) SHALL HAVE A FLAT FINISH, AND THE SECOND COATS SHALL HAVE A GLOSSY FINISH. THE PAINT APPLICATION SHALL BE GENEROUS, BUT SHOULD NOT EXCEED TWO MILS PER COAT. THE FIRST COAT SHALL BE WORKED WELL INTO THE PORES OF THE CONCRETE. PAINT SHALL NOT BE APPLIED WHEN THE TEMPERATURE IS BELOW 45 DEGREES FAHRENHEIT AND PREFERABLY SHALL BE APPLIED WHEN THE WEATHER HAS REACHED THE MAXIMUM TEMPERATURE OF THE DAY. PAINTING SHALL NOT START UNLESS IT CAN BE REASONABLY EXPECTED THAT THE CLEARANCE GAUGE CAN BE COMPLETED WITH ALL PAINT COATS PLUS AT LEAST SEVEN (7) DAYS TIME BEFORE ANY PORTION OF THE GAUGE MAY BECOME SUBMERGED.

PAYMENT FOR ALL LABOR, EQUIPMENT AND MATERIALS SHALL BE INCLUDED IN THE CONTRACT PRICE FOR ITEM 512 SEALING OF CONCRETE SURFACES, AS PER PLAN.

38. DOCUMENTATION FOR AS-BUILT DRAWINGS:

THE CONTRACTOR SHALL MAINTAIN A SET OF CLEARLY MARKED UP PLANS DOCUMENTING FIELD CHANGES DURING CONSTRUCTION. AT THE CONCLUSION OF CONSTRUCTION, THESE DRAWINGS SHALL BE TURNED OVER TO THE ENGINEER FOR INCORPORATION INTO THE AS-BUILT DRAWINGS TO BE PREPARED BY OTHERS. THE COST OF THIS WORK SHALL BE INCIDENTAL TO THE CONTRACT AND NO ADDITIONAL COMPENSATION WILL BE ALLOWED.

39. CONCRETE FOR DRILLED SHAFTS:

CONCRETE FOR DRILLED SHAFTS SHALL BE PER ODOT SUPPLEMENTAL SPECIFICATION 898 AND SHALL BE MODIFIED AS FOLLOWS:

1. SECTION 898.05, TABLE 3 SHALL BE MODIFIED TO INCLUDE UP TO 50% GROUND GRANULATED BLAST FURNACE SLAG

2. SECTION 898.15, "PAY FACT DETERMINATION" SHALL NOT BE USED.

1

LIST OF FREQUENTLY USED ABBREVIATIONS

AASHTO	—	AMERICAN ASSOCIATION OF STATE HIGHWAY AND TRANSPORTATION OFFICIALS
ADT	—	AVERAGE DAILY TRAFFIC
AISC	—	AMERICAN INSTITUTE OF STEEL CONSTRUCTION
ALT	—	ALTERNATE
ANSI	—	AMERICAN NATIONAL STANDARDS INSTITUTE
ASD	—	ALLOWABLE STRESS DESIGN
ASTM	—	AMERICAN SOCIETY FOR TESTING MATERIALS
B	—	BOTTOM
BRG	—	BEARING
C/C	—	CENTER TO CENTER
CATV	—	CABLE TELEVISION
CIP	—	CAST-IN-PLACE
CLR	—	CLEAR
CJ	—	CONSTRUCTION JOINT
COE	—	CORPS OF ENGINEERS
DIM	—	DIMENSION
EF	—	EACH FACE
EL	—	ELEVATION
ELEV	—	ELEVATION
ES	—	EACH SIDE
EW	—	EACH WAY
EXIST	—	EXISTING
EXP	—	EXPANSION
FF	—	FAR FACE
FIX	—	FIXED
FWD	—	FORWARD
GDR	—	GIRDER
IF	—	INSIDE FACE
KY	—	KENTUCKY
LME	—	LOW MEMBER ELEVATION
LVC	—	LENGTH OF VERTICAL CURVE
MH	—	MANHOLE
MHC	—	MINIMUM HORIZONTAL CLEARANCE
MHW	—	MEAN HIGH WATER
MSL	—	MEAN SEA LEVEL
MIN	—	MINIMUM
MISC	—	MISCELLANEOUS
MLW	—	MEAN LOW WATER
MVC	—	MINIMUM VERTICAL CLEARANCE
NF	—	NEAR FACE
NHW	—	NORMAL HIGH WATER
NTS	—	NOT TO SCALE
ODOT	—	OHIO DEPARTMENT OF TRANSPORTATION
OH	—	OHIO
OF	—	OUTSIDE FACE
PC	—	POINT OF CURVATURE
PG	—	PROFILE GRADE
PGL	—	PROFILE GRADE LINE
PI	—	POINT OF INTERSECTION
PMVC	—	POINT OF ACTUAL MINIMUM VERTICAL CLEARANCE
POC	—	POINT ON CURVE
POT	—	POINT ON TANGENT
PT	—	POINT OF TANGENCY
R or RAD	—	RADIUS
REQ'D	—	REQUIRED
RR	—	RAILROAD
R/W	—	RIGHT OF WAY
SE	—	SUPERELEVATION
SEG	—	SEGMENT
SH	—	SHEET
SHLD	—	SHOULDER
SS	—	STAINLESS STEEL
STA	—	STATION
T	—	TOP
TC	—	TANGENT TO CURVE AT INTERSECTION POINT
TS	—	TANGENT TO SPIRAL AT INTERSECTION POINT
TYP	—	TYPICAL
UNO	—	UNLESS NOTED OTHERWISE
WL	—	WORK LINE
WP	—	WORK POINT
BK	—	BACK (REFERENCED TO DIRECTION OF STATIONING)
AH	—	AHEAD (REFERENCED TO DIRECTION OF STATIONING)
LT	—	LEFT (REFERENCED TO DIRECTION OF STATIONING)
RT	—	RIGHT (REFERENCED TO DIRECTION OF STATIONING)
PRS	—	PAIRS
DIA	—	DIAMETER

NO.	REVISIONS	DATE	REV. BY
1	NOTE ADDED	12/11	BKL

DESIGNED MJZ | DRAWN CJK | REVIEWED DLJ | DATE 6/2010 | STRUCTURE FILE NUMBER 4401263 | CHECKED BWJ | REVISED

DESIGN AGENCY
URS
36 EAST 7TH STREET
SUITE 2300
CINCINNATI, OHIO 45202

GENERAL NOTES (4 OF 7)
BRIDGE NO. LAW-93-0000
IRONTON RUSSELL BRIDGE OVER OHIO RIVER

LAW-93-0.00
PID No. 81595

8/365

395/788

J:\Project\OV\ODOT\15005112 Ironton Russell\LAW\81595\structures\LAW093_1111C\sheets\Mainspan\093_0000CGN004.dgn - 12/12/2011 3:26:07 PM - jon_wanstrath

PAY ITEM NOTES:

BARRIER:

1. PRICE BID FOR "CONCRETE PARAPET" SHALL BE PER LINEAR FOOT AND SHALL INCLUDE ALL CONCRETE, STRUCTURAL TUBING, ANCHOR BOLTS, PEJF, REINFORCING STEEL, MISCELLANEOUS MATERIALS, EQUIPMENT AND LABOR NECESSARY FOR THE INSTALLATION OF THE BARRIER.

REINFORCEMENT:

1. THE WEIGHT OF A BAR WITH A MECHANICAL COUPLER DOES NOT INCLUDE THE WEIGHT OF THE MECHANICAL COUPLER. THE COST OF THE MECHANICAL COUPLER IS INCIDENTAL TO THE COST OF THE BAR.

FLOORBEAMS:

1. THE COST OF THE ANCHOR BOLTS AND HARDWARE SHALL BE CONSIDERED TO BE INCIDENTAL TO THE COST OF THE SUPERSTRUCTURE CONCRETE.

DECK:

1. THE COST OF THE C-I-P CONCRETE INSERTS SHALL BE CONSIDERED TO BE INCIDENTAL TO THE COST OF THE SUPERSTRUCTURE CONCRETE.

POST-TENSIONING:

1. COST OF SPIRAL REINFORCEMENT (LOCAL ZONE) AT EACH ANCHORAGE IS INCIDENTAL TO THE COST OF POST-TENSIONING.

STAY CABLES:

1. COST OF ANCHOR PLATES, GUIDE PIPES, DAMPERS, HARDWARE AND INSTALLATION SHALL BE INCLUDED IN THE LUMP SUM PRICE FOR STAY CABLES.

PIER TABLE SHEAR KEYS:

1. THE COST OF GALVANIZED STEEL FLASHING PLATE, BOLTS AND INSTALLATION SHALL BE CONSIDERED INCIDENTAL TO THE MAIN SPAN SUPERSTRUCTURE CONCRETE.

BEARINGS:

1. TESTING SHALL BE INCLUDED IN THE UNIT PRICE BID FOR THE BEARINGS, EACH.

STRIP SEAL EXPANSION JOINTS:

1. COST OF REINFORCEMENT PLACED INTO EXPANSION JOINT BLOCK-OUT SHALL BE CONSIDERED INCIDENTAL TO EXPANSION JOINT SYSTEM.

MODULAR EXPANSION JOINTS:

1. COST OF REINFORCEMENT PLACED INTO EXPANSION JOINT BLOCK-OUT SHALL BE CONSIDERED INCIDENTAL TO EXPANSION JOINT SYSTEM.

2. PAYMENT FOR PARAPET COVER PLATE AND ASSOCIATED HARDWARE SHALL BE CONSIDERED INCIDENTAL TO THE COST OF THE MODULAR EXPANSION JOINT.

TEMPORARY SHEET PILE WALL:

1. THE COST OF FURNISHING, INSTALLING, CUTTING, REMOVING AND DISPOSING OF STEEL SHEET PILES FOR CRITICAL TEMPORARY WALLS SHALL BE PAID FOR UNDER PAY ITEM 503: COFFERDAMS AND EXCAVATION BRACING, AS PER PLAN. THE COST OF ALL LABOR AND MATERIALS, FOR EXCAVATION AND DETWATERING, IF NECESSARY, SHALL BE INCIDENTAL TO THIS ITEM.

2. THE COST OF FURNISHING AND INSTALLING WALER BEAM CHANNELS & WEDGE PLATES REQUIRED FOR TIEBACK WALLS SHALL BE INCIDENTAL TO THE COST OF STEEL SHEET PILES.

3. THE COST OF REMOVING PRESTRESSED SOIL ANCHORS IF REQUIRED SHALL BE INCIDENTAL TO THE COST OF STEEL SHEET PILES.

4. PRESTRESSED SOIL ANCHORS AND TESTING OF ANCHORS SHALL BE INCIDENTAL TO THE COST OF STEEL SHEET PILES.

5. ANY SHEET PILE INSTALLED ABOVE THE INDICATED WALL TOP ELEVATION SHALL BE FOR THE CONVENIENCE OF THE CONTRACTOR AND SHALL BE INCIDENTAL TO THE COST OF STEEL SHEET PILES.

TOWERS:

1. COST OF PLACING CLEARANCE NUMBERS SHALL BE INCIDENTAL TO ITEM 512: SEALING OF CONCRETE SURFACES, AS PER PLAN.

2. COST OF FURNISHING AND INSTALLING 2" DIAMETER PVC DRAIN AND GRATE SHALL BE CONSIDERED INCIDENTAL TO TOWER CONCRETE.

3. COST OF UNISTRUT, ASSOCIATED HARDWARE AND OTHER MOUNTING BRACKETS FOR THE TOWER ANCHOR BOXES IS TO BE INCLUDED IN STRUCTURAL STEEL, LEVEL 6 FOR PAYMENT.

CABLE STAYED ERECTION SEQUENCE:

1. THE COST OF DESIGNING, FURNISHING, INSTALLING AND REMOVING THE TEMPORARY TOWERS, INCLUDING ANY FOOTING CAPS, FOUNDATIONS, TENSION TIE-DOWNS AND ANY MISCELLANEOUS HARDWARE, SHALL BE CONSIDERED INCIDENTAL TO ITEM 898: CLASS QSC3 CONCRETE (CABLE STAYED SUPERSTRUCTURE).

TOWER ERECTION SEQUENCE:

1. THE COST OF TEMPORARY STRUTS AND JACKING NECESSARY FOR THE CONSTRUCTION OF THE TOWERS SHALL BE INCLUDED IN THE UNIT PRICE FOR ITEM 898: QAQC CONCRETE, CLASS QSC3 (PIER 2, TOWER 3, TOWER 4, PIER 5).

ELECTRICAL CONDUITS:

1. STRUCTURAL STEEL FOR THE CONDUIT SUPPORTS SHALL BE INCLUDED WITH ITEM 513: STRUCTURAL STEEL MEMBERS, LEVEL 5 FOR PAYMENT.

2. CONDUIT, U-BOLTS, EXPANSION DEVICES, AND OTHER MISCELLANEOUS HARDWARE AND LABOR NECESSARY TO INSTALL THE UTILITY CONDUITS ARE INCLUDED IN THE LIGHTING SUMMARIES.

3. PIPE SLEEVES THROUGH CONCRETE ELEMENTS SHALL BE INCIDENTAL TO THE COST OF THE RESPECTIVE CONCRETE PAY ITEM.

E:\Bridges_XM\Ironton_Russell\LAW\81595\structures\LAW093_0000C\sheets\093_0000CGN007.dgn 4/25/2011 10:10:08 AM john_stahl

DESIGN AGENCY
URS
36 EAST 7TH STREET
SUITE 2300
CINCINNATI, OHIO 45202

DESIGNED	DRAWN	REVIEWED	DATE
MJZ	CER	DLJ	6/2010
CHECKED	REVISED	STRUCTURE FILE NUMBER	
BWJ		4401263	

GENERAL NOTES (5 OF 7)
BRIDGE NO. LAW-93-0000
IRONTON RUSSELL BRIDGE OVER OHIO RIVER

LAW-93-0.00
PID No. 81595

MAINSPAN UNIT WIND LOADING DIAGRAMS

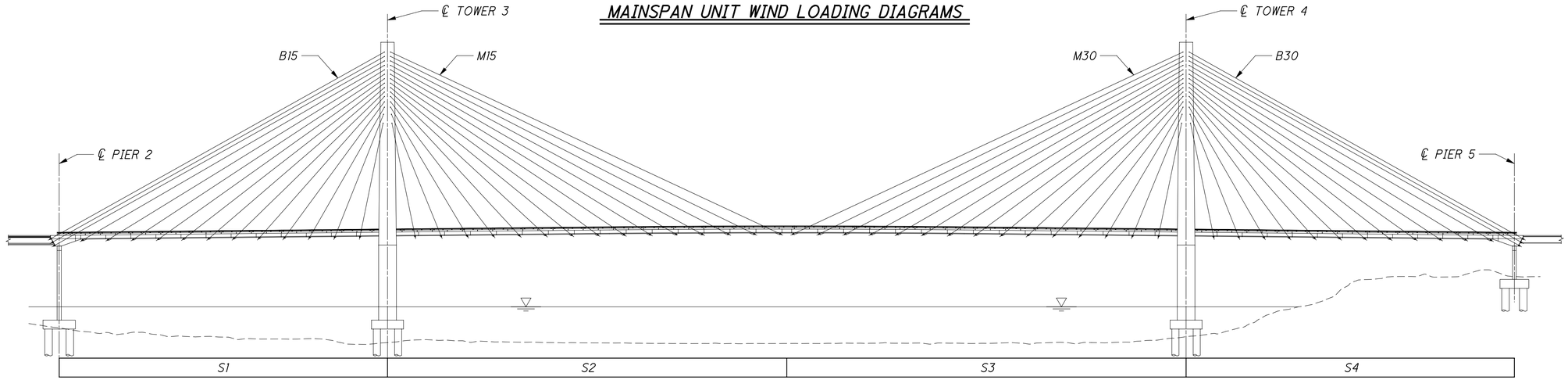

COMPLETED STRUCTURE

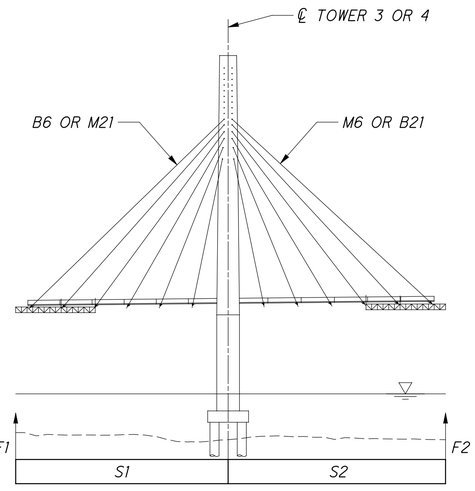

CONSTRUCTION STAGE 1

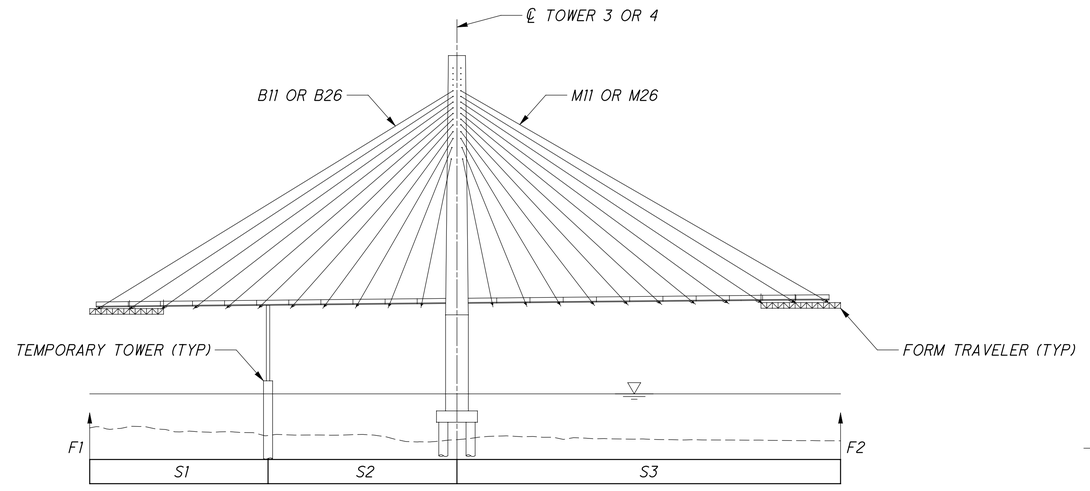

CONSTRUCTION STAGE 2

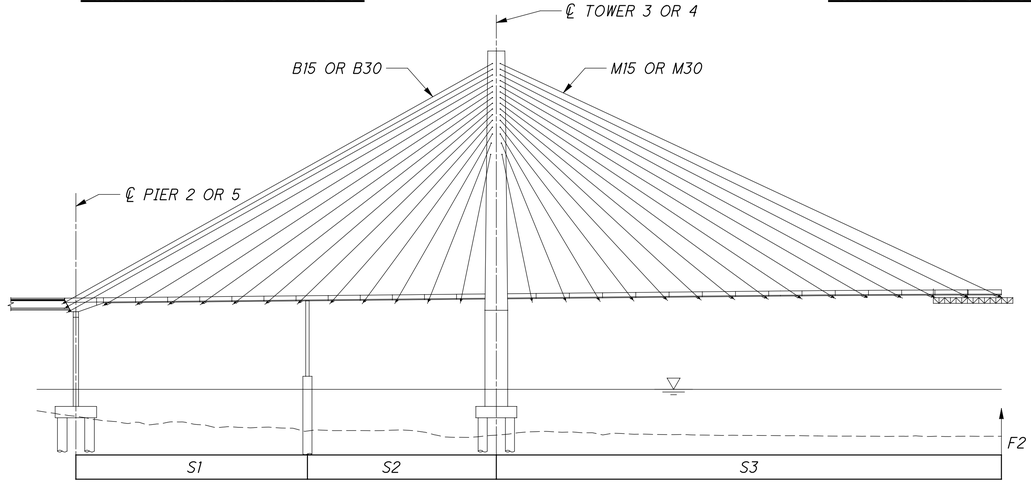

CONSTRUCTION STAGE 3

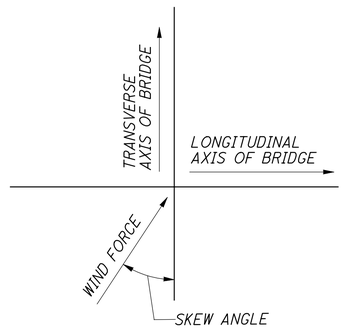

WIND SKEW ANGLE

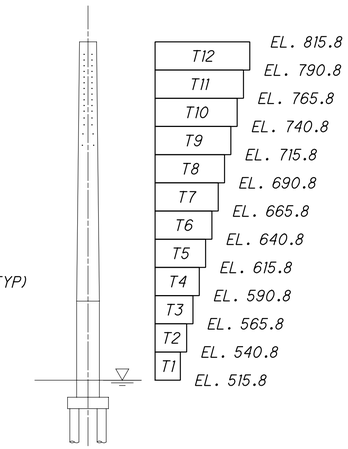

TOWER LEG LOADINGS

(PRESSURES - PER LEG)

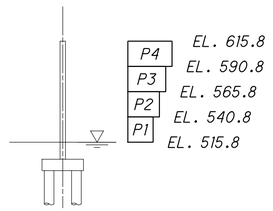

PIER LOADINGS

(PRESSURES)

NOTES

1. ALL LOAD CASES SHOWN ARE QUASI-STATIC INDIVIDUAL WIND LOADING CASES AT SERVICE LEVEL TO REPLICATE THE WIND BUFFETING RESPONSE. ALL FORCES INCLUDE MEAN WIND LOADS, GUST RESPONSE AND INERTIAL LOADS DUE TO THE BRIDGE'S DYNAMIC RESPONSE.
2. LOADS INDICATED FOR THE COMPLETED STRUCTURE CORRESPOND TO A 100-YR ONE-HOUR AVERAGED WIND VELOCITY OF 68.9 MPH AT THE REFERENCE ELEVATION AT THE BRIDGE DECK LEVEL.
3. LOADS INDICATED FOR THE CONSTRUCTION STAGES CORRESPOND TO A 20-YR ONE-HOUR AVERAGED WIND VELOCITY OF 61.5 MPH AT THE REFERENCE ELEVATION AT THE BRIDGE DECK LEVEL.

DESIGN AGENCY
URS
36 EAST 7TH STREET
SUITE 2300
CINCINNATI, OHIO 45202

DESIGNED	DRAWN	REVIEWED	DATE
MJZ	CJK	DLJ	6/2010
CHECKED	REVISED	STRUCTURE FILE NUMBER	
BWJ		4401263	

GENERAL NOTES (6 OF 7)

BRIDGE NO. LAW-93-0000

IRONTON RUSSELL BRIDGE OVER OHIO RIVER

LAW-93-0.00 PID No. 81595

E:\Bridges_XM\Ironton_Russell\LAW\81595\structures\LAW093_0000\sheets\093_0000CGN005.dgn 4/25/2011 10:10:16 AM john_stahl

COMPLETED STRUCTURE

LOAD CASE	WIND FORCE	S1	S2	S3	S4	T1 (ksf)	T2 (ksf)	T3 (ksf)	T4 (ksf)	T5 (ksf)	T6 (ksf)	T7 (ksf)	T8 (ksf)	T9 (ksf)	T10 (ksf)	T11 (ksf)	T12 (ksf)	P1 (ksf)	P2 (ksf)	P3 (ksf)	P4 (ksf)	STAY CABLES (ksf)
A (0 DEGREE SKEW)	TRANSVERSE FORCE (k/ft)	-0.790	-0.790	-0.790	-0.790	-0.038	-0.048	-0.056	-0.062	-0.068	-0.070	-0.074	-0.078	-0.080	-0.082	-0.084	-0.086	-0.074	-0.098	-0.113	-0.118	-0.040
	VERTICAL FORCE (k/ft)	1.010	-1.440	-1.440	1.010	---	---	---	---	---	---	---	---	---	---	---	---	---	---	---	---	---
	LONGITUDINAL FORCE (k/ft)	---	---	---	---	---	---	---	---	---	---	---	---	---	---	---	---	---	---	---	---	---
	TORSIONAL FORCE (k-ft/ft)	-7.530	10.670	10.670	-7.530	---	---	---	---	---	---	---	---	---	---	---	---	---	---	---	---	---
B (0 DEGREE SKEW)	TRANSVERSE FORCE (k/ft)	-0.790	-0.790	-0.790	-0.790	-0.038	-0.048	-0.056	-0.062	-0.068	-0.070	-0.074	-0.078	-0.080	-0.082	-0.084	-0.086	-0.074	-0.098	-0.113	-0.118	-0.040
	VERTICAL FORCE (k/ft)	-1.010	1.440	1.440	-1.010	---	---	---	---	---	---	---	---	---	---	---	---	---	---	---	---	---
	LONGITUDINAL FORCE (k/ft)	---	---	---	---	---	---	---	---	---	---	---	---	---	---	---	---	---	---	---	---	---
	TORSIONAL FORCE (k-ft/ft)	-7.530	10.670	10.670	-7.530	---	---	---	---	---	---	---	---	---	---	---	---	---	---	---	---	---
C (90 DEGREE SKEW)	TRANSVERSE FORCE (k/ft)	---	---	---	---	---	---	---	---	---	---	---	---	---	---	---	---	---	---	---	---	---
	VERTICAL FORCE (k/ft)	---	---	---	---	---	---	---	---	---	---	---	---	---	---	---	---	---	---	---	---	---
	LONGITUDINAL FORCE (k/ft)	0.017	0.017	0.017	0.017	0.026	0.035	0.040	0.044	0.048	0.050	0.053	0.055	0.057	0.059	0.060	0.062	0.048	0.070	0.080	0.084	0.028
	TORSIONAL FORCE (k-ft/ft)	---	---	---	---	---	---	---	---	---	---	---	---	---	---	---	---	---	---	---	---	---

CONSTRUCTION STAGE 1

LOAD CASE	WIND FORCE	S1	S2	F1*	F2*	T1 (ksf)	T2 (ksf)	T3 (ksf)	T4 (ksf)	T5 (ksf)	T6 (ksf)	T7 (ksf)	T8 (ksf)	T9 (ksf)	T10 (ksf)	T11 (ksf)	T12 (ksf)	STAY CABLES (ksf)
D (0 DEGREE SKEW)	TRANSVERSE FORCE (k/ft)	-0.117	-0.167	-52.940	-62.940	-0.017	-0.021	-0.024	-0.027	-0.029	-0.032	-0.032	-0.033	-0.035	-0.036	-0.038	-0.038	-0.018
	VERTICAL FORCE (k/ft)	3.040	3.290	55.000	62.000	---	---	---	---	---	---	---	---	---	---	---	---	---
	LONGITUDINAL FORCE (k/ft)	---	---	---	---	---	---	---	---	---	---	---	---	---	---	---	---	---
	TORSIONAL FORCE (k-ft/ft)	-6.410	-8.010	-104.000	-82.000	---	---	---	---	---	---	---	---	---	---	---	---	---
E (0 DEGREE SKEW)	TRANSVERSE FORCE (k/ft)	-0.047	-0.107	9.060	-55.940	-0.017	-0.021	-0.024	-0.027	-0.029	-0.032	-0.032	-0.033	-0.035	-0.036	-0.038	-0.038	-0.180
	VERTICAL FORCE (k/ft)	0.840	-0.860	20.000	-25.000	---	---	---	---	---	---	---	---	---	---	---	---	---
	LONGITUDINAL FORCE (k/ft)	---	---	---	---	---	---	---	---	---	---	---	---	---	---	---	---	---
	TORSIONAL FORCE (k-ft/ft)	-6.410	7.400	-104.000	82.000	---	---	---	---	---	---	---	---	---	---	---	---	---
F (90 DEGREE SKEW)	TRANSVERSE FORCE (k/ft)	---	---	---	---	---	---	---	---	---	---	---	---	---	---	---	---	---
	VERTICAL FORCE (k/ft)	---	---	---	---	---	---	---	---	---	---	---	---	---	---	---	---	---
	LONGITUDINAL FORCE (k/ft)	0.009	0.009	10.490	---	0.022	0.028	0.033	0.036	0.039	0.041	0.043	0.045	0.047	0.048	0.049	0.050	0.024
	TORSIONAL FORCE (k-ft/ft)	---	---	---	---	---	---	---	---	---	---	---	---	---	---	---	---	---

CONSTRUCTION STAGE 2

LOAD CASE	WIND FORCE	S1	S2	S3	F1*	F2*	T1 (ksf)	T2 (ksf)	T3 (ksf)	T4 (ksf)	T5 (ksf)	T6 (ksf)	T7 (ksf)	T8 (ksf)	T9 (ksf)	T10 (ksf)	T11 (ksf)	T12 (ksf)	STAY CABLES (ksf)
G (0 DEGREE SKEW)	TRANSVERSE FORCE (k/ft)	-0.720	-0.720	-0.720	-23.940	-23.940	-0.017	-0.021	-0.024	-0.027	-0.029	-0.032	-0.032	-0.033	-0.035	-0.036	-0.038	-0.038	-0.018
	VERTICAL FORCE (k/ft)	3.540	0.020	2.240	70.000	-70.000	---	---	---	---	---	---	---	---	---	---	---	---	---
	LONGITUDINAL FORCE (k/ft)	---	---	---	---	---	---	---	---	---	---	---	---	---	---	---	---	---	---
	TORSIONAL FORCE (k-ft/ft)	-8.310	26.700	-7.310	-100.000	-100.000	---	---	---	---	---	---	---	---	---	---	---	---	---
H (0 DEGREE SKEW)	TRANSVERSE FORCE (k/ft)	0.210	0.210	-0.350	-5.940	-25.940	-0.017	-0.021	-0.024	-0.027	-0.029	-0.032	-0.032	-0.033	-0.035	-0.036	-0.038	-0.038	-0.018
	VERTICAL FORCE (k/ft)	-0.580	0.020	0.560	-72.000	66.000	---	---	---	---	---	---	---	---	---	---	---	---	---
	LONGITUDINAL FORCE (k/ft)	---	---	---	---	---	---	---	---	---	---	---	---	---	---	---	---	---	---
	TORSIONAL FORCE (k-ft/ft)	7.500	25.500	-8.310	160.000	-80.000	---	---	---	---	---	---	---	---	---	---	---	---	---
I (90 DEGREE SKEW)	TRANSVERSE FORCE (k/ft)	---	---	---	---	---	---	---	---	---	---	---	---	---	---	---	---	---	---
	VERTICAL FORCE (k/ft)	---	---	---	---	---	---	---	---	---	---	---	---	---	---	---	---	---	---
	LONGITUDINAL FORCE (k/ft)	0.009	0.009	0.009	10.490	---	0.022	0.028	0.033	0.036	0.039	0.041	0.043	0.045	0.047	0.048	0.049	0.050	0.024
	TORSIONAL FORCE (k-ft/ft)	---	---	---	---	---	---	---	---	---	---	---	---	---	---	---	---	---	---

CONSTRUCTION STAGE 3

LOAD CASE	WIND FORCE	S1	S2	S3	F2*	T1 (ksf)	T2 (ksf)	T3 (ksf)	T4 (ksf)	T5 (ksf)	T6 (ksf)	T7 (ksf)	T8 (ksf)	T9 (ksf)	T10 (ksf)	T11 (ksf)	T12 (ksf)	P1 (ksf)	P2 (ksf)	P3 (ksf)	P4 (ksf)	STAY CABLES (ksf)
J (0 DEGREE SKEW)	TRANSVERSE FORCE (k/ft)	-0.390	-0.390	-0.290	-23.940	-0.017	-0.021	-0.024	-0.027	-0.029	-0.032	-0.032	-0.033	-0.035	-0.036	-0.038	-0.038	-0.032	-0.042	-0.049	-0.051	-0.018
	VERTICAL FORCE (k/ft)	2.040	0.020	1.040	10.000	---	---	---	---	---	---	---	---	---	---	---	---	---	---	---	---	---
	LONGITUDINAL FORCE (k/ft)	---	---	---	---	---	---	---	---	---	---	---	---	---	---	---	---	---	---	---	---	---
	TORSIONAL FORCE (k-ft/ft)	-14.310	23.700	-6.810	-150.000	---	---	---	---	---	---	---	---	---	---	---	---	---	---	---	---	---
K (0 DEGREE SKEW)	TRANSVERSE FORCE (k/ft)	0.330	0.330	-0.270	-17.940	-0.017	-0.021	-0.024	-0.027	-0.029	-0.032	-0.032	-0.033	-0.035	-0.036	-0.038	-0.038	-0.032	-0.042	-0.049	-0.051	-0.018
	VERTICAL FORCE (k/ft)	-0.580	0.020	0.660	35.000	---	---	---	---	---	---	---	---	---	---	---	---	---	---	---	---	---
	LONGITUDINAL FORCE (k/ft)	---	---	---	---	---	---	---	---	---	---	---	---	---	---	---	---	---	---	---	---	---
	TORSIONAL FORCE (k-ft/ft)	11.700	19.700	-6.810	-200.000	---	---	---	---	---	---	---	---	---	---	---	---	---	---	---	---	---
L (90 DEGREE SKEW)	TRANSVERSE FORCE (k/ft)	---	---	---	---	---	---	---	---	---	---	---	---	---	---	---	---	---	---	---	---	---
	VERTICAL FORCE (k/ft)	---	---	---	---	---	---	---	---	---	---	---	---	---	---	---	---	---	---	---	---	---
	LONGITUDINAL FORCE (k/ft)	0.009	0.009	0.009	10.490	0.022	0.028	0.033	0.036	0.039	0.041	0.043	0.045	0.047	0.048	0.049	0.050	0.043	0.056	0.065	0.068	0.024
	TORSIONAL FORCE (k-ft/ft)	---	---	---	---	---	---	---	---	---	---	---	---	---	---	---	---	---	---	---	---	---

* F1 IS A FORCE APPLIED AT SIDE SPAN CANTILEVER TIP. F2 IS A FORCE APPILED AT MAIN SPAN CANTILEVER TIP. FOR TRANSVERSE AND VERTICAL FORCES THE UNITS FOR F1 AND F2 ARE kips. FOR TORSIONAL FORCE THE UNITS FOR F1 AND F2 ARE kip-ft.

DESIGN AGENCY
URS
36 EAST 7TH STREET
SUITE 2300
CINCINNATI, OHIO 45202

DATE 6/2010
REVIEWED DLJ
STRUCTURE FILE NUMBER 4401263
DRAWN CJK
REVISED
DESIGNED MJZ
CHECKED BWJ

GENERAL NOTES (7 OF 7)
BRIDGE NO. LAW-93-0000
IRONTON RUSSELL BRIDGE OVER OHIO RIVER

LAW-93-0.00
PID No. 81595

E:\Bridges_XM\Ironton_Russell\LAW\81595\structures\LAW093_0000C\sheets\093_0000CGN006.dgn 4/25/2011 10:10:23 AM john_stahl

ESTIMATED QUANTITIES

ITEM	ITEM EXTENSION	KENTUCKY APPROACH QUANTITY	CABLE-STAYED BRIDGE QUANTITY	OHIO APPROACH QUANTITY	TOTAL QUANTITY	UNITS	DESCRIPTION	KY APPROACH			CABLE STAYED BRIDGE					OH APPROACH			SEE SHEET NUMBER
								REAR ABUTMENT	PIER 1	KY APPROACH SUPER-STRUCTURE	PIER 2	TOWER 3	TOWER 4	PIER 5	CABLE-STAYED SUPER-STRUCTURE	PIERS 6-8	FWD. ABUTMENT	OH APPROACH SUPER-STRUCTURE	
503	11101	LUMP	LUMP	LUMP			COFFERDAMS AND EXCAVATION BRACING, AS PER PLAN	LUMP	LUMP		LUMP	LUMP	LUMP	LUMP		LUMP	LUMP		7 / 364
503	21100	995		336	1331	CU YD	UNCLASSIFIED EXCAVATION	946	49							336			
503	31100	119			119	CU YD	ROCK EXCAVATION	119											
505	11100			LUMP	LUMP		PILE DRIVING EQUIPMENT MOBILIZATION									LUMP	LUMP		
507	00200			7240	7240	FT	STEEL PILES HP12X53, FURNISHED									5370	1870		
507	00250		1 3	2 6755	1 6755 2	3 FT	STEEL PILES HP12X53, DRIVEN					1			3	4995	1760	2	
509	10000	333820	4272499	332401	4938720	POUND	EPOXY COATED REINFORCING STEEL	110328	47831	175661	361408	994903	994903	127170	1794115	109011	8810	214580	
512	10001		72		72	SQ YD	SEALING OF CONCRETE SURFACES, AS PER PLAN					36	36						8 / 365
512	10100	1649	16701	1665	20015	SQ YD	SEALING OF CONCRETE SURFACES (EPOXY-URETHANE)	495	384	770	553	3659	3659	224	8606	583	144	938	
512	33000	50			50	SQ YD	TYPE 2 WATERPROOFING	50											
513	10300	1345800		1247076	2592876	POUND	STRUCTURAL STEEL MEMBERS, LEVEL 5			1345800								1247076	
513	10321		634660		634660	POUND	STRUCTURAL STEEL MEMBERS, LEVEL 6, AS PER PLAN					317330	317330						
513	20000	6732		9060	15792	EACH	WELDED STUD SHEAR CONNECTORS			6732								9060	
513	20001		14400		14400	EACH	WELDED STUD SHEAR CONNECTORS, AS PER PLAN					7200	7200						109/365
		A			A														
514	00060	12466		12044	24510	SQ FT	FIELD PAINTING STRUCTURAL STEEL, INTERMEDIATE COAT			12466	A							12044	8 / 365
514	00066	12466		12044	24510	SQ FT	FIELD PAINTING STRUCTURAL STEEL, FINISH COAT			12466								12044	8 / 365
514	10000	15		10	25	EACH	FINAL INSPECTION REPAIR			15								10	
516	11210		39	50	89	FT	STRUCTURAL EXPANSION JOINT INCLUDING ELASTOMERIC STRIP SEAL								39			50	
SPECIAL	51612400	61	37		98	FT	MODULAR EXPANSION JOINT (SEE SPECIAL PROVISIONS)			61					37				9, 60 & 270 /365
516	13200	413			413	SQ FT	1/2" PREFORMED EXPANSION JOINT FILLER			413									
516	13600	139		21	160	SQ FT	1" PREFORMED EXPANSION JOINT FILLER	139									21		
516	13900			48	48	SQ FT	2" PREFORMED EXPANSION JOINT FILLER										48		
516	25000			49	49	SQ FT	NYLON REINFORCED NEOPRENE SHEETING										49		
516	44201	6			6	EACH	ELASTOMERIC BEARING WITH INTERNAL LAMINATES AND LOAD PLATE (NEOPRENE), AS PER PLAN (3.23"x24"x16" PAD WITH 2"x39"x24" PLATE)			6									46 & 47 / 365
516	44401			5	5	EACH	ELASTOMERIC BEARING WITH INTERNAL LAMINATES AND LOAD PLATE (NEOPRENE), AS PER PLAN (5.45"x23.5"x26" PAD WITH 2.25"x24.5"x36" PLATE)											5	334 & 335 /365
516	46900	6			6	EACH	BEARING DEVICE, MISC.: ELASTOMERIC BEARING WITH INTERNAL LAMINATES AND LOAD PLATE WITH STAINLESS STEEL AND POLYTETRAFLOURETHYLENE SLIDING SURFACE (3.23"x15"x15" PAD WITH 2.25"x24"x47" PLATE)			6										46 & 47 / 365
516	46900	6			6	EACH	BEARING DEVICE, MISC.: ELASTOMERIC BEARING WITH INTERNAL LAMINATES AND LOAD PLATE WITH STAINLESS STEEL AND POLYTETRAFLOURETHYLENE SLIDING SURFACE (4.57"x26"x26" PAD WITH 2.5"x28"x55" PLATE)			6										46 & 47 / 365
516	46900		2		2	EACH	BEARING DEVICE, MISC.: ELASTOMERIC BEARING WITH INTERNAL LAMINATES AND LOAD PLATE WITH STAINLESS STEEL AND POLYTETRAFLOURETHYLENE SLIDING SURFACE (9"x22.5"x22.5" PAD WITH 2"x22.5"x22.5" TOP PLATE & 1"x25"x31" BOTTOM PLATE) (SEE SPECIAL PROVISIONS)								2				241/365
516	46900		2		2	EACH	BEARING DEVICE, MISC.: ELASTOMERIC BEARING WITH INTERNAL LAMINATES AND LOAD PLATE, AS PER PLAN (9"x26"x20" PAD WITH 1"x22"x35" TOP & BOTTOM PLATES) (SEE SPECIAL PROVISIONS)								2				242/365
516	46900			5	5	EACH	BEARING DEVICE, MISC.: ELASTOMERIC BEARING WITH INTERNAL LAMINATES AND LOAD PLATE WITH STAINLESS STEEL AND POLYTETRAFLOURETHYLENE SLIDING SURFACE (2.61"x14"x14" PAD WITH 1.5"x27"x23" PLATE)											5	334 & 335 /365
516	46900			5	5	EACH	BEARING DEVICE, MISC.: ELASTOMERIC BEARING WITH INTERNAL LAMINATES AND LOAD PLATE WITH STAINLESS STEEL AND POLYTETRAFLOURETHYLENE SLIDING SURFACE (3.61"x22"x24" PAD WITH 2"x22"x25" PLATE)											5	334 & 335 /365
516	46900			5	5	EACH	BEARING DEVICE, MISC.: ELASTOMERIC BEARING WITH INTERNAL LAMINATES AND LOAD PLATE WITH STAINLESS STEEL AND POLYTETRAFLOURETHYLENE SLIDING SURFACE (4.62"x25.5"x25.5" PAD WITH 2"x24"x26.5" PLATE)											5	334 & 335 /365
516	46900			5	5	EACH	BEARING DEVICE, MISC.: ELASTOMERIC BEARING WITH INTERNAL LAMINATES AND LOAD PLATE WITH STAINLESS STEEL AND POLYTETRAFLOURETHYLENE SLIDING SURFACE (3.17"x15.75"x15.75" PAD WITH 2"x18"x23" PLATE)											5	334 & 335 /365
517	76300	858	3282	1189	5329	FT	RAILING, MISC.: CONCRETE PARAPET WITH STEEL RAILS	103		755					3282			1189	15 / 365

NO.	REVISIONS	DATE	REV. BY
2	PAY ITEM QUANTITIES REVISED	01/14	CRK
3	PAY ITEM QUANTITIES REVISED	02/14	CRK
A	PAY ITEM QUANTITIES REVISED	1/12	BKL
1	PAY ITEM QUANTITIES REVISED	3/12	BKL

DESIGNED MJZ | DRAWN JDP | CHECKED BKL | REVIEWED RWB | DATE 6-10 | REVISED | STRUCTURE FILE NUMBER 4401263

DESIGN AGENCY
URS
36 EAST 7TH STREET
SUITE 2300
CINCINNATI, OHIO 45202

ESTIMATED QUANTITIES (1 OF 2)
BRIDGE NO. LAW-93-0000
IRONTON RUSSELL BRIDGE OVER OHIO RIVER

LAW-93-0.00
PID No. 81595

12 / 365

399
788

J:\Project\OA\ODOT\15005112 Ironton Russell\LAW\81595\structures\LAW093_1111C\sheets\093_0000_eq001.dgn - 3/11/2014 10:20:59 AM - jon_wanstrath

ESTIMATED QUANTITIES

ITEM	ITEM EXTENSION	KENTUCKY APPROACH QUANTITY	CABLE-STAYED BRIDGE QUANTITY	OHIO APPROACH QUANTITY	TOTAL QUANTITY	UNITS	DESCRIPTION	KY APPROACH			CABLE STAYED BRIDGE					OH APPROACH			SEE SHEET NUMBER
								REAR ABUTMENT	PIER 1	KY APPROACH SUPER-STRUCTURE	PIER 2	TOWER 3	TOWER 4	PIER 5	CABLE-STAYED SUPER-STRUCTURE	PIERS 6-8	FWD. ABUTMENT	OH APPROACH SUPER-STRUCTURE	
518	12201	8	8		16	EACH	SCUPPERS, INCLUDING SUPPORTS, AS PER PLAN			8					8				51 / 365
518	21200	385		35	420	CU YD	POROUS BACKFILL WITH FILTER FABRIC	385										35	
518	40000			67	67	FT	6" PERFORATED CORRUGATED PLASTIC PIPE											67	
518	40010			4	4	FT	6" NON-PERFORATED CORRUGATED PLASTIC PIPE, INCLUDING SPECIALS											4	
518	42000	229			229	FT	8" PERFORATED CORRUGATED PLASTIC PIPE	229											
518	42010	8			8	FT	8" NON-PERFORATED CORRUGATED PLASTIC PIPE, INCLUDING SPECIALS	8											
523	20000			1	1	EACH	DYNAMIC LOAD TESTING									1			
523	20500			1	1	EACH	RESTRIKE									1			
524	94804	120			120	FT	DRILLED SHAFTS, 42" DIAMETER, INTO BEDROCK (SEE SPECIAL PROVISIONS)	120											
524	94902	192			192	FT	DRILLED SHAFTS, 48" DIAMETER, ABOVE BEDROCK (SEE SPECIAL PROVISIONS)	192											
524	94950	45			45	FT	DRILLED SHAFTS, 72" DIAMETER, INTO BEDROCK (SEE SPECIAL PROVISIONS)		45										
524	94970	84			84	FT	DRILLED SHAFTS, 78" DIAMETER ABOVE BEDROCK (SEE SPECIAL PROVISIONS)		84										
524	94999		724		724	FT	DRILLED SHAFTS, 96" DIAMETER, INTO BEDROCK, AS PER PLAN (SEE SPECIAL PROVISIONS)				210	234	240	40					7 / 365
524	95000		523		523	FT	DRILLED SHAFTS, MISC.: 102" DIAMETER, ABOVE BEDROCK (SEE SPECIAL PROVISIONS)				65	113	107	238					7 / 365
524	95200		LUMP		LUMP		DRILLED SHAFTS, MISC. OSTERBERG CELL LOAD TESTING OF DRILLED SHAFTS (SEE SPECIAL PROVISIONS)					LUMP	LUMP						
524	95200		LUMP		LUMP		DRILLED SHAFTS, MISC. LATERAL LOAD TESTING OF DRILLED SHAFTS (SEE SPECIAL PROVISIONS)					LUMP	LUMP						
524	95200		LUMP		LUMP		DRILLED SHAFTS, MISC. TEMPORARY 96" DIAMETER, INTO BEDROCK (SEE SPECIAL PROVISIONS)					LUMP	LUMP						
524	95200		LUMP		LUMP		DRILLED SHAFTS, MISC. TEMPORARY 102" DIAMETER, ABOVE BEDROCK (SEE SPECIAL PROVISIONS)					LUMP	LUMP						
SPECIAL	53000200		LUMP		LUMP		STRUCTURE, MISC.: PERMANENT MAINTENANCE. ACCESS INCL. LADDERS, PLATFORMS, RAILINGS, AND STAIRS (SEE SPECIAL PROVISIONS)					LUMP	LUMP						
SPECIAL	53000300		154266			POUND	STRUCTURE, MISC.: POST-TENSIONING TENDONS (STRAND) (SEE SPECIAL PROVISIONS)				35591	13780	13780	19385	71730				
A SPECIAL	53000300		112532			POUND	STRUCTURE, MISC.: POST-TENSIONING BARS (SEE SPECIAL PROVISIONS)								112532				
SPECIAL	53000200		LUMP		LUMP		STRUCTURE, MISC.: STAY CABLE ASSEMBLAGE (SEE SPECIAL PROVISIONS)								LUMP				
SPECIAL	53000200		LUMP		LUMP		STRUCTURE, MISC.: STAY CABLE TESTING								LUMP				
SPECIAL	53000400		128		128	EACH	STRUCTURE, MISC.: VIBRATING WIRE SURFACE MOUNT STRAIN GAGE (SEE SPECIAL PROVISIONS)				96		32						
SPECIAL	53000400		192		192	EACH	STRUCTURE, MISC.: VIBRATING WIRE EMBEDMENT STRAIN GAGE (SEE SPECIAL PROVISIONS)				64		32		96				
SPECIAL	53000400		112		112	EACH	STRUCTURE, MISC.: RESISTIVE FOIL EMBEDMENT STRAIN GAGE (SEE SPECIAL PROVISIONS)								112				
SPECIAL	53000400		1		1	EACH	STRUCTURE, MISC.: VIBRATING WIRE TILT METER (SEE SPECIAL PROVISIONS)				1								
SPECIAL	53000400		46		46	EACH	STRUCTURE, MISC.: VIBRATING WIRE SISTER BAR STRAIN GAGE (SEE SPECIAL PROVISIONS)				30			16					
SPECIAL	53000400		13		13	EACH	STRUCTURE, MISC.: MULTIPLEXER (TEMPORARY INSTALLATION) (SEE SPECIAL PROVISIONS)				1	2	2	1	7				
SPECIAL	53000400		24		24	EACH	STRUCTURE, MISC.: MULTIPLEXER (PERMANENT INSTALLATION) (SEE SPECIAL PROVISIONS)				2	10	4	1	7				
SPECIAL	53000400		16		16	EACH	STRUCTURE, MISC.: VIBRATING WIRE INTERFACE (TEMPORARY INSTALLATION) (SEE SPECIAL PROVISIONS)				1	5	2	1	7				
SPECIAL	53000400		24		24	EACH	STRUCTURE, MISC.: VIBRATING WIRE INTERFACE (PERMANENT INSTALLATION) (SEE SPECIAL PROVISIONS)				2	10	4	1	7				
SPECIAL	53000400		16		16	EACH	STRUCTURE, MISC.: DATA LOGGER (TEMPORARY INSTALLATION) (SEE SPECIAL PROVISIONS)				1	5	2	1	7				
SPECIAL	53000400		5		5	EACH	STRUCTURE, MISC.: DATA LOGGER (PERMANENT INSTALLATION) (SEE SPECIAL PROVISIONS)					3	2						
601	11000	495			495	SQ YD	RIPRAP USING 6" REINFORCED CONCRETE SLAB	495											
607	39910	204		340	544	FT	VANDAL PROTECTION FENCE, 8' STRAIGHT, COATED FABRIC			204								340	
847	10001		5855		5855	SQ YD	MICRO SILICA MODIFIED CONCRETE OVERLAY, AS PER PLAN (1 1/4" THICK)								5855				6 / 365
898	10000		5640		5640	CU YD	QC/QA CONCRETE, CLASS QSC3 (PIER 2, TOWER 3, TOWER 4, PIER 5) (SEE SPECIAL PROVISIONS)				372	2569	2569	130					6 / 365
898	10000		5732	1	5732	CU YD	QC/QA CONCRETE, CLASS QSC3 (CABLE STAYED SUPERSTRUCTURE) (SEE SPECIAL PROVISIONS)			1					5732				6 / 365
898	10211	756	1	882	1638	CU YD	QC/QA CONCRETE, CLASS QSC2, SUPERSTRUCTURE (DECK), AS PER PLAN			756								882	6 / 365
898	10709	193		169	362	SQ YD	QC/QA CONCRETE, CLASS QSC2, SUPERSTRUCTURE (APPROACH SLAB), (T=17"), AS PER PLAN			193								169	6 / 365
898	20100	293		265	558	CU YD	QC/QA CONCRETE, CLASS QSC1, SUBSTRUCTURE (PIER ABOVE FOOTING)		293							265			
898	20150	522		54	576	CU YD	QC/QA CONCRETE, CLASS QSC1, SUBSTRUCTURE (ABUTMENT)	522									54		
898	20300	424	3417	268	4109	CU YD	QC/QA CONCRETE, CLASS QSC1, SUBSTRUCTURE (FOOTING)	424			1470	778	778	391		221	47		
SPECIAL	53000400		2		2		STRUCTURE, MISC: FALCON NESTING BOX (SEE SPECIAL PROVISIONS)					1	1	2					

NO.	REVISIONS	DATE	REV. BY
A	PAY ITEMS REVISED	11/11	BKL
B	PAY ITEM QUANTITIES REVISED	1/12	BKL

NO.	REVISIONS	DATE	REV. BY
1	QUANTITY REVISED	09/13	BKL
2	ADDED FALCON NESTING QUANTITY	12/14	TMB

DESIGNED MJZ | DRAWN JDP | CHECKED BKL | REVIEWED RWB | DATE 6-10 | REVISED | STRUCTURE FILE NUMBER 4401263

DESIGN AGENCY URS 36 EAST 7TH STREET SUITE 2300 CINCINNATI, OHIO 45202

ESTIMATED QUANTITIES (2 OF 2)

BRIDGE NO. LAW-93-0000

IRONTON RUSSELL BRIDGE OVER OHIO RIVER

LAW-93-0.00

PID No. 81595

13 / 365

400 / 788

J:\Project\OV_ODOT\15005112 Ironton Russell\LAW\81595\structures\LAW093_1111C\sheets\093_0000_0002.dgn - 12/19/2014 10:10:58 AM - jon_wanstrath

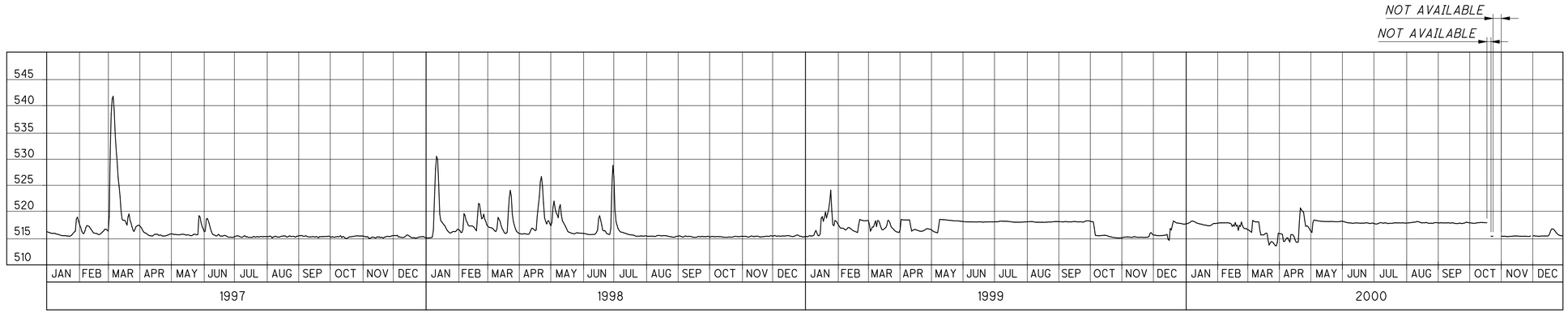

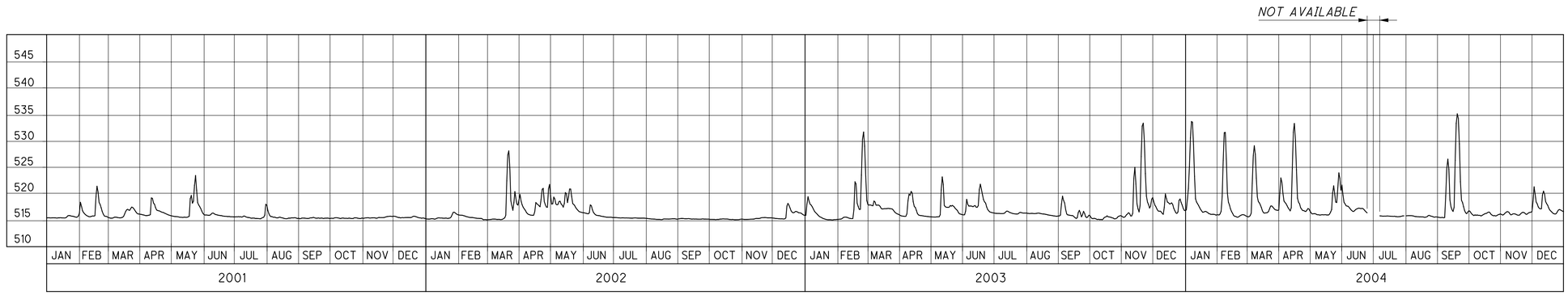

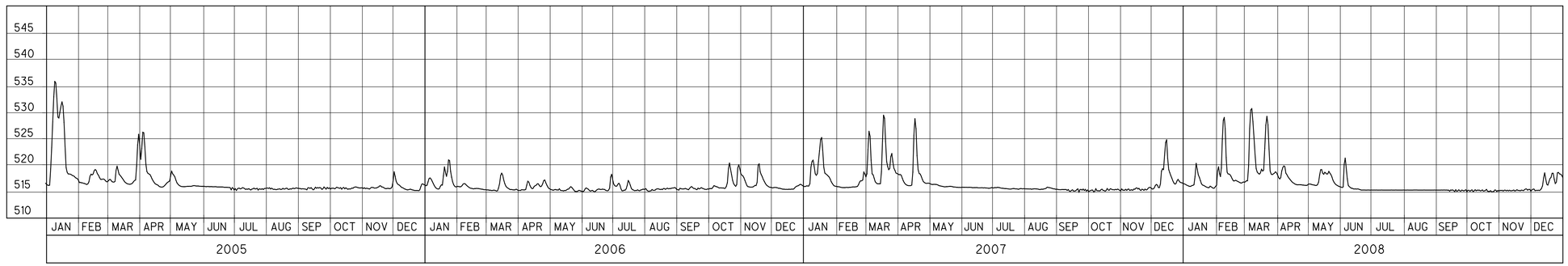

NOTES:

1. *THE DATA ON THIS SHEET HAS BEEN OBTAINED FROM THE U.S.G.S GAUGING STATION AT ASHLAND, KY.*
2. *ELEVATIONS SHOWN ARE BASED ON THE 1929 N.V.G.D*
3. *THE NORMAL POOL ELEVATION AT THIS LOCATION IS 481.03.*
4. *GAUGING STATION DOWNTIME OR INVALID DATA IS SHOWN AS "NOT AVAILABLE".*

DESIGN AGENCY
URS
36 EAST 7TH STREET
SUITE 2300
CINCINNATI, OHIO 45202

DESIGNED	DRAWN	REVIEWED	DATE
BMV	BMV	BA	6-10
CHECKED	REVISED	STRUCTURE FILE NUMBER	
MJZ		4401263	

HYDROGRAPH
BRIDGE NO. LAW-93-0000
IRONTON RUSSEL BRIDGE OVER OHIO RIVER

LAW-93-0.00
PID No. 81595

14 / 365

401
788

J:\Project\O\ODOT\15005112 Ironton Russell\LAW\81595\structures\LAW093_1111C\sheets\Towers\093_0000_md101.dgn - 4/29/2011 9:24:47 AM - john_corley

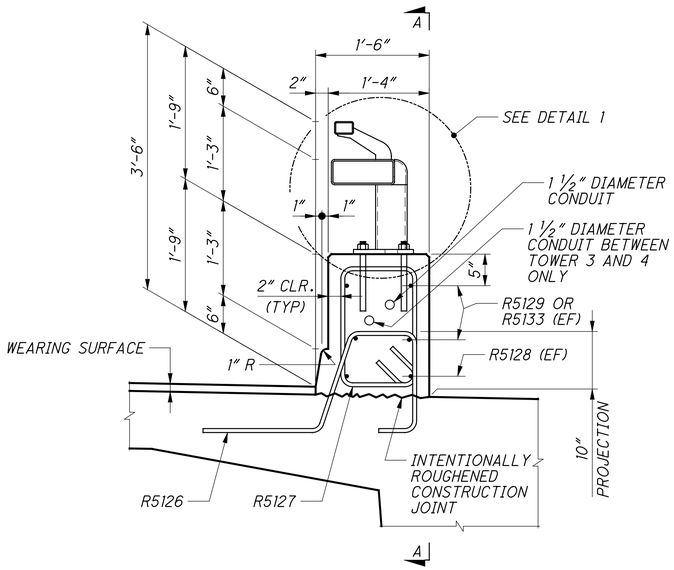

BARRIER TYPICAL SECTION
(SHOWN AT CABLE-STAYED BRIDGE)

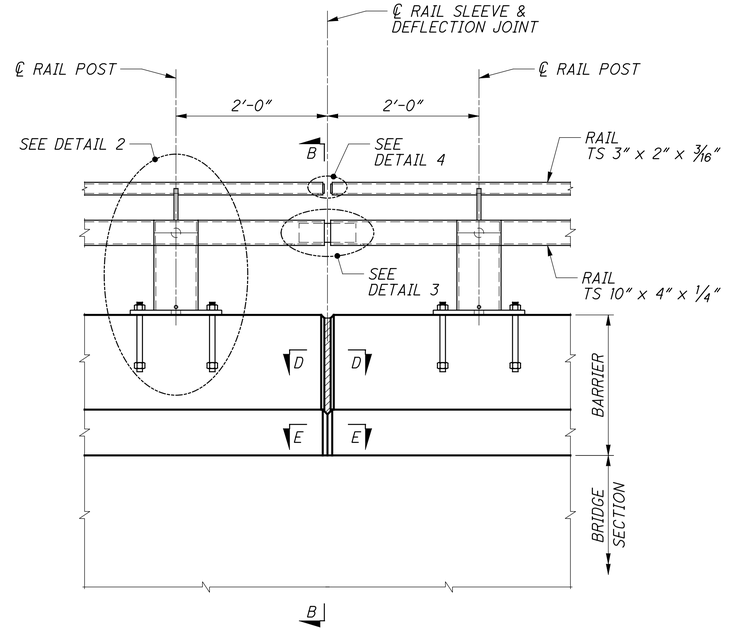

SECTION A-A

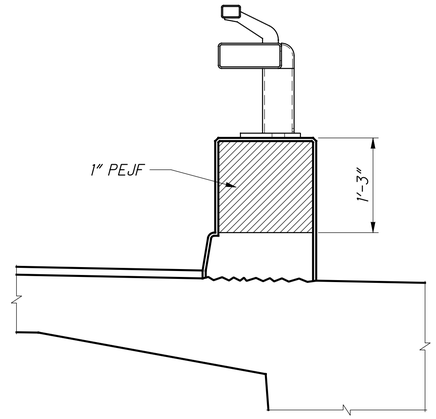

SECTION B-B
(ANCHOR BOLTS NOT SHOWN)

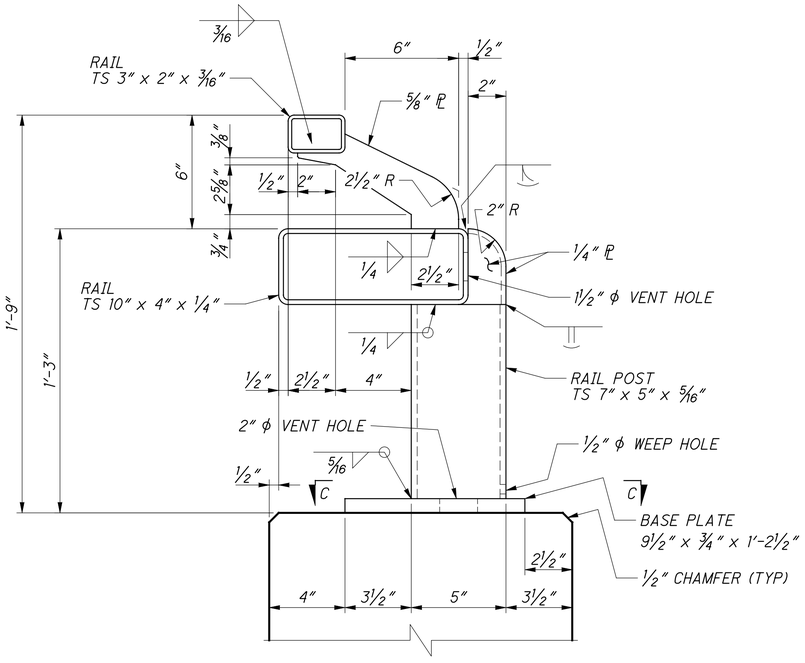

DETAIL 1
(ANCHOR BOLTS NOT SHOWN)

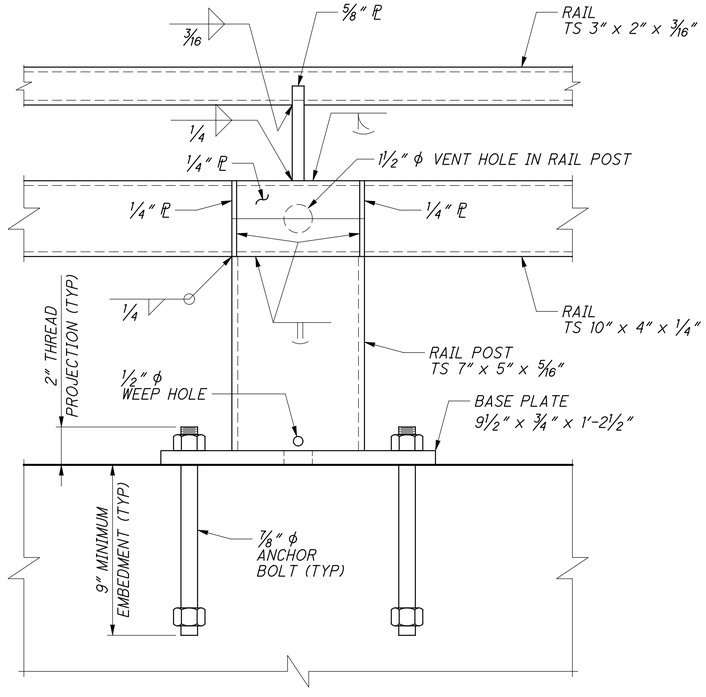

DETAIL 2

NOTES

1. LENGTH OF BARRIER FOR PAYMENT SHALL BE MEASURED ALONG THE TOE OF THE CONCRETE PARAPET.
2. SEE BARRIER LAYOUT DRAWINGS FOR DEFLECTION JOINT, RAIL SLEEVE SPACINGS AND REINFORCEMENT.
3. ANCHOR BOLTS SHALL BE ACCURATELY PLACED AND SUPPORTED TO PROVIDE CORRECT ALIGNMENT OF RAILING NORMAL TO GRADE.
4. STEEL TUBES SHALL BE IN ACCORDANCE WITH ASTM A500, GRADE B. STEEL PLATES SHALL BE IN ACCORDANCE WITH ASTM A709, GRADE 50.
5. GALVANIZE ALL STEEL ASSEMBLIES, BOLTS, NUTS AND WASHERS PER 711.02.
6. ANCHOR BOLTS SHALL BE IN ACCORDANCE WITH ASTM F1554, GRADE 105, TYPE 2A, WITH SUPPLEMENTARY REQUIREMENT S3 FOR PERMANENT GRADE IDENTIFICATION AND SUPPLEMENTARY REQUIREMENT S5 FOR CHARPY IMPACT TESTING. NUTS AND WASHERS SHALL BE AS RECOMMENDED IN ASTM F1554 FOR GRADE 105. ANCHOR BOLTS SHALL BE 7/8" DIAMETER CAST-IN-PLACE ANCHORS WITH HEX NUTS AND WASHERS, MINIMUM ULTIMATE CONDITION STRENGTH SHALL BE 46.6 KIPS, WITH A MINIMUM 9" EMBEDMENT LENGTH.
7. PRICE BID FOR "CONCRETE PARAPET" SHALL BE PER LINEAR FOOT AND SHALL INCLUDE ALL CONCRETE, STRUCTURAL TUBING, ANCHOR BOLTS, PEJF, REINFORCING STEEL, MISCELLANEOUS MATERIALS, EQUIPMENT AND LABOR NECESSARY FOR THE INSTALLATION OF THE BARRIER.
8. CONCRETE SHALL BE TYPE QC/QA CLASS QSC2 WITH A STRENGTH OF 4,500 PSI.
9. SEE ELECTRICAL PLANS FOR EMBEDDED CONDUIT DETAILS.

DESIGN AGENCY
URS
35 EAST 7TH STREET
SUITE 2300
CINCINNATI, OHIO 45202

DESIGNED	DRAWN	REVIEWED	DATE
MJZ	JLS	DLJ	6/2010
CHECKED	REVISED	STRUCTURE FILE NUMBER	
BWJ		4401263	

BARRIER DETAILS (1 OF 2)

BRIDGE NO. LAW-93-0000
IRONTON RUSSELL BRIDGE OVER OHIO RIVER

LAW-93-0.00
PID No. 81595

E:\Bridges_XM\Ironton_Russell\LAW\81595\structures\LAW093_0000C\sheets\093_0000CRA002.dgn 4/25/2011 10:10:38 AM john_stahl

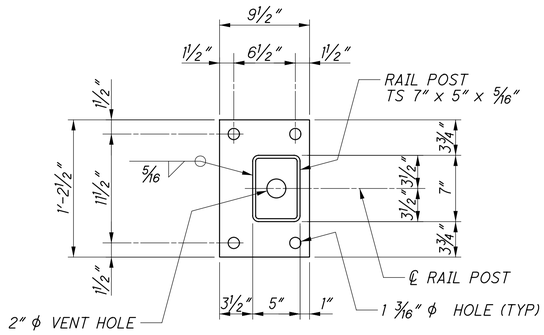

SECTION C-C
RAIL POST BASE PLATE

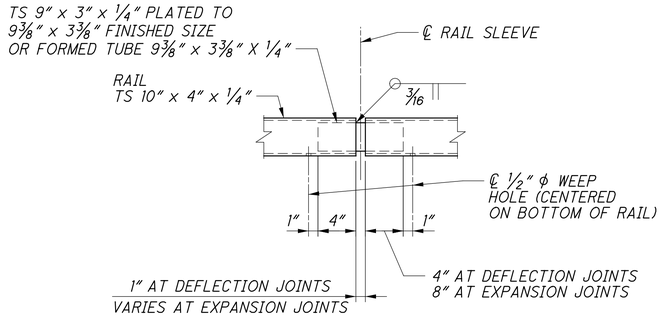

DETAIL 3
10" RAIL SLEEVE DETAIL

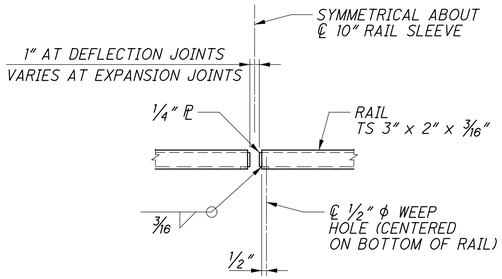

DETAIL 4
3" RAIL END DETAIL

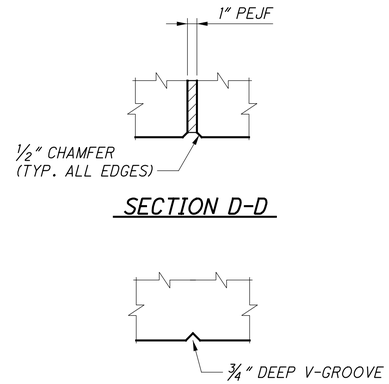

SECTION D-D

SECTION E-E

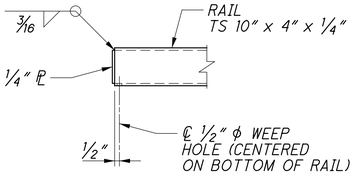

10" RAIL END DETAIL

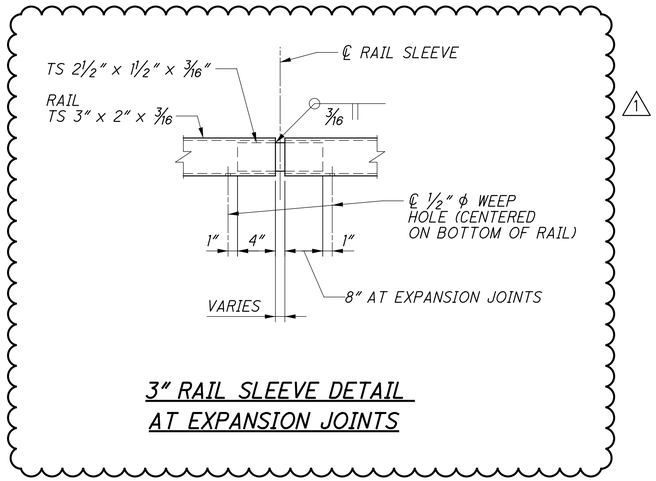

1

3" RAIL SLEEVE DETAIL
AT EXPANSION JOINTS

NO.	REVISIONS	DATE	REV. BY
1	ADDED DETAIL	4/15	CRK

DESIGN AGENCY
URS
36 EAST 7TH STREET
SUITE 2300
CINCINNATI, OHIO 45202

DESIGNED	DRAWN	REVIEWED	DATE
MJZ	JLS	DLJ	6/2010
CHECKED	REVISED	STRUCTURE FILE NUMBER	
BWJ		4401263	

BARRIER DETAILS (2 OF 2)
BRIDGE NO. LAW-93-0000
IRONTON RUSSELL BRIDGE OVER OHIO RIVER

LAW-93-0.00
PID No. 81595

16 /365

403
788

J:\Project\O\ODOT\15005112 Ironton Russell\LAW\81595\structures\LAW093_1111C\sheets\Mainspan\093_0000CRA002.dgn - 4/22/2015 1:48:40 PM - jon_wanstrath

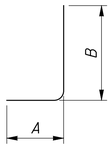

TYPE 1

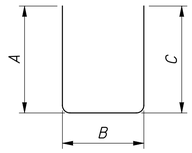

TYPE 2

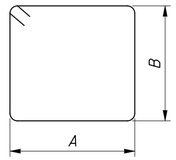

TYPE 3

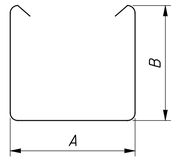

TYPE 4

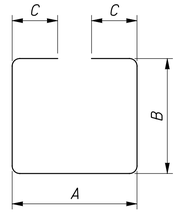

TYPE 5

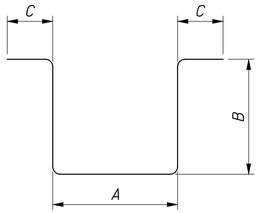

TYPE 6

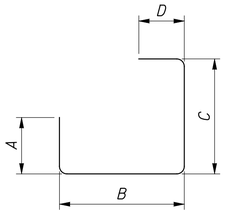

TYPE 7

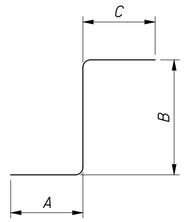

TYPE 8

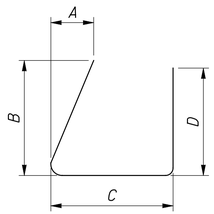

TYPE 9

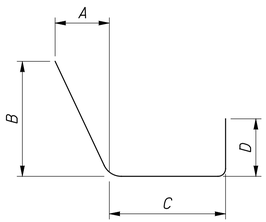

TYPE 10

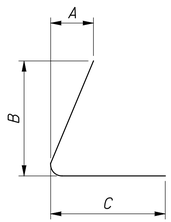

TYPE 11

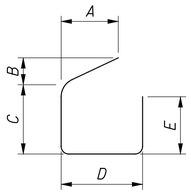

TYPE 12

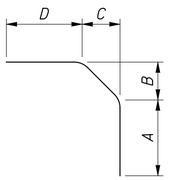

TYPE 13

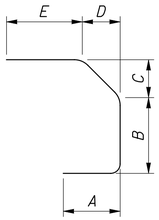

TYPE 14

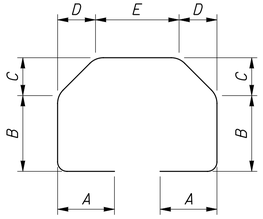

TYPE 15

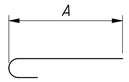

TYPE 16

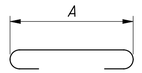

TYPE 17

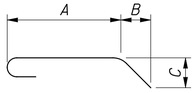

TYPE 18

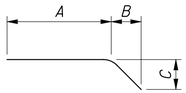

TYPE 19

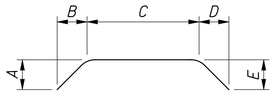

TYPE 20

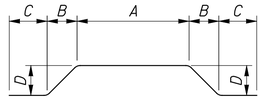

TYPE 21

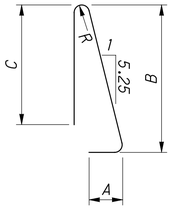

TYPE 23

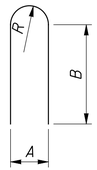

TYPE 24

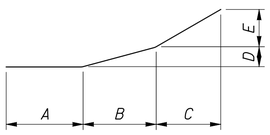

TYPE 25

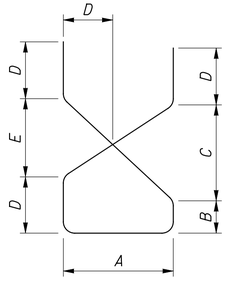

TYPE 26

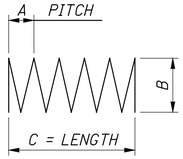

TYPE 27

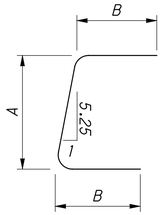

TYPE 28

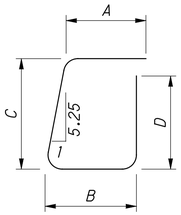

TYPE 29

BAR MARK LEGEND

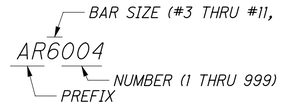

NOTES

1. FOR BAR DIMENSIONS SEE REINFORCING BAR LIST SHEETS.
2. ALL REINFORCING BARS SHALL BE EPOXY COATED EXCEPT POST-TENSIONING LOCAL ANCHORAGE ZONE SPIRAL REINFORCEMENT SHALL BE GALVANIZED.
3. ALL DIMENSIONS ARE OUT TO OUT, EXCEPT WHERE NOTED.
4. DIMENSION 'R' IS TO THE INSIDE OF THE BAR.
5. STANDARD BENDS ARE TO BE PROVIDED, EXCEPT WHERE NOTED.
6. ALL DIMENSIONS SHOWN ARE FINISHED DIMENSIONS.
7. MECHANICAL CONNECTORS:

   MECHANICAL CONNECTORS SHALL DEVELOP NOT LESS THAN 125% OF THE REINFORCING BAR YIELD STRENGTH.

   REINFORCING BARS ARE DETAILED TO THE GEOMETRIC MID-POINT OF THE CONNECTOR, EXCEPT WHERE NOTED.

   THE WEIGHT OF A BAR WITH A MECHANICAL COUPLER DOES NOT INCLUDE THE WEIGHT OF THE MECHANICAL COUPLER. THE COST OF THE MECHANICAL COUPLER IS INCIDENTAL TO THE COST OF THE BAR.

   ACTUAL BAR LENGTHS MAY VARY DEPENDING ON THE TYPE OF MECHANICAL CONNECTOR USED. AN ODOT APPROVED TYPE OF MECHANICAL CONNECTOR FOR REINFORCING BARS SHALL BE PROVIDED. INSTALLATION OF CONNECTORS SHALL CONFORM WITH MANUFACTURER'S RECOMMENDED PROCEDURES.

   CONNECTORS AND DOWEL BARS SHALL BE EPOXY COATED. COATING FOR BOTH CONNECTORS AND BARS SHALL CONFORM TO SAME SPECIFICATIONS. COATINGS WHICH HAVE BEEN DAMAGED OR WHICH OTHERWISE DO NOT MEET SPECIFICATIONS WITH RESPECT TO COLOR, CONTINUITY, AND UNIFORMITY MAY BE REPAIRED AS DIRECTED BY THE ENGINEER OR THEY MAY BE REPLACED BY MATERIAL WHICH MEET THE SPECIFICATIONS.

8. SPIRAL REINFORCING BARS:

   THE LENGTH SHOWN IN THE STEEL LIST FOR SPIRAL BARS IS THE LENGTH OF THE SPIRAL ALONG THE AXIS OF THE SPIRAL. ONE AND ONE-HALF CLOSED-COIL TURNS SHALL BE PROVIDED AT ENDS OF EACH SPIRAL UNIT.

   SPACERS:

   CONCRETE SPACERS OR OTHER APPROVED NON-CORROSIVE SPACING DEVICES SHALL BE USED AT SUFFICIENT INTERVALS (NEAR BOTTOM AND AT INTERVALS NOT EXCEEDING 10 FEET) TO INSURE CONCENTRIC SPACING FOR THE ENTIRE CAGE LENGTH. SPACERS SHALL BE CONSTRUCTED OF APPROVED MATERIAL EQUAL IN QUALITY AND DURABILITY TO THE CONCRETE SPECIFIED. THE SPACERS SHALL HAVE ADEQUATE DIMENSIONS TO ENSURE A MINIMUM COVER BETWEEN THE OUTSIDE OF THE REINFORCING CAGE AND THE DESIGN DIMENSION PER GENERAL NOTES.

9. ABBREVIATIONS USED IN THE BAR LISTS:

   INC = INCREMENT

10. FOR FIELD CUT BARS THE EPOXY COATING SHALL BE REPAIRED AT THE CUT.

DESIGN AGENCY
URS
36 EAST 7TH STREET
SUITE 2300
CINCINNATI, OHIO 45202

DESIGNED	DRAWN	REVIEWED	DATE
MJZ	CJK	DLJ	6/2010
CHECKED	REVISED	STRUCTURE FILE NUMBER	
BWJ		4401263	

STANDARD BAR BENDING DETAILS (1 OF 3)

BRIDGE NO. LAW-93-0000
IRONTON RUSSELL BRIDGE OVER OHIO RIVER

LAW-93-0.00
PID No. 81595

E:\Bridges_XM\Ironton_Russell\LAW\81595\structures\LAW093_0000C\sheets\093_0000CMD010.dgn 4/25/2011 10:10:47 AM john_stahl

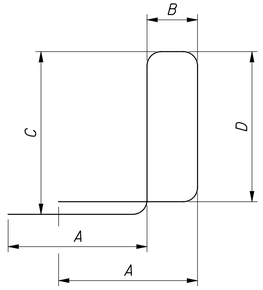

TYPE 30

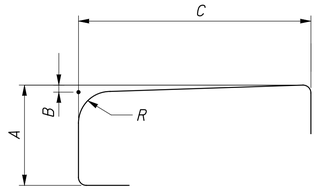

TYPE 31

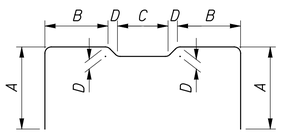

TYPE 32

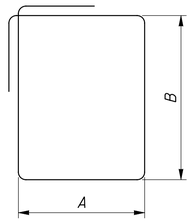

TYPE 33

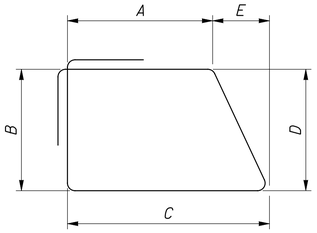

TYPE 34

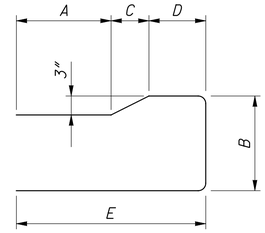

TYPE 35

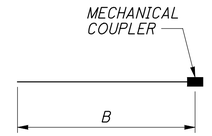

TYPE 36

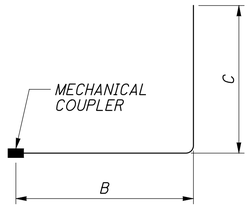

TYPE 37

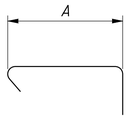

TYPE 38

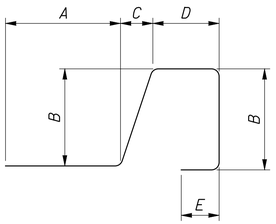

TYPE 39

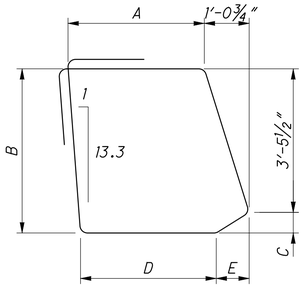

TYPE 40

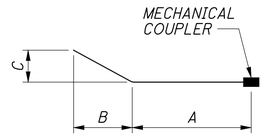

TYPE 41

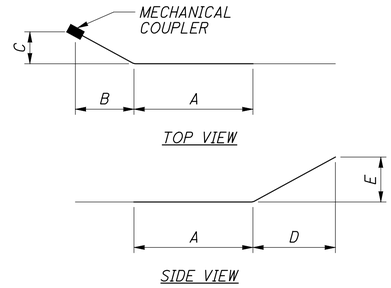

TYPE 42

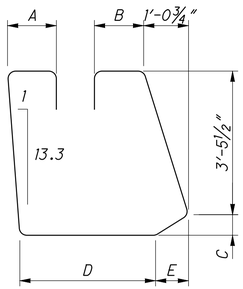

TYPE 43

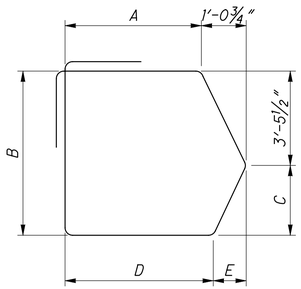

TYPE 44

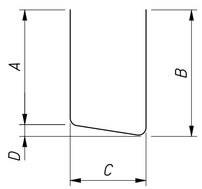

TYPE 45

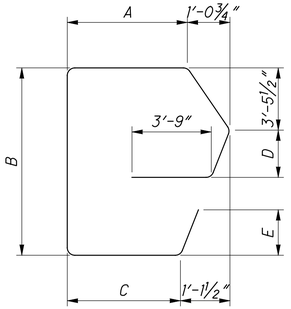

TYPE 46

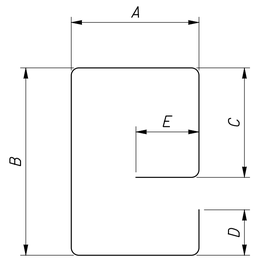

TYPE 47

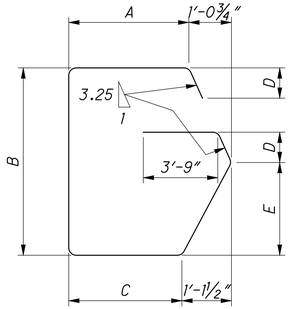

TYPE 48

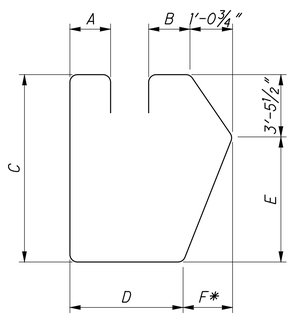

TYPE 49

* F= 1'-1½" (UNO)

DIAPHRAGM	MARK	F
KY	8877	1'-0½"
KY	8878	10"
KY	8916	1'-0½"
OH	8877	10¼"
OH	8916	10¼"

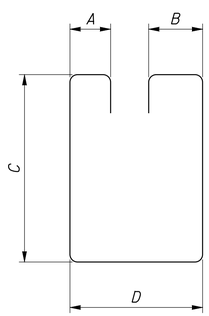

TYPE 50

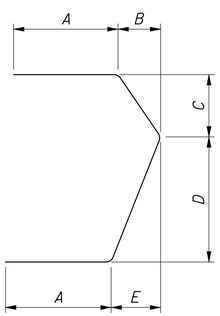

TYPE 51

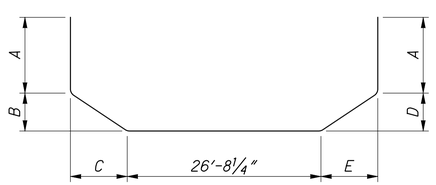

TYPE 52

DESIGN AGENCY
URS
38 EAST 7TH STREET
SUITE 2300
CINCINNATI, OHIO 45202

DESIGNED	DRAWN	REVIEWED	DATE
MJZ	CJK	DLJ	6/2010
CHECKED	REVISED	STRUCTURE FILE NUMBER	
BWJ		4401263	

STANDARD BAR BENDING DETAILS (2 OF 3)
BRIDGE NO. LAW-93-0000
IRONTON RUSSELL BRIDGE OVER OHIO RIVER

LAW-93-0.00
PID No. 81595

18 / 365

405
788

E:\Bridges_XM\Ironton_Russell\LAW\81595\structures\LAW093_0000C\sheets\093_0000CMD011.dgn 4/25/2011 10:10:52 AM john_stahl

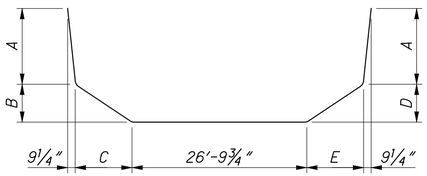

TYPE 53

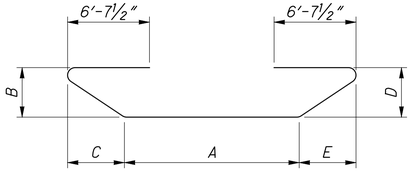

TYPE 54

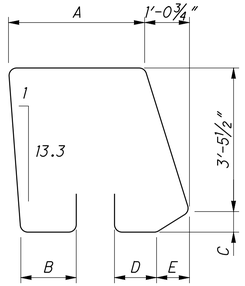

TYPE 55

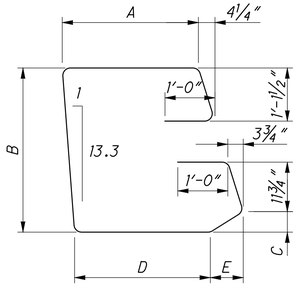

TYPE 56

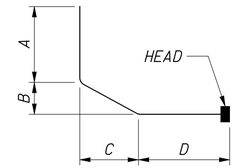

TYPE 57

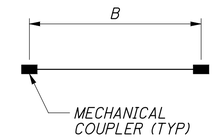

TYPE 58

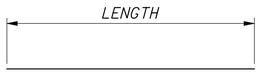

TYPE STR

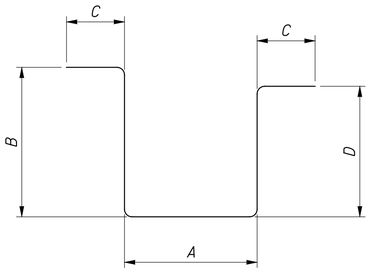

TYPE 59

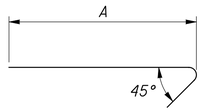

TYPE 60

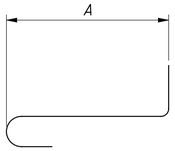

TYPE 61

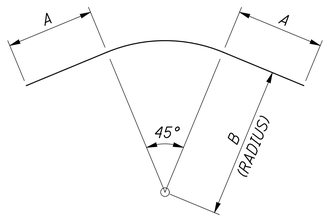

TYPE 62

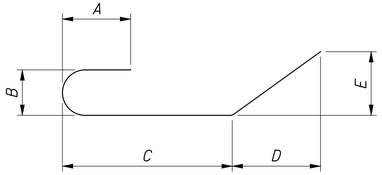

TYPE 63

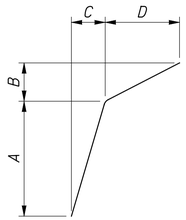

TYPE 64

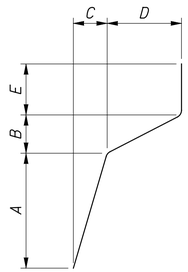

TYPE 65

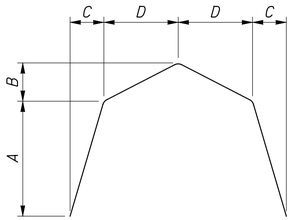

TYPE 66

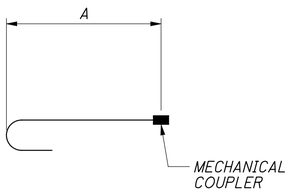

TYPE 67

DESIGN AGENCY
URS
36 EAST 7TH STREET
SUITE 2300
CINCINNATI, OHIO 45202

DESIGNED	DRAWN	REVIEWED	DATE
MJZ	CJK	DLJ	6/2010
CHECKED	REVISED	STRUCTURE FILE NUMBER	
BWJ		4401263	

STANDARD BAR BENDING DETAILS (3 OF 3)
BRIDGE NO. LAW-93-0000
IRONTON RUSSELL BRIDGE OVER OHIO RIVER

LAW-93-0.00
PID No. 81595

19 / 365

406
788

E:\Bridges_XM\Ironton_Russell\LAW\81595\structures\LAW093_0000C\sheets\093_0000CMD021.dgn 4/25/2011 10:10:56 AM john_stahl

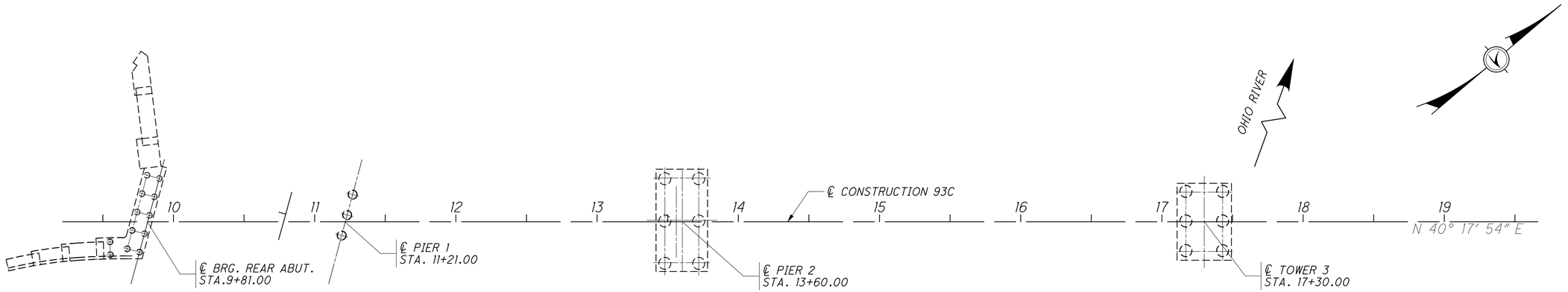

PART PLAN

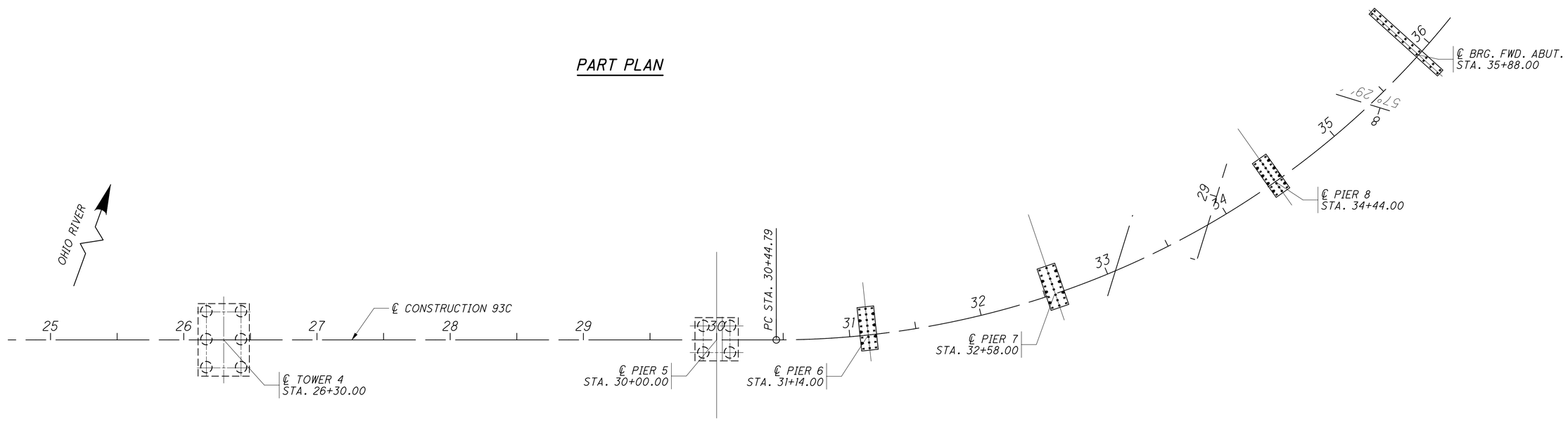

PART PLAN

NOTES

1. FOR GENERAL NOTES, SEE SHEETS 5/365 TO 11/365.
2. FOR REAR ABUTMENT AND PIER 1 FOUNDATION DETAILS, SEE SHEET 22/365.
3. FOR PIER 2, TOWER 3, TOWER 4, AND PIER 5 FOUNDATION DETAILS, SEE SHEET 70/365.
4. FOR PIER 6, PIER 7, PIER 8, AND FORWARD ABUTMENT DETAILS, SEE SHEET 310/365.

J:\Project\O\ODOT\15005112 Ironton Russell\LAW\81595\structures\LAW093_1111C\sheets\Kentucky Approach\093_0000_fp001.dgn - 4/29/2011 9:24:54 AM - john_corley

DESIGN AGENCY
URS
36 EAST 7TH STREET
SUITE 2300
CINCINNATI, OHIO 45202

DESIGNED	DRAWN	REVIEWED	DATE
MJZ	GJW	RWB	02-22-11
CHECKED	REVISED	STRUCTURE FILE NUMBER	
BKL		4401263	

GENERAL FOUNDATION LAYOUT
BRIDGE NO. LAW-93-0000
IRONTON RUSSELL BRIDGE OVER OHIO RIVER

LAW-93-0.00
PID No. 81595

20/365

407
788

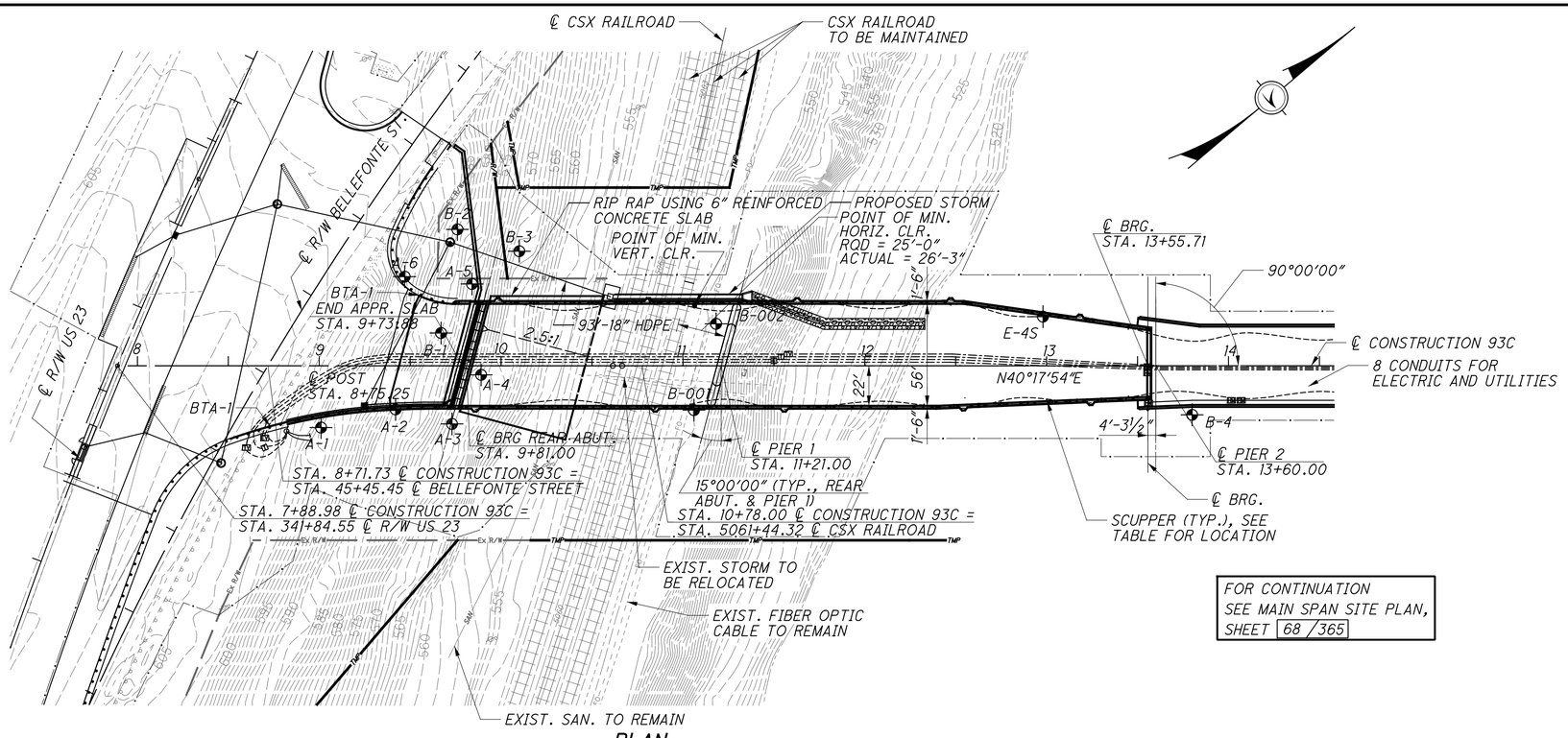

PLAN

FOR CONTINUATION SEE MAIN SPAN SITE PLAN, SHEET 68 / 365

PROPOSED SCUPPER LOCATIONS

NO.	STATION	SHOULDER
1	12+45.00	LEFT
2	12+30.00	RIGHT
3	12+75.00	LEFT
4	12+75.00	RIGHT
5	13+00.00	LEFT
6	13+00.00	RIGHT
7	13+45.00	LEFT
8	13+45.00	RIGHT

LIGHT POLE LOCATIONS

STATION	OFFSET
9+98.40	36.00' LT
9+85.75	24.00' RT
10+81.00	36.00' LT
10+84.75	24.00' RT
11+62.75	36.00' LT
11+55.75	24.00' RT
12+47.25	36.00' LT
12+54.26	23.38' RT
13+18.33	26.87' LT
13+24.27	20.38' RT

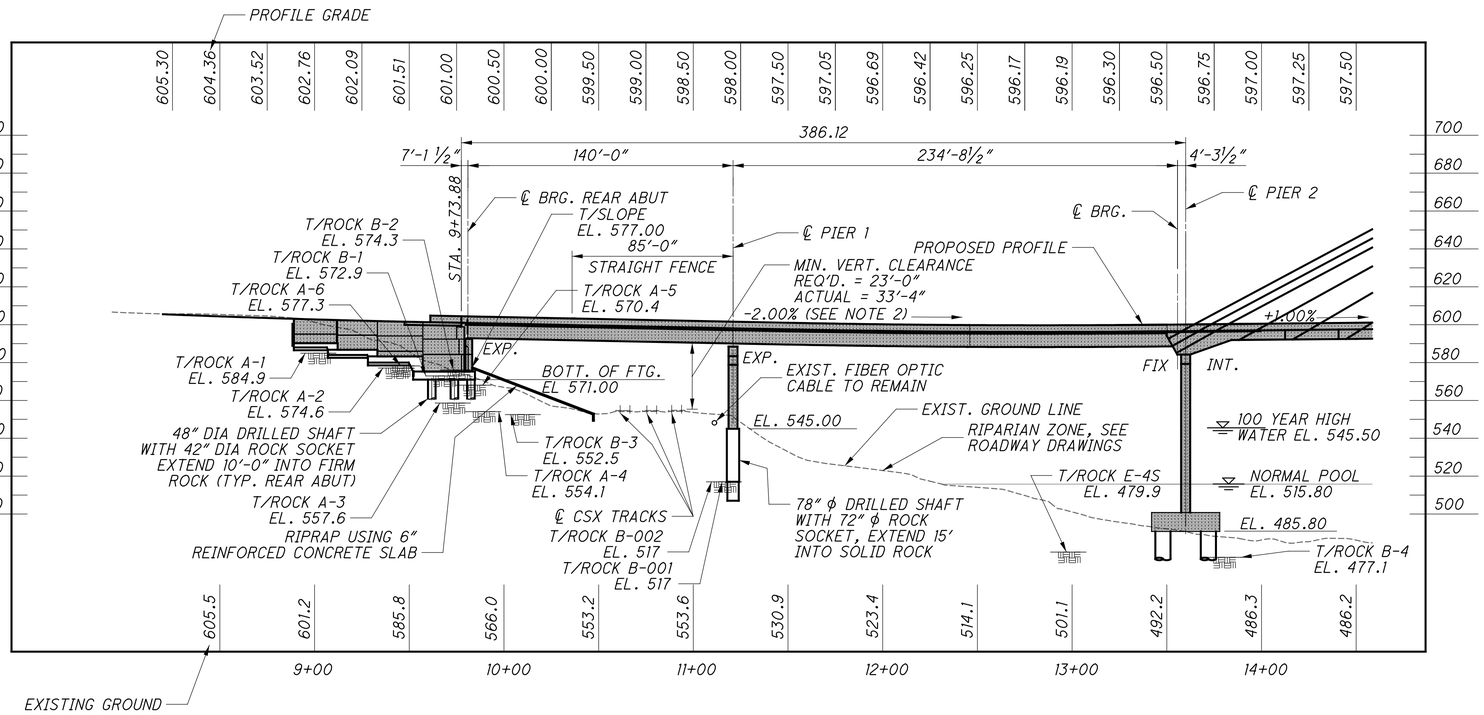

PROFILE ALONG ℄ CONSTRUCTION 93C

LEGEND

- BORING LOCATION
- T/ROCK = PROBABLE TOP OF FIRM ROCK.
- BTA-1 = BRIDGE TERMINAL ASSEMBLY, TYPE 1.

NOTES

1. FOR HYDRAULIC INFORMATION, SEE SHEET 68 / 365
2. FOR ADDITIONAL NOTES, VERTICAL CURVE AND BENCH MARK DATA, SEE SHEET 4 / 365
3. FOR REAR ABUTMENT PROPOSED GROUNDLINE & GRADING DETAILS, SEE SHEET 89 of 775.
4. SEE SHEET 141 OF 788 FOR APPROACH PAVEMENT DETAILS

PROPOSED KY APPROACH STRUCTURE

TYPE: CONTINUOUS TWO SPAN BENT STEEL PLATE GIRDER SUPERSTRUCTURE WITH COMPOSITE REINFORCED CONCRETE DECK ON REINFORCED CONCRETE PIERS AND ABUTMENTS.

SPANS: 140'-0", 234'-8 1/2" C/C BEARINGS

ROADWAY: VARIES 56'-0" TO 32'-0" TOE TO TOE OF PARAPET

LOADING: HL-93 AND 30 PSF FUTURE WEARING SURFACE

WEARING SURFACE: MONOLITHIC CONCRETE

SKEW: 15°00'00" LF REAR ABUTMENT AND PIER 1
PIER 2: NONE

APPROACH SLABS: AS-1-81 (30' LONG) MODIFIED

ALIGNMENT: TANGENT

CROWN: 0.016 FT/FT

DESIGN AGENCY
URS
36 EAST 7TH STREET
SUITE 2300
CINCINNATI, OHIO 45202

DESIGNED BER | DRAWN GJW | CHECKED MJZ | REVIEWED RWB | DATE 02-22-2011 | REVISED | STRUCTURE FILE NUMBER 4401263

GREENUP COUNTY, KY
LAWRENCE COUNTY, OH
STA. 9+73.88
STA. 35+90.50

KY APPROACH - SITE PLAN
BRIDGE LAW-93-0000
IRONTON RUSSELL BRIDGE OVER OHIO RIVER

LAW-93-0.00
PID No. 81595

J:\Project\O\ODOT\15005112 Ironton Russell\LAW\81595\structures\LAW093_1111C\sheets\093_0000_gp001.dgn - 1/4/2012 2:55:51 PM - jon_wanstrath

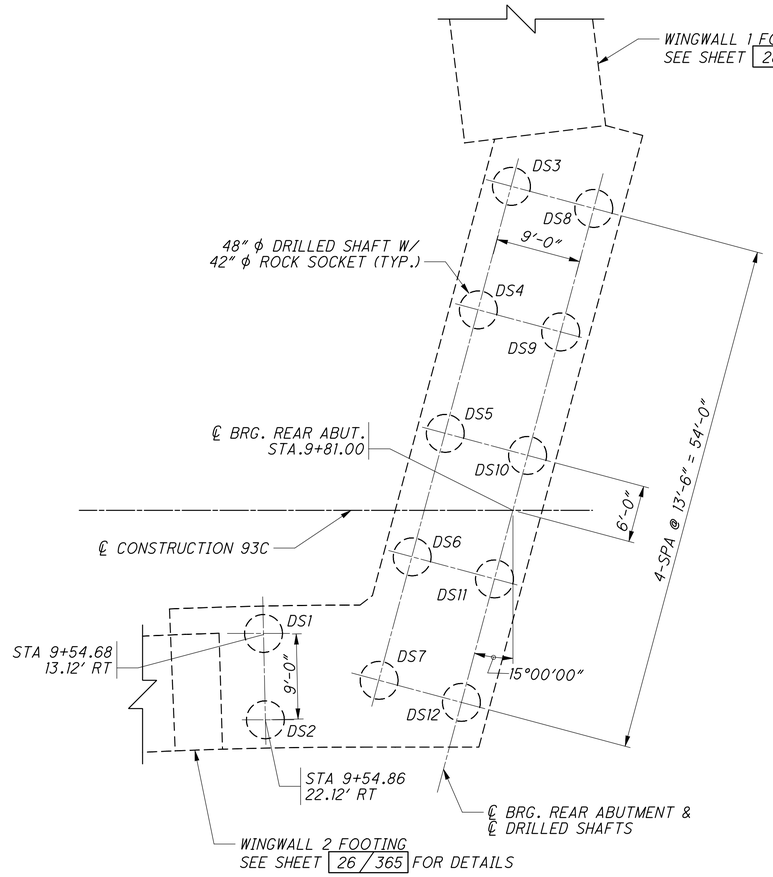

REAR ABUTMENT

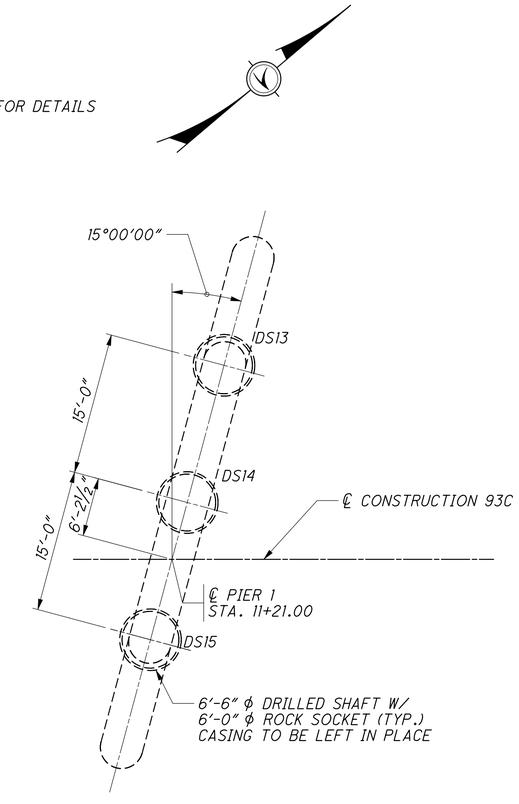

PIER 1

NOTES

1. DS DENOTES DRILLED SHAFT.
2. FOR GENERAL NOTES, SEE SHEETS 5 / 365 THRU 11 / 365
3. SEE APPROPRIATE FOUNDATION PLANS FOR LENGTHS AND REINFORCING FOR DRILLED SHAFTS.

Link to 279-012-000
Pier & 2 Drilled Shafts
As-Built

DESIGN AGENCY
URS
36 EAST 7TH STREET
SUITE 2300
CINCINNATI, OHIO 45202

DESIGNED	DRAWN	REVIEWED	DATE
MJZ	GJW	RWB	02-22-11
CHECKED	REVISED	STRUCTURE FILE NUMBER	
BKL		4401263	

KY APPROACH - FOUNDATION LAYOUT
BRIDGE NO. LAW-93-0000
IRONTON RUSSELL BRIDGE OVER OHIO RIVER

LAW-93-0.00
PID No. 81595

22/365

409
788

J:\Project\O\ODOT\15005112 Ironton Russell\LAW\81595\structures\LAW093_1111C\sheets\Kentucky Approach\093_0000_fp002.dgn - 4/29/2011 9:25:09 AM - john_corley

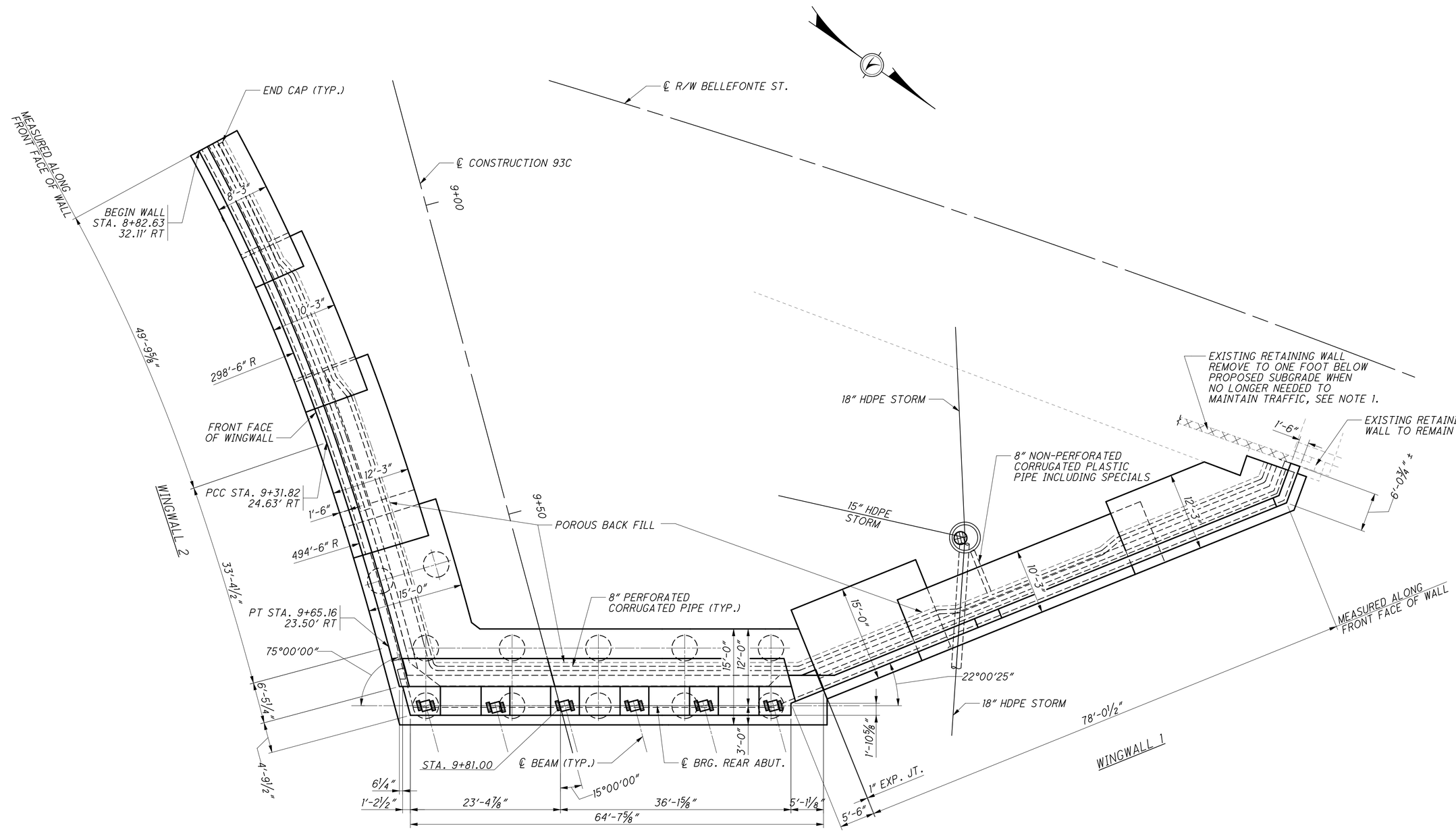

REAR ABUTMENT LAYOUT

NOTES

1. PARTIAL REMOVAL OF EXISTING BELLEFONTE STREET RETAINING WALL IS INCLUDED WITH THE ROADWAY PLAN QUANTITIES FOR PAYMENT.
2. THE CONTRACTOR IS TO PROVIDE TEMPORARY BRACING OR SHORING AS REQUIRED TO PROTECT BELLEFONTE ROAD RETAINING WALL DURING CONSTRUCTION OF THE PROPOSED FOOTING
3. POROUS BACKFILL WITH FILTER FABRIC: MINIMUM 2 FEET THICK SHALL EXTEND UP TO THE PLANE OF THE SUBGRADE, TO 1 FOOT BELOW THE MINIMUM EMBANKMENT SURFACE, AND LATERALLY FROM THE END OF WINGWALL 1 TO THE END OF WINGWALL 2.

DESIGN AGENCY
URS
36 EAST 7TH STREET
SUITE 2300
CINCINNATI, OHIO 45202

DESIGNED	DRAWN	REVIEWED	DATE
TJF	GJW	RWB	02-22-11
CHECKED	REVISED	STRUCTURE FILE NUMBER	
BER		4401263	

KY APPROACH - REAR ABUTMENT (1 OF 11)
BRIDGE NO. LAW-93-0000
IRONTON RUSSELL BRIDGE OVER OHIO RIVER

LAW-93-0.00
PID No. 81595

23/365

410/788

J:\Project\0\ODOT\15005112 Ironton Russell\LAW\81595\structures\LAW093_1111C\sheets\Kentucky Approach\093_0000_gr001.dgn - 4/29/2011 9:25:12 AM - john_corley

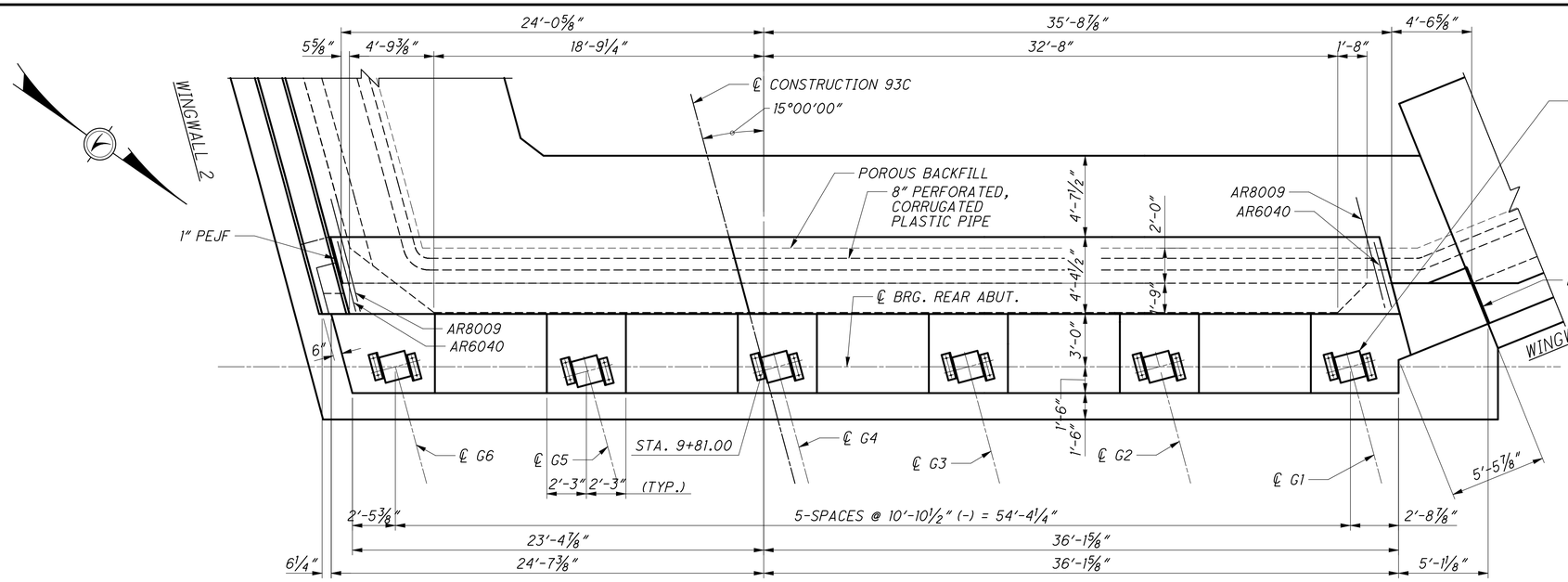

PART PLAN REAR ABUTMENT

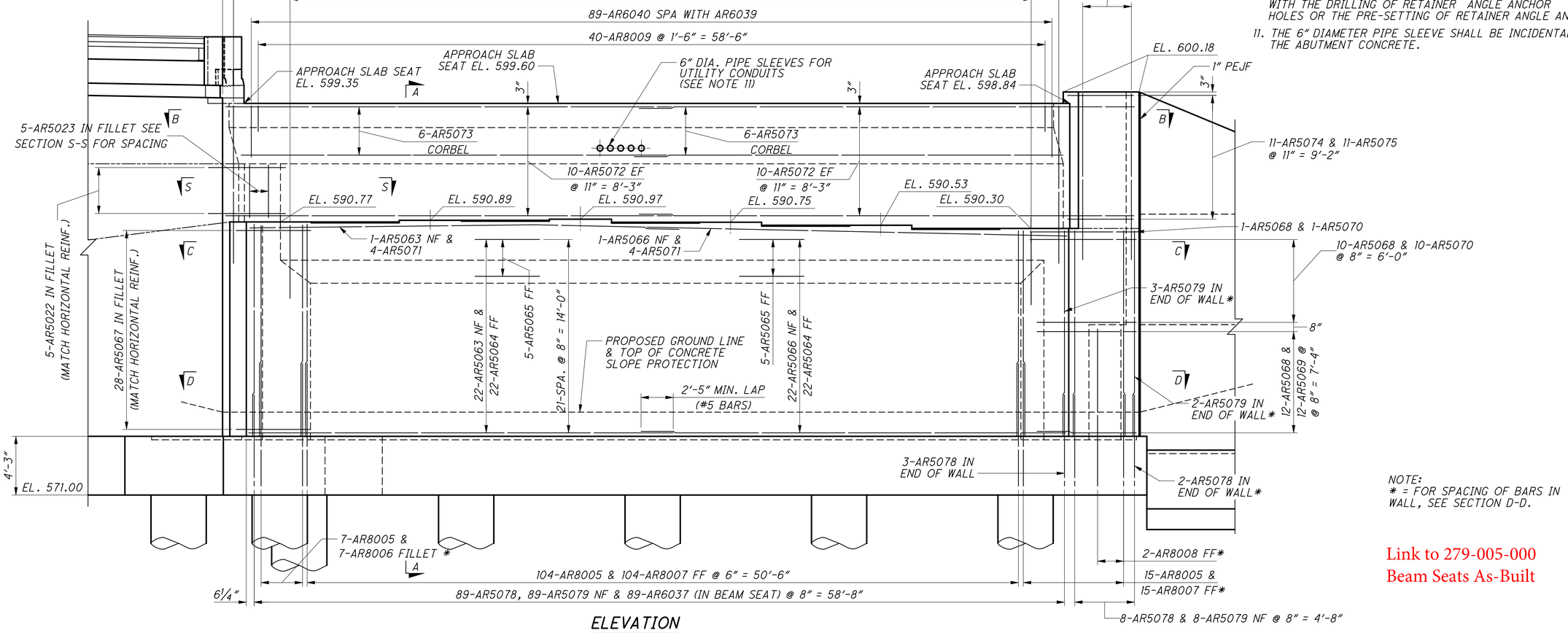

ELEVATION

NOTE:
* = FOR SPACING OF BARS IN WALL, SEE SECTION D-D.

NOTES

1. FOR GENERAL NOTES, SEE SHEETS 5 / 365 THRU 11 / 365
2. FOR FOOTING PLAN - ABUTMENT, SEE SHEET 25 / 365
3. FOR PLAN - WINGWALL 1, SEE SHEET 28 / 365 .
4. FOR PLAN - WINGWALL 2, SEE SHEET 26 / 365 .
5. FOR DEVELOPED ELEVATION - WINGWALL 1, SEE SHEET 29 / 365 .
6. FOR DEVELOPED ELEVATION - WINGWALL 2, SEE SHEET 27 / 365 .
7. FOR REINFORCING STEEL LIST, SEE SHEETS 64 / 365 THRU 66 / 365 .
8. FOR SECTION A-A, SEE SHEET 31 / 365 .
9. FOR SECTIONS B-B THRU D-D AND S-S, SEE SHEET 33 / 365
10. BRIDGE SEAT REINFORCING, SETTING ANCHORS: ACCURATELY PLACE REINFORCING STEEL IN THE VICINITY OF THE BRIDGE SEAT TO AVOID INTERFERENCE WITH THE DRILLING OF RETAINER ANGLE ANCHOR HOLES OR THE PRE-SETTING OF RETAINER ANGLE ANCHORS.
11. THE 6" DIAMETER PIPE SLEEVE SHALL BE INCIDENTAL TO THE ABUTMENT CONCRETE.

Link to 279-005-000
Beam Seats As-Built

DESIGN AGENCY
URS
36 EAST 7TH STREET
SUITE 2300
CINCINNATI, OHIO 45202

DESIGNED TJF | DRAWN GJW | REVIEWED RWB | DATE 02-22-11
CHECKED BER | REVISED | STRUCTURE FILE NUMBER 4401263

KY APPROACH - REAR ABUTMENT (2 OF 11)
BRIDGE NO. LAW-93-0000
IRONTON RUSSELL BRIDGE OVER OHIO RIVER

LAW-93-0.00
PID No. 81595

24 / 365

411 / 788

J:\Project\O\ODOT\15005112 Ironton Russell\LAW\81595\structures\LAW093_1111C\sheets\Kentucky Approach\093_0000_gr002.dgn - 4/29/2011 9:25:14 AM - john_corley

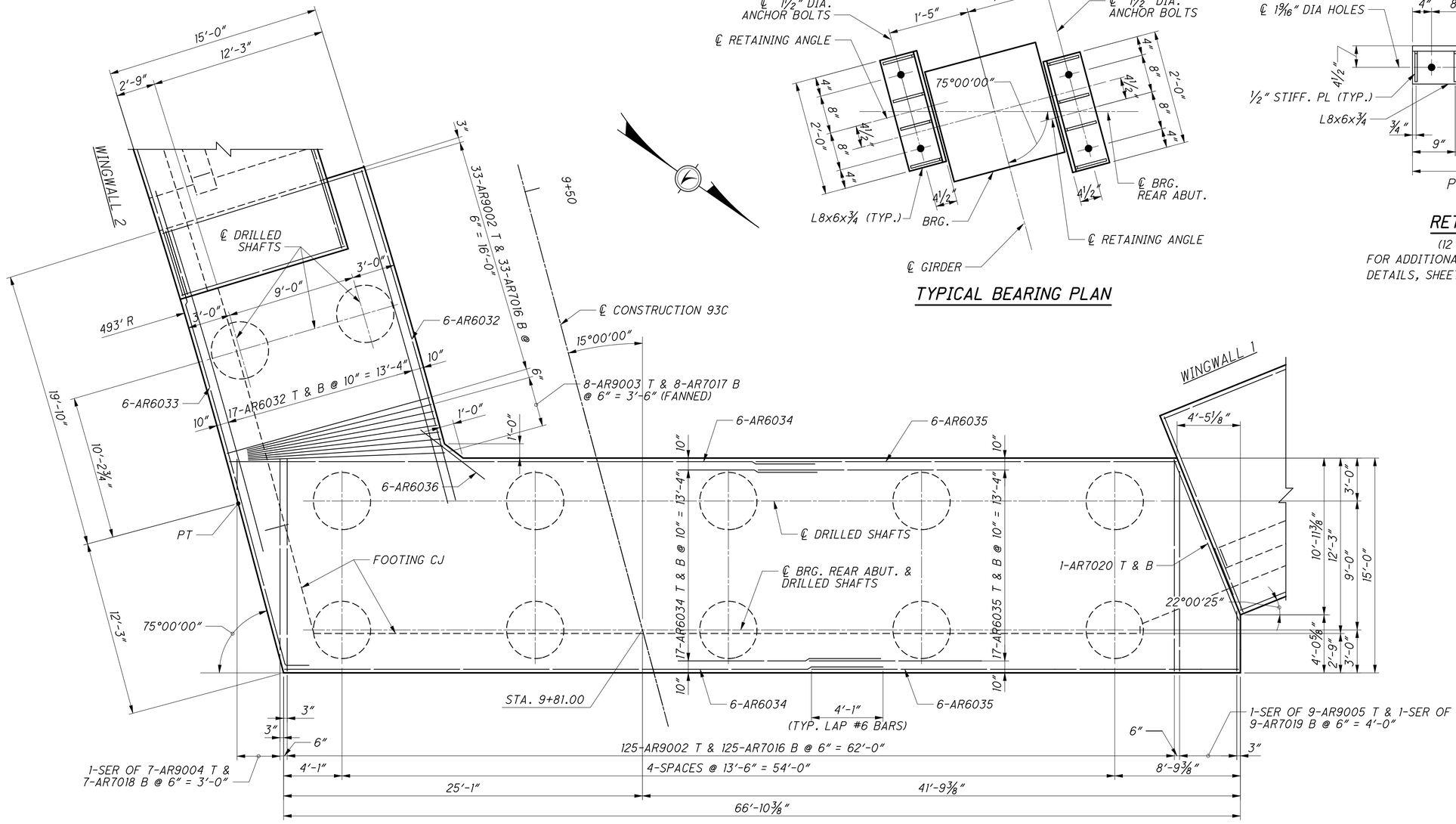

TYPICAL BEARING PLAN

RETAINER ANGLE DETAILS

(12 RETAINING ANGLES REQUIRED)
FOR ADDITIONAL DETAILS NOT SHOWN, SEE BEARING DETAILS, SHEETS 46/365 AND 47/365

FOOTING PLAN - ABUTMENT

NOTES

1. FOR GENERAL NOTES, SEE SHEETS 5/365 THRU 11/365
2. FOR FOOTING PLAN - WINGWALL 1, SEE SHEET 28/365
3. FOR FOOTING PLAN - WINGWALL 2, SEE SHEET 26/365
4. FOR REINFORCING STEEL LIST, SEE SHEET 64/365 THRU 66/365

DESIGN AGENCY
URS
36 EAST 7TH STREET
SUITE 2300
CINCINNATI, OHIO 45202

DESIGNED TJF | CHECKED BER
DRAWN GJW | REVISED
REVIEWED RWB | DATE 02-22-11
STRUCTURE FILE NUMBER 4401263

KY APPROACH - REAR ABUTMENT (3 OF 11)
BRIDGE NO. LAW-93-0000
IRONTON RUSSELL BRIDGE OVER OHIO RIVER

LAW-93-0.00
PID No. 81595

25/365

412/788

J:\Project\O\ODOT\15005112 Ironton Russell\LAW\81595\structures\LAW093_1111C\sheets\Kentucky Approach\093_0000_gr003.dgn - 4/29/2011 9:25:17 AM - john_corley

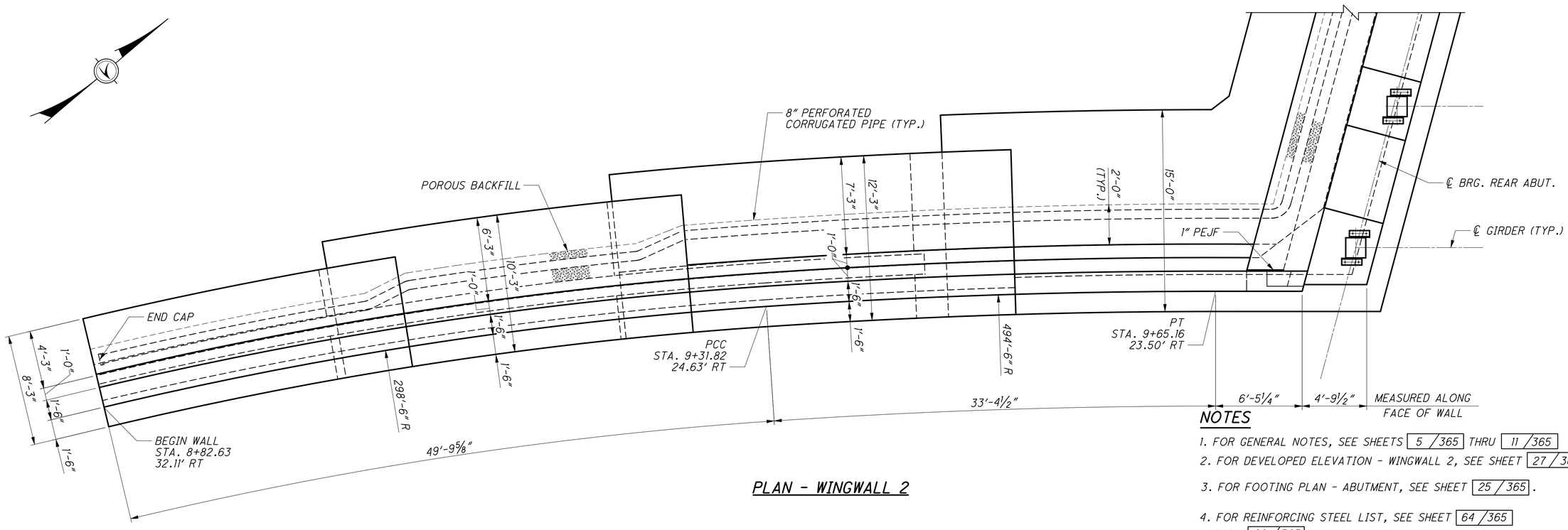

PLAN - WINGWALL 2

NOTES

1. FOR GENERAL NOTES, SEE SHEETS 5/365 THRU 11/365
2. FOR DEVELOPED ELEVATION - WINGWALL 2, SEE SHEET 27/365.
3. FOR FOOTING PLAN - ABUTMENT, SEE SHEET 25/365.
4. FOR REINFORCING STEEL LIST, SEE SHEET 64/365 THRU 66/365

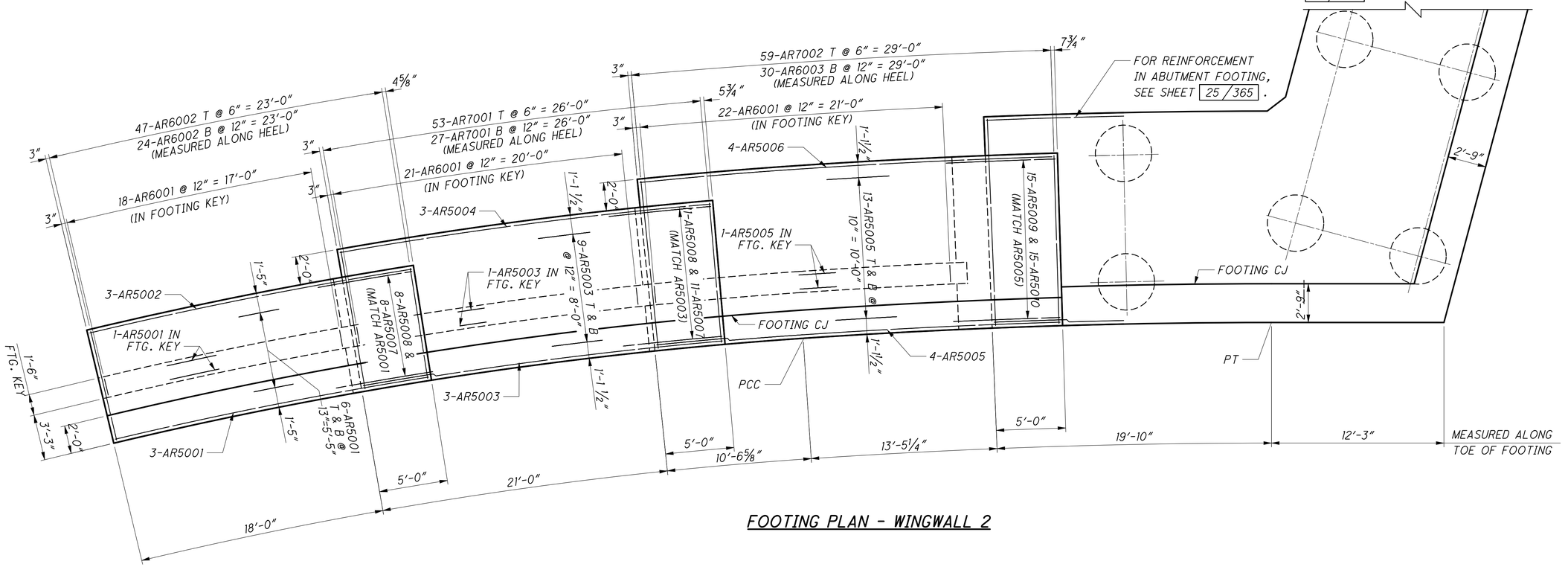

FOOTING PLAN - WINGWALL 2

DESIGN AGENCY
URS
36 EAST 7TH STREET
SUITE 2300
CINCINNATI, OHIO 45202

DESIGNED	DRAWN	REVIEWED	DATE
TJF	GJW	RWB	02-22-11
CHECKED	REVISED	STRUCTURE FILE NUMBER	
BER		4401263	

KY APPROACH - REAR ABUTMENT (4 OF 11)
BRIDGE NO. LAW-93-0000
IRONTON RUSSELL BRIDGE OVER OHIO RIVER

LAW-93-0.00
PID No. 81595

26/365

413
788

J:\Project\0_ODOT\15005112 Ironton Russell\LAW\81595\structures\LAW093_1111C\sheets\Kentucky Approach\093_0000_gr004.dgn - 4/29/2011 9:25:20 AM - john_corley

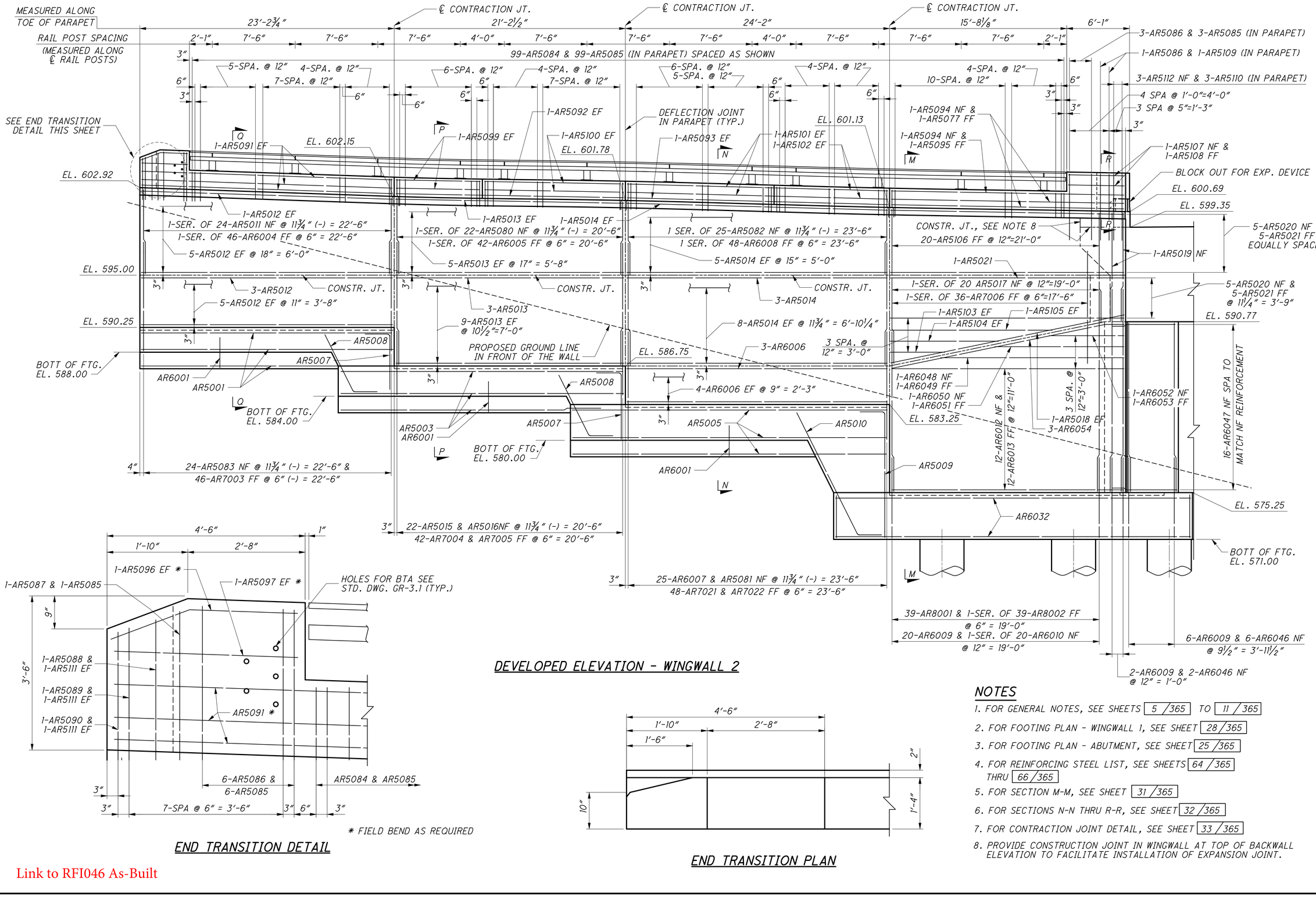

END TRANSITION DETAIL

DEVELOPED ELEVATION - WINGWALL 2

END TRANSITION PLAN

NOTES

1. FOR GENERAL NOTES, SEE SHEETS 5/365 TO 11/365
2. FOR FOOTING PLAN - WINGWALL 1, SEE SHEET 28/365
3. FOR FOOTING PLAN - ABUTMENT, SEE SHEET 25/365
4. FOR REINFORCING STEEL LIST, SEE SHEETS 64/365 THRU 66/365
5. FOR SECTION M-M, SEE SHEET 31/365
6. FOR SECTIONS N-N THRU R-R, SEE SHEET 32/365
7. FOR CONTRACTION JOINT DETAIL, SEE SHEET 33/365
8. PROVIDE CONSTRUCTION JOINT IN WINGWALL AT TOP OF BACKWALL ELEVATION TO FACILITATE INSTALLATION OF EXPANSION JOINT.

Link to RFI046 As-Built

DESIGN AGENCY
URS
36 EAST 7TH STREET
SUITE 2300
CINCINNATI, OHIO 45202

DESIGNED	DRAWN	REVIEWED	DATE
TJF	GJW	RWB	02-22-11
CHECKED	REVISED	STRUCTURE FILE NUMBER	
BER		4401263	

KY APPROACH - REAR ABUTMENT (5 OF 11)
BRIDGE NO. LAW-93-0000
IRONTON RUSSELL BRIDGE OVER OHIO RIVER

LAW-93-0.00
PID No. 81595

J:\Project\0_ODOT\150051112 Ironton Russell\LAW\81595\structures\LAW093_1111C\sheets\Kentucky Approach\093_0000_gr005.dgn - 4/29/2011 9:25:23 AM - john_corley

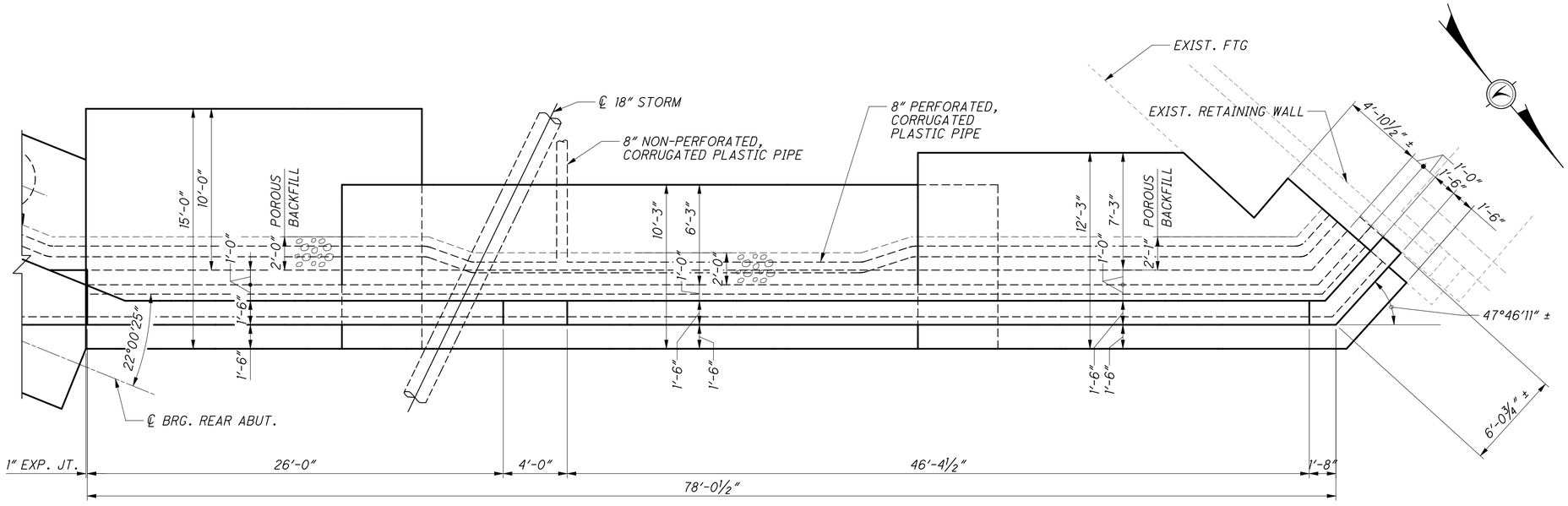

PLAN - WINGWALL 1

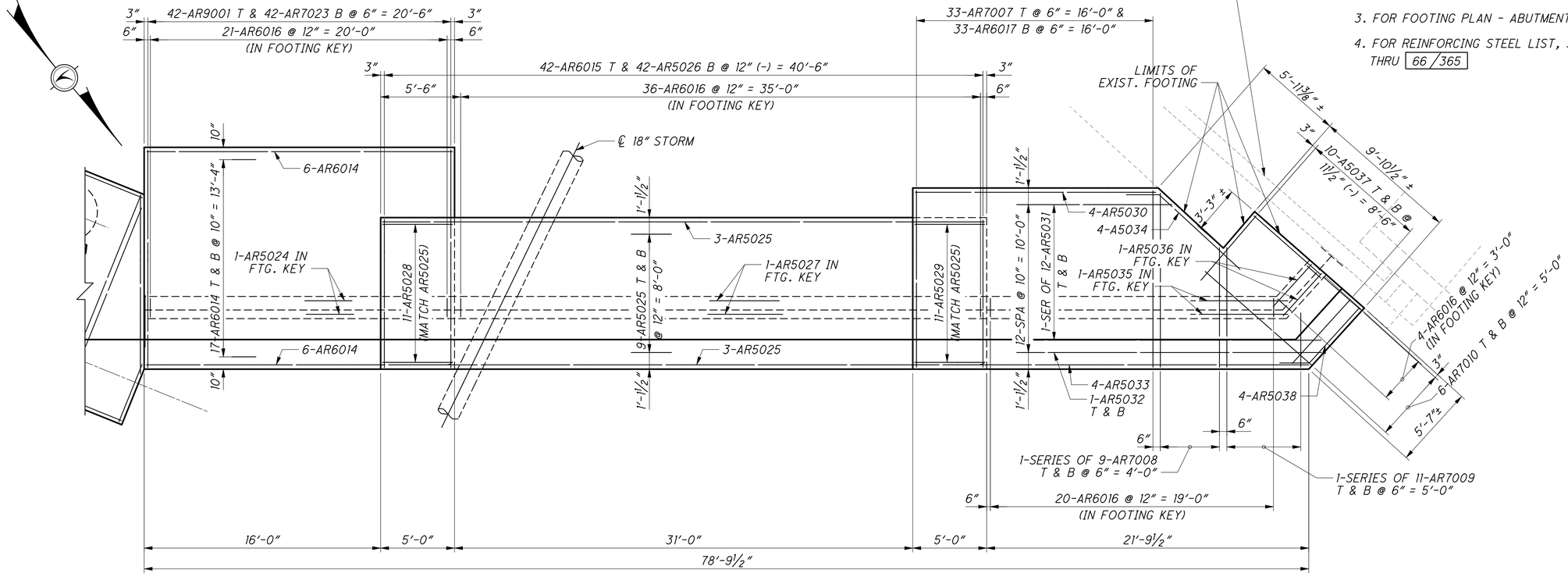

FOOTING PLAN - WINGWALL 1

NOTES

1. FOR GENERAL NOTES, SEE SHEETS 5/365 THRU 11/365.
2. FOR DEVELOPED ELEVATION - WINGWALL 1, SEE SHEET 29/365.
3. FOR FOOTING PLAN - ABUTMENT, SEE SHEET 25/365.
4. FOR REINFORCING STEEL LIST, SEE SHEET 64/365 THRU 66/365

DESIGN AGENCY
URS
36 EAST 7TH STREET
SUITE 2300
CINCINNATI, OHIO 45202

DESIGNED	DRAWN	REVIEWED	DATE
TJF	GJW	RWB	02-22-11
CHECKED	REVISED	STRUCTURE FILE NUMBER	
BER		4401263	

KY APPROACH - REAR ABUTMENT (6 OF 11)
BRIDGE NO. LAW-93-0000
IRONTON RUSSELL BRIDGE OVER OHIO RIVER

LAW-93-0.00
PID No. 81595

28/365

415/788

J:\Project\OA_ODOT\15005112 Ironton Russell\LAW\81595\structures\LAW093_1111C\sheets\Kentucky Approach\093_0000_gr006.dgn - 4/29/2011 9:25:27 AM - john_corley

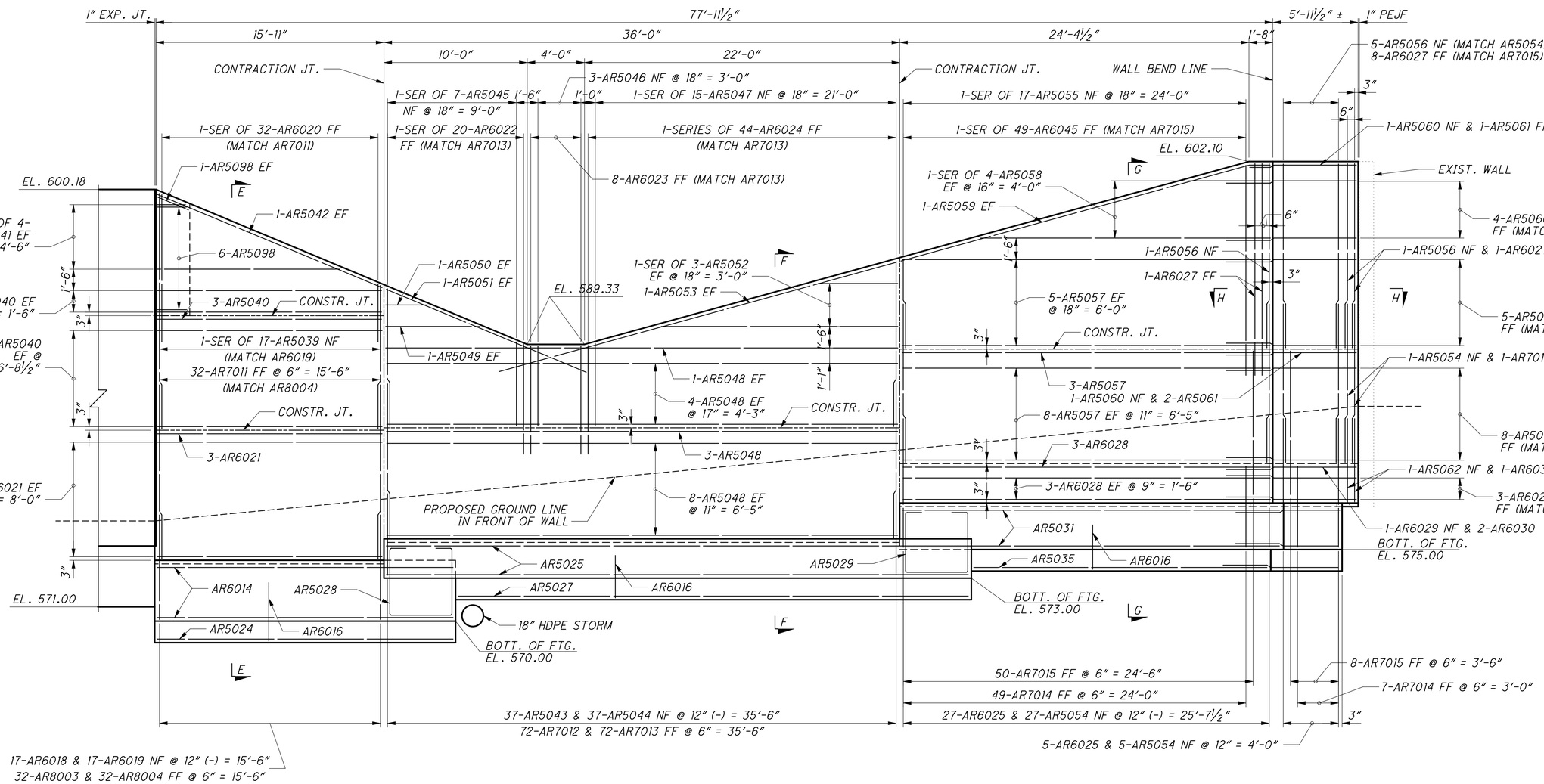

DEVELOPED ELEVATION - WINGWALL 1

NOTES

1. FOR GENERAL NOTES, SEE SHEETS 5 / 365 THRU 11 / 365
2. FOR FOOTING PLAN - WINGWALL 1, SEE SHEET 28 / 365
3. FOR REINFORCING STEEL LIST, SEE SHEETS 64 / 365 THRU 66 / 365
4. FOR SECTIONS E-E THRU H-H, SEE SHEET 30 / 365
5. FOR CONTRACTION JOINT DETAIL, SEE SHEET 33 / 365
6. FOR REINFORCING LAP LENGTH, SEE SECTIONS E-E THRU G-G SHEET 30 / 365

J:\Project\O\ODOT\15005112 Ironton Russell\LAW\81595\structures\LAW093_1111C\sheets\Kentucky Approach\093_0000_ar007.dgn — 4/29/2011 9:25:29 AM — john_corley

DESIGN AGENCY
URS
36 EAST 7TH STREET
SUITE 2300
CINCINNATI, OHIO 45202

DESIGNED TJF | DRAWN GJW | REVIEWED RWB | DATE 02-22-11
CHECKED BER | REVISED | STRUCTURE FILE NUMBER 4401263

KY APPROACH - REAR ABUTMENT (7 OF 11)
BRIDGE NO. LAW-93-0000
IRONTON RUSSELL BRIDGE OVER OHIO RIVER

LAW-93-0.00
PID No. 81595

29 / 365

416
788

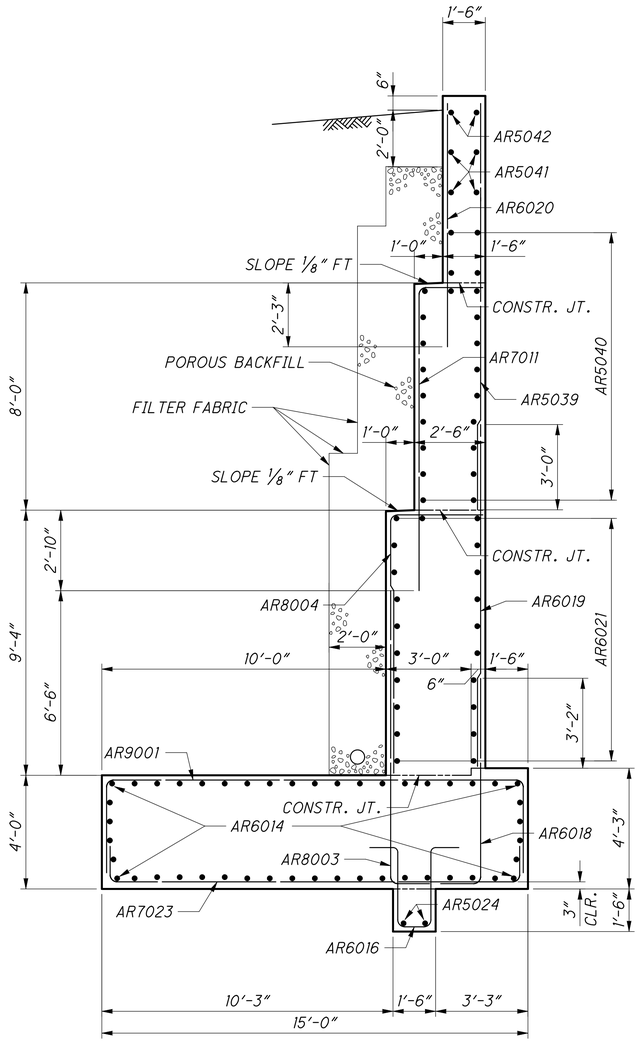

SECTION E-E

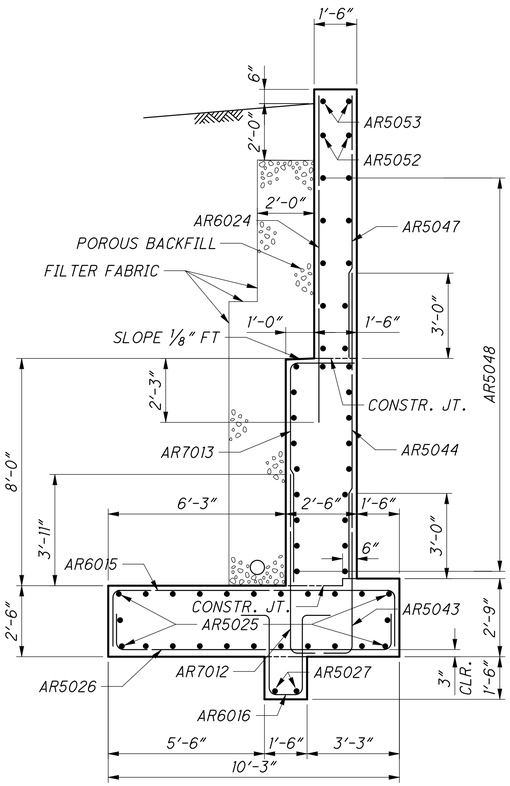

SECTION F-F

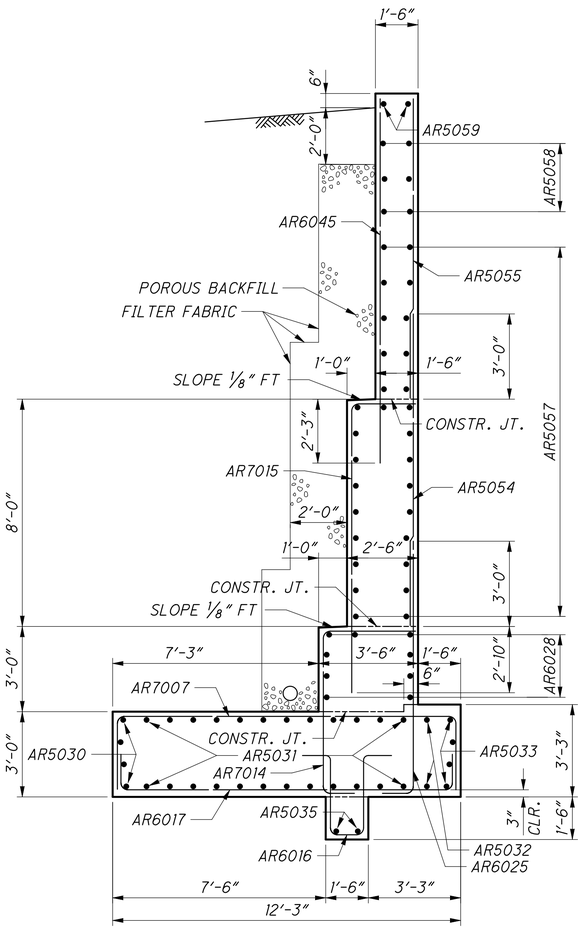

SECTION G-G

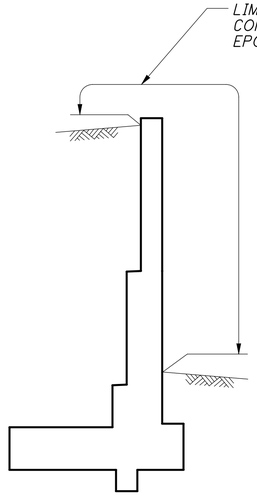

WINGWALL SEALING LIMITS

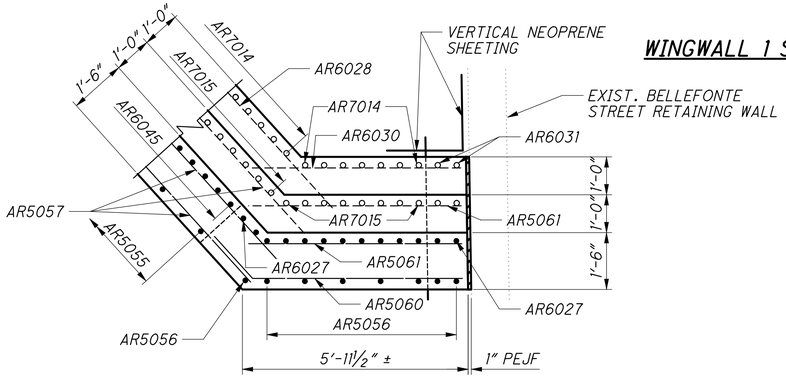

SECTION H-H

WINGWALL 1 SECTIONS

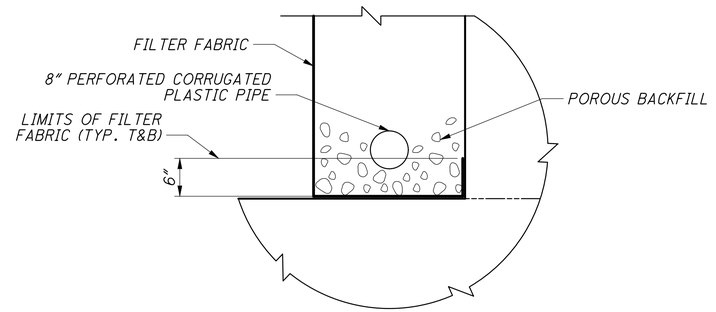

FILTER FABRIC DETAIL

DESIGN AGENCY
URS
36 EAST 7TH STREET
SUITE 2300
CINCINNATI, OHIO 45202

DESIGNED	DRAWN	REVIEWED	DATE
TJF	GJW	RWB	02-22-11
CHECKED	REVISED	STRUCTURE FILE NUMBER	
BER		4401263	

KY APPROACH - REAR ABUTMENT (8 OF 11)
BRIDGE NO. LAW-93-0000
IRONTON RUSSELL BRIDGE OVER OHIO RIVER

LAW-93-0.00
PID No. 81595

30/365

417
788

J:\Project\O_ODOT\15005112 Ironton Russell\LAW\81595\structures\LAW093_1111C\sheets\Kentucky Approach\093_0000_gr008.dgn - 4/29/2011 9:25:32 AM - john_corley

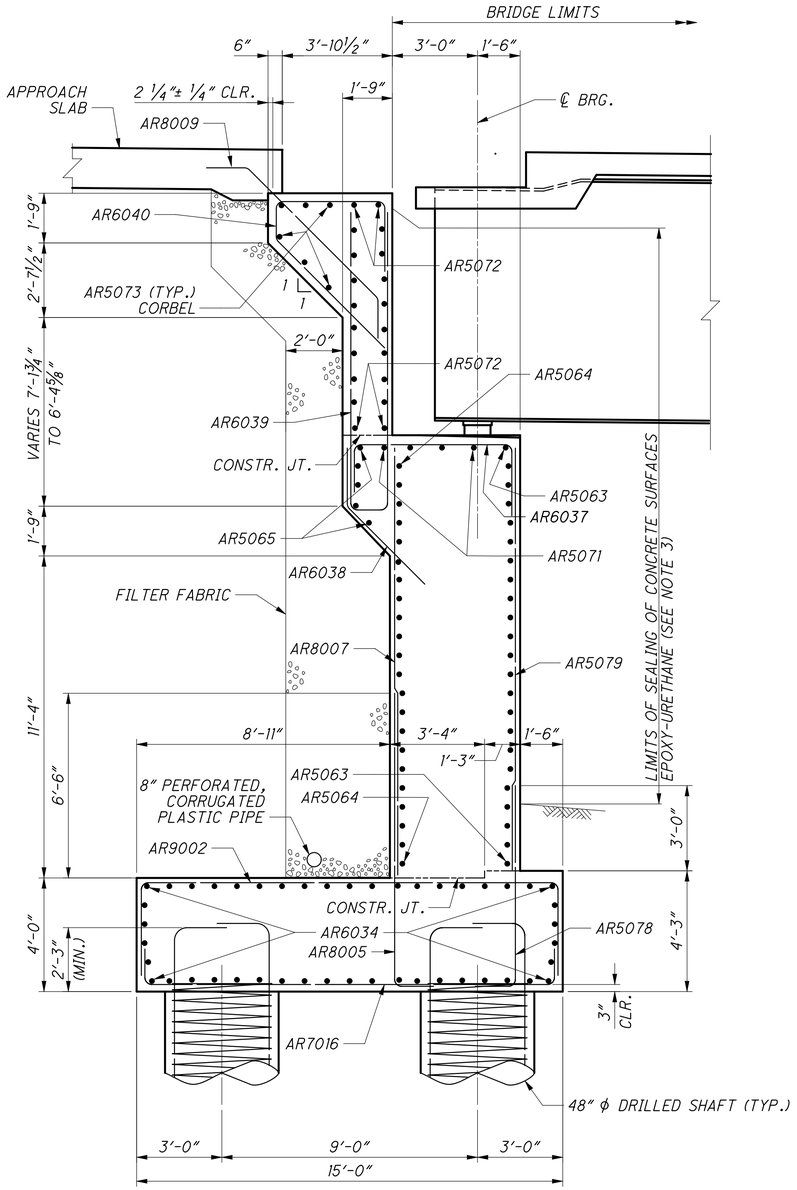

SECTION A-A

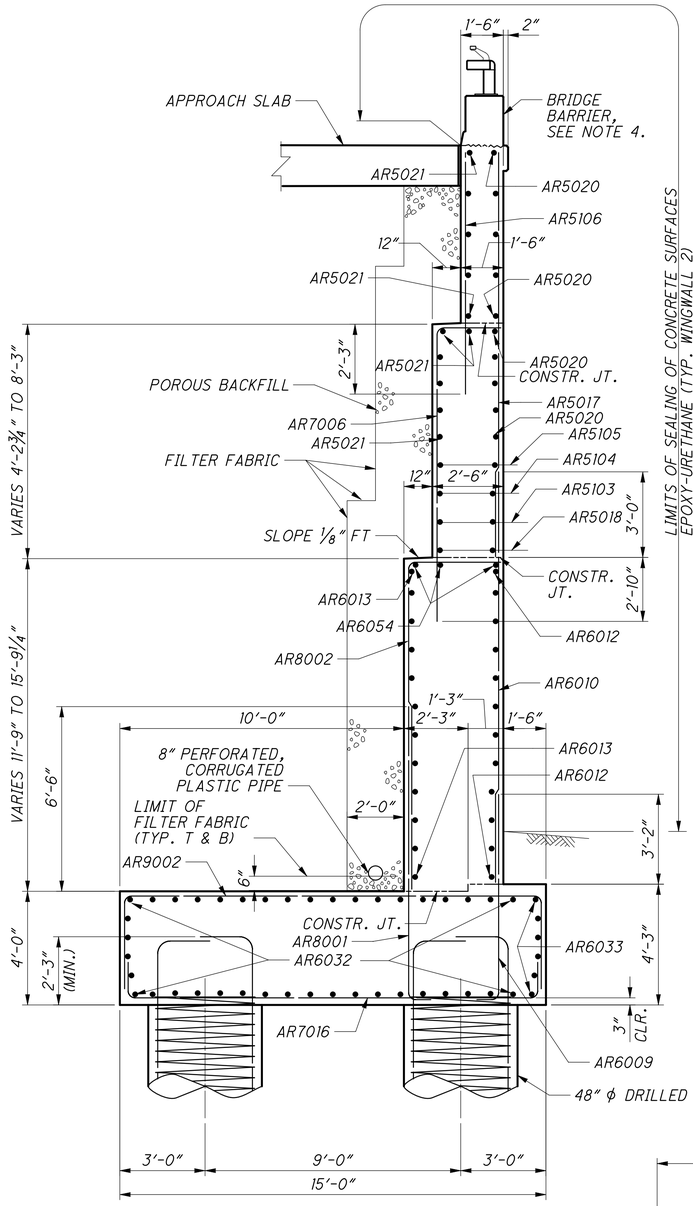

SECTION M-M

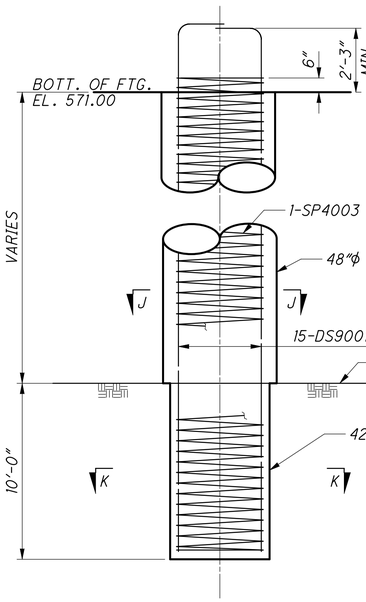

DRILLED SHAFT DETAIL

* = THE TOP ELEVATION OF "FIRM" ROCK, AS DEFINED IN THE SOIL BORINGS, VARIES AT EACH SHAFT. THE TOP OF FIRM ROCK SLOPES TOWARD THE RIVER AND WILL VARY IN ELEVATION ACROSS THE DIAMETER OF THE SHAFT. THE TOP OF FIRM ROCK (SANDSTONE/SILTSTONE) SHALL BE CONSIDERED THE ELEVATION AT WHICH THE SHAFT DIAMETER IS COMPLETELY INTO FIRM ROCK.

ANY SANDSTONE/SILTSTONE DRILLED THROUGH ABOVE THE TOP OF FIRM ROCK ELEVATION DEFINED ABOVE WILL BE PAID FOR UNDER "DRILLED SHAFT, 48" DIAMETER, ABOVE BEDROCK". SOILING BORINGS ALSO INDICATE THE PRESENCE OF CLAYEY SOIL AND WEATHERED SHALE ABOVE THE BEDROCK.

FOR ESTIMATING PURPOSES THE TOP OF FIRM ROCK IS ASSUMED TO BE 555.0. PRIOR TO FABRICATING REINFORCING STEEL CAGES FOR DRILLED SHAFTS CONTRACTOR SHALL VERIFY ACTUAL SHAFT LIMITS AND ADJUST ACCORDINGLY.

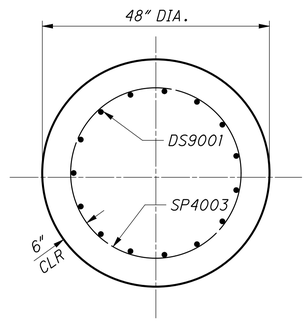

SECTION J-J

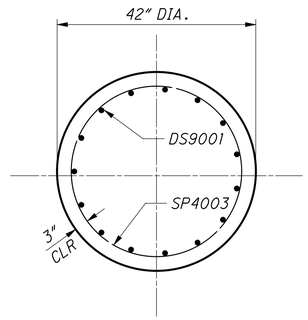

SECTION K-K

NOTES

1. FOR GENERAL NOTES, SEE SHEETS 5 / 365 THRU 11 / 365 .
2. FOR REINFORCING STEEL LIST, SEE SHEETS 64 / 365 THRU 66 / 365
3. SEALING OF BEAM SEATS: IF THE BEAM SEATS ARE SEALED WITH AN EPOXY OR NON-EPOXY SEALER PRIOR TO SETTING THE BEARINGS, DO NOT APPLY SEALER TO THE CONCRETE SURFACES UNDER THE PROPOSED BEARING LOCATIONS. IF THESE LOCATIONS ARE SEALED, REMOVE THE SEALER TO THE SATISFACTION OF THE ENGINEER PRIOR TO SETTING OF THE BEARINGS. THE DEPARTMENT WILL NOT PAY FOR THIS REMOVAL.
4. FOR ADDITIONAL BARRIER NOTES AND DETAILS, SEE SHEETS 15 / 365 , 16 / 365 AND 32 / 365 .

DESIGN AGENCY
URS
36 EAST 7TH STREET SUITE 2300 CINCINNATI, OHIO 45202

DESIGNED TJF | DRAWN GJW | REVIEWED RWB | DATE 02-22-11
CHECKED BER | REVISED | STRUCTURE FILE NUMBER 4401263

KY APPROACH - REAR ABUTMENT (9 OF 11)
BRIDGE NO. LAW-93-0000
IRONTON RUSSELL BRIDGE OVER OHIO RIVER

LAW-93-0.00
PID No. 81595

31 / 365

418 / 788

J:\Project\O_ODOT\15005112 Ironton Russell\LAW\81595\structures\LAW093_1111C\sheets\Kentucky Approach\093_0000_gr009.dgn - 4/29/2011 9:25:36 AM - john_corley

FOR REINFORCING IN PARAPET, SEE "DETAIL A" THIS SHEET.

Link to RFI046 As-Built

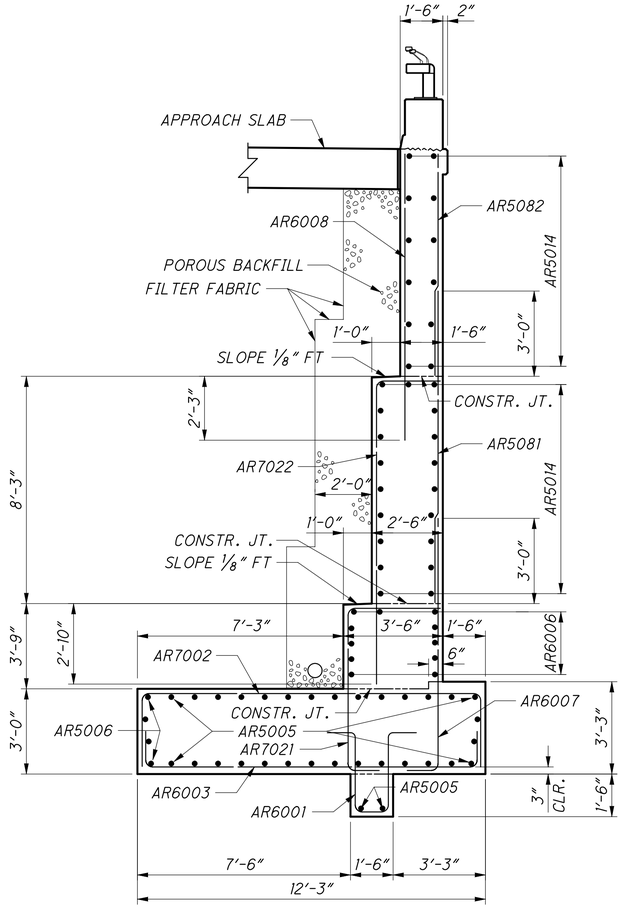

SECTION N-N

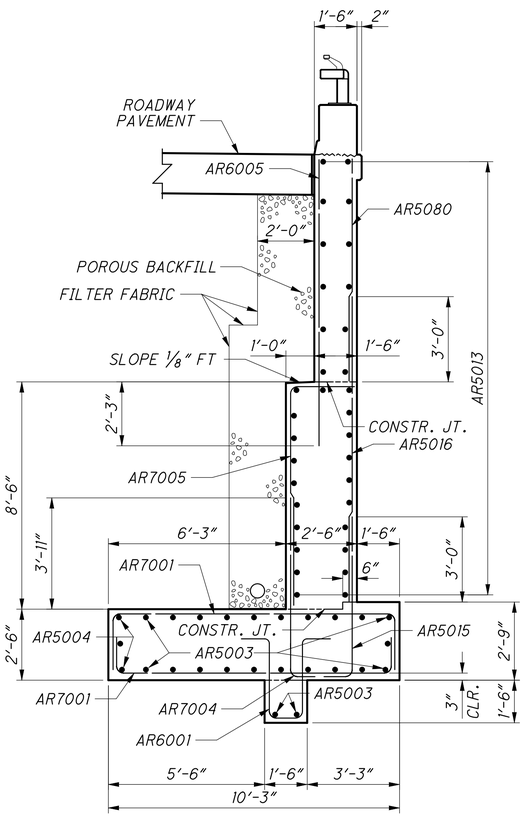

SECTION P-P

WINGWALL 2 SECTIONS

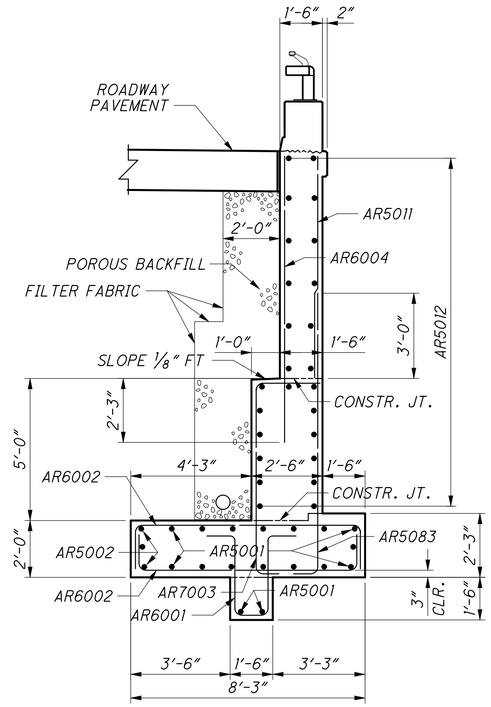

SECTION Q-Q

NOTES

1. FOR LIMITS OF SEALING CONCRETE SURFACES, SEE SHEET 31/365.
2. FOR ADDITIONAL DETAILS OF COVER PLATE, SEE SHEET 58/365.
3. FOR ADDITIONAL BARRIER DETAILS, SEE SHEET 15/365 AND 16/365.

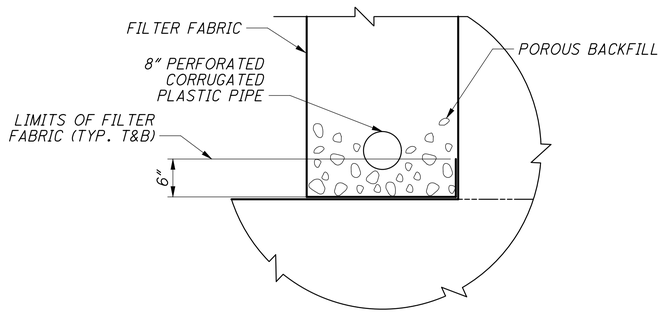

FILTER FABRIC DETAIL

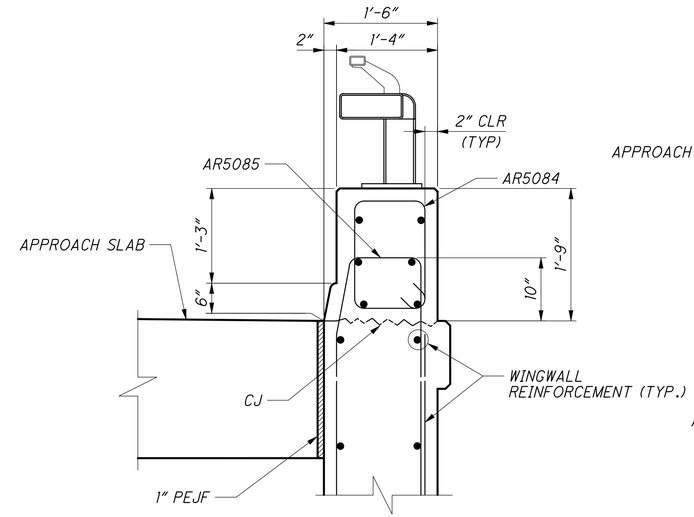

DETAIL A

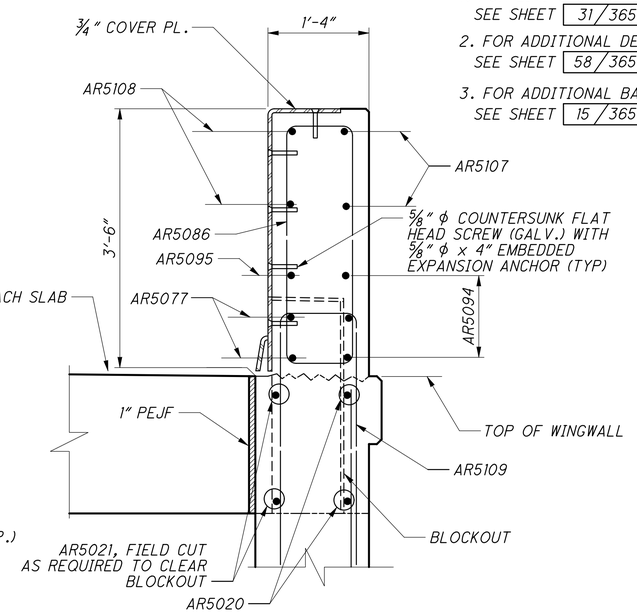

SECTION R-R

J:\Project\O\ODOT\15005112 Ironton Russell\LAW\81595\structures\LAW093_1111C\sheets\Kentucky Approach\093_0000_gr010.dgn - 4/29/2011 9:25:39 AM - john_corley

DESIGN AGENCY
URS
36 EAST 7TH STREET
SUITE 2300
CINCINNATI, OHIO 45202

DESIGNED	DRAWN	REVIEWED	DATE
TJF	GJW	RWB	02-22-11
CHECKED	REVISED	STRUCTURE FILE NUMBER	
BER		4401263	

KY APPROACH - REAR ABUTMENT WINGWALLS (10 OF 11)
BRIDGE NO. LAW-93-0000
IRONTON RUSSELL BRIDGE OVER OHIO RIVER

LAW-93-0.00
PID No. 81595

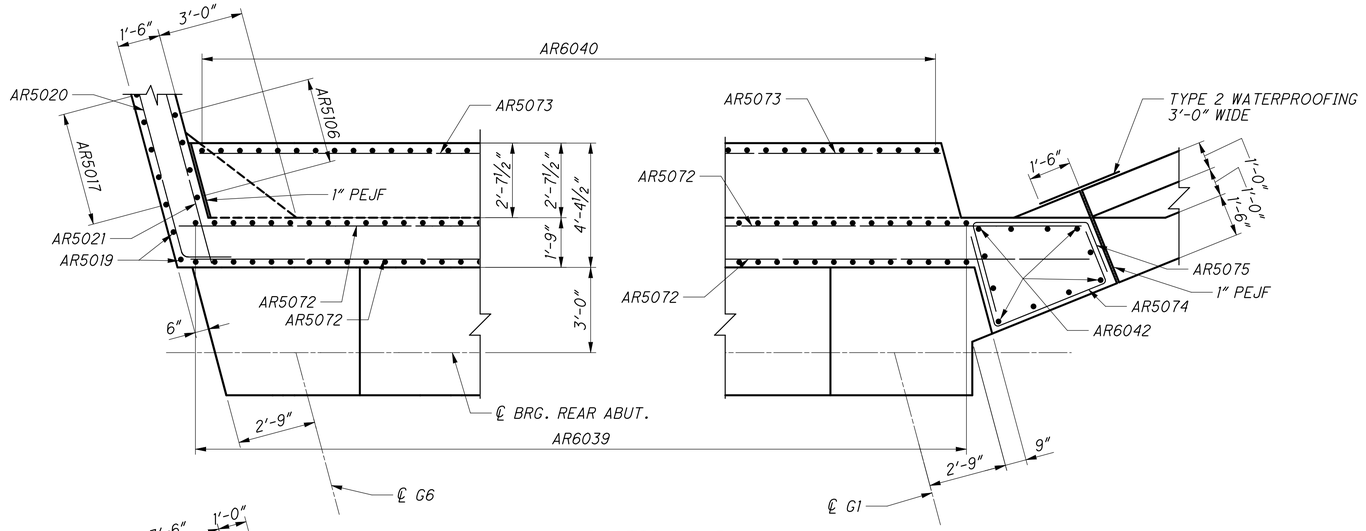

SECTION B-B

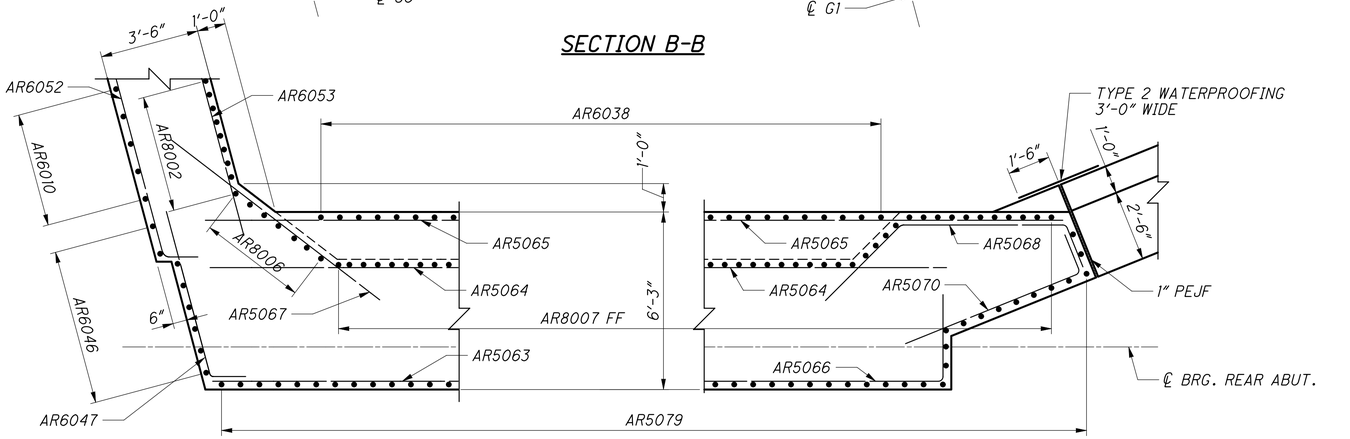

SECTION C-C

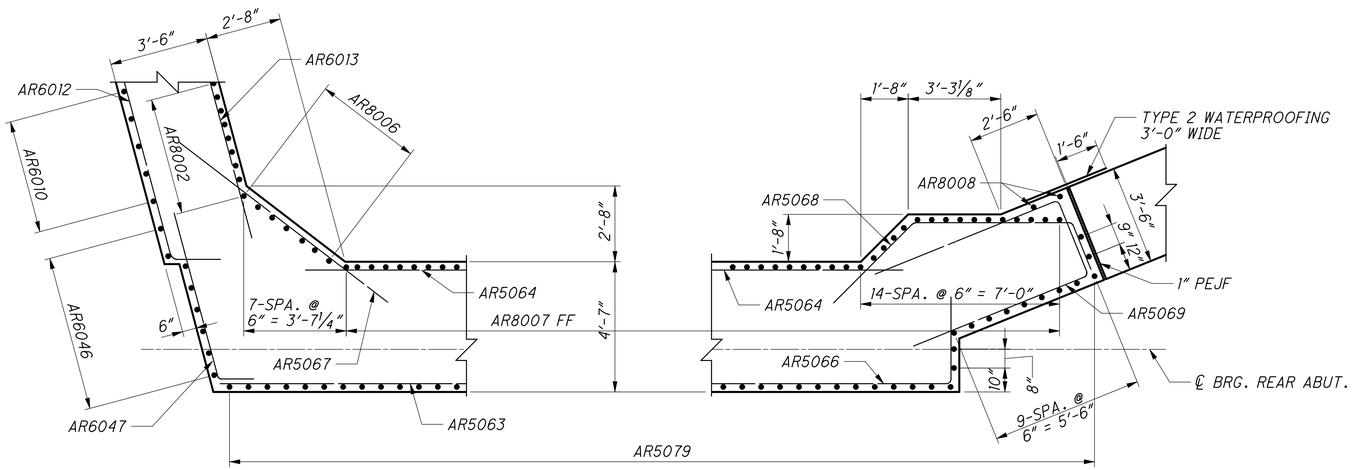

SECTION D-D

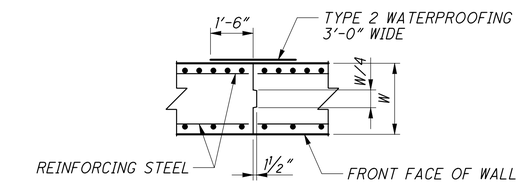

CONTRACTION JOINT DETAIL

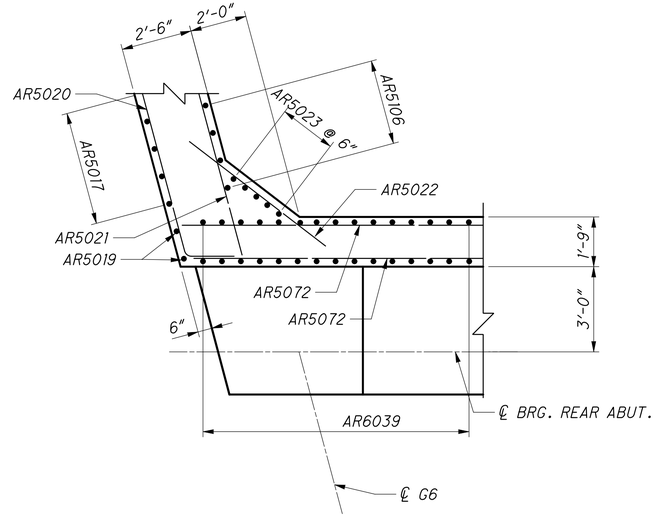

SECTION S-S

DESIGN AGENCY
URS
35 EAST 7TH STREET
SUITE 2300
CINCINNATI, OHIO 45202

DESIGNED	DRAWN	REVIEWED	DATE
TJF	GJW	RWB	02-22-11
CHECKED	REVISED	STRUCTURE FILE NUMBER	
BER		4401263	

KY APPROACH - REAR ABUTMENT (11 OF 11)
BRIDGE NO. LAW-93-0000
IRONTON RUSSELL BRIDGE OVER OHIO RIVER

LAW-93-0.00
PID No. 81595

33/365

420
788

J:\Project\O\ODOT\15005112 Ironton Russell\LAW\81595\structures\LAW093_1111C\sheets\Kentucky Approach\093_0000_gr011.dgn - 4/29/2011 9:25:42 AM - john_corley

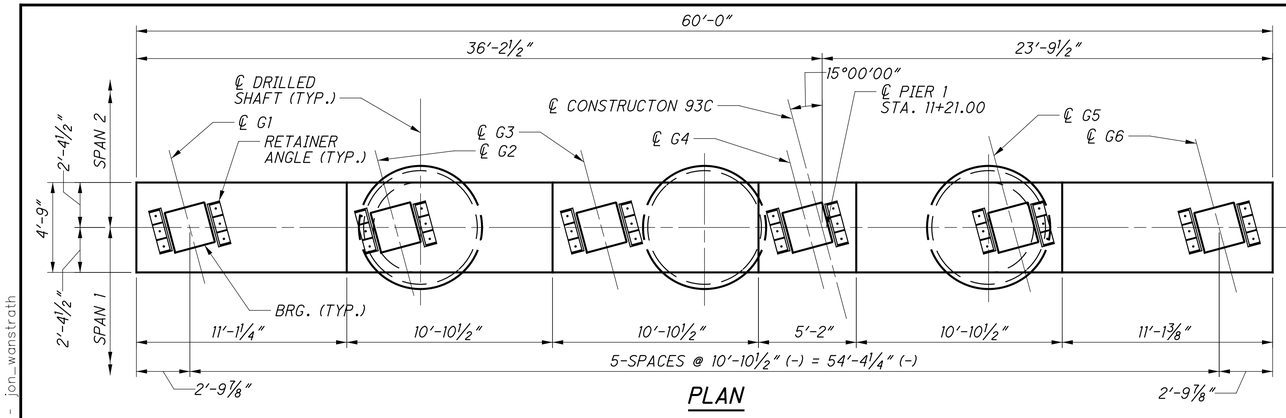

PLAN

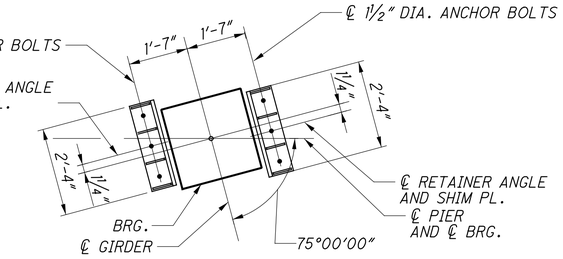

TYPICAL BEARING PLAN

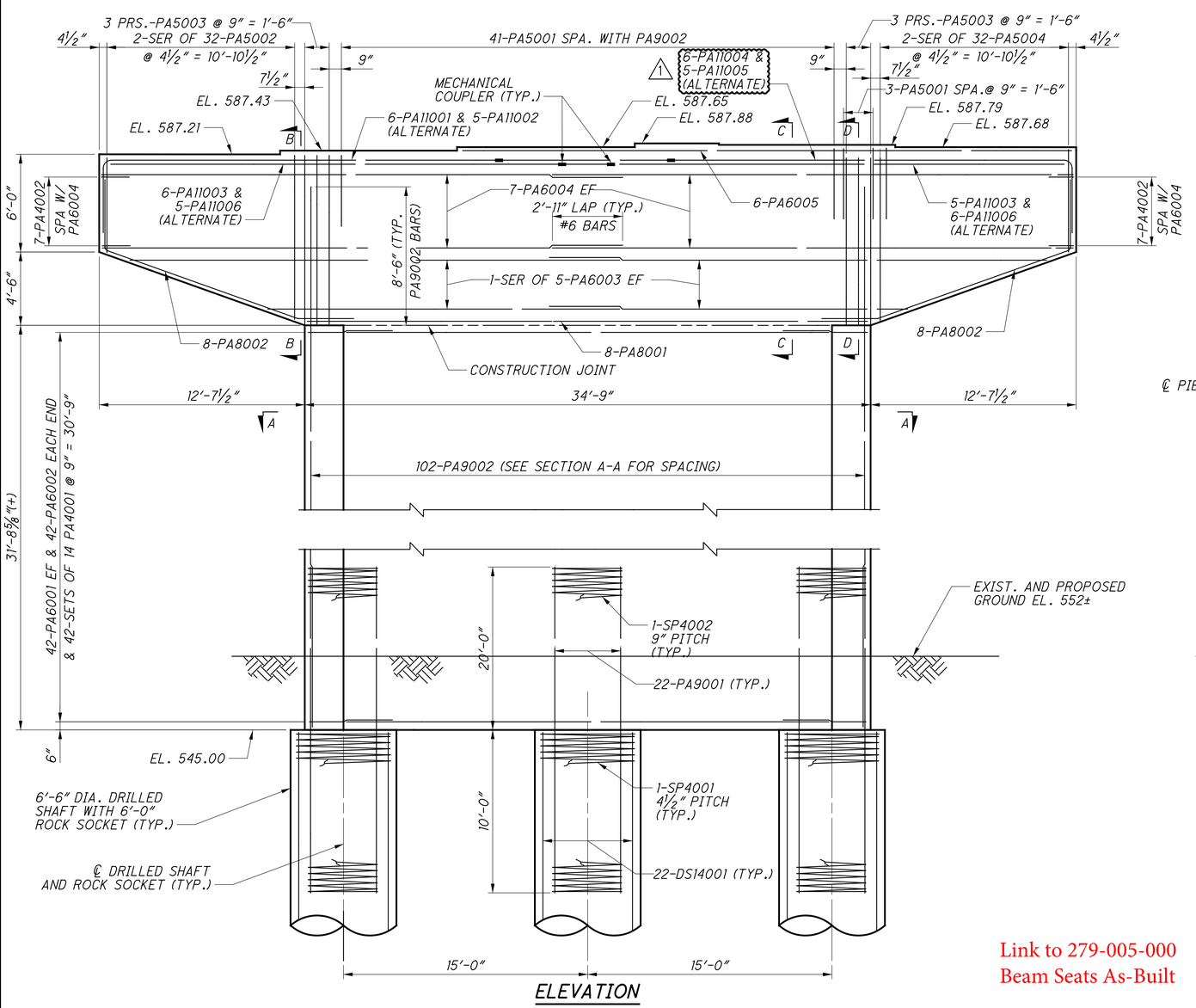

ELEVATION

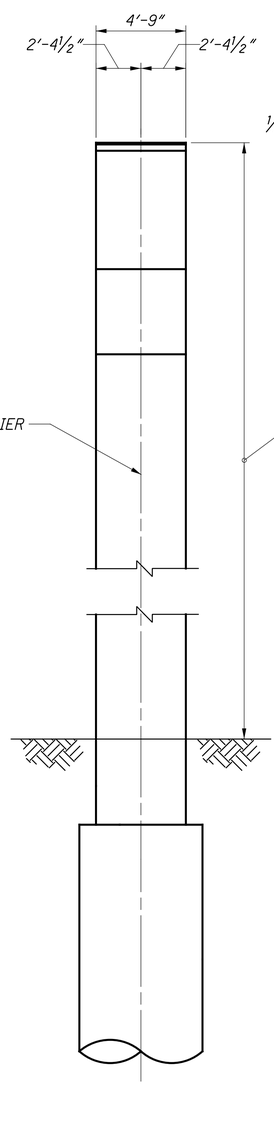

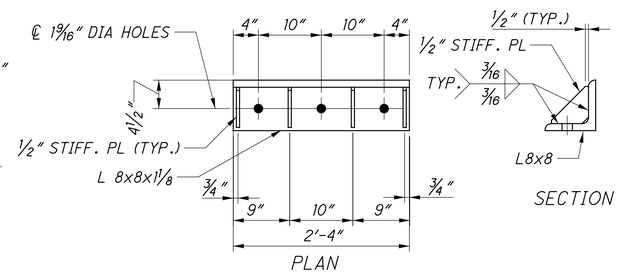

RETAINER ANGLE DETAILS

(12 RETAINING ANGLES AND SHIM PLATE REQUIRED)
DRILL 1"x8"x2'-0" SHIM PLATE TO MATCH RETAINING ANGLE.
FOR ADDITIONAL DETAILS NOT SHOWN, SEE BEARING DETAILS SHEETS 46/365 AND 47/365

NOTES

1. FOR REINFORCING STEEL LIST, SEE SHEET 66/365
2. FOR FOUNDATION LAYOUT, SEE SHEET 22/365
3. PRIOR TO BEGINNING CONSTRUCTION CONTRACTOR SHALL FIELD VERIFY LOCATION OF FIBER OPTIC CABLE APPROX. 13 FEET FROM CENTERLINE OF PIER. THE CONTRACTOR IS RESPONSIBLE FOR PROTECTING THIS FIBER OPTIC LINE DURING CONSTRUCTION. ANY DAMAGE TO THE FIBER OPTIC CABLE SHALL BE IMMEDIATELY REPAIRED AT THE CONTRACTORS EXPENSE.
4. FOR SECTIONS A-A THRU D-D, SEE SHEET 35/365
5. BRIDGE SEAT REINFORCING, SETTING ANCHORS: ACCURATELY PLACE REINFORCING STEEL IN THE VICINITY OF THE BRIDGE SEAT TO AVOID INTERFERENCE WITH THE DRILLING OF RETAINER ANGLE ANCHOR HOLES OR THE PRE-SETTING OF RETAINER ANGLE ANCHORS.

Link to Pier 1 Caisson As-Built

Link to Pier 2 Caisson As-Built

Link to 279-005-000 Beam Seats As-Built

NO.	REVISIONS	DATE	REV. BY
1	QUANTITIES REVISED	6/12	BKL

DESIGN AGENCY
URS
36 EAST 7TH STREET
SUITE 2300
CINCINNATI, OHIO 45202

DESIGNED	DRAWN	REVIEWED	DATE
LNG	LNG	RWB	02-22-11
CHECKED	REVISED	STRUCTURE FILE NUMBER	
MJZ		4401263	

KY APPROACH - PIER 1 REINFORCEMENT
BRIDGE NO. LAW-93-0000
IRONTON RUSSELL BRIDGE OVER OHIO RIVER

LAW-93-0.00
PID No. 81595

34/365
421
788

J:\Project\OV\ODOT\15005112 Ironton Russell\LAW\81595\structures\LAW093_1111C\sheets\Kentucky Approach\093_0000_pi101.dgn - 6/1/2012 8:30:29 AM - jon_wanstrath

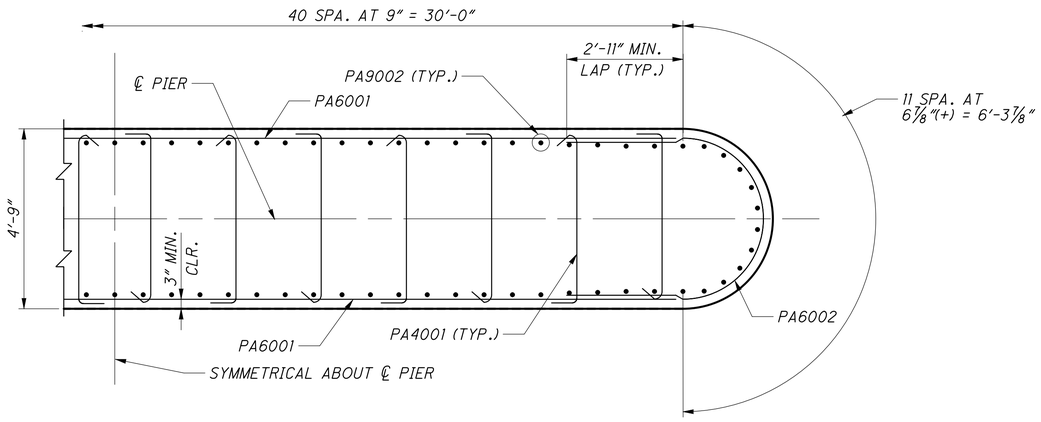

PART SECTION A-A

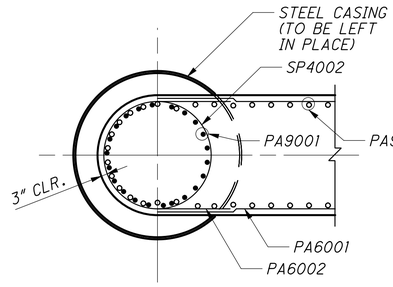

SECTION E-E

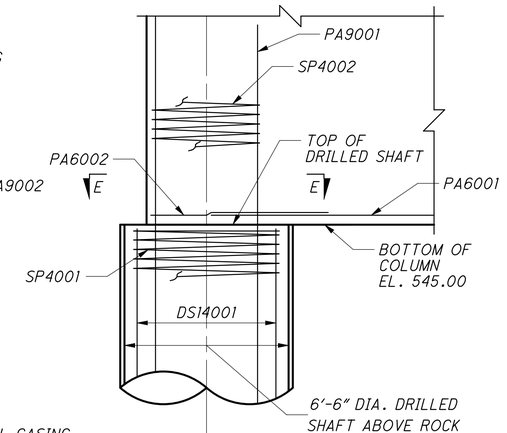

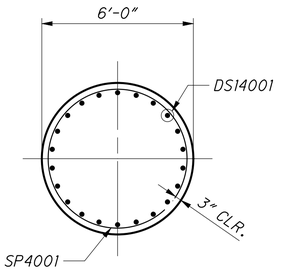

SECTION F-F

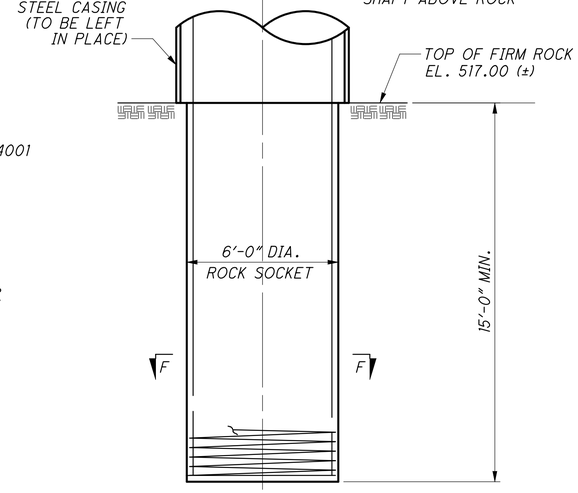

DRILLED SHAFT DETAILS

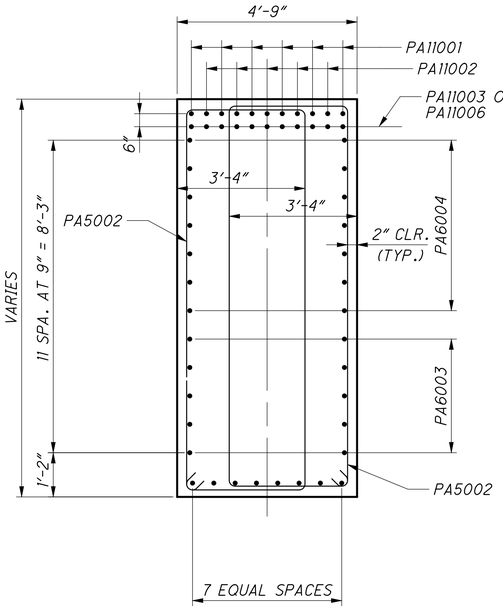

SECTION B-B

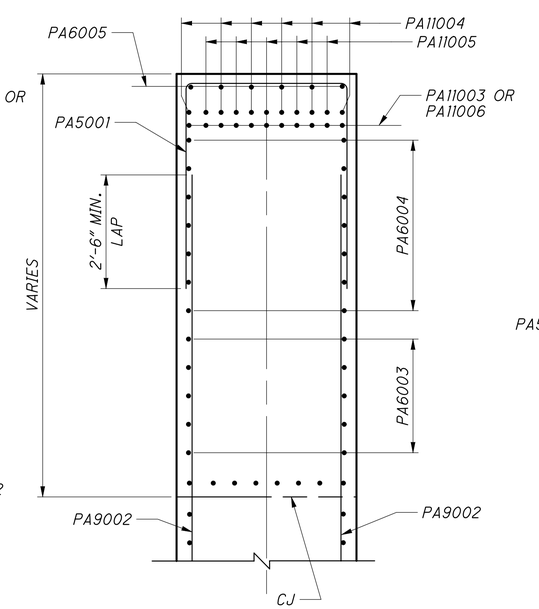

SECTION C-C

FOR DETAILS NOT SHOWN, SEE SECTION B-B.

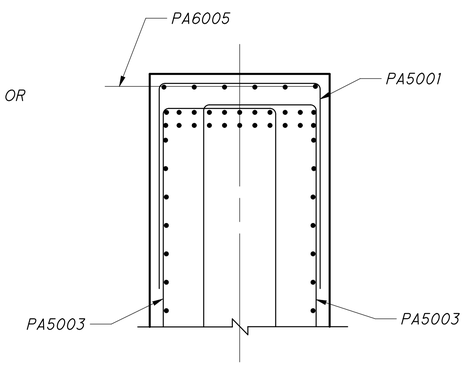

SECTION D-D

FOR DETAILS NOT SHOWN, SEE SECTION C-C.

NOTES

1. FOR ADDITIONAL NOTES, SEE SHEET 34 / 365 .

DESIGN AGENCY
URS
36 EAST 7TH STREET
SUITE 2300
CINCINNATI, OHIO 45202

DESIGNED	DRAWN	REVIEWED	DATE
LNG	LNG	RWB	02-22-11
CHECKED	REVISED	STRUCTURE FILE NUMBER	
MJZ		4401263	

KY APPROACH - PIER 1 DETAILS
BRIDGE NO. LAW-93-0000
IRONTON RUSSELL BRIDGE OVER OHIO RIVER

LAW-93-0.00
PID No. 81595

35 / 365

422
788

J:\Project\O\ODOT\15005112 Ironton Russell\LAW\81595\structures\LAW093_1111C\sheets\Kentucky Approach\093_0000_pi102.dgn - 4/29/2011 9:25:48 AM - john_corley

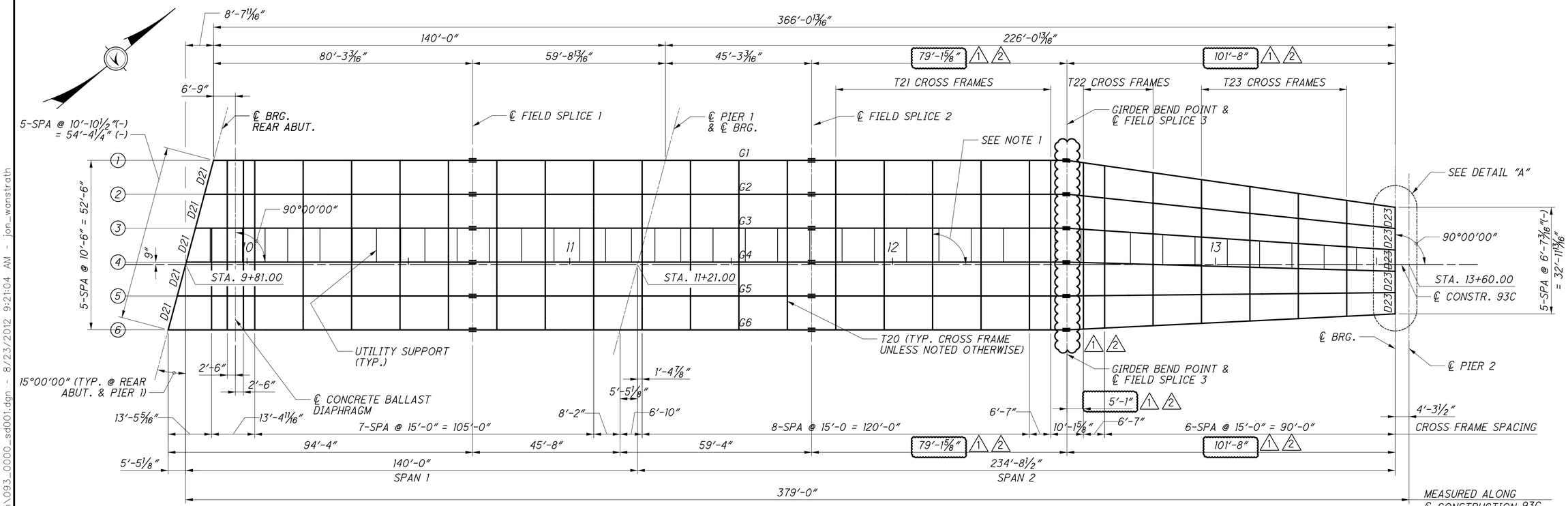

KENTUCKY APPROACH - FRAMING PLAN

NOTES

1. ALL THE INTERMEDIATE CROSSFRAMES ARE INTENDED TO BE LOCATED PERPENDICULAR TO CENTERLINE CONSTRUCTION 93C UNLESS NOTED OTHERWISE.
2. SEE SHEET 39 / 365 FOR CROSSFRAME DETAILS.
3. SEE SHEETS 37 / 365 & 38 / 365 FOR GIRDER ELEVATION AND GIRDER DETAILS.
4. SEE SHEETS 46 / 365 & 47 / 365 FOR BEARING DETAILS.
5. SEE SHEETS 41 / 365 & 42 / 365 FOR DEFLECTION AND CAMBER DETAILS.
6. SEE STRUCTURAL GENERAL NOTES FOR PAINTING INFORMATION.

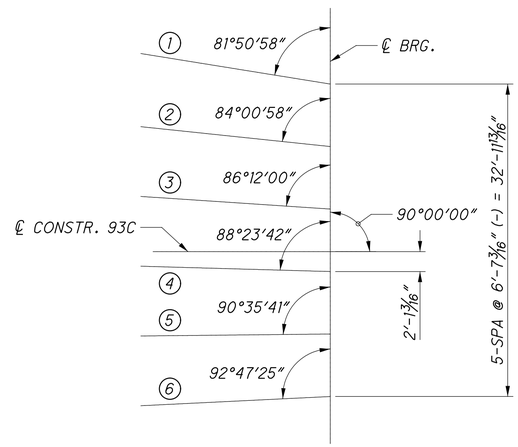

DETAIL "A"

NO.	REVISIONS	DATE	REV. BY
1	REVISED FIELD SPLICE LOCATION	8/12	BWJ
2	REVISED FIELD SPLICE LOCATION	8/12	BWJ

DESIGN AGENCY: URS, 36 EAST 7TH STREET, SUITE 2300, CINCINNATI, OHIO 45202
DESIGNED: KS | DRAWN: GJW | CHECKED: BWJ | REVIEWED: RWB | DATE: 02-22-11 | REVISED: | STRUCTURE FILE NUMBER: 4401263

KY APPROACH - FRAMING PLAN
BRIDGE NO. LAW-93-0000
IRONTON RUSSELL BRIDGE OVER OHIO RIVER

LAW-93-0.00
PID No. 81595

36 / 365

423 / 788

J:\Project\0\ODOT\15005112 Ironton Russell\LAW\81595\structures\LAW093_1111C\sheets\Kentucky Approach\093_0000_sd001.dgn - 8/23/2012 9:21:04 AM - jon_wanstrath

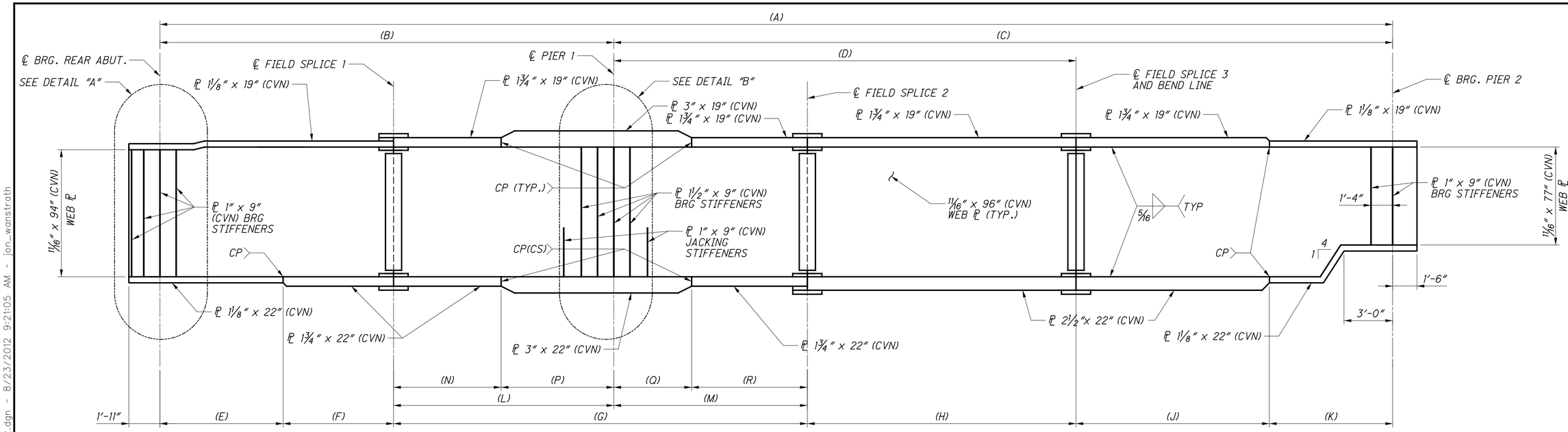

TYPICAL GIRDER ELEVATION

GIRDER	GIRDER DIMENSION TABLE															
	A	B	C	D	E	F	G	H	J	K	L	M	N	P	Q	R
1	367'-1¼"	140'-0"	227'-1¼"	124'-4 13/16"	35'-0"	45'-3 3/16"	105'-0"	79'-1⅝"	64'-8 1/16"	38'-0"	59'-8 13/16"	45'-3 3/16"	24'-11 13/16"	34'-9"	24'-0"	21'-3 3/16"
2	369'-5¼"	140'-0"	229'-5¼"	127'-2⅝"	35'-0"	48'-1"	105'-0"	79'-1⅝"	64'-2 11/16"	38'-0"	56'-11"	48'-1"	22'-2"	34'-9"	24'-0"	24'-1"
3	371'-11"	140'-0"	231'-11"	130'-0 3/8"	35'-0"	50'-10¾"	105'-0"	79'-1⅝"	63'-10 11/16"	38'-0"	54'-1¼"	50'-10¾"	19'-4¼"	34'-9"	24'-0"	26'-10¾"
4	374'-6⅝"	140'-0"	234'-6⅝"	132'-10⅛"	35'-0"	53'-8½"	105'-0"	79'-1⅝"	63'-8½"	38'-0"	51'-3½"	53'-8½"	16'-6½"	34'-9"	24'-0"	29'-8½"
5	377'-3 15/16"	140'-0"	237'-3 15/16"	135'-7⅛"	35'-0"	56'-6¼"	105'-0"	79'-1⅝"	63'-8 1/16"	38'-0"	48'-5¾"	56'-6¼"	13'-8¾"	34'-9"	24'-0"	32'-6¼"
6	380'-3 1/16"	140'-0"	240'-3 1/16"	138'-5⅝"	35'-0"	59'-4"	105'-0"	79'-1⅝"	63'-9 7/16"	38'-0"	45'-8"	59'-4"	10'-11"	34'-9"	24'-0"	35'-4"

GIRDER	BEND ANGLES
1	8°-09'-02"
2	5°-59'-02"
3	3°-48'-00"
4	1°-36'-18"
5	0°-35'-41"
6	2°-47'-25"

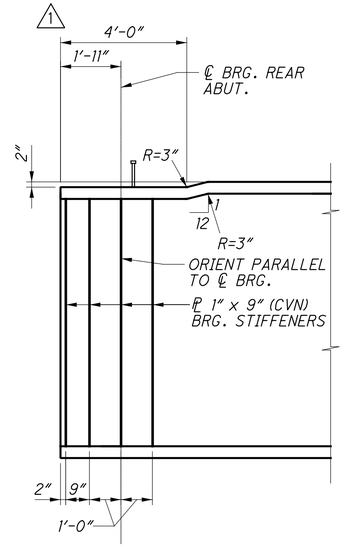

DETAIL "A"

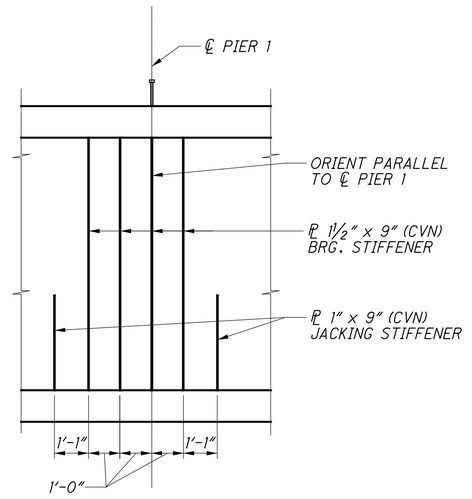

DETAIL "B"

NO.	REVISIONS	DATE	REV. BY
1	REVISED GIRDER DIMENSIONS	8/12	BWJ

DESIGN AGENCY
URS
36 EAST 7TH STREET
SUITE 2300
CINCINNATI, OHIO 45202

DESIGNED	DRAWN	REVIEWED	DATE
KS	GJW	RWB	02-22-11
CHECKED	REVISED	STRUCTURE FILE NUMBER	
BWJ		4401263	

KY APPROACH - TYPICAL GIRDER ELEVATION
BRIDGE NO. LAW-93-0000
IRONTON RUSSELL BRIDGE OVER OHIO RIVER

LAW-93-0.00
PID No. 81595

37/365

424/788

J:\Project\OA\ODOT\15005112 Ironton Russell\LAW\81595\structures\LAW093_1111C\sheets\Kentucky Approach\093_0000_sd002.dgn - 8/23/2012 9:21:05 AM - jon_wanstrath

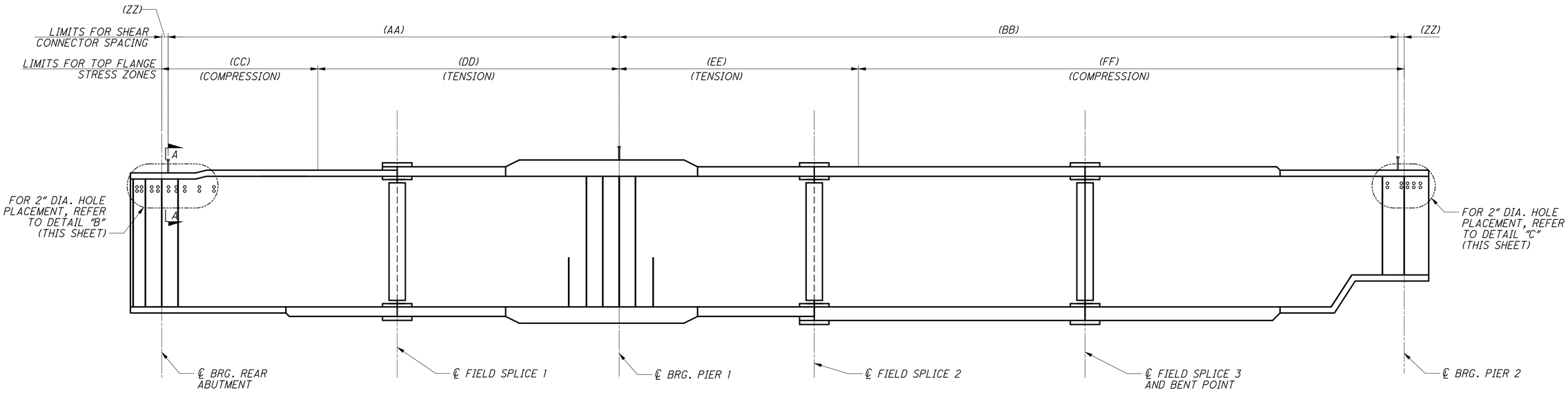

GIRDER ELEVATION FOR SHEAR STUD SPACING

GIRDER DIMENSION TABLE II							
LOCATION	SHEAR CONNECTOR SPACING			TOP FLANGE TENSION/COMPRESSION ZONES			
	(ZZ)	(AA)	(BB)	(CC)	(DD)	(EE)	(FF)
GIRDER LINE 1	5/8"	140 SPA @ 12"	227 SPA @ 12"	21'-10 13/16"	118'-1 3/16"	52'-4 7/16"	187'-10 5/8"
GIRDER LINE 2	2 5/8"	140 SPA @ 12"	229 SPA @ 12"	36'-5 5/8"	103'-6 3/8"	51'-11"	185'-4 7/8"
GIRDER LINE 3	5 1/2"	140 SPA @ 12"	231 SPA @ 12"	52'-3"	87'-9"	49'-9 1/8"	184'-9 7/16"
GIRDER LINE 4	3 5/16"	140 SPA @ 12"	234 SPA @ 12"	46'-0 3/8"	93'-11 5/8"	51'-4 7/16"	180'-6 9/16"
GIRDER LINE 5	2"(-)	140 SPA @ 12"	237 SPA @ 12"	37'-11 7/8"	102'-0 1/8"	54'-8"	174'-9 3/16"
GIRDER LINE 6	1 1/2"(+)	140 SPA @ 12"	240 SPA @ 12"	42'-9 1/8"	97'-2 7/8"	54'-10 15/16"	172'-2 5/16"

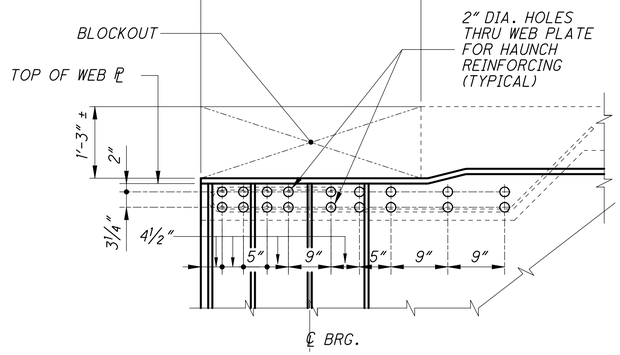

DETAIL "B"

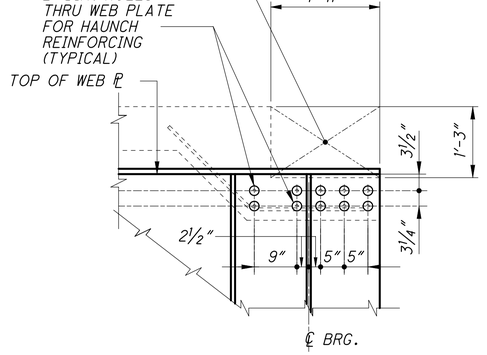

DETAIL "C"

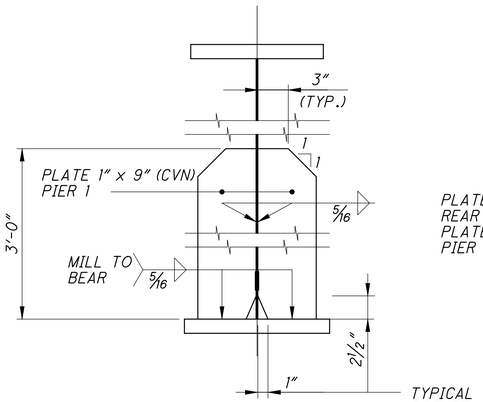

JACKING STIFFENER DETAIL

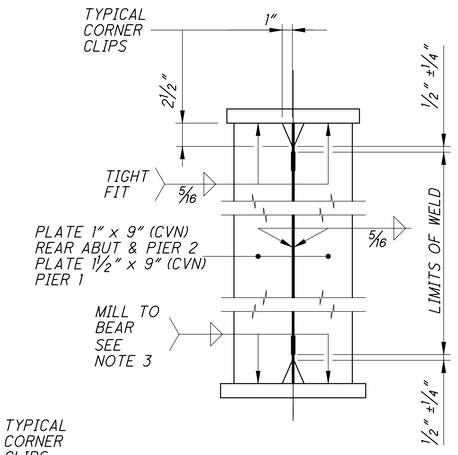

BEARING STIFFENER DETAIL

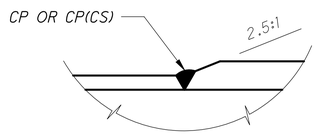

DETAIL "CP"

CP(CS) DENOTES COMPLETE JOINT PENETRATION WELD SUBJECT TO COMPRESSIVE STRESSES ONLY

CP DENOTES COMPLETE JOINT PENETRATION WELD

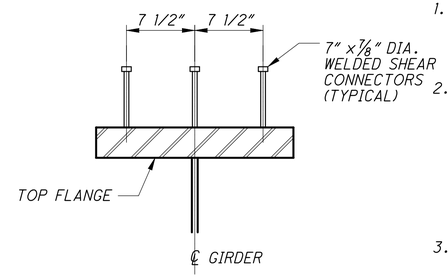

SECTION A-A

NOTES

1. WHERE A SHAPE OR PLATE IS DESIGNATED (CVN), FURNISH MATERIAL THAT MEETS THE MINIMUM NOTCH TOUGHNESS REQUIREMENTS AS SPECIFIED IN 711.01.
2. WELD ATTACHMENT OF SUPPORTS FOR CONCRETE DECK FINISHING MACHINE TO AREAS OF THE FASCIA STRINGER FLANGES DESIGNATED "COMPRESSION". DO NOT WELD ATTACHMENTS TO AREAS DESIGNATED "TENSION". FILLET WELDS TO COMPRESSION FLANGES SHALL BE AT LEAST 1" FROM EDGE OF FLANGE, BE NO MORE THAN 2" LONG, AND BE AT LEAST 1/4" FOR THICKNESSES UP TO 3/4" OR 5/16" FOR GREATER THAN 3/4" THICK.
3. FOR WELD SIZE, SEE APPROPRIATE CROSS FRAME DETAIL SHEET 39/365

J:\Project\O\ODOT\15005112 Ironton Russell\LAW\81595\structures\LAW093_1111C\sheets\Kentucky Approach\093_0000_sd003.dgn — 4/29/2011 9:25:55 AM — john_corley

DESIGN AGENCY
URS
36 EAST 7TH STREET
SUITE 2300
CINCINNATI, OHIO 45202

DESIGNED KS | DRAWN GJW | REVIEWED RWB | DATE 02-22-11
CHECKED BWJ | REVISED | STRUCTURE FILE NUMBER 4401263

KY APPROACH - GIRDER DETAILS
BRIDGE NO. LAW-93-0000
IRONTON RUSSELL BRIDGE OVER OHIO RIVER

LAW-93-0.00
PID No. 81595

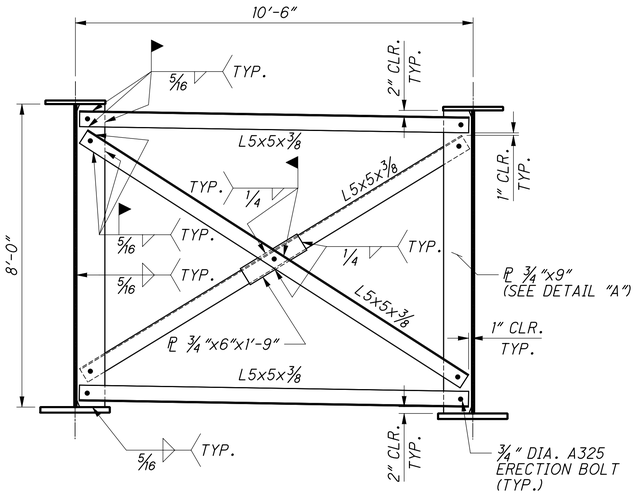

TYPE T20

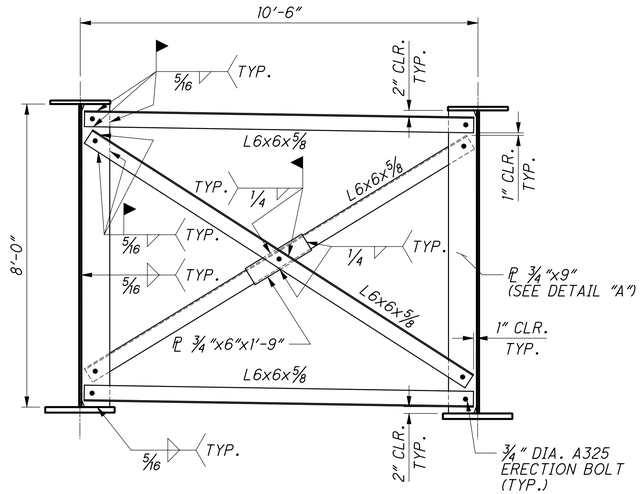

TYPE T21

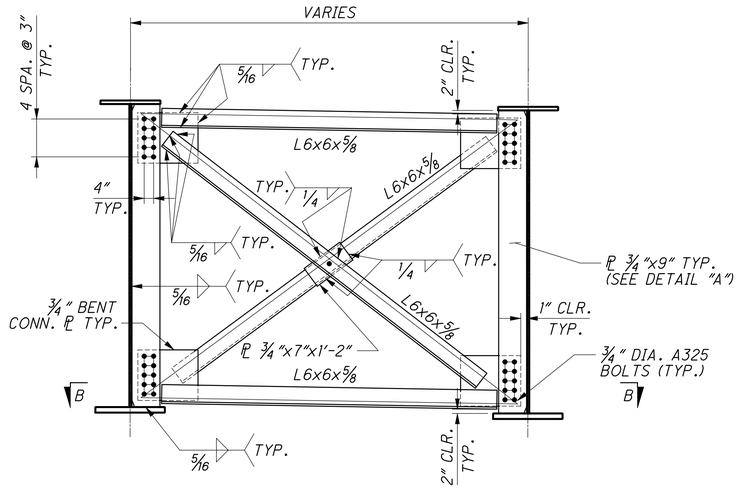

TYPE T22

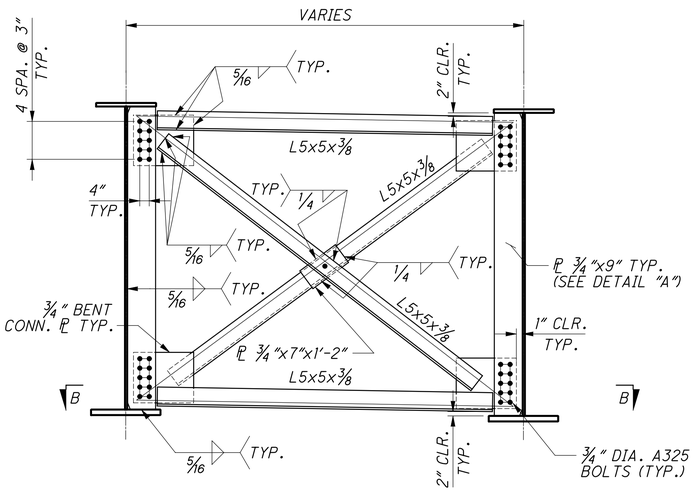

TYPE T23

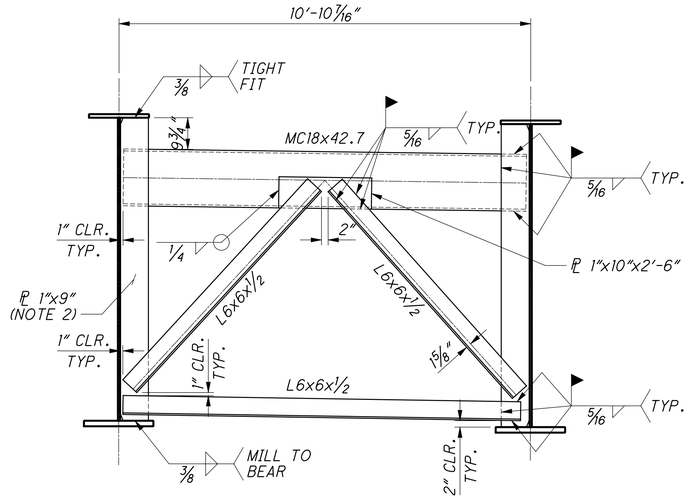

TYPE D21

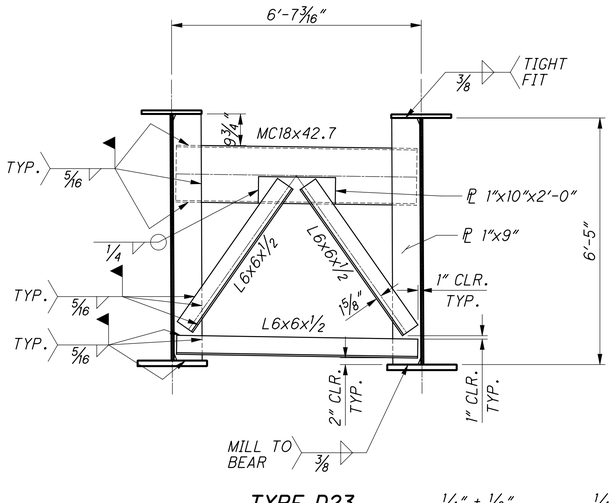

TYPE D23



SECTION B-B

Link to RFI107 As-Built

Link to RFI115 As-Built

NOTES

1. TERMINATE WELDS 1/2" SHORT OF CONNECTING MEMBER.
2. PLACE BEARING STIFFENERS AT REAR ABUTMENT AND PIER 1 PARALLEL TO CENTERLINE OF PIER.
3. FOR WELD SIZE, SEE APPROPRIATE CROSS FRAME DETAIL.

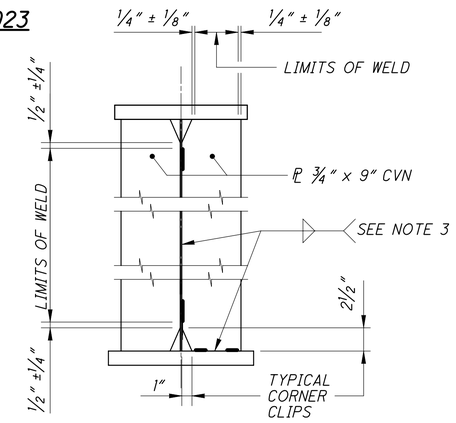

DETAIL "A"

(INTERIOR GIRDER SHOWN, EXTERIOR GIRDER SIMILAR BUT WITH STIFFENER ON INSIDE ONLY)

DESIGN AGENCY
URS
36 EAST 7TH STREET
SUITE 2300
CINCINNATI, OHIO 45202

DESIGNED	DRAWN	REVIEWED	DATE
KS	GJW	RWB	02-22-11
CHECKED	REVISED	STRUCTURE FILE NUMBER	
BWJ		4401263	

KY APPROACH - CROSS FRAME DETAILS

BRIDGE NO. LAW-93-0000

IRONTON RUSSELL BRIDGE OVER OHIO RIVER

LAW-93-0.00

PID No. 81595

J:\Project\O\ODOT\15005112 Ironton Russell\LAW\81595\structures\LAW093_1111C\sheets\Kentucky Approach\093_0000_sd004.dgn - 4/29/2011 9:25:58 AM - john_corley

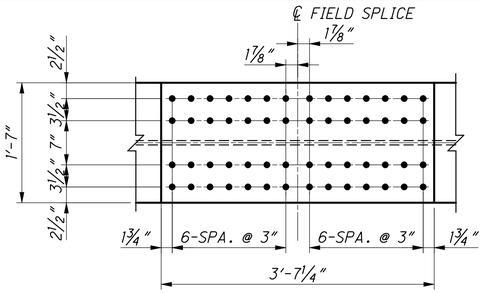

SECTION A-A

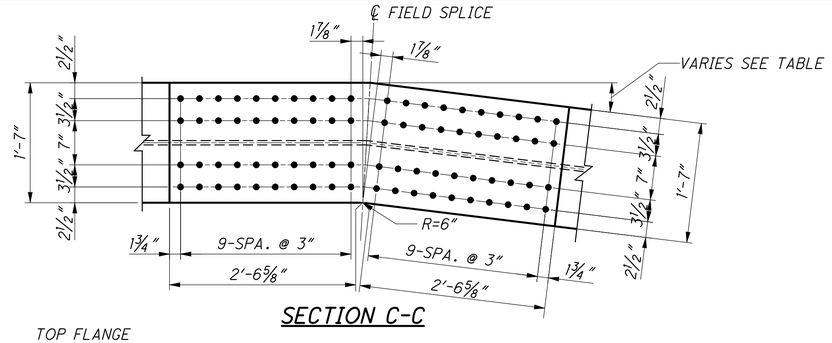

SECTION C-C

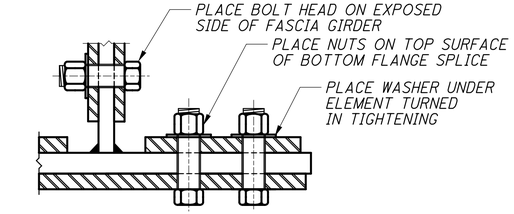

BOLT ORIENTATION DETAIL

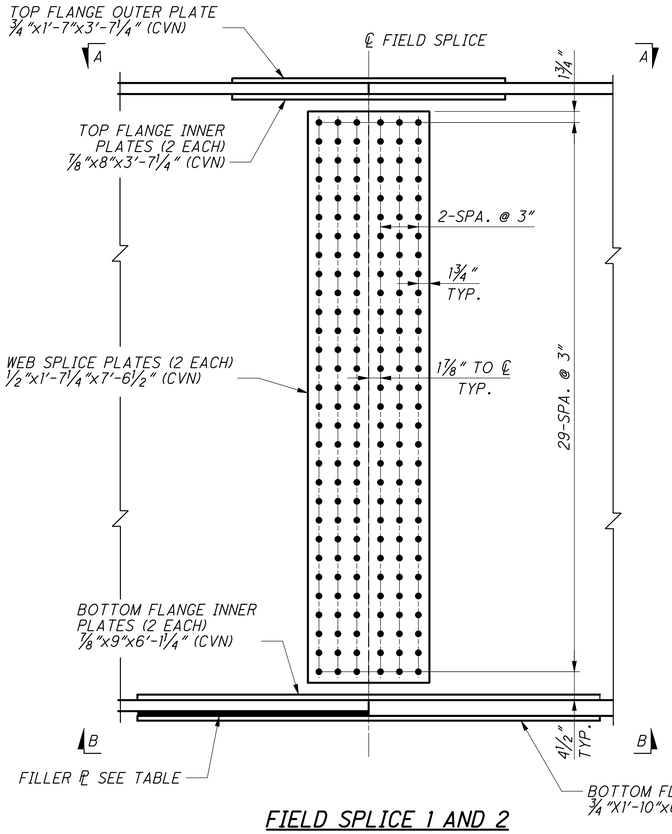

FIELD SPLICE 1 AND 2

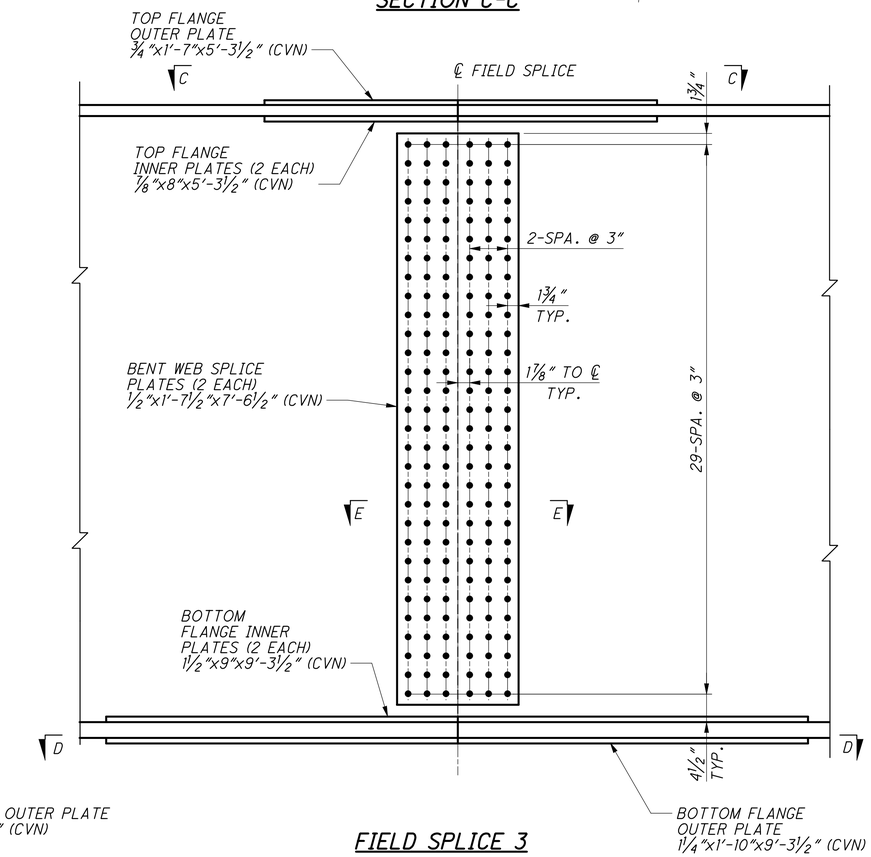

FIELD SPLICE 3

FILLER PLATE TABLE		
DESIGNATION	FIELD SPLICE	
	1	2
TOP FLANGE	ℙ ⅝"x1'-7"x1'-9⅝"	N/A
BOTT. FLANGE	N/A	ℙ ¾"x1'-10"x4'-7¾"

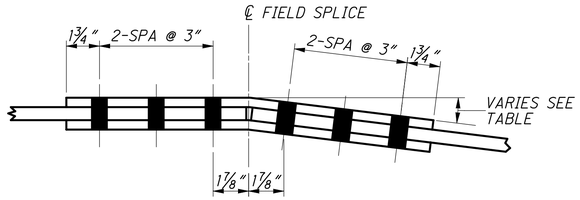

SECTION E-E

GIRDER	ANGLE
1	8°-09'-02"
2	5°-59'-02"
3	3°-48'-00"
4	1°-36'-18"
5	-0°-35'-41"
6	-2°-47'25"

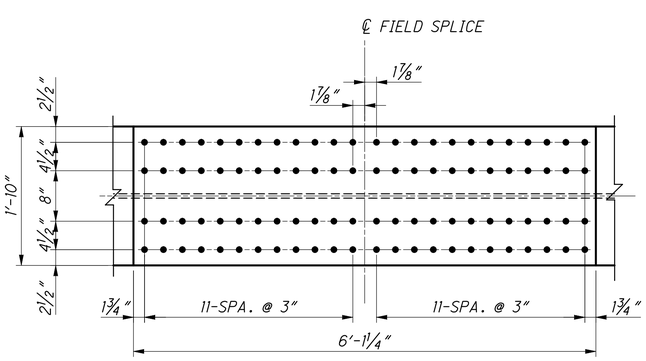

SECTION B-B

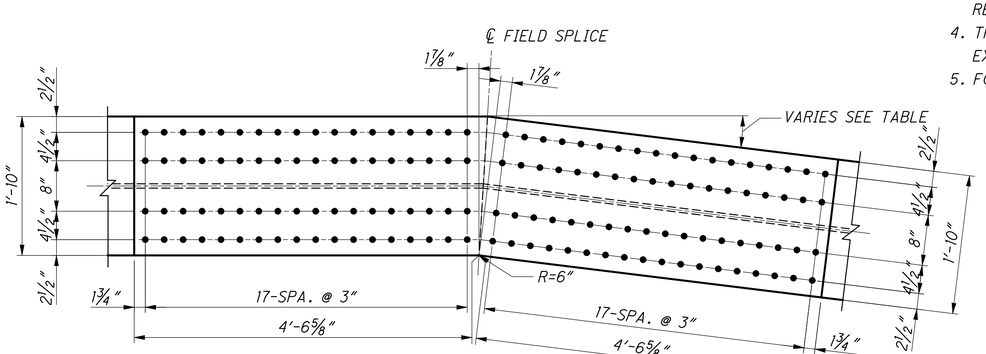

SECTION D-D

NOTES

1. ALL BOLTS IN FIELD SPLICES SHALL BE ⅞" DIAMETER HIGH STRENGTH BOLTS PER ASTM A325 TYPE III. ALL BOLT HOLES SHALL BE ¹⁵⁄₁₆" DIAMETER.
2. ALL SPLICE PLATES SHALL BE ASTM A709 GRADE 50W.
3. ALL SPLICE PLATES, EXCLUDING FILL PLATES, SHALL BE DESIGNATED (CVN). THE MATERIAL SHALL MEET THE SPECIFIED MINIMUM NOTCH TOUGHNESS REQUIREMENTS AS SPECIFIED IN CMS 711.01.
4. THE OPENING BETWEEN GIRDER ENDS AFTER ASSEMBLY SHALL NOT EXCEED ¼".
5. FOR LOCATIONS OF FIELD SPLICES, SEE FRAMING PLAN SHEET 36 / 365 .

Link to RFI035 As-Built

DESIGN AGENCY
URS
36 EAST 7TH STREET
SUITE 2300
CINCINNATI, OHIO 45202

DESIGNED KS | DRAWN LNG | CHECKED BWJ | REVIEWED RWB | DATE 02-22-11 | STRUCTURE FILE NUMBER 4401263 | REVISED

KY APPROACH - FIELD SPLICE DETAILS
BRIDGE NO. LAW-93-0000
IRONTON RUSSELL BRIDGE OVER OHIO RIVER

LAW-93-0.00
PID No. 81595

40/365

427
788

J:\Project\0\ODOT\15005112 Ironton Russell\LAW\81595\structures\LAW093_1111C\sheets\Kentucky Approach\093_0000_rnd004.dgn - 4/29/2011 9:26:00 AM - john_corley

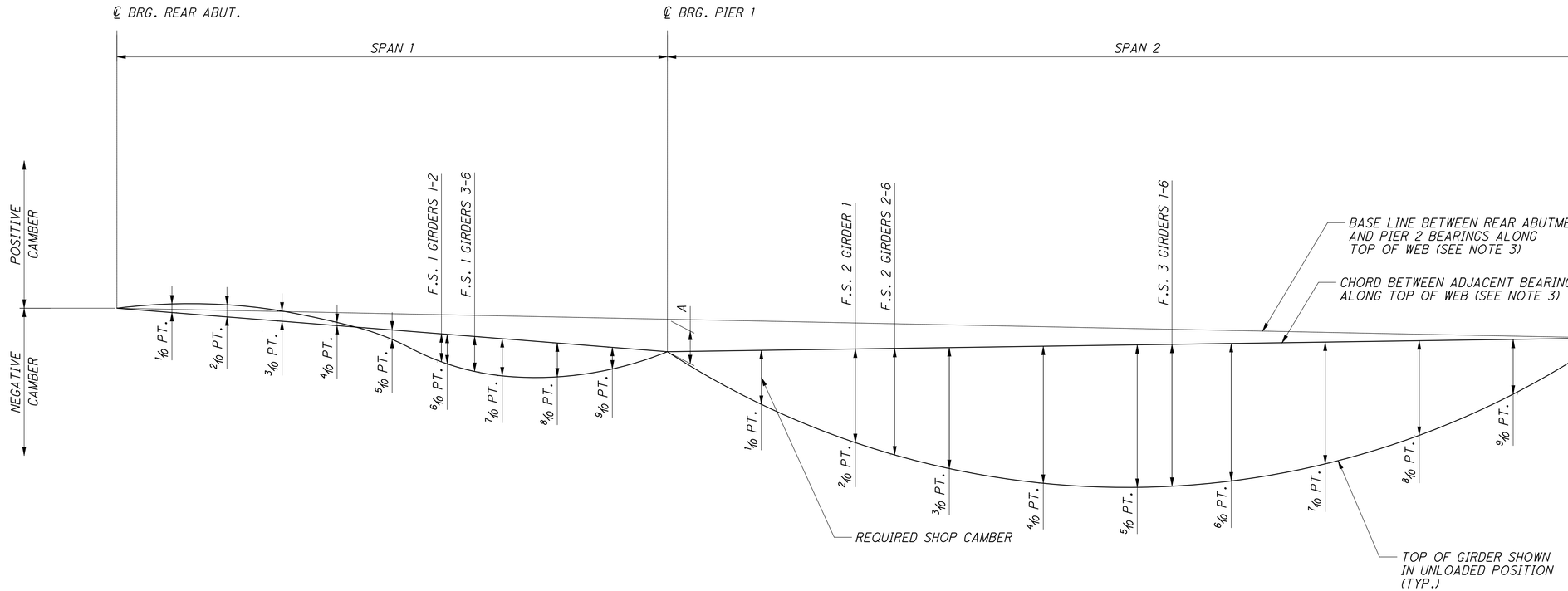

CAMBER & LAYOUT DIAGRAM

(GIRDER 4 SHOWN OTHERS SIMILAR)

BLOCKING DIMENSIONS (FEET)	
	A
GIRDER 1	1.31
GIRDER 2	1.27
GIRDER 3	1.24
GIRDER 4	1.18
GIRDER 5	1.18
GIRDER 6	1.20

NOTES

1. FOR FRAMING PLAN, SEE SHEET 36 / 365.
2. FOR DEFLECTION AND CAMBER TABLES, SEE SHEET 42 / 365.
3. WORK LINES NEGLECT THE CLIP IN THE TOP OF THE WEB NEAR THE REAR ABUTMENT.

DESIGN AGENCY
URS
36 EAST 7TH STREET
SUITE 2300
CINCINNATI, OHIO 45202

DESIGNED	DRAWN	REVIEWED	DATE
KS	LNG	RWB	02-22-11
CHECKED	REVISED	STRUCTURE FILE NUMBER	
BWJ		4401263	

KY APPROACH - DEFLECTION & CAMBER (1 OF 2)
BRIDGE NO. LAW-93-0000
IRONTON RUSSELL BRIDGE OVER OHIO RIVER

LAW-93-0.00
PID No. 81595

J:\Project\O\ODOT\15005112 Ironton Russell\LAW\81595\structures\LAW093_1111C\sheets\Kentucky Approach\093_0000_sd013.dgn - 4/29/2011 9:26:03 AM - john_corley

	ITEM	SPAN 1											
		REAR ABUT.	1/10 POINT	2/10 POINT	3/10 POINT	4/10 POINT	5/10 POINT	F.S. 1	6/10 POINT	7/10 POINT	8/10 POINT	9/10 POINT	PIER 1
GIRDER 1	DEFLECTION DUE TO WEIGHT OF STEEL	0″	0″	-1/16″	-1/8″	-3/16″	-1/4″	-5/16″	-5/16″	-3/8″	-5/16″	-3/16″	0″
	DEFLECTION DUE TO REMAINING DL	0″	1/16″	1/16″	-1/16″	-3/16″	-3/8″	-1/2″	-1/2″	-5/8″	-9/16″	-7/16″	0″
	ADJUSTMENT FOR VERTICAL CURVE	0″	0″	0″	0″	0″	0″	0″	0″	0″	0″	0″	0″
	REQUIRED SHOP CAMBER	0″	1/16″	0″	-3/16″	-3/8″	-5/8″	-13/16″	-13/16″	-1 1/16″	-7/8″	-5/8″	0″
GIRDER 2	DEFLECTION DUE TO WEIGHT OF STEEL	0″	0″	0″	-1/16″	-1/8″	-3/16″	-1/4″	-1/4″	-5/16″	-5/16″	-3/16″	0″
	DEFLECTION DUE TO REMAINING DL	0″	1/16″	1/16″	0″	-1/8″	-5/16″	-7/16″	-7/16″	-9/16″	-9/16″	-3/8″	0″
	ADJUSTMENT FOR VERTICAL CURVE	0″	0″	0″	0″	0″	0″	0″	0″	0″	0″	0″	0″
	REQUIRED SHOP CAMBER	0″	1/8″	1/16″	-1/16″	-1/4″	-1/2″	-3/4″	-11/16″	-7/8″	-13/16″	-9/16″	0″

	ITEM	SPAN 1											
		REAR ABUT.	1/10 POINT	2/10 POINT	3/10 POINT	4/10 POINT	5/10 POINT	6/10 POINT	F.S. 1	7/10 POINT	8/10 POINT	9/10 POINT	PIER 1
GIRDER 3	DEFLECTION DUE TO WEIGHT OF STEEL	0″	1/16″	1/16″	0″	-1/16″	-3/16″	-1/4″	-1/4″	-1/4″	-1/4″	-3/16″	0″
	DEFLECTION DUE TO REMAINING DL	0″	1/8″	1/8″	1/16″	-1/16″	-3/16″	-3/8″	-3/8″	-1/2″	-1/2″	-3/8″	0″
	ADJUSTMENT FOR VERTICAL CURVE	0″	0″	0″	0″	0″	0″	0″	0″	0″	0″	0″	0″
	REQUIRED SHOP CAMBER	0″	1/8″	3/16″	1/16″	-1/8″	-3/8″	-5/8″	-5/8″	-3/4″	-3/4″	-9/16″	0″
GIRDER 4	DEFLECTION DUE TO WEIGHT OF STEEL	0″	1/16″	1/16″	1/16″	0″	-1/8″	-3/16″	-3/16″	-1/4″	-1/4″	-3/16″	0″
	DEFLECTION DUE TO REMAINING DL	0″	1/8″	1/8″	1/8″	0″	-1/8″	-5/16″	-3/8″	-7/16″	-7/16″	-5/16″	0″
	ADJUSTMENT FOR VERTICAL CURVE	0″	0″	0″	0″	0″	0″	0″	0″	0″	0″	0″	0″
	REQUIRED SHOP CAMBER	0″	3/16″	1/4″	3/16″	0″	-1/4″	-1/2″	-9/16″	-11/16″	-11/16″	-1/2″	0″
GIRDER 5	DEFLECTION DUE TO WEIGHT OF STEEL	0″	1/16″	1/8″	1/16″	0″	-1/16″	-1/8″	-3/16″	-3/16″	-3/16″	-1/8″	0″
	DEFLECTION DUE TO REMAINING DL	0″	1/8″	3/16″	1/8″	0″	-1/16″	-1/4″	-5/16″	-3/8″	-7/16″	-5/16″	0″
	ADJUSTMENT FOR VERTICAL CURVE	0″	0″	0″	0″	0″	0″	0″	0″	0″	0″	0″	0″
	REQUIRED SHOP CAMBER	0″	3/16″	5/16″	1/4″	1/16″	-1/8″	-3/8″	-1/2″	-9/16″	-5/8″	-7/16″	0″
GIRDER 6	DEFLECTION DUE TO WEIGHT OF STEEL	0″	1/16″	1/8″	1/8″	1/16″	0″	-1/8″	-1/8″	-3/16″	-3/16″	-1/8″	0″
	DEFLECTION DUE TO REMAINING DL	0″	1/8″	3/16″	3/16″	1/8″	0″	-3/16″	-5/16″	-5/16″	-3/8″	-5/16″	0″
	ADJUSTMENT FOR VERTICAL CURVE	0″	0″	0″	0″	0″	0″	0″	0″	0″	0″	0″	0″
	REQUIRED SHOP CAMBER	0″	1/4″	5/16″	5/16″	3/16″	-1/16″	-5/16″	-7/16″	-1/2″	-9/16″	-7/16″	0″

	ITEM	SPAN 2											
		PIER 1	1/10 POINT	F.S. 2	2/10 POINT	3/10 POINT	4/10 POINT	5/10 POINT	KINK POINT F.S. 3	6/10 POINT	7/10 POINT	8/10 POINT	9/10 POINT	PIER 2
GIRDER 1	DEFLECTION DUE TO WEIGHT OF STEEL	0″	9/16″	1 1/4″	1 1/4″	2 1/16″	2 11/16″	3″	3 1/8″	3 1/16″	2 3/4″	2 1/16″	1 1/8″	0″
	DEFLECTION DUE TO REMAINING DL	0″	1 1/16″	2 9/16″	2 5/8″	4 3/16″	5 1/2″	6 1/4″	6 3/8″	6 5/16″	5 5/8″	4 1/4″	2 5/16″	0″
	ADJUSTMENT FOR VERTICAL CURVE	0″	-4 1/8″	-7 5/8″	-7 5/8″	-10 1/4″	-1′-0 1/16″	-1′-0 3/4″	-1′-0 3/4″	-1′-0 1/4″	-10 9/16″	-7 15/16″	-4 3/8″	0″
	REQUIRED SHOP CAMBER	0″	-2 1/2″	-3 3/4″	-3 3/4″	-4 1/16″	-3 13/16″	-3 1/2″	-3 5/16″	-2 7/8″	-2 3/16″	-1 5/8″	-1″	0″

	ITEM	SPAN 2											
		PIER 1	1/10 POINT	2/10 POINT	F.S. 2	3/10 POINT	4/10 POINT	5/10 POINT	KINK POINT F.S. 3	6/10 POINT	7/10 POINT	8/10 POINT	9/10 POINT	PIER 2
GIRDER 2	DEFLECTION DUE TO WEIGHT OF STEEL	0″	1/2″	1 1/4″	1 5/16″	2 1/16″	2 9/16″	2 15/16″	3″	3 1/16″	2 5/8″	2″	1 1/8″	0″
	DEFLECTION DUE TO REMAINING DL	0″	1 1/16″	2 1/2″	2 11/16″	4 1/16″	5 1/4″	6″	6 1/8″	6 1/16″	5 7/16″	4 1/8″	2 1/4″	0″
	ADJUSTMENT FOR VERTICAL CURVE	0″	-4″	-7 9/16″	-7 7/8″	-10 3/16″	-11 7/8″	-1′-0 9/16″	-1′-0 9/16″	-1′-0 1/8″	-10 1/2″	-7 15/16″	-4 7/16″	0″
	REQUIRED SHOP CAMBER	0″	-2 7/16″	-3 13/16″	-3 7/8″	-4 3/16″	-4″	-3 11/16″	-3 7/16″	-3 1/8″	-2 7/16″	-1 13/16″	-1 1/16″	0″
GIRDER 3	DEFLECTION DUE TO WEIGHT OF STEEL	0″	1/2″	1 3/16″	1 5/16″	1 7/8″	2 1/2″	2 13/16″	2 7/8″	2 7/8″	2 9/16″	2 1/16″	1 1/16″	0″
	DEFLECTION DUE TO REMAINING DL	0″	1″	2 7/16″	2 3/4″	3 15/16″	5 1/8″	5 13/16″	5 15/16″	5 7/8″	5 5/16″	4″	2 3/16″	0″
	ADJUSTMENT FOR VERTICAL CURVE	0″	-3 15/16″	-7 1/2″	-8 1/16″	-10 1/8″	-11 3/4″	-1′-0 7/16″	-1′-0 3/8″	-1′-0″	-10 7/16″	-7 15/16″	-4 7/16″	0″
	REQUIRED SHOP CAMBER	0″	-2 7/16″	-3 7/8″	-4″	-4 5/16″	-4 1/8″	-3 3/4″	-3 1/2″	-3 1/4″	-2 9/16″	-1 15/16″	-1 1/8″	0″
GIRDER 4	DEFLECTION DUE TO WEIGHT OF STEEL	0″	1/2″	1 3/16″	1 3/8″	1 7/8″	2 7/16″	2 3/4″	2 13/16″	2 13/16″	2 1/2″	1 15/16″	1 1/16″	0″
	DEFLECTION DUE TO REMAINING DL	0″	1″	2 3/8″	2 13/16″	3 13/16″	5″	5 11/16″	5 13/16″	5 3/4″	5 3/16″	3 15/16″	2 3/16″	0″
	ADJUSTMENT FOR VERTICAL CURVE	0″	-3 13/16″	-7 1/4″	-8 1/8″	-9 13/16″	-11 5/16″	-11 7/8″	-11 11/16″	-11 3/8″	-9 7/8″	-7 9/16″	-4 1/4″	0″
	REQUIRED SHOP CAMBER	0″	-2 5/16″	-3 11/16″	-3 15/16″	-4 1/8″	-3 15/16″	-3 7/16″	-3″	-2 13/16″	-2 3/16″	-1 11/16″	-1 1/16″	0″
GIRDER 5	DEFLECTION DUE TO WEIGHT OF STEEL	0″	1/2″	1 1/8″	1 3/8″	1 13/16″	2 3/8″	2 11/16″	2 3/4″	2 3/4″	2 1/2″	1 7/8″	1 1/16″	0″
	DEFLECTION DUE TO REMAINING DL	0″	1″	2 3/8″	2 7/8″	3 3/4″	4 7/8″	5 9/16″	5 11/16″	5 5/8″	5 1/16″	3 7/8″	2 1/8″	0″
	ADJUSTMENT FOR VERTICAL CURVE	0″	-3 13/16″	-7 7/16″	-8 9/16″	-10 1/16″	-11 11/16″	-1′-0 5/16″	-1′-0 1/8″	-11 7/8″	-10 7/16″	-8 1/16″	-4 1/2″	0″
	REQUIRED SHOP CAMBER	0″	-2 3/8″	-3 15/16″	-4 1/4″	-4 1/2″	-4 7/16″	-4 1/16″	-3 11/16″	-3 1/2″	-2 7/8″	-2 3/16″	-1 5/16″	0″
GIRDER 6	DEFLECTION DUE TO WEIGHT OF STEEL	0″	7/16″	1 1/8″	1 7/16″	1 3/4″	2 5/16″	2 5/8″	2 11/16″	2 11/16″	2 7/16″	1 7/8″	1″	0″
	DEFLECTION DUE TO REMAINING DL	0″	1 1/16″	2 5/16″	3 1/16″	3 11/16″	4 13/16″	5 7/16″	5 9/16″	5 9/16″	5″	3 13/16″	2 1/16″	0″
	ADJUSTMENT FOR VERTICAL CURVE	0″	-3 7/8″	-7 5/8″	-9 1/16″	-10 7/16″	-1′-0 3/16″	-1′-0 15/16″	-1′-0 3/4″	-1′-0 9/16″	-10 15/16″	-8 5/16″	-4 11/16″	0″
	REQUIRED SHOP CAMBER	0″	-2 1/2″	-4 1/4″	-4 11/16″	-5″	-5 1/16″	-4 13/16″	-4 1/2″	-4 5/16″	-3 9/16″	-2 11/16″	-1 9/16″	0″

NOTES

1. FOR FRAMING PLAN, SEE SHEET 36/365.
2. POSITIVE CAMBER VALUES INDICATES THAT CAMBER IS ABOVE THE CHORD BETWEEN ADJACENT BEARINGS.

J:\Project\0_ODOT\15005112 Ironton Russell\LAW\81595\structures\LAW093_1111C\sheets\Kentucky Approach\093_0000_sd014.dgn — 4/29/2011 9:26:05 AM — john_corley

DESIGN AGENCY
URS
36 EAST 7TH STREET
SUITE 2300
CINCINNATI, OHIO 45202

DESIGNED KS | DRAWN LNG | REVIEWED RWB | DATE 02-22-11
CHECKED BWJ | REVISED | STRUCTURE FILE NUMBER 4401263

KY APPROACH - DEFLECTION & CAMBER (2 OF 2)
BRIDGE NO. LAW-93-0000
IRONTON RUSSELL BRIDGE OVER OHIO RIVER

LAW-93-0.00
PID No. 81595

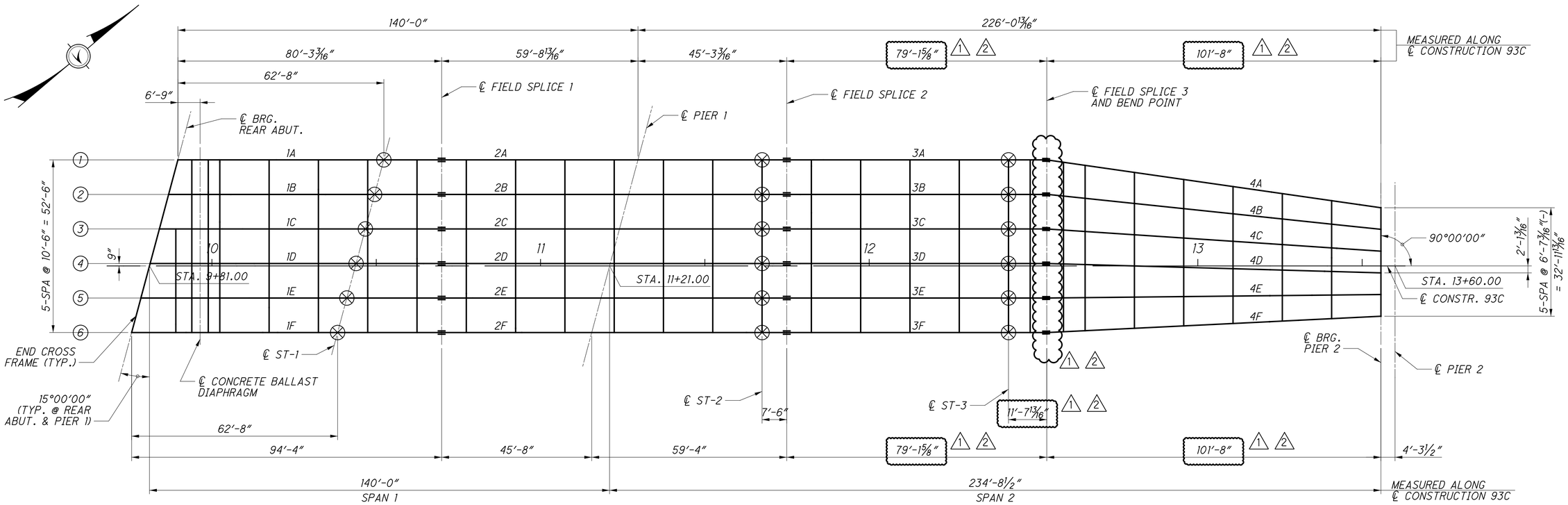

ERECTION PLAN - SPAN 1 & 2

ERECTION NOTES

1. THE CONTRACTOR'S ATTENTION IS DIRECTED TO REQUIREMENTS FOR STABILITY OF STEEL GIRDERS DURING ERECTION (CMS 513.26). THE GIRDERS ON THIS BRIDGE SHALL BE STABILIZED DURING ERECTION BY USE OF FALSEWORK, TEMPORARY BRACING, COMPRESSION FLANGE STIFFENING TRUSS OR BY USE OF A HOLDING CRANE UNTIL A SUFFICIENT NUMBER OF GIRDERS HAVE BEEN ERECTED AND CROSS FRAMES INSTALLED, TEMPORARILY (SEE NOTE 6 BELOW).

2. THE METHODS USED BY THE CONTRACTOR SHALL BE DOCUMENTED ON THE ERECTION DRAWINGS WITH ALL SUPPORTING STABILITY CALCULATIONS SUBMITTED IN ACCORDANCE WITH CMS ITEMS 501 AND 513. THE CONTRACTOR MAY SUBMIT AN ALTERNATE MEANS OF ERECTION FROM THE ONE SHOWN IN THE PLANS.

3. THE GIRDER NUMBERING SYSTEM USED HEREIN IS IDENTIFIED WITH NUMERIC PREFIX IDENTIFYING THE LIFT SEQUENCE FOLLOWED BY LETTER (A THRU F) WHICH IDENTIFIES ADDITIONAL LIFTS OF SIMILAR MEMBERS. THE NUMBERING SYSTEM IS INTENDED TO SHOW THE SEQUENTIAL INSTALLATION AND DOES NOT CORRESPOND TO ANY OTHER LABELING SYSTEM IN THE PLANS.

4. THE SHORING TOWERS SHOWN HEREIN ASSUME THAT ERECTION WILL BEGIN AT THE REAR ABUTMENT AND PROCEED TOWARD PIER 2. THE CONTRACTOR MAY, AT HIS DISCRETION, CHOOSE AN ALTERNATE ERECTION SEQUENCE. ALL GIRDER ERECTION SHALL STRICTLY ADHERE TO THE PROVISIONS OF THE RAILROAD AGREEMENT.

5. FIELD SPLICES SHALL BE INSTALLED WITH AT LEAST THREE-FOURTHS OF THE HOLES FILLED WITH COMPLETELY TIGHTENED BOLTS TO RESIST CONSTRUCTION LOADS DURING ERECTION.

6. CROSS FRAMES SHALL BE CONSIDERED TEMPORARILY INSTALLED WITH EVERY OTHER TOP AND BOTTOM CROSSFRAME HORIZONTALLY PLUS ONE DIAGONAL. AFTER GIRDERS ARE ALIGNED TRANSVERSELY, SNUG BOLTS AND THEN REMOVE LIFTING APPARATUS. PERMANENT FASTENING OF CROSS FRAMES SHALL COMMENCE AFTER COMPLETING MAIN CONNECTIONS IN ADJACENT SPANS.

7. IT IS THE CONTRACTOR'S RESPONSIBILITY TO MAINTAIN GIRDER STABILITY THROUGHOUT ALL PHASES OF CONSTRUCTION.

8. USE AND LOCATION OF TEMPORARY SHORING TOWERS SHALL BE THE RESPONSIBILITY OF THE CONTRACTOR. DESIGN, SCHEDULE, INSTALLATION AND REMOVAL OF TEMPORARY SHORING TOWERS SHALL BE INCLUDED IN THE CONTRACTOR'S ERECTION PROCEDURES.

LEGEND

⊗ SHORING POINT LOCATION

SHORING TOWER LOADS

LOCATION	VERTICAL LOAD PER GIRDER (k)
ST-1	69
ST-2	68
ST-3	127

NOTE: REACTIONS SHOWN INCLUDE STEEL WEIGHT PLUS A 25% FACTOR FOR ERECTION LOADS.

NOTES

1. FOR DESCRIPTION OF ERECTION SEQUENCE, SEE SHEET 44 / 365

NO.	REVISIONS	DATE	REV. BY
1	REVISED FIELD SPLICE LOCATION	8/12	BWJ
2	REVISED FIELD SPLICE LOCATION	8/12	BWJ

DESIGN AGENCY
URS
36 EAST 7TH STREET
SUITE 2300
CINCINNATI, OHIO 45202

DESIGNED	DRAWN	REVIEWED	DATE
KS	GJW	RWB	02-22-11
CHECKED	REVISED	STRUCTURE FILE NUMBER	
BTC		4401263	

KY APPROACH - ERECTION PLAN AND NOTES (1 OF 2)
BRIDGE NO. LAW-93-0000
IRONTON RUSSELL BRIDGE OVER OHIO RIVER

LAW-93-0.00
PID No. 81595

J:\Project\OV\ODOT\15005112 Ironton Russell\LAW\81595\structures\LAW093_1111C\sheets\Kentucky Approach\093_0000_rnd001.dgn - 8/23/2012 9:21:03 AM - jon_wanstrath

ERECTION SEQUENCE

1. SET BEARINGS ON SUBSTRUCTURE AT THE REAR ABUTMENT AND THEN IN ORDER OF ERECTION.

2. ASSEMBLE GIRDER PAIR 1A AND 1B ON THE GROUND WITH ALL INTERIOR CROSS FRAME ATTACHMENTS INSTALLED.

3. SET GIRDERS 1A AND 1B USING THE REAR ABUTMENT AND SHORING TOWER ST-1. STABILIZE GIRDERS LATERALLY AT THE REAR ABUTMENT AND SHORING TOWER ST-1 BEFORE REMOVING LIFTING APPARATUS.

4. SET AND ALIGN GIRDERS 1C THRU 1F. INSTALL ALL CROSS FRAMES USING ERECTION BOLTS. SNUG BOLTS (DO NOT TORQUE) BEFORE REMOVING LIFTING APPARATUS.

5. ASSEMBLE GIRDER PAIR 2A AND 2B ON THE GROUND WITH ALL INTERIOR CROSS FRAME ATTACHMENTS INSTALLED.

6. SET GIRDERS 2A AND 2B AND MAKE FIELD SPLICE USING PIER 1 AND SHORING TOWER ST-2. STABILIZE GIRDERS LATERALLY AT PIER 1 AND SHORING TOWER ST-2 BEFORE REMOVING LIFTING APPARATUS.

7. SET, ALIGN AND MAKE FIELD SPLICES ON GIRDERS 2C THRU 2F. INSTALL ALL CROSS FRAMES USING ERECTION BOLTS. SNUG BOLTS (DO NOT TORQUE) BEFORE REMOVING LIFTING APPARATUS.

8. ASSEMBLE GIRDER PAIR 3A AND 3B ON THE GROUND WITH ALL INTERIOR CROSS FRAME ATTACHMENTS INSTALLED.

9. SET GIRDERS 3A AND 3B AND MAKE FIELD SPLICE USING SHORING TOWER ST-3. STABILIZE GIRDERS LATERALLY AT SHORING TOWER ST-3 BEFORE REMOVING BEFORE REMOVING LIFTING APPARATUS.

10. SET, ALIGN AND MAKE FIELD SPLICES ON GIRDERS 3C THRU 3F. INSTALL ALL CROSS FRAMES USING ERECTION BOLTS. SNUG BOLTS (DO NOT TORQUE) BEFORE REMOVING LIFTING APPARATUS.

11. SET GIRDER 4A MAKE FIELD SPLICE AT BEND POINT. STABILIZE GIRDER AT PIER 2 BEFORE REMOVING LIFTING APPARATUS.

12. SET GIRDER 4B MAKE FIELD SPLICE AT BEND POINT. INSTALL ALL CROSS FRAMES.

13. CONTINUE TO SET AND ALIGN GIRDERS 4C THRU 4F. MAKE FIELD SPLICE AT BEND POINT. INSTALL ALL CROSS FRAMES AFTER EACH GIRDER IS SET BEFORE REMOVING LIFTING APPARATUS.

14. REMOVE SHIM PLATES AT TEMPORARY SHORING TOWERS ST-1, ST-2 AND ST-3 AFTER ALL INTERIOR CROSS FRAME CONNECTIONS HAVE BEEN COMPLETED.

15. AFTER ERECTION OF ALL GIRDERS IS COMPLETE WITH ALL INTERIOR CROSS FRAMES AND END DIAPHRAGMS FULLY INSTALLED, PLACE THE CONCRETE BALLAST DIAPHRAGM NEAR REAR ABUTMENT BEFORE DECK SLAB PLACEMENT.

NOTE:

1. FOR ERECTION NOTES AND SHORING TOWER LOADS REFER TO SHEET 43 / 365

J:\Project\O\ODOT\15005112 Ironton Russell\LAW\81595\structures\LAW093_1111C\sheets\Kentucky Approach\093_0000_nd002.dgn - 4/29/2011 9:26:11 AM - john_corley

DESIGN AGENCY
URS
36 EAST 7TH STREET
SUITE 2300
CINCINNATI, OHIO 45202

DESIGNED	DRAWN	REVIEWED	DATE
KS	GJW	RWB	02-22-11
CHECKED	REVISED	STRUCTURE FILE NUMBER	
BTC		4401263	

KY APPROACH - ERECTION PLAN AND NOTES (2 OF 2)
BRIDGE NO. LAW-93-0000
IRONTON RUSSELL BRIDGE OVER OHIO RIVER

LAW-93-0.00
PID No. 81595

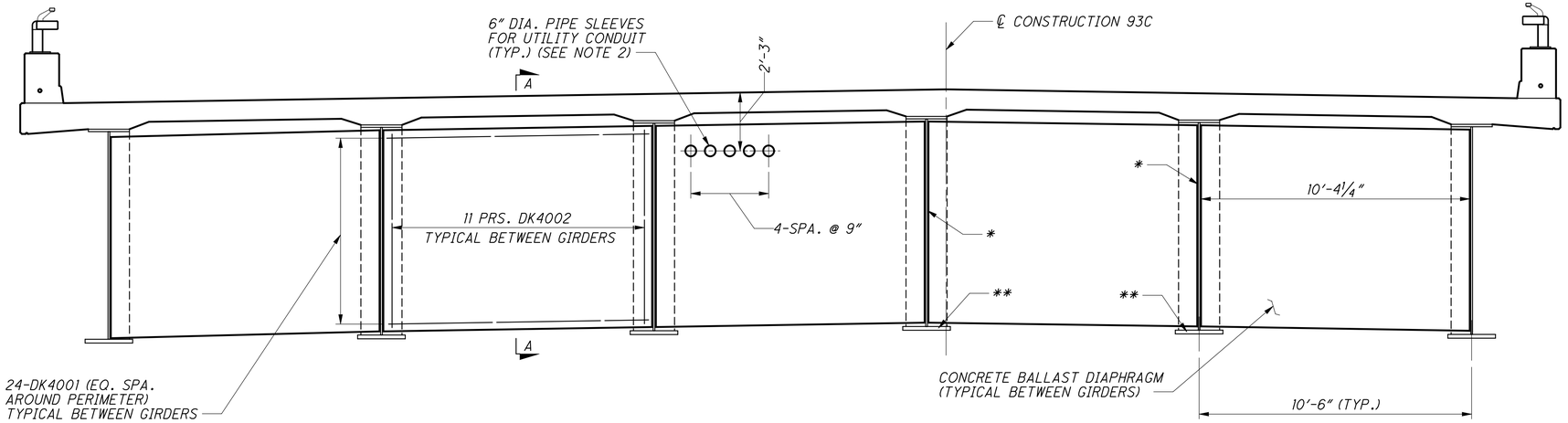

CONCRETE BALLAST DIAPHRAGM

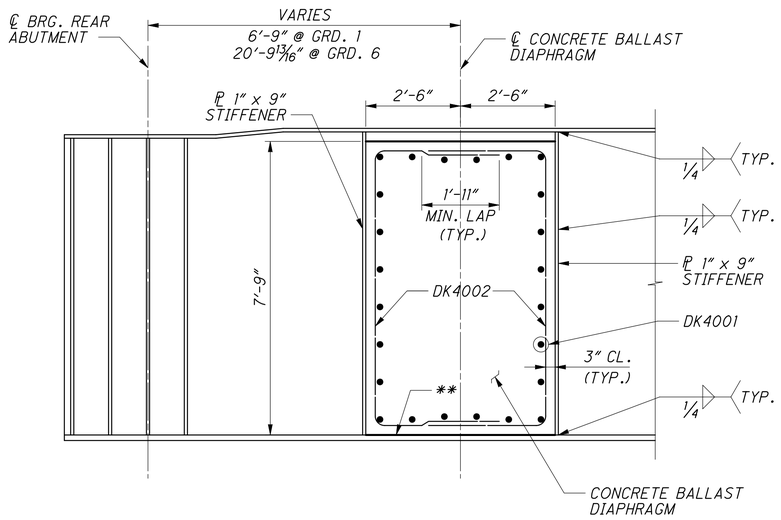

SECTION A-A

NOTES

1. FOR REINFORCING STEEL LIST, SEE SHEET 66/365
2. THE 6" DIAMETER PIPE SLEEVES FOR UTILITY CONDUITS SHALL BE INCIDENTAL TO THE COST OF SUPERSTRUCTURE CONCRETE.

* INDICATES ½"x7'-9"x5'-0" PREFORMED EXPANSION JOINT FILLER

** INDICATES ½"x6"x5'-0" PREFORMED EXPANSION JOINT FILLER

DESIGN AGENCY
URS
35 EAST 7TH STREET
SUITE 2300
CINCINNATI, OHIO 45202

DESIGNED	DRAWN	REVIEWED	DATE
KS	GJW	RWB	02-22-11
CHECKED	REVISED	STRUCTURE FILE NUMBER	
BWJ		4401263	

KY APPROACH - CONCRETE BALLAST DIAPHRAGM
BRIDGE NO. LAW-93-0000
IRONTON RUSSELL BRIDGE OVER OHIO RIVER

LAW-93-0.00
PID No. 81595

45/365

432
788

J:\Project\O\ODOT\15005112 Ironton Russell\LAW\81595\structures\LAW093_1111C\sheets\Kentucky Approach\093_0000_sd007.dgn - 4/29/2011 9:26:14 AM - john_corley

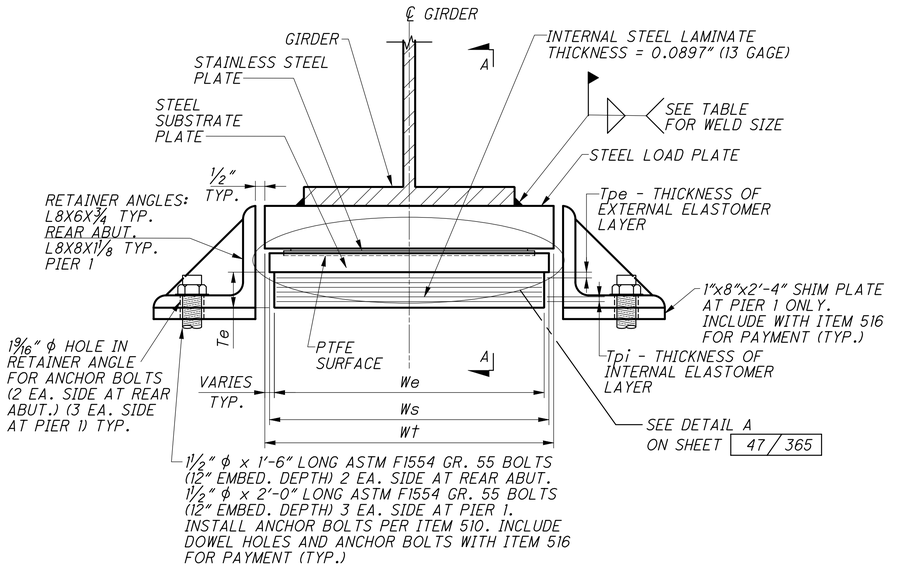

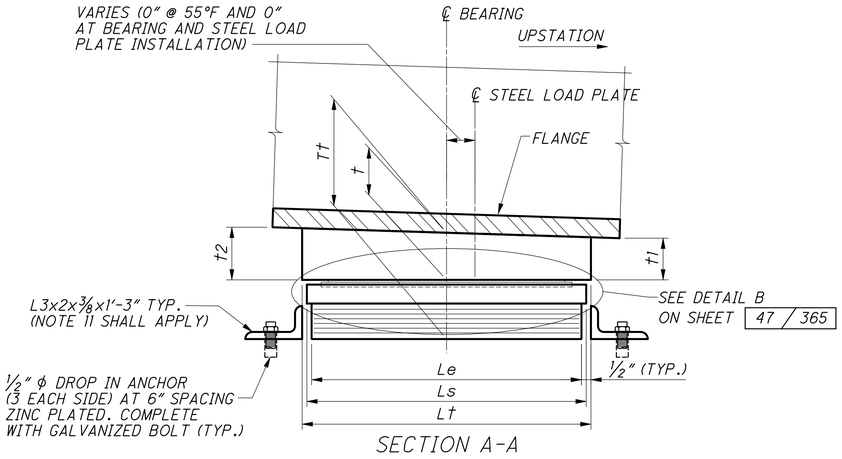

SECTION A-A

LAMINATED ELASTOMERIC EXPANSION BEARING WITH SLIDING PLATES PIER 1 AND REAR ABUTMENT

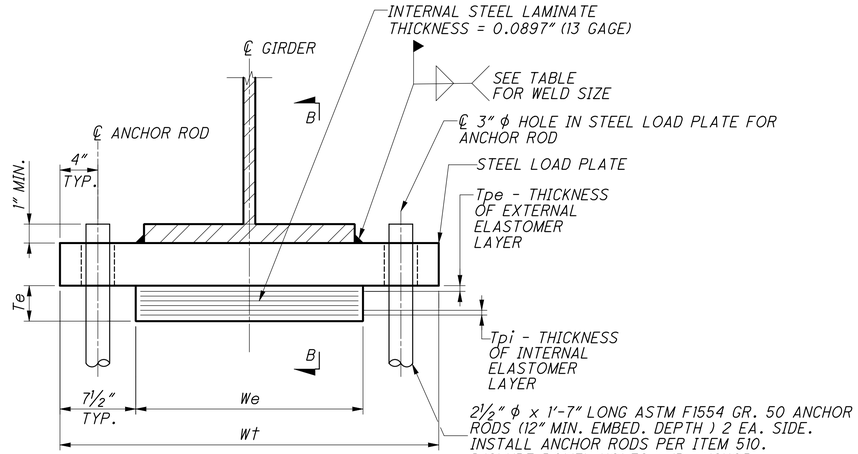

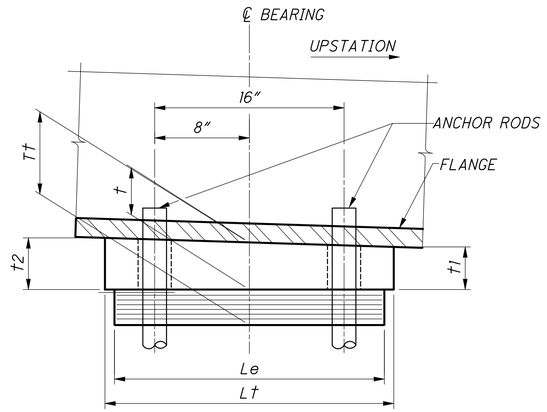

SECTION B-B

FIXED BEARING PIER 2

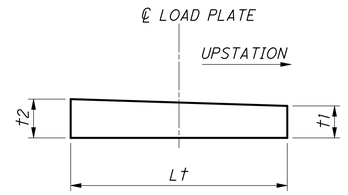

STEEL LOAD PLATE DETAIL

STEEL LOAD PLATE			
BEARING LOCATION	GIRDER	t1	t2
		INCHES	INCHES
REAR ABUTMENT	GIRDER 1	1.78	2.72
	GIRDER 2	1.78	2.72
	GIRDER 3	1.78	2.72
	GIRDER 4	1.78	2.72
	GIRDER 5	1.78	2.72
	GIRDER 6	1.78	2.72
PIER 1	GIRDER 1	1.95	3.05
	GIRDER 2	1.95	3.05
	GIRDER 3	1.95	3.05
	GIRDER 4	1.95	3.05
	GIRDER 5	1.95	3.05
	GIRDER 6	1.95	3.05
PIER 2	GIRDER 1	2.12	1.88
	GIRDER 2	2.12	1.88
	GIRDER 3	2.12	1.88
	GIRDER 4	2.12	1.88
	GIRDER 5	2.12	1.88
	GIRDER 6	2.12	1.88

NOTES

1. FOR ADDITIONAL NOTES AND DETAILS, SEE SHEET 47 / 365
2. FOR RETAINER ANGLE AT REAR ABUTMENT, SEE SHEET 25 / 365
3. FOR RETAINER ANGLE AT PIER 1, SEE SHEET 34 / 365

Link to RFI034 As-Built

ELASTOMERIC BEARING DATA

BEARING LOCATION	BEARING TYPE	NO. REQ'D.	DEAD LOAD *	LIVE LOAD *	TOTAL LOAD (DL+LL) *	We	Le	Tpi	NO. OF Tpi's	Tpe (TOP)	Tpe (BOTT.)	NUMBER OF INTERNAL LAMINATES (13 GAUGE)	Te	STEEL LOAD PLATE				STAINLESS STEEL PLATE				STEEL SUBSTRATE PLATE			PTFE SURFACE				Tt
														Wt	Lt	t (@ CL)	WELD	Wss	Lss	Tss	WELD	Ws	Ls	Ts	Wptfe	Lptfe	Tptfe	RECESS	
			KIPS	KIPS	KIPS	INCHES	INCHES	INCHES		INCHES	INCHES		INCHES	INCHES	INCHES	INCHES	INCHES	INCHES	INCHES	INCHES	INCHES	INCHES	INCHES	INCHES	INCHES	INCHES	INCHES	INCHES	INCHES
REAR ABUTMENT	EXP.	6	115	112	227	15.00	15.00	0.625	3	0.625	0.375	4	3.2338	24.00	47.00	2.25	1/2	12.00	46.00	0.25	1/4	16.00	16.00	1.50	10.00	10.00	0.19	0.094	7.33
PIER 1	EXP.	6	576	308	884	26.00	26.00	0.75	4	0.75	0.375	5	4.5735	28.00	55.00	2.50	1/2	22.00	54.00	0.31	1/4	27.00	27.00	1.50	20.00	20.00	0.19	0.094	8.98
PIER 2	FIX.	6	193	128	321	24.00	16.00	0.625	3	0.625	0.375	4	3.2338	39.00	24.00	2.00	1/2	----	----	----	----	----	----	----	----	----	----	----	5.23

* LOADS SHOWN ARE SERVICE LOADS WITH NO LOAD FACTOR INCLUDED.

DESIGN AGENCY
URS
36 EAST 7TH STREET
SUITE 2300
CINCINNATI, OHIO 45202

DESIGNED BTC | DRAWN JGC | CHECKED AR | REVIEWED RWB | REVISED | DATE 02-22-11 | STRUCTURE FILE NUMBER 4401263

KY APPROACH - BEARING DETAILS (1 OF 2)
BRIDGE NO. LAW-93-0000
IRONTON RUSSELL BRIDGE OVER OHIO RIVER

LAW-93-0.00
PID No. 81595

46 / 365

433
788

J:\Project\0\ODOT\15005112 Ironton Russell\LAW\81595\structures\LAW093_1111C\sheets\Kentucky Approach\093_0000_br001.dgn - 4/29/2011 9:26:16 AM - john_corley

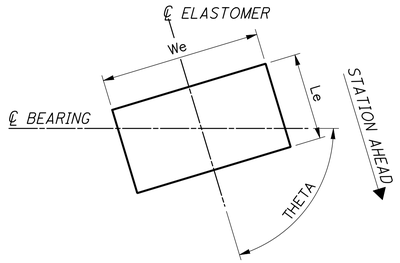

BEARING ORIENTATION PLAN

"THETA" ANGLES			
GIRDER	REAR ABUTMENT	PIER 1	PIER 2
GIRDER 1	75°00'00"	75°00'00"	90°00'00"
GIRDER 2	75°00'00"	75°00'00"	90°00'00"
GIRDER 3	75°00'00"	75°00'00"	90°00'00"
GIRDER 4	75°00'00"	75°00'00"	90°00'00"
GIRDER 5	75°00'00"	75°00'00"	90°00'00"
GIRDER 6	75°00'00"	75°00'00"	90°00'00"

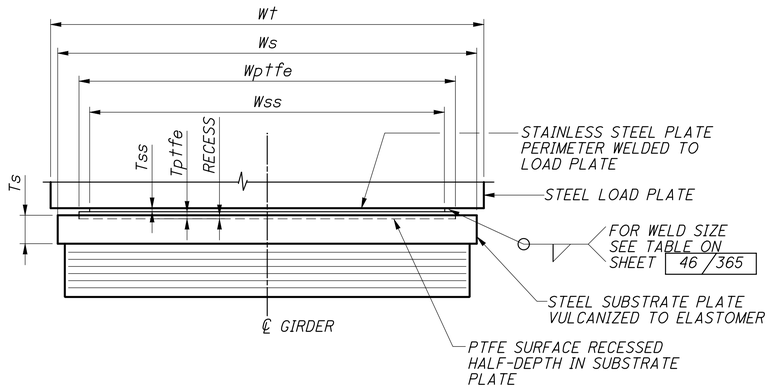

DETAIL A

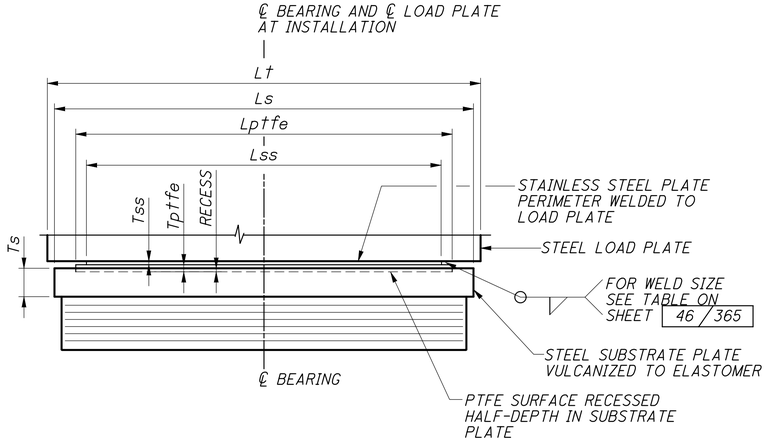

DETAIL B

PTFE = POLYTETRAFLOURETHYLENE

1. ELASTOMERIC BEARINGS:
THE ELASTOMER SHALL HAVE A HARDNESS OF 50 OR 60 DUROMETER. THE BEARINGS WERE DESIGNED IN ACCORDANCE WITH SECTIONS 14.7.2 (PTFE) AND 14.7.5 (METHOD B) OF THE AASHTO LRFD BRIDGE DESIGN SPECIFICATIONS.

2. WELDING SHALL BE CONTROLLED SO THAT THE PLATE TEMPERATURE AT THE ELASTOMER BONDED SURFACE DOES NOT EXCEED 300° F AS DETERMINED BY THE USE OF PYROMETRIC STICKS OR OTHER TEMPERATURE MONITORING DEVICES.

3. BEARING REPOSITIONING AT PIERS:
IF THE STEEL IS ERECTED AT AN AMBIENT TEMPERATURE HIGHER THAN 80° F OR LOWER THAN 40° F AND THE BEARING SHEAR DEFLECTION EXCEEDS 1/6 OF THE BEARING HEIGHT AT 60° F (± 10° F), THE GIRDERS SHALL BE RAISED TO ALLOW THE BEARINGS TO RETURN TO THEIR UNDEFORMED SHAPE AT 60° F (± 10° F). FOR INSTALLATION AT PIER 1 AND REAR ABUTMENT, SEE NOTE 16.

4. THE STEEL LOAD PLATES (AND STEEL SUBSTRATE PLATES AT PIER 1, 2 AND THE REAR ABUTMENT) SHALL BE ASTM A709 GRADE 50W - YIELD STRENGTH 50,000 PSI.

5. AT PIER 1 AND THE REAR ABUTMENT, THE LOAD PLATES AND SUBSTRATE PLATES SHALL BE SHOP PAINTED PER CMS 514.17 WITH A PRIME, INTERMEDIATE AND FINISH COAT (IZEU). CARE SHALL BE TAKEN BY THE FABRICATOR TO ENSURE THAT THE STAINLESS STEEL PLATE AND PTFE ARE NOT EXPOSED TO THE PAINTING OPERATION. PAYMENT FOR ALL LABOR, MATERIALS AND INCIDENTALS NECESSARY TO APPLY THE SHOP COATING SHALL BE INCLUDED IN THE COST OF THE BEARINGS.

   AT PIER 2 THE LOAD PLATE SHALL BE FIELD PAINTED PER CMS 514.17 WITH A PRIME, INTERMEDIATE AND FINISH COAT (OZEU). PAYMENT FOR ALL LABOR, MATERIALS AND INCIDENTALS NECESSARY TO APPLY THE FIELD COATING SHALL BE INCLUDED IN THE COST OF THE BEARINGS.

6. THE STEEL LOAD PLATE (OR STEEL SUBSTRATE PLATE AT PIER 1 AND THE REAR ABUTMENT) SHALL BE BONDED BY VULCANIZATION TO THE ELASTOMER DURING THE MOLDING PROCESS.

7. TOTAL DESIGN LOAD FOR BEARINGS EQUALS THE SUM OF THE DEAD LOADS AND LIVE LOADS TABULATED IN THE ELASTOMERIC BEARING DATA TABLE ON SHEET 46 / 365

8. BEARING ANCHOR RODS:
AT THE OPTION OF THE CONTRACTOR, THE BEARING ANCHOR RODS (OR FORMED HOLES), LOCATED AND SUPPORTED BY TEMPLATES, MAY BE CAST-IN-PLACE.

9. ANCHOR RODS AT PIER 2 AND ANCHOR BOLTS FOR RETAINER ANGLES AT PIER 1 AND THE REAR ABUTMENT SHALL CONFORM TO ASTM F1554 GRADE 55 AND SHALL BE GALVANIZED AS PER ODOT CONSTRUCTION AND MATERIAL SPECIFICATIONS 711.02.

10. RETAINER ANGLES:
AT THE CONTRACTOR'S OPTION THE RETAINER ANGLES AT PIER 1 AND THE REAR ABUTMENT MAY BE FIELD DRILLED AFTER INSTALLATION OF THE ANCHOR BOLTS AND ERECTION OF THE STEEL TO ALLOW MINOR POSITION ADJUSTMENTS WHICH MAY BE REQUIRED TO MAINTAIN PROPER CLEARANCE FROM THE BEAM FLANGES. THE FIELD DRILLED HOLES SHALL BE PRIMED IN ACCORDANCE WITH CMS 514.

11. ALL RETAINER ANGLES SHALL BE SHOP PAINTED PER CMS 514.17 WITH A PRIME, INTERMEDIATE AND FINISH COAT (IZEU). PAYMENT FOR ALL LABOR, MATERIALS AND INCIDENTALS NECESSARY TO APPLY THE SHOP COATING SHALL BE INCLUDED IN THE COST OF THE BEARINGS.

12. PTFE SURFACE (PIER 1 AND REAR ABUTMENT):
FINISHED UNFILLED DIMPLED LUBRICATED PTFE SHEETS SHALL BE MADE FROM 100 PERCENT VIRGIN PTFE RESIN AND SHALL CONFORM TO THE FOLLOWING REQUIREMENTS:

   TENSILE STRENGTH ASTM D4894 - 2800 PSI (MINIMUM)
   ELONGATION ASTM D4894 - 200 PERCENT (MINIMUM)
   SPECIFIC GRAVITY ASTM D792 - 2.13 (MINIMUM)
   MELTING POINT ASTM D4894 - 623° F (± 2° F)

   THE SHEET SHALL BE RECESSED AND EPOXY BONDED INTO THE STEEL SUBSTRATE. THE SHOULDERS OF THE RECESS SHALL BE SHARP AND SQUARE AND THE DEPTH SHALL BE EQUAL TO ONE-HALF OF THE PTFE THICKNESS.

   PTFE SHEET SHALL BE COMMERCIALLY ETCHED ON ITS BONDING SIDE.

   THE BONDING SURFACE OF THE SUBSTRATE PLATE SHALL BE CLEANED OF RUST, SCALE, OIL, AND GREASE BY BLAST CLEANING AND WIPED CLEAN WITH A CLEANING SOLVENT. BLAST CLEANING SHALL BE PERFORMED WITHIN A MAXIMUM OF FOUR HOURS PRIOR TO BONDING.

   THE ADHESIVE MATERIAL, THE BONDING PROCEDURES TO BE USED, AND SURFACE PREPARATION SHALL CONFORM TO THE REQUIREMENTS OF FEDERAL SPECIFICATION MMM-A-134 AND THE MANUFACTURER'S RECOMMENDATIONS. THE ADHESION BETWEEN THE PTFE AND STEEL SUBSTRATE PLATE SHALL BE TESTED IN ACCORDANCE WITH ASTM D429, METHOD B. THE MINIMUM PEEL STRENGTH SHALL BE 25 POUNDS PER INCH.

   AFTER COMPLETION OF THE BONDING OPERATION, THE PTFE SURFACE SHALL BE FREE FROM BUBBLES.

13. STAINLESS STEEL PLATES (PIER 1 AND REAR ABUTMENT):
THE STAINLESS STEEL SHEET SURFACE SHALL CONFORM TO ASTM A167 OR A240 TYPE 304 AND SHALL HAVE A #8 MINIMUM FINISH OR BETTER.

   STAINLESS STEEL SHALL BE ATTACHED TO THE LOAD PLATE BY A CONTINUOUS WELD AROUND ITS ENTIRE PERIMETER. WELDS SHALL CONFORM TO THE AWS REQUIREMENTS FOR STAINLESS STEEL. THE WELDER SHALL BE PRE - QUALIFIED BY TEST WELDS PREPARED, WELDED, AND TESTED IN ACCORDANCE WITH 6.7 OF ANSI/AWS D1.3, STRUCTURAL WELDING CODE - SHEET STEEL. AFTER WELDING, THE STAINLESS STEEL SHEET SHALL BE FLAT, FREE FROM WRINKLES, AND IN CONTINUOUS CONTACT WITH ITS BACKING PLATE. NO ROUGHNESS FROM THE WELD PROTRUDING ABOVE THE SURFACE OF THE STAINLESS STEEL WILL BE PERMITTED.

14. LUBRICANT (PIER 1 AND REAR ABUTMENT):
LUBRICANT SHALL BE SILICONE GREASE WHICH SATISFIES MILITARY SPECIFICATION MIL-S-8660.

15. TESTING OF SLIDING SURFACES (PIER 1 AND REAR ABUTMENT):
IN ADDITION TO THE TESTS REQUIRED FOR METHOD B DESIGN, A MATERIAL FRICTION TEST FOR THE SLIDING SURFACES SHALL BE PERFORMED PER SECTIONS 18.8.2.2 AND 18.8.4 OF THE AASHTO LRFD BRIDGE CONSTRUCTION SPECIFICATIONS. TESTING SHALL BE INCLUDED IN THE UNIT PRICE BID FOR BEARINGS, EACH.

16. ALL BEARINGS SHALL BE MARKED PRIOR TO SHIPPING. THE MARKS SHALL INCLUDE THE BEARING LOCATION ON THE BRIDGE, AND A DIRECTION ARROW THAT POINTS UPSTATION. ALL MARKS SHALL BE PERMANENT AND BE VISIBLE AFTER THE BEARINGS ARE INSTALLED.

17. INSTALLATION OF SLIDING BEARINGS (PIER 1 AND REAR ABUTMENT):
A REPRESENTATIVE FROM THE BEARING MANUFACTURER SHALL BE PRESENT ON SITE FOR A SUFFICIENT PERIOD OF TIME TO ENSURE THAT THE CONTRACTOR IS INSTALLING THE BEARINGS PROPERLY.

18. ALIGN THE CENTERLINE AND BASELINE OF THE BEARING ASSEMBLY AS SHOWN ON THIS SHEET. NO OFFSET IS REQUIRED TO COMPENSATE FOR AMBIENT TEMPERATURE DUE TO THE MOVEMENT ADJUSTMENT MADE ON PIER 2 SUBSTRUCTURE.

   THE UNIT BID PRICE SHALL INCLUDE ALL MATERIALS, LABOR, TESTING, ANCHOR RODS, DOWEL HOLES, SUBSTRATE AND SHIM PLATES (PIERS 1, 2, AND ABUTMENT), STAINLESS STEEL PLATES (PIER 1 AND ABUTMENT), RETAINER ANGLES (PIER 1 AND ABUTMENT), ANCHOR BOLTS (PIER 1 AND ABUTMENT), AND INCIDENTALS NECESSARY TO FURNISH AND INSTALL LAMINATED ELASTOMERIC BEARINGS, EITHER FIXED OR EXPANSION. PAYMENT WILL BE MADE AT THE CONTRACT PRICE PER EACH FOR THE APPROPRIATE ITEM 516.

19. FOR ADDITIONAL ELASTOMERIC BEARING DETAILS, SEE SHEET 46 / 365

20. FOR ADDITIONAL RETAINER ANGLE AND BEARING LAYOUT DETAILS AT PIER 1 SEE PIER 1 DETAILS ON SHEET 34 / 365

21. FOR FIXED BEARING ANCHOR PLAN, SEE KY DIAPHRAGM SEGMENT GEOMETRY ON SHEET 194 / 365

22. FOR ADDITIONAL RETAINER ANGLE AND BEARING LAYOUT DETAILS AT REAR ABUTMENT SEE REAR ABUTMENT DETAILS ON SHEET 25 / 365

J:\Project\O\ODOT\15005112 Ironton Russell\LAW\81595\structures\LAW093_1111C\sheets\Kentucky Approach\093_0000_br003.dgn - 4/29/2011 9:26:18 AM - john_corley

DESIGN AGENCY
URS
36 EAST 7TH STREET
SUITE 2300
CINCINNATI, OHIO 45202

DESIGNED	DRAWN	REVIEWED	DATE
BTC	JGC	RWB	02-22-11
CHECKED	REVISED	STRUCTURE FILE NUMBER	
AR		4401263	

KY APPROACH - BEARING DETAILS (2 OF 2)
BRIDGE NO. LAW-93-0000
IRONTON RUSSELL BRIDGE OVER OHIO RIVER

LAW-93-0.00
PID No. 81595

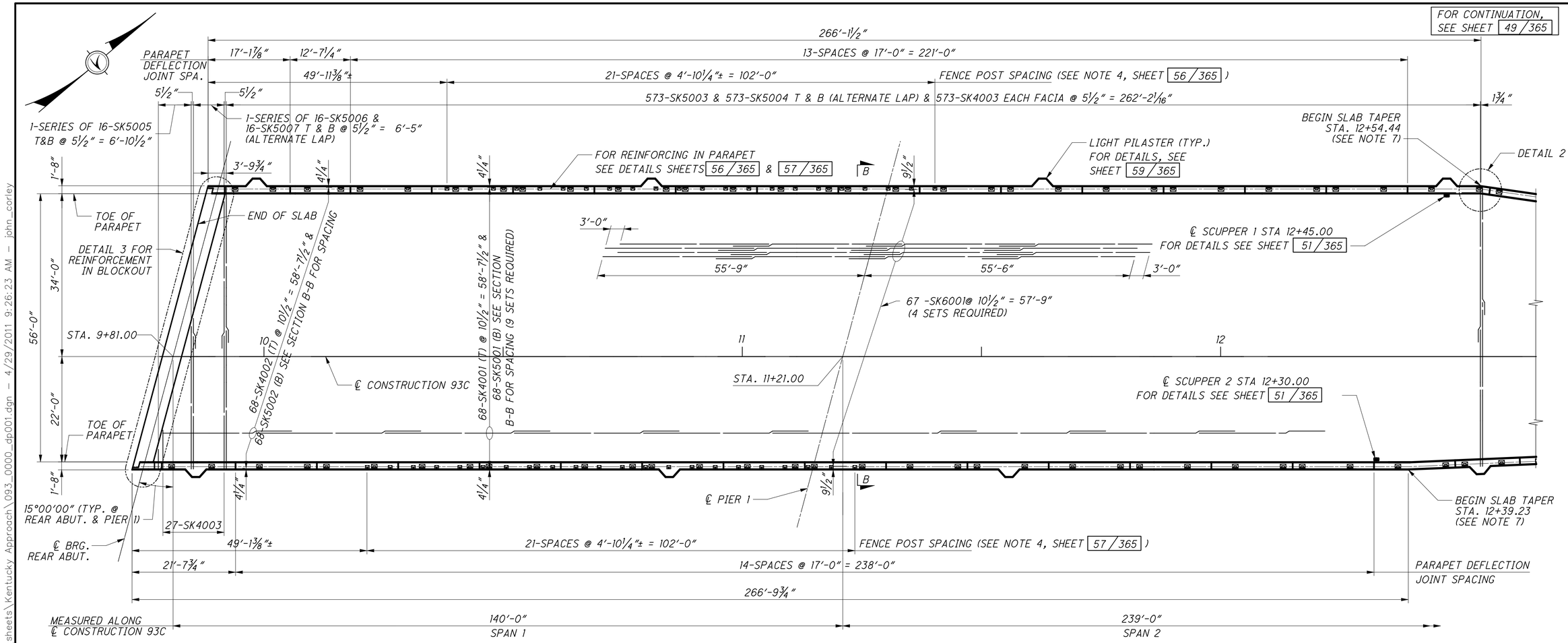

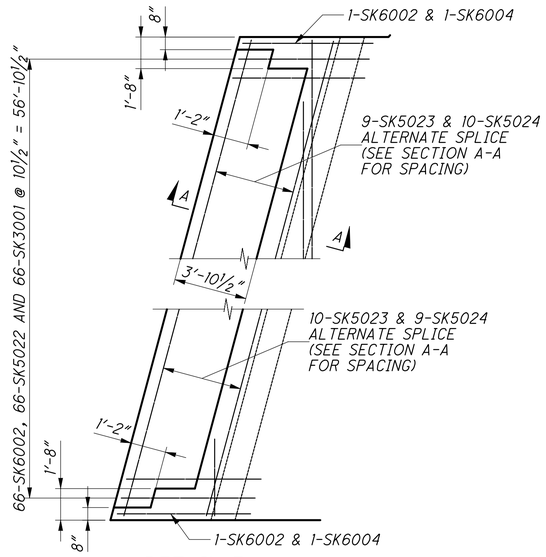

DETAIL 3

PART SLAB PLAN - KENTUCKY APPROACH

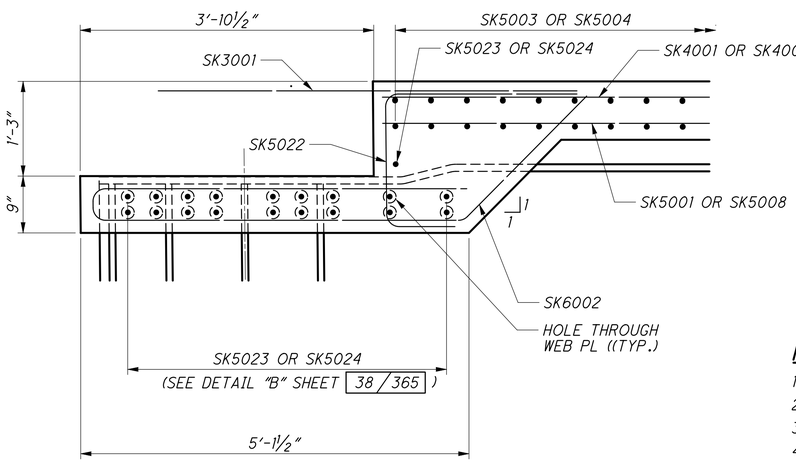

SECTION A-A

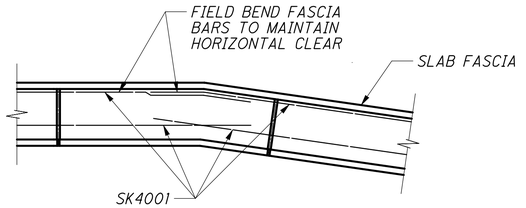

DETAIL 2

Link o RFI111 As-Built

NOTES

1. FOR GENERAL NOTES, SEE SHEETS 5/365 THRU 11/365.
2. FOR REINFORCING STEEL LIST, SEE SHEET 67/365.
3. FOR TABLES OF SCREED ELEVATIONS, SEE SHEET 53/365.
4. FOR BAR LAP SCHEDULE, SEE SHEET 49/365.
5. FOR SECTION B-B, SEE SHEET 50/365.
6. FOR ADDITIONAL CONDUIT SUPPORT NOTES AND DETAILS, SEE SHEET 51/365.
7. FOR PARAPET DETAIL AT BEGIN SLAB TAPER, SEE SHEETS 56/365 & 57/365

DESIGN AGENCY
URS
36 EAST 7TH STREET
SUITE 2300
CINCINNATI, OHIO 45202

DESIGNED	DRAWN	REVIEWED	DATE
MJZ	GJW	RWB	02-22-11
CHECKED	REVISED	STRUCTURE FILE NUMBER	
LNG		4401263	

KY APPROACH - PART SLAB PLAN (1 OF 2)
BRIDGE NO. LAW-93-0000
IRONTON RUSSELL BRIDGE OVER OHIO RIVER

LAW-93-0.00
PID No. 81595

48/365

435
788

J:\Project\O\ODOT\15005112 Ironton Russell\LAW\81595\structures\LAW093_1111C\sheets\Kentucky Approach\093_0000_dp001.dgn — 4/29/2011 9:26:23 AM — john_corley

FOR CONTINUATION, SEE SHEET 48 / 365

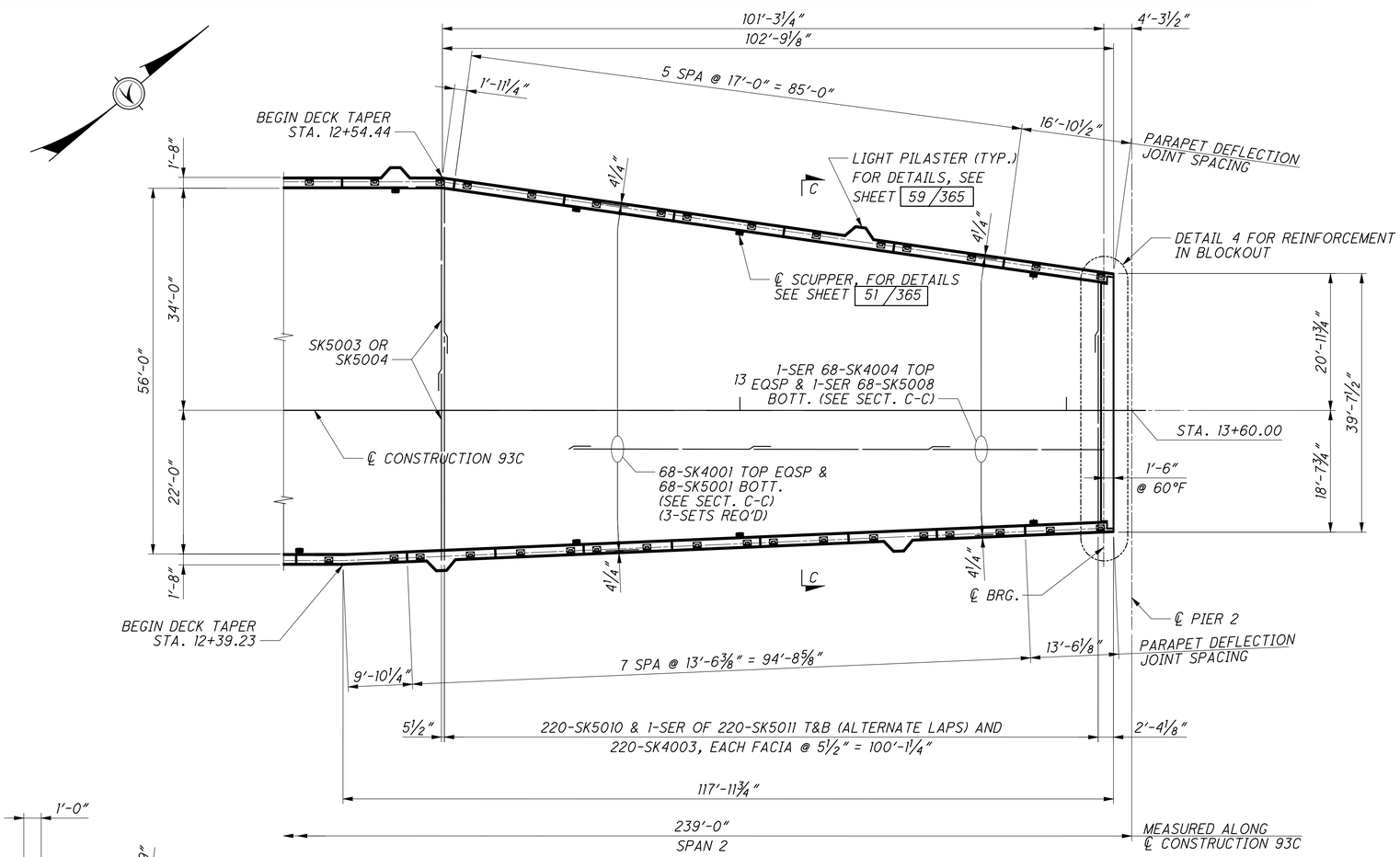

PART SLAB PLAN - KENTUCKY APPROACH

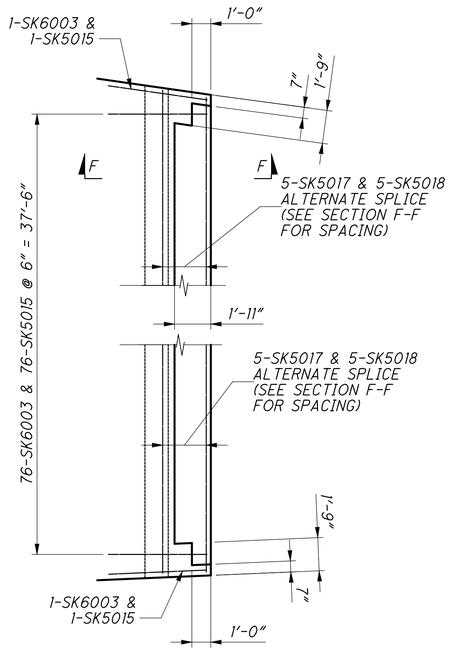

DETAIL 4

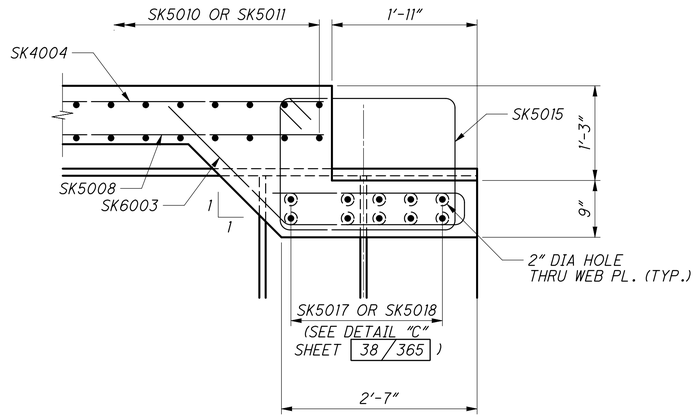

SECTION F-F

BAR LAP SCHEDULE

	BAR SIZE	MIN. LAP
SLAB	#4	1'-11"
	#5	2'-7"
	#6	2'-11"

SCUPPER LOCATIONS

NO.	STATION	SHOULDER
3	12+75.00	LEFT
4	12+75.00	RIGHT
5	13+00.00	LEFT
6	13+00.00	RIGHT
7	13+45.00	LEFT
8	13+45.00	RIGHT

NOTES

1. FOR GENERAL NOTES, SEE SHEETS 5 / 365 THRU 11 / 365.
2. FOR REINFORCING STEEL LIST, SEE SHEET 67 / 365.
3. FOR EXPANSION JOINT AT PIER 2 DETAILS, SEE SHEET 268 / 365 & 269 / 365
4. FOR TABLE OF SCREED ELEVATIONS, SEE SHEET 53 / 365.
5. FOR SECTION C-C, SEE SHEET 50 / 365.

DESIGN AGENCY
URS
36 EAST 7TH STREET
SUITE 2300
CINCINNATI, OHIO 45202

DESIGNED	DRAWN	REVIEWED	DATE
MJZ	GJW	RWB	02-22-11
CHECKED	REVISED	STRUCTURE FILE NUMBER	
LNG		4401263	

KY APPROACH - PART SLAB PLAN (2 OF 2)
BRIDGE NO. LAW-93-0000
IRONTON RUSSELL BRIDGE OVER OHIO RIVER

LAW-93-0.00
PID No. 81595

J:\Project\0\ODOT\15005112 Ironton Russell\LAW\81595\structures\LAW093_1111C\sheets\Kentucky Approach\093_0000_dp002.dgn — 4/29/2011 9:26:27 AM — john_corley

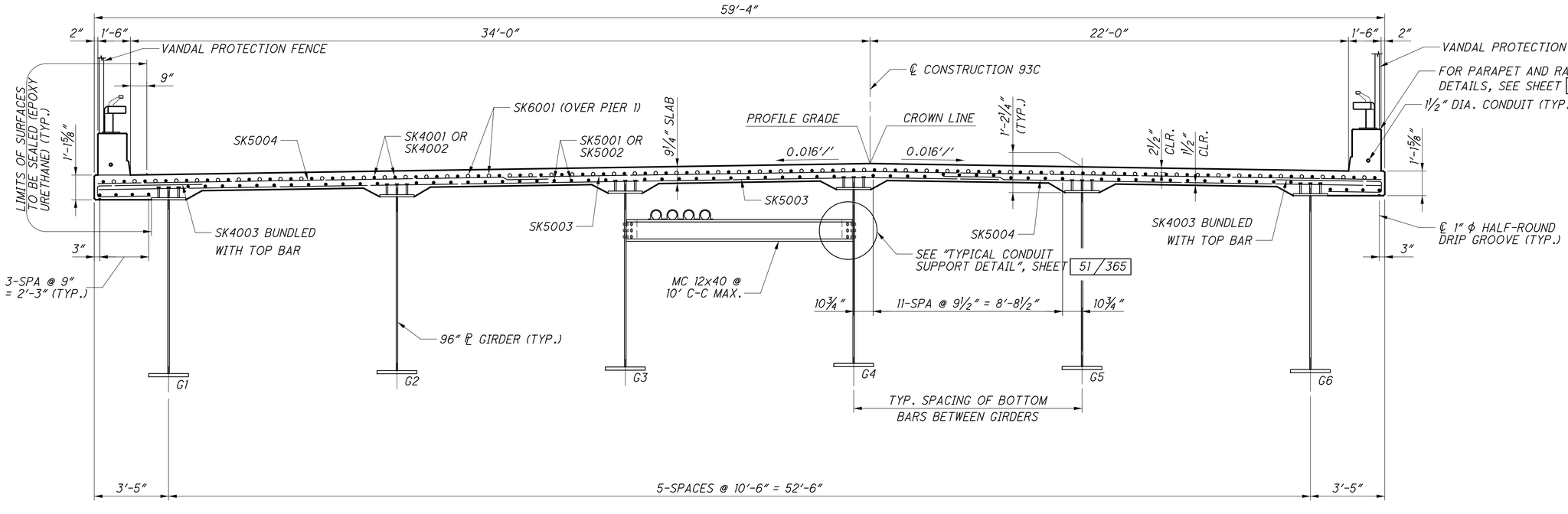

SECTION B-B

STA. 9+81.00 TO 12+39.23

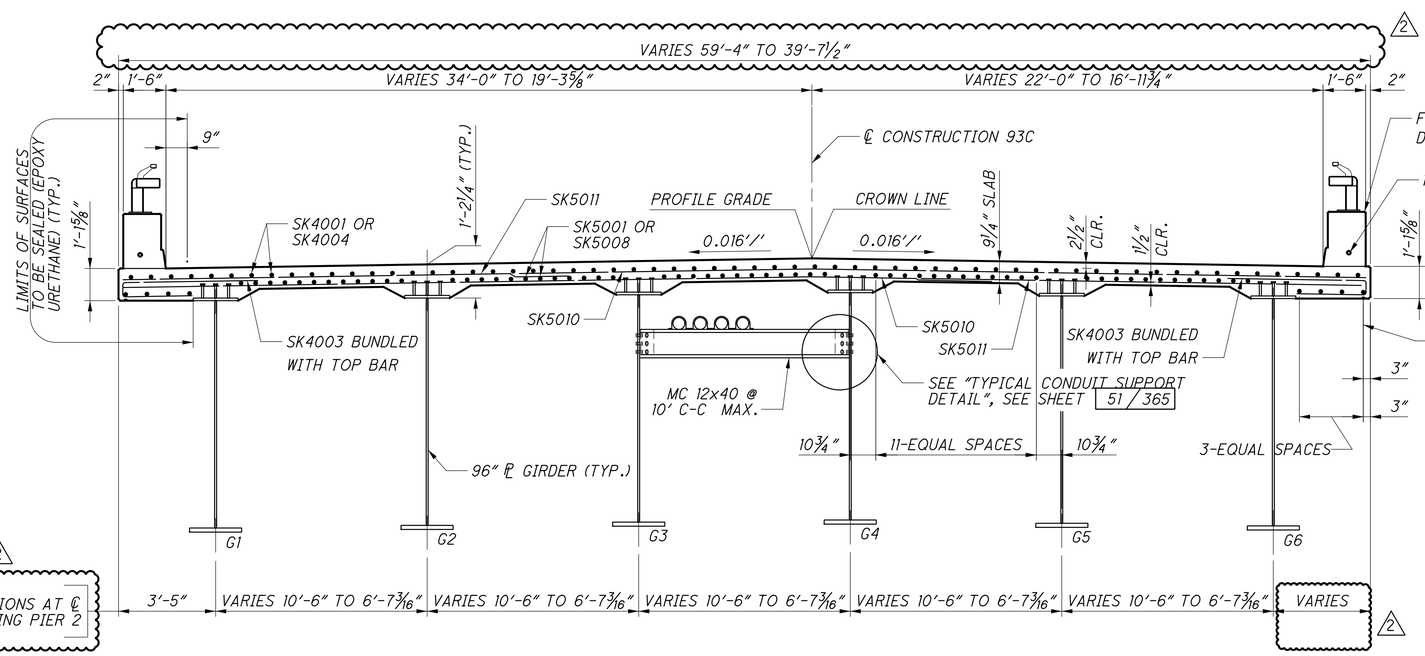

SECTION C-C

STA. 12+39.23 TO 13+57.21 1

Link to RFI114 As-Built

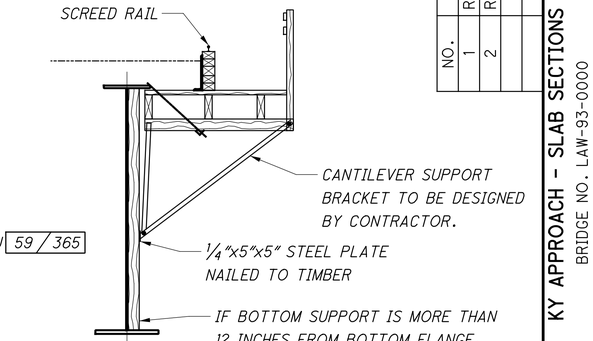

CANTILEVER FORMING AND FORM TRAVELER SUPPORT

NOTES

1. DECK SLAB CONCRETE QUANTITY: THE ESTIMATED QUANTITY OF DECK SLAB CONCRETE IS BASED ON THE CONSTANT DECK SLAB THICKNESS, AS SHOWN, PLUS THE QUANTITY OF CONCRETE THAT FORMS EACH GIRDER HAUNCH. THE ESTIMATE ASSUMES A CONSTANT HAUNCH THICKNESS OF 5 INCHES AND A CONSTANT HAUNCH WIDTH OUTSIDE THE EDGE OF EACH GIRDER FLANGE OF 9 INCHES. DEVIATE FROM THIS HAUNCH THICKNESS AS NECESSARY TO PLACE DECK SURFACE AT THE FINISHED GRADE. THE ALLOWABLE TOLERANCE FOR THE HAUNCH WIDTH OUTSIDE THE EDGE OF EACH GIRDER FLANGE IS ± 3 INCHES.
2. FOR SLAB PLAN, SEE SHEETS 48 / 365 AND 49 / 365 .
3. FOR LIGHTING PLANS, SEE SHEETS 260 THRU 34 OF 788
4. FOR RAILING DETAILS, SEE SHEETS 56 / 365 THRU 59 / 365 .
5. FOR ADDITIONAL CONDUIT SUPPORT NOTES AND DETAILS, SEE SHEET 51 / 365 .

NO.	REVISIONS	DATE	REV. BY
1	REVISED STATIONING	8/13	BKL
2	REVISED CALLOUT	8/13	BKL

DESIGNED MJZ | DRAWN GJW | CHECKED LNG | REVIEWED RWB | DATE 02-22-11 | REVISED | STRUCTURE FILE NUMBER 4401263

DESIGN AGENCY
URS
36 EAST 7TH STREET
SUITE 2300
CINCINNATI, OHIO 45202

KY APPROACH - SLAB SECTIONS
BRIDGE NO. LAW-93-0000
IRONTON RUSSELL BRIDGE OVER OHIO RIVER

LAW-93-0.00
PID No. 81595

50 / 365

437 / 788

J:\Project\OA\ODOT\15005112 Ironton Russell\LAW\81595\structures\LAW093_1111C\sheets\Kentucky Approach\093_0000_sd005.dgn - 8/29/2013 11:31:59 AM - jon_wanstrath

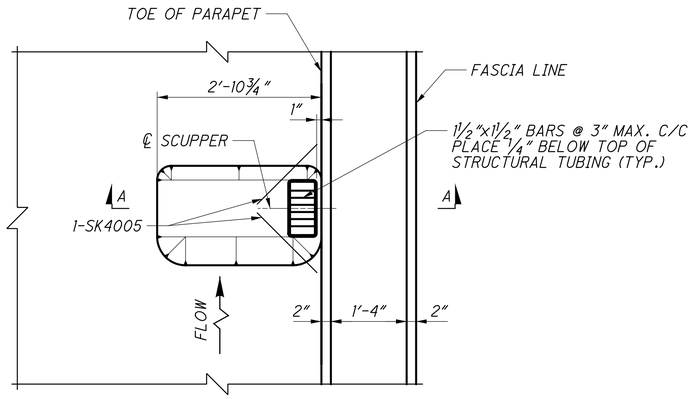

SCUPPER PLAN
(8 REQUIRED)

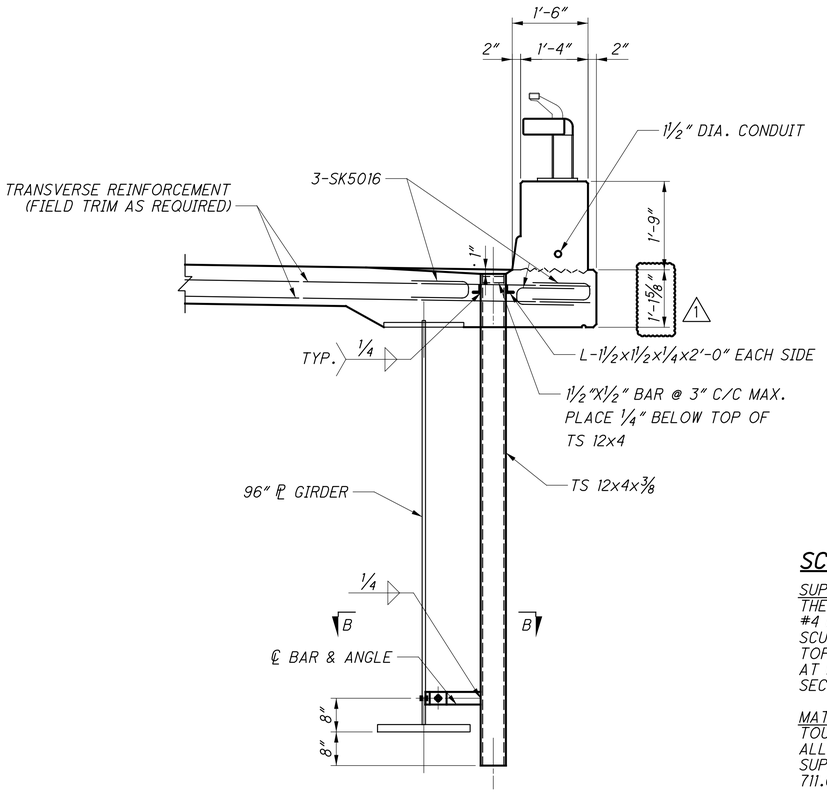

SECTION A-A

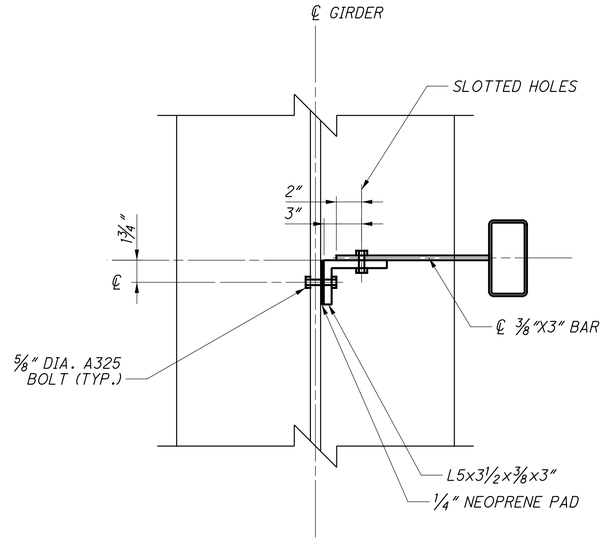

SECTION B-B

BEAM WEB AND ANGLE: AFTER THE DECK CONCRETE AS BEEN POURED, FIELD DRILL THE 13/16" DIAMETER HOLE IN THE WEB.

BASIS OF PAYMENT: THE DEPARTMENT WILL PAY FOR THE SUPPLEMENTAL REINFORCEMENT DESCRIBED ABOVE SEPERATELY UNDER ITEM 509.

SCUPPER NOTES

SUPPLEMENTAL REINFORCEMENT: REINFORCE THE CONCRETE DECK AT THE TWO SCUPPER CORNERS OPPOSITE THE CURB LINE WITH ONE (1) #4 BAR, 3'-0" LONG ORIENTED AT 45° TO THE LONG AXIS OF THE SCUPPER AND LOCATED JUST BELOW THE TRANSVERSE BARS IN THE TOP MAT OF STEEL. THREE (3) ADDITIONAL "U" BARS SHALL BE PLACED AT LOCATIONS OF FIELD TRIMMED TRANSVERSE BARS AS SHOWN IN SECTION A-A.

MATERIAL: FURNISH STRUCTURAL STEEL TUBING ACCORDING TO 707.10 TOUGHNESS TESTING IN ACCORDANCE WITH E436 IS NOT REQUIRED. ALL OTHER MATERIAL SHALL BE ASTM A709 GRADE 50W. GALVANIZE SUPPORT ANGLES, BARS, NUTS, AND WASHERS IN ACCORDANCE WITH 711.02.

FASTENER NOTES:

1. THE SIZE OF THE SLOTTED HOLES SHALL BE 1 1/16"x1 3/16". THE SLOT SHALL BE HORIZONTAL IN THE 3"x⅜" BAR AND VERTICAL IN THE ANGLE. BOLT SHALL BE ⅝" DIAMETER A325 TYPE 1, GALVANIZED, WITH HEX NUT AND TWO (2) WASHERS. TIGHTEN ACCORDING TO 513.
2. THE BOLTS SHALL BE ⅝" DIAMETER A325, TYPE 1, GALVANIZED. EACH ASSEMBLY SHALL INCLUDE A BOLT, NUT, AND TWO (2) WASHERS. TIGHTEN ACCORDING TO 513. PROVIDE A 3½"x3 ½"x⅛" PREFORMED BEARING PAD, 711.21, WITH A 13/16" DIAMETER HOLE, BETWEEN.

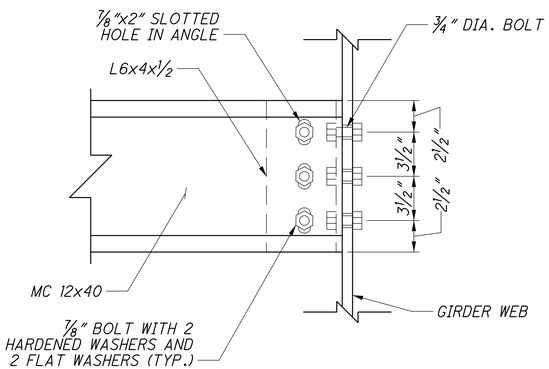

TYPICAL CONDUIT SUPPORT
(10'-0" MAX. SPACING)

NOTES FOR CONDUIT SUPPORTS

1. STRUCTURAL STEEL SHALL BE ASTM A709 GRADE 50W.
2. THE STRUCTURAL STEEL FOR THE CONDUIT SUPPORTS SHALL BE INCLUDED WITH ITEM 513, STRUCTURAL STEEL MEMBERS, LEVEL 5 FOR PAYMENT.
3. CONTRACTOR AND FABRICATOR SHALL COORDINATE WITH THE LIGHTING CONTRACTOR FOR SIZE AND LOCATION OF HOLE IN THE TOP FLANGE OF SUPPORT CHANNELS FOR INSTALLATION OF CONDUIT SUPPORTS.
4. CONDUIT U-BOLTS, EXPANSION JOINTS AND OTHER MISCELLANEOUS HARDWARE AND LABOR NECESSARY TO INSTALL THE UTILITY CONDUITS ARE INCLUDED WITH THE LIGHTING SUMMARIES.

NO.	REVISIONS	DATE	REV. BY
1	REVISED DETAIL	9/13	BKL

DESIGN AGENCY
URS
36 EAST 7TH STREET
SUITE 2300
CINCINNATI, OHIO 45202

DESIGNED MJZ | DRAWN GJW | REVIEWED RWB | DATE 02-22-11
CHECKED LNG | REVISED | STRUCTURE FILE NUMBER 4401263

KY APPROACH - SLAB DETAILS
BRIDGE NO. LAW-93-0000
IRONTON RUSSELL BRIDGE OVER OHIO RIVER

LAW-93-0.00
PID No. 81595

51/365

438
788

J:\Project\0\ODOT\15005112 Ironton Russell\LAW\81595\structures\LAW093_1111C\sheets\Kentucky Approach\093_0000_sd006.dgn - 9/30/2013 3:16:27 PM - jon_wanstrath

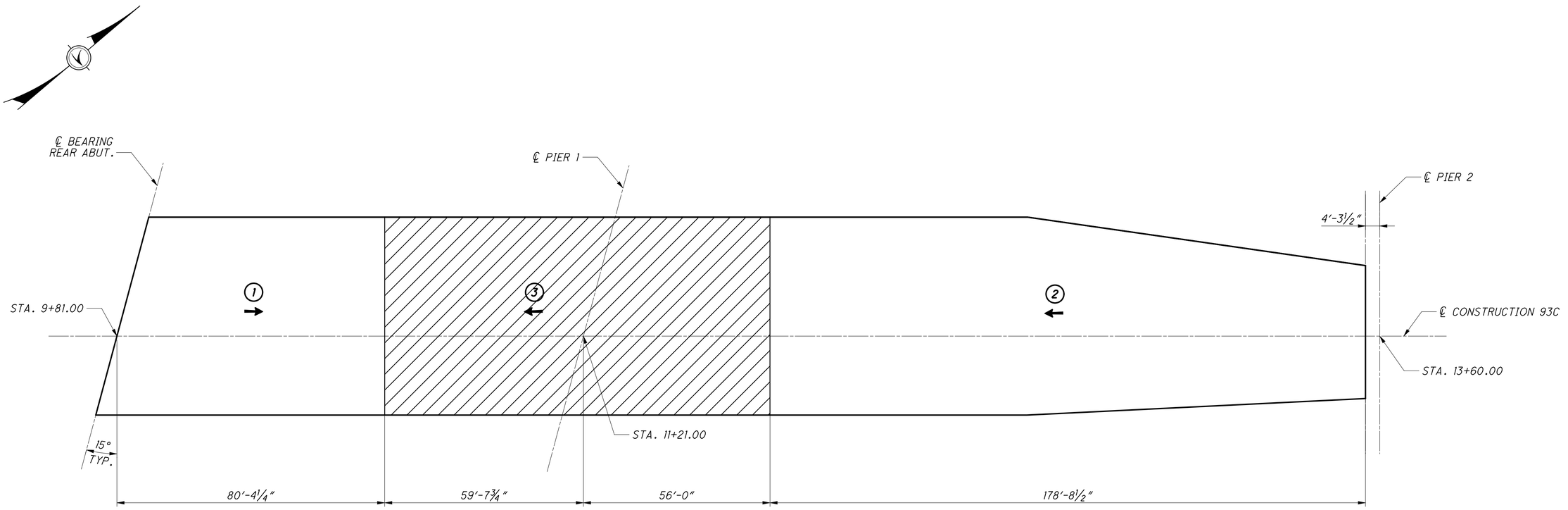

DECK POURING SEQUENCE

(3) POUR SEQUENCE NUMBER

← DIRECTION OF POUR

▨ DENOTES AREA OF NOTED DECK POUR

NOTES

1. DIMENSIONS ARE GIVEN ALONG THE ℄ CONSTRUCTION 93C.
2. THIS IS A SUGGESTED SEQUENCE FOR POURING THE DECK CONCRETE. SHOULD THE CONTRACTOR PROPOSE TO USE A DIFFERENT SEQUENCE, THE SUBMITTAL SHALL BE MADE IN ACCORDANCE WITH CMS ITEMS 501 AND 511.
3. FOR TRANSVERSE SECTION DETAILS SEE SHEET 50/365 .
4. FOR SLAB PLANS SEE SHEETS 48/365 AND 49/365 .

Link to RFI112 As-Built

DESIGN AGENCY
URS
36 EAST 7TH STREET
SUITE 2300
CINCINNATI, OHIO 45202

DESIGNED	DRAWN	REVIEWED	DATE
KS	LNG	RWB	02-22-11
CHECKED	REVISED	STRUCTURE FILE NUMBER	
BWJ		4401263	

KY APPROACH - DECK POURING SEQUENCE
BRIDGE NO. LAW-93-0000
IRONTON RUSSELL BRIDGE OVER OHIO RIVER

LAW-93-0.00
PID No. 81595

52/365

439
788

J:\Project\O\ODOT\15005112 Ironton Russell\LAW\81595\structures\LAW093_1111C\sheets\Kentucky Approach\093_0000_rnd003.dgn - 4/29/2011 9:26:36 AM - john_corley

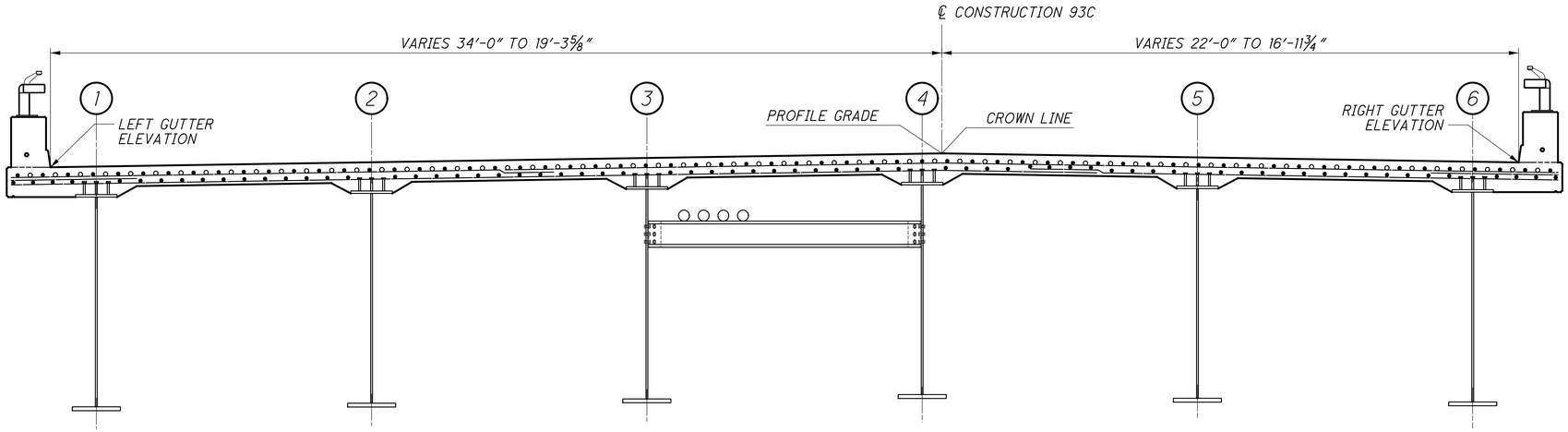

SCREED ELEVATIONS

		REAR ABUT.	1/10 POINT	2/10 POINT	3/10 POINT	4/10 POINT	5/10 POINT	6/10 POINT	7/10 POINT	8/10 POINT	9/10 POINT	PIER 1
LEFT GUTTER	STATION	9+90.11	10+04.11	10+18.11	10+32.11	10+46.11	10+60.11	10+74.11	10+88.11	11+02.11	11+16.11	11+30.11
	OFFSET	-34.00	-34.00	-34.00	-34.00	-34.00	-34.00	-34.00	-34.00	-34.00	-34.00	-34.00
	ELEV.	600.15	599.88	599.60	599.30	599.02	598.72	598.43	598.14	597.87	597.60	597.35
PROFILE GRADE	STATION	9+81.00	9+95.00	10+09.00	10+23.00	10+37.00	10+51.00	10+65.00	10+79.00	10+93.00	11+07.00	11+21.00
	OFFSET	0.00	0.00	0.00	0.00	0.00	0.00	0.00	0.00	0.00	0.00	0.00
	ELEV.	600.88	600.61	600.33	600.05	599.76	599.47	599.17	598.88	598.60	598.33	598.08
RIGHT GUTTER	STATION	9+75.11	9+89.11	10+03.11	10+17.11	10+31.11	10+45.11	10+59.11	10+73.11	10+87.11	11+01.11	11+15.11
	OFFSET	22.00	22.00	22.00	22.00	22.00	22.00	22.00	22.00	22.00	22.00	22.00
	ELEV.	600.65	600.38	600.10	599.82	599.54	599.25	598.94	598.66	598.37	598.10	597.85

SCREED ELEVATIONS

		PIER 1	1/10 POINT	2/10 POINT	3/10 POINT	4/10 POINT	5/10 POINT	KINK POINT	6/10 POINT	7/10 POINT	8/10 POINT	9/10 POINT	PIER 2 (℄ BEARING)
LEFT GUTTER	STATION	11+30.11	11+52.77	11+75.44	11+98.10	12+20.76	12+43.42	12+54.04	12+65.96	12+88.40	13+10.84	13+33.27	13+55.71
	OFFSET	-34.00	-34.00	-34.00	-34.00	-34.00	-34.00	-34.00	-32.30	-29.10	-25.91	-22.71	-19.51
	ELEV.	597.35	596.99	596.71	596.52	596.37	596.26	596.21	596.20	596.17	596.16	596.18	596.24
PROFILE GRADE	STATION	11+21.00	11+44.90	11+68.80	11+92.70	12+16.60	12+40.50	12+54.04	12+64.40	12+88.30	13+12.20	13+36.10	13+55.71
	OFFSET	0.00	0.00	0.00	0.00	0.00	0.00	0.00	0.00	0.00	0.00	0.00	0.00
	ELEV.	598.08	597.69	597.35	597.10	596.92	596.78	596.70	596.67	596.60	596.56	596.56	596.56
RIGHT GUTTER	STATION	11+15.11	11+39.18	11+63.25	11+87.32	12+11.40	12+35.47	12+54.04	12+59.53	12+83.58	13+07.62	13+31.66	13+55.71
	OFFSET	22.00	22.00	22.00	22.00	22.00	22.00	21.39	21.15	20.12	19.09	18.07	17.04
	ELEV.	597.85	597.45	597.09	596.81	596.60	596.44	596.34	596.33	596.26	596.22	596.22	596.28

△2 △1

NOTES

SCREED ELEVATIONS SHOWN REPRESENT THE THEORETICAL DECK SURFACE LOCATION PRIOR TO DEFLECTIONS CAUSED BY DECK PLACEMENT AND OTHER ANTICIPATED DEAD LOADS.

NO.	REVISIONS	DATE	REV. BY
1	REVISED OFFSETS IN TABLE	8/13	BKL
2	REVISED OFFSETS AND ELEVATIONS	10/13	BKL

DESIGN AGENCY
URS
36 EAST 7TH STREET
SUITE 2300
CINCINNATI, OHIO 45202

DESIGNED MJZ | DRAWN LNG | REVIEWED RWB | DATE 02-22-11
CHECKED LNG | REVISED | STRUCTURE FILE NUMBER 4401263

KY APPROACH - SCREED ELEVATIONS
BRIDGE NO. LAW-93-0000
IRONTON RUSSELL BRIDGE OVER OHIO RIVER

LAW-93-0.00
PID No. 81595

53 / 365

440
788

J:\Project\OVODOT\15005112 Ironton Russell\LAW\81595\structures\LAW093_1111C\sheets\Kentucky Approach\093_0000_sd010.dgn - 10/24/2013 1:45:54 PM - jon_wanstrath

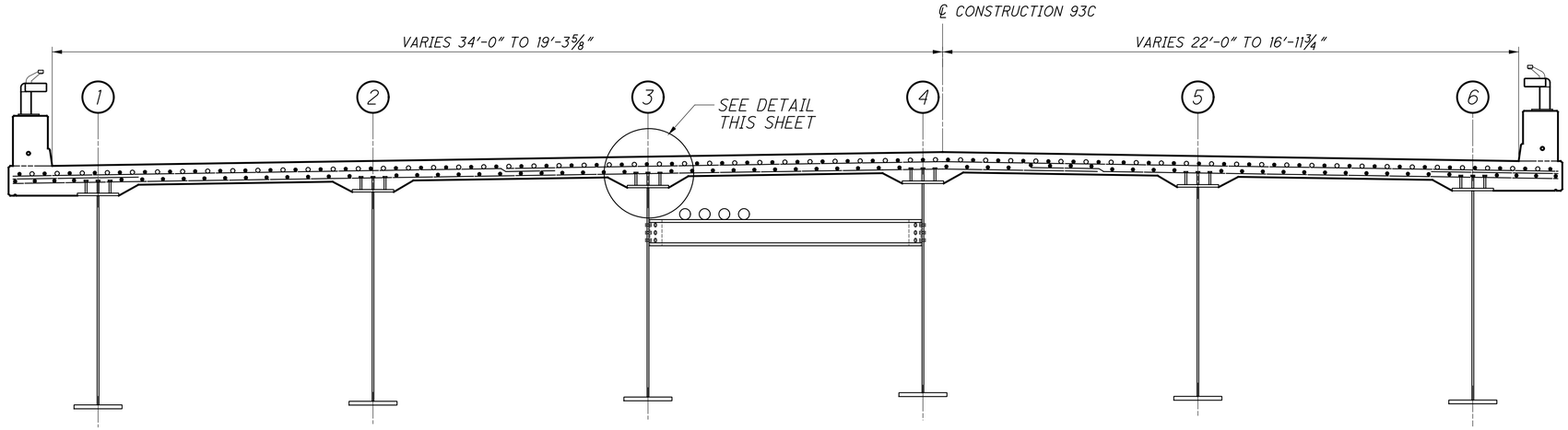

NO.	REVISIONS	DATE	REV. BY
1	REVISED OFFSETS IN TABLE	8/13	BKL

TOP OF HAUNCH ELEVATIONS

		REAR ABUT.	1/10 POINT	2/10 POINT	3/10 POINT	4/10 POINT	5/10 POINT	F.S 1	6/10 POINT	F.S. 1	7/10 POINT	8/10 POINT	9/10 POINT	PIER 1
GIRDER 1	STATION	9+89.64	10+03.64	10+17.64	10+31.64	10+45.64	10+59.64	10+69.91	10+73.64		10+87.64	11+01.64	11+15.64	11+29.64
	OFFSET	-32.25	-32.25	-32.25	-32.25	-32.25	-32.25	-32.25	-32.25		-32.25	-32.25	-32.25	-32.25
	ELEV.	599.42	599.15	598.87	598.57	598.28	597.99	597.77	597.70		597.41	597.13	596.86	596.62
GIRDER 2	STATION	9+86.83	10+00.83	10+14.83	10+28.83	10+42.83	10+56.83	10+69.91	10+70.83		10+84.83	10+98.83	11+12.83	11+26.83
	OFFSET	-21.75	-21.75	-21.75	-21.75	-21.75	-21.75	-21.75	-21.75		-21.75	-21.75	-21.75	-21.75
	ELEV.	599.64	599.37	599.09	598.81	598.52	598.23	597.95	597.93		597.64	597.36	597.09	596.84
GIRDER 3	STATION	9+84.01	9+98.01	10+12.01	10+26.01	10+40.01	10+54.01		10+68.01	10+69.91	10+82.01	10+96.01	11+10.01	11+24.01
	OFFSET	-11.25	-11.25	-11.25	-11.25	-11.25	-11.25		-11.25	-11.25	-11.25	-11.25	-11.25	-11.25
	ELEV.	599.87	599.59	599.32	599.04	598.75	598.46		598.16	598.12	597.87	597.59	597.32	597.07
GIRDER 4	STATION	9+81.20	9+95.20	10+09.20	10+23.20	10+37.20	10+51.20		10+65.20	10+69.91	10+79.20	10+93.20	11+07.20	11+21.20
	OFFSET	-0.75	-0.75	-0.75	-0.75	-0.75	-0.75		-0.75	-0.75	-0.75	-0.75	-0.75	-0.75
	ELEV.	600.09	599.82	599.54	599.26	598.98	598.69		598.38	598.29	598.10	597.82	597.55	597.29
GIRDER 5	STATION	9+78.39	9+92.39	10+06.39	10+20.39	10+34.39	10+48.39		10+62.39	10+69.91	10+76.39	10+90.39	11+04.39	11+18.39
	OFFSET	9.75	9.75	9.75	9.75	9.75	9.75		9.75	9.75	9.75	9.75	9.75	9.75
	ELEV.	600.01	599.74	599.46	599.18	598.90	598.61		598.30	598.15	598.01	597.73	597.46	597.21
GIRDER 6	STATION	9+75.57	9+89.57	10+03.57	10+17.57	10+31.57	10+45.57		10+59.57	10+69.91	10+73.57	10+87.57	11+01.57	11+15.57
	OFFSET	20.25	20.25	20.25	20.25	20.25	20.25		20.25	20.25	20.25	20.25	20.25	20.25
	ELEV.	599.89	599.62	599.35	599.07	598.79	598.50		598.19	597.98	597.91	597.62	597.35	597.09

TOP OF HAUNCH ELEVATIONS

		PIER 1	1/10 POINT	F.S. 2	2/10 POINT	F.S. 2	3/10 POINT	4/10 POINT	5/10 POINT	KINK POINT / F.S 3	6/10 POINT	7/10 POINT	8/10 POINT	9/10 POINT	PIER 2 (℄ BEARING)
GIRDER 1	STATION	11+29.64	11+52.35	11+74.91	11+75.06		11+97.77	12+20.48	12+43.19	12+54.04	12+65.78	12+88.27	13+10.75	13+33.23	13+55.71
	OFFSET	-32.25	-32.25	-32.25	-32.25		-32.25	-32.25	-32.25	-32.25	-30.57	-27.35	-24.13	-20.91	-17.69
	ELEV.	596.62	596.26	595.98	595.98		595.78	595.63	595.52	595.47	595.46	595.43	595.42	595.44	595.50
GIRDER 2	STATION	11+26.83	11+49.77		11+72.72	11+74.91	11+95.66	12+18.60	12+41.55	12+54.04	12+64.43	12+87.25	13+10.07	13+32.89	13+55.71
	OFFSET	-21.75	-21.75		-21.75	-21.75	-21.75	-21.75	-21.75	-21.75	-20.66	-18.27	-15.88	-13.49	-11.09
	ELEV.	596.84	596.47		596.17	595.93	595.96	595.80	595.68	595.61	595.60	595.56	595.54	595.55	595.61
GIRDER 3	STATION	11+24.01	11+47.21		11+70.40	11+74.91	11+93.59	12+16.78	12+39.97	12+54.04	12+63.15	12+86.29	13+09.43	13+32.57	13+55.71
	OFFSET	-11.25	-11.25		-11.25	-11.25	-11.25	-11.25	-11.25	-11.25	-10.65	-9.11	-7.57	-6.03	-4.50
	ELEV.	597.07	596.69		596.38	596.32	596.15	595.98	595.84	595.76	595.75	595.69	595.66	595.66	595.71
GIRDER 4	STATION	11+21.20	11+44.66		11+68.11	11+74.91	11+91.57	12+15.02	12+38.47	12+54.04	12+61.93	12+85.37	13+08.82	13+32.26	13+55.71
	OFFSET	-0.75	-0.75		-0.75	-0.75	-0.75	-0.75	-0.75	-0.75	-0.53	0.13	0.78	1.44	2.10
	ELEV.	597.29	596.91		596.58	596.46	596.33	596.15	596.01	595.92	595.90	595.83	595.76	595.73	595.75
GIRDER 5	STATION	11+18.39	11+42.12		11+65.85	11+74.91	11+89.59	12+13.32	12+37.05	12+54.04	12+60.78	12+84.51	13+08.25	13+31.98	13+55.71
	OFFSET	9.75	9.75		9.75	9.75	9.75	9.75	9.75	9.75	9.68	9.43	9.19	8.94	8.70
	ELEV.	597.21	596.81		596.47	596.32	596.21	596.01	595.86	595.77	595.75	595.67	595.62	595.61	595.65
GIRDER 6	STATION	11+15.57	11+39.60		11+63.63	11+74.91	11+87.65	12+11.68	12+35.70	12+54.04	12+59.72	12+83.72	13+07.71	13+31.71	13+55.71
	OFFSET	20.25	20.25		20.25	20.25	20.25	20.25	20.25	20.25	19.97	18.80	17.63	16.46	15.29
	ELEV.	597.09	596.70		596.34	596.15	596.07	595.86	595.70	595.59	595.58	595.51	595.48	595.48	595.54

1

NOTES

TOP OF HAUNCH ELEVATIONS SHOWN REPRESENT THE THEORETICAL LOCATION OF THE BOTTOM OF THE DECK ABOVE THE GIRDER HAUNCH PRIOR TO DEFLECTIONS CAUSED BY THE DECK PLACEMENT AND OTHER ANTICIPATED DEAD LOADS.

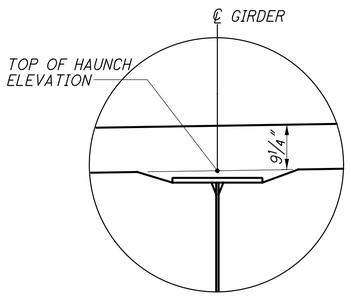

DETAIL

DESIGN AGENCY
URS
36 EAST 7TH STREET
SUITE 2300
CINCINNATI, OHIO 45202

DESIGNED MJZ | DRAWN LNG | REVIEWED RWB | DATE 02-22-11
CHECKED LNG | REVISED | STRUCTURE FILE NUMBER 4401263

KY APPROACH - HAUNCH ELEVATIONS
BRIDGE NO. LAW-93-0000
IRONTON RUSSELL BRIDGE OVER OHIO RIVER

LAW-93-0.00
PID No. 81595

54/365

441/788

J:\Project\OA\ODOT\15005112 Ironton Russell\LAW\81595\structures\LAW093_1111C\sheets\Kentucky Approach\093_0000_sd011.dgn - 8/28/2013 3:51:30 PM - jon_wanstrath

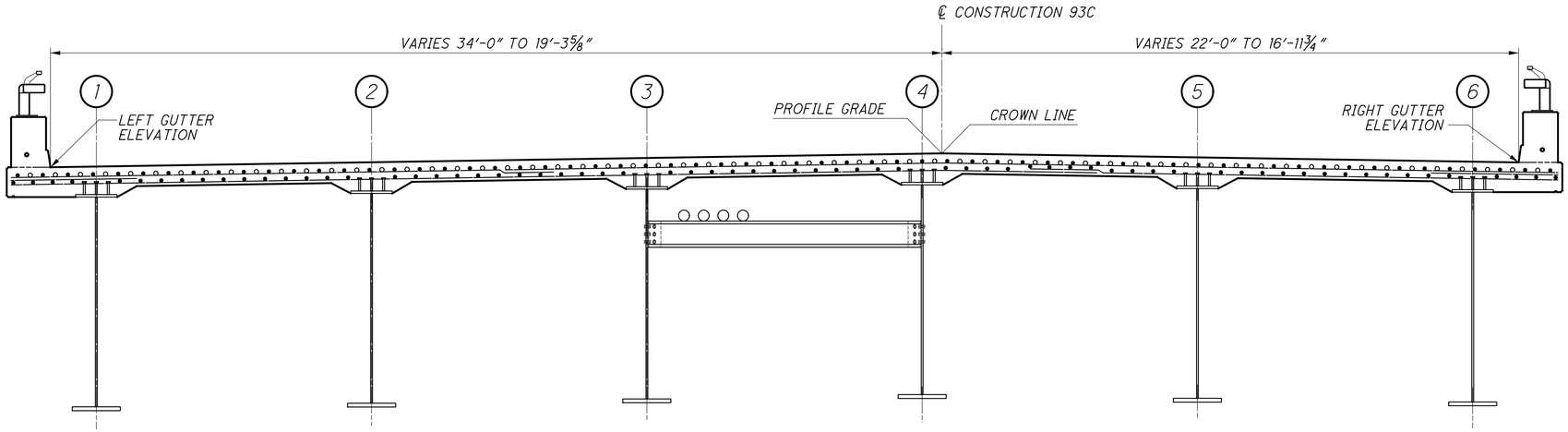

FINAL DECK SURFACE ELEVATIONS

		REAR ABUT.	1/10 POINT	2/10 POINT	3/10 POINT	4/10 POINT	5/10 POINT	6/10 POINT	7/10 POINT	8/10 POINT	9/10 POINT	PIER 1	1/10 POINT	2/10 POINT	3/10 POINT	4/10 POINT	5/10 POINT	KINK POINT	6/10 POINT	7/10 POINT	8/10 POINT	9/10 POINT	PIER 2 (℄ BEARING)
LEFT GUTTER	STATION	9+90.11	10+04.11	10+18.11	10+32.11	10+46.11	10+60.11	10+74.11	10+88.11	11+02.11	11+16.11	11+30.11	11+52.77	11+75.44	11+98.10	12+20.76	12+43.42	12+54.04	12+65.96	12+88.40	13+10.84	13+33.27	13+55.71
	OFFSET	-34.00	-34.00	-34.00	-34.00	-34.00	-34.00	-34.00	-34.00	-34.00	-34.00	-34.00	-34.00	-34.00	-34.00	-34.00	-34.00	-34.00	-32.30	-29.10	-25.91	-22.71	-19.51
	ELEV.	600.15	599.87	599.59	599.31	599.03	598.75	598.47	598.19	597.91	597.63	597.35	596.90	596.50	596.17	595.92	595.74	595.69	595.67	595.70	595.81	595.99	596.24
GIRDER 1	STATION	9+89.64	10+03.64	10+17.64	10+31.64	10+45.64	10+59.64	10+73.64	10+87.64	11+01.64	11+15.64	11+29.64	11+52.35	11+75.06	11+97.77	12+20.48	12+43.19	12+54.04	12+65.78	12+88.27	13+10.75	13+33.23	13+55.71
	OFFSET	-32.25	-32.25	-32.25	-32.25	-32.25	-32.25	-32.25	-32.25	-32.25	-32.25	-32.25	-32.25	-32.25	-32.25	-32.25	-32.25	-32.25	-30.57	-27.35	-24.13	-20.91	-17.69
	ELEV.	600.19	599.91	599.63	599.35	599.07	598.79	598.51	598.23	597.95	597.67	597.39	596.94	596.53	596.20	595.95	595.77	595.72	595.70	595.73	595.84	596.02	596.27
GIRDER 2	STATION	9+86.83	10+00.83	10+14.83	10+28.83	10+42.83	10+56.83	10+70.83	10+84.83	10+98.83	11+12.83	11+26.83	11+49.77	11+72.72	11+95.66	12+18.60	12+41.55	12+54.04	12+64.43	12+87.25	13+10.07	13+32.89	13+55.71
	OFFSET	-21.75	-21.75	-21.75	-21.75	-21.75	-21.75	-21.75	-21.75	-21.75	-21.75	-21.75	-21.75	-21.75	-21.75	-21.75	-21.75	-21.75	-20.66	-18.27	-15.88	-13.49	-11.09
	ELEV.	600.42	600.14	599.86	599.58	599.30	599.02	598.74	598.46	598.18	597.90	597.62	597.16	596.74	596.40	596.13	595.95	595.88	595.86	595.88	595.97	596.14	596.38
GIRDER 3	STATION	9+84.01	9+98.01	10+12.01	10+26.01	10+40.01	10+54.01	10+68.01	10+82.01	10+96.01	11+10.01	11+24.01	11+47.21	11+70.40	11+93.59	12+16.78	12+39.97	12+54.04	12+63.15	12+86.29	13+09.43	13+32.57	13+55.71
	OFFSET	-11.25	-11.25	-11.25	-11.25	-11.25	-11.25	-11.25	-11.25	-11.25	-11.25	-11.25	-11.25	-11.25	-11.25	-11.25	-11.25	-11.25	-10.65	-9.11	-7.57	-6.03	-4.50
	ELEV.	600.64	600.36	600.08	599.80	599.52	599.24	598.96	598.68	598.40	598.12	597.84	597.38	596.94	596.59	596.32	596.13	596.05	596.03	596.02	596.10	596.25	596.49
GIRDER 4	STATION	9+81.20	9+95.20	10+09.20	10+23.20	10+37.20	10+51.20	10+65.20	10+79.20	10+93.20	11+07.20	11+21.20	11+44.66	11+68.11	11+91.57	12+15.02	12+38.47	12+54.04	12+61.93	12+85.37	13+08.82	13+32.26	13+55.71
	OFFSET	-0.75	-0.75	-0.75	-0.75	-0.75	-0.75	-0.75	-0.75	-0.75	-0.75	-0.75	-0.75	-0.75	-0.75	-0.75	-0.75	-0.75	-0.53	0.13	0.78	1.44	2.10
	ELEV.	600.86	600.58	600.30	600.02	599.74	599.46	599.18	598.90	598.62	598.34	598.06	597.59	597.15	596.79	596.50	596.31	596.22	596.19	596.16	596.20	596.32	596.52
PROFILE GRADE	STATION	9+81.00	9+95.00	10+09.00	10+23.00	10+37.00	10+51.00	10+65.00	10+79.00	10+93.00	11+07.00	11+21.00	11+44.90	11+68.80	11+92.70	12+16.60	12+40.50	12+54.04	12+64.40	12+88.30	13+12.20	13+36.10	13+55.71
	OFFSET	0.00	0.00	0.00	0.00	0.00	0.00	0.00	0.00	0.00	0.00	0.00	0.00	0.00	0.00	0.00	0.00	0.00	0.00	0.00	0.00	0.00	0.00
	ELEV.	600.88	600.60	600.32	600.04	599.76	599.48	599.20	598.92	598.64	598.36	598.08	597.60	597.15	596.78	596.50	596.30	596.23	596.19	596.17	596.23	596.38	596.56
GIRDER 5	STATION	9+78.39	9+92.39	10+06.39	10+20.39	10+34.39	10+48.39	10+62.39	10+76.39	10+90.39	11+04.39	11+18.39	11+42.12	11+65.85	11+89.59	12+13.32	12+37.05	12+54.04	12+60.78	12+84.51	13+08.25	13+31.98	13+55.71
	OFFSET	9.75	9.75	9.75	9.75	9.75	9.75	9.75	9.75	9.75	9.75	9.75	9.75	9.75	9.75	9.75	9.75	9.75	9.68	9.43	9.19	8.94	8.70
	ELEV.	600.78	600.50	600.22	599.94	599.66	599.38	599.10	598.82	598.54	598.26	597.98	597.50	597.05	596.67	596.38	596.17	596.08	596.05	596.02	596.07	596.20	596.42
GIRDER 6	STATION	9+75.57	9+89.57	10+03.57	10+17.57	10+31.57	10+45.57	10+59.57	10+73.57	10+87.57	11+01.57	11+15.57	11+39.60	11+63.63	11+87.65	12+11.68	12+35.70	12+54.04	12+59.72	12+83.72	13+07.71	13+31.71	13+55.71
	OFFSET	20.25	20.25	20.25	20.25	20.25	20.25	20.25	20.25	20.25	20.25	20.25	20.25	20.25	20.25	20.25	20.25	20.25	19.97	18.80	17.63	16.46	15.29
	ELEV.	600.66	600.38	600.10	599.82	599.54	599.26	598.98	598.70	598.42	598.14	597.86	597.38	596.92	596.53	596.23	596.01	595.91	595.89	595.87	595.93	596.08	596.31
RIGHT GUTTER	STATION	9+75.11	9+89.11	10+03.11	10+17.11	10+31.11	10+45.11	10+59.11	10+73.11	10+87.11	11+01.11	11+15.11	11+39.18	11+63.25	11+87.32	12+11.40	12+35.47	12+54.04	12+59.53	12+83.58	13+07.62	13+31.66	13+55.71
	OFFSET	22.00	22.00	22.00	22.00	22.00	22.00	22.00	22.00	22.00	22.00	22.00	22.00	22.00	22.00	22.00	22.00	21.39	21.15	20.12	19.09	18.07	17.04
	ELEV.	600.65	600.37	600.09	599.81	599.53	599.25	598.97	598.69	598.41	598.13	597.85	597.36	596.90	596.51	596.20	595.99	595.89	595.87	595.84	595.91	596.05	596.28

△2 △1

NOTES

FINAL DECK SURFACE ELEVATIONS SHOWN REPRESENT THE DECK SURFACE LOCATION AFTER ALL ANTICIPATED DEAD LOAD DEFLECTIONS HAVE OCCURRED.

NO.	REVISIONS	DATE	REV. BY
1	REVISED OFFSETS IN TABLE	8/13	BKL
2	REVISED OFFSETS AND ELEVATIONS	10/13	BKL

DESIGN AGENCY
URS
36 EAST 7TH STREET
SUITE 2300
CINCINNATI, OHIO 45202

DESIGNED MJZ | DRAWN LNG | CHECKED LNG | REVISED | REVIEWED RWB | DATE 02-22-11 | STRUCTURE FILE NUMBER 4401263

KY APPROACH - DECK SURFACE ELEVATIONS
BRIDGE NO. LAW-93-0000
IRONTON RUSSELL BRIDGE OVER OHIO RIVER

LAW-93-0.00
PID No. 81595

55 / 365

442
788

J:\Project\O\ODOT\15005112 Ironton Russell\LAW\81595\structures\LAW093_1111C\sheets\Kentucky Approach\093_0000_sd012.dgn - 10/24/2013 1:45:56 PM - jon_wanstrath

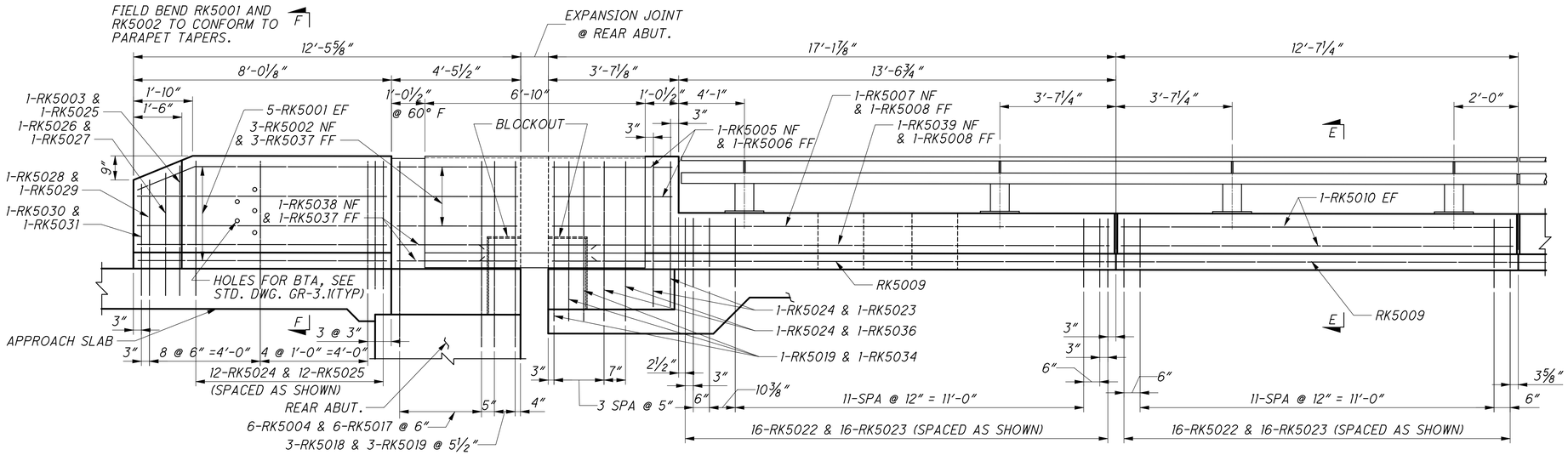

SEGMENT AT REAR ABUTMENT

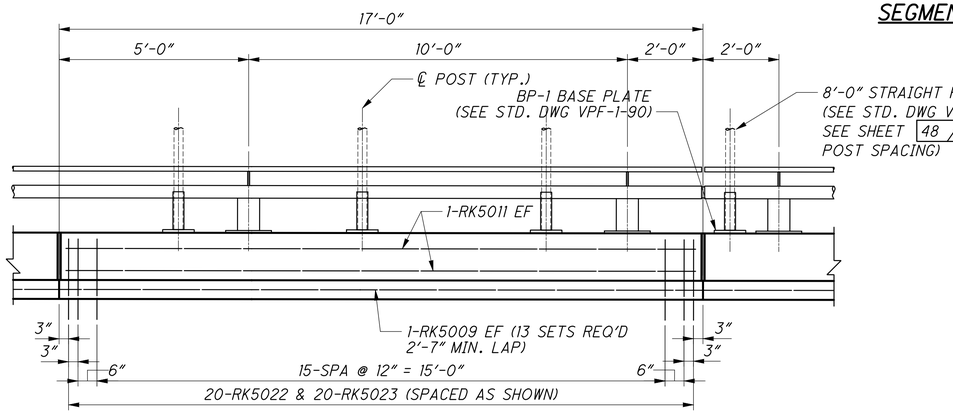

TYPICAL 17' SEGMENT (18 REQUIRED)

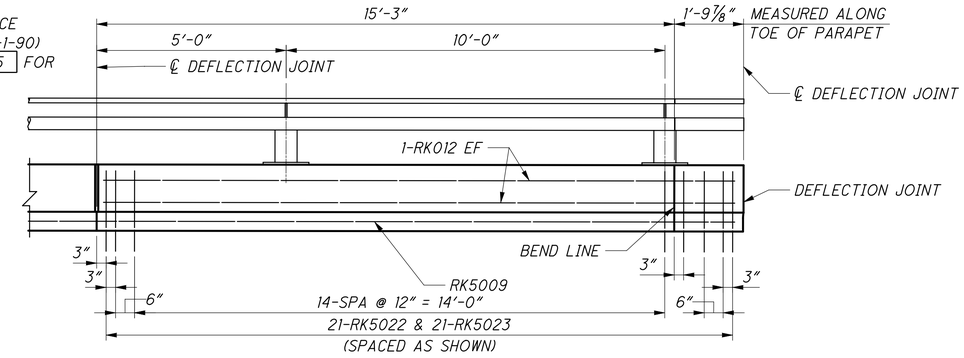

SEGMENT AT PARAPET BEND

FIELD BEND RK5009 AND RK5012 TO CONFORM TO BEND LINE OF PARAPET.

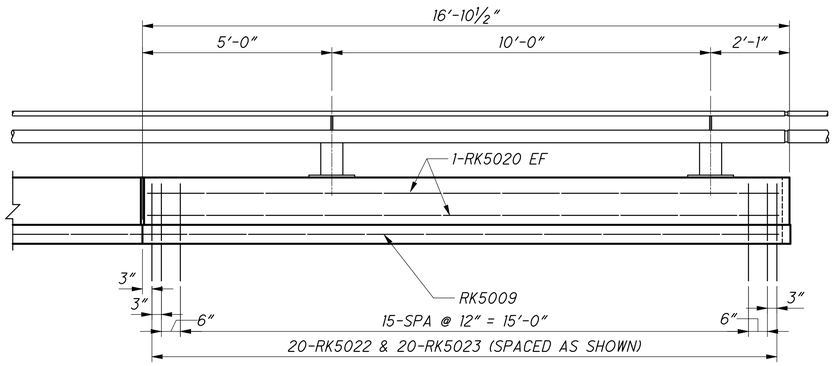

SEGMENT AT PIER 2

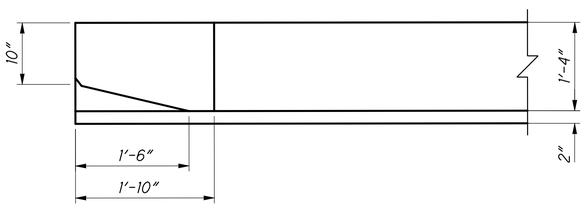

END TRANSITION PLAN

NOTES

1. FOR SECTIONS AND ADDITIONAL PARAPET DETAILS, SEE SHEETS 58/365 AND 59/365
2. DIMENSIONS ARE MEASURED ALONG OUTSIDE FACE OF PARAPET, EXCEPT AS SHOWN.
3. FOR REINFORCING STEEL LIST, SEE SHEET 67/365
4. FENCE POSTS SHALL BE LOCATED NEITHER CLOSER THAN 9" FROM A PARAPET JOINT NOR 1'-3" FROM A RAILING POST.

DESIGN AGENCY
URS
36 EAST 7TH STREET
SUITE 2300
CINCINNATI, OHIO 45202

DESIGNED LNG | DRAWN JGC | REVIEWED RWB | DATE 02-22-11
CHECKED MJZ | REVISED | STRUCTURE FILE NUMBER 4401263

KY APPROACH - LEFT PARAPET ELEVATION
BRIDGE NO. LAW-93-0000
IRONTON RUSSELL BRIDGE OVER OHIO RIVER

LAW-93-0.00
PID No. 81595

56/365

443/788

J:\Project\0\ODOT\15005112 Ironton Russell\LAW\81595\structures\LAW093_1111C\sheets\Kentucky Approach\093_0000_ra001.dgn - 4/29/2011 9:26:50 AM - john_corley

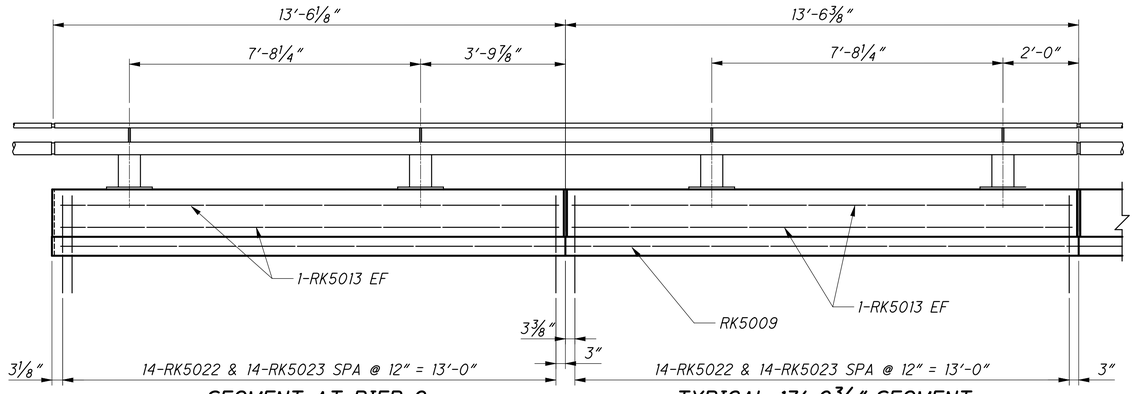

SEGMENT AT PIER 2

TYPICAL 13′-6⅜″ SEGMENT
(7 REQUIRED)

NOTES

1. FOR ADDITIONAL PARAPET DETAILS, SEE SHEETS 58 / 365 & 59 / 365 .
2. DIMENSIONS ARE MEASURED ALONG OUTSIDE FACE OF PARAPET, EXCEPT AS SHOWN.
3. FOR REINFORCING STEEL LIST, SEE SHEET 67 / 365
4. FENCE POSTS SHALL BE LOCATED NEITHER CLOSER THAN 9″ FROM A PARAPET JOINT NOR 1′-3″ FROM A RAILING POST.

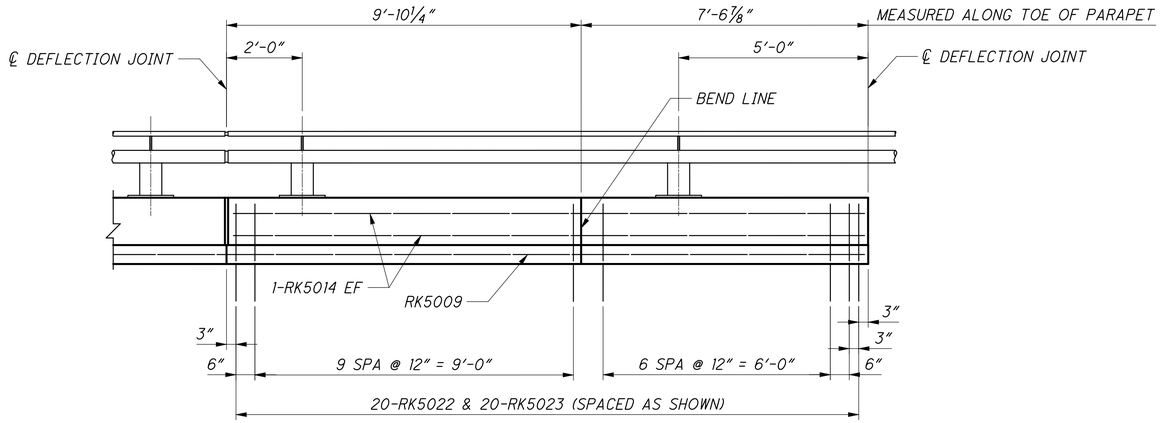

SEGMENT AT PARAPET BEND
FIELD BEND RK5009 AND RK5014 TO CONFORM TO BEND LINE OF PARAPET.

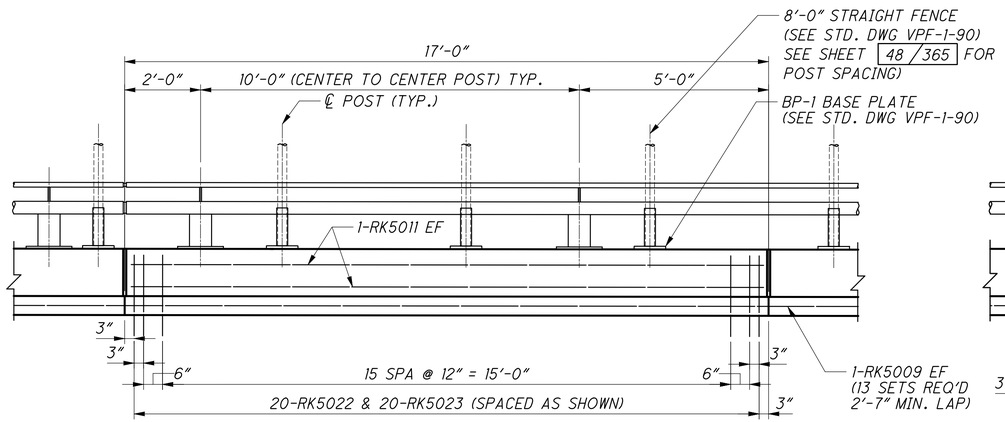

TYPICAL 17 -0″ SEGMENT
(14 REQUIRED)

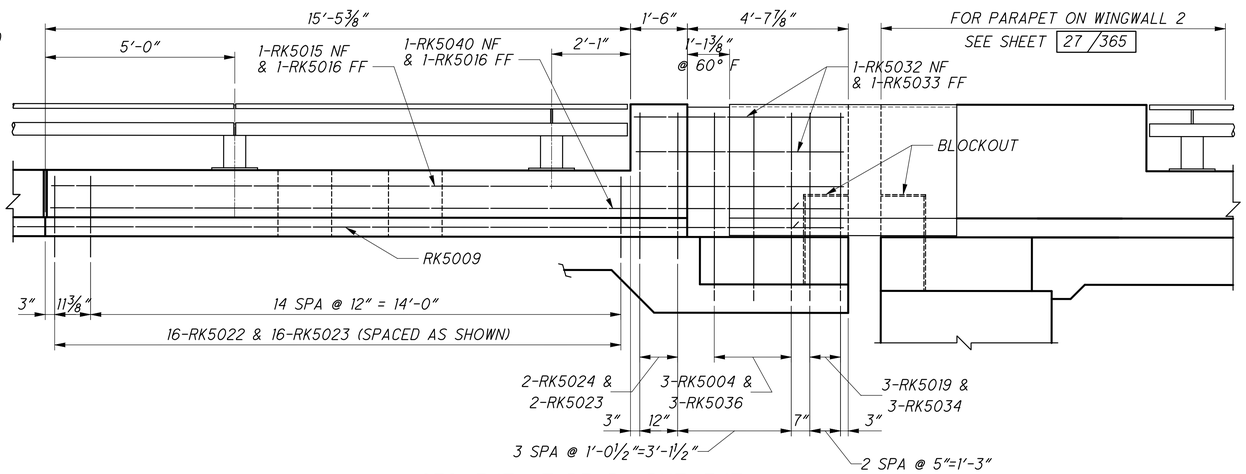

SEGMENT AT REAR ABUTMENT

DESIGN AGENCY
URS
36 EAST 7TH STREET
SUITE 2300
CINCINNATI, OHIO 45202

DESIGNED	DRAWN	REVIEWED	DATE
LNG	JGC	RWB	02-22-11
CHECKED	REVISED	STRUCTURE FILE NUMBER	
MJZ		4401263	

KY APPROACH - RIGHT PARAPET ELEVATION
BRIDGE NO. LAW-93-0000
IRONTON RUSSELL BRIDGE OVER OHIO RIVER

LAW-93-0.00
PID No. 81595

57 / 365

444
788

J:\Project\O\ODOT\15005112 Ironton Russell\LAW\81595\structures\LAW093_1111C\sheets\Kentucky Approach\093_0000_ra002.dgn - 4/29/2011 9:26:53 AM - john_corley

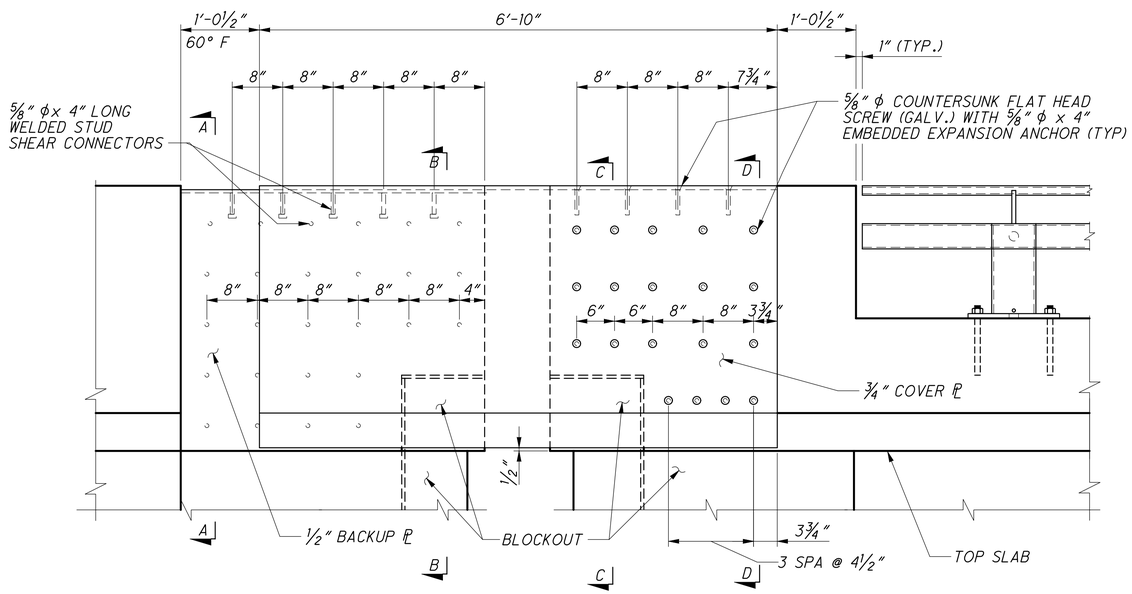

ELEVATION - SLIDING PLATES AT REAR ABUTMENT

(LEFTSIDE SHOWN, RIGHT SIDE SIMILAR)

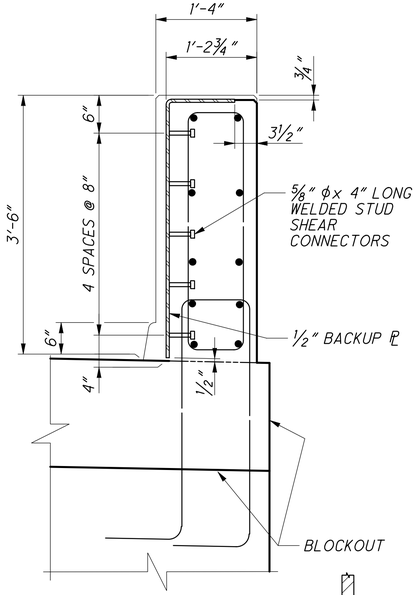

SECTION A-A

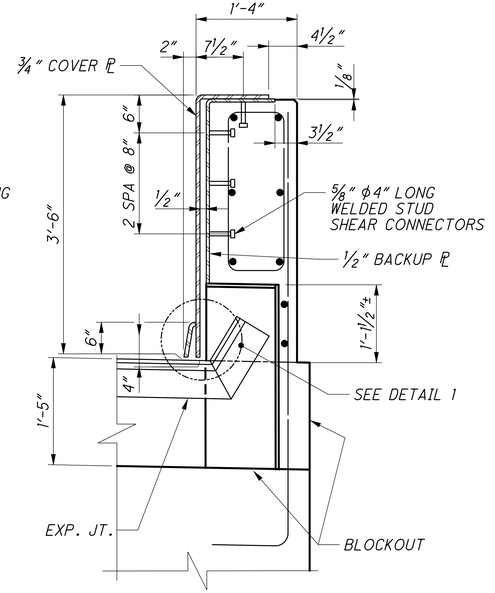

SECTION B-B

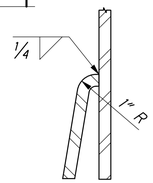

DETAIL 1

SECTION C-C

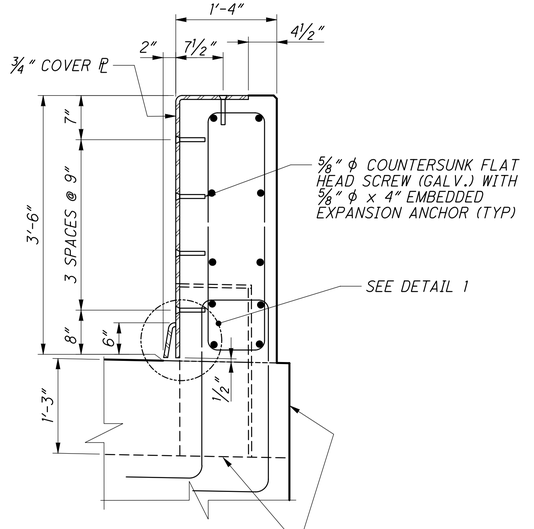

SECTION D-D

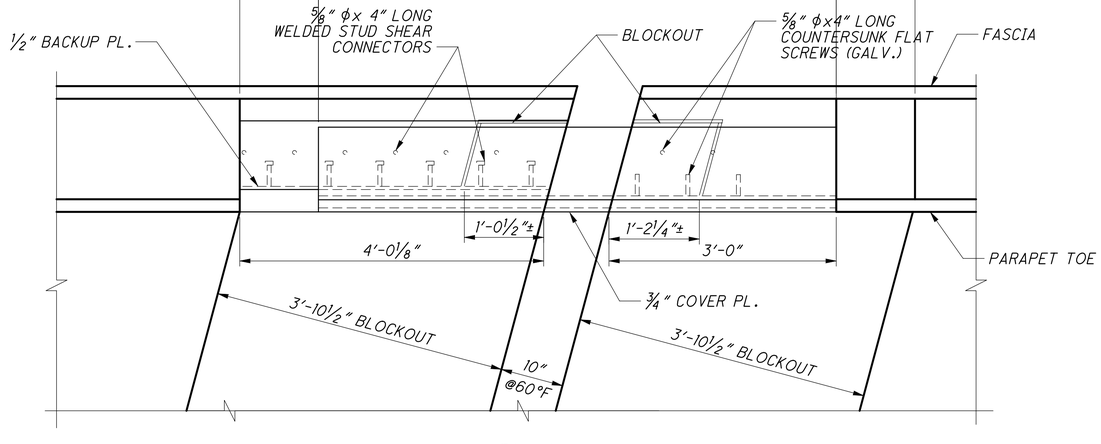

PLAN

(LEFT SIDE SHOWN, RIGHT SIDE SIMILAR)

NOTES

1. FOR EXPANSION JOINT DETAILS, SEE SHEET 60/365 AND 61/365.
2. CONCRETE PARAPET REINFORCEMENT SHALL BE ADJUSTED AS NECESSARY TO ACCOMMODATE EXPANSION JOINT BLOCK OUT.
3. CONTRACTOR SHALL PROVIDE SHOP DRAWINGS SHOWING ALL DETAILS OF PARAPET COVER PLATES FOR ENGINEER'S REVIEW.
4. PAYMENT FOR PARAPET COVER PLATES AND ASSOCIATED HARDWARE SHALL BE CONSIDERED INCIDENTAL TO THE COST OF THE MODULAR EXPANSION JOINT.
5. STEEL PLATE SHALL BE ASTM A709 GRADE 36. ALL COMPONENTS OF THE COVER PLATE ASSEMBLY SHALL BE GALVANIZED AFTER FABRICATION IN ACCORDANCE WITH CMS 711.02.

DESIGN AGENCY
URS
36 EAST 7TH STREET
SUITE 2300
CINCINNATI, OHIO 45202

DESIGNED LNG | DRAWN JGC | CHECKED MJZ | REVIEWED RWB | DATE 02-22-11 | STRUCTURE FILE NUMBER 4401263 | REVISED

KY APPROACH - PARAPET DETAILS (1 OF 2)
BRIDGE NO. LAW-93-0000
IRONTON RUSSELL BRIDGE OVER OHIO RIVER

LAW-93-0.00
PID No. 81595

58/365

445/788

J:\Project\O\ODOT\15005112 Ironton Russell\LAW\81595\structures\LAW093_1111C\sheets\Kentucky Approach\093_0000_ra007.dgn - 4/29/2011 9:26:55 AM - john_corley

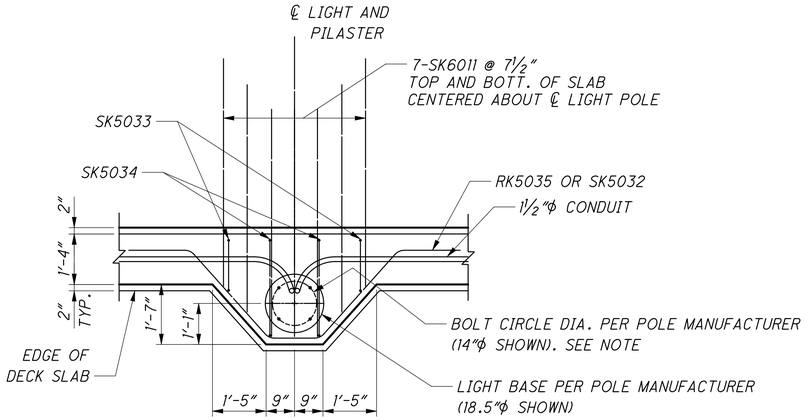

PLAN

NOTE:
CONFIRM ANCHOR BOLT REQUIREMENTS INCLUDING SIZE, BOLT CIRCLE DIAMETER, AND PROJECTION WITH CERTIFIED MANUFACTURER'S DRAWINGS.

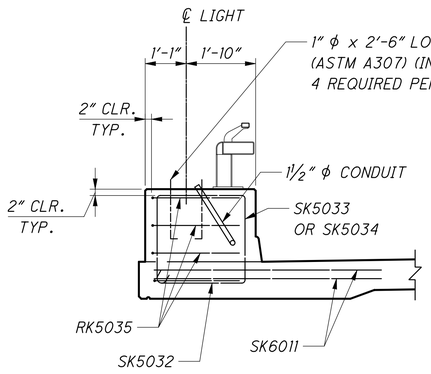

SECTION A-A

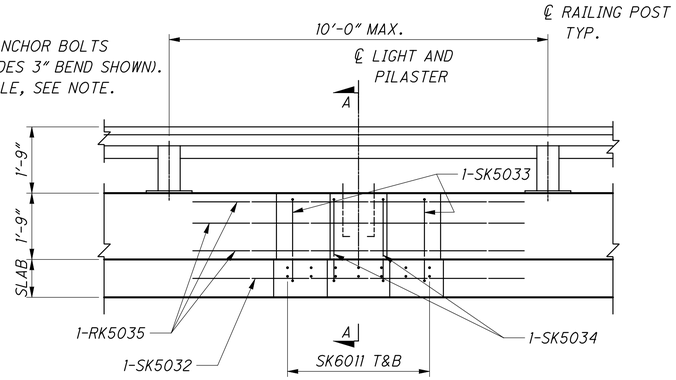

ELEVATION

LIGHT PILASTER DETAIL
(10 REQUIRED)

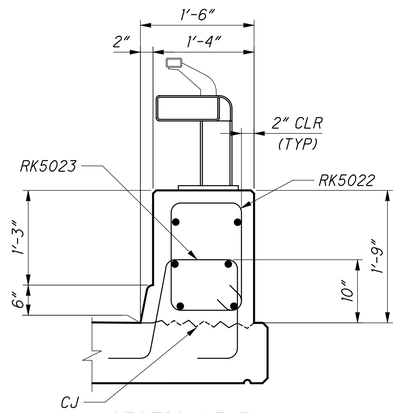

SECTION E-E
(TYPICAL PARAPET SECTION)
(KY APPROACH)

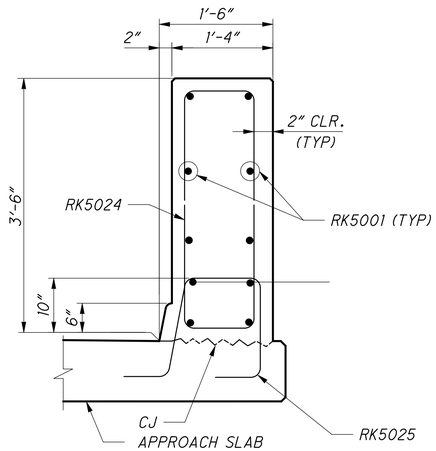

SECTION F-F

Link to RFI020 As-Built

J:\Project\O_ODOT\15005112 Ironton Russell\LAW\81595\structures\LAW093_1111C\sheets\Kentucky Approach\093_0000_ra009.dgn - 4/29/2011 9:26:57 AM - john_corley

DESIGN AGENCY
URS
36 EAST 7TH STREET
SUITE 2300
CINCINNATI, OHIO 45202

DESIGNED	DRAWN	REVIEWED	DATE
LNG	JGC	RWB	02-22-11
CHECKED	REVISED	STRUCTURE FILE NUMBER	
MJZ		4401263	

KY APPROACH - PARAPET DETAILS (2 OF 2)
BRIDGE NO. LAW-93-0000
IRONTON RUSSELL BRIDGE OVER OHIO RIVER

LAW-93-0.00
PID No. 81595

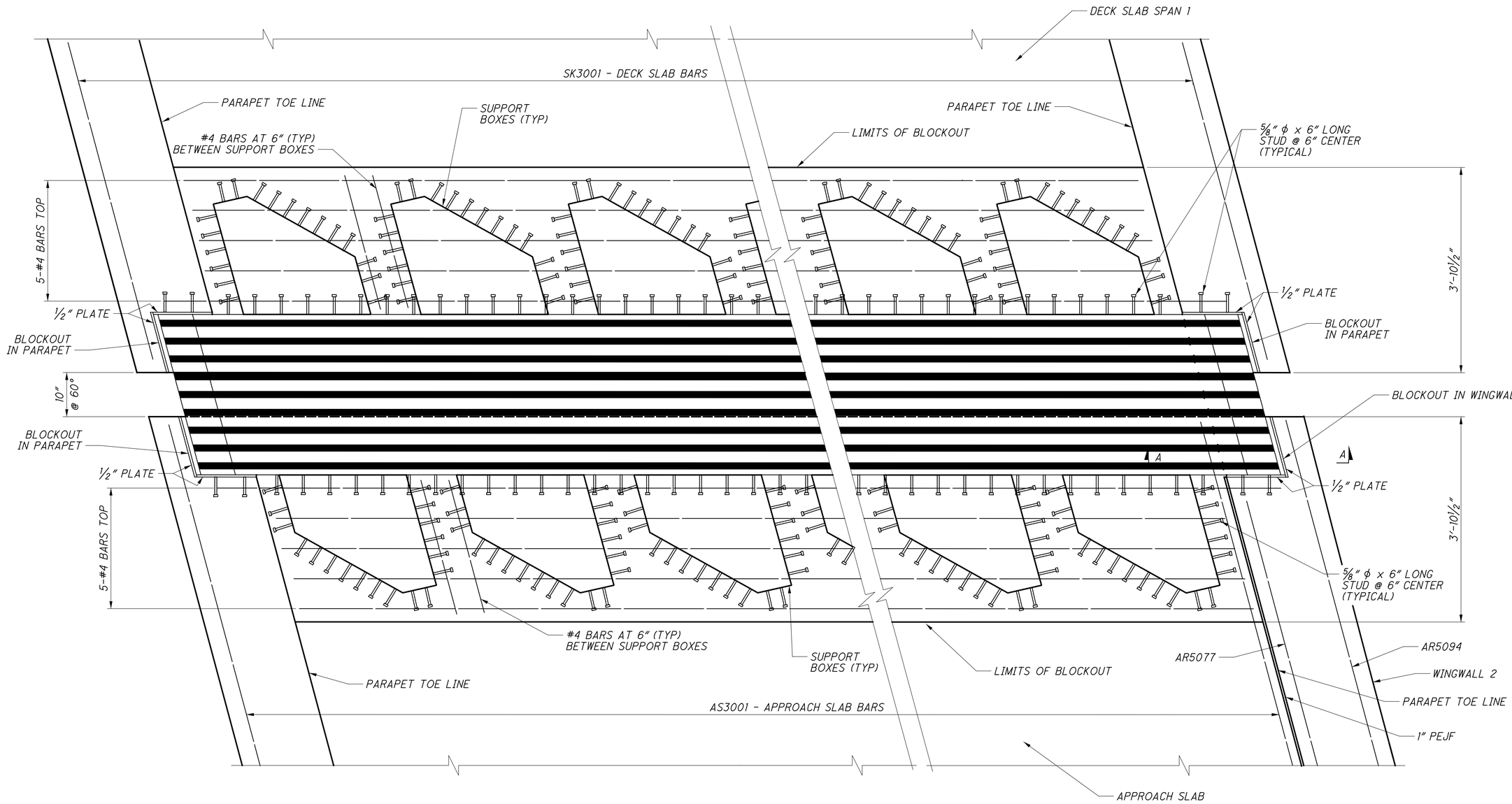

PLAN - MODULAR EXPANSION JOINT AT REAR ABUTMENT

NOTES

1. COST OF REINFORCEMENT PLACED INTO EXPANSION JOINT BLOCK-OUT SHALL BE CONSIDERED INCIDENTAL TO EXPANSION JOINT SYSTEM.
2. FOR SECTIONS THRU EXPANSION JOINT AND SECTION A-A, SEE SHEET 61 / 365
3. THE CONTRACTOR SHALL COORDINATE MODULAR EXPANSION JOINT BLOCK-OUT DIMENSIONS FOR MODULAR ASSEMBLY USED PRIOR TO POURING /CASTING OF CONCRETE.
4. REINFORCEMENT FROM DECK SPAN AND APPROACH SPAN SLAB MAY BE FIELD CUT OR BENT WHERE NECESSARY TO CLEAR SUPPORT BOXES, WITH APPROVAL OF ENGINEER.
5. 1/2" PLATES FORMING THE BLOCKOUT IN THE PARAPETS ARE A SUGGESTED DETAIL TO FASCILITATE CONSTRUCTION. THESE DETAILS ASSUME PARAPETS ARE CAST AFTER THE MODULAR JOINTS ARE INSTALLED. ALTERNATE DETAILS MAY BE USED WITH APPROVAL OF THE ENGINEER.
6. FOR DETAILS OF PARAPET SLIDING PLATES, SEE SHEET 58 / 365
7. THE MODULAR EXPANSION JOINT DESIGN SHALL INCLUDE ADDITIONAL MOVEMENTS AS PER AASHTO LRFD 14.5.6.9.2.
8. ALL LABOR, EQUIPMENT AND MATERIALS NECESSARY TO DESIGN, FABRICATE AND INSTALL THE MODULAR EXPANSION JOINT AS DETAILED HEREIN SHALL BE INCLUDED IN THE UNIT PRICE BID FOR ITEM 516, MODULAR EXPANSION JOINT (SEE SPECIAL PROVISIONS).

Link tot RFI110 As-Built

DESIGN AGENCY
URS
36 EAST 7TH STREET
SUITE 2300
CINCINNATI, OHIO 45202

DESIGNED	DRAWN	REVIEWED	DATE
LNG	JGC	RWB	02-22-11
CHECKED	REVISED	STRUCTURE FILE NUMBER	
MJZ		4401263	

KY APPROACH - EXPANSION JOINT REAR ABUTMENT (1 OF 2)
BRIDGE NO. LAW-93-0000
IRONTON RUSSELL BRIDGE OVER OHIO RIVER

LAW-93-0.00
PID No. 81595

60/365

447
788

J:\Project\OV\ODOT\15005112 Ironton Russell\LAW\81595\structures\LAW093_1111C\sheets\Kentucky Approach\093_0000_ex001.dgn - 10/10/2011 11:18:18 AM - jon_wanstrath

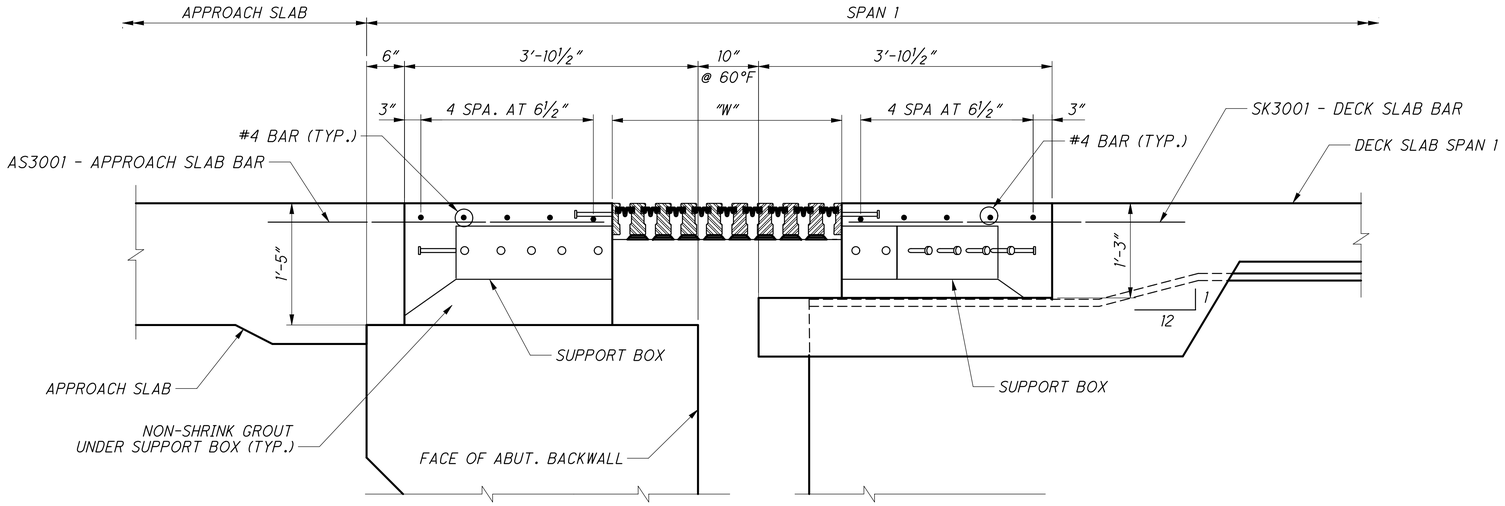

TYPICAL SECTION AT SUPPORT BOXES

(SHOWN NORMAL TO EXPANSION JOINT)

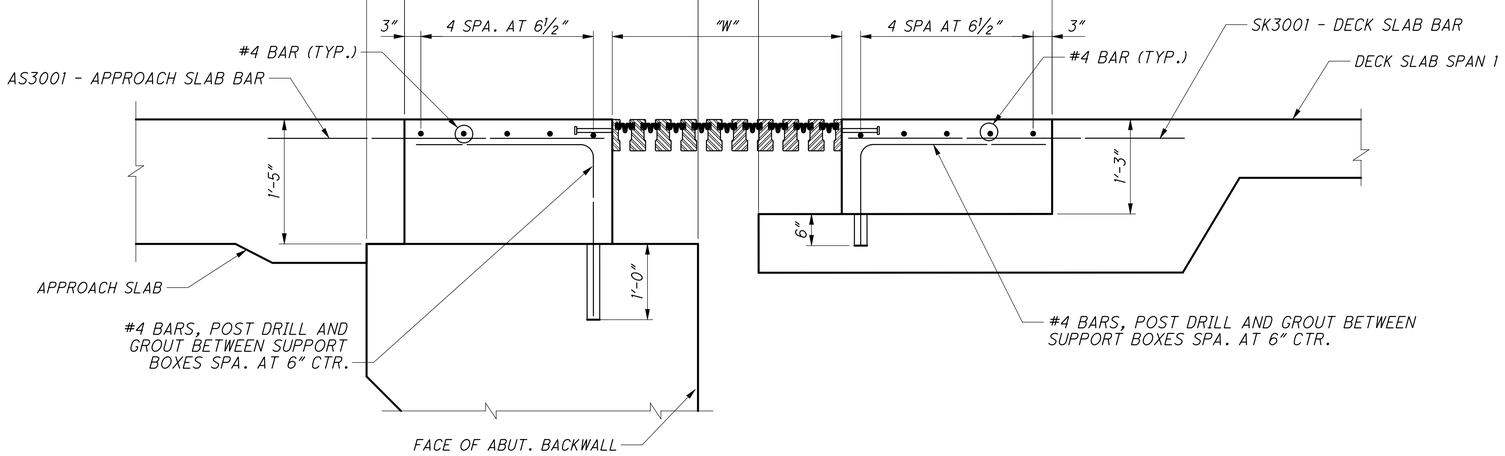

TYPICAL SECTION BETWEEN SUPPORT BOXES

(SHOWN NORMAL TO EXPANSION JOINT)

EXPANSION JOINT DATA				
DIMENSION "W" (IN)			TEMP. ADJUSTMENT (IN/10° F)	MIN. REQ'D SEAL MOVEMENT (IN)
AT 60° F	MIN.	MAX.		
2'-7"	1'-11"	4'-2"	1 7/16"	2'-2⅛"

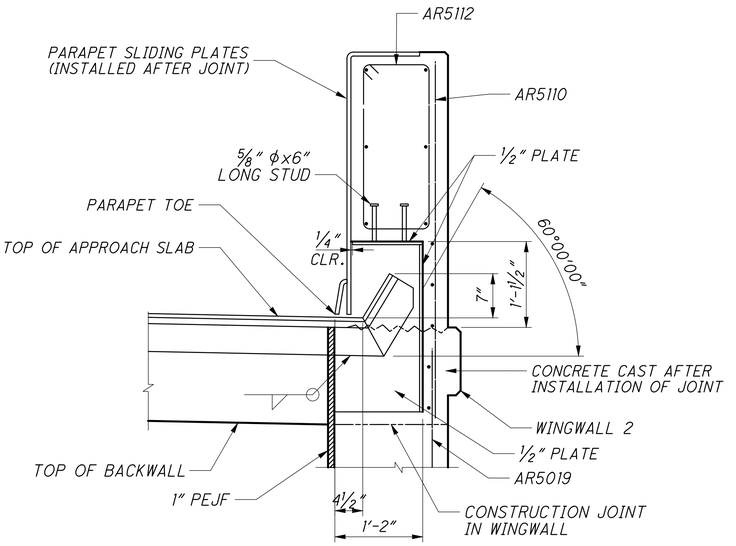

SECTION A-A

NOTE: SECTION A-A IS CUT THRU WINGWALL 2.
OTHER LOCATIONS ARE SIMILAR

NOTES

1. REINFORCEMENT FROM DECK SPAN AND APPROACH SPAN SLAB MAY BE FIELD CUT OR BENT WHERE NECESSARY TO CLEAR SUPPORT BOXES, WITH APPROVAL OF ENGINEER.
2. FOR DETAILS OF PARAPET SLIDING PLATES, SEE SHEET 58 / 365
3. COST OF REINFORCEMENT PLACED INTO EXPANSION JOINT BLOCK-OUT SHALL BE CONSIDERED INCIDENTAL TO EXPANSION JOINT SYSTEM.

J:\Project\0_ODOT\15005112 Ironton Russell\LAW\81595\structures\LAW093_1111C\sheets\Kentucky Approach\093_0000_ex002.dgn — 4/29/2011 9:27:02 AM — john_corley

DESIGN AGENCY
URS
36 EAST 7TH STREET
SUITE 2300
CINCINNATI, OHIO 45202

DESIGNED	DRAWN	REVIEWED	DATE
KS	JGC	RWB	02-22-11
CHECKED	REVISED	STRUCTURE FILE NUMBER	
BWJ		4401263	

KY APPROACH - EXPANSION JOINT REAR ABUTMENT (2 OF 2)
BRIDGE NO. LAW-93-0000
IRONTON RUSSELL BRIDGE OVER OHIO RIVER

LAW-93-0.00
PID No. 81595

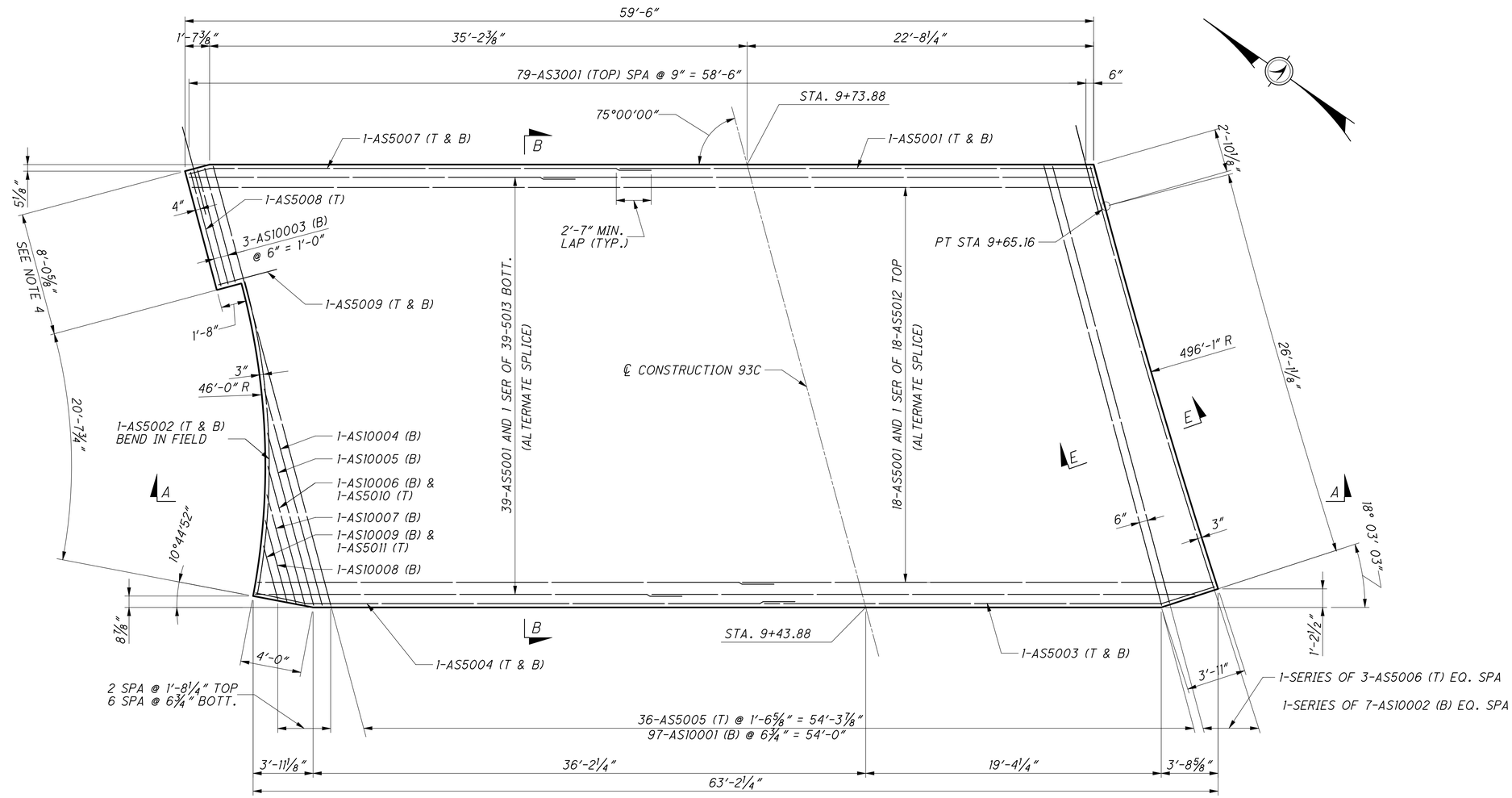

PLAN

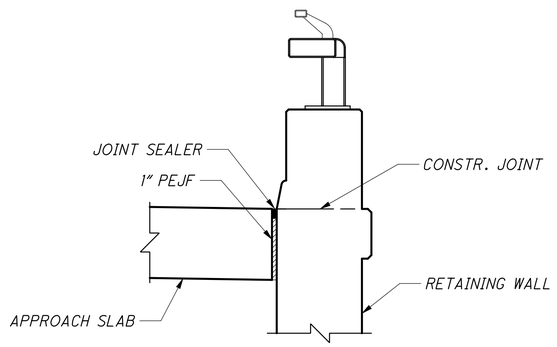

SECTION E-E

NOTES

1. FOR REINFORCING STEEL LIST, SEE SHEET 67/365.
2. FOR GENERAL NOTES SEE SHEETS 5/365 THRU 11/365
3. FOR SECTIONS A-A AND B-B, SEE SHEET 63/365.
4. FOR PARAPET DETAILS, SEE SHEETS 56/365 THRU 59/365

DESIGN AGENCY
URS
36 EAST 7TH STREET
SUITE 2300
CINCINNATI, OHIO 45202

DESIGNED	DRAWN	REVIEWED	DATE
BMV	BMV	RWB	02-22-11
CHECKED	REVISED	STRUCTURE FILE NUMBER	
MJZ		4401263	

KY APPROACH - APPROACH SLAB (1 OF 2)
BRIDGE NO. LAW-93-0000
IRONTON RUSSELL BRIDGE OVER OHIO RIVER

LAW-93-0.00
PID No. 81595

62/365

449
788

J:\Project\O\ODOT\15005112 Ironton Russell\LAW\81595\structures\LAW093_1111C\sheets\Kentucky Approach\093_0000_sd008.dgn — 4/29/2011 9:27:05 AM — john_corley

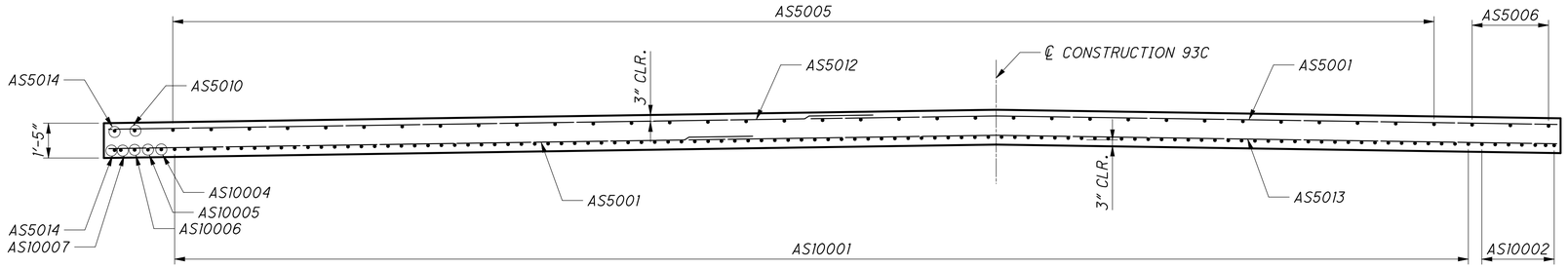

SECTION A-A

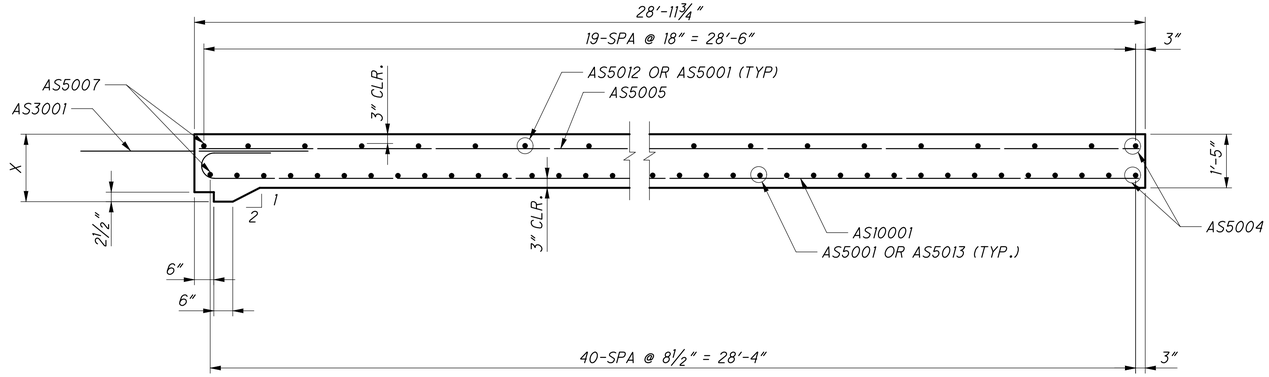

SECTION B-B

NOTES

1. FOR REINFORCING STEEL LIST, SEE SHEET 67/365 .
2. FOR GENERAL NOTES SEE SHEETS 5/365 THRU 11/365 .

J:\Project\O\ODOT\15005112 Ironton Russell\LAW\81595\structures\LAW093_1111C\sheets\Kentucky Approach\093_0000_sd009.dgn — 4/29/2011 9:27:07 AM — john_corley

DESIGN AGENCY
URS
36 EAST 7TH STREET
SUITE 2300
CINCINNATI, OHIO 45202

DESIGNED	DRAWN	REVIEWED	DATE
BMV	BMV	RWB	02-22-11
CHECKED	REVISED	STRUCTURE FILE NUMBER	
MJZ		4401263	

KY APPROACH - APPROACH SLAB (2 OF 2)
BRIDGE NO. LAW-93-0000
IRONTON RUSSELL BRIDGE OVER OHIO RIVER

LAW-93-0.00
PID No. 81595

63/365

450
788

MARK	NUMBER	LENGTH	WEIGHT	TYPE	DIMENSIONS						
					A	B	C	D	E	R	INC
KY APPROACH - ABUTMENT											
AR5001	17	22′-8″	402	STR							
AR5002	3	23′-3″	73	STR							
AR5003	23	25′-8″	616	STR							
AR5004	3	26′-6″	83	STR							
AR5005	32	28′-8″	957	STR							
AR5006	4	29′-6″	123	STR							
AR5007	19	6′-11″	137	1	1′-6″	5′-6″					
AR5008	19	7′-8″	152	19	1′-6″	2′-9″	5′-6″				
AR5009	15	12′-11″	202	1	1′-6″	11′-6″					
AR5010	15	14′-4″	224	19	1′-6″	5′-9″	11′-6″				
AR5011	1-SER OF 24	7′-0″ TO 7′-9″	185	STR							3/8″
AR5012	25	22′-9″	593	STR							
AR5013	33	20′-9″	714	STR							
AR5014	31	23′-8″	765	STR							
AR5015	22	6′-3″	143	1	10″	5′-6″					
AR5016	22	11′-3″	258	STR							
AR5017	1-SER OF 20	9′-9″ TO 14′-3″	250	STR							2 1/2″
AR5018	2	21′-6″	45	STR							
AR5019	2	9′-9″	20	STR							
AR5020	10	22′-7″	236	19	20′-11″	6″	1′-10″				
AR5021	11	20′-6″	235	STR							
AR5022	5	6′-0″	31	STR							
AR5023	5	4′-8″	24	STR							
AR5024	2	20′-8″	43	STR							
AR5025	24	40′-8″	1018	STR							
AR5026	42	13′-8″	599	2	2′-0″	9′-11″	2′-0″				
AR5027	2	35′-8″	74	STR							
AR5028	11	17′-2″	197	5	4′-8″	5′-0″	1′-6″				
AR5029	11	16′-2″	185	5	4′-8″	4′-6″	1′-6″				
AR5030	4	16′-5″	68	STR							
AR5031	2-SER OF 12	17′-4″ TO 27′-5″	560	STR							11″
AR5032	2	27′-5″	57	STR							
AR5033	4	26′-8″	111	STR							
AR5034	4	9′-8″	40	19	7′-8″	1′-5″	1′-5″				
AR5035	2	20′-3″	42	STR							
AR5036	2	3′-10″	8	STR							
AR5037	20	5′-9″	120	STR							
AR5038	4	7′-5″	31	19	5′-5″	1′-5″	1′-5″				
AR5039	1-SER OF 17	10′-1″ TO 16′-6″	236	STR							4 3/4″
AR5040	23	15′-7″	374	STR							
AR5041	2-SER OF 4	2′-0″ TO 12′-9″	62	STR							3′-7″
AR5042	2	17′-0″	35	STR							
AR5043	37	6′-3″	241	1	10″	5′-6″					
AR5044	37	10′-9″	415	STR							
AR5045	1-SER OF 7	5′-11″ TO 9′-8″	57	STR							7 1/2″
AR5046	3	5′-8″	18	STR							
AR5047	1-SER OF 15	5′-9″ TO 11′-7″	136	STR							5″

MARK	NUMBER	LENGTH	WEIGHT	TYPE	DIMENSIONS						
					A	B	C	D	E	R	INC
KY APPROACH - ABUTMENT CON'T.											
AR5048	29	35′-8″	1079	STR							
AR5049	2	6′-5″	13	STR							
AR5050	2	2′-10″	6	STR							
AR5051	2	14′-0″	29	STR							
AR5052	2-SER OF 3	5′-8″ TO 16′-6″	69	STR							5′-5″
AR5053	2	26′-7″	55	STR							
AR5054	34	11′-0″	390	STR							
AR5055	1-SER OF 17	6′-3″ TO 12′-10″	169	STR							5″
AR5056	8	12′-11″	108	STR							
AR5057	29	25′-10″	781	STR							
AR5058	2-SER OF 4	5′-10″ TO 20′-4″	109	STR							4′-10″
AR5059	2	26′-8″	56	19	25′-2″	1′-5″	5″				
AR5060	19	7′-8″	152	19	5′-8″	1′-5″	1′-5″				
AR5061	20	5′-8″	118	STR							
AR5062	2	7′-0″	15	1	2′-0″	5′-7″					
AR5063	23	30′-0″	720	STR							
AR5064	44	30′-10″	1415	STR							
AR5065	10	34′-4″	358	STR							
AR5066	23	34′-11″	838	1	3′-6″	31′-6″					
AR5067	23	8′-8″	208	STR							
AR5068	23	11′-6″	276	20	2′-10″	2′-10″	5′-7″	8″	1′-7″		
AR5069	12	16′-1″	201	2	6′-8″	3′-0″	6′-8″				
AR5070	11	8′-7″	98	1	1′-10″	6′-10″					
AR5071	8	31′-0″	259	STR							
AR5072	40	33′-7″	1401	STR							
AR5073	12	30′-11″	387	STR							
AR5074	11	9′-3″	106	9	5″	3′-3″	4′-4″	1′-11″			
AR5075	11	9′-3″	106	45	1′-11″	4′-1″	3′-3″	1′-1″			
AR5077	2	20′-3″	42	STR							
AR5078	102	7′-9″	824	1	10″	7′-0″					
AR5079	102	14′-10″	1578	STR							
AR5080	1-SER OF 22	6′-7″ TO 6′-11″	155	STR							3/16″
AR5081	25	11′-3″	293	STR							
AR5082	1-SER OF 25	5′-11″ TO 6′-7″	163	STR							3/8″
AR5083	24	10′-6″	263	1	10″	9′-9″					
AR5084	99	5′-4″	551 *	3	1′-0″	1′-5″					
AR5085	109	6′-10″	777 *	14	3′-0″	10 1/2″	3 1/2″	10 1/2″	2′-2″		
AR5086	11	8′-10″	101 *	3	1′-0″	3′-2″					
AR5087	1	8′-6″	9 *	3	1′-0″	3′-0″					
AR5088	1	7′-10″	8 *	3	10″	2′-10″					
AR5089	1	7′-2″	7 *	3	9″	2′-7″					
AR5090	1	6′-10″	7 *	3	8″	2′-6″					
AR5091	6	22′-9″	142 *	STR							
AR5092	2	20′-9″	43 *	STR							
AR5093	2	23′-8″	49 *	STR							
AR5094	3	21′-0″	66 *	STR							
AR5095	1	21′-5″	22 *	STR							

* INCLUDED WITH 517: RAILING MISC.: CONCRETE PARAPET WITH STEEL RAILS FOR PAYMENT.

NOTES

1. FOR CONTINUATION OF ABUTMENT BARS SEE SHEET 65/365 .

2. FOR STANDARD BAR BENDING DETAILS, SEE SHEETS 17/365 *THRU* 19/365 .

DESIGN AGENCY
URS
36 EAST 7TH STREET
SUITE 2300
CINCINNATI, OHIO 45202

DESIGNED BKL | DRAWN JGC | REVIEWED RWB | DATE 02-22-11
CHECKED MJZ | REVISED | STRUCTURE FILE NUMBER 4401263

KY APPROACH - REINFORCING STEEL LIST (1 OF 4)
BRIDGE NO. LAW-93-0000
IRONTON RUSSELL BRIDGE OVER OHIO RIVER

LAW-93-0.00
PID No. 81595

64/365

451/788

J:\Project\0_ODOT\15005112 Ironton Russell\LAW\81595\structures\LAW093_1111C\sheets\Kentucky Approach\093_0000_r1012.dgn - 4/29/2011 9:27:09 AM - john_corley

MARK	NUMBER	LENGTH	WEIGHT	TYPE	DIMENSIONS						
					A	B	C	D	E	R	INC
KY APPROACH - ABUTMENT CON'T.											
AR5096	2	4'-2"	9 *	19	2'-5"	1'-8"	8"				
AR5097	2	4'-2"	9 *	STR							
AR5098	7	6'-9"	49	9	1'-4"	3'-4"	1'-11"	1'-6"			
AR5099	4	7'-7"	32 *	STR							
AR5100	4	12'-9"	53 *	STR							
AR5101	4	12'-10"	54 *	STR							
AR5102	4	10'-4"	43 *	STR							
AR5103	2	4'-11"	10	STR							
AR5104	2	9'-10"	21	STR							
AR5105	2	14'-8"	31	STR							
AR5106	20	8'-3"	172	STR							
AR5107	2	5'-4"	11 *	STR							
AR5108	2	5'-9"	12 *	STR							
AR5109	2	6'-9"	14 *	2	3'-0"	1'-0"	3'-0"				
AR5110	3	5'-6"	17 *	STR							
AR5111	6	3'-6"	22 *	STR							
AR5112	3	6'-6"	20	3	2'-0"	1'-0"					
AR6001	61	8'-1"	741	6	1'-2"	2'-9"	1'-0"				
AR6002	71	10'-7"	1129	2	1'-6"	7'-11"	1'-6"				
AR6003	30	16'-9"	755	2	2'-7"	11'-11"	2'-7"				
AR6004	1-SER OF 46	9'-3" TO 10'-0"	665	STR							3/16"
AR6005	1-SER OF 42	6'-7" TO 6'-11"	426	STR							1/16"
AR6006	11	23'-8"	391	STR							
AR6007	25	10'-4"	388	1	1'-0"	9'-6"					
AR6008	1-SER OF 48	8'-2" TO 8'-10"	613	STR							1/16"
AR6009	28	8'-0"	336	1	1'-0"	7'-2"					
AR6010	1-SER OF 20	14'-6" TO 18'-6"	496	STR							2 1/2"
AR6012	12	22'-7"	407	19	20'-11"	6"	1'-10"				
AR6013	12	21'-3"	383	STR							
AR6014	46	20'-8"	1428	STR							
AR6015	42	13'-7"	857	2	2'-0"	9'-11"	2'-0"				
AR6016	81	8'-1"	983	6	1'-2"	2'-9"	1'-0"				
AR6017	33	16'-7"	822	2	2'-6"	11'-11"	2'-6"				
AR6018	17	8'-0"	204	1	1'-0"	7'-2"					
AR6019	17	12'-1"	309	STR							
AR6020	1-SER OF 32	4'-4" TO 10'-9"	362	STR							2 1/2"
AR6021	21	15'-7"	492	STR							
AR6022	1-SER OF 20	8'-1" TO 12'-0"	302	STR							2 1/2"
AR6023	8	8'-0"	96	STR							
AR6024	1-SER OF 44	8'-0" TO 13'-10"	721	STR							1 5/8"
AR6025	32	9'-7"	461	1	1'-0"	8'-9"					
AR6027	12	15'-2"	273	STR							
AR6028	9	25'-10"	349	STR							
AR6029	4	7'-8"	46	19	5'-8"	1'-5"	1'-5"				

MARK	NUMBER	LENGTH	WEIGHT	TYPE	DIMENSIONS						
					A	B	C	D	E	R	INC
KY APPROACH - ABUTMENT CON'T.											
AR6030	5	5'-8"	43	STR							
AR6031	2	6'-11"	21	2	1'-6"	2'-7"	3'-2"				
AR6032	40	24'-4"	1462	STR							
AR6033	6	33'-4"	300	19	31'-10"	5"	1'-6"				
AR6034	46	40'-0"	2764	STR							
AR6035	46	31'-8"	2188	STR							
AR6036	6	5'-6"	50	STR							
AR6037	89	9'-7"	1281	2	1'-6"	5'-11"	2'-6"				
AR6038	80	6'-9"	811	19	4'-0"	2'-0"	2'-0"				
AR6039	91	22'-7"	3087	2	10'-9"	1'-5"	10'-9"				
AR6040	89	13'-0"	1738	12	3'-11"	3'-11"	1'-4"	3'-11"	2'-6"		
AR6042	11	12'-7"	208	STR							
AR6045	1-SER OF 49	8'-6" TO 15'-1"	868	STR							1 3/4"
AR6046	8	18'-6"	222	STR							
AR6047	16	8'-2"	196	19	6'-6"	6"	1'-10"				
AR6048	1	18'-3"	27	19	16'-7"	6"	1'-10"				
AR6049	1	16'-7"	25	STR							
AR6050	1	13'-5"	20	19	11'-9"	6"	1'-10"				
AR6051	1	11'-9"	18	STR							
AR6052	1	8'-5"	13	19	6'-9"	6"	1'-10"				
AR6053	1	6'-9"	10	STR							
AR6054	6	21'-5"	193	19	19'-9"	1'-8"	4"				
AR7001	80	13'-7"	2221	2	2'-0"	9'-11"	2'-0"				
AR7002	59	16'-7"	2000	2	2'-6"	11'-11"	2'-6"				
AR7003	46	9'-4"	878	2	2'-0"	6'-6"	1'-2"				
AR7004	42	7'-2"	615	1	1'-2"	6'-2"					
AR7005	42	10'-1"	866	1	2'-0"	8'-3"					
AR7006	1-SER OF 36	5'-11" TO 9'-11"	583	1	2'-2"	3'-11" TO 7'-11"					2 1/8"
AR7007	33	16'-7"	1119	2	2'-6"	11'-11"	2'-6"				
AR7008	2-SER OF 9	12'-8" TO 16'-4"	533	2	2'-6"	8'-0" TO 11'-8"	2'-6"				5 1/2"
AR7009	2-SER OF 11	5'-4" TO 9'-11"	343	1	2'-6"	3'-0" TO 7'-7"					5 1/2"
AR7010	12	14'-2"	347	2	2'-6"	9'-6"	2'-6"				
AR7011	32	12'-6"	818	1	2'-1"	10'-7"					
AR7012	72	7'-2"	1055	1	1'-2"	6'-2"					
AR7013	72	9'-8"	1423	1	2'-1"	7'-9"					
AR7014	56	9'-5"	1078	2	1'-2"	5'-6"	3'-1"				
AR7015	60	12'-6"	1533	1	2'-1"	10'-7"					
AR7016	158	17'-4"	5598	2	1'-6"	14'-8"	1'-6"				
AR7017	8	14'-10"	243	1	1'-6"	13'-6"					
AR7018	1-SER OF 7	2'-10" TO 14'-1"	121	1	1'-6"	2'-3" TO 13'-3"					1'-10 1/2"

* INCLUDED WITH 517: RAILING MISC.: CONCRETE PARAPET WITH STEEL RAILS FOR PAYMENT.

Link to RFI046 As-Built

NOTES

1. FOR CONTINUATION OF ABUTMENT BARS SEE SHEET 66/365 .

2. FOR STANDARD BAR BENDING DETAILS, SEE SHEETS 17/365 *THRU* 19/365 .

DESIGN AGENCY
URS
36 EAST 7TH STREET
SUITE 2300
CINCINNATI, OHIO 45202

DESIGNED BKL | DRAWN JGC | REVIEWED RWB | DATE 02-22-11

CHECKED MJZ | REVISED

STRUCTURE FILE NUMBER 4401263

KY APPROACH - REINFORCING STEEL LIST (2 OF 4)

BRIDGE NO. LAW-93-0000

IRONTON RUSSELL BRIDGE OVER OHIO RIVER

LAW-93-0.00

PID No. 81595

J:\Project\O_ODOT\15005112 Ironton Russell\LAW\81595\structures\LAW093_1111C\sheets\Kentucky Approach\093_0000_r1013.dgn - 4/29/2011 9:27:12 AM - john_corley

MARK	NUMBER	LENGTH	WEIGHT	TYPE	DIMENSIONS						
					A	B	C	D	E	R	INC
KY APPROACH - ABUTMENT CON'T.											
AR7019	1-SER OF 9	5'-3" TO 15'-3"	189	1	1'-6"	3'-11" TO 13'-11"					1'-3"
AR7020	2	11'-10"	48	STR							
AR7021	48	10'-1"	989	2	3'-0"	6'-3"	1'-2"				
AR7022	48	12'-8"	1243	1	2'-0"	10'-10"					
AR7023	42	21'-4"	1831	2	3'-6"	14'-8"	3'-6"				
AR8001	39	11'-5"	1189	1	1'-4"	10'-3"					
AR8002	1-SER OF 39	14'-3" TO 18'-2"	1688	1	3'-0"	11'-4" TO 15'-4"					1¼"
AR8003	32	11'-5"	975	1	1'-4"	10'-3"					
AR8004	32	11'-11"	1018	1	3'-1"	9'-1"					
AR8005	126	11'-5"	3841	1	1'-4"	10'-3"					
AR8006	7	15'-7"	291	STR							
AR8007	119	15'-1"	4792	STR							
AR8008	2	13'-1"	70	1	1'-4"	11'-11"					
AR8009	40	9'-3"	988	20	1'-0"	1'-0"	6'-6"	1'-0"	1'-0"		
AR9001	42	21'-2"	3023	2	3'-6"	14'-8"	3'-6"				
AR9002	158	21'-2"	11371	2	3'-6"	14'-8"	3'-6"				
AR9003	8	16'-9"	456	1	3'-6"	13'-6"					
AR9004	1-SER OF 7	5'-6" TO 16'-6"	262	1	3'-6"	2'-3" TO 13'-3"					1'-8"
AR9005	1-SER OF 9	7'-2" TO 17'-2"	372	1	3'-6"	3'-11" TO 13'-11"					1'-3"
		TOTAL=	110328								
KY APPROACH - DRILLED SHAFTS (INCLUDED IN DRILLED SHAFTS FOR PAYMENT)											
SP4001	3	42'-10"	2201	27	4 1/2"	5'-6"	42'-10"				
DS14001	66	42'-10"	21627	STR							
SP4003	12	26'-6"	5403	27	4 1/2"	3'-0"	26'-6"				
DS9001	180	29'-7"	18105	1	1'-7"	28'-3"					
		TOTAL =	47336								

MARK	NUMBER	LENGTH	WEIGHT	TYPE	DIMENSIONS						
					A	B	C	D	E	R	INC
KY APPROACH - PIER 1											
PA4001	588	5'-5"	2128	38	4'-3"						
PA4002	14	5'-7"	52	2	8"	4'-5"	8"				
SP4002	3	30'-0"	3984	27	9"	4'-3"	30'-0"				
PA5001	44	13'-8"	627	2	4'-9"	4'-5"	4'-9"				
PA5002	2 SER OF 32	18'-7" TO 26'-9"	1513	3	3'-2"	5'-10" TO 9'-11"					3 3/16"
PA5003	12	27'-3"	341	3	3'-2"	10'-2"					
PA5004	2 SER OF 32	19'-5" TO 27'-7"	1569	3	3'-2"	6'-3" TO 10'-4"					3 3/16"
PA6001	84	30'-0"	3785	STR							
PA6002	84	12'-5"	1567	24	4'-3"	2'-11"					2'-0 3/4"
PA6003	4 SER OF 5	21'-5" TO 29'-10"	770	STR							2'-1 1/4"
PA6004	28	31'-4"	1318	STR							
PA6005	6	37'-8"	339	STR							
PA8001	8	34'-5"	735	STR							
PA8002	16	22'-7"	965	13	5'-0"	11'-11"	4'-3"	5'-0"			
PA9001	66	30'-0"	6732	STR							
PA9002	102	40'-3"	13959	STR							
PA11001	6	29'-5"	938	1	24'-9"	5'-0"					
PA11002	5	39'-5"	1047	1	34'-9"	5'-0"					
PA11003	11	28'-3"	1651	STR	29'-9"						
PA11004 △1	6	39'-5"	1257	△1 37		5'-0"	34'-9"				
PA11005	5	29'-5"	781	37		5'-0"	24'-9"				
PA11006	11	31'-3"	1826	36	29'-9"						
		TOTAL=	47884	△1							
BALLAST DIAPHRAGM											
DK4001	120	10'-0"	802	ST							
DK4002	110	13'-7"	998	2	3'-3"	7'-3"	3'-3"				
		TOTAL=	1800								

NOTES

1. FOR STANDARD BAR BENDING DETAILS, SEE SHEETS 17/365 THRU 19/365.

NO.	REVISIONS	DATE	REV. BY
1	QUANTITIES REVISED	6/12	BKL

DESIGN AGENCY
URS
35 EAST 7TH STREET
SUITE 2300
CINCINNATI, OHIO 45202

DESIGNED BKL | DRAWN JGC | REVIEWED RWB | DATE 02-22-11
CHECKED MJZ | REVISED | STRUCTURE FILE NUMBER 4401263

KY APPROACH - REINFORCING STEEL LIST (3 OF 4)
BRIDGE NO. LAW-93-0000
IRONTON RUSSELL BRIDGE OVER OHIO RIVER

LAW-93-0.00
PID No. 81595

66/365

453
788

J:\Project\O\ODOT\15005112 Ironton Russell\LAW\81595\structures\LAW093_1111C\sheets\Kentucky Approach\093_0000_r1014.dgn - 6/1/2012 8:30:30 AM - jon_wanstrath

MARK	NUMBER	LENGTH	WEIGHT	TYPE	DIMENSIONS						
					A	B	C	D	E	R	INC
KY APPROACH - DECK SLAB											
SK3001	66	5′-7″	139	STR							
SK4001	816	30′-0″	16353	STR							
SK4002	68	15′-0″	681	STR							
SK4003	1613	7′-6″	8081	2	4′-9″	8″	2′-3″				
SK4004	1 SER OF 68	20′-6″ TO 34′-9″	1255	STR							2 ½″
SK4005	16	3′-0″	32	STR							
SK5001	816	30′-0″	25533	STR							
SK5002	68	21′-5″	1519	STR							
SK5003	1146	40′-0″	47811	STR							
SK5004	1146	21′-7″	25798	STR							
SK5005	2-SER OF 16	4′-4″ TO 29′-8″	567	STR							1′-8 ¼″
SK5006	2-SER OF 16	4′-4″ TO 28′-8″	551	STR							1′-7 ½″
SK5007	32	30′-0″	1001								
SK5008	1-SER OF 68	23′-0″ TO 37′-2″	2134	STR							2 ½″
SK5010	440	30′-0″	13768	STR							
SK5011	2-SER OF 220	12′-3″ TO 31′-7″	10058	STR							1″
SK5015	78	7′-9″	630	3	1′-6″	2′-1″					
SK5016	72	2′-9″	207	2	1′-2″	8″	1′-2″				
SK5017	10	23′-0″	240	STR							
SK5018	10	19′-0″	198	STR							
SK5022	66	4′-6″	310	2	2′-6″	1′-6″	9″				
SK5023	19	30′-0″	595	STR							
SK5024	19	34′-0″	674	STR							
SK5032	10	9′-6″	99	21	1′-4″	1′-10″	1′-6″	2′-1″			
SK5033	20	7′-9″	162	3	2′-1″	1′-6″					
SK5034	20	9′-11″	207	3	2′-1″	2′-7″					
SK6001	268	30′-0″	12076	STR							
SK6002	68	11′-3″	1149	63	4′-6″	5″	4′-8″	1′-6″	1′-6″		
SK6003	78	6′-4″	742	63	2′-0″	5″	2′-3″	1′-6″	1′-6″		
SK6004	2	9′-9″	29	2	2′-6″	1′-7″	6′-0″				
SK6011	140	6′-0″	1262	STR							
		TOTAL=	173,861								
KY APPROACH - APPROACH SLAB											
AS3001	79	6′-0″	178	STR							
AS5001	59	30′-0″	1846	STR							
AS5002	2	20′-9″	43	STR							
AS5003	2	31′-7″	66	19	28′-0″	3′-5″	1′-1″				
AS5004	2	33′-11″	71	19	30′-7″	3′-4″	7″				
AS5005	36	29′-6″	1108	STR							
AS5006	1 SER OF 3	28′-8″ TO 29′-5″	91	STR							4½″
AS5007	2	30′-10″	64	19	29′-5″	1′-4″	4″				
AS5008	1	7′-6″	8	STR							
AS5009	2	5′-0″	10	STR							
AS5010	1	9′-4″	10	STR							
AS5011	1	3′-7″	4	STR							
AS5012	1 SER OF 18	31′-4″ TO 35′-2″	624	STR							2¾″

MARK	NUMBER	LENGTH	WEIGHT	TYPE	DIMENSIONS						
					A	B	C	D	E	R	INC
KY APPROACH - APPROACH SLAB CON'T.											
AS5013	1 SER OF 39	31′-4″ TO 35′-2″	1353	STR							1/8″
AS10001	97	30′-11″	12904	16	29′-6″						
AS10002	1-SER OF 7	30′-1″ TO 30′-10″	917	16	28′-8″ TO 29′-5″						1½″
AS10003	3	7′-6″	97	STR							
AS10004	1	14′-7″	63	STR							
AS10005	1	11′-7″	50	STR							
AS10006	1	9′-4″	40	STR							
AS10007	1	7′-3″	31	STR							
AS10008	1	5′-5″	23	STR							
AS10009	1	3′-7″	15	STR							
		TOTAL=	19616								
KY APPROACH - PARAPETS (INCLUDED IN CONCRETE PARAPET WITH STEEL RAILING FOR PAYMENT)											
RK5001	10	7′-8″	80	STR							
RK5002	3	3′-8″	11	STR							
RK5003	1	8′-6″	9	3	1′-0″	3′-0″					
RK5004	6	8′-4″	52	3	10″	3′-1″					
RK5005	2	3′-8″	8	STR							
RK5006	2	3′-3″	7	STR							
RK5007	1	17′-2″	18	STR							
RK5008	2	16′-10″	35	STR							
RK5009	52	30′-0″	1627	STR							
RK5010	4	12′-3″	51	STR							
RK5011	128	16′-8″	2225	STR							
RK5012	4	16′-9″	70	STR							
RK5013	32	13′-2″	439	STR							
RK5014	4	17′-1″	71	STR							
RK5015	1	20′-10″	22	STR							
RK5016	2	21′-3″	44	STR							
RK5017	6	8′-4″	52	30	10″	10″	3′-2″	3′-2″			
RK5018	3	6′-2″	19	STR							
RK5019	9	6′-2″	58	3	10″	2′-0″					
RK5020	4	16′-6″	69	STR							
RK5022	861	5′-4″	4789	3	1′-0″	1′-5″					
RK5023	865	5′-9″	5188	39	1′-6″	1′-4″	6″	10 1/2″	10″		
RK5024	18	8′-10″	166	3	1′-0″	3′-2″					
RK5025	12	5′-10″	73	30	10″	1′-0″	1′-10″	1′-10″			
RK5026	1	7′-10″	8	3	10″	2′-10″					
RK5027	1	5′-8″	6	30	10″	10″	1′-10″	1′-10″			
RK5028	1	7′-0″	7	3	8″	2′-7″					
RK5029	1	5′-6″	6	30	10″	8″	1′-10″	1′-10″			
RK5030	1	6′-8″	7	3	7″	2′-6″					
RK5031	1	5′-5″	6	30	10″	7″	1′-10″	1′-10″			
RK5032	2	5′-3″	11	STR							
RK5033	2	5′-8″	12	STR							
RK5034	6	5′-8″	35	1	10″	4′-11″					
RK5035	30	9′-6″	297	21	1′-4″	1′-10″	1′-6″	2′-1″			
RK5036	5	7′-6″	39	30	10″	10″	2′-9″	2′-9″			
RK5037	5	4′-1″	21	STR							
RK5038	2	2′-5″	5	STR							
RK5039	1	15′-4″	16	STR							
RK5040	1	19′-8″	16	STR							
		TOTAL	15675								

NOTES

1. FOR STANDARD BAR BENDING DETAILS, SEE SHEETS 17/365 *THRU* 19/365.

DESIGN AGENCY
URS
36 EAST 7TH STREET
SUITE 2300
CINCINNATI, OHIO 45202

DESIGNED	DRAWN	REVIEWED	DATE
BKL	JGC	RWB	02-22-11
CHECKED	REVISED	STRUCTURE FILE NUMBER	
MJZ		4401263	

KY APPROACH - REINFORCING STEEL LIST (4 OF 4)
BRIDGE NO. LAW-93-0000
IRONTON RUSSELL BRIDGE OVER OHIO RIVER

LAW-93-0.00
PID No. 81595

67/365

454
788

J:\Project\0\ODOT\15005112 Ironton Russell\LAW\81595\structures\LAW093_1111C\sheets\Kentucky Approach\093_0000_r1011.dgn - 4/29/2011 9:27:17 AM - john_corley

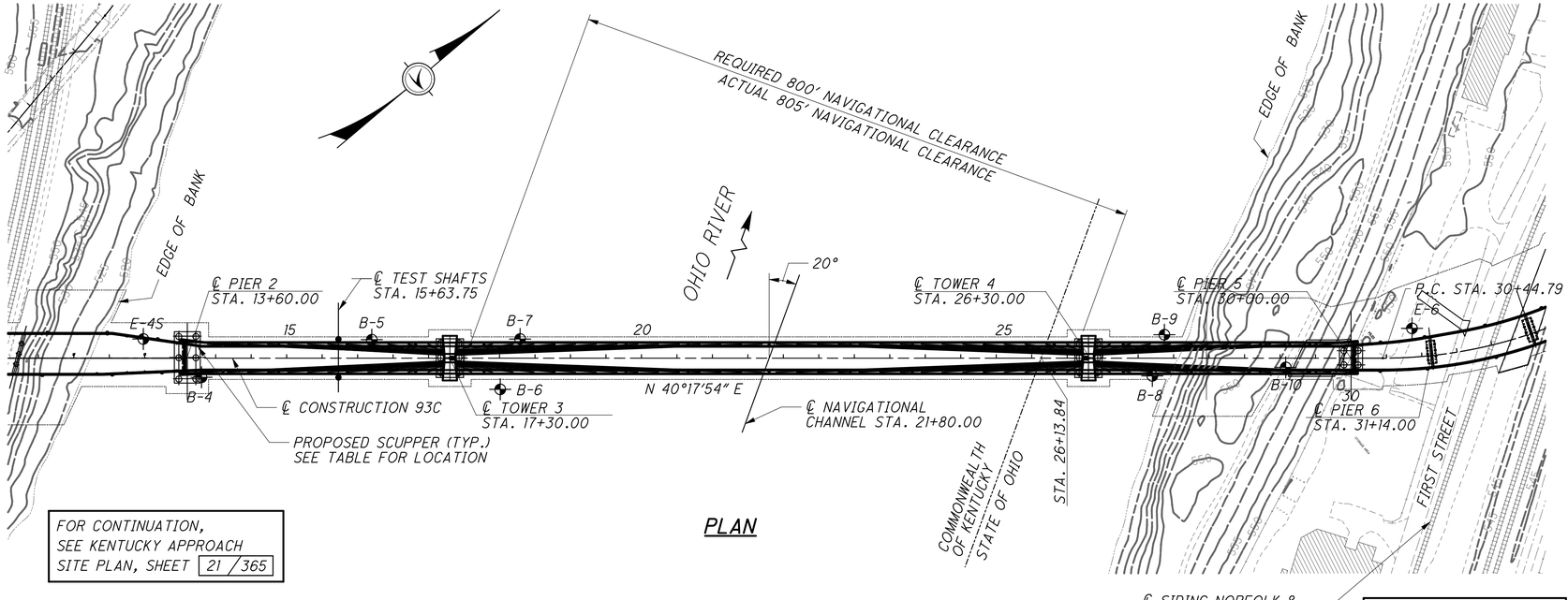

FOR CONTINUATION, SEE KENTUCKY APPROACH SITE PLAN, SHEET 21 / 365

FOR CONTINUATION, SEE OHIO APPROACH SITE PLAN, SHEET 307 / 365

PLAN

HYDRAULIC DATA

DRAINAGE AREA = 61,000 SQ. MILES
Q (100) = 587000 CFS V (100) = 6.34 FT/S
STRUCTURE CLEARS THE 100 YEAR
DESIGN HW BY 45.6 FEET.

NOTES

1. FOR ADDITIONAL NOTES, BENCHMARKS AND VERTICAL PROFILE, SEE SHEET 4 / 365

LEGEND

⊕ BORING LOCATION
T/ROCK = PROBABLE TOP OF FIRM ROCK

PROPOSED MAIN SPAN STRUCTURE

TYPE: THREE SPAN CABLE STAYED WITH CONCRETE EDGE GIRDERS AND REINFORCED CONCRETE DELTA SHAPED TOWERS.
SPANS: 370'-0", 900'-0" & 370'-0" MEASURED C/C PIERS.
ROADWAY: 32'-0" MEASURED TOE/TOE OF DEFLECTOR PARAPET
LOADING: HL-93
WEARING SURFACE: 1¼" MIN, MICRO-SILICA MODIFIED CONCRETE OVERLAY
SKEW: NONE
ALIGNMENT: TANGENT
CROWN: 0.016 FT/FT TO SUPERELEVATION TRANSITION

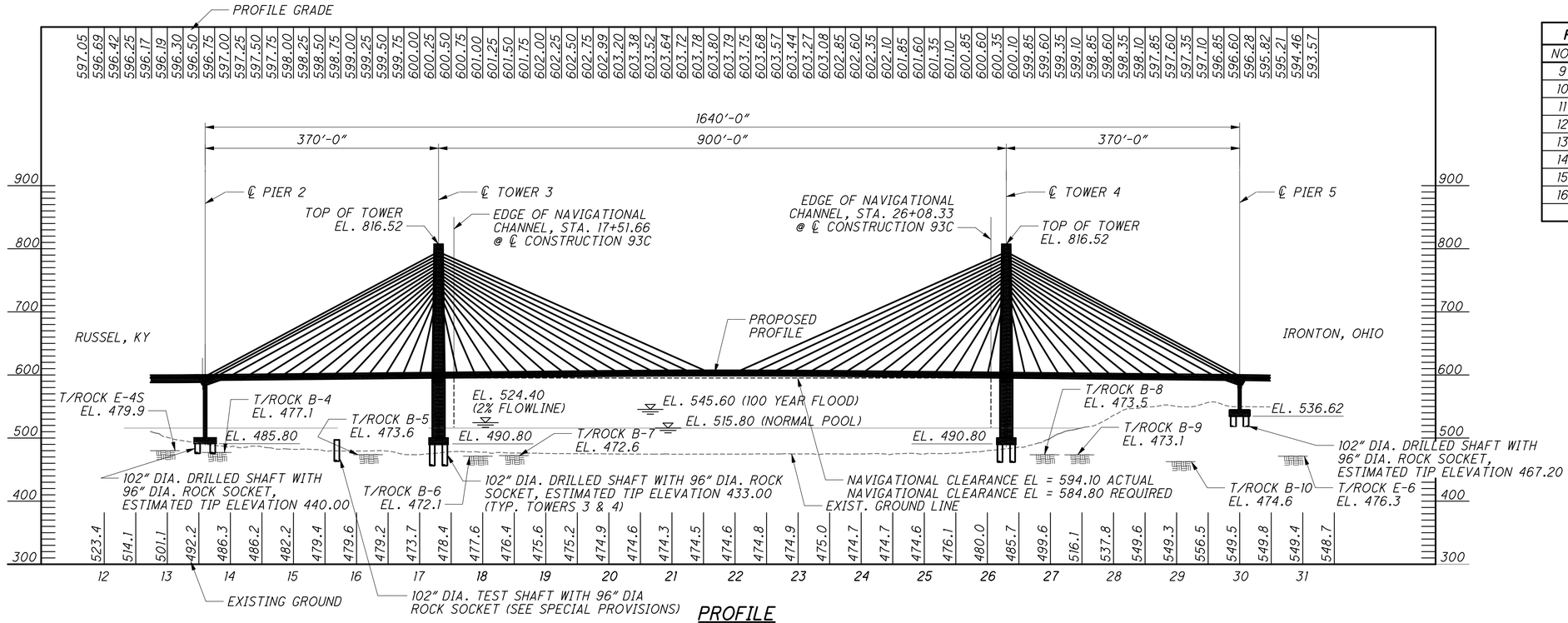

PROFILE

PROPOSED SCUPPER LOCATIONS

NO.	STATION	SHOULDER
9	13+75.00	LEFT
10	17+20.00	LEFT
11	17+20.00	RIGHT
12	26+20.00	RIGHT
13	26+40.00	LEFT
14	26+40.00	RIGHT
15	29+90.00	RIGHT
16	29+95.00	RIGHT

DESIGN AGENCY
URS
36 EAST 7TH STREET
SUITE 2300
CINCINNATI, OHIO 45202

DESIGNED	DRAWN	REVIEWED	DATE
DEJ	GJW	BKL	7-08
CHECKED	REVISED	STRUCTURE FILE NUMBER	
MJZ		4401263	

GREENUP COUNTY, KY
LAWRENCE COUNTY, OH
STA. 9+73.88
STA. 35+90.50

MAIN SPAN SITE PLAN
BRIDGE NO. LAW-93C-0000
IRONTON RUSSELL BRIDGE OVER OHIO RIVER

LAW-93C-0.00
PID No. 81595

68 / 365

455 / 788

J:\Project\O_ODOT\15005112 Ironton Russell\LAW\81595\structures\LAW093_1111C\sheets\093_0000_gp002.dgn - 4/29/2011 9:27:23 AM - john_corley

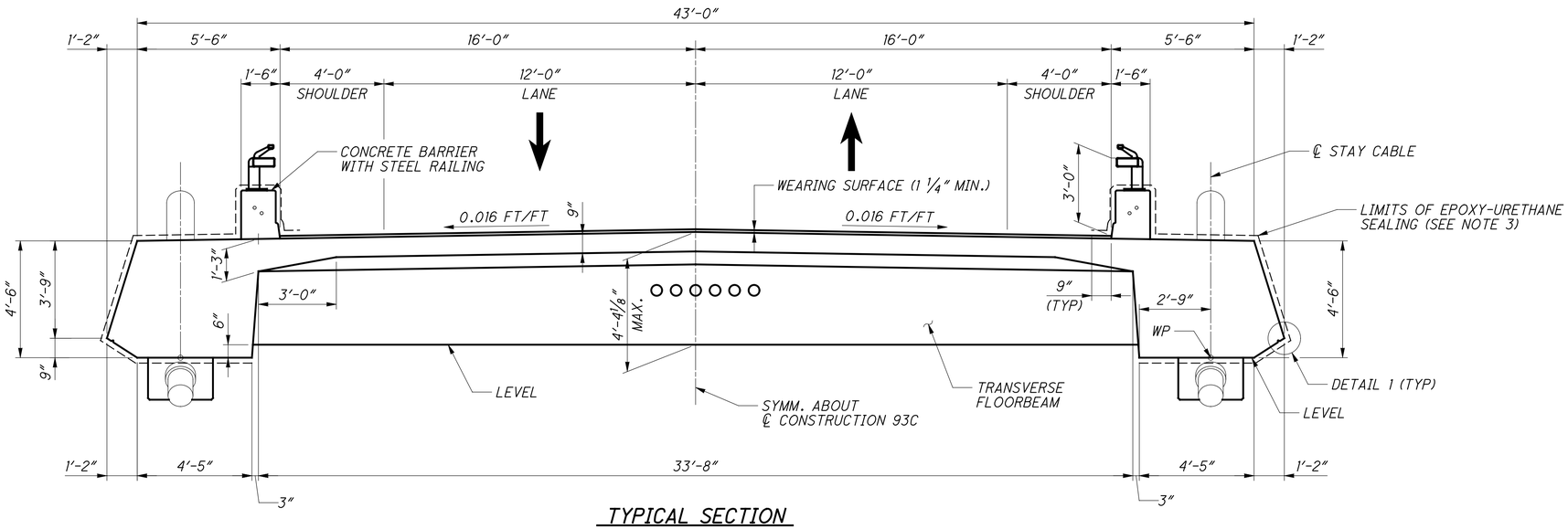

TYPICAL SECTION

(SEGMENTS B2 THRU B27, M2 THRU M30, KY PIER TABLE, OH PIER TABLE, AND CLOSURE POUR AT MAINSPAN)

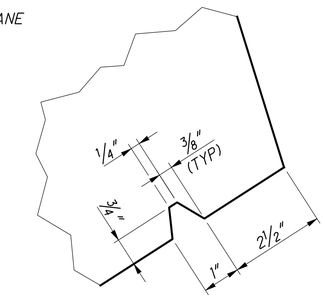

DETAIL 1

NOTES

1. FOR SUPERSTRUCTURE GEOMETRY FOR KENTUCKY DIAPHRAGM SEGMENT, SEE SHEET NO. 194/365 TO 197/365.
2. FOR SUPERSTRUCTURE GEOMETRY FOR OHIO DIAPHRAGM SEGMENT, SEE SHEET NO. 209/365 TO 212/365.
3. LIMITS OF EPOXY-URETHANE SEALING SHALL EXTEND ACCROSS ENTIRE MAIN SPAN UNIT (FROM KY DIAPHRAGM TO OH DIAPHRAGM).

DESIGN AGENCY
URS
36 EAST 7TH STREET
SUITE 2300
CINCINNATI, OHIO 45202

DESIGNED	DRAWN	REVIEWED	DATE
BWJ	CER	DLJ	6/2010
CHECKED	REVISED	STRUCTURE FILE NUMBER	
ASM		4401263	

CABLE STAYED SUPERSTRUCTURE GEOMETRY
BRIDGE NO. LAW-93-0000
IRONTON RUSSELL BRIDGE OVER OHIO RIVER

LAW-93-0.00
PID No. 81595

69/365

456
788

E:\Bridges_XM\Ironton_Russell\LAW\81595\structures\LAW093_0000C\sheets\093_0000CSD001.dgn 4/25/2011 10:11:29 AM john_stahl

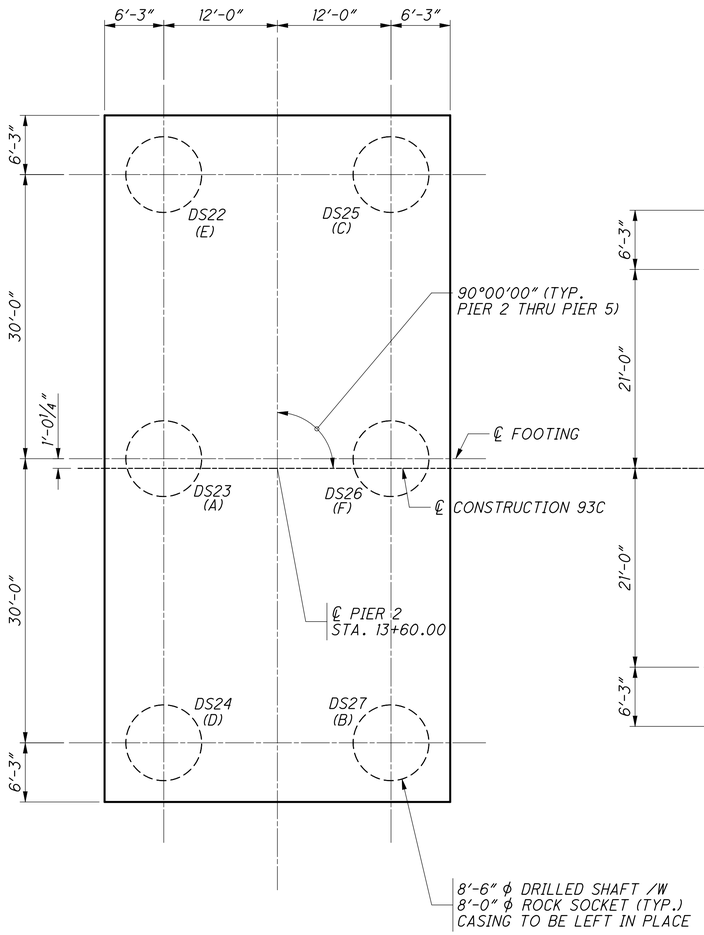

PIER 2

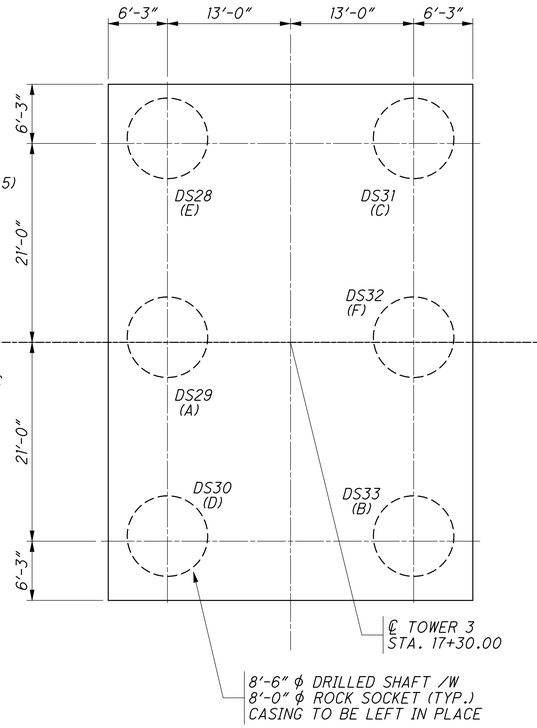

TOWER 3

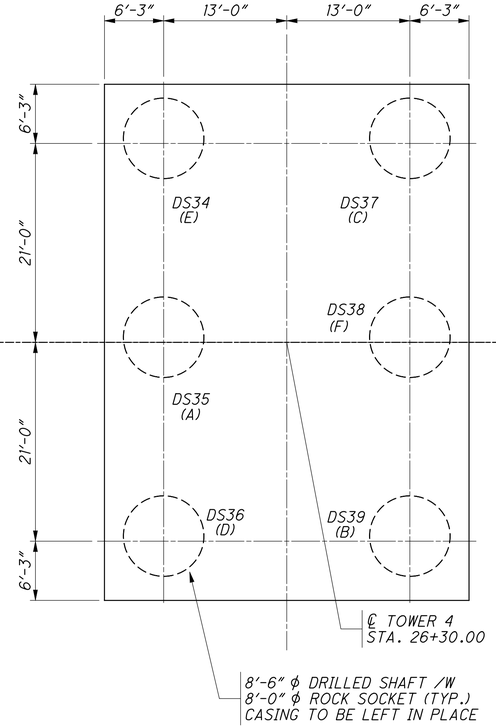

TOWER 4

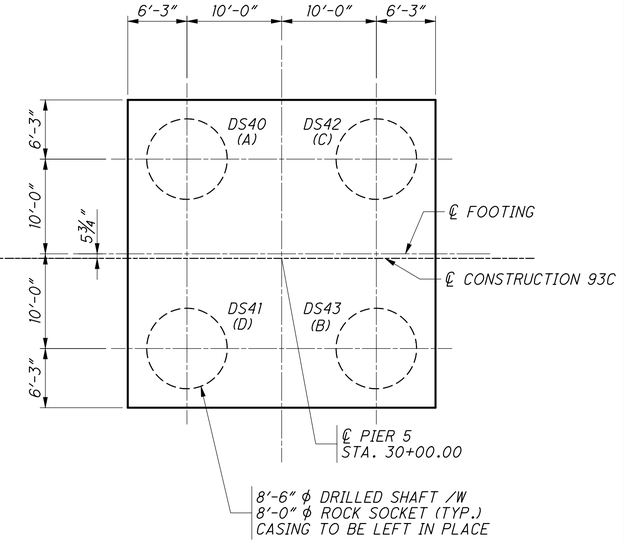

PIER 5

NOTES

1. DS DENOTES DRILLED SHAFT.
2. FOR GENERAL NOTES, SEE SHEET 5/365 THRU 11/365
3. SEE APPROPRIATE FOUNDATION PLANS FOR LENGTHS AND REINFORCING FOR DRILLED SHAFTS.
4. DRILLED SHAFTS SHALL BE CONSTRUCTED IN THE ORDER SHOWN A-F OR A-D UNLESS APPROVED BY THE ENGINEER.

Link to 279-012-000
Pier 1 & 2 Drilled Shafts
As-Built

DESIGN AGENCY
URS
36 EAST 7TH STREET
SUITE 2300
CINCINNATI, OHIO 45202

DESIGNED	DRAWN	REVIEWED	DATE
MJZ	GJW	RWB	02-22-11
CHECKED	REVISED	STRUCTURE FILE NUMBER	
BKL		4401263	

FOUNDATION LAYOUT - MAIN SPAN
BRIDGE NO. LAW-93-0000
IRONTON RUSSELL BRIDGE OVER OHIO RIVER

LAW-93-0.00
PID No. 81595

70/365

457
788

J:\Project\0\ODOT\150051112 Ironton Russell\LAW\81595\structures\LAW093_1111C\sheets\Kentucky Approach\093_0000_fp003.dgn - 4/29/2011 9:27:38 AM - john_corley

Link to P2 & P5
Camber RFI As-Built

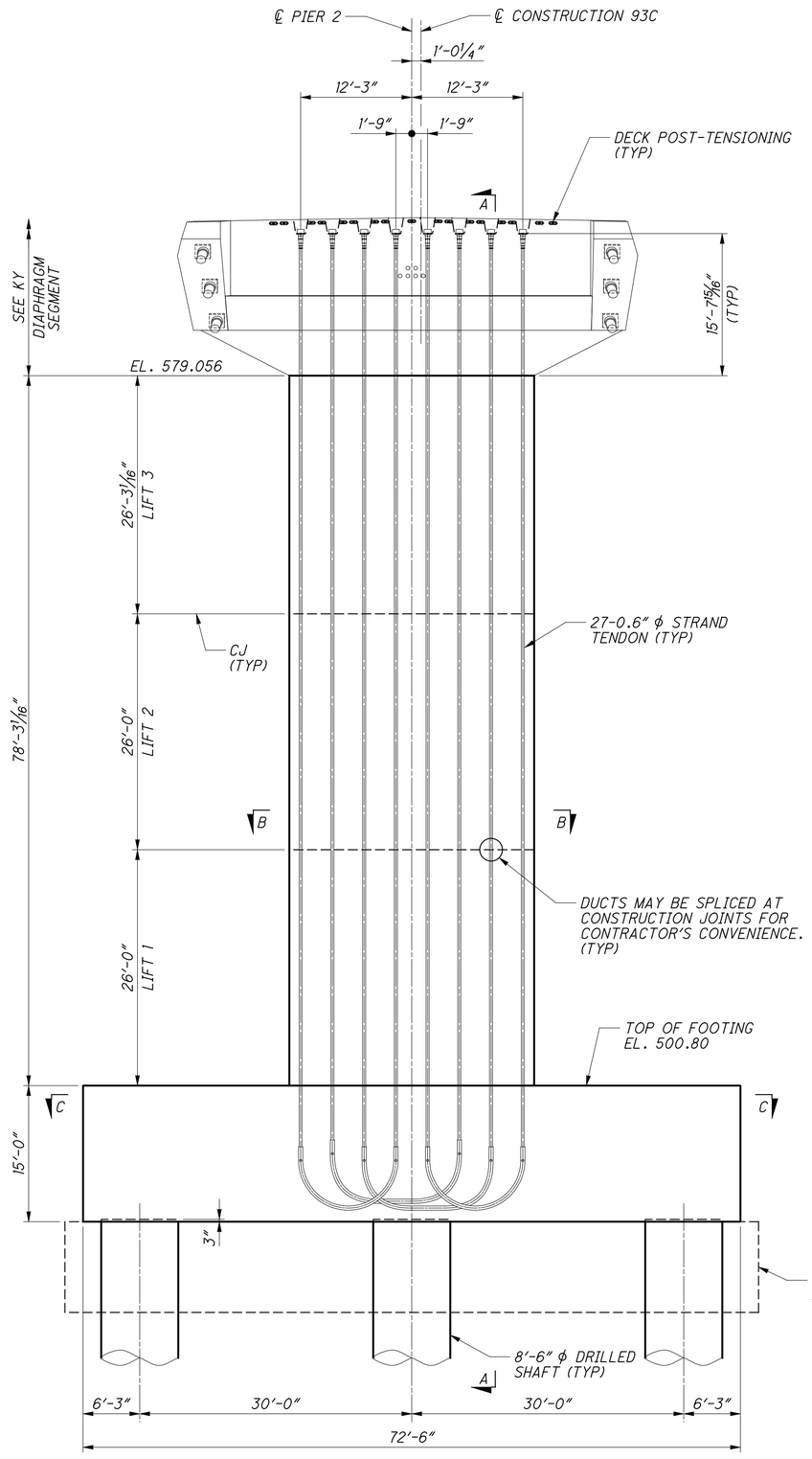

PIER 2 - ELEVATION VIEW

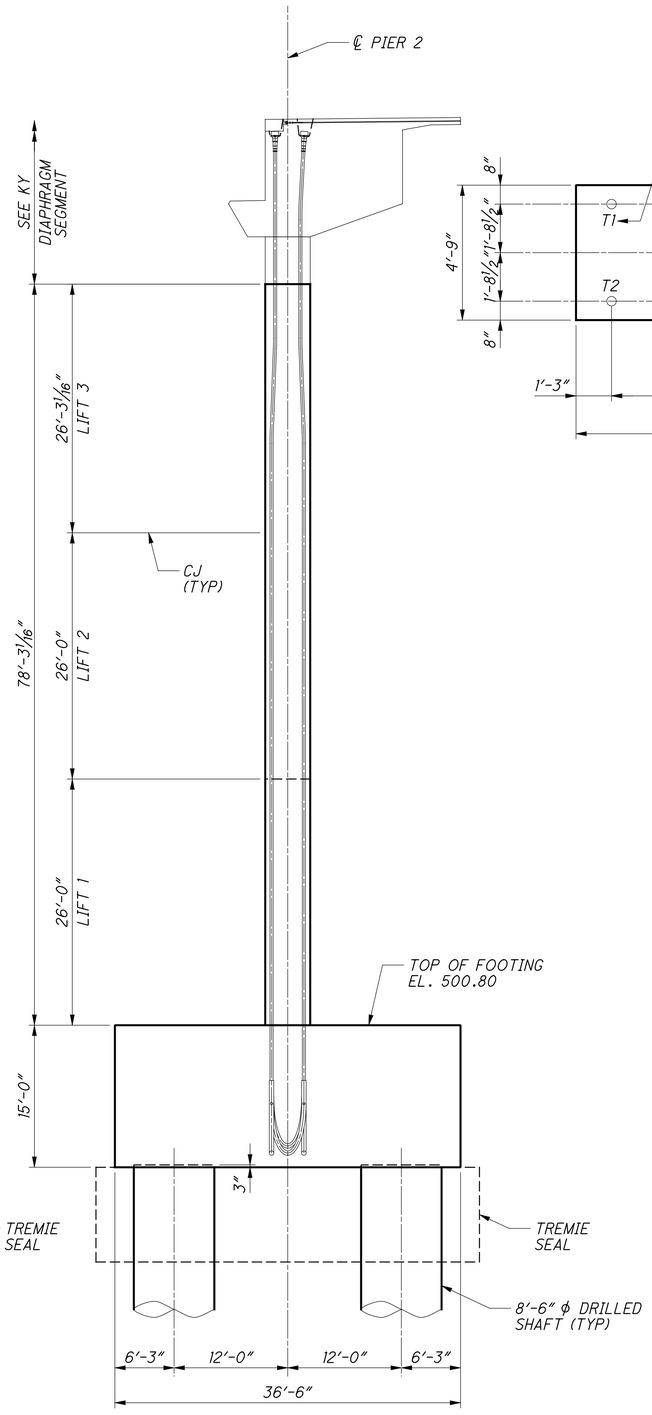

SECTION A-A

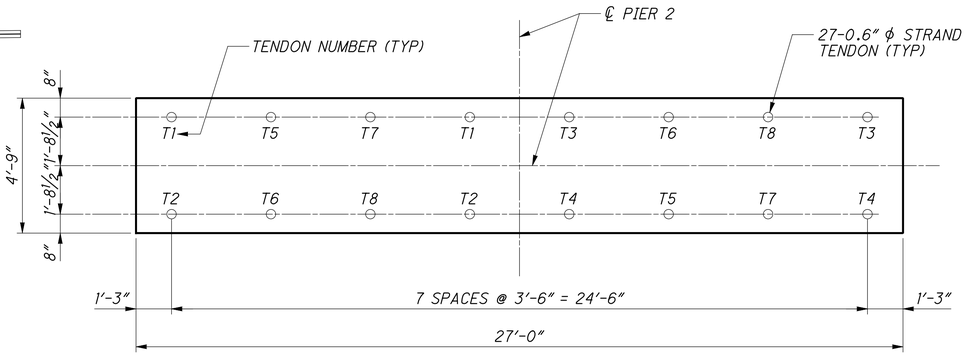

SECTION B-B

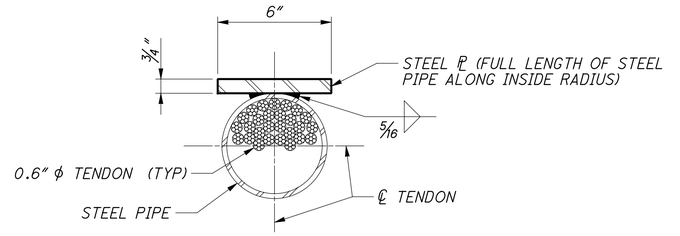

GALVANIZED DUCT DETAIL
(TYPICAL ALL TENDONS)

NOTES

1. COLUMN CONCRETE SHALL BE CLASS QSC3 WITH A MINIMUM 28-DAY COMPRESSIVE STRENGTH OF 6,500 PSI.
2. FOOTING CONCRETE SHALL BE CLASS QSC1 WITH A MINIMUM 28-DAY COMPRESSIVE STRENGTH OF 4,000 PSI.
3. TENDONS T1 THRU T8 SHALL CONSIST OF 27-0.6" DIAMETER STRANDS AND SHALL BE JACKED FROM BOTH ENDS SIMULTANEOUSLY. JACKING FORCE SHALL BE 1265 KIPS PER TENDON.
4. FOR PORTIONS OF POST-TENSIONING TENDONS WITH A RADIUS OF CURVATURE LESS THAN 20'-0" UTILIZE GALVANIZED RIGID STEEL PIPE (SCHEDULE 40) CONFORMING TO ASTM A53, TYPE 3, GRADE B WITH A NOMINAL 5" DIAMETER.
5. FOR KY DIAPHRAGM SEGMENT DETAILS, SEE SHEET NO. 194/365 TO 208/365.
6. DIMENSIONS AND DETAILS OF TREMIE SEAL SHALL BE DETERMINED BY THE CONTRACTOR.

DESIGN AGENCY
URS
36 EAST 7TH STREET
SUITE 2300
CINCINNATI, OHIO 45202

DESIGNED BWJ | DRAWN CER | CHECKED AR | REVIEWED DLJ | DATE 6/2010 | REVISED | STRUCTURE FILE NUMBER 4401263

PIER 2 GEOMETRY (1 OF 2)
BRIDGE NO. LAW-93-0000
IRONTON RUSSELL BRIDGE OVER OHIO RIVER

LAW-93-0.00 PID No. 81595

E:\Bridges_XM\Ironton_Russell\LAW\81595\structures\LAW093_0000C\sheets\093_0000CPI001.dgn 4/25/2011 10:11:36 AM john_stahl

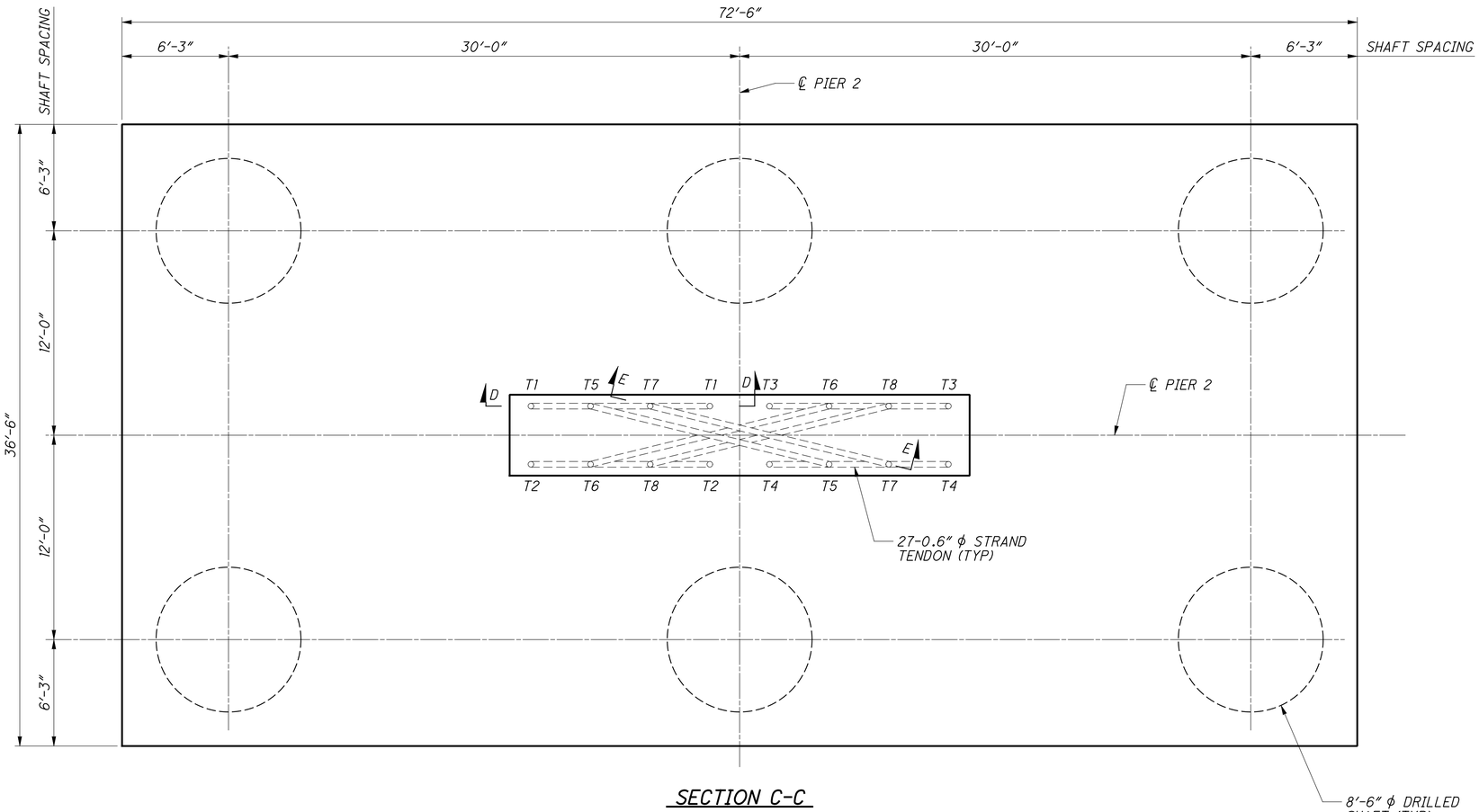

SECTION C-C

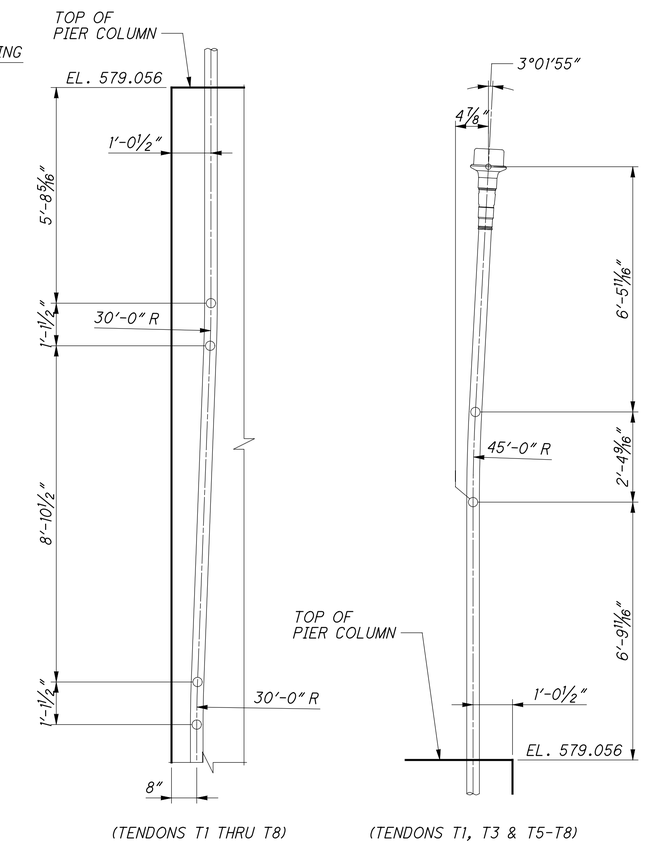

(TENDONS T1 THRU T8) (TENDONS T1, T3 & T5-T8)

TENDON DETAILS

Link to RFI064 As-Built

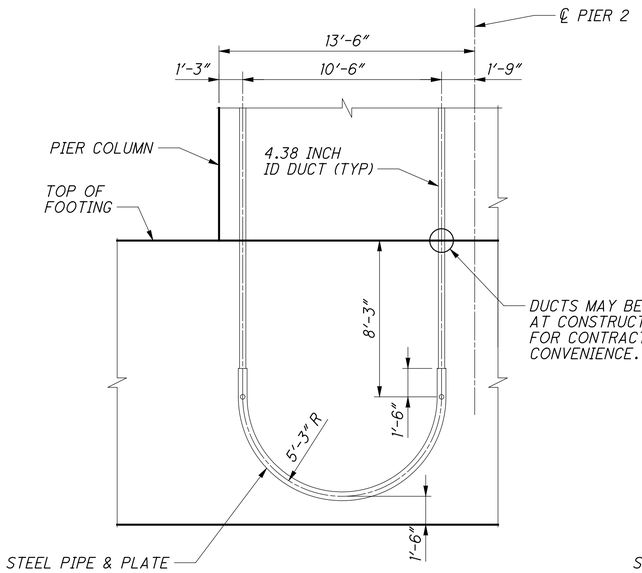

SECTION D-D

(SECTION ALONG TENDONS T1 THRU T4)

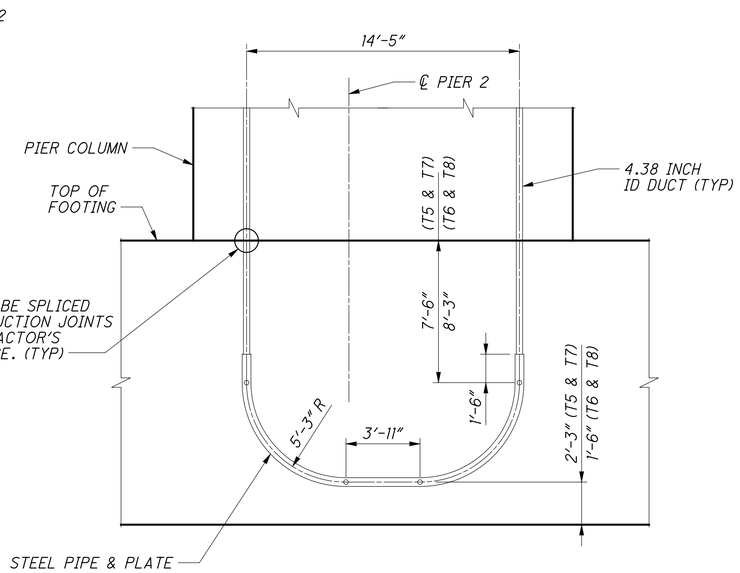

SECTION E-E

(SECTION ALONG TENDONS T5 THRU T8)

PIER 2 TENDON QUANTITIES

TENDON ID	NO. OF TENDONS	NUMBER OF 0.6" DIA. STRANDS	JACKING FORCE (kips)	TENDON LENGTH (ft)	TENDON WEIGHT (lbs)	TOTAL WEIGHT (lbs)
T1	1	27	1265	221.08	4417	4417
T2	1	27	1265	221.08	4417	4417
T3	1	27	1265	221.08	4417	4417
T4	1	27	1265	221.08	4417	4417
T5	1	27	1265	223.50	4466	4466
T6	1	27	1265	225.00	4496	4496
T7	1	27	1265	223.50	4466	4466
T8	1	27	1265	225.00	4496	4496
					TOTAL =	35591

NOTES

1. WEIGHT INDICATED IN SCHEDULES ARE BASED ON TENDON LENGTH FROM ANCHOR PLATE TO ANCHOR PLATE. WEIGHT IS SHOWN FOR INFORMATIONAL PURPOSES ONLY. CONTRACTOR IS RESPONSIBLE FOR ESTIMATING QUANTITY OF POST-TENSIONING STRAND REQUIRED.
2. COST OF SPIRAL REINFORCEMENT (LOCAL ZONE) AT EACH ANCHORAGE IS INCIDENTAL TO THE COST OF POST-TENSIONING.
3. THE PIER TENDONS WILL BE STRESSED IN ORDER BASED ON THE TENDON NUMBER.
4. FOR ADDITIONAL STRESSING INFORMATION, SEE "KY DIAPHRAGM SEGMENT TRANSVERSE POST-TENSIONING (1 OF 2)" SHEET.

DESIGN AGENCY
URS
36 EAST 7TH STREET
SUITE 2300
CINCINNATI, OHIO 45202

DESIGNED	DRAWN	REVIEWED	DATE
BWJ	CER	DLJ	6/2010
CHECKED	REVISED	STRUCTURE FILE NUMBER	
AR		4401263	

PIER 2 GEOMETRY (2 OF 2)
BRIDGE NO. LAW-93-0000
IRONTON RUSSELL BRIDGE OVER OHIO RIVER

LAW-93-0.00
PID No. 81595

E:\Bridges_XM\Ironton_Russell\LAW\81595\structures\LAW093_0000\sheets\093_0000CPI002.dgn 4/25/2011 10:11:44 AM john_stahl

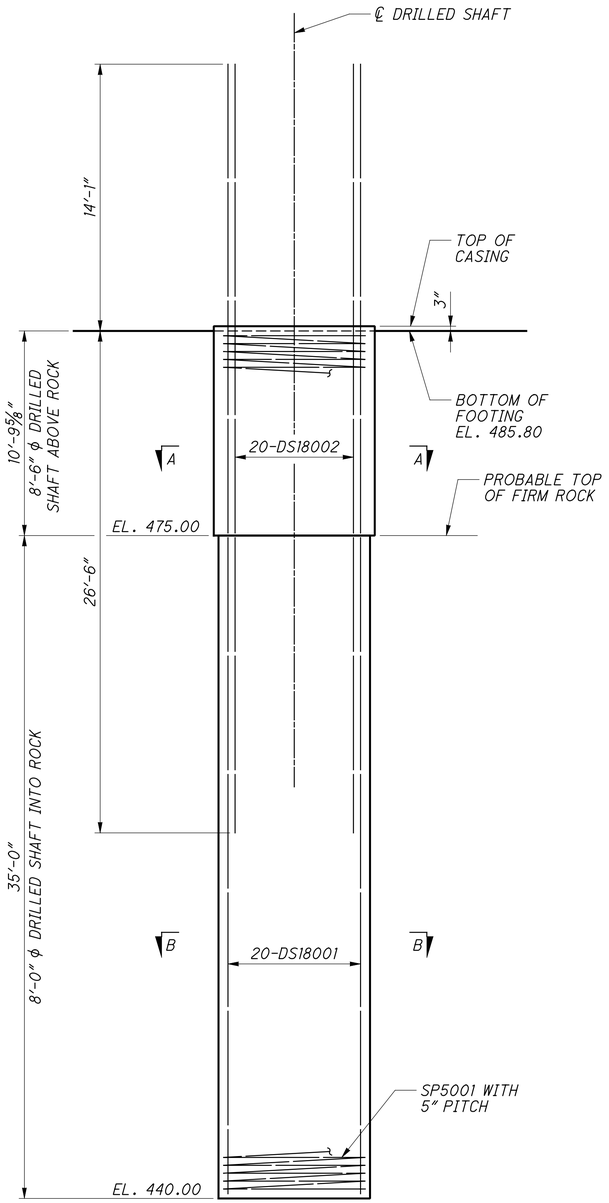

PIER 2 DRILLED SHAFT

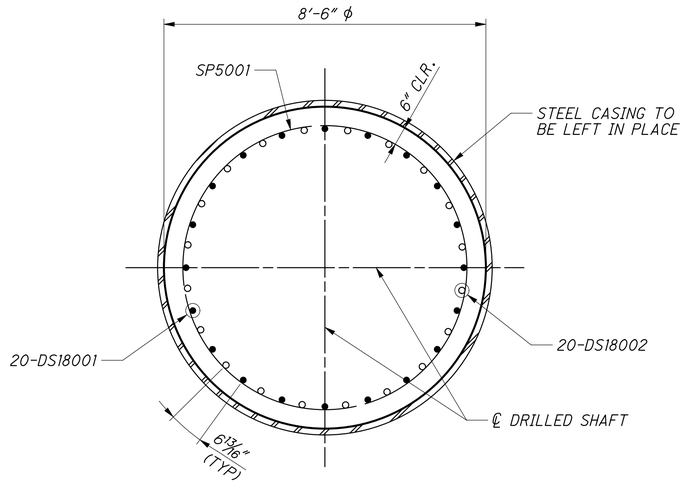

SECTION A-A

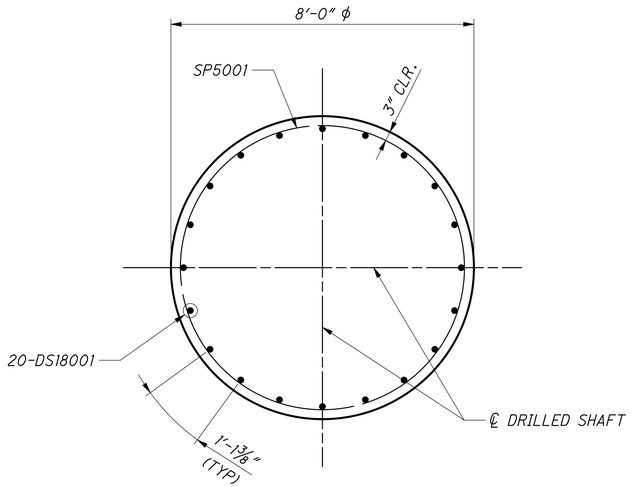

SECTION B-B

Link to 279-009-000
Towers As-Built

Link to RFI047A As-Built

DRILLED SHAFT NOTES

1. THE CONTRACTOR SHALL SUBMIT PLANS AND PROCEDURES SHOWING METHOD OF CONSTRUCTING THE DRILLED SHAFT AND FOUNDATIONS TO THE ENGINEER FOR REVIEW AT LEAST 30 DAYS PRIOR TO BEGINNING WORK. PLANS AND PROCEDURES SHALL BE PREPARED AND STAMPED BY A PROFESSIONAL ENGINEER IN THE STATE OF OHIO.
2. CASING ARE TO REMAIN IN PLACE, AS SHOWN.
3. DRILLED SHAFTS ARE DETAILED WITH CONTINUOUS SPIRALS. SPIRALS SHALL BE TERMINATED WITH 1 ½ TURNS TOP AND BOTTOM. CONTRACTOR MAY OPTIONALLY PROVIDE SPLICED OR COUPLED SPIRALS AND HOOPS IN ACCORDANCE WITH AASHTO SPECIFICATIONS. SIZE AND SPACING OF OPTIONAL HOOPS SHALL MATCH CONTINUOUS SPIRAL REINFORCEMENT SHOWN. ANY VARIATION FROM DETAILS SHOWN ON THESE PLANS SHALL BE SUBMITTED TO THE ENGINEER FOR REVIEW.
4. TOP OF FIRM ROCK SHALL BE CONSIDERED AS THE BOTTOM ELEVATION OF THE CASING. PAY QUANTITIES ARE TO BE BASED ON THIS ELEVATION.
5. SHOP DRAWINGS OF DRILLED SHAFT REINFORCING ARE TO BE SUBMITTED TO THE ENGINEER FOR APPROVAL.

DESIGN AGENCY
URS
36 EAST 7TH STREET
SUITE 2300
CINCINNATI, OHIO 45202

DESIGNED	DRAWN	REVIEWED	DATE
BWJ	CER	DLJ	6/2010
CHECKED	REVISED	STRUCTURE FILE NUMBER	
AR		4401263	

PIER 2 DRILLED SHAFT & FOOTING DETAILS (1 OF 4)
BRIDGE NO. LAW-93-0000
IRONTON RUSSELL BRIDGE OVER OHIO RIVER

LAW-93-0.00
PID No. 81595

E:\Bridges_XM\Ironton_Russell\LAW\81595\structures\LAW093_0000C\sheets\093_0000CPI009.dgn 4/25/2011 10:11:51 AM john_stahl

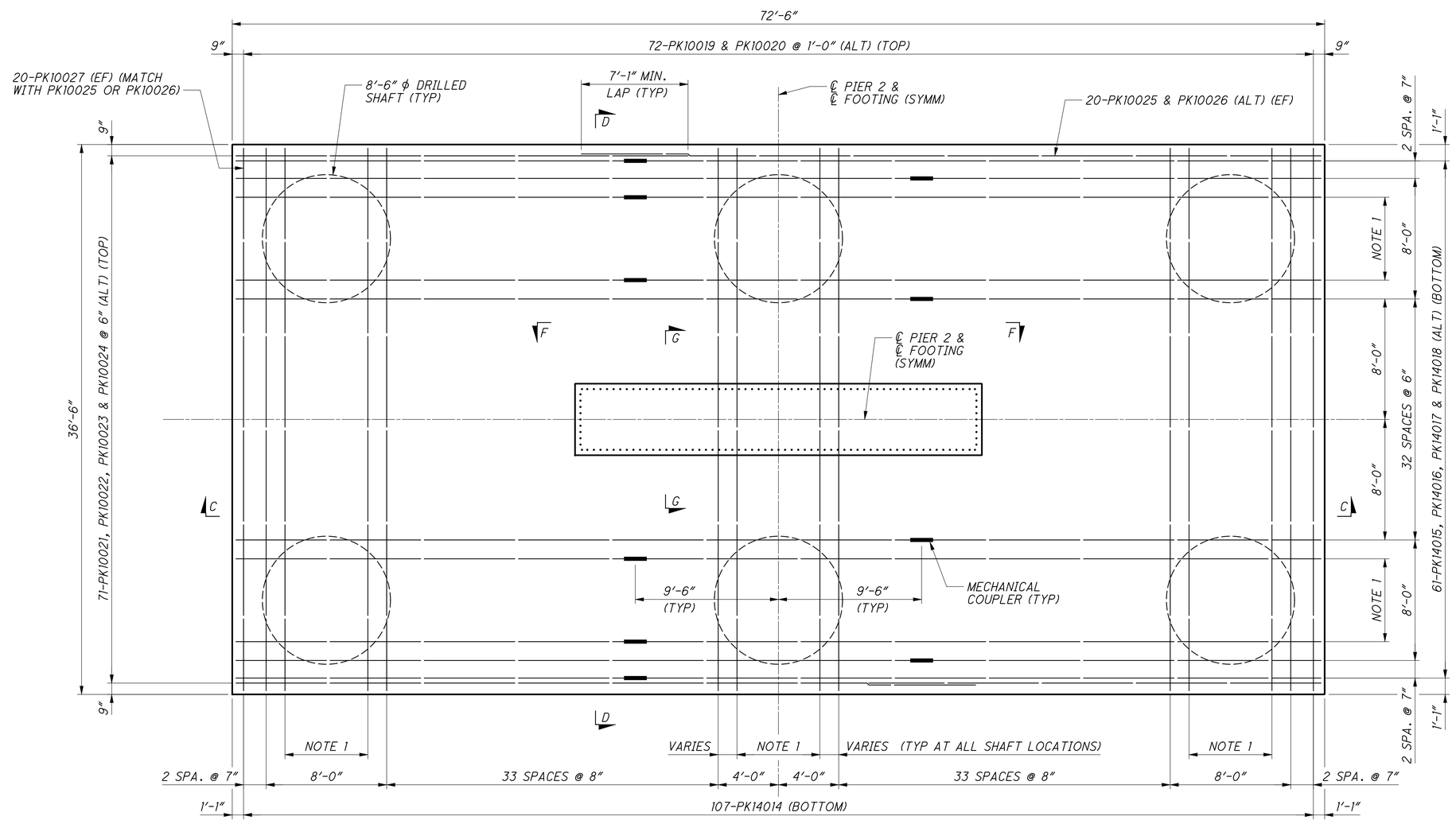

PLAN

(DRILLED SHAFT REINFORCEMENT NOT SHOWN)

NOTES

1. PLACE 11-PK14014, 11-PK14015/PK14016, OR 11-PK14017/PK14018 THROUGH DRILLED SHAFT REINFORCEMENT.
2. BARS PK11029 ARE PROVISIONAL REINFORCEMENT TO BE USED FOR FUTURE PIER STRENGTHENING.
3. MECHANICAL COUPLERS SHALL BE CAPABLE OF DEVELOPING 125 PERCENT YIELD STRENGTH OF THE BARS BEING SPLICED.
4. FOOTING BARS MAY BE SHIFTED LOCALLY TO CLEAR MECHANICAL COUPLERS.

DESIGN AGENCY
URS
36 EAST 7TH STREET
SUITE 2300
CINCINNATI, OHIO 45202

DESIGNED	DRAWN	REVIEWED	DATE
BWJ	CER	DLJ	6/2010
CHECKED	REVISED	STRUCTURE FILE NUMBER	
AR		4401263	

PIER 2 DRILLED SHAFT & FOOTING DETAILS (2 OF 4)
BRIDGE NO. LAW-93-0000
IRONTON RUSSELL BRIDGE OVER OHIO RIVER

LAW-93-0.00
PID No. 81595

E:\Bridges_XM\Ironton_Russell\LAW\81595\structures\LAW093_0000C\sheets\093_0000CPI010.dgn 4/25/2011 10:11:57 AM john_stahl

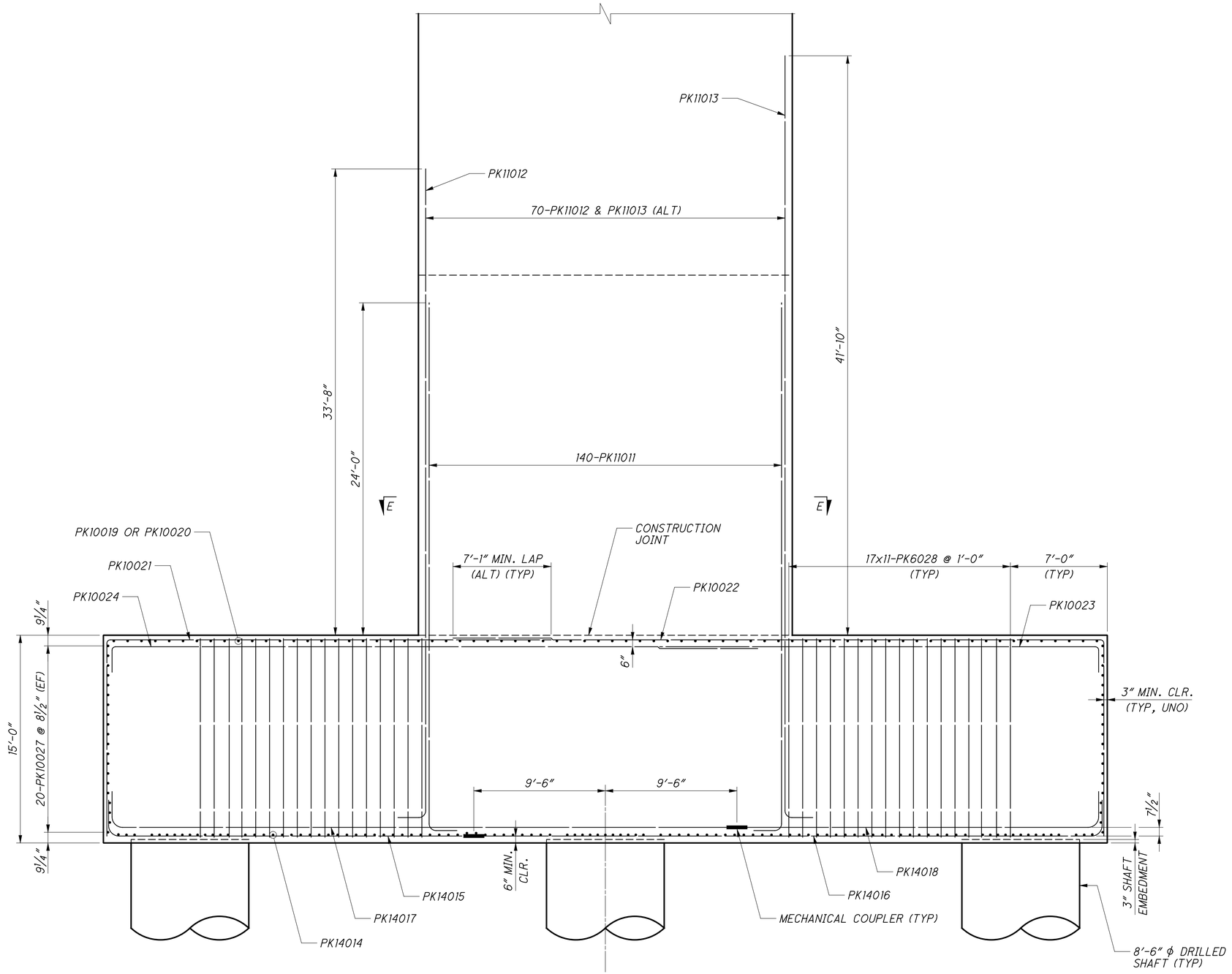

SECTION C-C

E:\Bridges_XM\Ironton_Russell\LAW\81595\structures\LAW093_0000C\sheets\093_0000CP1010.dgn 4/25/2011 10:12:00 AM john_stahl

DESIGN AGENCY
URS
36 EAST 7TH STREET
SUITE 2300
CINCINNATI, OHIO 45202

DESIGNED	DRAWN	REVIEWED	DATE
BWJ	CER	DLJ	6/2010
CHECKED	REVISED	STRUCTURE FILE NUMBER	
AR		4401263	

PIER 2 DRILLED SHAFT & FOOTING DETAILS (3 OF 4)

BRIDGE NO. LAW-93-0000
IRONTON RUSSELL BRIDGE OVER OHIO RIVER

LAW-93-0.00
PID No. 81595

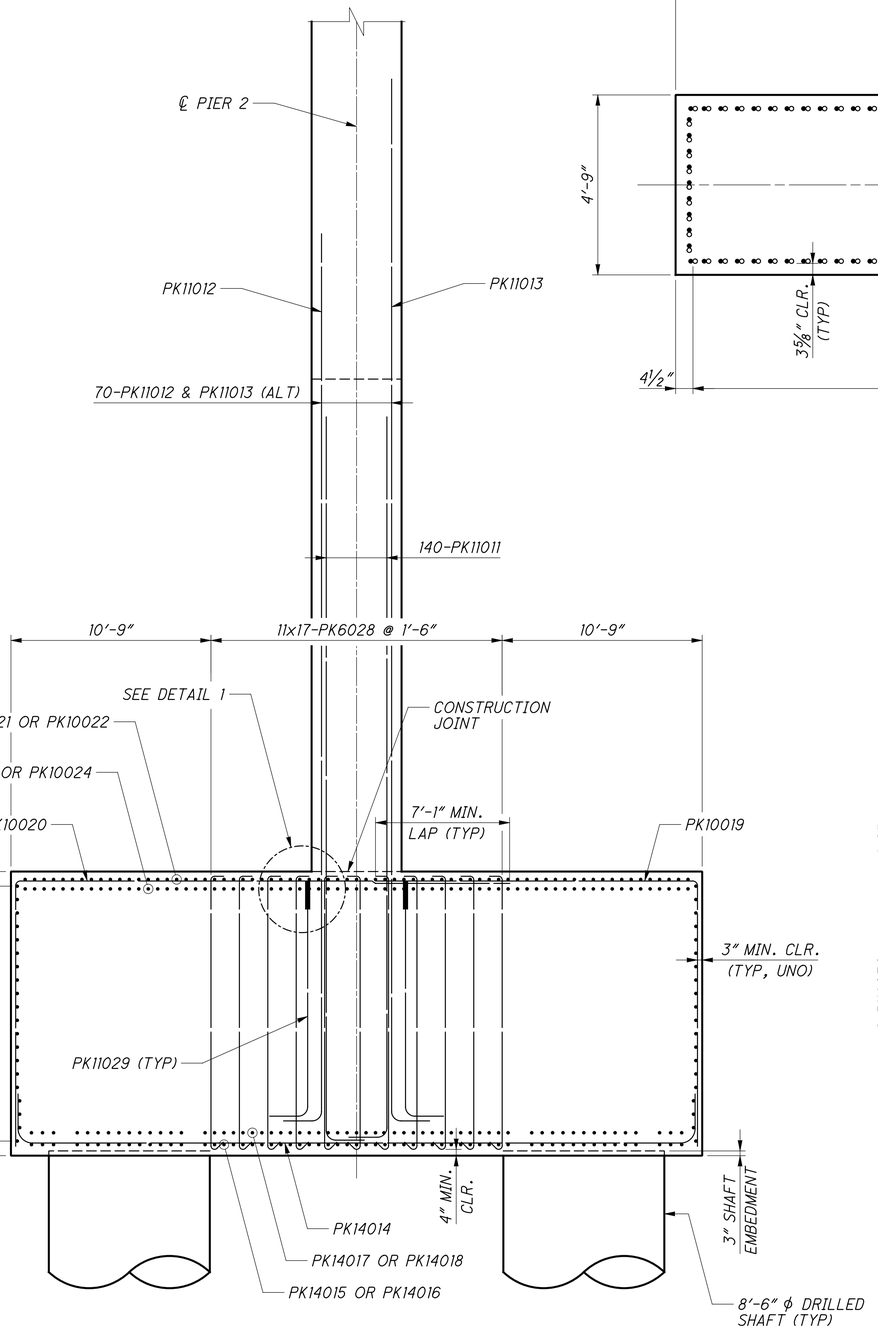

SECTION D-D

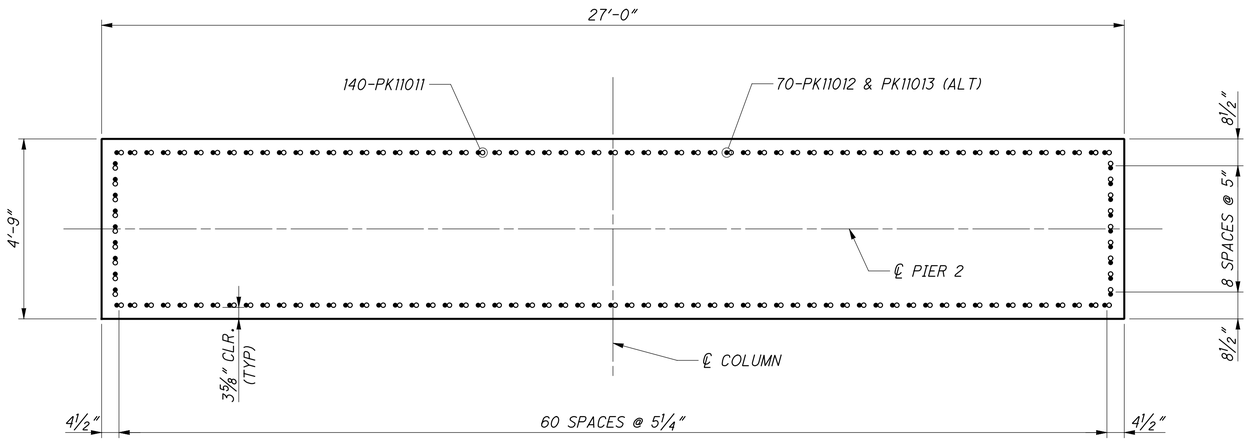

SECTION E-E

(POST-TENSIONING TENDONS NOT SHOWN)

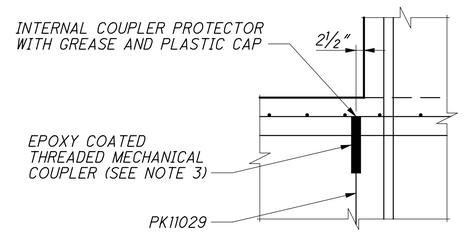

DETAIL 1

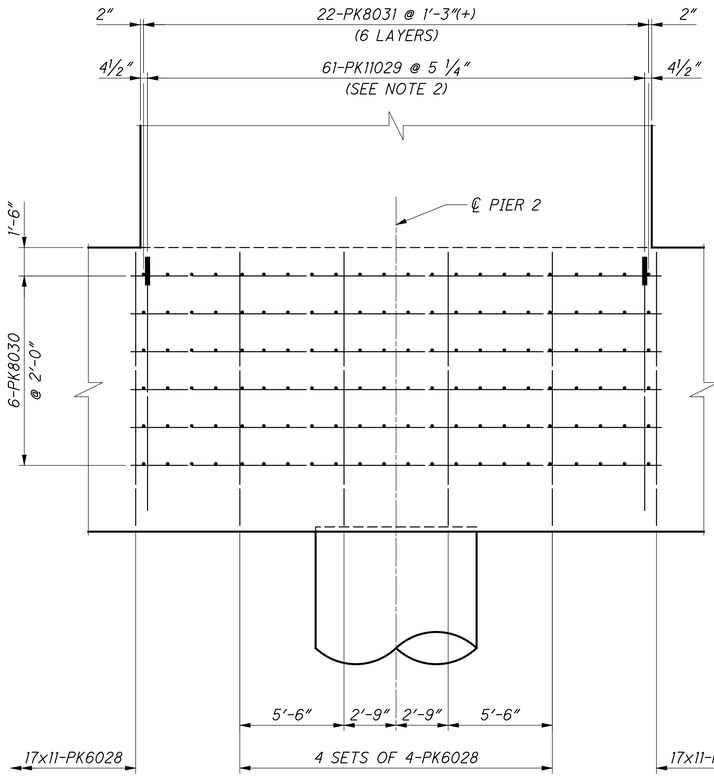

SECTION F-F

(FOOTING REINFORCEMENT NOT SHOWN FOR CLARITY)

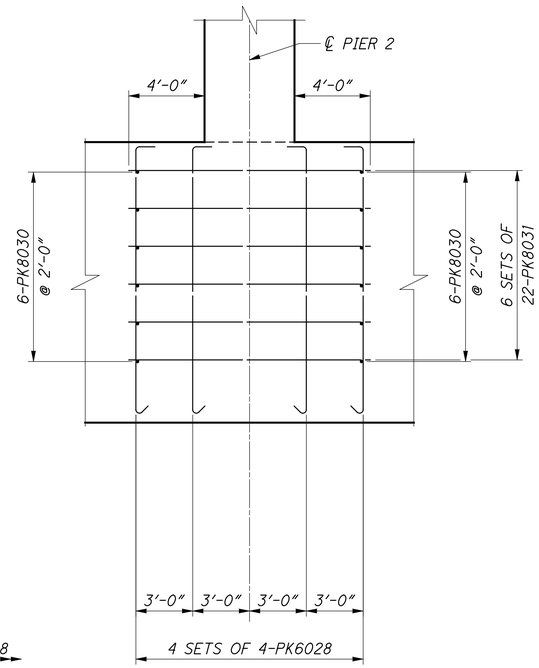

SECTION G-G

(FOOTING REINFORCEMENT NOT SHOWN FOR CLARITY)

NOTES

1. BAR PK8031 MAY BE SHIFTED WHERE NEEDED TO AVOID CONFLICTS WITH PIER POST-TENSIONING.

DESIGN AGENCY
URS
36 EAST 7TH STREET
SUITE 2300
CINCINNATI, OHIO 45202

DESIGNED	DRAWN	REVIEWED	DATE
BWJ	CER	DLJ	6/2010
CHECKED	REVISED	STRUCTURE FILE NUMBER	
AR		4401263	

PIER 2 DRILLED SHAFT & FOOTING DETAILS (4 OF 4)

BRIDGE NO. LAW-93-0000
IRONTON RUSSELL BRIDGE OVER OHIO RIVER

LAW-93-0.00
PID No. 81595

76 / 365

463 / 788

E:\Bridges_XM\Ironton_Russell\LAW\81595\structures\LAW093_0000C\sheets\093_0000CPI010.dgn 4/25/2011 10:12:03 AM john_stahl

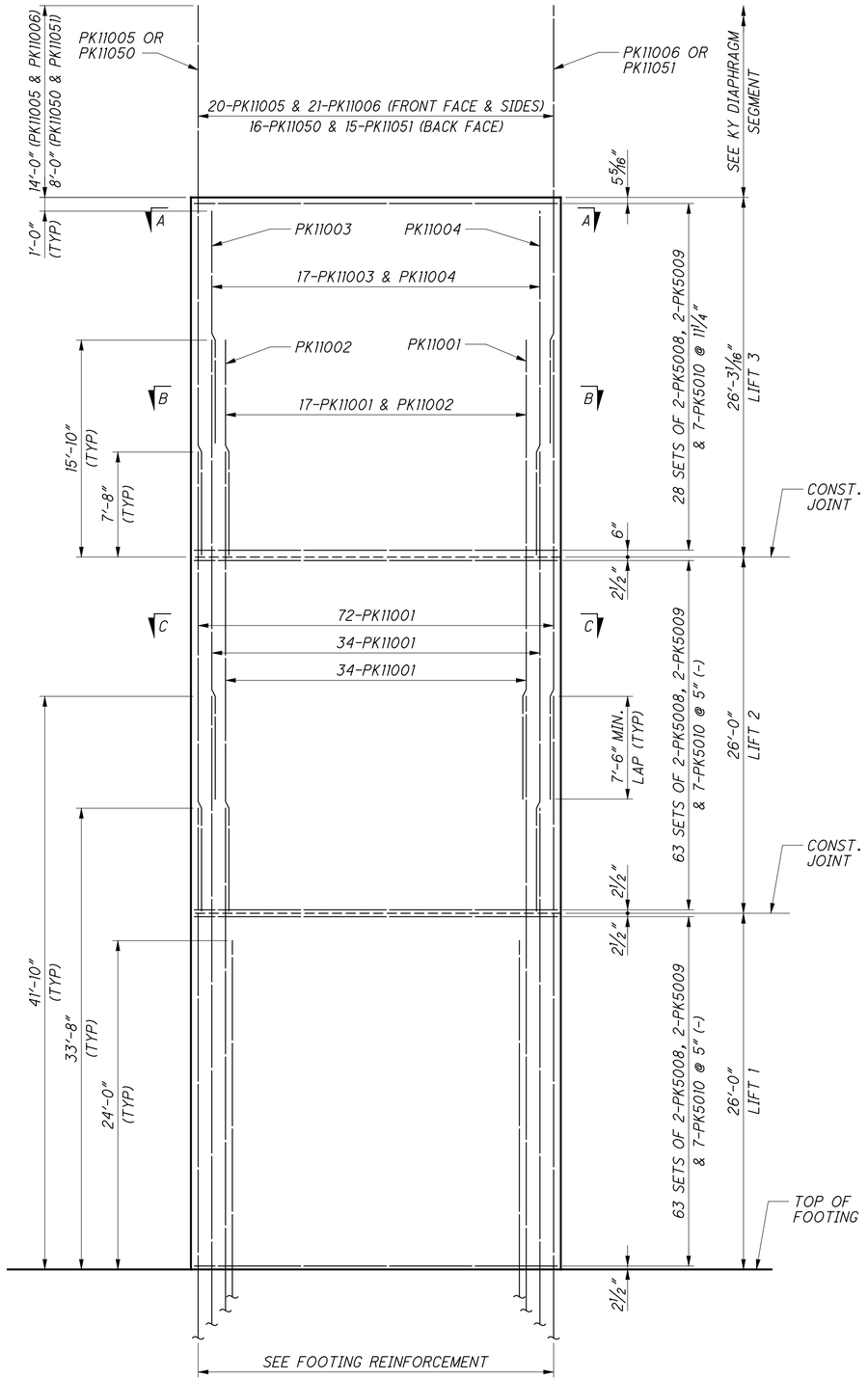

SECTION THRU PIER 2

(LOOKING STATIONS AHEAD)

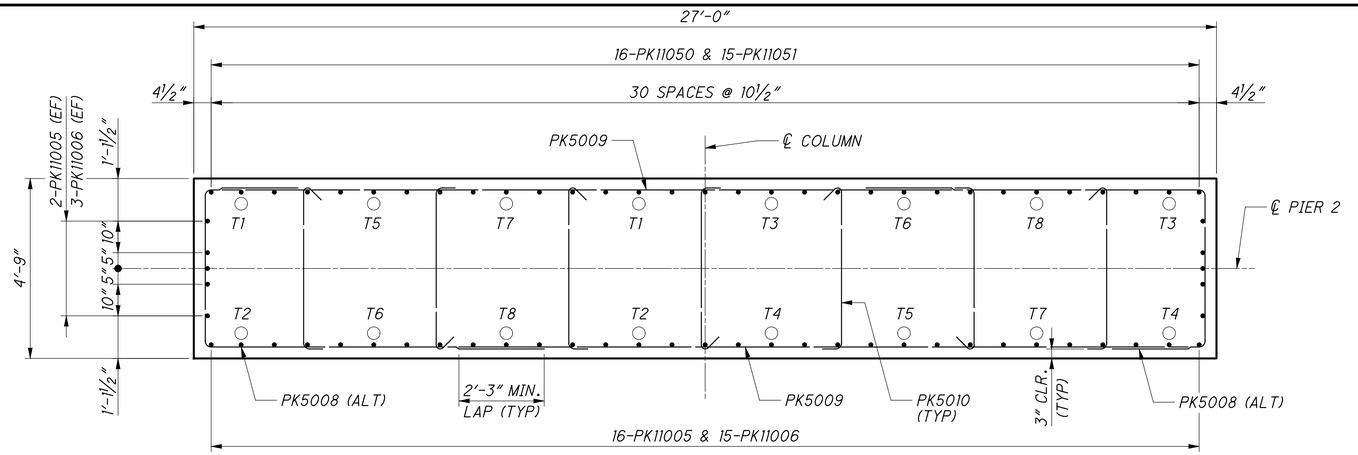

SECTION A-A

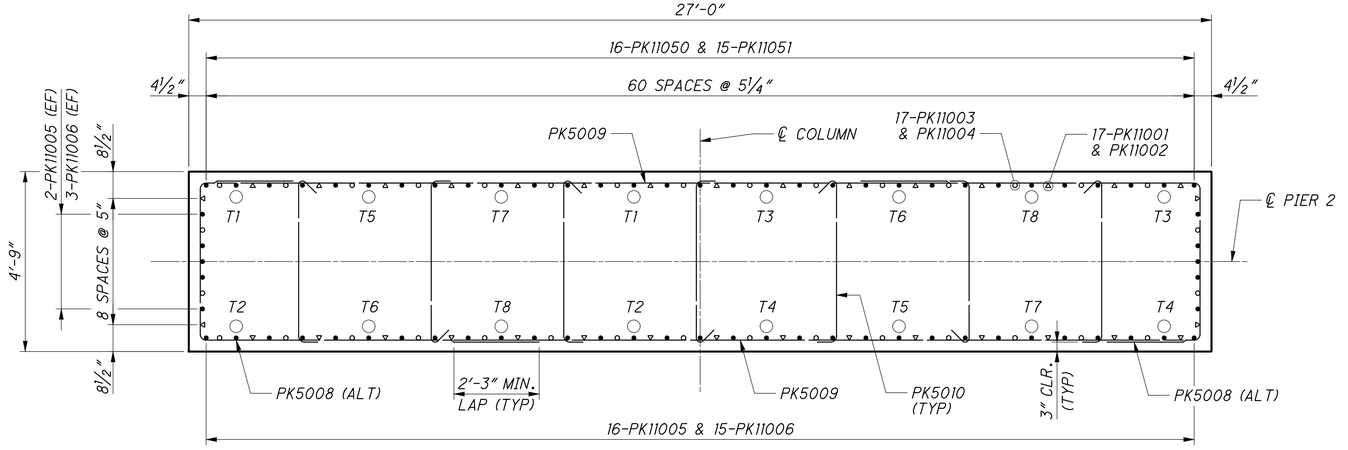

SECTION B-B

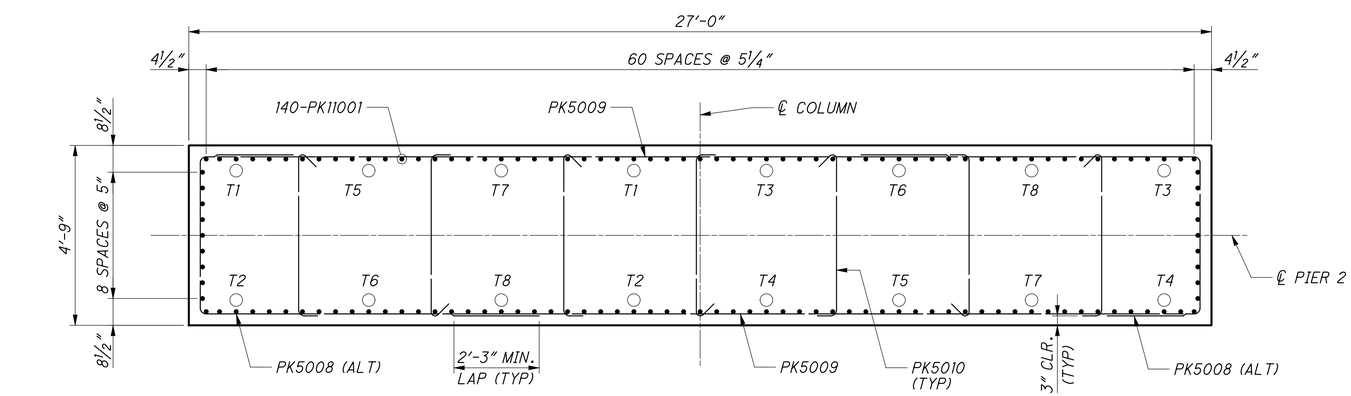

SECTION C-C

DESIGN AGENCY
URS
36 EAST 7TH STREET
SUITE 2300
CINCINNATI, OHIO 45202

DESIGNED	DRAWN	REVIEWED	DATE
BWJ	CER	DLJ	6/2010
CHECKED	REVISED	STRUCTURE FILE NUMBER	
AR		4401263	

PIER 2 REINFORCEMENT

BRIDGE NO. LAW-93-0000
IRONTON RUSSELL BRIDGE OVER OHIO RIVER

LAW-93-0.00
PID No. 81595

77 / 365

464
788

E:\Bridges_XM\Ironton_Russell\LAW\81595\structures\LAW093_0000C\sheets\093_0000CP1013.dgn 4/25/2011 10:12:10 AM john_stahl

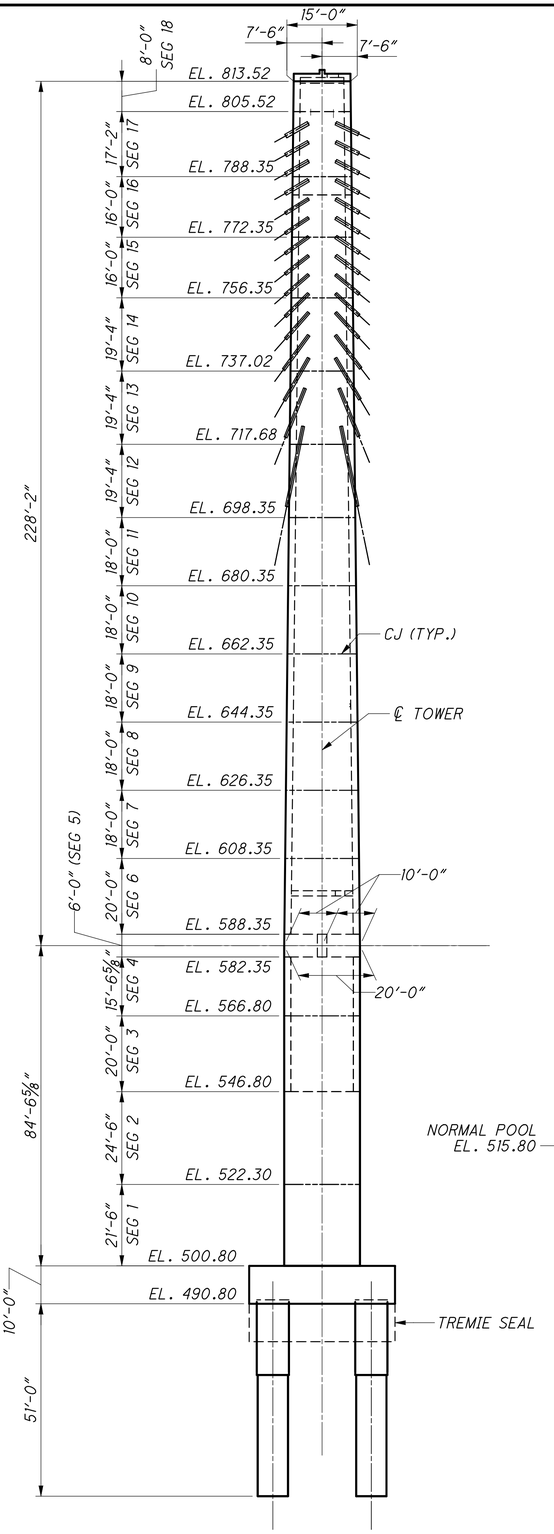

TOWER SIDE ELEVATION

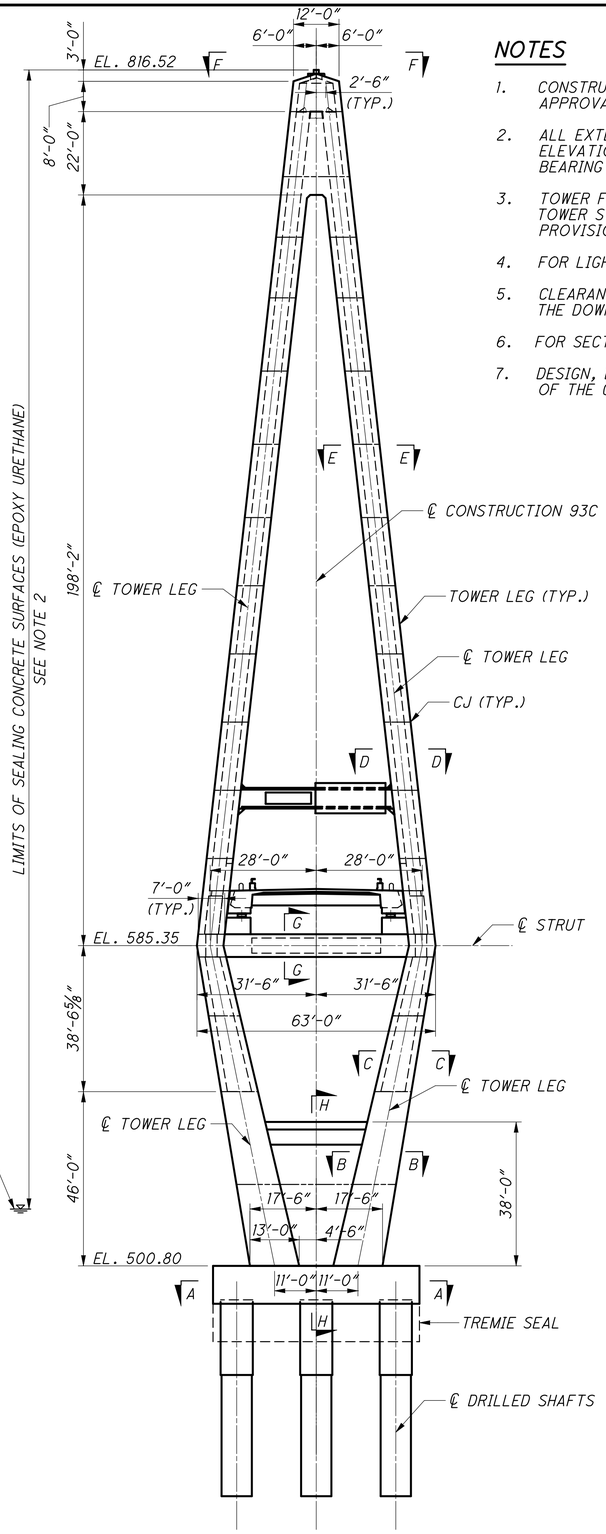

TOWER FRONT ELEVATION

NOTES

1. CONSTRUCTION JOINTS MAY BE RELOCATED SUBJECT TO ENGINEER'S APPROVAL.
2. ALL EXTERIOR CONCRETE SURFACES FROM TOP OF TOWER TO NORMAL POOL ELEVATION SHALL BE SEALED WITH AN EPOXY URETHANE SEALER, EXCEPT FOR BEARING SURFACES.
3. TOWER FOOTING, LOWER LEG SEGMENTS 1 AND 2, AND SOLID PORTIONS OF TOWER STRUTS ARE "MASS CONCRETE" AS DEFINED IN THE SPECIAL PROVISIONS.
4. FOR LIGHTNING PROTECTION DETAILS, SEE SHEETS 290 THRU 296 OF 775.
5. CLEARANCE GAUGE TO BE PLACED ON THE UPSTREAM SIDE OF TOWER 4 AND THE DOWNSTREAM SIDE OF TOWER 3, FOR DETAILS SEE SHEET 80/365.
6. FOR SECTIONS B-B THRU F-F, SEE SHEET 79/365.
7. DESIGN, DIMENSIONS AND DETAILS OF TREMIE SEAL ARE THE RESPONSIBILITY OF THE CONTRACTOR.

Link to Tower 3
Location As-Built

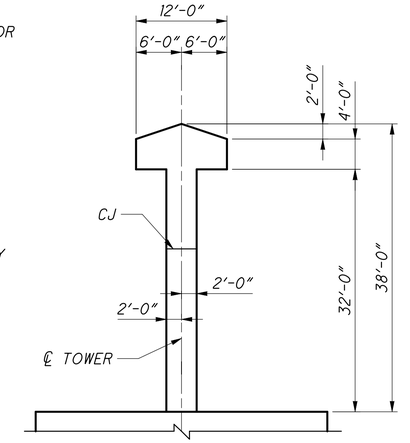

SECTION H-H

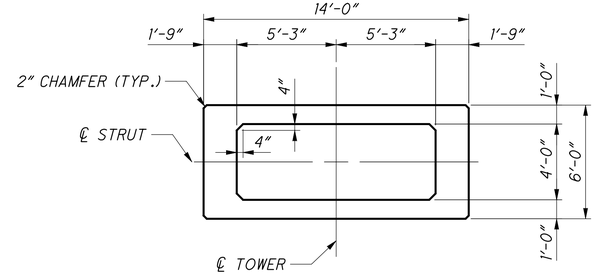

SECTION G-G

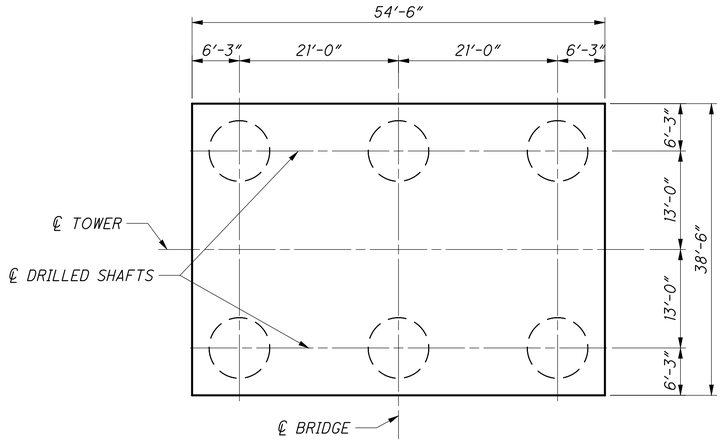

SECTION A-A

J:\Project\OJODOT\15005112 Ironton Russell\LAW\81595\structures\LAW093_1111C\sheets\Towers\093_0000_pi301.dgn — 4/29/2011 9:27:41 AM — john_corley

DESIGN AGENCY
URS
36 EAST 7TH STREET
SUITE 2300
CINCINNATI, OHIO 45202

DESIGNED	DRAWN	REVIEWED	DATE
MJZ	JDP	BA	6-10
CHECKED	REVISED	STRUCTURE FILE NUMBER	
BKL		4401263	

TOWER GEOMETRY (1 OF 3)
BRIDGE NO. LAW-93-0000
IRONTON RUSSEL BRIDGE OVER OHIO RIVER

LAW-93-0.00
PID No. 81595

78/365
465/788

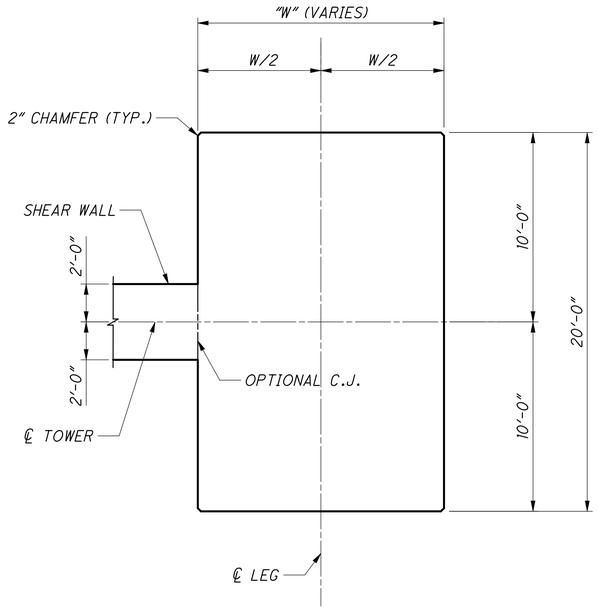

SECTION B-B

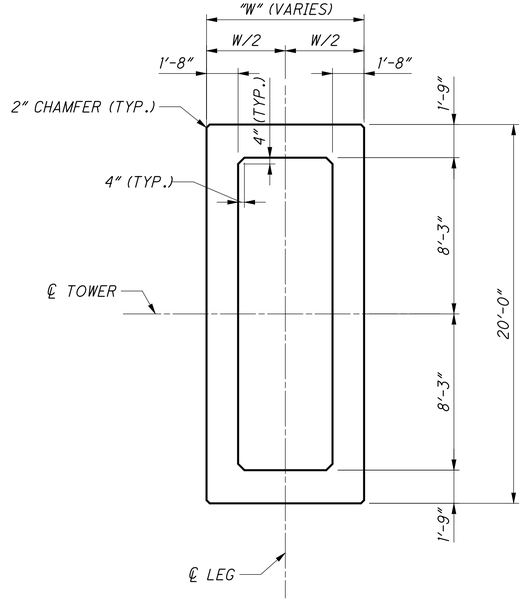

SECTION C-C

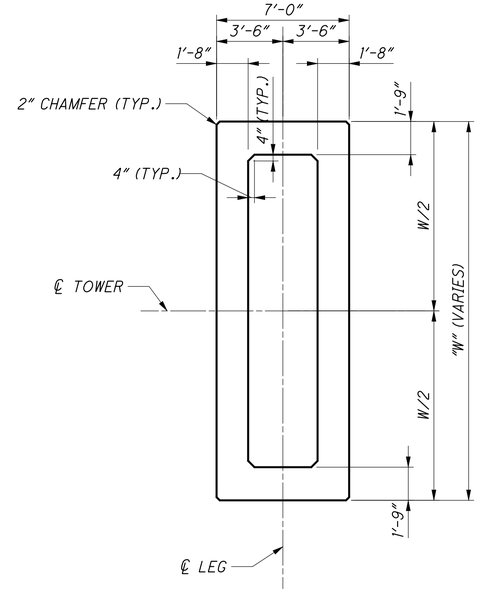

SECTION D-D

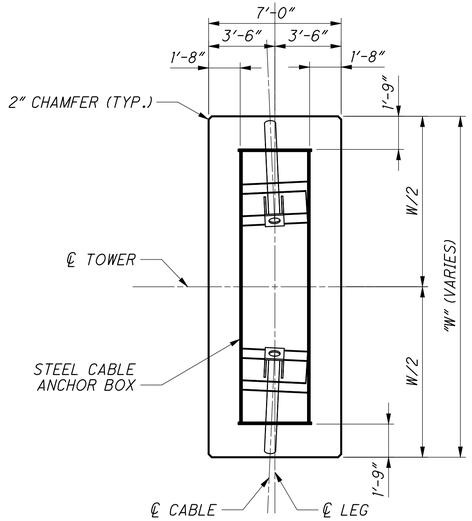

SECTION E-E

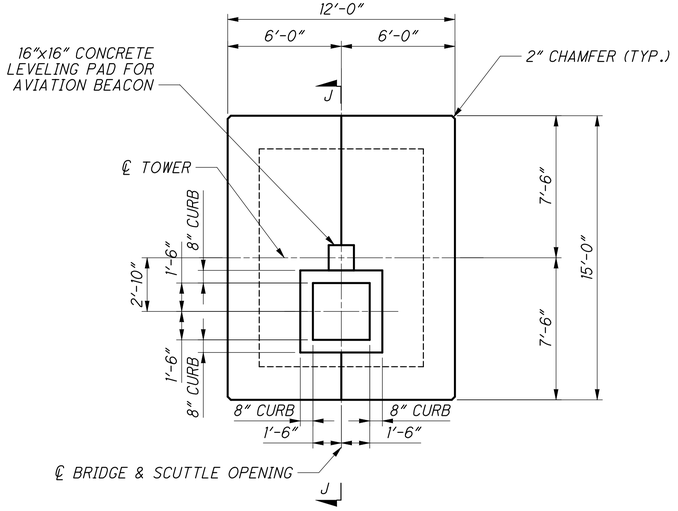

VIEW F-F

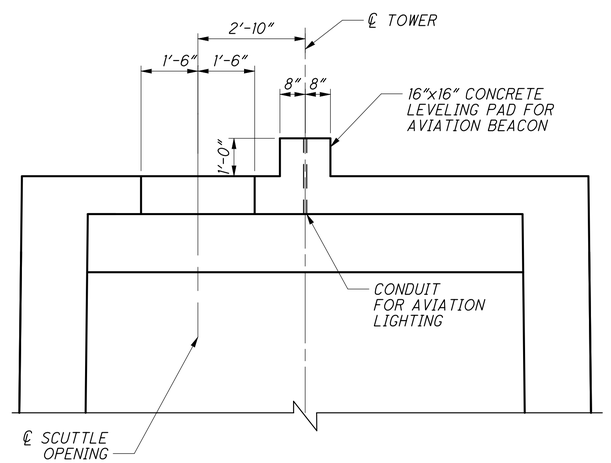

SECTION J-J

J:\Project\O\ODOT\15005112 Ironton Russell\LAW\81595\structures\LAW093_1111C\sheets\Towers\093_0000_pi302.dgn — 4/29/2011 9:27:49 AM — john_corley

DESIGN AGENCY
URS
36 EAST 7TH STREET
SUITE 2300
CINCINNATI, OHIO 45202

DESIGNED	DRAWN	REVIEWED	DATE
MJZ	JDP	BA	6-10
CHECKED	REVISED	STRUCTURE FILE NUMBER	
BKL		4401263	

TOWER GEOMETRY (2 OF 3)
BRIDGE NO. LAW-93-0000
IRONTON RUSSEL BRIDGE OVER OHIO RIVER

LAW-93-0.00
PID No. 81595

79 / 365

466
788

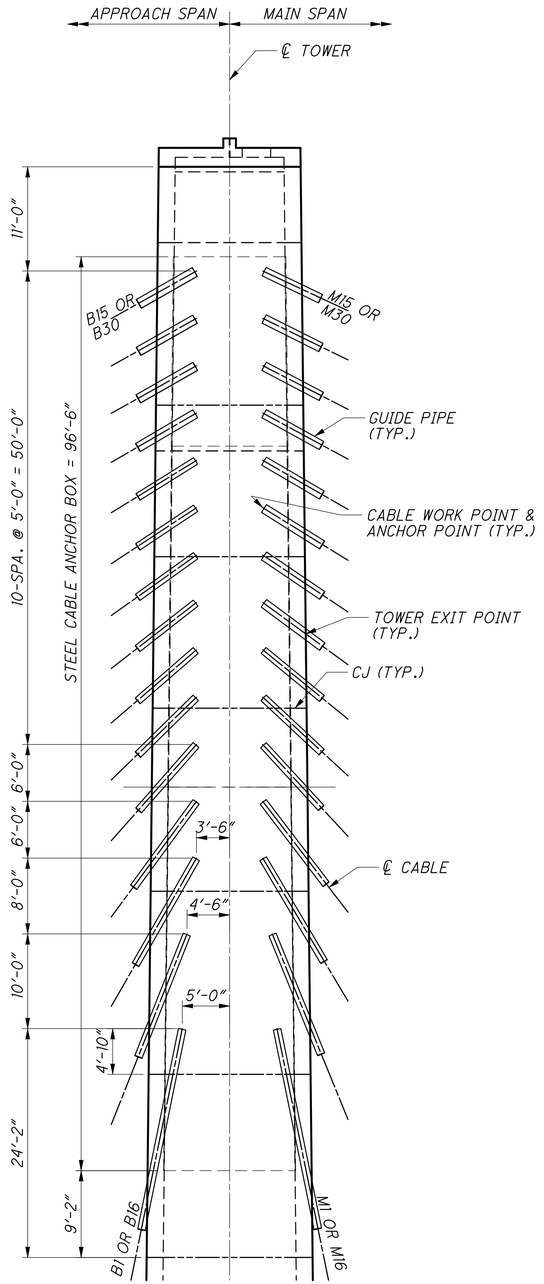

SIDE ELEVATION

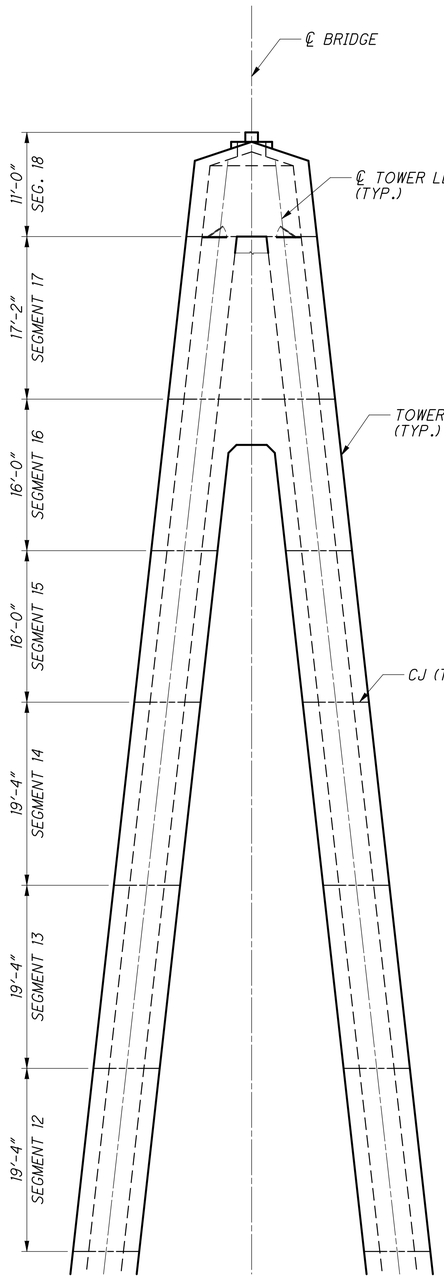

FRONT ELEVATION

CABLE ANCHORAGE AT TOWERS

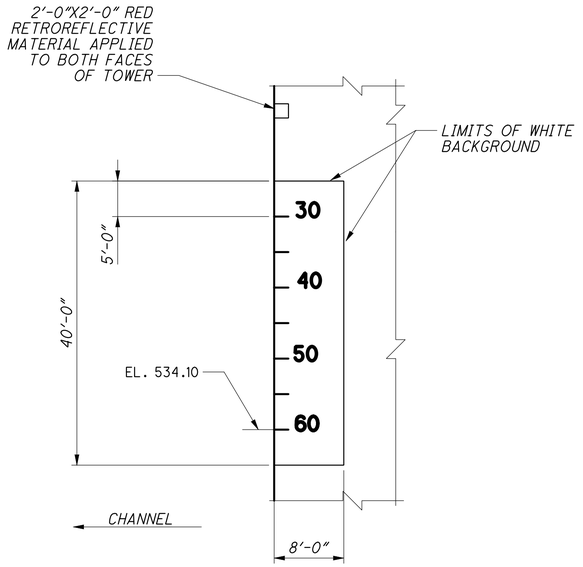

CLEARANCE GAUGE DETAIL

TOWER 3 (KY) DOWNSTREAM FACE
TOWER 4 (OH) UPSTREAM FACE

CLEARANCE GAUGE NOTES

1. THE NUMBERS SHALL CONFORM WITH THOSE PUBLISHED IN THE "STANDARD ALPHABET FOR HIGHTWAY SIGNS" PUBLISHED BY FHWA, SERIES E, 36" TALL.
2. LENGTH OF FOOT MARKS SHALL BE NO LESS THEN 17" LONG AND THE SAME THICKNESS AS THE NUMERALS.
3. INTERMEDIATE FOOT MARKS SHALL BE ½ THE LENGTH AND THICKNESS OF THE PRIMARY FOOT MARKS.
4. PAYMENT SHALL BE INCLUDED IN ITEM 512 - SEALING OF CONCRETE SURFACES, AS PER PLAN.

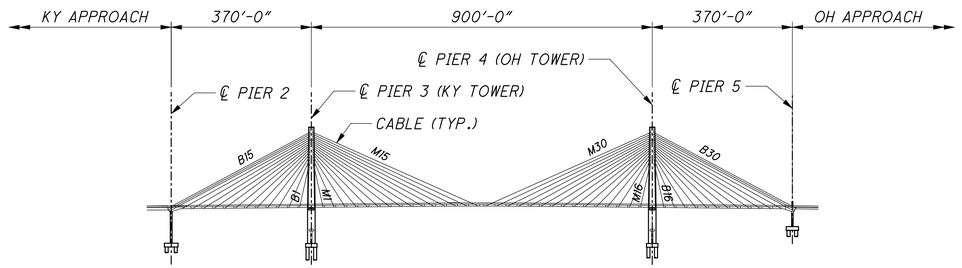

KEY PLAN

DESIGN AGENCY
URS
36 EAST 7TH STREET
SUITE 2300
CINCINNATI, OHIO 45202

DESIGNED	DRAWN	REVIEWED	DATE
MJZ	JDP	BA	6-10
CHECKED	REVISED	STRUCTURE FILE NUMBER	
BKL		4401263	

TOWER GEOMETRY (3 OF 3)
BRIDGE NO. LAW-93-0000
IRONTON RUSSEL BRIDGE OVER OHIO RIVER

LAW-93-0.00
PID No. 81595

J:\Project\0\ODOT\15005112 Ironton Russell\LAW\81595\structures\LAW093_1111C\sheets\Towers\093_0000_pi303.dgn — 4/29/2011 9:27:54 AM — john_corley

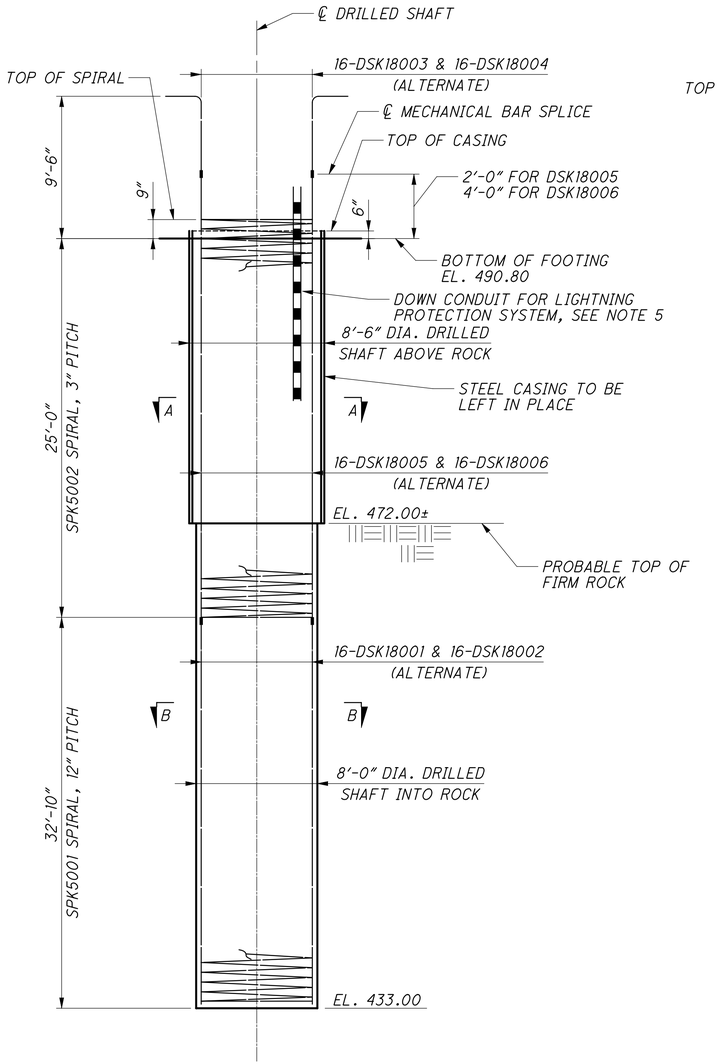

TOWER 3 (KY) DRILLED SHAFT

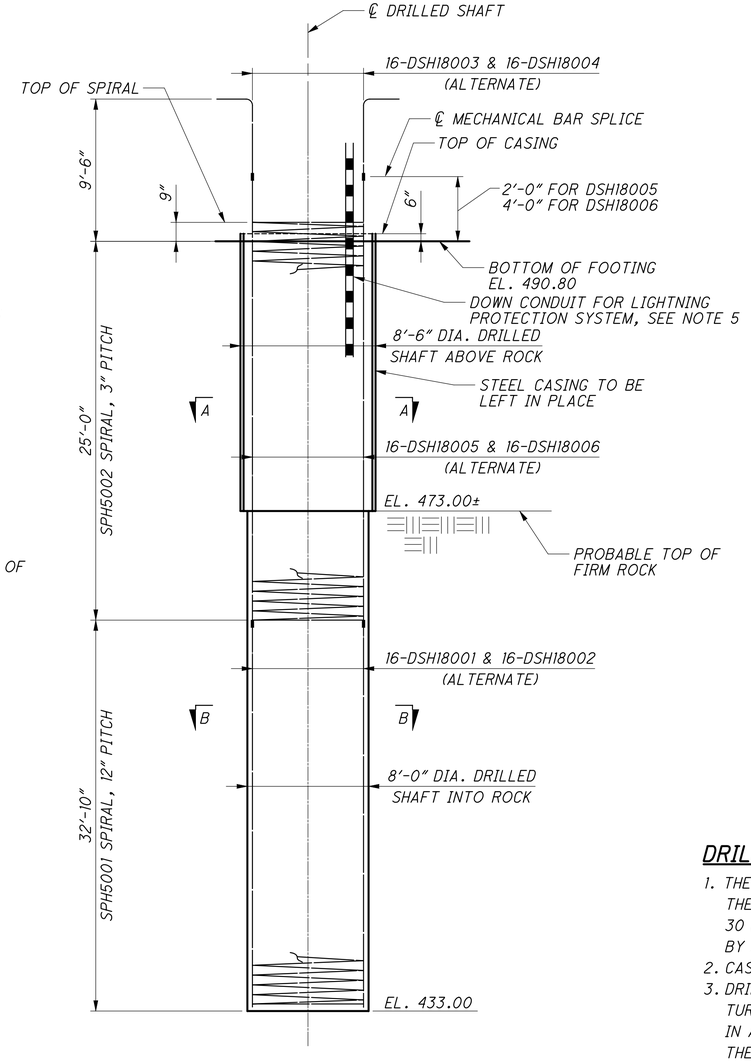

TOWER 4 (OH) DRILLED SHAFT

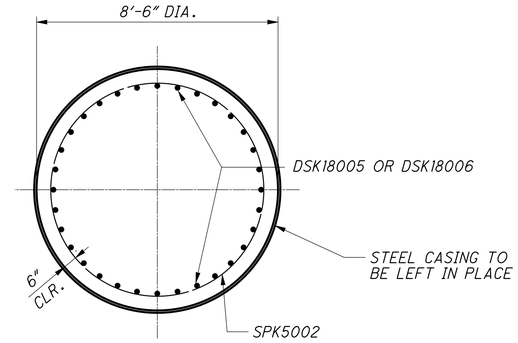

SECTION A-A

(TOWER 3 SHOWN, TOWER 4 SIMILAR)

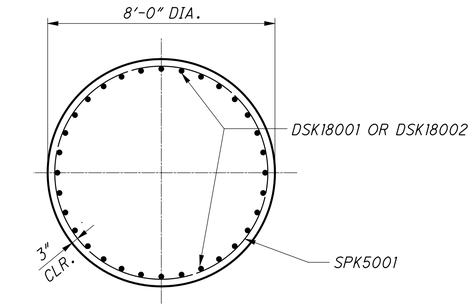

SECTION B-B

(TOWER 3 SHOWN, TOWER 4 SIMILAR)

DRILLED SHAFT NOTES

1. THE CONTRACTOR SHALL SUBMIT PLANS AND PROCEDURES SHOWING METHOD OF CONSTRUCTING THE DRILLED SHAFTS AND DRILLED SHAFT FOUNDATIONS TO THE ENGINEER FOR REVIEW AT LEAST 30 DAYS PRIOR TO BEGINNING WORK. PLANS AND PROCEDURES SHALL BE PREPARED AND STAMPED BY A PROFESSIONAL ENGINEER REGISTERED IN THE STATE OF OHIO.
2. CASINGS ARE TO REMAIN IN PLACE, AS SHOWN.
3. DRILLED SHAFTS ARE DETAILED WITH CONTINUOUS SPIRALS. SPIRALS SHALL BE TERMINATED WITH 1 ½ TURNS TOP AND BOTTOM. CONTRACTOR MAY PROVIDE SPLICED OR COUPLED SPIRALS AND HOOPS IN ACCORDANCE WITH AASHTO SPECIFICATIONS. SIZE AND SPACING OF OPTIONAL HOOPS SHALL MATCH THE SIZE AND PITCH OF THE CONTINUOUS SPIRAL SHOWN.
4. SHOP DRAWINGS OF DRILLED SHAFT REINFORCING ARE TO BE SUBMITTED TO THE ENGINEER FOR APPROVAL.
5. LIGHTNING PROTECTION DOWN CONDUCTORS ARE TO BE INSTALLED INSIDE DRILLED SHAFTS, SEE SHEETS 290 THRU 296 OF 775.
6. TOP OF FIRM BEDROCK SHALL BE CONSIDERED AS THE BOTTOM ELEVATION OF THE CASING. PAY QUANTITIES ARE TO BE BASED ON THIS ELEVATION.
7. BOTTOM OF DRILLED SHAFT SHALL EXTEND A MINIMUM OF 5 FEET BELOW COAL SEAM ENCOUNTERED AROUND ELEVATION 455+/- OR TO ELEVATION SHOWN IN PLANS, WHICHEVER IS DEEPER.

NOTES

1. FOR REINFORCING STEEL LIST, SEE SHEET 278/365 AND 283/365 .

DESIGN AGENCY
URS
36 EAST 7TH STREET
SUITE 2300
CINCINNATI, OHIO 45202

DESIGNED	DRAWN	REVIEWED	DATE
BER	JGC	BA	6-10
CHECKED	REVISED	STRUCTURE FILE NUMBER	
MJZ		4401263	

TOWER REINFORCEMENT - DRILLED SHAFTS
BRIDGE NO. LAW-93-0000
IRONTON RUSSEL BRIDGE OVER OHIO RIVER

LAW-93-0.00
PID No. 81595

J:\Project\O\ODOT\15005112 Ironton Russell\LAW\81595\structures\LAW093_1111C\sheets\Towers\093_0000_pi304.dgn — 4/29/2011 9:27:57 AM — john_corley

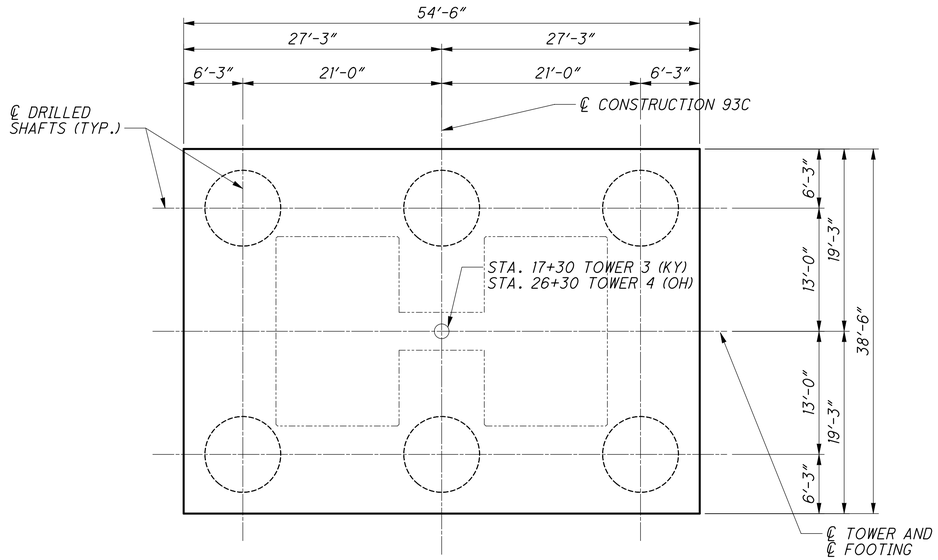

FOOTING PLAN

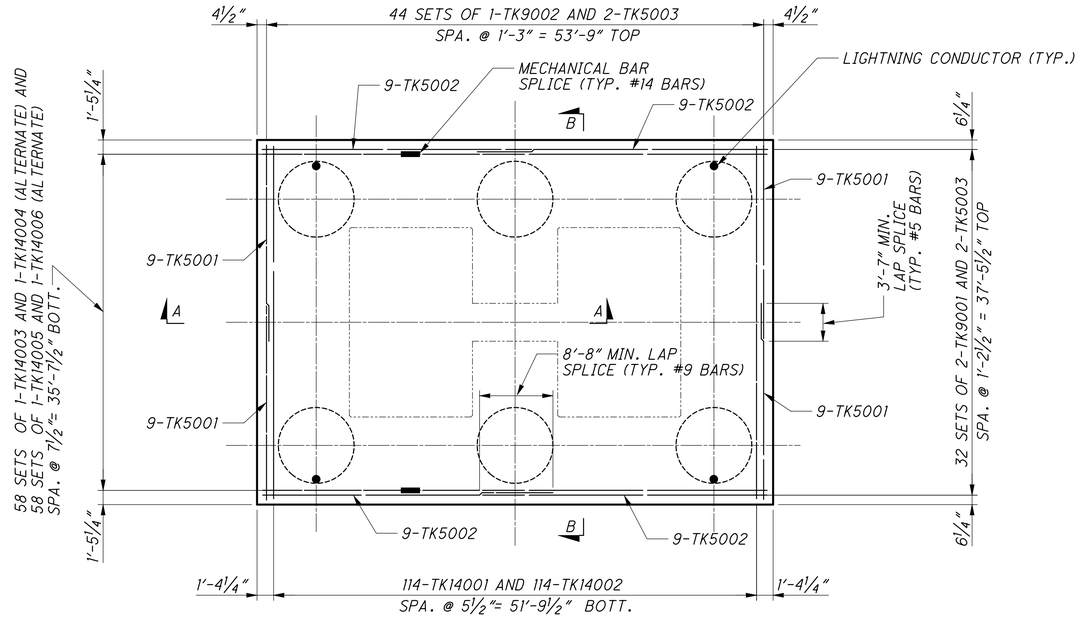

FOOTING REINFORCING PLAN

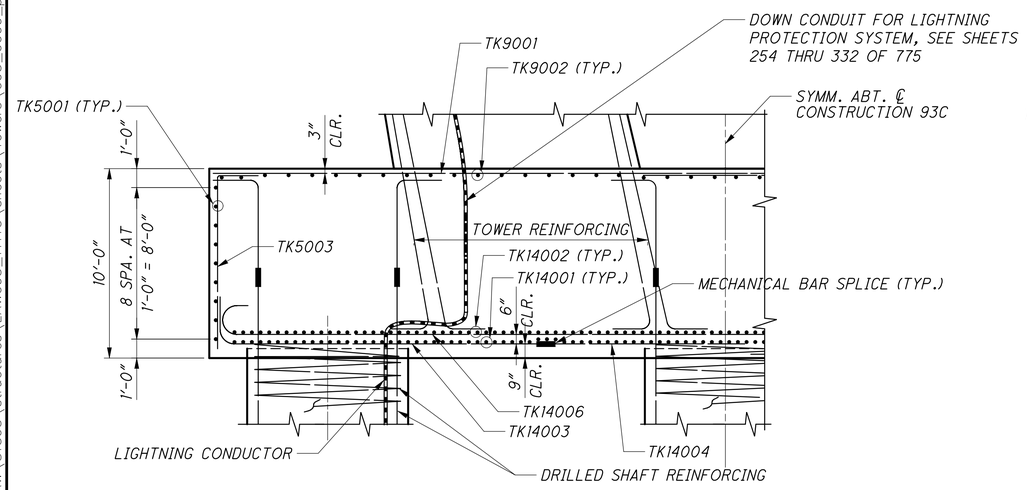

SECTION A-A

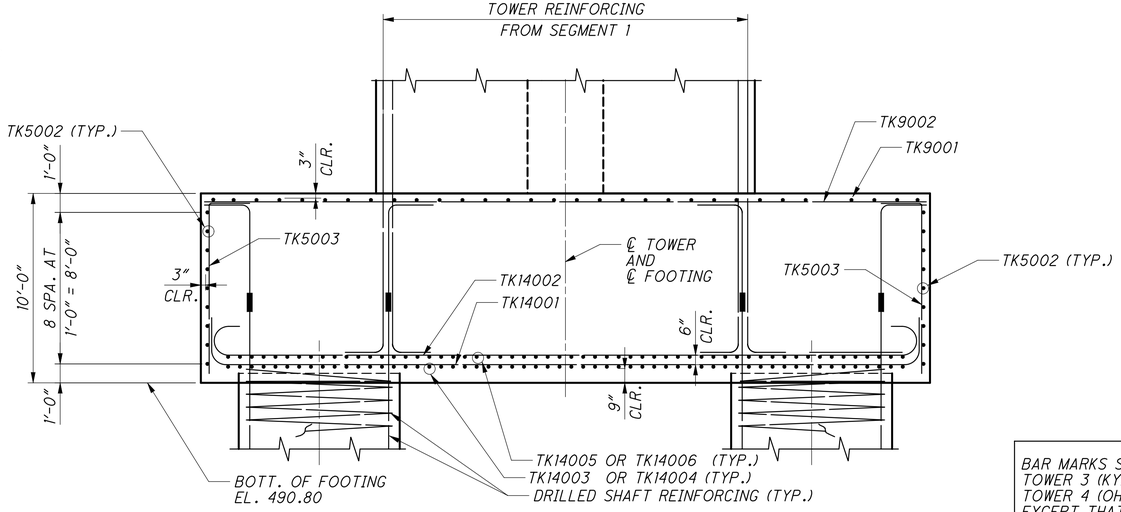

SECTION B-B

BAR MARKS SHOWN APPLY TO TOWER 3 (KY). BAR MARKS FOR TOWER 4 (OH)) ARE THE SAME EXCEPT THAT THE BAR MARK PREFIX WILL BE A "TH" RATHER THAN A "TK".

NOTES

1. CONTRACTOR SHALL ADJUST BAR SPACING AS REQURIED TO CLEAR DRILLED SHAFT AND TOWER LEG REINFORCEMENT.
2. FOR REINFORCING STEEL LIST, SEE SHEET 278/365
3. FOR GROUNDING AND LIGHTNING PROTECTION SYSTEM AT FOUNDATION, SEE SHEETS 290 THRU 296 OF 775.
4. CONTRACTOR IS RESPONIBLE FOR DESIGN OF COFFER DAM AND TREMIE SEAL. TREMIE SEAL NOT SHOWN.

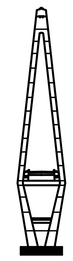

KEY ELEVATION

DESIGN AGENCY
URS
36 EAST 7TH STREET
SUITE 2300
CINCINNATI, OHIO 45202

DESIGNED	DRAWN	REVIEWED	DATE
BER	JGC	BA	6-10
CHECKED	REVISED	STRUCTURE FILE NUMBER	
MJZ		4401263	

TOWER REINFORCING - FOOTING
BRIDGE NO. LAW-93-0000
IRONTON RUSSEL BRIDGE OVER OHIO RIVER

LAW-93-0.00
PID No. 81595

82/365

469
788

J:\Project\O\ODOT\15005112 Ironton Russell\LAW\81595\structures\LAW093_1111C\sheets\Towers\093_0000_pi305.dgn — 4/29/2011 9:28:02 AM — john_corley

Link to RFI106 As-Built

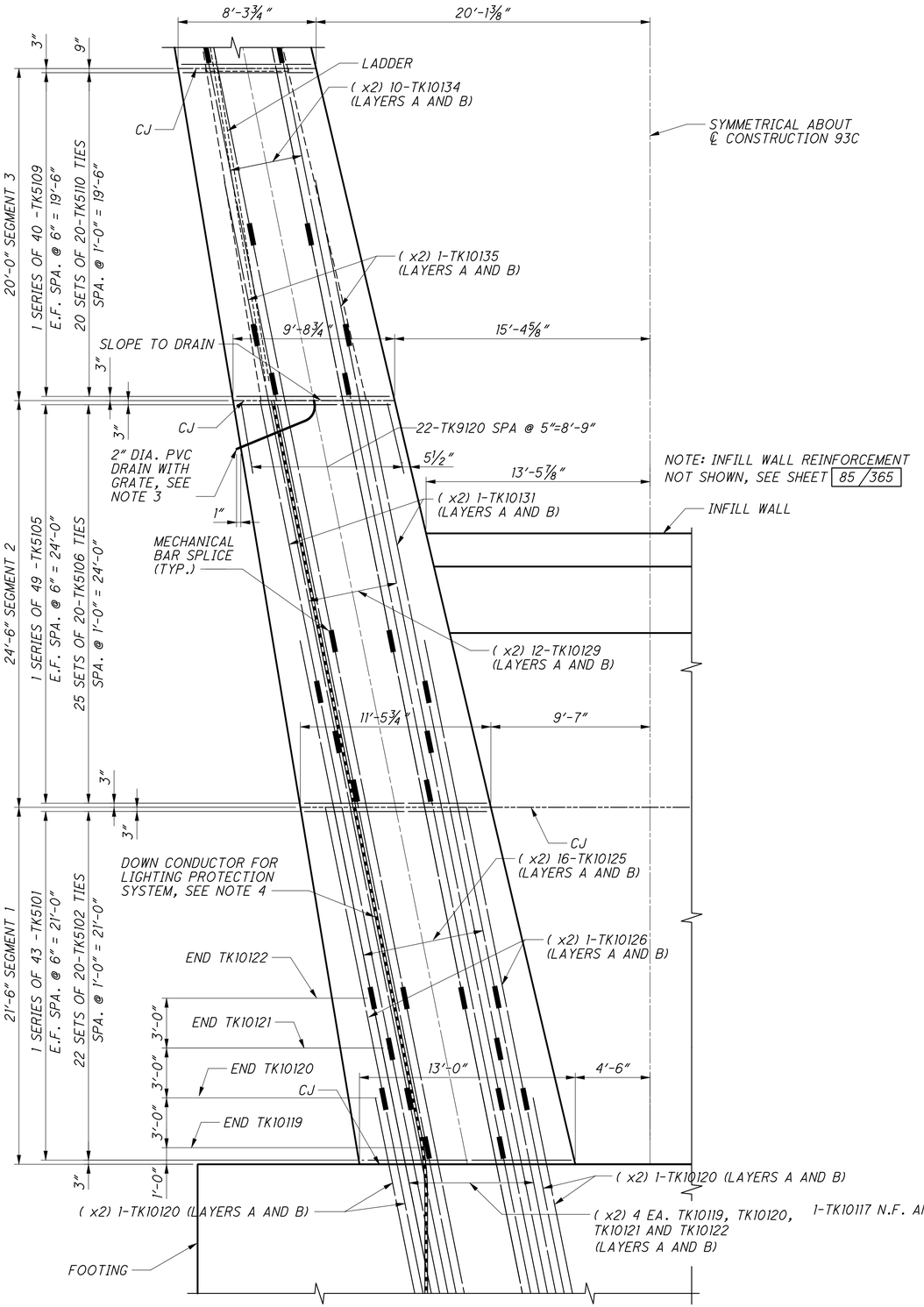

HALF TOWER ELEVATION - SEGMENTS 1, 2 AND 3

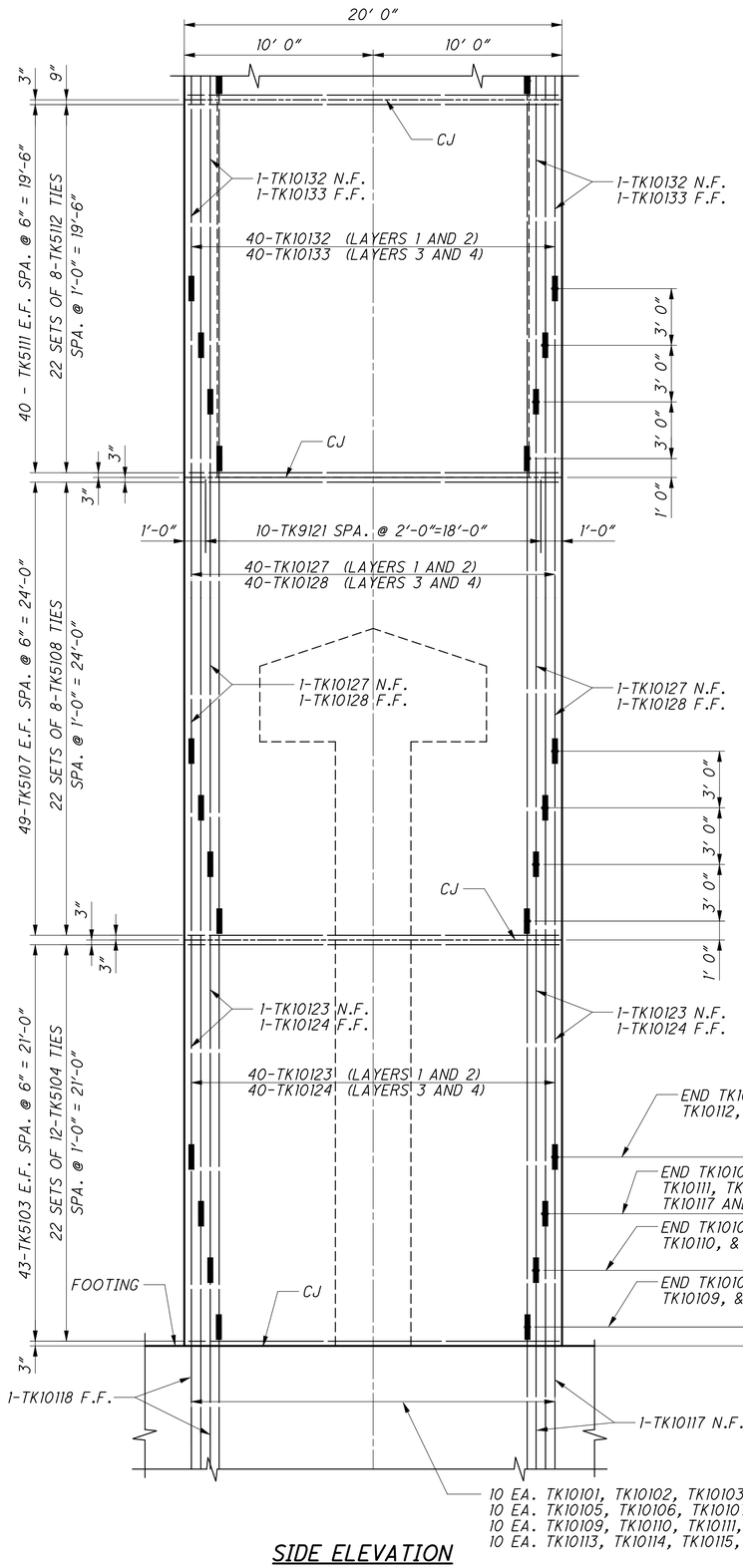

SIDE ELEVATION

NOTES

1. FOR HORIZONTAL SECTIONS, SEE SHEET 84/365
2. FOR REINFORCING STEEL LIST, SEE SHEET 278/365
3. COST OF FURNISHING AND INSTALLING 2″ DIAMETER PVC DRAIN AND GRATE SHALL BE CONSIDERED INCIDENTAL TO TOWER CONCRETE.
4. FOR DETAILS OF LIGHTNING PROTECTION AND ELECTRICAL SYSTEMS, SEE ELECTRICAL DRAWINGS.

ONE TOWER LEG IS SHOWN FOR DETAILING PURPOSES. THE OTHER TOWER LEG IS SYMMETRICAL ABOUT THE ℄ CONSTRUCTION 93C.
THE REINFORCING STEEL LIST INCLUDES REINFORCING FOR BOTH LEGS.

BAR MARKS SHOWN APPLY TO TOWER 3 (KY). BAR MARKS FOR TOWER 4 (OH)) ARE THE SAME EXCEPT THAT THE BAR MARK PREFIX WILL BE A "TH" RATHER THAN A "TK".

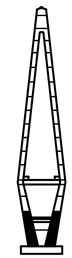

KEY ELEVATION

DESIGN AGENCY
URS
36 EAST 7TH STREET
SUITE 2300
CINCINNATI, OHIO 45202

DESIGNED	DRAWN	REVIEWED	DATE
BER	JGC	BA	6-10
CHECKED	REVISED	STRUCTURE FILE NUMBER	
MJZ		4401263	

TOWER REINFORCING - SEGMENTS 1, 2 AND 3 (1 OF 2)
BRIDGE NO. LAW-93-0000
IRONTON RUSSEL BRIDGE OVER OHIO RIVER

LAW-93-0.00
PID No. 81595

83/365
470/788

J:\Project\O_ODOT\15005112 Ironton Russell\LAW\81595\structures\LAW093_1111C\sheets\Towers\093_0000_pi312.dgn - 4/29/2011 9:28:08 AM - john_corley

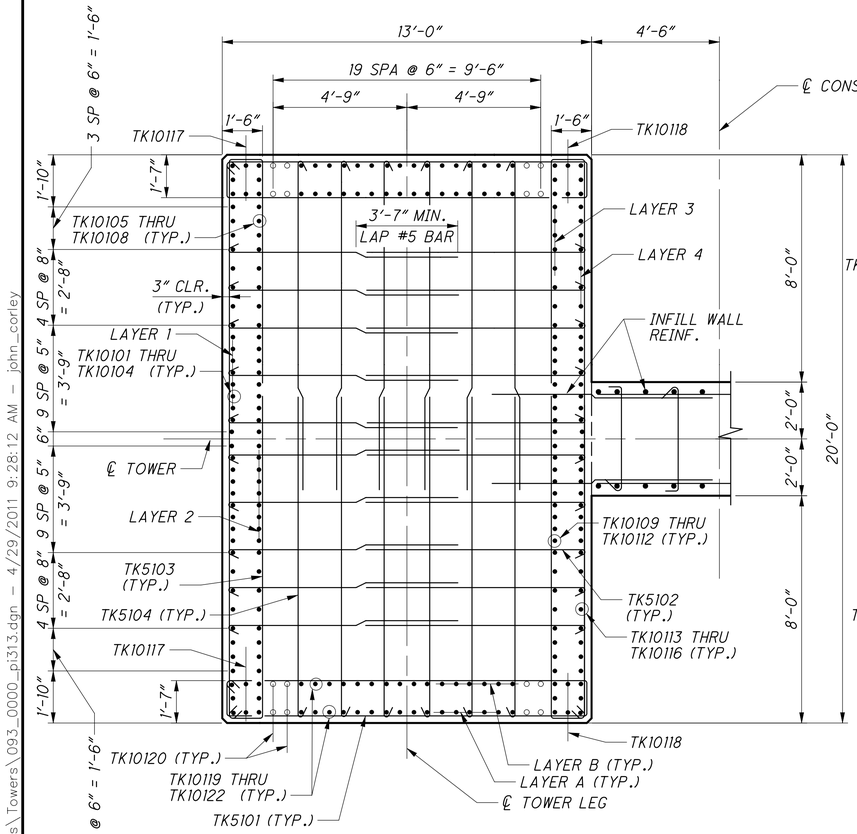

PART SECTION - BOTTOM OF SEGMENT 1

○ INDICATES BARS THAT ARE TERMINATED WITHIN THIS SEGMENT.

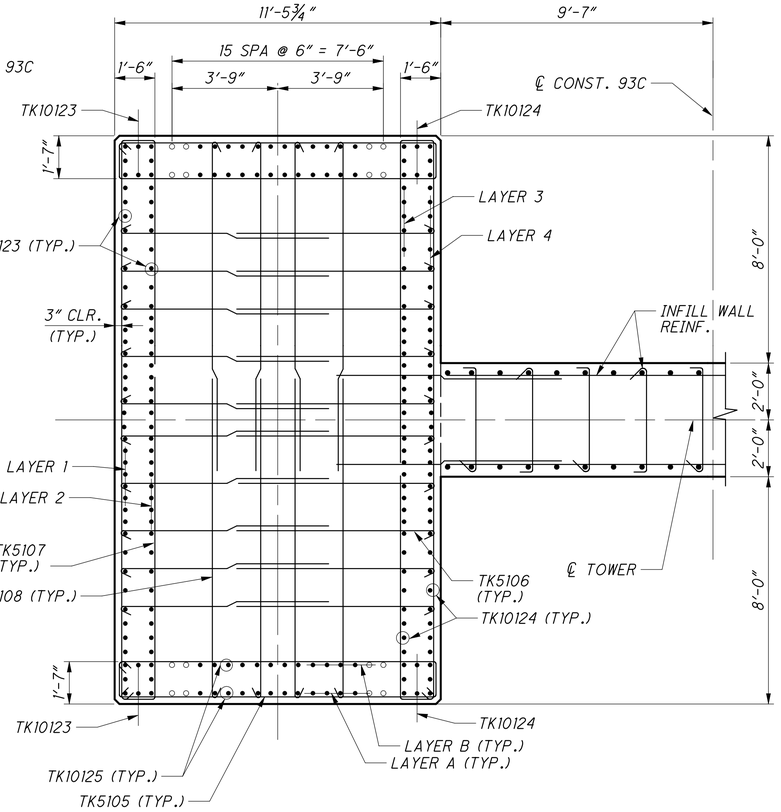

PART SECTION - BOTTOM OF SEGMENT 2

○ INDICATES BARS THAT ARE TERMINATED WITHIN THIS SEGMENT.
FOR DETAILS NOT SHOWN, SEE SEGMENT 1 SECTION.

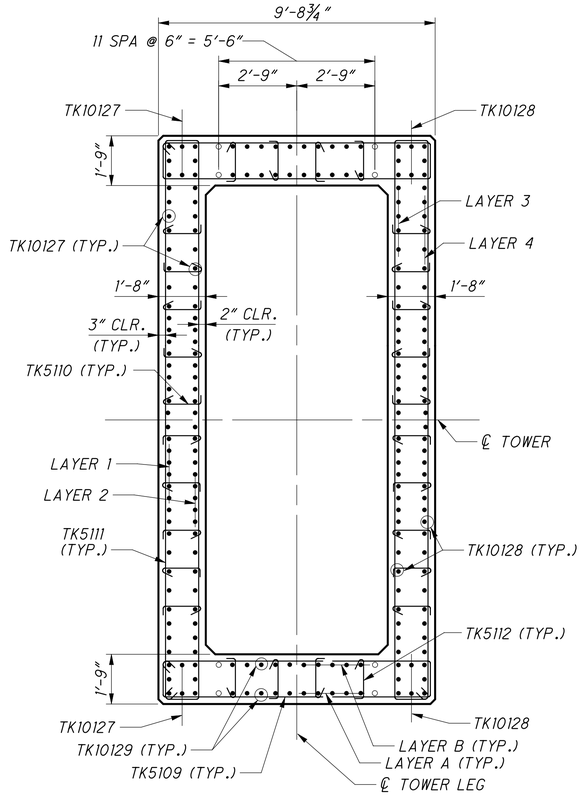

PART SECTION - BOTTOM OF SEGMENT 3

○ INDICATES BARS THAT ARE TERMINATED WITHIN THIS SEGMENT.
FOR DETAILS NOT SHOWN, SEE SEGMENT 1 SECTION.

BAR MARKS SHOWN APPLY TO TOWER 3 (KY). BAR MARKS FOR TOWER 4 (OH)) ARE THE SAME EXCEPT THAT THE BAR MARK PREFIX WILL BE A "TH" RATHER THAN A "TK".

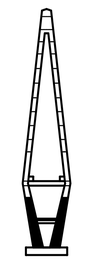

KEY ELEVATION

J:\Project\0\ODOT\15005112 Ironton Russell\LAW\81595\structures\LAW093_1111C\sheets\Towers\093_0000_pi313.dgn — 4/29/2011 9:28:12 AM — john_corley

DESIGN AGENCY
URS
36 EAST 7TH STREET
SUITE 2300
CINCINNATI, OHIO 45202

DESIGNED	DRAWN	REVIEWED	DATE
BER	JGC	BA	6-10
CHECKED	REVISED	STRUCTURE FILE NUMBER	
MJZ		4401263	

TOWER REINFORCING - SEGMENTS 1, 2 AND 3 (2 OF 2)
BRIDGE NO. LAW-93-0000
IRONTON RUSSEL BRIDGE OVER OHIO RIVER

LAW-93-0.00
PID No. 81595

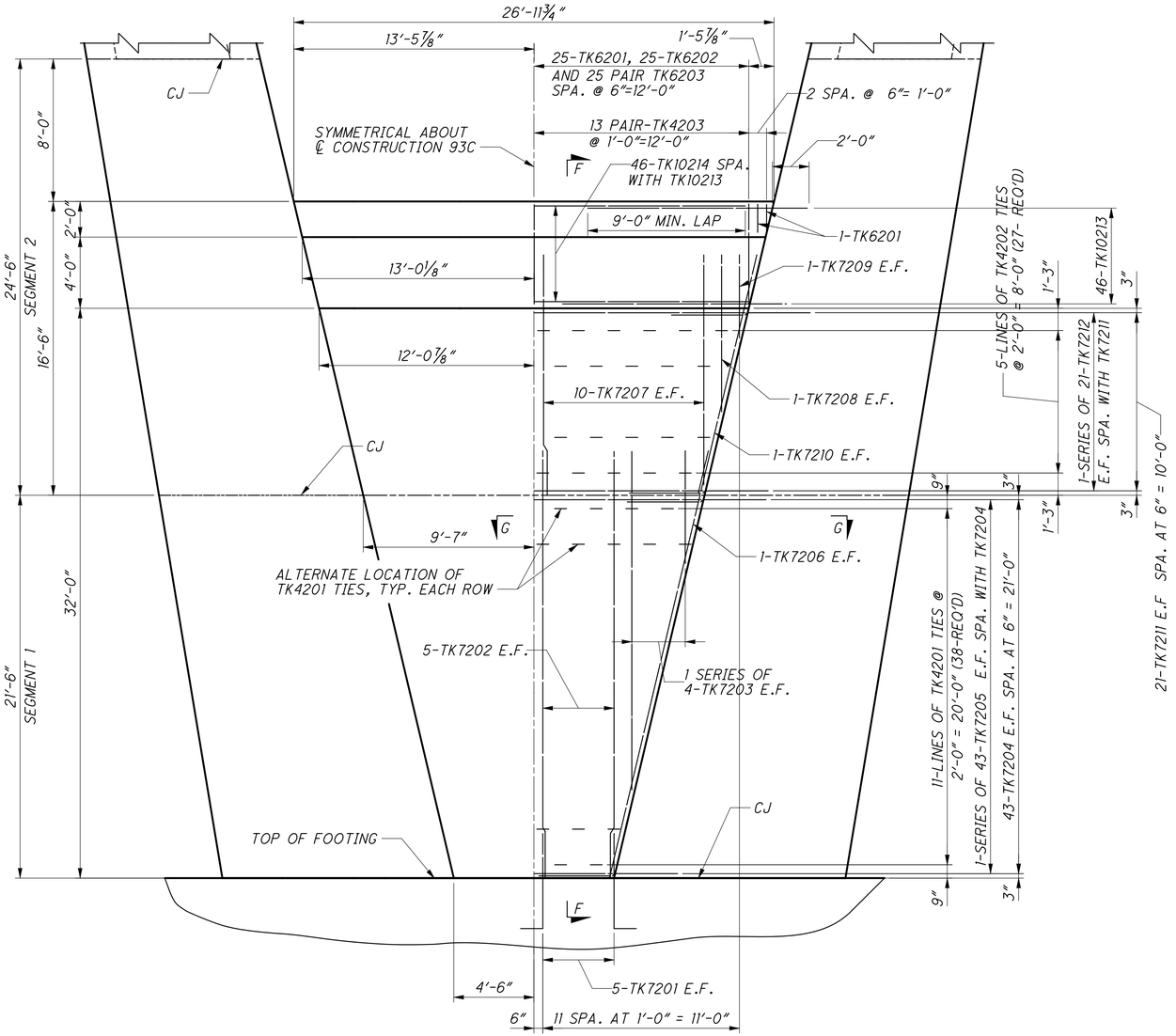

ELEVATION - INFILL WALL

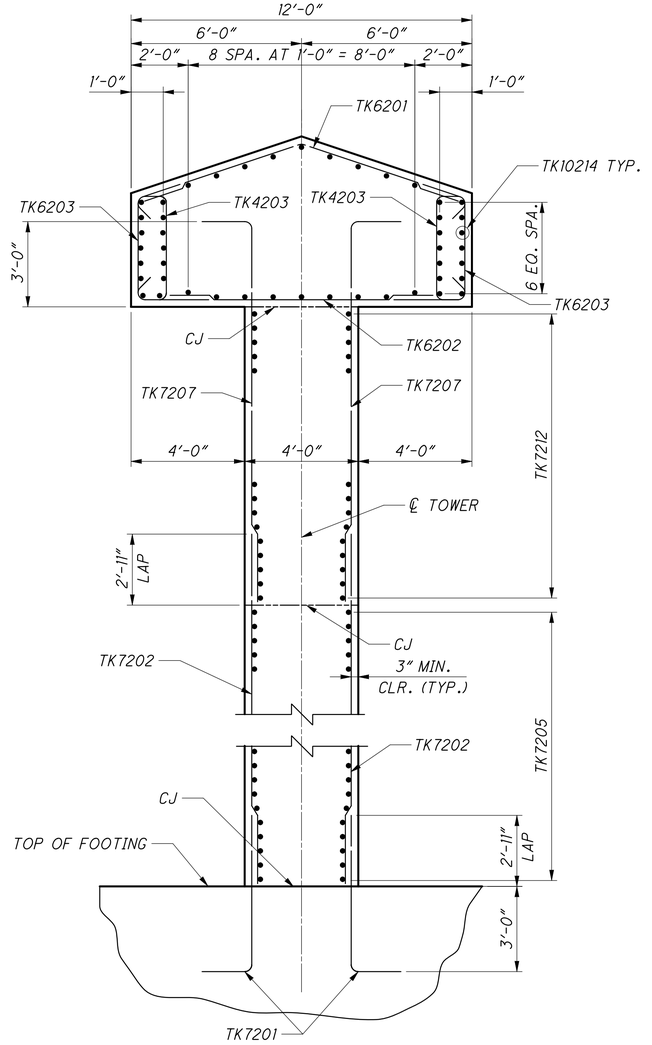

SECTION F-F

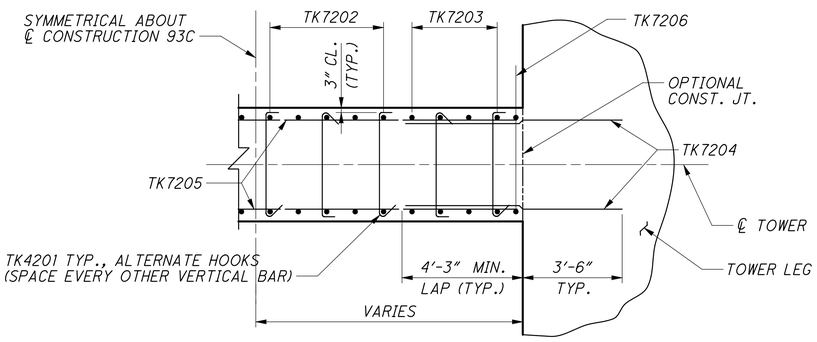

SECTION G-G

BAR MARKS SHOWN APPLY TO TOWER 3 (KY). BAR MARKS FOR TOWER 4 (OH)) ARE THE SAME EXCEPT THAT THE BAR MARK PREFIX WILL BE A "TH" RATHER THAN A "TK".

NOTES

1. FOR REINFORCING STEEL LIST, SEE SHEET 279/365

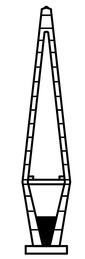

KEY ELEVATION

DESIGN AGENCY
URS
36 EAST 7TH STREET
SUITE 2300
CINCINNATI, OHIO 45202

DESIGNED	DRAWN	REVIEWED	DATE
BER	JGC	BA	6-10
CHECKED	REVISED	STRUCTURE FILE NUMBER	
MJZ		4401263	

TOWER REINFORCING - INFILL WALL
BRIDGE NO. LAW-93-0000
IRONTON RUSSEL BRIDGE OVER OHIO RIVER

LAW-93-0.00
PID No. 81595

85/365

472/788

J:\Project\0\ODOT\15005112 Ironton Russell\LAW\81595\structures\LAW093_1111C\sheets\Towers\093_0000_pi311.dgn - 4/29/2011 9:28:15 AM - john_corley

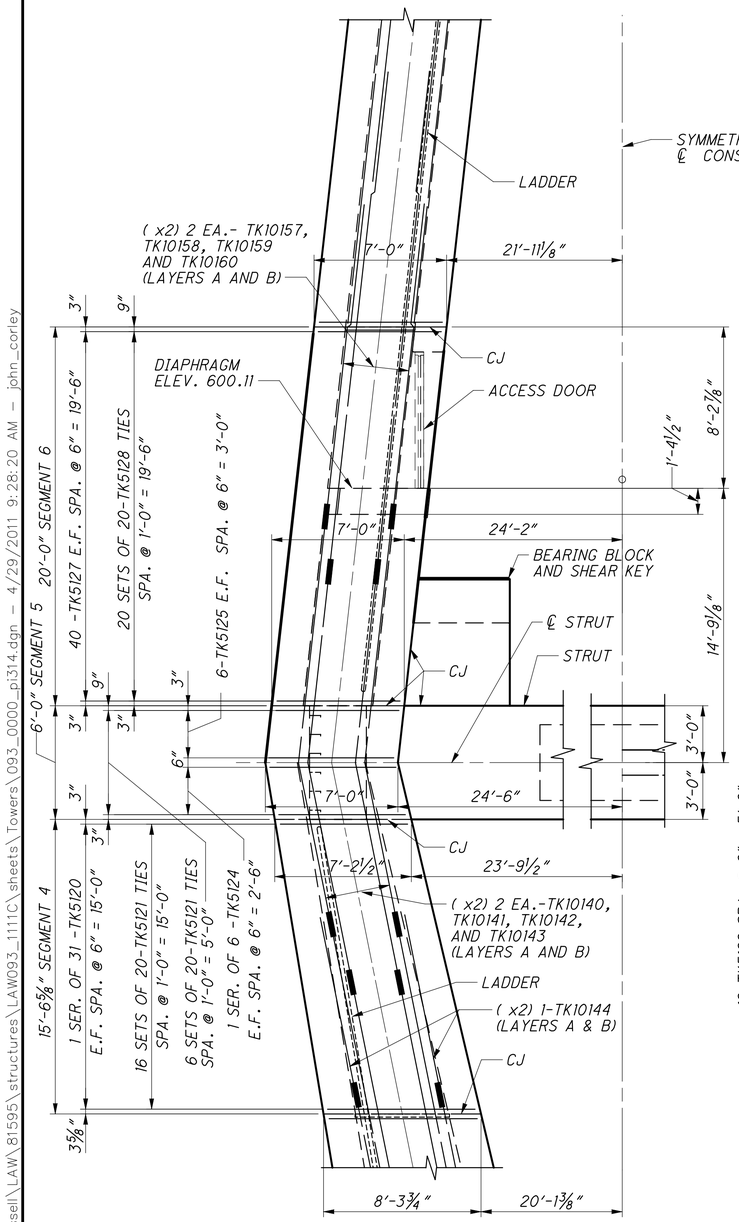

HALF TOWER ELEVATION - SEGMENTS 4, 5 AND 6

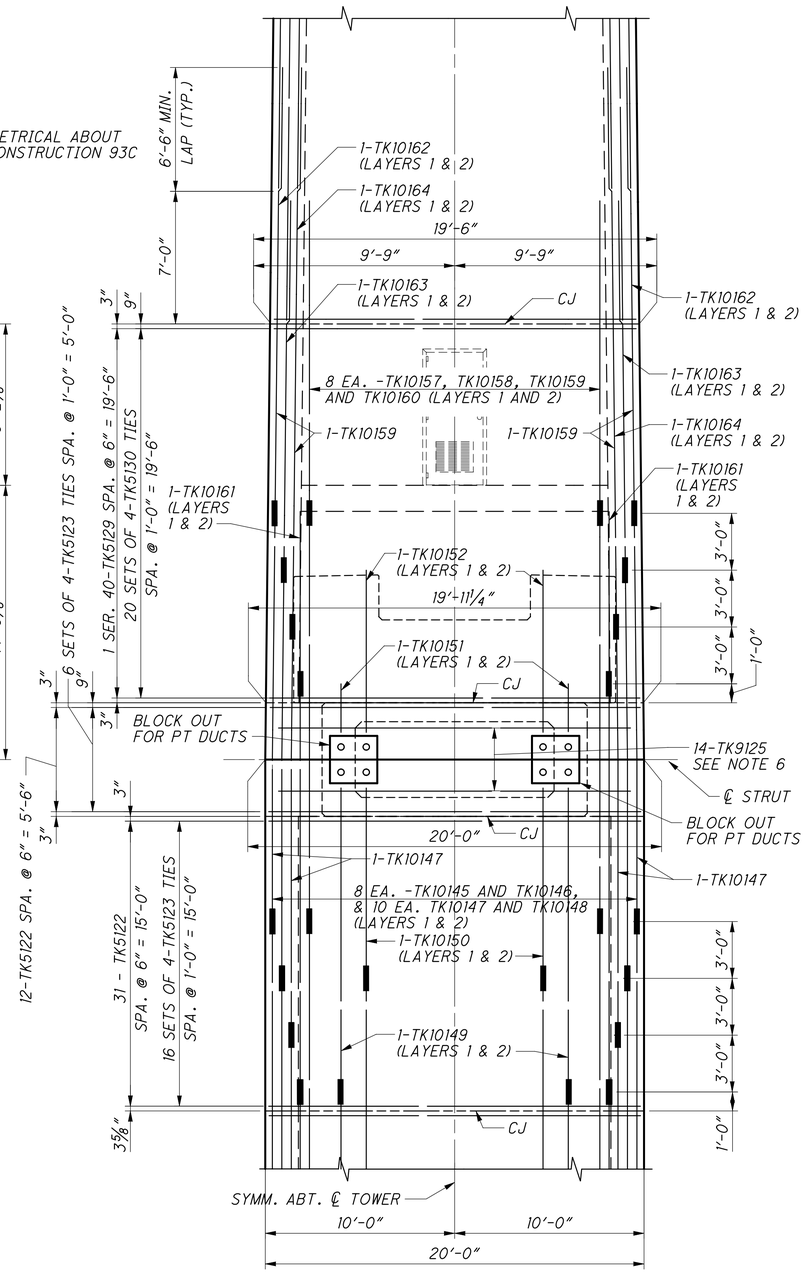

OUTSIDE ELEVATION

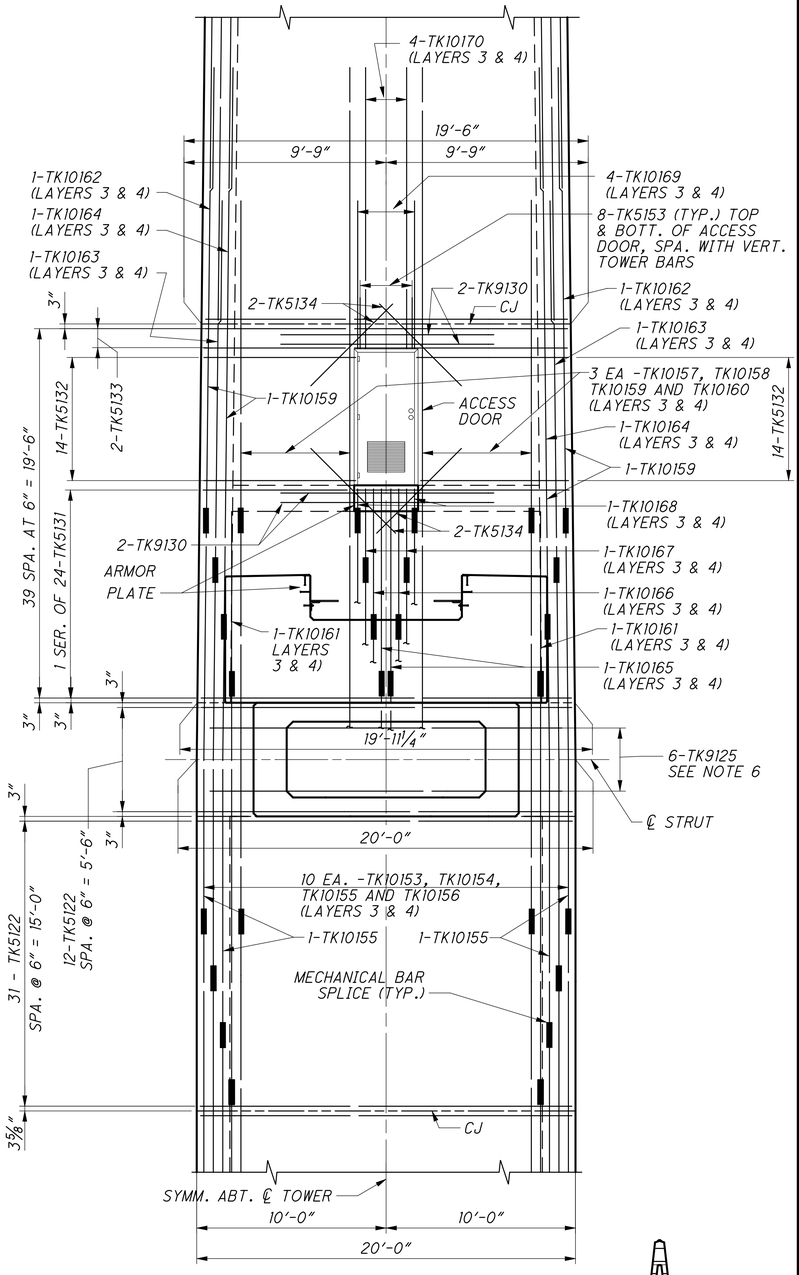

INSIDE ELEVATION

NOTES

1. FOR HORIZONTAL SECTIONS, SEE SHEET 87 / 365 & 88 / 365
2. FOR REINFORCING STEEL LIST, SEE SHEET 280 / 365
3. LIGHTNING PROTECTION SYSTEM NOT SHOWN FOR DETAILS, SEE SHEETS 290 THRU 296 OF 775.
4. FOR ACCESS DOOR DETAILS, SEE SHEET 120 / 365
5. FOR DETAILS OF ARMOR PLATES, SEE SHEET 235 / 365
6. FOR TK9125 SPACING SEE SECTION B-B SHEET 88 / 365

NOTE: STRUT REINFORCEMENT NOT SHOWN, SEE SHEET 89 / 365

ONE TOWER LEG IS SHOWN FOR DETAILING PURPOSES. THE OTHER TOWER LEG IS SYMMETRICAL ABOUT THE ℄ CONSTRUCTION 93C.
THE REINFORCING STEEL LIST INCLUDES REINFORCING FOR BOTH LEGS.

BAR MARKS SHOWN APPLY TO TOWER 3 (KY). BAR MARKS FOR TOWER 4 (OH)) ARE THE SAME EXCEPT THAT THE BAR MARK PREFIX WILL BE A "TH" RATHER THAN A "TK".

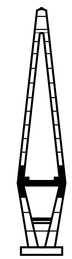

KEY ELEVATION

DESIGN AGENCY
URS
36 EAST 7TH STREET
SUITE 2300
CINCINNATI, OHIO 45202

DESIGNED	DRAWN	CHECKED
BER	JGC	MJZ

REVIEWED	DATE	STRUCTURE FILE NUMBER
BA	6-10	4401263

REVISED

TOWER REINFORCING - SEGMENTS 4, 5 AND 6 (1 OF 3)

BRIDGE NO. LAW-93-0000
IRONTON RUSSEL BRIDGE OVER OHIO RIVER

LAW-93-0.00
PID No. 81595

86 / 365

473 / 788

J:\Project\O\ODOT\15005112 Ironton Russell\LAW\81595\structures\LAW093_1111C\sheets\Towers\093_0000_pi314.dgn - 4/29/2011 9:28:20 AM - john_corley

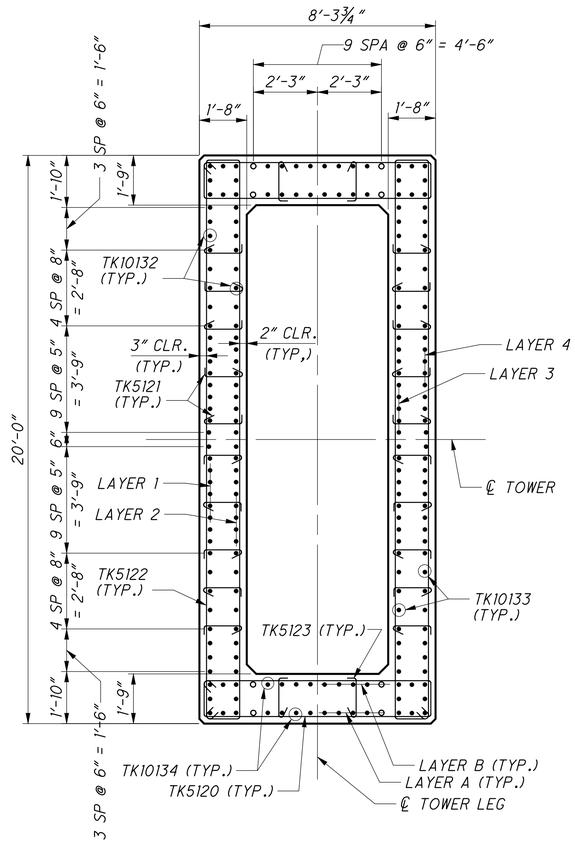

PART SECTION - BOTTOM OF SEGMENT 4

○ INDICATES BARS THAT ARE TERMINATED WITHIN THIS SEGMENT.

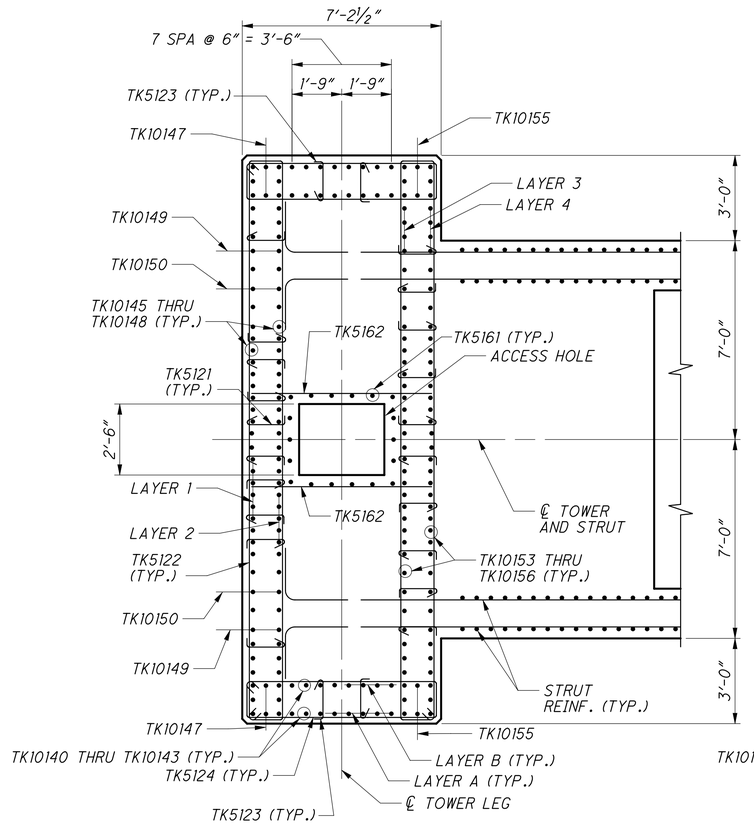

PART SECTION - BOTTOM OF SEGMENT 5

FOR DETAILS NOT SHOWN, SEE BOTTOM OF SEGMENT 4 SECTION.

STRUT BOTTOM REINFORCEMENT NOT SHOWN FOR CLARITY. FOR ADDITIONAL DETAILS SEE STRUT DRAWINGS.

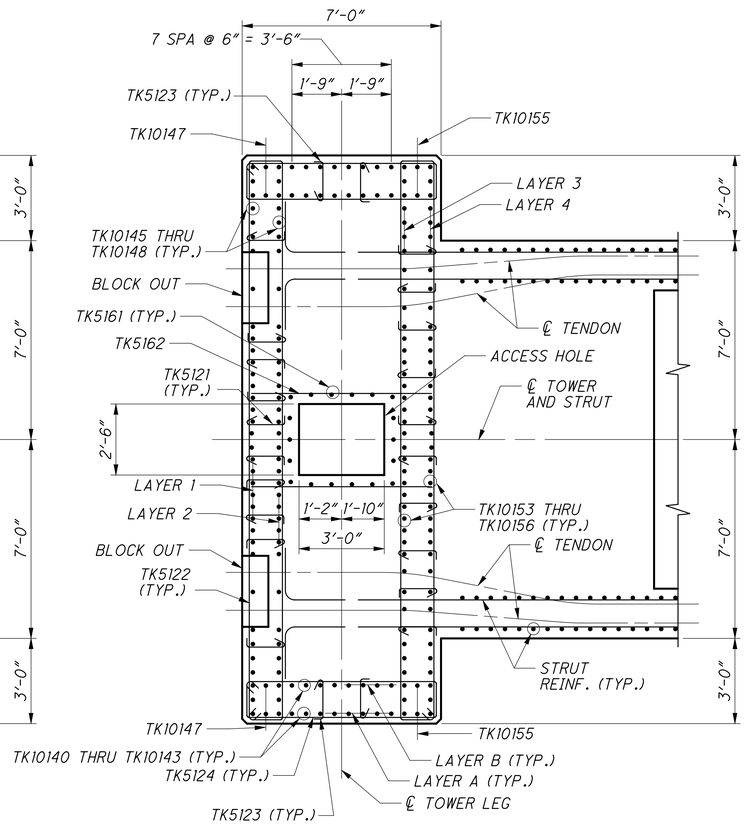

PART SECTION - AT ℄ STRUT - SEGMENT 5

FOR DETAILS NOT SHOWN, SEE BOTTOM OF SEGMENT 4 SECTION.

BAR MARKS SHOWN APPLY TO TOWER 3 (KY). BAR MARKS FOR TOWER 4 (OH)) ARE THE SAME EXCEPT THAT THE BAR MARK PREFIX WILL BE A "TH" RATHER THAN A "TK".



KEY ELEVATION

NOTES

1. FOR STRUT REINFORCEMENT, SEE SHEET 89/365
2. FOR REINFORCING STEEL LIST, SEE SHEET 280/365
3. LIGHTNING PROTECTION SYSTEM NOT SHOWN FOR DETAILS, SEE SHEETS 290 THRU 296 OF 775.
4. FOR ADDITIONAL ACCESS OPENING DETAILS, SEE SHEET 88/365

DESIGN AGENCY
URS
36 EAST 7TH STREET
SUITE 2300
CINCINNATI, OHIO 45202

DESIGNED	DRAWN	REVIEWED	DATE
BER	JGC	BA	6-10
CHECKED	REVISED	STRUCTURE FILE NUMBER	
MJZ		4401263	

TOWER REINFORCING - SEGMENTS 4, 5 AND 6 (2 OF 3)

BRIDGE NO. LAW-93-0000
IRONTON RUSSEL BRIDGE OVER OHIO RIVER

LAW-93-0.00
PID No. 81595

87/365

474/788

J:\Project\O\ODOT\15005112 Ironton Russell\LAW\81595\structures\LAW093_1111C\sheets\Towers\093_0000_pi315.dgn - 4/29/2011 9:28:25 AM - john_corley

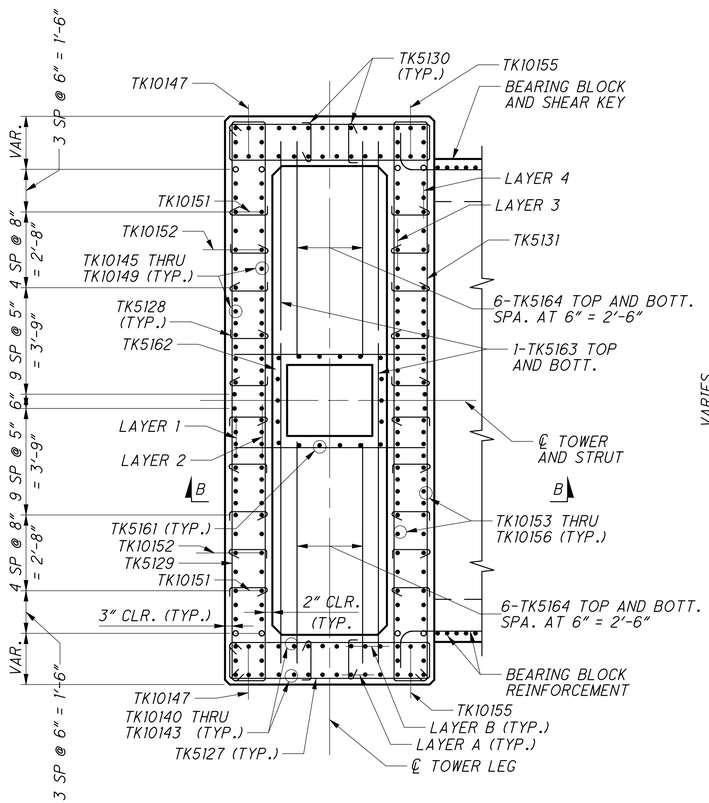

PART SECTION - BOTTOM OF SEGMENT 6

○ INDICATES BARS THAT ARE TERMINATED WITHIN THIS SEGMENT.

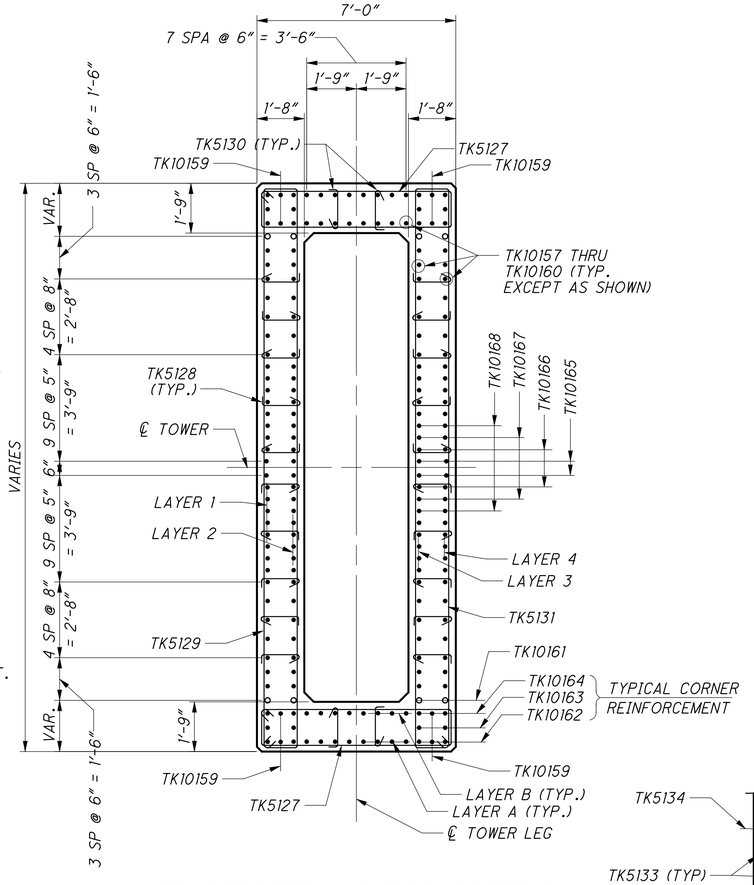

PART SECTION - TYPICAL SEGMENT 6

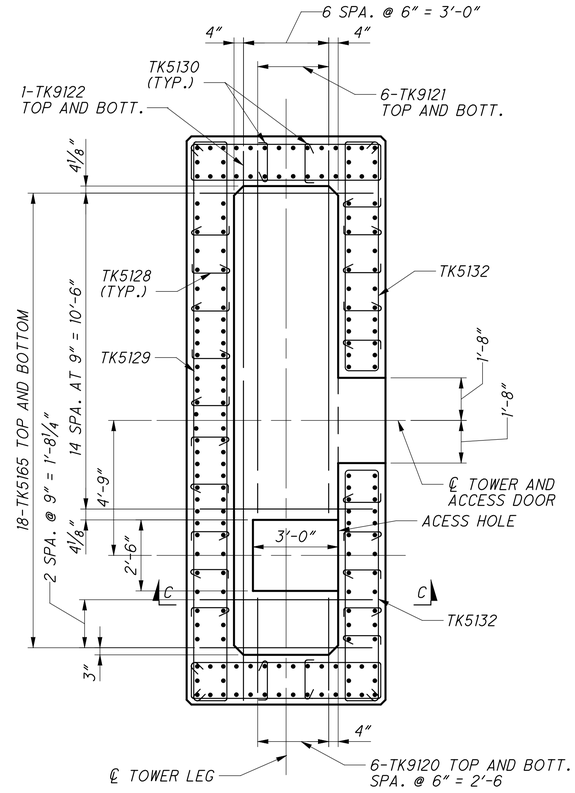

PART SECTION THRU ACCESS DOOR - SEGMENT 6

FOR DETAILS NOT SHOWN, SEE TYPICAL SEGMENT 6.

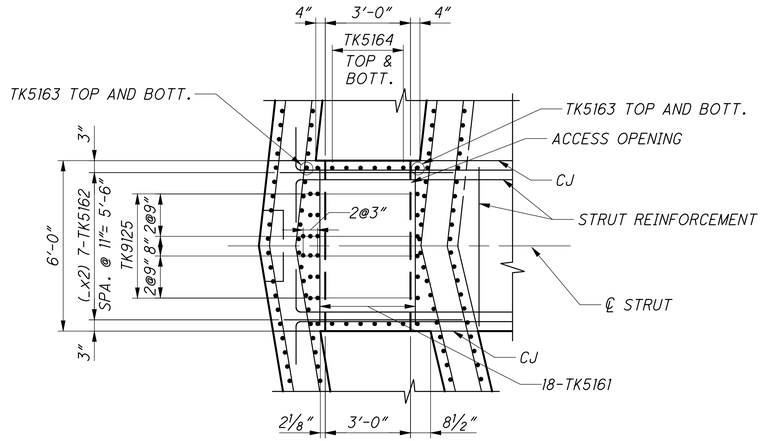

SECTION B-B

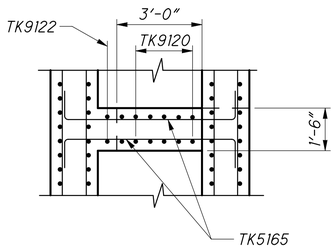

SECTION C-C

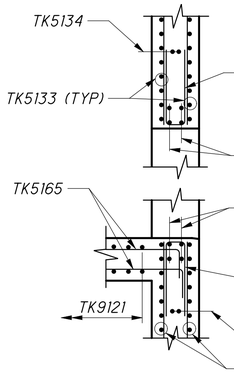

VERTICAL SECTION THRU ACCESS DOOR - SEGMENT 6

BAR MARKS SHOWN APPLY TO TOWER 3 (KY). BAR MARKS FOR TOWER 4 (OH)) ARE THE SAME EXCEPT THAT THE BAR MARK PREFIX WILL BE A "TH" RATHER THAN A "TK".

NOTES

1. FOR STRUT REINFORCEMENT, SEE SHEET 89 / 365
2. FOR REINFORCING STEEL LIST, SEE SHEET 280 / 365
3. LIGHTNING PROTECTION SYSTEM NOT SHOWN FOR DETAILS, SEE SHEETS 290 THRU 296 OF 775.
4. FOR DETAILS OF ACCESS DOOR , SEE SHEET 120 / 365



KEY ELEVATION

DESIGN AGENCY
URS
36 EAST 7TH STREET
SUITE 2300
CINCINNATI, OHIO 45202

DESIGNED	DRAWN	REVIEWED	DATE
BER	JGC	BA	6-10
CHECKED	REVISED	STRUCTURE FILE NUMBER	
MJZ		4401263	

TOWER REINFORCING - SEGMENTS 4, 5 AND 6 (3 OF 3)
BRIDGE NO. LAW-93-0000
IRONTON RUSSEL BRIDGE OVER OHIO RIVER

LAW-93-0.00
PID No. 81595

88 / 365

475 / 788

J:\Project\O\ODOT\15005112 Ironton Russell\LAW\81595\structures\LAW093_1111C\sheets\Towers\093_0000_pi316.dgn — 4/29/2011 9:28:29 AM — john_corley

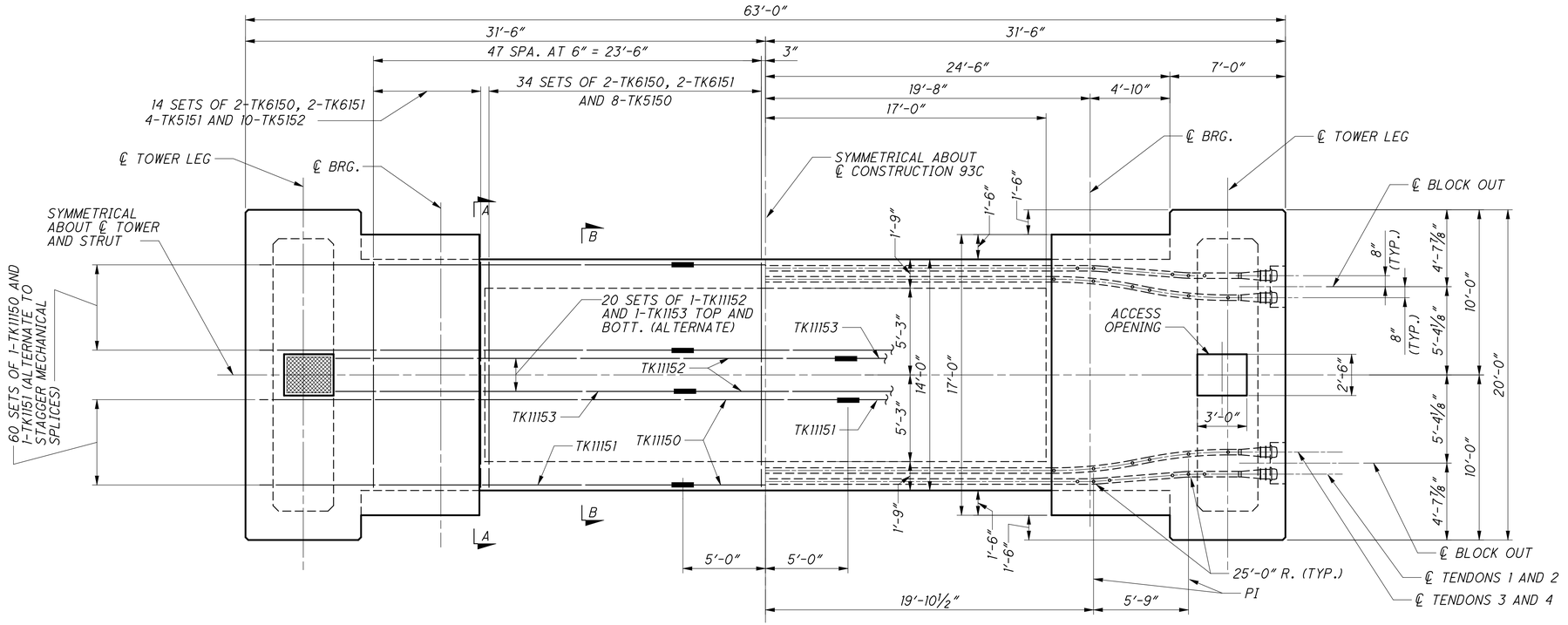

PLAN

DIMENSION SHOWN ARE MEASURED ALONG ℄ OF STRUT.

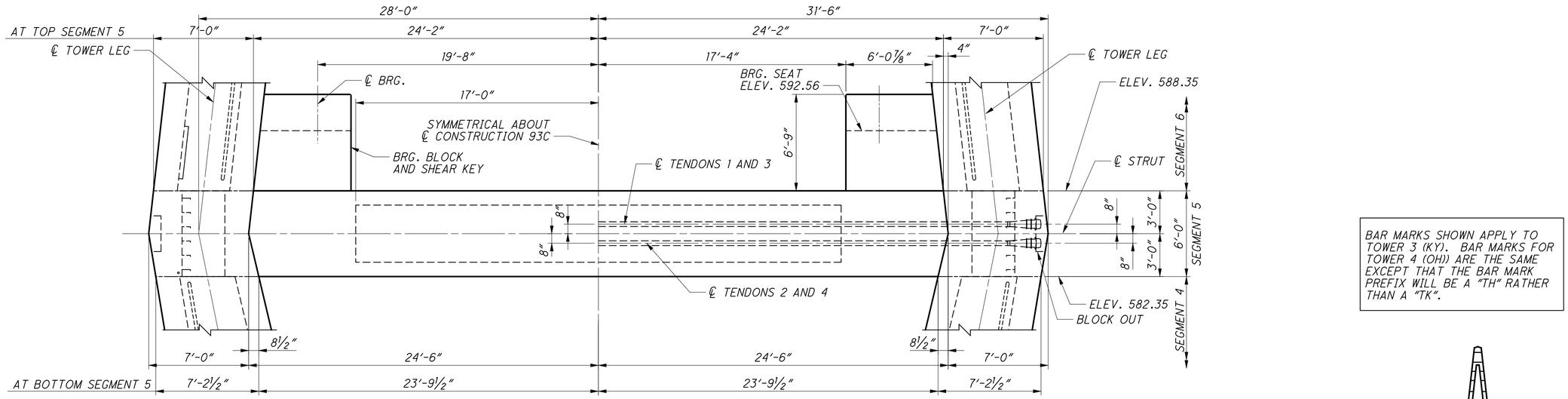

ELEVATION

TOWER STRUT - SEGMENT 5

BAR MARKS SHOWN APPLY TO TOWER 3 (KY). BAR MARKS FOR TOWER 4 (OH)) ARE THE SAME EXCEPT THAT THE BAR MARK PREFIX WILL BE A "TH" RATHER THAN A "TK".

NOTES

1. FOR REINFORCING STEEL LIST, SEE SHEET 280 / 365
2. LIGHTNING PROTECTION SYSTEM NOT SHOWN FOR DETAILS, SEE SHEETS 290 THRU 296 OF 775.
3. FOR SECTIONS A-A AND B-B, SEE SHEET 90 / 365
4. FOR BEARING BLOCK & SHEAR KEY DETAILS, SEE SHEET 90 / 365 & 91 / 365

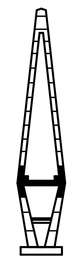

KEY ELEVATION

DESIGN AGENCY
URS
36 EAST 7TH STREET
SUITE 2300
CINCINNATI, OHIO 45202

DESIGNED	DRAWN	REVIEWED	DATE
BER	JGC	BA	6-10
CHECKED	REVISED	STRUCTURE FILE NUMBER	
MJZ		4401263	

TOWER REINFORCEMENT - STRUT DETAILS (1 OF 4)
BRIDGE NO. LAW-93-0000
IRONTON RUSSEL BRIDGE OVER OHIO RIVER

LAW-93-0.00
PID No. 81595

89 / 365

476
788

J:\Project\O\ODOT\15005112 Ironton Russell\LAW\81595\structures\LAW093_1111C\sheets\Towers\093_0000_pi328.dgn — 4/29/2011 9:28:33 AM — john_corley

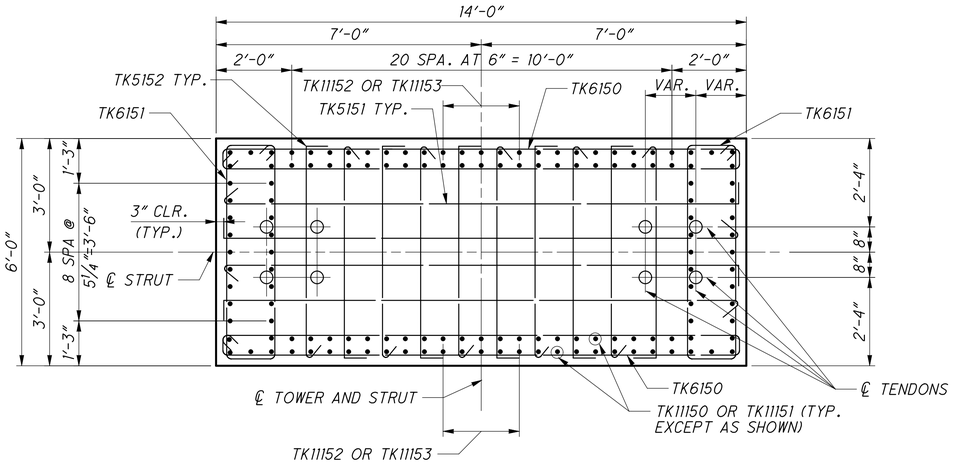

SECTION A-A

SHIFT TK11150 AND TK11151 BARS AS REQUIRED TO CLEAR PT DUCT.

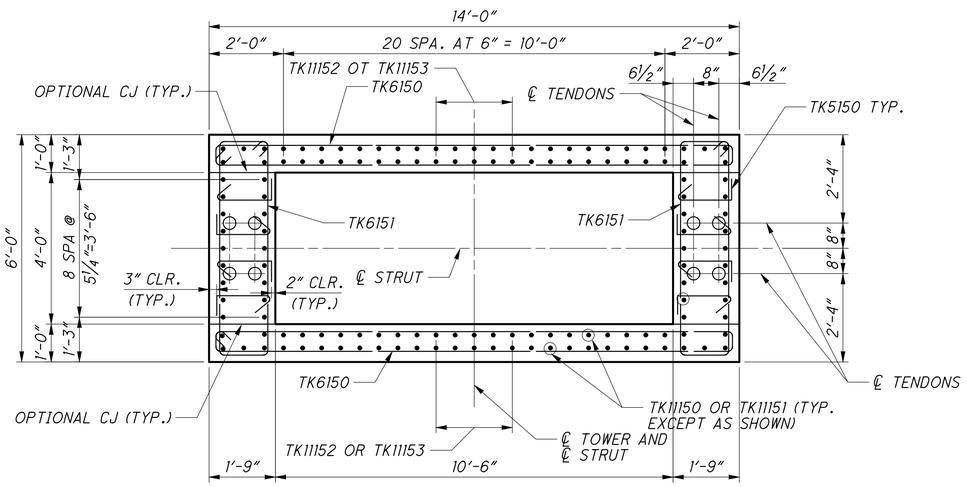

SECTION B-B

SHIFT TK11150 AND TK11151 BARS AS REQUIRED TO CLEAR PT DUCT.

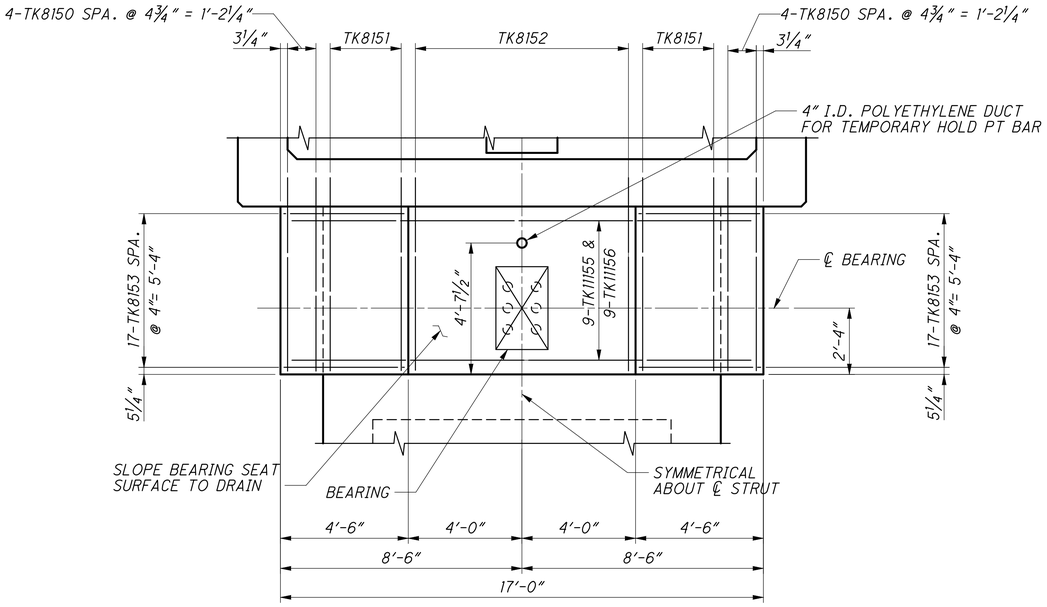

PLAN - BEARING BLOCK/ SHEAR KEY

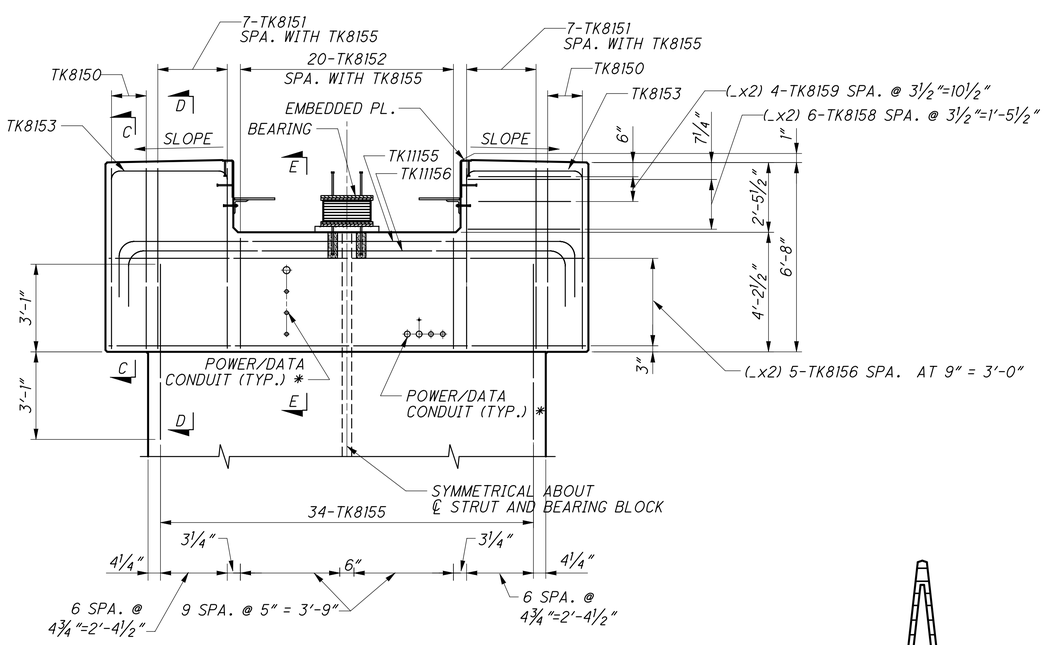

ELEVATION - BEARING BLOCK/SHEAR KEY

* CONDUITS SHALL BE CAST INTO CONCRETE. THE CONTRACTOR IS RESPONSIBLE FOR PROVIDING ADEQUATE PROTRUSION FROM FACE OF CONCRETE FOR ATTACHMENT AND TO PROTECT ENDS OF CONDUIT FROM DAMAGE. COORDINATE WITH DRAWINGS 293 & 294 OF 788 FOR SIZING AND LOCATION OF CONDUITS.

BAR MARKS SHOWN APPLY TO TOWER 3 (KY). BAR MARKS FOR TOWER 4 (OH)) ARE THE SAME EXCEPT THAT THE BAR MARK PREFIX WILL BE A "TH" RATHER THAN A "TK".

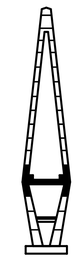

KEY ELEVATION

NOTES

1. FOR BEARING DETAILS, SEE SHEET 241 / 365
2. FOR EMBEDDED PLATE DETAILS, SEE SHEET 235 / 365
3. FOR REINFORCING STEEL LIST, SEE SHEET 280 / 365
4. FOR SECTIONS C-C, D-D AND E-E, SEE SHEET 91 / 365

DESIGN AGENCY
URS
36 EAST 7TH STREET
SUITE 2300
CINCINNATI, OHIO 45202

DESIGNED	DRAWN	REVIEWED	DATE
BER	JGC	BA	6-10
CHECKED	REVISED	STRUCTURE FILE NUMBER	
MJZ		4401263	

TOWER REINFORCEMENT - STRUT DETAILS (2 OF 4)
BRIDGE NO. LAW-93-0000
IRONTON RUSSEL BRIDGE OVER OHIO RIVER

LAW-93-0.00
PID No. 81595

90 / 365

477 / 788

J:\Project\O\ODOT\15005112 Ironton Russell\LAW\81595\structures\LAW093_1111C\sheets\Towers\093_0000_pi329.dgn — 4/29/2011 9:28:36 AM — john_corley

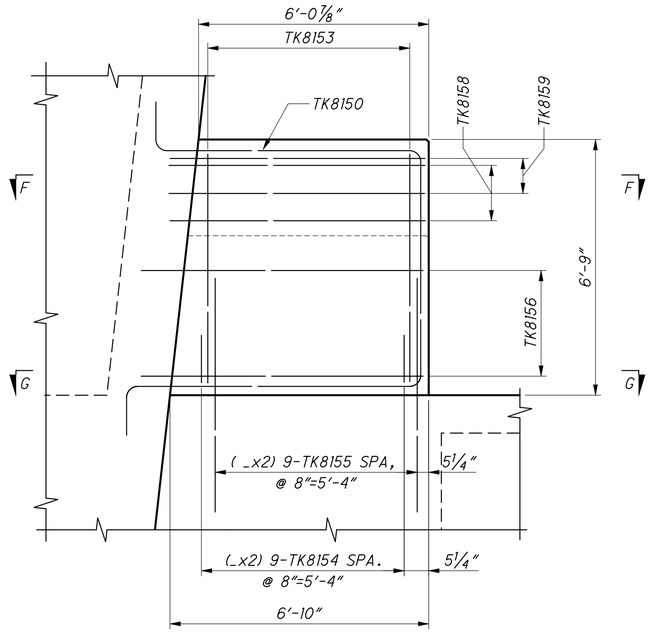

SIDE ELEVATION BEARING BLOCK/SHEAR KEY

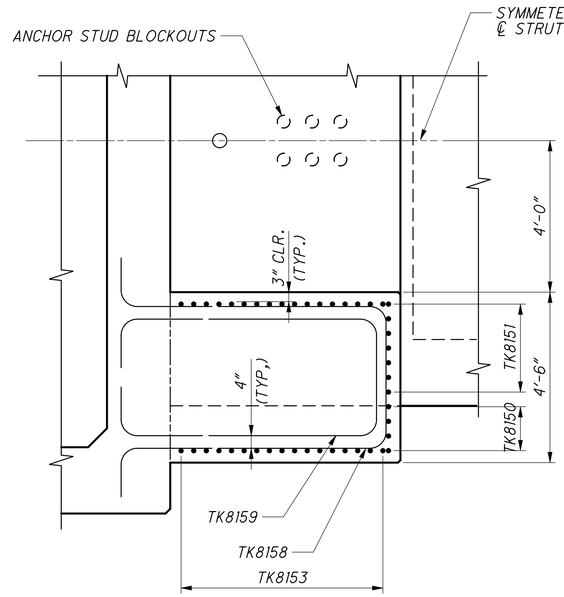

SECTION F-F

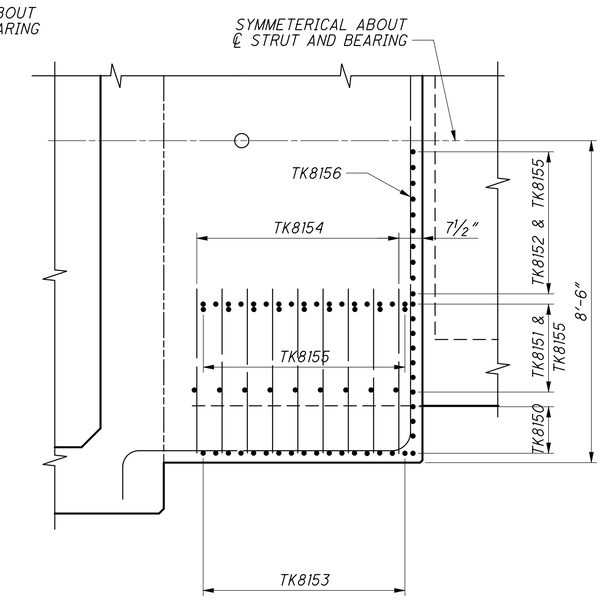

SECTION G-G

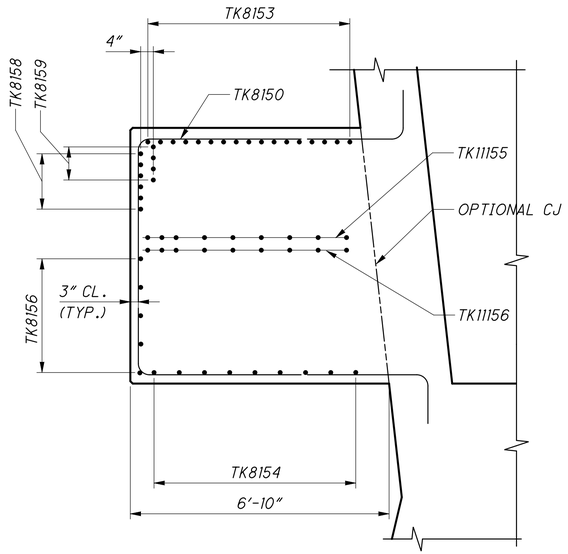

SECTION C-C

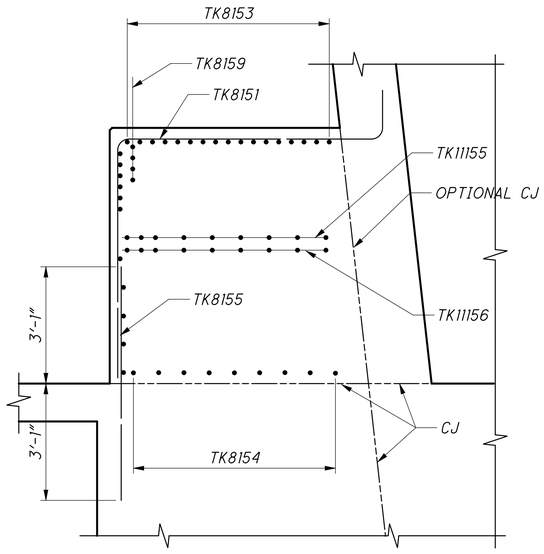

SECTION D-D

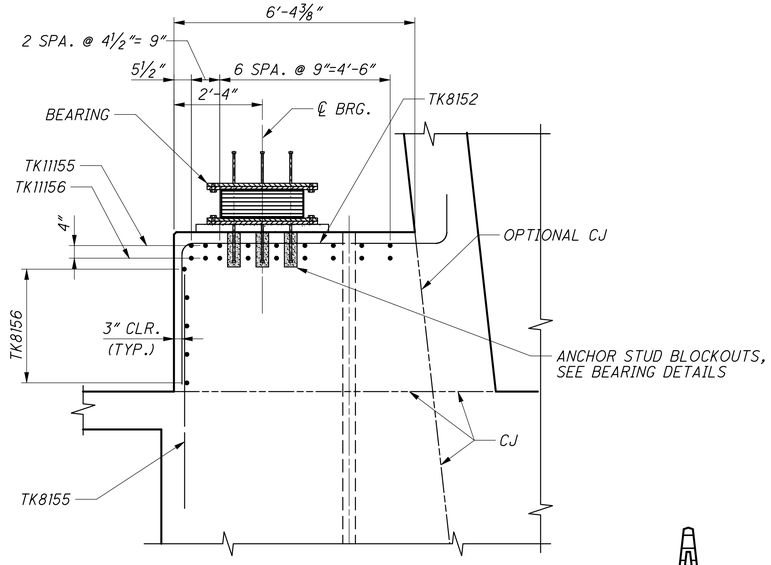

SECTION E-E

NOTES

1. FOR BEARING DETAILS, SEE SHEET 241/365
2. EMBEDED PLATES NOT SHOWN, FOR DETAILS SEE SHEET 235/365
3. FOR REINFORCING STEEL LIST, SEE SHEET 280/365

BAR MARKS SHOWN APPLY TO TOWER 3 (KY). BAR MARKS FOR TOWER 4 (OH)) ARE THE SAME EXCEPT THAT THE BAR MARK PREFIX WILL BE A "TH" RATHER THAN A "TK".

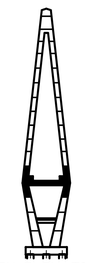

KEY ELEVATION

J:\Project\O\ODOT\15005112 Ironton Russell\LAW\81595\structures\LAW093_1111C\sheets\Towers\093_0000_pi330.dgn — 4/29/2011 9:28:40 AM — john_corley

DESIGN AGENCY
URS
36 EAST 7TH STREET
SUITE 2300
CINCINNATI, OHIO 45202

DESIGNED	DRAWN	REVIEWED	DATE
BER	BMV	BA	6-10
CHECKED	REVISED	STRUCTURE FILE NUMBER	
MJZ		4401263	

TOWER REINFORCEMENT - STRUT DETAILS (3 OF 4)
BRIDGE NO. LAW-93-0000
IRONTON RUSSEL BRIDGE OVER OHIO RIVER

LAW-93-0.00
PID No. 81595

91/365

478/788

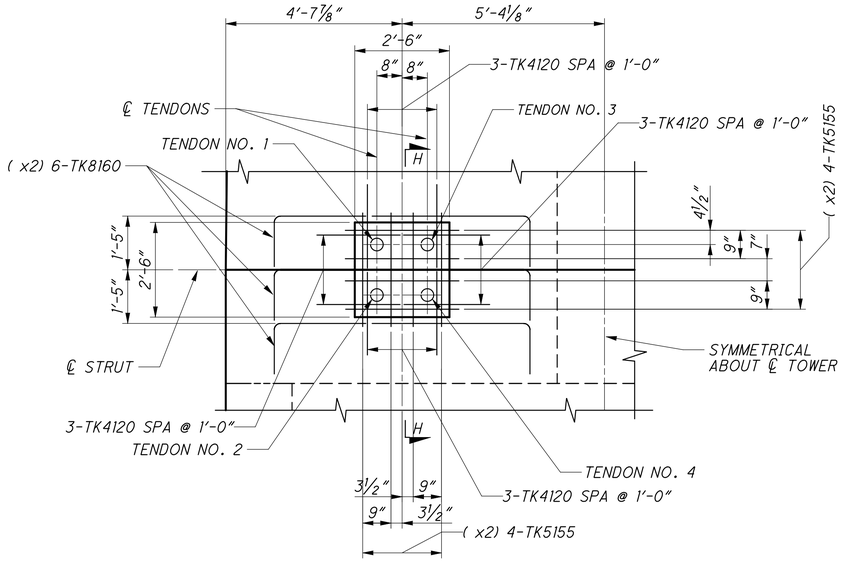

PART BLOCK OUT ELEVATION

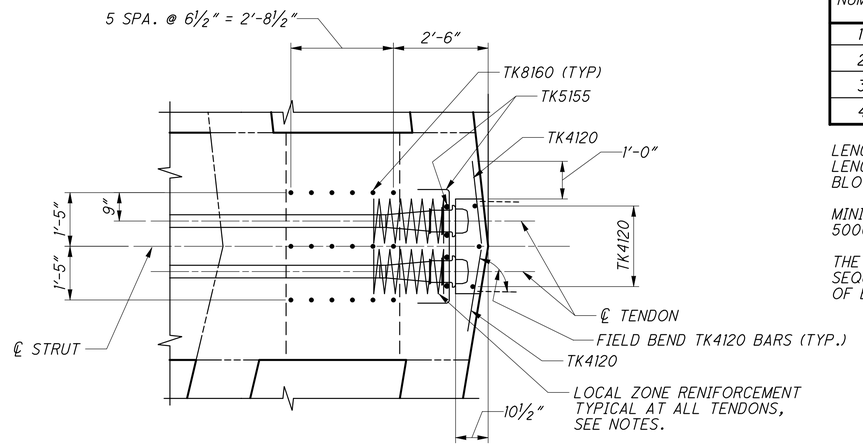

SECTION H-H

TOWER STRUT
TABLE OF POST-TENSIONING TENDONS

TENDON NUMBER	NUMBER OF TENDONS	NUMBER OF 0.6" DIA STRANDS.	TENDON LENGTH (FEET)	JACKING FORCE (KIPS)	TOTAL WEIGHT (LBS)
1	4	19	61'-3"	890.6	3445
2	4	19	61'-3"	890.6	3445
3	4	19	61'-3"	890.6	3445
4	4	19	61'-3"	890.6	3445

LENGTHS INDICATED IN TABLE ARE FOR BIDING PURPOSES ONLY. LENGTHS ARE BASED ON TENDON LENGTHS FROM FACE OF BLOCKOUT TO FACE OF BLOCKOUT.

MINIMUM STRENGTH OF CONCRETE IN TOWER STRUT SHALL BE 5000 PSI PRIOR TO POST-TENSIONING.

THE CONTRACTOR IS RESPONSIBLE FOR ESTABLISHING A STRESS SEQUENCE FOR THE POST- TENSIONING THAT MINIMIZES OUT OF BALANCE FORCES.

POST-TENSIONING DETAILS

POST-TENSIONING NOTES

1. DIMENSIONS SHOWN MAY VARY DEPENDING ON THE POST-TENSIONING SYSTEM USED.
2. THE RECESS SHALL BE ROUGHENED TO AN AMPLITUDE OF ¼".
3. WITHIN 7 DAYS UPON COPMLETION OF TENDON GROUTING, PROTECT THE ANCHORAGE TERMINI OF POST-TENSIONING TENDONS AND GROUT INLET/OUTLET AS INDICATED IN THE SPECIAL PROVISIONS. USE A FACTORY PREPROPORTIONED EPOXY GROUT MEETING THE REQUIREMENTS OF THE SPECIAL PROVISIONS. CLEAN THE AREAS TO BE GROUTED, CONSTRUCT, AND FILL ALL RECESSES IN ACCORDANCE WITH THE SPECIAL PROVISIONS.
4. LOCAL REINFORCEMENT SHALL BE GALVANIZED. COST OF LOCAL REINFORCEMENT AT EACH ANCHORAGE IS INCIDENTAL TO THE COST OF POST-TENSIONING. THE SUPPLIER OF THE POST-TENSIONING IS RESPONSIBLE FOR DESIGN OF LOCAL ZONE REINFORCEMENT.

BAR MARKS SHOWN APPLY TO TOWER 3 (KY). BAR MARKS FOR TOWER 4 (OH)) ARE THE SAME EXCEPT THAT THE BAR MARK PREFIX WILL BE A "TH" RATHER THAN A "TK".

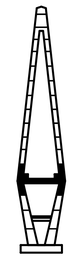

KEY ELEVATION

DESIGN AGENCY
URS
36 EAST 7TH STREET
SUITE 2300
CINCINNATI, OHIO 45202

DESIGNED	DRAWN	REVIEWED	DATE
BER	JGC	BA	6-10
CHECKED	REVISED	STRUCTURE FILE NUMBER	
MJZ		4401263	

TOWER REINFORCEMENT - STRUT DETAILS (4 OF 4)
BRIDGE NO. LAW-93-0000
IRONTON RUSSEL BRIDGE OVER OHIO RIVER

LAW-93-0.00
PID No. 81595

92 / 365

479
788

J:\Project\O\ODOT\15005112 Ironton Russell\LAW\81595\structures\LAW093_1111C\sheets\Towers\093_0000_pi331.dgn - 4/29/2011 9:28:43 AM - john_corley

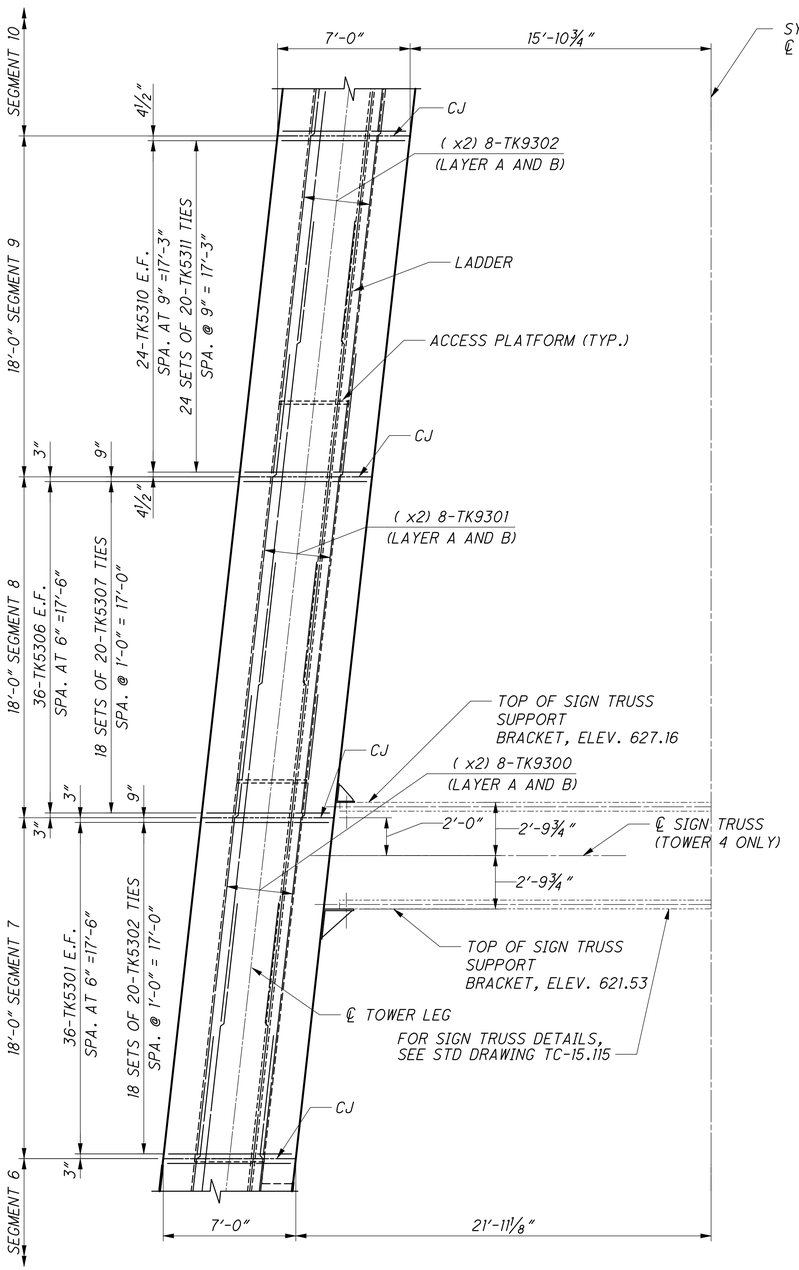

HALF TOWER ELEVATION - SEGMENTS 7, 8 AND 9

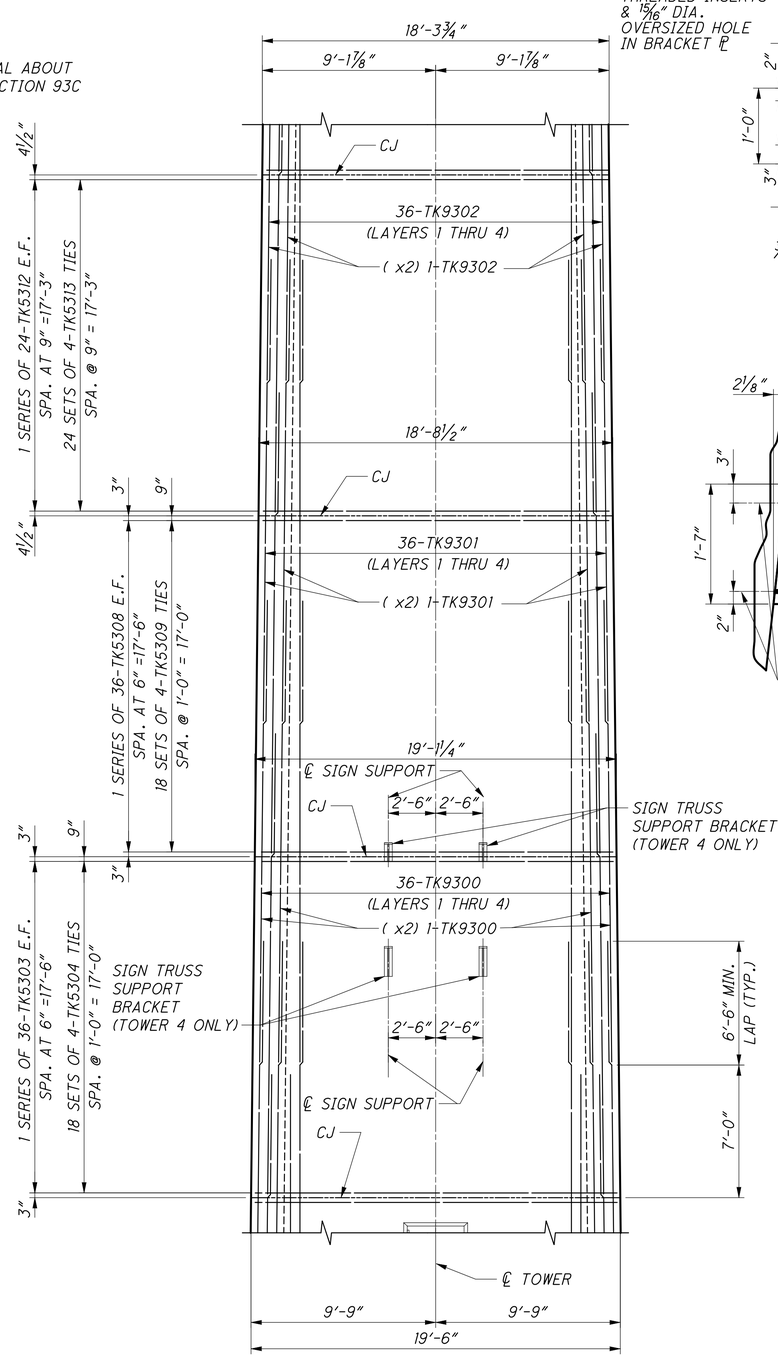

SIDE ELEVATION

NOTES

1. FOR HORIZONTAL SECTIONS, SEE SHEET 94/365
2. FOR REINFORCING STEEL LIST, SEE SHEET 281/365
3. LIGHTNING PROTECTION SYSTEM NOT SHOWN FOR DETAILS, SEE SHEETS 290 THRU 296 OF 775.

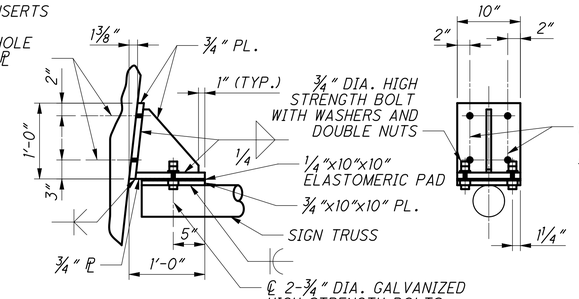

TYPICAL TOP BRACKET DETAILS

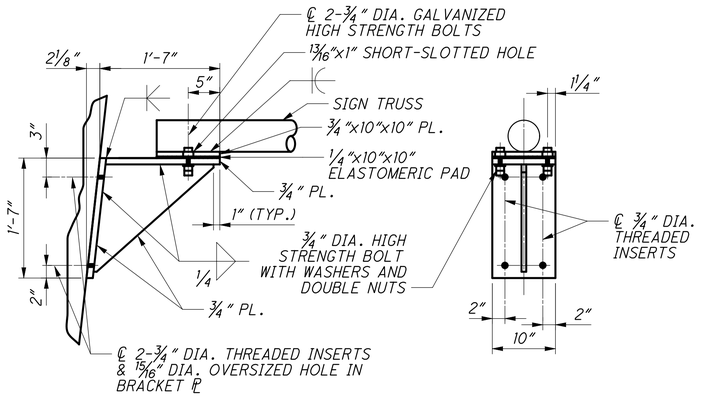

TYPICAL BOTTOM BRACKET DETAILS

SIGN TRUSS SUPPORT BRACKET DETAILS

NOTE: SIGN TRUSS REQUIRED AT TOWER 4 (OH) ONLY.

SUPPORT BRACKETS SHALL BE GALVANIZED AFTER FABRICATION. FOR SIGN TRUSS DETAILS, SEE STD. DRAWING TC-15.115

COST OF FURNISHING AND INSTALLING IN-PLACE THE SUPPORT BRACKETS SHALL BE INCLUDED WITH THE COST OF THE SIGN TRUSS.

HOLD DOWN CLAMP TO HAVE PTFE SLIDE PLATES ON ALL SURFACES THAT CONTACT SIGN TRUSS.

HOLD DOWN MUST HAVE A MINIMUM LATERAL SAFE WORKING LOAD LIMIT OF 4,000 LBS.

ONE TOWER LEG IS SHOWN FOR DETAILING PURPOSES. THE OTHER TOWER LEG IS SYMMETRICAL ABOUT THE ℄ CONSTRUCTION 93C.
THE REINFORCING STEEL LIST INCLUDES REINFORCING FOR BOTH LEGS.

BAR MARKS SHOWN APPLY TO TOWER 3 (KY). BAR MARKS FOR TOWER 4 (OH)) ARE THE SAME EXCEPT THAT THE BAR MARK PREFIX WILL BE A "TH" RATHER THAN A "TK".



KEY ELEVATION

DESIGN AGENCY
URS
36 EAST 7TH STREET
SUITE 2300
CINCINNATI, OHIO 45202

DESIGNED	DRAWN	REVIEWED	DATE
BER	JGC	BA	6-10
CHECKED	REVISED		STRUCTURE FILE NUMBER
MJZ			4401263

TOWER REINFORCING - SEGMENTS 7, 8 AND 9 (1 OF 2)

BRIDGE NO. LAW-93-0000
IRONTON RUSSEL BRIDGE OVER OHIO RIVER

LAW-93-0.00
PID No. 81595

93/365

480/788

J:\Project\O\ODOT\15005112 Ironton Russell\LAW\81595\structures\LAW093_1111C\sheets\Towers\093_0000_pi317.dgn — 4/29/2011 9:28:47 AM — john_corley

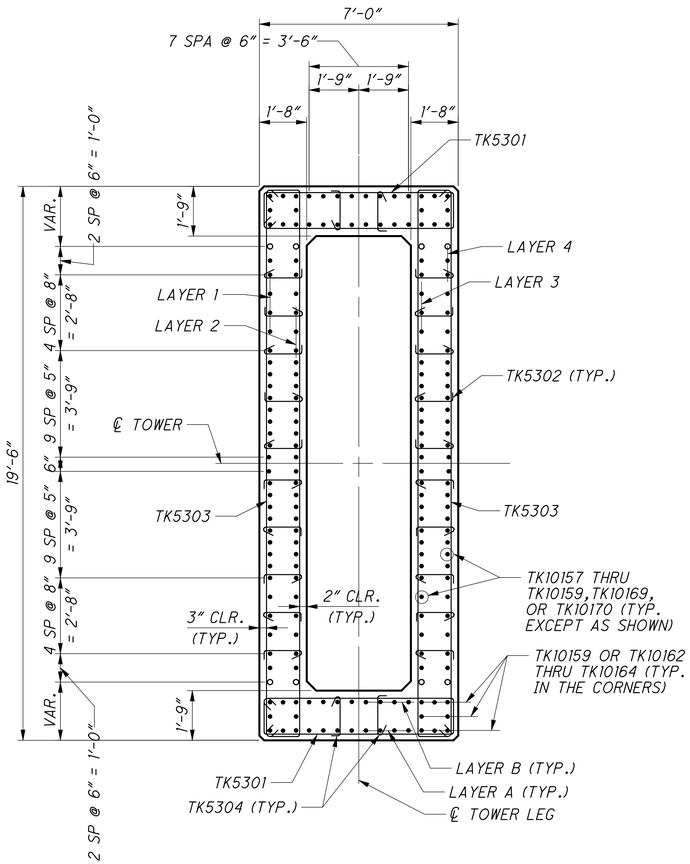

PART SECTION - BOTTOM OF SEGMENT 7

○ INDICATES BARS THAT ARE TERMINATED WITHIN THIS SEGMENT.

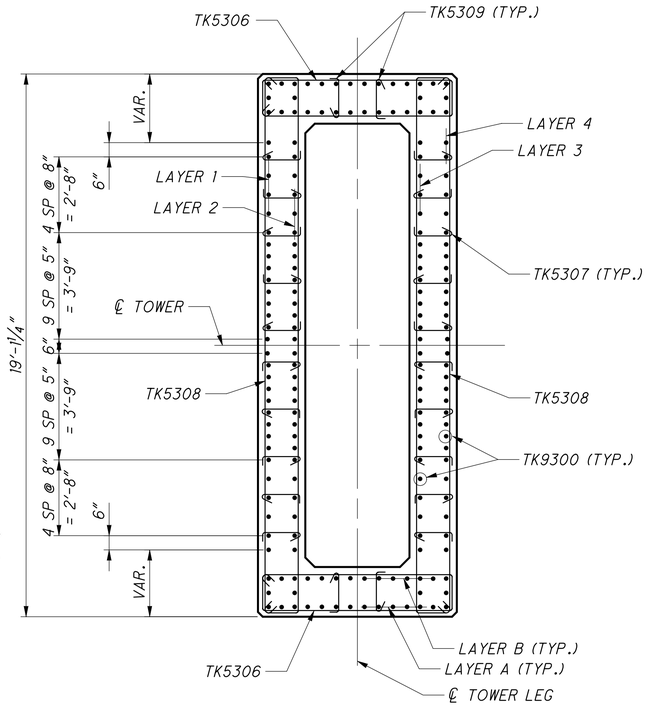

PART SECTION - BOTTOM OF SEGMENT 8

FOR DETAILS NOT SHOWN, SEE SEGEMENT 7 SECTION.

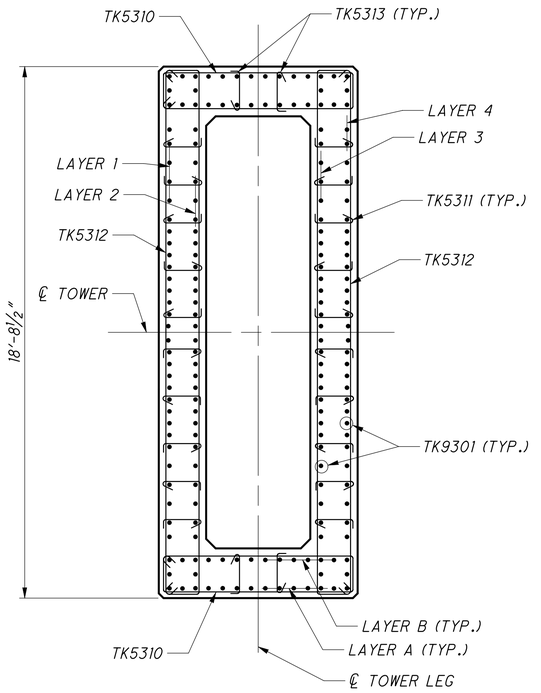

PART SECTION - BOTTOM OF SEGMENT 9

FOR DETAILS NOT SHOWN, SEE SEGEMENT 7 SECTION.

BAR MARKS SHOWN APPLY TO TOWER 3 (KY). BAR MARKS FOR TOWER 4 (OH)) ARE THE SAME EXCEPT THAT THE BAR MARK PREFIX WILL BE A "TH" RATHER THAN A "TK".

NOTES

1. FOR REINFORCING STEEL LIST, SEE SHEET 281/365
2. LIGHTNING PROTECTION SYSTEM NOT SHOWN FOR DETAILS, SEE SHEETS 290 THRU 296 OF 775.

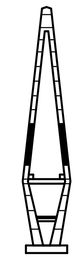

KEY ELEVATION

J:\Project\O\ODOT\15005112 Ironton Russell\LAW\81595\structures\LAW093_1111C\sheets\Towers\093_0000_pi318.dgn — 4/29/2011 9:28:51 AM — john_corley

DESIGN AGENCY
URS
36 EAST 7TH STREET
SUITE 2300
CINCINNATI, OHIO 45202

DESIGNED	DRAWN	REVIEWED	DATE
BER	JGC	BA	6-10
CHECKED	REVISED	STRUCTURE FILE NUMBER	
MJZ		4401263	

TOWER REINFORCING - SEGMENTS 7, 8 AND 9 (2 OF 2)
BRIDGE NO. LAW-93-0000
IRONTON RUSSEL BRIDGE OVER OHIO RIVER

LAW-93-0.00
PID No. 81595

94/365

481
788

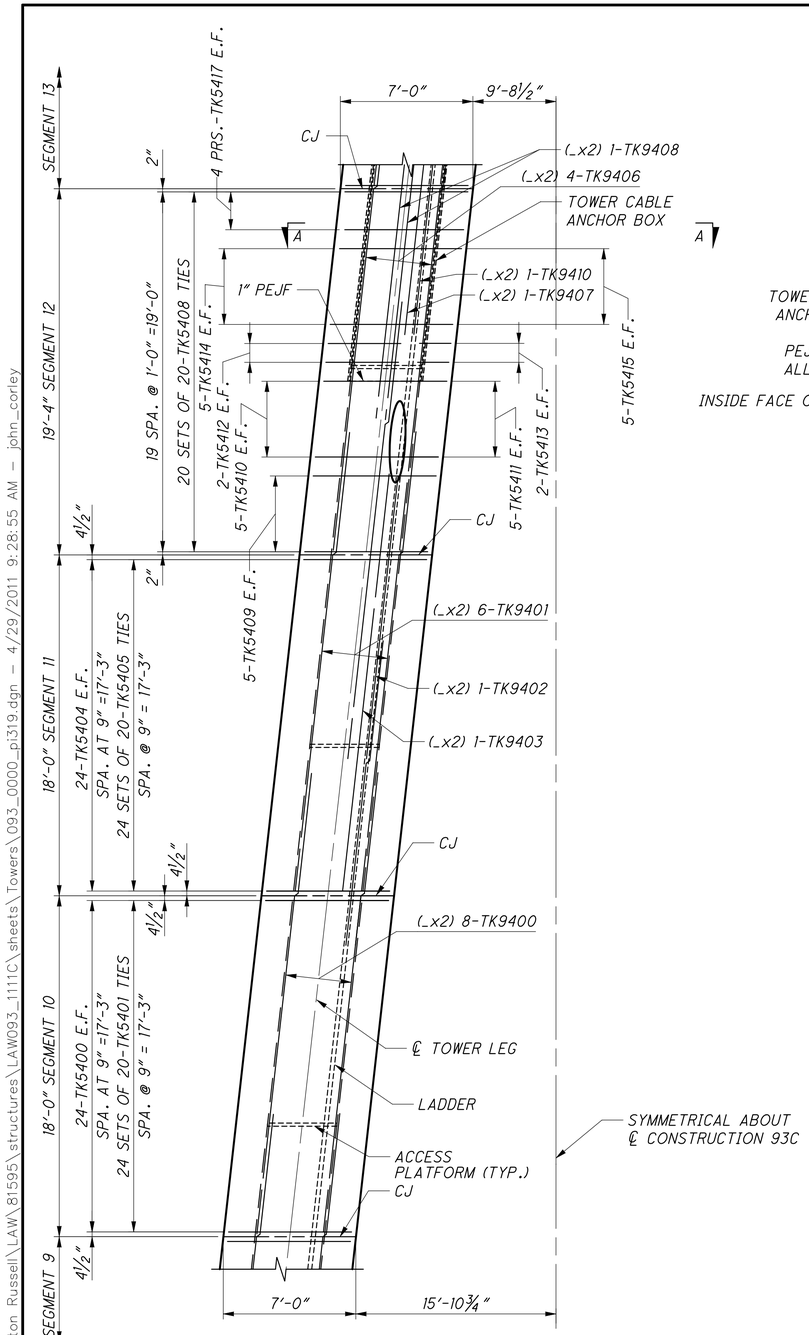

LAYER A REINFORCEMENT

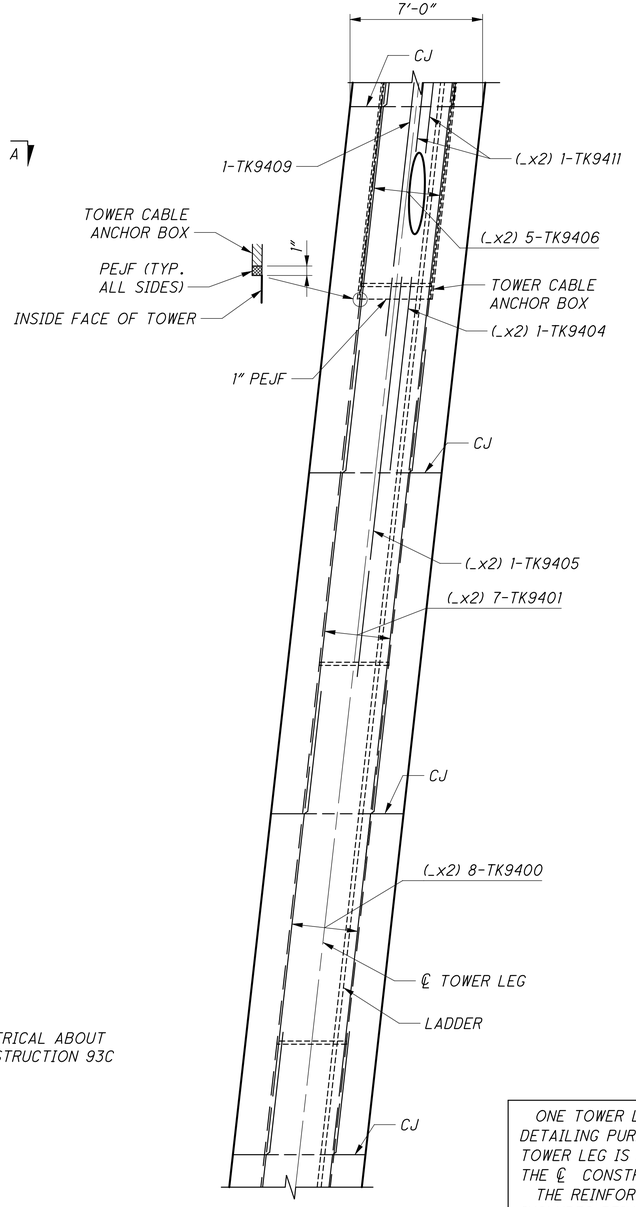

LAYER B REINFORCEMENT

FOR DETAILS NOT SHOWN SEE LAYER A REINFORCEMENT

ONE TOWER LEG IS SHOWN FOR DETAILING PURPOSES. THE OTHER TOWER LEG IS SYMMETRICAL ABOUT THE ℄ CONSTRUCTION 93C. THE REINFORCING STEEL LIST INCLUDES REINFORCING FOR BOTH LEGS.

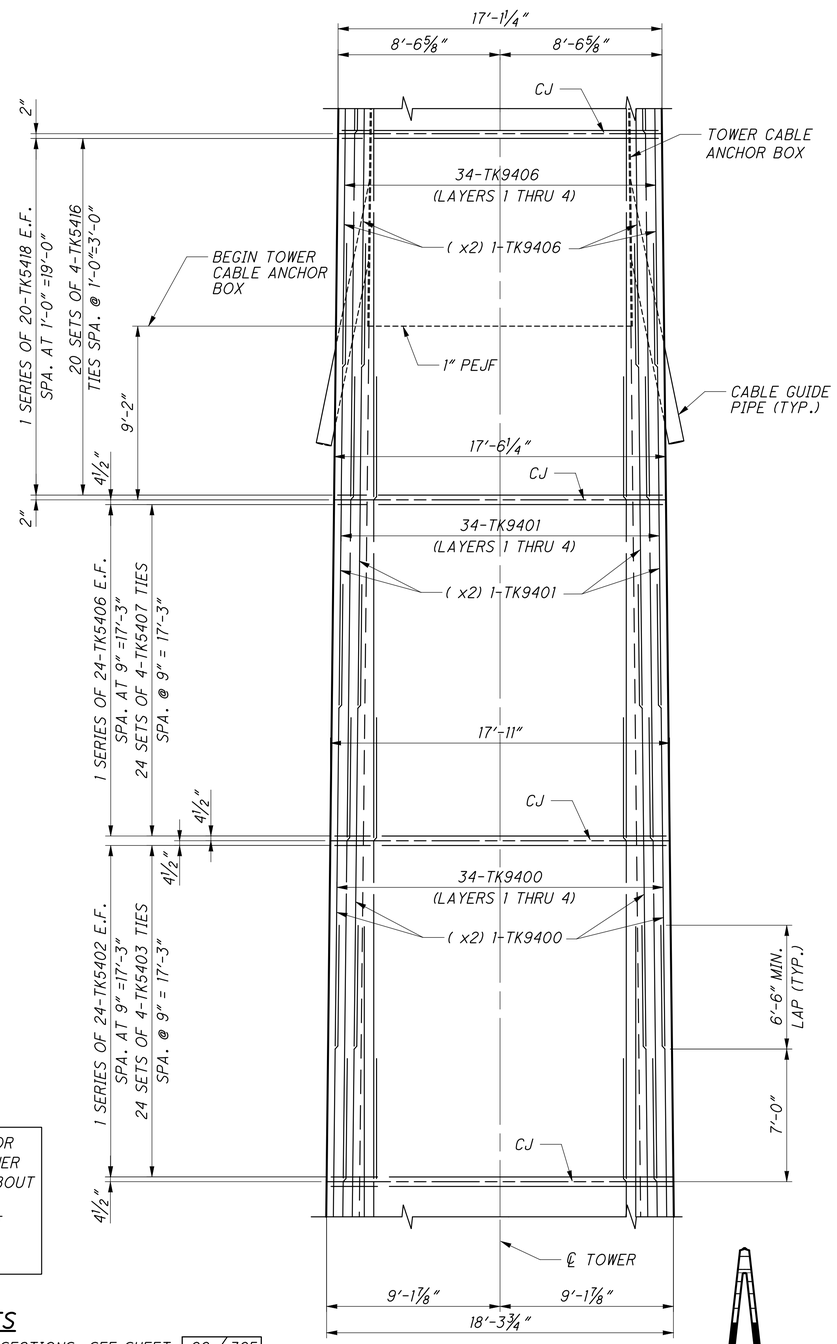

SIDE ELEVATION

BAR MARKS SHOWN APPLY TO TOWER 3 (KY). BAR MARKS FOR TOWER 4 (OH)) ARE THE SAME EXCEPT THAT THE BAR MARK PREFIX WILL BE A "TH" RATHER THAN A "TK".



KEY ELEVATION

NOTES

1. FOR HORIZONTAL SECTIONS, SEE SHEET 96 / 365
2. FOR REINFORCING STEEL LIST, SEE SHEET 281 / 365
3. LIGHTNING PROTECTION SYSTEM NOT SHOWN FOR DETAILS, SEE SHEETS 290 THRU 296 OF 775.
4. FOR DETAILS OF TOWER CABLE ANCHOR BOX, SEE SHEETS 104 / 365 THRU 112 / 365
5. FOR ADDITIONAL REINFORCING AT CABLE, GUIDE PIPES. SEE SHEET 98 / 365

HALF TOWER ELEVATION - SEGMENTS 10, 11 AND 12

DESIGN AGENCY
URS
36 EAST 7TH STREET
SUITE 2300
CINCINNATI, OHIO 45202

DESIGNED	DRAWN	REVIEWED	DATE
BER	JGC	BA	6-10
CHECKED	REVISED	STRUCTURE FILE NUMBER	
MJZ		4401263	

TOWER REINFORCING - SEGMENTS 10, 11 AND 12 (1 OF 2)
BRIDGE NO. LAW-93-0000
IRONTON RUSSEL BRIDGE OVER OHIO RIVER

LAW-93-0.00
PID No. 81595

95 / 365

482
788

J:\Project\0\ODOT\15005112 Ironton Russell\LAW\81595\structures\LAW093_1111C\sheets\Towers\093_0000_pi319.dgn — 4/29/2011 9:28:55 AM — john_corley

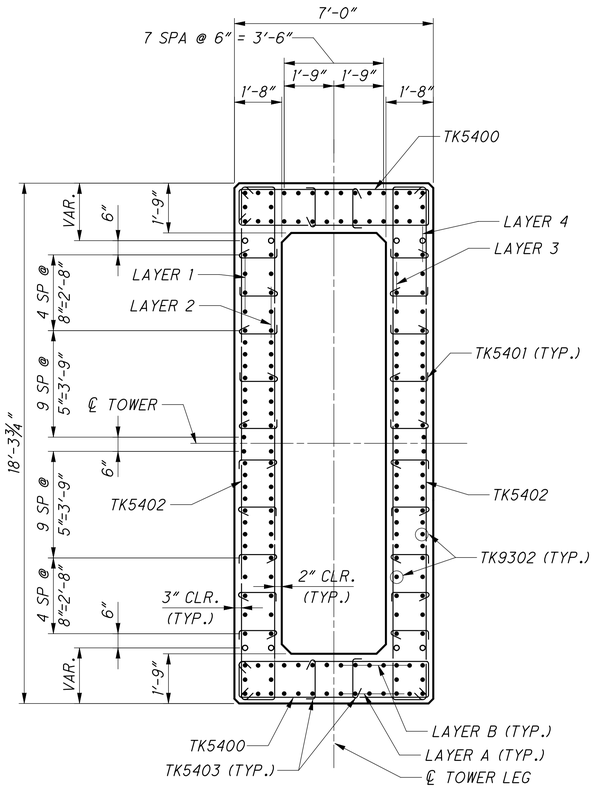

PART SECTION
BOTTOM OF SEGMENT 10

° INDICATES BARS THAT ARE TERMINATED WITHIN THIS SEGMENT.

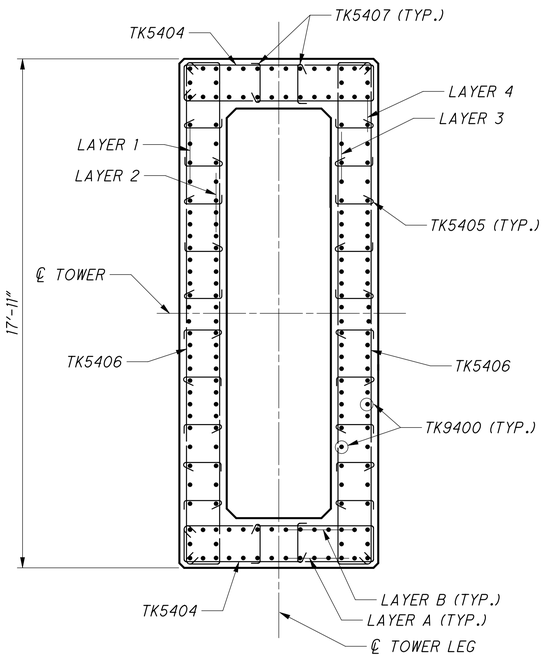

PART SECTION
BOTTOM OF SEGMENT 11

FOR DETAILS NOT SHOWN, SEE SEGEMENT 10 SECTION.

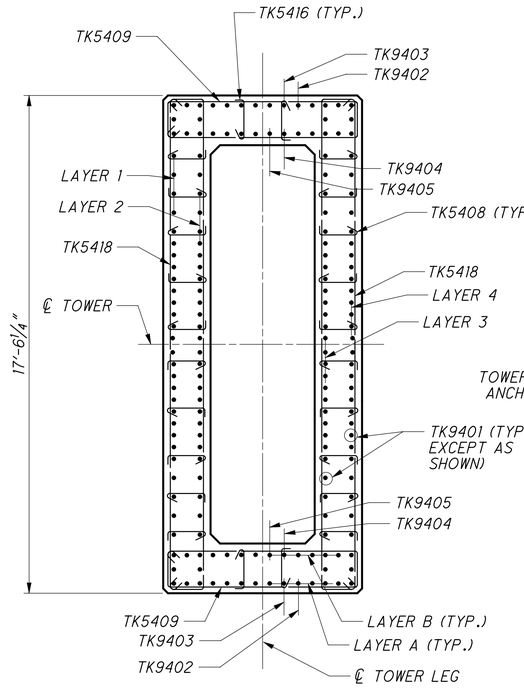

PART SECTION
BOTTOM OF SEGMENT 12

FOR DETAILS NOT SHOWN, SEE SEGEMENT 10 SECTION.

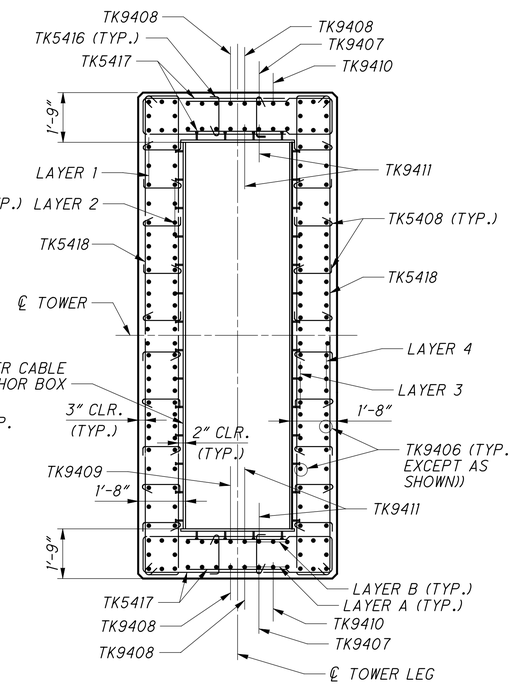

SECTION A-A

FOR DETAILS NOT SHOWN, SEE SEGEMENT 10 SECTION.

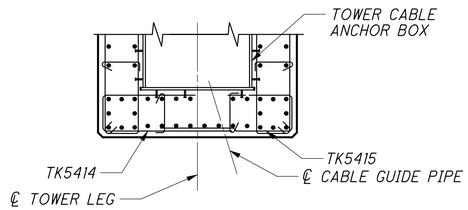

ABOVE PIPE

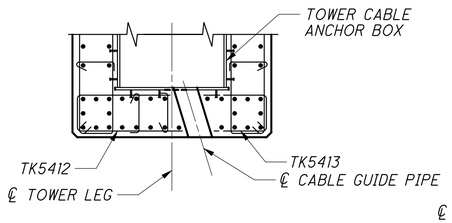

AT PIPE

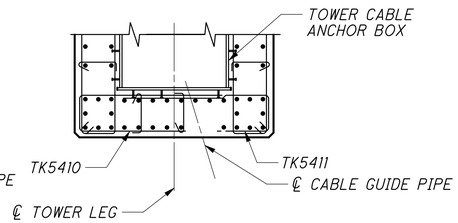

BELOW PIPE

NOTE: SHIFT TK5416 AS REQUIRED AT CABLE GUIDE PIPE LOCATIONS.

PART TYPICAL SECTIONS AT CABLE GUIDE PIPES

FOR DETAILS NOT SHOWN, SEE SEGMENT 10 SECTION.

Link to RFI147 As-Built

Link to RFI155 As-Built

BAR MARKS SHOWN APPLY TO TOWER 3 (KY). BAR MARKS FOR TOWER 4 (OH)) ARE THE SAME EXCEPT THAT THE BAR MARK PREFIX WILL BE A "TH" RATHER THAN A "TK".

NOTES

1. FOR REINFORCING STEEL LIST, SEE SHEET 281/365
2. LIGHTNING PROTECTION SYSTEM NOT SHOWN FOR DETAILS, SEE SHEETS 290 THRU 296 OF 775.
3. MINIMUM LAP FOR #5 BARS SHALL BE 2'-6".
4. FOR DETAILS OF TOWER CABLE ANCHOR BOX, SEE SHEET 104/365 THRU 112/365



KEY ELEVATION

J:\Project\OJODOT\15005112 Ironton Russell\LAW\81595\structures\LAW093_1111C\sheets\Towers\093_0000_pi320.dgn — 4/29/2011 9:28:59 AM — john_corley

DESIGN AGENCY
URS
36 EAST 7TH STREET
SUITE 2300
CINCINNATI, OHIO 45202

DESIGNED	DRAWN	REVIEWED	DATE
BER	JGC	BA	6-10
CHECKED	REVISED	STRUCTURE FILE NUMBER	
MJZ		4401263	

TOWER REINFORCING - SEGMENTS 10, 11 AND 12 (2 OF 2)
BRIDGE NO. LAW-93-0000
IRONTON RUSSEL BRIDGE OVER OHIO RIVER

LAW-93-0.00
PID No. 81595

96/365

483/788

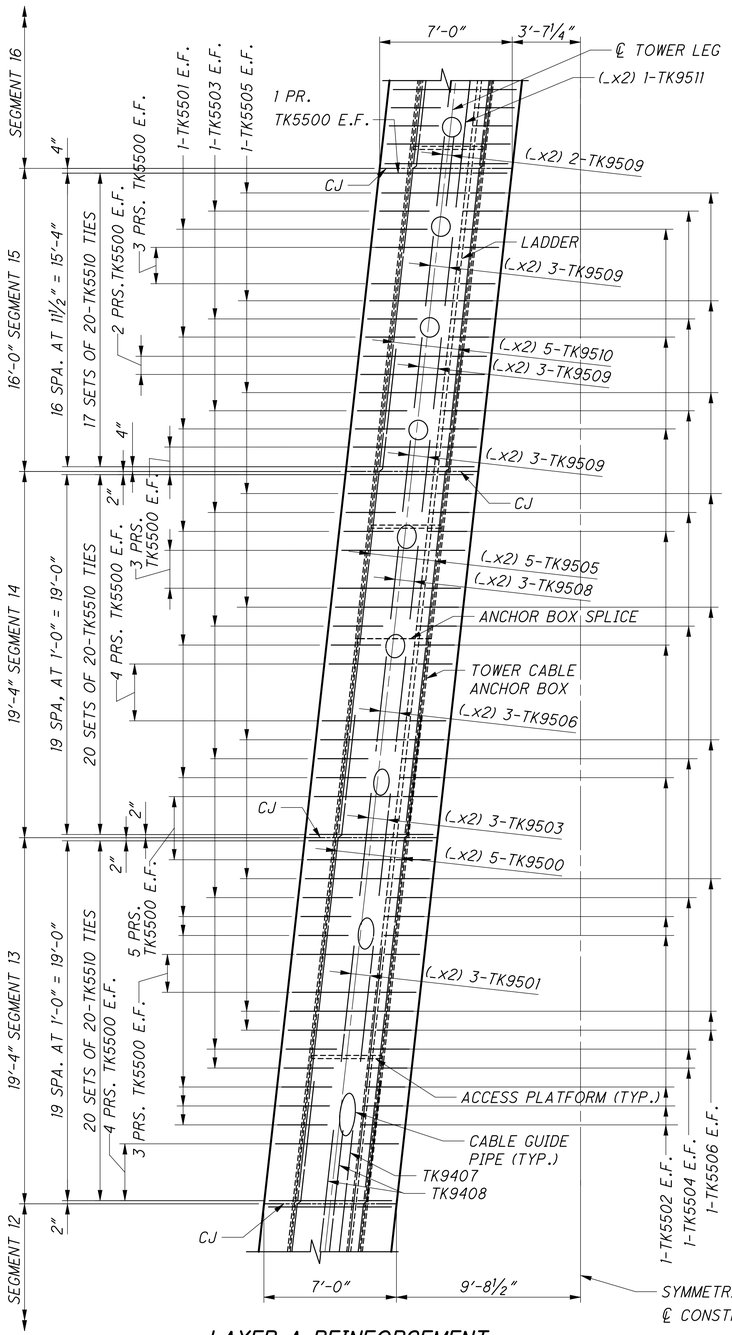

LAYER A REINFORCEMENT

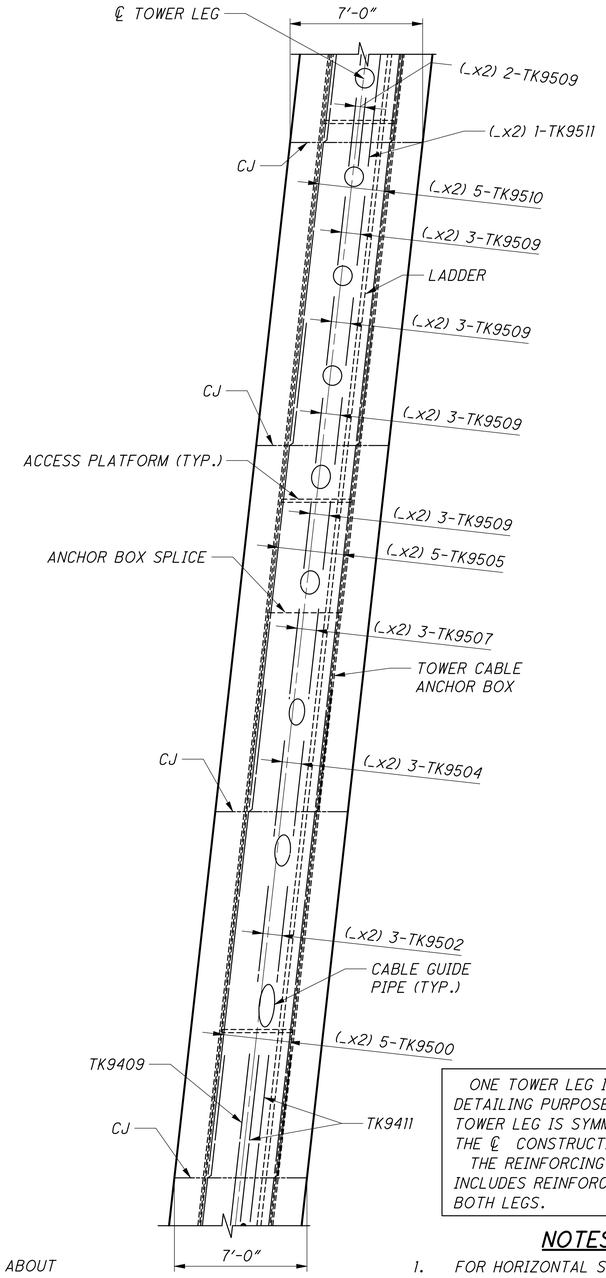

LAYER B REINFORCEMENT

ONE TOWER LEG IS SHOWN FOR DETAILING PURPOSES. THE OTHER TOWER LEG IS SYMMETRICAL ABOUT THE ℄ CONSTRUCTION 93C.
THE REINFORCING STEEL LIST INCLUDES REINFORCING FOR BOTH LEGS.

NOTES

1. FOR HORIZONTAL SECTIONS, SEE SHEET 98 / 365
2. FOR REINFORCING STEEL LIST, SEE SHEET 281 / 365
3. LIGHTNING PROTECTION SYSTEM NOT SHOWN FOR DETAILS, SEE SHEETS 290 THRU 296 OF 775.
4. FOR DEATILS OF TOWER CABLE ANCHOR BOX AND CABLE GUIDE PIPES, SEE SHEETS 104 / 365 THRU 112 / 365
5. FOR ADDITIONAL REINFORCING AT CABLE, GUIDE PIPES. SEE SHEET 98 / 365

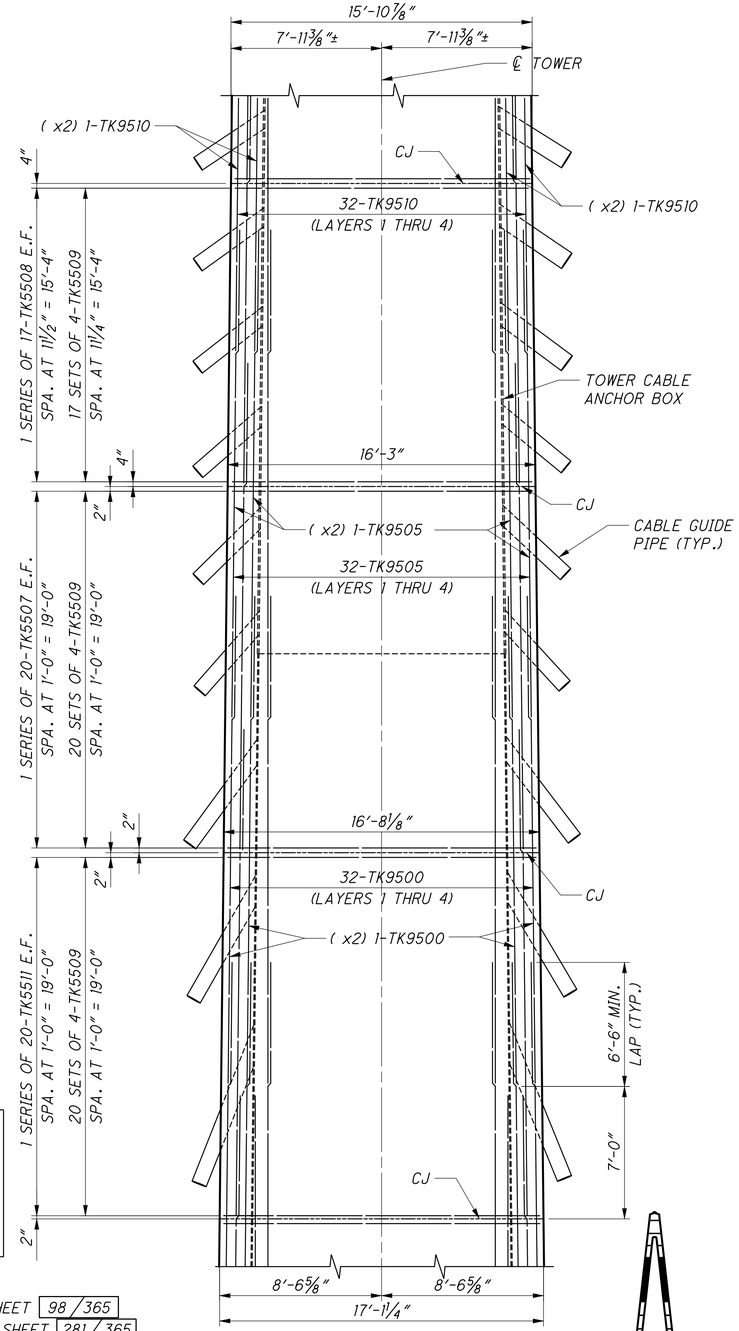

SIDE ELEVATION

BAR MARKS SHOWN APPLY TO TOWER 3 (KY). BAR MARKS FOR TOWER 4 (OH)) ARE THE SAME EXCEPT THAT THE BAR MARK PREFIX WILL BE A "TH" RATHER THAN A "TK".



KEY ELEVATION

HALF TOWER ELEVATION - SEGMENTS 13, 14 AND 15

J:\Project\O\ODOT\15005112 Ironton Russell\LAW\81595\structures\LAW093_1111C\sheets\Towers\093_0000_pi321.dgn — 4/29/2011 9:29:03 AM — john_corley

DESIGN AGENCY
URS
35 EAST 7TH STREET
SUITE 2300
CINCINNATI, OHIO 45202

DESIGNED	DRAWN	REVIEWED	DATE
BER	JGC	BA	6-10
CHECKED	REVISED	STRUCTURE FILE NUMBER	
MJZ		4401263	

TOWER REINFORCING - SEGMENTS 13, 14 AND 15 (1 OF 2)
BRIDGE NO. LAW-93-0000
IRONTON RUSSEL BRIDGE OVER OHIO RIVER

LAW-93-0.00
PID No. 81595

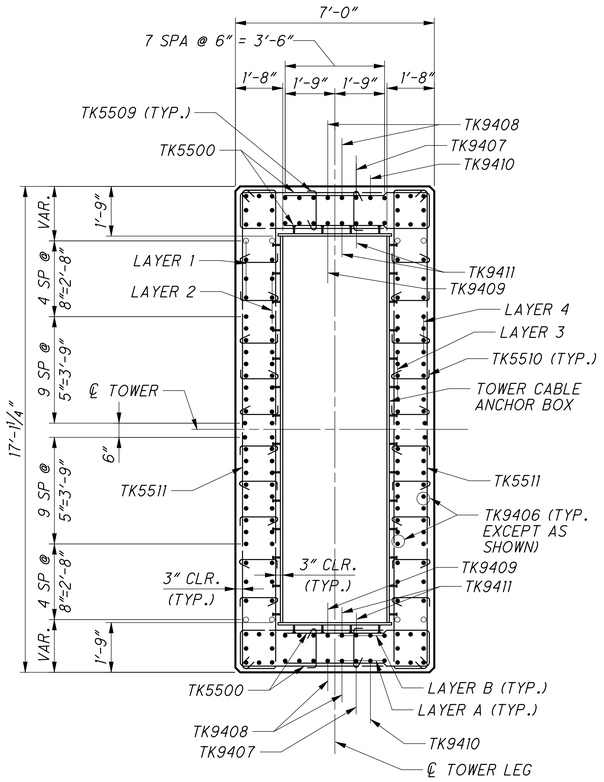

PART SECTION BOTTOM OF SEGMENT 13

° INDICATES BARS THAT ARE TERMINATED WITHIN THIS SEGMENT.

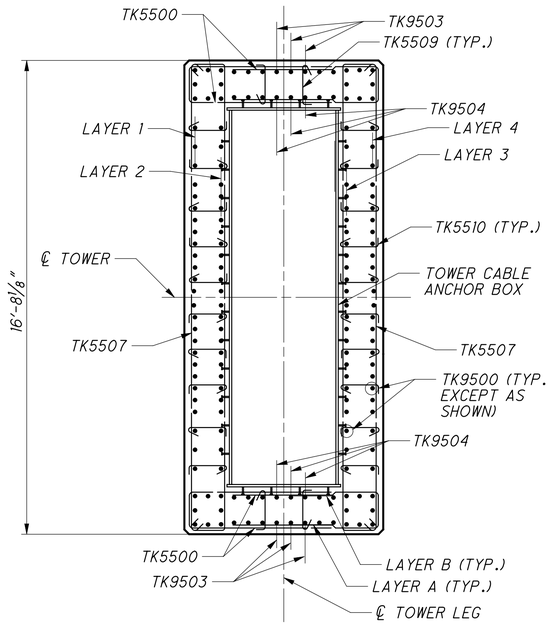

PART SECTION BOTTOM OF SEGMENT 14

FOR DETAILS NOT SHOWN, SEE SEGEMENT 13 SECTION.

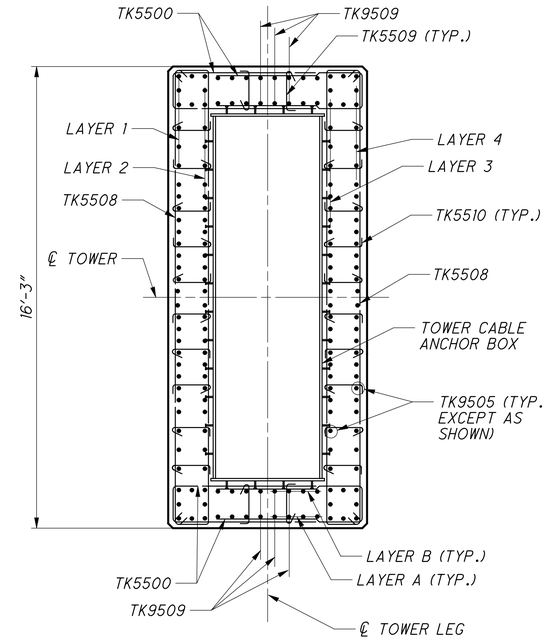

PART SECTION BOTTOM OF SEGMENT 15

FOR DETAILS NOT SHOWN, SEE SEGEMENT 13 SECTION.

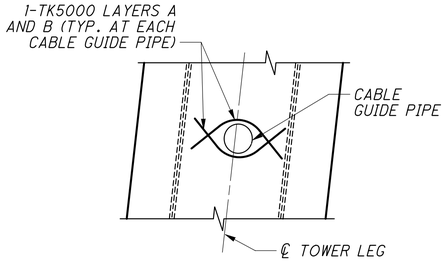

TYPICAL ADDITIONAL REINFORCEMENT AT CABLE GUIDE PIPE

(TYPICAL 60 LOCATION PER TOWER)

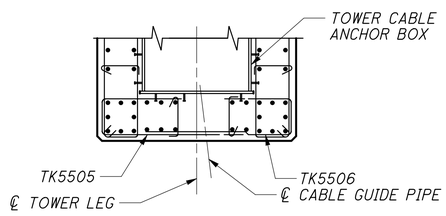

ABOVE PIPE

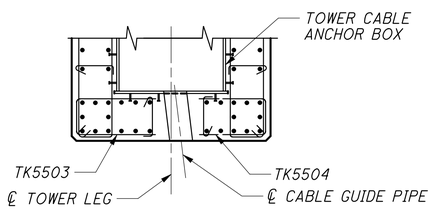

AT PIPE

NOTE: SHIFT TK5509 AS REQUIRED AT CABLE GUIDE PIPE LOCATIONS.

PART TYPICAL SECTIONS AT CABLE GUIDE PIPES

FOR DETAILS NOT SHOWN, SEE SEGEMENT 13 SECTION.

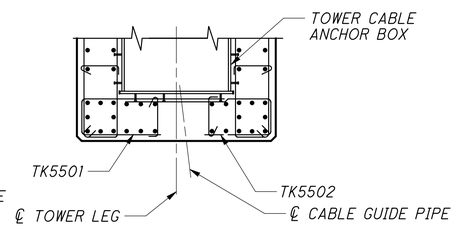

BELOW PIPE

NOTES

1. FOR REINFORCING STEEL LIST, SEE SHEET 281/365
2. LIGHTNING PROTECTION SYSTEM NOT SHOWN FOR DETAILS, SEE SHEETS 290 THRU 296 OF 775.
3. MINIMUM LAP FOR #5 BARS SHALL BE 2'-6".

BAR MARKS SHOWN APPLY TO TOWER 3 (KY). BAR MARKS FOR TOWER 4 (OH)) ARE THE SAME EXCEPT THAT THE BAR MARK PREFIX WILL BE A "TH" RATHER THAN A "TK".



KEY ELEVATION

DESIGN AGENCY
URS
36 EAST 7TH STREET
SUITE 2300
CINCINNATI, OHIO 45202

DESIGNED	DRAWN	REVIEWED	DATE
BER	JGC	BA	6-10
CHECKED	REVISED	STRUCTURE FILE NUMBER	
MJZ		4401263	

TOWER REINFORCING - SEGMENTS 13, 14 AND 15 (2 OF 2)
BRIDGE NO. LAW-93-0000
IRONTON RUSSEL BRIDGE OVER OHIO RIVER

LAW-93-0.00
PID No. 81595

98/365

485
788

J:\Project\O\ODOT\15005112 Ironton Russell\LAW\81595\structures\LAW093_1111C\sheets\Towers\093_0000_pi322.dgn — 4/29/2011 9:29:08 AM — john_corley

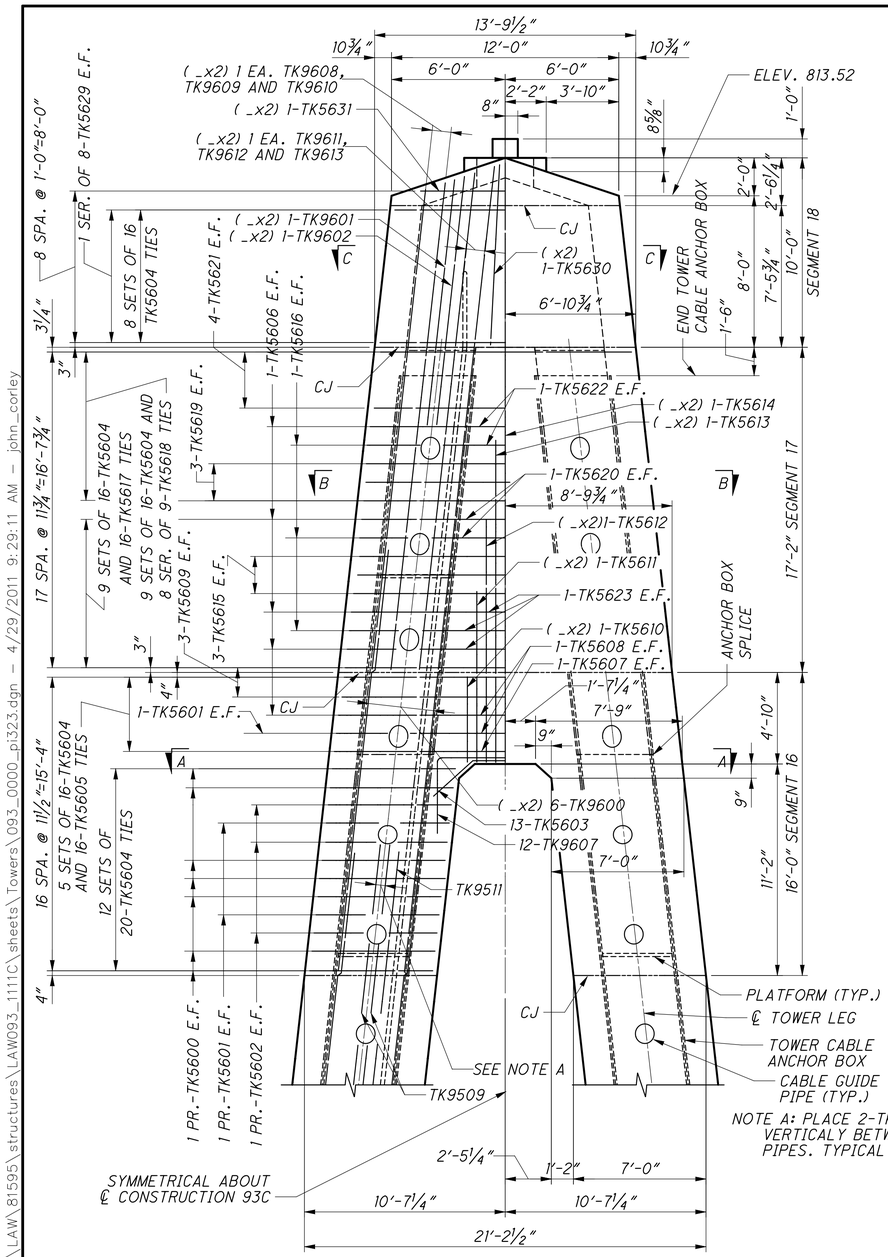

NOTE A: PLACE 2-TK9604 E.F. CENTERED VERTICALY BETWEEN CABLE GUIDE PIPES. TYPICAL FOR SEGMENTS 16 AND 17

LAYER A REINFORCEMENT

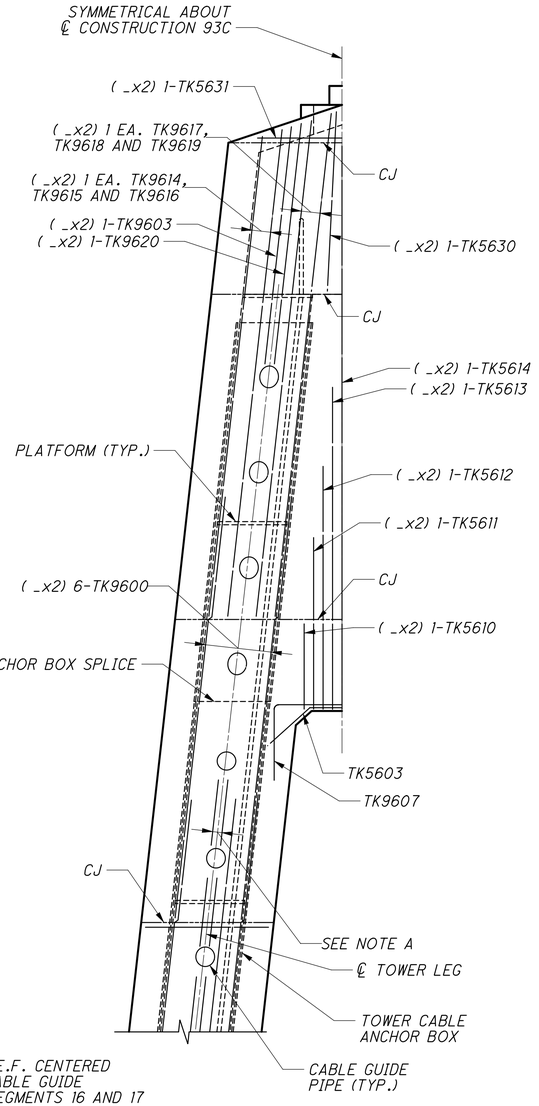

LAYER B REINFORCEMENT

FOR DETAILS NOT SHOWN, SEE LAYER A REINFORCEMENT.

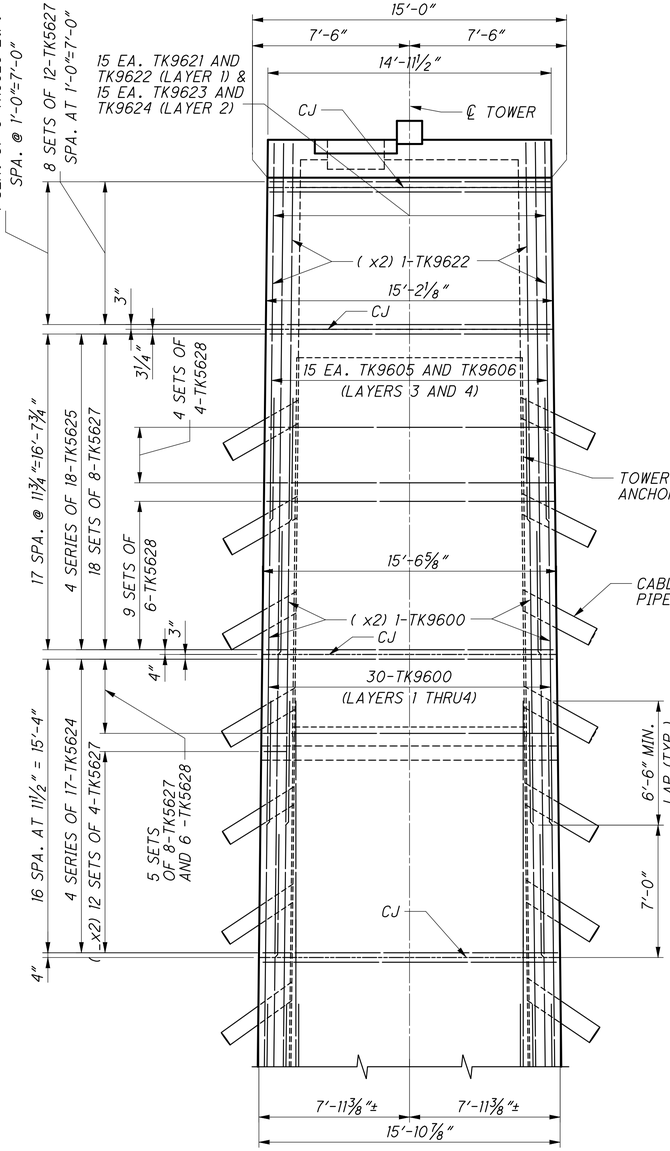

SIDE ELEVATION

HALF TOWER ELEVATION - SEGMENTS 16, 17 AND 18

NOTES

1. FOR HORIZONTAL SECTIONS, SEE SHEETS 100/365 THRU 102/365
2. FOR REINFORCING STEEL LIST, SEE SHEET 282/365
3. LIGHTNING PROTECTION SYSTEM NOT SHOWN FOR DETAILS, SEE SHEETS 290 THRU 296 OF 775.
4. FOR ADDIONAL REINFORCEMENT AT CABLE GUIDE PIPES, SEE SHEET 98/365

ONE TOWER LEG IS SHOWN FOR DETAILING PURPOSES. THE OTHER TOWER LEG IS SYMMETRICAL ABOUT THE ℄ CONSTRUCTION 93C.
THE REINFORCING STEEL LIST INCLUDES REINFORCING FOR BOTH LEGS.

BAR MARKS SHOWN APPLY TO TOWER 3 (KY). BAR MARKS FOR TOWER 4 (OH)) ARE THE SAME EXCEPT THAT THE BAR MARK PREFIX WILL BE A "TH" RATHER THAN A "TK".

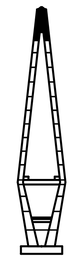

KEY ELEVATION

DESIGN AGENCY
URS
36 EAST 7TH STREET
SUITE 2300
CINCINNATI, OHIO 45202

DESIGNED	DRAWN	REVIEWED	DATE
BER	JGC	BA	6-10
CHECKED	REVISED		STRUCTURE FILE NUMBER
MJZ			4401263

TOWER REINFORCING - SEGMENTS 16, 17 AND 18 (1 OF 5)

BRIDGE NO. LAW-93-0000
IRONTON RUSSEL BRIDGE OVER OHIO RIVER

LAW-93-0.00
PID No. 81595

99/365

486
788

J:\Project\O\ODOT\15005112 Ironton Russell\LAW\81595\structures\LAW093_1111C\sheets\Towers\093_0000_pi323.dgn — 4/29/2011 9:29:11 AM — john_corley

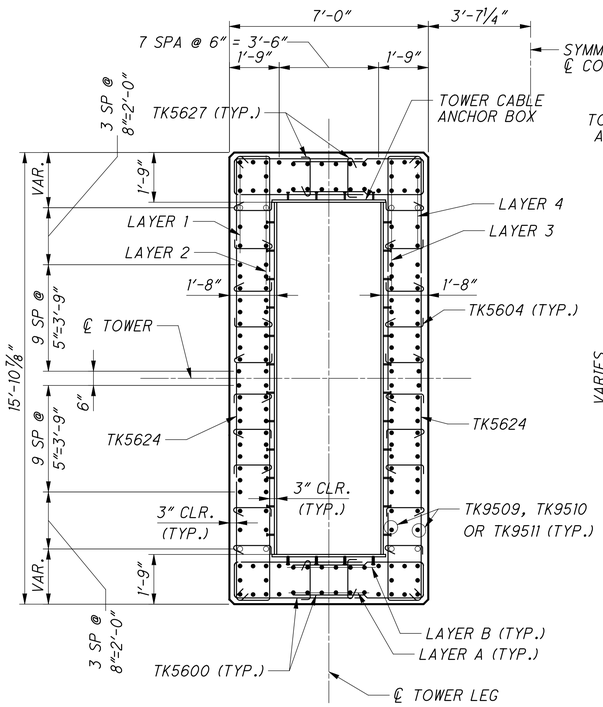

PART SECTION
BOTTOM OF SEGMENT 16

° INDICATES BARS THAT ARE TERMINATED WITHIN THIS SEGMENT.

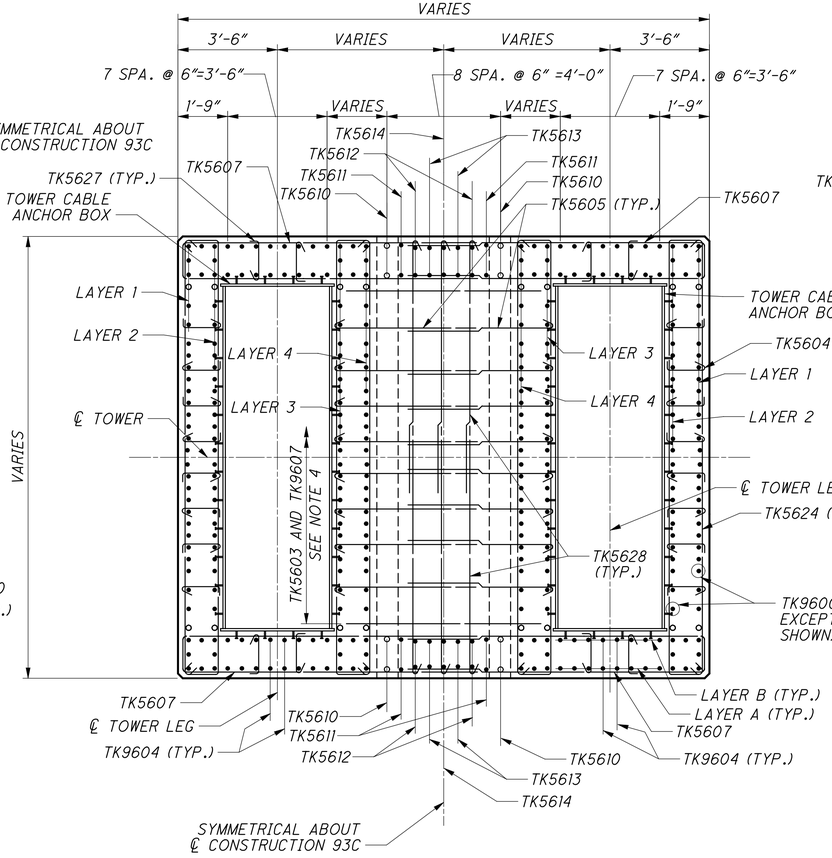

SECTION A-A

° INDICATES BARS THAT ARE TERMINATED WITHIN THIS SEGMENT.
FOR DETAILS NOT SHOWN, SEE SEGMENT 16 SECTION

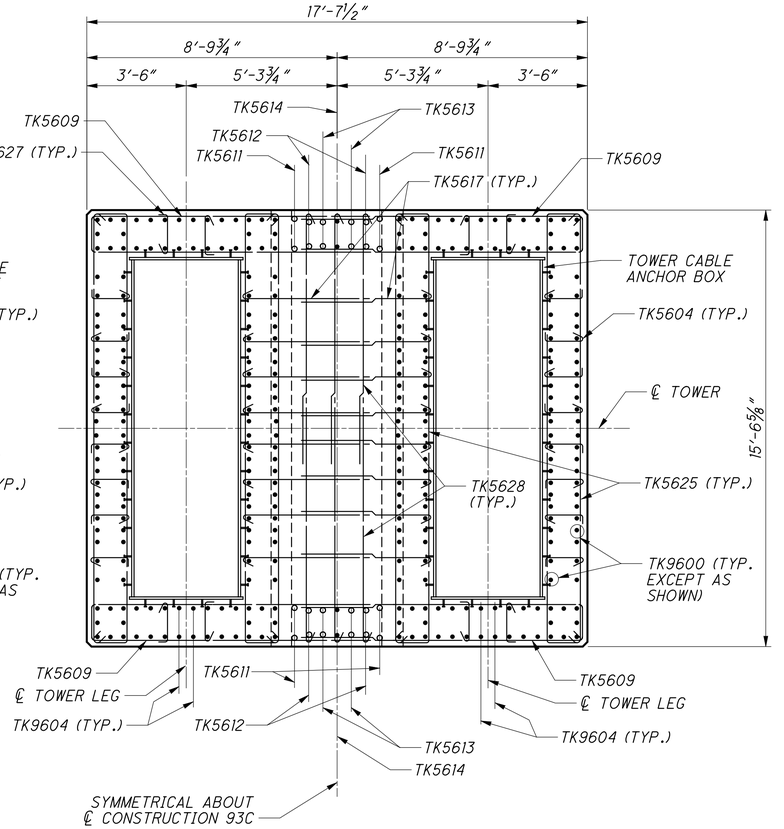

BOTTOM OF SEGMENT 17

° INDICATES BARS THAT ARE TERMINATED WITHIN THIS SEGMENT.
FOR DETAILS NOT SHOWN, SEE SEGMENT 16 SECTION

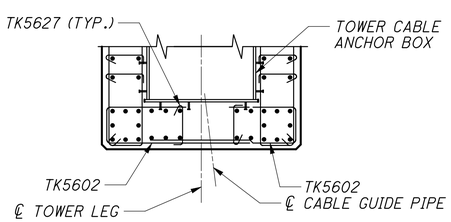

ABOVE PIPE

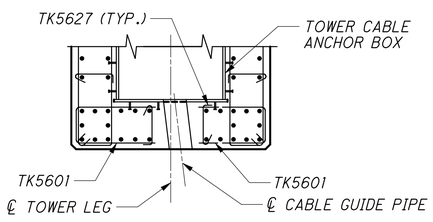

AT PIPE

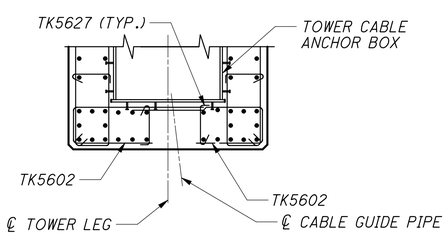

BELOW PIPE

NOTE: SHIFT TK5627 AS REQUIRED AT CABLE GUIDE PIPE LOCATIONS.

PART TYPICAL SECTIONS
AT CABLE GUIDE PIPES - SEGMENT 16

FOR DETAILS NOT SHOWN, SEE SEGEMENT 16 SECTION.

NOTES

1. FOR REINFORCING STEEL LIST, SEE SHEET 282/365
2. LIGHTNING PROTECTION SYSTEM NOT SHOWN FOR DETAILS, SEE SHEETS 290 THRU 296 OF 775.
3. MINIMUM LAP FOR #5 BARS SHALL BE 2'-6".
4. TK5603 AND TK9607 BARS ARE SPACED ALTERNATELY WITH LAYER 4 TK9600 BARS.

BAR MARKS SHOWN APPLY TO TOWER 3 (KY). BAR MARKS FOR TOWER 4 (OH)) ARE THE SAME EXCEPT THAT THE BAR MARK PREFIX WILL BE A "TH" RATHER THAN A "TK".

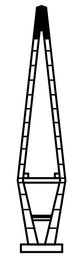

KEY ELEVATION

J:\Project\O\ODOT\15005112 Ironton Russell\LAW\81595\structures\LAW093_1111C\sheets\Towers\093_0000_pi324.dgn — 4/29/2011 9:29:16 AM — john_corley

DESIGN AGENCY
URS
36 EAST 7TH STREET
SUITE 2300
CINCINNATI, OHIO 45202

DESIGNED	DRAWN	REVIEWED	DATE
BER	JGC	BA	6-10
CHECKED	REVISED	STRUCTURE FILE NUMBER	
MJZ		4401263	

TOWER REINFORCING - SEGMENTS 16, 17 AND 18 (2 OF 5)
BRIDGE NO. LAW-93-0000
IRONTON RUSSEL BRIDGE OVER OHIO RIVER

LAW-93-0.00
PID No. 81595

100/365

487
788

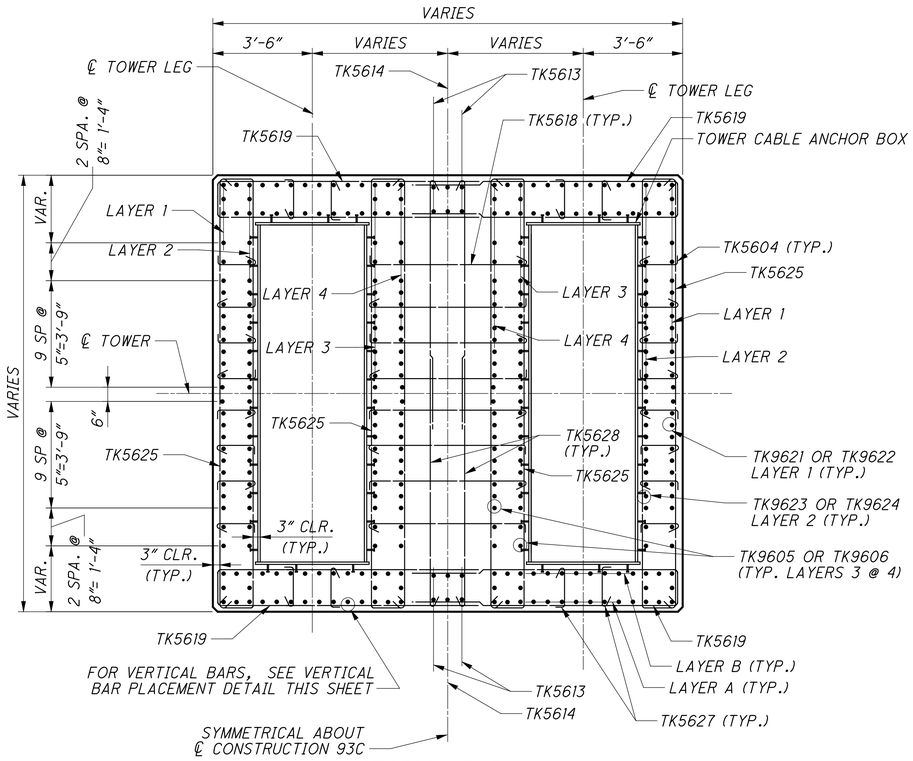

SECTION B-B

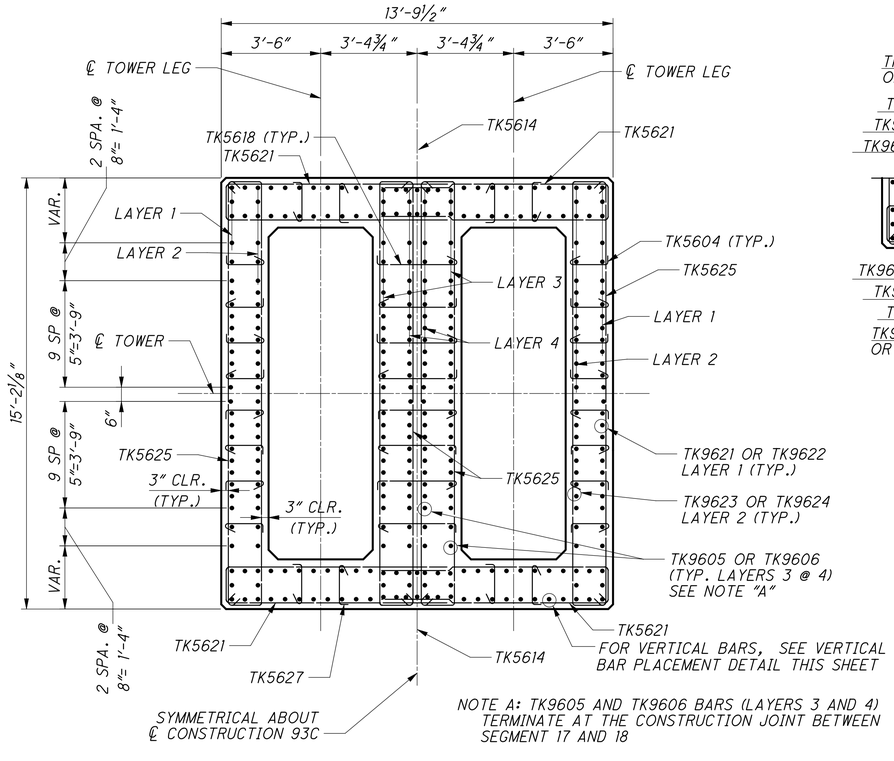

NOTE A: TK9605 AND TK9606 BARS (LAYERS 3 AND 4) TERMINATE AT THE CONSTRUCTION JOINT BETWEEN SEGMENT 17 AND 18

SECTION AT TOP OF SEGMENT 17

FOR DETAILS NOT SHOWN, SEE SECTION. B-B.

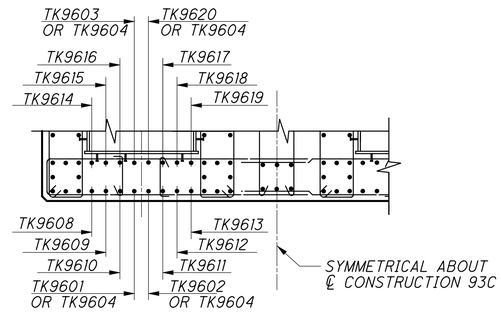

VERTICAL BAR PLACEMENT

1. VERTICAL BARS SHOWN ARE TYPICAL FOR SEGMENTS 17 AND 18.
2. BAR MARKS ARE SYMMETRICAL ABOUT ℄ CONSTRUCTION 93C AND ℄ TOWER.

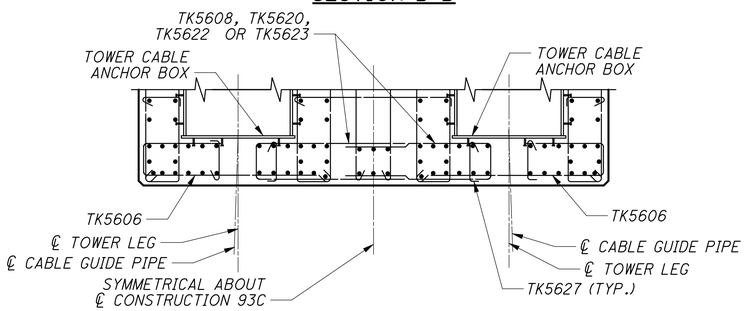

ABOVE PIPE

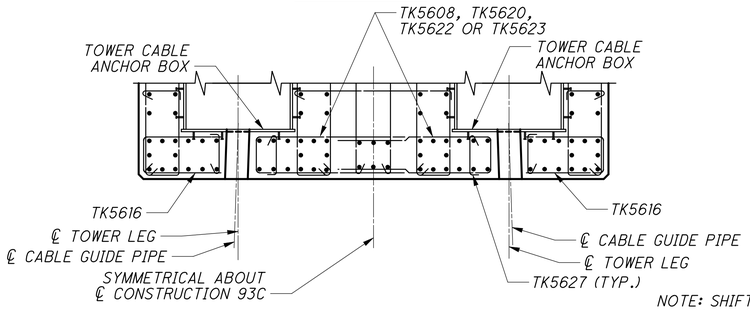

AT PIPE

NOTE: SHIFT TK5627 AS REQUIRED AT CABLE GUIDE PIPE LOCATIONS.

PART TYPICAL SECTIONS AT CABLE GUIDE PIPES

FOR DETAILS NOT SHOWN, SEE SECTION B-B.

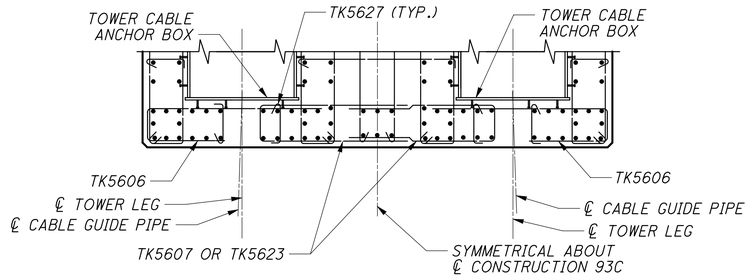

BELOW PIPE

NOTES

1. FOR REINFORCING STEEL LIST, SEE SHEET 282/365
2. LIGHTNING PROTECTION SYSTEM NOT SHOWN FOR DETAILS, SEE SHEETS 290 THRU 296 OF 775.
3. MINIMUM LAP FOR #5 BARS SHALL BE 2'-6"

BAR MARKS SHOWN APPLY TO TOWER 3 (KY). BAR MARKS FOR TOWER 4 (OH)) ARE THE SAME EXCEPT THAT THE BAR MARK PREFIX WILL BE A "TH" RATHER THAN A "TK".

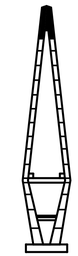

KEY ELEVATION

DESIGN AGENCY
URS
36 EAST 7TH STREET
SUITE 2300
CINCINNATI, OHIO 45202

DESIGNED	DRAWN	REVIEWED	DATE
BER	JGC	BA	6-10
CHECKED	REVISED	STRUCTURE FILE NUMBER	
MJZ		4401263	

TOWER REINFORCING - SEGMENTS 16, 17 AND 18 (3 OF 5)
BRIDGE NO. LAW-93-0000
IRONTON RUSSEL BRIDGE OVER OHIO RIVER

LAW-93-0.00
PID No. 81595

101/365

488/788

J:\Project\O_ODOT\15005112 Ironton Russell\LAW\81595\structures\LAW093_1111C\sheets\Towers\093_0000_pi325.dgn — 4/29/2011 9:29:21 AM — john_corley

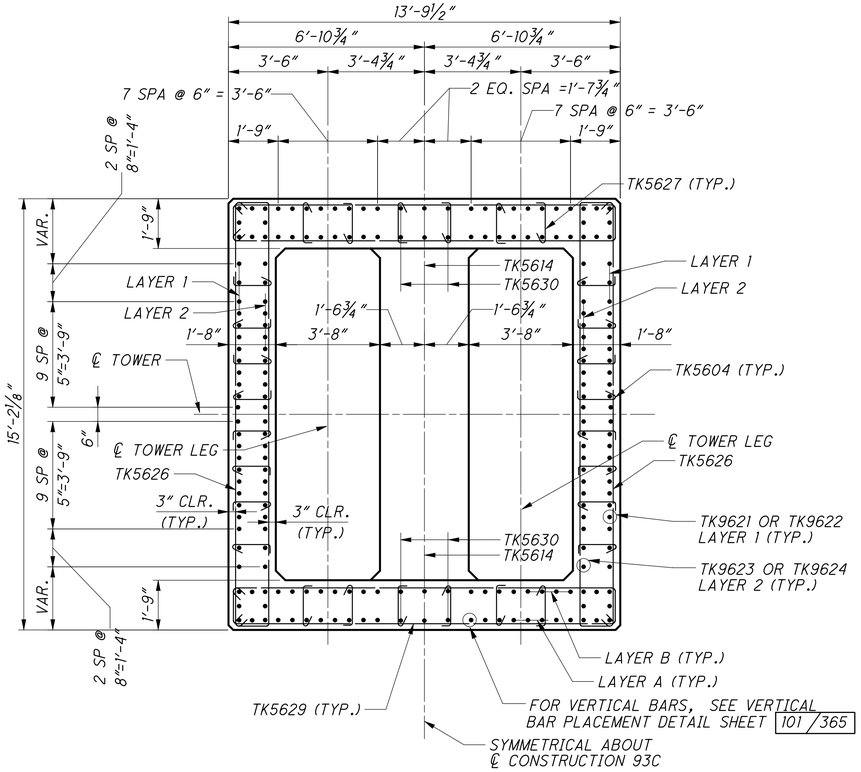

SECTION AT BOTTOM OF SEGMENT 18

DIMENSIONS SHOWN ARE MEASURED AT THE CONSTRUCTION JOINT BETWEEN SEGMENT 17 AND 18

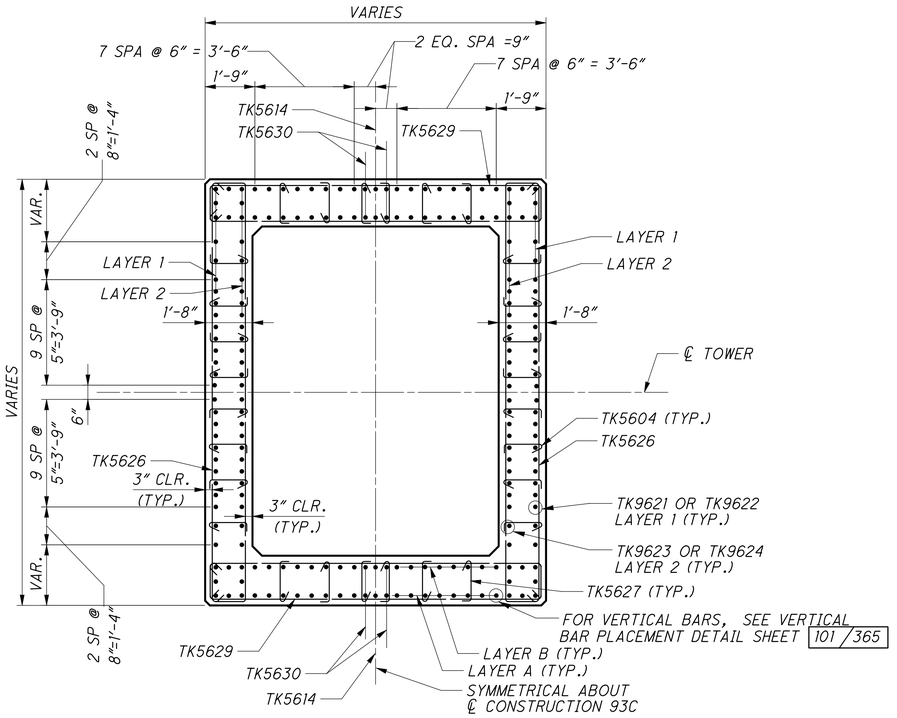

SECTION C-C

BAR MARKS SHOWN APPLY TO TOWER 3 (KY). BAR MARKS FOR TOWER 4 (OH)) ARE THE SAME EXCEPT THAT THE BAR MARK PREFIX WILL BE A "TH" RATHER THAN A "TK".

NOTES

1. FOR REINFORCING STEEL LIST, SEE SHEET 282/365
2. LIGHTNING PROTECTION SYSTEM NOT SHOWN FOR DETAILS, SEE SHEETS 290 THRU 296 OF 775.

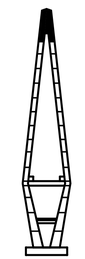

KEY ELEVATION

J:\Project\0\ODOT\15005112 Ironton Russell\LAW\81595\structures\LAW093_1111C\sheets\Towers\093_0000_pi326.dgn — 4/29/2011 9:29:25 AM — john_corley

DESIGN AGENCY
URS
36 EAST 7TH STREET
SUITE 2300
CINCINNATI, OHIO 45202

DESIGNED	DRAWN	REVIEWED	DATE
BER	JGC	BA	6-10
CHECKED	REVISED	STRUCTURE FILE NUMBER	
MJZ		4401263	

TOWER REINFORCING - SEGMENTS 16, 17 AND 18 (4 OF 5)
BRIDGE NO. LAW-93-0000
IRONTON RUSSEL BRIDGE OVER OHIO RIVER

LAW-93-0.00
PID No. 81595

102/365

489
788

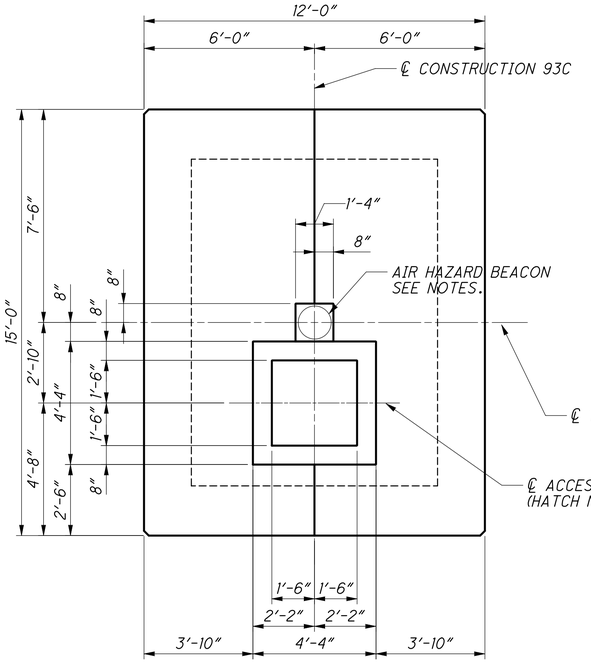

TOWER ROOF PLAN - DIMENSIONS

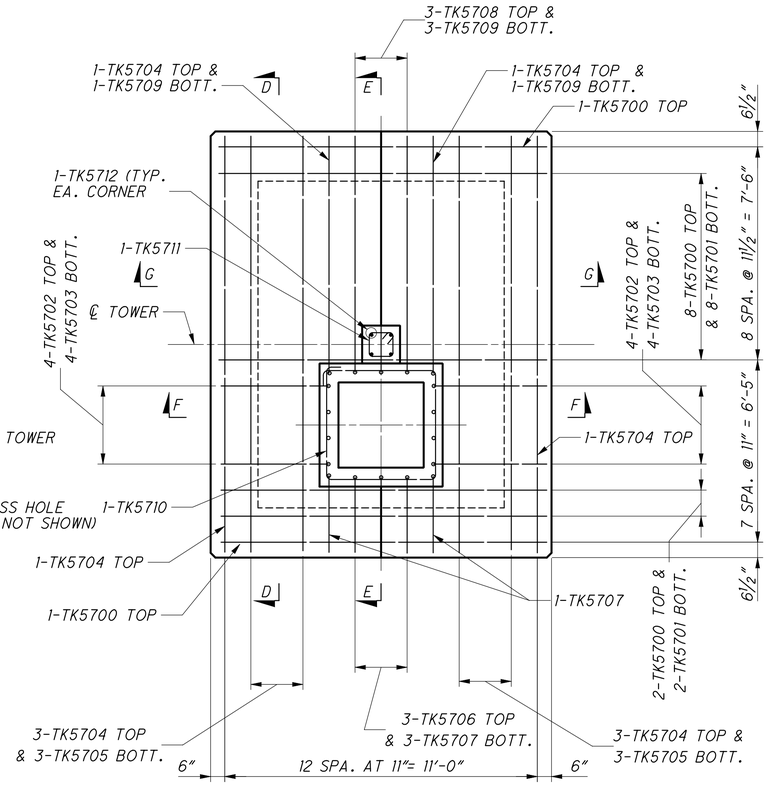

TOWER ROOF PLAN - REINFORCEMENT

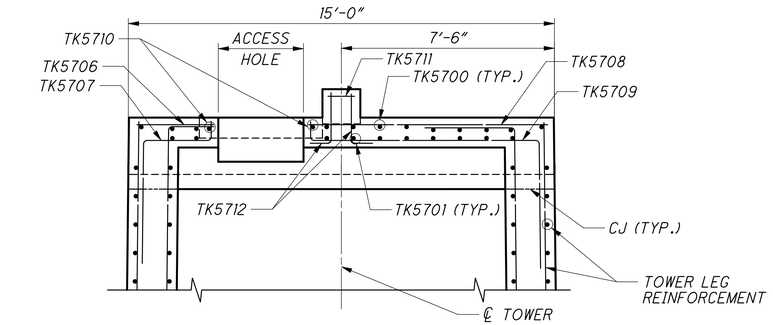

SECTION E-E

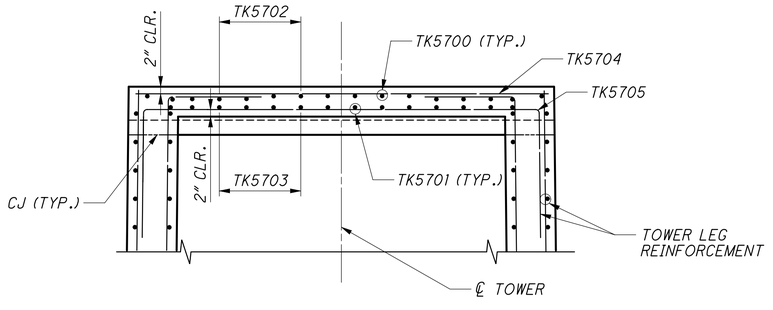

SECTION D-D

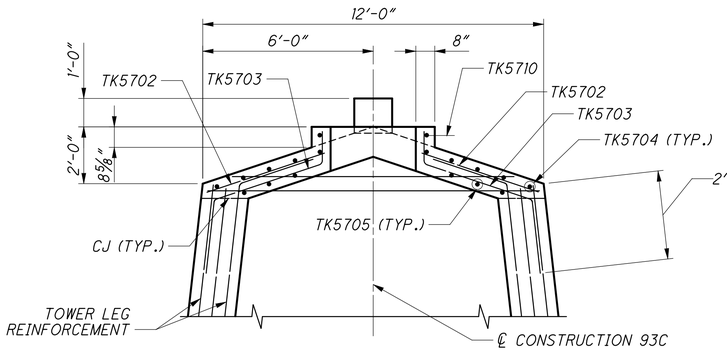

SECTION F-F

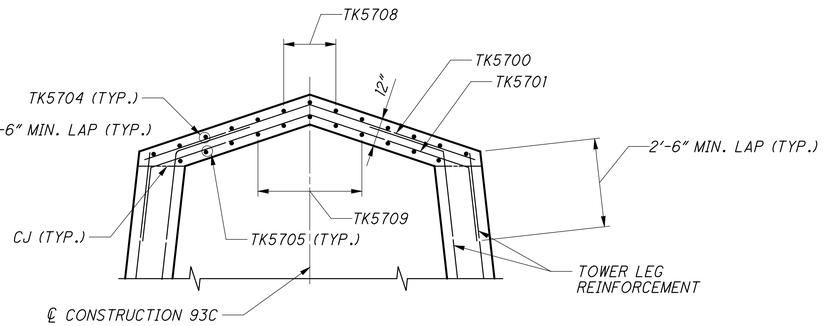

SECTION G-G

NOTES

1. FOR REINFORCING STEEL LIST, SEE SHEET 282/365
2. LIGHTNING PROTECTION SYSTEM NOT SHOWN
   FOR DETAILS, SEE SHEETS 290 THRU 296 OF 775.
3. FOR ADDITIONAL ACCESS HATCH DETAILS
   SEE SHEET 117/365
4. FOR FOR AVIATION LIGHTING DETAILS,
   SEE SHEETS 289 OF 775.

BAR MARKS SHOWN APPLY TO TOWER 3 (KY). BAR MARKS FOR TOWER 4 (OH) ARE THE SAME EXCEPT THAT THE BAR MARK PREFIX WILL BE A "TH" RATHER THAN A "TK".

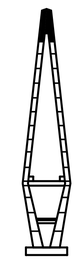

KEY ELEVATION

DESIGN AGENCY
URS
36 EAST 7TH STREET
SUITE 2300
CINCINNATI, OHIO 45202

DESIGNED	DRAWN	REVIEWED	DATE
BER	JGC	BA	6-10
CHECKED	REVISED	STRUCTURE FILE NUMBER	
MJZ		4401263	

TOWER REINFORCING - SEGMENTS 16, 17 AND 18 (5 OF 5)
BRIDGE NO. LAW-93-0000
IRONTON RUSSEL BRIDGE OVER OHIO RIVER

LAW-93-0.00
PID No. 81595

103/365

490
788

J:\Project\0\ODOT\15005112 Ironton Russell\LAW\81595\structures\LAW093_1111C\sheets\Towers\093_0000_pi327.dgn — 4/29/2011 9:29:28 AM — john_corley

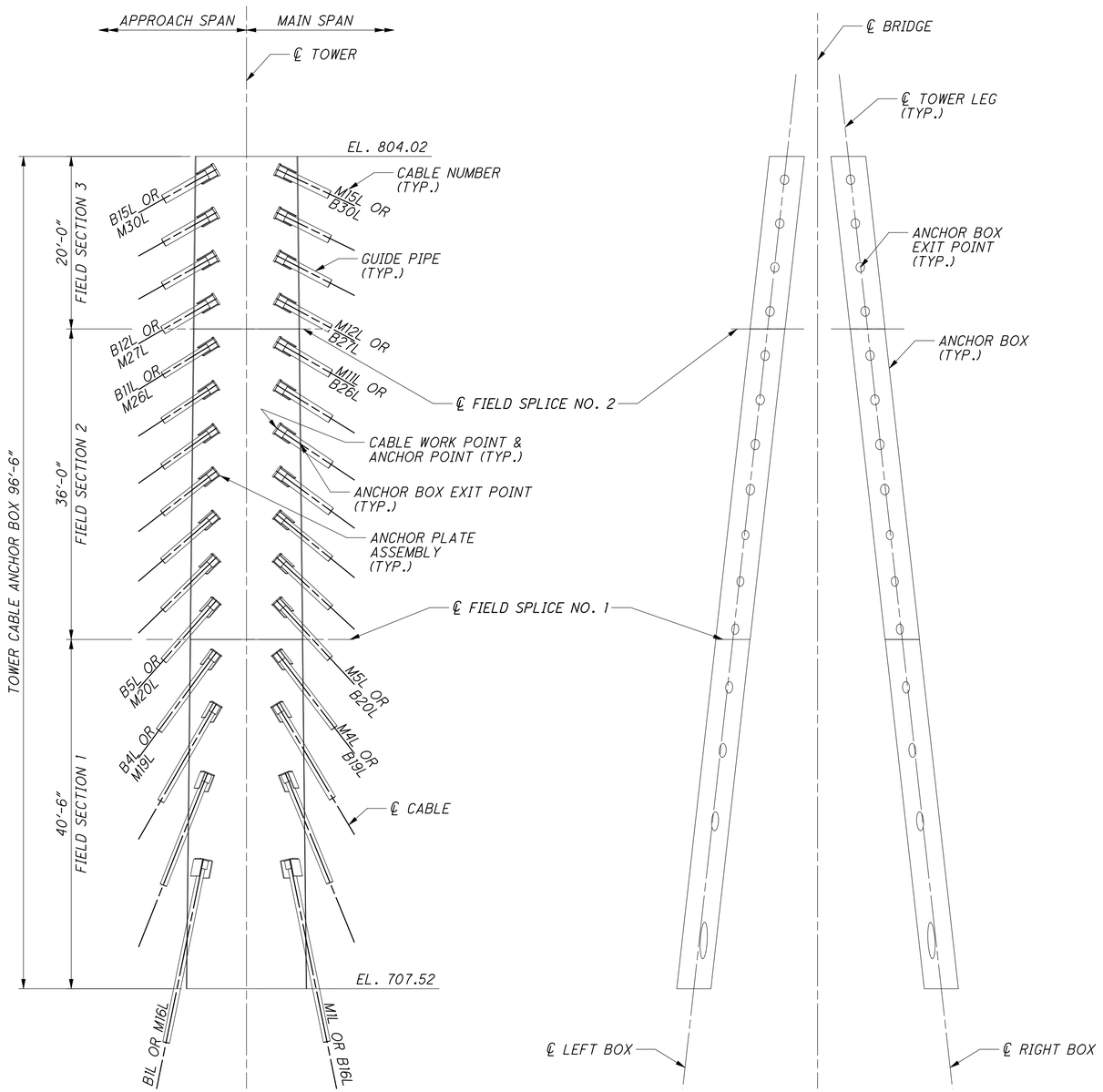

SIDE ELEVATION

(LEFT LEG SHOWN, RIGHT LEG SIMILAR)
SEE NOTE 5

FRONT ELEVATION

TOWER CABLE ANCHOR BOX NOTES

1. FOR STAY CABLE GEOMETRY, SEE SHEET 227/365 THRU 229/365
2. FOR FIELD SECTION DETAILS, SEE SHEETS 105/365 THRU 107/365.
3. FOR FIELD SPLICE DETAILS, SEE SHEET 108/365.
4. STRUCTURAL STEEL FOR THE TOWER CABLE ANCHOR BOX SHALL CONFORM TO ASTM A 709, GRADE 50(FCM) AND SHALL BE GALVANIZED.
5. FIELD SECTIONS SHALL BE FABRICATED AND COMPLETELY ASSEMBLED PRIOR TO GALVANIZING. NO DRILLING OR WELDING IS PERMITTED AFTER SECTION HAS BEEN GALVANIZED.
6. (FCM) INDICATES FRACTURE CRITICAL PLATES, AND SHALL MEET THE MINIMUN NOTCH TOUGHNESS REQUIRMENTS AS SPECIFIED IN CMS 711.01.
7. THE CABLES IN THE LEFT LEG AND RIGHT LEG ARE DESIGNATED WITH 'L' AND 'R' RESPECTIVELY.

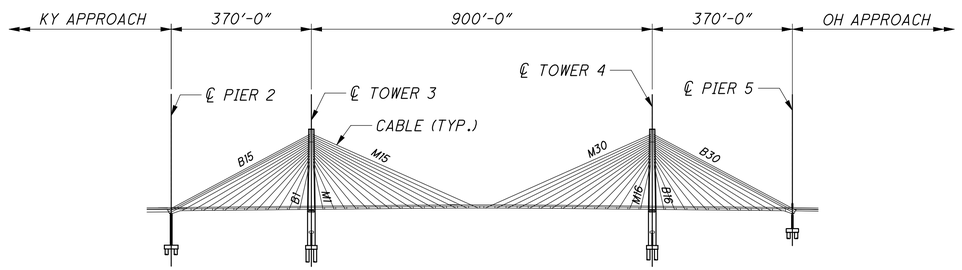

KEY PLAN

Link to RFI023 As-Built

DESIGN AGENCY
URS
36 EAST 7TH STREET
SUITE 2300
CINCINNATI, OHIO 45202

DESIGNED	DRAWN	REVIEWED	DATE
BMV	JDP	BA	6-10
CHECKED	REVISED	STRUCTURE FILE NUMBER	
MJZ		4401263	

TOWER CABLE ANCHOR BOX - LAYOUT
BRIDGE NO. LAW-93-0000
IRONTON RUSSEL BRIDGE OVER OHIO RIVER

LAW-93-0.00
PID No. 81595

104/365

491
788

J:\Project\O\ODOT\15005112 Ironton Russell\LAW\81595\structures\LAW093_1111C\sheets\Towers\093_0000_pi351.dgn - 4/29/2011 9:29:33 AM - john_corley

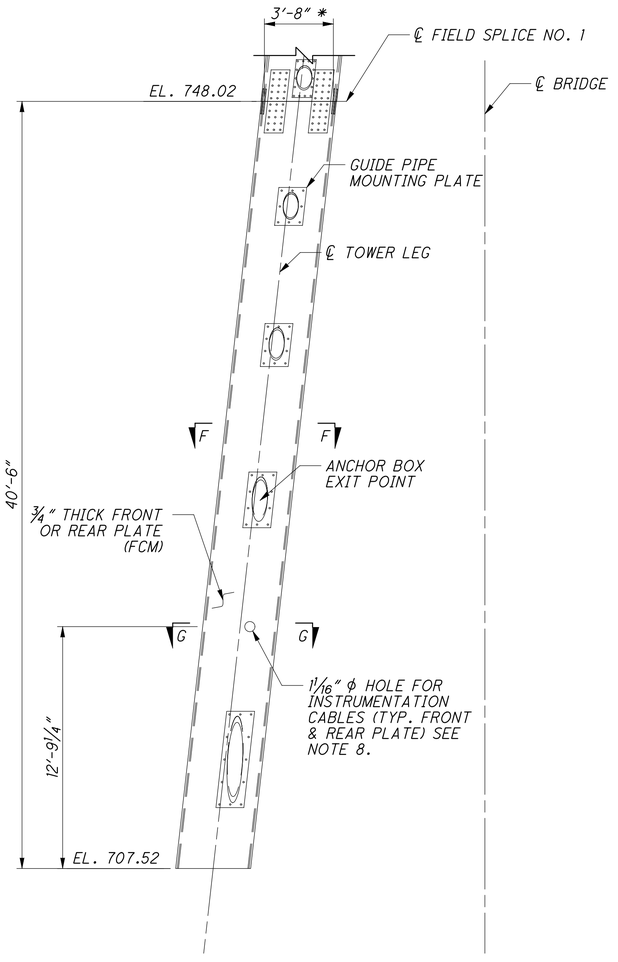

VIEW A-A
(VIEW B-B OPP. HAND)

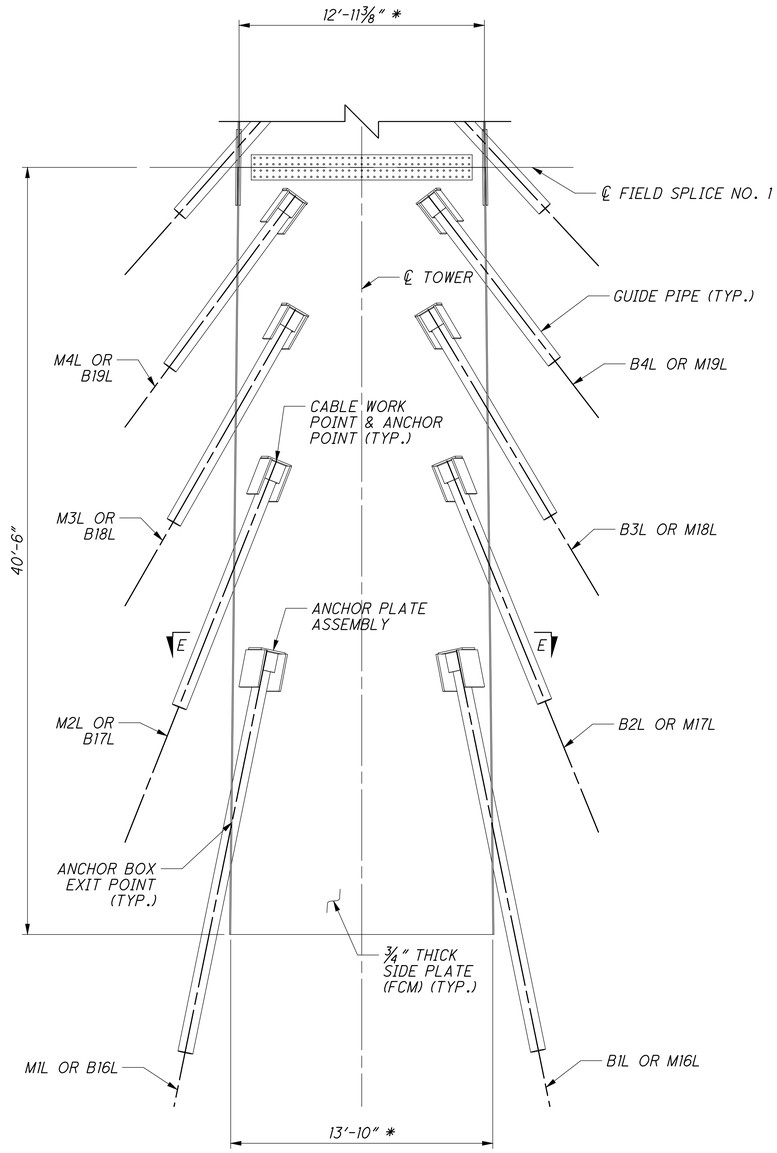

VIEW C-C
(VIEW D-D OPP. HAND)

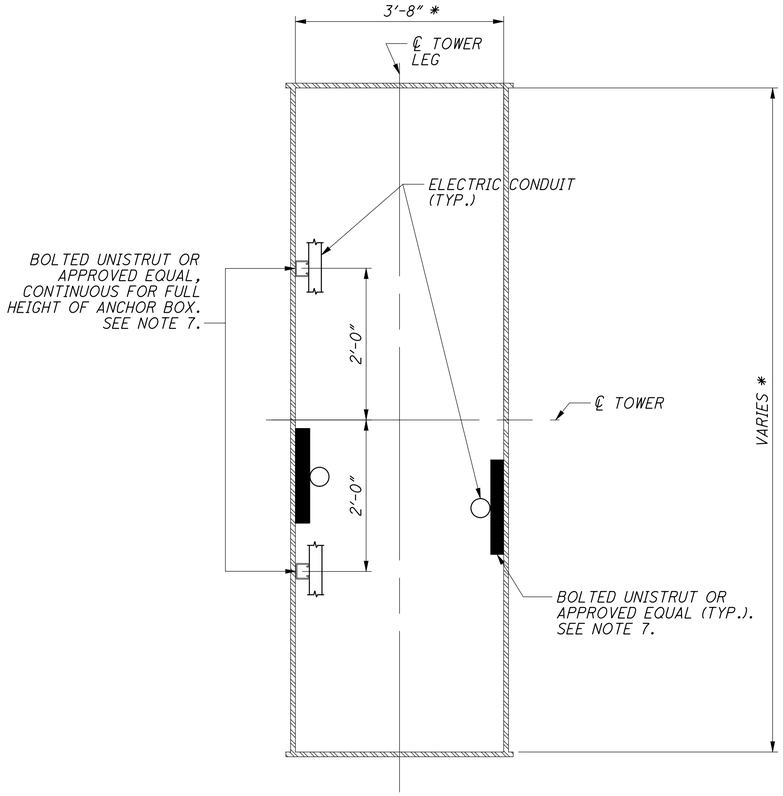

SECTION F-F
(TYP. SHOWING CONDUIT ATTACHMENT)

NOTES

1. FOR TOWER CABLE ANCHOR BOX LAYOUT, SEE SHEET 104 / 365 .
2. * INDICATES INSIDE TO INSIDE DIMENSION OF STEEL PLATES.
3. FOR TYPICAL WELDED STUD SHEAR CONNECTOR LAYOUT, SEE SHEET 109 / 365 .
4. FOR FIELD SPLICE DETAILS, SEE SHEET 108 / 365 .
5. FOR SECTION E-E & ANCHOR PLATE ASSEMBLY DETAILS, SEE SHEET 110 / 365 .
6. FOR INSTRUMENTATION DETAILS, SEE SPECIAL PROVISIONS.
7. THE CONTRACTOR SHALL COORDINATE CONDUIT SUPPORT DETAILS WITH THE ELECTRICAL CONTRACTOR. UNISTRUT, ASSOCIATED HARDWARE, AND OTHER MOUNTING BRACKETS SHALL BE INCIDENTAL TO THE UNIT PRICE BID FOR ITEM 513 STRUCTURAL STEEL MEMBERS, LEVEL 6, AS PER PLAN.
8. FILL UNUSED INSTRUMENTATION HOLES WITH 1" ϕ (FOR 1 1/16" ϕ HOLE) OR ¼" ϕ (FOR ⅜" ϕ HOLE) HIGH STRENGTH BOLTS PRIOR TO CASTING CONCRETE.
9. FOR SECTION G-G, SEE SHEET 107 / 365 .

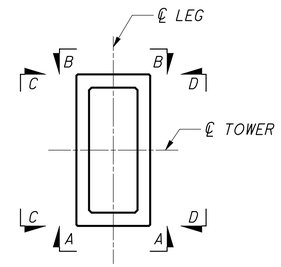

KEY PLAN



KEY ELEVATION

Link to RFI023 As-Built

ANCHOR BOX - FIELD SECTION 1

DESIGN AGENCY
URS
36 EAST 7TH STREET
SUITE 2300
CINCINNATI, OHIO 45202

DESIGNED	DRAWN	REVIEWED	DATE
BKL	JDP	BA	6-10
CHECKED	REVISED	STRUCTURE FILE NUMBER	
MJZ		4401263	

TOWER CABLE ANCHOR BOX - FIELD SECTION 1
BRIDGE NO. LAW-93-0000
IRONTON RUSSELL BRIDGE OVER OHIO RIVER

LAW-93-0.00
PID No. 81595

105/365

492
788

J:\Project\O\ODOT\15005112 Ironton Russell\LAW\81595\structures\LAW093_1111C\sheets\Towers\093_0000_pi352.dgn - 4/29/2011 9:29:37 AM - john_corley

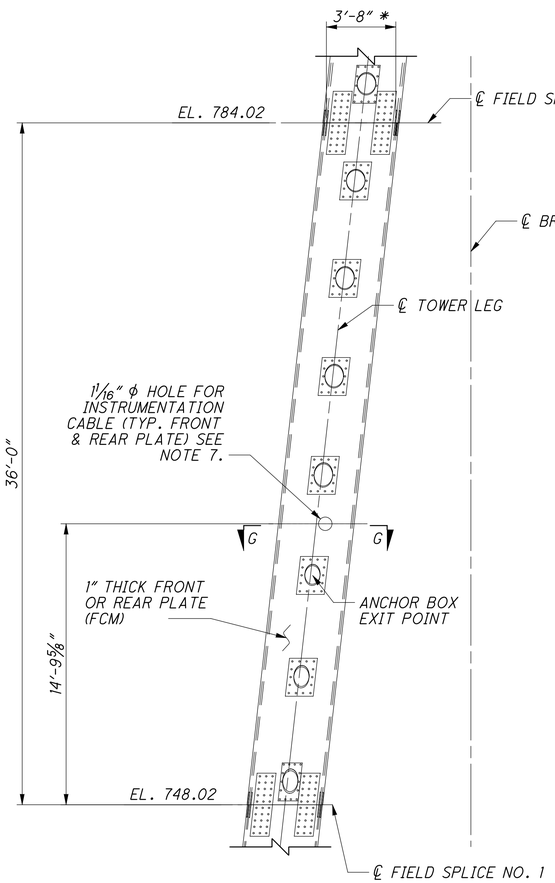

VIEW A-A
VIEW B-B OPP. HAND

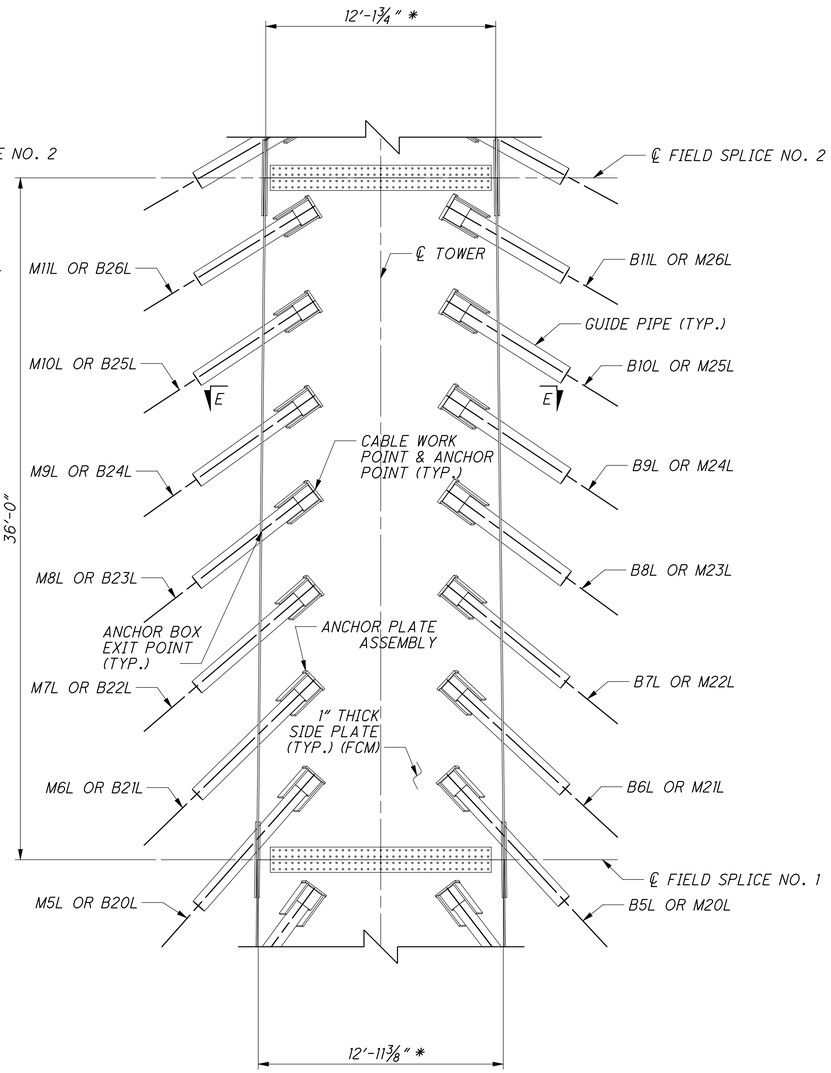

VIEW C-C
VIEW D-D OPP. HAND

ANCHOR BOX - FIELD SECTION 2
LEFT LEG SHOWN, RIGHT LEG OPP. HAND

NOTES
1. FOR TOWER CABLE ANCHOR BOX LAYOUT, SEE SHEET 104 / 365 .
2. * INDICATES INSIDE TO INSIDE DIMENSION OF STEEL PLATES.
3. FOR TYPICAL WELDED STUD SHEAR CONNECTOR LAYOUT, SEE SHEET 109 / 365 .
4. FOR FIELD SPLICE DETAILS, SEE SHEET 108 / 365 .
5. FOR SECTION E-E & ANCHOR PLATE ASSEMBLY DETAILS, SEE SHEET 110 / 365 .
6. FOR INSTRUMENTATION DETAILS, SEE SPECIAL PROVISIONS.
7. FILL UNUSED INSTRUMENTATION HOLES WITH 1" ϕ (FOR 1 1/16" ϕ HOLES) OR 1/4" ϕ (FOR 3/8" ϕ HOLES) HIGH STRENGTH BOLTS PRIOR TO CASTING CONCRETE.
8. FOR SECTION G-G, SEE SHEET 107 / 365 .

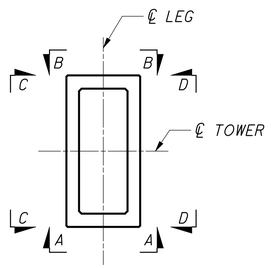

KEY PLAN

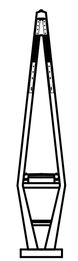

KEY ELEVATION

Link to RFI023 As-Built Link to RFI071 As-Built

J:\Project\OJODOT\15005112 Ironton Russell\LAW\81595\structures\LAW093_1111C\sheets\Towers\093_0000_pi353.dgn — 4/29/2011 9:29:43 AM — john_corley

DESIGN AGENCY
URS
38 EAST 7TH STREET
SUITE 2300
CINCINNATI, OHIO 45202

DESIGNED	DRAWN	REVIEWED	DATE
BKL	JDP	BA	6-10
CHECKED	REVISED	STRUCTURE FILE NUMBER	
MJZ		4401263	

TOWER CABLE ANCHOR BOX - FIELD SECTION 2
BRIDGE NO. LAW-93-0000
IRONTON RUSSEL BRIDGE OVER OHIO RIVER

LAW-93-0.00
PID No. 81595

106 / 365

493
788

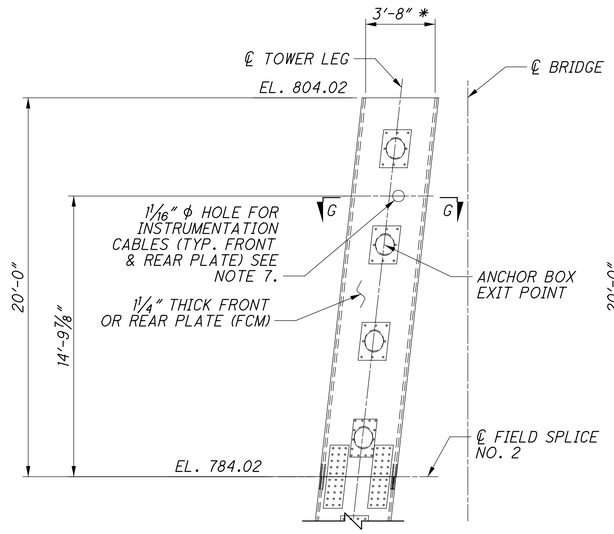

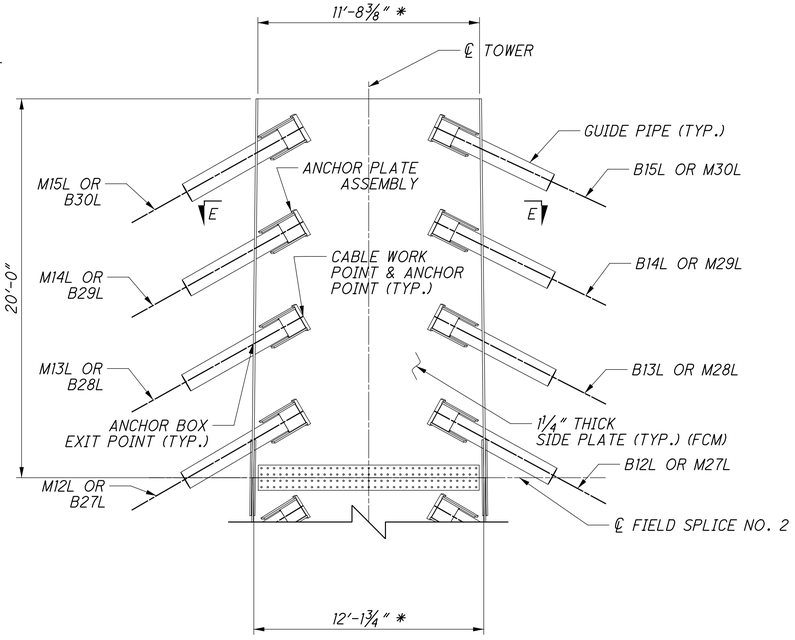

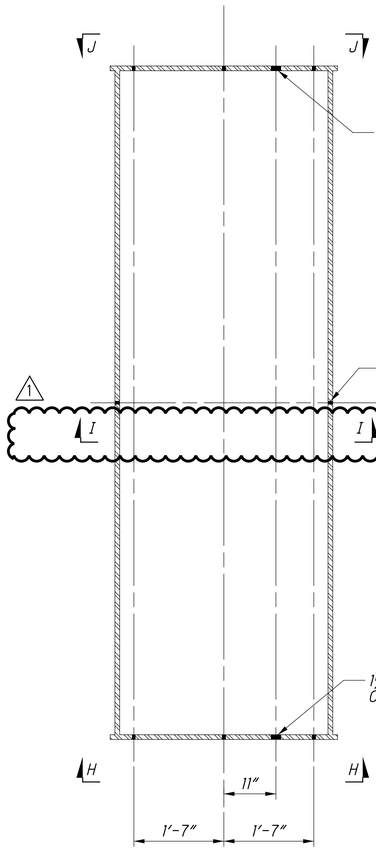

VIEW A-A
VIEW B-B OPP. HAND

VIEW C-C
VIEW D-D OPP. HAND

SECTION G-G

ANCHOR BOX - FIELD SECTION 3
(LEFT LEG SHOWN, RIGHT LEG OPP. HAND)

Link to RFI087 As-Built

Link to RFI 086 As-Built

Link to RFI023 As-Built

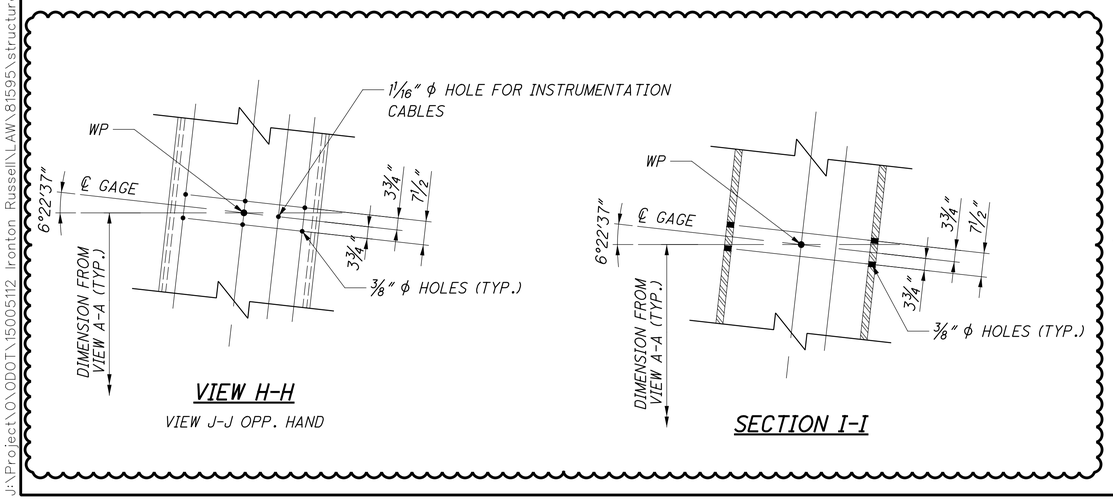

VIEW H-H
VIEW J-J OPP. HAND

SECTION I-I

NOTES

1. FOR TOWER CABLE ANCHOR BOX LAYOUT, SEE SHEET 104 / 365.
2. * INDICATES INSIDE TO INSIDE DIMENSION OF STEEL PLATES.
3. FOR TYPICAL WELDED STUD SHEAR CONNECTOR LAYOUT, SEE SHEET 109 / 365 .
4. FOR FIELD SPLICE DETAILS, SEE SHEET 108 / 365.
5. FOR SECTION E-E & ANCHOR PLATE ASSEMBLY DETAILS, SEE SHEET 110 / 365 .
6. FOR INSTRUMENTATION DETAILS, SEE SPECIAL PROVISIONS.
7. FILL UNUSED INSTRUMENTATION HOLES WITH 1" ϕ (FOR 1⁄16" ϕ HOLES) OR 1⁄4" ϕ (FOR ⅜" ϕ HOLES) HIGH STRENGTH BOLTS PRIOR TO CASTING CONCRETE.
8. STRAIN GAGES SHALL BE ORIENTED WITH THEIR AXES PARALLEL TO THE ℄ TOWER LEG.

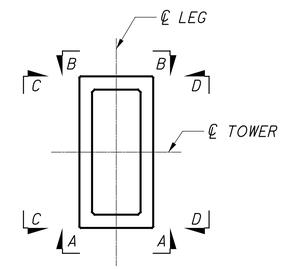

KEY PLAN



KEY ELEVATION

NO.	REVISIONS	DATE	REV. BY
1	REVISED DETAILS	1/13	BER

DESIGN AGENCY
URS
36 EAST 7TH STREET
SUITE 2300
CINCINNATI, OHIO 45202

DESIGNED	DRAWN	REVIEWED	DATE
BKL	JDP	BA	6-10
CHECKED	REVISED	STRUCTURE FILE NUMBER	
MJZ		4401263	

TOWER CABLE ANCHOR BOX - FIELD SECTION 3
BRIDGE NO. LAW-93-0000
IRONTON RUSSELL BRIDGE OVER OHIO RIVER

LAW-93-0.00
PID No. 81595

107/365

494
788

J:\Project\O\ODOT\15005112 Ironton Russell\LAW\81595\structures\LAW093_1111C\sheets\Towers\093_0000_pi354.dgn - 1/14/2013 3:05:28 PM - nabil_hamadani

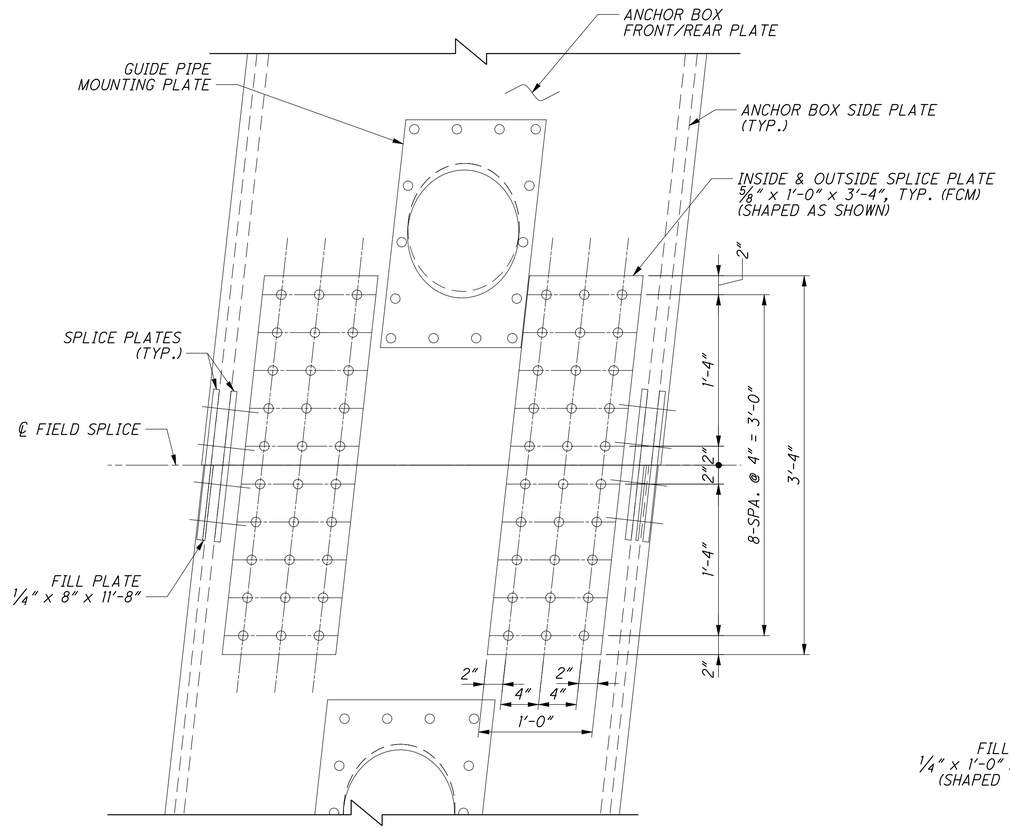

FRONT VIEW A-A

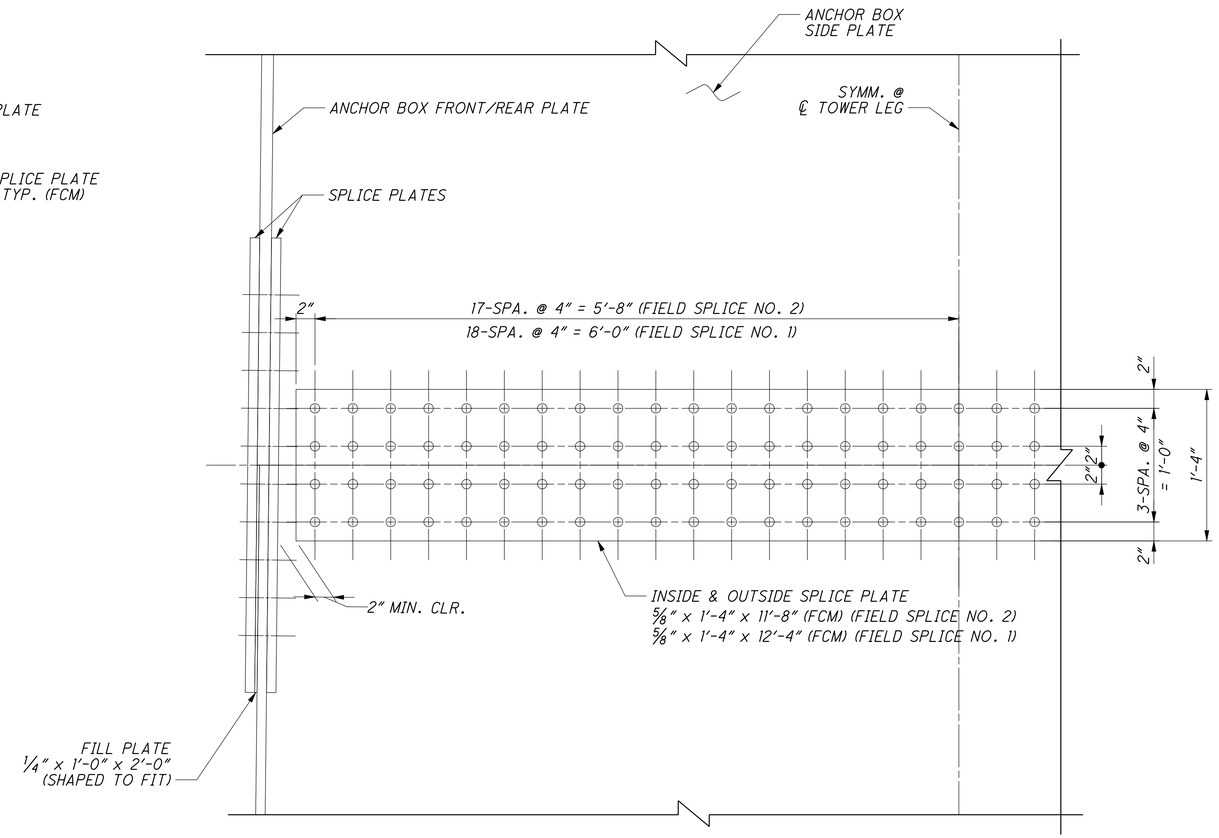

SIDE VIEW C-C

ANCHOR BOX SPLICE DETAILS

LEFT LEG SHOWN, RIGHT LEG OPP. HAND

NOTES

1. FOR TOWER CABLE ANCHOR BOX LAYOUT AND CABLE ANCHOR BOX NOTES, SEE SHEET 111 / 365 .
2. FOR TYPICAL WELDED STUD SHEAR CONNECTOR LAYOUT, SEE SHEET 109 / 365 .
3. FOR ANCHOR PLATE ASSEMBLY DETAILS, SEE SHEET 110 / 365 .
4. ALL FIELD SPLICE BOLTS SHALL BE 1" DIAMETER HIGH STRENGTH ASTM A-325 GALVANIZED IN STANDARD HOLES.

Link to RFI023 As-Built

Link to RFI029 As-Built

Link to RFI090 As-Built

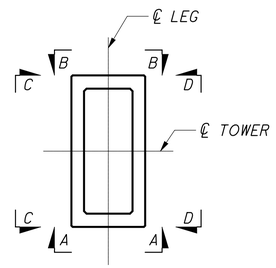

KEY PLAN

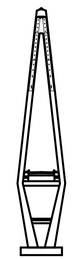

KEY ELEVATION

J:\Project\O\ODOT\15005112 Ironton Russell\LAW\81595\structures\LAW093_1111C\sheets\Towers\093_0000_pi355.dgn — 4/29/2011 9:29:53 AM — john_corley

DESIGN AGENCY
URS
36 EAST 7TH STREET
SUITE 2300
CINCINNATI, OHIO 45202

DESIGNED	DRAWN	REVIEWED	DATE
BMV	JDP	BA	6-10
CHECKED	REVISED	STRUCTURE FILE NUMBER	
BKL		4401263	

TOWER CABLE ANCHOR BOX - SPLICE DETAILS

BRIDGE NO. LAW-93-0000

IRONTON RUSSEL BRIDGE OVER OHIO RIVER

LAW-93-0.00

PID No. 81595

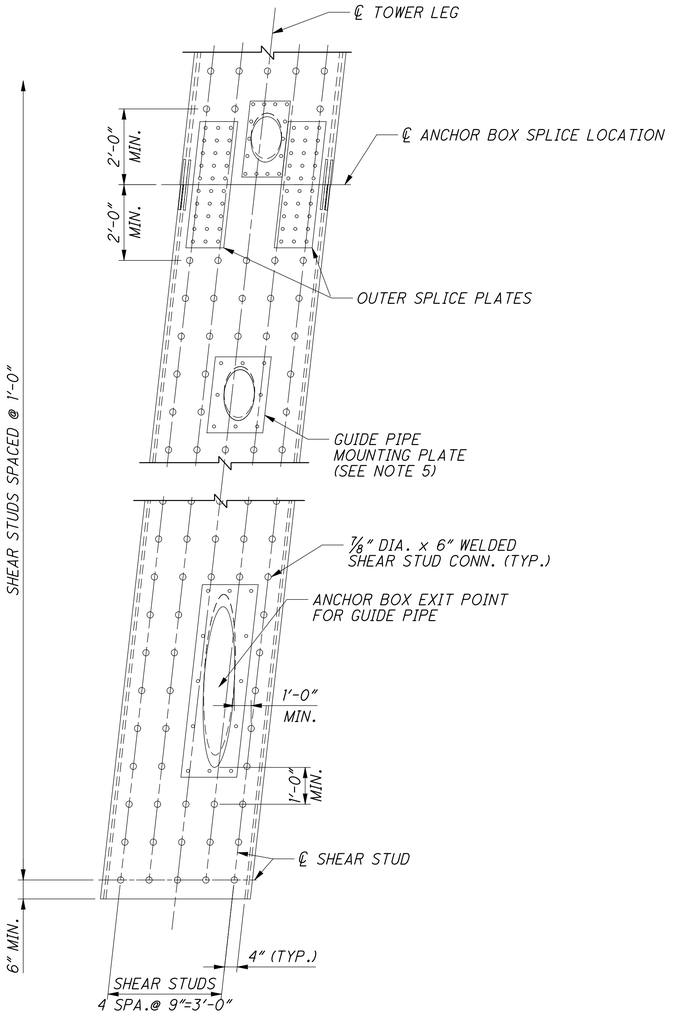

FRONT ELEVATION

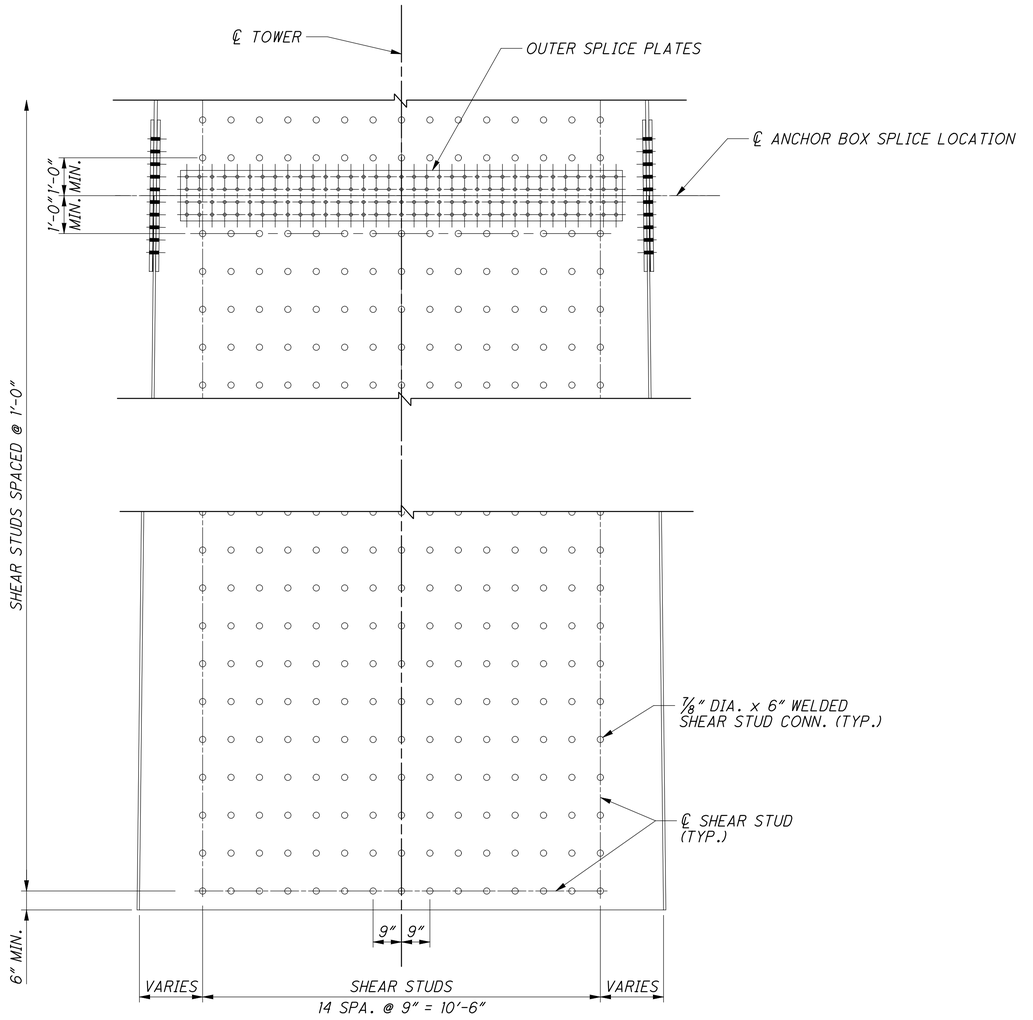

SIDE ELEVATION

WELDED SHEAR STUD CONNECTOR SPACING

NOTES

1. FOR SPLICE DETAILS, SEE SHEET 108 / 365.
2. FOR GUIDE PIPE EXIT POINT LOCATIONS, SEE SHEET 112 / 365.
3. FOR ANCHOR BOX DIMENSIONS, SEE SHEETS 105 / 365 THRU 107 / 365.
4. THE WELDED STUD SHEAR CONNECTORS SHALL BE 7/8" ϕ x 6" LONG HEADED STUDS AND SHALL BE SHOP WELDED TO THE OUTSIDE OF THE TOWER CABLE ANCHOR BOX PRIOR TO GALVANIZING.
5. THE SHEAR STUDS OMITTED DUE TO INTERFERENCE WITH THE GUIDE PIPE MOUNTING PLATE SHALL BE REPLACED BY ADDING AN EQUAL NUMBER OF STUDS IN THE VICINITY OF THE PIPE. THE RESULTING SHEAR STUD SPACING SHALL NOT BE LESS THAN 6" IN EACH DIRECTION.

Link to RFI023 As-Built Link to RFI080 As-Built

DESIGN AGENCY
URS
36 EAST 7TH STREET
SUITE 2300
CINCINNATI, OHIO 45202

DESIGNED	DRAWN	REVIEWED	DATE
BMV	JDP	BA	6-10
CHECKED	REVISED	STRUCTURE FILE NUMBER	
BKL		4401263	

TOWER CABLE ANCHOR BOX - SHEAR STUD DETAILS
BRIDGE NO. LAW-93-0000
IRONTON RUSSEL BRIDGE OVER OHIO RIVER

LAW-93-0.00
PID No. 81595

109/365

496
788

J:\Project\O\ODOT\15005112 Ironton Russell\LAW\81595\structures\LAW093_1111C\sheets\Towers\093_0000_pi356.dgn - 4/29/2011 9:29:59 AM - john_corley

Link to RFI089 As-Built Link to RFI084 As-Built Link to RFI049 As-Built

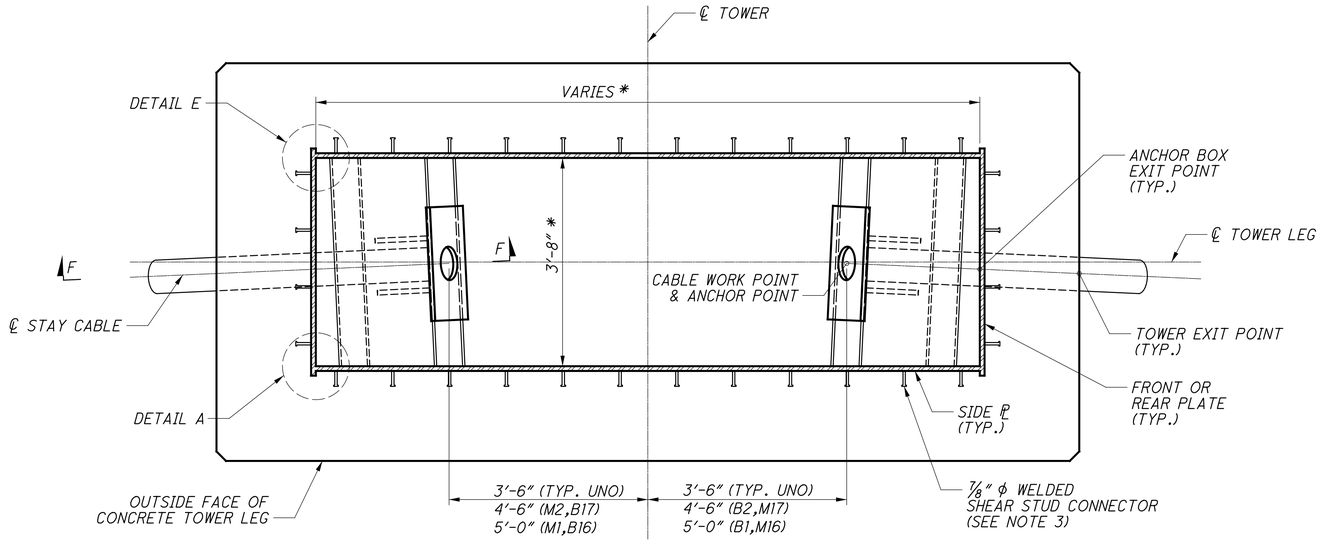

SECTION E-E

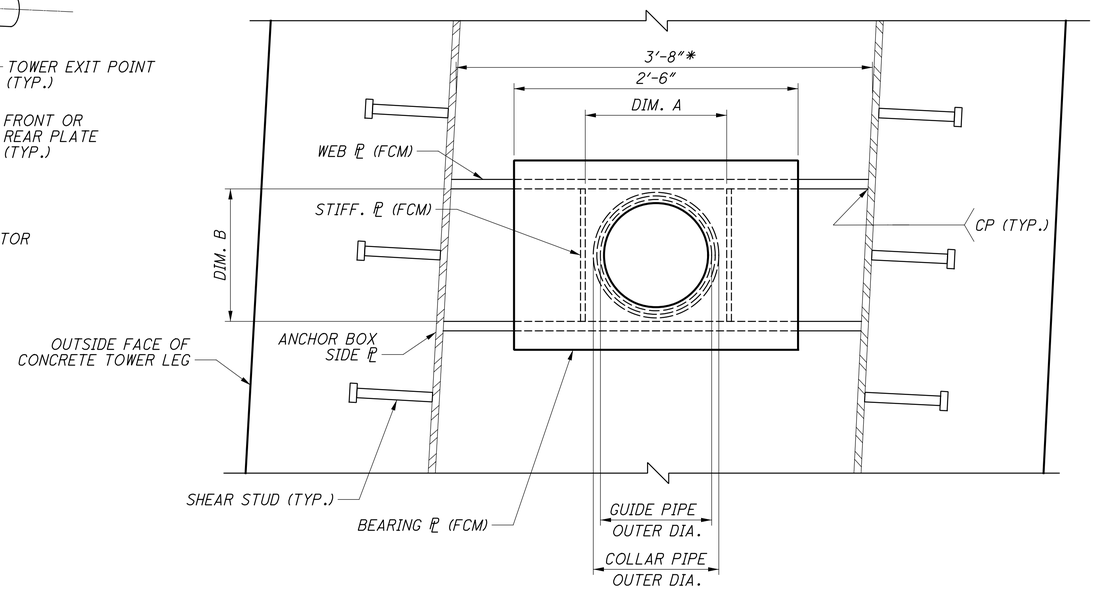

VIEW B-B

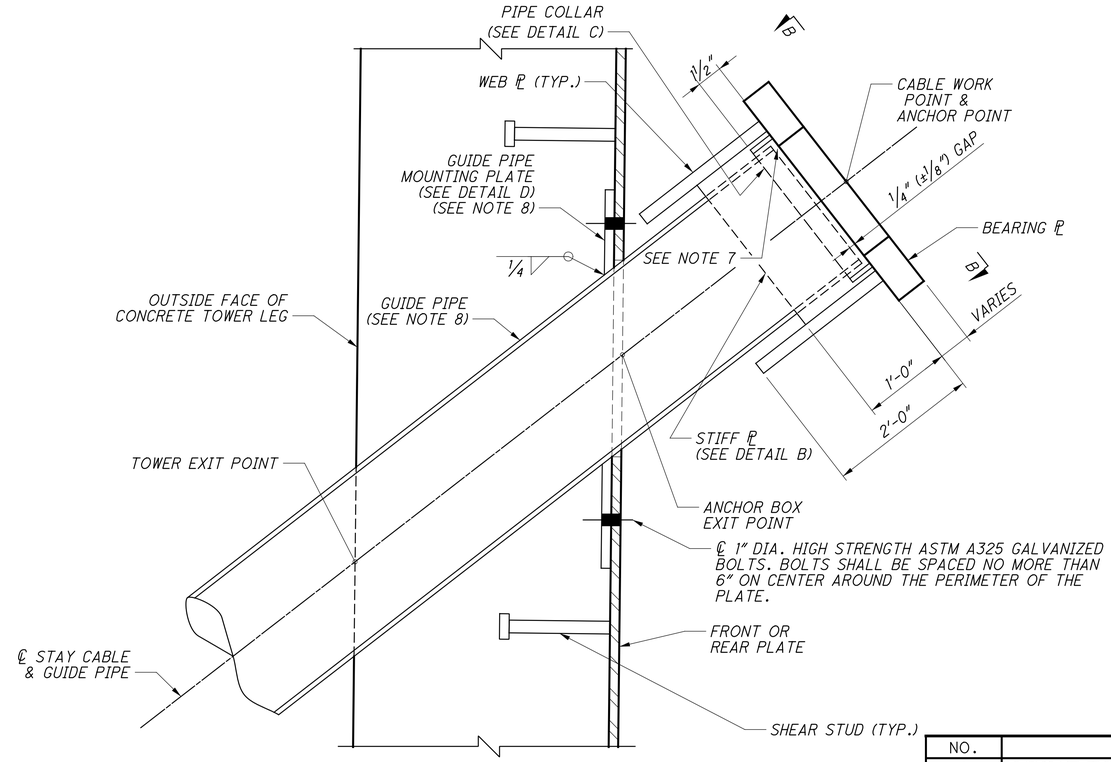

SECTION F-F
ANCHOR PLATE ASSEMBLY

1

CABLE NO.	BEARING PL. THK.	WIDTH	LENGTH
B1-B3, B16-B18, M1, M2, M16, M17	1⅛"	18"	30"
B4, B5, B19, B20 M3, M4, M18, M19	1⅛"	20"	30"
B6-B11, B21-B26, M5-M7, M20-M22	1½"	20"	30"
B12, B13, B27, B28 M8-M13, M23-M28	2"	20"	30"
B14, B29	2⅜"	20"	30"
B15, B30	2¾"	22"	30"
M14, M15, M29, M30	2⅜"	22"	30"

CABLE NUMBERS	GUIDE PIPE I.D.	GUIDE PIPE O.D.	COLLAR PIPE I.D.	COLLAR PIPE O.D.	STIFF. PL. THK.	STIFF. PL. DIM. A	WEB PL. THK.	WEB PL. DIM. B
B1-B3, M1,M2 M16, M17, B16-B18	9"	9⅝"	10"	10¾"	¾"	12"	1"	14"
B4-B14, M3-M13, M18-M28, B19-B29	11"	11¾"	12"	12¾"	¾"	14"	1"	16"
B15, M14, M15 M29, M30, B30	12"	12¾"	13"	14"	¾"	16"	1"	18"

NOTES

1. FOR TOWER CABLE ANCHOR BOX LAYOUT, SEE SHEET 104/365
2. * INDICATES LEVEL DIMENSION, INSIDE TO INSIDE OF STEEL PLATES.
3. FOR TYPICAL WELDED STUD SHEAR CONNECTOR LAYOUT, SEE SHEET 109/365
4. FOR FIELD SPLICE DETAILS, SEE SHEET 108/365
5. FOR DETAILS A, B, C, D & E, SEE SHEET 111/365
6. FOR TOWER CABLE BOX GEOMETRY, SEE SHEET 112/365
7. GAP BETWEEN GUIDE PIPE AND BEARING PLATE SHALL BE CAULKED DURING INSTALLATION WITH FLURODYN CAULK AND SHALL BE INCLUDED WITH STAY CABLE FOR PAYMENT.
8. GUIDE PIPES AND MOUNTING PLATES ARE INCLUDED WITH STAY CABLES FOR PAYMENT.

NO.	REVISIONS	DATE	REV. BY
1	REVISED TABLE	1/13	BER

DESIGN AGENCY
URS
36 EAST 7TH STREET
SUITE 2300
CINCINNATI, OHIO 45202

DESIGNED	DRAWN	REVIEWED	DATE
BKL	JDP	BA	6-10
CHECKED	REVISED	STRUCTURE FILE NUMBER	
BMV		4401263	

TOWER CABLE ANCHOR BOX - DETAILS (1 OF 2)
BRIDGE NO. LAW-93-0000
IRONTON RUSSEL BRIDGE OVER OHIO RIVER

LAW-93-0.00
PID No. 81595

110/365

497/788

J:\Project\O\ODOT\15005112 Ironton Russell\LAW\81595\structures\LAW093_1111C\sheets\Towers\093_0000_pi357.dgn - 1/8/2013 9:27:10 AM - jon_wanstrath

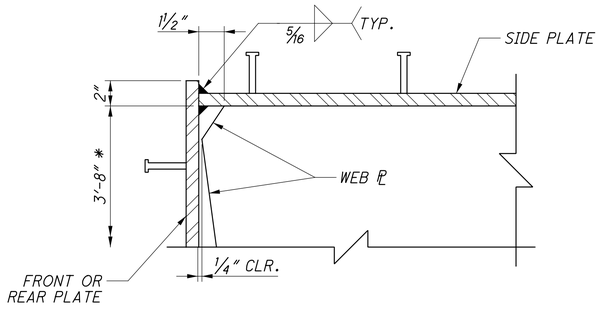

DETAIL E - WEB PLATE

NOTE: CLIP CORNERS OF WEB ℄ WHERE NECESSARY FOR FIT ONLY.

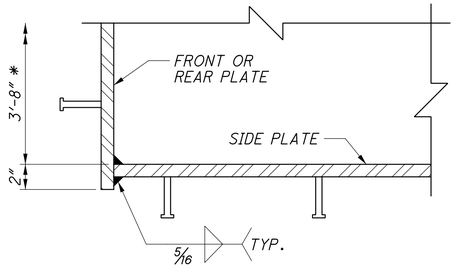

DETAIL A-ANCHOR BOX PLATE

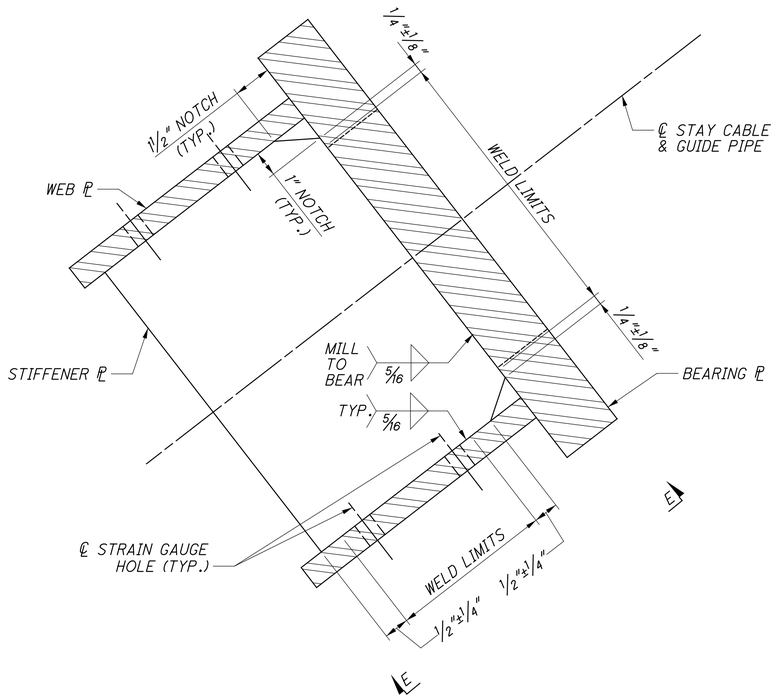

DETAIL B - STIFFENER PLATE

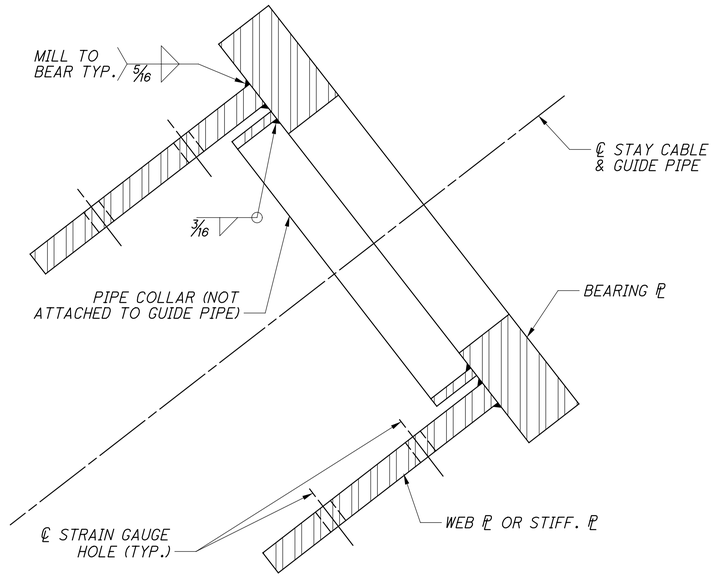

DETAIL C - PIPE COLLAR

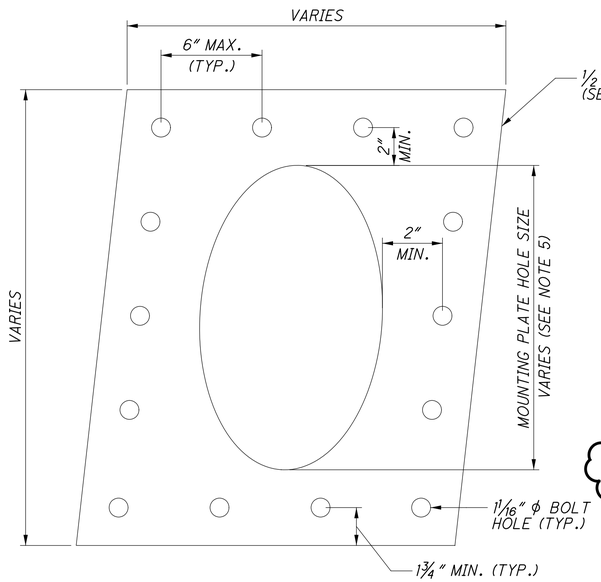

DETAIL D - GUIDE PIPE MOUNTING PLATE

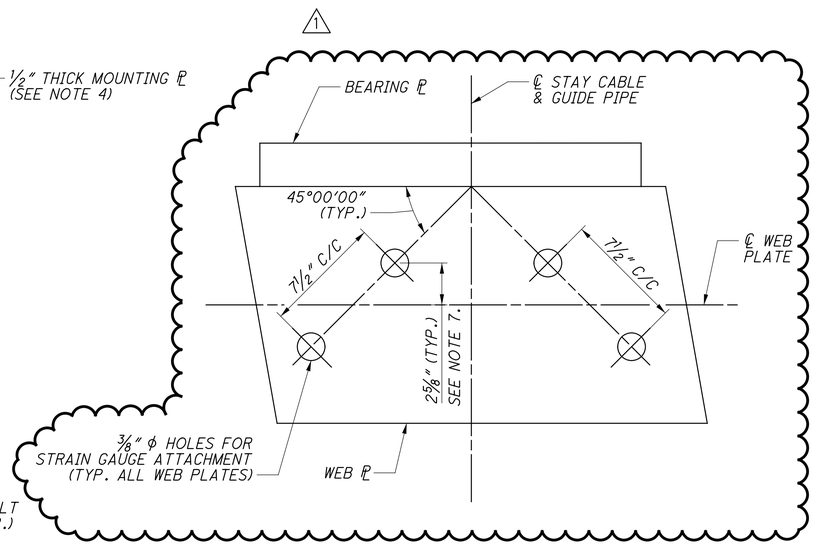

VIEW E - GAUGE PLACEMENT ON WEB PLATES

NOTES

1. FOR TOWER CABLE ANCHOR BOX LAYOUT, SEE SHEET 104 / 365
2. FOR TYPICAL WELDED STUD SHEAR CONNECTOR LAYOUT, SEE SHEET 109 / 365
3. FOR FIELD SPLICE DETAILS, SEE SHEET 108 / 365
4. GUIDE PIPE MOUNTING PLATES ARE TO BE SIZED AND SHAPED AS REQUIRED TO PROPERLY ORIENT GUIDE PIPE AND MEET THE FOLLOWING BOLTING REQUIREMENTS. THE DESIGN REQUIREMENT IS TO MOUNT THE GUIDE PIPE TO THE TOWER CABLE ANCHOR BOX, USING A MINIMUM SIX (6) 1" DIAMETER HIGH STRENGH ASTM A-325 GALVANIZED BOLTS. THE BOLTS SHALL BE SPACED SUCH THAT THE MAXIMUM CENTER TO CENTER SPACING OF THE BOLTS DOES NOT EXCEED 6". THE GUIDE PIPE SHALL BE SHOP WELDED TO THE MOUNTING PLATE PRIOR TO GALVANIZING.
5. THE HOLE IN THE MOUNTING PLATE SHALL BE SIZED AND ORIENTED IN SUCH A MANNER SO AS TO ACCOMMODATE THE GUIDE PIPE WELDING. THE CENTER LINE OF COMPLETED GUIDE PIPE AND MOUNTING PLATE ASSEMBLY, AS INSTALLED IN PLACE, SHALL COINCIDE WITH THE CENTER LINE OF STAY CABLE AT EACH LOCATION.
6. FOR LOCATION OF DETAILS A THRU E, SEE SHEET 110 / 365
7. EACH PAIR OF STRAIN GAUGES SHALL BE CENTERED MID-WIDTH ON THE WEB PLATE IN THE DIRECTION PARALLEL TO THE CABLE, AND LATERALLY BETWEEN THE EDGE OF THE WEB PLATE AND ITS CENTERLINE. IN NO CASE SHALL A GAUGE HOLE BE LOCATED CLOSER THAN 3" TO THE EDGE OF THE PLATE.

Link to RFI051 As-Built

Link to RFI070 As-Built

NO.	REVISIONS	DATE	REV. BY
1	REVISED DETAIL	1/13	BER

DESIGN AGENCY
URS
36 EAST 7TH STREET
SUITE 2300
CINCINNATI, OHIO 45202

DESIGNED	DRAWN	REVIEWED	DATE
BKL	JDP	BA	6-10
CHECKED	REVISED	STRUCTURE FILE NUMBER	
BMV		4401263	

TOWER CABLE ANCHOR BOX - DETAILS (2 OF 2)
BRIDGE NO. LAW-93-0000
IRONTON RUSSEL BRIDGE OVER OHIO

LAW-93-0.00
PID No. 81595

111 / 365

498
788

J:\Project\OV\ODOT\15005112 Ironton Russell\LAW\81595\structures\LAW093_1111C\sheets\Towers\093_0000_pi358.dgn - 1/11/2013 4:45:58 PM - nabil_hamadani

TOWER 3

CABLE LOCATION	ANCHOR BOX EXIT POINT COORDINATES		
	X (FT)	Y (FT)	Z (FT)
B15 L	-455.885	801.160	-3.858
B14 L	-455.941	796.129	-4.412
B13 L	-455.996	791.098	-4.966
B12 L	-456.051	786.017	-5.515
B11 L	-456.107	780.892	-6.081
B10 L	-456.164	775.744	-6.649
B9 L	-456.221	770.566	-7.219
B8 L	-456.278	765.345	-7.791
B7 L	-456.336	760.056	-8.367
B6 L	-456.395	754.681	-8.948
B5 L	-456.455	749.155	-9.538
B4 L	-456.529	742.379	-10.254
B3 L	-456.609	735.080	-10.998
B2 L	-456.698	726.958	-11.885
B1 L	-456.847	713.424	-13.179
M1 L	-443.154	713.471	-13.179
M2 L	-443.303	727.110	-11.879
M3 L	-443.393	735.271	-10.990
M4 L	-443.472	742.551	-10.246
M5 L	-443.546	749.310	-9.532
M6 L	-443.607	754.821	-8.943
M7 L	-443.666	760.187	-8.362
M8 L	-443.723	765.460	-7.787
M9 L	-443.781	770.676	-7.215
M10 L	-443.837	775.849	-6.645
M11 L	-443.894	780.992	-6.077
M12 L	-443.950	786.111	-5.511
M13 L	-444.006	791.212	-4.946
M14 L	-444.061	796.299	-4.381
M15 L	-444.117	801.376	-3.817
B15 R	-455.885	801.160	3.840
B14 R	-455.941	796.129	4.397
B13 R	-455.996	791.098	4.955
B12 R	-456.051	786.017	5.515
B11 R	-456.107	780.892	6.081
B10 R	-456.164	775.744	6.649
B9 R	-456.221	770.566	7.219
B8 R	-456.278	765.345	7.791
B7 R	-456.336	760.056	8.367
B6 R	-456.395	754.681	8.948
B5 R	-456.455	749.155	9.538
B4 R	-456.529	742.379	10.254
B3 R	-456.609	735.080	10.998
B2 R	-456.698	726.958	11.885
B1 R	-456.847	713.424	13.179
M1 R	-443.154	713.471	13.179
M2 R	-443.303	727.110	11.879
M3 R	-443.393	735.271	10.990
M4 R	-443.472	742.551	10.246
M5 R	-443.546	749.310	9.532
M6 R	-443.607	754.821	8.943
M7 R	-443.666	760.187	8.362
M8 R	-443.723	765.460	7.787
M9 R	-443.781	770.676	7.215
M10 R	-443.837	775.849	6.645
M11 R	-443.894	780.992	6.077
M12 R	-443.950	786.111	5.511
M13 R	-444.006	791.212	4.946
M14 R	-444.061	796.299	4.381
M15 R	-444.117	801.376	3.817

TOWER 4

CABLE LOCATION	ANCHOR BOX EXIT POINT COORDINATES		
	X (FT)	Y (FT)	Z (FT)
M30 L	444.117	801.376	-3.817
M29 L	444.061	796.299	-4.381
M28 L	444.006	791.212	-4.946
M27 L	443.950	786.111	-5.511
M26 L	443.894	780.992	-6.077
M25 L	443.837	775.849	-6.645
M24 L	443.781	770.676	-7.215
M23 L	443.723	765.460	-7.787
M22 L	443.666	760.187	-8.362
M21 L	443.607	754.821	-8.943
M20 L	443.546	749.310	-9.532
M19 L	443.472	742.551	-10.246
M18 L	443.393	735.271	-10.990
M17 L	443.303	727.110	-11.879
M16 L	443.154	713.472	-13.179
B16 L	456.847	713.425	-13.179
B17 L	456.698	726.959	-11.885
B18 L	456.609	735.080	-10.998
B19 L	456.529	742.379	-10.254
B20 L	456.455	749.155	-9.538
B21 L	456.395	754.681	-8.948
B22 L	456.336	760.056	-8.367
B23 L	456.278	765.345	-7.791
B24 L	456.221	770.566	-7.219
B25 L	456.164	775.743	-6.649
B26 L	456.107	780.892	-6.081
B27 L	456.051	786.017	-5.515
B28 L	455.996	791.098	-4.958
B29 L	455.941	796.129	-4.401
B30 L	455.885	801.160	-3.843
M30 R	444.117	801.376	3.817
M29 R	444.061	796.299	4.381
M28 R	444.006	791.212	4.946
M27 R	443.950	786.111	5.511
M26 R	443.894	780.992	6.077
M25 R	443.837	775.849	6.645
M24 R	443.781	770.676	7.215
M23 R	443.723	765.460	7.787
M22 R	443.666	760.187	8.362
M21 R	443.607	754.821	8.943
M20 R	443.546	749.310	9.532
M19 R	443.472	742.551	10.246
M18 R	443.393	735.271	10.990
M17 R	443.303	727.110	11.879
M16 R	443.154	713.472	13.179
B16 R	456.847	713.425	13.179
B17 R	456.698	726.959	11.885
B18 R	456.609	735.080	10.998
B19 R	456.529	742.379	10.254
B20 R	456.455	749.155	9.538
B21 R	456.395	754.681	8.948
B22 R	456.336	760.056	8.367
B23 R	456.278	765.345	7.791
B24 R	456.221	770.566	7.219
B25 R	456.164	775.743	6.649
B26 R	456.107	780.892	6.081
B27 R	456.051	786.017	5.515
B28 R	455.996	791.098	4.948
B29 R	455.941	796.129	4.390
B30 R	455.885	801.160	3.832

1

1. FOR ADDITIONAL WORK POINT ELEVATIONS, SEE STAY CABLE GEOMETRY SHEETS 227/365 THRU 229/365

NO.	REVISIONS	DATE	REV. BY
1	TABLES REVISED	9/12	BER

DESIGNED BKL | DRAWN JGC | REVIEWED BA | DATE 6-10

CHECKED MJZ | REVISED | STRUCTURE FILE NUMBER 4401263

DESIGN AGENCY
URS
36 EAST 7TH STREET
SUITE 2300
CINCINNATI, OHIO 45202

TOWER CABLE ANCHOR BOX - GEOMETRY
BRIDGE NO. LAW-93-0000
IRONTON RUSSEL BRIDGE OVER OHIO RIVER

LAW-93-0.00
PID No. 81595

112/365

499
788

J:\Project\ODOT\15005112 Ironton Russell\LAW\81595\structures\LAW093_1111C\sheets\Towers\093_0000_pi370.dgn - 9/21/2012 2:08:27 PM - jon_wanstrath

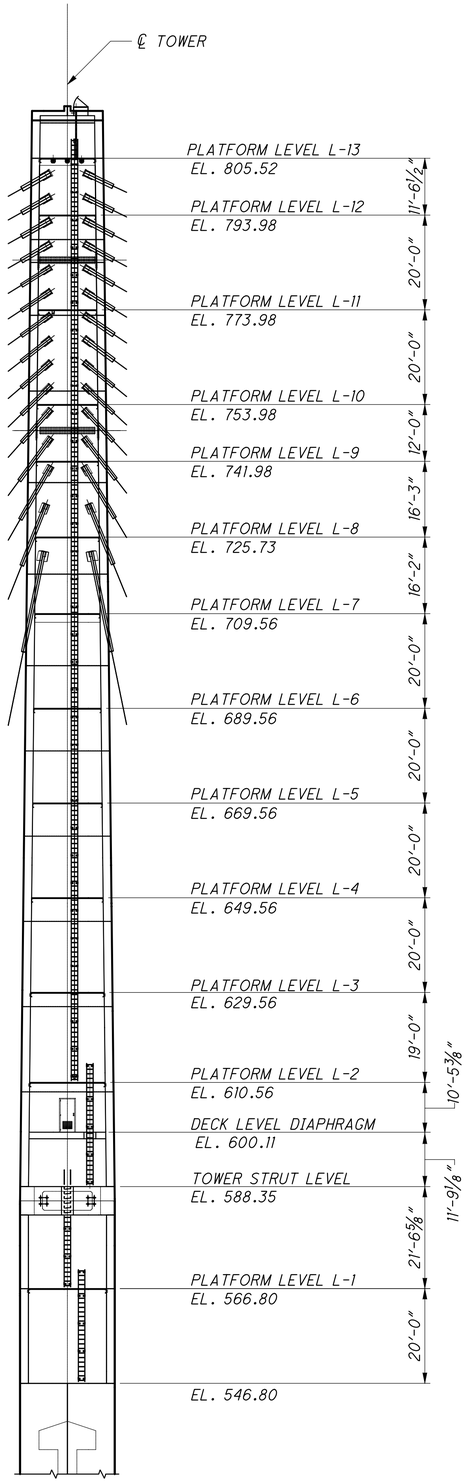

RIGHT SIDE VIEW

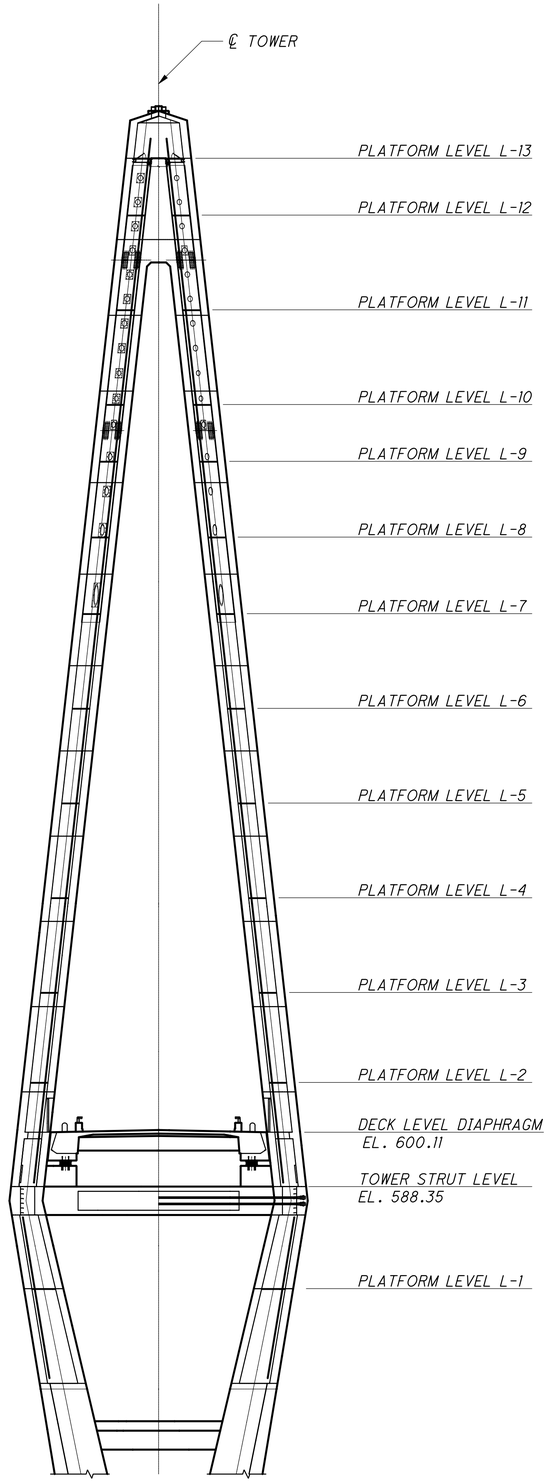

TOWER ELEVATION

NOTES

1. TOWER 3 (KY) SHOWN, TOWER 4 (OH) SIMILAR.
2. ALL LADDERS, GRATING SUPPORTS, BOLTS, NUTS, AND WASHERS SHALL BE GALVANIZED AFTER FABRICATION IN ACCORDANCE WITH ASTM A123.
3. ALL LADDER SPLICES SHALL BE BOLTED AND SHALL CONFORM TO THE REQUIREMENTS OF OSHA 1910.27.
4. FIBERGLASS GRATING SHALL BE MANUFACTURED AND INSTALLED USING CLIP TYPE FASTENERS IN ACCORDANCE WITH ANSI/NAAMM STANDARD MBG 531-09.
5. A LADDER SAFETY DEVICE SHALL BE INSTALLED BETWEEN PLATFORM LEVELS L-2 AND L-13. SEE SPECIAL PROVISIONS
6. ALL WELDED LADDER AND PLATFORM BRACKET ATTACHMENTS WITHIN THE ANCHOR BOX SHALL BE ATTACHED PRIOR TO GALVANIZING THE STEEL ANCHOR BOX.
7. ACCESS HATCHES SHALL BE EQUIPPED WITH STEEL FLUSH LIFTING HANDLES THAT DO NOT PROTRUDE ABOVE THE FLOOR AND HOLD-OPEN DEVICES CAPABLE OF AUTOMATICALLY SUPPORTING HATCH IN OPEN POSITION.
8. LIGHTNING PROTECTION SYSTEM SHALL BE BONDED TO ALL LADDERS AND PLATFORMS. SEE SHEETS 298 THRU 304 OF 788.
9. ELECTRICAL EQUIPMENT, INSPECTION LIGHTING AND RELATED CONDUIT SHALL BE INSTALLED IN EACH TOWER LEG, SEE SHEETS 285 THRU 297 OF 788 FOR DETAILS. NECESSARY CUTOUTS IN GALVANIZED METAL GRATING PLATFORMS SHALL BE MADE IN ACCORDANCE WITH ANSI/NAAMM STANDARD MBG 531-09. IT IS RECOMMENDED THAT CUTOUTS FOR ALL PIPING 4 IN. OR LESS IN DIAMETER BE MADE IN THE FIELD.
10. THE PLATFORM LEVEL ELEVATIONS SHOWN ARE AT THE TOP OF THE PLATFORM GRATING.

J:\Project\O\ODOT\15005112 Ironton Russell\LAW\81595\structures\LAW093_1111C\sheets\Towers\093_0000_pi361.dgn — 4/29/2011 9:30:11 AM — john_corley

DESIGN AGENCY
URS
36 EAST 7TH STREET
SUITE 2300
CINCINNATI, OHIO 45202

DESIGNED	DRAWN	REVIEWED	DATE
DRC	MHR	BA	6-10
CHECKED	REVISED	STRUCTURE FILE NUMBER	
BKL		4401263	

TOWER LADDER AND PLATFORM LAYOUT
BRIDGE NO. LAW-93-0000
IRONTON RUSSEL BRIDGE OVER OHIO RIVER

LAW-93-0.00
PID No. 81595

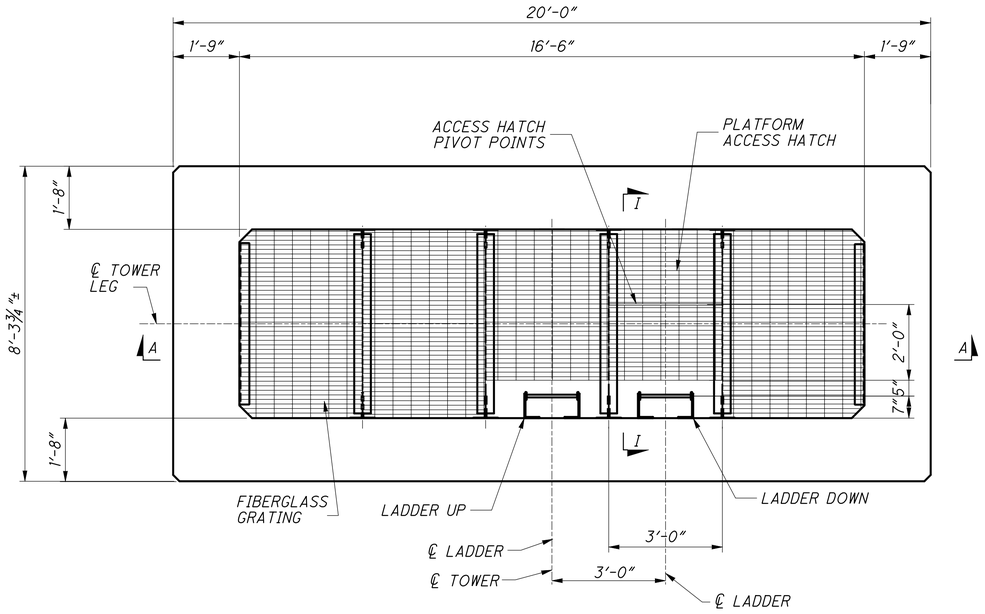

PLAN AT PLATFORM LEVEL L-1

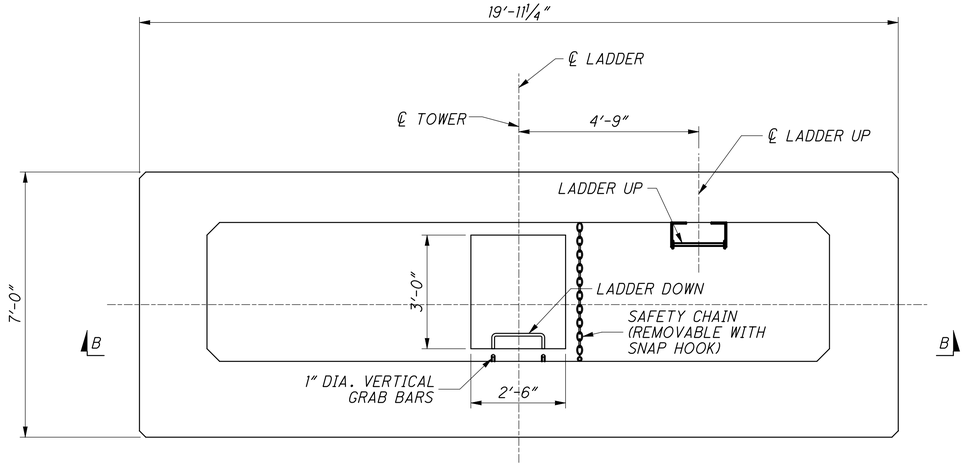

PLAN AT TOWER STRUT

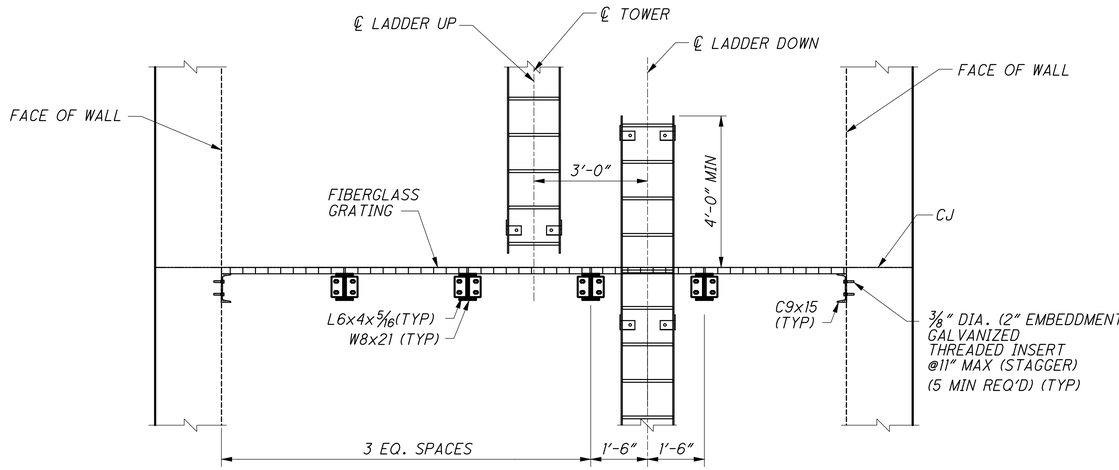

SECTION A-A

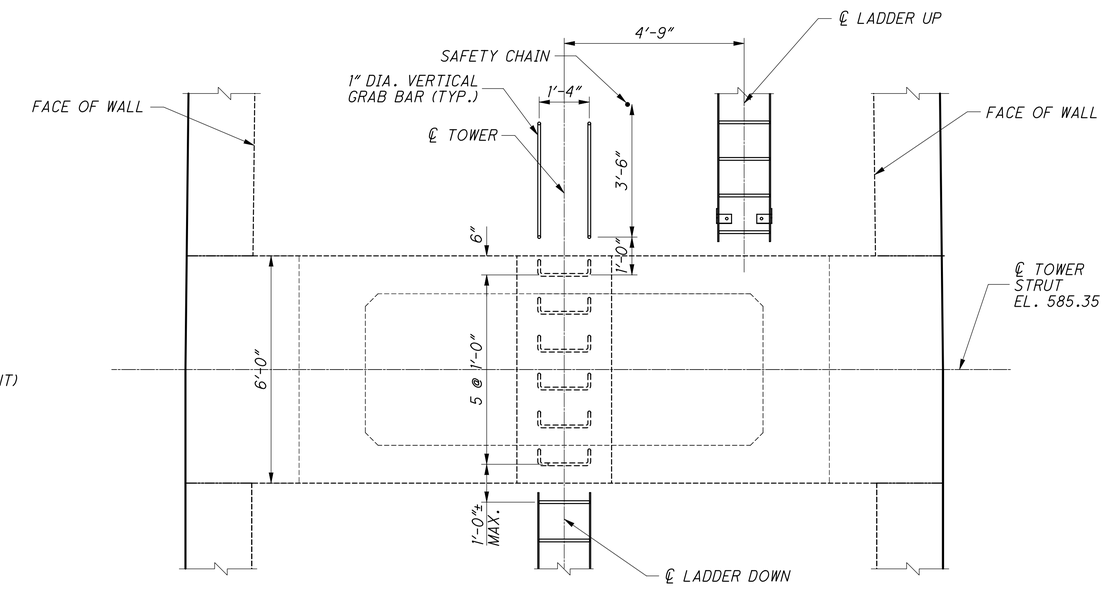

SECTION B-B

NOTES

1. FOR INDIVIDUAL RUNG AND VERTICAL GRAB BAR DETAILS SEE SHEET 119 / 365
2. FOR ADDITIONAL NOTES SEE SHEET 113 / 365
3. FOR LOCATION OF ELECTRICAL EQUIPMENT, INSPECTION LIGHTING AND CONDUIT SEE SHEETS 285 THRU 297 OF 788.
4. FOR SECTION I-I, SEE SHEET 118 / 365

Link to RFI075 As-Built

Link to RFI116 As-Built

DESIGN AGENCY
URS
36 EAST 7TH STREET
SUITE 2300
CINCINNATI, OHIO 45202

DESIGNED	DRAWN	REVIEWED	DATE
DRC	MHR	BA	6-10
CHECKED	REVISED	STRUCTURE FILE NUMBER	
BKL		4401263	

TOWER LADDER AND PLATFORM DETAILS (1 OF 8)
BRIDGE NO. LAW-93-0000
IRONTON RUSSEL BRIDGE OVER OHIO RIVER

LAW-93-0.00
PID No. 81595

J:\Project\O\ODOT\15005112 Ironton Russell\LAW\81595\structures\LAW093_1111C\sheets\Towers\093_0000_pi362.dgn — 4/29/2011 9:30:21 AM — john_corley

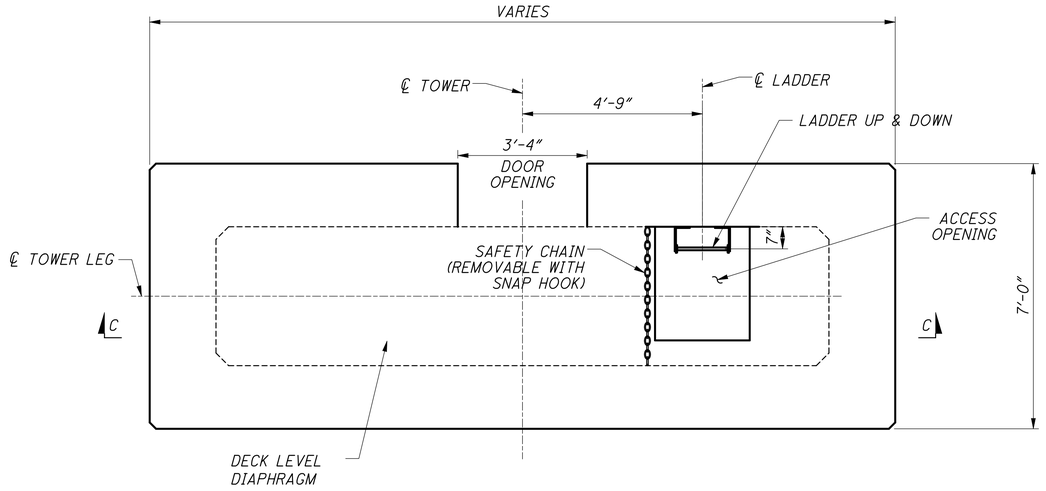

PLAN AT DECK LEVEL DIAPHRAGM

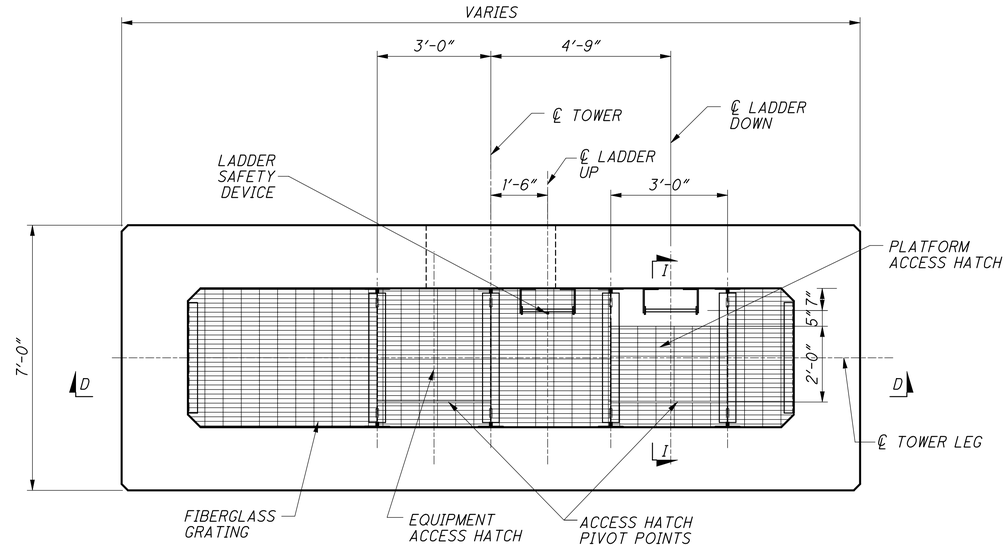

PLAN AT PLATFORM LEVEL L-2

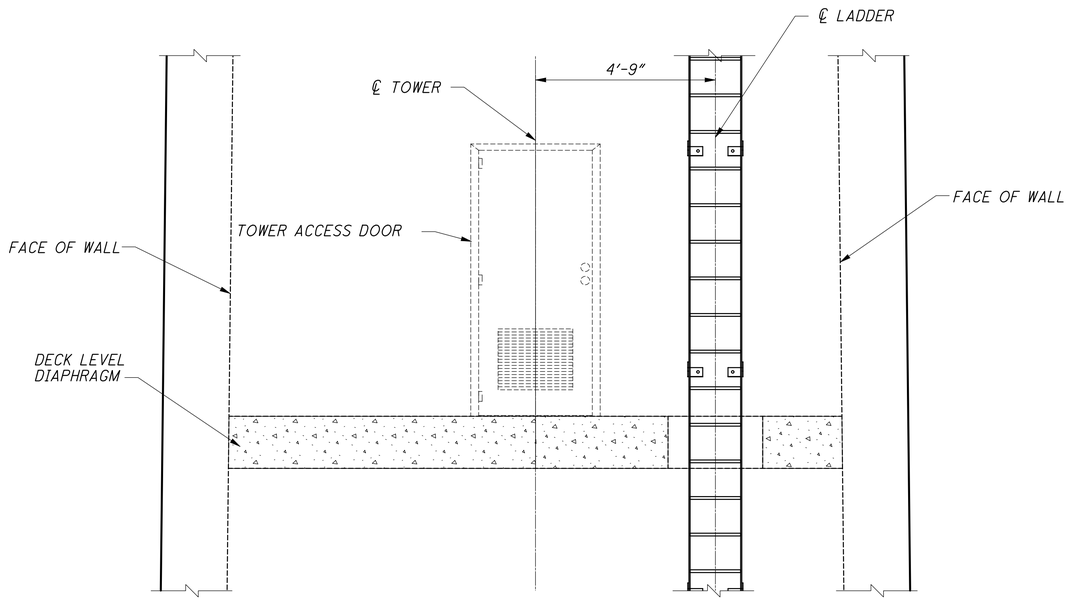

SECTION C-C

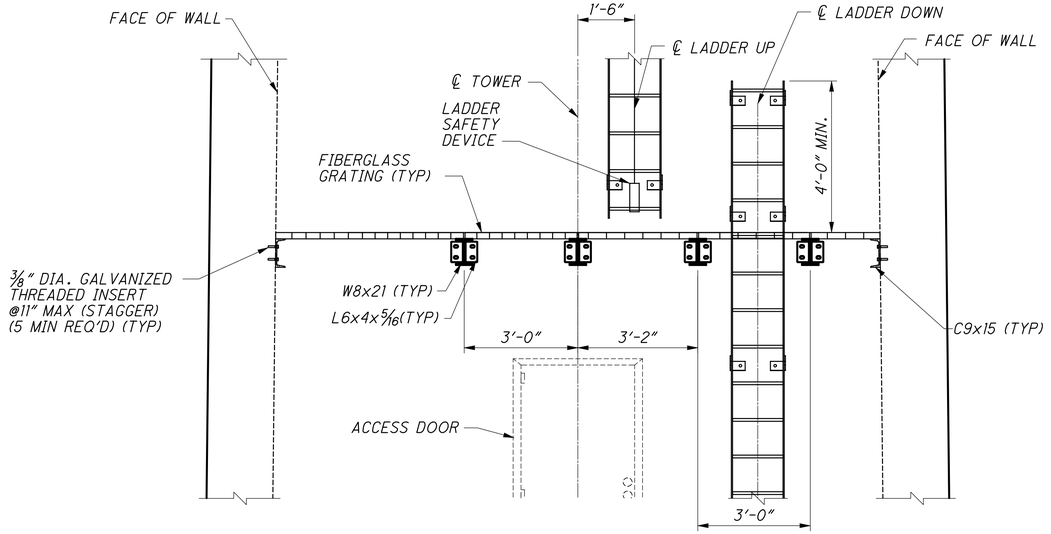

SECTION D-D

NOTES

1. FOR ADDITIONAL NOTES SEE SHEET 113/365
2. FOR LOCATION OF ELECTRICAL EQUIPMENT, INSPECTION LIGHTING AND CONDUIT SEE SHEETS 285 THRU 297 OF 788.
3. FOR SECTION I-I, SEE SHEET 118/365

J:\Project\O_ODOT\15005112 Ironton Russell\LAW\81595\structures\LAW093_1111C\sheets\Towers\093_0000_pi363.dgn — 4/29/2011 9:30:28 AM — john_corley

DESIGN AGENCY
URS
36 EAST 7TH STREET
SUITE 2300
CINCINNATI, OHIO 45202

DESIGNED DRC | DRAWN MHR | CHECKED BKL | REVIEWED BA | DATE 6-10 | REVISED | STRUCTURE FILE NUMBER 4401263

TOWER LADDER AND PLATFORM DETAILS (2 OF 8)
BRIDGE NO. LAW-93-0000
IRONTON RUSSEL BRIDGE OVER OHIO RIVER

LAW-93-0.00
PID No. 81595

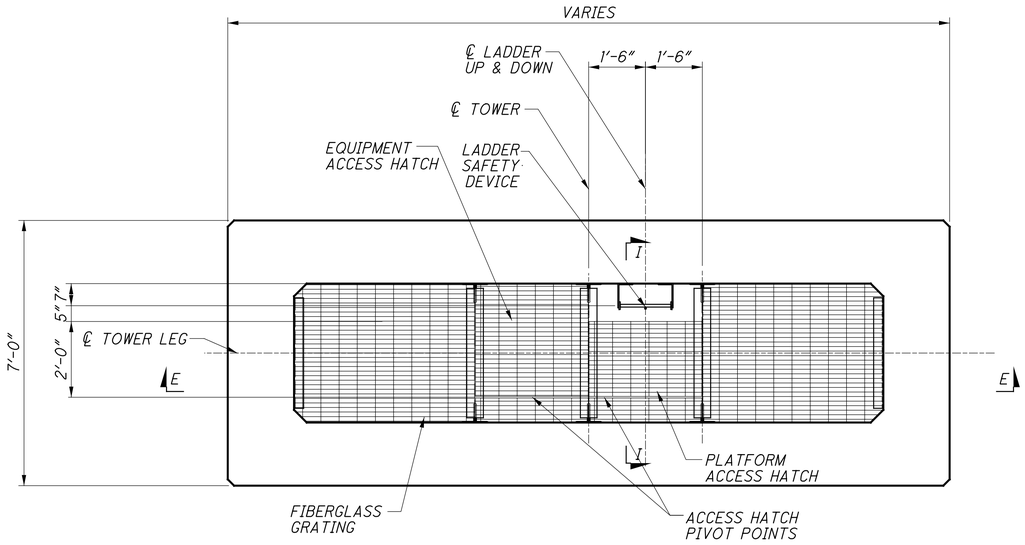

PLAN AT PLATFORM LEVELS L-3 THRU L-6

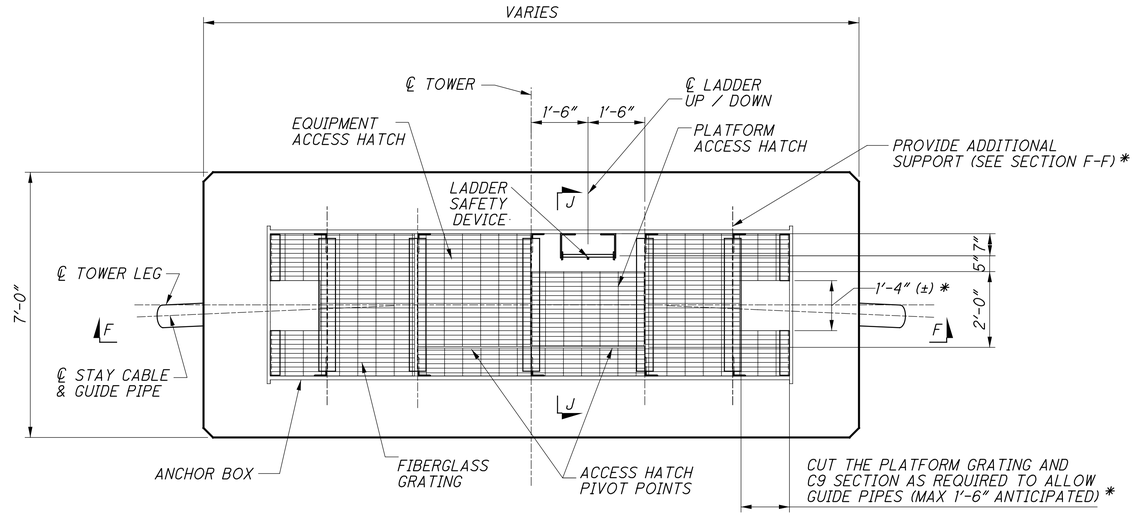

PLAN AT PLATFORM LEVELS L-7 THRU L-12

* TYPICAL BOTH SIDES OF THE TOWER OPENING AT LEVELS L-8 AND L-9 WHERE INTERFERENCE WITH GUIDE PIPE IS ENCOUNTERED.

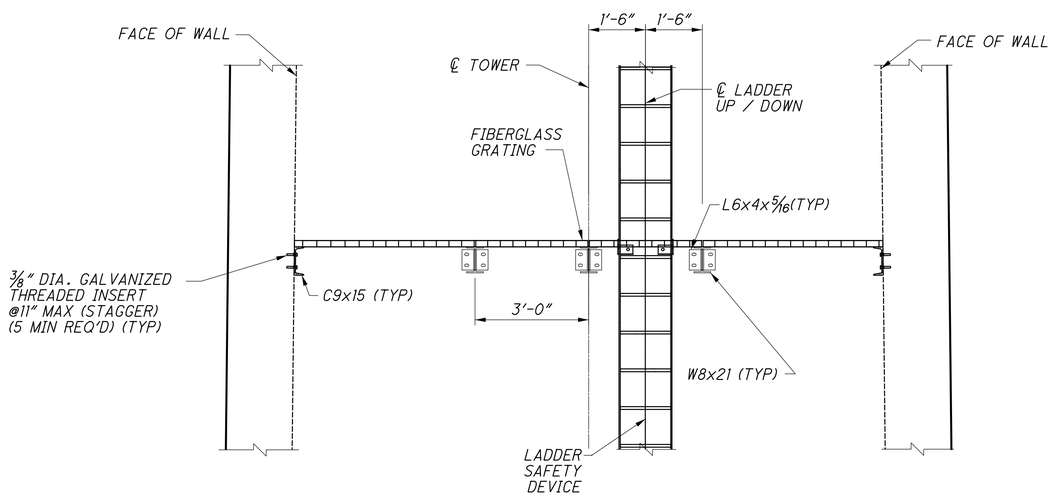

SECTION E-E

(LEVEL L-3 SHOWN, L-4 THRU L-6 SIMILAR)

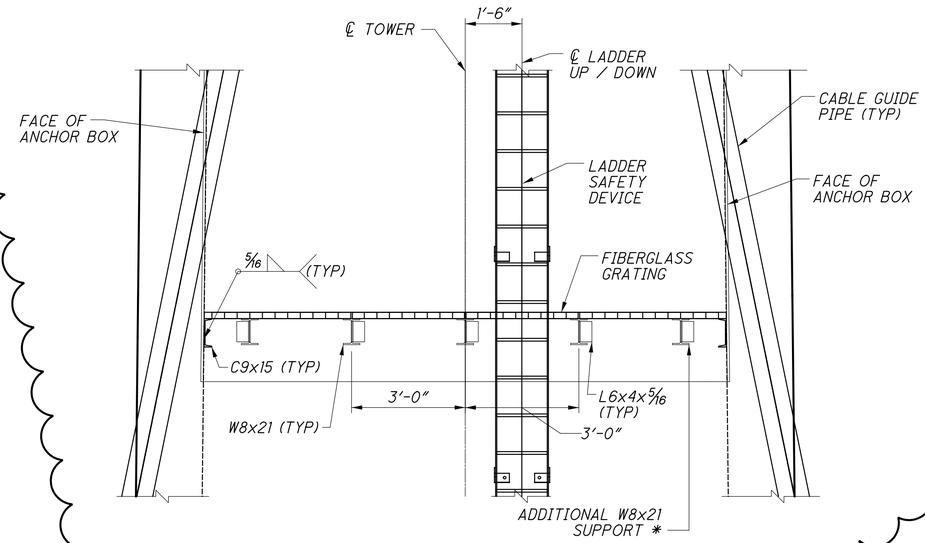

SECTION F-F

(LEVEL L-7 SHOWN, L-8 THRU L-12 SIMILAR)

NOTES

1. FOR ADDITIONAL NOTES SEE SHEET 113 / 365
2. FOR LOCATION OF ELECTRICAL EQUIPMENT, INSPECTION LIGHTING AND CONDUIT SEE SHEETS 285 THRU 297 OF 788.
3. FOR SECTION I-I, SEE SHEET 118 / 365
4. FOR SECTION J-J SEE SHEET 119 / 365

NO.	REVISIONS	DATE	REV. BY
1	ADDED CUTS TO ACCOMMODATE GUIDE PIPES	11/12	BKL

DESIGN AGENCY
URS
35 EAST 7TH STREET
SUITE 2300
CINCINNATI, OHIO 45202

DESIGNED	DRAWN	REVIEWED	DATE
DRC	MHR	BA	6-10
CHECKED	REVISED	STRUCTURE FILE NUMBER	
BKL		4401263	

TOWER LADDER AND PLATFORM DETAILS (3 OF 8)
BRIDGE NO. LAW-93-0000
IRONTON RUSSEL BRIDGE OVER OHIO RIVER

LAW-93-0.00
PID No. 81595

116 / 365

503 / 788

J:\Project\OA\ODOT\15005112 Ironton Russell\LAW\81595\structures\LAW093_1111C\sheets\Towers\093_0000_pi364.dgn - 11/28/2012 8:57:50 AM - jon_wanstrath

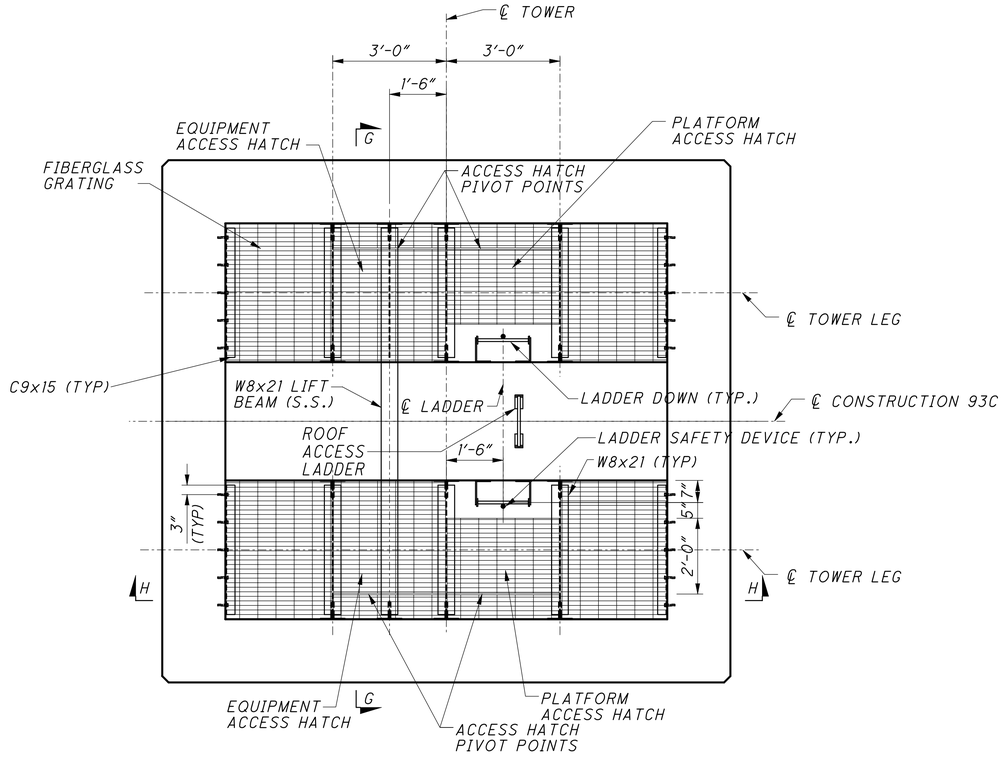

SECTION AT PLATFORM LEVEL L-13

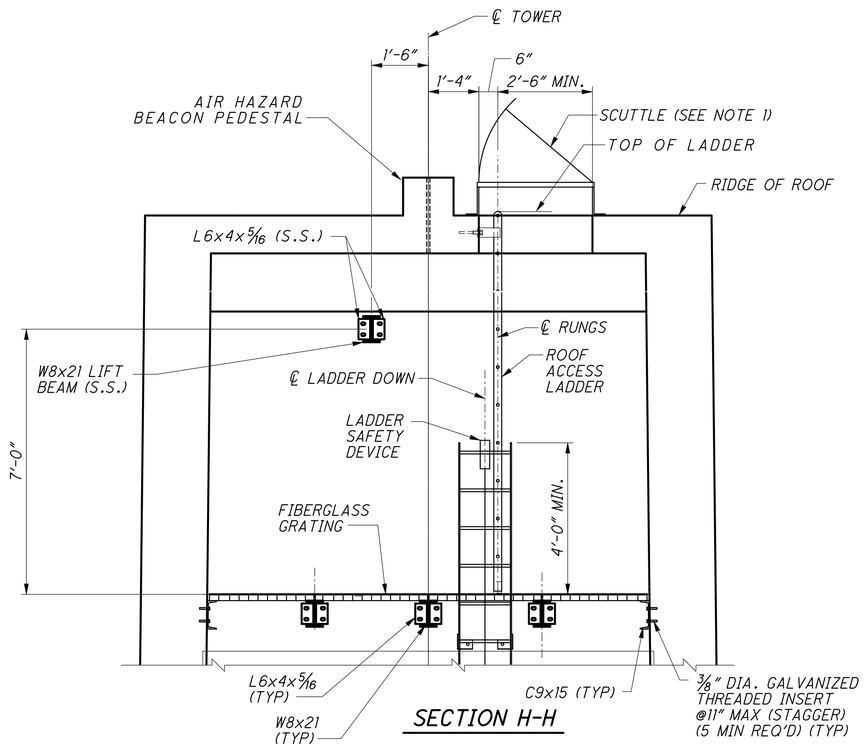

SECTION H-H

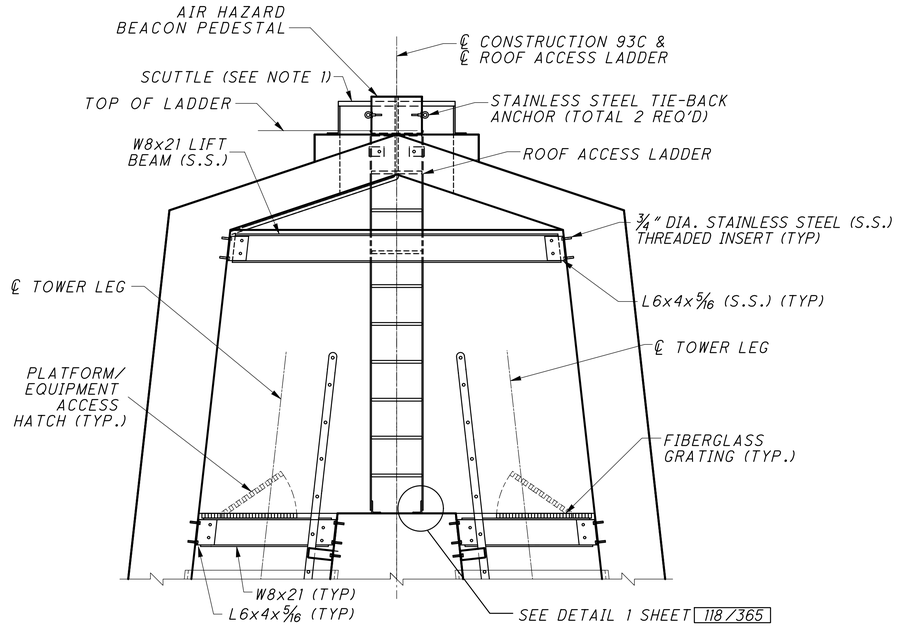

SECTION G-G

Link to RFI050 As-Built

NOTES

1. THE ROOF SCUTTLE SHALL BE TYPE E AS MANUFACTURED BY THE BILCO COMPANY OF NEW HAVEN, CT.; TYPE SINGLE LEAF AS MANUFACTURED BY BABCOCK-DAVIS HATCHWAYS INC. OF ARLINGTON, VA. OR AN APPROVED EQUAL.
2. FOR ADDITIONAL NOTES SEE SHEET 113/365
3. FOR LOCATION OF ELECTRICAL EQUIPMENT, INSPECTION LIGHTING AND CONDUIT SEE SHEETS 285 THRU 297 OF 788.

J:\Project\O_ODOT\15005112 Ironton Russell\LAW\81595\structures\LAW093_1111C\sheets\Towers\093_0000_pi365.dgn — 4/29/2011 9:30:41 AM — john_corley

DESIGN AGENCY
URS
36 EAST 7TH STREET
SUITE 2300
CINCINNATI, OHIO 45202

DESIGNED	DRAWN	REVIEWED	DATE
DRC	MHR	BA	6-10
CHECKED	REVISED	STRUCTURE FILE NUMBER	
BKL		4401263	

TOWER LADDER AND PLATFORM DETAILS (4 OF 8)
BRIDGE NO. LAW-93-0000
IRONTON RUSSEL BRIDGE OVER OHIO RIVER

LAW-93-0.00
PID No. 81595

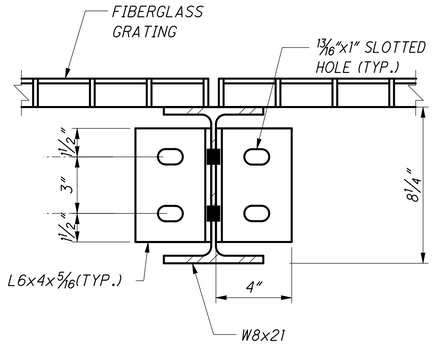

SECTION K-K

(PLATFORM LEVELS L-1 TO L-6 AND L-13)

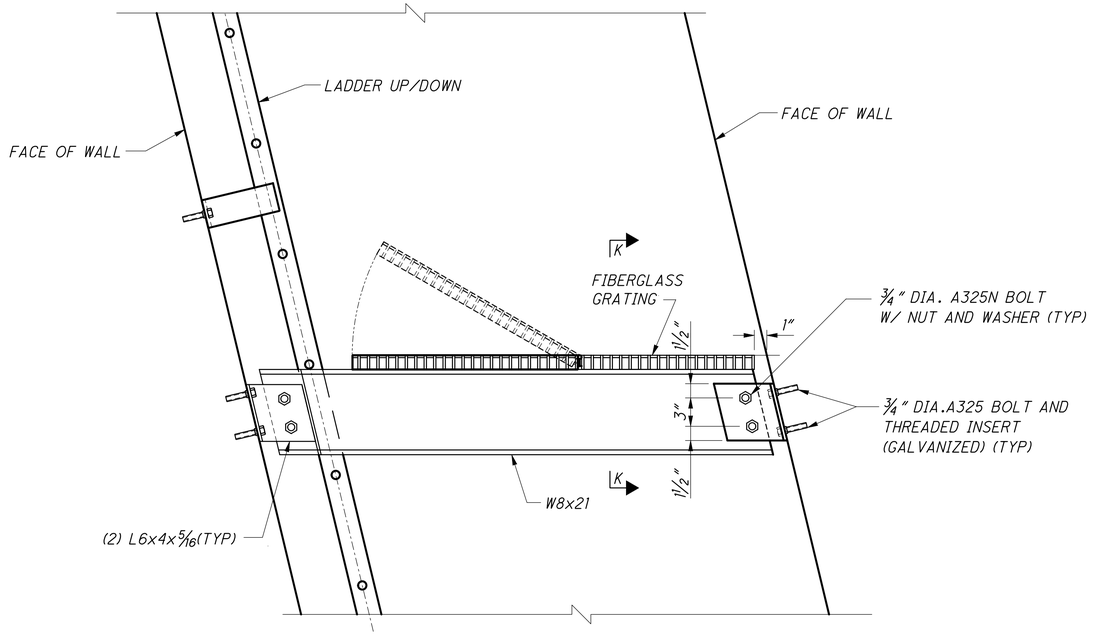

SECTION I-I

(PLATFORM LEVEL L-1 SHOWN, LEVELS L-2 - L-6 AND L-13 SIMILAR)

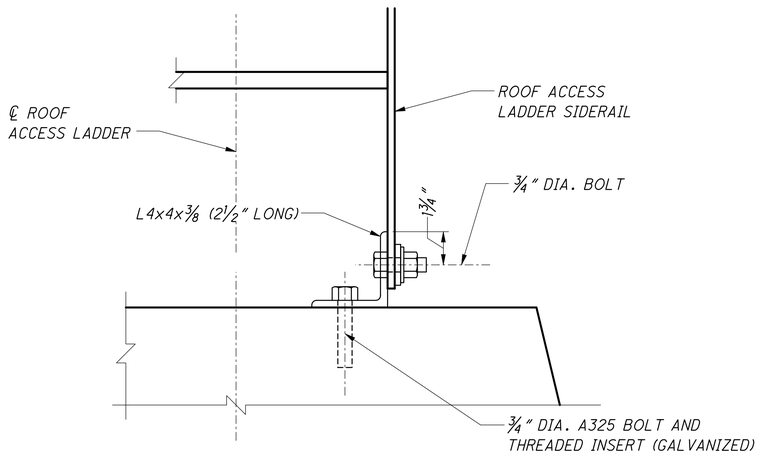

DETAIL 1

(PLATFORM LEVEL L-13 ONLY)

NOTES

1. FIBERGLASS GRATING TO BE FASTENED TO THE SUPPORTS AT 1'-6" SPACING MINIMUM WITH REMOVABLE CLIP-TYPE FASTENERS. FASTENERS AS PER GRATING MANUFACTURER.

2. FOR ADDITIONAL NOTES SEE SHEET 113/365

DESIGN AGENCY
URS
36 EAST 7TH STREET
SUITE 2300
CINCINNATI, OHIO 45202

DESIGNED	DRAWN	REVIEWED	DATE
DRC	MHR	BA	6-10
CHECKED	REVISED	STRUCTURE FILE NUMBER	
BKL		4401263	

TOWER LADDER AND PLATFORM DETAILS (5 OF 8)
BRIDGE NO. LAW-93-0000
IRONTON RUSSEL BRIDGE OVER OHIO RIVER

LAW-93-0.00
PID No. 81595

118/365

505
788

J:\Project\O\ODOT\15005112 Ironton Russell\LAW\81595\structures\LAW093_1111C\sheets\Towers\093_0000_pi366.dgn — 4/29/2011 9:30:44 AM — john_corley

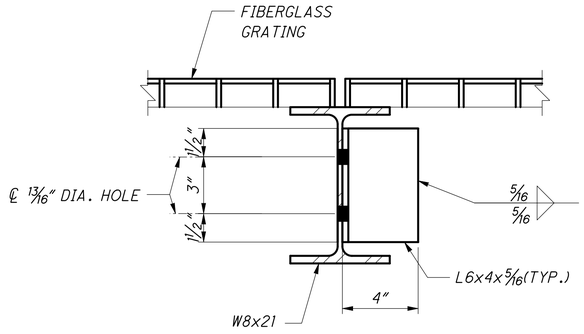

SECTION L-L

(PLATFORM LEVELS L-7 TO L-12)

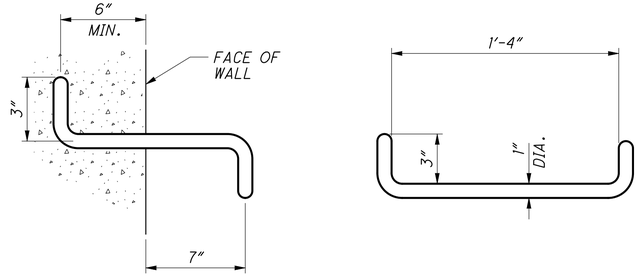

INDIVIDUAL RUNG DETAILS

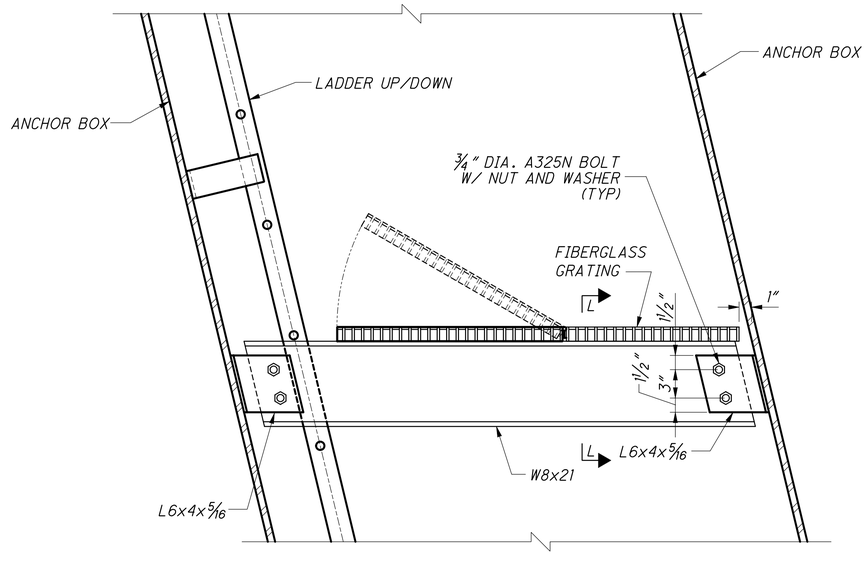

SECTION J-J

(PLATFORM LEVELS L-7 TO L-12)

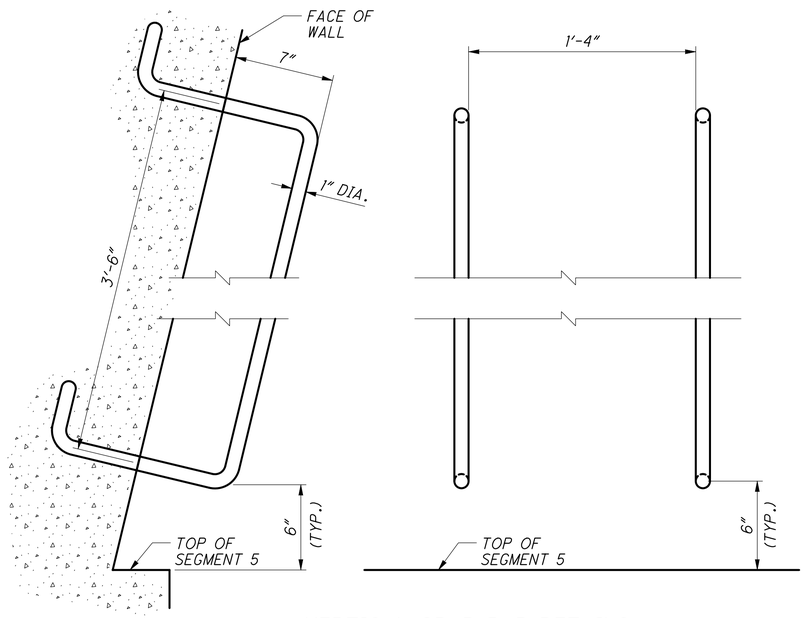

VERTICAL GRAB BAR DETAILS

NOTES

1. FIBERGLASS GRATING TO BE FASTENED TO THE SUPPORTS AT 1'-6" SPACING MINIMUM WITH REMOVABLE CLIP-TYPE FASTENERS. FASTENERS AS PER GRATING MANUFACTURER.
2. INDIVIDUAL LADDER RUNGS AND VERTICAL GRAB BARS SHALL BE EMBEDDED 6" MINIMUM INTO WALLS OF SEGMENT 5 AND SEGMENT 6, RESPECTIVELY.
3. FOR ADDITIONAL NOTES SEE SHEET 113/ 365

DESIGN AGENCY
URS
36 EAST 7TH STREET
SUITE 2300
CINCINNATI, OHIO 45202

DESIGNED	DRAWN	REVIEWED	DATE
DRC	MHR	BA	6-10
CHECKED	REVISED	STRUCTURE FILE NUMBER	
BKL		4401263	

TOWER LADDER AND PLATFORM DETAILS (6 OF 8)
BRIDGE NO. LAW-93-0000
IRONTON RUSSEL BRIDGE OVER OHIO RIVER

LAW-93-0.00
PID No. 81595

119/365

506
788

J:\Project\O\ODOT\15005112 Ironton Russell\LAW\81595\structures\LAW093_1111C\sheets\Towers\093_0000_pi367.dgn — 4/29/2011 9:30:46 AM — john_corley

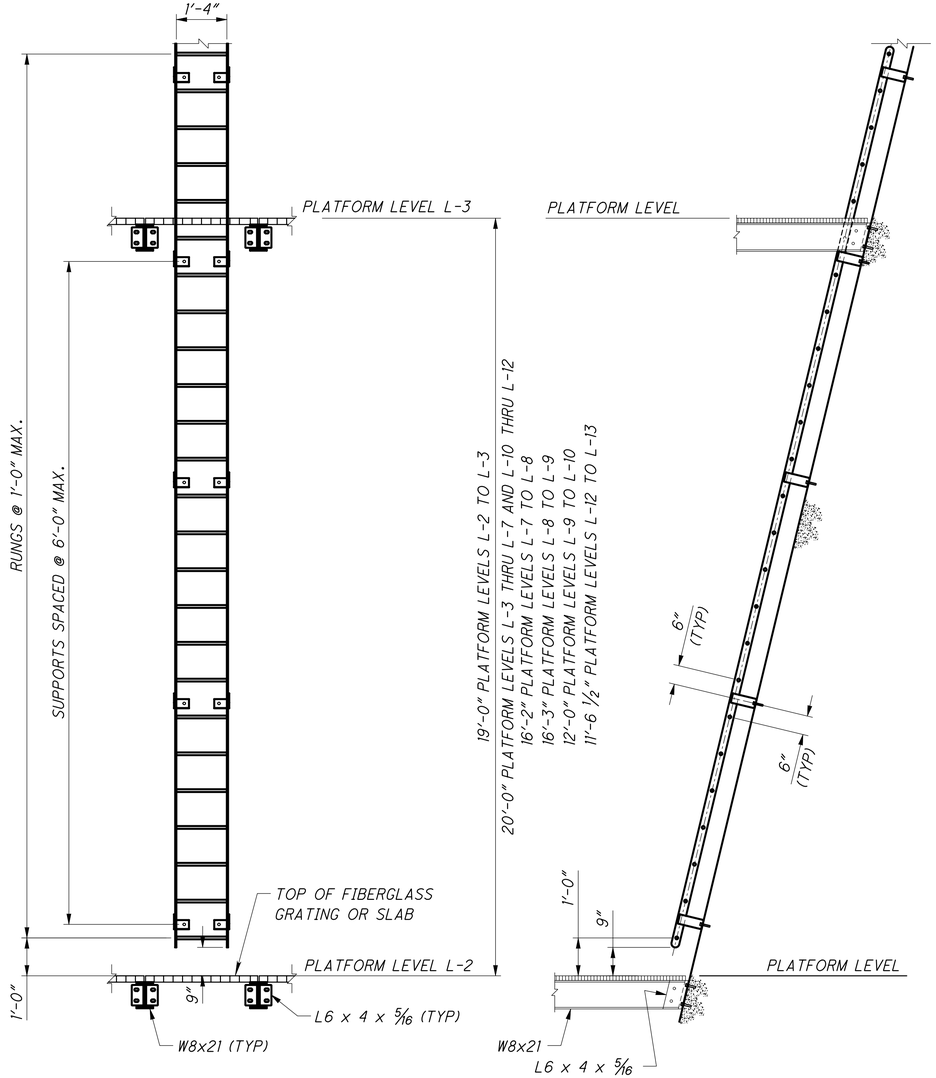

LADDER FRONT ELEVATION

LADDER SIDE ELEVATION

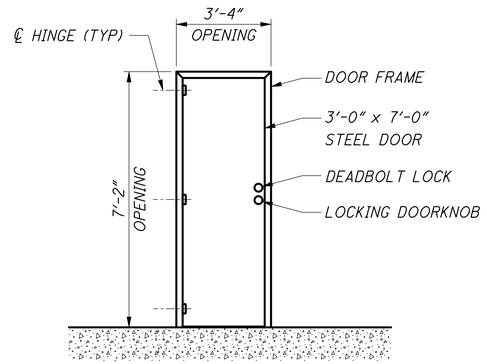

TOWER ACCESS DOOR ELEVATION

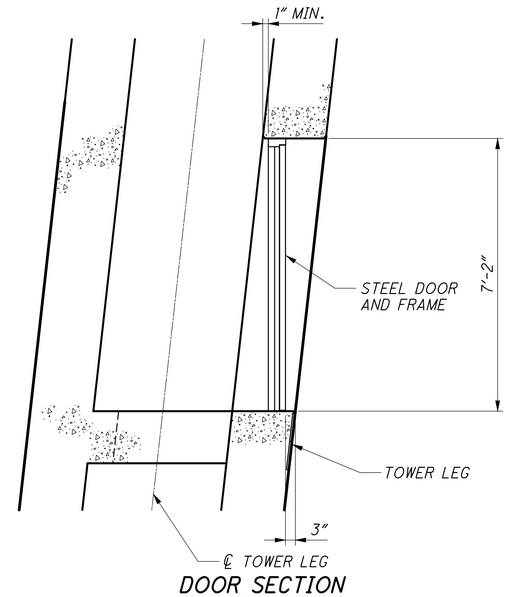

DOOR SECTION

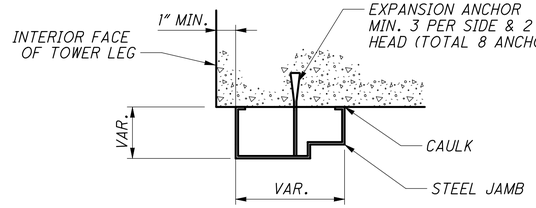

DOOR FRAME DETAIL

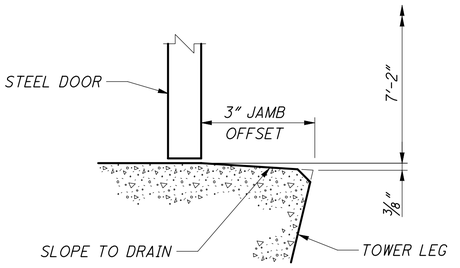

WASH DETAIL

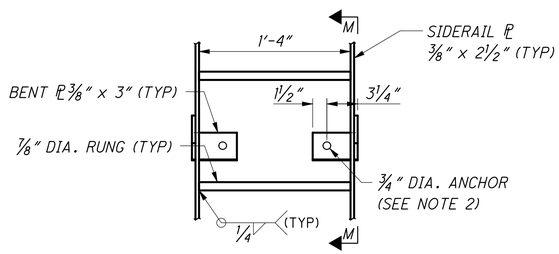

LADDER ANCHOR DETAIL

(PLATFORM LEVELS L-1 TO L-6 AND L-13)

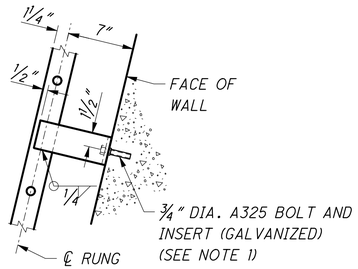

SECTION M-M

(PLATFORM LEVELS L-1 TO L-6 AND L-13)

NOTES

1. CONTRACTOR SHALL COORDINATE LOCATION OF CAST-IN-PLACE EMBEDMENTS AND WELDED ATTACHMENTS BEFORE FABRICATING LADDERS.
2. SUB-PUNCH HOLES AND REEM TO FULL SIZE IN FIELD.
3. STRUCTURAL STEEL SHALL CONFORM TO ASTM A709, GRADE 36.
4. ALL LADDERS, GRATING SUPPORTS, SECTION OF GRATING, BOLTS, NUTS & WASHERS SHALL BE GALVANIZED AFTER FABRICATION IN ACCORDANCE WITH ASTM A123.
5. LIGHTNING PROTECTION SYSTEM SHALL BE BONDED TO ALL LADDERS AND PLATFORMS. SEE SHEETS 298 THRU 304 OF 788.
6. FOR ADDITIONAL NOTES SEE SHEET 113/ 365

DESIGN AGENCY
URS
36 EAST 7TH STREET
SUITE 2300
CINCINNATI, OHIO 45202

DESIGNED	DRAWN	REVIEWED	DATE
DRC	MHR	BA	6-10
CHECKED	REVISED	STRUCTURE FILE NUMBER	
BKL		4401263	

TOWER LADDER AND PLATFORM DETAILS (7 OF 8)
BRIDGE NO. LAW-93-0000
IRONTON RUSSEL BRIDGE OVER OHIO RIVER

LAW-93-0.00
PID No. 81595

120/365

507
788

J:\Project\0\ODOT\15005112 Ironton Russell\LAW\81595\structures\LAW093_1111C\sheets\Towers\093_0000_pi368.dgn — 4/29/2011 9:30:48 AM — john_corley

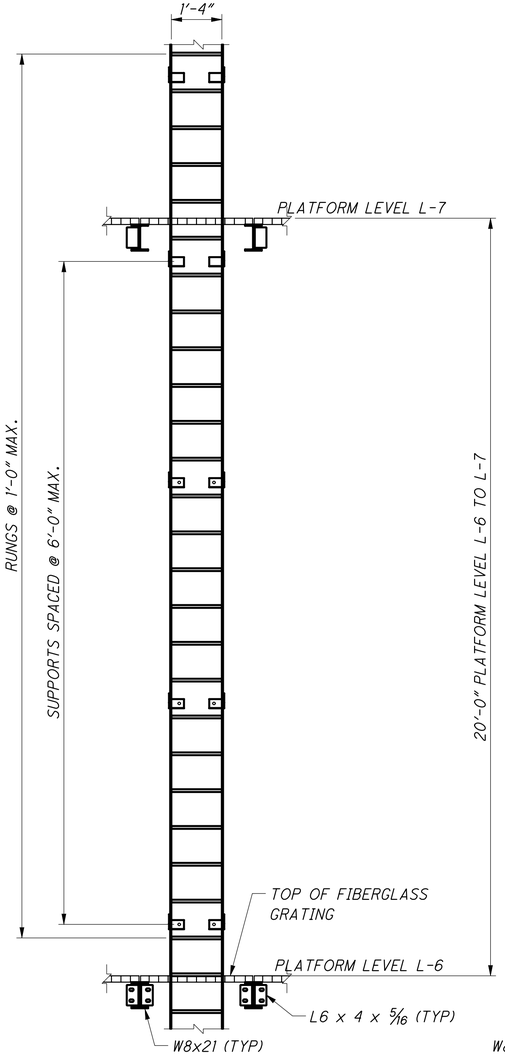

LADDER FRONT ELEVATION

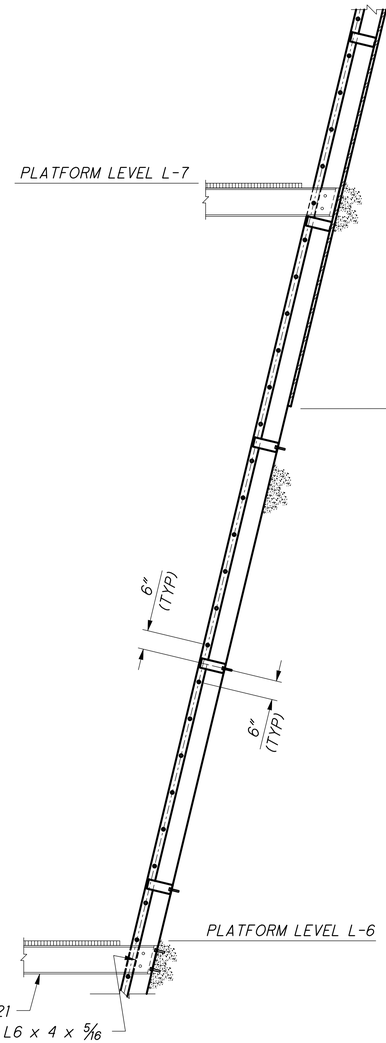

LADDER SIDE ELEVATION

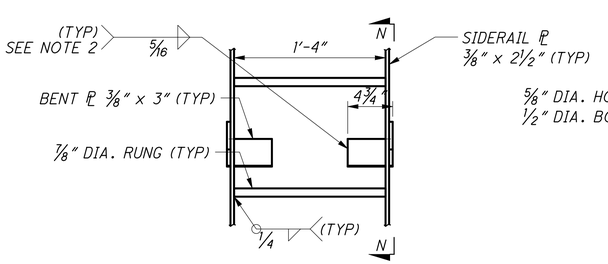

LADDER ANCHOR DETAIL

(PLATFORM LEVELS L-7 TO L-12)

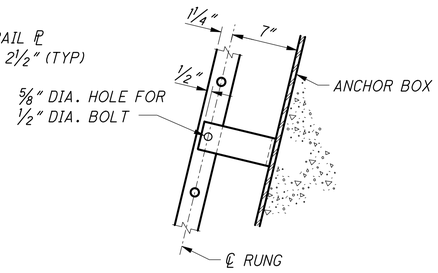

SECTION N-N

(PLATFORM LEVELS L-7 TO L-12)

NOTES

1. CONTRACTOR SHALL COORDINATE LOCATION OF CAST-IN-PLACE EMBEDMENTS AND WELDED ATTACHMENTS BEFORE FABRICATING LADDERS.
2. ALL WELDED LADDER AND PLATFORM BRACKET ATTACHMENTS WITHIN THE ANCHOR BOX SHALL BE MADE PRIOR TO GALVANIZING.
3. STRUCTURAL STEEL SHALL CONFORM TO ASTM A709, GRADE 36.
4. LIGHTNING PROTECTION SYSTEM SHALL BE BONDED TO ALL LADDERS AND PLATFORMS. SEE SHEETS 298 THRU 304 OF 788.
5. FOR ADDITIONAL NOTES SEE SHEET 113/365

Link to RFI103 As-Built

J:\Project\O\ODOT\15005112 Ironton Russell\LAW\81595\structures\LAW093_1111C\sheets\Towers\093_0000_pi369.dgn — 4/29/2011 9:30:51 AM — john_corley

DESIGN AGENCY
URS
36 EAST 7TH STREET
SUITE 2300
CINCINNATI, OHIO 45202

DESIGNED	DRAWN	REVIEWED	DATE
DRC	MHR	BA	6-10
CHECKED	REVISED	STRUCTURE FILE NUMBER	
BKL		4401263	

TOWER LADDER AND PLATFORM DETAILS (8 OF 8)
BRIDGE NO. LAW-93-0000
IRONTON RUSSEL BRIDGE OVER OHIO RIVER

LAW-93-0.00
PID No. 81595

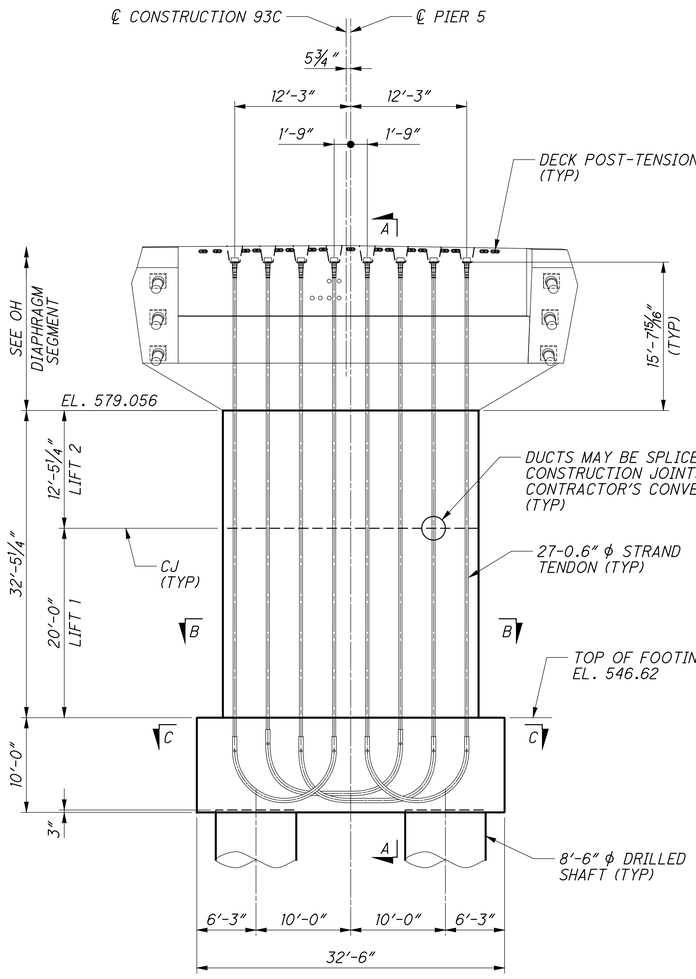

PIER 5 - ELEVATION VIEW
(LOOKING STATIONS BACK)

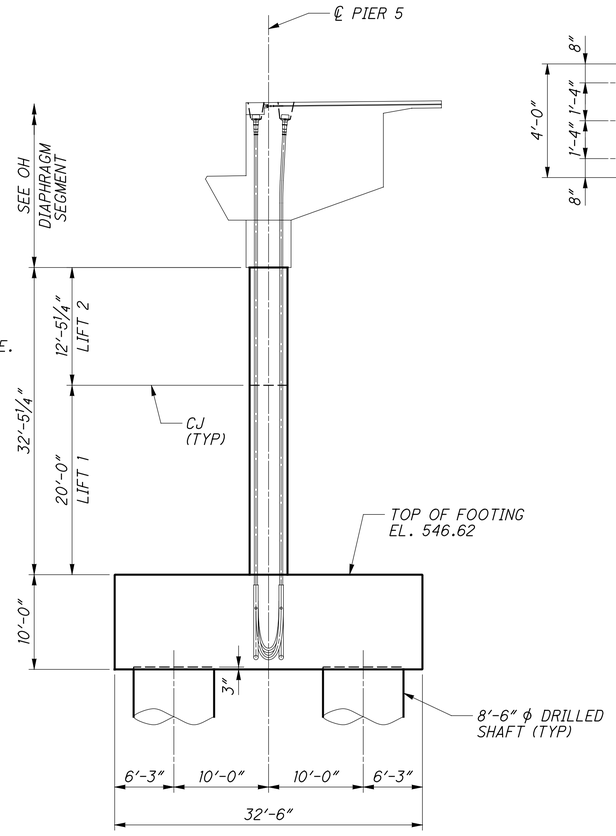

SECTION A-A

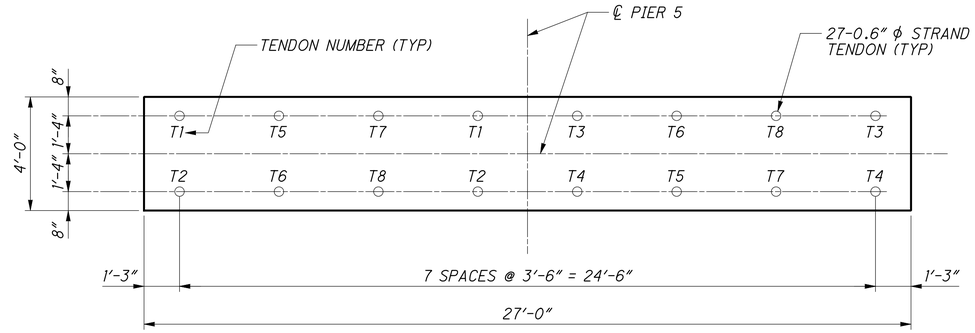

SECTION B-B

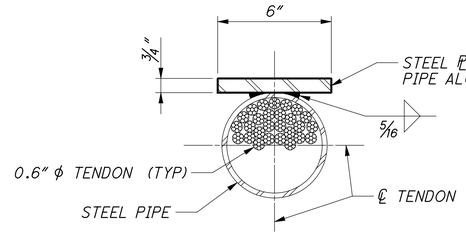

GALVANIZED DUCT DETAIL
(TYPICAL ALL TENDONS)

NOTES

1. COLUMN CONCRETE SHALL BE CLASS QSC3 WITH A MINIMUM 28-DAY COMPRESSIVE STRENGTH OF 6,500 PSI.
2. FOOTING CONCRETE SHALL BE CLASS QSC1 WITH A MINIMUM 28-DAY COMPRESSIVE STRENGTH OF 4,000 PSI.
3. TENDONS T1 THRU T8 SHALL CONSIST OF 27-0.6″ DIAMETER STRANDS AND SHALL BE JACKED FROM BOTH ENDS SIMULTANEOUSLY. JACKING FORCE SHALL BE 1265 KIPS PER TENDON.
4. FOR PORTIONS OF POST-TENSIONING TENDONS WITH A RADIUS OF CURVATURE LESS THAN 20′-0″ UTILIZE GALVANIZED RIGID STEEL PIPE (SCHEDULE 40) CONFORMING TO ASTM A53, TYPE 3, GRADE B WITH A NOMINAL 5″ DIAMETER.
5. FOR OH DIAPHRAGM SEGMENT DETAILS, SEE SHEET NO. 209/365 TO 223/365.

DESIGN AGENCY
URS
36 EAST 7TH STREET
SUITE 2300
CINCINNATI, OHIO 45202

DESIGNED	DRAWN	REVIEWED	DATE
BWJ	CER	DLJ	6/2010
CHECKED	REVISED	STRUCTURE FILE NUMBER	
AR		4401263	

PIER 5 GEOMETRY (1 OF 2)
BRIDGE NO. LAW-93-0000
IRONTON RUSSELL BRIDGE OVER OHIO RIVER

LAW-93-0.00
PID No. 81595

E:\Bridges_XM\Ironton_Russell\LAW\81595\structures\LAW093_0000C\sheets\093_0000CPI003.dgn 4/25/2011 10:12:42 AM john_stahl

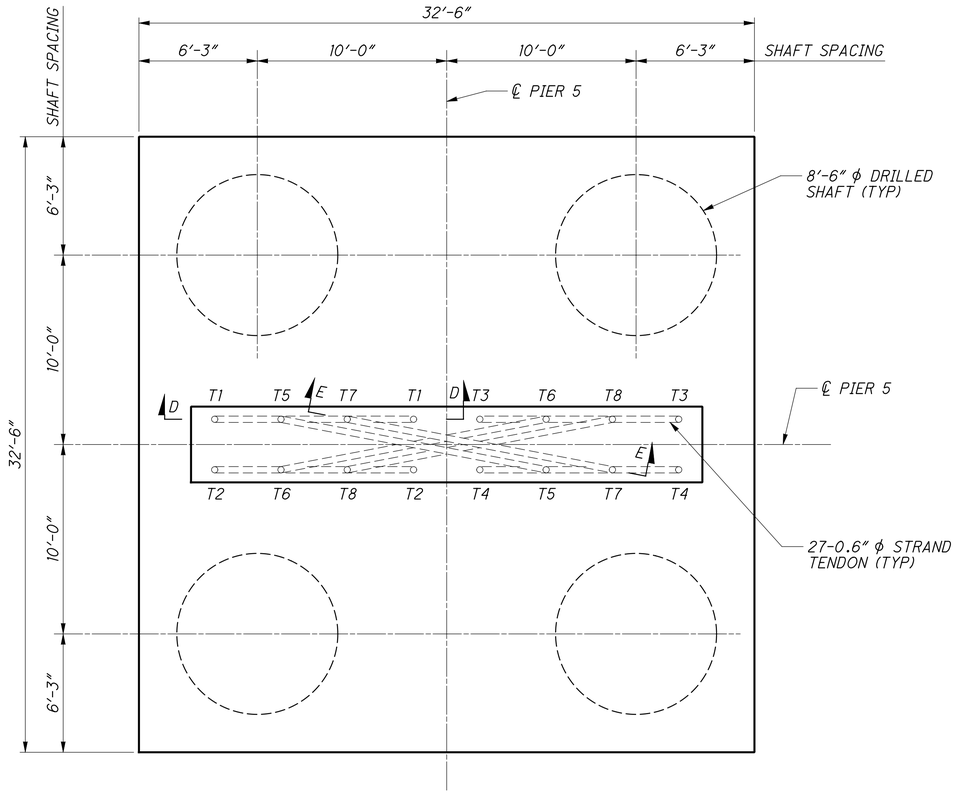

SECTION C-C

PIER 5 TENDON QUANTITIES						
TENDON ID	NO. OF TENDONS	NUMBER OF 0.6" DIA. STRANDS	JACKING FORCE (kips)	TENDON LENGTH (ft)	TENDON WEIGHT (lbs)	TOTAL WEIGHT (lbs)
T1	1	27	1265	119.78	2393	2393
T2	1	27	1265	119.78	2393	2393
T3	1	27	1265	119.78	2393	2393
T4	1	27	1265	119.78	2393	2393
T5	1	27	1265	122.03	2438	2438
T6	1	27	1265	123.53	2468	2468
T7	1	27	1265	122.03	2438	2438
T8	1	27	1265	123.53	2468	2468
					TOTAL =	19385

NOTES:

1. WEIGHT INDICATED IN SCHEDULES ARE BASED ON TENDON LENGTH FROM ANCHOR PLATE TO ANCHOR PLATE. WEIGHT IS SHOWN FOR INFORMATIONAL PURPOSES ONLY. CONTRACTOR IS RESPONSIBLE FOR ESTIMATING QUANTITY OF POST-TENSIONING STRAND REQUIRED.
2. COST OF SPIRAL REINFORCEMENT (LOCAL ZONE) AT EACH ANCHORAGE IS INCIDENTAL TO THE COST OF POST-TENSIONING.
3. THE PIER TENDONS WILL BE STRESSED IN ORDER BASED ON THE TENDON NUMBER.
4. FOR ADDITIONAL STRESSING INFORMATION, SEE "OH DIAPHRAGM SEGMENT TRANSVERSE POST-TENSIONING (1 OF 2)" SHEET.

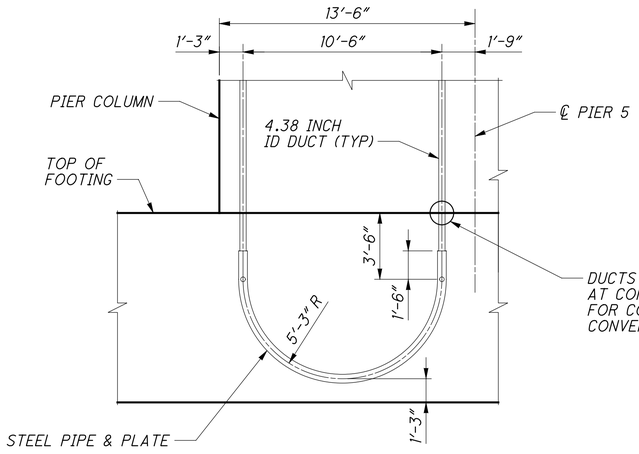

SECTION D-D
(SECTION ALONG TENDONS T1 THRU T4)

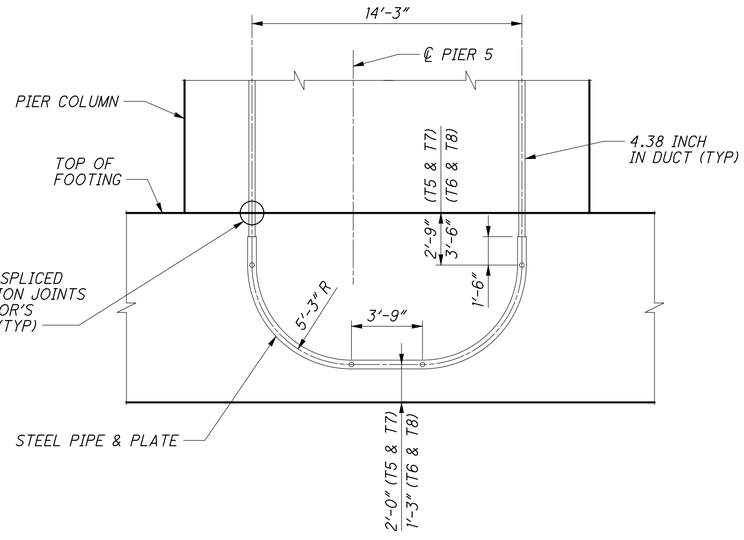

SECTION E-E
(SECTION ALONG TENDONS T5 THRU T8)

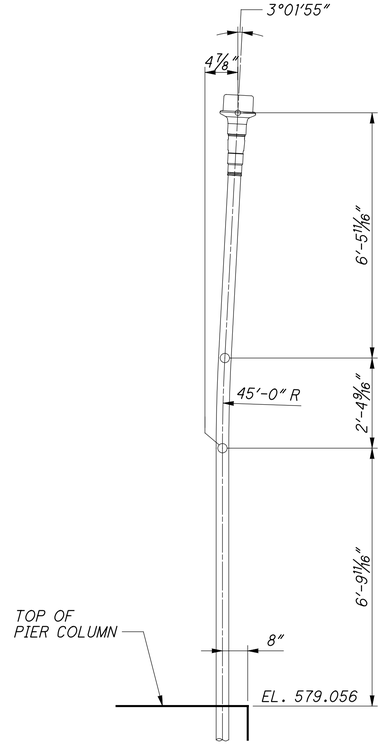

TENDON DETAILS
(TENDONS T1, T3 & T5-T8)

DESIGN AGENCY
URS
36 EAST 7TH STREET
SUITE 2300
CINCINNATI, OHIO 45202

DESIGNED BWJ | DRAWN CER | REVIEWED DLJ | DATE 6/2010
CHECKED AR | REVISED
STRUCTURE FILE NUMBER 4401263

PIER 5 GEOMETRY (2 OF 2)
BRIDGE NO. LAW-93-0000
IRONTON RUSSELL BRIDGE OVER OHIO RIVER

LAW-93-0.00
PID No. 81595

123/365
510/788

E:\Bridges_XW\Ironton_Russell\LAW\81595\structures\LAW093_0000C\sheets\093_0000CP1004.dgn 4/25/2011 10:12:50 AM john_stahl

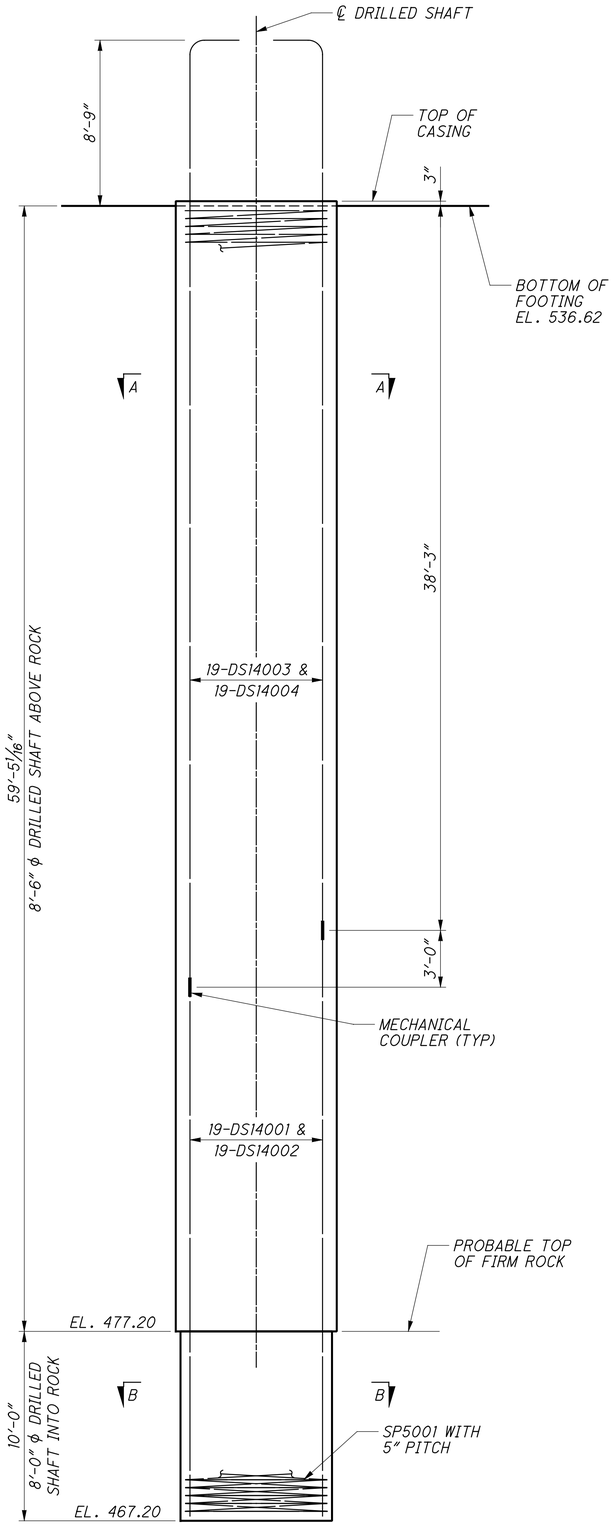

PIER 5 DRILLED SHAFT

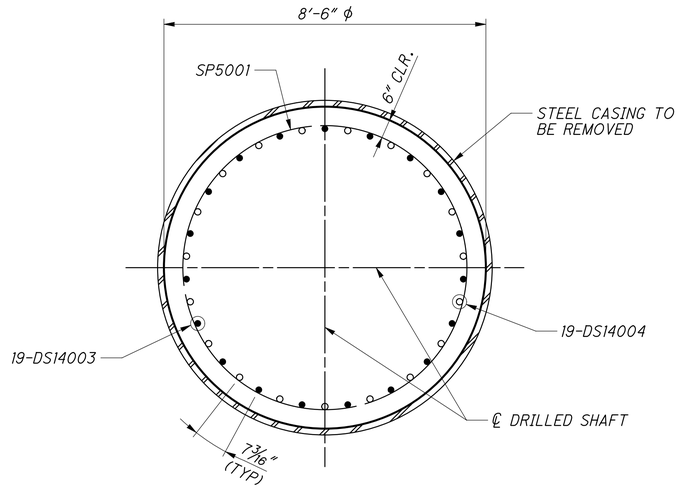

SECTION A-A

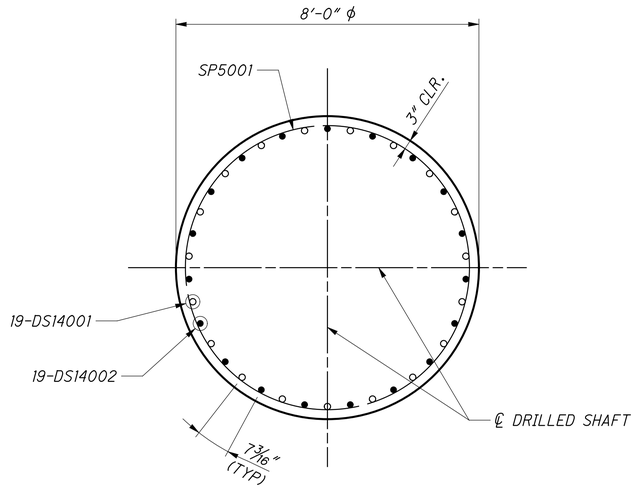

SECTION B-B

DRILLED SHAFT NOTES

1. THE CONTRACTOR SHALL SUBMIT PLANS AND PROCEDURES SHOWING METHOD OF CONSTRUCTING THE DRILLED SHAFT AND FOUNDATIONS TO THE ENGINEER FOR REVIEW AT LEAST 30 DAYS PRIOR TO BEGINNING WORK. PLANS AND PROCEDURES SHALL BE PREPARED AND STAMPED BY A PROFESSIONAL ENGINEER IN THE STATE OF OHIO.
2. CASINGS ARE TO BE REMOVED, AS SHOWN.
3. DRILLED SHAFTS ARE DETAILED WITH CONTINUOUS SPIRALS. SPIRALS SHALL BE TERMINATED WITH 1 ½ TURNS TOP AND BOTTOM. CONTRACTOR MAY OPTIONALLY PROVIDE SPLICED OR COUPLED SPIRALS AND HOOPS IN ACCORDANCE WITH AASHTO SPECIFICATIONS. SIZE AND SPACING OF OPTIONAL HOOPS SHALL MATCH CONTINUOUS SPIRAL REINFORCEMENT SHOWN. ANY VARIATION FROM DETAILS SHOWN ON THESE PLANS SHALL BE SUBMITTED TO THE ENGINEER FOR REVIEW.
4. TOP OF FIRM ROCK SHALL BE CONSIDERED AS THE BOTTOM ELEVATION OF THE CASING. PAY QUANTITIES ARE TO BE BASED ON THIS ELEVATION.
5. SHOP DRAWINGS OF DRILLED SHAFT REINFORCING ARE TO BE SUBMITTED TO THE ENGINEER FOR APPROVAL.
6. DRILLED SHAFT REINFORCEMENT SHALL BE SPLICED BY MECHANICAL COUPLERS CAPABLE OF DEVELOPING 125 PERCENT FY OF THE BARS BEING SPLICED.

DESIGN AGENCY
URS
35 EAST 7TH STREET
SUITE 2300
CINCINNATI, OHIO 45202

DESIGNED	DRAWN	REVIEWED	DATE
BWJ	CER	DLJ	6/2010
CHECKED	REVISED	STRUCTURE FILE NUMBER	
AR		4401263	

PIER 5 DRILLED SHAFT & FOOTING DETAILS (1 OF 3)
BRIDGE NO. LAW-93-0000
IRONTON RUSSELL BRIDGE OVER OHIO RIVER

LAW-93-0.00
PID No. 81595

124/365

511/788

E:\Bridges_XM\Ironton_Russell\LAW\81595\structures\LAW093_0000C\sheets\093_0000CPI011.dgn 4/25/2011 10:12:56 AM john_stahl

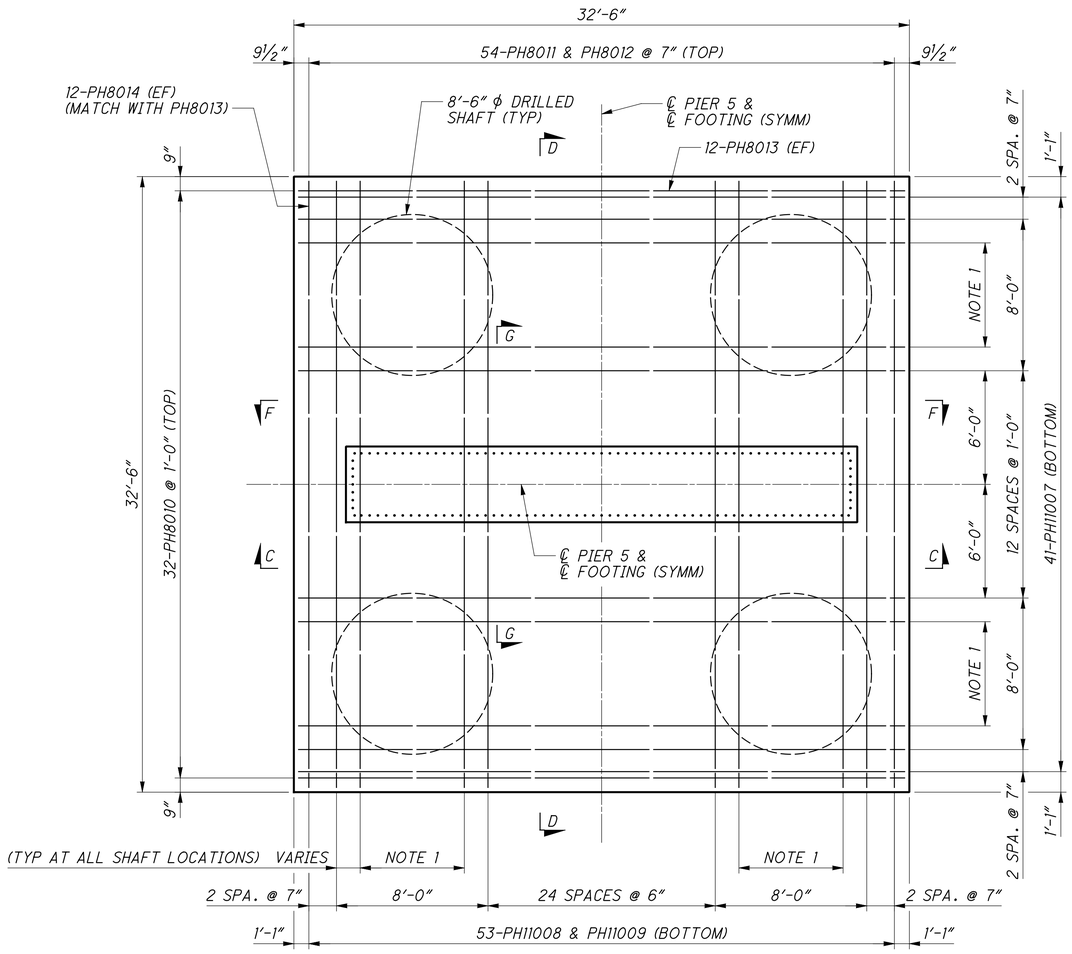

PLAN

(DRILLED SHAFT REINFORCEMENT NOT SHOWN)

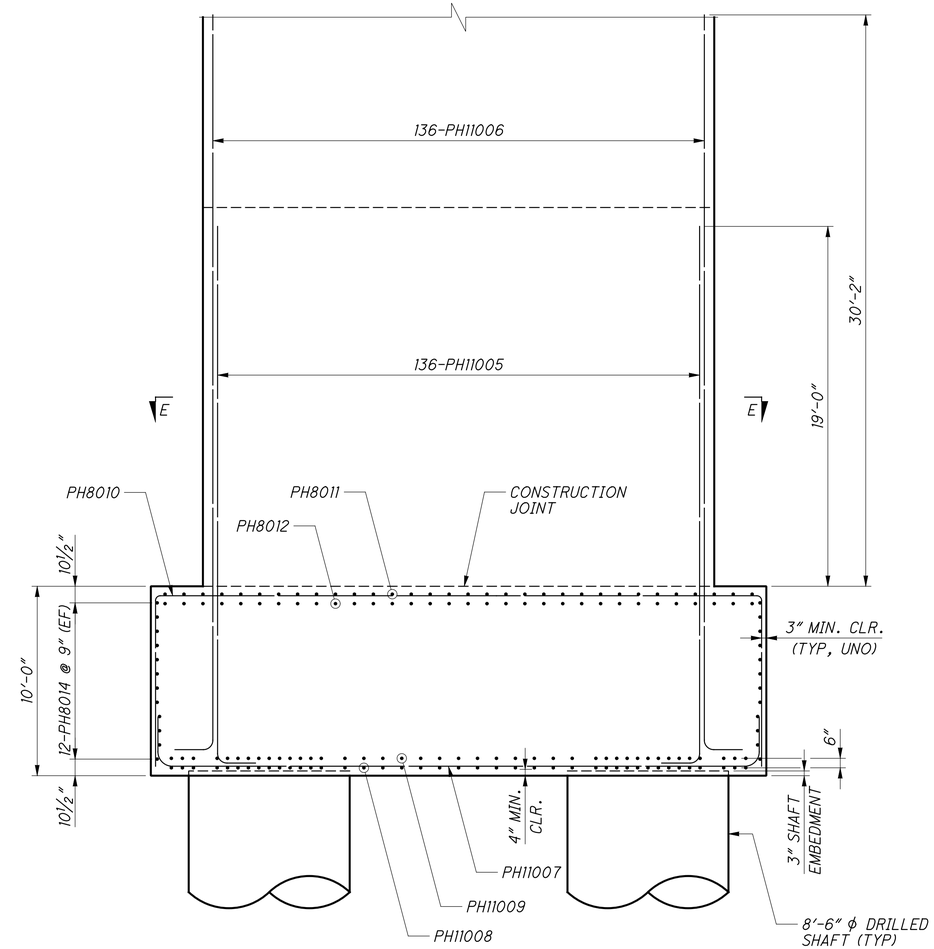

SECTION C-C

NOTES

1. PLACE 11-PH11007, 11-PH11008 OR 11-PH11009 THROUGH DRILLED SHAFT REINFORCEMENT.
2. BARS PH11015 ARE PROVISIONAL REINFORCEMENT TO BE USED FOR FUTURE PIER STRENGTHENING.
3. MECHANICAL COUPLERS SHALL BE CAPABLE OF DEVELOPING 125 PERCENT YIELD STRENGTH OF THE BARS BEING SPLICED.
4. FOOTING BARS MAY BE SHIFTED LOCALLY TO CLEAR MECHANICAL COUPLERS.

Link to RFI045 As-Built

E:\Bridges_XM\Ironton_Russell\LAW\81595\structures\LAW093_0000C\sheets\093_0000CPI012.dgn 4/25/2011 10:13:02 AM john_stahl

DESIGN AGENCY
URS
36 EAST 7TH STREET
SUITE 2300
CINCINNATI, OHIO 45202

DESIGNED	DRAWN	REVIEWED	DATE
BWJ	CER	DLJ	6/2010
CHECKED	REVISED	STRUCTURE FILE NUMBER	
AR		4401263	

PIER 5 DRILLED SHAFT & FOOTING DETAILS (2 OF 3)

BRIDGE NO. LAW-93-0000

IRONTON RUSSELL BRIDGE OVER OHIO RIVER

LAW-93-0.00

PID No. 81595

NOTES

1. BAR PH8018 MAY BE SHIFTED WHERE NEEDED TO AVOID CONFLICTS WITH PIER POST-TENSIONING.

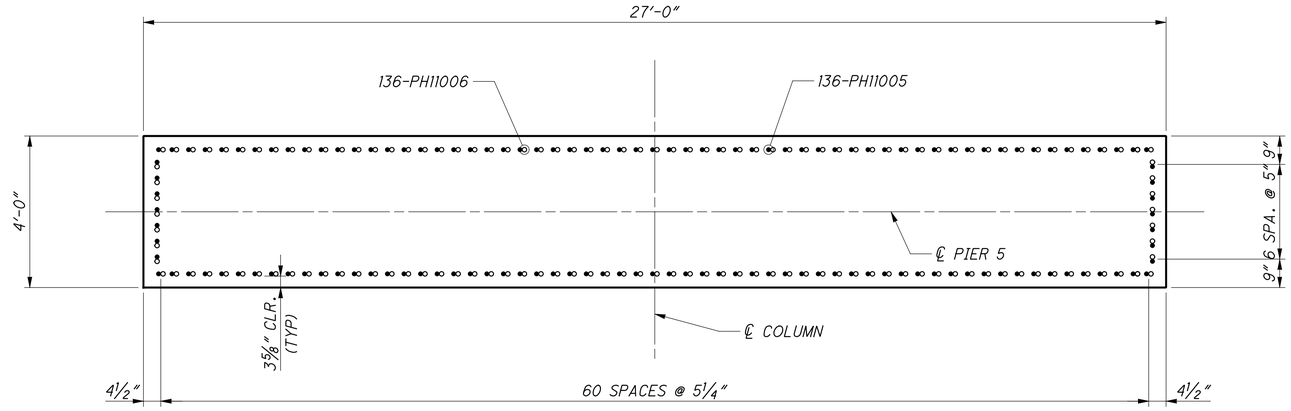

SECTION E-E
(POST-TENSIONING TENDONS NOT SHOWN)

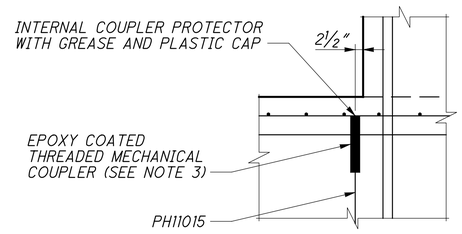

DETAIL 1

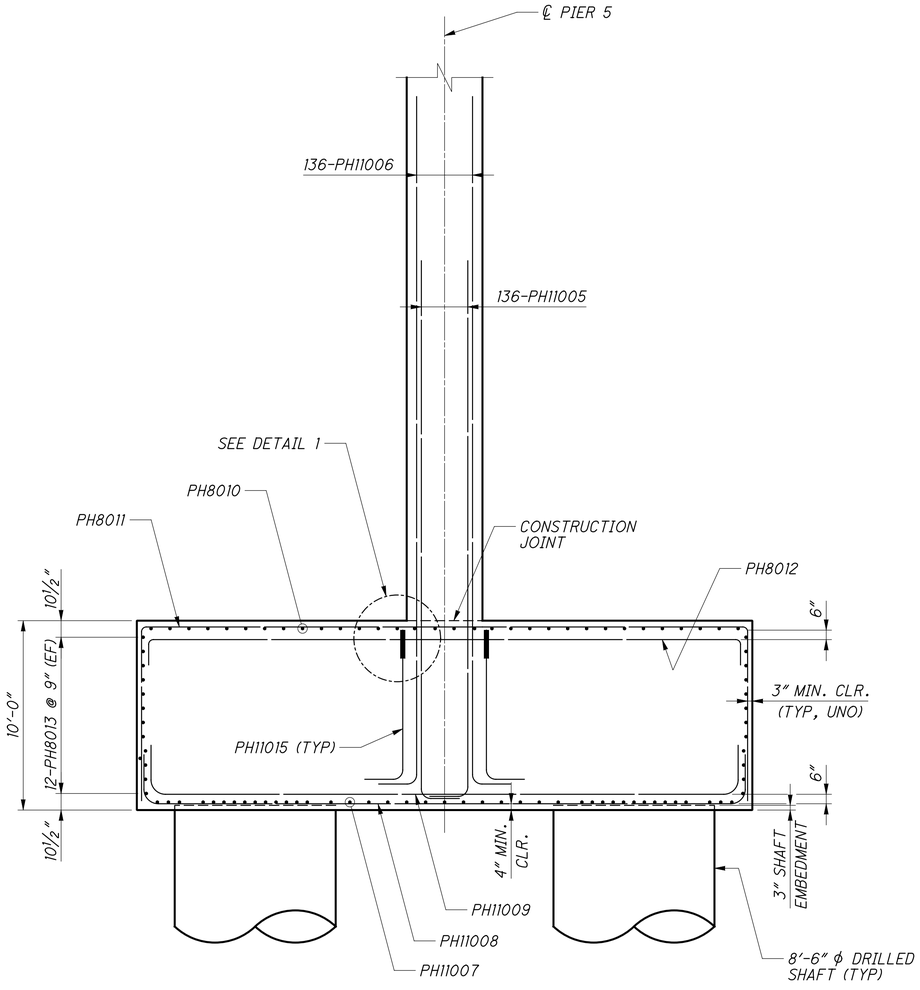

SECTION D-D

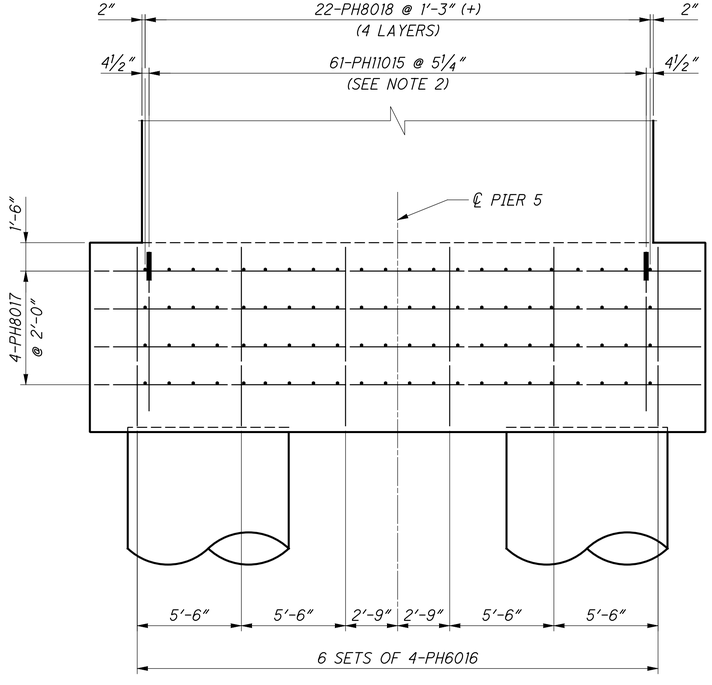

SECTION F-F
(FOOTING REINFORCEMENT NOT SHOWN FOR CLARITY)

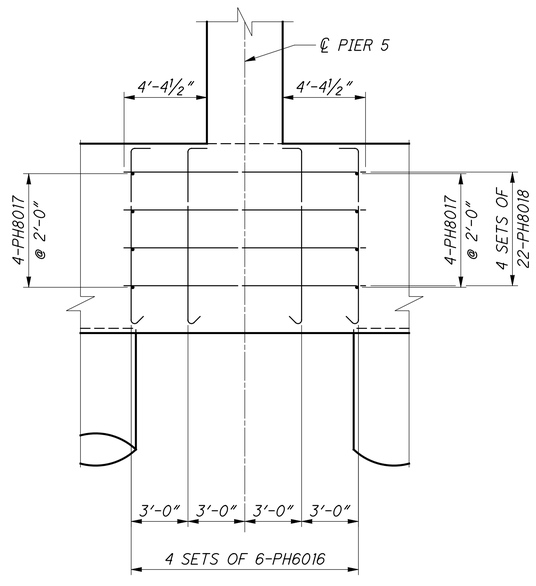

SECTION G-G
(FOOTING REINFORCEMENT NOT SHOWN FOR CLARITY)

DESIGN AGENCY
URS
36 EAST 7TH STREET
SUITE 2300
CINCINNATI, OHIO 45202

DESIGNED	DRAWN	REVIEWED	DATE
BWJ	CER	DLJ	6/2010
CHECKED	REVISED	STRUCTURE FILE NUMBER	
AR		4401263	

PIER 5 DRILLED SHAFT & FOOTING DETAILS (3 OF 3)
BRIDGE NO. LAW-93-0000
IRONTON RUSSELL BRIDGE OVER OHIO RIVER

LAW-93-0.00
PID No. 81595

126/365
513/788

E:\Bridges_XM\Ironton_Russell\LAW\81595\structures\LAW093_0000C\sheets\093_0000CPI012.dgn 4/25/2011 10:13:06 AM john_stahl

Link to Unnumbered RFI As-Built

Link to RFI042 As-Built

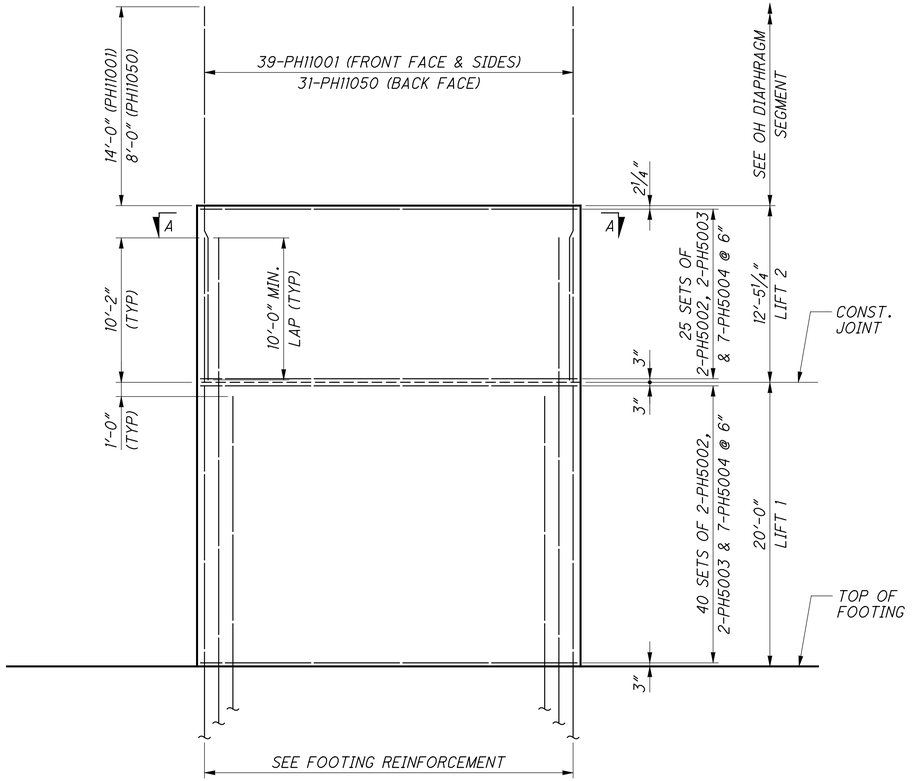

SECTION THRU PIER 5
(LOOKING STATIONS BACK)

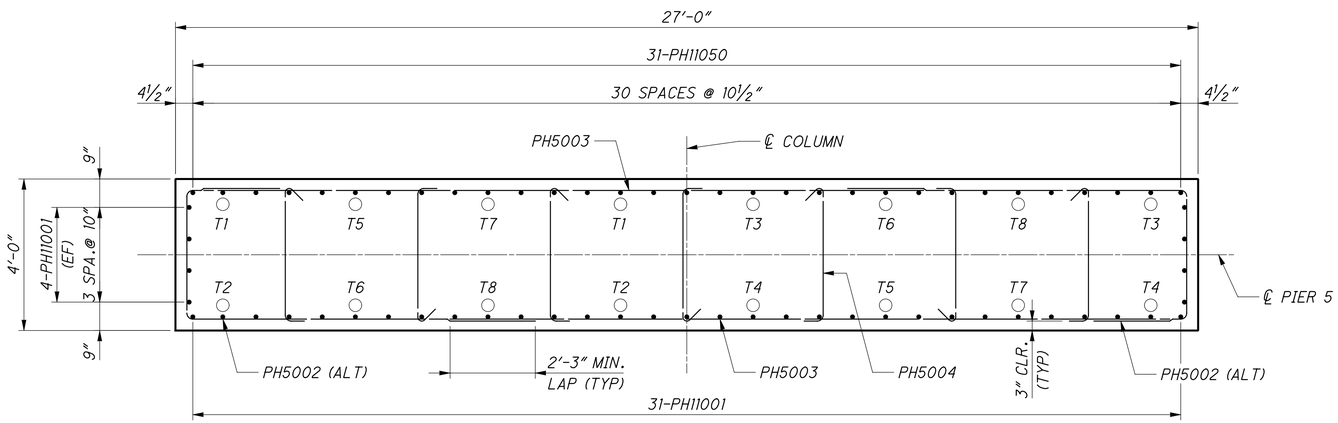

SECTION A-A

E:\Bridges_XM\Ironton_Russell\LAW\81595\structures\LAW093_0000C\sheets\093_0000CP1014.dgn 4/25/2011 10:13:13 AM john_stahl

DESIGN AGENCY
URS
36 EAST 7TH STREET
SUITE 2300
CINCINNATI, OHIO 45202

DESIGNED	DRAWN	REVIEWED	DATE
BWJ	CER	DLJ	6/2010
CHECKED	REVISED	STRUCTURE FILE NUMBER	
AR		4401263	

PIER 5 REINFORCEMENT
BRIDGE NO. LAW-93-0000
IRONTON RUSSELL BRIDGE OVER OHIO RIVER

LAW-93-0.00
PID No. 81595

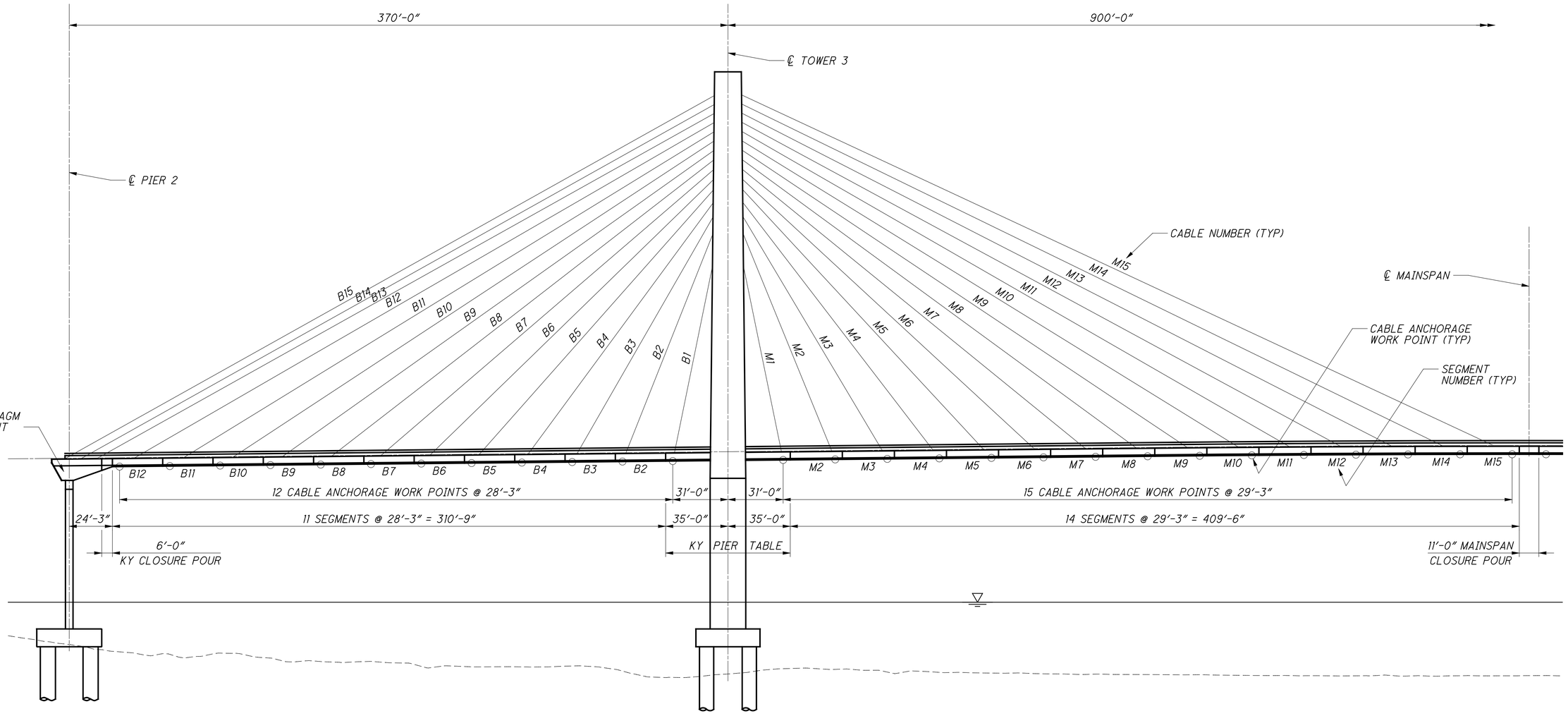

PARTIAL ELEVATION - PIER 2 & TOWER 3

NOTES

1. FOR CABLE ANCHORAGE WORK POINTS IN KY DIAPHRAGM SEGMENT, SEE SHEET NO. 195/365

DESIGN AGENCY
URS
36 EAST 7TH STREET
SUITE 2300
CINCINNATI, OHIO 45202

DESIGNED	DRAWN	REVIEWED	DATE
AR	CER	DLJ	6/2010
CHECKED	REVISED	STRUCTURE FILE NUMBER	
ASM		4401263	

CABLE AND SEGMENT DESIGNATION (1 OF 2)
BRIDGE NO. LAW-93-0000
IRONTON RUSSELL BRIDGE OVER OHIO RIVER

LAW-93-0.00
PID No. 81595

128/365

515
788

E:\Bridges_XM\Ironton_Russell\LAW\81595\structures\LAW093_0000C\sheets\093_0000CSD003.dgn 4/25/2011 10:13:17 AM john_stahl

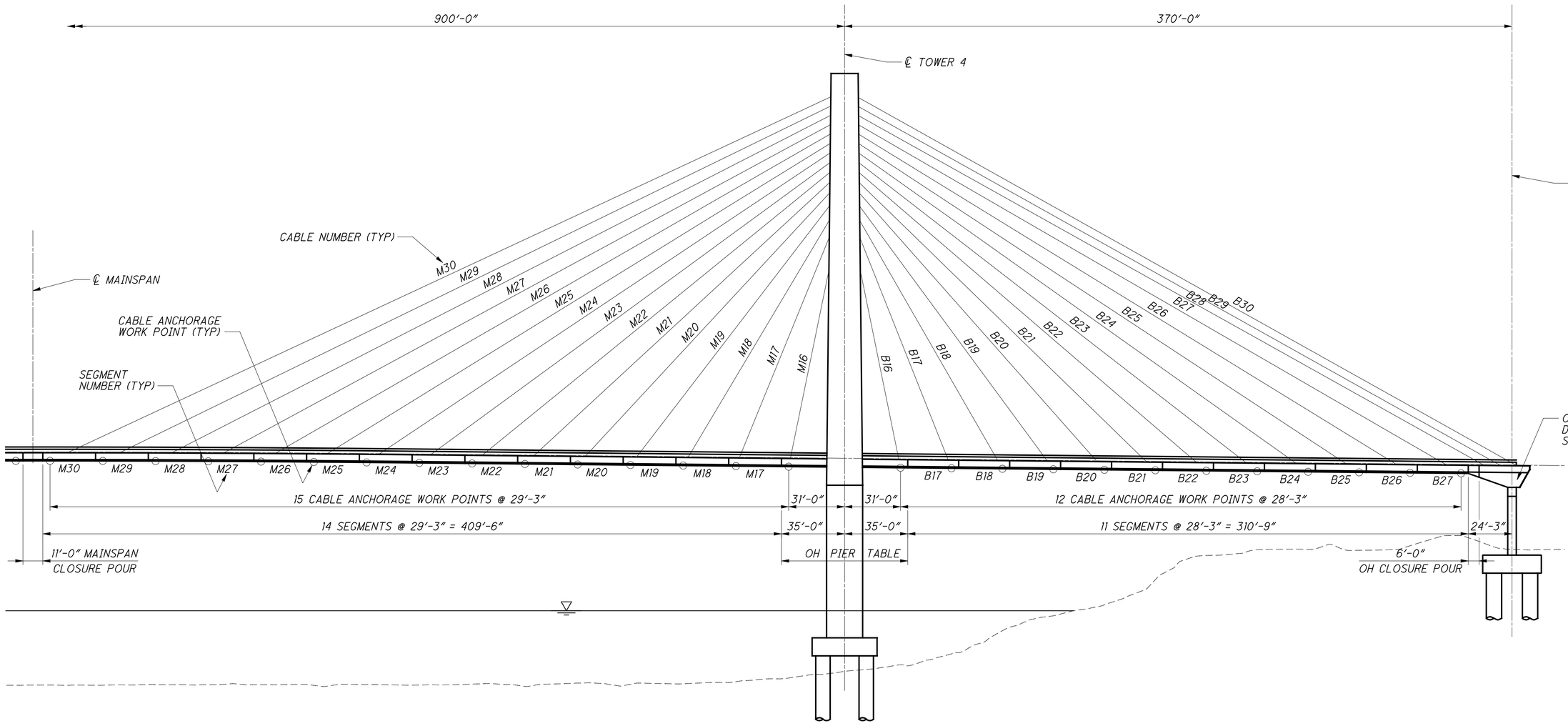

PARTIAL ELEVATION - TOWER 4 & PIER 5

NOTES

1. FOR CABLE ANCHORAGE WORK POINTS IN OH DIAPHRAGM SEGMENT, SEE SHEET NO. 210/365

E:\Bridges_XM\Ironton_Russell\LAW\81595\structures\LAW093_0000C\sheets\093_0000CSD003.dgn 4/25/2011 10:13:21 AM john_stahl

DESIGN AGENCY
URS
35 EAST 7TH STREET
SUITE 2300
CINCINNATI, OHIO 45202

DESIGNED	DRAWN	REVIEWED	DATE
AR	CER	DLJ	6/2010
CHECKED	REVISED	STRUCTURE FILE NUMBER	
ASM		4401263	

CABLE AND SEGMENT DESIGNATION (2 OF 2)
BRIDGE NO. LAW-93-0000
IRONTON RUSSELL BRIDGE OVER OHIO RIVER

LAW-93-0.00
PID No. 81595

129/365

516/788

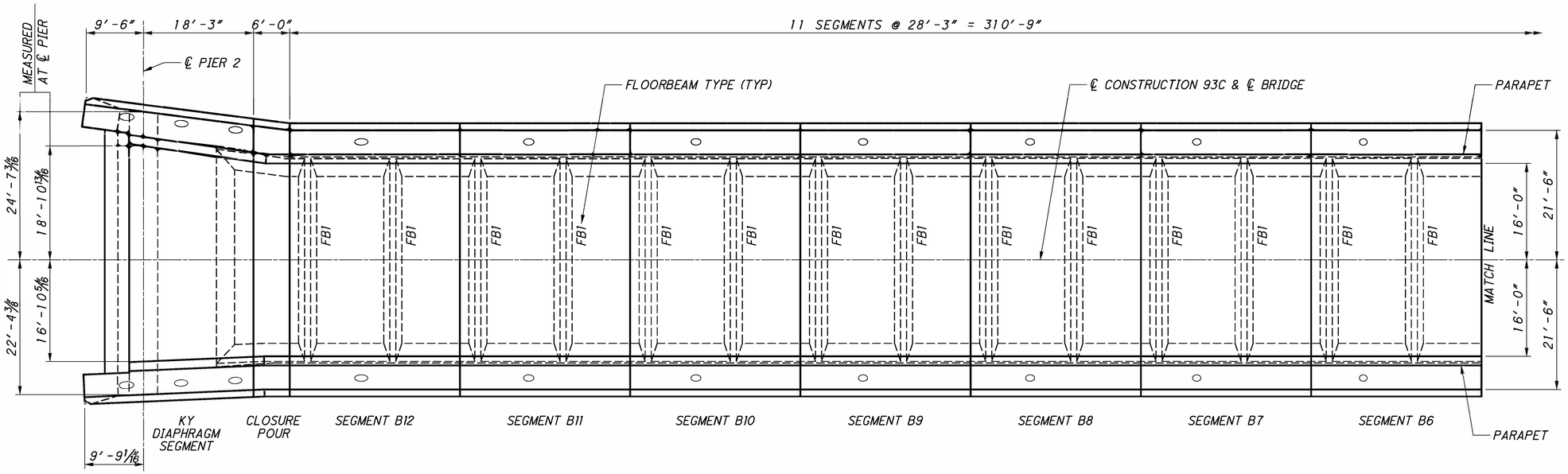

PARTIAL FRAMING PLAN

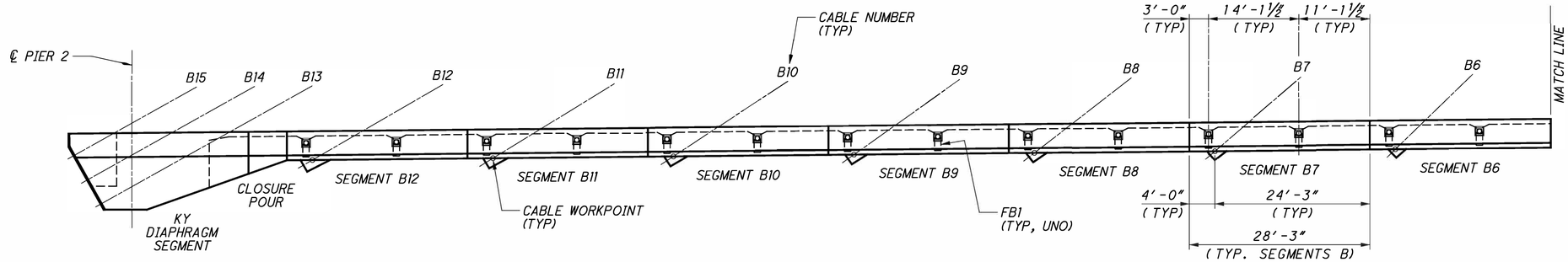

PARTIAL ELEVATION

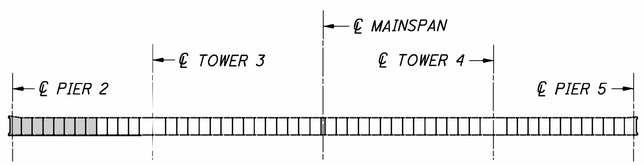

KEY PLAN

NOTES

1. FOR EMBEDDED CONDUIT AND GROUNDING CONDUCTOR DETAILS, SEE ELECTRICAL PLANS.

Link to 028-003-001
VECP #1 As-Built

DESIGN AGENCY
URS
35 EAST 7TH STREET
SUITE 2300
CINCINNATI, OHIO 45202

DESIGNED	DRAWN	REVIEWED	DATE
ASM	CER	DLJ	6/2010
CHECKED	REVISED	STRUCTURE FILE NUMBER	
BWJ		4401263	

FRAMING PLAN AND ELEVATION (1 OF 7)
BRIDGE NO. LAW-93-0000
IRONTON RUSSELL BRIDGE OVER OHIO RIVER

LAW-93-0.00
PID No. 81595

130/365
517/788

E:\Bridges_XM\Ironton_Russell\LAW\81595\structures\LAW093_0000C\sheets\093_0000CDP001.dgn 4/25/2011 10:13:26 AM john_stahl

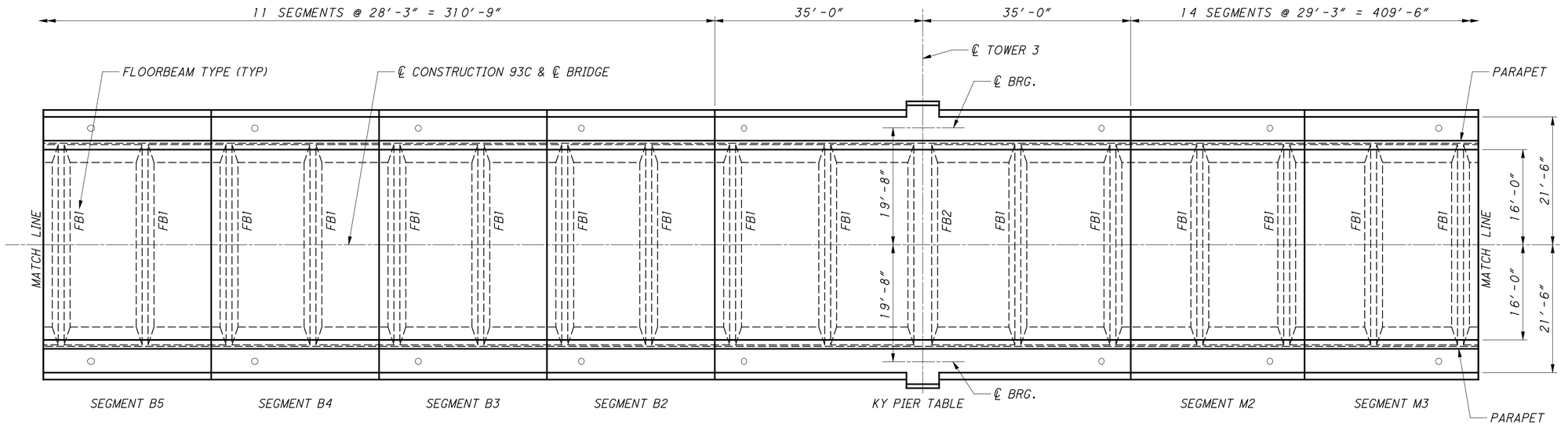

PARTIAL FRAMING PLAN

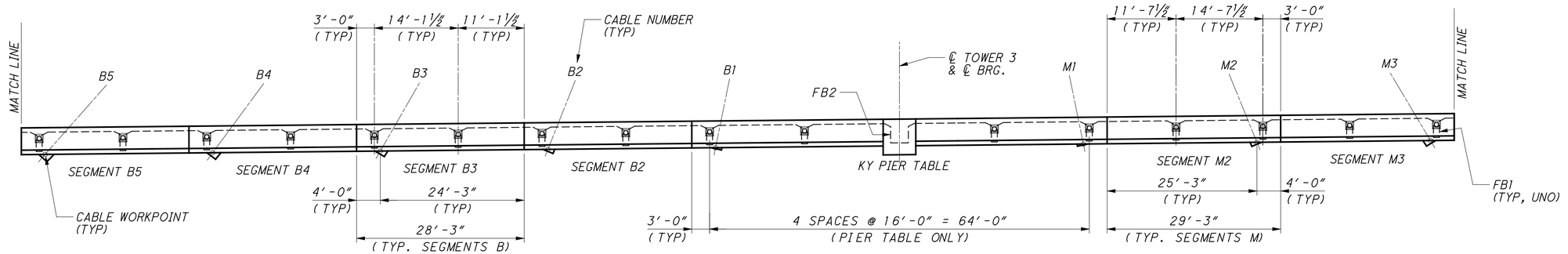

PARTIAL ELEVATION

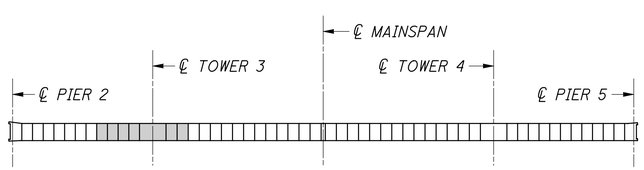

KEY PLAN

DESIGN AGENCY
URS
36 EAST 7TH STREET
SUITE 2300
CINCINNATI, OHIO 45202

DESIGNED	DRAWN	REVIEWED	DATE
ASM	CER	DLJ	6/2010
CHECKED	REVISED	STRUCTURE FILE NUMBER	
BWJ		4401263	

FRAMING PLAN AND ELEVATION (2 OF 7)
BRIDGE NO. LAW-93-0000
IRONTON RUSSELL BRIDGE OVER OHIO RIVER

LAW-93-0.00
PID No. 81595

131/365

518
788

E:\Bridges_XM\Ironton_Russell\LAW\81595\structures\LAW093_0000C\sheets\093_0000CDP001.dgn 4/25/2011 10:13:30 AM john_stahl

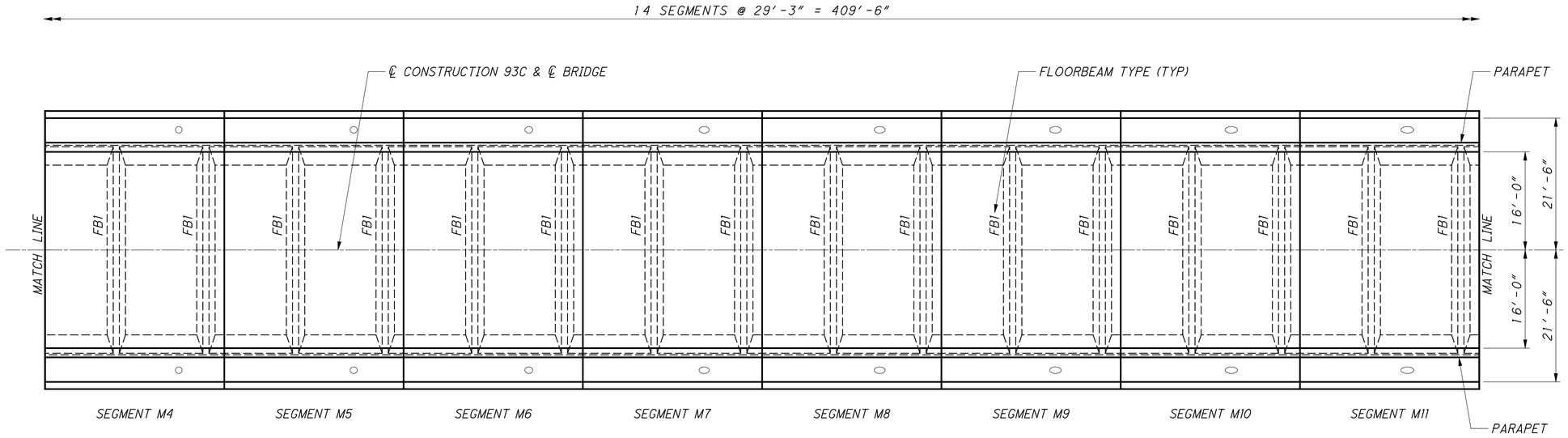

PARTIAL FRAMING PLAN

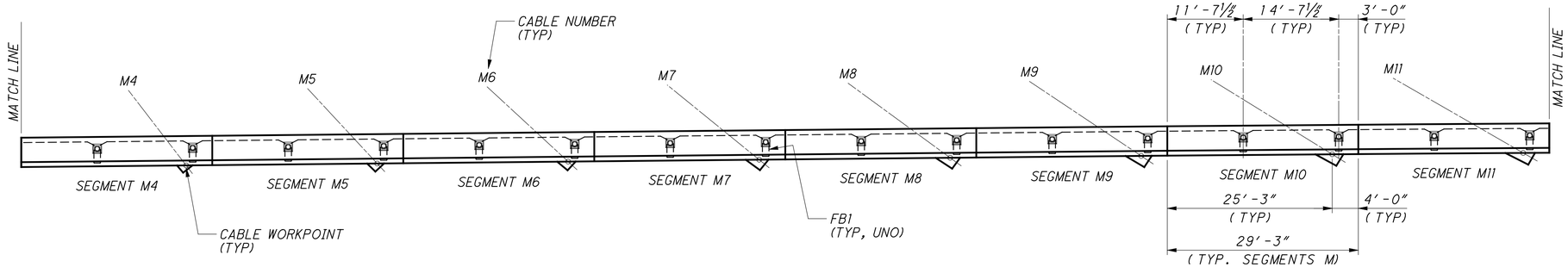

PARTIAL ELEVATION

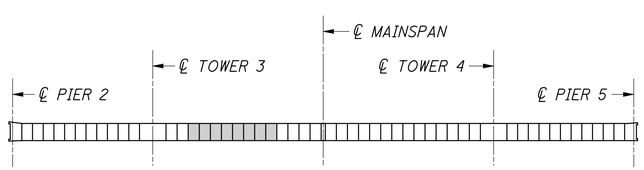

KEY PLAN

DESIGN AGENCY
URS
35 EAST 7TH STREET
SUITE 2300
CINCINNATI, OHIO 45202

DESIGNED	DRAWN	REVIEWED	DATE
ASM	CER	DLJ	6/2010
CHECKED	REVISED	STRUCTURE FILE NUMBER	
BWJ		4401263	

FRAMING PLAN AND ELEVATION (3 OF 7)
BRIDGE NO. LAW-93-0000
IRONTON RUSSELL BRIDGE OVER OHIO RIVER

LAW-93-0.00
PID No. 81595

132/365

519
788

E:\Bridges_XM\Ironton_Russell\LAW\81595\structures\LAW093_0000C\sheets\093_0000CDP001.dgn 4/25/2011 10:13:34 AM john_stahl

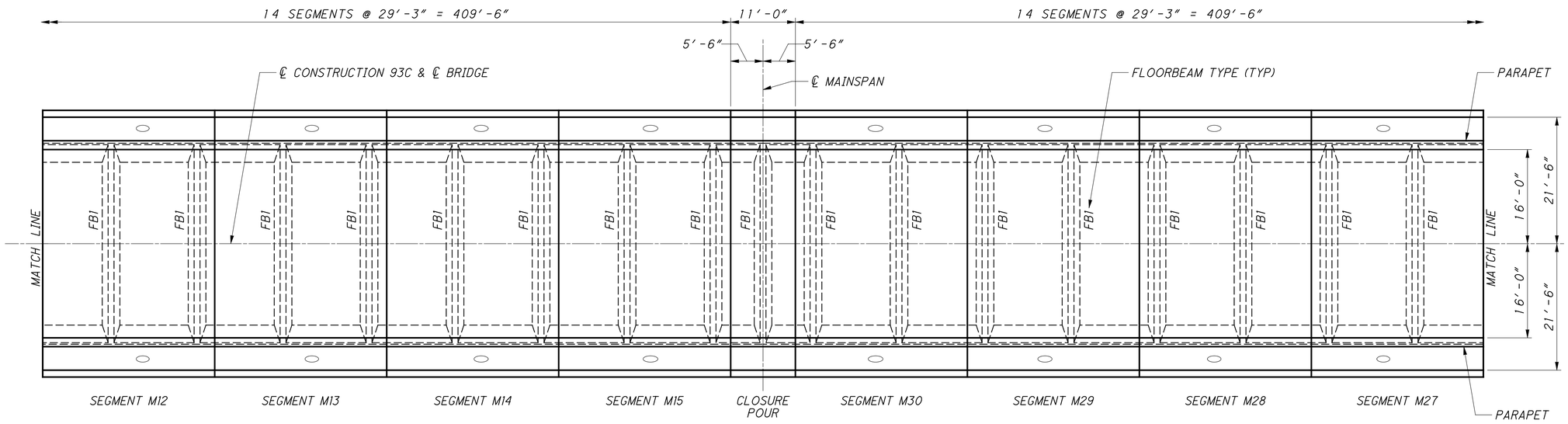

PARTIAL FRAMING PLAN

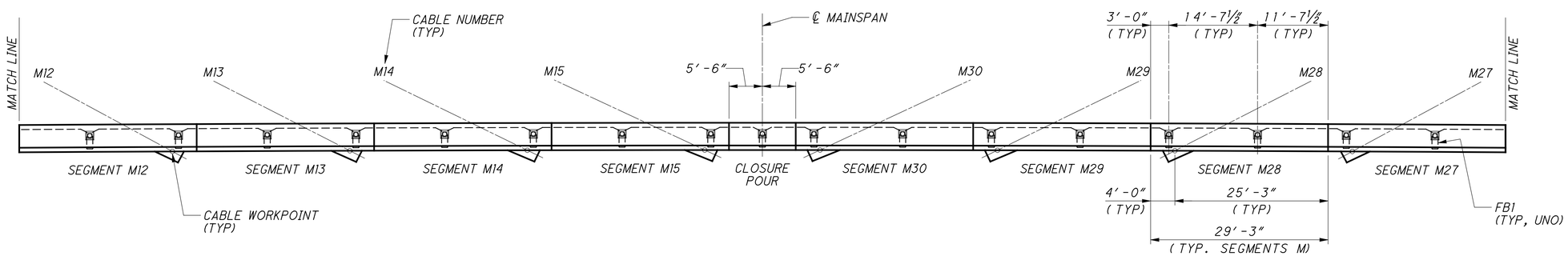

PARTIAL ELEVATION

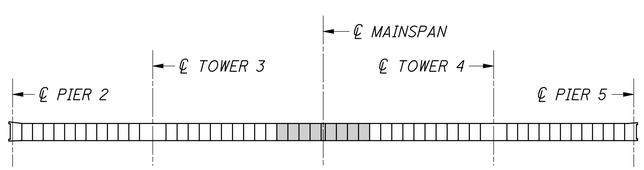

KEY PLAN

DESIGN AGENCY
URS
36 EAST 7TH STREET
SUITE 2300
CINCINNATI, OHIO 45202

DESIGNED	DRAWN	REVIEWED	DATE
ASM	CER	DLJ	6/2010
CHECKED	REVISED	STRUCTURE FILE NUMBER	
BWJ		4401263	

FRAMING PLAN AND ELEVATION (4 OF 7)
BRIDGE NO. LAW-93-0000
IRONTON RUSSELL BRIDGE OVER OHIO RIVER

LAW-93-0.00
PID No. 81595

133/365

520
788

E:\Bridges_XM\Ironton_Russell\LAW\81595\structures\LAW093_0000C\sheets\093_0000CDP001.dgn 4/25/2011 10:13:37 AM john_stahl

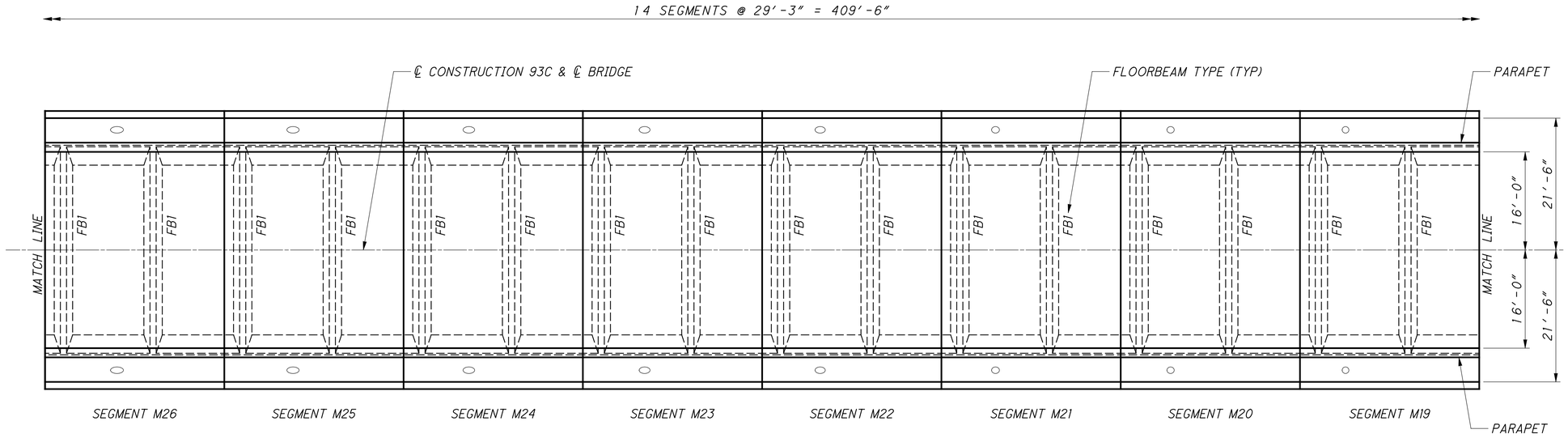

PARTIAL FRAMING PLAN

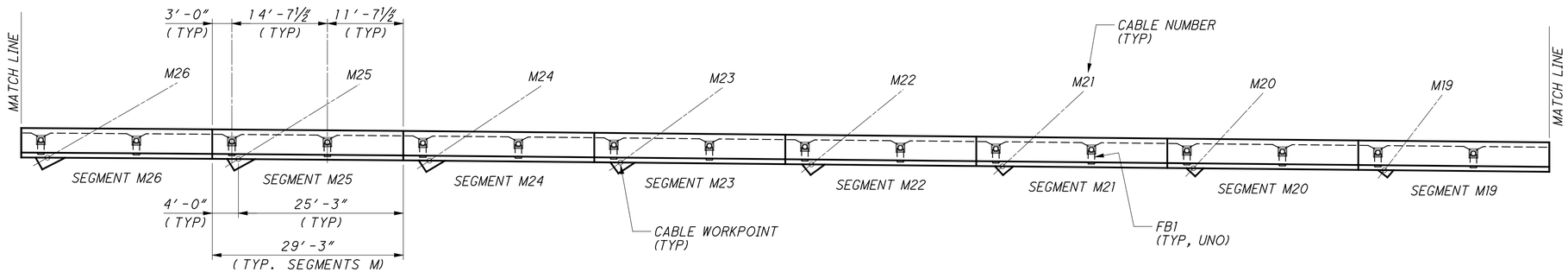

PARTIAL ELEVATION

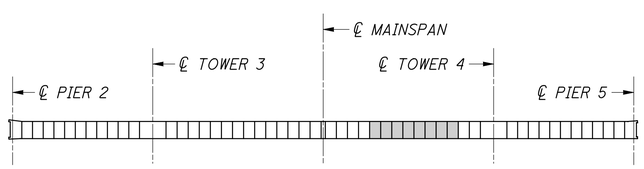

KEY PLAN

DESIGN AGENCY
URS
38 EAST 7TH STREET
SUITE 2300
CINCINNATI, OHIO 45202

DESIGNED	DRAWN	REVIEWED	DATE
ASM	CER	DLJ	6/2010
CHECKED	REVISED	STRUCTURE FILE NUMBER	
BWJ		4401263	

FRAMING PLAN AND ELEVATION (5 OF 7)
BRIDGE NO. LAW-93-0000
IRONTON RUSSELL BRIDGE OVER OHIO RIVER

LAW-93-0.00
PID No. 81595

134/365

521
788

E:\Bridges_XM\Ironton_Russell\LAW\81595\structures\LAW093_0000C\sheets\093_0000CDP001.dgn 4/25/2011 10:13:41 AM john_stahl

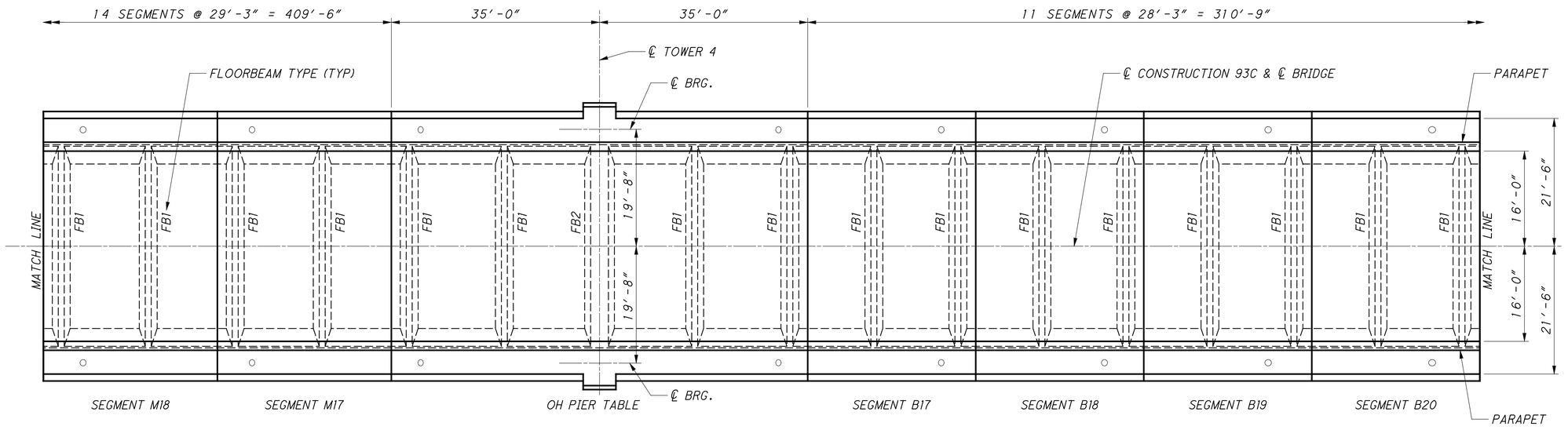

PARTIAL FRAMING PLAN

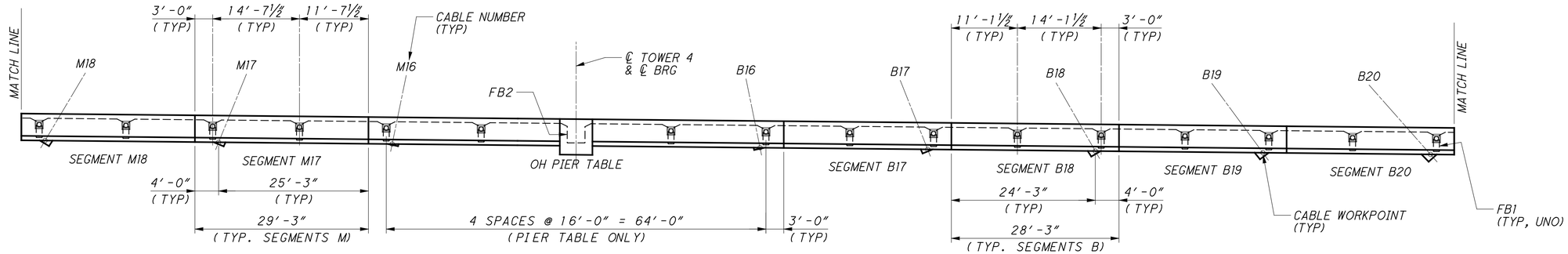

PARTIAL ELEVATION

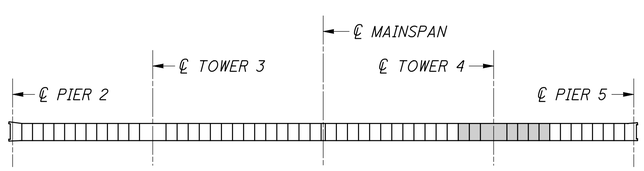

KEY PLAN

DESIGN AGENCY
URS
36 EAST 7TH STREET
SUITE 2300
CINCINNATI, OHIO 45202

DESIGNED	DRAWN	REVIEWED	DATE
ASM	CER	DLJ	6/2010
CHECKED	REVISED	STRUCTURE FILE NUMBER	
BWJ		4401263	

FRAMING PLAN AND ELEVATION (6 OF 7)
BRIDGE NO. LAW-93-0000
IRONTON RUSSELL BRIDGE OVER OHIO RIVER

LAW-93-0.00
PID No. 81595

135/365

522
788

E:\Bridges_XM\Ironton_Russell\LAW\81595\structures\LAW093_0000C\sheets\093_0000CDP001.dgn 4/25/2011 10:13:45 AM john_stahl

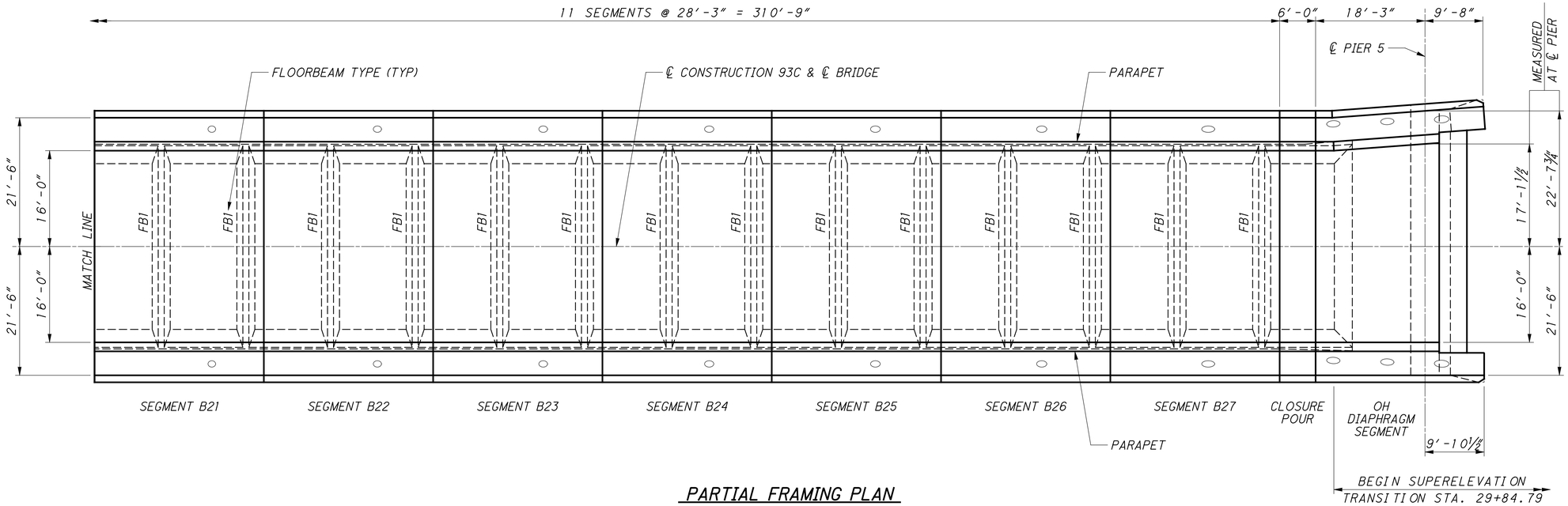

PARTIAL FRAMING PLAN

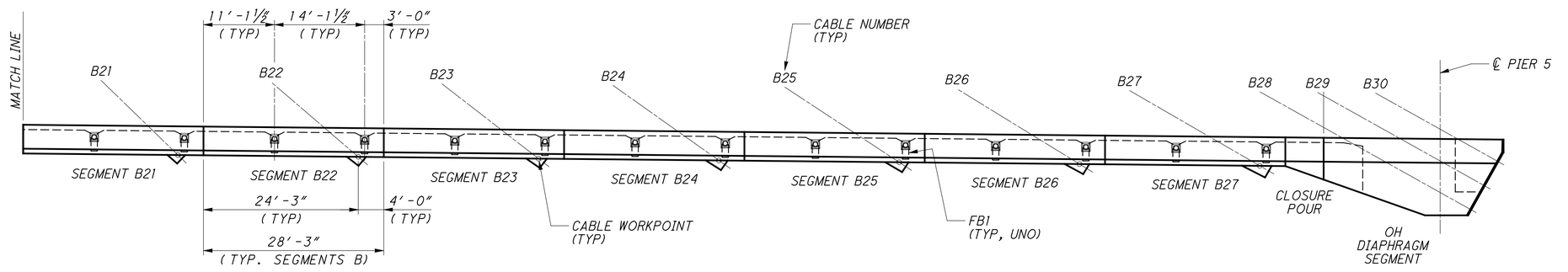

PARTIAL ELEVATION

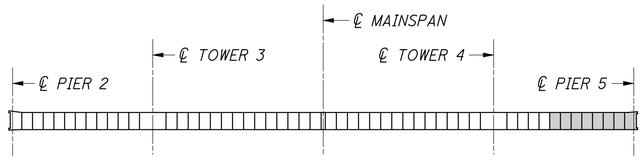

KEY PLAN

E:\Bridges_XM\Ironton_Russell\LAW\81595\structures\LAW093_0000C\sheets\093_0000CDP001.dgn 4/25/2011 10:13:49 AM john_stahl

DESIGN AGENCY
URS
36 EAST 7TH STREET
SUITE 2300
CINCINNATI, OHIO 45202

DESIGNED	DRAWN	REVIEWED	DATE
ASM	CER	DLJ	6/2010
CHECKED	REVISED	STRUCTURE FILE NUMBER	
BWJ		4401263	

FRAMING PLAN AND ELEVATION (7 OF 7)
BRIDGE NO. LAW-93-0000
IRONTON RUSSELL BRIDGE OVER OHIO RIVER

LAW-93-0.00
PID No. 81595

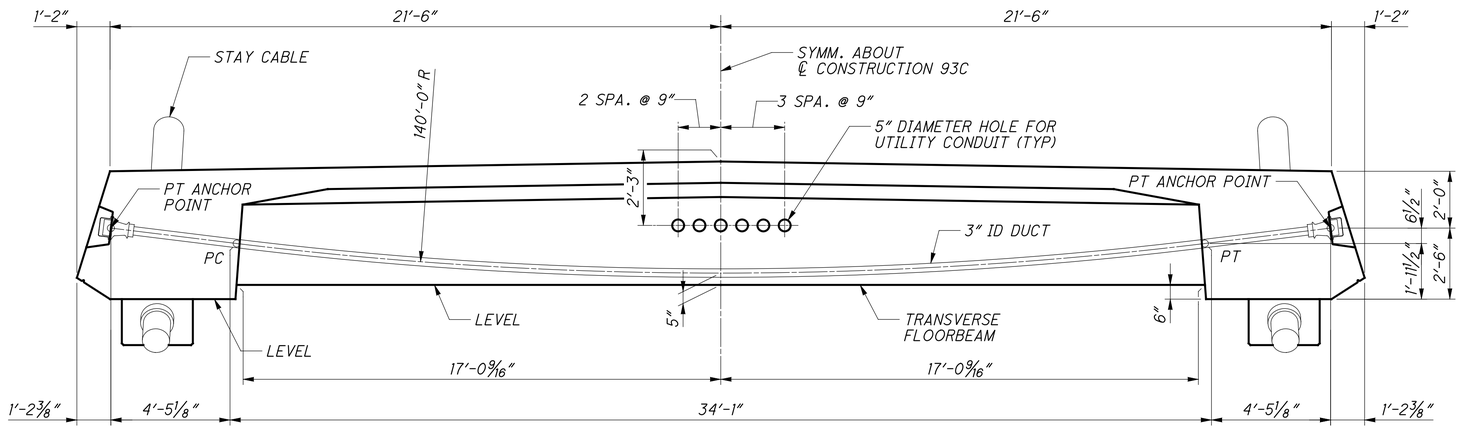

FLOORBEAM TENDON GEOMETRY

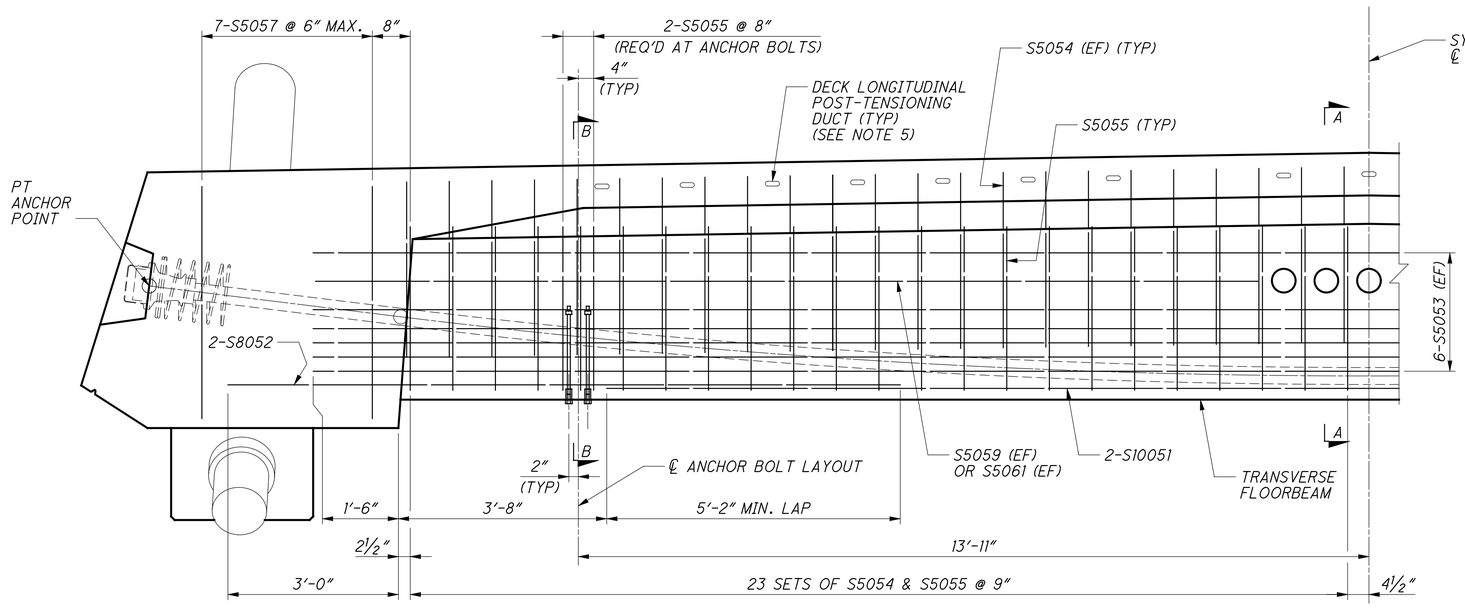

FLOORBEAM REINFORCING

(MAIN SPAN DECK POST-TENSIONING LAYOUT SHOWN, SIDE SPAN DECK POST-TENSIONING LOCKOUT SIMILAR)

ANCHOR BOLT NOTES

1. STAINLESS STEEL ANCHOR BOLTS ARE PROVIDED FOR SUPPORT OF A FUTURE INSPECTION TRAVELER TO BE SUPPLIED BY OTHERS.
2. STAINLESS STEEL ANCHOR BOLTS SHALL BE IN ACCORDANCE WITH ASTM F593.
3. STAINLESS STEEL NUTS SHALL BE IN ACCORDANCE WITH ASTM F594.
4. THE COUPLING NUT SHALL BE CAPABLE OF DEVELOPING 125% OF THE YIELD STRENGTH OF THE ANCHOR BOLT.

Link to 028-003-000
VECP #1 As-Built

Link to RFI014 As-Built

TRANSVERSE FLOORBEAM - FB1 TENDON QUANTITIES						
FLOORBEAM TYPE	NO. OF TENDONS	NUMBER OF 0.6" DIA. STRANDS	JACKING FORCE (kips)	TENDON LENGTH (ft)	TENDON WEIGHT (lbs)	TOTAL WEIGHT (lbs)
FB1	109	9	395	43.08	287	31276
					TOTAL =	31276

NOTES

1. TRANSVERSE TENDONS IN FLOORBEAMS SHALL BE 9x0.6" GRADE 270, LOW RELAXATION STRANDS.
2. TRANSVERSE TENDONS SHALL NOT BE STRESSED UNTIL THE CONCRETE REACHES A MINIMUM STRENGTH OF 3000 psi.
3. FLOOR BEAM TENDONS MAY BE SINGLE END STRESSED.
4. TRANSVERSE TENDONS OF NEWLY CAST FLOORBEAMS SHALL BE FULLY STRESSED PRIOR TO REMOVAL OF FLOORBEAM FORMS.
5. FOR LOCATIONS OF LONGITUDINAL DECK POST-TENSIONING, SEE SHEETS 139/365 THRU 142/365
6. TENDON LENGTH FROM ANCHOR POINT TO ANCHOR POINT IS 43'-1".
7. WEIGHT INDICATED IN SCHEDULES ARE BASED ON TENDON LENGTH FROM ANCHOR PLATE TO ANCHOR PLATE. WEIGHT IS SHOWN FOR INFORMATIONAL PURPOSES ONLY. CONTRACTOR IS RESPONSIBLE FOR ESTIMATING QUANTITY OF POST-TENSIONING STRAND REQUIRED.
8. COST OF SPIRAL REINFORCEMENT (LOCAL ZONE) AT EACH ANCHORAGE IS INCIDENTAL TO THE COST OF POST-TENSIONING.
9. FLOORBEAMS SHALL BE ORIENTED PERPENDICULAR TO THE LOCAL PROFILE GRADE LINE OF THE BRIDGE.
10. COST OF ANCHOR BOLTS AND HARDWARE SHALL BE CONSIDERED INCIDENTAL TO THE COST OF THE SUPERSTRUCTURE CONCRETE.

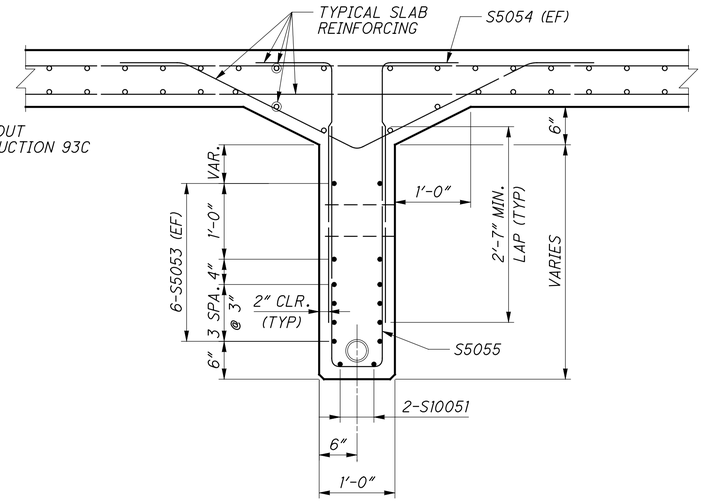

SECTION A-A

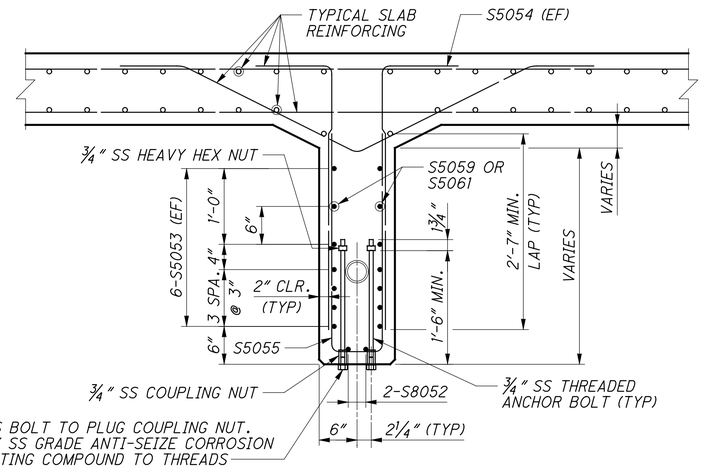

SECTION B-B

DESIGN AGENCY
URS
36 EAST 7TH STREET
SUITE 2300
CINCINNATI, OHIO 45202

DESIGNED ASM | DRAWN CER | CHECKED BWJ | REVIEWED DLJ | DATE 6/2010 | STRUCTURE FILE NUMBER 4401263 | REVISED

FLOORBEAM FB1 DETAILS
BRIDGE NO. LAW-93-0000
IRONTON RUSSELL BRIDGE OVER OHIO RIVER

LAW-93-0.00
PID No. 81595

137/365

524/788

E:\Bridges_XM\Ironton_Russell\LAW\81595\structures\LAW093_0000C\sheets\093_0000CSD002.dgn 4/25/2011 10:13:55 AM john_stahl

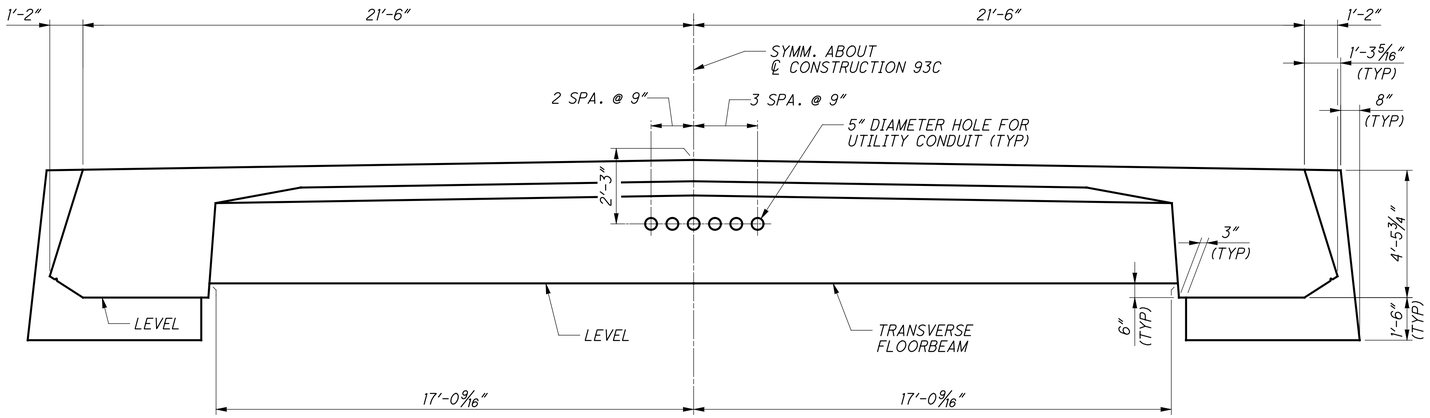

FLOORBEAM GEOMETRY

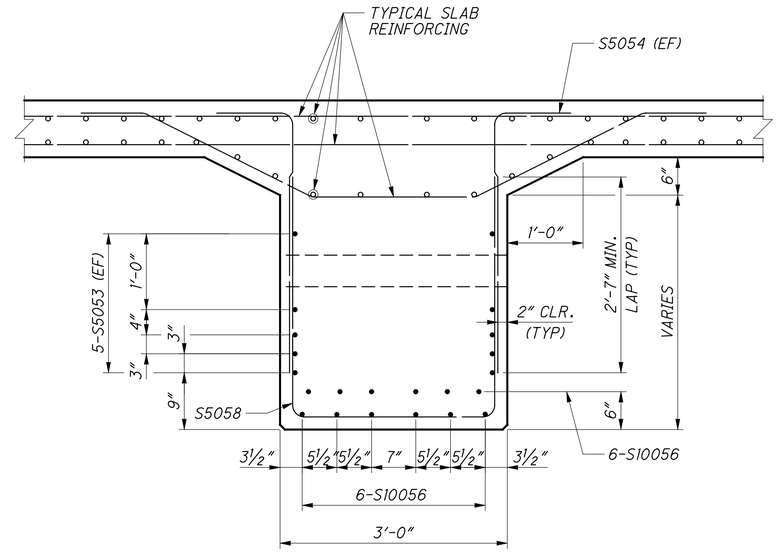

SECTION A-A

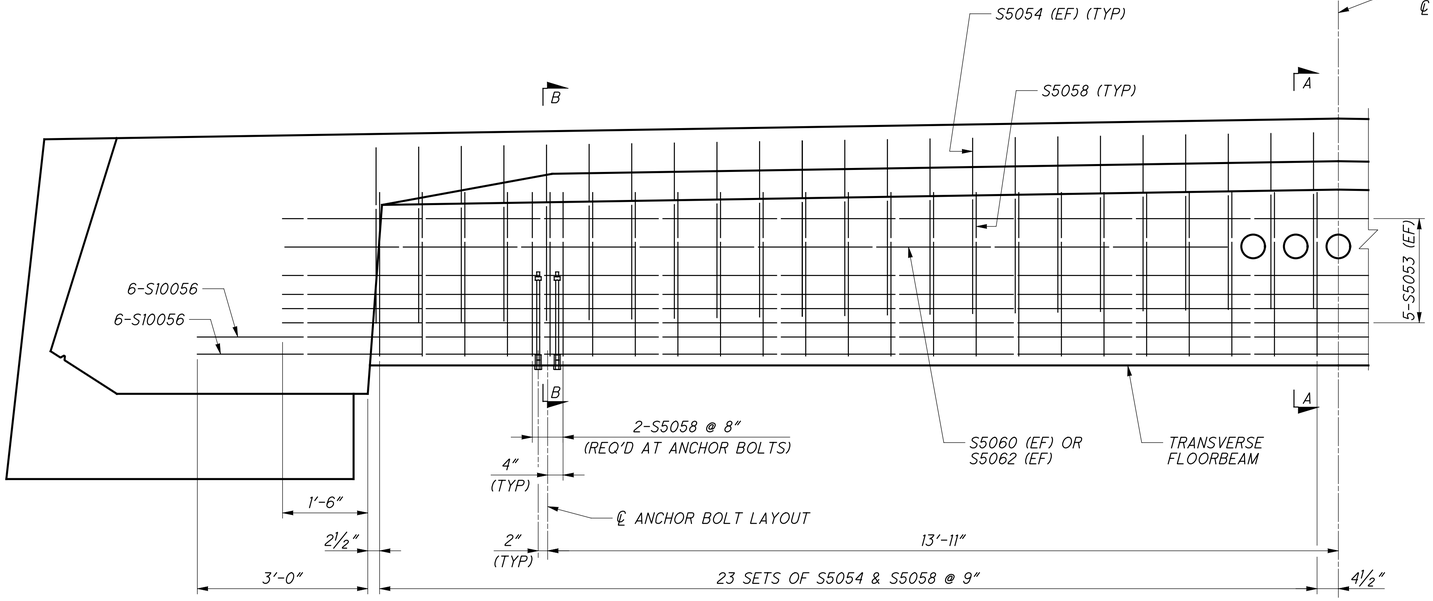

FLOORBEAM REINFORCING

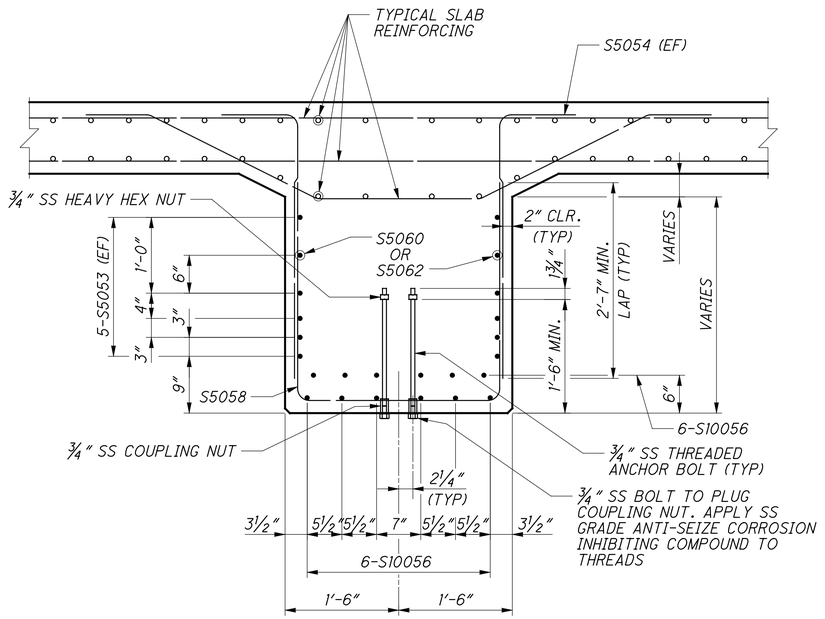

SECTION B-B

ANCHOR BOLT NOTES

1. STAINLESS STEEL ANCHOR BOLTS ARE PROVIDED FOR SUPPORT OF A FUTURE INSPECTION TRAVELER TO BE SUPPLIED BY OTHERS.
2. STAINLESS STEEL ANCHOR BOLTS SHALL BE IN ACCORDANCE WITH ASTM F593.
3. STAINLESS STEEL NUTS SHALL BE IN ACCORDANCE WITH ASTM F594.
4. THE COUPLING NUT SHALL BE CAPABLE OF DEVELOPING 125% OF THE YIELD STRENGTH OF THE ANCHOR BOLT.
5. COST OF ANCHOR BOLTS AND HARDWARE SHALL BE CONSIDERED INCIDENTAL TO THE COST OF THE SUPERSTRUCTURE CONCRETE.

Link to 028-003-000
VECP #1 As-Built

DESIGN AGENCY
URS
36 EAST 7TH STREET
SUITE 2300
CINCINNATI, OHIO 45202

DESIGNED	DRAWN	REVIEWED	DATE
ASM	CER	DLJ	6/2010
CHECKED	REVISED	STRUCTURE FILE NUMBER	
BWJ		4401263	

FLOORBEAM FB2 DETAILS

BRIDGE NO. LAW-93-0000
IRONTON RUSSELL BRIDGE OVER OHIO RIVER

LAW-93-0.00
PID No. 81595

E:\Bridges_XW\Ironton_Russell\LAW\81595\structures\LAW093_0000C\sheets\093_0000CSD024.dgn 4/25/2011 10:14:02 AM john_stahl

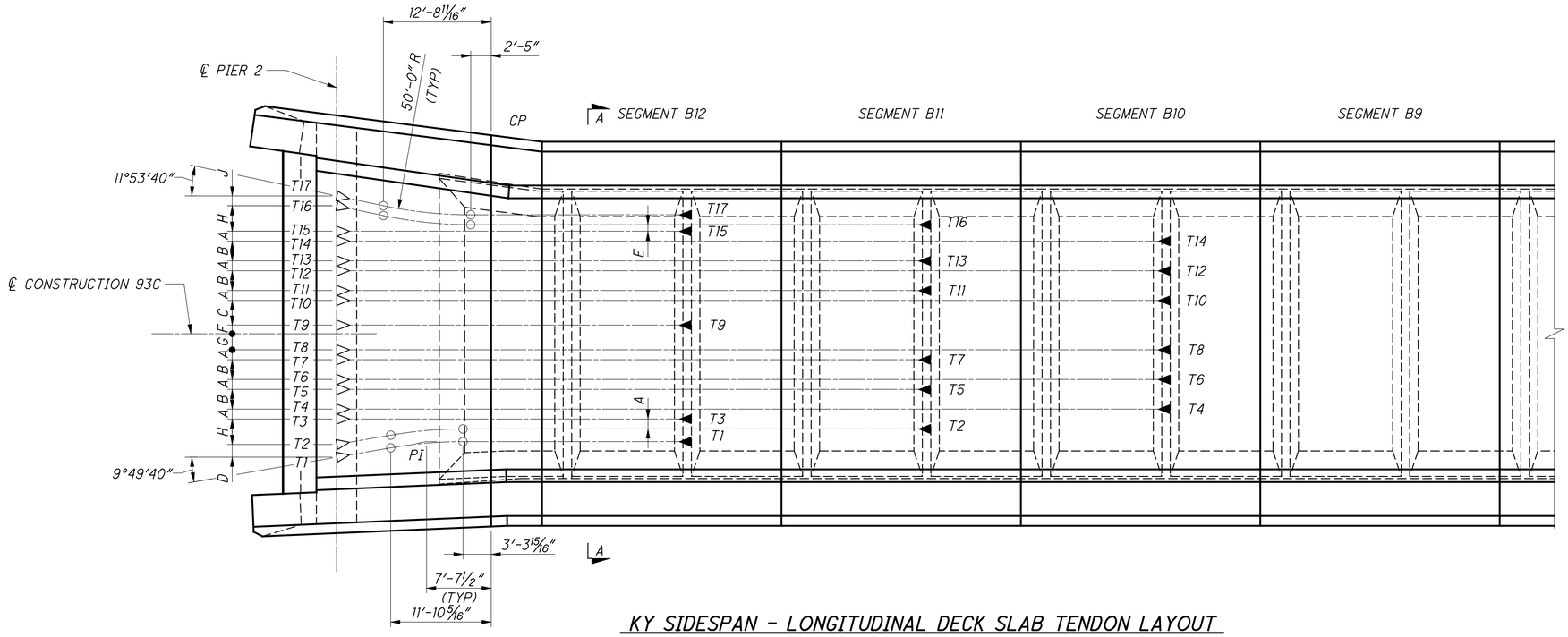

KY SIDESPAN - LONGITUDINAL DECK SLAB TENDON LAYOUT

DIMENSIONS		
DIM	PIER 2	PIER 5
A	1'-2"	
B	2'-4"	
C	2'-11"	
D	1'-6"	
E	9 1/4"	
F	1'-0 1/4"	5 3/4"
G	1'-10 3/4"	2'-5 1/4"
H	3'-0"	
J	1'-2"	

LEGEND

▷—— DEAD END

▶—— STRESSING END

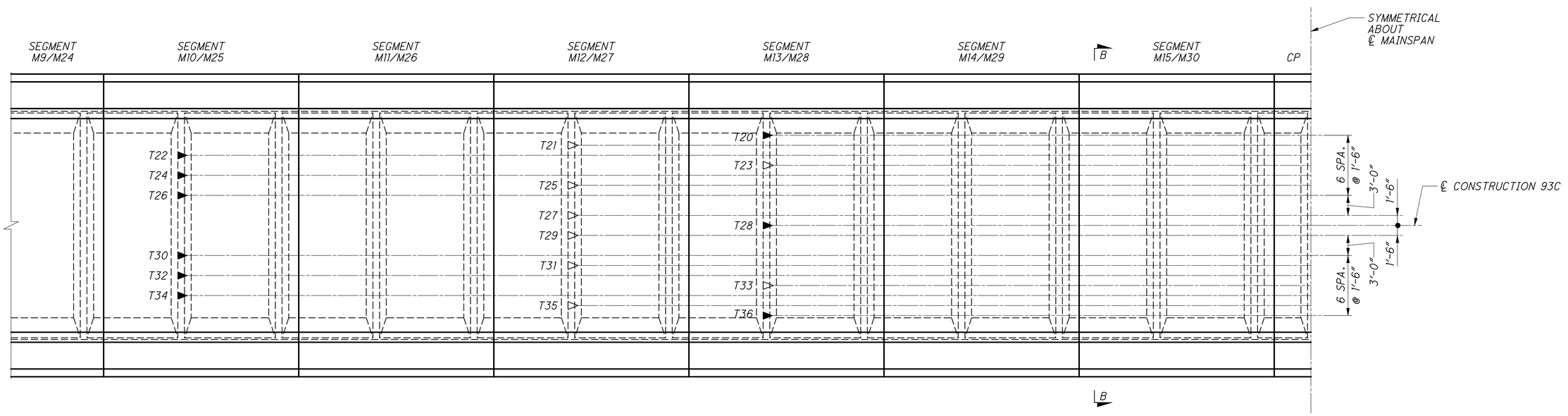

MAINSPAN - LONGITUDINAL DECK SLAB TENDON LAYOUT

DESIGN AGENCY
URS
36 EAST 7TH STREET
SUITE 2300
CINCINNATI, OHIO 45202

DESIGNED	DRAWN	REVIEWED	DATE
BWJ	CER	DLJ	6/2010
CHECKED	REVISED	STRUCTURE FILE NUMBER	
ASM		4401263	

DECK SLAB POST-TENSIONING LAYOUT (1 OF 2)
BRIDGE NO. LAW-93-0000
IRONTON RUSSELL BRIDGE OVER OHIO RIVER

LAW-93-0.00
PID No. 81595

139/365

526/788

E:\Bridges_XM\Ironton_Russell\LAW\81595\structures\LAW093_0000C\sheets\093_0000CSD004.dgn 4/25/2011 10:14:09 AM john_stahl

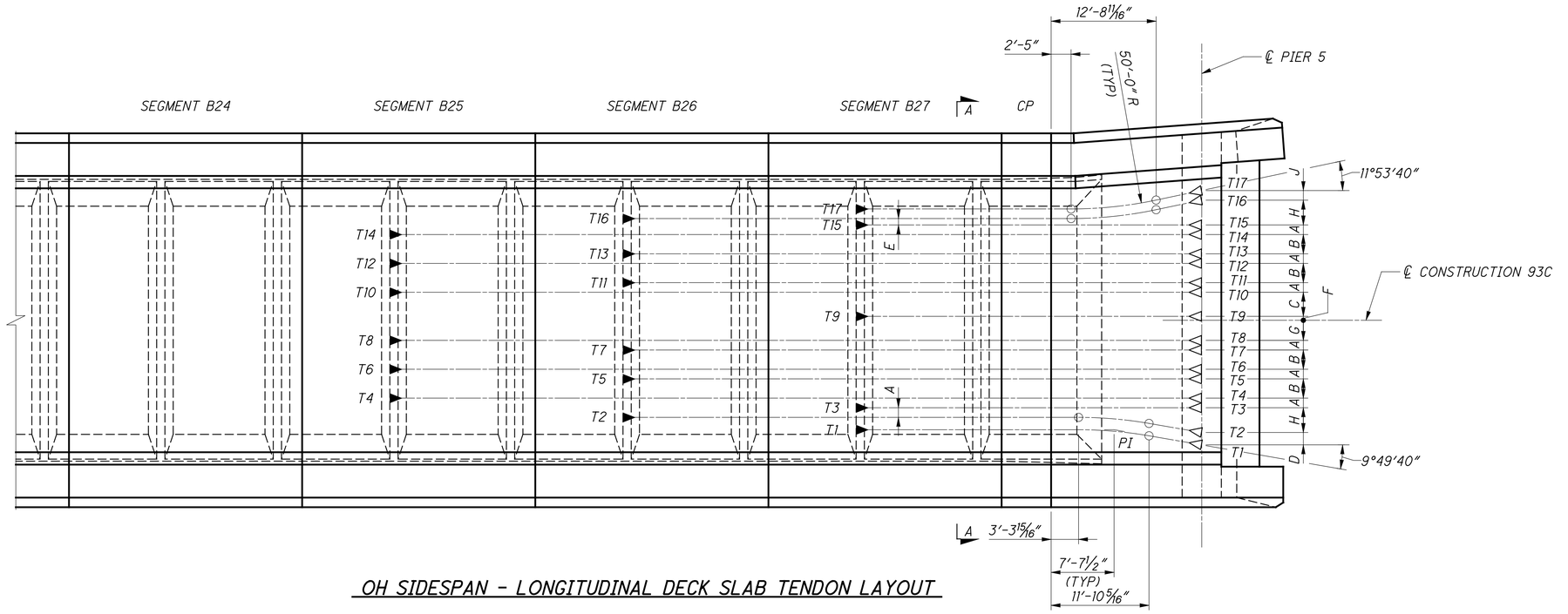

OH SIDESPAN - LONGITUDINAL DECK SLAB TENDON LAYOUT

LEGEND

- DEAD END
- STRESSING END

DESIGN AGENCY
URS
36 EAST 7TH STREET
SUITE 2300
CINCINNATI, OHIO 45202

DESIGNED	DRAWN	REVIEWED	DATE
BWJ	CER	DLJ	6/2010
CHECKED	REVISED	STRUCTURE FILE NUMBER	
ASM		4401263	

DECK SLAB POST-TENSIONING LAYOUT (2 OF 2)
BRIDGE NO. LAW-93-0000
IRONTON RUSSELL BRIDGE OVER OHIO RIVER

LAW-93-0.00
PID No. 81595

140/365

527/788

E:\Bridges_XM\Ironton_Russell\LAW\81595\structures\LAW093_0000C\sheets\093_0000CSD023.dgn 4/25/2011 10:14:14 AM john_stahl

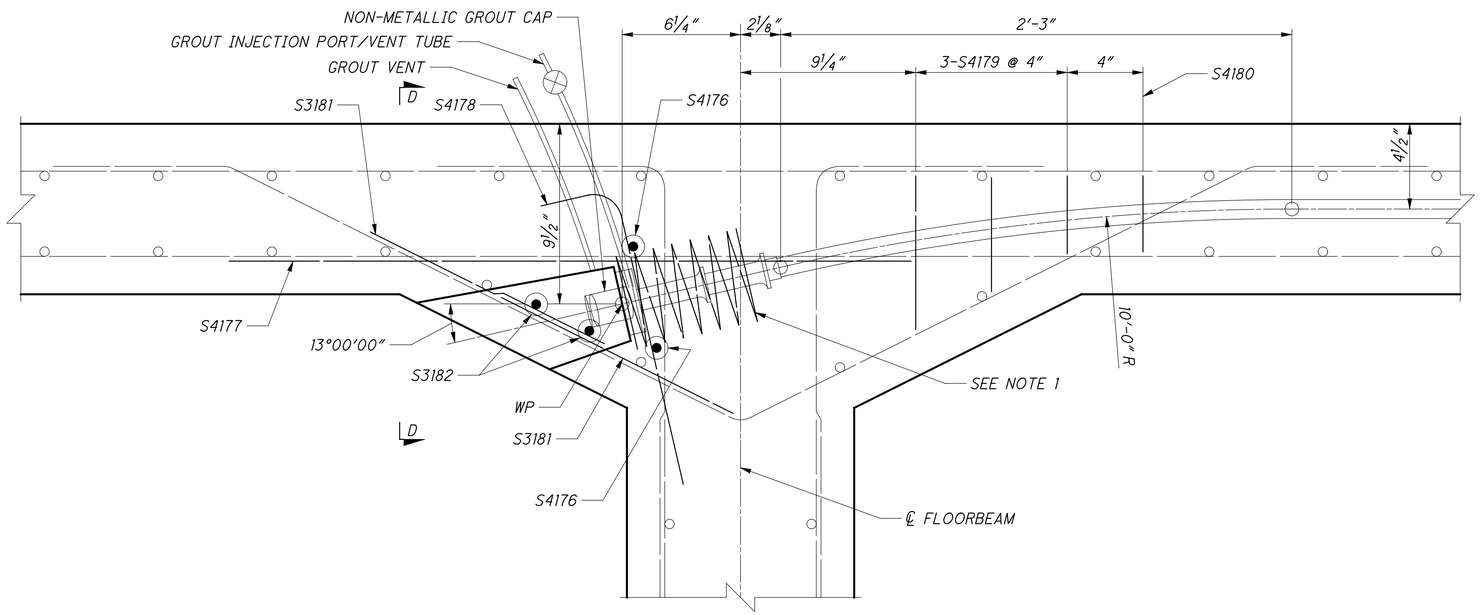

SECTION AT TRANSVERSE FLOORBEAM ANCHORAGE

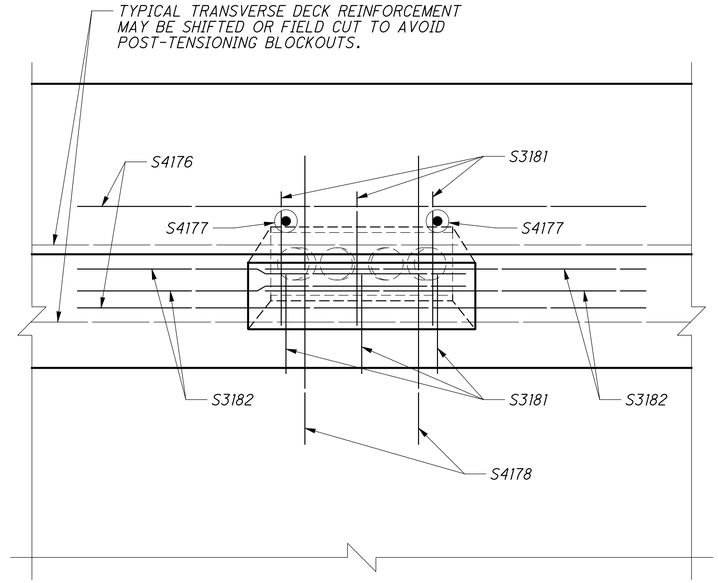

SECTION D-D

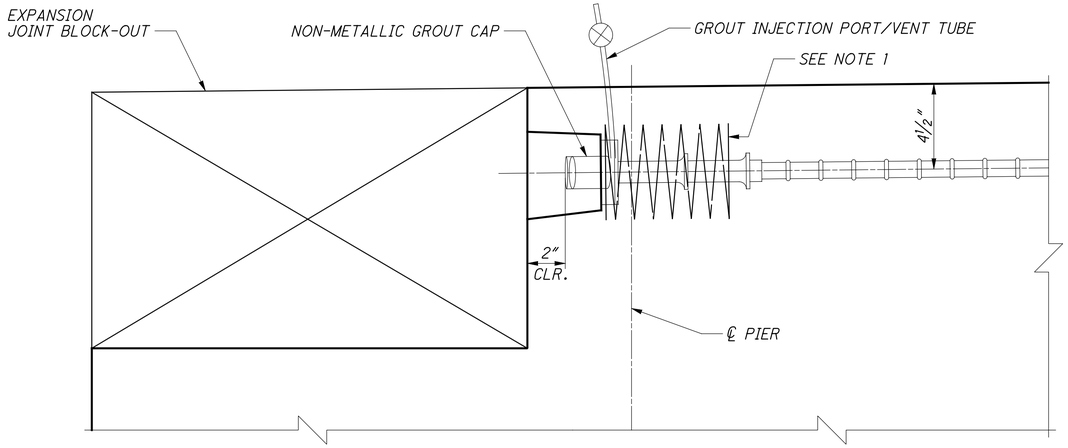

SECTION AT EXPANSION JOINT BLOCK-OUT ANCHORAGE

(DIAPHRAGM SEGMENT REINFORCEMENT NOT SHOWN FOR CLARITY)

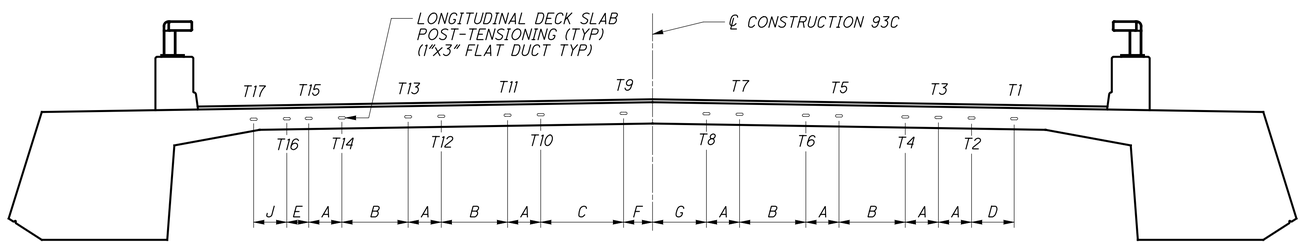

SECTION A-A

(FOR DIMENSIONS SEE TABLE ON "DECK SLAB POST-TENSIONING LAYOUT (1 OF 2)" SHEET)

NOTES

1. POST TENSIONING LOCAL ZONE REINFORCEMENT SHALL BE THE RESPONSIBILITY OF THE POST-TENSIONING SUPPLIER. COST OF LOCAL ZONE REINFORCEMENT SHALL BE CONSIDERED INCIDENTAL TO THE COST OF POST-TENSIONING.
2. WITHIN 7 DAYS UPON COMPLETION OF THE TENDON GROUTING, PROTECT THE POST-TENSIONING ANCHORAGE AND GROUT INLET/OUTLET AS INDICATED IN THE SPECIAL PROVISIONS.
3. BARS S3181 AND S3182 SHALL BE TEMPORARILY BENT OUT OF POSITION TO ACCESS POST-TENSIONING ANCHORAGE.
4. LONGITUDINAL DECK SLAB TENDONS SHALL BE 4-0.6" DIAMETER STRAND WITH GRADE 270 KSI LOW RELAXATION.
5. STRESSING SEQUENCE SHALL BE ARRANGED TO AVOID ECCENTRICITY OR OVERSTRESSING CONDITIONS. TENDONS MAY BE SINGLE END STRESSED.
6. REINFORCING MAY SHIFT TO AVOID POST-TENSIONING TENDON.
7. JACKING FORCE FOR DECK SLAB TENDONS SHALL BE 187 KIPS PER TENDON.
8. FOR DECK SLAB TENDON QUANTITIES SEE SHEET NO. 142/365
9. FOR LOCATION OF SECTION CUT A-A, SEE DECK SLAB POST-TENSIONING LAYOUT (1 OF 2) & (2 OF 2)" SHEETS.

DESIGN AGENCY
URS
36 EAST 7TH STREET
SUITE 2300
CINCINNATI, OHIO 45202

DESIGNED	DRAWN	REVIEWED	DATE
BWJ	CER	DLJ	6/2010
CHECKED	REVISED	STRUCTURE FILE NUMBER	
ASM		4401263	

DECK SLAB POST-TENSIONING DETAILS (1 OF 2)
BRIDGE NO. LAW-93-0000
IRONTON RUSSELL BRIDGE OVER OHIO RIVER

LAW-93-0.00
PID No. 81595

141/365

528
788

E:\Bridges_XM\Ironton_Russell\LAW 81595\structures\LAW093_0000C\sheets\093_0000CSD005.dgn 4/25/2011 10:14:18 AM john_stahl

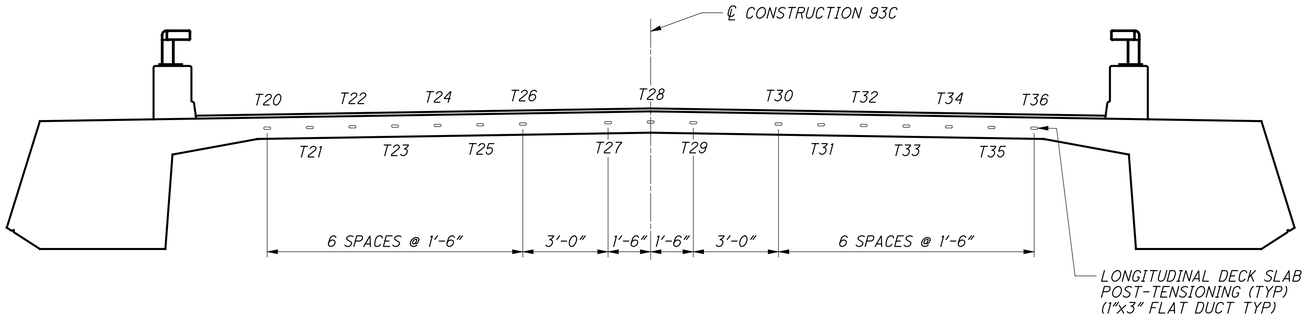

SECTION B-B

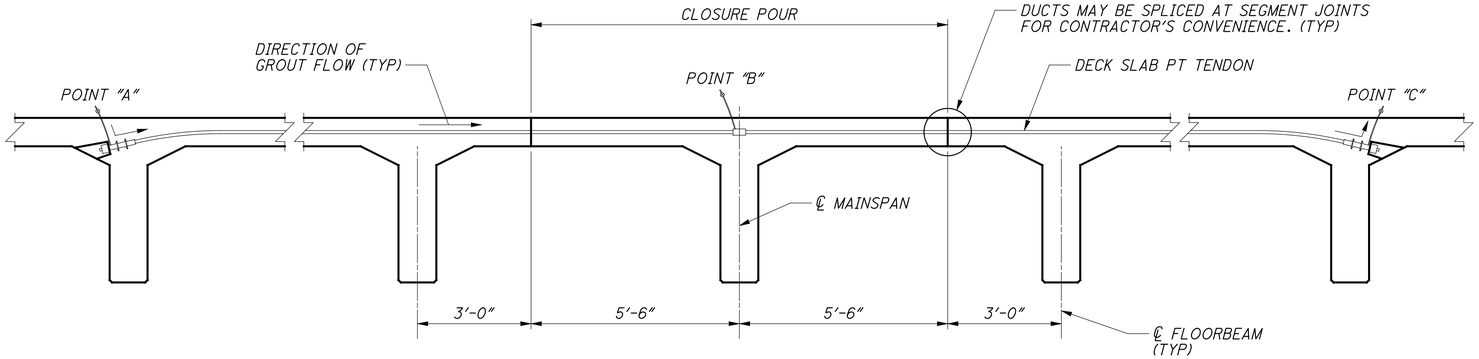

MAINSPAN GROUTING SCHEMATIC

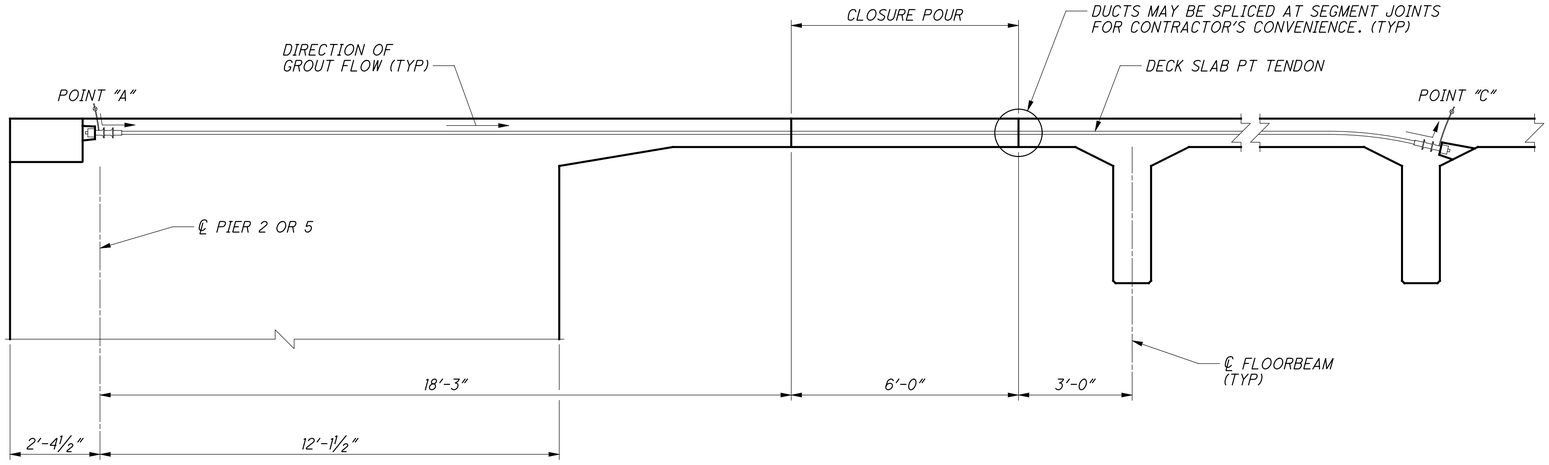

SIDESPAN GROUTING SCHEMATIC

GROUTING NOTES

1. PROVIDE GROUT INJECTION PORT AT TENDON LOW POINT "A".
2. PROVIDE GROUT OUTLET VENT AT OPPOSITE ANCHORAGE, POINT "C".
3. PROVIDE ONE INTERMEDIATE GROUT OUTLET VENT AT TENDON HIGH POINT "B" FOR TENDON LENGTHS BETWEEN 150' AND 200'. PROVIDE TWO INTERMEDIATE GROUT OUTLET VENTS FOR TENDON LENGTHS BETWEEN 200' AND 250'. PROVIDE THREE INTERMEDIATE GROUT OUTLET VENTS FOR TENDON LENGTHS OVER 250'.
4. VENTS AND INJECTION PORTS SHALL BE LOCATED ON THE TOP OF THE ANCHORAGE.
5. ANCHORAGES SHALL BE PROTECTED BY A PERMANENT NON-METALLIC GROUT CAP, MECHANICALLY SECURED AND SEALED AGAINST THE ANCHOR PLATE WITH A COMPRESSIBLE NEOPRENE O-RING AND FULLY FILLED WITH GROUT. GROUT CAP SHALL HAVE 2" MINIMUM COVER.
6. FOR LOCATION OF SECTION CUT B-B, SEE DECK SLAB POST-TENSIONING LAYOUT (1 OF 2)" SHEET.

LONGITUDINAL DECK SLAB TENDONS

TENDON ID NUMBER	NUMBER OF TENDONS	NUMBER OF 0.6" DIAMETER STRANDS	JACKING FORCE (kips)	TENDON LENGTH (ft)	TENDON WEIGHT (lbs)	TOTAL WEIGHT (lbs)
T1	2	4	187	41.99	124	249
T2	2	4	187	70.24	208	416
T3	2	4	187	41.88	124	248
T4	2	4	187	98.38	291	582
T5	2	4	187	70.13	208	415
T6	2	4	187	98.38	291	582
T7	2	4	187	70.13	208	415
T8	2	4	187	98.38	291	582
T9	2	4	187	41.88	124	248
T10	2	4	187	98.38	291	582
T11	2	4	187	70.13	208	415
T12	2	4	187	98.38	291	582
T13	2	4	187	70.13	208	415
T14	2	4	187	98.38	291	582
T15	2	4	187	41.88	124	248
T16	2	4	187	70.37	208	417
T17	2	4	187	42.12	125	249
T20	1	4	187	164.34	486	486
T21	1	4	187	222.84	660	660
T22	1	4	187	339.84	1006	1006
T23	1	4	187	164.34	486	486
T24	1	4	187	339.84	1006	1006
T25	1	4	187	222.84	660	660
T26	1	4	187	339.84	1006	1006
T27	1	4	187	222.84	660	660
T28	1	4	187	164.34	486	486
T29	1	4	187	222.84	660	660
T30	1	4	187	339.84	1006	1006
T31	1	4	187	222.84	660	660
T32	1	4	187	339.84	1006	1006
T33	1	4	187	164.34	486	486
T34	1	4	187	339.84	1006	1006
T35	1	4	187	222.84	660	660
T36	1	4	187	164.34	486	486
					TOTAL =	19655

DESIGN AGENCY
URS
36 EAST 7TH STREET
SUITE 2300
CINCINNATI, OHIO 45202

DATE 6/2010
REVIEWED DLJ
STRUCTURE FILE NUMBER 4401263
DRAWN CER
REVISED
DESIGNED BWJ
CHECKED AR

DECK SLAB POST-TENSIONING DETAILS (2 OF 2)
BRIDGE NO. LAW-93-0000
IRONTON RUSSELL BRIDGE OVER OHIO RIVER

LAW-93-0.00
PID No. 81595

142/365

529
788

E:\Bridges_XM\Ironton_Russell\LAW\81595\structures\LAW093_0000C\sheets\093_0000CSD016.dgn 4/25/2011 10:14:25 AM john_stahl

NOTES

1. FOR SECTIONS A-A AND B-B, SEE SHEET NO. 144/365

2. FOR BARRIER STARTER BAR REQUIREMENTS AND ADDITIONAL DETAILS, SEE SHEET NO. 263/365 TO 267/365

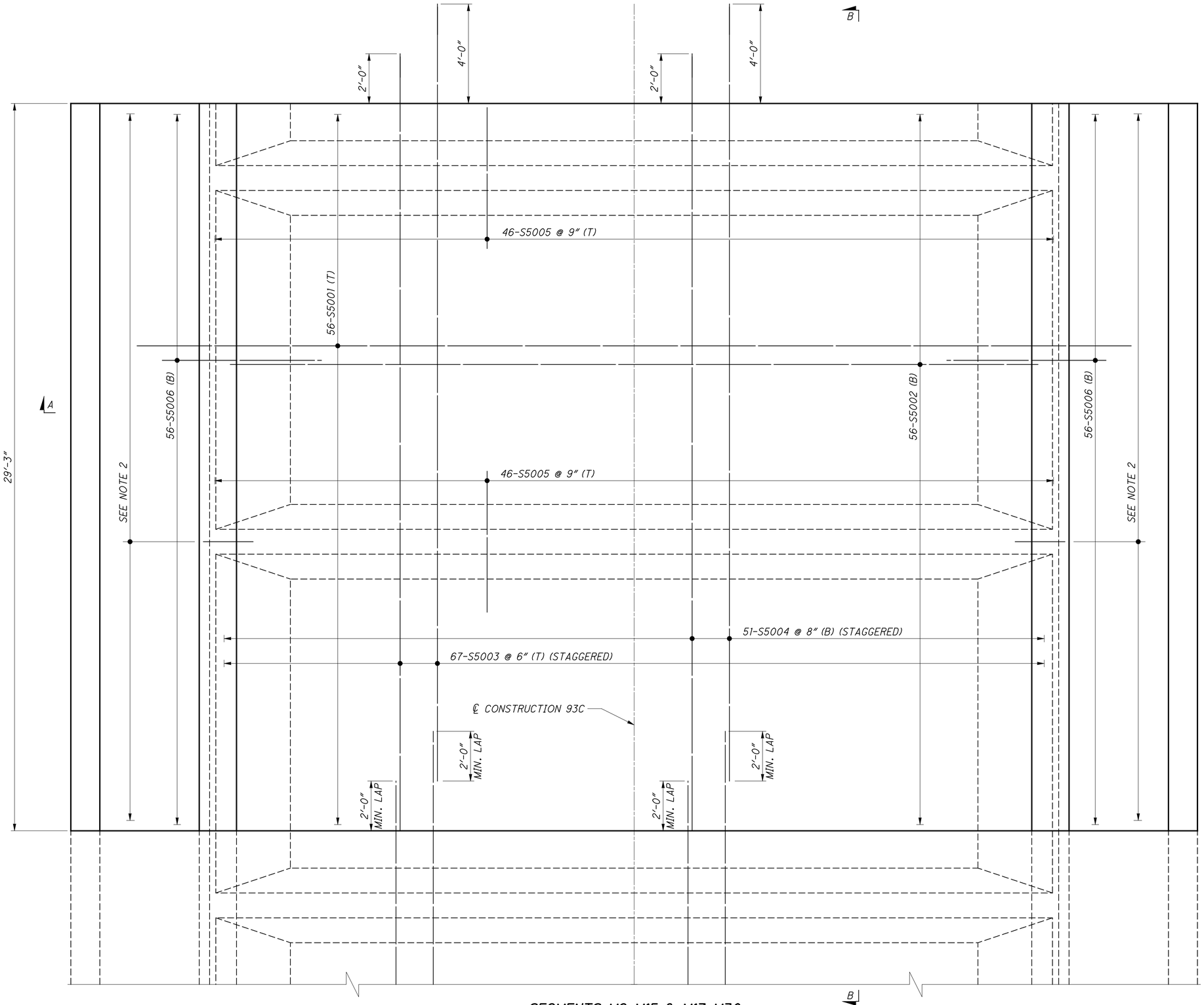

SEGMENTS M2-M15 & M17-M30

E:\Bridges_XW\Ironton_Russell\LAW\81595\structures\LAW093_0000C\sheets\093_0000CSD006.dgn 4/25/2011 10:14:32 AM john_stahl

DESIGN AGENCY
URS
36 EAST 7TH STREET
SUITE 2300
CINCINNATI, OHIO 45202

DESIGNED	DRAWN	REVIEWED	DATE
AR	CER	DLJ	6/2010
CHECKED	REVISED	STRUCTURE FILE NUMBER	
BWJ		4401263	

DECK REINFORCEMENT - MAINSPAN (1 OF 2)
BRIDGE NO. LAW-93-0000
IRONTON RUSSELL BRIDGE OVER OHIO RIVER

LAW-93-0.00
PID No. 81595

143/365

530
788

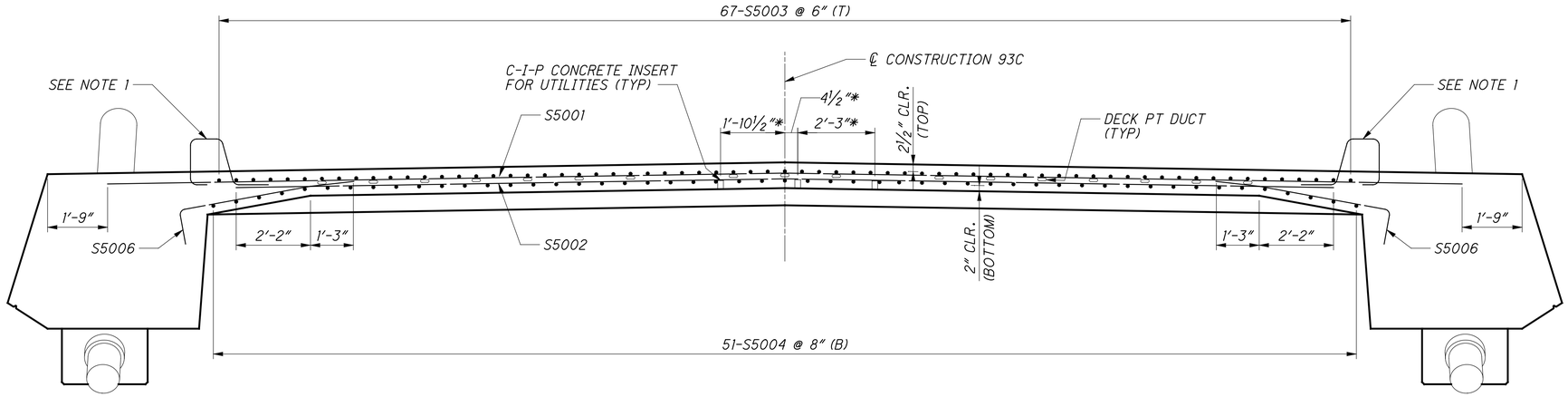

SECTION A-A

(LOOKING STATIONS AHEAD FOR SEGMENTS M2-M15)
(LOOKING STATIONS BACK FOR SEGMENTS M17-M30)

* DIMENSIONS SHOWN FOR SEGMENTS M2-M15.
SEGMENTS M17-M30 OPPOSITE HAND.

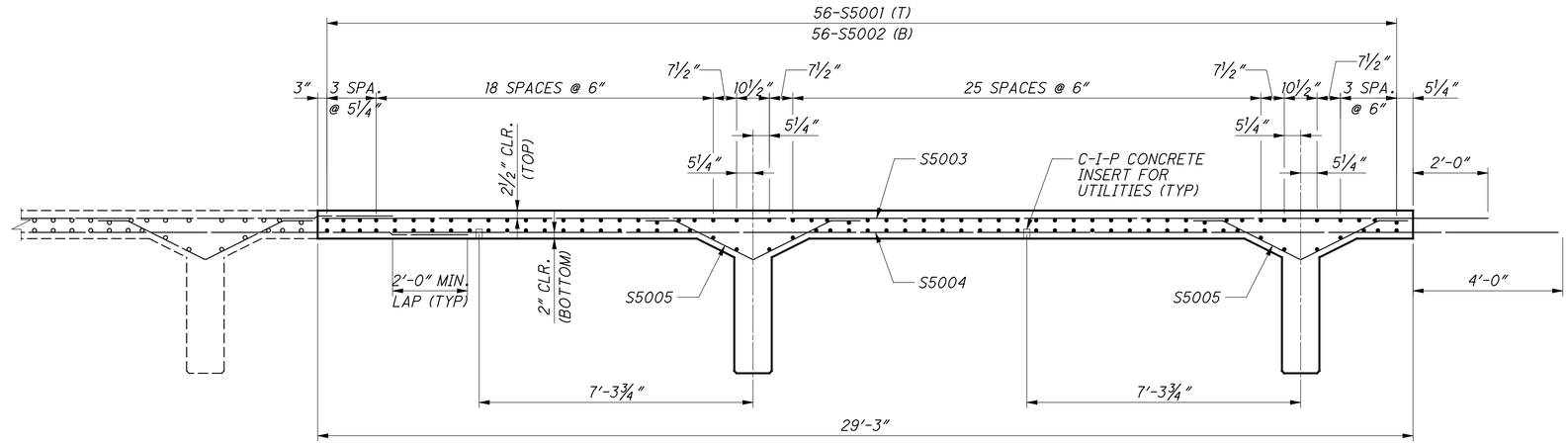

SECTION B-B

NOTES

1. FOR BARRIER STARTER BAR REQUIREMENTS AND ADDITIONAL DETAILS, SEE SHEET NO. 263/365 TO 267/365
2. SHIFT DECK REINFORCEMENT TO PROVIDE CLEARANCE WITH C-I-P CONCRETE INSERTS.
3. COST OF C-I-P CONCRETE INSERTS SHALL BE CONSIDERED INCIDENTAL TO THE COST OF THE SUPERSTRUCTURE CONCRETE.
4. FOR FLOORBEAM SPACINGS, SEE SHEET NO. 130/365 TO 136/365

DESIGN AGENCY
URS
36 EAST 7TH STREET
SUITE 2300
CINCINNATI, OHIO 45202

DESIGNED	DRAWN	REVIEWED	DATE
AR	CER	DLJ	6/2010
CHECKED	REVISED	STRUCTURE FILE NUMBER	
BWJ		4401263	

DECK REINFORCEMENT - MAINSPAN (2 OF 2)

BRIDGE NO. LAW-93-0000
IRONTON RUSSELL BRIDGE OVER OHIO RIVER

LAW-93-0.00
PID No. 81595

144/365

531
788

E:\Bridges_XM\Ironton_Russell\LAW\81595\structures\LAW093_0000C\sheets\093_0000CSD007.dgn 4/25/2011 10:14:37 AM john_stahl

* (SEG B2-B11 & B17-B26)
** (SEG B12 & B27)

SEGMENTS B2-B12 & B17-B27

NOTES

1. FOR SECTIONS A-A AND B-B, SEE SHEET NO. 146/365
2. FOR BARRIER STARTER BAR REQUIREMENTS AND ADDITIONAL DETAILS, SEE SHEET NO. 263/365 TO 267/365

DESIGN AGENCY
URS
36 EAST 7TH STREET
SUITE 2300
CINCINNATI, OHIO 45202

DESIGNED	DRAWN	REVIEWED	DATE
AR	CER	DLJ	6/2010
CHECKED	REVISED	STRUCTURE FILE NUMBER	
BWJ		4401263	

DECK REINFORCEMENT - SIDESPAN (1 OF 2)
BRIDGE NO. LAW-93-0000
IRONTON RUSSELL BRIDGE OVER OHIO RIVER

LAW-93-0.00
PID No. 81595

145/365

532/788

E:\Bridges_XM\Ironton_Russell\LAW\81595\structures\LAW093_0000C\sheets\093_0000CSD008.dgn 4/25/2011 10:14:42 AM john_stahl

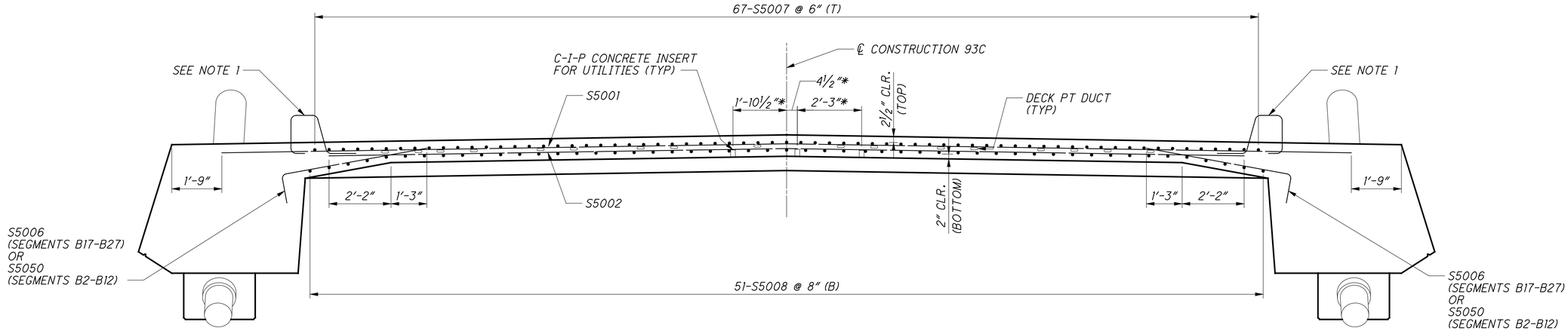

SECTION A-A

(LOOKING STATIONS BACK FOR SEGMENTS B2-B12)
(LOOKING STATIONS AHEAD FOR SEGMENTS B17-B27)

* DIMENSIONS SHOWN FOR SEGMENTS B17-B27.
SEGMENTS B2-B12 OPPOSITE HAND.

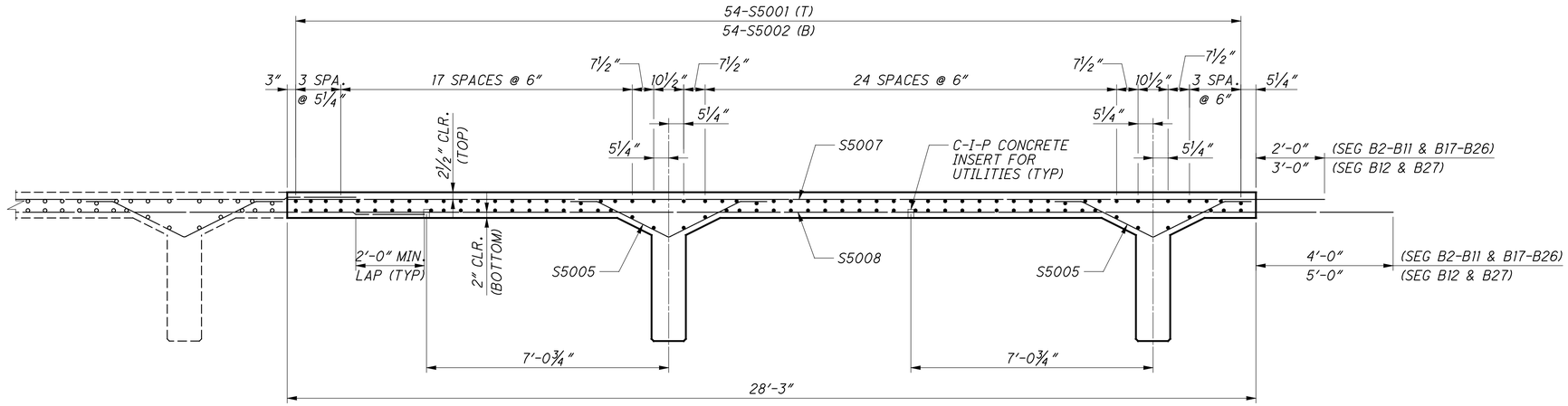

SECTION B-B

NOTES

1. FOR BARRIER STARTER BAR REQUIREMENTS AND ADDITIONAL DETAILS, SEE SHEET NO. 263/365 TO 267/365
2. SHIFT DECK REINFORCEMENT TO PROVIDE CLEARANCE WITH C-I-P CONCRETE INSERTS.
3. BAR S5006 OR S5050 MAY BE SHIFTED TO PROVIDE CLEARANCE WITH DECK POST-TENSIONING DUCT.
4. COST OF C-I-P CONCRETE INSERTS SHALL BE CONSIDERED INCIDENTAL TO THE COST OF THE SUPERSTRUCTURE CONCRETE.
5. FOR FLOORBEAM SPACINGS, SEE SHEET NO. 130/365 TO 136/365

DESIGN AGENCY
URS
36 EAST 7TH STREET
SUITE 2300
CINCINNATI, OHIO 45202

DESIGNED	DRAWN	REVIEWED	DATE
AR	CER	DLJ	6/2010
CHECKED	REVISED	STRUCTURE FILE NUMBER	
BWJ		4401263	

DECK REINFORCEMENT - SIDESPAN (2 OF 2)
BRIDGE NO. LAW-93-0000
IRONTON RUSSELL BRIDGE OVER OHIO RIVER

LAW-93-0.00
PID No. 81595

146/365

533
788

E:\Bridges_XM\Ironton_Russell\LAW\81595\structures\LAW093_0000C\sheets\093_0000CSD009.dgn 4/25/2011 10:14:47 AM john_stahl

NOTES

1. FOR SECTIONS A-A AND B-B, SEE SHEET NO. 148/365

2. FOR BARRIER STARTER BAR REQUIREMENTS AND ADDITIONAL DETAILS, SEE SHEET NO. 263/365 TO 267/365

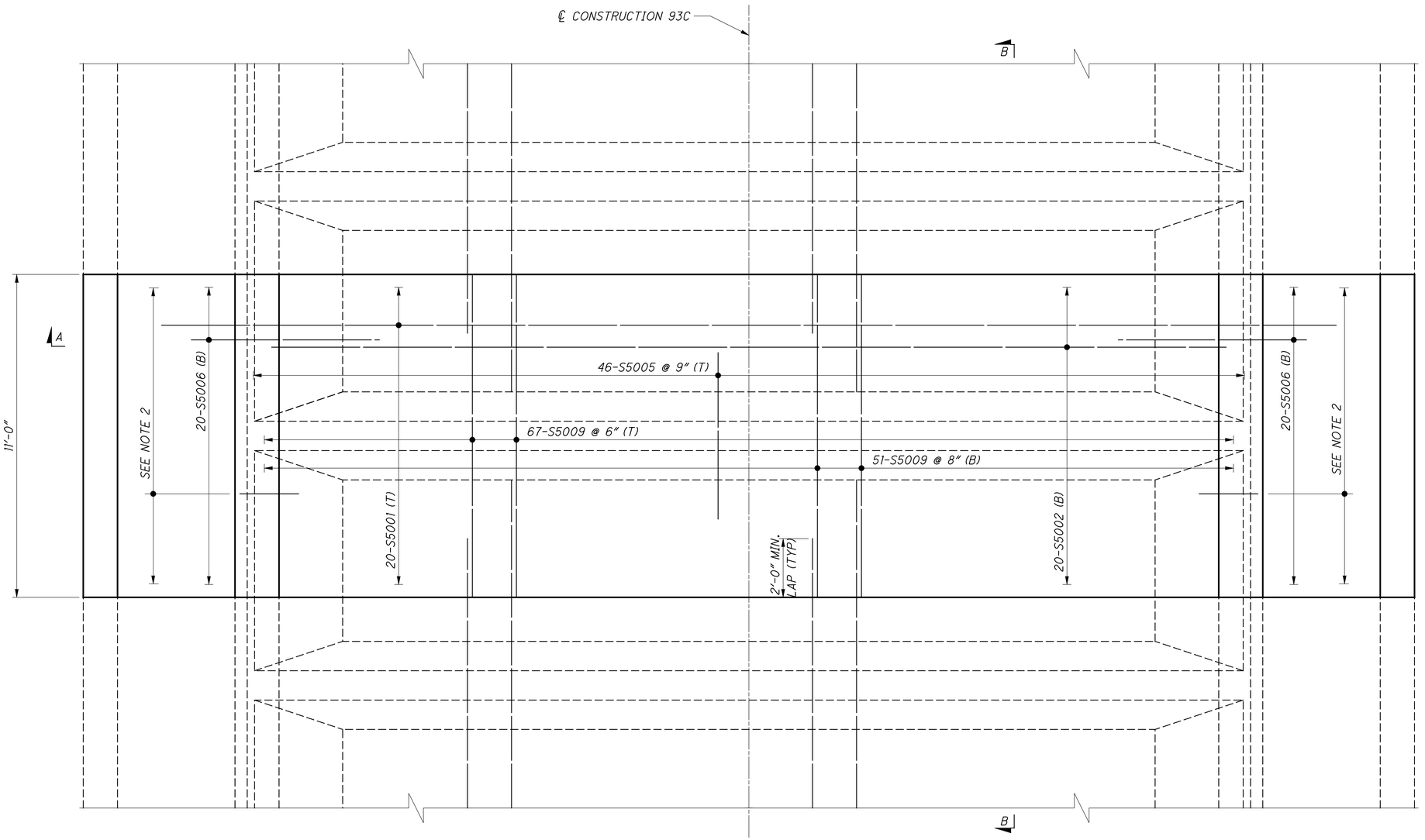

CLOSURE POUR

E:\Bridges_XM\Ironton_Russell\LAW\81595\structures\LAW093_0000C\sheets\093_0000CSD010.dgn 4/25/2011 10:14:53 AM john_stahl

DESIGN AGENCY
URS
36 EAST 7TH STREET
SUITE 2300
CINCINNATI, OHIO 45202

DESIGNED	DRAWN	REVIEWED	DATE
AR	CER	DLJ	6/2010
CHECKED	REVISED	STRUCTURE FILE NUMBER	
BWJ		4401263	

DECK REINFORCEMENT - MAINSPAN CLOSURE POUR (1 OF 2)

BRIDGE NO. LAW-93-0000
IRONTON RUSSELL BRIDGE OVER OHIO RIVER

LAW-93-0.00
PID No. 81595

147/365

534
788

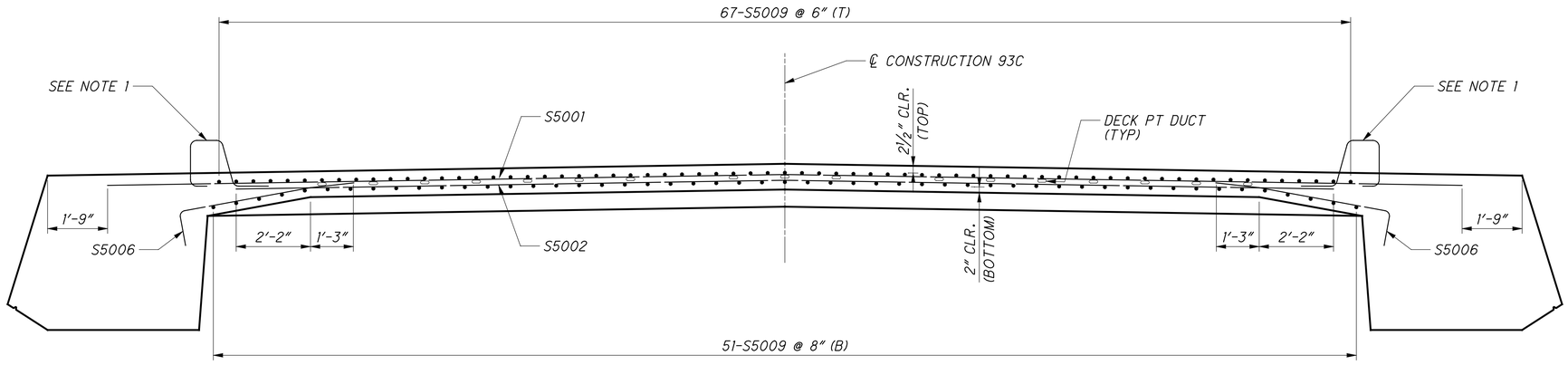

SECTION A-A

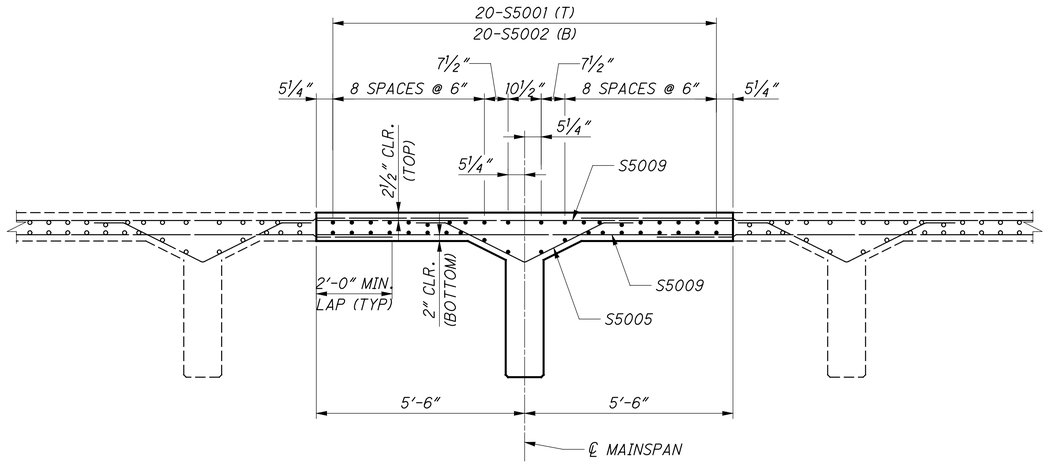

SECTION B-B

NOTES

1. FOR BARRIER STARTER BAR REQUIREMENTS AND ADDITIONAL DETAILS, SEE SHEET NO. 263/365 TO 267/365
2. FOR FLOORBEAM SPACINGS, SEE SHEET NO. 130/365 TO 136/365

DESIGN AGENCY
URS
36 EAST 7TH STREET
SUITE 2300
CINCINNATI, OHIO 45202

DESIGNED	DRAWN	REVIEWED	DATE
AR	CER	DLJ	6/2010
CHECKED	REVISED	STRUCTURE FILE NUMBER	
BWJ		4401263	

DECK REINFORCEMENT - MAINSPAN CLOSURE POUR (2 OF 2)
BRIDGE NO. LAW-93-0000
IRONTON RUSSELL BRIDGE OVER OHIO RIVER

LAW-93-0.00
PID No. 81595

148/365

535
788

E:\Bridges_XW\Ironton_Russell\LAW\81595\structures\LAW093_0000C\sheets\093_0000CSD011.dgn 4/25/2011 10:14:58 AM john_stahl

NOTES

1. FOR SECTIONS A-A AND B-B, SEE SHEET NO. 150/365
2. FOR BARRIER STARTER BAR REQUIREMENTS AND ADDITIONAL DETAILS, SEE SHEET NO. 263/365 TO 267/365

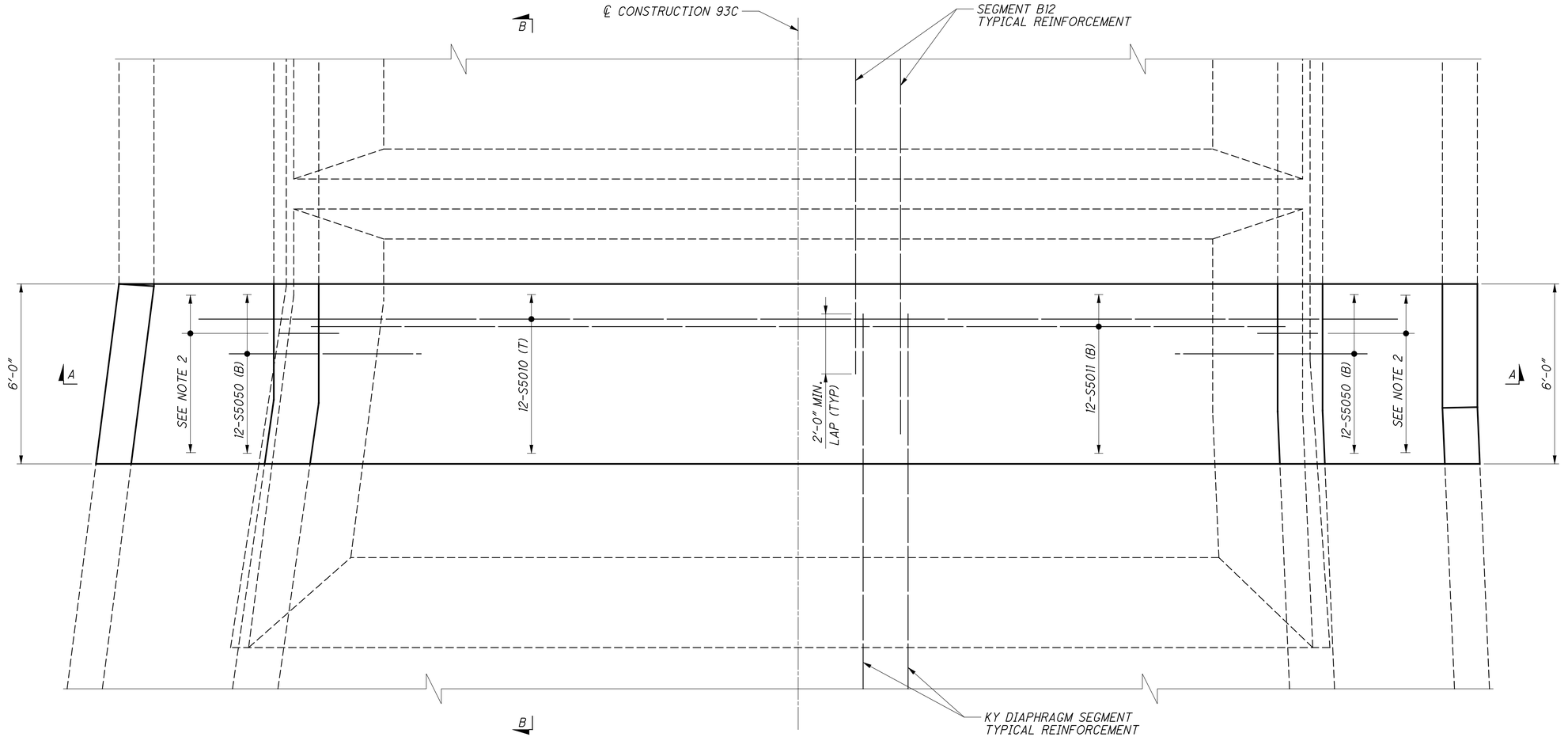

KY CLOSURE POUR

E:\Bridges_XM\Ironton_Russell\LAW\81595\structures\LAW093_0000C\sheets\093_0000CSD019.dgn 4/25/2011 10:15:04 AM john_stahl

DESIGN AGENCY
URS
36 EAST 7TH STREET
SUITE 2300
CINCINNATI, OHIO 45202

DESIGNED	DRAWN	REVIEWED	DATE
BWJ	CER	DLJ	6/2010
CHECKED	REVISED	STRUCTURE FILE NUMBER	
AR		4401263	

DECK REINFORCEMENT - KY CLOSURE POUR (1 OF 2)
BRIDGE NO. LAW-93-0000
IRONTON RUSSELL BRIDGE OVER OHIO RIVER

LAW-93-0.00
PID No. 81595

149/365

536/788

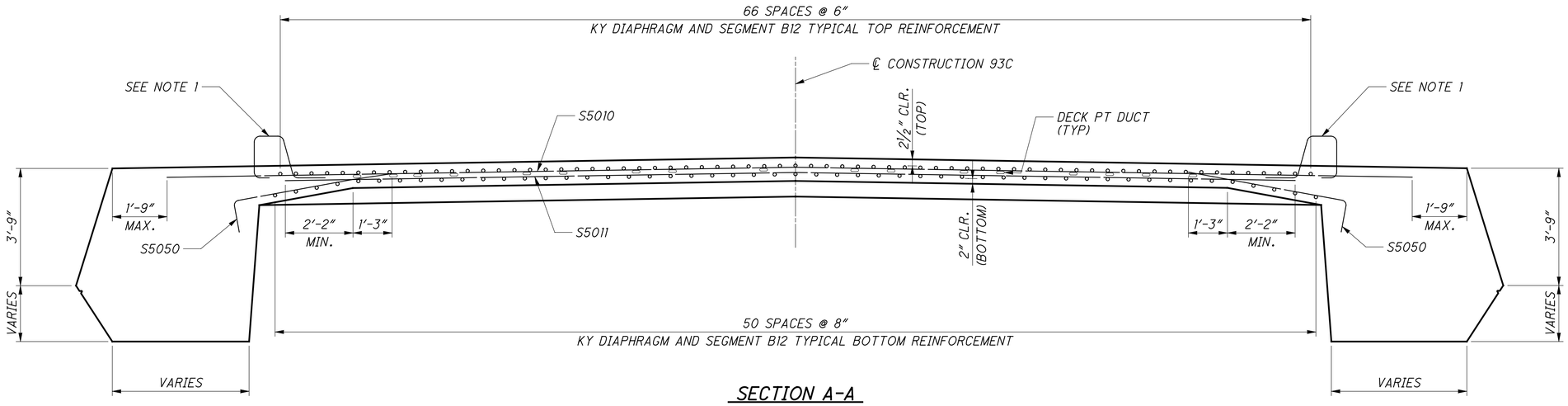

SECTION A-A

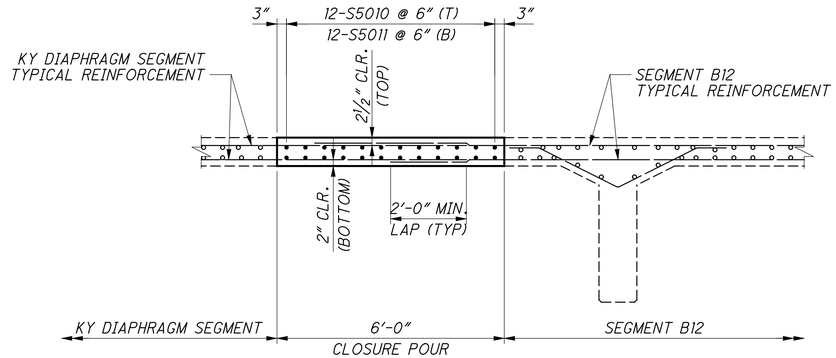

SECTION B-B

NOTES

1. FOR BARRIER STARTER BAR REQUIREMENTS AND ADDITIONAL DETAILS, SEE SHEET NO. 263/365 TO 267/365
2. BAR S5050 MAY BE SHIFTED TO PROVIDE CLEARANCE WITH DECK POST-TENSIONING DUCT.

DESIGN AGENCY
URS
36 EAST 7TH STREET
SUITE 2300
CINCINNATI, OHIO 45202

DESIGNED	DRAWN	REVIEWED	DATE
AR	CER	DLJ	6/2010
CHECKED	REVISED	STRUCTURE FILE NUMBER	
BWJ		4401263	

DECK REINFORCEMENT - KY CLOSURE POUR (2 OF 2)
BRIDGE NO. LAW-93-0000
IRONTON RUSSELL BRIDGE OVER OHIO RIVER

LAW-93-0.00
PID No. 81595

150/365

537/788

E:\Bridges_XW\Ironton_Russell\LAW\81595\structures\LAW093_0000C\sheets\093_0000CSD020.dgn 4/25/2011 10:15:09 AM john_stahl

NOTES

1. FOR SECTIONS A-A AND B-B, SEE SHEET NO. 152/365

2. FOR BARRIER STARTER BAR REQUIREMENTS AND ADDITIONAL DETAILS, SEE SHEET NO. 263/365 TO 267/365

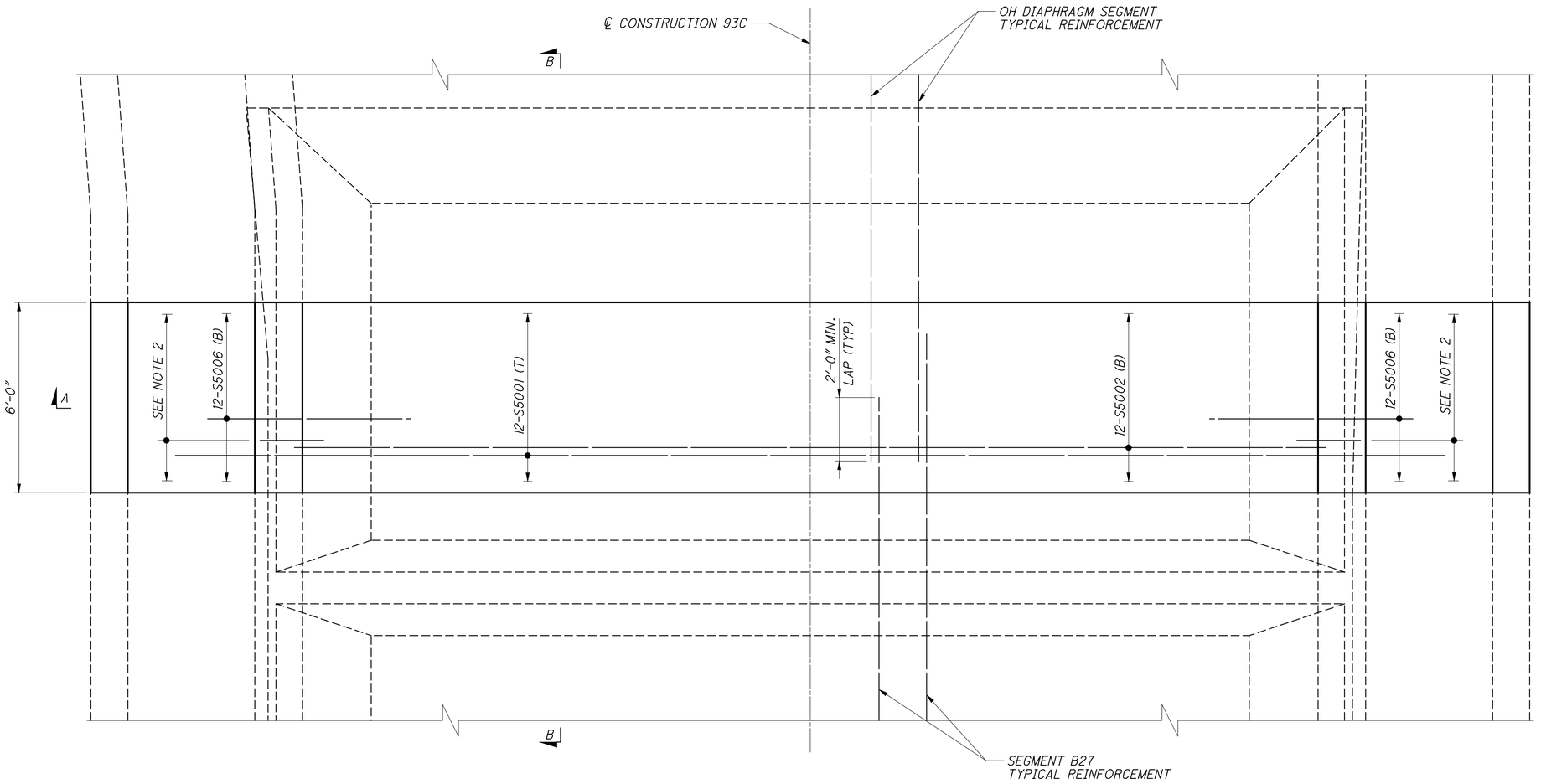

OH CLOSURE POUR

E:\Bridges_XM\Ironton_Russell\LAW\81595\structures\LAW093_0000C\sheets\093_0000CSD021.dgn 4/25/2011 10:15:14 AM john_stahl

DESIGN AGENCY
URS
36 EAST 7TH STREET
SUITE 2300
CINCINNATI, OHIO 45202

DESIGNED	DRAWN	REVIEWED	DATE
BWJ	CER	DLJ	6/2010
CHECKED	REVISED	STRUCTURE FILE NUMBER	
AR		4401263	

DECK REINFORCEMENT - OH CLOSURE POUR (1 OF 2)
BRIDGE NO. LAW-93-0000
IRONTON RUSSELL BRIDGE OVER OHIO RIVER

LAW-93-0.00
PID No. 81595

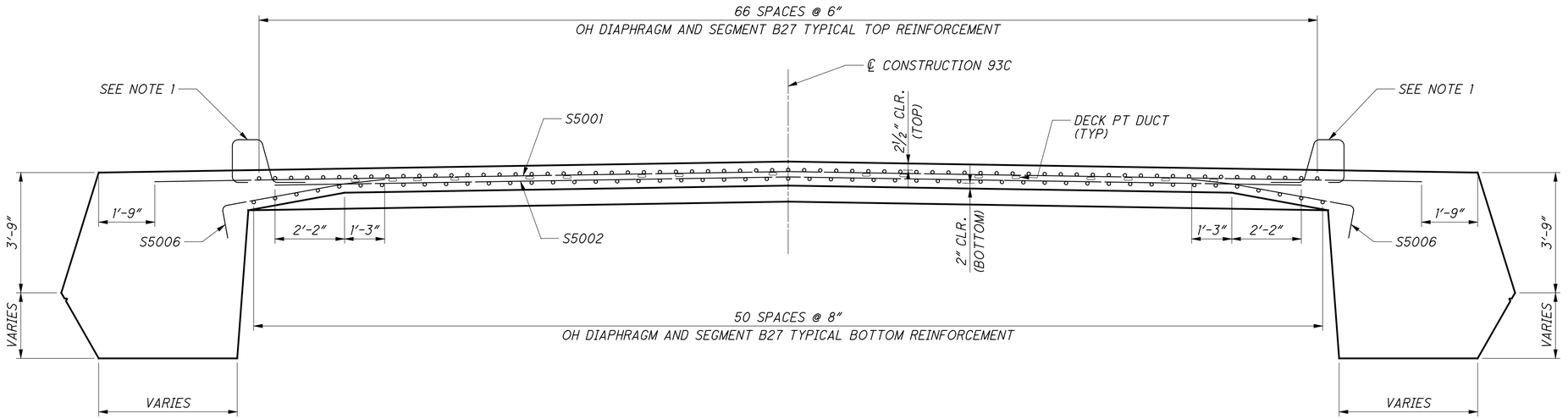

SECTION A-A

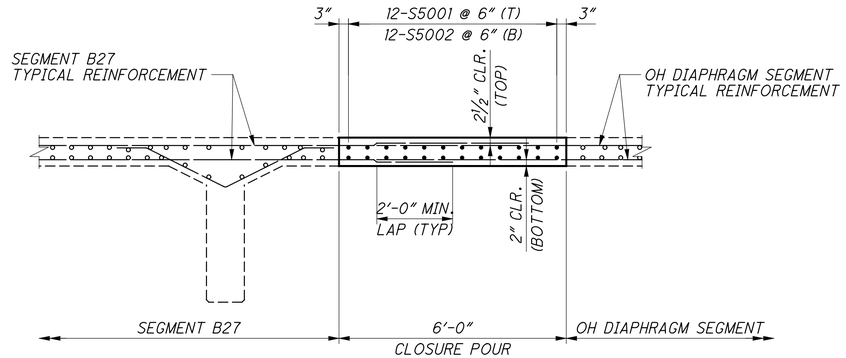

SECTION B-B

NOTES

1. FOR BARRIER STARTER BAR REQUIREMENTS AND ADDITIONAL DETAILS, SEE SHEET NO. 263/365 TO 267/365
2. BAR S5006 MAY BE SHIFTED TO PROVIDE CLEARANCE WITH DECK POST-TENSIONING DUCT.

DESIGN AGENCY
URS
36 EAST 7TH STREET
SUITE 2300
CINCINNATI, OHIO 45202

DESIGNED	DRAWN	REVIEWED	DATE
AR	CER	DLJ	6/2010
CHECKED	REVISED	STRUCTURE FILE NUMBER	
BWJ		4401263	

DECK REINFORCEMENT - OH CLOSURE POUR (2 OF 2)
BRIDGE NO. LAW-93-0000
IRONTON RUSSELL BRIDGE OVER OHIO RIVER

LAW-93-0.00
PID No. 81595

152/365

539
788

E:\Bridges_XM\Ironton_Russell\LAW\81595\structures\LAW093_0000C\sheets\093_0000CSD022.dgn 4/25/2011 10:15:18 AM john_stahl

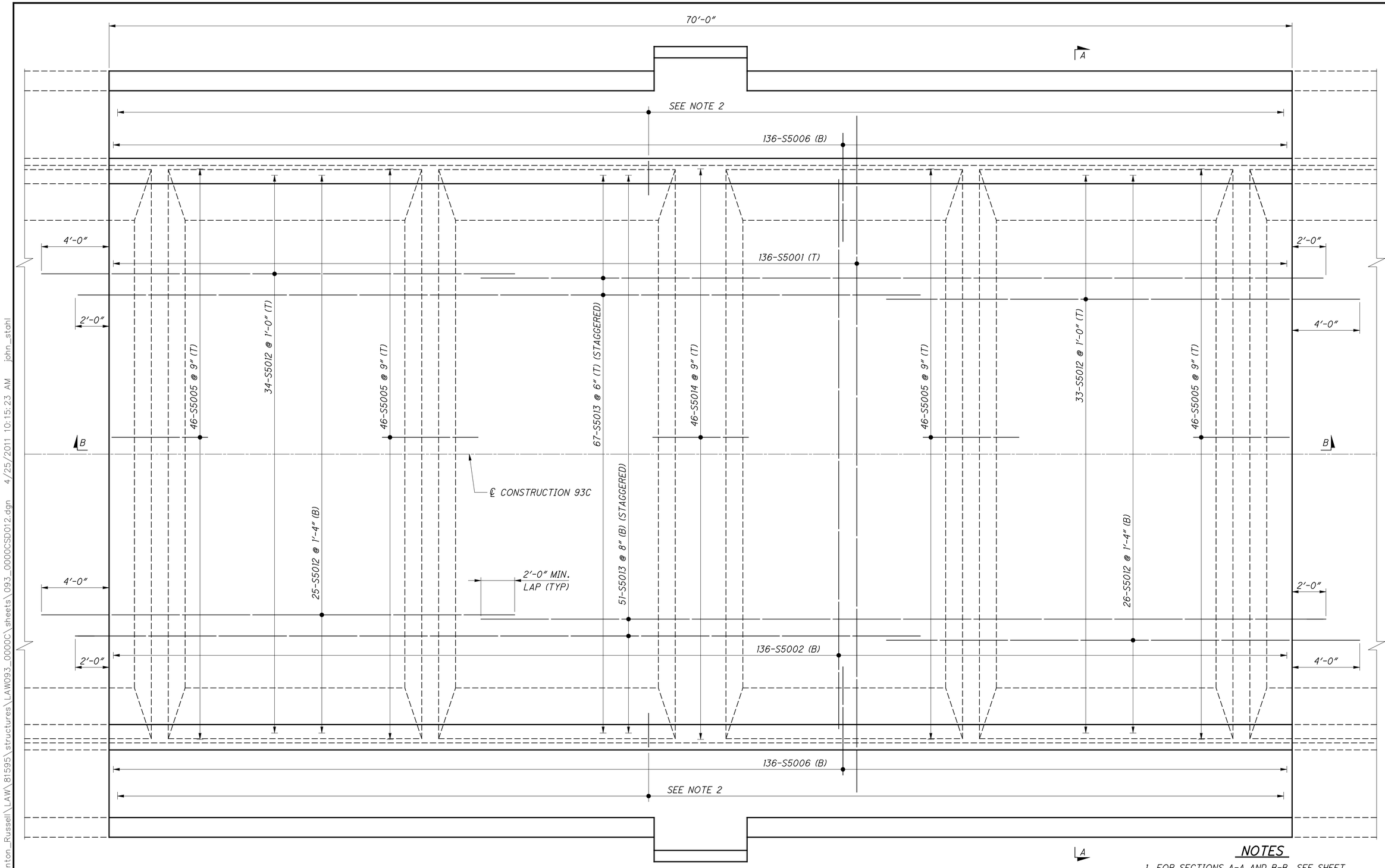

PIER TABLE

NOTES

1. FOR SECTIONS A-A AND B-B, SEE SHEET NO. 154/365
2. FOR BARRIER STARTER BAR REQUIREMENTS AND ADDITIONAL DETAILS, SEE SHEET NO. 263/365 TO 267/365

E:\Bridges_XM\Ironton_Russell\LAW\81595\structures\LAW093_0000C\sheets\093_0000CSD012.dgn 4/25/2011 10:15:23 AM john_stahl

DESIGN AGENCY
URS
36 EAST 7TH STREET
SUITE 2300
CINCINNATI, OHIO 45202

DESIGNED	DRAWN	REVIEWED	DATE
AR	CER	DLJ	6/2010
CHECKED	REVISED	STRUCTURE FILE NUMBER	
BWJ		4401263	

DECK REINFORCEMENT - PIER TABLE (1 OF 2)
BRIDGE NO. LAW-93-0000
IRONTON RUSSELL BRIDGE OVER OHIO RIVER

LAW-93-0.00
PID No. 81595

153/365

540/788

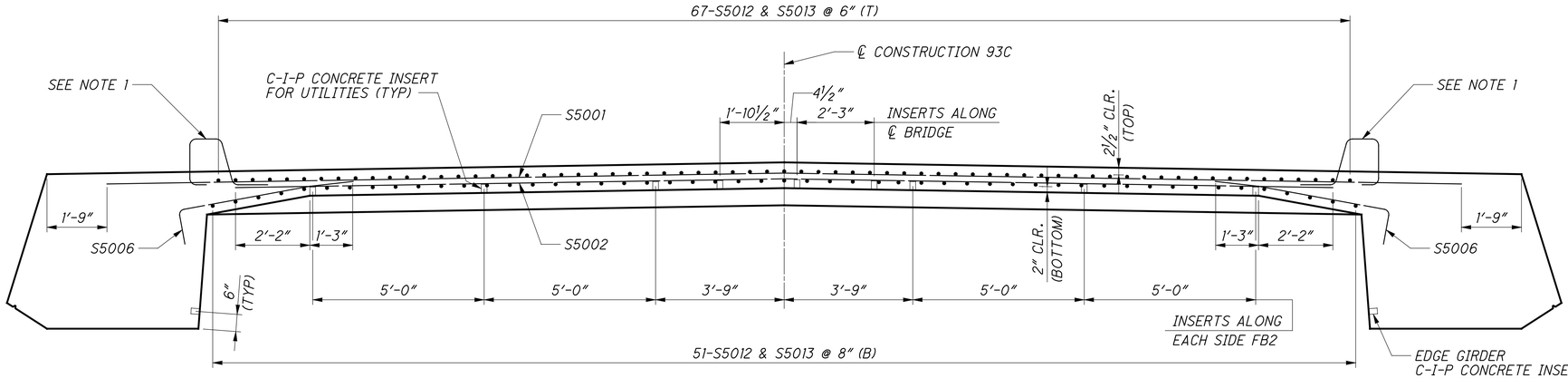

NOTES

1. FOR BARRIER STARTER BAR REQUIREMENTS AND ADDITIONAL DETAILS, SEE SHEET NO. 263/365 TO 267/365
2. SHIFT DECK REINFORCEMENT TO PROVIDE CLEARANCE WITH C-I-P CONCRETE INSERTS.
3. COST OF C-I-P CONCRETE INSERTS SHALL BE CONSIDERED INCIDENTAL TO THE COST OF THE SUPERSTRUCTURE CONCRETE.
4. FOR FLOORBEAM SPACINGS, SEE SHEET NO. 130/365 TO 136/365

SECTION A-A

(LOOKING STATIONS AHEAD FOR BOTH KY PIER TABLE AND OH PIER TABLE)

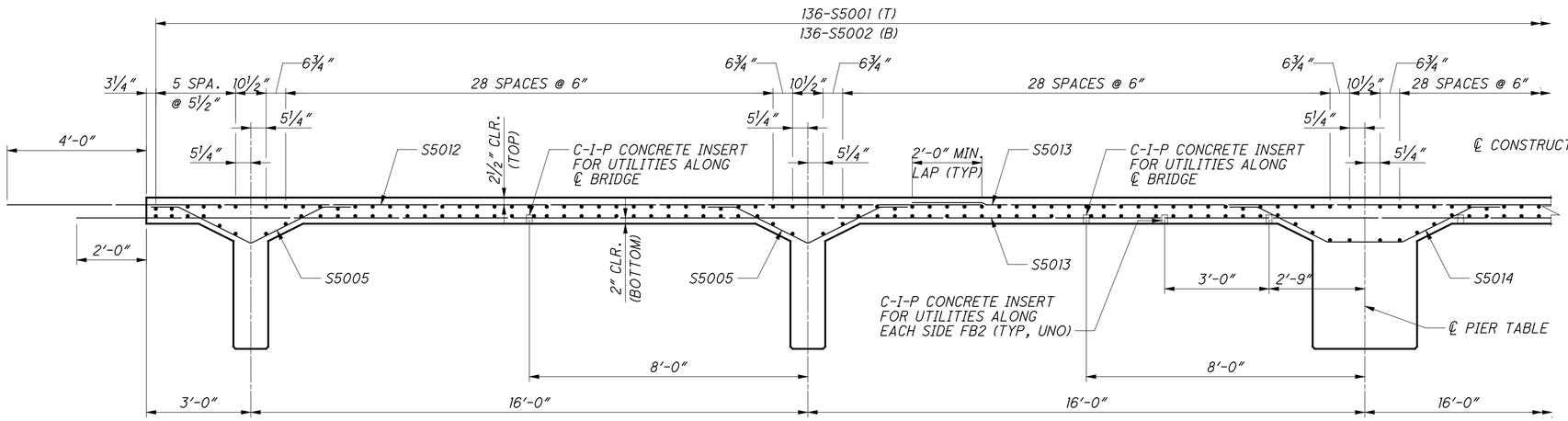

PARTIAL SECTION B-B

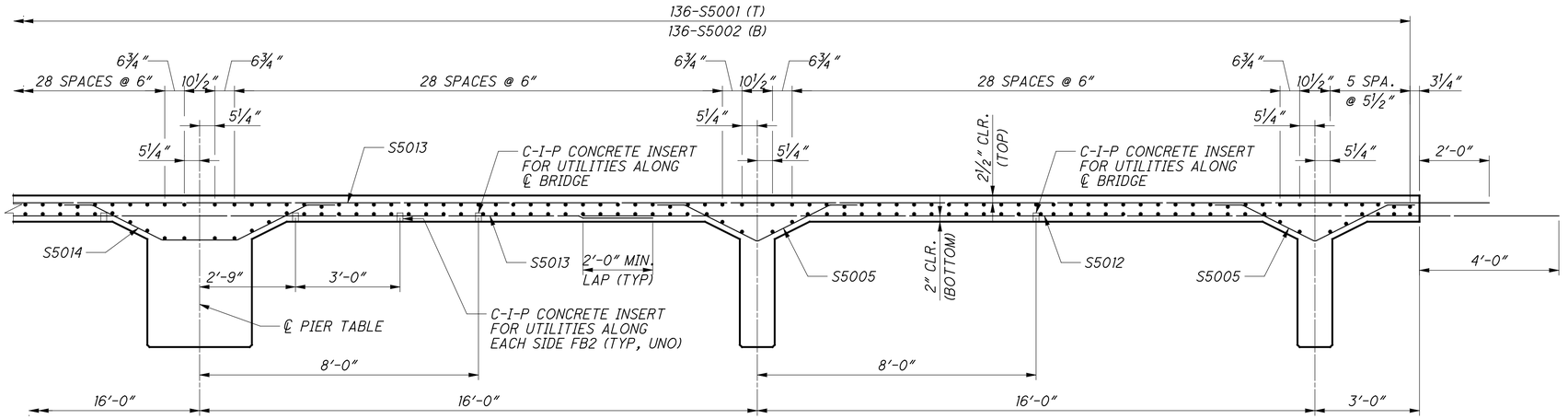

PARTIAL SECTION B-B

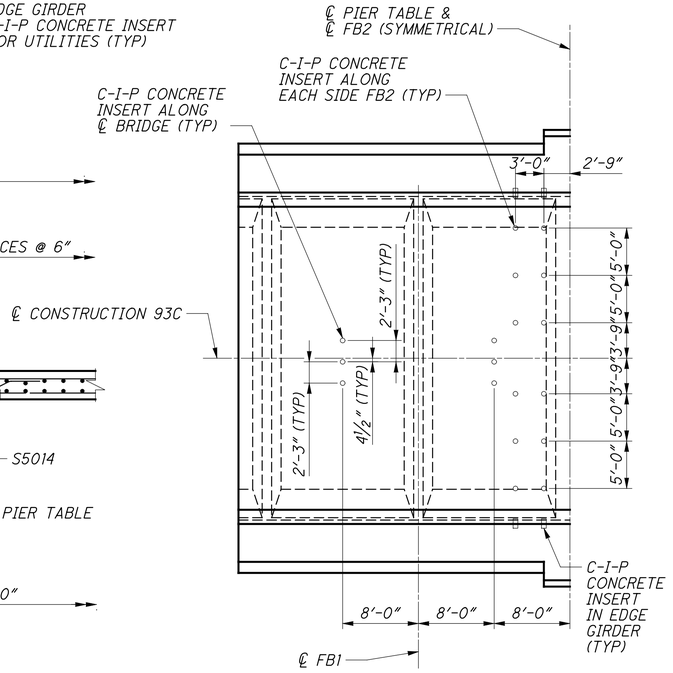

PARTIAL PIER TABLE PLAN

(SHOWING INSERTS)

DESIGN AGENCY: URS, 36 EAST 7TH STREET, SUITE 2300, CINCINNATI, OHIO 45202

DESIGNED	DRAWN	REVIEWED	DATE
AR	CER	DLJ	6/2010
CHECKED	REVISED	STRUCTURE FILE NUMBER	
BWJ		4401263	

DECK REINFORCEMENT - PIER TABLE (2 OF 2)

BRIDGE NO. LAW-93-0000
IRONTON RUSSELL BRIDGE OVER OHIO RIVER

LAW-93-0.00
PID No. 81595

154/365

541/788

E:\Bridges_XM\Ironton_Russell\LAW\81595\structures\LAW093_0000C\sheets\093_0000CSD013.dgn 4/25/2011 10:15:28 AM john_stahl

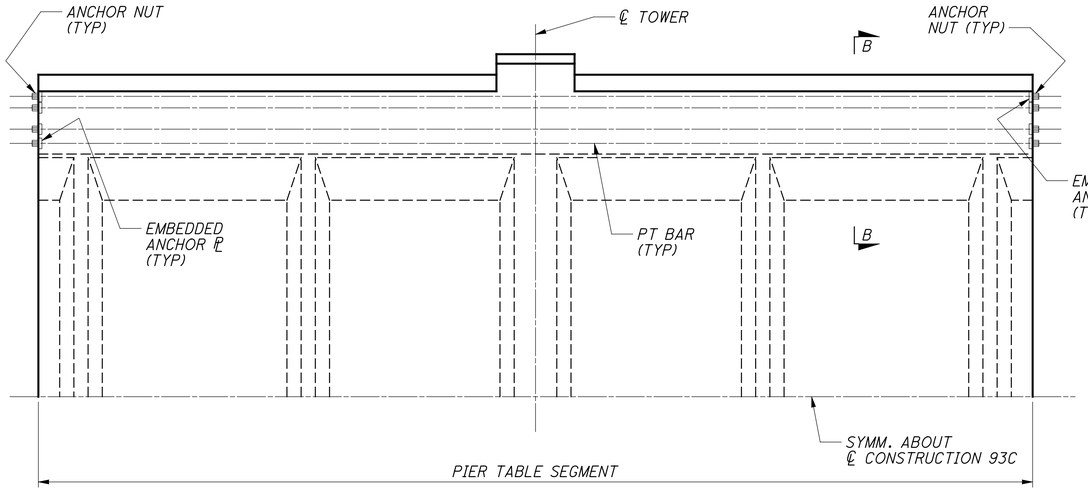

PLAN VIEW - STAGE 1

1. CAST PIER TABLE SEGMENT.
2. ALLOW SEGMENT TO CURE.
3. INSTALL AND STRESS 4 PT BARS FOR EACH EDGE GIRDER.

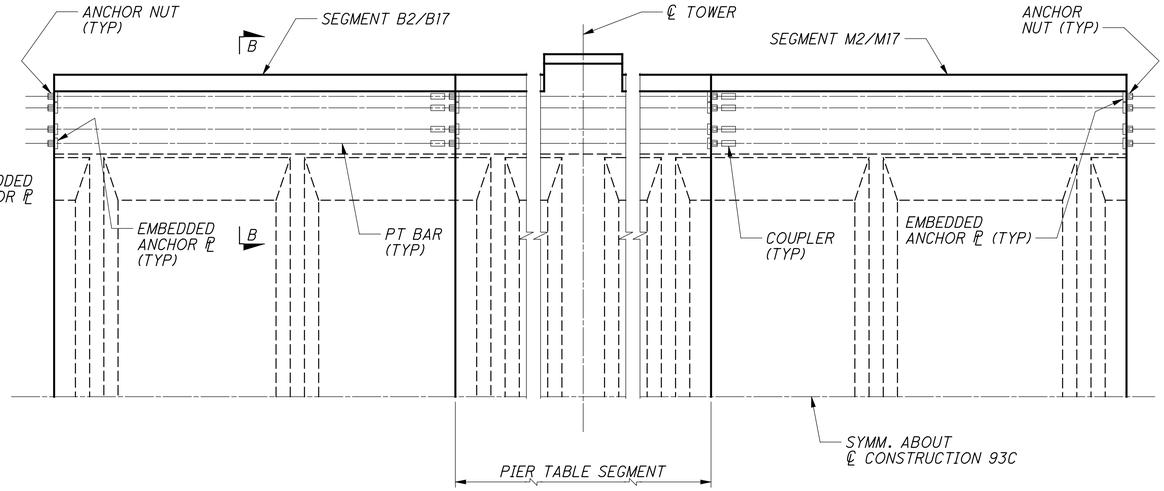

PLAN VIEW - STAGE 2

1. PLACE AND TIE REINFORCING AND EXTEND PT BARS USING COUPLERS FOR SEGMENT B2, M2, B17 OR M17.
2. CAST SEGMENTS B2, M2, B17 OR M17.
3. STRESS PT BARS PRIOR TO STRESSING OF STAY CABLES.

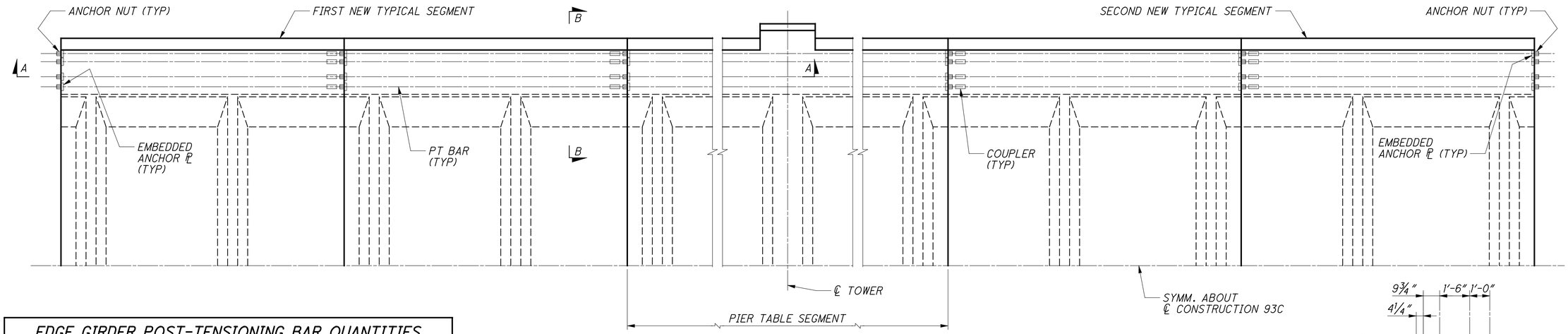

PLAN VIEW - SUBSEQUENT STAGES

1. PLACE AND TIE REINFORCING AND EXTEND PT BARS USING COUPLERS FOR THE NEXT NEW TYPICAL SEGMENT.
2. CAST NEW TYPICAL SEGMENT.
3. STRESS PT BARS FOR THE NEW TYPICAL SEGMENT PRIOR TO STRESSING OF STAY CABLES.

Link to RFI150 As-Built

EDGE GIRDER POST-TENSIONING BAR QUANTITIES

LOCATION	NUMBER REQUIRED	BAR LENGTH (ft)	TOTAL WEIGHT (LBS)
TOWER 3	8	762.00	56,266
TOWER 4	8	762.00	56,266
		TOTAL	112,532

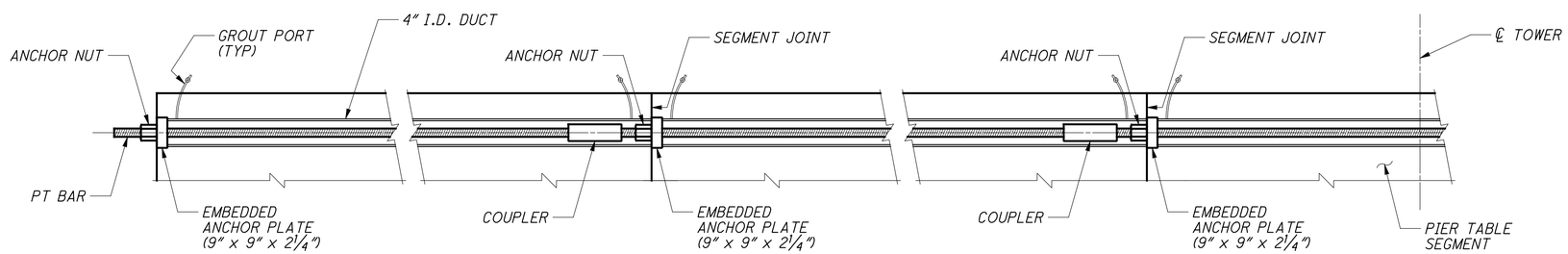

SECTION A-A

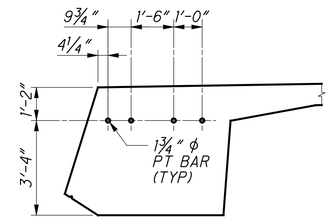

SECTION B-B

NOTES

1. BAR POST-TENSIONING LIMITS ARE:

   BEGIN SEGMENT B11 TO END SEGMENT M15 AND
   BEGIN SEGMENT M30 TO END SEGMENT B26.

2. ALL POST-TENSIONING BARS SHALL BE 1¾" DIAMETER.
3. ALL POST-TENSIONING BARS SHALL BE STRESSED TO 273 KIPS PER BAR AFTER SEATING.
4. AFTER CANTILEVERING OPERATIONS ARE COMPLETE THE PT BARS SHALL BE GROUTED PER THE SPECIAL PROVISIONS.

DESIGN AGENCY
URS
36 EAST 7TH STREET
SUITE 2300
CINCINNATI, OHIO 45202

DESIGNED	DRAWN	REVIEWED	DATE
ASM	CER	DLJ	6/2010
CHECKED	REVISED	STRUCTURE FILE NUMBER	
BWJ		4401263	

EDGE GIRDER POST-TENSIONING BAR DETAILS
BRIDGE NO. LAW-93-0000
IRONTON RUSSELL BRIDGE OVER OHIO RIVER

LAW-93-0.00
PID No. 81595

155/365

542/788

E:\Bridges_XM\Ironton_Russell\LAW\81595\structures\LAW093_0000C\sheets\093_0000CSD025.dgn 4/25/2011 10:15:36 AM john_stahl

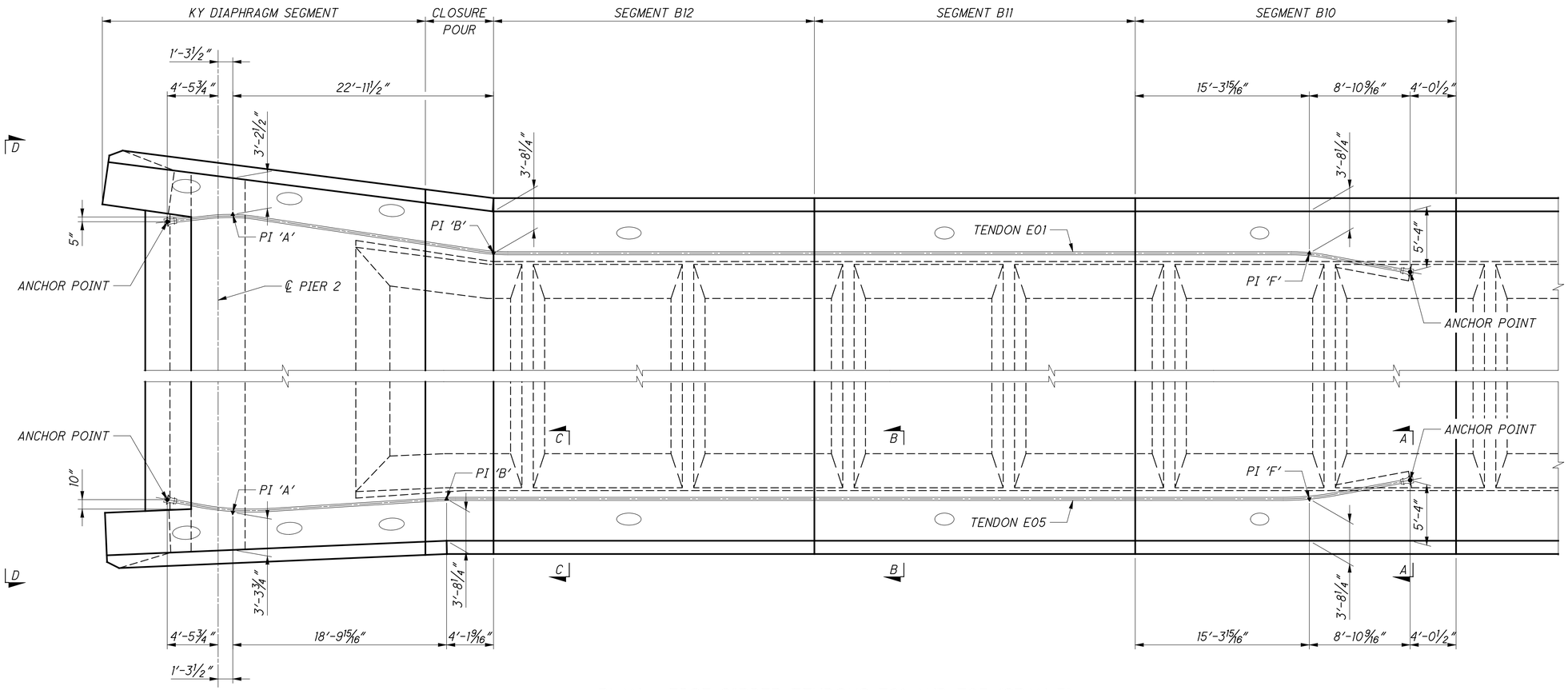

PLAN - EDGE GIRDER TENDONS E01 AND E05 (SPAN 3)

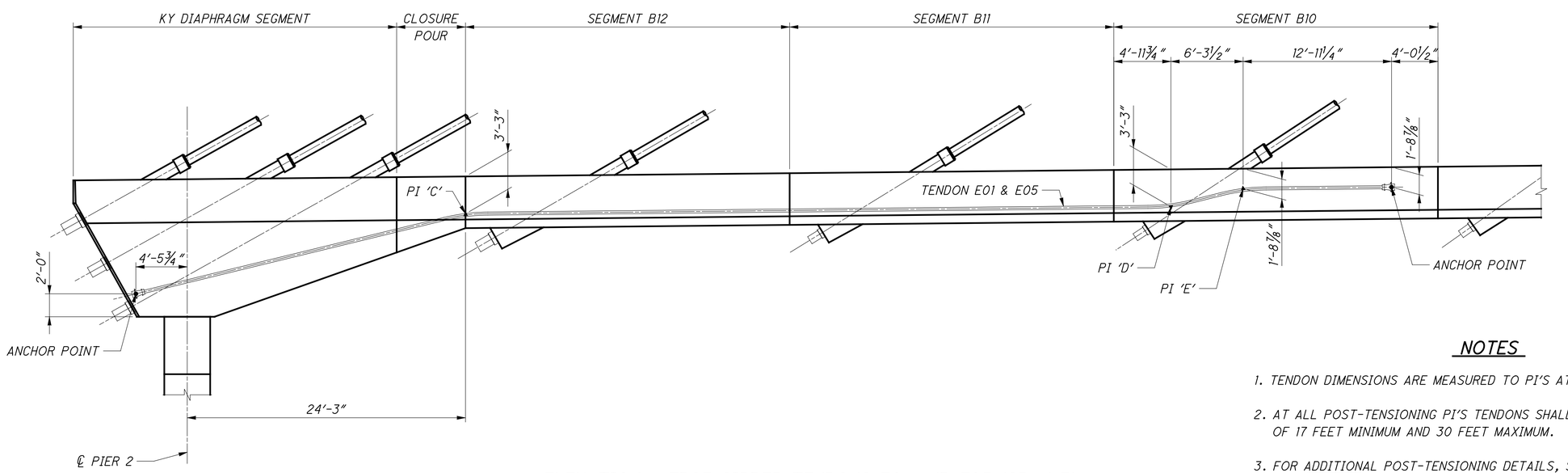

ELEVATION - EDGE GIRDER TENDONS E01 AND E05 (SPAN 3)

NOTES

1. TENDON DIMENSIONS ARE MEASURED TO PI'S AT ℄ POST-TENSIONING DUCT.
2. AT ALL POST-TENSIONING PI'S TENDONS SHALL BE BENT WITH A RADIUS OF 17 FEET MINIMUM AND 30 FEET MAXIMUM.
3. FOR ADDITIONAL POST-TENSIONING DETAILS, SEE SHEET NO. 164/365 AND 165/365.

DESIGN AGENCY
URS
36 EAST 7TH STREET
SUITE 2300
CINCINNATI, OHIO 45202

DESIGNED	DRAWN	REVIEWED	DATE
ASM	CER	DLJ	6/2010
CHECKED	REVISED	STRUCTURE FILE NUMBER	
BWJ		4401263	

EDGE GIRDER POST-TENSIONING TENDON DETAILS (1 OF 8)

BRIDGE NO. LAW-93-0000
IRONTON RUSSELL BRIDGE OVER OHIO RIVER

LAW-93-0.00
PID No. 81595

156/365

543
788

E:\Bridges_XM\Ironton_Russell\LAW\81595\structures\LAW093_0000C\sheets\093_0000CSD026.dgn 4/25/2011 10:15:43 AM john_stahl

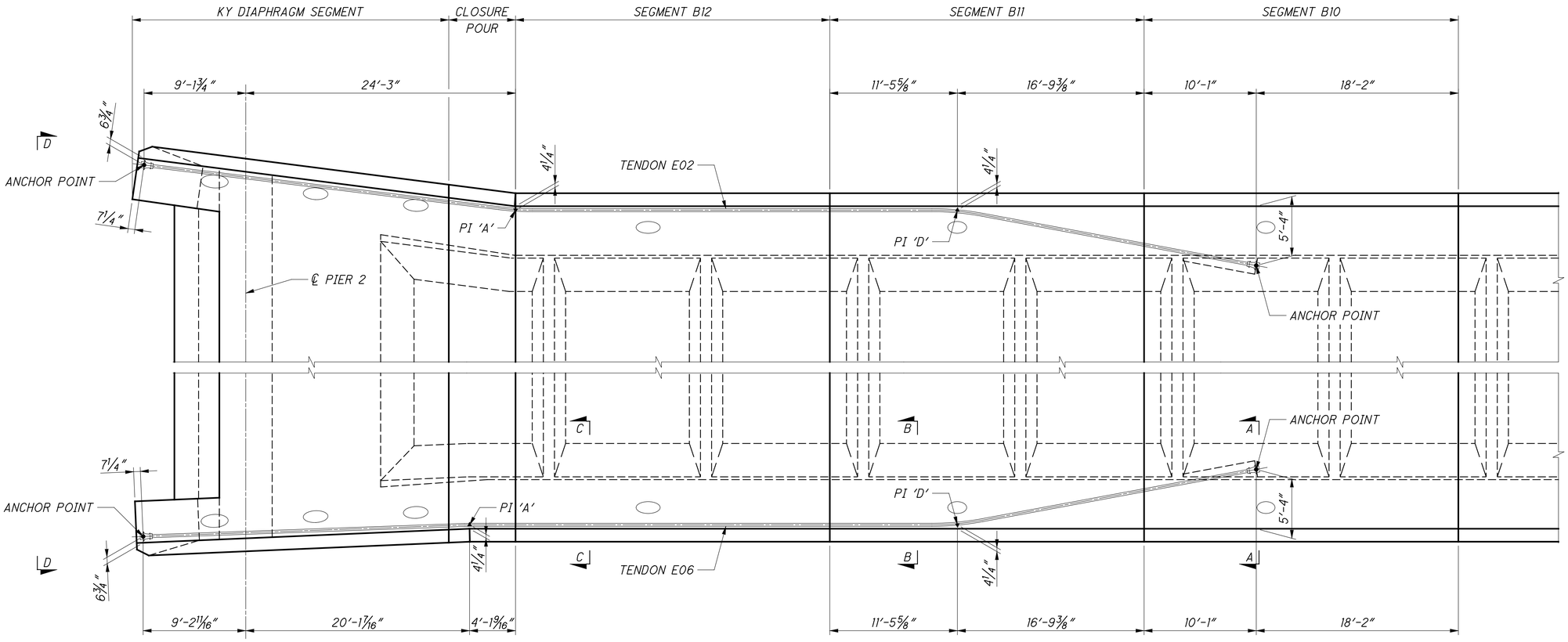

PLAN - EDGE GIRDER TENDONS E02 AND E06 (SPAN 3)

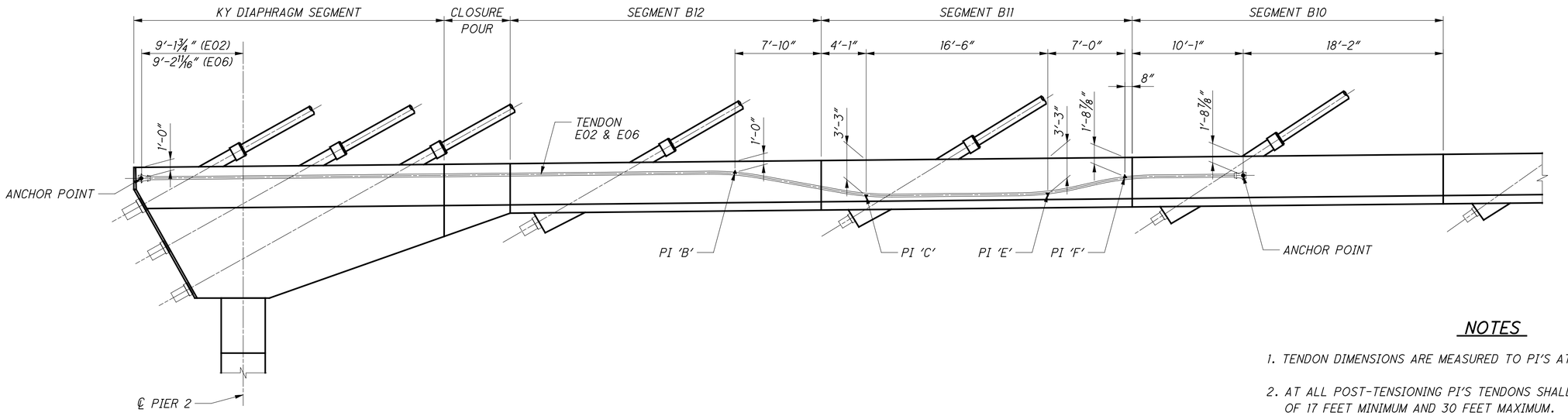

ELEVATION - EDGE GIRDER TENDONS E02 AND E06 (SPAN 3)

NOTES

1. TENDON DIMENSIONS ARE MEASURED TO PI'S AT ℄ POST-TENSIONING DUCT.
2. AT ALL POST-TENSIONING PI'S TENDONS SHALL BE BENT WITH A RADIUS OF 17 FEET MINIMUM AND 30 FEET MAXIMUM.
3. FOR ADDITIONAL POST-TENSIONING DETAILS, SEE SHEET NO. 164/365 AND 165/365.

DESIGN AGENCY
URS
36 EAST 7TH STREET
SUITE 2300
CINCINNATI, OHIO 45202

DESIGNED	DRAWN	REVIEWED	DATE
ASM	CER	DLJ	6/2010
CHECKED	REVISED	STRUCTURE FILE NUMBER	
BWJ		4401263	

EDGE GIRDER POST-TENSIONING TENDON DETAILS (2 OF 8)
BRIDGE NO. LAW-93-0000
IRONTON RUSSELL BRIDGE OVER OHIO RIVER

LAW-93-0.00
PID No. 81595

157/365

544
788

E:\Bridges_XM\Ironton_Russell\LAW\81595\structures\LAW093_0000C\sheets\093_0000CSD026.dgn 4/25/2011 10:15:47 AM john_stahl

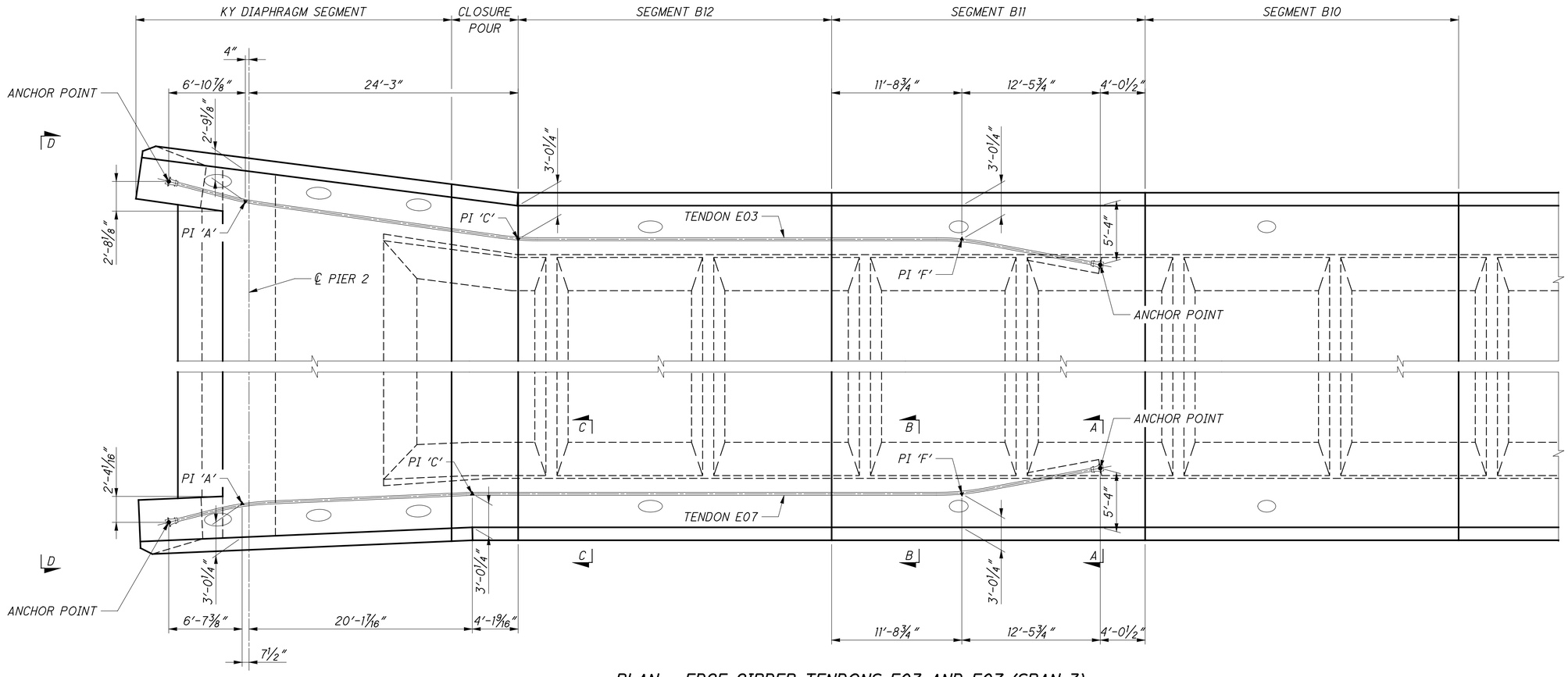

PLAN - EDGE GIRDER TENDONS E03 AND E07 (SPAN 3)

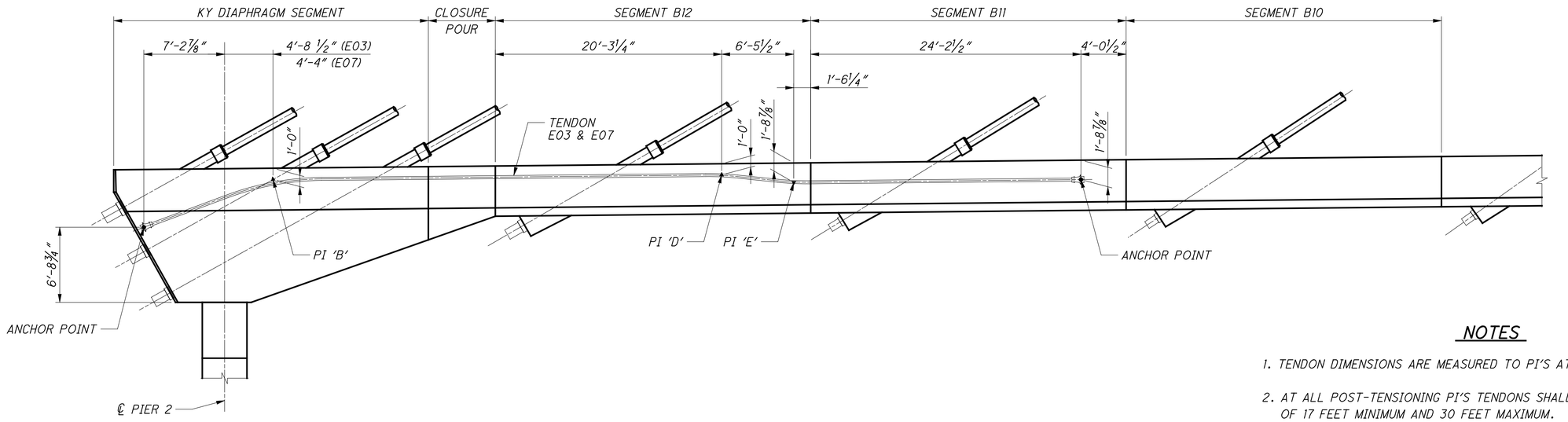

ELEVATION - EDGE GIRDER TENDONS E03 AND E07 (SPAN 3)

NOTES

1. TENDON DIMENSIONS ARE MEASURED TO PI'S AT ℄ POST-TENSIONING DUCT.
2. AT ALL POST-TENSIONING PI'S TENDONS SHALL BE BENT WITH A RADIUS OF 17 FEET MINIMUM AND 30 FEET MAXIMUM.
3. FOR ADDITIONAL POST-TENSIONING DETAILS, SEE SHEET NO. 164/365 AND 165/365.

DESIGN AGENCY
URS
36 EAST 7TH STREET
SUITE 2300
CINCINNATI, OHIO 45202

DESIGNED	DRAWN	REVIEWED	DATE
ASM	CER	DLJ	6/2010
CHECKED	REVISED	STRUCTURE FILE NUMBER	
BWJ		4401263	

EDGE GIRDER POST-TENSIONING TENDON DETAILS (3 OF 8)
BRIDGE NO. LAW-93-0000
IRONTON RUSSELL BRIDGE OVER OHIO RIVER

LAW-93-0.00
PID No. 81595

158/365

545
788

E:\Bridges_XM\Ironton_Russell\LAW\81595\structures\LAW093_0000C\sheets\093_0000CSD026.dgn 4/25/2011 10:15:50 AM john_stahl

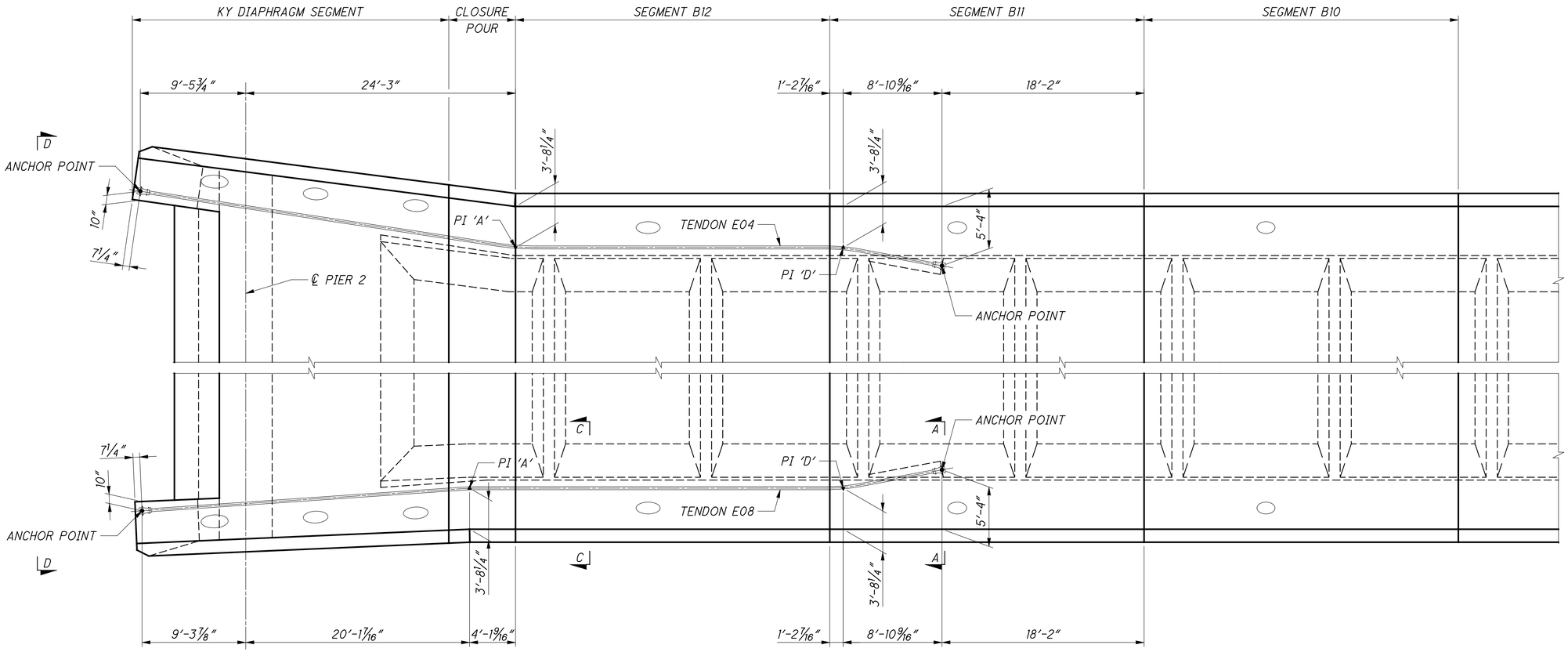

PLAN - EDGE GIRDER TENDONS E04 AND E08 (SPAN 3)

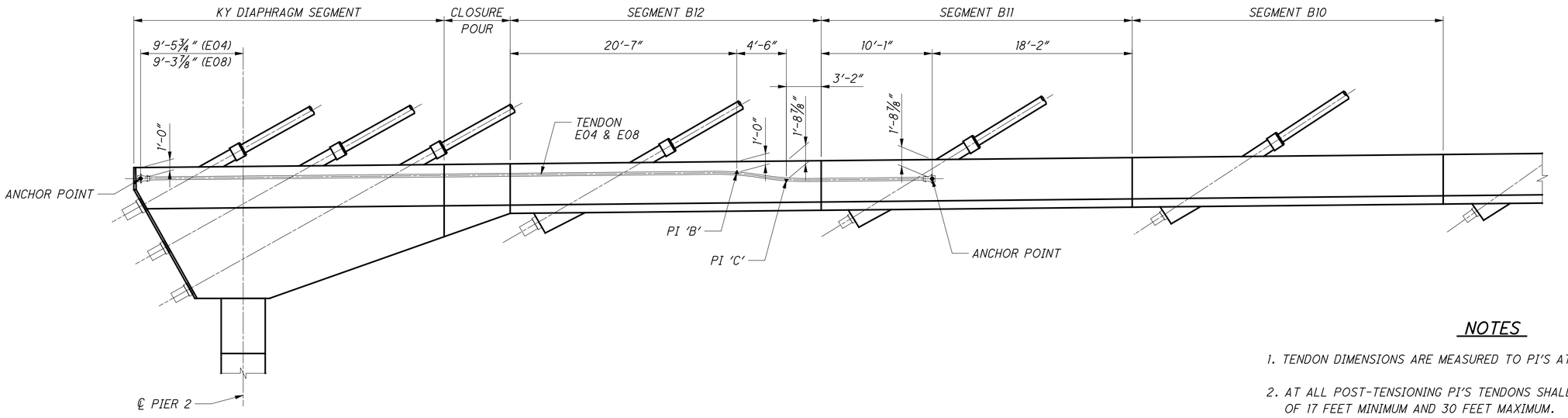

ELEVATION - EDGE GIRDER TENDONS E04 AND E08 (SPAN 3)

NOTES

1. TENDON DIMENSIONS ARE MEASURED TO PI'S AT ℄ POST-TENSIONING DUCT.
2. AT ALL POST-TENSIONING PI'S TENDONS SHALL BE BENT WITH A RADIUS OF 17 FEET MINIMUM AND 30 FEET MAXIMUM.
3. FOR ADDITIONAL POST-TENSIONING DETAILS, SEE SHEET NO. 164/365 AND 165/365.

DESIGN AGENCY
URS
36 EAST 7TH STREET
SUITE 2300
CINCINNATI, OHIO 45202

DESIGNED	DRAWN	REVIEWED	DATE
ASM	CER	DLJ	6/2010
CHECKED	REVISED	STRUCTURE FILE NUMBER	
BWJ		4401263	

EDGE GIRDER POST-TENSIONING TENDON DETAILS (4 OF 8)
BRIDGE NO. LAW-93-0000
IRONTON RUSSELL BRIDGE OVER OHIO RIVER

LAW-93-0.00
PID No. 81595

159/365

546
788

E:\Bridges_XM\Ironton_Russell\LAW\81595\structures\LAW093_0000C\sheets\093_0000CSD026.dgn 4/25/2011 10:15:54 AM john_stahl

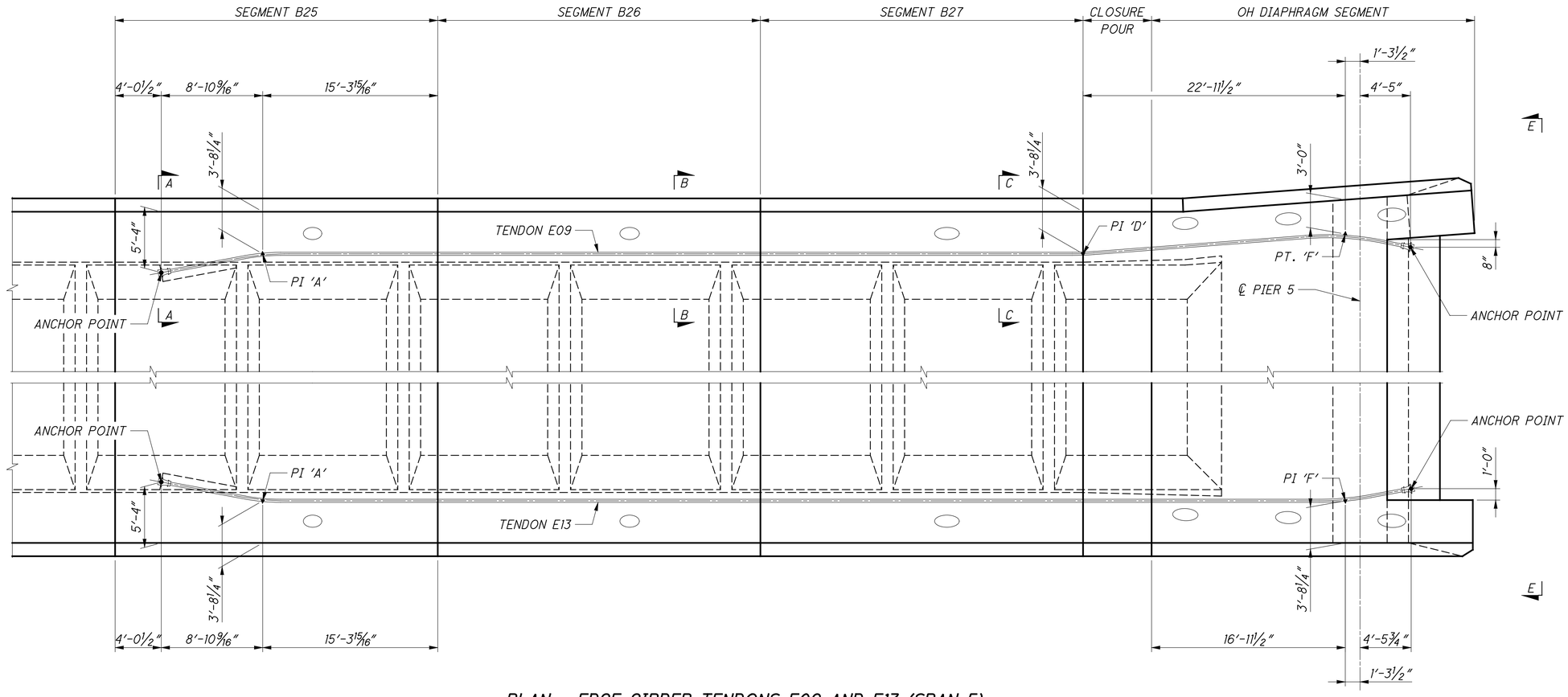

PLAN - EDGE GIRDER TENDONS E09 AND E13 (SPAN 5)

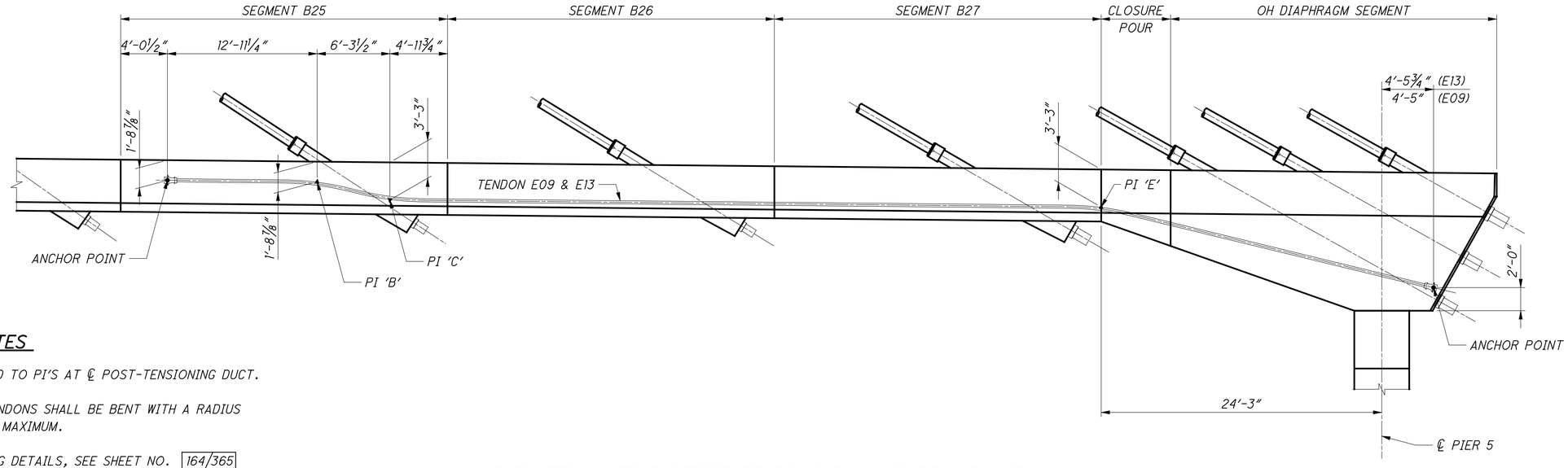

ELEVATION - EDGE GIRDER TENDONS E09 AND E13 (SPAN 5)

Link to RFI097 As-Built

NOTES

1. TENDON DIMENSIONS ARE MEASURED TO PI'S AT ℄ POST-TENSIONING DUCT.
2. AT ALL POST-TENSIONING PI'S TENDONS SHALL BE BENT WITH A RADIUS OF 17 FEET MINIMUM AND 30 FEET MAXIMUM.
3. FOR ADDITIONAL POST-TENSIONING DETAILS, SEE SHEET NO. 164/365 AND 165/365.

DESIGN AGENCY
URS
36 EAST 7TH STREET
SUITE 2300
CINCINNATI, OHIO 45202

DESIGNED ASM | DRAWN CER | CHECKED BWJ | REVIEWED DLJ | DATE 6/2010 | REVISED | STRUCTURE FILE NUMBER 4401263

EDGE GIRDER POST-TENSIONING TENDON DETAILS (5 OF 8)

BRIDGE NO. LAW-93-0000
IRONTON RUSSELL BRIDGE OVER OHIO RIVER

LAW-93-0.00
PID No. 81595

160/365

547
788

E:\Bridges_XM\Ironton_Russell\LAW\81595\structures\LAW093_0000C\sheets\093_0000CSD026.dgn 4/25/2011 10:15:58 AM john_stahl

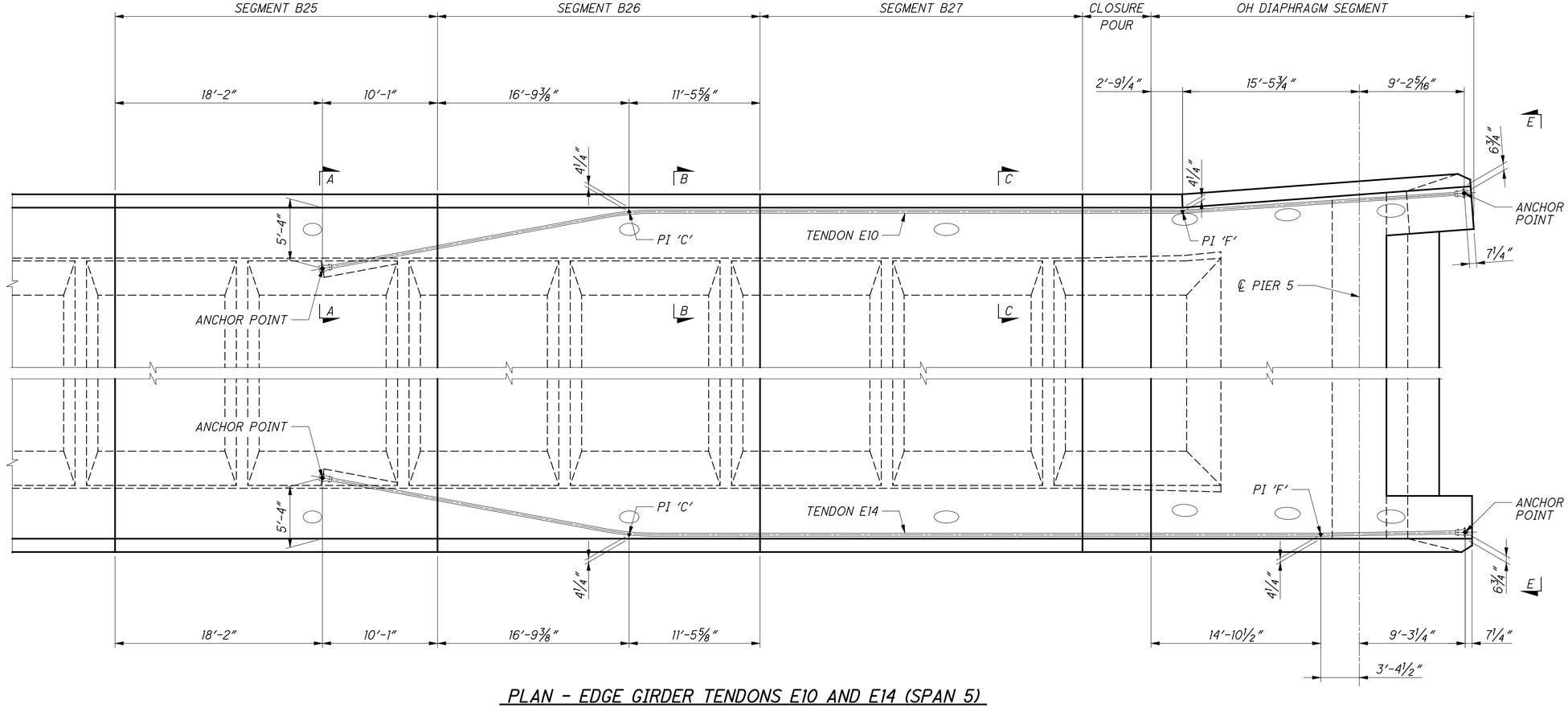

PLAN - EDGE GIRDER TENDONS E10 AND E14 (SPAN 5)

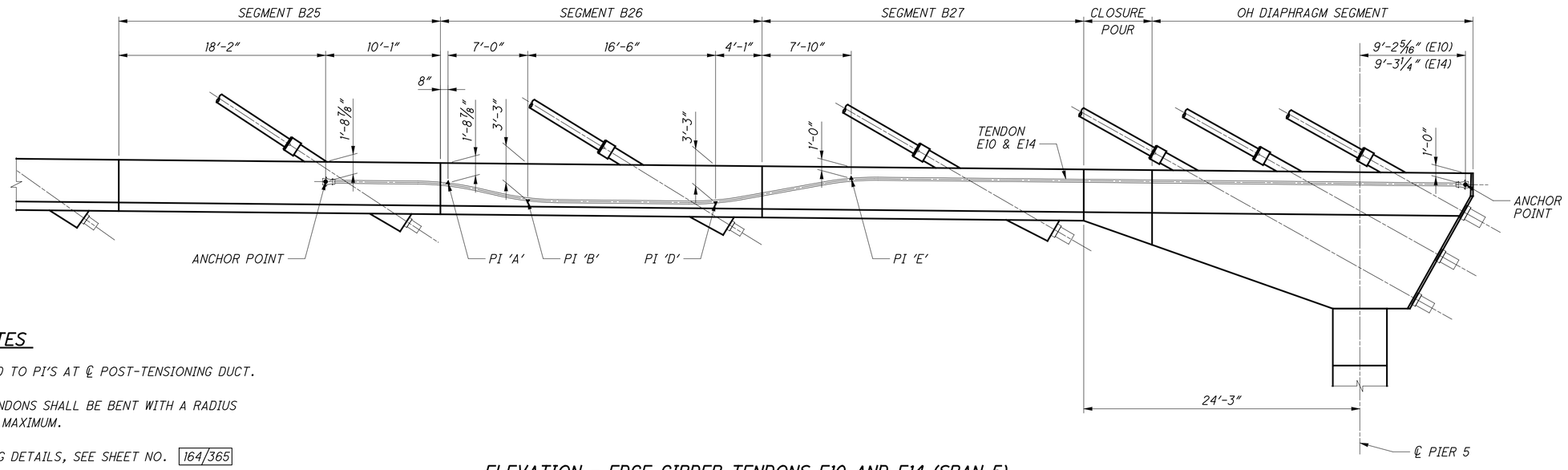

ELEVATION - EDGE GIRDER TENDONS E10 AND E14 (SPAN 5)

NOTES

1. TENDON DIMENSIONS ARE MEASURED TO PI'S AT ℄ POST-TENSIONING DUCT.
2. AT ALL POST-TENSIONING PI'S TENDONS SHALL BE BENT WITH A RADIUS OF 17 FEET MINIMUM AND 30 FEET MAXIMUM.
3. FOR ADDITIONAL POST-TENSIONING DETAILS, SEE SHEET NO. 164/365 AND 165/365.

DESIGN AGENCY
URS
36 EAST 7TH STREET
SUITE 2300
CINCINNATI, OHIO 45202

DESIGNED	DRAWN	REVIEWED	DATE
ASM	CER	DLJ	6/2010
CHECKED	REVISED	STRUCTURE FILE NUMBER	
BWJ		4401263	

EDGE GIRDER POST-TENSIONING TENDON DETAILS (6 OF 8)
BRIDGE NO. LAW-93-0000
IRONTON RUSSELL BRIDGE OVER OHIO RIVER

LAW-93-0.00
PID No. 81595

161/365

548
788

E:\Bridges_XM\Ironton_Russell\LAW\81595\structures\LAW093_0000C\sheets\093_0000CSD026.dgn 4/25/2011 10:16:02 AM john_stahl

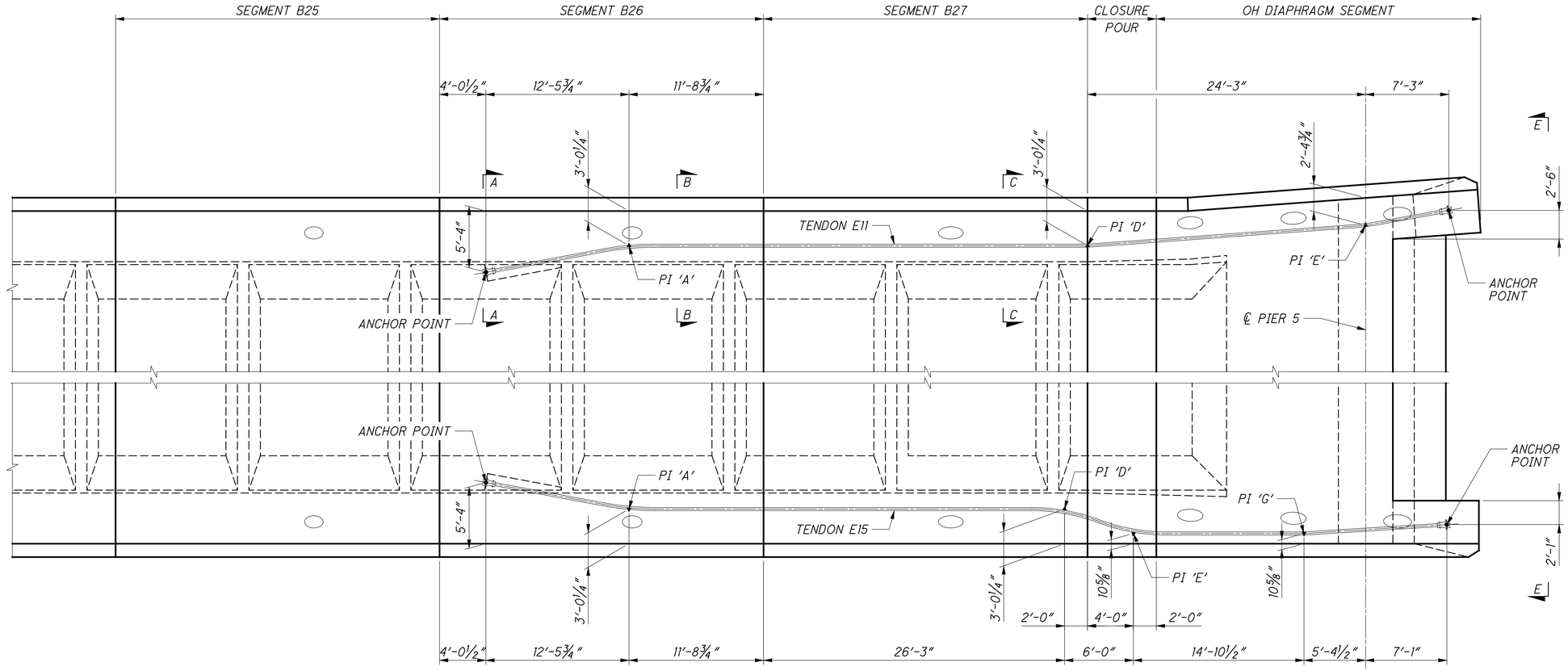

PLAN - EDGE GIRDER TENDONS E11 AND E15 (SPAN 5)

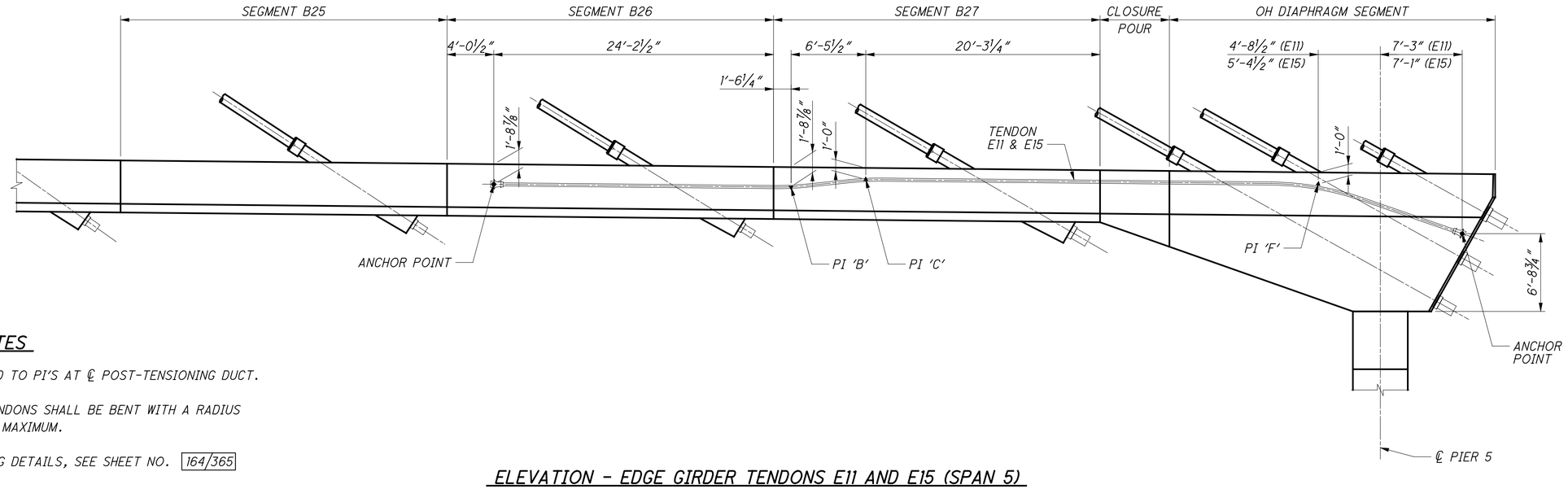

ELEVATION - EDGE GIRDER TENDONS E11 AND E15 (SPAN 5)

NOTES

1. TENDON DIMENSIONS ARE MEASURED TO PI'S AT ℄ POST-TENSIONING DUCT.
2. AT ALL POST-TENSIONING PI'S TENDONS SHALL BE BENT WITH A RADIUS OF 17 FEET MINIMUM AND 30 FEET MAXIMUM.
3. FOR ADDITIONAL POST-TENSIONING DETAILS, SEE SHEET NO. 164/365 AND 165/365.

DESIGN AGENCY
URS
36 EAST 7TH STREET
SUITE 2300
CINCINNATI, OHIO 45202

DESIGNED	DRAWN	REVIEWED	DATE
ASM	CER	DLJ	6/2010
CHECKED	REVISED	STRUCTURE FILE NUMBER	
BWJ		4401263	

EDGE GIRDER POST-TENSIONING TENDON DETAILS (7 OF 8)
BRIDGE NO. LAW-93-0000
IRONTON RUSSELL BRIDGE OVER OHIO RIVER

LAW-93-0.00
PID No. 81595

162/365

549
788

E:\Bridges_XM\Ironton_Russell\LAW\81595\structures\LAW093_0000C\sheets\093_0000CSD026.dgn 4/25/2011 10:16:06 AM john_stahl

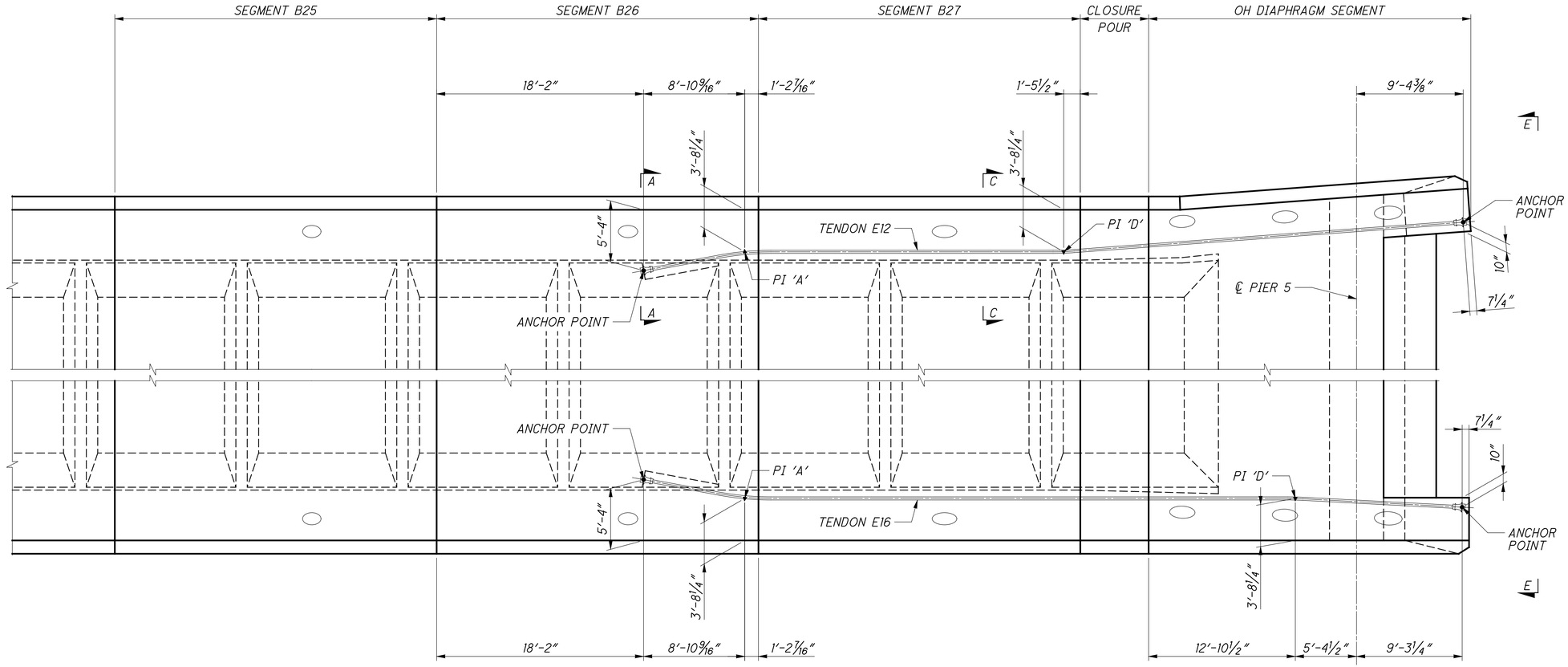

PLAN - EDGE GIRDER TENDONS E12 AND E16 (SPAN 5)

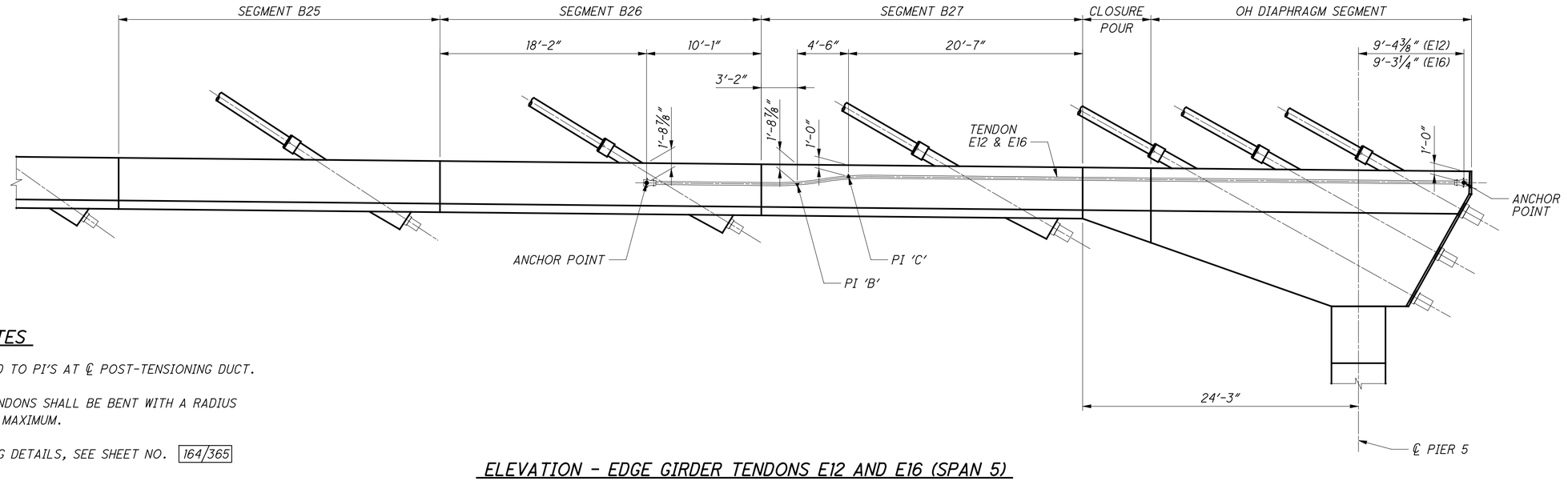

ELEVATION - EDGE GIRDER TENDONS E12 AND E16 (SPAN 5)

NOTES

1. TENDON DIMENSIONS ARE MEASURED TO PI'S AT ℄ POST-TENSIONING DUCT.
2. AT ALL POST-TENSIONING PI'S TENDONS SHALL BE BENT WITH A RADIUS OF 17 FEET MINIMUM AND 30 FEET MAXIMUM.
3. FOR ADDITIONAL POST-TENSIONING DETAILS, SEE SHEET NO. 164/365 AND 165/365.

DESIGN AGENCY
URS
36 EAST 7TH STREET
SUITE 2300
CINCINNATI, OHIO 45202

DESIGNED	DRAWN	REVIEWED	DATE
ASM	CER	DLJ	6/2010
CHECKED	REVISED	STRUCTURE FILE NUMBER	
BWJ		4401263	

EDGE GIRDER POST-TENSIONING TENDON DETAILS (8 OF 8)

BRIDGE NO. LAW-93-0000
IRONTON RUSSELL BRIDGE OVER OHIO RIVER

LAW-93-0.00
PID No. 81595

163/365

550
788

E:\Bridges_XM\Ironton_Russell\LAW\81595\structures\LAW093_0000C\sheets\093_0000CSD026.dgn 4/25/2011 10:16:10 AM john_stahl

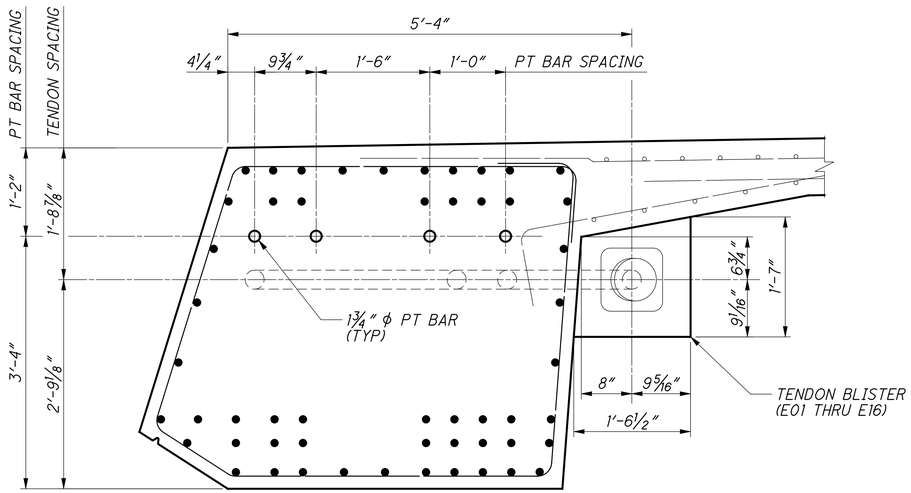

SECTION A-A

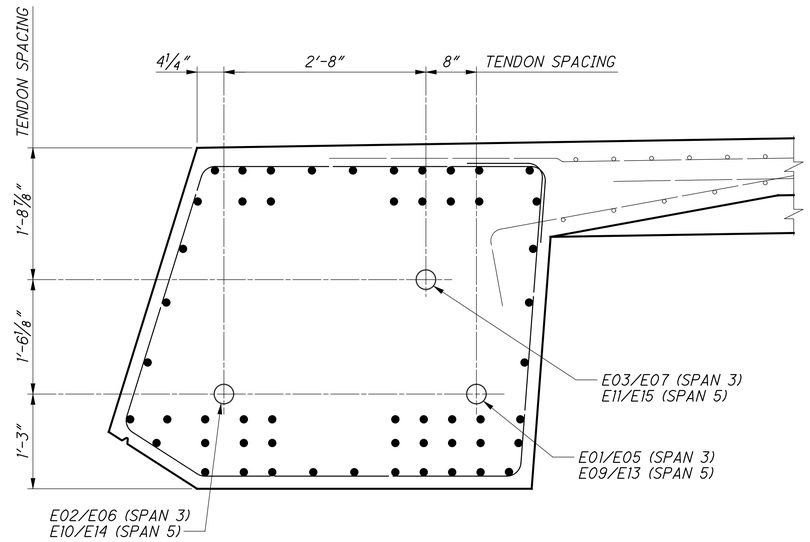

SECTION B-B

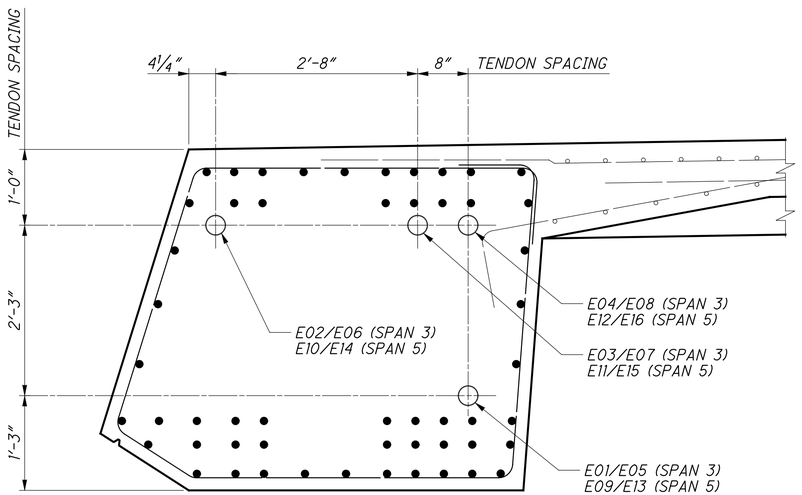

SECTION C-C

E:\Bridges_XM\Ironton_Russell\LAW\81595\structures\LAW093_0000C\sheets\093_0000CSD027.dgn 4/25/2011 10:16:15 AM john_stahl

DESIGN AGENCY
URS
36 EAST 7TH STREET
SUITE 2300
CINCINNATI, OHIO 45202

DESIGNED	DRAWN	REVIEWED	DATE
ASM	CER	DLJ	6/2010
CHECKED	REVISED	STRUCTURE FILE NUMBER	
BWJ		4401263	

EDGE GIRDER POST-TENSIONING DETAILS (1 OF 2)

BRIDGE NO. LAW-93-0000
IRONTON RUSSELL BRIDGE OVER OHIO RIVER

LAW-93-0.00
PID No. 81595

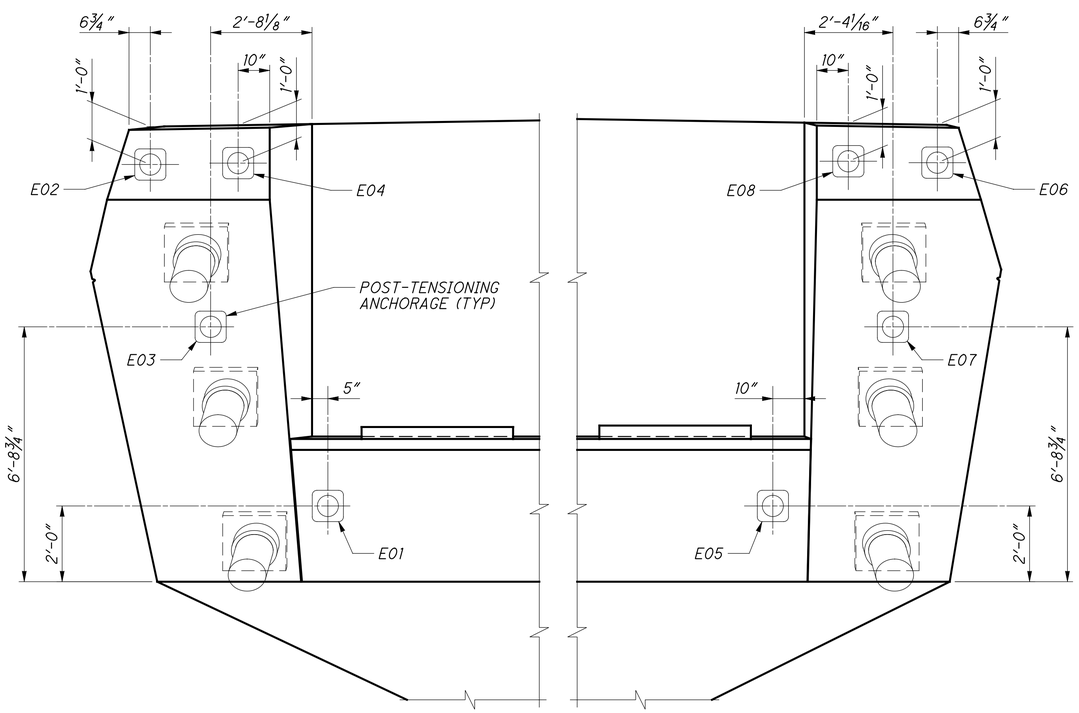

VIEW D-D

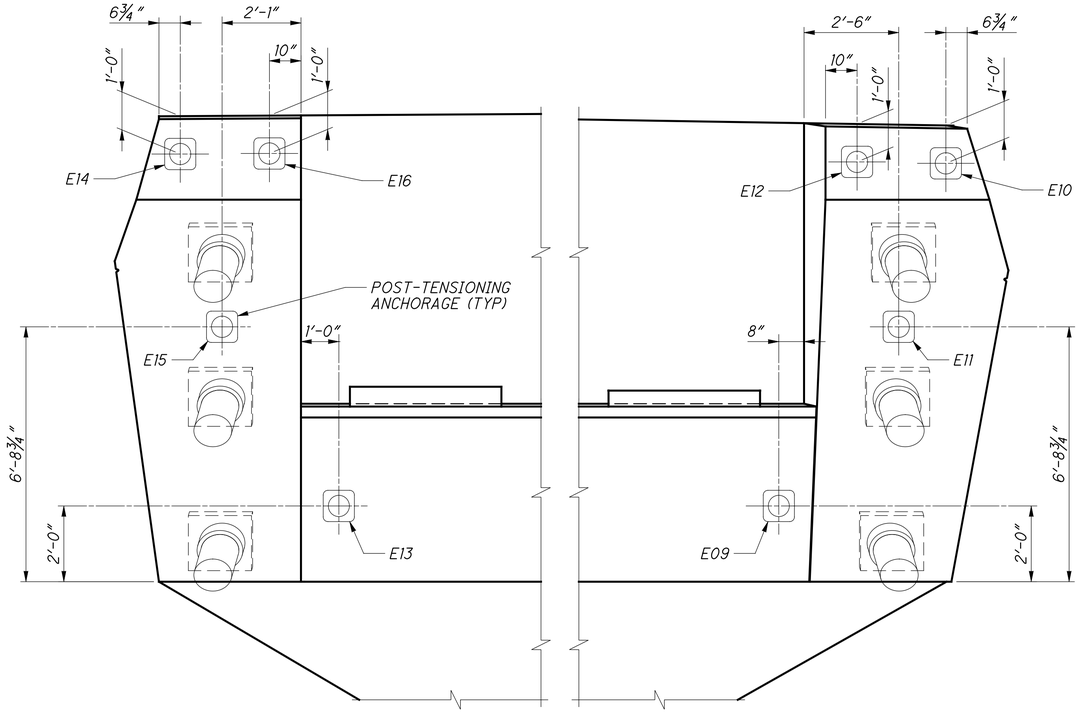

VIEW E-E

EDGE GIRDER TENDON QUANTITIES

TENDON ID	NO. OF TENDONS	NUMBER OF 0.6" DIA. STRANDS	JACKING FORCE (kips)	TENDON LENGTH (ft)	TENDON WEIGHT (lbs)	TOTAL WEIGHT (lbs)
E01	1	12	562	110.93	985	985
E02	1	12	562	101.05	897	897
E03	1	12	562	85.42	759	759
E04	1	12	562	72.65	645	645
E05	1	12	562	110.79	984	984
E06	1	12	562	100.93	896	896
E07	1	12	562	85.22	757	757
E08	1	12	562	72.18	641	641
E09	1	12	562	110.76	984	984
E10	1	12	562	101.08	898	898
E11	1	12	562	85.17	756	756
E12	1	12	562	72.25	642	642
E13	1	12	562	110.47	981	981
E14	1	12	562	101.08	898	898
E15	1	12	562	85.19	757	757
E16	1	12	562	72.08	640	640
					TOTAL =	13120

NOTES

1. TENDONS E01 THRU E16 SHALL CONSIST OF 12-0.6 DIAMETER STRANDS IN 3.35 INCH ID DUCTS.
2. TENDONS E01 THRU E16 SHALL BE SINGLE END STRESSED FROM PIER 2 OR PIER 5 END.
3. TRANSVERSE DIAPHRAGM TENDONS SHALL BE FULLY STRESSED AND GROUTED PRIOR TO STRESSING TENDONS E01 THROUGH E16.
4. TENDON SHALL BE STRESSED IN PAIRS FROM BOTTOM TO TOP, i.e. E01/E05, E03/E07, E02/E06, E04/E08. USE SIMILAR SEQUENCE FOR PIER 5 ANCHORS.
5. WEIGHT INDICATED IN SCHEDULES ARE BASED ON TENDON LENGTH FROM ANCHOR PLATE TO ANCHOR PLATE. WEIGHT IS SHOWN FOR INFORMATIONAL PURPOSES ONLY. CONTRACTOR IS RESPONSIBLE FOR ESTIMATING QUANTITY OF POST-TENSIONING STRAND REQUIRED.
6. COST OF SPIRAL REINFORCEMENT (LOCAL ZONE) AT EACH ANCHORAGE IS INCIDENTAL TO THE COST OF POST-TENSIONING.

DESIGN AGENCY
URS
36 EAST 7TH STREET
SUITE 2300
CINCINNATI, OHIO 45202

DESIGNED	DRAWN	REVIEWED	DATE
ASM	CER	DLJ	6/2010
CHECKED	REVISED	STRUCTURE FILE NUMBER	
BWJ		4401263	

EDGE GIRDER POST-TENSIONING DETAILS (2 OF 2)
BRIDGE NO. LAW-93-0000
IRONTON RUSSELL BRIDGE OVER OHIO RIVER

LAW-93-0.00
PID No. 81595

E:\Bridges_XM\Ironton_Russell\LAW\81595\structures\LAW093_0000C\sheets\093_0000CSD028.dgn 4/25/2011 10:16:20 AM john_stahl

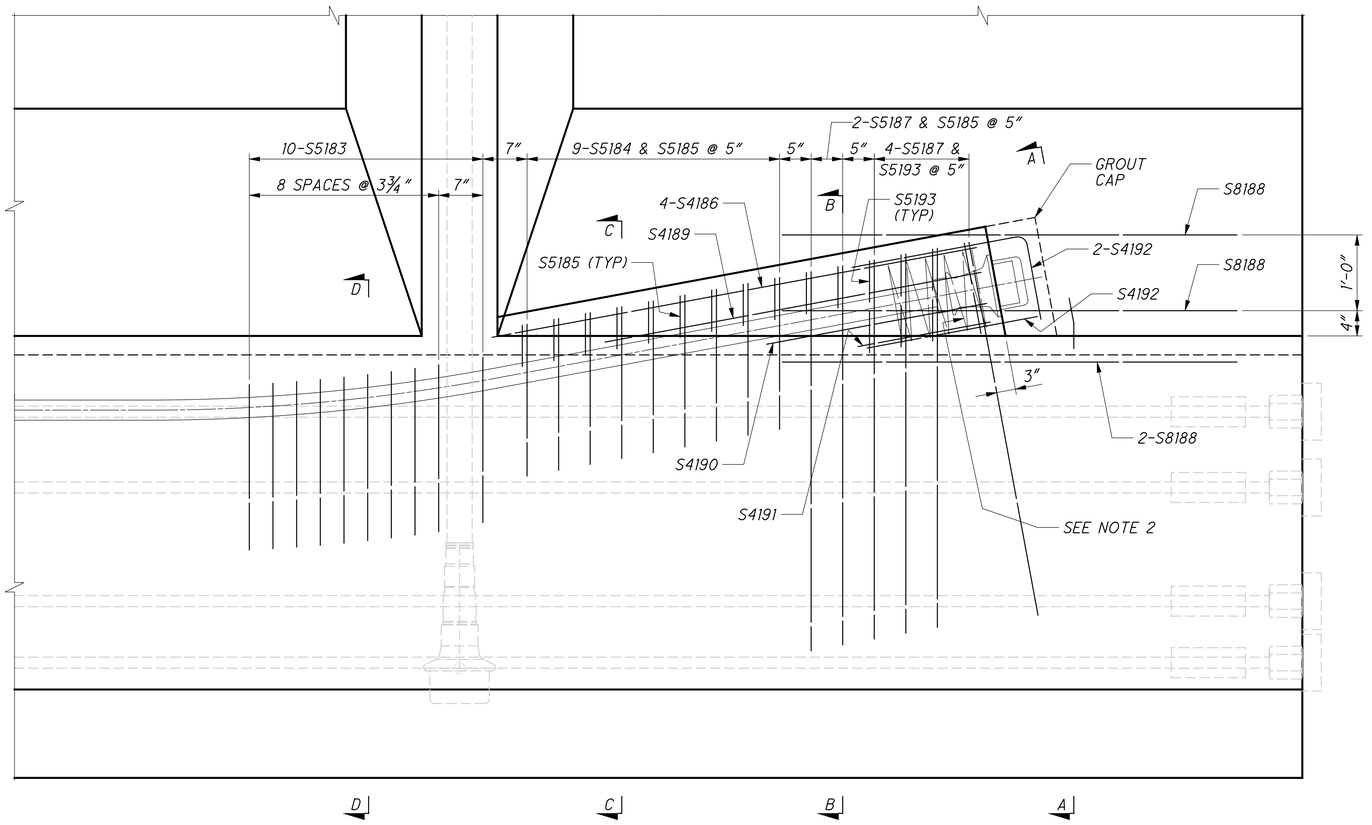

PLAN

(TENDON E05 SHOWN, OTHERS SIMILAR)

NOTES

1. EDGE GIRDER SHEAR REINFORCEMENT MAY BE SHIFTED TO PROVIDE CLEARANCE WITH EDGE GIRDER POST-TENSIONING TENDONS.
2. COST OF SPIRAL REINFORCEMENT (LOCAL ZONE) AT EACH ANCHORAGE IS INCIDENTAL TO THE COST OF POST-TENSIONING.

DESIGN AGENCY
URS
36 EAST 7TH STREET
SUITE 2300
CINCINNATI, OHIO 45202

DESIGNED	DRAWN	REVIEWED	DATE
VB	CER	DLJ	6/2010
CHECKED	REVISED	STRUCTURE FILE NUMBER	
BWJ		4401263	

EDGE GIRDER POST-TENSIONING REINFORCEMENT DETAILS (1 OF 2)

BRIDGE NO. LAW-93-0000
IRONTON RUSSELL BRIDGE OVER OHIO RIVER

LAW-93-0.00
PID No. 81595

166/365

553/788

E:\Bridges_XW\Ironton_Russell\LAW\81595\structures\LAW093_0000C\sheets\093_0000CSD034.dgn 4/25/2011 10:16:26 AM john_stahl

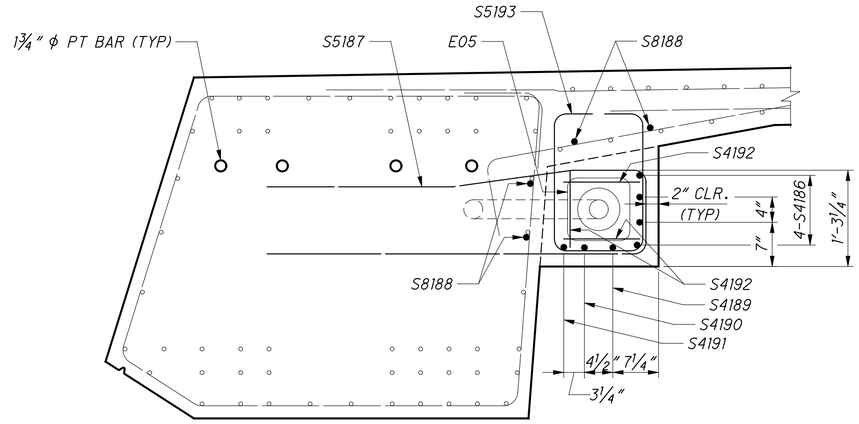

SECTION A-A

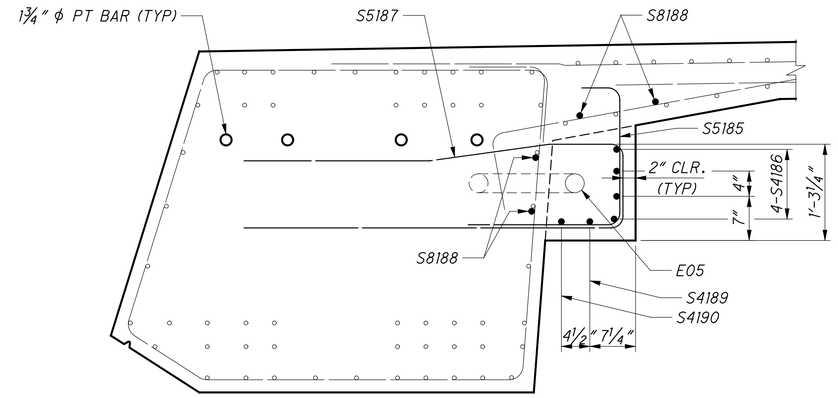

SECTION B-B

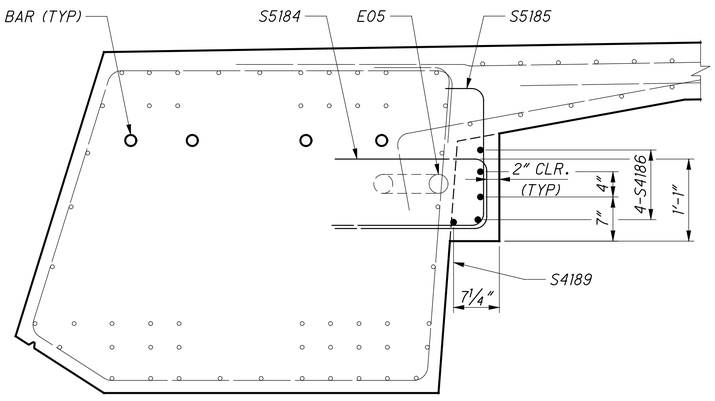

SECTION C-C

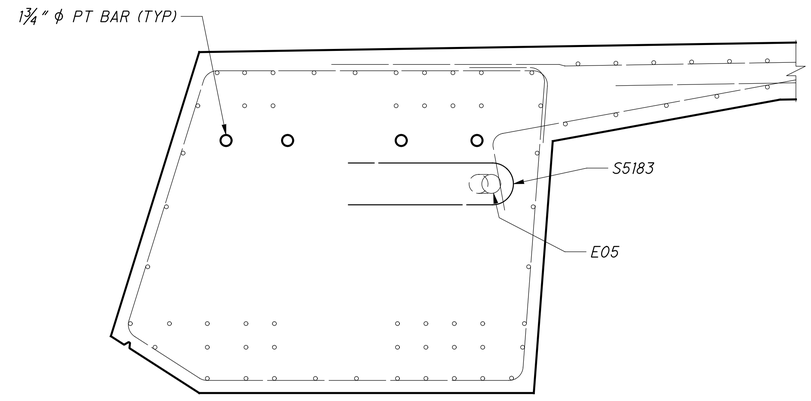

SECTION D-D

E:\Bridges_XM\Ironton_Russell\LAW\81595\structures\LAW093_0000C\sheets\093_0000CSD035.dgn 4/25/2011 10:16:31 AM john_stahl

DESIGN AGENCY
URS
36 EAST 7TH STREET
SUITE 2300
CINCINNATI, OHIO 45202

DESIGNED	DRAWN	REVIEWED	DATE
VB	CER	DLJ	6/2010
CHECKED	REVISED	STRUCTURE FILE NUMBER	
BWJ		4401263	

EDGE GIRDER POST-TENSIONING REINFORCEMENT DETAILS (2 OF 2)
BRIDGE NO. LAW-93-0000
IRONTON RUSSELL BRIDGE OVER OHIO RIVER

LAW-93-0.00
PID No. 81595

167/365

554
788

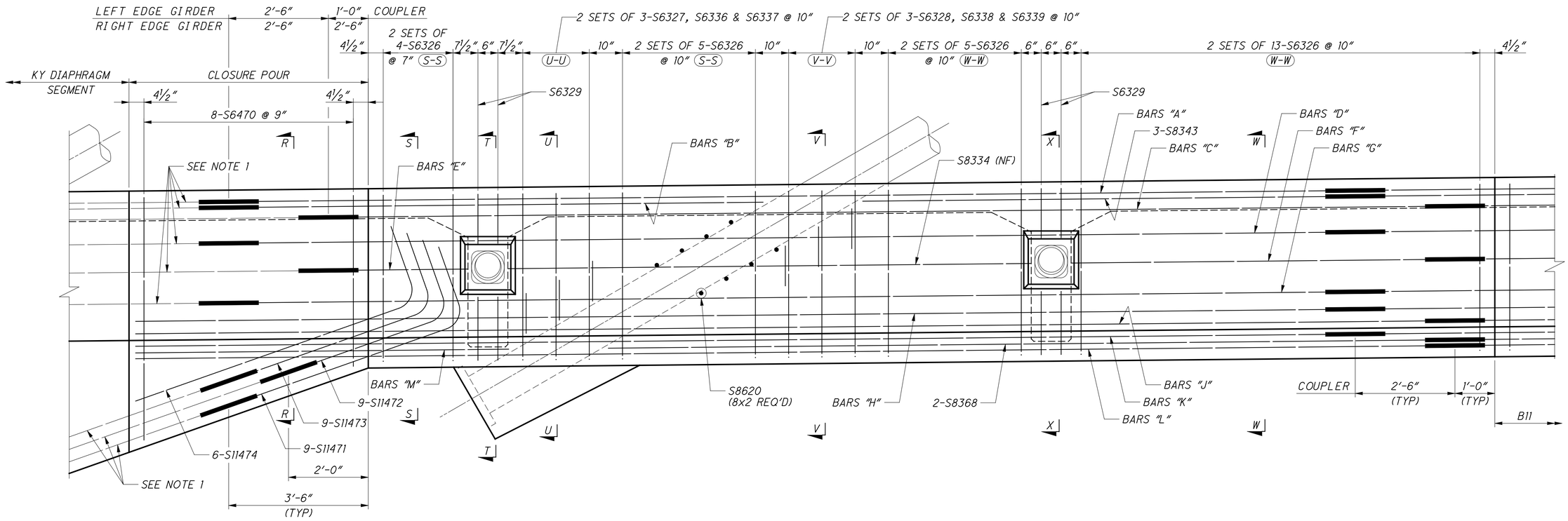

SEGMENT B12 & CLOSURE POUR AT DIAPHRAGM

	LEFT EDGE GIRDER	RIGHT EDGE GIRDER
BARS "A"	6-11331 & S11480	S11483, S11484, S11485, S11497, S11498, S11499 & S11500
BARS "B"	2-S8340 & 2-S11482	S8488, S11489 & S11490
BARS "C"	6-S11331, S11479 & S11480	S11486, S11487, S11491, S11492, S11493, S11494 S11495 & S11496
BARS "D"	S8332 (EF)	S8501 (NF) & S8502 (FF)
BARS "E"	S8333 (NF)	S8504 (NF)
BARS "F"	S8335 (NF) & S8332 (FF)	S8335 (NF) & S8503 (FF)
BARS "G"	S8332 (EF)	S8505 (NF) & S8506 (FF)
BARS "H"	5-S11468 & 1-S11476	2-S11507, 3-S11508 & 1-S11511
BARS "J"	8-S11469 & 2-S11476	4-S11507, 4-S11508 & 2-S11511
BARS "K"	7-S11468 & 2-S11475	3-S11507, 4-S11508 & 2-S11510
BARS "L"	6-S11469 & 2-S11477	3-S11507, 3-S11508 & 2-S11509
BARS "M"	2-S8365	2-S8512

(LEFT & RIGHT EDGE GIRDER ARE WITH RESPECT TO LOOKING STATIONS BACK)

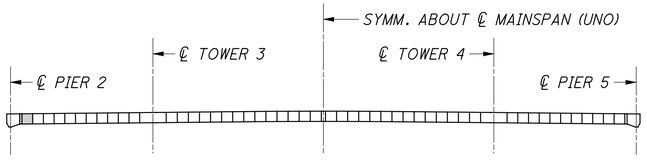

KEY ELEVATION

Link to RFI135 As-Built

NOTES

1. FOR PIER DIAPHRAGM SEGMENT BAR MARKS, SEE SHEET NOS. 200/365 THRU 208/365
2. MECHANICAL COUPLERS SHALL BE STAGGERED BOTH VERTICALLY AND HORIZONTALLY WITHIN THE SECTION.
3. FOR SECTIONS SEE SHEET NOS. 184/365 THRU 193/365
4. LONGITUDINAL BARS WITHIN CLOSURE HAVE BEEN INTENTIONALLY MADE LONG TO ACCOUNT FOR CONSTRUCTION TOLERANCES AND COUPLER POSITIONING. THESE BARS SHALL BE FIELD CUT TO ACCOMMODATE FINAL COUPLER POSITIONS. CUT END OF BAR SHALL BE FIELD REPAIRED WITH EPOXY COATING.
5. HOOKS ON BOTTOM BARS WITHIN CLOSURE MAY BE ROTATED TO AVOID EDGE GIRDER POST-TENSIONING.

DESIGN AGENCY
URS
36 EAST 7TH STREET
SUITE 2300
CINCINNATI, OHIO 45202

DATE 6/2010
REVIEWED DLJ
STRUCTURE FILE NUMBER 4401263
DRAWN CER
REVISED
DESIGNED RTG
CHECKED ASM

EDGE GIRDER REINFORCEMENT LAYOUT (1 OF 16)
BRIDGE NO. LAW-93-0000
IRONTON RUSSELL BRIDGE OVER OHIO RIVER

LAW-93-0.00
PID No. 81595

168/365

555
788

E:\Bridges_XM\Ironton_Russell\LAW\81595\structures\LAW093_0000C\sheets\093_0000CSD014.dgn 4/25/2011 10:16:37 AM john_stahl

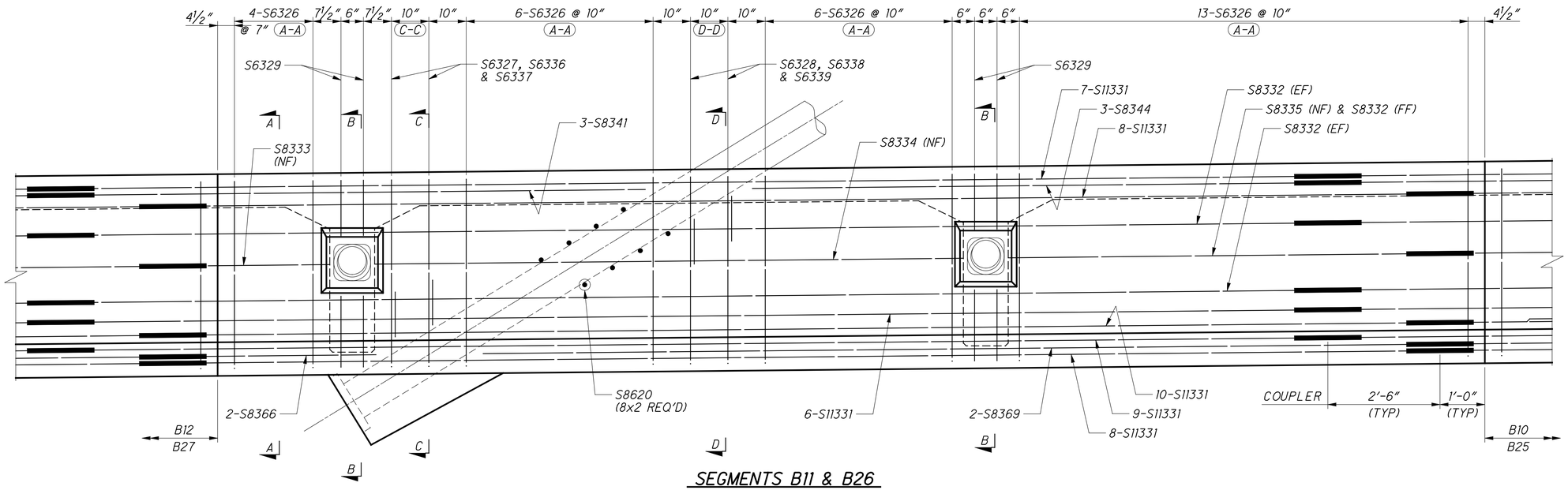

SEGMENTS B11 & B26

(SEGMENT B11 SHOWN)

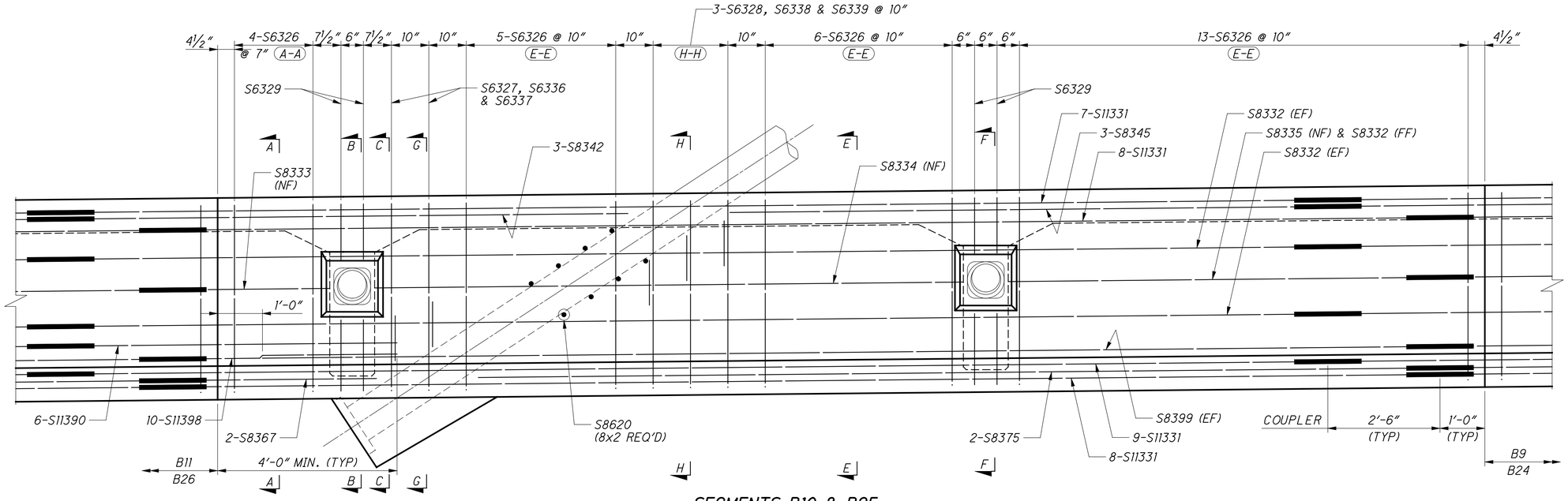

SEGMENTS B10 & B25

(SEGMENT B10 SHOWN)

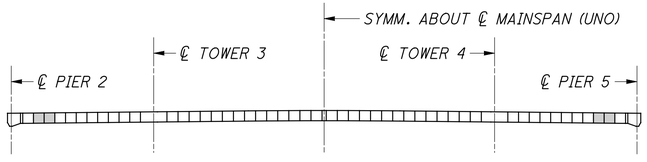

KEY ELEVATION

NOTES

1. FOR SECTIONS, SEE SHEET NOS. 184/365 THRU 193/365

DESIGN AGENCY
URS
38 EAST 7TH STREET
SUITE 2300
CINCINNATI, OHIO 45202

DESIGNED	DRAWN	REVIEWED	DATE
RTG	CER	DLJ	6/2010
CHECKED	REVISED	STRUCTURE FILE NUMBER	
ASM		4401263	

EDGE GIRDER REINFORCEMENT LAYOUT (2 OF 16)
BRIDGE NO. LAW-93-0000
IRONTON RUSSELL BRIDGE OVER OHIO RIVER

LAW-93-0.00
PID No. 81595

169/365

556/788

E:\Bridges_XM\Ironton_Russell\LAW\81595\structures\LAW093_0000C\sheets\093_0000CSD014.dgn 4/25/2011 10:16:43 AM john_stahl

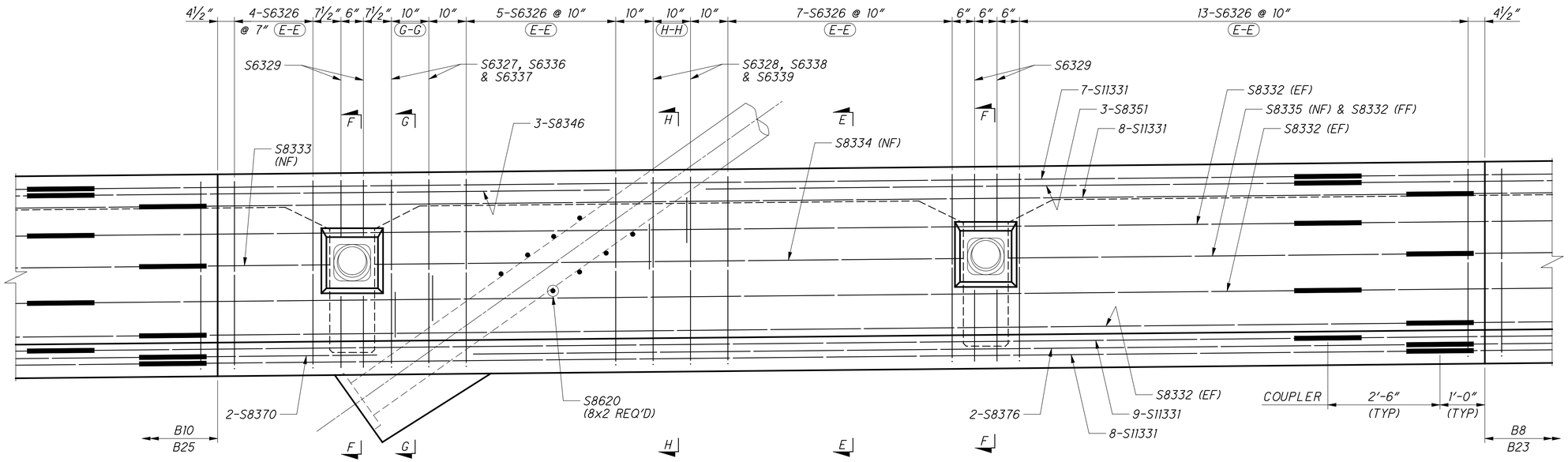

SEGMENTS B9 & B24
(SEGMENT B9 SHOWN)

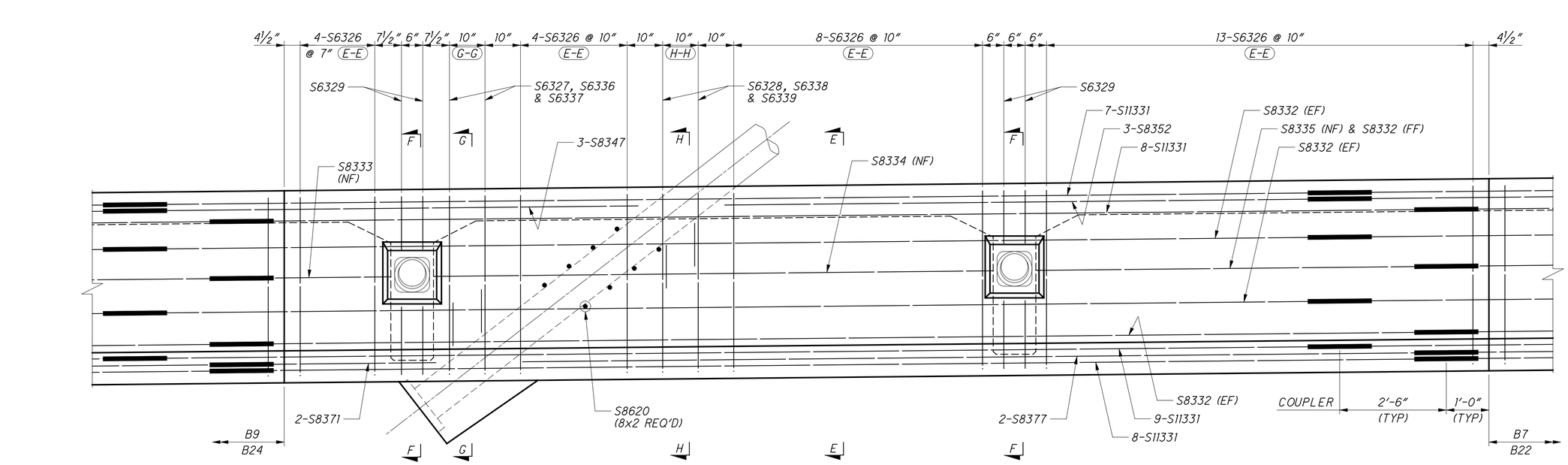

SEGMENTS B8 & B23
(SEGMENT B8 SHOWN)

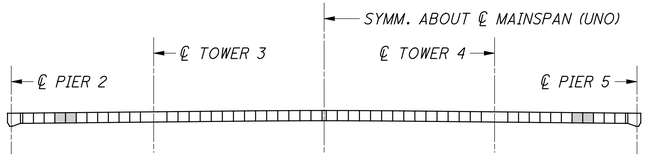

KEY ELEVATION

NOTES

1. FOR SECTIONS, SEE SHEET NOS. 184/365 THRU 193/365

DESIGN AGENCY
URS
36 EAST 7TH STREET
SUITE 2300
CINCINNATI, OHIO 45202

DESIGNED	DRAWN	REVIEWED	DATE
RTG	CER	DLJ	6/2010
CHECKED	REVISED	STRUCTURE FILE NUMBER	
ASM		4401263	

EDGE GIRDER REINFORCEMENT LAYOUT (3 OF 16)
BRIDGE NO. LAW-93-0000
IRONTON RUSSELL BRIDGE OVER OHIO RIVER

LAW-93-0.00
PID No. 81595

170/365

557/788

E:\Bridges_XM\Ironton_Russell\LAW\81595\structures\LAW093_0000C\sheets\093_0000CSD014.dgn 4/25/2011 10:16:47 AM john_stahl

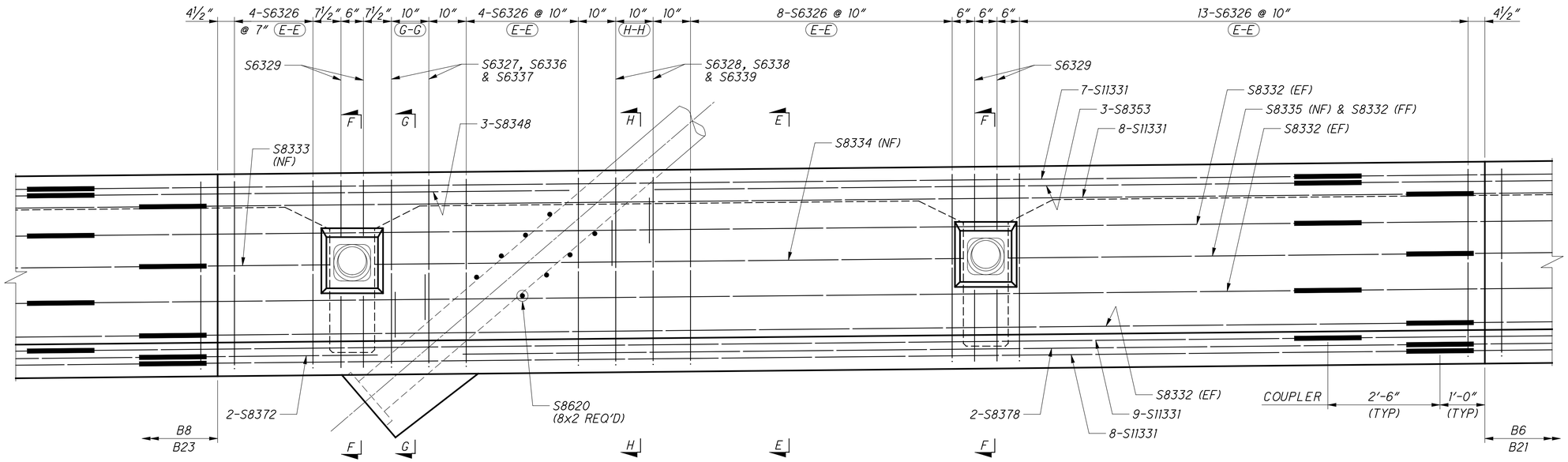

SEGMENTS B7 & B22
(SEGMENT B7 SHOWN)

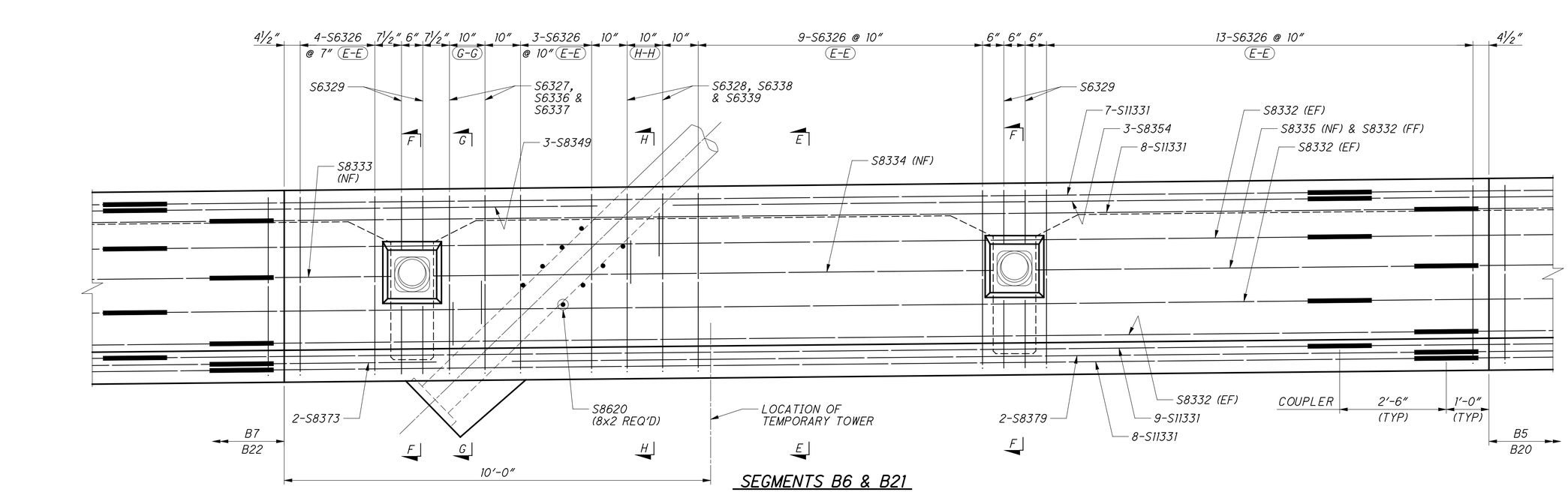

SEGMENTS B6 & B21
(SEGMENT B6 SHOWN)

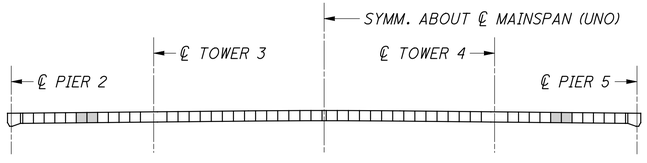

KEY ELEVATION

NOTES

1. FOR SECTIONS, SEE SHEET NOS. 184/365 THRU 193/365

DESIGN AGENCY
URS
36 EAST 7TH STREET
SUITE 2300
CINCINNATI, OHIO 45202

DESIGNED RTG | DRAWN CER | REVIEWED DLJ | DATE 6/2010
CHECKED ASM | REVISED | STRUCTURE FILE NUMBER 4401263

EDGE GIRDER REINFORCEMENT LAYOUT (4 OF 16)
BRIDGE NO. LAW-93-0000
IRONTON RUSSELL BRIDGE OVER OHIO RIVER

LAW-93-0.00
PID No. 81595

171/365

558/788

E:\Bridges_XM\Ironton_Russell\LAW\81595\structures\LAW093_0000C\sheets\093_0000CSD014.dgn 4/25/2011 10:16:52 AM john_stahl

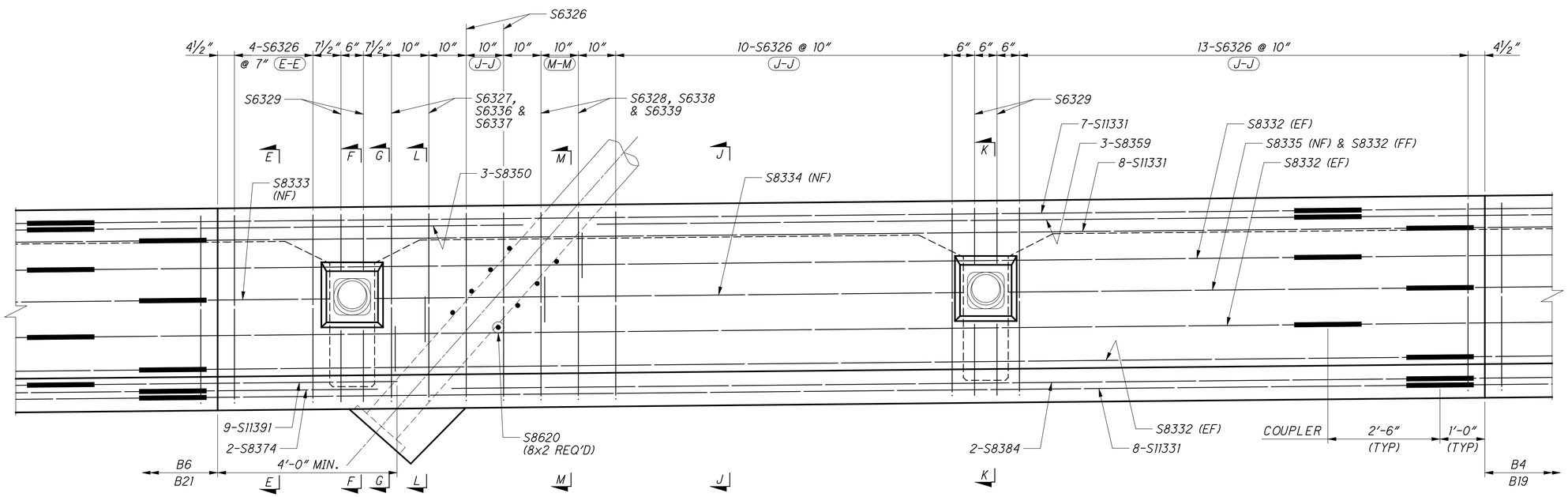

SEGMENTS B5 & B20
(SEGMENT B5 SHOWN)

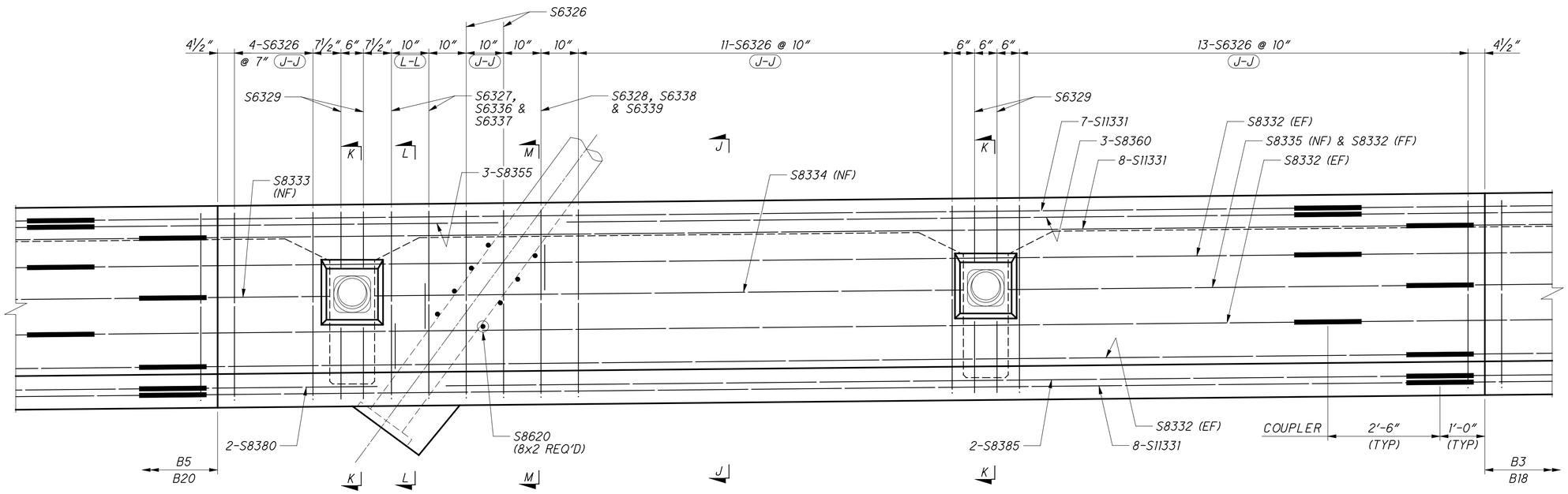

SEGMENTS B4 & B19
(SEGMENT B4 SHOWN)

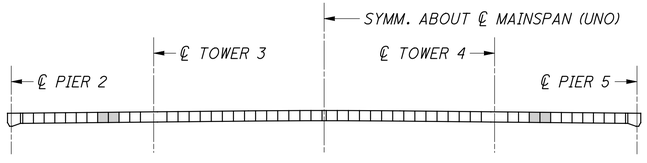

KEY ELEVATION

NOTES

1. FOR SECTIONS, SEE SHEET NOS. 184/365 THRU 193/365

DESIGN AGENCY
URS
36 EAST 7TH STREET
SUITE 2300
CINCINNATI, OHIO 45202

DESIGNED	DRAWN	REVIEWED	DATE
RTG	CER	DLJ	6/2010
CHECKED	REVISED	STRUCTURE FILE NUMBER	
ASM		4401263	

EDGE GIRDER REINFORCEMENT LAYOUT (5 OF 16)
BRIDGE NO. LAW-93-0000
IRONTON RUSSELL BRIDGE OVER OHIO RIVER

LAW-93-0.00
PID No. 81595

172/365

559/788

E:\Bridges_XM\Ironton_Russell\LAW\81595\structures\LAW093_0000C\sheets\093_0000CSD014.dgn 4/25/2011 10:16:56 AM john_stahl

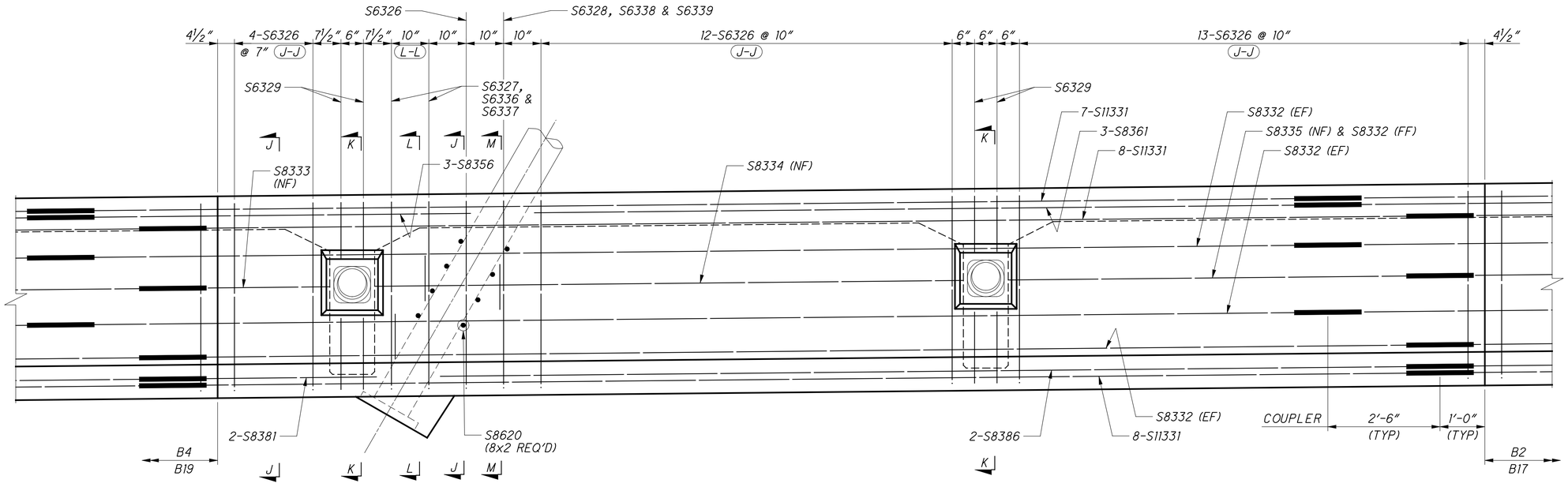

SEGMENTS B3 & B18
(SEGMENT B3 SHOWN)

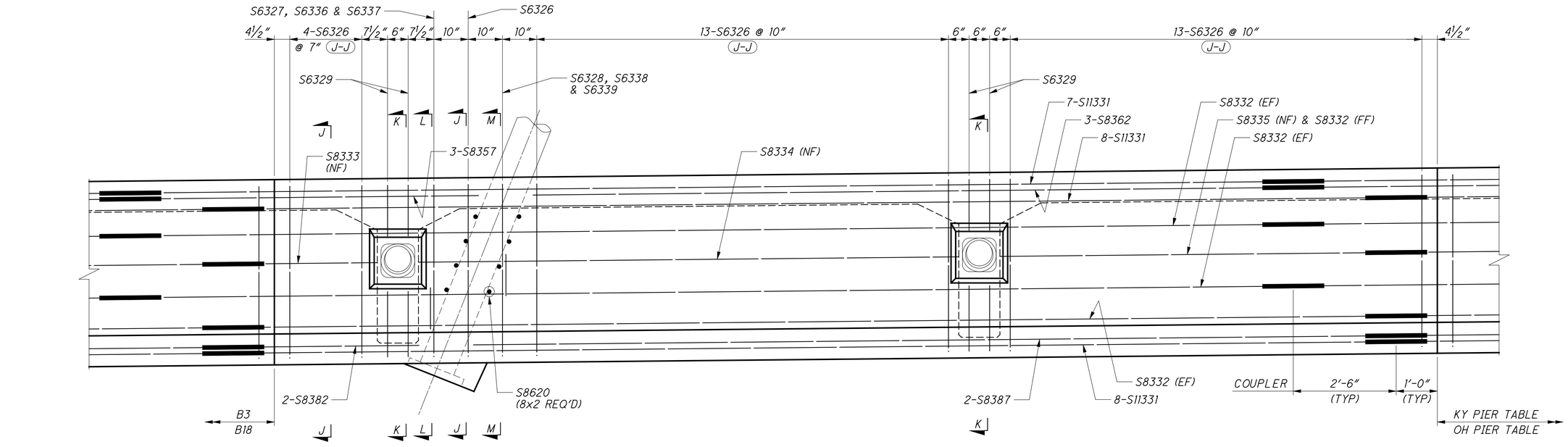

SEGMENTS B2 & B17
(SEGMENT B2 SHOWN)

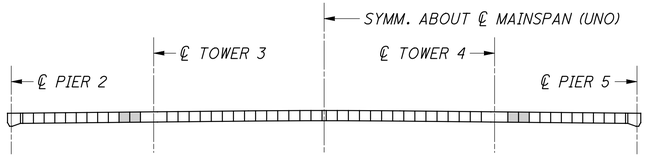

KEY ELEVATION

NOTES

1. FOR SECTIONS, SEE SHEET NOS. 184/365 THRU 193/365

DESIGN AGENCY
URS
36 EAST 7TH STREET
SUITE 2300
CINCINNATI, OHIO 45202

DESIGNED	DRAWN	REVIEWED	DATE
RTG	CER	DLJ	6/2010
CHECKED	REVISED	STRUCTURE FILE NUMBER	
ASM		4401263	

EDGE GIRDER REINFORCEMENT LAYOUT (6 OF 16)
BRIDGE NO. LAW-93-0000
IRONTON RUSSELL BRIDGE OVER OHIO RIVER

LAW-93-0.00
PID No. 81595

173/365

560/788

E:\Bridges_XM\Ironton_Russell\LAW\81595\structures\LAW093_0000C\sheets\093_0000CSD014.dgn 4/25/2011 10:17:01 AM john_stahl

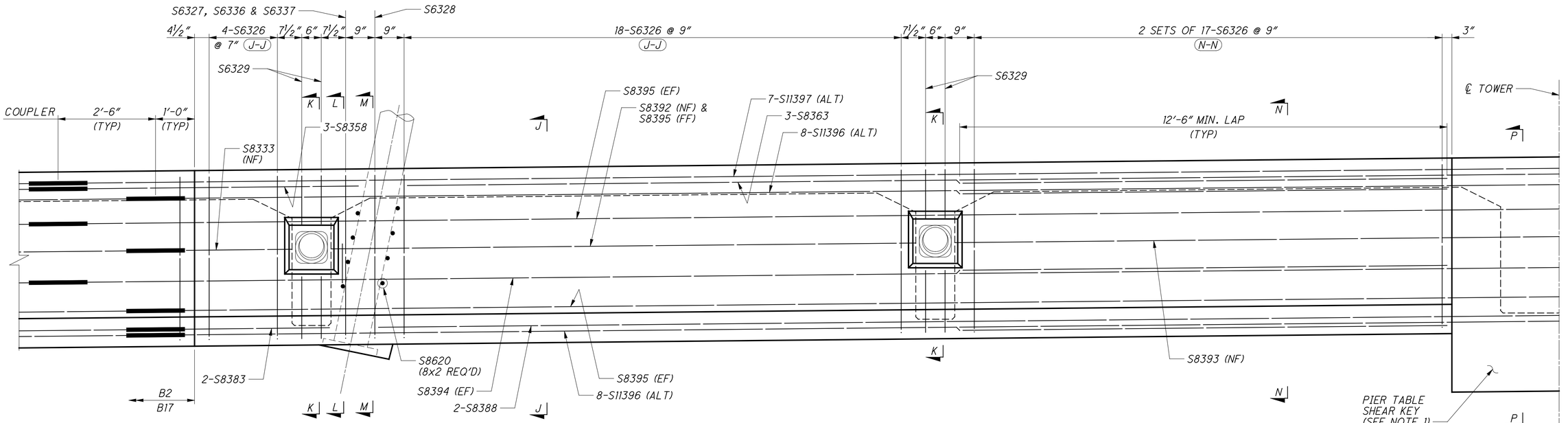

PARTIAL PIER TABLE

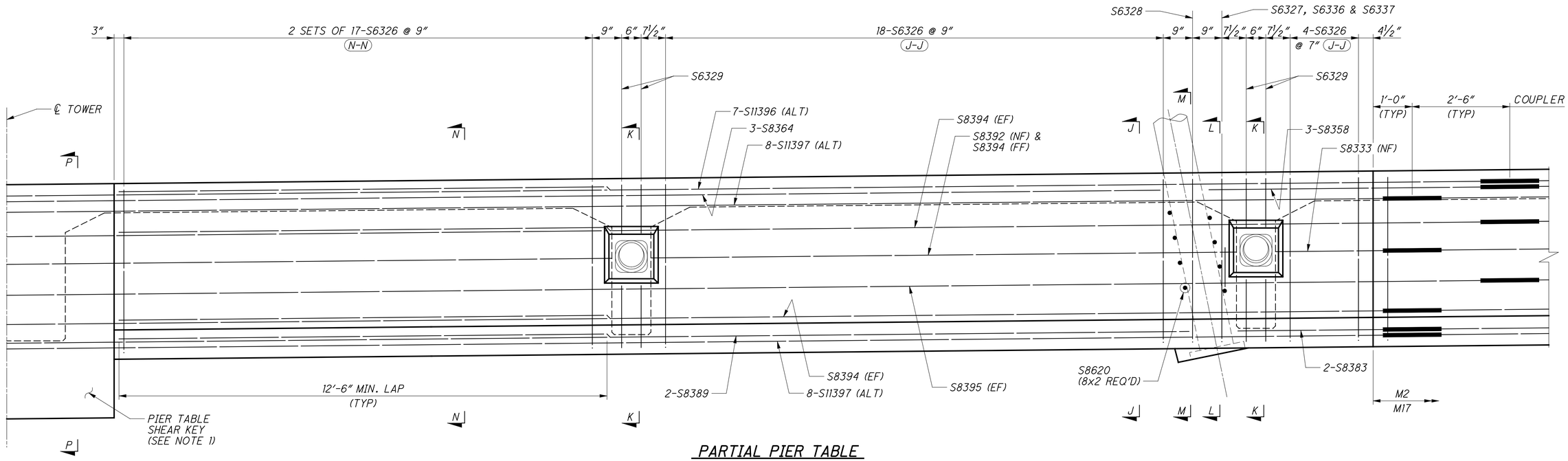

PARTIAL PIER TABLE

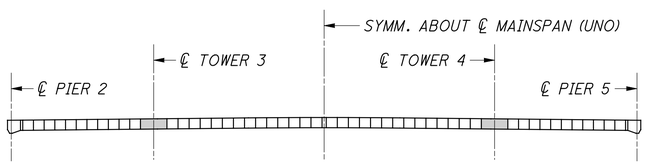

KEY ELEVATION

NOTES

1. FOR PIER TABLE SHEAR KEY REINFORCING LAYOUT, SEE SHEET NO. 239/365 & 240/365
2. FOR SECTIONS, SEE SHEET NOS. 184/365 THRU 193/365
3. FOR LOCATION OF CIP INSERTS NEAR PIER TABLE SHEAR KEYS, SEE SHEET NO. 154/365

DESIGN AGENCY
URS
36 EAST 7TH STREET
SUITE 2300
CINCINNATI, OHIO 45202

DESIGNED	DRAWN	REVIEWED	DATE
RTG	CER	DLJ	6/2010
CHECKED	REVISED	STRUCTURE FILE NUMBER	
ASM		4401263	

EDGE GIRDER REINFORCEMENT LAYOUT (7 OF 16)
BRIDGE NO. LAW-93-0000
IRONTON RUSSELL BRIDGE OVER OHIO RIVER

LAW-93-0.00
PID No. 81595

174/365

561/788

E:\Bridges_XM\Ironton_Russell\LAW\81595\structures\LAW093_0000C\sheets\093_0000CSD014.dgn 4/25/2011 10:17:05 AM john_stahl

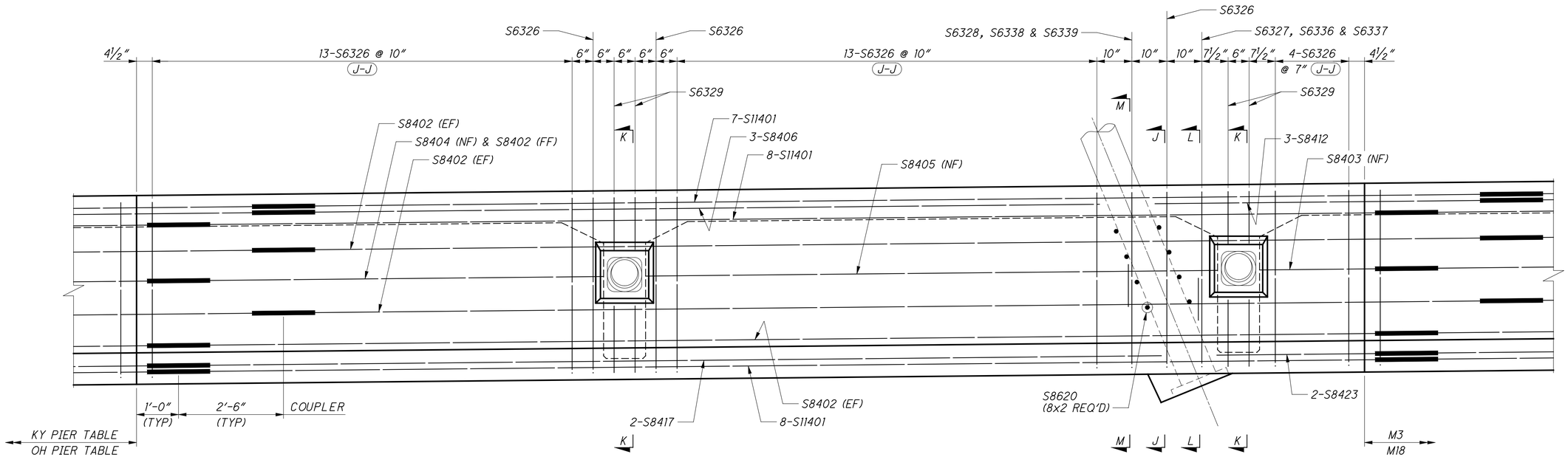

SEGMENTS M2 & M17
(SEGMENT M2 SHOWN)

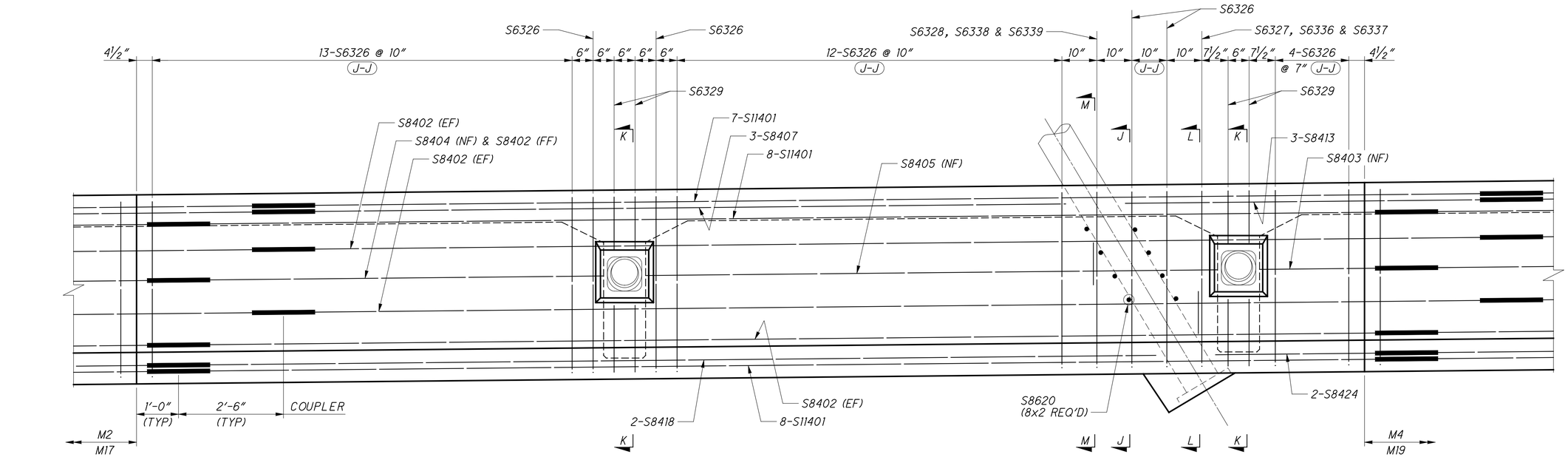

SEGMENTS M3 & M18
(SEGMENT M3 SHOWN)

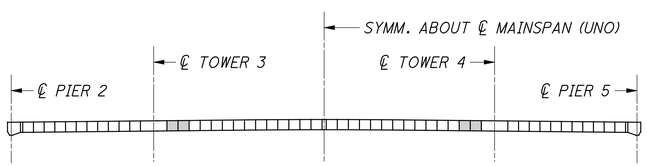

KEY ELEVATION

NOTES

1. FOR SECTIONS, SEE SHEET NOS. 184/365 THRU 193/365

Link to RFI156 As-Built

DESIGN AGENCY
URS
36 EAST 7TH STREET
SUITE 2300
CINCINNATI, OHIO 45202

DESIGNED	DRAWN	REVIEWED	DATE
RTG	CER	DLJ	6/2010
CHECKED	REVISED	STRUCTURE FILE NUMBER	
ASM		4401263	

EDGE GIRDER REINFORCEMENT LAYOUT (8 OF 16)
BRIDGE NO. LAW-93-0000
IRONTON RUSSELL BRIDGE OVER OHIO RIVER

LAW-93-0.00
PID No. 81595

175/365

562
788

E:\Bridges_XW\Ironton_Russell\LAW\81595\structures\LAW093_0000C\sheets\093_0000CSD014.dgn 4/25/2011 10:17:10 AM john_stahl

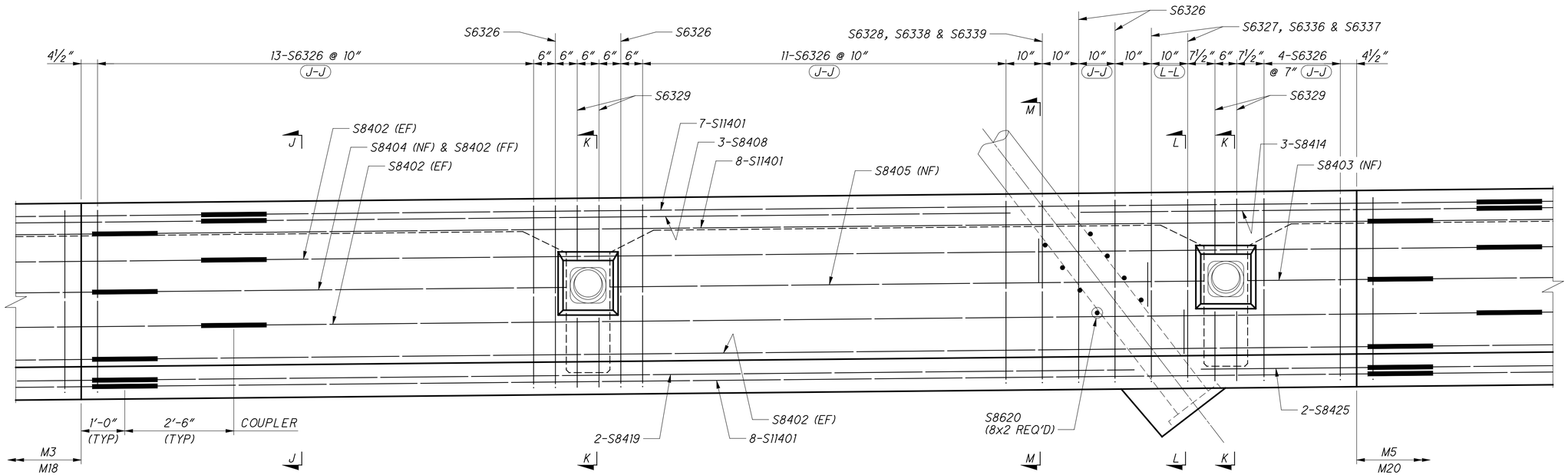

SEGMENTS M4 & M19
(SEGMENT M4 SHOWN)

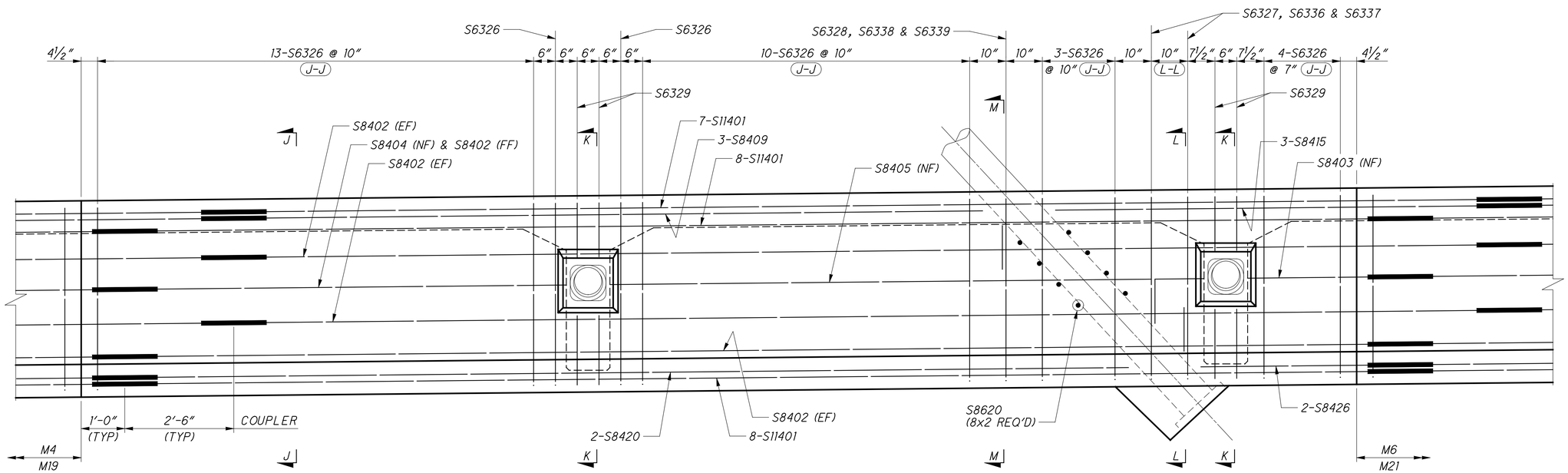

SEGMENTS M5 & M20
(SEGMENT M5 SHOWN)

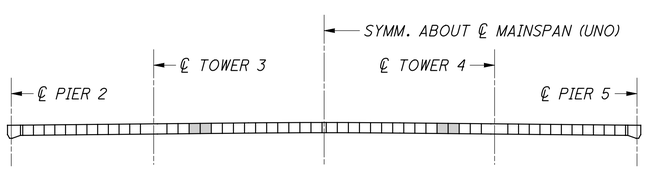

KEY ELEVATION

NOTES

1. FOR SECTIONS, SEE SHEET NOS. 184/365 THRU 193/365

DESIGN AGENCY
URS
36 EAST 7TH STREET
SUITE 2300
CINCINNATI, OHIO 45202

DESIGNED	DRAWN	REVIEWED	DATE
RTG	CER	DLJ	6/2010
CHECKED	REVISED	STRUCTURE FILE NUMBER	
ASM		4401263	

EDGE GIRDER REINFORCEMENT LAYOUT (9 OF 16)
BRIDGE NO. LAW-93-0000
IRONTON RUSSELL BRIDGE OVER OHIO RIVER

LAW-93-0.00
PID No. 81595

176/365

563
788

E:\Bridges_XW\Ironton_Russell\LAW\81595\structures\LAW093_0000C\sheets\093_0000CSD014.dgn 4/25/2011 10:17:14 AM john_stahl

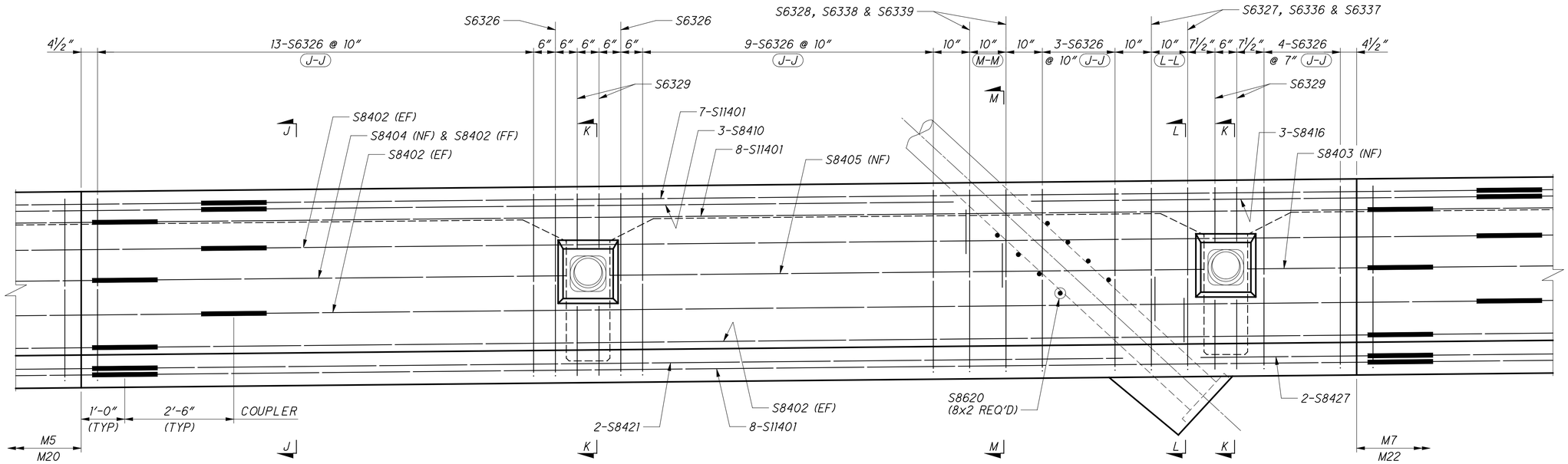

SEGMENTS M6 & M21

(SEGMENT M6 SHOWN)

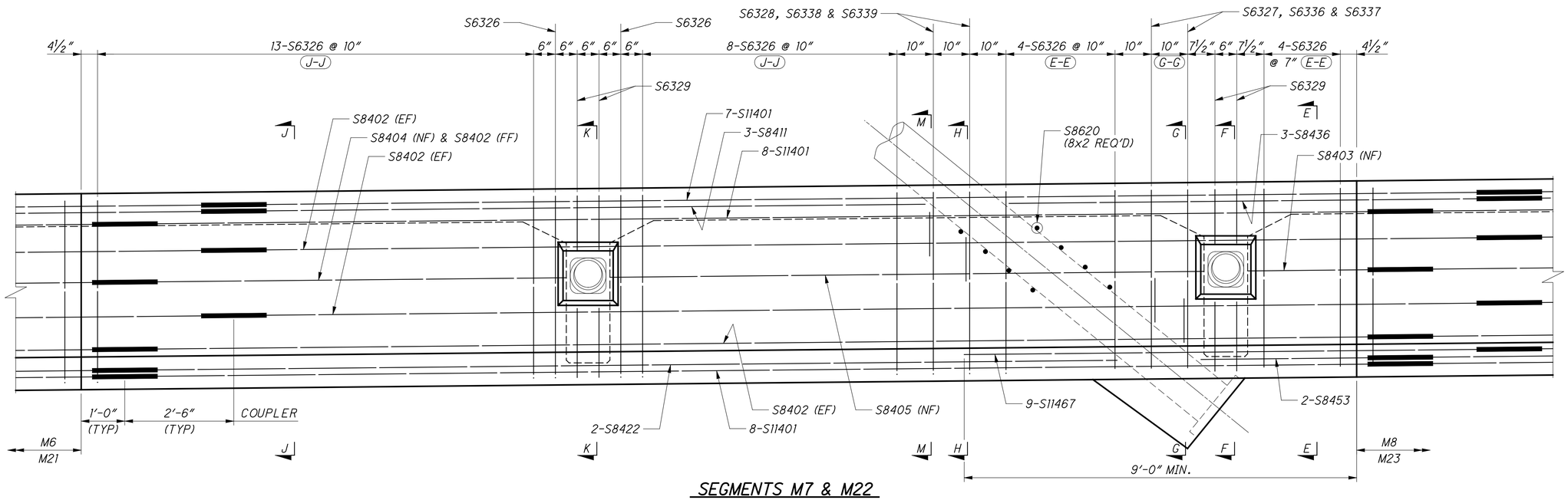

SEGMENTS M7 & M22

(SEGMENT M7 SHOWN)

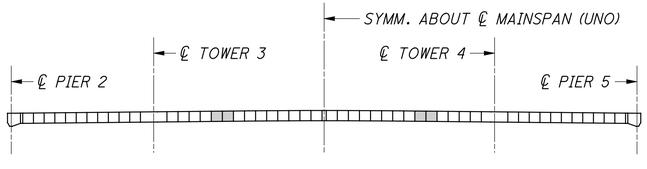

KEY ELEVATION

NOTES

1. FOR SECTIONS, SEE SHEET NOS. 184/365 THRU 193/365

DESIGN AGENCY
URS
36 EAST 7TH STREET
SUITE 2300
CINCINNATI, OHIO 45202

DATE 6/2010
REVIEWED DLJ
STRUCTURE FILE NUMBER 4401263
DRAWN CER
REVISED
DESIGNED RTG
CHECKED ASM

EDGE GIRDER REINFORCEMENT LAYOUT (10 OF 16)
BRIDGE NO. LAW-93-0000
IRONTON RUSSELL BRIDGE OVER OHIO RIVER

LAW-93-0.00
PID No. 81595

177/365
564/788

E:\Bridges_XM\Ironton_Russell\LAW\81595\structures\LAW093_0000C\sheets\093_0000CSD014.dgn 4/25/2011 10:17:18 AM john_stahl

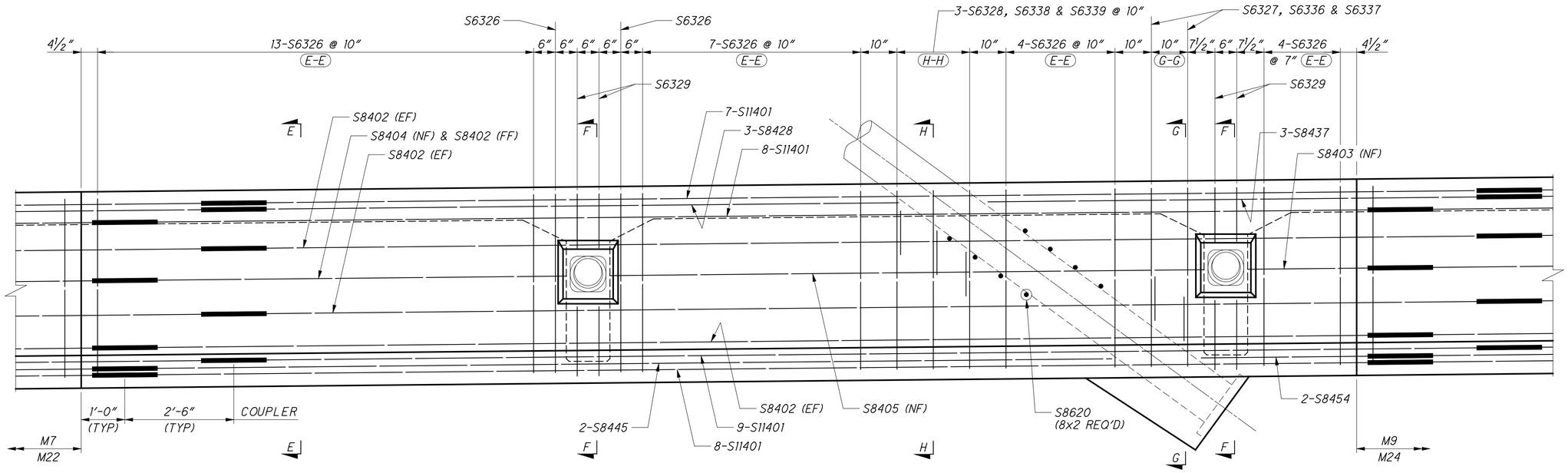

SEGMENTS M8 & M23
(SEGMENT M8 SHOWN)

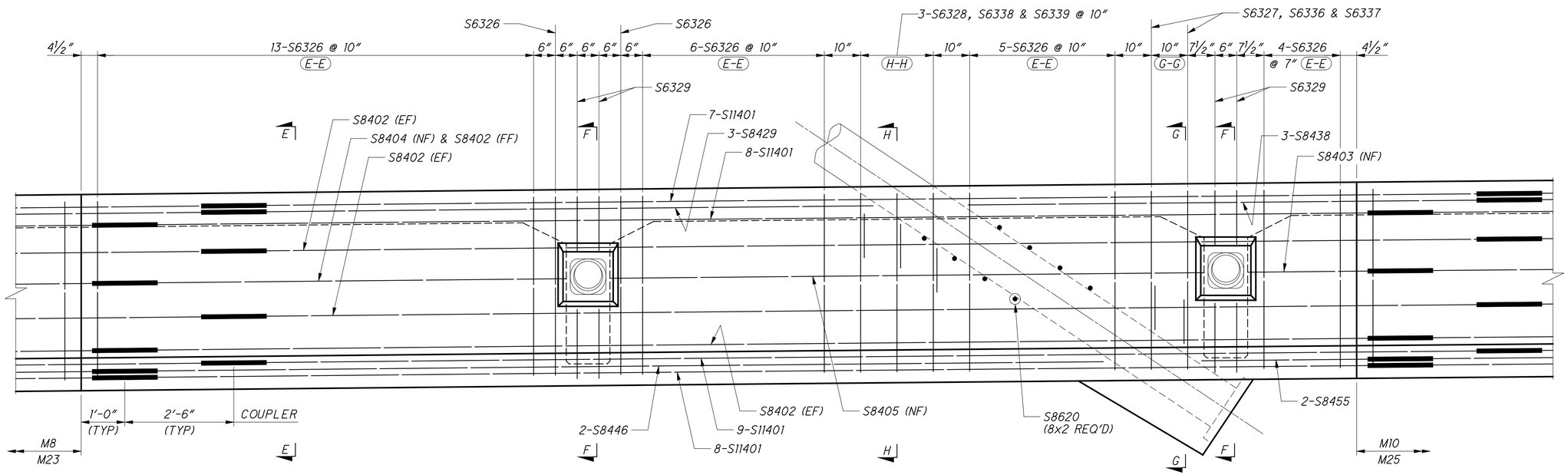

SEGMENTS M9 & M24
(SEGMENT M9 SHOWN)

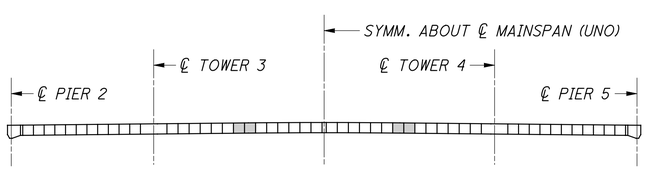

KEY ELEVATION

NOTES

1. FOR SECTIONS, SEE SHEET NOS. 184/365 THRU 193/365

DESIGN AGENCY
URS
36 EAST 7TH STREET
SUITE 2300
CINCINNATI, OHIO 45202

DESIGNED	DRAWN	REVIEWED	DATE
RTG	CER	DLJ	6/2010
CHECKED	REVISED	STRUCTURE FILE NUMBER	
ASM		4401263	

EDGE GIRDER REINFORCEMENT LAYOUT (11 OF 16)
BRIDGE NO. LAW-93-0000
IRONTON RUSSELL BRIDGE OVER OHIO RIVER

LAW-93-0.00
PID No. 81595

178/365

565
788

E:\Bridges_XW\Ironton_Russell\LAW\81595\structures\LAW093_0000C\sheets\093_0000CSD014.dgn 4/25/2011 10:17:23 AM john_stahl

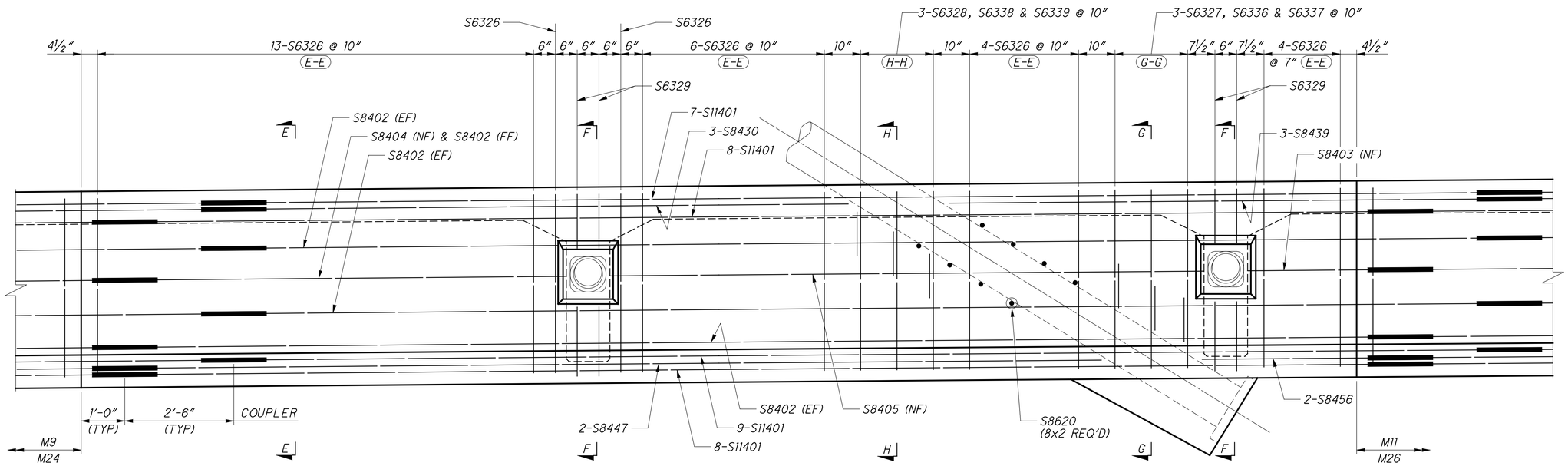

SEGMENTS M10 & M25
(SEGMENT M10 SHOWN)

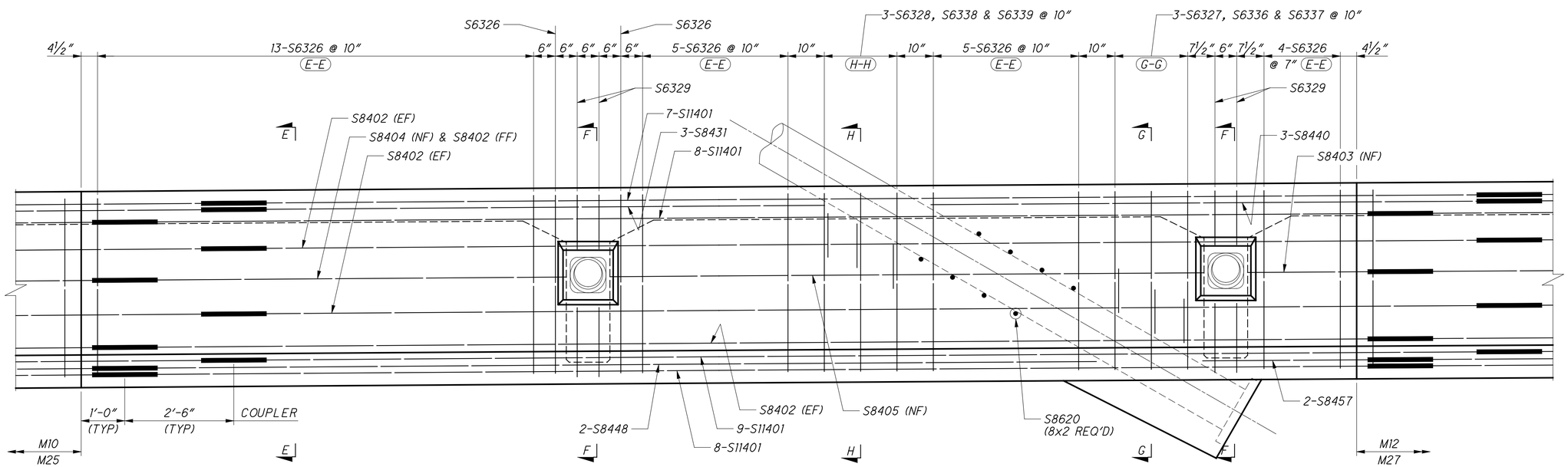

SEGMENTS M11 & M26
(SEGMENT M11 SHOWN)

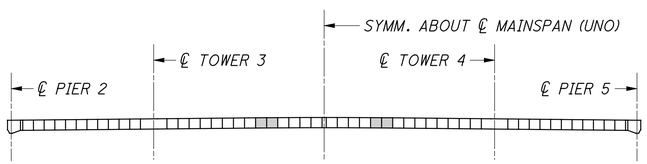

KEY ELEVATION

NOTES

1. FOR SECTIONS, SEE SHEET NOS. 184/365 THRU 193/365

DESIGN AGENCY
URS
36 EAST 7TH STREET
SUITE 2300
CINCINNATI, OHIO 45202

DATE 6/2010
REVIEWED DLJ
STRUCTURE FILE NUMBER 4401263
DRAWN CER
REVISED
DESIGNED RTG
CHECKED ASM

EDGE GIRDER REINFORCEMENT LAYOUT (12 OF 16)
BRIDGE NO. LAW-93-0000
IRONTON RUSSELL BRIDGE OVER OHIO RIVER

LAW-93-0.00
PID No. 81595

179/365
566/788

E:\Bridges_XM\Ironton_Russell\LAW\81595\structures\LAW093_0000C\sheets\093_0000CSD014.dgn 4/25/2011 10:17:27 AM john_stahl

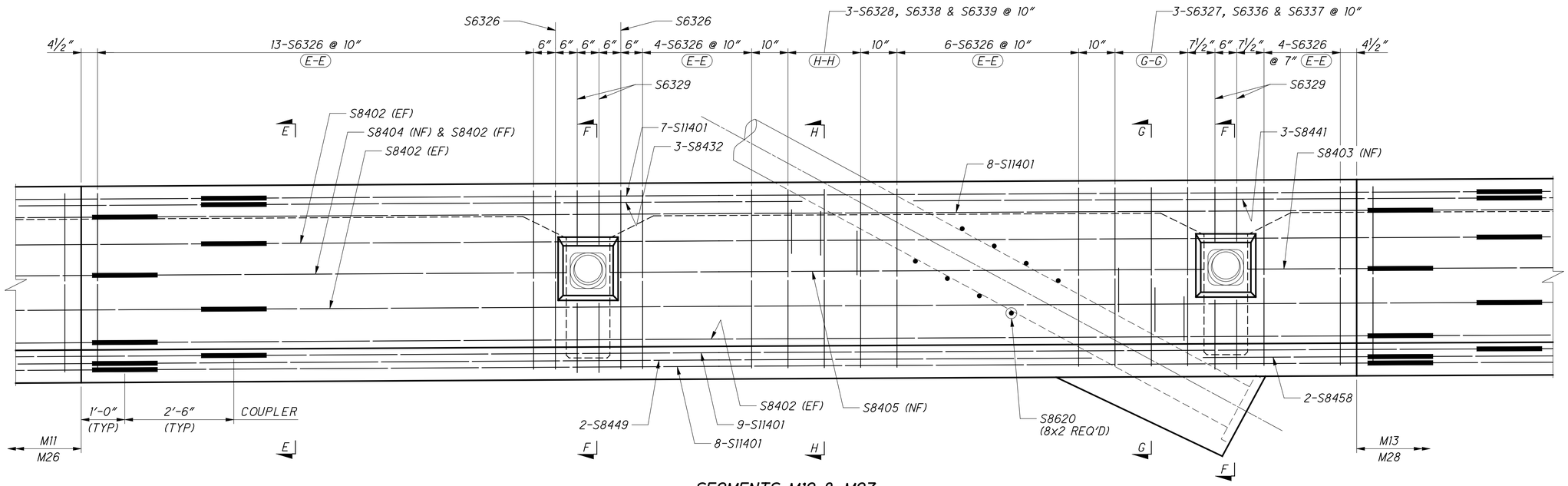

SEGMENTS M12 & M27

(SEGMENT M12 SHOWN)

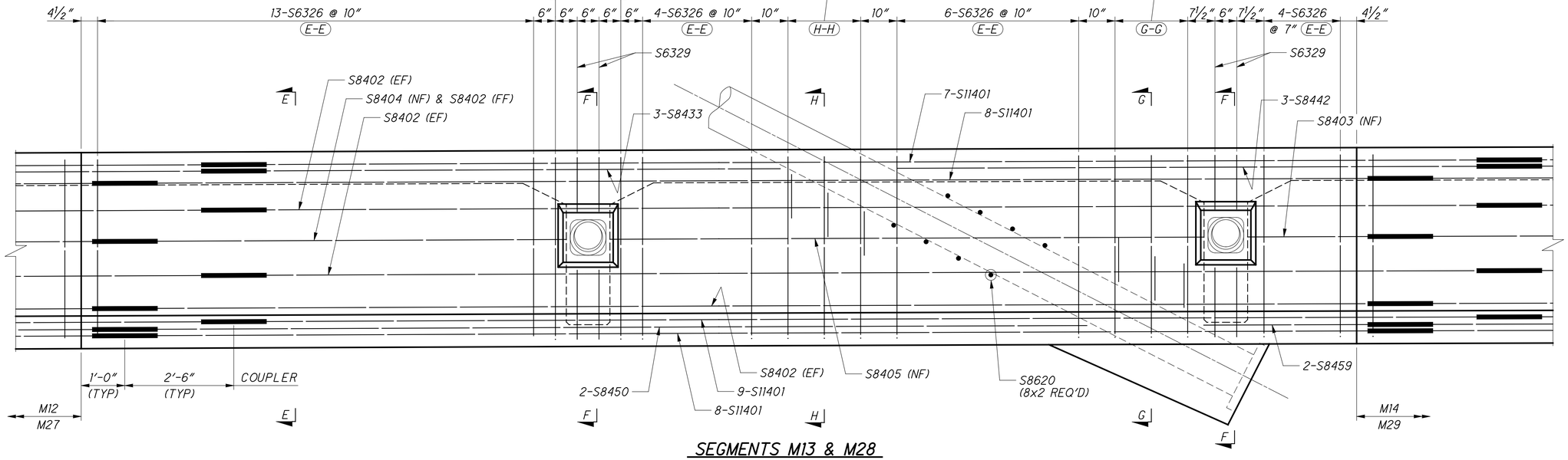

SEGMENTS M13 & M28

(SEGMENT M13 SHOWN)

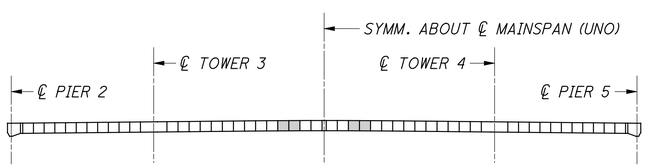

KEY ELEVATION

NOTES

1. FOR SECTIONS, SEE SHEET NOS. 184/365 THRU 193/365

DESIGN AGENCY
URS
36 EAST 7TH STREET
SUITE 2300
CINCINNATI, OHIO 45202

DESIGNED	DRAWN	REVIEWED	DATE
RTG	CER	DLJ	6/2010
CHECKED	REVISED	STRUCTURE FILE NUMBER	
ASM		4401263	

EDGE GIRDER REINFORCEMENT LAYOUT (13 OF 16)
BRIDGE NO. LAW-93-0000
IRONTON RUSSELL BRIDGE OVER OHIO RIVER

LAW-93-0.00
PID No. 81595

180/365

567/788

E:\Bridges_XM\Ironton_Russell\LAW\81595\structures\LAW093_0000C\sheets\093_0000CSD014.dgn 4/25/2011 10:17:32 AM john_stahl

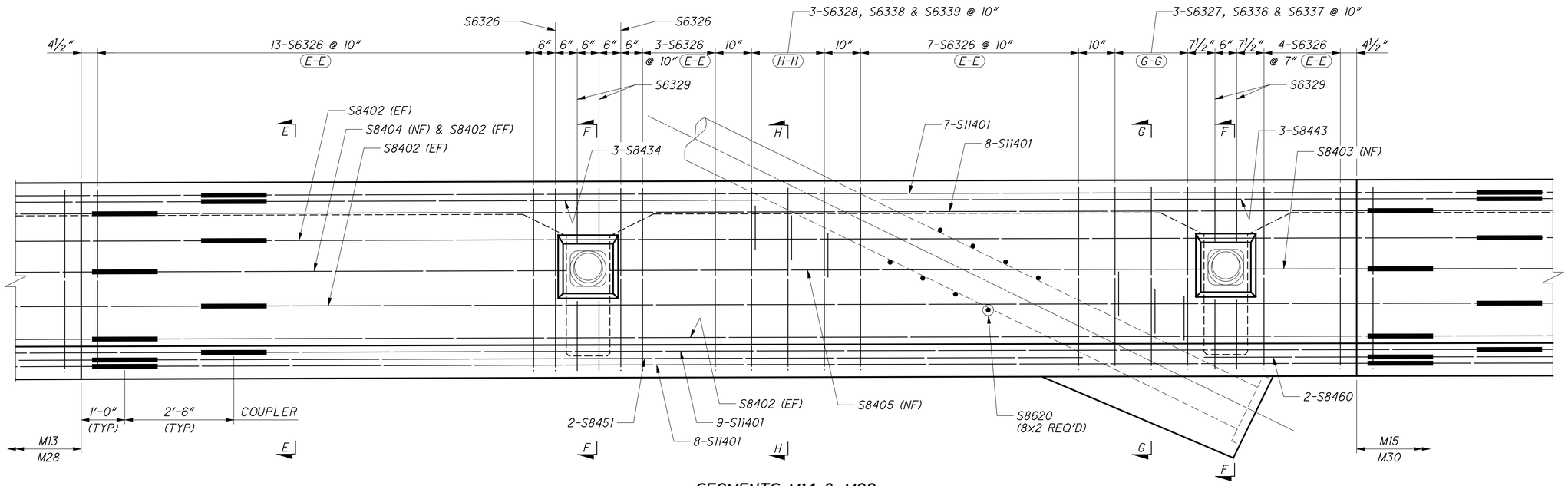

SEGMENTS M14 & M29
(SEGMENT M14 SHOWN)

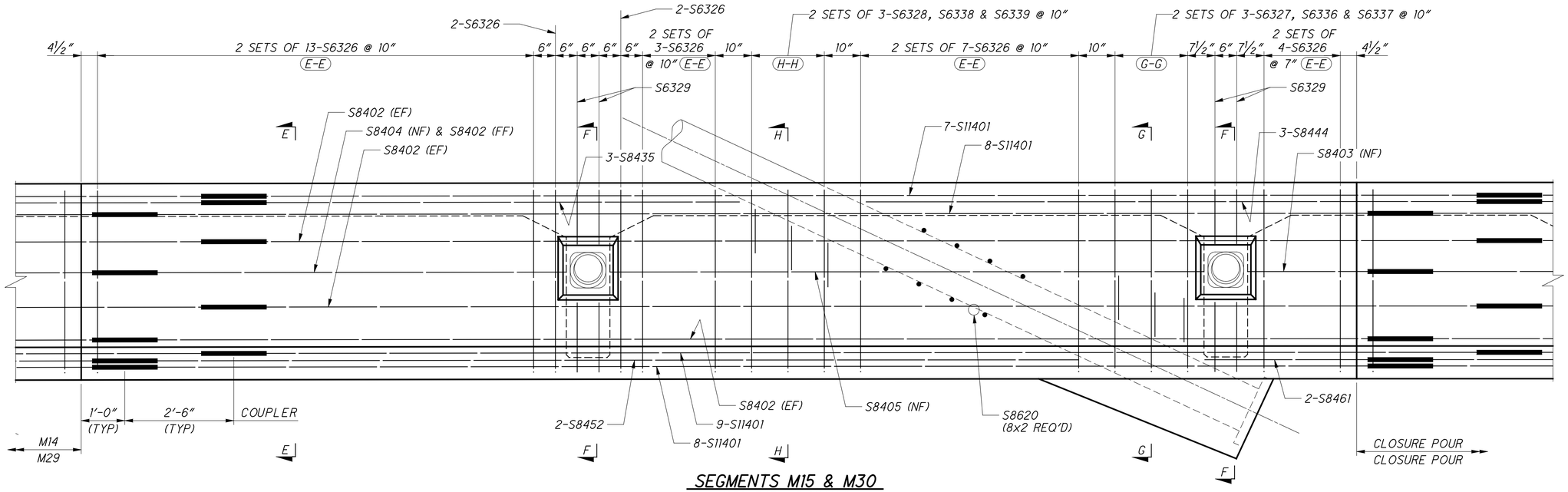

SEGMENTS M15 & M30
(SEGMENT M15 SHOWN)

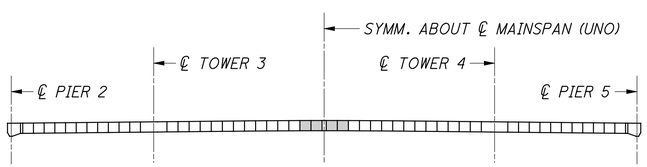

KEY ELEVATION

NOTES

1. FOR SECTIONS, SEE SHEET NOS. 184/365 THRU 193/365

DESIGN AGENCY
URS
36 EAST 7TH STREET
SUITE 2300
CINCINNATI, OHIO 45202

DESIGNED	DRAWN	REVIEWED	DATE
RTG	CER	DLJ	6/2010
CHECKED	REVISED	STRUCTURE FILE NUMBER	
ASM		4401263	

EDGE GIRDER REINFORCEMENT LAYOUT (14 OF 16)
BRIDGE NO. LAW-93-0000
IRONTON RUSSELL BRIDGE OVER OHIO RIVER

LAW-93-0.00
PID No. 81595

181/365

568/788

E:\Bridges_XM\Ironton_Russell\LAW\81595\structures\LAW093_0000C\sheets\093_0000CSD014.dgn 4/25/2011 10:17:37 AM john_stahl

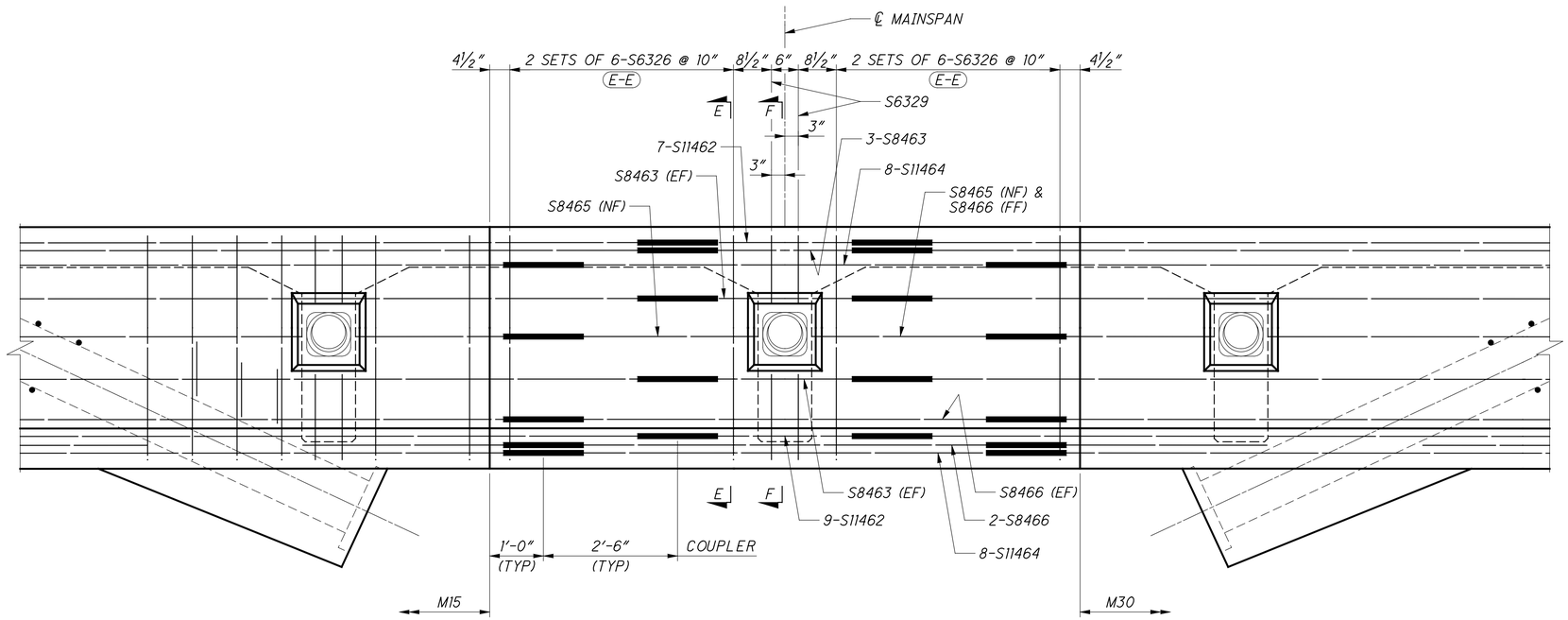

CLOSURE POUR AT ℄ MAINSPAN

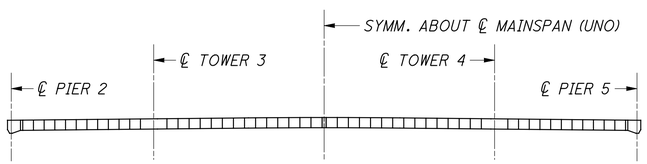

KEY ELEVATION

NOTES

1. FOR SECTIONS, SEE SHEET NOS. 184/365 THRU 193/365

2. LONGITUDINAL BARS WITHIN CLOSURE HAVE BEEN INTENTIONALLY MADE LONG TO ACCOUNT FOR CONSTRUCTION TOLERANCES AND COUPLER POSITIONING. THESE BARS SHALL BE FIELD CUT TO ACCOMMODATE FINAL COUPLER POSITIONS. CUT END OF BAR SHALL BE FIELD REPAIRED WITH EPOXY COATING.

DESIGN AGENCY
URS
36 EAST 7TH STREET
SUITE 2300
CINCINNATI, OHIO 45202

DESIGNED	DRAWN	REVIEWED	DATE
RTG	CER	DLJ	6/2010
CHECKED	REVISED	STRUCTURE FILE NUMBER	
ASM		4401263	

EDGE GIRDER REINFORCEMENT LAYOUT (15 OF 16)
BRIDGE NO. LAW-93-0000
IRONTON RUSSELL BRIDGE OVER OHIO RIVER

LAW-93-0.00
PID No. 81595

182/365

569
788

E:\Bridges_XM\Ironton_Russell\LAW\81595\structures\LAW093_0000C\sheets\093_0000CSD014.dgn 4/25/2011 10:17:41 AM john_stahl

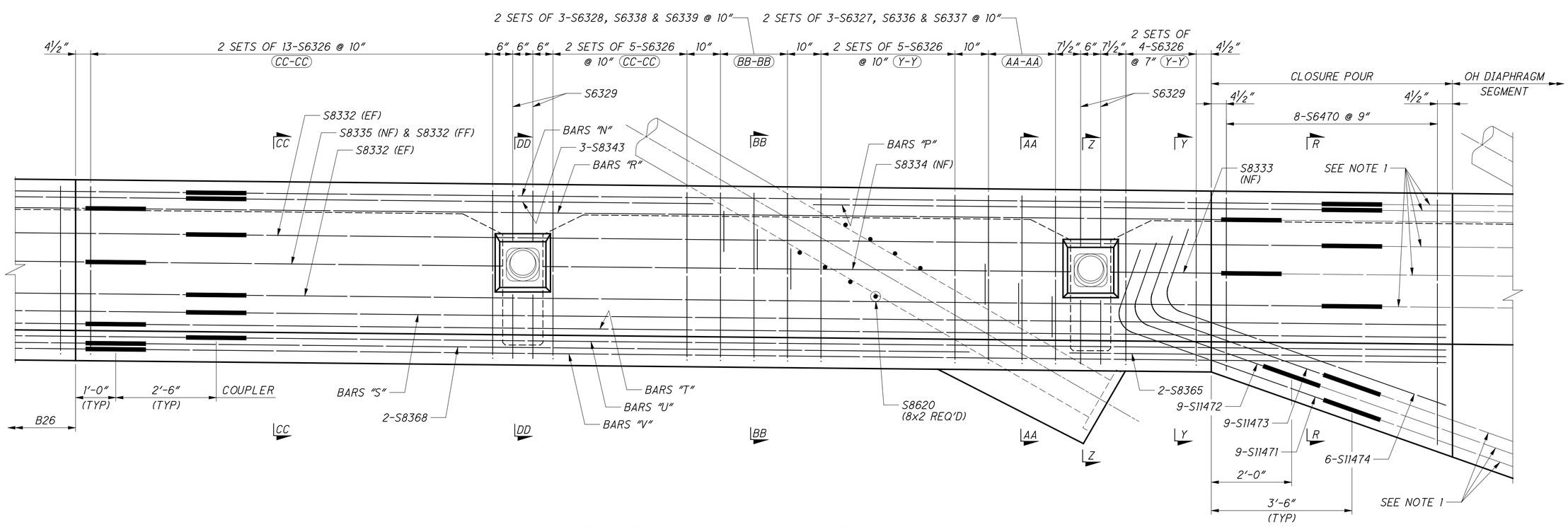

SEGMENT B27 & CLOSURE POUR AT DIAPHRAGM

	LEFT EDGE GIRDER	RIGHT EDGE GIRDER
BARS "N"	5-S11331, S11479 & S11480	6-S11331 & S11480
BARS "P"	S8340, S11481 & 2-S11482	2-S8340, S11481 & S11482
BARS "R"	6-S11331, S11479 & S11480	6-S11331, S11479 & S11480
BARS "S"	5-S11468 & 1-S11476	6-S11468
BARS "T"	8-S11469 & 2-S11476	9-S11469 & 1-S11476
BARS "U"	7-S11468 & 2-S11475	8-S11468 & 1-S11475
BARS "V"	6-S11469 & 2-S11477	7-S11469 & 1-S11477

(LEFT & RIGHT EDGE GIRDER ARE WITH RESPECT TO LOOKING STATIONS AHEAD)

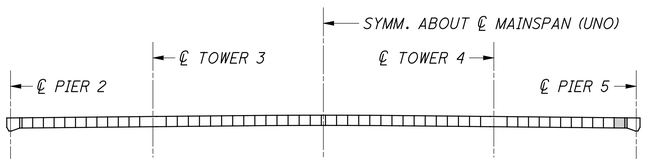

KEY ELEVATION

NOTES

1. FOR PIER DIAPHRAGM SEGMENT BAR MARKS, SEE SHEET NOS. 215/365 THRU 223/365
2. FOR SECTIONS SEE SHEET NOS. 184/365 THRU 193/365
3. LONGITUDINAL BARS WITHIN CLOSURE HAVE BEEN INTENTIONALLY MADE LONG TO ACCOUNT FOR CONSTRUCTION TOLERANCES AND COUPLER POSITIONING. THESE BARS SHALL BE FIELD CUT TO ACCOMMODATE FINAL COUPLER POSITIONS. CUT END OF BAR SHALL BE FIELD REPAIRED WITH EPOXY COATING.
4. HOOKS ON BOTTOM BARS WITHIN CLOSURE MAY BE ROTATED TO AVOID EDGE GIRDER POST-TENSIONING.

DESIGN AGENCY
URS
36 EAST 7TH STREET
SUITE 2300
CINCINNATI, OHIO 45202

DESIGNED	DRAWN	REVIEWED	DATE
RTG	CER	DLJ	6/2010
CHECKED	REVISED	STRUCTURE FILE NUMBER	
ASM		4401263	

EDGE GIRDER REINFORCEMENT LAYOUT (16 OF 16)
BRIDGE NO. LAW-93-0000
IRONTON RUSSELL BRIDGE OVER OHIO RIVER

LAW-93-0.00
PID No. 81595

183/365

570
788

E:\Bridges_XM\Ironton_Russell\LAW\81595\structures\LAW093_0000C\sheets\093_0000CSD014.dgn 4/25/2011 10:17:44 AM john_stahl

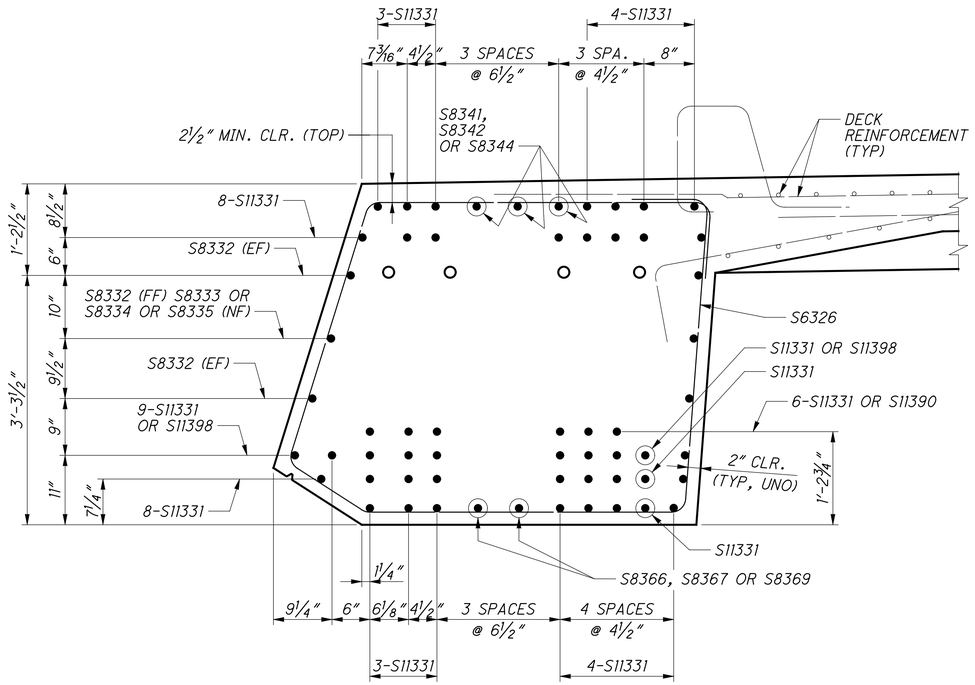

SECTION A-A

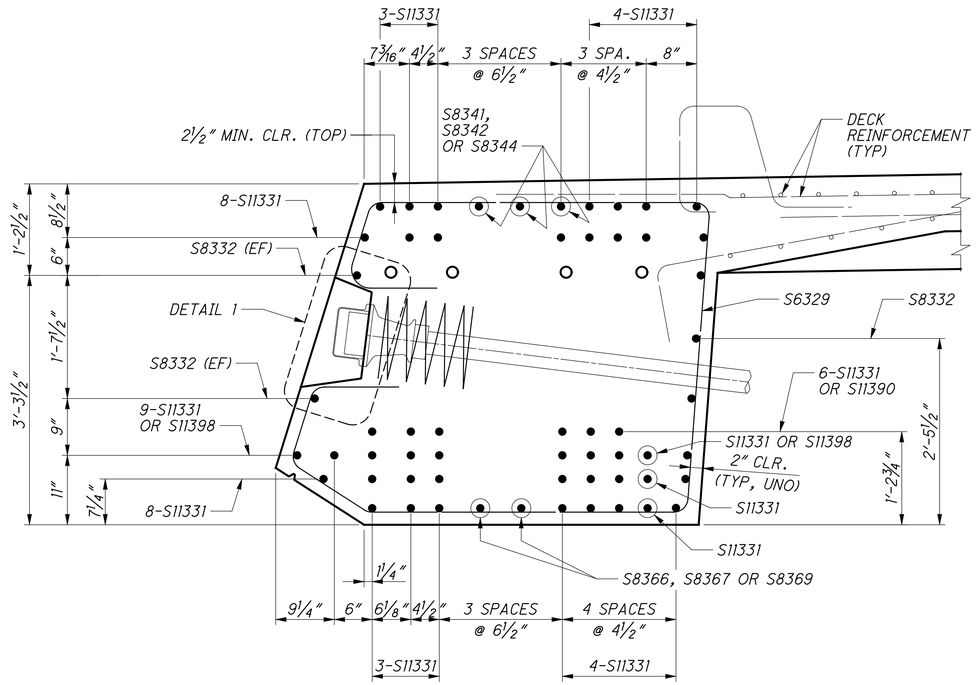

SECTION B-B

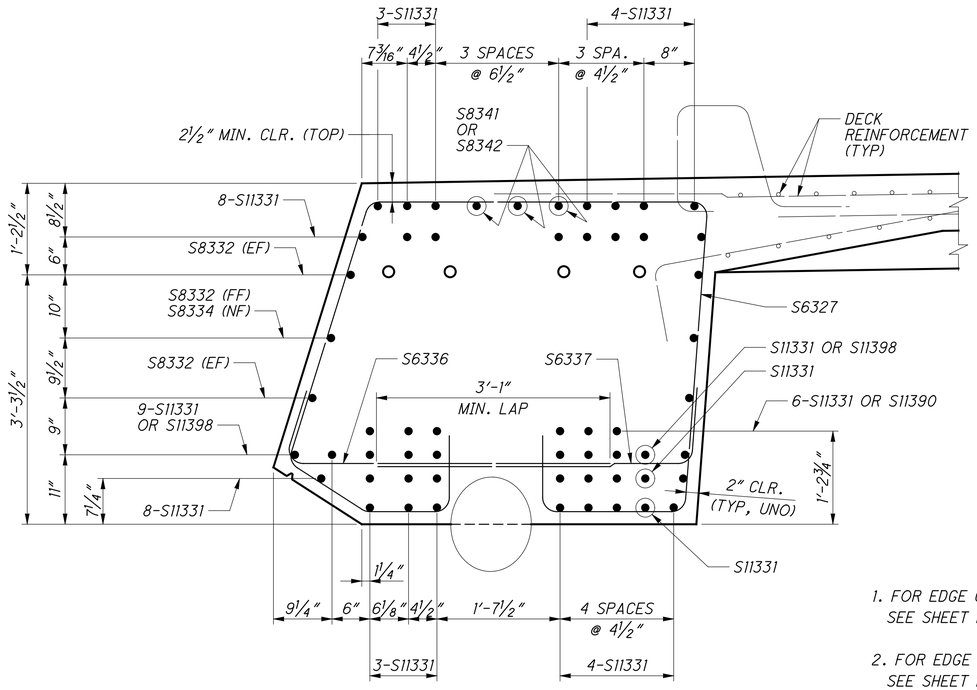

SECTION C-C

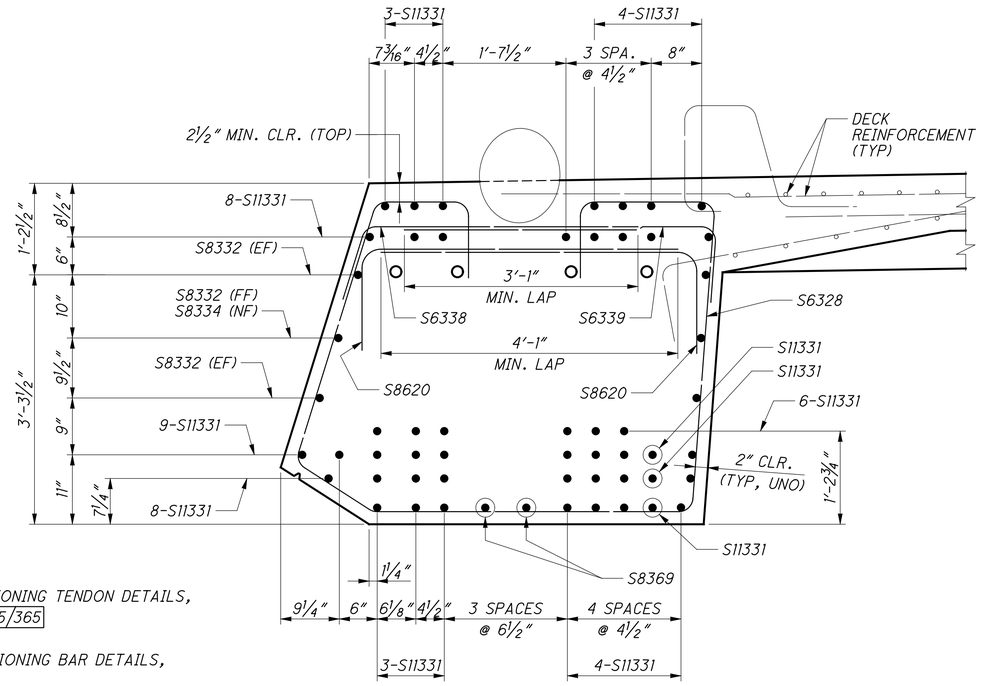

SECTION D-D

NOTES

1. FOR EDGE GIRDER POST-TENSIONING TENDON DETAILS, SEE SHEET NO. 164/365 & 165/365
2. FOR EDGE GIRDER POST-TENSIONING BAR DETAILS, SEE SHEET NO. 155/365
3. MECHANICAL COUPLERS SHALL BE STAGGERED BOTH VERTICALLY AND HORIZONTALLY WITHIN THE SECTION.

DESIGN AGENCY
URS
36 EAST 7TH STREET
SUITE 2300
CINCINNATI, OHIO 45202

DESIGNED	DRAWN	REVIEWED	DATE
RTG	CER	DLJ	6/2010
CHECKED	REVISED	STRUCTURE FILE NUMBER	
ASM		4401263	

EDGE GIRDER REINFORCEMENT DETAILS (1 OF 10)
BRIDGE NO. LAW-93-0000
IRONTON RUSSELL BRIDGE OVER OHIO RIVER

LAW-93-0.00
PID No. 81595

184/365

571
788

E:\Bridges_XM\Ironton_Russell\LAW\81595\structures\LAW093_0000C\sheets\093_0000CSD015.dgn 4/25/2011 10:17:51 AM john_stahl

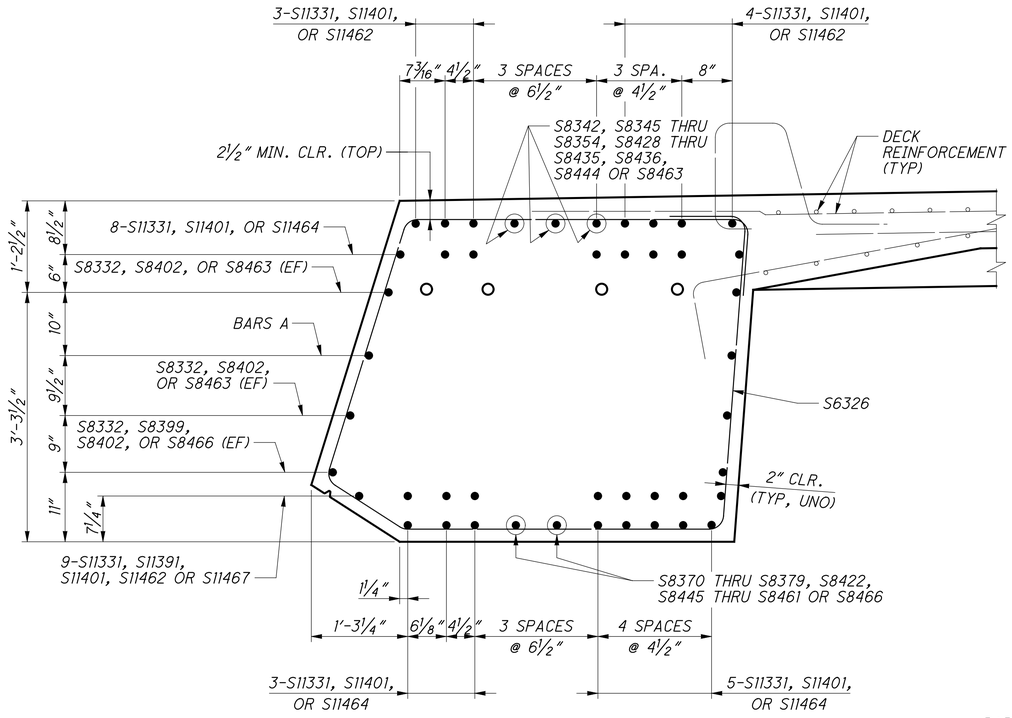

SECTION E-E

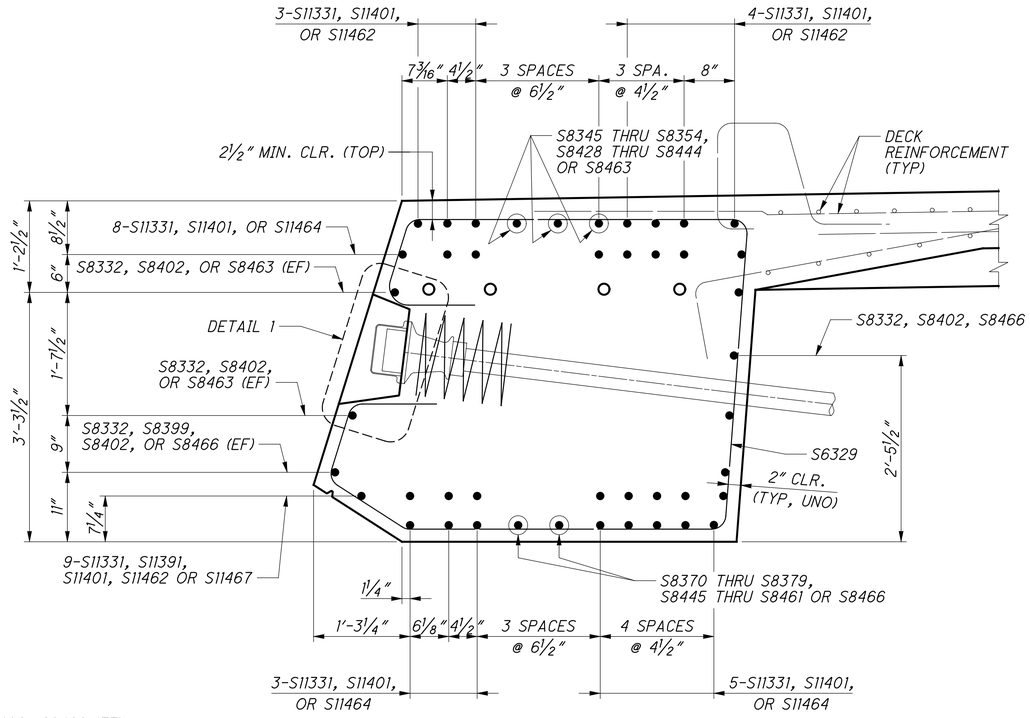

SECTION F-F

BARS A: S8332, S8402, S8466 (FF)
OR S8333, S8334, S8335,
S8403, S8404, S8405, S8465 (NF)

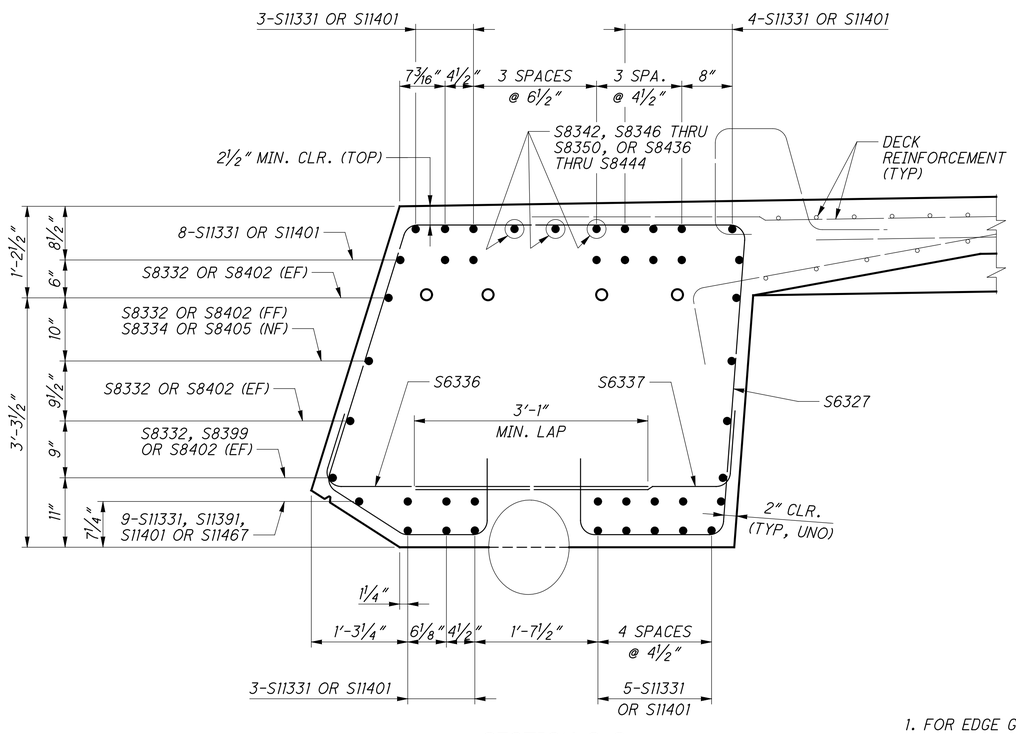

SECTION G-G

NOTES

1. FOR EDGE GIRDER POST-TENSIONING BAR DETAILS, SEE SHEET NO. 155/365

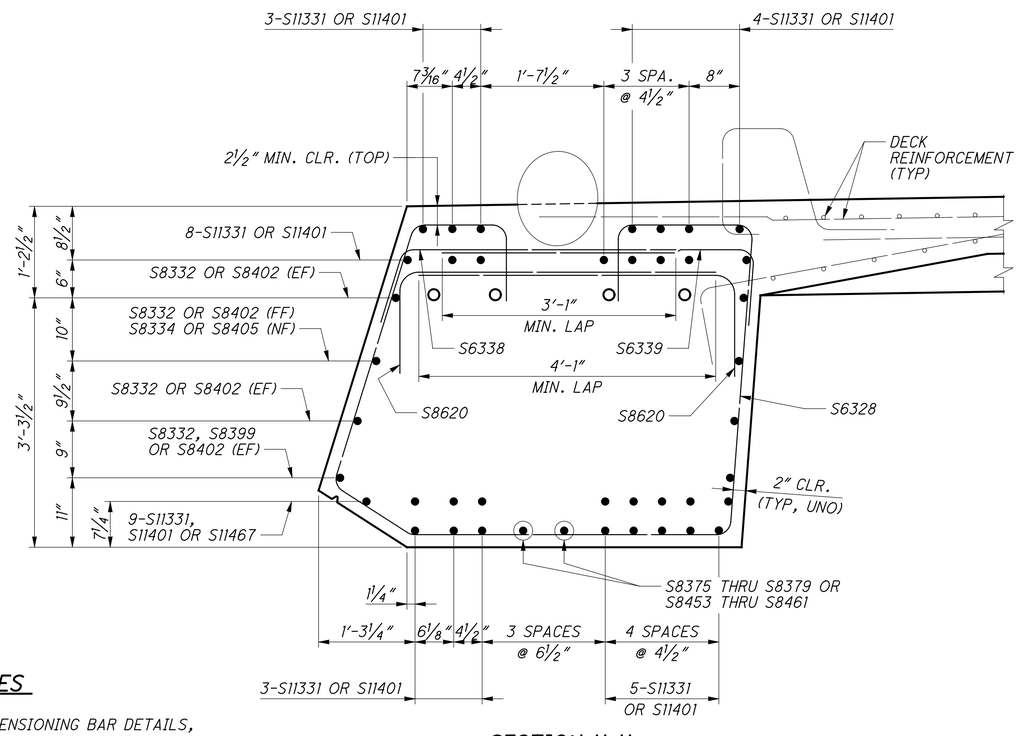

SECTION H-H

DESIGN AGENCY
URS
36 EAST 7TH STREET
SUITE 2300
CINCINNATI, OHIO 45202

DESIGNED	DRAWN	REVIEWED	DATE
RTG	CER	DLJ	6/2010
CHECKED	REVISED	STRUCTURE FILE NUMBER	
ASM		4401263	

EDGE GIRDER REINFORCEMENT DETAILS (2 OF 10)
BRIDGE NO. LAW-93-0000
IRONTON RUSSELL BRIDGE OVER OHIO RIVER

LAW-93-0.00
PID No. 81595

185/365

572
788

E:\Bridges_XM\Ironton_Russell\LAW\81595\structures\LAW093_0000C\sheets\093_0000CSD015.dgn 4/25/2011 10:17:57 AM john_stahl

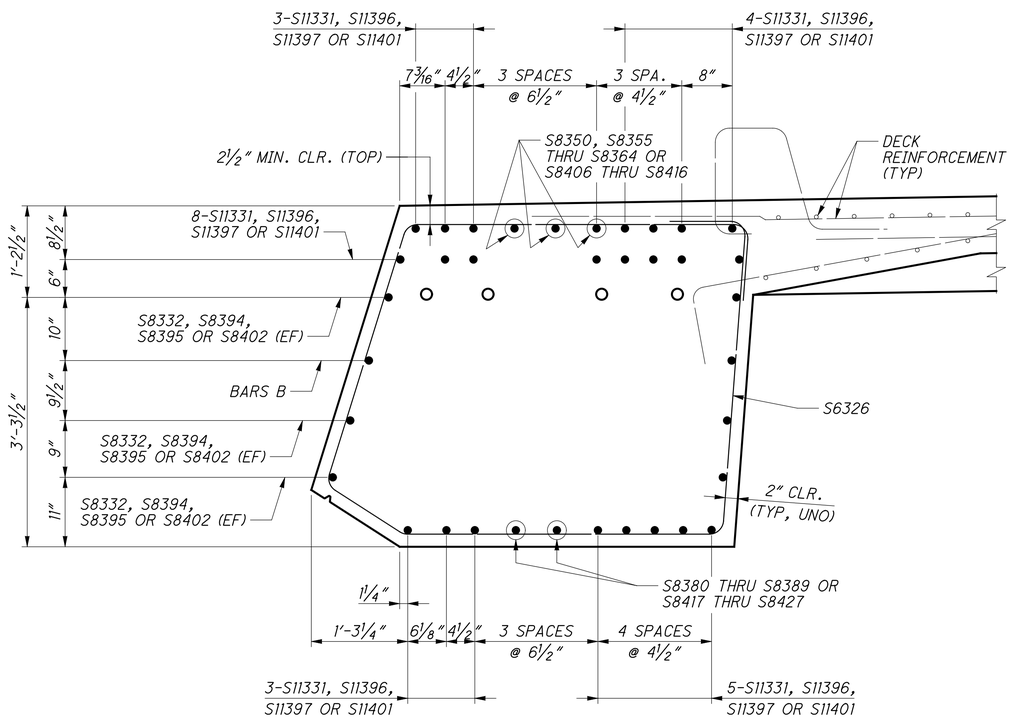

SECTION J-J

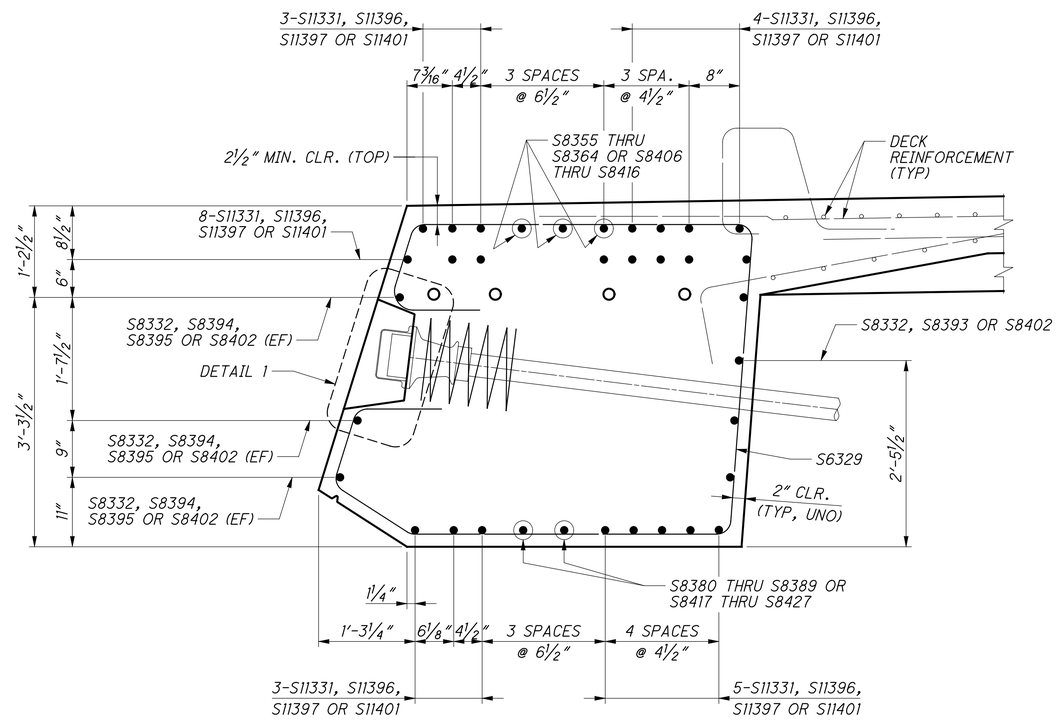

SECTION K-K

BARS B: S8333, S8334, S8335, S8392, S8403, S8404, S8405 (NF) OR S8332, S8394, S8395, S8402 (FF)

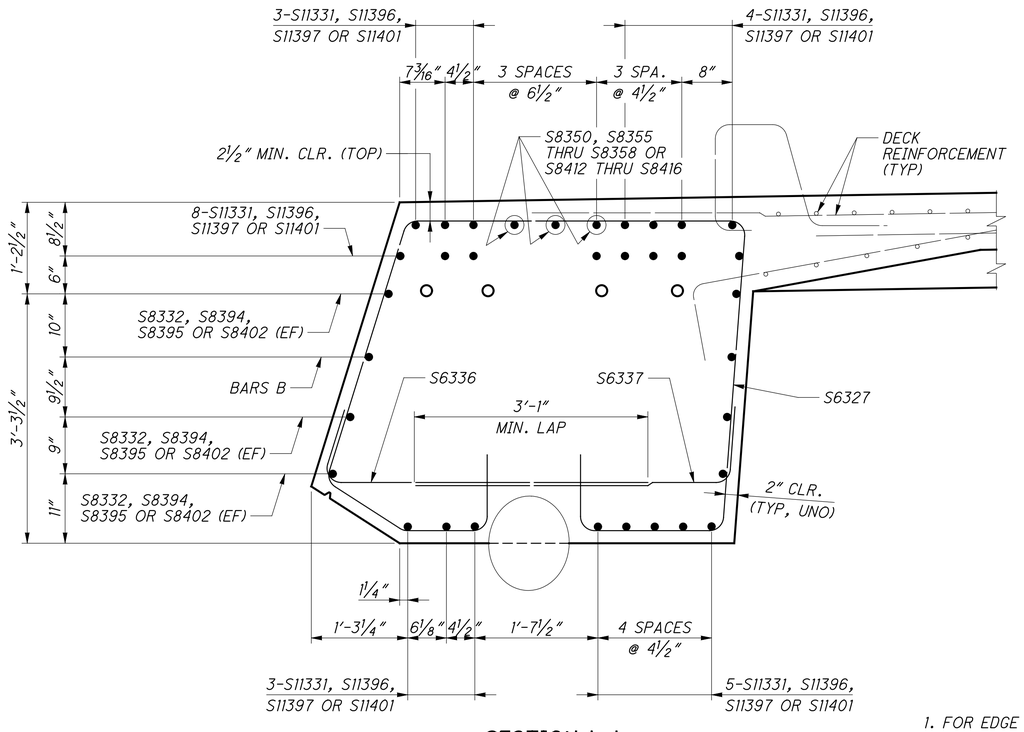

SECTION L-L

NOTES

1. FOR EDGE GIRDER POST-TENSIONING BAR DETAILS, SEE SHEET NO. 155/365

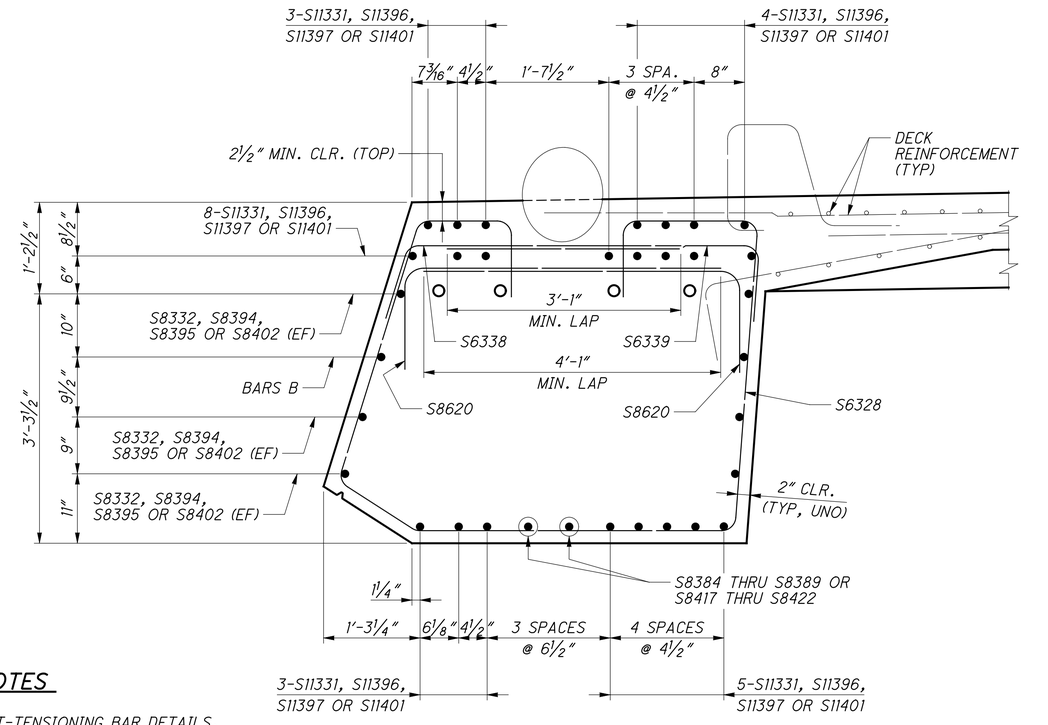

SECTION M-M

DESIGN AGENCY: URS, 36 EAST 7TH STREET SUITE 2300 CINCINNATI, OHIO 45202

DESIGNED	DRAWN	REVIEWED	DATE
RTG	CER	DLJ	6/2010
CHECKED	REVISED	STRUCTURE FILE NUMBER	
ASM		4401263	

EDGE GIRDER REINFORCEMENT DETAILS (3 OF 10)

BRIDGE NO. LAW-93-0000

IRONTON RUSSELL BRIDGE OVER OHIO RIVER

LAW-93-0.00

PID No. 81595

E:\Bridges_XM\Ironton_Russell\LAW\81595\structures\LAW093_0000C\sheets\093_0000CSD015.dgn 4/25/2011 10:18:03 AM john_stahl

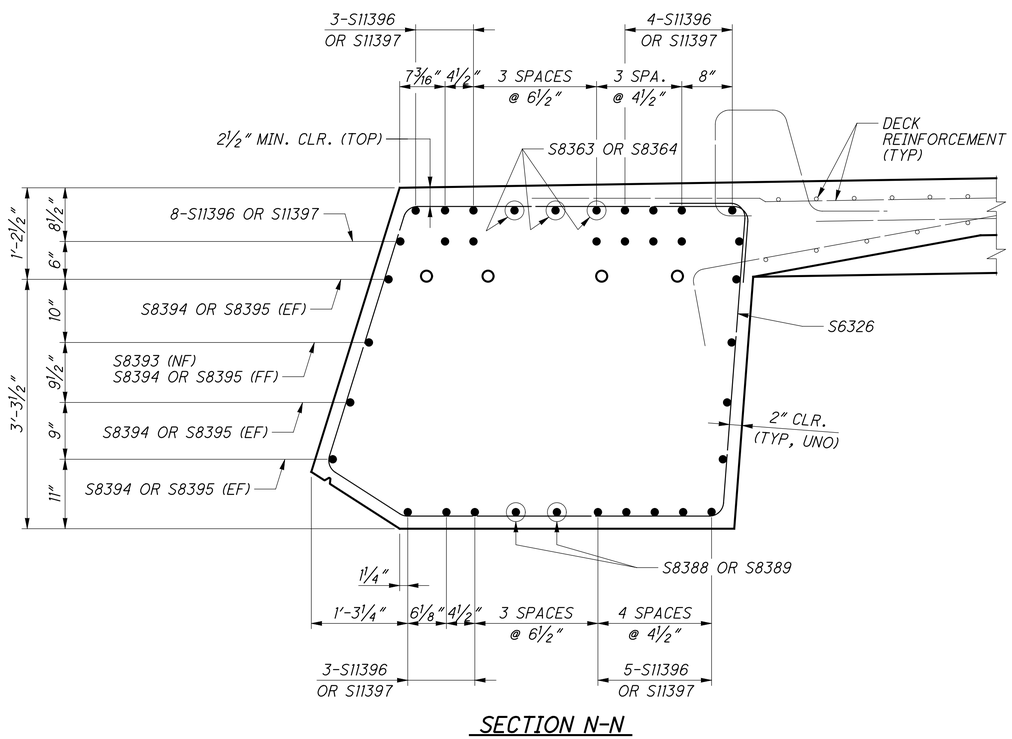

SECTION N-N

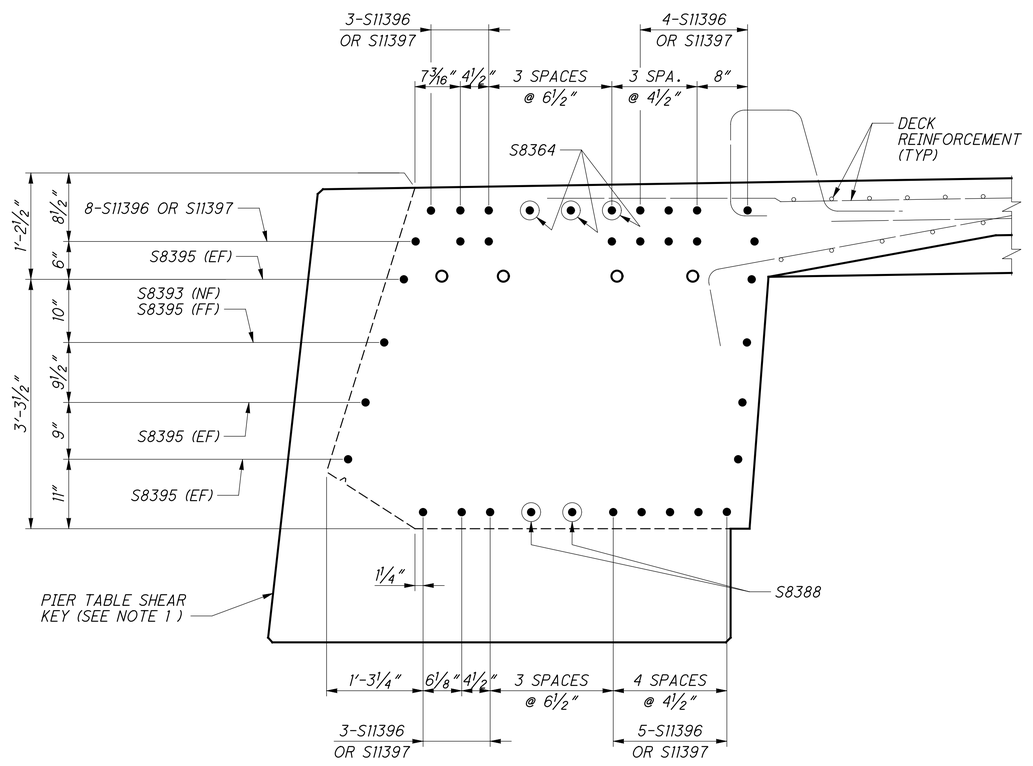

SECTION P-P

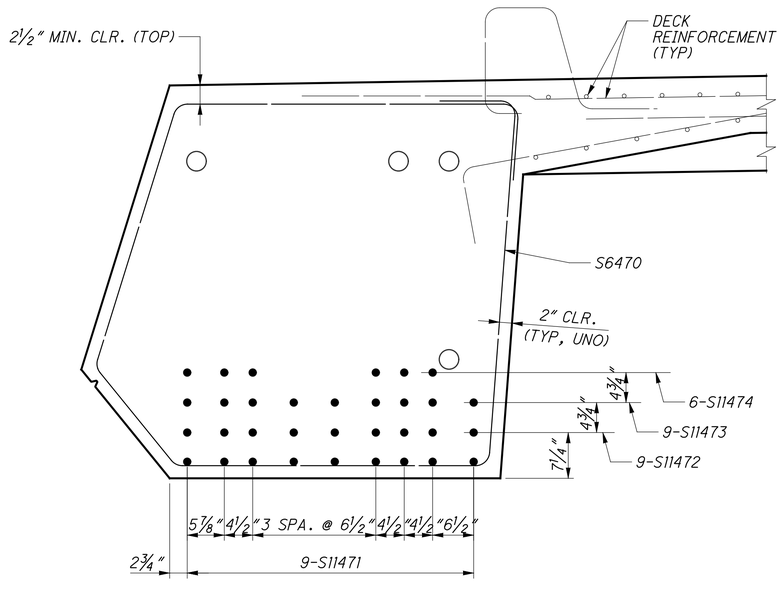

SECTION R-R

(EDGE GIRDER REINFORCEMENT NOT SHOWN.
SEE SECTION S-S FOR B12 SEGMENT EDGE GIRDER REINFORCEMENT
AND SECTION Y-Y FOR B27 SEGMENT EDGE GIRDER REINFORCEMENT)

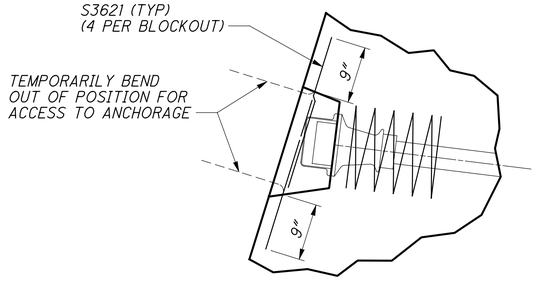

DETAIL 1

(TYPICAL FOR ALL TRANSVERSE FLOORBEAM TENDONS)

NOTES

1. FOR PIER TABLE SHEAR KEY REINFORCING LAYOUT, SEE SHEET NO. 239/365 & 240/365

2. FOR EDGE GIRDER POST-TENSIONING BAR DETAILS, SEE SHEET NO. 155/365

DESIGN AGENCY
URS
36 EAST 7TH STREET
SUITE 2300
CINCINNATI, OHIO 45202

DESIGNED	DRAWN	REVIEWED	DATE
RTG	CER	DLJ	6/2010
CHECKED	REVISED	STRUCTURE FILE NUMBER	
ASM		4401263	

EDGE GIRDER REINFORCEMENT DETAILS (4 OF 10)
BRIDGE NO. LAW-93-0000
IRONTON RUSSELL BRIDGE OVER OHIO RIVER

LAW-93-0.00
PID No. 81595

187/365

574
788

E:\Bridges_XM\Ironton_Russell\LAW\81595\structures\LAW093_0000C\sheets\093_0000CSD015.dgn 4/25/2011 10:18:09 AM john_stahl

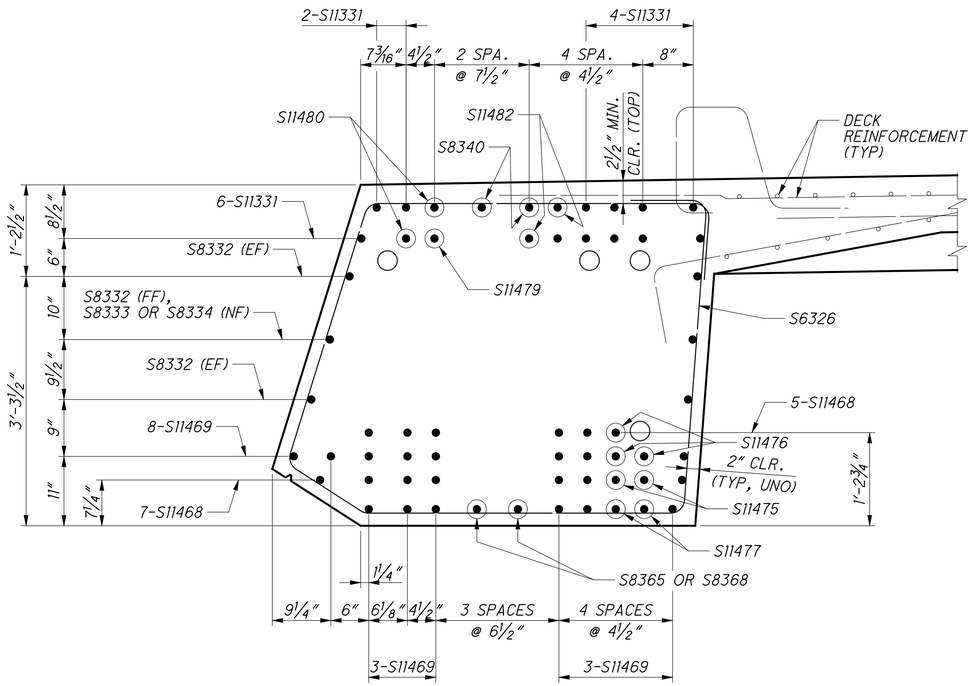

SECTION S-S

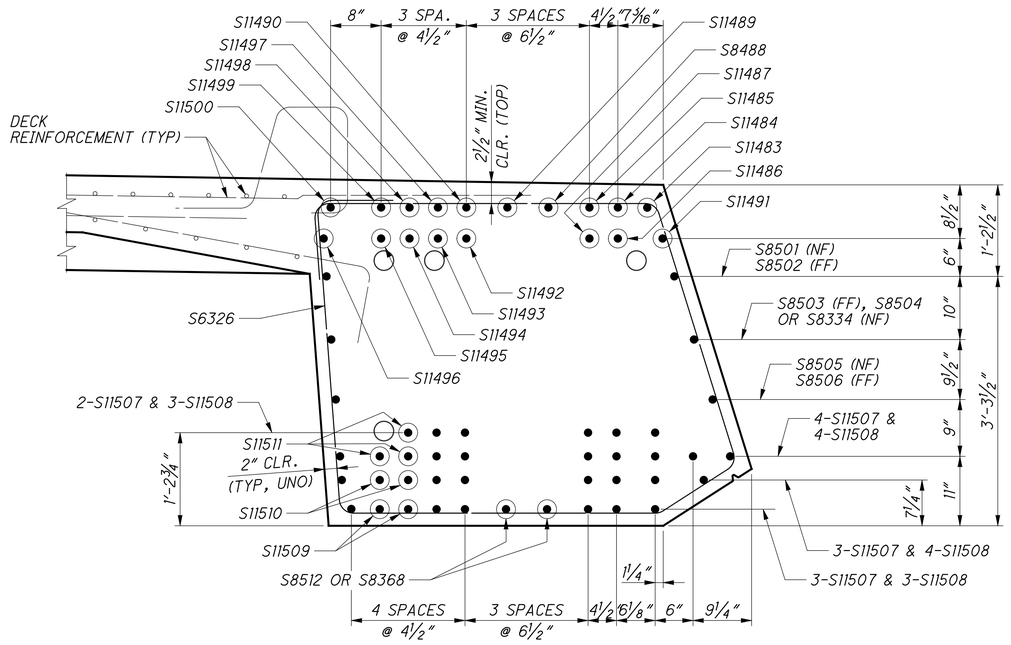

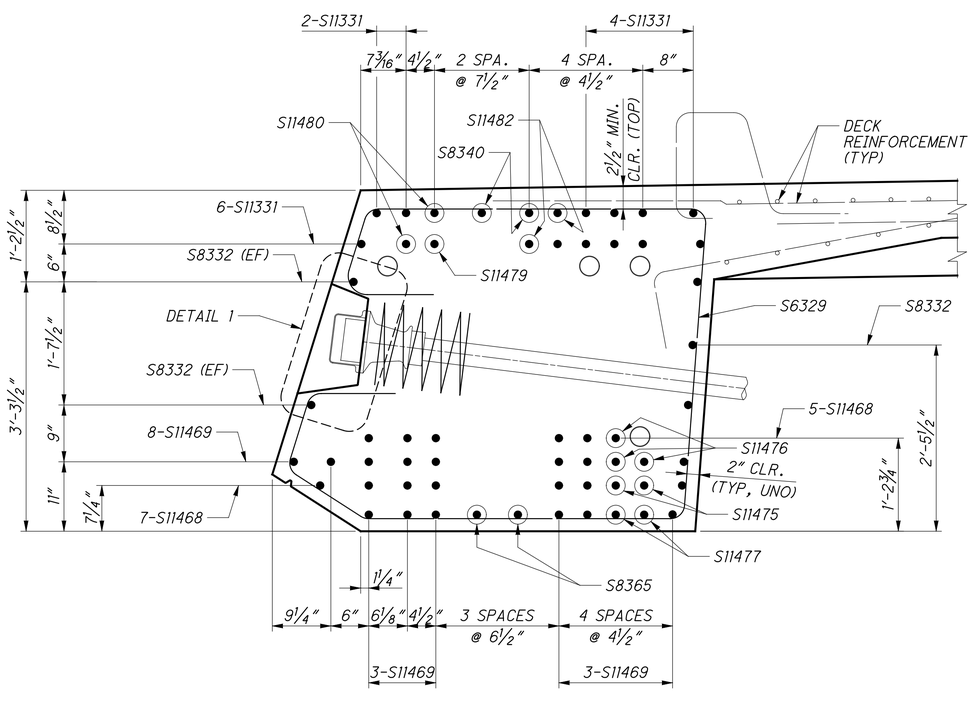

SECTION T-T

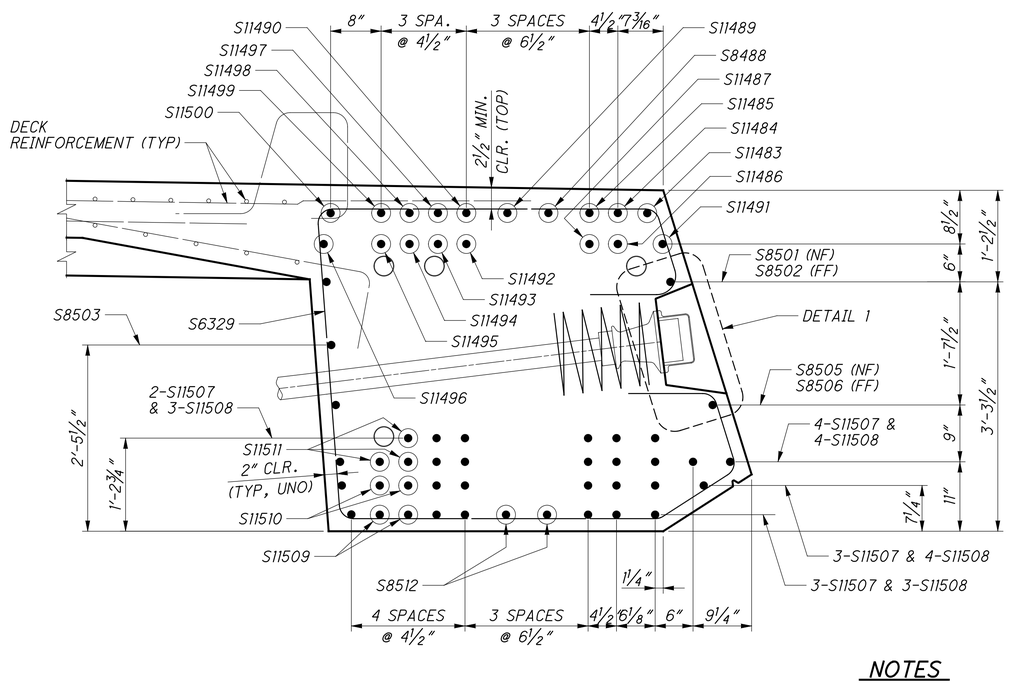

NOTES

1. FOR EDGE GIRDER POST-TENSIONING BAR DETAILS, SEE SHEET NO. 155/365

DESIGN AGENCY
URS
35 EAST 7TH STREET
SUITE 2300
CINCINNATI, OHIO 45202

DESIGNED	DRAWN	REVIEWED	DATE
RTG	CER	DLJ	6/2010
CHECKED	REVISED	STRUCTURE FILE NUMBER	
ASM		4401263	

EDGE GIRDER REINFORCEMENT DETAILS (5 OF 10)
BRIDGE NO. LAW-93-0000
IRONTON RUSSELL BRIDGE OVER OHIO RIVER

LAW-93-0.00
PID No. 81595

188/365

575
788

E:\Bridges_XM\Ironton_Russell\LAW\81595\structures\LAW093_0000C\sheets\093_0000CSD015.dgn 4/25/2011 10:18:14 AM john_stahl

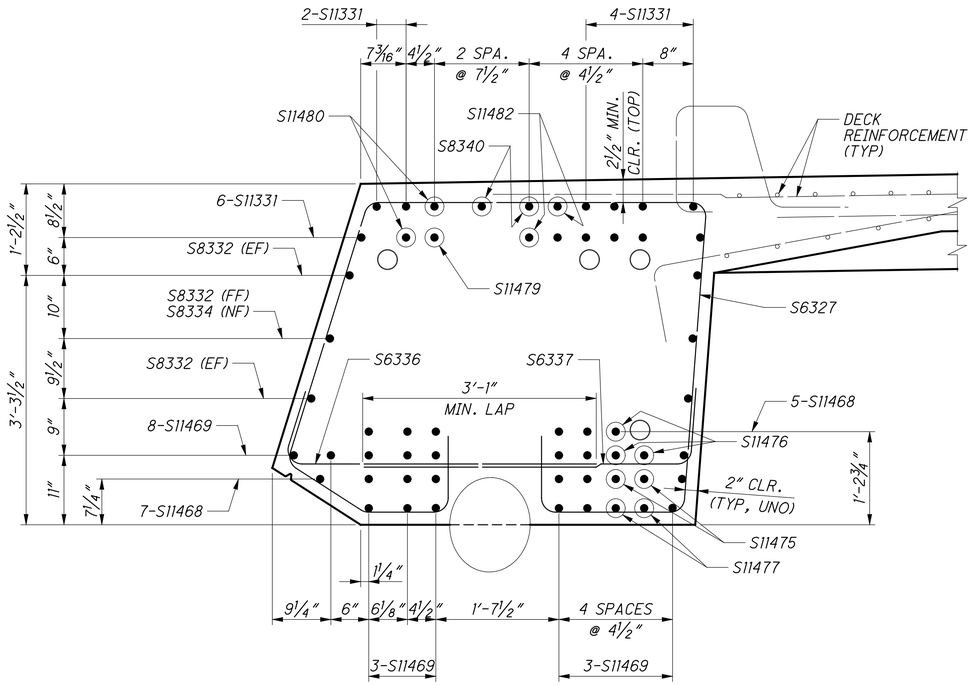

SECTION U-U

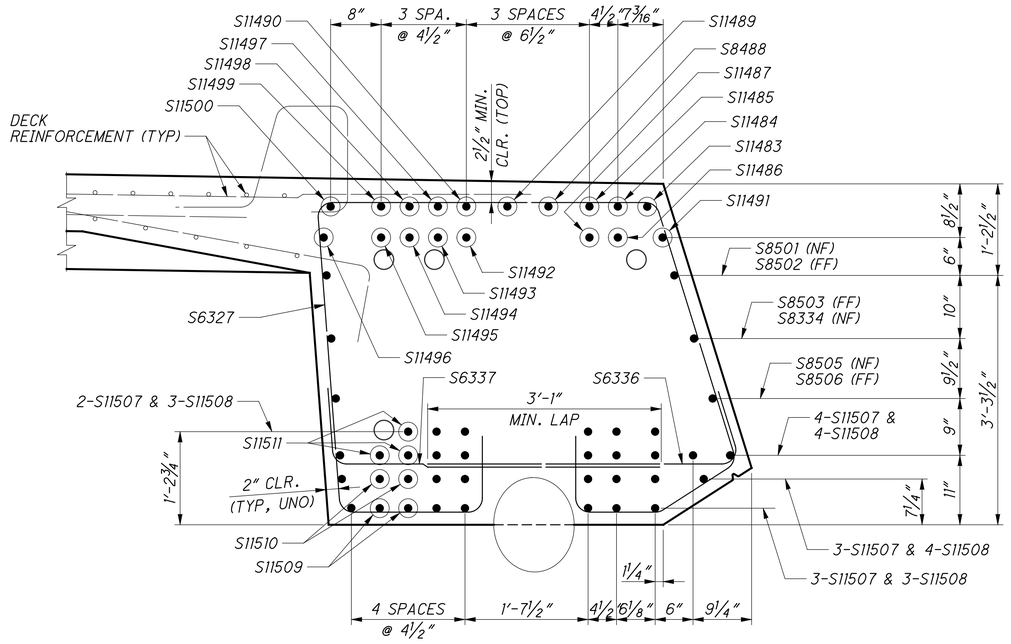

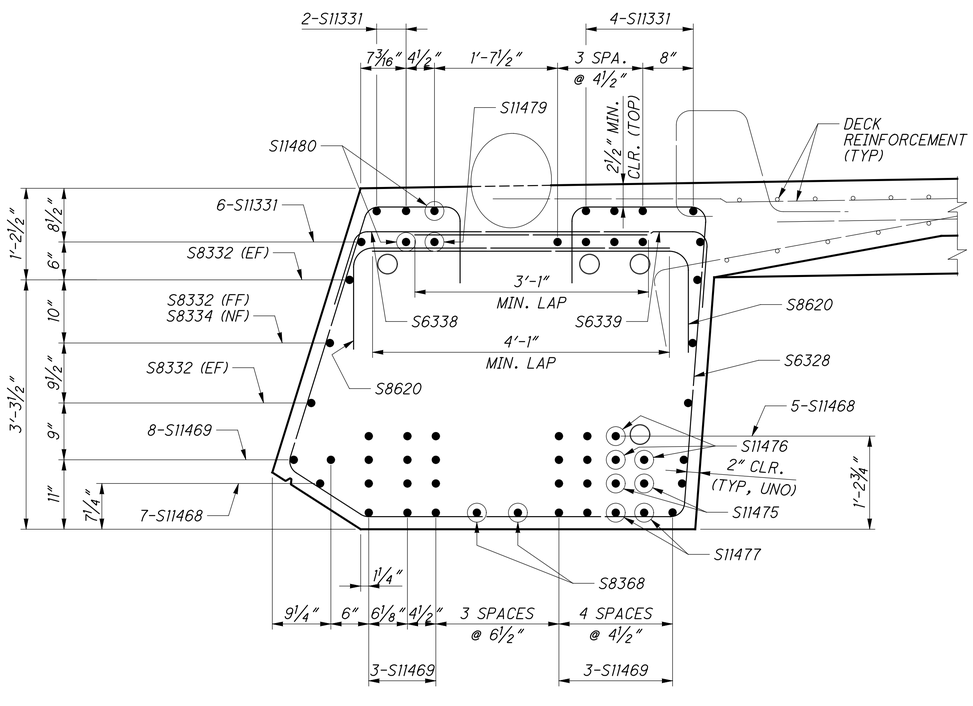

SECTION V-V

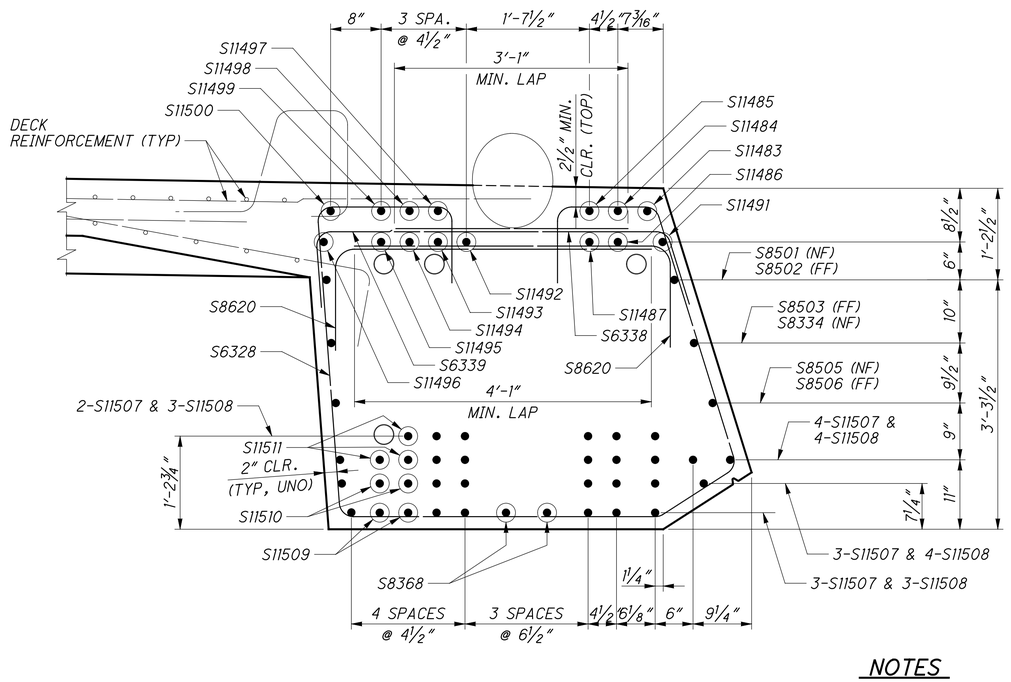

NOTES

1. FOR EDGE GIRDER POST-TENSIONING BAR DETAILS, SEE SHEET NO. 155/365

DESIGN AGENCY
URS
35 EAST 7TH STREET
SUITE 2300
CINCINNATI, OHIO 45202

DESIGNED	DRAWN	REVIEWED	DATE
RTG	CER	DLJ	6/2010
CHECKED	REVISED	STRUCTURE FILE NUMBER	
ASM		4401263	

EDGE GIRDER REINFORCEMENT DETAILS (6 OF 10)
BRIDGE NO. LAW-93-0000
IRONTON RUSSELL BRIDGE OVER OHIO RIVER

LAW-93-0.00
PID No. 81595

189/365

576
788

E:\Bridges_XM\Ironton_Russell\LAW\81595\structures\LAW093_0000C\sheets\093_0000CSD015.dgn 4/25/2011 10:18:20 AM john_stahl

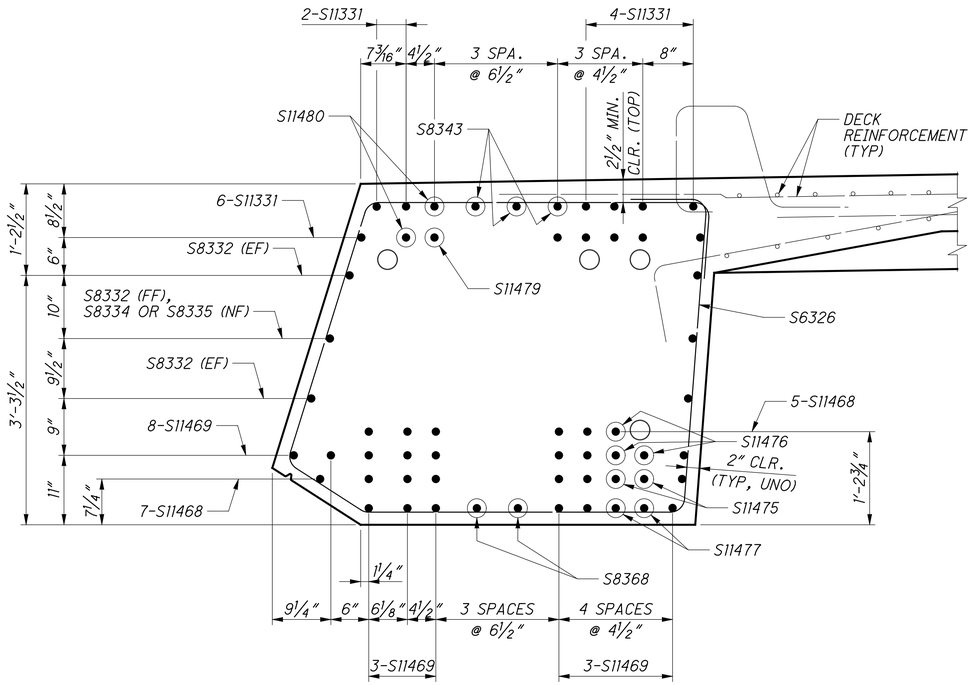

SECTION W-W

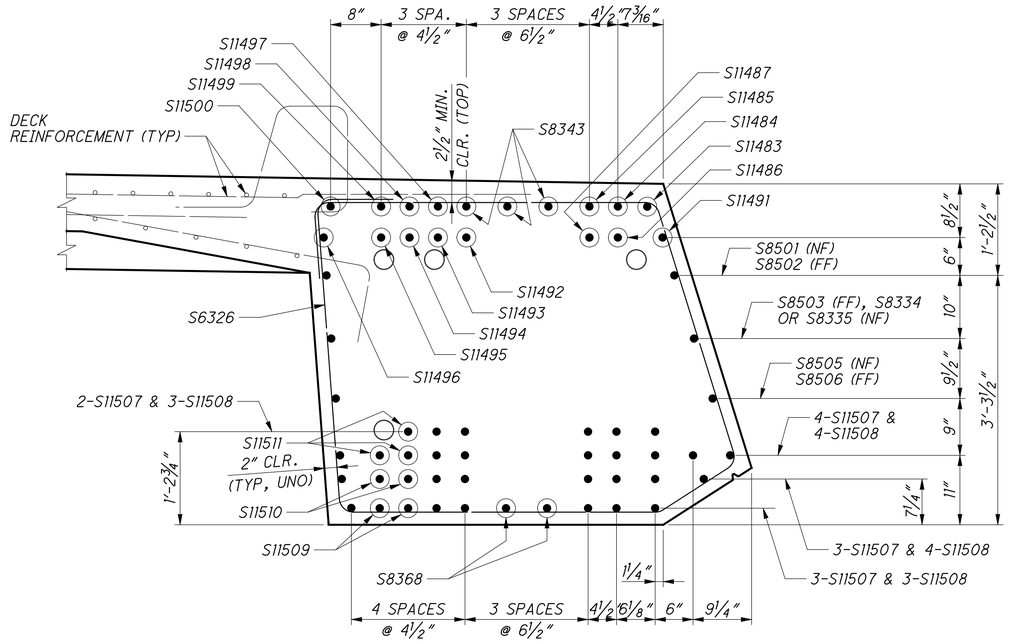

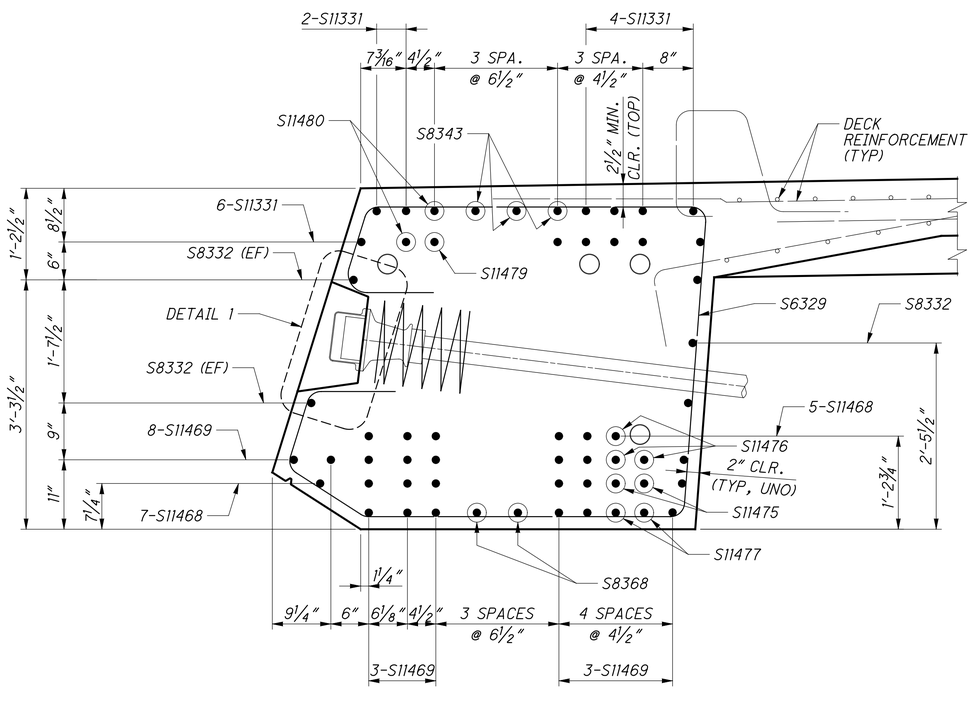

SECTION X-X

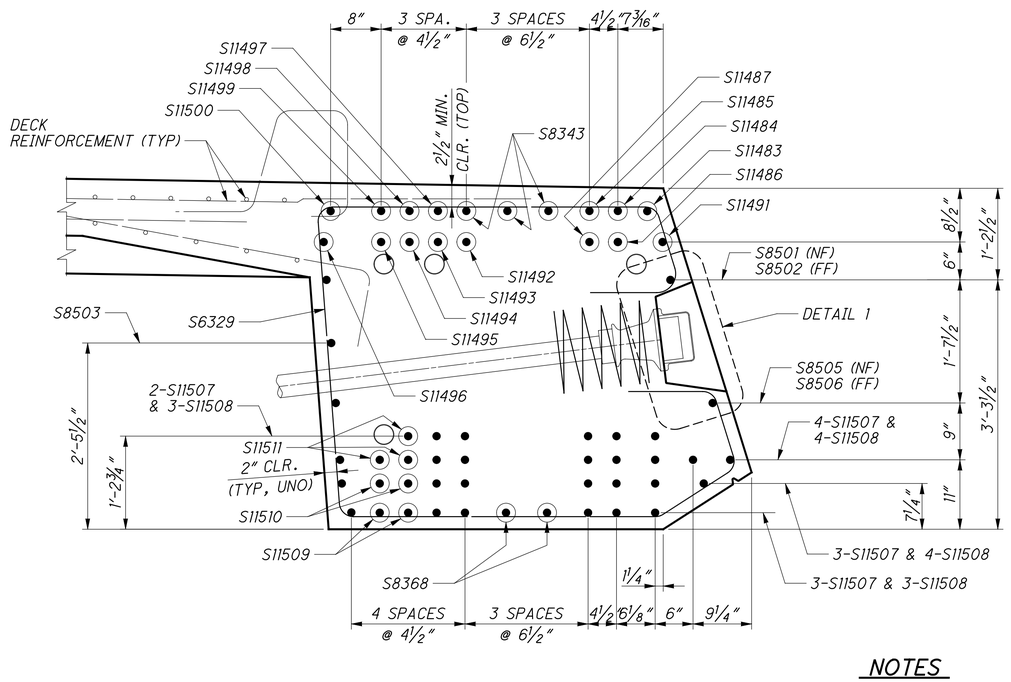

NOTES

1. FOR EDGE GIRDER POST-TENSIONING BAR DETAILS, SEE SHEET NO. 155/365

DESIGN AGENCY
URS
35 EAST 7TH STREET
SUITE 2300
CINCINNATI, OHIO 45202

DESIGNED	DRAWN	REVIEWED	DATE
RTG	CER	DLJ	6/2010
CHECKED	REVISED	STRUCTURE FILE NUMBER	
ASM		4401263	

EDGE GIRDER REINFORCEMENT DETAILS (7 OF 10)
BRIDGE NO. LAW-93-0000
IRONTON RUSSELL BRIDGE OVER OHIO RIVER

LAW-93-0.00
PID No. 81595

190/365

577
788

E:\Bridges_XM\Ironton_Russell\LAW\81595\structures\LAW093_0000C\sheets\093_0000CSD015.dgn 4/25/2011 10:18:26 AM john_stahl

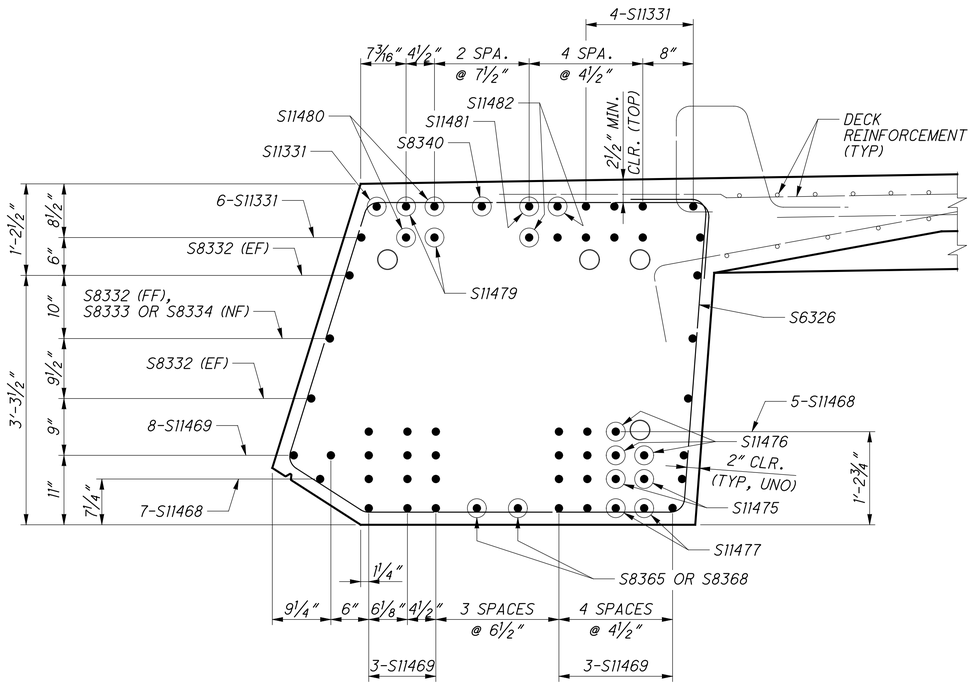

SECTION Y-Y

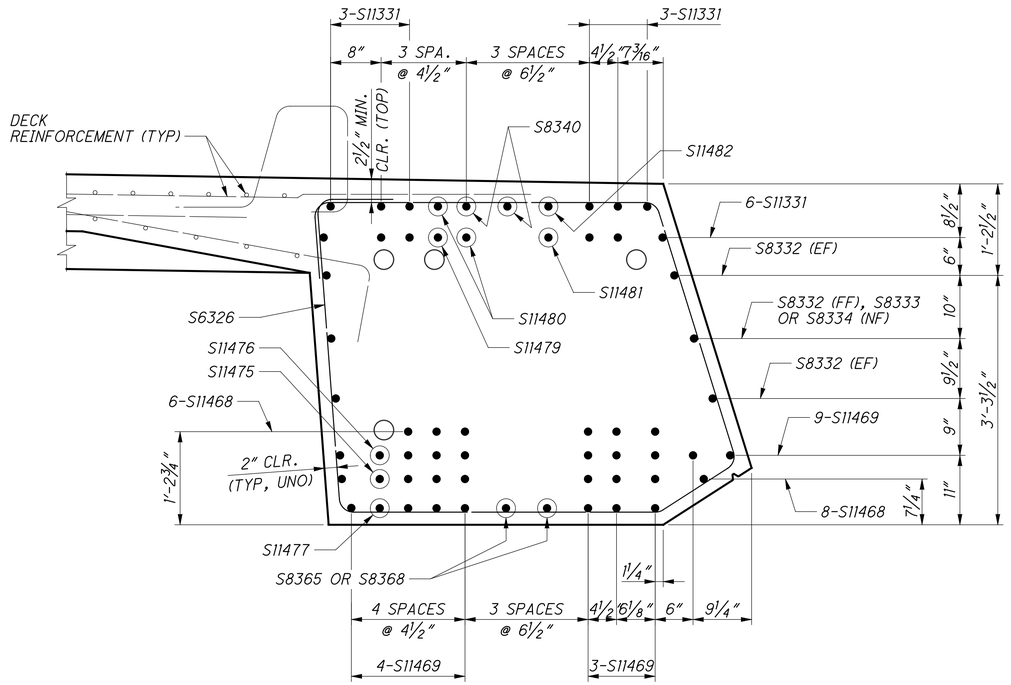

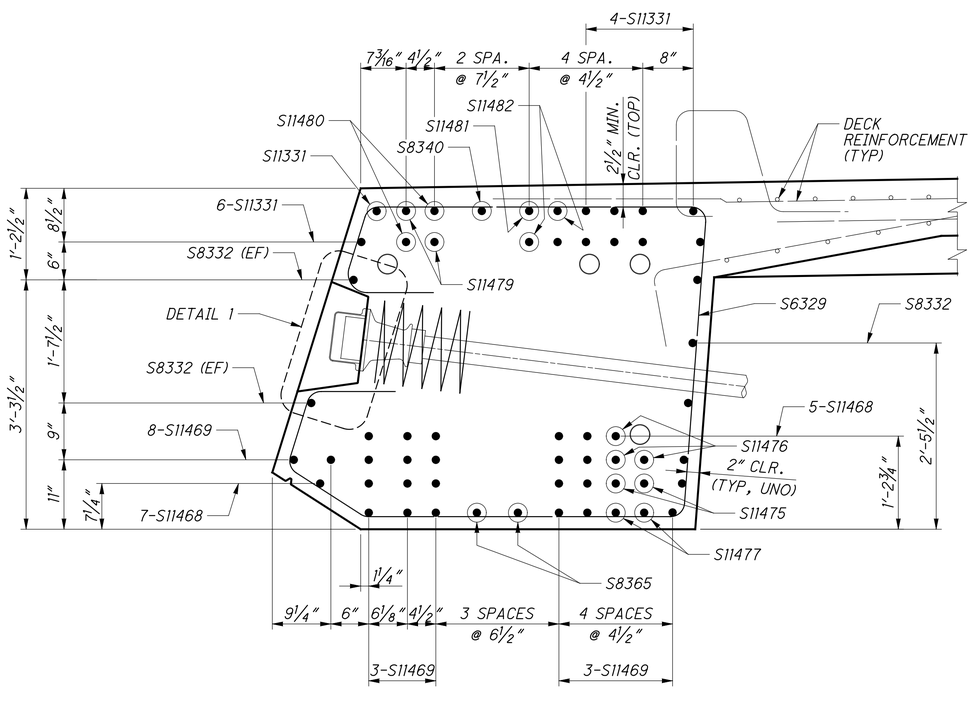

SECTION Z-Z

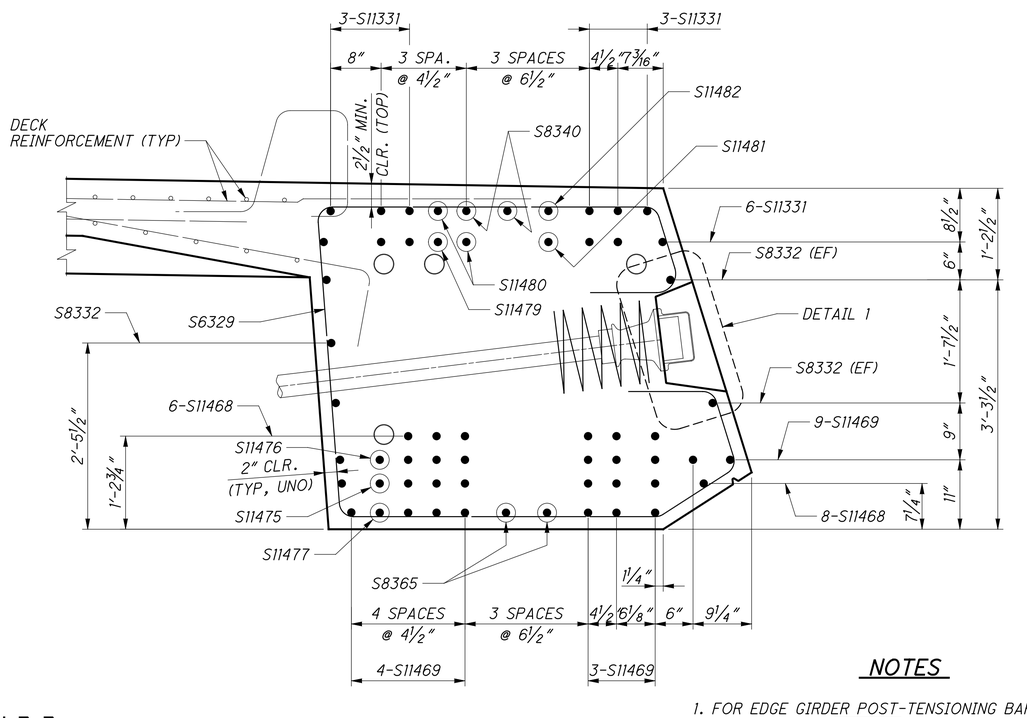

NOTES

1. FOR EDGE GIRDER POST-TENSIONING BAR DETAILS, SEE SHEET NO. 155/365

DESIGN AGENCY
URS
36 EAST 7TH STREET
SUITE 2300
CINCINNATI, OHIO 45202

DESIGNED RTG
DRAWN CER
REVIEWED DLJ
DATE 6/2010
CHECKED ASM
REVISED
STRUCTURE FILE NUMBER 4401263

EDGE GIRDER REINFORCEMENT DETAILS (8 OF 10)

BRIDGE NO. LAW-93-0000
IRONTON RUSSELL BRIDGE OVER OHIO RIVER

LAW-93-0.00
PID No. 81595

E:\Bridges_XM\Ironton_Russell\LAW\81595\structures\LAW093_0000C\sheets\093_0000CSD015.dgn 4/25/2011 10:18:32 AM john_stahl

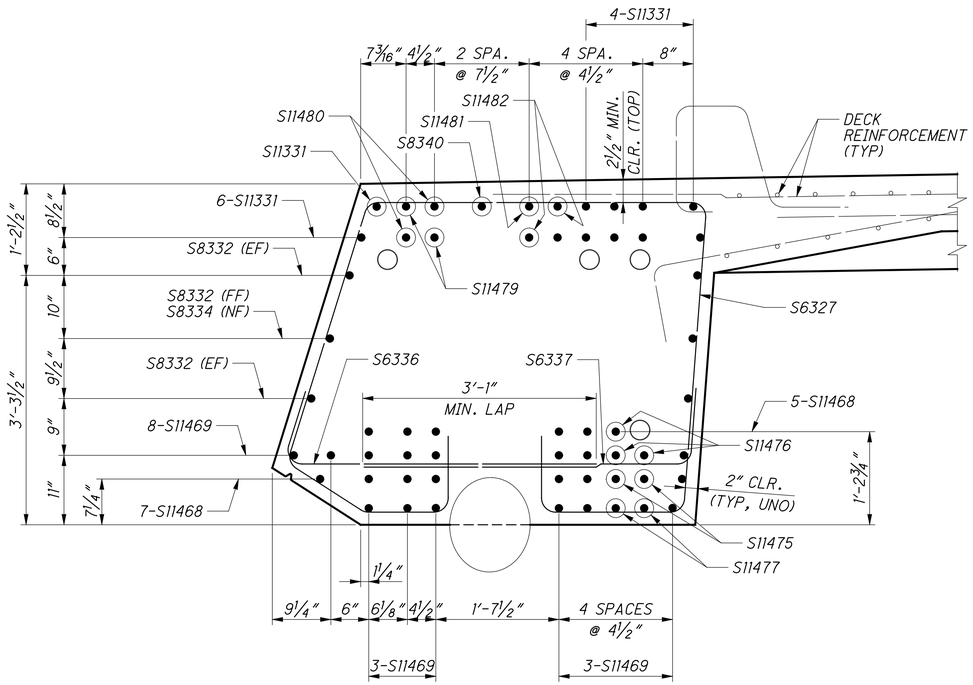

SECTION AA-AA

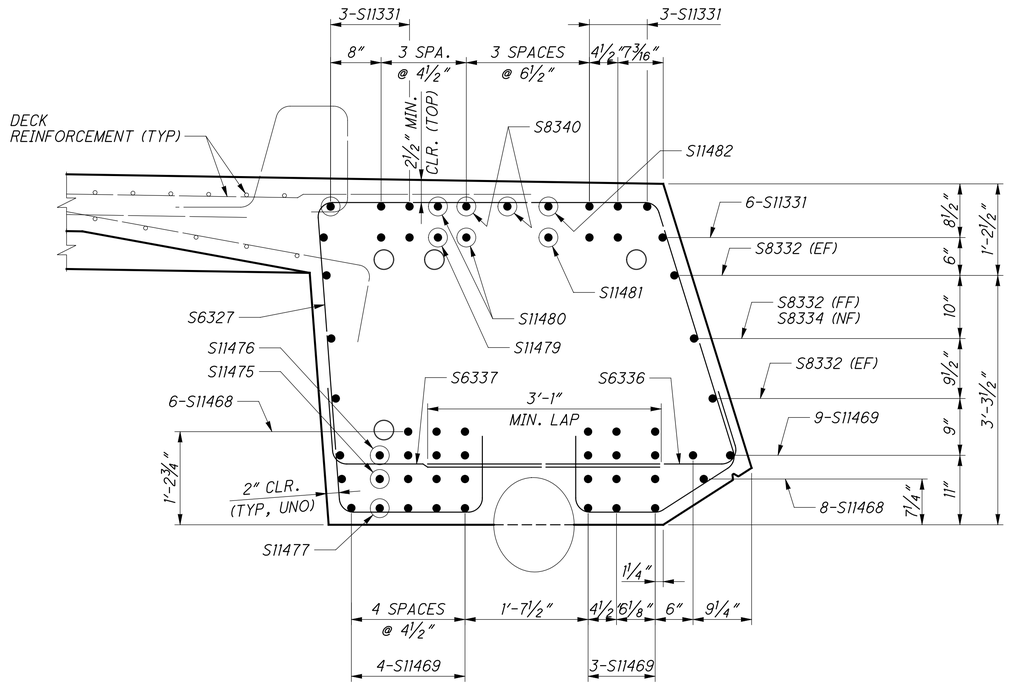

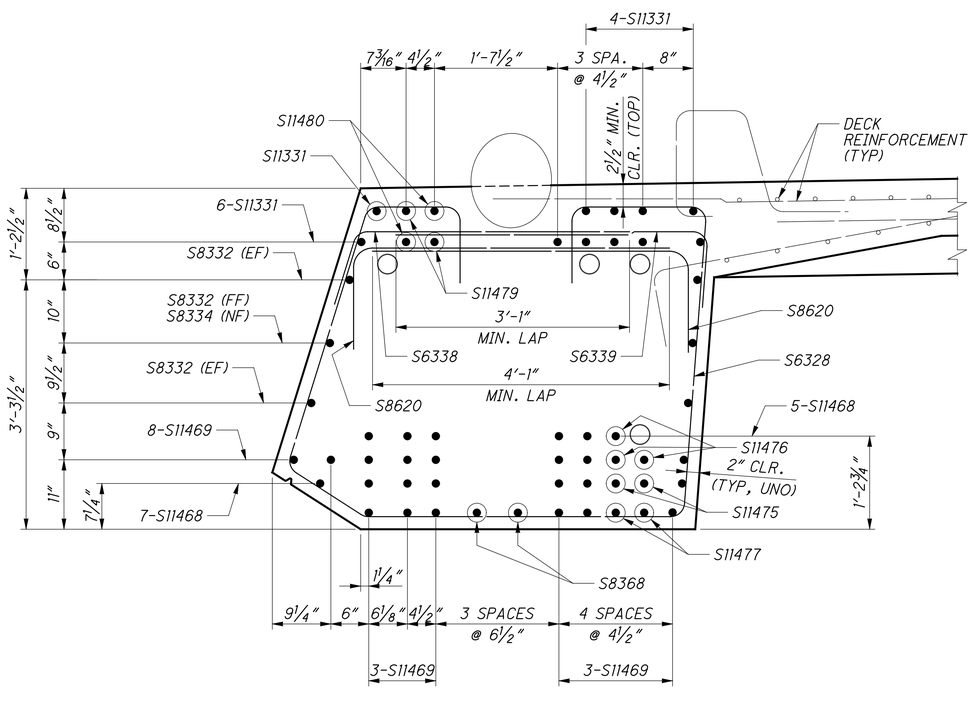

SECTION BB-BB

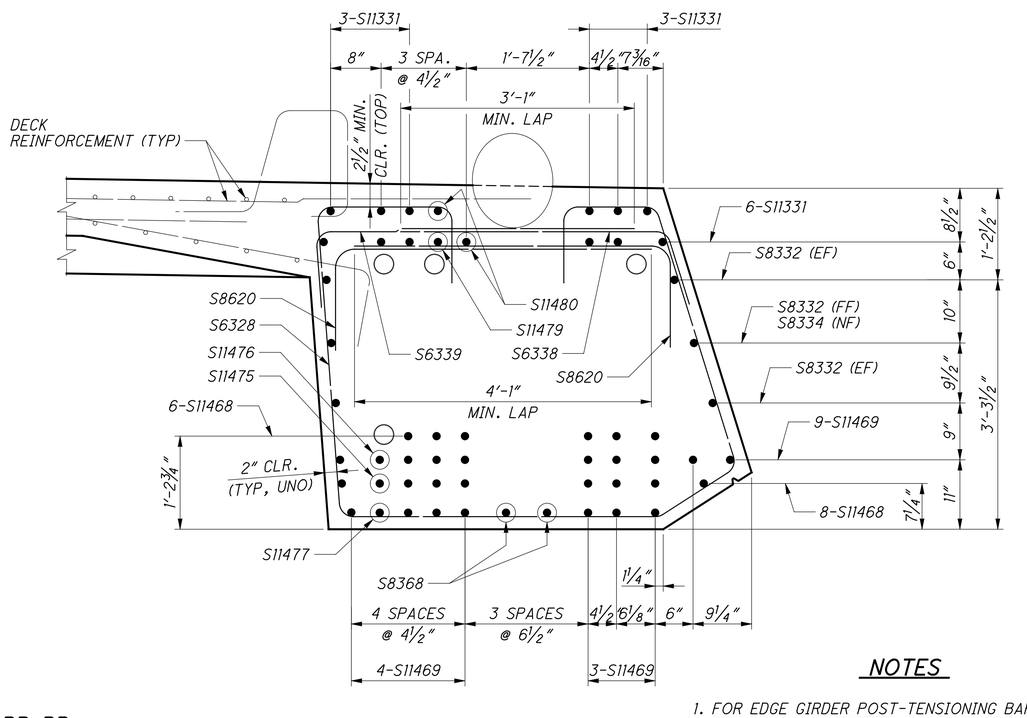

NOTES

1. FOR EDGE GIRDER POST-TENSIONING BAR DETAILS, SEE SHEET NO. 155/365

DESIGN AGENCY
URS
36 EAST 7TH STREET
SUITE 2300
CINCINNATI, OHIO 45202

DESIGNED	DRAWN	REVIEWED	DATE
RTG	CER	DLJ	6/2010
CHECKED	REVISED	STRUCTURE FILE NUMBER	
ASM		4401263	

EDGE GIRDER REINFORCEMENT DETAILS (9 OF 10)
BRIDGE NO. LAW-93-0000
IRONTON RUSSELL BRIDGE OVER OHIO RIVER

LAW-93-0.00
PID No. 81595

192/365

579/788

E:\Bridges_XM\Ironton_Russell\LAW\81595\structures\LAW093_0000C\sheets\093_0000CSD015.dgn 4/25/2011 10:18:38 AM john_stahl

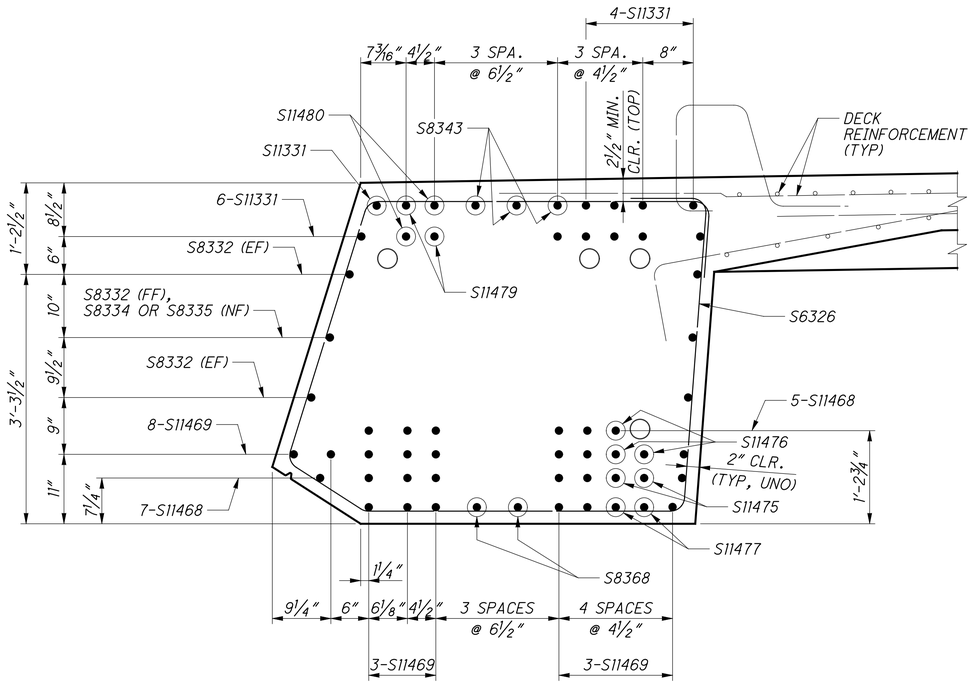

SECTION CC-CC

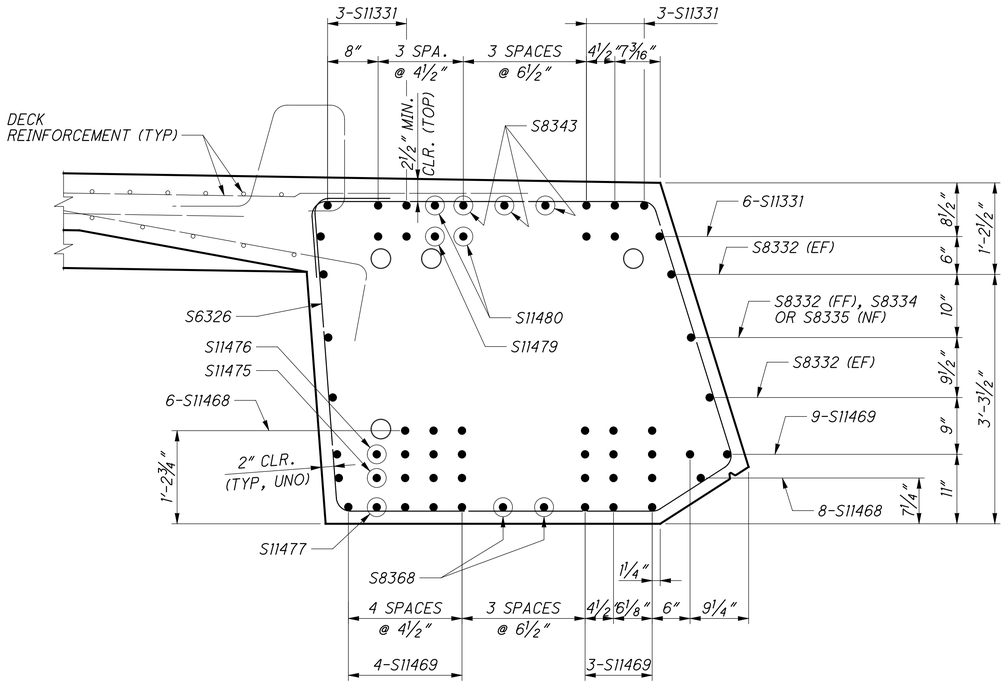

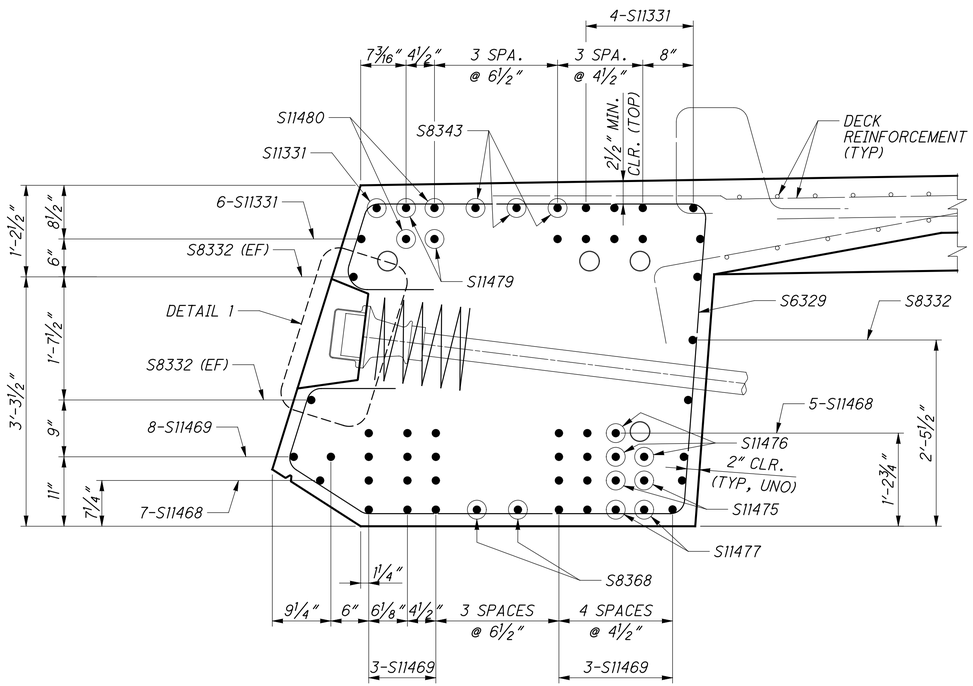

SECTION DD-DD

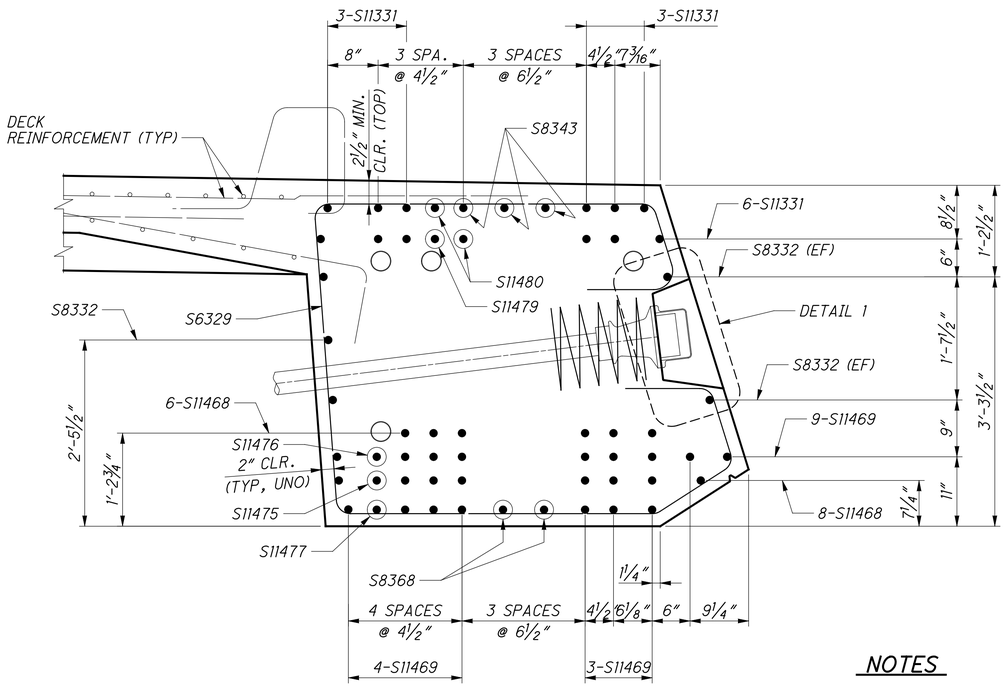

NOTES

1. FOR EDGE GIRDER POST-TENSIONING BAR DETAILS, SEE SHEET NO. 155/365

DESIGN AGENCY
URS
36 EAST 7TH STREET
SUITE 2300
CINCINNATI, OHIO 45202

DESIGNED	DRAWN	REVIEWED	DATE
RTG	CER	DLJ	6/2010
CHECKED	REVISED	STRUCTURE FILE NUMBER	
ASM		4401263	

EDGE GIRDER REINFORCEMENT DETAILS (10 OF 10)
BRIDGE NO. LAW-93-0000
IRONTON RUSSELL BRIDGE OVER OHIO RIVER

LAW-93-0.00
PID No. 81595

193/365

580/788

E:\Bridges_XM\Ironton_Russell\LAW\81595\structures\LAW093_0000C\sheets\093_0000CSD015.dgn 4/25/2011 10:18:43 AM john_stahl

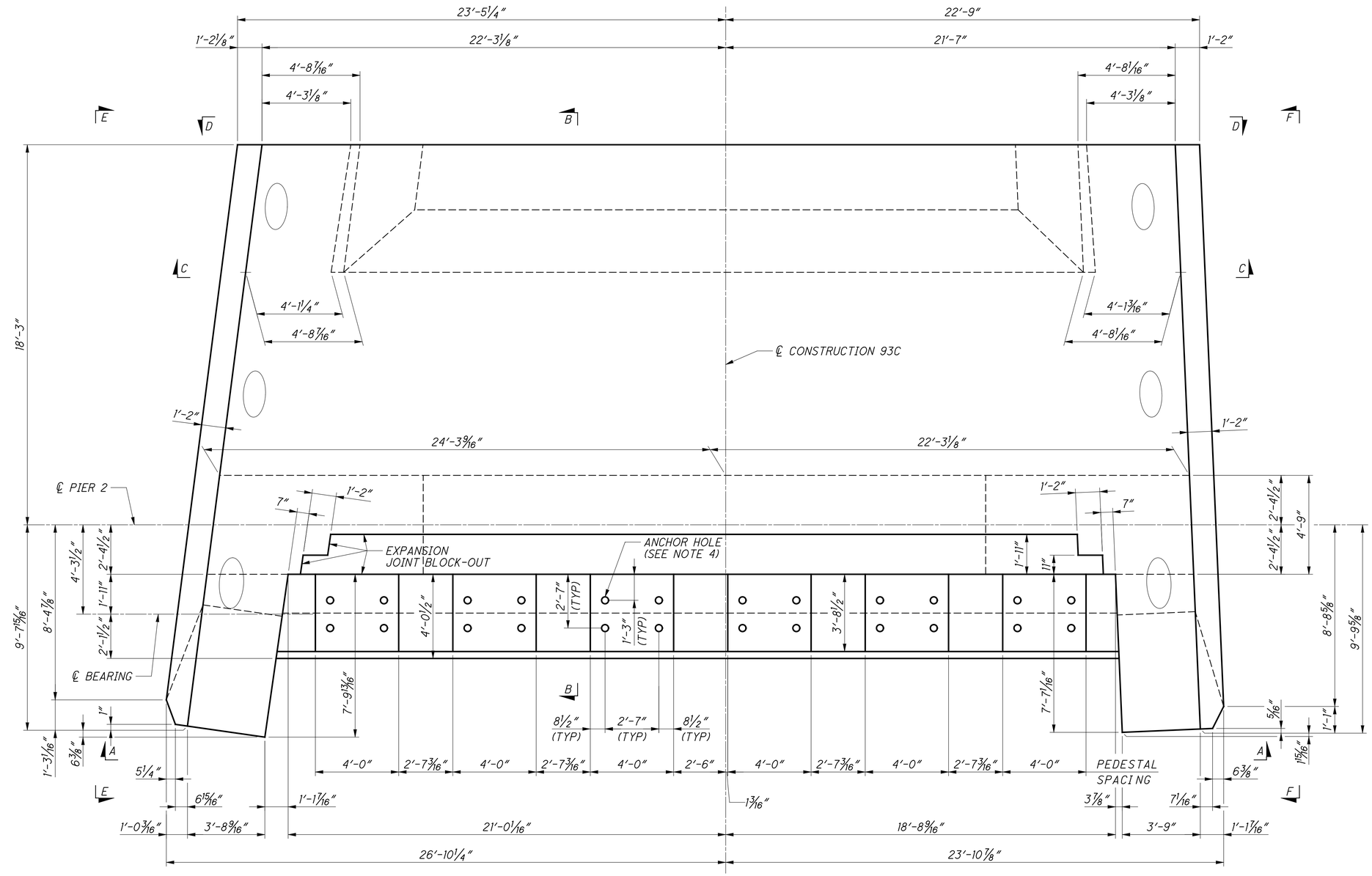

KY DIAPHRAGM SEGMENT

NOTES

1. FOR VIEW A-A AND SECTION B-B, SEE SHEET NO. 195/365
2. FOR SECTION C-C AND VIEW D-D, SEE SHEET NO. 196/365
3. FOR VIEWS E-E AND F-F, SEE SHEET NO. 197/365
4. FOR ANCHOR HOLE DETAILS SEE SHEET NO. 46/365

DESIGN AGENCY
URS
36 EAST 7TH STREET
SUITE 2300
CINCINNATI, OHIO 45202

DESIGNED	DRAWN	REVIEWED	DATE
ASM	CER	DLJ	6/2010
CHECKED	REVISED	STRUCTURE FILE NUMBER	
BWJ		4401263	

KY DIAPHRAGM SEGMENT GEOMETRY (1 OF 4)
BRIDGE NO. LAW-93-0000
IRONTON RUSSELL BRIDGE OVER OHIO RIVER

LAW-93-0.00
PID No. 81595

194/365

581
788

E:\Bridges_XM\Ironton_Russell\LAW\81595\structures\LAW093_0000C\sheets\093_0000CSD017.dgn 4/25/2011 10:18:50 AM john_stahl

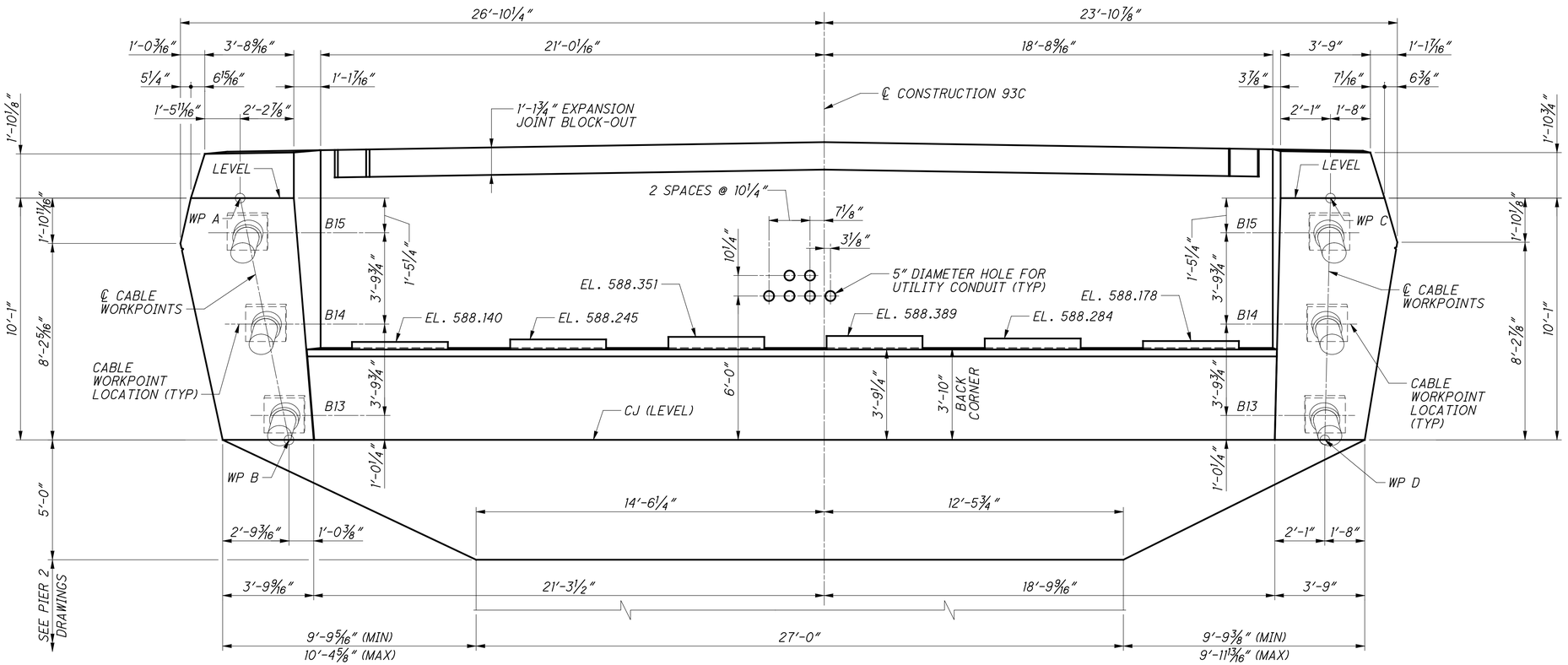

VIEW A-A

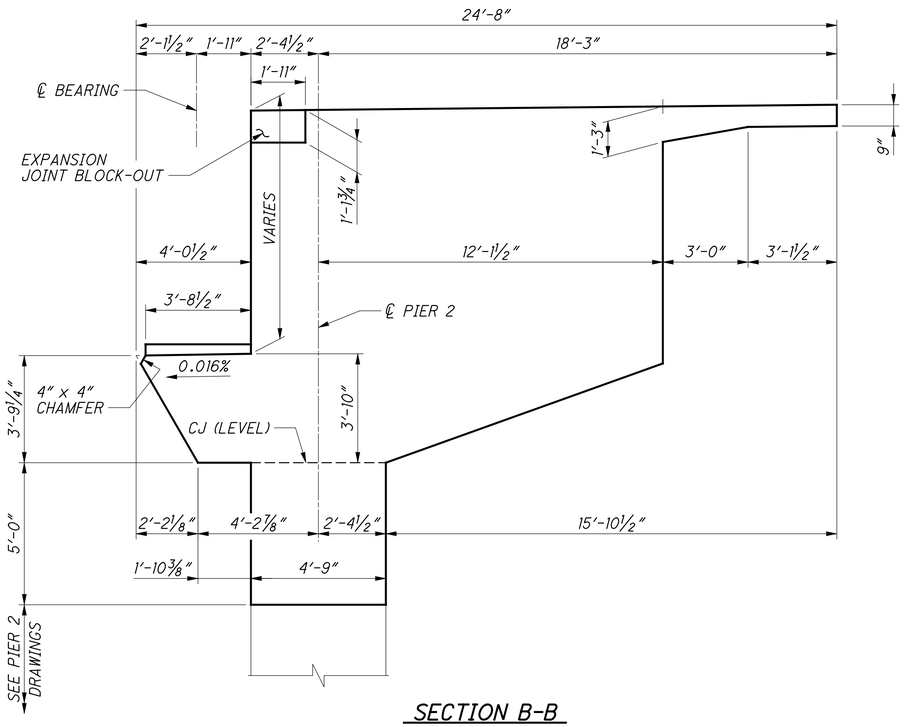

SECTION B-B

WORK POINTS	
LOCATION	ELEVATION
WP A & C	594.139
WP B & D	584.056

Link to 279-005-000
Beam Seats As-Built

NOTES

1. WORK THIS SHEET WITH SHEET NO. 194/365

DESIGN AGENCY
URS
36 EAST 7TH STREET
SUITE 2300
CINCINNATI, OHIO 45202

DESIGNED	DRAWN	REVIEWED	DATE
ASM	CER	DLJ	6/2010
CHECKED	REVISED	STRUCTURE FILE NUMBER	
BWJ		4401263	

KY DIAPHRAGM SEGMENT GEOMETRY (2 OF 4)
BRIDGE NO. LAW-93-0000
IRONTON RUSSELL BRIDGE OVER OHIO RIVER

LAW-93-0.00
PID No. 81595

195/365

582
788

E:\Bridges_XM\Ironton_Russell\LAW\81595\structures\LAW093_0000C\sheets\093_0000CSD017.dgn 4/25/2011 10:18:54 AM john_stahl

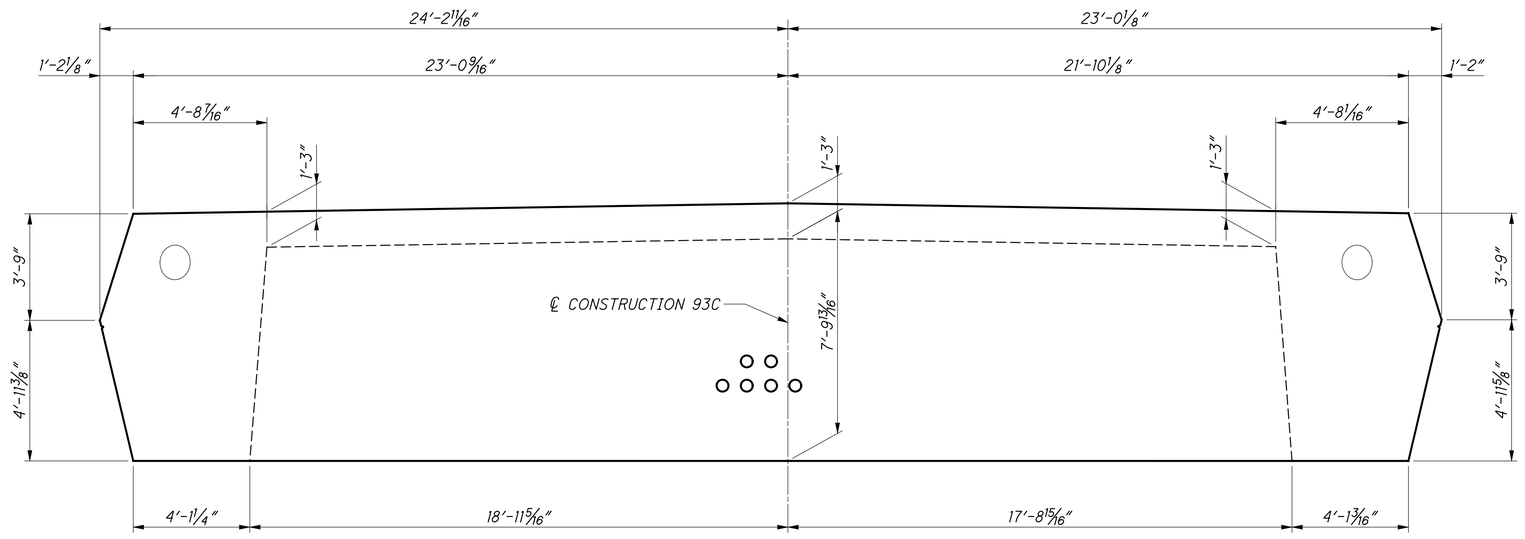

SECTION C-C

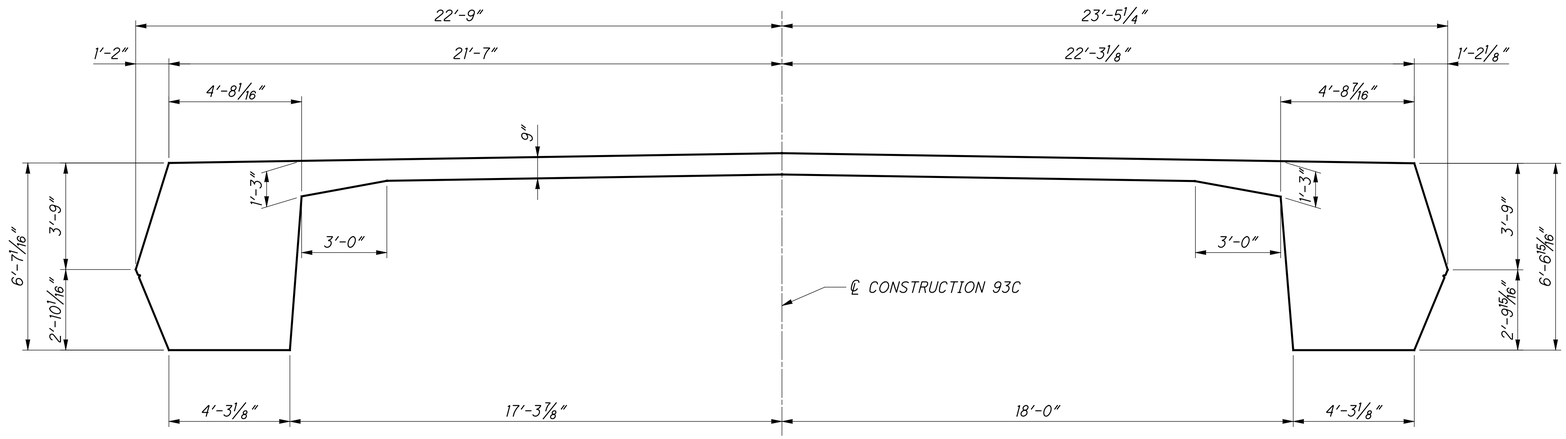

VIEW D-D

NOTES

1. WORK THIS SHEET WITH SHEET NO. 194/365
2. FOR DRIP DETAIL SEE SHEET NO. 69/365

DESIGN AGENCY
URS
36 EAST 7TH STREET
SUITE 2300
CINCINNATI, OHIO 45202

DESIGNED	DRAWN	REVIEWED	DATE
ASM	CER	DLJ	6/2010
CHECKED	REVISED	STRUCTURE FILE NUMBER	
BWJ		4401263	

KY DIAPHRAGM SEGMENT GEOMETRY (3 OF 4)
BRIDGE NO. LAW-93-0000
IRONTON RUSSELL BRIDGE OVER OHIO RIVER

LAW-93-0.00
PID No. 81595

196/365

583
788

E:\Bridges_XM\Ironton_Russell\LAW\81595\structures\LAW093_0000C\sheets\093_0000CSD017.dgn 4/25/2011 10:18:58 AM john_stahl

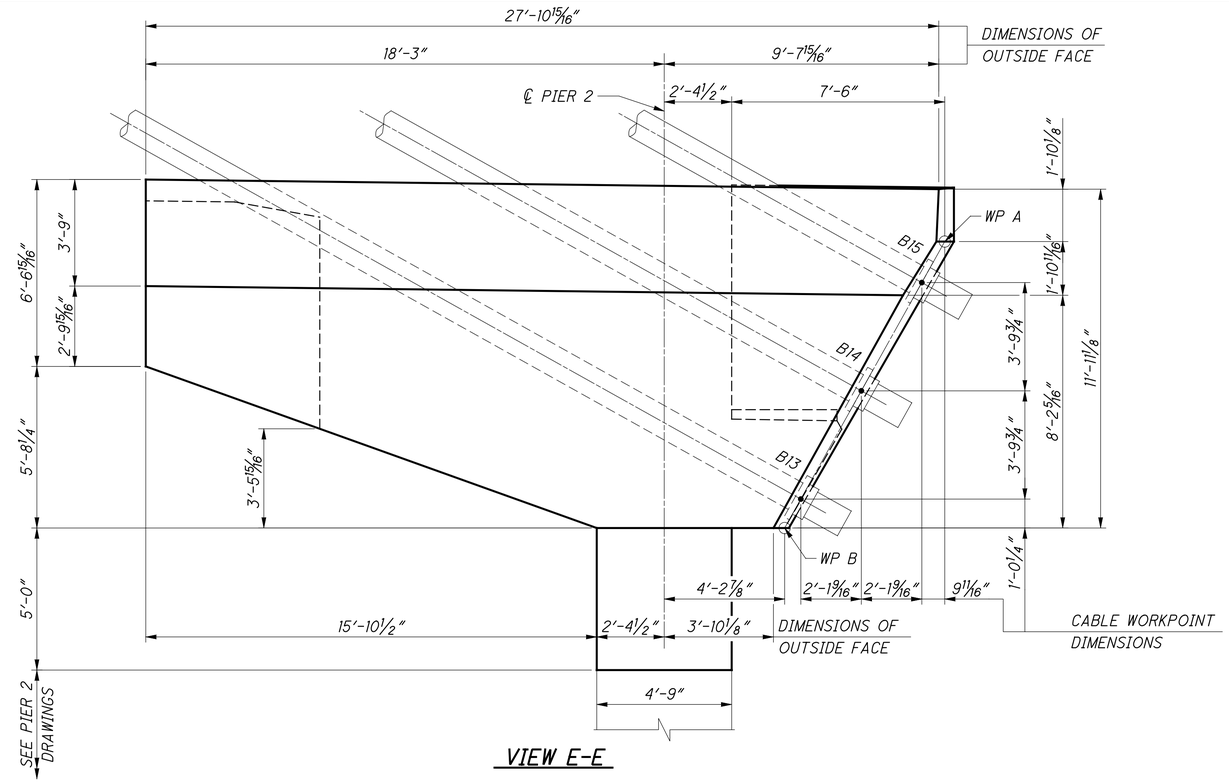

VIEW E-E

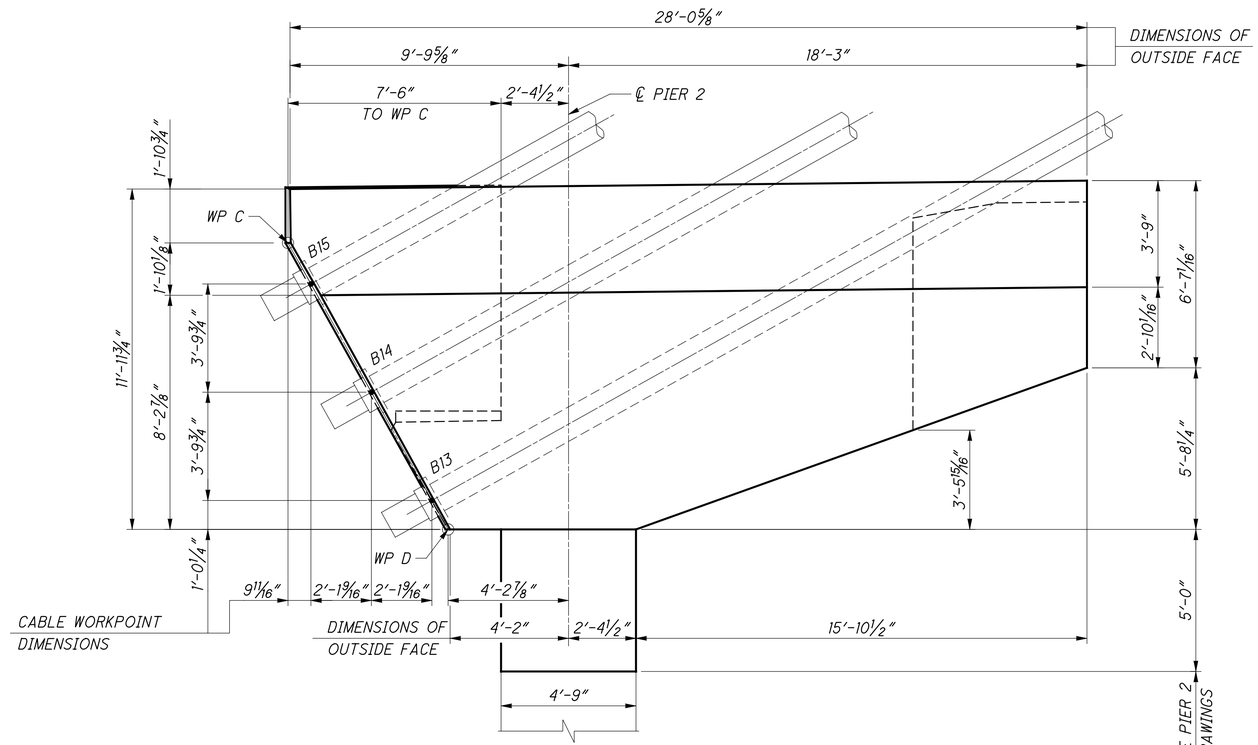

VIEW F-F

NOTES

1. WORK THIS SHEET WITH SHEET NO. 194/365

DESIGN AGENCY
URS
35 EAST 7TH STREET
SUITE 2300
CINCINNATI, OHIO 45202

DESIGNED	DRAWN	REVIEWED	DATE
ASM	CER	DLJ	6/2010
CHECKED	REVISED	STRUCTURE FILE NUMBER	
BWJ		4401263	

KY DIAPHRAGM SEGMENT GEOMETRY (4 OF 4)
BRIDGE NO. LAW-93-0000
IRONTON RUSSELL BRIDGE OVER OHIO RIVER

LAW-93-0.00
PID No. 81595

197/365

584
788

E:\Bridges_XM\Ironton_Russell\LAW\81595\structures\LAW093_0000C\sheets\093_0000CSD017.dgn 4/25/2011 10:19:01 AM john_stahl

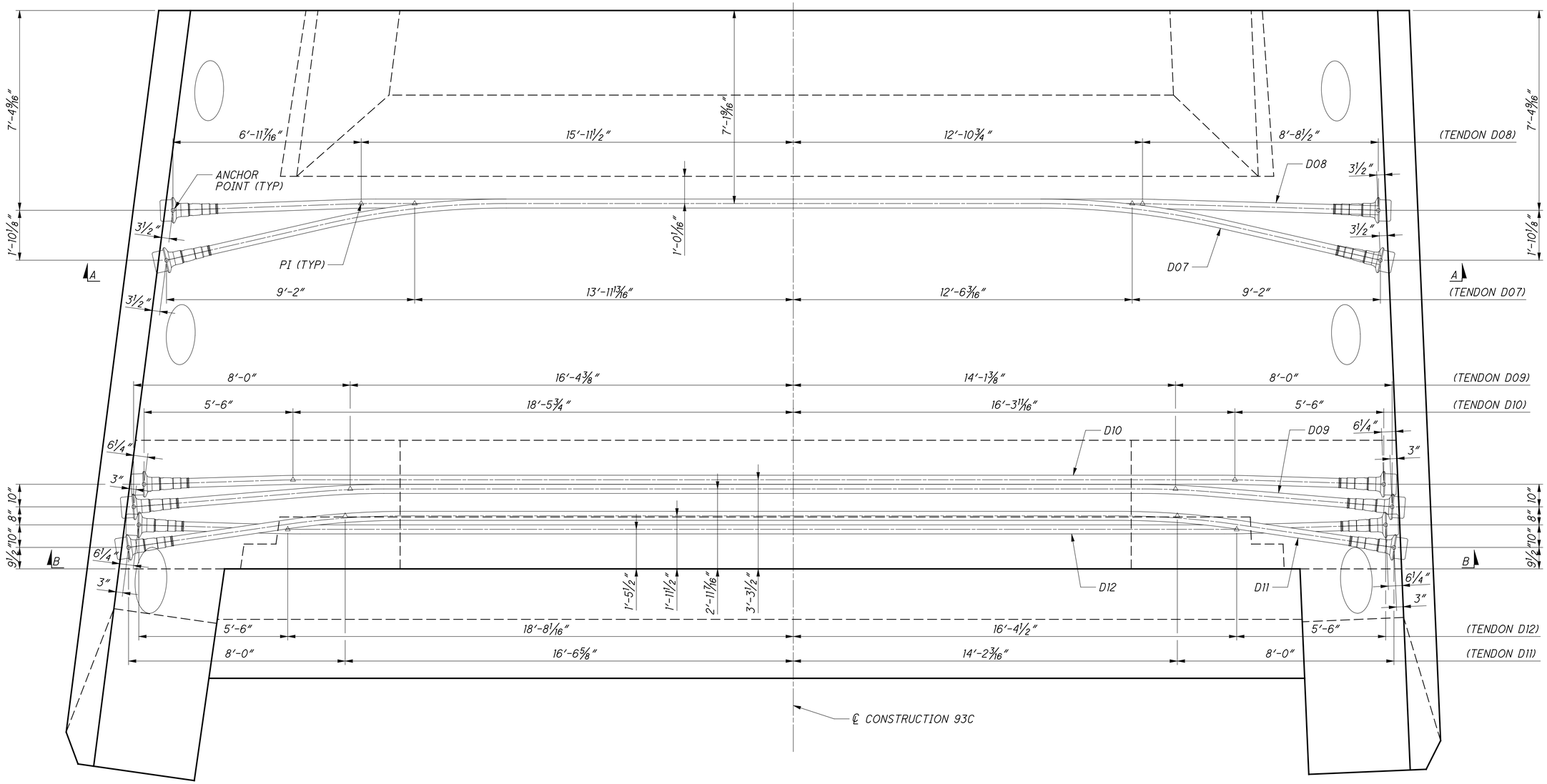

PLAN

NOTES

1. ALL DIMENSIONS ARE TO THE PI OR ANCHOR POINT AT THE CENTERLINE OF TENDON DUCT.
2. ALL DIAPHRAGM TENDONS ARE COMPRISED OF 19 - 0.6IN DIAMETER STRANDS IN 4.00 INCH ID DUCT.
3. ALL TENDONS ARE BENT WITH A 30 FT RADIUS UNLESS NOTED OTHERWISE.
4. TENDONS SHALL BE STRESSED TO 891 KIPS PRIOR TO SEATING.
5. TENDONS SHALL NOT BE STRESSED UNTIL THE DIAPHRAGM SEGMENT IS COMPLETED AND THE CONCRETE HAS ATTAINED A MINIMUM STRENGTH OF 3500 PSI.
6. THE DIAPHRAGM TENDONS WILL BE STRESSED IN ORDER BASED ON THE TENDON NUMBER.
7. DIAPHRAGM TENDONS MAY BE SINGLE END STRESSED BUT THE STRESSING ENDS SHALL ALTERNATE.
8. WEIGHT INDICATED IN SCHEDULES ARE BASED ON TENDON LENGTH FROM ANCHOR PLATE TO ANCHOR PLATE. WEIGHT IS SHOWN FOR INFORMATIONAL PURPOSES ONLY. CONTRACTOR IS RESPONSIBLE FOR ESTIMATING QUANTITY OF POST-TENSIONING STRAND REQUIRED.
9. COST OF SPIRAL REINFORCEMENT (LOCAL ZONE) AT EACH ANCHORAGE IS INCIDENTAL TO THE COST OF POST-TENSIONING.
10. VERTICAL COLUMN TENDONS SHALL NOT BE STRESSED UNTIL ALL TRANSVERSE DIAPHRAGM TENDONS ARE STRESSED.
11. FOR PIER TENDON STRESSING INFORMATION, SEE "PIER 2 GEOMETRY (1 OF 2) & (2 OF 2)" SHEETS.

KY DIAPHRAGM SEGMENT TENDON QUANTITIES

TENDON ID	NUMBER OF TENDONS	NUMBER OF 0.6" DIA. STRANDS	JACKING FORCE (kips)	TENDON LENGTH (ft)	TENDON WEIGHT (lbs)	TOTAL WEIGHT (lbs)
D07	1	19	891	45.44	639	639
D08	1	19	891	44.66	628	628
D09	1	19	891	46.79	658	658
D10	1	19	891	48.41	681	681
D11	1	19	891	46.90	659	659
D12	1	19	891	48.41	681	681
					TOTAL=	3,946

DESIGN AGENCY
URS
36 EAST 7TH STREET
SUITE 2300
CINCINNATI, OHIO 45202

DESIGNED	DRAWN	REVIEWED	DATE
ASM	CER	DLJ	6/2010
CHECKED	REVISED	STRUCTURE FILE NUMBER	
RTG		4401263	

KY DIAPHRAGM SEGMENT TRANSVERSE POST-TENSIONING (1 OF 2)
BRIDGE NO. LAW-93-0000
IRONTON RUSSELL BRIDGE OVER OHIO RIVER

LAW-93-0.00
PID No. 81595

198/365

585/788

E:\Bridges_XM\Ironton_Russell\LAW\81595\structures\LAW093_0000C\sheets\093_0000CSD030.dgn 4/25/2011 10:19:06 AM john_stahl

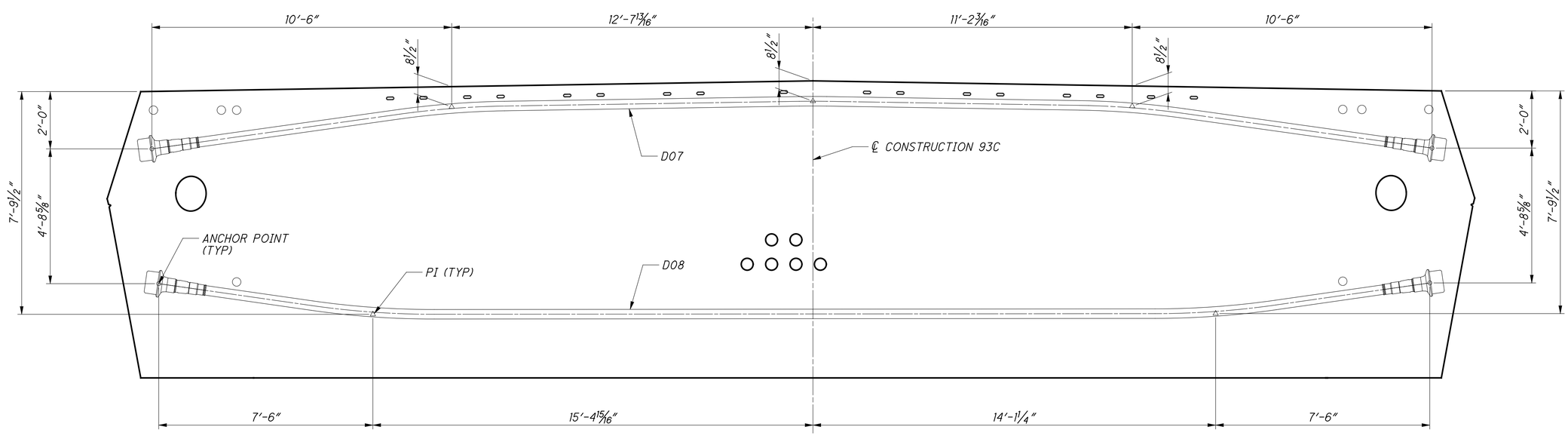

SECTION A-A

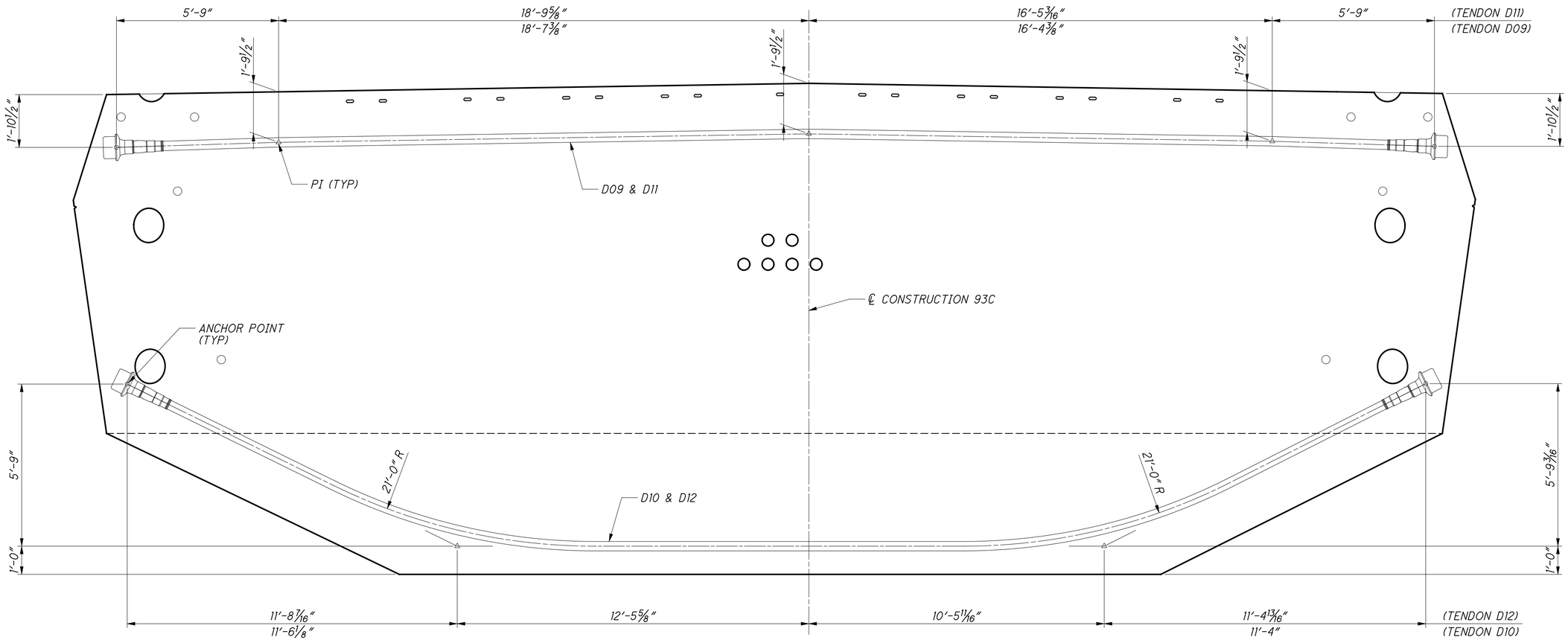

SECTION B-B

DESIGN AGENCY
URS
36 EAST 7TH STREET
SUITE 2300
CINCINNATI, OHIO 45202

DESIGNED	DRAWN	REVIEWED	DATE
ASM	CER	DLJ	6/2010
CHECKED	REVISED	STRUCTURE FILE NUMBER	
RTG		4401263	

KY DIAPHRAGM SEGMENT TRANSVERSE POST-TENSIONING (2 OF 2)
BRIDGE NO. LAW-93-0000
IRONTON RUSSELL BRIDGE OVER OHIO RIVER

LAW-93-0.00
PID No. 81595

199/365

586/788

E:\Bridges_XM\Ironton_Russell\LAW\81595\structures\LAW093_0000C\sheets\093_0000CSD030.dgn 4/25/2011 10:19:11 AM john_stahl

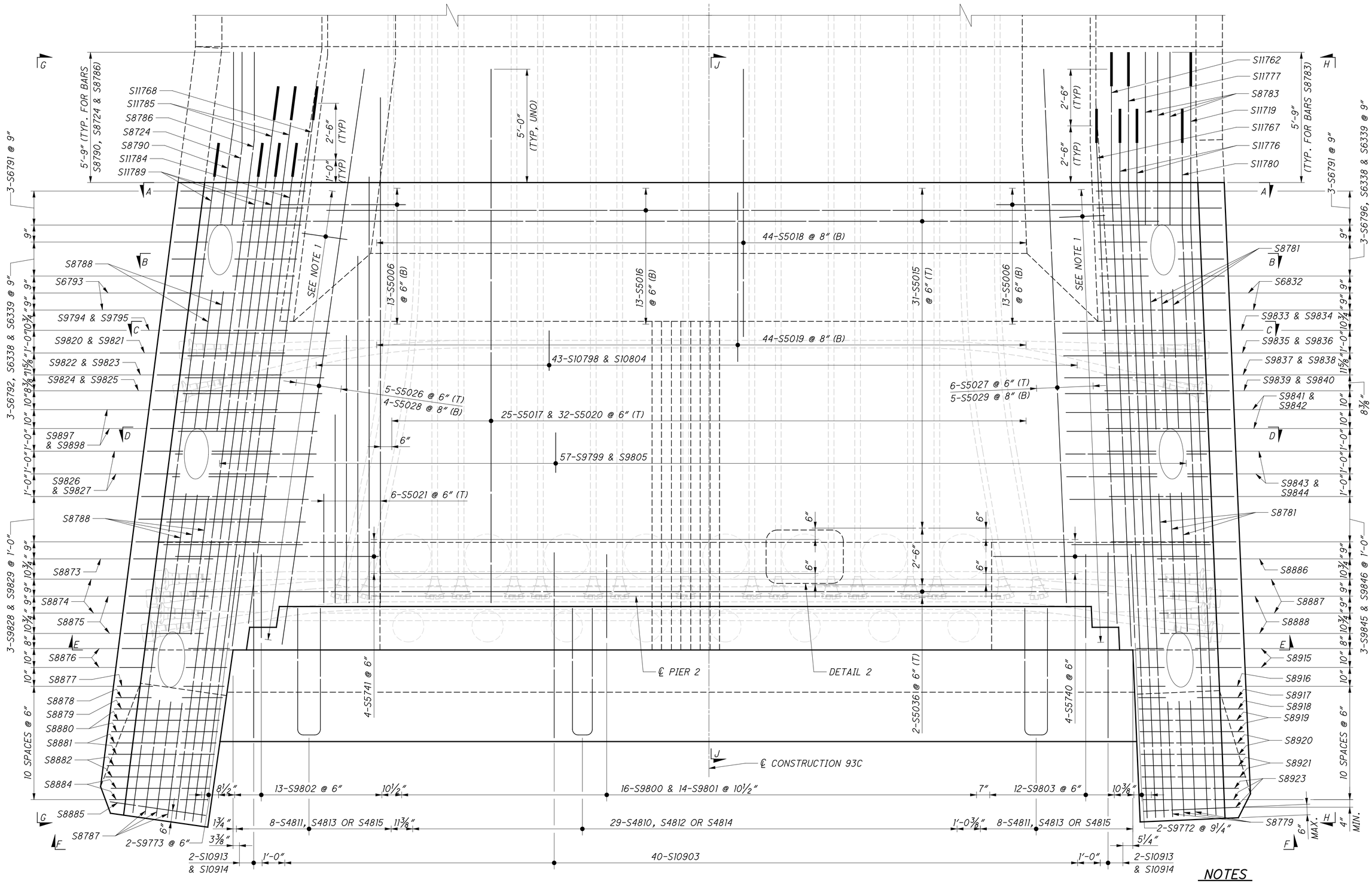

PLAN

NOTES

1. FOR BARRIER STARTER BAR REQUIREMENTS AND ADDITIONAL DETAILS, SEE SHEET NO. 267/365

DESIGN AGENCY
URS
36 EAST 7TH STREET
SUITE 2300
CINCINNATI, OHIO 45202

DESIGNED	DRAWN	REVIEWED	DATE
ASM	CER	DLJ	6/2010
CHECKED	REVISED	STRUCTURE FILE NUMBER	
RTG		4401263	

KY DIAPHRAGM SEGMENT REINFORCEMENT (1 OF 9)
BRIDGE NO. LAW-93-0000
IRONTON RUSSELL BRIDGE OVER OHIO RIVER

LAW-93-0.00
PID No. 81595

E:\Bridges_XM\Ironton_Russell\LAW\81595\structures\LAW093_0000C\sheets\093_0000CSD029.dgn 4/25/2011 10:19:17 AM john_stahl

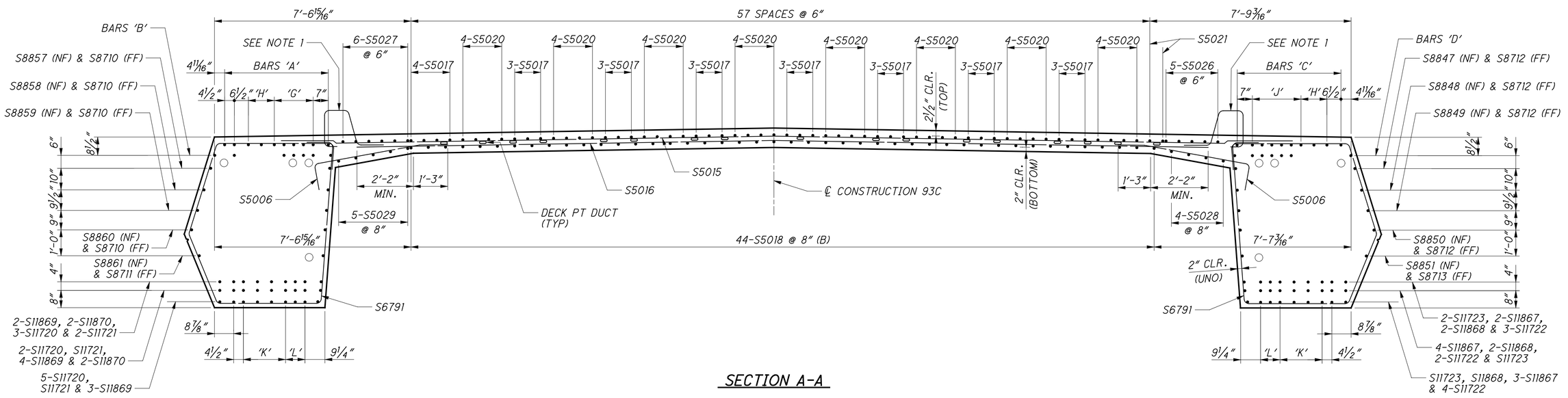

SECTION A-A

BARS 'A' = S11719, S11762, S11767, 2-S11776, S11777, S11780 & 3-S8783
BARS 'B' = S11752, S11753, S11764, S11891, S11892 & 2-S11893
BARS 'C' = S8724, S11768, S11784, 2-S11785, S8786, 3-S11789 & S8790
BARS 'D' = S11754, S11894, 3-S11895 & 2-S11896
BARS 'E' = S11719, S11762, S11767, 2-S11776, S11777 & S11780
BARS 'F' = S11768, S11784, 2-S11785, S8786 & 3-S11789

SPACING 'G' = 4 SPACES @ 4 1/2"
SPACING 'H' = 2 SPACES @ 6"
SPACING 'J' = 5 SPACES @ 4 1/2"
SPACING 'K' = 3 SPACES @ 6 1/2"
SPACING 'L' = 2 SPACES @ 4 1/2"
SPACING 'M' = 3 SPACES @ 4 1/2"

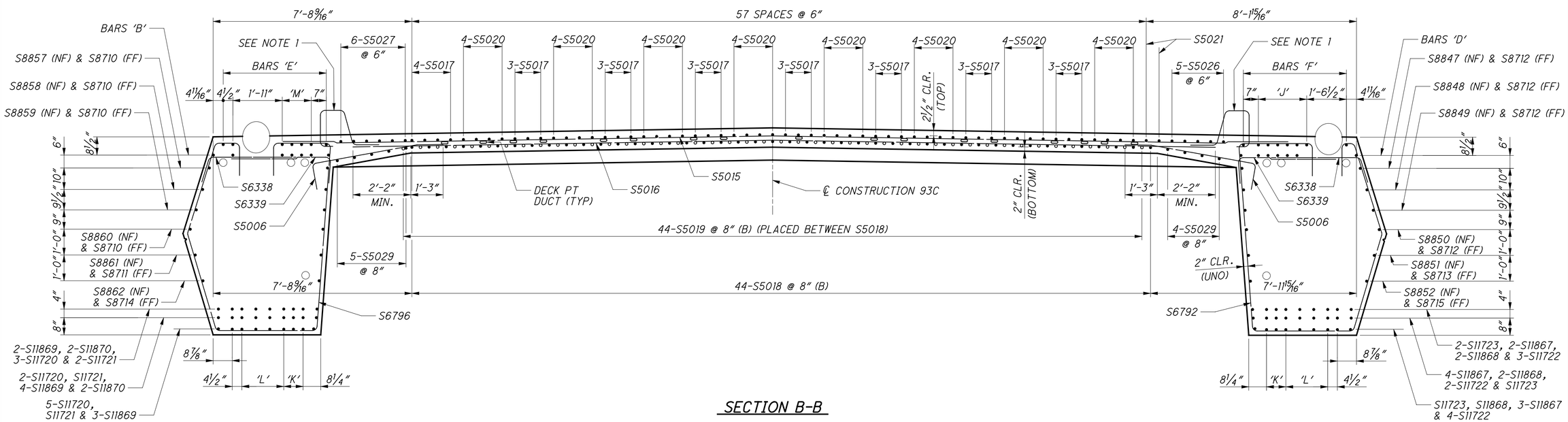

SECTION B-B

NOTES

1. FOR BARRIER STARTER BAR REQUIREMENTS AND ADDITIONAL DETAILS, SEE SHEET NO. 267/365

DESIGN AGENCY
URS
36 EAST 7TH STREET
SUITE 2300
CINCINNATI, OHIO 45202

DESIGNED	DRAWN	REVIEWED	DATE
ASM	CER	DLJ	6/2010
CHECKED	REVISED	STRUCTURE FILE NUMBER	
RTG		4401263	

KY DIAPHRAGM SEGMENT REINFORCEMENT (2 OF 9)
BRIDGE NO. LAW-93-0000
IRONTON RUSSELL BRIDGE OVER OHIO RIVER

LAW-93-0.00
PID No. 81595

201/365

588/788

E:\Bridges_XM\Ironton_Russell\LAW\81595\structures\LAW093_0000C\sheets\093_0000CSD029.dgn 4/25/2011 10:19:25 AM john_stahl

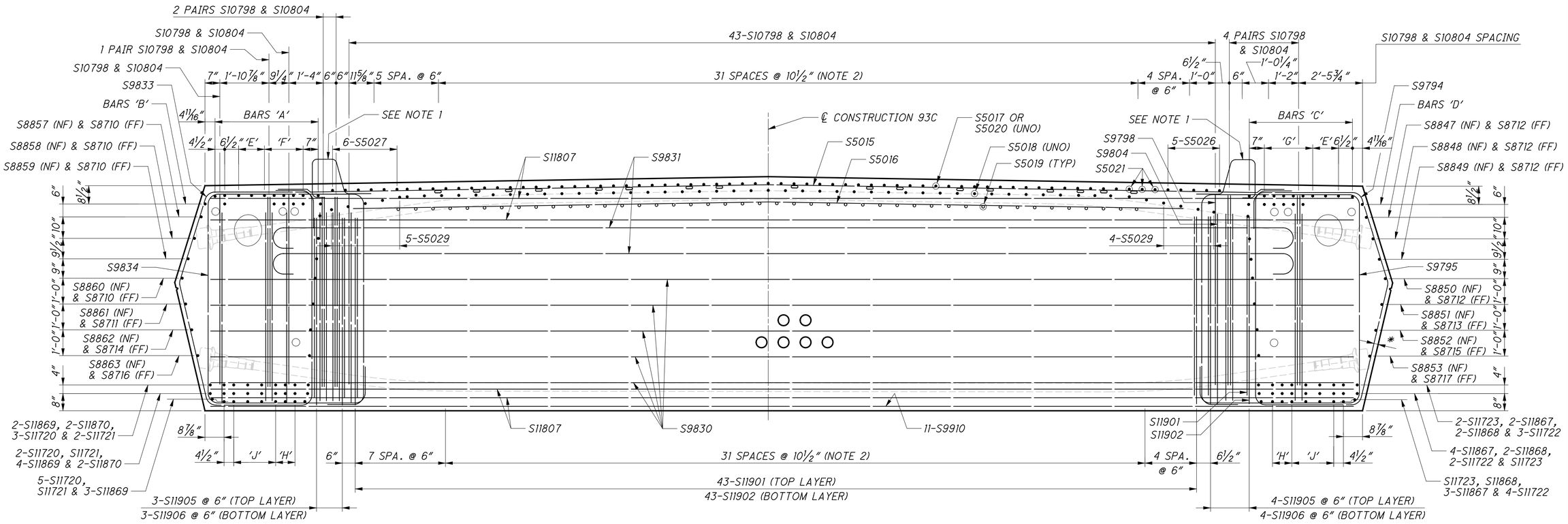

SECTION C-C

BARS 'A' = S11719, S11762, S11767, 2-S11776, S11777, S11780 & 3-S8781
BARS 'B' = S11752, S11753, S11764, S11891, S11892 & 2-S11893
BARS 'C' = S11768, S11784, 2-S11785, S8786, 2-S8788 & 3-S11789
BARS 'D' = S11754, S11894, 3-S11895 & 2-S11896

SPACING 'E' = 2 SPACES @ 6"
SPACING 'F' = 4 SPACES @ 4½"
SPACING 'G' = 5 SPACES @ 4½"
SPACING 'H' = 2 SPACES @ 4½"
SPACING 'J' = 3 SPACES @ 6½"

* 2" CLR. (UNO)

NOTES

1. FOR BARRIER STARTER BAR REQUIREMENTS AND ADDITIONAL DETAILS, SEE SHEET NO. 267/365
2. SHIFT OR ROTATE BARS AS NEEDED TO AVOID CONFLICT WITH UTILITY PENETRATIONS AND POST-TENSIONING TENDONS.

DESIGN AGENCY
URS
36 EAST 7TH STREET
SUITE 2300
CINCINNATI, OHIO 45202

DESIGNED	DRAWN	REVIEWED	DATE
ASM	CER	DLJ	6/2010
CHECKED	REVISED	STRUCTURE FILE NUMBER	
RTG		4401263	

KY DIAPHRAGM SEGMENT REINFORCEMENT (3 OF 9)
BRIDGE NO. LAW-93-0000
IRONTON RUSSELL BRIDGE OVER OHIO RIVER

LAW-93-0.00
PID No. 81595

202/365

589
788

E:\Bridges_XM\Ironton_Russell\LAW\81595\structures\LAW093_0000C\sheets\093_0000CSD029.dgn 4/25/2011 10:19:32 AM john_stahl

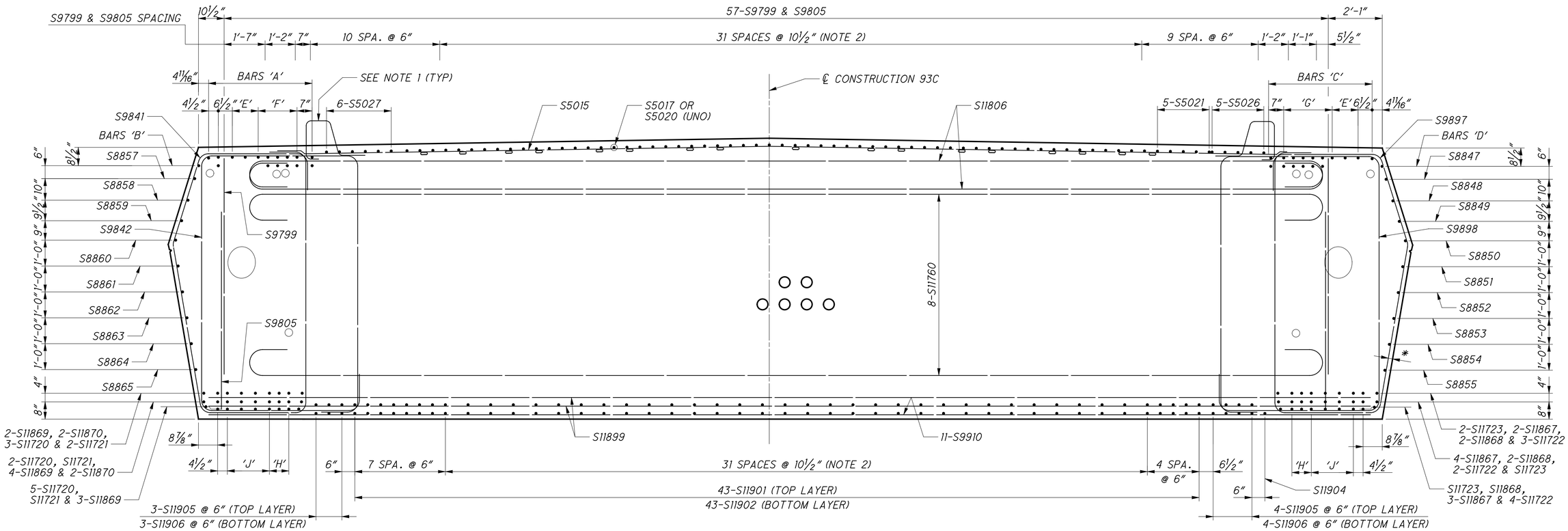

SECTION D-D

BARS 'A' = S11719, S11762, S11767, 2-S11776, S11777, S11780 & 3-S8781
BARS 'B' = S11764, S11891, S11892, 2-S11893, S11752 & S11753
BARS 'C' = S11768, S11784, 2-S11785, S8786, 2-S8788 & 3-S11789
BARS 'D' = S11754, S11894, 3-S11895 & 2-S11896

SPACING 'E' = 2 SPACES @ 6"
SPACING 'F' = 4 SPACES @ 4½"
SPACING 'G' = 5 SPACES @ 4½"
SPACING 'H' = 2 SPACES @ 4½"
SPACING 'J' = 3 SPACES @ 6½"

* 2" CLR. (UNO)

NOTES

1. FOR BARRIER STARTER BAR REQUIREMENTS AND ADDITIONAL DETAILS, SEE SHEET NO. 267/365

2. SHIFT OR ROTATE BARS AS NEEDED TO AVOID CONFLICT WITH UTILITY PENETRATIONS AND POST-TENSIONING TENDONS.

DESIGN AGENCY
URS
36 EAST 7TH STREET
SUITE 2300
CINCINNATI, OHIO 45202

DESIGNED	DRAWN	REVIEWED	DATE
ASM	CER	DLJ	6/2010
CHECKED	REVISED	STRUCTURE FILE NUMBER	
RTG		4401263	

KY DIAPHRAGM SEGMENT REINFORCEMENT (4 OF 9)
BRIDGE NO. LAW-93-0000
IRONTON RUSSELL BRIDGE OVER OHIO RIVER

LAW-93-0.00
PID No. 81595

203/365

590
788

E:\Bridges_XM\Ironton_Russell\LAW\81595\structures\LAW093_0000C\sheets\093_0000CSD029.dgn 4/25/2011 10:19:38 AM john_stahl

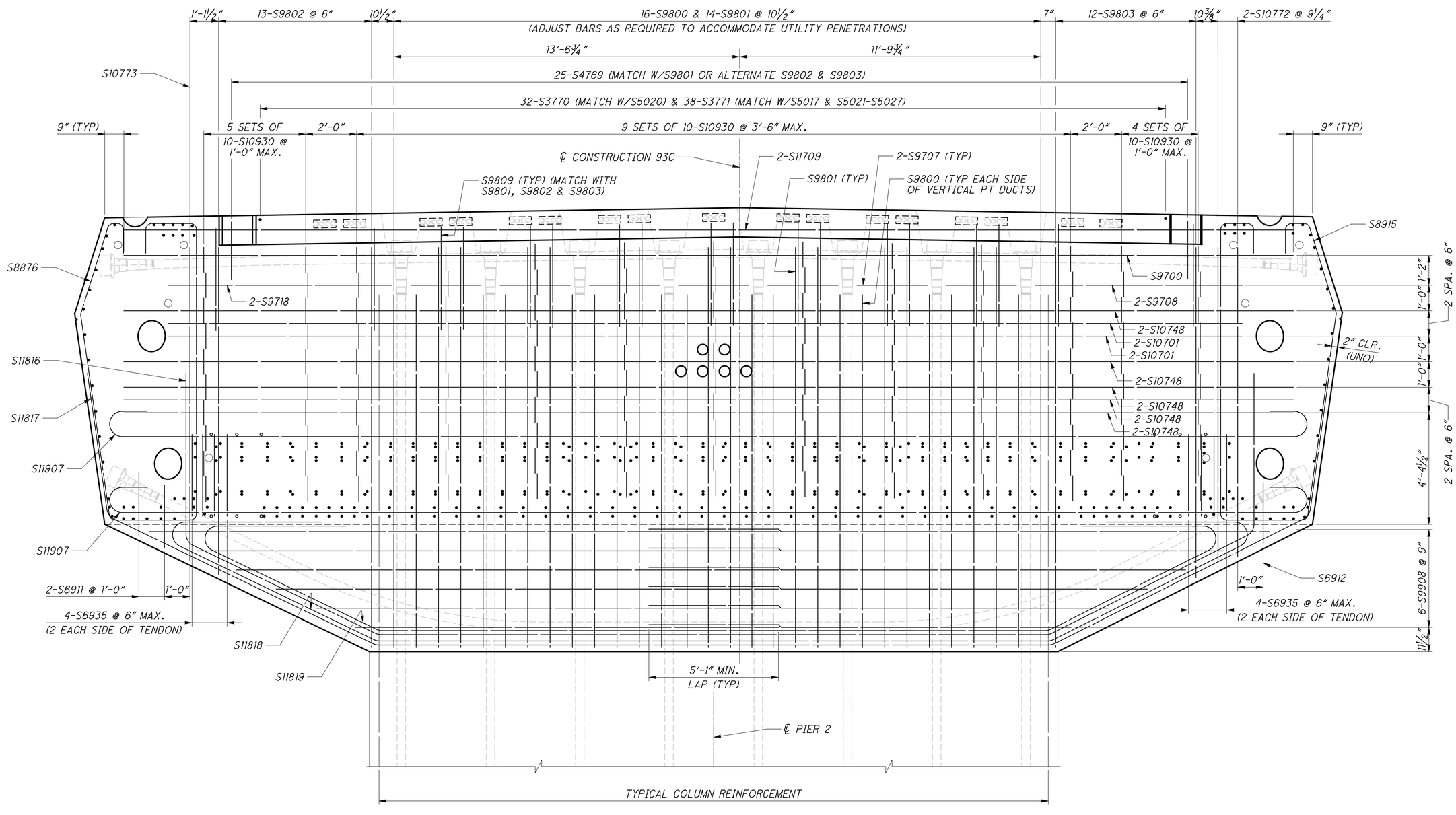

SECTION E-E

DESIGN AGENCY
URS
36 EAST 7TH STREET
SUITE 2300
CINCINNATI, OHIO 45202

DESIGNED	DRAWN	REVIEWED	DATE
ASM	CER	DLJ	6/2010
CHECKED	REVISED	STRUCTURE FILE NUMBER	
RTG		4401263	

KY DIAPHRAGM SEGMENT REINFORCEMENT (5 OF 9)
BRIDGE NO. LAW-93-0000
IRONTON RUSSELL BRIDGE OVER OHIO RIVER

LAW-93-0.00
PID No. 81595

204/365

591
788

E:\Bridges_XM\Ironton_Russell\LAW\81595\structures\LAW093_0000C\sheets\093_0000CSD029.dgn 4/25/2011 10:19:44 AM john_stahl

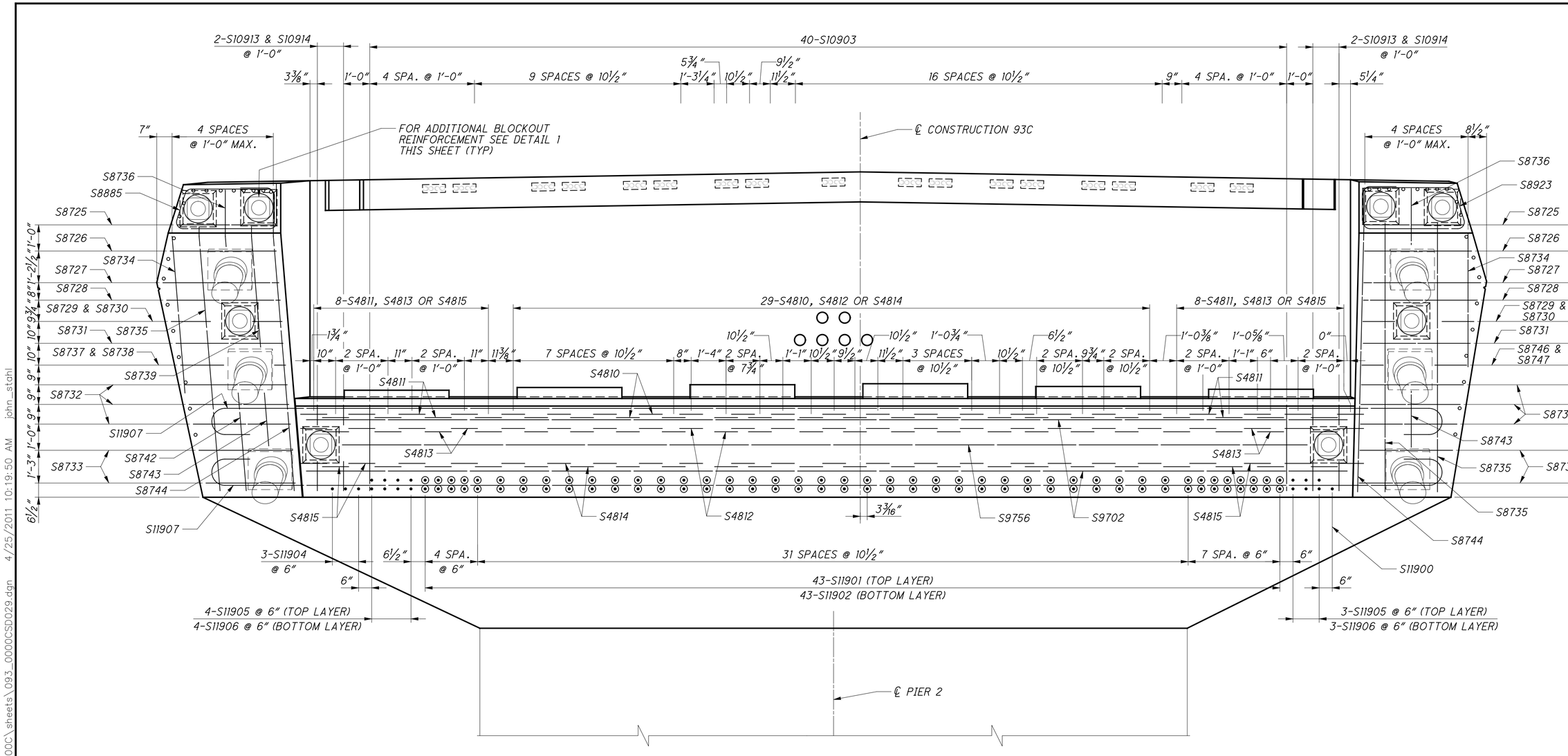

VIEW F-F

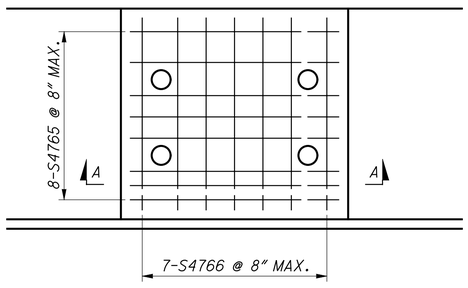

PEDESTAL REINFORCEMENT - PLAN

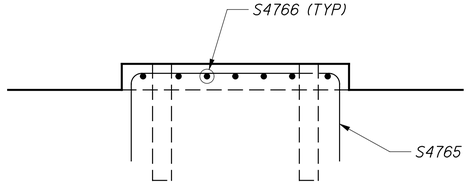

SECTION A-A

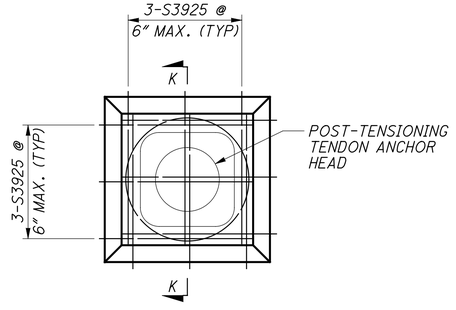

DETAIL 1

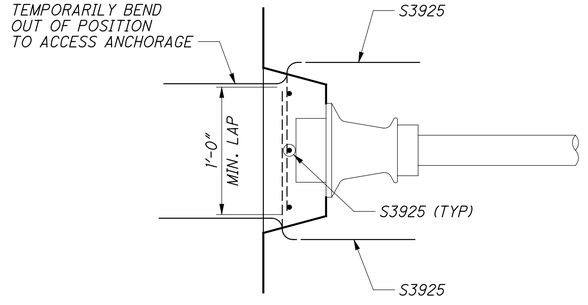

SECTION K-K

DESIGN AGENCY
URS
36 EAST 7TH STREET
SUITE 2300
CINCINNATI, OHIO 45202

DESIGNED	DRAWN	REVIEWED	DATE
ASM	CER	DLJ	6/2010
CHECKED	REVISED	STRUCTURE FILE NUMBER	
RTG		4401263	

KY DIAPHRAGM SEGMENT REINFORCEMENT (6 OF 9)
BRIDGE NO. LAW-93-0000
IRONTON RUSSELL BRIDGE OVER OHIO RIVER

LAW-93-0.00
PID No. 81595

205/365

592
788

E:\Bridges_XM\Ironton_Russell\LAW\81595\structures\LAW093_0000C\sheets\093_0000CSD029.dgn 4/25/2011 10:19:50 AM john_stahl

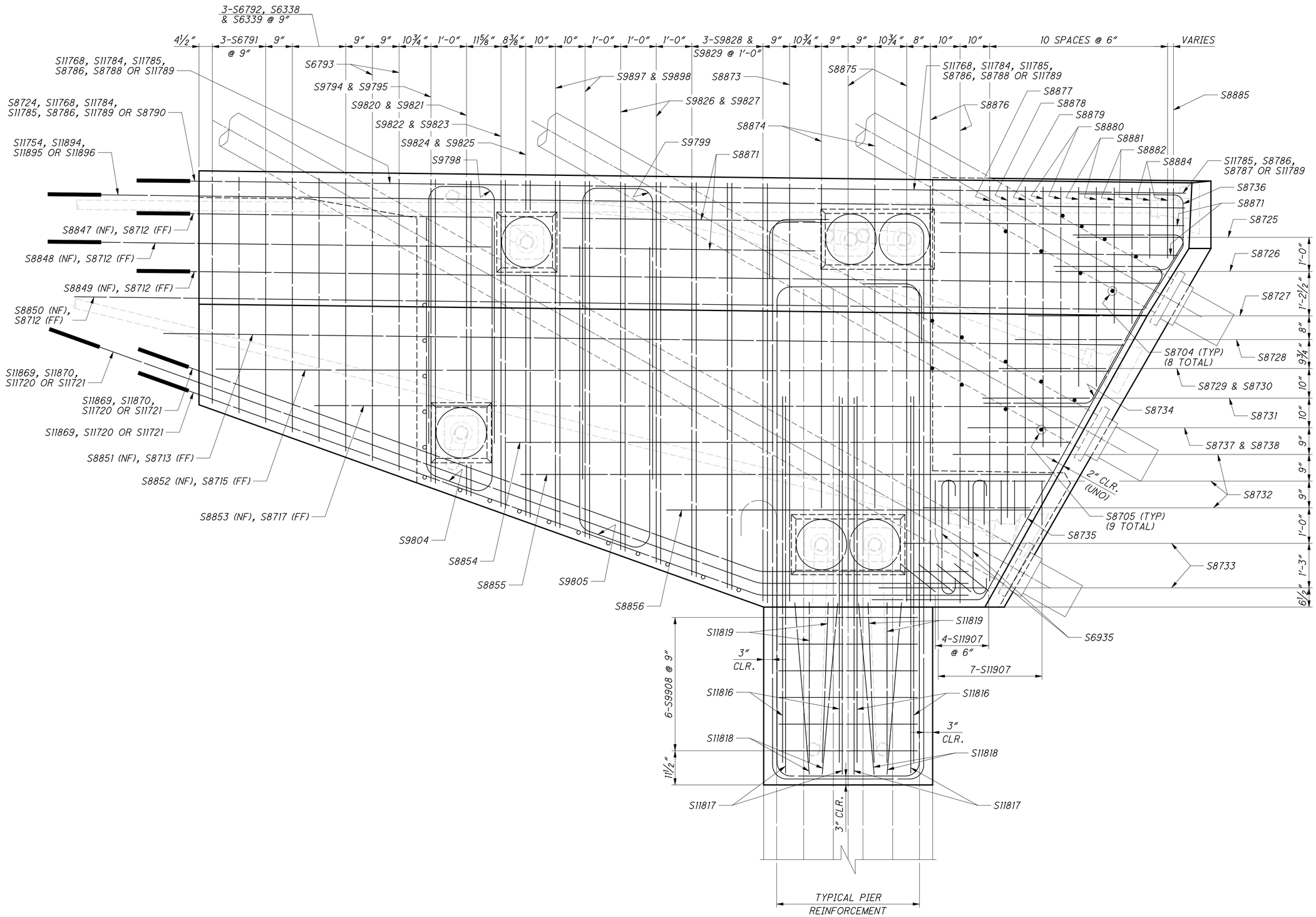

VIEW G-G

E:\Bridges_XM\Ironton_Russell\LAW\81595\structures\LAW093_0000C\sheets\093_0000CSD029.dgn 4/25/2011 10:19:58 AM john_stahl

DESIGN AGENCY
URS
36 EAST 7TH STREET
SUITE 2300
CINCINNATI, OHIO 45202

DESIGNED	DRAWN	REVIEWED	DATE
ASM	CER	DLJ	6/2010
CHECKED	REVISED	STRUCTURE FILE NUMBER	
RTG		4401263	

KY DIAPHRAGM SEGMENT REINFORCEMENT (7 OF 9)
BRIDGE NO. LAW-93-0000
IRONTON RUSSELL BRIDGE OVER OHIO RIVER

LAW-93-0.00
PID No. 81595

206/365

593
788

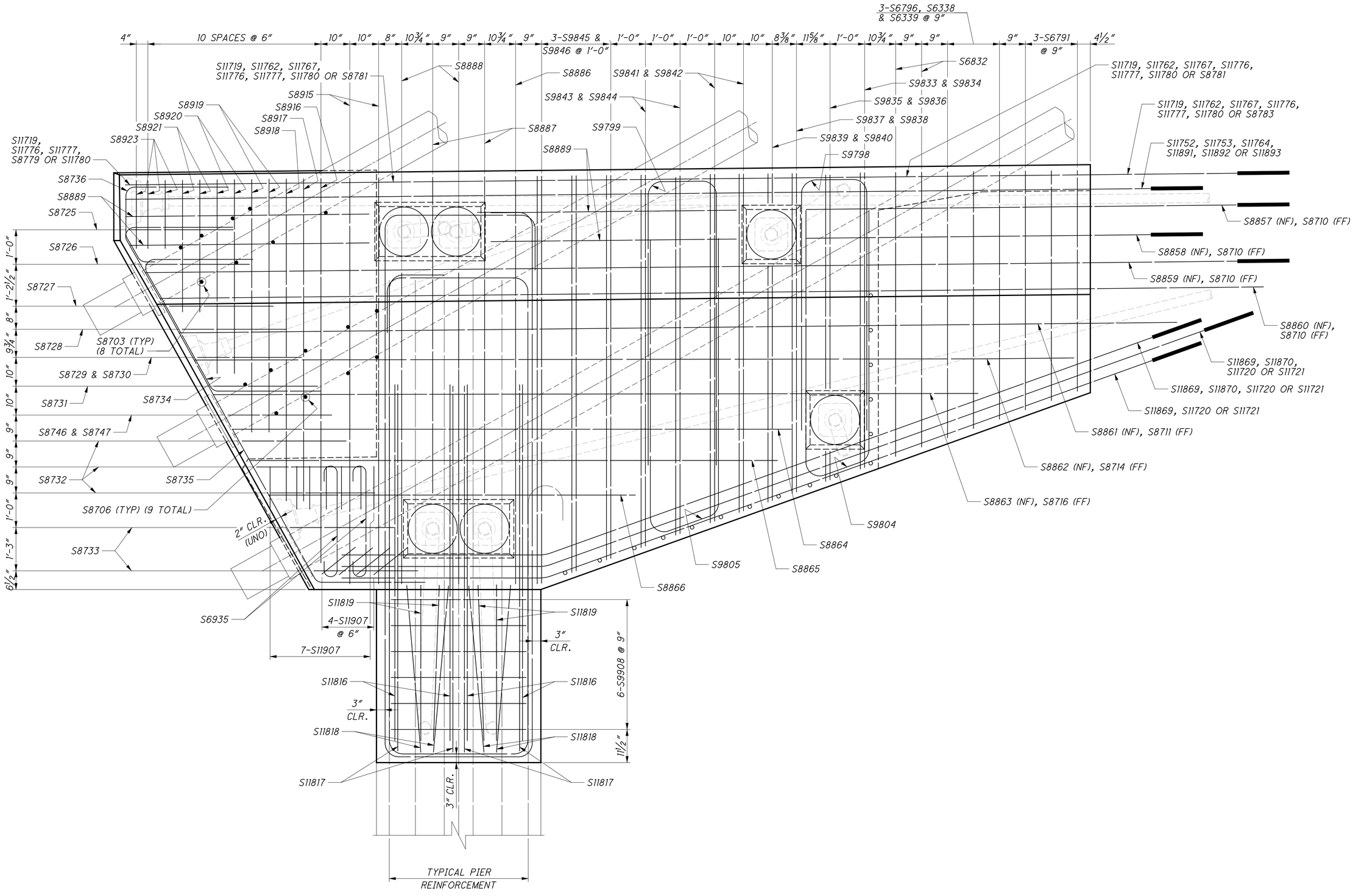

VIEW H-H

E:\Bridges_XM\Ironton_Russell\LAW\81595\structures\LAW093_0000C\sheets\093_0000CSD029.dgn 4/25/2011 10:20:03 AM john_stahl

DESIGN AGENCY
URS
36 EAST 7TH STREET
SUITE 2300
CINCINNATI, OHIO 45202

DESIGNED	DRAWN	REVIEWED	DATE
ASM	CER	DLJ	6/2010
CHECKED	REVISED	STRUCTURE FILE NUMBER	
RTG		4401263	

KY DIAPHRAGM SEGMENT REINFORCEMENT (8 OF 9)
BRIDGE NO. LAW-93-0000
IRONTON RUSSELL BRIDGE OVER OHIO RIVER

LAW-93-0.00
PID No. 81595

207/365

594/788

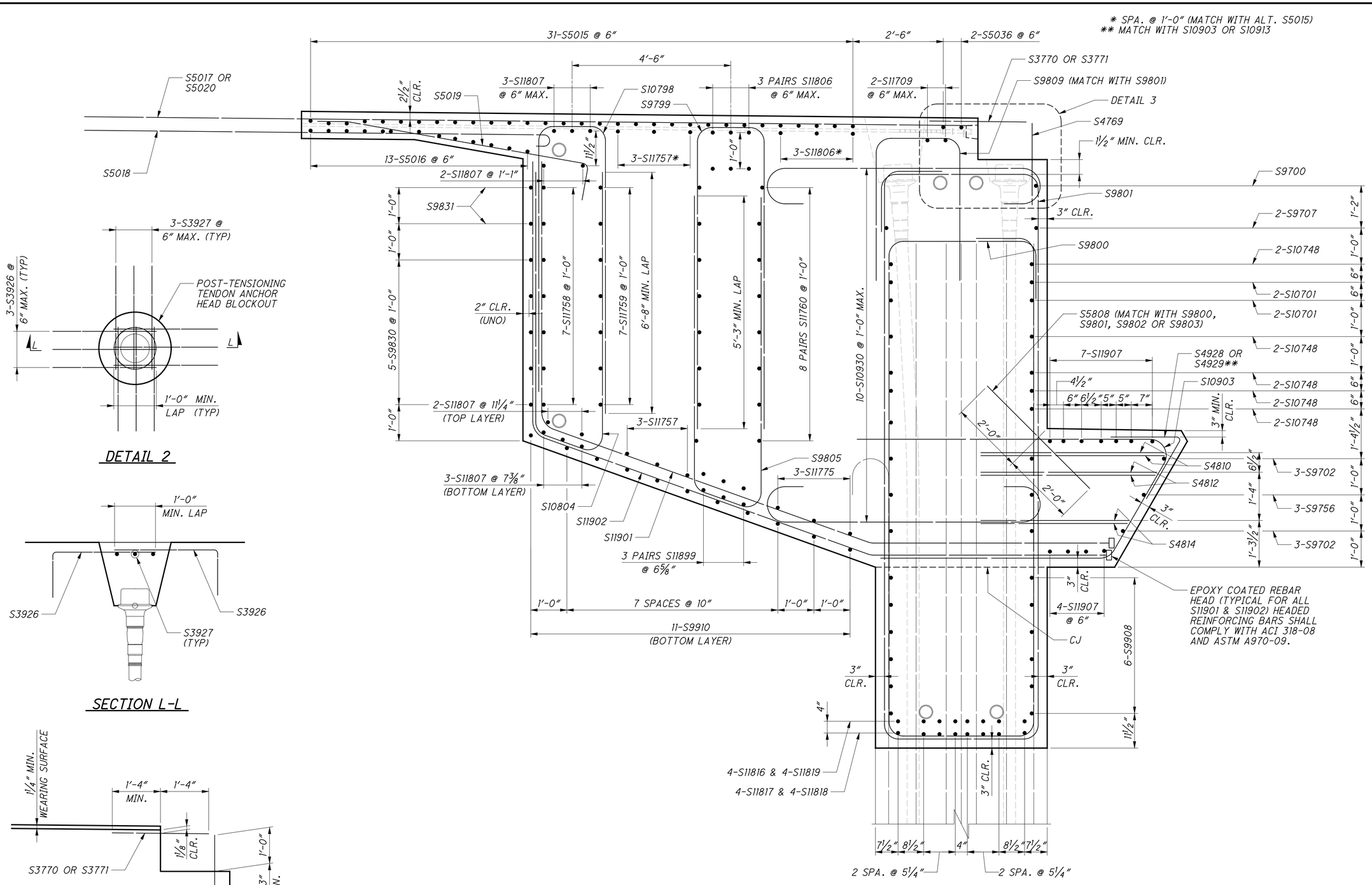

E:\Bridges_XM\Ironton_Russell\LAW\81595\structures\LAW093_0000C\sheets\093_0000CSD029.dgn 4/25/2011 10:20:10 AM john_stahl

DESIGN AGENCY
URS
36 EAST 7TH STREET
SUITE 2300
CINCINNATI, OHIO 45202

DESIGNED	DRAWN	REVIEWED	DATE
ASM	CER	DLJ	6/2010
CHECKED	REVISED	STRUCTURE FILE NUMBER	
RTG		4401263	

KY DIAPHRAGM SEGMENT REINFORCEMENT (9 OF 9)
BRIDGE NO. LAW-93-0000
IRONTON RUSSELL BRIDGE OVER OHIO RIVER

LAW-93-0.00
PID No. 81595

208/365

595
788

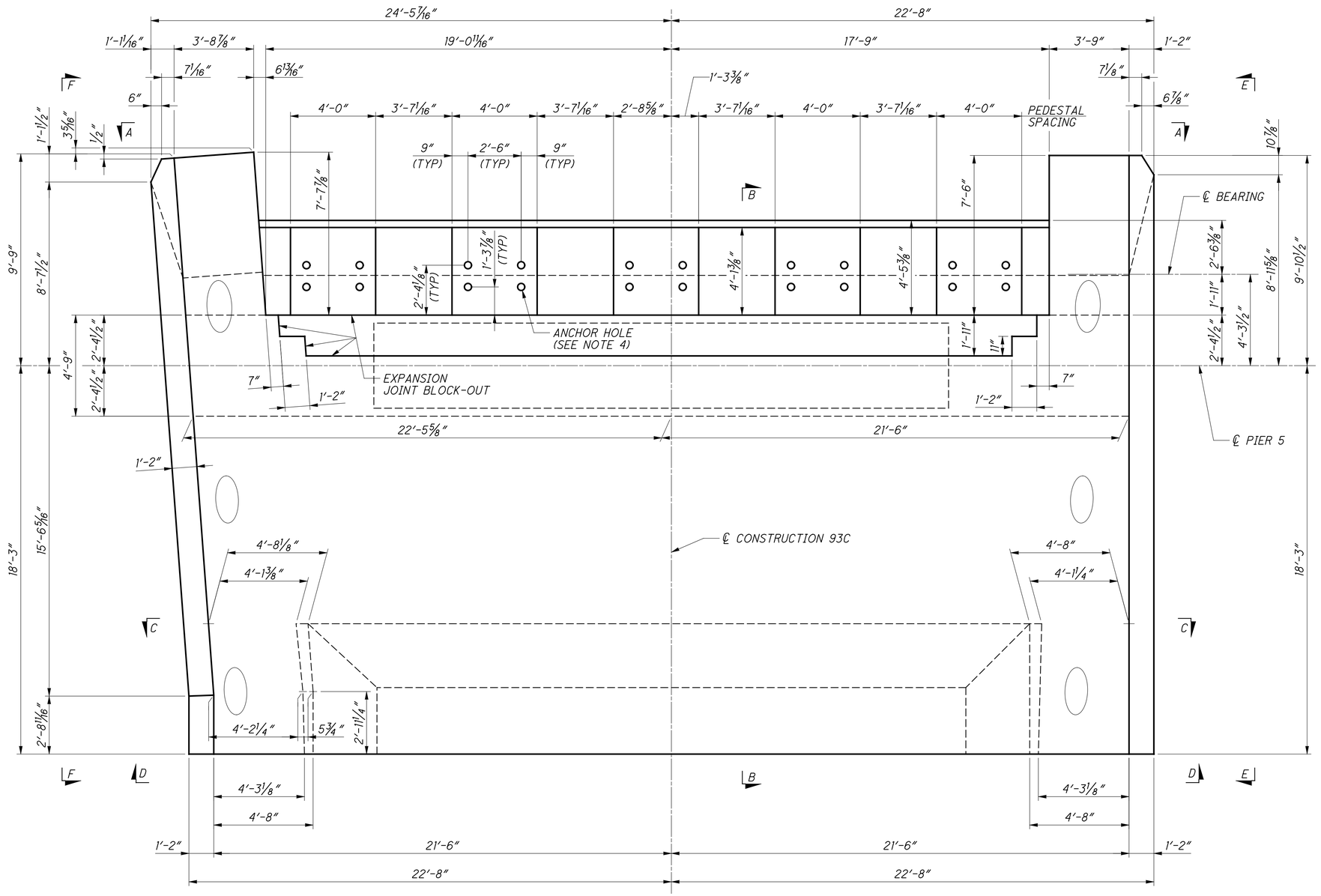

OH DIAPHRAGM SEGMENT

NOTES

1. FOR VIEW A-A AND SECTION B-B, SEE SHEET NO. 210/365
2. FOR SECTION C-C AND VIEW D-D, SEE SHEET NO. 211/365
3. FOR VIEWS E-E AND F-F, SEE SHEET NO. 212/365
4. FOR ANCHOR HOLES DETAILS SEE SHEET NO. 334/365

DESIGN AGENCY
URS
36 EAST 7TH STREET
SUITE 2300
CINCINNATI, OHIO 45202

DESIGNED	DRAWN	REVIEWED	DATE
ASM	CER	DLJ	6/2010
CHECKED	REVISED	STRUCTURE FILE NUMBER	
BWJ		4401263	

OH DIAPHRAGM SEGMENT GEOMETRY (1 OF 4)
BRIDGE NO. LAW-93-0000
IRONTON RUSSELL BRIDGE OVER OHIO RIVER

LAW-93-0.00
PID No. 81595

209/365

596
788

E:\Bridges_XM\Ironton_Russell\LAW\81595\structures\LAW093_0000C\sheets\093_0000CSD018.dgn 4/25/2011 10:20:18 AM john_stahl

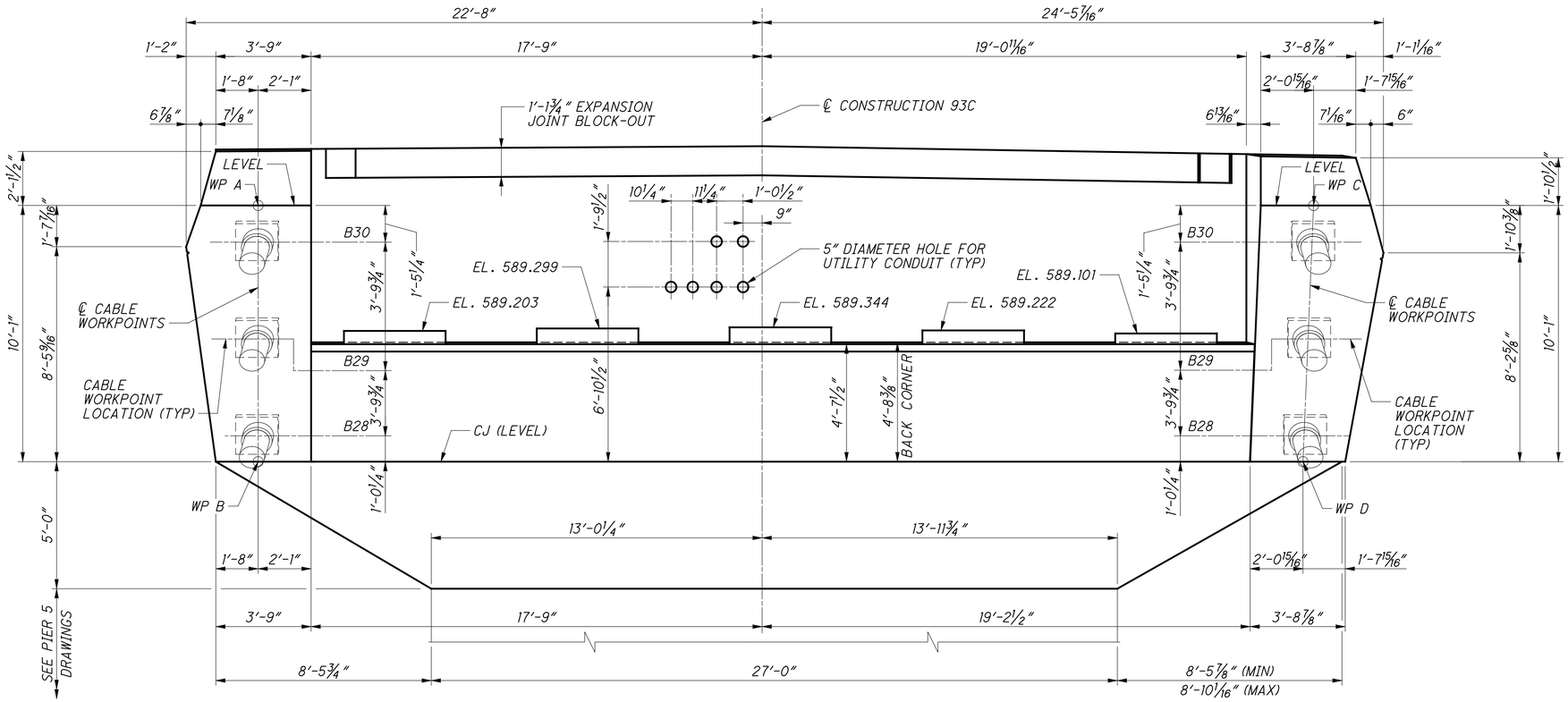

VIEW A-A

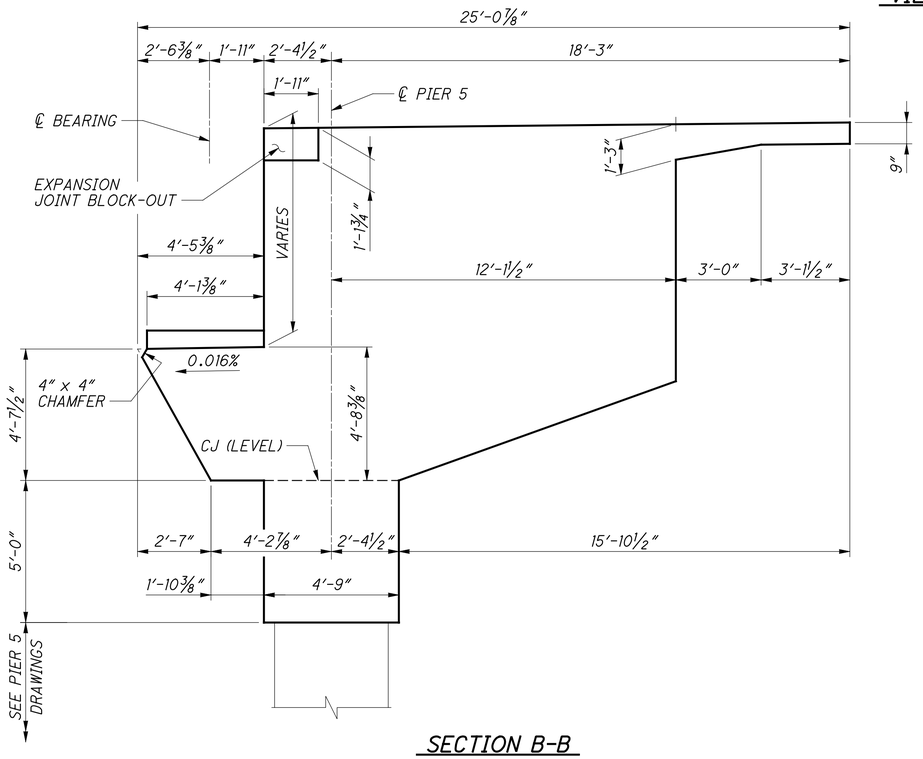

SECTION B-B

WORK POINTS	
LOCATION	ELEVATION
WP A & C	594.139
WP B & D	584.056

Link to 279-005-000
Beam Seats As-Built

NOTES

1. WORK THIS SHEET WITH SHEET NO. 209/365

DESIGN AGENCY
URS
36 EAST 7TH STREET
SUITE 2300
CINCINNATI, OHIO 45202

DESIGNED	DRAWN	REVIEWED	DATE
ASM	CER	DLJ	6/2010
CHECKED	REVISED	STRUCTURE FILE NUMBER	
BWJ		4401263	

OH DIAPHRAGM SEGMENT GEOMETRY (2 OF 4)
BRIDGE NO. LAW-93-0000
IRONTON RUSSELL BRIDGE OVER OHIO RIVER

LAW-93-0.00
PID No. 81595

210/365

597
788

E:\Bridges_XM\Ironton_Russell\LAW\81595\structures\LAW093_0000C\sheets\093_0000CSD018.dgn 4/25/2011 10:20:22 AM john_stahl

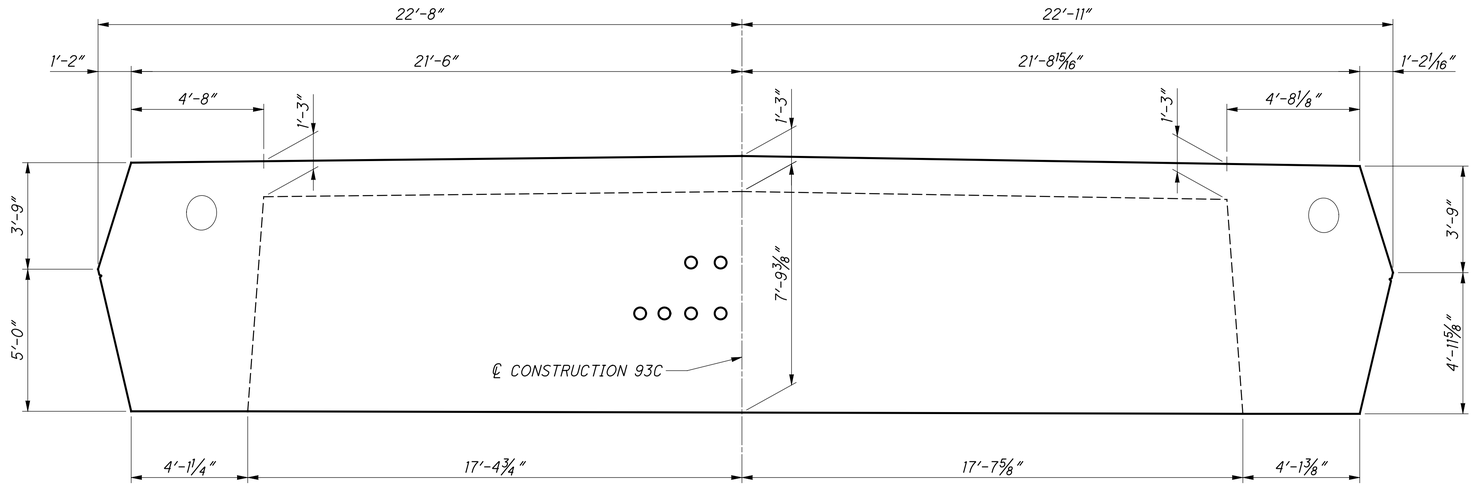

SECTION C-C

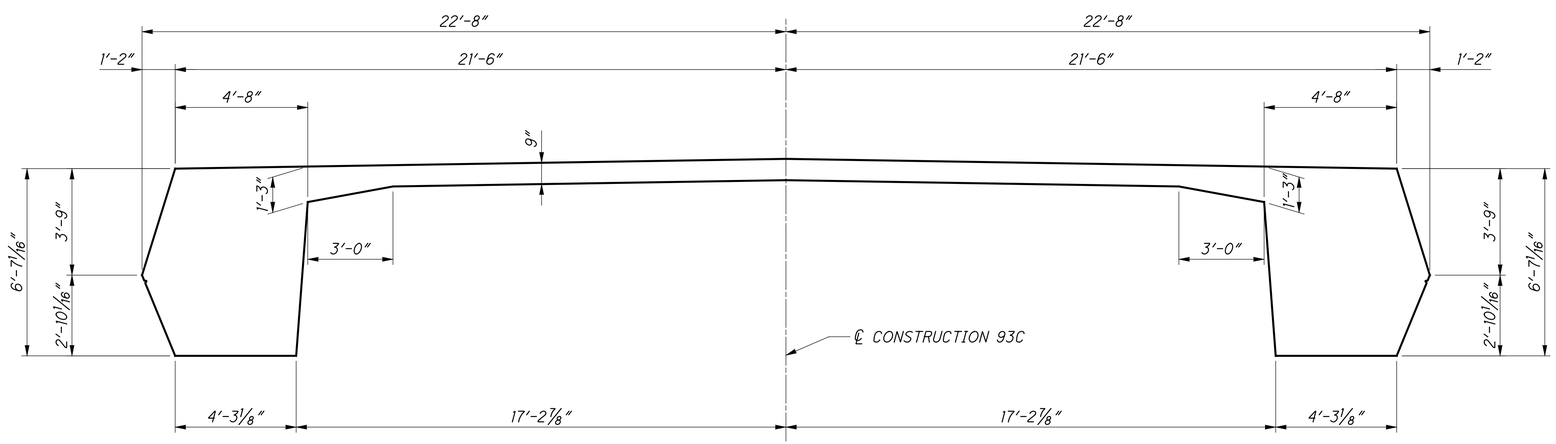

VIEW D-D

NOTES

1. WORK THIS SHEET WITH SHEET NO. 210/365
2. FOR DRIP DETAIL SEE SHEET NO. 69/365

DESIGN AGENCY
URS
36 EAST 7TH STREET
SUITE 2300
CINCINNATI, OHIO 45202

DESIGNED	DRAWN	REVIEWED	DATE
ASM	CER	DLJ	6/2010
CHECKED	REVISED	STRUCTURE FILE NUMBER	
BWJ		4401263	

OH DIAPHRAGM SEGMENT GEOMETRY (3 OF 4)
BRIDGE NO. LAW-93-0000
IRONTON RUSSELL BRIDGE OVER OHIO RIVER

LAW-93-0.00
PID No. 81595

211/365

598
788

E:\Bridges_XM\Ironton_Russell\LAW\81595\structures\LAW093_0000C\sheets\093_0000CSD018.dgn 4/25/2011 10:20:26 AM john_stahl

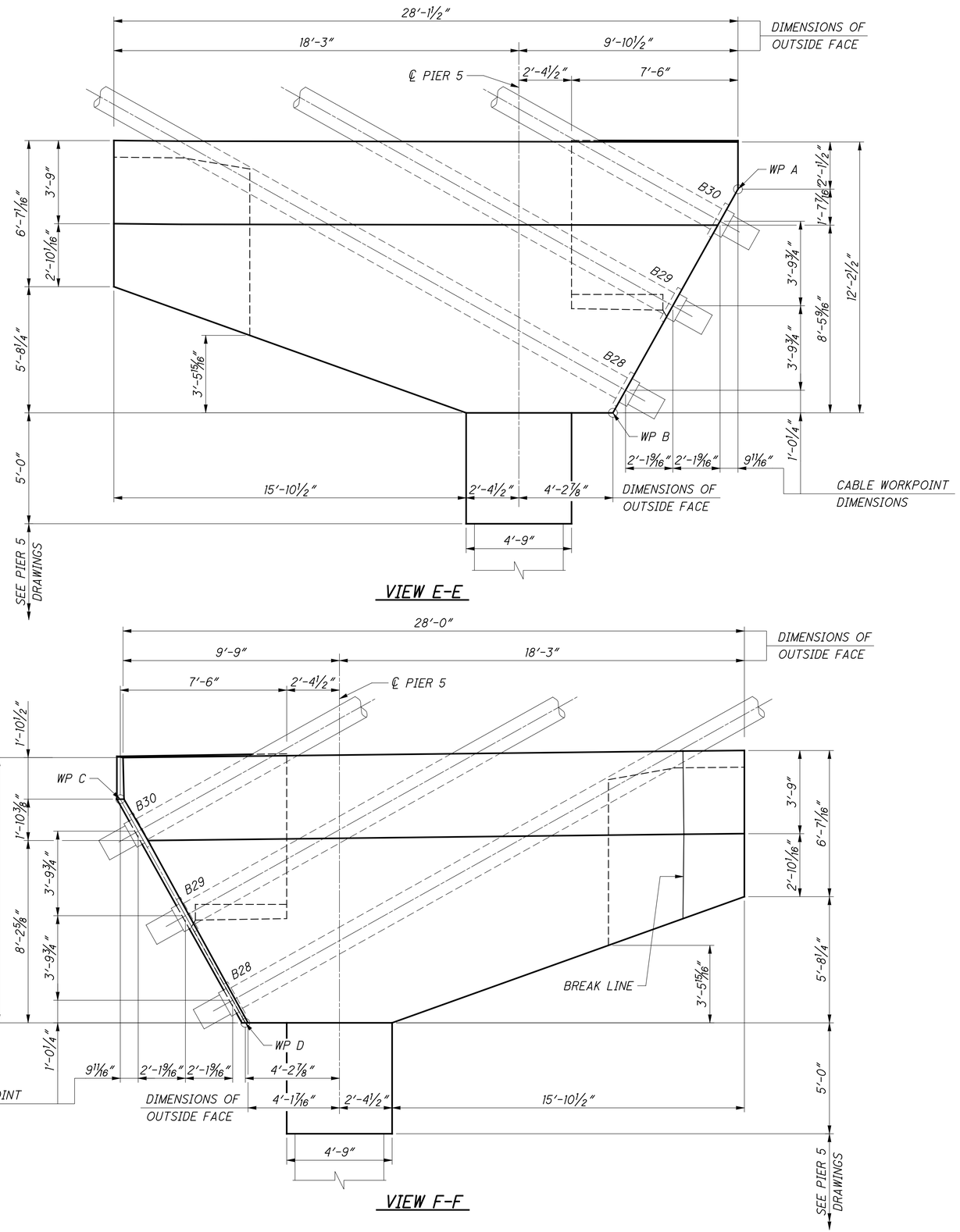

NOTES

1. WORK THIS SHEET WITH SHEET NO. 209/365

DESIGN AGENCY
URS
36 EAST 7TH STREET
SUITE 2300
CINCINNATI, OHIO 45202

DESIGNED	DRAWN	REVIEWED	DATE
ASM	CER	DLJ	6/2010
CHECKED	REVISED	STRUCTURE FILE NUMBER	
BWJ		4401263	

OH DIAPHRAGM SEGMENT GEOMETRY (4 OF 4)
BRIDGE NO. LAW-93-0000
IRONTON RUSSELL BRIDGE OVER OHIO RIVER

LAW-93-0.00
PID No. 81595

212/365

599
788

E:\Bridges_XM\Ironton_Russell\LAW\81595\structures\LAW093_0000C\sheets\093_0000CSD018.dgn 4/25/2011 10:20:29 AM john_stahl

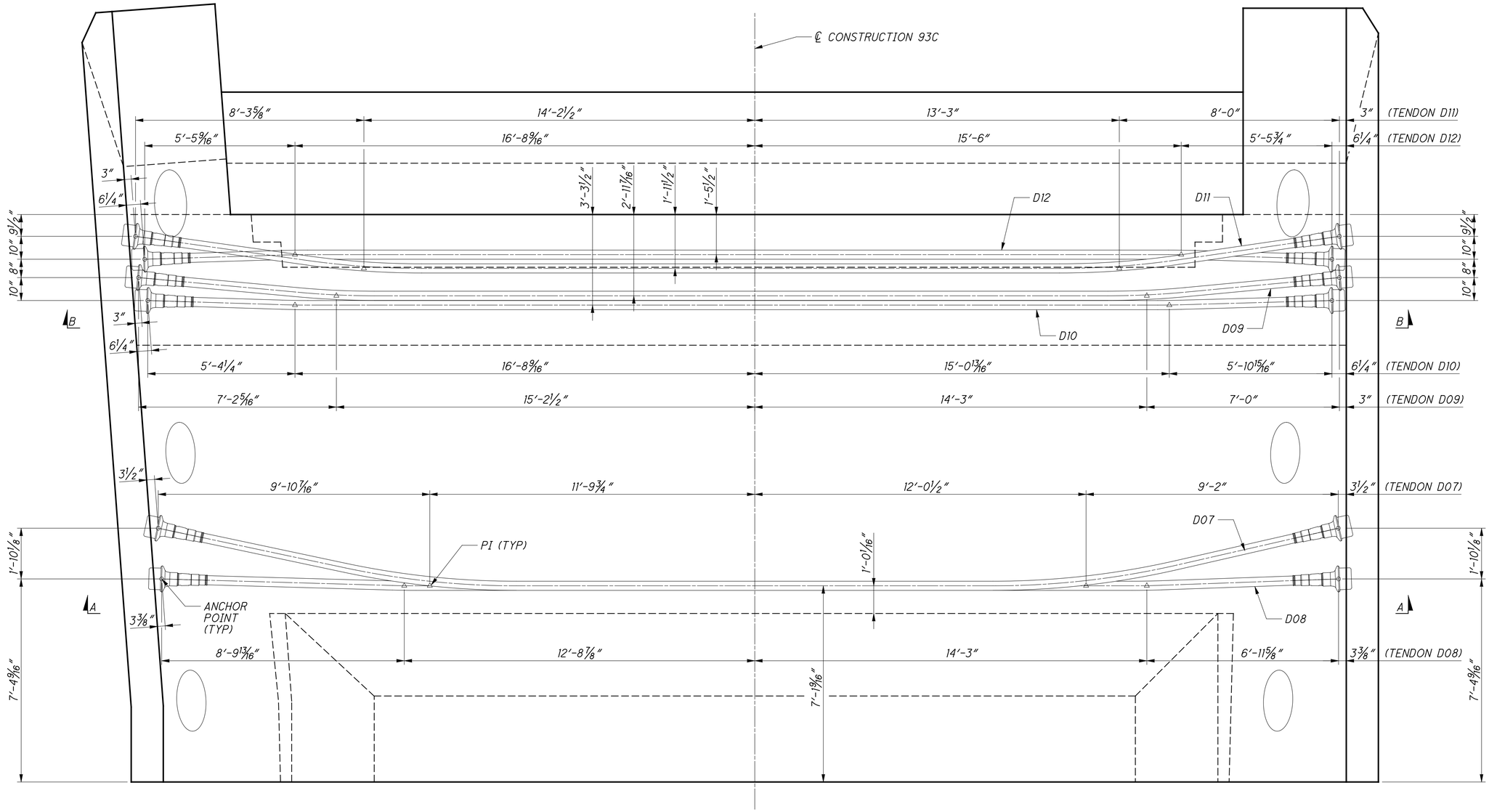

PLAN

Link to RFI146 As-Built

NOTES

1. ALL DIMENSIONS ARE TO THE PI OR ANCHOR POINT AT THE CENTERLINE OF TENDON DUCT.
2. ALL DIAPHRAGM TENDONS ARE COMPRISED OF 19 - 0.6IN DIAMETER STRANDS IN 4.00 INCH ID DUCT.
3. ALL TENDONS ARE BENT WITH A 30 FT RADIUS UNLESS NOTED OTHERWISE.
4. TENDONS SHALL BE STRESSED TO 891 KIPS PRIOR TO SEATING.
5. TENDONS SHALL NOT BE STRESSED UNTIL THE DIAPHRAGM SEGMENT IS COMPLETED AND THE CONCRETE HAS ATTAINED A MINIMUM STRENGTH OF 3500 PSI.
6. THE DIAPHRAGM TENDONS WILL BE STRESSED IN ORDER BASED ON THE TENDON NUMBER.
7. DIAPHRAGM TENDONS MAY BE SINGLE END STRESSED BUT THE STRESSING ENDS SHALL ALTERNATE.
8. WEIGHT INDICATED IN SCHEDULES ARE BASED ON TENDON LENGTH FROM ANCHOR PLATE TO ANCHOR PLATE. WEIGHT IS SHOWN FOR INFORMATIONAL PURPOSES ONLY. CONTRACTOR IS RESPONSIBLE FOR ESTIMATING QUANTITY OF POST-TENSIONING STRAND REQUIRED.
9. COST OF SPIRAL REINFORCEMENT (LOCAL ZONE) AT EACH ANCHORAGE IS INCIDENTAL TO THE COST OF POST-TENSIONING.
10. VERTICAL COLUMN TENDONS SHALL NOT BE STRESSED UNTIL ALL TRANSVERSE DIAPHRAGM TENDONS ARE STRESSED.
11. FOR PIER TENDON STRESSING INFORMATION, SEE "PIER 5 GEOMETRY (1 OF 2) & (2 OF 2)" SHEETS.

OH DIAPHRAGM SEGMENT TENDON QUANTITIES

TENDON ID	NUMBER OF TENDONS	NUMBER OF 0.6" DIA. STRANDS	JACKING FORCE (kips)	TENDON LENGTH (ft)	TENDON WEIGHT (lbs)	TOTAL WEIGHT (lbs)
D07	1	19	891	43.50	612	612
D08	1	19	891	42.93	604	604
D09	1	19	891	43.82	616	616
D10	1	19	891	45.68	642	642
D11	1	19	891	43.92	617	617
D12	1	19	891	45.68	642	642
					TOTAL=	3,733

DESIGN AGENCY
URS
36 EAST 7TH STREET
SUITE 2300
CINCINNATI, OHIO 45202

DESIGNED	DRAWN	REVIEWED	DATE
ASM	CER	DLJ	6/2010
CHECKED	REVISED	STRUCTURE FILE NUMBER	
RTG		4401263	

OH DIAPHRAGM SEGMENT TRANSVERSE POST-TENSIONING (1 OF 2)
BRIDGE NO. LAW-93-0000
IRONTON RUSSELL BRIDGE OVER OHIO RIVER

LAW-93-0.00
PID No. 81595

213/365

600/788

E:\Bridges_XM\Ironton_Russell\LAW\81595\structures\LAW093_0000C\sheets\093_0000CSD032.dgn 4/25/2011 10:20:35 AM john_stahl
4/25/2011

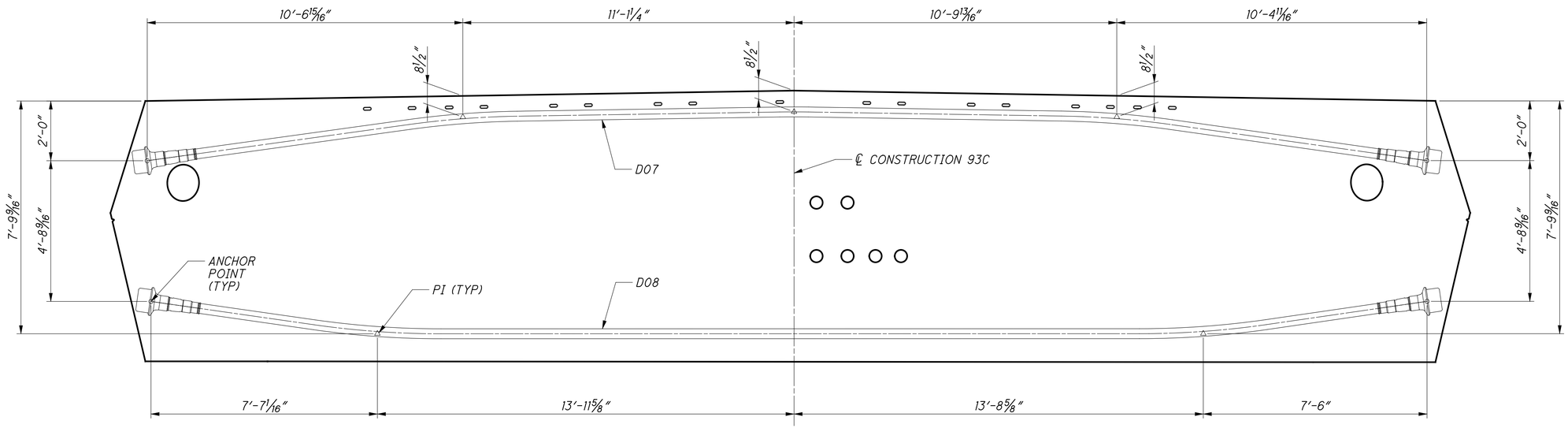

SECTION A-A

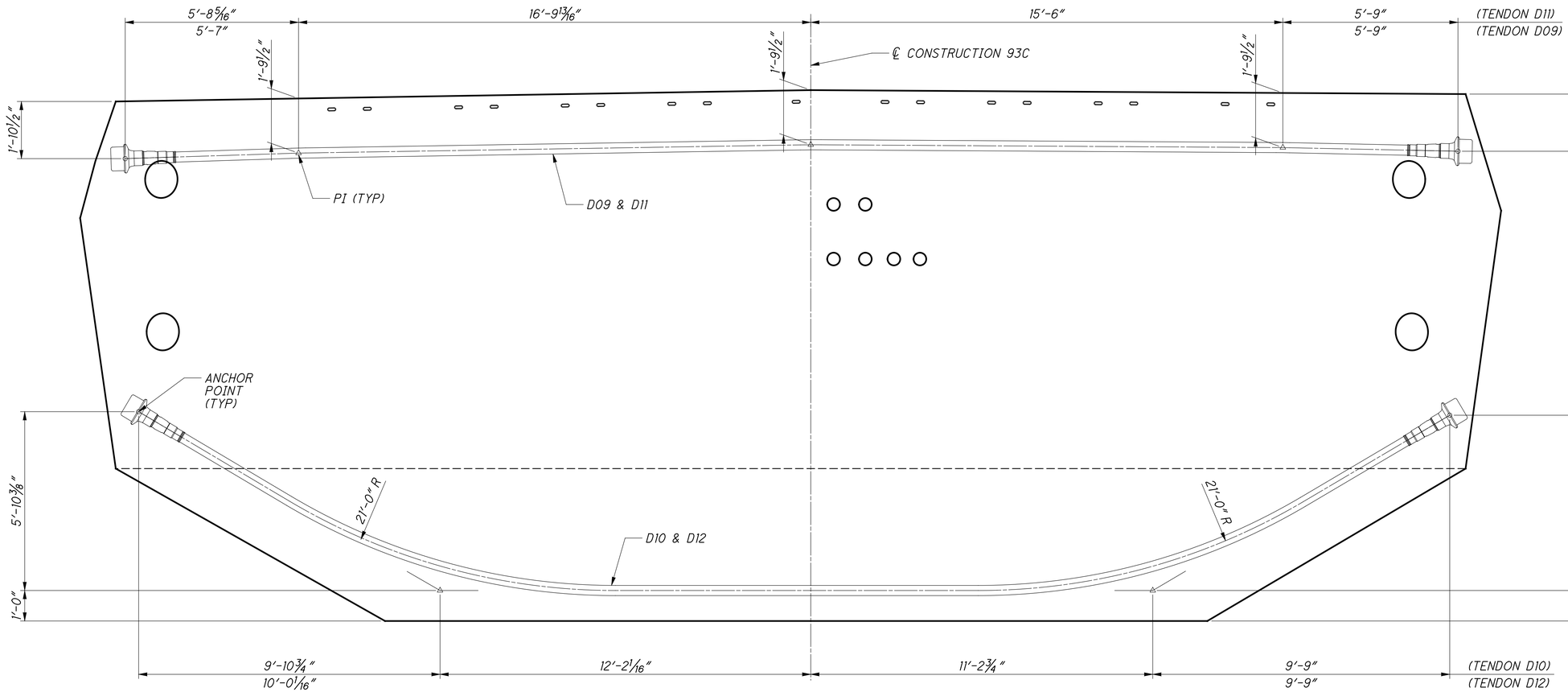

SECTION B-B

E:\Bridges_XM\Ironton_Russell\LAW\81595\structures\LAW093_0000C\sheets\093_0000CSD032.dgn 4/25/2011 10:20:41 AM john_stahl

DESIGN AGENCY
URS
36 EAST 7TH STREET
SUITE 2300
CINCINNATI, OHIO 45202

DESIGNED	DRAWN	REVIEWED	DATE
ASM	CER	DLJ	6/2010
CHECKED	REVISED	STRUCTURE FILE NUMBER	
RTG		4401263	

OH DIAPHRAGM SEGMENT TRANSVERSE POST-TENSIONING (2 OF 2)

BRIDGE NO. LAW-93-0000
IRONTON RUSSELL BRIDGE OVER OHIO RIVER

LAW-93-0.00
PID No. 81595

214/365

601
788

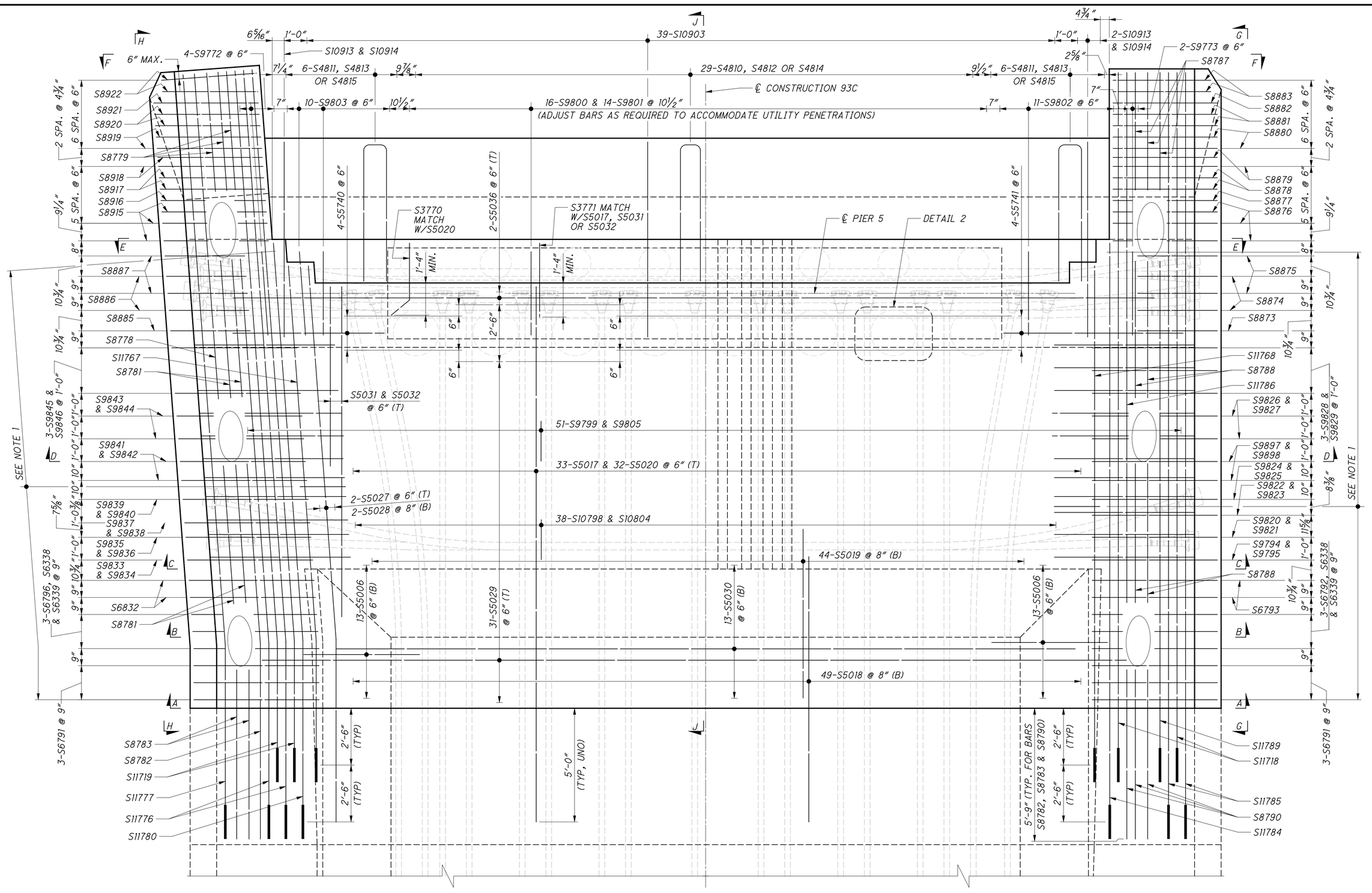

PLAN

NOTES

1. FOR BARRIER STARTER BAR REQUIREMENTS AND ADDITIONAL DETAILS, SEE SHEET NO. 267/365

DESIGN AGENCY
URS
36 EAST 7TH STREET
SUITE 2300
CINCINNATI, OHIO 45202

DESIGNED	DRAWN	REVIEWED	DATE
ASM	CER	DLJ	6/2010
CHECKED	REVISED	STRUCTURE FILE NUMBER	
RTG		4401263	

OH DIAPHRAGM SEGMENT REINFORCEMENT (1 OF 9)

BRIDGE NO. LAW-93-0000
IRONTON RUSSELL BRIDGE OVER OHIO RIVER

LAW-93-0.00
PID No. 81595

215/365

602/788

E:\Bridges_XM\Ironton_Russell\LAW\81595\structures\LAW093_0000C\sheets\093_0000CSD031.dgn 4/25/2011 10:20:49 AM john_stahl

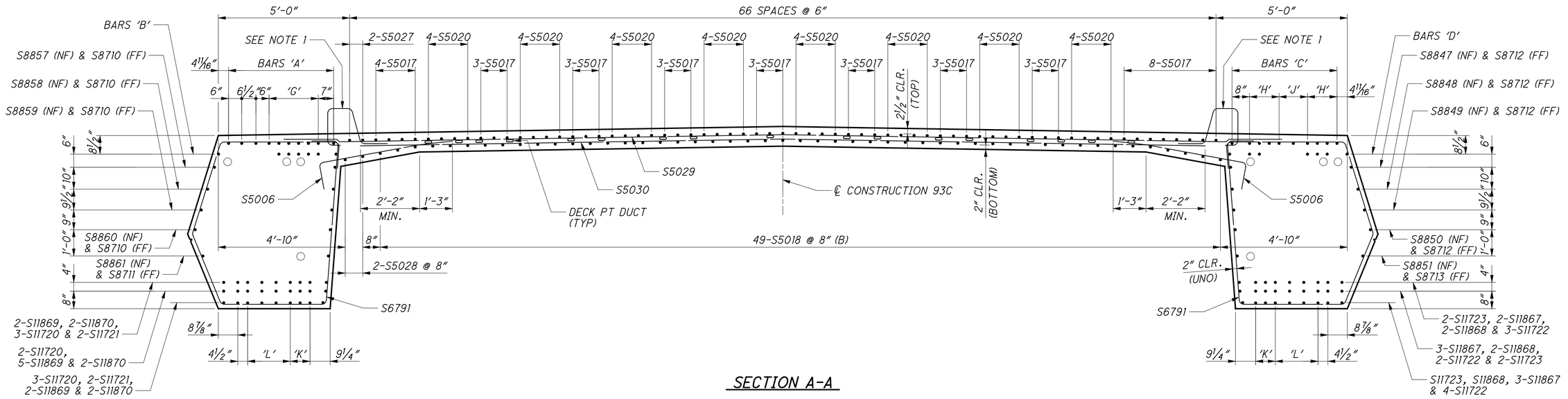

SECTION A-A

BARS 'A' = S11767, 2-S11719, 2-S11776, S11777, S11780, S8782 & 2-S8783
BARS 'B' = 2-S11752, S11753, S11891, 2-S11892 & S11893
BARS 'C' = 2-S11718, S11768, S11784, 2-S11785, S11789 & 3-S8790
BARS 'D' = 2-S11754, S11755, S11894, 2-S11895 & S11896
BARS 'E' = 2-S11719, S11767, 2-S11776, S11777, S11780 & S8782
BARS 'F' = 2-S11718, S11768, S11784, 2-S11785 & S11789

SPACING 'G' = 5 SPACES @ 4 1/2"
SPACING 'H' = 3 SPACES @ 4 1/2"
SPACING 'J' = 2 SPACES @ 6 1/2"
SPACING 'K' = 2 SPACES @ 4 1/2"
SPACING 'L' = 3 SPACES @ 6 1/2"

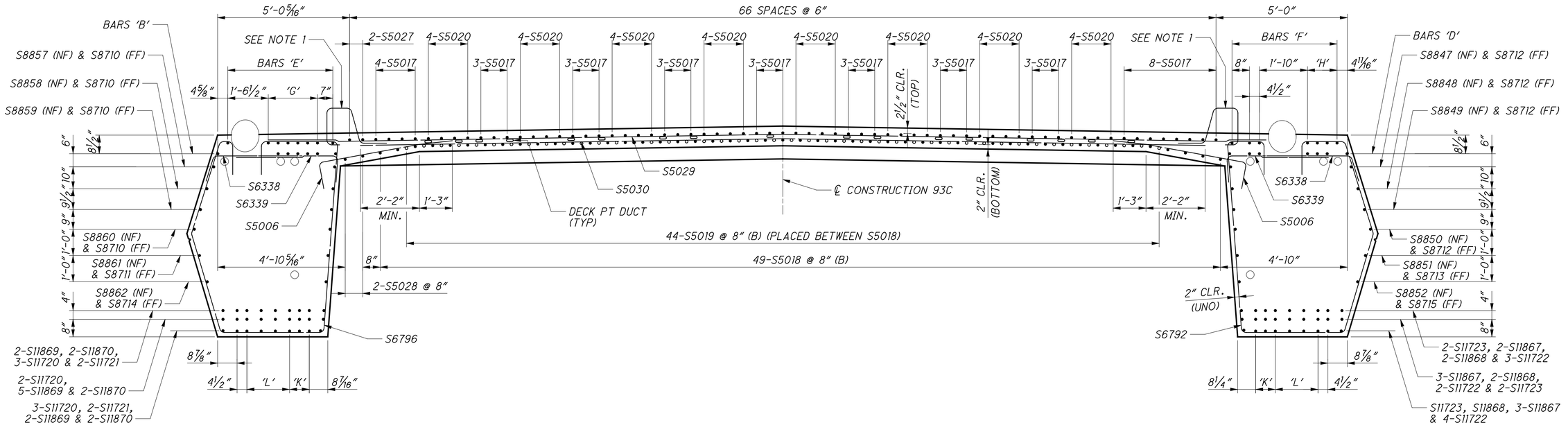

SECTION B-B

NOTES

1. FOR BARRIER STARTER BAR REQUIREMENTS AND ADDITIONAL DETAILS, SEE SHEET NO. 267/365

DESIGN AGENCY
URS
36 EAST 7TH STREET
SUITE 2300
CINCINNATI, OHIO 45202

DESIGNED	DRAWN	REVIEWED	DATE
ASM	CER	DLJ	6/2010
CHECKED	REVISED	STRUCTURE FILE NUMBER	
RTG		4401263	

OH DIAPHRAGM SEGMENT REINFORCEMENT (2 OF 9)
BRIDGE NO. LAW-93-0000
IRONTON RUSSELL BRIDGE OVER OHIO RIVER

LAW-93-0.00
PID No. 81595

216/365

603
788

E:\Bridges_XM\Ironton_Russell\LAW\81595\structures\LAW093_0000C\sheets\093_0000CSD031.dgn 4/25/2011 10:20:57 AM john_stahl

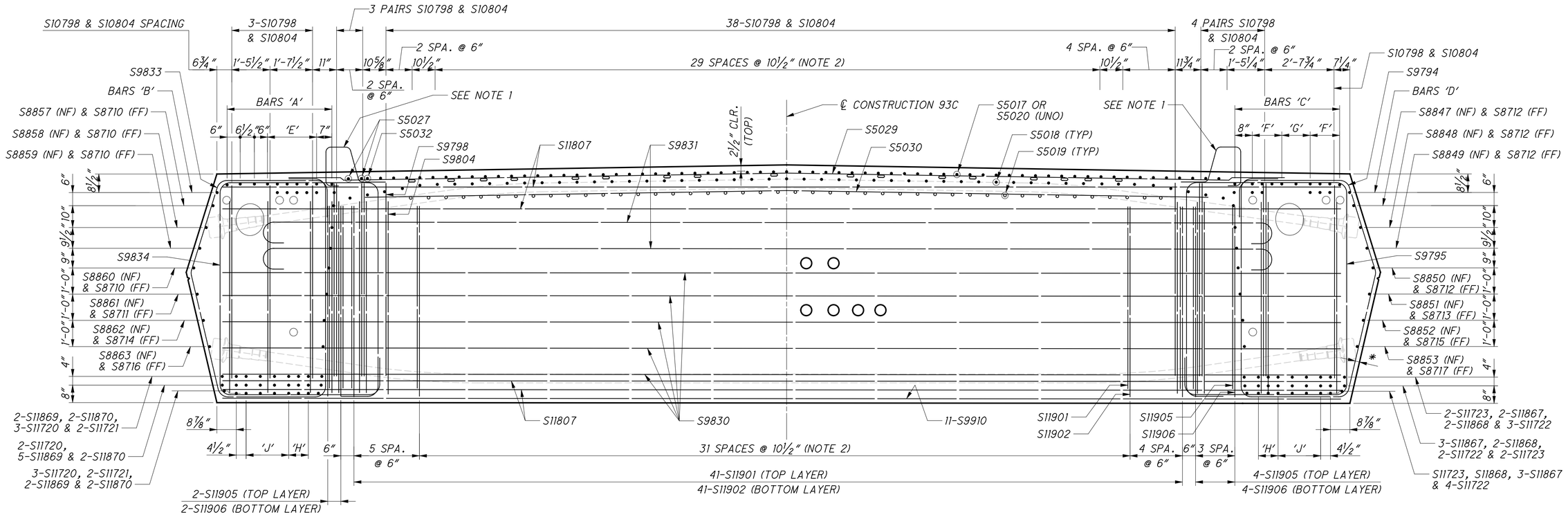

SECTION C-C

BARS 'A' = S11767, 2-S11719, 2-S11776, S11777, S11780, 2-S8781 & S8782
BARS 'B' = 2-S11752, S11753, S11891, 2-S11892 & S11893
BARS 'C' = 2-S11718, S11768, S11784, 2-S11785, S11786, 2-S8788 & S11789
BARS 'D' = 2-S11754, S11755, S11894, 2-S11895 & S11896

SPACING 'E' = 5 SPACES @ 4½"
SPACING 'F' = 3 SPACES @ 4½"
SPACING 'G' = 2 SPACES @ 6½"
SPACING 'H' = 2 SPACES @ 4½"
SPACING 'J' = 3 SPACES @ 6½"

* 2" CLR. (UNO)

NOTES

1. FOR BARRIER STARTER BAR REQUIREMENTS AND ADDITIONAL DETAILS, SEE SHEET NO. 267/365
2. SHIFT OR ROTATE BARS AS NEEDED TO AVOID CONFLICT WITH UTILITY PENETRATIONS.

DESIGN AGENCY
URS
36 EAST 7TH STREET
SUITE 2300
CINCINNATI, OHIO 45202

DESIGNED ASM | DRAWN CER | REVIEWED DLJ | DATE 6/2010
CHECKED RTG | REVISED | STRUCTURE FILE NUMBER 4401263

OH DIAPHRAGM SEGMENT REINFORCEMENT (3 OF 9)
BRIDGE NO. LAW-93-0000
IRONTON RUSSELL BRIDGE OVER OHIO RIVER

LAW-93-0.00
PID No. 81595

217/365

604
788

E:\Bridges_XM\Ironton_Russell\LAW\81595\structures\LAW093_0000C\sheets\093_0000CSD031.dgn 4/25/2011 10:21:04 AM john_stahl

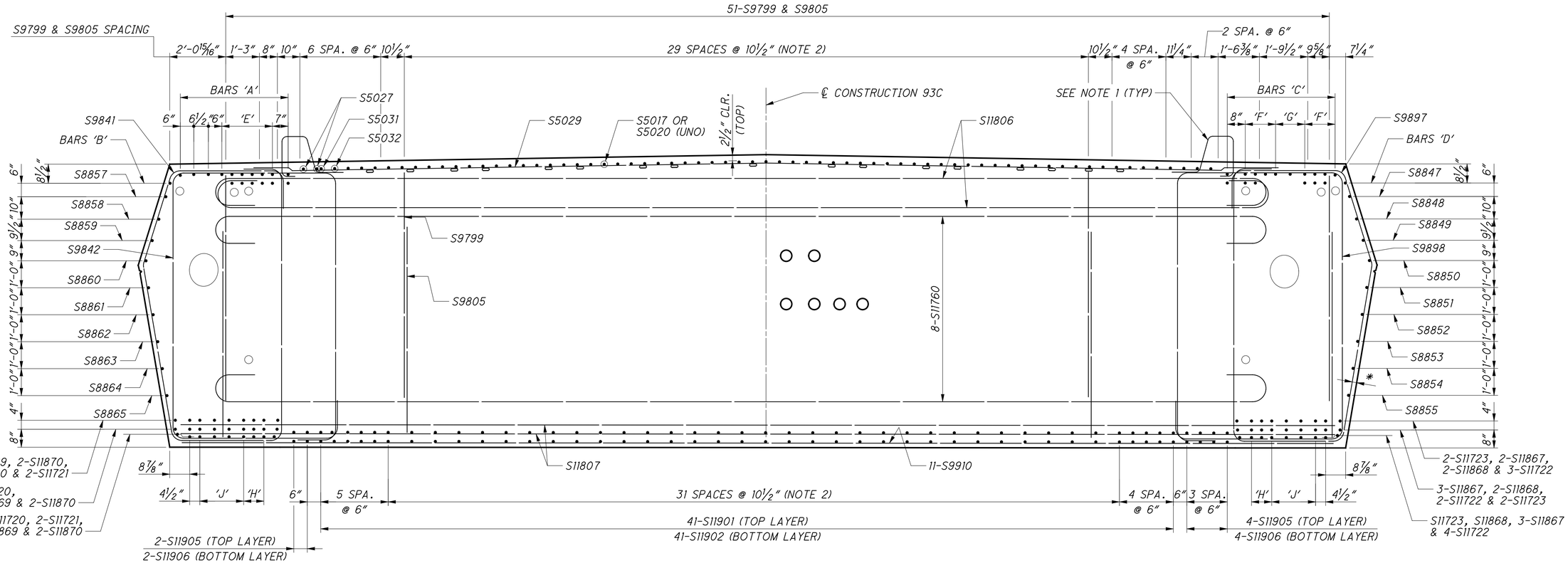

SECTION D-D

BARS 'A' = S11767, 2-S11719, 2-S11776, S11777, S11780, 2-S8781 & S8782
BARS 'B' = 2-S11752, S11753, S11891, 2-S11892 & S11893
BARS 'C' = 2-S11718, S11768, S11784, 2-S11785, S11786, 2-S8788 & S11789
BARS 'D' = 2-S11754, S11755, S11894, 2-S11895 & S11896

SPACING 'E' = 5 SPACES @ 4 1/2"
SPACING 'F' = 3 SPACES @ 4 1/2"
SPACING 'G' = 2 SPACES @ 6 1/2"
SPACING 'H' = 2 SPACES @ 4 1/2"
SPACING 'J' = 3 SPACES @ 6 1/2"

* 2" CLR. (UNO)

NOTES

1. FOR BARRIER STARTER BAR REQUIREMENTS AND ADDITIONAL DETAILS, SEE SHEET NO. 267/365
2. SHIFT OR ROTATE BARS AS NEEDED TO AVOID CONFLICT WITH UTILITY PENETRATIONS.

DESIGN AGENCY
URS
36 EAST 7TH STREET
SUITE 2300
CINCINNATI, OHIO 45202

DESIGNED ASM | DRAWN CER | REVIEWED DLJ | DATE 6/2010
CHECKED RTG | REVISED | STRUCTURE FILE NUMBER 4401263

OH DIAPHRAGM SEGMENT REINFORCEMENT (4 OF 9)

BRIDGE NO. LAW-93-0000
IRONTON RUSSELL BRIDGE OVER OHIO RIVER

LAW-93-0.00
PID No. 81595

E:\Bridges_XW\Ironton_Russell\LAW\81595\structures\LAW093_0000C\sheets\093_0000CSD031.dgn 4/25/2011 10:21:11 AM john_stahl

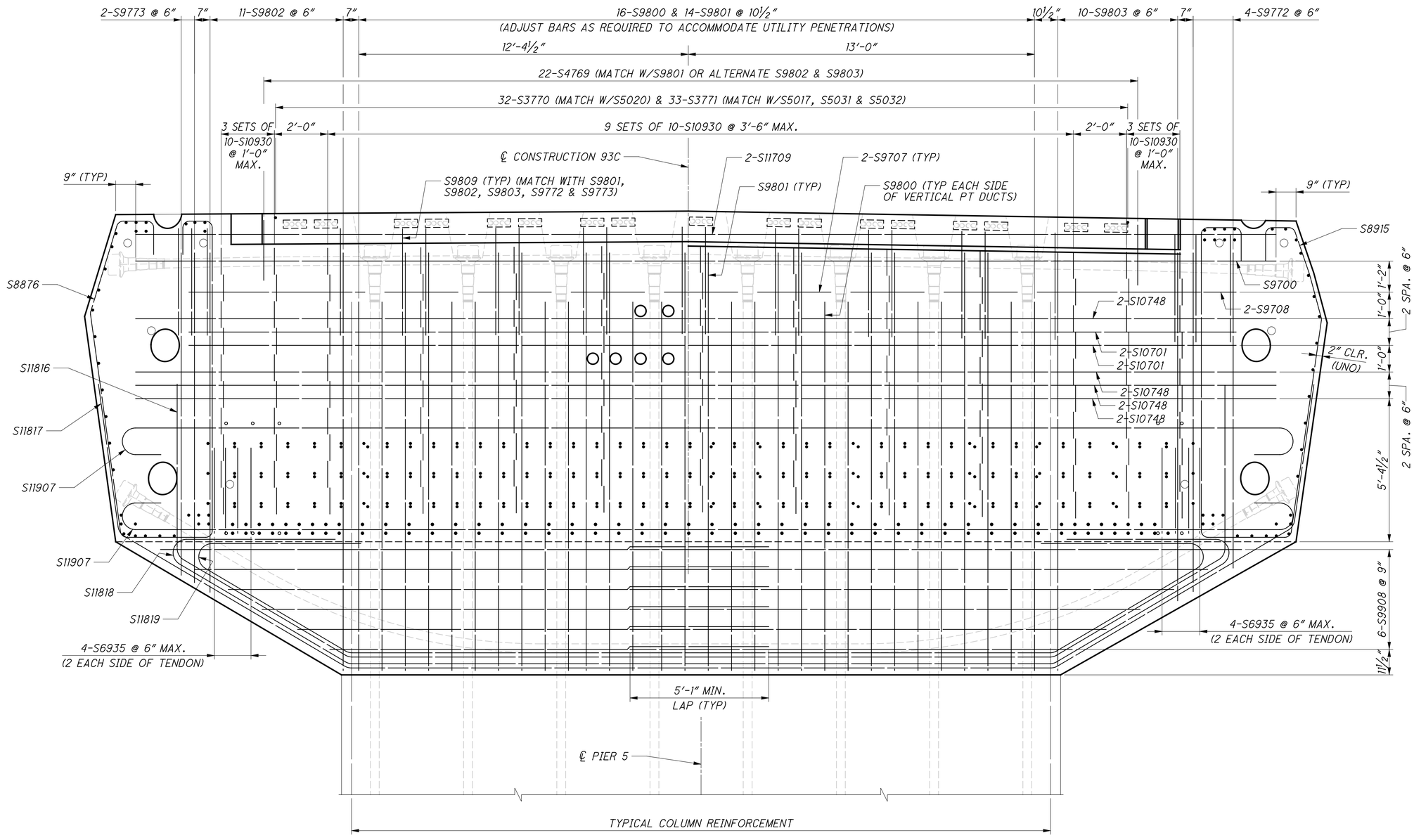

SECTION E-E

E:\Bridges_XM\Ironton_Russell\LAW\81595\structures\LAW093_0000C\sheets\093_0000CSD031.dgn 4/25/2011 10:21:17 AM john_stahl

DESIGN AGENCY
URS
36 EAST 7TH STREET
SUITE 2300
CINCINNATI, OHIO 45202

DESIGNED	DRAWN	REVIEWED	DATE
ASM	CER	DLJ	6/2010
CHECKED	REVISED	STRUCTURE FILE NUMBER	
RTG		4401263	

OH DIAPHRAGM SEGMENT REINFORCEMENT (5 OF 9)
BRIDGE NO. LAW-93-0000
IRONTON RUSSELL BRIDGE OVER OHIO RIVER

LAW-93-0.00
PID No. 81595

219/365

606
788

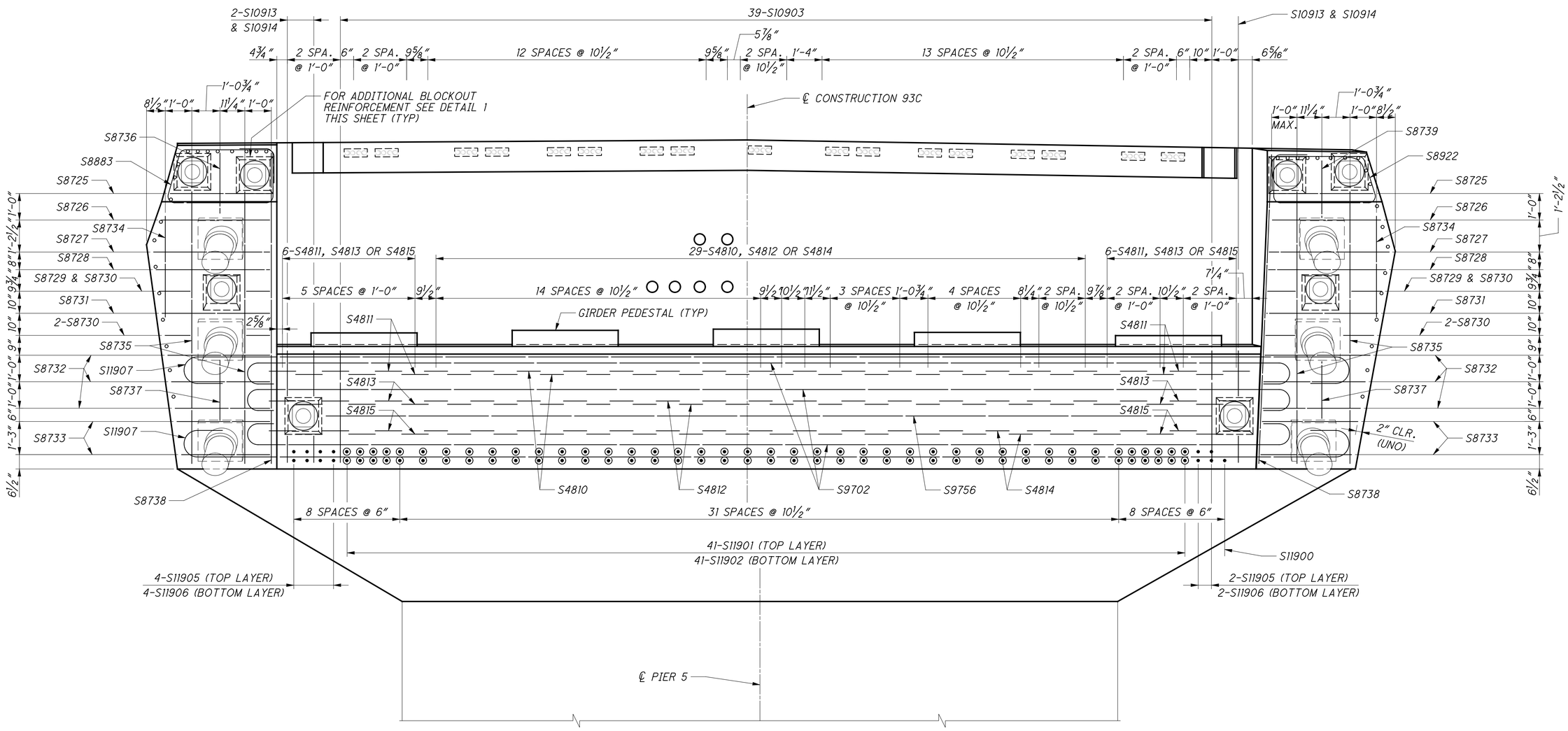

VIEW F-F

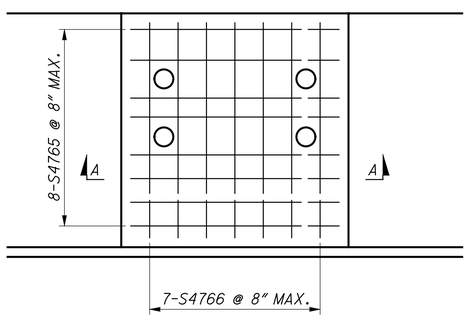

PEDESTAL REINFORCEMENT - PLAN

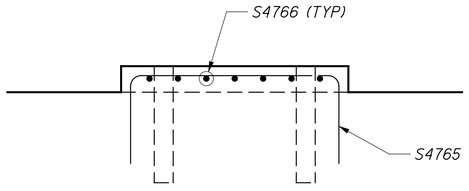

SECTION A-A

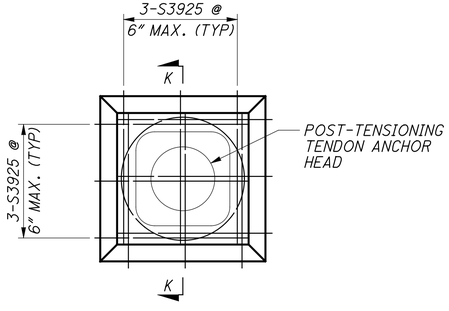

DETAIL 1

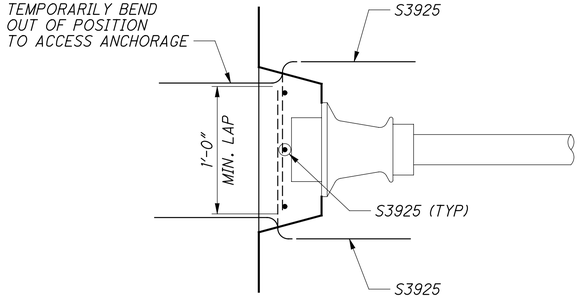

SECTION K-K

DESIGN AGENCY
URS
36 EAST 7TH STREET
SUITE 2300
CINCINNATI, OHIO 45202

DESIGNED	DRAWN	REVIEWED	DATE
ASM	CER	DLJ	6/2010
CHECKED	REVISED	STRUCTURE FILE NUMBER	
RTG		4401263	

OH DIAPHRAGM SEGMENT REINFORCEMENT (6 OF 9)
BRIDGE NO. LAW-93-0000
IRONTON RUSSELL BRIDGE OVER OHIO RIVER

LAW-93-0.00
PID No. 81595

220/365
607
788

E:\Bridges_XM\Ironton_Russell\LAW\81595\structures\LAW093_0000C\sheets\093_0000CSD031.dgn 4/25/2011 10:21:23 AM john_stahl

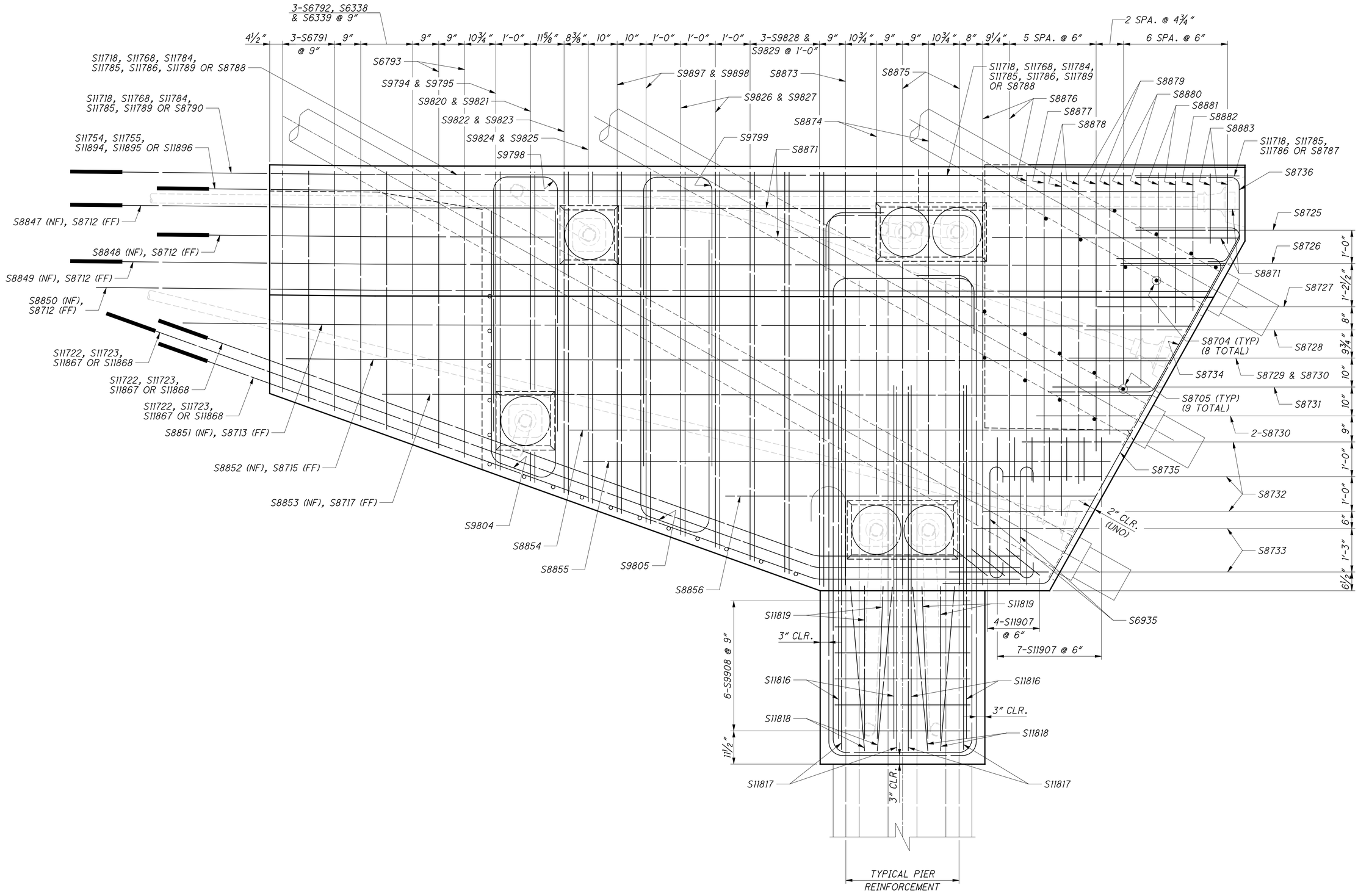

VIEW G-G

E:\Bridges_XM\Ironton_Russell\LAW\81595\structures\LAW093_0000C\sheets\093_0000CSD031.dgn 4/25/2011 10:21:30 AM john_stahl

DESIGN AGENCY
URS
36 EAST 7TH STREET
SUITE 2300
CINCINNATI, OHIO 45202

DESIGNED	DRAWN	REVIEWED	DATE
ASM	CER	DLJ	6/2010
CHECKED	REVISED	STRUCTURE FILE NUMBER	
RTG		4401263	

OH DIAPHRAGM SEGMENT REINFORCEMENT (7 OF 9)
BRIDGE NO. LAW-93-0000
IRONTON RUSSELL BRIDGE OVER OHIO RIVER

LAW-93-0.00
PID No. 81595

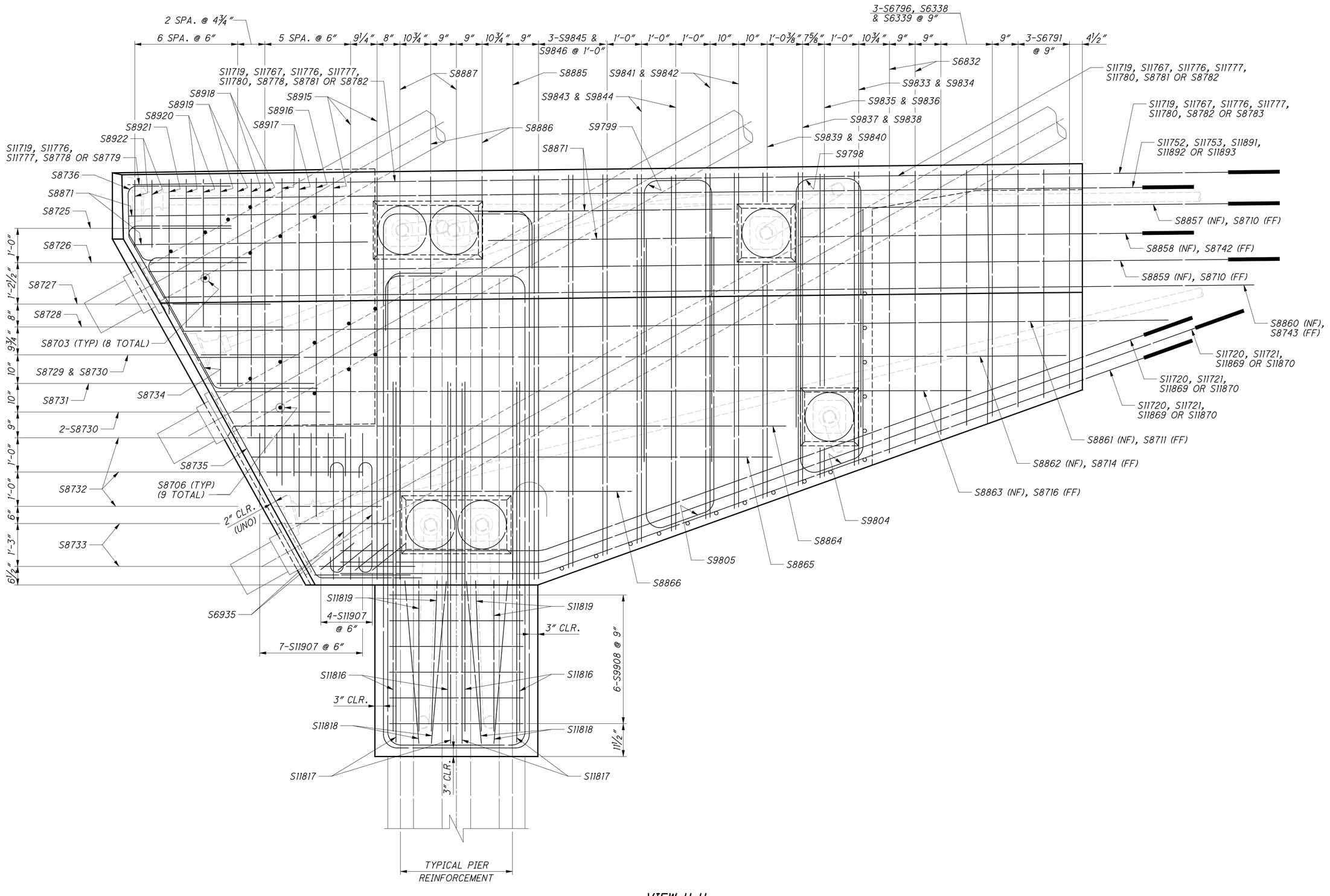

VIEW H-H

E:\Bridges_XM\Ironton_Russell\LAW\81595\structures\LAW093_0000C\sheets\093_0000CSD031.dgn 4/25/2011 10:21:36 AM john_stahl

DESIGN AGENCY
URS
36 EAST 7TH STREET
SUITE 2300
CINCINNATI, OHIO 45202

DESIGNED	DRAWN	REVIEWED	DATE
ASM	CER	DLJ	6/2010
CHECKED	REVISED	STRUCTURE FILE NUMBER	
RTG		4401263	

OH DIAPHRAGM SEGMENT REINFORCEMENT (8 OF 9)
BRIDGE NO. LAW-93-0000
IRONTON RUSSELL BRIDGE OVER OHIO RIVER

LAW-93-0.00
PID No. 81595

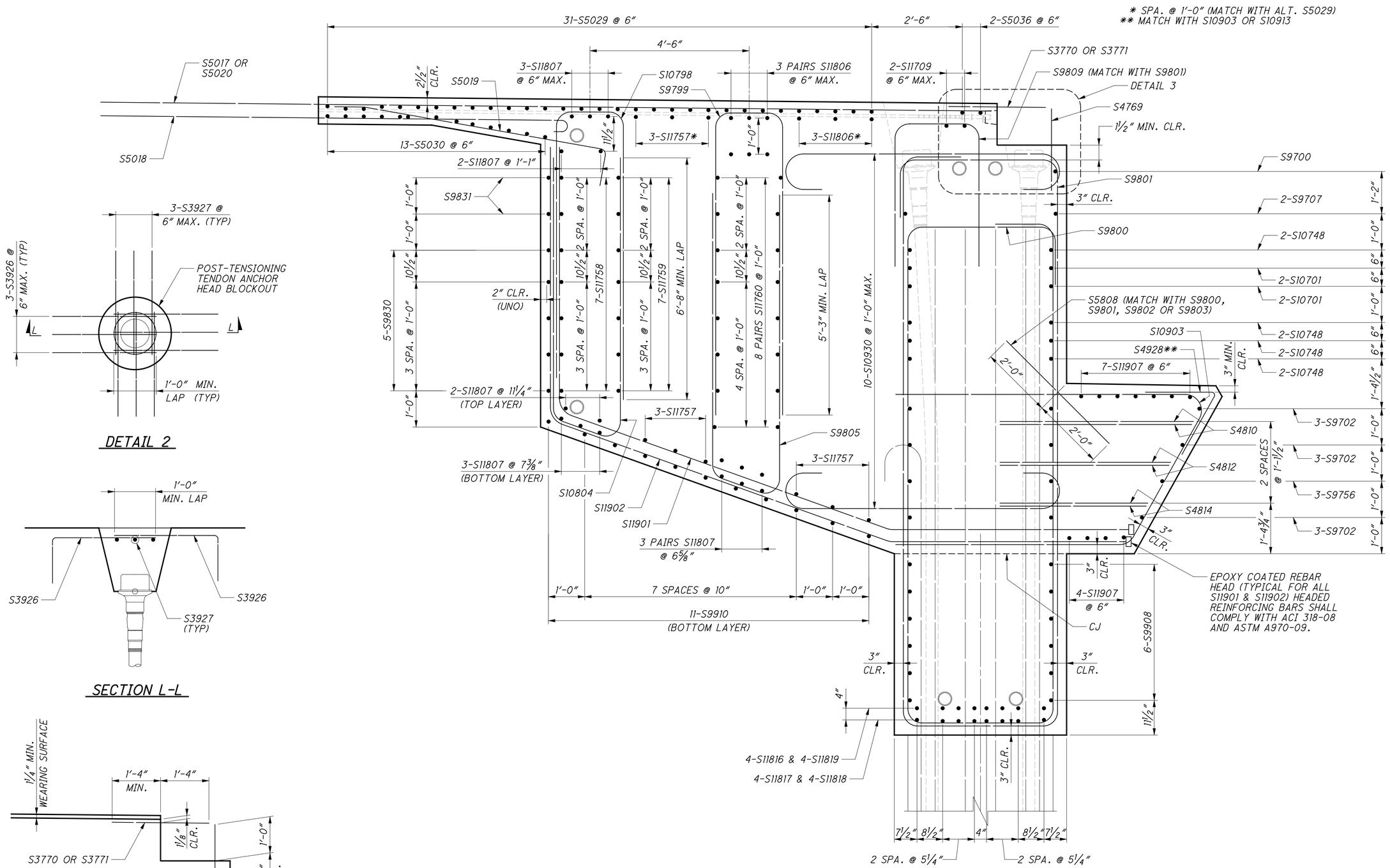

SECTION J-J

DETAIL 2

SECTION L-L

DETAIL 3

E:\Bridges_XM\Ironton_Russell\LAW\81595\structures\LAW093_0000C\sheets\093_0000CSD031.dgn 4/25/2011 10:21:42 AM john_stahl

DESIGN AGENCY
URS
36 EAST 7TH STREET
SUITE 2300
CINCINNATI, OHIO 45202

DESIGNED	DRAWN	REVIEWED	DATE
ASM	CER	DLJ	6/2010
CHECKED	REVISED	STRUCTURE FILE NUMBER	
RTG		4401263	

OH DIAPHRAGM SEGMENT REINFORCEMENT (9 OF 9)
BRIDGE NO. LAW-93-0000
IRONTON RUSSELL BRIDGE OVER OHIO RIVER

LAW-93-0.00
PID No. 81595

223/365

610
788

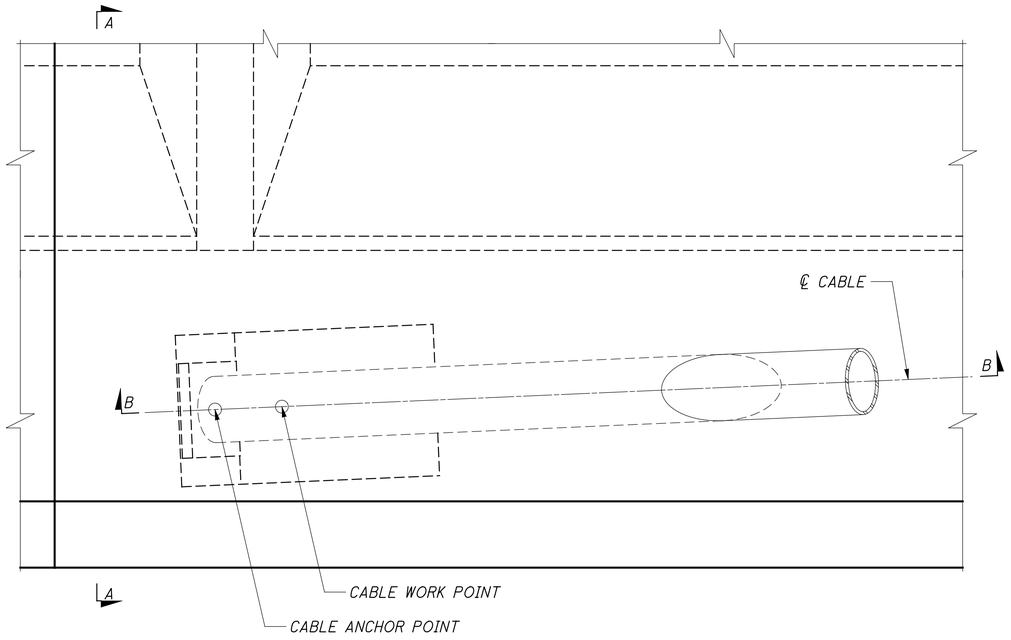

PLAN

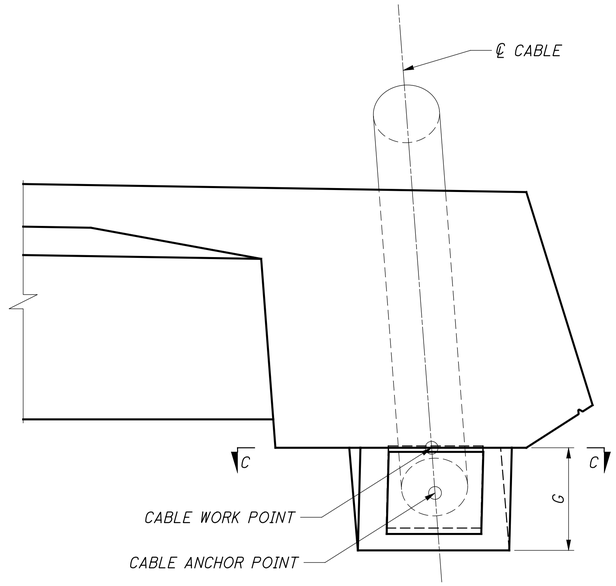

SECTION A-A

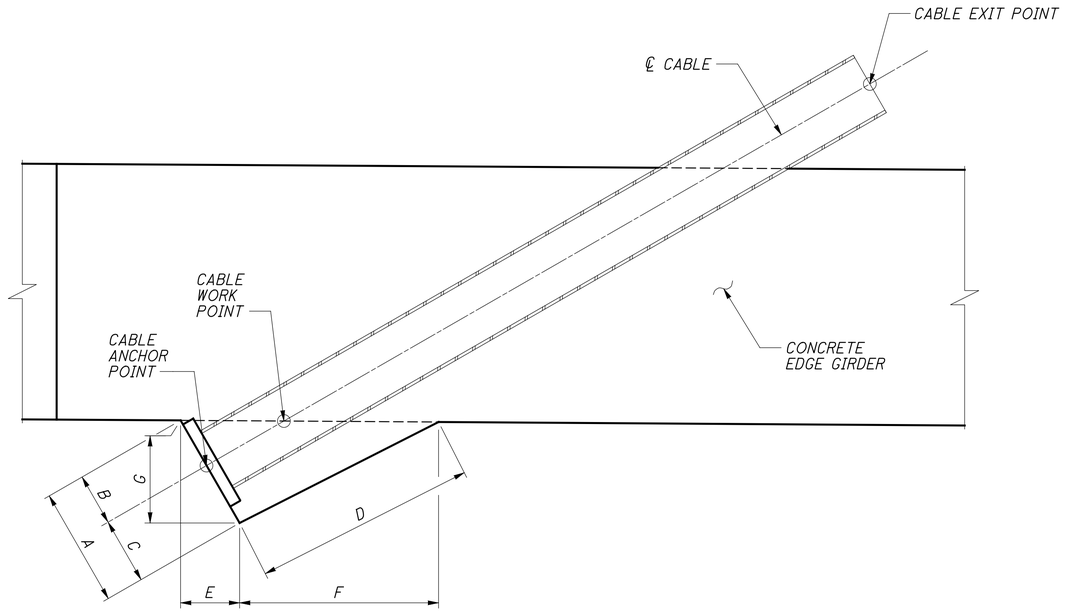

SECTION B-B

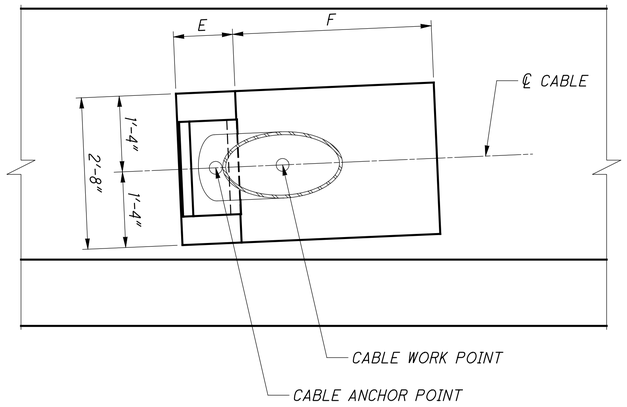

SECTION C-C

NOTES

1. FOR ANCHOR PLATE AND GUIDE PIPE SIZES, SEE SHEET NO. 230/365

2. FOR CABLE WORK POINT, ANCHOR POINT AND EXIT POINT COORDINATES, SEE SHEET NO. 227/365 THRU 229/365

DESIGN AGENCY
URS
36 EAST 7TH STREET
SUITE 2300
CINCINNATI, OHIO 45202

DESIGNED	DRAWN	REVIEWED	DATE
ASM	CER	DLJ	6/2010
CHECKED	REVISED	STRUCTURE FILE NUMBER	
BWJ		4401263	

STAY CABLE BLISTER GEOMETRY (1 OF 2)
BRIDGE NO. LAW-93-0000
IRONTON RUSSELL BRIDGE OVER OHIO RIVER

LAW-93-0.00
PID No. 81595

224/365

611
788

E:\Bridges_XM\Ironton_Russell\LAW\81595\structures\LAW093_0000C\sheets\093_0000CMD003.dgn 4/25/2011 10:21:51 AM john_stahl

TABLE OF VARIABLES

CABLE NUMBER	DIM "A"	DIM "B"	DIM "C"	DIM "D"	DIM "E"	DIM "F"	DIM "G"
B12L	2'-2"	11½"	1'-2½"	4'-3⅜"	1'-0⅞"	3'-10½"	1'-10⅝"
B11L	2'-2"	11½"	1'-2½"	4'-0½"	1'-1⅜"	3'-6¾"	1'-10¼"
B10L	2'-2"	11½"	1'-2½"	3'-9"	1'-2⅛"	3'-3"	1'-9⅞"
B9L	2'-2"	11½"	1'-2½"	3'-5¼"	1'-2⅞"	2'-11"	1'-9¼"
B8L	2'-2"	11½"	1'-2½"	3'-1⅜"	1'-3¾"	2'-6⅞"	1'-8⅝"
B7L	2'-2"	11½"	1'-2½"	2'-9½"	1'-4¾"	2'-2⅝"	1'-7⅛"
B6L	2'-2"	11½"	1'-2½"	2'-5⅜"	1'-6"	1'-10¼"	1'-6¾"
B5L	2'-2"	11½"	1'-2½"	2'-1"	1'-7⅜"	1'-5⅝"	1'-5⅜"
B4L	2'-2"	11½"	1'-2½"	1'-8⅝"	1'-8⅞"	1'-1⅛"	1'-3½"
B3L	1'-8"	8½"	11½"	1'-0⅜"	1'-5¼"	6¾"	10⅛"
B2L	1'-8"	8½"	11½"	8½"	1'-6½"	3⅝"	7½"
B1L	1'-8"	8½"	11½"	4½"	1'-7⅝"	1⅛"	4⅛"
M1L	1'-8"	8½"	11½"	4⅛"	1'-7½"	1⅛"	4⅛"
M2L	1'-8"	8½"	11½"	8¼"	1'-6½"	3½"	7⅝"
M3L	2'-2"	11½"	1'-2½"	1'-3⅞"	1'-10¼"	8⅞"	1'-1⅜"
M4L	2'-2"	11½"	1'-2½"	1'-8⅝"	1'-8½"	1'-1½"	1'-4"
M5L	2'-2"	11½"	1'-2½"	2'-1⅛"	1'-7"	1'-6⅛"	1'-5¾"
M6L	2'-2"	11½"	1'-2½"	2'-5⅝"	1'-5½"	1'-10⅞"	1'-7¼"
M7L	2'-2"	11½"	1'-2½"	2'-10"	1'-4¼"	2'-3⅝"	1'-8¼"
M8L	2'-2"	11½"	1'-2½"	3'-2⅛"	1'-3⅛"	2'-8⅛"	1'-9⅛"
M9L	2'-2"	11½"	1'-2½"	3'-6¼"	1'-2¼"	3'-0½"	1'-9¾"
M10L	2'-2"	11½"	1'-2½"	3'-10¼"	1'-1½"	3'-4¾"	1'-10¼"
M11L	2'-2"	11½"	1'-2½"	4'-2⅛"	1'-0¾"	3'-8⅞"	1'-10⅝"
M12L	2'-2"	11½"	1'-2½"	4'-5⅞"	1'-0⅛"	4'-0⅞"	1'-11"
M13L	2'-2"	11½"	1'-2½"	4'-9¾"	11⅝"	4'-4⅞"	1'-11¼"
M14L	2'-3"	1'-0"	1'-3"	5'-3⅞"	11½"	4'-11"	2'-0⅜"
M15L	2'-3"	1'-0"	1'-3"	5'-7⅝"	11⅛"	5'-3"	2'-0⅝"
B12R	2'-2"	11½"	1'-2½"	4'-3⅞"	1'-0⅞"	3'-10½"	1'-10⅝"
B11R	2'-2"	11½"	1'-2½"	4'-0½"	1'-1⅜"	3'-6¾"	1'-10¼"
B10R	2'-2"	11½"	1'-2½"	3'-9"	1'-2⅛"	3'-3"	1'-9⅞"
B9R	2'-2"	11½"	1'-2½"	3'-5¼"	1'-2⅞"	2'-11"	1'-9¼"
B8R	2'-2"	11½"	1'-2½"	3'-1⅜"	1'-3¾"	2'-6⅞"	1'-8⅝"
B7R	2'-2"	11½"	1'-2½"	2'-9½"	1'-4¾"	2'-2⅝"	1'-7⅛"
B6R	2'-2"	11½"	1'-2½"	2'-5⅜"	1'-6"	1'-10¼"	1'-6¾"
B5R	2'-2"	11½"	1'-2½"	2'-1"	1'-7⅜"	1'-5⅝"	1'-5⅜"
B4R	2'-2"	11½"	1'-2½"	1'-8⅝"	1'-8⅞"	1'-1⅛"	1'-3½"
B3R	1'-8"	8½"	11½"	1'-0⅜"	1'-5¼"	6¾"	10⅛"
B2R	1'-8"	8½"	11½"	8½"	1'-6½"	3⅝"	7½"
B1R	1'-8"	8½"	11½"	4½"	1'-7⅝"	1⅛"	4⅛"
M1R	1'-8"	8½"	11½"	4⅛"	1'-7½"	1⅛"	4⅛"
M2R	1'-8"	8½"	11½"	8¼"	1'-6½"	3½"	7⅝"
M3R	2'-2"	11½"	1'-2½"	1'-3⅞"	1'-10¼"	8⅞"	1'-1⅜"
M4R	2'-2"	11½"	1'-2½"	1'-8⅝"	1'-8½"	1'-1½"	1'-4"
M5R	2'-2"	11½"	1'-2½"	2'-1⅛"	1'-7"	1'-6⅛"	1'-5¾"
M6R	2'-2"	11½"	1'-2½"	2'-5⅝"	1'-5½"	1'-10⅞"	1'-7¼"
M7R	2'-2"	11½"	1'-2½"	2'-10"	1'-4¼"	2'-3⅝"	1'-8¼"
M8R	2'-2"	11½"	1'-2½"	3'-2⅛"	1'-3⅛"	2'-8⅛"	1'-9⅛"
M9R	2'-2"	11½"	1'-2½"	3'-6¼"	1'-2¼"	3'-0½"	1'-9¾"
M10R	2'-2"	11½"	1'-2½"	3'-10¼"	1'-1½"	3'-4¾"	1'-10¼"
M11R	2'-2"	11½"	1'-2½"	4'-2⅛"	1'-0¾"	3'-8⅞"	1'-10⅝"
M12R	2'-2"	11½"	1'-2½"	4'-5⅞"	1'-0⅛"	4'-0⅞"	1'-11"
M13R	2'-2"	11½"	1'-2½"	4'-9¾"	11⅝"	4'-4⅞"	1'-11¼"
M14R	2'-3"	1'-0"	1'-3"	5'-3⅞"	11½"	4'-11"	2'-0⅜"
M15R	2'-3"	1'-0"	1'-3"	5'-7⅝"	11⅛"	5'-3"	2'-0⅝"

TABLE OF VARIABLES

CABLE NUMBER	DIM "A"	DIM "B"	DIM "C"	DIM "D"	DIM "E"	DIM "F"	DIM "G"
M30L	2'-3"	1'-0"	1'-3"	5'-7⅝"	11⅛"	5'-3"	2'-0⅝"
M29L	2'-3"	1'-0"	1'-3"	5'-3⅞"	11½"	4'-11"	2'-0⅜"
M28L	2'-2"	11½"	1'-2½"	4'-9¾"	11⅝"	4'-4⅞"	1'-11¼"
M27L	2'-2"	11½"	1'-2½"	4'-6"	1'-0⅛"	4'-0⅞"	1'-11"
M26L	2'-2"	11½"	1'-2½"	4'-2⅛"	1'-0¾"	3'-8⅞"	1'-10⅝"
M25L	2'-2"	11½"	1'-2½"	3'-10¼"	1'-1½"	3'-4¾"	1'-10¼"
M24L	2'-2"	11½"	1'-2½"	3'-6¼"	1'-2¼"	3'-0½"	1'-9¾"
M23L	2'-2"	11½"	1'-2½"	3'-2⅛"	1'-3⅛"	2'-8⅛"	1'-9⅛"
M22L	2'-2"	11½"	1'-2½"	2'-10"	1'-4¼"	2'-3⅝"	1'-8¼"
M21L	2'-2"	11½"	1'-2½"	2'-5⅝"	1'-5½"	1'-10⅞"	1'-7¼"
M20L	2'-2"	11½"	1'-2½"	2'-1⅛"	1'-7"	1'-6⅛"	1'-5¾"
M19L	2'-2"	11½"	1'-2½"	1'-8⅝"	1'-8½"	1'-1½"	1'-4"
M18L	2'-2"	11½"	1'-2½"	1'-3⅞"	1'-10¼"	8⅞"	1'-1⅜"
M17L	1'-8"	8½"	11½"	8¼"	1'-6½"	3½"	7⅝"
M16L	1'-8"	8½"	11½"	4⅛"	1'-7½"	1⅛"	4⅛"
B16L	1'-8"	8½"	11½"	4½"	1'-7⅝"	1⅛"	4⅛"
B17L	1'-8"	8½"	11½"	8½"	1'-6½"	3⅝"	7½"
B18L	1'-8"	8½"	11½"	1'-0⅜"	1'-5¼"	6¾"	10⅛"
B19L	2'-2"	11½"	1'-2½"	1'-8⅝"	1'-8⅞"	1'-1⅛"	1'-3½"
B20L	2'-2"	11½"	1'-2½"	2'-1"	1'-7⅜"	1'-5⅝"	1'-5⅜"
B21L	2'-2"	11½"	1'-2½"	2'-5⅜"	1'-6"	1'-10¼"	1'-6¾"
B22L	2'-2"	11½"	1'-2½"	2'-9½"	1'-4¾"	2'-2⅝"	1'-7⅞"
B23L	2'-2"	11½"	1'-2½"	3'-1⅜"	1'-3¾"	2'-6⅞"	1'-8⅝"
B24L	2'-2"	11½"	1'-2½"	3'-5¼"	1'-2⅞"	2'-11"	1'-9¼"
B25L	2'-2"	11½"	1'-2½"	3'-9"	1'-2⅛"	3'-3"	1'-9⅞"
B26L	2'-2"	11½"	1'-2½"	4'-0½"	1'-1⅜"	3'-6¾"	1'-10¼"
B27L	2'-2"	11½"	1'-2½"	4'-3⅞"	1'-0⅞"	3'-10½"	1'-10⅝"
M30R	2'-3"	1'-0"	1'-3"	5'-7⅝"	11⅛"	5'-3"	2'-0⅝"
M29R	2'-3"	1'-0"	1'-3"	5'-3⅞"	11½"	4'-11"	2'-0⅜"
M28R	2'-2"	11½"	1'-2½"	4'-9¾"	11⅝"	4'-4⅞"	1'-11¼"
M27R	2'-2"	11½"	1'-2½"	4'-6"	1'-0⅛"	4'-0⅞"	1'-11"
M26R	2'-2"	11½"	1'-2½"	4'-2⅛"	1'-0¾"	3'-8⅞"	1'-10⅝"
M25R	2'-2"	11½"	1'-2½"	3'-10¼"	1'-1½"	3'-4¾"	1'-10¼"
M24R	2'-2"	11½"	1'-2½"	3'-6¼"	1'-2¼"	3'-0½"	1'-9¾"
M23R	2'-2"	11½"	1'-2½"	3'-2⅛"	1'-3⅛"	2'-8⅛"	1'-9⅛"
M22R	2'-2"	11½"	1'-2½"	2'-10"	1'-4¼"	2'-3⅝"	1'-8¼"
M21R	2'-2"	11½"	1'-2½"	2'-5⅝"	1'-5½"	1'-10⅞"	1'-7¼"
M20R	2'-2"	11½"	1'-2½"	2'-1⅛"	1'-7"	1'-6⅛"	1'-5¾"
M19R	2'-2"	11½"	1'-2½"	1'-8⅝"	1'-8½"	1'-1½"	1'-4"
M18R	2'-2"	11½"	1'-2½"	1'-3⅞"	1'-10¼"	8⅞"	1'-1⅜"
M17R	1'-8"	8½"	11½"	8¼"	1'-6½"	3½"	7⅝"
M16R	1'-8"	8½"	11½"	4⅛"	1'-7½"	1⅛"	4⅛"
B16R	1'-8"	8½"	11½"	4½"	1'-7⅝"	1⅛"	4⅛"
B17R	1'-8"	8½"	11½"	8½"	1'-6½"	3⅝"	7½"
B18R	1'-8"	8½"	11½"	1'-0⅜"	1'-5¼"	6¾"	10⅛"
B19R	2'-2"	11½"	1'-2½"	1'-8⅝"	1'-8⅞"	1'-1⅛"	1'-3½"
B20R	2'-2"	11½"	1'-2½"	2'-1"	1'-7⅜"	1'-5⅝"	1'-5⅜"
B21R	2'-2"	11½"	1'-2½"	2'-5⅜"	1'-6"	1'-10¼"	1'-6¾"
B22R	2'-2"	11½"	1'-2½"	2'-9½"	1'-4¾"	2'-2⅝"	1'-7⅞"
B23R	2'-2"	11½"	1'-2½"	3'-1⅜"	1'-3¾"	2'-6⅞"	1'-8⅝"
B24R	2'-2"	11½"	1'-2½"	3'-5¼"	1'-2⅞"	2'-11"	1'-9¼"
B25R	2'-2"	11½"	1'-2½"	3'-9"	1'-2⅛"	3'-3"	1'-9⅞"
B26R	2'-2"	11½"	1'-2½"	4'-0½"	1'-1⅜"	3'-6¾"	1'-10¼"
B27R	2'-2"	11½"	1'-2½"	4'-3⅞"	1'-0⅞"	3'-10½"	1'-10⅝"

E:\Bridges_XM\Ironton_Russell\LAW\81595\structures\LAW093_0000C\sheets\093_0000CMD004.dgn 4/25/2011 10:21:57 AM john_stahl

DESIGN AGENCY
URS
36 EAST 7TH STREET
SUITE 2300
CINCINNATI, OHIO 45202

DESIGNED ASM | DRAWN CER | CHECKED BWJ | REVIEWED DLJ | DATE 6/2010 | STRUCTURE FILE NUMBER 4401263 | REVISED

STAY CABLE BLISTER GEOMETRY (2 OF 2)
BRIDGE NO. LAW-93-0000
IRONTON RUSSELL BRIDGE OVER OHIO RIVER

LAW-93-0.00
PID No. 81595

225/365

612
788

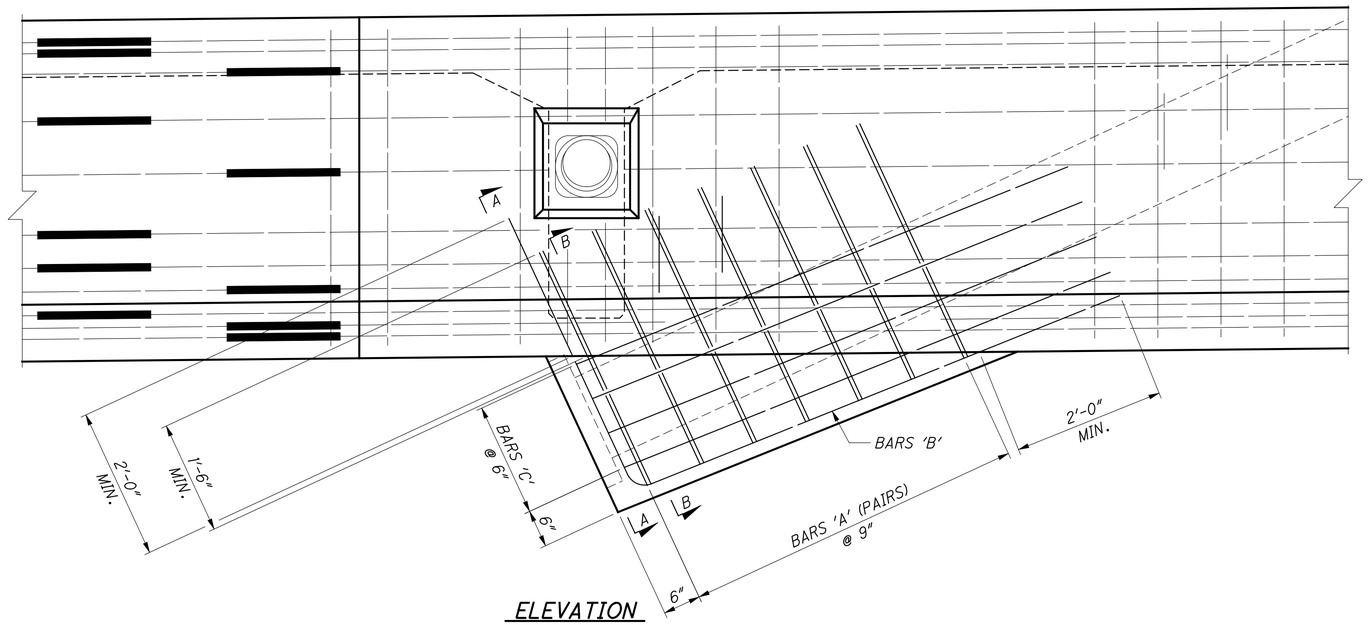

ELEVATION

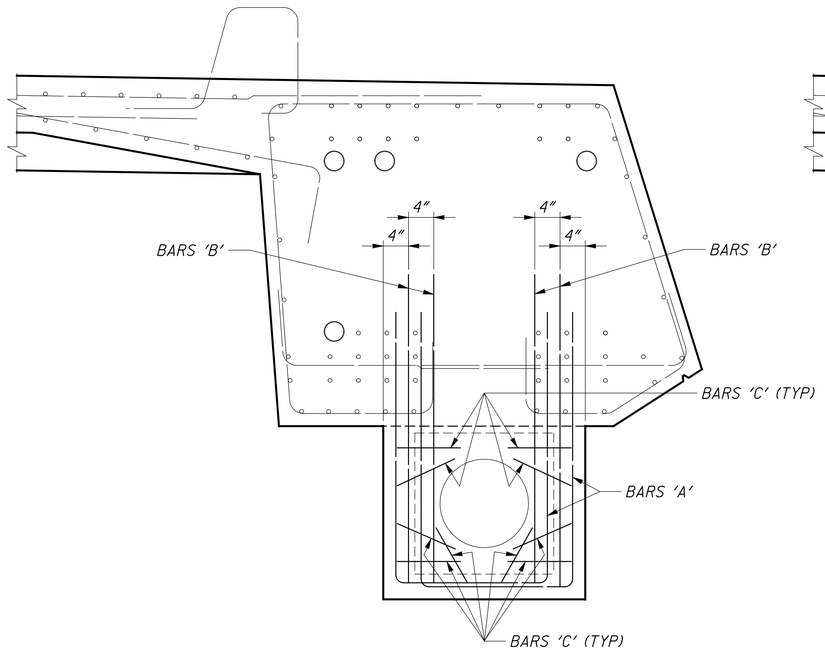

SECTION A-A

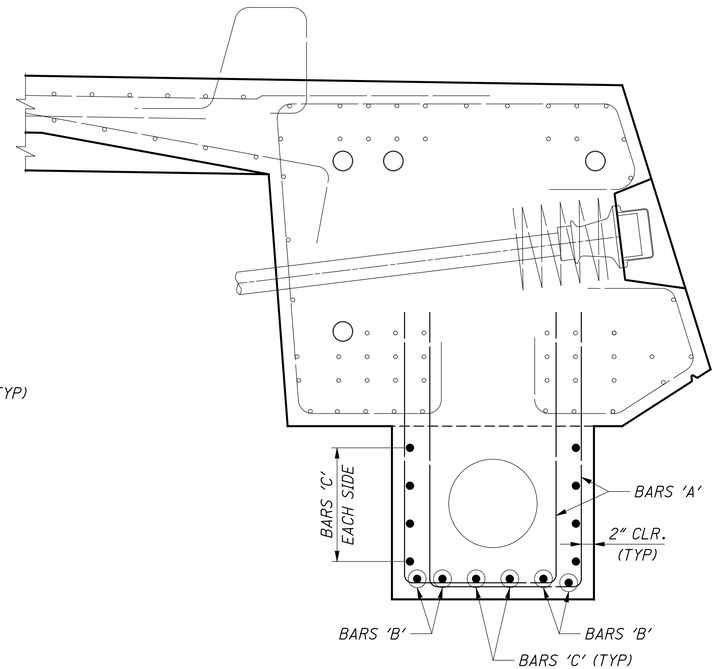

SECTION B-B

Cable Number	No of 'A' Bars	No of 'B' Bars	No of 'C' Bars
B12	12 -S4230	4 -S5236	10 -S5242
B11	10 -S4229	4 -S5235	10 -S5241
B10	10 -S4229	4 -S5235	10 -S5241
B9	8 -S4228	4 -S5234	10 -S5240
B8	8 -S4228	4 -S5234	10 -S5240
B7	8 -S4228	4 -S5234	10 -S5240
B6	6 -S4227	4 -S5233	10 -S5239
B5	6 -S4227	4 -S5233	10 -S5239
B4	6 -S4227	4 -S5233	10 -S5239
B3	6 -S4226	4 -S5232	8 -S5238
B2	6 -S4226	4 -S5232	8 -S5238
B1	6 -S4226	4 -S5232	8 -S5238
M1	6 -S4226	4 -S5232	8 -S5238
M2	6 -S4226	4 -S5232	8 -S5238
M3	6 -S4227	4 -S5233	10 -S5239
M4	6 -S4227	4 -S5233	10 -S5239
M5	6 -S4227	4 -S5233	10 -S5239
M6	8 -S4228	4 -S5234	10 -S5240
M7	8 -S4228	4 -S5234	10 -S5240
M8	8 -S4228	4 -S5234	10 -S5240
M9	10 -S4229	4 -S5235	10 -S5241
M10	10 -S4229	4 -S5235	10 -S5241
M11	12 -S4230	4 -S5236	10 -S5242
M12	12 -S4230	4 -S5236	10 -S5242
M13	12 -S4230	4 -S5236	10 -S5242
M14	14 -S4231	4 -S5237	10 -S5243
M15	14 -S4231	4 -S5237	10 -S5243
M30	14 -S4231	4 -S5237	10 -S5243
M29	14 -S4231	4 -S5237	10 -S5243
M28	12 -S4230	4 -S5236	10 -S5242
M27	12 -S4230	4 -S5236	10 -S5242
M26	12 -S4230	4 -S5236	10 -S5242
M25	10 -S4229	4 -S5235	10 -S5241
M24	10 -S4229	4 -S5235	10 -S5241
M23	8 -S4228	4 -S5234	10 -S5240
M22	8 -S4228	4 -S5234	10 -S5240
M21	8 -S4228	4 -S5234	10 -S5240
M20	6 -S4227	4 -S5233	10 -S5239
M19	6 -S4227	4 -S5233	10 -S5239
M18	6 -S4227	4 -S5233	10 -S5239
M17	6 -S4226	4 -S5232	8 -S5238
M16	6 -S4226	4 -S5232	8 -S5238
B16	6 -S4226	4 -S5232	8 -S5238
B17	6 -S4226	4 -S5232	8 -S5238
B18	6 -S4226	4 -S5232	8 -S5238
B19	6 -S4227	4 -S5233	10 -S5239
B20	6 -S4227	4 -S5233	10 -S5239
B21	6 -S4227	4 -S5233	10 -S5239
B22	8 -S4228	4 -S5234	10 -S5240
B23	8 -S4228	4 -S5234	10 -S5240
B24	8 -S4228	4 -S5234	10 -S5240
B25	10 -S4229	4 -S5235	10 -S5241
B26	10 -S4229	4 -S5235	10 -S5241
B27	12 -S4230	4 -S5236	10 -S5242

NOTES

1. FOR EDGE GIRDER REINFORCEMENT, SEE SHEET NOS. 168/365 THRU 193/365
2. FOR EDGE GIRDER BLISTER GEOMETRY, SEE SHEET NOS. 224/365 & 225/365
3. FOR ANCHOR PLATE AND GUIDE PIPE DIAMETERS, SEE SHEET NO. 230/365
4. SMALL ADJUSTMENTS IN REBAR PLACEMENT OR ROTATION OF HOOKED ENDS CAN BE MADE TO MISS STAY GUIDE PIPES, MAIN GIRDER AND FLOOR BEAM REINFORCEMENT.

DESIGN AGENCY
URS
35 EAST 7TH STREET
SUITE 2300
CINCINNATI, OHIO 45202

DESIGNED AR | DRAWN DCW | REVIEWED DLJ | DATE 6/2010
CHECKED BWJ | REVISED | STRUCTURE FILE NUMBER 4401263

STAY CABLE BLISTER REINFORCEMENT

BRIDGE NO. LAW-93-0000
IRONTON RUSSELL BRIDGE OVER OHIO RIVER

LAW-93-0.00 PID No. 81595

E:\Bridges_XM\Ironton_Russell\LAW\81595\structures\LAW093_0000C\sheets\093_0000CMD019.dgn 4/25/2011 10:22:08 AM john_stahl

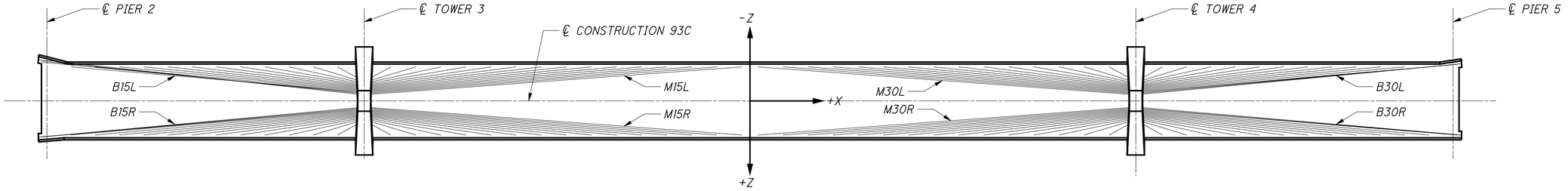

KEY PLAN

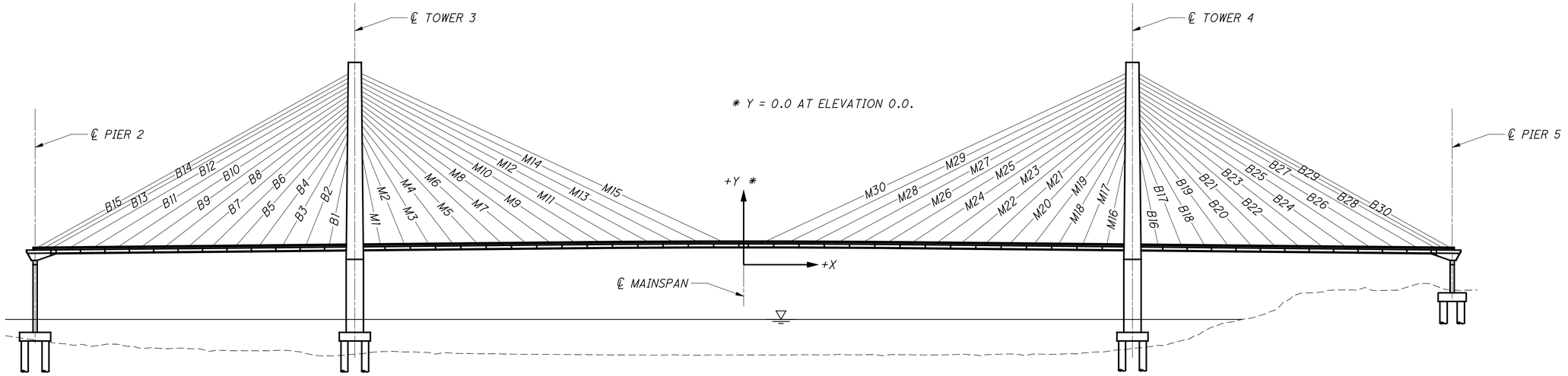

KEY ELEVATION

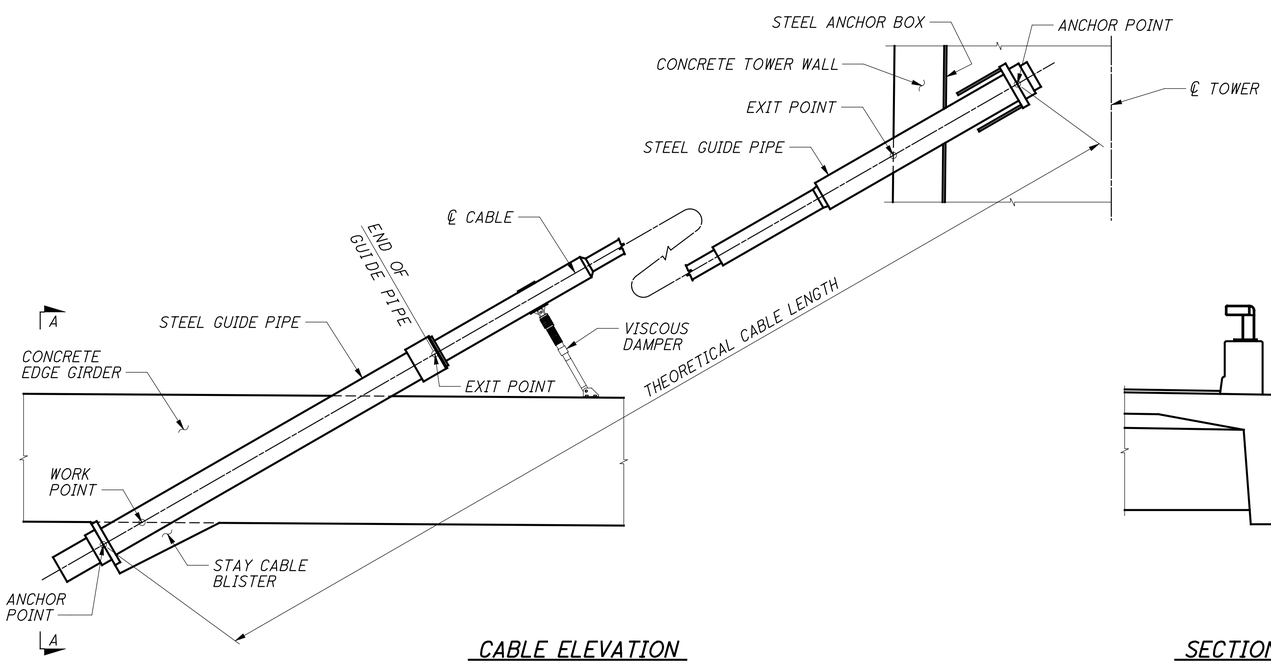

CABLE ELEVATION

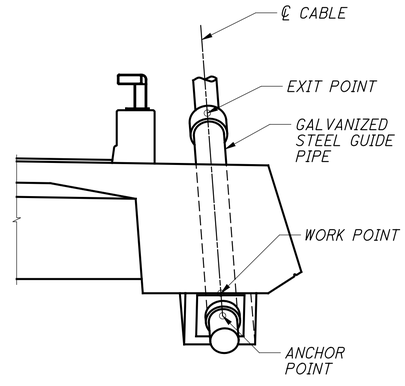

SECTION A-A

NOTES

1. Z-COORDINATE ARE BASED ON ℄ BRIDGE.
2. L AND R DESIGNATIONS ON CABLE NUMBERS REFER TO LEFT AND RIGHT CABLE PLANES WHEN LOOKING STATIONS AHEAD.
3. CABLE LENGTHS INDICATED DO NOT INCLUDE DEAD LOAD SAG, ELASTIC STRAND ELONGATION OR SHIM THICKNESS.
4. ALL COORDINATES AND LENGTHS ARE IN FEET, UNLESS NOTED OTHERWISE.
5. CABLE COORDINATES AND ANGLES TAKE DEAD LOAD SAG INTO ACCOUNT AND ARE BASED ON THE FINAL BRIDGE PROFILE AFTER ALL LONG-TERM LOSSES HAVE OCCURED.
6. FOR ANCHOR PLATE AND GUIDE PIPE DIMENSIONS, SEE SHEET NO. 230/365

DESIGN AGENCY
URS
36 EAST 7TH STREET
SUITE 2300
CINCINNATI, OHIO 45202

DESIGNED	DRAWN	REVIEWED	DATE
AR	CER	DLJ	6/2010
CHECKED	REVISED	STRUCTURE FILE NUMBER	
BWJ		4401263	

STAY CABLE GEOMETRY (1 OF 3)
BRIDGE NO. LAW-93-0000
IRONTON RUSSELL BRIDGE OVER OHIO RIVER

LAW-93-0.00
PID No. 81595

227/365

614/788

E:\Bridges_XM\Ironton_Russell\LAW\81595\structures\LAW093_0000C\sheets\093_0000CMD002.dgn 4/25/2011 10:22:17 AM john_stahl

CABLE ANCHOR POINT, WORK POINT AND EXIT POINT COORDINATES - TOWER 3

CABLE NUMBER	SUPERSTRUCTURE ANCHORAGE									TOWER ANCHORAGE						CHORD LENGTH (ft)
	WORK POINT			ANCHOR POINT			EXIT POINT			ANCHOR POINT			EXIT POINT			
	X	Y	Z	X	Y	Z	X	Y	Z	X	Y	Z	X	Y	Z	
B15L	-829.068	592.702	-24.063	-829.068	592.702	-24.063	-820.086	597.618	-23.576	-453.500	802.520	-3.729	-457.646	800.156	-3.954	430.684
B14L	-826.938	588.889	-23.297	-826.938	588.889	-23.297	-810.792	597.728	-22.475	-453.500	797.520	-4.288	-457.702	795.126	-4.502	428.187
B13L	-824.807	585.077	-22.531	-824.807	585.077	-22.531	-801.501	597.838	-21.421	-453.500	792.520	-4.847	-457.757	790.094	-5.050	425.693
B12L	-791.750	591.934	-19.833	-793.254	591.081	-19.897	-780.926	598.077	-19.371	-453.500	787.520	-5.406	-457.813	784.980	-5.590	392.723
B11L	-763.500	592.217	-19.833	-764.891	591.377	-19.895	-753.333	598.352	-19.378	-453.500	782.520	-5.965	-457.870	779.792	-6.160	365.642
B10L	-735.250	592.499	-19.833	-736.523	591.676	-19.893	-725.771	598.628	-19.385	-453.500	777.520	-6.523	-457.927	774.568	-6.732	338.849
B9L	-707.000	592.782	-19.833	-708.146	591.979	-19.891	-698.254	598.903	-19.393	-453.500	772.520	-7.082	-457.985	769.300	-7.308	312.416
B8L	-678.750	593.064	-19.833	-679.765	592.287	-19.888	-670.769	599.178	-19.401	-453.500	767.520	-7.641	-458.043	763.963	-7.887	286.447
B7L	-650.500	593.347	-19.833	-651.379	592.601	-19.885	-643.306	599.452	-19.408	-453.500	762.520	-8.200	-458.103	758.521	-8.472	261.085
B6L	-622.250	593.629	-19.833	-622.984	592.924	-19.881	-615.909	599.726	-19.417	-453.500	757.520	-8.759	-458.164	752.945	-9.065	236.517
B5L	-594.000	593.912	-19.833	-594.583	593.259	-19.877	-588.561	599.999	-19.426	-453.500	752.520	-9.317	-458.227	747.138	-9.671	213.025
B4L	-565.750	594.194	-19.833	-566.184	593.610	-19.871	-561.238	600.272	-19.437	-453.500	746.520	-9.988	-458.306	739.950	-10.409	190.202
B3L	-537.500	594.477	-19.833	-537.711	594.112	-19.856	-533.988	600.545	-19.449	-453.500	740.520	-10.659	-458.394	731.959	-11.193	169.149
B2L	-509.250	594.759	-19.833	-509.359	594.486	-19.849	-506.830	600.816	-19.467	-454.500	732.520	-11.553	-458.498	722.405	-12.157	148.767
B1L	-481.000	595.042	-19.833	-481.032	594.888	-19.842	-479.762	601.086	-19.492	-455.000	722.520	-12.670	-458.697	704.313	-13.689	130.457
M1L	-419.000	595.662	-19.833	-418.971	595.521	-19.841	-420.239	601.682	-19.492	-445.000	722.520	-12.670	-441.304	704.407	-13.688	129.837
M2L	-389.750	595.954	-19.833	-389.642	595.690	-19.849	-392.216	601.962	-19.467	-445.500	732.520	-11.553	-441.505	722.680	-12.146	148.025
M3L	-360.500	596.247	-19.833	-360.209	595.763	-19.864	-364.099	602.244	-19.449	-446.500	740.520	-10.659	-441.610	732.259	-11.180	168.776
M4L	-331.250	596.539	-19.833	-330.804	595.963	-19.871	-335.884	602.526	-19.437	-446.500	746.520	-9.988	-441.697	740.224	-10.398	190.133
M5L	-302.000	596.832	-19.833	-301.398	596.189	-19.877	-307.596	602.809	-19.426	-446.500	752.520	-9.317	-441.775	747.385	-9.661	213.554
M6L	-272.750	597.124	-19.833	-271.990	596.430	-19.881	-279.283	603.092	-19.417	-446.500	757.520	-8.759	-441.839	753.172	-9.056	237.755
M7L	-243.500	597.417	-19.833	-242.588	596.684	-19.885	-250.917	603.376	-19.408	-446.500	762.520	-8.200	-441.900	758.733	-8.463	263.093
M8L	-214.250	597.709	-19.833	-213.193	596.948	-19.888	-222.510	603.660	-19.399	-446.500	767.520	-7.641	-441.959	764.152	-7.879	289.270
M9L	-185.000	597.996	-19.833	-183.804	597.211	-19.891	-194.056	603.944	-19.391	-446.500	772.520	-7.082	-442.017	769.481	-7.301	316.080
M10L	-155.750	598.245	-19.833	-154.420	597.440	-19.894	-165.581	604.200	-19.383	-446.500	777.520	-6.523	-442.075	774.743	-6.726	343.393
M11L	-126.500	598.452	-19.833	-125.042	597.629	-19.896	-137.072	604.416	-19.375	-446.500	782.520	-5.965	-442.132	779.959	-6.154	371.099
M12L	-97.250	598.615	-19.833	-95.668	597.778	-19.898	-108.540	604.591	-19.367	-446.500	787.520	-5.406	-442.189	785.138	-5.584	399.118
M13L	-68.000	598.736	-19.833	-66.298	597.886	-19.900	-79.989	604.726	-19.358	-446.500	792.520	-4.847	-442.245	790.289	-5.015	427.390
M14L	-38.750	598.814	-19.833	-36.853	597.915	-19.905	-51.422	604.820	-19.350	-446.500	797.520	-4.288	-442.302	795.418	-4.448	455.957
M15L	-9.500	598.850	-19.833	-7.486	597.939	-19.907	-22.830	604.873	-19.342	-446.500	802.520	-3.729	-442.358	800.531	-3.882	484.612
B15R	-829.068	592.702	21.083	-829.068	592.702	21.083	-819.999	597.665	20.664	-453.500	802.520	3.729	-457.646	800.156	3.921	430.553
B14R	-826.938	588.889	20.990	-826.938	588.889	20.990	-810.727	597.764	20.265	-453.500	797.520	4.288	-457.702	795.126	4.476	428.091
B13R	-824.807	585.077	20.901	-824.807	585.077	20.901	-801.456	597.863	19.891	-453.500	792.520	4.847	-457.757	790.095	5.031	425.628
B12R	-791.750	591.934	19.833	-793.254	591.081	19.897	-780.926	598.077	19.371	-453.500	787.520	5.406	-457.813	784.980	5.590	392.723
B11R	-763.500	592.217	19.833	-764.891	591.377	19.895	-753.333	598.352	19.378	-453.500	782.520	5.965	-457.870	779.792	6.160	365.642
B10R	-735.250	592.499	19.833	-736.523	591.676	19.893	-725.771	598.628	19.385	-453.500	777.520	6.523	-457.927	774.568	6.732	338.849
B9R	-707.000	592.782	19.833	-708.146	591.979	19.891	-698.254	598.903	19.393	-453.500	772.520	7.082	-457.985	769.300	7.308	312.416
B8R	-678.750	593.064	19.833	-679.765	592.287	19.888	-670.769	599.178	19.401	-453.500	767.520	7.641	-458.043	763.963	7.887	286.447
B7R	-650.500	593.347	19.833	-651.379	592.601	19.885	-643.306	599.452	19.408	-453.500	762.520	8.200	-458.103	758.521	8.472	261.085
B6R	-622.250	593.629	19.833	-622.984	592.924	19.881	-615.909	599.726	19.417	-453.500	757.520	8.759	-458.164	752.945	9.065	236.517
B5R	-594.000	593.912	19.833	-594.583	593.259	19.877	-588.561	599.999	19.426	-453.500	752.520	9.317	-458.227	747.138	9.671	213.025
B4R	-565.750	594.194	19.833	-566.184	593.610	19.871	-561.238	600.272	19.437	-453.500	746.520	9.988	-458.306	739.950	10.409	190.202
B3R	-537.500	594.477	19.833	-537.711	594.112	19.856	-533.988	600.545	19.449	-453.500	740.520	10.659	-458.394	731.959	11.193	169.149
B2R	-509.250	594.759	19.833	-509.359	594.486	19.849	-506.830	600.816	19.467	-454.500	732.520	11.553	-458.498	722.405	12.157	148.767
B1R	-481.000	595.042	19.833	-481.032	594.888	19.842	-479.762	601.086	19.492	-455.000	722.520	12.670	-458.697	704.313	13.689	130.457
M1R	-419.000	595.662	19.833	-418.971	595.521	19.841	-420.239	601.682	19.492	-445.000	722.520	12.670	-441.304	704.407	13.688	129.837
M2R	-389.750	595.954	19.833	-389.642	595.690	19.849	-392.216	601.962	19.467	-445.500	732.520	11.553	-441.505	722.680	12.146	148.025
M3R	-360.500	596.247	19.833	-360.209	595.763	19.864	-364.099	602.244	19.449	-446.500	740.520	10.659	-441.610	732.259	11.180	168.776
M4R	-331.250	596.539	19.833	-330.804	595.963	19.871	-335.884	602.526	19.437	-446.500	746.520	9.988	-441.697	740.224	10.398	190.133
M5R	-302.000	596.832	19.833	-301.398	596.189	19.877	-307.596	602.809	19.426	-446.500	752.520	9.317	-441.775	747.385	9.661	213.554
M6R	-272.750	597.124	19.833	-271.990	596.430	19.881	-279.283	603.092	19.417	-446.500	757.520	8.759	-441.839	753.172	9.056	237.755
M7R	-243.500	597.417	19.833	-242.588	596.684	19.885	-250.917	603.376	19.408	-446.500	762.520	8.200	-441.900	758.733	8.463	263.093
M8R	-214.250	597.709	19.833	-213.193	596.948	19.888	-222.510	603.660	19.399	-446.500	767.520	7.641	-441.959	764.152	7.879	289.270
M9R	-185.000	597.996	19.833	-183.804	597.211	19.891	-194.056	603.944	19.391	-446.500	772.520	7.082	-442.017	769.481	7.301	316.080
M10R	-155.750	598.245	19.833	-154.420	597.440	19.894	-165.581	604.200	19.383	-446.500	777.520	6.523	-442.075	774.743	6.726	343.393
M11R	-126.500	598.452	19.833	-125.042	597.629	19.896	-137.072	604.416	19.375	-446.500	782.520	5.965	-442.132	779.959	6.154	371.099
M12R	-97.250	598.615	19.833	-95.668	597.778	19.898	-108.540	604.591	19.367	-446.500	787.520	5.406	-442.189	785.138	5.584	399.118
M13R	-68.000	598.736	19.833	-66.298	597.886	19.900	-79.989	604.726	19.358	-446.500	792.520	4.847	-442.245	790.289	5.015	427.390
M14R	-38.750	598.814	19.833	-36.853	597.915	19.905	-51.422	604.820	19.350	-446.500	797.520	4.288	-442.302	795.418	4.448	455.957
M15R	-9.500	598.850	19.833	-7.486	597.939	19.907	-22.830	604.873	19.342	-446.500	802.520	3.729	-442.358	800.531	3.882	484.612

E:\Bridges_XM\Ironton_Russell\LAW\81595\structures\LAW093_0000C\sheets\093_0000CMD006.dgn 4/25/2011 10:22:24 AM john_stahl

DESIGN AGENCY
URS
36 EAST 7TH STREET
SUITE 2300
CINCINNATI, OHIO 45202

DESIGNED AR | DRAWN CER | REVIEWED DLJ | DATE 6/2010
CHECKED BWJ | REVISED | STRUCTURE FILE NUMBER 4401263

STAY CABLE GEOMETRY (2 OF 3)
BRIDGE NO. LAW-93-0000
IRONTON RUSSELL BRIDGE OVER OHIO RIVER

LAW-93-0.00
PID No. 81595

CABLE ANCHOR POINT, WORK POINT AND EXIT POINT COORDINATES - TOWER 4

CABLE NUMBER	SUPERSTRUCTURE ANCHORAGE									TOWER ANCHORAGE						CHORD LENGTH (ft)
	WORK POINT			ANCHOR POINT			EXIT POINT			ANCHOR POINT			EXIT POINT			
	X	Y	Z	X	Y	Z	X	Y	Z	X	Y	Z	X	Y	Z	
M30L	9.500	598.850	-19.833	7.486	597.939	-19.907	22.828	604.873	-19.342	446.500	802.520	-3.729	442.358	800.531	-3.882	484.611
M29L	38.750	598.814	-19.833	36.853	597.915	-19.905	51.422	604.820	-19.350	446.500	797.520	-4.288	442.302	795.418	-4.448	455.957
M28L	68.000	598.736	-19.833	66.298	597.886	-19.900	79.990	604.726	-19.358	446.500	792.520	-4.847	442.245	790.289	-5.015	427.390
M27L	97.250	598.615	-19.833	95.668	597.778	-19.898	108.540	604.591	-19.367	446.500	787.520	-5.406	442.189	785.138	-5.584	399.118
M26L	126.500	598.452	-19.833	125.042	597.629	-19.896	137.072	604.416	-19.375	446.500	782.520	-5.965	442.132	779.959	-6.154	371.099
M25L	155.750	598.245	-19.833	154.420	597.440	-19.894	165.581	604.200	-19.383	446.500	777.520	-6.523	442.075	774.744	-6.726	343.393
M24L	185.000	597.996	-19.833	183.804	597.211	-19.891	194.056	603.944	-19.391	446.500	772.520	-7.082	442.017	769.481	-7.301	316.080
M23L	214.250	597.709	-19.833	213.193	596.948	-19.888	222.510	603.660	-19.399	446.500	767.520	-7.641	441.959	764.152	-7.879	289.270
M22L	243.500	597.417	-19.833	242.588	596.684	-19.885	250.917	603.376	-19.408	446.500	762.520	-8.200	441.900	758.733	-8.463	263.093
M21L	272.750	597.124	-19.833	271.990	596.430	-19.881	279.283	603.092	-19.417	446.500	757.520	-8.759	441.839	753.172	-9.056	237.755
M20L	302.000	596.832	-19.833	301.398	596.189	-19.877	307.596	602.809	-19.426	446.500	752.520	-9.317	441.775	747.385	-9.661	213.554
M19L	331.250	596.539	-19.833	330.804	595.963	-19.871	335.885	602.526	-19.437	446.500	746.520	-9.988	441.697	740.223	-10.398	190.133
M18L	360.500	596.247	-19.833	360.209	595.763	-19.864	364.100	602.244	-19.449	446.500	740.520	-10.659	441.610	732.259	-11.180	168.777
M17L	389.750	595.954	-19.833	389.642	595.690	-19.849	392.216	601.962	-19.467	445.500	732.520	-11.553	441.505	722.680	-12.146	148.025
M16L	419.000	595.662	-19.833	418.971	595.521	-19.841	420.239	601.682	-19.492	445.000	722.520	-12.670	441.304	704.409	-13.688	129.837
B16L	481.000	595.042	-19.833	481.032	594.888	-19.842	479.762	601.086	-19.492	455.000	722.520	-12.670	458.697	704.315	-13.689	130.457
B17L	509.250	594.759	-19.833	509.359	594.486	-19.849	506.830	600.816	-19.467	454.500	732.520	-11.553	458.498	722.405	-12.157	148.767
B18L	537.500	594.477	-19.833	537.711	594.112	-19.856	533.988	600.545	-19.449	453.500	740.520	-10.659	458.394	731.959	-11.193	169.149
B19L	565.750	594.194	-19.833	566.184	593.610	-19.871	561.238	600.272	-19.437	453.500	746.520	-9.988	458.306	739.950	-10.409	190.202
B20L	594.000	593.912	-19.833	594.583	593.259	-19.877	588.561	599.999	-19.426	453.500	752.520	-9.317	458.227	747.138	-9.671	213.025
B21L	622.250	593.629	-19.833	622.984	592.924	-19.881	615.909	599.726	-19.417	453.500	757.520	-8.759	458.164	752.945	-9.065	236.517
B22L	650.500	593.347	-19.833	651.379	592.601	-19.885	643.306	599.452	-19.408	453.500	762.520	-8.200	458.103	758.521	-8.472	261.085
B23L	678.750	593.064	-19.833	679.765	592.287	-19.888	670.769	599.178	-19.401	453.500	767.520	-7.641	458.043	763.963	-7.887	286.448
B24L	707.000	592.782	-19.833	708.147	591.979	-19.891	698.254	598.903	-19.393	453.500	772.520	-7.082	457.985	769.299	-7.308	312.416
B25L	735.250	592.499	-19.833	736.523	591.676	-19.893	725.768	598.628	-19.385	453.500	777.520	-6.523	457.927	774.567	-6.732	338.849
B26L	763.500	592.217	-19.833	764.891	591.377	-19.895	753.333	598.352	-19.378	453.500	782.520	-5.965	457.870	779.792	-6.160	365.642
B27L	791.750	591.934	-19.833	793.254	591.081	-19.897	780.924	598.077	-19.371	453.500	787.520	-5.406	457.813	784.980	-5.590	392.723
B28L	824.807	585.077	-21.328	824.807	585.077	-21.328	801.467	597.856	-20.292	453.500	792.520	-4.847	457.757	790.094	-5.036	425.644
B29L	826.938	588.889	-21.484	826.938	588.889	-21.484	810.741	597.757	-20.738	453.500	797.520	-4.288	457.702	795.126	-4.482	428.110
B30L	829.068	592.702	-21.641	829.068	592.702	-21.641	820.015	597.656	-21.209	453.500	802.520	-3.729	457.646	800.156	-3.927	430.576
M30R	9.500	598.850	19.833	7.486	597.939	19.907	22.828	604.873	19.342	446.500	802.520	3.729	442.358	800.531	3.882	484.611
M29R	38.750	598.814	19.833	36.853	597.915	19.905	51.422	604.820	19.350	446.500	797.520	4.288	442.302	795.418	4.448	455.957
M28R	68.000	598.736	19.833	66.298	597.886	19.900	79.990	604.726	19.358	446.500	792.520	4.847	442.245	790.289	5.015	427.390
M27R	97.250	598.615	19.833	95.668	597.778	19.898	108.540	604.591	19.367	446.500	787.520	5.406	442.189	785.138	5.584	399.118
M26R	126.500	598.452	19.833	125.042	597.629	19.896	137.072	604.416	19.375	446.500	782.520	5.965	442.132	779.959	6.154	371.099
M25R	155.750	598.245	19.833	154.420	597.440	19.894	165.581	604.200	19.383	446.500	777.520	6.523	442.075	774.744	6.726	343.393
M24R	185.000	597.996	19.833	183.804	597.211	19.891	194.056	603.944	19.391	446.500	772.520	7.082	442.017	769.481	7.301	316.080
M23R	214.250	597.709	19.833	213.193	596.948	19.888	222.510	603.660	19.399	446.500	767.520	7.641	441.959	764.152	7.879	289.270
M22R	243.500	597.417	19.833	242.588	596.684	19.885	250.917	603.376	19.408	446.500	762.520	8.200	441.900	758.733	8.463	263.093
M21R	272.750	597.124	19.833	271.990	596.430	19.881	279.283	603.092	19.417	446.500	757.520	8.759	441.839	753.172	9.056	237.755
M20R	302.000	596.832	19.833	301.398	596.189	19.877	307.596	602.809	19.426	446.500	752.520	9.317	441.775	747.385	9.661	213.554
M19R	331.250	596.539	19.833	330.804	595.963	19.871	335.885	602.526	19.437	446.500	746.520	9.988	441.697	740.223	10.398	190.133
M18R	360.500	596.247	19.833	360.209	595.763	19.864	364.100	602.244	19.449	446.500	740.520	10.659	441.610	732.259	11.180	168.777
M17R	389.750	595.954	19.833	389.642	595.690	19.849	392.216	601.962	19.467	445.500	732.520	11.553	441.505	722.680	12.146	148.025
M16R	419.000	595.662	19.833	418.971	595.521	19.841	420.239	601.682	19.492	445.000	722.520	12.670	441.304	704.409	13.688	129.837
B16R	481.000	595.042	19.833	481.032	594.888	19.842	479.762	601.086	19.492	455.000	722.520	12.670	458.697	704.315	13.689	130.457
B17R	509.250	594.759	19.833	509.359	594.486	19.849	506.830	600.816	19.467	454.500	732.520	11.553	458.498	722.405	12.157	148.767
B18R	537.500	594.477	19.833	537.711	594.112	19.856	533.988	600.545	19.449	453.500	740.520	10.659	458.394	731.959	11.193	169.149
B19R	565.750	594.194	19.833	566.184	593.610	19.871	561.238	600.272	19.437	453.500	746.520	9.988	458.306	739.950	10.409	190.202
B20R	594.000	593.912	19.833	594.583	593.259	19.877	588.561	599.999	19.426	453.500	752.520	9.317	458.227	747.138	9.671	213.025
B21R	622.250	593.629	19.833	622.984	592.924	19.881	615.909	599.726	19.417	453.500	757.520	8.759	458.164	752.945	9.065	236.517
B22R	650.500	593.347	19.833	651.379	592.601	19.885	643.306	599.452	19.408	453.500	762.520	8.200	458.103	758.521	8.472	261.085
B23R	678.750	593.064	19.833	679.765	592.287	19.888	670.769	599.178	19.401	453.500	767.520	7.641	458.043	763.963	7.887	286.448
B24R	707.000	592.782	19.833	708.147	591.979	19.891	698.254	598.903	19.393	453.500	772.520	7.082	457.985	769.299	7.308	312.416
B25R	735.250	592.499	19.833	736.523	591.676	19.893	725.768	598.628	19.385	453.500	777.520	6.523	457.927	774.567	6.732	338.849
B26R	763.500	592.217	19.833	764.891	591.377	19.895	753.333	598.352	19.378	453.500	782.520	5.965	457.870	779.792	6.160	365.642
B27R	791.750	591.934	19.833	793.254	591.081	19.897	780.924	598.077	19.371	453.500	787.520	5.406	457.813	784.980	5.590	392.723
B28R	824.807	585.077	19.833	824.807	585.077	19.833	801.425	597.879	18.889	453.500	792.520	4.847	457.757	790.094	5.019	425.589
B29R	826.938	588.889	19.833	826.938	588.889	19.833	810.611	597.828	19.153	453.500	797.520	4.288	457.702	795.126	4.463	428.047
B30R	829.068	592.702	19.833	829.068	592.702	19.833	819.745	597.804	19.433	453.500	802.520	3.729	457.646	800.156	3.907	430.505

E:\Bridges_XW\Ironton_Russell\LAW\81595\structures\LAW093_0000C\sheets\093_0000CMD007.dgn 4/25/2011 10:22:42 AM john_stahl

DESIGN AGENCY
URS
36 EAST 7TH STREET
SUITE 2300
CINCINNATI, OHIO 45202

DESIGNED AR | DRAWN CER | REVIEWED DLJ | DATE 6/2010
CHECKED BWJ | REVISED | STRUCTURE FILE NUMBER 4401263

STAY CABLE GEOMETRY (3 OF 3)
BRIDGE NO. LAW-93-0000
IRONTON RUSSELL BRIDGE OVER OHIO RIVER

LAW-93-0.00
PID No. 81595

STAY CABLE SCHEDULE OF SIZES AND FORCE EFFECTS

CABLE NUMBER	NUMBER OF 0.6" STRANDS	EDGE GIRDER BEARING PLATE		DECK	TOWER	UNFACTORED LOADS							STRENGTH I	FATIGUE
		WIDTH (INCHES)	THICKNESS (INCHES)	STRESSING END GUIDE PIPE OUTER DIAMETER (INCHES)	FIXED END GUIDE PIPE OUTER DIAMETER (INCHES)	INITIAL DEAD LOAD (KIPS)	FINAL DEAD LOAD (KIPS)	WEARING SURFACE (KIPS)	LIVE LOAD +IMPACT MAXIMUM (KIPS)	THERMAL LOAD MAXIMUM (KIPS)	CABLE LOSS ENVELOP (KIPS)	CABLE EXCHANGE ENVELOP (KIPS)	MAXIMUM (KIPS)	STRESS RANGE (KSI)
B15	35	22.0	2.75	14.00	12.750	650.1	620.0	33.9	120.5	61.7	1004.9	1069.8	1160.4	4.7
B14	29	21.0	2.75	12.75	11.750	542.3	521.5	28.0	98.1	42.7	870.8	904.4	958.6	4.7
B13	22	21.0	2.75	12.75	11.750	423.8	411.4	21.1	73.0	25.2	669.8	697.3	737.0	4.4
B12	22	21.0	2.75	12.75	11.750	404.5	402.1	21.4	69.8	4.9	636.9	665.4	695.4	4.6
B11	22	21.0	2.75	12.75	11.750	390.7	398.6	22.2	68.2	15.9	667.6	672.0	691.9	5.0
B10	22	21.0	2.75	12.75	11.750	371.3	382.8	23.2	68.3	26.3	685.1	672.1	678.2	6.4
B9	20	21.0	2.75	12.75	11.750	360.8	371.6	21.9	62.9	26.3	680.8	653.0	651.7	6.7
B8	19	21.0	2.75	12.75	11.750	352.0	361.1	21.4	64.5	22.4	674.8	646.7	637.9	7.0
B7	18	21.0	2.75	12.75	11.750	265.2	272.4	20.4	65.1	16.1	591.3	543.8	517.8	7.5
B6	18	21.0	2.75	12.75	11.750	264.9	270.5	20.2	69.7	10.2	570.8	541.0	520.2	7.9
B5	18	21.0	2.75	12.75	11.750	261.0	264.1	19.3	71.2	4.9	578.3	541.1	510.5	8.0
B4	18	21.0	2.75	12.75	11.750	255.8	255.6	17.7	69.9	0.0	580.1	533.3	492.0	7.8
B3	17	15.0	1.50	10.50	9.625	232.2	228.5	14.1	63.5	3.9	546.4	491.7	445.8	7.9
B2	16	15.0	1.50	10.50	9.625	210.9	204.2	9.2	54.6	3.5	486.5	435.8	393.6	7.8
B1	14	15.0	1.50	10.50	9.625	191.1	181.5	3.2	36.8	0.4	381.6	349.9	323.7	6.7
M1	14	15.0	1.50	10.50	9.625	191.8	181.4	3.2	37.2	2.4	383.0	351.3	326.4	6.7
M2	16	15.0	1.50	10.50	9.625	209.6	208.2	9.1	55.4	1.4	489.0	436.9	392.0	7.8
M3	18	21.0	2.75	12.75	11.750	226.2	228.8	14.5	66.2	2.4	555.6	496.7	446.0	7.8
M4	18	21.0	2.75	12.75	11.750	261.0	262.5	16.8	66.9	0.2	591.2	539.1	494.1	7.8
M5	19	21.0	2.75	12.75	11.750	281.6	282.0	19.1	70.3	1.1	615.9	569.5	530.0	7.8
M6	20	21.0	2.75	12.75	11.750	293.6	293.8	20.9	73.6	1.3	635.5	588.2	554.4	7.8
M7	21	21.0	2.75	12.75	11.750	313.8	314.0	22.5	77.0	1.5	666.3	621.3	589.7	7.8
M8	23	21.0	2.75	12.75	11.750	330.1	330.3	25.2	83.7	1.6	701.9	658.4	627.8	7.8
M9	23	21.0	2.75	12.75	11.750	353.5	354.0	25.7	82.9	1.4	724.5	685.0	658.3	7.7
M10	24	21.0	2.75	12.75	11.750	378.6	379.7	27.1	84.3	1.0	763.2	723.1	696.5	7.5
M11	25	21.0	2.75	12.75	11.750	410.6	412.3	28.2	84.2	0.4	802.8	765.0	740.5	7.4
M12	26	21.0	2.75	12.75	11.750	432.4	435.1	28.8	84.5	2.1	826.7	793.7	772.8	7.6
M13	27	21.0	2.75	12.75	11.750	442.9	446.1	28.5	85.3	4.6	863.6	817.5	789.6	7.6
M14	30	22.0	2.75	14.00	12.750	488.8	492.1	29.3	93.2	8.5	954.3	900.0	867.7	7.6
M15	31	22.0	2.75	14.00	12.750	505.8	507.6	26.9	96.9	12.5	953.8	912.8	893.2	7.7
M30	31	22.0	2.75	14.00	12.750	507.0	492.3	28.4	100.9	8.1	953.8	912.8	899.8	7.8
M29	30	22.0	2.75	14.00	12.750	489.5	482.2	30.4	96.4	5.5	954.3	900.0	870.4	7.7
M28	27	21.0	2.75	12.75	11.750	443.2	441.3	29.2	87.3	2.8	863.6	817.5	789.6	7.6
M27	26	21.0	2.75	12.75	11.750	432.9	433.6	29.2	85.6	0.8	826.7	793.7	772.8	7.6
M26	25	21.0	2.75	12.75	11.750	410.8	412.8	28.4	84.3	0.5	802.8	765.0	741.6	7.4
M25	24	21.0	2.75	12.75	11.750	378.4	381.0	27.1	83.7	1.3	763.2	723.1	697.1	7.5
M24	23	21.0	2.75	12.75	11.750	352.9	355.1	25.6	82.4	1.5	724.5	685.0	658.6	7.7
M23	23	21.0	2.75	12.75	11.750	329.0	331.1	25.1	83.3	1.4	701.9	658.4	627.8	7.7
M22	21	21.0	2.75	12.75	11.750	312.9	314.4	22.4	76.8	1.0	666.3	621.3	589.6	7.8
M21	20	21.0	2.75	12.75	11.750	292.9	293.8	20.8	73.5	0.7	635.5	588.2	553.7	7.8
M20	19	21.0	2.75	12.75	11.750	281.2	281.5	19.0	70.1	0.4	615.9	569.5	528.4	7.8
M19	18	21.0	2.75	12.75	11.750	260.8	261.0	16.8	66.9	0.2	591.2	539.1	492.1	7.8
M18	18	21.0	2.75	12.75	11.750	226.4	225.7	14.5	66.8	0.1	555.6	496.7	442.7	7.7
M17	16	15.0	1.50	10.50	9.625	210.9	207.0	9.0	56.7	0.1	489.0	436.9	395.1	7.7
M16	14	15.0	1.50	10.50	9.625	195.3	185.2	2.9	38.6	0.3	383.0	351.3	332.1	6.6
B16	14	15.0	1.50	10.50	9.625	194.7	184.1	3.5	38.3	1.5	381.6	349.9	332.3	6.6
B17	16	15.0	1.50	10.50	9.625	212.5	206.8	9.4	55.4	1.8	486.5	435.8	396.4	7.7
B18	17	15.0	1.50	10.50	9.625	232.7	230.2	14.1	63.5	1.6	546.4	491.7	445.0	7.8
B19	18	21.0	2.75	12.75	11.750	256.1	256.0	17.7	69.5	0.5	580.1	533.3	492.0	7.8
B20	18	21.0	2.75	12.75	11.750	261.9	264.2	19.5	70.4	1.8	578.3	541.1	507.8	7.9
B21	18	21.0	2.75	12.75	11.750	266.3	270.6	20.5	68.4	5.2	570.8	541.0	515.9	7.8
B22	18	21.0	2.75	12.75	11.750	266.0	271.8	21.0	65.8	9.3	591.3	543.8	515.6	7.4
B23	19	21.0	2.75	12.75	11.750	352.6	359.6	22.2	66.2	14.0	674.8	646.7	635.9	6.9
B24	20	21.0	2.75	12.75	11.750	360.6	368.3	22.8	66.1	17.7	680.8	653.0	650.2	6.6
B25	22	21.0	2.75	12.75	11.750	368.4	375.2	24.1	72.1	19.6	685.1	672.1	673.1	6.3
B26	22	21.0	2.75	12.75	11.750	391.3	397.9	22.8	70.9	15.1	667.6	672.0	696.3	4.9
B27	22	21.0	2.75	12.75	11.750	403.9	400.0	21.2	68.5	4.3	636.9	665.4	691.8	4.2
B28	22	21.0	2.75	12.75	11.750	425.2	414.9	20.2	67.7	8.0	669.8	697.3	718.4	3.8
B29	29	21.0	2.75	12.75	11.750	545.1	526.5	26.3	89.2	17.9	870.8	904.4	930.1	3.9
B30	35	22.0	2.75	14.00	12.750	653.0	625.3	31.4	107.5	29.1	1004.9	1069.8	1119.3	3.9

NOTES

1. STAY ANCHORAGE BEARING PLATES AND GUIDE PIPES AS ASSUMED FOR DESIGN ARE SHOWN. ACTUAL BEARING PLATES AND GUIDE PIPES SHALL BE DESIGNED BY THE CONTRACTOR OR STAY CABLE SUPPLIER AND SUBMITTED TO THE ENGINEER FOR APPROVAL. EDGE GIRDER BEARING PLATES HAVE BEEN DESIGNED ASSUMING NO SPIRAL REINFORCEMENT.

2. STAY ANCHORS AND HDPE PIPES SHALL BE SIZED TO ACCOMMODATE THE TABULATED NUMBER OF STRANDS PLUS TWO ADDITIONAL STRANDS. THE SUPPLY AND PLACEMENT OF THE ADDITIONAL STRANDS ARE NOT INCLUDED IN THIS CONTRACT.

3. FOR TOWER ANCHORAGE DETAILS AND BEARING PLATE SIZES, SEE SHEETS 110/365 THRU 111/365.

4. THE COMPONENT, "INITIAL DEAD LOAD", INCLUDES ALL PERMANENT LOADS EXCEPT WEARING SURFACE LOAD.

5. THE COMPONENT, "FINAL DEAD LOAD", INCLUDES ALL PERMANENT LOADS EXCEPT WEARING SURFACE LOAD.

6. THE COMPONENT, "THERMAL", IS THE FORCE CAUSED BY UNIFORM TEMPERATURE CHANGE.

7. CABLE FORCES INDICATED UNDER THE CABLE LOSS ENVELOPE ARE BASED UPON THE FOLLOWING LOAD GROUP: 1.2 DC + 1.4 DW + 0.75 (LL+IM) + CABLE LOSS DYNAMIC FORCES. A DYNAMIC AMPLIFICATION OF 2.0 WAS USED.

8. CABLE FORCES INDICATED UNDER THE CABLE EXCHANGE ENVELOPE ARE BASED UPON THE FOLLOWING LOAD GROUP: 1.2 DC + 1.4 DW + 1.5 (LL+IM) + CABLE EXCHANGE FORCES.

STAY CABLE QUANTITIES	
TOTAL WEIGHT	665,907 LBS

(A GREASED AND INDIVIDUALLY SHEATED STRAND WEIGHT OF 0.82 LB/FT WAS USED IN THE CALCULATIONS FOR THE TOTAL STAY CABLE WEIGHT.)

DESIGN AGENCY
URS
36 EAST 7TH STREET
SUITE 2300
CINCINNATI, OHIO 45202

DESIGNED ASM | DRAWN JLS | REVIEWED DLJ | DATE 6/2010 | CHECKED VB | REVISED | STRUCTURE FILE NUMBER 4401263

STAY CABLE SCHEDULE

BRIDGE NO. LAW-93-0000

IRONTON RUSSELL BRIDGE OVER OHIO RIVER

LAW-93-0.00

PID No. 81595

E:\Bridges_XM\Ironton_Russell\LAW\81595\structures\LAW093_0000C\sheets\093_0000CMD005.dgn 4/25/2011 10:23:00 AM john_stahl

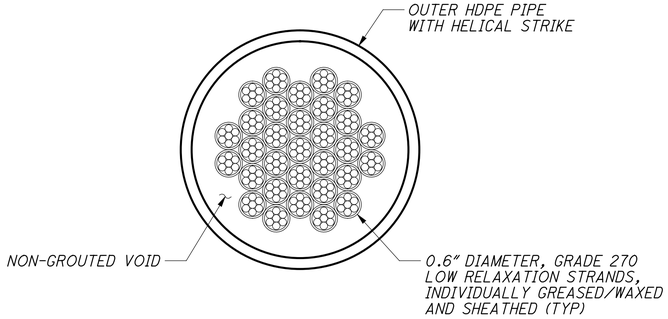

SECTION A-A

Link to 256-002-002
Guide Deviator As-Built

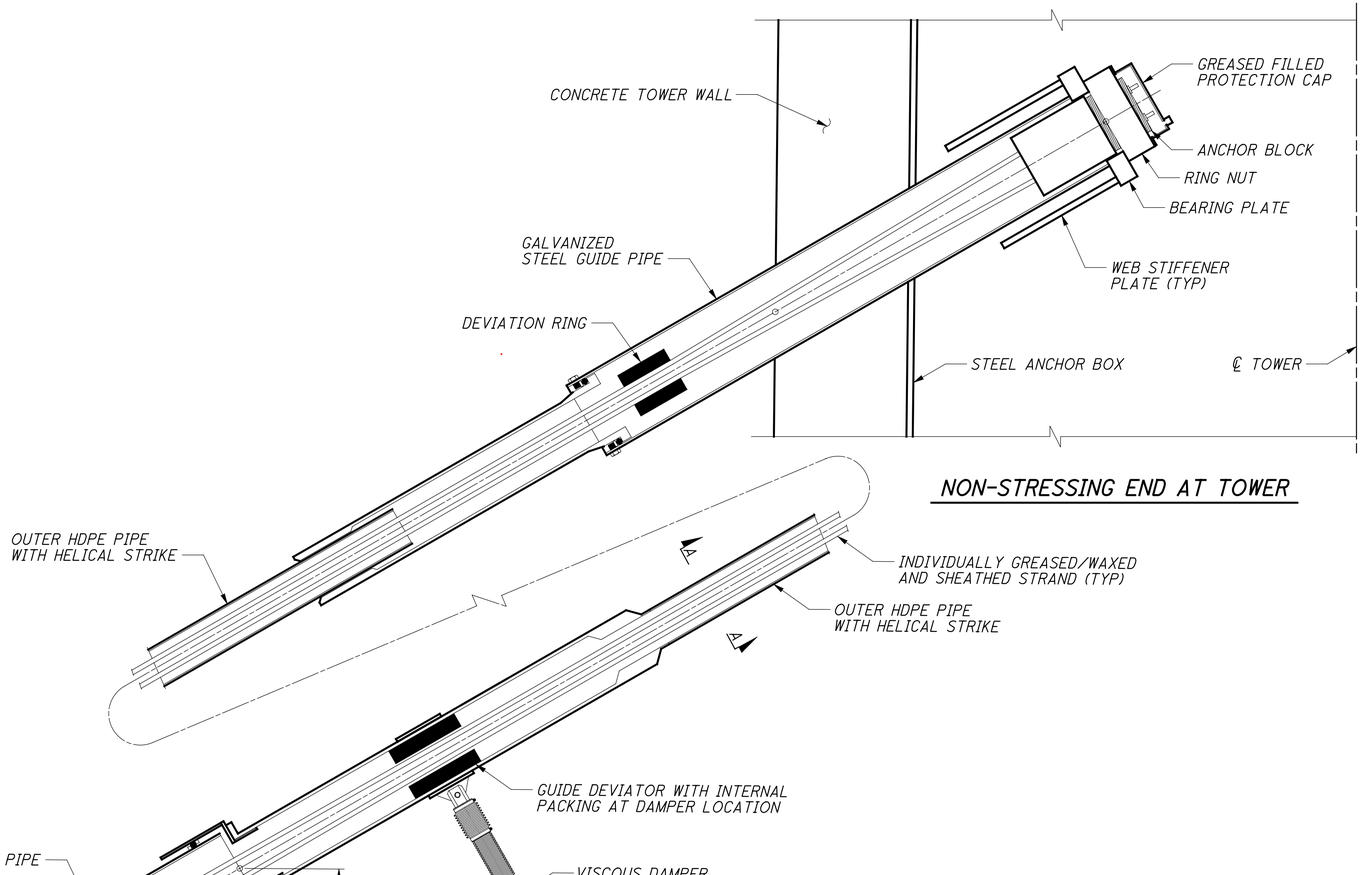

NON-STRESSING END AT TOWER

STRESSING END AT EDGE GIRDER

Link o 256-002-002
Guide Deviator As-Built

NOTES

1. STAY CABLE DETAILS ARE SCHEMATIC. SEE PROJECT SPECIAL PROVISIONS FOR DETAIL REQUIREMENTS.
2. STAY CABLE SYSTEM CONSISTS OF 0.6" DIAMETER LOW-RELAXATION GREASED OR WAXED AND INDIVIDUALLY SHEATHED STRANDS ENCASED IN AN UNGROUTED OUTER HDPE PIPE.

DESIGN AGENCY
URS
36 EAST 7TH STREET
SUITE 2300
CINCINNATI, OHIO 45202

DESIGNED	DRAWN	REVIEWED	DATE
ASM	KAC	DLJ	6/2010
CHECKED	REVISED	STRUCTURE FILE NUMBER	
BWJ		4401263	

STAY CABLE DETAILS (1 OF 3)
BRIDGE NO. LAW-93-0000
IRONTON RUSSELL BRIDGE OVER OHIO RIVER

LAW-93-0.00
PID No. 81595

231/365
618/788

E:\Bridges_XM\Ironton_Russell\LAW\81595\structures\LAW093_0000C\sheets\093_0000CMD001.dgn 4/25/2011 10:23:13 AM john_stahl

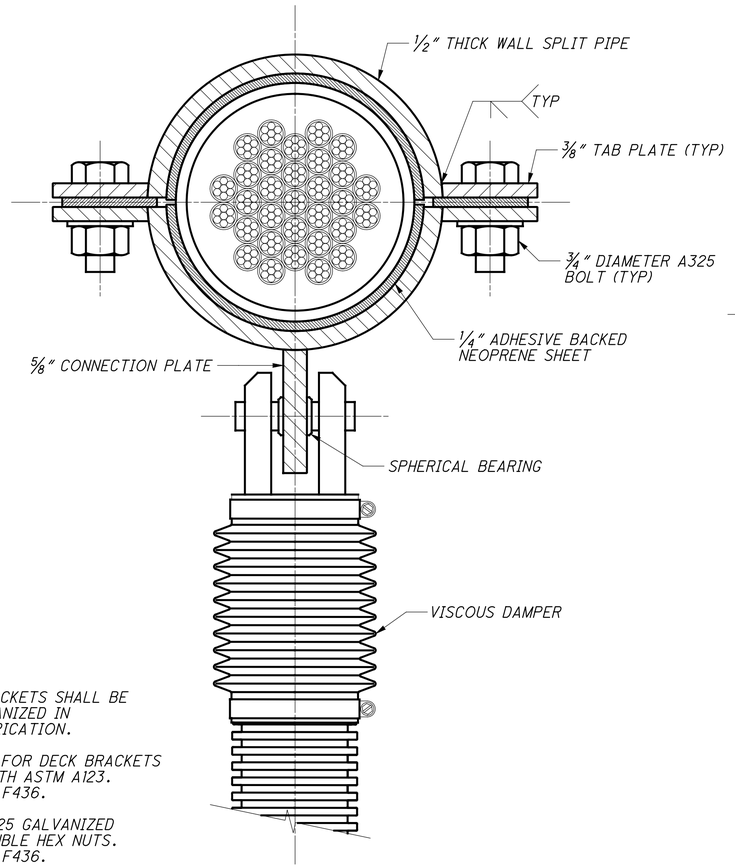

SECTION B-B

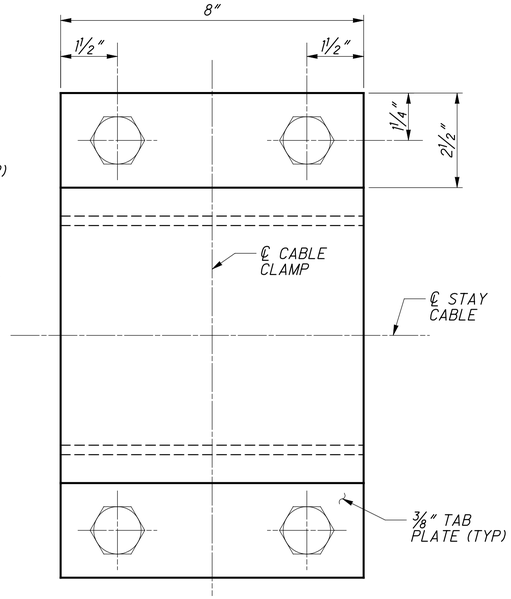

CABLE COLLAR TOP VIEW

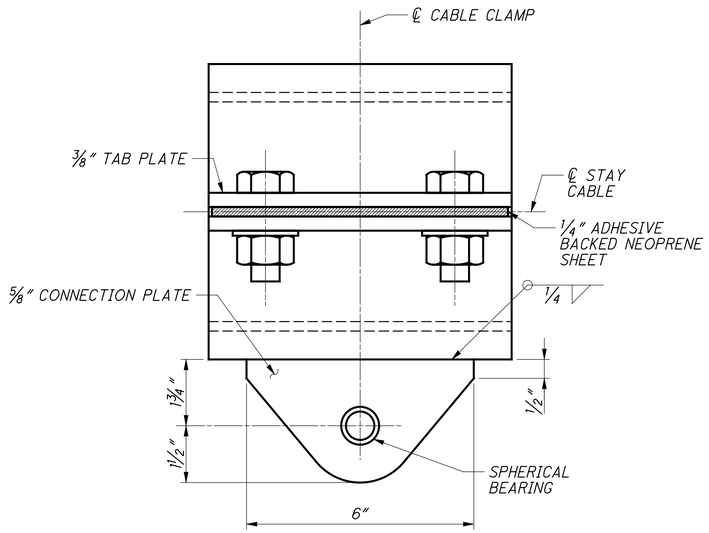

CABLE COLLAR SIDE VIEW

Link to RFI106 As-Built

NOTES

1. STEEL FOR CABLE COLLAR AND DECK BRACKETS SHALL BE ASTM A709 GRADE 36 MINIMUM AND GALVANIZED IN ACCORDANCE WITH ASTM A123 AFTER FABRICATION.
2. POST DRILLED ADHESIVE ANCHOR BOLTS FOR DECK BRACKETS SHALL BE GALVANIZED IN ACCORDANCE WITH ASTM A123. PROVIDE GALVANIZED WASHERS PER ASTM F436.
3. BOLTS FOR CABLE COLLAR SHALL BE A325 GALVANIZED WITH THREAD LOCKING COMPOUND OR DOUBLE HEX NUTS. PROVIDE GALVANIZED WASHERS PER ASTM F436.
4. WELDING SHALL BE PERFORMED IN ACCORDANCE WITH AWS D1.5.
5. PROVIDE INTERNAL PACKING BETWEEN STAY CABLE STRANDS AND THE HDPE PIPE AT LOCATION OF CABLE COLLAR ASSEMBLY.
6. COST OF DAMPERS, HARDWARE AND INSTALLATION SHALL BE INCLUDED IN THE LUMP SUM PRICE FOR STAY CABLES.
7. VISCOUS DAMPERS SHALL BE PLACED DIRECTLY IN THE PLANE OF THE CABLE.
8. VISCOUS DAMPERS SHALL BE IN ACCORDANCE WITH THE PROJECT SPECIAL PROVISIONS AND SHALL BE DOUBLE-ACTING FLUID DAMPERS INSTALLED IN A NEUTRAL MID-STROKE POSITION, UNLESS NOTED OTHERWISE.
9. VISCOUS DAMPERS WERE DESIGNED ASSUMING A NON-LINEAR DAMPING BEHAVIOR WITH THE LOCATION OF DAMPER TO CABLE CONNECTION AS INDICATED IN THE DRAWINGS. THE DAMPERS WERE ASSUMED TO HAVE A LINEAR VISCOUS DAMPING COMPONENT IN ADDITION TO THE EFFECTS OF A NON-ZERO DAMPER FRICTION. DAMPERS SHALL HAVE MAXIMUM STATIC FRICTION OF 0.250 KIPS. THE ACTUAL STATIC FRICTION SHALL BE INCORPORATED INTO THE BEHAVIOR OF THE DAMPER.
10. CABLE DAMPING DEVICES OTHER THAN THE PROPOSED NON-LINEAR VISCOUS DAMPERS MAY BE UTILIZED WITH APPROVAL OF THE ENGINEER. ALL DAMPING DEVICES SHALL BE CAPABLE OF PROVIDING A SCRUTON NUMBER GREATER THAN 10 IN THE FIRST 5 MODES OF VIBRATION FOR OSCILLATION AMPLITUDES (AT THE ANTI-NODAL LOCATIONS) BETWEEN ONE-TENTH OF A CABLE DIAMETER AND THREE CABLE DIAMETERS. THE SCRUTON NUMBER CRITERION ONLY NEEDS TO BE SATISFIED FOR CABLES WITH A FUNDAMENTAL FREQUENCY LESS THAN 3 Hz.
11. THE ENERGY DISSIPATION SHALL BE TAKEN AS THE LARGER OF THE FOLLOWING TWO VALUES. 50% OF THE MAXIMUM INSTANTANEOUS POWER OVER A 5-MINUTE PERIOD OR 50% OF THE AVERAGE POWER OVER A 60-MINUTE PERIOD.

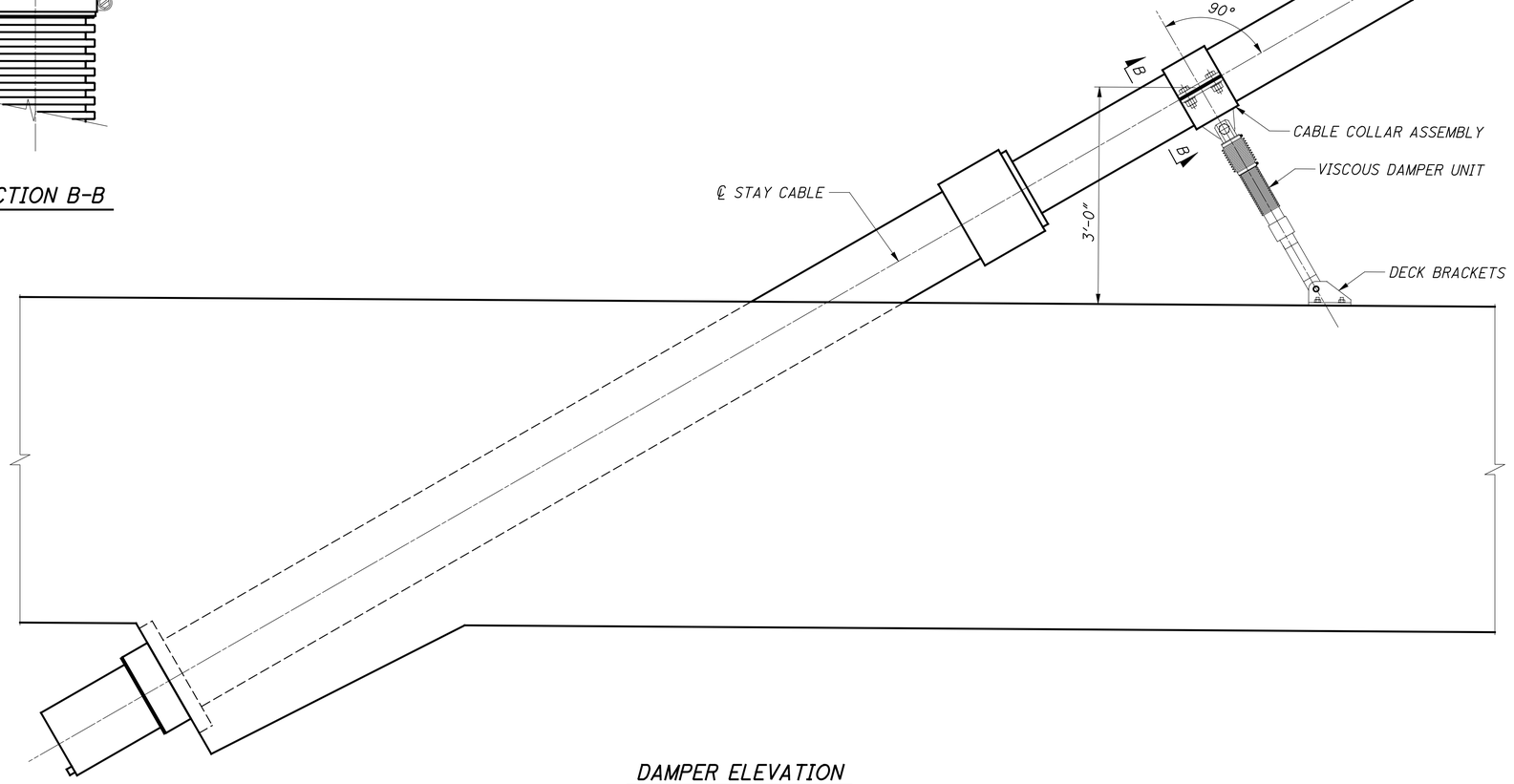

DAMPER ELEVATION

DESIGN AGENCY
URS
36 EAST 7TH STREET
SUITE 2300
CINCINNATI, OHIO 45202

DESIGNED ASM | DRAWN KAC | REVIEWED DLJ | DATE 6/2010
CHECKED BWJ | REVISED | STRUCTURE FILE NUMBER 4401263

STAY CABLE DETAILS (2 OF 3)
BRIDGE NO. LAW-93-0000
IRONTON RUSSELL BRIDGE OVER OHIO RIVER

LAW-93-0.00
PID No. 81595

232/365
619/788

E:\Bridges_XM\Ironton_Russell\LAW\81595\structures\LAW093_0000C\sheets\093_0000CMD001.dgn 4/25/2011 10:23:17 AM john_stahl

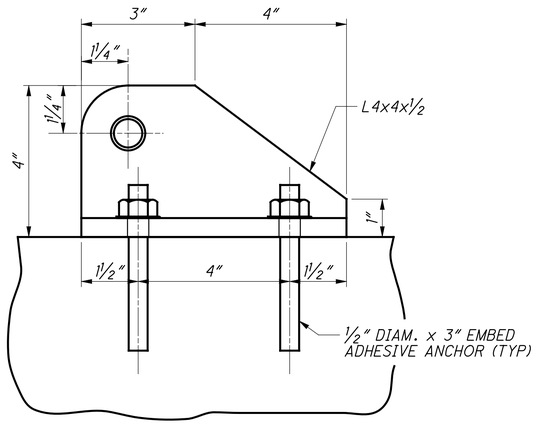

DECK BRACKET SIDE VIEW

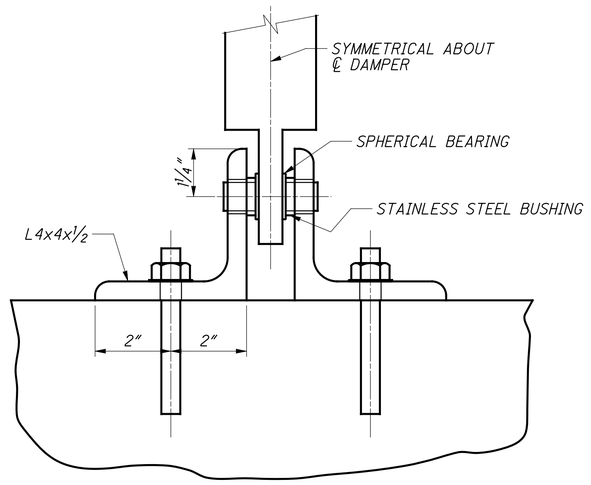

DECK BRACKET SECTION VIEW

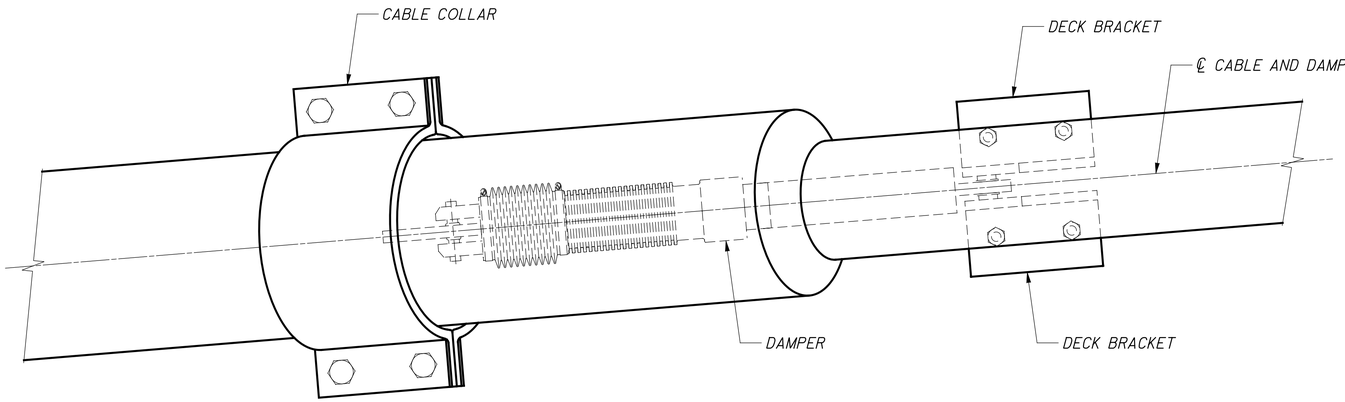

PLAN - CABLE DAMPER ORIENTATION

VISCOUS DAMPER PARAMETERS

STAY CABLE NUMBER	DAMPER CONSTANT (k-sec/ft)	DAMPER MAXIMUM VELOCITY (ft/sec)	DAMPER MAXIMUM DISPLACEMENT (ft)	DAMPER MAXIMUM FORCE (kips)	MAXIMUM POWER DISSIPATION (hp)	AVERAGE POWER DISSIPATION (hp)
B15, B30	2.40	0.97	0.164	2.59	2.35	0.32
B14, B29	0.70	1.46	0.243	1.27	1.78	0.29
B13, B28	0.40	2.04	0.336	1.07	2.10	0.36
B12, B27	1.00	1.35	0.207	1.60	2.05	0.31
B11, B26	1.00	1.46	0.209	1.71	2.37	0.36
B10, B25	1.00	1.58	0.213	1.83	2.74	0.41
B9, B24	1.00	1.80	0.218	2.05	3.46	0.50
B8, B23	1.00	2.00	0.220	2.25	4.22	0.61
B7, B22	0.70	2.06	0.231	1.69	3.30	0.50
B6, B21	0.70	1.98	0.201	1.63	3.05	0.61
B5, B20	0.70	1.84	0.171	1.54	2.70	0.73
B4, B19	0.70	1.72	0.146	1.46	2.39	0.72
B3, B18	0.40	1.65	0.127	0.91	1.47	0.49
B2, B17	0.40	1.57	0.109	0.88	1.34	0.45
B1, B16	0.40	1.46	0.091	0.83	1.19	0.40
M1, M16	0.40	1.45	0.090	0.83	1.18	0.40
M2, M17	0.40	1.54	0.106	0.87	1.31	0.44
M3, M18	0.70	1.66	0.132	1.41	2.23	0.68
M4, M19	0.70	1.71	0.143	1.44	2.35	0.71
M5, M20	0.70	1.84	0.171	1.54	2.69	0.74
M6, M21	0.70	2.01	0.207	1.66	3.15	0.60
M7, M22	0.70	2.09	0.236	1.72	3.40	0.51
M8, M23	0.70	1.84	0.231	1.54	2.69	0.42
M9, M24	0.80	1.69	0.224	1.60	2.57	0.39
M10, M25	0.80	1.55	0.220	1.49	2.20	0.34
M11, M26	1.00	1.42	0.214	1.67	2.25	0.34
M12, M27	1.00	1.31	0.210	1.56	1.94	0.30
M13, M28	1.00	1.19	0.206	1.44	1.64	0.26
M14, M29	1.30	1.21	0.225	1.82	2.07	0.31
M15, M30	1.30	1.11	0.220	1.69	1.78	0.27

DESIGN AGENCY
URS
35 EAST 7TH STREET
SUITE 2300
CINCINNATI, OHIO 45202

DESIGNED	DRAWN	REVIEWED	DATE
ASM	KAC	DLJ	6/2010
CHECKED	REVISED	STRUCTURE FILE NUMBER	
BWJ		4401263	

STAY CABLE DETAILS (3 OF 3)
BRIDGE NO. LAW-93-0000
IRONTON RUSSELL BRIDGE OVER OHIO RIVER

LAW-93-0.00
PID No. 81595

233/365

620
788

E:\Bridges_XM\Ironton_Russell\LAW\81595\structures\LAW093_0000C\sheets\093_0000CMD001.dgn 4/25/2011 10:23:22 AM john_stahl

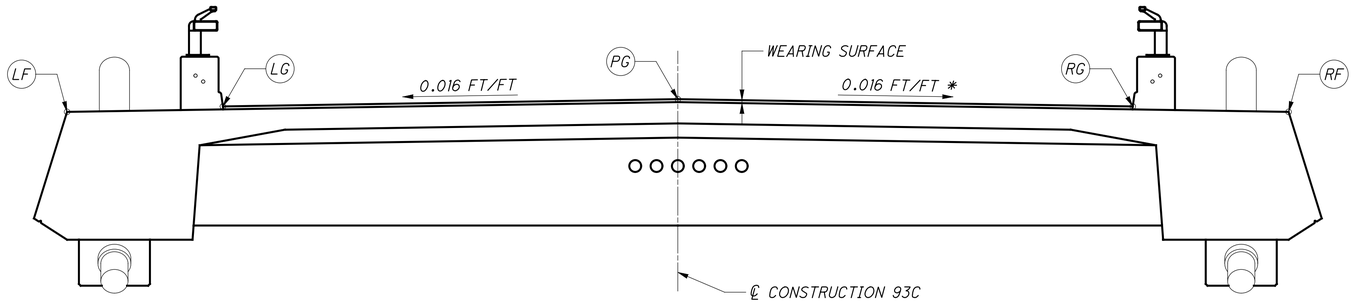

TYPICAL SECTION
(LOOKING STATIONS AHEAD)

0.016 FT/FT → BEGIN SE TRANSITION STATION 29+84.79

0.016 FT/FT ← END SE TRANSITION STATION 30+64.79

* SUPERELEVATION TRANSITION DATA
(SEE SECTION 209.1 OF ODOT BRIDGE DESIGN MANUAL FOR SHOULDER TRANSITION DATA)

NOTES

1. LEGEND:
   - LF = LEFT FASCIA LINE
   - LG = LEFT GUTTER LINE
   - PG = PROFILE GRADE LINE
   - RG = RIGHT GUTTER LINE
   - RF = RIGHT FASCIA LINE
2. FINISH GRADE ELEVATIONS ARE GIVEN ALONG ALL SEGMENT JOINTS, CLOSURE POUR JOINTS, ℄ PIERS 2 & 5, ℄ TOWERS 3 & 4, FRONT FACE OF KY DIAPHRAGM AND BACK FACE OF OH DIAPHRAGM.
3. FINISH GRADE ELEVATIONS ARE GIVEN AT THE TOP OF THE 1¼" WEARING SURFACE FOR LEFT GUTTER, PROFILE GRADE AND RIGHT GUTTER LINES.
4. FOR SEGMENT DESIGNATION, SEE SHEET NO. 128/365 & 129/365.

LOCATION/DESCRIPTION	LF	LG	PG	RG	RF
FRONT FACE KY DIAPHRAGM	596.02	596.22	596.54	596.26	596.07
℄ PIER 2	596.10	596.30	596.60	596.33	596.14
KY DIAPHRAGM/KY CLOSURE POUR	596.32	596.52	596.78	596.53	596.33
CLOSURE POUR/B12	596.39	596.59	596.84	596.59	596.39
B12/B11	596.68	596.87	597.13	596.87	596.68
B11/B10	596.96	597.15	597.41	597.15	596.96
B10/B9	597.24	597.43	597.69	597.43	597.24
B9/B8	597.52	597.72	597.97	597.72	597.52
B8/B7	597.81	598.00	598.26	598.00	597.81
B7/B6	598.09	598.28	598.54	598.28	598.09
B6/B5	598.37	598.56	598.82	598.56	598.37
B5/B4	598.65	598.85	599.10	598.85	598.65
B4/B3	598.94	599.13	599.39	599.13	598.94
B3/B2	599.22	599.41	599.67	599.41	599.22
B2/KY PIER TABLE	599.50	599.69	599.95	599.69	599.50
℄ TOWER 3	599.85	600.04	600.30	600.04	599.85
KY PIER TABLE/M2	600.20	600.39	600.65	600.39	600.20
M2/M3	600.49	600.69	600.94	600.69	600.49
M3/M4	600.79	600.98	601.24	600.98	600.79
M4/M5	601.08	601.27	601.53	601.27	601.08
M5/M6	601.37	601.56	601.82	601.56	601.37
M6/M7	601.66	601.86	602.11	601.86	601.66
M7/M8	601.96	602.15	602.41	602.15	601.96
M8/M9	602.25	602.44	602.70	602.44	602.25
M9/M10	602.53	602.72	602.98	602.72	602.53
M10/M11	602.78	602.97	603.22	602.97	602.78
M11/M12	602.98	603.17	603.42	603.17	602.98
M12/M13	603.13	603.33	603.58	603.33	603.13
M13/M14	603.25	603.44	603.70	603.44	603.25
M14/M15	603.32	603.51	603.77	603.51	603.32
M15/CLOSURE POUR	603.35	603.54	603.80	603.54	603.35

LOCATION/DESCRIPTION	LF	LG	PG	RG	RF
CLOSURE POUR/M30	603.35	603.54	603.80	603.54	603.35
M30/M29	603.32	603.51	603.77	603.51	603.32
M29/M28	603.25	603.44	603.70	603.44	603.25
M28/M27	603.13	603.33	603.58	603.33	603.13
M27/M26	602.98	603.17	603.42	603.17	602.98
M26/M25	602.78	602.97	603.22	602.97	602.78
M25/M24	602.53	602.72	602.98	602.72	602.53
M24/M23	602.25	602.44	602.70	602.44	602.25
M23/M22	601.96	602.15	602.41	602.15	601.96
M22/M21	601.66	601.86	602.11	601.86	601.66
M21/M20	601.37	601.56	601.82	601.56	601.37
M20/M19	601.08	601.27	601.53	601.27	601.08
M19/M18	600.79	600.98	601.24	600.98	600.79
M18/M17	600.49	600.69	600.94	600.69	600.49
M17/OH PIER TABLE	600.20	600.39	600.65	600.39	600.20
℄ TOWER 4	599.85	600.04	600.30	600.04	599.85
OH PIER TABLE/B17	599.50	599.69	599.95	599.69	599.50
B17/B18	599.22	599.41	599.67	599.41	599.22
B18/B19	598.94	599.13	599.39	599.13	598.94
B19/B20	598.65	598.85	599.10	598.85	598.65
B20/B21	598.37	598.56	598.82	598.56	598.37
B21/B22	598.09	598.28	598.54	598.28	598.09
B22/B23	597.81	598.00	598.26	598.00	597.81
B23/B24	597.52	597.72	597.97	597.72	597.52
B24/B25	597.24	597.43	597.69	597.43	597.24
B25/B26	596.96	597.15	597.41	597.15	596.96
B26/B27	596.68	596.87	597.13	596.87	596.68
B27/OH CLOSURE POUR	596.39	596.59	596.84	596.59	596.39
OH CLOSURE POUR/OH DIAPHRAGM	596.33	596.53	596.78	596.53	596.33
℄ PIER 5	596.13	596.33	596.60	596.40	596.28
BACK FACE OH DIAPHRAGM	596.06	596.25	596.53	596.35	596.27

DESIGN AGENCY
URS
36 EAST 7TH STREET
SUITE 2300
CINCINNATI, OHIO 45202

DESIGNED	DRAWN	REVIEWED	DATE
VB	JLS	DLJ	6/2010
CHECKED	REVISED	STRUCTURE FILE NUMBER	
BWJ		4401263	

FINISH GRADE ELEVATIONS - MAINSPAN UNIT
BRIDGE NO. LAW-93-0000
IRONTON RUSSELL BRIDGE OVER OHIO RIVER

LAW-93-0.00
PID No. 81595

234/365

621
788

E:\Bridges_XW\Ironton_Russell\LAW\81595\structures\LAW093_0000C\sheets\093_0000CSD033.dgn 4/25/2011 10:23:30 AM john_stahl

Link to RFI118 As-Built

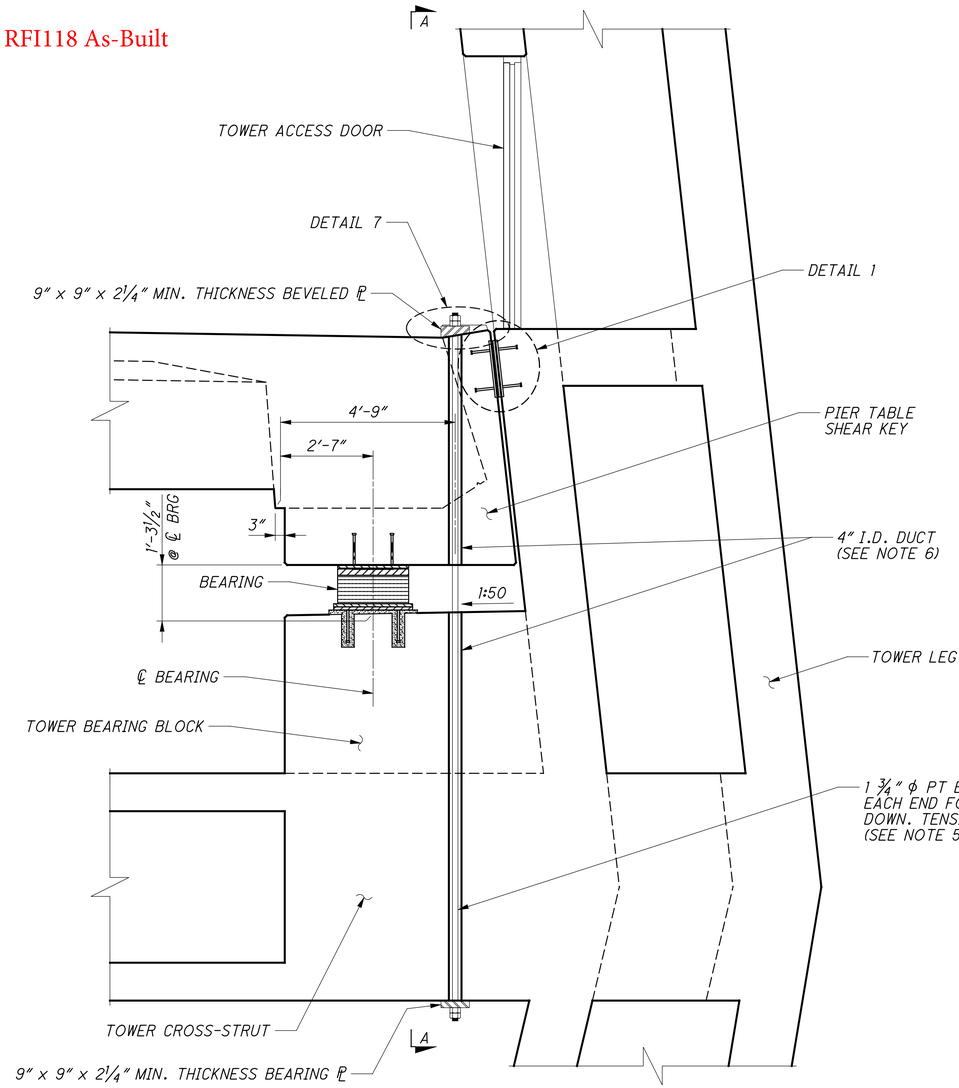

SECTION AT ℄ TOWER 3

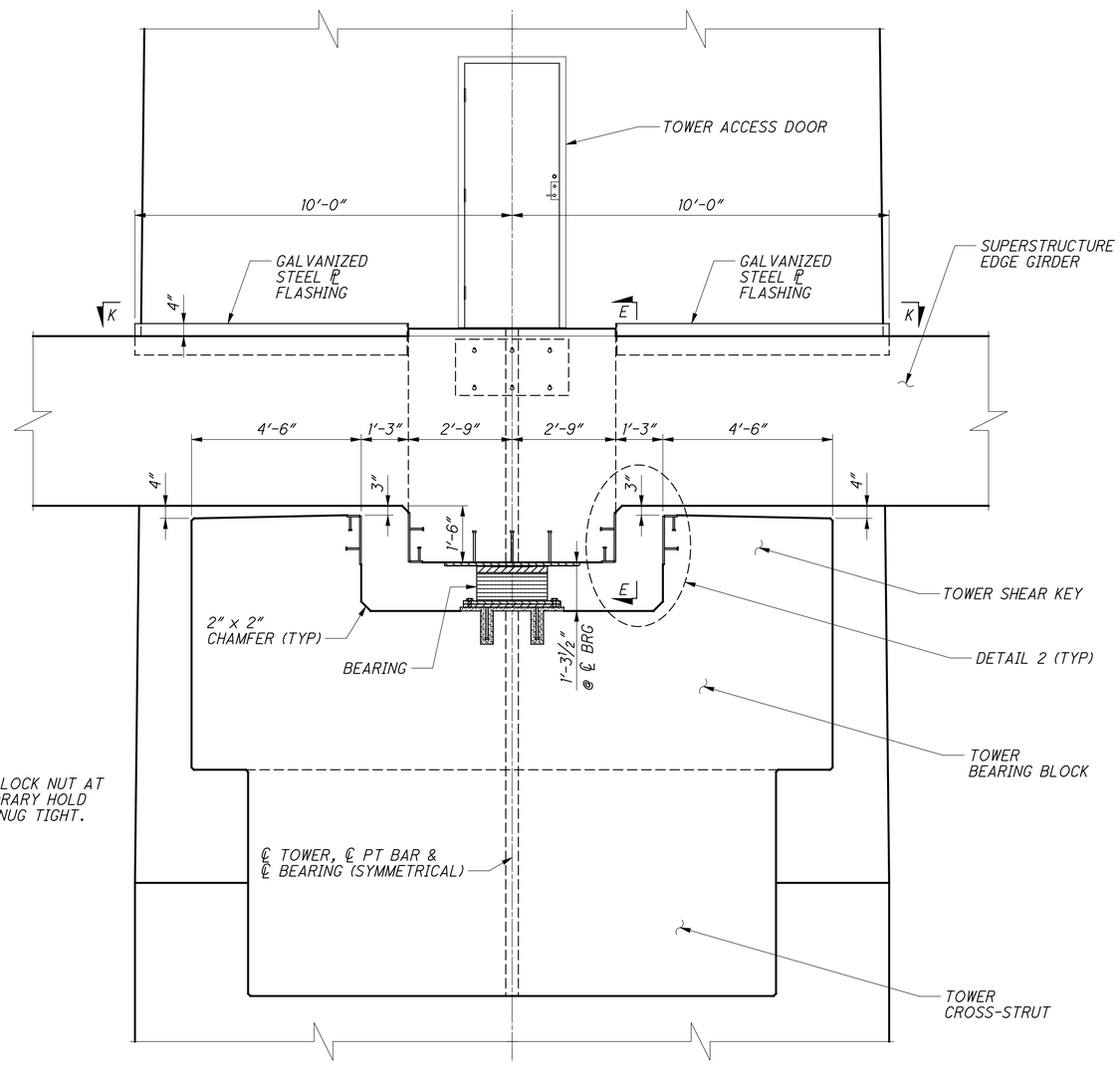

SECTION A-A (TOWER 3)

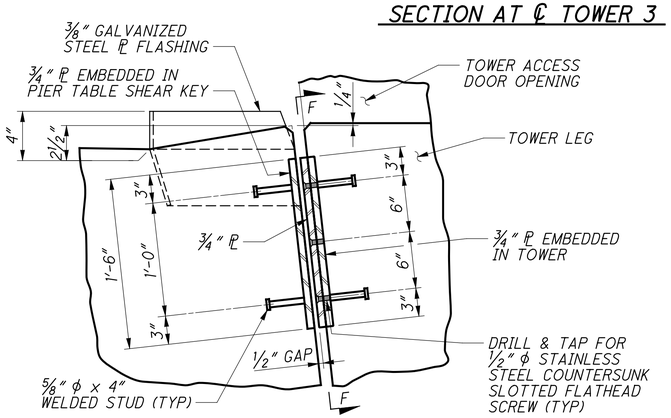

DETAIL 1 (TOWER 3 & 4)

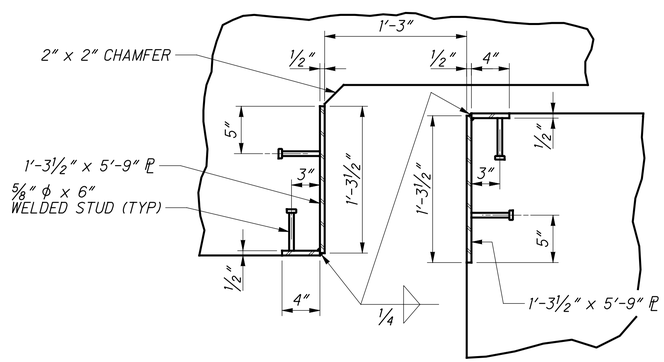

DETAIL 2 (TOWER 3)

NOTES

1. PLATES EMBEDDED IN TOWER LEG AND SUPERSTRUCTURE SHEAR KEY SHALL BE STAINLESS STEEL TYPE 316. WELDED STUDS SHALL BE STAINLESS STEEL.
2. SHIM TO ¼" NOMINAL GAP AT UNCOMPRESSED SIDE. SHIM TO BEAR AT COMPRESSED SIDE. A TEMPORARY GAP OF ⅛" IS ALLOWABLE DURING CONSTRUCTION TO FACILITATE INSTALLATION OF SHIM PACK BEARING PLATES. SEE ERECTION SEQUENCE DRAWINGS.
3. ⅜" STAINLESS STEEL ADHESIVE ANCHOR WITH 3" MIN. EMBEDMENT INSTALLED IN STRICT ACCORDANCE WITH MANUFACTURERS RECOMMENDATIONS.
4. FOR ADDITIONAL SECTIONS AND DETAILS, SEE SHEET NOS. 236/365 THRU 238/365
5. POST-TENSIONING BAR SHALL BE REMOVED PRIOR TO JACKING SUPERSTRUCTURE LONGITUDINALLY BEFORE CLOSURE POUR. SEE ERECTION SEQUENCE DRAWINGS.
6. ALL DUCTS SHALL BE GROUTED AFTER REMOVAL OF PT BAR.
7. THE COST OF GALVANIZED STEEL FLASHING PLATE, BOLTS AND INSTALLATION SHALL BE CONSIDERED INCIDENTAL TO THE MAIN SPAN SUPERSTRUCTURE CONCRETE.
8. COST OF STAINLESS STEEL PLATES EMBEDDED IN TOWER LEGS AND SUPERSTRUCTURE SHEAR KEY, INCLUDING BOLTS AND INSTALLATION, SHALL BE CONSIDERED INCIDENTAL TO THE MAINSPAN SUPERSTRUCTURE CONCRETE.

DESIGN AGENCY
URS
36 EAST 7TH STREET
SUITE 2300
CINCINNATI, OHIO 45202

DESIGNED	DRAWN	REVIEWED	DATE
BTC	CER	DLJ	6/2010
CHECKED	REVISED	STRUCTURE FILE NUMBER	
BWJ		4401263	

PIER TABLE SHEAR KEY GEOMETRY (1 OF 4)

BRIDGE NO. LAW-93-0000

IRONTON RUSSELL BRIDGE OVER OHIO RIVER

LAW-93-0.00 PID No. 81595

235/365

622/788

E:\Bridges_XM\Ironton_Russell\LAW\81595\structures\LAW093_0000C\sheets\093_0000CPI005.dgn 4/25/2011 10:23:41 AM john_stahl

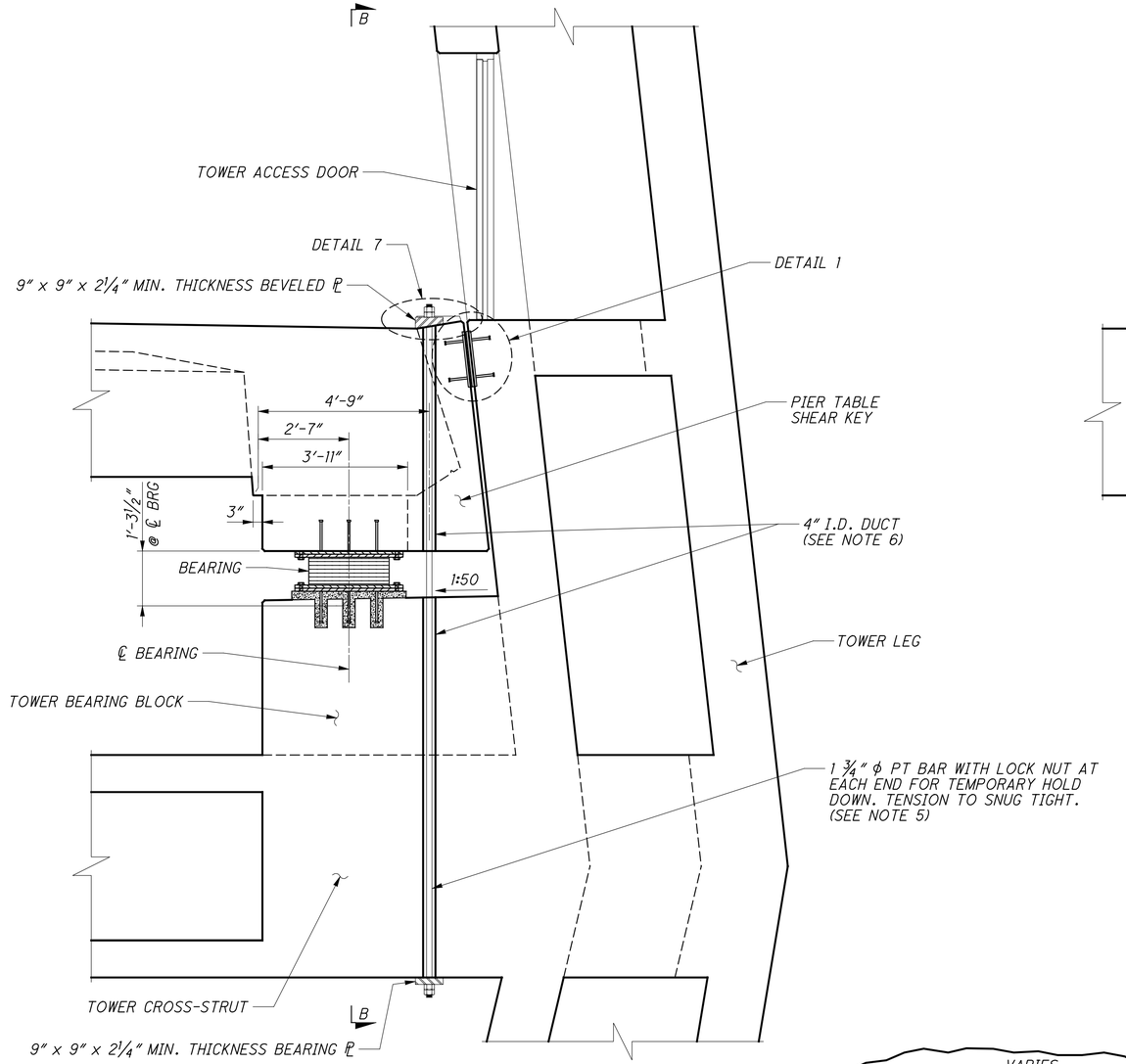

SECTION AT ℄ TOWER 4

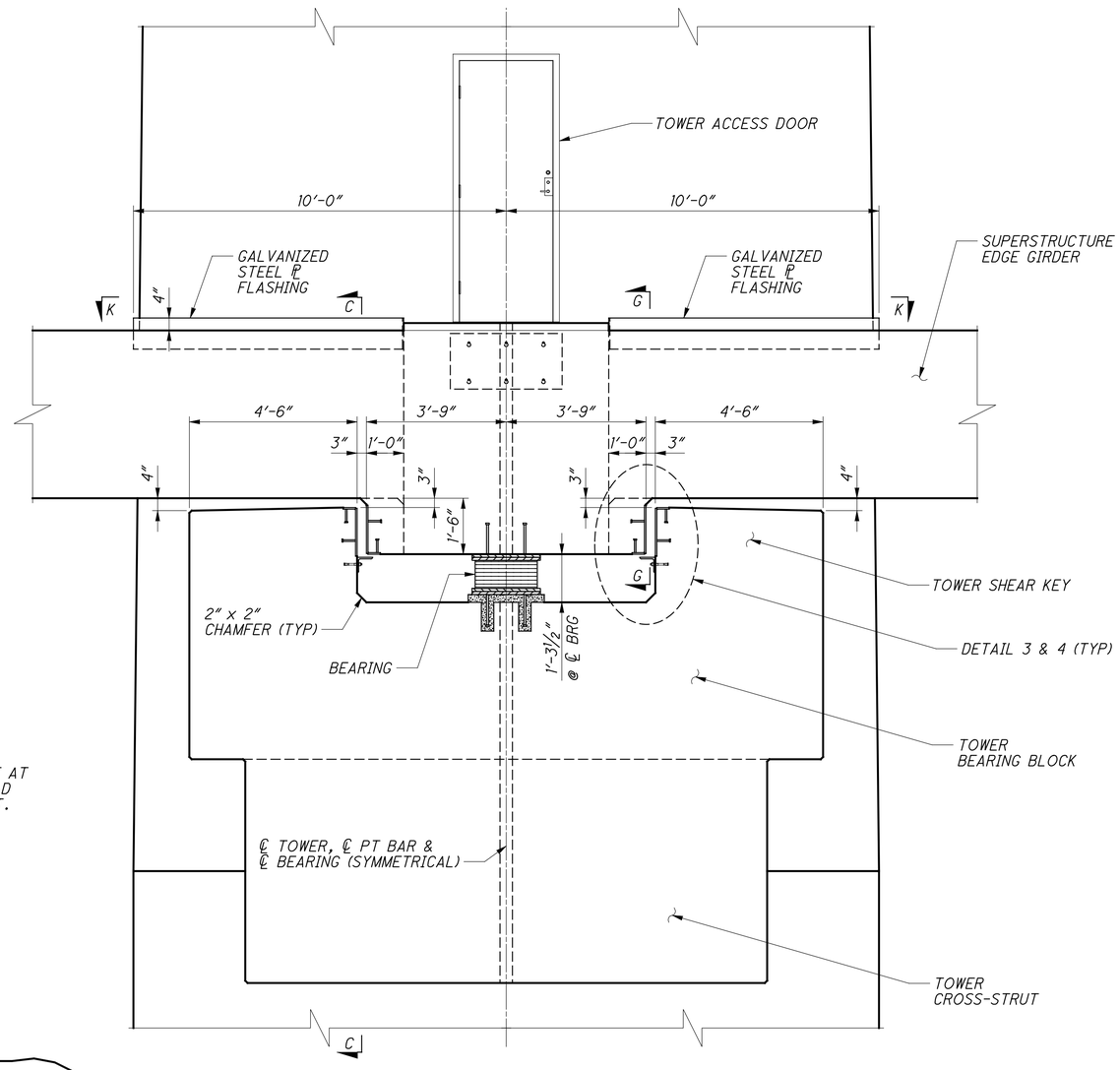

SECTION B-B (TOWER 4)

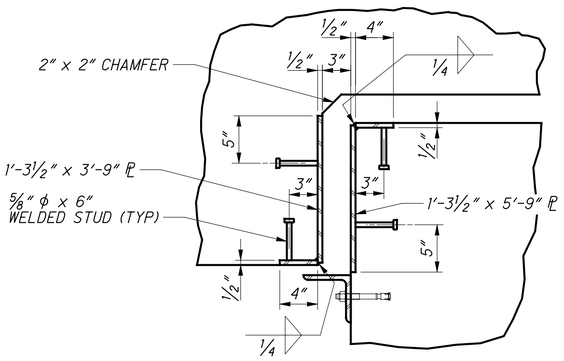

DETAIL 3 (TOWER 4)

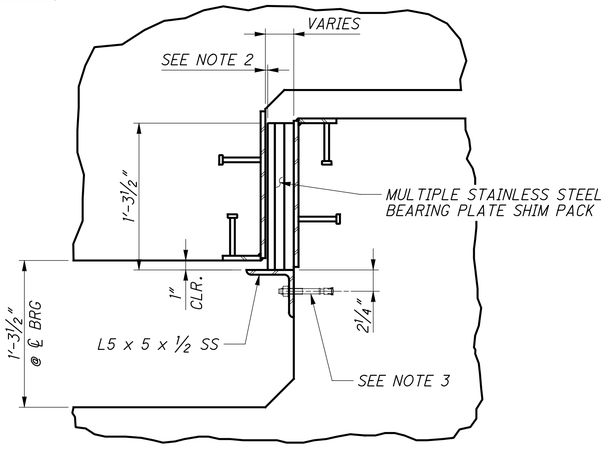

DETAIL 4 (TOWER 4)

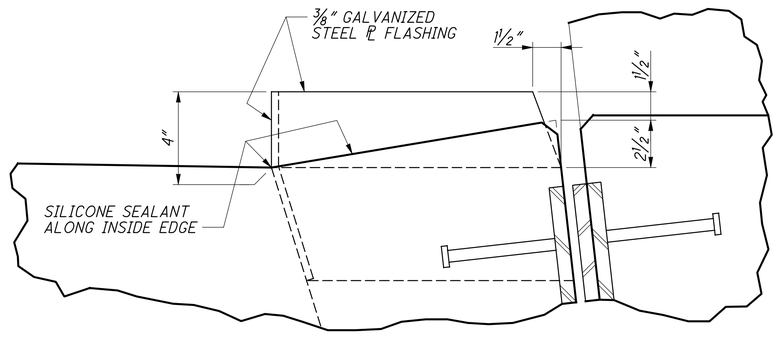

DETAIL 7 (TOWER 3 & 4)

(SEE NOTE 7)

DESIGN AGENCY
URS
38 EAST 7TH STREET
SUITE 2300
CINCINNATI, OHIO 45202

DESIGNED BTC | DRAWN CER | REVIEWED DLJ | DATE 6/2010
CHECKED BWJ | REVISED | STRUCTURE FILE NUMBER 4401263

PIER TABLE SHEAR KEY GEOMETRY (2 OF 4)

BRIDGE NO. LAW-93-0000
IRONTON RUSSELL BRIDGE OVER OHIO RIVER

LAW-93-0.00 PID No. 81595

236/365

623/788

E:\Bridges_XM\Ironton_Russell\LAW\81595\structures\LAW093_0000C\sheets\093_0000CPI008.dgn 4/25/2011 10:23:51 AM john_stahl

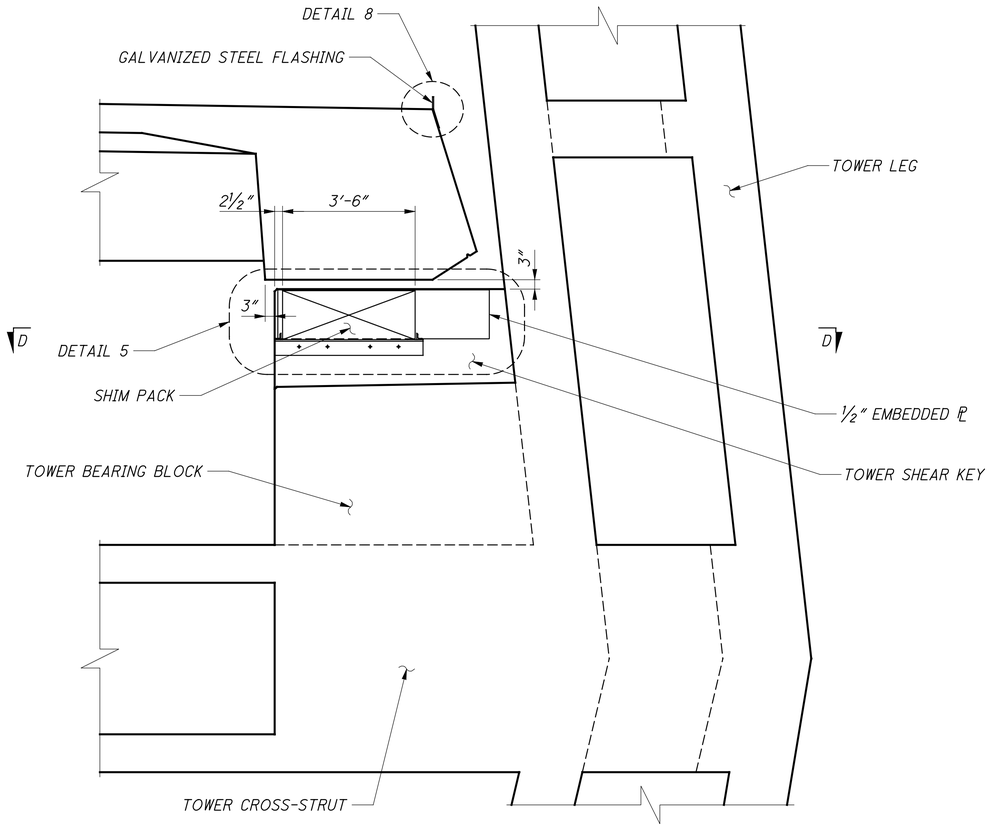

SECTION C-C (TOWER 4)

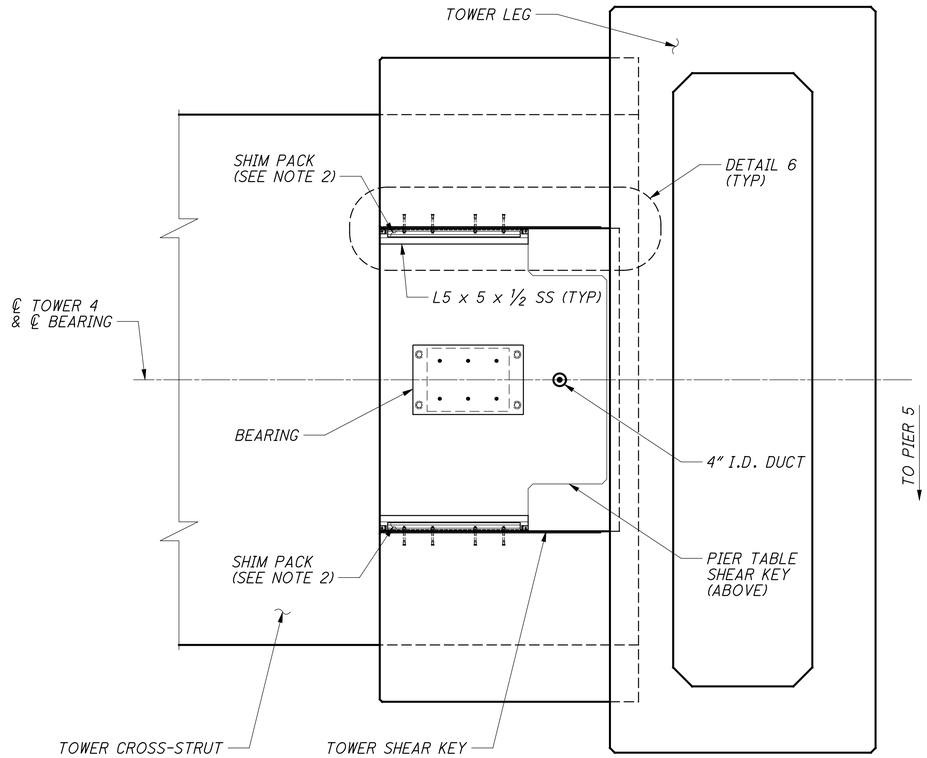

SECTION D-D (TOWER 4)

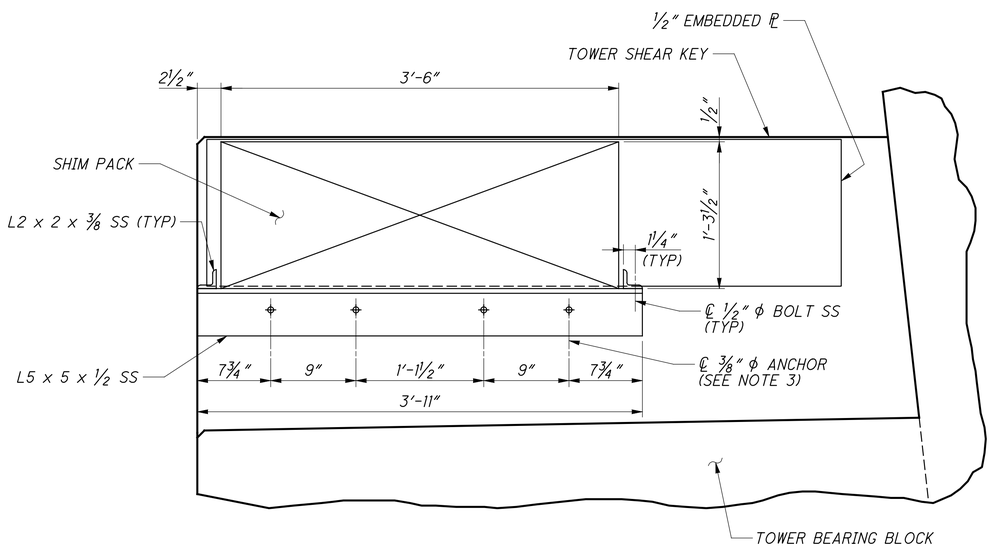

DETAIL 5 (TOWER 4)

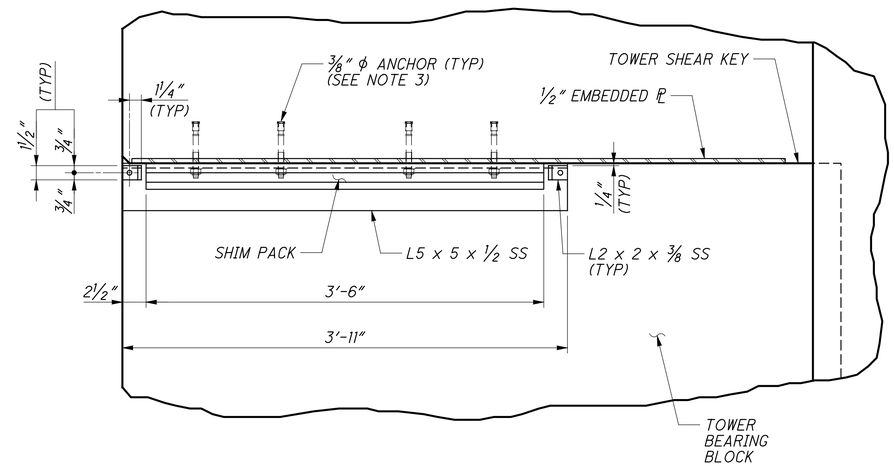

DETAIL 6 (TOWER 4)
(PIER TABLE SHEAR KEY NOT SHOWN FOR CLARITY)

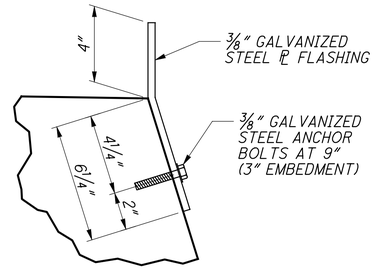

DETAIL 8

DESIGN AGENCY
URS
36 EAST 7TH STREET
SUITE 2300
CINCINNATI, OHIO 45202

DESIGNED	DRAWN	REVIEWED	DATE
BTC	CER	DLJ	6/2010
CHECKED	REVISED	STRUCTURE FILE NUMBER	
BWJ		4401263	

PIER TABLE SHEAR KEY GEOMETRY (3 OF 4)
BRIDGE NO. LAW-93-0000
IRONTON RUSSELL BRIDGE OVER OHIO RIVER

LAW-93-0.00
PID No. 81595

237/365

624
788

E:\Bridges_XM\Ironton_Russell\LAW\81595\structures\LAW093_0000C\sheets\093_0000CPI006.dgn 4/25/2011 10:23:58 AM john_stahl

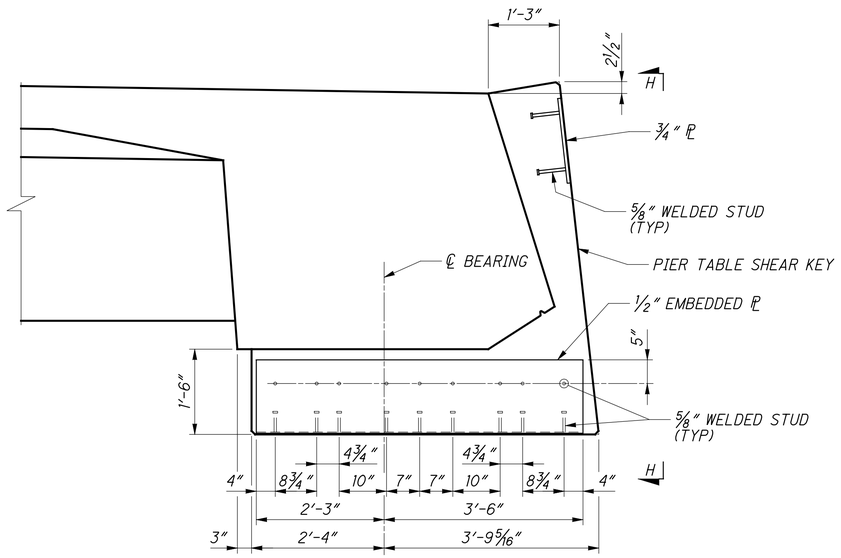

SECTION E-E (TOWER 3)

(BEARING AND FLASHING NOT SHOWN FOR CLARITY)

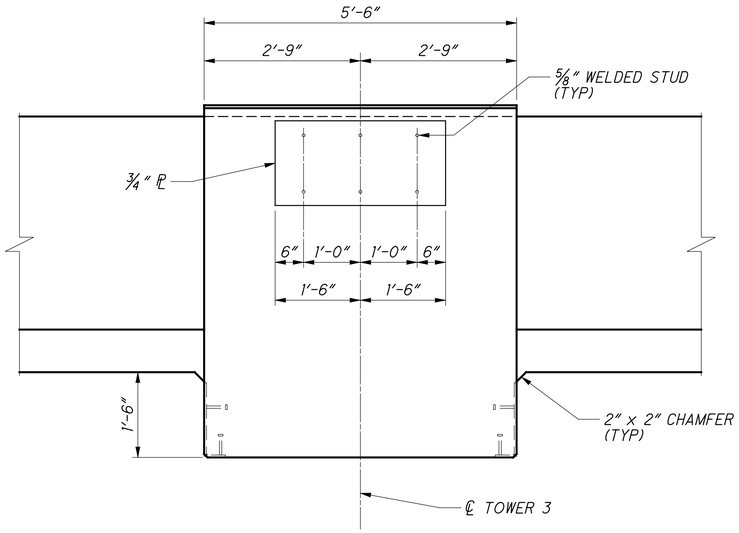

VIEW H-H

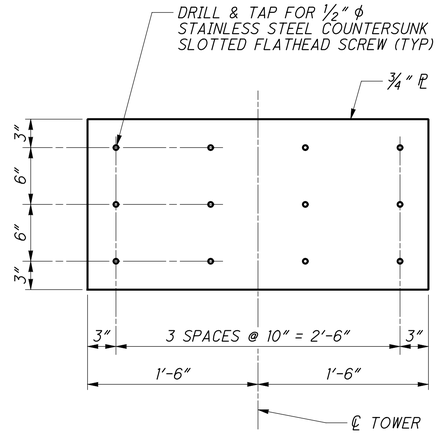

VIEW F-F

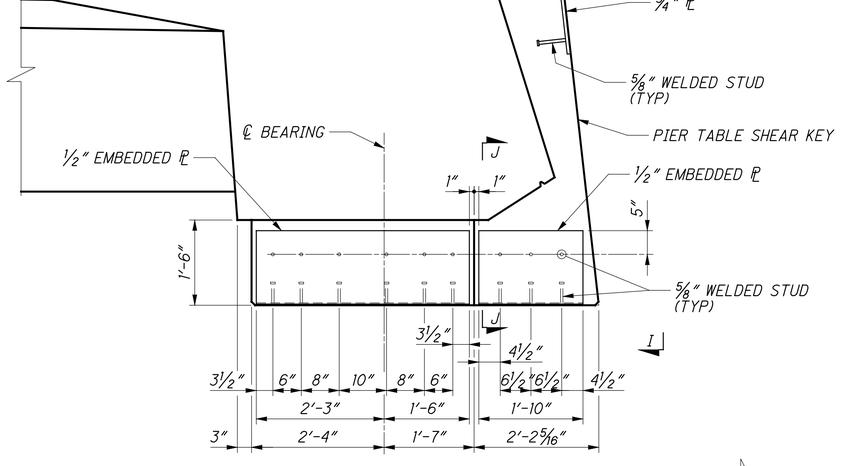

SECTION G-G (TOWER 4)

(BEARING AND FLASHING NOT SHOWN FOR CLARITY)

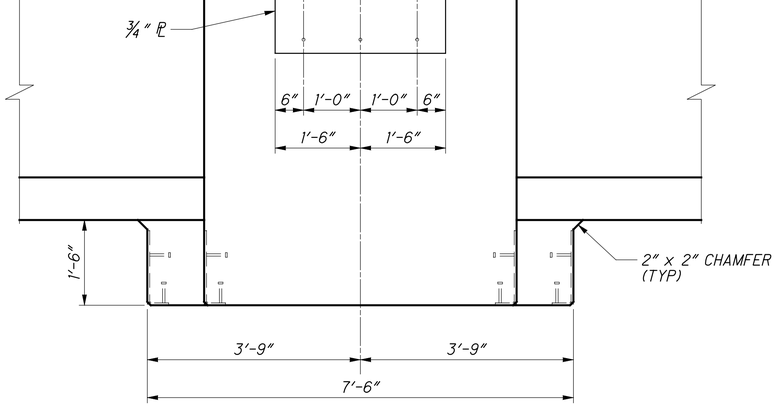

VIEW I-I

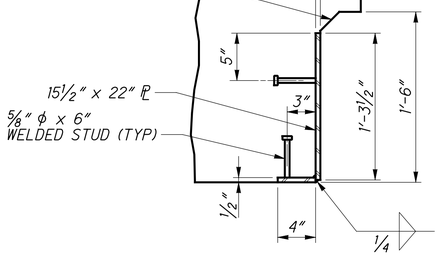

SECTION J-J

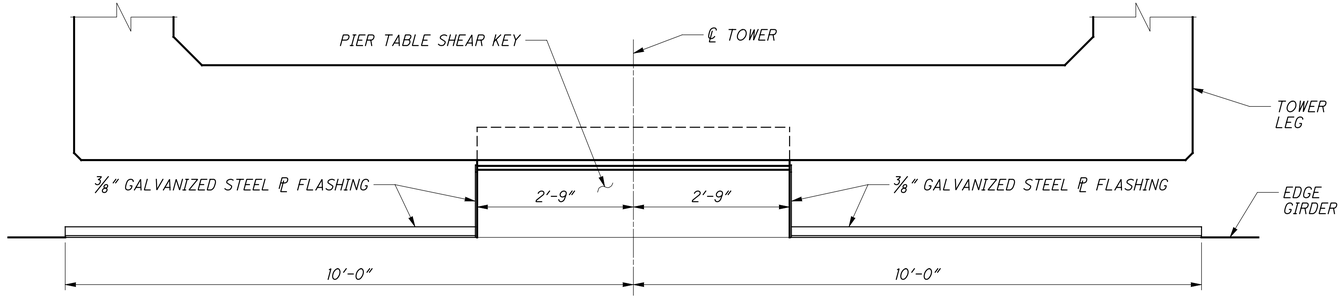

VIEW K-K

DESIGN AGENCY
URS
35 EAST 7TH STREET
SUITE 2300
CINCINNATI, OHIO 45202

DESIGNED BTC
DRAWN CER
REVIEWED DLJ
DATE 6/2010
CHECKED BWJ
REVISED
STRUCTURE FILE NUMBER 4401263

PIER TABLE SHEAR KEY GEOMETRY (4 OF 4)

BRIDGE NO. LAW-93-0000

IRONTON RUSSELL BRIDGE OVER OHIO RIVER

LAW-93-0.00
PID No. 81595

E:\Bridges_XM\Ironton_Russell\LAW\81595\structures\LAW093_0000C\sheets\093_0000CPI007.dgn 4/25/2011 10:24:05 AM john_stahl

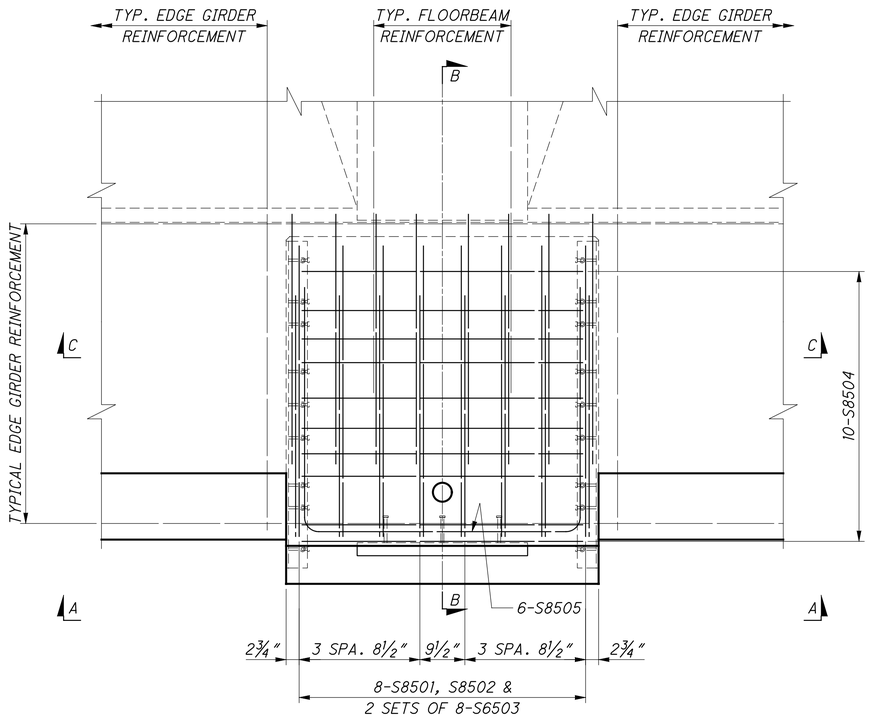

PLAN

(BEARING NOT SHOWN FOR CLARITY)

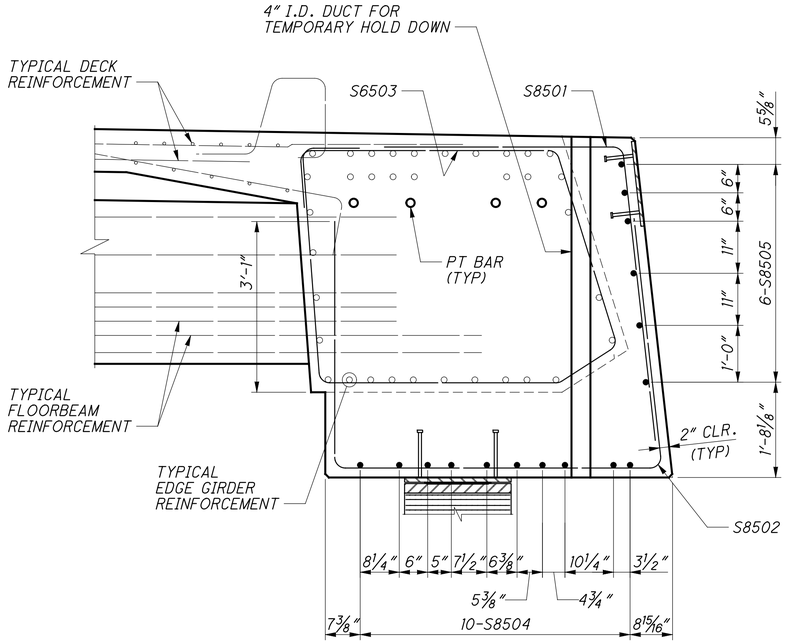

SECTION B-B

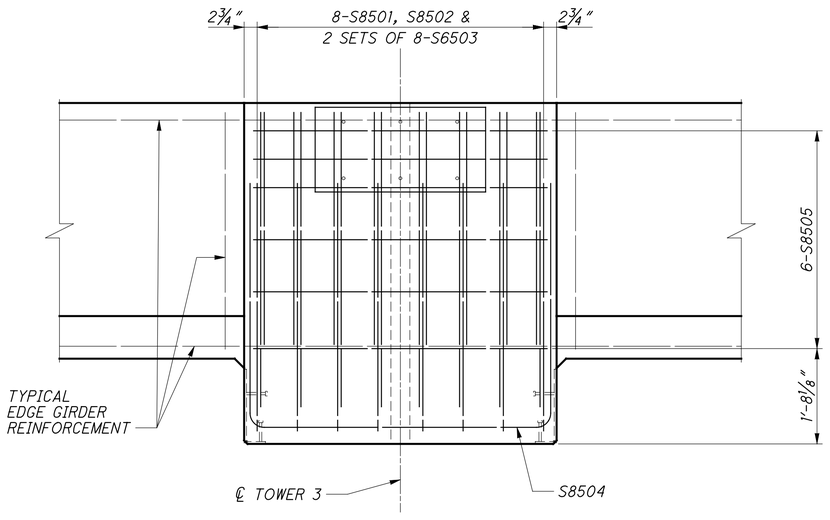

VIEW A-A

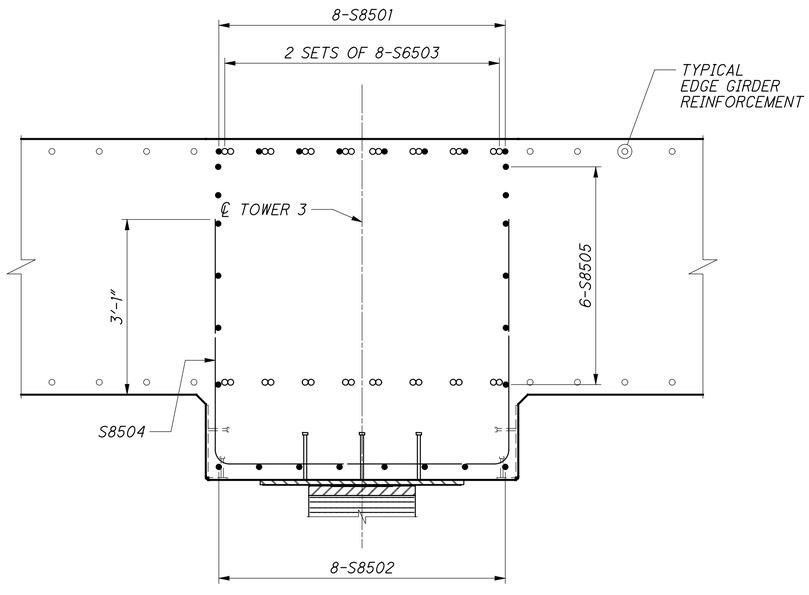

SECTION C-C

NOTES

1. FOR EDGE GIRDER REINFORCEMENT, SEE SHEET NOS. 174/365 & 187/365

2. FOR EMBEDDED PLATE DETAILS, SEE SHEET NOS. 235/365 THRU 238/365

DESIGN AGENCY
URS
36 EAST 7TH STREET
SUITE 2300
CINCINNATI, OHIO 45202

DESIGNED	DRAWN	REVIEWED	DATE
BTC	CER	DLJ	6/2010
CHECKED	REVISED	STRUCTURE FILE NUMBER	
VB		4401263	

PIER TABLE SHEAR KEY REINFORCEMENT - TOWER 3
BRIDGE NO. LAW-93-0000
IRONTON RUSSELL BRIDGE OVER OHIO RIVER

LAW-93-0.00
PID No. 81595

239/365

626
788

E:\Bridges_XW\Ironton_Russell\LAW\81595\structures\LAW093_0000C\sheets\093_0000CMD009.dgn 4/25/2011 10:24:11 AM john_stahl

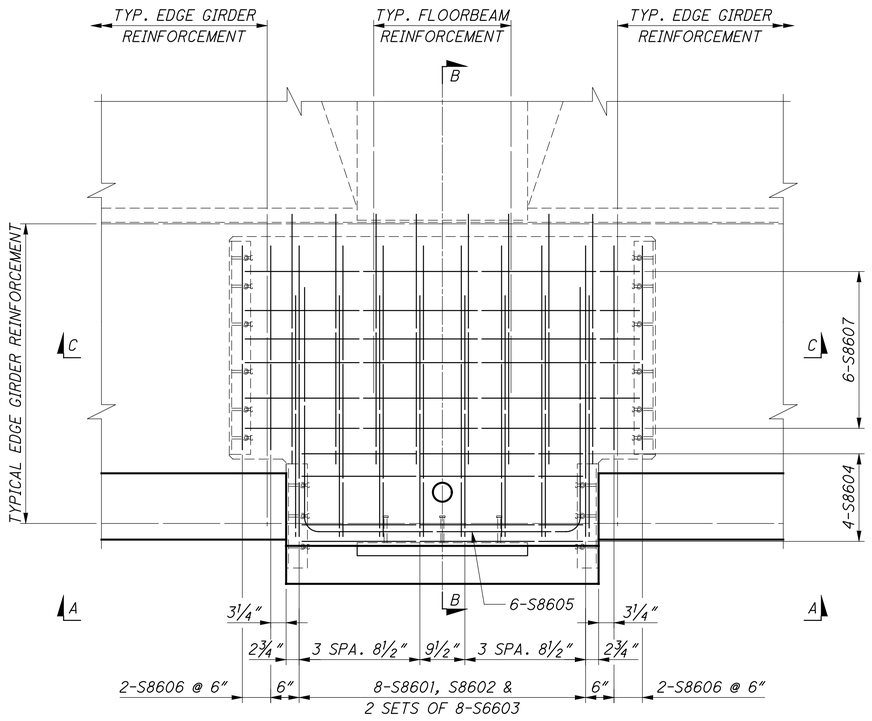

PLAN

(BEARING NOT SHOWN FOR CLARITY)

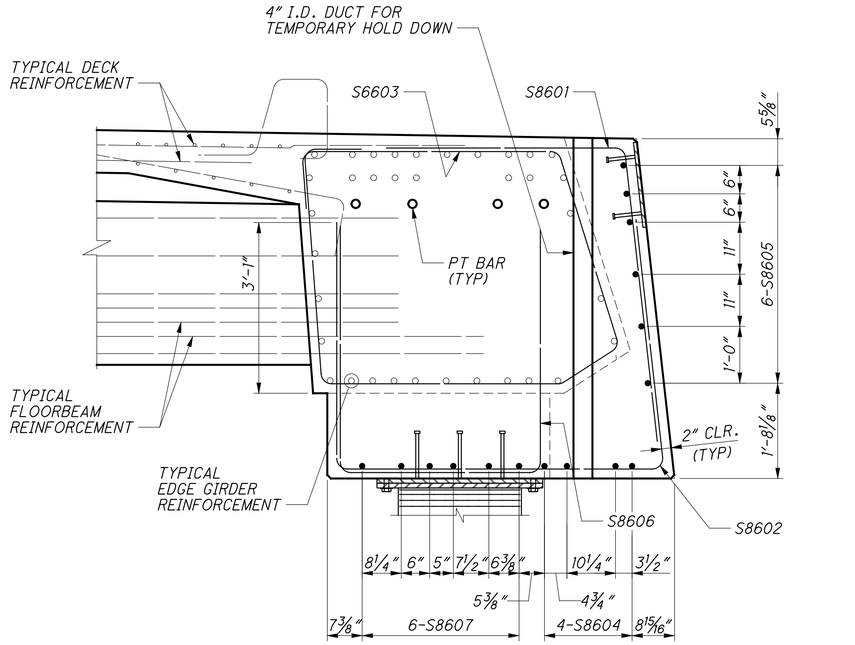

SECTION B-B

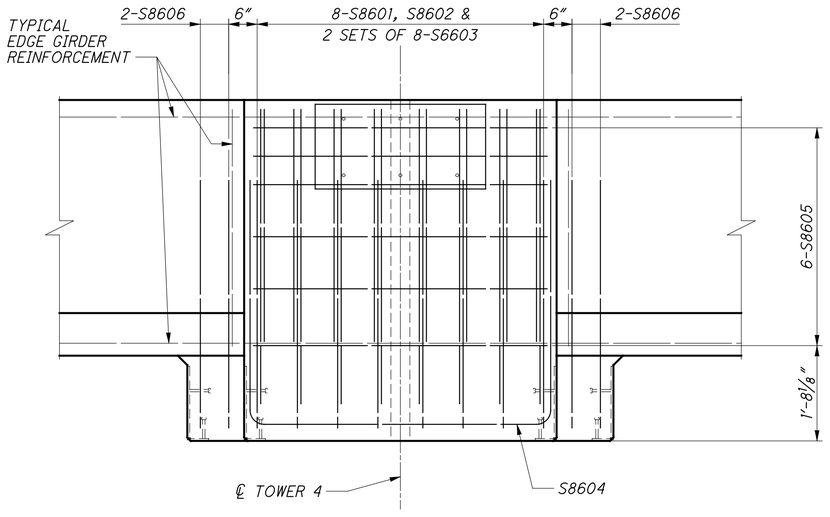

VIEW A-A

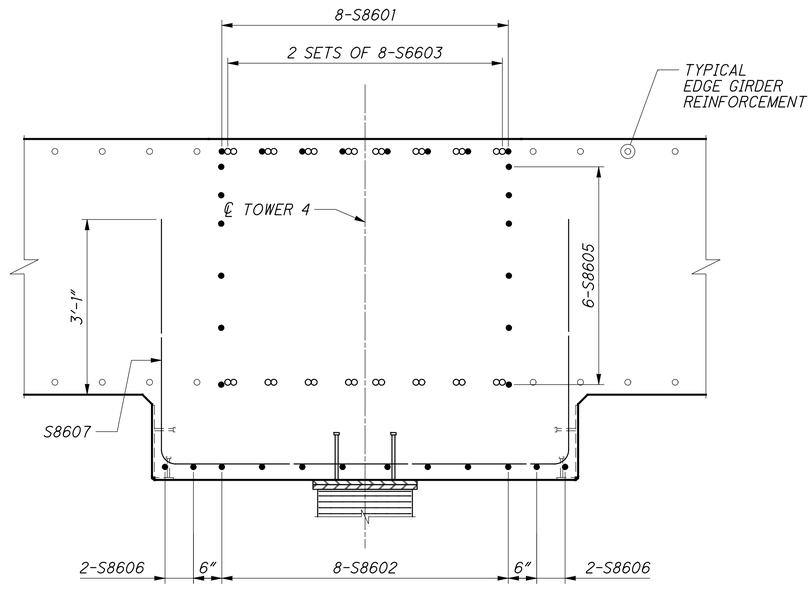

SECTION C-C

NOTES

1. FOR EDGE GIRDER REINFORCEMENT, SEE SHEET NOS. 174/365 & 187/365
2. FOR EMBEDDED PLATE DETAILS, SEE SHEET NOS. 235/365 THRU 238/365

DESIGN AGENCY
URS
36 EAST 7TH STREET
SUITE 2300
CINCINNATI, OHIO 45202

DESIGNED	DRAWN	REVIEWED	DATE
BTC	CER	DLJ	6/2010
CHECKED	REVISED	STRUCTURE FILE NUMBER	
VB		4401263	

PIER TABLE SHEAR KEY REINFORCEMENT
BRIDGE NO. LAW-93-0000
IRONTON RUSSELL BRIDGE OVER OHIO RIVER

LAW-93-0.00
PID No. 81595

240/365

627
788

E:\Bridges_XW\Ironton_Russell\LAW\81595\structures\LAW093_0000C\sheets\093_0000CMD009.dgn 4/25/2011 10:24:16 AM john_stahl

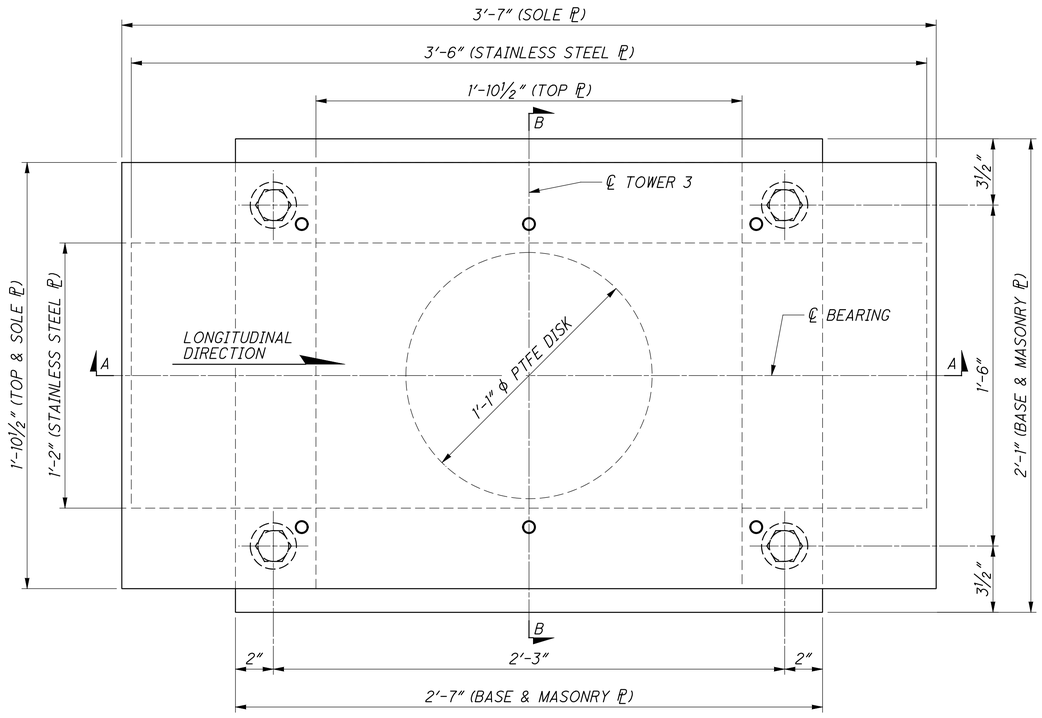

PLAN

BEARING MOVEMENTS							
LOCATION	PERMANENT	THERMAL		LIVE LOAD		TOTAL	
		CONTRACTION	EXPANSION	CONTRACTION	EXPANSION	CONTRACTION	EXPANSION
TOWER 3	3¾"	3⅝"	-3⅛"	¼"	-⅜"	7 ⅝"	-3½"

BEARING LOAD TABLE (kips)					
LOCATION	DEAD LOAD	MAX. LIVE LOAD	MIN. LIVE LOAD	MAX. TOTAL LOAD	MIN. TOTAL LOAD
TOWER 3	307	170	-22	477	285

(UNFACTORED LOADS PER BEARING)

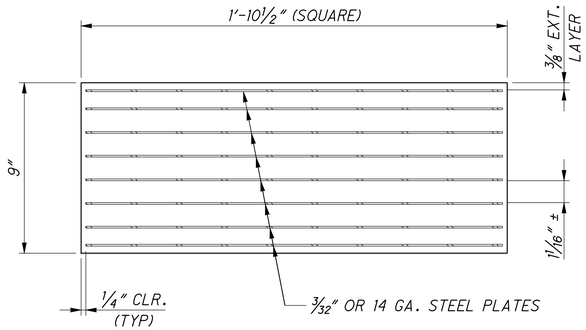

ELASTOMERIC PAD

NOTES

1. ALL STEEL LOAD PLATES SHALL BE A709 GRADE 50 METALIZED.
2. ALL ELASTOMER SHALL HAVE A SHEAR MODULUS (G) OF 130 PSI AT 73° F.
3. ALL ELASTOMERIC PADS SHALL BE VULCANIZED TO TOP AND BASE PLATES.
4. ELASTOMER SHALL CONFORM TO AASHTO LOW TEMPERATURE GRADE 3.
5. WELDED STUD BLOCKOUTS SHALL BE FORMED WITH CORRUGATED GALVANIZED METAL THAT IS TO REMAIN IN PLACE OR A SMOOTH REMOVABLE FORM. BLOCKOUTS SHALL HAVE A MINIMUM DIAMETER OF 4". REINFORCING STEEL IN THE SUBSTRUCTURE SHALL BE ADJUSTED TO CLEAR BLOCKOUTS.
6. NUMBER OF BEARING UNITS REQUIRED FOR TOWER 3 IS 2 TOTAL.
7. BEARINGS SHALL BE FABRICATED AND TESTED IN ACCORDANCE WITH THE SPECIAL PROVISIONS.
8. BEARINGS WERE DESIGNED IN ACCORDANCE WITH SECTION 14.7.5 (METHOD B) OF THE LRFD BRIDGE DESIGN SPECIFICATIONS. TESTING SHALL BE INCLUDED IN THE UNIT PRICE BID FOR THE BEARINGS, EACH.
9. BLOCKOUT HOLES SHALL BE FREE OF DEBRIS PRIOR TO GROUTING. THE BLOCKOUTS SHALL BE GROUTED WITH A NON-SHRINK GROUT HAVING A MINIMUM STRENGTH OF 6,000 PSI.
10. REINFORCEMENT IN GROUT PAD SHALL CONSIST OF 4" x 4" x 0.148" DIAMETER WELDED WIRE MESH. PROVIDE A 2" CLEAR COVER.

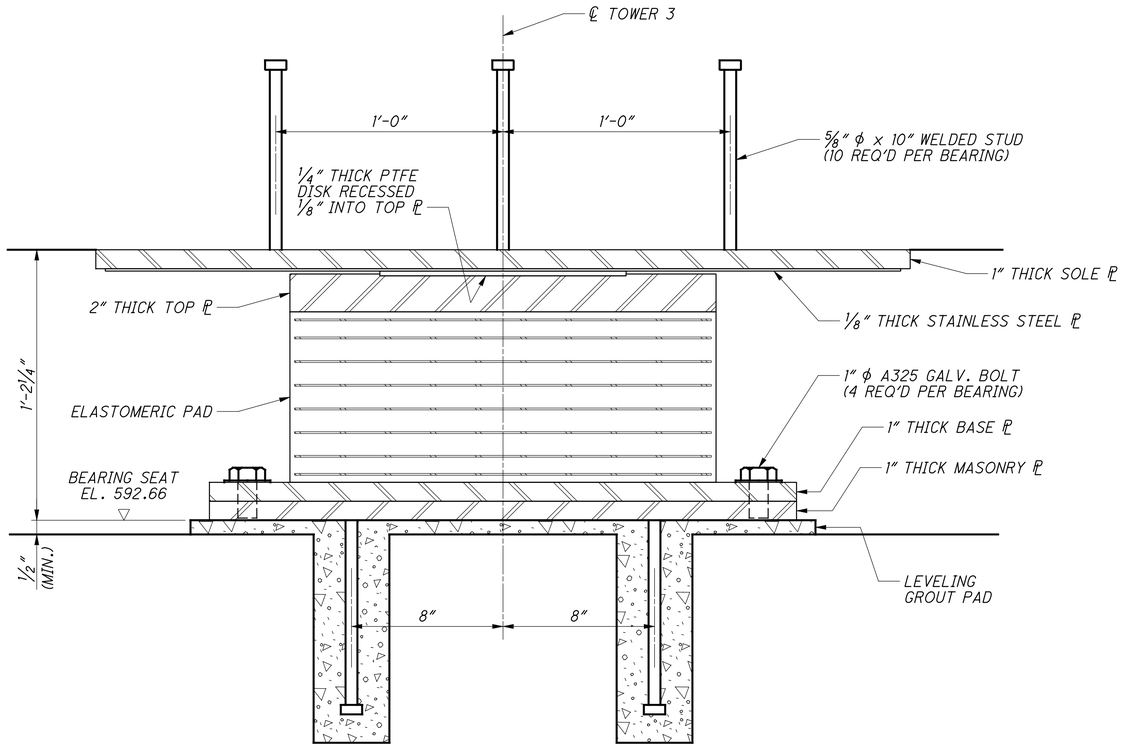

SECTION A-A

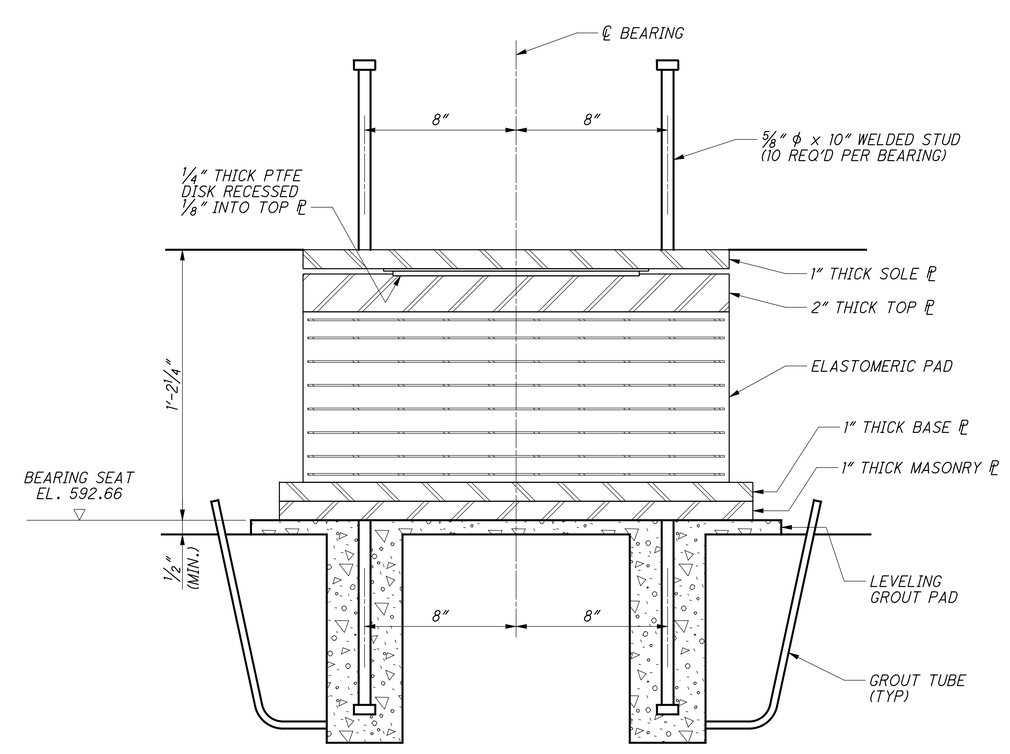

SECTION B-B

DESIGN AGENCY
URS
36 EAST 7TH STREET
SUITE 2300
CINCINNATI, OHIO 45202

DESIGNED BTC | DRAWN CER | REVIEWED DLJ | DATE 6/2010
CHECKED BWJ | REVISED | STRUCTURE FILE NUMBER 4401263

BEARING DETAILS - TOWER 3

BRIDGE NO. LAW-93-0000

IRONTON RUSSELL BRIDGE OVER OHIO RIVER

LAW-93-0.00

PID No. 81595

E:\Bridges_XM\Ironton_Russell\LAW\81595\structures\LAW093_0000C\sheets\093_0000CBR001.dgn 4/25/2011 10:24:23 AM john_stahl

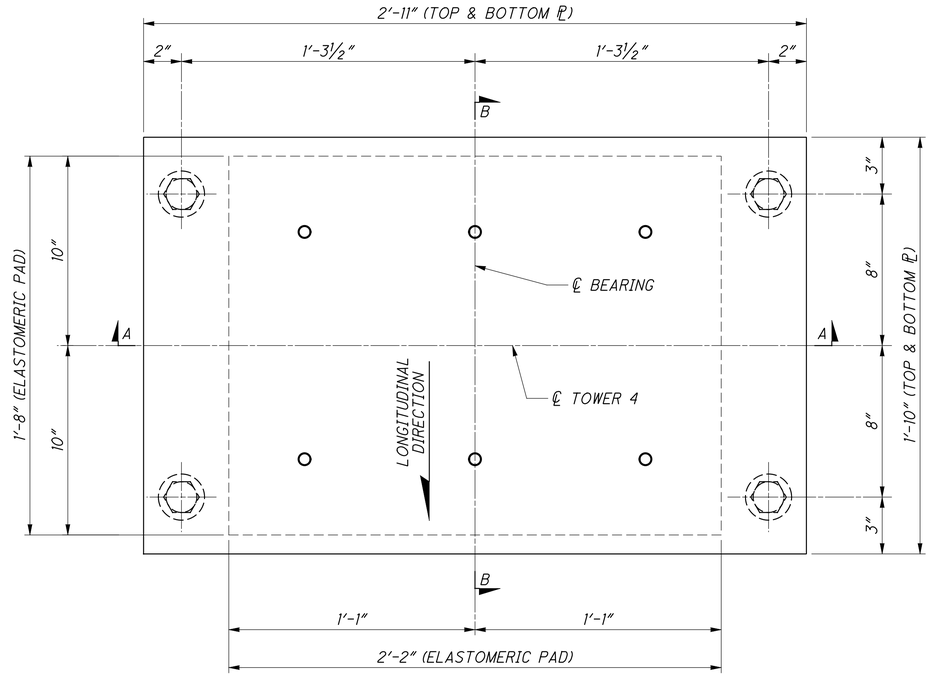

PLAN

BEARING LOAD TABLE (kips)					
LOCATION	DEAD LOAD	MAX. LIVE LOAD	MIN. LIVE LOAD	MAX. TOTAL LOAD	MIN. TOTAL LOAD
TOWER 4	302	170	-22	472	280

(UNFACTORED LOADS PER BEARING)

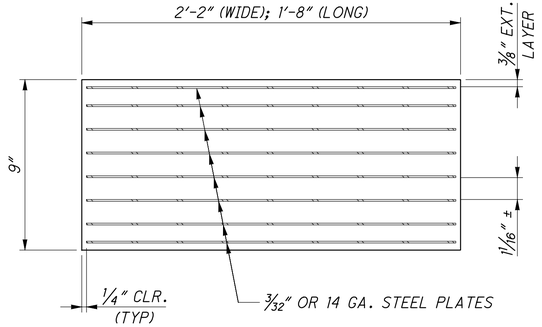

ELASTOMERIC PAD

NOTES

1. ALL STEEL LOAD PLATES SHALL BE A709 GRADE 50 METALIZED.
2. ALL ELASTOMER SHALL HAVE A SHEAR MODULUS (G) OF 130 PSI AT 73° F.
3. ALL ELASTOMERIC PADS SHALL BE VULCANIZED TO TOP AND BASE PLATES.
4. ELASTOMER SHALL CONFORM TO AASHTO LOW TEMPERATURE GRADE 3.
5. WELDED STUD BLOCKOUTS SHALL BE FORMED WITH CORRUGATED GALVANIZED METAL THAT IS TO REMAIN IN PLACE OR A SMOOTH REMOVABLE FORM. BLOCKOUTS SHALL HAVE A MINIMUM DIAMETER OF 4". REINFORCING STEEL IN THE SUBSTRUCTURE SHALL BE ADJUSTED TO CLEAR BLOCKOUTS.
6. NUMBER OF BEARING UNITS REQUIRED FOR TOWER 4 IS 2 TOTAL.
7. BEARINGS SHALL BE FABRICATED AND TESTED IN ACCORDANCE WITH THE SPECIAL PROVISIONS.
8. BEARINGS WERE DESIGNED IN ACCORDANCE WITH SECTION 14.7.5 (METHOD B) OF THE LRFD BRIDGE DESIGN SPECIFICATIONS. TESTING SHALL BE INCLUDED IN THE UNIT PRICE BID FOR THE BEARINGS, EACH.
9. BLOCKOUT HOLES SHALL BE FREE OF DEBRIS PRIOR TO GROUTING. THE BLOCKOUTS SHALL BE GROUTED WITH A NON-SHRINK GROUT HAVING A MINIMUM STRENGTH OF 6,000 PSI.
10. REINFORCEMENT IN GROUT PAD SHALL CONSIST OF 4" x 4" x 0.148" DIAMETER WELDED WIRE MESH. PROVIDE A 2" CLEAR COVER.

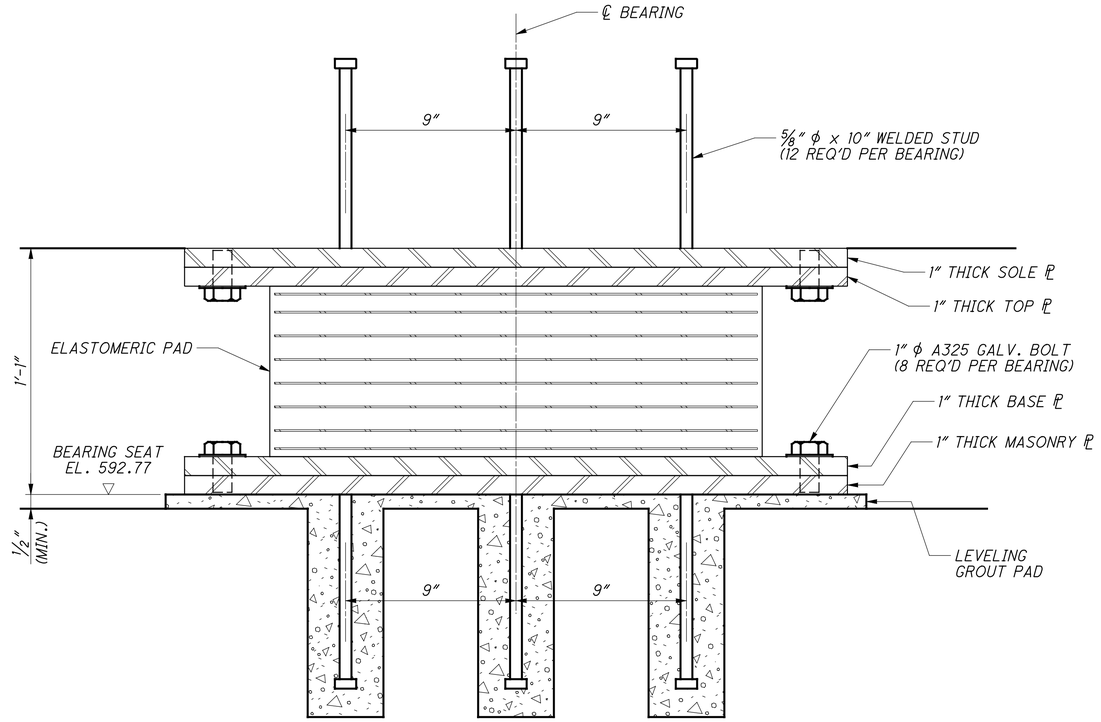

SECTION A-A

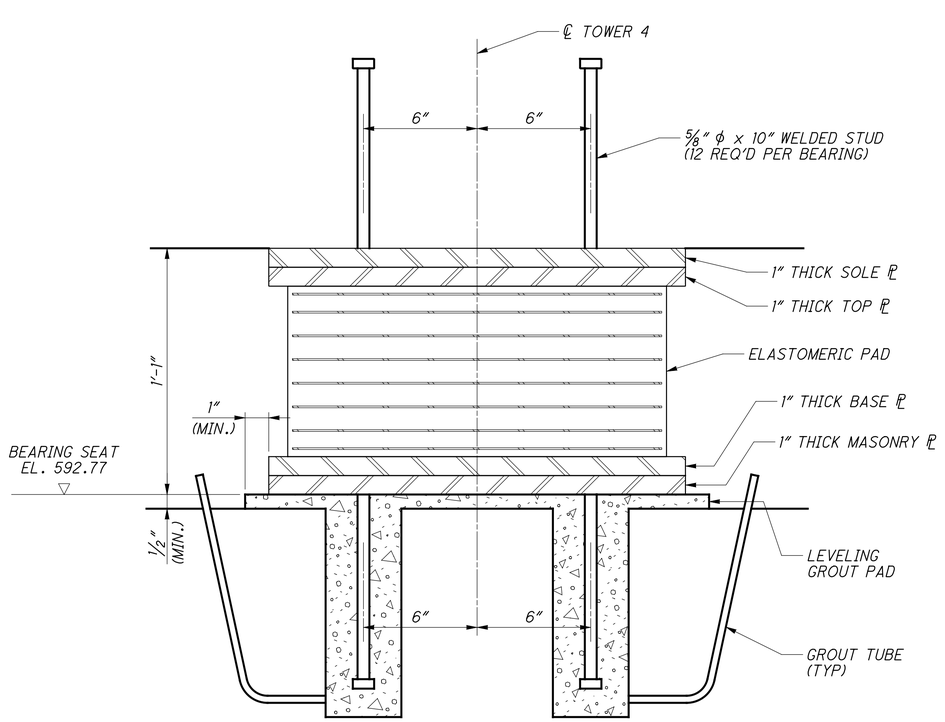

SECTION B-B

DESIGN AGENCY
URS
36 EAST 7TH STREET
SUITE 2300
CINCINNATI, OHIO 45202

DESIGNED	DRAWN	REVIEWED	DATE
BTC	CER	DLJ	6/2010
CHECKED	REVISED	STRUCTURE FILE NUMBER	
BWJ		4401263	

BEARING DETAILS - TOWER 4
BRIDGE NO. LAW-93-0000
IRONTON RUSSELL BRIDGE OVER OHIO RIVER

LAW-93-0.00
PID No. 81595

242/365

629
788

E:\Bridges_XM\Ironton_Russell\LAW\81595\structures\LAW093_0000C\sheets\093_0000CBR002.dgn 4/25/2011 10:24:31 AM john_stahl

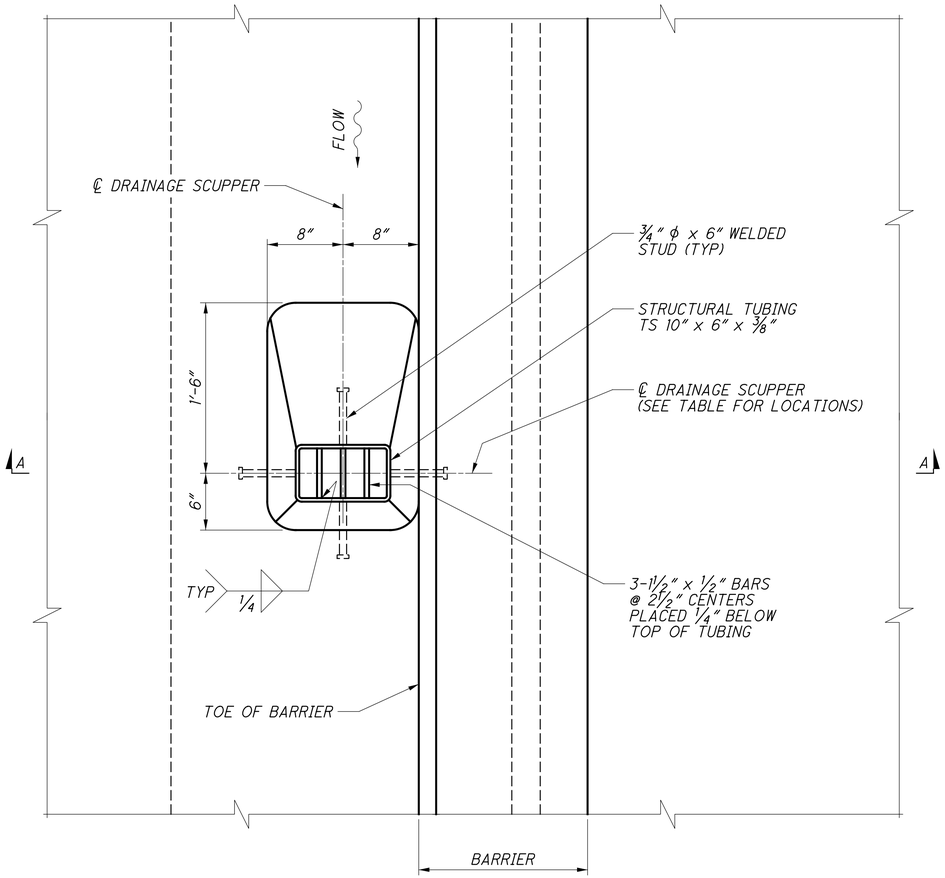

DRAINAGE SCUPPER PLAN

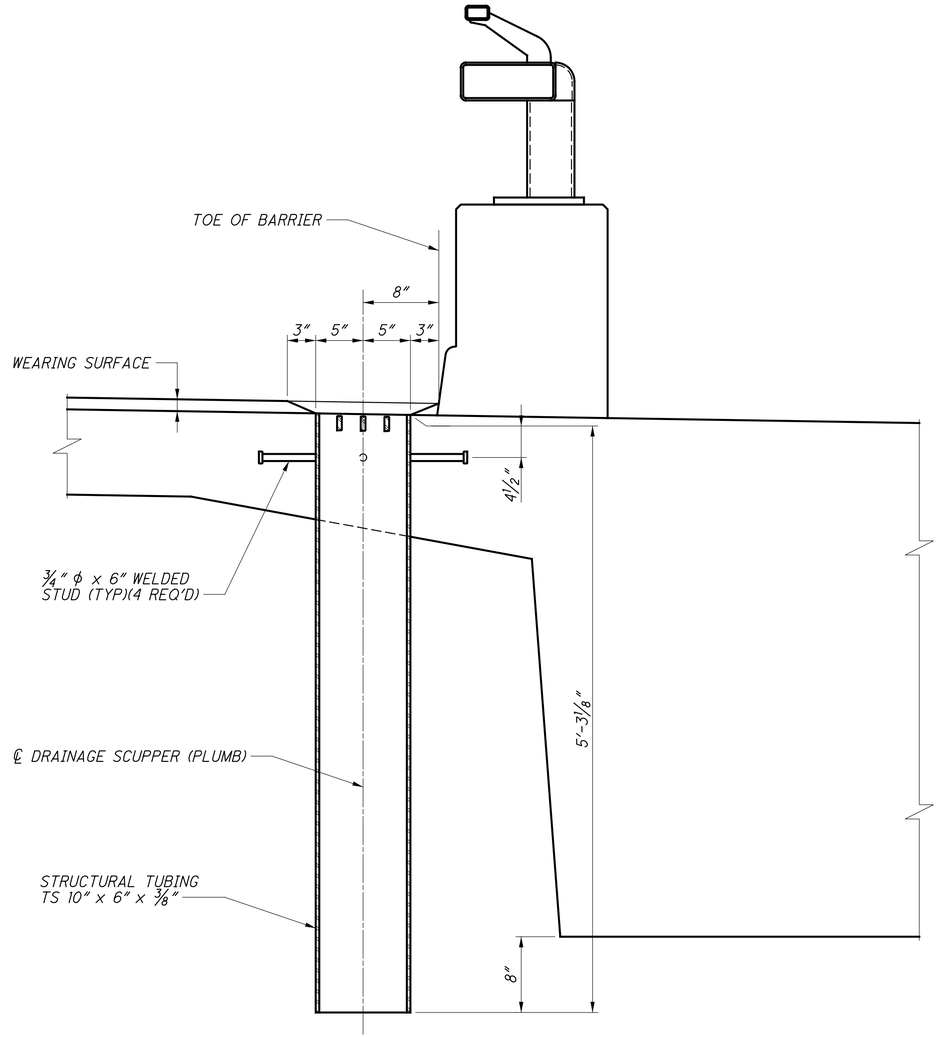

SECTION A-A

PROPOSED SCUPPER LOCATIONS

NO.	STATION	SHOULDER
9	13+75.00	LEFT
10	17+15.00	LEFT
11	17+15.00	RIGHT
12	26+15.00	RIGHT
13	26+45.00	LEFT
14	26+45.00	RIGHT
15	29+83.00	RIGHT
16	29+85.50	RIGHT

1

NOTES

1. THE CONCRETE DECK AT THE TWO SCUPPER CORNERS OPPOSITE THE CURB LINE SHALL BE REINFORCED WITH ONE #4 BAR, 3′-0″ LONG ORIENTED AT 45 DEGREES TO THE LONG AXIS OF THE SCUPPER.
2. STRUCTURAL STEEL TUBING SHALL BE ASTM A500 GRADE B OR A501. ALL OTHER MATERIAL SHALL BE ASTM A709 GRADE 50. ASSEMBLY SHALL BE GALVANIZED IN ACCORDANCE WITH CMS 711.02.
3. THE TOP OF THE TUBING SHALL BE CUT SQUARE.
4. MEASUREMENT AND PAYMENT IS PER ITEM 518 AND INCLUDES ALL LABOR, MATERIALS, COATINGS AND EQUIPMENT NECESSARY TO COMPLETE INSTALLATION OF THE SCUPPER.

NO.	REVISIONS	DATE	REV. BY
1	REVISED TABLE	07/14	CRK

Link to RFI074 As-Built

DESIGNED AR | DRAWN CER | CHECKED BWJ | REVIEWED DLJ | DATE 6/2010 | REVISED | STRUCTURE FILE NUMBER 4401263

DESIGN AGENCY
URS
36 EAST 7TH STREET SUITE 2300 CINCINNATI, OHIO 45202

DRAINAGE DETAILS - MAINSPAN UNIT
BRIDGE NO. LAW-93-0000
IRONTON RUSSELL BRIDGE OVER OHIO RIVER

LAW-93-0.00
PID No. 81595

243/365

630
788

J:\Project\O\ODOT\15005112 Ironton Russell\LAW\81595\structures\LAW093_1111C\sheets\Mainspan\093_0000CMD008.dgn - 7/15/2014 8:46:38 AM - jon_wanstrath

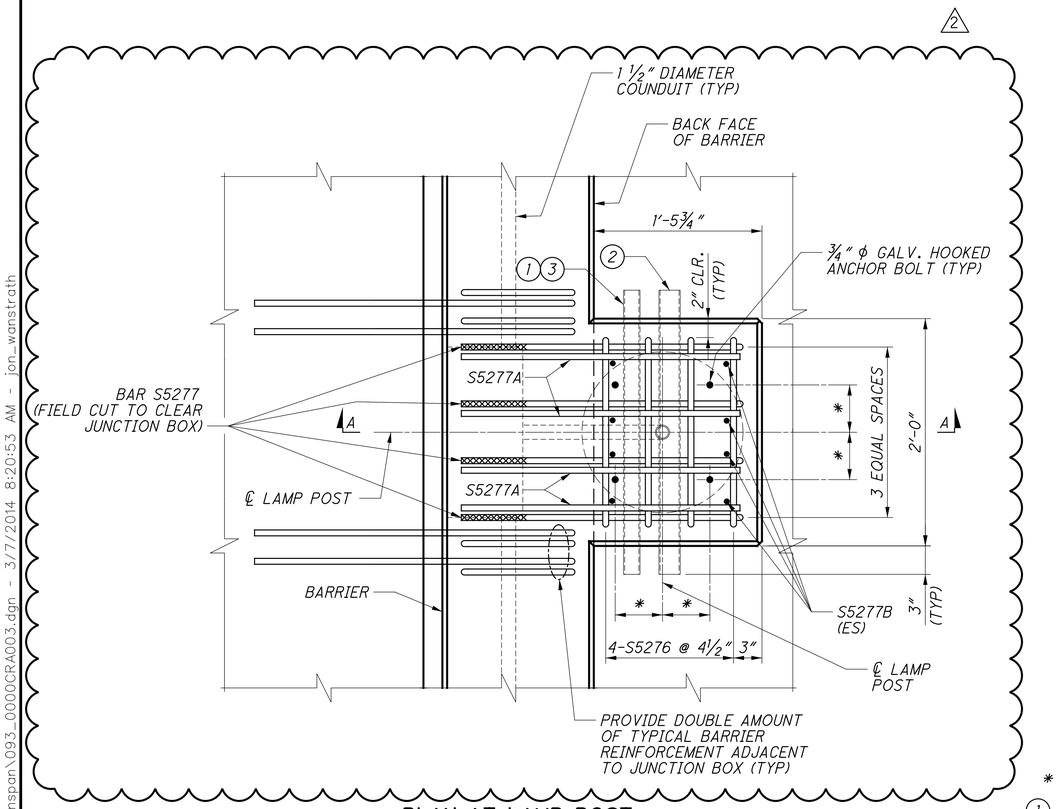

PLAN AT LAMP POST

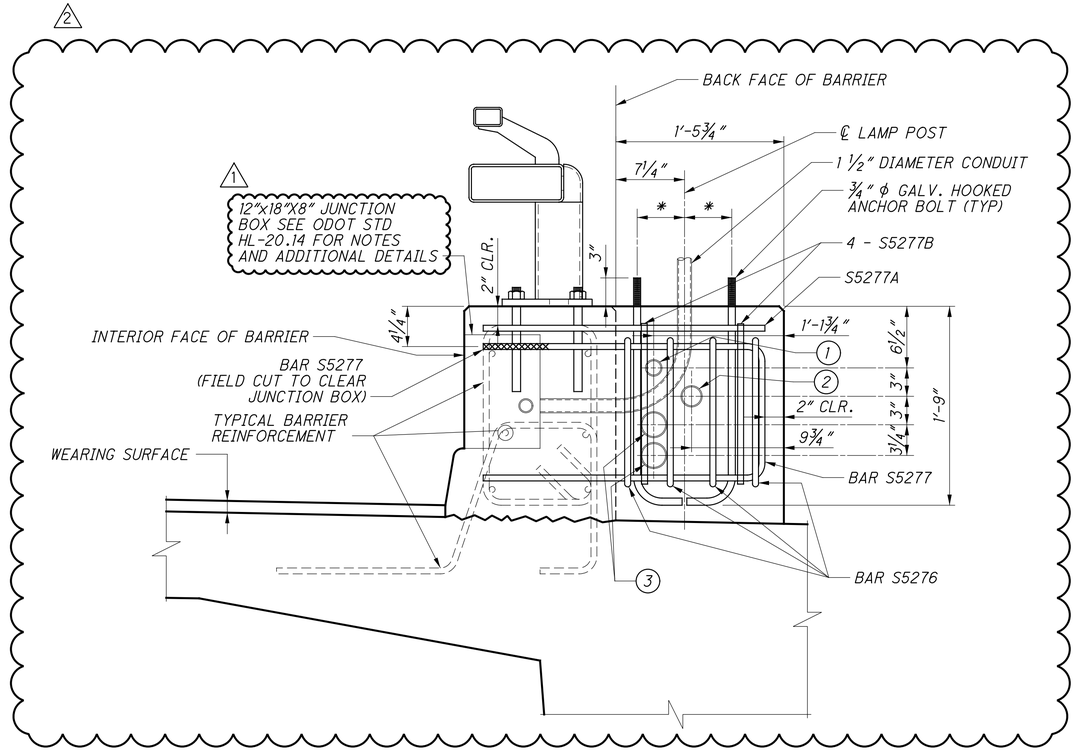

LEGEND

* SEE NOTE 1

(1) 1½" ϕ I.D. GALVANIZED RIGID STEEL SLEEVE (NOTE 4 & 5)

(2) 2" ϕ I.D. GALVANIZED RIGID STEEL SLEEVE (NOTE 4 & 5)

(3) 2½" ϕ I.D. GALVANIZED RIGID STEEL SLEEVE (NOTE 4 & 5)

SECTION A-A

LAMP POST LOCATIONS		
POLE NUMBER	STATION	OFFSET
XA-5	14+10.25	RIGHT
XB-5	14+10.25	LEFT
XA-6	14+88.75	RIGHT
XB-6	14+88.75	LEFT
XA-7	15+85.25	RIGHT
XB-7	15+85.25	LEFT
XA-8	16+81.75	RIGHT
XB-8	16+81.75	LEFT
XC-1	17+78.25	RIGHT
XD-1	17+78.25	LEFT
XC-2	18+76.75	RIGHT
XD-2	18+76.75	LEFT

LAMP POST LOCATIONS		
POLE NUMBER	STATION	OFFSET
XC-3	19+78.25	RIGHT
XD-3	19+78.25	LEFT
XC-4	20+65.75	RIGHT
XD-4	20+65.75	LEFT
XC-5	21+80.00	RIGHT
XD-5	21+80.00	LEFT
XC-6	22+94.25	RIGHT
XD-6	22+94.25	LEFT
XC-7	23+81.75	RIGHT
XD-7	23+81.75	LEFT
XC-8	24+83.25	RIGHT
XD-8	24+83.25	LEFT

LAMP POST LOCATIONS		
POLE NUMBER	STATION	OFFSET
XC-9	25+81.75	RIGHT
XD-9	25+81.75	LEFT
YE-1	26+78.25	RIGHT
YF-1	26+78.25	LEFT
YE-2	27+74.75	RIGHT
YF-2	27+74.75	LEFT
YE-3	28+71.25	RIGHT
YF-3	28+71.25	LEFT
YE-4	29+49.75	RIGHT
YF-4	29+49.75	LEFT

NOTES

1. CONTRACTOR SHALL COORDINATE ANCHOR BOLT SPACING WITH CHOSEN LIGHT POLE MANUFACTURER. FINAL ANCHOR BOLT LOCATION AND SPACING SHALL BE SUBMITTED TO THE ENGINEER FOR APPROVAL PRIOR TO CASTING OF ANCHOR BOLTS IN CONCRETE.
2. LAMP POST BLISTER CONCRETE SHALL BE CLASS QSC2 WITH A MINIMUM 28-DAY COMPRESSIVE STRENGTH OF 4,500 PSI.
3. PLACE BARS TO AVOID JUNCTION BOX.
4. GALVANIZED RIGID STEEL SLEEVES ARE ONLY REQUIRED IN LAMP POST BLISTERS ON RIGHT SIDE OF BRIDGE.
5. FOR ADDITIONAL DETAILS, SEE LIGHTING PLANS.

NO.	REVISIONS	DATE	REV. BY
1	REVISED CALLOUT	02/14	CRK
2	REVISED DETAILS	02/14	CRK

DESIGN AGENCY
URS
36 EAST 7TH STREET
SUITE 2300
CINCINNATI, OHIO 45202

DESIGNED	DRAWN	REVIEWED	DATE
RTG	CER	DLJ	6/2010
CHECKED	REVISED	STRUCTURE FILE NUMBER	
BWJ		4401263	

LAMP POST BLISTER DETAILS
BRIDGE NO. LAW-93-0000
IRONTON RUSSELL BRIDGE OVER OHIO RIVER

LAW-93-0.00
PID No. 81595

244/365

631
788

J:\Project\0\ODOT\15005112 Ironton Russell\LAW\81595\structures\LAW093_1111C\sheets\Mainspan\093_0000CRA003.dgn - 3/7/2014 8:20:53 AM - jon_wanstrath

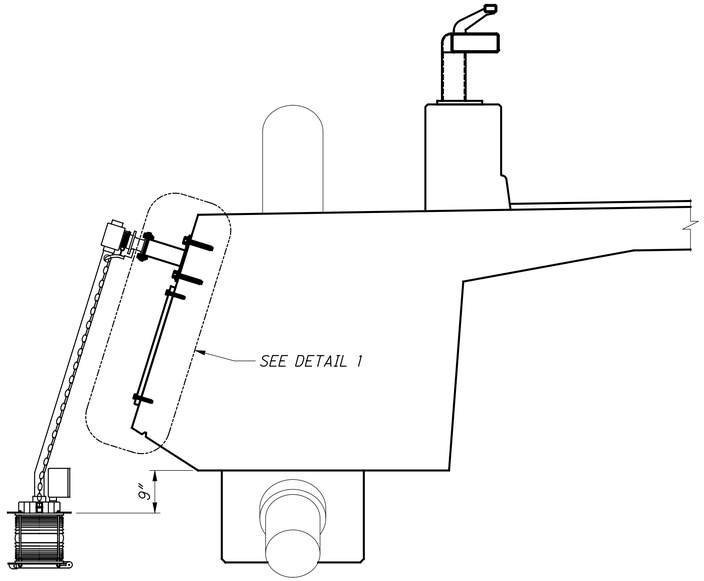

NAVIGATION LIGHT MOUNTING DETAIL

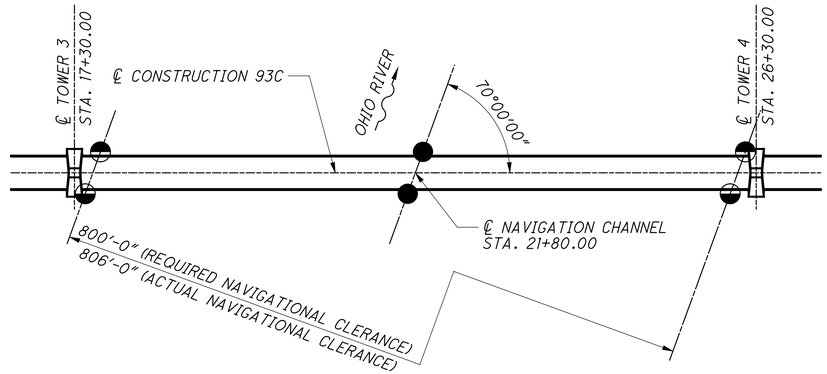

LOCATION PLAN

LEGEND

- DENOTES 180° RED NAVIGATION LIGHT MOUNTED ON EDGE GIRDER AT LIMITS OF NAVIGATIONAL CHANNEL
- DENOTES 360° GREEN NAVIGATION LIGHT MOUNTED ON EDGE GIRDER AT ℄ OF NAVIGATIONAL CHANNEL

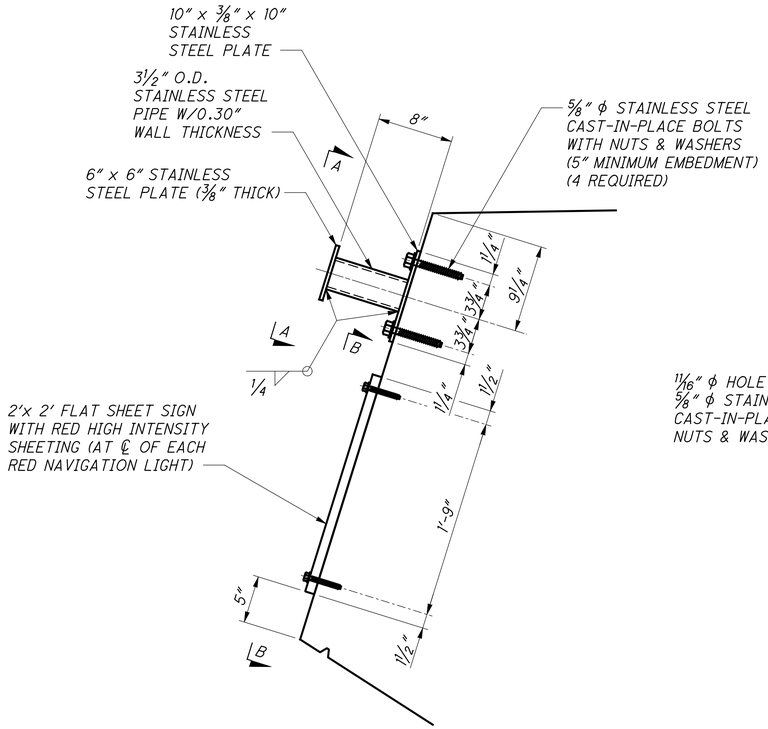

DETAIL 1

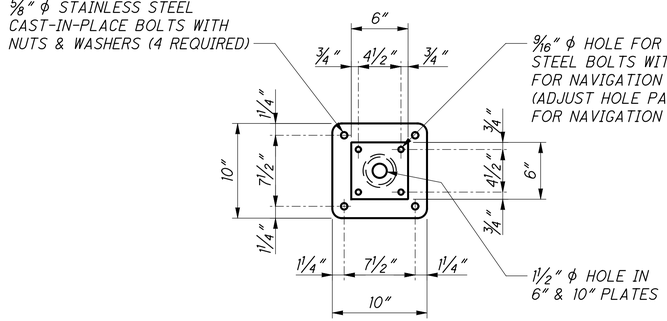

VIEW A-A

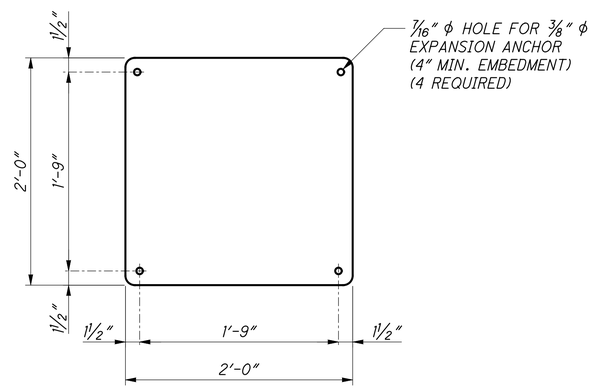

VIEW B-B

DESIGN AGENCY
URS
38 EAST 7TH STREET
SUITE 2300
CINCINNATI, OHIO 45202

DESIGNED	DRAWN	REVIEWED	DATE
AR	JLS	DLJ	6/2010
CHECKED	REVISED	STRUCTURE FILE NUMBER	
BWJ		4401263	

NAVIGATION LIGHTING
BRIDGE NO. LAW-93-0000
IRONTON RUSSELL BRIDGE OVER OHIO RIVER

LAW-93-0.00
PID No. 81595

245/365

632
788

E:\Bridges_XW\Ironton_Russell\LAW\81595\structures\LAW093_0000C\sheets\093_0000CMD020.dgn 4/25/2011 10:24:50 AM john_stahl

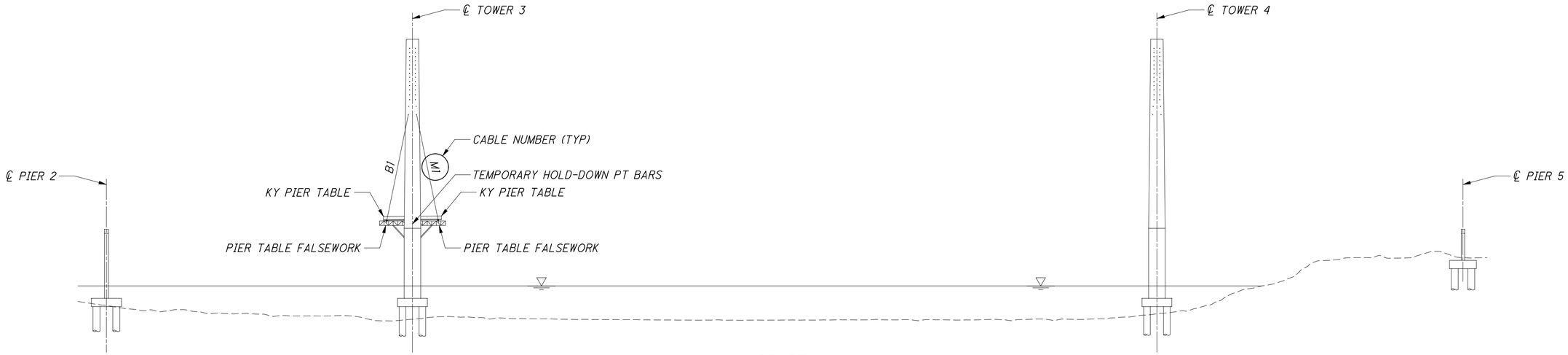

STAGE 1

1. CAST KY PIER TABLE SEGMENT ON FALSEWORK.
2. PROVIDE TEMPORARY LONGITUDINAL FIXITY BETWEEN KY PIER TABLE AND TOWER 3.
3. INSTALL TEMPORARY HOLD DOWN PT BARS.
4. INSTALL AND STRESS CABLE B1.
5. INSTALL AND STRESS CABLE M1.
6. REMOVE PIER TABLE FALSEWORK.

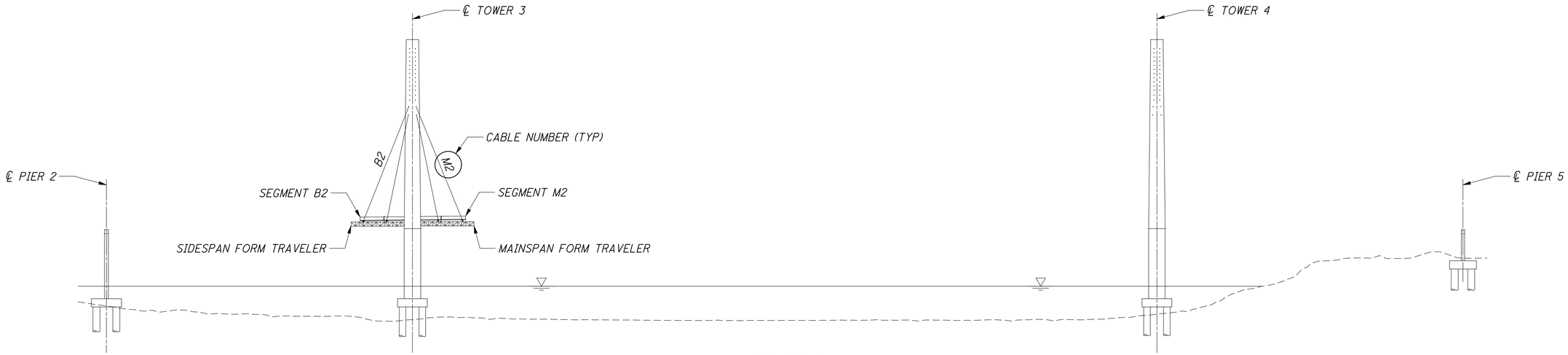

STAGE 2

1. INSTALL SIDESPAN FORM TRAVELER ATTACHED TO KY PIER TABLE SEGMENT.
2. ERECT CABLE B2. ATTACH TO FORM TRAVELER SATELLITE ANCHORAGE.
3. PLACE REINFORCEMENT AND POUR CONCRETE FOR SEGMENT B2.
4. TRANSFER CABLE B2 TO SEGMENT ANCHORAGE. PERFORM FINAL CABLE STRESSING.
5. INSTALL MAINSPAN FORM TRAVELER ATTACHED TO KY PIER TABLE SEGMENT.
6. ERECT CABLE M2. ATTACH TO FORM TRAVELER SATELLITE ANCHORAGE.
7. PLACE REINFORCEMENT AND POUR CONCRETE FOR SEGMENT M2.
8. TRANSFER CABLE M2 TO SEGMENT ANCHORAGE. PERFORM FINAL CABLE STRESSING.

DESIGN AGENCY
URS
36 EAST 7TH STREET
SUITE 2300
CINCINNATI, OHIO 45202

DESIGNED	DRAWN	REVIEWED	DATE
RTG	JLS	DLJ	6/2010
CHECKED	REVISED	STRUCTURE FILE NUMBER	
BWJ		4401263	

CABLE STAYED ERECTION SEQUENCE (1 OF 11)
BRIDGE NO. LAW-93-0000
IRONTON RUSSELL BRIDGE OVER OHIO RIVER

LAW-93-0.00
PID No. 81595

246/365

633
788

E:\Bridges_XM\Ironton_Russell\LAW\81595\structures\LAW093_0000C\sheets\093_0000CPC001.dgn 4/25/2011 10:25:03 AM john_stahl



STAGE 3

1. LAUNCH SIDESPAN FORM TRAVELER TO SEGMENT B2.
2. ERECT CABLE B3. ATTACH TO FORM TRAVELER SATELLITE ANCHORAGE.
3. PLACE REINFORCEMENT AND POUR CONCRETE FOR SEGMENT B3.
4. TRANSFER CABLE B3 TO SEGMENT ANCHORAGE. PERFORM FINAL CABLE STRESSING.
5. LAUNCH MAINSPAN FORM TRAVELER TO SEGMENT M2.
6. ERECT CABLE M3. ATTACH TO FORM TRAVELER SATELLITE ANCHORAGE.
7. PLACE REINFORCEMENT AND POUR CONCRETE FOR SEGMENT M3.
8. TRANSFER CABLE M3 TO SEGMENT ANCHORAGE. PERFORM FINAL CABLE STRESSING.
9. REPEAT STEPS 1 TO 8 FOR SEGMENTS B4, M4, B5, M5, B6 & M6.
10. CAST KY DIAPHRAGM SEGMENT ON FALSEWORK.
11. STRESS PIER 2 VERTICAL POST-TENSIONING.

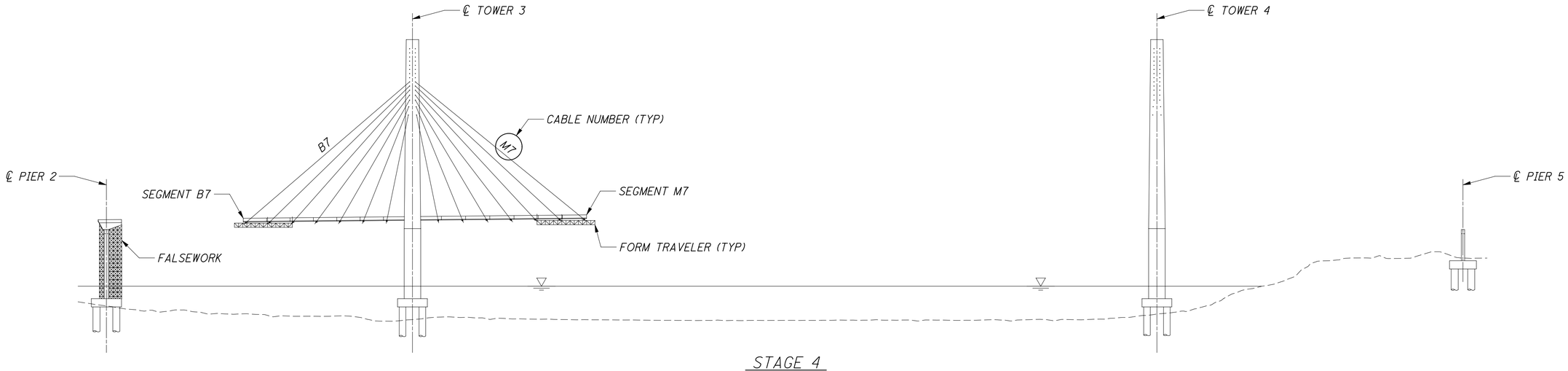

STAGE 4

1. LAUNCH SIDESPAN FORM TRAVELER TO SEGMENT B6.
2. ERECT CABLE B7. ATTACH TO FORM TRAVELER SATELLITE ANCHORAGE.
3. PLACE REINFORCEMENT AND POUR CONCRETE FOR SEGMENT B7.
4. TRANSFER CABLE B7 TO SEGMENT ANCHORAGE. PERFORM FINAL CABLE STRESSING.
5. LAUNCH MAINSPAN FORM TRAVELER TO SEGMENT M6.
6. ERECT CABLE M7. ATTACH TO FORM TRAVELER SATELLITE ANCHORAGE.
7. PLACE REINFORCEMENT AND POUR CONCRETE FOR SEGMENT M7.
8. TRANSFER CABLE M7 TO SEGMENT ANCHORAGE. PERFORM FINAL CABLE STRESSING.

DESIGN AGENCY
URS
36 EAST 7TH STREET
SUITE 2300
CINCINNATI, OHIO 45202

DESIGNED	DRAWN	REVIEWED	DATE
RTG	JLS	DLJ	6/2010
CHECKED	REVISED	STRUCTURE FILE NUMBER	
BWJ		4401263	

CABLE STAYED ERECTION SEQUENCE (2 OF 11)
BRIDGE NO. LAW-93-0000
IRONTON RUSSELL BRIDGE OVER OHIO RIVER

LAW-93-0.00
PID No. 81595

E:\Bridges_XM\Ironton_Russell\LAW\81595\structures\LAW093_0000C\sheets\093_0000CPC001.dgn 4/25/2011 10:25:11 AM john_stahl

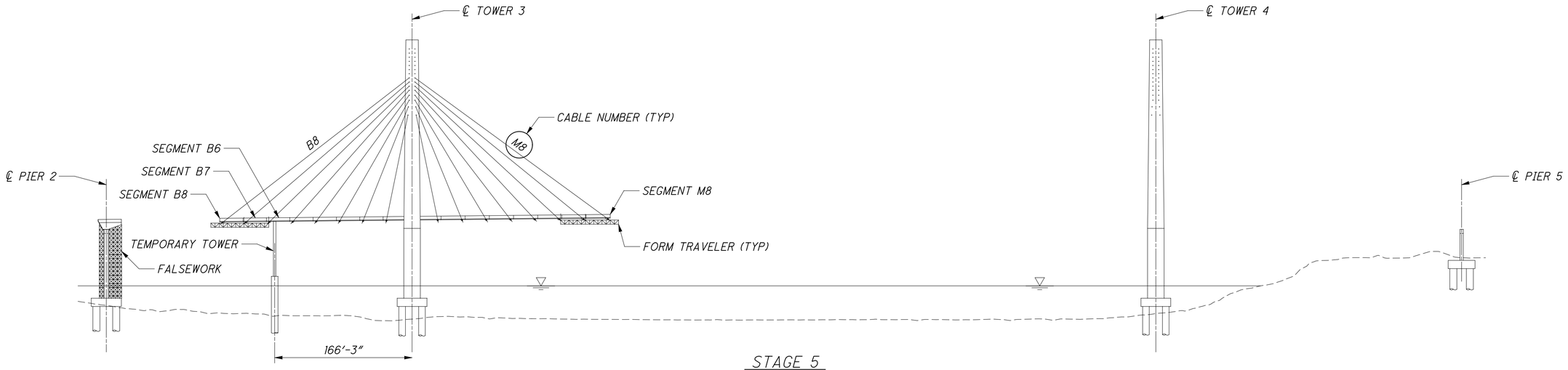

STAGE 5

1. LAUNCH SIDESPAN FORM TRAVELER TO SEGMENT B7.
2. ERECT TEMPORARY TOWER WITH TENSION TIE-DOWN UNDER SEGMENT B6.
3. ERECT CABLE B8. ATTACH TO FORM TRAVELER SATELLITE ANCHORAGE.
4. PLACE REINFORCEMENT AND POUR CONCRETE FOR SEGMENT B8.
5. TRANSFER CABLE B8 TO SEGMENT ANCHORAGE. PERFORM FINAL CABLE STRESSING.
6. LAUNCH MAINSPAN FORM TRAVELER TO SEGMENT M7.
7. ERECT CABLE M8. ATTACH TO FORM TRAVELER SATELLITE ANCHORAGE.
8. PLACE REINFORCEMENT AND POUR CONCRETE FOR SEGMENT M8.
9. TRANSFER CABLE M8 TO SEGMENT ANCHORAGE. PERFORM FINAL CABLE STRESSING.
10. REPEAT STEPS 1 AND 3 TO 9 FOR SEGMENTS B9, M9, B10, M10, B11 AND M11.

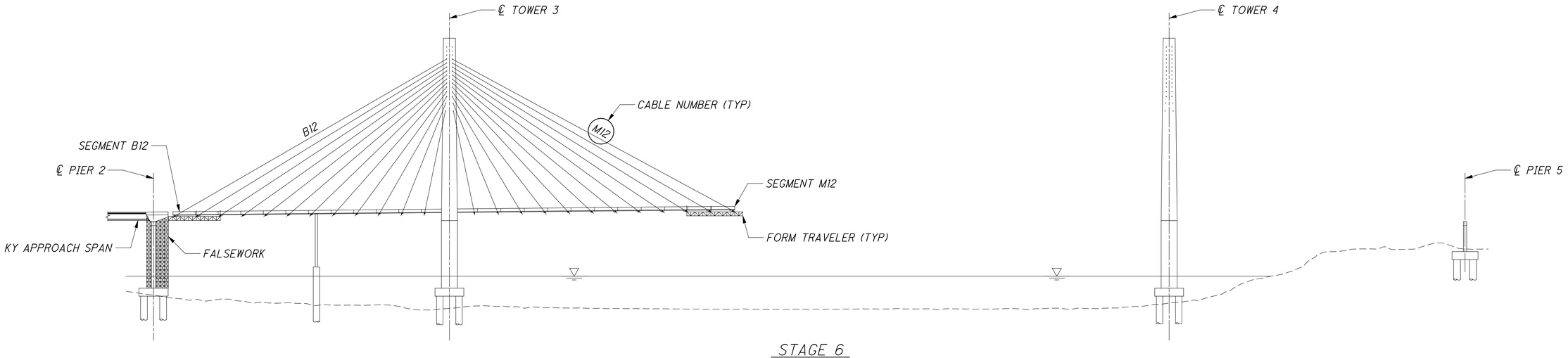

STAGE 6

1. LAUNCH SIDESPAN FORM TRAVELER TO SEGMENT B11.
2. ERECT CABLE B12. ATTACH TO FORM TRAVELER SATELLITE ANCHORAGE.
3. PLACE REINFORCEMENT AND POUR CONCRETE FOR SEGMENT B12.
4. TRANSFER CABLE B12 TO SEGMENT ANCHORAGE. PERFORM FINAL CABLE STRESSING.
5. LAUNCH MAINSPAN FORM TRAVELER TO SEGMENT M11.
6. ERECT CABLE M12. ATTACH TO FORM TRAVELER SATELLITE ANCHORAGE.
7. PLACE REINFORCEMENT AND POUR CONCRETE FOR SEGMENT M12.
8. TRANSFER CABLE M12 TO SEGMENT ANCHORAGE. PERFORM FINAL CABLE STRESSING.
9. KY APPROACH SPAN COMPLETED.

DESIGN AGENCY
URS
36 EAST 7TH STREET
SUITE 2300
CINCINNATI, OHIO 45202

DESIGNED	DRAWN	REVIEWED	DATE
RTG	JLS	DLJ	6/2010
CHECKED	REVISED	STRUCTURE FILE NUMBER	
BWJ		4401263	

CABLE STAYED ERECTION SEQUENCE (3 OF 11)
BRIDGE NO. LAW-93-0000
IRONTON RUSSELL BRIDGE OVER OHIO RIVER

LAW-93-0.00
PID No. 81595

248/365

635
788

E:\Bridges_XM\Ironton_Russell\LAW\81595\structures\LAW093_0000C\sheets\093_0000CPC001.dgn 4/25/2011 10:25:20 AM john_stahl

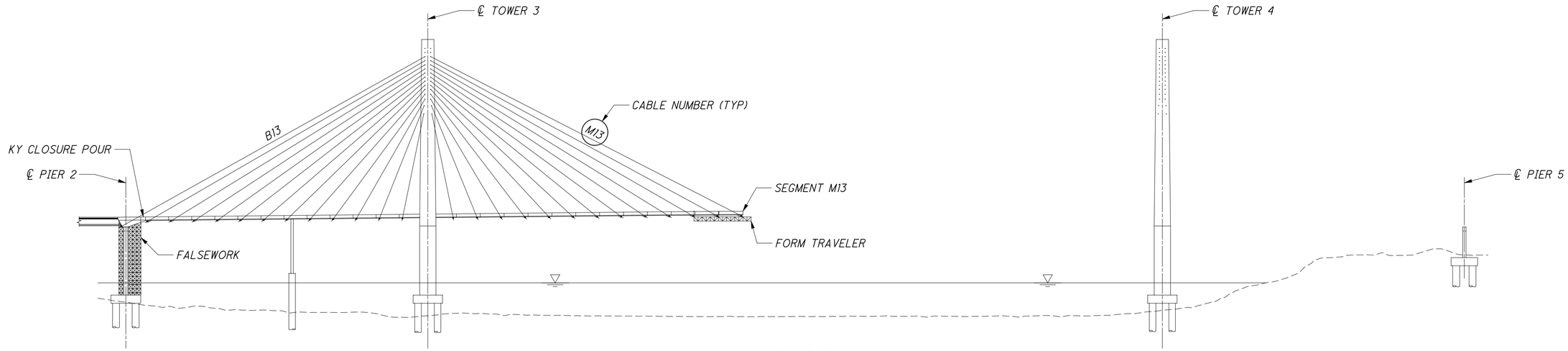

STAGE 7

1. CAST CLOSURE POUR BETWEEN SEGMENT B12 AND KY DIAPHRAGM SEGMENT.
2. ERECT AND STRESS CABLE B13.
3. REMOVE SIDESPAN FORM TRAVELER.
4. LAUNCH MAINSPAN FORM TRAVELER TO SEGMENT M12.
5. ERECT CABLE M13. ATTACH TO FORM TRAVELER SATELLITE ANCHORAGE.
6. PLACE REINFORCEMENT AND POUR CONCRETE FOR SEGMENT M13.
7. TRANSFER CABLE M13 TO SEGMENT ANCHORAGE. PERFORM FINAL CABLE STRESSING.
8. INSTALL AND STRESS KY SIDESPAN DECK AND EDGE GIRDER POST-TENSIONING.

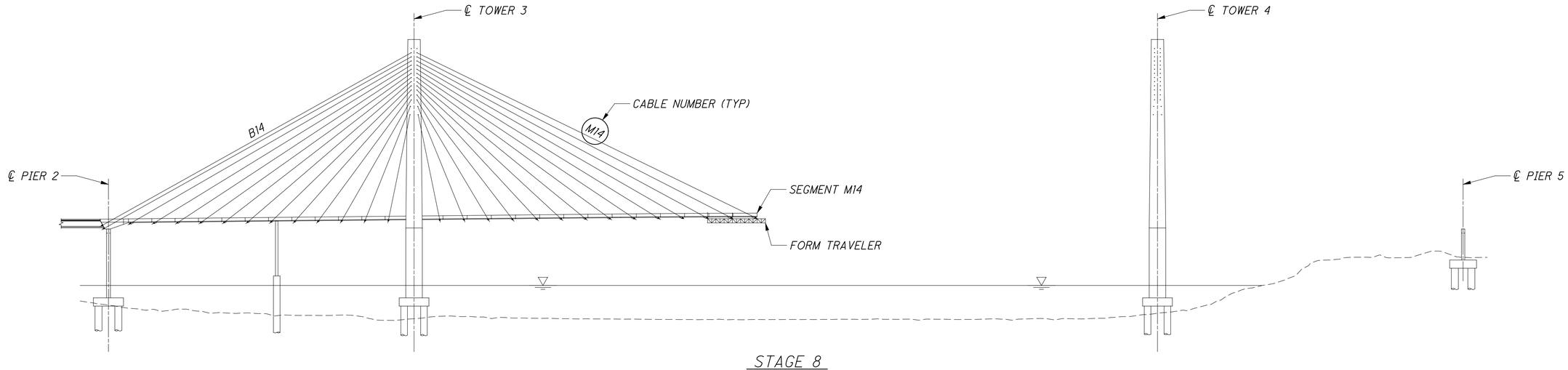

STAGE 8

1. ERECT AND STRESS CABLE B14.
2. REMOVE PIER 2 FALSEWORK.
3. LAUNCH MAINSPAN FORM TRAVELER TO SEGMENT M13.
4. ERECT CABLE M14. ATTACH TO FORM TRAVELER SATELLITE ANCHORAGE.
5. PLACE REINFORCEMENT AND POUR CONCRETE FOR SEGMENT M14.
6. TRANSFER CABLE M14 TO SEGMENT ANCHORAGE. PERFORM FINAL CABLE STRESSING.

DESIGN AGENCY
URS
36 EAST 7TH STREET
SUITE 2300
CINCINNATI, OHIO 45202

DESIGNED	DRAWN	REVIEWED	DATE
RTG	JLS	DLJ	6/2010
CHECKED	REVISED	STRUCTURE FILE NUMBER	
BWJ		4401263	

CABLE STAYED ERECTION SEQUENCE (4 OF 11)
BRIDGE NO. LAW-93-0000
IRONTON RUSSELL BRIDGE OVER OHIO RIVER

LAW-93-0.00
PID No. 81595

249/365

636
788

E:\Bridges_XM\Ironton_Russell\LAW\81595\structures\LAW093_0000C\sheets\093_0000CPC001.dgn 4/25/2011 10:25:29 AM john_stahl

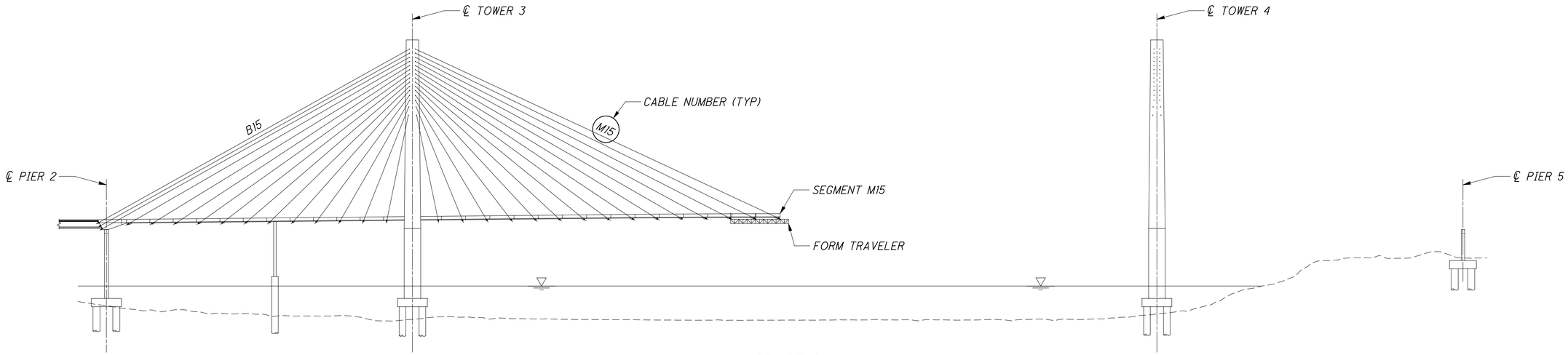

STAGE 9

1. ERECT AND STRESS CABLE B15.
2. LAUNCH MAINSPAN FORM TRAVELER TO SEGMENT M14.
3. ERECT CABLE M15. ATTACH TO FORM TRAVELER SATELLITE ANCHORAGE.
4. PLACE REINFORCEMENT AND POUR CONCRETE FOR SEGMENT M15.
5. TRANSFER CABLE M15 TO SEGMENT ANCHORAGE. PERFORM FINAL CABLE STRESSING.
6. REMOVE MAINSPAN FORM TRAVELER.

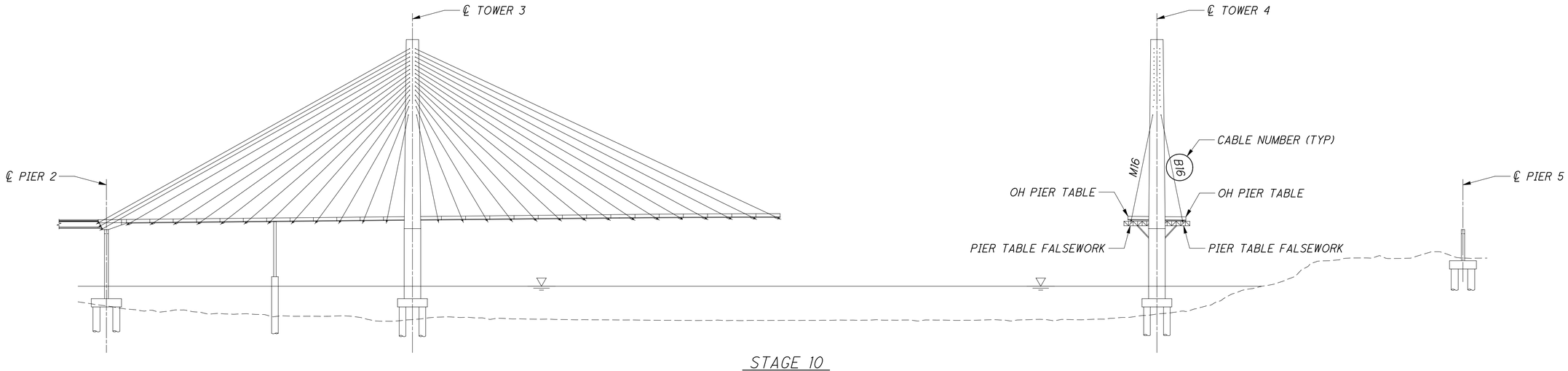

STAGE 10

1. CAST OH PIER TABLE SEGMENT ON FALSEWORK.
2. INSTALL SHIM PACKS TO PROVIDE LONGITUDINAL FIXITY BETWEEN OH PIER TABLE AND TOWER 4.
3. INSTALL TEMPORARY HOLD DOWN PT BARS.
4. INSTALL AND STRESS CABLE B16.
5. INSTALL AND STRESS CABLE M16.
6. REMOVE PIER TABLE FALSEWORK.

DESIGN AGENCY
URS
36 EAST 7TH STREET
SUITE 2300
CINCINNATI, OHIO 45202

DESIGNED	DRAWN	REVIEWED	DATE
RTG	JLS	DLJ	6/2010
CHECKED	REVISED	STRUCTURE FILE NUMBER	
BWJ		4401263	

CABLE STAYED ERECTION SEQUENCE (5 OF 11)
BRIDGE NO. LAW-93-0000
IRONTON RUSSELL BRIDGE OVER OHIO RIVER

LAW-93-0.00
PID No. 81595

250/365

637
788

E:\Bridges_XM\Ironton_Russell\LAW\81595\structures\LAW093_0000C\sheets\093_0000CPC001.dgn 4/25/2011 10:25:38 AM john_stahl

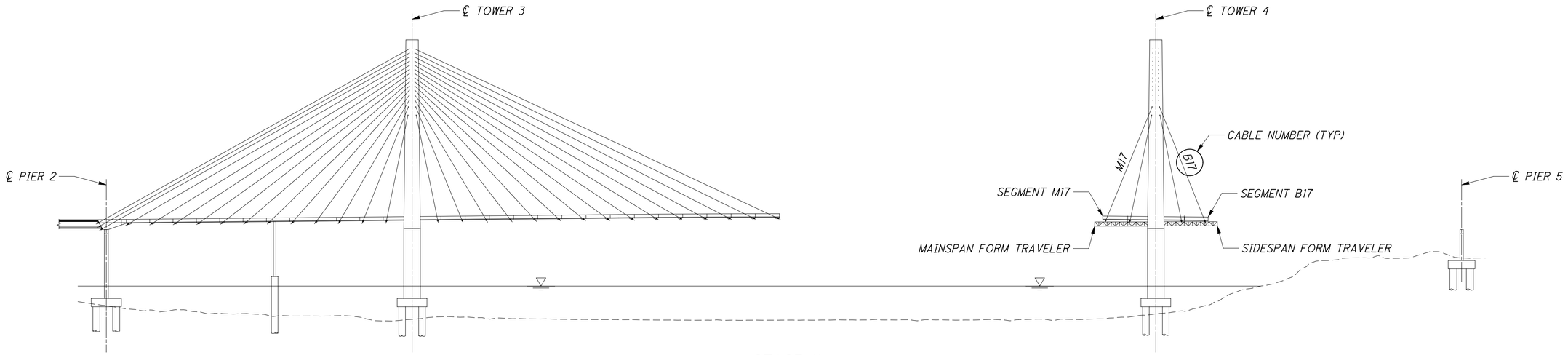

STAGE 11

1. INSTALL SIDESPAN FORM TRAVELER ATTACHED TO OH PIER TABLE SEGMENT.
2. ERECT CABLE B17. ATTACH TO FORM TRAVELER SATELLITE ANCHORAGE.
3. PLACE REINFORCEMENT AND POUR CONCRETE FOR SEGMENT B17.
4. TRANSFER CABLE B17 TO SEGMENT ANCHORAGE. PERFORM FINAL CABLE STRESSING.
5. INSTALL MAINSPAN FORM TRAVELER ATTACHED TO OH PIER TABLE SEGMENT.
6. ERECT CABLE M17. ATTACH TO FORM TRAVELER SATELLITE ANCHORAGE.
7. PLACE REINFORCEMENT AND POUR CONCRETE FOR SEGMENT M17.
8. TRANSFER CABLE M17 TO SEGMENT ANCHORAGE. PERFORM FINAL CABLE STRESSING.

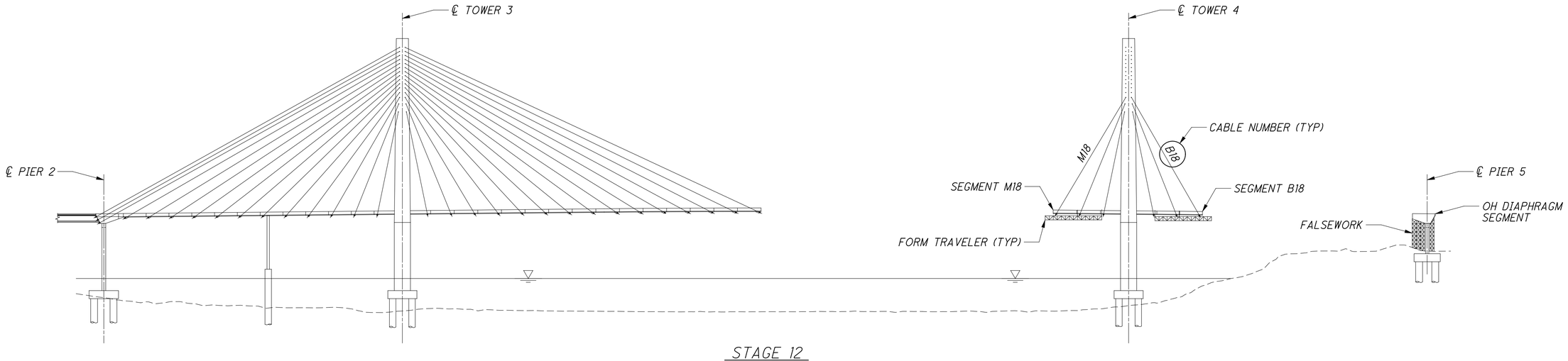

STAGE 12

1. LAUNCH SIDESPAN FORM TRAVELER TO SEGMENT B17.
2. ERECT CABLE B18. ATTACH TO FORM TRAVELER SATELLITE ANCHORAGE.
3. PLACE REINFORCEMENT AND POUR CONCRETE FOR SEGMENT B18.
4. TRANSFER CABLE B18 TO SEGMENT ANCHORAGE. PERFORM FINAL CABLE STRESSING.
5. LAUNCH MAINSPAN FORM TRAVELER TO SEGMENT M17.
6. ERECT CABLE M18. ATTACH TO FORM TRAVELER SATELLITE ANCHORAGE.
7. PLACE REINFORCEMENT AND POUR CONCRETE FOR SEGMENT M18.
8. TRANSFER CABLE M18 TO SEGMENT ANCHORAGE. PERFORM FINAL CABLE STRESSING.
9. REPEAT STEPS 1 TO 8 FOR SEGMENTS B19, M19, B20, M20, B21 & M21.
10. CAST OH DIAPHRAGM SEGMENT ON FALSEWORK.
11. STRESS PIER 5 VERTICAL POST-TENSIONING.

DESIGN AGENCY
URS
36 EAST 7TH STREET
SUITE 2300
CINCINNATI, OHIO 45202

DATE 6/2010
REVIEWED DLJ
STRUCTURE FILE NUMBER 4401263
DRAWN JLS
REVISED
DESIGNED RTG
CHECKED BWJ

CABLE STAYED ERECTION SEQUENCE (6 OF 11)

BRIDGE NO. LAW-93-0000
IRONTON RUSSELL BRIDGE OVER OHIO RIVER

LAW-93-0.00
PID No. 81595

251/365
638/788

E:\Bridges_XM\Ironton_Russell\LAW\81595\structures\LAW093_0000C\sheets\093_0000CPC001.dgn 4/25/2011 10:25:48 AM john_stahl

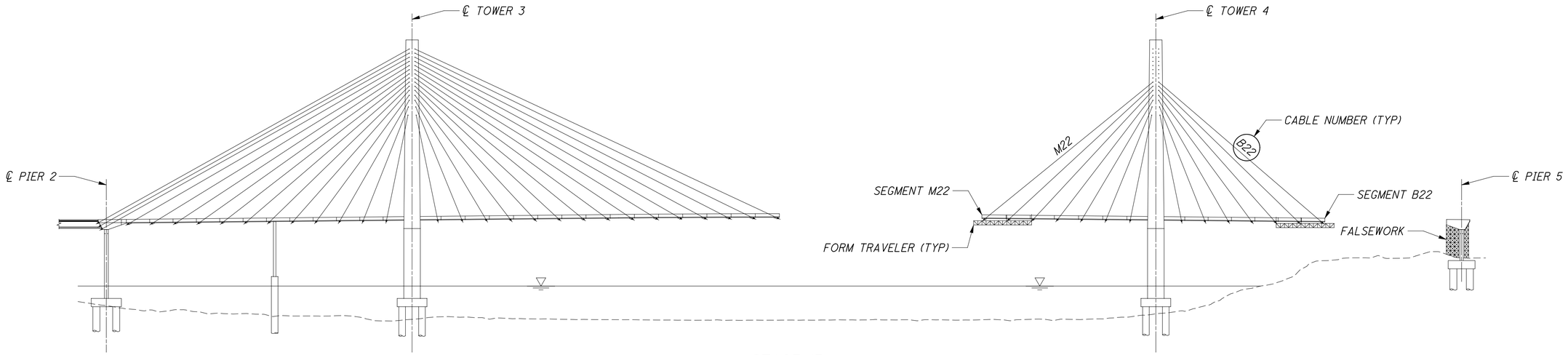

STAGE 13

1. LAUNCH SIDESPAN FORM TRAVELER TO SEGMENT B21.
2. ERECT CABLE B22. ATTACH TO FORM TRAVELER SATELLITE ANCHORAGE.
3. PLACE REINFORCEMENT AND POUR CONCRETE FOR SEGMENT B22.
4. TRANSFER CABLE B22 TO SEGMENT ANCHORAGE. PERFORM FINAL CABLE STRESSING.
5. LAUNCH MAINSPAN FORM TRAVELER TO SEGMENT M21.
6. ERECT CABLE M22. ATTACH TO FORM TRAVELER SATELLITE ANCHORAGE.
7. PLACE REINFORCEMENT AND POUR CONCRETE FOR SEGMENT M22.
8. TRANSFER CABLE M22 TO SEGMENT ANCHORAGE. PERFORM FINAL CABLE STRESSING.

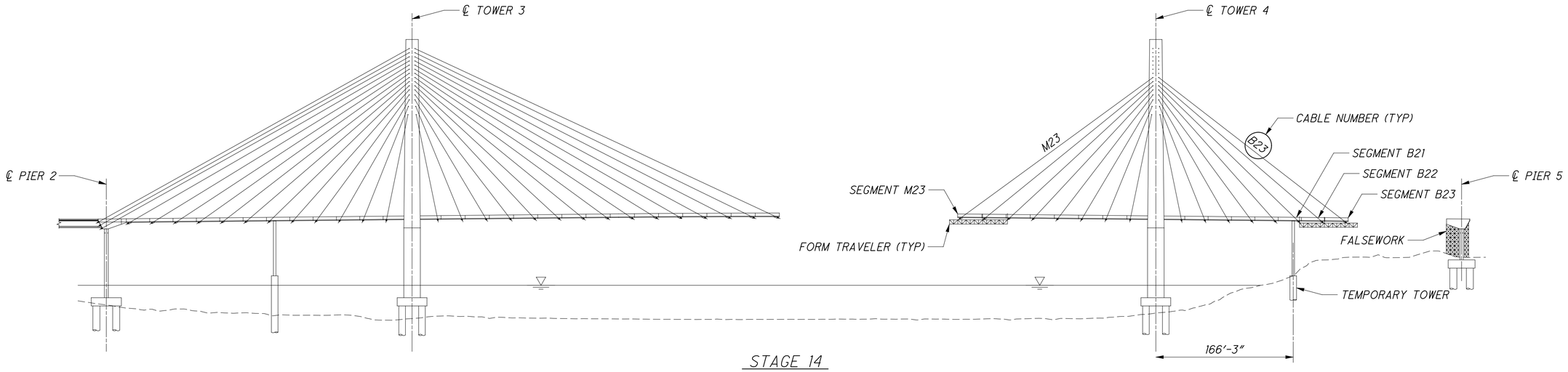

STAGE 14

1. LAUNCH SIDESPAN FORM TRAVELER TO SEGMENT B22.
2. ERECT TEMPORARY TOWER WITH TENSION TIE-DOWN UNDER SEGMENT B21.
3. ERECT CABLE B23. ATTACH TO FORM TRAVELER SATELLITE ANCHORAGE.
4. PLACE REINFORCEMENT AND POUR CONCRETE FOR SEGMENT B23.
5. TRANSFER CABLE B23 TO SEGMENT ANCHORAGE. PERFORM FINAL CABLE STRESSING.
6. LAUNCH MAINSPAN FORM TRAVELER TO SEGMENT M22.
7. ERECT CABLE M23. ATTACH TO FORM TRAVELER SATELLITE ANCHORAGE.
8. PLACE REINFORCEMENT AND POUR CONCRETE FOR SEGMENT M23.
9. TRANSFER CABLE M23 TO SEGMENT ANCHORAGE. PERFORM FINAL CABLE STRESSING.
10. REPEAT STEPS 1 AND 3 TO 9 FOR SEGMENTS B24, M24, B25, M25, B26 AND M26.

DESIGN AGENCY
URS
36 EAST 7TH STREET
SUITE 2300
CINCINNATI, OHIO 45202

DESIGNED	DRAWN	REVIEWED	DATE
RTG	JLS	DLJ	6/2010
CHECKED	REVISED	STRUCTURE FILE NUMBER	
BWJ		4401263	

CABLE STAYED ERECTION SEQUENCE (7 OF 11)
BRIDGE NO. LAW-93-0000
IRONTON RUSSELL BRIDGE OVER OHIO RIVER

LAW-93-0.00
PID No. 81595

E:\Bridges_XM\Ironton_Russell\LAW\81595\structures\LAW093_0000C\sheets\093_0000CPC001.dgn 4/25/2011 10:25:58 AM john_stahl

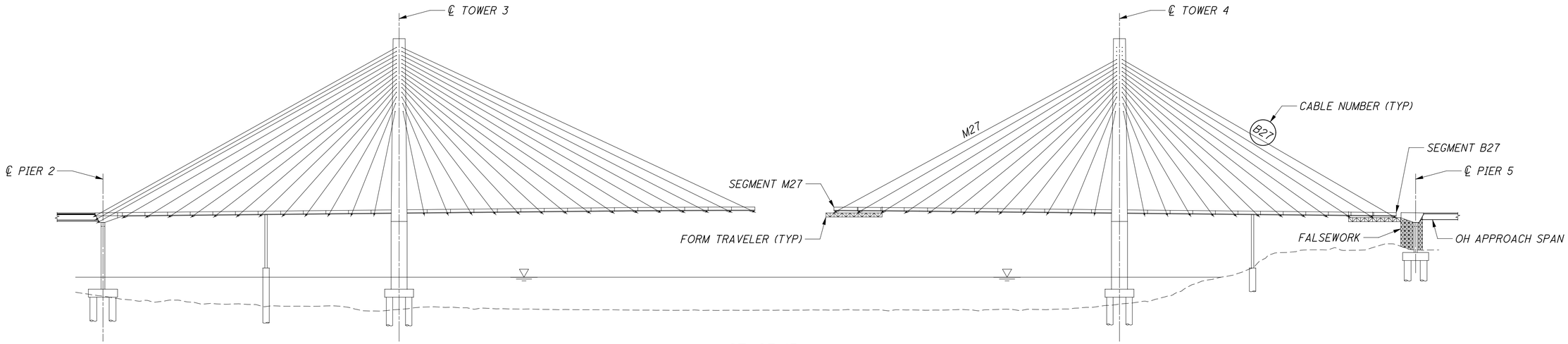

STAGE 15

1. LAUNCH SIDESPAN FORM TRAVELER TO SEGMENT B26.
2. ERECT CABLE B27. ATTACH TO FORM TRAVELER SATELLITE ANCHORAGE.
3. PLACE REINFORCEMENT AND POUR CONCRETE FOR SEGMENT B27.
4. TRANSFER CABLE B27 TO SEGMENT ANCHORAGE. PERFORM FINAL CABLE STRESSING.
5. LAUNCH MAINSPAN FORM TRAVELER TO SEGMENT M26.
6. ERECT CABLE M27. ATTACH TO FORM TRAVELER SATELLITE ANCHORAGE.
7. PLACE REINFORCEMENT AND POUR CONCRETE FOR SEGMENT M27.
8. TRANSFER CABLE M27 TO SEGMENT ANCHORAGE. PERFORM FINAL CABLE STRESSING.
9. OH APPROACH SPAN COMPLETED.

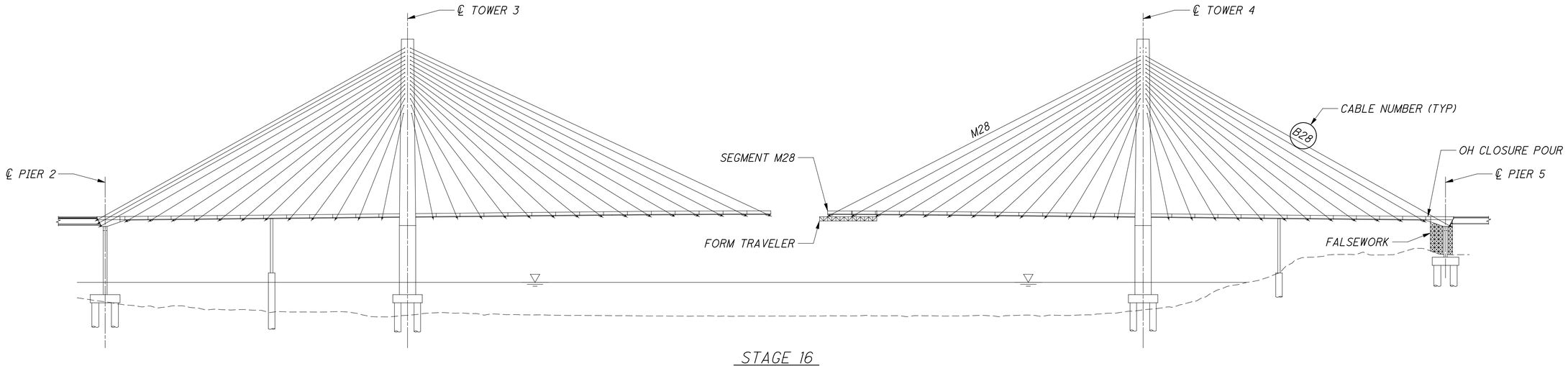

STAGE 16

1. CAST CLOSURE POUR BETWEEN SEGMENT B27 AND OH DIAPHRAGM SEGMENT.
2. ERECT AND STRESS CABLE B28.
3. REMOVE SIDESPAN FORM TRAVELER.
4. LAUNCH MAINSPAN FORM TRAVELER TO SEGMENT M27.
5. ERECT CABLE M28. ATTACH TO FORM TRAVELER SATELLITE ANCHORAGE.
6. PLACE REINFORCEMENT AND POUR CONCRETE FOR SEGMENT M28.
7. TRANSFER CABLE M28 TO SEGMENT ANCHORAGE. PERFORM FINAL CABLE STRESSING.
8. INSTALL AND STRESS OH SIDESPAN DECK AND EDGE GIRDER POST-TENSIONING.

DESIGN AGENCY
URS
36 EAST 7TH STREET
SUITE 2300
CINCINNATI, OHIO 45202

DESIGNED	DRAWN	REVIEWED	DATE
RTG	JLS	DLJ	6/2010
CHECKED	REVISED	STRUCTURE FILE NUMBER	
BWJ		4401263	

CABLE STAYED ERECTION SEQUENCE (8 OF 11)
BRIDGE NO. LAW-93-0000
IRONTON RUSSELL BRIDGE OVER OHIO RIVER

LAW-93-0.00
PID No. 81595

253/365

640
788

E:\Bridges_XM\Ironton_Russell\LAW\81595\structures\LAW093_0000C\sheets\093_0000CPC001.dgn 4/25/2011 10:26:09 AM john_stahl

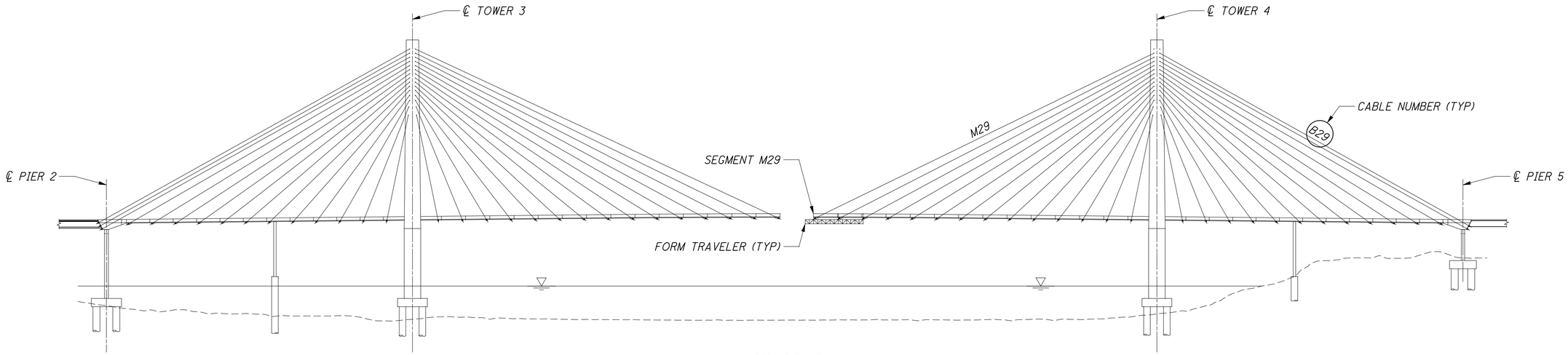

STAGE 17

1. ERECT AND STRESS CABLE B29.
2. REMOVE PIER 5 FALSEWORK.
3. LAUNCH MAINSPAN FORM TRAVELER TO SEGMENT M28.
4. ERECT CABLE M29. ATTACH TO FORM TRAVELER SATELLITE ANCHORAGE.
5. PLACE REINFORCEMENT AND POUR CONCRETE FOR SEGMENT M29.
6. TRANSFER CABLE M29 TO SEGMENT ANCHORAGE. PERFORM FINAL CABLE STRESSING.

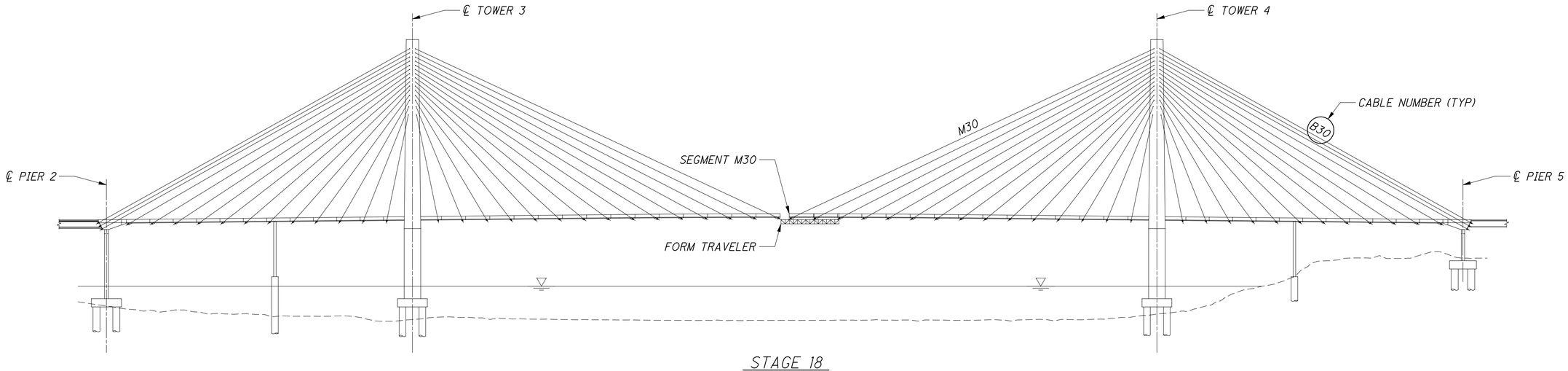

STAGE 18

1. ERECT AND STRESS CABLE B30.
2. LAUNCH MAINSPAN FORM TRAVELER TO SEGMENT M29.
3. ERECT CABLE M30. ATTACH TO FORM TRAVELER SATELLITE ANCHORAGE.
4. PLACE REINFORCEMENT AND POUR CONCRETE FOR SEGMENT M30.
5. TRANSFER CABLE M30 TO SEGMENT ANCHORAGE. PERFORM FINAL CABLE STRESSING.
6. REMOVE MAINSPAN FORM TRAVELER.

DESIGN AGENCY
URS
36 EAST 7TH STREET
SUITE 2300
CINCINNATI, OHIO 45202

DATE 6/2010
REVIEWED DLJ
STRUCTURE FILE NUMBER 4401263

DRAWN JLS
REVISED

DESIGNED RTG
CHECKED BWJ

CABLE STAYED ERECTION SEQUENCE (9 OF 11)
BRIDGE NO. LAW-93-0000
IRONTON RUSSELL BRIDGE OVER OHIO RIVER

LAW-93-0.00
PID No. 81595

254/365

641
788

E:\Bridges_XM\Ironton_Russell\LAW\81595\structures\LAW093_0000C\sheets\093_0000CPC001.dgn 4/25/2011 10:26:19 AM john_stahl

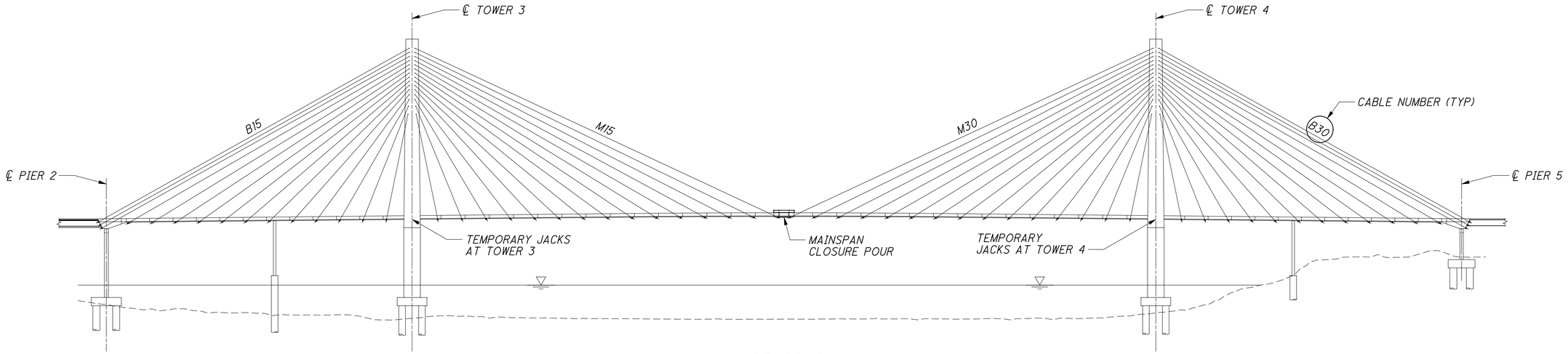

STAGE 19

1. REMOVE TEMPORARY HOLD DOWN PT BARS AT TOWER 3 AND TOWER 4 AND GROUT DUCTS.
2. TERMPORARILY RELEASE LONGITUDINAL FIXITY IN THE DIRECTION OF JACKING AT TOWER 3 AND TOWER 4. THE RELEASE SHALL BE IN A GRADUAL AND CONTROLLED MANNER TO ENSURE SUDDEN LOADS ARE NOT IMPARTED TO THE STRUCTURE. JACK SUPERSTRUCTURE LONGITUDINALLY AT TOWER 3 AND TOWER 4 FOR TEMPERATURE ADJUSTMENT. REINSTALL LONGITUDINAL FIXITY AT TOWER 3 AND TOWER 4. SEE SUPERSTRUCTURE JACKING DETAILS. SEE SHEETS "PIER TABLE SHEAR KEY GEOMETRY" FOR SHIM PACK DETAILS AT TOWER 4.
3. INSTALL PERMANENT SHIM PACKS AT TOWER 4 & REMOVE TEMPORARY JACKS.
4. INSTALL STRONG BACK SYSTEM TO ALIGN AND STABILIZE CANTILEVER TIPS.
5. FORM, REINFORCE AND POUR MIDSPAN CLOSURE SEGMENT.

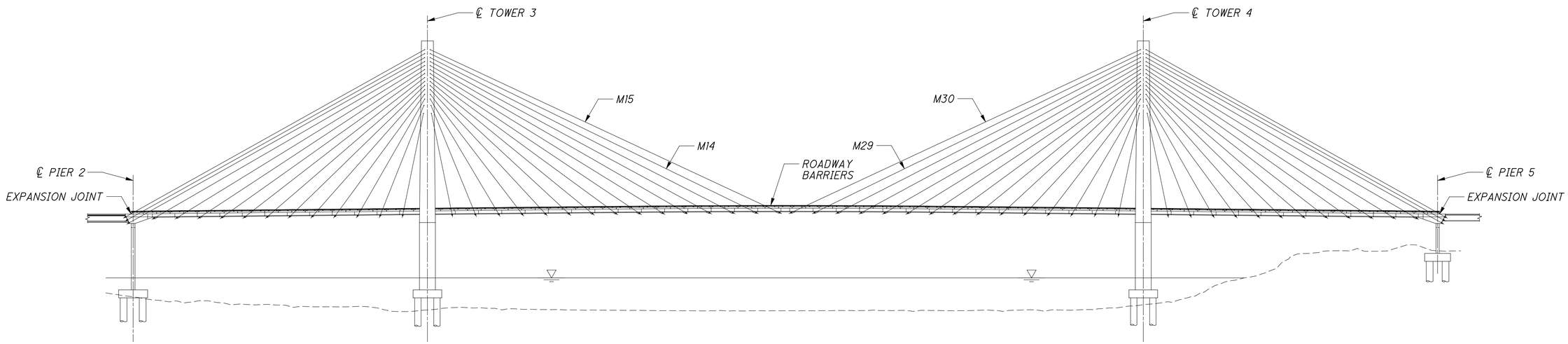

STAGE 20

1. RELEASE AND REMOVE TEMPORARY TOWERS.
2. RELEASE TEMPORARY JACK/FIXITY BETWEEN SUPERSTRUCTURE AND TOWER 3 IN A GRADUAL AND CONTROLLED MANNER TO ENSURE SUDDEN LOADS ARE NOT IMPARTED TO THE STRUCTURE.
3. INSTALL AND STRESS MAINSPAN DECK POST-TENSIONING.
4. PERFORM RESTRESSING OPERATIONS FOR CABLES M14, M15, M29 AND M30.
5. PLACE BARRIERS AND INITIAL WEARING SURFACE.
6. INSTALL EXPANSION JOINTS.
7. GRIND DECK TO ACHIEVE RIDABILITY REQUIREMENTS.
8. COMPLETE REMAINING MISCELLANEOUS WORKS.

E:\Bridges_XM\Ironton_Russell\LAW\81595\structures\LAW093_0000C\sheets\093_0000CPC001.dgn 4/25/2011 10:26:29 AM john_stahl

DESIGN AGENCY
URS
35 EAST 7TH STREET
SUITE 2300
CINCINNATI, OHIO 45202

DESIGNED	DRAWN	REVIEWED	DATE
RTG	JLS	DLJ	6/2010
CHECKED	REVISED	STRUCTURE FILE NUMBER	
BWJ		4401263	

CABLE STAYED ERECTION SEQUENCE (10 OF 11)
BRIDGE NO. LAW-93-0000
IRONTON RUSSELL BRIDGE OVER OHIO RIVER

LAW-93-0.00
PID No. 81595

255/365

642
788

JACKING DATA

AVERAGE CONCRETE TEMPERATURE AT TIME OF MIDSPAN CLOSURE	TOWER 3		TOWER 4	
	REQUIRED JACKING MOVEMENT	APPROXIMATE JACKING FORCE PER EDGE GIRDER (kips)	REQUIRED JACKING MOVEMENT	APPROXIMATE JACKING FORCE PER EDGE GIRDER (kips)
15°F	-4.0"	248	-1.0"	233
25°F	-3.0"	186	-0.75"	175
35°F	-2.0"	124	-0.50"	117
45°F	-1.0"	62	-0.25"	58
55°F	0.0"	0	0.0"	0
65°F	+1.0"	62	+0.25"	58
75°F	+2.0"	124	+0.50"	117
85°F	+3.0"	186	+0.75"	175
95°F	+4.0"	248	+1.0"	233

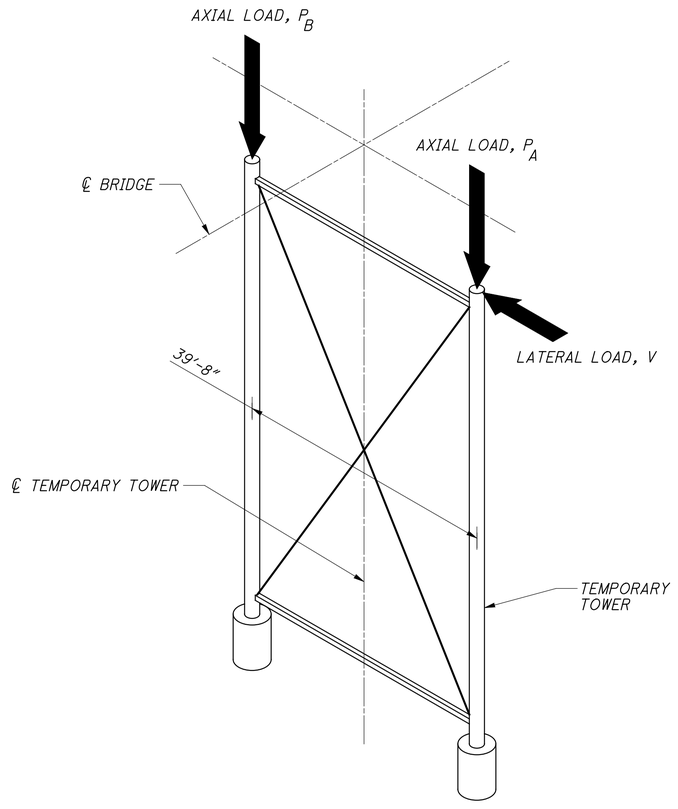

LOADS ON TEMPORARY TOWERS

TEMPORARY TOWER LOADS: DEAD LOAD + WIND LOADS

	P_B	P_A	V
LOAD CASE 1	+281 K	+291 K	40 K
LOAD CASE 2	-315 K	-439 K	6 K

(-) COMPRESSION; (+) TENSION
ALL LOADS ARE SERVICE LEVEL.
EACH TEMPORARY TOWER LEG SHALL BE DESIGNED FOR THE MAXIMUM TENSION AND COMPRESSION FORCE INDICATED IN THE TABLE ABOVE. LOAD CASE 1 IS WIND DURING CANTILEVERING OPERATIONS CREATING MAXIMUM UPLIFT ON TEMPORARY TOWER. LOAD CASE 2 IS WIND DURING CANTILEVERING OPERATIONS CREATING MAXIMUM COMPRESSION ON TEMPORARY TOWERS. SEE GENERAL NOTES FOR WIND LOADING DURING CONSTRUCTION STAGE 2.

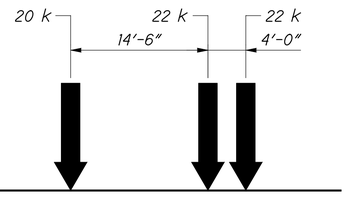

CONSTRUCTION LIVE LOAD DETAIL
(SEE NOTE 6)

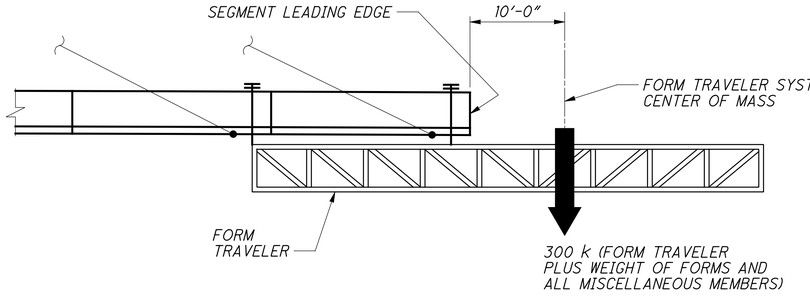

ASSUMED FORM TRAVELER WEIGHT

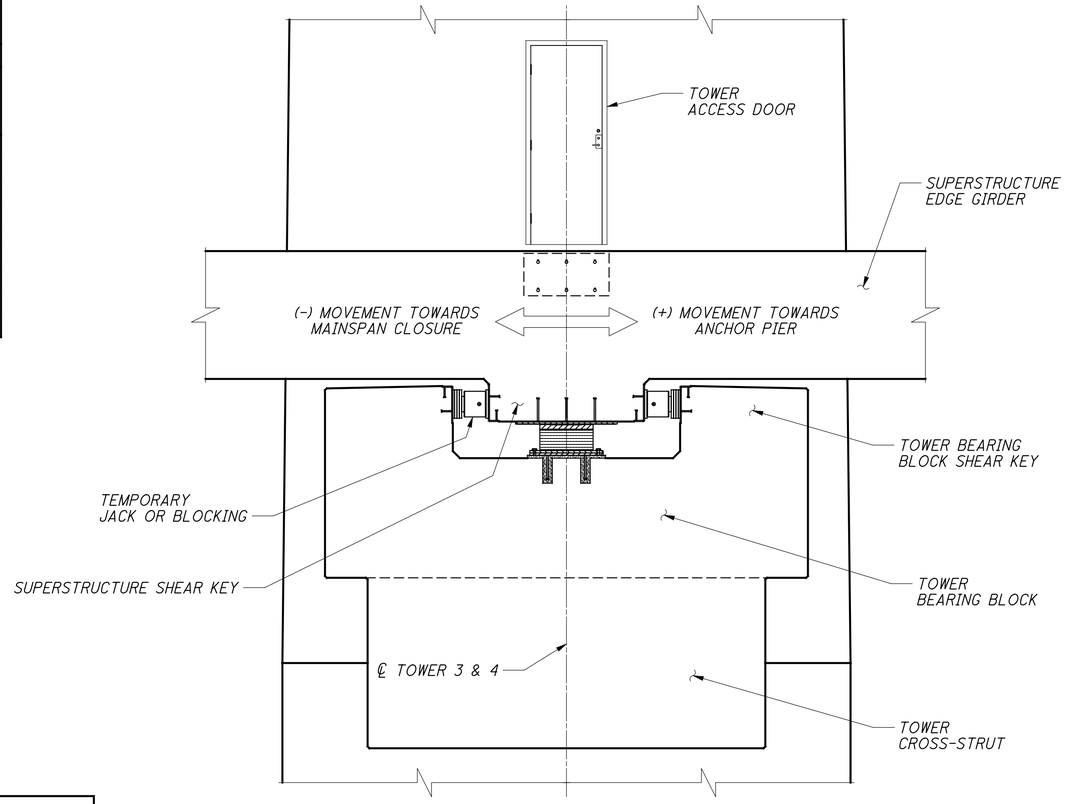

SUPERSTRUCTURE JACKING DETAILS
(FOR TEMPERATURE ADJUSTMENT PRIOR TO MAINSPAN CLOSURE POUR, SEE TABLE OF REQUIRED JACKING MOVEMENTS.)

NOTES

1. THE INFORMATION SHOWN IN THE ERECTION SEQUENCE DRAWINGS CONVEYS THE ASSUMPTION MADE DURING THE DESIGN OF THE STRUCTURE. ALL INFORMATION IS FOR THE CONTRACTORS INFORMATION ONLY AND THE CONTRACTOR IS FULLY RESPONSIBLE FOR SELECTING THE MEANS AND METHODS TO CONSTRUCT THE STRUCTURE. THE CONTRACTOR SHALL SUBMIT FOR REVIEW AND APPROVAL OF THE ENGINEER, CALCULATIONS OF THE INFLUENCE OF THE SELECTED ERECTION SEQUENCE, LOADS AND DETAILS ON THE STRUCTURE, IN ACCORDANCE WITH THE PROJECT SPECIFICATIONS. THESE DOCUMENTS SHALL BE SIGNED AND SEALED BY A PROFESSIONAL ENGINEER REGISTERED IN THE STATE OF OHIO.

2. THE COST OF DESIGNING, FURNISHING, INSTALLING AND REMOVING THE TEMPORARY TOWERS, INCLUDING ANY FOOTING CAPS, FOUNDATIONS, TENSION TIE-DOWNS AND ANY MISCELLANEOUS HARDWARE, SHALL BE CONSIDERED INCIDENTAL TO THE CLASS QSC3 CONCRETE CAST-IN-PLACE SUPERSTRUCTURE.

3. EACH TEMPORARY TOWER FRAME SHALL BE DESIGNED FOR A SERVICE COMPRESSION FORCE OF 754 KIPS AND A TENSION FORCE OF 572 KIPS FOR THE FULL BRIDGE WIDTH. THESE LOADS ARE AT THE TOP OF THE TEMPORARY TOWERS AND INCLUDE UNBALANCED DEAD LOADS, CONSTRUCTION LIVE LOADS AND VERTICAL WIND LOADS. EACH TEMPORARY TOWER FRAME SHALL BE DESIGNED FOR A LATERAL FORCE OF 40 KIPS, LOCATED AT THE TOP OF THE TEMPORARY TOWER, DUE TO WIND LOADS. THE LOADS INDICATED FOR THE TEMPORARY TOWERS ARE FOR INFORMATION ONLY. THE CONTRACTOR SHALL BE RESPONSIBLE FOR DETERMINING THE LOADS ON THE TEMPORARY TOWERS BASED ON THE CHOSEN METHOD OF ERECTION.

4. A MINIMUM CONCRETE COMPRESSIVE STRENGTH OF 4500 PSI SHALL BE OBTAINED PRIOR TO FINAL STAY STRESSING AND APPLICATION OF CONSTRUCTION LIVE LOAD.

5. PRIOR TO RELEASING THE JACKS BETWEEN THE OH PIER TABLE AND TOWER 4, THE GAP SHALL BE FULLY SHIMMED FOR THE PERMANENT CONFIGURATION.

6. SUPERSTRUCTURE DURING CANTILEVERING HAS BEEN CHECKED FOR THE VEHICLE SHOWN IN CONSTRUCTION LIVE LOAD DETAIL. THIS LOAD IS NON-CONCURRENT WITH THE 10 PSF CONSTRUCTION LIVE LOAD. LOADS SHOWN ARE AXLE LOADS.

DESIGN AGENCY
URS
36 EAST 7TH STREET
SUITE 2300
CINCINNATI, OHIO 45202

DESIGNED RTG | DRAWN JLS | CHECKED BWJ | REVIEWED DLJ | DATE 6/2010 | REVISED | STRUCTURE FILE NUMBER 4401263

CABLE STAYED ERECTION SEQUENCE (11 OF 11)
BRIDGE NO. LAW-93-0000
IRONTON RUSSELL BRIDGE OVER OHIO RIVER

LAW-93-0.00
PID No. 81595

256/365
643/788

E:\Bridges_XM\Ironton_Russell\LAW\81595\structures\LAW093_0000C\sheets\093_0000CPC001.dgn 4/25/2011 10:26:36 AM john_stahl

TOWER ERECTION NOTES

1. CONSTRUCTION SEQUENCE SHOWN IS CONCEPTUAL AND IS PRESENTED FOR INFORMATION ONLY AND IS NOT TO BE CONSIDERED PART OF THE BID DOCUMENTS.
2. THE CONTRACTOR SHALL BE RESPONSIBLE FOR DEVELOPING DETAILS OF ALL ERECTION STAGES AND ALL CALCULATIONS FOR CAMBER AND STRESS CONTROL NECESSARY FOR THE SAFE ERECTION OF THE BRIDGE.
3. FOR JACKING AND TEMPORARY CROSS-STRUT NOTES, SEE SHEET 258/365.
4. CONTRACTOR IS RESPONSIBLE FOR DESIGN AND PERMITTING OF TOWER CRANE, AS WELL AS CONTROL OF TOWER LEG STRESSES AS A RESULT OF THE TOWER CRANE. TOWER LEG IS DESIGNED TO SUPPORT THE FOLLOWING CONCEPTUAL TOWER CRANE LOADS:
   MID SEGMENT 6 465 ft/kips TORSION
   92 kips LATERAL FORCES
   MID SEGMENT 11 465 ft/kips TORSION
   92 kips LATERAL FORCES

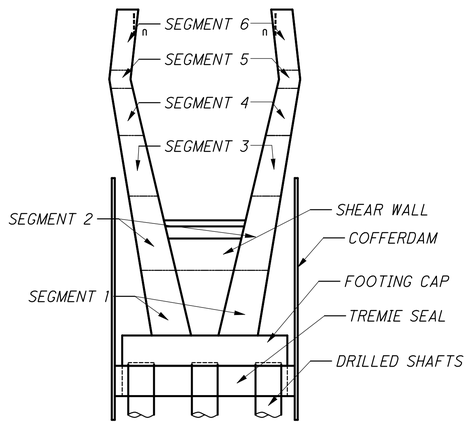

STAGE I

1. CONSTRUCT DRILLED SHAFTS.
2. CONSTRUCT COFFERDAMS AND TREMIE SEAL.
3. CONSTRUCT FOOTING CAP.
4. CONSTRUCT LOWER TOWER LEG SEGMENTS 1 & 2.
5. CONSTRUCT SHEAR WALL BETWEEN TOWER LEGS.
6. CONSTRUCT LOWER TOWER LEG SEGMENTS 3 & 4.
7. CONSTRUCT TOWER LEG SEGMENT 5.
8. CONSTRUCT UPPER TOWER LEG SEGMENT 6.

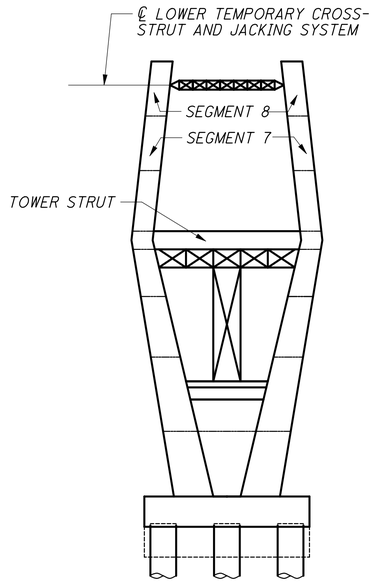

STAGE II

1. INSTALL FALSEWORK FOR TOWER STRUT.
2. FORM AND CAST TOWER STRUT.
3. POST TENSION TOWER STRUT. MINIMUM STRENGTH OF CONCRETE IN TOWER STRUT SHALL BE 5000 psi PRIOR TO POST-TENSIONING.
4. CONSTRUCT UPPER TOWER LEG SEGMENTS 7 & 8.
5. INSTALL LOWER TEMPORARY CROSS-STRUT AT EL. 635.50.

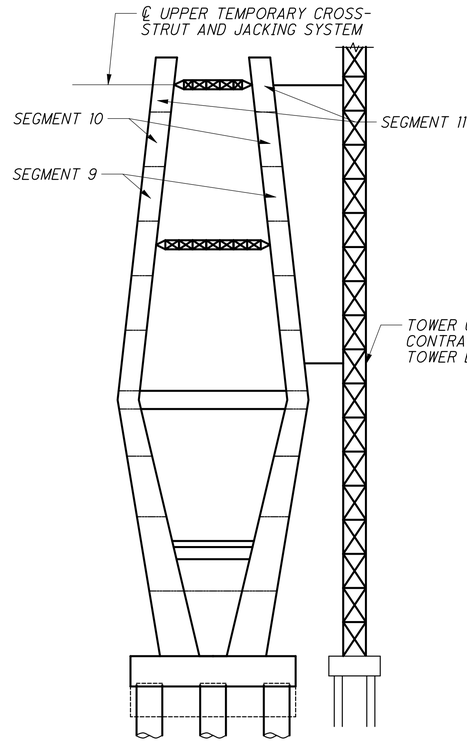

STAGE III

1. CONSTRUCT UPPER TOWER LEG SEGMENTS 9, 10, & 11.
2. INSTALL UPPER TEMPORARY CROSS-STRUT AT EL. 688.00.

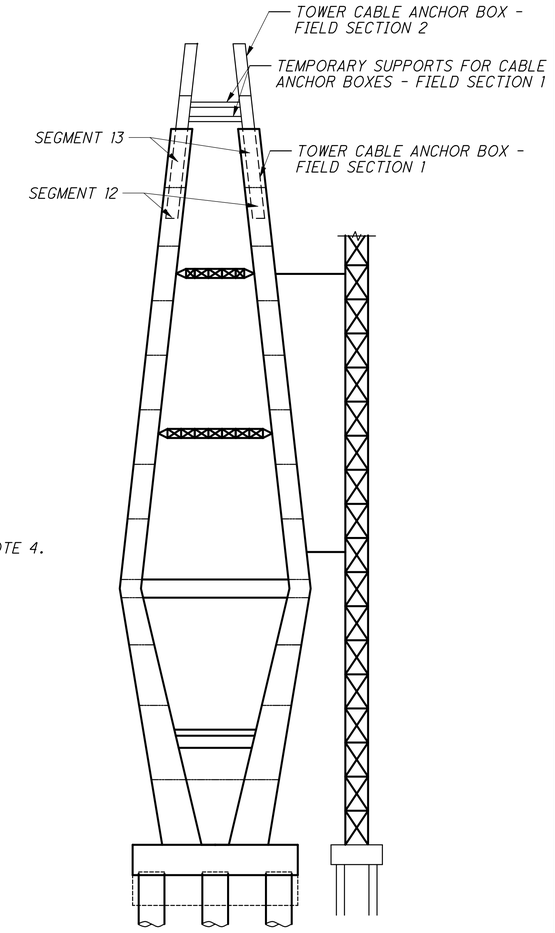

STAGE IV

1. INSTALL CABLE ANCHOR BOX-FIELD SECTION 1 AND TEMPORARY SUPPORTS.
2. CONSTRUCT UPPER TOWER LEG SEGMENTS 12 AND 13.
3. INSTALL CABLE ANCHOR BOX-FIELD SECTION 2.
4. JACK UPPER TEMPORARY CROSS-STRUT UNTIL STRESSES ON TEMPORARY SUPPORTS FOR CABLE ANCHOR BOXES ARE REMOVED.
5. REMOVE TEMPORARY SUPPORTS FOR TOWER CABLE ANCHOR BOX-FIELD SECTION 1.

J:\Project\O\ODOT\15005112 Ironton Russell\LAW\81595\structures\LAW093_1111C\sheets\Towers\093_0000_pi359.dgn -- 4/29/2011 9:30:56 AM -- john_corley

DESIGN AGENCY
URS
36 EAST 7TH STREET
SUITE 2300
CINCINNATI, OHIO 45202

DESIGNED	DRAWN	REVIEWED	DATE
MJZ	NH	BA	6-10
CHECKED	REVISED	STRUCTURE FILE NUMBER	
BER		4401263	

TOWER ERECTION SEQUENCE (1 OF 2)
BRIDGE NO. LAW-93-0000
IRONTON RUSSEL BRIDGE OVER OHIO RIVER

LAW-93-0.00
PID No. 81595

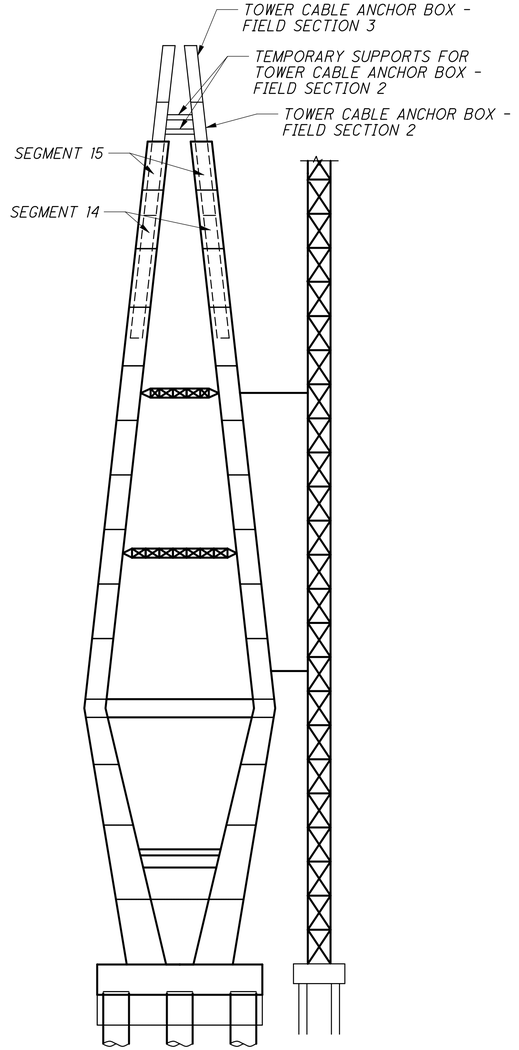

STAGE V

1. INSTALL TEMPORARY SUPPORTS FOR CABLE ANCHOR BOX - FIELD SECTION 2.
2. CONSTRUCT UPPER TOWER LEG SEGMENTS 14 AND 15.
3. INSTALL TOWER CABLE ANCHOR BOX - FIELD SECTION 3.
4. JACK UPPER TEMPORARY CROSS STRUT UNTIL STRESSES ON TEMPORARY SUPPORTS FOR CABLE ANCHOR BOX - FIELD SECITON 2 ARE REMOVED.
5. REMOVE TEMPORARY SUPPORTS FOR CABLE ANCHOR BOX - FIELD SECITON 2.

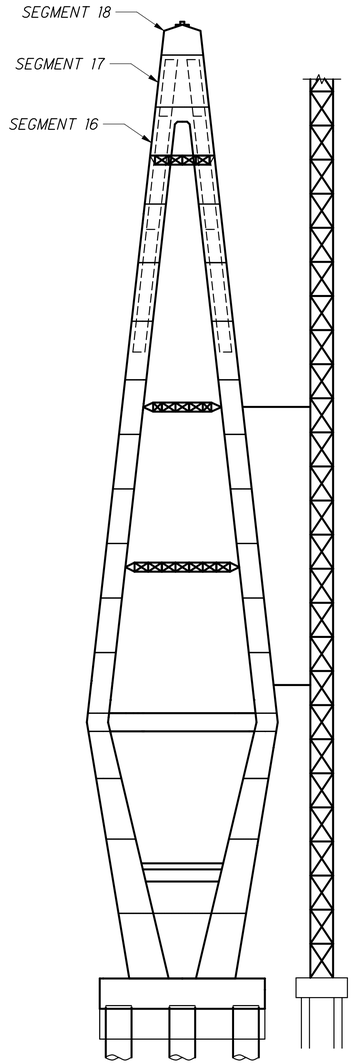

STAGE VI

1. CONSTRUCT TEMPORARY STRUT AND FORMWORK AT TOP OF SEGMENT 15.
2. CONSTRUCT TOWER SEGMENTS 16, 17, & 18.

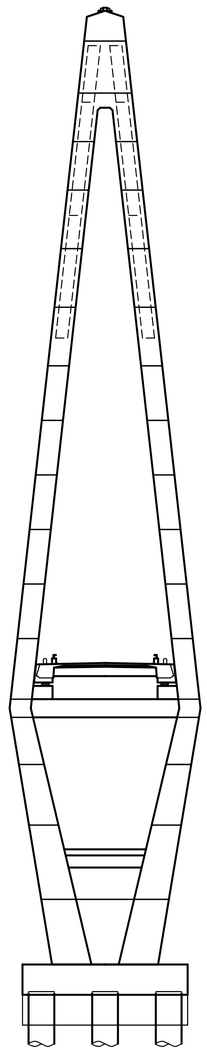

STAGE VII

1. REMOVE UPPER TEMPORARY CROSS-STRUT.
2. REMOVE LOWER TEMPORARY CROSS-STRUT.
3. CONSTRUCT BEARING PEDESTALS ON CROSS-STRUT.

JACKING NOTES

1. THE CONTRACTOR SHALL BE RESPONSIBLE FOR THE DESIGN, INSTALLATION AND OPERATION OF AN ADEQUATE JACKING SYSTEM INCLUDING ANY TEMPORARY OR PERMANENT SUPPORTS NECESSARY TO PERFORM THE WORK DESCRIBED.
2. JACKS ALONE SHALL NOT BE USED TO SUPPORT THE JACKING FORCE EXCEPT DURING ACTUAL JACKING OPERATION. SUPPORTS APPROVED BY THE ENGINEER SHALL BE INSTALLED IMMEDIATELY UPON COMPLETION OF THE JACKING OPERATION TO SUPPORT THE LOAD.
3. THE CONTRACTOR SHALL SUBMIT 3 SETS OF JACKING PLANS, CALCULATIONS AND PROCEDURES IN CONJUCTION WITH THE TEMPORARY CROSS STRUT DESIGN SUBMITTAL.
4. PAYMENT SHALL BE INCLUDED IN THE UNIT PRICE FOR ITEM 898, QC/QA CONCRETE, CONCRETE CLASS QSC3 (PIER 2. TOWER 3 TOWER 4, PIER 5)

TEMPORARY CROSS-STRUT NOTES

1. THE CONTRACTOR SHALL BE RESPONSIBLE FOR THE DESIGN AND INSTALLATION OF THE TEMPORARY CROSS-STRUTS INCLUDING COMPUTATIONS OF DEAD LOAD, WIND LOAD, AND THERMAL LOAD EFFECTS.
2. FOR ESTIMATING PURPOSES THE CONTRACTOR MAY USE THE FOLLOWING DEAD LOAD FORCES ON THE TEMPORARY CROSS-STRUTS:
   LOWER TEMPORARY CROSS STRUT = 190 KIPS
   UPPER TEMPORARY CROSS STRUT = 335 KIPS
3. SWIVEL LOAD CAPS OR SOME OTHER DEVICE SHALL BE USED TO PREVENT BENDING IN THE TEMPORARY CROSS-STRUTS.
4. THE CONTRACTOR SHALL SUBMIT 3 SETS OF PLANS, CALCULATIONS AND PROCEDURES TO THE ENGINEER FOR APPROVAL AT LEAST 30 DAYS BEFORE WORK IS TO BEGIN. THE PLANS, CALCULATIONS, AND PROCEDURES SHALL BE PREPARED AND STAMPED BY A PROFESSIONAL ENGINEER REGISTERED IN THE STATE OF OHIO.
5. PAYMENT SHALL BE INCLUDED IN THE UNIT PRICE FOR ITEM 898, QC/QA CONCRETE, CLASS QSC3 (PIER 2, TOWER 3, TOWER 4, PIER 5)

DESIGN AGENCY
URS
36 EAST 7TH STREET
SUITE 2300
CINCINNATI, OHIO 45202

DESIGNED	DRAWN	REVIEWED	DATE
MJZ	NH	BA	6-10
CHECKED	REVISED	STRUCTURE FILE NUMBER	
BER		4401263	

TOWER ERECTION SEQUENCE (2 OF 2)
BRIDGE NO. LAW-93-0000
IRONTON RUSSEL BRIDGE OVER OHIO RIVER

LAW-93-0.00
PID No. 81595

J:\Project\0\ODOT\15005112 Ironton Russell\LAW\81595\structures\LAW093_1111C\sheets\Towers\093_0000_pi360.dgn — 4/29/2011 9:31:03 AM — john_corley

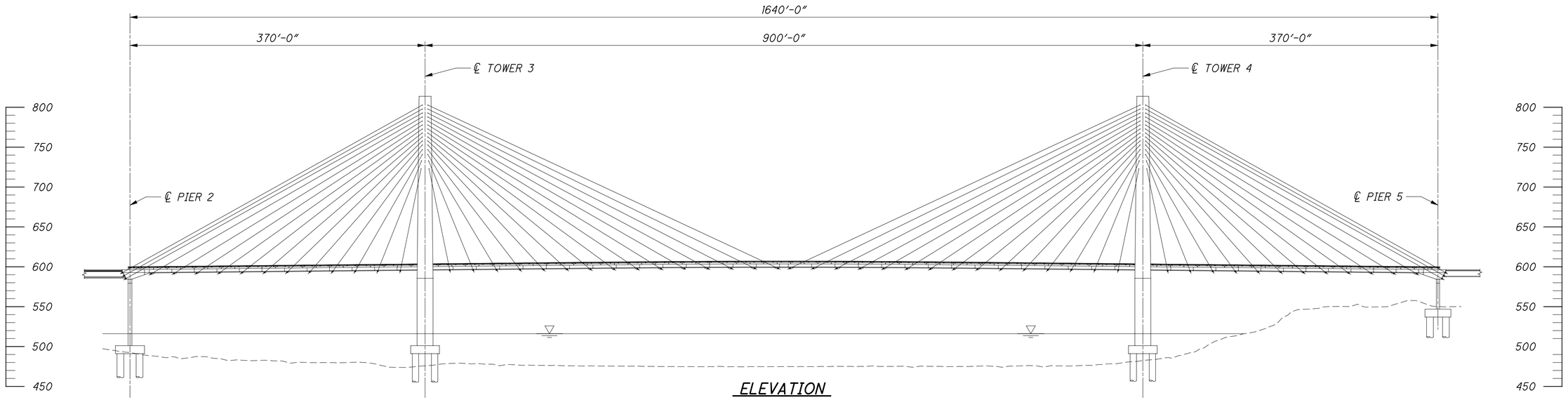

ELEVATION

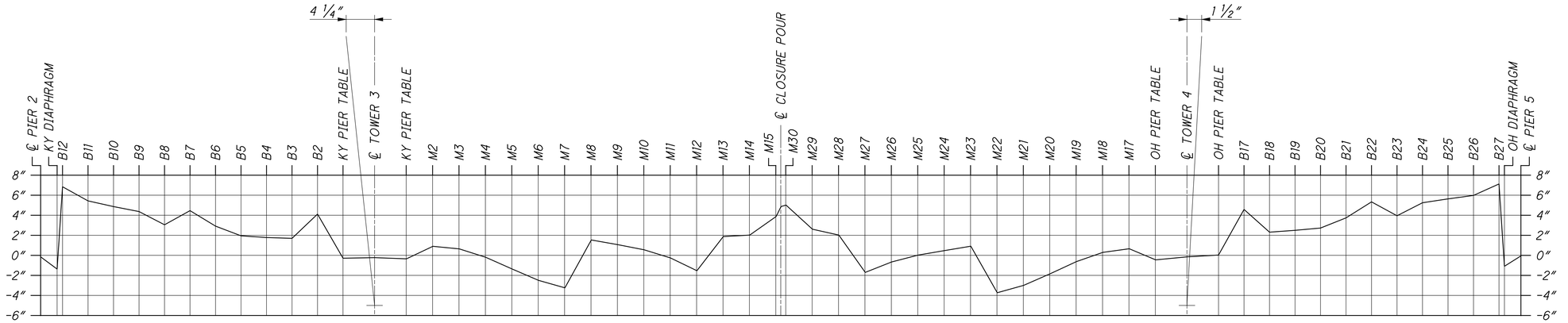

CAMBER AT DAY 10,000 *

* BRIDGE SHALL BE CAMBERED TO FINAL PROFILE AT DAY 10,000. CAMBER AT DAY 10,000 IS THE CAMBER REQUIRED AT SEGMENT CASTING TO MEET THE FINAL PROFILE IN DAY = 10,000.

CAMBER AT DAY 10,000 TABLE

SEGMENT JOINT	PIER 2	KY DIAPHRAGM	B12	B11	B10	B9	B8	B7	B6	B5	B4	B3	B2	KY PIER TABLE	TOWER 3	KY PIER TABLE	M2	M3	M4	M5	M6	M7	M8	M9	M10	M11	M12	M13	M14	M15
CAMBER (in)	-0.15	-1.37	6.84	5.43	4.86	4.37	3.05	4.46	2.91	1.95	1.78	1.69	4.12	-0.29	-0.23	-0.35	0.90	0.64	-0.19	-1.36	-2.50	-3.24	1.53	1.07	0.55	-0.26	-1.54	1.88	2.02	3.78

CAMBER AT DAY 10,000 TABLE CONTINUED

SEGMENT JOINT	℄ CLOSURE POUR	M30	M29	M28	M27	M26	M25	M24	M23	M22	M21	M20	M19	M18	M17	OH PIER TABLE	TOWER 4	OH PIER TABLE	B17	B18	B19	B20	B21	B22	B23	B24	B25	B26	B27	OH DIAPHRAGM	PIER 5
CAMBER (in)	4.87	5.01	2.61	2.02	-1.70	-0.66	0.02	0.47	0.91	-3.73	-3.00	-1.84	-0.63	0.29	0.66	-0.45	-0.15	0.03	4.58	2.31	2.49	2.72	3.74	5.33	3.95	5.25	5.63	5.98	7.12	-1.09	-0.06

CASTING DAY TABLE

SEGMENT NUMBER	PIER 2 CLOSURE	B12	B11	B10	B9	B8	B7	B6	B5	B4	B3	B2	TOWER 3 PIER TABLE	M2	M3	M4	M5	M6	M7	M8	M9	M10	M11	M12	M13	M14	M15	℄ CLOSURE POUR	M30	M29	M28	M27	M26	M25	M24	M23	M22	M21	M20	M19	M18	M17	TOWER 4 PIER TABLE	B17	B18	B19	B20	B21	B22	B23	B24	B25	B26	B27	PIER 5 CLOSURE
CASTING DAY	331	303	275	247	219	191	161	133	105	77	49	21	0	35	63	91	119	147	175	205	233	261	289	317	352	373	394	806	795	774	753	718	690	662	634	606	576	548	520	492	464	436	401	422	450	478	506	534	562	592	620	648	676	704	732

DESIGN AGENCY
URS
36 EAST 7TH STREET
SUITE 2300
CINCINNATI, OHIO 45202

DESIGNED	DRAWN	REVIEWED	DATE
BTC	CJK	DLJ	6/2010
CHECKED	REVISED	STRUCTURE FILE NUMBER	
BWJ		4401263	

CABLE STAYED CAMBER
BRIDGE NO. LAW-93-0000
IRONTON RUSSELL BRIDGE OVER OHIO RIVER

LAW-93-0.00
PID No. 81595

259/365
646/788

E:\Bridges_XM\Ironton_Russell\LAW\81595\structures\LAW093_0000C\sheets\093_0000CMD014.dgn 4/25/2011 10:26:51 AM john_stahl

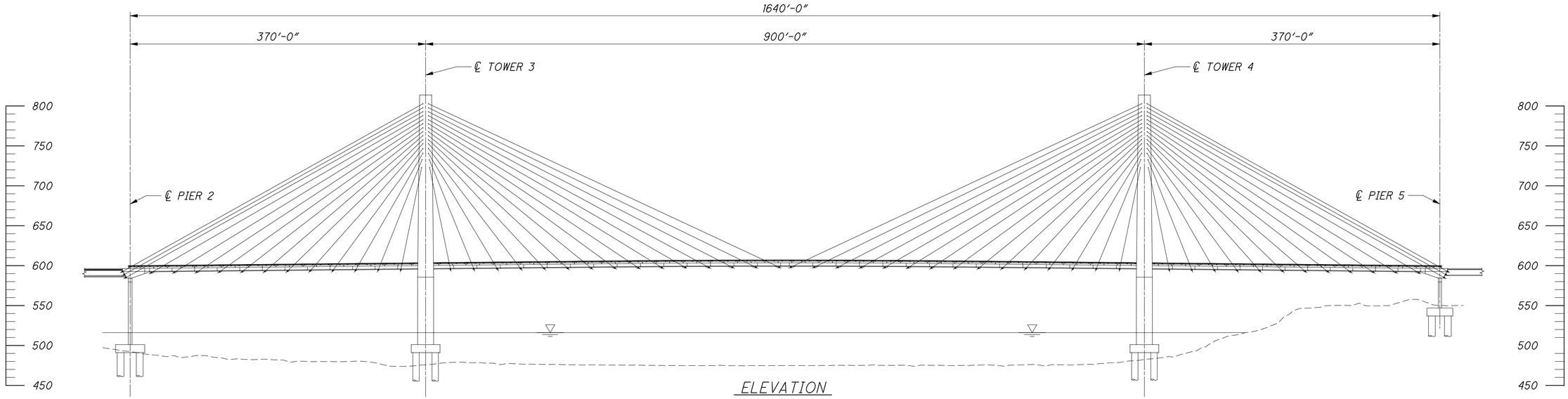

ELEVATION

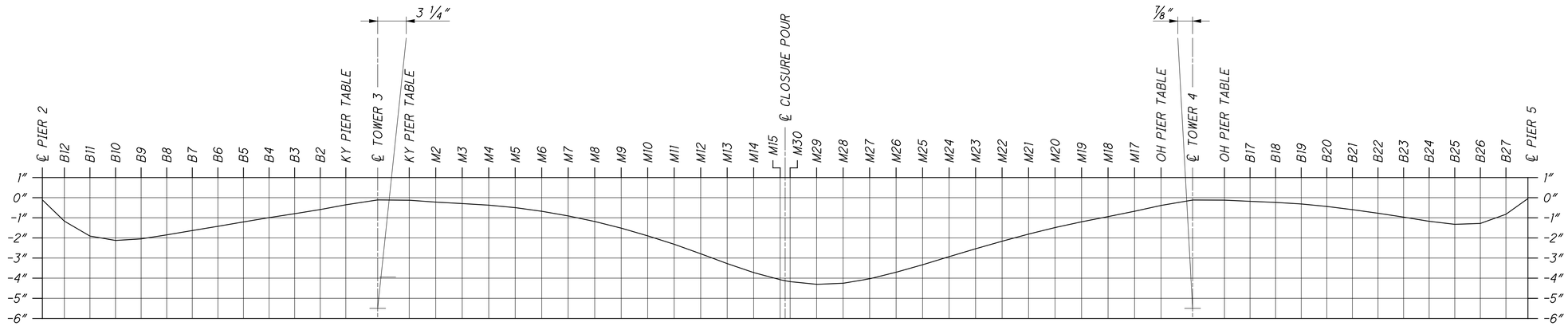

DEFLECTION FROM END OF CONSTRUCTION TO DAY 10,000

DEFLECTION FROM END OF CONSTRUCTION TO DAY 10,000 TABLE

SEGMENT JOINT	PIER 2	B12	B11	B10	B9	B8	B7	B6	B5	B4	B3	B2	KY PIER TABLE	TOWER 3	KY PIER TABLE	M2	M3	M4	M5	M6	M7	M8	M9	M10	M11	M12	M13	M14	M15
DEFLECTION (in)	-0.11	-1.17	-1.91	-2.12	-2.05	-1.85	-1.63	-1.42	-1.20	-0.99	-0.80	-0.59	-0.35	-0.11	-0.13	-0.22	-0.29	-0.37	-0.50	-0.68	-0.91	-1.19	-1.52	-1.90	-2.32	-2.79	-3.28	-3.73	-4.08

DEFLECTION FROM END OF CONSTRUCTION TO DAY 10,000 TABLE CONTINUED

SEGMENT JOINT	℄ CLOSURE POUR	M30	M29	M28	M27	M26	M25	M24	M23	M22	M21	M20	M19	M18	M17	OH PIER TABLE	TOWER 4	OH PIER TABLE	B17	B18	B19	B20	B21	B22	B23	B24	B25	B26	B27	PIER 5
DEFLECTION (in)	-4.13	-4.17	-4.30	-4.25	-4.03	-3.70	-3.33	-2.93	-2.53	-2.16	-1.80	-1.48	-1.20	-0.94	-0.67	-0.38	-0.12	-0.12	-0.18	-0.24	-0.31	-0.44	-0.59	-0.77	-0.97	-1.17	-1.32	-1.28	-0.82	-0.04

DESIGN AGENCY
URS
38 EAST 7TH STREET
SUITE 2300
CINCINNATI, OHIO 45202

DESIGNED	DRAWN	REVIEWED	DATE
BTC	CJK	DLJ	6/2010
CHECKED	REVISED	STRUCTURE FILE NUMBER	
BWJ		4401263	

CABLE STAYED DEFLECTION
BRIDGE NO. LAW-93-0000
IRONTON RUSSELL BRIDGE OVER OHIO RIVER

LAW-93-0.00
PID No. 81595

260/365

647
788

4/25/2011 10:27:01 AM john_stahl

E:\Bridges_XM\Ironton_Russell\LAW\81595\structures\LAW093_0000C\sheets\093_0000CMD015.dgn

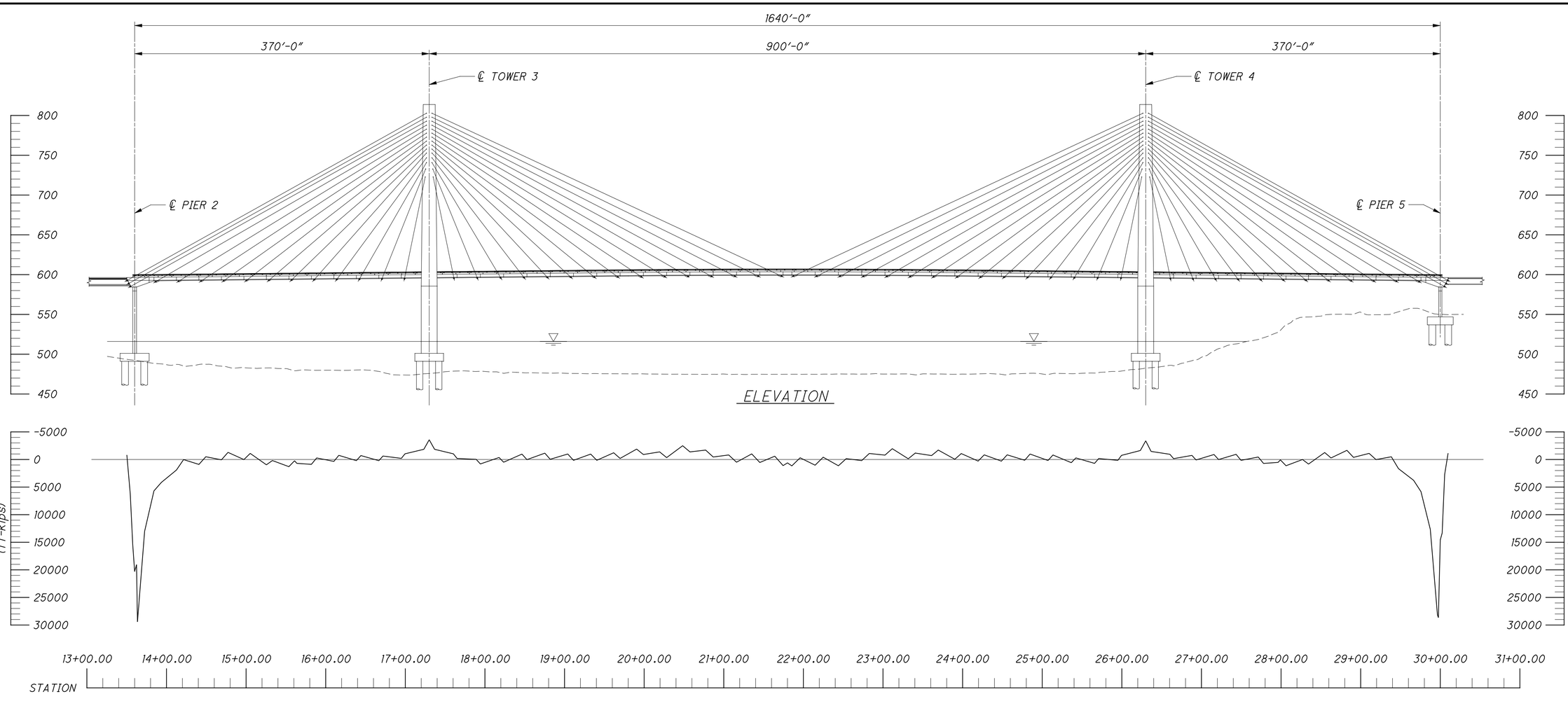

PERMANENT LOAD MOMENT

TABLE OF MOMENT VALUES (PER FULL BRIDGE WIDTH)

Stationing	Moment (ft-kips)	Stationing	Moment (ft-kips)	Stationing	Moment (ft-kips)	Stationing	Moment (ft-kips)	Stationing	Moment (ft-kips)	Stationing	Moment (ft-kips)
13+50.25	-759.32	15+82.00	878.84	18+82.00	-37.18	21+85.50	1153.1	25+07.25	181.14	27+99.14	65.5
13+54.47	6181.44	15+88.67	-278.57	19+04.05	-993.71	21+95.93	-307.56	25+13.52	-814.55	28+06.25	1130.13
13+57.63	15482.64	16+10.25	342.12	19+11.25	152.6	22+14.75	1034.18	25+36.50	574.67	28+26.98	4.61
13+60.00	20295.9	16+16.46	-749.68	19+32.87	-978.69	22+24.87	-412.38	25+42.26	-286.45	28+34.50	828.69
13+62.37	19054.21	16+38.50	205.63	19+40.50	146.72	22+44.00	1136.88	25+65.75	703.58	28+54.84	-1260.91
13+63.55	29410.72	16+44.22	-710.98	19+61.71	-1219.14	22+53.82	-153.04	25+70.95	-170.92	28+62.75	-280.55
13+72.55	13001.17	16+66.75	214.72	19+69.75	-193.38	22+73.25	202.89	25+95.00	156.11	28+82.72	-1657.1
13+84.25	5690.49	16+71.93	-625.17	19+90.58	-1884.15	22+82.74	-1088.69	25+99.59	-744.77	28+91.00	-383.84
13+93.52	4159.42	16+95.00	-201.63	19+99.00	-902.16	23+02.50	-793.59	26+23.25	-1626.34	29+10.62	-1106.05
14+12.50	1912.28	16+99.59	-1028.79	20+19.45	-1378.22	23+11.65	-1957.79	26+30.00	-3378.14	29+19.25	19.32
14+21.46	16.81	17+23.25	-1846.14	20+28.25	-341.6	23+31.75	-131.58	26+36.75	-1463.24	29+38.54	-492.21
14+40.75	893.84	17+30.00	-3578.65	20+48.35	-2495.44	23+40.55	-1162.59	26+60.41	-941.73	29+47.50	1658.76
14+49.38	-497.32	17+36.75	-1845.29	20+57.50	-1375.66	23+61.00	-709.6	26+65.00	-151.67	29+66.48	3771.34
14+69.00	60.66	17+60.41	-1024.51	20+77.26	-1703.74	23+69.42	-1708.76	26+88.07	-740.67	29+75.75	5825.26
14+77.28	-1287.67	17+65.00	-186.75	20+86.75	-448.44	23+90.25	-40.29	26+93.25	86.79	29+87.45	12651.2
14+97.25	14.86	17+89.05	-22.21	21+06.18	-821.15	23+98.29	-1073.87	27+15.78	-901.95	29+96.45	28156.39
15+05.16	-1103.06	17+94.25	808.46	21+16.00	490.87	24+19.50	286.31	27+21.50	13.17	29+97.62	28654
15+25.50	959.87	18+17.74	-360.14	21+35.12	-1015.15	24+27.13	-841.03	27+43.54	-935.27	30+00.00	14580.86
15+33.02	189.41	18+23.50	488.94	21+45.25	541.74	24+48.75	296.11	27+49.75	155.18	30+02.37	13324.93
15+53.75	1297.76	18+46.48	-974.31	21+64.07	-595.45	24+55.95	-843.54	27+71.33	-445.12	30+05.52	2694.01
15+60.86	234.2	18+52.75	27.23	21+74.50	1107.59	24+78.00	136.14	27+78.00	712.03	30+09.75	-1081.08
15+63.75	699.79	18+75.26	-1147.21	21+80.00	617.65	24+84.74	-984.65	27+96.25	527.27		

NOTES

1. PERMANENT LOAD MOMENTS ARE UNFACTORED AND INCLUDES THE SUMMATION OF DEAD LOAD, SUPERIMPOSED DEAD LOADS, CREEP, SHRINKAGE, LOCKED-IN CONSTRUCTION LOADS (FORM TRAVLER), PRIMARY AND SECONDARY POST TENSIONING LOADS.
2. MOMENT VALUES REPORTED ARE FROM FORWARD STAGE, GEOMETRIC NON-LINEAR ANALYSIS.
3. MOMENT VALUES REPORTED ARE AT THE END OF CONSTRUCTION.

DESIGN AGENCY
URS
36 EAST 7TH STREET
SUITE 2300
CINCINNATI, OHIO 45202

DESIGNED	DRAWN	REVIEWED	DATE
RTG	CJK	DLJ	6/2010
CHECKED	REVISED	STRUCTURE FILE NUMBER	
BWJ		4401263	

PERMANENT LOAD MOMENTS AT END OF CONSTRUCTION (1 OF 2)
BRIDGE NO. LAW-93-0000
IRONTON RUSSELL BRIDGE OVER OHIO RIVER

LAW-93-0.00
PID No. 81595

E:\Bridges_XM\Ironton_Russell\LAW\81595\structures\LAW093_0000C\sheets\093_0000CMD012.dgn 4/25/2011 10:27:10 AM john_stahl

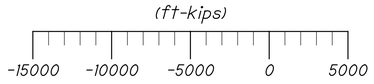

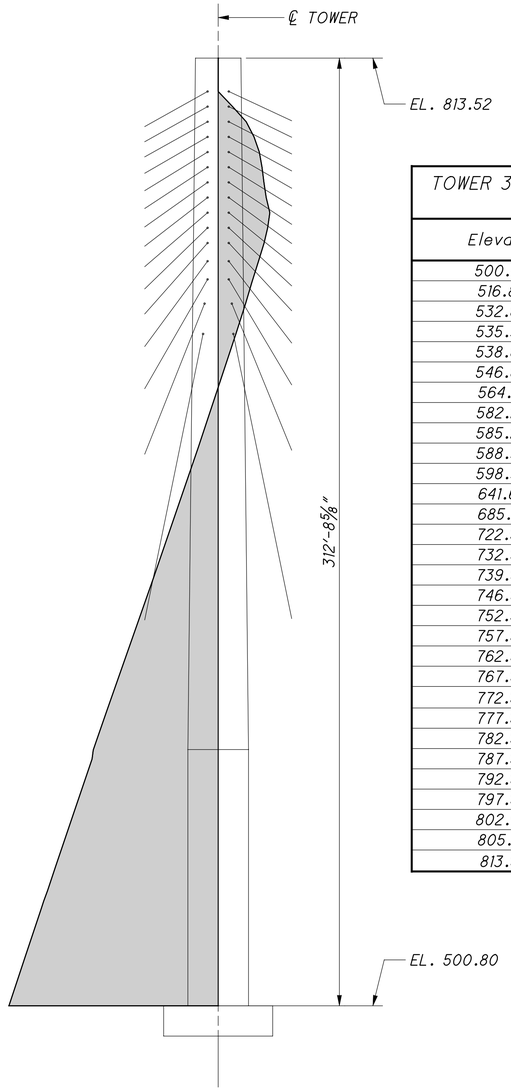

TOWER 3

TOWER 3 TABLE OF MOMENT VALUES (PER TOWER LEG)	
Elevation	Moment (ft-kips)
500.802	-13280.76
516.802	-12261.47
532.802	-11233.54
535.333	-11075.87
538.802	-10829.84
546.802	-10317.87
564.516	-9163.09
582.229	-8005.00
585.227	-7929.05
588.352	-7722.73
598.352	-7055.45
641.685	-4128.02
685.019	-1266.71
722.520	1124.00
732.520	1738.31
739.520	2136.82
746.520	2559.15
752.520	2914.39
757.520	3139.61
762.520	3277.84
767.520	3046.89
772.520	2902.69
777.520	2782.24
782.520	2610.46
787.520	2275.27
792.520	1778.92
797.520	914.10
802.520	-0.98
805.521	-0.75
813.521	-0.00

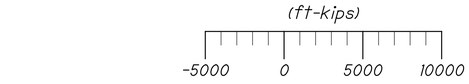

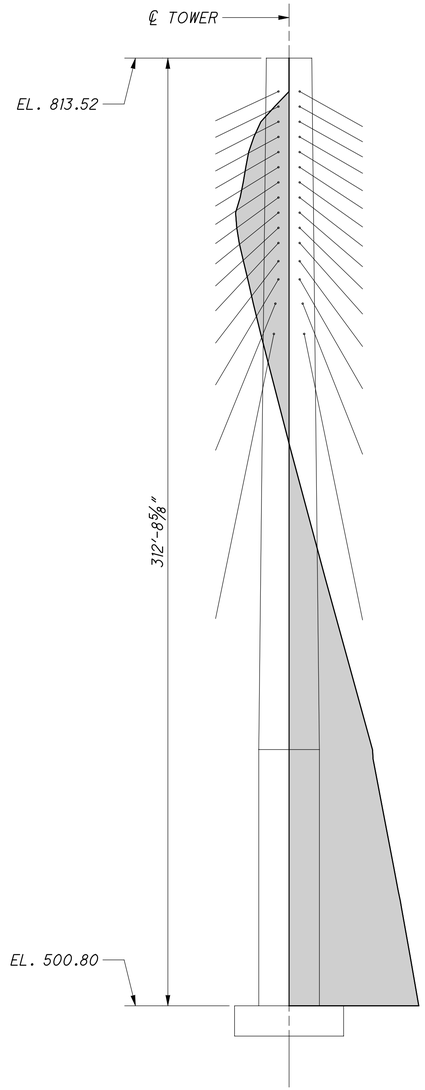

TOWER 4

TOWER 4 TABLE OF MOMENT VALUES (PER TOWER LEG)	
Elevation	Moment (ft-kips)
500.802	8231.53
516.802	7696.96
532.802	7146.08
535.333	7063.78
538.802	6923.70
546.802	6634.14
564.516	5981.23
582.229	5331.54
585.227	5299.43
588.352	5135.46
598.352	4605.43
641.685	2305.67
685.019	66.14
722.520	-1799.27
732.520	-2270.68
739.520	-2574.05
746.520	-2896.02
752.520	-3165.20
757.520	-3320.51
762.520	-3395.27
767.520	-3105.81
772.520	-2910.52
777.520	-2747.51
782.520	-2565.55
787.520	-2233.53
792.520	-1790.40
797.520	-919.40
802.520	0.54
805.521	0.42
813.521	0.00

E:\Bridges_XM\Ironton_Russell\LAW\81595\structures\LAW093_0000C\sheets\093_0000CMD013.dgn 4/25/2011 10:27:22 AM john_stahl

DESIGN AGENCY
URS
36 EAST 7TH STREET
SUITE 2300
CINCINNATI, OHIO 45202

DESIGNED	DRAWN	REVIEWED	DATE
RTG	CJK	DLJ	6/2010
CHECKED	REVISED	STRUCTURE FILE NUMBER	
BWJ		4401263	

PERMANENT LOAD MOMENTS AT END OF CONSTRUCTION (2 OF 2)
BRIDGE NO. LAW-93-0000
IRONTON RUSSELL BRIDGE OVER OHIO RIVER

LAW-93-0.00
PID No. 81595

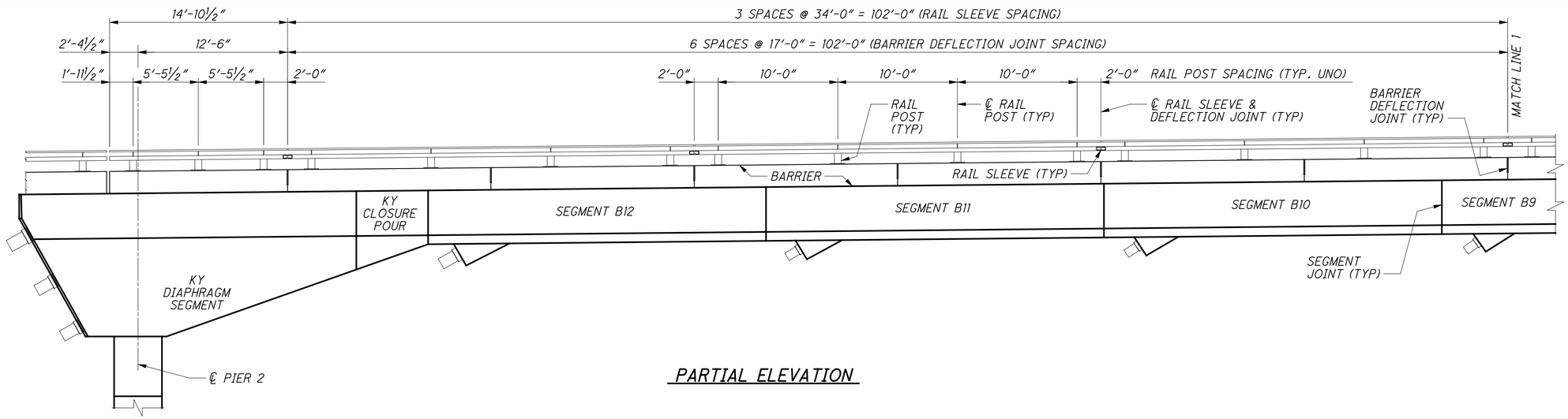

PARTIAL ELEVATION

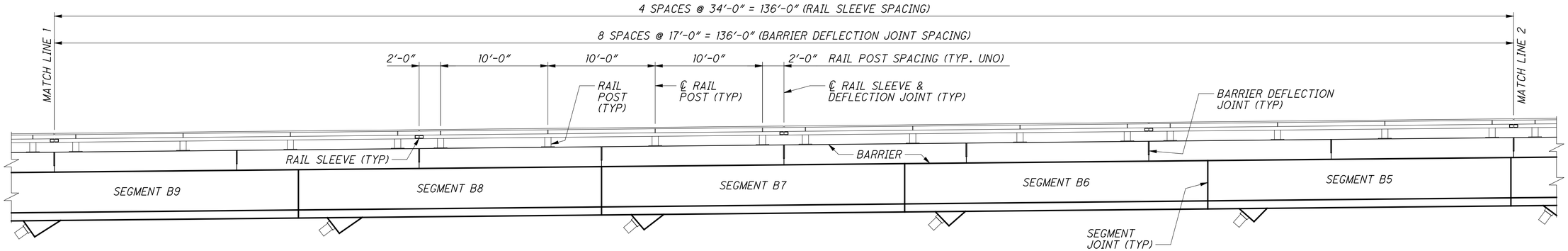

PARTIAL ELEVATION

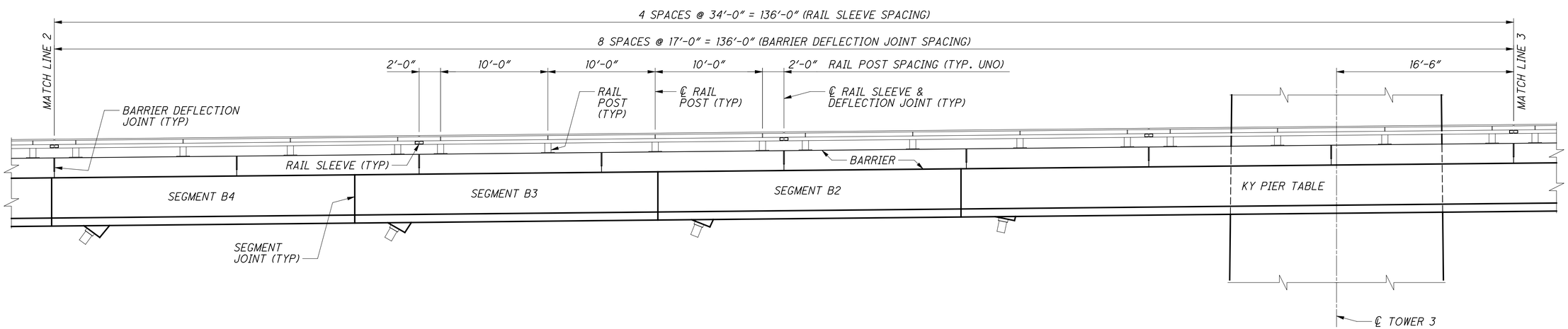

PARTIAL ELEVATION

DESIGN AGENCY
URS
36 EAST 7TH STREET
SUITE 2300
CINCINNATI, OHIO 45202

DESIGNED	DRAWN	REVIEWED	DATE
AR	JLS	DLJ	6/2010
CHECKED	REVISED	STRUCTURE FILE NUMBER	
BWJ		4401263	

BARRIER LAYOUT - MAINSPAN UNIT (1 OF 5)
BRIDGE NO. LAW-93-0000
IRONTON RUSSELL BRIDGE OVER OHIO RIVER

LAW-93-0.00 PID No. 81595

263/365

650/788

E:\Bridges_XM\Ironton_Russell\LAW\81595\structures\LAW093_0000C\sheets\093_0000CRA001.dgn 4/25/2011 10:27:31 AM john_stahl

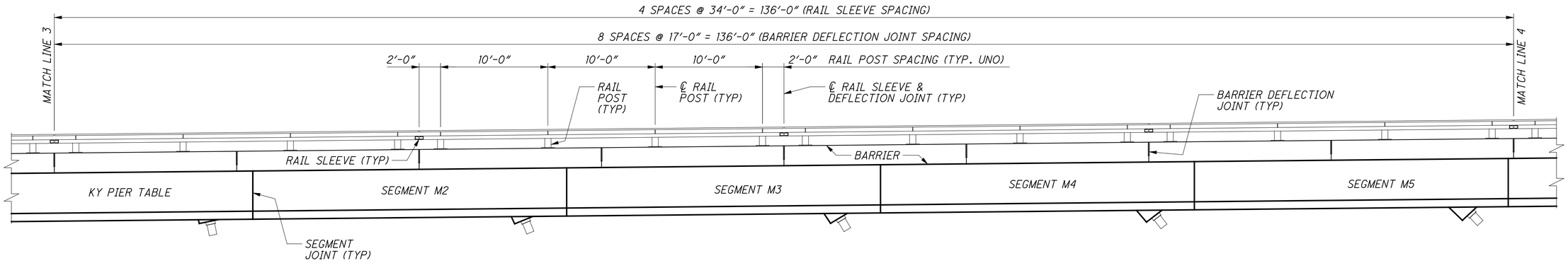

PARTIAL ELEVATION

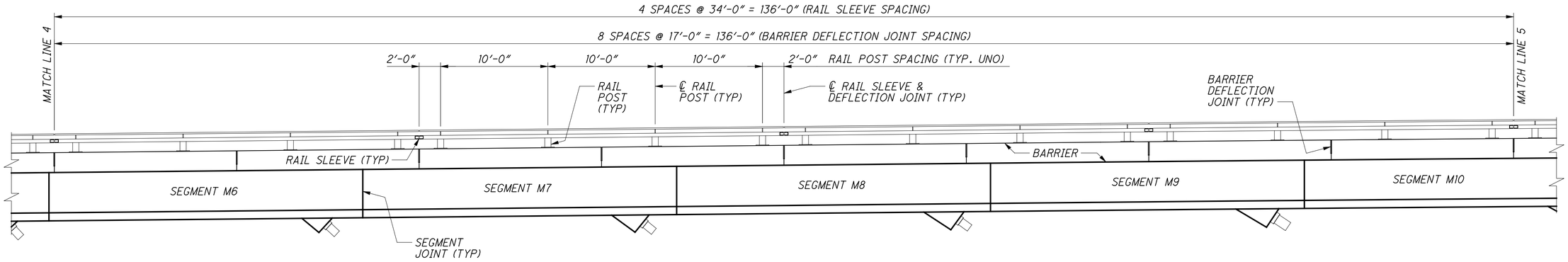

PARTIAL ELEVATION

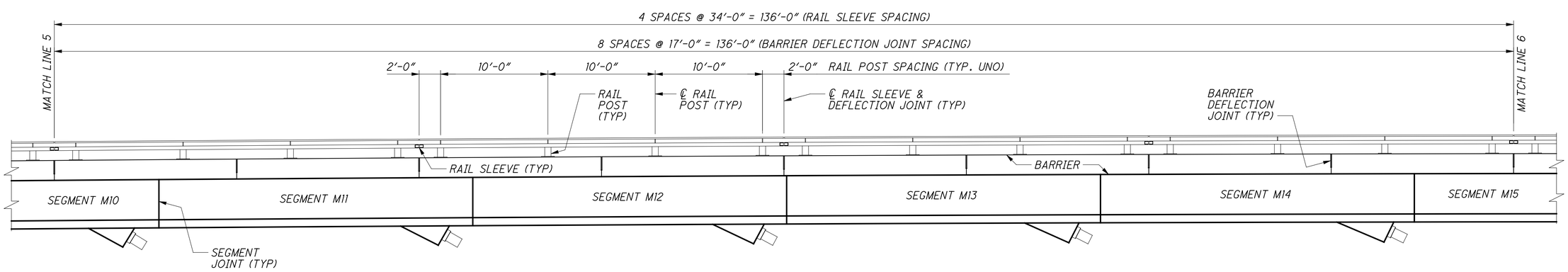

PARTIAL ELEVATION

DESIGN AGENCY
URS
36 EAST 7TH STREET
SUITE 2300
CINCINNATI, OHIO 45202

DESIGNED	DRAWN	REVIEWED	DATE
AR	JLS	DLJ	6/2010
CHECKED	REVISED	STRUCTURE FILE NUMBER	
BWJ		4401263	

BARRIER LAYOUT - MAINSPAN UNIT (2 OF 5)
BRIDGE NO. LAW-93-0000
IRONTON RUSSELL BRIDGE OVER OHIO RIVER

LAW-93-0.00
PID No. 81595

264/365

651
788

E:\Bridges_XM\Ironton_Russell\LAW\81595\structures\LAW093_0000C\sheets\093_0000CRA001.dgn 4/25/2011 10:27:37 AM john_stahl

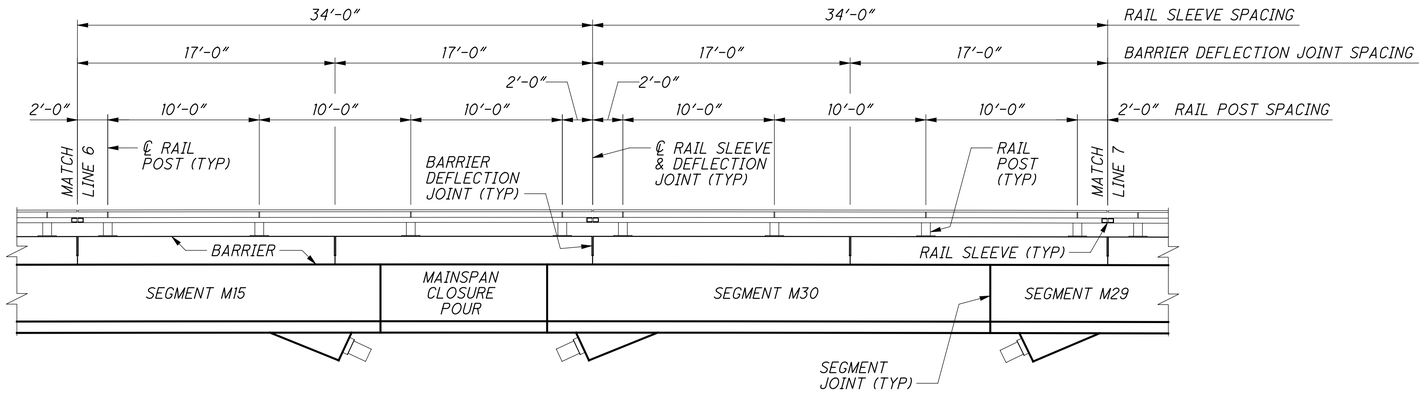

PARTIAL ELEVATION

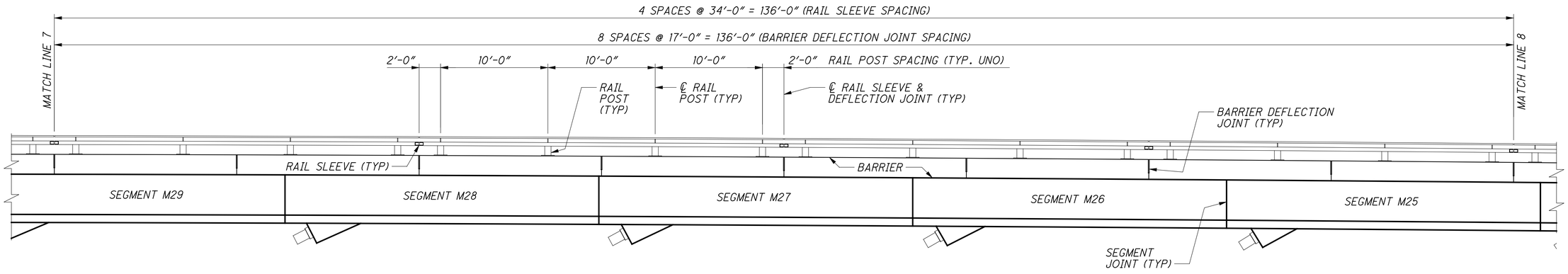

PARTIAL ELEVATION

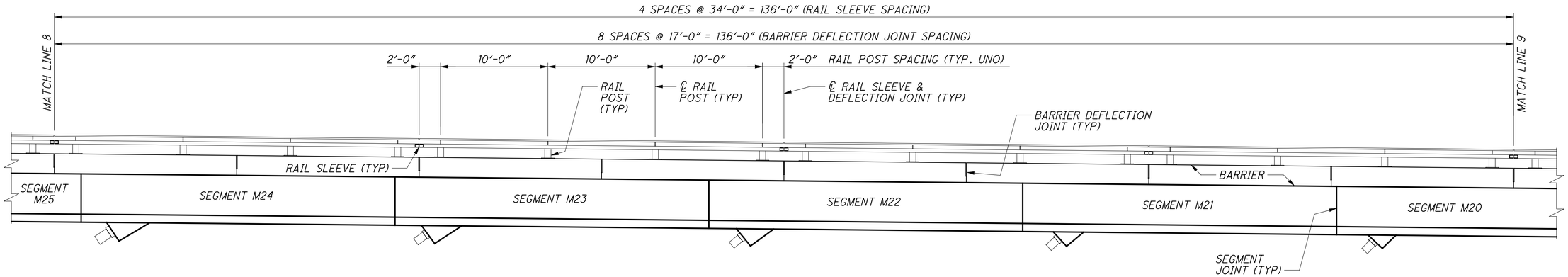

PARTIAL ELEVATION

DESIGN AGENCY
URS
36 EAST 7TH STREET
SUITE 2300
CINCINNATI, OHIO 45202

DESIGNED	DRAWN	REVIEWED	DATE
AR	JLS	DLJ	6/2010
CHECKED	REVISED	STRUCTURE FILE NUMBER	
BWJ		4401263	

BARRIER LAYOUT - MAINSPAN UNIT (3 OF 5)
BRIDGE NO. LAW-93-0000
IRONTON RUSSELL BRIDGE OVER OHIO RIVER

LAW-93-0.00
PID No. 81595

265/365

652
788

4/25/2011 10:27:43 AM john_stahl

E:\Bridges_XM\Ironton_Russell\LAW\81595\structures\LAW093_0000C\sheets\093_0000CRA001.dgn

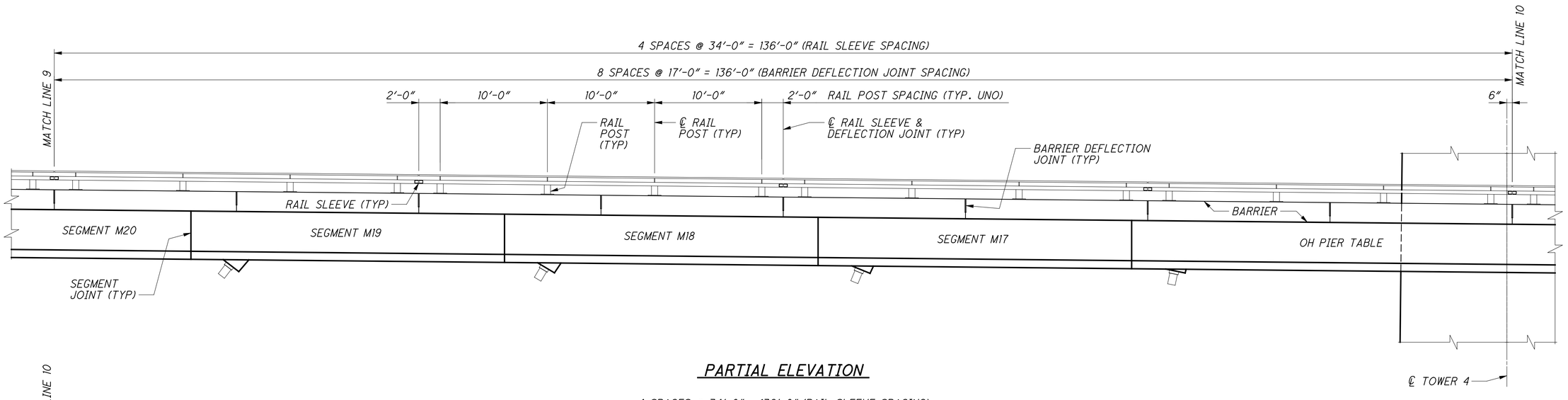

PARTIAL ELEVATION

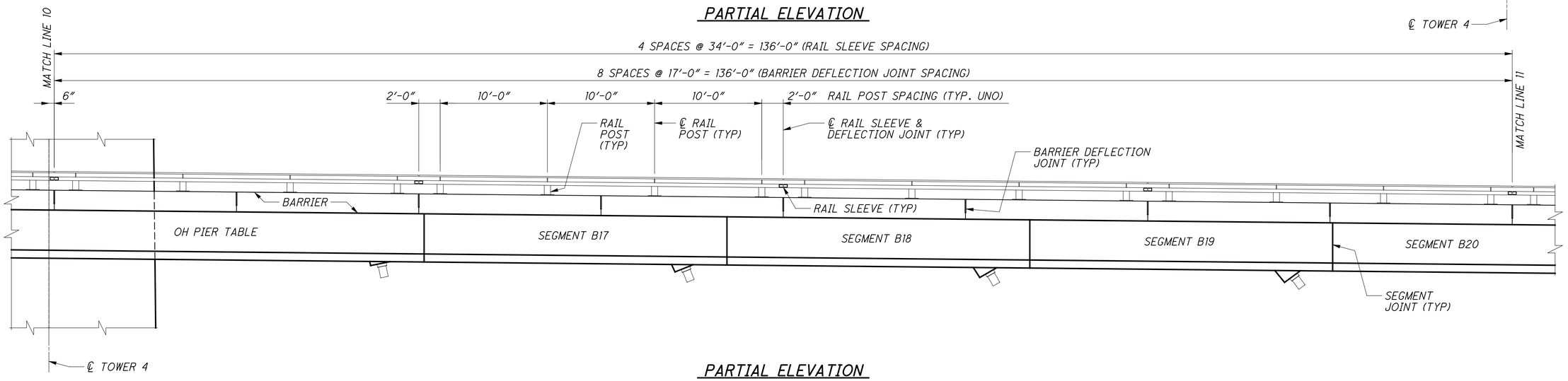

PARTIAL ELEVATION

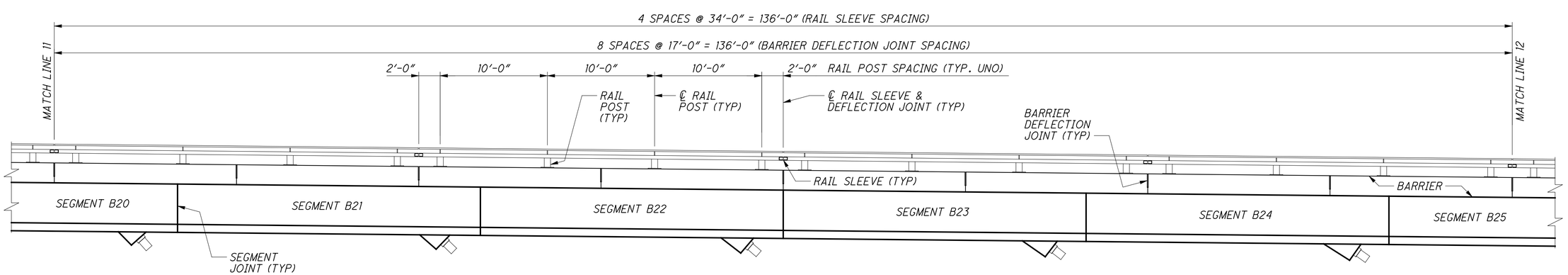

PARTIAL ELEVATION

DESIGN AGENCY
URS
36 EAST 7TH STREET
SUITE 2300
CINCINNATI, OHIO 45202

DESIGNED	DRAWN	REVIEWED	DATE
AR	JLS	DLJ	6/2010
CHECKED	REVISED	STRUCTURE FILE NUMBER	
BWJ		4401263	

BARRIER LAYOUT - MAINSPAN UNIT (4 OF 5)
BRIDGE NO. LAW-93-0000
IRONTON RUSSELL BRIDGE OVER OHIO RIVER

LAW-93-0.00
PID No. 81595

266/365

653
788

E:\Bridges_XM\Ironton_Russell\LAW\81595\structures\LAW093_0000C\sheets\093_0000CRA001.dgn 4/25/2011 10:27:49 AM john_stahl

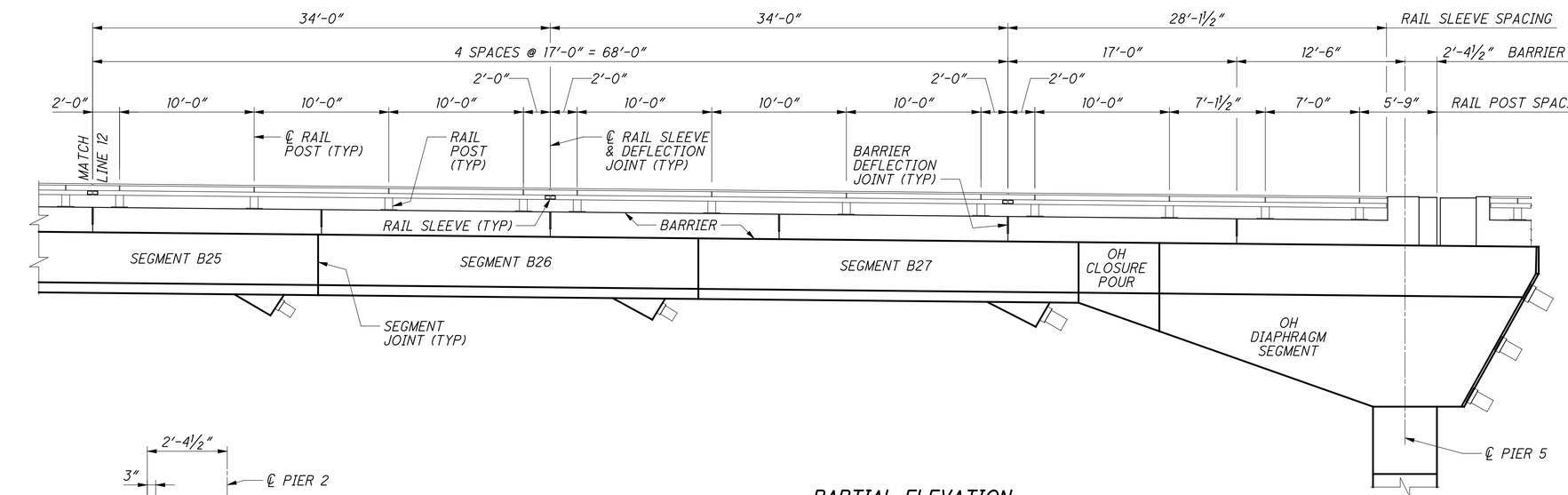

PARTIAL ELEVATION

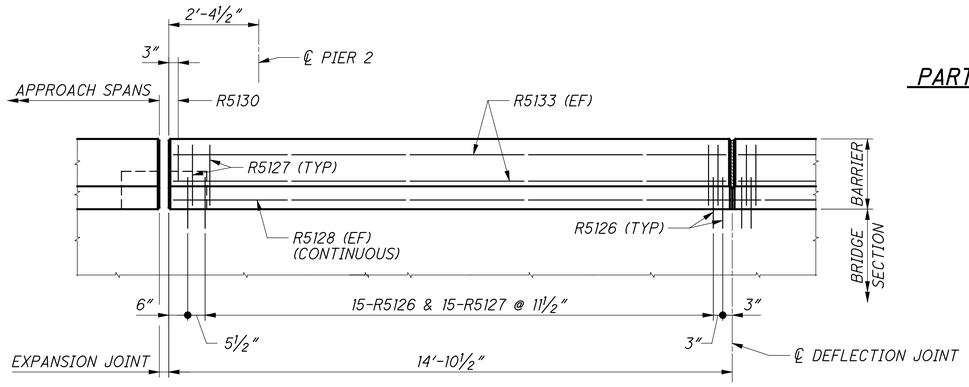

ELEVATION - BARRIER REINFORCEMENT LAYOUT AT PIER 2

(RAILING AND POST NOT SHOWN)

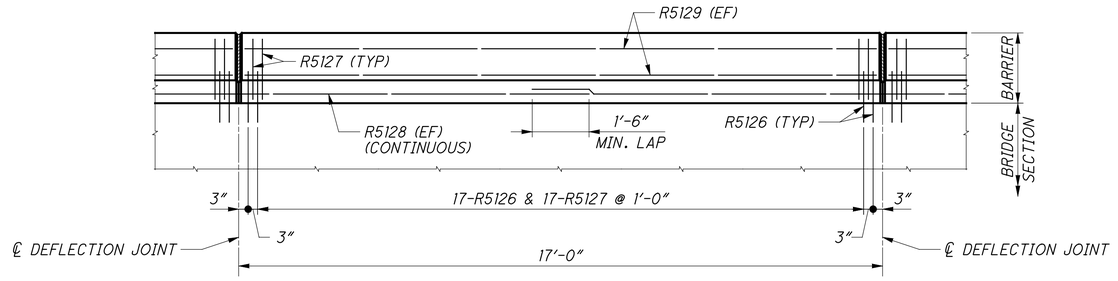

ELEVATION - TYPICAL BARRIER REINFORCEMENT LAYOUT

(RAILING AND POST NOT SHOWN)

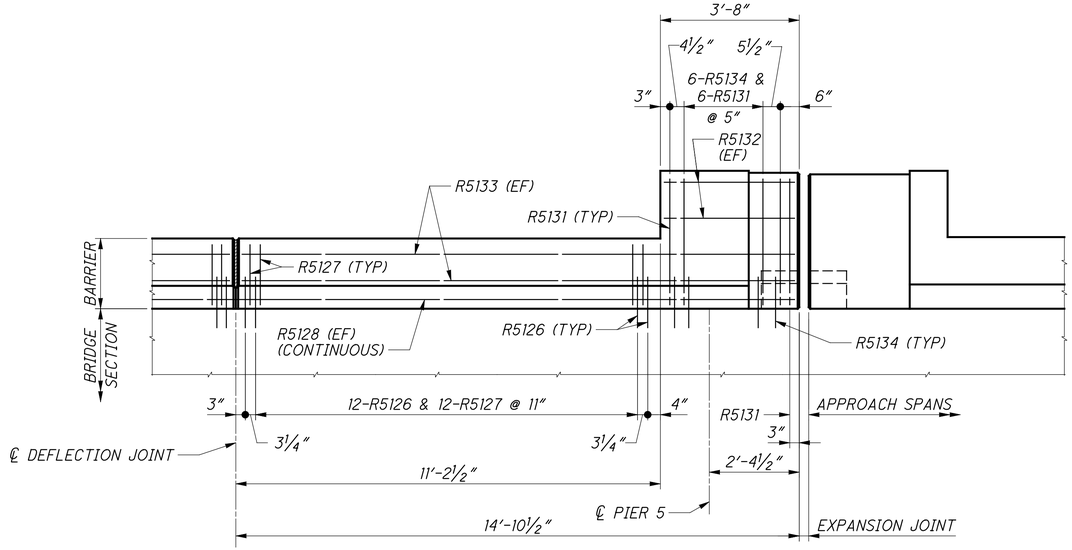

ELEVATION - BARRIER REINFORCEMENT LAYOUT AT PIER 5

(RAILING AND POST NOT SHOWN)

NOTES

1. ALL DIMENSIONS ARE ALONG ℄ CONSTRUCTION, UNLESS NOTED OTHERWISE.
2. FOR ADDITIONAL BARRIER DETAILS SEE SHEETS 15/365 AND 16/365 .
3. FOR EXPANSION JOINT DETAILS SEE SHEET 268/365 & 269/365 OR 270/365 & 271/365 .
4. FOR BARRIER PLATE DETAILS SEE SHEET 272/365 & 273/365 .

DESIGN AGENCY
URS
36 EAST 7TH STREET
SUITE 2300
CINCINNATI, OHIO 45202

DESIGNED	DRAWN	REVIEWED	DATE
AR	JLS	DLJ	6/2010
CHECKED	REVISED	STRUCTURE FILE NUMBER	
BWJ		4401263	

BARRIER LAYOUT - MAINSPAN UNIT (5 OF 5)
BRIDGE NO. LAW-93-0000
IRONTON RUSSELL BRIDGE OVER OHIO RIVER

LAW-93-0.00
PID No. 81595

E:\Bridges_XM\Ironton_Russell\LAW\81595\structures\LAW093_0000C\sheets\093_0000CRA001.dgn 4/25/2011 10:27:56 AM john_stahl

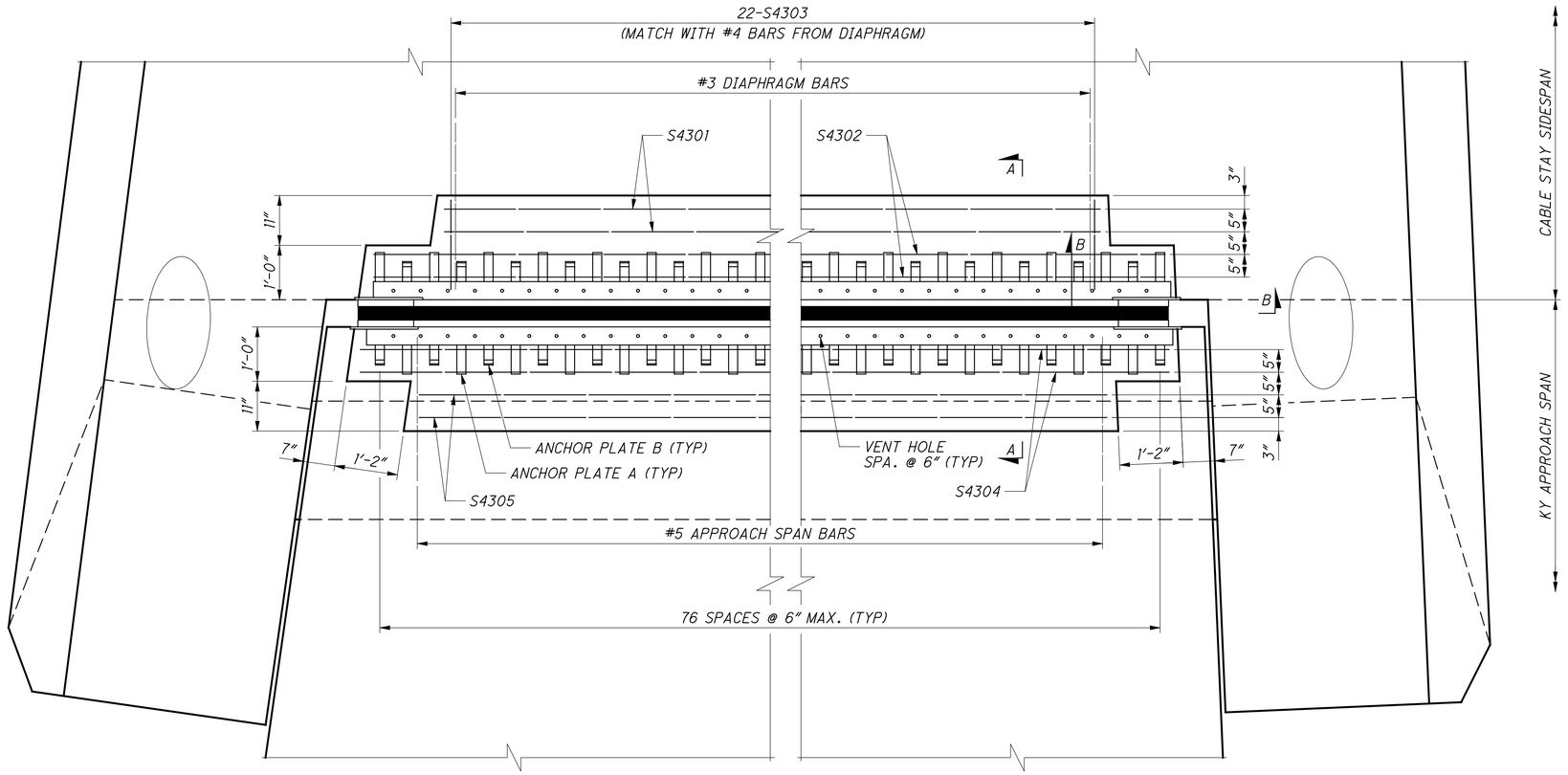

PLAN - STRIP SEAL EXPANSION JOINT AT PIER 2

(5" STRIP SEAL EXPANSION JOINT. SEE STD. DWG. EXJ-6-06)

EXPANSION JOINT DATA					
DIM. "Y" (IN)	DIMESNION "A" (IN.)			TEMP. ADJUSTMENT (IN/ 10°F)	MIN. REQ'D SEAL MOVEMENT (IN)
	AT 60°F	MIN.	MAX.		
1/4	2	7/8	4 3/8	1/8	3 1/2

NOTES

1. 3/4" ϕ x 1'-3" LONG THREADED RODS SHALL NOT BE PLACED CLOSER THAN 1'-0" TO THE VERTICAL PT DUCTS IN ANCHOR PIER 2.
2. EXPANSION JOINT SEAL OPENING WIDTH SHALL BE ADJUSTED FOR AMBIENT TEMPERATURE AT TIME OF SETTING.
3. COST OF REINFORCEMENT PLACED INTO EXPANSION JOINT BLOCK-OUT SHALL BE CONSIDERED INCIDENTAL TO EXPANSION JOINT SYSTEM.
4. AT LEAST 30 DAYS PRIOR TO INSTALLATION OF THE JOINT ASSEMBLY, CONTRACTOR SHALL SUBMIT WRITTEN DESCRIPTION OF THE INSTALLATION PROCEDURES TO THE ENGINEER FOR APPROVAL.
5. REINFORCEMENT FROM DIAPHRAGM SEGMENT AND APPROACH SPAN SLAB MAY BE FIELD BENT OR CUT WHERE NECESSARY AT ANCHOR PLATE AND SUPPORT ANGLE LOCATIONS, WITH APPROVAL OF ENGINEER.

DESIGN AGENCY
URS
36 EAST 7TH STREET
SUITE 2300
CINCINNATI, OHIO 45202

DESIGNED	DRAWN	REVIEWED	DATE
AR	CER	DLJ	6/2010
CHECKED	REVISED	STRUCTURE FILE NUMBER	
BWJ		4401263	

STRIP SEAL EXPANSION JOINT - PIER 2 (1 OF 2)
BRIDGE NO. LAW-93-0000
IRONTON RUSSELL BRIDGE OVER OHIO RIVER

LAW-93-0.00
PID No. 81595

E:\Bridges_XM\Ironton_Russell\LAW\81595\structures\LAW093_0000C\sheets\093_0000CEX001.dgn 4/25/2011 10:28:03 AM john_stahl

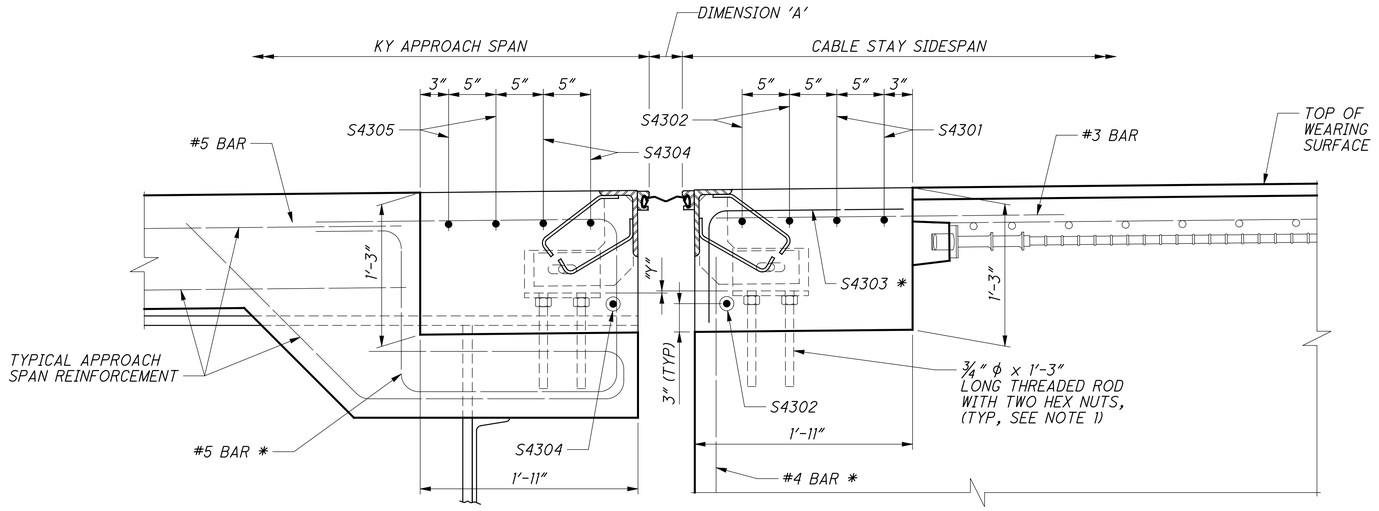

SECTION A-A

* BARS TO BE FIELD BENT OR CUT AT ANCHOR PLATE AND SUPPORT ANGLE LOCATIONS. SEE NOTE 5.

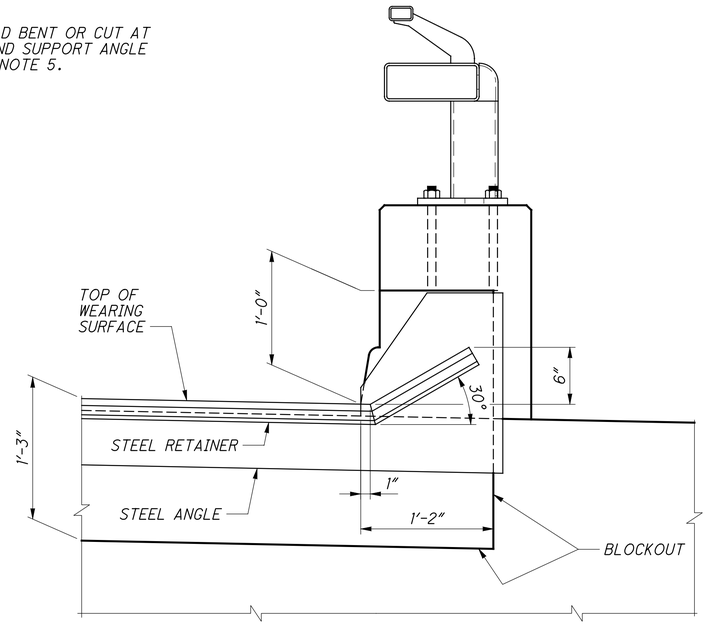

SECTION B-B

BILL OF REINFORCING STEEL

MARK	SIZE	LENGTH
S4301	4	35'-6¾"
S4302	4	38'-0½"
S4303	4	2'-8¼"
S4304	4	38'-4½"
S4305	4	36'-1¾"

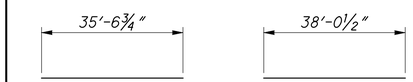

BAR S4301

BAR S4302

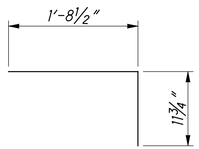

BAR S4303

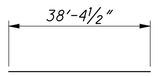

BAR S4304

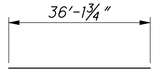

BAR S4305

DESIGN AGENCY
URS
36 EAST 7TH STREET
SUITE 2300
CINCINNATI, OHIO 45202

DESIGNED	DRAWN	REVIEWED	DATE
AR	CER	DLJ	6/2010
CHECKED	REVISED	STRUCTURE FILE NUMBER	
BWJ		4401263	

STRIP SEAL EXPANSION JOINT - PIER 2 (2 OF 2)
BRIDGE NO. LAW-93-0000
IRONTON RUSSELL BRIDGE OVER OHIO RIVER

LAW-93-0.00
PID No. 81595

269/365

656
788

E:\Bridges_XM\Ironton_Russell\LAW\81595\structures\LAW093_0000C\sheets\093_0000CEX006.dgn 4/25/2011 10:28:10 AM john_stahl

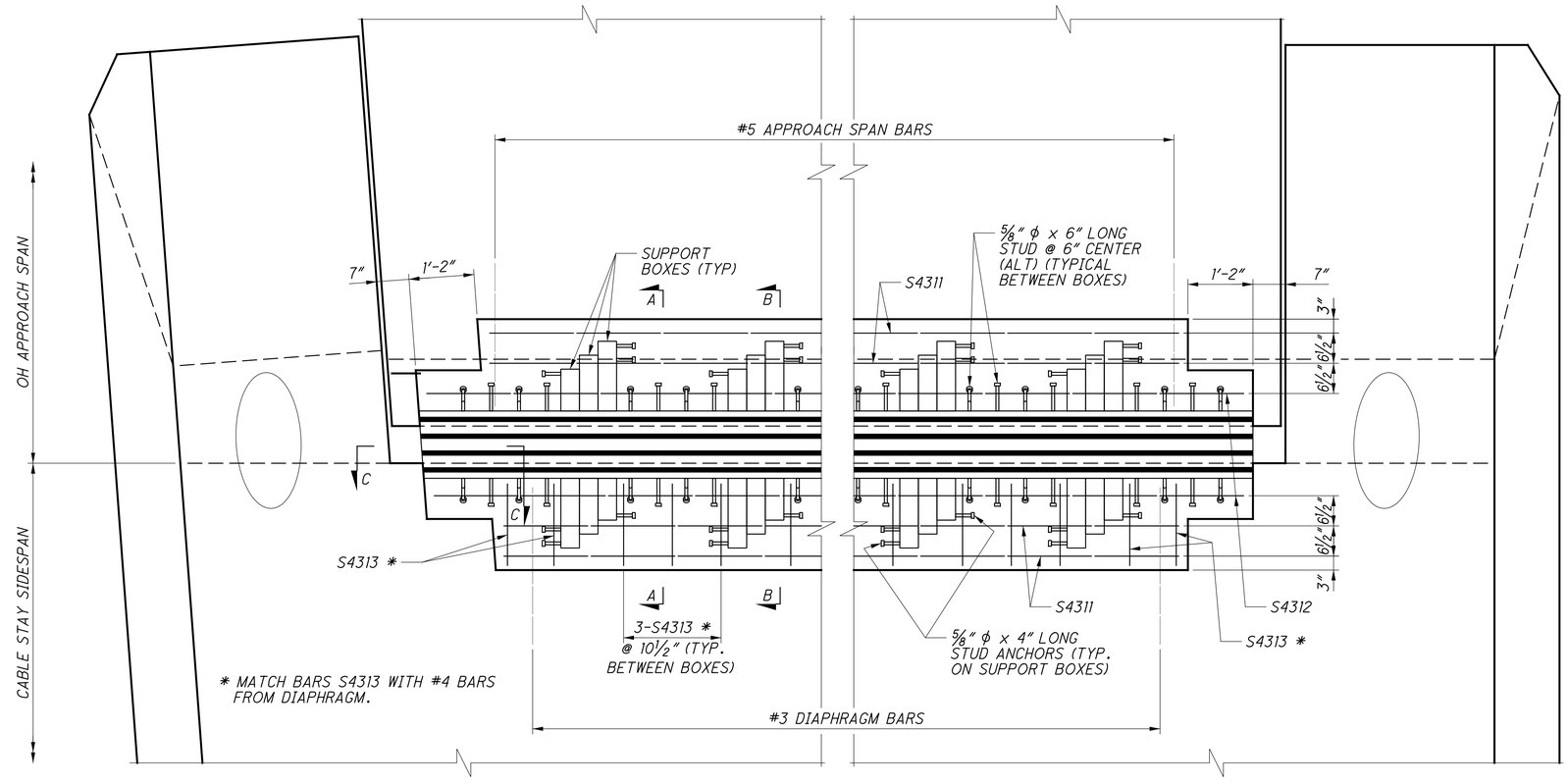

PLAN - MODULAR EXPANSION JOINT AT PIER 5

EXPANSION JOINT DATA				
DIMENSION "W" (IN)			TEMP ADJUSTMENT (IN/ 10°F)	MIN. REQ'D SEAL MOVEMENT (IN)
AT 60°F	MIN	MAX		
1'-2½"	10½"	1'-9⅞"	⅜"	11⅜"

NOTES

1. COST OF REINFORCEMENT PLACED INTO EXPANSION JOINT BLOCK-OUT SHALL BE CONSIDERED INCIDENTAL TO EXPANSION JOINT SYSTEM.
2. FOR DETAILS OF EXPANSION JOINT PARAPET COVER PLATES, SEE SHEET NOS. 272/365 & 273/365 .
3. THE CONTRACTOR SHALL COORDINATE MODULAR EXPANSION JOINT BLOCK-OUT DIMENSIONS FOR MODULAR ASSEMBLY USED PRIOR TO POURING /CASTING OF CONCRETE.
4. REINFORCEMENT FROM DIAPHRAGM SEGMENT AND APPROACH SPAN SLAB MAY BE FIELD CUT WHERE NECESSARY TO CLEAR SUPPORT BOXES, WITH APPROVAL OF ENGINEER.
5. THE MODULAR EXPANSION JOINT DESIGN SHALL INCLUDE ADDITIONAL MOVEMENTS AS PER AASHTO LRFD 14.5.6.9.2.
6. ALL LABOR, EQUIPMENT AND MATERIALS NECESSARY TO DESIGN, FABRICATE, AND INSTALL THE MODULAR EXPANSION JOINT AS DETAILED HEREIN SHALL BE INCLUDED IN THE UNIT PRICE BID FOR ITEM 516, MODULAR EXPANSION JOINT (SEE SPECIAL PROVISIONS).

BILL OF REINFORCING STEEL		
MARK	SIZE	LENGTH
S4311	4	32'-10"
S4312	4	35'-3"
S4313	4	2'-4½"

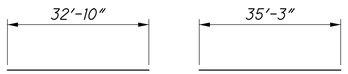

BAR S4311

BAR S4312

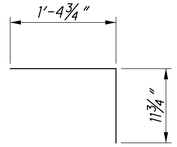

BAR S4313

J:\Project\O\ODOT\15005112 Ironton Russell\LAW\81595\structures\LAW093_1111C\sheets\Mainspan\093_0000CEX002.dgn - 10/10/2011 11:18:19 AM - jon_wanstrath

DESIGN AGENCY
URS
35 EAST 7TH STREET
SUITE 2300
CINCINNATI, OHIO 45202

DESIGNED	DRAWN	REVIEWED	DATE
AR	CER	DLJ	6/2010
CHECKED	REVISED	STRUCTURE FILE NUMBER	
BWJ		4401263	

MODULAR EXPANSION JOINT - PIER 5 (1 OF 2)
BRIDGE NO. LAW-93-0000
IRONTON RUSSELL BRIDGE OVER OHIO RIVER

LAW-93-0.00
PID No. 81595

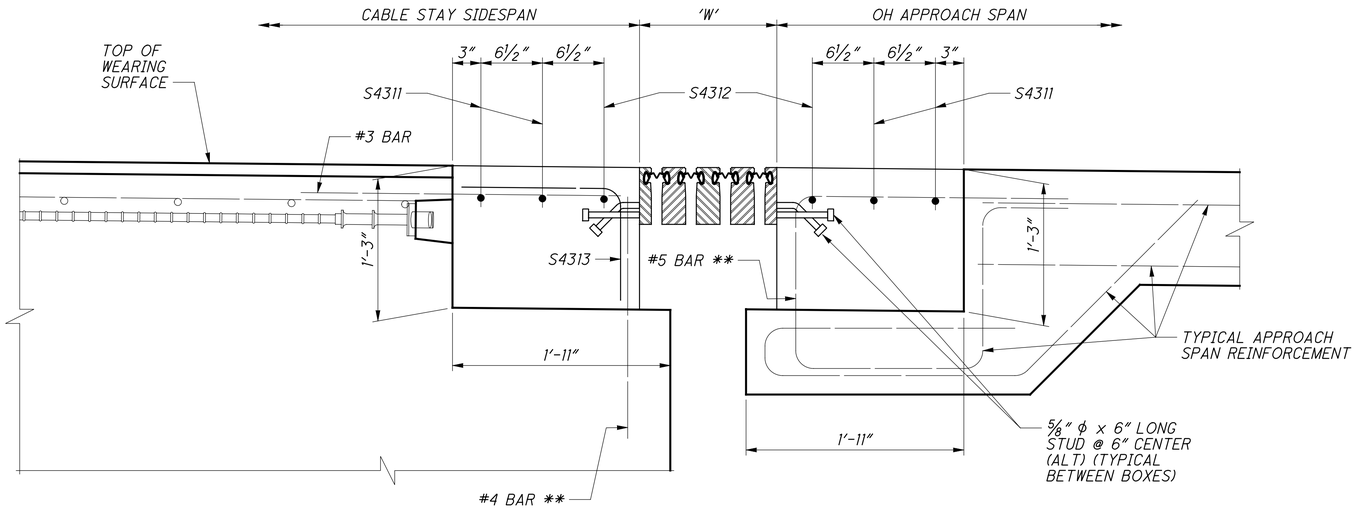

SECTION A-A

** BARS TO BE FIELD CUT AT SUPPORT BOX LOCATIONS. SEE NOTE 5.

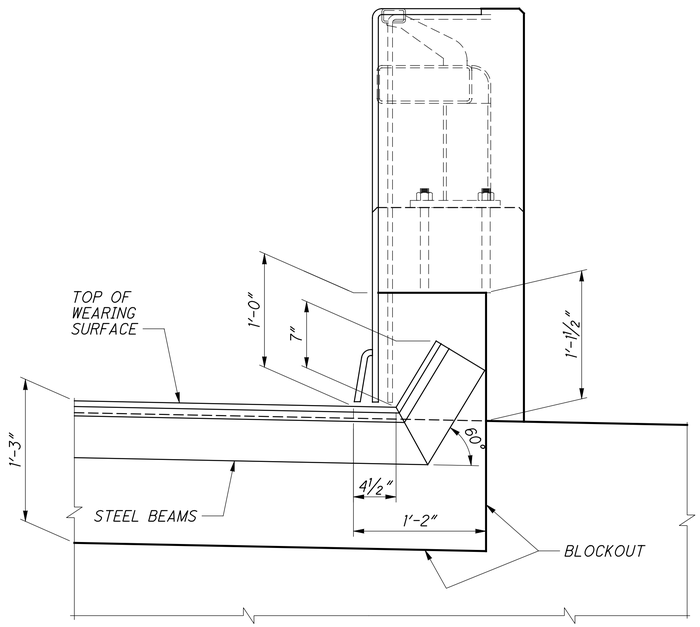

SECTION C-C

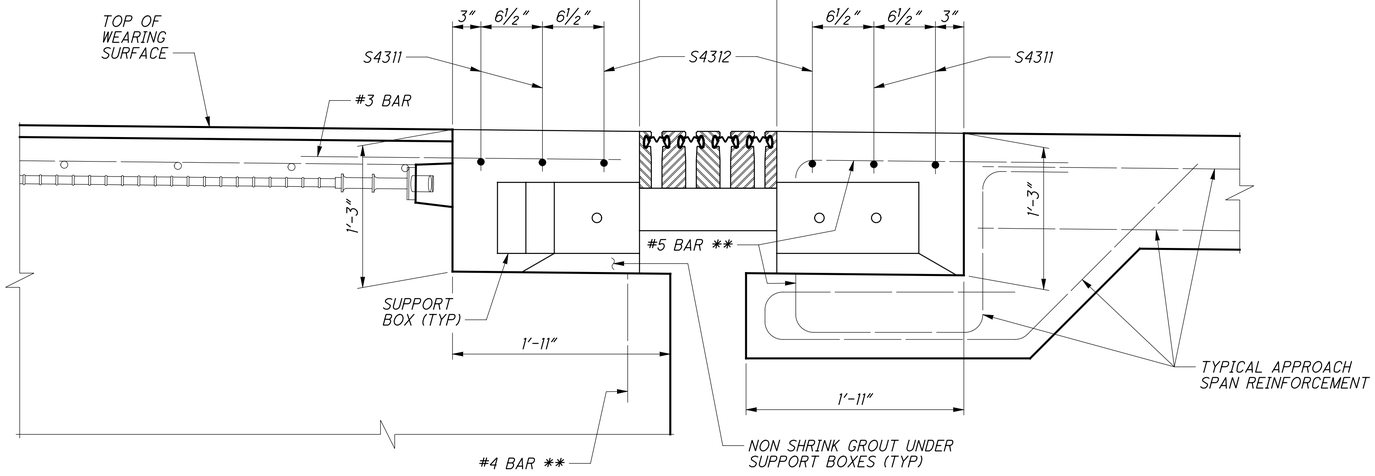

SECTION B-B

Link to RFI110 As-Built

DESIGN AGENCY
URS
36 EAST 7TH STREET
SUITE 2300
CINCINNATI, OHIO 45202

DESIGNED	DRAWN	REVIEWED	DATE
AR	CER	DLJ	6/2010
CHECKED	REVISED	STRUCTURE FILE NUMBER	
BWJ		4401263	

MODULAR EXPANSION JOINT - PIER 5 (2 OF 2)
BRIDGE NO. LAW-93-0000
IRONTON RUSSELL BRIDGE OVER OHIO RIVER

LAW-93-0.00
PID No. 81595

271/365

658
788

E:\Bridges_XM\Ironton_Russell\LAW\81595\structures\LAW093_0000C\sheets\093_0000CEX003.dgn 4/25/2011 10:28:23 AM john_stahl

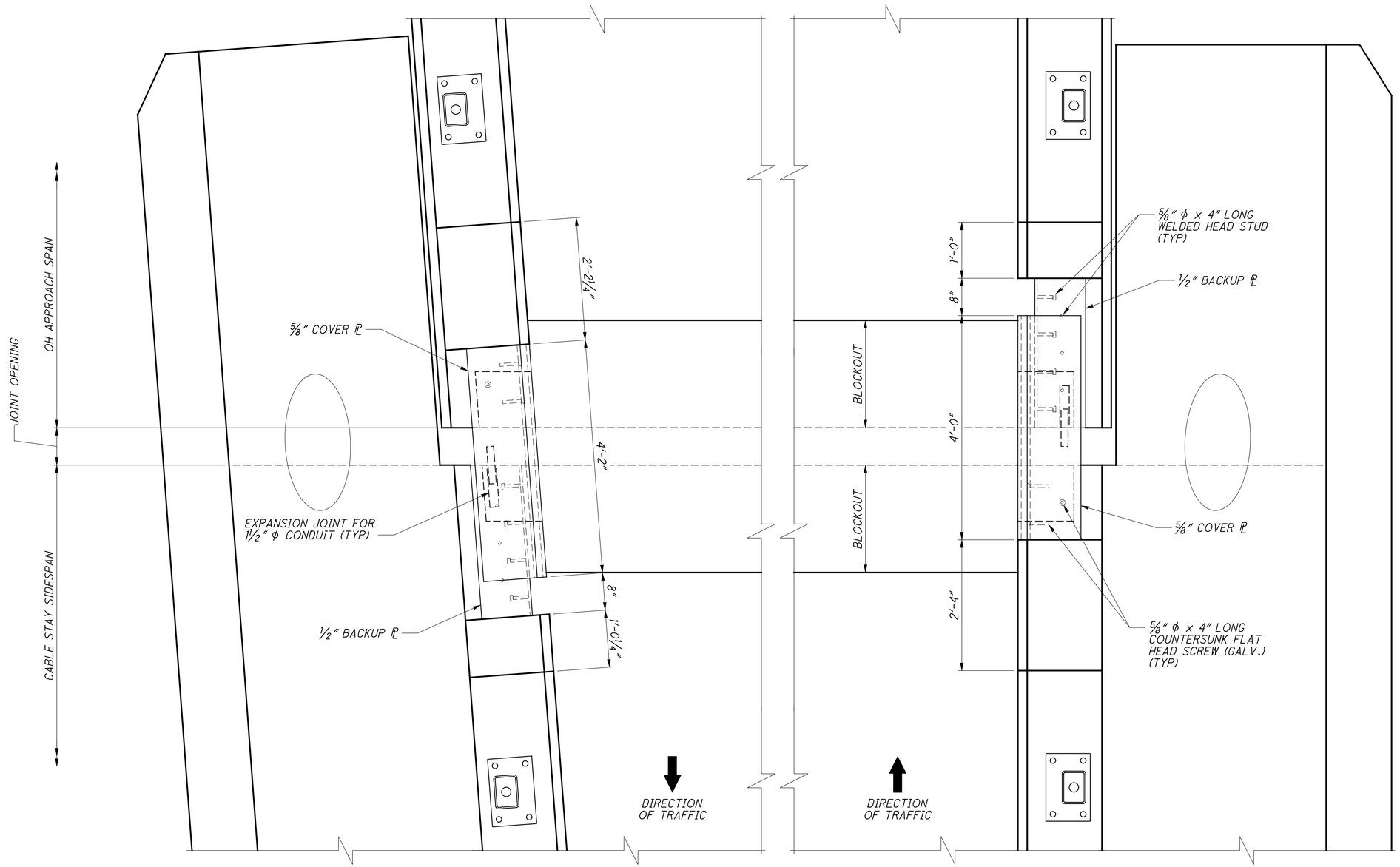

PLAN - BARRIER COVER PLATE AT PIER 5

NOTES

1. FOR EXPANSION JOINT DETAILS, SEE SHEET NOS. 270/365 & 271/365.
2. CONCRETE PARAPET REINFORCEMENT SHALL BE ADJUSTED AS NECESSARY TO ACCOMMODATE EXPANSION JOINT BLOCK-OUT.
3. CONTRACTOR SHALL PROVIDE SHOP DRAWINGS SHOWING ALL DETAILS OF PARAPET COVER PLATES FOR ENGINEER'S REVIEW.
4. PAYMENT FOR PARAPET COVER PLATE AND ASSOCIATED HARDWARE SHALL BE CONSIDERED INCIDENTAL TO THE COST OF THE MODULAR EXPANSION JOINT.
5. STEEL PLATE SHALL BE ASTM A709 GRADE 36. ALL COMPONENTS OF THE COVER PLATE ASSEMBLY SHALL BE GALVANIZED AFTER FABRICATION IN ACCORDANCE WITH CMS 711.02.

DESIGN AGENCY
URS
36 EAST 7TH STREET
SUITE 2300
CINCINNATI, OHIO 45202

DESIGNED	DRAWN	REVIEWED	DATE
AR	CER	DLJ	6/2010
CHECKED	REVISED	STRUCTURE FILE NUMBER	
BWJ		4401263	

BARRIER COVER PLATE DETAILS - PIER 5 (1 OF 2)
BRIDGE NO. LAW-93-0000
IRONTON RUSSELL BRIDGE OVER OHIO RIVER

LAW-93-0.00 PID No. 81595

272/365

659
788

E:\Bridges_XM\Ironton_Russell\LAW\81595\structures\LAW093_0000C\sheets\093_0000CEX004.dgn 4/25/2011 10:28:29 AM john_stahl

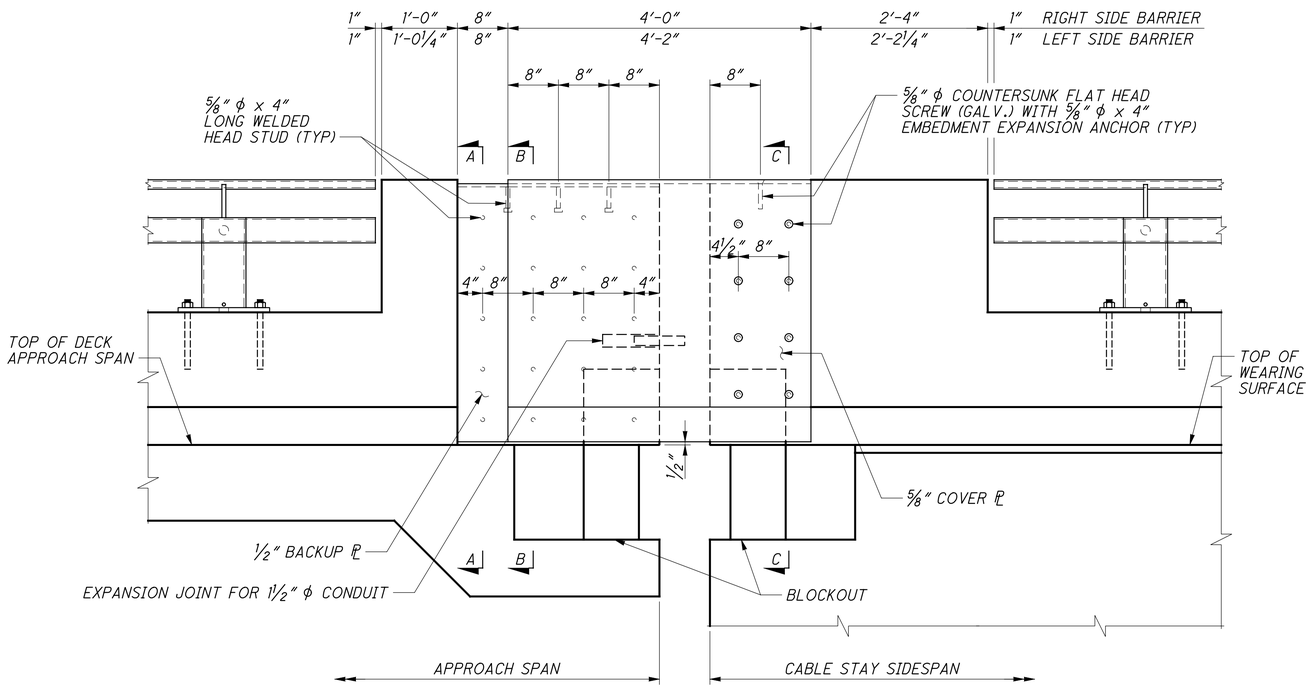

ELEVATION
(RIGHT SIDE SHOWN, LEFT SIDE SIMILAR)

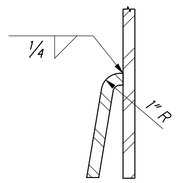

DETAIL 1

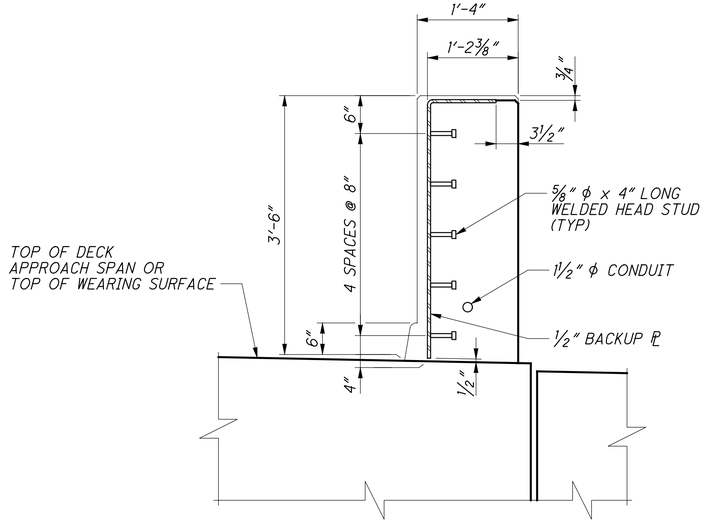

SECTION A-A

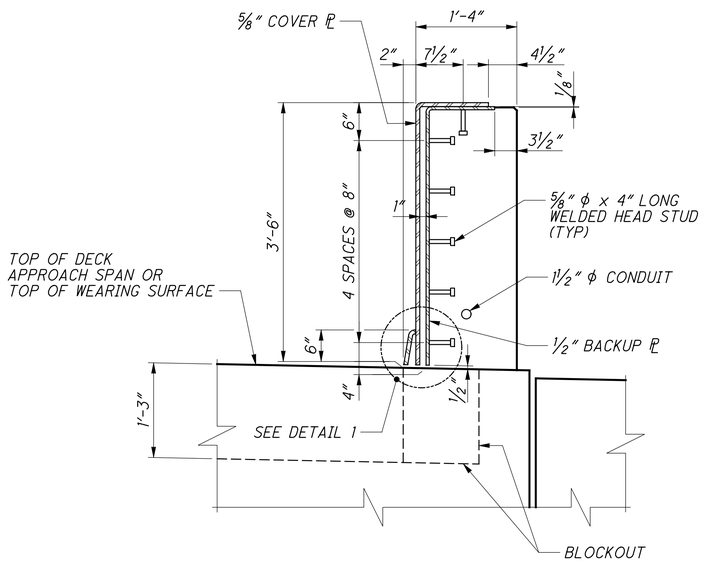

SECTION B-B

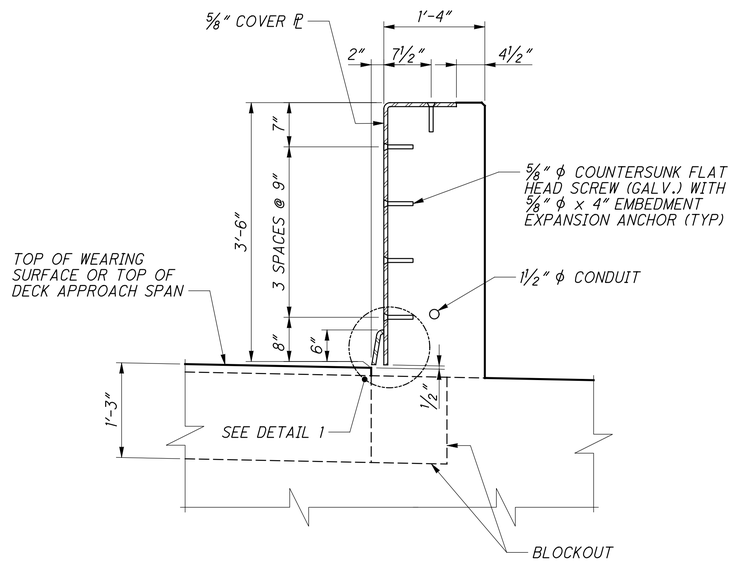

SECTION C-C

DESIGN AGENCY
URS
36 EAST 7TH STREET
SUITE 2300
CINCINNATI, OHIO 45202

DESIGNED	DRAWN	REVIEWED	DATE
AR	CER	DLJ	6/2010
CHECKED	REVISED	STRUCTURE FILE NUMBER	
BWJ		4401263	

BARRIER COVER PLATE DETAILS - PIER 5 (2 OF 2)
BRIDGE NO. LAW-93-0000
IRONTON RUSSELL BRIDGE OVER OHIO RIVER

LAW-93-0.00
PID No. 81595

273/365

660
788

E:\Bridges_XM\Ironton_Russell\LAW\81595\structures\LAW093_0000C\sheets\093_0000CEX005.dgn 4/25/2011 10:28:34 AM john_stahl

TEMPORARY SHEET PILE WALL NOTES

1. CRITICAL TEMPORARY WALLS HAVE BEEN DESIGNED BASED ON THE RETAINED HEIGHT AS SHOWN PLUS 2 FEET TO ACCOUNT FOR DISTURBANCE AT THE BOTTOM OF THE EXCAVATION.

2. STEEL SHEET PILE SECTIONS ARE DESIGNED FOR FLEXURE BASED ON LOAD AND RESISTANCE FACTOR DESIGN WITH A RESISTANCE FACTOR OF 0.9. COLD-ROLLED SECTION PROPERTIES ARE ASSUMED TO BE 85% OF THE FULL SECTION VALUES. MINIMUM VALUES SHOWN IN THE CRITICAL TEMPORARY WALL DATA TABLE FOR SECTION MODULUS AND MOMENT OF INERTIA SATISFY STRENGTH REQUIREMENTS AND LIMIT LATERAL DEFLECTIONS TO 1" MAXIMUM.

3. STEEL SHEET PILE TIP ELEVATIONS ARE COMPUTED BASED ON LOAD AND RESISTANCE FACTOR STRENGTH LIMIT STATES AND A MINIMUM SERVICE LIMIT STATE FACTOR OF SAFETY OF 2.0 FOR ROTATION ABOUT THE SHEET PILE TIP.

4. OVERALL EXTERNAL STABILITY OF TIEBACK WALLS BASED ON A FACTOR OF SAFETY OF 1.3.

5. LATERAL EARTH PRESSURE FOR CANTILEVER WALLS BASED ON RANKINE EARTH PRESSURE THEORY. LATERAL EARTH PRESSURE FOR TIEBACK WALLS BASED ON TERZAGHI EARTH PRESSURE THEORY.

6. IF CONDITIONS ENCOUNTERED DURING CONSTRUCTION OPERATIONS SIGNIFICANTLY DIFFER FROM THOSE SHOWN, THE ENGINEER SHALL BE NOTIFIED AND WALL REDESIGN CONSIDERED.

7. DEWATERING REQUIRED FOR FOUNDATION CONSTRUCTION SHALL BE PERFORMED PRIOR TO EXCAVATION TO PROPOSED BOTTOM.

8. TEMPORARY EXCAVATION SLOPES ARE ASSUMED TO BE 1.0 VERT. TO 2.0 HORIZ.

9. FOR UTILITY LOCATIONS EXISTING AND NEW, SEE ROADWAY PLANS. THE CONTRACTOR SHALL FIELD VERIFY THE LOCATION OF UTILITIES BEFORE COMMENCING WITH CONSTRUCTION OF CRITICAL TEMPORARY WALLS.

10. THE DESIGN FOR THE STEEL SHEET PILES IS BASED ON ASTM A328 (Fy=38.5ksi).

11. SHEET PILING SHALL BE REMOVED, UNLESS NOTED OTHERWISE, AND REMAIN THE PROPERTY OF THE CONTRACTOR. ANY SHEET PILE LOCATED WITHIN 40 FEET FROM THE PERMANENT MSE WALL PANELS SHALL BE CUT OFF A MINIMUM OF 2 FEET BELOW FINAL GROUND. THE CONTRACTOR SHALL REMOVE AND DISPOSE OF SHEET PILING ABOVE CUT-OFF POINT.

12. ALL WALL LENGTHS AND OFFSETS ARE TO THE FRONT FACE OF THE WALL.

13. STEEL SHEET PILING SHALL BE IN GOOD CONDITION AND FREE FROM DEFECTS. REJECTION CRITERIA FOR PHYSICAL DAMAGE SHALL BE BASED SOLELY ON THE ENGINEER'S JUDGEMENT.

14. THE CONTRACTOR SHALL HAVE SUITABLE EQUIPMENT AND SHALL TAKE APPROPRIATE MEASURES TO ACHIEVE THE REQUIRED TIP ELEVATIONS AND ANY ASSOCIATED COST SHALL BE INCIDENTAL TO THE COST OF STEEL SHEET PILES.

15. PRESTRESSED SOIL ANCHORS SHALL BE CONSTRUCTED AND TESTED IN ACCORDANCE WITH AASHTO LRFD BRIDGE CONSTRUCTION SPECIFICATIONS. CREEP TESTING OF SOIL ANCHORS WILL NOT BE REQUIRED.

BID ITEM NOTES

1. THE COST OF FURNISHING, INSTALLING, CUTTING, REMOVING AND DISPOSING OF STEEL SHEET PILES FOR CRITICAL TEMPORARY WALLS SHALL BE PAID FOR UNDER PAY ITEM 503 (COFFERDAMS, CRIBS AND SHEETING). THE COST OF ALL LABOR AND MATERIALS, FOR EXCAVATION AND DEWATERING, IF NECESSARY, SHALL BE INCIDENTAL TO THE COST OF STEEL SHEET PILES.

2. THE COST OF FURNISHING AND INSTALLING WALER BEAM CHANNELS & WEDGE PLATES REQUIRED FOR TIEBACK WALLS SHALL BE INCIDENTAL TO THE COST OF STEEL SHEET PILES.

3. THE COST OF REMOVING PRESTRESSED SOIL ANCHORS IF REQUIRED SHALL BE INCIDENTAL TO THE COST OF STEEL SHEET PILES.

4. PRESTRESSED SOIL ANCHORS AND TESTING OF ANCHORS SHALL BE INCIDENTAL TO THE COST OF STEEL SHEET PILES.

5. ANY SHEET PILE INSTALLED ABOVE THE INDICATED WALL TOP ELEVATION SHALL BE FOR THE CONVENIENCE OF THE CONTRACTOR AND SHALL BE INCIDENTAL TO THE COST OF STEEL SHEET PILES.

DESIGN AGENCY
URS
36 EAST 7TH STREET
SUITE 2300
CINCINNATI, OHIO 45202

DESIGNED	DRAWN	REVIEWED	DATE
BTC	KAC	DLJ	6/2010
CHECKED	REVISED	STRUCTURE FILE NUMBER	
AR		4401263	

TEMPORARY SHEET PILE WALL - PIER 5 (1 OF 3)
BRIDGE NO. LAW-93-0000
IRONTON RUSSELL BRIDGE OVER OHIO RIVER

LAW-93-0.00
PID No. 81595

E:\Bridges_XM\Ironton_Russell\LAW\81595\structures\LAW093_0000C\sheets\093_0000CMD016.dgn 4/25/2011 10:28:40 AM john_stahl

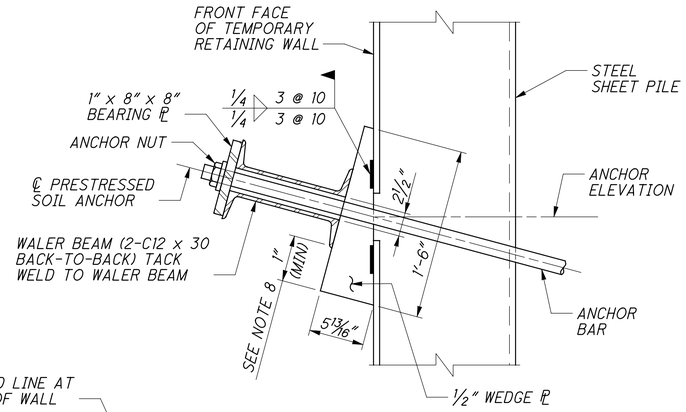

DETAIL "A"

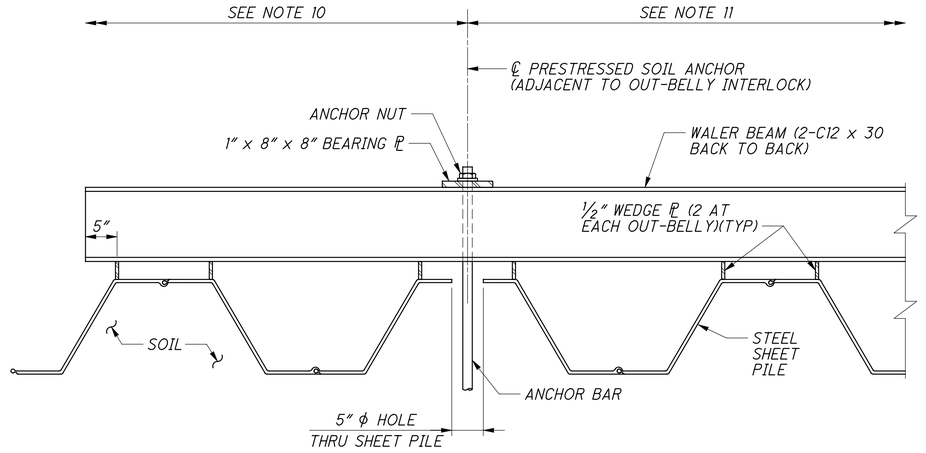

PLAN AT TIE BACK

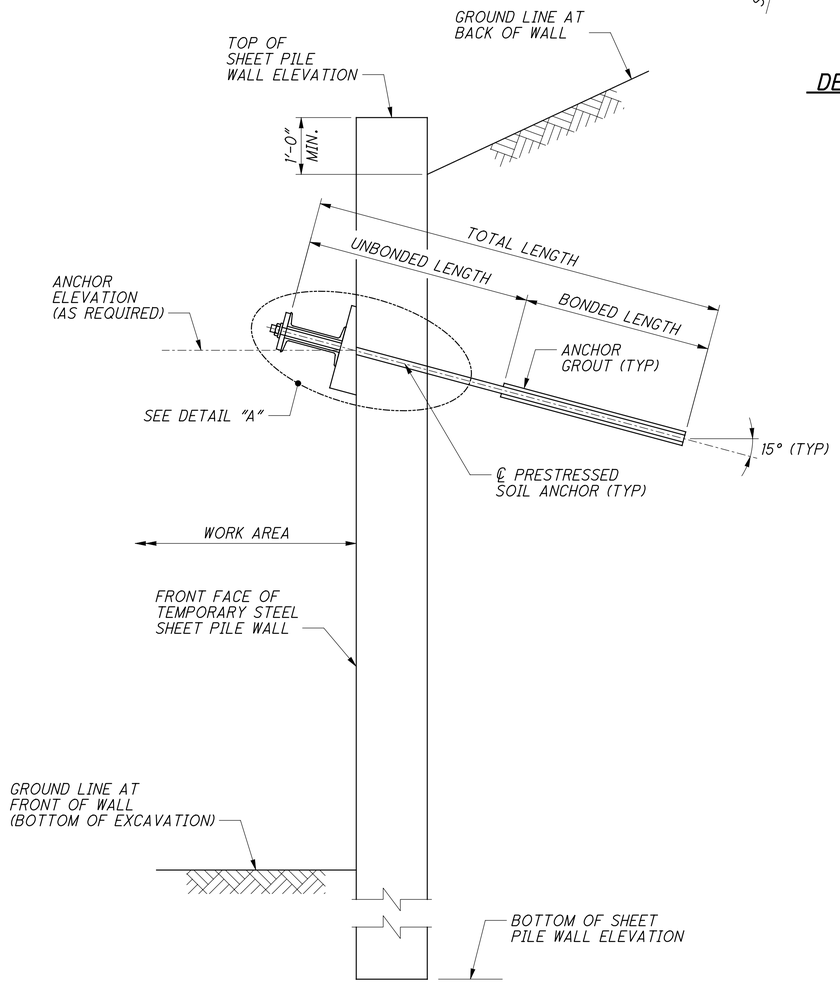

TYPICAL SECTION
TIE BACK & CANTILEVER WALLS

NOTES

1. TIE BACK WALL CONSTRUCTION SEQUENCE:
   A. INSTALL STEEL SHEET PILES AT THE LIMITS SHOWN ON THE DRAWINGS TO THE MINIMUM DEPTH OF PENETRATION.
   B. EXCAVATE SOILS TO A DEPTH OF ONE FOOT BELOW ANCHOR ELEVATION.
   C. CUT HOLES IN SHEET PILE SECTIONS AND CONSTRUCT PRESTRESSED SOIL ANCHORS.
   D. INSTALL WEDGE PLATES, WALER BEAM SECTIONS AND BEARING PLATES.
   E. TEST ANCHORS FOR THE REQUIRED DESIGN LOADS.
   F. PRESTRESS ANCHOR BAR AND ANCHORAGE TO THE REQUIRE LOCK-OFF LOAD.
   G. EXCAVATE TO FINAL GRADE.
2. ANCHOR TENDONS SHALL BE STEEL BARS CONFORMING TO AASHTO M275, GUARANTEED MINIMUM ULTIMATE TENSILE STRENGTH Fpu = 150 ksi. BARS SHALL HAVE COLD ROLLED THREADS AT ANCHORAGE ENDS.
3. ANCHOR NUTS SHALL BE STANDARD HEAVY DUTY HEXAGON HEAD TYPE CONFORMING TO ASTM A-29 GRADE C-1045.
4. BAR DIAMETERS SHOWN IN PRESTRESSED ANCHOR SCHEDULE ARE BASED ON THE STRENGTH DESIGN LOAD SHOWN AND A TENSILE RESISTANCE NOT TO EXCEED 0.8Fpu. AT NO TIME DURING INSTALLATION AND TESTING OF THE ANCHORS SHALL THE ANCHORS BE STRESSED IN EXCESS OF 0.8Fpu.
5. STRUCTURAL STEEL FOR BEARING PLATES, WALER BEAMS AND WEDGE PLATES SHALL BE IN ACCORDANCE WITH AASHTO M270, GRADE 50.
6. WELDING SHALL BE IN ACCORDANCE WITH THE CURRENT EDITION OF THE ANSI/AASHTO/AWS D1.5 BRIDGE WELDING CODE.
7. STEEL ANCHOR BARS SHALL NOT BE FLAME CUT OR USED AS A GROUND FOR WELDING PURPOSES.
8. ADJUST VERTICAL POSITION OF WEDGE PLATES TO COMPENSATE FOR HORIZONTAL MIS-ALIGNMENT OF STEEL SHEET PILES (± 1" MAX) AND PROVIDE UNIFORM SUPPORT OF WALER BEAM.
9. DESIGN LOADS AND ANCHOR SPACINGS ARE BASED ON THE LOCATION OF ANCHORS ADJACENT TO OUT-BELLY INTERLOCKS FOR ASSUMED STEEL SHEET PILE SHAPES. ADJUSTMENTS TO ANCHOR SPACING BASED ON STEEL SHEET PILE SHAPES SELECTED BY THE CONTRACTOR MAY REQUIRE MODIFICATIONS TO DESIGN LOADS AND WALER BEAM. ADJUSTMENTS TO ANCHOR SPACING IN EXCESS OF (±) 3" WILL REQUIRE APPROVAL OF THE ENGINEER.
10. WALER BEAM SHALL CANTILEVER ONE OUT-BELLY MAXIMUM.
11. WALER BEAM SHALL BE CONTINUOUS ACROSS 3 ANCHORS MINIMUM, UNO.
12. THE BONDED LENGTH SHALL BE DESIGNED TO HAVE A MINIMUM ULTIMATE TENSILE CAPACITY EQUAL TO THE SOIL ANCHOR STRENGTH DESIGN LOAD.

DESIGN AGENCY
URS
36 EAST 7TH STREET
SUITE 2300
CINCINNATI, OHIO 45202

DESIGNED	DRAWN	REVIEWED	DATE
BTC	KAC	DLJ	6/2010
CHECKED	REVISED	STRUCTURE FILE NUMBER	
AR		4401263	

TEMPORARY SHEET PILE WALL - PIER 5 (2 OF 3)
BRIDGE NO. LAW-93-0000
IRONTON RUSSELL BRIDGE OVER OHIO RIVER

LAW-93-0.00
PID No. 81595

E:\Bridges_XM\Ironton_Russell\LAW\81595\structures\LAW093_0000C\sheets\093_0000CMD017.dgn 4/25/2011 10:28:47 AM john_stahl

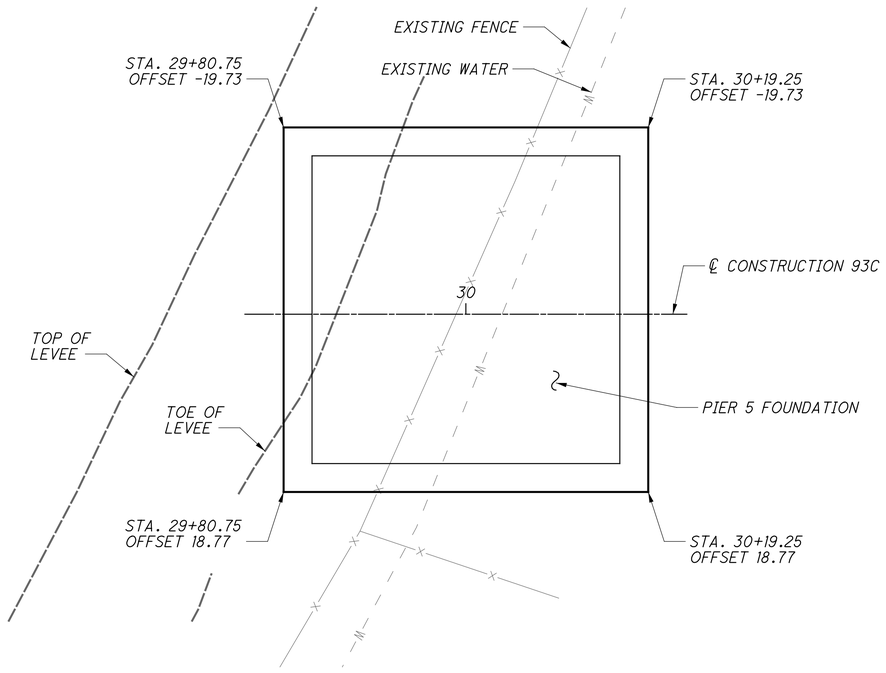

PLAN
(SEE NOTES 1 & 2)

TEMPORARY SHEET PILE WALL DATA		
MINIMUM SECTION MODULUS *		MINIMUM MOMENT OF INERTIA (in^4)*
HOT ROLLED (in^3)	COLD ROLLED (in^3)	
31.0	36.5	187.3

* VALUES SHOWN PER FOOT WIDTH OF WALL

PRESTRESSED SOIL ANCHOR SCHEDULE					
WALL SEGMENT	NO. REQUIRED	DESIGN LOAD SERVICE/STRENGTH (kip)*		BAR DIAMETER (in)	MIN. UNBONDED LENGTH (ft)
1	7	46.7	63.0	1.375	16
2	3	76.1	102.5	1.375	16
3	4	104.8	153.0	1.375	18
4	2	76.6	111.8	1.375	18
5	5	46.7	63.0	1.375	16
6	7	46.7	63.0	1.375	16

* DESIGN LOAD IS ALONG THE AXIS OF PRESTRESSED SOIL ANCHORS (AT 15 DEGREE FROM HORIZONTAL)

TEMPORARY SHEET PILE WALL GEOTECHNICAL DATA				
	LEVEE	LAYER 1	LAYER 2	LAYER 3
DESIGN WATER LEVEL (FT. NAVD)	540			
LAYER ELEVATIONS (FT. NAVD)	TOP OF LEVEE TO 550.0	550.0 TO 532.0	532.0 TO 514.3	514.3 TO 477.2
UNIT WEIGHT (PCF)	125	125	120	130
SUBMERGED UNIT WEIGHT (PCF)	63	63	58	68
ANGLE OF INTERNAL FRICTION (DEGREES)	0	0	0	30
COHESION (PSF)	1000	1000	500	0

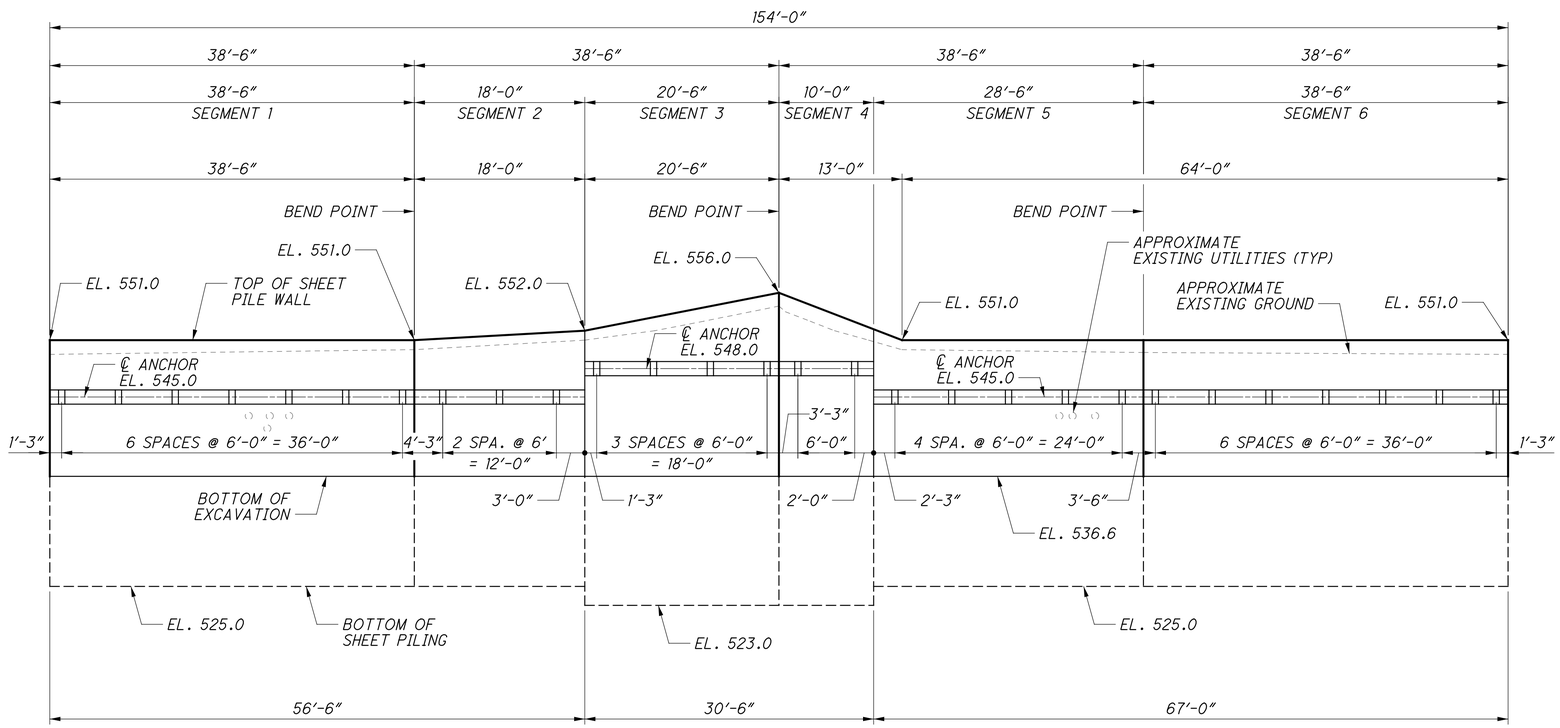

ELEVATION

NOTES:

1. A PREVIOUS PROJECT SURVEY INDICATED PRESENCE OF TELECOM AND GAS LINES IN THE AREA. THESE WERE NOT INDICATED BY THE SUE SURVEY DONE FOR THE PRESENT PROJECT. THE UTILITIES NOT SHOWN BY THE PRESENT SURVEY, MAY BE INACTIVE OR MAY NOT BE THERE AT ALL. THE CONTRACTOR SHALL BE CAREFUL IN CONSTRUCTING THE TEMPORARY SHEET PILE WALL IN THIS AREA AND NOTIFY THE PROJECT ENGINEER OF ANY UTILITIES DETECTED.

2. SEE UTILITY SHEET 198 FOR DETAILS OF WATER LINE RELOCATION.

DESIGN AGENCY
URS
36 EAST 7TH STREET
SUITE 2300
CINCINNATI, OHIO 45202

DESIGNED BTC | DRAWN KAC | REVIEWED DLJ | DATE 6/2010
CHECKED AR | REVISED | STRUCTURE FILE NUMBER 4401263

TEMPORARY SHEET PILE WALL - PIER 5 (3 OF 3)

BRIDGE NO. LAW-93-0000
IRONTON RUSSELL BRIDGE OVER OHIO RIVER

LAW-93-0.00
PID No. 81595

276/365

663
788

J:\Project\O\ODOT\15005112 Ironton Russell\LAW\81595\structures\LAW093_1111C\sheets\Mainspan\093_0000CMD018.dgn - 12/5/2011 3:58:16 PM - jon_wanstrath

MARK	NUMBER	LENGTH	WEIGHT	TYPE	DIMENSIONS						
					A	B	C	D	E	R	INC
PIER 2 FOOTING											
PK11011	140	40′-3″	29,939	1	2′-0″	38′-3″					
PK11012	70	49′-5″	18,379	1	2′-0″	47′-5″					
PK11013	70	57′-7″	21,416	1	2′-0″	55′-7″					
PK14014	107	41′-2″	33,697	2	2′-7″	36′-0″	2′-7″				
PK14015	61	29′-1″	13,572	37		26′-6″	2′-7″				
PK14016	61	48′-1″	22,438	1	2′-7″	45′-6″					
PK14017	61	47′-10″	22,321	37		45′-3″	2′-7″				
PK14018	61	28′-10″	13,455	1	2′-7″	26′-3″					
PK10019	72	31′-6″	9,759	1	14′-3″	17′-3″					
PK10020	72	40′-7″	12,573	1	14′-3″	26′-4″					
PK10021	71	48′-4″	14,766	1	14′-4″	34′-0″					
PK10022	71	59′-5″	18,153	1	14′-4″	45′-1″					
PK10023	71	35′-7″	10,871	1	1′-10″	33′-9″					
PK10024	71	46′-8″	14,257	1	1′-10″	44′-10″					
PK10025	40	35′-10″	6,168	1	1′-10″	34′-0″					
PK10026	40	46′-11″	8,075	1	1′-10″	45′-1″					
PK10027	40	39′-5″	6,784	2	1′-10″	35′-9″	1′-10″				
PK6028	390	16′-1″	9,421	38	14′-5″						
PK11029	122	14′-8″	9,507	37		12′-8″	2′-0″				
PK8030	12	28′-0″	897	STR							
PK8031	132	12′-9″	4,494	STR							
		TOTAL =	300,942								
PIER 2 DRILLED SHAFTS											
SP5001	6	2636′-0″	16,494	27	5″	7′-6″	45′-8″				
DS18001	120	59′-8″	97,374	STR							
DS18002	120	40′-7″	66,234	STR							
		TOTAL =	180,102								
PIER 2 COLUMN											
PK11001	140	33′-6″	24,918	STR							
PK11002	17	15′-8″	1,415	STR							
PK11003	17	16′-11″	1,528	STR							
PK11004	17	25′-1″	2,266	STR							
PK11005	20	40′-1″	4,259	STR							
PK11006	21	31′-11″	3,561	STR							
PK5008	308	15′-9″	5,060	2	2′-6″	4′-3″	9′-0″				
PK5009	308	19′-6″	6,264	STR							
PK5010	1078	5′-3″	5,903	38	4′-3″						
PK11050	16	36′-1″	3,067	1	2′-0″	34′-1″					
PK11051	15	27′-11″	2,225	1	2′-0″	25′-11″					
		TOTAL =	60,466								

NOTES

1. FOR STANDARD BAR BENDING DETAILS, SEE SHEET NOS. 17/365 THRU 19/365.

DESIGN AGENCY
URS
36 EAST 7TH STREET
SUITE 2300
CINCINNATI, OHIO 45202

DESIGNED BWJ | DRAWN JLS | REVIEWED DLJ | DATE 6/2010 | CHECKED AR | REVISED | STRUCTURE FILE NUMBER 4401263

REINFORCING STEEL LIST - PIER 2

BRIDGE NO. LAW-93-0000
IRONTON RUSSELL BRIDGE OVER OHIO RIVER

LAW-93-0.00
PID No. 81595

E:\Bridges_XM\Ironton_Russell\LAW\81595\structures\LAW093_0000C\sheets\093_0000CRL001.dgn 4/25/2011 10:29:02 AM john_stahl

MARK	NUMBER	LENGTH	WEIGHT	TYPE	DIMENSIONS						
					A	B	C	D	E	R	INC
TOWER 3 (KY) - DRILLED SHAFTS(INCLUDED IN DRILLED SHAFTS FOR PAYMENT)											
SPK5001	6	32′-10″	5257	27	1′-0″	7′-6″	32′-10″				
SPK5002	6	25′-9″	15633	27	3″	7′-6″	25′-9″				
DSK18001	96	30′-0″	39168	36		30′-0″					
DSK18002	96	40′-0″	52224	36		40′-0″					
DSK18003	96	10′-3″	13382	1	3′-5″	7′-6″					
DSK18004	96	8′-3″	10771	1	3′-5″	5′-6″					
DSK18005	96	29′-10″	38950	36		29′-10″					
DSK18006	96	21′-10″	28506	36		21′-10″					
		TOTAL=	203,891								
TOWER 3 (KY) - FOOTING											
TK5001	36	21′-9″	817	1	1′-0″	20′-10″					
TK5002	36	29′-9″	1117	1	1′-0″	28′-10″					
TK5003	152	10′-3″	1625	1	10″	9′-6″					
TK9001	64	31′-4″	6818	STR							
TK9002	44	38′-0″	5685	STR							
TK14001	114	41′-11″	36556	2	2′-7″	37′-3″	2′-7″				
TK14002	114	41′-11″	36556	17	37′-5″						
TK14003	58	18′-9″	8319	37		16′-8″	2′-7″				
TK14004	58	39′-3″	17415	1	2′-7″	37′-2″					
TK14005	58	18′-10″	8356	67	16′-7″						
TK14006	58	39′-4″	17452	16	37′-1″						
		TOTAL=	140,716								

MARK	NUMBER	LENGTH	WEIGHT	TYPE	DIMENSIONS						
					A	B	C	D	E	R	INC
TOWER 3 (KY) - TOWER SEGMENTS 1 THRU 3											
TK5101	4-SER OF 43	25′-2″ TO 28′-2″	4784	3	11′-0″ TO 12′-6″	1′-4″					7/8″
TK5102	880	8′-7″	7878	60	8′-1″						
TK5103	172	42′-0″	7535	3	19′-6″	1′-3″					
TK5104	528	12′-1″	6654	60	11′-7″						
TK5105	4-SER OF 49	21′-6″ TO 25′-0″	4753	3	9′-2″ TO 10′-11″	1′-4″					7/8″
TK5106	1000	7′-10″	8170	60	7′-4″						
TK5107	196	42′-0″	8586	3	19′-6″	1′-3″					
TK5108	352	12′-1″	4436	60	11′-7″						
TK5109	4-SER OF 40	18′-11″ TO 21′-9″	3393	3	7′-10″ TO 9′-3″	1′-4″					7/8″
TK5110	800	2′-5″	2016	38	1′-3″						
TK5111	160	42′-0″	7009	3	19′-6″	1′-3″					
TK5112	352	2′-6″	918	38	1′-4″						
TK9120	44	21′-5″	3204	2	1′-6″	19′-0″	1′-6″				
TK9121	20	11′-5″	776	2	1′-6″	9′-0″	1′-6″				
TK10101	20	11′-3″	968	11	1′-7″	9′-7″	1′-10″				
TK10102	20	14′-3″	1226	11	2′-1″	12′-7″	1′-10″				
TK10103	20	17′-4″	1492	11	2′-7″	15′-7″	1′-10″				
TK10104	20	20′-4″	1750	11	3′-1″	18′-7″	1′-10″				
TK10105	20	11′-3″	968	19	9′-9″	4″	1′-10″				
TK10106	20	14′-4″	1234	19	12′-10″	4″	1′-10″				
TK10107	20	17′-5″	1499	19	15′-11″	4″	1′-10″				
TK10108	20	20′-6″	1764	19	19′-0″	4″	1′-10″				
TK10109	20	11′-4″	975	11	2′-3″	9′-7″	1′-10″				
TK10110	20	14′-5″	1241	11	3′-0″	12′-4″	1′-10″				
TK10111	20	17′-6″	1506	11	3′-8″	15′-7″	1′-10″				
TK10112	20	20′-7″	1771	11	4′-4″	18′-7″	1′-10″				
TK10113	20	11′-4″	975	19	9′-9″	5″	1′-10″				
TK10114	20	14′-5″	1241	19	12′-10″	5″	1′-10″				
TK10115	20	17′-6″	1506	19	15′-11″	5″	1′-10″				
TK10116	20	20′-7″	1771	19	19′-0″	5″	1′-10				
TK10117	8	17′-2″	591	1	1′-10″	15′-8″					
TK10118	8	17′-5″	600	1	1′-10″	15′-11″					
TK10119	32	11′-1″	1526	1	1′-10″	9′-7″					
TK10120	64	14′-1″	3878	1	1′-10″	12′-7″					
TK10121	32	17′-2″	2364	1	1′-10″	15′-8″					
TK10122	32	20′-3″	2788	1	1′-10″	18′-9″					
TK10123	168	21′-10″	15783	36							
TK10124	168	22′-1″	15964	36							
TK10125	128	21′-11″	12071	36							
TK10126	16	17′-7″	1211	36							
TK10127	168	24′-10″	17952	36							
TK10128	168	25′-2″	18193	36							
TK10129	96	25′-0″	10327	36							
TK10131	16	17′-9″	1222	36							
TK10132	168	20′-3″	14639	36							
TK10133	168	20′-7″	14880	36							
TK10134	80	20′-0″	6885	36							
TK10135	16	10′-0″	688	36							
		TOTAL=	233561								

NOTES

1. FOR STANDARD BAR BENDING DETAILS, SEE SHEETS 17/365 THRU 19/365.

J:\Project\O_ODOT\15005112 Ironton Russell\LAW\81595\structures\LAW093_1111C\sheets\Towers\093_0000_r001.dgn - 4/29/2011 9:31:10 AM - john_corley

DESIGN AGENCY
URS
36 EAST 7TH STREET
SUITE 2300
CINCINNATI, OHIO 45202

DESIGNED BKL | DRAWN JGC | REVIEWED BA | DATE 6-10 | CHECKED MJZ | REVISED | STRUCTURE FILE NUMBER 4401263

TOWER 3 (KY) - REINFORCING STEEL LIST SHEET 1 OF 5

BRIDGE NO. LAW-93-0000

IRONTON RUSSEL BRIDGE OVER OHIO RIVER

LAW-93-0.00

PID No. 81595

MARK	NUMBER	LENGTH	WEIGHT	TYPE	DIMENSIONS						
					A	B	C	D	E	R	INC
TOWER 3 (KY) - INFILL WALL											
TK4201	76	4′-6″	228	38	3′-6″						
TK4202	54	4′-6″	162	38	3′-6″						
TK4203	50	5′-7″	186	4	3′-6″	9″					
TK6201	53	12′-0″	955	19	6′-0″	4′-10″	3′-7″				
TK6202	49	11′-6″	846	STR							
TK6203	98	9′-6″	1398	10	1′-0″	3′-0″	3′-6″	3′-0″			
TK7201	20	6′-11″	283	1	1′-2″	5′-11″					
TK7202	20	24′-5″	998	STR							
TK7203	4-SER OF 4	6′-5″ TO 19′-1″	417	STR							4′-2¾″
TK7204	172	7′-9″	2725	STR							
TK7205	2-SER OF 43	9′-0″ TO 19′-1″	2468	STR							2⅞″
TK7206	4	24′-7″	201	STR							
TK7207	40	14′-6″	1186	1	1′-2″	13′-6″					
TK7208	4	9′-5″	77	1	1′-2″	8′-5″					
TK7209	4	5′-2″	42	1	1′-2″	4′-2″					
TK7210	4	14′-8″	120	1	1′-2″	13′-8″					
TK7211	84	7′-9″	1331	STR							
TK7212	2-SER OF 21	19′-2″ TO 24′-1″	1856	STR							3″
TK10213	92	13′-11″	5509	1	12′-5″	1′-10″					
TK10214	46	24′-0″	4751	STR							
		TOTAL=	25739								

NOTES

1. FOR STANDARD BAR BENDING DETAILS, SEE SHEETS 17/365 THRU 19/365.

DESIGN AGENCY
URS
36 EAST 7TH STREET
SUITE 2300
CINCINNATI, OHIO 45202

DESIGNED	DRAWN	REVIEWED	DATE
BKL	JGC	BA	6-10
CHECKED	REVISED	STRUCTURE FILE NUMBER	
MJZ		4401263	

SHEET 2 OF 5

TOWER 3 (KY) - REINFORCING STEEL LIST SHEET
BRIDGE NO. LAW-93-0000
IRONTON RUSSEL BRIDGE OVER OHIO RIVER

LAW-93-0.00
PID No. 81595

279/365

666
788

J:\Project\O\ODOT\15005112 Ironton Russell\LAW\81595\structures\LAW093_1111C\sheets\Towers\093_0000_r002.dgn — 4/29/2011 9:31:13 AM — john_corley

MARK	NUMBER	LENGTH	WEIGHT	TYPE	DIMENSIONS						
					A	B	C	D	E	R	INC
TOWER 3 (KY) - TOWER SEGMENTS 4 THRU 6											
TK4120	48	2′-3″	72	STR							
TK5120	4-SER OF 31	16′-7″ TO 18′-11″	2296	3	6′-8″ TO 7′-10″	1′-4″					1″
TK5121	880	2′-5″	2218	38	1′-3″	10″					
TK5122	172	41′-10″	7505	3	19′-6″	1′-3″					
TK5123	176	2′-6″	459	38	1′-4″	10″					
TK5124	4-SER OF 6	16′-3″ TO 16′-7″	411	3	6′-6″ TO 6′-8″	1′-4″					3/4″
TK5125	24	16′-3″	407	3	6′-6″	1′-4″					
TK5127	160	16′-3″	2712	3	6′-6″	1′-4″					
TK5128	800	2′-5″	2016	38	1′-3″	10″					
TK5129	2-SER OF 40	41′-1″ TO 42′-1″	3470	3	19′-0″ TO 19′-6″	1′-3″					1/4″
TK5130	160	2′-6″	417	38	1′-4″	10″					
TK5131	2-SER OF 24	41′-5″ TO 42′-1″	2090	3	19′-2″ TO 19′-5″	1′-3″					1/4″
TK5132	56	18′-5″	1076	3	7′-8″	1′-3″					
TK5133	4	41′-1″	171	3	19′-0″	1′-3″					
TK5134	16	6′-0″	100	STR							
TK5150	544	2′-6″	1418	38	1′-4″	10″					
TK5151	112	14′-8″	1713	38	13′-6″	10″					
TK5152	280	8′-8″	2531	38	5′-6″	10″					
TK5153	32	6′-0″	200	2	2′-6″	1′-3″	2′-6″				
TK5155	32	4′-5″	147	2	10″	3′-0″	10″				
TK5161	36	5′-8″	213	STR							
TK5162	28	6′-6″	190	STR							
TK5163	8	19′-6″	163	STR							
TK5164	48	8′-5″	421	STR							
TK5165	72	7′-11″	595	2	10″	6′-6″	10″				
TK6150	192	28′-9″	8291	3	13′-6″	7″					
TK6151	192	14′-3″	4109	3	5′-6″	1′-4″					
TK8150	16	22′-5″	958	59	6′-3″	7′-0″	1′-4″	7′-8″			
TK8151	28	14′-0″	1047	8	6′-2″	6′-11	1′-4″				
TK8152	40	11′-10″	1264	8	3′-9″	7′-2″	1′-4″				
TK8153	68	15′-11″	2890	2	6′-2″	4′-0″	6′-2″				
TK8154	36	5′-5″	521	1	1′-4″	4′-3″					
TK8155	104	6′-2″	1712	STR							
TK8156	2 SER OF 5	32′-6″ TO 33′-8″	883	6	16′-6″	7′-1″ TO 7′-8″	1′-4″				3 1/2″
TK8158	24	19′-10″	1271	6	3′-8″	7′-2″	1′-4″				
TK8159	16	18′-4″	783	5	3′-0″	6′-10″	1′-4″				
TK8160	72	9′-0″	1730	2	1′-4″	6′-9″	1′-4″				
TK9120	24	14′-8″	1197	61	12′-1″	1′-7″					
TK9121	24	5′-11″	483	61	3′-4″	1′-7″					
TK9122	4	19′-11″	271	2	1′-7″	19′-4″	1′-7″				
TK9125	40	21′-11″	2981	2	1′-9″	19′-0″	1′-9″				
TK9130	16	10′-0″	544	STR							

MARK	NUMBER	LENGTH	WEIGHT	TYPE	DIMENSIONS						
					A	B	C	D	E	R	INC
TOWER 3 (KY) - TOWER SEGMENTS 4 THRU 6 CON'T.											
TK10140	16	21′-10″	1503	41	8′-8″	12′-6″	4′-0″				
TK10141	16	21′-10″	1503	41	11′-9″	9′-7″	3′-1″				
TK10142	16	21′-11″	1509	41	14′-10″	6′-9″	2′-2″				
TK10143	16	21′-11″	1509	41	17′-11″	3′-10″	1′-3″				
TK10144	16	10′-0″	688	36							
TK10145	32	21′-9″	2995	41	8′-8″	12′-7″	3′-7″				
TK10146	32	21′-10″	3006	41	11′-9″	9′-8″	2′-9″				
TK10147	48	21′-10″	4510	41	14′-9″	6′-9″	1′-11				
TK10148	40	21′-10″	3758	41	17′-10″	3′-10″	1′-1″				
TK10149	8	16′-1″	554	36		16′-1″					
TK10150	8	10′-0″	344	36		10′-0″					
TK10151	8	2′-5″	83	36		2′-5″					
TK10152	8	8′-5″	290	36		8′-5″					
TK10153	40	21′-11″	3772	41	8′-10″	12′-4″	4′-5″				
TK10154	40	21′-11″	3772	41	11′-11″	12′-4″	4′-5″				
TK10155	48	22′-0″	4544	41	14′-11″	6′-8″	2′-5″				
TK10156	40	22′-1″	3801	41	18′-0″	3′-10″	1′-4″				
TK10157	72	16′-7″	5138	36		16′-7″					
TK10158	72	26′-8″	8262	36		26′-8″					
TK10159	88	22′-8″	8583	36		22′-8″					
TK10160	72	32′-9″	10146	36		32′-9″					
TK10161	16	10′-0″	688	36		10′-0″					
TK10162	16	23′-8″	1629	36		23′-8″					
TK10163	16	19′-8″	1354	36		19′-8″					
TK10164	16	29′-8″	2042	36		29′-8″					
TK10165	8	10′-6″	361	36		10′-6″					
TK10166	8	7′-6″	258	36		7′-6″					
TK10167	8	4′-6″	155	36		4′-6″					
TK10168	8	1′-3″	43	36		1′-3″					
TK10169	16	7′-10″	539	STR							
TK10170	16	14′-10″	1021	STR							
TK11150	120	43′-6″	27734	1	2′-0″	35′-0″					
TK11151	120	28′-2″	17958	37		25′-0″	2′-0″				
TK11152	20	37′-7″	3994	1	2′-0″	30′-11″					
TK11153	20	22′-1″	2347	37		20′-11″	2′-0″				
TK11155	18	19′-6″	1865	2	2′-0″	16′-2″	2′-0″				
TK11156	18	18′-10″	1801	2	2′-0″	15′-6″	2′-0″				
		TOTAL =	198005								

NOTES

1. FOR STANDARD BAR BENDING DETAILS, SEE SHEETS 17/365 THRU 19/365.

DESIGN AGENCY
URS
35 EAST 7TH STREET
SUITE 2300
CINCINNATI, OHIO 45202

DESIGNED	DRAWN	REVIEWED	DATE
BKL	JGC	BA	6-10
CHECKED	REVISED	STRUCTURE FILE NUMBER	
MJZ		4401263	

TOWER 3 (KY) - REINFORCING STEEL LIST SHEET
BRIDGE NO. LAW-93-0000
IRONTON RUSSEL BRIDGE OVER OHIO RIVER

LAW-93-0.00
PID No. 81595

280/365

667
788

J:\Project\O\ODOT\15005112 Ironton Russell\LAW\81595\structures\LAW093_1111C\sheets\Towers\093_0000_r003.dgn — 4/29/2011 9:31:15 AM — john_corley

MARK	NUMBER	LENGTH	WEIGHT	TYPE	DIMENSIONS						
					A	B	C	D	E	R	INC
TOWER 3 (KY) - TOWER SEGMENTS 7 THRU 9											
TK5301	144	16′-3″	2441	3	6′-6″	1′-4″					
TK5302	720	2′-5″	1815	38	1′-3″	10″					
TK5303	4-SER OF 36	40′-3″ TO 41′-1″	6108	3	18′-7″ TO 19′-0″	1′-3″					1/4″
TK5304	144	2′-6″	375	38	1′-4″	10″					
TK5306	144	16′-3″	2441	3	6′-6″	1′-4″					
TK5307	720	2′-5″	1815	38	1′-3″	10″					
TK5308	4-SER OF 36	39′-7″ TO 40′-3″	5995	3	18′-3″ TO 18′-7″	1′-3″					1/4″
TK5309	144	2′-6″	375	38	1′-4″	10″					
TK5310	96	16′-3″	1627	3	6′-6″	1′-4″					
TK5311	960	2′-5″	2420	38	1′-3″	10″					
TK5312	4-SER OF 24	38′-9″ TO 39′-7″	3922	3	17′-10″ TO 18′-3″	1′-3″					3/8″
TK5313	192	2′-6″	501	38	1′-4″	10″					
		△1									
TK9300	368	24′-6″	30654	STR							
TK9301	368	24′-6″	30654	STR							
TK9302	368	24′-6″	30654	STR							
		TOTAL=	121,797								
TOWER 3 (KY) - TOWER SEGMENTS 10 THRU 12											
TK5000	16	6′-10″	114	62	3′-0″	1′-0″					
TK5400	96	16′-3″	1627	3	6′-6″	1′-4″					
TK5401	960	2′-5″	2420	38	1′-3″						
TK5402	4-SER OF 24	37′-11″ TO 38′-7″	3830	3	17′-5″ TO 17′-9″	1′-3″					1/4″
TK5403	192	2′-6″	501	38	1′-4″						
TK5404	96	16′-3″	1627	3	6′-6″	1′-4″					
TK5405	960	2′-5″	2420	38	1′-3″						
TK5406	4 -SER OF 24	37′-1″ TO 37′-11″	3755	3	17′-0″ TO 17′-5″	1′-3″					3/8″
TK5407	192	2′-6″	501	38	1′-4″						
TK5408	800	2′-5″	2016	38	1′-3″						
TK5409	20	16′-3″	339	3	6′-6″	1′-4″					
TK5410	20	9′-2″	191	2	4′-6″	1′-4″	3′-7″				
TK5411	20	7′-2″	149	2	4′-6″	1′-4″	1′-7″				
TK5412	8	7′-9″	65	2	3′-1″	1′-4″	3′-7″				
TK5413	8	4′-9″	40	2	2′-1″	1′-4″	1′-7″				
TK5414	20	8′-8″	181	2	3′-1″	1′-4″	4′-6″				
TK5415	20	7′-8″	160	2	2′-1″	1′-4″	4′-6″				
TK5416	160	2′-6″	417	38	1′-4″						
TK5417	32	10′-1″	337	2	4′-6″	1′-4″	4′-6″				
TK5418	4 SER OF 20	36′-3″ TO 37′-1″	3059	3	16′-7″ TO 17′-0″	1′-3″					1/2″
TK9400	352	24′-6″	29322	STR							
TK9401	340	24′-6″	28322	STR							

△1

MARK	NUMBER	LENGTH	WEIGHT	TYPE	DIMENSIONS						
					A	B	C	D	E	R	INC
TOWER 3 (KY) - TOWER SEGMENTS 10 THRU 12 CON'T.											
TK9402	4	15′-1″	205	STR							
TK9403	4	22′-1″	300	STR							
TK9404	4	10′-1″	137	STR							
TK9405	4	21′-2″	288	STR							
TK9406	324	25′-10″	28458	△1 STR							
TK9407	4	11′-7″	158	STR							
TK9408	8	16′-2″	440	STR							
TK9409	4	18′-8″	254	STR							
TK9410	4	21′-4″	290	STR							
TK9411	8	8′-10″	240	STR							
		TOTAL=	112163	△1							
TOWER 3 (KY) - TOWER SEGMENTS 13 THRU 15											
TK5000	128	6′-10″	912	62	3′-0″	1′-0″					
TK5500	224	10′-0″	2336	2	4′-6″	1′-3″	4′-6″				
TK5501	44	8′-1″	371	2	2′-7″	1′-3″	4′-6″				
TK5502	44	7′-7″	348	2	2′-1″	1′-3″	4′-6″				
TK5503	36	6′-1″	228	2	2′-7″	1′-3″	2′-7″				
TK5504	36	5′-2″	194	2	2′-1″	1′-3″	2′-1″				
TK5505	36	8′-1″	304	2	4′-6″	1′-3″	2′-7″				
TK5506	36	7′-7″	285	2	2′-1″	1′-3″	4′-6″				
TK5507	4-SER OF 20	34′-5″ TO 35′-3″	2906	3	15′-9″ TO 16′-2″	1′-2″					1/2″
TK5508	4-SER OF 17	33′-9″ TO 34′-5″	2417	3	15′-5″ TO 15′-9″	1′-2″					1/2″
TK5509	456	2′-5″	1149	38	1′-3″						
TK5510	2280	2′-4″	5549	38	1′-2″						
TK5511	4 SER OF 20	35′-3″: TO 36′-1″	2976	3	16′-2″ TO 16′-7″	1′-2″					1/2″
TK9500	312	25′-10″	27404	△1 STR							
TK9501	12	6′-1″	248	STR							
TK9502	12	5′-3″	214	STR							
TK9503	12	5′-4″	218	STR							
TK9504	12	5′-0″	204	STR							
TK9505	312	25′-10″	27404	△1 STR							
TK9506	12	5′-0″	204	STR							
TK9507	12	4′-9″	194	STR							
TK9508	12	3′-10″	156	STR							
TK9509	100	3′-7″	1218	STR							
TK9510	312	22′-6″	23868	△1 STR							
TK9511	8	8′-7″	233	STR							
		TOTAL=	101540	△1							

NOTES

1. FOR STANDARD BAR BENDING DETAILS, SEE SHEETS 17/365 THRU 19/365.

NO.	REVISIONS	DATE	REV. BY
1	SIZE AND QUANTITIES REVISED	3/12	BKL

DESIGNED BKL | DRAWN JGC | REVIEWED BA | DATE 6-10
CHECKED MJZ | REVISED | STRUCTURE FILE NUMBER 4401263

DESIGN AGENCY
URS
36 EAST 7TH STREET
SUITE 2300
CINCINNATI, OHIO 45202

TOWER 3 (KY) - REINFORCING STEEL LIST SHEET 4 OF 5

BRIDGE NO. LAW-93-0000
IRONTON RUSSEL BRIDGE OVER OHIO RIVER

LAW-93-0.00
PID No. 81595

281/365

668
788

J:\Project\OA\ODOT\15005112 Ironton Russell\LAW\81595\structures\LAW093_1111C\sheets\Towers\093_0000_rl004.dgn - 3/16/2012 10:24:44 AM - jon_wanstrath

MARK	NUMBER	LENGTH	WEIGHT	TYPE	DIMENSIONS						
					A	B	C	D	E	R	INC
TOWER 3 (KY) - TOWER SEGMENTS 16 THRU 18											
TK5000	96	6′-10″	684	62	3′-0″	1′-0″					
TK5600	56	10′-0″	584	2	4′-6″	1′-3″	4′-6″				
TK5601	20	6′-6″	136	2	2′-9″	1′-3″	2′-9″				
TK5602	24	8′-3″	207	2	4′-6″	1′-3″	2′-9″				
TK5603	13	8′-10″	120	20	1′-10″	2′-1″	3′-5″	2′-1″	1′-10″		
TK5604	976	2′-4″	2375	38	1′-2″						
TK5605	80	5′-3″	438	60	4′-9″						
TK5606	20	10′-0″	209	2	6′-6″	1′-3″	2′-6″				
TK5607	4	21′-8″	90	2	10′-4″	1′-3″	10′-4″				
TK5608	8	13′-6″	113	2	6′-3″	1′-3″	6′-3″				
TK5609	12	21′-0″	263	2	10′-0″	1′-3″	10′-0″				
TK5610	8	4′-7″	38	STR							
TK5611	8	9′-0″	75	STR							
TK5612	8	12′-10″	107	STR							
TK5613	8	17′-0″	142	STR							
TK5614	4	29′-8″	124	STR							
TK5615	12	19′-6″	244	2	9′-3″	1′-3″	9′-3″				
TK5616	12	6′-0″	75	2	2′-6″	1′-3″	2′-6″				
TK5617	144	4′-9″	713	60	4′-3″						
TK5618	8 SER OF 9	3′-10″ TO 5′-7″	354	38	2′-8″ TO 4′-5″						2 1/2″
TK5619	12	18′-8″	234	2	8′-10″	1′-3″	8′-10″				
TK5620	8	11′-4″	95	2	5′-2″	1′-3″	5′-2″				
TK5621	16	17′-6″	292	2	8′-3″	1′-3″	8′-3″				
TK5622	8	10′-0″	83	2	4′-6″	1′-3″	4′-6″				
TK5623	12	12′-4″	154	2	5′-8″	1′-3″	5′-8″				
TK5624	4 SER OF 17	32′-11″ TO 33′-9″	2364	3	15′-0″ TO 15′-5″	1′-2″					5/8″
TK5625	4 SER OF 18	32′-3″ TO 32′-11″	2447	3	14′-8″ TO 15′-0″	1′-2″					3/8″
TK5626	2 SER OF 8	31′-11″ TO 32′-3″	535	3	14′-6″ TO 14′-8″	1′-2″					1/2″
TK5627	376	2′-5″	948	38	1′-3″						
TK5628	100	9′-4″	973	60	8′-10″						
TK5629	2 SER OF 8	26′-1″ TO 29′-7″	464	3	11′-6″ TO 13′-3″	1′-3″					6″
TK5630	8	7′-8″	64	STR	7′-8″						
TK5631	4	8′-11″	37	STR							

MARK	NUMBER	LENGTH	WEIGHT	TYPE	DIMENSIONS						
					A	B	C	D	E	R	INC
TOWER 3 (KY) - TOWER SEGMENTS 16 THRU 18 CON'T.											
TK5700	12	12′-3″	153	19	6′-2″	4′-11″	3′-8″				
TK5701	10	16′-8″	174	66	2′-6″	1′-10″	4″	5′-7″			
TK5702	8	4′-4″	36	STR							
TK5703	8	7′-9″	65	65	2′-7″	1′-3″	3″	3′-9″	1′-1″		
TK5704	10	14′-6″	151	STR							
TK5705	6	19′-3″	120	2	2′-6″	14′-6″	2′-6″				
TK5706	3	2′-9″	9	STR							
TK5707	5	5′-4″	28	8	7″	2′-9″	2′-6″				
TK5708	3	8′-5″	26	STR							
TK5709	5	11′-3″	59	8	7″	8′-5″	2′-6″				
TK5710	1	17′-1″	18	33	4′-0″	4′-0″					
TK5711	1	4′-7″	5	3	1′-0″	1′-0″					
TK5712	4	2′-3″	9	1	1′-6″	10″					
TK9600	296	22′-6″	22644	1 STR							
TK9601	4	13′-0″	177	STR							
TK9602	4	13′-3″	180	STR							
TK9603	4	15′-3″	207	1	2′-6″	13′-0″					
TK9604	80	3′-5″	929	STR							
TK9605	60	10′-0″	2040	STR							
TK9606	60	17′-0″	3468	STR							
TK9607	12	14′-7″	595	2	4′-0″	7′-2″	4′-0″				
TK9608	4	25′-6″	347	STR							
TK9609	4	18′-8″	254	STR							
TK9610	4	25′-10″	351	STR							
TK9611	4	26′-4″	358	STR							
TK9612	4	19′-6″	265	STR							
TK9613	4	26′-8″	363	STR							
TK9614	4	27′-10″	379	1	2′-6″	25′-6″					
TK9615	4	20′-11″	284	1	2′-6″	18′-8″					
TK9616	4	28′-2″	383	1	2′-6″	25′-10″					
TK9617	4	28′-7″	389	1	2′-6″	26′-4″					
TK9618	4	21′-9″	296	1	2′-6″	19′-6″					
TK9619	4	28′-11″	393	1	2′-6″	26′-8″					
TK9620	4	15′-5″	210	1	2′-6″	13′-2″					
TK9621	30	25′-2″	2567	1 STR							
TK9622	38	18′-2″	2347	STR							
TK9623	30	29′-7″	3018	19	27′-0″	1′-1″	2′-5″				
TK9624	30	22′-7″	2304	19	20′-0″	1′-1″	2′-5″				
		TOTAL =	61382	1							

NOTES

1. FOR STANDARD BAR BENDING DETAILS, SEE SHEETS 17/365 THRU 19/365.

NO.	REVISIONS	DATE	REV. BY
1	SIZE AND QUANTITIES REVISED	3/12	BKL

DESIGNED BKL | DRAWN JGC | CHECKED MJZ | REVIEWED BA | DATE 6-10 | REVISED | STRUCTURE FILE NUMBER 4401263

DESIGN AGENCY
URS
36 EAST 7TH STREET
SUITE 2300
CINCINNATI, OHIO 45202

TOWER 3 (KY) - REINFORCING STEEL LIST SHEET 5 OF 5
BRIDGE NO. LAW-93-0000
IRONTON RUSSEL BRIDGE OVER OHIO

LAW-93-0.00
PID No. 81595

282/365

669
788

J:\Project\OV\ODOT\15005112 Ironton Russell\LAW\81595\structures\LAW093_1111C\sheets\Towers\093_0000_rl005.dgn - 3/16/2012 10:25:05 AM - jon_wanstrath

MARK	NUMBER	LENGTH	WEIGHT	TYPE	DIMENSIONS						
					A	B	C	D	E	R	INC
TOWER 4 (OH) - DRILLED SHAFTS(INCLUDED IN DRILLED SHAFTS FOR PAYMENT)											
SPK5001	6	32′-10″	5257	27	1′-0″	7′-6″	32′-10″				
SPK5002	6	25′-9″	15633	27	3″	7′-6″	25′-9″				
DSH18001	96	30′-0″	39168	36		30′-0″					
DSH18002	96	40′-0″	52224	36		40′-0″					
DSH18003	96	10′-3″	13382	1	3′-5″	7′-6″					
DSH18004	96	8′-3″	10771	1	3′-5″	5′-6″					
DSH18005	96	29′-10″	38950	36		29′-10″					
DSH18006	96	21′-10″	28506	36		21′-10″					
		TOTAL=	203,891								
TOWER 4 (OH) - FOOTING											
TH5001	36	21′-9″	817	1	1′-0″	20′-10″					
TH5002	36	29′-9″	1117	1	1′-0″	28′-10″					
TH5003	152	10′-3″	1625	1	10″	9′-6″					
TH9001	64	31′-4″	6818	STR							
TH9002	44	38′-0″	5685	STR							
TH14001	114	41′-11″	36556	2	2′-7″	37′-3″	2′-7″				
TH14002	114	41′-11″	36556	17	37′-5″						
TH14003	58	18′-9″	8319	37		16′-8″	2′-7″				
TH14004	58	39′-3″	17415	1	2′-7″	37′-2″					
TH14005	58	18′-10″	8356	67	16′-7″						
TH14006	58	39′-4″	17452	16	37′-1″						
		TOTAL=	140,716								

MARK	NUMBER	LENGTH	WEIGHT	TYPE	DIMENSIONS						
					A	B	C	D	E	R	INC
TOWER 4 (OH) - TOWER SEGMENTS 1 THRU 3											
TH5101	4-SER OF 43	25′-2″ TO 28′-2″	4784	3	11′-0″ TO 12′-6″	1′-4″					7/8″
TH5102	880	8′-7″	7878	60	8′-1″						
TH5103	172	42′-0″	7535	3	19′-6″	1′-3″					
TH5104	528	12′-1″	6654	60	11′-7″						
TH5105	4-SER OF 49	21′-6″ TO 25′-0″	4753	3	9′-2″ TO 10′-11″	1′-4″					7/8″
TH5106	1000	7′-10″	8170	60	7′-4″						
TH5107	196	42′-0″	8586	3	19′-6″	1′-3″					
TH5108	352	12′-1″	4436	60	11′-7″						
TH5109	4-SER OF 40	18′-11″ TO 21′-9″	3393	3	7′-10″ TO 9′-3″	1′-4″					7/8″
TH5110	800	2′-5″	2016	38	1′-3″						
TH5111	160	42′-0″	7009	3	19′-6″	1′-3″					
TH5112	352	2′-6″	918	38	1′-4″						
TH9120	44	21′-5″	3204	2	1′-6″	19′-0″	1′-6″				
TH9121	20	11′-5″	776	2	1′-6″	9′-0″	1′-6″				
TH10101	20	11′-3″	968	11	1′-7″	9′-7″	1′-10″				
TH10102	20	14′-3″	1226	11	2′-1″	12′-7″	1′-10″				
TH10103	20	17′-4″	1492	11	2′-7″	15′-7″	1′-10″				
TH10104	20	20′-4″	1750	11	3′-1″	18′-7″	1′-10″				
TH10105	20	11′-3″	968	19	9′-9″	4″	1′-10″				
TH10106	20	14′-4″	1234	19	12′-10″	4″	1′-10″				
TH10107	20	17′-5″	1499	19	15′-11″	4″	1′-10″				
TH10108	20	20′-6″	1764	19	19′-0″	4″	1′-10″				
TH10109	20	11′-4″	975	11	2′-3″	9′-7″	1′-10″				
TH10110	20	14′-5″	1241	11	3′-0″	12′-4″	1′-10″				
TH10111	20	17′-6″	1506	11	3′-8″	15′-7″	1′-10″				
TH10112	20	20′-7″	1771	11	4′-4″	18′-7″	1′-10″				
TH10113	20	11′-4″	975	19	9′-9″	5″	1′-10″				
TH10114	20	14′-5″	1241	19	12′-10″	5″	1′-10″				
TH10115	20	17′-6″	1506	19	15′-11″	5″	1′-10″				
TH10116	20	20′-7″	1771	19	19′-0″	5″	1′-10				
TH10117	8	17′-2″	591	1	1′-10″	15′-8″					
TH10118	8	17′-5″	600	1	1′-10″	15′-11″					
TH10119	32	11′-1″	1526	1	1′-10″	9′-7″					
TH10120	64	14′-1″	3878	1	1′-10″	12′-7″					
TH10121	32	17′-2″	2364	1	1′-10″	15′-8″					
TH10122	32	20′-3″	2788	1	1′-10″	18′-9″					
TH10123	168	21′-10″	15783	36							
TH10124	168	22′-1″	15964	36							
TH10125	128	21′-11″	12071	36							
TH10126	16	17′-7″	1211	36							
TH10127	168	24′-10″	17952	36							
TH10128	168	25′-2″	18193	36							
TH10129	96	25′-0″	10327	36							
TH10131	16	17′-9″	1222	36							
TH10132	168	20′-3″	14639	36							
TH10133	168	20′-7″	14880	36							
TH10134	80	20′-0″	6885	36							
TH10135	16	10′-0″	688	36							
		TOTAL=	233561								

NOTES

1. FOR STANDARD BAR BENDING DETAILS, SEE SHEETS 17/365 *THRU* 19/365.

J:\Project\O_ODOT\15005112 Ironton Russell\LAW\81595\structures\LAW093_1111C\sheets\Towers\093_0000_r1006.dgn — 4/29/2011 9:31:23 AM — john_corley

DESIGN AGENCY
URS
35 EAST 7TH STREET
SUITE 2300
CINCINNATI, OHIO 45202

DESIGNED BKL | DRAWN JGC | CHECKED MJZ | REVIEWED BA | DATE 6-10 | REVISED | STRUCTURE FILE NUMBER 4401263

TOWER 4 (OH) - REINFORCING STEEL LIST SHEET 1 OF 5

BRIDGE NO. LAW-93-0000

IRONTON RUSSEL BRIDGE OVER OHIO RIVER

LAW-93-0.00

PID No. 81595

MARK	NUMBER	LENGTH	WEIGHT	TYPE	DIMENSIONS						
					A	B	C	D	E	R	INC
TOWER 4 (OH) - INFILL WALL											
TH4201	76	4′-6″	228	38	3′-6″						
TH4202	54	4′-6″	162	38	3′-6″						
TH4203	50	5′-7″	186	4	3′-6″	9″					
TH6201	53	12′-0″	955	19	6′-0″	4′-10″	3′-7″				
TH6202	49	11′-6″	846	STR							
TH6203	98	9′-6″	1398	10	1′-0″	3′-0″	3′-6″	3′-0″			
TH7201	20	6′-11″	283	1	1′-2″	5′-11″					
TH7202	20	24′-5″	998	STR							
TH7203	4-SER OF 4	6′-5″ TO 19′-1″	417	STR							4′-2¾″
TH7204	172	7′-9″	2725	STR							
TH7205	2-SER OF 43	9′-0″ TO 19′-1″	2468	STR							2⅞″
TH7206	4	24′-7″	201	STR							
TH7207	40	14′-6″	1186	1	1′-2″	13′-6″					
TH7208	4	9′-5″	77	1	1′-2″	8′-5″					
TH7209	4	5′-2″	42	1	1′-2″	4′-2″					
TH7210	4	14′-8″	120	1	1′-2″	13′-8″					
TH7211	84	7′-9″	1331	STR							
TH7212	2-SER OF 21	19′-2″ TO 24′-1″	1856	STR							3″
TH10213	92	13′-11″	5509	1	12′-5″	1′-10″					
TH10214	46	24′-0″	4751	STR							
		TOTAL=	25739								

NOTES

1. FOR STANDARD BAR BENDING DETAILS, SEE SHEETS 17/365 THRU 19/365.

J:\Project\O\ODOT\15005112 Ironton Russell\LAW\81595\structures\LAW093_1111C\sheets\Towers\093_0000_r1007.dgn — 4/29/2011 9:31:26 AM — john_corley

DESIGN AGENCY
URS
36 EAST 7TH STREET
SUITE 2300
CINCINNATI, OHIO 45202

DESIGNED BKL | DRAWN JGC | REVIEWED BA | DATE 6-10 | STRUCTURE FILE NUMBER 4401263 | CHECKED MJZ | REVISED

TOWER 4 (OH) - REINFORCING STEEL LIST SHEET 2 OF 5

BRIDGE NO. LAW-93-0000

IRONTON RUSSEL BRIDGE OVER OHIO RIVER

LAW-93-0.00

PID No. 81595

MARK	NUMBER	LENGTH	WEIGHT	TYPE	DIMENSIONS						
					A	B	C	D	E	R	INC
TOWER 4 (OH) - TOWER SEGMENTS 4 THRU 6											
TH4120	48	2′-3″	72	STR							
TH5120	4-SER OF 31	16′-7″ TO 18′-11″	2296	3	6′-8″ TO 7′-10″	1′-4″					1″
TH5121	880	2′-5″	2218	38	1′-3″	10″					
TH5122	172	41′-10″	7505	3	19′-6″	1′-3″					
TH5123	176	2′-6″	459	38	1′-4″	10″					
TH5124	4-SER OF 6	16′-3″ TO 16′-7″	411	3	6′-6″ TO 6′-8″	1′-4″					3/4″
TH5125	24	16′-3″	407	3	6′-6″	1′-4″					
TH5127	160	16′-3″	2712	3	6′-6″	1′-4″					
TH5128	800	2′-5″	2016	38	1′-3″	10″					
TH5129	2-SER OF 40	41′-1″ TO 42′-1″	3470	3	19′-0″ TO 19′-6″	1′-3″					1/4″
TH5130	160	2′-6″	417	38	1′-4″	10″					
TH5131	2-SER OF 24	41′-5″ TO 42′-1″	2090	3	19′-2″ TO 19′-5″	1′-3″					1/4″
TH5132	56	18′-5″	1076	3	7′-8″	1′-3″					
TH5133	4	41′-1″	171	3	19′-0″	1′-3″					
TH5134	16	6′-0″	100	STR							
TH5150	544	2′-6″	1418	38	1′-4″	10″					
TH5151	112	14′-8″	1713	38	13′-6″	10″					
TH5152	280	8′-8″	2531	38	5′-6″	10″					
TH5153	32	6′-0″	200	2	2′-6″	1′-3″	2′-6″				
TH5155	32	4′-5″	147	2	10″	3′-0″	10″				
TH5161	36	5′-8″	213	STR							
TH5162	28	6′-6″	190	STR							
TH5163	8	19′-6″	163	STR							
TH5164	48	8′-5″	421	STR							
TH5165	72	7′-11″	595	2	10″	6′-6″	10″				
TH6150	192	28′-9″	8291	3	13′-6″	7″					
TH6151	192	14′-3″	4109	3	5′-6″	1′-4″					
TH8150	16	22′-5″	958	59	6′-3″	7′-0″	1′-4″	7′-8″			
TH8151	28	14′-0″	1047	8	6′-2″	6′-11	1′-4″				
TH8152	40	11′-10″	1264	8	3′-9″	7′-2″	1′-4″				
TH8153	68	15′-11″	2890	2	6′-2″	4′-0″	6′-2″				
TH8154	36	5′-5″	521	1	1′-4″	4′-3″					
TH8155	104	6′-2″	1712	STR							
TH8156	2 SER OF 5	32′-6″ TO 33′-8″	883	6	16′-6″	7′-1″ TO 7′-8″	1′-4″				3 1/2″
TH8158	24	19′-10″	1271	6	3′-8″	7′-2″	1′-4″				
TH8159	16	18′-4″	783	5	3′-0″	6′-10″	1′-4″				
TH8160	72	9′-0″	1730	2	1′-4″	6′-9″	1′-4″				
TH9120	24	14′-8″	1197	61	12′-1″	1′-7″					
TH9121	24	5′-11″	483	61	3′-4″	1′-7″					
TH9122	4	19′-11″	271	2	1′-7″	19′-4″	1′-7″				
TH9125	40	21′-11″	2981	2	1′-9″	19′-0″	1′-9″				
TH9130	16	10′-0″	544	STR							

MARK	NUMBER	LENGTH	WEIGHT	TYPE	DIMENSIONS						
					A	B	C	D	E	R	INC
TOWER 4 (OH) - TOWER SEGMENTS 4 THRU 6 CON'T.											
TH10140	16	21′-10″	1503	41	8′-8″	12′-6″	4′-0″				
TH10141	16	21′-10″	1503	41	11′-9″	9′-7″	3′-1″				
TH10142	16	21′-11″	1509	41	14′-10″	6′-9″	2′-2″				
TH10143	16	21′-11″	1509	41	17′-11″	3′-10″	1′-3″				
TH10144	16	10′-0″	688	36							
TH10145	32	21′-9″	2995	41	8′-8″	12′-7″	3′-7″				
TH10146	32	21′-10″	3006	41	11′-9″	9′-8″	2′-9″				
TH10147	48	21′-10″	4510	41	14′-9″	6′-9″	1′-11				
TH10148	40	21′-10″	3758	41	17′-10″	3′-10″	1′-1″				
TH10149	8	16′-1″	554	36		16′-1″					
TH10150	8	10′-0″	344	36		10′-0″					
TH10151	8	2′-5″	83	36		2′-5″					
TH10152	8	8′-5″	290	36		8′-5″					
TH10153	40	21′-11″	3772	41	8′-10″	12′-4″	4′-5″				
TH10154	40	21′-11″	3772	41	11′-11″	12′-4″	4′-5″				
TH10155	48	22′-0″	4544	41	14′-11″	6′-8″	2′-5″				
TH10156	40	22′-1″	3801	41	18′-0″	3′-10″	1′-4″				
TH10157	72	16′-7″	5138	36		16′-7″					
TH10158	72	26′-8″	8262	36		26′-8″					
TH10159	88	22′-8″	8583	36		22′-8″					
TH10160	72	32′-9″	10146	36		32′-9″					
TH10161	16	10′-0″	688	36		10′-0″					
TH10162	16	23′-8″	1629	36		23′-8″					
TH10163	16	19′-8″	1354	36		19′-8″					
TH10164	16	29′-8″	2042	36		29′-8″					
TH10165	8	10′-6″	361	36		10′-6″					
TH10166	8	7′-6″	258	36		7′-6″					
TH10167	8	4′-6″	155	36		4′-6″					
TH10168	8	1′-3″	43	36		1′-3″					
TH10169	16	7′-10″	539	STR							
TH10170	16	14′-10″	1021	STR							
TH11150	120	43′-6″	27734	1	2′-0″	35′-0″					
TH11151	120	28′-2″	17958	37		25′-0″	2′-0″				
TH11152	20	37′-7″	3994	1	2′-0″	30′-11″:					
TH11153	20	22′-1″	2347	37		20′-11″	2′-0″				
TH11155	18	19′-6″	1865	2	2′-0″	16′-2″	2′-0″				
TH11156	18	18′-10″	1801	2	2′-0″	15′-6″	2′-0″				
		TOTAL =	198005								

NOTES

1. FOR STANDARD BAR BENDING DETAILS, SEE SHEETS 17/365 THRU 19/365.

DESIGN AGENCY
URS
36 EAST 7TH STREET
SUITE 2300
CINCINNATI, OHIO 45202

DESIGNED BKL | DRAWN JGC | REVIEWED BA | DATE 6-10
CHECKED MJZ | REVISED | STRUCTURE FILE NUMBER 4401263

TOWER 4 (OH) - REINFORCING STEEL LIST SHEET 3 OF 5
BRIDGE NO. LAW-93-0000
IRONTON RUSSEL BRIDGE OVER OHIO RIVER

LAW-93-0.00
PID No. 81595

285/365

672
788

J:\Project\0\ODOT\15005112 Ironton Russell\LAW\81595\structures\LAW093_1111C\sheets\Towers\093_0000_r1008.dgn — 4/29/2011 9:31:28 AM — john_corley

MARK	NUMBER	LENGTH	WEIGHT	TYPE	DIMENSIONS						
					A	B	C	D	E	R	INC
TOWER 4 (OH) - TOWER SEGMENTS 7 THRU 9											
TH5301	144	16′-3″	2441	3	6′-6″	1′-4″					
TH5302	720	2′-5″	1815	38	1′-3″	10″					
TH5303	4-SER OF 36	40′-3″ TO 41′-1″	6108	3	18′-7″ TO 19′-0″	1′-3″					1/4″
TH5304	144	2′-6″	375	38	1′-4″	10″					
TH5306	144	16′-3″	2441	3	6′-6″	1′-4″					
TH5307	720	2′-5″	1815	38	1′-3″	10″					
TH5308	4-SER OF 36	39′-7″ TO 40′-3″	5995	3	18′-3″ TO 18′-7″	1′-3″					1/4″
TH5309	144	2′-6″	375	38	1′-4″	10″					
TH5310	96	16′-3″	1627	3	6′-6″	1′-4″					
TH5311	960	2′-5″	2420	38	1′-3″	10″					
TH5312	4-SER OF 24	38′-9″ TO 39′-7″	3922	3	17′-10″ TO 18′-3″	1′-3″					3/8″
TH5313	192	2′-6″	501	38	1′-4″	10″					
		△1									
TH9300	368	24′-6″	30654	STR							
TH9301	368	24′-6″	30654	STR							
TH9302	368	24′-6″	30654	STR							
		TOTAL=	121,797								
TOWER 4 (OH) - TOWER SEGMENTS 10 THRU 12											
TH5000	16	6′-10″	114	62	3′-0″	1′-0″					
TH5400	96	16′-3″	1627	3	6′-6″	1′-4″					
TH5401	960	2′-5″	2420	38	1′-3″						
TH5402	4-SER OF 24	37′-11″ TO 38′-7″	3830	3	17′-5″ TO 17′-9″	1′-3″					1/4″
TH5403	192	2′-6″	501	38	1′-4″						
TH5404	96	16′-3″	1627	3	6′-6″	1′-4″					
TH5405	960	2′-5″	2420	38	1′-3″						
TH5406	4 -SER OF 24	37′-1″ TO 37′-11″	3755	3	17′-0″ TO 17′-5″	1′-3″					3/8″
TH5407	192	2′-6″	501	38	1′-4″						
TH5408	800	2′-5″	2016	38	1′-3″						
TH5409	20	16′-3″	339	3	6′-6″	1′-4″					
TH5410	20	9′-2″	191	2	4′-6″	1′-4″	3′-7″				
TH5411	20	7′-2″	149	2	4′-6″	1′-4″	1′-7″				
TH5412	8	7′-9″	65	2	3′-1″	1′-4″	3′-7″				
TH5413	8	4′-9″	40	2	2′-1″	1′-4″	1′-7″				
TH5414	20	8′-8″	181	2	3′-1″	1′-4″	4′-6″				
TH5415	20	7′-8″	160	2	2′-1″	1′-4″	4′-6″				
TH5416	160	2′-6″	417	38	1′-4″						
TH5417	32	10′-1″	337	2	4′-6″	1′-4″	4′-6″				
TH5418	4 SER OF 20	36′-3″ TO 37′-1″	3059	3	16′-7″ TO 17′-0″	1′-3″					1/2″
TH9400	352	24′-6″	29322	STR							
TH9401	340	24′-6″	28322	STR							
		△1									

MARK	NUMBER	LENGTH	WEIGHT	TYPE	DIMENSIONS						
					A	B	C	D	E	R	INC
TOWER 4 (OH) - TOWER SEGMENTS 10 THRU 12 CON'T.											
TH9402	4	15′-1″	205	STR							
TH9403	4	22′-1″	300	STR							
TH9404	4	10′-1″	137	STR							
TH9405	4	21′-2″	288	STR							
TH9406	324	25′-10″	28458	△1 STR							
TH9407	4	11′-7″	158	STR							
TH9408	8	16′-2″	440	STR							
TH9409	4	18′-8″	254	STR							
TH9410	4	21′-4″	290	STR							
TH9411	8	8′-10″	240	STR							
		TOTAL=	112163	△1							
TOWER 4 (OH) - TOWER SEGMENTS 13 THRU 15											
TH5000	128	6′-10″	912	62	3′-0″	1′-0″					
TH5500	224	10′-0″	2336	2	4′-6″	1′-3″	4′-6″				
TH5501	44	8′-1″	371	2	2′-7″	1′-3″	4′-6″				
TH5502	44	7′-7″	348	2	2′-1″	1′-3″	4′-6″				
TH5503	36	6′-1″	228	2	2′-7″	1′-3″	2′-7″				
TH5504	36	5′-2″	194	2	2′-1″	1′-3″	2′-1″				
TH5505	36	8′-1″	304	2	4′-6″	1′-3″	2′-7″				
TH5506	36	7′-7″	285	2	2′-1″	1′-3″	4′-6″				
TH5507	4-SER OF 20	34′-5″ TO 35′-3″	2906	3	15′-9″ TO 16′-2″	1′-2″					1/2″
TH5508	4-SER OF 17	33′-9″ TO 34′-5″	2417	3	15′-5″ TO 15′-9″	1′-2″					1/2″
TH5509	456	2′-5″	1149	38	1′-3″						
TH5510	2280	2′-4″	5549	38	1′-2″						
TH5511	4 SER OF 20	35′-3″: TO 36′-1″	2976	3	16′-2″ TO 16′-7″	1′-2″					1/2″
TH9500	312	25′-10″	27404	△1 STR							
TH9501	12	6′-1″	248	STR							
TH9502	12	5′-3″	214	STR							
TH9503	12	5′-4″	218	STR							
TH9504	12	5′-0″	204	STR							
TH9505	312	25′-10″	27404	△1 STR							
TH9506	12	5′-0″	204	STR							
TH9507	12	4′-9″	194	STR							
TH9508	12	3′-10″	156	STR							
TH9509	100	3′-7″	1218	STR							
TH9510	312	22′-6″	23868	△1 STR							
TH9511	8	8′-7″	233	STR							
		TOTAL=	101540	△1							

NOTES

1. FOR STANDARD BAR BENDING DETAILS, SEE SHEETS 17/365 THRU 19/365.

NO.	REVISIONS	DATE	REV. BY
1	SIZE AND QUANTITIES REVISED	3/12	BKL

DESIGN AGENCY
URS
36 EAST 7TH STREET
SUITE 2300
CINCINNATI, OHIO 45202

DESIGNED BKL | DRAWN JGC | REVIEWED BA | DATE 6-10
CHECKED MJZ | REVISED | STRUCTURE FILE NUMBER 4401263

TOWER 4 (OH) - REINFORCING STEEL LIST SHEET 4 OF 5

BRIDGE NO. LAW-93-0000
IRONTON RUSSEL BRIDGE OVER OHIO RIVER

LAW-93-0.00
PID No. 81595

286/365

673
788

J:\Project\OA\ODOT\15005112 Ironton Russell\LAW\81595\structures\LAW093_1111C\sheets\Towers\093_0000_rl009.dgn - 3/16/2012 10:25:29 AM - jon_wanstrath

MARK	NUMBER	LENGTH	WEIGHT	TYPE	DIMENSIONS						
					A	B	C	D	E	R	INC
TOWER 4 (OH) - TOWER SEGMENTS 16 THRU 18											
TH5000	96	6′-10″	684	62	3′-0″	1′-0″					
TH5600	56	10′-0″	584	2	4′-6″	1′-3″	4′-6″				
TH5601	20	6′-6″	136	2	2′-9″	1′-3″	2′-9″				
TH5602	24	8′-3″	207	2	4′-6″	1′-3″	2′-9″				
TH5603	13	8′-10″	120	20	1′-10″	2′-1″	3′-5″	2′-1″	1′-10″		
TH5604	976	2′-4″	2375	38	1′-2″						
TH5605	80	5′-3″	438	60	4′-9″						
TH5606	20	10′-0″	209	2	6′-6″	1′-3″	2′-6″				
TH5607	4	21′-8″	90	2	10′-4″	1′-3″	10′-4″				
TH5608	8	13′-6″	113	2	6′-3″	1′-3″	6′-3″				
TH5609	12	21′-0″	263	2	10′-0″	1′-3″	10′-0″				
TH5610	8	4′-7″	38	STR							
TH5611	8	9′-0″	75	STR							
TH5612	8	12′-10″	107	STR							
TH5613	8	17′-0″	142	STR							
TH5614	4	29′-8″	124	STR							
TH5615	12	19′-6″	244	2	9′-3″	1′-3″	9′-3″				
TH5616	12	6′-0″	75	2	2′-6″	1′-3″	2′-6″				
TH5617	144	4′-9″	713	60	4′-3″						
TH5618	8 SER OF 9	3′-10″ TO 5′-7″	354	38	2′-8″ TO 4′-5″						2 1/2″
TH5619	12	18′-8″	234	2	8′-10″	1′-3″	8′-10″				
TH5620	8	11′-4″	95	2	5′-2″	1′-3″	5′-2″				
TH5621	16	17′-6″	292	2	8′-3″	1′-3″	8′-3″				
TH5622	8	10′-0″	83	2	4′-6″	1′-3″	4′-6″				
TH5623	12	12′-4″	154	2	5′-8″	1′-3″	5′-8″				
TH5624	4 SER OF 17	32′-11″ TO 33′-9″	2364	3	15′-0″ TO 15′-5″	1′-2″					5/8″
TH5625	4 SER OF 18	32′-3″ TO 32′-11″	2447	3	14′-8″ TO 15′-0″	1′-2″					3/8″
TH5626	2 SER OF 8	31′-11″ TO 32′-3″	535	3	14′-6″ TO 14′-8″	1′-2″					1/2″
TH5627	376	2′-5″	948	38	1′-3″						
TH5628	100	9′-4″	973	60	8′-10″						
TH5629	2 SER OF 8	26′-1″ TO 29′-7″	464	3	11′-6″ TO 13′-3″	1′-3″					6″
TH5630	8	7′-8″	64	STR	7′-8″						
TH5631	4	8′-11″	37	STR							

MARK	NUMBER	LENGTH	WEIGHT	TYPE	DIMENSIONS						
					A	B	C	D	E	R	INC
TOWER 4 (OH) - TOWER SEGMENTS 16 THRU 18 CON'T.											
TH5700	12	12′-3″	153	19	6′-2″	4′-11″	3′-8″				
TH5701	10	16′-8″	174	66	2′-6″	1′-10″	4″	5′-7″			
TH5702	8	4′-4″	36	STR							
TH5703	8	7′-9″	65	65	2′-7″	1′-3″	3″	3′-9″	1′-1″		
TH5704	10	14′-6″	151	STR							
TH5705	6	19′-3″	120	2	2′-6″	14′-6″	2′-6″				
TH5706	3	2′-9″	9	STR							
TH5707	5	5′-4″	28	8	7″	2′-9″	2′-6″				
TH5708	3	8′-5″	26	STR							
TH5709	5	11′-3″	59	8	7″	8′-5″	2′-6″				
TH5710	1	17′-1″	18	33	4′-0″	4′-0″					
TH5711	1	4′-7″	5	3	1′-0″	1′-0″					
TH5712	4	2′-3″	9	1	1′-6″	10″					
TH9600	296	22′-6″	22644	1 STR							
TH9601	4	13′-0″	177	STR							
TH9602	4	13′-3″	180	STR							
TH9603	4	15′-3″	207	1	2′-6″	13′-0″					
TH9604	80	3′-5″	929	STR							
TH9605	60	10′-0″	2040	STR							
TH9606	60	17′-0″	3468	STR							
TH9607	12	14′-7″	595	2	4′-0″	7′-2″	4′-0″				
TH9608	4	25′-6″	347	STR							
TH9609	4	18′-8″	254	STR							
TH9610	4	25′-10″	351	STR							
TH9611	4	26′-4″	358	STR							
TH9612	4	19′-6″	265	STR							
TH9613	4	26′-8″	363	STR							
TH9614	4	27′-10″	379	1	2′-6″	25′-6″					
TH9615	4	20′-11″	284	1	2′-6″	18′-8″					
TH9616	4	28′-2″	383	1	2′-6″	25′-10″					
TH9617	4	28′-7″	389	1	2′-6″	26′-4″					
TH9618	4	21′-9″	296	1	2′-6″	19′-6″					
TH9619	4	28′-11″	393	1	2′-6″	26′-8″					
TH9620	4	15′-5″	210	1	2′-6″	13′-2″					
TH9621	30	25′-2″	2567	1 STR							
TH9622	38	18′-2″	2347	STR							
TH9623	30	29′-7″	3018	19	27′-0″	1′-1″	2′-5″				
TH9624	30	22′-7″	2304	19	20′-0″	1′-1″	2′-5″				
		TOTAL =	61382	1							

NOTES

1. FOR STANDARD BAR BENDING DETAILS, SEE SHEETS 17/365 THRU 19/365.

NO.	REVISIONS	DATE	REV. BY
1	SIZE AND QUANTITIES REVISED	3/12	BKL

DESIGNED BKL | DRAWN JGC | CHECKED MJZ | REVIEWED BA | DATE 6-10 | REVISED | STRUCTURE FILE NUMBER 4401263

DESIGN AGENCY URS 36 EAST 7TH STREET SUITE 2300 CINCINNATI, OHIO 45202

TOWER 4 (OH) - REINFORCING STEEL LIST SHEET 5 OF 5

BRIDGE NO. LAW-93-0000

IRONTON RUSSEL BRIDGE OVER OHIO RIVER

LAW-93-0.00

PID No. 81595

287/365

674
788

J:\Project\OV\ODOT\15005112 Ironton Russell\LAW\81595\structures\LAW093_1111C\sheets\Towers\093_0000_rl010.dgn - 3/16/2012 10:25:48 AM - jon_wanstrath

MARK	NUMBER	LENGTH	WEIGHT	TYPE	DIMENSIONS						
					A	B	C	D	E	R	INC
PIER 5 FOOTING											
PH11005	136	30′-5″	21,978	1	2′-0″	28′-5″					
PH11006	136	41′-2″	29,746	1	2′-0″	39′-2″					
PH11007	41	36′-0″	7,842	2	2′-0″	32′-0″	2′-0″				
PH11008	53	36′-0″	10,137	2	2′-0″	32′-0″	2′-0″				
PH11009	53	35′-5″	9,973	2	2′-0″	31′-5″	2′-0″				
PH8010	32	50′-8″	4,329	2	9′-4″	32′-0″	9′-4″				
PH8011	54	50′-10″	7,329	2	9′-5″	32′-0″	9′-5″				
PH8012	54	34′-2″	4,926	2	1′-4″	31′-6″	1′-4″				
PH8013	24	34′-6″	2,211	2	1′-4″	31′-10″	1′-4″				
PH8014	24	34′-6″	2,211	2	1′-4″	31′-10″	1′-4″				
PH11015	122	10′-0″	6,482	37		8′-0″	2′-0″				
PH6016	24	11′-1″	400	38	9′-5″						
PH8017	8	31′-0″	662	STR							
PH8018	88	12′-9″	2,996	STR							
		TOTAL =	111,222								
PIER 5 DRILLED SHAFTS											
SP5001	4	3965′-0″	16,544	27	5″	7′-6″	69′-4″				
DS14001	76	28′-0″	16,280	36		28′-0″					
DS14002	76	31′-0″	18,024	36		31′-0″					
DS14003	76	52′-7″	30,572	1	2′-7″	50′-0″					
DS14004	76	49′-7″	28,828	1	2′-7″	47′-0″					
		TOTAL =	110,248								
PIER 5 COLUMN											
PH11001	39	26′-4″	5,456	STR							
PH11050	31	22′-4″	3,678	1	2′-0″	20′-4″					
PH5002	130	15′-0″	2,034	2	2′-6″	3′-6″	9′-0″				
PH5003	130	19′-6″	2,644	STR							
PH5004	455	4′-6″	2,136	38	3′-6″						
		TOTAL =	15,948								

NOTES

1. FOR STANDARD BAR BENDING DETAILS, SEE SHEET NOS. 17/365 THRU 19/365.

DESIGN AGENCY
URS
36 EAST 7TH STREET
SUITE 2300
CINCINNATI, OHIO 45202

DESIGNED	DRAWN	REVIEWED	DATE
BWJ	JLS	DLJ	6/2010
CHECKED	REVISED	STRUCTURE FILE NUMBER	
AR		4401263	

REINFORCING STEEL LIST - PIER 5
BRIDGE NO. LAW-93-0000
IRONTON RUSSELL BRIDGE OVER OHIO RIVER

LAW-93-0.00
PID No. 81595

288/365

675
788

E:\Bridges_XM\Ironton_Russell\LAW\81595\structures\LAW093_0000C\sheets\093_0000CRL020.dgn 4/25/2011 10:29:18 AM john_stahl

MARK	NUMBER	LENGTH	WEIGHT	TYPE	DIMENSIONS A	B	C	D	E	R	INC
FLOORBEAM FB1							NUMBER OF ITEMS REQUIRED = 109				
S10051	2	26′-10″	231	STR							
S8052	4	11′-10″	126	STR							
S5053	12	37′-2″	465	STR							
S5054	92	4′-6″	432	1	1′-0″	3′-6″					
S5055	50	7′-0″	365	2	3′-2″	8″	3′-2″				
S5057	14	11′-6″	168	3	1′-4″	3′-11 ½″					
S5059	2	16′-11″	35	STR							
S5061	2	16′-2″	34	STR							
	WEIGHT PER ITEM =		1,856								
	TOTAL =		202,304								
FLOORBEAM FB2							NUMBER OF ITEMS REQUIRED = 2				
S5053	10	37′-2″	388	STR							
S5054	92	4′-6″	432	1	1′-0″	3′-6″					
S10056	12	40′-2″	2,074	STR							
S5058	50	9′-0″	469	2	3′-2″	2′-8″	3′-2″				
S5060	2	16′-11″	35	STR							
S5062	2	16′-2″	34	STR							
	WEIGHT PER ITEM =		3,432								
	TOTAL =		6,864								
LAMP POST BLISTERS							NUMBER OF ITEMS REQUIRED = 34				
S5276	4	7′-0″	29	33	1′-8″	1′-4″					
S5277	4	6′-0″	25	2	2′-5″	1′-2″	2′-5″				
S5277A	4	2′-5″	10	STR	2′-5″						
S5277B	8	1′-6″	13	STR	1′-6″						
	WEIGHT PER ITEM =		77								
	TOTAL =		2,618								
BARRIERS							NUMBER OF ITEMS REQUIRED = 1				
R5126	3674	5′-9″	22,034	39	1′-7″	1′-4″	4″	11″	6″		
R5127	3672	6′-1″	23,297	3	1′-0″	1′-7″					
R5128	172	40′-0″	7,176	STR							
R5129	760	16′-7″	13,145	STR							
R5130	2	4′-9″	10	3	1′-0″	11″					
R5131	18	8′-9″	164	3	10″	3′-1″					
R5132	8	3′-4″	28	STR							
R5133	16	14′-6″	242	STR							
R5134	14	5′-6″	80	39	1′-7″	1′-4″	3″	8″	6″		
	WEIGHT PER ITEM =		66,176								
	TOTAL =		66,176								
DECK POST-TENSIONING TENDONS							NUMBER OF ITEMS REQUIRED = 68				
S4176	2	2′-6″	3	STR							
S4177	2	3′-0″	4	STR							
S4178	2	1′-9″	2	1	5″	1′-4″					
S4179	1	VARIES	6	6	10″	VARIES	8″				4″
	SETS	2′-10″				4″					
	OF	TO				TO					
	3	3′-6″				8″					
S4180	1	2′-10″	2	6	10″	4″	8″				
S3181	6	1′-2″	3	STR							
S3182	4	1′-8″	3	STR							
	WEIGHT PER ITEM =		23								
	TOTAL =		1,564								

MARK	NUMBER	LENGTH	WEIGHT	TYPE	DIMENSIONS A	B	C	D	E	R	INC
STAY CABLE BLISTERS - CABLES B1-B3, M1, M2, M16, M17 & B16-B18									NUMBER OF ITEMS REQUIRED = 20		
S4226	6	8′-0″	32	2	3′-0″	2′-0″	3′-0″				
S5232	4	6′-4″	26	19	3′-6″	2″	2′-10″				
S5238	8	3′-8″	31	1	10″	2′-10″					
	WEIGHT PER ITEM =		89								
	TOTAL =		1,780								
STAY CABLE BLISTERS - CABLES B4-B6, M3-M5, M18-M20 & B19-B21									NUMBER OF ITEMS REQUIRED = 24		
S4227	6	9′-0″	36	2	3′-6″	2′-0″	3′-6″				
S5233	4	8′-3″	34	19	4′-0″	3″	4′-3″				
S5239	10	5′-1″	53	1	10″	4′-3″					
	WEIGHT PER ITEM =		123								
	TOTAL =		2,952								
STAY CABLE BLISTERS - CABLES B7-B9, M6-M8, M21-M23 & B22-B24									NUMBER OF ITEMS REQUIRED = 24		
S4228	8	9′-0″	48	2	3′-6″	2′-0″	3′-6″				
S5234	4	9′-3″	39	19	4′-0″	3″	5′-3″				
S5240	10	6′-1″	63	1	10″	5′-3″					
	WEIGHT PER ITEM =		150								
	TOTAL =		3,600								
STAY CABLE BLISTERS - CABLES B10, B11, M9, M10, M24, M25, B25 & B26									NUMBER OF ITEMS REQUIRED = 16		
S4229	10	9′-0″	60	2	3′-6″	2′-0″	3′-6″				
S5235	4	9′-10″	41	19	4′-0″	4″	5′-10″				
S5241	10	6′-8″	70	1	10″	5′-10″					
	WEIGHT PER ITEM =		171								
	TOTAL =		2,736								
STAY CABLE BLISTERS - CABLES B12, M11-M13, M26-M28 & B27									NUMBER OF ITEMS REQUIRED = 16		
S4230	12	9′-0″	72	2	3′-6″	2′-0″	3′-6″				
S5236	4	10′-7″	44	19	4′-0″	4″	6′-7″				
S5242	10	7′-5″	77	1	10″	6′-7″					
	WEIGHT PER ITEM =		193								
	TOTAL =		3,088								
STAY CABLE BLISTERS - CABLES M14, M15, M29 & M30									NUMBER OF ITEMS REQUIRED = 8		
S4231	14	9′-2″	86	2	3′-7″	2′-0″	3′-7″				
S5237	4	11′-6″	48	19	4′-1″	5″	7′-5″				
S5243	10	8′-3″	86	1	10″	7′-5″					
	WEIGHT PER ITEM =		220								
	TOTAL =		1,760								
EDGE GIRDER POST-TENSIONING BLISTERS									NUMBER OF ITEMS REQUIRED = 16		
S5183	10	4′-9″	50	24	7″	1′-11″				3 ½″	
S5184	9	4′-10″	46	2	2′-0″	10″	2′-0″				
S5185	11	4′-5″	51	2	2′-0″	1′-10″	7″				
S4186	4	6′-6″	17	STR							
S5187	6	11′-2 ¼″	70	35	2′-5″	1′-2″	1′-7″	1′-0″	5′-0″		
S8188	4	6′-0″	64	STR							
S4189	1	5′-0″	3	STR							
S4190	1	3′-0″	2	STR							
S4191	1	1′-10″	1	STR							
S4192	3	3′-5″	7	1	1′-2″	2′-3″					
S5193	4	6′-0″	25	5	1′-2″	1′-11″	6″				
	WEIGHT PER ITEM =		336								
	TOTAL =		5,376								

NO.	REVISIONS	DATE	REV. BY
1	REVISED BAR LIST	02/14	CRK

NOTES

1. FOR STANDARD BAR BENDING DETAILS, SEE SHEET NOS. 17/365 THRU 19/365.

DESIGN AGENCY
URS
36 EAST 7TH STREET
SUITE 2300
CINCINNATI, OHIO 45202

DESIGNED BWJ | DRAWN JLS | CHECKED AR | REVIEWED DLJ | DATE 6/2010 | REVISED | STRUCTURE FILE NUMBER 4401263

REINFORCING STEEL LIST - CABLE STAYED SUPERSTRUCTURE (1 OF 18)
BRIDGE NO. LAW-93-0000
IRONTON RUSSELL BRIDGE OVER OHIO RIVER

LAW-93-0.00
PID No. 81595

289/365

676
788

J:\Project\OV\ODOT\15005112 Ironton Russell\LAW\81595\structures\LAW093_1111C\sheets\Mainspan\093_0000CRL002.dgn - 3/7/2014 8:20:55 AM - jon_wanstrath

MARK	NUMBER	LENGTH	WEIGHT	TYPE	DIMENSIONS						
					A	B	C	D	E	R	INC
SIDESPAN DECK - SEGMENT B2								NUMBER OF ITEMS REQUIRED = 1			
S5001	54	39′-6″	2,225	19	19′-9″	19′-9″	8″				
S5002	54	32′-0″	1,802	19	16′-0″	16′-0″	6″				
S5005	92	6′-2″	592	21	0″	2′-1″	9″	1′-1″			
S5007	67	30′-3″	2,114	STR							
S5008	51	30′-3″	1,609	STR							
S5050	108	6′-2″	695	1	1′-0″	5′-2″					
S6326	62	19′-7″	1,824	40	4′-5 1/2″	4′-1 1/4″	7 3/4″	4′-2 1/2″	1′-0 1/4″		
S6327	2	18′-5″	55	55	4′-5 1/2″	1′-10 1/2″	7 3/4″	1′-1 1/4″	1′-0 1/4″		
S6328	2	18′-2″	55	43	1′-9 1/4″	1′-2 1/2″	7 3/4″	4′-2 1/2″	1′-0 1/4″		
S6329	8	18′-3″	219	56	4′-5 1/2″	4′-1 1/4″	7 3/4″	4′-2 1/2″	1′-0 1/4″		
S11331	46	28′-3″	6,904	36		28′-3″					
S8332	14	28′-3″	1,056	36		28′-3″					
S8333	2	3′-6″	19	STR							
S8334	2	13′-1 1/2″	70	STR							
S8335	2	9′-7 1/2″	51	36		9′-7 1/2″					
S6336	2	5′-3 1/4″	16	11	3 1/2″	11 1/2″	4′-3 1/4″				
S6337	2	5′-2 1/2″	16	19	4′-2 1/2″	3/4″	1′-0″				
S6338	2	5′-2 1/2″	16	19	4′-2 1/2″	3 1/2″	11 1/2″				
S6339	2	5′-7″	17	11	1″	1′-0″	4′-7″				
S8357	6	5′-11″	95	STR							
S8362	6	18′-5″	295	36		18′-5″					
S8382	4	4′-6″	48	STR							
S8387	4	19′-10″	212	36		19′-10″					
S8620	32	5′-7″	477	1	1′-4″	4′-3″					
S3621	16	2′-0″	12	STR							
	WEIGHT PER ITEM =		20,494								
	TOTAL =		20,494								
SIDESPAN DECK - SEGMENT B3								NUMBER OF ITEMS REQUIRED = 1			
S5001	54	39′-6″	2,225	19	19′-9″	19′-9″	8″				
S5002	54	32′-0″	1,802	19	16′-0″	16′-0″	6″				
S5005	92	6′-2″	592	21	0″	2′-1″	9″	1′-1″			
S5007	67	30′-3″	2,114	STR							
S5008	51	30′-3″	1,609	STR							
S5050	108	6′-2″	695	1	1′-0″	5′-2″					
S6326	60	19′-7″	1,765	40	4′-5 1/2″	4′-1 1/4″	7 3/4″	4′-2 1/2″	1′-0 1/4″		
S6327	4	18′-5″	111	55	4′-5 1/2″	1′-10 1/2″	7 3/4″	1′-1 1/4″	1′-0 1/4″		
S6328	2	18′-2″	55	43	1′-9 1/4″	1′-2 1/2″	7 3/4″	4′-2 1/2″	1′-0 1/4″		
S6329	8	18′-3″	219	56	4′-5 1/2″	4′-1 1/4″	7 3/4″	4′-2 1/2″	1′-0 1/4″		
S11331	46	28′-3″	6,904	36		28′-3″					
S8332	14	28′-3″	1,056	36		28′-3″					
S8333	2	3′-6″	19	STR							
S8334	2	13′-1 1/2″	70	STR							
S8335	2	9′-7 1/2″	51	36		9′-7 1/2″					
S6336	4	5′-3 1/4″	32	11	3 1/2″	11 1/2″	4′-3 1/4″				
S6337	4	5′-2 1/2″	31	19	4′-2 1/2″	3/4″	1′-0″				
S6338	2	5′-2 1/2″	16	19	4′-2 1/2″	3 1/2″	11 1/2″				
S6339	2	5′-7″	17	11	1″	1′-0″	4′-7″				
S8356	6	6′-7″	105	STR							
S8361	6	17′-8″	283	36		17′-8″					
S8381	4	4′-6″	48	STR							
S8386	4	19′-9″	211	36		19′-9″					
S8620	32	5′-7″	477	1	1′-4″	4′-3″					
S3621	16	2′-0″	12	STR							
	WEIGHT PER ITEM =		20,519								
	TOTAL =		20,519								

MARK	NUMBER	LENGTH	WEIGHT	TYPE	DIMENSIONS						
					A	B	C	D	E	R	INC
SIDESPAN DECK - SEGMENT B4								NUMBER OF ITEMS REQUIRED = 1			
S5001	54	39′-6″	2,225	19	19′-9″	19′-9″	8″				
S5002	54	32′-0″	1,802	19	16′-0″	16′-0″	6″				
S5005	92	6′-2″	592	21	0″	2′-1″	9″	1′-1″			
S5007	67	30′-3″	2,114	STR							
S5008	51	30′-3″	1,609	STR							
S5050	108	6′-2″	695	1	1′-0″	5′-2″					
S6326	60	19′-7″	1,765	40	4′-5 1/2″	4′-1 1/4″	7 3/4″	4′-2 1/2″	1′-0 1/4″		
S6327	4	18′-5″	111	55	4′-5 1/2″	1′-10 1/2″	7 3/4″	1′-1 1/4″	1′-0 1/4″		
S6328	2	18′-2″	55	43	1′-9 1/4″	1′-2 1/2″	7 3/4″	4′-2 1/2″	1′-0 1/4″		
S6329	8	18′-3″	219	56	4′-5 1/2″	4′-1 1/4″	7 3/4″	4′-2 1/2″	1′-0 1/4″		
S11331	46	28′-3″	6,904	36		28′-3″					
S8332	14	28′-3″	1,056	36		28′-3″					
S8333	2	3′-6″	19	STR							
S8334	2	13′-1 1/2″	70	STR							
S8335	2	9′-7 1/2″	51	36		9′-7 1/2″					
S6336	4	5′-3 1/4″	32	11	3 1/2″	11 1/2″	4′-3 1/4″				
S6337	4	5′-2 1/2″	31	19	4′-2 1/2″	3/4″	1′-0″				
S6338	2	5′-2 1/2″	16	19	4′-2 1/2″	3 1/2″	11 1/2″				
S6339	2	5′-7″	17	11	1″	1′-0″	4′-7″				
S8355	6	7′-2″	115	STR							
S8360	6	16′-11″	271	36		16′-11″					
S8380	4	4′-6″	48	STR							
S8385	4	19′-7″	209	36		19′-7″					
S8620	32	5′-7″	477	1	1′-4″	4′-3″					
S3621	16	2′-0″	12	STR							
	WEIGHT PER ITEM =		20,515								
	TOTAL =		20,515								
SIDESPAN DECK - SEGMENT B5								NUMBER OF ITEMS REQUIRED = 1			
S5001	54	39′-6″	2,225	19	19′-9″	19′-9″	8″				
S5002	54	32′-0″	1,802	19	16′-0″	16′-0″	6″				
S5005	92	6′-2″	592	21	0″	2′-1″	9″	1′-1″			
S5007	67	30′-3″	2,114	STR							
S5008	51	30′-3″	1,609	STR							
S5050	108	6′-2″	695	1	1′-0″	5′-2″					
S6326	58	19′-7″	1,706	40	4′-5 1/2″	4′-1 1/4″	7 3/4″	4′-2 1/2″	1′-0 1/4″		
S6327	4	18′-5″	111	55	4′-5 1/2″	1′-10 1/2″	7 3/4″	1′-1 1/4″	1′-0 1/4″		
S6328	4	18′-2″	109	43	1′-9 1/4″	1′-2 1/2″	7 3/4″	4′-2 1/2″	1′-0 1/4″		
S6329	8	18′-3″	219	56	4′-5 1/2″	4′-1 1/4″	7 3/4″	4′-2 1/2″	1′-0 1/4″		
S11331	46	28′-3″	6,904	36		28′-3″					
S8332	14	28′-3″	1,056	36		28′-3″					
S8333	2	3′-6″	19	STR							
S8334	2	13′-1 1/2″	70	STR							
S8335	2	9′-7 1/2″	51	36		9′-7 1/2″					
S6336	4	5′-3 1/4″	32	11	3 1/2″	11 1/2″	4′-3 1/4″				
S6337	4	5′-2 1/2″	31	19	4′-2 1/2″	3/4″	1′-0″				
S6338	4	5′-2 1/2″	31	19	4′-2 1/2″	3 1/2″	11 1/2″				
S6339	4	5′-7″	34	11	1″	1′-0″	4′-7″				
S8350	6	7′-9″	124	STR							
S8359	6	16′-3″	260	36		16′-3″					
S8374	4	4′-6″	48	STR							
S8384	4	19′-6″	208	36		19′-6″					
S11391	18	7′-6″	717	STR							
S8620	32	5′-7″	477	1	1′-4″	4′-3″					
S3621	16	2′-0″	12	STR							
	WEIGHT PER ITEM =		21,256								
	TOTAL =		21,256								

NOTES

1. FOR STANDARD BAR BENDING DETAILS, SEE SHEET NOS. 17/365 *THRU* 19/365.

DESIGN AGENCY
URS
36 EAST 7TH STREET
SUITE 2300
CINCINNATI, OHIO 45202

DESIGNED BWJ | DRAWN JLS | CHECKED AR | REVIEWED DLJ | DATE 6/2010 | REVISED | STRUCTURE FILE NUMBER 4401263

REINFORCING STEEL LIST - CABLE STAYED SUPERSTRUCTURE (2 OF 18)
BRIDGE NO. LAW-93-0000
IRONTON RUSSELL BRIDGE OVER OHIO RIVER

LAW-93-0.00
PID No. 81595

290/365

677
788

E:\Bridges_XM\Ironton_Russell\LAW\81595\structures\LAW093_0000C\sheets\093_0000CRL003.dgn 4/25/2011 10:29:35 AM john_stahl

MARK	NUMBER	LENGTH	WEIGHT	TYPE	DIMENSIONS						
					A	B	C	D	E	R	INC
SIDESPAN DECK - SEGMENT B6								NUMBER OF ITEMS REQUIRED = 1			
S5001	54	39′-6″	2,225	19	19′-9″	19′-9″	8″				
S5002	54	32′-0″	1,802	19	16′-0″	16′-0″	6″				
S5005	92	6′-2″	592	21	0″	2′-1″	9″	1′-1″			
S5007	67	30′-3″	2,114	STR							
S5008	51	30′-3″	1,609	STR							
S5050	108	6′-2″	695	1	1′-0″	5′-2″					
S6326	58	19′-7″	1,706	40	4′-5 1/2″	4′-1 1/4″	7 3/4″	4′-2 1/2″	1′-0 1/4″		
S6327	4	18′-5″	111	55	4′-5 1/2″	1′-10 1/2″	7 3/4″	1′-1 1/4″	1′-0 1/4″		
S6328	4	18′-2″	109	43	1′-9 1/4″	1′-2 1/2″	7 3/4″	4′-2 1/2″	1′-0 1/4″		
S6329	8	18′-3″	219	56	4′-5 1/2″	4′-1 1/4″	7 3/4″	4′-2 1/2″	1′-0 1/4″		
S11331	64	28′-3″	9,606	36		28′-3″					
S8332	14	28′-3″	1,056	36		28′-3″					
S8333	2	3′-6″	19	STR							
S8334	2	13′-1 1/2″	70	STR							
S8335	2	9′-7 1/2″	51	36		9′-7 1/2″					
S6336	4	5′-3 1/4″	32	11	3 1/2″	11 1/2″	4′-3 1/4″				
S6337	4	5′-2 1/2″	31	19	4′-2 1/2″	3/4″	1′-0″				
S6338	4	5′-2 1/2″	31	19	4′-2 1/2″	3 1/2″	11 1/2″				
S6339	4	5′-7″	34	11	1″	1′-0″	4′-7″				
S8349	6	8′-4″	134	STR							
S8354	6	15′-6″	248	36		15′-6″					
S8373	4	4′-6″	48	STR							
S8379	4	19′-4″	206	36		19′-4″					
S8620	32	5′-7″	477	1	1′-4″	4′-3″					
S3621	16	2′-0″	12	STR							
	WEIGHT PER ITEM =		23,237								
	TOTAL =		23,237								
SIDESPAN DECK - SEGMENT B7								NUMBER OF ITEMS REQUIRED = 1			
S5001	54	39′-6″	2,225	19	19′-9″	19′-9″	8″				
S5002	54	32′-0″	1,802	19	16′-0″	16′-0″	6″				
S5005	92	6′-2″	592	21	0″	2′-1″	9″	1′-1″			
S5007	67	30′-3″	2,114	STR							
S5008	51	30′-3″	1,609	STR							
S5050	108	6′-2″	695	1	1′-0″	5′-2″					
S6326	58	19′-7″	1,706	40	4′-5 1/2″	4′-1 1/4″	7 3/4″	4′-2 1/2″	1′-0 1/4″		
S6327	4	18′-5″	111	55	4′-5 1/2″	1′-10 1/2″	7 3/4″	1′-1 1/4″	1′-0 1/4″		
S6328	4	18′-2″	109	43	1′-9 1/4″	1′-2 1/2″	7 3/4″	4′-2 1/2″	1′-0 1/4″		
S6329	8	18′-3″	219	56	4′-5 1/2″	4′-1 1/4″	7 3/4″	4′-2 1/2″	1′-0 1/4″		
S11331	64	28′-3″	9,606	36		28′-3″					
S8332	14	28′-3″	1,056	36		28′-3″					
S8333	2	3′-6″	19	STR							
S8334	2	13′-1 1/2″	70	STR							
S8335	2	9′-7 1/2″	51	36		9′-7 1/2″					
S6336	4	5′-3 1/4″	32	11	3 1/2″	11 1/2″	4′-3 1/4″				
S6337	4	5′-2 1/2″	31	19	4′-2 1/2″	3/4″	1′-0″				
S6338	4	5′-2 1/2″	31	19	4′-2 1/2″	3 1/2″	11 1/2″				
S6339	4	5′-7″	34	11	1″	1′-0″	4′-7″				
S8348	6	8′-10″	142	STR							
S8353	6	15′-0″	240	36		15′-0″					
S8372	4	4′-6″	48	STR							
S8378	4	19′-3″	206	36		19′-3″					
S8620	32	5′-7″	477	1	1′-4″	4′-3″					
S3621	16	2′-0″	12	STR							
	WEIGHT PER ITEM =		23,237								
	TOTAL =		23,237								

MARK	NUMBER	LENGTH	WEIGHT	TYPE	DIMENSIONS						
					A	B	C	D	E	R	INC
SIDESPAN DECK - SEGMENT B8								NUMBER OF ITEMS REQUIRED = 1			
S5001	54	39′-6″	2,225	19	19′-9″	19′-9″	8″				
S5002	54	32′-0″	1,802	19	16′-0″	16′-0″	6″				
S5005	92	6′-2″	592	21	0″	2′-1″	9″	1′-1″			
S5007	67	30′-3″	2,114	STR							
S5008	51	30′-3″	1,609	STR							
S5050	108	6′-2″	695	1	1′-0″	5′-2″					
S6326	58	19′-7″	1,706	40	4′-5 1/2″	4′-1 1/4″	7 3/4″	4′-2 1/2″	1′-0 1/4″		
S6327	4	18′-5″	111	55	4′-5 1/2″	1′-10 1/2″	7 3/4″	1′-1 1/4″	1′-0 1/4″		
S6328	4	18′-2″	109	43	1′-9 1/4″	1′-2 1/2″	7 3/4″	4′-2 1/2″	1′-0 1/4″		
S6329	8	18′-3″	219	56	4′-5 1/2″	4′-1 1/4″	7 3/4″	4′-2 1/2″	1′-0 1/4″		
S11331	64	28′-3″	9,606	36		28′-3″					
S8332	14	28′-3″	1,056	36		28′-3″					
S8333	2	3′-6″	19	STR							
S8334	2	13′-1 1/2″	70	STR							
S8335	2	9′-7 1/2″	51	36		9′-7 1/2″					
S6336	4	5′-3 1/4″	32	11	3 1/2″	11 1/2″	4′-3 1/4″				
S6337	4	5′-2 1/2″	31	19	4′-2 1/2″	3/4″	1′-0″				
S6338	4	5′-2 1/2″	31	19	4′-2 1/2″	3 1/2″	11 1/2″				
S6339	4	5′-7″	34	11	1″	1′-0″	4′-7″				
S8347	6	9′-3″	148	STR							
S8352	6	14′-5″	231	36		14′-5″					
S8371	4	4′-6″	48	STR							
S8377	4	19′-1″	204	36		19′-1″					
S8620	32	5′-7″	477	1	1′-4″	4′-3″					
S3621	16	2′-0″	12	STR							
	WEIGHT PER ITEM =		23,232								
	TOTAL =		23,232								
SIDESPAN DECK - SEGMENT B9								NUMBER OF ITEMS REQUIRED = 1			
S5001	54	39′-6″	2,225	19	19′-9″	19′-9″	8″				
S5002	54	32′-0″	1,802	19	16′-0″	16′-0″	6″				
S5005	92	6′-2″	592	21	0″	2′-1″	9″	1′-1″			
S5007	67	30′-3″	2,114	STR							
S5008	51	30′-3″	1,609	STR							
S5050	108	6′-2″	695	1	1′-0″	5′-2″					
S6326	58	19′-7″	1,706	40	4′-5 1/2″	4′-1 1/4″	7 3/4″	4′-2 1/2″	1′-0 1/4″		
S6327	4	18′-5″	111	55	4′-5 1/2″	1′-10 1/2″	7 3/4″	1′-1 1/4″	1′-0 1/4″		
S6328	4	18′-2″	109	43	1′-9 1/4″	1′-2 1/2″	7 3/4″	4′-2 1/2″	1′-0 1/4″		
S6329	8	18′-3″	219	56	4′-5 1/2″	4′-1 1/4″	7 3/4″	4′-2 1/2″	1′-0 1/4″		
S11331	64	28′-3″	9,606	36		28′-3″					
S8332	14	28′-3″	1,056	36		28′-3″					
S8333	2	3′-6″	19	STR							
S8334	2	13′-1 1/2″	70	STR							
S8335	2	9′-7 1/2″	51	36		9′-7 1/2″					
S6336	4	5′-3 1/4″	32	11	3 1/2″	11 1/2″	4′-3 1/4″				
S6337	4	5′-2 1/2″	31	19	4′-2 1/2″	3/4″	1′-0″				
S6338	4	5′-2 1/2″	31	19	4′-2 1/2″	3 1/2″	11 1/2″				
S6339	4	5′-7″	34	11	1″	1′-0″	4′-7″				
S8346	6	9′-8″	155	STR							
S8351	6	13′-10″	222	36		13′-10″					
S8370	4	4′-6″	48	STR							
S8376	4	19′-0″	203	36		19′-0″					
S8620	32	5′-7″	477	1	1′-4″	4′-3″					
S3621	16	2′-0″	12	STR							
	WEIGHT PER ITEM =		23,229								
	TOTAL =		23,229								

NOTES

1. FOR STANDARD BAR BENDING DETAILS, SEE SHEET NOS. 17/365 *THRU* 19/365.

DESIGN AGENCY
URS
35 EAST 7TH STREET
SUITE 2300
CINCINNATI, OHIO 45202

DESIGNED BWJ | DRAWN JLS | REVIEWED DLJ | DATE 6/2010 | CHECKED AR | REVISED | STRUCTURE FILE NUMBER 4401263

REINFORCING STEEL LIST - CABLE STAYED SUPERSTRUCTURE (3 OF 18)

BRIDGE NO. LAW-93-0000
IRONTON RUSSELL BRIDGE OVER OHIO RIVER

LAW-93-0.00
PID No. 81595

E:\Bridges_XM\Ironton_Russell\LAW\81595\structures\LAW093_0000C\sheets\093_0000CRL004.dgn 4/25/2011 10:29:46 AM john_stahl

MARK	NUMBER	LENGTH	WEIGHT	TYPE	DIMENSIONS						
					A	B	C	D	E	R	INC
SIDESPAN DECK - SEGMENT B10								NUMBER OF ITEMS REQUIRED = 1			
S5001	54	39′-6″	2,225	19	19′-9″	19′-9″	8″				
S5002	54	32′-0″	1,802	19	16′-0″	16′-0″	6″				
S5005	92	6′-2″	592	21	0″	2′-1″	9″	1′-1″			
S5007	67	30′-3″	2,114	STR							
S5008	51	30′-3″	1,609	STR							
S5050	108	6′-2″	695	1	1′-0″	5′-2″					
S6326	56	19′-7″	1,647	40	4′-5 1/2″	4′-1 1/4″	7 3/4″	4′-2 1/2″	1′-0 1/4″		
S6327	4	18′-5″	111	55	4′-5 1/2″	1′-10 1/2″	7 3/4″	1′-1 1/4″	1′-0 1/4″		
S6328	6	18′-2″	164	43	1′-9 1/4″	1′-2 1/2″	7 3/4″	4′-2 1/2″	1′-0 1/4″		
S6329	8	18′-3″	219	56	4′-5 1/2″	4′-1 1/4″	7 3/4″	4′-2 1/2″	1′-0 1/4″		
S11331	64	28′-3″	9,606	36		28′-3″					
S8332	10	28′-3″	754	36		28′-3″					
S8333	2	3′-6″	19	STR							
S8334	2	13′-1 1/2″	70	STR							
S8335	2	9′-7 1/2″	51	36		9′-7 1/2″					
S6336	4	5′-3 1/4″	32	11	3 1/2″	11 1/2″	4′-3 1/4″				
S6337	4	5′-2 1/2″	31	19	4′-2 1/2″	3/4″	1′-0″				
S6338	6	5′-2 1/2″	47	19	4′-2 1/2″	3 1/2″	11 1/2″				
S6339	6	5′-7″	50	11	1″	1′-0″	4′-7″				
S8342	6	10′-0″	160	STR							
S8345	6	13′-3″	212	36		13′-3″					
S8367	4	4′-6″	48	STR							
S8375	4	18′-11″	202	36		18′-11″					
S11390	12	7′-6″	478	STR							
S11398	20	7′-6″	797	STR							
S8399	4	26′-3″	280	36		26′-3″					
S8620	32	5′-7″	477	1	1′-4″	4′-3″					
S3621	16	2′-0″	12	STR							
	WEIGHT PER ITEM =		24,504								
	TOTAL =		24,504								
SIDESPAN DECK - SEGMENT B11								NUMBER OF ITEMS REQUIRED = 1			
S5001	54	39′-6″	2,225	19	19′-9″	19′-9″	8″				
S5002	54	32′-0″	1,802	19	16′-0″	16′-0″	6″				
S5005	92	6′-2″	592	21	0″	2′-1″	9″	1′-1″			
S5007	67	30′-3″	2,114	STR							
S5008	51	30′-3″	1,609	STR							
S5050	108	6′-2″	695	1	1′-0″	5′-2″					
S6326	58	19′-7″	1,706	40	4′-5 1/2″	4′-1 1/4″	7 3/4″	4′-2 1/2″	1′-0 1/4″		
S6327	4	18′-5″	111	55	4′-5 1/2″	1′-10 1/2″	7 3/4″	1′-1 1/4″	1′-0 1/4″		
S6328	4	18′-2″	109	43	1′-9 1/4″	1′-2 1/2″	7 3/4″	4′-2 1/2″	1′-0 1/4″		
S6329	8	18′-3″	219	56	4′-5 1/2″	4′-1 1/4″	7 3/4″	4′-2 1/2″	1′-0 1/4″		
S11331	96	28′-3″	14,409	36		28′-3″					
S8332	10	28′-3″	754	36		28′-3″					
S8333	2	3′-6″	19	STR							
S8334	2	13′-1 1/2″	70	STR							
S8335	2	9′-7 1/2″	51	36		9′-7 1/2″					
S6336	4	5′-3 1/4″	32	11	3 1/2″	11 1/2″	4′-3 1/4″				
S6337	4	5′-2 1/2″	31	19	4′-2 1/2″	3/4″	1′-0″				
S6338	4	5′-2 1/2″	31	19	4′-2 1/2″	3 1/2″	11 1/2″				
S6339	4	5′-7″	34	11	1″	1′-0″	4′-7″				
S8341	6	10′-6″	168	STR							
S8344	6	12′-10″	206	36		12′-10″					
S8366	4	4′-6″	48	STR							
S8369	4	18′-10″	201	36		18′-10″					
S8620	32	5′-7″	477	1	1′-4″	4′-3″					
S3621	16	2′-0″	12	STR							
	WEIGHT PER ITEM =		27,725								
	TOTAL =		27,725								

MARK	NUMBER	LENGTH	WEIGHT	TYPE	DIMENSIONS						
					A	B	C	D	E	R	INC
MAINSPAN DECK - SEGMENT M2, M17								NUMBER OF ITEMS REQUIRED = 2			
S5001	56	39′-6″	2,307	19	19′-9″	19′-9″	8″				
S5002	56	32′-0″	1,869	19	16′-0″	16′-0″	6″				
S5003	67	31′-3″	2,184	STR							
S5004	51	31′-3″	1,662	STR							
S5005	92	6′-2″	592	21	0″	2′-1″	9″	1′-1″			
S5006	112	6′-1″	711	10	1′-3″	1″	3′-10″	1′-0″			
S6326	66	19′-7″	1,941	40	4′-5 1/2″	4′-1 1/4″	7 3/4″	4′-2 1/2″	1′-0 1/4″		
S6327	2	18′-5″	55	55	4′-5 1/2″	1′-10 1/2″	7 3/4″	1′-1 1/4″	1′-0 1/4″		
S6328	2	18′-2″	55	43	1′-9 1/4″	1′-2 1/2″	7 3/4″	4′-2 1/2″	1′-0 1/4″		
S6329	8	18′-3″	219	56	4′-5 1/2″	4′-1 1/4″	7 3/4″	4′-2 1/2″	1′-0 1/4″		
S6336	2	5′-3 1/4″	16	11	3 1/2″	11 1/2″	4′-3 1/4″				
S6337	2	5′-2 1/2″	16	19	4′-2 1/2″	3/4″	1′-0″				
S6338	2	5′-2 1/2″	16	19	4′-2 1/2″	3 1/2″	11 1/2″				
S6339	2	5′-7″	17	11	1″	1′-0″	4′-7″				
S11401	46	29′-3″	7,149	36		29′-3″					
S8402	14	29′-3″	1,093	36		29′-3″					
S8403	2	3′-6″	19	STR							
S8404	2	10′-1 1/2″	54	36		10′-1 1/2″					
S8405	2	13′-7 1/2″	73	STR							
S8406	6	19′-5″	311	36		19′-5″					
S8412	6	5′-11″	95	STR							
S8417	4	20′-10″	223	36		20′-10″					
S8423	4	4′-6″	48	STR							
S8620	32	5′-7″	477	1	1′-4″	4′-3″					
S3621	16	2′-0″	12	STR							
	WEIGHT PER ITEM =		21,214								
	TOTAL =		42,428								
MAINSPAN DECK - SEGMENT M3, M18								NUMBER OF ITEMS REQUIRED = 2			
S5001	56	39′-6″	2,307	19	19′-9″	19′-9″	8″				
S5002	56	32′-0″	1,869	19	16′-0″	16′-0″	6″				
S5003	67	31′-3″	2,184	STR							
S5004	51	31′-3″	1,662	STR							
S5005	92	6′-2″	592	21	0″	2′-1″	9″	1′-1″			
S5006	112	6′-1″	711	10	1′-3″	1″	3′-10″	1′-0″			
S6326	66	19′-7″	1,941	40	4′-5 1/2″	4′-1 1/4″	7 3/4″	4′-2 1/2″	1′-0 1/4″		
S6327	2	18′-5″	55	55	4′-5 1/2″	1′-10 1/2″	7 3/4″	1′-1 1/4″	1′-0 1/4″		
S6328	2	18′-2″	55	43	1′-9 1/4″	1′-2 1/2″	7 3/4″	4′-2 1/2″	1′-0 1/4″		
S6329	8	18′-3″	219	56	4′-5 1/2″	4′-1 1/4″	7 3/4″	4′-2 1/2″	1′-0 1/4″		
S6336	2	5′-3 1/4″	16	11	3 1/2″	11 1/2″	4′-3 1/4″				
S6337	2	5′-2 1/2″	16	19	4′-2 1/2″	3/4″	1′-0″				
S6338	2	5′-2 1/2″	16	19	4′-2 1/2″	3 1/2″	11 1/2″				
S6339	2	5′-7″	17	11	1″	1′-0″	4′-7″				
S11401	46	29′-3″	7,149	36		29′-3″					
S8402	14	29′-3″	1,093	36		29′-3″					
S8403	2	3′-6″	19	STR							
S8404	2	10′-1 1/2″	54	36		10′-1 1/2″					
S8405	2	13′-7 1/2″	73	STR							
S8407	6	18′-6″	296	36		18′-6″					
S8413	6	6′-8″	107	STR							
S8418	4	20′-9″	222	36		20′-9″					
S8424	4	4′-6″	48	STR							
S8620	32	5′-7″	477	1	1′-4″	4′-3″					
S3621	16	2′-0″	12	STR							
	WEIGHT PER ITEM =		21,210								
	TOTAL =		42,420								

NOTES

1. FOR STANDARD BAR BENDING DETAILS, SEE SHEET NOS. 17/365 *THRU* 19/365.

DESIGN AGENCY
URS
36 EAST 7TH STREET
SUITE 2300
CINCINNATI, OHIO 45202

DESIGNED BWJ | DRAWN JLS | CHECKED AR | REVIEWED DLJ | DATE 6/2010 | REVISED | STRUCTURE FILE NUMBER 4401263

REINFORCING STEEL LIST - CABLE STAYED SUPERSTRUCTURE (4 OF 18)

BRIDGE NO. LAW-93-0000
IRONTON RUSSELL BRIDGE OVER OHIO RIVER

LAW-93-0.00
PID No. 81595

E:\Bridges_XM\Ironton_Russell\LAW\81595\structures\LAW093_0000C\sheets\093_0000CRL005.dgn 4/25/2011 10:29:58 AM john_stahl

MARK	NUMBER	LENGTH	WEIGHT	TYPE	DIMENSIONS						
					A	B	C	D	E	R	INC
MAINSPAN DECK - SEGMENT M4, M19								NUMBER OF ITEMS REQUIRED = 2			
S5001	56	39′-6″	2,307	19	19′-9″	19′-9″	8″				
S5002	56	32′-0″	1,869	19	16′-0″	16′-0″	6″				
S5003	67	31′-3″	2,184	STR							
S5004	51	31′-3″	1,662	STR							
S5005	92	6′-2″	592	21	0″	2′-1″	9″	1′-1″			
S5006	112	6′-1″	711	10	1′-3″	1″	3′-10″	1′-0″			
S6326	64	19′-7″	1,883	40	4′-5 1/2″	4′-1 1/4″	7 3/4″	4′-2 1/2″	1′-0 1/4″		
S6327	4	18′-5″	111	55	4′-5 1/2″	1′-10 1/2″	7 3/4″	1′-1 1/4″	1′-0 1/4″		
S6328	2	18′-2″	55	43	1′-9 1/4″	1′-2 1/2″	7 3/4″	4′-2 1/2″	1′-0 1/4″		
S6329	8	18′-3″	219	56	4′-5 1/2″	4′-1 1/4″	7 3/4″	4′-2 1/2″	1′-0 1/4″		
S6336	4	5′-3 1/4″	32	11	3 1/2″	11 1/2″	4′-3 1/4″				
S6337	4	5′-2 1/2″	31	19	4′-2 1/2″	3/4″	1′-0″				
S6338	2	5′-2 1/2″	16	19	4′-2 1/2″	3 1/2″	11 1/2″				
S6339	2	5′-7″	17	11	1″	1′-0″	4′-7″				
S11401	46	29′-3″	7,149	36		29′-3″					
S8402	14	29′-3″	1,093	36		29′-3″					
S8403	2	3′-6″	19	STR							
S8404	2	10′-1 1/2″	54	36		10′-1 1/2″					
S8405	2	13′-7 1/2″	73	STR							
S8408	6	17′-10″	286	36		17′-10″					
S8414	6	7′-3″	116	STR							
S8419	4	20′-7″	220	36		20′-7″					
S8425	4	4′-6″	48	STR							
S8620	32	5′-7″	477	1	1′-4″	4′-3″					
S3621	16	2′-0″	12	STR							
		WEIGHT PER ITEM =	21,236								
		TOTAL =	42,472								
MAINSPAN DECK - SEGMENT M5, M20								NUMBER OF ITEMS REQUIRED = 2			
S5001	56	39′-6″	2,307	19	19′-9″	19′-9″	8″				
S5002	56	32′-0″	1,869	19	16′-0″	16′-0″	6″				
S5003	67	31′-3″	2,184	STR							
S5004	51	31′-3″	1,662	STR							
S5005	92	6′-2″	592	21	0″	2′-1″	9″	1′-1″			
S5006	112	6′-1″	711	10	1′-3″	1″	3′-10″	1′-0″			
S6326	64	19′-7″	1,883	40	4′-5 1/2″	4′-1 1/4″	7 3/4″	4′-2 1/2″	1′-0 1/4″		
S6327	4	18′-5″	111	55	4′-5 1/2″	1′-10 1/2″	7 3/4″	1′-1 1/4″	1′-0 1/4″		
S6328	2	18′-2″	55	43	1′-9 1/4″	1′-2 1/2″	7 3/4″	4′-2 1/2″	1′-0 1/4″		
S6329	8	18′-3″	219	56	4′-5 1/2″	4′-1 1/4″	7 3/4″	4′-2 1/2″	1′-0 1/4″		
S6336	4	5′-3 1/4″	32	11	3 1/2″	11 1/2″	4′-3 1/4″				
S6337	4	5′-2 1/2″	31	19	4′-2 1/2″	3/4″	1′-0″				
S6338	2	5′-2 1/2″	16	19	4′-2 1/2″	3 1/2″	11 1/2″				
S6339	2	5′-7″	17	11	1″	1′-0″	4′-7″				
S11401	46	29′-3″	7,149	36		29′-3″					
S8402	14	29′-3″	1,093	36		29′-3″					
S8403	2	3′-6″	19	STR							
S8404	2	10′-1 1/2″	54	36		10′-1 1/2″					
S8405	2	13′-7 1/2″	73	STR							
S8409	6	17′-2″	275	36		17′-2″					
S8415	6	7′-10″	126	STR							
S8420	4	20′-6″	219	36		20′-6″					
S8426	4	4′-6″	48	STR							
S8620	32	5′-7″	477	1	1′-4″	4′-3″					
S3621	16	2′-0″	12	STR							
		WEIGHT PER ITEM =	21,234								
		TOTAL =	42,468								

MARK	NUMBER	LENGTH	WEIGHT	TYPE	DIMENSIONS						
					A	B	C	D	E	R	INC
MAINSPAN DECK - SEGMENT M6, M21								NUMBER OF ITEMS REQUIRED = 2			
S5001	56	39′-6″	2,307	19	19′-9″	19′-9″	8″				
S5002	56	32′-0″	1,869	19	16′-0″	16′-0″	6″				
S5003	67	31′-3″	2,184	STR							
S5004	51	31′-3″	1,662	STR							
S5005	92	6′-2″	592	21	0″	2′-1″	9″	1′-1″			
S5006	112	6′-1″	711	10	1′-3″	1″	3′-10″	1′-0″			
S6326	62	19′-7″	1,824	40	4′-5 1/2″	4′-1 1/4″	7 3/4″	4′-2 1/2″	1′-0 1/4″		
S6327	4	18′-5″	111	55	4′-5 1/2″	1′-10 1/2″	7 3/4″	1′-1 1/4″	1′-0 1/4″		
S6328	4	18′-2″	109	43	1′-9 1/4″	1′-2 1/2″	7 3/4″	4′-2 1/2″	1′-0 1/4″		
S6329	8	18′-3″	219	56	4′-5 1/2″	4′-1 1/4″	7 3/4″	4′-2 1/2″	1′-0 1/4″		
S6336	4	5′-3 1/4″	32	11	3 1/2″	11 1/2″	4′-3 1/4″				
S6337	4	5′-2 1/2″	31	19	4′-2 1/2″	3/4″	1′-0″				
S6338	4	5′-2 1/2″	31	19	4′-2 1/2″	3 1/2″	11 1/2″				
S6339	4	5′-7″	34	11	1″	1′-0″	4′-7″				
S11401	46	29′-3″	7,149	36		29′-3″					
S8402	14	29′-3″	1,093	36		29′-3″					
S8403	2	3′-6″	19	STR							
S8404	2	10′-1 1/2″	54	36		10′-1 1/2″					
S8405	2	13′-7 1/2″	73	STR							
S8410	6	16′-5″	263	36		16′-5″					
S8416	6	8′-5″	135	STR							
S8421	4	20′-4″	217	36		20′-4″					
S8427	4	4′-6″	48	STR							
S8620	32	5′-7″	477	1	1′-4″	4′-3″					
S3621	16	2′-0″	12	STR							
		WEIGHT PER ITEM =	21,256								
		TOTAL =	42,512								
MAINSPAN DECK - SEGMENT M7, M22								NUMBER OF ITEMS REQUIRED = 2			
S5001	56	39′-6″	2,307	19	19′-9″	19′-9″	8″				
S5002	56	32′-0″	1,869	19	16′-0″	16′-0″	6″				
S5003	67	31′-3″	2,184	STR							
S5004	51	31′-3″	1,662	STR							
S5005	92	6′-2″	592	21	0″	2′-1″	9″	1′-1″			
S5006	112	6′-1″	711	10	1′-3″	1″	3′-10″	1′-0″			
S6326	62	19′-7″	1,824	40	4′-5 1/2″	4′-1 1/4″	7 3/4″	4′-2 1/2″	1′-0 1/4″		
S6327	4	18′-5″	111	55	4′-5 1/2″	1′-10 1/2″	7 3/4″	1′-1 1/4″	1′-0 1/4″		
S6328	4	18′-2″	109	43	1′-9 1/4″	1′-2 1/2″	7 3/4″	4′-2 1/2″	1′-0 1/4″		
S6329	8	18′-3″	219	56	4′-5 1/2″	4′-1 1/4″	7 3/4″	4′-2 1/2″	1′-0 1/4″		
S6336	4	5′-3 1/4″	32	11	3 1/2″	11 1/2″	4′-3 1/4″				
S6337	4	5′-2 1/2″	31	19	4′-2 1/2″	3/4″	1′-0″				
S6338	4	5′-2 1/2″	31	19	4′-2 1/2″	3 1/2″	11 1/2″				
S6339	4	5′-7″	34	11	1″	1′-0″	4′-7″				
S11401	46	29′-3″	7,149	36		29′-3″					
S8402	14	29′-3″	1,093	36		29′-3″					
S8403	2	3′-6″	19	STR							
S8404	2	10′-1 1/2″	54	36		10′-1 1/2″					
S8405	2	13′-7 1/2″	73	STR							
S8411	6	15′-10″	254	36		15′-10″					
S8422	4	20′-3″	216	36		20′-3″					
S8436	6	8′-11″	143	STR							
S8453	4	4′-6″	48	STR							
S11467	18	12′-6″	1,195	STR							
S8620	32	5′-7″	477	1	1′-4″	4′-3″					
S3621	16	2′-0″	12	STR							
		WEIGHT PER ITEM =	22,449								
		TOTAL =	44,898								

NOTES

1. FOR STANDARD BAR BENDING DETAILS, SEE SHEET NOS. 17/365 *THRU* 19/365.

DESIGN AGENCY
URS
36 EAST 7TH STREET
SUITE 2300
CINCINNATI, OHIO 45202

DESIGNED BWJ | DRAWN JLS | CHECKED AR | REVIEWED DLJ | DATE 6/2010 | REVISED | STRUCTURE FILE NUMBER 4401263

REINFORCING STEEL LIST - CABLE STAYED SUPERSTRUCTURE (5 OF 18)
BRIDGE NO. LAW-93-0000
IRONTON RUSSELL BRIDGE OVER OHIO RIVER

LAW-93-0.00
PID No. 81595

293/365

680
788

E:\Bridges_XM\Ironton_Russell\LAW\81595\structures\LAW093_0000C\sheets\093_0000CRL006.dgn 4/25/2011 10:30:09 AM john_stahl

MARK	NUMBER	LENGTH	WEIGHT	TYPE	DIMENSIONS						
					A	B	C	D	E	R	INC
MAINSPAN DECK - SEGMENT M8, M23								NUMBER OF ITEMS REQUIRED = 2			
S5001	56	39′-6″	2,307	19	19′-9″	19′-9″	8″				
S5002	56	32′-0″	1,869	19	16′-0″	16′-0″	6″				
S5003	67	31′-3″	2,184	STR							
S5004	51	31′-3″	1,662	STR							
S5005	92	6′-2″	592	21	0″	2′-1″	9″	1′-1″			
S5006	112	6′-1″	711	10	1′-3″	1″	3′-10″	1′-0″			
S6326	60	19′-7″	1,765	40	4′-5 1/2″	4′-1 1/4″	7 3/4″	4′-2 1/2″	1′-0 1/4″		
S6327	4	18′-5″	111	55	4′-5 1/2″	1′-10 1/2″	7 3/4″	1′-1 1/4″	1′-0 1/4″		
S6328	6	18′-2″	164	43	1′-9 1/4″	1′-2 1/2″	7 3/4″	4′-2 1/2″	1′-0 1/4″		
S6329	8	18′-3″	219	56	4′-5 1/2″	4′-1 1/4″	7 3/4″	4′-2 1/2″	1′-0 1/4″		
S6336	4	5′-3 1/4″	32	11	3 1/2″	11 1/2″	4′-3 1/4″				
S6337	4	5′-2 1/2″	31	19	4′-2 1/2″	3/4″	1′-0″				
S6338	6	5′-2 1/2″	47	19	4′-2 1/2″	3 1/2″	11 1/2″				
S6339	6	5′-7″	50	11	1″	1′-0″	4′-7″				
S11401	64	29′-3″	9,946	36		29′-3″					
S8402	14	29′-3″	1,093	36		29′-3″					
S8403	2	3′-6″	19	STR							
S8404	2	10′-1 1/2″	54	36		10′-1 1/2″					
S8405	2	13′-7 1/2″	73	STR							
S8428	6	15′-2″	243	36		15′-2″					
S8437	6	9′-5″	151	STR							
S8445	4	20′-1″	215	36		20′-1″					
S8454	4	4′-6″	48	STR							
S8620	32	5′-7″	477	1	1′-4″	4′-3″					
S3621	16	2′-0″	12	STR							
		WEIGHT PER ITEM =	24,075								
		TOTAL =	48,150								
MAINSPAN DECK - SEGMENT M9, M24								NUMBER OF ITEMS REQUIRED = 2			
S5001	56	39′-6″	2,307	19	19′-9″	19′-9″	8″				
S5002	56	32′-0″	1,869	19	16′-0″	16′-0″	6″				
S5003	67	31′-3″	2,184	STR							
S5004	51	31′-3″	1,662	STR							
S5005	92	6′-2″	592	21	0″	2′-1″	9″	1′-1″			
S5006	112	6′-1″	711	10	1′-3″	1″	3′-10″	1′-0″			
S6326	60	19′-7″	1,765	40	4′-5 1/2″	4′-1 1/4″	7 3/4″	4′-2 1/2″	1′-0 1/4″		
S6327	4	18′-5″	111	55	4′-5 1/2″	1′-10 1/2″	7 3/4″	1′-1 1/4″	1′-0 1/4″		
S6328	6	18′-2″	164	43	1′-9 1/4″	1′-2 1/2″	7 3/4″	4′-2 1/2″	1′-0 1/4″		
S6329	8	18′-3″	219	56	4′-5 1/2″	4′-1 1/4″	7 3/4″	4′-2 1/2″	1′-0 1/4″		
S6336	4	5′-3 1/4″	32	11	3 1/2″	11 1/2″	4′-3 1/4″				
S6337	4	5′-2 1/2″	31	19	4′-2 1/2″	3/4″	1′-0″				
S6338	6	5′-2 1/2″	47	19	4′-2 1/2″	3 1/2″	11 1/2″				
S6339	6	5′-7″	50	11	1″	1′-0″	4′-7″				
S11401	64	29′-3″	9,946	36		29′-3″					
S8402	14	29′-3″	1,093	36		29′-3″					
S8403	2	3′-6″	19	STR							
S8404	2	10′-1 1/2″	54	36		10′-1 1/2″					
S8405	2	13′-7 1/2″	73	STR							
S8429	6	14′-6″	232	36		14′-6″					
S8438	6	9′-10″	158	STR							
S8446	4	20′-0″	214	36		20′-0″					
S8455	4	4′-6″	48	STR							
S8620	32	5′-7″	477	1	1′-4″	4′-3″					
S3621	16	2′-0″	12	STR							
		WEIGHT PER ITEM =	24,070								
		TOTAL =	48,140								

MARK	NUMBER	LENGTH	WEIGHT	TYPE	DIMENSIONS						
					A	B	C	D	E	R	INC
MAINSPAN DECK - SEGMENT M10, M25								NUMBER OF ITEMS REQUIRED = 2			
S5001	56	39′-6″	2,307	19	19′-9″	19′-9″	8″				
S5002	56	32′-0″	1,869	19	16′-0″	16′-0″	6″				
S5003	67	31′-3″	2,184	STR							
S5004	51	31′-3″	1,662	STR							
S5005	92	6′-2″	592	21	0″	2′-1″	9″	1′-1″			
S5006	112	6′-1″	711	10	1′-3″	1″	3′-10″	1′-0″			
S6326	58	19′-7″	1,706	40	4′-5 1/2″	4′-1 1/4″	7 3/4″	4′-2 1/2″	1′-0 1/4″		
S6327	6	18′-5″	166	55	4′-5 1/2″	1′-10 1/2″	7 3/4″	1′-1 1/4″	1′-0 1/4″		
S6328	6	18′-2″	164	43	1′-9 1/4″	1′-2 1/2″	7 3/4″	4′-2 1/2″	1′-0 1/4″		
S6329	8	18′-3″	219	56	4′-5 1/2″	4′-1 1/4″	7 3/4″	4′-2 1/2″	1′-0 1/4″		
S6336	6	5′-3 1/4″	48	11	3 1/2″	11 1/2″	4′-3 1/4″				
S6337	6	5′-2 1/2″	47	19	4′-2 1/2″	3/4″	1′-0″				
S6338	6	5′-2 1/2″	47	19	4′-2 1/2″	3 1/2″	11 1/2″				
S6339	6	5′-7″	50	11	1″	1′-0″	4′-7″				
S11401	64	29′-3″	9,946	36		29′-3″					
S8402	14	29′-3″	1,093	36		29′-3″					
S8403	2	3′-6″	19	STR							
S8404	2	10′-1 1/2″	54	36		10′-1 1/2″					
S8405	2	13′-7 1/2″	73	STR							
S8430	6	14′-1″	226	36		14′-1″					
S8439	6	10′-4″	166	STR							
S8447	4	19′-10″	212	36		19′-10″					
S8456	4	4′-6″	48	STR							
S8620	32	5′-7″	477	1	1′-4″	4′-3″					
S3621	16	2′-0″	12	STR							
		WEIGHT PER ITEM =	24,098								
		TOTAL =	48,196								
MAINSPAN DECK - SEGMENT M11, M26								NUMBER OF ITEMS REQUIRED = 2			
S5001	56	39′-6″	2,307	19	19′-9″	19′-9″	8″				
S5002	56	32′-0″	1,869	19	16′-0″	16′-0″	6″				
S5003	67	31′-3″	2,184	STR							
S5004	51	31′-3″	1,662	STR							
S5005	92	6′-2″	592	21	0″	2′-1″	9″	1′-1″			
S5006	112	6′-1″	711	10	1′-3″	1″	3′-10″	1′-0″			
S6326	58	19′-7″	1,706	40	4′-5 1/2″	4′-1 1/4″	7 3/4″	4′-2 1/2″	1′-0 1/4″		
S6327	6	18′-5″	166	55	4′-5 1/2″	1′-10 1/2″	7 3/4″	1′-1 1/4″	1′-0 1/4″		
S6328	6	18′-2″	164	43	1′-9 1/4″	1′-2 1/2″	7 3/4″	4′-2 1/2″	1′-0 1/4″		
S6329	8	18′-3″	219	56	4′-5 1/2″	4′-1 1/4″	7 3/4″	4′-2 1/2″	1′-0 1/4″		
S6336	6	5′-3 1/4″	48	11	3 1/2″	11 1/2″	4′-3 1/4″				
S6337	6	5′-2 1/2″	47	19	4′-2 1/2″	3/4″	1′-0″				
S6338	6	5′-2 1/2″	47	19	4′-2 1/2″	3 1/2″	11 1/2″				
S6339	6	5′-7″	50	11	1″	1′-0″	4′-7″				
S11401	64	29′-3″	9,946	36		29′-3″					
S8402	14	29′-3″	1,093	36		29′-3″					
S8403	2	3′-6″	19	STR							
S8404	2	10′-1 1/2″	54	36		10′-1 1/2″					
S8405	2	13′-7 1/2″	73	STR							
S8431	6	13′-6″	216	36		13′-6″					
S8440	6	10′-9″	172	STR							
S8448	4	19′-9″	211	36		19′-9″					
S8457	4	4′-6″	48	STR							
S8620	32	5′-7″	477	1	1′-4″	4′-3″					
S3621	16	2′-0″	12	STR							
		WEIGHT PER ITEM =	24,093								
		TOTAL =	48,186								

NOTES

1. FOR STANDARD BAR BENDING DETAILS, SEE SHEET NOS. 17/365 *THRU* 19/365.

DESIGN AGENCY
URS
36 EAST 7TH STREET
SUITE 2300
CINCINNATI, OHIO 45202

DRAWN JLS | REVIEWED DLJ | DATE 6/2010
DESIGNED BWJ | CHECKED AR | REVISED
STRUCTURE FILE NUMBER 4401263

REINFORCING STEEL LIST - CABLE STAYED SUPERSTRUCTURE (16 OF 18)
BRIDGE NO. LAW-93-0000
IRONTON RUSSELL BRIDGE OVER OHIO RIVER

LAW-93-0.00
PID No. 81595

294/365

681
788

E:\Bridges_XM\Ironton_Russell\LAW\81595\structures\LAW093_0000C\sheets\093_0000CRL007.dgn 4/25/2011 10:30:20 AM john_stahl

MARK	NUMBER	LENGTH	WEIGHT	TYPE	DIMENSIONS						
					A	B	C	D	E	R	INC
MAINSPAN DECK - SEGMENT M12, M27								NUMBER OF ITEMS REQUIRED = 2			
S5001	56	39′-6″	2,307	19	19′-9″	19′-9″	8″				
S5002	56	32′-0″	1,869	19	16′-0″	16′-0″	6″				
S5003	67	31′-3″	2,184	STR							
S5004	51	31′-3″	1,662	STR							
S5005	92	6′-2″	592	21	0″	2′-1″	9″	1′-1″			
S5006	112	6′-1″	711	10	1′-3″	1″	3′-10″	1′-0″			
S6326	58	19′-7″	1,706	40	4′-5 ½″	4′-1 ¼″	7 ¾″	4′-2 ½″	1′-0 ¼″		
S6327	6	18′-5″	166	55	4′-5 ½″	1′-10 ½″	7 ¾″	1′-1 ¼″	1′-0 ¼″		
S6328	6	18′-2″	164	43	1′-9 ¼″	1′-2 ½″	7 ¾″	4′-2 ½″	1′-0 ¼″		
S6329	8	18′-3″	219	56	4′-5 ½″	4′-1 ¼″	7 ¾″	4′-2 ½″	1′-0 ¼″		
S6336	6	5′-3 ¼″	48	11	3 ½″	11 ½″	4′-3 ¼″				
S6337	6	5′-2 ½″	47	19	4′-2 ½″	¾″	1′-0″				
S6338	6	5′-2 ½″	47	19	4′-2 ½″	3 ½″	11 ½″				
S6339	6	5′-7″	50	11	1″	1′-0″	4′-7″				
S11401	64	29′-3″	9,946	36		29′-3″					
S8402	14	29′-3″	1,093	36		29′-3″					
S8403	2	3′-6″	19	STR							
S8404	2	10′-1 ½″	54	36		10′-1 ½″					
S8405	2	13′-7 ½″	73	STR							
S8432	6	13′-0″	208	36		13′-0″					
S8441	6	11′-1″	178	STR							
S8449	4	19′-8″	210	36		19′-8″					
S8458	4	4′-6″	48	STR							
S8620	32	5′-7″	477	1	1′-4″	4′-3″					
S3621	16	2′-0″	12	STR							
	WEIGHT PER ITEM =		24,090								
	TOTAL =		48,180								
MAINSPAN DECK - SEGMENT M13, M28								NUMBER OF ITEMS REQUIRED = 2			
S5001	56	39′-6″	2,307	19	19′-9″	19′-9″	8″				
S5002	56	32′-0″	1,869	19	16′-0″	16′-0″	6″				
S5003	67	31′-3″	2,184	STR							
S5004	51	31′-3″	1,662	STR							
S5005	92	6′-2″	592	21	0″	2′-1″	9″	1′-1″			
S5006	112	6′-1″	711	10	1′-3″	1″	3′-10″	1′-0″			
S6326	58	19′-7″	1,706	40	4′-5 ½″	4′-1 ¼″	7 ¾″	4′-2 ½″	1′-0 ¼″		
S6327	6	18′-5″	166	55	4′-5 ½″	1′-10 ½″	7 ¾″	1′-1 ¼″	1′-0 ¼″		
S6328	6	18′-2″	164	43	1′-9 ¼″	1′-2 ½″	7 ¾″	4′-2 ½″	1′-0 ¼″		
S6329	8	18′-3″	219	56	4′-5 ½″	4′-1 ¼″	7 ¾″	4′-2 ½″	1′-0 ¼″		
S6336	6	5′-3 ¼″	48	11	3 ½″	11 ½″	4′-3 ¼″				
S6337	6	5′-2 ½″	47	19	4′-2 ½″	¾″	1′-0″				
S6338	6	5′-2 ½″	47	19	4′-2 ½″	3 ½″	11 ½″				
S6339	6	5′-7″	50	11	1″	1′-0″	4′-7″				
S11401	64	29′-3″	9,946	36		29′-3″					
S8402	14	29′-3″	1,093	36		29′-3″					
S8403	2	3′-6″	19	STR							
S8404	2	10′-1 ½″	54	36		10′-1 ½″					
S8405	2	13′-7 ½″	73	STR							
S8433	6	12′-6″	200	36		12′-6″					
S8442	6	11′-6″	184	STR							
S8450	4	19′-6″	208	36		19′-6″					
S8459	4	4′-6″	48	STR							
S8620	32	5′-7″	477	1	1′-4″	4′-3″					
S3621	16	2′-0″	12	STR							
	WEIGHT PER ITEM =		24,086								
	TOTAL =		48,172								

MARK	NUMBER	LENGTH	WEIGHT	TYPE	DIMENSIONS						
					A	B	C	D	E	R	INC
MAINSPAN DECK - SEGMENT M14, M29								NUMBER OF ITEMS REQUIRED = 2			
S5001	56	39′-6″	2,307	19	19′-9″	19′-9″	8″				
S5002	56	32′-0″	1,869	19	16′-0″	16′-0″	6″				
S5003	67	31′-3″	2,184	STR							
S5004	51	31′-3″	1,662	STR							
S5005	92	6′-2″	592	21	0″	2′-1″	9″	1′-1″			
S5006	112	6′-1″	711	10	1′-3″	1″	3′-10″	1′-0″			
S6326	58	19′-7″	1,706	40	4′-5 ½″	4′-1 ¼″	7 ¾″	4′-2 ½″	1′-0 ¼″		
S6327	6	18′-5″	166	55	4′-5 ½″	1′-10 ½″	7 ¾″	1′-1 ¼″	1′-0 ¼″		
S6328	6	18′-2″	164	43	1′-9 ¼″	1′-2 ½″	7 ¾″	4′-2 ½″	1′-0 ¼″		
S6329	8	18′-3″	219	56	4′-5 ½″	4′-1 ¼″	7 ¾″	4′-2 ½″	1′-0 ¼″		
S6336	6	5′-3 ¼″	48	11	3 ½″	11 ½″	4′-3 ¼″				
S6337	6	5′-2 ½″	47	19	4′-2 ½″	¾″	1′-0″				
S6338	6	5′-2 ½″	47	19	4′-2 ½″	3 ½″	11 ½″				
S6339	6	5′-7″	50	11	1″	1′-0″	4′-7″				
S11401	64	29′-3″	9,946	36		29′-3″					
S8402	14	29′-3″	1,093	36		29′-3″					
S8403	2	3′-6″	19	STR							
S8404	2	10′-1 ½″	54	36		10′-1 ½″					
S8405	2	13′-7 ½″	73	STR							
S8434	6	12′-0″	192	36		12′-0″					
S8443	6	11′-10″	190	STR							
S8451	4	19′-5″	207	36		19′-5″					
S8460	4	4′-5″	48	STR							
S8620	32	5′-7″	477	1	1′-4″	4′-3″					
S3621	16	2′-0″	12	STR							
	WEIGHT PER ITEM =		24,083								
	TOTAL =		48,166								
MAINSPAN DECK - SEGMENT M15, M30								NUMBER OF ITEMS REQUIRED = 2			
S5001	56	39′-6″	2,307	19	19′-9″	19′-9″	8″				
S5002	56	32′-0″	1,869	19	16′-0″	16′-0″	6″				
S5003	67	31′-3″	2,184	STR							
S5004	51	31′-3″	1,662	STR							
S5005	92	6′-2″	592	21	0″	2′-1″	9″	1′-1″			
S5006	112	6′-1″	711	10	1′-3″	1″	3′-10″	1′-0″			
S6326	116	19′-7″	3,412	40	4′-5 ½″	4′-1 ¼″	7 ¾″	4′-2 ½″	1′-0 ¼″		
S6327	12	18′-5″	332	55	4′-5 ½″	1′-10 ½″	7 ¾″	1′-1 ¼″	1′-0 ¼″		
S6328	12	18′-2″	328	43	1′-9 ¼″	1′-2 ½″	7 ¾″	4′-2 ½″	1′-0 ¼″		
S6329	8	18′-3″	219	56	4′-5 ½″	4′-1 ¼″	7 ¾″	4′-2 ½″	1′-0 ¼″		
S6336	12	5′-3 ¼″	95	11	3 ½″	11 ½″	4′-3 ¼″				
S6337	12	5′-2 ½″	94	19	4′-2 ½″	¾″	1′-0″				
S6338	12	5′-2 ½″	94	19	4′-2 ½″	3 ½″	11 ½″				
S6339	12	5′-7″	101	11	1″	1′-0″	4′-7″				
S11401	64	29′-3″	9,946	36		29′-3″					
S8402	14	29′-3″	1,093	36		29′-3″					
S8403	2	3′-6″	19	STR							
S8404	2	10′-1 ½″	54	36		10′-1 ½″					
S8405	2	13′-7 ½″	73	STR							
S8435	6	11′-7″	186	36		11′-7″					
S8444	6	12′-2″	195	STR							
S8452	4	19′-4″	207	36		19′-4″					
S8461	4	4′-5″	48	STR							
S8620	32	5′-7″	477	1	1′-4″	4′-3″					
S3621	16	2′-0″	12	STR							
	WEIGHT PER ITEM =		26,310								
	TOTAL =		52,620								

NOTES

1. FOR STANDARD BAR BENDING DETAILS, SEE SHEET NOS. 17/365 *THRU* 19/365.

DESIGN AGENCY
URS
36 EAST 7TH STREET
SUITE 2300
CINCINNATI, OHIO 45202

DESIGNED BWJ | DRAWN JLS | REVIEWED DLJ | DATE 6/2010 | CHECKED AR | REVISED | STRUCTURE FILE NUMBER 4401263

REINFORCING STEEL LIST - CABLE STAYED SUPERSTRUCTURE (7 OF 18)
BRIDGE NO. LAW-93-0000
IRONTON RUSSELL BRIDGE OVER OHIO RIVER

LAW-93-0.00
PID No. 81595

295/365

682
788

E:\Bridges_XM\Ironton_Russell\LAW\81595\structures\LAW093_0000C\sheets\093_0000CRL008.dgn 4/25/2011 10:30:31 AM john_stahl

MARK	NUMBER	LENGTH	WEIGHT	TYPE	DIMENSIONS						
					A	B	C	D	E	R	INC
PIER TABLE TOWER 3					NUMBER OF ITEMS REQUIRED = 1						
S5001	136	39′-6″	5,603	19	19′-9″	19′-9″	8″				
S5002	136	32′-0″	4,539	19	16′-0″	16′-0″	6″				
S5005	184	6′-2″	1,183	21	0″	2′-1″	9″	1′-1″			
S5006	272	6′-1″	1,726	10	1′-3″	1″	3′-10″	1′-0″			
S5012	118	28′-0″	3,446	STR							
S5013	118	50′-0″	6,154	STR							
S5014	46	8′-4″	400	21	2′-2″	2′-1″	9″	1′-1″			
S6326	224	19′-7″	6,589	40	4′-5 1/2″	4′-1 1/4″	7 3/4″	4′-2 1/2″	1′-0 1/4″		
S6327	4	18′-5″	111	55	4′-5 1/2″	1′-10 1/2″	7 3/4″	1′-1 1/4″	1′-0 1/4″		
S6328	4	18′-2″	109	43	1′-9 1/4″	1′-2 1/2″	7 3/4″	4′-2 1/2″	1′-0 1/4″		
S6329	16	18′-3″	439	56	4′-5 1/2″	4′-1 1/4″	7 3/4″	4′-2 1/2″	1′-0 1/4″		
S8333	4	3′-6″	37	STR							
S6336	4	5′-3 1/4″	32	11	3 1/2″	11 1/2″	4′-3 1/4″				
S6337	4	5′-2 1/2″	31	19	4′-2 1/2″	3/4″	1′-0″				
S8358	12	5′-2″	166	STR							
S8363	6	26′-3″	421	STR							
S8364	6	45′-3″	725	STR							
S8383	8	4′-5″	94	STR							
S8388	4	46′-0″	491	STR							
S8389	4	27′-0″	288	STR							
S8392	4	15′-0″	160	STR							
S8393	2	31′-0″	166	STR							
S8394	14	35′-3″	1,318	STR							
S8395	14	54′-3″	2,028	STR							
S11396	46	35′-3″	8,615	STR							
S11397	46	54′-3″	13,259	STR							
S8501	16	9′-6″	406	10	7″	5′-2″	4′-3″	0″			
S8502	16	14′-6″	620	9	6″	4′-5″	5′-9″	4′-4″			
S6503	32	19′-7″	940	40	4′-5 1/2″	4′-1 1/4″	7 3/4″	4′-2 1/2″	1′-0 1/4″		
S8504	20	13′-10″	738	2	4′-4″	5′-2″	4′-4″				
S8505	12	13′-6″	432	2	4′-4″	4′-10″	4′-4″				
S8620	64	5′-7″	954	1	1′-4″	4′-3″					
S3621	32	2′-0″	24	STR							
		WEIGHT PER ITEM =	62,244								
		TOTAL =	62,244								

MARK	NUMBER	LENGTH	WEIGHT	TYPE	DIMENSIONS						
					A	B	C	D	E	R	INC
PIER TABLE TOWER 4					NUMBER OF ITEMS REQUIRED = 1						
S5001	136	39′-6″	5,603	19	19′-9″	19′-9″	8″				
S5002	136	32′-0″	4,539	19	16′-0″	16′-0″	6″				
S5005	184	6′-2″	1,183	21	0″	2′-1″	9″	1′-1″			
S5006	272	6′-1″	1,726	10	1′-3″	1″	3′-10″	1′-0″			
S5012	118	28′-0″	3,446	STR							
S5013	118	50′-0″	6,154	STR							
S5014	46	8′-4″	400	21	2′-2″	2′-1″	9″	1′-1″			
S6326	224	19′-7″	6,589	40	4′-5 1/2″	4′-1 1/4″	7 3/4″	4′-2 1/2″	1′-0 1/4″		
S6327	4	18′-5″	111	55	4′-5 1/2″	1′-10 1/2″	7 3/4″	1′-1 1/4″	1′-0 1/4″		
S6328	4	18′-2″	109	43	1′-9 1/4″	1′-2 1/2″	7 3/4″	4′-2 1/2″	1′-0 1/4″		
S6329	16	18′-3″	439	56	4′-5 1/2″	4′-1 1/4″	7 3/4″	4′-2 1/2″	1′-0 1/4″		
S8333	4	3′-6″	37	STR							
S6336	4	5′-3 1/4″	32	11	3 1/2″	11 1/2″	4′-3 1/4″				
S6337	4	5′-2 1/2″	31	19	4′-2 1/2″	3/4″	1′-0″				
S8358	12	5′-2″	166	STR							
S8363	6	26′-3″	421	STR							
S8364	6	45′-3″	725	STR							
S8383	8	4′-5″	94	STR							
S8388	4	46′-0″	491	STR							
S8389	4	27′-0″	288	STR							
S8392	4	15′-0″	160	STR							
S8393	2	31′-0″	166	STR							
S8394	14	35′-3″	1,318	STR							
S8395	14	54′-3″	2,028	STR							
S11396	46	35′-3″	8,615	STR							
S11397	46	54′-3″	13,259	STR							
S8601	16	9′-6″	406	10	7″	5′-2″	4′-3″	0″			
S8602	16	14′-6″	620	9	6″	4′-5″	5′-9″	4′-4″			
S6603	32	19′-7″	940	40	4′-5 1/2″	4′-1 1/4″	7 3/4″	4′-2 1/2″	1′-0 1/4″		
S8604	8	13′-10″	296	2	4′-4″	5′-2″	4′-4″				
S8605	12	13′-6″	432	2	4′-4″	4′-10″	4′-4″				
S8606	8	12′-3″	262	2	4′-4″	3′-7″	4′-4″				
S8607	12	15′-10″	508	2	4′-4″	7′-2″	4′-4″				
S8620	64	5′-7″	954	1	1′-4″	4′-3″					
S3621	32	2′-0″	24	STR							
		WEIGHT PER ITEM =	62,572								
		TOTAL =	62,572								

NOTES

1. FOR STANDARD BAR BENDING DETAILS, SEE SHEET NOS. 17/365 *THRU* 19/365.

DESIGN AGENCY
URS
36 EAST 7TH STREET
SUITE 2300
CINCINNATI, OHIO 45202

DESIGNED BWJ | DRAWN JLS | REVIEWED DLJ | DATE 6/2010 | CHECKED AR | REVISED | STRUCTURE FILE NUMBER 4401263

REINFORCING STEEL LIST - CABLE STAYED SUPERSTRUCTURE (8 OF 18)

BRIDGE NO. LAW-93-0000
IRONTON RUSSELL BRIDGE OVER OHIO RIVER

LAW-93-0.00
PID No. 81595

296/365

683
788

E:\Bridges_XM\Ironton_Russell\LAW\81595\structures\LAW093_0000C\sheets\093_0000CRL009.dgn 4/25/2011 10:30:43 AM john_stahl

MARK	NUMBER	LENGTH	WEIGHT	TYPE	DIMENSIONS						
					A	B	C	D	E	R	INC
SIDESPAN DECK - SEGMENT B17								NUMBER OF ITEMS REQUIRED = 1			
S5001	54	39′-6″	2,225	19	19′-9″	19′-9″	8″				
S5002	54	32′-0″	1,802	19	16′-0″	16′-0″	6″				
S5005	92	6′-2″	592	21	0″	2′-1″	9″	1′-1″			
S5006	108	6′-1″	685	10	1′-3″	1″	3′-10″	1′-0″			
S5007	67	30′-3″	2,114	STR							
S5008	51	30′-3″	1,609	STR							
S6326	62	19′-7″	1,824	40	4′-5 1/2″	4′-1 1/4″	7 3/4″	4′-2 1/2″	1′-0 1/4″		
S6327	2	18′-5″	55	55	4′-5 1/2″	1′-10 1/2″	7 3/4″	1′-1 1/4″	1′-0 1/4″		
S6328	2	18′-2″	55	43	1′-9 1/4″	1′-2 1/2″	7 3/4″	4′-2 1/2″	1′-0 1/4″		
S6329	8	18′-3″	219	56	4′-5 1/2″	4′-1 1/4″	7 3/4″	4′-2 1/2″	1′-0 1/4″		
S11331	46	28′-3″	6,904	36		28′-3″					
S8332	14	28′-3″	1,056	36		28′-3″					
S8333	2	3′-6″	19	STR							
S8334	2	13′-1 1/2″	70	STR							
S8335	2	9′-7 1/2″	51	36		9′-7 1/2″					
S6336	2	5′-3 1/4″	16	11	3 1/2″	11 1/2″	4′-3 1/4″				
S6337	2	5′-2 1/2″	16	19	4′-2 1/2″	3/4″	1′-0″				
S6338	2	5′-2 1/2″	16	19	4′-2 1/2″	3 1/2″	11 1/2″				
S6339	2	5′-7″	17	11	1″	1′-0″	4′-7″				
S8357	6	5′-11″	95	STR							
S8362	6	18′-5″	295	36		18′-5″					
S8382	4	4′-6″	48	STR							
S8387	4	19′-10″	212	36		19′-10″					
S8620	32	5′-7″	477	1	1′-4″	4′-3″					
S3621	16	2′-0″	12	STR							
	WEIGHT PER ITEM =		20,484								
	TOTAL =		20,484								
SIDESPAN DECK - SEGMENT B18								NUMBER OF ITEMS REQUIRED = 1			
S5001	54	39′-6″	2,225	19	19′-9″	19′-9″	8″				
S5002	54	32′-0″	1,802	19	16′-0″	16′-0″	6″				
S5005	92	6′-2″	592	21	0″	2′-1″	9″	1′-1″			
S5006	108	6′-1″	685	10	1′-3″	1″	3′-10″	1′-0″			
S5007	67	30′-3″	2,114	STR							
S5008	51	30′-3″	1,609	STR							
S6326	60	19′-7″	1,765	40	4′-5 1/2″	4′-1 1/4″	7 3/4″	4′-2 1/2″	1′-0 1/4″		
S6327	4	18′-5″	111	55	4′-5 1/2″	1′-10 1/2″	7 3/4″	1′-1 1/4″	1′-0 1/4″		
S6328	2	18′-2″	55	43	1′-9 1/4″	1′-2 1/2″	7 3/4″	4′-2 1/2″	1′-0 1/4″		
S6329	8	18′-3″	219	56	4′-5 1/2″	4′-1 1/4″	7 3/4″	4′-2 1/2″	1′-0 1/4″		
S11331	46	28′-3″	6,904	36		28′-3″					
S8332	14	28′-3″	1,056	36		28′-3″					
S8333	2	3′-6″	19	STR							
S8334	2	13′-1 1/2″	70	STR							
S8335	2	9′-7 1/2″	51	36		9′-7 1/2″					
S6336	4	5′-3 1/4″	32	11	3 1/2″	11 1/2″	4′-3 1/4″				
S6337	4	5′-2 1/2″	31	19	4′-2 1/2″	3/4″	1′-0″				
S6338	2	5′-2 1/2″	16	19	4′-2 1/2″	3 1/2″	11 1/2″				
S6339	2	5′-7″	17	11	1″	1′-0″	4′-7″				
S8356	6	6′-7″	105	STR							
S8361	6	17′-8″	283	36		17′-8″					
S8381	4	4′-6″	48	STR							
S8386	4	19′-9″	211	36		19′-9″					
S8620	32	5′-7″	477	1	1′-4″	4′-3″					
S3621	16	2′-0″	12	STR							
	WEIGHT PER ITEM =		20,509								
	TOTAL =		20,509								

MARK	NUMBER	LENGTH	WEIGHT	TYPE	DIMENSIONS						
					A	B	C	D	E	R	INC
SIDESPAN DECK - SEGMENT B19								NUMBER OF ITEMS REQUIRED = 1			
S5001	54	39′-6″	2,225	19	19′-9″	19′-9″	8″				
S5002	54	32′-0″	1,802	19	16′-0″	16′-0″	6″				
S5005	92	6′-2″	592	21	0″	2′-1″	9″	1′-1″			
S5006	108	6′-1″	685	10	1′-3″	1″	3′-10″	1′-0″			
S5007	67	30′-3″	2,114	STR							
S5008	51	30′-3″	1,609	STR							
S6326	60	19′-7″	1,765	40	4′-5 1/2″	4′-1 1/4″	7 3/4″	4′-2 1/2″	1′-0 1/4″		
S6327	4	18′-5″	111	55	4′-5 1/2″	1′-10 1/2″	7 3/4″	1′-1 1/4″	1′-0 1/4″		
S6328	2	18′-2″	55	43	1′-9 1/4″	1′-2 1/2″	7 3/4″	4′-2 1/2″	1′-0 1/4″		
S6329	8	18′-3″	219	56	4′-5 1/2″	4′-1 1/4″	7 3/4″	4′-2 1/2″	1′-0 1/4″		
S11331	46	28′-3″	6,904	36		28′-3″					
S8332	14	28′-3″	1,056	36		28′-3″					
S8333	2	3′-6″	19	STR							
S8334	2	13′-1 1/2″	70	STR							
S8335	2	9′-7 1/2″	51	36		9′-7 1/2″					
S6336	4	5′-3 1/4″	32	11	3 1/2″	11 1/2″	4′-3 1/4″				
S6337	4	5′-2 1/2″	31	19	4′-2 1/2″	3/4″	1′-0″				
S6338	2	5′-2 1/2″	16	19	4′-2 1/2″	3 1/2″	11 1/2″				
S6339	2	5′-7″	17	11	1″	1′-0″	4′-7″				
S8355	6	7′-2″	115	STR							
S8360	6	16′-11″	271	36		16′-11″					
S8380	4	4′-6″	48	STR							
S8385	4	19′-7″	209	36		19′-7″					
S8620	32	5′-7″	477	1	1′-4″	4′-3″					
S3621	16	2′-0″	12	STR							
	WEIGHT PER ITEM =		20,505								
	TOTAL =		20,505								
SIDESPAN DECK - SEGMENT B20								NUMBER OF ITEMS REQUIRED = 1			
S5001	54	39′-6″	2,225	19	19′-9″	19′-9″	8″				
S5002	54	32′-0″	1,802	19	16′-0″	16′-0″	6″				
S5005	92	6′-2″	592	21	0″	2′-1″	9″	1′-1″			
S5006	108	6′-1″	685	10	1′-3″	1″	3′-10″	1′-0″			
S5007	67	30′-3″	2,114	STR							
S5008	51	30′-3″	1,609	STR							
S6326	58	19′-7″	1,706	40	4′-5 1/2″	4′-1 1/4″	7 3/4″	4′-2 1/2″	1′-0 1/4″		
S6327	4	18′-5″	111	55	4′-5 1/2″	1′-10 1/2″	7 3/4″	1′-1 1/4″	1′-0 1/4″		
S6328	4	18′-2″	109	43	1′-9 1/4″	1′-2 1/2″	7 3/4″	4′-2 1/2″	1′-0 1/4″		
S6329	8	18′-3″	219	56	4′-5 1/2″	4′-1 1/4″	7 3/4″	4′-2 1/2″	1′-0 1/4″		
S11331	46	28′-3″	6,904	36		28′-3″					
S8332	14	28′-3″	1,056	36		28′-3″					
S8333	2	3′-6″	19	STR							
S8334	2	13′-1 1/2″	70	STR							
S8335	2	9′-7 1/2″	51	36		9′-7 1/2″					
S6336	4	5′-3 1/4″	32	11	3 1/2″	11 1/2″	4′-3 1/4″				
S6337	4	5′-2 1/2″	31	19	4′-2 1/2″	3/4″	1′-0″				
S6338	4	5′-2 1/2″	31	19	4′-2 1/2″	3 1/2″	11 1/2″				
S6339	4	5′-7″	34	11	1″	1′-0″	4′-7″				
S8350	6	7′-9″	124	STR							
S8359	6	16′-3″	260	36		16′-3″					
S8374	4	4′-6″	48	STR							
S8384	4	19′-6″	208	36		19′-6″					
S11391	18	7′-6″	717	STR							
S8620	32	5′-7″	477	1	1′-4″	4′-3″					
S3621	16	2′-0″	12	STR							
	WEIGHT PER ITEM =		21,246								
	TOTAL =		21,246								

NOTES

1. FOR STANDARD BAR BENDING DETAILS, SEE SHEET NOS. 17/365 THRU 19/365.

DESIGN AGENCY
URS
36 EAST 7TH STREET
SUITE 2300
CINCINNATI, OHIO 45202

DRAWN JLS | REVIEWED DLJ | DATE 6/2010
DESIGNED BWJ | CHECKED AR | REVISED
STRUCTURE FILE NUMBER 4401263

REINFORCING STEEL LIST - CABLE STAYED SUPERSTRUCTURE (19 OF 18)
BRIDGE NO. LAW-93-0000
IRONTON RUSSELL BRIDGE OVER OHIO RIVER

LAW-93-0.00
PID No. 81595

297/365

684
788

E:\Bridges_XM\Ironton_Russell\LAW\81595\structures\LAW093_0000C\sheets\093_0000CRL010.dgn 4/25/2011 10:30:52 AM john_stahl

MARK	NUMBER	LENGTH	WEIGHT	TYPE	DIMENSIONS						
					A	B	C	D	E	R	INC
SIDESPAN DECK - SEGMENT B21								NUMBER OF ITEMS REQUIRED = 1			
S5001	54	39′-6″	2,225	19	19′-9″	19′-9″	8″				
S5002	54	32′-0″	1,802	19	16′-0″	16′-0″	6″				
S5005	92	6′-2″	592	21	0″	2′-1″	9″	1′-1″			
S5006	108	6′-1″	685	10	1′-3″	1″	3′-10″	1′-0″			
S5007	67	30′-3″	2,114	STR							
S5008	51	30′-3″	1,609	STR							
S6326	58	19′-7″	1,706	40	4′-5 1/2″	4′-1 1/4″	7 3/4″	4′-2 1/2″	1′-0 1/4″		
S6327	4	18′-5″	111	55	4′-5 1/2″	1′-10 1/2″	7 3/4″	1′-1 1/4″	1′-0 1/4″		
S6328	4	18′-2″	109	43	1′-9 1/4″	1′-2 1/2″	7 3/4″	4′-2 1/2″	1′-0 1/4″		
S6329	8	18′-3″	219	56	4′-5 1/2″	4′-1 1/4″	7 3/4″	4′-2 1/2″	1′-0 1/4″		
S11331	64	28′-3″	9,606	36		28′-3″					
S8332	14	28′-3″	1,056	36		28′-3″					
S8333	2	3′-6″	19	STR							
S8334	2	13′-1 1/2″	70	STR							
S8335	2	9′-7 1/2″	51	36		9′-7 1/2″					
S6336	4	5′-3 1/4″	32	11	3 1/2″	11 1/2″	4′-3 1/4″				
S6337	4	5′-2 1/2″	31	19	4′-2 1/2″	3/4″	1′-0″				
S6338	4	5′-2 1/2″	31	19	4′-2 1/2″	3 1/2″	11 1/2″				
S6339	4	5′-7″	34	11	1″	1′-0″	4′-7″				
S8349	6	8′-4″	134	STR							
S8354	6	15′-6″	248	36		15′-6″					
S8373	4	4′-6″	48	STR							
S8379	4	19′-4″	206	36		19′-4″					
S8620	32	5′-7″	477	1	1′-4″	4′-3″					
S3621	16	2′-0″	12	STR							
	WEIGHT PER ITEM =		23,227								
	TOTAL =		23,227								
SIDESPAN DECK - SEGMENT B22								NUMBER OF ITEMS REQUIRED = 1			
S5001	54	39′-6″	2,225	19	19′-9″	19′-9″	8″				
S5002	54	32′-0″	1,802	19	16′-0″	16′-0″	6″				
S5005	92	6′-2″	592	21	0″	2′-1″	9″	1′-1″			
S5006	108	6′-1″	685	10	1′-3″	1″	3′-10″	1′-0″			
S5007	67	30′-3″	2,114	STR							
S5008	51	30′-3″	1,609	STR							
S6326	58	19′-7″	1,706	40	4′-5 1/2″	4′-1 1/4″	7 3/4″	4′-2 1/2″	1′-0 1/4″		
S6327	4	18′-5″	111	55	4′-5 1/2″	1′-10 1/2″	7 3/4″	1′-1 1/4″	1′-0 1/4″		
S6328	4	18′-2″	109	43	1′-9 1/4″	1′-2 1/2″	7 3/4″	4′-2 1/2″	1′-0 1/4″		
S6329	8	18′-3″	219	56	4′-5 1/2″	4′-1 1/4″	7 3/4″	4′-2 1/2″	1′-0 1/4″		
S11331	64	28′-3″	9,606	36		28′-3″					
S8332	14	28′-3″	1,056	36		28′-3″					
S8333	2	3′-6″	19	STR							
S8334	2	13′-1 1/2″	70	STR							
S8335	2	9′-7 1/2″	51	36		9′-7 1/2″					
S6336	4	5′-3 1/4″	32	11	3 1/2″	11 1/2″	4′-3 1/4″				
S6337	4	5′-2 1/2″	31	19	4′-2 1/2″	3/4″	1′-0″				
S6338	4	5′-2 1/2″	31	19	4′-2 1/2″	3 1/2″	11 1/2″				
S6339	4	5′-7″	34	11	1″	1′-0″	4′-7″				
S8348	6	8′-10″	142	STR							
S8353	6	15′-0″	240	36		15′-0″					
S8372	4	4′-6″	48	STR							
S8378	4	19′-3″	206	36		19′-3″					
S8620	32	5′-7″	477	1	1′-4″	4′-3″					
S3621	16	2′-0″	12	STR							
	WEIGHT PER ITEM =		23,227								
	TOTAL =		23,227								

MARK	NUMBER	LENGTH	WEIGHT	TYPE	DIMENSIONS						
					A	B	C	D	E	R	INC
SIDESPAN DECK - SEGMENT B23								NUMBER OF ITEMS REQUIRED = 1			
S5001	54	39′-6″	2,225	19	19′-9″	19′-9″	8″				
S5002	54	32′-0″	1,802	19	16′-0″	16′-0″	6″				
S5005	92	6′-2″	592	21	0″	2′-1″	9″	1′-1″			
S5006	108	6′-1″	685	10	1′-3″	1″	3′-10″	1′-0″			
S5007	67	30′-3″	2,114	STR							
S5008	51	30′-3″	1,609	STR							
S6326	58	19′-7″	1,706	40	4′-5 1/2″	4′-1 1/4″	7 3/4″	4′-2 1/2″	1′-0 1/4″		
S6327	4	18′-5″	111	55	4′-5 1/2″	1′-10 1/2″	7 3/4″	1′-1 1/4″	1′-0 1/4″		
S6328	4	18′-2″	109	43	1′-9 1/4″	1′-2 1/2″	7 3/4″	4′-2 1/2″	1′-0 1/4″		
S6329	8	18′-3″	219	56	4′-5 1/2″	4′-1 1/4″	7 3/4″	4′-2 1/2″	1′-0 1/4″		
S11331	64	28′-3″	9,606	36		28′-3″					
S8332	14	28′-3″	1,056	36		28′-3″					
S8333	2	3′-6″	19	STR							
S8334	2	13′-1 1/2″	70	STR							
S8335	2	9′-7 1/2″	51	36		9′-7 1/2″					
S6336	4	5′-3 1/4″	32	11	3 1/2″	11 1/2″	4′-3 1/4″				
S6337	4	5′-2 1/2″	31	19	4′-2 1/2″	3/4″	1′-0″				
S6338	4	5′-2 1/2″	31	19	4′-2 1/2″	3 1/2″	11 1/2″				
S6339	4	5′-7″	34	11	1″	1′-0″	4′-7″				
S8347	6	9′-3″	148	STR							
S8352	6	14′-5″	231	36		14′-5″					
S8371	4	4′-6″	48	STR							
S8377	4	19′-1″	204	36		19′-1″					
S8620	32	5′-7″	477	1	1′-4″	4′-3″					
S3621	16	2′-0″	12	STR							
	WEIGHT PER ITEM =		23,222								
	TOTAL =		23,222								
SIDESPAN DECK - SEGMENT B24								NUMBER OF ITEMS REQUIRED = 1			
S5001	54	39′-6″	2,225	19	19′-9″	19′-9″	8″				
S5002	54	32′-0″	1,802	19	16′-0″	16′-0″	6″				
S5005	92	6′-2″	592	21	0″	2′-1″	9″	1′-1″			
S5006	108	6′-1″	685	10	1′-3″	1″	3′-10″	1′-0″			
S5007	67	30′-3″	2,114	STR							
S5008	51	30′-3″	1,609	STR							
S6326	58	19′-7″	1,706	40	4′-5 1/2″	4′-1 1/4″	7 3/4″	4′-2 1/2″	1′-0 1/4″		
S6327	4	18′-5″	111	55	4′-5 1/2″	1′-10 1/2″	7 3/4″	1′-1 1/4″	1′-0 1/4″		
S6328	4	18′-2″	109	43	1′-9 1/4″	1′-2 1/2″	7 3/4″	4′-2 1/2″	1′-0 1/4″		
S6329	8	18′-3″	219	56	4′-5 1/2″	4′-1 1/4″	7 3/4″	4′-2 1/2″	1′-0 1/4″		
S11331	64	28′-3″	9,606	36		28′-3″					
S8332	14	28′-3″	1,056	36		28′-3″					
S8333	2	3′-6″	19	STR							
S8334	2	13′-1 1/2″	70	STR							
S8335	2	9′-7 1/2″	51	36		9′-7 1/2″					
S6336	4	5′-3 1/4″	32	11	3 1/2″	11 1/2″	4′-3 1/4″				
S6337	4	5′-2 1/2″	31	19	4′-2 1/2″	3/4″	1′-0″				
S6338	4	5′-2 1/2″	31	19	4′-2 1/2″	3 1/2″	11 1/2″				
S6339	4	5′-7″	34	11	1″	1′-0″	4′-7″				
S8346	6	9′-8″	155	STR							
S8351	6	13′-10″	222	36		13′-10″					
S8370	4	4′-6″	48	STR							
S8376	4	19′-0″	203	36		19′-0″					
S8620	32	5′-7″	477	1	1′-4″	4′-3″					
S3621	16	2′-0″	12	STR							
	WEIGHT PER ITEM =		23,219								
	TOTAL =		23,219								

NOTES

1. FOR STANDARD BAR BENDING DETAILS, SEE SHEET NOS. 17/365 *THRU* 19/365.

DESIGN AGENCY
URS
36 EAST 7TH STREET
SUITE 2300
CINCINNATI, OHIO 45202

DESIGNED BWJ | DRAWN JLS | REVIEWED DLJ | DATE 6/2010
CHECKED AR | REVISED | STRUCTURE FILE NUMBER 4401263

REINFORCING STEEL LIST - CABLE STAYED SUPERSTRUCTURE (10 OF 18)

BRIDGE NO. LAW-93-0000
IRONTON RUSSELL BRIDGE OVER OHIO RIVER

LAW-93-0.00
PID No. 81595

298/365

685
788

E:\Bridges_XM\Ironton_Russell\LAW\81595\structures\LAW093_0000C\sheets\093_0000CRL011.dgn 4/25/2011 10:31:03 AM john_stahl

MARK	NUMBER	LENGTH	WEIGHT	TYPE	DIMENSIONS						
					A	B	C	D	E	R	INC
SIDESPAN DECK - SEGMENT B25								NUMBER OF ITEMS REQUIRED = 1			
S5001	54	39′-6″	2,225	19	19′-9″	19′-9″	8″				
S5002	54	32′-0″	1,802	19	16′-0″	16′-0″	6″				
S5005	92	6′-2″	592	21	0″	2′-1″	9″	1′-1″			
S5006	108	6′-1″	685	10	1′-3″	1″	3′-10″	1′-0″			
S5007	67	30′-3″	2,114	STR							
S5008	51	30′-3″	1,609	STR							
S6326	56	19′-7″	1,647	40	4′-5 1/2″	4′-1 1/4″	7 3/4″	4′-2 1/2″	1′-0 1/4″		
S6327	4	18′-5″	111	55	4′-5 1/2″	1′-10 1/2″	7 3/4″	1′-1 1/4″	1′-0 1/4″		
S6328	6	18′-2″	164	43	1′-9 1/4″	1′-2 1/2″	7 3/4″	4′-2 1/2″	1′-0 1/4″		
S6329	8	18′-3″	219	56	4′-5 1/2″	4′-1 1/4″	7 3/4″	4′-2 1/2″	1′-0 1/4″		
S11331	64	28′-3″	9,606	36		28′-3″					
S8332	10	28′-3″	754	36		28′-3″					
S8333	2	3′-6″	19	STR							
S8334	2	13′-1 1/2″	70	STR							
S8335	2	9′-7 1/2″	51	36		9′-7 1/2″					
S6336	4	5′-3 1/4″	32	11	3 1/2″	11 1/2″	4′-3 1/4″				
S6337	4	5′-2 1/2″	31	19	4′-2 1/2″	3/4″	1′-0″				
S6338	6	5′-2 1/2″	47	19	4′-2 1/2″	3 1/2″	11 1/2″				
S6339	6	5′-7″	50	11	1″	1′-0″	4′-7″				
S8342	6	10′-0″	160	STR							
S8345	6	13′-3″	212	36		13′-3″					
S8367	4	4′-6″	48	STR							
S8375	4	18′-11″	202	36		18′-11″					
S11390	12	7′-6″	478	STR							
S11398	20	7′-6″	797	STR							
S8399	4	26′-3″	280	36		26′-3″					
S8620	32	5′-7″	477	1	1′-4″	4′-3″					
S3621	16	2′-0″	12	STR							
	WEIGHT PER ITEM =		24,494								
	TOTAL =		24,494								
SIDESPAN DECK - SEGMENT B26								NUMBER OF ITEMS REQUIRED = 1			
S5001	54	39′-6″	2,225	19	19′-9″	19′-9″	8″				
S5002	54	32′-0″	1,802	19	16′-0″	16′-0″	6″				
S5005	92	6′-2″	592	21	0″	2′-1″	9″	1′-1″			
S5006	108	6′-1″	685	10	1′-3″	1″	3′-10″	1′-0″			
S5007	67	30′-3″	2,114	STR							
S5008	51	30′-3″	1,609	STR							
S6326	58	19′-7″	1,706	40	4′-5 1/2″	4′-1 1/4″	7 3/4″	4′-2 1/2″	1′-0 1/4″		
S6327	4	18′-5″	111	55	4′-5 1/2″	1′-10 1/2″	7 3/4″	1′-1 1/4″	1′-0 1/4″		
S6328	4	18′-2″	109	43	1′-9 1/4″	1′-2 1/2″	7 3/4″	4′-2 1/2″	1′-0 1/4″		
S6329	8	18′-3″	219	56	4′-5 1/2″	4′-1 1/4″	7 3/4″	4′-2 1/2″	1′-0 1/4″		
S11331	96	28′-3″	14,409	36		28′-3″					
S8332	10	28′-3″	754	36		28′-3″					
S8333	2	3′-6″	19	STR							
S8334	2	13′-1 1/2″	70	STR							
S8335	2	9′-7 1/2″	51	36		9′-7 1/2″					
S6336	4	5′-3 1/4″	32	11	3 1/2″	11 1/2″	4′-3 1/4″				
S6337	4	5′-2 1/2″	31	19	4′-2 1/2″	3/4″	1′-0″				
S6338	4	5′-2 1/2″	31	19	4′-2 1/2″	3 1/2″	11 1/2″				
S6339	4	5′-7″	34	11	1″	1′-0″	4′-7″				
S8341	6	10′-6″	168	STR							
S8344	6	12′-10″	206	36		12′-10″					
S8366	4	4′-6″	48	STR							
S8369	4	18′-10″	201	36		18′-10″					
S8620	32	5′-7″	477	1	1′-4″	4′-3″					
S3621	16	2′-0″	12	STR							
	WEIGHT PER ITEM =		27,715								
	TOTAL =		27,715								

MARK	NUMBER	LENGTH	WEIGHT	TYPE	DIMENSIONS						
					A	B	C	D	E	R	INC
SIDESPAN DECK - SEGMENT B27								NUMBER OF ITEMS REQUIRED = 1			
S5001	54	39′-6″	2,225	19	19′-9″	19′-9″	8″				
S5002	54	32′-0″	1,802	19	16′-0″	16′-0″	6″				
S5005	92	6′-2″	592	21	0″	2′-1″	9″	1′-1″			
S5006	108	6′-1″	685	10	1′-3″	1″	3′-10″	1′-0″			
S5007	67	31′-3″	2,184	STR							
S5008	51	31′-3″	1,662	STR							
S6326	108	19′-7″	3,176	40	4′-5 1/2″	4′-1 1/4″	7 3/4″	4′-2 1/2″	1′-0 1/4″		
S6327	12	18′-5″	332	55	4′-5 1/2″	1′-10 1/2″	7 3/4″	1′-1 1/4″	1′-0 1/4″		
S6328	12	18′-2″	328	43	1′-9 1/4″	1′-2 1/2″	7 3/4″	4′-2 1/2″	1′-0 1/4″		
S6329	8	18′-3″	219	56	4′-5 1/2″	4′-1 1/4″	7 3/4″	4′-2 1/2″	1′-0 1/4″		
S11331	23	28′-3″	3,452	36		28′-3″					
S8332	10	28′-3″	754	36		28′-3″					
S8333	2	3′-6″	19	STR							
S8334	2	13′-1 1/2″	70	STR							
S8335	2	9′-7 1/2″	51	36		9′-7 1/2″					
S6336	12	5′-3 1/4″	95	11	3 1/2″	11 1/2″	4′-3 1/4″				
S6337	12	5′-2 1/2″	94	19	4′-2 1/2″	3/4″	1′-0″				
S6338	12	5′-2 1/2″	94	19	4′-2 1/2″	3 1/2″	11 1/2″				
S6339	12	5′-7″	101	11	1″	1′-0″	4′-7″				
S8340	3	15′-7″	125	STR							
S8343	6	12′-4″	198	36		12′-4″					
S8365	4	9′-3″	99	STR							
S8368	4	18′-8″	199	36		18′-8″					
S11468	26	33′-6″	4,628	36		33′-6″					
S11469	30	33′-6″	5,340	36		33′-6″					
S11475	3	28′-3″	450	36		28′-3″					
S11476	4	26′-9″	568	36		26′-9″					
S11477	3	29′-3″	466	36		29′-3″					
S11479	3	33′-6″	534	36		33′-6″					
S11480	4	33′-6″	712	36		33′-6″					
S11481	2	10′-10″	115	STR							
S11482	3	13′-4″	213	STR							
S8620	32	5′-7″	477	1	1′-4″	4′-3″					
S3621	16	2′-0″	12	STR							
	WEIGHT PER ITEM =		32,071								
	TOTAL =		32,071								
OH CLOSURE POUR DECK								NUMBER OF ITEMS REQUIRED = 1			
S5001	12	39′-6″	494	19	19′-9″	19′-9″	8″				
S5002	12	32′-0″	401	19	16′-0″	16′-0″	6″				
S5006	24	6′-1″	152	10	1′-3″	1″	3′-10″	1′-0″			
S6470	2 SETS OF 8	VARIES 19′-5″ TO 22′-9″	507	40	4′-5 1/2″	VARIES 4′-1 1/2″ TO 5′-11 1/2″	VARIES 8″ TO 2′-6″	4′-0″	1′-0 1/4″		(-) 5 3/4″
S11471	18	8′-3″	789	1	6′-3″	2′-0″					
S11472	18	6′-3″	598	1	4′-3″	2′-0″					
S11473	18	7′-5″	709	1	5′-5″	2′-0″					
S11474	12	9′-6″	606	1	7′-6″	2′-0″					
	WEIGHT PER ITEM =		4,256								
	TOTAL =		4,256								

NOTES

1. FOR STANDARD BAR BENDING DETAILS, SEE SHEET NOS. 17/365 THRU 19/365.

DESIGN AGENCY
URS
36 EAST 7TH STREET
SUITE 2300
CINCINNATI, OHIO 45202

DRAWN JLS | DESIGNED BWJ | CHECKED AR | REVIEWED DLJ | DATE 6/2010 | STRUCTURE FILE NUMBER 4401263 | REVISED

REINFORCING STEEL LIST - CABLE STAYED SUPERSTRUCTURE (11 OF 18)

BRIDGE NO. LAW-93-0000
IRONTON RUSSELL BRIDGE OVER OHIO RIVER

LAW-93-0.00
PID No. 81595

E:\Bridges_XM\Ironton_Russell\LAW\81595\structures\LAW093_0000C\sheets\093_0000CRL012.dgn 4/25/2011 10:31:14 AM john_stahl

MARK	NUMBER	LENGTH	WEIGHT	TYPE	DIMENSIONS						
					A	B	C	D	E	R	INC
SIDESPAN DECK - SEGMENT B12								NUMBER OF ITEMS REQUIRED = 1			
S5001	54	39′-6″	2,225	19	19′-9″	19′-9″	8″				
S5002	54	32′-0″	1,802	19	16′-0″	16′-0″	6″				
S5005	92	6′-2″	592	21	0″	2′-1″	9″	1′-1″			
S5007	67	31′-3″	2,184	STR							
S5008	51	31′-3″	1,662	STR							
S5050	108	6′-2″	695	1	1′-0″	5′-2″					
S6326	108	19′-7″	3,176	40	4′-5 1/2″	4′-1 1/4″	7 3/4″	4′-2 1/2″	1′-0 1/4″		
S6327	12	18′-5″	332	55	4′-5 1/2″	1′-10 1/2″	7 3/4″	1′-1 1/4″	1′-0 1/4″		
S6328	12	18′-2″	328	43	1′-9 1/4″	1′-2 1/2″	7 3/4″	4′-2 1/2″	1′-0 1/4″		
S6329	8	18′-3″	219	56	4′-5 1/2″	4′-1 1/4″	7 3/4″	4′-2 1/2″	1′-0 1/4″		
S11331	12	28′-3″	1,801	36		28′-3″					
S8332	5	28′-3″	377	36		28′-3″					
S8333	1	3′-6″	9	STR							
S8334	2	13′-1 1/2″	70	STR							
S8335	2	9′-7 1/2″	51	36		9′-7 1/2″					
S6336	12	5′-3 1/4″	95	11	3 1/2″	11 1/2″	4′-3 1/4″				
S6337	12	5′-2 1/2″	94	19	4′-2 1/2″	3/4″	1′-0″				
S6338	12	5′-2 1/2″	94	19	4′-2 1/2″	3 1/2″	11 1/2″				
S6339	12	5′-7″	101	11	1″	1′-0″	4′-7″				
S8340	2	15′-7″	83	STR							
S8343	6	12′-4″	198	36		12′-4″					
S8365	2	9′-3″	49	STR							
S8368	4	18′-8″	199	36		18′-8″					
S11468	12	33′-6″	2,136	36		33′-6″					
S11469	14	33′-6″	2,492	36		33′-6″					
S11475	2	28′-3″	300	36		28′-3″					
S11476	3	26′-9″	426	36		26′-9″					
S11477	2	29′-3″	311	36		29′-3″					
S11479	1	33′-6″	178	36		33′-6″					
S11480	2	33′-6″	356	36		33′-6″					
S11482	2	13′-4″	142	STR							
S11483	1	32′-9 1/2″	174	41	29′-3″	3′-6″	5 1/4″				
S11484	1	33′-6 1/4″	178	41	31′-1 3/4″	2′-4 1/4″	3 1/2″				
S11485	1	33′-6″	178	41	32′-1 3/4″	1′-4″	2″				
S11486	1	33′-6 1/4″	178	41	31′-1 3/4″	2′-4 1/4″	3 1/2″				
S11487	1	33′-6″	178	41	32′-1 3/4″	1′-4″	2″				
S8488	1	16′-3″	44	19	14′-6″	1′-8″	2 1/2″				
S11489	1	15′-5 1/4″	82	19	12′-7″	2′-10″	4 1/4″				
S11490	1	15′-5″	82	19	11′-3 3/4″	4′-1″	6 1/4″				
S11491	1	32′-9 1/2″	174	41	29′-3″	3′-6″	5 1/4″				
S11492	1	32′-9 1/2″	174	41	28′-8″	4′-1″	6 1/4″				
S11493	1	32′-9 1/2″	174	41	28′-8″	4′-1″	6 1/4″				
S11494	1	32′-9 1/2″	174	41	28′-8 1/2″	4′-0 1/2″	6 1/4″				
S11495	1	32′-9 1/2″	174	41	28′-8 3/4″	4′-0 1/4″	6″				
S11496	1	32′-9 1/2″	174	41	28′-1 1/2″	4′-7 1/2″	7″				
S11497	1	32′-9″	174	41	28′-8″	4′-0 3/4″	6 1/4″				
S11498	1	32′-9 1/2″	174	41	28′-8 1/2″	4′-0 1/2″	6 1/4″				
S11499	1	32′-9 1/2″	174	41	28′-8 3/4″	4′-0 1/4″	6″				
S11500	1	32′-9 1/2″	174	41	28′-1 1/2″	4′-7 1/2″	7″				
S8501	1	32′-9 1/2″	88	41	27′-9″	5′-0″	7 1/4″				
S8502	1	32′-9 1/2″	88	41	28′-1 1/2″	4′-7 1/2″	7″				
S8503	1	32′-9 1/2″	88	41	28′-1 1/2″	4′-7 1/2″	7″				
S8504	1	7′-6 1/2″	20	19	2′-6″	5′-0″	7 1/4″				
S8505	1	32′-9 1/2″	88	41	27′-9″	5′-0″	7 1/4″				
S8506	1	32′-9 1/2″	88	41	27′-9″	5′-0″	7 1/4″				
S11507	12	31′-0 1/2″	1,979	41	25′-8″	5′-4″	8 1/4″				
S11508	13	33′-6 1/2″	2,316	41	28′-2″	5′-4″	8 1/4″				
S11509	2	29′-3″	311	36		29′-3″					
S11510	2	28′-3″	300	36		28′-3″					
S11511	3	27′-3″	434	36		27′-3″					
S8512	2	9′-4 1/2″	50	19	4′-0″	5′-4″	8 1/4″				
S8620	32	5′-7″	477	1	1′-4″	4′-3″					
S3621	16	2′-0″	12	STR							
	WEIGHT PER ITEM =		31,950								
	TOTAL =		31,950								

MARK	NUMBER	LENGTH	WEIGHT	TYPE	DIMENSIONS						
					A	B	C	D	E	R	INC
KY CLOSURE POUR DECK								NUMBER OF ITEMS REQUIRED = 1			
S5010	12	40′-4″	505	19	19′-10″	20′-6″	8″				
S5011	12	33′-4″	417	19	16′-4″	17′-0″	6″				
S5050	24	6′-2″	154	1	1′-0″	5′-2″					
S6470	2	VARIES	507	40	4′-5 1/2″	VARIES	VARIES	4′-0″	1′-0 1/4″		(-) 5 3/4″
	SETS	19′-5″				4′-1 1/2″	8″				
	OF	TO				TO	TO				
	8	22′-9″				5′-11 1/2″	2′-6″				
S11471	18	8′-3″	789	1	6′-3″	2′-0″					
S11472	18	6′-3″	598	1	4′-3″	2′-0″					
S11473	18	7′-5″	709	1	5′-5″	2′-0″					
S11474	12	9′-6″	606	1	7′-6″	2′-0″					
	WEIGHT PER ITEM =		4,285								
	TOTAL =		4,285								
MAINSPAN CLOSURE DECK								NUMBER OF ITEMS REQUIRED = 1			
S5001	20	39′-6″	824	19	19′-9″	19′-9″	8″				
S5002	20	32′-0″	668	19	16′-0″	16′-0″	6″				
S5005	46	6′-2″	296	21	0″	2′-1″	9″	1′-1″			
S5006	40	6′-1″	254	10	1′-3″	1″	3′-10″	1′-0″			
S5009	118	10′-11″	1,344	STR							
S6326	48	19′-7″	1,412	40	4′-5 1/2″	4′-1 1/4″	7 3/4″	4′-2 1/2″	1′-0 1/4″		
S6329	4	18′-3″	110	56	4′-5 1/2″	4′-1 1/4″	7 3/4″	4′-2 1/2″	1′-0 1/4″		
S11462	32	9′-6″	1,615	58		9′-6″					
S8463	14	9′-6″	355	58		9′-6″					
S11464	32	9′-6″	1,615	58		9′-6″					
S8465	4	4′-0″	43	36		4′-0″					
S8466	10	9′-6″	254	58		9′-6″					
S3621	8	2′-0″	6	STR							
	WEIGHT PER ITEM =		8,796								
	TOTAL =		8,796								

NOTES

1. FOR STANDARD BAR BENDING DETAILS, SEE SHEET NOS. 17/365 *THRU* 19/365.

DESIGN AGENCY
URS
36 EAST 7TH STREET
SUITE 2300
CINCINNATI, OHIO 45202

DATE 6/2010
REVIEWED DLJ
STRUCTURE FILE NUMBER 4401263
DRAWN JLS
REVISED
DESIGNED BWJ
CHECKED AR

REINFORCING STEEL LIST - CABLE STAYED SUPERSTRUCTURE (12 OF 18)
BRIDGE NO. LAW-93-0000
IRONTON RUSSELL BRIDGE OVER OHIO RIVER

LAW-93-0.00
PID No. 81595

300/365

687
788

E:\Bridges_XM\Ironton_Russell\LAW\81595\structures\LAW093_0000C\sheets\093_0000CRL013.dgn 4/25/2011 10:31:25 AM john_stahl

MARK	NUMBER	LENGTH	WEIGHT	TYPE	DIMENSIONS						
					A	B	C	D	E	R	INC
KY DIAPHRAGM SEGMENT					NUMBER OF ITEMS REQUIRED = 1						
S5006	26	6′- 2″	166	10	1′- 3″	2 ½″	3′- 10″	1′- 0″			
S5015	1	VARIES	1,333	STR							(-) 1″
	SETS	40′- 0″									
	OF	TO									
	31	42′- 5″									
S5016	13	33′- 4″	452	STR							
S5017	25	23′- 8″	618	STR							
S5018	44	12′- 3″	563	16	11′- 8″						
S5019	44	7′- 6″	345	1	1′- 0″	6′- 6″					
S5020	32	20′- 6″	685	STR							
S5021	1	VARIES	75	STR							(+) 3′ - 4 ½″
	SETS	20′- 4″									
	OF	TO									
	6	3′- 5″									
S5026	5	23′- 10″	125	STR							
S5027	6	23′- 7″	148	STR							
S5028	4	23′- 10″	100	STR							
S5029	5	23′- 7″	123	STR							
S5036	2	42′- 8″	90	STR							
S6338	6	5′- 7″	50	19	4′- 6″	3 ¾″	1′- 0″				
S6339	6	5′- 7″	50	11	1″	1′- 0″	4′- 6″				
S9700	3	45′- 10″	468	STR							
S10701	4	48′- 5″	834	2	3′- 0″	42′- 5″	3′- 0″				
S9702	6	48′- 9″	995	2	3′- 0″	42′- 9″	3′- 0″				
S8703	8	6′- 2″	132	2	1′- 4″	3′- 6″	1′- 4″				
S8704	8	6′- 8″	143	2	1′- 4″	4′- 0″	1′- 4″				
S8705	9	6′- 2″	149	2	1′- 4″	3′- 6″	1′- 4″				
S8706	9	6′- 8″	161	2	1′- 4″	4′- 0″	1′- 4″				
S9707	14	8′- 0″	381	2	3′- 0″	2′- 0″	3′- 0″				
S9708	2	14′- 2″	97	2	3′- 0″	8′- 2″	3′- 0″				
S11709	2	46′- 6″	495	STR							
S8710	4	13′- 8″	146	41	3′- 1″	10′- 6 ½″	5 ½″				
S8711	1	10′- 9″	29	19	10′- 6 ½″	4 ½″	¼″				
S8712	4	13′- 3″	142	36		13′- 3″					
S8713	1	11′- 0″	30	STR							
S8714	1	8′- 1″	22	STR							
S8715	1	8′- 0″	22	STR							
S8716	1	4′- 6″	13	36		4′- 6″					
S8717	1	4′- 7″	13	36		4′- 7″					
S9718	2	14′- 6″	99	2	3′- 0″	8′- 6″	3′- 0″				
S11719	1	33′- 0″	175	41	6′- 10 ¾″	26′- 0″	1′- 2 ¾″				
S11720	10	26′- 8″	1,415	42	17′- 9 ¾″	3′- 1 ¾″	1 ½″	5′- 4″	1′- 11″		
S11721	4	18′- 6″	393	41	7 ¾″	17′- 9 ¾″	9″				
S11722	9	26′- 10″	1,282	41	21′- 1 ½″	5′- 4″	1′- 11″				
S11723	4	18′- 8″	396	36		18′- 7 ¼″					
S8724	1	7′- 8″	21	19	3′- 6″	4′- 1 ½″	6 ¼″				
S8725	2	16′- 6″	88	2	2′- 6″	3′- 9″	10′- 2 ¾″				
S8726	2	16′- 4″	87	2	2′- 6″	4′- 0 ½″	9′- 9″				
S8727	2	15′- 11″	85	2	2′- 6″	4′- 4 ½″	9′- 0″				
S8728	2	15′- 7″	83	2	2′- 6″	4′- 4 ¾″	8′- 7 ½″				
S8729	2	6′- 0″	33	2	2′- 6″	1′- 0″	2′- 6″				
S8730	2	11′- 3″	60	2	2′- 6″	10″	7′- 10 ¼″				
S8731	2	14′- 2″	76	2	2′- 6″	3′- 11″	7′- 8 ½″				
S8732	2	VARIES	174	2	2′- 6″	VARIES	VARIES				2′-2 ½″
	SETS	8′- 8″				3′- 7″	2′- 6″				
	OF	TO				TO	TO				
	3	13′- 1″				3′- 9 ½″	6′- 9″				
S8733	2	VARIES	90	2	2′- 6″	VARIES	2′- 6″				3″
	SETS	8′- 3″				3′- 2 ¾″					
	OF	TO				TO					
	2	8′- 6″				3′- 5 ½″					
S8734	2	10′- 2″	55	45	2′- 6″	2′- 6″	4′- 6″	2′- 6″			
S8735	3	16′- 2″	130	45	2′- 6″	2′- 6″	9′- 9″	5′- 5″			

MARK	NUMBER	LENGTH	WEIGHT	TYPE	DIMENSIONS						
					A	B	C	D	E	R	INC
KY DIAPHRAGM SEGMENT - CONTINUED					NUMBER OF ITEMS REQUIRED = 1						
S8736	2	5′- 4″	29	14	2′- 6″	1′- 6″	6 ½″	3 ½″	8″		
S8737	1	7′- 0″	19	2	2′- 6″	2′- 0″	2′- 6″				
S8738	1	7′- 10″	21	1	7″	7′- 3″					
S8739	1	7′- 9″	21	11	2′- 6 ½″	4′- 6″	2′- 6″				
S5740	4	9′- 6″	40	STR							
S5741	4	9′- 7″	40	STR							
S8742	1	9′- 7″	26	45	2′- 6″	2′- 6″	4′- 0″	2′- 1 ¼″			
S8743	2	5′- 6″	30	11	1′- 5 ½″	2′- 7″	2′- 6″				
S8744	2	17′- 11″	96	14	2′- 6″	1′- 8 ¾″	9′- 9″	5′- 5″	2′- 6″		
S8746	1	10′- 8″	29	2	2′- 6″	10″	7′- 3″				
S8747	1	6′- 4″	17	2	2′- 6″	1′- 4″	2′- 6″				
S10748	8	45′-10″	1578	STR							
S11752	1	28′- 9″	153	41	4′- 4 ¾″	24′- 3″	1′- 0 ½″				
S11753	1	22′- 11″	122	41	2′- 6″	20′- 4 ½″	¼″				
S11754	1	20′- 8″	110	36		20′- 7 ½″					
S9756	3	42′- 8″	435	2	3′- 0″	36′- 7″	3′- 0″				
S11757	6	47′- 6″	1,515	17	44′- 4″						
S11758	7	43′- 2″	1,606	17	40′- 0″						
S11759	7	43′- 4″	1,612	17	40′- 2″						
S11760	16	44′- 2″	3,755	17	41′- 0″						
S11762	1	25′- 6″	136	41	5′- 0″	20′- 5 ½″	1′- 0″				
S11764	1	23′- 6″	125	41	3′- 2 ½″	20′- 3″	1′- 0 ¼″				
S4765	48	7′- 8″	246	2	2′- 0″	3′- 8″	2′- 0″				
S4766	42	6′- 9″	189	12	4 ½″	8 ½″	7″	3′- 4″	2′- 0″		
S11767	1	22′- 0″	117	41	8 ½″	21′- 3″	1′- 0 ¼″				
S11768	1	23′- 2″	123	36		23′- 1 ½″					
S4769	25	2′- 3″	38	STR							
S3770	32	3′- 5″	41	19	2′- 2″	10″	10″				
S3771	38	3′-0″	43	STR							
S9772	1	VARIES	248	34	VARIES	4′- 3″	VARIES	4′- 3″	1″		9″
	SETS	36′- 11″			12′- 6 ½″		12′- 7 ½″				
	OF	TO			TO		TO				
	2	36′- 2″			12′- 2″		12′- 3″				
S9773	1	36′- 0″	123	34	12′- 1″	4′- 3″	12′- 2″	4′- 3″	1″		
S11775	3	48′- 7″	775	17	45′- 5″						
S11776	2	30′- 7″	325	41	2′- 6″	28′- 0″	1′- 3 ¾″				
S11777	1	33′- 1″	176	41	5′- 0″	28′- 0″	1′- 3 ¾″				
S8779	3	5′- 0 ¾″	41	STR							
S11780	1	30′- 6″	162	41	4′- 4 ¾″	26′- 0″	1′- 1 ½″				
S8781	6	6′- 2″	99	STR							
S8783	3	7′- 8″	62	STR							
S11784	1	23′- 2″	123	36		23′- 1 ¾″					
S11785	2	33′- 6″	356	36		33′- 6″					
S8786	1	16′- 10″	45	19	12′- 9 ½″	3′- 11 ¾″	6″				
S8787	3	5′- 0″	41	STR							
S8788	5	6′- 5″	86	STR							
S11789	3	31′- 0″	494	36		30′- 11 ¾″					
S8790	1	7′- 9″	21	19	4′- 6 ½″	3′- 1 ½″	4 ¾″				
S6791	2	VARIES	216	40	4′- 5 ½″	VARIES	VARIES	VARIES	1′- 1 ¼″		6″
	SETS	23′- 5″				6′- 3 ¾″	2′- 10 ¼″	3′- 11 ¼″			
	OF	TO				TO	TO	TO			
	3	24′- 5″				6′- 10″	3′- 4 ½″	3′- 10 ¾″			
S6792	1	VARIES	107	43	2′- 9 ½″	6″	VARIES	VARIES	1′- 1 ¼″		6″
	SETS	23′- 1″					3′- 7 ¾″	3′- 10 ½″			
	OF	TO					TO	TO			
	3	24′- 1″					4′- 2″	3′- 10″			
S6793	1	VARIES	80	40	4′- 5 ½″	VARIES	VARIES	VARIES	1′- 1 ¼″		6″
	SETS	26′- 5″				7′- 10 ½″	4′- 5″	3′- 10″			
	OF	TO				TO	TO	TO			
	2	26′- 11″				8′- 1 ½″	4′- 8″	3′- 9 ¾″			
S6796	1	VARIES	107	43	2′- 2 ½″	11 ½″	VARIES	VARIES	1′- 1 ¼″		5″
	SETS	23′- 2″					3′- 8″	3′- 10 ½″			
	OF	TO					TO	TO			
	3	24′- 0″					4′- 1 ½″	3′- 10 ¼″			

NOTES

1. FOR STANDARD BAR BENDING DETAILS, SEE SHEET NOS. 17/365 THRU 19/365.

DESIGN AGENCY
URS
36 EAST 7TH STREET
SUITE 2300
CINCINNATI, OHIO 45202

DESIGNED BWJ | DRAWN JLS | CHECKED AR | REVIEWED DLJ | DATE 6/2010 | REVISED | STRUCTURE FILE NUMBER 4401263

REINFORCING STEEL LIST - CABLE STAYED SUPERSTRUCTURE (13 OF 18)

BRIDGE NO. LAW-93-0000
IRONTON RUSSELL BRIDGE OVER OHIO RIVER

LAW-93-0.00 PID No. 81595

301/365

688/788

E:\Bridges_XM\Ironton_Russell\LAW\81595\structures\LAW093_0000C\sheets\093_0000CRL014.dgn 4/25/2011 10:31:35 AM john_stahl

MARK	NUMBER	LENGTH	WEIGHT	TYPE	DIMENSIONS						
					A	B	C	D	E	R	INC
KY DIAPHRAGM SEGMENT - CONTINUED					NUMBER OF ITEMS REQUIRED = 1						
S9794	1	28′- 6″	97	44	4′- 1 1/4″	8′- 5 1/4″	4′- 11 3/4″	4′- 0 1/2″	1′- 1 1/2″		
S9795	1	32′- 7″	111	33	6′- 2 1/2″	8′- 5 3/4″					
S10798	60	17′- 6″	4,519	2	7′- 10″	1′- 10″	7′- 10″				
S9799	57	20′- 3″	3,909	2	9′- 2″	1′- 10″	9′- 2″				
S9800	16	39′- 2″	2,131	33	4′- 3″	13′- 9″					
S9801	14	43′- 0″	2,047	33	4′- 3″	15′- 8″					
S9802	1	VARIES	1,758	33	4′- 3″	VARIES					(-) 6 1/2″
	SETS	43′- 0″				15′- 8″					
	OF	TO				TO					
	13	36′- 7″				12′- 5 1/4″					
S9803	1	VARIES	1,641	33	4′- 3″	VARIES					(+) 6″
	SETS	43′- 0″				15′- 8″					
	OF	TO				TO					
	12	37′- 5″				12′- 10 1/2″					
S10804	60	18′- 0″	4,635	45	7′- 8″	8′- 4″	1′- 10″	8″			
S9805	57	18′- 10″	3,641	45	8′- 1″	8′- 9″	1′- 10″	8″			
S11806	9	44′- 10″	2,144	17	41′- 8″						
S11807	10	44′- 4″	2,356	STR							
S5808	55	4′- 0″	230	STR							
S9809	14	10′- 3″	488	2	4′- 0″	2′- 3″	4′- 0″				
S4810	29	11′- 6″	222	2	5′- 3″	11″	5′- 3″				
S4811	8	11′- 7″	62	2	5′- 3″	1′- 0 1/2″	5′- 3″				
S4812	29	10′- 11″	212	2	5′- 0″	11″	5′- 0″				
S4813	8	11′- 1″	60	2	5′- 0″	1′- 0 1/2″	5′- 0″				
S4814	29	9′- 6″	183	2	4′- 3″	11″	4′- 3″				
S4815	8	9′- 7″	51	2	4′- 3″	1′- 0 1/2″	4′- 3″				
S11816	4	55′- 10″	1,186	52	6′- 7″	3′- 6 1/2″	7′- 4″	3′- 6″	6′- 11 3/4″		
S11817	4	59′- 11″	1,273	53	5′- 2″	4′- 11 3/4″	10′- 4″	5′- 0″	9′- 11 3/4″		
S11818	4	58′- 4″	1,240	54	26′- 10″	4′- 9 1/2″	7′- 10 1/2″	4′- 10″	7′- 7 1/2″		
S11819	4	56′- 8″	1,204	54	26′- 8 1/4″	4′- 5 1/2″	7′- 2″	4′- 6″	6′- 11 1/4″		
S9820	1	28′- 4″	97	46	4′- 1 1/4″	8′- 9 3/4″	4′- 0 1/2″	2′- 10″	10 1/2″		
S9821	1	25′- 11″	88	47	6′- 2 1/2″	8′- 10″	6′- 2″	11″	3′- 9″		
S9822	1	30′- 0″	102	44	4′- 1 1/4″	9′- 1 3/4″	5′- 8 1/4″	4′- 0 1/2″	1′- 1 1/2″		
S9823	1	34′- 0″	116	33	6′- 2 1/2″	9′- 2 1/4″					
S9824	1	28′- 5″	97	48	4′- 1 1/4″	9′- 4 1/2″	4′- 0 3/4″	10 1/2″	5′- 11″		
S9825	1	33′- 4″	114	47	6′- 2 1/2″	9′- 5″	6′- 10″	10 1/2″	3′- 9″		
S9826	1	VARIES	214	49	7″	2′- 4 1/2″	VARIES	4′- 0 1/2″	VARIES		8″
	SETS	31′- 1″					10′- 3 1/2″		6′- 10″		
	OF	TO					TO		TO		
	2	31′- 9″					10′- 7 3/4″		7′- 2 1/4″		
S9827	1	VARIES	242	50	7″	4′- 6″	VARIES	6′- 2 1/2″			8″
	SETS	35′- 2″					10′- 4″				
	OF	TO					TO				
	2	35′- 10″					10′- 8 1/4″				
S9828	1	VARIES	350	44	4′- 1 1/4″	VARIES	VARIES	4′- 0 1/2″	1′- 1 1/2″		8 1/2″
	SETS	33′- 7″				10′- 11 3/4″	7′- 6 1/4″				
	OF	TO				TO	TO				
	3	35′- 0″				11′- 8 1/4″	8′- 2 3/4″				
S9829	1	VARIES	391	33	6′- 2 1/2″	VARIES					8″
	SETS	37′- 8″				11′- 0 1/4″					
	OF	TO				TO					
	3	39′- 0″				11′- 8 1/2″					
S9830	5	44′- 5 1/2″	756	STR							
S9831	2	42′- 6″	289	17	40′- 0″						
S6832	1	VARIES	81	40	4′- 5 1/2″	VARIES	VARIES	3′- 9 3/4″	1′- 1 1/4″		6″
	SETS	26′- 6″				7′- 11″	4′- 5 1/2″				
	OF	TO				TO	TO				
	2	27′- 0″				8′- 2″	4′- 8 1/2″				
S9833	1	28′- 7″	98	44	4′- 1 1/4″	8′- 5 3/4″	5′- 0 1/4″	4′- 0 1/2″	1′- 1 1/2″		
S9834	1	32′- 8″	111	33	6′- 2 1/2″	8′- 6 1/4″					
S9835	1	28′- 4″	97	46	4′- 1 1/4″	8′- 10″	4′- 0 1/2″	2′- 10″	10 1/2″		
S9836	1	26′- 0″	89	47	6′- 2 1/2″	8′- 10 1/2″	6′- 2 1/2″	11″	3′- 9″		
S9837	1	30′- 0″	102	44	4′- 1 1/4″	9′- 2″	5′- 8 1/2″	4′- 0 1/2″	1′- 1 1/2″		

MARK	NUMBER	LENGTH	WEIGHT	TYPE	DIMENSIONS						
					A	B	C	D	E	R	INC
KY DIAPHRAGM SEGMENT - CONTINUED					NUMBER OF ITEMS REQUIRED = 1						
S9838	1	34′- 0″	116	33	6′- 2 1/2″	9′- 2 1/2″					
S9839	1	28′- 6″	97	48	4′- 1 1/4″	9′- 5″	4′- 0 3/4″	10 1/2″	5′- 11 1/2″		
S9840	1	27′- 3″	93	47	6′- 2 1/2″	9′- 5 1/2″	6′- 10 1/2″	10 1/2″	3′- 9″		
S9841	1	VARIES	213	44	4′- 1 1/4″	VARIES	VARIES	4′- 0 1/2″	1′- 1 1/2″		7″
	SETS	31′- 0″				9′- 8 1/2″	6′- 3″				
	OF	TO				TO	TO				
	2	31′- 7″				10′- 0″	6′- 6 1/2″				
S9842	1	VARIES	239	33	6′- 2 1/2″	VARIES					7″
	SETS	35′- 1″				9′- 9″					
	OF	TO				TO					
	2	35′- 8″				10′- 0 1/2″					
S9843	1	VARIES	214	49	7″	2′- 4 1/2″	VARIES	4′- 0 1/2″	VARIES		8″
	SETS	31′- 2″					10′- 4″		6′- 10 1/2″		
	OF	TO					TO		TO		
	2	31′- 10″					10′- 8 1/4″		7′- 2 3/4″		
S9844	1	VARIES	242	50	7″	4′- 6″	VARIES	6′- 2 1/2″			8″
	SETS	35′- 3″					10′- 4 1/2″				
	OF	TO					TO				
	2	35′- 11″					10′- 8 3/4″				
S9845	1	VARIES	351	44	4′- 1 1/4″	VARIES	VARIES	4′- 0 1/2″	1′- 1 1/2″		8 1/2″
	SETS	33′- 8″				11′- 0 1/2″	7′- 7″				
	OF	TO				TO	TO				
	3	35′- 1″				11′- 8 3/4″	8′- 3 1/4″				
S9846	1	VARIES	392	33	6′- 2 1/2″	VARIES					8″
	SETS	37′- 9″				11′- 1″					
	OF	TO				TO					
	3	39′- 1″				11′- 8 3/4″					
S8847	1	9′- 6″	26	36		9′- 5″					
S8848	1	12′- 0″	32	36		11′- 11″					
S8849	1	28′- 6″	76	36		28′- 5″					
S8850	1	30′- 6″	82	STR							
S8851	1	27′- 5 1/2″	74	STR							
S8852	1	25′- 3″	68	STR							
S8853	1	21′- 3″	57	STR							
S8854	1	16′- 4″	44	STR							
S8855	1	14′- 3″	39	STR							
S8856	1	10′- 10″	29	STR							
S8857	1	13′- 5″	36	41	6′- 10 1/2″	6′- 5 1/2″	4″				
S8858	1	10′- 11″	29	41	4′- 4 1/2″	6′- 5 1/2″	4″				
S8859	1	32′- 5″	87	41	6′- 10 1/2″	25′- 5 1/2″	1′- 1″				
S8860	1	32′- 2″	86	19	6′- 10 1/2″	25′- 2 1/2″	1′- 1″				
S8861	1	28′- 4″	76	STR							
S8862	1	25′- 3″	68	STR							
S8863	1	21′- 3″	57	STR							
S8864	1	16′- 4″	44	STR							
S8865	1	14′- 3″	39	STR							
S8866	1	10′- 10″	29	STR							
S11867	9	24′- 4″	1,161	41	18′- 7 1/4″	5′- 4″	1′- 11″				
S11868	5	21′- 2″	562	36		21′- 1 1/2″					
S11869	9	24′- 2″	1,154	42	17′- 9 3/4″	7 3/4″	1/4″	5′- 4″	1′- 11″		
S11870	4	21′- 0″	446	41	17′- 9 3/4″	3′- 1 3/4″	1 1/2″				
S8871	8	7′- 0″	150	STR							
S8873	1	19′- 11″	54	51	4′- 0″	1′- 0 3/4″	3′- 5 1/2″	8′- 2 1/4″	1′- 1 1/2″		
S8874	2	17′- 5″	93	51	4′- 0″	1′- 0 3/4″	3′- 5 1/2″	5′- 8 1/4″	9 1/4″		
S8875	2	17′- 5″	93	51	4′- 0″	3 3/4″	1′- 0 1/2″	8′- 2 1/4″	1′- 1 1/2″		
S8876	2	31′- 11″	171	49	1′- 8″	6″	11′- 7 3/4″	3′- 6″	8′- 2 1/4″		
S8877	1	31′- 2″	84	49	1′- 8″	6″	11′- 2 3/4″	3′- 6 3/4″	7′- 9 1/4″		
S8878	1	28′- 2″	76	49	1′- 8″	6″	9′- 7 3/4″	3′- 9 1/4″	6′- 2 1/4″		
S8879	1	29′- 6″	79	44	3′- 6″	9′- 7 3/4″	6′- 2 1/4″	3′- 9 1/4″	10″		
S8880	2	25′- 5″	136	44	3′- 6″	7′- 5 3/4″	4′- 0 1/4″	4′- 0 3/4″	6 1/2″		
S8881	2	22′- 9″	122	44	3′- 6″	6′- 0 3/4″	2′- 7 1/4″	4′- 3″	4 1/4″		
S8882	2	19′- 4″	104	44	3′- 6″	4′- 3″	9 1/2″	4′- 6″	1 1/4″		
S8884	2	11′- 9″	63	34	3′- 6″	2′- 0″	4′- 1 1/4″	2′- 0″	7 1/4″		

NOTES

1. FOR STANDARD BAR BENDING DETAILS, SEE SHEET NOS. 17/365 THRU 19/365.

DESIGN AGENCY
URS
36 EAST 7TH STREET
SUITE 2300
CINCINNATI, OHIO 45202

DATE 6/2010
REVIEWED DLJ
STRUCTURE FILE NUMBER 4401263
DRAWN JLS
REVISED
DESIGNED BWJ
CHECKED AR

REINFORCING STEEL LIST - CABLE STAYED SUPERSTRUCTURE (14 OF 18)
BRIDGE NO. LAW-93-0000
IRONTON RUSSELL BRIDGE OVER OHIO RIVER

LAW-93-0.00
PID No. 81595

302/365

689
788

E:\Bridges_XM\Ironton_Russell\LAW\81595\structures\LAW093_0000C\sheets\093_0000CRL015.dgn 4/25/2011 10:31:47 AM john_stahl

MARK	NUMBER	LENGTH	WEIGHT	TYPE	DIMENSIONS						
					A	B	C	D	E	R	INC
KY DIAPHRAGM SEGMENT - CONTINUED					NUMBER OF ITEMS REQUIRED = 1						
S8885	1	13′- 7″	37	34	3′- 5 1/2″	2′- 0″	4′- 0 3/4″	2′- 0″	7 1/4″		
S8886	1	20′- 0″	54	51	4′- 0″	1′- 0 3/4″	3′- 5 1/2″	8′- 2 3/4″	1′- 1 1/2″		
S8887	2	17′- 5″	93	51	4′- 0″	1′- 0 3/4″	3′- 5 1/2″	5′- 8 3/4″	9 1/4″		
S8888	2	17′- 5″	93	51	4′- 0″	3 3/4″	1′- 0 1/2″	8′- 2 3/4″	1′- 1 1/2″		
S8889	4	7′- 0″	75	STR							
S11891	1	30′- 0″	160	41	2′- 6″	27′- 5″	1′- 3 3/4″				
S11892	1	31′- 5″	167	41	6′- 10 3/4″	24′- 5″	1′- 1 1/2″				
S11893	2	31′- 6″	335	41	5′- 0″	26′- 5″	1′- 3 3/4″				
S11894	1	24′- 2″	128	36		24′- 1″					
S11895	3	32′- 0″	509	36		31′- 11″					
S11896	2	29′- 5″	313	36		29′- 4 3/4″					
S9897	1	VARIES	213	44	4′- 1 1/4″	VARIES	VARIES	4′- 0 1/2″	1′- 1 1/2″		7″
	SETS	30′- 11″				9′- 8″	6′- 2 1/2″				
	OF	TO				TO	TO				
	2	31′- 6″				9′- 11 1/2″	6′- 6″				
S9898	1	VARIES	245	33	6′- 2 1/2″	VARIES					4″
	SETS	35′- 11″				10′- 2″					
	OF	TO				TO					
	2	35′- 7″				10′-0″					
S11899	6	45′- 0″	1,435	STR							
S11900	1	9′- 0″	48	19	6′- 2 3/4″	2′- 7″	11″				
S11901	43	22′- 5″	5,122	57	6′- 0″	3′- 4 1/4″	9′- 4 1/4″	6′- 5 3/4″			
S11902	43	22′- 5″	5,116	57	6′- 0″	3′- 5 1/4″	9′- 6 3/4″	6′- 2 3/4″			
S10903	40	18′- 2″	3,115	45	6′- 5 1/2″	8′- 0″	3′- 3 1/2″	1′- 6 1/2″			
S11904	1	VARIES	120	19	6′- 2 3/4″	VARIES	VARIES				1′-3 1/2″
	SETS	6′- 3″				0″	0″				
	OF	TO				TO	TO				
	3	8′- 10″				7′- 10″	2′- 9 3/4″				
S11905	7	22′- 5″	834	13	6′- 0″	3′- 4 1/4″	9′- 4 1/4″	6′- 5 3/4″			
S11906	7	22′- 5″	833	13	6′- 0″	3′- 5 1/4″	9′- 6 3/4″	6′- 2 3/4″			
S11907	11	50′- 0″	2,923	17	46′- 10″						
S9908	2	VARIES	1,918	2	VARIES	4′- 0″	VARIES				(+) 3′-7″
	SETS	38′- 0″			17′- 0″		17′- 0″				
	OF	TO			TO		TO				
	6	56′- 0″			26′- 0″		26′- 0″				
S9910	1	VARIES	1,695	STR							2″
	SETS	44′- 6″									
	OF	TO									
	11	46′- 2″									
S6911	2	8′- 3″	25	2	2′- 6″	3′- 3″	2′- 6″				
S6912	1	7′- 5″	12	2	2′- 1″	3′- 3″	2′- 1″				
S10913	4	9′- 1″	157	11	2″	11 1/2″	8′- 1 1/4″				
S10914	4	7′- 10″	134	19	6′- 6 3/4″	7″	1′- 0 1/2″				
S8915	3	31′- 11″	256	49	1′- 2 1/2″	11″	11′- 8 1/4″	3′- 5 1/2″	8′- 2 3/4″		
S8916	1	31′- 2″	84	49	1′- 2 1/2″	11″	11′- 3 1/4″	3′- 6 1/4″	7′- 9 3/4″		
S8917	1	VARIES	154	44	3′- 5 1/2″	VARIES	VARIES	VARIES	VARIES		1′-9″
	SETS	29′- 9″				9′- 10″	6′- 4 1/2″	3′- 8 1/2″	10 1/4″		
	OF	TO				TO	TO	TO	TO		
	2	28′- 0″				8′- 10 1/2″	5′- 5″	3′- 10″	8 3/4″		
S8918	1	VARIES	138	44	3′- 5 1/2″	VARIES	VARIES	VARIES	VARIES		8″
	SETS	26′- 2″				7′- 10 1/2″	4′- 5″	4′- 0 1/4″	7″		
	OF	TO				TO	TO	TO	TO		
	2	25′- 6″				7′- 6 1/2″	4′- 1″	4′- 0 3/4″	6 1/2″		
S8919	2	22′- 10″	122	44	3′- 5 1/2″	6′- 1 1/4″	2′- 7 3/4″	4′- 3″	4 1/4″		
S8920	2	19′- 9″	106	44	3′- 5 1/2″	4′- 5 1/4″	11 3/4″	4′- 5 3/4″	1 1/2″		
S8921	1	18′- 10″	51	44	3′- 5 1/2″	3′- 11 1/2″	6″	4′- 6 1/2″	3/4″		
S8923	3	14′- 10″	119	34	3′- 5 1/2″	2′- 2 1/2″	4′- 1 3/4″	2′- 2 1/2″	8 1/4″		
S3925	240	2′- 4″	211	1	1′- 0″	1′- 4″					
S3926	96	3′- 10″	139	1	1′- 0″	2′- 10″					
S3927	96	3′- 0″	109	1	1′- 0″	2′- 0″					
S4928	40	4′- 0″	106	11	10 3/4″	1′- 9″	2′- 0″				
S4929	4	3′- 0″	8	11	4 1/2″	10 1/2″	2′- 0″				
S10930	180	10′- 2″	7,875	17	7′-8″						
S6935	16	4′- 8″	111	17	3′-3″						
	WEIGHT PER ITEM =		111,851								
	TOTAL =		111,851								

NOTES

1. FOR STANDARD BAR BENDING DETAILS, SEE SHEET NOS. 17/365 THRU 19/365.

DESIGN AGENCY
URS
36 EAST 7TH STREET
SUITE 2300
CINCINNATI, OHIO 45202

DESIGNED	DRAWN	REVIEWED	DATE
BWJ	JLS	DLJ	6/2010
CHECKED	REVISED	STRUCTURE FILE NUMBER	
AR		4401263	

REINFORCING STEEL LIST - CABLE STAYED SUPERSTRUCTURE (15 OF 18)

BRIDGE NO. LAW-93-0000
IRONTON RUSSELL BRIDGE OVER OHIO RIVER

LAW-93-0.00
PID No. 81595

303/365

690
788

E:\Bridges_XM\Ironton_Russell\LAW\81595\structures\LAW093_0000C\sheets\093_0000CRL016.dgn 4/25/2011 10:31:59 AM john_stahl

MARK	NUMBER	LENGTH	WEIGHT	TYPE	DIMENSIONS						
					A	B	C	D	E	R	INC
OH DIAPHRAGM SEGMENT					NUMBER OF ITEMS REQUIRED = 1						
S5006	26	6′- 2″	166	10	1′- 3″	1″	3′- 10″	1′- 0″			
S5017	33	23′- 7″	812	STR							
S5018	49	12′- 3″	627	16	11′- 8″						
S5019	44	7′- 6″	345	1	1′- 0″	6′- 6″					
S5020	32	20′- 6″	685	STR							
S5027	2	24′- 7″	52	19	16′- 6″	8′- 0″	7″				
S5028	2	12′- 4″	26	18	3′- 8″	8′- 0″	7″				
S5029	1	VARIES	1,253	19	VARIES	VARIES	7″				(-) 1/4″
	SETS	38′- 6″			18′- 6″	19′- 11″					
	OF	TO			TO	TO					
	31	39′- 1″			18′- 9″	20′- 4″					
S5030	13	32′- 0″	434	19	16′- 0″	16′- 0″	6″				
S5031	1	14′- 6″	16	STR							
S5032	1	7′- 11″	9	STR							
S5036	2	40′- 9″	85	19	19′- 6″	21′- 2″	7 1/2″				
S6338	6	5′- 7″	50	19	4′- 6″	3 3/4″	1′- 0″				
S6339	6	5′- 7″	50	11	1″	1′- 0″	4′- 6″				
S9700	3	42′- 10″	437	STR							
S10701	4	45′- 9″	788	2	3′- 0″	39′- 9″	3′- 0″				
S9702	9	41′- 11″	1,283	17	39′- 5″						
S8703	8	6′- 0″	129	2	1′- 4″	3′- 4″	1′- 4″				
S8704	8	6′- 0″	129	2	1′- 4″	3′- 4″	1′- 4″				
S8705	9	6′- 8″	161	2	1′- 4″	4′- 0″	1′- 4″				
S8706	9	6′- 8″	161	2	1′- 4″	4′- 0″	1′- 4″				
S9707	14	8′- 0″	381	2	3′- 0″	2′- 0″	3′- 0″				
S9708	2	12′- 6″	85	2	3′- 0″	6′- 6″	3′- 0″				
S11709	2	42′- 9″	455	STR							
S8710	2	13′- 8″	73	41	7′- 9″	5′- 10″	5 1/4″				
S8711	1	11′- 0″	30	19	5′- 8″	5′- 3″	4″				
S8712	4	13′- 8″	146	36		13′- 8″					
S8713	1	11′- 0″	30	STR							
S8714	1	8′- 4″	23	19	2′- 5″	5′- 10″	5 1/4″				
S8715	1	8′- 3″	23	STR							
S8716	1	4′- 6″	13	STR							
S8717	1	5′- 0″	14	STR							
S11718	2	30′- 6″	325	36		30′- 6″					
S11719	2	30′- 8″	326	41	5′- 4″	25′- 3″	1′- 10 1/2″				
S11720	8	27′- 3″	1,158	42	14′- 0″	7′- 6″	8″	5′- 4″	2′- 0″		
S11721	4	19′- 5″	412	41	5′- 4″	14′- 0″	1′- 0″				
S11722	9	27′- 11″	1,333	41	22′- 2″	5′- 4″	2′- 0″				
S11723	5	19′- 6″	519	36		19′- 6″					
S8725	2	16′- 3″	87	2	2′- 6″	3′- 9″	10′- 0″				
S8726	2	15′- 11″	85	2	2′- 6″	4′- 0 3/4″	9′- 4″				
S8727	2	15′- 4″	82	2	2′- 6″	4′- 4 1/2″	8′- 5″				
S8728	2	15′- 1″	81	2	2′- 6″	4′- 3 1/4″	8′- 3″				
S8729	2	6′- 3″	34	2	2′- 6″	1′- 2 1/4″	2′- 6″				
S8730	6	11′- 3″	181	2	2′- 6″	10 3/4″	7′- 10 1/4″				
S8731	2	13′- 9″	74	2	2′- 6″	3′- 11″	7′- 4″				
S8732	2	VARIES	140	2	2′- 6″	VARIES	2′- 6″				1 1/2″
	SETS	8′- 7″				3′- 6 1/4″					
	OF	TO				TO					
	3	8′- 10″				3′- 9 1/2″					
S8733	2	VARIES	90	2	2′- 6″	VARIES	2′- 6″				3″
	SETS	8′- 3″				3′- 2 3/4″					
	OF	TO				TO					
	2	8′- 6″				3′- 5 1/2″					
S8734	2	9′- 9″	52	45	2′- 6″	2′- 6″	4′- 1 1/4″	2′- 3 1/2″			
S8735	4	16′- 8″	178	45	2′- 6″	2′- 6″	10′- 3″	5′- 5 1/4″			
S8736	1	5′- 7″	15	14	2′- 6″	1′- 9 1/4″	6 1/4″	3 3/4″	8″		
S8737	2	7′- 10″	42	45	2′- 6″	2′- 6″	2′- 5″	1′- 4 1/4″			
S8738	2	18′- 2″	97	14	2′- 6″	1′- 9 1/4″	9′- 10 1/2″	5′- 6 1/4″	2′- 6″		
S8739	1	5′- 4″	15	14	2′- 6″	1′- 6″	6 1/4″	3 3/4″	8″		
S5740	4	8′- 3″	35	STR							

MARK	NUMBER	LENGTH	WEIGHT	TYPE	DIMENSIONS						
					A	B	C	D	E	R	INC
OH DIAPHRAGM SEGMENT - CONTINUED					NUMBER OF ITEMS REQUIRED = 1						
S5741	4	8′- 2″	35	STR							
S8742	1	11′- 2″	30	41	5′- 3″	5′- 10″	5 1/4″				
S8743	1	11′- 2″	30	19	5′- 3″	5′- 10″	5 1/4″				
S10748	8	42′- 10″	1,475	STR							
S11752	2	29′- 0″	308	41	5′- 4″	23′- 7″	1′- 9″				
S11753	1	24′- 6″	130	41	7′- 9 1/2″	16′- 7″	1′- 3″				
S11754	2	31′- 3″	332	36		31′- 2″					
S11755	1	24′- 6″	131	36		24′- 6″					
S9756	3	39′- 6″	403	2	3′- 0″	33′- 6″	3′- 0″				
S11757	9	46′- 5″	2,220	17	43′- 3″						
S11758	7	41′- 6″	1,544	17	38′- 4″						
S11759	7	41′- 11″	1,559	17	38′- 9″						
S11760	16	41′- 11″	3,564	17	38′- 9″						
S4765	40	7′- 8″	205	2	2′- 0″	3′- 8″	2′- 0″				
S4766	35	8′- 2″	190	12	9 1/4″	1′- 5 1/2″	8 1/2″	3′- 9″	2′- 0″		
S11767	1	22′- 1″	118	41	16′- 7″	5′- 4″	1′- 3″				
S11768	1	22′- 0″	117	36		22′- 0″					
S4769	22	2′- 3″	34	STR							
S3770	32	3′- 5″	41	19	2′- 2″	10″	10″				
S3771	33	3′- 0″	38	STR							
S9772	1	VARIES	492	33	4′- 3″	VARIES					(+) 6 1/2″
	SETS	37′- 0″				12′- 8″					
	OF	TO				TO					
	4	35′- 4″				11′- 10″					
S9773	1	VARIES	243	33	4′- 3″	VARIES					8″
	SETS	36′- 0″				12′- 2″					
	OF	TO				TO					
	2	35′- 4″				11′- 10″					
S11776	2	33′- 2″	352	41	7′- 9 1/2″	25′- 3″	1′- 10″				
S11777	1	33′- 0″	176	41	7′- 9 1/2″	25′- 1″	1′- 10″				
S8778	1	14′- 3″	39	STR							
S8779	3	5′- 1″	41	STR							
S11780	1	25′- 6″	136	41	7′- 9 1/2″	17′- 7″	1′- 3″				
S8781	4	6′- 4″	68	STR							
S8782	1	16′- 7″	45	19	8′- 0″	8′- 6″	7 1/2″				
S8783	2	7′- 10″	42	36		7′- 10″					
S11784	1	25′- 6″	136	36		25′- 6″					
S11785	2	33′- 0″	351	36		33′- 0″					
S11786	1	23′- 4″	124	STR							
S8787	3	5′- 3″	43	STR							
S8788	4	6′- 5″	69	STR							
S11789	1	22′- 3″	119	36		22′- 3″					
S8790	3	7′- 8″	61	36		7′- 7″					
S6791	2	VARIES	216	40	4′- 5 1/2″	VARIES	VARIES	VARIES	1′- 1″		5 1/2″
	SETS	23′- 6″				6′- 4″	2′- 10 1/4″	3′- 11 1/2″			
	OF	TO				TO	TO	TO			
	3	24′- 5″				6′- 10 1/4″	3′- 4 1/2″	3′- 11″			
S6792	1	VARIES	108	43	1′- 4 3/4″	1′- 7 1/4″	VARIES	VARIES	1′- 1″		5″
	SETS	23′- 7″					3′- 8″	3′- 11″			
	OF	TO					TO	TO			
	3	24′- 5″					4′- 1 1/2″	3′- 10 1/2″			
S6793	1	VARIES	81	40	4′- 5 1/2″	VARIES	VARIES	3′- 10 1/4″	1′- 1″		6″
	SETS	26′- 6″				7′- 11″	4′- 5 1/2″				
	OF	TO				TO	TO				
	2	27′- 0″				8′- 2″	4′- 8 1/2″				
S9794	1	28′- 7″	97	44	4′- 1″	8′- 5 3/4″	5′- 0 1/4″	4′- 0 1/4″	1′- 1 1/2″		
S9795	1	32′- 7″	111	33	6′- 2″	8′- 6 1/2″					
S6796	1	VARIES	107	43	2′- 10″	6″	VARIES	VARIES	1′- 1″		5 1/2″
	SETS	23′- 2″					3′- 8″	3′- 11″			
	OF	TO					TO	TO			
	3	24′- 1″					4′- 1 1/2″	3′- 10 1/2″			
S10798	56	17′- 6″	4,217	2	7′- 10″	1′- 10″	7′- 10″				
S9799	51	20′- 3″	3,497	2	9′- 2″	1′- 10″	9′- 2″				
S9800	16	39′- 5″	2,142	33	4′- 3″	13′- 10 1/4″					

NOTES

1. FOR STANDARD BAR BENDING DETAILS, SEE SHEET NOS. 17/365 THRU 19/365.

DESIGN AGENCY
URS
36 EAST 7TH STREET
SUITE 2300
CINCINNATI, OHIO 45202

DESIGNED BWJ | DRAWN JLS | CHECKED AR | REVIEWED DLJ | DATE 6/2010 | REVISED | STRUCTURE FILE NUMBER 4401263

REINFORCING STEEL LIST - CABLE STAYED SUPERSTRUCTURE (16 OF 18)

BRIDGE NO. LAW-93-0000
IRONTON RUSSELL BRIDGE OVER OHIO RIVER

LAW-93-0.00
PID No. 81595

E:\Bridges_XM\Ironton_Russell\LAW\81595\structures\LAW093_0000C\sheets\093_0000CRL017.dgn 4/25/2011 10:32:08 AM john_stahl

MARK	NUMBER	LENGTH	WEIGHT	TYPE	DIMENSIONS						
					A	B	C	D	E	R	INC
OH DIAPHRAGM SEGMENT - CONTINUED					NUMBER OF ITEMS REQUIRED = 1						
S9801	14	43′- 0″	2,047	33	4′- 3″	15′- 8″					
S9802	1	VARIES	1,493	33	4′- 3″	VARIES					(-) 7 ½″
	SETS	43′- 0″				15′- 8″					
	OF	TO				TO					
	11	36′- 10″				12′- 7″					
S9803	1	VARIES	1,364	33	4′- 3″	VARIES					(+) 7 ½″
	SETS	43′- 0″				15′- 8″					
	OF	TO				TO					
	10	37′- 3″				12′- 9 ¼″					
S10804	56	18′- 0″	4,326	45	7′- 8″	8′- 4″	1′- 10″	8″			
S9805	51	18′- 10″	3,258	45	8′- 1″	8′- 9″	1′- 10″	8″			
S11806	9	42′- 2″	2,017	17	39′- 0″						
S11807	16	43′- 1″	3,663	STR							
S5808	51	4′- 0″	213	STR							
S9809	14	10′- 3″	488	2	4′- 0″	2′- 3″	4′- 0″				
S4810	29	11′- 11″	231	2	5′- 6″	11″	5′- 6″				
S4811	12	12′- 1″	97	2	5′- 6″	1′- 0 ½″	5′- 6″				
S4812	29	10′- 9″	209	2	4′- 11″	11″	4′- 11″				
S4813	12	10′- 11″	88	2	4′- 11″	1′- 0 ½″	4′- 11″				
S4814	29	9′- 6″	183	2	4′- 3″	11″	4′- 3″				
S4815	12	9′- 7″	77	2	4′- 3″	1′- 0 ½″	4′- 3″				
S11816	4	54′- 6″	1,158	52	6′- 4″	3′- 9″	6′- 4 ¼″	3′- 11″	6′- 7 ¾″		
S11817	4	58′- 1″	1,234	53	5′- 7″	4′- 11 ¾″	8′- 5 ¼″	5′- 1″	8′- 9 ¾″		
S11818	4	56′- 5″	1,199	54	26′- 9 ¾″	4′- 9 ¾″	6′- 6 ¼″	4′- 9 ¾″	6′- 8″		
S11819	4	54′- 11″	1,166	54	26′- 8 ¼″	4′- 5 ¾″	5′- 11 ½″	4′- 5 ¾″	5′- 11 ½″		
S9820	1	28′- 4″	97	46	4′- 1″	8′- 10″	4′- 0 ¼″	2′- 10 ¾″	1′- 0″		
S9821	1	32′- 4″	110	47	6′- 2″	8′- 10 ½″	6′- 4″	1′- 0″	3′- 9″		
S9822	1	30′- 0″	102	44	4′- 1″	9′- 2 ¼″	5′- 8 ¾″	4′- 0 ¼″	1′- 1 ½″		
S9823	1	33′- 11″	116	33	6′- 2″	9′- 2 ½″					
S9824	1	29′- 5″	100	48	4′- 1″	9′- 5 ½″	4′- 0 ½″	11″	6′- 0″		
S9825	1	33′- 5″	114	47	6′- 2″	9′- 5 ¾″	6′- 10 ¾″	11″	3′- 9″		
S9826	1	VARIES	216	49	1′- 5″	1′- 6 ½″	VARIES	4′- 0 ½″	VARIES		8″
	SETS	31′- 4″					10′- 4 ¾″		6′- 11 ¼″		
	OF	TO					TO		TO		
	2	32′- 0″					10′- 9″		7′- 3 ½″		
S9827	1	VARIES	313	50	1′- 7″	3′- 5 ½″	VARIES	6′- 2″			9″
	SETS	45′- 8″					10′- 5″				
	OF	TO					TO				
	2	46′- 5″					10′- 9 ½″				
S9828	1	VARIES	352	44	4′- 1″	VARIES	VARIES	4′- 0 ¼″	1′- 1 ½″		8″
	SETS	33′- 10″				11′- 1 ½″	7′- 8″				
	OF	TO				TO	TO				
	3	35′- 2″				11′- 9 ¾″	8′- 4 ¼″				
S9829	1	VARIES	393	33	6′- 2″	VARIES					8″
	SETS	37′- 10″				11′- 1 ¾″					
	OF	TO				TO					
	3	39′- 2″				11′- 10″					
S9830	5	43′- 0″	731	STR							
S9831	2	40′- 10″	278	17	38′- 4″						
S6832	1	VARIES	80	40	4′- 5 ½″	VARIES	VARIES	VARIES	1′- 0 ¼″		9″
	SETS	26′- 3″				7′- 9″	4′- 4″	3′- 10 ½″			
	OF	TO				TO	TO	TO			
	2	27′- 0″				8′- 2″	4′- 8 ½″	3′- 10″			
S9833	1	28′- 7″	98	44	4′- 1″	8′- 5 ¾″	5′- 0 ¼″	4′- 0 ¼″	1′- 1 ½″		
S9834	1	32′- 7″	111	33	6′- 2″	8′- 6 ½″					
S9835	1	28′- 4″	97	46	4′- 1″	8′- 10″	4′- 0 ¼″	2′- 10 ¾″	1′- 0″		
S9836	1	32′- 4″	110	47	6′- 2″	8′- 10 ½″	6′- 4″	1′- 0″	3′- 9″		
S9837	1	30′- 0″	102	44	4′- 1″	9′- 2″	5′- 8 ½″	4′- 0 ¼″	1′- 1 ½″		
S9838	1	33′- 11″	116	33	6′- 2″	9′- 2 ½″					
S9839	1	29′- 5″	100	48	4′- 1″	9′- 5 ½″	4′- 0 ½″	11″	6′- 0″		
S9840	1	33′- 5″	114	47	6′- 2″	9′- 5 ¾″	6′- 10 ¾″	11″	3′- 9″		

MARK	NUMBER	LENGTH	WEIGHT	TYPE	DIMENSIONS						
					A	B	C	D	E	R	INC
OH DIAPHRAGM SEGMENT - CONTINUED					NUMBER OF ITEMS REQUIRED = 1						
S9841	1	VARIES	213	44	4′- 1″	VARIES	VARIES	4′- 0 ¼″	1′- 1 ½″		7″
	SETS	31′- 1″				9′- 9″	6′- 3 ½″				
	OF	TO				TO	TO				
	2	31′- 8″				10′- 0 ½″	6′- 7″				
S9842	1	VARIES	241	33	6′- 2″	VARIES					7″
	SETS	35′- 1″				9′- 9 ¼″					
	OF	TO				TO					
	2	35′- 8″				10′- 0 ¾″					
S9843	1	VARIES	215	49	2′- 3 ¼″	8 ½″	VARIES	4′- 0 ½″	VARIES		9″
	SETS	31′- 3″					10′- 4 ¾″		6′- 11 ¼″		
	OF	TO					TO		TO		
	2	32′- 0″					10′- 9″		7′- 3 ½″		
S9844	1	VARIES	242	50	8 ½″	4′- 4″	VARIES	6′- 2″			9″
	SETS	35′- 3″					10′- 5″				
	OF	TO					TO				
	2	36′- 0″					10′- 9 ½″				
S9845	1	VARIES	352	44	4′- 1″	VARIES	VARIES	4′- 0 ¼″	1′- 1 ½″		8″
	SETS	33′- 10″				11′- 1 ½″	7′- 8″				
	OF	TO				TO	TO				
	3	35′- 2″				11′- 9 ¾″	8′- 4 ¼″				
S9846	1	VARIES	393	33	6′- 2″	VARIES					8″
	SETS	37′- 10″				11′- 1 ¾″					
	OF	TO				TO					
	3	39′- 2″				11′- 10″					
S8847	1	10′- 9 ¼″	29	STR							
S8848	1	13′- 3 ¼″	36	STR							
S8849	1	29′- 10 ½″	80	STR							
S8850	1	31′- 11″	86	STR							
S8851	1	28′- 8 ½″	77	STR							
S8852	1	25′- 2″	68	STR							
S8853	1	22′- 2″	60	STR							
S8854	1	16′- 2″	44	STR							
S8855	1	14′- 6″	39	STR							
S8856	1	10′- 9 ½″	29	STR							
S8857	1	13′- 4″	36	41	7′- 9 ½″	5′- 6″	4 ½″				
S8858	1	10′- 11″	29	41	5′- 4″	5′- 6″	4 ½″				
S8859	1	32′- 6″	87	41	7′- 9 ½″	24′- 7 ½″	1′- 10″				
S8860	1	29′- 8″	80	19	5′- 4″	24′- 3″	1′- 9″				
S8861	1	28′- 3″	76	19	23′- 6″	4′- 8 ½″	4″				
S8862	1	25′- 0″	67	19	22′- 11″	2′- 0″	1 ¾″				
S8863	1	21′- 2″	57	STR							
S8864	1	16′- 1″	43	STR							
S8865	1	14′- 3″	39	STR							
S8866	1	10′- 9″	29	STR							
S11867	8	25′- 3″	1,071	41	19′- 6″	5′- 4″	2′- 0″				
S11868	5	22′- 3″	589	36		22′- 2″					
S11869	9	25′- 1″	1,198	42	14′- 0″	5′- 4″	6″	5′- 4″	2′- 0″		
S11870	6	21′- 10″	696	41	7′- 9 ½″	14′- 0″	1′- 0″				
S8871	8	7′- 3″	155	STR							
S8873	1	20′- 1″	54	51	4′- 0″	1′- 0 ¾″	3′- 5 ½″	8′- 4 ½″	1′- 1 ½″		
S8874	2	17′- 8″	95	51	4′- 0″	1′- 0 ¾″	3′- 5 ½″	5′- 11 ½″	9 ½″		
S8875	2	17′- 7″	94	51	4′- 0″	4″	1′- 1″	8′- 4 ½″	1′- 1 ½″		
S8876	3	32′- 3″	258	49	11 ¾″	1′- 1 ¾″	11′- 10″	3′- 5 ½″	8′- 4 ½″		
S8877	1	28′- 9″	77	49	11 ¾″	1′- 5″	9′- 10″	3′- 8 ¾″	6′- 4 ½″		
S8878	1	VARIES	154	44	3′- 5 ½″	VARIES	VARIES	VARIES	VARIES		1′- 10″
	SETS	29′- 9″				9′- 10″	6′- 4 ½″	3′- 8 ¾″	10 ¼″		
	OF	TO				TO	TO	TO	TO		
	2	27′- 11″				8′- 10″	5′- 4 ½″	3′- 10 ¼″	8 ¾″		
S8879	1	VARIES	137	44	3′- 5 ½″	VARIES	VARIES	VARIES	VARIES		9″
	SETS	26′- 0″				7′- 10″	4′- 4 ½″	4′- 0″	7″		
	OF	TO				TO	TO	TO	TO		
	2	25′- 3″				7′- 5″	3′- 11 ½″	4′- 0 ½″	6 ½″		
S8880	2	23′- 4″	125	44	3′- 5 ½″	6′- 1″	2′- 7 ½″	4′- 2 ¾″	4 ¼″		

NOTES

1. FOR STANDARD BAR BENDING DETAILS, SEE SHEET NOS. 17/365 THRU 19/365.

DESIGN AGENCY
URS
36 EAST 7TH STREET
SUITE 2300
CINCINNATI, OHIO 45202

DATE 6/2010
REVIEWED DLJ
STRUCTURE FILE NUMBER 4401263
DRAWN JLS
REVISED
DESIGNED BWJ
CHECKED AR

REINFORCING STEEL LIST - CABLE STAYED SUPERSTRUCTURE (17 OF 18)
BRIDGE NO. LAW-93-0000
IRONTON RUSSELL BRIDGE OVER OHIO RIVER

LAW-93-0.00
PID No. 81595

305/365

692
788

E:\Bridges_XM\Ironton_Russell\LAW\81595\structures\LAW093_0000C\sheets\093_0000CRL018.dgn 4/25/2011 10:32:20 AM john_stahl

MARK	NUMBER	LENGTH	WEIGHT	TYPE	DIMENSIONS						
					A	B	C	D	E	R	INC
OH DIAPHRAGM SEGMENT - CONTINUED					NUMBER OF ITEMS REQUIRED = 1						
S8881	2	20′- 2″	108	44	3′- 5 1/2″	4′- 5″	11 1/2″	4′- 5 1/2″	1 1/2″		
S8882	1	19′- 4″	52	44	3′- 5 1/2″	3′- 11 1/2″	6″	4′- 6 1/4″	3/4″		
S8883	2	12′- 2″	65	34	3′- 5 1/2″	2′- 2 1/2″	4′- 1 3/4″	2′- 2 1/2″	8 1/4″		
S8885	1	20′- 1″	54	51	4′- 0″	1′- 0 3/4″	3′- 5 1/2″	8′- 4 1/2″	1′- 1 1/2″		
S8886	2	17′- 8″	95	51	4′- 0″	1′- 0 3/4″	3′- 5 1/2″	5′- 11 1/2″	9 1/2″		
S8887	2	17′- 7″	94	51	4′- 0″	4″	1′- 1″	8′- 4 1/2″	1′- 1 1/2″		
S11891	1	28′- 10″	154	41	5′- 4″	23′- 5″	1′- 9″				
S11892	2	31′- 6″	335	41	7′- 9 1/2″	23′- 7″	1′- 9″				
S11893	1	23′- 0″	123	41	5′- 4″	17′- 7″	1′- 3 1/2″				
S11894	1	23′- 0″	123	36		23′- 0″					
S11895	2	28′- 9″	305	36		28′- 8″					
S11896	1	31′- 3″	166	36		31′- 2″					
S9897	1	VARIES	210	44	4′- 1″	VARIES	VARIES	4′- 0 1/4″	1′- 1 1/2″		7″
	SETS	30′- 7″				9′- 9″	6′- 3 1/2″				
	OF	TO				TO	TO				
	2	31′- 2″				10′- 0 1/2″	6′- 7″				
S9898	1	VARIES	241	33	6′- 2″	VARIES					7″
	SETS	35′- 1″				9′- 9 1/4″					
	OF	TO				TO					
	2	35′- 8″				10′- 0 3/4″					
S11900	1	13′- 1″	70	19	9′- 4″	3′- 8″	3 1/2″				
S11901	41	22′- 5″	4,884	57	6′- 0″	3′- 4 1/4″	9′- 4 1/4″	6′- 5 3/4″			
S11902	41	22′- 5″	4,878	57	6′- 0″	3′- 5 1/4″	9′- 6 3/4″	6′- 2 3/4″			
S10903	39	19′- 6″	3,260	45	6′- 5 1/2″	8′- 4 3/4″	4′- 1 3/4″	1′- 11″			
S11905	6	22′- 5″	715	13	6′- 0″	3′- 4 1/4″	9′- 4 1/4″	6′- 5 3/4″			
S11906	6	22′- 5″	714	13	6′- 0″	3′- 5 1/4″	9′- 6 3/4″	6′- 2 3/4″			
S11907	11	47′- 1″	5,504	17	43′- 11″						
S9908	2	VARIES	1,864	2	VARIES	4′- 0″	VARIES				3′- 1″
	SETS	38′- 0″			17′- 0″		17′- 0″				
	OF	TO			TO		TO				
	6	53′- 5″			24′- 8″		24′- 8″				
S9910	1	VARIES	1,628	STR							(-) 3/4″
	SETS	43′- 3″									
	OF	TO									
	11	43′- 10″									
S10913	3	10′- 3″	132	11	6 1/2″	1′- 8 1/4″	8′- 4 3/4″				
S10914	3	7′- 8″	99	19	6′- 5 1/2″	7″	1′- 0 1/2″				
S8915	3	32′- 6″	260	49	1′- 3 3/4″	10 3/4″	11′- 8″	3′- 5 1/2″	8′- 2 1/2″		
S8916	1	29′- 1″	78	49	1′- 3 3/4″	10 3/4″	9′- 10″	3′- 8 3/4″	6′- 4 1/2″		
S8917	1	VARIES	154	44	3′- 5 1/2″	VARIES	VARIES	VARIES	VARIES		1′- 10″
	SETS	29′- 9″				9′- 10″	6′- 4 1/2″	3′- 8 3/4″	10 1/4″		
	OF	TO				TO	TO	TO	TO		
	2	27′- 11″				8′- 10″	5′- 4 1/2″	3′- 10 1/4″	8 3/4″		
S8918	1	VARIES	137	44	3′- 5 1/2″	VARIES	VARIES	VARIES	VARIES		9″
	SETS	26′- 0″				7′- 10″	4′- 4 1/2″	4′- 0″	7″		
	OF	TO				TO	TO	TO	TO		
	2	25′- 3″				7′- 5″	3′- 11 1/2″	4′- 0 1/2″	6 1/2″		
S8919	2	23′- 4″	125	44	3′- 5 1/2″	6′- 1″	2′- 7 1/2″	4′- 2 3/4″	4 1/4″		
S8920	2	20′- 2″	108	44	3′- 5 1/2″	4′- 5″	11 1/2″	4′- 5 1/2″	1 1/2″		
S8921	1	19′- 4″	52	44	3′- 5 1/2″	3′- 11 1/2″	6″	4′- 6 1/4″	3/4″		
S8922	2	12′- 2″	65	34	3′- 5 1/2″	2′- 2 1/2″	4′- 1 3/4″	2′- 2 1/2″	8 1/4″		
S3925	240	2′- 4″	211	1	1′- 0″	1′- 4″					
S3926	48	3′- 10″	70	1	1′- 0″	2′- 10″					
S3927	48	3′- 0″	55	1	1′- 0″	2′- 0″					
S4928	42	4′- 0″	112	11	10 3/4″	1′- 9″	2′- 0″				
S10930	150	10′- 2″	6,562	17	7′- 8″						
S6935	16	5′- 5″	131	17	4′- 1″						
	WEIGHT PER ITEM =		109,753								
		TOTAL =	109,753								

NOTES

1. FOR STANDARD BAR BENDING DETAILS, SEE SHEET NOS. 17/365 *THRU* 19/365.

DESIGN AGENCY
URS
36 EAST 7TH STREET
SUITE 2300
CINCINNATI, OHIO 45202

DESIGNED	DRAWN	REVIEWED	DATE
BWJ	JLS	DLJ	6/2010
CHECKED	REVISED	STRUCTURE FILE NUMBER	
AR		4401263	

REINFORCING STEEL LIST - CABLE STAYED SUPERSTRUCTURE (18 OF 18)
BRIDGE NO. LAW-93-0000
IRONTON RUSSELL BRIDGE OVER OHIO RIVER

LAW-93-0.00
PID No. 81595

306/365

693
788

E:\Bridges_XM\Ironton_Russell\LAW\81595\structures\LAW093_0000C\sheets\093_0000CRL019.dgn 4/25/2011 10:32:32 AM john_stahl

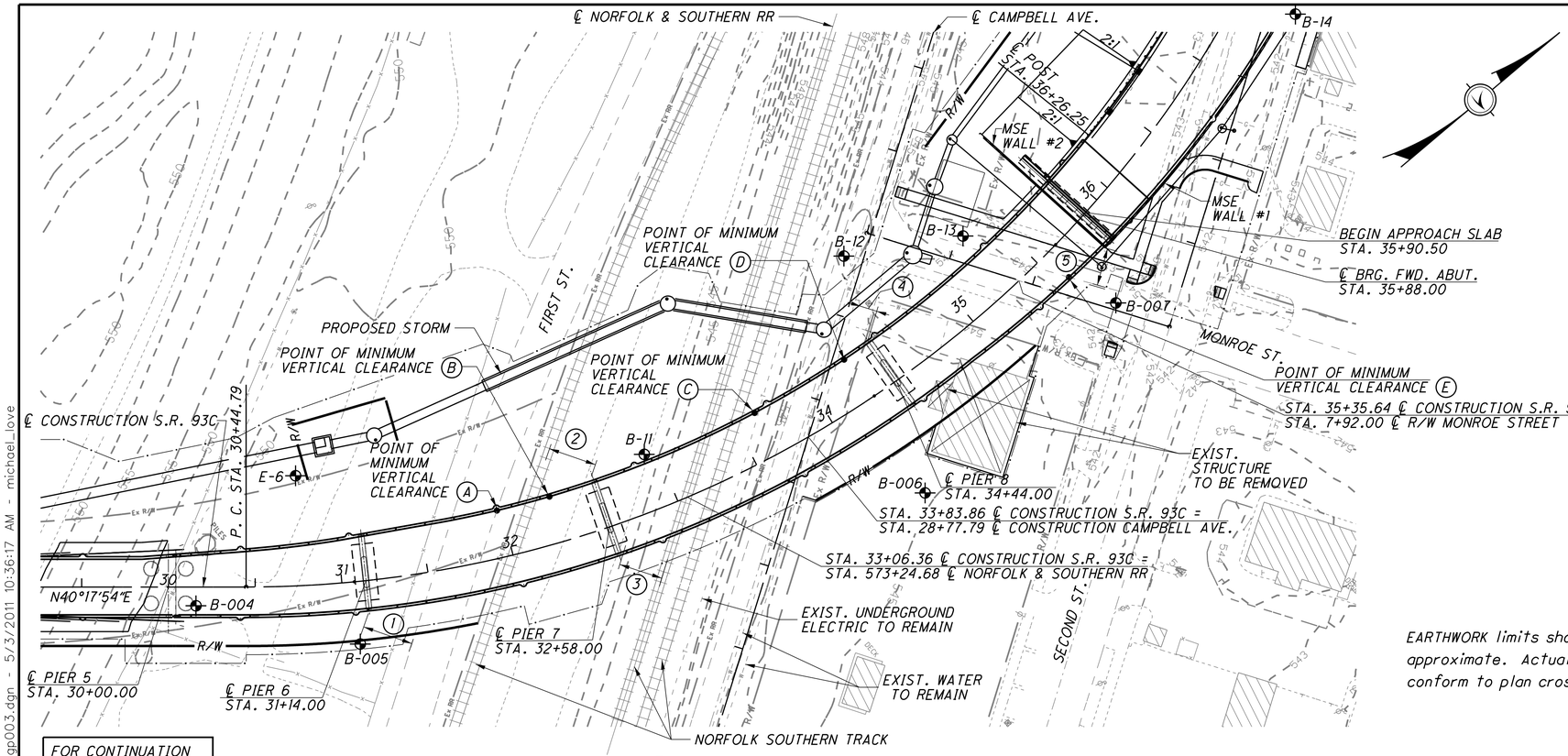

PLAN

FOR CONTINUATION SEE MAIN SPAN SITE PLAN, SHEET 68/365

EARTHWORK limits shown are approximate. Actual slopes shall conform to plan cross sections.

PROPOSED OHIO APPROACH STRUCTURE

TYPE: CONTINUOUS CURVED STEEL PLATE GIRDERS WITH COMPOSITE REINFORCED CONCRETE DECK ON REINFORCED CONCRETE PIERS AND ABUTMENTS.

SPANS: 109'-8½", 144'-0", 186'-0", 144'-0" C/C BEARINGS MEASURED ALONG ℄ CONSTR. SR 93C

ROADWAY: VARIES 32'-0" TO 46'-10" TOE TO TOE OF PARAPET

LOADING: HL-93

WEARING SURFACE: MONOLITHIC CONCRETE

SKEW: NONE (ALL SUBSTRUCTURE UNITS ARE RADIAL)

APPROACH SLABS: AS-1-81 (30' LONG)

ALIGNMENT: CURVE LEFT

CROWN: 0.016 FT/FT MAX

NOTES

1. FOR HYDRAULIC INFORMATION, SEE SHEET 68/365.
2. FOR ADDITIONAL NOTES, BENCHMARKS, HORIZONTAL CURVE DATA AND VERTICAL PROFILE, SEE SHEET 4/365.
3. FOR PAVEMENT TRANSITION DETAIL, SEE SHEET 343/365.
4. FOR MSE WALL DETAILS, SEE SHEETS 371/788 TO 387/788.
5. FOR GENERAL NOTES, SEE SHEETS 16/788 TO 25/788.

LEGEND

BORING LOCATION

T/ROCK = PROBABLE TOP OF FIRM ROCK

MINIMUM VERTICAL CLEARANCES

	PROPOSED	REQUIRED
(A) IST ST	34.1'	14.5'
(B) N.S. SIDING	31.2'	23.0'
(C) N.S. TRACKS	23.8'	23.0'
(D) CAMPBELL AVE.	25.4'	14.5'
(E) MONROE ST.	19.2'	14.5'

MINIMUM HORIZONTAL CLEARANCES

	PROPOSED	REQUIRED
(1) IST ST	29.2'	10.0'
(2) N.S. SIDING	28.5'	25.0'
(3) N.S. TRACKS	25.5'	25.0'
(4) CAMPBELL AVE.	10.0'	10.0'
(5) MONROE ST.	21.9'	10.0'

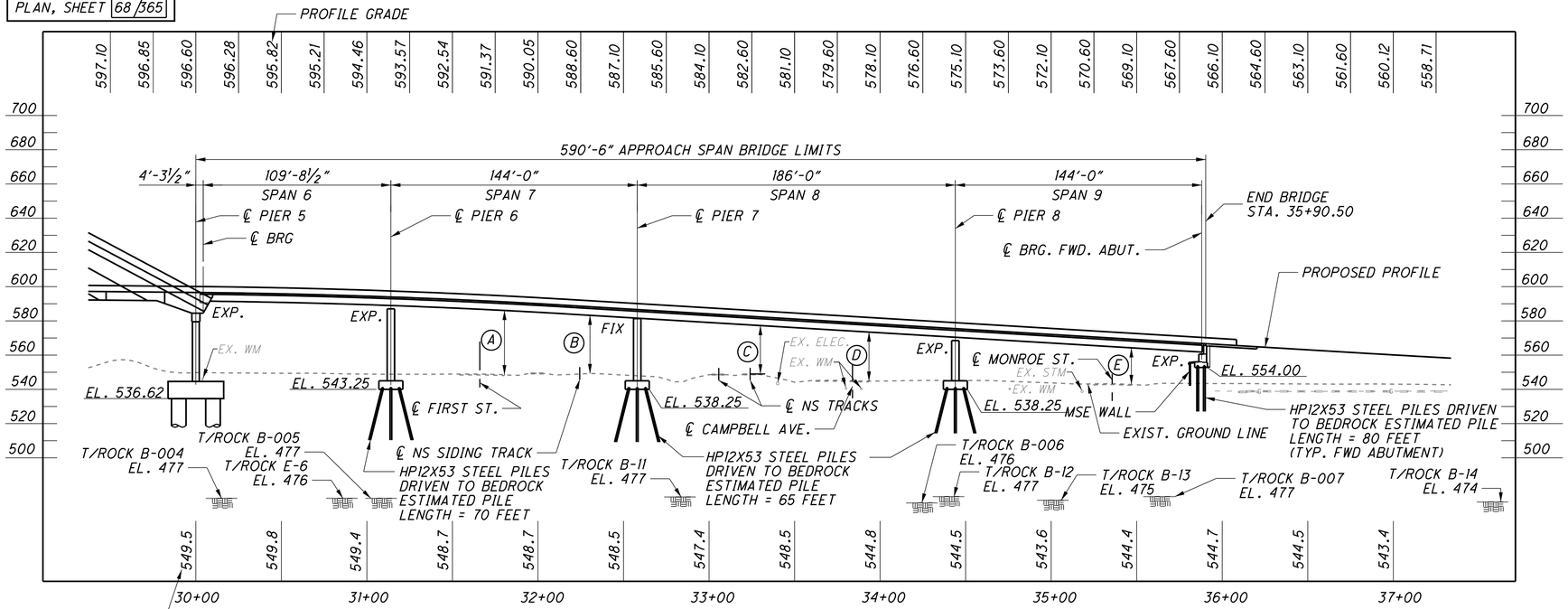

PROFILE ALONG ℄ CONSTRUCTION S.R. 93C

DESIGN AGENCY
URS
36 EAST 7TH STREET
SUITE 2300
CINCINNATI, OHIO 45202

DESIGNED	DRAWN	REVIEWED	DATE
BER	CJW	BKL	8-28-09
CHECKED	REVISED		STRUCTURE FILE NUMBER
MJZ			4401263

GREENUP COUNTY, KY
LAWRENCE COUNTY, OH
STA. 9+73.88
STA. 35+90.50

OHIO APPROACH SITE PLAN
BRIDGE NO. LAW-93C-0000
IRONTON RUSSELL BRIDGE OVER OHIO RIVER

LAW-93-0.00
PID No. 81595

307/365

694/788

J:\Project\0\ODOT\15005112 Ironton Russell\LAW\81595\structures\LAW093_1111C\sheets\093_0000_gp003.dgn - 5/3/2011 10:36:17 AM - michael_love

LIGHTING PILASTER LOCATIONS	
1 2	30+41.50 LT.&RT.
3 4	31+06.50 LT.&RT.
5	31+97.00 LT.
6	32+02.00 RT.
7 8	32+84.00 LT.&RT.
9 10	33+72.00 LT.&RT.
11	34+49.00 LT.
12	34+51.00 RT.
13 14	35+34.00 LT.&RT.
15 16	36+03.00 LT.&RT.

℄ CONSTRUCTION S.R. 93C CURVE DATA
P.I. STA. 35+24.08
Δ = 72°48'31" (LT.)
Dc = 8°48'53"
R = 650.00'
T = 479.30'
L = 825.99'
E = 157.60'

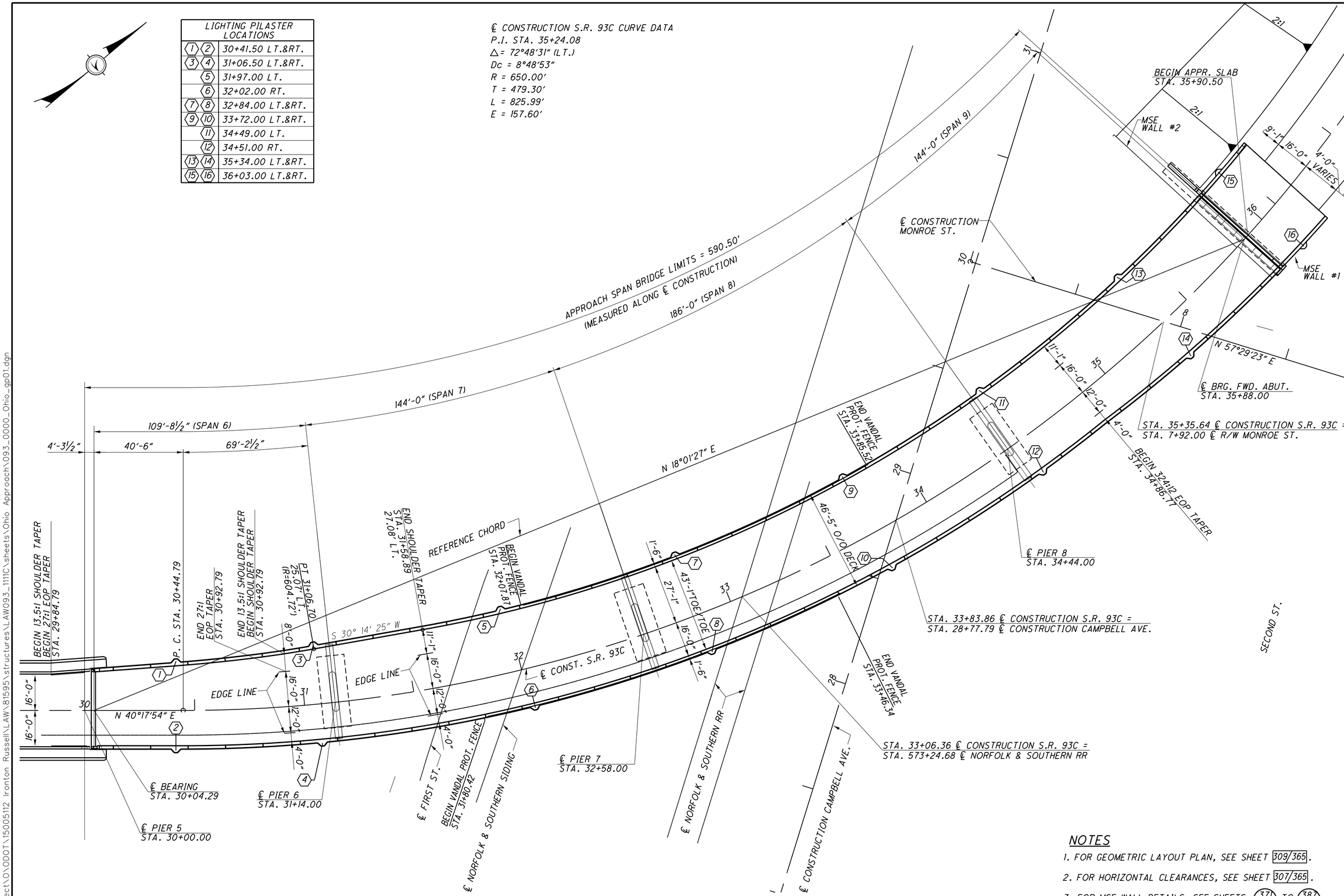

GENERAL PLAN

NOTES

1. FOR GEOMETRIC LAYOUT PLAN, SEE SHEET 309/365.
2. FOR HORIZONTAL CLEARANCES, SEE SHEET 307/365.
3. FOR MSE WALL DETAILS, SEE SHEETS 371/788 TO 387/788

DESIGN AGENCY: URS, 36 EAST 7TH STREET, SUITE 2300, CINCINNATI, OHIO 45202

DESIGNED	DRAWN	REVIEWED	DATE
PJW	GJW	JTH	06-11-10
CHECKED	REVISED	STRUCTURE FILE NUMBER	
MAL		4401263	

OHIO APPROACH - GENERAL PLAN
BRIDGE NO. LAW-93C-0000
IRONTON RUSSELL BRIDGE OVER OHIO RIVER

LAW-93-0.00
PID No. 81595

J:\Project\O\ODOT\15005112 Ironton Russell\LAW\81595\structures\LAW093_1111C\sheets\Ohio Approach\093_0000_Ohio_gp01.dgn

℄ CONSTRUCTION S.R. 93C CURVE DATA
P.I. STA. 35+24.08
△= 72°48'31" (LT.)
Dc = 8°48'53"
R = 650.00'
T = 479.30'
L = 825.99'
E = 157.60'

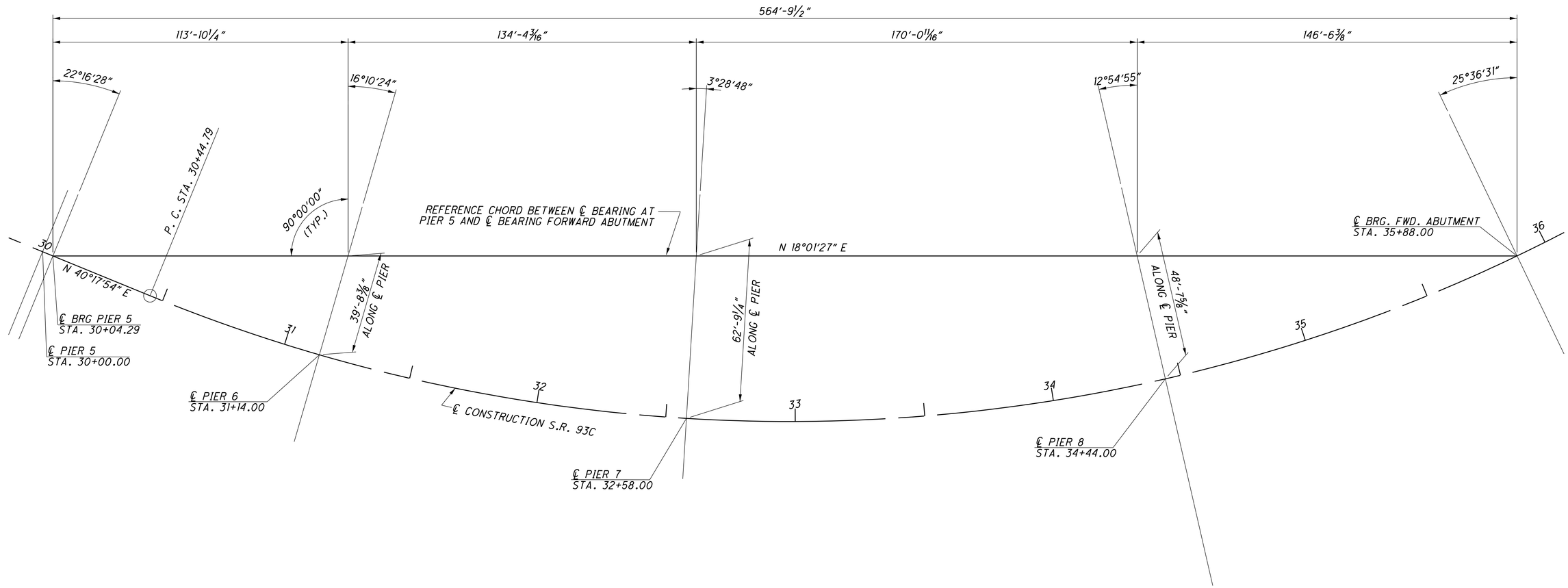

NOTE:
ALL SUBSTRUCTURE UNITS ARE ALIGNED RADIAL TO THE ℄ CONSTRUCTION S.R. 93C CURVE.

GEOMETRIC LAYOUT PLAN

DESIGN AGENCY
URS
36 EAST 7TH STREET
SUITE 2300
CINCINNATI, OHIO 45202

DESIGNED	DRAWN	REVIEWED	DATE
MAL	MAL	JTH	06-11-10
CHECKED	REVISED	STRUCTURE FILE NUMBER	
ALH		4401263	

OHIO APPROACH - GEOMETRIC LAYOUT PLAN
BRIDGE NO. LAW-93C-0000
IRONTON RUSSELL BRIDGE OVER OHIO RIVER

LAW-93-0.00
PID No. 81595

309/365
696/788

J:\Project\O\ODOT\15005112 Ironton Russell\LAW\81595\structures\LAW093_1111C\sheets\Ohio Approach\093_0000_Ohio_gp02.dgn

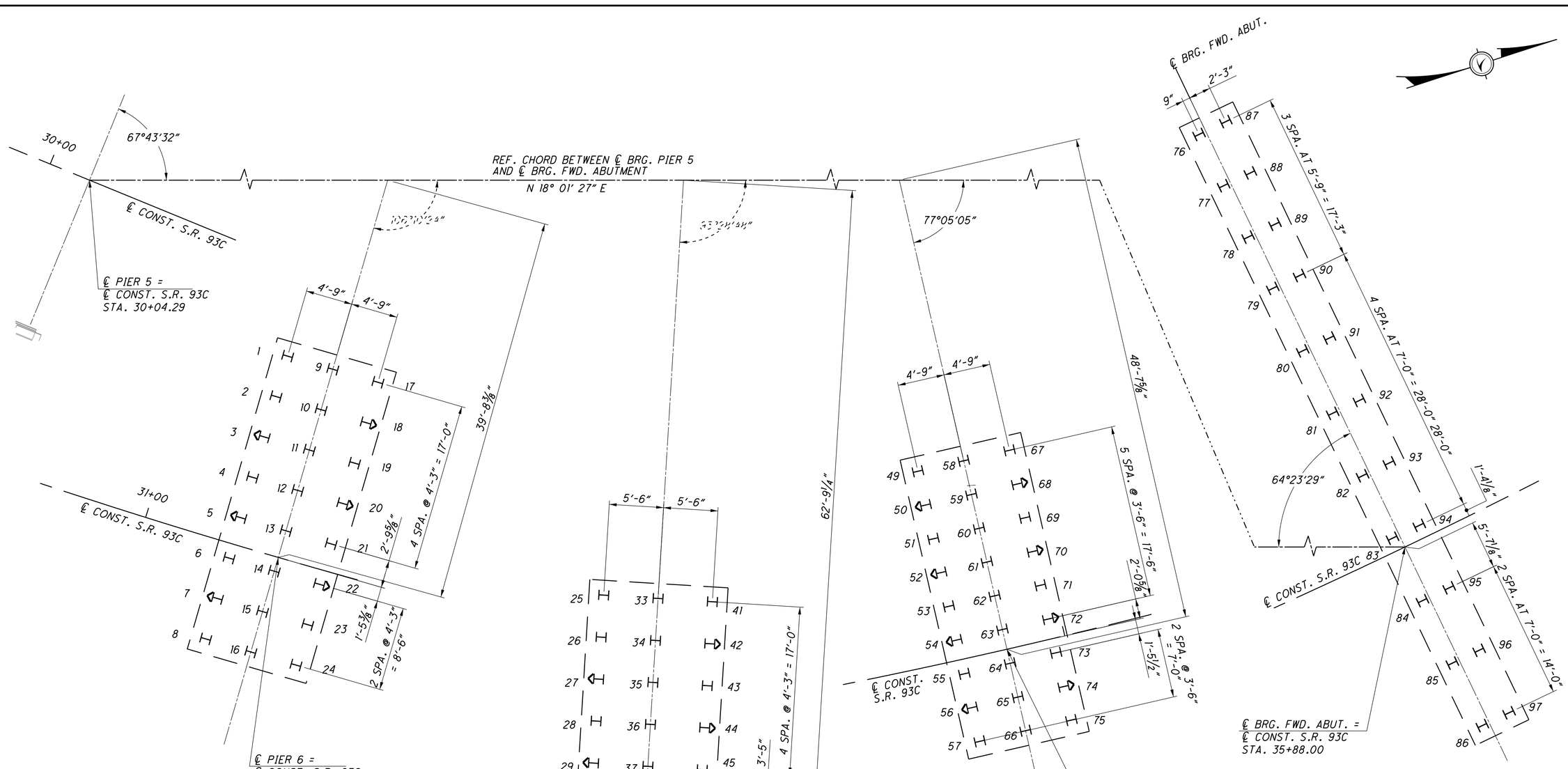

PILING TABLE			
LOCATION	PILE NO.	CUT-OFF ELEVATION	ESTIMATED LENGTH
PIER 6	1-24	544.25	70'-0"
PIER 7	25-48	539.25	65'-0"
PIER 8	49-75	539.25	65'-0"
FWD. ABUTMENT	76-97	555.00	80'-0"

NOTES:

1. ↦ DENOTES 1:4V BATTERED PILES.
2. FOR PIER FOOTING DETAILS, REFER TO SHEETS 313/365 TO 318/365.
3. ALL PILES SHOWN ARE HP 12x53.
4. FOR PILE DRIVING CONSTRAINTS AT THE FORWARD ABUTMENT SEE MSE WALL PLANS SHEETS (371/788) TO (387/788).
5. IF PILE SLEEVES ARE TO BE USED AT THE FORWARD ABUTMENT, ALL PILES (PILES NO. 76-97) SHALL BE DRIVEN THROUGH 18" DIA. SLEEVES TO AN ELEVATION OF 539.50'.
6. FOR STRUCTURE GROUNDING DETAILS, SEE SHEETS (303/788) AND (304/788).

J:\Project\ODOT\15005112 Ironton Russell\LAW\81595\structures\LAW093_1111C\sheets\Ohio Approach\093_0000_Ohio_fp01.dgn

DESIGN AGENCY
URS
36 EAST 7TH STREET
SUITE 2300
CINCINNATI, OHIO 45202

DESIGNED	DRAWN	REVIEWED	DATE
MAL	MAL	JTH	06-11-10
CHECKED	REVISED	STRUCTURE FILE NUMBER	
ALH		4401263	

OHIO APPROACH - PILING PLAN
BRIDGE NO. LAW-93C-0000
IRONTON RUSSELL BRIDGE OVER OHIO RIVER

LAW-93-0.00
PID No. 81595

310/365

697/788

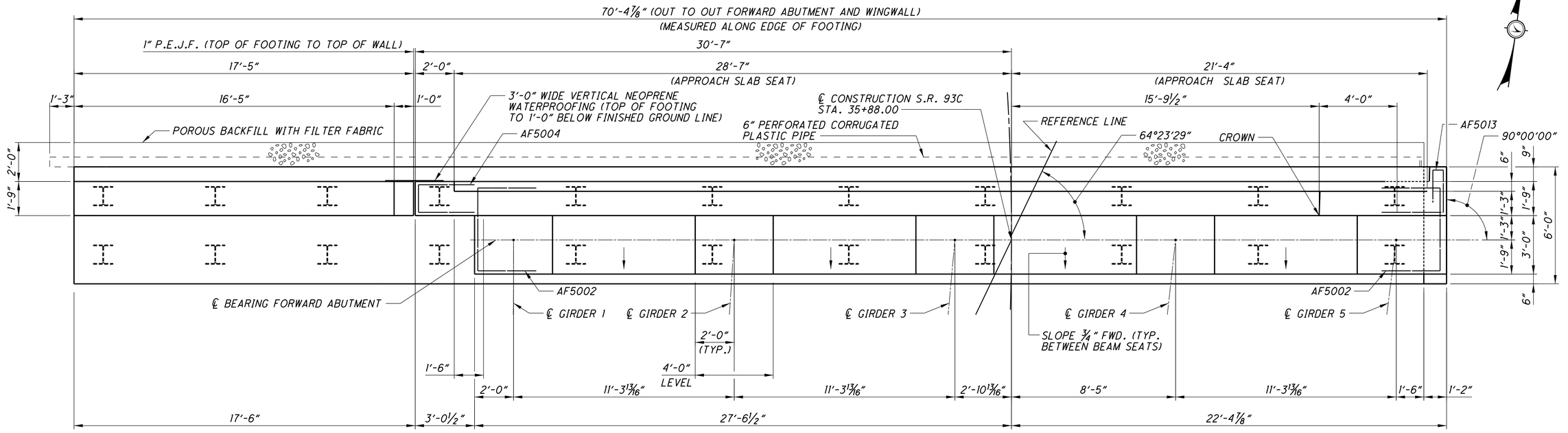

FORWARD ABUTMENT PLAN

MINIMUM LAP LENGTHS	
BAR SIZE	LENGTH
NO. 5	2'-9"
NO. 6	3'-4"
NO. 8	5'-6"

UNLESS NOTED OTHERWISE

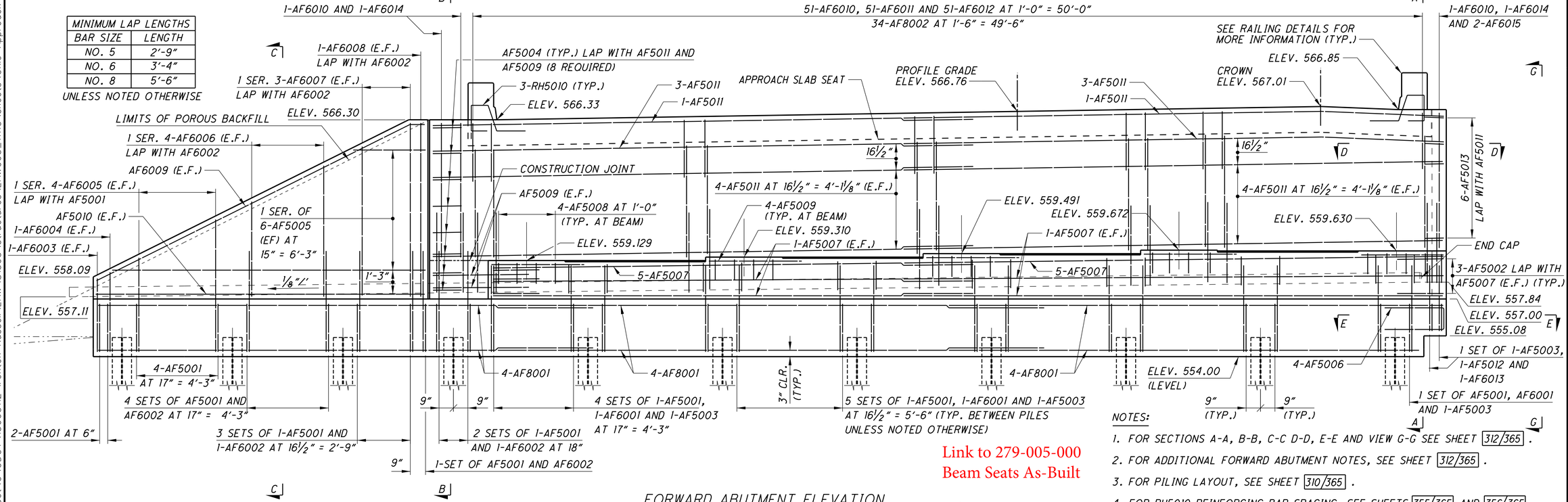

FORWARD ABUTMENT ELEVATION

Link to 279-005-000 Beam Seats As-Built

Link to RFI099 As-Built

NOTES:

1. FOR SECTIONS A-A, B-B, C-C D-E, E-E AND VIEW G-G SEE SHEET 312/365 .
2. FOR ADDITIONAL FORWARD ABUTMENT NOTES, SEE SHEET 312/365 .
3. FOR PILING LAYOUT, SEE SHEET 310/365 .
4. FOR RH5010 REINFORCING BAR SPACING, SEE SHEETS 355/365 AND 356/365 .
5. FOR LIGHTING CONDUIT PENETRATION, SEE SHEETS 278/788 AND 275/788 .

DESIGN AGENCY
URS
36 EAST 7TH STREET
SUITE 2300
CINCINNATI, OHIO 45202

DESIGNED	DRAWN	REVIEWED	DATE
JJB	ALH/JJB	JTH	06-11-10
CHECKED	REVISED	STRUCTURE FILE NUMBER	
TES		4401263	

OHIO APPROACH - FORWARD ABUTMENT DETAILS (1 OF 2)
BRIDGE NO. LAW-93C-0000
IRONTON RUSSELL BRIDGE OVER OHIO RIVER

LAW-93-0.00
PID No. 81595

311/365

698/788

J:\Project\OA\ODOT\15005112 Ironton Russell\LAW\81595\structures\LAW093_1111C\sheets\Ohio Approach\093_0000_Ohio_af01.dgn

Link to RFI099 As-Built

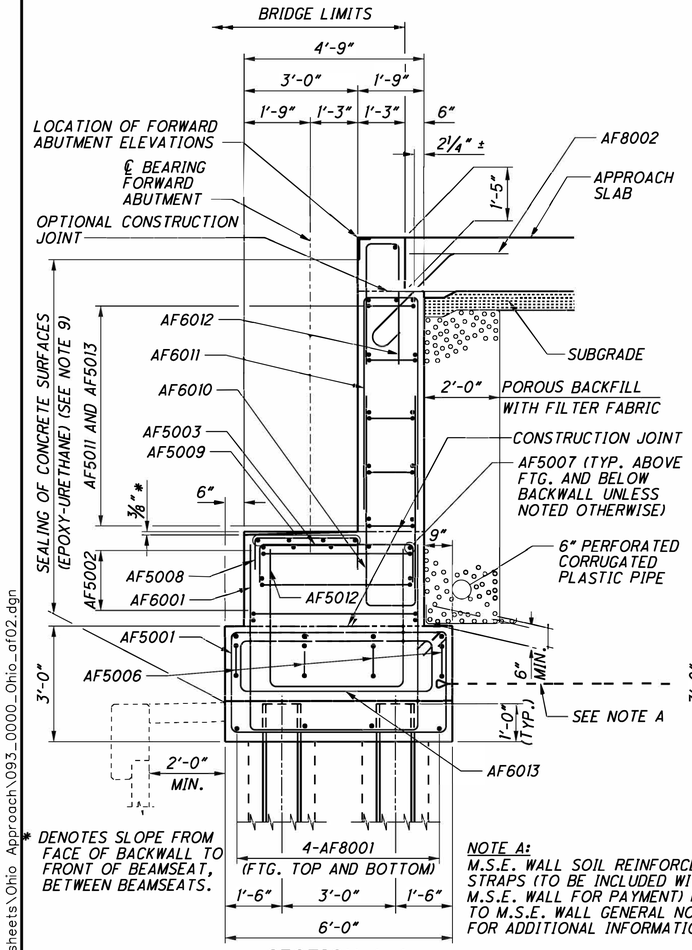

SECTION A-A

* DENOTES SLOPE FROM FACE OF BACKWALL TO FRONT OF BEAMSEAT, BETWEEN BEAMSEATS.

NOTE A:
M.S.E. WALL SOIL REINFORCEMENT STRAPS (TO BE INCLUDED WITH M.S.E. WALL FOR PAYMENT) REFER TO M.S.E. WALL GENERAL NOTES FOR ADDITIONAL INFORMATION.

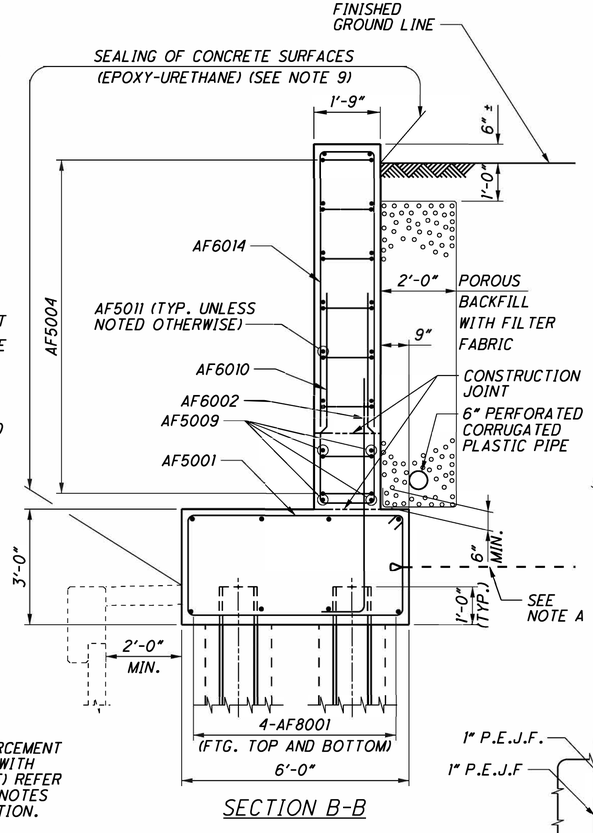

SECTION B-B

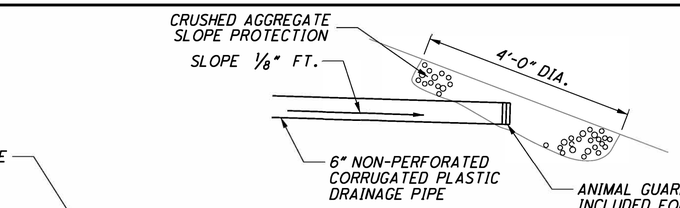

TYPICAL PIPE TERMINATION DETAIL

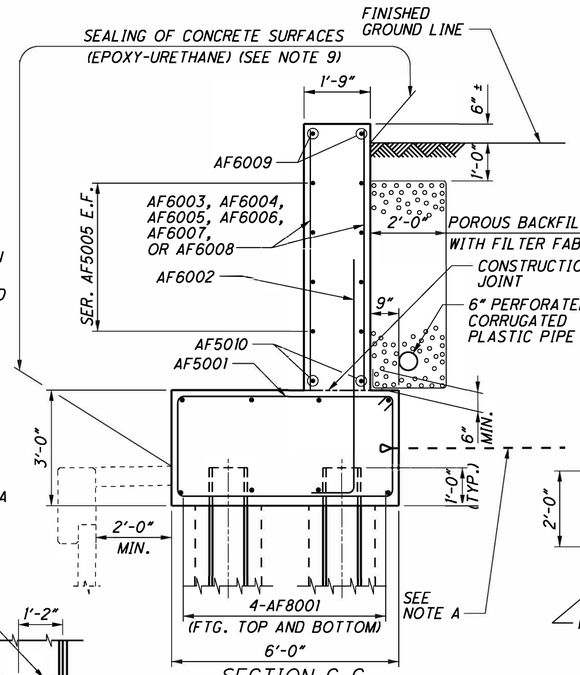

SECTION C-C

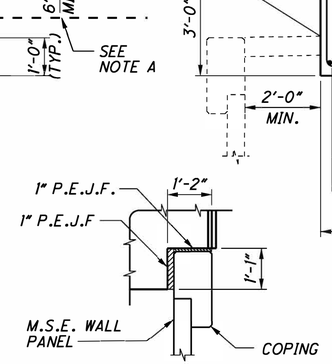

SECTION F-F

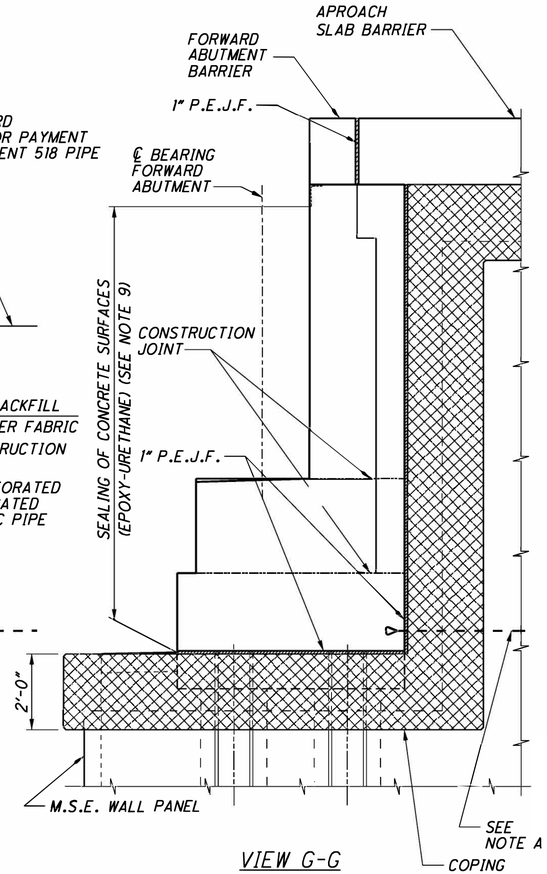

VIEW G-G

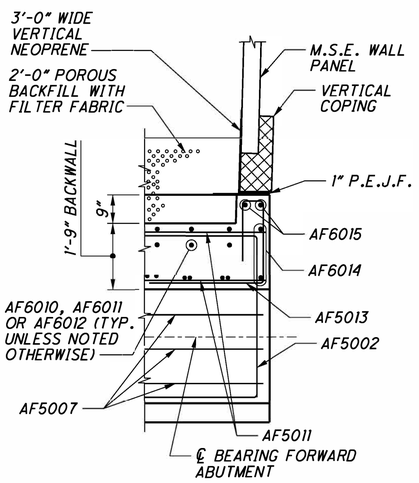

SECTION D-D

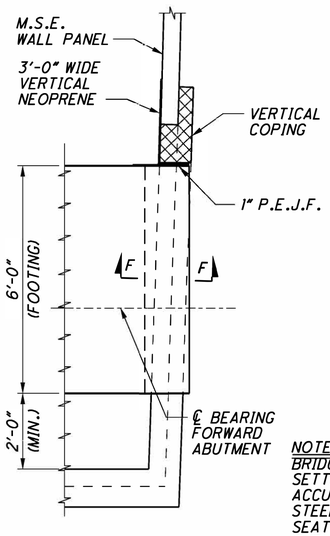

SECTION E-E

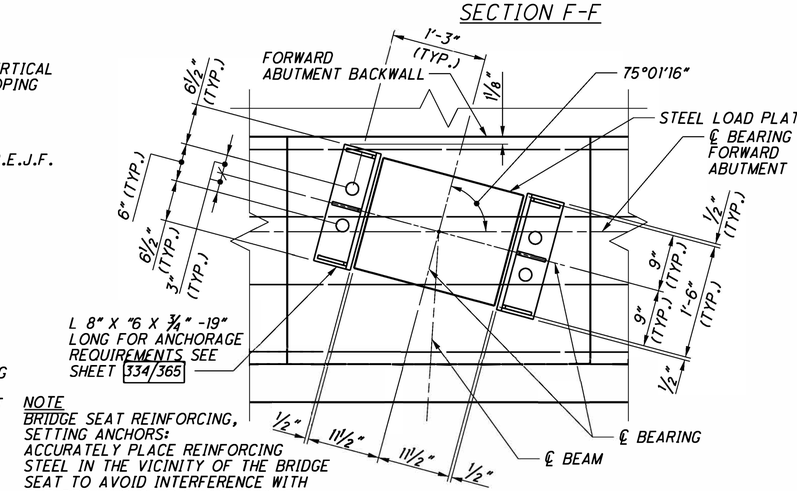

TYPICAL BEARING LAYOUT

NOTE
BRIDGE SEAT REINFORCING, SETTING ANCHORS:
ACCURATELY PLACE REINFORCING STEEL IN THE VICINITY OF THE BRIDGE SEAT TO AVOID INTERFERENCE WITH THE DRILLING OF RETAINER ANGLE ANCHOR HOLES OR THE PRE-SETTING OF RETAINER ANGLE ANCHORS.

NOTES:

1. FOR LOCATIONS OF SECTIONS A-A, B-B, C-C, D-D, E-E AND VIEW G-G SEE SHEET 311/365.
2. FOR APPROACH SLAB DETAILS, SEE SHEET 358/365.
3. REINFORCING STEEL IN THE VICINITY OF THE BRIDGE SEAT SHALL BE ACCURATELY PLACED TO AVOID INTERFERENCE WITH THE DRILLING OF THE ANCHOR BOLT HOLES.
4. FOR REINFORCING SCHEDULE, SEE SHEET 359/365.
5. FOR EXPANSION JOINT DETAILS, SEE SHEET 345/365.
6. ALL REINFORCING SHALL BE 2 INCHES CLEAR FROM THE FACE OF CONCRETE UNLESS NOTED OTHERWISE.
7. POROUS BACKFILL WITH FILTER FABRIC: 2 FEET THICK SHALL EXTEND UP TO THE PLANE OF THE SUBGRADE, TO 1 FOOT BELOW THE EMBANKMENT SURFACE, AND LATERALLY FROM THE M.S.E. WALL TO THE END OF THE WINGWALL.
8. BACKWALL CONCRETE: IN ADDITION TO 511.10, DO NOT PLACE BACKWALL CONCRETE ABOVE THE OPTIONAL CONSTRUCTION JOINT AT THE APPROACH SLAB SEAT UNTIL AFTER THE DECK CONCRETE IN THE SPAN ADJACENT TO THE ABUTMENT HAS BEEN PLACED.
9. SEALING OF BEAM SEATS: IF THE BEAM SEATS ARE SEALED WITH AN EPOXY OR NON-EPOXY SEALER PRIOR TO SETTING THE BEARINGS, DO NOT APPLY SEALER TO THE CONCRETE SURFACES UNDER THE PROPOSED BEARING LOCATIONS. IF THESE LOCATIONS ARE SEALED, REMOVE THE SEALER TO THE SATISFACTION OF THE ENGINEER PRIOR TO SETTING THE BEARINGS. THE DEPARTMENT WILL NOT PAY FOR THIS REMOVAL.

DESIGN AGENCY
URS
36 EAST 7TH STREET
SUITE 2300
CINCINNATI, OHIO 45202

DESIGNED	DRAWN	REVIEWED	DATE
JJB	ALH/JJB	JTH	06-11-10
CHECKED	REVISED	STRUCTURE FILE NUMBER	
TES		4401263	

OHIO APPROACH - FORWARD ABUTMENT DETAILS (2 OF 2)
BRIDGE NO. LAW-93C-0000
IRONTON RUSSELL BRIDGE OVER OHIO RIVER

LAW-93-0.00
PID No. 81595

312/365

699
788

J:\Project\0\ODOT\15005112 Ironton Russell\LAW\81595\structures\LAW093_1111C\sheets\Ohio Approach\093_0000_Ohio_af02.dgn

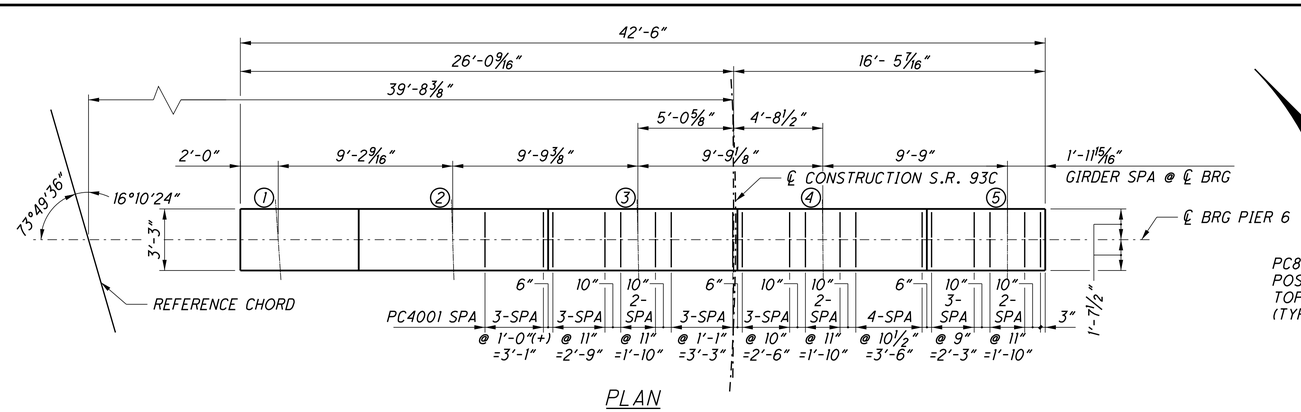

PLAN

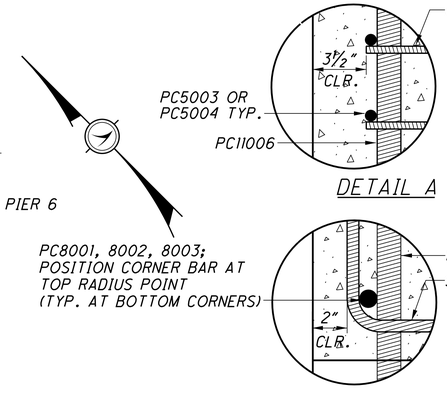

DETAIL A

DETAIL B

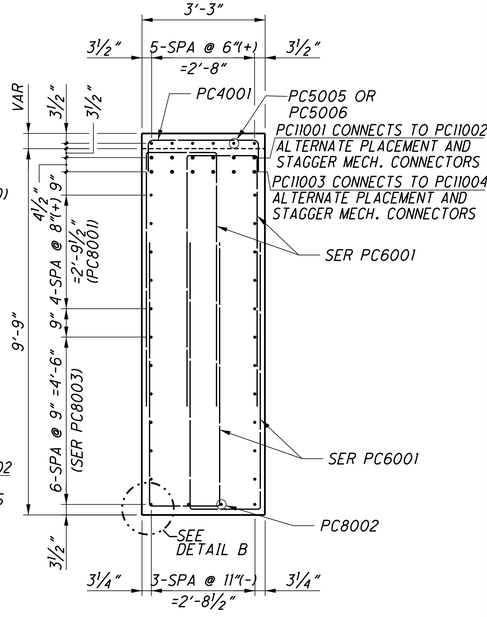

SECTION C-C

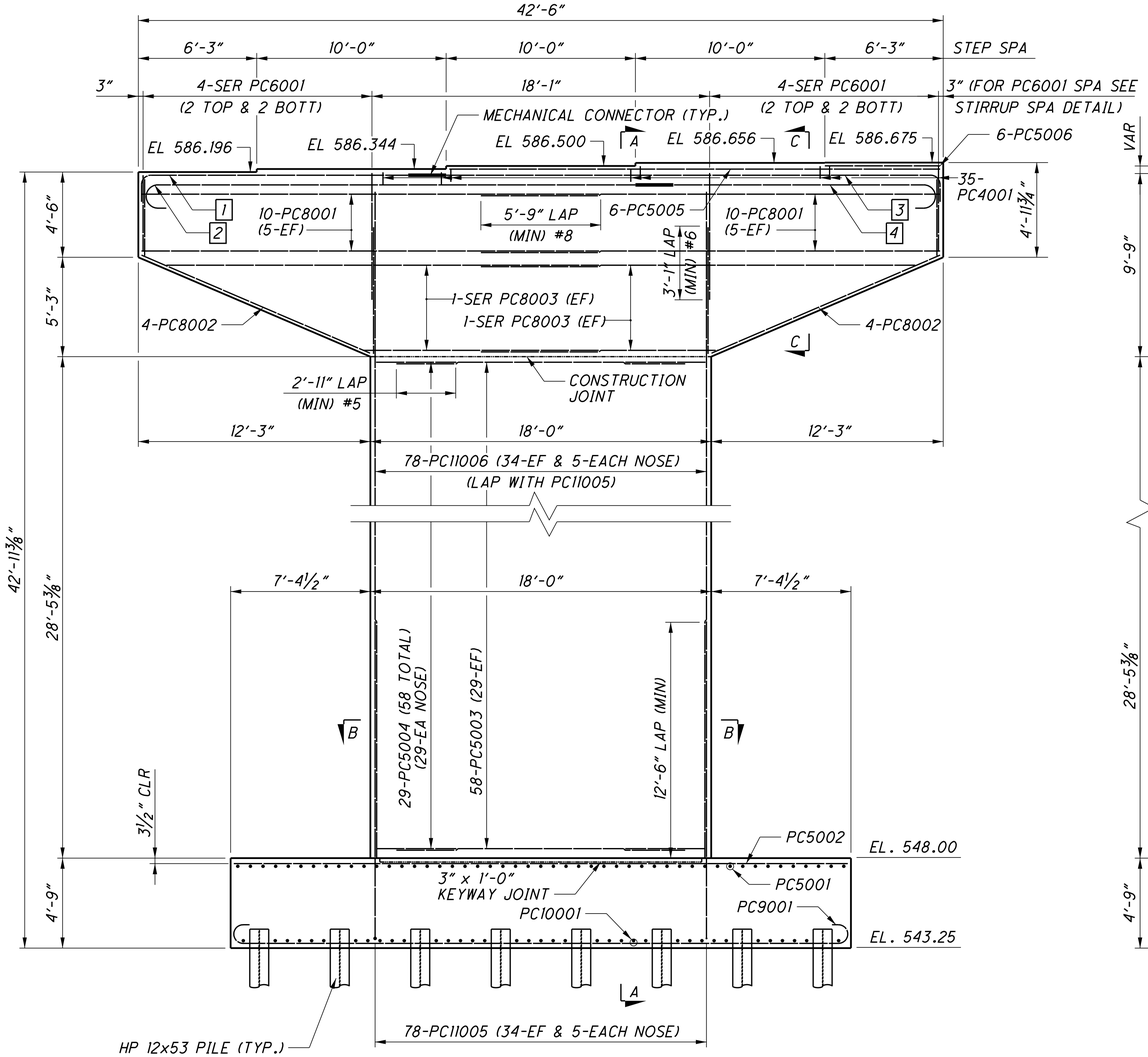

ELEVATION

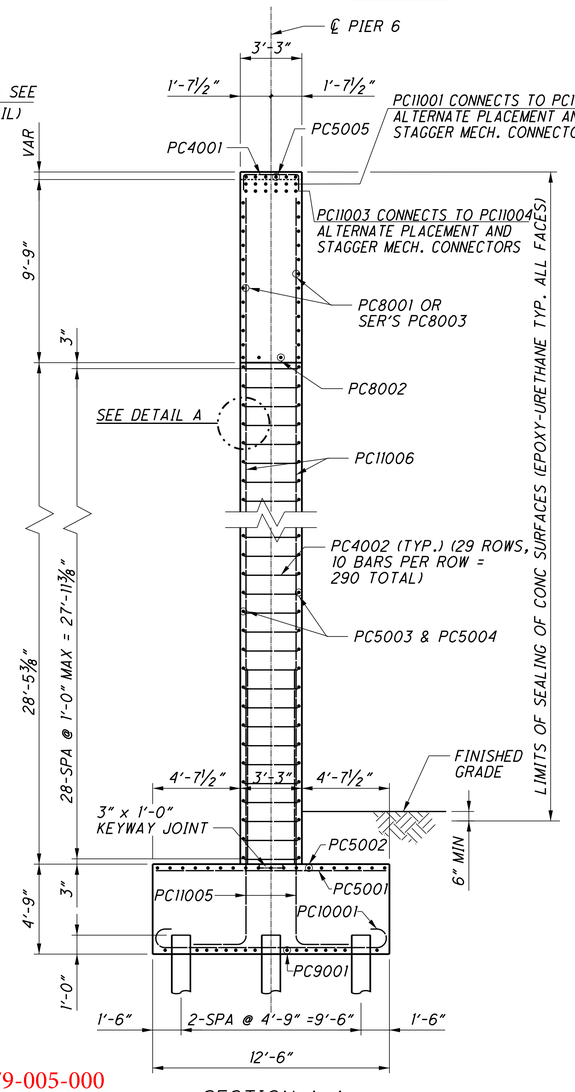

SECTION A-A

LEGEND

1. 3-PC11001 & 3-PC11002 (STAGGER MECHANICAL CONNECTORS)*
2. 3-PC11003 & 3-PC11004 (STAGGER MECHANICAL CONNECTORS)*
3. 3-PC11001 & 3-PC11002 (STAGGER MECHANICAL CONNECTORS)*
4. 3-PC11003 & 3-PC11004 (STAGGER MECHANICAL CONNECTORS)*

* STAGGER CONNECTORS VERTICALLY & HORIZONTALLY

NOTES

1. SPLICE #11 BARS IN PIER CAP USING APPROVED MECHANICAL CONNECTORS.
2. MECHANICAL CONNECTORS SHALL DEVELOP A MINIMUM ULTIMATE STRENGTH OF 125% OF THE REQUIRED YIELD STRENGTH OF THE REINFORCEMENT THEY CONNECT. MECHANICAL SPLICES SHALL MEET THE REQUIREMENTS OF ITEM 509 AND SHALL BE STAGGERED.
3. 3" MIN CLEAR COVER IN PIER STEM AND BOTTOM OF FOOTING, 2" FOR ALL OTHER SURFACES UNLESS NOTED.
4. FOR SECTION B-B, SEE SHEET 314/365 .
5. FOR FOUNDATION PLAN AND FOOTING REINFORCING SEE SHEET 314/365 .
6. FOR STIRRUP SPACING DETAIL, SEE SHEET 314/365 .
7. FOR REINFORCING STEEL LIST, SEE SHEET 360/365.

Link to RFI012 As-Built

Link to 279-005-000 Beam Seats As-Built

URS
DESIGN AGENCY
36 EAST 7TH STREET SUITE 2300 CINCINNATI, OHIO 45202

DESIGNED	DRAWN	REVIEWED	DATE
JEH	KK	JTH	06-11-10
CHECKED	REVISED	STRUCTURE FILE NUMBER	
MKT		4401263	

OHIO APPROACH - PIER 6 DETAILS
BRIDGE NO. LAW-93C-0000
IRONTON RUSSELL BRIDGE OVER OHIO RIVER

LAW-93-0.00
PID No. 81595

313/365

700/788

J:\Project\O\ODOT\15005112 Ironton Russell\LAW\81595\structures\LAW093_1111C\sheets\Ohio Approach\093_0000_pi601.dgn

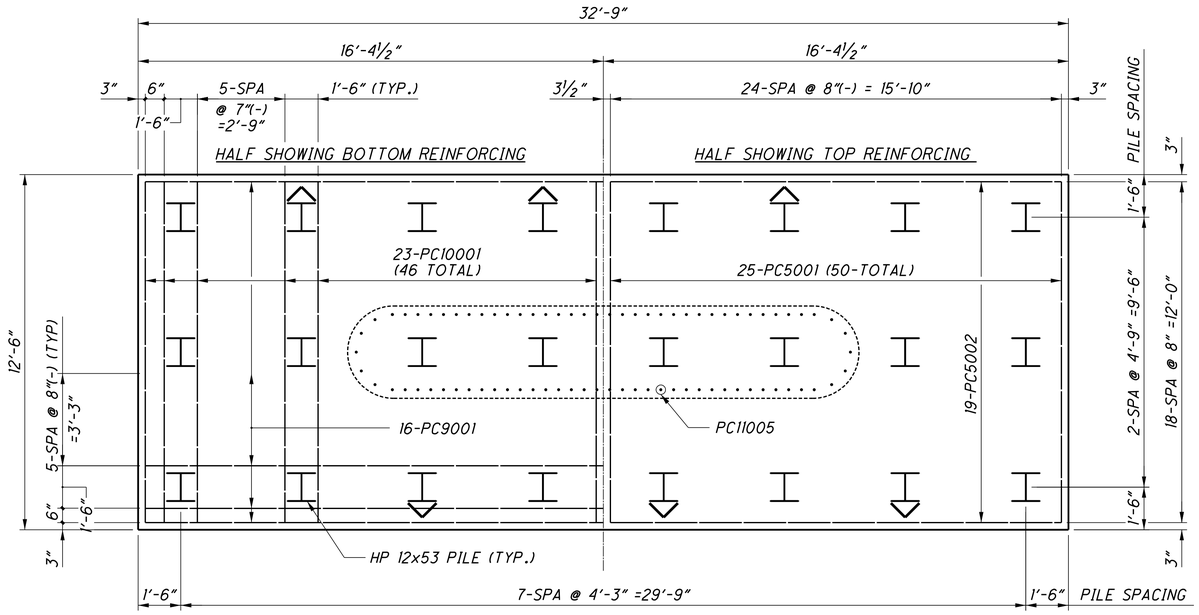

FOOTING PLAN

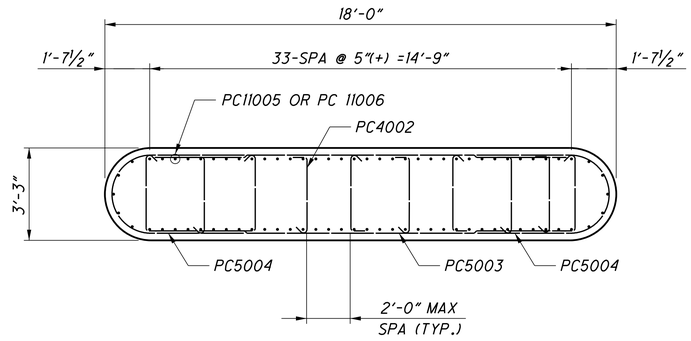

SECTION B-B

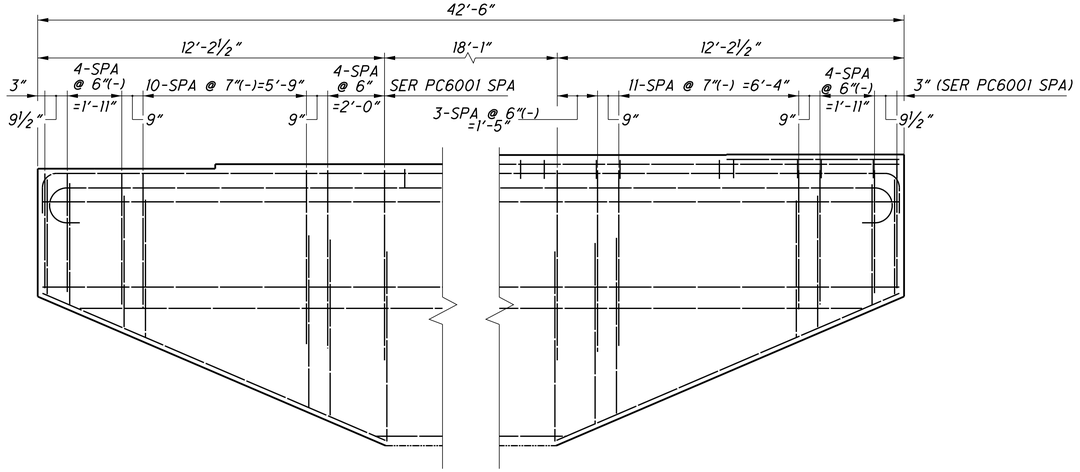

STIRRUP SPACING DETAIL

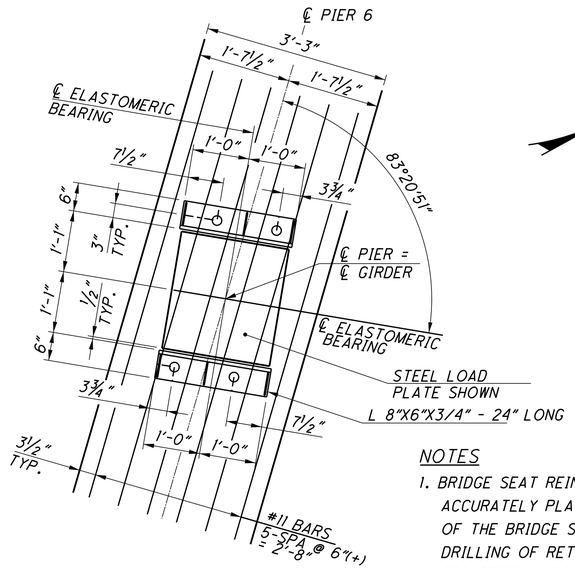

TYPICAL BEARING LAYOUT

NOTES

1. BRIDGE SEAT REINFORCING, SETTING ANCHORS:
   ACCURATELY PLACE REINFORCING STEEL IN THE VICINITY OF THE BRIDGE SEAT TO AVOID INTERFERENCE WITH THE DRILLING OF RETAINER ANGLE ANCHOR HOLES OR THE PRE-SETTING OF RETAINER ANGLE ANCHORS.

2. ANCHORAGE REQUIREMENTS:
   FOR ANCHORAGE REQUIREMENTS SEE SHEET 335/365

LEGEND

INDICATES 1:4 BATTER IN DIRECTION INDICATED

NOTES

1. FOR ADDITIONAL NOTES, SEE SHEET 313/365.

Link to RFI012 As-Built

DESIGN AGENCY
URS
36 EAST 7TH STREET
SUITE 2300
CINCINNATI, OHIO 45202

DESIGNED	DRAWN	REVIEWED	DATE
MKT	KK	JTH	06-11-10
CHECKED	REVISED	STRUCTURE FILE NUMBER	
JEH		4401263	

OHIO APPROACH - PIER 6 FOUNDATION PLAN & DETAILS
BRIDGE NO. LAW-93C-0000
IRONTON RUSSELL BRIDGE OVER OHIO RIVER

LAW-93-0.00
PID No. 81595

314/365

701/788

J:\Project\O\ODOT\15005112 Ironton Russell\LAW\81595\structures\LAW093_1111C\sheets\Ohio Approach\093_0000_pi602.dgn

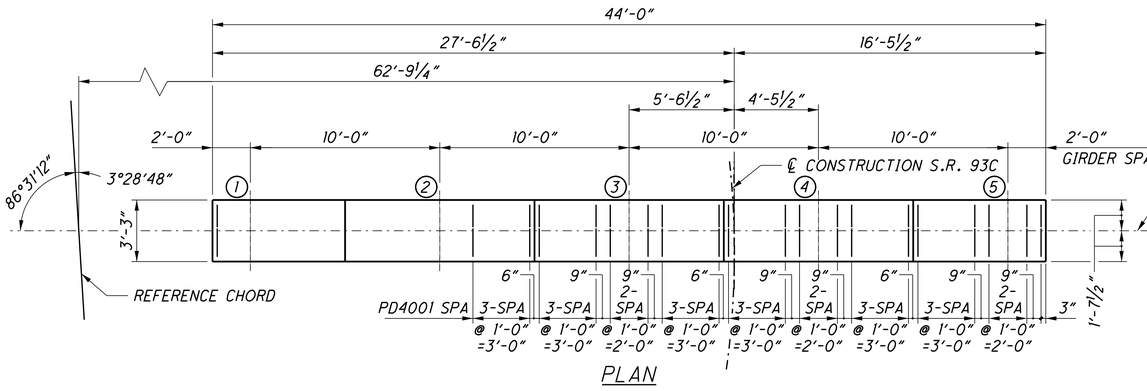

PLAN

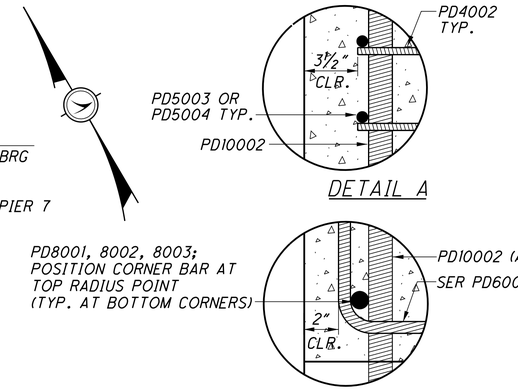

DETAIL A

DETAIL B

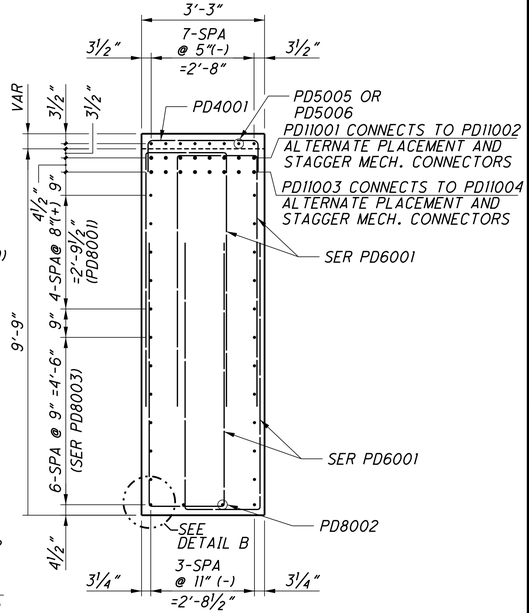

SECTION C-C

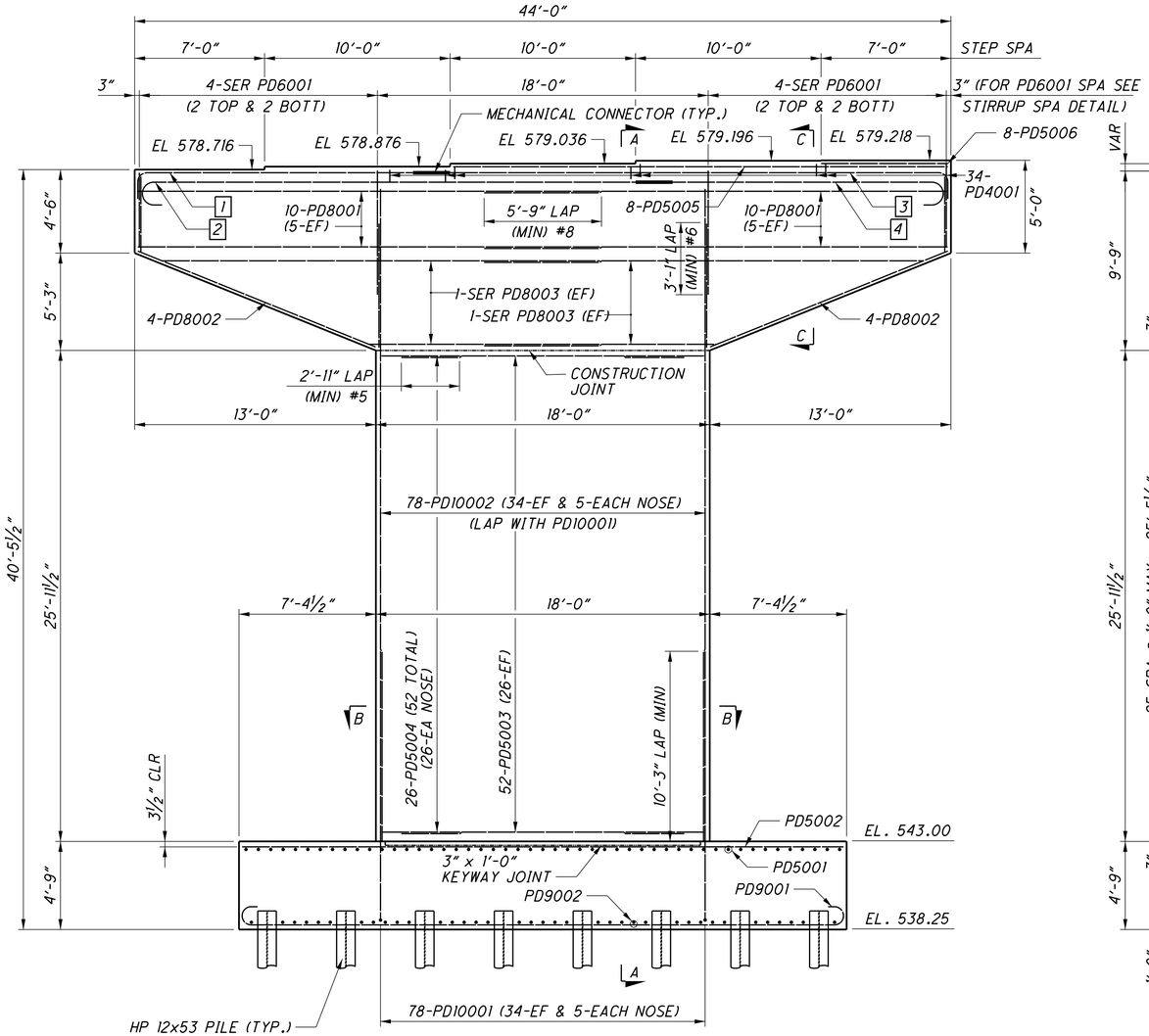

ELEVATION

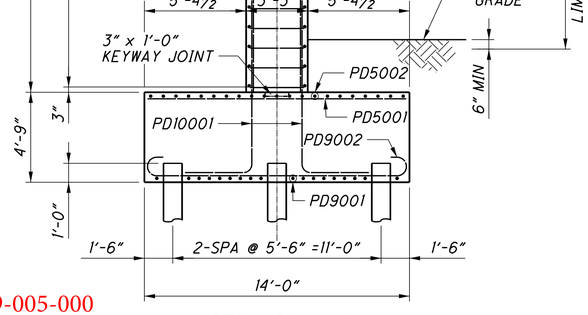

SECTION A-A

Link to RFI012 As-Built

Link to 279-005-000 Beam Seats As-Built

LEGEND

1. 4-PD11001 & 4-PD11002 (STAGGER MECHANICAL CONNECTORS)*
2. 4-PD11003 & 4-PD11004 (STAGGER MECHANICAL CONNECTORS)*
3. 4-PD11001 & 4-PD11002 (STAGGER MECHANICAL CONNECTORS)*
4. 4-PD11003 & 4-PD11004 (STAGGER MECHANICAL CONNECTORS)*

* STAGGER CONNECTORS VERTICALLY & HORIZONTALLY

NOTES

1. SPLICE #11 BARS IN PIER CAP USING APPROVED MECHANICAL CONNECTORS.
2. MECHANICAL CONNECTORS SHALL DEVELOP A MINIMUM ULTIMATE STRENGTH OF 125% OF THE REQUIRED YIELD STRENGTH OF THE REINFORCEMENT THEY CONNECT. MECHANICAL SPLICES SHALL MEET THE REQUIREMENTS OF ITEM 509 AND SHALL BE STAGGERED.
3. 3" MIN CLEAR COVER IN PIER STEM AND BOTTOM OF FOOTING, 2" FOR ALL OTHER SURFACES UNLESS NOTED.
4. FOR SECTION B-B, SEE SHEET 316/365.
5. FOR FOUNDATION PLAN AND FOOTING REINFORCING SEE SHEET 316/365.
6. FOR REINFORCING STEEL LIST SEE SHEET 361/365.
7. FOR STIRRUP SPACING DETAIL SEE SHEET 316/365.

URS
DESIGN AGENCY
36 EAST 7TH STREET
SUITE 2300
CINCINNATI, OHIO 45202

DESIGNED	DRAWN	REVIEWED	DATE
MKT	KK	JTH	06-11-10
CHECKED	REVISED	STRUCTURE FILE NUMBER	
JEH		4401263	

OHIO APPROACH - PIER 7 DETAILS
BRIDGE NO. LAW-93C-0000
IRONTON RUSSELL BRIDGE OVER OHIO RIVER

LAW-93-0.00
PID No. 81595

315/365

702/788

J:\Project\OA\ODOT\15005112 Ironton Russell\LAW\81595\structures\LAW093_1111C\sheets\Ohio Approach\093_0000_pi701.dgn

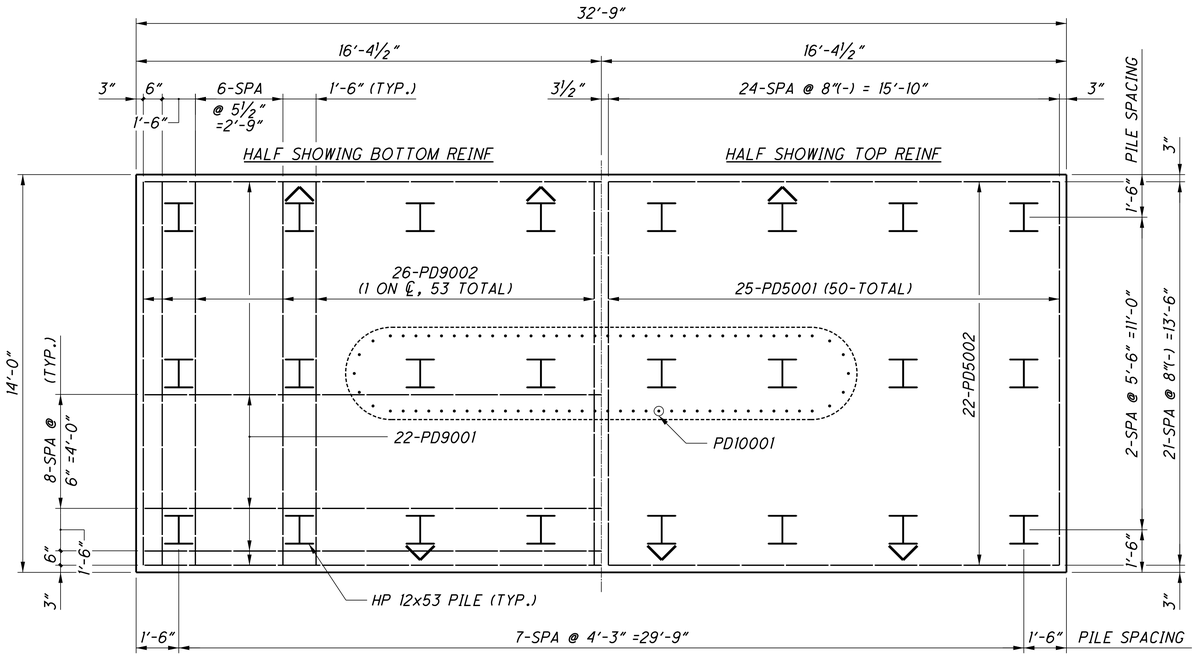

FOOTING PLAN

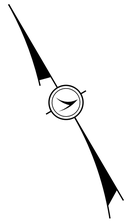

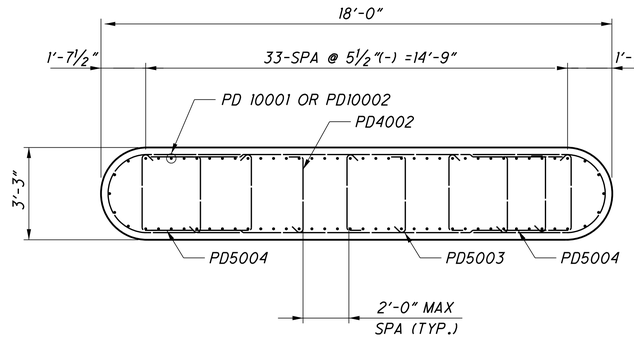

SECTION B-B

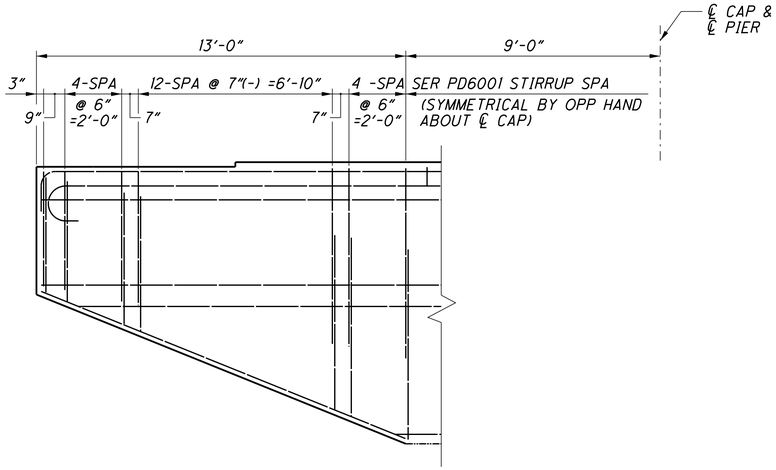

STIRRUP SPACING DETAIL

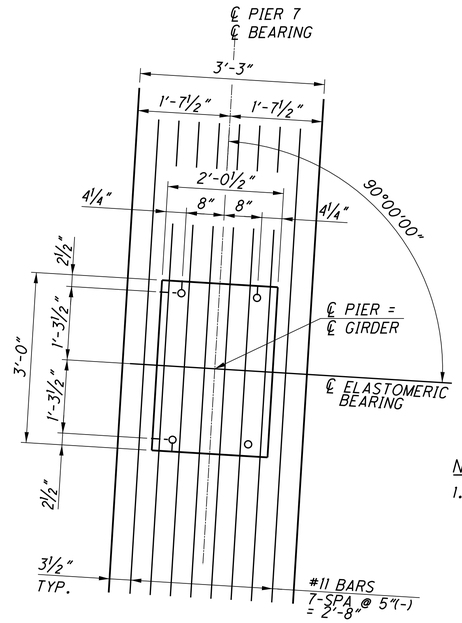

TYPICAL BEARING LAYOUT

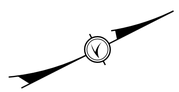

NOTES

1. BRIDGE SEAT REINFORCING, SETTING ANCHORS: ACCURATELY PLACE REINFORCING STEEL IN THE VICINITY OF THE BRIDGE SEAT TO AVOID INTERFERENCE WITH THE DRILLING OF BEARING ANCHOR HOLES OR THE PRE-SETTING OF BEARING ANCHORS.

2. ANCHORAGE REQUIREMENTS: FOR ANCHORAGE REQUIREMENTS SEE SHEET 335/365

LEGEND

INDICATES 1:4 BATTER IN DIRECTION INDICATED

NOTES

1. FOR ADDITIONAL NOTES, SEE SHEET 315/365 .

Link to RFI012 As-Built

DESIGN AGENCY
URS
36 EAST 7TH STREET
SUITE 2300
CINCINNATI, OHIO 45202

DESIGNED	DRAWN	REVIEWED	DATE
MKT	KK	JTH	06-11-10
CHECKED	REVISED	STRUCTURE FILE NUMBER	
JEH		4401263	

OHIO APPROACH - PIER 7 FOUNDATION PLAN & DETAILS
BRIDGE NO. LAW-93C-0000
IRONTON RUSSELL BRIDGE OVER OHIO RIVER

LAW-93-0.00
PID No. 81595

316/365

703/788

J:\Project\ODOT\15005112 Ironton Russell\LAW\81595\structures\LAW093_1111C\sheets\Ohio Approach\093_0000_pi702.dgn

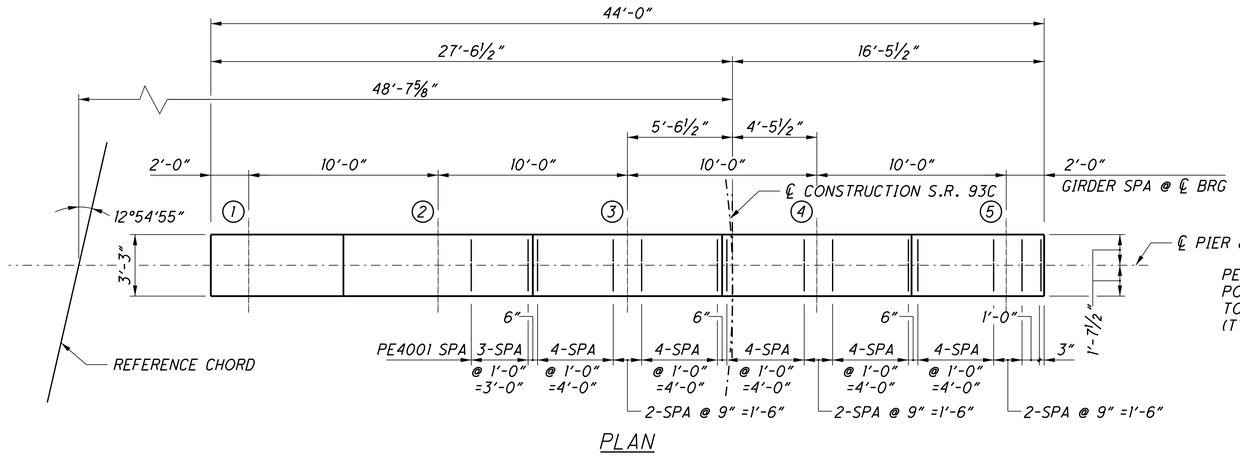

PLAN

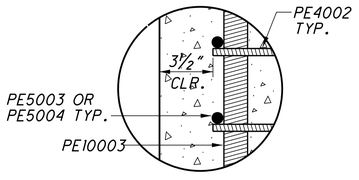

DETAIL A

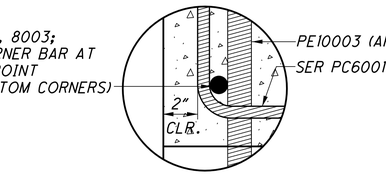

DETAIL B

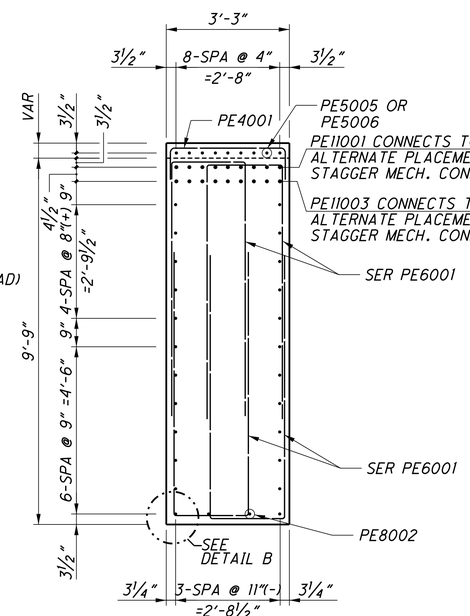

SECTION C-C

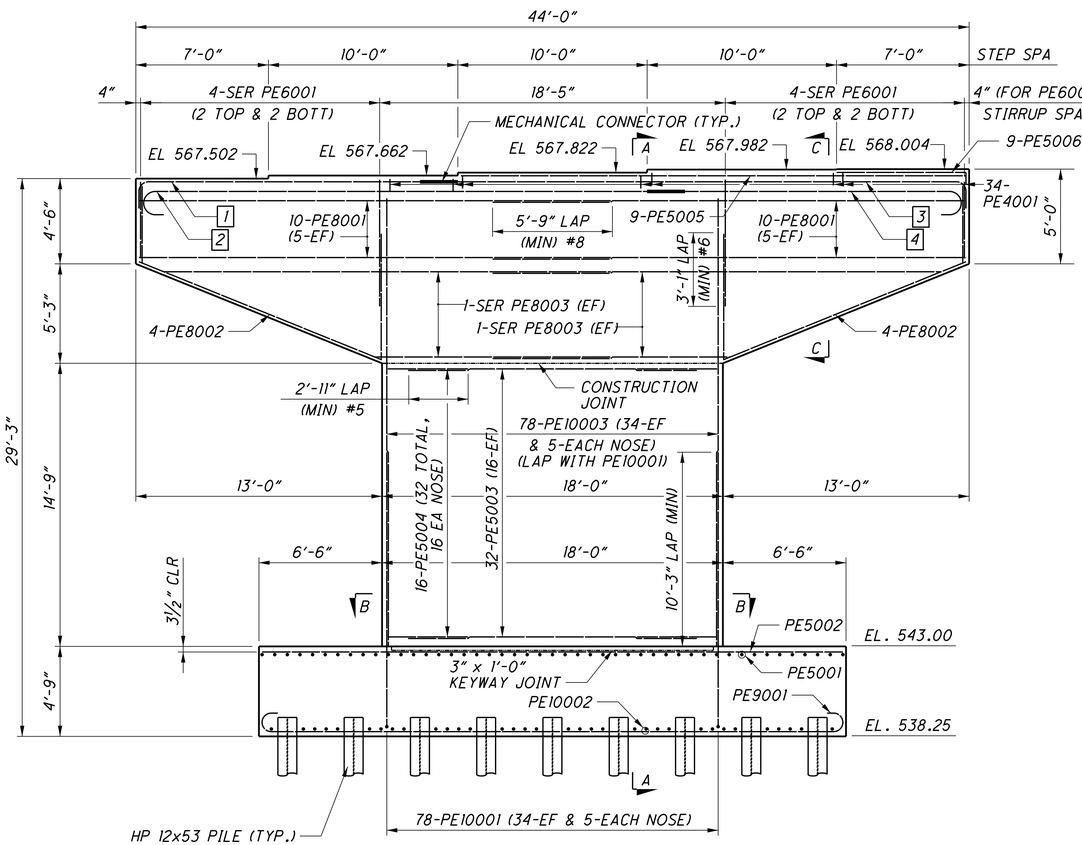

ELEVATION

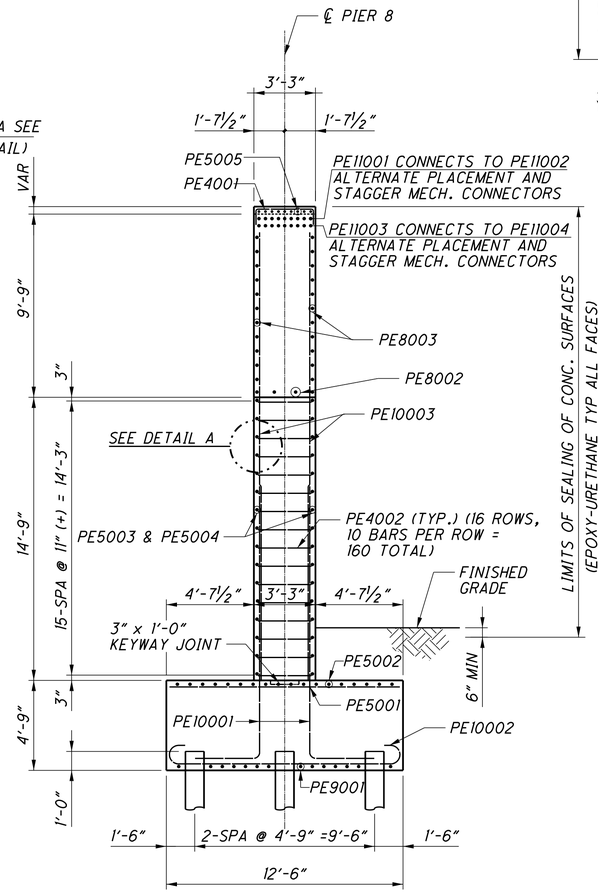

SECTION A-A

Link to RFI012 As-Built

Link to 279-005-000 Beam Seats As-Built

LEGEND

1. 5-PE11001 & 4-PE11002 (STAGGER MECHANICAL CONNECTORS)*
2. 5-PE11003 & 4-PE11004 (STAGGER MECHANICAL CONNECTORS)*
3. 4-PE11001 & 5-PE11002 (STAGGER MECHANICAL CONNECTORS)*
4. 4-PE11003 & 5-PE11004 (STAGGER MECHANICAL CONNECTORS)*

* STAGGER CONNECTORS VERTICALLY & HORIZONTALLY

NOTES

1. SPLICE #11 BARS IN PIER CAP USING APPROVED MECHANICAL CONNECTORS.
2. MECHANICAL CONNECTORS SHALL DEVELOP A MINIMUM ULTIMATE STRENGTH OF 125% OF THE REQUIRED YIELD STRENGTH OF THE REINFORCEMENT THEY CONNECT. MECHANICAL SPLICES SHALL MEET THE REQUIREMENTS OF ITEM 509 AND SHALL BE STAGGERED.
3. 3" MIN CLEAR COVER IN PIER STEM AND BOTTOM OF FOOTING, 2" FOR ALL OTHER SURFACES UNLESS NOTED.
4. FOR SECTION B-B, SEE SHEET 318/365.
5. FOR FOUNDATION PLAN AND FOOTING REINFORCING SEE SHEET 318/365.
6. FOR REINFORCING STEEL LIST SEE SHEET 362/365.
7. FOR STIRRUP SPACING DETAIL SEE SHEET 318/365.

DESIGN AGENCY
URS
36 EAST 7TH STREET
SUITE 2300
CINCINNATI, OHIO 45202

DESIGNED	DRAWN	REVIEWED	DATE
MKT	KK	JTH	06-11-10
CHECKED	REVISED	STRUCTURE FILE NUMBER	
JEH		4401263	

OHIO APPROACH - PIER 8 DETAILS

BRIDGE NO. LAW-93C-0000
IRONTON RUSSELL BRIDGE OVER OHIO RIVER

LAW-93-0.00
PID No. 81595

J:\Project\OV\ODOT\15005112 Ironton Russell\LAW\81595\structures\LAW093_1111C\sheets\Ohio Approach\093_0000_pi801.dgn

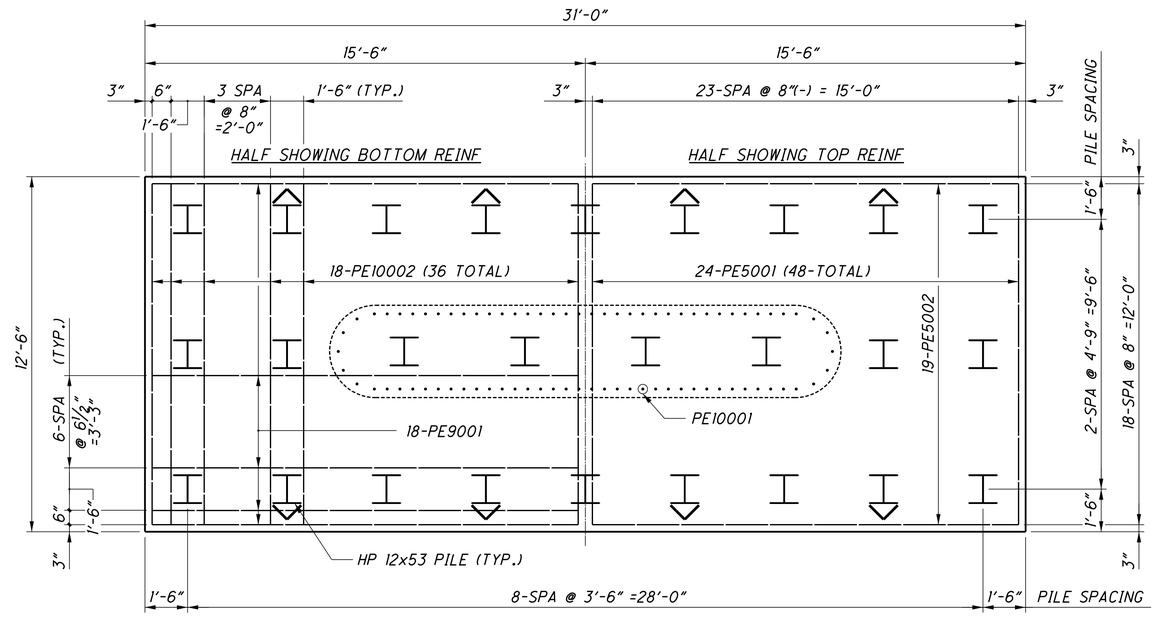

FOOTING PLAN

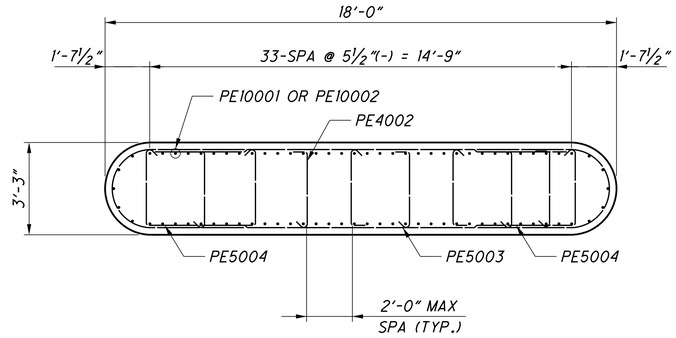

SECTION B-B

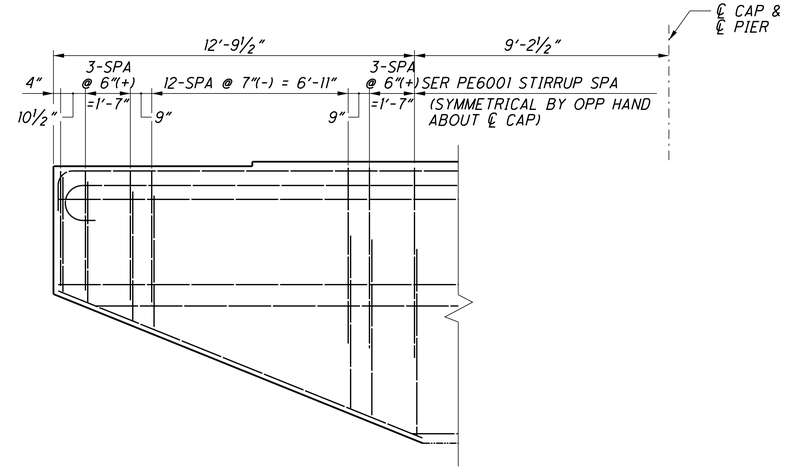

STIRRUP SPACING DETAIL

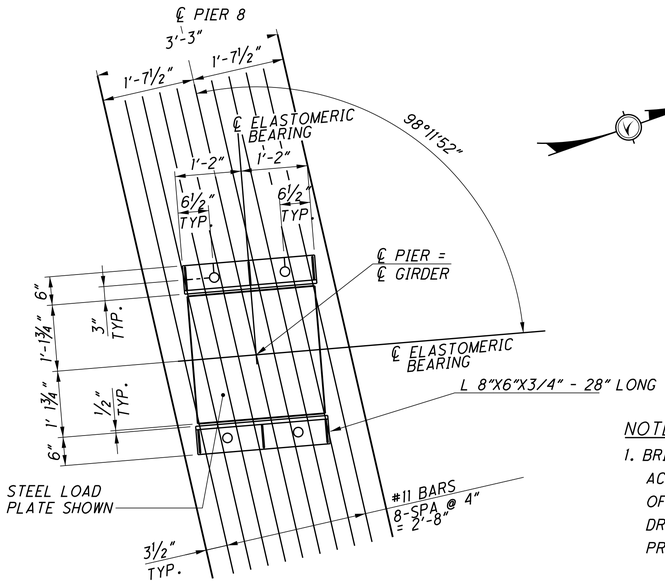

TYPICAL BEARING LAYOUT

NOTES

1. BRIDGE SEAT REINFORCING, SETTING ANCHORS:
   ACCURATELY PLACE REINFORCING STEEL IN THE VICINITY OF THE BRIDGE SEAT TO AVOID INTERFERENCE WITH THE DRILLING OF RETAINER ANGLE ANCHOR HOLES OR THE PRE-SETTING OF RETAINER ANGLE ANCHORS.

2. ANCHORAGE REQUIREMENTS:
   FOR ANCHORAGE REQUIREMENTS SEE SHEET 335/365

LEGEND

INDICATES 1:4 BATTER IN DIRECTION INDICATED

NOTES

1. FOR ADDITIONAL NOTES, SEE SHEET 317/365

Link to RFI012 As-Built

DESIGN AGENCY
URS
36 EAST 7TH STREET
SUITE 2300
CINCINNATI, OHIO 45202

DESIGNED	DRAWN	REVIEWED	DATE
MKT	KK	JTH	06-11-10
CHECKED	REVISED	STRUCTURE FILE NUMBER	
JEH		4401263	

OHIO APPROACH - PIER 8 FOUNDATION PLAN & DETAILS
BRIDGE NO. LAW-93C-0000
IRONTON RUSSELL BRIDGE OVER OHIO RIVER

LAW-93-0.00
PID No. 81595

318/365

705/788

J:\Project\ODOT\15005112 Ironton Russell\LAW\81595\structures\LAW093_1111C\sheets\Ohio Approach\093_0000_pi802.dgn

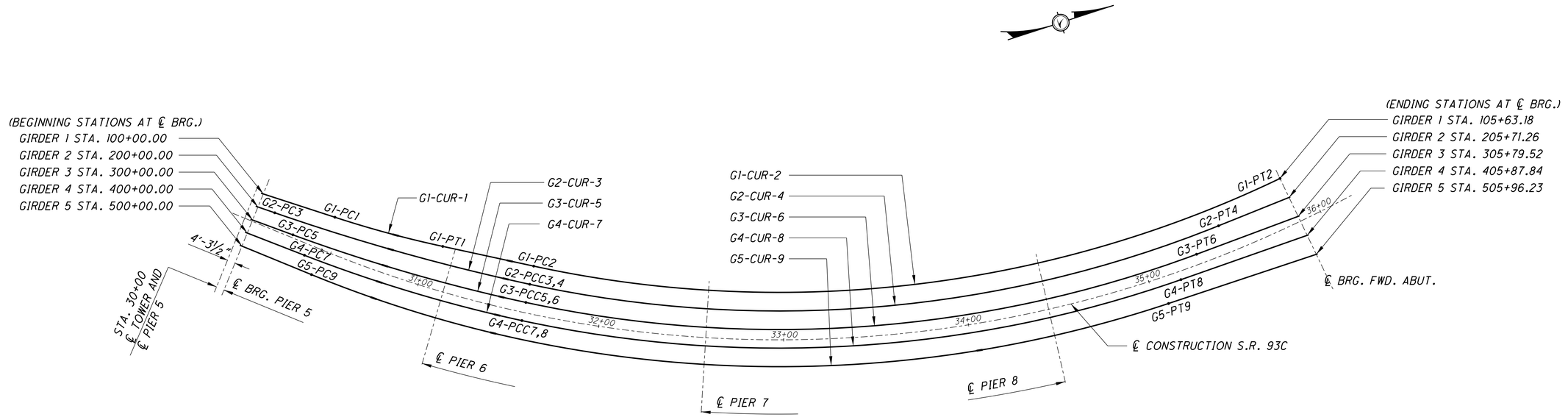

GIRDERS 1 THRU 5 CURVE DATA				
GIRDER NO. 1	GIRDER NO. 2	GIRDER NO. 3	GIRDER NO. 4	GIRDER NO. 5
CURVE G1-CUR-1	CURVE G2-CUR-3	CURVE G3-CUR-5	CURVE G4-CUR-7	CURVE G5-CUR-9
P.I. STA 100+70.732 Δ = 5° 49′ 16″ LT. Dc = 9° 40′ 12″ R = 592.52′ T = 30.12′ Lc = 60.20′ E = 0.77′ G1-PC1 STA. 100+40.602 G1-PT1 STA. 101+00.802 BEARING IN (N 36° 03′ 43″ E) BEARING OUT (N 30° 14′ 27″ E)	P.I. STA 200+81.055 Δ = 6° 52′ 24″ LT. Dc = 4° 48′ 55″ R = 1189.90′ T = 71.46′ Lc = 142.74′ E = 2.14′ G2-PC3 STA. 200+09.595 G2-PCC3,4 STA. 201+52.335 BEARING IN (N 37° 06′ 52″ E) BEARING OUT (N 30° 14′ 28″ E)	P.I. STA 300+88.627 Δ = 7° 55′ 50″ LT. Dc = 6° 03′ 56″ R = 944.63′ T = 65.48′ Lc = 130.75′ E = 2.27′ G3-PC5 STA. 300+23.147 G3-PCC5,6 STA. 301+53.897 BEARING IN (N 38° 10′ 18″ E) BEARING OUT (N 30° 14′ 28″ E)	P.I. STA 400+94.408 Δ = 8° 59′ 32″ LT. Dc = 7° 20′ 41″ R = 780.09′ T = 61.34′ Lc = 122.43′ E = 2.41′ G4-PC7 STA. 400+33.068 G4-PCC7,8 STA. 401+55.498 BEARING IN (N 39° 14′ 00″ E) BEARING OUT (N 30° 14′ 28″ E)	P.I. STA 502+86.848 Δ = 40° 41′ 04″ LT. Dc = 8° 37′ 23″ R = 664.46′ T = 246.35′ Lc = 471.82 E = 44.20′ G5-PC9 STA. 500+40.498 G5-PT9 STA. 505+12.318 BEARING IN (N 40° 17′ 54″ E) BEARING OUT (N 0° 23′ 10″ W)
CURVE G1-CUR-2	CURVE G2-CUR-4	CURVE G3-CUR-6	CURVE G4-CUR-8	
P.I. STA 103+64.882 Δ = 37° 49′ 32″ LT. Dc = 9° 10′ 31″ R = 624.46′ T = 213.96′ Lc = 412.26′ E = 35.64′ G1-PC2 STA. 101+50.922 G1-PT2 STA. 105+63.182 BEARING IN (N 30° 14′ 27″ E) BEARING OUT (N 7° 35′ 05″ W)	P.I. STA 203+47.125 Δ = 34° 08′ 00″ LT. Dc = 9° 01′ 50″ R = 634.46′ T = 194.78′ Lc = 377.97′ E = 29.23′ G2-PCC3,4 STA. 201+52.335 G2-PT4 STA. 205+30.305 BEARING IN (N 30° 14′ 28″ E) BEARING OUT (N 3° 53′ 32″ W)	P.I. STA 303+42.647 Δ = 32° 38′ 57″ LT. Dc = 8° 53′ 26″ R = 644.46′ T = 188.75′ Lc = 367.23′ E = 27.07′ G3-PCC5,6 STA. 301+53.897 G3-PT6 STA. 305+21.127 BEARING IN (N 30° 14′ 28″ E) BEARING OUT (N 2° 24′ 29″ W)	P.I. STA 403+40.318 Δ = 31° 32′ 24″ LT. Dc = 8° 45′ 17″ R = 654.46′ T = 184.82′ Lc = 360.26′ E = 25.60′ G4-PCC7,8 STA. 401+55.498 G4-PT8 STA. 405+15.758 BEARING IN (N 30° 14′ 28″ E) BEARING OUT (N 1° 17′ 56″ W)	

J:\Project\ODOT\15005112 Ironton Russell\LAW\81595\structures\LAW093_1111C\sheets\Ohio Approach\093_0000_Ohio_sd08.dgn

DESIGN AGENCY
URS
36 EAST 7TH STREET
SUITE 2300
CINCINNATI, OHIO 45202

DESIGNED	DRAWN	REVIEWED	DATE
BER	ALH	JTH	06-11-10
CHECKED	REVISED	STRUCTURE FILE NUMBER	
DB		4401263	

OHIO APPROACH - GIRDER LAYOUT CURVE DATA
BRIDGE NO. LAW-93C-0000
IRONTON RUSSELL BRIDGE OVER OHIO RIVER

LAW-93-0.00
PID No. 81595

319 / 365

706
788

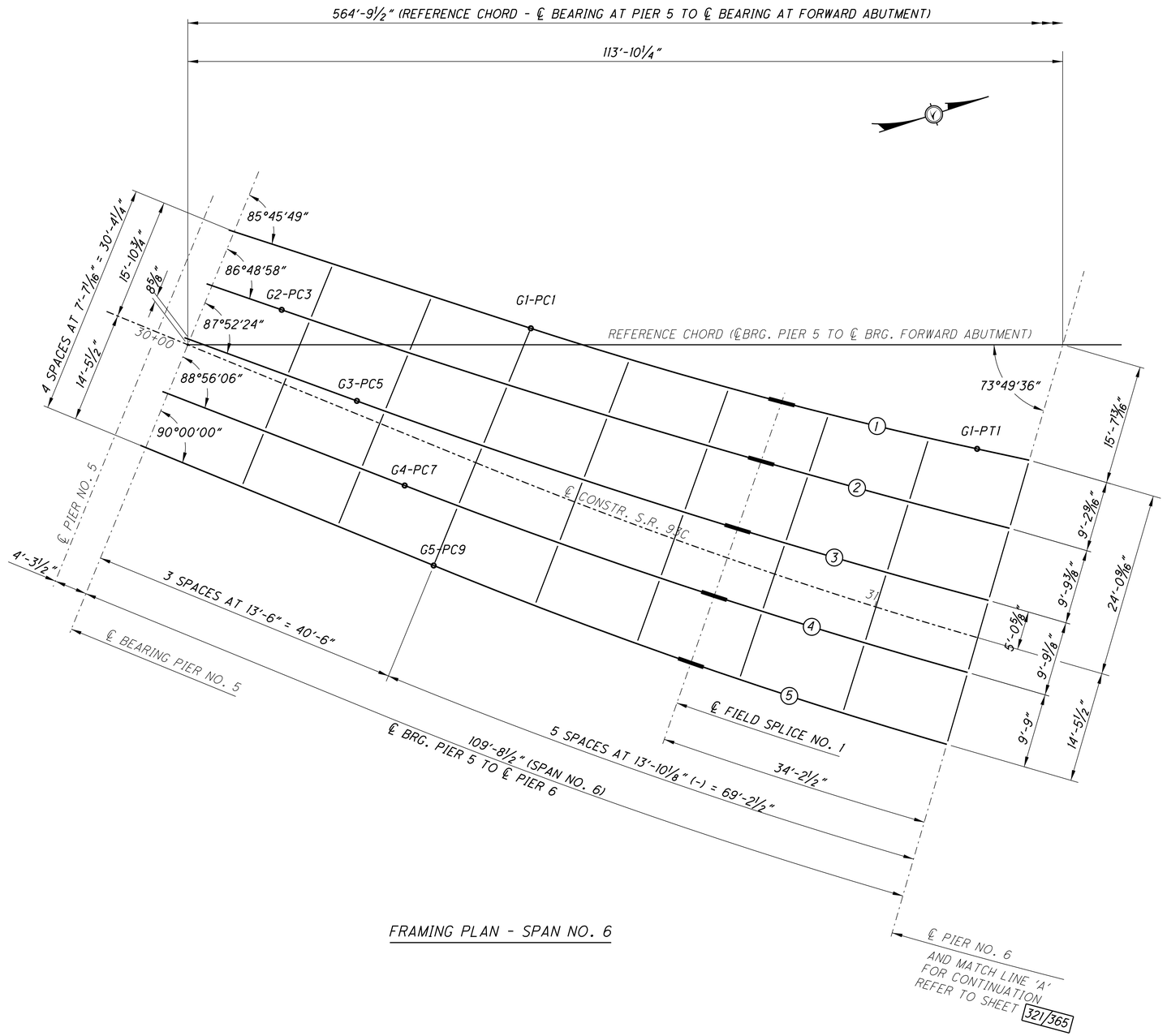

FRAMING PLAN - SPAN NO. 6

NOTES:

1. THE CROSSFRAME LOCATIONS ARE GIVEN ALONG AND RADIAL TO ℄ CONSTRUCTION S.R. 93C.
2. THE SPAN LENGTHS, CENTER TO CENTER BEARING LINES ARE GIVEN ALONG THE ℄ CONSTRUCTION S.R. 93C.
3. FOR GIRDER LAYOUT CURVE DATA, REFER TO SHEET 319/365
4. FOR INTERMEDIATE AND END CROSS FRAME DETAILS, REFER TO SHEET 326/365
5. FOR GIRDER ELEVATION DETAILS, REFER TO SHEET 324/365 AND 325/365
6. FOR GIRDER DEFLECTION AND CAMBER TABLES, REFER TO SHEETS 328/365 AND 329/365
7. HIGH STRENGTH BOLTS SHALL BE 1" DIAMETER A325 TYPE 3.
8. SEE STRUCTURAL GENERAL NOTES FOR PAINTING REQUIREMENTS.
9. WELD ATTACHMENT OF SUPPORTS FOR CONCRETE DECK FINISHING MACHINE TO AREAS OF THE FASCIA STRINGER FLANGES DESIGNATED "COMPRESSION". DO NOT WELD ATTACHMENTS TO AREAS DESIGNATED "TENSION". FILLET WELDS TO COMPRESSION FLANGES SHALL BE AT LEAST 1" FROM EDGE OF FLANGE, BE NO MORE THAN 2" LONG, AND BE AT LEAST ¼" FOR THICKNESSES UP TO ¾" OR 5/16" FOR THICKNESSES GREATER THAN ¾".
10. MC 12x40 CONDUIT SUPPORTS SHALL BE SPACED AT A MAXIMUM OF 10'-0". THE CONDUIT SUPPORTS SHALL BE SPACED SO THAT THEY DO NOT INTERFERE WITH ANY CROSSFRAMES, BEARING STIFFNERS, INTERMEDIATE STIFFNERS, FIELD SPLICES, AND SHOP WELDED WEB SPLICES. FOR CONDUIT SUPPORT DETAILS REFER TO SHEET 343/365
11. PARTIAL PAINTING OF A709 GRADE 50W STEEL: PAINT THE FASCIA GIRDERS AND ANY ATTACHMENTS THEIR ENTIRE LENGTH. THE PRIME COAT SHALL BE 708.01. THE TOP COAT COLOR SHALL CLOSELY APPROACH FEDERAL STANDARD NO. 595B-16405, GRAY.

    PAINT THE LAST 10 FT OF EACH INTERIOR GIRDER END ADJACENT TO PIER 5 AND THE FORWARD ABUTMENT INCLUDING ALL CROSS FRAMES AND OTHER STEEL WITHIN THESE LIMITS THAT ARE NOT INCLUDED WITH THE FASCIA GIRDERS. THE PRIME COAT SHALL BE 708.01. THE TOP COAT COLOR SHALL CLOSELY APPROACH FEDERAL STANDARD NO. 595B-20045 OR 20059 (THE COLOR OF WEATHERING STEEL).

DESIGN AGENCY
URS
36 EAST 7TH STREET
SUITE 2300
CINCINNATI, OHIO 45202

DESIGNED	DRAWN	REVIEWED	DATE
PJW	ALH	JTH	06-11-10
CHECKED	REVISED	STRUCTURE FILE NUMBER	
DB		4401263	

OHIO APPROACH - FRAMING PLAN - SPAN NO. 6
BRIDGE NO. LAW-93C-0000
IRONTON RUSSELL BRIDGE OVER OHIO RIVER

LAW-93-0.00
PID No. 81595

J:\Project\O\ODOT\15005112 Ironton Russell\LAW\81595\structures\LAW093_1111C\sheets\Ohio Approach\093_0000_Ohio_sd01.dgn

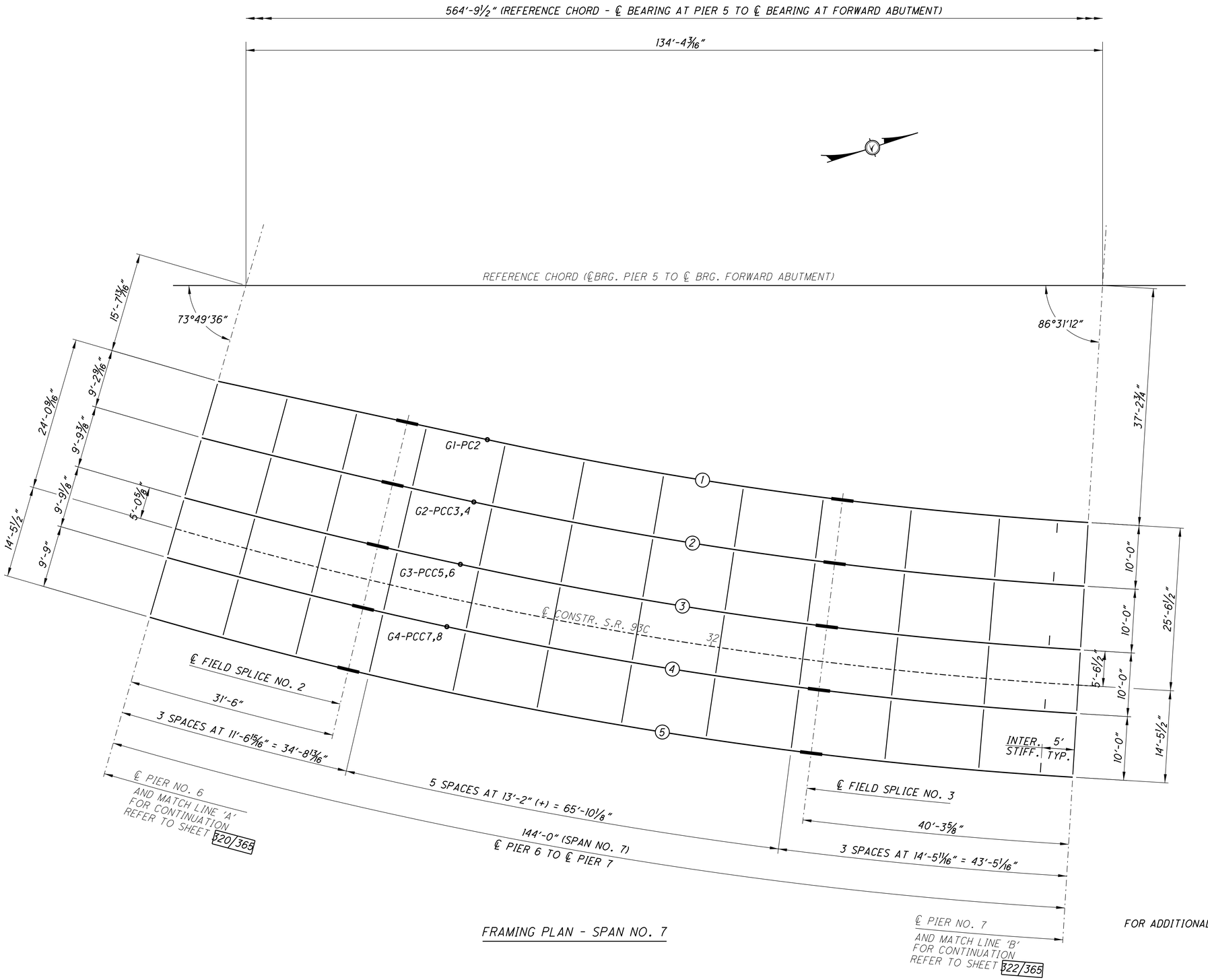

FRAMING PLAN - SPAN NO. 7

NOTE:

FOR ADDITIONAL NOTES AND REFERENCES REFER TO SHEET 320/365

J:\Project\OVODOT\15005112 Ironton Russell\LAW\81595\structures\LAW093_1111C\sheets\Ohio Approach\093_0000_Ohio_sd02.dgn

DESIGN AGENCY
URS
36 EAST 7TH STREET
SUITE 2300
CINCINNATI, OHIO 45202

DESIGNED	DRAWN	REVIEWED	DATE
PJW	ALH	JTH	06-11-10
CHECKED	REVISED	STRUCTURE FILE NUMBER	
DB		4401263	

OHIO APPROACH - FRAMING PLAN - SPAN NO. 7
BRIDGE NO. LAW-93C-0000
IRONTON RUSSELL BRIDGE OVER OHIO RIVER

LAW-93-0.00
PID No. 81595

321/365

708
788

564'-9½" (REFERENCE CHORD - ℄ BEARING AT PIER 5 TO ℄ BEARING AT FORWARD ABUTMENT)

170'-0 11/16"

REFERENCE CHORD (℄BRG. PIER 5 TO ℄ BRG. FORWARD ABUTMENT)

86°31'12"

77°05'05"

37'-2¾"

23'-1⅛"

10'-0"

25'-6½"

14'-5½"

5'-6½"

℄ CONSTR. S.R. 93C

33

34

INTER. STIFF. TYP. 5'

5' TYP. INTER. STIFF.

℄ FIELD SPLICE NO. 4

40'-3⅝"

15'-6⅝"

℄ FIELD SPLICE NO. 5

40'-3⅝"

15'-6⅝"

10 SPACES AT 15'-5⅞" = 154'-10¾"

186'-0" (SPAN NO. 8)
℄ PIER 7 TO ℄ PIER 8

℄ PIER NO. 7
AND MATCH LINE 'B'
FOR CONTINUATION
REFER TO SHEET 321/365

℄ PIER NO. 8
AND MATCH LINE 'C'
FOR CONTINUATION
REFER TO SHEET 323/365

FRAMING PLAN - SPAN NO. 8

NOTE:

FOR ADDITIONAL NOTES AND REFERENCES REFER TO SHEET 320/365

J:\Project\OA\ODOT\15005112 Ironton Russell\LAW\81595\structures\LAW093_1111C\sheets\Ohio Approach\093_0000_Ohio_sd03.dgn

DESIGN AGENCY
URS
36 EAST 7TH STREET
SUITE 2300
CINCINNATI, OHIO 45202

DESIGNED	DRAWN	REVIEWED	DATE
PJW	ALH	JTH	06-11-10
CHECKED	REVISED	STRUCTURE FILE NUMBER	
DB		4401263	

OHIO APPROACH - FRAMING PLAN - SPAN NO. 8
BRIDGE NO. LAW-93C-0000
IRONTON RUSSELL BRIDGE OVER OHIO RIVER

LAW-93-0.00
PID No. 81595

322/365

709
788

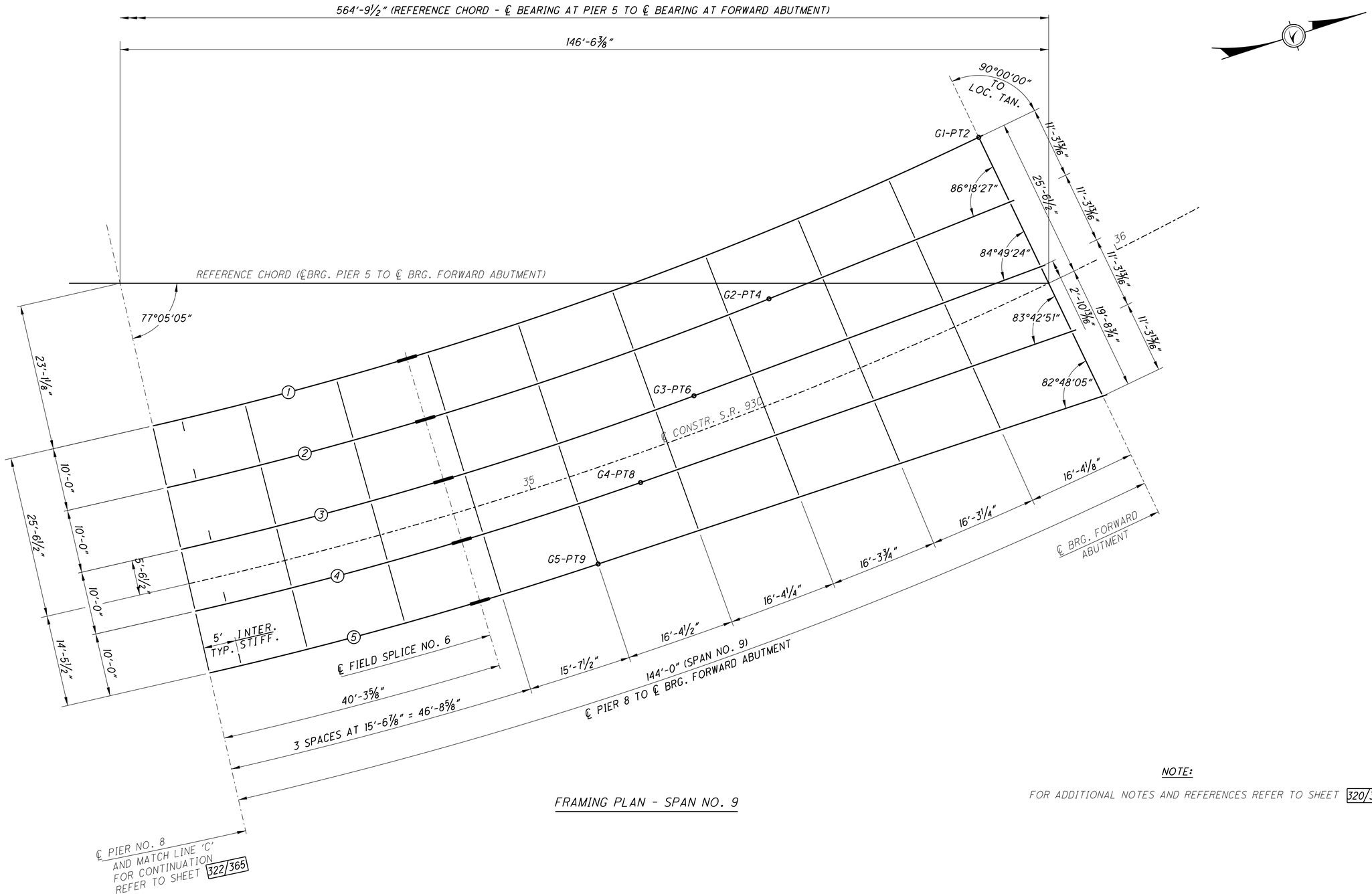

FRAMING PLAN - SPAN NO. 9

NOTE:

FOR ADDITIONAL NOTES AND REFERENCES REFER TO SHEET 320/365

J:\Project\O\ODOT\15005112 Ironton Russell\LAW\81595\structures\LAW093_1111C\sheets\Ohio Approach\093_0000_Ohio_sd04.dgn

DESIGN AGENCY
URS
36 EAST 7TH STREET
SUITE 2300
CINCINNATI, OHIO 45202

DESIGNED	DRAWN	REVIEWED	DATE
PJW	ALH	JTH	06-11-10
CHECKED	REVISED	STRUCTURE FILE NUMBER	
DB		4401263	

OHIO APPROACH - FRAMING PLAN - SPAN NO. 9
BRIDGE NO. LAW-93C-0000
IRONTON RUSSELL BRIDGE OVER OHIO RIVER

LAW-93-0.00
PID No. 81595

323/365

710
788

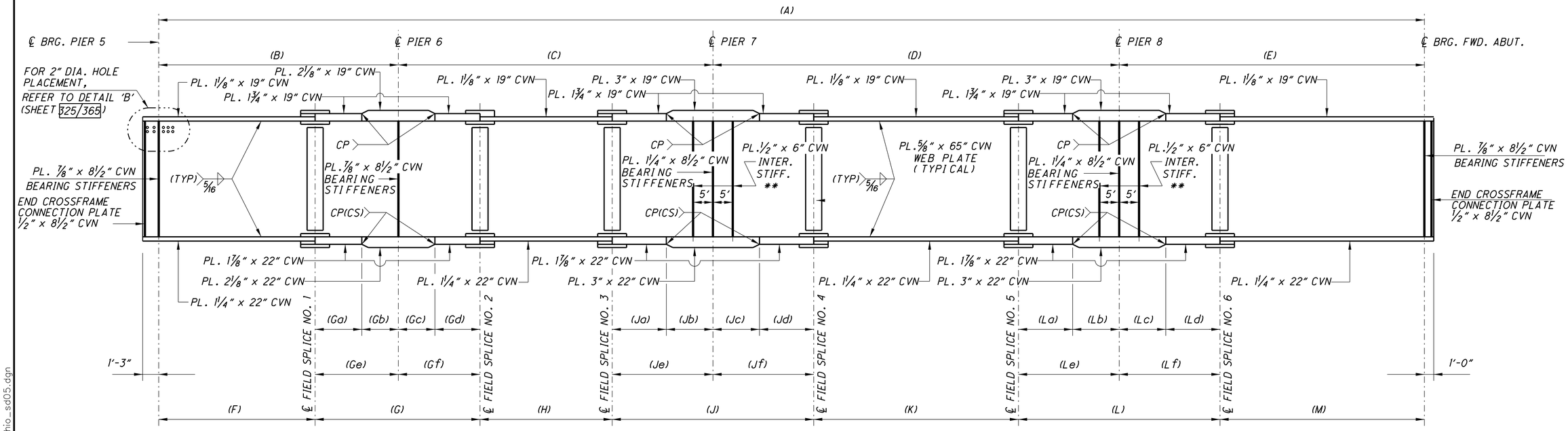

KEY GIRDER ELEVATION

** DENOTES INTERMEDIATE STIFFENERS SHALL BE PLACED ON THE INSIDE FACE OF FASCIA GIRDERS AND TOWARDS THE CENTER FOR THE INTERIOR GIRDERS.

GIRDER DIMENSION TABLE I

LOCATION	(A)	(B)	(C)	(D)	(E)	(F)	(G)	(H)	(J)	(K)	(L)	(M)
GIRDER LINE 1	563'-2⅛"	107'-8¹³⁄₁₆"	138'-4⅞"	178'-8⁵⁄₁₆"	138'-4⅛"	74'-7⁷⁄₁₆"	63'-5¼"	69'-4⁵⁄₁₆"	77'-5¼"	101'-3¹⁄₁₆"	80'-2¾"	96'-10"
GIRDER LINE 2	571'-3⅛"	108'-6⅛"	140'-6⁵⁄₁₆"	181'-6¹⁄₁₆"	140'-7⅜"	75'-0³⁄₁₆"	64'-3³⁄₁₆"	70'-5⅝"	78'-8⅛"	102'-10⁹⁄₁₆"	81'-6³⁄₁₆"	98'-5¼"
GIRDER LINE 3	579'-6³⁄₁₆"	109'-4⁹⁄₁₆"	142'-9⁷⁄₁₆"	184'-5"	142'-11³⁄₁₆"	75'-4¹³⁄₁₆"	65'-2¾"	71'-7"	79'-11"	104'-6"	82'-9⁵⁄₁₆"	100'-5¼"
GIRDER LINE 4	587'-10⅛"	110'-3⁹⁄₁₆"	144'-11⅞"	187'-3⅜"	145'-3⁵⁄₁₆"	75'-9⅞"	66'-2⅜"	72'-8⁵⁄₁₆"	81'-1⅞"	106'-1½"	84'-1"	101'-9¼"
GIRDER LINE 5	596'-2¹³⁄₁₆"	111'-3"	147'-2¹⁄₁₆"	190'-1¹⁄₁₆"	147'-7¹⁄₁₆"	76'-3⁵⁄₁₆"	67'-2¹⁄₁₆"	73'-9⅝"	82'-4¾"	107'-8¹⁵⁄₁₆"	85'-4⁷⁄₁₆"	103'-5¹¹⁄₁₆"

LOCATION	(Ga)	(Gb)	(Gc)	(Gd)	(Ge)	(Gf)
GIRDER LINE 1	16'-2¼"	16'-11¹⁄₁₆"	15'-5¹⁄₁₆"	14'-10⅞"	33'-1⁵⁄₁₆"	30'-3¹⁵⁄₁₆"
GIRDER LINE 2	16'-4½"	17'-1⅞"	15'-7⅝"	15'-1⅝"	33'-5¹⁵⁄₁₆"	30'-9¼"
GIRDER LINE 3	16'-7⁵⁄₁₆"	17'-4½"	15'-10½"	15'-4⁷⁄₁₆"	33'-11³⁄₁₆"	31'-2⁵⁄₁₆"
GIRDER LINE 4	16'-10⅛"	17'-7⁹⁄₁₆"	16'-1⅜"	15'-7⁵⁄₁₆"	34'-5¹¹⁄₁₆"	31'-8¹¹⁄₁₆"
GIRDER LINE 5	17'-0¹⁵⁄₁₆"	17'-10¹¹⁄₁₆"	16'-4⁵⁄₁₆"	15'-10⅛"	34'-11⅝"	32'-2⁷⁄₁₆"

LOCATION	(Ja)	(Jb)	(Jc)	(Jd)	(Je)	(Jf)
GIRDER LINE 1	19'-0⁵⁄₁₆"	19'-8⁵⁄₁₆"	19'-8⁵⁄₁₆"	19'-0⁵⁄₁₆"	38'-8⅝"	38'-8⅝"
GIRDER LINE 2	19'-3¹⁵⁄₁₆"	20'-0⅛"	20'-0⅛"	19'-3¹⁵⁄₁₆"	39'-4¹⁄₁₆"	39'-4¹⁄₁₆"
GIRDER LINE 3	19'-7⅝"	20'-3⅞"	20'-3⅞"	19'-7⅝"	39'-11½"	39'-11½"
GIRDER LINE 4	19'-11¼"	20'-7¹¹⁄₁₆"	20'-7¹¹⁄₁₆"	19'-11¼"	40'-6¹⁵⁄₁₆"	40'-6¹⁵⁄₁₆"
GIRDER LINE 5	20'-2⅞"	20'-11½"	20'-11½"	20'-2⅞"	41'-2⅜"	41'-2⅜"

LOCATION	(La)	(Lb)	(Lc)	(Ld)	(Le)	(Lf)
GIRDER LINE 1	19'-0⁵⁄₁₆"	19'-8⁵⁄₁₆"	21'-1⅝"	20'-4½"	38'-8⅝"	41'-6⅛"
GIRDER LINE 2	19'-3¹⁵⁄₁₆"	20'-0⅛"	21'-5¹¹⁄₁₆"	20'-8⅞"	39'-4¹⁄₁₆"	42'-2⅛"
GIRDER LINE 3	19'-7⅝"	20'-3⅞"	21'-9¾"	21'-0⅜"	39'-11½"	42'-10⅛"
GIRDER LINE 4	19'-11¼"	20'-7¹¹⁄₁₆"	22'-1³⁄₁₆"	21'-4¼"	40'-6¹⁵⁄₁₆"	43'-6¹⁄₁₆"
GIRDER LINE 5	20'-2⅞"	20'-11½"	22'-5⅞"	21'-8³⁄₁₆"	41'-2⅜"	44'-2¹⁄₁₆"

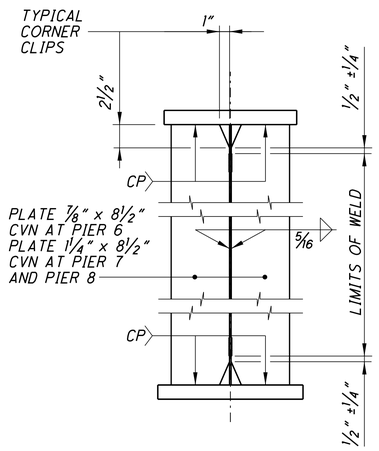

BEARING STIFFENER DETAIL
AT PIERS 6, 7, 8

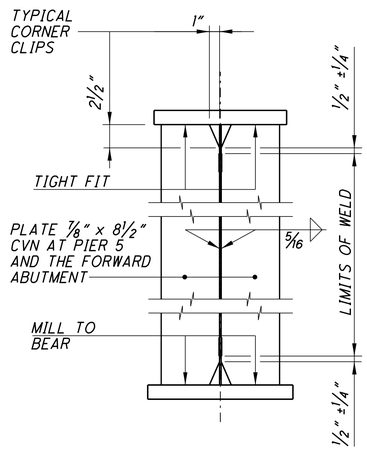

BEARING STIFFENER DETAIL
AT PIER 5 AND FWD. ABUTMENT

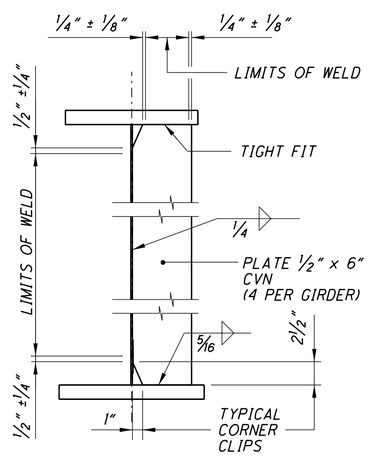

INTERMEDIATE STIFFENER DETAIL

NOTES
1. FOR ADDITIONAL NOTES AND DETAILS SEE SHEET 325/365

DESIGN AGENCY
URS
36 EAST 7TH STREET
SUITE 2300
CINCINNATI, OHIO 45202

DESIGNED PJW
DRAWN ALH
REVIEWED JTH
DATE 06-11-10
CHECKED DB
REVISED
STRUCTURE FILE NUMBER 4401263

OHIO APPROACH - GIRDER DETAILS
BRIDGE NO. LAW-93C-0000
IRONTON RUSSELL BRIDGE OVER OHIO RIVER

LAW-93-0.00
PID No. 81595

324/365

711
788

J:\Project\OVODOT\15005112 Ironton Russell\LAW\81595\structures\LAW093_1111C\sheets\Ohio Approach\093_0000_Ohio_sd05.dgn

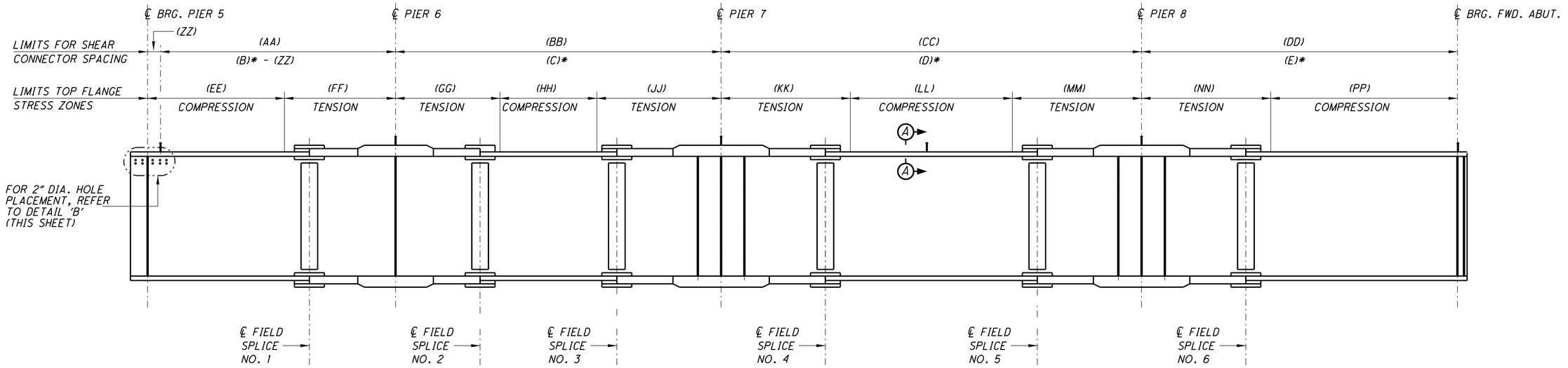

KEY GIRDER ELEVATION

* DENOTES FOR DIMENSION REFER TO GIRDER DIMENSION TABLE I , SHEET 324/365

GIRDER DIMENSION TABLE II

LOCATION	SHEAR CONNECTOR SPACING					TOP FLANGE TENNSION/COMPRESSION ZONES									
	(ZZ)	(AA)	(BB)	(CC)	(DD)	(EE)	(FF)	(GG)	(HH)	(JJ)	(KK)	(LL)	(MM)	(NN)	(PP)
GIRDER LINE 1	11 3/16"	122 SPA @ 10 1/2"	145 SPA @ 11 1/2"(-)	187 SPA @ 11 1/2"(-)	133 SPA @ 12 1/2"(-)	57'-7 15/16"	50'-0 7/8"	46'-9 1/2"	25'-3"	66'-4 7/16"	49'-6 13/16"	71'-6"	57'-7 7/16"	57'-11 11/16"	80'-5 3/8"
GIRDER LINE 2	10 5/8"	123 SPA @ 10 1/2"	147 SPA @ 11 1/2"(-)	190 SPA @ 11 1/2"(-)	135 SPA @ 12 1/2"(-)	57'-8 1/4"	50'-9 7/8"	50'-8 3/8"	18'-2 3/16"	71'-8 3/8"	49'-9 13/16"	73'-5 1/16"	58'-3 3/4"	60'-1 3/4"	80'-5 5/8"
GIRDER LINE 3	10 9/16"	124 SPA @ 10 1/2"	149 SPA @ 11 1/2"(-)	193 SPA @ 11 1/2"(-)	138 SPA @ 12 1/2"(-)	64'-4 5/16"	45'-0 1/4"	42'-8 3/4"	32'-11 1/4"	67'-1 1/16"	46'-9"	82'-0"	55'-8"	59'-0 3/8"	83'-10 13/16"
GIRDER LINE 4	11 1/16"	125 SPA @ 10 1/2"	151 SPA @ 11 1/2"(+)	196 SPA @ 11 1/2"(-)	140 SPA @ 12 1/2"(-)	64'-9 "	45'-6 1/2"	42'-1 5/16"	34'-10 7/16"	68'-0 1/8"	46'-1 13/16"	85'-7 9/16"	55'-6"	59'-7 1/8"	85'-8 3/16"
GIRDER LINE 5	12"	122 SPA @ 10 1/2"	154 SPA @ 11 1/2"(-)	199 SPA @ 11 1/2"(-)	142 SPA @ 12 1/2"(-)	59'-6"	51'-9"	62'-5 1/16"	0'-0"	84'-9 3/8"	51'-10 5/16"	75'-11 1/16"	62'-4 5/16"	67'-3 3/4"	80'-3 15/16"

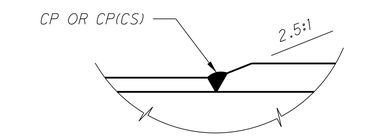

DETAIL 'CP'

CP(CS) DENOTES COMPLETE JOINT PENETRATION WELD SUBJECT TO COMPRESSIVE STRESSES ONLY

CP DENOTES COMPLETE JOINT PENETRATION WELD

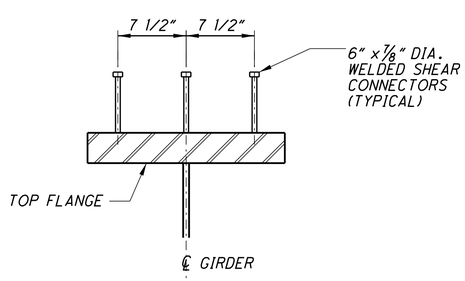

SECTION 'A-A'

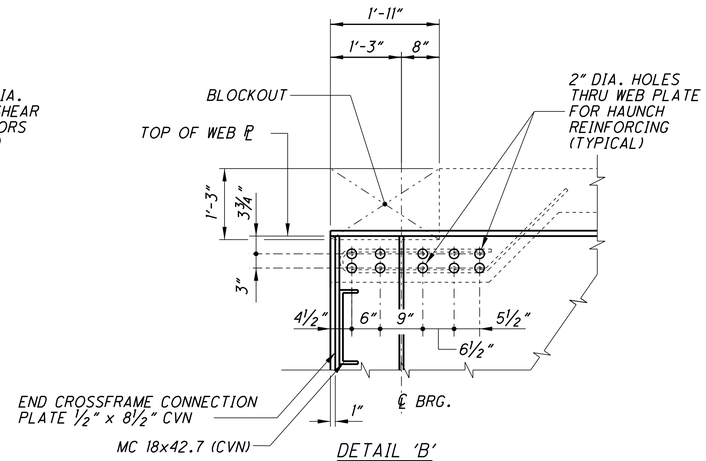

DETAIL 'B'

NOTES

1. CVN:
   WHERE A SHAPE OR PLATE IS DESIGNATED CVN, FURNISH MATERIAL THAT MEETS THE MINIMUM NOTCH TOUGHNESS REQUIREMENTS AS SPECIFIED IN 711.01.

2. WELD ATTACHMENT OF SUPPORTS FOR CONCRETE DECK FINISHING MACHINE TO AREAS OF THE FASCIA STRINGER FLANGES DESIGNATED "COMPRESSION". DO NOT WELD ATTACHMENTS TO AREAS DESIGNATED "TENSION". FILLET WELDS TO COMPRESSION FLANGES SHALL BE AT LEAST 1" FROM EDGE OF FLANGE, BE NO MORE THAN 2" LONG, AND BE AT LEAST 1/4" FOR THICKNESSES UP TO 3/4" OR 5/16" FOR GREATER THAN 3/4" THICK.

DESIGN AGENCY
URS
35 EAST 7TH STREET
SUITE 2300
CINCINNATI, OHIO 45202

DESIGNED	DRAWN	REVIEWED	DATE
PJW	ALH	JTH	06-11-10
CHECKED	REVISED	STRUCTURE FILE NUMBER	
DB		4401263	

OHIO APPROACH - GIRDER AND MISCELLANEOUS DETAILS
BRIDGE NO. LAW-93C-0000
IRONTON RUSSELL BRIDGE OVER OHIO RIVER

LAW-93-0.00
PID No. 81595

J:\Project\OV\ODOT\15005112 Ironton Russell\LAW\81595\structures\LAW093_1111C\sheets\Ohio Approach\093_0000_Ohio_sd06.dgn

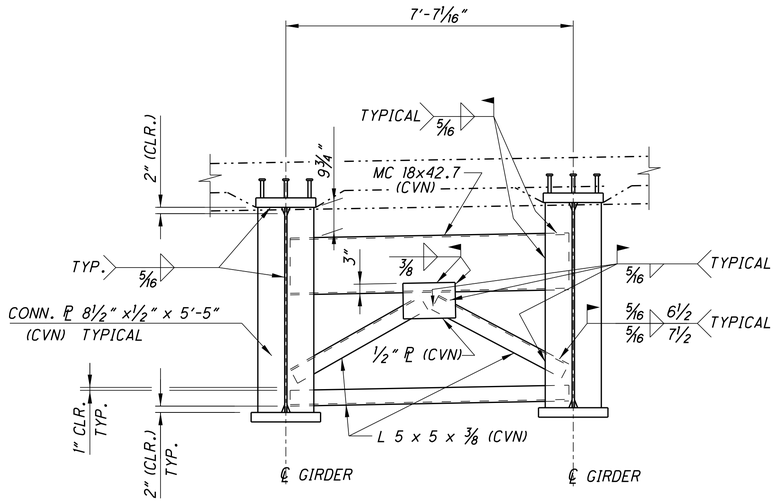

END CROSSFRAME DETAIL PIER NO. 5

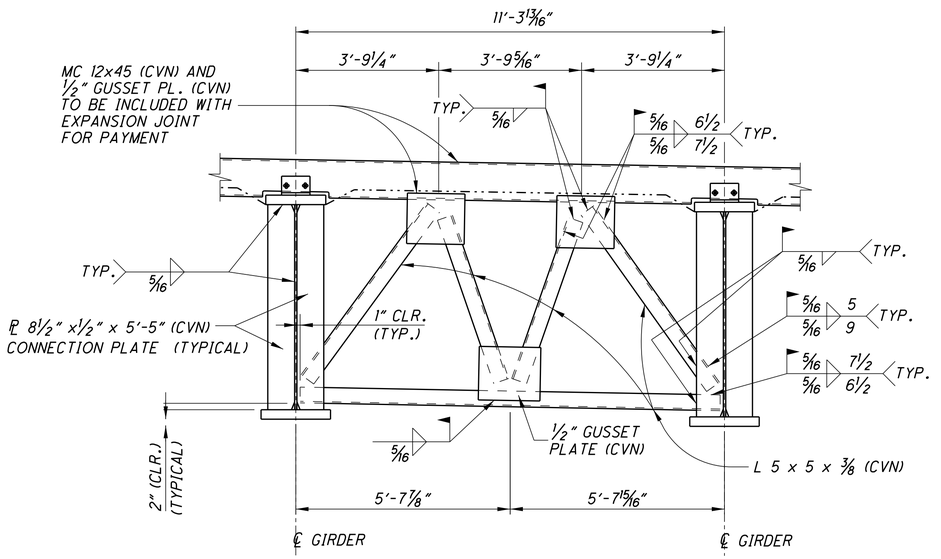

END CROSSFRAME DETAIL FORWARD ABUTMENT

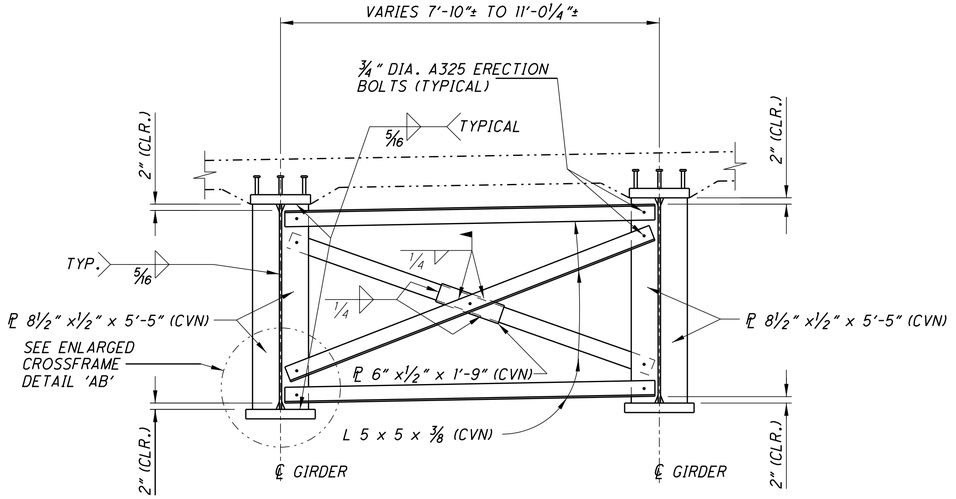

INTERMEDIATE CROSSFRAME DETAIL

NOTE: CONNECT INTERMEDIATE CROSSFRAMES MEMBERS TO BEARING STIFFENER PL'S AT PIERS P-6, P-7, & P-8. PL 8 1/2"x1/2"x5'-5" NOT REQUIRED AT PIER BEARING LOCATION. FOR BEARING STIFFENER DETAIL, SEE SHEET 324/365

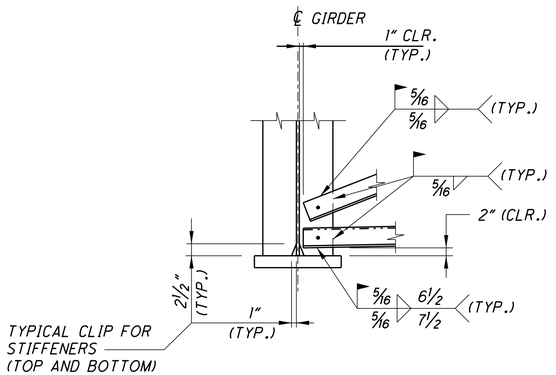

ENLARGED INTERMEDIATE CROSSFRAME DETAIL 'AB'

NOTES:

1. CVN:
WHERE A SHAPE OR PLATE IS DESIGNATED (CVN), FURNISH MATERIAL THAT MEETS THE MINIMUM NOTCH TOUGHNESS REQUIREMENTS AS SPECIFIED IN 711.01.

2. MATERLIAL:
ALL CROSSFRAME MATERIAL SHALL BE A709 GRADE 50W.

3. FASTENERS:
ALL BOLTS SHALL BE A325. FOR PAINTED STEEL, TYPE 1 GALVANIZED BOLTS SHALL BE USED. FOR BARE A709 GRADE 50W STEEL, TYPE 3 BOLTS SHALL BE USED. EACH ANCHOR ASSEMBLY SHALL INCLUDE A BOLT, NUT AND TWO (2) WASHERS, TIGHTENED ACCORDING TO CMS 513.

4. WORK POINTS:
WORK POINTS SHALL BE COORDINATED BETWEEN EXPANSION JOINT AND STRUCTURAL STEEL SUPPLIERS TO ASSURE FIT UP AT ALL END CROSSFRAME DESIGN LOCATIONS.

DESIGN AGENCY
URS
36 EAST 7TH STREET
SUITE 2300
CINCINNATI, OHIO 45202

DESIGNED	DRAWN	REVIEWED	DATE
PJW	ALH	JTH	06-11-10
CHECKED	REVISED	STRUCTURE FILE NUMBER	
DB		4401263	

OHIO APPROACH - INTERMEDIATE AND END CROSSFRAME DETAILS
BRIDGE NO. LAW-93C-0000
IRONTON RUSSELL BRIDGE OVER OHIO RIVER

LAW-93-0.00
PID No. 81595

326/365

713
788

J:\Project\ODOT\15005112 Ironton Russell\LAW\81595\structures\LAW093_1111C\sheets\Ohio Approach\093_0000_Ohio_sd07.dgn

Link to RFI035 As-Built

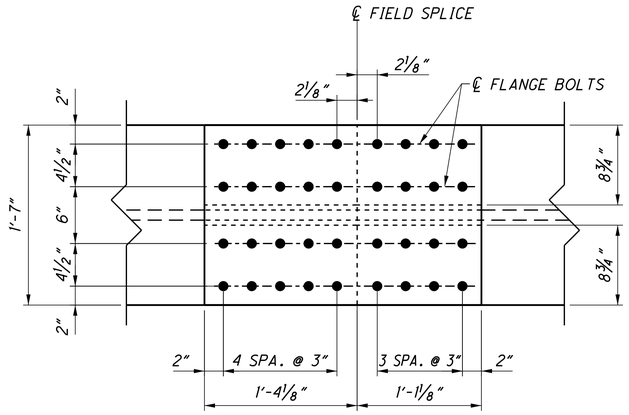

VIEW A-A

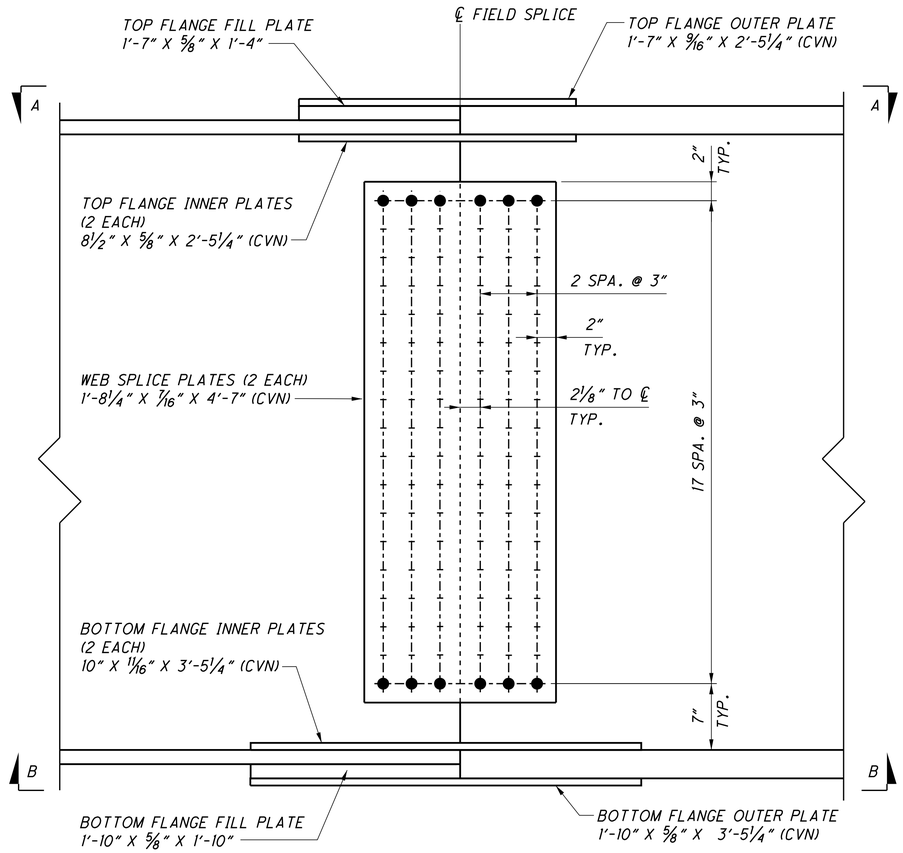

FIELD SPLICE DETAIL

(F.S. 1, 3 AND 5 SHOWN - F.S. 2, 4 AND 6 OPPOSITE HAND)

NOTES:

1. ALL BOLTS IN FIELD SPLICES SHALL BE 1" DIAMETER HIGH STRENGTH BOLTS PER ASTM A325 TYPE III. ALL BOLT HOLES SHALL BE 1 1⁄16" DIAMETER.
2. ALL SPLICE PLATES SHALL BE ASTM A709 GRADE 50W.
3. ALL SPLICE PLATES, EXCLUDING FILL PLATES, SHALL BE DESIGNATED (CVN). THE MATERIAL SHALL MEET THE SPECIFIED MINIMUM NOTCH TOUGHNESS REQUIREMENTS AS SPECIFIED IN CMS 711.01.
4. THE OPENING BETWEEN GIRDER ENDS AFTER ASSEMBLY SHALL NOT EXCEED ¼".
5. FOR LOCATIONS OF FIELD SPLICES, SEE FRAMING PLAN SHEETS 320/365 THRU 323/365 .

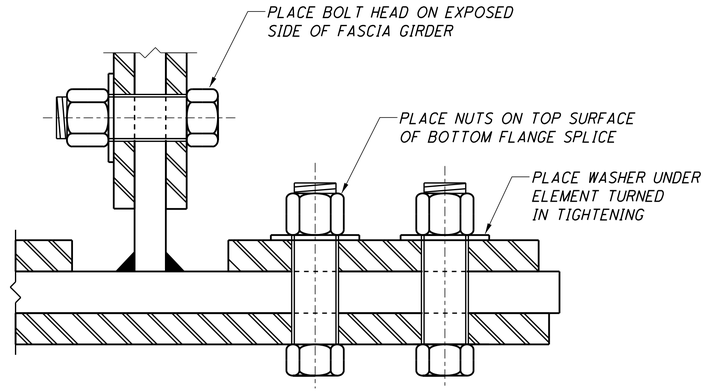

BOLT ORIENTATION DETAIL

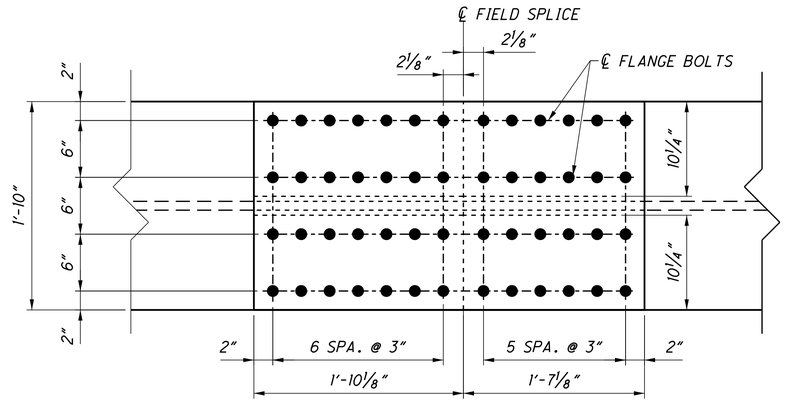

VIEW B-B

DESIGN AGENCY
URS
36 EAST 7TH STREET
SUITE 2300
CINCINNATI, OHIO 45202

DESIGNED	DRAWN	REVIEWED	DATE
PJW	MAL	JTH	06-11-10
CHECKED	REVISED	STRUCTURE FILE NUMBER	
DB		4401263	

OHIO APPROACH - FIELD SPLICE DETAILS
BRIDGE NO. LAW-93C-0000
IRONTON RUSSELL BRIDGE OVER OHIO RIVER

LAW-93-0.00
PID No. 81595

327/365

714/788

J:\Project\O\ODOT\15005112 Ironton Russell\LAW\81595\structures\LAW093_1111C\sheets\Ohio Approach\093_0000_Ohio_md11.dgn

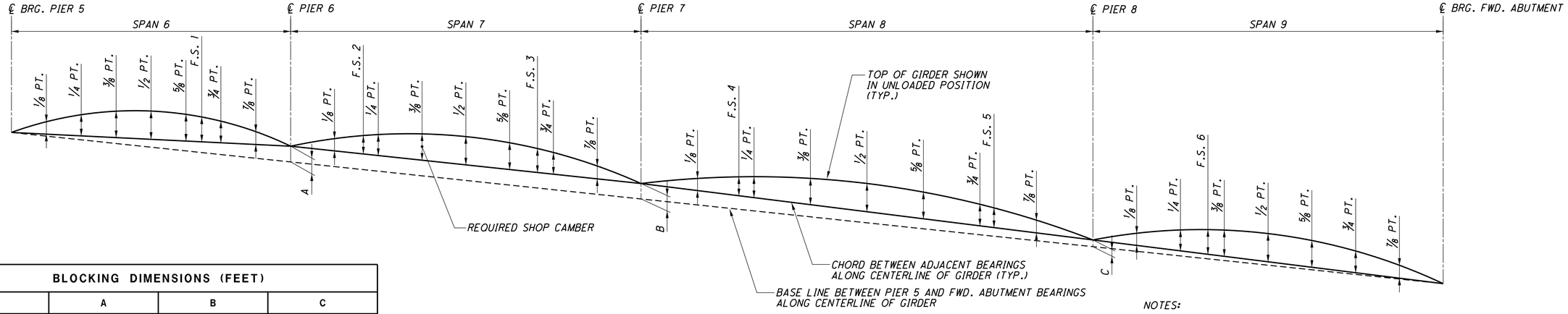

CAMBER AND LAYDOWN DIAGRAM

BLOCKING DIMENSIONS (FEET)			
	A	B	C
GIRDER 1	3.02	2.97	1.30
GIRDER 2	2.99	2.96	1.28
GIRDER 3	2.98	2.94	1.26
GIRDER 4	3.10	3.02	1.28
GIRDER 5	3.18	3.09	1.34

NOTES:

1. FOR FRAMING PLANS, SEE SHEETS 320/365 TO 323/365
2. HEAT CURVING SHALL BE PERMITTED. AN ADJUSTMENT OF ½ THE CALCULATED CAMBER INCREASE DUE TO HEAT CURVING HAS BEEN APPLIED TO THE SHOP CAMBER.
3. POSITIVE CAMBER VALUES INDICATE THAT CAMBER IS ABOVE THE CHORD BETWEEN ADJACENT BEARINGS.

DEFLECTION AND CAMBER (INCHES) - GIRDER 1

	PIER 5	1/8 POINT	1/4 POINT	3/8 POINT	1/2 POINT	5/8 POINT	F.S. 1	3/4 POINT	7/8 POINT	PIER 6	1/8 POINT	F.S. 2	1/4 POINT	3/8 POINT	1/2 POINT	5/8 POINT	F.S. 3	3/4 POINT	7/8 POINT	PIER 7
DEFLECTION DUE TO WEIGHT OF STEEL	0"	1/16"	3/16"	3/16"	3/16"	3/16"	1/8"	1/8"	1/16"	0"	0"	1/16"	1/16"	1/16"	1/16"	1/16"	0"	0"	0"	0"
DEFLECTION DUE TO REMAINING DL	0"	3/8"	11/16"	13/16"	13/16"	5/8"	1/2"	3/8"	1/8"	0"	1/16"	1/4"	5/16"	1/2"	1/2"	5/16"	1/16"	0"	- 1/8"	0"
ADJUSTMENT FOR VERTICAL/HORIZONTAL CURVE	0"	1 7/8"	3 3/16"	4 1/16"	4 5/16"	4 1/16"	3 9/16"	3 1/4"	1 7/8"	0"	2 11/16"	4 5/16"	4 5/8"	5 3/4"	5 15/16"	5 5/16"	4 3/16"	3 3/4"	1 7/8"	0"
ADJUSTMENT FOR HEAT CURVING GIRDERS	0"	1/16"	1/8"	3/16"	3/16"	1/8"	1/8"	1/16"	1/16"	0"	0"	1/16"	1/16"	1/8"	1/8"	1/16"	0"	0"	- 1/16"	0"
REQUIRED SHOP CAMBER	0"	2 3/8"	4 3/16"	5 1/4"	5 1/2"	5"	4 5/16"	3 13/16"	2 1/8"	0"	2 3/4"	4 11/16"	5 1/16"	6 7/16"	6 5/8"	5 3/4"	4 1/4"	3 3/4"	1 11/16"	0"
	PIER 7	1/8 POINT	F.S. 4	1/4 POINT	3/8 POINT	1/2 POINT	5/8 POINT	3/4 POINT	F.S. 5	7/8 POINT	PIER 8	1/8 POINT	1/4 POINT	F.S. 6	3/8 POINT	1/2 POINT	5/8 POINT	3/4 POINT	7/8 POINT	FWD. ABUT.
DEFLECTION DUE TO WEIGHT OF STEEL	0"	1/8"	5/16"	3/8"	9/16"	5/8"	1/2"	5/16"	1/4"	1/8"	0"	1/16"	1/8"	3/16"	1/4"	3/8"	7/16"	3/8"	3/16"	0"
DEFLECTION DUE TO REMAINING DL	0"	3/4"	1 1/2"	1 13/16"	2 11/16"	2 15/16"	2 7/16"	1 1/2"	1 3/16"	1/2"	0"	3/16"	11/16"	15/16"	1 3/8"	1 7/8"	2"	1 11/16"	1"	0"
ADJUSTMENT FOR VERTICAL/HORIZONTAL CURVE	0"	0"	0"	0"	0"	0"	0"	0"	0"	0"	0"	0"	0"	0"	0"	0"	0"	0"	0"	0"
ADJUSTMENT FOR HEAT CURVING GIRDERS	0"	1/16"	1/8"	3/16"	1/4"	1/4"	1/4"	1/8"	1/8"	1/16"	0"	0"	1/8"	1/8"	3/16"	1/4"	1/4"	1/4"	1/8"	0"
REQUIRED SHOP CAMBER	0"	15/16"	1 15/16"	2 3/8"	3 1/2"	3 13/16"	3 3/16"	1 15/16"	1 9/16"	11/16"	0"	1/4"	15/16"	1 1/4"	1 13/16"	2 1/2"	2 11/16"	2 5/16"	1 5/16"	0"

DEFLECTION AND CAMBER (INCHES) - GIRDER 2

	PIER 5	1/8 POINT	1/4 POINT	3/8 POINT	1/2 POINT	5/8 POINT	F.S. 1	3/4 POINT	7/8 POINT	PIER 6	1/8 POINT	F.S. 2	1/4 POINT	3/8 POINT	1/2 POINT	5/8 POINT	F.S. 3	3/4 POINT	7/8 POINT	PIER 7
DEFLECTION DUE TO WEIGHT OF STEEL	0"	1/8"	3/16"	3/16"	3/16"	3/16"	1/8"	1/8"	1/16"	0"	0"	1/16"	1/16"	1/16"	1/16"	1/16"	0"	0"	- 1/16"	0"
DEFLECTION DUE TO REMAINING DL	0"	7/16"	3/4"	15/16"	7/8"	11/16"	9/16"	7/16"	1/8"	0"	1/16"	1/4"	5/16"	1/2"	7/16"	1/4"	0"	- 1/16"	- 3/16"	0"
ADJUSTMENT FOR VERTICAL/HORIZONTAL CURVE	0"	1 13/16"	3 1/8"	3 15/16"	4 1/8"	3 7/8"	3 1/2"	3 1/16"	1 13/16"	0"	2 13/16"	4 7/16"	4 3/4"	5 13/16"	6"	5 3/8"	4 1/4"	3 13/16"	1 7/8"	0"
ADJUSTMENT FOR HEAT CURVING GIRDERS	0"	1/16"	1/8"	3/16"	3/16"	1/8"	1/8"	1/16"	1/16"	0"	0"	1/16"	1/16"	1/8"	1/8"	1/16"	0"	0"	- 1/16"	0"
REQUIRED SHOP CAMBER	0"	2 7/16"	4 3/16"	5 1/4"	5 3/8"	4 7/8"	4 5/16"	3 11/16"	2 1/16"	0"	2 7/8"	4 13/16"	5 3/16"	6 1/2"	6 5/8"	5 3/4"	4 1/4"	3 3/4"	1 9/16"	0"
	PIER 7	1/8 POINT	F.S. 4	1/4 POINT	3/8 POINT	1/2 POINT	5/8 POINT	3/4 POINT	F.S. 5	7/8 POINT	PIER 8	1/8 POINT	1/4 POINT	F.S. 6	3/8 POINT	1/2 POINT	5/8 POINT	3/4 POINT	7/8 POINT	FWD. ABUT.
DEFLECTION DUE TO WEIGHT OF STEEL	0"	3/16"	3/8"	7/16"	5/8"	11/16"	5/8"	3/8"	5/16"	1/8"	0"	1/16"	1/8"	3/16"	5/16"	3/8"	7/16"	3/8"	3/16"	0"
DEFLECTION DUE TO REMAINING DL	0"	7/8"	1 13/16"	2 1/8"	3 3/16"	3 1/2"	2 15/16"	1 13/16"	1 7/16"	5/8"	0"	1/8"	11/16"	1"	1 7/16"	2"	2 3/16"	1 7/8"	1 1/8"	0"
ADJUSTMENT FOR VERTICAL/HORIZONTAL CURVE	0"	0"	0"	0"	0"	0"	0"	0"	0"	0"	0"	- 1/16"	- 1/16"	- 1/16"	- 1/8"	- 1/8"	- 3/16"	- 1/4"	- 3/16"	0"
ADJUSTMENT FOR HEAT CURVING GIRDERS	0"	1/16"	1/8"	3/16"	1/4"	1/4"	1/4"	1/8"	1/8"	1/16"	0"	0"	1/16"	1/8"	3/16"	1/4"	1/4"	1/4"	1/8"	0"
REQUIRED SHOP CAMBER	0"	1 1/8"	2 5/16"	3"	4 1/16"	4 7/16"	3 13/16"	2 5/16"	1 7/8"	13/16"	0"	1/8"	13/16"	1 1/4"	1 13/16"	2 1/2"	2 11/16"	2 1/4"	1 1/4"	0"

DESIGN AGENCY
URS
36 EAST 7TH STREET
SUITE 2300
CINCINNATI, OHIO 45202

DESIGNED	DRAWN	REVIEWED	DATE
PJW	MAL	JTH	06-11-10
CHECKED	REVISED	STRUCTURE FILE NUMBER	
DB		4401263	

OHIO APPROACH - DEFLECTION AND CAMBER (1 OF 2)
BRIDGE NO. LAW-93C-0000
IRONTON RUSSELL BRIDGE OVER OHIO RIVER

LAW-93-0.00
PID No. 81595

328/365

715/788

J:\Project\ODOT\15005112 Ironton Russell\LAW\81595\structures\LAW093_1111C\sheets\Ohio Approach\093_0000_Ohio_md01.dgn

DEFLECTION AND CAMBER (INCHES) - GIRDER 3

	PIER 5	1/8 POINT	1/4 POINT	3/8 POINT	1/2 POINT	5/8 POINT	F.S. 1	3/4 POINT	7/8 POINT	PIER 6	1/8 POINT	F.S. 2	1/4 POINT	3/8 POINT	1/2 POINT	5/8 POINT	F.S. 3	3/4 POINT	7/8 POINT	PIER 7
DEFLECTION DUE TO WEIGHT OF STEEL	0"	1/8"	3/16"	1/4"	1/4"	3/16"	1/8"	1/8"	1/16"	0"	0"	1/16"	1/16"	1/16"	1/16"	0"	0"	- 1/16"	- 1/16"	0"
DEFLECTION DUE TO REMAINING DL	0"	7/16"	13/16"	1"	1"	3/4"	5/8"	1/2"	3/16"	0"	1/16"	1/4"	5/16"	7/16"	7/16"	3/16"	- 1/16"	- 1/8"	- 1/4"	0"
ADJUSTMENT FOR VERTICAL/HORIZONTAL CURVE	0"	1 13/16"	3 1/8"	3 7/8"	4 1/8"	3 13/16"	3 1/2"	3 1/16"	1 3/4"	0"	2 13/16"	4 7/16"	4 3/4"	5 13/16"	6 1/16"	5 3/8"	4 1/4"	3 13/16"	1 7/8"	0"
ADJUSTMENT FOR HEAT CURVING GIRDERS	0"	1/16"	1/8"	3/16"	3/16"	1/8"	1/8"	1/16"	1/16"	0"	0"	1/16"	1/16"	1/8"	1/8"	1/16"	0"	- 1/16"	- 1/16"	0"
REQUIRED SHOP CAMBER	0"	2 7/16"	4 1/4"	5 5/16"	5 9/16"	4 7/8"	4 3/8"	3 3/4"	2 1/16"	0"	2 7/8"	4 13/16"	5 3/16"	6 7/16"	6 11/16"	5 5/8"	4 3/16"	3 9/16"	1 1/2"	0"
	PIER 7	1/8 POINT	F.S. 4	1/4 POINT	3/8 POINT	1/2 POINT	5/8 POINT	3/4 POINT	F.S. 5	7/8 POINT	PIER 8	1/8 POINT	1/4 POINT	F.S. 6	3/8 POINT	1/2 POINT	5/8 POINT	3/4 POINT	7/8 POINT	FWD. ABUT.
DEFLECTION DUE TO WEIGHT OF STEEL	0"	3/16"	7/16"	1/2"	3/4"	13/16"	11/16"	7/16"	3/8"	1/8"	0"	0"	1/8"	3/16"	5/16"	7/16"	7/16"	3/8"	1/4"	0"
DEFLECTION DUE TO REMAINING DL	0"	1 1/16"	2 1/16"	2 7/16"	3 5/8"	4"	3 3/8"	2 1/16"	1 11/16"	3/4"	0"	- 1/16"	- 1/8"	- 3/16"	- 1/4"	- 5/16"	- 3/8"	- 3/8"	- 1/4"	0"
ADJUSTMENT FOR VERTICAL/HORIZONTAL CURVE	0"	0"	0"	0"	0"	0"	0"	0"	0"	0"	0"	0"	1/16"	1/8"	3/16"	1/4"	1/4"	1/4"	1/8"	0"
ADJUSTMENT FOR HEAT CURVING GIRDERS	0"	1/16"	1/8"	3/16"	1/4"	5/16"	1/4"	1/8"	1/8"	1/16"	0"	0"	1/16"	1/8"	3/16"	1/4"	1/4"	1/4"	1/8"	0"
REQUIRED SHOP CAMBER	0"	1 5/16"	2 5/8"	3 1/8"	4 5/8"	5 1/8"	4 5/16"	2 5/8"	2 3/16"	15/16"	0"	1/16"	3/4"	1 1/8"	1 3/4"	2 1/2"	2 11/16"	2 1/4"	1 5/16"	0"

DEFLECTION AND CAMBER (INCHES) - GIRDER 4

	PIER 5	1/8 POINT	1/4 POINT	3/8 POINT	1/2 POINT	5/8 POINT	F.S. 1	3/4 POINT	7/8 POINT	PIER 6	1/8 POINT	F.S. 2	1/4 POINT	3/8 POINT	1/2 POINT	5/8 POINT	F.S. 3	3/4 POINT	7/8 POINT	PIER 7
DEFLECTION DUE TO WEIGHT OF STEEL	0"	1/8"	3/16"	1/4"	1/4"	3/16"	3/16"	1/8"	1/16"	0"	0"	0"	1/16"	1/16"	1/16"	0"	- 1/16"	- 1/16"	- 1/16"	0"
DEFLECTION DUE TO REMAINING DL	0"	1/2"	7/8"	1 1/16"	1 1/16"	13/16"	11/16"	1/2"	3/16"	0"	1/16"	3/16"	1/4"	7/16"	3/8"	1/8"	- 1/8"	- 3/16"	- 5/16"	0"
ADJUSTMENT FOR VERTICAL/HORIZONTAL CURVE	0"	2 1/16"	3 9/16"	4 1/2"	4 7/8"	4 9/16"	4 3/16"	3 1/2"	2"	0"	2 13/16"	4 1/2"	4 3/4"	5 7/8"	6 1/16"	5 3/8"	4 1/4"	3 13/16"	1 15/16"	0"
ADJUSTMENT FOR HEAT CURVING GIRDERS	0"	1/16"	1/8"	3/16"	3/16"	1/8"	1/8"	1/16"	1/16"	0"	0"	1/16"	1/16"	1/8"	1/8"	0"	- 1/16"	- 1/16"	- 1/16"	0"
REQUIRED SHOP CAMBER	0"	2 3/4"	4 3/4"	6"	6 3/8"	5 11/16"	5 3/16"	4 3/16"	2 5/16"	0"	2 7/8"	4 3/4"	5 1/8"	6 1/2"	6 5/8"	5 1/2"	4"	3 1/2"	1 1/2"	0"
	PIER 7	1/8 POINT	F.S. 4	1/4 POINT	3/8 POINT	1/2 POINT	5/8 POINT	3/4 POINT	F.S. 5	7/8 POINT	PIER 8	1/8 POINT	1/4 POINT	F.S. 6	3/8 POINT	1/2 POINT	5/8 POINT	3/4 POINT	7/8 POINT	FWD. ABUT.
DEFLECTION DUE TO WEIGHT OF STEEL	0"	1/4"	1/2"	9/16"	7/8"	15/16"	13/16"	1/2"	3/8"	3/16"	0"	0"	1/8"	3/16"	5/16"	7/16"	1/2"	7/16"	1/4"	0"
DEFLECTION DUE TO REMAINING DL	0"	1 3/16"	2 3/8"	2 13/16"	4 1/8"	4 1/2"	3 13/16"	2 3/8"	1 15/16"	13/16"	0"	1/8"	11/16"	1"	1 9/16"	2 3/16"	2 7/16"	2 1/8"	1 1/4"	0"
ADJUSTMENT FOR VERTICAL/HORIZONTAL CURVE	0"	0"	0"	0"	0"	0"	0"	0"	0"	0"	0"	- 1/8"	- 1/4"	- 5/16"	- 3/8"	- 1/2"	- 9/16"	- 1/2"	- 5/16"	0"
ADJUSTMENT FOR HEAT CURVING GIRDERS	0"	1/16"	1/8"	3/16"	1/4"	5/16"	1/4"	1/8"	1/8"	1/16"	0"	0"	1/16"	1/8"	3/16"	1/4"	1/4"	1/4"	1/8"	0"
REQUIRED SHOP CAMBER	0"	1 1/2"	3"	3 9/16"	5 1/4"	5 3/4"	4 7/8"	3"	2 7/16"	1 1/16"	0"	0"	5/8"	1"	1 11/16"	2 3/8"	2 5/8"	2 5/16"	1 5/16"	0"

DEFLECTION AND CAMBER (INCHES) - GIRDER 5

	PIER 5	1/8 POINT	1/4 POINT	3/8 POINT	1/2 POINT	5/8 POINT	F.S. 1	3/4 POINT	7/8 POINT	PIER 6	1/8 POINT	F.S. 2	1/4 POINT	3/8 POINT	1/2 POINT	5/8 POINT	F.S. 3	3/4 POINT	7/8 POINT	PIER 7
DEFLECTION DUE TO WEIGHT OF STEEL	0"	1/8"	1/4"	1/4"	1/4"	1/4"	3/16"	1/8"	1/16"	0"	0"	0"	1/16"	1/16"	1/16"	0"	- 1/16"	- 1/16"	- 1/16"	0"
DEFLECTION DUE TO REMAINING DL	0"	9/16"	15/16"	1 1/8"	1 1/8"	15/16"	3/4"	9/16"	1/4"	0"	1/16"	3/16"	1/4"	3/8"	5/16"	0"	- 1/4"	- 5/16"	- 3/8"	0"
ADJUSTMENT FOR VERTICAL/HORIZONTAL CURVE	0"	2 1/16"	3 5/8"	4 5/8"	5 3/16"	4 7/8"	4 1/2"	3 3/4"	2 1/8"	0"	2 7/8"	4 1/2"	4 13/16"	5 7/8"	6 1/16"	5 3/8"	4 1/4"	3 13/16"	1 15/16"	0"
ADJUSTMENT FOR HEAT CURVING GIRDERS	0"	1/16"	1/8"	3/16"	3/16"	1/8"	1/8"	1/16"	1/16"	0"	0"	1/16"	1/16"	1/8"	1/16"	0"	- 1/16"	- 1/16"	- 1/8"	0"
REQUIRED SHOP CAMBER	0"	2 13/16"	4 15/16"	6 3/16"	6 3/4"	6 3/16"	5 9/16"	4 1/2"	2 1/2"	0"	2 15/16"	4 3/4"	5 3/16"	6 7/16"	6 1/2"	5 3/8"	3 7/8"	3 3/8"	1 3/8"	0"
	PIER 7	1/8 POINT	F.S. 4	1/4 POINT	3/8 POINT	1/2 POINT	5/8 POINT	3/4 POINT	F.S. 5	7/8 POINT	PIER 8	1/8 POINT	1/4 POINT	F.S. 6	3/8 POINT	1/2 POINT	5/8 POINT	3/4 POINT	7/8 POINT	FWD. ABUT.
DEFLECTION DUE TO WEIGHT OF STEEL	0"	1/4"	9/16"	5/8"	15/16"	1 1/16"	7/8"	9/16"	7/16"	3/16"	0"	0"	1/8"	3/16"	5/16"	7/16"	1/2"	7/16"	1/4"	0"
DEFLECTION DUE TO REMAINING DL	0"	1 5/16"	2 5/8"	3 1/8"	4 5/8"	5 1/16"	4 1/4"	2 5/8"	2 1/8"	15/16"	0"	1/16"	11/16"	1"	1 9/16"	2 1/4"	2 1/2"	2 3/16"	1 1/4"	0"
ADJUSTMENT FOR VERTICAL/HORIZONTAL CURVE	0"	0"	0"	0"	0"	0"	0"	0"	0"	0"	0"	- 1/16"	- 1/16"	- 1/8"	3/16"	9/16"	11/16"	11/16"	7/16"	0"
ADJUSTMENT FOR HEAT CURVING GIRDERS	0"	1/16"	1/8"	3/16"	1/4"	5/16"	1/4"	1/8"	1/8"	1/16"	0"	0"	1/16"	1/8"	3/16"	1/4"	1/4"	1/4"	1/8"	0"
REQUIRED SHOP CAMBER	0"	1 5/8"	3 5/16"	3 15/16"	5 13/16"	6 7/16"	5 3/8"	3 5/16"	2 11/16"	1 3/16"	0"	0"	13/16"	1 3/16"	2 1/4"	3 1/2"	3 15/16"	3 9/16"	2 1/16"	0"

NOTES:

1. *FOR FRAMING PLANS, SEE SHEETS 320/365 TO 323/365*
2. *HEAT CURVING SHALL BE PERMITTED. AN ADJUSTMENT OF ½ THE CALCULATED CAMBER INCREASE DUE TO HEAT CURVING HAS BEEN APPLIED TO THE SHOP CAMBER.*
3. *POSITIVE CAMBER VALUES INDICATE THAT CAMBER IS ABOVE THE CHORD BETWEEN ADJACENT BEARINGS.*

DESIGN AGENCY
URS
36 EAST 7TH STREET
SUITE 2300
CINCINNATI, OHIO 45202

DESIGNED PJW | DRAWN MAL | REVIEWED JTH | DATE 06-11-10 | CHECKED DB | REVISED | STRUCTURE FILE NUMBER 4401263

OHIO APPROACH - DEFLECTION AND CAMBER (2 OF 2)
BRIDGE NO. LAW-93C-0000
IRONTON RUSSELL BRIDGE OVER OHIO RIVER

LAW-93-0.00
PID No. 81595

J:\Project\O\ODOT\15005112 Ironton Russell\LAW\81595\structures\LAW093_1111C\sheets\Ohio Approach\093_0000_Ohio_md02.dgn

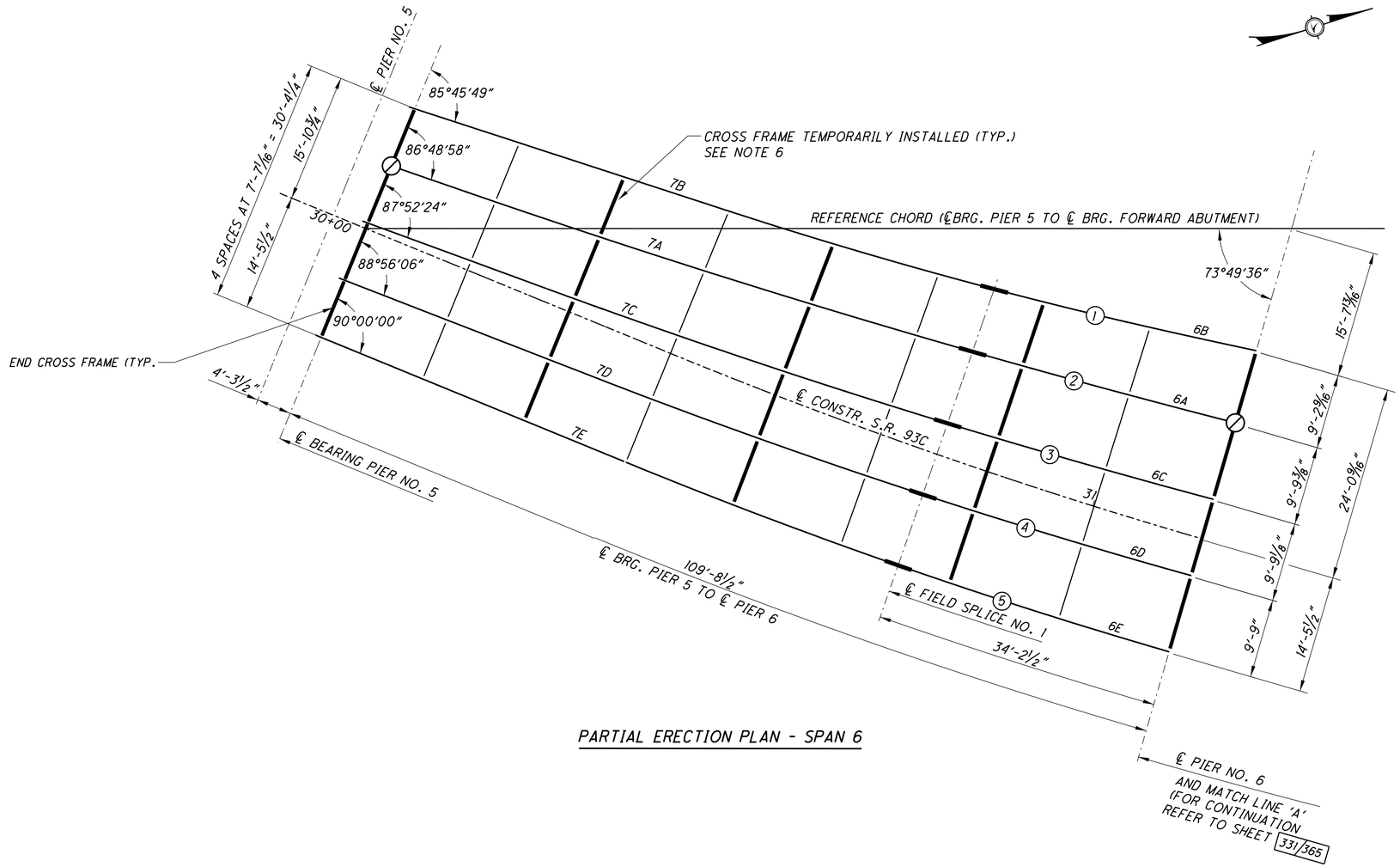

PARTIAL ERECTION PLAN - SPAN 6

LEGEND

⊘ SINGLE GIRDER STABILIZATION LOCATION

⊗ SHORING POINT LOCATION

SHORING TOWER LOADS

LOCATION	VERTICAL LOAD PER GIRDER (k)
ST-1	40
ST-2	50
ST-3	35

NOTE: REACTIONS SHOWN INCLUDE STEEL WEIGHT PLUS A 25% FACTOR FOR ERECTION LOADS.

ERECTION NOTES

1. THE CONTRACTOR'S ATTENTION IS DIRECTED TO REQUIREMENTS FOR STABILITY OF STEEL GIRDERS DURING ERECTION (CMS 513.26). THE GIRDERS ON THIS BRIDGE SHALL BE STABILIZED DURING ERECTION BY USE OF FALSEWORK, TEMPORARY BRACING, COMPRESSION FLANGE STIFFENING TRUSS OR BY USE OF A HOLDING CRANE UNTIL A SUFFICIENT NUMBER OF GIRDERS HAVE BEEN ERECTED AND CROSS FRAMES INSTALLED, TEMPORARILY (SEE NOTE 6 BELOW).
2. THE METHODS USED BY THE CONTRACTOR SHALL BE DOCUMENTED ON THE ERECTION DRAWINGS WITH ALL SUPPORTING STABILITY CALCULATIONS SUBMITTED IN ACCORDANCE WITH CMS ITEMS 501 AND 513. THE CONTRACTOR MAY SUBMIT AN ALTERNATE MEANS OF ERECTION FROM THE ONE SHOWN IN THE PLANS.
3. THE GIRDER NUMBERING SYSTEM USED HEREIN IS IDENTIFIED WITH NUMERIC PREFIX IDENTIFYING THE LIFT SEQUENCE FOLLOWED BY LETTER (A THRU E) WHICH IDENTIFIES ADDITIONAL LIFTS OF SIMILAR MEMBERS. THE NUMBERING SYSTEM IS INTENDED TO SHOW THE SEQUENTIAL INSTALLATION AND DOES NOT CORRESPOND TO ANY OTHER LABELING SYSTEM IN THE PLANS.
4. THE SHORING TOWERS SHOWN HEREIN ASSUME THAT ERECTION WILL BEGIN AT THE FORWARD ABUTMENT AND PROCEED TOWARD PIER 6. THE CONTRACTOR MAY, AT HIS DISCRETION, CHOOSE AN ALTERNATE ERECTION SEQUENCE. ALL GIRDER ERECTION SHALL STRICTLY ADHERE TO THE PROVISIONS OF THE MAINTENANCE OF TRAFFIC PLANS.
5. FIELD SPLICES SHALL BE INSTALLED WITH AT LEAST THREE-FOURTHS OF THE HOLES WITH COMPLETELY TIGHTENED BOLTS TO RESIST CONSTRUCTION LOADS DURING ERECTION.
6. CROSS FRAMES SHALL BE CONSIDERED TEMPORARILY INSTALLED WHEN EVERY OTHER CROSSFRAME HAS BEEN ERECTED (UNLESS NOTED OTHERWISE, SEE SPAN 8) CONNECTED USING TOP AND BOTTOM HORIZONTAL MEMBERS PLUS ONE DIAGONAL MEMBER. AFTER GIRDERS ARE ALIGNED TRANSVERSELY, SNUG BOLTS AND THEN REMOVE LIFTING APPARATUS. PERMANENT FASTENING OF CROSS FRAMES SHALL COMMENCE AFTER COMPLETING MAIN CONNECTIONS IN ADJACENT SPANS.

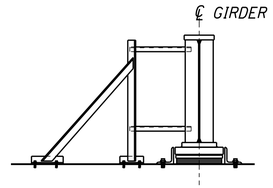

TYPICAL SINGLE GIRDER STABILIZATION DETAIL

NOTE:

1. FOR DESCRIPTION OF ERECTION SEQUENCE, SEE SHEET 331/365

DESIGN AGENCY
URS
36 EAST 7TH STREET
SUITE 2300
CINCINNATI, OHIO 45202

DESIGNED	DRAWN	REVIEWED	DATE
JJB	JJB	JTH	06-11-10
CHECKED	REVISED	STRUCTURE FILE NUMBER	
PJW		4401263	

OHIO APPROACH - ERECTION PLAN AND NOTES (1 OF 4)
BRIDGE NO. LAW-93C-0000
IRONTON RUSSELL BRIDGE OVER OHIO RIVER

LAW-93-0.00
PID No. 81595

330/365

717/788

J:\Project\0\ODOT\15005112 Ironton Russell\LAW\81595\structures\LAW093_1111C\sheets\Ohio Approach\093_0000_Ohio_md06.dgn

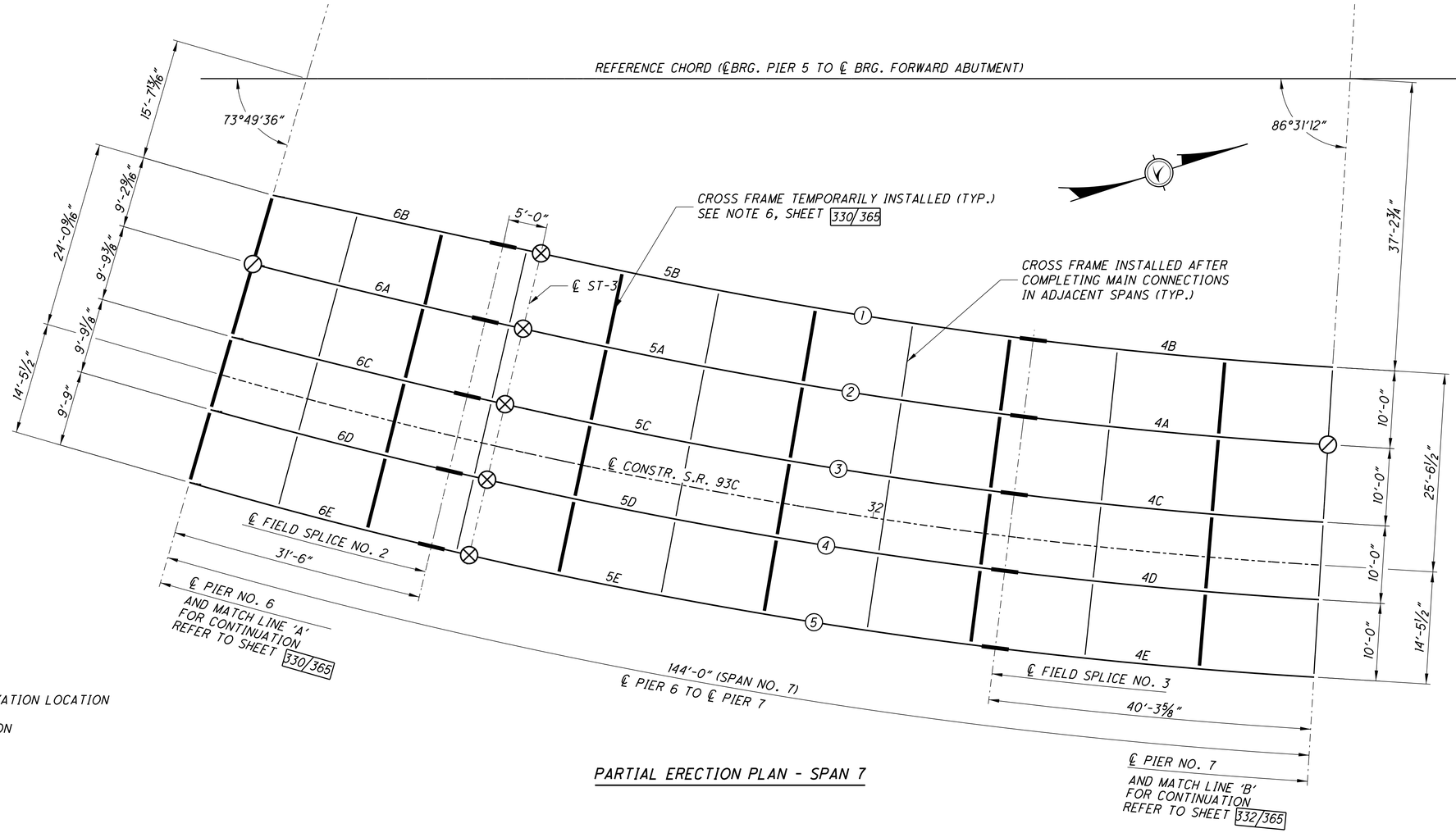

PARTIAL ERECTION PLAN - SPAN 7

LEGEND

⊘ SINGLE GIRDER STABILIZATION LOCATION

⊗ SHORING POINT LOCATION

ERECTION SEQUENCE

1. SET BEARINGS ON SUBSTRUCTURE UNITS IN ORDER OF ERECTION.
2. SET GIRDER 1A USING SHORING TOWER ST-1. STABILIZE GIRDER LATERALLY AT THE FORWARD ABUTMENT AND ST-1. DO NOT REMOVE LIFTING APPARATUS UNTIL GIRDER 1B IS PLACED AND CROSS FRAMES ARE TEMPORARILY INSTALLED AS NOTED.
3. SET GIRDERS 1B THRU 1E INTO POSITION PLACING TEMPORARILY INSTALLED CROSS FRAMES AS NOTED. ALIGN EACH GIRDER TRANSVERSELY AND INSTALL CROSS FRAMES TEMPORARILY AND SNUG BOLTS (DO NOT TORQUE) BEFORE REMOVING LIFTING APPARATUS.
4. SET GIRDER 2A. STABILIZE GIRDER LATERALLY AT PIER 8. DO NOT REMOVE LIFTING APPARATUS UNTIL GIRDER 2B IS PLACED AND CROSS FRAMES ARE TEMPORARILY INSTALLED AS NOTED.
5. SET GIRDERS 2B THRU 2E INTO POSITION PLACING TEMPORARILY INSTALLED CROSS FRAMES AS NOTED. ALIGN EACH GIRDER TRANSVERSELY AND INSTALL CROSS FRAMES TEMPORARILY AND SNUG BOLTS (DO NOT TORQUE) BEFORE REMOVING LIFTING APPARATUS.
6. SET GIRDER 3A USING SHORING TOWER ST-2. STABILIZE GIRDER LATERALLY AT ST-2A. DO NOT REMOVE LIFTING APPARATUS UNTIL GIRDER 3B IS PLACED AND CROSS FRAMES ARE TEMPORARILY INSTALLED AS NOTED.
7. SET GIRDERS 3B THRU 3E INTO POSITION PLACING TEMPORARILY INSTALLED CROSS FRAMES AS NOTED. ALIGN EACH GIRDER TRANSVERSELY AND INSTALL CROSS FRAMES TEMPORARILY AND SNUG BOLTS (DO NOT TORQUE) BEFORE REMOVING LIFTING APPARATUS.
8. SET GIRDER 4A. STABILIZE GIRDER LATERALLY AT PIER 7. DO NOT REMOVE LIFTING APPARATUS UNTIL GIRDER 4B IS PLACED AND CROSS FRAMES ARE TEMPORARILY INSTALLED AS NOTED.
9. SET GIRDERS 4B THRU 4E INTO POSITION PLACING TEMPORARILY INSTALLED CROSS FRAMES AS NOTED. ALIGN EACH GIRDER TRANSVERSELY AND INSTALL CROSS FRAMES TEMPORARILY AND SNUG BOLTS (DO NOT TORQUE) BEFORE REMOVING LIFTING APPARATUS.
10. SET GIRDER 5A USING SHORING TOWER ST-3. STABILIZE GIRDER LATERALLY AT ST-3. DO NOT REMOVE LIFTING APPARATUS UNTIL GIRDER 5B IS PLACED AND CROSS FRAMES ARE TEMPORARILY INSTALLED AS NOTED.
11. SET GIRDERS 5B THRU 5E INTO POSITION PLACING TEMPORARILY INSTALLED CROSS FRAMES AS NOTED. ALIGN EACH GIRDER TRANSVERSELY AND INSTALL CROSS FRAMES TEMPORARILY AND SNUG BOLTS (DO NOT TORQUE) BEFORE REMOVING LIFTING APPARATUS.
12. SET GIRDER 6A. STABILIZE GIRDER LATERALLY AT PIER 6. DO NOT REMOVE LIFTING APPARATUS UNTIL GIRDER 6B IS PLACED AND CROSS FRAMES ARE TEMPORARILY INSTALLED AS NOTED.
13. SET GIRDERS 6B THRU 6E INTO POSITION PLACING TEMPORARILY INSTALLED CROSS FRAMES AS NOTED. ALIGN EACH GIRDER TRANSVERSELY AND INSTALL CROSS FRAMES TEMPORARILY AND SNUG BOLTS (DO NOT TORQUE) BEFORE REMOVING LIFTING APPARATUS.
14. SET GIRDER 7A. STABILIZE GIRDER LATERALLY AT PIER 5. DO NOT REMOVE LIFTING APPARATUS UNTIL GIRDER 7B IS PLACED AND CROSS FRAMES ARE TEMPORARILY INSTALLED AS NOTED.
15. SET GIRDERS 7B THRU 7E INTO POSITION PLACING TEMPORARILY INSTALLED CROSS FRAMES AS NOTED. ALIGN EACH GIRDER TRANSVERSELY AND INSTALL CROSS FRAMES TEMPORARILY AND SNUG BOLTS (DO NOT TORQUE) BEFORE REMOVING LIFTING APPARATUS.

NOTE:

1. FOR ERECTION NOTES AND SHORING TOWER LOADS REFER TO SHEET 330/365

DESIGN AGENCY
URS
36 EAST 7TH STREET
SUITE 2300
CINCINNATI, OHIO 45202

DESIGNED	DRAWN	REVIEWED	DATE
JJB	JJB	JTH	06-11-10
CHECKED	REVISED	STRUCTURE FILE NUMBER	
PJW		4401263	

OHIO APPROACH - ERECTION PLAN AND NOTES (2 OF 4)
BRIDGE NO. LAW-93C-0000
IRONTON RUSSELL BRIDGE OVER OHIO RIVER

LAW-93-0.00
PID No. 81595

331/365

718
788

J:\Project\OV\ODOT\15005112 Ironton Russell\LAW\81595\structures\LAW093_1111C\sheets\Ohio Approach\093_0000_Ohio_md07.dgn

LEGEND

⊘ SINGLE GIRDER STABILIZATION LOCATION

⊗ SHORING POINT LOCATION

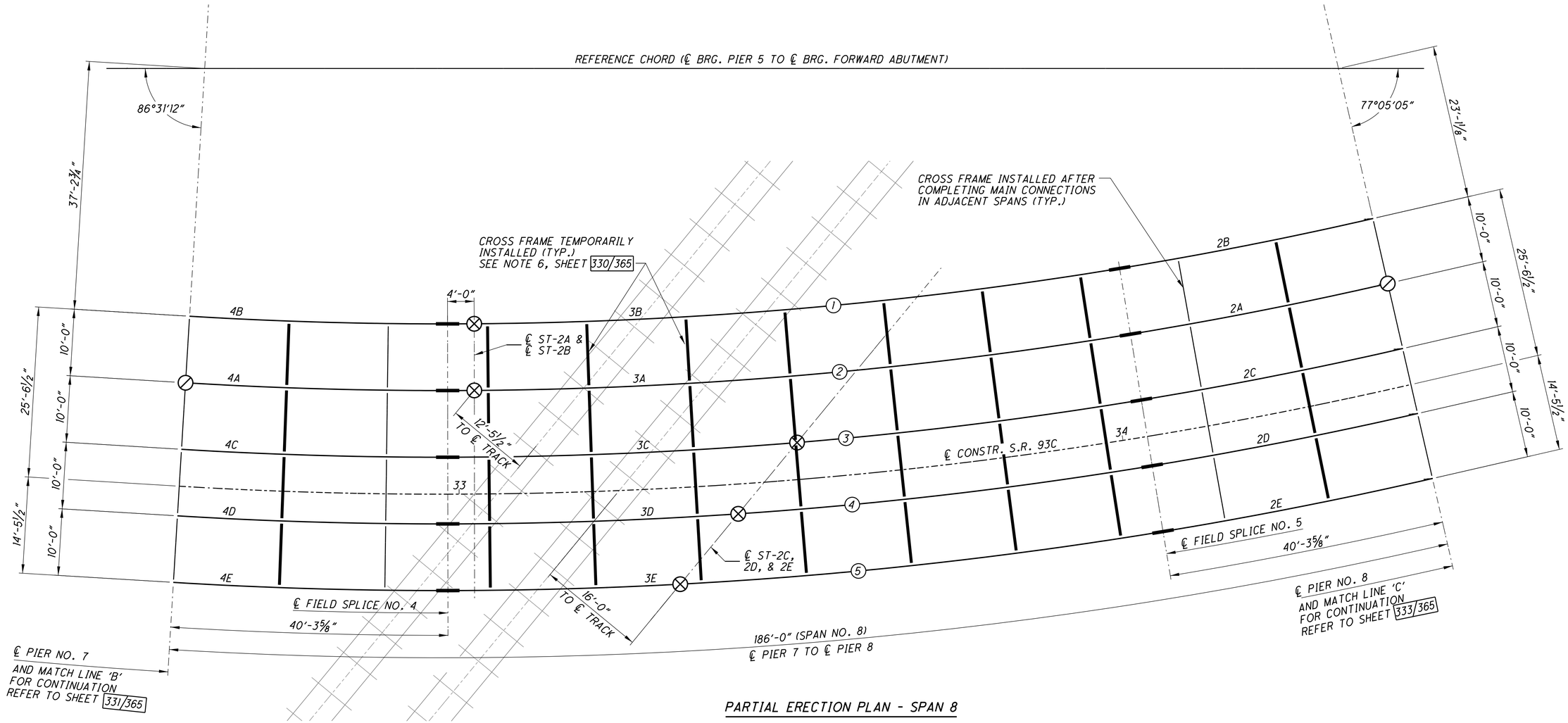

PARTIAL ERECTION PLAN - SPAN 8

NOTES:

1. FOR ERECTION NOTES AND SHORING TOWER LOADS, SEE SHEET 330/365
2. FOR DESCRIPTION OF ERECTION SEQUENCE, SEE SHEET 331/365

DESIGN AGENCY
URS
36 EAST 7TH STREET
SUITE 2300
CINCINNATI, OHIO 45202

DESIGNED	DRAWN	REVIEWED	DATE
JJB	JJB	JTH	06-11-10
CHECKED	REVISED	STRUCTURE FILE NUMBER	
PJW		4401263	

OHIO APPROACH - ERECTION PLAN AND NOTES (3 OF 4)
BRIDGE NO. LAW-93C-0000
IRONTON RUSSELL BRIDGE OVER OHIO RIVER

LAW-93-0.00
PID No. 81595

332/365

719
788

J:\Project\OV\ODOT\15005112 Ironton Russell\LAW\81595\structures\LAW093_1111C\sheets\Ohio Approach\093_0000_Ohio_md08.dgn

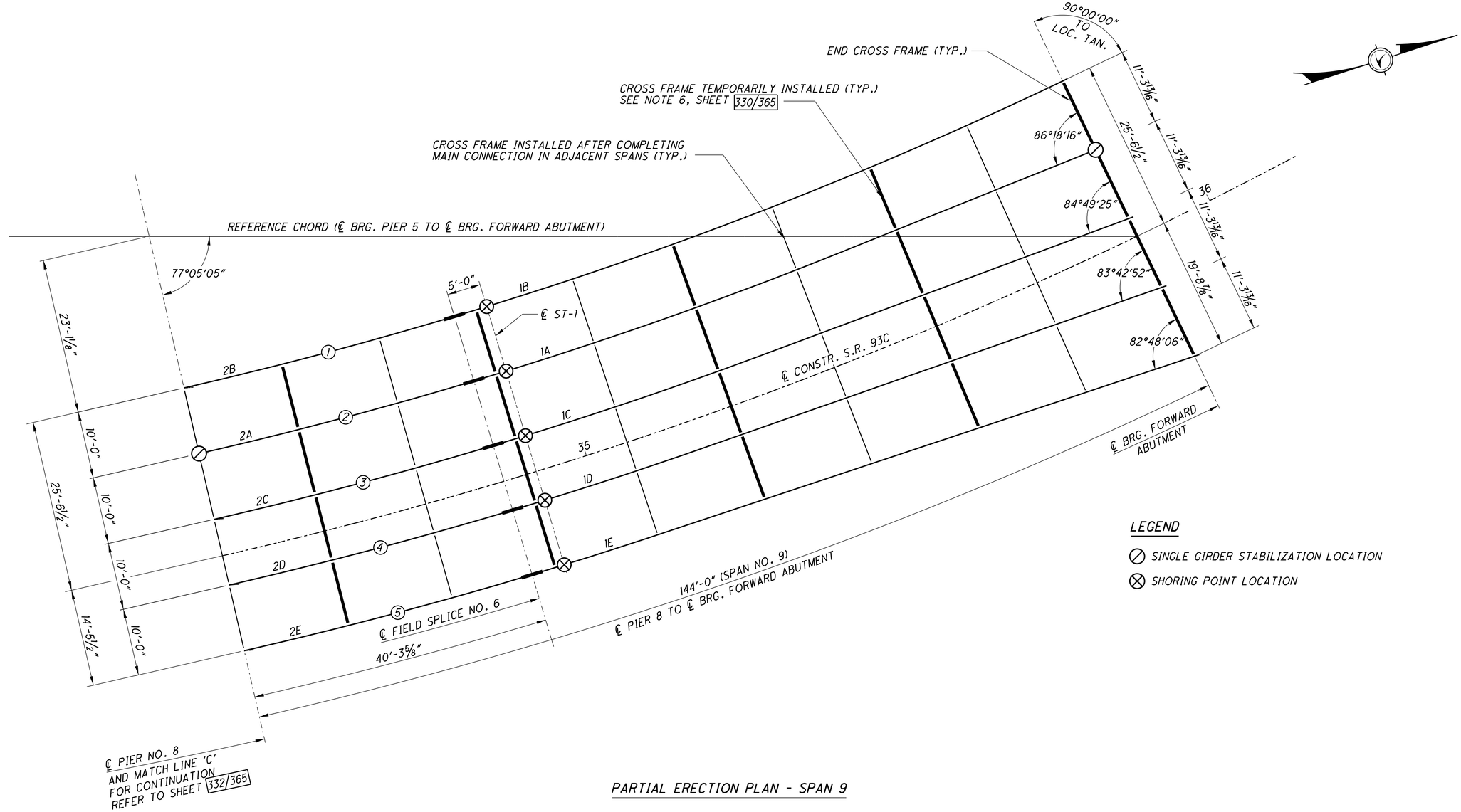

PARTIAL ERECTION PLAN - SPAN 9

LEGEND

⊘ *SINGLE GIRDER STABILIZATION LOCATION*

⊗ *SHORING POINT LOCATION*

NOTES:

1. *FOR ERECTION NOTES AND SHORING TOWER LOADS, SEE SHEET* 330/365
2. *FOR DESCRIPTION OF ERECTION SEQUENCE, SEE SHEET* 331/365

DESIGN AGENCY
URS
36 EAST 7TH STREET
SUITE 2300
CINCINNATI, OHIO 45202

DESIGNED	DRAWN	REVIEWED	DATE
JJB	JJB	JTH	06-11-10
CHECKED	REVISED	STRUCTURE FILE NUMBER	
PJW		4401263	

OHIO APPROACH - ERECTION PLAN AND NOTES (4 OF 4)
BRIDGE NO. LAW-93C-0000
IRONTON RUSSELL BRIDGE OVER OHIO RIVER

LAW-93-0.00
PID No. 81595

333/365

720
788

J:\Project\OV\ODOT\15005112 Ironton Russell\LAW\81595\structures\LAW093_1111C\sheets\Ohio Approach\093_0000_Ohio_md09.dgn

Link to RFI127 As-Built Link to RFI133 As-Built

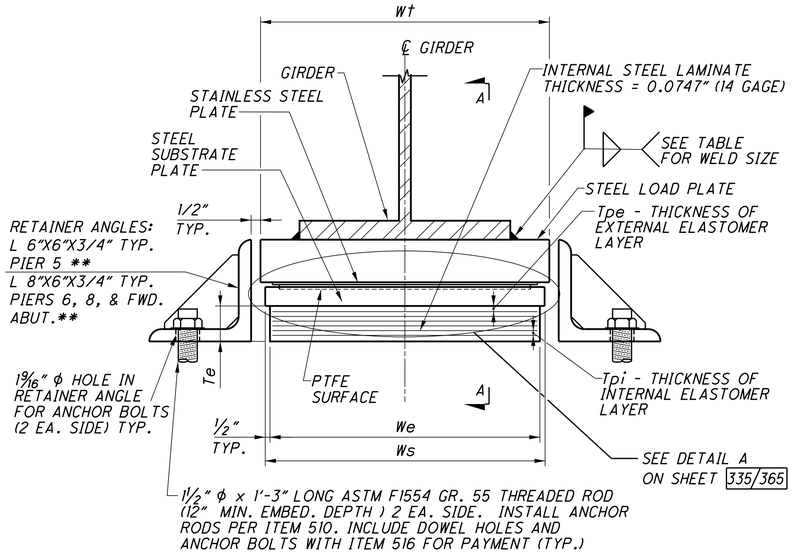

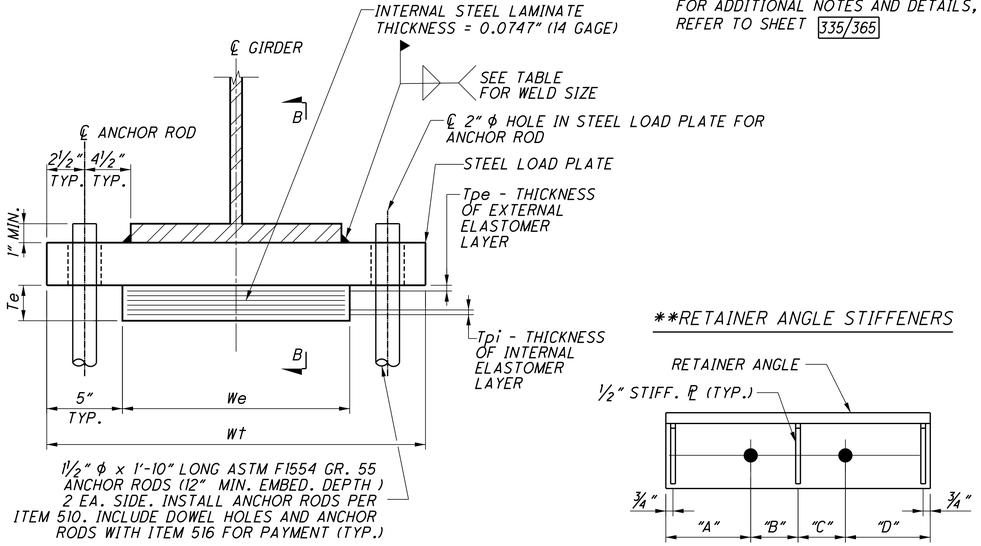

FOR ADDITIONAL NOTES AND DETAILS, REFER TO SHEET 335/365

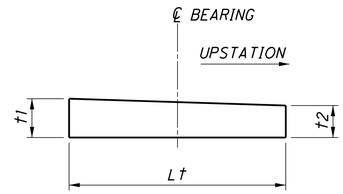

STEEL LOAD PLATE DETAIL

STEEL LOAD PLATE			
BEARING LOCATION	GIRDER	t1	t2
PIER 5	GIRDER 1	1.64	1.37
	GIRDER 2	1.64	1.37
	GIRDER 3	1.64	1.37
	GIRDER 4	1.64	1.37
	GIRDER 5	1.64	1.37
PIER 6	GIRDER 1	2.39	1.61
	GIRDER 2	2.39	1.61
	GIRDER 3	2.39	1.61
	GIRDER 4	2.39	1.61
	GIRDER 5	2.39	1.61
PIER 7	GIRDER 1	2.99	1.52
	GIRDER 2	2.99	1.52
	GIRDER 3	2.99	1.52
	GIRDER 4	2.99	1.52
	GIRDER 5	2.99	1.52
PIER 8	GIRDER 1	2.72	1.28
	GIRDER 2	2.72	1.28
	GIRDER 3	2.72	1.28
	GIRDER 4	2.72	1.28
	GIRDER 5	2.72	1.28
FWD. ABUTMENT	GIRDER 1	2.54	1.46
	GIRDER 2	2.54	1.46
	GIRDER 3	2.54	1.46
	GIRDER 4	2.54	1.46
	GIRDER 5	2.54	1.46

**RETAINER ANGLE STIFFENERS

PLAN

STIFFENER DIMENSIONS				
LOCATION	"A"	"B"	"C"	"D"
PIER 5	9¾"	10½"	10½"	9¾"
PIER 6	3¾"	8¼"	4½"	7½"
PIER 8	6½"	7½"	7½"	6½"
FWD. ABUT.	6½"	3"	3"	6½"

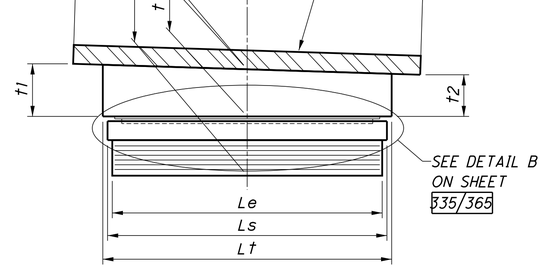

SECTION A-A

LAMINATED ELASTOMERIC EXPANSION BEARING WITH SLIDING PLATES PIERS 5, 6, 8, AND FWD. ABUTMENT

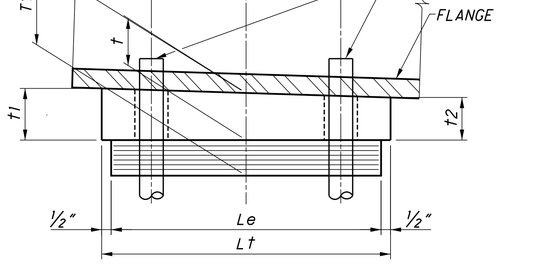

SECTION B-B

LAMINATED ELASTOMERIC FIXED BEARING PIER 7

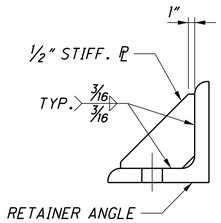

SECTION

ELASTOMERIC BEARING DATA

BEARING LOCATION	BEARING TYPE	NO. REQ'D.	DEAD LOAD *	LIVE LOAD *	TOTAL LOAD (DL+LL) *	We	Le	Tpi	NO. OF Tpi's	Tpe (TOP)	Tpe (BOTT.)	NUMBER OF INTERNAL LAMINATES (14 GAUGE)	Te	STEEL LOAD PLATE				STAINLESS STEEL PLATE				STEEL SUBSTRATE PLATE			PTFE SURFACE				Tt
														Wt	Lt	t (@ CL)	WELD	Wss	Lss	Tss	WELD	Ws	Ls	Ts	Wptfe	Lptfe	Tptfe	RECESS	
			KIPS	KIPS	KIPS	INCHES	INCHES	INCHES		INCHES	INCHES		INCHES	INCHES	INCHES	INCHES	INCHES	INCHES	INCHES	INCHES	INCHES	INCHES	INCHES	INCHES	INCHES	INCHES	INCHES	INCHES	INCHES
PIER 5	EXP.	5	83.2	73.8	157.0	14.00	14.00	0.50	3	0.50	0.31	4	2.61	23.00	27.00	1.50	1/2	11.00	26.00	0.12	1/8	15.00	15.00	1.50	9.00	9.00	0.19	0.094	5.83
PIER 6	EXP.	5	297.3	196.6	493.9	24.00	22.00	0.75	3	0.75	0.31	4	3.61	25.00	22.00	2.000	1/2	18.00	21.00	0.12	1/8	25.00	23.00	1.63	16.00	16.00	0.19	0.094	7.45
PIER 7	FIX.	5	406.5	217.6	624.1	26.00	23.50	0.75	5	0.75	0.50	6	5.45	36.00	24.50	2.250	1/2	----	----	----	----	----	----	----	----	----	----	----	7.70
PIER 8	EXP.	5	456.2	217.7	673.9	25.50	25.50	0.75	4	0.75	0.50	5	4.62	26.50	24.00	2.00	1/2	20.00	23.00	0.12	1/8	26.50	26.50	1.50	18.00	18.00	0.19	0.094	8.34
FWD. ABUTMENT	EXP.	5	110.9	79.0	189.9	15.75	15.75	0.63	3	0.63	0.38	4	3.17	23.00	18.00	2.00	1/2	12.00	17.00	0.12	1/8	16.75	16.75	1.50	10.00	10.00	0.19	0.094	6.89

* LOADS SHOWN ARE SERVICE LOADS WITH NO LOAD FACTOR INCLUDED.

DESIGN AGENCY
URS
36 EAST 7TH STREET
SUITE 2300
CINCINNATI, OHIO 45202

DESIGNED	DRAWN	REVIEWED	DATE
DB	MAL	JTH	06-11-10
CHECKED	REVISED	STRUCTURE FILE NUMBER	
JJB		4401263	

OHIO APPROACH - BEARING DETAILS (1 OF 2)
BRIDGE NO. LAW-93C-0000
IRONTON RUSSELL BRIDGE OVER OHIO RIVER

LAW-93-0.00
PID No. 81595

334/365
721/788

J:\Project\O\ODOT\15005112 Ironton Russell\LAW\81595\structures\LAW093_1111C\sheets\Ohio Approach\093_0000_Ohio_br01.dgn

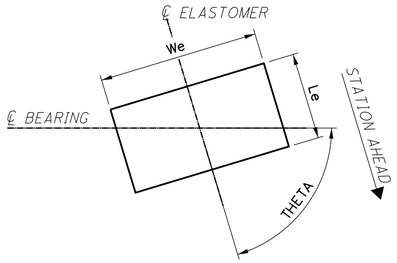

BEARING ORIENTATION PLAN

"THETA" ANGLES					
GIRDER	PIER 5	PIER 6	PIER 7	PIER 8	FWD. ABUTMENT
GIRDER 1	85°30'02"	83°20'51"	90°00'00"	98°11'52"	104°58'54"
GIRDER 2	85°30'02"	83°20'51"	90°00'00"	98°11'52"	104°58'54"
GIRDER 3	85°30'02"	83°20'51"	90°00'00"	98°11'52"	104°58'54"
GIRDER 4	85°30'02"	83°20'51"	90°00'00"	98°11'52"	104°58'54"
GIRDER 5	85°30'02"	83°20'51"	90°00'00"	98°11'52"	104°58'54"

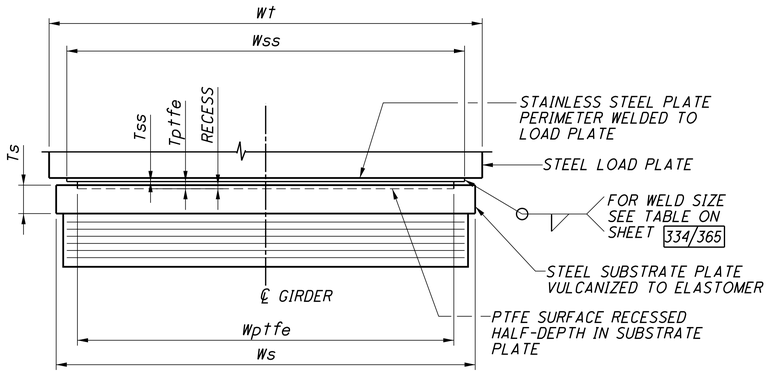

DETAIL A

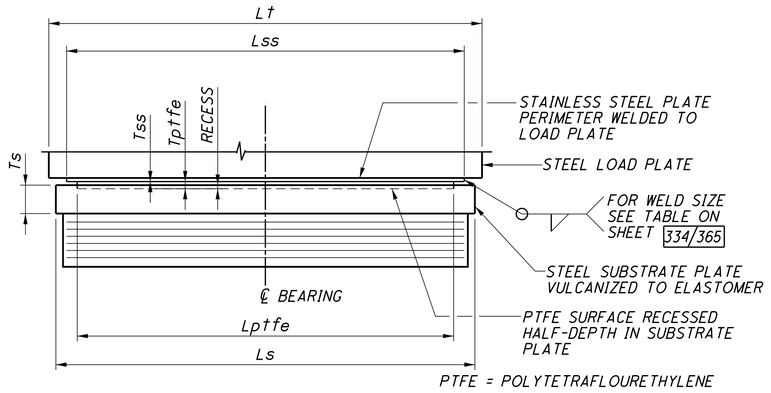

DETAIL B

NOTES

1. ELASTOMERIC BEARINGS:
THE ELASTOMER SHALL HAVE A HARDNESS OF 50 DUROMETER. THE BEARINGS WERE DESIGNED IN ACCORDANCE WITH SECTIONS 14.7.2 (PTFE) AND 14.7.6 (METHOD A) OF THE AASHTO LRFD BRIDGE DESIGN SPECIFICATIONS. THE LONGTERM COMPRESSION PROOF LOAD TEST (AASHTO LRFD BRIDGE CONSTRUCTION SPECIFICATIONS SECTION 18.2.5.7) IS NOT REQUIRED.

2. WELDING SHALL BE CONTROLLED SO THAT THE PLATE TEMPERATURE AT THE ELASTOMER BONDED SURFACE DOES NOT EXCEED 300° F AS DETERMINED BY THE USE OF PYROMETRIC STICKS OR OTHER TEMPERATURE MONITORING DEVICES.

3. BEARING REPOSITIONING AT PIERS AND FORWARD ABUTMENT:
IF THE STEEL IS ERECTED AT AN AMBIENT TEMPERATURE HIGHER THAN 80° F OR LOWER THAN 40° F AND THE BEARING SHEAR DEFLECTION EXCEEDS 1/6 OF THE BEARING HEIGHT AT 60° F (± 10° F), THE GIRDERS SHALL BE RAISED TO ALLOW THE BEARINGS TO RETURN TO THEIR UNDEFORMED SHAPE AT 60° F (± 10° F). FOR INSTALLATION AT PIERS 5, 6, 8, AND FWD. ABUTMENT, SEE NOTE 16.

4. THE STEEL LOAD PLATES (AND STEEL SUBSTRATE PLATES AT PIERS 5, 6, 8, AND THE FWD. ABUTMENT) SHALL BE ASTM A709 GRADE 50W - YIELD STRENGTH 50,000 PSI.

5. AT PIERS 5, 6, 8, AND THE FWD. ABUTMENT, THE LOAD PLATES AND SUBSTRATE PLATES SHALL BE SHOP PAINTED PER CMS 514.17 WITH A PRIME, INTERMEDIATE, AND FINISH COAT (IZEU). CARE SHALL BE TAKEN BY THE FABRICATOR TO ENSURE THAT THE STAINLESS STEEL PLATE AND PTFE ARE NOT EXPOSED TO THE PAINTING OPERATION. PAYMENT FOR ALL LABOR, MATERIALS AND INCIDENTALS NECESSARY TO APPLY THE SHOP COATING SHALL BE INCLUDED IN THE COST OF THE BEARINGS.

   AT PIER 7 THE LOAD PLATE SHALL BE FIELD PAINTED PER CMS 514.17 WITH A PRIME, INTERMEDIATE, AND FINISH COAT (OZEU). PAYMENT FOR ALL LABOR, MATERIALS AND INCIDENTALS NECESSARY TO APPLY THE FIELD COATING SHALL BE INCLUDED IN THE COST OF THE BEARINGS.

6. THE STEEL LOAD PLATE (OR STEEL SUBSTRATE PLATE AT PIERS 5, 6, 8, AND THE FWD. ABUTMENT) SHALL BE BONDED BY VULCANIZATION TO THE ELASTOMER DURING THE MOLDING PROCESS.

7. TOTAL DESIGN LOAD FOR BEARINGS EQUALS THE SUM OF THE DEAD LOADS AND LIVE LOADS TABULATED IN THE BEARING DATA TABLE ON SHEET 334/365

8. BEARING ANCHOR RODS:
AT THE OPTION OF THE CONTRACTOR, THE BEARING ANCHOR RODS (OR FORMED HOLES), LOCATED AND SUPPORTED BY TEMPLATES, MAY BE CAST-IN-PLACE.

9. ANCHOR RODS AT PIER 7 AND THREADED ANCHOR RODS FOR RETAINER ANGLES AT PIERS 5, 6, 8, AND THE FWD. ABUTMENT SHALL CONFORM TO ASTM F1554 GRADE 55 AND SHALL BE GALVANIZED AS PER ODOT CONSTRUCTION AND MATERIAL SPECIFICATIONS 711.02.

10. RETAINER ANGLES:
AT THE OPTION OF THE CONTRACTOR RETAINER ANGLES AT PIERS 5, 6, 8, AND THE FWD. ABUTMENT MAY BE FIELD DRILLED AFTER INSTALLATION OF THE ANCHOR BOLTS AND ERECTION OF THE STEEL TO ALLOW MINOR POSITION ADJUSTMENTS WHICH MAY BE REQUIRED TO MAINTAIN PROPER CLEARANCE FROM THE BEAM FLANGES.

11. ALL RETAINER ANGLES SHALL BE SHALL BE SHOP METALLIZED PER CMS 516.03 WITH 100% ZINC WIRE. PAYMENT FOR ALL LABOR, MATERIALS AND INCIDENTALS NECESSARY TO APPLY THE SHOP COATING SHALL BE INCLUDED IN THE COST OF THE BEARINGS.

12. PTFE SURFACE (PIERS 5, 6, 8, AND FWD. ABUTMENT):
FINISHED UNFILLED DIMPLED LUBRICATED PTFE SHEETS SHALL BE MADE FROM 100 PERCENT VIRGIN PTFE RESIN AND SHALL CONFORM TO THE FOLLOWING REQUIREMENTS:

   TENSILE STRENGTH ASTM D4894 - 2800 PSI (MINIMUM)
   ELONGATION ASTM D4894 - 200 PERCENT (MINIMUM)
   SPECIFIC GRAVITY ASTM D792 - 2.13 (MINIMUM)
   MELTING POINT ASTM D4894 - 623° F (± 2° F)

   THE SHEET SHALL BE RECESSED AND EPOXY BONDED INTO THE STEEL SUBSTRATE. THE SHOULDERS OF THE RECESS SHALL BE SHARP AND SQUARE AND THE DEPTH SHALL BE EQUAL TO ONE-HALF OF THE PTFE THICKNESS.

   PTFE SHEET SHALL BE COMMERCIALLY ETCHED ON ITS BONDING SIDE.

   THE BONDING SURFACE OF THE SUBSTRATE PLATE SHALL BE CLEANED OF RUST, SCALE, OIL, AND GREASE BY BLAST CLEANING AND WIPED CLEAN WITH A CLEANING SOLVENT. BLAST CLEANING SHALL BE PERFORMED WITHIN A MAXIMUM OF FOUR HOURS PRIOR TO BONDING.

   THE ADHESIVE MATERIAL, THE BONDING PROCEDURES TO BE USED, AND SURFACE PREPARATION SHALL CONFORM TO THE REQUIREMENTS OF FEDERAL SPECIFICATION MMM-A-134 AND THE MANUFACTURER'S RECOMMENDATIONS. THE ADHESION BETWEEN THE PTFE AND STEEL SUBSTRATE PLATE SHALL BE TESTED IN ACCORDANCE WITH ASTM D429, METHOD B. THE MINIMUM PEEL STRENGTH SHALL BE 25 POUNDS PER SQUARE INCH.

   AFTER COMPLETION OF THE BONDING OPERATION, THE PTFE SURFACE SHALL BE FREE FROM BUBBLES.

13. STAINLESS STEEL PLATES (PIERS 5, 6, 8, AND FWD. ABUTMENT):
THE STAINLESS STEEL SHEET SURFACE SHALL CONFORM TO ASTM A167 OR A240 TYPE 304 AND SHALL HAVE A #8 MINIMUM FINISH OR BETTER.

   STAINLESS STEEL SHALL BE ATTACHED TO THE LOAD PLATE BY A CONTINUOUS WELD AROUND ITS ENTIRE PERIMETER. WELDS SHALL CONFORM TO THE AWS REQUIREMENTS FOR STAINLESS STEEL. THE WELDER SHALL BE PRE - QUALIFIED BY TEST WELDS PREPARED, WELDED, AND TESTED IN ACCORDANCE WITH 6.7 OF ANSI/AWS D1.3, STRUCTURAL WELDING CODE - SHEET STEEL.
   AFTER WELDING, THE STAINLESS STEEL SHEET SHALL BE FLAT, FREE FROM WRINKLES, AND IN CONTINUOUS CONTACT WITH ITS BACKING PLATE. NO ROUGHNESS FROM THE WELD PROTRUDING ABOVE THE SURFACE OF THE STAINLESS STEEL WILL BE PERMITTED.

14. LUBRICANT (PIERS 5, 6, 8, AND FWD. ABUTMENT):
LUBRICANT SHALL BE SILICONE GREASE WHICH SATISFIES MILITARY SPECIFICATION MIL-S-8660.

15. TESTING OF SLIDING SURFACES (PIERS 5, 6, 8, AND FWD. ABUTMENT):
IN ADDITION TO THE TESTS REQUIRED FOR METHOD A DESIGN, A MATERIAL FRICTION TEST FOR THE SLIDING SURFACES SHALL BE PERFORMED PER SECTIONS 18.8.2.2 AND 18.8.4 OF THE AASHTO LRFD BRIDGE CONSTRUCTION SPECIFICATIONS.

16. ALL BEARINGS SHALL BE MARKED PRIOR TO SHIPPING. THE MARKS SHALL INCLUDE THE BEARING LOCATION ON THE BRIDGE, AND A DIRECTION ARROW THAT POINTS UPSTATION. ALL MARKS SHALL BE PERMANENT AND BE VISIBLE AFTER THE BEARINGS ARE INSTALLED.

17. INSTALLATION OF SLIDING BEARINGS (PIERS 5,6,8, AND FWD. ABUTMENT):
A REPRESENTATIVE FROM THE BEARING MANUFACTURER SHALL BE PRESENT ON SITE FOR A SUFFICIENT PERIOD OF TIME TO ENSURE THAT THE CONTRACTOR IS INSTALLING THE BEARINGS PROPERLY.

   ALIGN THE CENTERLINE AND BASELINE OF THE BEARING ASSEMBLY AS SHOWN ON THIS SHEET. UPPER AND LOWER BEARING PARTS SHALL BE OFFSET TO COMPENSATE FOR AMBIENT TEMPERATURE. THE PLANS ASSUME AN AMBIENT TEMPERATURE OF 60°F.

18. THE UNIT BID PRICE SHALL INCLUDE ALL MATERIALS, LABOR, TESTING, ANCHOR RODS, SUBSTRATE PLATES (PIERS 5, 6, 8, AND FWD. ABUTMENT), STAINLESS STEEL PLATES (PIERS 5, 6, 8, AND FWD. ABUTMENT), RETAINER ANGLES (PIERS 5, 6, 8, AND FWD. ABUTMENT), ANCHOR BOLTS (PIERS 5, 6, 8, AND FWD. ABUTMENT), AND INCIDENTALS NECESSARY TO FURNISH AND INSTALL LAMINATED ELASTOMERIC BEARINGS, EITHER FIXED OR EXPANSION. PAYMENT WILL BE MADE AT THE CONTRACT PRICE PER EACH FOR THE APPROPRIATE ITEM 516.

19. BEARINGS ARE SET ON THE AVERAGE OF THE INTERIOR AND EXTERIOR CHORDS (GIRDER LINES 1 AND 5) FROM EACH SUPPORT TO THE FIXED PIER 7. BEARINGS AT PIER 5 ARE SET ON THE AVERAGE OF THE INTERIOR AND EXTERIOR CHORDS (GIRDER LINES 1 AND 5) TO THE FIXED PIER 7 AND TANGENT GIRDERS ON THE MAIN SPAN.

20. FOR ADDITIONAL ELASTOMERIC BEARING DETAILS, SEE SHEET 334/365

21. FOR ADDITIONAL RETAINER ANGLE AND BEARING LAYOUT DETAILS AT PIER 5 SEE PIER 5 DETAILS ON SHEET 220/365

22. FOR ADDITIONAL RETAINER ANGLE AND BEARING LAYOUT DETAILS AT PIER 6 SEE PIER 6 DETAILS ON SHEET 314/365

23. FOR FIXED BEARING ANCHOR PLAN, SEE PIER 7 DETAILS ON SHEET 316/365

24. FOR ADDITIONAL RETAINER ANGLE AND BEARING LAYOUT DETAILS AT PIER 8 SEE PIER 8 DETAILS ON SHEET 318/365

25. FOR ADDITIONAL RETAINER ANGLE AND BEARING LAYOUT DETAILS AT FWD. ABUTMENT SEE FWD. ABUTMENT DETAILS ON SHEET 312/365

J:\Project\O\ODOT\15005112 Ironton Russell\LAW\81595\structures\LAW093_1111C\sheets\Ohio Approach\093_0000_Ohio_br03.dgn

DESIGN AGENCY
URS
36 EAST 7TH STREET
SUITE 2300
CINCINNATI, OHIO 45202

DESIGNED	DRAWN	REVIEWED	DATE
DB	MAL	JTH	06-11-10
CHECKED	REVISED	STRUCTURE FILE NUMBER	
JJB		4401263	

OHIO APPROACH - BEARING DETAILS (2 OF 2)
BRIDGE NO. LAW-93C-0000
IRONTON RUSSELL BRIDGE OVER OHIO RIVER

LAW-93-0.00
PID No. 81595

335/365

722
788

NOTES:

1. FOR TRANSVERSE SECTION, REFER TO SHEET 343/365
2. FOR FORWARD EXPANSION JOINT, REFER TO SHEET 345/365
3. FOR MODULAR JOINT, REFER TO SHEETS 270/365 AND 271/365
4. FOR ADDITIONAL REINFORCING OVER PIERS, REFER TO SHEET 342/365
5. FOR RAILING DETAILS AND LIGHT PILASTER DETAILS, REFER TO SHEET 350/365 TO 357/365
6. FOR LIGHTING PLANS, REFER TO SHEETS 260/788 THRU 344/788

℄ BRG. PIER 5
℄ PIER 5
4'-3½"
11"
1-SER'S. SH5002 (LAP WITH SER'S SH5001) & 77-SH4016
51-SH5004 (LAP WITH SER'S SH5003) & 51-SH4016
51-SH5006 (LAP WITH SER'S SH5005) & 51-SH4016
1-SER'S. SH5008 (LAP WITH SER'S SH5007) & 51-SH4016
816-SH5009 (LAP WITH SH5009 AND SER'S. SH5010) & 816-SH4016
34-SH5032, SH5033 & SH5034 IN HAUNCH (7 BETWEEN GIRDERS WITH 3 EACH OVERHANG) AT 11½"
LIGHT STANDARD SEE NOTE 6 (TYP.)
℄ PIER 6
1-SER'S. SH5015
52- SH5016
52- SH5016
26- SH5017 (15 LENGTHS)
26- SH5016 (14 LENGTHS)
℄ CONSTRUCTION S.R. 93C
LAPS VARY 2'-0" MIN. (TYP.)
MATCH LINE 'A'
2 LAYERS OF 5-SH5031 (IN HAUNCH) (3 LENGTHS EA. LAYER)
1-SER'S. SH5001 & 77-SH4016
11"
4"
75 SPACES AT 6¼" = 39'-0¾"
1-SER'S. SH5003 & 51-SH4016
1-SER'S. SH5005 & 51-SH4016
1-SER'S. SH5007 & 51-SH5016
969 SPACES AT 6" = 484'-6"
732-SH5009 & 732-SH4016
LIGHT STANDARD SEE NOTE 6 (TYP.)
A
B
D
D

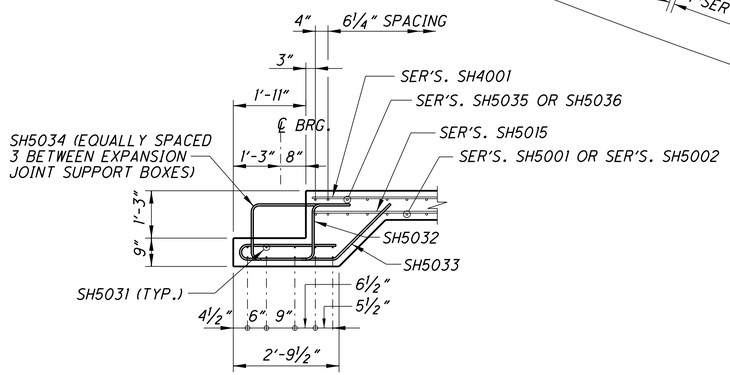

TYPICAL SECTION D-D
(NOT TO SCALE)

SLAB PLAN - BOTTOM REINFORCING

DESIGN AGENCY
URS
36 EAST 7TH STREET
SUITE 2300
CINCINNATI, OHIO 45202

DESIGNED	DRAWN	REVIEWED	DATE
PJW	ALH	JTH	06-11-10
CHECKED	REVISED	STRUCTURE FILE NUMBER	
DB		4401263	

OHIO APPROACH - SLAB PLAN - BOTTOM REINFORCING (1 OF 3)
BRIDGE NO. LAW-93C-0000
IRONTON RUSSELL BRIDGE OVER OHIO RIVER

LAW-93-0.00
PID No. 81595

336/365

723/788

J:\Project\O\ODOT\15005112 Ironton Russell\LAW\81595\structures\LAW093_1111C\sheets\Ohio Approach\093_0000_Ohio_dp01.dgn

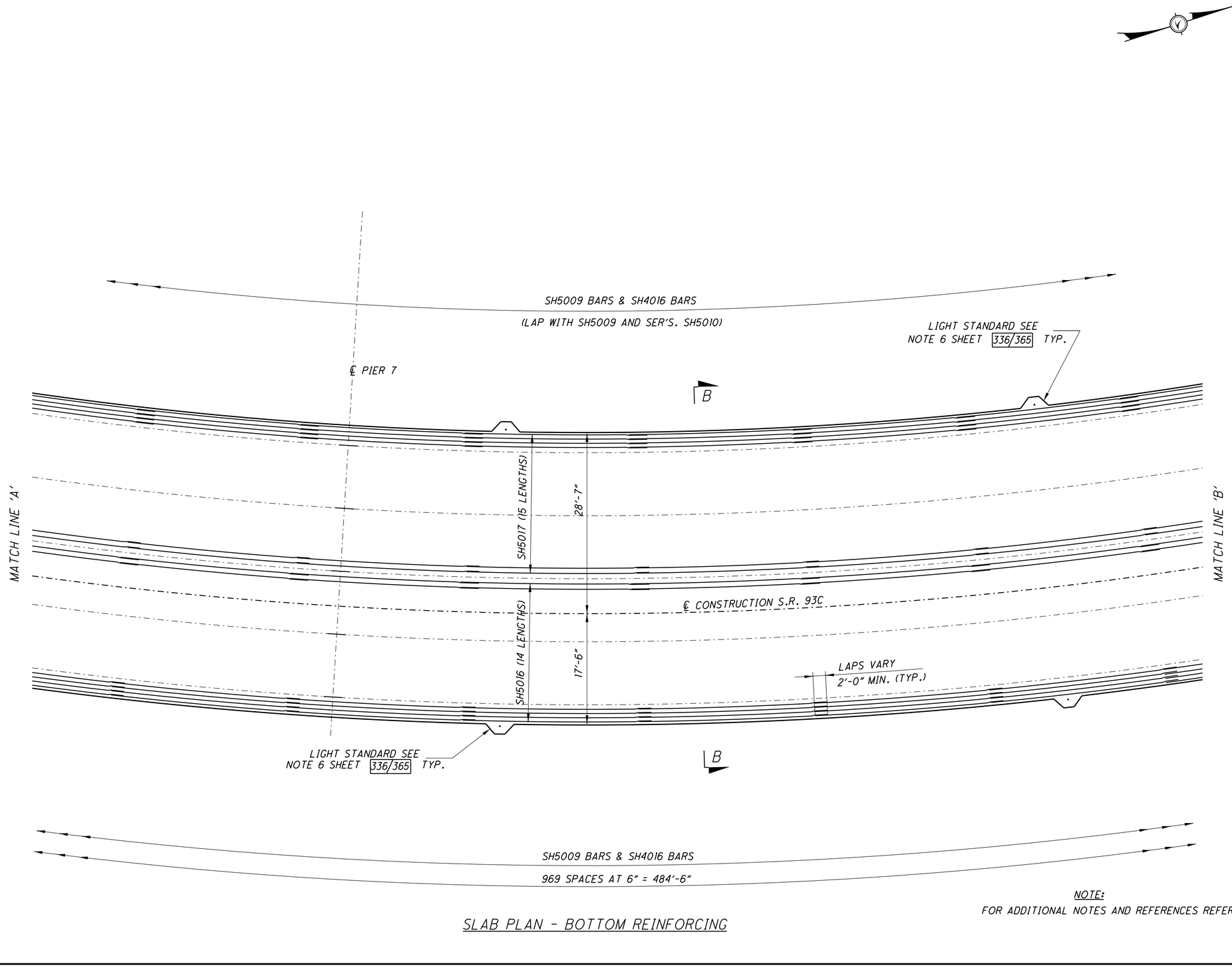

SLAB PLAN - BOTTOM REINFORCING

NOTE:
FOR ADDITIONAL NOTES AND REFERENCES REFER TO SHEET 336/365

J:\Project\OAODOT\15005112 Ironton Russell\LAW\81595\structures\LAW093_1111C\sheets\Ohio Approach\093_0000_Ohio_dp03.dgn

DESIGN AGENCY
URS
36 EAST 7TH STREET
SUITE 2300
CINCINNATI, OHIO 45202

DESIGNED	DRAWN	REVIEWED	DATE
PJW	ALH	JTH	06-11-10
CHECKED	REVISED	STRUCTURE FILE NUMBER	
DB		4401263	

OHIO APPROACH - SLAB PLAN - BOTTOM REINFORCING (2 OF 3)
BRIDGE NO. LAW-93C-0000
IRONTON RUSSELL BRIDGE OVER OHIO RIVER

LAW-93-0.00
PID No. 81595

337/365

724
788

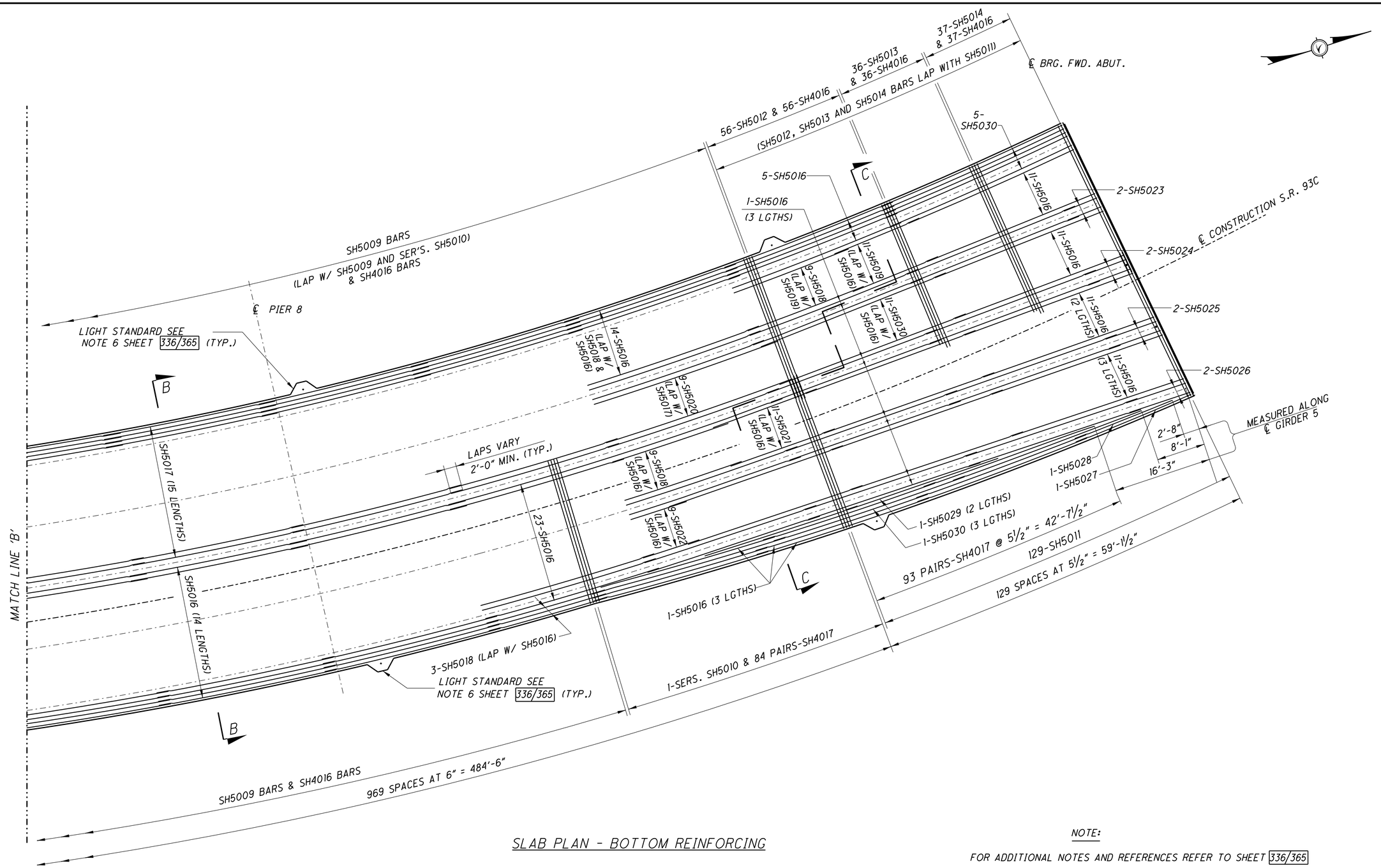

SLAB PLAN - BOTTOM REINFORCING

NOTE:

FOR ADDITIONAL NOTES AND REFERENCES REFER TO SHEET 336/365

J:\Project\O\ODOT\15005112 Ironton Russell\LAW\81595\structures\LAW093_1111C\sheets\Ohio Approach\093_0000_Ohio_dp02.dgn

DESIGN AGENCY
URS
36 EAST 7TH STREET
SUITE 2300
CINCINNATI, OHIO 45202

DESIGNED	DRAWN	REVIEWED	DATE
PJW	ALH	JTH	06-11-10
CHECKED	REVISED	STRUCTURE FILE NUMBER	
DB		4401263	

OHIO APPROACH - SLAB PLAN - BOTTOM REINFORCING (3 OF 3)
BRIDGE NO. LAW-93C-0000
IRONTON RUSSELL BRIDGE OVER OHIO RIVER

LAW-93-0.00
PID No. 81595

338/365

725
788

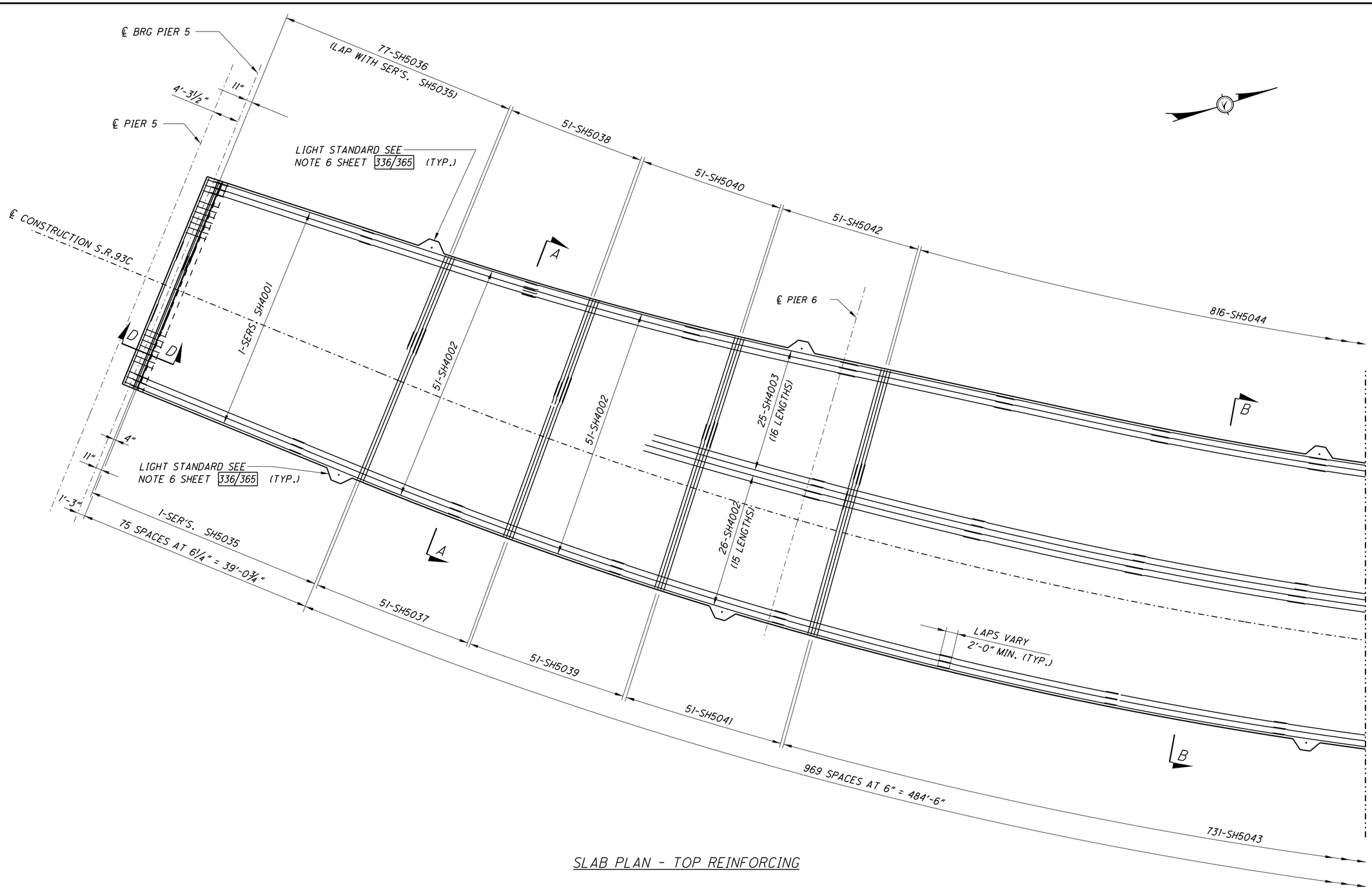

SLAB PLAN - TOP REINFORCING

NOTE:

FOR ADDITIONAL NOTES, SECTION D-D AND REFERENCES REFER TO SHEET 336/365

J:\Project\O\ODOT\15005112 Ironton Russell\LAW\81595\structures\LAW093_1111C\sheets\Ohio Approach\093_0000_Ohio_dp04.dgn

DESIGN AGENCY
URS
35 EAST 7TH STREET
SUITE 2300
CINCINNATI, OHIO 45202

DESIGNED	DRAWN	REVIEWED	DATE
PJW	ALH	JTH	06-11-10
CHECKED	REVISED	STRUCTURE FILE NUMBER	
DB		4401263	

OHIO APPROACH - SLAB PLAN - TOP REINFORCING (1 OF 3)
BRIDGE NO. LAW-93C-0000
IRONTON RUSSELL BRIDGE OVER OHIO RIVER

LAW-93-0.00
PID No. 81595

339/365

726
788

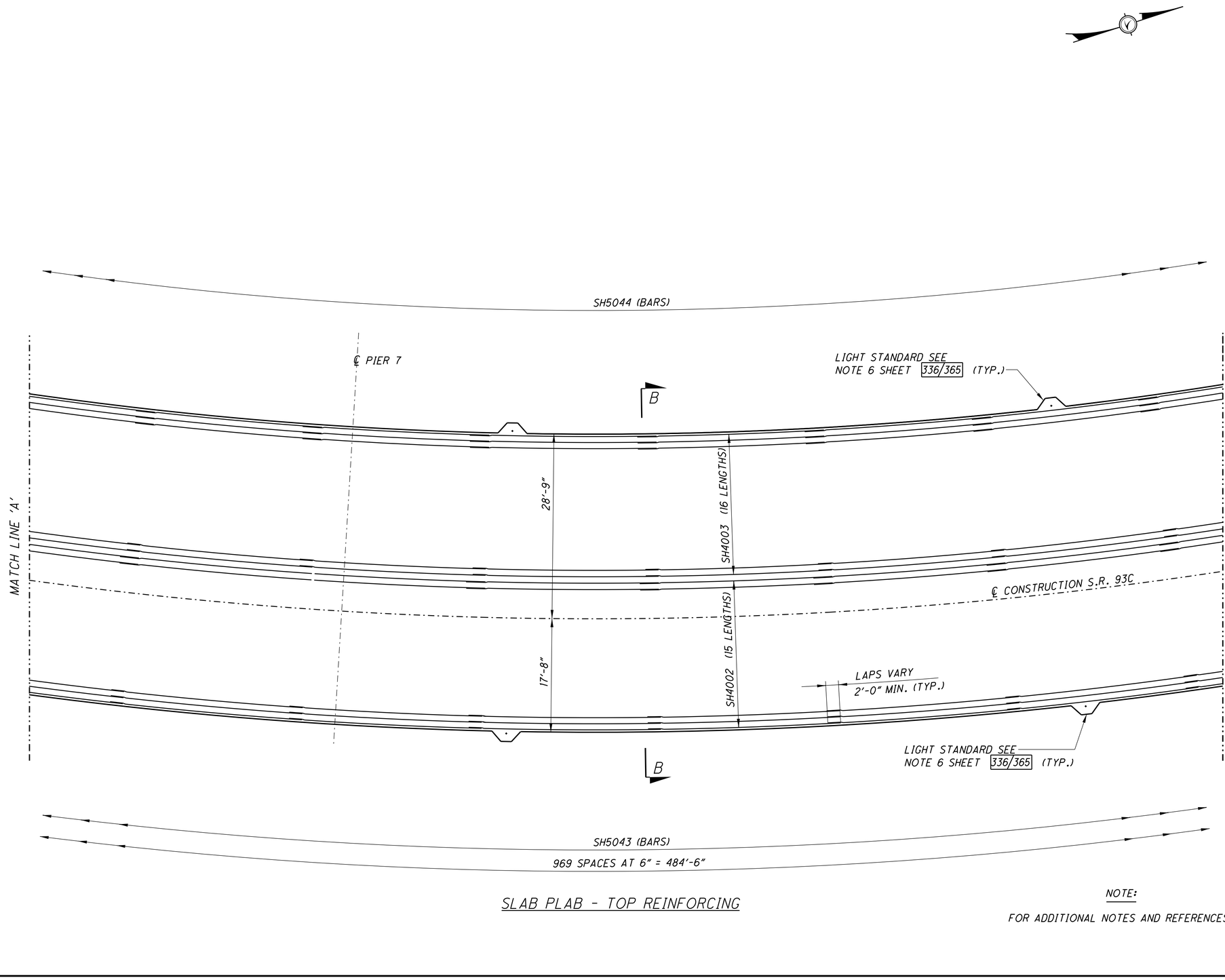

SLAB PLAB - TOP REINFORCING

NOTE:

FOR ADDITIONAL NOTES AND REFERENCES REFER TO SHEET 336/365

J:\Project\O\ODOT\15005112 Ironton Russell\LAW\81595\structures\LAW093_1111C\sheets\Ohio Approach\093_0000_Ohio_dp05.dgn

DESIGN AGENCY
URS
36 EAST 7TH STREET
SUITE 2300
CINCINNATI, OHIO 45202

DESIGNED	DRAWN	REVIEWED	DATE
PJW	ALH	JTH	06-11-10
CHECKED	REVISED	STRUCTURE FILE NUMBER	
DB		4401263	

OHIO APPROACH - SLAB PLAN - TOP REINFORCING (2 OF 3)
BRIDGE NO. LAW-93C-0000
IRONTON RUSSELL BRIDGE OVER OHIO RIVER

LAW-93-0.00
PID No. 81595

340/365

727
788

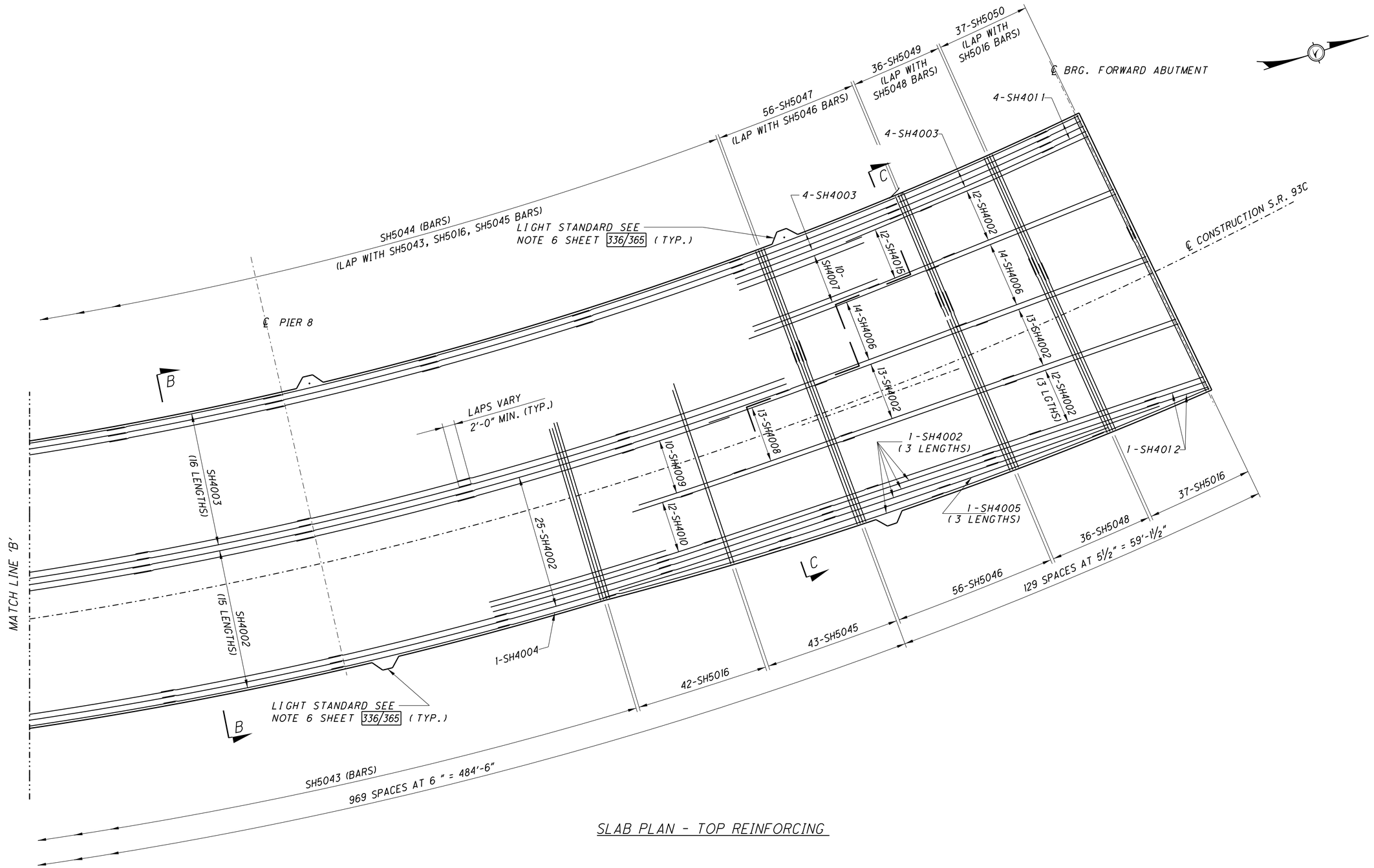

SLAB PLAN - TOP REINFORCING

NOTE:

FOR ADDITIONAL NOTES AND REFERENCES REFER TO SHEET 336/365

J:\Project\OV\ODOT\15005112 Ironton Russell\LAW\81595\structures\LAW093_1111C\sheets\Ohio Approach\093_0000_Ohio_dp06.dgn

DESIGN AGENCY
URS
36 EAST 7TH STREET
SUITE 2300
CINCINNATI, OHIO 45202

DESIGNED	DRAWN	REVIEWED	DATE
PJW	ALH	JTH	06-11-10
CHECKED	REVISED	STRUCTURE FILE NUMBER	
DB		4401263	

OHIO APPROACH - SLAB PLAN - TOP REINFORCING (3 OF 3)
BRIDGE NO. LAW-93C-0000
IRONTON RUSSELL BRIDGE OVER OHIO RIVER

LAW-93-0.00
PID No. 81595

341/365

728
788

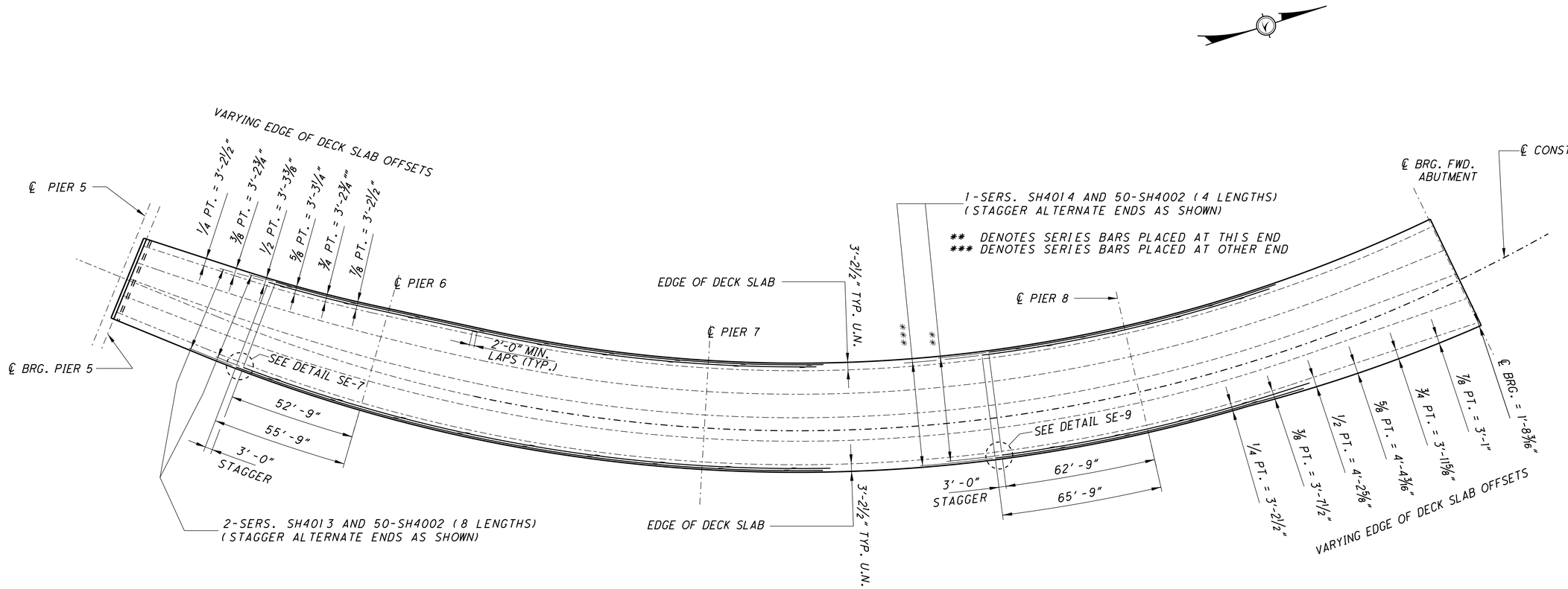

SLAB PLAN

SHOWING ADDITIONAL REINFORCING OVER PIERS AND EDGE OF DECK OFFSETS

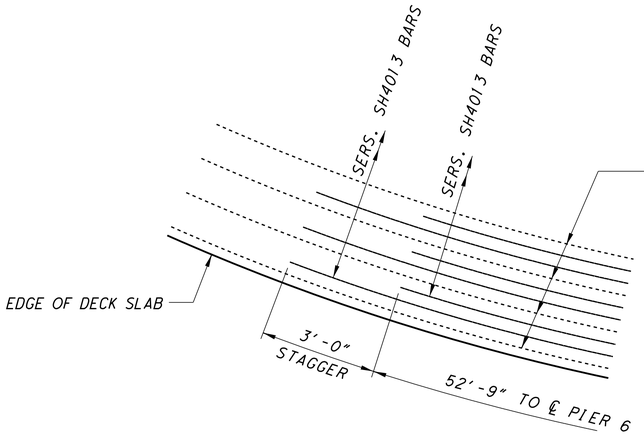

DETAIL SE-7

(SHOWING STAGGER LAYOUT)

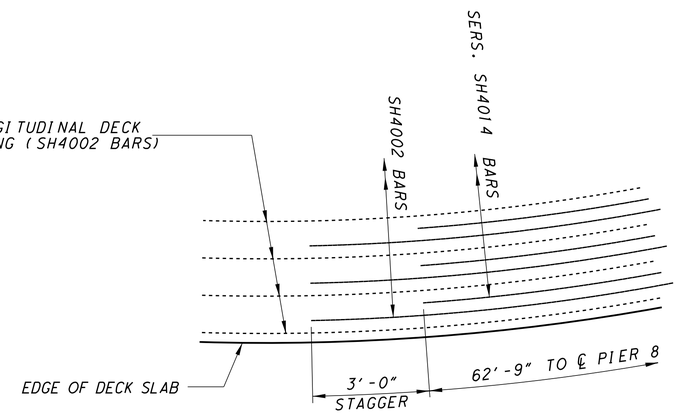

DETAIL SE-9

(SHOWING STAGGER LAYOUT)

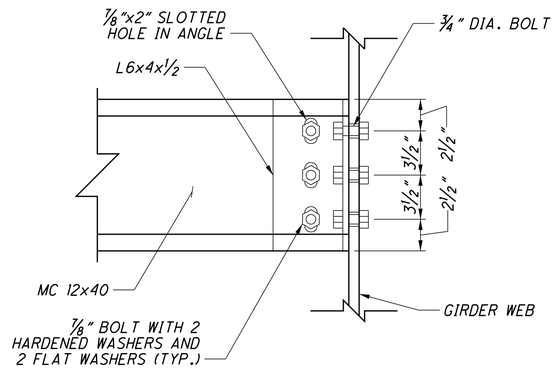

TYPICAL CONDUIT SUPPORT

(10'-0" MAX. SPACING)

NOTE:

FOR ADDITIONAL NOTES AND REFERENCES REFER TO SHEET 336/365

NOTES FOR CONDUIT SUPPORTS:

1. STRUCTURAL STEEL SHALL BE ASTM A709 GRADE 50W.

2. THE STRUCTURAL STEEL FOR THE CONDUIT SUPPORTS SHALL BE INCLUDED WITH ITEM 513, STRUCTURAL STEEL MEMBERS, LEVEL 5 FOR PAYMENT.

3. CONTRACTOR AND FABRICATOR SHALL COORDINATE WITH THE LIGHTING CONTRACTOR FOR SIZE AND LOCATION OF HOLE IN THE TOP FLANGE OF SUPPORT CHANNELS FOR INSTALLATION OF CONDUIT SUPPORTS.

4. CONDUIT U-BOLTS, EXPANSION JOINTS AND OTHER MISCELLANEOUS HARDWARE AND LABOR NECESSARY TO INSTALL THE UTILITY CONDUITS ARE INCLUDED WITH THE LIGHTING SUMMARIES.

DESIGN AGENCY
URS
35 EAST 7TH STREET
SUITE 2300
CINCINNATI, OHIO 45202

DESIGNED	DRAWN	REVIEWED	DATE
PJW	ALH	JTH	06-11-10
CHECKED	REVISED	STRUCTURE FILE NUMBER	
DB		4401263	

OHIO APPROACH - SLAB PLAN - ADDITIONAL BARS OVER PIERS & SLAB OFFSETS
BRIDGE NO. LAW-93C-0000
IRONTON RUSSELL BRIDGE OVER OHIO RIVER

LAW-93-0.00
PID No. 81595

342/365

729/788

J:\Project\O\ODOT\15005112 Ironton Russell\LAW\81595\structures\LAW093_1111C\sheets\Ohio Approach\093_0000_Ohio_dp07.dgn

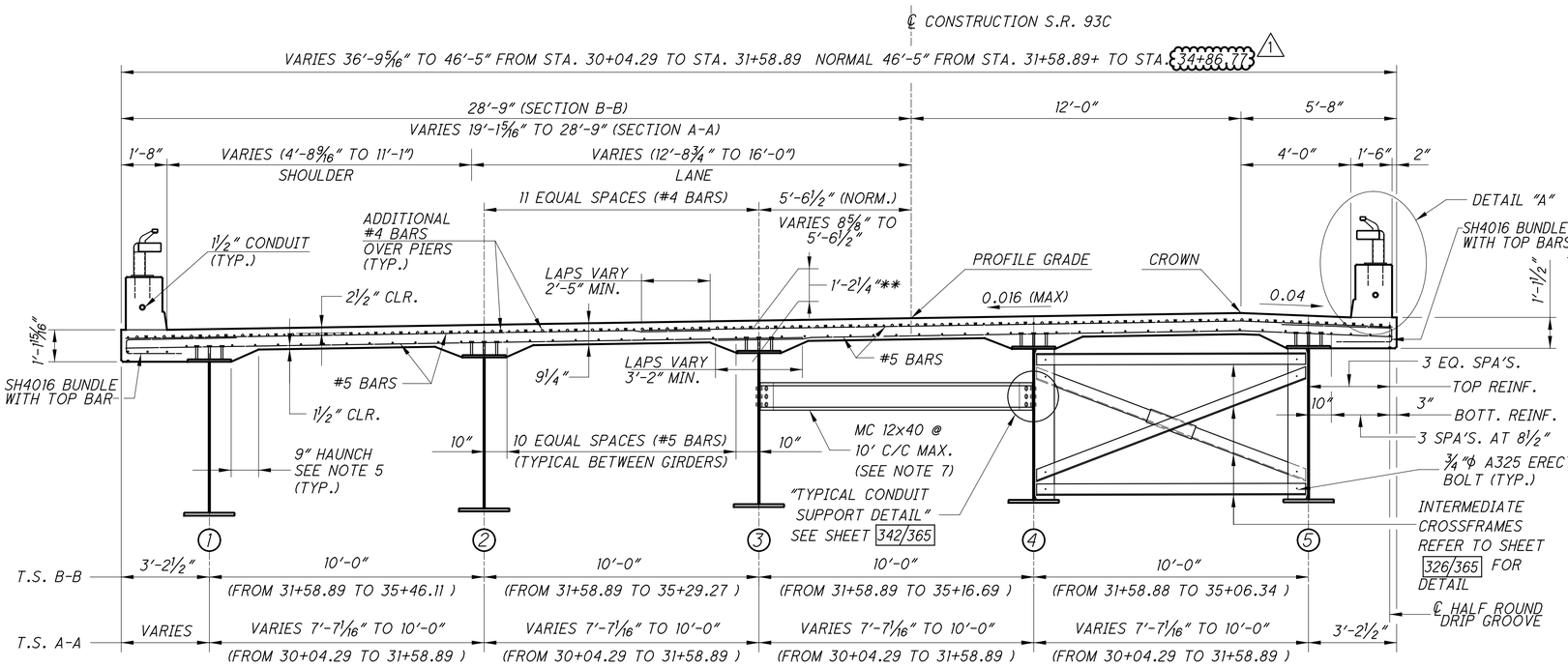

TRANSVERSE SECTIONS A-A AND B-B

** DENOTES TOP OF WEB PLATE TO TOP OF DECK SLAB

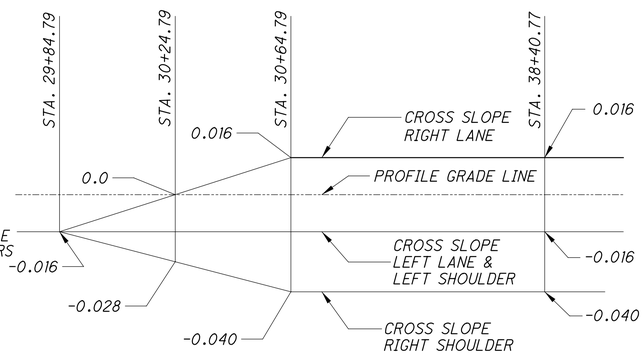

PAVEMENT TRANSITION DETAIL

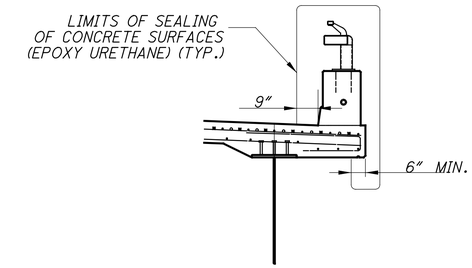

DETAIL "A"

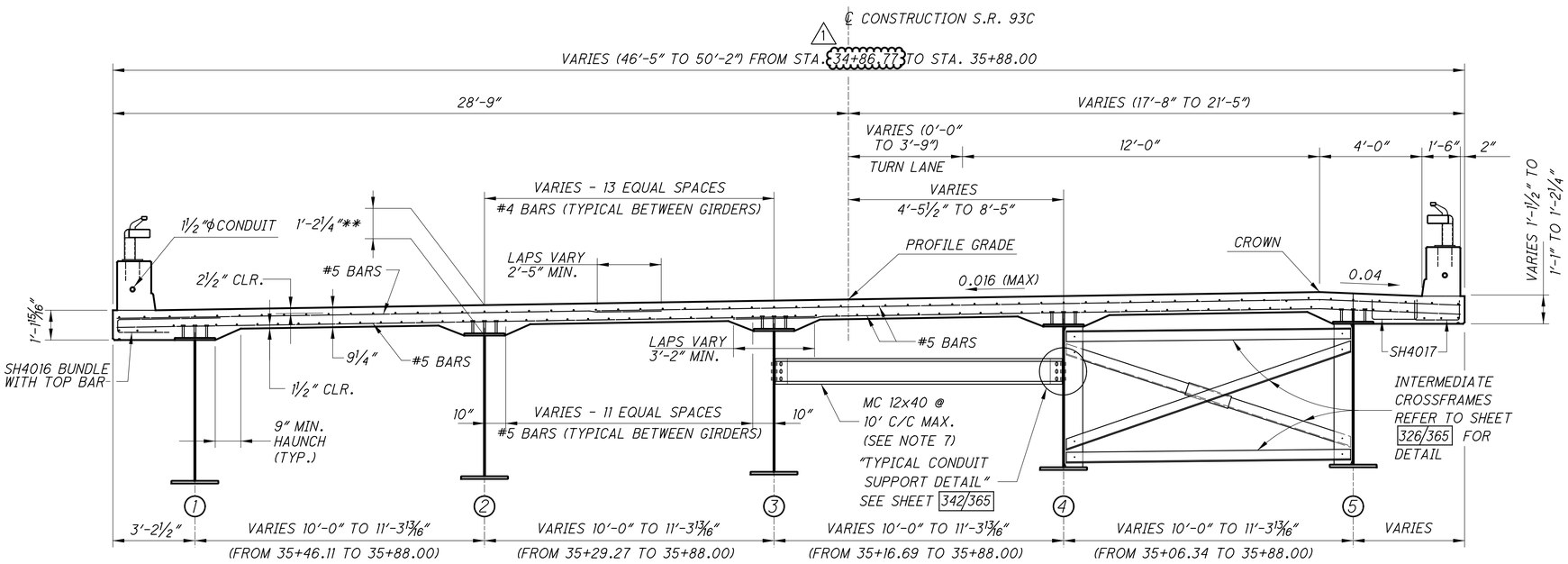

TRANSVERSE SECTIONS C-C

** DENOTES TOP OF WEB PLATE TO TOP OF DECK SLAB

NO.	REVISIONS	DATE	REV. BY
1	REVISED STATIONING	02/14	CRK

NOTES:

1. FOR SLAB REINFORCING REFER TO SHEETS 336/365 THRU 341/365
2. FOR SLAB OVERHANGS REFER TO SHEET 342/365
3. FOR RAILING DETAILS REFER TO SHEETS 350/365 THRU 357/365
4. FOR LIGHTING PLANS REFER TO SHEET 260/788 THRU 344/788
5. DECK SLAB CONCRETE QUANTITY: THE ESTIMATED QUANTITY OF DECK SLAB CONCRETE IS BASED ON THE CONSTANT DECK SLAB THICKNESS, AS SHOWN, PLUS THE QUANTITY OF CONCRETE THAT FORMS EACH BEAM/GIRDER HAUNCH. THE ESTIMATE ASSUMES A CONSTANT HAUNCH THICKNESS OF 5 INCHES AND A CONSTANT HAUNCH WIDTH OUTSIDE THE EDGE OF EACH BEAM/GIRDER FLANGE OF 9 INCHES. DEVIATE FROM THIS HAUNCH THICKNESS AS NECESSARY TO PLACE THE DECK SURFACE AT THE FINISHED GRADE. THE ALLOWABLE TOLERANCE FOR THE HAUNCH WIDTH OUTSIDE THE EDGE OF EACH BEAM/GIRDER FLANGE IS ±3 INCHES. THE HAUNCH THICKNESS WAS MEASURED AT THE CENTERLINE OF THE BEAM/GIRDER, FROM THE SURFACE OF THE DECK TO THE BOTTOM OF THE TOP FLANGE MINUS THE DECK SLAB THICKNESS. THE AREA OF ALL EMBEDDED STEEL PLATES HAS BEEN DEDUCTED FROM THE HAUNCH QUANTITY IN ACCORDANCE WITH 511.24.
6. FOR ADDITIONAL BAR MARK CALLOUTS REFER TO SHEET 344/365
7. FOR ADDITIONAL CONDUIT SUPPORT NOTES AND DETAILS SEE SHEETS 320/365 AND 365/365

DESIGN AGENCY
URS
36 EAST 7TH STREET
SUITE 2300
CINCINNATI, OHIO 45202

DESIGNED PJW | DRAWN ALH | REVIEWED JTH | DATE 06-11-10
CHECKED MAL | REVISED | STRUCTURE FILE NUMBER 4401263

OHIO APPROACH - TRANSVERSE SECTIONS A-A, B-B, AND C-C
BRIDGE NO. LAW-93C-0000
IRONTON RUSSELL BRIDGE OVER OHIO RIVER

LAW-93-0.00
PID No. 81595

343/365
730/788

J:\Project\ODOT\15005112 Ironton Russell\LAW\81595\structures\LAW093_1111C\sheets\Ohio Approach\093_0000_Ohio_ts02.dgn

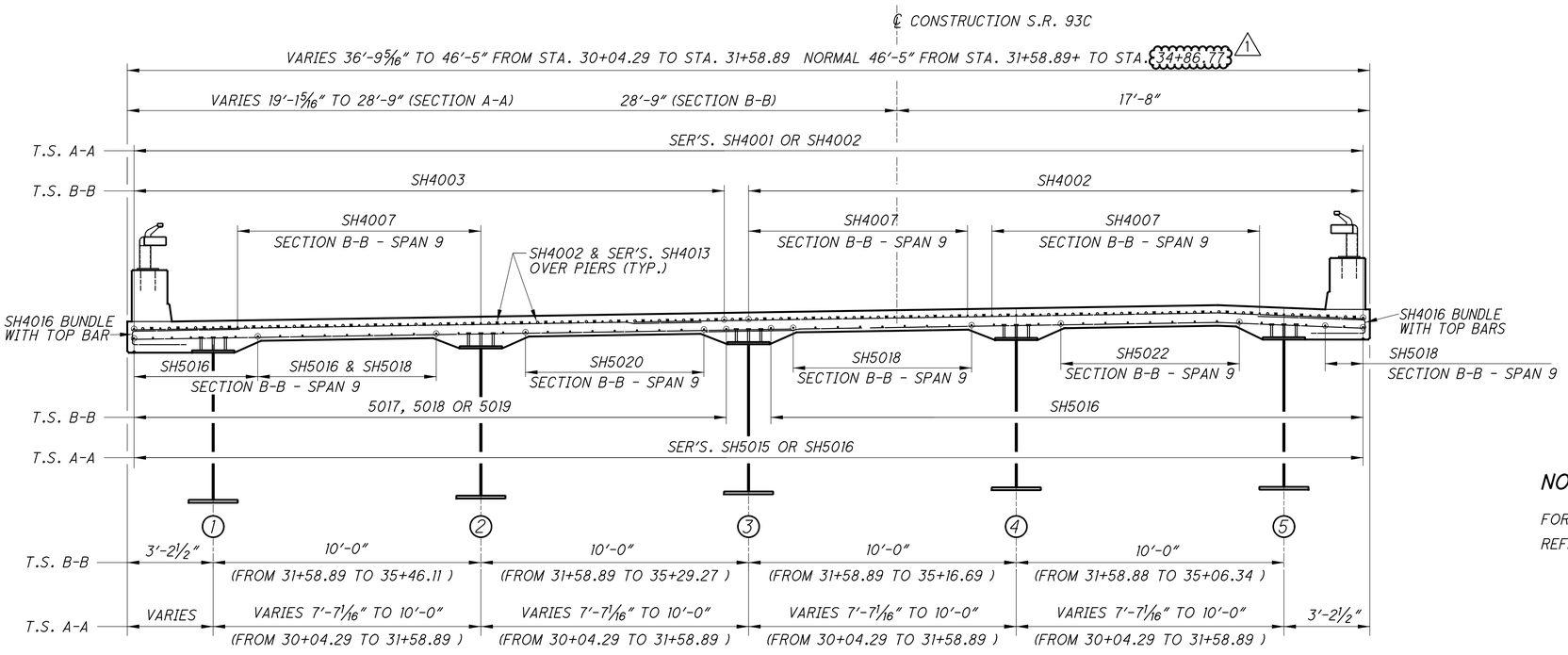

TRANSVERSE SECTIONS A-A AND B-B

SHOWING REINFORCING BAR MARK LOCATIONS

NOTE:

FOR NOTES, ADDITIONAL DETAILS AND CROSS REFERENCES REFER TO SHEET 342/365

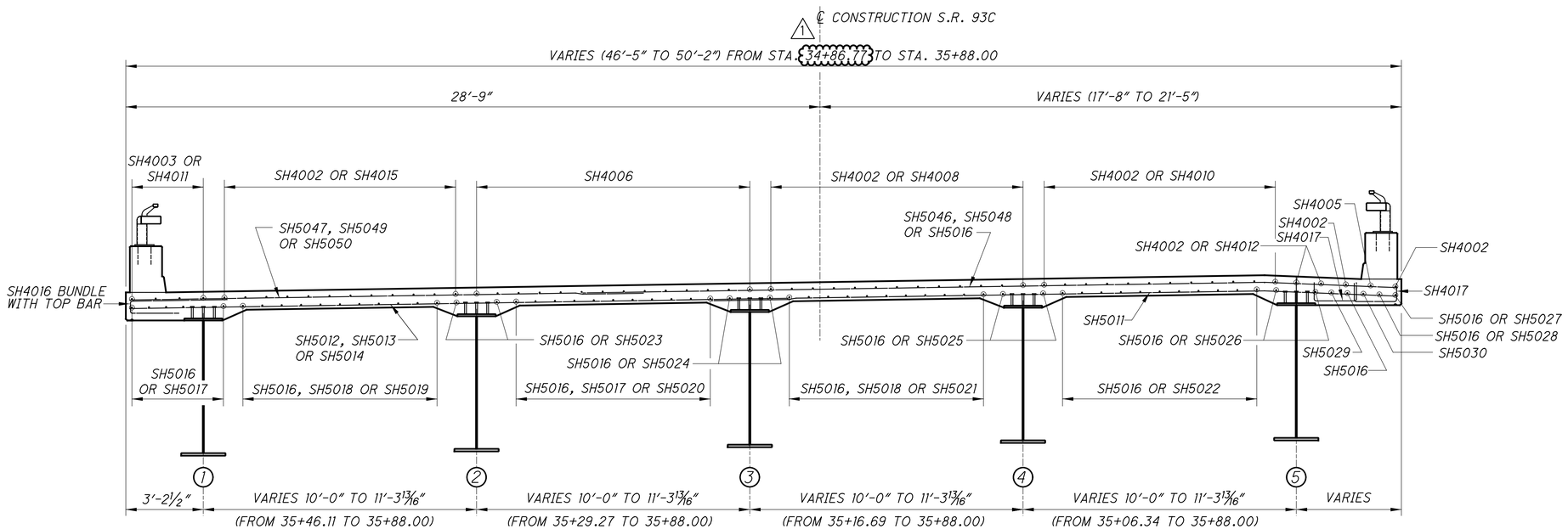

TRANSVERSE SECTIONS C-C

SHOWING REINFORCING BAR MARK LOCATIONS

NO.	REVISIONS	DATE	REV. BY
1	REVISED STATIONING	02/14	CRK

DESIGN AGENCY
URS
35 EAST 7TH STREET
SUITE 2300
CINCINNATI, OHIO 45202

DESIGNED	DRAWN	REVIEWED	DATE
PJW	ALH	JTH	06-11-10
CHECKED	REVISED	STRUCTURE FILE NUMBER	
MAL		4401263	

OHIO APPROACH - TRANSVERSE SECTIONS A-A, B-B, AND C-C
BRIDGE NO. LAW-93C-0000
IRONTON RUSSELL BRIDGE OVER OHIO RIVER

LAW-93-0.00
PID No. 81595

344/365

731
788

J:\Project\O\ODOT\15005112 Ironton Russell\LAW\81595\structures\LAW093_1111C\sheets\Ohio Approach\093_0000_Ohio_ts03.dgn

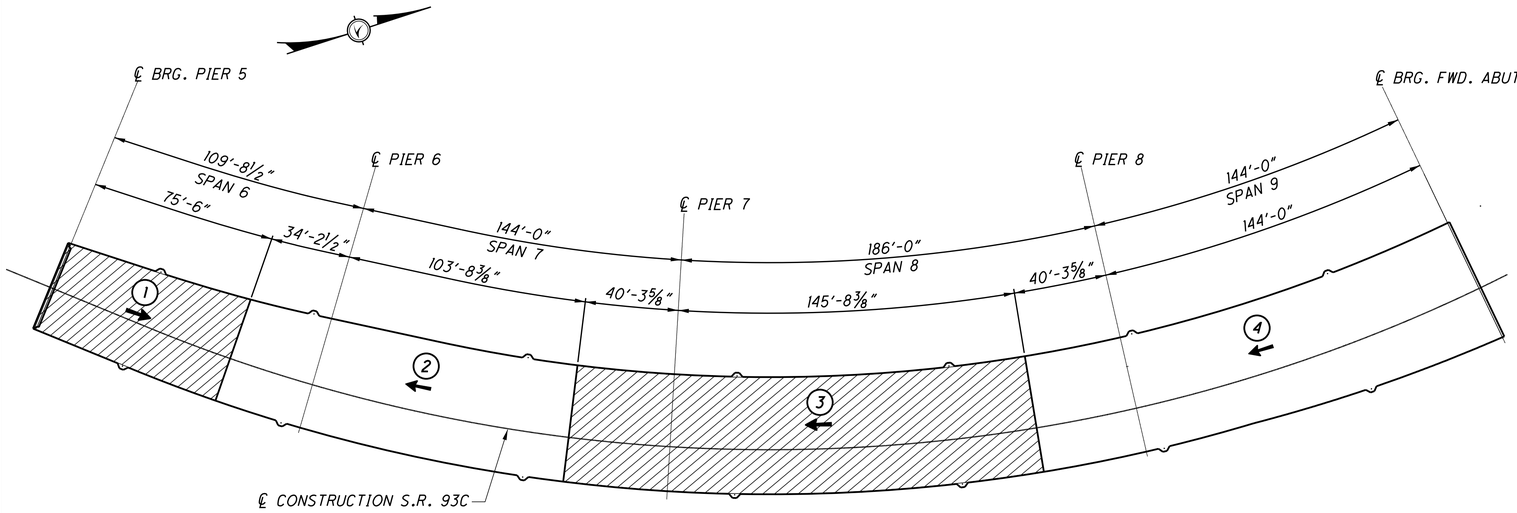

DECK POURING SEQUENCE

(3) POUR SEQUENCE NUMBER

← DIRECTION OF POUR

▨ DENOTES AREA OF NOTED DECK POUR

NOTES:

1. DIMENSIONS ARE GIVEN ALONG THE ℄ CONSTRUCTION S.R. 93C.
2. THIS IS A SUGGESTED SEQUENCE FOR POURING THE DECK CONCRETE. SHOULD THE CONTRACTOR PROPOSE TO USE A DIFFERENT SEQUENCE, THE SUBMITTAL SHALL BE MADE IN ACCORDANCE WITH CMS ITEMS 501 AND 511.
3. FOR TRANSVERSE SECTION DETAILS SEE SHEET 343/365.
4. FOR SLAB PLANS SEE SHEETS 336/365 TO 342/365.

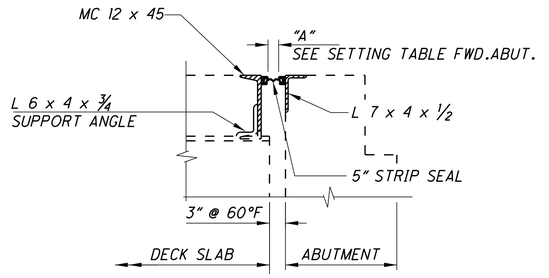

SECTION C-C

SETTING TABLE F.A.	
TEMPERATURE	DIM. "A"
30° F	3⅛"
40° F	2⅞"
50° F	2⅝"
60° F	2⅜"
70° F	2⅛"
80° F	1⅞"
90° F	1⅝"

DECK EXPANSION AND CONTRACTION MOVEMENTS ARE CALCULATED FROM A REFERENCE OF 60°F, THE TEMPERATURE RANGE USED IS -30°F TO 120°F (CONTRACTION = 2⁵⁄₁₆"), (EXPANSION = 1⁹⁄₁₆") EQUAL A TOTAL MOVEMENT OF 3⅞".

USE A 5" STRIP SEAL FOR THE EXPANSION JOINT AT THE FORWARD ABUTMENT.

THE STRIP SEAL SHALL BE SUPPLIED IN ONE CONTINUOUS PIECE. NO SPLICES WILL BE ACCEPTABLE.

1⅜" WIDE STRIP SEAL RETAINER WIDTHS AT THE FORWARD ABUTMENT ARE ASSUMED IN THE PLANS FOR SLAB DIMENSIONING. IF A DIFFERENT RETAINER WIDTH IS USED, THE CONTRACTOR SHALL ADJUST DIMENSIONS ACCORDINGLY.

FOR ADDITIONAL NOTES AND DETAILS, REFER TO ODOT STANDARD DRAWING EXJ-4-87.

FORWARD ABUTMENT EXPANSION JOINT

Link to RFI141 As-Built

DESIGN AGENCY
URS
36 EAST 7TH STREET
SUITE 2300
CINCINNATI, OHIO 45202

DESIGNED	DRAWN	REVIEWED	DATE
JTL	MAL	JTH	06-11-10
CHECKED	REVISED	STRUCTURE FILE NUMBER	
DB		4401263	

OHIO APPROACH - DECK POUR SEQUENCE & MISC. DETAILS
BRIDGE NO. LAW-93C-0000
IRONTON RUSSELL BRIDGE OVER OHIO RIVER

LAW-93-0.00
PID No. 81595

J:\Project\O\ODOT\15005112 Ironton Russell\LAW\81595\structures\LAW093_1111C\sheets\Ohio Approach\093_0000_Ohio_md10.dgn

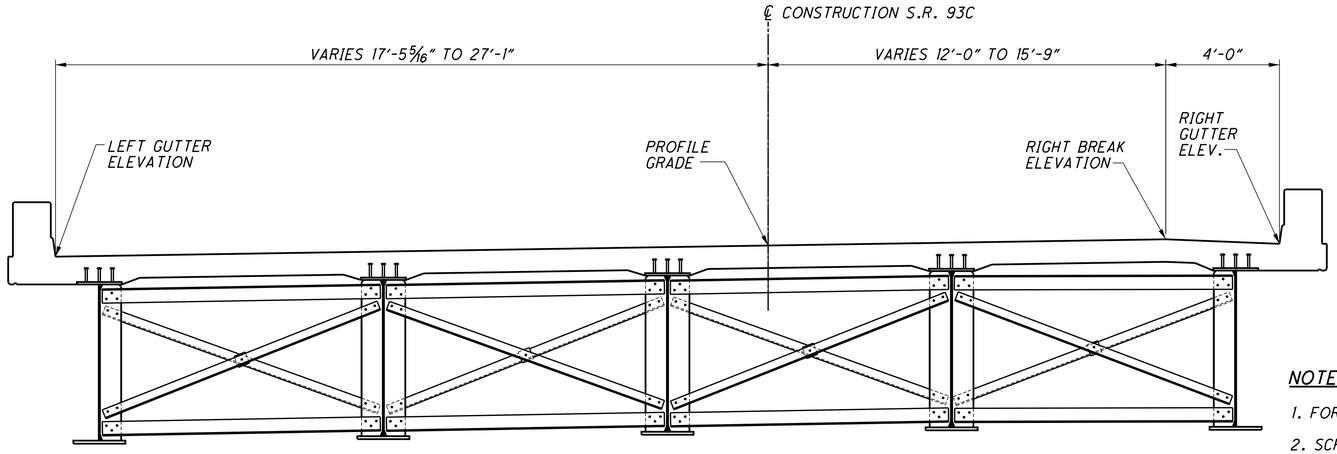

SCREED LINE LOCATIONS

NOTES:

1. FOR FRAMING PLANS SEE SHEETS 320/365 TO 323/365
2. SCREED ELEVATIONS SHOWN REPRESENT THE THEORETICAL DECK SURFACE LOCATION PRIOR TO DEFLECTIONS CAUSED BY DECK PLACEMENT AND OTHER ANTICIPATED DEAD LOADS.
3. AN ALLOWANCE OF ½ THE CALCULATED CAMBER INCREASE DUE TO HEAT CURVING HAS BEEN APPLIED TO THE SCREED ELEVATIONS TO ALLOW FOR LOSS OF HEAT CAMBER IN SERVICE.

SCREED ELEVATIONS

		PIER 5	1/8 POINT	1/4 POINT	3/8 POINT	1/2 POINT	5/8 POINT	3/4 POINT	7/8 POINT	PIER 6	1/8 POINT	1/4 POINT	3/8 POINT	1/2 POINT	5/8 POINT	3/4 POINT	7/8 POINT	PIER 7
LEFT GUTTER	STATION	30+04.29	30+17.72	30+31.15	30+44.58	30+58.42	30+72.28	30+86.17	31+00.07	31+14.00	31+31.96	31+49.95	31+67.96	31+85.97	32+03.97	32+21.98	32+39.99	32+58.00
	OFFSET	-17.44	-18.44	-19.43	-20.45	-21.50	-22.52	-23.52	-24.56	-25.59	-26.55	-27.02	-27.08	-27.08	-27.08	-27.08	-27.08	-27.08
	ELEV.	596.28	596.13	595.94	595.69	595.37	594.99	594.56	594.08	593.57	592.89	592.15	591.33	590.43	589.43	588.35	587.25	586.19
PROFILE GRADE	STATION	30+04.29	30+17.96	30+31.62	30+45.28	30+58.99	30+72.72	30+86.47	31+00.23	31+14.00	31+31.99	31+49.99	31+67.99	31+85.99	32+04.00	32+22.00	32+40.00	32+58.00
	OFFSET	0.00	0.00	0.00	0.00	0.00	0.00	0.00	0.00	0.00	0.00	0.00	0.00	0.00	0.00	0.00	0.00	0.00
	ELEV.	596.56	596.43	596.25	596.01	595.71	595.35	594.93	594.47	593.98	593.31	592.57	591.76	590.85	589.85	588.76	587.67	586.62
RIGHT BREAK	STATION	30+04.29	30+18.20	30+32.11	30+45.99	30+59.59	30+73.19	30+86.80	31+00.40	31+14.00	31+32.00	31+50.00	31+68.00	31+86.00	32+04.00	32+22.00	32+40.00	32+58.00
	OFFSET	12.00	12.00	12.00	12.00	12.00	12.00	12.00	12.00	12.00	12.00	12.00	12.00	12.00	12.00	12.00	12.00	12.00
	ELEV.	596.46	596.40	596.29	596.11	595.88	595.54	595.12	594.66	594.18	593.50	592.76	591.95	591.03	590.02	588.94	587.85	586.81
RIGHT GUTTER	STATION	30+04.29	30+18.20	30+32.11	30+45.99	30+59.59	30+73.19	30+86.80	31+00.40	31+14.00	31+32.00	31+50.00	31+68.00	31+86.00	32+04.00	32+22.00	32+40.00	32+58.00
	OFFSET	16.00	16.00	16.00	16.00	16.00	16.00	16.00	16.00	16.00	16.00	16.00	16.00	16.00	16.00	16.00	16.00	16.00
	ELEV.	596.37	596.30	596.17	595.98	595.72	595.38	594.96	594.50	594.02	593.34	592.60	591.79	590.87	589.86	588.78	587.69	586.65

SCREED ELEVATIONS

		PIER 7	1/8 POINT	1/4 POINT	3/8 POINT	1/2 POINT	5/8 POINT	3/4 POINT	7/8 POINT	PIER 8	1/8 POINT	1/4 POINT	3/8 POINT	1/2 POINT	5/8 POINT	3/4 POINT	7/8 POINT	FWD. ABUT.
LEFT GUTTER	STATION	32+58.00	32+81.25	33+04.50	33+27.75	33+51.00	33+74.25	33+97.50	34+20.75	34+44.00	34+62.00	34+80.00	34+98.00	35+16.00	35+34.00	35+52.00	35+70.00	35+88.00
	OFFSET	-27.08	-27.08	-27.08	-27.08	-27.08	-27.08	-27.08	-27.08	-27.08	-27.08	-27.08	-27.08	-27.08	-27.08	-27.08	-27.08	-27.08
	ELEV.	586.19	584.86	583.56	582.24	580.87	579.44	577.95	576.47	575.03	573.96	572.93	571.92	570.88	569.82	568.71	567.56	566.39
PROFILE GRADE	STATION	32+58.00	32+81.25	33+04.50	33+27.75	33+51.00	33+74.25	33+97.50	34+20.75	34+44.00	34+62.02	34+80.04	34+98.06	35+16.08	35+34.10	35+52.11	35+70.09	35+88.00
	OFFSET	0.00	0.00	0.00	0.00	0.00	0.00	0.00	0.00	0.00	0.00	0.00	0.00	0.00	0.00	0.00	0.00	0.00
	ELEV.	586.62	585.32	584.07	582.78	581.42	579.97	578.45	576.92	575.46	574.39	573.36	572.36	571.34	570.28	569.16	568.01	566.82
RIGHT BREAK	STATION	32+58.00	32+81.25	33+04.50	33+27.75	33+51.00	33+74.25	33+97.50	34+20.75	34+44.00	34+62.06	34+80.11	34+98.16	35+16.22	35+34.25	35+52.25	35+70.17	35+88.00
	OFFSET	12.00	12.00	12.00	12.00	12.00	12.00	12.00	12.00	12.00	12.00	12.00	12.42	13.09	13.76	14.43	15.09	15.75
	ELEV.	586.81	585.53	584.29	583.02	581.67	580.20	578.67	577.13	575.65	574.58	573.55	572.55	571.54	570.49	569.39	568.25	567.07
RIGHT GUTTER	STATION	32+58.00	32+81.25	33+04.50	33+27.75	33+51.00	33+74.25	33+97.50	34+20.75	34+44.00	34+62.06	34+80.11	34+98.16	35+16.22	35+34.25	35+52.25	35+70.17	35+88.00
	OFFSET	16.00	16.00	16.00	16.00	16.00	16.00	16.00	16.00	16.00	16.00	16.00	16.42	17.09	17.76	18.43	19.09	19.75
	ELEV.	586.65	585.37	584.14	582.87	581.52	580.05	578.51	576.97	575.49	574.41	573.39	572.39	571.38	570.34	569.24	568.09	566.91

DESIGN AGENCY
URS
36 EAST 7TH STREET
SUITE 2300
CINCINNATI, OHIO 45202

DESIGNED	DRAWN	REVIEWED	DATE
PJW	MAL	JTH	06-11-10
CHECKED	REVISED	STRUCTURE FILE NUMBER	
DB		4401263	

OHIO APPROACH - SCREED ELEVATIONS
BRIDGE NO. LAW-93C-0000
IRONTON RUSSELL BRIDGE OVER OHIO RIVER

LAW-93-0.00
PID No. 81595

J:\Project\OhDOT\15005112 Ironton Russell\LAW\81595\structures\LAW093_1111C\sheets\Ohio Approach\093_0000_Ohio_md03.dgn

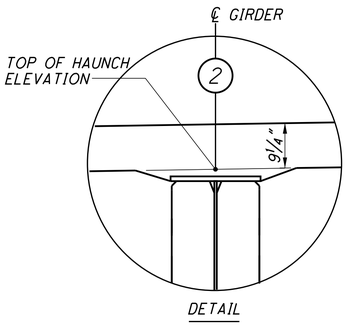

DETAIL

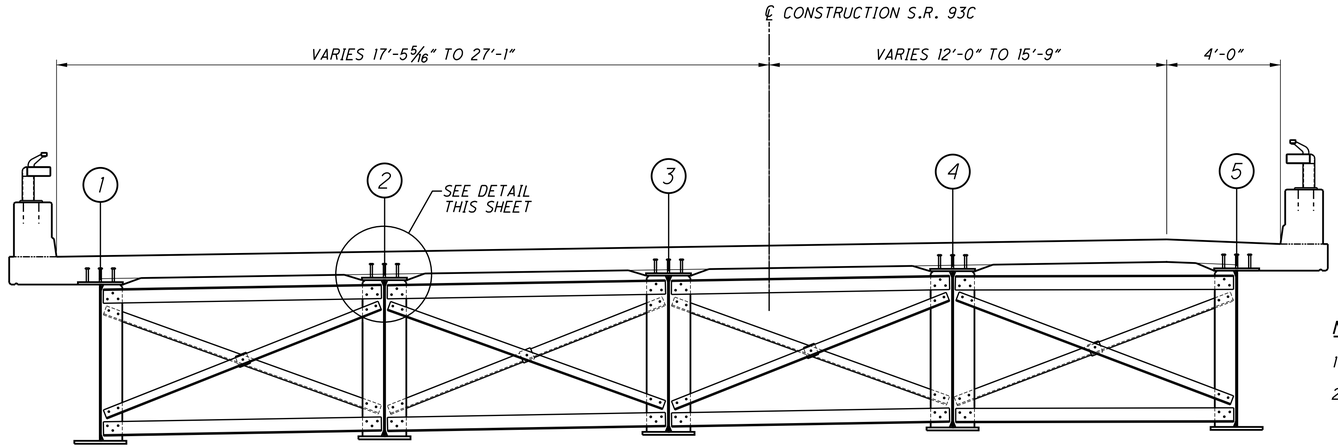

NOTES:

1. FOR FRAMING PLANS SEE SHEETS 320/365 TO 323/365
2. TOP OF HAUNCH ELEVATIONS SHOWN REPRESENT THE THEORETICAL LOCATION OF THE BOTTOM OF THE DECK ABOVE THE GIRDER HAUNCH PRIOR TO DEFLECTIONS CAUSED BY DECK PLACEMENT AND OTHER ANTICIPATED DEAD LOADS.
3. AN ALLOWANCE OF ½ THE CALCULATED CAMBER INCREASE DUE TO HEAT CURVING HAS BEEN APPLIED TO THE TOP OF HAUNCH ELEVATIONS TO ALLOW FOR LOSS OF HEAT CAMBER IN SERVICE.

TOP OF HAUNCH LOCATIONS

TOP OF HAUNCH ELEVATIONS

		PIER 5	1/8 POINT	1/4 POINT	3/8 POINT	1/2 POINT	5/8 POINT	F.S. 1	3/4 POINT	7/8 POINT	PIER 6	1/8 POINT	F.S. 2	1/4 POINT	3/8 POINT	1/2 POINT	5/8 POINT	F.S. 3	3/4 POINT	7/8 POINT	PIER 7
GIRDER 1	STATION	30+04.29	30+17.72	30+31.15	30+44.58	30+58.42	30+72.28	30+79.79	30+86.17	31+00.07	31+14.00	31+31.96	31+45.50	31+49.95	31+67.96	31+85.97	32+03.97	32+17.70	32+21.98	32+39.99	32+58.00
	OFFSET	-15.90	-16.89	-17.89	-18.88	-19.89	-20.91	-21.47	-21.95	-23.01	-24.05	-25.00	-25.41	-25.48	-25.54	-25.54	-25.54	-25.54	-25.54	-25.54	-25.54
	ELEV.	595.53	595.39	595.19	594.94	594.62	594.24	594.01	593.81	593.34	592.83	592.14	591.59	591.40	590.59	589.68	588.68	587.87	587.60	586.51	585.44
GIRDER 2	STATION	30+04.29	30+17.84	30+31.37	30+44.90	30+58.67	30+72.46	30+79.79	30+86.29	31+00.14	31+14.00	31+31.99	31+45.50	31+49.98	31+67.99	31+85.99	32+03.99	32+17.70	32+21.99	32+40.00	32+58.00
	OFFSET	-8.31	-9.07	-9.95	-10.98	-12.01	-12.92	-13.35	-13.69	-14.33	-14.83	-15.29	-15.48	-15.51	-15.54	-15.54	-15.54	-15.54	-15.54	-15.54	-15.54
	ELEV.	595.65	595.51	595.32	595.07	594.75	594.37	594.15	593.94	593.47	592.97	592.29	591.75	591.56	590.74	589.84	588.84	588.02	587.76	586.66	585.60
GIRDER 3	STATION	30+04.29	30+17.96	30+31.62	30+45.28	30+58.99	30+72.72	30+79.79	30+86.47	31+00.23	31+14.00	31+31.99	31+45.50	31+49.99	31+67.99	31+85.99	32+04.00	32+17.70	32+22.00	32+40.00	32+58.00
	OFFSET	-0.72	-1.23	-1.74	-2.41	-3.12	-3.74	-4.02	-4.27	-4.71	-5.05	-5.37	-5.50	-5.52	-5.54	-5.54	-5.54	-5.54	-5.54	-5.54	-5.54
	ELEV.	595.77	595.64	595.45	595.20	594.89	594.52	594.31	594.09	593.63	593.13	592.45	591.91	591.72	590.90	589.99	588.99	588.17	587.91	586.81	585.76
GIRDER 4	STATION	30+04.29	30+18.08	30+31.86	30+45.64	30+59.30	30+72.96	30+79.79	30+86.64	31+00.32	31+14.00	31+32.00	31+45.50	31+50.00	31+68.00	31+86.00	32+04.00	32+17.70	32+22.00	32+40.00	32+58.00
	OFFSET	6.87	6.61	6.36	6.06	5.69	5.38	5.24	5.11	4.89	4.71	4.55	4.48	4.47	4.46	4.46	4.46	4.46	4.46	4.46	4.46
	ELEV.	595.73	595.64	595.50	595.29	595.02	594.66	594.46	594.24	593.78	593.29	592.61	592.06	591.87	591.06	590.15	589.14	588.32	588.06	586.97	585.92
GIRDER 5	STATION	30+04.29	30+18.20	30+32.11	30+45.99	30+59.59	30+73.19	30+79.79	30+86.80	31+00.40	31+14.00	31+32.00	31+45.50	31+50.00	31+68.00	31+86.00	32+04.00	32+17.70	32+22.00	32+40.00	32+58.00
	OFFSET	14.46	14.46	14.46	14.46	14.46	14.46	14.46	14.46	14.46	14.46	14.46	14.46	14.46	14.46	14.46	14.46	14.46	14.46	14.46	14.46
	ELEV.	595.63	595.57	595.44	595.26	595.01	594.67	594.47	594.25	593.79	593.31	592.63	592.08	591.89	591.08	590.16	589.15	588.33	588.07	586.98	585.94

TOP OF HAUNCH ELEVATIONS

		PIER 7	1/8 POINT	F.S. 4	1/4 POINT	3/8 POINT	1/2 POINT	5/8 POINT	3/4 POINT	F.S. 5	7/8 POINT	PIER 8	1/8 POINT	1/4 POINT	F.S. 6	3/8 POINT	1/2 POINT	5/8 POINT	3/4 POINT	7/8 POINT	FWD. ABUT.
GIRDER 1	STATION	32+58.00	32+81.25	32+98.30	33+04.50	33+27.75	33+51.00	33+74.25	33+97.50	34+03.70	34+20.75	34+44.00	34+62.00	34+80.00	34+87.21	34+98.00	35+16.00	35+34.00	35+52.00	35+70.00	35+88.00
	OFFSET	-25.54	-25.54	-25.54	-25.54	-25.54	-25.54	-25.54	-25.54	-25.54	-25.54	-25.54	-25.54	-25.54	-25.54	-25.54	-25.54	-25.54	-25.54	-25.54	-25.54
	ELEV.	585.44	584.11	583.16	582.81	581.50	580.13	578.69	577.21	576.81	575.72	574.28	573.22	572.19	571.78	571.17	570.14	569.07	567.96	566.81	565.64
GIRDER 2	STATION	32+58.00	32+81.25	32+98.30	33+04.50	33+27.75	33+51.00	33+74.25	33+97.50	34+03.70	34+20.75	34+44.00	34+62.01	34+80.02	34+87.21	34+98.02	35+16.03	35+34.04	35+52.05	35+70.04	35+88.00
	OFFSET	-15.54	-15.54	-15.54	-15.54	-15.54	-15.54	-15.54	-15.54	-15.54	-15.54	-15.54	-15.54	-15.54	-15.54	-15.54	-15.54	-15.54	-15.51	-15.11	-14.22
	ELEV.	585.60	584.29	583.34	583.00	581.70	580.33	578.89	577.39	576.99	575.89	574.44	573.37	572.35	571.94	571.34	570.31	569.24	568.13	566.99	565.82
GIRDER 3	STATION	32+58.00	32+81.25	32+98.30	33+04.50	33+27.75	33+51.00	33+74.25	33+97.50	34+03.70	34+20.75	34+44.00	34+62.02	34+80.04	34+87.21	34+98.06	35+16.08	35+34.10	35+52.11	35+70.09	35+88.00
	OFFSET	-5.54	-5.54	-5.54	-5.54	-5.54	-5.54	-5.54	-5.54	-5.54	-5.54	-5.54	-5.54	-5.54	-5.54	-5.54	-5.54	-5.52	-5.14	-4.27	-2.90
	ELEV.	585.76	584.46	583.53	583.19	581.90	580.54	579.09	577.58	577.17	576.06	574.60	573.53	572.50	572.10	571.50	570.47	569.41	568.31	567.16	566.00
GIRDER 4	STATION	32+58.00	32+81.25	32+98.30	33+04.50	33+27.75	33+51.00	33+74.25	33+97.50	34+03.70	34+20.75	34+44.00	34+62.04	34+80.07	34+87.21	34+98.11	35+16.15	35+34.18	35+52.18	35+70.13	35+88.00
	OFFSET	4.46	4.46	4.46	4.46	4.46	4.46	4.46	4.46	4.46	4.46	4.46	4.46	4.46	4.46	4.46	4.46	4.70	5.44	6.68	8.42
	ELEV.	585.92	584.63	583.71	583.38	582.10	580.74	579.28	577.76	577.35	576.23	574.76	573.69	572.66	572.26	571.66	570.63	569.58	568.48	567.34	566.18
GIRDER 5	STATION	32+58.00	32+81.25	32+98.30	33+04.50	33+27.75	33+51.00	33+74.25	33+97.50	34+03.70	34+20.75	34+44.00	34+62.06	34+80.11	34+87.21	34+98.16	35+16.22	35+34.25	35+52.25	35+70.17	35+88.00
	OFFSET	14.46	14.46	14.46	14.46	14.46	14.46	14.46	14.46	14.46	14.46	14.46	14.46	14.46	14.46	14.46	14.54	15.07	16.12	17.68	19.74
	ELEV.	585.94	584.66	583.76	583.43	582.16	580.81	579.34	577.80	577.39	576.26	574.78	573.71	572.68	572.28	571.70	570.71	569.67	568.56	567.37	566.14

DESIGN AGENCY
URS
36 EAST 7TH STREET
SUITE 2300
CINCINNATI, OHIO 45202

DESIGNED	DRAWN	REVIEWED	DATE
PJW	MAL	JTH	06-11-10
CHECKED	REVISED	STRUCTURE FILE NUMBER	
DB		4401263	

OHIO APPROACH - HAUNCH ELEVATIONS
BRIDGE NO. LAW-93C-0000
IRONTON RUSSELL BRIDGE OVER OHIO RIVER

LAW-93-0.00
PID No. 81595

347/365

734/788

J:\Project\O\ODOT\15005112 Ironton Russell\LAW\81595\structures\LAW093_1111C\sheets\Ohio Approach\093_0000_Ohio_md05.dgn

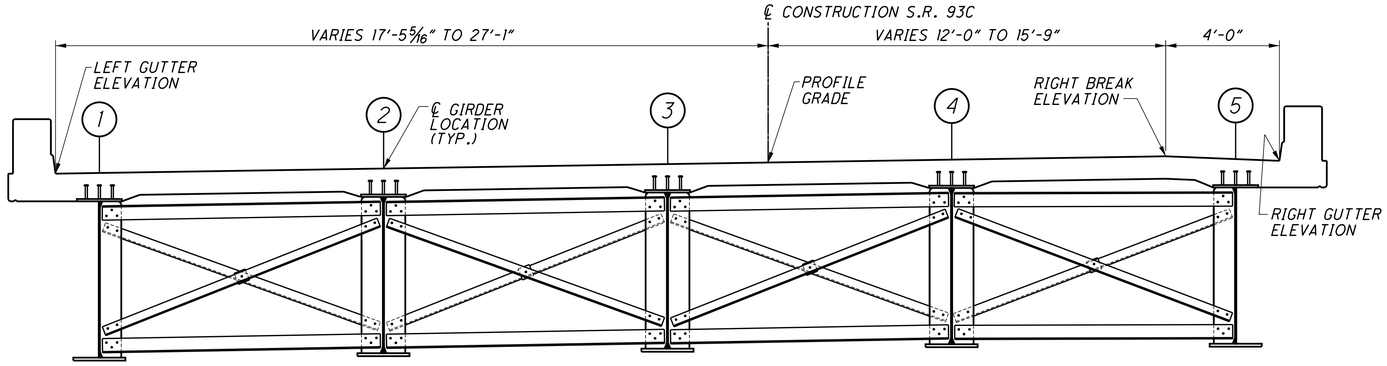

FINAL DECK SURFACE LOCATIONS

NOTES:

1. FOR FRAMING PLANS SEE SHEETS 320/365 TO 323/365
2. FINAL DECK SURFACE ELEVATIONS SHOWN REPRESENT THE DECK SURFACE LOCATION AFTER ALL ANTICIPATED DEAD LOAD DEFLECTIONS HAVE OCCURRED.

FINAL DECK SURFACE ELEVATIONS

		PIER 5	1/8 POINT	1/4 POINT	3/8 POINT	1/2 POINT	5/8 POINT	F.S. 1	3/4 POINT	7/8 POINT	PIER 6	1/8 POINT	F.S. 2	1/4 POINT	3/8 POINT	1/2 POINT	5/8 POINT	F.S. 3	3/4 POINT	7/8 POINT	PIER 7
LEFT GUTTER	STATION	30+04.29	30+17.72	30+31.15	30+44.58	30+58.42	30+72.28	--	30+86.17	31+00.07	31+14.00	31+31.96	--	31+49.95	31+67.96	31+85.97	32+03.97	--	32+21.98	32+39.99	32+58.00
	OFFSET	-17.44	-18.44	-19.43	-20.45	-21.50	-22.52	--	-23.52	-24.56	-25.59	-26.55	--	-27.02	-27.08	-27.08	-27.08	--	-27.08	-27.08	-27.08
	ELEV.	596.28	596.09	595.87	595.60	595.28	594.92	--	594.52	594.07	593.57	592.88	--	592.11	591.28	590.38	589.40	--	588.35	587.27	586.19
GIRDER 1	STATION	30+04.29	30+17.72	30+31.15	30+44.58	30+58.42	30+72.28	30+79.79	30+86.17	31+00.07	31+14.00	31+31.96	31+45.50	31+49.95	31+67.96	31+85.97	32+03.97	32+17.70	32+21.98	32+39.99	32+58.00
	OFFSET	-15.90	-16.89	-17.89	-18.88	-19.89	-20.91	-21.47	-21.95	-23.01	-24.05	-25.00	-25.41	-25.48	-25.54	-25.54	-25.54	-25.54	-25.54	-25.54	-25.54
	ELEV.	596.30	596.12	595.89	595.63	595.31	594.95	594.74	594.54	594.09	593.60	592.90	592.33	592.14	591.31	590.40	589.42	588.63	588.37	587.29	586.21
GIRDER 2	STATION	30+04.29	30+17.84	30+31.37	30+44.90	30+58.67	30+72.46	30+79.79	30+86.29	31+00.14	31+14.00	31+31.99	31+45.50	31+49.98	31+67.99	31+85.99	32+03.99	32+17.70	32+21.99	32+40.00	32+58.00
	OFFSET	-8.31	-9.07	-9.95	-10.98	-12.01	-12.92	-13.35	-13.69	-14.33	-14.83	-15.29	-15.48	-15.51	-15.54	-15.54	-15.54	-15.54	-15.54	-15.54	-15.54
	ELEV.	596.42	596.24	596.02	595.75	595.43	595.07	594.87	594.67	594.23	593.75	593.06	592.49	592.30	591.46	590.56	589.58	588.79	588.53	587.45	586.37
GIRDER 3	STATION	30+04.29	30+17.96	30+31.62	30+45.28	30+58.99	30+72.72	30+79.79	30+86.47	31+00.23	31+14.00	31+31.99	31+45.50	31+49.99	31+67.99	31+85.99	32+04.00	32+17.70	32+22.00	32+40.00	32+58.00
	OFFSET	-0.72	-1.23	-1.74	-2.41	-3.12	-3.74	-4.02	-4.27	-4.71	-5.05	-5.37	-5.50	-5.52	-5.54	-5.54	-5.54	-5.54	-5.54	-5.54	-5.54
	ELEV.	596.54	596.36	596.14	595.88	595.56	595.21	595.01	594.82	594.38	593.90	593.21	592.65	592.46	591.62	590.72	589.74	588.95	588.69	587.61	586.53
PROFILE GRADE	STATION	30+04.29	30+17.96	30+31.62	30+45.28	30+58.99	30+72.72	--	30+86.47	31+00.23	31+14.00	31+31.99	--	31+49.99	31+67.99	31+85.99	32+04.00	--	32+22.00	32+40.00	32+58.00
	OFFSET	0.00	0.00	0.00	0.00	0.00	0.00	--	0.00	0.00	0.00	0.00	--	0.00	0.00	0.00	0.00	--	0.00	0.00	0.00
	ELEV.	596.56	596.38	596.17	595.91	595.61	595.27	--	594.89	594.46	593.98	593.30	--	592.54	591.71	590.81	589.83	--	588.78	587.70	586.62
GIRDER 4	STATION	30+04.29	30+18.08	30+31.86	30+45.64	30+59.30	30+72.96	30+79.79	30+86.64	31+00.32	31+14.00	31+32.00	31+45.50	31+50.00	31+68.00	31+86.00	32+04.00	32+17.70	32+22.00	32+40.00	32+58.00
	OFFSET	6.87	6.61	6.36	6.06	5.69	5.38	5.24	5.11	4.89	4.71	4.55	4.48	4.47	4.46	4.46	4.46	4.46	4.46	4.46	4.46
	ELEV.	596.50	596.36	596.18	595.96	595.69	595.35	595.16	594.96	594.53	594.06	593.37	592.81	592.61	591.78	590.88	589.90	589.11	588.85	587.77	586.69
GIRDER 5	STATION	30+04.29	30+18.20	30+32.11	30+45.99	30+59.59	30+73.19	30+79.79	30+86.80	31+00.40	31+14.00	31+32.00	31+45.50	31+50.00	31+68.00	31+86.00	32+04.00	32+17.70	32+22.00	32+40.00	32+58.00
	OFFSET	14.46	14.46	14.46	14.46	14.46	14.46	14.46	14.46	14.46	14.46	14.46	14.46	14.46	14.46	14.46	14.46	14.46	14.46	14.46	14.46
	ELEV.	596.40	596.29	596.12	595.92	595.67	595.35	595.17	594.97	594.54	594.08	593.39	592.83	592.64	591.81	590.90	589.92	589.13	588.87	587.79	586.71
RIGHT BREAK	STATION	30+04.29	30+18.20	30+32.11	30+45.99	30+59.59	30+73.19	--	30+86.80	31+00.40	31+14.00	31+32.00	--	31+50.00	31+68.00	31+86.00	32+04.00	--	32+22.00	32+40.00	32+58.00
	OFFSET	12.00	12.00	12.00	12.00	12.00	12.00	--	12.00	12.00	12.00	12.00	--	12.00	12.00	12.00	12.00	--	12.00	12.00	12.00
	ELEV.	596.46	596.35	596.20	596.00	595.77	595.45	--	595.07	594.64	594.18	593.49	--	592.74	591.90	591.00	590.02	--	588.97	587.89	586.81
RIGHT GUTTER	STATION	30+04.29	30+18.20	30+32.11	30+45.99	30+59.59	30+73.19	--	30+86.80	31+00.40	31+14.00	31+32.00	--	31+50.00	31+68.00	31+86.00	32+04.00	--	32+22.00	32+40.00	32+58.00
	OFFSET	16.00	16.00	16.00	16.00	16.00	16.00	--	16.00	16.00	16.00	16.00	--	16.00	16.00	16.00	16.00	--	16.00	16.00	16.00
	ELEV.	596.37	596.25	596.08	595.86	595.61	595.29	--	594.91	594.48	594.02	593.33	--	592.58	591.74	590.84	589.86	--	588.81	587.73	586.65

DESIGN AGENCY
URS
36 EAST 7TH STREET
SUITE 2300
CINCINNATI, OHIO 45202

DESIGNED PJW | DRAWN MAL | REVIEWED JTH | DATE 06-11-10
CHECKED DB | REVISED | STRUCTURE FILE NUMBER 4401263

OHIO APPROACH - DECK SURFACE ELEVATIONS (1 OF 2)
BRIDGE NO. LAW-93C-0000
IRONTON RUSSELL BRIDGE OVER OHIO RIVER

LAW-93-0.00
PID No. 81595

348/365

735/788

J:\Project\0\ODOT\15005112 Ironton Russell\LAW\81595\structures\LAW093_1111C\sheets\Ohio Approach\093_0000_Ohio_md04.dgn

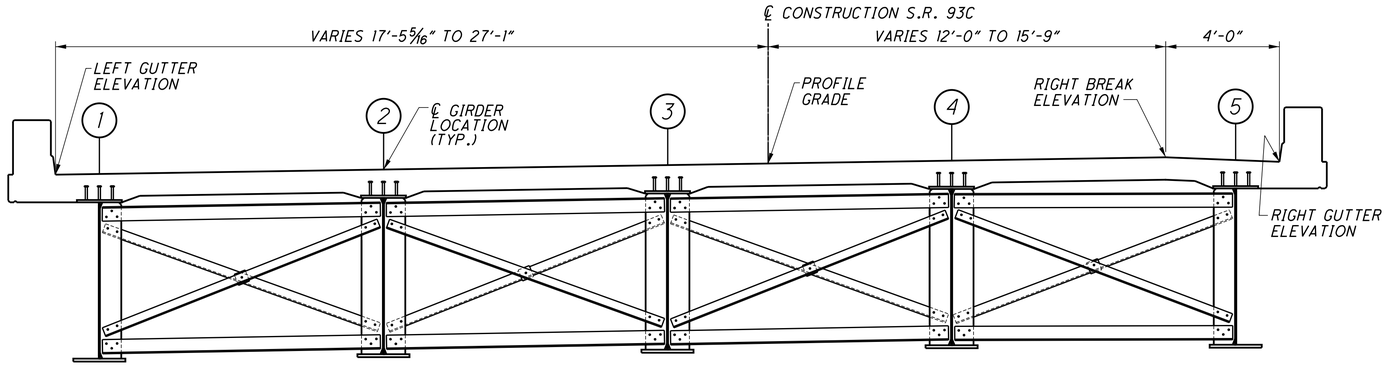

FINAL DECK SURFACE LOCATIONS

NOTES:

1. FOR FRAMING PLANS SEE SHEETS 320/365 TO 323/365
2. FINAL DECK SURFACE ELEVATIONS SHOWN REPRESENT THE DECK SURFACE LOCATION AFTER ALL ANTICIPATED DEAD LOAD DEFLECTIONS HAVE OCCURRED.

FINAL DECK SURFACE ELEVATIONS

		PIER 7	1/8 POINT	F.S. 4	1/4 POINT	3/8 POINT	1/2 POINT	5/8 POINT	3/4 POINT	F.S. 5	7/8 POINT	PIER 8	1/8 POINT	1/4 POINT	F.S. 6	3/8 POINT	1/2 POINT	5/8 POINT	3/4 POINT	7/8 POINT	FWD. ABUT.
LEFT GUTTER	STATION	32+58.00	32+81.25	--	33+04.50	33+27.75	33+51.00	33+74.25	33+97.50	--	34+20.75	34+44.00	34+62.00	34+80.00	--	34+98.00	35+16.00	35+34.00	35+52.00	35+70.00	35+88.00
	OFFSET	-27.08	-27.08	--	-27.08	-27.08	-27.08	-27.08	-27.08	--	-27.08	-27.08	-27.08	-27.08	--	-27.08	-27.08	-27.08	-27.08	-27.08	-27.08
	ELEV.	586.19	584.79	--	583.40	582.00	580.61	579.21	577.82	--	576.42	575.03	573.95	572.87	--	571.79	570.71	569.63	568.55	567.47	566.39
GIRDER 1	STATION	32+58.00	32+81.25	32+98.30	33+04.50	33+27.75	33+51.00	33+74.25	33+97.50	34+03.70	34+20.75	34+44.00	34+62.00	34+80.00	34+87.21	34+98.00	35+16.00	35+34.00	35+52.00	35+70.00	35+88.00
	OFFSET	-25.54	-25.54	-25.54	-25.54	-25.54	-25.54	-25.54	-25.54	-25.54	-25.54	-25.54	-25.54	-25.54	-25.54	-25.54	-25.54	-25.54	-25.54	-25.54	-25.54
	ELEV.	586.21	584.82	583.79	583.42	582.03	580.63	579.24	577.84	577.47	576.45	575.05	573.97	572.89	572.46	571.81	570.73	569.65	568.57	567.49	566.41
GIRDER 2	STATION	32+58.00	32+81.25	32+98.30	33+04.50	33+27.75	33+51.00	33+74.25	33+97.50	34+03.70	34+20.75	34+44.00	34+62.01	34+80.02	34+87.21	34+98.02	35+16.03	35+34.04	35+52.05	35+70.04	35+88.00
	OFFSET	-15.54	-15.54	-15.54	-15.54	-15.54	-15.54	-15.54	-15.54	-15.54	-15.54	-15.54	-15.54	-15.54	-15.54	-15.54	-15.54	-15.54	-15.51	-15.11	-14.22
	ELEV.	586.37	584.98	583.95	583.58	582.19	580.79	579.40	578.00	577.63	576.61	575.21	574.13	573.05	572.62	571.97	570.89	569.81	568.73	567.66	566.59
GIRDER 3	STATION	32+58.00	32+81.25	32+98.30	33+04.50	33+27.75	33+51.00	33+74.25	33+97.50	34+03.70	34+20.75	34+44.00	34+62.02	34+80.04	34+87.21	34+98.06	35+16.08	35+34.10	35+52.11	35+70.09	35+88.00
	OFFSET	-5.54	-5.54	-5.54	-5.54	-5.54	-5.54	-5.54	-5.54	-5.54	-5.54	-5.54	-5.54	-5.54	-5.54	-5.54	-5.54	-5.52	-5.14	-4.27	-2.90
	ELEV.	586.53	585.14	584.11	583.74	582.35	580.95	579.56	578.16	577.79	576.77	575.37	574.29	573.21	572.78	572.13	571.05	569.97	568.89	567.83	566.77
PROFILE GRADE	STATION	32+58.00	32+81.25	--	33+04.50	33+27.75	33+51.00	33+74.25	33+97.50	--	34+20.75	34+44.00	34+62.02	34+80.04	--	34+98.06	35+16.08	35+34.10	35+52.11	35+70.09	35+88.00
	OFFSET	0.00	0.00	--	0.00	0.00	0.00	0.00	0.00	--	0.00	0.00	0.00	0.00	--	0.00	0.00	0.00	0.00	0.00	0.00
	ELEV.	586.62	585.23	--	583.83	582.44	581.04	579.65	578.25	--	576.86	575.46	574.38	573.30	--	572.22	571.14	570.05	568.97	567.89	566.82
GIRDER 4	STATION	32+58.00	32+81.25	32+98.30	33+04.50	33+27.75	33+51.00	33+74.25	33+97.50	34+03.70	34+20.75	34+44.00	34+62.04	34+80.07	34+87.21	34+98.11	35+16.15	35+34.18	35+52.18	35+70.13	35+88.00
	OFFSET	4.46	4.46	4.46	4.46	4.46	4.46	4.46	4.46	4.46	4.46	4.46	4.46	4.46	4.46	4.46	4.46	4.70	5.44	6.68	8.42
	ELEV.	586.69	585.30	584.27	583.90	582.51	581.11	579.72	578.32	577.95	576.93	575.53	574.45	573.37	572.94	572.28	571.20	570.12	569.06	568.00	566.95
GIRDER 5	STATION	32+58.00	32+81.25	32+98.30	33+04.50	33+27.75	33+51.00	33+74.25	33+97.50	34+03.70	34+20.75	34+44.00	34+62.06	34+80.11	34+87.21	34+98.16	35+16.22	35+34.25	35+52.25	35+70.17	35+88.00
	OFFSET	14.46	14.46	14.46	14.46	14.46	14.46	14.46	14.46	14.46	14.46	14.46	14.46	14.46	14.46	14.46	14.54	15.07	16.12	17.68	19.74
	ELEV.	586.71	585.32	584.30	583.92	582.53	581.13	579.74	578.34	577.97	576.95	575.55	574.47	573.39	572.96	572.33	571.28	570.21	569.13	568.03	566.91
RIGHT BREAK	STATION	32+58.00	32+81.25	--	33+04.50	33+27.75	33+51.00	33+74.25	33+97.50	--	34+20.75	34+44.00	34+62.06	34+80.11	--	34+98.16	35+16.22	35+34.25	35+52.25	35+70.17	35+88.00
	OFFSET	12.00	12.00	--	12.00	12.00	12.00	12.00	12.00	--	12.00	12.00	12.00	12.00	--	12.42	13.09	13.76	14.43	15.09	15.75
	ELEV.	586.81	585.42	--	584.02	582.63	581.23	579.84	578.44	--	577.05	575.65	574.57	573.49	--	572.41	571.34	570.27	569.20	568.13	567.07
RIGHT GUTTER	STATION	32+58.00	32+81.25	--	33+04.50	33+27.75	33+51.00	33+74.25	33+97.50	--	34+20.75	34+44.00	34+62.06	34+80.11	--	34+98.16	35+16.22	35+34.25	35+52.25	35+70.17	35+88.00
	OFFSET	16.00	16.00	--	16.00	16.00	16.00	16.00	16.00	--	16.00	16.00	16.00	16.00	--	16.42	17.09	17.76	18.43	19.09	19.75
	ELEV.	586.65	585.26	--	583.86	582.47	581.07	579.68	578.28	--	576.89	575.49	574.41	573.33	--	572.25	571.18	570.11	569.04	567.97	566.91

DESIGN AGENCY
URS
36 EAST 7TH STREET
SUITE 2300
CINCINNATI, OHIO 45202

DESIGNED	DRAWN	REVIEWED	DATE
PJW	MAL	JTH	06-11-10
CHECKED	REVISED	STRUCTURE FILE NUMBER	
DB		4401263	

OHIO APPROACH - DECK SURFACE ELEVATIONS (2 OF 2)
BRIDGE NO. LAW-93C-0000
IRONTON RUSSELL BRIDGE OVER OHIO RIVER

LAW-93-0.00
PID No. 81595

J:\Project\0\ODOT\15005112 Ironton Russell\LAW\81595\structures\LAW093_1111C\sheets\Ohio Approach\093_0000_Ohio_md04A.dgn

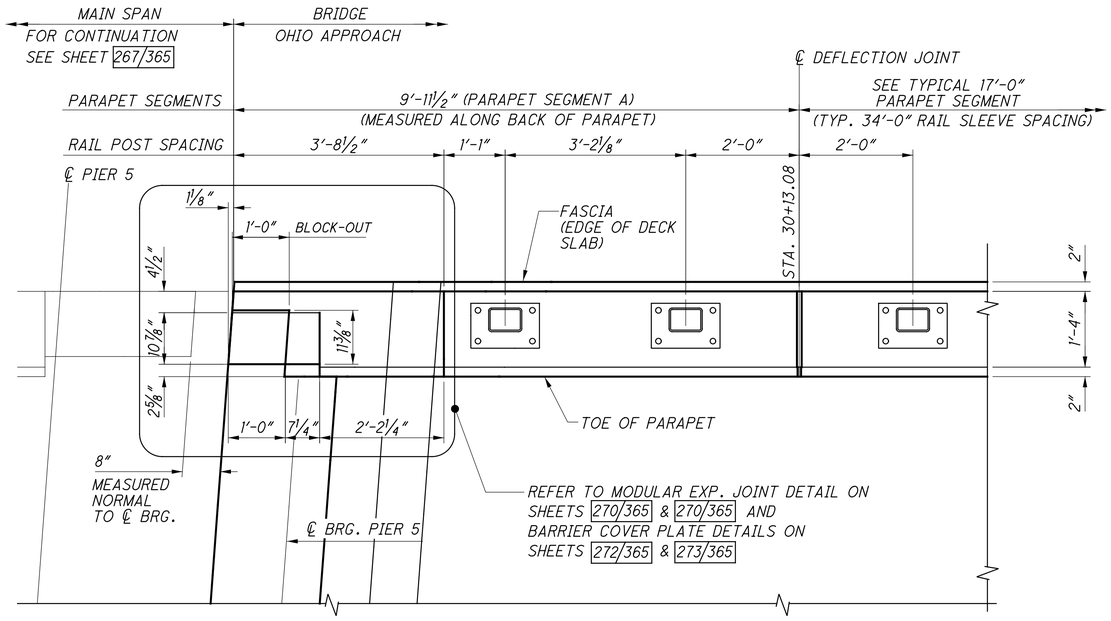

PLAN

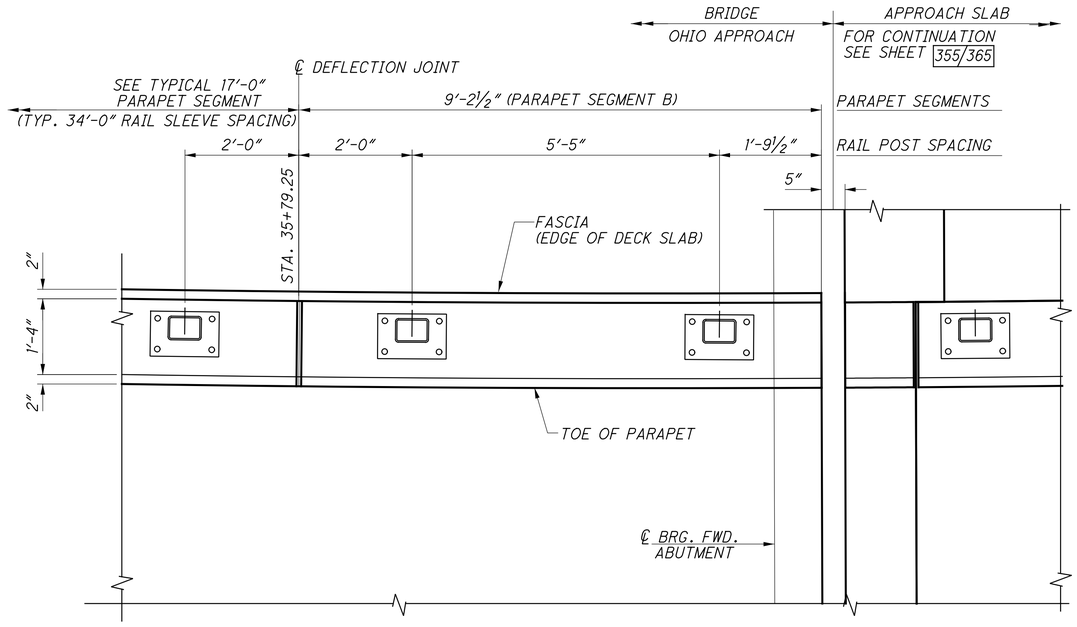

PLAN

NO.	REVISIONS	DATE	REV. BY
1	REVISED RAIL	4/15	CRK

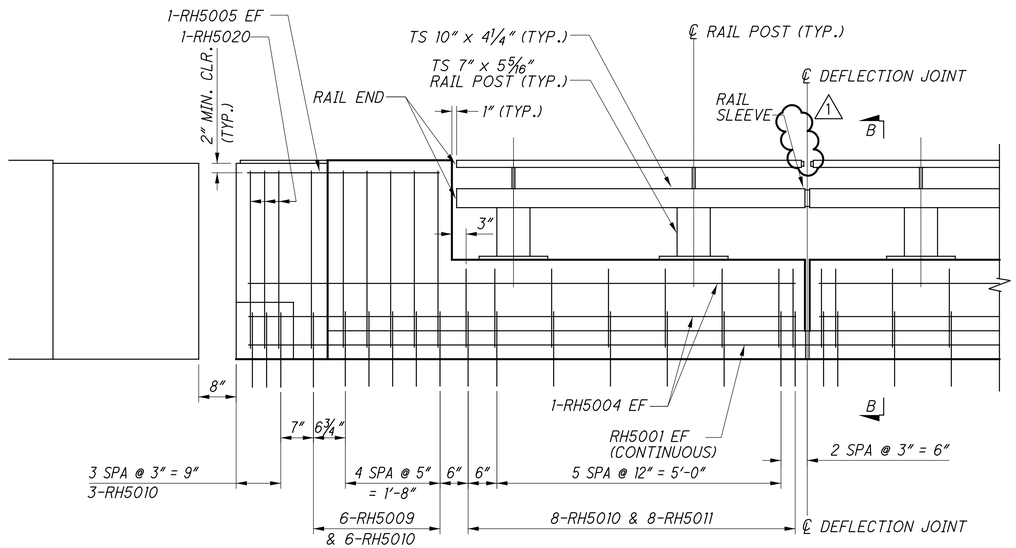

ELEVATION

PARAPET SEGMENT A

1 - REQUIRED
OHIO APPROACH AT PIER 5, LEFT SIDE

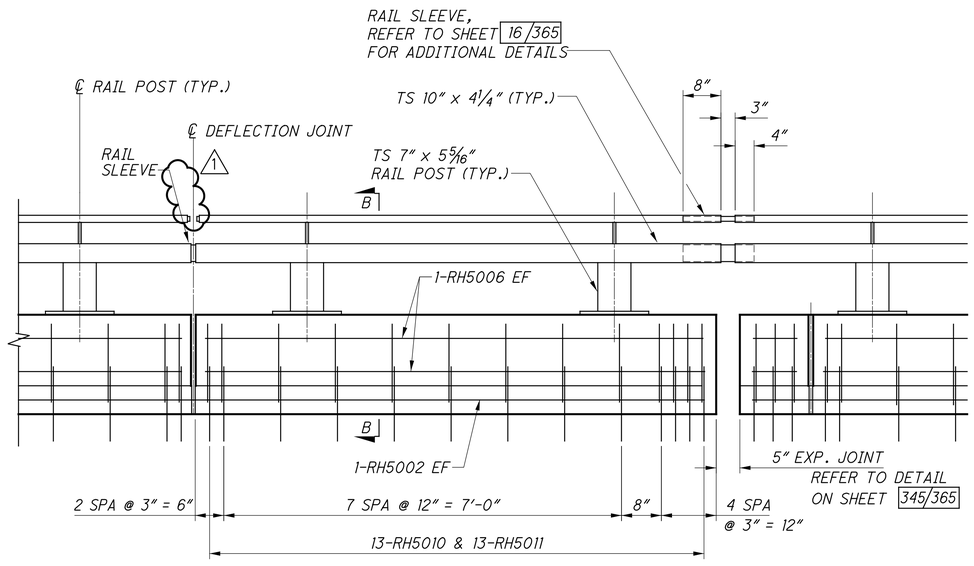

ELEVATION

PARAPET SEGMENT B

1 - REQUIRED
OHIO APPROACH AT FORWARD ABUTMENT, LEFT SIDE

FOR SECTION B-B, BARRIER TYPICAL SECTION, REFER TO SHEET 15/365

FOR ADDITIONAL PARAPET AND TUBE RAILING DETAILS, REFER TO SHEET 16/365

DESIGN AGENCY
URS
36 EAST 7TH STREET
SUITE 2300
CINCINNATI, OHIO 45202

DESIGNED	DRAWN	REVIEWED	DATE
MAL	MAL	JTH	06-11-10
CHECKED	REVISED	STRUCTURE FILE NUMBER	
ALH		4401263	

OHIO APPROACH - PARAPET DETAILS (1 OF 7)
BRIDGE NO. LAW-93C-0000
IRONTON RUSSELL BRIDGE OVER OHIO RIVER

LAW-93-0.00
PID No. 81595

350/365

737
788

J:\Project\O\ODOT\15005112 Ironton Russell\LAW\81595\structures\LAW093_1111C\sheets\Ohio Approach\093_0000_Ohio_ra02.dgn

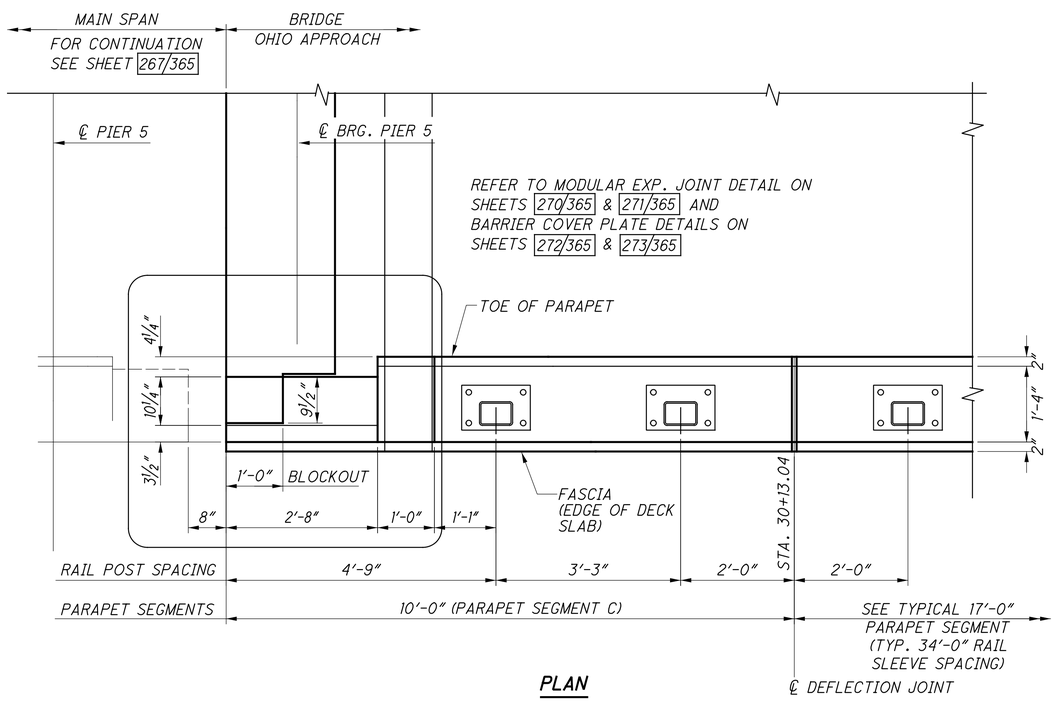

PLAN

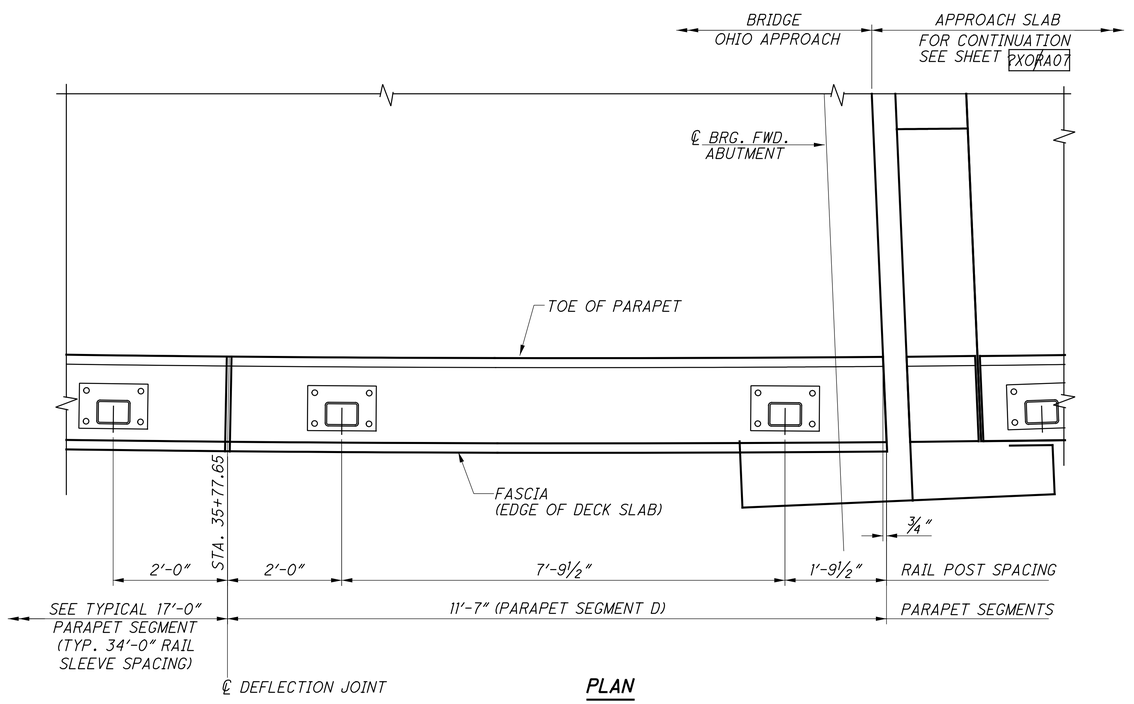

PLAN

NO.	REVISIONS	DATE	REV. BY
1	REVISED RAIL	4/15	CRK

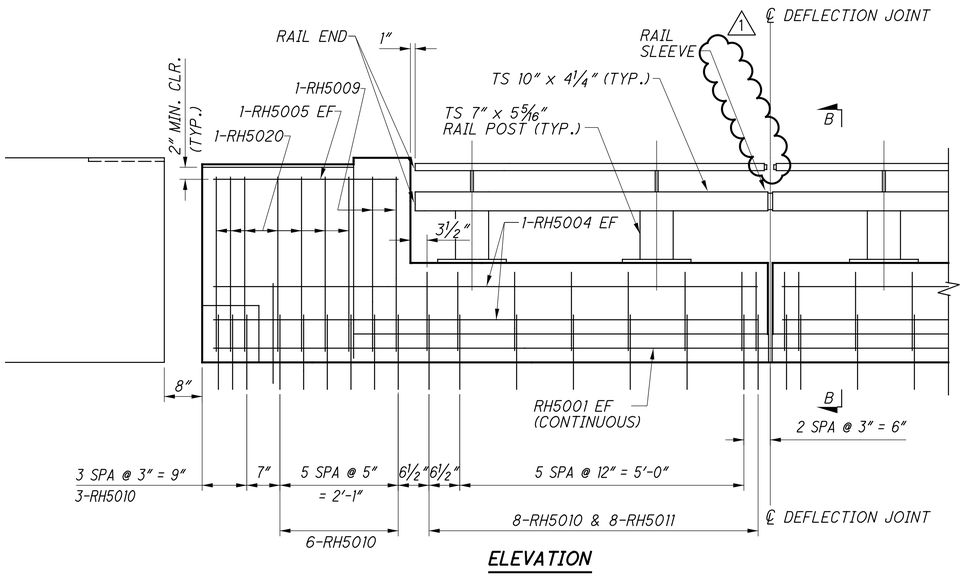

ELEVATION

PARAPET SEGMENT C

1 - REQUIRED
OHIO APPROACH AT PIER 5, RIGHT SIDE

FOR SECTION B-B, TYPICAL BARRIER SECTION, REFER TO SHEET 15/365
FOR ADDITIONAL RAIL DETAILS, REFER TO SHEET 16/365

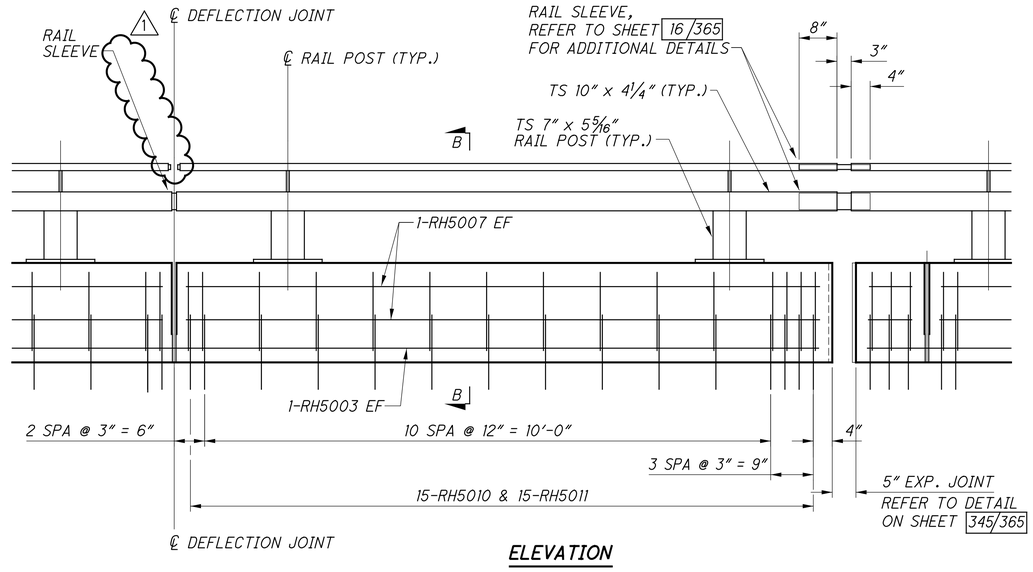

ELEVATION

PARAPET SEGMENT D

1 - REQUIRED
OHIO APPROACH AT FORWARD ABUTMENT, RIGHT SIDE

DESIGN AGENCY
URS
36 EAST 7TH STREET
SUITE 2300
CINCINNATI, OHIO 45202

DESIGNED	DRAWN	REVIEWED	DATE
MAL	MAL	JTH	06-11-10
CHECKED	REVISED	STRUCTURE FILE NUMBER	
ALH		4401263	

OHIO APPROACH - PARAPET DETAILS (2 OF 7)
BRIDGE NO. LAW-93C-0000
IRONTON RUSSELL BRIDGE OVER OHIO RIVER

LAW-93-0.00
PID No. 81595

351/365
738/788

J:\Project\ODOT\15005112 Ironton Russell\LAW\81595\structures\LAW093_1111C\sheets\Ohio Approach\093_0000_Ohio_ra05.dgn

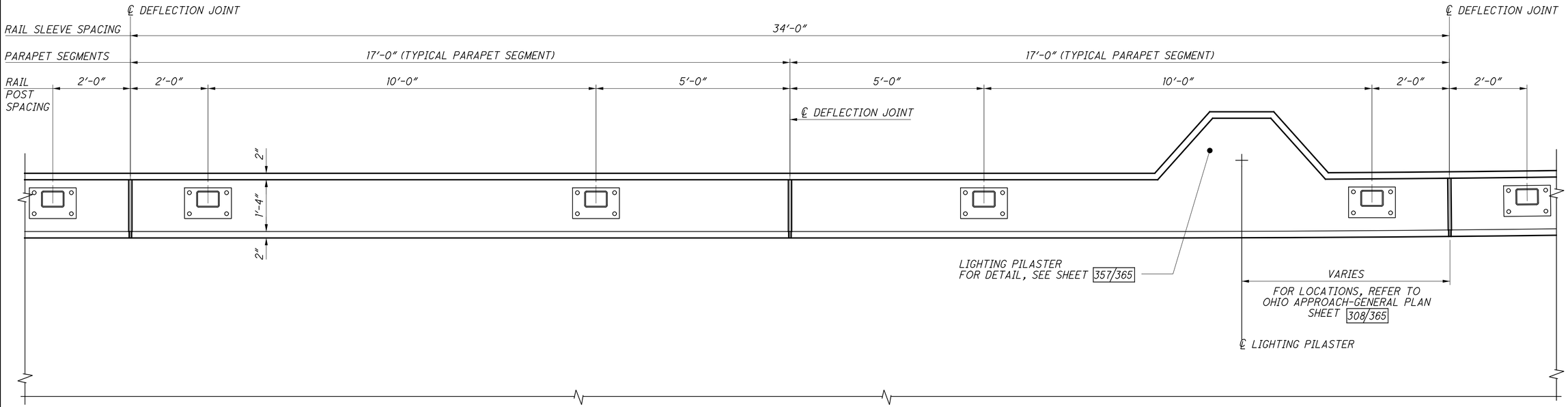

PLAN

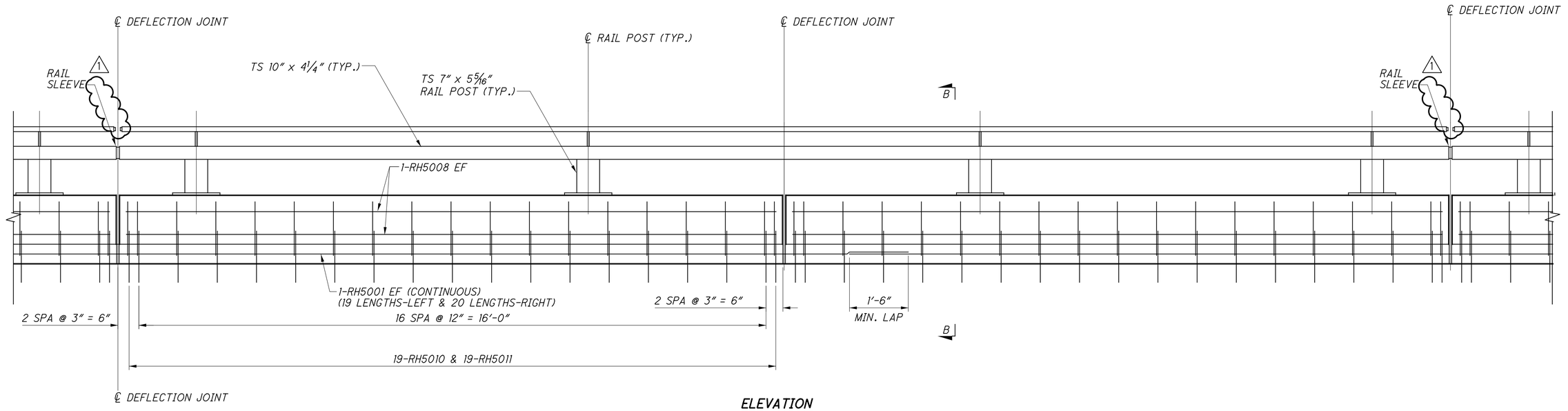

ELEVATION

TYPICAL 17'-0" PARAPET SEGMENT

32* - REQUIRED, LEFT SIDE
34* - REQUIRED, RIGHT SIDE

* INCLUDES THE 10 PARAPET SEGMENTS EACH SIDE WITH VANDAL PROTECTION FENCE

FOR SECTION B-B, TYPICAL BARRIER SECTION, REFER TO SHEET 15/365

FOR ADDITIONAL PARAPET AND TUBE RAILING DETAILS, REFER TO SHEET 16/365

NO.	REVISIONS	DATE	REV. BY
1	REVISED RAIL	4/15	CRK

J:\Project\ODOT\15005112 Ironton Russell\LAW\81595\structures\LAW093_1111C\sheets\Ohio Approach\093_0000_Ohio_ra03.dgn

DESIGN AGENCY
URS
36 EAST 7TH STREET
SUITE 2300
CINCINNATI, OHIO 45202

DESIGNED	DRAWN	REVIEWED	DATE
MAL	MAL	JTH	06-11-10
CHECKED	REVISED	STRUCTURE FILE NUMBER	
ALH		4401263	

OHIO APPROACH - PARAPET DETAILS (3 OF 7)
BRIDGE NO. LAW-93C-0000
IRONTON RUSSELL BRIDGE OVER OHIO RIVER

LAW-93-0.00
PID No. 81595

352/365

739
788

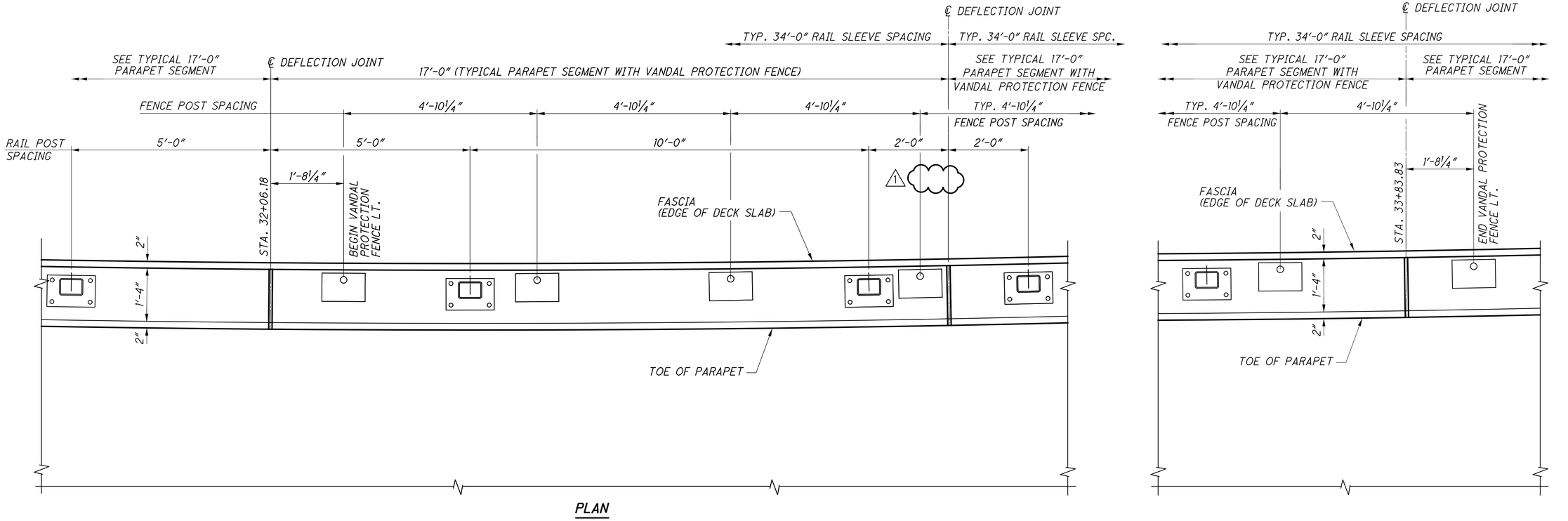

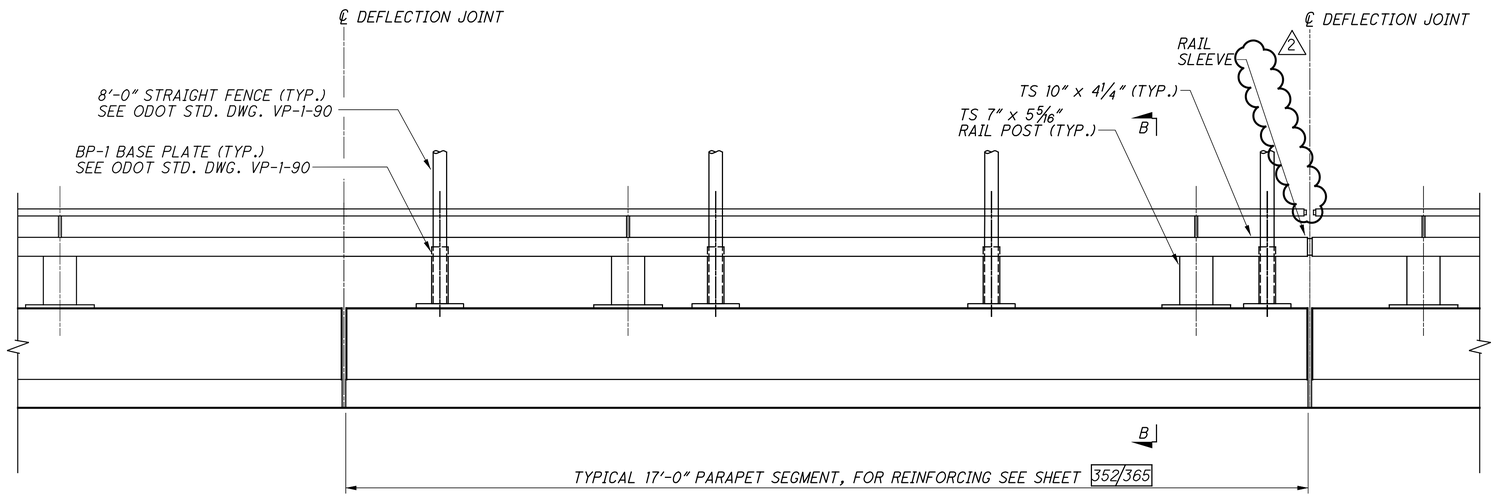

ELEVATION

TYPICAL 17'-0" PARAPET SEGMENT WITH VANDAL PROTECTION FENCE

NO.	REVISIONS	DATE	REV. BY
1	REMOVED DIMENSION	08/14	CRK
2	REVISED RAIL	04/15	CRK

NOTE:

FOR SECTION B-B, BARRIER TYPICAL SECTION, REFER TO SHEET 15/365

FOR ADDITIONAL PARAPET AND TUBE RAILING DETAILS, REFER TO SHEET 16/365

DESIGN AGENCY
URS
36 EAST 7TH STREET
SUITE 2300
CINCINNATI, OHIO 45202

DESIGNED	DRAWN	REVIEWED	DATE
MAL	MAL	JTH	06-11-10
CHECKED	REVISED	STRUCTURE FILE NUMBER	
ALH		4401263	

OHIO APPROACH - PARAPET DETAILS (4 OF 7)
BRIDGE NO. LAW-93C-0000
IRONTON RUSSELL BRIDGE OVER OHIO RIVER

LAW-93-0.00
PID No. 81595

353/365

740
788

J:\Project\O\ODOT\15005112 Ironton Russell\LAW\81595\structures\LAW093_1111C\sheets\Ohio Approach\093_0000_Ohio_ra04.dgn

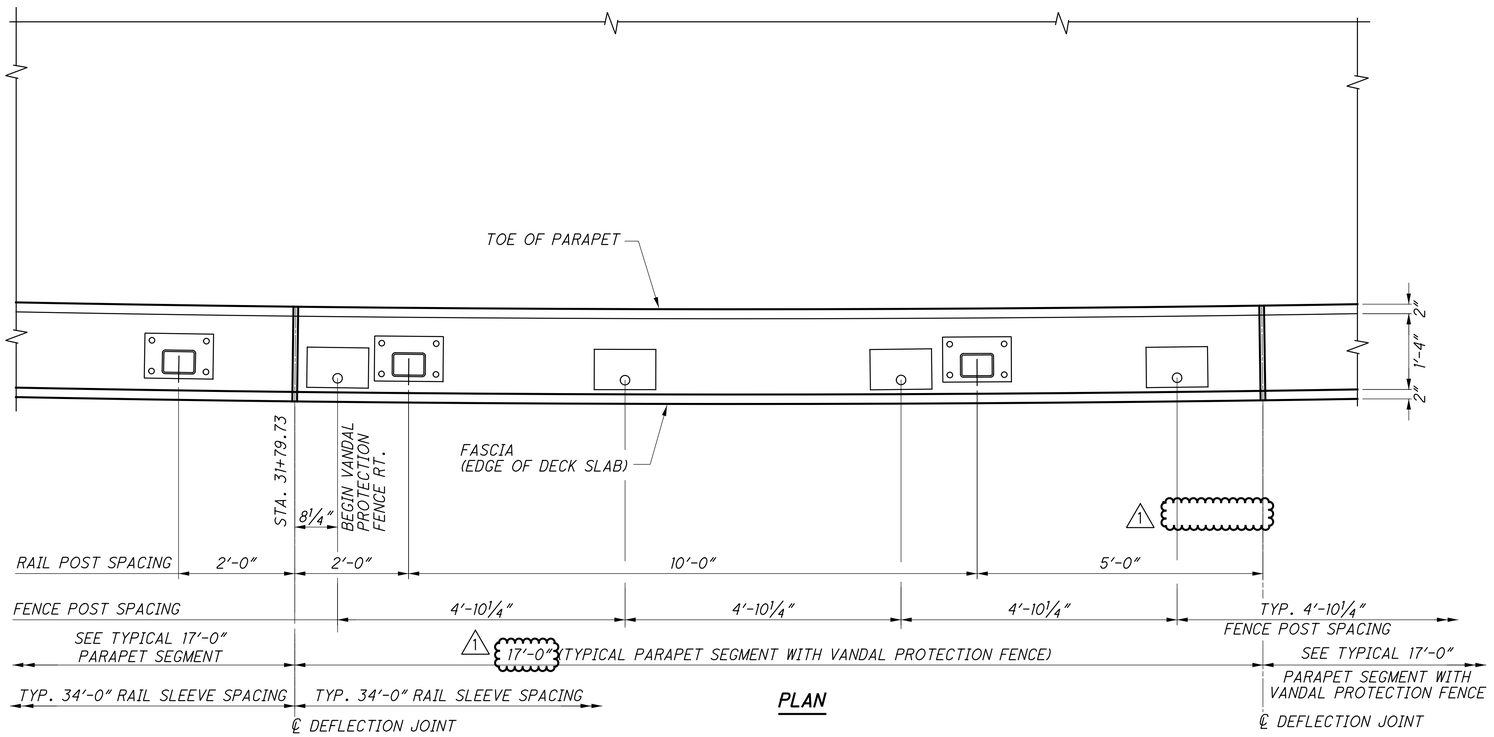

PLAN

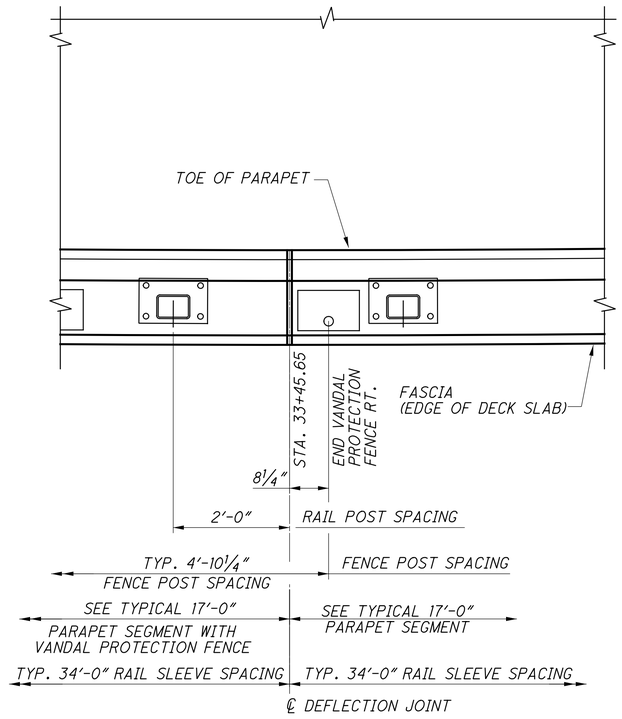

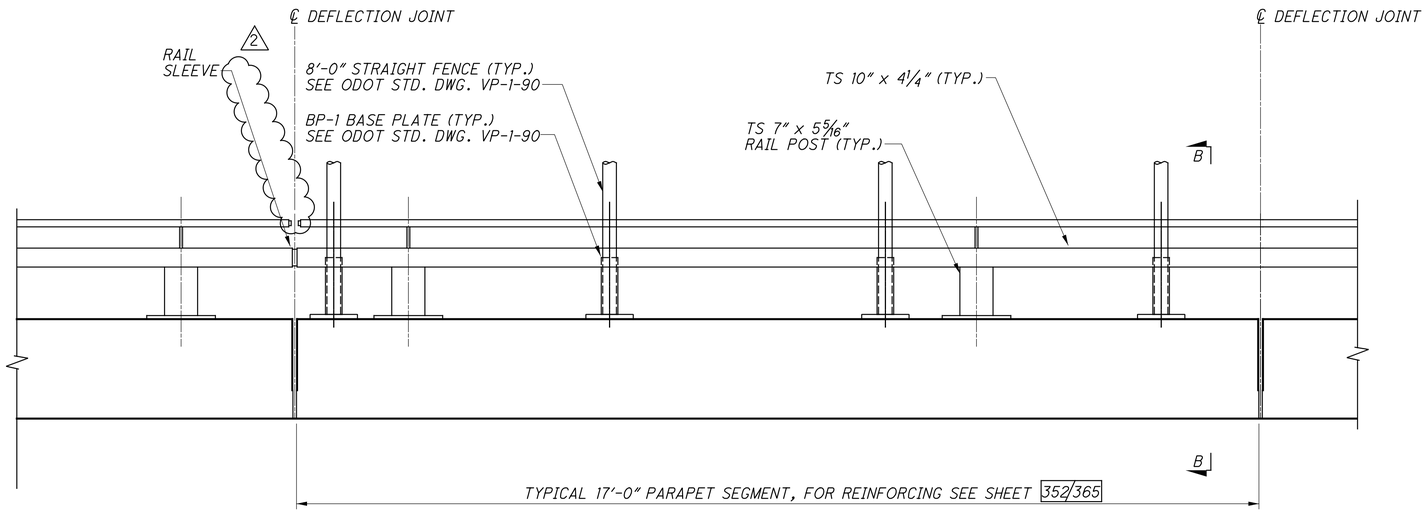

ELEVATION

TYPICAL 17'-0" PARAPET SEGMENT WITH VANDAL PROTECTION FENCE

NO.	REVISIONS	DATE	REV. BY
1	REVISED/REMOVED DIMENSIONS	08/14	CRK
2	REVISED RAIL	04/15	CRK

NOTES:

FOR SECTION B-B, TYPICAL BARRIER SECTION, REFER TO SHEET 15/365

FOR ADDITIONAL PARAPET AND TUBE RAILING DETAILS, REFER TO SHEET 16/365

DESIGN AGENCY
URS
36 EAST 7TH STREET
SUITE 2300
CINCINNATI, OHIO 45202

DESIGNED	DRAWN	REVIEWED	DATE
MAL	MAL	JTH	06-11-10
CHECKED	REVISED	STRUCTURE FILE NUMBER	
ALH		4401263	

OHIO APPROACH - PARAPET DETAILS (5 OF 7)
BRIDGE NO. LAW-93C-0000
IRONTON RUSSELL BRIDGE OVER OHIO RIVER

LAW-93-0.00
PID No. 81595

354/365

741
788

J:\Project\O\ODOT\15005112 Ironton Russell\LAW\81595\structures\LAW093_1111C\sheets\Ohio Approach\093_0000_Ohio_ra08.dgn

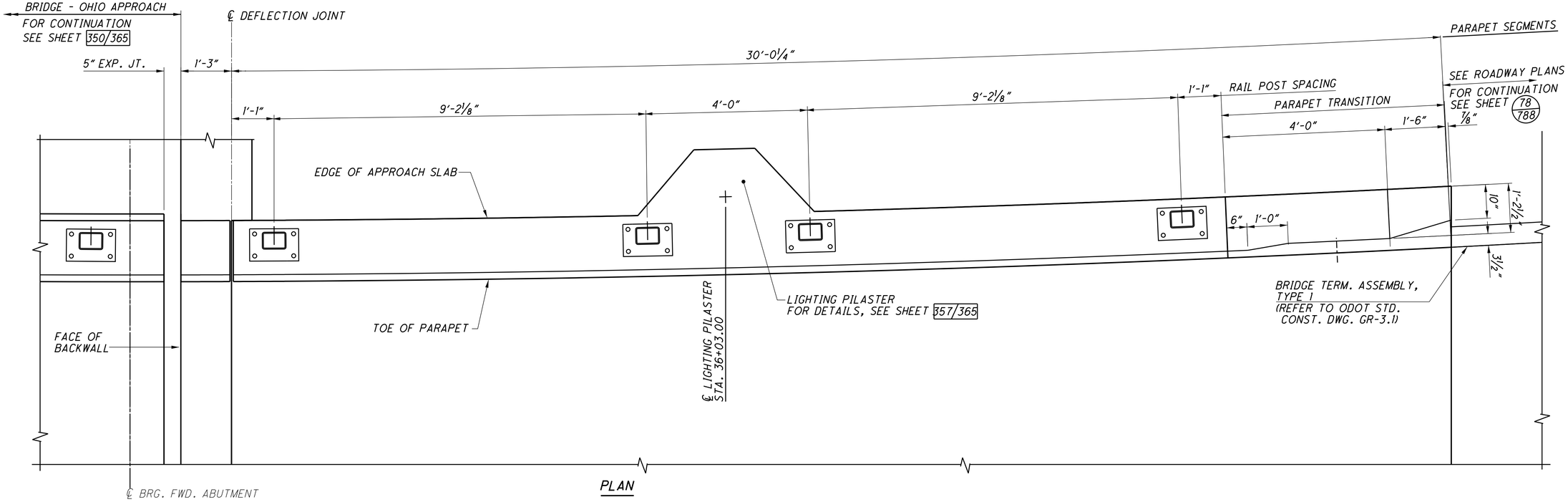

PLAN

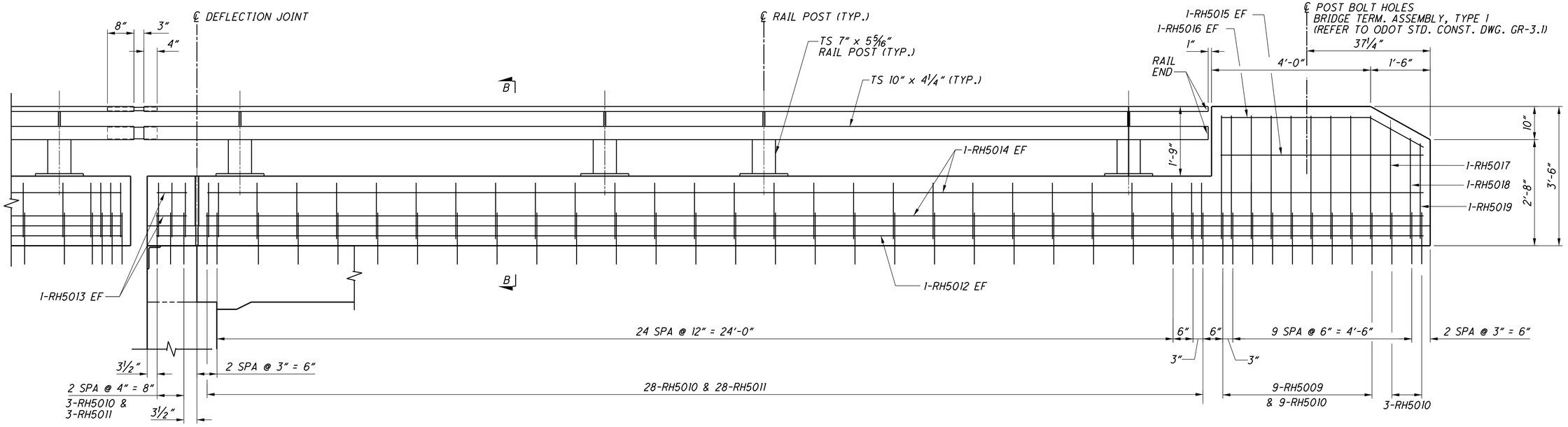

ELEVATION

PARAPET - APPROACH SLAB LT.

1 - REQUIRED
OHIO APPROACH AT APPROACH SLAB, LEFT SIDE

NOTES:

FOR SECTION B-B, TYPICAL BARRIER SECTION, REFER TO SHEET 15/365

FOR ADDITIONAL PARAPET AND TUBE RAILING DETAILS, REFER TO SHEET 16/365

J:\Project\O\ODOT\15005112 Ironton Russell\LAW\81595\structures\LAW093_1111C\sheets\Ohio Approach\093_0000_Ohio_ra06.dgn

DESIGN AGENCY
URS
36 EAST 7TH STREET
SUITE 2300
CINCINNATI, OHIO 45202

DESIGNED	DRAWN	REVIEWED	DATE
MAL	MAL	JTH	06-11-10
CHECKED	REVISED	STRUCTURE FILE NUMBER	
ALH		4401263	

OHIO APPROACH - PARAPET DETAILS (6 OF 7)
BRIDGE NO. LAW-93C-0000
IRONTON RUSSELL BRIDGE OVER OHIO RIVER

LAW-93-0.00
PID No. 81595

355/365

742/788

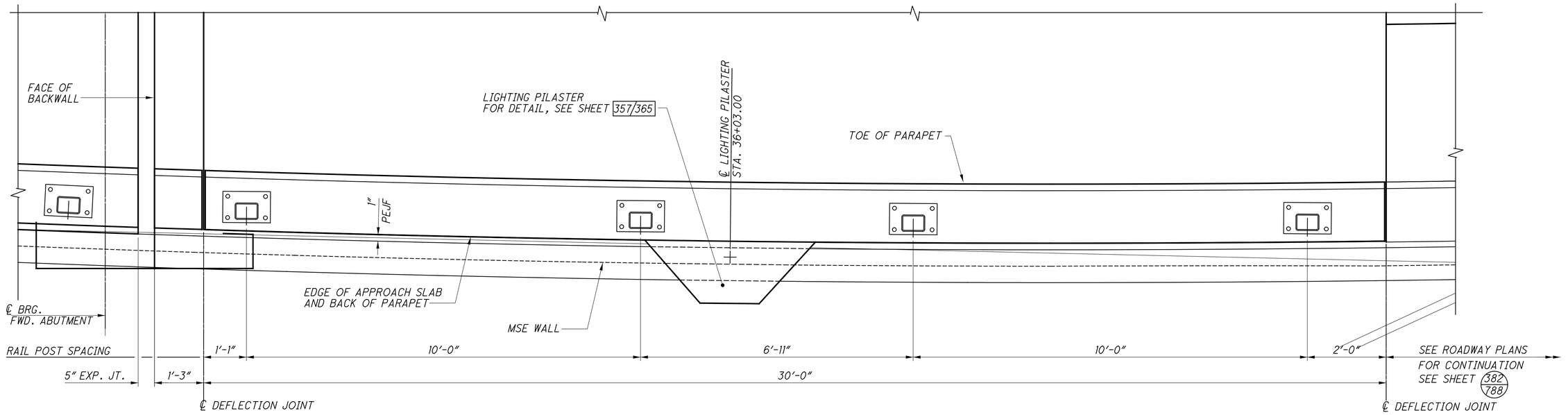

PLAN

NO.	REVISIONS	DATE	REV. BY
1	REVISED RAIL	4/15	CRK

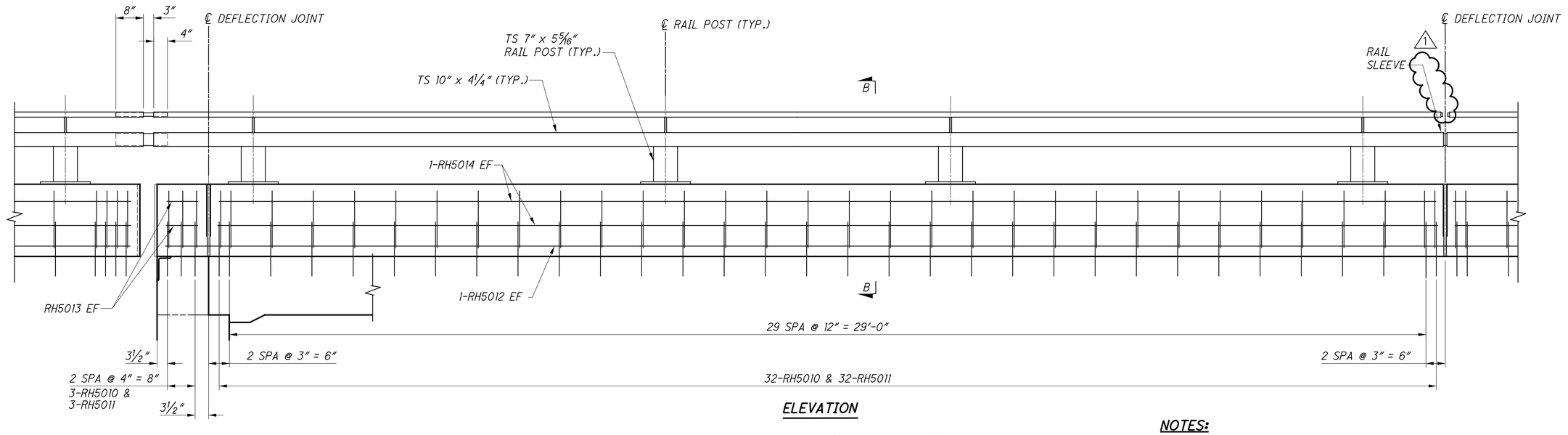

ELEVATION

PARAPET - APPROACH SLAB RT.

1 - REQUIRED
OHIO APPROACH AT APPROACH SLAB, RIGHT SIDE

NOTES:

FOR SECTION B-B, TYPICAL BARRIER SECTION, REFER TO SHEET 15/365

FOR ADDITIONAL PARAPET AND TUBE RAILING DETAILS, REFER TO SHEET 16/365

DESIGN AGENCY
URS
35 EAST 7TH STREET
SUITE 2300
CINCINNATI, OHIO 45202

DESIGNED	DRAWN	REVIEWED	DATE
MAL	MAL	JTH	06-11-10
CHECKED	REVISED	STRUCTURE FILE NUMBER	
ALH		4401263	

OHIO APPROACH - PARAPET DETAILS (7 OF 7)
BRIDGE NO. LAW-93C-0000
IRONTON RUSSELL BRIDGE OVER OHIO RIVER

LAW-93-0.00
PID No. 81595

356/365

743/788

J:\Project\O\ODOT\15005112 Ironton Russell\LAW\81595\structures\LAW093_1111C\sheets\Ohio Approach\093_0000_Ohio_ra07.dgn

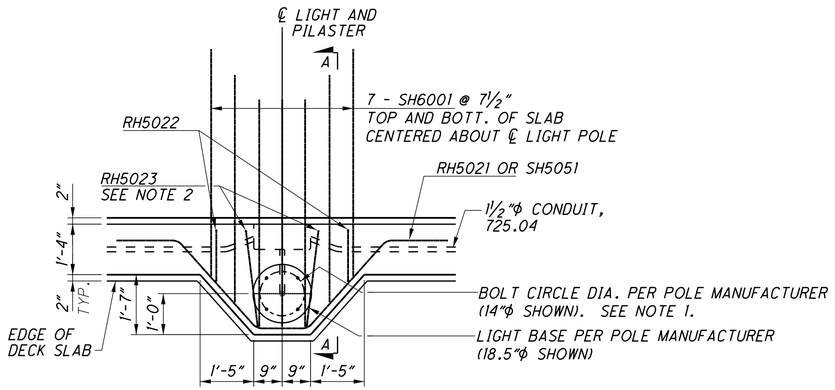

PLAN

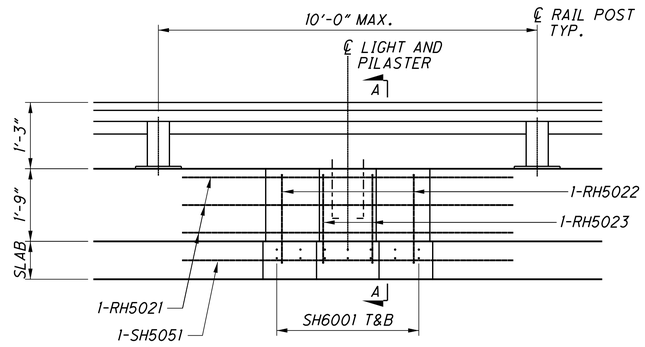

ELEVATION

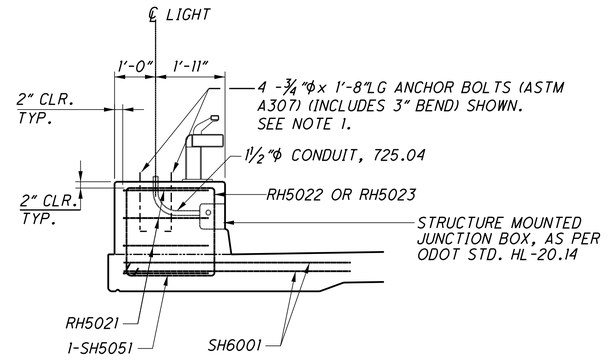

SECTION A-A

LIGHT PILASTER DETAIL

FOR OHIO APPROACH BRIDGE DECK LOCATIONS

14 - REQUIRED

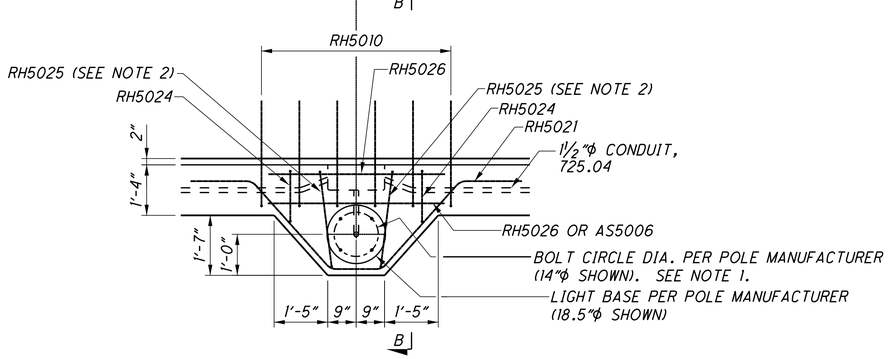

PLAN

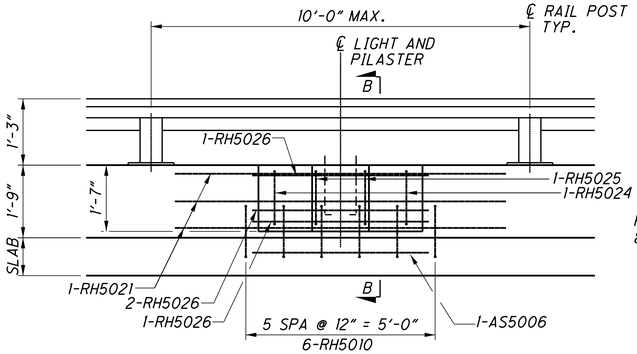

ELEVATION

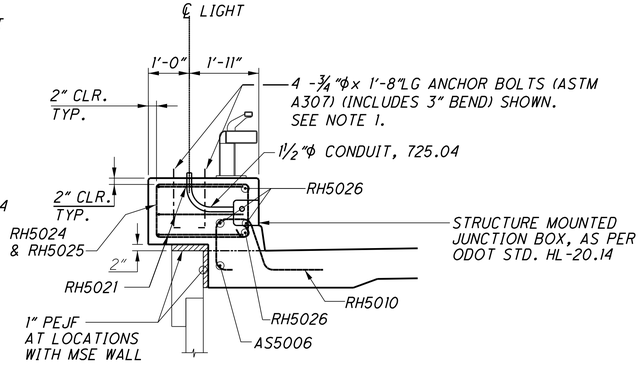

SECTION B-B

LIGHT PILASTER DETAIL

FOR OHIO APPROACH SLAB

2 - REQUIRED

NOTES:

1. CONFIRM ANCHOR BOLT REQUIREMENTS INCLUDING SIZE, BOLT CIRCLE DIAMETER, AND PROJECTION WITH CERTIFIED MANUFACTURER'S DRAWINGS.
2. PLACE BARS TO AVOID JUNCTION BOX.
3. FOR LIGHT POLE AND PILASTER LOCATIONS, REFER TO GENERAL PLAN SHEET 308/365.
4. PAYMENT FOR 1" PEJF AT APPROACH SLAB LOCATION SHALL BE INCLUDED WITH ITEM 898, OC/OA CONCRETE, CLASS OSC2, SUPERSTRUCTURE (APPROACH SLAB), (T=17"), AS PER PLAN.

J:\Project\OA\ODOT\15005112 Ironton Russell\LAW\81595\structures\LAW093_1111C\sheets\Ohio Approach\093_0000_Ohio_md12.dgn

DESIGN AGENCY
URS
36 EAST 7TH STREET
SUITE 2300
CINCINNATI, OHIO 45202

DESIGNED	DRAWN	REVIEWED	DATE
JTL	MAL	JTH	06-11-10
CHECKED	REVISED	STRUCTURE FILE NUMBER	
DB		4401263	

OHIO APPROACH - LIGHTING PILASTER DETAILS
BRIDGE NO. LAW-93C-0000
IRONTON RUSSELL BRIDGE OVER OHIO RIVER

LAW-93-0.00
PID No. 81595

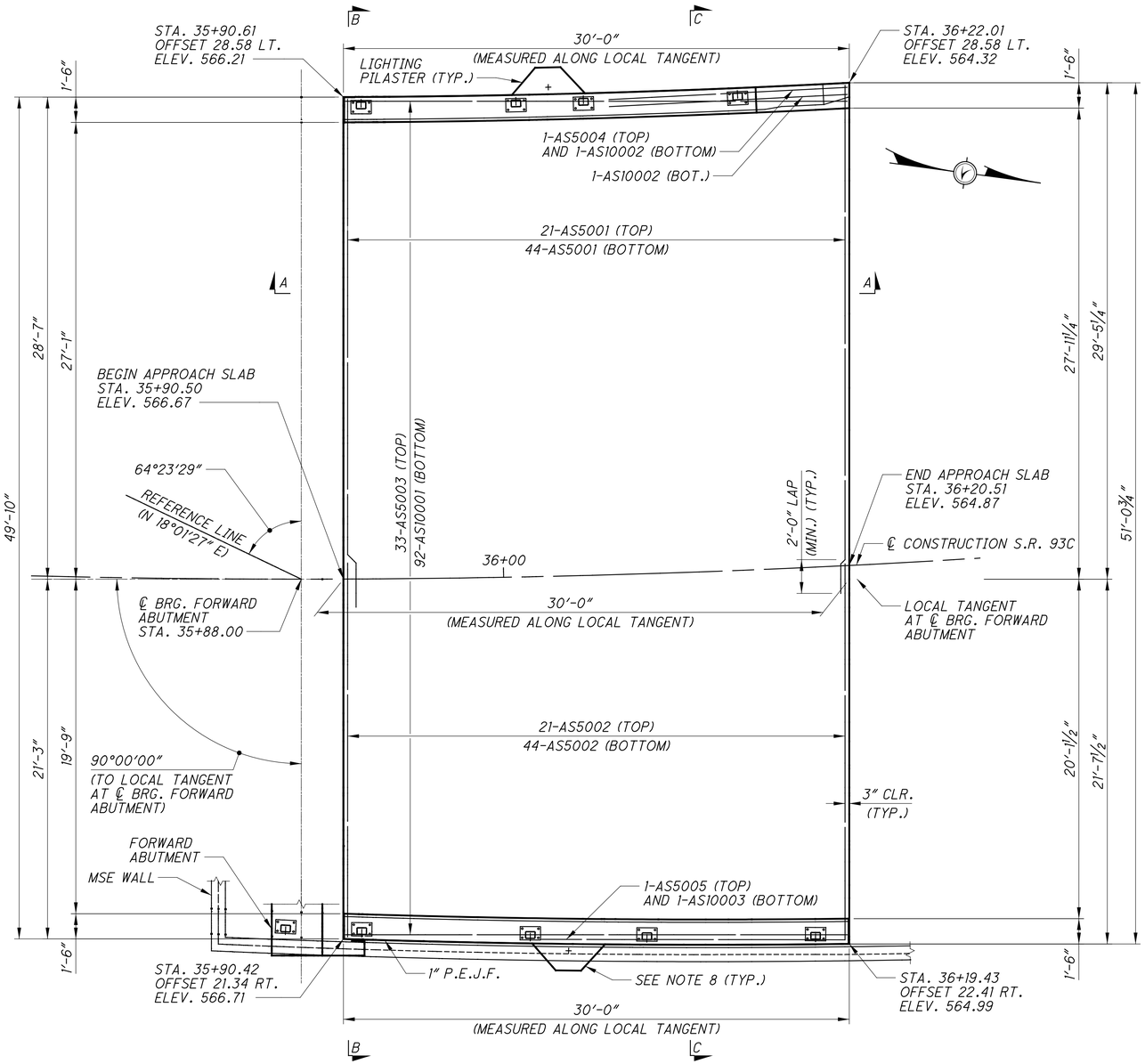

FORWARD APPROACH SLAB PLAN

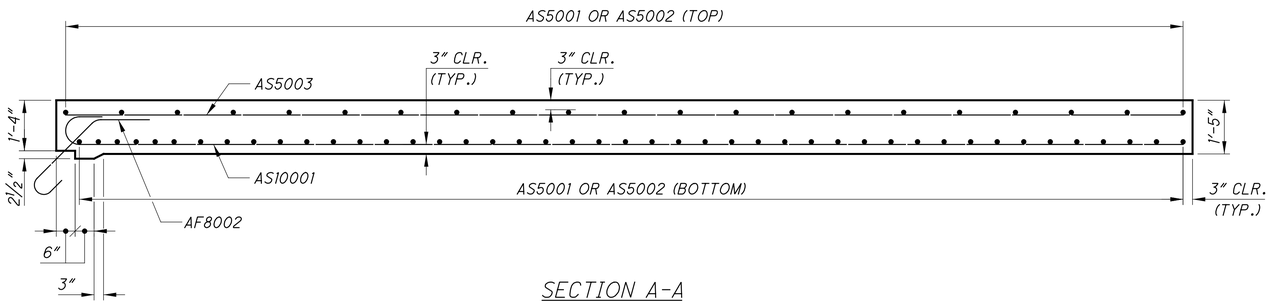

SECTION A-A

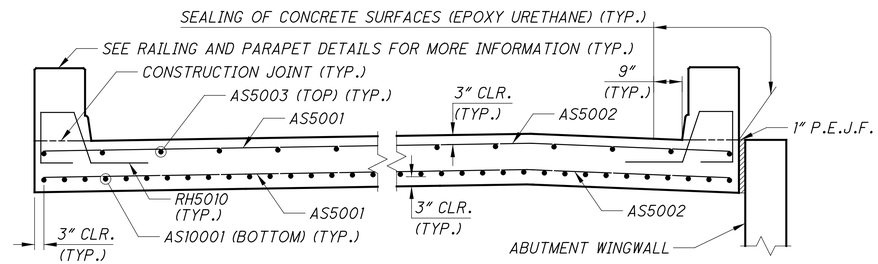

SECTION B-B

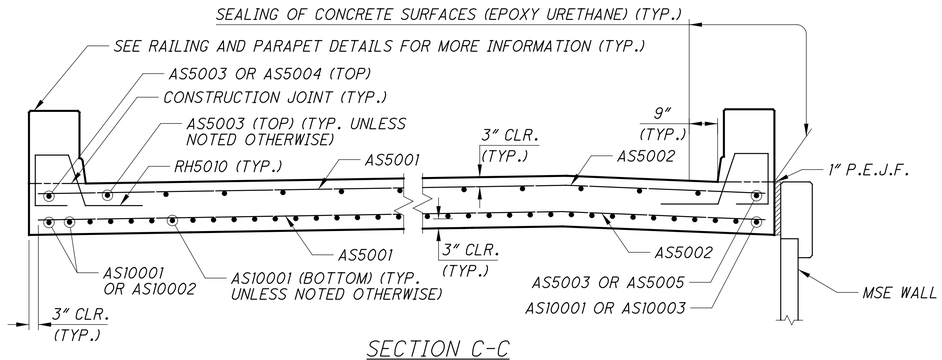

SECTION C-C

NOTES:

1. PAYMENT FOR 1" P.E.J.F. AT FORWARD APPROACH SLAB SHALL BE INCLUDED WITH ITEM 898 QC/QA CONCRETE, CLASS QSC2, SUPERSTRUCTURE (APPROACH SLAB), (T=17"), AS PER PLAN.
2. FOR NOTES FOR ITEM 517, RAILING MISC. CONCRETE PARAPET WITH STEEL TUBE RAILS, SEE SHEET 8/365.
3. FOR FORWARD ABUTMENT DETAILS, SEE SHEETS 311/365 AND 312/365 .
4. FOR MSE WALL DETAILS, SEE MSE PLANS.
5. FOR FORWARD APPROACH SLAB REINFORCING SPACING AND ADDITIONAL INFORMATION, SEE ODOT STANDARD DRAWING AS-1-81.
6. FOR FORWARD APPROACH RAILING AND PARAPET DETAILS, SEE SHEETS 355/365 AND 356/365 .
7. FOR LIGHTING PILASTER DETAILS, SEE SHEET 357/365.
8. FOR AS5006 REINFORCING SPACING SEE SHEETS 355/365 AND 356/356 .

DESIGN AGENCY
URS
36 EAST 7TH STREET
SUITE 2300
CINCINNATI, OHIO 45202

DESIGNED JJB | DRAWN JJB | REVIEWED JTH | DATE 06-11-10
CHECKED DB | REVISED | STRUCTURE FILE NUMBER 4401263

OHIO APPROACH – FORWARD APPROACH SLAB DETAILS

BRIDGE NO. LAW-93C-0000
IRONTON RUSSELL BRIDGE OVER OHIO RIVER

LAW-93-0.00
PID No. 81595

358/365

745
788

J:\Project\OA\ODOT\15005112 Ironton Russell\LAW\81595\structures\LAW093_1111C\sheets\Ohio Approach\093_0000_Ohio_as01.dgn

MARK	NUMBER	LENGTH	WEIGHT	TYPE	DIMENSIONS						
					A	B	C	D	E	R	INC
OHIO APPROACH - FORWARD ABUTMENT											
AF5001	51	16′- 8″	887	3	5′-6″	2′-6″					
AF5002	6	9′- 8″	60	2	2′-9″	4′-5″	2′-9″				
AF5003	37	8′- 0″	309	2	1′-11″	4′-5″	1′-11″				
AF5004	8	6′- 8″	56	2	2′-9″	1′-5″	2′-9″				
	2 SER.	3′- 9″									
AF5005	OF	TO	125	STR							2′-5 ¾″
	6	16′- 2″									
AF5006	4	6′- 9″	28	2	2′-9″	1′-6″	2′-9″				
AF5007	18	26′- 2″	491	STR							
AF5008	20	6′- 5″	134	2	1′-3″	4′-2″	1′-3″				
AF5009	24	5′- 3″	131	STR							
AF5010	2	17′- 1″	36	STR							
AF5011	24	27′- 9″	695	STR							
AF5012	2	10′- 5″	22	2	3′-7″	3′-6″	3′-7″				
AF5013	6	6′-10″	43	7	2′-9″	2′-2″	0′-8″	1′-8″			
AF6001	35	13′- 11″	732	2	4′-11″	4′-5″	4′-11″				
AF6002	10	5′- 11″	89	1	1′-0″	5′-1″					
AF6003	2	3′- 6″	11	STR							
AF6004	2	3′- 9″		STR							
	2 SER.	4′- 10″									
AF6005	OF	TO	71	STR							0′-8 ¼″
	4	6′- 11″									
	2 SER.	4′- 9″									
AF6006	OF	TO	69	STR							0′-8″
	4	6′- 9″									
	2 SER.	7′- 9″									
AF6007	OF	TO	75	STR							0′-7″
	3	8′- 11″									
AF6008	2	8′- 11″	27	STR							
AF6009	2	18′- 11″	57	19	18′-2″	0′-8″	0′-4″				
AF6010	54	11′- 1″	899	2	5′-0″	1′-5″	5′-0″				
AF6011	51	13′- 7″	1041	2	6′-3″	1′-5″	6′-3″				
AF6012	51	6′- 3″	479	2	2′-10″	11″	2′-10″				
AF6013	2	8′- 8″	26	1	4′-5″	4′-5″					
AF6014	3		61	2	6′-3″	1′-5″	6′-3″				
AF6015	2	6′- 7″	20	STR							
AF8001	24	26′- 1″	1671	STR							
AF8002	34	5′- 0″	454	18	2′-10″	1′-0″	1′-0″				
SUB-TOTAL			8810								

NOTES:

1. ALL REINFORCING SHALL STEEL SHALL BE EPOXY-COATED.

2. FOR STANDARD BAR BENDING DETAILS, SEE SHEETS 17/365 TO 19/365 .

3. FOR FORWARD ABUTMENT DETAILS, SEE SHEETS 311/365 AND 312/365 .

DESIGN AGENCY
URS
36 EAST 7TH STREET
SUITE 2300
CINCINNATI, OHIO 45202

DESIGNED JJB | DRAWN JJB | REVIEWED JTH | DATE 06-11-10
CHECKED DB | REVISED | STRUCTURE FILE NUMBER 4401263

OHIO APPROACH - FORWARD ABUTMENT REINFORCING STEEL LIST
BRIDGE NO. LAW-93C-0000
IRONTON RUSSELL BRIDGE OVER OHIO RIVER

LAW-93-0.00
PID No. 81595

359/365

746
788

J:\Project\O\ODOT\15005112 Ironton Russell\LAW\81595\structures\LAW093_1111C\sheets\Ohio Approach\093_0000_Ohio_r101.dgn

MARK	NUMBER	LENGTH	WEIGHT	TYPE	DIMENSIONS						
					A	B	C	D	E	R	INC
PIER 6											
PC4001	35	4′- 1″	95	2	0′-8″	2′-11″	0′-8″				
PC4002	290	3′- 9″	726	38	2′-9″						
PC5001	50	12′- 2″	634	STR							
PC5002	19	32′- 5″	642	STR							
PC5003	58	14′- 9″	892	STR							
PC5004	58	10′- 4″	625	24	2′-9″	3′-0″				1′-3⅞″	
PC5005	6	25′- 11″	162	STR							
PC5006	6	5′- 11″	37	STR							
	8 SR	9′- 2″			3′-10″		3′-10″				
PC6001	OF	TO	3084	2	TO	1′-10″	TO				0′-2⅞″±
	22	14′- 2″			6′-4″		6′-4″				
PC8001	20	24′- 0″	1282	STR							
PC8002	8	13′- 2″	281	STR							
	4 SR	12′- 2″									
PC8003	OF	TO	1302	STR							1′-9″
	7	22′- 8″									
PC9001	16	34′- 11″	1899	17	32′-5″						
PC10001	46	15′- 0″	2969	17	12′-2″						
PC11001	6	19′- 11″	635	37		18′-3″	2′-0″				
PC11002	6	25′- 7″	816	37		23′-11″	2′-0″				
PC11003	6	25′- 1″	800	67	23′-6″						
PC11004	6	19′- 7″	624	67	18′-0″						
PC11005	78	18′- 7″	7701	1	2′-0″	16′-11″					
PC11006	78	37′- 3″	15437	STR							
SUB-TOTAL			40643								

FOR REINF. STEEL NOTES,
SEE SHEET 359/365

J:\Project\O\ODOT\15005112 Ironton Russell\LAW\81595\structures\LAW093_1111C\sheets\Ohio Approach\093_0000_pi603.dgn

DESIGN AGENCY
URS
36 EAST 7TH STREET
SUITE 2300
CINCINNATI, OHIO 45202

DESIGNED	DRAWN	REVIEWED	DATE
KK	KK	JTH	06-11-10
CHECKED	REVISED	STRUCTURE FILE NUMBER	
FES		4401263	

OHIO APPROACH - PIER 6 REINFORCING STEEL LIST
BRIDGE NO. LAW-93C-0000
IRONTON RUSSELL BRIDGE OVER OHIO RIVER

LAW-93-0.00
PID No. 81595

360/365

747
788

MARK	NUMBER	LENGTH	WEIGHT	TYPE	DIMENSIONS						
					A	B	C	D	E	R	INC
PIER 7											
PD4001	34	4′-1″	93	2	0′-8″	2′-11″	0′-8″				
PD4002	260	3′-9″	651	38	2′-9″						
PD5001	50	13′- 8″	1691	STR							
PD5002	22	32′- 5″	314	STR							
PD5003	52	15′- 0″	814	STR							
PD5004	52	9′-11″	560	24	2′-9″	3′-0″				1′-3⅞″	
PD5005	8	26′- 8″	223	STR							
PD5006	8	6′- 8″	56	STR							
	8 SR	9′- 2″			3′-9″		3′-9″				
PD6001	OF	TO	3389	2	TO	2′-0″	TO				0′-2¾″±
	24	14′- 4″			6′-4″		6′-4″				
PD8001	20	24′- 9″	1322	STR							
PD8002	8	13′- 10″	295	STR							
	4 SR	12′- 2″									
PD8003	OF	TO	1327	STR							1′-10⅜″±
	7	23′- 4″									
PD9001	22	34′- 11″	2612	17	32′-5″						
PD9002	53	16′- 2″	2913	17	13′-8″						
PD10001	78	16′- 2″	5426	1	1′-10″	14′-8″					
PD10002	78	34′-10″	11691	STR							
PD11001	8	20′- 8″	879	37		19′-0″	2′-0″				
PD11002	8	26′- 4″	1119	37		24′-8″	2′-0″				
PD11003	8	25′- 10″	1098	67	24′-3″						
PD11004	8	20′- 4″	864	67	18′-9″						
SUB-TOTAL			37337								

FOR REINF. STEEL NOTES, SEE SHEET 359/365

DESIGN AGENCY
URS
35 EAST 7TH STREET
SUITE 2300
CINCINNATI, OHIO 45202

DESIGNED	DRAWN	REVIEWED	DATE
KK	KK	JTH	06-11-10
CHECKED	REVISED	STRUCTURE FILE NUMBER	
FES		4401263	

OHIO APPROACH - PIER 7 REINFORCING STEEL LIST
BRIDGE NO. LAW-93C-0000
IRONTON RUSSELL BRIDGE OVER OHIO RIVER

LAW-93-0.00
PID No. 81595

J:\Project\0\ODOT\15005112 Ironton Russell\LAW\81595\structures\LAW093_1111C\sheets\Ohio Approach\093_0000_pi703.dgn

MARK	NUMBER	LENGTH	WEIGHT	TYPE	DIMENSIONS						
					A	B	C	D	E	R	INC
PIER 8											
PE4001	34	4′-1″	93	2	0′-8″	2′-11″	0′-8″				
PE4002	160	3′-9″	401	38	2′-9″						
PE5001	48	12′- 2″	609	STR							
PE5002	19	30′- 8″	608	STR							
PE5003	32	15′- 0″	501	STR							
PE5004	32	10′-4″	345	24	2′-9″	3′-0″				1′-3 7/8″	
PE5005	9	26- 8″	250	STR							
PE5006	9	6′- 8″	63	STR							
	8 SR	9′-4″			3′-10″		3′-10″				
PE6001	OF	TO	3128	2	TO	2′-0″	TO				0′-2 7/8″±
	22	14′-4 ″			6′-4″		6′-4″				
PE8001	20	24′- 9″	1322	STR							
PE8002	8	13′- 10″	295	STR							
	4 SR	12′- 2″									
PE8003	OF	TO	1327	STR							1′-10 3/8″±
	7	23′- 4″									
				1							
PE9001	18	33′-2″	2030	17	30′-8″	1					
PE10001	78	16′- 2″	5426	1	1′-10″	14′-8″					
PE10002	36	15′-0″	2324	1 17	12′-2″	1					
PE10003	78	23′-6″	7887	STR							
PE11001	9	20′- 8″	988	37		19′-0″	2′-0″				
PE11002	9	26′- 4″	1259	37		24′-8″	2′-0″				
PE11003	9	25′- 10″	1235	67	24′-4″						
PE11004	9	20′- 4″	972	67	18′-9″						
SUB-TOTAL			31063								
			1								

FOR REINF. STEEL NOTES, SEE SHEET 359/365

NO.	REVISIONS	DATE	REV. BY
1	TABLE REVISED	4/12	BER

DESIGN AGENCY
URS
36 EAST 7TH STREET
SUITE 2300
CINCINNATI, OHIO 45202

DESIGNED KK | DRAWN KK | REVIEWED JTH | DATE 06-11-10
CHECKED FES | REVISED | STRUCTURE FILE NUMBER 4401263

OHIO APPROACH - PIER 8 REINFORCING STEEL LIST

BRIDGE NO. LAW-93C-0000
IRONTON RUSSELL BRIDGE OVER OHIO RIVER

LAW-93-0.00
PID No. 81595

362/362

749
788

J:\Project\OA\ODOT\15005112 Ironton Russell\LAW\81595\structures\LAW093_1111C\sheets\Ohio Approach\093_0000_pi803.dgn

MARK	NUMBER	LENGTH	WEIGHT	TYPE	DIMENSIONS						
					A	B	C	D	E	R	INC
OHIO APPROACH - SUPERSTRUCTURE											
SH 4001	1 SER. OF 50	26′-10″ TO 29′- 4″	938	STR							0′-0 ½″
SH 4002	1203	30′- 0″	24108	STR							
SH 4003	408	29′- 1″	7926	STR							
SH 4004	1	20′- 3″	14	STR							
SH 4005	3	29′- 6″	59	STR							
SH 4006	28	33′- 3″	622	STR							
SH 4007	10	21′- 10″	146	STR							
SH 4008	13	20′- 6″	178	STR							
SH 4009	10	18′- 6″	124	STR							
SH 4010	12	10′- 4″	83	STR							
SH 4011	4	8′- 0″	21	STR							
SH 4012	2	10′- 8″	14	STR							
SH 4013	4 SER. OF 50	7′- 2″ TO 16′- 5″	1575	STR							0′-2 ¼″
SH 4014	2 SER. OF 50	13′- 7″ TO 22′- 8″	1211	STR							0′-2 ¼″
SH 4015	12	15′- 3″	122	STR							
SH 4016	2137	6′- 4″	9041	2	2′-0″	0′-6″	4′-0″				
SH 4017	354	3′- 0″	709	2	0′-9″	1′-9″	0′-9″				
SH 5001	1 SER. OF 77	19′- 10″ TO 21′- 6″	1660	STR							0′-0 ¼″
SH 5002	1 SER. OF 77	19′- 10″ TO 21′- 2″	1646	STR							0′-0 ¼″
SH 5003	1 SER. OF 51	21′- 6″ TO 22′- 9″	1177	STR							0′-0 ¼″
SH 5004	51	21′- 10″	1161	STR							
SH 5005	1 SER. OF 51	22′- 9″ TO 23′- 8″	1235	STR							0′-0 ¼″
SH 5006	51	22′- 9″	1210	STR							
SH 5007	1 SER. OF 51	23′- 8″ TO 24′- 4″	1277	STR							0′-0 ¼″
SH 5008	1 SER. OF 51	22′- 9″ TO 24′- 0″	1243	STR							0′-0 ¼″
SH 5009	1548	24′- 8″	39826	STR							
SH 5010	1 SER. OF 84	24′- 8″ TO 26′- 3″	2230	STR							0′-0 ¼″
SH 5011	129	26′- 6″	3565	STR							
SH 5012	56	25′- 2″	1470	STR							
SH 5013	36	26′- 0″	976	STR							

MARK	NUMBER	LENGTH	WEIGHT	TYPE	DIMENSIONS						
					A	B	C	D	E	R	INC
OHIO APPROACH - SUPERSTRUCTURE (CONTINUED)											
SH 5014	37	27′- 4″	1055	STR							
SH 5015	1 SER. OF 52	26′-10″ TO 29′- 4″	1523	STR							0′-0 ½″
SH 5016	672	30′- 0″	21027	STR							
SH 5017	390	29′-1″	11830	STR							
SH 5018	21	20′- 6″	449	STR							
SH 5019	11	15′- 3″	175	STR							
SH 5020	9	32′- 4″	304	STR							
SH 5021	11	18′- 9″	215	STR							
SH 5022	9	10′- 6″	99	STR							
SH 5023	2	6′- 1″	13	STR							
SH 5024	2	7′- 7″	16	STR							
SH 5025	2	9′- 1″	19	STR							
SH 5026	2	10′- 8″	22	STR							
SH 5027	1	20′- 8″	22	STR							
SH 5028	1	17′- 4″	18	STR							
SH 5029	2	26′- 7″	55	STR							
SH 5030	19	33′- 3″	659	STR							
SH 5031	30	14′- 2″	443	STR							
SH 5032	34	3′- 8″	130	8	1′-5″	1′-6″	1′-0″				
SH 5033	34	8′- 0″	284	63	2′-6″	0′-5″	2′-6″	1′-9″	1′-9″		
SH 5034	34	5′- 4″	189	2	2′-8″	1′-6″	1′-5″				
SH 5035	1 SER. OF 77	22′- 10″ TO 25′- 11″	1958	STR							0′-0 ½″
SH 5036	77	16′- 2″	1298	STR							
SH 5037	51	27′- 0″	1436	STR							
SH 5038	51	16′- 11″	900	STR							
SH 5039	51	28′- 2″	1498	STR							
SH 5040	51	17′- 8″	940	STR							
SH 5041	51	28′- 11″	1538	STR							
SH 5042	51	18′- 8″	993	STR							
SH 5043	731	29′- 3″	22301	STR							
SH 5044	816	19′- 4″	16454	STR							
SH 5045	43	31′- 0″	1390	STR							
SH 5046	56	31′- 7″	1845	STR							
SH 5047	56	19′- 7″	1144	STR							
SH 5048	36	31′- 3″	1173	STR							
SH 5049	36	20′- 11″	785	STR							
SH 5050	37	22′- 5″	865	STR							
SH 5051	14	10′- 10″	158	21	1′-4″	2′-1″	1′-8″	2′-4″			
SH 6001	196	6′- 0″	1766	STR							
SUPERSTRUCTURE TOTAL *			202556								

** DENOTES LIGHTING AND RAILING BARS PLACED IN SUPERSTRUCTURE ARE NOT INCLUDED IN THIS TOTAL.*

FOR REINF. STEEL NOTES, SEE SHEET 359/365

DESIGN AGENCY
URS
35 EAST 7TH STREET
SUITE 2300
CINCINNATI, OHIO 45202

DESIGNED	DRAWN	REVIEWED	DATE
PJW	ALH	JTH	06-11-10
CHECKED	REVISED	STRUCTURE FILE NUMBER	
MAL		4401263	

OHIO APPROACH - SUPERSTRUCTURE REINFORCING STEEL LIST
BRIDGE NO. LAW-93C-0000
IRONTON RUSSELL BRIDGE OVER OHIO RIVER

LAW-93-0.00
PID No. 81595

J:\Project\OA\ODOT\15005112 Ironton Russell\LAW\81595\structures\LAW093_1111C\sheets\Ohio Approach\093_0000_Ohio_r102.dgn

MARK	NUMBER	LENGTH	WEIGHT	TYPE	DIMENSIONS						
					A	B	C	D	E	R	INC
OHIO APPROACH - FORWARD APPROACH SLAB											
AS5001	65	30'-0"	2034	STR							
AS5002	65	22'-9"	1542	STR							
AS5003	33	29'-6"	1015	STR							
AS5004	1	15'-0"	16	STR							
AS5005	1	18'-0"	19	STR							
AS5006	2	4'-8"	10	STR							
AS10001	92	30'-11"	12239	16	29'-6"						
AS10002	2	15'-0"	129	STR							
AS10003	1	18'-0"	77	STR							
SUB-TOTAL			17081	(FOR INFORMATION ONLY)							

NOTES:

1. *ALL REINFORCING STEEL SHALL BE EPOXY-COATED.*
2. *FOR STANDARD BAR BENDING DETAILS, SEE SHEETS* 17/365 *TO* 19/365 .
3. *FOR FORWARD APPROACH SLAB DETAILS, SEE SHEET* 358/365 .
4. *BARS BEGINNING WITH THE PREFIX "AS" SHALL BE INCLUDED FOR PAYMENT WITH ITEM 898 OC/OA CONCRETE, CLASS OSC2, SUPERSTRUCTURE (APPROACH SLAB), (T=17"), AS PER PLAN.*

DESIGN AGENCY
URS
36 EAST 7TH STREET
SUITE 2300
CINCINNATI, OHIO 45202

DESIGNED	DRAWN	REVIEWED	DATE
JJB	JJB	JTH	06-11-10
CHECKED	REVISED	STRUCTURE FILE NUMBER	
DB		4401263	

OHIO APPROACH - APPROACH SLAB REINFORCING STEEL LIST
BRIDGE NO. LAW-93C-0000
IRONTON RUSSELL BRIDGE OVER OHIO RIVER

LAW-93-0.00
PID No. 81595

364/365

751/788

J:\Project\O\ODOT\15005112 Ironton Russell\LAW\81595\structures\LAW093_1111C\sheets\Ohio Approach\093_0000_Ohio_r103.dgn

MARK	NUMBER	LENGTH	WEIGHT	TYPE	DIMENSIONS						
					A	B	C	D	E	R	INC
OHIO APPROACH - BARRIER RAILING											
RH5001	78	30'- 0"	2441	STR							
RH5002	2	16'- 2"	34	STR							
RH5003	2	22'- 9"	47	STR							
RH5004	8	9'- 5"	79	STR							
RH5005	4	3'- 2"	13	STR							
RH5006	4	8'- 8"	36	STR							
RH5007	4	11'- 0"	46	STR							
RH5008	264	16'- 6"	4543	STR							
RH5009	17	8'- 5"	149	3	0'-11"	3'-1"					
RH5010	1406	5'- 1"	7450	39	1'-6"	1'-4"	0'-5 3/4"	0'-10 1/2"	0'-5"		
RH5011	1364	5'- 3"	7469	3	1'-0"	1'-5"					
RH5012	4	30'-9"	128	STR							
RH5013	8	0'- 11"	8	STR							
RH5014	8	29'- 8"	248	STR							
RH5015	2	5'- 2"	11	STR							
RH5016	2	5'- 0"	10	19	3'-10"	1'-4"	0'-8"				
RH5017	1	7'- 10"	8	3	0'-11"	2'-9 1/2"					
RH5018	1	7'- 3"	8	3	0'-11"	2'-6"					
RH5019	1	6'- 11"	7	3	0'-11"	2'-4"					
RH5020	10	7'-9"	81	3	0'-8"	3'-0"					
RH5021	48	10'- 10"	542	21	1'-4"	2'-1"	1'-8"	2'-4"			
RH5022	28	8'- 0"	234	3	2'-4"	1'-4"					
RH5023	28	10'- 4"	302	3	2'-4"	2'-6"					
RH5024	4	6'- 0"	25	3	1'-4"	1'-4"					
RH5025	4	8'- 4"	35	3	1'-4"	2'-6"					
RH5026	8	4'- 8"	39	STR							
SUB-TOTAL			23934	(FOR INFORMATION ONLY)							

FOR REINF. STEEL NOTES, SEE SHEET 359/365

DESIGN AGENCY
URS
36 EAST 7TH STREET
SUITE 2300
CINCINNATI, OHIO 45202

DESIGNED	DRAWN	REVIEWED	DATE
MAL	MAL	JTH	06-11-10
CHECKED	REVISED	STRUCTURE FILE NUMBER	
DB		4401263	

OHIO APPROACH - PARAPET REINFORCING STEEL LIST
BRIDGE NO. LAW-93C-0000
IRONTON RUSSELL BRIDGE OVER OHIO RIVER

LAW-93-0.00
PID No. 81595

J:\Project\ODOT\15005112 Ironton Russell\LAW\81595\structures\LAW093_1111C\sheets\Ohio Approach\093_0000_Ohio_r104.dgn

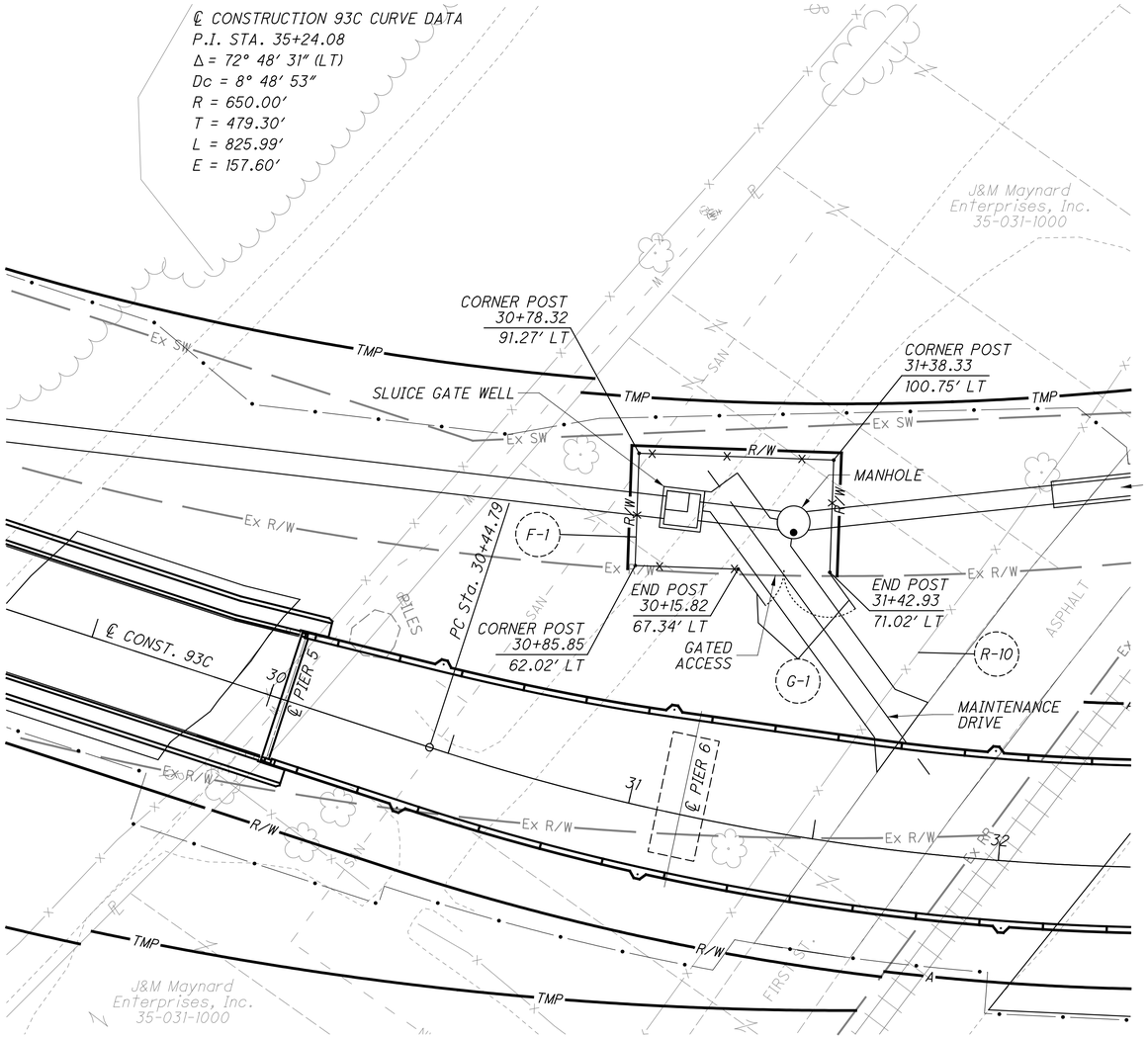

CROSS REFERENCES	
76	PLAN SHEET
159-158	DRIVEWAY DETAILS
163-173	DRAINAGE DETAILS
198-207	WATER WORK
388-752	STRUCTURES

HORIZONTAL SCALE IN FEET
0 10 20 40

CALCULATED AMD
CHECKED SCC

FENCE PLAN - 93C
SLUICE GATE WELL ENCLOSURE

LAW-93-0.00

753
788

J:\Project\O\ODOT\15005112 Ironton Russell\LAW\81595\roadway\sheets\81595GX002.dgn - 4/22/2011 3:46:10 PM - jon_wanstrath

RIGHT OF WAY LEGEND SHEET LAW-93-0.00

LAWRENCE COUNTY, OHIO
UPPER TWP.,SEC. 19,T.1N,R.18W
CITY OF IRONTON
GREENUP COUNTY, KY.
CITY OF RUSSELL

PROJECT DESCRIPTION

REPLACEMENT OF THE EXISTING STRUCTURE
OVER THE OHIO RIVER AND APPROACHES
ON THE OHIO AND KENTUCKY SIDES.
LENGTH OF PROJECT = 3643.20'

PROJECT CONTROL

STATE PLANE GRID - OHIO SOUTH NAD27
PROJECT ADJUSTMENT FACTOR = 1.000024962

* PLANS PREPARED BY:

FIRM NAME : URS CORPORATION

PLANS PREPARED BY: RICK HICKLE

FIELD REVIEW BY: DAN STANKAVICH, P.S.
DATE COMPLETED: FEBRUARY 4, 2010

OWNERSHIP VERIFIED BY: DAN STANKAVICH, P.S.
DATE COMPLETED: FEBRUARY 2, 2010

DATE COMPLETED: FEBRUARY 9, 2010

OHIO UTILITY OWNERS			
GAS	COLUMBIA GAS OF OHIO ATTN: Mr. Gary Sullivan P.O. Box 14241 Lexington, KY 40512 (859) 288-0225		
WATER	CITY OF IRONTON ATTN: MR. MARK WHITE P.O. BOX 704 IRONTON, OH 45638-0704 (740) 532-3412		
ELECTRIC	AMERICAN ELECTRIC POWER (AEP) ATTN: MR. PAUL PAXTON 850 TECH CENTER DRIVE GAHANNA, OH 43230 (614) 883-6831		
CABLE	TIME WARNER CABLE ATTN: MR. ROD FROST 225 RUSSELL ROAD ASHLAND, KY 41101 (606) 326-6803		
TELEPHONE	AT&T OHIO ATTN: MS. SANDI RANDOLPH 3935 NORTHPOINTE DRIVE ZANESVILLE, OH 43701 (740) 454-3455		
SANITARY	CITY OF IRONTON ATTN: MR. JOHN HASKINS P.O. BOX 704 IRONTON, OH 45638-0704 (740) 532-8425		
KENTUCKY UTILITY OWNERS			
WATER	CITY OF RUSSELL ATTN: PAUL MOORE P.O. BOX 394 RUSSELL, KY 41169-0394 (606) 836-9666		
SANITARY	GREENUP CO. ENVIRONMENTAL COMMISSION ATTN: MR. RALPH LARGE P.O. BOX 471 RUSSELL, KY 41169-0471 (606) 836-4600		
TELEPHONE	WINDSTREAM KENTUCKY EAST, LLC ATTN: MR. RALPH BROWN 619 15TH STREET ASHLAND, KY 41101 (606) 329-6255	CABLE	ADELPHIA ATTN: MR. DENNIS MEADOWS 225 RUSSELL ROAD ASHLAND, KY 41101 (606) 329-6255
GAS	COLUMBIA GAS OF KENTUCKY ATTN: MR. RUSS RYAN 121 9TH STREET ASHLAND, KY 41101 (606) 324-7155	ELECTRIC	KENTUCKY POWER COMPANY ATTN: MR. DON CANFIELD 1701 CENTRAL AVENUE ASHLAND, KY 41101 (606) 327-1476

NOTES: THE LOCATION OF THE UNDERGROUND UTILITIES SHOWN ON THE PLANS ARE OBTAINED FROM THE OWNER OF THE UTILITIES AS REQUIRED BY SECTION 153.64 O.R.C.

CONVENTIONAL SYMBOLS

County Line
Township Line
Section Line
Corporation Line or
Fence Line (Ex) (Pr)
Center Line
Right of Way (Ex) Ex R/W
Right of Way (Pr) R/W
Standard Highway Ease.(Ex) Ex SH
Temporary Right of Way TMP
Channel Ease. (Pr) CH
Utility Ease. (Ex) Ex U
Railroad or
Guardrail (Ex) (Pr)
Construction Limits
Edge of Pavement (Ex)
Edge of Pavement (Pr)
Edge of Shoulder (Ex)
Edge of Shoulder (Pr)

Ditch / Creek (Ex)
Ditch / Creek (Pr)
Tree Line (Ex)
Ownership Hook Symbol , Example
Property Line Symbol , Example
Break Line Symbol , Example
Tree (Pr) , Tree (Ex) , Shrub (Ex)
Tree (Remove) , Shrub (Remove)
Evergreen (Ex) , Stump
Evergreen (Remove) , Stump (Remove)
Wetland (Pr) , Grass (Pr) , Aerial Target
Post (Ex) , Mailbox (Ex) MB , Mailbox (Pr) MB
Light (Ex) , Telephone Marker (Ex) TEL
Fire Hydrant (Ex) , Water Meter (Ex) W
Water Valve (Ex) , Utility Valve Unknown (Ex.)
Telephone Pole (Ex) , Power Pole (Ex)
Light Pole (Ex)

LEGEND:
WD = WARRANTY DEED
WDV = WARRANTY DEED ACQUIRED IN THE NAME OF OTHERS
SH = STANDARD HIGHWAY EASEMENT
A = AERIAL EASEMENT
S = SEWER EASEMENT
T = TEMPORARY EASEMENT
PRE = PROPERTY RIGHT (Easement)
PRW = PROPERTY RIGHT FEE SIMPLE

INDEX OF SHEETS:

TITLE / LEGEND	1
PROPERTY MAPS	2-5
SCHEMATIC SHEET	6
SUMMARY SHEETS	7-9
RIGHT OF WAY PLAN SHEETS	10-30
RAILROAD PLATS	31-35

STRUCTURE KEY

- RESIDENTIAL
- COMMERCIAL
- OUT-BUILDING

* All Right of Way stations are based on the centerline of existing and proposed Right of Way. For centerline and stationing of existing and proposed right of way see Plat Book 11, Page 79 Lawrence County Recorder's Office (LAW-93-0.00 PID 19925).

I, Dan Stankavich, P. S. have prepared this Right of Way plan for the Ohio for the Ohio Department of Transportation in August 2009. The original survey work contained in this plan is based on a survey by, or under the direct supervision of Mark Lukosavich, P.S. 8088 of the URS Corporation in 2008, and incorporated into this plan. The results of these surveys are contained herein.

As a part of this project I have reestablished the locations of the existing property lines and centerline of existing Right of Way for property takes contained herein.

All of my work contained herein was conducted in accordance with Ohio Administrative Code 4733-37 commonly known as "A Minimum Standards for Boundary Surveys in the State of Ohio" unless noted.

The words I and my as used herein are to mean that either myself or someone working under my direct supervision.

_____ , Professional Land Surveyor No. , Date: _____

SURVEYORS SEAL

STATE OF OHIO
DAN STANKAVICH
7122
REGISTERED
PROFESSIONAL ENGINEER

SIGNED: _____
DATE: _____

FEDERAL PROJECT NO. E060(822)
PID NO. 81595
CALCULATED REH CHECKED DS
RIGHT OF WAY LEGEND SHEET
LAW-93-0.00
1 / 35
754 788

J:\Project\O\ODOT\15005112 Ironton Russell\LAW\81595\row\sheets\81595RL001.dgn - 4/27/2011 2:45:09 PM - jon_wonstrath

LAW-93-0.00
CITY OF RUSSELL
GREENUP COUNTY
COMMONWEALTH OF KENTUCKY

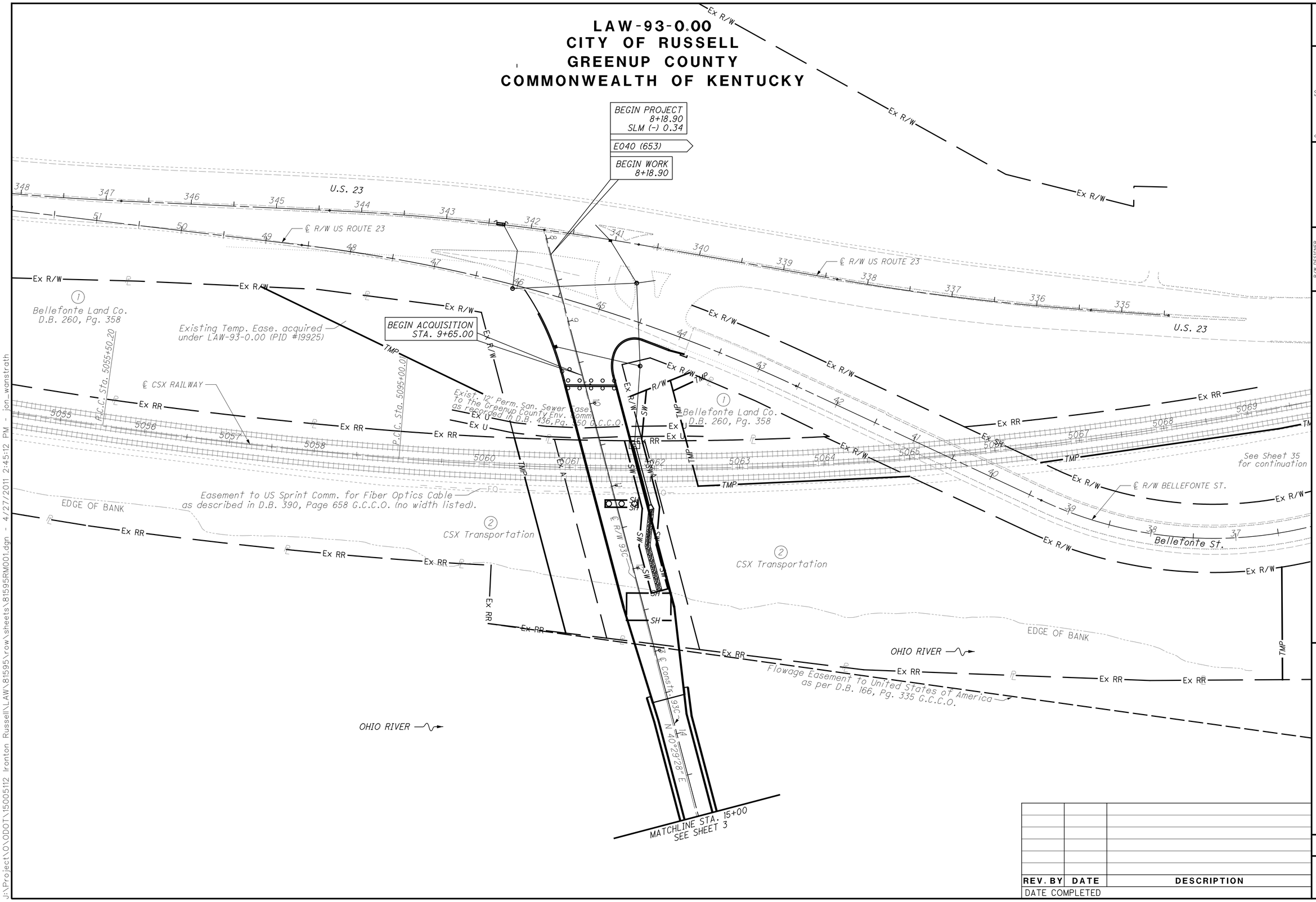

J:\Project\O\ODOT\15005112 Ironton Russell\LAW\81595\row\sheets\81595RM001.dgn - 4/27/2011 2:45:12 PM - jon_wanstrath

HORIZONTAL SCALE IN FEET
0 25 50 100

PID NO. 81595

R/W DESIGNER REH
R/W REVIEWER DS

PROPERTY MAP

LAW-93-0.00

REV. BY	DATE	DESCRIPTION

DATE COMPLETED

LAWRENCE COUNTY
UPPER TOWNSHIP
SECTION 19, T1N, R18W
CITY OF IRONTON

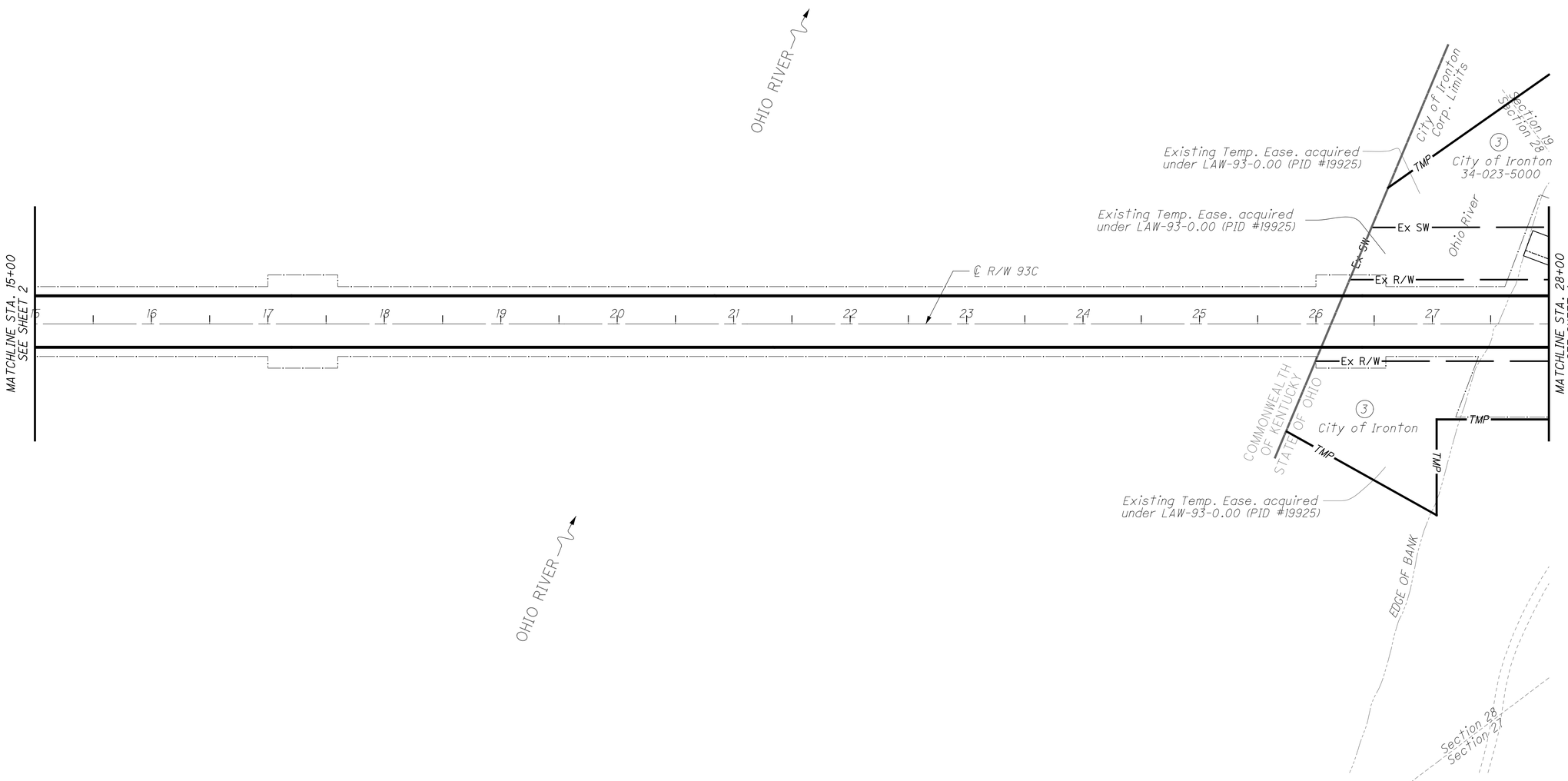

REV. BY	DATE	DESCRIPTION

DATE COMPLETED

HORIZONTAL SCALE IN FEET
0 25 50 100

PID NO. 81595

R/W DESIGNER REH
R/W REVIEWER DS

PROPERTY MAP

LAW-93-0.00

J:\Project\O\ODOT\15005112 Ironton Russell\LAW\81595\row\sheets\81595RM002.dgn - 4/27/2011 2:45:13 PM - jon_wanstrath

LAWRENCE COUNTY
UPPER TOWNSHIP
T1N, R18W, SECTION 19
CITY OF IRONTON

MATCHLINE STA. 28+00
SEE SHEET 3

OHIO RIVER

EDGE OF BANK

Existing Temp. Ease. acquired under LAW-93-0.00 (PID #19925)

℄ R/W 93C

TMP

Ex R/W

Ex SW

City of Ironton

City of Ironton
34-023-5000

Existing Temp. Ease. acquired under LAW-93-0.00 (PID #19925)

Existing Sewer Ease. acquired under LAW-93-0.00 (PID #19925)

Existing Temp. Ease. acquired under LAW-93-0.00 (PID #19925)

Section 28
Section 19

35-032-1700

J&M Maynard Enterprises, Inc.
35-032-1700

MULBERRY ST.

Ex RR

W.D. Kelly's First Addition Subdivision
PB 1, PG. 44

Lot 119 | Lot 118 | Lot 117 | Lot 116 | Lot 115 | Lot 114 | Lot 113 | Lot 112 | Lot 111 | Lot 110 | Lot 109 | Lot 108 | Lot 107 | Lot 106

Lot 120

Eden Alley

35-022-5000

34-058-0200.000

Vine Alley

J&M Maynard Enterprises, Inc.

Norfolk Southern Corp.
30-095-9019

℄ MAINLINE NS RAILWAY

564 565 566 567 568 569 570 571 572 573 574 575 576

℄ R/W CAMPBELL AVE

26 27 28 29 30 31

Norfolk Southern Co
30-095-9019
Lot 94

Lot 87

Lot 81

Lot 93

Lot 88

Lot 80

Lot 80

QUINCY STREET

W.D. Kelly's First Add. Sub.
PB 1, PG. 44
Lot 91

Norfolk Southern Corp.
30-095-9019

℄ R/W 93C

Section 19
Section 20

℄ R/W MONROE ST.

℄ R/W SECOND ST.

MATCHLINE STA. 37+50
SEE SHEET 5

Lot 75

Lot 64
34-057-0700.000

VINE ALLEY

5A Norfolk Southern Corp.
30-095-9019

24 R.A.C. II, LTD
35-022-1400 & 1401

J:\Project\OVODOT\15005112 Ironton Russell\LAW\81595\row\sheets\81595RM003.dgn - 4/27/2011 2:45:15 PM - jon_wanstrath

REV. BY	DATE	DESCRIPTION
DS	6/29/10	DELETE PARCEL 6T
DATE COMPLETED		

HORIZONTAL SCALE IN FEET
0 25 50 100

PID NO. 81595

R/W DESIGNER REH
R/W REVIEWER DS

PROPERTY MAP

LAW-93-0.00

4 / 35

757
788

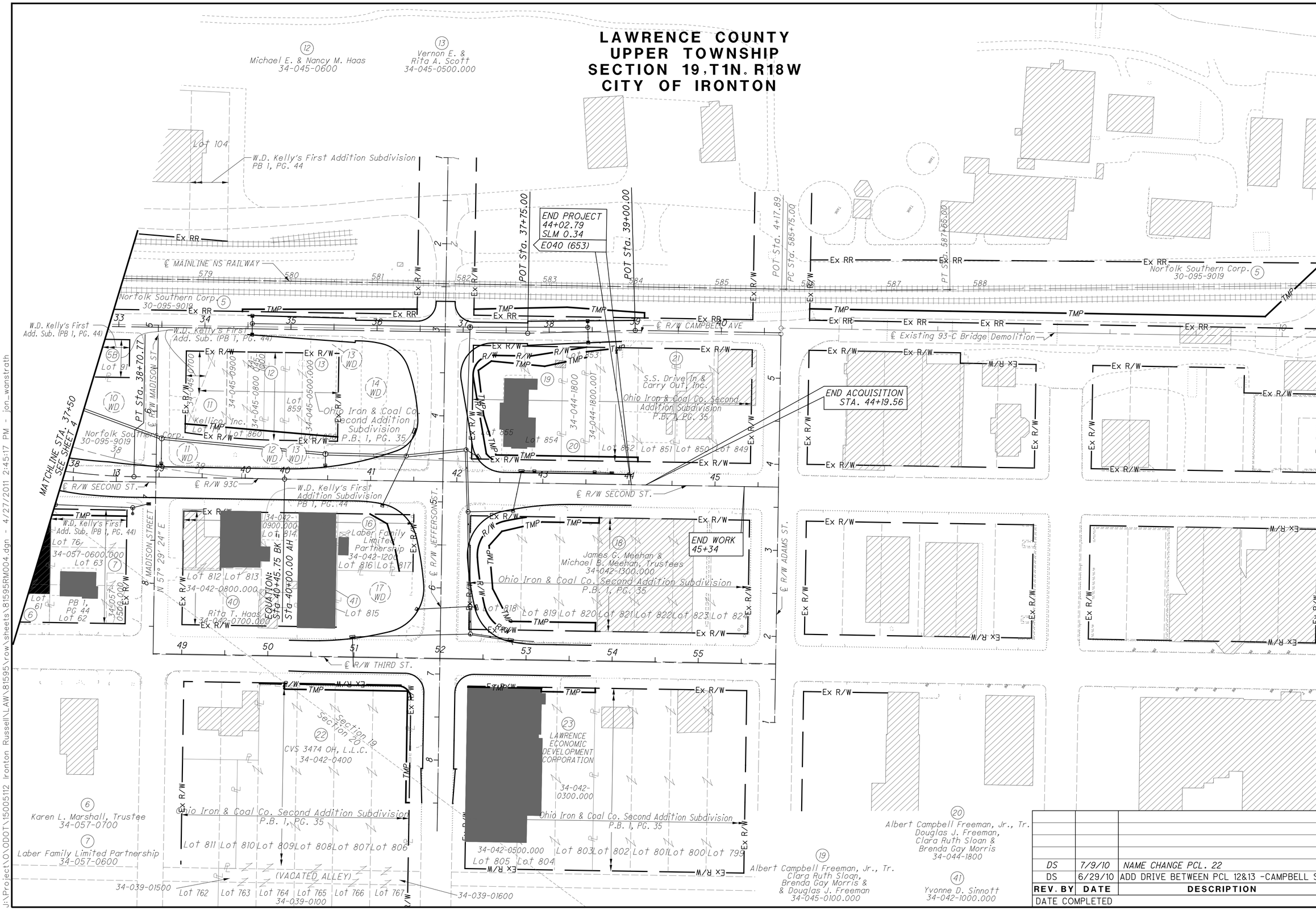

REV. BY	DATE	DESCRIPTION
DS	7/9/10	NAME CHANGE PCL. 22
DS	6/29/10	ADD DRIVE BETWEEN PCL 12&13 -CAMPBELL ST

DATE COMPLETED

HORIZONTAL SCALE IN FEET

PID NO. 81595

R/W DESIGNER REH

R/W REVIEWER DS

PROPERTY MAP

LAW-93-0.00

J:\Project\O\ODOT\15005112 Ironton Russell\LAW\81595\row\sheets\81595RM004.dgn - 4/27/2011 2:45:17 PM - jon_wanstrath

RIGHT OF WAY
SHEET SCHEMATIC

LAW-93-0.00

6 / 35

759
788

REV. BY	DATE	DESCRIPTION

DATE COMPLETED

TOTAL NUMBER OF :

19 OWNERSHIPS 0 TOTAL TAKES

42 PARCELS 1 OWNERSHIPS W/ STRUCTURES INVOLVED

GROSS TAKE - PRO IN TAKE = NET TAKE

GRANTEE:

ALL RIGHT OF WAY ACQUIRED IN THE NAME OF STATE OF OHIO UNLESS OTHERWISE SHOWN.

ALL AREAS IN ACRES UNLESS OTHERWISE NOTED

PARCEL NO.	OWNER	SHEET NO.	OWNERS RECORD BOOK	OWNERS RECORD PAGE	AUDITOR'S PARCEL	RECORD AREA	TOTAL P.R.O.	GROSS TAKE	P.R.O. IN TAKE	NET TAKE	STRUC-TURE	NET RESIDUE LEFT	NET RESIDUE RIGHT	TYPE FUND	REMARKS	AS ACQUIRED BOOK	AS ACQUIRED PAGE
1-WD*	COMMONWEALTH OF KENTUCKY, TRANSPORTATION CABINET	10,11	O.R. 523	199	NOT ASSIGNED	0.466	0							FEDERAL	DEED RECORDED IN GREENUP COUNTY, KY	523	199
1-WD1	BELLEFONTE LAND CO.	10,11	D.B.260	358		4.336[1]		0.043	———	0.043	NO	0.274	3.572				
1-S		10,11						0.012	———	0.012							
1-T1*		10,11							———						FOR ADDITIONAL WORK AREA DURING CONSTRUCTION	523	199
1-T2*		10,11							———						FOR ADDITIONAL WORK AREA DURING CONSTRUCTION	523	199
1-T3		10,11						0.008		0.008					CONSTRUCT RETAINING WALL AND ROADWAY GRADING		
2-A*	CSX TRANSPORTATION	10,11,12	D.B. 43	166	---	---	0				NO	---	---		EXISTING RAILROAD R/W-DEED RECORDED IN GREENUP COUNTY, KY	527	739
2-SH1		9,10,11	D.B. 88	183				0.008	———	0.008							
2-SH2		12						0.038	———	0.038							
2-S		10,11,12						0.083		0.083							
2-T1		10,11,12						3.765		3.765					CONSTRUCT BRIDGE APPROACH AND ACCESS ROAD		
2-T2		10,11,12						0.826		0.826					CONSTRUCT ACCESS ROAD		
3-WD*	STATE OF OHIO-DEPARTMENT OF TRANSPORTATION	14,15,16	O.R. 343	685	35-023-5000.001	0.65	0									343	685
3-WD1	THE CITY OF IRONTON, OHIO	15,16	D.B.151	630	35-023-5000	12.30		0.008	———	0.008	NO	11.043	1.256		RECORD AREA FROM AUDITOR'S RECORDS		
3-S*		14,15,16														343	691
3-T1*		14,15,16													FOR ADDITIONAL WORK AREA DURING CONSTRUCTION	343	696
3-T2*		14,15,16,17,18													FOR ADDITIONAL WORK AREA DURING CONSTRUCTION	343	696
4-WD*	STATE OF OHIO-DEPARTMENT OF TRANSPORTATION	15,16,17,18	O.R. 361	62	35-022-5000.001	0.3191										361	062
4-WD1	J & M MAYNARD ENTERPRISES, INC.	15,16,17,18	D.B. 614	710	35-022-5000	1.93		0.106	———	0.106		0.870[1] #	0.911[1]				
					35-031-1000	0.58						0	0.58				
					34-058-0200	0.0868		0				0.0868	0				
					34-058-0300	0.240		0				0.240	0				
					35-032-1700	0.460						0	0.460				
4-WDV++					35-022-5000			0.043	———	0.043							
	GRAND TOTAL					3.2968	0	0.149		0.149		1.1968	1.951			361	66
4-S*		15,16,17,18													SEWER EASEMENT		
5-A	NORFOLK SOUTHERN CORP.	17,18	D.B. 42	48	N/A	N/A	0	0.286	———	0.286	NO	---	---		OPERATING RAILROAD PROPERTY		
5-SH		17,18	ORD. BK.	153				0.013	———	0.013		---	---				
5-S		17,18						0.065	———	0.065		---	---				
5-T1		17,18						0.615	———	0.615					CONSTRUCT BRIDGE & APPROACHES		
5-T2		25,26						0.020	———	0.020					ROADWAY GRADING		
5-T3		27,28						0.040	———	0.040					ROADWAY GRADING		
5-T4		29,30						0.155		0.155					DEMOLITION OF EXISTING BRIDGE		
5A-WD	NORFOLK SOUTHERN CORP.	17,18,19,20	D.B. 89	335	30-095-9019	0.283[1]	0	0.100		0.100	NO	0	0.183				
5A-T		17,18						0.034		0.034					ROADWAY GRADING		
5B-WD	NORFOLK SOUTHERN CORP.	19,20	D.B. 89	335	30-095-9019	0.283[1]	0	0.088		0.088	NO	0	0.195				
5B-T		19,20,25,26						0.026		0.026					ROADWAY GRADING		
6-PRW	KAREN L. MARSHALL, TRUSTEE	19,20	O.R. 383	339	34-057-0400	0.1818[1]	0								LOSS OF ACCESS - 2nd STREET		
7-T	LABER FAMILY LIMITED PARTNERSHIP	19,20,21,22	O.R. 357	741	34-057-0600	0.267[1]	0	0.014		0.014					REMOVE PRIVATE DRIVE & CONSTRUCT DRAINAGE		
7-PRW		19,20,21,22													LOSS OF ACCESS - 2nd STREET		
8-WD*	STATE OF OHIO-DEPARTMENT OF TRANSPORTATION	19,20	O.R. 352	186	34-057-1100	0.105	0									352	186
					34-057-1200	0.0727											
	GRAND TOTAL					0.178											

RECORD AREA IS AUDITOR'S RECORD AREA.

*.***[1]-AREA CALCULATED

NOTE: ALL TEMPORARY PARCELS TO BE OF 36 MONTH DURATION.

NOTE: UNDER NO CIRCUMSTANCES ARE TEMPORARY EASEMENTS TO BE USED FOR STORAGE OF MATERIAL OR EQUIPMENT BY THE CONTRACTOR UNLESS NOTED OTHERWISE.

LEGEND:
WD = WARRANTY DEED
WDV = WARRANTY DEED ACQUIRED IN THE NAME OF OTHERS
SH = STANDARD HIGHWAY EASEMENT
A = AERIAL EASEMENT
S = SEWER EASEMENT
T = TEMPORARY EASEMENT
PRE = PROPERTY RIGHT
PRW = PROPERTY RIGHT FEE SIMPLE

++ = ACQUIRED IN THE NAME OF THE CITY OF IRONTON

= COMBINED RESIDUE OF 4WD1 AND 4WDV

*-These Parcels were acquired under project LAW-93-0.00 (PID No. 19925) as recorded in Plat Book 11, Pg. 79 Lawrence County Recorder's Office.

REV. BY	DATE	DESCRIPTION
DS	7/14/10	REVISE RECORD AREA PARCEL 6 AND 7
DS	6/29/10	DEL. PCL 6-T. ADD PCL. 6-PRW, Revise PPN PCL.6
DS	4/6/2010	ADD 4-WD1 DESIGNATION TO PAR. 4 SERIES
FIELD REVIEW BY		DATE:
OWNERSHIP VERIFIED BY		DATE:
DATE COMPLETED		

FEDERAL PROJECT NO. E060(822)

PID NO. 81595

STATE JOB NO. 495304

R/W DESIGNER REH

R/W REVIEWER DS

SUMMARY OF ADDITIONAL RIGHT OF WAY

LAW-93-0.00

J:\Project\O\ODOT\15005112 Ironton Russell\LAW\81595\row\sheets\81595RS001.DGN - 4/27/2011 2:45:20 PM - jon_wanstrath

GROSS TAKE - PRO IN TAKE = NET TAKE

GRANTEE:
ALL RIGHT OF WAY ACQUIRED IN THE NAME OF STATE OF OHIO UNLESS OTHERWISE SHOWN.

ALL AREAS IN ACRES UNLESS OTHERWISE NOTED

PARCEL NO.	OWNER	SHEET NO.	OWNERS RECORD BOOK	OWNERS RECORD PAGE	AUDITOR'S PARCEL	RECORD AREA	TOTAL P.R.O.	GROSS TAKE	P.R.O. IN TAKE	NET TAKE	STRUCTURE	NET RESIDUE LEFT	NET RESIDUE RIGHT	TYPE FUND	REMARKS	AS ACQUIRED BOOK	AS ACQUIRED PAGE
9-WD*	STATE OF OHIO-DEPARTMENT OF TRANSPORTATION	19,20	O.R. 346	92	34-057-1300	0.0889										346	092
10-WD*	STATE OF OHIO-DEPARTMENT OF TRANSPORTATION	19,20,25,26	O.R. 350	461	34-057-0800	0.0889										350	461
					34-057-0900	0.117											
					34-057-1000	0.0768											
	GRAND TOTAL					0.283											
11-WD*	STATE OF OHIO-DEPARTMENT OF TRANSPORTATION	25,26	O.R. 359	394	34-045-0700.001	0.0202										359	394
					34-045-0800.001	0.0092											
					34-045-0900.001	0.011											
11-T	KELLICO, INC.	25,26	D.B. 595	731	34-045-0700	0.1091		0.0122		0.0122					ROADWAY GRADING		
					34-045-0800	0.0312		0.0050		0.0050							
					34-045-0900	0.0595		0.0064		0.0064							
					34-045-1000	0.0184											
	GRAND TOTAL					0.2182		0.024		0.024							
12-WD*	STATE OF OHIO-DEPARTMENT OF TRANSPORTATION	25,26	O.R. 355	665	34-045-0600.001	0.0099										355	665
12-T	MICHAEL E. & NANCY M. HAAS	25,26	D.B. 637	389	34-045-0600	0.0606		0.006		0.006				FEDERAL	ROADWAY GRADING		
13-WD1*	STATE OF OHIO-DEPARTMENT OF TRANSPORTATION	25,26	O.R. 357	588	34-045-0500.001	0.0256										357	588
13-WD2*		25,26	O.R. 357	588	34-045-0500.002	0.011										357	588
13-T	VERNON E. & RITA A. SCOTT	25,26	D.B. 391	165	34-045-0500	0.1452		0.010		0.010	NO				ROADWAY GRADING		
14-WD*	STATE OF OHIO-DEPARTMENT OF TRANSPORTATION	25,26	O.R. 426	216	34-045-0400	0.070									TOTAL TAKE - (DELETED PARCELS 14WD1 & 14WD2 AND WAS ACQUIRED	426	216
		25,26													UNDER PARCEL 14WD AS TOTAL TAKE)		
15-WD*	STATE OF OHIO-DEPARTMENT OF TRANSPORTATION	N/A	O.R. 352	190	34-045-0300	0.1293										352	190
16-WD	LABER FAMILY LIMITED PARTNERSHIP	21,22	509	608	34-042-1200	0.133	0	0.041		0.041	NO	0	0.092				
16-PRW															LOSS OF ACCESS-SECOND STREET		
16-E								0.092		0.092							
17-WD*	STATE OF OHIO-DEPARTMENT OF TRANSPORTATION	21,22	O.R. 343	677	34-042-1100	0.133										346	095
			O.R. 346	095													
18-WD	JAMES G. MEEHAN & MICHAEL B. MEEHAN, TRUSTEES	23,24	D.B. 512	373	34-042-1300	0.9818[1]	0	0.055		0.055	S(6)	0	0.9268		3 "IN" SIGNS, 3 "OUT" SIGNS		
18-T		23,24						0.086		0.086					ROADWAY GRADING, DRIVE REMOVAL AND RECONSTRUCTION		
19-WD	ALBERT CAMPBELL FREEMAN, JR. trustee of the ALBERT	27,28	O.R. 7	612	34-045-0100	0.315	0	0.048		0.048	S(3)	0.267	0		2 POST "KFC" SIGN, IN & OUT SIGNS		
19-T	CAMPBELL FREEMAN, JR. TR., REVOCABLE LIVING TRUST	27,28	O.R. 493	628				0.049		0.049					ROADWAY GRADING and CONSTRUCT PORTION OF A DRIVE		
	dated November 16,2007, CLARA RUTH SLOAN,																
	BRENDA GAY MORRIS & DOUGLAS J. FREEMAN																
20-WD	ALBERT CAMPBELL FREEMAN, JR. trustee of the ALBERT	27,28	O.R.127	344	34-044-1800	0.083[1]	0	0.002		0.002	NO	0.081	0				
20-T1	CAMPBELL FREEMAN, JR. TR., REVOCABLE LIVING TRUST	27,28	O.R. 493	628				0.003		0.003					ROADWAY GRADING		
20-T2	dated November 16,2007, DOUGLAS J. FREEMAN,	27,28						0.008		0.008					ROADWAY GRADING		
	CLARA RUTH SLOAN & BRENDA GAY MORRIS																

NOTE: ALL TEMPORARY PARCELS TO BE OF 36 MONTH DURATION.

NOTE: UNDER NO CIRCUMSTANCES ARE TEMPORARY EASEMENTS TO BE USED FOR STORAGE OF MATERIAL OR EQUIPMENT BY THE CONTRACTOR UNLESS NOTED OTHERWISE.

RECORD AREA IS AUDITOR'S RECORD AREA.
*.***[1]-AREA CALCULATED

LEGEND:
WD = WARRANTY DEED
SH = STANDARD HIGHWAY EASEMENT
A = AERIAL EASEMENT
S = SEWER EASEMENT
T = TEMPORARY EASEMENT
PRE = PROPERTY RIGHT
PRW = PROPERTY RIGHT FEE SIMPLE

*-These Parcels were acquired under project LAW-93-0.00 (PID No. 19925) as recorded in Plat Book 11, Pg. 79 Lawrence County Recorder's Office.

REV. BY	DATE	DESCRIPTION
DS	7/14/10	REVISE RECORD AREA PARCEL 18 AND 20
FIELD REVIEW BY		DATE:
OWNERSHIP VERIFIED BY		DATE:
DATE COMPLETED		

FEDERAL PROJECT NO. E060(822)
PID NO. 81595
STATE JOB NO. 495304
R/W DESIGNER REH
R/W REVIEWER DS

SUMMARY OF ADDITIONAL RIGHT OF WAY

LAW-93-0.00

J:\Project\O\ODOT\15005112 Ironton Russell\LAW\81595\row\sheets\81595RS002.dgn - 4/27/2011 2:45:21 PM - jon_wanstrath

GROSS TAKE - PRO IN TAKE = NET TAKE

GRANTEE:
ALL RIGHT OF WAY ACQUIRED IN THE NAME OF STATE OF OHIO UNLESS OTHERWISE SHOWN.

ALL AREAS IN ACRES UNLESS OTHERWISE NOTED

PARCEL NO.	OWNER	SHEET NO.	OWNERS RECORD BOOK	OWNERS RECORD PAGE	AUDITOR'S PARCEL	RECORD AREA	TOTAL P.R.O.	GROSS TAKE	P.R.O. IN TAKE	NET TAKE	STRUCTURE	NET RESIDUE LEFT	NET RESIDUE RIGHT	TYPE FUND	REMARKS	AS ACQUIRED BOOK	AS ACQUIRED PAGE
21-T1*	S.S. DRIVE-IN & CARRY OUT,INC.	27,28	D.B. 609	168	34-044-1600	0.133	0								ROADWAY GRADING and CONSTRUCT PORTION OF A DRIVE	346	99
21-T2*		27,28			34-044-1700	0.133									ROADWAY GRADING	346	99
					34-044-1800.001	0.0515											
22-WD	CVS 3474 OH, L.L.C., A DELAWARE LIMITED	21,22	O.R. 580	761	34-042-0400	0.8566	0	0.005	0	0.005	NO	0	0.8516				
	LIABILITY COMPANY				34-039-1500	0.1400	0	0	0				0.1400				
					34-039-0100	0.3999	0	0	0				0.3999				
					34-039-1600	0.0667	0	0	0				0.0667	FEDERAL			
					34-039-1700	0.0667	0	0	0				0.0667				
	GRAND TOTAL=					1.5299	0	0.005		0.005			1.5249				
22-T		21,22						0.031		0.031					ROADWAY GRADING		
23-T*	LAWRENCE ECOMOMIC DEVELOPMENT CORPORATION	23,24	O.R. 529	315	34-042-0500	0.506	0				NO				ROADWAY GRADING	361	182
					34-042-0300	0.214									SUBJECT TO LEASE AS PER D.B. 529,Pg. 320 TO OHIO POWER CO.		
	GRAND TOTAL=					0.720											
24-WD	R.A.C. II, LTD.	17,18,19,20	O.R. 265	817	35-022-1401	0.1859	0	0.044		0.044	YES	0			1 STY. COMMERCIAL		
			O.R. 265	818	35-022-1400	0.0808		0		0							
	GRAND TOTAL=					0.2667		0.044		0.044			0.2227				
24-T		17,18,19,20						0.142		0.142					STRUCTURE REMOVAL & ROADWAY GRADING		
40-PRW	RITA T. HAAS	21,22	D.B. 450	341	34-042-0700	0.1333	0								LOSS OF ACCESS		
					34-042-0800	0.1333	0										
					34-042-0900	0.1333	0										
41-PR*	YVONNE D. SINNOTT	21,22	D.B. 639	348	34-042-1000										LOSS OF ACCESS	432	282

RECORD AREA IS AUDITOR'S RECORD AREA.

NOTE: ALL TEMPORARY PARCELS TO BE OF 36 MONTH DURATION.

NOTE: UNDER NO CIRCUMSTANCES ARE TEMPORARY EASEMENTS TO BE USED FOR STORAGE OF MATERIAL OR EQUIPMENT BY THE CONTRACTOR UNLESS NOTED OTHERWISE.

LEGEND:
WD = WARRANTY DEED
SH = STANDARD HIGHWAY EASEMENT
A = AERIAL EASEMENT
S = SEWER EASEMENT
T = TEMPORARY EASEMENT
PRE = PROPERTY RIGHT

*-These Parcels were acquired under project LAW-93-0.00 (PID No. 19925) as recorded in Plat Book 11, Pg. 79 Lawrence County Recorder's Office.

REV. BY	DATE	DESCRIPTION
DS	9/1/10	ADD PPN'S TO PARCEL 40
DS	7/9/10	NAME & REC. AREA CHANGE PARCEL 22
FIELD REVIEW BY		DATE:
OWNERSHIP VERIFIED BY		DATE:
DATE COMPLETED		

FEDERAL PROJECT NO. E060(822)
PID NO. 81595
STATE JOB NO. 495304
R/W DESIGNER REH
R/W REVIEWER DS

SUMMARY OF ADDITIONAL RIGHT OF WAY

LAW-93-0.00

9 / 35

762 / 788

J:\Project\OV\ODOT\15005112 Ironton Russell\LAW\81595\row\sheets\81595RS003.dgn - 4/27/2011 2:45:23 PM - jon_wanstrath

CITY OF RUSSELL
GREENUP COUNTY
COMMONWEALTH OF KENTUCKY

CURVE DATA
(A) Arc=20.71', Rad.=3787.83'
Chd.=20.71', Brg.=N34°36'22"W

BEGIN PROJECT 8+18.90
SLM (-) 0.34
E040 (653)
BEGIN WORK 8+18.90

℄ EX. R/W US 23 CURVE DATA
P.I. STA. 342+55.30
Δ = 7° 18' 00" (LT)
Dc = 2° 00' 00"
R = 2,864.94'
T = 182.76'
L = 365.02'
E = 5.82'

CSX RR CURVE DATA
P.I. STA. 5057+25.16
Δ = 3° 29' 53" (LT)
Dc = 1° 00' 00"
R = 5,729.64'
T = 174.96'
L = 349.80'
E = 2.67'

HORIZONTAL SCALE IN FEET
0 10 20 40

PID NO. 81595
R/W DESIGNER REH
R/W REVIEWER DS

RIGHT OF WAY BOUNDARY SHEET
STA. 7+88.98 TO STA. 12+00

LAW-93-0.00

10 / 35
763 / 788

REV. BY | DATE | DESCRIPTION
DATE COMPLETED

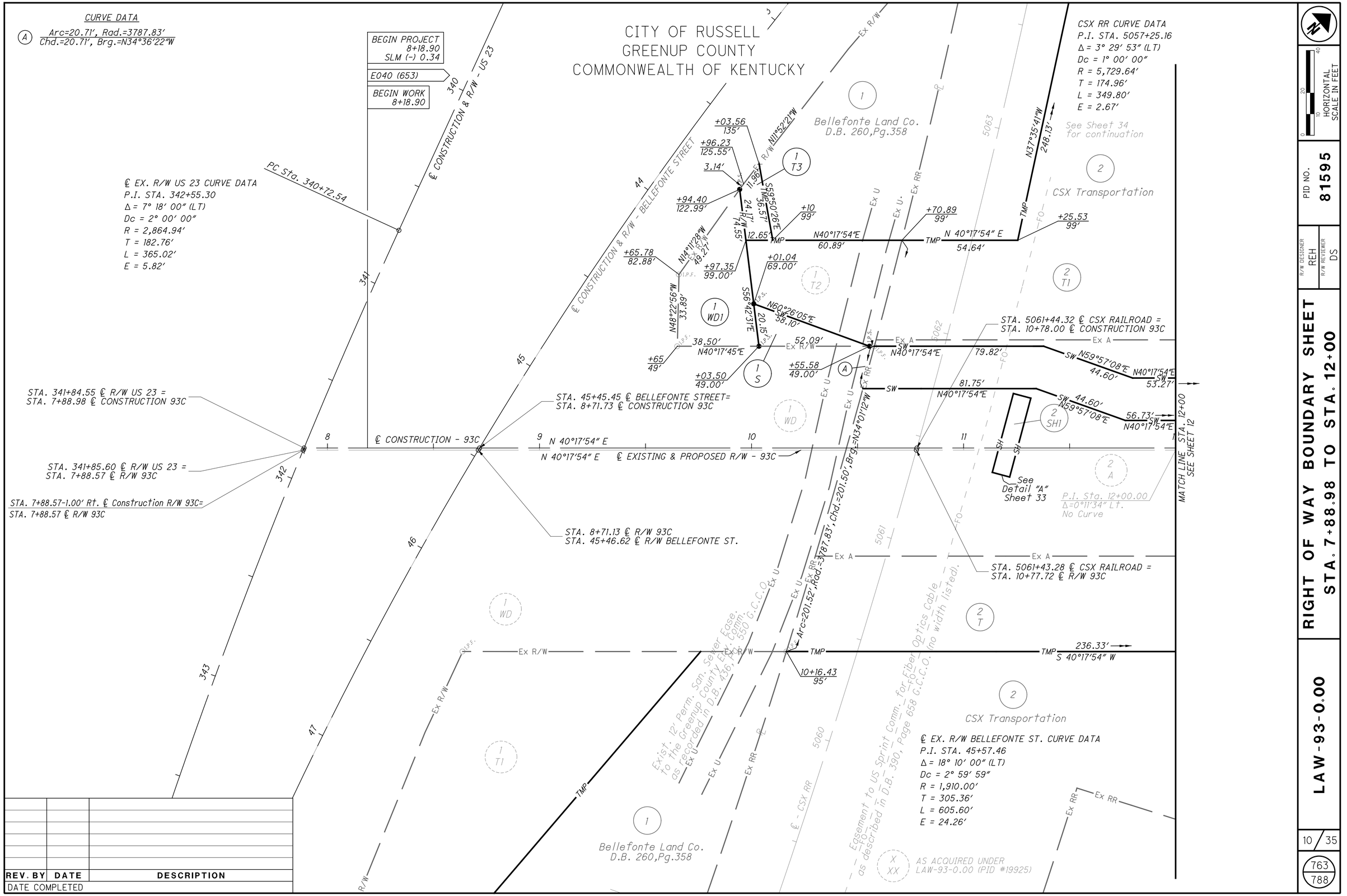

CITY OF RUSSELL
GREENUP COUNTY
COMMONWEALTH OF KENTUCKY

BEGIN PROJECT 8+18.90
SLM (-) 0.34
E040 (653)
BEGIN WORK 8+18.90

℄ CONSTR. & R/W - US 23
℄ CONSTR. R/W - BELLEFONTE STREET

℄ EX. R/W US 23 CURVE DATA
P.I. STA. 342+55.30
Δ = 7° 18′ 00″ (LT)
Dc = 2° 00′ 00″
R = 2,864.94′
T = 182.76′
L = 365.02′
E = 5.82′

PC Sta. 340+72.54

CSX RR CURVE DATA
P.I. STA. 5057+25.16
Δ = 3° 29′ 53″ (LT)
Dc = 1° 00′ 00″
R = 5,729.64′
T = 174.96′
L = 349.80′
E = 2.67′

STA. 341+84.55 ℄ R/W US 23 =
STA. 7+88.98 ℄ CONSTRUCTION 93C

STA. 341+85.60 ℄ R/W US 23 =
STA. 7+88.57 ℄ R/W 93C

STA. 45+45.45 ℄ BELLEFONTE STREET=
STA. 8+71.73 ℄ CONSTRUCTION 93C

BEGIN APPROACH SLAB +47.55

N 40° 17′ 54″ E
N 40° 17′ 54″ E

BEGIN ACQUISITION STA. 9+65.00

STA. 8+71.13 ℄ R/W 93C
STA. 45+46.62 ℄ R/W BELLEFONTE ST.

STA. 5061+44.32 ℄ CSX RAILROAD =
STA. 10+78.00 ℄ CONSTRUCTION 93C

STA. 5061+43.28 ℄ CSX RAILROAD =
STA. 10+77.72 ℄ R/W 93C

MATCH LINE STA. 12+00
SEE SHEET 12

℄ CONSTRUCTION - 93C
℄ Exist. & Prop. R/W - 93C

℄ EX. R/W BELLEFONTE STREET CURVE DATA
P.I. STA. 45+57.46
Δ = 18° 10′ 00″ (LT)
Dc = 2° 59′ 59″
R = 1,910.00′
T = 305.36′
L = 605.60′
E = 24.26′

Bellefonte Land Co.
P.O. Box 318
Ashland, KY 41105
D.B. 260,Pg.358

CSX Transportation
Property Tax Department J910
500 Water St.
Jacksonville, FL 32202

Exist. 12' Perm. San. Sewer Ease. to The Greenup County Ext. Comm. as recorded in D.B. 436, Pg. 550 C.C.O.

Easement to US Sprint Comm. for Fiber Optics Cable as described in D.B. 390, Page 658 C.C.O.

Pipeline Protected

P.I. Sta. 12+00.00
Δ=09°34″ Lt.
No Curve

AS ACQUIRED UNDER LAW-93-0.00 (PID # 19925)

ABUT. WINGWALL

15" CMP

Construction Limits

R.R. (AAA-T1) BUILDING

REV. BY	DATE	DESCRIPTION
DATE COMPLETED		

J:\Project\O\ODOT\15005112 Ironton Russell\LAW\81595\row\sheets\81595RT001.dgn - 4/27/2011 2:21:58 PM - jon_wanstrath

HORIZONTAL SCALE IN FEET
0 10 20 40

PID NO. 81595

R/W DESIGNER REH
R/W REVIEWER DS

RIGHT OF WAY TOPO SHEET
STA. 7+88.98 TO STA. 12+00

LAW-93-0.00

11 / 35
764 / 788

CSX RR CURVE DATA
P.I. STA. 5057+25.16
Δ = 3° 29′ 53″ (LT)
Dc = 1° 00′ 00″
R = 5,729.64′
T = 174.96′
L = 349.80′
E = 2.67′

CITY OF RUSSELL
GREENUP COUNTY
COMMONWEALTH OF KENTUCKY

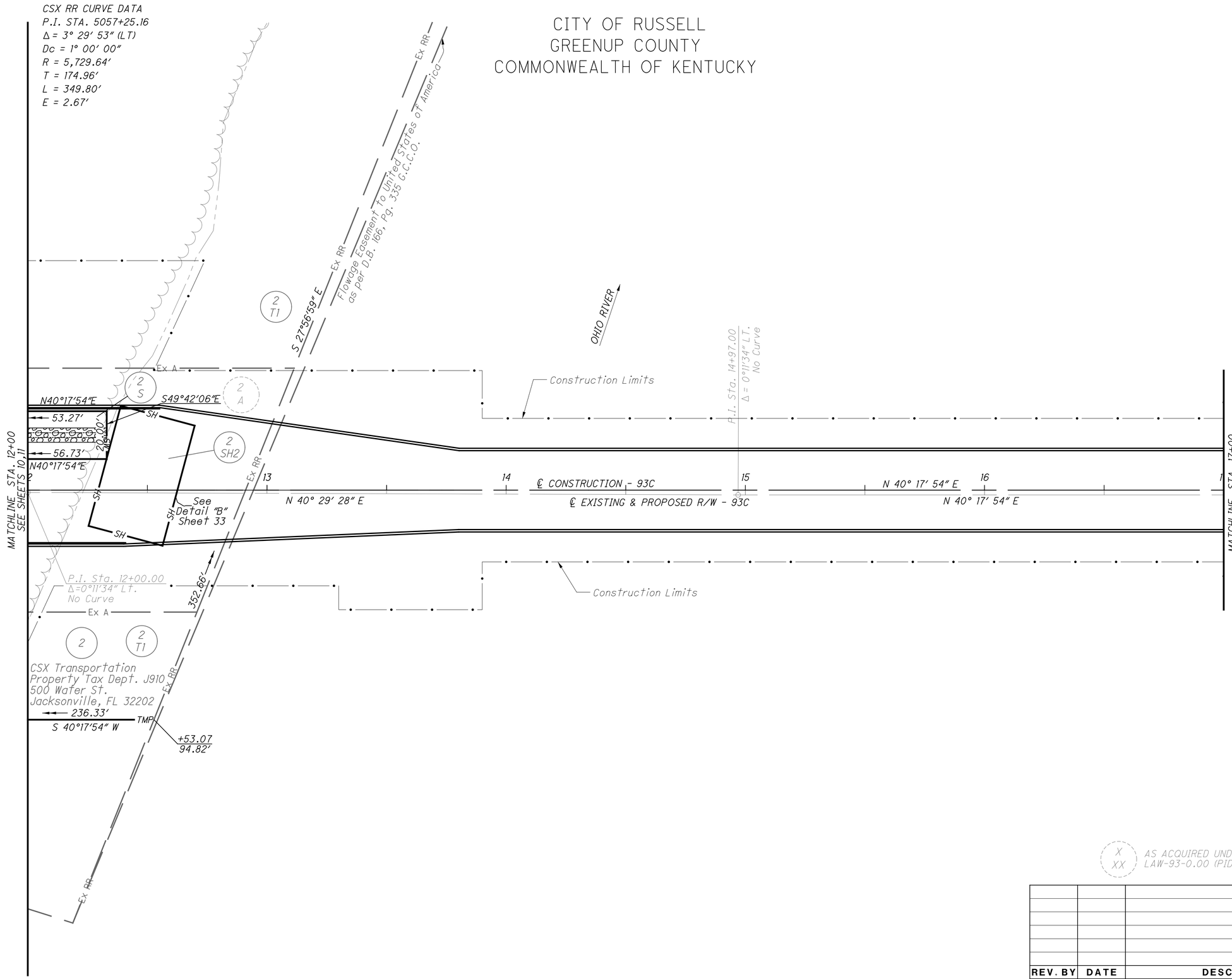

X / XX — AS ACQUIRED UNDER LAW-93-0.00 (PID # 19925)

REV. BY	DATE	DESCRIPTION

DATE COMPLETED

HORIZONTAL SCALE IN FEET
0 10 20 40

PID NO. 81595

R/W DESIGNER REH
R/W REVIEWER DS

RIGHT OF WAY PLAN
STA. 12+00 TO STA. 17+00

LAW-93-0.00

12 / 35

765 / 788

J:\Project\KYODOT\15005112 Ironton Russell\LAW\81595\row\sheets\81595RD002.dgn - 4/27/2011 2:21:59 PM - jon_wanstrath

GREENUP COUNTY
COMMONWEALTH OF KENTUCKY

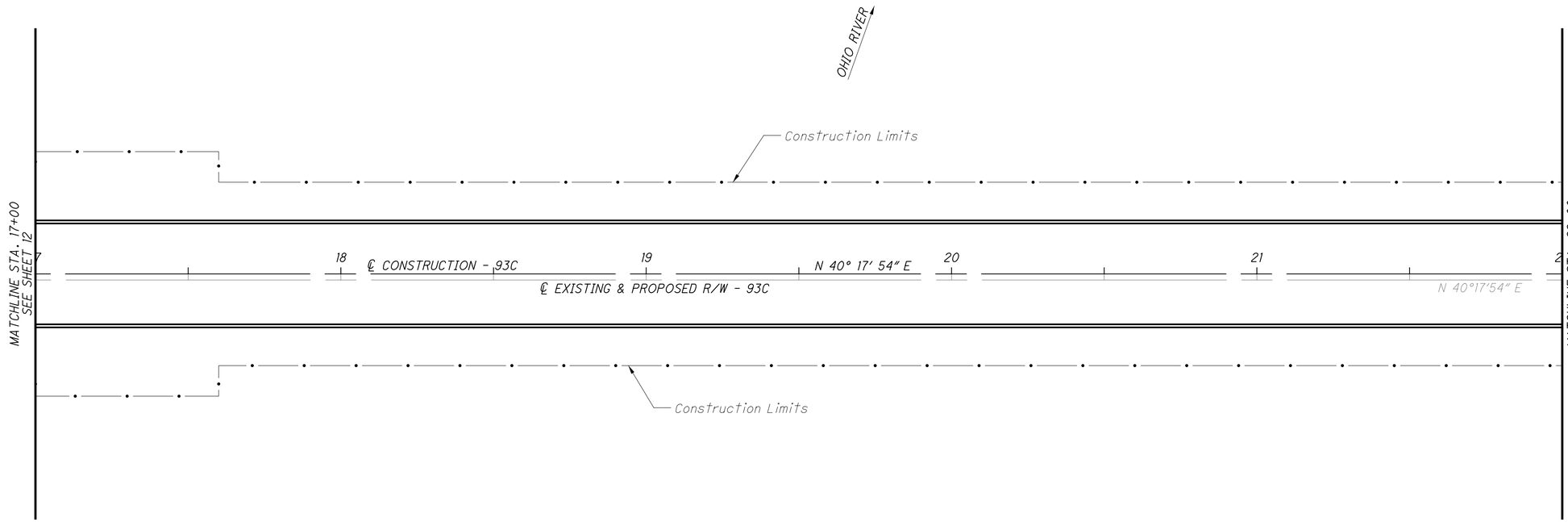

REV. BY	DATE	DESCRIPTION
DATE COMPLETED		

HORIZONTAL SCALE IN FEET
0 10 20 40

PID NO. 81595

R/W DESIGNER REH
R/W REVIEWER DS

RIGHT OF WAY PLAN
STA. 17+00 TO STA. 22+00

LAW-93-0.00

13 / 35

766
788

J:\Project\O\ODOT\15005112 Ironton Russell\LAW\81595\row\sheets\81595RD003.dgn - 4/27/2011 2:22:01 PM - jon_wanstrath

GREENUP COUNTY
COMMONWEALTH OF KENTUCKY
T1N, R18W, SEC. 19
UPPER TOWNSHIP
CITY OF IRONTON
LAWRENCE COUNTY
STATE OF OHIO

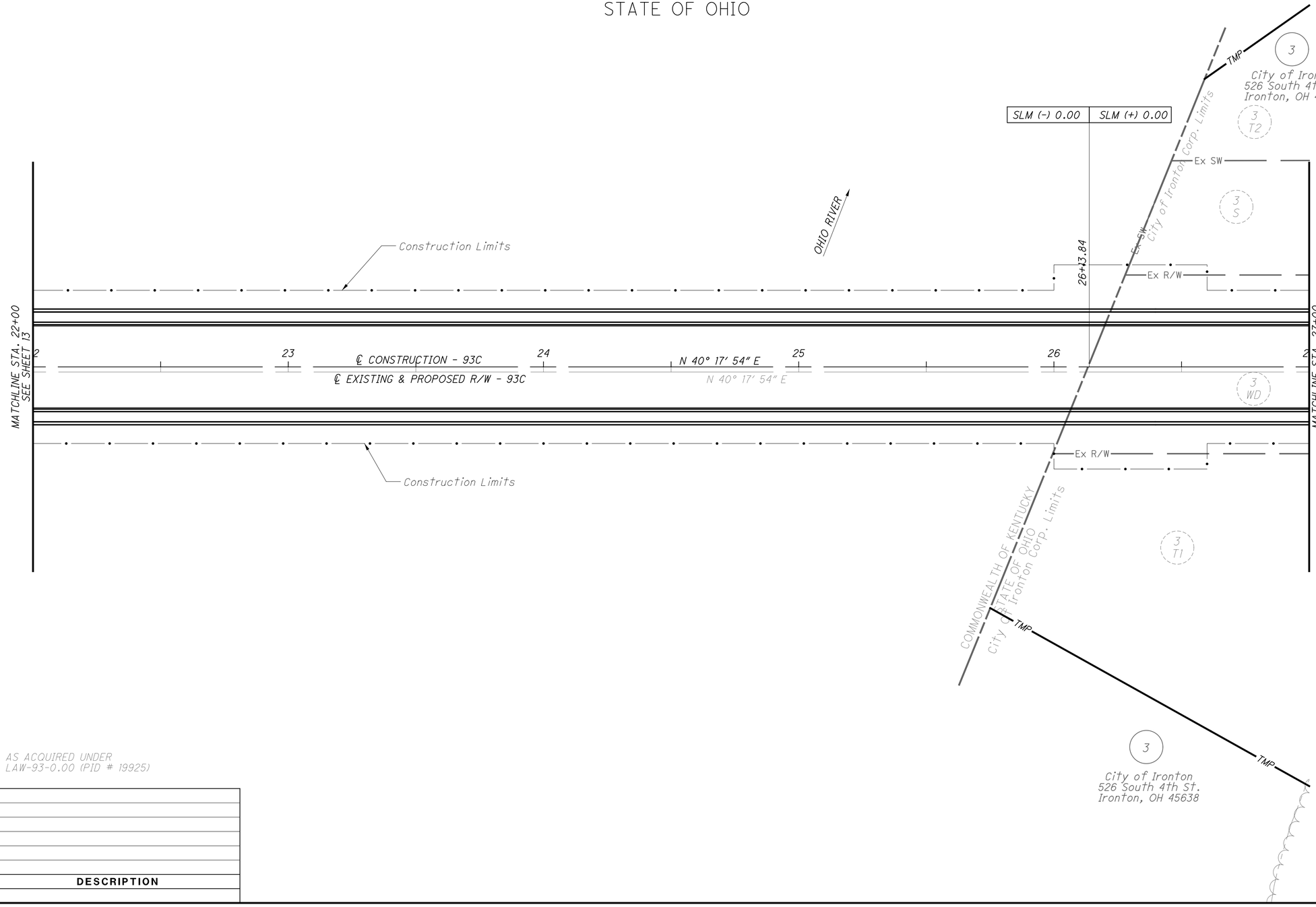

X
XX
AS ACQUIRED UNDER
LAW-93-0.00 (PID # 19925)

REV. BY	DATE	DESCRIPTION
DATE COMPLETED		

J:\Project\O\ODOT\15005112 Ironton Russell\LAW\81595\row\sheets\81595RD004.dgn - 4/27/2011 2:22:02 PM - jon_wanstrath

HORIZONTAL SCALE IN FEET
0 10 20 40

PID NO. 81595

R/W DESIGNER REH
R/W REVIEWER DS

RIGHT OF WAY PLAN
STA. 22+00 TO STA. 27+00

LAW-93-0.00

14 / 35

767
788

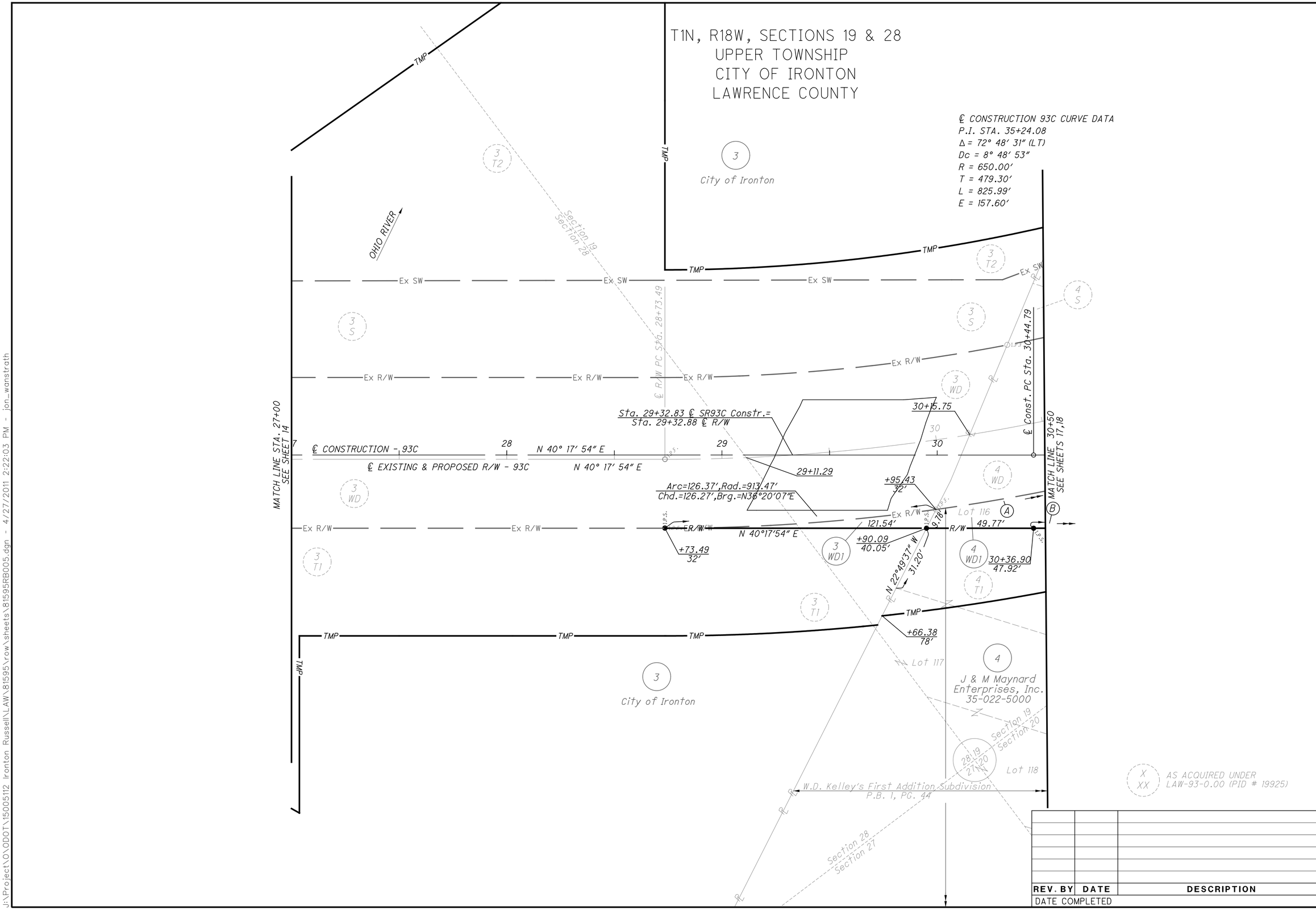

REV. BY	DATE	DESCRIPTION
DATE COMPLETED		

HORIZONTAL SCALE IN FEET 0 10 20 40

PID NO. 81595

R/W DESIGNER REH
R/W REVIEWER DS

RIGHT OF WAY BOUNDARY SHEET
STA. 27+00 TO STA. 30+50

LAW-93-0.00

15/35

768/788

J:\Project\O\ODOT\15005112 Ironton Russell\LAW\81595\row\sheets\81595RB005.dgn - 4/27/2011 2:22:03 PM - jon_wanstrath

T1N, R18W, SECTION 19
UPPER TOWNSHIP
CITY OF IRONTON
LAWRENCE COUNTY

℄ CONSTRUCTION 93C CURVE DATA
P.I. STA. 35+24.08
Δ = 72° 48′ 31″ (LT)
Dc = 8° 48′ 53″
R = 650.00′
T = 479.30′
L = 825.99′
E = 157.60′

PARCEL 3:
REMOVE 200 L.F. CHAIN LINK FENCE WITH BARBED WIRE, OF WIHICH 80 L.F. ENCROACH EXISTING R/W

PARCEL 4:
REMOVE 280 L.F. (TOTAL)CHAIN LINK FENCE OF WHICH 85 L.F. ENCROACH EXIST. R/W.

MATCH LINE STA. 27+00
SEE SHEET 14

MATCH LINE 30+50
SEE SHEETS 17,18

℄ CONSTRUCTION - 93C
N 40°17′54″ E
℄ EXISTING & PROPOSED R/W - 93C
N 40°17′54″ E

OHIO RIVER

Flood Wall

Construction Limits

Ex SW

Ex R/W

TMP

60′ - 72″, TYPE C

224′ -72″ BORED OR JACKED, TYPE C

PC Sta. 28+73.49

PC Sta. 30+44.79

Save if possible

City of Ironton
526 South 4th St.
Ironton, OH 45638

J & M Maynard
Enterprises, Inc.
1214 S. 2nd St.
Ironton, OH 45638
35-022-5000

6′ Chain Link w/ 3 barb

STORAGE AREA

W.D. Kelley's First Addition Subdivision
P.B. 1, PG. 44

Section 28
Section 27

X
XX
AS ACQUIRED UNDER
LAW-93-0.00 (PID # 19925)

REV. BY	DATE	DESCRIPTION
DATE COMPLETED		

HORIZONTAL SCALE IN FEET
0 10 20 40

PID NO. 81595

R/W DESIGNER REH
R/W REVIEWER DS

RIGHT OF WAY TOPO SHEET
STA. 27+00 TO STA. 30+50

LAW-93-0.00

16 / 35

769
788

J:\Project\ODOT\15005112 Ironton Russell\LAW\81595\row\sheets\81595RT005.dgn - 4/27/2011 2:22:06 PM - jon_wanstrath

℄ CONSTRUCTION 93C CURVE DATA
P.I. STA. 35+24.08
Δ = 72° 48′ 31″ (LT)
Dc = 8° 48′ 53″
R = 650.00′
T = 479.30′
L = 825.99′
E = 157.60′

EXISTING CENTERLINE R/W S.R. 93C
P.I. STA. 35+23.47
Δ = 72° 48′ 31″ (LT)
Dc = 6° 30′ 00″
R = 881.47′
T = 649.98′
L = 1,120.13′
E = 213.73′

NOTE : PARCEL 4WDV OVERLAP EXISTING SEWER EASEMENT 100%

T1N, R18W, SECTIONS 19 & 20
UPPER TOWNSHIP
CITY OF IRONTON
LAWRENCE COUNTY

Ⓐ Arc=88.63′,Rad.=684.00′ Chd.=88.57′,Brg.=S2°19′07″W
Ⓑ Arc=28.02′,Rad.=2299.01′ Chd.=28.02′,Brg.=N29°25′22″W
Ⓒ Arc=102.87′,Rad.=2299.01′ Chd.=102.86′,Brg.=N29°53′53″W
Ⓓ Arc=95.75′,Rad.=843.47′ Chd.=95.70′,Brg.=S19°03′06″W
Ⓔ Arc=56.01′,Rad.=843.47′ Chd.=56.00′,Brg.=S24°12′22″W

STA. 601+34.43 ℄ NORFOLK & SOUTHERN RR = STA. 33+42.07 ℄ R/W 93C
STA. 29+59.91 ℄ R/W CAMPBELL AVE.= STA. 34+26.05 ℄ R/W 93C
STA. 28+77.79 ℄ CONSTRUCTION CAMPBELL AVE. = STA. 33+83.86 ℄ CONSTRUCTION 93C
STA. 573+24.68 ℄ NORFOLK & SOUTHERN RR = STA. 33+06.36 ℄ CONSTRUCTION 93C
STA. 28+75.17 ℄ R/W CAMBELL AVE = STA. 33+80.20 ℄ CONSTRUCTION - 93C

℄ EXISTING & PROPOSED R/W - 93C
℄ CONSTRUCTION - 93C
℄ - NORFOLK SOUTHERN RR
℄ R/W - CAMPBELL AVENUE
℄ CONSTRUCTION - CAMPBELL AVENUE

J&M Maynard Enterprises, Inc. 35-022-5000
Norfolk Southern Corp. 30-095-9019
J & M Maynard Enterprises, Inc. 35-022-5000
Norfolk Southern Corp. 30-095-9019
Norfolk Southern Corp. 30-095-9019
Norfolk Southern Corp. 30-095-9019
R.A.C. II, Ltd. 35-022-1401

W.D. Kelley's First Addition Subdivision P.B. 1, PG. 44
FMR. EDEN ALLEY Vac. 12-26-1940
EDEN ALLEY

Lot 111 Lot 112 Lot 113 Lot 114 Lot 115 Lot 116 Lot 117 Lot 118 Lot 93 Lot 94 Lot 87 Lot 88 Lot 80 Lot 81

Section 19 Section 20

MATCH LINE 30+50 SEE SHEETS 15.16
MATCH LINE SEE SHEETS 19.20

See Detail "A" Sheet 31

AS ACQUIRED UNDER LAW-93-0.00 (PID #19925)

REV. BY	DATE	DESCRIPTION
DATE COMPLETED		

HORIZONTAL SCALE IN FEET 0 10 20 40

PID NO. 81595

R/W DESIGNER REH
R/W REVIEWER DS

RIGHT OF WAY BOUNDARY SHEET
STA. 30+50 TO STA. 34+50

LAW-93-0.00

17 / 35

770
788

J:\Project\OV\ODOT\15005112 Ironton Russell\LAW\81595\row\sheets\81595RB006.dgn - 4/27/2011 2:22:07 PM - jon_wanstrath

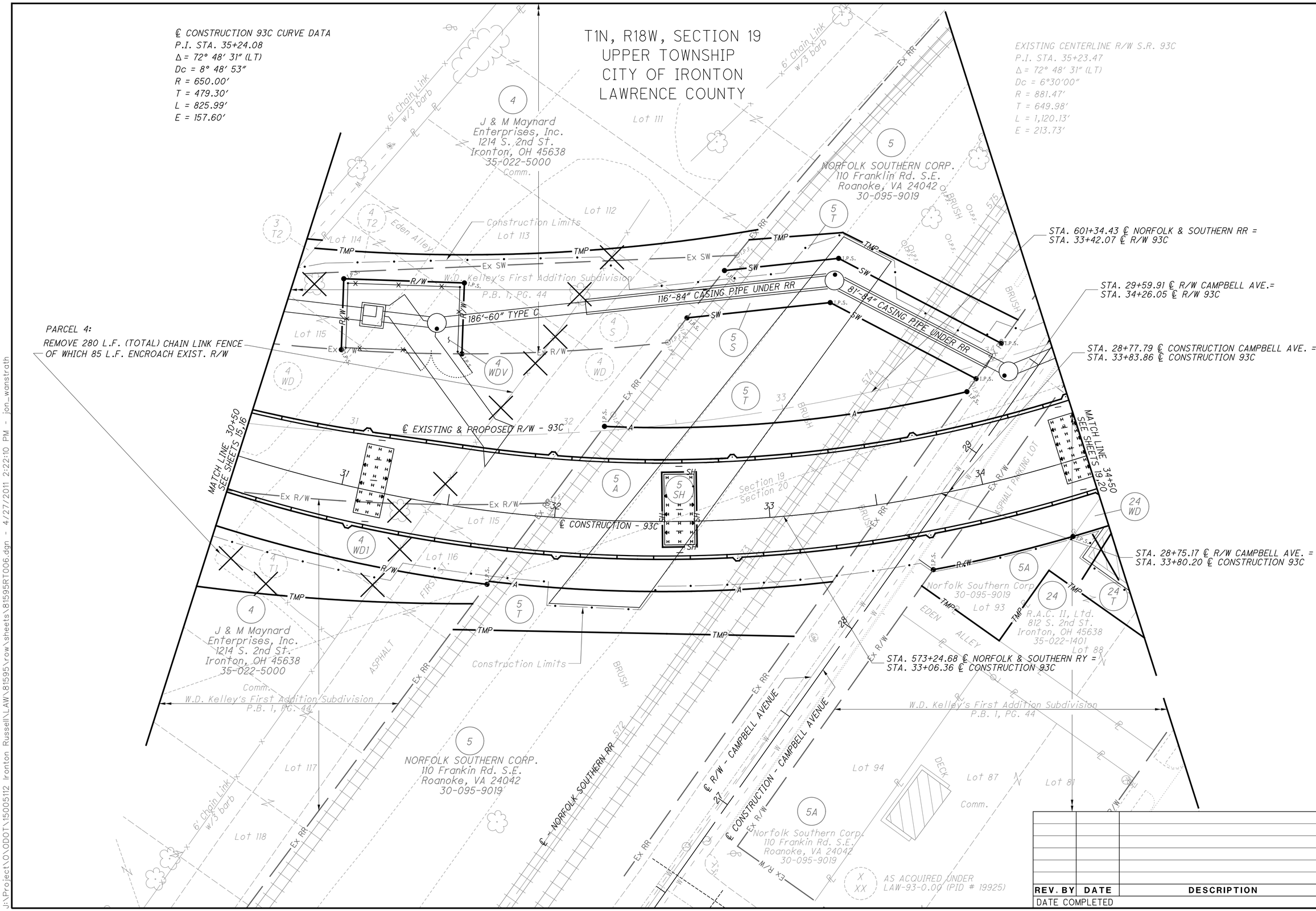

REV. BY	DATE	DESCRIPTION
DATE COMPLETED		

HORIZONTAL SCALE IN FEET 0 10 20 40

PID NO. 81595

R/W DESIGNER REH
R/W REVIEWER DS

RIGHT OF WAY TOPO SHEET
STA. 30+50 TO STA. 34+50

LAW-93-0.00

J:\Project\O\ODOT\15005112 Ironton Russell\LAW\81595\row\sheets\81595RT006.dgn - 4/27/2011 2:22:10 PM - jon_wanstrath

℄ CONSTRUCTION 93C CURVE DATA
P.I. STA. 35+24.08
Δ = 72° 48′ 31″ (LT)
Dc = 8° 48′ 53″
R = 650.00′
T = 479.30′
L = 825.99′
E = 157.60′

EXISTING CENTERLINE R/W S.R. 93C
P.I. STA. 35+23.47
Δ = 72° 48′ 31″ (LT)
Dc = 6° 30′ 00″
R = 881.47′
T = 649.98′
L = 1,120.13′
E = 213.73′

T1N, R18W, SECTION 19 & 20
UPPER TOWNSHIP
CITY OF IRONTON
LAWRENCE COUNTY

STA. 29+63.20 ℄ CONSTRUCTION CAMPBELL AVE. =
STA. 34+30.22 ℄ R/W 93C

℄ - NORFOLK SOUTHERN RR
Ex RR
MATCH LINE STA. 32+00 CAMPBELL AVE. SEE SHEETS 25, 26
℄ CONSTRUCTION CAMPBELL AVENUE
POT Sta. 7+00.00
N 32° 30′ 37″ W
Ex R/W
VINE ALLEY
Lot 91
W.D. Kelley's First Addition Subdivision P.B. 1, PG. 44
+42.82 53′
+18.99 39.92′
N32°30′37″W 26.09′
TMP
N 12°59′34″ W 131.70′
24.86′ T.P.S.
R/W
132.86′ N 13°10′13″ W
Ex R/W 24.51′ I.P.S.
Norfolk Southern Corp. 30-095-9019 Lot 92
5B WD
5B T
+97.27 27.09′
N 57°29′23″ E 44.00′
+58.61 56.10′
149.88′ N32°30′37″W
N32°30′37″W 122.73′
+42.04 9.89′
5A WD
Norfolk Southern Corp. 30-095-9019
+66.54 45.91′
MATCH LINE 34+50 SEE SHEETS 17, 18
72.70′ N32°30′37″W
+20.49 10.42′
8 WD
9 WD
10 WD
℄ EXISTING & PROPOSED R/W 93C
MATCH LINE SEE SHEETS 21, 22
℄ CONSTRUCTION - 93C
N 57°29′23″ E 50.58′
24 WD
Arc=88.63′, Rad.=684.00′ Chd.=88.57′, Brg.=S2°19′07″W
+92.43 88.13′
24 T
Lot 88
W.D. Kelley's First Addition Subdivision P.B. 1, PG. 44
24
R.A.C. II, Ltd. 35-022-1401
Ex R/W 37.42′
S57°29′23″W 88.00′
92.00′ N32°30′37″W
Lot 80
+10.17 119.87′
+44.34 170.77′
STA. 7+92.00 ℄ R/W MONROE STREET =
STA. 35+35.64 ℄ CONSTRUCTION 93C
℄ CONSTR. & R/W MONROE STREET
POT Sta. 10+00.00
MONROE STREET
Section 19
Section 20
SECOND STREET
7 PRW
7 T
+47.35 76.13′
N32°30′37″W 88.00′
88.00′ N32°30′37″W
TMP N32°30′37″W 7.00′
+49.12 82.86′
℄ CONSTRUCTION & R/W 2ND STREET
N 32°30′37″ W
+95.22 94.38′
N32°30′37″W 60.00′
6 PRW
Lot 76
34-057-0400.000
S57°29′23″W
N57°29′23″E
Lot 75
W.D. Kelley's First Addition Subdivision P.B. 1, PG. 44
Lot 63
Vine Alley (Vac.)
6
Karen L. Marshall, Trustee 34-057-0700.000
Lot 64
Lot 61
7
Laber Family Limited Partnership 34-057-0600.000
Lot 62
X XX AS ACQUIRED UNDER LAW-93-0.00 (PID # 19925)

REV. BY	DATE	DESCRIPTION
DS	6/29/10	DELETE 6T. ADD PARCEL 6PRW
DATE COMPLETED		

J:\Project\O\ODOT\15005112 Ironton Russell\LAW\81595\row\sheets\81595RB007.dgn - 4/27/2011 2:22:11 PM - jon_wanstrath

HORIZONTAL SCALE IN FEET
0 10 20 40

PID NO. 81595
R/W DESIGNER REH
R/W REVIEWER DS

RIGHT OF WAY BOUNDARY SHEET
STA. 34+50 TO STA. 38+50
LAW-93-0.00

19 / 35
772 / 788

EXISTING CENTERLINE R/W S.R. 93C
P.I. STA. 35+23.47
Δ = 72° 48′ 31″ (LT)
Dc = 6° 30′ 00″
R = 881.47′
T = 649.98′
L = 1,120.13′
E = 213.73′

T1N, R18W, SECTION 19
UPPER TOWNSHIP
CITY OF IRONTON
LAWRENCE COUNTY

℄ - NORFOLK SOUTHERN RR
MATCH LINE STA. 32+00 CAMPBELL AVE.
SEE SHEETS 24, 25
℄ CONSTRUCTION CAMPBELL AVENUE N 32° 30′ 37″ W
Construction Limits
STA. 29+63.20 ℄ CONSTRUCTION CAMPBELL AVE. =
STA. 34+30.22 ℄ R/W 93C
W.D. Kelley's First Addition Subdivision
P.B. 1, PG. 44
Norfolk Southern Corp.
110 Franklin Rd. S.E.
Roanoke, VA 24042
30-095-9019
END APPROACH SLAB
+20.26
MATCH LINE 34+50
SEE SHEET 17-18
MATCH LINE STA. 38+50
SEE SHEET 21-22
℄ CONSTRUCTION - 93C
N57°29′23″E
℄ R/W MONROE STREET
℄ R/W 2ND STREET
N 32°30′37″ W
R.A.C. II, Ltd.
904 S. 3rd St.
Ironton, OH 45638
35-022-1401
Karen L. Marshall, Trustee
720 S. 3rd St.
Ironton, OH 45638
34-057-0700.000
Laber Family
Limited Partnership
704 S. 3rd St.
Ironton, OH 45638
34-057-0600.000
34-057-0400.000
STA. 7+92.00 ℄ R/W MONROE STREET =
STA. 35+35.64 ℄ CONSTRUCTION 93C
X / XX AS ACQUIRED UNDER LAW-93-0.00 (PID # 19925)

REV. BY	DATE	DESCRIPTION
DS	6/29/10	DELETE 6T. ADD PARCEL 6PRW
DATE COMPLETED		

J:\Project\O\ODOT\15005112 Ironton Russell\LAW\81595\row\sheets\81595RT007.dgn - 4/27/2011 2:22:13 PM - jon_wanstrath

HORIZONTAL SCALE IN FEET
0 10 20 40

PID NO. 81595
R/W DESIGNER REH
R/W REVIEWER DS

RIGHT OF WAY TOPO SHEET
S.R. 93C STA. 34+50 TO 38+50

LAW-93-0.00

20 / 35

773
788

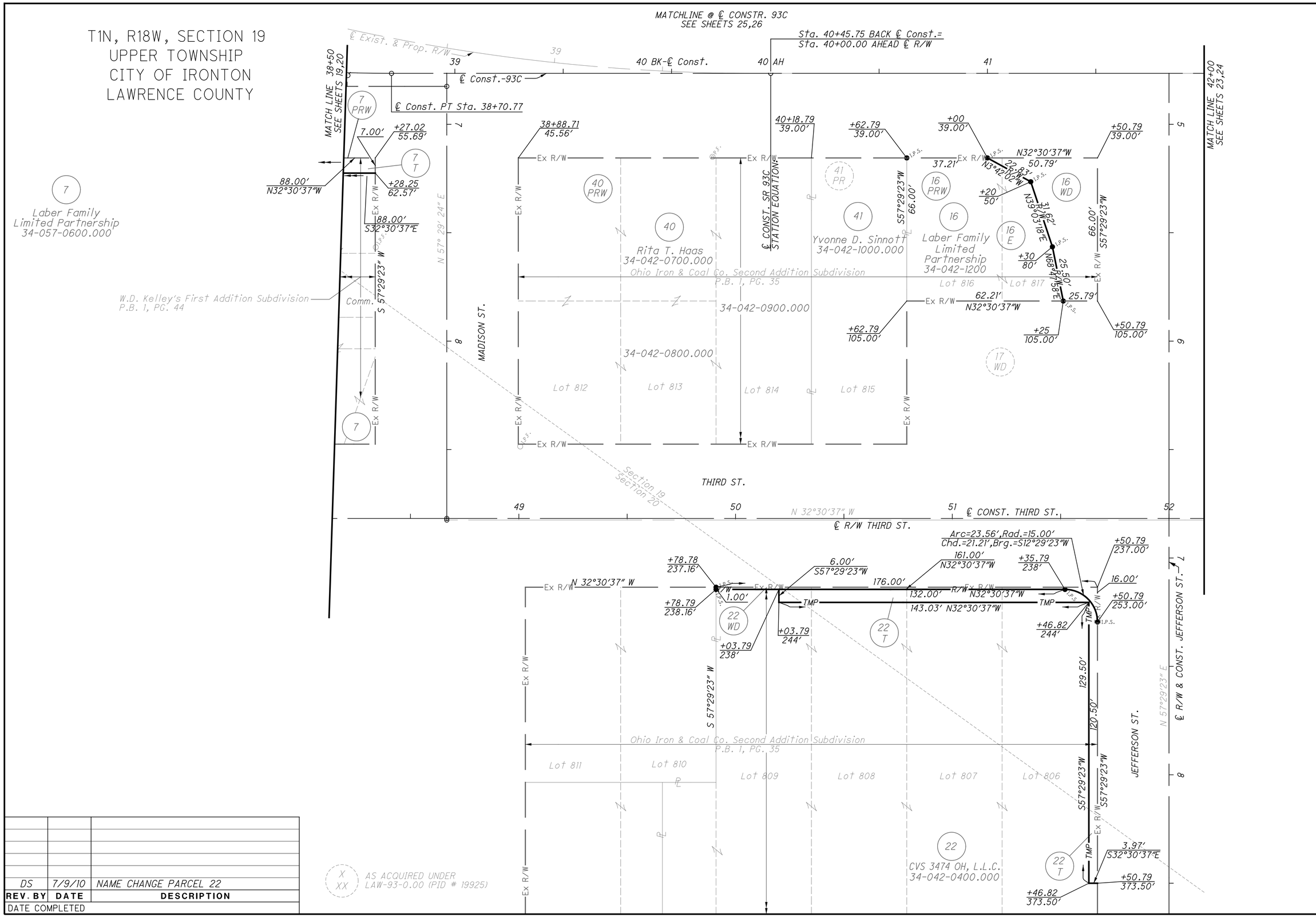

REV. BY	DATE	DESCRIPTION
DS	7/9/10	NAME CHANGE PARCEL 22

DATE COMPLETED

HORIZONTAL SCALE IN FEET

PID NO. 81595

R/W DESIGNER REH

R/W REVIEWER DS

RIGHT OF WAY BOUNDARY SHEET
STA. 38+50 TO STA. 42+00

LAW-93-0.00

T1N, R8W, SECTION 19
UPPER TOWNSHIP
CITY OF IRONTON
LAWRENCE COUNTY

MATCHLINE @ ℄ CONSTR. 93C
SEE SHEETS 25,26

Sta. 40+45.75 BACK ℄ Const.=
Sta. 40+00.00 AHEAD ℄ R/W

℄ Existing & Proposed R/W-93C

39 | 40 BK-℄ Const. | 40 AH | 41

℄ CONSTRUCTION-93C

℄ CONSTRUCTION & R/W-93C

MATCH LINE 38+50
SEE SHEETS 19,20

MATCH LINE 42+00
SEE SHEETS 23,24

539.92'

S 40° 04' 47" E

CONSTRUCTION LIMITS

7 T

7 PRW

Ex R/W

Comm.

W.D. Kelley's First Addition Subdivision
P.B. 1, PG. 44

7

Laber Family
Limited Partnership
704 S. 3rd St.
Ironton, OH 45638
34-057-0600.000

MADISON ST.

40 PRW
CONC.

40
Rita T. Haas
616 S. 3rd St.
Ironton, OH 45638
34-042-0700.000

Res.

EX. OVERHANG
DO NOT DIST.

(CHARLIES TIRE)
Comm.

GRAVEL

℄ CONST. SR 93C
STATION EQUATION:

41 PR

(BRICK BLDG.)

16 PRW

WOOD DECK

1-STY FRAME (Comm.)

Laber Family
Limited
Partnership
801 Center St.
Ironton, OH 45638
34-042-1200.000
Comm.

ASPH. PARKING LOT

SIGN POSTS
(Take)

16 WD

16

Ohio Iron & Coal Co. Second Addition Subdivision
P.B. 1, PG. 35

Lot 812 | Lot 813 | Lot 814 | Lot 816 | Lot 817

34-042-0900.000

34-042-0800.000

41
Yvonne D. Sinnott
612 S. 3rd St.
Ironton, OH 45638
34-042-1000.000
Comm.
Lot 815

Construction Limits

ASPHALT PARKING LOT

17 WD

Underground Tanks

TH #15 GAS ELEV. 539.42'

TH #2 GAS ELEV. 537.85'

TH #3 GAS ELEV. 536.42'

Section 19
Section 20

WALK

15" VCP (ABANDON)

32'-18" TYPE B

10" VCP

8" VCP

SAN

49 | 50 | 51 | 52

N 32° 30' 37" W

44'-12" TYPE B

℄ R/W THIRD ST.

℄ CONST. THIRD ST.

CURB | SIGN | WALK

TMP

22 WD

CONC CURB (SAVE)

22 T

Construction Limits

CONC. PARKING

SIGN POST (TYP.)

TH #5 GAS ELEV. 539.38'

℄ R/W & CONST. JEFFERSON ST.

N 57°29'23" E

(ABANDON)

JEFFERSON ST.

Ohio Iron & Coal Co. Second Addition Subdivision
P.B. 1, PG. 35

Lot 811 | Lot 810 | Lot 809 | Lot 808 | Lot 807 | Lot 806

Comm.

22
CVS 3474 OH, L.L.C.
320 Jefferson St.
Ironton, OH 45638
34-042-0400.000

X
XX
AS ACQUIRED UNDER
LAW-93-0.00 (PID # 19925)

REV. BY	DATE	DESCRIPTION
DS	7/9/10	NAME CHANGE PARCEL 22
DATE COMPLETED		

HORIZONTAL SCALE IN FEET
0 10 20 40

PID NO. 81595

R/W DESIGNER REH
R/W REVIEWER DS

RIGHT OF WAY TOPO SHEET
STA. 38+50 TO STA. 42+00

LAW-93-0.00

22 / 35

775
788

J:\Project\ODOT\15005112 Ironton Russell\LAW\81595\row\sheets\81595RT008.dgn - 4/27/2011 2:22:16 PM - jon_wanstrath

MATCHLINE @ ℄ CONSTR. 93C
SEE SHEETS 26, 27

T1N, R18W, SECTION 19
UPPER TOWNSHIP
CITY OF IRONTON
LAWRENCE COUNTY

MATCH LINE 42+00
SEE SHEETS 20, 21

43 44 45

℄ Constr. & R/W - 93C

SECOND ST.

Arc=57.67', Rad.=40.50'
Chd.=52.92', Brg.=S86°20'55"E

+16.79
39.00'

+56.65
44.55'

30.21'
S43°05'05"E

+86.35
39.00'

+66.20
39.00'

N 32°30'37" W

79.84'

66.18'
N 32°30'37" W

6.00'
N57°36'01"E

+66.18
45'

Ex R/W
69.57'

R/W

I.P.S.

+53.41
56.58'

48.01'
N46°28'01"W

TMP

+00
45'

18
T

Arc=56.35', Rad.=350.50'
Chd.=56.29', Brg.=N48°15'08"E

22.37'
N8°40'17"W

+38.79
73.50'

18

JAMES G. MEEHAN &
Michael B. Meehan, Trustees
34-042-1300.000

JEFFERSON ST.
S 57°29'23" W
132.00'

+25.43
87.27'

50.25'
S57°46'44"W

Ohio Iron & Coal Co. Second Addition
P.B. 1, PG. 35

Lot 818 Lot 819 Lot 820 Lot 821 Lot 822 Lot 823 Lot 824

+43.79
123.50'

N 29°25'01" E
42.50'

+34.46
142.83'

+63.79
161'

18
T

+63.79
161'

END WORK-3RD ST.
STA. 53+75.00

18
WD

TMP

N 32°30'37" W
100.00'

42.62'

104.38'
N 32°30'37" W

10.00'
N57°29'23"E

+59.40
171.00'

+63.79
171.00'

+16.79
171.00'

Arc=39.13', Rad.=40.50'
Chd.=37.62', Brg.=N15°58'07"E

ADAMS ST.

S 57°29'24" W

53 ℄ CONSTRUCTION 3RD ST. 54 55

N 32°30'37" W

℄ R/W 3RD ST.

N 32°30'37" W

THIRD ST.

Ex R/W

TMP

23
T

23

Lot 805 Lot 804 Lot 803 Lot 802 Lot 801 Lot 800 Lot 799

Ohio Iron & Coal Co. Second Addition
P.B. 1, PG. 35

LAWRENCE ECONOMIC DEVELOPMENT CORPORATION
34-042-0500.000 34-042-0300.000

X
XX
AS ACQUIRED UNDER
LAW-93-0.00 (PID # 19925)

HORIZONTAL SCALE IN FEET
0 10 20 40

PID NO. 81595

R/W DESIGNER REH
R/W REVIEWER DS

RIGHT OF WAY BOUNDARY SHEET
STA. 42+00 TO STA. 43+66.20

LAW-93-0.00

23 / 35

776
788

REV. BY	DATE	DESCRIPTION
DATE COMPLETED		

MATCHLINE @ ℄ CONSTR. 93C
SEE SHEETS 27,28

MATCH LINE 42+00
SEE SHEETS 21,22

T1N,R18W,SECTION 19
UPPER TOWNSHIP
CITY OF IRONTON
LAWRENCE COUNTY

43 44 45

℄ CONSTR. & R/W 93C

SECOND ST.

ABANDON 2 EX. DRIVES

Construction Limits

"OUT" SIGN

Ex R/W

R/W

TMP

CVS 2 POLE SIGN (SAVE)

18

Bollard (SAVE)

CVS BRICK BUILDING

JAMES G. MEEHAN &
Michael B. Meehan, Trustees
518 S. 3rd St.
Ironton, OH 45638
34-042-1300.000

I.P.S.

REMOVE 132 L.F. 6" CONC. CURB

ASPHALT PARKING

Comm. LOT

Ohio Iron & Coal Co. Second Addition
P.B. 1, PG. 35

JEFFERSON ST.

110'-21" TYPE B

Lot 818 Lot 819 Lot 820

END WORK
STA. 53+75.00

Lot 821 Lot 822 Lot 823 Lot 824

1-STY COMMERCIAL

ADAMS ST.

S 57° 29' 24" W

7'-12" TYPE B

18 T

Constr. Limits

CVS 2 POLE SIGN (SAVE)

LIGHT POLE (SAVE)

CONC. BASE

"IN" SIGN

18 WD

32'-18" TYPE B

60'-15" TYPE B

48'-12" TYPE B

Lamp Hole

EX. DRIVE TO BE ABAND.

47'-12" TYPE B

53

℄ CONSTRUCTION 3RD ST.

℄ R/W 3RD ST.

54

N 32°30'37"W

N 32°30'37" W

55

THIRD ST.

SAN

W

G

DND

23 T

Exist. Temp R/W to face of building.

1-STY COMMERCIAL

Lot 805 Lot 804 Lot 803 Lot 802 Lot 801 Lot 800 Lot 799

WALK

Ohio Iron & Coal Co. Second Addition
P.B. 1, PG. 35

Construction Limits

23

LAWRENCE ECONOMIC DEVELOPMENT CORPORATION
216 Collins Ave.
Ironton, OH 45638

Comm. 34-042-0500.000 34-042-0300.000

X
XX

AS ACQUIRED UNDER
LAW-93-0.00 (PID # 19925)

HORIZONTAL SCALE IN FEET
0 10 20 40

PID NO. 81595

R/W DESIGNER REH
R/W REVIEWER DS

RIGHT OF WAY TOPO SHEET
STA. 42+00 TO STA. 43+66.20

LAW-93-0.00

24 / 35

777
788

REV. BY	DATE	DESCRIPTION

DATE COMPLETED

T1N,R18W, SECTION 19
UPPER TOWNSHIP
CITY OF IRONTON
LAWRENCE COUNTY

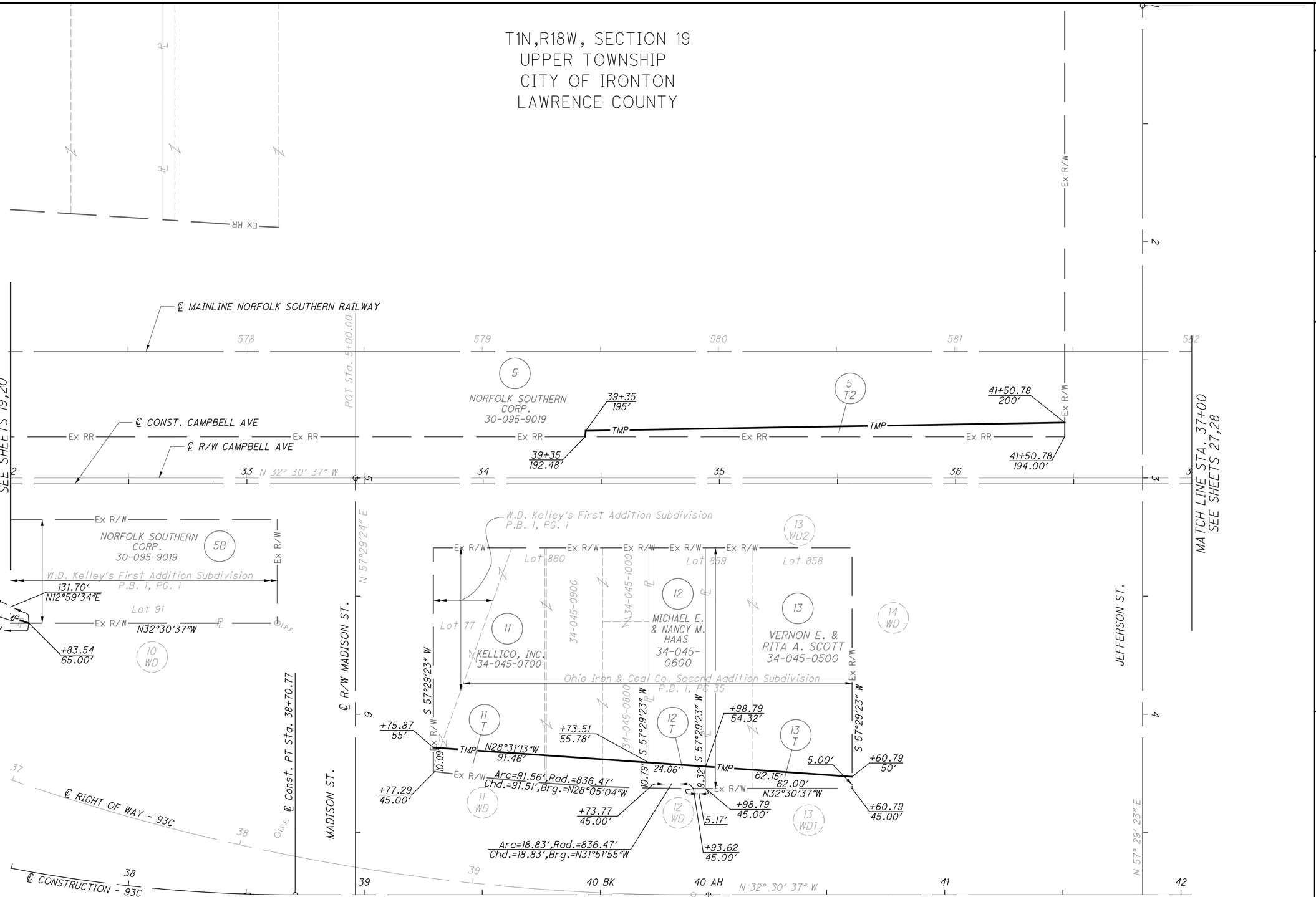

HORIZONTAL SCALE IN FEET
0 10 20 40

PID NO. 81595

R/W DESIGNER REH
R/W REVIEWER DS

RIGHT OF WAY BOUNDARY SHEET
CAMPBELL AVE. STA. 32+00 TO 35+00

LAW-93-0.00

25 / 35

778
788

REV. BY	DATE	DESCRIPTION

DATE COMPLETED

J:\Project\O\ODOT\15005112 Ironton Russell\LAW\81595\row\sheets\81595RB010.dgn - 4/27/2011 2:22:20 PM - jon_wanstrath

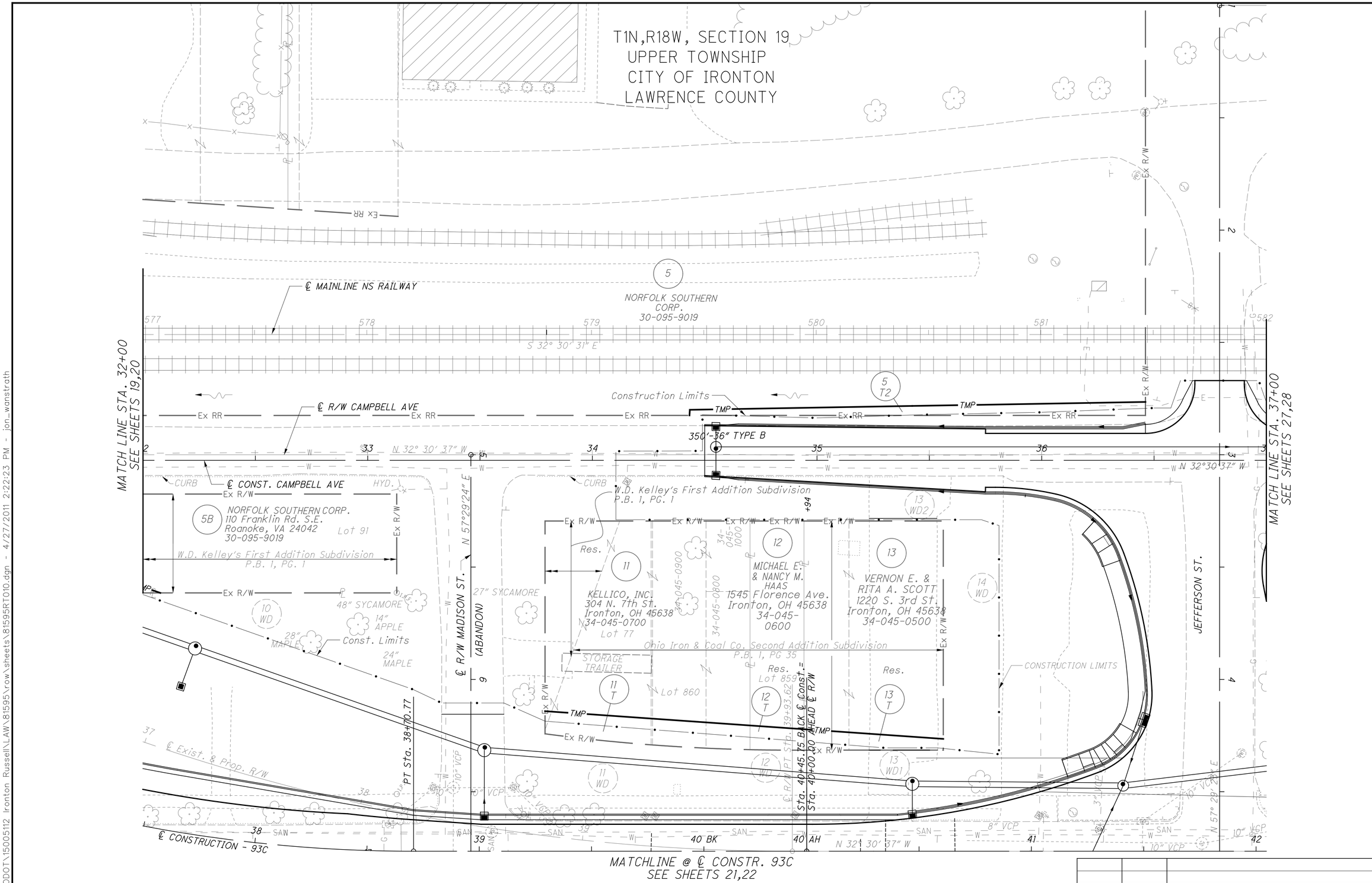

REV. BY	DATE	DESCRIPTION
DS	6/29/10	ADD DRIVE BETWEEN PCL 12 & 13 - CAMPBELL ST

DATE COMPLETED

HORIZONTAL SCALE IN FEET 0 10 20 40

PID NO. 81595

R/W DESIGNER REH
R/W REVIEWER DS

RIGHT OF WAY TOPO SHEET
CAMPBELL AVE. STA. 32+00 TO 35+00

LAW-93-0.00

J:\Project\O\ODOT\15005112 Ironton Russell\LAW\81595\row\sheets\81595RT010.dgn - 4/27/2011 2:22:23 PM - jon_wanstrath

LAWRENCE COUNTY
UPPER TOWNSHIP
SECTION 19, T1N, R18W
CITY OF IRONTON

Ⓐ Arc=39.81', Rad.=22.66'
Chd.=34.88', Brg.=N82°50'42"W

Ⓑ Arc=9.63', Rad.=25.50'
Chd.=9.57', Brg.=N8°40'56"E

20
Albert Campbell Freeman Jr., Tr.
Clara Ruth Sloan,
Brenda Gay Morris &
Douglas Freeman
34-044-1800

Ex R/W

STA. 37+75.06 ℄ R/W CAMPBELL AVE, 2.50' RT=
P.I. STA. 37+75.00 ℄ CONST. CAMPBELL AVE
△= 2°26'46" LT.
NO CURVE

END WORK
STA. 39+00.00

℄ MAINLINE NS RAILWAY.

5 NORFOLK SOUTHERN CORP.
30-095-9019

583 584 585

POT Sta. 4+17.89

PC Sta. 585+75.00

+16.78 / 194.00'
+16.78 / 201'
7.00'
+25 / 205'
5 T3
+15 / 200'
+15 / 194.00'
108.29' N 34°37'37" W
90.14' N 29°19'48" W
198.22' N32°30'37"W
6.00' N 57°29'23" E
TMP
Ex RR

℄ R/W CAMPBELL AVE.
N 32°30'37" W
CAMPBELL AVE.
℄ OF CONST. CAMPBELL AVE N 32°30'37" W
N 34°57'23" W
7 38 39 40

MATCH LINE STA. 37+00
SEE SHEETS 25,26

19 WD
+83.86 / 147.66'
N32°30'37"W 104.00'
20 WD
+20.79 / 159.00'
4.83'
27.43'
+48.21 / 159.00'
37.49' N42°30'25"W
27.85'
28.13' N45°21'43"W
+20.79 / 154.16'
+48.21 / 147.00'
21 T2
20 T2
+39.68 / 147.66'
+16.79 / 159.00' (A)
44.18' N32°30'37"W
62.20' N27°53'58"W
18.60'
+38 / 141'
S68°45'50"E
+00 / 136'
19 T
+23 / 130'
+17.42 / 120.81'
+20.79 / 140.74'
13.42'
21.32'
12.00'
+30 / 78'
+33.91 / 33.31'
+45 / 32'
+20.79 / 32'
+48.22 / 32'
5.00'
21 T1
N32°30'37"W 75.78'
79.67'
24.33'
+16.79 / 27.00'
(B) +41.11 / 27.00'
19 T
5.00'
+20.79 / 27.00'
20 T1
+48.22 / 27.00'
N 32°30'37" W

STA. 38+99.94 ℄ R/W CAMPBELL AVE, 2.84' LT=
P.I. STA. 39+00 ℄ CONST. CAMPBELL AVE
△ = 2°26'46" RT.
NO CURVE

19 WD
20 WD
19 T
20 T
20 T1
21 T1
21 T2

19
Albert Campbell Freeman, Jr., Tr.
Clara Ruth Sloan,
Brenda Gay Morris &
& Douglas J. Freeman
34-045-0100.000

20
S.S. Drive In &
Carry Out, Inc.
34-044-1700

21
34-044-1600

34-044-1800
34-044-1800.001

JEFFERSON ST.
S 57°29'23" W 132.00'
N 46°48'12" E 88.04'
N49°49'23"E 52.47'
N39°25'46"E 48.38'

ADAMS ST.
S 57°29'23" W

Ohio Iron & Coal Co. Second Addition Subdivision
P.B. 1, PG 35
Lot 855 Lot 854 Lot 853 Lot 852 Lot 851

SECOND STREET
N 32° 30' 37" W
43 44 45

MATCHLINE @ ℄ CONSTR. 93C
SEE SHEETS 23,24

END ACQUISITION
STA. 44+15.00

Ex R/W
Ex RR

4+50.81 / 23'
5 T4
4+50.81 / 14.05'
TMP 8.95'
N32°28'16"W 529.19'
518.69' N32°28'16"W
Ex SH
4.20'
℄ OF 93-C BRIDGE DEMOLITION

MATCH LINE STA. 5+50
SEE SHEETS 30,31

X / XX AS ACQUIRED UNDER LAW-93-0.00 (PID # 19925)

REV. BY	DATE	DESCRIPTION
DATE COMPLETED		

HORIZONTAL SCALE IN FEET
0 10 20 40

PID NO. 81595

R/W DESIGNER REH
R/W REVIEWER DS

RIGHT OF WAY BOUNDARY SHEET
CAMPBELL AVE. STA. 37+00 TO 40+00

LAW-93-0.00

27 / 35

780 / 788

J:\Project\O\ODOT\15005112 Ironton Russell\LAW\81595\row\sheets\81595RB011.dgn - 4/27/2011 2:22:24 PM - jon_wanstrath

LAWRENCE COUNTY
UPPER TOWNSHIP
SECTION 19, T1N, R18W
CITY OF IRONTON

19 Albert Campbell Freeman, Jr., Tr.
Clara Ruth Sloan,
Brenda Gay Morris &
Douglas J. Freeman
520 S. 2nd St.
Ironton, OH 45638
34-045-0100.000

20 Albert Campbell Freeman Jr., Tr.
Clara Ruth Sloan,
Brenda Gay Morris &
Douglas J. Freeman
514-516 S. 2nd St.
Ironton, OH 45638
34-044-1800

℄ MAINLINE NS RAILWAY.

END WORK
STA. 39+00.00

STA. 37+75.06 ℄ R/W CAMPBELL AVE, 2.50' RT=
P.I. STA. 37+75.00 ℄ CONST. CAMPBELL AVE
Δ= 2°26'46" LT.
NO CURVE

582 583 584 585

5 T3

17'-12" TYPE B

7'-12" TYPE B

Construction Limits

5 NORFOLK SOUTHERN CORP.
30-095-9019

POT Sta. 4+17.89

5 T4

TMP

Ex R/W

Ex RR

+16.84

15'-12" TYPE B

℄ R/W CAMPBELL AVE.

38

20 WD

N 32°30'37" W

℄ OF CONST. CAMPBELL AVE

N 34°57'22" W

℄ R/W

39

CAMPBELL AVE. 40

℄ OF 93+C BRIDGE DEMOLITION

MATCH LINE STA. 37+00
SEE SHEET'S 25,26

MATCH LINE STA. 5+50
SEE SHEETS 30,31

19 WD

R/W RETAINING WALL 3

+46.84

STA. 38+99.94 ℄ R/W CAMPBELL AVE, 2.84' LT=
P.I. STA. 39+00 ℄ CONST. CAMPBELL AVE
Δ= 2°26'46" RT.
NO CURVE

21 T2

20 T2

Portable Shed

PAVED PARKING

21

34-044-1600

Comm.

Res.

TAKE 48 L.F. FENCE AND GATE

34-044-1800.001

S.S. Drive In &
Carry Out, Inc.
506 S. 2nd St.
Ironton, OH 45638
34-044-1700

19

20

KFC

1-STY COMMERCIAL

PARKING LOT

JEFFERSON ST.

ADAMS ST.

Ohio Iron & Coal Co. Second Addition Subdivision
P.B. 1, PG 35

Lot 855

Lot 854

34-044-1800

Lot 852
Comm.

Lot 853

13 WD2

19 WD

Constr. Limits

19 T

20 T1

21 T1

"OUT" SIGN

"IN" SIGN

"KFC" SIGN
(TAKE)

EXIST DRIVE
TO BE ABANDONED

END ACQUISITION
STA. 44+15.00

43 44 45

SECOND ST.

8" VCP

3" STM

MATCH LINE @ ℄ CONSTR. 93C
SEE SHEETS 23,24

X
XX
AS ACQUIRED UNDER
LAW-93-0.00 (PID # 19925)

REV. BY	DATE	DESCRIPTION
DS	5/7/2010	REV. DRIVE ENT. PCL 19, ON 2nd Street

DATE COMPLETED

HORIZONTAL SCALE IN FEET
0 10 20 40

PID NO. 81595

R/W DESIGNER REH
R/W REVIEWER DS

TOPO SHEET
RIGHT OF WAY TOPO SHEET
CAMPBELL AVE. STA. 37+00 TO 39+00

LAW-93-0.00

28 / 35

781
788

J:\Project\O\ODOT\15005112 Ironton Russell\LAW\81595\row\sheets\81595RT011.dgn - 4/27/2011 2:22:26 PM - jon_wanstrath

CITY OF RUSSELL
GREENUP COUNTY
COMMONWEALTH OF KENTUCKY

℄ EX. R/W BELLEFONTE ST.
P.I. STA. 37+36.34
Δ = 51° 22′ 06″ (RT)
Dc = 11° 59′ 57″
R = 477.50′
T = 229.64′
L = 428.10′
E = 52.35′

℄ EX. R/W BELLEFONTE ST.
P.I. STA. 32+60.70
Δ = 15°38′ (LT)
Dc = 5°00′
R = 1146.92′
T = 157.30′
L = 312.67′
E = 10.74′

CSX RR CURVE DATA
P.I. STA. 5057+25.16
Δ = 3° 29′ 53″ (LT)
Dc = 1° 00′ 00″
R = 5,729.64′
T = 174.96′
L = 349.80′
E = 2.67′

NOTE : SHEET R/W SHEET 35 of 35 (CSX RAILROAD PLAT) FOR PARCEL DIMENSIONS

M.P. 524
Sta. 5102+37.6

Bellefonte Land Co.

CSX Transportation

See Sheet 11 for continuation

OHIO RIVER

℄ R/W - BELLEFONTE STREET

REV. BY	DATE	DESCRIPTION
DATE COMPLETED		

HORIZONTAL SCALE IN FEET
0 25 50 100

PID NO. 81595

R/W DESIGNER REH
R/W REVIEWER DS

RIGHT OF WAY TOPO SHEET
CONTRACTOR ACCESS

LAW-93-0.00

29 / 35

782
788

J:\Project\OA\ODOT\15005112 Ironton Russell\LAW\81595\row\sheets\81595RT013.dgn - 4/27/2011 2:22:27 PM - jon_wonstrath

LAWRENCE COUNTY
UPPER TOWNSHIP
SECTION 19,T1N,R18W
CITY OF IRONTON

NOTE:
THE AREA UNDER THE BRIDGE NOT DEFINED BY RIGHT OF WAY LINES IS OWNED BY THE CITY OF IRONTON, OHIO. A CITY ORDINANCE IS IN PLACE WHICH ALLOWS ACCESS TO THE BRIDGE FOR MAINTENANCE, CONSTRUCTION, ETC. IT IS ASSUMED THIS WOULD INCLUDE THE REMOVAL OF THE EXISTING BRIDGE.

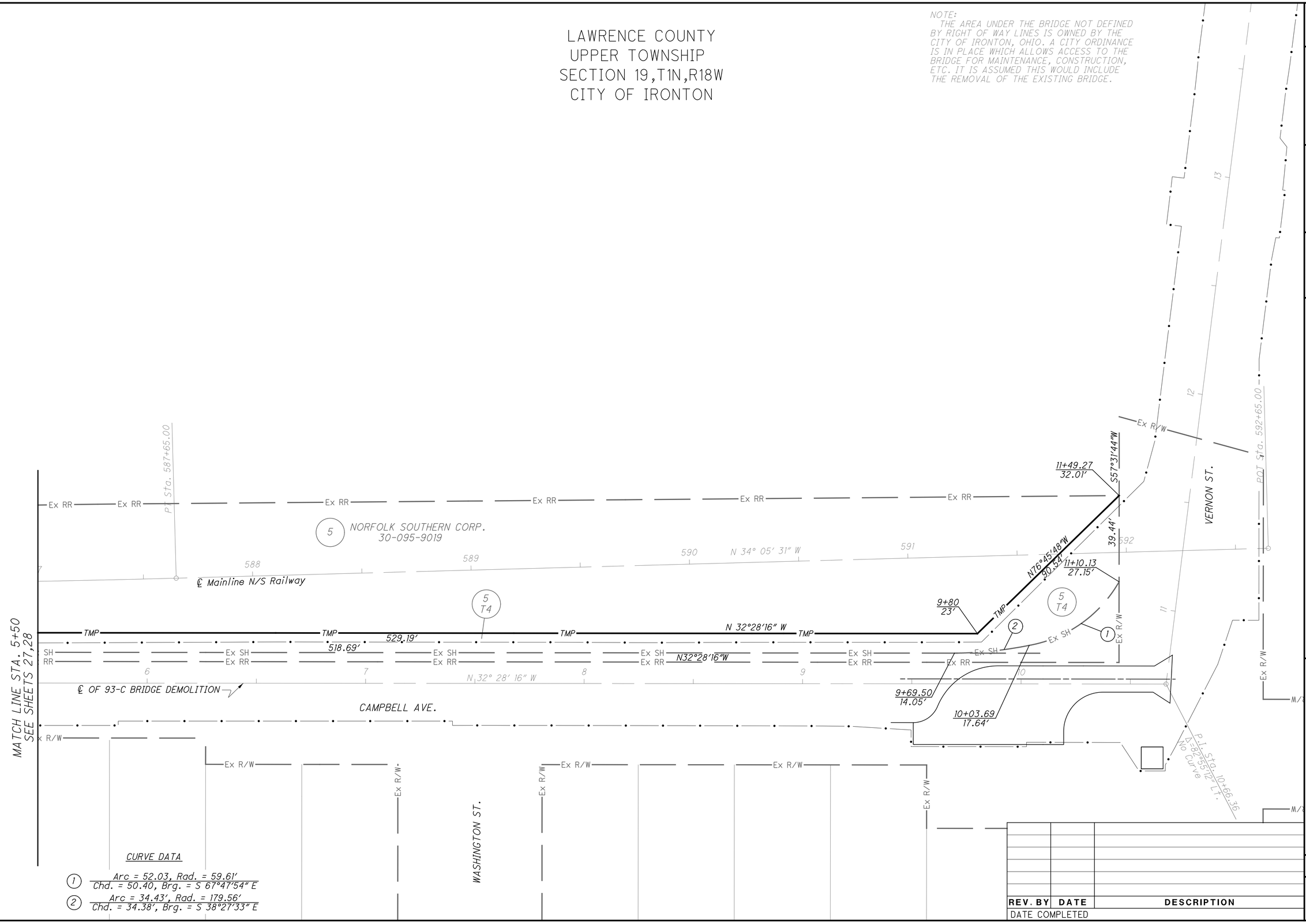

CURVE DATA

(1) Arc = 52.03, Rad. = 59.61'
Chd. = 50.40, Brg. = S 67°47'54" E

(2) Arc = 34.43', Rad. = 179.56'
Chd. = 34.38', Brg. = S 38°27'33" E

REV. BY	DATE	DESCRIPTION
DATE COMPLETED		

HORIZONTAL SCALE IN FEET
0 10 20 40

R/W DESIGNER REH
R/W REVIEWER DS

PID NO. 81595

RIGHT OF WAY BOUNDARY SHEET
DEMOLITION-CAMPBELL AVE.

LAW-93-0.00

30 / 35

783
788

J:\Project\O\ODOT\15005112 Ironton Russell\LAW\81595\row\sheets\81595RB012.dgn - 4/27/2011 2:22:28 PM - jon_wanstrath

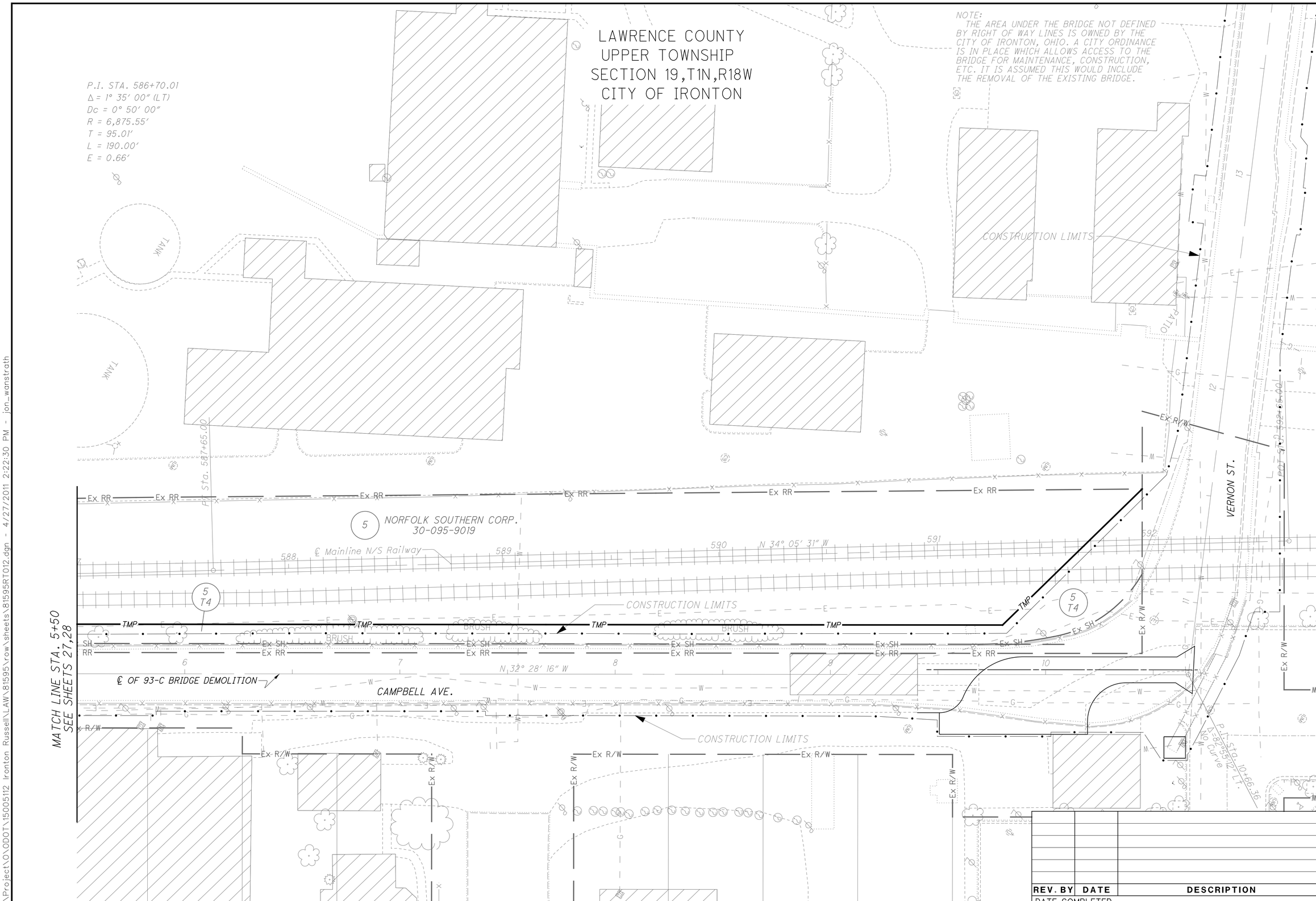

REV. BY	DATE	DESCRIPTION

DATE COMPLETED

HORIZONTAL SCALE IN FEET 0 10 20 40

PID NO. 81595

R/W DESIGNER REH
R/W REVIEWER DS

RIGHT OF WAY TOPO SHEET
DEMOLITION-CAMPBELL AVE.

LAW-93-0.00

J:\Project\O\ODOT\15005112 Ironton Russell\LAW\81595\row\sheets\81595RT012.dgn - 4/27/2011 2:22:30 PM - jon_wanstrath

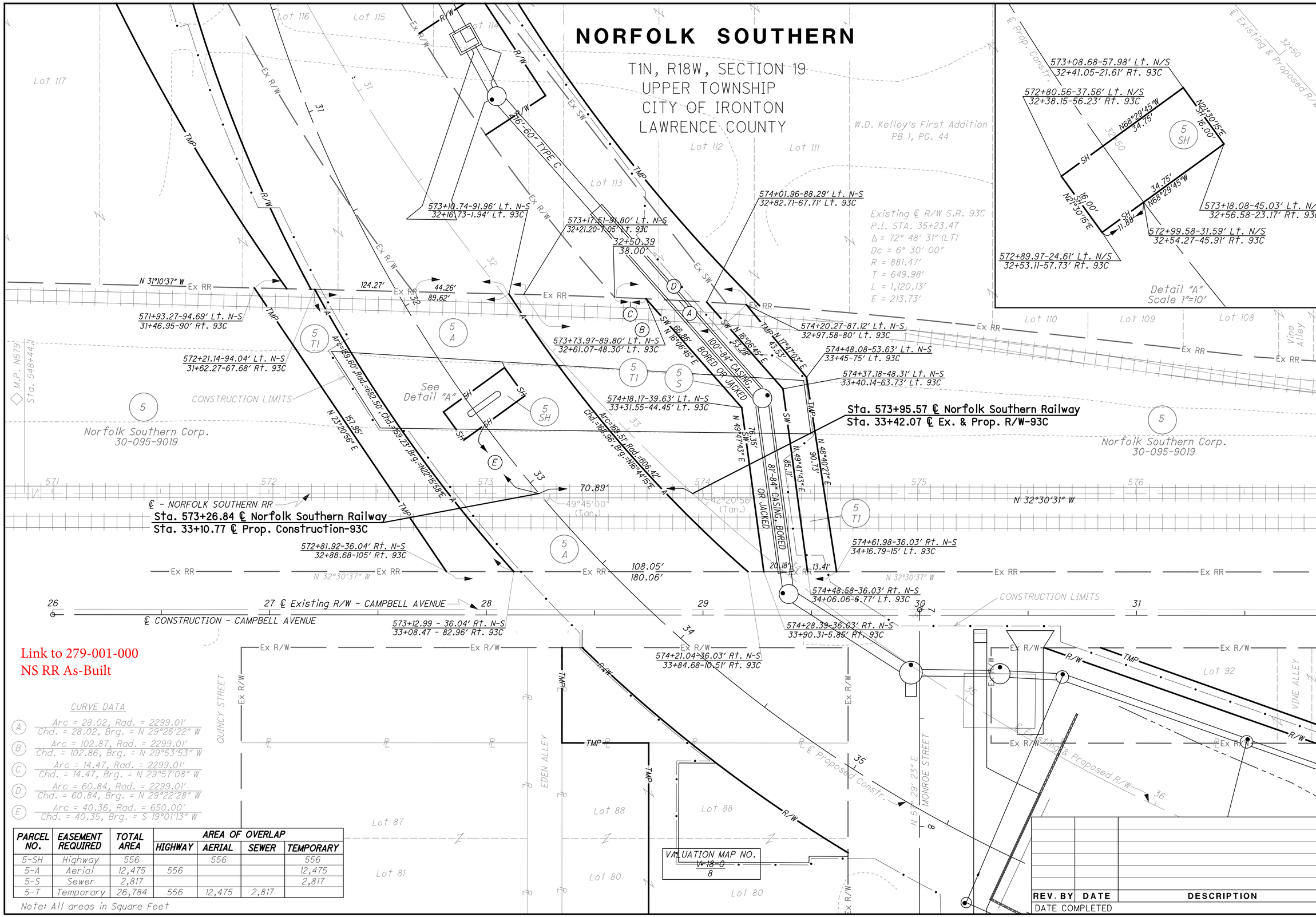

PARCEL NO.	EASEMENT REQUIRED	TOTAL AREA	AREA OF OVERLAP			
			HIGHWAY	AERIAL	SEWER	TEMPORARY
5-SH	Highway	556		556		556
5-A	Aerial	12,475	556			12,475
5-S	Sewer	2,817				2,817
5-T	Temporary	26,784	556	12,475	2,817	

Note: All areas in Square Feet

HORIZONTAL SCALE IN FEET

PID NO. 81595

R/W DESIGNER REH

R/W REVIEWER DS

RAILROAD PLAT

LAW-93-0.00

NORFOLK SOUTHERN

T1N,R18W,SECTION 19
UPPER TOWNSHIP
CITY OF IRONTON
LAWRENCE COUNTY

LINE DATA

- (A) 2.52′ S 61°18′00″ W
- (B) 6.00′ N 57°29′23″ E
- (C) 7.00′ S 57°29′23″ W
- (D) 108.29′ N 34°37′37″ W
- (E) 90.14′ N 29°19′48″ W
- (F) 6.00′ N 57°29′23″ E

CURVE DATA

- (1) Arc = 52.03, Rad. = 59.61′ Chd. = 50.40, Brg. = S 67°47′54″ E
- (2) Arc = 34.43′, Rad. = 179.56′ Chd. = 34.38′, Brg. = S 38°27′33″ E

NORFOLK & SOUTHERN RR CURVE DATA
P.I. STA. 586+70.01
Δ = 1° 35′ 00″ (LT)
Dc = 0° 50′ 00″
R = 6,875.55′
T = 95.01′
L = 190.00′
E = 0.66′

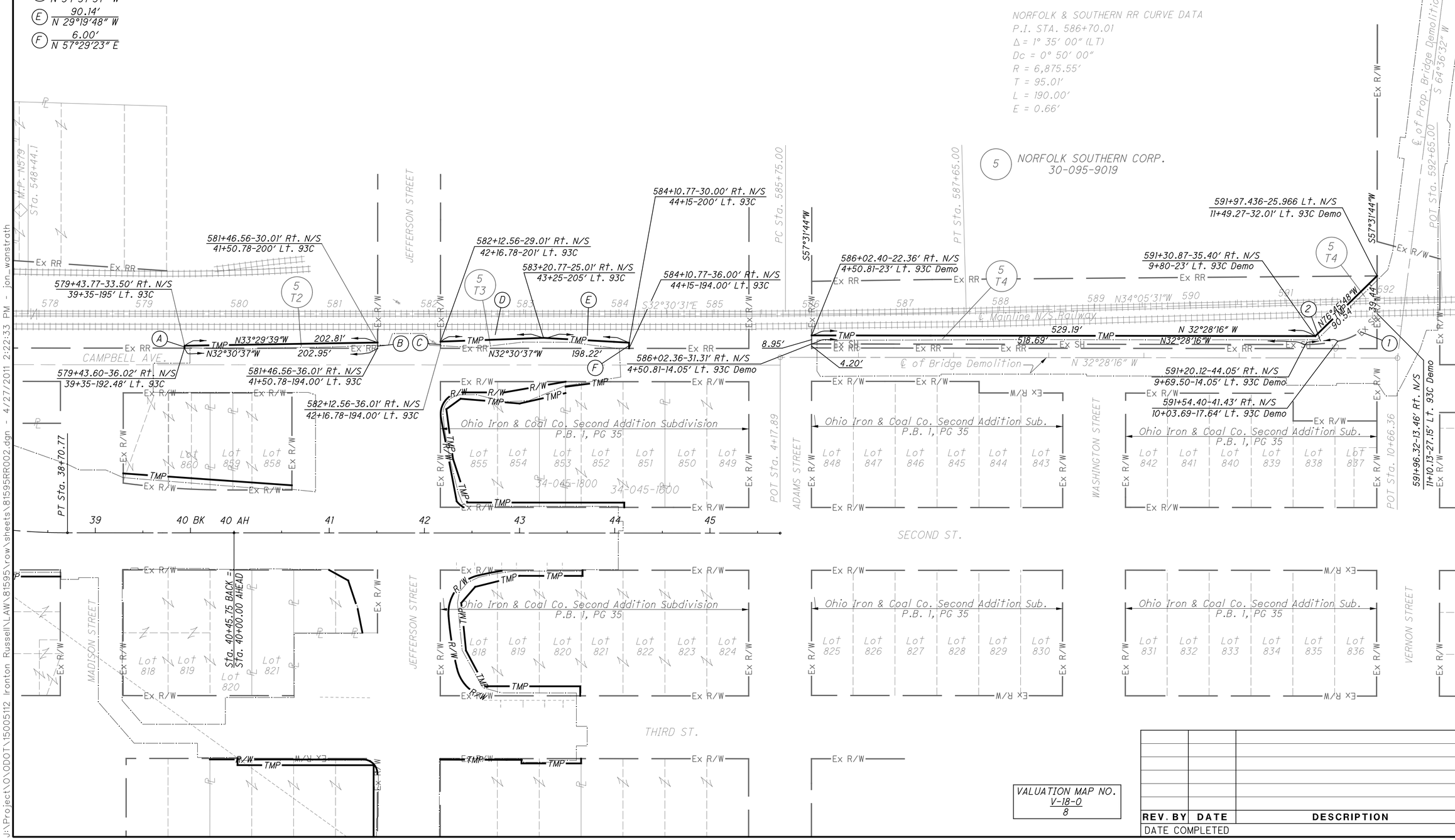

VALUATION MAP NO. V-18-0 / 8

REV. BY	DATE	DESCRIPTION

DATE COMPLETED

HORIZONTAL SCALE IN FEET 0 25 50 100

PID NO. 81595

R/W DESIGNER REH
R/W REVIEWER DS

RAILROAD PLAT

LAW-93-0.00

J:\Project\O\ODOT\15005112 Ironton Russell\LAW\81595\row\sheets\81595RR002.dgn - 4/27/2011 2:22:33 PM - jon_wanstrath

CSX CORPORATION

CITY OF RUSSELL
GREENUP COUNTY
COMMONWEALTH OF KENTUCKY

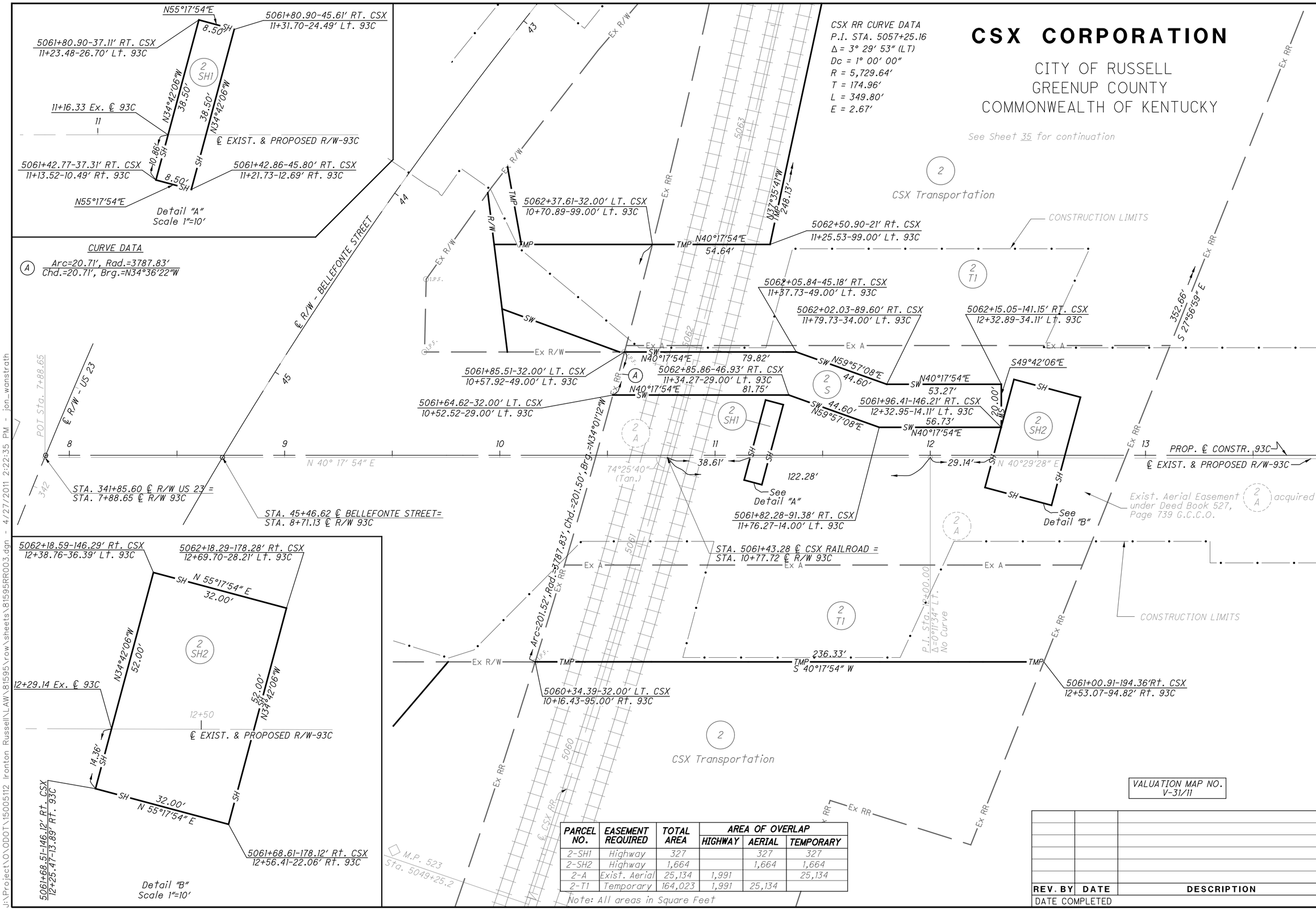

PARCEL NO.	EASEMENT REQUIRED	TOTAL AREA	AREA OF OVERLAP		
			HIGHWAY	AERIAL	TEMPORARY
2-SH1	Highway	327		327	327
2-SH2	Highway	1,664		1,664	1,664
2-A	Exist. Aerial	25,134	1,991		25,134
2-T1	Temporary	164,023	1,991	25,134	

Note: All areas in Square Feet

VALUATION MAP NO. V-31/11

REV. BY	DATE	DESCRIPTION
DATE COMPLETED		

HORIZONTAL SCALE IN FEET 0 10 20 40

PID NO. 81595

R/W DESIGNER REH
R/W REVIEWER DS

RAILROAD PLAT

LAW-93-0.00

J:\Project\O\ODOT\15005112 Ironton Russell\LAW\81595\row\sheets\81595RR003.dgn - 4/27/2011 2:22:35 PM - jon_wanstrath

CSX CORPORATION

CITY OF RUSSELL
GREENUP COUNTY
COMMONWEALTH OF KENTUCKY

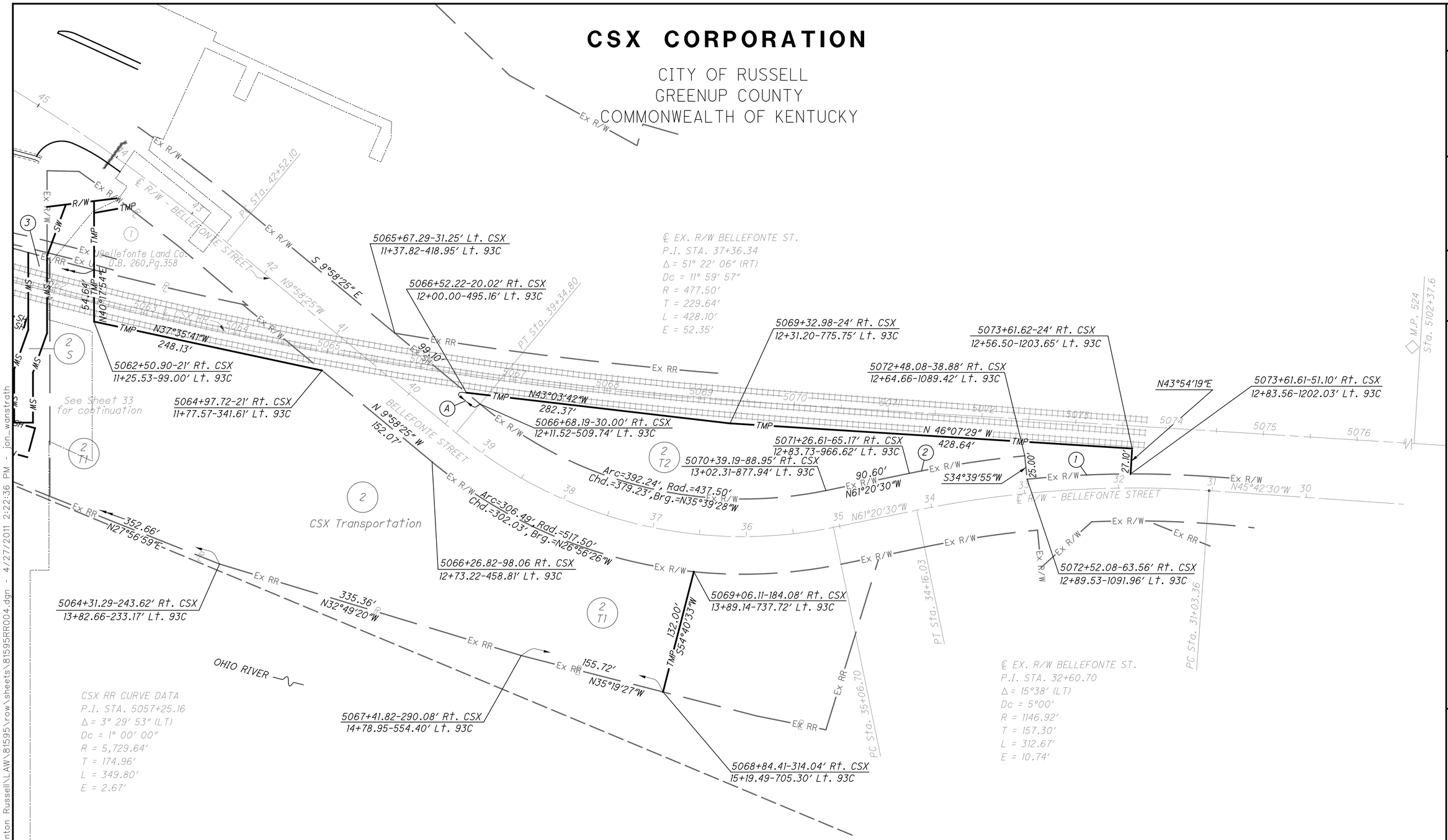

PARCEL NO.	EASEMENT REQUIRED	TOTAL AREA	AREA OF OVERLAP		
			HIGHWAY	AERIAL	TEMPORARY
2-SH1	Highway	327		327	327
2-SH2	Highway	1,664		1,664	1,664
2-A	Exist. Aerial	25,134	1,991		25,134
2-T1	Temporary	164,023	1,991	25,134	
2-T2	Temporary	35,972			

Note: All areas in Square Feet

CURVE DATA

(1) Arc=110.27', Rad.=1160.92'
Chd.=110.23', Brg.=S52°36'49"E

(2) Arc=124.33', Rad.=1185.92'
Chd.=124.28', Brg.=S58°20'18"E

(3) Arc=201.52', Rad.=3787.83'
Chd.=201.50', Brg.=S34°01'12"E

LINE DATA

(A) 18.90'
S 9°58'25" E

VALUATION MAP NO.
V-31/11

REV. BY	DATE	DESCRIPTION
DATE COMPLETED		

HORIZONTAL SCALE IN FEET
0 25 50 100

PID NO. 81595

R/W DESIGNER REH
R/W REVIEWER DS

RAILROAD PLAT

LAW-93-0.00

35 / 35

788
788

J:\Project\O\ODOT\15005112 Ironton Russell\LAW\81595\row\sheets\81595RR004.dgn - 4/27/2011 2:22:36 PM - jon_wanstrath

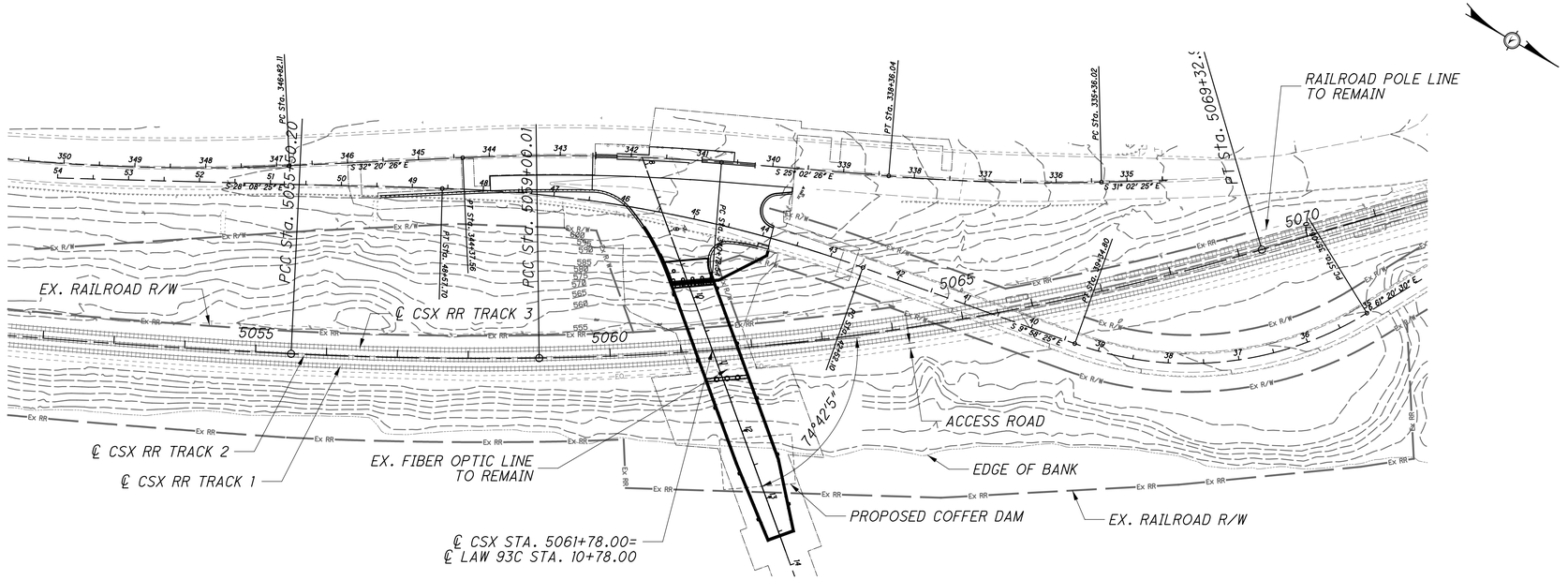

PLAN

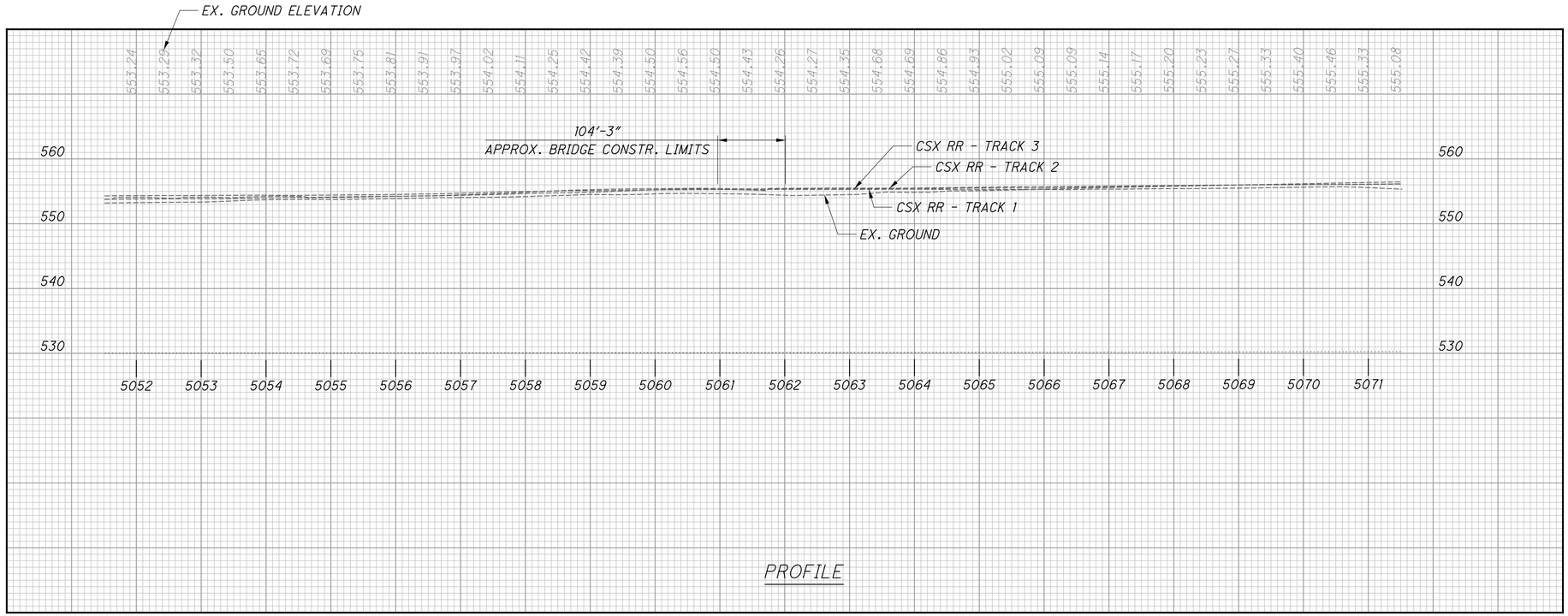

PROFILE

DESIGN AGENCY
URS
36 EAST 7TH STREET
SUITE 2200
CINCINNATI, OHIO 45202

DESIGNED	DRAWN	REVIEWED	DATE
MJZ	JDP	BKL	8-09
CHECKED	REVISED	STRUCTURE FILE NUMBER	
BER			

SUPPLEMENTAL SITE PLAN FOR RAILROAD CROSSING
CSX RAILROAD RUSSELL, KENTUCKY
LAW-093C-00.00 BRIDGE OVER THE OHIO RIVER

LAW-093C-00.00
PID No. 81595

1 / 4

J:\Project\0\ODOT\15005112 Ironton Russell\LAW\81595\structures\LAW093_1111C\sheets\093_0000_rr001.dgn - 5/3/2011 8:49:46 AM - jon_wanstrath

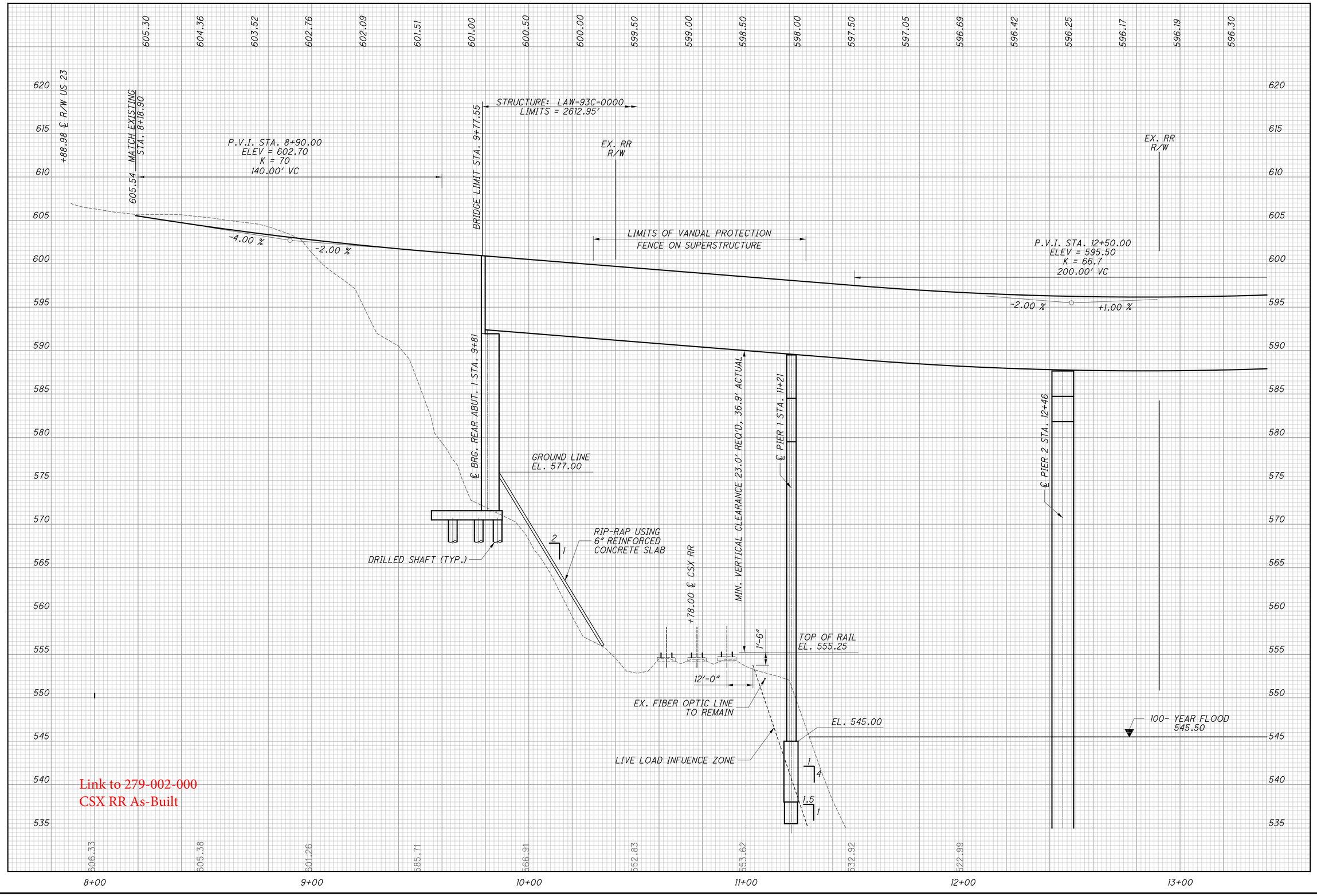

J:\Project\O\ODOT\15005112 Ironton Russell\LAW\81595\structures\LAW093_1111C\sheets\093_0000_rr002.dgn - 5/3/2011 8:49:48 AM - jon_wanstrath

DESIGN AGENCY
URS
36 EAST 7TH STREET
SUITE 2300
CINCINNATI, OHIO 45202

DESIGNED	DRAWN	REVIEWED	DATE
MJZ	JDP	BKL	8-09
CHECKED	REVISED	STRUCTURE FILE NUMBER	
BER			

SUPPLEMENTAL SITE PLAN FOR RAILROAD CROSSING
CSX RAILROAD RUSSELL, KENTUCKY
LAW-93C OVER THE OHIO RIVER

LAW-93C-0.00
PID No. 81595

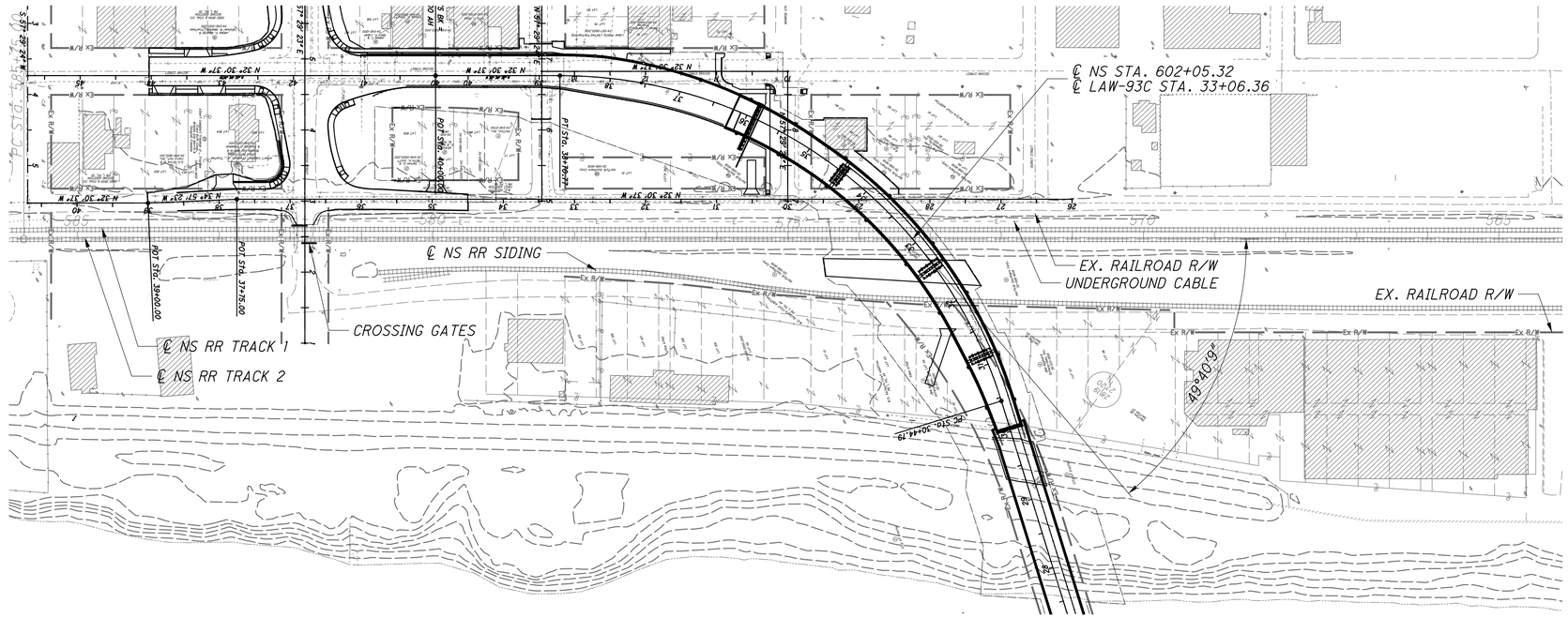

PLAN

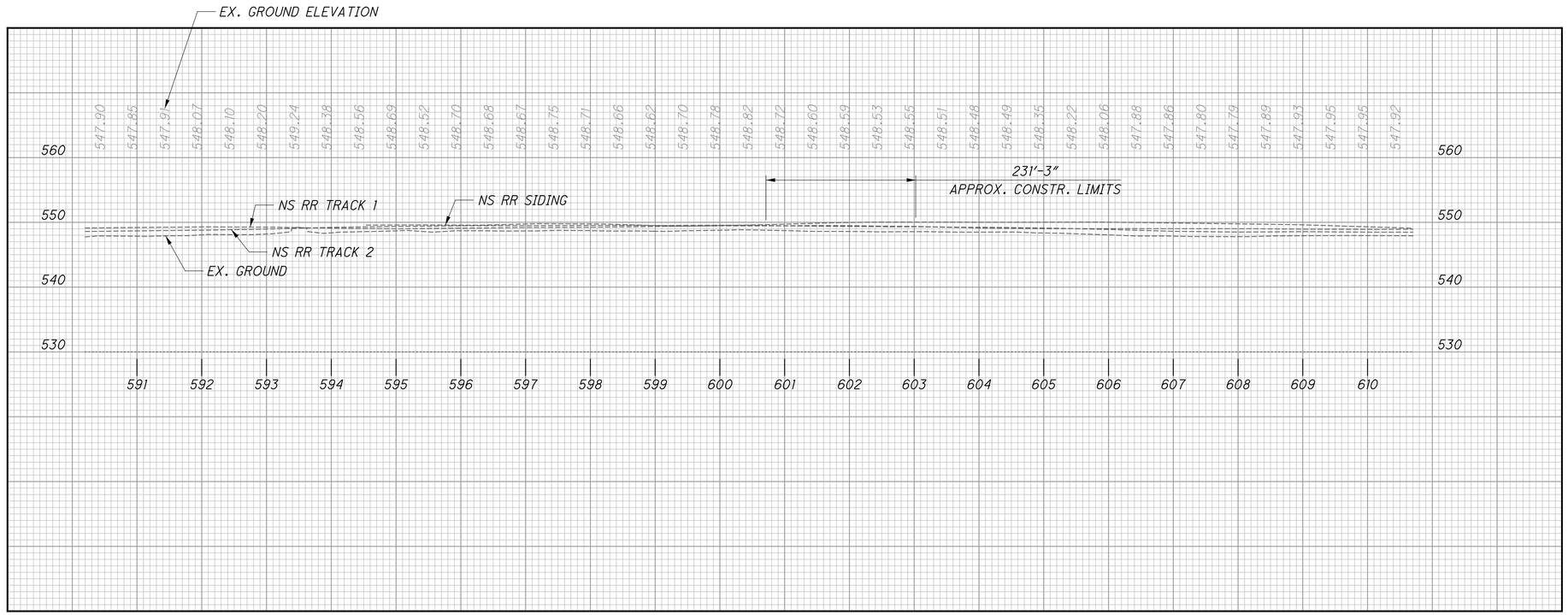

PROFILE

J:\Project\OJODOT\15005112 Ironton Russell\LAW\81595\structures\LAW093_1111C\sheets\093_0000_rr003.dgn - 5/3/2011 8:49:50 AM - jon_wanstrath

DESIGN AGENCY
URS
36 EAST 7TH STREET
SUITE 2300
CINCINNATI, OHIO 45202

DESIGNED	DRAWN	REVIEWED	DATE
MJZ	JDP	BKL	8-09
CHECKED	REVISED	STRUCTURE FILE NUMBER	
BER			

SUPPLEMENTAL SITE PLAN FOR RAILROAD CROSSING
NORFORLK-SOUTHERN RAILWAY, IRONTON, OHIO
LAW-093C-00.00 BRIDGE OVER THE OHIO RIVER

LAW-093C-00.00
PID No. 81595

3 / 4

595.82 595.21 594.46 593.57 592.54 591.37 590.05 588.60 587.10 585.60 584.10 582.60 581.10 579.60 578.10 576.60 575.10

STRUCTURE: LAW-93C-0000
LIMITS = 2612.95'

P.V.I. STA. 31+10.00
ELEV = 595.50
K = 44
220.00' VC

-1.00 %

-6.00 %

LIMITS OF VANDAL PROTECTION
FENCE ON SUPERSTRUCTURE

-6.00 %

605 600 595 590 585 580 575 570 565 560 555 550 545 540 535 530

℄ PIER 7 STA. 31+14

MIN. VERT. CLEAR. 14.5' REQ'D, 34.1' ACTUAL

MIN. VERT. CLEAR. 23.0' REQ'D, 31.2' ACTUAL

MIN. HORZ. CLEARANCE= ' REQ'D., 55'-10" ACTUAL

℄ PIER 8 STA. 32+58

EX. RR R/W

℄ NORFOLK-SOUTHERN RR +06.36

MIN. HORZ. CLEARANCE= ' REQ'D., 45'-5 15/16" ACTUAL

MIN. VERT. CLEAR. 23.0' REQ'D, 23.8' ACTUAL

EX. RR R/W

℄ R/W CAMPBELL AVE. +80.20

MIN. VERT. CLEAR. 14.5' REQ'D, 25.4' ACTUAL

℄ PIER 9 STA. 34+44

FIRST ST

TOP OF RAIL EL. 550.04

TOP OF RAIL EL. 549.37

TOP OF RAIL EL. 549.50

EL. 543.25

EL. 538.25

LIVE LOAD INFLUENCE ZONE

1.5 1

EL. 538.25

549.37 548.92 548.91 549.37 548.34 548.56 544.15 544.85 545.23

31+00 32+00 33+00 34+00

Link to 279-001-000
NS RR As-Built

J:\Project\ODOT\15005112 Ironton Russell\LAW\81595\structures\LAW093_1111C\sheets\093_0000_rr004.dgn - 5/3/2011 8:49:51 AM - jon_wanstrath

DESIGN AGENCY
URS
36 EAST 7TH STREET
SUITE 2300
CINCINNATI OHIO 45202

DESIGNED	DRAWN	REVIEWED	DATE
MJZ	JDP	BKL	8-09
CHECKED	REVISED	STRUCTURE FILE NUMBER	
BER			

SUPPLEMENTAL SIGHT PLANS FOR RAILWAY CROSSINGS
NORFOLK SOUTHERN RAILWAY, IRONTON, OHIO
LAW-93C-0.00 ACROSS THE OHIO RIVER

LAW-93C-00.00
PID No. 81595

4 / 4

PROJECT DESCRIPTION

THIS PROJECT, LAW-93C-0.00, IS THE BRIDGE REPLACEMENT OF SR 93 ACROSS THE OHIO RIVER CONNECTING RUSSELL, GREENUP COUNTY, KENTUCKY AND IRONTON, LAWRENCE COUNTY, OHIO.

HISTORIC RECORDS

THIRTY-EIGHT SOIL BORINGS WERE ADVANCED BY DLZ OHIO, INC, CONTRACTED BY E.L. ROBINSON ENGINERING COMPANY AS PART OF A PRELIMINARY BRIDGE DESIGN REPORT SUBMITTED BY BAKER AND ASSOCIATES TO ODOT IN AUGUST, 2004. THESE BORINGS ARE PRESENTED ON THIS SOIL PROFILE.

GEOLOGY

THE SITE LIES IN THE UNGLACIATED PORTION OF OHIO, WITHIN THE IRONTON DISTRICT OF THE ALLEGHENY (KANAWHA) PLATEAU SECTION, A PART OF THE ALLEGHENY PLATEAUS. THE SOILS UNDERLYING THE PROJECT AREA ARE ALLUVIAL, LOW-LEVEL TRAIN-OUTWASH, COMPOSED OF SAND AND GRAVEL WITH SMALL AREAS OF PEAT. THE OVERBURDEN SOILS ARE UNDERLAIN BY SEDIMENTARY BEDROCK; PRIMARILY SANDSTONE, SILTSTONE, AND SHALE.

RECONNAISSANCE

THE SITE WAS VISITED ON JULY 23, 2008. THE LAND USAGE ON THE OHIO SIDE OF THE BRIDGE IS GENERALLY COMMERCIAL AND RESIDENTIAL. THERE IS DENSE TREE AND VEGETATION COVER ON THE KENTUCKY SIDE WITH AN APPROXIMATE 3:1 (HORIZONTAL TO VERTICAL) SLOPE FROM BELLEFONTE STREET/KY-244 TO THE CSX RAILROAD TRACKS. THE SLOPE STEEPENS TO APPROXIMATELY 1.5:1 TO 2:1 (HORIZONTAL TO VERTICAL) FROM THE CSX RAILROAD TRACKS DOWN TO THE OHIO RIVER. ACCESS TO THE PROPOSED BORING LOCATIONS ON THE KENTUCKY SIDE WAS MADE FROM A GRAVEL AREA ADJACENT TO BELLEFONTE ST/KY-244, NORTHWEST OF THE PROJECT SITE. THE PROJECT SITE IS BORDERED BY US-23 TO THE SOUTH ON THE KENTUCKY SIDE AND ALIGNS WITH SECOND STREET ON THE OHIO SIDE IN IRONTON. THE OHIO RIVER FLOWS FROM THE SOUTHEAST TO THE NORTHWEST ACROSS THE SITE.

SUBSURFACE EXPLORATION

SEVEN TEST BORINGS WERE COMPLETED AS PART OF THIS SUBSURFACE EXPLORATION, BETWEEN SEPTEMBER 11, 2008 AND MAY 1, 2009. THE BORINGS WERE DRILLED WITH A TRUCK MOUNTED ROTARY DRILL RIG, USING 3 1/4-INCH I.D. HOLLOW STEM AUGERS TO ADVANCE THE HOLES THROUGH SOIL. DISTURBED SOIL SAMPLES WERE OBTAINED IN ACCORDANCE WITH THE STANDARD PENETRATION TEST (AASHTO T206) AT 2.5-FOOT INTERVALS IN THE TOP 30 FEET OF THE BORING, THEN AT 5-FOOT INTERVALS UNITL BORING TERMINATION OR BEDROCK. THE AUTOMATIC HAMMER WAS CALIBRATED ON JULY 17, 2007 AND HAS A DRILL ROD ENERGY RATIO OF 80.0%. WHERE BEDROCK WAS ENCOUNTERED, THE ROCK WAS SAMPLED USING A TYPE NQ SERIES CORE BARREL, WATER METHOD.

EXPLORATION FINDINGS

SOIL CONDITIONS ON THE KENTUCKY SIDE CONSISTED PRIMARILY OF COHESIVE SOILS THAT CLASSIFIED AS A-6a AND A-6b. GRANULAR SOILS WERE ALSO PRESENT AND CLASSIFIED AS A-1-b AND A-2-4. AS THE TOPOGRAPHY SLOPES TOWARD THE OHIO RIVER, THE OVERBURDEN CONSISTS OF COHESIVE SOIL THAT CLASSIFIED AS A-4a, A-4b, A-6a, AND A-7-6. GENERALLY, SANDSTONE BEDROCK WAS ENCOUNTERED IN THE BORINGS WITH LAYERS OF SILTSTONE AND SHALE ALSO PRESENT.

WITHIN THE OHIO RIVER, SOIL CONDITIONS CONSISTED PRIMARILY OF GRANULAR SOILS THAT CLASSIFIED AS A-1-b, A-3, AND A-3a. GENERALLY SANDSTONE BEDROCK WAS ENCOUNTERED IN THE BORINGS WITH A STRATUM OF CLAYSTONE, COAL, AND SILTSTONE APPROXIMATELY 17 TO 20 FEET BENEATH THE TOP OF BEDROCK.

ON THE OHIO SIDE, SOIL CONDITIONS CONSISTED OF GRANULAR SOILS, THAT CLASSIFIED AS A-1-a, A-1-b, A-3, A-3a, AND A-4a; AS WELL AS COHESIVE SOIL THAT CLASSIFIED AS A-4b, A-6a, A-6b, AND A-7-6. GENERALLY SANDSTONE BEDROCK WAS ENCOUNTERED IN THE BORINGS WITH AREAS OF SHALE OVERLYING THE SANDSTONE ALSO PRESENT. A STRATUM OF CLAYSTONE, COAL, AND SILTSTONE WAS ENCONTERED APPROXIMATELY 17 TO 20 FEET BELOW THE TOP OF BEDROCK.

GROUNDWATER WAS NOT OBSERVED ON THE KENTUCKY SIDE OF THE PROJECT; HOWEVER, IT VARIED WITH THE ELEVATION OF THE OHIO RIVER ON THE OHIO SIDE.

SPECIFICATIONS

THIS GEOTECHNICAL EXPLORATION WAS PERFORMED IN ACCORDANCE WITH THE STATE OF OHIO, DEPARTMENT OF TRANSPORTATION, OFFICE OF GEOTECHNICAL ENGINEERING, SPECIFICATIONS FOR GEOTECHNICAL EXPLORATIONS, DATED OCTOBER 2008.

AVAILABLE INFORMATION

ALL AVAILABLE SOIL AND BEDROCK INFORMATION THAT CAN BE CONVENIENTLY SHOWN ON THE GEOTECHNICAL EXPLORATION SHEETS HAS BEEN SO REPORTED. ADDITIONAL EXPLORATIONS MAY HAVE BEEN MADE TO STUDY SOME SPECIAL ASPECT OF THE PROJECT. COPIES OF THIS DATA, IF ANY, MAY BE INSPECTED IN THE DISTRICT DEPUTY DIRECTOR'S OFFICE, THE OFFICE OF GEOTECHNICAL ENGINEERING AT 1600 WEST BROAD STREET OR THE OFFICE OF STRUCTURAL ENGINEERING AT 1980 WEST BROAD STREET.

LEGEND

DESCRIPTION	ODOT CLASS	CLASSIFIED MECH./VISUAL	
GRAVEL AND/OR STONE FRAGMENTS	A-1-a	1	0
GRAVEL AND/OR STONE FRAGMENTS WITH SAND	A-1-b	11	26
FINE SAND	A-3	3	3
SANDY SILT	A-4a	6	12
SILT	A-4b	2	4
SILT AND CLAY	A-6a	9	21
CLAY	A-7-6	3	14
	TOTAL	35	79
COARSE AND FINE SAND - HISTORIC BORINGS ONLY	A-3a		
GRAVEL AND/OR STONE FRAGMENTS WITH SAND AND SILT - HISTORIC BORINGS ONLY	A-2-4		
GRAVEL AND/OR STONE FRAGMENTS WITH SAND, SILT AND CLAY - HISTORIC BORINGS ONLY	A-2-6		
SILTY CLAY - HISTORIC BORINGS ONLY	A-6b		
COAL - HISTORIC BORINGS ONLY	VISUAL		
SHALE	VISUAL		
WEATHERED SHALE	VISUAL		
SANDSTONE	VISUAL		
WEATHERED SANDSTONE	VISUAL		
SILTSTONE	VISUAL		
CLAYSTONE/MUDSTONE	VISUAL		
BOULDERY ZONE	VISUAL		
SOD AND TOPSOIL = X = APPROXIMATE THICKNESS	VISUAL		

BORING LOCATION - PLAN VIEW.

HISTORIC BORING LOCATION - PLAN VIEW.

DRIVE SAMPLE AND/OR ROCK CORE BORING PLOTTED TO VERTICAL SCALE ONLY. HORIZONTAL BAR INDICATES A CHANGE IN STRATIGRAPHY.

X/Y/Z — NUMBER OF BLOWS FOR STANDARD PENETRATION TEST
X= NUMBER OF BLOWS FOR FIRST 6 INCHES
Y= NUMBER OF BLOWS FOR SECOND 6 INCHES
Z= NUMBER OF BLOWS FOR THIRD 6 INCHES

W — INDICATES WATER CONTENT IN PERCENT.

N_{60} — INDICATES STANDARD PENETRATION RESISTANCE NORMALIZED TO 60% DRILL ROD ENERGY RATIO.

N — INDICATES STANDARD PENETRATION RESISTANCE.

W— INDICATES FREE WATER ELEVATION.

▼— INDICATES STATIC WATER ELEVATION.

SS — INDICATES A SPLIT SPOON SAMPLE.

NP — INDICATES A NON-PLASTIC SAMPLE.

TR — INDICATES THE TOP OF ROCK.

EOB — INDICATES END OF BORING.

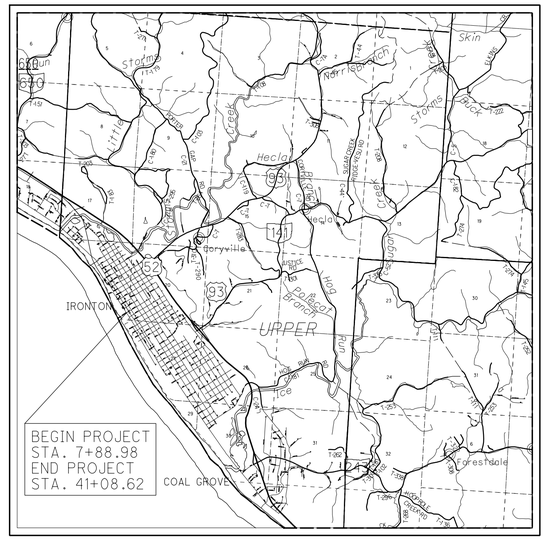

LOCATION MAP

SCALE IN MILES

0 1 2 3 4

N

PARTICLE SIZE DEFINITIONS

12"	3"	2.0 mm	0.42 mm	0.074 mm	0.005 mm
BOULDERS	COBBLES	GRAVEL	COARSE SAND	FINE SAND	SILT	CLAY
		No. 10 SIEVE	No. 40 SIEVE	No. 200 SIEVE		

D_{50} VALUES

BORING NO.	SAMPLE NO.	ELEVATION	D_{50} VALUE (mm)	D_{50} VALUE (in)
B-003-0-08	SS-1	496.4'-494.9'	2.00	0.0787
	SS-2	494.9'-493.4'	1.50	0.0591
	SS-4	491.9'-490.4'	1.67	0.0657
	SS-5	487.8'-486.3'	0.20	0.0079
	SS-6	485.3'-483.8'	0.21	0.0083
	SS-7	482.8'-481.3'	1.50	0.0591
B-004-0-03	SS-1	487.6'-486.1'	0.30	0.0118
	SS-2	485.1'-483.6'	0.27	0.0106
	SS-3	482.6'-481.1'	0.41	0.0161
	SS-4	480.1'-478.6'	0.35	0.0138
B-008-0-03	SS-3	508.1'-506.6'	2.40	0.0945
	SS-4	505.6'-504.1'	0.01	0.004
	SS-5	503.1'-501.6'	0.02	0.008
	SS-6	500.6'-499.1'	0.01	0.004
	SS-7	498.1'-496.6'	0.42	0.0165
	SS-8	495.6'-494.1'	0.83	0.0327
	SS-9	493.1'-491.6'	0.64	0.0252
B-009-0-03	SS-4	503.6'-502.1'	0.01	0.004
	SS-5	501.1'-499.6'	2.43	0.0957
	SS-6	498.6'-497.1'	1.22	0.0480
	SS-8	493.6'-492.1'	1.07	0.0421
	SS-9	491.1'-489.6'	0.40	0.0157
	SS-10	488.6'-487.1'	0.69	0.0272
	SS-11	486.1'-484.6'	0.62	0.0244
	SS-12	483.6'-482.1'	0.42	0.0165
	SS-13	478.6'-477.9'	1.04	0.0409

RECON. - D.R. 07/2008
DRILLING - D.R. & T.C. 09/08 & 04/09 - 05/09
DRAWN - M.J. 07/09 - 08/09 & 02/10 & 03/11
REVIEWED - E.K. 08/09 & 02/10 & 03/11

DESIGN AGENCY
STANTEC CONSULTING SERVICES INC.
CINCINNATI, OHIO

PID NO. 81595

STRUCTURE FOUNDATION EXPLORATION
LAW-93C-0.00 OVER OHIO RIVER
LAW-93-0.00

V:\1755\active\175537016\Drawings\81595\structures\SHEETS\81595S01.dgn 5/4/2011 10:41:27 AM mjennings

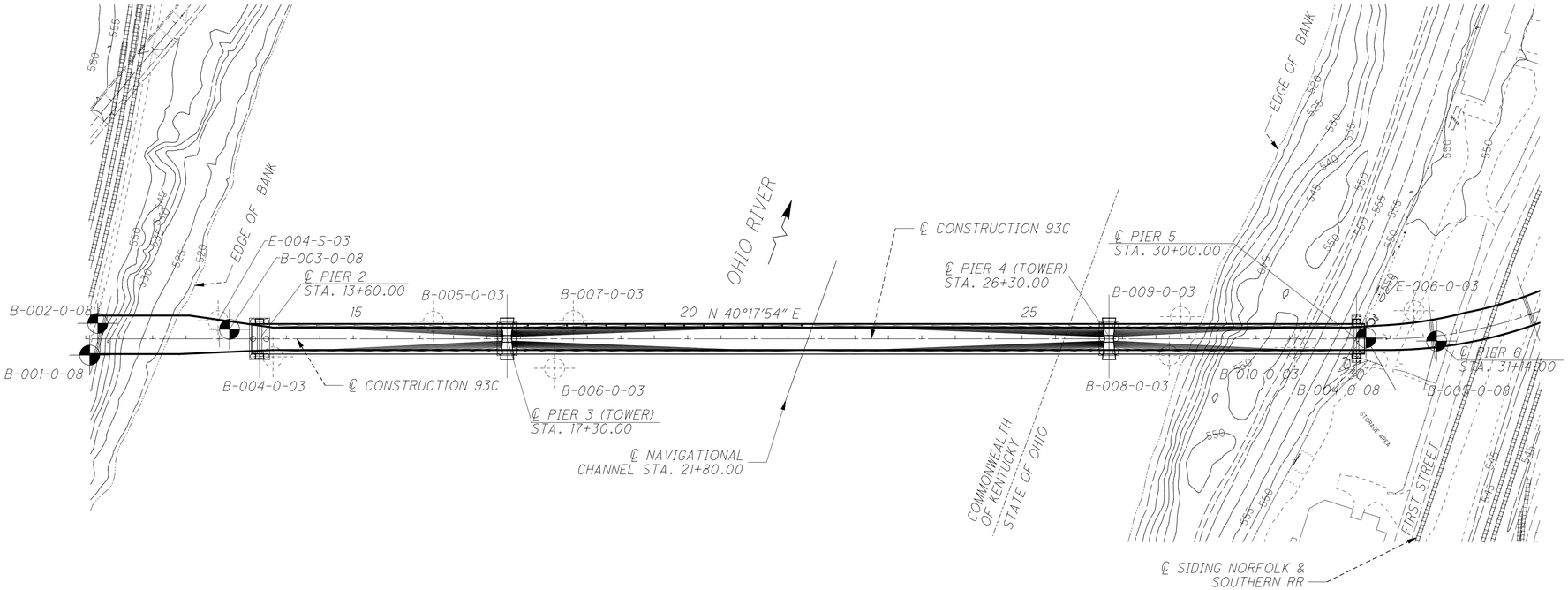

FOR CONTINUATION,
SEE KENTUCKY APPROACH
SITE PLAN SHEET 2

FOR CONTINUATION,
SEE OHIO APPROACH
SITE PLAN SHEET 4

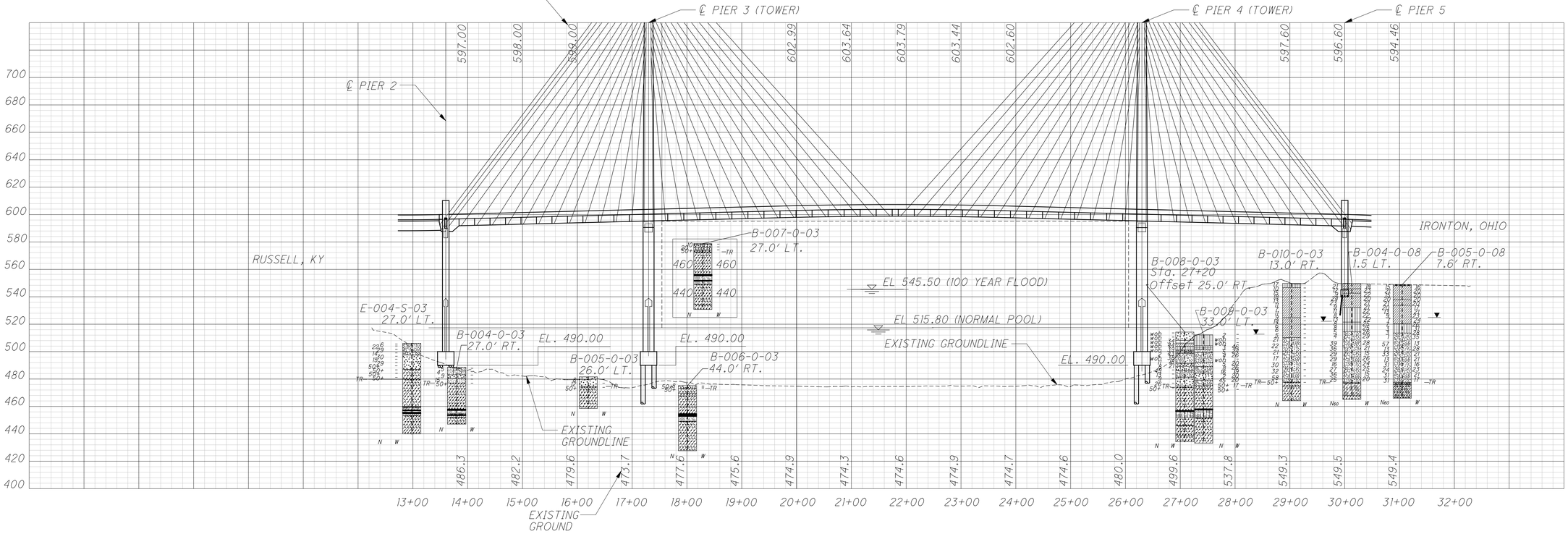

HORIZONTAL SCALE IN FEET
0 20 40 80

DRAWN MSJ
CHECKED EMK

STRUCTURE FOUNDATION EXPLORATION
BRIDGE NO. LAW-93C-0.00 OVER OHIO RIVER

LAW-93-0.00

V:\1755\active\175537016\Drawings\81595\structures\SHEETS\81595S03.dgn 5/4/2011 10:49:05 AM mjennings

HORIZONTAL SCALE IN FEET
0 20 40 80

DRAWN MSJ
CHECKED EMK

STRUCTURE FOUNDATION EXPLORATION
BRIDGE NO. LAW-93C-0.00 OVER OHIO RIVER

LAW-93-0.00

2 / 38

V:\1755\active\175537016\Drawings\81595\structures\SHEETS\81595S02.dgn 5/4/2011 10:46:32 AM mjennings

FOR CONTINUATION, SEE MAIN SPAN SITE PLAN 1 SHEET 3

HORIZONTAL SCALE IN FEET
0 20 40 80

DRAWN MSJ
CHECKED EMK

STRUCTURE FOUNDATION EXPLORATION
BRIDGE NO. LAW-93C-0.00 OVER OHIO RIVER

LAW-93-0.00

V:\1755\active\175537016\Drawings\81595\structures\SHEETS\81595S04.dgn 5/4/2011 10:51:06 AM mjennings

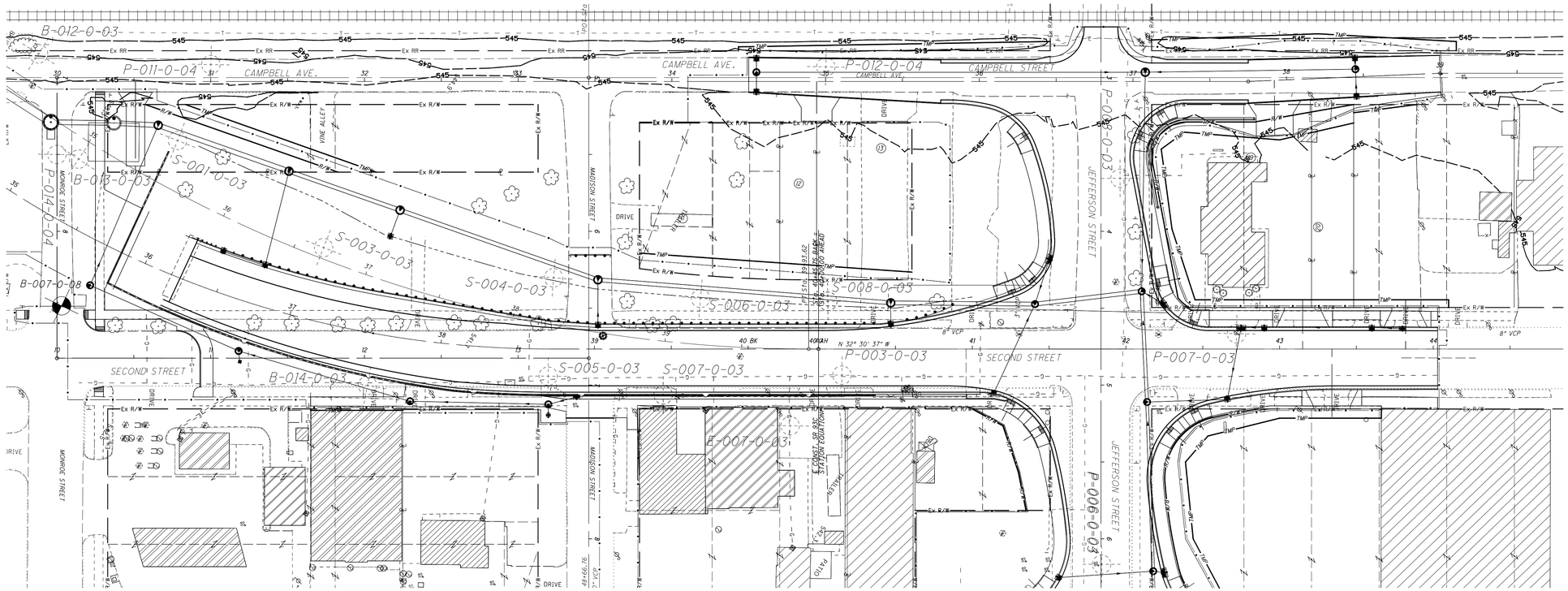

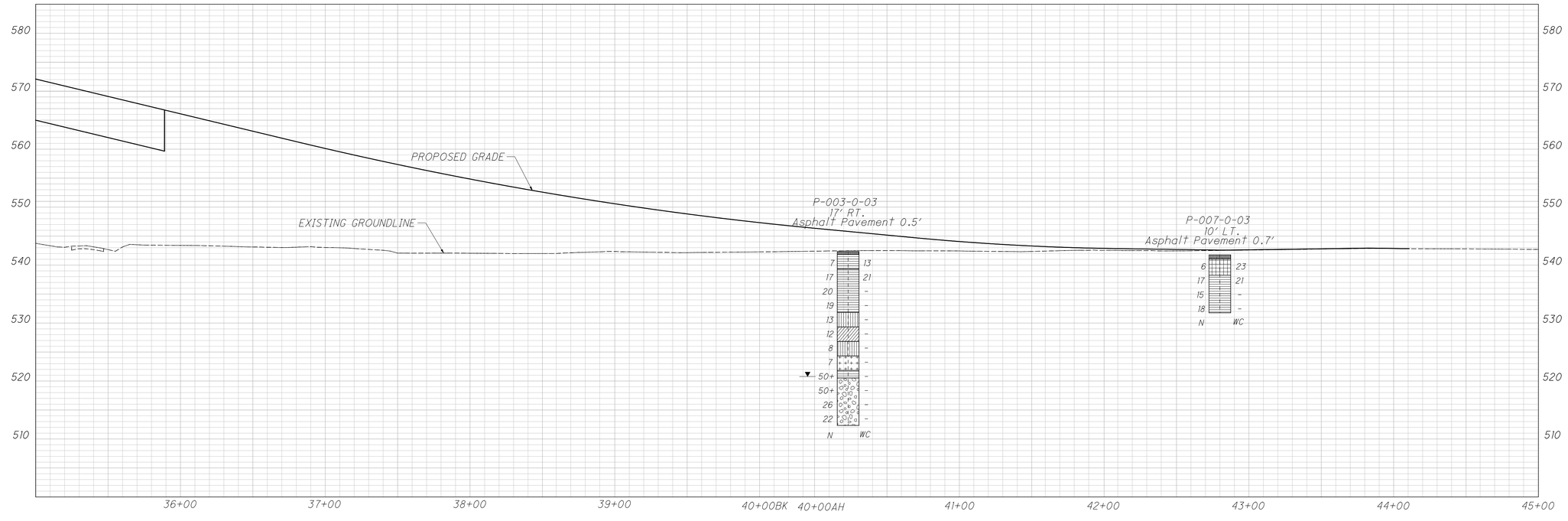

HORIZONTAL SCALE IN FEET
0 20 40 80

DRAWN MSJ
CHECKED EMK

SOIL PROFILE
SECOND STREET - STA. 40+00 TO 44+00

LAW-93-0.00

5 / 38

V:\1755\active\175537016\Drawings\81595\structures\SHEETS\81595S04_2.dgn 5/4/2011 10:52:14 AM mjennings

HORIZONTAL SCALE IN FEET
0 20 40 80

DRAWN MSJ
CHECKED EMK

SOIL PROFILE

CAMPBELL AVENUE - STA 26+75 TO 36+00

LAW-93-0.00

V:\1755\active\175537016\Drawings\81595\structures\SHEETS\81595S04_3.dgn 5/4/2011 10:53:15 AM mjennings

V:\1755\active\175537016\Drawings\81595\structures\SHEETS\81595S04_4.dgn 5/4/2011 10:57:03 AM mjennings

SOIL PROFILE

AVENUE - STA 3+00 TO 8+50

JEFFERSON

LAW-93-0.00

DRAWN MSJ

CHECKED EMK

HORIZONTAL SCALE IN FEET

0 20 40 80

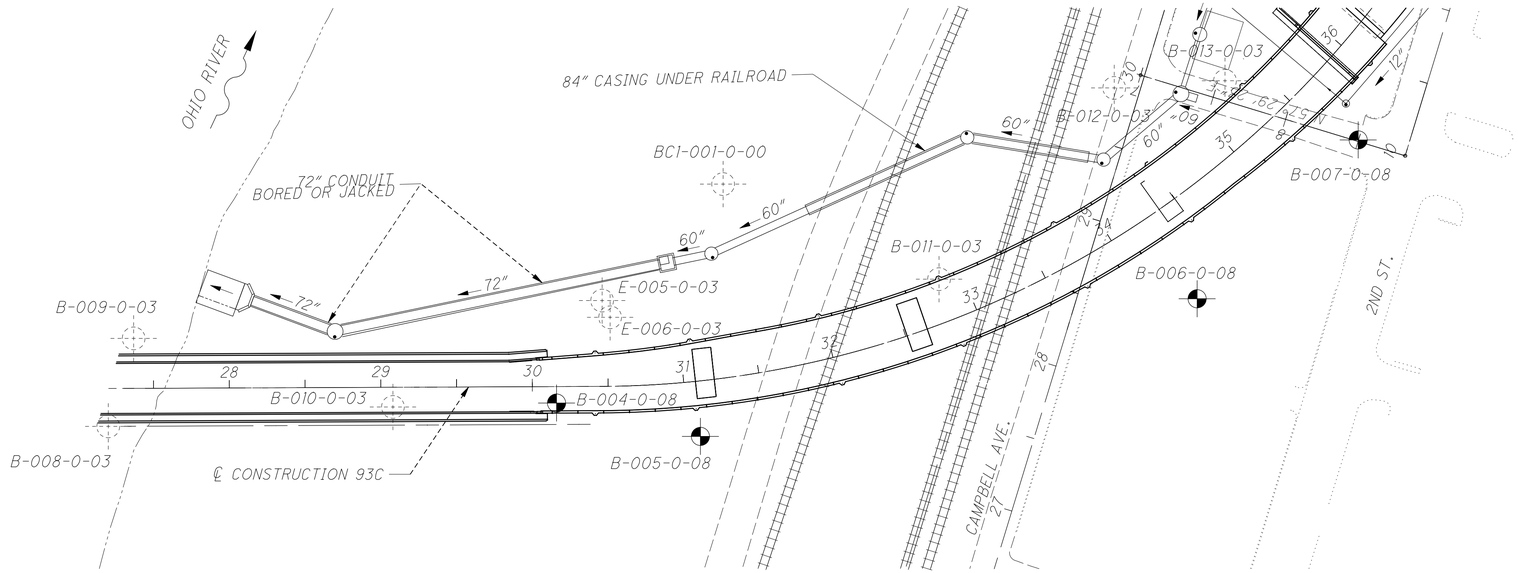

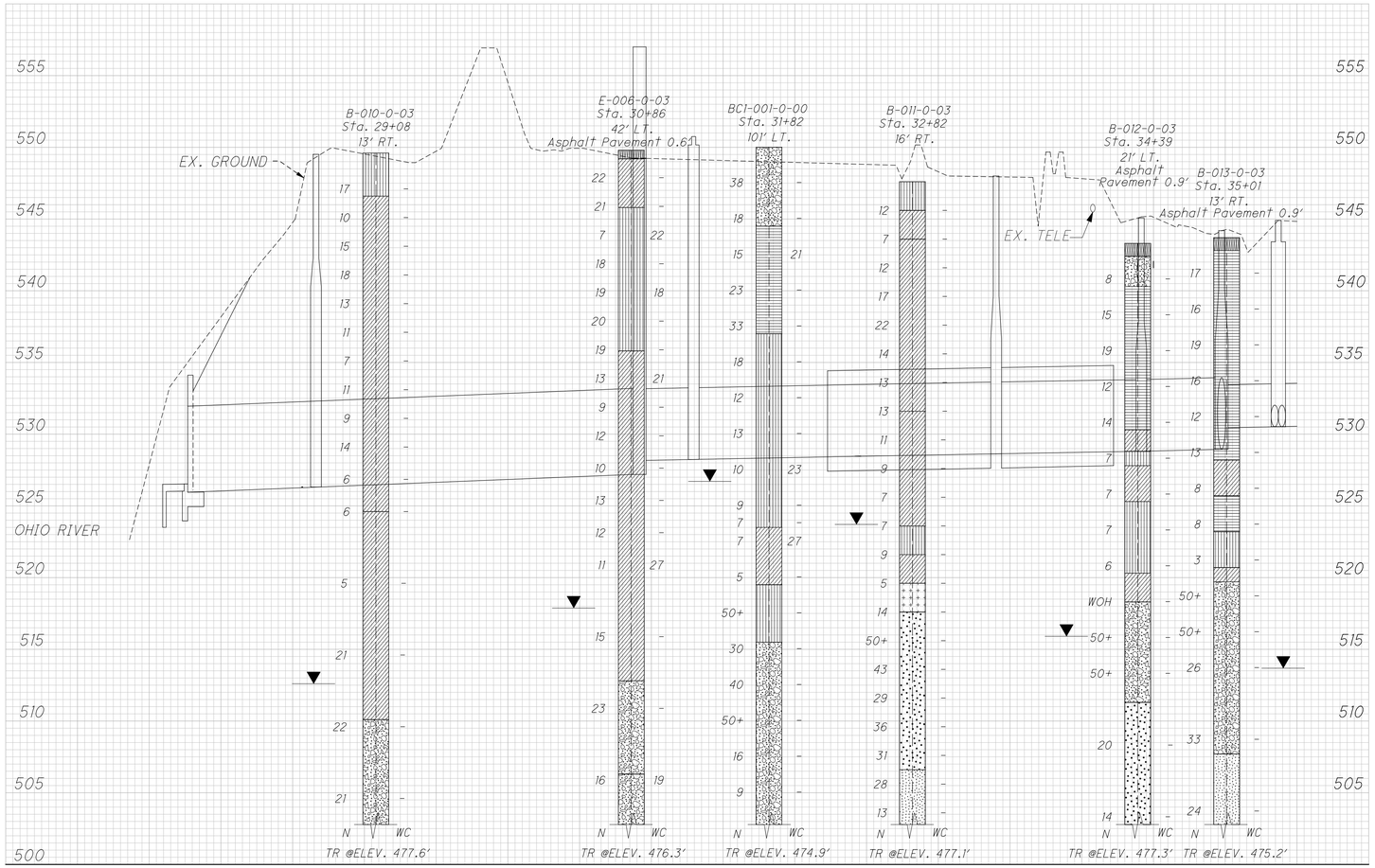

℄ CONST. 93C - LEFT PROFILE

HORIZONTAL SCALE IN FEET
0 25 50 100

DRAWN MSJ
CHECKED EMK

STRUCTURE FOUNDATION EXPLORATION
72" - 84" CONDUIT BORED OR JACKED

LAW-93-0.00

mjennings
V:\1755\active\175537016\Drawings\81595\structures\SHEETS\81595S04.1.dgn 5/4/2011 10:58:58 AM

V:\1755\active\175537016\Drawings\81595\structures\SHEETS\81595S05.dgn 5/4/2011 11:00:19 AM mjennings

PROJECT: LAW-93C-0	DRILLING FIRM / OPERATOR: STANTEC / TC	DRILL RIG: CME 55 TRUCK	STATION / OFFSET: 11+06 24.4 RT	EXPLORATION ID B-001-0-08
TYPE: BRIDGE REPLACEMENT	SAMPLING FIRM / LOGGER: STANTEC / DBR	HAMMER: CME AUTOMATIC	ALIGNMENT: MAINLINE	
PID: 81595 BR ID: LAW-93C-0000	DRILLING METHOD: 3.25" HSA / NQ	CALIBRATION DATE: 7/17/07	ELEVATION: 553.2 (MSL) EOB: 47.2 ft.	PAGE 1 OF 1
START: 4/28/09 END: 4/28/09	SAMPLING METHOD: SPT / NQ	ENERGY RATIO (%): 80	LAT / LONG: Not Recorded	

MATERIAL DESCRIPTION AND NOTES	ELEV.	DEPTHS	SPT / RQD	N60	REC (%)	SAMPLE ID	HP (tsf)	GRADATION (%) GR	CS	FS	SI	CL	ATTERBERG LL	PL	PI	WC	ODOT CLASS (GI)	BACK FILL
BOULDERY ZONE Railroad Ballast	553.2																	
	547.1		8 5 4	12	78	SS-1	–	–	–	–	–	–	–	–	–	14	A-7-6 (V)	
STIFF TO VERY STIFF, LIGHT BROWN AND GRAY, CLAY, TRACE SAND, AND SILT, DAMP			3 3 5	11	72	SS-2	–	–	–	–	–	–	–	–	–	16	A-7-6 (V)	
			5 5 6	15	100	SS-3	–	2	1	6	39	52	46	25	21	24	A-7-6 (14)	
			4 6 9	20	100	SS-4	–	–	–	–	–	–	–	–	–	24	A-7-6 (V)	
	538.2																	
VERY STIFF, LIGHT BROWN AND GRAY, SILT AND CLAY, LITTLE SAND, DAMP			6 7 8	20	100	SS-5	–	–	–	–	–	–	–	–	–	21	A-6a (V)	
			3 5 7	16	100	SS-6	–	0	0	16	55	29	32	21	11	20	A-6a (8)	
	533.2																	
MEDIUM DENSE, BROWN, SANDY SILT, LITTLE CLAY, WET			2 5 6	15	100	SS-7	–	–	–	–	–	–	–	–	–	21	A-4a (V)	
			3 3 5	11	94	SS-8	–	–	–	–	–	–	–	–	–	20	A-4a (V)	
VERY LOOSE @ 508.21 feet		▼ 0 hr	WOH WOH 1	1	100	SS-9	–	0	0	43	41	16	NP	NP	NP	27	A-4a (4)	
			WOH 1 1	3	100	SS-10	–	–	–	–	–	–	–	–	–	26	A-4a (V)	
			WOH 1 2	4	100	SS-11	–	–	–	–	–	–	–	–	–	24	A-4a (V)	
	520.1																	
LOOSE, GRAY, SANDY SILT, LITTLE CLAY, WET			1 2 4	8	100	SS-12	–	–	–	–	–	–	–	–	–	34	A-4a (V)	
	517.0	TR	1 1 50/2"	50+	100	SS-13	–	–	–	–	–	–	–	–	–	26	A-4a (V)	
SANDSTONE, GRAY, SLIGHTLY WEATHERED, STRONG, FINE TO MEDIUM GRAINED, THIN BEDDED, MICACEOUS, WIDE FRACTURE SPACING; RQD 98%, REC 100%. COMPRESSIVE STRENGTH 320 tsf AT 512.5'			95		100	NQ-14											CORE	
	511.0																	
SILTSTONE, GRAY, SANDY, SLIGHTLY WEATHERED, STRONG, LAMINATED, ARENACEOUS, CLOSE FRACTURE SPACING; RQD 82%, REC 100%.			81		100	NQ-15											CORE	
	506.0	EOB																

NOTES:

ABANDONMENT METHODS, MATERIALS, QUANTITIES: BORING SEALED WITH CEMENT BENTONITE GROUT

STANDARD ODOT SOIL BORING LOG (11 X 17) - GM DOT.GDT - 7/24/09 11:06 - V:\1755\ACTIVE\175537016\GINT DATA\175537016 BORING LOGS.GPJ

PROJECT: LAW-93C-0	DRILLING FIRM / OPERATOR: STANTEC / TC	DRILL RIG: CME 55 TRUCK	STATION / OFFSET: 11+18 23.1 LT	EXPLORATION ID B-002-0-08
TYPE: BRIDGE REPLACEMENT	SAMPLING FIRM / LOGGER: STANTEC / DBR	HAMMER: CME AUTOMATIC	ALIGNMENT: MAINLINE	
PID: 81595 BR ID: LAW-93C-0000	DRILLING METHOD: 3.25" HSA / NQ	CALIBRATION DATE: 7/17/07	ELEVATION: 553.4 (MSL) EOB: 49.19 ft.	PAGE 1 OF 1
START: 4/28/09 END: 4/28/09	SAMPLING METHOD: SPT / NQ	ENERGY RATIO (%): 80	LAT / LONG: Not Recorded	

MATERIAL DESCRIPTION AND NOTES	ELEV. 553.4	DEPTHS	SPT/RQD	N60	REC (%)	SAMPLE ID	HP (tsf)	GRADATION (%) GR	CS	FS	SI	CL	ATTERBERG LL	PL	PI	WC	ODOT CLASS (GI)	BACK FILL
BOULDERY ZONE RAILROAD BALLAST	548.6																	
STIFF, BROWN WITH GRAY, SANDY SILT, SOME GRAVEL, LITTLE CLAY, DAMP TO MOIST	543.4		2 3 4	9	72	SS-1	–	27	13	20	21	19	26	18	8	18	A-4a (1)	
			4 3 5	11	44	SS-2	–	–	–	–	–	–	–	–	–	16	A-4a (V)	
MEDIUM STIFF TO VERY STIFF, BROWN WITH GRAY MOTTLED, SILT AND CLAY, LITTLE SAND, DAMP TO MOIST			2 3 5	11	100	SS-3	–	–	–	–	–	–	–	–	–	24	A-6a (V)	
			4 7 12	25	100	SS-4	–	–	–	–	–	–	–	–	–	21	A-6a (V)	
			3 4 8	16	100	SS-5	–	0	0	18	53	29	34	20	14	21	A-6a (10)	
			3 5 7	16	100	SS-6	–	–	–	–	–	–	–	–	–	19	A-6a (V)	
			4 5 5	13	100	SS-7	–	–	–	–	–	–	–	–	–	24	A-6a (V)	
	529.7		4 2 4	8	100	SS-8	–	–	–	–	–	–	–	–	–	24	A-6a (V)	
VERY LOOSE TO LOOSE, BROWN, SILT, SOME SAND, LITTLE CLAY, MOIST TO WET		▼ 0 hr	1 2 2	5	100	SS-9	–	–	–	–	–	–	–	–	–	25	A-4b (V)	
			WOH 1 1	3	100	SS-10	–	0	0	33	50	17	NP	NP	NP	30	A-4b (6)	
			WOH WOH 1	1	100	SS-11	–	–	–	–	–	–	–	–	–	28	A-4b (V)	
			WOH 2 3	7	100	SS-12	–	–	–	–	–	–	–	–	–	31	A-4b (V)	
	519.6																	
VERY LOOSE, GRAY, SANDY SILT, TRACE GRAVEL, LITTLE CLAY, WET	517.0	TR	1 1 50/5"	50+	100	SS-13	–	2	3	33	43	19	23	19	4	25	A-4a (5)	
SANDSTONE, GRAY, MODERATLEY WEATHERED, SLIGHTLY STRONG, FINE, THIN BEDDED, ARENACEOUS; RQD 96%, REC 100%. COMPRESSIVE STRENGTH 244 tsf AT 513.9'	510.3		96		100	NQ-14											CORE	
SILTSTONE, GRAY, MODERATELY WEATHERED, STRONG, FINE GRAINED, THIN BEDDED, ARENACEOUS; RQD 89%, REC 100%. COMPRESSIVE STRENGTH 552 tsf AT 510.2' COMPRESSIVE STRENGTH 543 tsf AT 508.4'	504.2	EOB	89		100	NQ-15											CORE	

NOTES:

ABANDONMENT METHODS, MATERIALS, QUANTITIES: BORING SEALED WITH CEMENT BENTONITE GROUT

STANDARD ODOT SOIL BORING LOG (11 X 17) - OH DOT.GDT - 7/24/09 11:20 - V:\1755\ACTIVE\175537016\GINT DATA\175537016 BORING LOGS.GPJ

PROJECT: LAW-93C-0	DRILLING FIRM / OPERATOR: STANTEC / TC	DRILL RIG: CME 55 TRUCK	STATION / OFFSET: 13+15 14.2 LT	EXPLORATION ID B-003-0-08
TYPE: BRIDGE REPLACEMENT	SAMPLING FIRM / LOGGER: STANTEC / DBR	HAMMER: CME AUTOMATIC	ALIGNMENT: MAINLINE	
PID: 81595 BR ID: LAW-93C-0000	DRILLING METHOD: 3.25" HSA / NQ	CALIBRATION DATE: 7/17/07	ELEVATION: 515.3 (MSL) EOB: 57.2 ft.	PAGE 1 OF 1
START: 9/11/08 END: 9/11/08	SAMPLING METHOD: SPT / NQ	ENERGY RATIO (%): 80	LAT / LONG: Not Recorded	

MATERIAL DESCRIPTION AND NOTES	ELEV. 515.3	DEPTHS	SPT/ RQD	N60	REC (%)	SAMPLE ID	HP (tsf)	GRADATION (%) GR	CS	FS	SI	CL	ATTERBERG LL	PL	PI	WC	ODOT CLASS (GI)	BACK FILL
BARGE DECK																		
	513.0	W																
WATER (Ohio River)																		
	496.4																	
MEDIUM DENSE, BROWN AND ORANGISH BROWN, COARSE AND FINE SAND, AND GRAVEL, TRACE SILT, TRACE CLAY, WET	494.9		3 7 8	20	100	SS-1	–	49	30	12	7	2	NP	NP	NP	21	A-1-b (0)	
MEDIUM DENSE, BROWN AND ORANGISH BROWN, FINE SAND, AND GRAVEL, TRACE SILT, WET			5 6 8	19	100	SS-2	–	35	49	11	5	0	NP	NP	NP	16	A-1-b (0)	
			5 5 3	11	28	SS-3	–	–	–	–	–	–	–	–	–	20	A-1-b (V)	
	490.6		3 5 6	15	100	SS-4	–	45	36	15	4	0	NP	NP	NP	16	A-1-b (0)	
MEDIUM DENSE TO DENSE, ORANGISH BROWN, FINE SAND, TRACE GRAVEL, TRACE SILT, WET		FS	5 6 8	19	100	SS-5	–	2	12	79	7	0	NP	NP	NP	32	A-3 (0)	
	483.3		7 12 18	40	100	SS-6	–	7	16	69	8	0	NP	NP	NP	28	A-3 (0)	
DENSE, ORANGISH BROWN, FINE SAND, AND GRAVEL, TRACE SILT, WET			7 11 13	32	100	SS-7	–	43	38	14	5	0	NP	NP	NP	17	A-1-b (0)	
	480.2	TR																
SANDSTONE, (AUGERED).	480.0		50/4"	50+	100	SS-8	–	–	–	–	–	–	–	–	–	15	A-1-b (V)	
SANDSTONE, GRAY TO BROWN, HIGHLY WEATHERED, WEAK, COARSE GRAINED, THIN BEDDED, HIGHLY FRACTURED, WEAKLY CEMENTED; RQD 20%, REC 46%.	475.4		20		33	NQ-9											CORE	
SANDSTONE, GRAY, SLIGHTLY WEATHERED, MODERATELY STRONG, FINE GRAINED, THIN TO MEDIUM BEDDED, MICACEOUS; RQD 87%, REC 95%.			75		93	NQ-10											CORE	
			87		91	NQ-11											CORE	
	458.1	EOB																

NOTES: NONE

ABANDONMENT METHODS, MATERIALS, QUANTITIES: SOIL CUTTINGS

STANDARD ODOT SOIL BORING LOG (11 X 17) - OH DOT.GDT - 7/24/09 12:42 - V:\1755\ACTIVE\175537016\GINT DATA\175537016 BORING LOGS.GPJ

PROJECT: LAW-93C-0	DRILLING FIRM / OPERATOR: STANTEC / TC	DRILL RIG: CME 55 TRUCK	STATION / OFFSET: 30+14.2 1.5' LT	EXPLORATION ID B-004-0-08
TYPE: BRIDGE REPLACEMENT	SAMPLING FIRM / LOGGER: STANTEC / DBR	HAMMER: CME AUTOMATIC	ALIGNMENT: MAINLINE	
PID: 81595 BR ID: LAW-93C-0000	DRILLING METHOD: 3.25" HSA / NQ	CALIBRATION DATE: 7/17/07	ELEVATION: 549.5 (MSL) EOB: 84.4 ft.	PAGE 1 OF 1
START: 4/29/09 END: 4/29/09	SAMPLING METHOD: SPT / NQ	ENERGY RATIO (%): 80	LAT / LONG: Not Recorded	

MATERIAL DESCRIPTION AND NOTES	ELEV.	DEPTHS	SPT/RQD	N60	REC (%)	SAMPLE ID	HP (tsf)	GRADATION (%) GR	CS	FS	SI	CL	ATTERBERG LL	PL	PI	WC	ODOT CLASS (GI)	BACK FILL
STIFF TO VERY STIFF, BROWN TO BLACK, SILT AND CLAY, LITTLE GRAVEL, SOME SAND, DAMP TO MOIST	549.5		4 5 1,1	21	72	SS-1	–	–	–	–	–	–	–	–	–	18	A-6a (V)	
	545.7	2.5	3 4 5	12	100	SS-2	–	15	13	13	39	20	33	22	11	23	A-6a (5)	
STIFF, BROWN WITH GRAY, SILT AND CLAY, LITTLE GRAVEL, SOME SAND, MOIST		5.0	2 3 4	9	72	SS-3	–	–	–	–	–	–	–	–	–	22	A-6a (V)	
	542.5	7.5	4 7 1,1	24	100	SS-4	–	–	–	–	–	–	–	–	–	20	A-6a (V)	
STIFF TO VERY STIFF, BROWN, SILT AND CLAY, LITTLE SAND, MOIST		10.0	5 7 10	23	100	SS-5	–	0	0	18	53	29	32	19	13	21	A-6a (9)	
		12.5	2 3 4	9	100	SS-6	–	–	–	–	–	–	–	–	–	21	A-6a (V)	
		15.0	2 3 5	11	100	SS-7	–	–	–	–	–	–	–	–	–	22	A-6a (V)	
	532.0	17.5	1 2 4	8	100	SS-8	–	–	–	–	–	–	–	–	–	22	A-4a (V)	
STIFF, BROWN, SANDY SILT, SOME CLAY, MOIST TO WET		20.0	2 4 6	13	100	SS-9	–	0	0	31	45	24	26	18	8	22	A-4a (7)	
		22.5	1 2 4	8	100	SS-10	–	–	–	–	–	–	–	–	–	25	A-4a (V)	
		25.0	1 3 3	8	100	SS-11	–	–	–	–	–	–	–	–	–	25	A-4a (V)	
	521.4 ▼ 0 hr	27.5	1 2 2	5	100	SS-12	–	–	–	–	–	–	–	–	–	26	A-4a (V)	
SOFT TO MEDIUM STIFF, GRAY TO BROWN, SANDY SILT, SOME CLAY, WET		30.0	WOH 1 2	4	100	SS-13	–	0	0	32	44	24	24	18	6	29	A-4a (7)	
	514.3	32.5																
MEDIUM DENSE TO DENSE, BROWN, GRAVEL AND/OR STONE FRAGMENTS WITH SAND, TRACE SILT, TRACE CLAY, FINE TO COARSE GRAINED, SUBANGULAR, WET		35.0	7 11 18	39	100	SS-14	–	–	–	–	–	–	–	–	–	28	A-1-b (V)	
		40.0	10 16 1,1	36	100	SS-15	–	32	40	20	6	2	NP	NP	NP	21	A-1-b (0)	
		45.0	8 12 10	29	100	SS-16	–	–	–	–	–	–	–	–	–	15	A-1-b (V)	
		50.0	10 11 1,1	29	100	SS-17	–	–	–	–	–	–	–	–	–	26	A-1-b (V)	
		55.0	5 6 6	16	100	SS-18	–	–	–	–	–	–	–	–	–	24	A-1-b (V)	
		60.0	8 9 1,1	27	100	SS-19	–	–	–	–	–	–	–	–	–	25	A-1-b (V)	
		65.0	8 16 1,1	36	100	SS-20	–	–	–	–	–	–	–	–	–	15	A-1-b (V)	
		70.0	8 9 10	25	100	SS-21	–	–	–	–	–	–	–	–	–	20	A-1-b (V)	
	477.2 TR																	
SHALE, WEATHERED (AUGERED).	476.8	72.5																
SHALE, GRAY WITH VERY DARK GRAY, MODERATELY WEATHERED, MODERATELY STRONG, SANDY, LAMINATED; RQD 24%, REC 53%.		75.0	56		90	NQ-22											CORE	
	467.8	77.5																
SANDSTONE, GRAY, MODERATELY WEATHERED, MODERATELY STRONG, FINE GRAINED, THIN BEDDED; RQD 63%, REC 99%.		80.0																
	465.1 EOB	82.5	63		99	NQ-23											CORE	

NOTES: NONE

ABANDONMENT METHODS, MATERIALS, QUANTITIES: SOIL CUTTINGS

STANDARD ODOT SOIL BORING LOG (11 X 17) - OH DOT.GDT - 7/24/09 12:52 - V:\1755\ACTIVE\175537016\GINT DATA\175537016 BORING LOGS.GPJ

PROJECT: LAW-93C-0	DRILLING FIRM / OPERATOR: STANTEC / TC	DRILL RIG: CME 55 TRUCK	STATION / OFFSET: 31+19.6 7.6' RT	EXPLORATION ID B-005-0-08
TYPE: BRIDGE REPLACEMENT	SAMPLING FIRM / LOGGER: STANTEC / DBR	HAMMER: CME AUTOMATIC	ALIGNMENT: MAINLINE	
PID: 81595 BR ID: LAW-93C-0000	DRILLING METHOD: 3.25" HSA / NQ	CALIBRATION DATE: 7/17/07	ELEVATION: 548.8 (MSL) EOB: 82.9 ft.	PAGE 1 OF 1
START: 4/29/09 END: 4/29/09	SAMPLING METHOD: SPT / NQ	ENERGY RATIO (%): 80	LAT / LONG: Not Recorded	

MATERIAL DESCRIPTION AND NOTES	ELEV.	DEPTHS	SPT / RQD	N60	REC (%)	SAMPLE ID	HP (tsf)	GRADATION (%) GR	CS	FS	SI	CL	ATTERBERG LL	PL	PI	WC	ODOT CLASS (GI)	BACK FILL
GRAVEL AND/OR STONE FRAGMENTS	548.8																	
	548.0																	
STIFF TO VERY STIFF, BROWN WITH GRAY, SILT AND CLAY, LITTLE GRAVEL, SOME SAND, DAMP TO MOIST		2.5	9 5 6	15	100	SS-1	–	–	–	–	–	–	–	–	–	16	A-1-a (V)	
		5.0	4 8 8	21	100	SS-2	–	17	13	15	34	21	34	20	14	20	A-6a (6)	
		7.5	3 4 7	15	100	SS-3	–	–	–	–	–	–	–	–	–	20	A-6a (V)	
		10.0	3 6 9	20	100	SS-4	–	–	–	–	–	–	–	–	–	20	A-6a (V)	
	537.7	12.5	4 6 10	21	100	SS-5	–	–	–	–	–	–	–	–	–	20	A-6a (V)	
VERY STIFF, BROWN, SILT AND CLAY, LITTLE SAND, DAMP		15.0	3 6 9	20	100	SS-6	–	0	1	10	55	34	34	19	15	17	A-6a (10)	
	533.7	17.5	2 4 6	13	100	SS-7	–	–	–	–	–	–	–	–	–	21	A-6a (V)	
STIFF, BROWN, SILT AND CLAY, TRACE SAND, MOIST TO WET		20.0	2 3 4	9	100	SS-8	–	–	–	–	–	–	–	–	–	23	A-6a (V)	
MEDIUM STIFF @ 528.77 FEET		22.5	WOH 2 3	7	100	SS-9	–	–	–	–	–	–	–	–	–	24	A-6a (V)	
			▼ 0 hr															
		25.0	1 2 3	7	100	SS-10	–	–	–	–	–	–	–	–	–	26	A-6a (V)	
SOFT @ 523.77 FEET		27.5	WOH 1 1	3	100	SS-11	–	0	1	6	65	28	31	20	11	31	A-6a (8)	
	520.1	30.0	WOH WOH 2	3	100	SS-12	–	–	–	–	–	–	–	–	–	28	A-4a (V)	
VERY SOFT, GRAY, SILT, TRACE SAND, SOME CLAY, WET		32.5	WOH WOH 1	1	100	SS-13	–	0	2	6	70	22	27	21	6	35	A-4b (8)	
	513.4	35.0	5 23 20	57	100	SS-14	–	–	–	–	–	–	–	–	–	13	A-1-b (V)	
MEDIUM DENSE TO DENSE, ORANGISH BROWN, GRAVEL AND/OR STONE FRAGMENTS WITH SAND, TRACE SILT, WELL GRADED, SUBANGULAR, WET		37.5																
		40.0	3 4 6	13	100	SS-15	–	–	–	–	–	–	–	–	–	28	A-1-b (V)	
		42.5																
		45.0	5 12 13	33	100	SS-16	–	14	39	41	6	0	NP	NP	NP	21	A-1-b (0)	
		47.5																
		50.0	1 4 6	13	94	SS-17	–	–	–	–	–	–	–	–	–	21	A-1-b (V)	
		52.5																
		55.0	5 11 12	31	100	SS-18	–	–	–	–	–	–	–	–	–	16	A-1-b (V)	
		57.5																
		60.0	5 8 10	24	100	SS-19	–	–	–	–	–	–	–	–	–	23	A-1-b (V)	
		62.5																
		65.0	4 10 13	31	100	SS-20	–	–	–	–	–	–	–	–	–	21	A-1-b (V)	
		67.5																
	477.4	70.0	TR 5 9 14	31	100	SS-21	–	–	–	–	–	–	–	–	–	17	A-1-b (V)	
SHALE. (interbedded with sandstone, augered)	475.9	72.5																
SHALE, GRAY, MODERATELY WEATHERED, MODERATELY STRONG, FINE GRAINED, LAMINATED, INTERBEDDED WITH SANDSTONE; RQD 62%, REC 100%. Shale (60%) Interbedded with Sandstone (40%)		75.0																
		77.5	62		100	NQ-22											CORE	
		80.0																
	465.9	82.5	EOB															

NOTES: NONE

ABANDONMENT METHODS, MATERIALS, QUANTITIES: SOIL CUTTINGS

STANDARD ODOT SOIL BORING LOG (11 X 17) - OH DOT.GDT - 7/24/09 12:53 - V:\1755\ACTIVE\175537016\GINT DATA\175537016 BORING LOGS.GPJ

PROJECT: LAW-93C-0	DRILLING FIRM / OPERATOR: STANTEC / TC	DRILL RIG: CME 55 TRUCK	STATION / OFFSET: 34+50.5 6.4' RT	EXPLORATION ID B-006-0-08
TYPE: BRIDGE REPLACEMENT	SAMPLING FIRM / LOGGER: STANTEC / DBR	HAMMER: CME AUTOMATIC	ALIGNMENT: MAINLINE	
PID: 81595 BR ID: LAW-93C-0000	DRILLING METHOD: 3.25" HSA / NQ	CALIBRATION DATE: 7/17/07	ELEVATION: 545.4 (MSL) EOB: 79.6 ft.	PAGE 1 OF 1
START: 4/30/09 END: 4/30/09	SAMPLING METHOD: SPT / NQ	ENERGY RATIO (%): 80	LAT / LONG: Not Recorded	

MATERIAL DESCRIPTION AND NOTES	ELEV. 545.4	DEPTHS	SPT/RQD	N60	REC (%)	SAMPLE ID	HP (tsf)	GRADATION (%) GR	CS	FS	SI	CL	ATTERBERG LL	PL	PI	WC	ODOT CLASS (GI)	BACK FILL
ASPHALT PAVEMENT	545.0																	
MEDIUM STIFF TO VERY STIFF, BROWN AND GRAY, CLAY, AND SILT, LITTLE SAND, DAMP TO MOIST		2.5	1 2 4	8	72	SS-1	–	–	–	–	–	–	–	–	–	29	A-7-6 (V)	
		5.0	1 2 4	8	94	SS-2	–	0	12	5	44	39	41	21	20	27	A-7-6 (12)	
		7.5	6 7 11	24	100	SS-3	–	–	–	–	–	–	–	–	–	21	A-7-6 (V)	
		10.0	5 6 9	20	100	SS-4	–	–	–	–	–	–	–	–	–	21	A-7-6 (V)	
		12.5	4 5 8	17	100	SS-5	–	–	–	–	–	–	–	–	–	22	A-7-6 (V)	
		15.0	3 5 6	15	100	SS-6	–	–	–	–	–	–	–	–	–	22	A-7-6 (V)	
		17.5	1 4 6	13	100	SS-7	–	–	–	–	–	–	–	–	–	23	A-7-6 (V)	
		20.0	2 4 4	11	100	SS-8	–	–	–	–	–	–	–	–	–	24	A-7-6 (V)	
	522.9	22.5	1 2 4	8	100	SS-9	–	–	–	–	–	–	–	–	–	25	A-6a (V)	
MEDIUM STIFF TO STIFF, BROWN AND GRAY, SILT AND CLAY, TRACE GRAVEL, TRACE SAND, MOIST		25.0	2 2 5	9	100	SS-10	–	6	3	7	54	30	31	18	13	24	A-6a (9)	
	517.7	▼ 0 hr																
DENSE TO VERY DENSE, BROWN, GRAVEL AND/OR STONE FRAGMENTS WITH SAND, TRACE SILT, TRACE CLAY, POORLY GRADED, SUBANGULAR, WET		27.5	3 11 14	33	100	SS-11	–	–	–	–	–	–	–	–	–	13	A-1-b (V)	
		30.0	12 20 23	57	100	SS-12	–	47	31	16	5	1	NP	NP	NP	10	A-1-b (0)	
		32.5																
		35.0	2 5 20	33	100	SS-13	–	–	–	–	–	–	–	–	–	29	A-1-b (V)	
	505.4	37.5																
MEDIUM DENSE TO DENSE, BROWN, FINE SAND, TRACE SILT, TRACE CLAY, POORLY GRADED, SUBANGULAR, WET		40.0	5 8 12	27	100	SS-14	–	–	–	–	–	–	–	–	–	21	A-3 (V)	
		42.5																
		45.0	2 4 6	13	100	SS-15	–	0	36	58	5	1	NP	NP	NP	33	A-3 (0)	
		47.5																
F S		50.0	11 11 14	33	100	SS-16	–	–	–	–	–	–	–	–	–	24	A-3 (V)	
		52.5																
		55.0	5 6 11	23	100	SS-17	–	–	–	–	–	–	–	–	–	19	A-3 (V)	
	484.5	57.5																
MEDIUM DENSE, GRAY, GRAVEL AND/OR STONE FRAGMENTS WITH SAND, TRACE SILT, TRACE CLAY, POORLY GRADED, SUBANGULAR, WET		60.0	5 8 13	28	100	SS-18	–	–	–	–	–	–	–	–	–	17	A-1-b (V)	
		62.5																
		65.0	7 8 10	24	100	SS-19	–	17	44	33	5	1	NP	NP	NP	24	A-1-b (0)	
	476.3	67.5																
SHALE, DARK GRAY, MODERATELY WEATHERED, MODERATELY STRONG, LAMINATED, RQD 56%, REC 100%.		TR 70.0																
	471.4	72.5																
SANDSTONE, GRAY, MODERATELY WEATHERED, MODERATELY STRONG, MEDIUM GRAINED, MICACEOUS; RQD 56%, REC 100%.		75.0	56		100	NQ-20											CORE	
	465.8	EOB 77.5																

NOTES:

ABANDONMENT METHODS, MATERIALS, QUANTITIES: BORING SEALED WITH CEMENT BENTONITE GROUT

STANDARD ODOT SOIL BORING LOG (11 X 17) - OH DOT.GDT - 7/24/09 12:53 - V:\1755\ACTIVE\175537016\GINT DATA\175537016 BORING LOGS.GPJ

PROJECT: LAW-93C-0	DRILLING FIRM / OPERATOR: STANTEC / TC	DRILL RIG: CME 55 TRUCK	STATION / OFFSET: 35+96.5 2.3' LT	EXPLORATION ID B-007-0-08
TYPE: BRIDGE REPLACEMENT	SAMPLING FIRM / LOGGER: STANTEC / DBR	HAMMER: CME AUTOMATIC	ALIGNMENT: MAINLINE	
PID: 81595 BR ID: LAW-93C-0000	DRILLING METHOD: 3.25" HSA / NQ	CALIBRATION DATE: 7/17/07	ELEVATION: 543.7 (MSL) EOB: 76.9 ft.	PAGE 1 OF 1
START: 5/1/09 END: 5/1/09	SAMPLING METHOD: SPT / NQ	ENERGY RATIO (%): 80	LAT / LONG: Not Recorded	

MATERIAL DESCRIPTION AND NOTES	ELEV. 543.7	DEPTHS	SPT / RQD	N60	REC (%)	SAMPLE ID	HP (tsf)	GRADATION (%) GR	CS	FS	SI	CL	ATTERBERG LL	PL	PI	WC	ODOT CLASS (GI)	BACK FILL
TOPSOIL	543.1		2 2 3	7	72	SS-1	–	–	–	–	–	–	–	–	–	25	A-7-6 (V)	
MEDIUM STIFF TO VERY STIFF, BROWN WITH GRAY MOTTLED, CLAY, AND SILT, LITTLE SAND, DAMP TO MOIST		2.5	2 2 5	9	100	SS-2	–	0	6	5	44	45	47	25	22	22	A-7-6 (14)	
		5.0	4 8 11	25	100	SS-3	–	–	–	–	–	–	–	–	–	20	A-7-6 (V)	
		7.5	4 7 9	21	100	SS-4	–	–	–	–	–	–	–	–	–	20	A-7-6 (V)	
		10.0	3 6 8	19	100	SS-5	–	–	–	–	–	–	–	–	–	21	A-7-6 (V)	
	531.1	12.5	4 4 6	13	100	SS-6	–	–	–	–	–	–	–	–	–	23	A-6a (V)	
STIFF, BROWN, SILT AND CLAY, LITTLE SAND, MOIST		15.0	3 4 6	13	100	SS-7	–	0	0	10	62	28	31	19	12	23	A-6a (9)	
	525.9	17.5	2 4 4	11	100	SS-8	–	–	–	–	–	–	–	–	–	25	A-6a (V)	
MEDIUM STIFF TO STIFF, BROWN, SILT, LITTLE SAND, LITTLE CLAY, MOIST		20.0	2 3 3	8	100	SS-9	–	0	1	9	67	23	29	20	9	25	A-4b (8)	
		22.5	WOH 2 8	13	100	SS-10	–	–	–	–	–	–	–	–	–	25	A-4b (V)	
	518.3	▼ 0 hr 25.0	5 18 22	53	100	SS-11	–	–	–	–	–	–	–	–	–	10	A-1-b (V)	
DENSE TO VERY DENSE, ORANGISH BROWN, GRAVEL AND/OR STONE FRAGMENTS WITH SAND, TRACE SILT, TRACE CLAY, FINE TO COARSE GRAINED, WET		27.5	5 32 34	88	100	SS-12	–	41	37	15	5	2	NP	NP	NP	12	A-1-b (0)	
		30.0	5 16 17	44	100	SS-13	–	–	–	–	–	–	–	–	–	25	A-1-b (V)	
	508.7	32.5																
MEDIUM DENSE, ORANGISH BROWN, GRAVEL AND/OR STONE FRAGMENTS WITH SAND, TRACE SILT, FINE TO COARSE GRAINED, WET		35.0	8 5 5	13	100	SS-14	–	–	–	–	–	–	–	–	–	26	A-1-b (V)	
		37.5																
		40.0	3 4 6	13	100	SS-15	–	–	–	–	–	–	–	–	–	23	A-1-b (V)	
		42.5																
		45.0	4 7 8	20	100	SS-16	–	–	–	–	–	–	–	–	–	19	A-1-b (V)	
		47.5																
		50.0	3 3 11	19	100	SS-17	–	12	60	22	6	0	NP	NP	NP	23	A-1-b (0)	
		52.5																
		55.0	4 5 6	15	100	SS-18	–	–	–	–	–	–	–	–	–	21	A-1-b (V)	
		57.5																
		60.0	5 7 8	20	100	SS-19	–	–	–	–	–	–	–	–	–	25	A-1-b (V)	
		62.5																
	477.7	TR 65.0	5 23 50	97	72	SS-20	–	43	40	11	5	1	NP	NP	NP	9	A-1-b (0)	
SANDSTONE (AUGERED)	476.8																	
SANDSTONE, GRAY, SLIGHTLY WEATHERED, MODERATELY STRONG, FINE GRAINED, RQD 87%, REC 100%.		67.5																
		70.0																
		72.5	100		100	NQ-21											CORE	
		75.0																
	466.8	EOB																

NOTES: NONE

ABANDONMENT METHODS, MATERIALS, QUANTITIES: SOIL CUTTINGS

STANDARD ODOT SOIL BORING LOG (11 X 17) - OH DOT.GDT - 7/24/09 12:53 - V:\1755\ACTIVE\175537016\GINT DATA\175537016 BORING LOGS.GPJ

Client: Baker & Associates | Project: LAW -93C -0.00 | Job No. 0321-4003.00

Log of: Boring A-001-0-03 | Location: Station 9+01; 34' Rt. | Date Drilled: 1-15-04

WATER OBSERVATIONS: Water seepage at: None observed; Water level at completion: Dry (prior to coring), 3.80 (after coring)

Depth (ft)	Elev. (ft)	Blows per 6"	Recovery (in)	Sample No. Drive	Core Run	Hand Penetrometer (tsf)	DESCRIPTION	GRADATION % Aggregate	% C. Sand	% M. Sand	% F. Sand	% Silt	% Clay	STANDARD PENETRATION (N) Blows per foot 10 20 30 40 / Moisture Content-% PL Natural LL 10 20 30 40
0	598.9						Topsoil - 1"							
		2 2 3	15	S-1		1.25	Stiff brownish gray SILTY CLAY (A-6b), little gravel, little fine to coarse sand; damp to moist.							
4.5	594.4	2 3 11	18	S-2		3.0	Very stiff gray and brown SILTY CLAY (A-6b), little gravel, trace to little fine to coarse sand; contains relict rock structure; damp to moist.							
5							PROBABLE TOP OF WEATHERED ROCK							
6.0	592.9	10 19 40	18	S-3		—	Soft to medium hard dark gray and brown SHALE; severely weathered to partially decomposed; rust-stained.							
		10 21 30	18	S-4		4.5+								
11.0	587.9	12 50/5"	11	S-5			Medium hard light gray and brown SILTSTONE; severely weathered and partially decomposed.							
14.0	584.9	50/5"	2	S-6			PROBABLE TOP OF FIRM ROCK							
15		Core 60"	Rec 54"		RQD 65%	1	Soft to medium hard light gray SILTSTONE; thin bedded to laminated; weathered; broken. @ 14.0' - 16.7', very broken with low angle rust stained fractures. @ 16.5' - 16.7', high angle hematite healed fracture. @ 17.1', horizontal severely weathered rust stained fracture. @ 17.8', low angle rust stained fracture. @ 18.3', low angle clay filled fracture. @ 18.7', low angle rust stained fracture.							
19.0	579.9						Bottom of Boring - 19.0'							
20														
25														

Client: Baker & Associates | Project: LAW -93C -0.00 | Job No. 0321-4003.00

Log of: Boring A-003-0-03 | Location: Station 9+73; 32' Rt. | Date Drilled: 1-14-04

WATER OBSERVATIONS: Water seepage at: None observed; Water level at completion: Dry (prior to coring), 4.40 (after coring), 11.13 (16 hrs after completion)

Depth (ft)	Elev. (ft)	Blows per 6"	Recovery (in)	Sample No. Drive	Core Run	Hand Penetrometer (tsf)	DESCRIPTION	GRADATION % Aggregate	% C. Sand	% M. Sand	% F. Sand	% Silt	% Clay	STANDARD PENETRATION (N) Blows per foot 10 20 30 40 / Moisture Content-% PL Natural LL 10 20 30 40
0	571.6						Topsoil - 5"							
		2 3 6		S-1		0.25	FILL: Soft black SILT AND CLAY (A-6a), little to some gravel and slag, trace fine to coarse sand; moist.							
3.0	568.6						Description							
5		3 3 5	12	S-2		2.5	Very stiff brown and gray SILTY CLAY (A-6b), little fine to coarse sand, little gravel; damp.							
5.5	566.1						Medium dense brown GRAVEL WITH SAND, SILT, AND CLAY (A-2-6); damp.							
8.0	563.6	9 8 9	18	S-3										
10		4 3 6	18	S-4		2.75	Very stiff brown and gray SILTY CLAY (A-6b), trace to little fine to coarse sand, trace gravel; contains relict rock structure; damp.							
10.5	561.1						Medium dense brown GRAVEL WITH SAND, SILT, AND CLAY (A-2-6); damp; decomposed sandstone.							
13.0	558.6	6 4 21	18	S-5			PROBABLE TOP OF WEATHERED ROCK							
14.0	557.6	50/1"	1	S-6			Soft light brown fine-grained SANDSTONE; micaceous; severely weathered and partially decomposed. PROBABLE TOP OF FIRM ROCK							
15		Core 12"	Rec 9"		RQD 42%	1	Medium hard to hard brown and dark brown fine to medium grained SANDSTONE, micaceous; thin bedded; moderately weathered to weathered; broken. @ 14.4', low angle clay filled fracture. @ 14.5' - 14.9', clay seam. @ 15.0' - 17.5', very broken with low to high angle rust stained fractures. @ 16.8' - 17.1', extremely broken/rubbled zone. @ 17.5', becomes hard and intact.							
		Core 60"	Rec 55"		RQD 67%	2								
20														
		Core 60"	Rec 60"		RQD 100%	3	@ 23.4', gray sandstone with very thin coal stringers. @ 24.2' & 24.5', horizontal rust stained partially clay filled fractures.							
25	546.6													
		Core 60"	Rec 60"		RQD 100%	4	Medium hard to hard brown, gray and black fine to medium grained SANDSTONE, micaceous; slightly argillaceous; thick bedded; moderately weathered; contains coal stringers @ 28.4', thick coal stringer.							
30	541.6													
		Core 60"	Rec 60"		RQD 100%	5	Hard gray very fine to fine grained SANDSTONE, micaceous; thin to thick bedded; intact; slightly weathered; contains dark gray laminae. @ 30.6' - 32.9', gray and brown. @ 33.2', brown. @ 34.7', horizontal fracture with weathering.							
35.3	536.3						Bottom of Boring - 35.3'							
40														
45														
50														

Client: Baker & Associates | Project: LAW -93C -0.00 | Job No. 0321-4003.00

Log of: Boring A-002-0-03 | Location: Station 9+42; 24' Rt. | Date Drilled: 1-15-04

WATER OBSERVATIONS: Water seepage at: None observed; Water level at completion: Dry (prior to coring), 2.10 (after coring)

Depth (ft)	Elev. (ft)	Blows per 6"	Recovery (in)	Sample No. Drive	Core Run	Hand Penetrometer (tsf)	DESCRIPTION	GRADATION % Aggregate	% C. Sand	% M. Sand	% F. Sand	% Silt	% Clay	STANDARD PENETRATION (N) Blows per foot 10 20 30 40 / Moisture Content-% PL Natural LL 10 20 30 40
0	583.1						Topsoil - 4"							
		3 4 5	11	S-1			Loose gray and brown GRAVEL WITH SAND, SILT, AND CLAY (A-2-6); contains rock fragments; damp to moist.							
3.0	580.1													
5		2 4 5	12	S-2		3.25	Very stiff gray and brown SILTY CLAY (A-6b), trace to little gravel, trace to little fine to coarse sand; damp.							
6.0	577.1						PROBABLE TOP OF WEATHERED ROCK							
		22 50/5"	11	S-3		—	Soft light gray and brown SILTSTONE; severely weathered and partially decomposed; rust-stained.							
8.5	574.6	50/4"	0	S-4			PROBABLE TOP OF FIRM ROCK							
9.2	573.9						Medium hard brownish gray SILTSTONE, micaceous; thin bedded; moderately to severely weathered.							
10		Core 60"	Rec 57"		RQD 95%	1	Medium hard to hard brown and gray fine grained SANDSTONE, micaceous; thin to thick bedded; weathered. @ 9.2' & 9.3', horizontal rust stained fracture. @ 9.8', low angle rust stained fracture. @ 10.0', hard, gray, moderately weathered to unweathered. @ 10.4', horizontal moderately weathered fracture.							
13.5	569.6						Bottom of Boring - 13.5'							
15														
20														
25														

STRUCTURE FOUNDATION EXPLORATION

HISTORIC BORING LOGS A-001-0-03-A-002-0-03-A-003-0-03

DRAWN M.S.J. | CHECKED E.M.K.

LAW-93-0.00

V:\1755\active\175537016\Drawings\81595\structures\SHEETS\81595S12.dgn 5/4/2011 11:11:42 AM mjennings

Client: Baker & Associates | Project: LAW -93C -0.00 | Job No. 0321-4003.00

Log of: Boring A-004-0-03 | Location: Station 9+89; 5' Rt. | Date Drilled: 1-13-04

WATER OBSERVATIONS:
Water seepage at: None observed
Water level at completion: Dry (prior to coring)
5.61 (after coring)

Depth (ft)	Elev. (ft)	Blows per 6"	Recovery (in)	Sample No. Drive	Core Run	Hand Penetrometer (tsf)	DESCRIPTION	% Aggregate	% C. Sand	% M. Sand	% F. Sand	% Silt	% Clay	STANDARD PENETRATION (N) Blows per foot 10 20 30 40	Moisture Content-% PL Natural LL 10 20 30 40
0	569.1						Topsoil - 6"								
		3 3 4	12	S-1		1.25	POSSIBLE FILL: Stiff brown, gray, and black SILT and CLAY (A-6a), some fine to coarse sand, trace gravel; damp. @ 3.0', little gravel.	6	11	—	13	34	36		X X
5	563.6	6 4 5	18	S-2		2.0									
5.5															
		9 6 6	3	S-3		NA	Medium dense brown GRAVEL WITH SAND (A-1-b); contains sandstone fragments; possible sandstone boulder; damp	84	6	—	5	2	3		Non-plastic
8.0	561.1														
		5 7 12	18	S-4		4.5	Hard brown and gray SILT AND CLAY (A-6a), little fine to coarse sand, trace gravel; damp. @ 11.0', brownish gray.	4	8	—	12	37	39		X
12.1	557.0	8 15 46	18	S-5a S-5b		4.5 NA	Siltstone Boulder								61
13.0	556.1														
		26 26 25	18	S-6		1.5-3.0 NA	Stiff to very stiff brown and gray SILTY CLAY (A-6b), little fine to coarse sand, trace gravel; damp. PROBABLE TOP OF FIRM ROCK	3	4	—	13	35	45		X X 51 50+
15	554.1	50/2"	2	S-7	1		Medium hard to hard grayish brown fine to medium grained SANDSTONE, micaceous; thick to thin bedded; slightly weathered to weathered. @ 15.0' - 15.7', broken. @ 15.7' - 17.5', intact.								
17.5	551.6	Core 60"	Rec 51"	RQD 50%											
20	549.1						Medium hard to hard dark brown and brownish gray fine to medium grained SANDSTONE, micaceous; thin bedded to laminated; weathered; contains coal stringers; broken with ruststained fractures.								
25							Bottom of Boring - 20.0'								

Client: Baker & Associates | Project: LAW -93C -0.00 | Job No. 0321-4003.00

Log of: Boring A-005-0-03 | Location: Station 9+84; 45' Lt. | Date Drilled: 1-15-04

WATER OBSERVATIONS:
Water seepage at: None observed
Water level at completion: Dry (prior to coring)
2.48 (after coring)

Depth (ft)	Elev. (ft)	Blows per 6"	Recovery (in)	Sample No. Drive	Core Run	Hand Penetrometer (tsf)	DESCRIPTION	% Aggregate	% C. Sand	% M. Sand	% F. Sand	% Silt	% Clay	STANDARD PENETRATION (N) Blows per foot 10 20 30 40	Moisture Content-% PL Natural LL 10 20 30 40
0	576.6						Topsoil - 8"								
		2 1 2	17	S-1		2.0	FILL: Stiff gray and brown SILT AND CLAY (A-6a), little gravel, little fine to coarse sand; damp to moist.								
3.0	573.6														
		3 3 4	13	S-2		1.0	Stiff black SILT AND CLAY (A-6a), little fine to coarse sand, little gravel; organic; damp.								
5	571.6														
6.2	570.4	6 50/5"	11	S-3a S-3b		1.75 NA	Stiff brown SILT AND CLAY (A-6a), little gravel, little fine to coarse sand; damp. PROBABLE TOP OF FIRM ROCK								50+
		Core 48"	Rec 35"	RQD 13%	1		Medium hard to hard brown very fine grained SANDSTONE, micaceous; moderately weathered to weathered; broken with horizontal ruststained fractures. @ 10.1', high angle wide ruststained and clay filled fracture. @ 10.5', becomes slightly broken to intact.								
10		Core 60"	Rec 54"	RQD 85%	2		@ 11.8', high angle ruststained clay filled fracture. @ 12.1', low angle ruststained clay filled fracture. @ 12.6', horizontal ruststained clay filled fracture. @ 13.4', low angle ruststained clay filled fracture.								
14.4	562.2														
15		Core 60"	Rec 60"	RQD 97%	3		Hard gray and brown fine to medium grained SANDSTONE, micaceous; thick bedded to laminated; slightly weathered to unweathered; contains dark gray laminae.								
20		Core 60"	Rec 60"	RQD 100%	4		@ 22.7', brown fine to coarse grained, thin to thick; unweathered.								
25	551.6	60"	Rec 60"	RQD 100%	4		Hard brown fine to coarse SANDSTONE, micaceous; thin to thick bedded; unweathered.								
27.7	548.9	Core 20"	Rec 20"	RQD 100%	5										
30							Bottom of Boring - 27.7'								
35															
40															
45															
50															

DRAWN M.S.J. | CHECKED E.M.K.

STRUCTURE FOUNDATION EXPLORATION

HISTORIC BORING LOGS A-004-0-03-A-005-0-03

LAW-93-0.00

17 / 38

V:\1755\active\175537016\Drawings\81595\structures\SHEETS\81595S13.dgn 5/4/2011 11:13:59 AM mjennings

Client: Baker & Associates | Project: LAW -93C -0.00 | Job No. 0321-4003.00

Log of: Boring A-006-0-03 | Location: Station 9+47; 49' Lt. | Date Drilled: 1-15-04

Depth (ft)	Elev. (ft)	Blows per 6"	Recovery (in)	Sample No. Drive	Sample No. Core Run	Hand Penetrometer (tsf)	WATER OBSERVATIONS:	DESCRIPTION
0	591.3						Water seepage at: None observed Water level at completion: Dry (prior to coring) 3.85 (after coring)	Topsoil - 5"
3.0	588.3	4 6 9	18	S-1		3.5		Very stiff brown and light gray SILTY CLAY (A-6b), trace to little fine to coarse sand, trace to little gravel; contains relict rock structure; damp. PROBABLE TOP OF WEATHERED ROCK
5		26 40 48	18	S-2				Soft to medium hard brown and gray SHALE and SILTSTONE; severely weathered and partially decomposed.
		24 26 34	18	S-3				
10		20 33 49	18	S-4				@ 11.0', gray.
		10 31 48	18	S-5				
14.0	577.3	50/5"	5	S-6				PROBABLE TOP OF FIRM ROCK
15		Core 60"	Rec 58"	RQD 97%	1			Medium hard light gray fine grained SANDSTONE, argillaceous; micaceous; thin bedded to laminated. @ 14.2' - 15.3', horizontal rust stained fracture. @ 16.5' - 17.0', healed high angle fracture. @ 17.4' - 17.8', siltstone layer, severely weathered. @ 17.8', horizontal rust stained fracture. @ 18.1', horizontal rust stained fracture.
18.3	573.2							
19.0	572.3							Hard brown and gray fine to medium grained SANDSTONE, micaceous thin to thick bedded.
20								Bottom of Boring - 19.0'
25								

GRADATION: % Aggregate | % C. Sand | % M. Sand | % F. Sand | % Silt | % Clay

STANDARD PENETRATION (N) Blows per foot: 10 20 30 40

Moisture Content - % Natural: PL X — X LL; 10 20 30 40

Depth (ft)	Elev. (ft)	Sample No.	Hand Penetrometer (tsf)	Sample No. Press	WATER OBSERVATIONS:	DESCRIPTION
0	580.9				Water seepage at: None Water level at completion: Dry (prior to coring) Dry (including core water)	
0.4	580.5	1		1		Topsoil - 5"
5		2		2		Medium stiff brown and light gray SILT AND CLAY (A-6a), little fine to coarse sand, trace to little gravel; damp to moist.
5.2	575.7					PROBABLE TOP OF WEATHERED ROCK
		3		3		Very soft reddish brown SANDSTONE; severely weathered to decomposed; very broken.
8.0	572.9	4		4		PROBABLE TOP OF FIRM ROCK
10		Core 78"	Rec 76"	RQD 87%	1	Medium hard reddish brown fine to medium grained SANDSTONE; weathered; broken.
11.9	569.0					@ 11.3' - 11.9', light brown.
15		Core 120"	Rec 120"	RQD 96%	2	Medium hard gray fine to medium grained SANDSTONE, micaceous, moderately weathered. @ 14.9' - 15.0', very broken zone.
20						@ 20.3' - 20.5', very broken zone. @ 24.6' - 24.8', very broken zone. @ 24.7', light brown.
25		Core 42"	Rec 42"	RQD 83%		
28.0	552.9					Bottom of Boring - 28.0'
30						
35						
40						
45						
50						

GRADATION: % Aggregate | % C. Sand | % M. Sand | % F. Sand | % Silt | % Clay

STANDARD PENETRATION (N) Blows per foot: 10 20 30 40

Moisture Content - % Natural: PL X — X LL; 10 20 30 40; 50+; 50+

DRAWN M.S.J. | CHECKED E.M.K.

STRUCTURE FOUNDATION EXPLORATION

HISTORIC BORING LOGS A-006-0-03-B-001-0-03

LAW-93-0.00

18 / 38

V:\1755\active\175537016\Drawings\81595\structures\SHEETS\81595S14.dgn 5/4/2011 11:14:49 AM mjennings

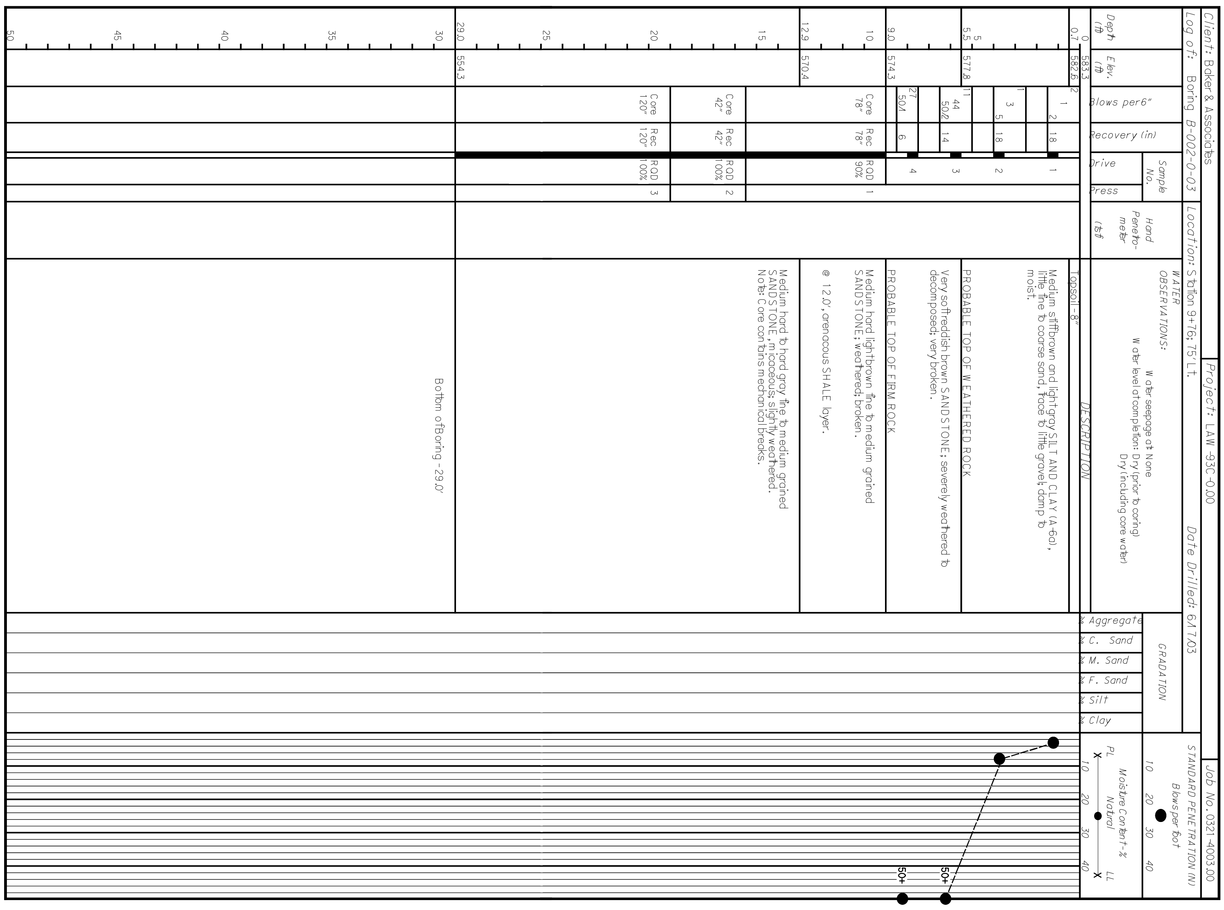

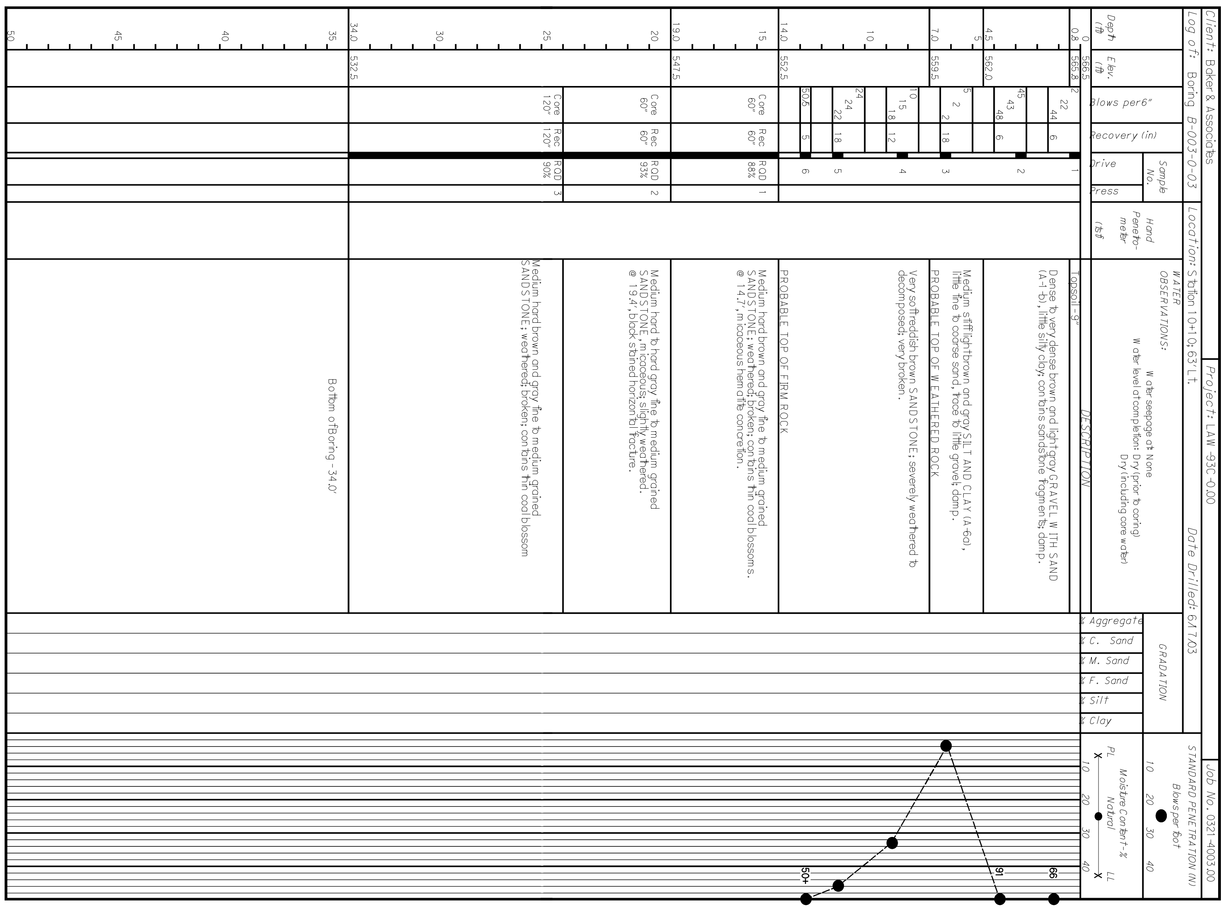

LAW-93-0.00

STRUCTURE FOUNDATION EXPLORATION

HISTORIC BORING LOGS B-002-0-03-B-003-0-03

DRAWN M.S.J.

CHECKED E.M.K.

Client: Baker & Associates | **Project:** LAW-93C-0.00 | **Job No.** 0321-4003.00

Log of: Boring B-004-0-03 | **Location:** Station 13+80; 27' Rt. | **Date Drilled:** 5/29/03

Depth (ft)	Elev. (ft)	Blows per 6"	Recovery (in)	Sample No. Drive	Sample No. Press	Hand Penetrometer (tsf)	WATER OBSERVATIONS	% Aggregate	% C. Sand	% M. Sand	% F. Sand	% Silt	% Clay	STANDARD PENETRATION (N) Blows per foot 10 20 30 40	Moisture Content-% PL Natural LL 10 20 30 40
							Water seepage at Channel Surface - River Pool Water level at completion: River Pool Elevation 26.9 ft water depth								
0	488.6						DESCRIPTION								
		2 2 3	8	1			Loose brownish gray FINE SAND (A-3), trace coarse sand and gravel, trace silt; wet.	2	6	—	86	6			Non-plastic
5		2 1 3	12	2				0	2	—	94	4			Non-plastic
5.5	483.1														
		3 3 6	9	3			Loose to medium dense brownish gray COARSE AND FINE SAND (A-3a), little fine gravel; wet.	9	39	—	49	3			Non-plastic
8.0	480.6														
10		5 6 9	16	4			Medium dense brownish gray FINE SAND (A-3), some coarse gravel, trace gravel; wet.	1	25	—	69	5			Non-plastic
							@ 10.5', dense; contains sandstone fragments.								
11.5	477.1	50/5	3	5			PROBABLE TOP OF ROCK								
		Core 60"	Rec 55"	RQD 92%	1		Medium hard to hard gray fine grained SANDSTONE, micaceous; laminated to thin bedded; slightly weathered; slightly broken; contains very thin black slightly carbonaceous highly micaceous layers. Note: mechanical breakage along bedding planes, especially at the thin black layers. @ 12.7', low angle clean fracture. @ 16.5'-16.7', high angle hematite healed fracture.								
15															
		Core 60"	Rec 60"	RQD 100%	2										
20															
		Core 120"	Rec 120"	RQD 100%	3										
25	463.6						Medium hard to hard gray SANDSTONE, micaceous; laminated to thin bedded; slightly weathered; slightly broken; contains very thin black slightly carbonaceous highly micaceous layers. Note: mechanical breakage along bedding planes, especially at the thin black layers. @ 26.8', low angle clay filled fracture.								
30															
30.5	458.1						Soft black COAL; slightly weathered; slightly broken.								
31.5	457.1						Soft to medium hard light gray CLAYSTONE, arenaceous; slightly micaceous; moderately weathered; slightly broken. @ 32.1', 32.8' & 33.0', near horizontal fractures with weathering. @ 33.6', low angle clay filled fracture.								
33.6	455.0	Core 120"	Rec 120"	RQD 95%	4										
34.6	454.0						Soft to medium hard black SHALE, carbonaceous; thin bedded; weathered; slightly broken.								
35															
35.3	453.3						Soft black COAL; shaley; moderately weathered; broken.								
36.7	451.9						Medium hard gray SHALE; thin bedded; moderately weathered; slightly broken.								
40							Medium hard to hard gray and dark gray fine grained SANDSTONE, micaceous; argillaceous; laminated to very thin bedded; slightly weathered; slightly broken.								
41.5	447.1						Bottom of Boring - 41.5'								
45															
50															

Client: Baker & Associates | **Project:** LAW-93C-0.00 | **Job No.** 0321-4003.00

Log of: Boring B-005-0-03 | **Location:** Station 16+20; 26' Lt. | **Date Drilled:** 6/4/03

Depth (ft)	Elev. (ft)	Blows per 6"	Recovery (in)	Sample No. Drive	Sample No. Press	Hand Penetrometer (tsf)	WATER OBSERVATIONS	% Aggregate	% C. Sand	% M. Sand	% F. Sand	% Silt	% Clay	STANDARD PENETRATION (N) Blows per foot 10 20 30 40	Moisture Content-% PL Natural LL 10 20 30 40
							Water seepage at Channel Surface - River Pool Water level at completion: River Pool Elevation 34.8 ft water Depth								
0	481.6						DESCRIPTION								
		12 4 3	5	1			Loose to medium dense brownish gray COARSE AND FINE SAND (A-3a), little fine gravel; wet.								
5		4 5 7	9	2											
7.0	474.6	4 8 50/5	17	3A 3B			PROBABLE TOP OF WEATHERED ROCK Soft to medium hard SANDSTONE; severely weathered to partially decomposed; damp. PROBABLE TOP OF FIRM ROCK								
8.0	473.6	Core 120"	Rec 120"	RQD 96%	1		Medium hard to hard gray SANDSTONE, micaceous; laminated to thin bedded; slightly weathered; slightly broken; contains very thin black highly micaceous layers and coal stringers. @ 12.8'-13.4', broken zone.								
10															
15															
20		Core 60"	Rec 60"	RQD 100%	2										
23.0	458.6						@ 22.7', brown fine to coarse grained, thin to thick; unweathered.								
25							Bottom of Boring - 23.0' Note: Lost core barrel and 10 ft of core steel within borehole. Note: Lost 15 ft of augers in off-set borehole.								

DRAWN M.S.J. | CHECKED E.M.K.

STRUCTURE FOUNDATION EXPLORATION

HISTORIC BORING LOGS B-004-0-03-B-005-0-03

LAW-93-0.00

20 / 38

V:\1755\active\175537016\Drawings\81595\structures\SHEETS\81595S16.dgn 5/4/2011 11:16:31 AM mjennings

V:\1755\active\175537016\Drawings\81595\structures\SHEETS\81595S17.dgn 5/4/2011 11:17:27 AM mjennings

Client: Baker & Associates | Project: LAW -93C -0.00 | Job No. 0321-4003.00

Log of: Boring B-006-0-03 | Location: Station 18+01; 44' Rt. | Date Drilled: 11/20/03

Depth (ft)	Elev. (ft)	Blows per 6"	Recovery (in)	Sample No. Drive	Sample No. Press	Hand Penetrometer (tsf)	WATER OBSERVATIONS: Water seepage at Channel Surface - River Pool. Water level at completion: River Pool Elevation 38.0 ft W ater Depth	GRADATION % Aggregate	% C. Sand	% M. Sand	% F. Sand	% Silt	% Clay	STANDARD PENETRATION (N) Blows per foot 10 20 30 40	Moisture Content-% PL Natural LL 10 20 30 40
0	477.6						DESCRIPTION								
		3 4 4	10	1			Loose brown COARSE AND FINE SAND (A-3a), some fine gravel; wet.								
2.0	475.6						PROBABLE TOP OF WEATHERED ROCK								
		50/5"	0				Soft gray SANDSTONE; fine to medium grained; severely weathered to decomposed; very broken.								50+
4.1	473.5														
		50/1"	1	2											50+
5															
5.5	472.1						PROBABLE TOP OF FIRM ROCK								
		Core 24"	Rec 6"	RQD 0%	1		Soft to medium hard gray SANDSTONE; fine to medium grained; moderately to severely weathered; broken.								
7.5	470.1						@ 5.5', seated casing to depth of 5.5 feet.								
10		Core 60"	Rec 54"	RQD 75%	2		Medium hard to hard gray SANDSTONE; fine to medium grained; micaceous; thin bedded to laminated; slightly weathered.								
							@ 11.5', contains very thin coal stringers.								
							@ 10.5 -12.0', Pressuremeter Test1; E = 667,100 psi.								
15		Core 60"	Rec 59"	RQD 98%	3										
							@ 15.5 -17.0', Pressuremeter Test2; E = 586,400 psi.								
		Core 60"	Rec 47"	RQD 78%	4		*@ 18.2 -19.7', Pressuremeter Test3; E = 625,500 psi.*								
20															
20.5	457.1						Soft black COAL; broken; slightly pyritic.								
22.5	455.1														
25		Core 60"	Rec 56"	RQD 80%	5		Medium hard gray CLAYSTONE, carbonaceous; moderately weathered; slightly broken.								
26.0	451.6						Soft black COAL; broken; slightly pyritic.								
							Medium hard to hard gray SANDSTONE; fine to medium grained; micaceous; very thin bedded to laminated; slightly weathered.								
30		Core 60"	Rec 60"	RQD 100%	6										
		Core 60"	Rec 60"	RQD 100%	7										
35															
		Core 60"	Rec 60"	RQD 100%	8										
40															
		Core 60"	Rec 60"	RQD 100%	9										
45															
47.5	430.1						Bottom of Boring - 47.5'								
50															

Client: Baker & Associates | Project: LAW -93C -0.00 | Job No. 0321-4003.00

Log of: Boring B-007-0-03 | Location: Station 18+29; 27' LT. | Date Drilled: 11/18/03

Depth (ft)	Elev. (ft)	Blows per 6"	Recovery (in)	Sample No. Drive	Sample No. Press	Hand Penetrometer (tsf)	WATER OBSERVATIONS: Water seepage at Channel Surface - River Pool. Water level at completion: River Pool Elevation 36.2 ft W ater Depth	GRADATION % Aggregate	% C. Sand	% M. Sand	% F. Sand	% Silt	% Clay	STANDARD PENETRATION (N) Blows per foot 10 20 30 40	Moisture Content-% PL Natural LL 10 20 30 40
0	479.4						DESCRIPTION								
0.5	478.9	24 3 7 7		1			Debris - wood and rock fragments								
2.5	476.9						Medium dense brown COARSE AND FINE SAND (A-3a); wet.								
		11 7 13	2	2			Medium dense brown GRAVEL WITH SAND AND SILT (A-2-4); wet.								
5	474.4						Medium dense brown COARSE AND FINE SAND (A-3a); wet.								
6.0	473.4	10 3 50.4"	13	3A 3B			PROBABLE TOP OF WEATHERED ROCK								
6.8	472.6						Soft gray SANDSTONE; severely weathered to decomposed; damp								50+
							PROBABLE TOP OF FIRM ROCK								
10		Core 58"	Rec 58"	RQD 100%	1		Medium hard to hard gray SANDSTONE; fine to medium grained; micaceous; thin bedded to laminated; slightly to moderately weathered. @ 8.4', seated casing to depth of 8.4 feet.								
							@ 11.6' -13.1', Pressuremeter Test1; E = 636,800 psi.								
		Core 58"	Rec 58"	RQD 100%	2		@ 13.8', slightly argillaceous. @ 13.8' -14.7', carbonaceous stringers, coal and fossil fragments. *@ 14.6' -16.1', Pressuremeter Test2; E = 439,400 psi.* @ 15.4' -17.6', carbonaceous stringers.								
15							@ 16.1' and 16.6', thin clay seams.								
							@ 16.6' -17.3', contains small claystone clasts.								
		Core 57"	Rec 56"	RQD 98%	3		*@ 17.6' -19.1', Pressuremeter Test3; E = 525,600 psi.*								
20							*@ 20.6' -22.1', Pressuremeter Test4; E = 504,300 psi.*								
22.4	457.0														
23.6	455.8						Soft black coal; broken; slightly pyritic.								
25		Core 62"	Rec 55"	RQD 76%	4		Medium hard light gray CLAYSTONE; moderately weathered.								
26.9	452.5						@ 26.3', dark gray, carbonaceous.								
27.4	452.0						Soft black COAL; interbedded with claystone.								
		Core 60"	Rec 60"	RQD 100%	5		Medium hard to hard dark gray CLAYSTONE, arenaceous; pyritic.								
29.7	449.7														
30							Hard dark gray SANDSTONE, very fine grained to fine grained; arenaceous; very thin bedded to laminated.								
		Core 60"	Rec 59"	RQD 98%	6										
35															
		Core 60"	Rec 60"	RQD 100%	7		@ 38.2', dark gray to black micaceous laminae.								
40							@ 41.1' - 41.5', black, micaceous.								
44.6	434.8	Core 60"	Rec 60"	RQD 100%	8										
45							Hard gray SANDSTONE, fine to coarse grained; very thin bedded; contains occasional dark gray/black laminae.								
48.0	431.4						Bottom of Boring - 48.0'								
50															

DRAWN M.S.J. | CHECKED E.M.K.

STRUCTURE FOUNDATION EXPLORATION

HISTORIC BORING LOGS B-006-0-03-B-007-0-03

LAW-93-0.00

Client: Baker & Associates | Project: LAW -93C -0.00 | Job No. 0321-4003.00

Log of: Boring B-008-0-03 | Location: Station 27+20; 25' Rt. | Date Drilled: 6/5/03

Depth (ft)	Elev. (ft)	Blows per 6"	Recovery (in)	Sample No. Drive	Sample No. Press	Hand Penetrometer (tsf)	WATER OBSERVATIONS	DESCRIPTION	% Aggregate	% C. Sand	% M. Sand	% F. Sand	% Silt	% Clay	STANDARD PENETRATION (N) Blows per foot 10 20 30 40	Moisture Content-% PL Natural LL 10 20 30 40
0	514.1						Water seepage at Channel Surface - River Pool Water level at completion: River Pool Elevation 4.6 ft water depth	Very loose brown COARSE AND FINE SAND (A-3a), little fine gravel; wet.								
5		3 W OH W OH	0	1												
6.0	508.1	W OH W OH W OH	0	2												
8.0	506.1	W OH W OH W OH	2	3				Very loose brown GRAVEL WITH SAND (A-1-b), trace to little silt and clay; wet.	52	13	—	24	11		Non-plastic	
10		W OH W OH W OH	10	4		>0.25		Very soft brownish gray SILT AND CLAY (A-6a), some fine to coarse sand, trace gravel; wet.	2	4	—	18	45	31		X X
10.5	503.6															
13.0	501.1	W OH W OH W OH	13	5		>0.25		Very soft brownish gray SANDY SILT (A-4a), some clay, some fine to coarse sand, trace gravel; wet.	2	2	—	19	49	28		X X
15		1 1	18	6		0.5		Soft brownish gray SILTY CLAY (A-6b), little fine to coarse sand; wet.	0	0	—	8	48	44		X X
15.5	498.6															
20		W OH W OH W OH	7	7				Very loose to loose brownish gray GRAVEL WITH SAND (A-1-b), little to some silt; wet. @ 18.0', trace silt.	37	13	—	28	22		Non-plastic	
		4 7	18	8					29	50	—	17	4			Non-plastic
23.0	491.1	2 6	18	9					17	65	—	13	5			Non-plastic
25	489.1	7 12 37	18	10				Dense brownish gray COARSE AND FINE SAND (A-3a), some gravel, trace silt; wet.								
28.0	486.1	4 6 7	18	11				Medium dense brownish gray COARSE AND FINE SAND (A-3a), little to some gravel, trace silt; wet.								
30		4 4 5	5	12				Loose gray GRAVEL WITH SAND (A-1-b), trace silt; wet.								
33.0	481.1															
35		5 7 19	18	13				Medium dense brownish gray COARSE AND FINE SAND (A-3a), little to some gravel, trace silt; wet.								
39.2	474.9	12		14A				BOULDERS: sandstone and igneous rocks PROBABLE TOP OF FIRM ROCK							50+	
40		50.2	11	14B												
40.6	473.5	Core 120"	Rec 113"	ROD 94%	1			Medium hard to hard gray SANDSTONE, micaceous; laminated to thin bedded; slightly weathered; slightly broken; contains very thin black highly micaceous layers. Note: mechanical breakage along bedding planes, especially at the thin black layers. @ 42.1', slightly carbonaceous, contains fossilized plant fragments within black layers. @ 42.9', low angle fracture with slight clay infilling. @ 45.5' - 45.7', highly weathered joint.								
45																
50	464.1															

BORING LOG CONTINUED ON THIS SHEET

Client: Baker & Associates | Project: LAW -93C -0.00 | Job No. 0321-4003.00

Log of: Boring B-008-0-03 | Location: Station 27+20; 25' Rt. | Date Drilled: 6/5/03

Depth (ft)	Elev. (ft)	Blows per 6"	Recovery (in)	Sample No. Drive	Sample No. Press	Hand Penetrometer (tsf)	WATER OBSERVATIONS	DESCRIPTION	% Aggregate	% C. Sand	% M. Sand	% F. Sand	% Silt	% Clay	STANDARD PENETRATION (N) Blows per foot 10 20 30 40	Moisture Content-% PL Natural LL 10 20 30 40
50	464.1						Water seepage at Channel Surface - River Pool Water level at completion: River Pool Elevation 4.6 ft water depth									
		Core 60"	Rec 53"	ROD 88%	2			Medium hard to hard gray SANDSTONE, micaceous; laminated to thin bedded; slightly weathered; slightly broken; contains very thin black slightly carbonaceous highly micaceous layers. Note: mechanical breakage along bedding planes, especially at the thin black layers. @ 53.5', mid angle fracture.								
55		Core 60"	Rec 60"	ROD 100%	3			@ 55.0', numerous thin coal blossoms evident.								
57.2	456.9							Soft black COAL; slightly weathered; slightly broken.								
58.0	456.1							Medium hard gray CLAYSTONE, carbonaceous; arenaceous; slightly micaceous; moderately weathered; slightly broken. @ 58.0', near horizontal fracture.								
60		Core 60"	Rec 50"	ROD 83%	4			@ 61.0' - 61.5', boney coal layer.								
62.5	451.6							Medium hard to hard gray and dark gray fine grained SANDSTONE, argillaceous; micaceous; very thin bedded; slightly weathered; slightly broken. @ 61.3' - 61.5', near horizontal fractures.								
65																
68.2	445.9	Core 60"	Rec 58"	ROD 97%	5			Medium hard dark gray fine grained SANDSTONE, micaceous; argillaceous; laminated to very thin bedded; slightly weathered; slightly broken. @ 69.2' - 69.5', severely weathered and broken.								
70																
75		Core 60"	Rec 57"	ROD 85%	6											
75.5	439.1	Core 60"	Rec 50"	ROD 100%	7			@ 78.9', very thin coal blossom.								
80	434.1							Bottom of Boring - 85.0'								
85																
90																
95																
100																

DRAWN: M.S.J. CHECKED: E.M.K.

STRUCTURE FOUNDATION EXPLORATION

HISTORIC BORING LOG B-008-0-03

LAW-93-0.00

V:\1755\active\175537016\Drawings\81595\structures\SHEETS\81595S18.dgn 5/4/2011 11:18:21 AM mjennings

Client: Baker & Associates | Project: LAW -93C -0.00 | Job No. 0321 -4003.00

Log of: Boring B-009-0-03 | Location: Station 27+37; 33' Lt. | Date Drilled: 6/9/03

WATER OBSERVATIONS: Water seepage at Channel Surface - River Pool
Water level at completion: River Pool Elevation 5.5 ft Water Depth

STANDARD PENETRATION (N) Blows per foot 10 20 30 40

Depth (ft)	Elev. (ft)	Blows per 6"	Recovery (in)	Sample No. Drive	Sample No. Press	Hand Penetrometer (tsf)	DESCRIPTION	% Aggregate	% C. Sand	% M. Sand	% F. Sand	% Silt	% Clay	Moisture Content-% PL Natural LL
0	512.1						DESCRIPTION							
		1 1 1	0	1			Very loose brownish gray SANDY SILT (A-4a), little gravel; contains brick and trash fragments; wet.							
5		WOH WOH WOH	0	2										
		WOH WOH WOH	0	3										
8.0	504.1													
10		WOH 1 2	18	4		>0.25	Very soft brown CLAY (A-7-6), trace fine sand; wet.	0	0	—	6	46	48	X X
10.5	501.6													
		2 3 2	18	5			Very loose to loose dark brown GRAVEL (A-1-a), "and" fine to coarse sand, trace silt, trace clay; wet.	52	22	—	13	8	5	Non-plastic
13.0	499.1													
15		2 1 3	18	6			Very loose to loose dark brown GRAVEL WITH SAND (A-1-b), little silt, trace clay; wet.	44	22	—	14	14	6	Non-plastic
		WOH WOH WOH	0	7										
		1 2 3	3	8			@ 18.0', trace silt, trace clay.	30	50	—	14	3	3	Non-plastic
20														
20.5	491.6													
		1 3 5	18	9			Loose gray FINE SAND (A-3), some to 'and' coarse sand and gravel, trace silt; wet.	5	37	—	53	5		Non-plastic
23.0	489.1													
25		4 7 9	18	10			Medium dense dark brown GRAVEL WITH SAND (A-1-b), trace silt; wet.	27	53	—	16	4		Non-plastic
		1 1 1	18	11			Medium dense dark brown GRAVEL WITH SAND (A-1-b), trace silt and clay; wet.	26	44	—	25	5		Non-plastic
28.0	484.1													
30		13 24 21	18	12			Dense gray COARSE AND FINE SAND (A-3a), little gravel, trace silt; wet.	11	38	—	44	7		Non-plastic
33.0	479.1													
35		34 50/3	9	13			Very dense gray GRAVEL WITH SAND (A-1-b), trace silt; wet.	21	60	—	17	2		Non-plastic 50+
37.0	475.1						PROBABLE TOP OF WEATHERED ROCK							
39.0	473.1	50/4	2	14			Soft gray SANDSTONE; severely weathered to decomposed.							50+
							PROBABLE TOP OF FIRM ROCK							
40		Core 60"	Rec 60"	RQD 100%	1		Medium hard to hard gray SANDSTONE, micaceous; laminated to thin bedded; slightly weathered; slightly broken; contains very thin black highly micaceous layers.							
45		Core 60"	Rec 60"	RQD 95%	2		@ 46.5' - 46.9', very broken zone.							
50	462.1	Core 60"	Rec 60"	RQD 100%	3									

Client: Baker & Associates | Project: LAW -93C -0.00 | Job No. 0321 -4003.00

Log of: Boring B-009-0-03 | Location: Station 27+37; 33' Lt. | Date Drilled: 6/9/03

WATER OBSERVATIONS: Water seepage at: Channel Surface - River Pool
Water level at completion: River Pool Elevation 5.5 ft Water Depth

STANDARD PENETRATION (N) Blows per foot 10 20 30 40

Depth (ft)	Elev. (ft)	Blows per 6"	Recovery (in)	Sample No. Drive	Sample No. Press	Hand Penetrometer (tsf)	DESCRIPTION	% Aggregate	% C. Sand	% M. Sand	% F. Sand	% Silt	% Clay	Moisture Content-% PL Natural LL
50	462.1						DESCRIPTION							
		Core 60"	Rec 60"	RQD 100%	3		Medium hard to hard gray SANDSTONE, micaceous; laminated to thin bedded; slightly weathered; slightly broken; contains very thin black highly micaceous layers and coal stringers.							
54.0	458.1													
54.8	457.3						Soft black COAL; slightly weathered; slightly broken.							
55		Core 60"	Rec 58"	RQD 97%	4		Medium hard gray CLAYSTONE, carbonaceous; arenaceous; slightly micaceous; moderately weathered; slightly broken, contains occasional sandstone laminae.							
60		Core 60"	Rec 58"	RQD 97%	5									
60.7	451.4						Medium hard to hard gray and dark gray fine grained SANDSTONE, argillaceous; micaceous; very thin bedded; slightly weathered; intact.							
65		Core 60"	Rec 48"	RQD 80%	6									
70		Core 60"	Rec 60"	RQD 100%	7									
75		Core 60"	Rec 60"	RQD 100%	8									
79.0	433.1													
80							Bottom of Boring - 79.0'							
85														
90														
95														
100														

DRAWN M.S.J. | CHECKED E.M.K.

STRUCTURE FOUNDATION EXPLORATION
HISTORIC BORING LOG B-009-0-03

LAW-93-0.00

23/38

V:\1755\active\175537016\Drawings\81595\structures\SHEETS\81595S19.dgn 5/4/2011 11:19:45 AM mjennings

Client: Baker & Associates | Project: LAW -93C -0.00 | Job No. 0321-4003.00

Log of: Boring B-010-0-03 | Location: Station 29+08; 13' Rt. | Date Drilled: 5/28.03

Depth (ft)	Elev. (ft)	Blows per 6"	Recovery (in)	Sample No. Drive	Sample No. Press	Hand Penetrometer (tsf)	WATER OBSERVATIONS: Water seepage at 22.0' Water level at completion: 37.0' (prior to drill water use) 24.4' (including drill water)	GRADATION % Aggregate	% C. Sand	% M. Sand	% F. Sand	% Silt	% Clay	STANDARD PENETRATION (N) Blows per foot 10 20 30 40	Moisture Content-% PL Natural LL 10 20 30 40
							DESCRIPTION								
0	549.6	3 7 10	10	1		1.0	FILL: Stiff black SANDY SILT (A-4a), little clay, trace to little gravel; contains cinders and brick fragments; moist.								
3.0	546.6														
		3 5 5	14	2		3.5	Very stiff brown SILT AND CLAY (A-6a), little fine to coarse sand, trace to little gravel; damp to moist.								
5		5 7 8	18	3		2.75									
		6 8 10	18	4		3.25									
10		3 6 7	18	5		2.25									
							@ 13.0', stiff; moist to wet.								
		4 5 6	18	6		1.0									
15		2 3 4	18	7		0.75									
		2 5 6	18	8		0.75									
20							@ 22.0', thin fine to coarse sand seam; wet.								
		3 4 5	18	9		2.0									
		5 6 8	18	10		1.0									
25	524.6						Stiff brown SILT AND CLAY (A-6a), little fine to coarse sand, trace to little gravel; contains sand seams; moist to wet.								
		2 2 4	18	11		1.25									
30		2 2 4	12	12		1.0									
		2 2 3	18	13		1.0	@ 35.0', color change to gray.								
35															
39.5	510.1														
40		3 9 12	18	14			Medium dense brown GRAVEL WITH SAND (A-1-b), little silty clay; wet. Note: Drill water added at 40 ft.								
		9 10 12	18	15											
45															
		5 10 11	18	16											
50	499.6														

BORING LOG CONTINUED ON THIS SHEET

Client: Baker & Associates | Project: LAW -93C -0.00 | Job No. 0321-4003.00

Log of: Boring B-010-0-03 | Location: Station 29+08; 13' Rt. | Date Drilled: 5/28.03

Depth (ft)	Elev. (ft)	Blows per 6"	Recovery (in)	Sample No. Drive	Sample No. Press	Hand Penetrometer (tsf)	WATER OBSERVATIONS: Water seepage at 22.0' Water level at completion: 37.0' (prior to drill water use) 24.4' (including drill water)	GRADATION % Aggregate	% C. Sand	% M. Sand	% F. Sand	% Silt	% Clay	STANDARD PENETRATION (N) Blows per foot 10 20 30 40	Moisture Content-% PL Natural LL 10 20 30 40
							DESCRIPTION								
50	499.6						Medium dense brown GRAVEL WITH SAND (A-1-b), little silty clay; wet.								
		5 8 9	18	17											
55															
		9 12 18	18	18											
60															
		10 14 18	18	19			@ 64.5', color change to gray.								
65															
		20 23 35	18	20											
72.0	477.6						PROBABLE TOP OF WEATHERED ROCK								
		50/2	2	21			Soft gray SANDSTONE; severely weathered. Note: Auger Refusal at 75 ft. PROBABLE TOP OF FIRM ROCK								
75	474.6														
		Core 42"	Rec 37"	RQD 88%	1		Medium hard to hard gray fine grained SANDSTONE, micaceous; laminated to thin bedded; slightly weathered; slightly broken; contains very thin black highly micaceous layers and coal stringers.								
80		Core 60"	Rec 55"	RQD 92%	2										
		Core 24"	Rec 19"	RQD 79%	3										
85															
85.5	464.1						Bottom of Boring - 85.5'								
90															
95															
100															

DRAWN M.S.J. | CHECKED E.M.K.

STRUCTURE FOUNDATION EXPLORATION

HISTORIC BORING LOG B-010-0-03

LAW-93-0.00

V:\1755\active\175537016\Drawings\81595\structures\SHEETS\81595S20.dgn 5/4/2011 11:20:39 AM mjennings

Client: Baker & Associates | Project: LAW -93C -0.00 | Job No. 0321 -4003.00

Log of: Boring B-011-0-03 | Location: Station 32+82; 16' R t. | Date Drilled: 5/21.03

Depth (ft)	Elev. (ft)	Blows per 6"	Recovery (in)	Sample No.	Sample Drive	Sample Press	Hand Penetrometer (tsf)	WATER OBSERVATIONS	DESCRIPTION
0	547.6							Water seepage at 12.5', 21.0' Water level at completion: 23.9'	
		3 3 9	6	1					FILL: Medium dense dark brown, black and red SANDY SILT (A-4a); contains cinders and brick fragments; damp to moist.
2.0	545.6	2 3 4	10						
		7	18	2			2.0		Stiff mottled brown and light brown SILT AND CLAY (A-6a), trace to little fine to coarse sand; damp to moist.
4.0	543.6	3 6 6							
5		7	17	3			4.5		Hard mottled brown and gray SILT AND CLAY (A-6a), little fine to coarse sand; slight chemical odor; damp to moist.
		6 7 10							@ 6.0', color change to brown.
		13	20	4			4.25		
		5 11 11							@ 8.0', very stiff; damp to moist.
10		15	24	5			2.25		
		5 6 8							
		12	24	6			2.75		
		3 6 7							
		9	24	7			2.5		
15		3 6 7							
16.0	531.6	12	24	8			2.0		
		3 4 7							Stiff brown SILT AND CLAY (A-6a), trace fine to coarse sand; slightly organic; slightly micaceous; moist.
		10	20	9			1.0		
		3 4 5							
20		7	24	10			1.75		
		2 3 4							
		6	24	11			1.0		
		2 3 4							
24.0	523.6	6	20	12			1.0		
		1 4 5							Very stiff brown SANDY SILT (A-4a), little to some clay; damp to moist.
26.0	521.6	6	20	13			2.0		
		1 2 3							Stiff brown and gray SILT AND CLAY (A-6a), trace to little fine to coarse sand; damp to moist.
28.0	519.6	4	20	14			1.25		
		4 6 8							Medium dense brown SILT (A-4b), trace to little fine to coarse sand; damp to moist.
30	517.6	11	24	15					
		12 20 33							Dense to very dense brown COARSE AND FINE SAND (A-3a), little gravel, little silt; wet.
		39	16	16					
		9 20 23							
		16	0	17					
35		6 12 17							
		18	12	18					
		12 14 22							
		20	24	19					
		14 14 17							
40		21	20	20					
41.0	506.6	8 21 7							
		8	24	21					
		3 5 8							Medium dense brown FINE SAND (A-3), trace coarse sand and gravel; wet.
		9	12	22					
45		5 8 10							
		10	13	23					
		3 5 5							
		8	12	24					@ 48.0' - 50.0', dense, brown and black, contains coal fragments.
		5 13 16							
50	497.6	17	12	25					

GRADATION: % Aggregate | % C. Sand | % M. Sand | % F. Sand | % Silt | % Clay

STANDARD PENETRATION (N) Blows per foot: 10 20 30 40

Moisture Content-%: PL X Natural X LL; 10 20 30 40

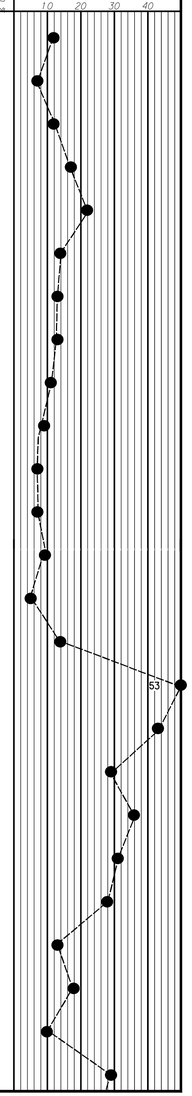

Client: Baker & Associates | Project: LAW -93C -0.00 | Job No. 0321 -4003.00

Log of: Boring B-011-0-03 | Location: Station 32+82; 16' R t. | Date Drilled: 5/21.03

Depth (ft)	Elev. (ft)	Blows per 6"	Recovery (in)	Sample No.	Sample Drive	Sample Press	Hand Penetrometer (tsf)	WATER OBSERVATIONS	DESCRIPTION
50	497.6							Water seepage at 12.5', 21.0' Water level at completion: 23.9'	
		5 9 9							Medium dense brown FINE SAND (A-3), trace coarse sand and gravel; wet.
		11	13	26					
		5 6 8							
		9	24	27					
55		4 6 8							
56.0	491.6	9	20	28					
		2 5 6							Medium dense brown COARSE AND FINE SAND (A-3a), trace gravel; wet.
		8	20	29					
		5 9 9							
		11	20	30					
60		10 14 10							@ 60.0', color change to gray.
		9	24	31					
		6 9 9							
		12	15	32					
		8 15 17							
65		15	18	33					@ 64.0' - 66.0', medium dense.
66.0	481.6								
		6 8 12							Medium dense gray FINE SAND (A-3), trace coarse sand and gravel; wet.
		15	18	34					
68.0	479.6								
		6 10 15							Medium dense gray COARSE AND FINE SAND (A-3a), trace gravel; wet.
70		22	24	35					
70.5	477.1								PROBABLE TOP OF ROCK
		11 50.5	10	36					Medium hard to hard gray fine grained SANDSTONE, micaceous; laminated to thin bedded; slightly weathered; slightly broken; contains very thin black highly micaceous layers and coal stringers.
		Core 30"	Rec 12"	RQD 17%	1				
		Core 62"	Rec 62"	RQD 95%	2				
80		Core 29"	Rec 29"	RQD 100%	3				
81.2	466.4								Bottom of Boring - 81.2'
85									
90									
95									
100									

GRADATION: % Aggregate | % C. Sand | % M. Sand | % F. Sand | % Silt | % Clay

STANDARD PENETRATION (N) Blows per foot: 10 20 30 40

Moisture Content-%: PL X Natural X LL; 10 20 30 40

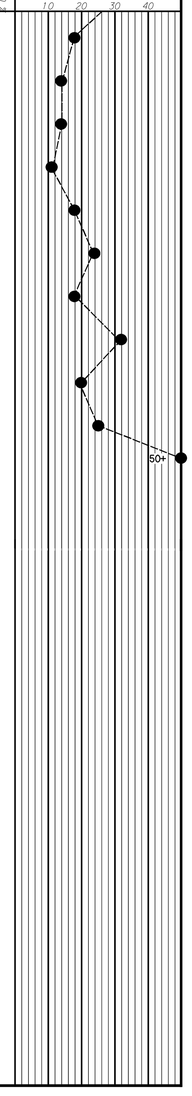

DRAWN M.S.J. | CHECKED E.M.K.

STRUCTURE FOUNDATION EXPLORATION
HISTORIC BORING LOG B-011-0-03

LAW-93-0.00

25 / 38

V:\1755\active\175537016\Drawings\81595\structures\SHEETS\81595S21.dgn 5/4/2011 11:21:34 AM mjennings

Client: Baker & Associates | Project: LAW -93C -0.00 | Job No. 0321-4003.00

Log of: Boring B-012-0-03 | Location: Station 34+39; 21' Lt. | Date Drilled: 5/6/03

Depth (ft)	Elev. (ft)	Blows per 6"	Recovery (in)	Sample No. Drive	Sample No. Press	Hand Penetrometer (tsf)	WATER OBSERVATIONS	DESCRIPTION
0	545.3						Water seepage at 14.4', 18.0'	
0.8	544.6						Water level at completion: 29.4' (prior to adding drill water) 30.2' (including drill water)	Asphalt Concrete Pavement - 3"
		7 5 3 5		1				Aggregate Base - 6"
3.0	542.3							FILL: Loose black GRAVEL WITH SAND (A-1-b), little silty clay; contains cinders; damp to moist.
		4 7 8	18	2		4.25 - 4.5		Hard brown SILTY CLAY (A-6b), little fine to coarse sand; slightly organic; damp.
5		6 10 9	18	3		4.5+		
								@ 8.0', very stiff; non-organic.
10		4 6 6	18	4		2.5		
		4 6 8	18	5		2.25		
13.0	532.3							
		2 3 4	18	6A		1.0		Stiff brown SILT AND CLAY (A-6a), little fine to coarse sand; damp.
14.5	530.8			6B				Loose brown SANDY SILT (A-4a); damp to moist.
15	529.8							
		2 3 4	18	7		1.0		Stiff brown SILT AND CLAY (A-6a), little fine to coarse sand; damp.
18.0	527.3							
20		2 3 4	18	8				Loose brown SANDY SILT (A-4a); damp to moist.
		1 2 4	18	9				
23.0	522.3							
		WOH WOH WOH	18	10		0.25		Very soft to soft brown and gray SILT AND CLAY (A-6a), trace fine to coarse sand; moist to wet.
25	520.3							
		29 40 31	18	11				Very dense brown GRAVEL WITH SAND (A-1-b), trace to little silty clay; wet.
30		24 37 33	18	12				
32.0	513.3							
35		10 9 11	18	13				Medium dense brown COARSE AND FINE SAND (A-3a), little gravel, trace silty clay; wet.
		5 7 7	4	14				
40								
42.0	503.3							
45		5 7 10	18	15				Medium dense brown FINE SAND (A-3), trace coarse sand and gravel, trace silt; wet.
47.0	498.3							
50	495.3	8 7 10	5	16				Medium dense brown and gray COARSE AND FINE SAND (A-3a), some gravel, trace silt; wet.

STANDARD PENETRATION (N) Blows per foot: 10 20 30 40

Moisture Content-%: PL X — Natural — X LL; 10 20 30 40

GRADATION: % Aggregate | % C. Sand | % M. Sand | % F. Sand | % Silt | % Clay

BORING LOG CONTINUED ON THIS SHEET

Client: Baker & Associates | Project: LAW -93C -0.00 | Job No. 0321-4003.00

Log of: Boring B-012-0-03 | Location: Station 34+39; 21' Lt. | Date Drilled: 5/6/03

Depth (ft)	Elev. (ft)	Blows per 6"	Recovery (in)	Sample No. Drive	Sample No. Press	Hand Penetrometer (tsf)	WATER OBSERVATIONS	DESCRIPTION
50	495.3						Water seepage at 14.4', 18.0'	
							Water level at completion: 29.4' (prior to adding drill water) 30.2' (including drill water)	Medium dense brown and gray COARSE AND FINE SAND (A-3a), some gravel, trace silt; wet.
		14 19 21	8	17				
55								@ 58.0', color change to gray.
		9 12 19	13	18				
60								
		14 15 13	0	19				
65								
68.0	477.3							PROBABLE TOP OF ROCK
70		Core 120"	Rec 120"	RQD 98%	1			Medium hard to hard gray fine grained SANDSTONE, micaceous; laminated to thin bedded; slightly weathered; slightly broken; contains very thin black highly micaceous layers and coal stringers.
75		Core 120"	Rec 120"	RQD 98%	1			
78.0	467.3							Bottom of Boring - 78.0'
80								
85								
90								
95								
100								

STANDARD PENETRATION (N) Blows per foot: 10 20 30 40

Moisture Content-%: PL X — Natural — X LL; 10 20 30 40

GRADATION: % Aggregate | % C. Sand | % M. Sand | % F. Sand | % Silt | % Clay

DRAWN M.S.J. | CHECKED E.M.K.

STRUCTURE FOUNDATION EXPLORATION

HISTORIC BORING LOG B-012-0-03

LAW-93-0.00

V:\1755\active\175537016\Drawings\81595\structures\SHEETS\81595522.dgn 5/4/2011 11:22:24 AM mjennings

Client: Baker & Associates | Project: LAW -93C -0.00 | Job No. 0321-4003.00

Log of: Boring B-013-0-03 | Location: Station 35+01; 13' Rt. | Date Drilled: 5/7/03

Depth (ft)	Elev. (ft)	Blows per 6"	Recovery (in)	Sample No. Drive	Sample No. Press	Hand Penetrometer (tsf)	DESCRIPTION
0	543.7						
0.9	542.8						Aggregate Base - 11"
		8 9 18		1		1.5 - 2.0	Stiff to very stiff brown SILTY CLAY (A-6b), trace to little fine to coarse sand; slightly organic; damp.
		4 6 10 18		2		4.5+	@ 3.0' - 8.0', hard.
5		6 8 11 18		3		4.5+	
		5 6 10 18		4		3.0	
10		5 5 7 18		5		2.5	
		5 6 7 18		6		1.75	@ 13.0', stiff.
15.5	528.2						
		2 4 4 18		7		1.75	Stiff brown SILT AND CLAY (A-6a), little fine sand; moist.
18.0	525.7						
20		4 3 5 18		8		1.0	Stiff grayish brown SILTY CLAY (A-6b), little fine to coarse sand; slightly organic; damp to moist.
20.5	523.2						
		1 2 1 18		9A 9B		— 0.25	Soft brown SANDY SILT (A-4a); wet.
23.0	520.7						
24.0	519.7	WH 50/5	11	10A 10B		0.5	Medium stiff brown SILT AND CLAY (A-6a); moist to wet.
25							Very dense brown GRAVEL WITH SAND (A-1-b), little to some clayey silt; wet.
		22 34 48 18		11			
		11 2 24 7		12			@ 28.0', medium dense to dense.
30							
		15 25 8 2		13			@ 33.0', contains large sandstone fragments.
35							
36.0	507.7						
		14 13 11 18		14			Medium dense brown FINE SAND (A-3), trace silt; wet.
40							
		10 19 14 18		15			
45							
		15 12 12 0		16			Note: Auger sample collected from drive 16.
50	493.7						

WATER OBSERVATIONS:
Water seepage at: 21.5'
Water level at completion: 30' (prior to adding drill water)
24.5' (including drill water)

GRADATION: % Aggregate | % C. Sand | % M. Sand | % F. Sand | % Silt | % Clay

STANDARD PENETRATION (N)
Blows per foot: 10 20 30 40
Moisture Content-%: PL X—Natural—X LL; 10 20 30 40

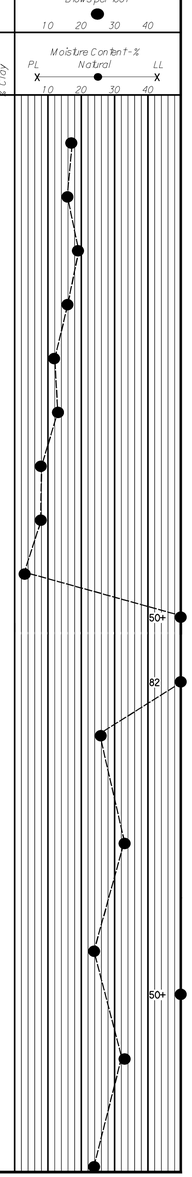

Client: Baker & Associates | Project: LAW -93C -0.00 | Job No. 0321-4003.00

Log of: Boring B-013-0-03 | Location: Station 35+01; 13' Rt. | Date Drilled: 5/7/03

Depth (ft)	Elev. (ft)	Blows per 6"	Recovery (in)	Sample No. Drive	Sample No. Press	Hand Penetrometer (tsf)	DESCRIPTION
50	493.7						
							Medium dense gray COARSE AND FINE SAND (A-3a), trace silt; wet.
55		12 14 11 15		17			
		7 12 17 0		18			
60							
62.0	481.7						
		12 13 16 16		19			Medium dense gray GRAVEL (A-1-a), some fine to coarse sand; wet.
65							
68.5	475.2	50/1	1	20			PROBABLE TOP OF ROCK
70		Core 78"	Rec 78"	RQD 100%	1		Medium hard to hard gray fine grained SANDSTONE, micaceous; laminated to thin bedded; slightly weathered; slightly broken; contains very thin black slightly carbonaceous highly micaceous layers and coal stringers. Notes: mechanical breakage along bedding planes, especially at the thin black layers.
75		Core 42"	Rec 25"	RQD 57%	2		
79.0	464.7						@ 75.5' - 75.6', broken zone.
80							Bottom of Boring - 79.0'
85							
90							
95							
100							

WATER OBSERVATIONS:
Water seepage at: 21.5'
Water level at completion: 30' (prior to adding drill water)
24.5' (including drill water)

GRADATION: % Aggregate | % C. Sand | % M. Sand | % F. Sand | % Silt | % Clay

STANDARD PENETRATION (N)
Blows per foot: 10 20 30 40
Moisture Content-%: PL X—Natural—X LL; 10 20 30 40

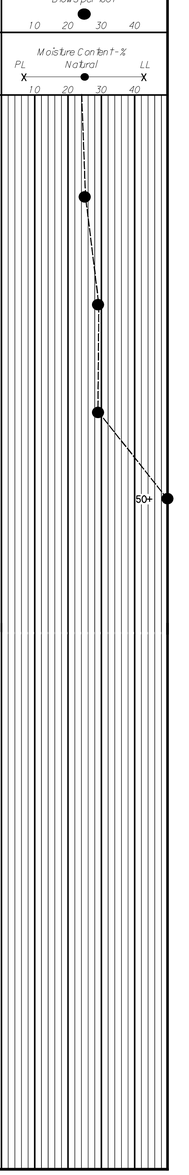

DRAWN M.S.J. | CHECKED E.M.K.

STRUCTURE FOUNDATION EXPLORATION

HISTORIC BORING LOG B-013-0-03

LAW-93-0.00

27 / 38

V:\1755\active\175537016\Drawings\81595\structures\SHEETS\81595523.dgn 5/4/2011 11:23:17 AM mjennings

Client: Baker & Associates | Project: LAW -93C -0.00 | Job No. 0321-4003.00

LOG OF: Boring B-014-0-03 | Location: Station 37+13.7; 34' Rt. | Date Drilled: 5/6/03

WATER OBSERVATIONS:
Water seepage at 18.5'
Water level at completion: 31.5' (prior to adding drill water)
22.9' (including drill water)

Depth (ft)	Elev. (ft)	Blows per 6"	Recovery (in)	Sample No. Drive	Sample No. Press	Hand Penetrometer (tsf)	DESCRIPTION	% Aggregate	% C. Sand	% M. Sand	% F. Sand	% Silt	% Clay	STANDARD PENETRATION (N) Blows per foot 10 20 30 40	Moisture Content-% PL Natural LL 10 20 30 40
0	542.2						DESCRIPTION								
1.0	541.2						Portland Cement Concrete - 5" Aggregate Base - 7"								
		3 2 4	10	1		—	Medium stiff to stiff brown CLAY (A-7-6), little fine to coarse sand, trace gravel; damp.	6	6	—	10	37	41	X	X
3.0	539.2														
		4 1 8	18	2		4.25	Very stiff to hard brown SILTY CLAY (A-6b), trace fine to coarse sand; damp.	0	3	—	6	47	44	X	X
5		6 7 10	18	3		4.0		0	0	—	4	54	42	X	X
10		5 7 9	18	4		4.5		0	0	—	2	56	42	X	X
10.5															
		4 5 7	18	5		3.5	Very stiff brown SILT AND CLAY (A-6a), trace fine sand; damp to moist.	0	0	—	4	65	31	X	X
15		4 5 6	18	6		1.5		0	0	—	3	64	33	X	X
		2 4 6	18	7		2.25		0	1	—	4	61	34	X	X
		1 3 4	18	8		—	@ 18.0', contains siltseam, moist to wet.	0	1	—	9	59	31	X	X
20															
20.5	521.7														
		16 19 23	18	9			Medium dense to dense brown GRAVEL (A-1-a), some fine to coarse sand, trace silt; moist.	56	18	—	19	7		Non-plastic	
25		10 16 15	18	10											
		10 13 16	18	11											
30		9 9 14	18	12											
32.0	510.2														
		3 4 9	9	13			Medium dense brown COARSE AND FINE SAND (A-3a), little to some gravel; wet.								
35															
40		4 5 9	9	14											
44.5	497.7														
		5 7 43	10	15			Medium dense brown GRAVEL WITH SAND (A-1-b), trace to little silty clay; wet.							50	
45															
47.0	495.2														
		14 17 14	14	16			Dense brown COARSE AND FINE SAND (A-3a), little gravel, little silt; wet.								
50	492.2														

BORING LOG CONTINUED ON THIS SHEET

Client: Baker & Associates | Project: LAW -93C -0.00 | Job No. 0321-4003.00

LOG OF: Boring B-014-0-03 | Location: Station 37+13.7; 34' Rt. | Date Drilled: 5/6/03

WATER OBSERVATIONS:
Water seepage at 18.5'
Water level at completion: 31.5' (prior to adding drill water)
22.9' (including drill water)

Depth (ft)	Elev. (ft)	Blows per 6"	Recovery (in)	Sample No. Drive	Sample No. Press	Hand Penetrometer (tsf)	DESCRIPTION	% Aggregate	% C. Sand	% M. Sand	% F. Sand	% Silt	% Clay	STANDARD PENETRATION (N) Blows per foot 10 20 30 40	Moisture Content-% PL Natural LL 10 20 30 40
50	492.2						DESCRIPTION								
52.0	490.2						Dense brown COARSE AND FINE SAND (A-3a), little gravel, little silt; wet.								
							Very dense brown and gray FINE SAND (A-3), trace gravel; wet.								
55		14 49 50/6	17	17										50+	
							@ 57.0', gray; little gravel.								
60		10 13 12	10	18											
65		14 21 27	18	19											
68.0	474.2						PROBABLE TOP OF ROCK								
70		Core 120"	Rec 119"	RQD 99%	1		Medium hard to hard gray fine grained SANDSTONE, micaceous; laminated to thin bedded; slightly weathered; slightly broken; contains very thin black highly micaceous layers and coal stringers.								
75		Core 120"	Rec 119"	RQD 99%	1										
78.0	464.2						Bottom of Boring - 78.0'								
80															
85															
90															
95															
100															

DRAWN M.S.J. | CHECKED E.M.K.

STRUCTURE FOUNDATION EXPLORATION

HISTORIC BORING LOG B-014-0-03

LAW-93-0.00

V:\1755\active\175537016\Drawings\81595\structures\SHEETS\81595524.dgn 5/4/2011 11:24:10 AM mjennings

Date Started 12/4/00 Project Ironton-Russell Bridge
Date Completed 12/5/00 Drilling Method: 6" od HS; 1.5 ft SPT on 2.5 ft centers, NX core w/water
Boring No. BC1-001-0-00 Station & Offset Surface Elevation 549.99
Coord.: North 192549.9 East 1947658.7 Water Elev. 526.9 Time 10:06 Date 12/5/00
S.O. Number 23847-005-A000-00012 File IRONTON Water Elev. 526 Time 14:10 Date 12/7/00

Elev. (ft)	Depth (ft)	Std. Pen./ ROD	Rec. (ft)	Loss (ft)	Description	Sample No.	Physical Characteristics: % Agg	% C.S.	% F.S.	% Silt	% Clay	LL	PI	WC	ODOT Class
549.0					SAND WITH SILT AND GRAVEL, (sp-sm,a-1-b), dark brown, moist, medium dense to dense, NP, sand is fine, gravel is subangular, fine to medium limestone and brick fragments, fine coal fragments in S-2	A-N									
547.5		12-16-22	1.3	0.2		S-1									
546.5	4					A-N									
		21-11-7	0.8	0.7		S-2									
545.0					fill	A-N									
544.0		4-6-9	1.5	0	5.5'- EL 544.5	S-3	0	8	7	0	85	38	16	21	A-6b
542.5	8				SILTY CLAY, (cl,a-6), gray-brown to brown, moist, stiff to hard, +PL in S-3, -PL below, trace fine rounded gravel and decomposed coal, homogeneous below approx. 6.5	A-N									
541.5		6-10-13	0.9	0.6		S-4									
540.0						A-N									
539.0	12	11-15-18	1.5	0	alluvium	S-5									
537.5					13.0'- EL 537.0	A-N									
536.5		6-8-10	1.4	0.1	SANDY SILT WITH CLAY, (cl-ml,a-4), brown, moist, stiff to very stiff, +PL, homogeneous	S-6									
535.0	16					A-N									
534.0		5-5-7	1.5	0		S-7									
532.5						A-N									
531.5		5-6-7	1.5	0		S-8									
530.0	20					A-N									
529.0		4-4-6	1.3	0.2		S-9									
527.5			2.0	0	pene taken @ bottom of tabe	ST-1	0	1	27	45	27	28	7	23	A-4a
525.5	24	2-3-6	1.5	0		S-10									
524.0					26.5'- EL 523.5	S-11									
522.5	28	3-4-3	1.4	0.1	SILT AND CLAY, trace fine sand, (cl,a-6), brown, moist to wet, medium stiff, homogeneous	A-N									
521.5		2-4-3	1.5	0	transitional boundary	S-12	0	0	7	0	93	35	13	27	A-6a
520.0						A-N									
519.0	32	2-2-3	1.5	0	penetration readings taken in cohesive zones but unit is mostly cohesionless	S-13									
517.5					30.5'- EL 519.5	A-N									
516.5		2-24-41	1.3	0.2	SANDY SILT, (ml,a-4), brown, moist to wet, medium stiff, +PL (low cohesion), homogeneous	S-14									
515.0	36					A-N									
514.0		12-14-16	1.2	0.3	clayey and gray @ transition	S-15									
512.5					34.5'- EL 515.5	A-N									
511.5					SAND WITH GRAVEL, (sw-sm,a-1-b),	S-16									
510.0	40	13-18-22	1.5	0	brown, wet, medium dense to very	A-N									
509.0					dense, homogeneous, sand is well-	S-17									
507.5		13-32-36	1.5	0	graded angular, gravel is fine to medium grained, subangular to	A-N									
506.5	44				rounded.	S-18									
505.0		10-9-7	1.5	0	S-15 is very gravelly	A-N									
504.0					water encountered @ 36 ft (elev 514.0)	S-19									
502.5	48	2-3-6	1.5	0	low gravel volume in S-18 may be wash sand, all gravel is @ bottom of sample loose in S-19 only	A-N									
501.5					low blows in S-19 may indicate heave	S-20									
500.0		8-8-9	1.2	0.3	in boring	A-N									
499.0	52				S-20 & below appear to be	S-21	21	56	17	2	4	NP	NP	14	A-1-b
497.5		9-11-15	1.3	0.2	represantative samples of in-place unit	A-N									
496.5						S-22									
495.0		9-12-14	1.1	0.4		A-N									
494.0	56					S-23									
492.5		12-20-15	1.1	0.4		A-N									
491.5						S-24									
490.0	60	9-15-23	1.1	0.4		A-N									
489.0					61.0'- EL 489.0	S-25									
487.5		18-19-20	1.5	0	SANDY GRAVEL, (gp,a-1-a), gray to gray brown, wet, medium to very dense,	A-N									
486.5	64				gravel is predominantly fine and	S-26									
485.0		15-13-11	1.2	0.3	rounded to subrounded with occasional coarse rounded particles, sand is	A-N									

BORING CONTINUES TO RIGHT

Date Started 12/4/00 Project Ironton-Russell Bridge
Date Completed 12/5/00 Drilling Method: 6" od HS; 1.5 ft SPT on 2.5 ft centers, NX core w/water
Boring No. BC1-001-0-00 Station & Offset Surface Elevation 549.99
Coord.: North 192549.9 East 1947658.7 Water Elev. 526.9 Time 10:06 Date 12/5/00
S.O. Number 23847-005-A000-00012 File IRONTON Water Elev. 526 Time 14:10 Date 12/7/00

Elev. (ft)	Depth (ft)	Std. Pen./ ROD	Rec. (ft)	Loss (ft)	Description	Sample No.	Physical Characteristics: % Agg	% C.S.	% F.S.	% Silt	% Clay	LL	PI	WC	ODOT Class
484.0		17-18-20	1.1	0.4	well graded angular	S-27									
482.5	68					A-N									
481.5		9-13-14	1.2	0.3		S-28									
480.0						A-N									
479.0	72	8-8-56	1.3	0.2	gravel in S-29 is less sandy, may be washed by sampling method	S-29									
477.5						A-N									
476.5		50/0.4	0.2	0.2	quartzite cobble fragment recovered in S-30	S-30									
476.1						A-N									
475.0		65/0.1	0.1	0	75.1'- EL 474.9	S-31									
474.9	76	ROD=0%	1.9	0.1	SANDSTONE, light gray with dark gray banding, medium hard, intensely to very intensely bedded, RD=5-15 degrees, widely fractured on bedding planes RD = 165-175 degrees, clay filled fracture (1/8" thick) @ 75.7	R-1									
472.9					76.3'- EL 473.7										
	80	ROD=49%	7.8	0.2	SANDSTONE, medium grained, gray, medium hard, fresh, intensely to very thinly bedded, RD = 5-10 degrees, widely to very widely fractured RD = 170 degrees lab samples: 76.3-77.0 sandtone 82.1-83.1 shale	R-2									
	84														
	88														
					78.9'- EL 471.1										
	92				SANDSTONE, fine grained, silty, light gray with dark gray banding, soft to medium hard, fresh, intensely to very intensely bedded RD = 5-20 degrees, very widely fractured on bedding planes, RD = 170 degrees										
					81.2'- EL 468.8										
	96				SHALE, sandy, dark gray with light gray banding, fresh, soft, very intensely bedded, RD = 5-10 degrees, widely to very widely fractured on bedding planes, RD = 170-175 degrees, breaks readily on bedding, sandy below 83.8, highly broken 84.1-84.3										
	100				85.1'- EL 464.9										
					End of Boring @ 85.1 ft										
	104														
	108														
	112														
	116														
	120														
	124														
	128														

DRAWN M.S.J. CHECKED E.M.K.

STRUCTURE FOUNDATION EXPLORATION

HISTORIC BORING LOG BC1-001-0-00

LAW-93-0.00

29/38

V:\1755\active\175537016\Drawings\81595\structures\SHEETS\81595525.dgn 5/4/2011 11:25:24 AM mjennings

Date Started 12/6/00 Project Ironton-Russell Bridge
Date Completed 12/6/00 Drilling Method: 4 1/4" I.D. H.S. augers; 1 3/8" I.D. Split Spoon; NX Core barrel with H2O
Boring No. BC1-002-0-00 Station & Offset Surface Elevation 493.3
Coord.: North 192127.7 East 1947479.9 Water Elev. 514.8 Time Date 12/6/00
S.O. Number 23847-005-A000-00012 File IRONTON Water Elev. Time Date

Elev. (ft)	Depth (ft)	Std. Pen./ RQD	Rec. (ft)	Loss (ft)	Description	Sample No.	Physical Characteristics: % Agg	% C.S.	% F.S.	% Silt	% Clay	LL	PI	WC	ODOT Class
492.3					SILTY, CLAYEY GRAVEL; (gc-gm,a-2-6); dark grey; wet; medium dense; gravel is angular to rounded, fine to medium	A-N									
490.8		1-5-10	0.4	1.1	slag, sandstone, shale and granite, trace to little shells	S-1									
489.8	4				Alluvium	A-N									
488.3		5-9-8	0.5	1	with sand in S-2, sand is fine to coarse	S-2									
487.3					6.0'- EL 487.3	A-N									
485.8	8	4-5-6	1.0	0.5	SILTY SAND; (sm,a-1-b); dark grey; wet; medium dense; homogeneous	S-3									
484.8					Alluvium	A-N									
483.3		4-5-6	0.8	0.7		S-4									
482.3	12					A-N									
480.8		3-5-5	1.0	0.5		S-5									
479.8					13.5'- EL 479.8	A-N									
478.3		3-4-6	1.3	0.2	WELL GRADED SAND; (sw,a-1-b); light grey and white; wet; medium dense to dense	S-6									
477.3	16				Alluvium	A-N									
475.8		5-14-25	1.3	0.2	with gravel from 14.8-15.0 (0.2 ft)	S-7									
474.8					18.5'- EL 474.8	A-N									
474.6	20	50/0.2	0	0.2	SILTY SAND WITH GRAVEL; (sm,a-1-b); grey and black; moist; very dense; homogeneous; sand is very fine; gravel is angular, fine, sandstone fragments	S-8									
472.3					residuum	A-N									
472.1		50/0.2	0.2	0	21.2'- EL 472.1	S-9									
	24	RQD=76%	5.0	0	SANDSTONE, fine grained; grey; medium hard to hard; slightly weathered to fresh; thinly to medium bedded, RD = 0-5 degrees; very closely to widely fractured, RD = 0-5 degrees, little to some carbonaceous laminations	R-1									
467.1															
	28														
	32	RQD=63%	9.6	0.4		R-2									
					34.1'- EL 459.2										
					COAL; black; soft; slightly weathered; indistinctly bedded, broken to closely fractured										
457.1					35.2'- EL 458.1										
	36				MUDSTONE; grey; soft to medium hard; slightly weathered; indistinctly bedded; closely fractured, RD = 0-45 degrees										
	40	RQD=47%	9.6	0.4	37.0'- EL 456.3	R-3									
					MUDSTONE; grey to dark grey; soft to very soft; moderately weathered; indistinctly bedded; very closely to medium fractured, RD = 0-20 degrees coal from 39.8 to 40.1, very soft, broken (0.3 ft)										
	44														
447.1					41.0'- EL 452.3										
	48	RQD=50%	4.7	0.3	SILTY SANDSTONE, very fine grained; grey; medium hard to hard; slightly weathered to fresh; thinly to medium bedded, RD = 0-5 degrees; medium fractured, RD = 0-5 degrees	R-4									
					51.2'- EL 442.1										
	52				End of boring @ 51.2										
	56														
	60														
	64														

Date Started 12/6/00 Project Ironton-Russell Bridge
Date Completed 12/6/00 Drilling Method: 4 1/4" O.D. H.S. augers; 1 3/8" I.D. Split Spoon; NX Core barrel with H2O
Boring No. BC1-003-0-00 Station & Offset Surface Elevation 475.7
Coord.: North 191298.1 East 1946880.1 Water Elev. 514.9 Time Date 12/6/00
S.O. Number 23847-005-A000-00012 File IRONTON Water Elev. Time Date

Elev. (ft)	Depth (ft)	Std. Pen./ RQD	Rec. (ft)	Loss (ft)	Description	Sample No.	Physical Characteristics: % Agg	% C.S.	% F.S.	% Silt	% Clay	LL	PI	WC	ODOT Class
			0.1	1.4	SILTY GRAVEL WITH SAND; (gm,a-1-b); brown and grey; wet; medium dense;	S-1	79	10	10	0	2	NP	NP	10	A-1-a
474.2															
		5-6-7	0.3	1.2	homogeneous	S-2	35	22	20	0	23	NP	NP	14	A-1-b
472.7					Alluvium										
472.0	4	1-50/0.2	0.7	0	little clay in S-2	S-3	2	68	22	0	7	NP	NP	16	A-1-b
					3.0'- EL 472.7	A-N									
471.2		50/0	0	0	GRAVEL WITH SAND (sw-sm,a-1-b); light grey; wet; very loose; homogeneous	S-4									
471.2					Alluvium										
		ROD=87%	5.2	-	3.5'- EL 472.2										
	8			0	SILTY SAND WITH GRAVEL; (sm,a-1-b); grey; moist; very dense; gravel is angular, fine sandstone fragments	R-1									
466.0					Residuum										
					4.5'- EL 471.2										
	12				SANDSTONE, fine grained; grey; medium hard to hard; slightly weathered to fresh; thinly to thickly bedded, RD = 0-5 degrees; closely to widely fractured, RD = 0-5 degrees; trace carbonaceous laminations										
		ROD=80%	8.0	0		R-2									
	16														
					16.5'- EL 459.2										
458.0					MUDSTONE; grey; soft; slightly weathered; indistinctly bedded; very closely fractured, RD = 0-5 degrees; little slickensides throughout										
	20	ROD=18%	4.5	0.5	17.2'- EL 458.5	R-3									
					SANDSTONE, fine grained; grey; medium hard to hard; slightly weathered to fresh; very thinly to thinly bedded, RD = 0-5 degrees; very closely to closely fractured, RD = 0-5 degrees										
453.0					18.9'- EL 456.8										
	24				COAL; black; soft; slightly weathered; indistinctly bedded, broken to closely fractured RD = 0-90 degrees										
					20.5'- EL 455.2										
	28	ROD=70%	10.0	0	MUDSTONE; grey and tan; soft; slightly to moderately weathered; indistinctly bedded; closely to medium fractured, RD = 0-45 degrees; some interbedded, laminated siltstone and sandstone;	R-4									
443.0					trace to little slickensides throughout										
	32				23.5'- EL 452.2										
		ROD=70%	2.0	0	COAL AND CARBONACEOUS SHALE; black; very soft; highly weathered; laminated; broken	R-5									
					23.8'- EL 451.9										
	36				MUDSTONE; grey; soft to medium hard; slightly weathered; indistinctly bedded; medium fractured; some interbedded; laminated sandstone										
					25.2'- EL 450.5										
	40				SILTY SANDSTONE, very fine grained; light grey and grey; medium hard to hard; slightly weathered to fresh; very thinly to thinly bedded, RD = 0-5 degrees; closely to widely fractured, RD = 0-5 degrees										
					29.9'- EL 445.8										
	44				SANDSTONE; very fine to fine grained; light grey and grey; hard; fresh; thinly to thickly bedded, RD = 0-5 degrees; closely to widely fractured, RD = 0-90 degrees										
					vertically fractured from 33.4 to 33.8 (442.3-441.9)										
	48				34.7'- EL 441.0										
					End of boring @ 34.7										
	52														
	56														
	60														
	64														

DRAWN M.S.J. CHECKED E.M.K.

STRUCTURE FOUNDATION EXPLORATION

HISTORIC BORING LOGS BC1-002-0-00 - BC1-003-0-00

LAW-93-0.00

V:\1755\active\175537016\Drawings\81595\structures\SHEETS\81595S26.dgn 5/4/2011 11:26:56 AM mjennings

Date Started 12/6/00 Project Ironton-Russell Bridge
Date Completed 12/6/00 Drilling Method: 6" O.D. H.S. with SPT @ 2.5 ft centers, NX Core with water
Boring No. BC1-004-0-00 Station & Offset Surface Elevation 604.13
Coord.: North 190735.2 East 1946326.1 Water Elev. 589.8 Time 12:25 Date 12/6/00
S.O. Number 23847-005-A000-00012 File IRONTON Water Elev. 589.5 Time 07:09 Date 12/8/00

Elev. (ft)	Depth (ft)	Std. Pen./ RQD	Rec. (ft)	Loss (ft)	Description	Sample No.	Physical Characteristics: % Agg	% C.S.	% F.S.	% Silt	% Clay	LL	PI	WC	ODOT Class
603.1					SANDSTONE Aggregate (shoulder runout) 0.6'- EL 603.5	A-N									
601.6		5-12-10	0.7	0.8	SILTY CLAY WITH SAND; (cl-ml,a-5); grey-brown; moist; very stiff; +PL; sand is very fine grained	S-1									
600.6	4				fill 4.4'- EL 599.7	A-N									
599.1		13-20-24	0.9	0.6		S-2									
598.1					SANDY SILT AND CLAY; (cl,a-4); grey-brown; dry; hard; -PL; remnant bedding of decomposed shale residuum	A-N									
596.6	8	14-27-30	1.1	0.4		S-3	0	8	7	38	47	34	10	10	A-4a
595.6						A-N									
594.3		15-31-50/0.3	1.2	0.1		S-4									
593.1						A-N									
592.3	12	25-50/0.3	0.7	0.1	11.7'- EL 592.4	S-5									
590.6					SILTY SAND; (sm,a-1-b); decomp Sandstone	A-N									
590.3		50/0.3	0.3	0	boring dry to 15.1 ft prior to coring	S-6									
589.1					11.8'- EL 592.3	A-N									
589.0	16	50/0.1	0	0.1	SHALE FRAGMENTS; (gp,a-1-a);	S-7									
587.0		RQD=15%	2.0	0	carbonaceous; dark grey; dry; very dense; friable; broken on remnant bedding	R-1									
					15.0'- EL 589.1										
	20				SANDSTONE; medium grained; grey; medium hard; fresh top of rock @ 15.0 ft										
		RQD=64%	8.0	0	15.5'- EL 588.6	R-2									
					COAL; slightly weathered 15.8'- EL 588.3										
	24				SANDY SHALE; grey; very soft; fresh; very intensely bedded RD = 0-5										
579.0					degrees; widely fractured on bedding planes, RD = 175-180 degrees sample prepared 17.2 to 18.0 (shale)										
	28				sample prepared 21.1 to 22.1 (sandstone)										
		RQD=67%	10.0	0	vertical fracture 18.3, 0.7 length 18.6'- EL 585.5	R-3									
	32				SANDSTONE; fine grained argillaceous, grey, soft to medium hard; fresh; very intensely bedded RD = 0 degrees; very widely to widely fractured; RD = 120 - 170 degrees; occasional slickensides angular fractures @ 19.2 - 130 degrees 20.3 - 120 degrees 21.2 - 120 degrees 21.3 - 120 degrees 21.6 - 120 degrees & 180 degrees 23.8 - 160 degrees 24.5 - 170 degrees 25.0 - 175 degrees broken: 21.3 - 21.6 (0.3) 25.7 - 26.2 (0.5)										
	36														
	40														
	44														
	48				26.2'- EL 577.9 SHALE; grey-brown; very soft; highly weathered to decomp; very intensely bedded, RD = 0 degrees unfractured transitional boundary 28.1'- EL 576.0										
	52				SILTY SANDSTONE; grey; medium hard; fresh; very intensely bedded, RD = 0 degrees; unfractured, highly argillaceous & broken 31.7 to 31.8; sand is fine to medium grained 32.0'- EL 572.1										
	56				SANDSTONE; medium grained; light brown-grey; medium hard to hard; very thinly bedded, RD = 0-15 degrees; very wide fractures on bedding shale seam 33.0-33.2 slightly weathered, shift to grey @ 34.0 35.1'- EL 569.0										
	60														
	64				End of boring @ 35.1 ft										

STRUCTURE FOUNDATION EXPLORATION
HISTORIC BORING LOG BC1-004-0-00

LAW-93-0.00

DRAWN M.S.J.
CHECKED E.M.K.

31 / 38

V:\1755\active\175537016\Drawings\81595\structures\SHEETS\81595527.dgn 5/4/2011 11:28:09 AM mjennings

Client: Baker & Associates | Project: LAW -93C -0.00 | Job No. 0321-4003.00

Log of: Boring E-004-S-03 | Location: Station 12+98; 27' Lt. | Date Drilled: 6/2/03

Depth (ft)	Elev. (ft)	Blows per 6"	Recovery (in)	Sample No. Drive	Sample No. Run	Hand Penetrometer (tsf)	WATER OBSERVATIONS:	DESCRIPTION	GRADATION % Aggregate	% C. Sand	% M. Sand	% F. Sand	% Silt	% Clay	STANDARD PENETRATION (N) Blows per foot 10 20 30 40	Moisture Content-% PL Natural LL 10 20 30 40
0	506.1						Water seepage at Channel Surface - River Pool									
		2 3 3	13	1			Water level at completion: River Pool Elevation 10.1 ft Water Depth	Loose to medium dense brown and gray GRAVEL WITH SAND (A-1-b), little silt; wet.								
5		6 13 9	18	2												
		18 16 13	12	3				@ 8.5' - 10.0', 2.0' sand heave; washed out with tricone.								
8.5	497.6															
10		4 7 7	12	4				Medium dense brown COARSE AND FINE SAND (A-3a), little silt, trace gravel; wet.								
		8 13 17	15	5				@ 11.0' - 12.5', little silty clay.								
15		3 6 9	9	6												
		3 11 18	18	7												
19.0	487.1							PROBABLE TOP OF WEATHERED ROCK								
20		2 50/4	10	8				Soft gray SANDSTONE; severely weathered and partially decomposed.							50+	
		32 50/5	11	9											50+	
25	481.1	50/5	2	10											50+	
26.2	479.9	50/2	2	11				PROBABLE TOP OF FIRM ROCK								
		Core 118"	Rec 116"	RQD 98%				Medium hard to hard gray SANDSTONE, micaceous; laminated to thin bedded; slightly weathered; slightly broken; contains very thin black highly micaceous layers and coal stringers.								
30																
35																
		Core 120"	Rec 120"	RQD 100%	2											
40																
45																
46.1	460.0															
46.5	459.6							Soft black COAL; slightly weathered; slightly broken.								
		Core 120"	Rec 120"	RQD 98%	3			Medium hard light gray SHALE; thin bedded; moderately weathered; slightly broken.								
48.7	457.4															
49.1	457.0							Soft black COAL; slightly weathered; slightly broken.								
50	456.1							Medium hard gray CLAYSTONE, carbonaceous; arenaceous; slightly micaceous; moderately weathered; slightly broken.								

Client: Baker & Associates | Project: LAW -93C -0.00 | Job No. 0321-4003.00

Log of: Boring E-004-S-03 | Location: Station 12+98; 27' Lt. | Date Drilled: 6/2/03

Depth (ft)	Elev. (ft)	Blows per 6"	Recovery (in)	Sample No. Drive	Sample No. Run	Hand Penetrometer (tsf)	WATER OBSERVATIONS:	DESCRIPTION	GRADATION % Aggregate	% C. Sand	% M. Sand	% F. Sand	% Silt	% Clay	STANDARD PENETRATION (N) Blows per foot 10 20 30 40	Moisture Content-% PL Natural LL 10 20 30 40
50	456.1						Water seepage at Channel Surface - River Pool									
50.2	455.9	Core 120"	Rec 120"	RQD 98%	3		Water level at completion: River Pool Elevation 10.1 ft Water Depth	Medium hard gray CLAYSTONE, carbonaceous; arenaceous; slightly micaceous; moderately weathered; slightly broken.								
51.2	454.9							Soft black COAL; slightly weathered; slightly broken.								
52.8	453.3							Medium hard light gray SHALE; thin bedded; moderately weathered; slightly broken.								
55								Medium hard to hard gray and dark gray fine grained SANDSTONE, argillaceous; micaceous; very thin bedded; slightly weathered; slightly broken; contains occasional shale laminae.								
60		Core 120"	Rec 120"	RQD 100%	4											
65																
66.0	440.1							Bottom of Boring - 66.0'								
70								Boring was drilled as a structural boring from a barge.								
75																

DRAWN M.S.J. | CHECKED E.M.K.

STRUCTURE FOUNDATION EXPLORATION

HISTORIC BORING LOG E-004-S-03

LAW-93-0.00

V:\1755\active\175537016\Drawings\81595\structures\SHEETS\81595528.dgn 5/4/2011 11:50:45 AM mjennings

Client: Baker & Associates | Project: LAW -93C -0.00 | Job No. 0321-4003.00

Log of: Boring E-005-0-03 | Location: Station 30+84; 54' Lt. | Date Drilled: 5/19 & 5/20/03

WATER OBSERVATIONS: Water seepage at 4.0'. Water level at completion: 12.4' (augers removed)

Depth (ft)	Elev. (ft)	Blows per 6"	Recovery (in)	Sample No.	Drive	Press	Hand Penetrometer (tsf)	DESCRIPTION	% Aggregate	% C. Sand	% M. Sand	% F. Sand	% Silt	% Clay	STANDARD PENETRATION (N) Blows per foot (10 20 30 40)	Moisture Content-% PL Natural LL (10 20 30 40)
0	549.9							DESCRIPTION								
0.8	549.1	6 13 5 6	18	1			4.5+	Aggregate Base - 10"								
4.0	545.9	4 4 6 8	6	2			1.25	FILL: Hard dark gray and brown SILT AND CLAY (A-6a), some fine to coarse sand; contains glass and brick fragments and organic zones; damp. @ 2.0' - 4.0', stiff.								
5		2 2 2	18	3			1.25	Stiff to very stiff brown and gray SILTY CLAY (A-6b), little fine to coarse sand, trace gravel; moist.								
		2 5 5	20	4			1.0									
		4 6 9	24	4A			4.0	@ 7.0', becomes reddish brown.								
10	539.9	7 12 13	24	5			2.5									
		5 11 12 15	12	6			3.5	Stiff to very stiff reddish brown SILT AND CLAY (A-6a), some fine to coarse sand, trace gravel; moist.								
		3 6 6 5	18	7			1.5									
15		3 4 6 6	12	8			0.5	@ 14.0' - 16.0', medium stiff.								
		4 5 5 5	12	9			—									
20	529.9			10			1.25									
								Bottom of Boring - 20.0'								
25																

Client: Baker & Associates | Project: LAW -93C -0.00 | Job No. 0321-4003.00

Log of: Boring E-006-0-03 | Location: Station 30+86; 42' Lt. | Date Drilled: 5/20/03 & 7/21/03

WATER OBSERVATIONS: Water seepage at 38.5' through 70'. Water level at completion: None (5/20/03). 32.0' (7/22/03, includes core water)

Depth (ft)	Elev. (ft)	Blows per 6"	Recovery (in)	Sample No.	Drive	Run	Hand Penetrometer (tsf)	DESCRIPTION	% Aggregate	% C. Sand	% M. Sand	% F. Sand	% Silt	% Clay	STANDARD PENETRATION (N) Blows per foot (10 20 30 40)	Moisture Content-% PL Natural LL (10 20 30 40)
0	549.8							DESCRIPTION								
0.5	549.3	21 14 8 4	14	1			4.0	Aggregate Base - 6"								
4.0	545.8	4 8 13 16	12	2			4.0	FILL: Very stiff to hard black and dark gray SILT AND CLAY (A-6a), little fine to coarse sand, trace gravel; damp.								
5		3 3 4 5	20	3			2.75	Very stiff to hard brown SILTY and CLAY (A-6a), little fine to coarse sand, trace gravel; damp.	0	8	—	7	49	36		
		4 7 11 14	24	4			4.5+									
10		6 8 11 12	24	5			3.75		0	1	—	3	53	43		
		6 9 11 14	24	6			4.5+									
14.0	535.8	6 9 10 12	24	7			2.5									
15		3 6 7 7	24	8			1.0	Medium stiff to stiff brown SANDY SILT (A-4a), some fine to coarse sand; moist.	0	0	—	46	33	21		
		3 4 5 7	24	9			0.5									
20		3 6 6 8	24	10			1.5									
		4 4 6	18	11			1.5	@ 23.5' - 25.0', contains numerous fine sand seams.								
25	524.8	5 5 8	18	12			1.0	Medium stiff brown SILT AND CLAY (A-6a), some fine to coarse sand; contains numerous fine sand seams; moist.								
		5 5 7	18	13			0.75									
30		2 5 6	18	14			1.0		0	0	—	22	48	30		
		3 5 10	18	15			0.5	@ 33.5' - 35.0', gray, contains wood fragments.								
37.0	512.8															
40		19 12 11	14	16				Medium dense brown GRAVEL WITH SAND (A-1-b), little silt; wet.								
43.5	506.3															
45		4 5 11	13	17				Medium dense brown GRAVEL WITH SAND (A-1-b), trace to little silt; wet.	36	30	—	21	13		Non-plastic	
								@ 48.5' - 50.0', brown and black, little silt, contains coal fragments.								
50	499.8	6 11 14	9	18												

BORING LOG CONTINUED ON THE FOLLOWING SHEET.

DRAWN M.S.J. | CHECKED E.M.K.

STRUCTURE FOUNDATION EXPLORATION

HISTORIC BORING LOGS E-005-0-03 - E-006-0-03

LAW-93-0.00

V:\1755\active\175537016\Drawings\81595\structures\SHEETS\81595S29.dgn 5/4/2011 11:51:39 AM mjennings

Client: Baker & Associates | Project: LAW -93C -0.00 | Job No. 0321-4003.00

Log of: Boring E-006-0-03 | Location: Station 30+86; 42' Lt. | Date Drilled: 5/20/03 & 7/21/03

Depth (ft)	Elev. (ft)	Blows per 6"	Recovery (in)	Sample No. Drive	Sample No. Run	Hand Penetrometer (tsf)	WATER OBSERVATIONS	GRADATION % Aggregate	% C. Sand	% M. Sand	% F. Sand	% Silt	% Clay	STANDARD PENETRATION (N) Blows per foot 10 20 30 40	Moisture Content-% PL Natural LL 10 20 30 40
50	499.8						Water seepage at 38.5' through 70' Water level at completion: None (5/20/03) 32.0' (7/22/03, includes core water)								
							DESCRIPTION								
		12 9 9 16		19			Medium dense brown GRAVEL WITH SAND (A-1-b), trace to little silt; wet.								
55															
		12 15 17 18		20				12	43	—	38	7			non-plastic
60															
		12 15 14 14		21											
65															
		12 13 14 12		22											
70															
73.5	476.3						@ 73.5', auger refusal. PROBABLE TOP OF ROCK								
75	474.8	Core 12"	Rec 12"	ROD 100%	1		Medium hard gray SANDSTONE, Very fine grained. @ 74.8', low angle fracture.								
		Core 120"	Rec 106"	ROD 82%	2		Medium hard gray SANDSTONE, Very fine grained. @ 74.1' - 75.8', fine to medium grained.								
77.9	471.9														
80							Hard gray SANDSTONE, fine grained, micaceous, contains occasional shale seams. @ 82.0', near horizontal fracture.								
85		Core 120"	Rec 115"	ROD 73%	3										
88.6	461.2						Medium hard gray SILTSTONE.								
89.3	460.5						Hard gray SANDSTONE, fine to medium grained, micaceous, contains numerous dark gray carbonaceous shale interbeds. @ 90.3' - 90.4', dark gray SHALE. @ 91.1', low angle fracture.								
90															
93.6	456.2						@ 93.3' - 93.4', soft gray SHALE seam.								
94.5	455.3						COAL								
95		Core 120"	Rec 118"	ROD 73%	4		Soft to medium hard gray SANDSTONE, very fined grained. @ 96.7', low angle fracture. @ 98.1' - 99.0', carbonaceous with coal seams. @ 99.5' - 102.5', arenaceous, micaceous.								
100	449.8														

BORING LOG CONTINUED ON THIS SHEET

Client: Baker & Associates | Project: LAW -93C -0.00 | Job No. 0321-4003.00

Log of: Boring E-006-0-03 | Location: Station 30+86; 42' Lt. | Date Drilled: 5/20/03 & 7/21/03

Depth (ft)	Elev. (ft)	Blows per 6"	Recovery (in)	Sample No. Drive	Sample No. Run	Hand Penetrometer (tsf)	WATER OBSERVATIONS	GRADATION % Aggregate	% C. Sand	% M. Sand	% F. Sand	% Silt	% Clay	STANDARD PENETRATION (N) Blows per foot 10 20 30 40	Moisture Content-% PL Natural LL 10 20 30 40
100	449.8						Water seepage at 38.5' through 70' Water level at completion: None (5/20/03) 32.0' (7/22/03, includes core water)								
							DESCRIPTION								
		Core 120"	Rec 118"	ROD 73%	4		Soft to medium hard gray SANDSTONE, very fined grained. @ 99.5' - 102.5', arenaceous, micaceous.								
102.5	447.3						Medium hard to hard gray SANDSTONE, fine grained, micaceous.								
105		Core 120"	Rec 108"	ROD 90%	5										
110															
114.5	435.3														
115							Bottom of Boring - 114.5' NOTE: Boring was drilled as an environmental boring to 20 feet on 5/20/03. Upon completion of environmental analytical analysis of samples the boring was completed as a structural boring to 114.5 feet.								
120															
125															

DRAWN M.S.J. | CHECKED E.M.K.

STRUCTURE FOUNDATION EXPLORATION

HISTORIC BORING LOG E-006-0-03

LAW-93-0.00

V:\1755\active\175537016\Drawings\81595\structures\SHEETS\81595S30.dgn 5/4/2011 11:52:33 AM mjennings

Client: Baker & Associates | Project: LAW -93C -0.00 | Job No. 0321 -4003.00

Log of: Boring E-007-0-03 | Location: Station 39+84; 50' Rt. | Date Drilled: 5/19/03 & 7/28/03

Depth (ft)	Elev. (ft)	Blows per 6"	Recovery (in)	Sample No. Drive	Sample No. Run	Hand Penetrometer (tsf)	WATER OBSERVATIONS	GRADATION % Aggregate	% C. Sand	% M. Sand	% F. Sand	% Silt	% Clay	STANDARD PENETRATION (N) Blows per foot 10 20 30 40	Moisture Content-% PL Natural LL 10 20 30 40
0	542.7						DESCRIPTION								
0.3	542.4	9 5 4	5	12	1	1.75	Aggregate Base - 4"								
2.5	540.2	3 5 9	12	20	2	4.5	Very stiff to hard brown SILT AND CLAY (A-6a), little to some fine to coarse sand, trace gravel; damp to moist.								
5		6 7 8	12	23	3	4.5	Very stiff to hard brown CLAY (A-7-6), trace fine to coarse sand; damp.	0	3	—	3	44	50		
		9 6 9	12	24	4	3.5									
10		8 8 11	13	24	5	3.75									
		3 6 7	9	24	6	3.25	@ 12.0', damp to moist.								
15		3 5 6	9	24	7	2.5									
16.0	526.7	3 5 6	9	24	8	2.25									
		3 5 5	6	24	9	1.5	Medium stiff to stiff brown SILT (A-4b); some clay, some fine sand; moist.	0	0	—	21	54	25		
20	522.7	2 3 5	6	24	10	0.5									
		11 27 34	18		11		Dense to very dense brown GRAVEL (A-1-a), some fine to coarse sand, trace silt; wet.	60	15	—	20	5		Non-plastic	61
25	517.7	9 19 23	16		12		@ 23.5', becomes wet.								
		7 19 13	18		13		Dense to very dense brown GRAVEL (A-1-a), some fine to coarse sand, trace silt; wet.								
30		20 32 30	12		14										62
32.0	510.7						Medium dense brown COARSE AND FINE SAND (A-3a), little gravel, trace silt; wet.	15	32	—	45	8		Non-plastic	
35		7 8 8	18		15										
40		4 5 7	18		16										
45		10 10 11	12		17										
50	492.7	11 10 15	20		18										

Client: Baker & Associates | Project: LAW -93C -0.00 | Job No. 0321 -4003.00

Log of: Boring E-007-0-03 | Location: Station 39+84; 50' Rt. | Date Drilled: 5/19/03 & 7/28/03

Depth (ft)	Elev. (ft)	Blows per 6"	Recovery (in)	Sample No. Drive	Sample No. Run	Hand Penetrometer (tsf)	WATER OBSERVATIONS	GRADATION	STANDARD PENETRATION (N) Blows per foot	Moisture Content-% PL Natural LL
50	492.7						DESCRIPTION			
		8 12 30	18		19		Dense to very dense brown FINE SAND (A-3), little coarse sand, trace gravel; wet.			
55		10 23 32	18		20				55	
60		30 46 48	18		21					
65							@ 66.0', auger refusal.			
66.0	476.7						PROBABLE TOP OF ROCK		94	
		Core 44"	Rec 43		RQD 84%	1	Medium hard to hard gray SANDSTONE, fine to medium grained, micaceous.			
70		Core 76"	Rec 70"		RQD 87%	2				
75							@ 72.1', 72.7', low angle fractures.			
76.0	466.7						Bottom of Boring - 76.0'			
80							NOTE: Boring was drilled as an environmental boring to 20 feet on 5/20/03. Upon completion of environmental analytical analysis of samples the boring was completed as a structural boring to 76 feet.			
85										
90										
95										
100										

STRUCTURE FOUNDATION EXPLORATION
HISTORIC BORING LOG E-007-0-03

DRAWN M.S.J. | CHECKED E.M.K.

LAW-93-0.00

V:\1755\active\175537016\Drawings\81595\structures\SHEETS\81595S31.dgn 5/4/2011 11:53:24 AM mjennings

Client: Baker & Associates | Project: LAW-93C Phase II | Job No. 0321-4003-01

LOG OF: Boring S-001-0-03 | Location: Sta. 35+50.0, 30' Lt. | Date Drilled: 5-5-04

WATER OBSERVATIONS: Water seepage at: 20.5', 23.5'
Water level at completion: 24.5' measured inside of augers

Depth (ft)	Elev. (ft)	Blows per 6"	Recovery (in)	Sample No. Drive	Sample No. Press / Core	Hand Penetrometer (tsf)	DESCRIPTION	GRADATION % Agg.	% C. Sand	% M. Sand	% F. Sand	% Silt	% Clay
0	544.7						Topsoil to 12"						
1.0	543.7	2 2 3	18	1		1.75	Stiff brown SILT AND CLAY (A-6a), trace fine to coarse sand; damp to moist.						
		1 4 9	18	2		4.25	@ 3.5-6.0'; hard and dry.						
5		7 10 14	18	3		4.5+	@ 6.0'; dry.						
		2 9 12	18	4		3.5	@ 8.0-13.0'; very stiff, damp.						
10		1 4 7	18	5		3.0							
		2 6 6	18	6		1.75	@ 13.5'; little fine to coarse sand.						
15		1 4 5	18	7		1.75							
		1 3 3	18	8		1.5							
20													
20.5	524.2	WOH 1 2	18	9			Very soft brown SANDY SILT (A-4a); moist to wet.						
23.0	521.7	WOH 1 2	18	10		0.25	Very soft brown SILT AND CLAY (A-6a), little fine to coarse sand; moist to wet.						
25													
25.5	519.2	12 25 23	18	11			Dense brown GRAVEL (A-1-a), trace fine to coarse sand, trace silty clay; moist.						
		38 32 23	16	12									
30.0	514.7						Bottom of Boring - 30.0'						

STANDARD PENETRATION (N)
Natural Moisture Content, %
PL ——— LL
Blows per foot - 10 20 30 40

Client: Baker & Associates | Project: LAW-93C Phase II | Job No. 0321-4003-01

LOG OF: Boring S-004-0-03 | Location: Sta. 38+20.0, 30' Lt. | Date Drilled: 5-5-04

WATER OBSERVATIONS: Water seepage at: None
Water level at completion: Dry

Depth (ft)	Elev. (ft)	Blows per 6"	Recovery (in)	Sample No. Drive	Sample No. Press / Core	Hand Penetrometer (tsf)	DESCRIPTION	GRADATION % Agg.	% C. Sand	% M. Sand	% F. Sand	% Silt	% Clay
0	543.0						12" Topsoil						
1.0	542.0	1 3 6	18	1		4.0	Very stiff to hard brown SILT AND CLAY (A-6a), trace fine to coarse sand; damp to moist.						
		3 8 11	18	2		4.25							
5		5 6 12	18	3		3.0							
		4 6 9	18	4		3.5							
10		4 5 7 18	18	5		2.0							
13.0	530.0	1 4 5	18	6		2.25							
							Bottom of Boring - 15.0'						

STANDARD PENETRATION (N)
PL ——— LL
Blows per foot - 10 20 30 40

Client: Baker & Associates | Project: LAW-93C Phase II | Job No. 0321-4003-01

LOG OF: Boring S-003-0-03 | Location: Sta. 36+68.0, 7' Lt. | Date Drilled: 5-6-04

WATER OBSERVATIONS: Water seepage at: 23.0'
Water level at completion: 23.5' measured inside of augers

Depth (ft)	Elev. (ft)	Blows per 6"	Recovery (in)	Sample No. Drive	Sample No. Press / Core	Hand Penetrometer (tsf)	DESCRIPTION	GRADATION % Agg.	% C. Sand	% M. Sand	% F. Sand	% Silt	% Clay
0	544.3						Topsoil to 12"						
1.0	543.3	1 1 1	15	1		1.25	FILL: Stiff black and brown SILT AND CLAY (A-6a), some gravel; trace fine to coarse sand; contains brick fragements; damp to moist.						
3.0	541.3	3 6 8	18	2		3.5	Very stiff brown SILT AND CLAY (A-6a), trace fine to coarse sand; damp.						
5		5 7 12	18	3		3.5							
		4 6 9	18	4		3.0							
10		2 5 6	18	5		2.0							
		4 6 5	18	6		1.5	@ 13.0'; stiff, damp to moist.						
15		2 4 4	18	7		1.5							
		1 2 3	18	8		1.5							
20													
		1 3 3	18	9		1.0	@ 21.0'; soft, little fine to coarse sand.						
23.0	521.3						Very dense, brown (A-1-a), little fine to coarse sand; moist.						
25.0	519.3	5 40 36	12	10									
							Bottom of Boring - 25.0'						
30													

STANDARD PENETRATION (N)
Natural Moisture Content, %
PL ——— LL
Blows per foot - 10 20 30 40

Client: Baker & Associates | Project: LAW-93C Phase II | Job No. 0321-4003-01

LOG OF: Boring S-005-0-03 | Location: Sta. 38+30.5, 33.5' Rt. | Date Drilled: 5-5-04

WATER OBSERVATIONS: Water seepage at: None
Water level at completion: Dry

Depth (ft)	Elev. (ft)	Blows per 6"	Recovery (in)	Sample No. Drive	Sample No. Press / Core	Hand Penetrometer (tsf)	DESCRIPTION	GRADATION % Agg.	% C. Sand	% M. Sand	% F. Sand	% Silt	% Clay
0	542.4						2" Asphalt, 5" Concrete						
0.6	541.8	2 1 2	18	1		1.25	Medium stiff brown SILT AND CLAY (A-6a), little gravel, trace fine to coarse sand; moist.						
3.0	539.4	4 6 9	18	2		4.25	Very stiff to hard brown SILT AND CLAY (A-6a), trace fine to coarse sand; moist.						
5		1 4 6	18	3		2.25							
		7 10 10	18	4		2.5							
10		2 4 7	18	5		2.5							
		1 4 6	18	6		2.75							
15.0	527.4						Bottom of Boring - 15.0'						
20													
25													
30													

STANDARD PENETRATION (N)
Natural Moisture Content, %
PL ——— LL
Blows per foot - 10 20 30 40

DRAWN M.S.J. | CHECKED E.M.K.

STRUCTURE FOUNDATION EXPLORATION
HISTORIC BORING LOGS S-001-0-03 - S-003-0-03 - S-004-0-03 - S-005-0-03
LAW-93-0.00

V:\1755\active\175537016\Drawings\81595\structures\SHEETS\81595532.dgn 5/4/2011 11:54:31 AM mjennings

Client: Baker & Associates | Project: LAW-93C Phase II | Job No.0321-4003-01

LOG OF: Boring *S-006-0-03* | Location: Sta. 39+20.0, 30.0' Lt. | Date Drilled: 5-5-04

WATER OBSERVATIONS: Water seepage at: None; Water level at completion: Dry

Depth (ft)	Elev. (ft)	Blows per 6"	Recovery (in)	Sample No. Drive	Sample No. Press / Core	Hand Penetrometer (tsf)	DESCRIPTION	GRADATION % Aggregate	% C. Sand	% M. Sand	% F. Sand	% Silt	% Clay	STANDARD PENETRATION (N)
0	543.2													PL — LL; Blows per foot - 10 20 30 40
0.3	542.9	2 3 3	18	1		1.0	4" Topsoil Medium stiff light brown SILT AND CLAY (A-6a), trace fine to coarse sand, trace gravel; moist.							
4.0	539.2	6 8 11	18	2		4.5+	Hard brown SILT AND CLAY (A-6a), trace fine to coarse sand; damp.							
		2 4 8	18	3		4.25								
		13 16 14	18	4		4.5+								
10.0	533.2						Bottom of Boring - 10.0'							

Client: Baker & Associates | Project: LAW-93C Phase II | Job No.0321-4003-01

LOG OF: Boring *S-008-0-03* | Location: Sta. 40+54.5, 31.0' Lt. | Date Drilled: 5-6-04

WATER OBSERVATIONS: Water seepage at: None; Water level at completion: Dry

Depth (ft)	Elev. (ft)	Blows per 6"	Recovery (in)	Sample No. Drive	Sample No. Press / Core	Hand Penetrometer (tsf)	DESCRIPTION	GRADATION % Aggregate	% C. Sand	% M. Sand	% F. Sand	% Silt	% Clay	STANDARD PENETRATION (N) Natural Moisture Content, %
0	543.5													PL — LL; Blows per foot - 10 20 30 40
1.0	542.5	1 2 2	18	1		0.5	12" Topsoil Hard brown SILT AND CLAY (A-6a), trace fine to coarse sand, trace gravel; moist.							
3.0	540.5	6 8 10	18	2		4.5+	Stiff to hard brown SILT AND CLAY (A-6a), trace fine to coarse sand, trace gravel; damp to moist.							
		1 4 5	18	3		2.0	@ 6.0'; stiff to very stiff.							
		6 10 10	18	4		2.0								
10.0	533.5						Bottom of Boring - 10.0'							

Client: Baker & Associates | Project: LAW-93C Phase II | Job No.0321-4003-01

LOG OF: Boring *S-007-0-03* | Location: Sta. 39+02.5, 34.8' Rt. | Date Drilled: 5-5-04

WATER OBSERVATIONS: Water seepage at: None; Water level at completion: Dry

Depth (ft)	Elev. (ft)	Blows per 6"	Recovery (in)	Sample No. Drive	Sample No. Press / Core	Hand Penetrometer (tsf)	DESCRIPTION	GRADATION % Aggregate	% C. Sand	% M. Sand	% F. Sand	% Silt	% Clay	STANDARD PENETRATION (N) Natural Moisture Content, %
0	541.9													PL — LL; Blows per foot - 10 20 30 40
0.8	541.1	2 3 7	18	1		3.5	4" Asphalt, 5" Concrete FILL: Very stiff to hard brown SILT AND CLAY (A-6a), trace fine to coarse sand; damp.							
3.5	538.4	6 7 9	18	2		2.0	Stiff brownish gray SILT AND CLAY (A-6a); damp to moist.							
		2 5 6	18	3		1.5								
		4 6 6	18	4		2.0								
10.0	531.9						Bottom of Boring - 10.0'							

DRAWN M.S.J. | CHECKED E.M.K.

STRUCTURE FOUNDATION EXPLORATION

HISTORIC BORING LOGS S-006-0-03 - S-007-0-03 - S-008-0-03

LAW-93-0.00

V:\1755\active\175537016\Drawings\81595\structures\SHEETS\81595533.dgn 5/4/2011 11:55:23 AM mjennings

Stantec

Unconfined Compressive Strength Of Intact Rock Core

ASTM D 7012

Project Name: Ironton-Russell Bridge | Project Number: 175537016
Lithology: Sandstone, gray, slightly weathered, moderately strong, fine to medium grained, thin bedded, micaceous, wide fracture spacing | Lab ID: UCR-1
Hole Number: B-001 | Depth (ft/elev): 40.7'-41.8' | Date Received: 06-02-2009

Temperature (°C): 20 | Moisture Condition: As received, moist | Date Tested: 06-18-2009

Side Planeness	Pass	Height (in)	4.721	Wet Unit Weight (pcf)	135.3
Perpendicularity	Pass	Diameter (in)	1.989	Dry Unit Weight (pcf)	N/A
End Planeness	Pass	Area (in^2)	3.106	Moisture Content (%)	N/A

Loading Rate (lbf/sec): 50
Peak Load (lbf): 13820

Failure Type: Shear

Compressive Strength (psi): 4450

Compressive Strength (tsf): 320

Failure Sketches

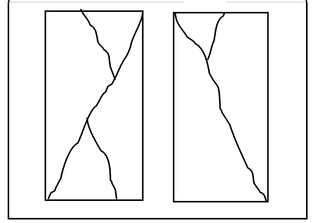

Stantec

Unconfined Compressive Strength Of Intact Rock Core

ASTM D 7012

Project Name: Ironton-Russell Bridge | Project Number: 175537016
Lithology: Siltstone, gray, moderately weathered, strong, fine grained, thin bedded, arenaceous | Lab ID: UCR-4
Hole Number: B-002 | Depth (ft/elev): 43.2'-43.6' | Date Received: 06-02-2009

Temperature (°C): 20 | Moisture Condition: As received, moist | Date Tested: 06-18-2009

Side Planeness	Pass	Height (in)	4.535	Wet Unit Weight (pcf)	150.9
Perpendicularity	Pass	Diameter (in)	1.988	Dry Unit Weight (pcf)	N/A
End Planeness	Pass	Area (in^2)	3.104	Moisture Content (%)	N/A

Loading Rate (lbf/sec): 110
Peak Load (lbf): 23780

Failure Type: Cone

Compressive Strength (psi): 7660

Compressive Strength (tsf): 552

Failure Sketches

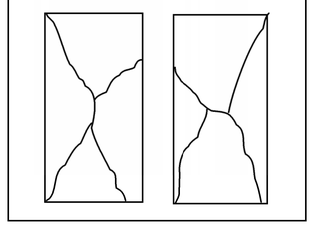

Stantec

Unconfined Compressive Strength Of Intact Rock Core

ASTM D 7012

Project Name: Ironton-Russell Bridge | Project Number: 175537016
Lithology: Sandstone, gray, moderately weathered, slightly strong, fine grained, thin bedded, arenaceous | Lab ID: UCR-3
Hole Number: B-002 | Depth (ft/elev): 39.5'-40.5' | Date Received: 06-02-2009

Temperature (°C): 20 | Moisture Condition: As received, moist | Date Tested: 06-18-2009

Side Planeness	Fail	Height (in)	4.718	Wet Unit Weight (pcf)	134.9
Perpendicularity	Pass	Diameter (in)	1.990	Dry Unit Weight (pcf)	N/A
End Planeness	Pass	Area (in^2)	3.109	Moisture Content (%)	N/A

Loading Rate (lbf/sec): 50
Peak Load (lbf): 10520

Failure Type: Undetermined

Compressive Strength (psi): 3380

Compressive Strength (tsf): 244

Failure Sketches

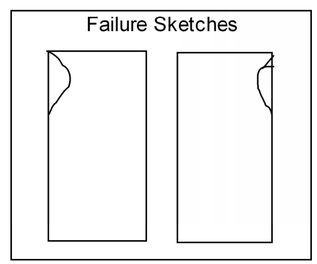

Stantec

Unconfined Compressive Strength Of Intact Rock Core

ASTM D 7012

Project Name: Ironton-Russell Bridge | Project Number: 175537016
Lithology: Siltstone, gray, moderately weathered, strong, fine grained, thin bedded, arenaceous | Lab ID: UCR-2
Hole Number: B-002 | Depth (ft/elev): 45.0'-45.4' | Date Received: 06-02-2009

Temperature (°C): 20 | Moisture Condition: As received, moist | Date Tested: 06-18-2009

Side Planeness	Fail	Height (in)	4.809	Wet Unit Weight (pcf)	155.9
Perpendicularity	Pass	Diameter (in)	1.984	Dry Unit Weight (pcf)	N/A
End Planeness	Pass	Area (in^2)	3.093	Moisture Content (%)	N/A

Loading Rate (lbf/sec): 110
Peak Load (lbf): 23310

Failure Type: Cone and Shear

Compressive Strength (psi): 7540

Compressive Strength (tsf): 543

Failure Sketches

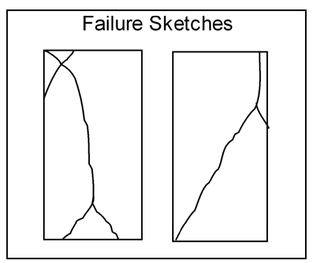

DRAWN: M.S.J. | CHECKED: E.M.K.

STRUCTURE FOUNDATION EXPLORATION
LABORATORY TEST DATA

LAW-93-0.00

V:\1755\active\175537016\Drawings\81595\structures\SHEETS\81595534.dgn 5/4/2011 11:56:15 AM mjennings

A.3 Select RFIs

1+50

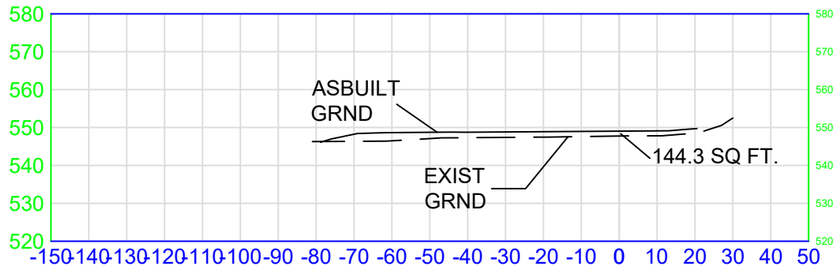

1+00

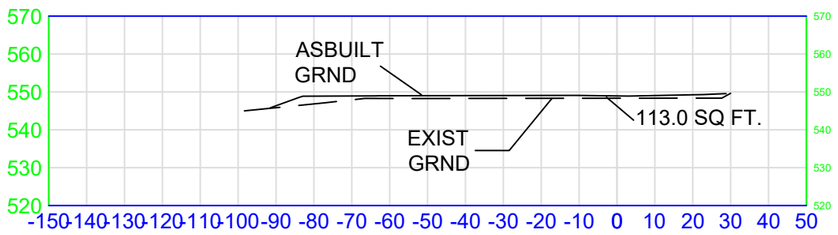

Notes:

KY ACCESS ROAD
1+00-1+50

SHT 1 / 1

BRAYMAN Civil Infrastructure Engineering

Drawn By: MS

Date: 01/09/18

Scale: 1 = 20

3+50

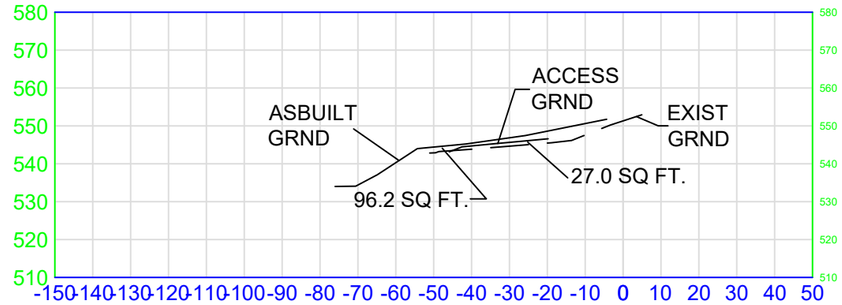

3+00

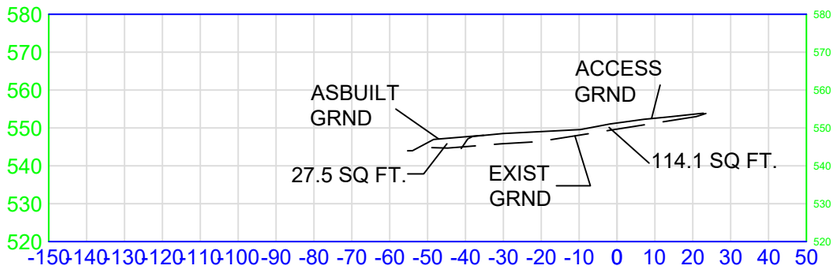

2+50

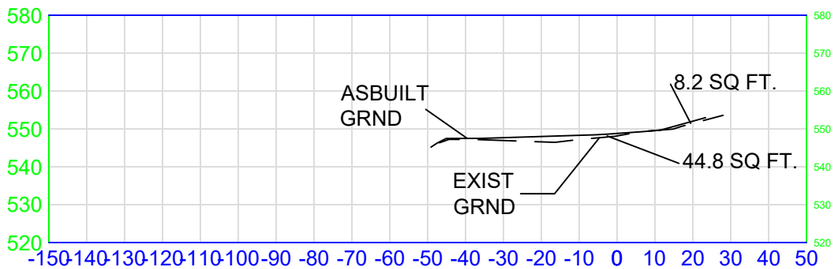

2+00

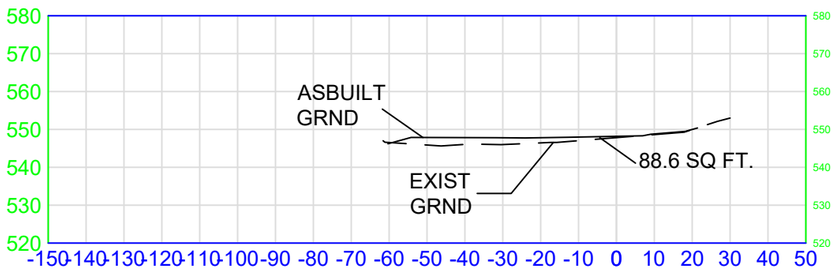

Notes:

KY ACCESS ROAD
2+00-3+50

SHT 1 2

Drawn By: MS

Scale: 1 = 20

Date: 01/09/18

5+00

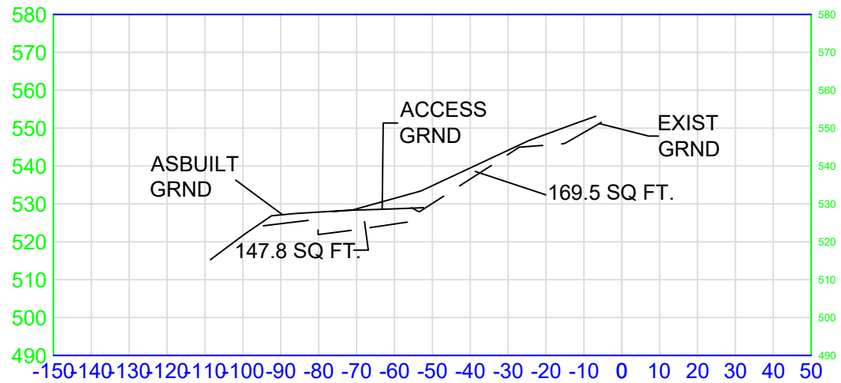

4+50

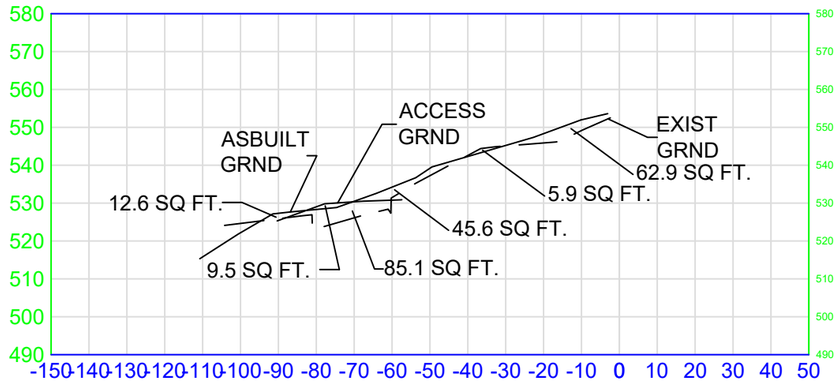

4+00

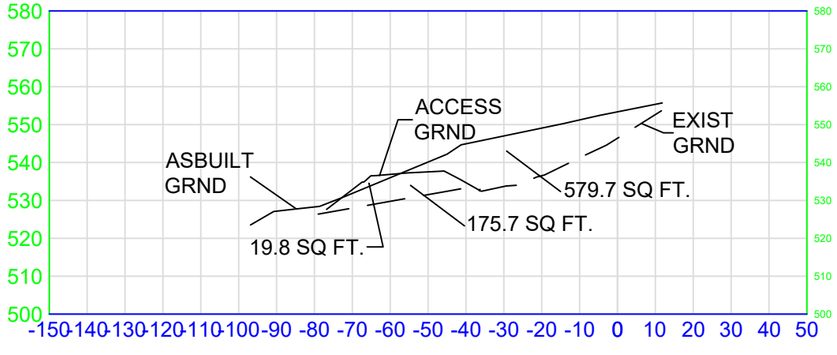

Notes:

KY ACCESS ROAD
4+00-5+00

SHT 1 / 3

BRAYMAN CONSTRUCTION CORPORATION

Drawn By: MS

Scale: 1 = 20

Date: 01/09/18

6+50

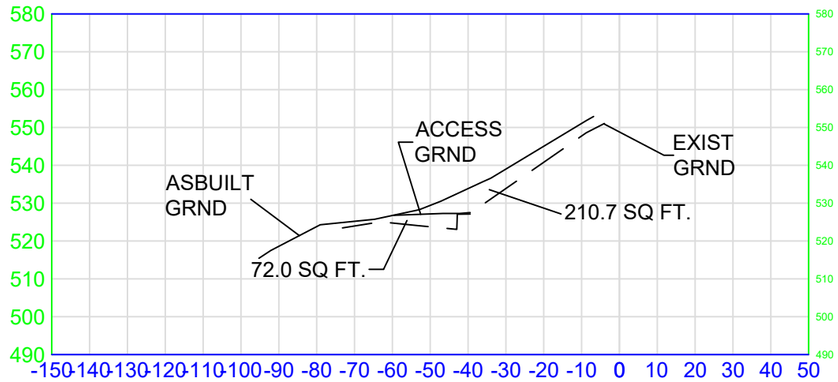

6+00

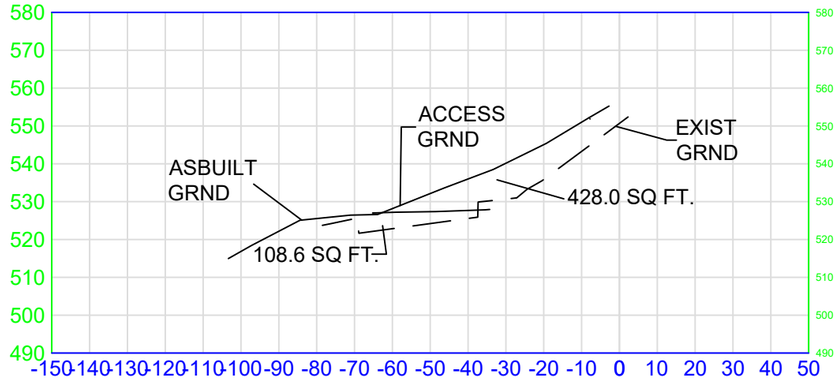

5+50

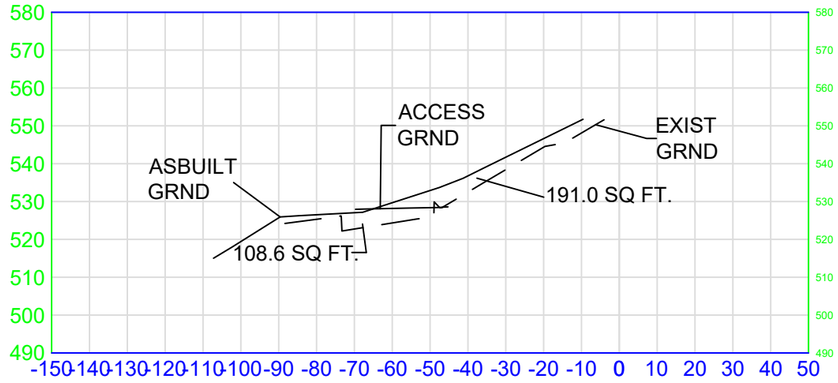

Notes:

KY ACCESS ROAD
5+50-6+50

SHT 1 / 4

BRAYMAN

Drawn By: MS

Scale: 1 = 20

Date: 01/09/18

7+75

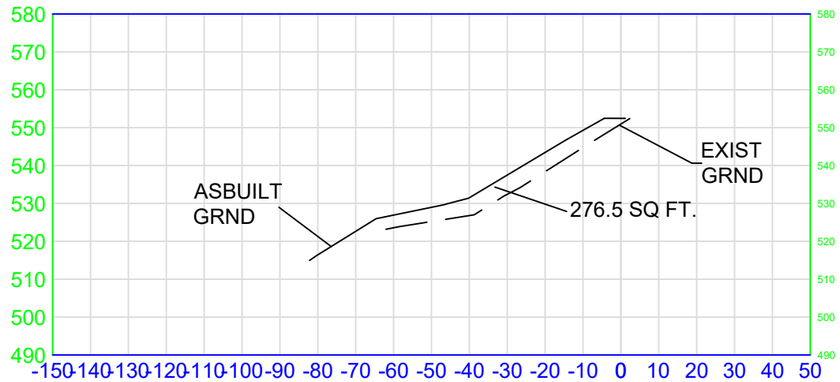

7+50

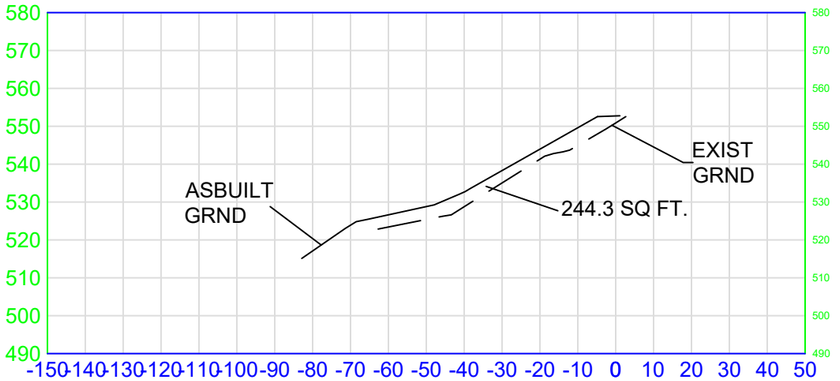

7+00

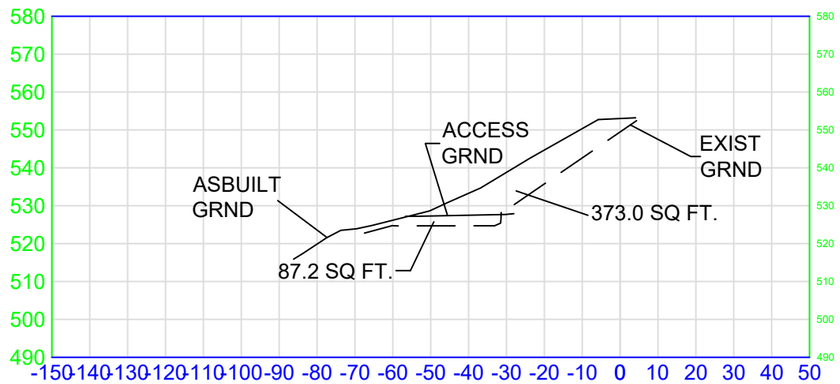

Notes:

KY ACCESS ROAD
7+00-7+75

SHT 1 / 5

BRAYMAN construction corporation

Drawn By: MS

Scale: 1 = 20

Date: 01/09/18

1+00

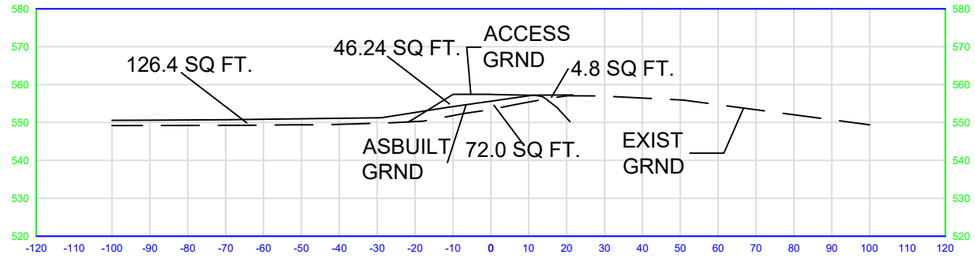

0+50

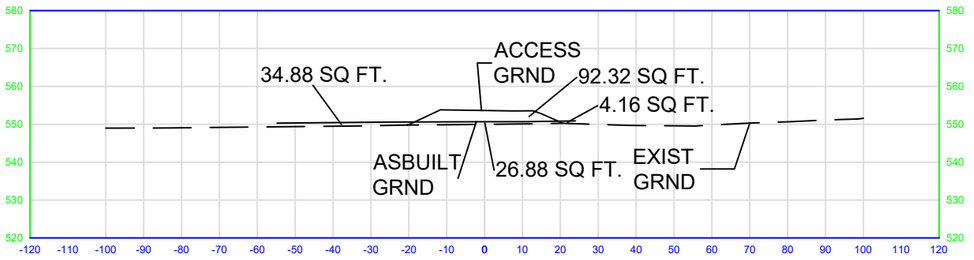

0+25

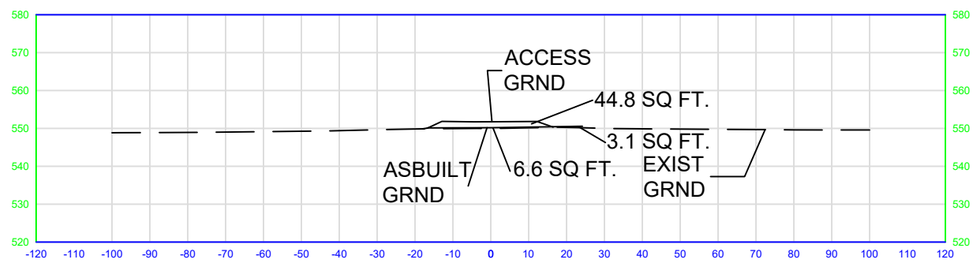

Notes:

OH ACCESS ROAD
0+25-1+00

SHT 1 / 1

BRAYMAN

Drawn By: MS

Date: 01/09/18

Scale: 1 = 20

2+50

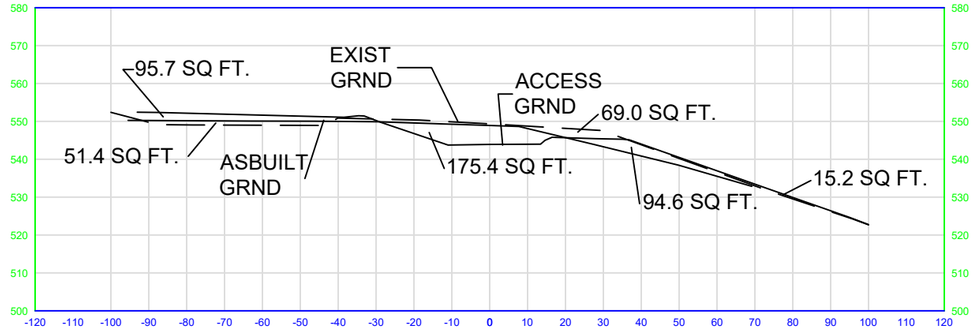

2+00

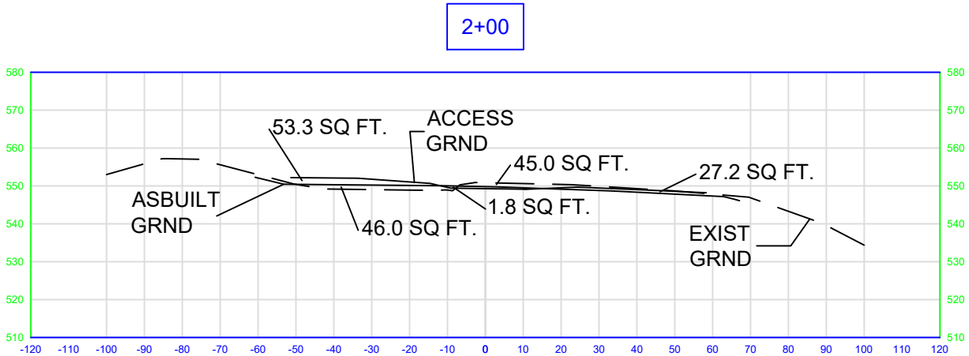

1+50

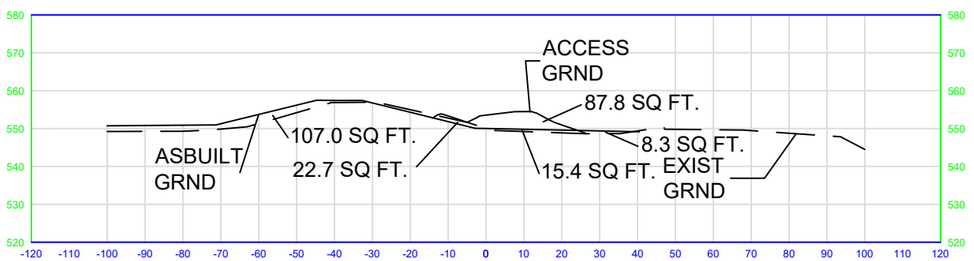

Notes:

OH ACCESS ROAD
1+50-2+50

SHT 1 / 2

Drawn By: MS

Scale: 1 = 20

Date:01/09/18

3+50

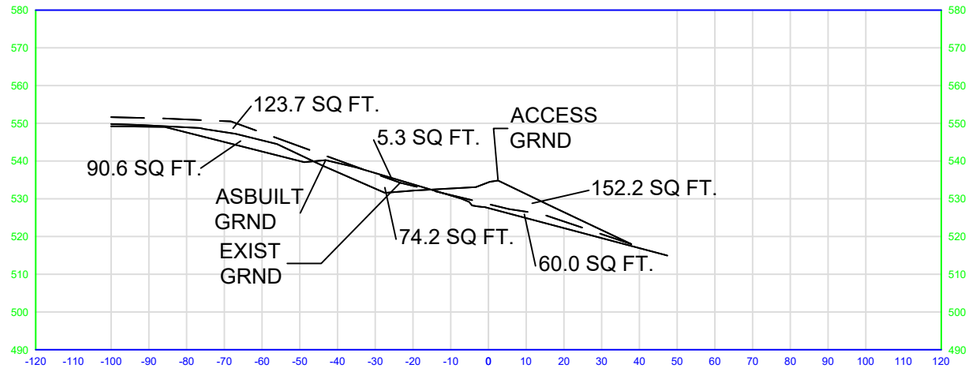

3+00

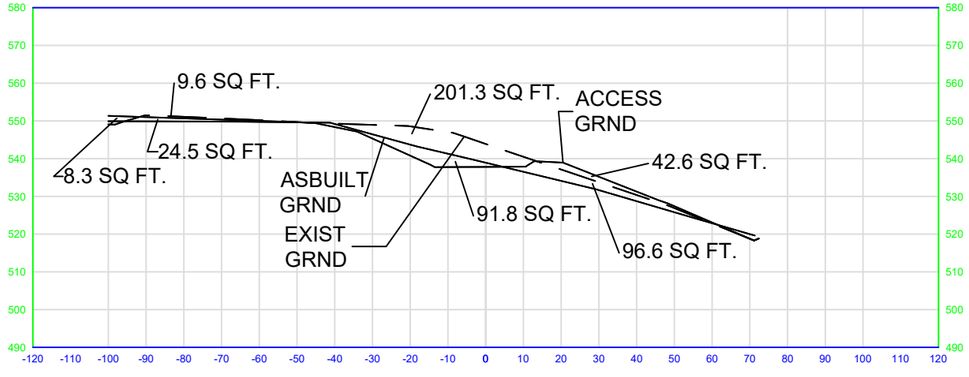

Notes:

OH ACCESS ROAD
3+00-3+50

SHT 1 / 3

Drawn By: MS

Scale: 1= 20

Date: 01/09/18

4+50

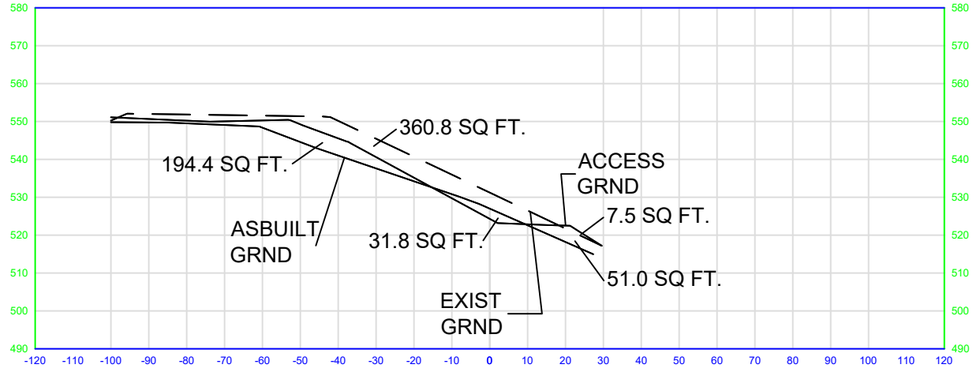

4+00

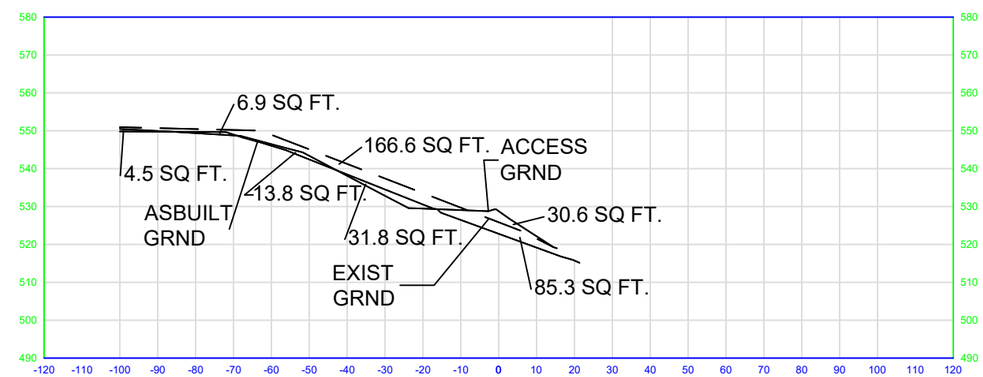

Notes:

OH ACCESS ROAD
4+00-4+50

SHT 1 / 4

Drawn By: MS

Date: 01/09/18

Scale: 1 = 20

5+25

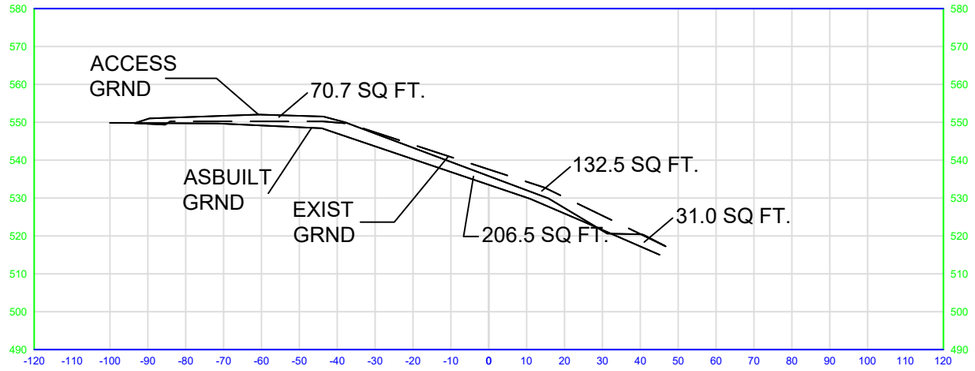

5+00

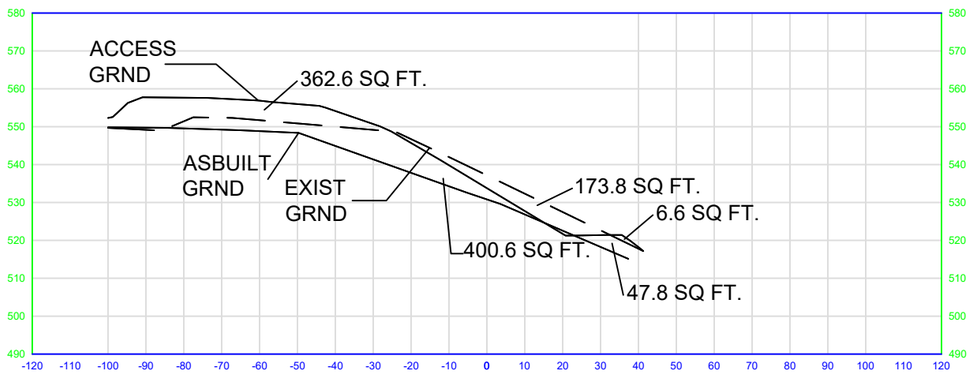

Notes:

OH ACCESS ROAD
5+00-5+25

SHT 1 / 5

Drawn By: MS

Scale: 1 = 20

Date: 01/09/18

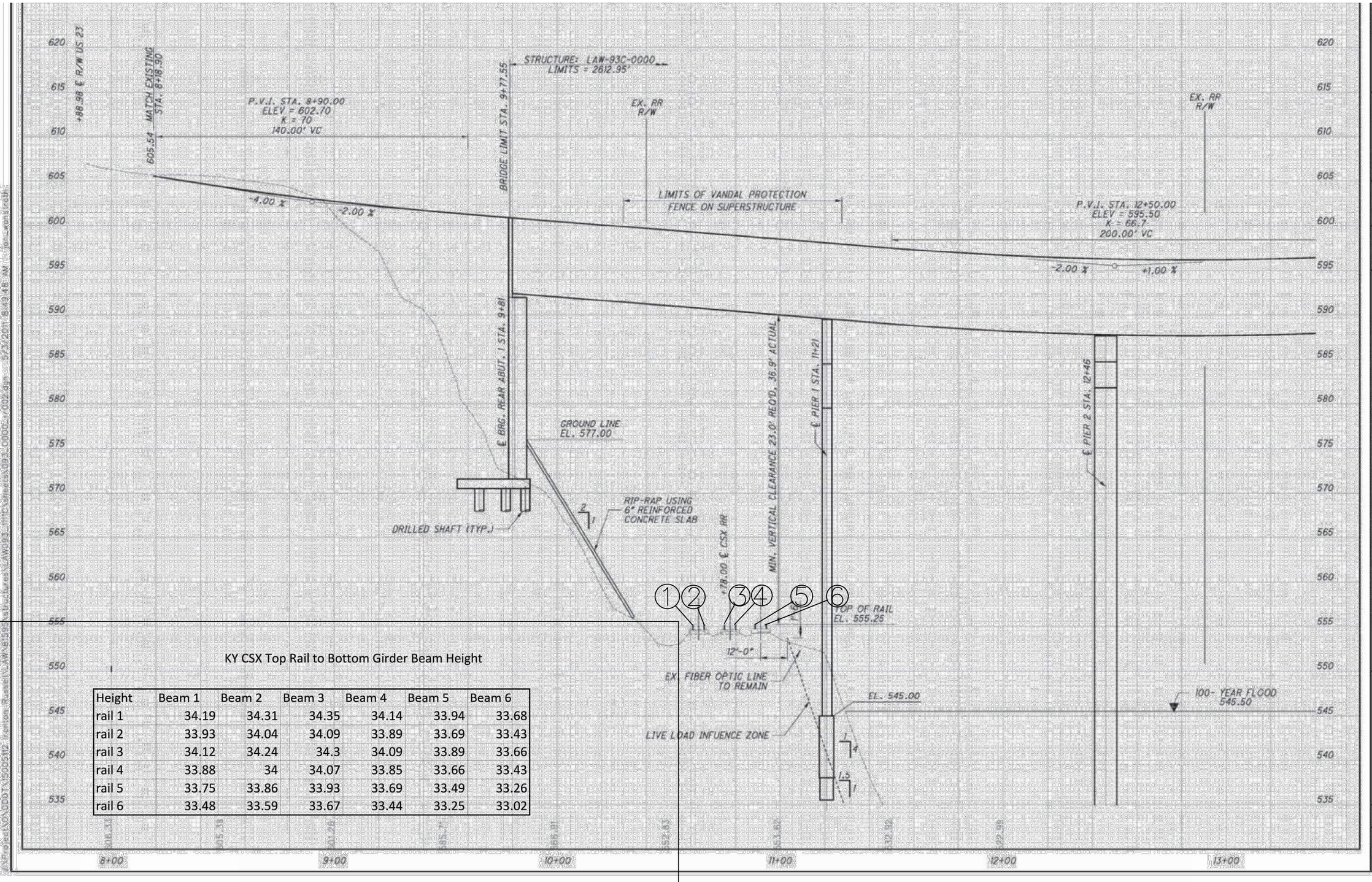

KY CSX Top Rail to Bottom Girder Beam Height

Height	Beam 1	Beam 2	Beam 3	Beam 4	Beam 5	Beam 6
rail 1	34.19	34.31	34.35	34.14	33.94	33.68
rail 2	33.93	34.04	34.09	33.89	33.69	33.43
rail 3	34.12	34.24	34.3	34.09	33.89	33.66
rail 4	33.88	34	34.07	33.85	33.66	33.43
rail 5	33.75	33.86	33.93	33.69	33.49	33.26
rail 6	33.48	33.59	33.67	33.44	33.25	33.02

URS

DESIGNED MJZ | DRAWN JDP | CHECKED BER | REVIEWED BKL | DATE 8-09

SUPPLEMENTAL SITE PLAN FOR RAILROAD CROSSING
CSX RAILROAD RUSSELL, KENTUCKY
LAW-93C OVER THE OHIO RIVER

LAW-93C-0.00
PID No. 81595

2 / 4

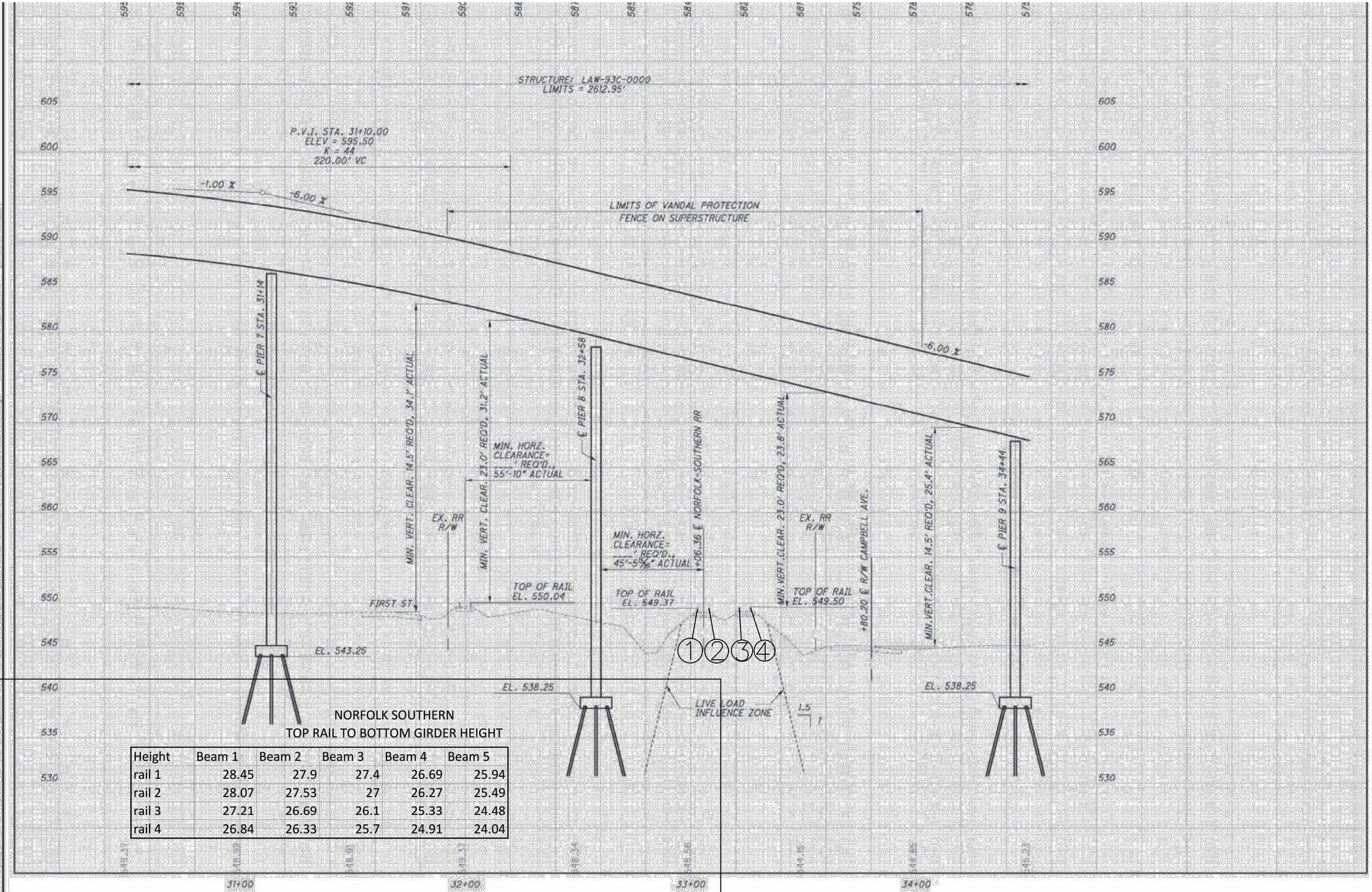

NORFOLK SOUTHERN
TOP RAIL TO BOTTOM GIRDER HEIGHT

Height	Beam 1	Beam 2	Beam 3	Beam 4	Beam 5
rail 1	28.45	27.9	27.4	26.69	25.94
rail 2	28.07	27.53	27	26.27	25.49
rail 3	27.21	26.69	26.1	25.33	24.48
rail 4	26.84	26.33	25.7	24.91	24.04

URS

SUPPLEMENTAL SIGHT PLANS FOR RAILWAY CROSSINGS
NORFOLK SOUTHERN RAILWAY, IRONTON, OHIO
LAW-93C-0.00 ACROSS THE OHIO RIVER

LAW-93C-00.00
PID No. 81595

4 / 4

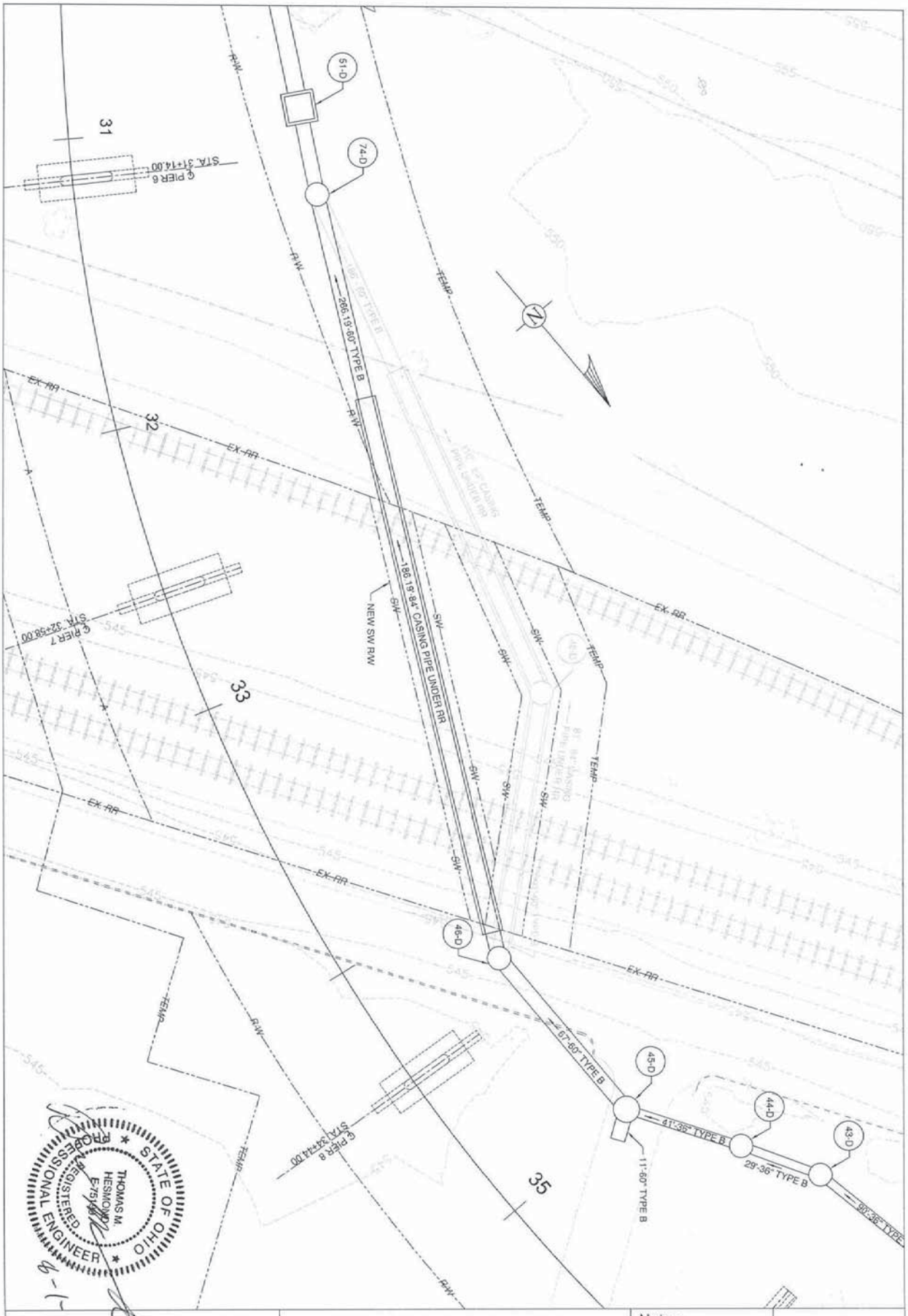

	LAW-93C-0000 IRONTON RUSSELL BRIDGE OVER OHIO RIVER VECP 2 REVISED STORM WATER SEWER PLAN	Notes:	
Date: 4/26/12	Scale: 1"=30'		

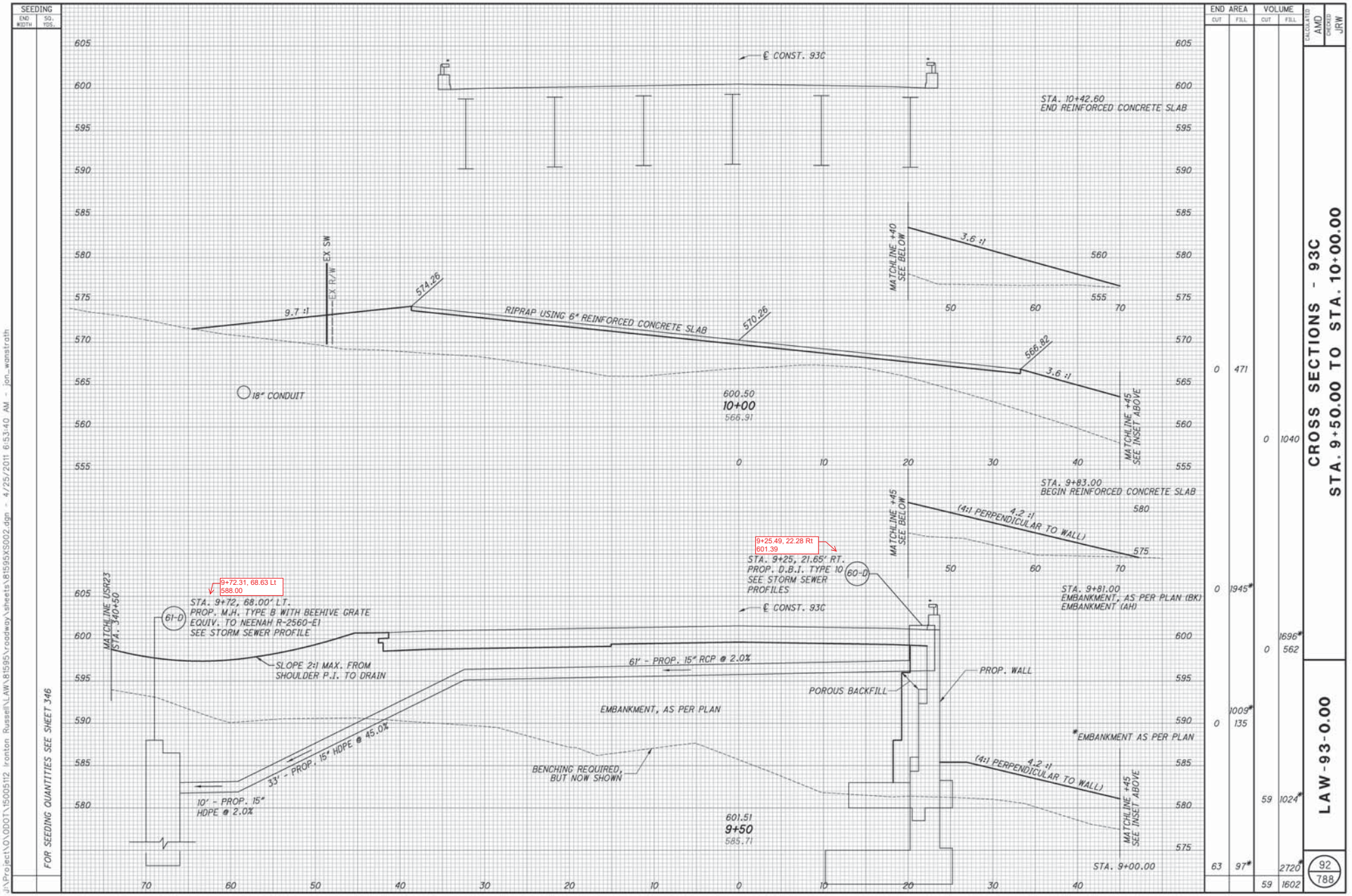

J:\Project\V\ODOT\15005112 Ironton Russell\LAW\81595\roadway\sheets\81595XS002.dgn - 4/25/2011 6:53:40 AM - jon_wanstroth

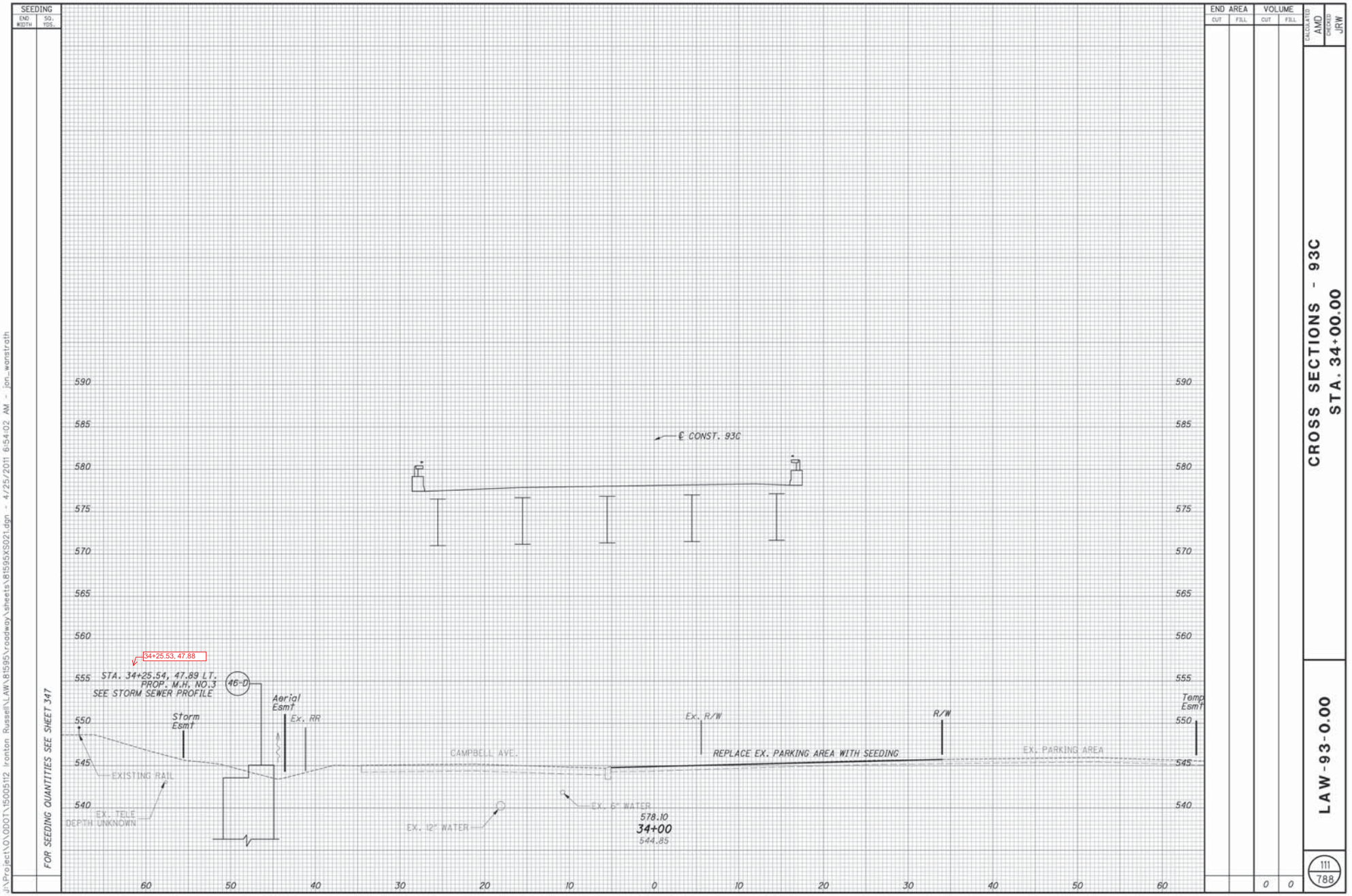
SEEDING
END WIDTH
SQ. YDS.
FOR SEEDING QUANTITIES SEE SHEET 347
END AREA
CUT
FILL
VOLUME
CUT
FILL
0
0
CALCULATED AMD
CHECKED JRW
CROSS SECTIONS - 93C
STA. 34+00.00
LAW-93-0.00
111
788
J:\Project\OV\ODOT\15005112 Ironton Russell\LAW-81595\roadway\sheets\81595XS021.dgn - 4/25/2011 6:54:02 AM - jon_wanstrath
590
585
580
575
570
565
560
555
550
545
540
℄ CONST. 93C
34+25.53, 47.88
STA. 34+25.54, 47.89 LT.
PROP. M.H. NO.3
SEE STORM SEWER PROFILE
46-D
Aerial Esmt
Ex. RR
Storm Esmt
Ex. R/W
R/W
Temp Esmt
CAMPBELL AVE.
REPLACE EX. PARKING AREA WITH SEEDING
EX. PARKING AREA
EXISTING RAIL
EX. TELE
DEPTH UNKNOWN
EX. 12" WATER
EX. 6" WATER
578.10
34+00
544.85
60
50
40
30
20
10
0
10
20
30
40
50
60

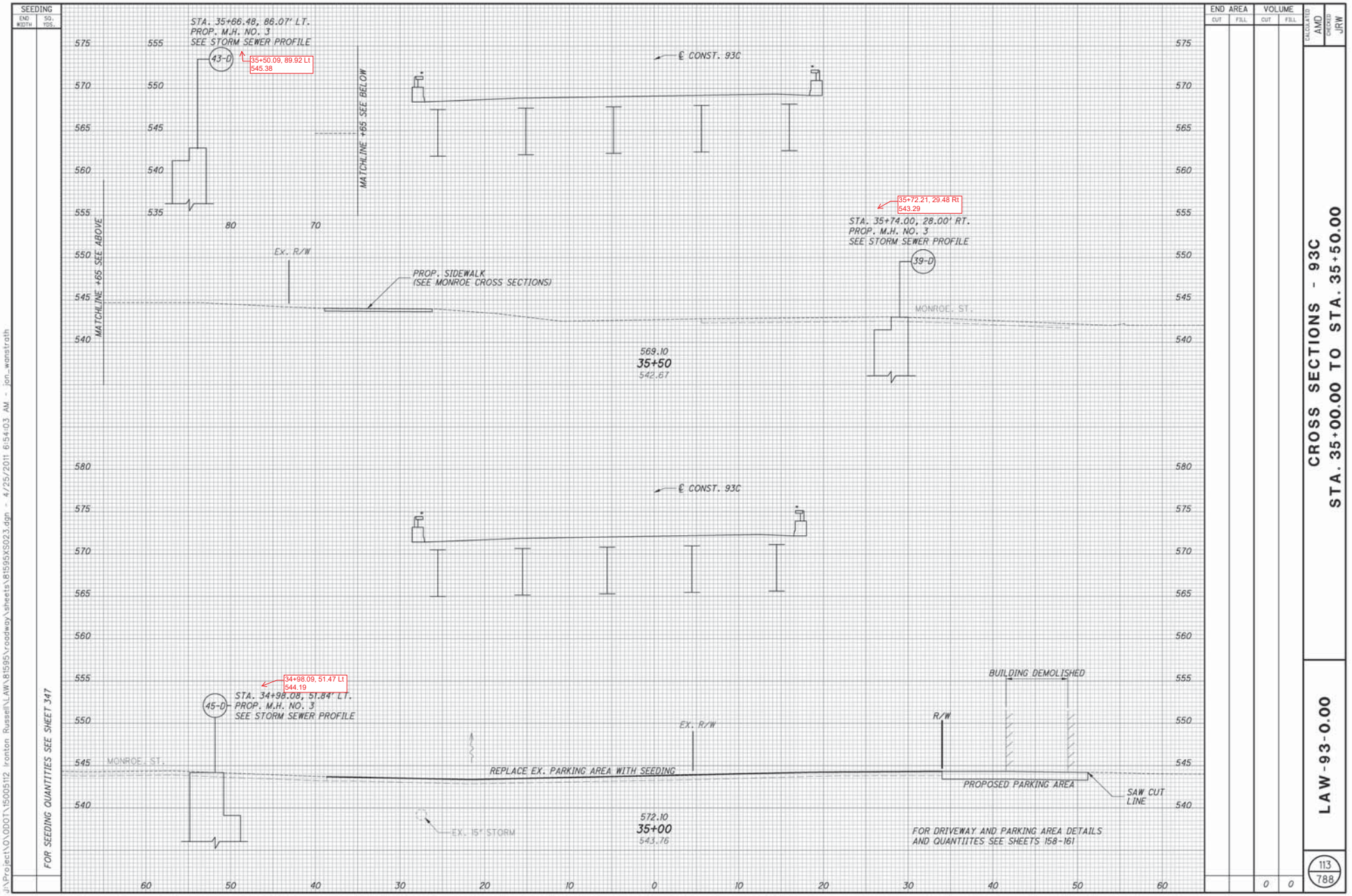
SEEDING
END WIDTH
SQ. YDS.
FOR SEEDING QUANTITIES SEE SHEET 347
STA. 35+66.48, 86.07' LT.
PROP. M.H. NO. 3
SEE STORM SEWER PROFILE
43-D
35+50.09, 89.92 Lt
545.38
MATCHLINE +65 SEE BELOW
℄ CONST. 93C
MATCHLINE +65 SEE ABOVE
Ex. R/W
PROP. SIDEWALK
(SEE MONROE CROSS SECTIONS)
35+72.21, 29.48 Rt
543.29
STA. 35+74.00, 28.00' RT.
PROP. M.H. NO. 3
SEE STORM SEWER PROFILE
39-D
MONROE ST.
569.10
35+50
542.67
℄ CONST. 93C
34+98.09, 51.47 Lt
544.19
STA. 34+98.08, 51.84' LT.
PROP. M.H. NO. 3
SEE STORM SEWER PROFILE
45-D
MONROE ST.
Ex. R/W
R/W
BUILDING DEMOLISHED
REPLACE EX. PARKING AREA WITH SEEDING
PROPOSED PARKING AREA
SAW CUT LINE
EX. 15" STORM
572.10
35+00
543.76
FOR DRIVEWAY AND PARKING AREA DETAILS
AND QUANTITIES SEE SHEETS 158-161
END AREA
CUT
FILL
VOLUME
CUT
FILL
0
0
CALCULATED AMD
CHECKED JRW
CROSS SECTIONS - 93C
STA. 35+00.00 TO STA. 35+50.00
LAW-93-0.00
113
788
J:\Project\OJODOT\15005112 Ironton Russell\LAW\81595\roadway\sheets\81595XS023.dgn - 4/25/2011 6:54:03 AM - jon_wanstroth

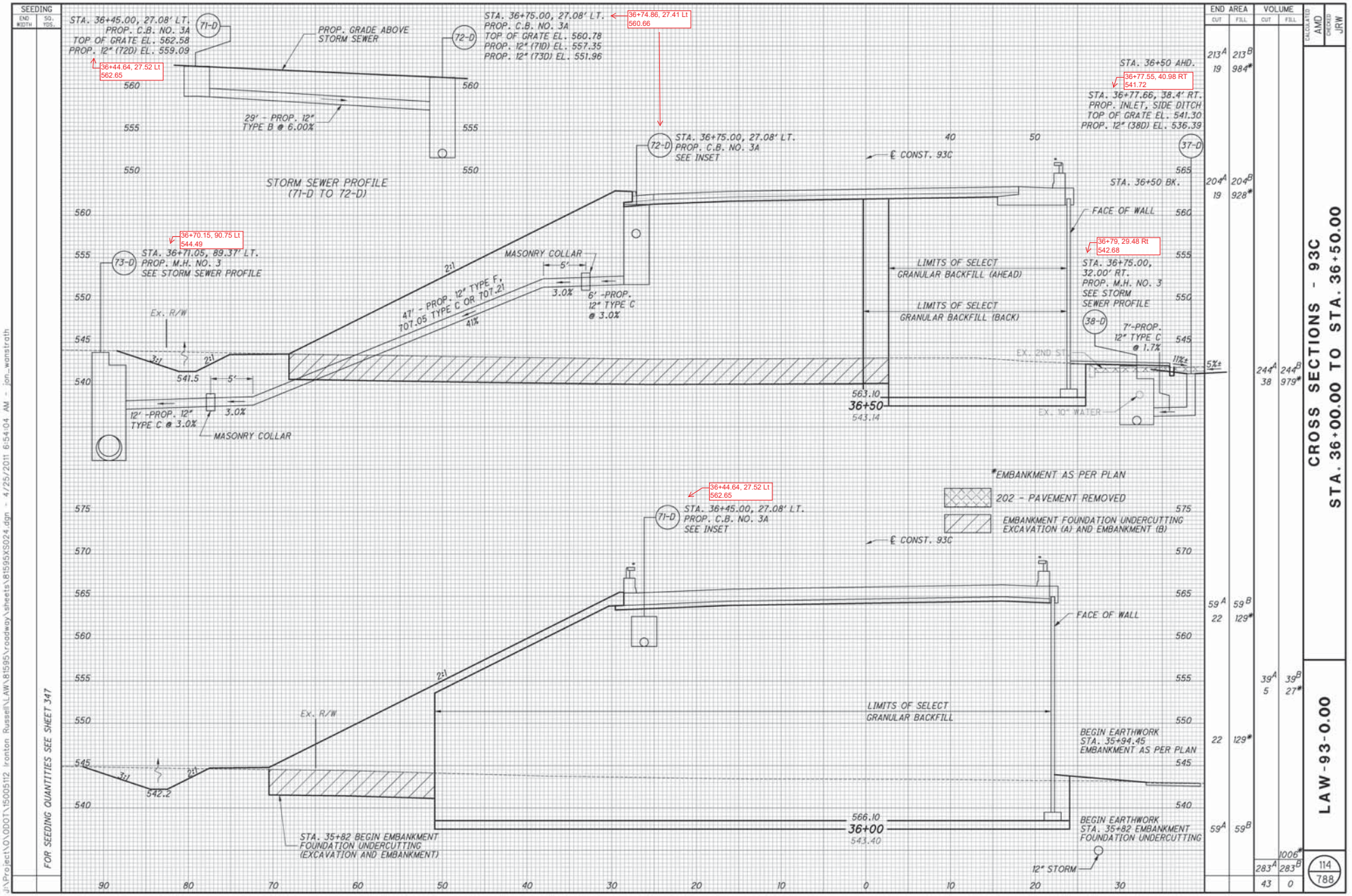
SEEDING
END WIDTH
SQ. YDS.
FOR SEEDING QUANTITIES SEE SHEET 347
STA. 36+45.00, 27.08' LT.
PROP. C.B. NO. 3A
TOP OF GRATE EL. 562.58
PROP. 12" (72D) EL. 559.09
71-D
36+44.64, 27.52 Lt
562.65
PROP. GRADE ABOVE STORM SEWER
29' - PROP. 12" TYPE B @ 6.00%
72-D
STA. 36+75.00, 27.08' LT.
PROP. C.B. NO. 3A
TOP OF GRATE EL. 560.78
PROP. 12" (71D) EL. 557.35
PROP. 12" (73D) EL. 551.96
36+74.86, 27.41 Lt
560.66
STORM SEWER PROFILE
(71-D TO 72-D)
STA. 36+50 AHD.
36+77.55, 40.98 RT
541.72
STA. 36+77.66, 38.4' RT.
PROP. INLET, SIDE DITCH
TOP OF GRATE EL. 541.30
PROP. 12" (38D) EL. 536.39
37-D
STA. 36+50 BK.
FACE OF WALL
36+70.15, 90.75 Lt
544.49
73-D
STA. 36+71.05, 89.37' LT.
PROP. M.H. NO. 3
SEE STORM SEWER PROFILE
MASONRY COLLAR
5'
3.0%
6' -PROP. 12" TYPE C @ 3.0%
47' - PROP. 12" TYPE F, 707.05 TYPE C OR 707.21
41%
2:1
Ex. R/W
3:1
541.5
12' -PROP. 12" TYPE C @ 3.0%
MASONRY COLLAR
LIMITS OF SELECT GRANULAR BACKFILL (AHEAD)
LIMITS OF SELECT GRANULAR BACKFILL (BACK)
36+79, 29.48 Rt
542.68
STA. 36+75.00, 32.00' RT.
PROP. M.H. NO. 3
SEE STORM SEWER PROFILE
38-D
7"-PROP. 12" TYPE C @ 1.7%
EX. 2ND ST.
EX. 10" WATER
11%±
5%±
563.10
36+50
543.14
℄ CONST. 93C
STA. 36+75.00, 27.08' LT.
PROP. C.B. NO. 3A
SEE INSET
*EMBANKMENT AS PER PLAN
202 - PAVEMENT REMOVED
EMBANKMENT FOUNDATION UNDERCUTTING EXCAVATION (A) AND EMBANKMENT (B)
36+44.64, 27.52 Lt
562.65
71-D
STA. 36+45.00, 27.08' LT.
PROP. C.B. NO. 3A
SEE INSET
℄ CONST. 93C
FACE OF WALL
LIMITS OF SELECT GRANULAR BACKFILL
BEGIN EARTHWORK
STA. 35+94.45
EMBANKMENT AS PER PLAN
Ex. R/W
3:1
2:1
542.2
STA. 35+82 BEGIN EMBANKMENT FOUNDATION UNDERCUTTING (EXCAVATION AND EMBANKMENT)
566.10
36+00
543.40
BEGIN EARTHWORK
STA. 35+82 EMBANKMENT FOUNDATION UNDERCUTTING
12" STORM
END AREA
CUT
FILL
213A 213B
19 984*
204A 204B
19 928*
59A 59B
22 129*
22 129*
59A 59B
VOLUME
CUT
FILL
244A 244B
38 979*
39A 39B
5 27*
1006*
283A 283B
43 0
CALCULATED AMD
CHECKED JRW
CROSS SECTIONS - 93C
STA. 36+00.00 TO STA. 36+50.00
LAW-93-0.00
114
788
J:\Project\OJ\ODOT\15005112 Ironton Russell\LAW\81595\roadway\sheets\81595XS024.dgn - 4/25/2011 6:54:04 AM - jon_wonstroth

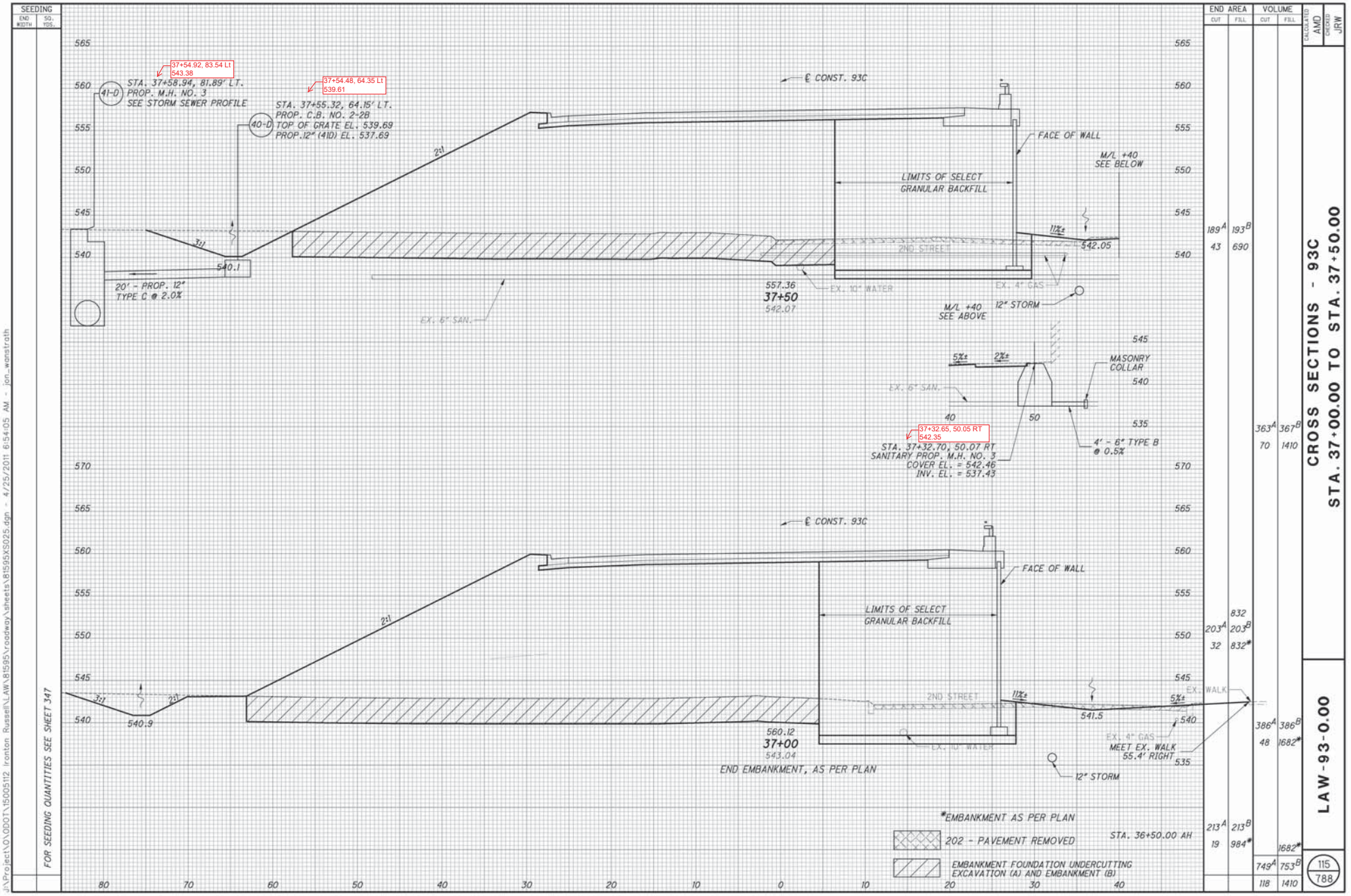
SEEDING
END WIDTH
SQ. YDS.
FOR SEEDING QUANTITIES SEE SHEET 347
END AREA
CUT
FILL
VOLUME
CUT
FILL
37+54.92, 83.54 Lt
543.38
STA. 37+58.94, 81.89' LT.
PROP. M.H. NO. 3
SEE STORM SEWER PROFILE
41-D
37+54.48, 64.35 Lt
539.61
STA. 37+55.32, 64.15' LT.
PROP. C.B. NO. 2-2B
TOP OF GRATE EL. 539.69
PROP. 12" (41D) EL. 537.69
40-D
℄ CONST. 93C
FACE OF WALL
M/L +40
SEE BELOW
LIMITS OF SELECT
GRANULAR BACKFILL
2:1
3:1
540.1
20' - PROP. 12"
TYPE C @ 2.0%
EX. 6" SAN.
557.36
37+50
542.07
EX. 10" WATER
EX. 4" GAS
2ND STREET
11%±
542.05
M/L +40
SEE ABOVE
12" STORM
5%±
2%±
MASONRY
COLLAR
40
50
37+32.65, 50.05 RT
542.35
STA. 37+32.70, 50.07 RT
SANITARY PROP. M.H. NO. 3
COVER EL. = 542.46
INV. EL. = 537.43
4' - 6" TYPE B
@ 0.5%
℄ CONST. 93C
FACE OF WALL
LIMITS OF SELECT
GRANULAR BACKFILL
2:1
3:1
2:1
540.9
2ND STREET
11%±
541.5
5%±
EX. WALK
EX. 4" GAS
MEET EX. WALK
55.4' RIGHT
560.12
37+00
543.04
END EMBANKMENT, AS PER PLAN
EX. 10" WATER
12" STORM
*EMBANKMENT AS PER PLAN
202 - PAVEMENT REMOVED
EMBANKMENT FOUNDATION UNDERCUTTING
EXCAVATION (A) AND EMBANKMENT (B)
STA. 36+50.00 AH
189A 193B
43 690
832
203A 203B
32 832*
213A 213B
19 984*
749A 753B
118 1410
363A 367B
70 1410
386A 386B
48 1682*
1682*
80 70 60 50 40 30 20 10 0 10 20 30 40
CALCULATED AMD
CHECKED JRW
CROSS SECTIONS - 93C
STA. 37+00.00 TO STA. 37+50.00
LAW-93-0.00
115
788
J:\Project\OVODOT\15005112 Ironton Russell\LAW\81595\roadway\sheets\81595XS025.dgn - 4/25/2011 6:54:05 AM - jon_wanstroth

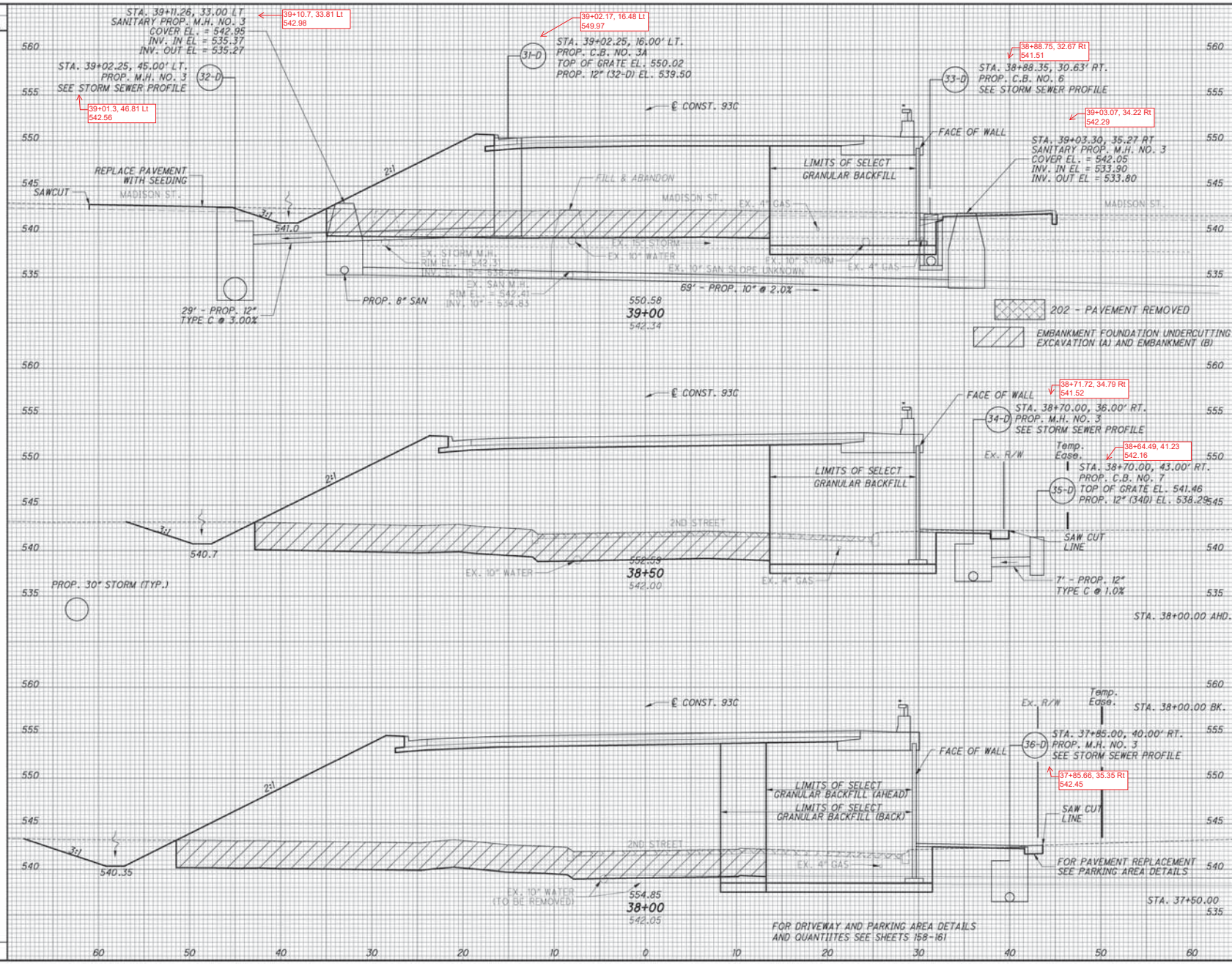

SEEDING END WIDTH	SEEDING SQ. YDS.
	FOR SEEDING QUANTITIES SEE SHEET 347

END AREA CUT	END AREA FILL	VOLUME CUT	VOLUME FILL
147 A	147 B		
11	297		
		283 A	295 B
		33	682
158 A	171 B		
24	439		
		317 A	339 B
		48	965
184 A	195 B		
28	603		
172 A	180 B		
28	543		
		335 A	346 B
		66	1142
189 A	193 B		
43	690		
		935 A	980 B
		147	2789

CALCULATED AMD
CHECKED JRW

CROSS SECTIONS - 93C
STA. 38+00.00 TO STA. 39+00.00

LAW-93-0.00

J:\Project\O\ODOT\15005112 Ironton Russell\LAW\81595\roadway\sheets\81595XS026.dgn - 6/20/2011 10:41:40 AM - jon_wanstrath

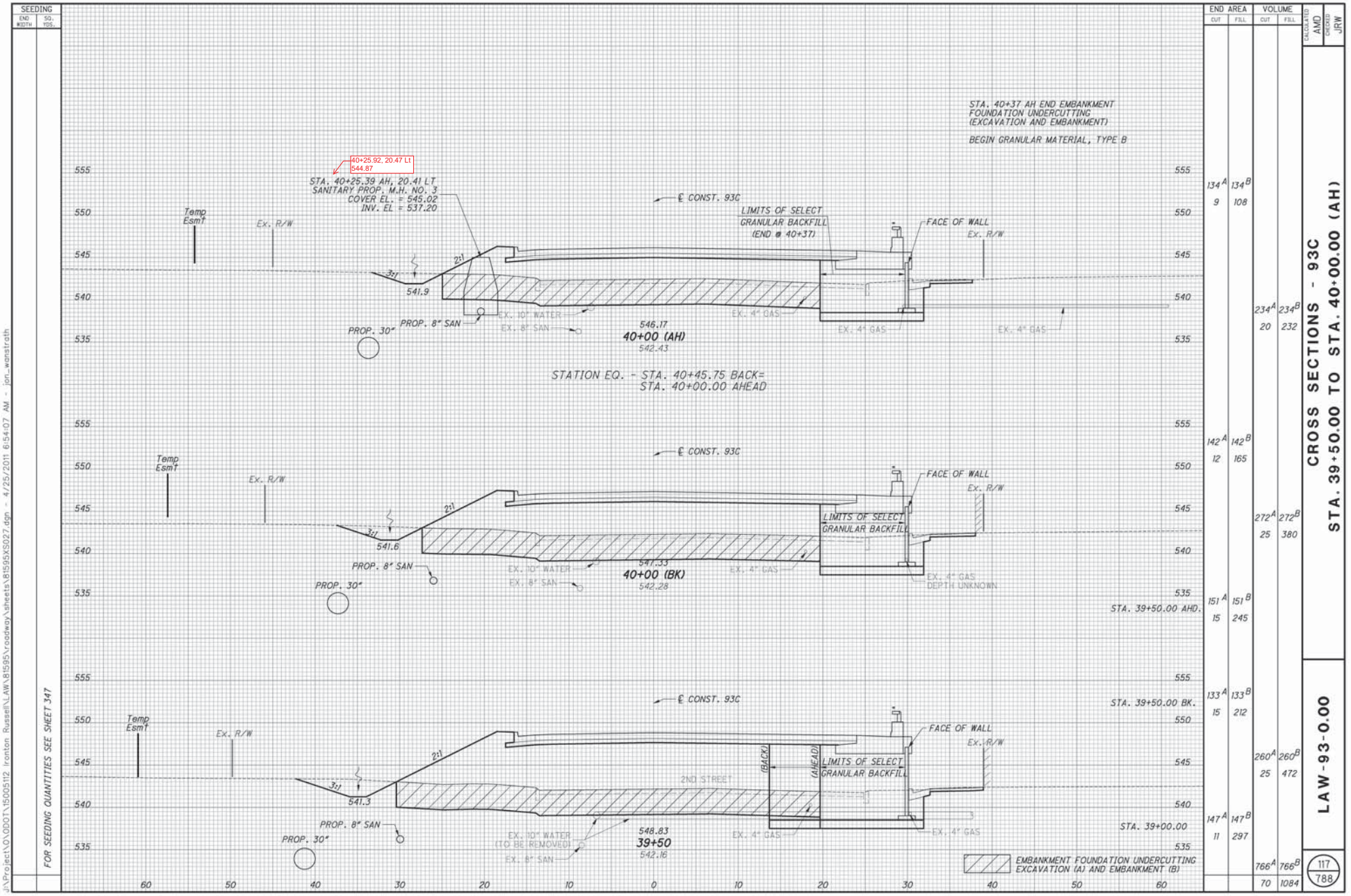

J:\Project\OV\ODOT\15005112 Ironton Russell\LAW\81595\roadway\sheets\81595XS027.dgn - 4/25/2011 6:54:07 AM - jon_wonstroth

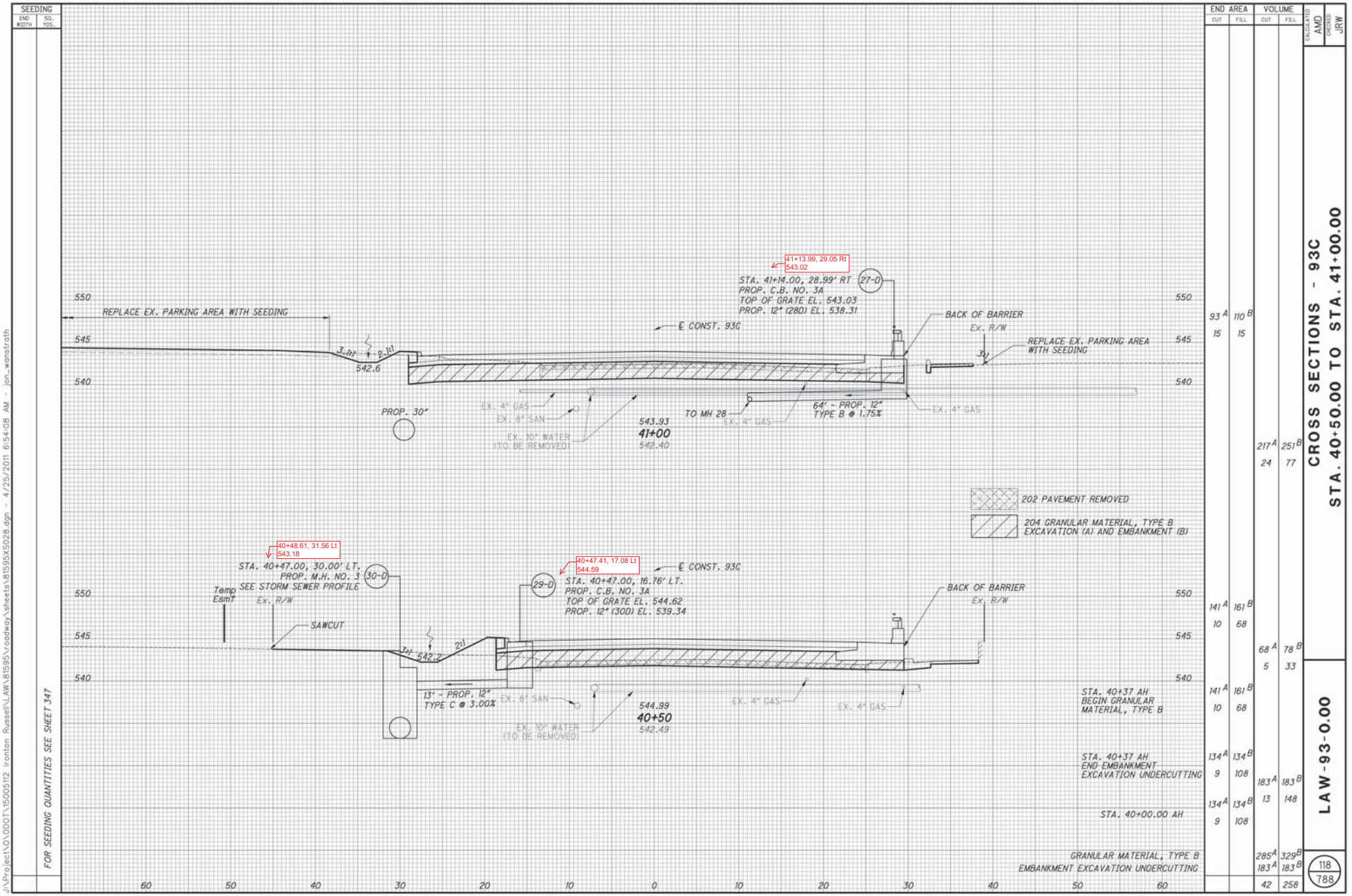
SEEDING
END WIDTH
SQ. YDS.
FOR SEEDING QUANTITIES SEE SHEET 347
END AREA
CUT
FILL
VOLUME
CUT
FILL
CALCULATED AMD
CHECKED JRW
CROSS SECTIONS - 93C
STA. 40+50.00 TO STA. 41+00.00
LAW-93-0.00
118
788
J:\Project\OV\ODOT\15005112 Ironton Russell\LAW-81595\roadway\sheets\81595XS028.dgn - 4/25/2011 6:54:08 AM - jon_wanstroth
REPLACE EX. PARKING AREA WITH SEEDING
3:1
2:1
542.6
PROP. 30"
EX. 4" GAS
EX. 8" SAN
EX. 10" WATER (TO BE REMOVED)
543.93
41+00
542.40
41+13.99, 29.05 Rt
543.02
STA. 41+14.00, 28.99' RT
PROP. C.B. NO. 3A
TOP OF GRATE EL. 543.03
PROP. 12" (28D) EL. 538.31
27-D
℄ CONST. 93C
BACK OF BARRIER
Ex. R/W
REPLACE EX. PARKING AREA WITH SEEDING
TO MH 28
EX. 4" GAS
64' - PROP. 12" TYPE B @ 1.75%
EX. 4" GAS
202 PAVEMENT REMOVED
204 GRANULAR MATERIAL, TYPE B EXCAVATION (A) AND EMBANKMENT (B)
40+48.61, 31.56 Lt
543.18
STA. 40+47.00, 30.00' LT.
PROP. M.H. NO. 3
SEE STORM SEWER PROFILE
30-D
Temp Esmt
Ex. R/W
SAWCUT
542.2
40+47.41, 17.08 Lt
544.59
29-D
℄ CONST. 93C
STA. 40+47.00, 16.76' LT.
PROP. C.B. NO. 3A
TOP OF GRATE EL. 544.62
PROP. 12" (30D) EL. 539.34
BACK OF BARRIER
Ex. R/W
13' - PROP. 12" TYPE C @ 3.00%
EX. 8" SAN
EX. 10" WATER (TO BE REMOVED)
544.99
40+50
542.49
EX. 4" GAS
EX. 4" GAS
STA. 40+37 AH
BEGIN GRANULAR MATERIAL, TYPE B
STA. 40+37 AH
END EMBANKMENT EXCAVATION UNDERCUTTING
STA. 40+00.00 AH
GRANULAR MATERIAL, TYPE B EMBANKMENT EXCAVATION UNDERCUTTING
550
545
540
60
50
40
30
20
10
0
10
20
30
40
50
60
93 A 110 B
15 15
217 A 251 B
24 77
141 A 161 B
10 68
68 A 78 B
5 33
141 A 161 B
10 68
134 A 134 B
9 108
183 A 183 B
13 148
134 A 134 B
9 108
285 A 329 B
183 A 183 B
42 258

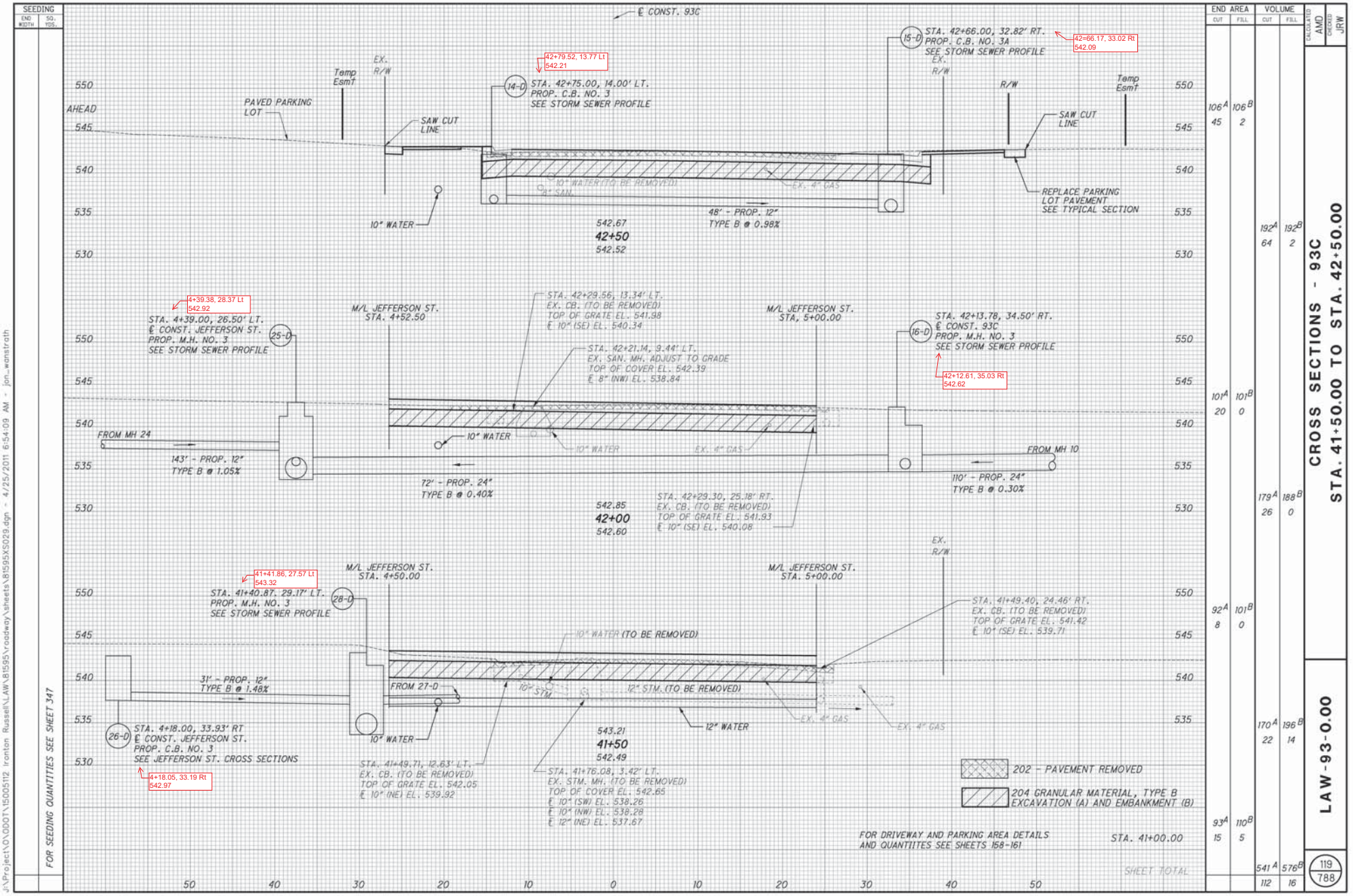
SEEDING
END WIDTH
SQ. YDS.
FOR SEEDING QUANTITIES SEE SHEET 347
END AREA
CUT
FILL
VOLUME
CUT
FILL
CALCULATED AMD
CHECKED JRW
CROSS SECTIONS - 93C
STA. 41+50.00 TO STA. 42+50.00
LAW-93-0.00
119
788
℄ CONST. 93C
STA. 42+66.00, 32.82' RT.
PROP. C.B. NO. 3A
SEE STORM SEWER PROFILE
42=66.17, 33.02 Rt
542.09
42+79.52, 13.77 Lt
542.21
STA. 42+75.00, 14.00' LT.
PROP. C.B. NO. 3
SEE STORM SEWER PROFILE
Temp Esmt
EX. R/W
R/W
PAVED PARKING LOT
SAW CUT LINE
AHEAD
10" WATER (TO BE REMOVED)
EX. 4" GAS
4" SAN.
10" WATER
48' - PROP. 12" TYPE B @ 0.98%
REPLACE PARKING LOT PAVEMENT SEE TYPICAL SECTION
542.67
42+50
542.52
4+39.38, 28.37 Lt
542.92
STA. 4+39.00, 26.50' LT.
℄ CONST. JEFFERSON ST.
PROP. M.H. NO. 3
SEE STORM SEWER PROFILE
M/L JEFFERSON ST.
STA. 4+52.50
STA. 42+29.56, 13.34' LT.
EX. CB. (TO BE REMOVED)
TOP OF GRATE EL. 541.98
℄ 10" (SE) EL. 540.34
STA. 42+21.14, 9.44' LT.
EX. SAN. MH. ADJUST TO GRADE
TOP OF COVER EL. 542.39
℄ 8" (NW) EL. 538.84
M/L JEFFERSON ST.
STA. 5+00.00
STA. 42+13.78, 34.50' RT.
℄ CONST. 93C
PROP. M.H. NO. 3
SEE STORM SEWER PROFILE
42+12.61, 35.03 Rt
542.62
FROM MH 24
143' - PROP. 12" TYPE B @ 1.05%
10" WATER
10" WATER
EX. 6" GAS
FROM MH 10
72' - PROP. 24" TYPE B @ 0.40%
110' - PROP. 24" TYPE B @ 0.30%
542.85
42+00
542.60
STA. 42+29.30, 25.18' RT.
EX. CB. (TO BE REMOVED)
TOP OF GRATE EL. 541.93
℄ 10" (SE) EL. 540.08
41+41.86, 27.57 Lt
543.32
STA. 41+40.87, 29.17' LT.
PROP. M.H. NO. 3
SEE STORM SEWER PROFILE
M/L JEFFERSON ST.
STA. 4+50.00
M/L JEFFERSON ST.
STA. 5+00.00
EX. R/W
STA. 41+49.40, 24.46' RT.
EX. CB. (TO BE REMOVED)
TOP OF GRATE EL. 541.42
℄ 10" (SE) EL. 539.71
10" WATER (TO BE REMOVED)
31' - PROP. 12" TYPE B @ 1.48%
FROM 27-D
10" STM.
12" STM. (TO BE REMOVED)
EX. 4" GAS
EX. 4" GAS
12" WATER
STA. 4+18.00, 33.93' RT
℄ CONST. JEFFERSON ST.
PROP. C.B. NO. 3
SEE JEFFERSON ST. CROSS SECTIONS
4+18.05, 33.19 Rt
542.97
10" WATER
543.21
41+50
542.49
STA. 41+49.71, 12.63' LT.
EX. CB. (TO BE REMOVED)
TOP OF GRATE EL. 542.05
℄ 10" (NE) EL. 539.92
STA. 41+76.08, 3.42' LT.
EX. STM. MH. (TO BE REMOVED)
TOP OF COVER EL. 542.65
℄ 10" (SW) EL. 538.26
℄ 10" (NW) EL. 538.28
℄ 12" (NE) EL. 537.67
202 - PAVEMENT REMOVED
204 GRANULAR MATERIAL, TYPE B EXCAVATION (A) AND EMBANKMENT (B)
FOR DRIVEWAY AND PARKING AREA DETAILS AND QUANTITIES SEE SHEETS 158-161
STA. 41+00.00
SHEET TOTAL
106A 45
106B 2
101A 20
101B 0
92A 8
101B 0
93A 15
110B 5
192A 64
192B 2
179A 26
188B 0
170A 22
196B 14
541A 112
576B 16
50 40 30 20 10 0 10 20 30 40 50
J:\Project\ODOT\15005112 Ironton Russell\LAW\81595\roadway\sheets\81595XS029.dgn - 4/25/2011 6:54:09 AM - jon_wanstrath

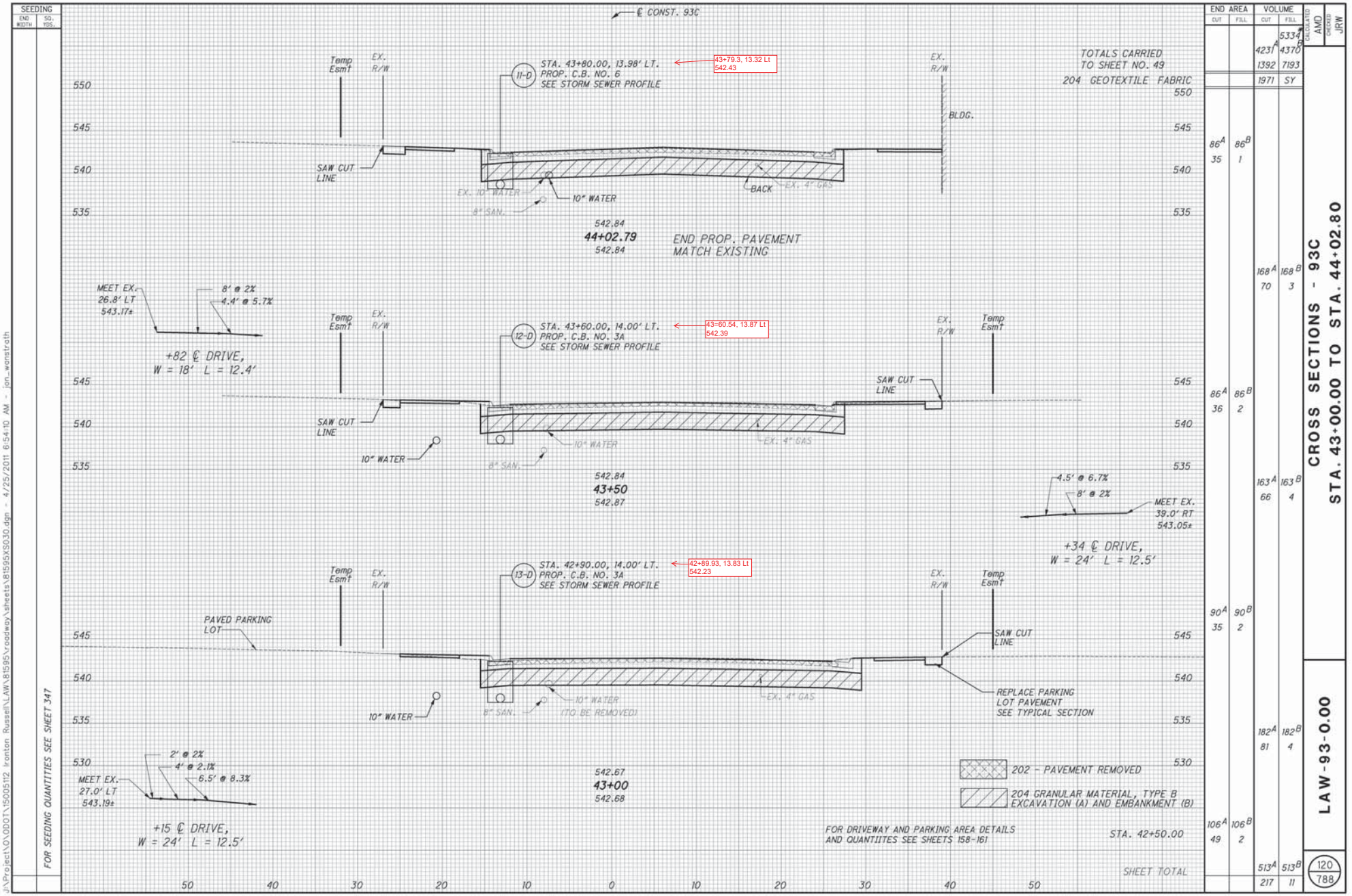

SEEDING

END WIDTH	SQ. YDS.

FOR SEEDING QUANTITIES SEE SHEET 347

END AREA CUT	END AREA FILL	VOLUME CUT	VOLUME FILL
			5334^{A}
		423^{A}	4370^{B}
		1392	7193
		1971	SY
86^{A}	86^{B}		
35	1		
		168^{A}	168^{B}
		70	3
86^{A}	86^{B}		
36	2		
		163^{A}	163^{B}
		66	4
90^{A}	90^{B}		
35	2		
		182^{A}	182^{B}
		81	4
106^{A}	106^{B}		
49	2		
		513^{A}	513^{B}
		217	11

CALCULATED AMD
CHECKED JRW

CROSS SECTIONS - 93C
STA. 43+00.00 TO STA. 44+02.80

LAW-93-0.00

120
788

J:\Project\OJODOT\15005112 Ironton Russell\LAW\81595\roadway\sheets\81595XS030.dgn - 4/25/2011 6:54:10 AM - jon_wanstrath

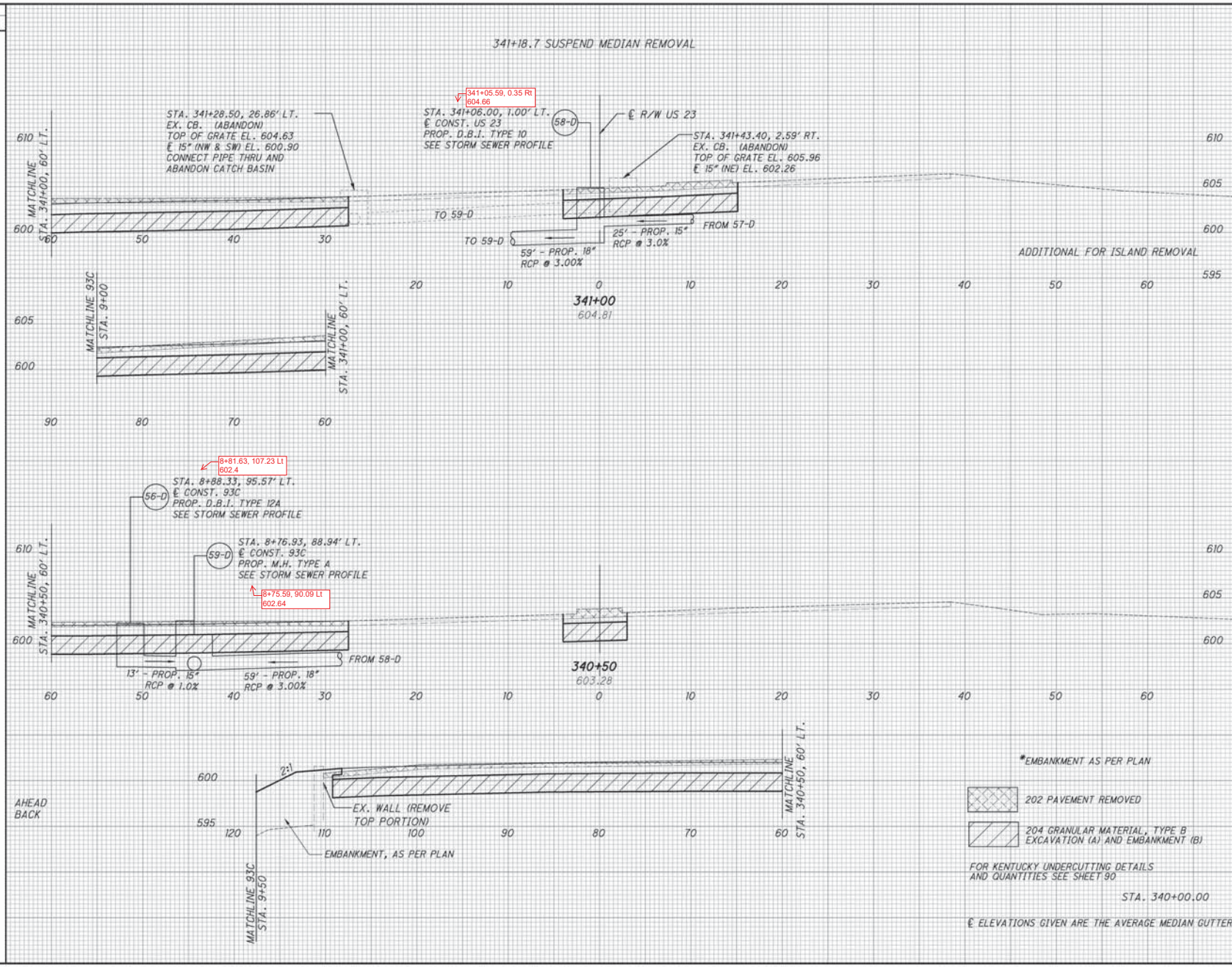

SEEDING END WIDTH	SEEDING SQ. YDS.
	FOR SEEDING QUANTITIES SEE SHEET 346

END AREA CUT	END AREA FILL	VOLUME CUT	VOLUME FILL
152A	152B		
67	0		
		306A	306B
		127	0
			33*
178A	178B		
70	0		
	35*		
		224A	224B
		104	12
			65*
64A	64B		
42	13		
	70*		98*
		530A	530B
		231	12

CALCULATED AMD
CHECKED JRW

CROSS SECTIONS - US 23
STA. 340+50 TO STA. 341+00

LAW-93-0.00

J:\Project\O\ODOT\15005112 Ironton Russell\LAW\81595\roadway\sheets\81595XS032.dgn - 4/25/2011 6:54:12 AM - jon_wanstrath

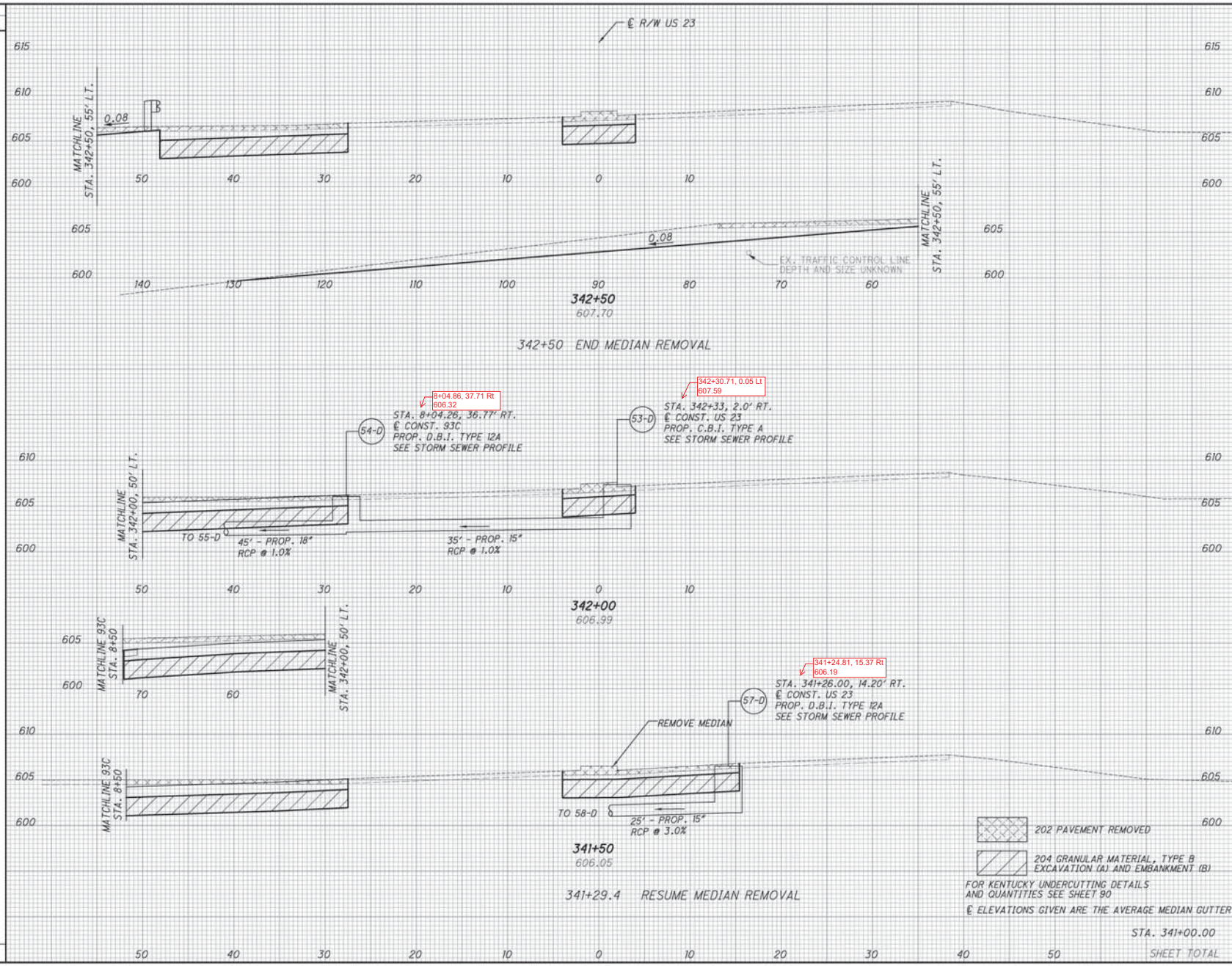

SEEDING END WIDTH	SEEDING SQ. YDS.	END AREA CUT	END AREA FILL	VOLUME CUT	VOLUME FILL
		58A	58B		
		94	0		
				151A	151B
				139	0
		105A	105B		
		56	0		
				179A	179B
				78	0
		88A	88B		
		28	0		
				223A	223B
				88	0
		152A	152B		
		67	0	553A	553B
				305	0

FOR SEEDING QUANTITIES SEE SHEET 346

CALCULATED AMD
CHECKED JRW

CROSS SECTIONS US 23
STA. 341+50 TO STA. 342+50

LAW-93-0.00

J:\Project\O\ODOT\15005112 Ironton Russell\LAW\81595\roadway\sheets\81595XS033.dgn - 4/25/2011 6:54:13 AM - jon_wanstrath

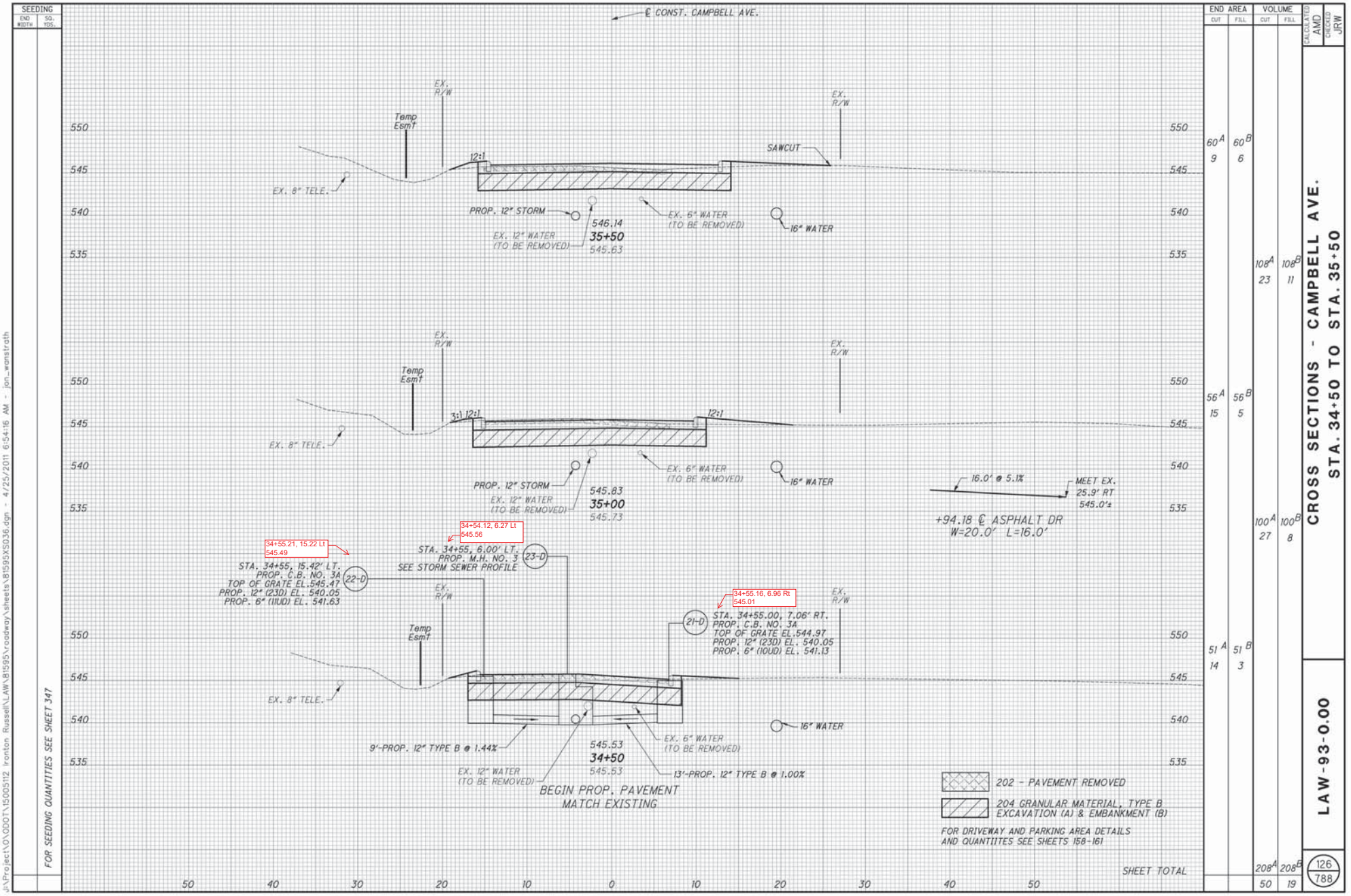
SEEDING
END WIDTH
SQ. YDS.
FOR SEEDING QUANTITIES SEE SHEET 347
℄ CONST. CAMPBELL AVE.
EX. R/W
Temp Esmt
EX. 8" TELE.
12:1
SAWCUT
PROP. 12" STORM
EX. 12" WATER (TO BE REMOVED)
546.14
35+50
545.63
EX. 6" WATER (TO BE REMOVED)
16" WATER
3:1
545.83
35+00
545.73
16.0' @ 5.1%
MEET EX. 25.9' RT 545.0'±
+94.18 ℄ ASPHALT DR W=20.0' L=16.0'
34+55.21, 15.22 Lt 545.49
STA. 34+55, 15.42' LT. PROP. C.B. NO. 3A TOP OF GRATE EL.545.47 PROP. 12" (23D) EL. 540.05 PROP. 6" (11UD) EL. 541.63
22-D
34+54.12, 6.27 Lt 545.56
STA. 34+55, 6.00' LT. PROP. M.H. NO. 3 SEE STORM SEWER PROFILE
23-D
34+55.16, 6.96 Rt 545.01
STA. 34+55.00, 7.06' RT. PROP. C.B. NO. 3A TOP OF GRATE EL.544.97 PROP. 12" (23D) EL. 540.05 PROP. 6" (10UD) EL. 541.13
21-D
9'-PROP. 12" TYPE B @ 1.44%
545.53
34+50
545.53
13'-PROP. 12" TYPE B @ 1.00%
BEGIN PROP. PAVEMENT MATCH EXISTING
202 - PAVEMENT REMOVED
204 GRANULAR MATERIAL, TYPE B EXCAVATION (A) & EMBANKMENT (B)
FOR DRIVEWAY AND PARKING AREA DETAILS AND QUANTITIES SEE SHEETS 158-161
SHEET TOTAL
END AREA
CUT
FILL
VOLUME
CUT
FILL
60A 9
60B 6
56A 15
56B 5
51A 14
51B 3
108A 23
108B 11
100A 27
100B 8
208A 50
208B 19
CALCULATED AMD
CHECKED JRW
CROSS SECTIONS - CAMPBELL AVE. STA. 34+50 TO STA. 35+50
LAW-93-0.00
126
788

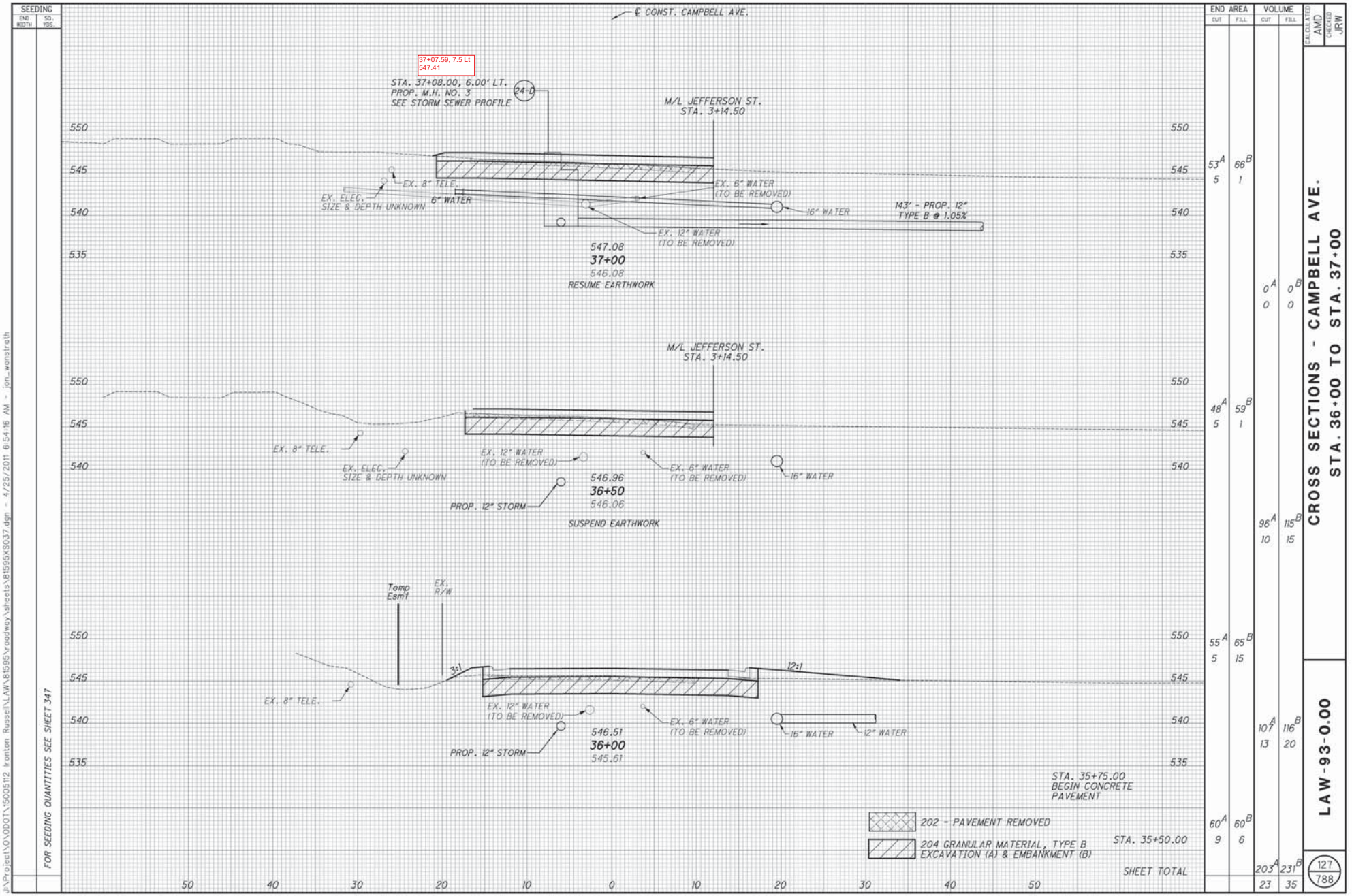
SEEDING
END WIDTH
SQ. YDS.
℄ CONST. CAMPBELL AVE.
37+07.59, 7.5 Lt
547.41
STA. 37+08.00, 6.00' LT.
PROP. M.H. NO. 3
SEE STORM SEWER PROFILE
24-D
M/L JEFFERSON ST.
STA. 3+14.50
EX. 8" TELE.
EX. ELEC.
SIZE & DEPTH UNKNOWN
6" WATER
EX. 6" WATER
(TO BE REMOVED)
16" WATER
143' - PROP. 12"
TYPE B @ 1.05%
EX. 12" WATER
(TO BE REMOVED)
547.08
37+00
546.08
RESUME EARTHWORK
M/L JEFFERSON ST.
STA. 3+14.50
EX. 8" TELE.
EX. ELEC.
SIZE & DEPTH UNKNOWN
EX. 12" WATER
(TO BE REMOVED)
EX. 6" WATER
(TO BE REMOVED)
16" WATER
PROP. 12" STORM
546.96
36+50
546.06
SUSPEND EARTHWORK
Temp Easmt
EX. R/W
3:1
12:1
EX. 8" TELE.
EX. 12" WATER
(TO BE REMOVED)
EX. 6" WATER
(TO BE REMOVED)
16" WATER
12" WATER
PROP. 12" STORM
546.51
36+00
545.61
STA. 35+75.00
BEGIN CONCRETE
PAVEMENT
202 - PAVEMENT REMOVED
204 GRANULAR MATERIAL, TYPE B
EXCAVATION (A) & EMBANKMENT (B)
STA. 35+50.00
SHEET TOTAL
550
545
540
535
50 40 30 20 10 0 10 20 30 40 50
END AREA
CUT FILL
VOLUME
CUT FILL
53A 66B
5 1
48A 59B
5 1
55A 65B
5 15
60A 60B
9 6
0A 0B
0 0
96A 115B
10 15
107A 116B
13 20
203A 231B
23 35
CALCULATED AMD
CHECKED JRW
CROSS SECTIONS - CAMPBELL AVE.
STA. 36+00 TO STA. 37+00
LAW-93-0.00
127
788
FOR SEEDING QUANTITIES SEE SHEET 347
J:\Project\ODOT\15005112 Ironton Russell\LAW\81595\roadway\sheets\81595XS037.dgn - 4/25/2011 6:54:16 AM - jon_wanstrath

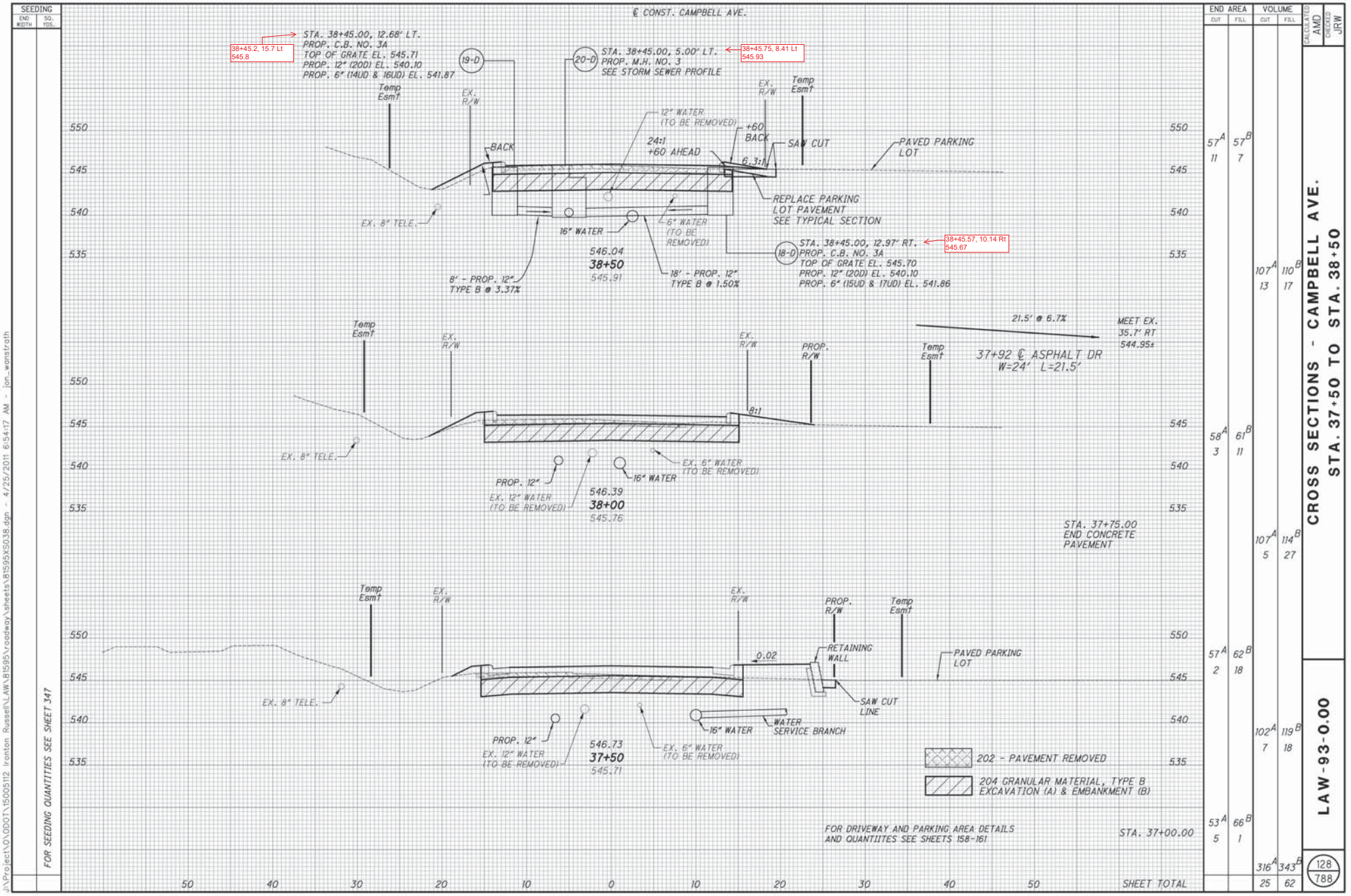
SEEDING
END WIDTH
SQ. YDS.
FOR SEEDING QUANTITIES SEE SHEET 347
℄ CONST. CAMPBELL AVE.
STA. 38+45.00, 12.68' LT.
PROP. C.B. NO. 3A
TOP OF GRATE EL. 545.71
PROP. 12" (20D) EL. 540.10
PROP. 6" (14UD & 16UD) EL. 541.87
38+45.2, 15.7 Lt
545.8
19-D
20-D
STA. 38+45.00, 5.00' LT.
PROP. M.H. NO. 3
SEE STORM SEWER PROFILE
38+45.75, 8.41 Lt
545.93
Temp Esmt
EX. R/W
12" WATER (TO BE REMOVED)
+60 BACK
24:1 +60 AHEAD
6.3:1
SAW CUT
PAVED PARKING LOT
BACK
REPLACE PARKING LOT PAVEMENT SEE TYPICAL SECTION
EX. 8" TELE.
16" WATER
6" WATER (TO BE REMOVED)
546.04
38+50
545.91
8' - PROP. 12" TYPE B @ 3.37%
18' - PROP. 12" TYPE B @ 1.50%
STA. 38+45.00, 12.97' RT.
PROP. C.B. NO. 3A
TOP OF GRATE EL. 545.70
PROP. 12" (20D) EL. 540.10
PROP. 6" (15UD & 17UD) EL. 541.86
38+45.57, 10.14 Rt
545.67
18-D
21.5' @ 6.7%
MEET EX. 35.7' RT 544.95±
37+92 ℄ ASPHALT DR
W=24' L=21.5'
PROP. R/W
8:1
EX. 6" WATER (TO BE REMOVED)
PROP. 12"
EX. 12" WATER (TO BE REMOVED)
546.39
38+00
545.76
STA. 37+75.00
END CONCRETE PAVEMENT
RETAINING WALL
0.02
PAVED PARKING LOT
SAW CUT LINE
WATER SERVICE BRANCH
546.73
37+50
545.71
202 - PAVEMENT REMOVED
204 GRANULAR MATERIAL, TYPE B
EXCAVATION (A) & EMBANKMENT (B)
FOR DRIVEWAY AND PARKING AREA DETAILS AND QUANTIITES SEE SHEETS 158-161
STA. 37+00.00
SHEET TOTAL
END AREA
CUT
FILL
VOLUME
CUT
FILL
57A 11
57B 7
107A 13
110B 17
58A 3
61B 11
107A 5
114B 27
57A 2
62B 18
102A 7
119B 18
53A 5
66B 1
316A 25
343B 62
CALCULATED AMD
CHECKED JRW
CROSS SECTIONS - CAMPBELL AVE.
STA. 37+50 TO STA. 38+50
LAW-93-0.00
128
788
J:\Project\OJODOT\15005112 Ironton Russell\LAW\81595\roadway\sheets\81595XS038.dgn - 4/25/2011 6:54:17 AM - jon_wanstrath

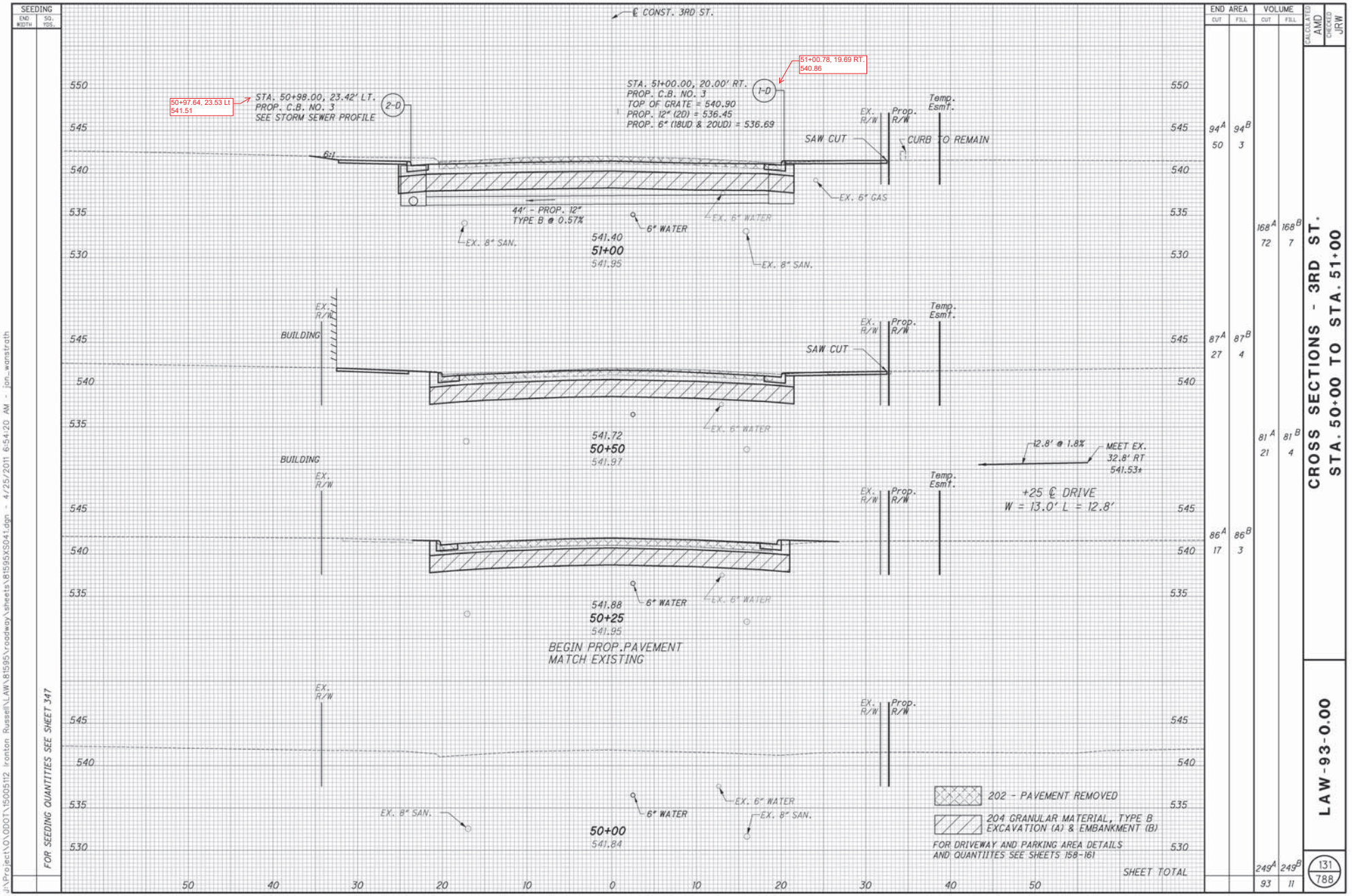
SEEDING
END WIDTH
SQ. YDS.
FOR SEEDING QUANTITIES SEE SHEET 347
℄ CONST. 3RD ST.
END AREA
CUT
FILL
VOLUME
CUT
FILL
CALCULATED AMD
CHECKED JRW
50+97.64, 23.53 Lt
541.51
STA. 50+98.00, 23.42' LT.
PROP. C.B. NO. 3
SEE STORM SEWER PROFILE
2-D
51+00.78, 19.69 RT.
540.86
STA. 51+00.00, 20.00' RT.
PROP. C.B. NO. 3
TOP OF GRATE = 540.90
PROP. 12" (2D) = 536.45
PROP. 6" (18UD & 20UD) = 536.69
1-D
Temp. Esmt.
EX. R/W
Prop. R/W
SAW CUT
CURB TO REMAIN
6:1
EX. 6" GAS
44' - PROP. 12" TYPE B @ 0.57%
6" WATER
EX. 6" WATER
EX. 8" SAN.
541.40
51+00
541.95
94A 94B
50 3
168A 168B
72 7
BUILDING
541.72
50+50
541.97
87A 87B
27 4
81A 81B
21 4
12.8' @ 1.8%
MEET EX. 32.8' RT
541.53±
+25 ℄ DRIVE
W = 13.0' L = 12.8'
86A 86B
17 3
541.88
50+25
541.95
BEGIN PROP.PAVEMENT
MATCH EXISTING
EX. 8" SAN.
50+00
541.84
202 - PAVEMENT REMOVED
204 GRANULAR MATERIAL, TYPE B
EXCAVATION (A) & EMBANKMENT (B)
FOR DRIVEWAY AND PARKING AREA DETAILS
AND QUANTITIES SEE SHEETS 158-161
SHEET TOTAL
249A 249B
93 11
550
545
540
535
530
50 40 30 20 10 0 10 20 30 40 50
CROSS SECTIONS - 3RD ST.
STA. 50+00 TO STA. 51+00
LAW-93-0.00
131
788
J:\Project\OVODOT\15005112 Ironton Russell\LAW\81595\roadway\sheets\81595XS041.dgn - 4/25/2011 6:54:20 AM - jon_wanstrath

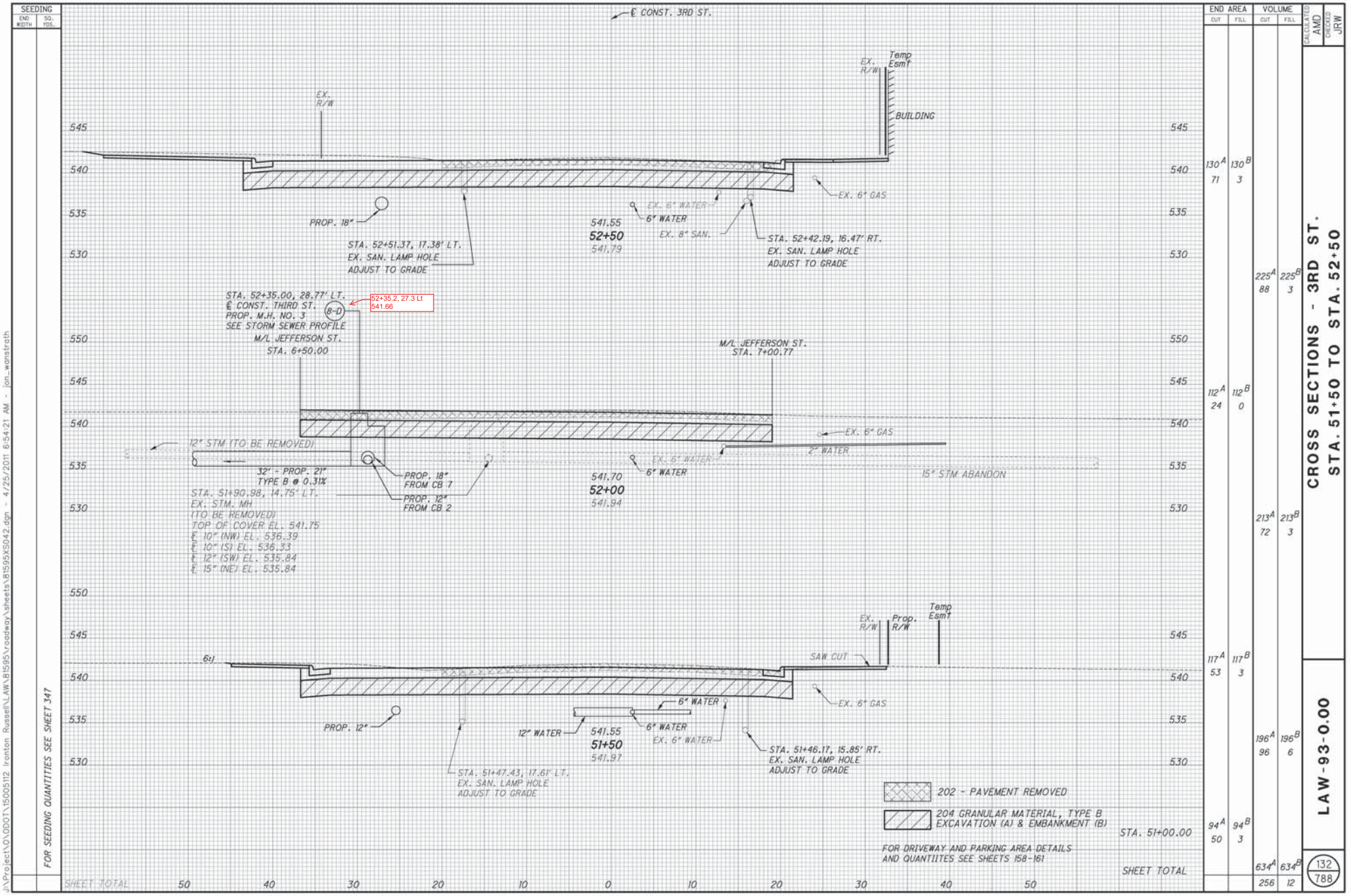
SEEDING
END WIDTH
SQ. YDS.
FOR SEEDING QUANTITIES SEE SHEET 347
℄ CONST. 3RD ST.
EX. R/W
Temp Esmt
BUILDING
EX. 6" GAS
EX. 6" WATER
6" WATER
EX. 8" SAN.
PROP. 18"
STA. 52+51.37, 17.38' LT.
EX. SAN. LAMP HOLE
ADJUST TO GRADE
541.55
52+50
541.79
STA. 52+42.19, 16.47' RT.
EX. SAN. LAMP HOLE
ADJUST TO GRADE
STA. 52+35.00, 28.77' LT.
℄ CONST. THIRD ST.
PROP. M.H. NO. 3
SEE STORM SEWER PROFILE
S-D
52+35.2, 27.3 Lt
541.66
M/L JEFFERSON ST.
STA. 6+50.00
M/L JEFFERSON ST.
STA. 7+00.77
12" STM (TO BE REMOVED)
32' - PROP. 21"
TYPE B @ 0.31%
PROP. 18"
FROM CB 1
PROP. 12"
FROM CB 2
STA. 51+90.98, 14.75' LT.
EX. STM. MH
(TO BE REMOVED)
TOP OF COVER EL. 541.75
℄ 10" (NW) EL. 536.39
℄ 10" (S) EL. 536.33
℄ 12" (SW) EL. 535.84
℄ 15" (NE) EL. 535.84
541.70
52+00
541.94
EX. 6" GAS
2" WATER
EX. 6" WATER
6" WATER
15" STM ABANDON
EX. R/W
Prop. R/W
Temp Esmt
SAW CUT
6:1
EX. 6" GAS
6" WATER
EX. 6" WATER
PROP. 12"
12" WATER
541.55
51+50
541.97
6" WATER
STA. 51+46.17, 15.85' RT.
EX. SAN. LAMP HOLE
ADJUST TO GRADE
STA. 51+47.43, 17.61' LT.
EX. SAN. LAMP HOLE
ADJUST TO GRADE
202 - PAVEMENT REMOVED
204 GRANULAR MATERIAL, TYPE B
EXCAVATION (A) & EMBANKMENT (B)
FOR DRIVEWAY AND PARKING AREA DETAILS
AND QUANTITIES SEE SHEETS 158-161
STA. 51+00.00
SHEET TOTAL
SHEET TOTAL
545
540
535
530
550
50 40 30 20 10 0 10 20 30 40 50
END AREA
CUT
FILL
VOLUME
CUT
FILL
130A 130B
71 3
112A 112B
24 0
117A 117B
53 3
94A 94B
50 3
225A 225B
88 3
213A 213B
72 3
196A 196B
96 6
634A 634B
256 12
CALCULATED AMD
CHECKED JRW
CROSS SECTIONS - 3RD ST.
STA. 51+50 TO STA. 52+50
LAW-93-0.00
132
788

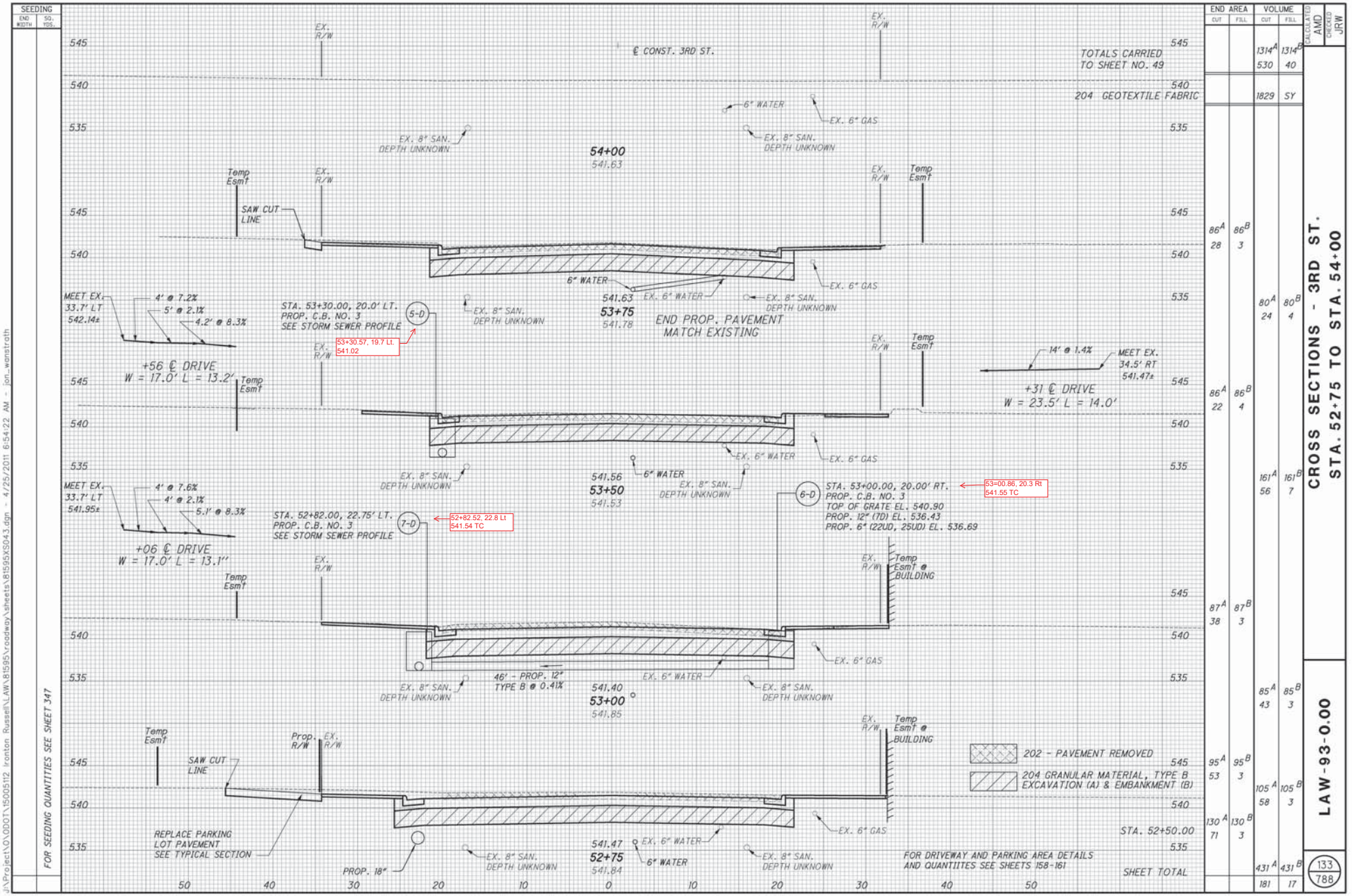
SEEDING
END WIDTH
SQ. YDS.
FOR SEEDING QUANTITIES SEE SHEET 347
END AREA
CUT
FILL
VOLUME
CUT
FILL
CALCULATED AMD
CHECKED JRW
CROSS SECTIONS - 3RD ST.
STA. 52+75 TO STA. 54+00
LAW-93-0.00
133
788
€ CONST. 3RD ST.
EX. R/W
TOTALS CARRIED TO SHEET NO. 49
204 GEOTEXTILE FABRIC
1829 SY
1314A 1314B
530 40
6" WATER
EX. 6" GAS
EX. 8" SAN. DEPTH UNKNOWN
54+00
541.63
Temp Esmt
SAW CUT LINE
6" WATER
541.63
53+75
541.78
EX. 6" WATER
END PROP. PAVEMENT MATCH EXISTING
MEET EX. 33.7' LT 542.14±
4' @ 7.2%
5' @ 2.1%
4.2' @ 8.3%
+56 € DRIVE
W = 17.0' L = 13.2'
STA. 53+30.00, 20.0' LT.
PROP. C.B. NO. 3
SEE STORM SEWER PROFILE
5-D
53+30.57, 19.7 Lt.
541.02
14' @ 1.4%
MEET EX. 34.5' RT 541.47±
+31 € DRIVE
W = 23.5' L = 14.0'
541.56
53+50
541.53
6" WATER
6-D
STA. 53+00.00, 20.00' RT.
PROP. C.B. NO. 3
TOP OF GRATE EL. 540.90
PROP. 12" (7D) EL. 536.43
PROP. 6" (22UD, 25UD) EL. 536.69
53+00.86, 20.3 Rt
541.55 TC
MEET EX. 33.7' LT 541.95±
4' @ 7.6%
4' @ 2.1%
5.1' @ 8.3%
+06 € DRIVE
W = 17.0' L = 13.1'
STA. 52+82.00, 22.75' LT.
PROP. C.B. NO. 3
SEE STORM SEWER PROFILE
7-D
52+82.52, 22.8 Lt
541.54 TC
Temp Esmt @ BUILDING
46' - PROP. 12" TYPE B @ 0.41%
541.40
53+00
541.85
202 - PAVEMENT REMOVED
204 GRANULAR MATERIAL, TYPE B
EXCAVATION (A) & EMBANKMENT (B)
Prop. R/W
REPLACE PARKING LOT PAVEMENT SEE TYPICAL SECTION
PROP. 18"
541.47
52+75
541.84
STA. 52+50.00
FOR DRIVEWAY AND PARKING AREA DETAILS AND QUANTITIES SEE SHEETS 158-161
SHEET TOTAL
86A 86B
28 3
80A 80B
24 4
86A 86B
22 4
161A 161B
56 7
87A 87B
38 3
85A 85B
43 3
95A 95B
53 3
105A 105B
58 3
130A 130B
71 3
431A 431B
181 17
50 40 30 20 10 0 10 20 30 40 50
J:\Project\OVODOT\15005112 Ironton Russell\LAW-81595\roadway\sheets\81595XS043.dgn - 4/25/2011 6:54:22 AM - jon_wonstroth

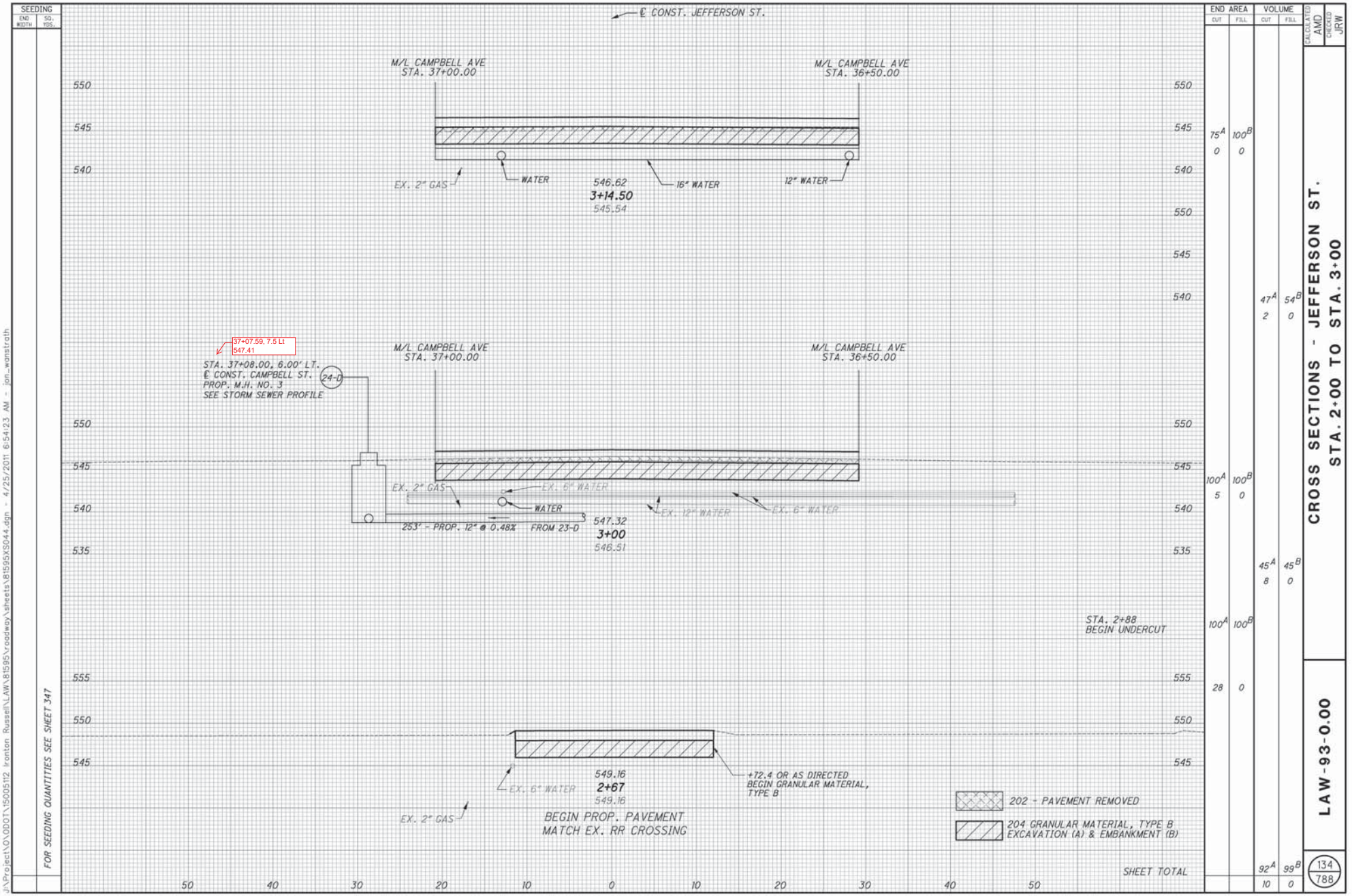
SEEDING
END WIDTH
SQ. YDS.
FOR SEEDING QUANTITIES SEE SHEET 347
℄ CONST. JEFFERSON ST.
M/L CAMPBELL AVE STA. 37+00.00
M/L CAMPBELL AVE STA. 36+50.00
EX. 2" GAS
WATER
546.62
3+14.50
545.54
16" WATER
12" WATER
37+07.59, 7.5 Lt
547.41
STA. 37+08.00, 6.00' LT.
℄ CONST. CAMPBELL ST.
PROP. M.H. NO. 3
SEE STORM SEWER PROFILE
24-D
EX. 6" WATER
EX. 12" WATER
253' - PROP. 12" @ 0.48% FROM 23-D
547.32
3+00
546.51
STA. 2+88
BEGIN UNDERCUT
549.16
2+67
549.16
+72.4 OR AS DIRECTED
BEGIN GRANULAR MATERIAL, TYPE B
BEGIN PROP. PAVEMENT
MATCH EX. RR CROSSING
202 - PAVEMENT REMOVED
204 GRANULAR MATERIAL, TYPE B
EXCAVATION (A) & EMBANKMENT (B)
END AREA
CUT
FILL
VOLUME
CUT
FILL
75A 100B
0 0
47A 54B
2 0
100A 100B
5 0
45A 45B
8 0
100A 100B
28 0
SHEET TOTAL
92A 99B
10 0
CALCULATED AMD
CHECKED JRW
CROSS SECTIONS - JEFFERSON ST.
STA. 2+00 TO STA. 3+00
LAW-93-0.00
134
788
J:\Project\OVODOT\15005112 Ironton Russell\LAW\81595\roadway\sheets\81595XS044.dgn - 4/25/2011 6:54:23 AM - jon_wonstroth

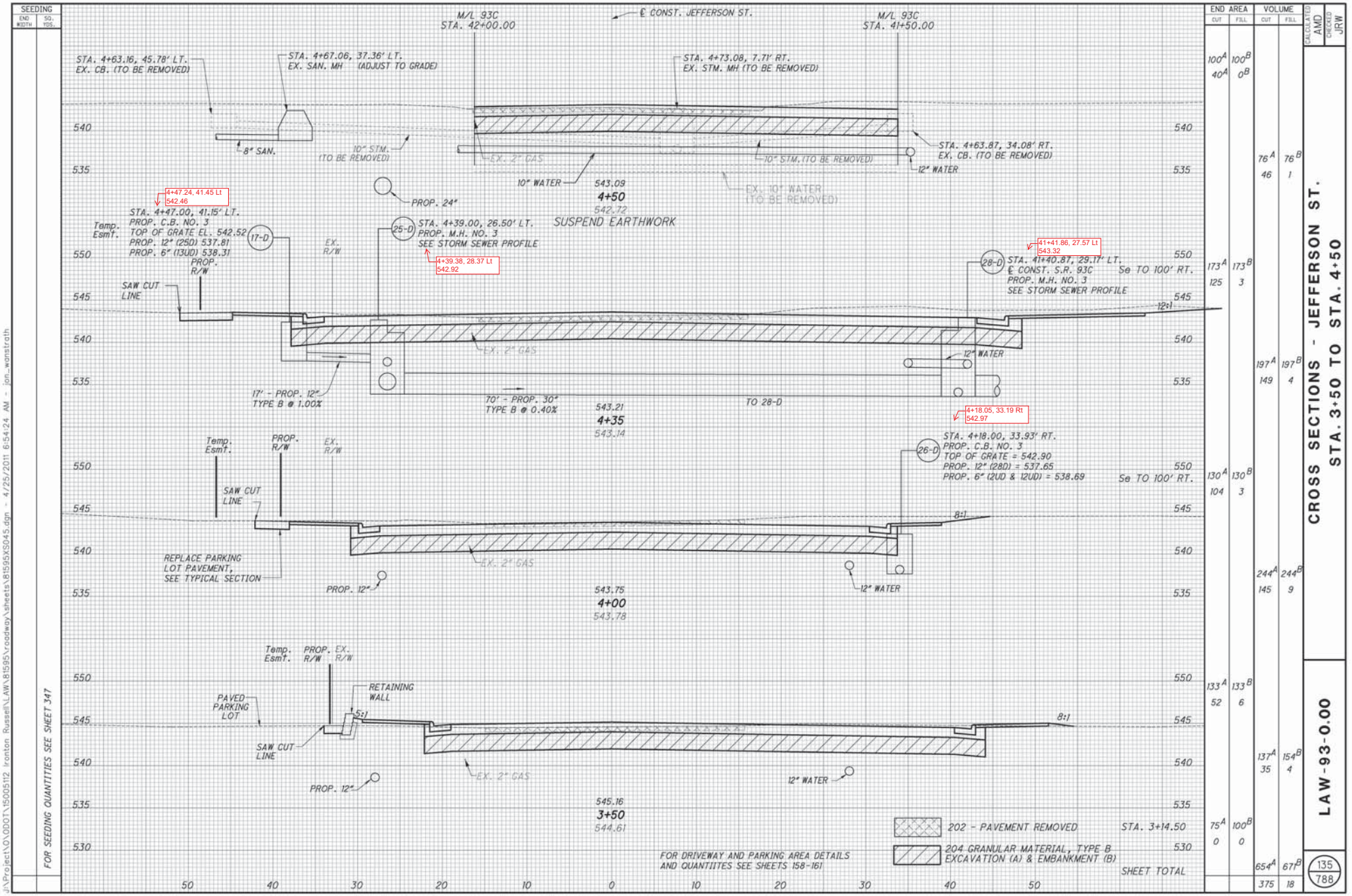
SEEDING
END WIDTH
SQ. YDS.
FOR SEEDING QUANTITIES SEE SHEET 347
END AREA
CUT
FILL
VOLUME
CUT
FILL
CALCULATED AMD
CHECKED JRW
CROSS SECTIONS - JEFFERSON ST.
STA. 3+50 TO STA. 4+50
LAW-93-0.00
135
788
M/L 93C
STA. 42+00.00
℄ CONST. JEFFERSON ST.
M/L 93C
STA. 41+50.00
STA. 4+63.16, 45.78' LT.
EX. CB. (TO BE REMOVED)
STA. 4+67.06, 37.36' LT.
EX. SAN. MH (ADJUST TO GRADE)
STA. 4+73.08, 7.71' RT.
EX. STM. MH (TO BE REMOVED)
8" SAN.
10" STM. (TO BE REMOVED)
EX. 2" GAS
10" WATER
543.09
4+50
542.72
SUSPEND EARTHWORK
10" STM. (TO BE REMOVED)
12" WATER
STA. 4+63.87, 34.08' RT.
EX. CB. (TO BE REMOVED)
EX. 10" WATER (TO BE REMOVED)
PROP. 24"
4+47.24, 41.45 Lt
542.46
STA. 4+47.00, 41.15' LT.
PROP. C.B. NO. 3
TOP OF GRATE EL. 542.52
PROP. 12" (25D) 537.81
PROP. 6" (13UD) 538.31
Temp. Esmt.
17-D
25-D
STA. 4+39.00, 26.50' LT.
PROP. M.H. NO. 3
SEE STORM SEWER PROFILE
4+39.38, 28.37 Lt
542.92
EX. R/W
PROP. R/W
SAW CUT LINE
41+41.86, 27.57 Lt
543.32
28-D
STA. 41+40.87, 29.17' LT.
℄ CONST. S.R. 93C
PROP. M.H. NO. 3
SEE STORM SEWER PROFILE
Se TO 100' RT.
12:1
EX. 2" GAS
12" WATER
17' - PROP. 12"
TYPE B @ 1.00%
70' - PROP. 30"
TYPE B @ 0.40%
TO 28-D
543.21
4+35
543.14
4+18.05, 33.19 Rt
542.97
Temp. Esmt.
PROP. R/W
EX. R/W
SAW CUT LINE
26-D
STA. 4+18.00, 33.93' RT.
PROP. C.B. NO. 3
TOP OF GRATE = 542.90
PROP. 12" (28D) = 537.65
PROP. 6" (2UD & 12UD) = 538.69
Se TO 100' RT.
8:1
REPLACE PARKING LOT PAVEMENT, SEE TYPICAL SECTION
EX. 2" GAS
PROP. 12"
12" WATER
543.75
4+00
543.78
Temp. Esmt.
PROP. R/W
EX. R/W
PAVED PARKING LOT
RETAINING WALL
5:1
8:1
SAW CUT LINE
EX. 2" GAS
PROP. 12"
12" WATER
545.16
3+50
544.61
202 - PAVEMENT REMOVED
204 GRANULAR MATERIAL, TYPE B
EXCAVATION (A) & EMBANKMENT (B)
STA. 3+14.50
FOR DRIVEWAY AND PARKING AREA DETAILS AND QUANTITIES SEE SHEETS 158-161
SHEET TOTAL
50 40 30 20 10 0 10 20 30 40 50
540 535 550 545 530
100A 100B
40A 0B
76A 76B
46 1
173A 173B
125 3
197A 197B
149 4
130A 130B
104 3
244A 244B
145 9
133A 133B
52 6
137A 154B
35 4
75A 100B
0 0
654A 671B
375 18
J:\Project\OVODOT\15005112 Ironton Russell\LAW-81595\roadway\sheets\81595XS045.dgn - 4/25/2011 6:54:24 AM - jon_wonstroth

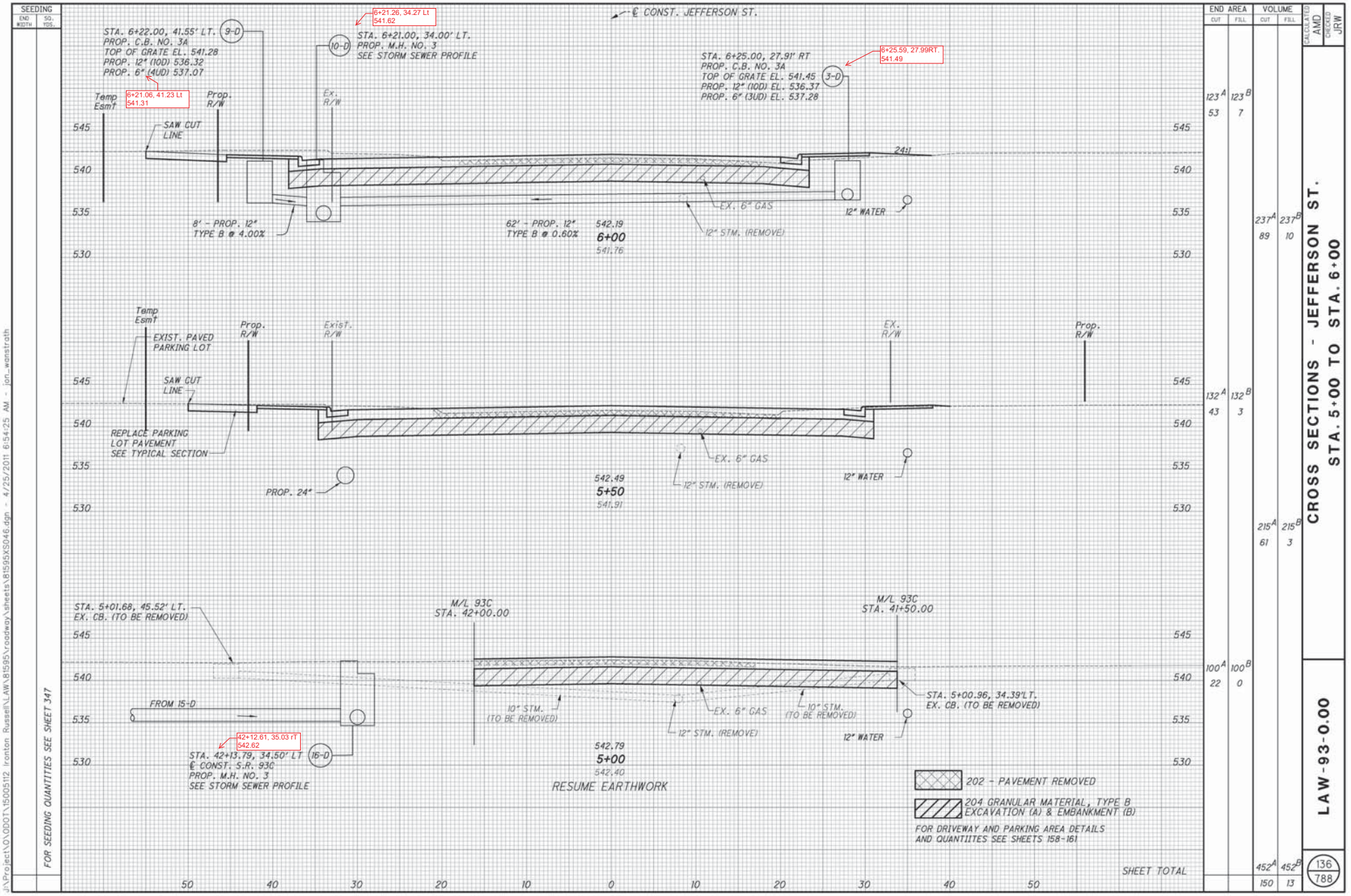
SEEDING
END WIDTH
SQ. YDS.
FOR SEEDING QUANTITIES SEE SHEET 347
END AREA
CUT
FILL
VOLUME
CUT
FILL
CALCULATED AMD
CHECKED JRW
CROSS SECTIONS - JEFFERSON ST.
STA. 5+00 TO STA. 6+00
LAW-93-0.00
136
788
℄ CONST. JEFFERSON ST.
STA. 6+22.00, 41.55' LT.
PROP. C.B. NO. 3A
TOP OF GRATE EL. 541.28
PROP. 12" (10D) 536.32
PROP. 6" (4UD) 537.07
9-D
6+21.06, 41.23 Lt
541.31
6+21.26, 34.27 Lt
541.62
STA. 6+21.00, 34.00' LT.
PROP. M.H. NO. 3
SEE STORM SEWER PROFILE
10-D
STA. 6+25.00, 27.91' RT
PROP. C.B. NO. 3A
TOP OF GRATE EL. 541.45
PROP. 12" (10D) EL. 536.37
PROP. 6" (3UD) EL. 537.28
3-D
6+25.59, 27.99RT.
541.49
Temp Esmt
Prop. R/W
Ex. R/W
SAW CUT LINE
24"
8' - PROP. 12" TYPE B @ 4.00%
62' - PROP. 12" TYPE B @ 0.60%
542.19
6+00
541.76
EX. 6" GAS
12" STM. (REMOVE)
12" WATER
Temp Esmt
EXIST. PAVED PARKING LOT
Prop. R/W
Exist. R/W
EX. R/W
Prop. R/W
SAW CUT LINE
REPLACE PARKING LOT PAVEMENT SEE TYPICAL SECTION
PROP. 24"
542.49
5+50
541.91
EX. 6" GAS
12" STM. (REMOVE)
12" WATER
STA. 5+01.68, 45.52' LT.
EX. CB. (TO BE REMOVED)
M/L 93C
STA. 42+00.00
M/L 93C
STA. 41+50.00
FROM 15-D
10" STM. (TO BE REMOVED)
EX. 6" GAS
10" STM. (TO BE REMOVED)
STA. 5+00.96, 34.39'LT.
EX. CB. (TO BE REMOVED)
12" STM. (REMOVE)
12" WATER
42+12.61, 35.03 rT
542.62
STA. 42+13.79, 34.50' LT
℄ CONST. S.R. 93C
PROP. M.H. NO. 3
SEE STORM SEWER PROFILE
16-D
542.79
5+00
542.40
RESUME EARTHWORK
202 - PAVEMENT REMOVED
204 GRANULAR MATERIAL, TYPE B
EXCAVATION (A) & EMBANKMENT (B)
FOR DRIVEWAY AND PARKING AREA DETAILS AND QUANTITIES SEE SHEETS 158-161
SHEET TOTAL
545
540
535
530
50
40
30
20
10
0
10
20
30
40
50
123A 123B
53 7
132A 132B
43 3
100A 100B
22 0
237A 237B
89 10
215A 215B
61 3
452A 452B
150 13
J:\Project\OJODOT\15005112 Ironton Russell\LAW\81595\roadway\sheets\81595XS046.dgn - 4/25/2011 6:54:25 AM - jon_wanstrath

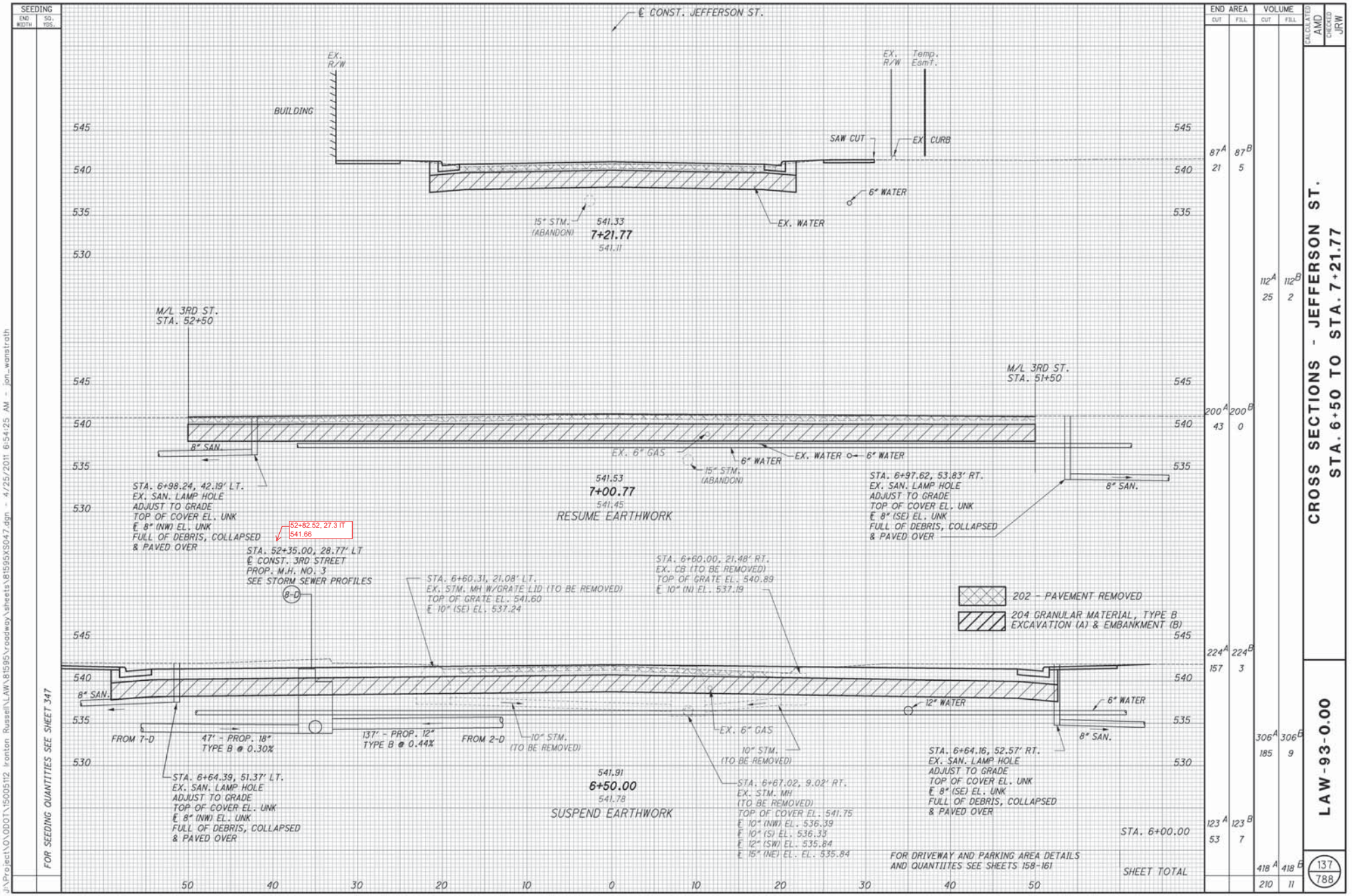
SEEDING
END WIDTH
SQ. YDS.
FOR SEEDING QUANTITIES SEE SHEET 347
℄ CONST. JEFFERSON ST.
EX. R/W
BUILDING
EX. R/W
Temp. Esmt.
SAW CUT
EX. CURB
6" WATER
15" STM. (ABANDON)
541.33
7+21.77
541.11
EX. WATER
M/L 3RD ST. STA. 52+50
M/L 3RD ST. STA. 51+50
8" SAN.
EX. 6" GAS
6" WATER
EX. WATER
6" WATER
15" STM. (ABANDON)
541.53
7+00.77
541.45
RESUME EARTHWORK
STA. 6+98.24, 42.19' LT.
EX. SAN. LAMP HOLE
ADJUST TO GRADE
TOP OF COVER EL. UNK
℄ 8" (NW) EL. UNK
FULL OF DEBRIS, COLLAPSED
& PAVED OVER
STA. 6+97.62, 53.83' RT.
EX. SAN. LAMP HOLE
ADJUST TO GRADE
TOP OF COVER EL. UNK
℄ 8" (SE) EL. UNK
FULL OF DEBRIS, COLLAPSED
& PAVED OVER
8" SAN.
52+82.52, 27.3 LT
541.66
STA. 52+35.00, 28.77' LT
℄ CONST. 3RD STREET
PROP. M.H. NO. 3
SEE STORM SEWER PROFILES
8-D
STA. 6+60.31, 21.08' LT.
EX. STM. MH W/GRATE LID (TO BE REMOVED)
TOP OF GRATE EL. 541.60
℄ 10" (SE) EL. 537.24
STA. 6+60.00, 21.48' RT.
EX. CB (TO BE REMOVED)
TOP OF GRATE EL. 540.89
℄ 10" (N) EL. 537.19
202 - PAVEMENT REMOVED
204 GRANULAR MATERIAL, TYPE B
EXCAVATION (A) & EMBANKMENT (B)
8" SAN.
FROM 7-D
47' - PROP. 18" TYPE B @ 0.30%
137' - PROP. 12" TYPE B @ 0.44%
FROM 2-D
10" STM. (TO BE REMOVED)
12" WATER
6" WATER
EX. 6" GAS
10" STM. (TO BE REMOVED)
8" SAN.
STA. 6+64.39, 51.37' LT.
EX. SAN. LAMP HOLE
ADJUST TO GRADE
TOP OF COVER EL. UNK
℄ 8" (NW) EL. UNK
FULL OF DEBRIS, COLLAPSED
& PAVED OVER
541.91
6+50.00
541.78
SUSPEND EARTHWORK
STA. 6+67.02, 9.02' RT.
EX. STM. MH
(TO BE REMOVED)
TOP OF COVER EL. 541.75
℄ 10" (NW) EL. 536.39
℄ 10" (S) EL. 536.33
℄ 12" (SW) EL. 535.84
℄ 15" (NE) EL. EL. 535.84
STA. 6+64.16, 52.57' RT.
EX. SAN. LAMP HOLE
ADJUST TO GRADE
TOP OF COVER EL. UNK
℄ 8" (SE) EL. UNK
FULL OF DEBRIS, COLLAPSED
& PAVED OVER
STA. 6+00.00
FOR DRIVEWAY AND PARKING AREA DETAILS AND QUANTITIES SEE SHEETS 158-161
SHEET TOTAL
545
540
535
530
50 40 30 20 10 0 10 20 30 40 50
END AREA
CUT FILL
87A 87B
21 5
200A 200B
43 0
224A 224B
157 3
123A 123B
53 7
418A 418B
210 11
VOLUME
CUT FILL
112A 112B
25 2
306A 306B
185 9
CALCULATED AMD
CHECKED JRW
CROSS SECTIONS - JEFFERSON ST.
STA. 6+50 TO STA. 7+21.77
LAW-93-0.00
137
788
J:\Project\OVODOT\15005112 Ironton Russell\LAW-81595\roadway\sheets\81595XS047.dgn - 4/25/2011 6:54:25 AM - jon_wonstroth

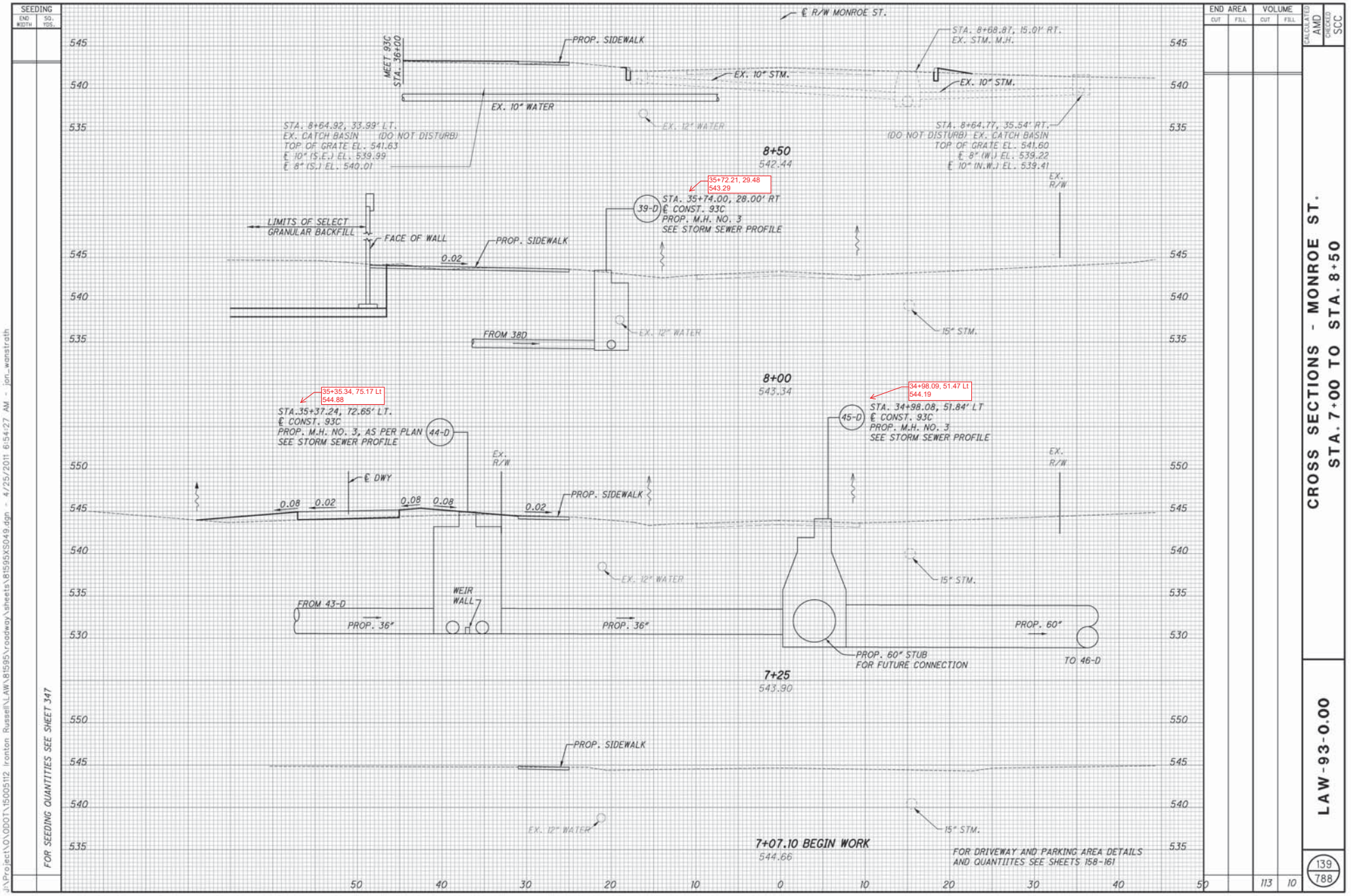

J:\Project\OV\ODOT\150051\2 Ironton Russell\LAW\81595\roadway\sheets\81595XS049.dgn - 4/25/2011 6:54:27 AM - jon_wonstroth

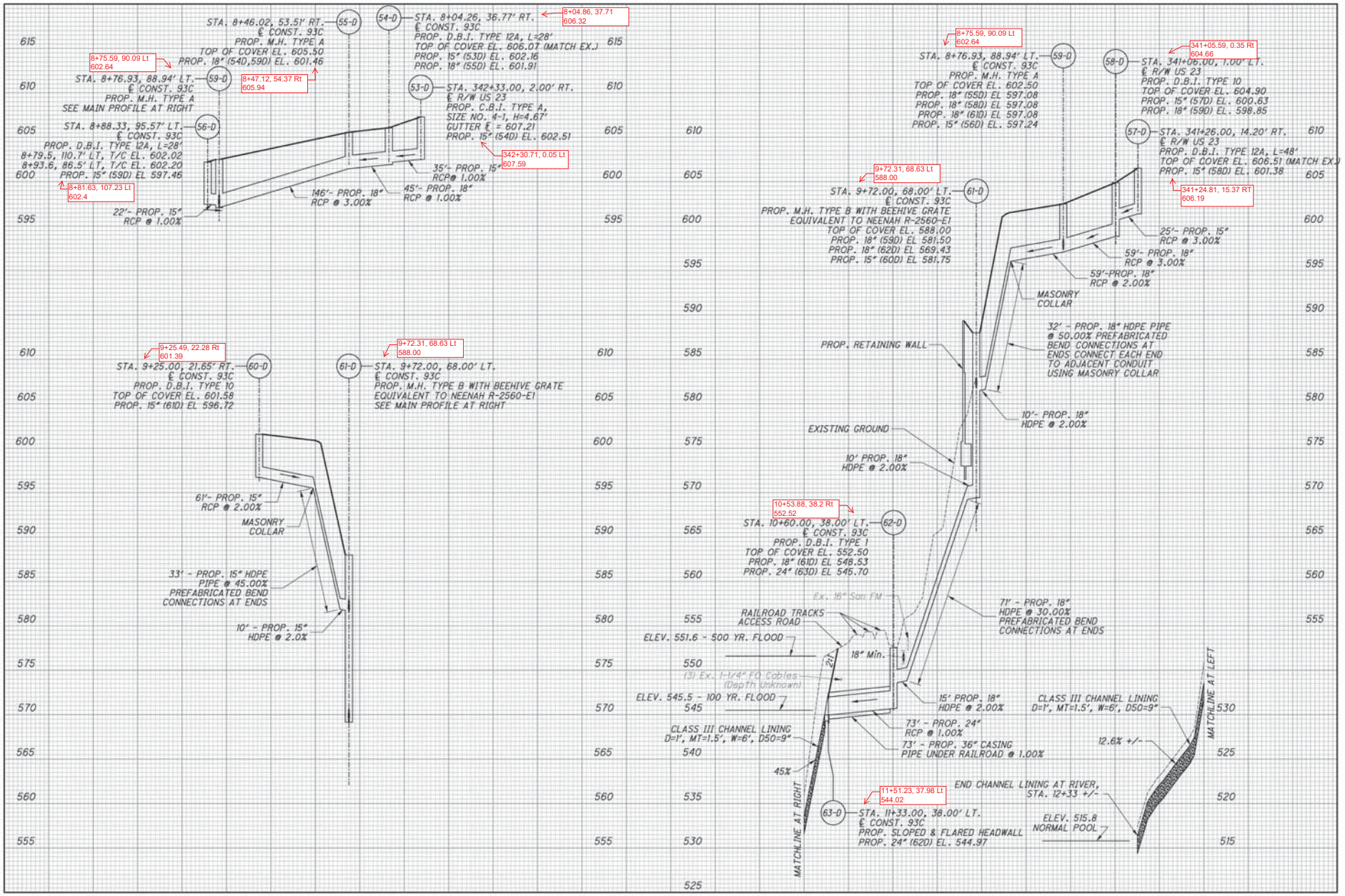

CALCULATED JDP
CHECKED SCC

STORM SEWER PROFILES
KENTUCKY

LAW-93-0.00

164
788

J:\Project\LOUDOT\150051\2 Ironton Russell\LAW_81595\drainage\sheets\81595DF003.dgn - 4/25/2011 6:54:57 AM - jon_wonstrath

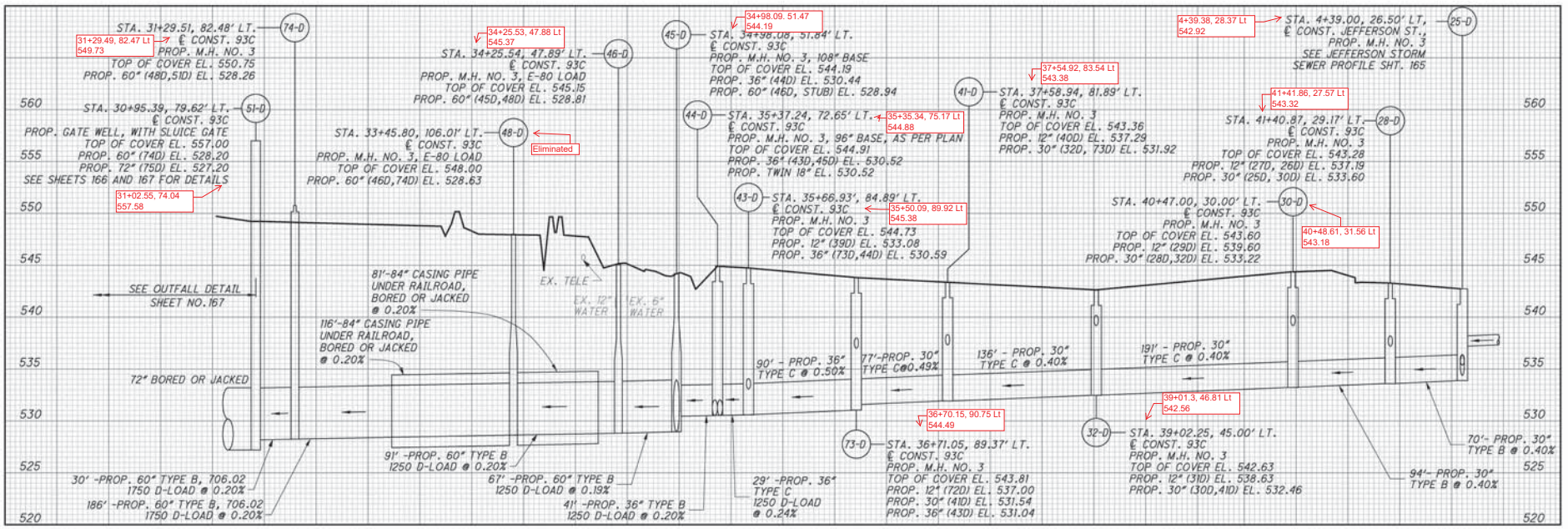

℄ CONST. 93C - LEFT PROFILE

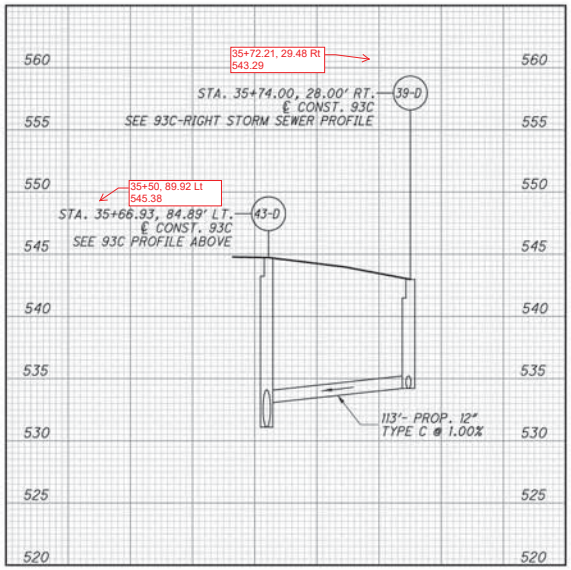

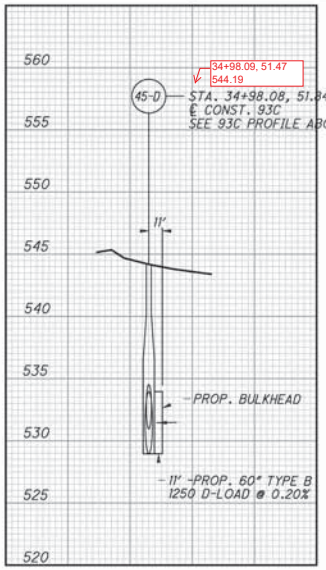

STUB PARALLEL TO MONROE ST.

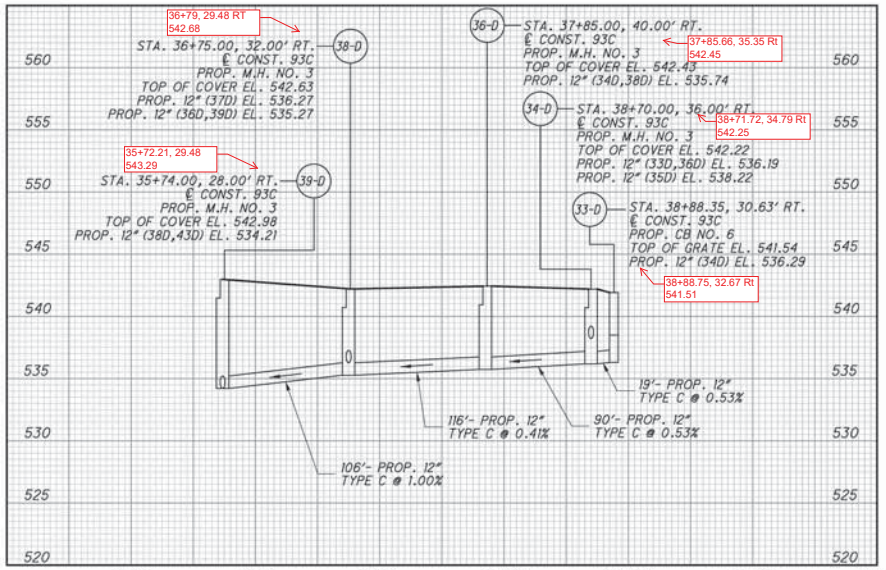

℄ CONST. 93C - RIGHT PROFILE

CALCULATED JDP
CHECKED SCC

STORM SEWER PROFILES
93C

LAW-93-0.00

165
788

J:\Project\YJOOT\15005112 Ironton Russell\LAW-81595\drainage\sheets\81595DF001.dgn - 4/25/2011 6:54:58 AM - jon_wanstrath

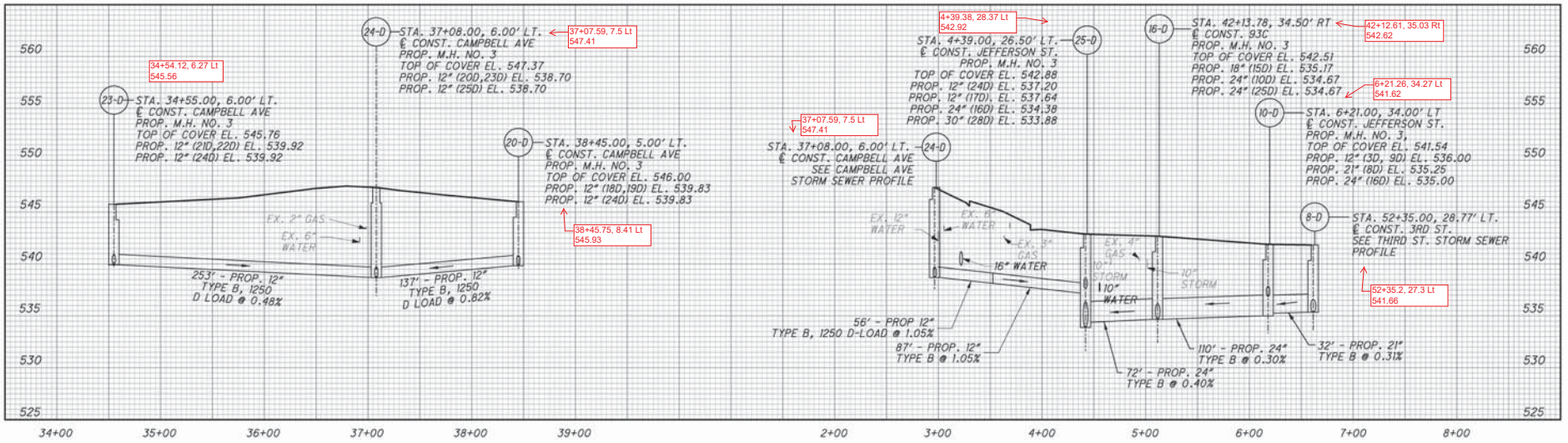

STORM SEWER PROFILES
93C, CAMPBELL AVE, 3RD ST, & JEFFERSON ST

CALCULATED JDP
CHECKED SCC

LAW-93-0.00

J:\Project\OVODOT\15005112 Ironton Russell\LAW_81595\drainage\sheets\81595DF002.dgn - 4/25/2011 6:54:59 AM - jon_wanstrath

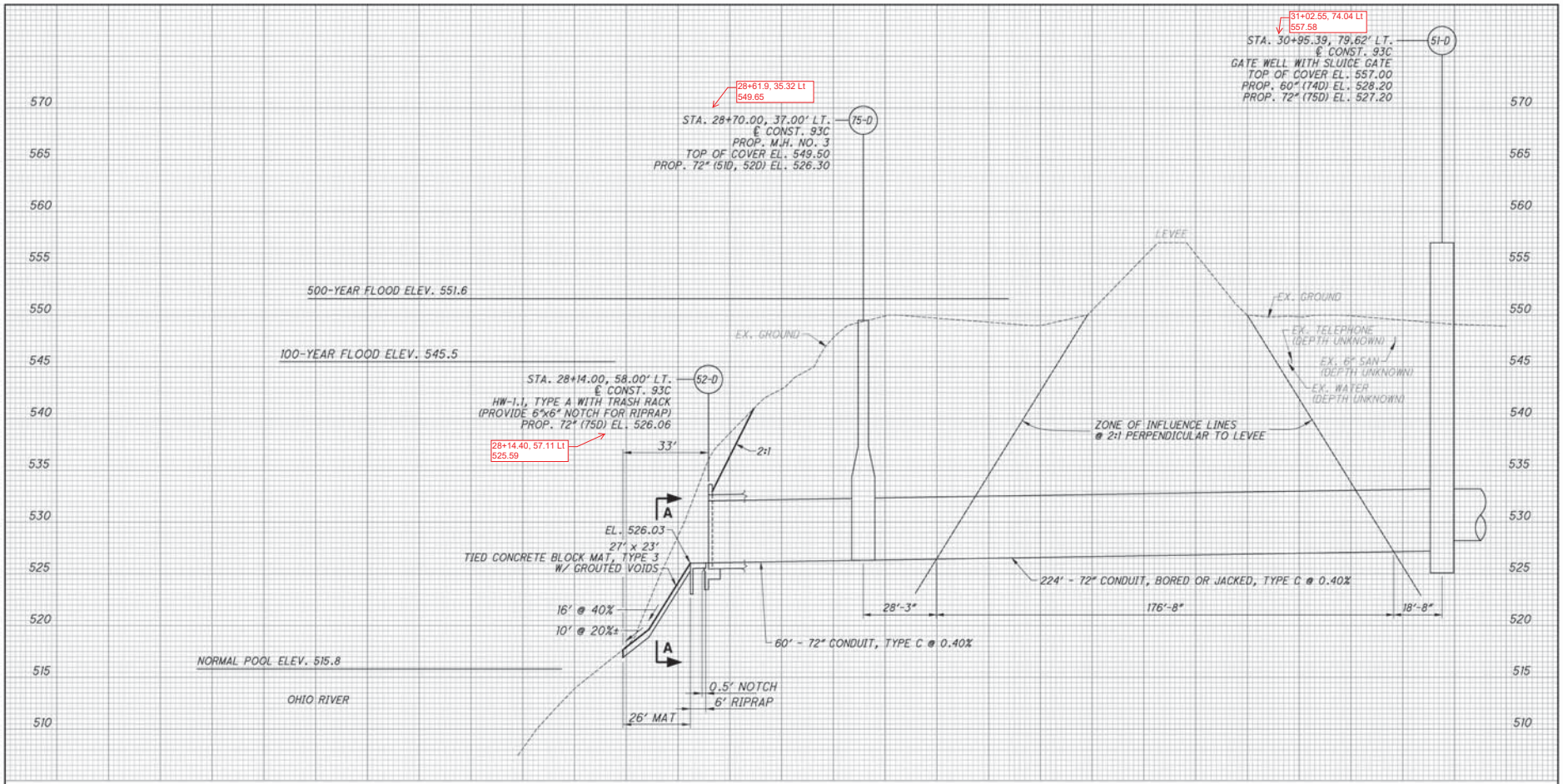

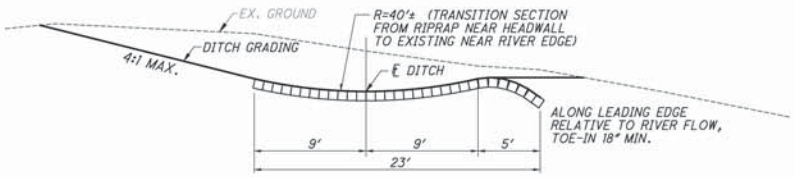

SECTION A-A
SHOWN NEAR CENTER OF MAT

CALCULATED JDP
DRAWN
CHECKED SCC

OUTFALL SEWER PROFILE

LAW-93-0.00

167
788

J:\Project\ODOT\15005112 Ironton Russell\LAW\81595\drainage\sheets\81595D0006.dgn - 4/25/2011 6:55:00 AM - jon_wanstrath

PROP. 12" (72D) EL. 559.09

PROP. 12" (71D) EL. 557.39
PROP. 12" (73D) EL. 551.96

29' - PROP. 12" TYPE B @ 6.00%

STORM SEWER PROFILE
(71-D TO 72-D)

72-D STA. 36+75.00, 27.08' LT.
PROP. C.B. NO. 3A
SEE INSET

℄ CONST. 93C

STA. 36+50 AHD.

STA. 36+77.66, 38.4' RT.
PROP. INLET, SIDE DITCH
TOP OF GRATE EL. 541.30
PROP. 12" (38D) EL. 536.39

37-D

STA. 36+50 BK.

FACE OF WALL

73-D STA. 36+71.05, 89.37' LT.
PROP. M.H. NO. 3
SEE STORM SEWER PROFILE

MASONRY COLLAR

5'

2:1

3.0%

6' -PROP. 12" TYPE C @ 3.0%

47' - PROP. 12" - TYPE F, TYPE C OR 701.01

701.05

41%

LIMITS OF SELECT GRANULAR BACKFILL (AHEAD)

LIMITS OF SELECT GRANULAR BACKFILL (BACK)

STA. 36+75.00,
32.00' RT.
PROP. M.H. NO. 3
SEE STORM
SEWER PROFILE

38-D

7"=PROP. 12" TYPE C @ 1.7%

11%±

5%±

Ex. R/W

3%

2%

541.5

5'

12' -PROP. 12" TYPE C @ 3.0%

3.0%

MASONRY COLLAR

EX. 2ND ST.

EX. 8" SANITARY

EX. 10" WATER

566.10
36+50
545.14

*EMBANKMENT AS PER PLAN

202 - PAVEMENT REMOVED

EMBANKMENT FOUNDATION UNDERCUTTING EXCAVATION (A) AND EMBANKMENT (B)

71-D STA. 36+45.00, 27.08' LT.
PROP. C.B. NO. 3A
SEE INSET

℄ CONST. 93C

FACE OF WALL

Ex. R/W

3%

2%

542.2

LIMITS OF SELECT GRANULAR BACKFILL

BEGIN EARTHWORK
STA. 35+94.45
EMBANKMENT AS PER PLAN

STA. 35+82 BEGIN EMBANKMENT FOUNDATION UNDERCUTTING (EXCAVATION AND EMBANKMENT)

566.10
36+00
543.40

BEGIN EARTHWORK
STA. 35+82 EMBANKMENT FOUNDATION UNDERCUTTING

12" STORM

FOR SEEDING QUANTITIES SEE SHEET 347

213 A 19	213 B 984*				
204 A 19	204 B 928*				
		244 A 38	244 B 979*		
59 A 22	59 B 129*				
22	129*	39 A 5	39 B 27*		
59 A	59 B				
			1006*		
		283 A	283 B		
		43	0		

CROSS SECTIONS - 93C
STA. 36+00.00 TO STA. 36+50.00

LAW-93-0.00

114
788

J:\Project\O\ODOT\15005112 Ironton Russell\LAW\81595\roadway\sheets\81595XS024.dgn - 4/25/2011 6:54:04 AM - jon_wansfrath

CROSS SECTIONS - 93C
STA. 37+00.00 TO STA. 37+50.00

LAW-93-0.00

115
788

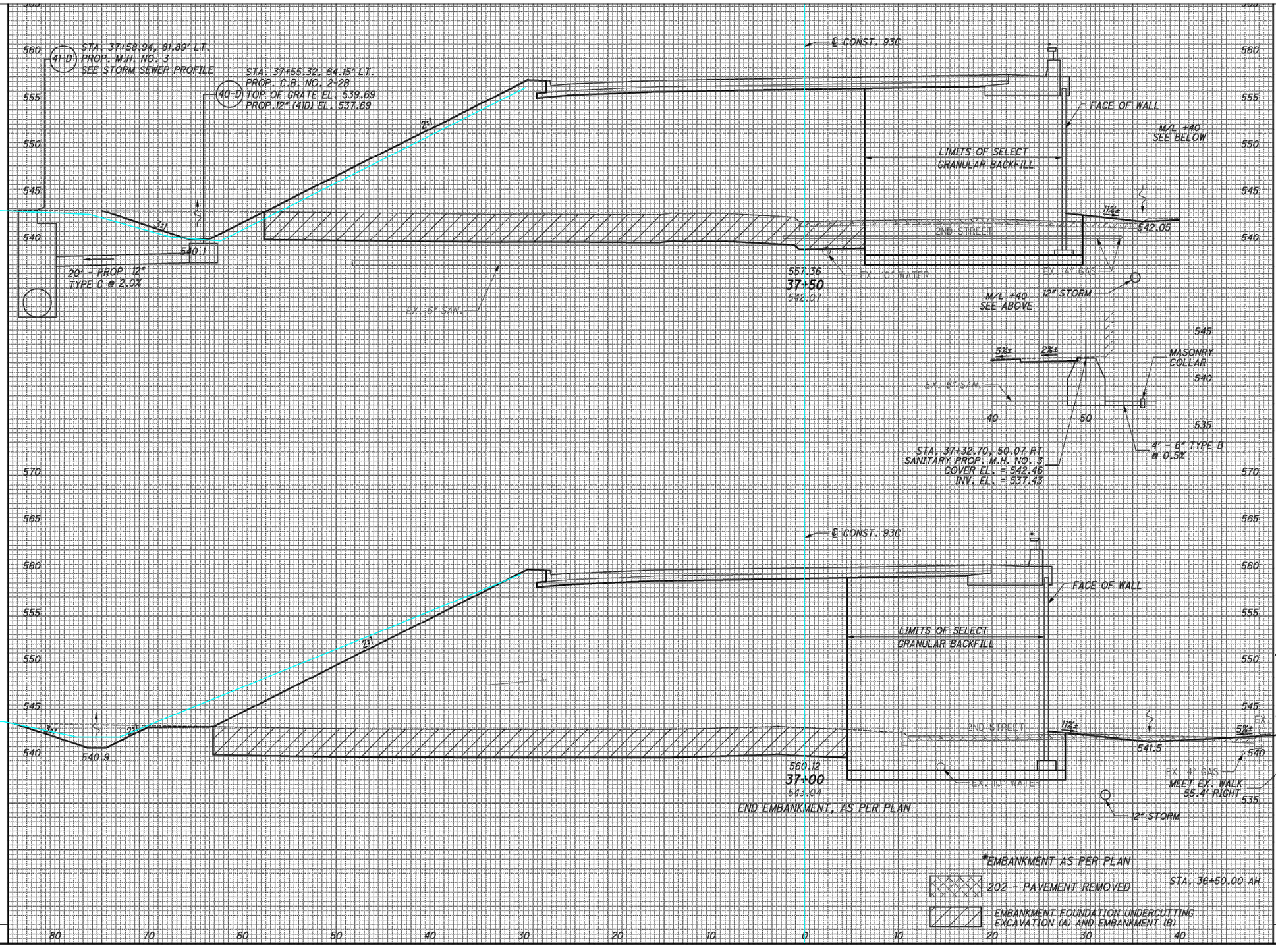

| | | |

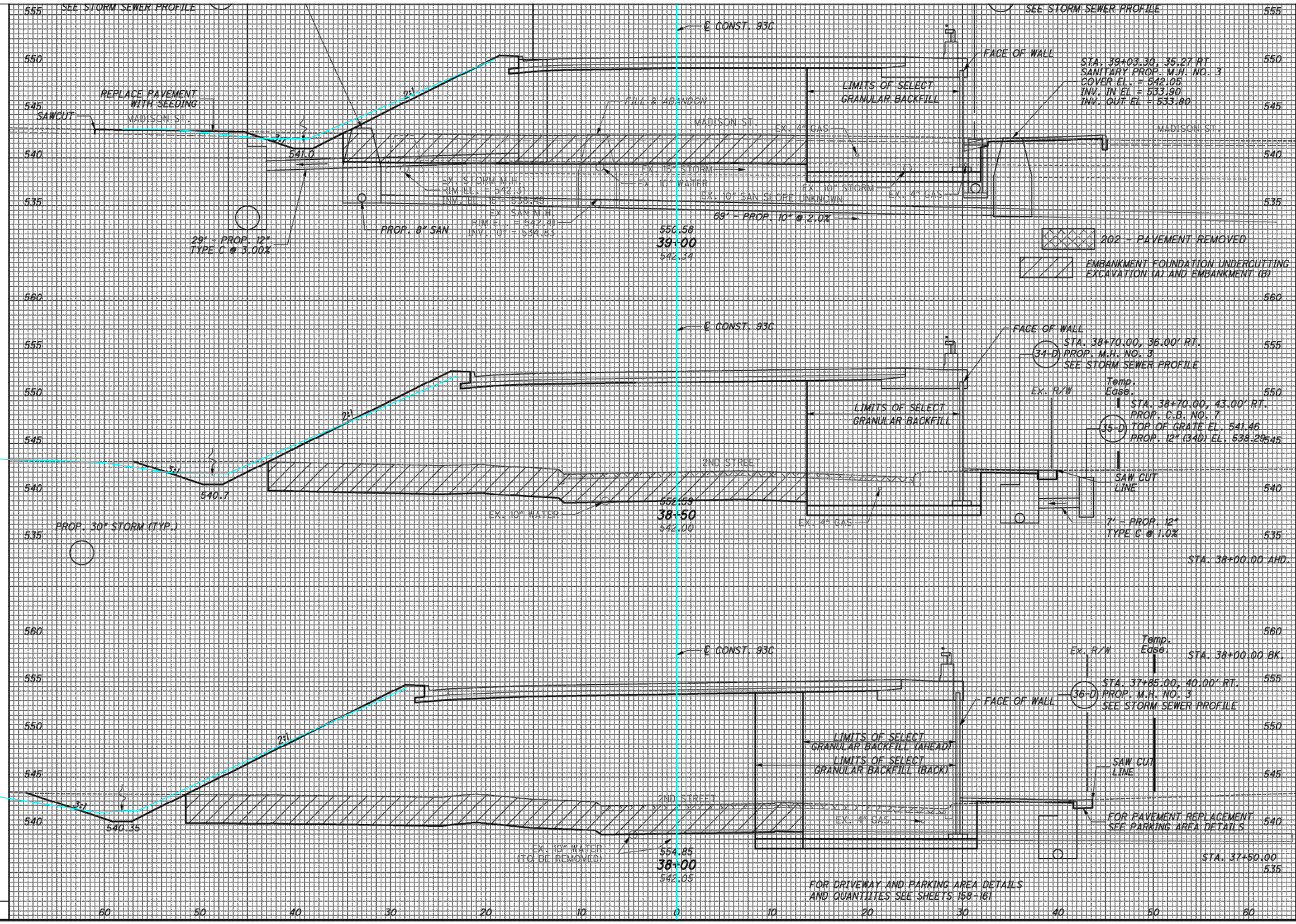

147 A 11	147 B 297	283 A 33	295 B 682	
158 A 24	171 B 439			
		317 A 48	339 B 965	
184 A 28	195 B 603			
172 A 28	180 B 543			
		335 A 66	346 B 1142	
189 A 43	193 B 690			
		935 A 147	980 B 2789	

CROSS SECTIONS - 93C
STA. 38+00.00 TO STA. 39+00.00

LAW-93-0.00

116
788

J:\Project\O\ODOT\15005112 Ironton Russell\LAW\81595\roadway\sheets\81585XS026.dgn - 6/20/2011 10:41:40 AM - jon_wanstrath

J:\Project\O\ODOT\15005112 Ironton Russell\LAW\81595\roadway\sheets\81595XS028.dgn - 4/25/2011 6:54:08 AM - jon_wanstrath

FOR SEEDING QUANTITIES SEE SHEET 347

CROSS SECTIONS - 93C
STA. 40+50.00 TO STA. 41+00.00

93 A	110 B	217 A	251 B		
15	15	24	77		
141 A	161 B				
10	68				
		68 A	78 B		
		5	33		
141 A	161 B				
10	68				
134 A	134 B				
9	108	183 A	183 B		
134 A	134 B	13	148		
9	108				
		285 A	329 B		
		183 A	183 B		
		42	258		

LAW-93-0.00

118
788

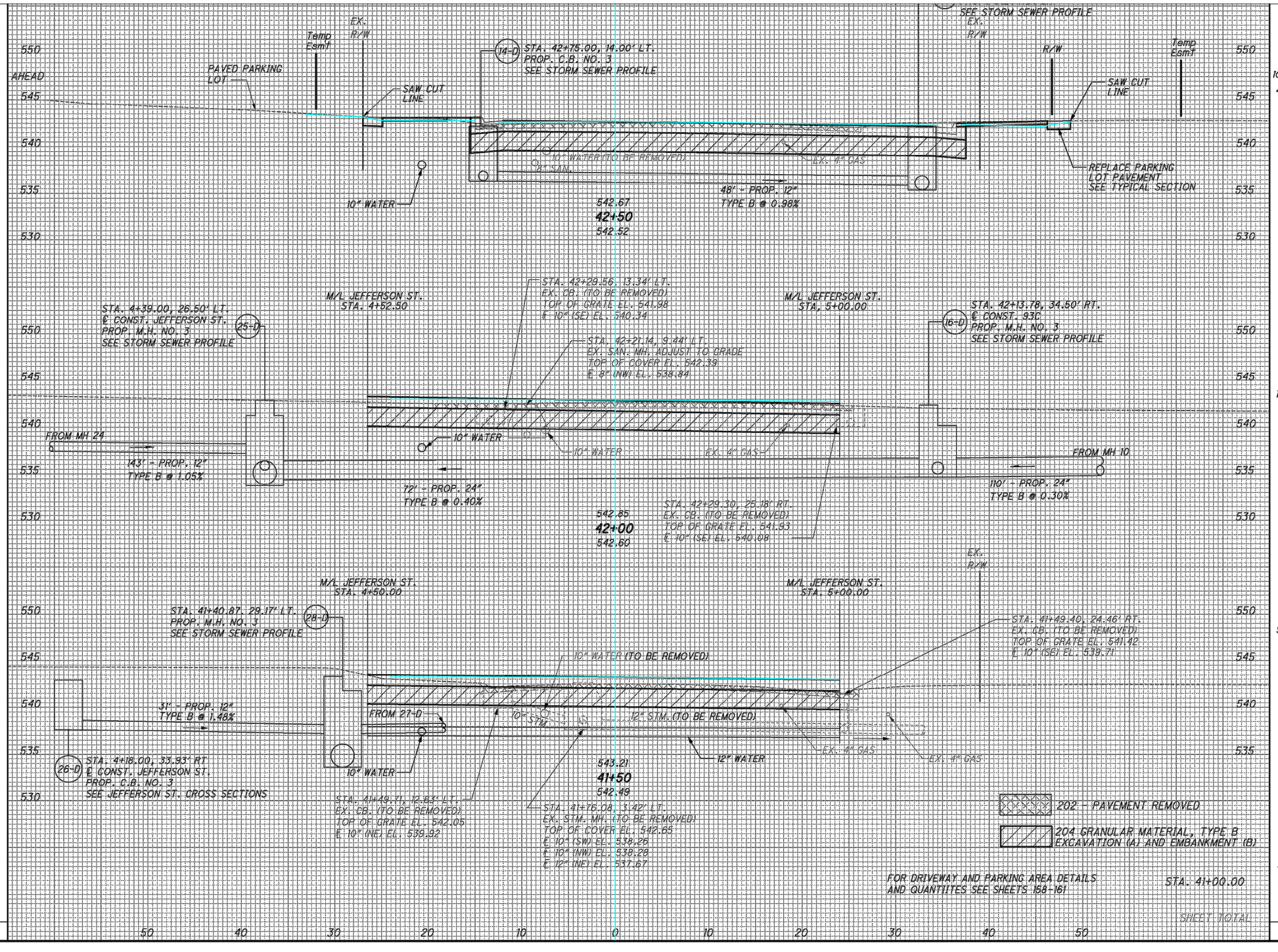

106A 45	106B 2		
101A 20	101B 0	192A 64	192B 2
92A 8	101B 0	179A 26	188B 0
93A 15	110B 5	170A 22	196B 14
		541A 112	576B 16

FOR SEEDING QUANTITIES SEE SHEET 347

J:\Project\O\ODOT\15005112 Ironton Russell\LAW\81595\roadway\sheets\81595XS029.dgn - 4/25/2011 6:54:09 AM - jon_wanstrath

CROSS SECTIONS - 93C
STA. 41+50.00 TO STA. 42+50.00

LAW-93-0.00

J:\Project\O\ODOT\15005112 Ironton Russell\LAW\81595\roadway\sheets\81595XS030.dgn - 4/25/2011 6:54:10 AM - jon_wanstrath

FOR SEEDING QUANTITIES SEE SHEET 347

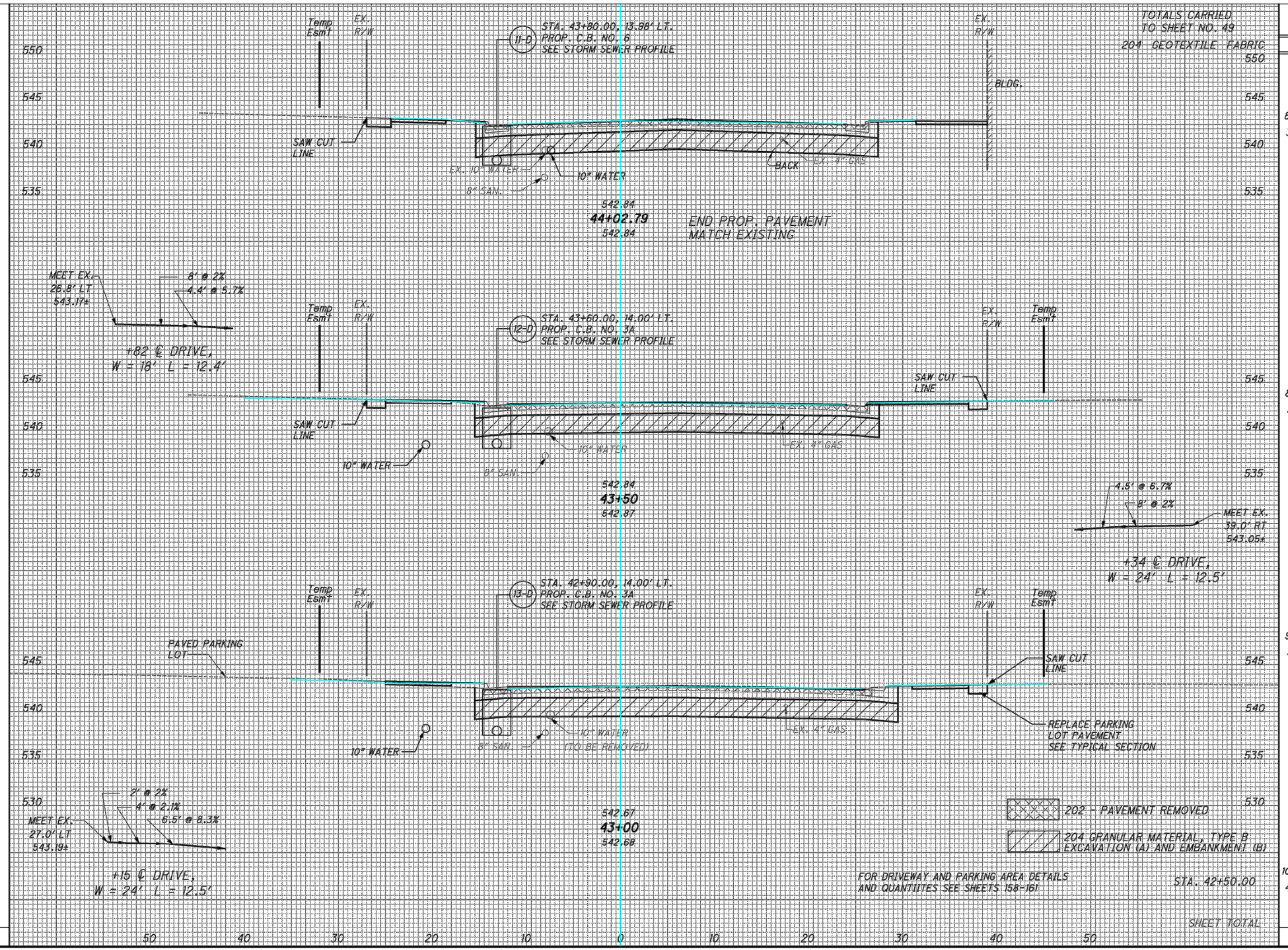

TOTALS CARRIED TO SHEET NO. 49

		4231	4370
		1392	7193
204 GEOTEXTILE FABRIC		1971	SY
86A 35	86B 1		
		168A 70	168B 3
86A 36	86B 2		
		163A 66	163B 4
90A 35	90B 2		
		182A 81	182B 4
106A 49	106B 2		
		513A 217	513B 11

CROSS SECTIONS - 93C
STA. 43+00.00 TO STA. 44+02.80

LAW-93-0.00

J:\Project\O\ODOT\15005112 Ironton Russell\LAW\81595\roadway\sheets\81595XS037.dgn - 4/25/2011 6:54:16 AM - jon_wanstrath

FOR SEEDING QUANTITIES SEE SHEET 347

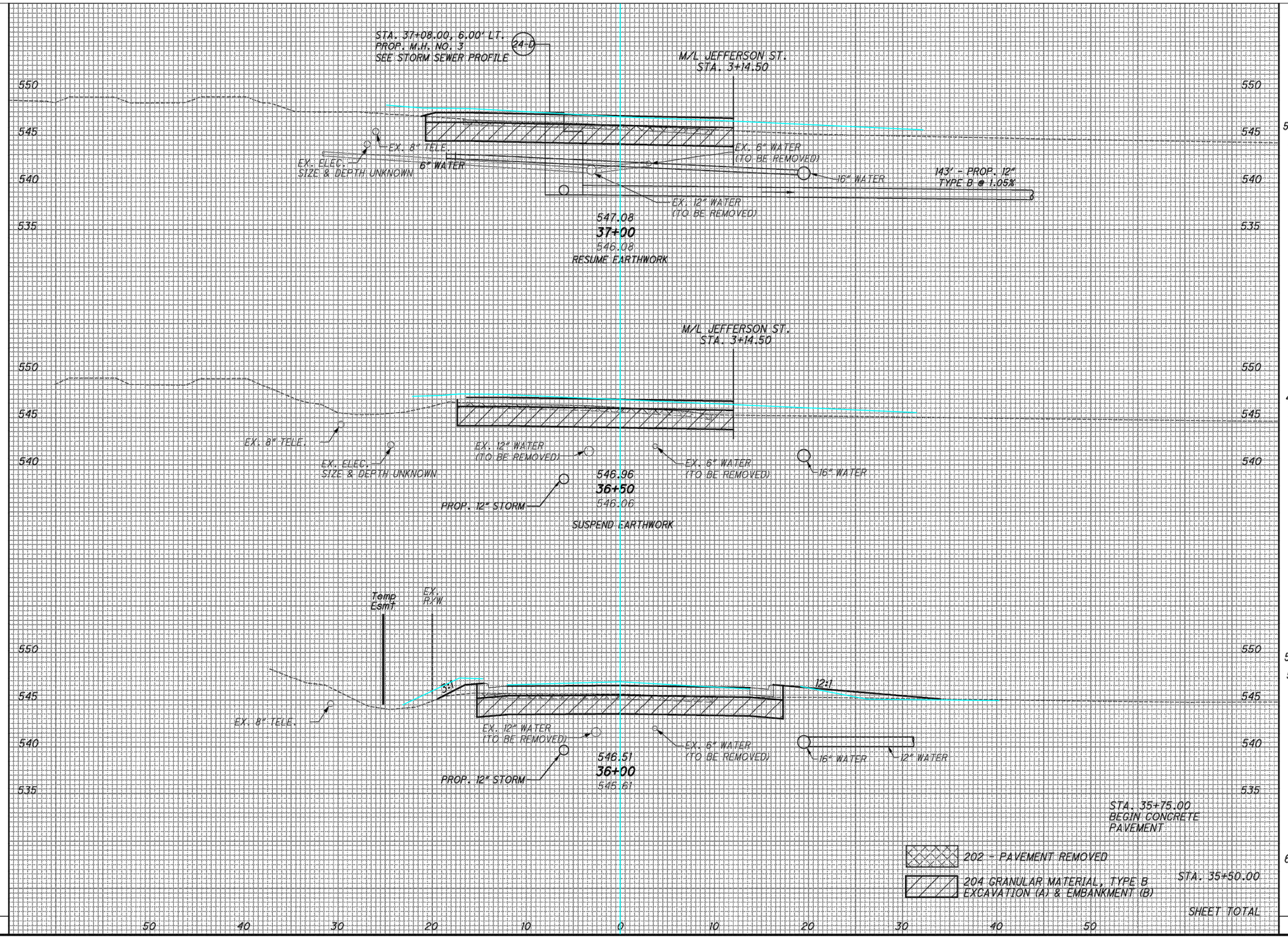

53^{A} 5	66^{B} 1	0^{A} 0	0^{B} 0	
48^{A} 5	59^{B} 1			
		96^{A} 10	115^{B} 15	
55^{A} 5	65^{B} 15			
		107^{A} 13	116^{B} 20	
60^{A} 9	60^{B} 6			
		203^{A} 23	231^{B} 35	

CROSS SECTIONS - CAMPBELL AVE.
STA. 36+00 TO STA. 37+00

LAW-93-0.00

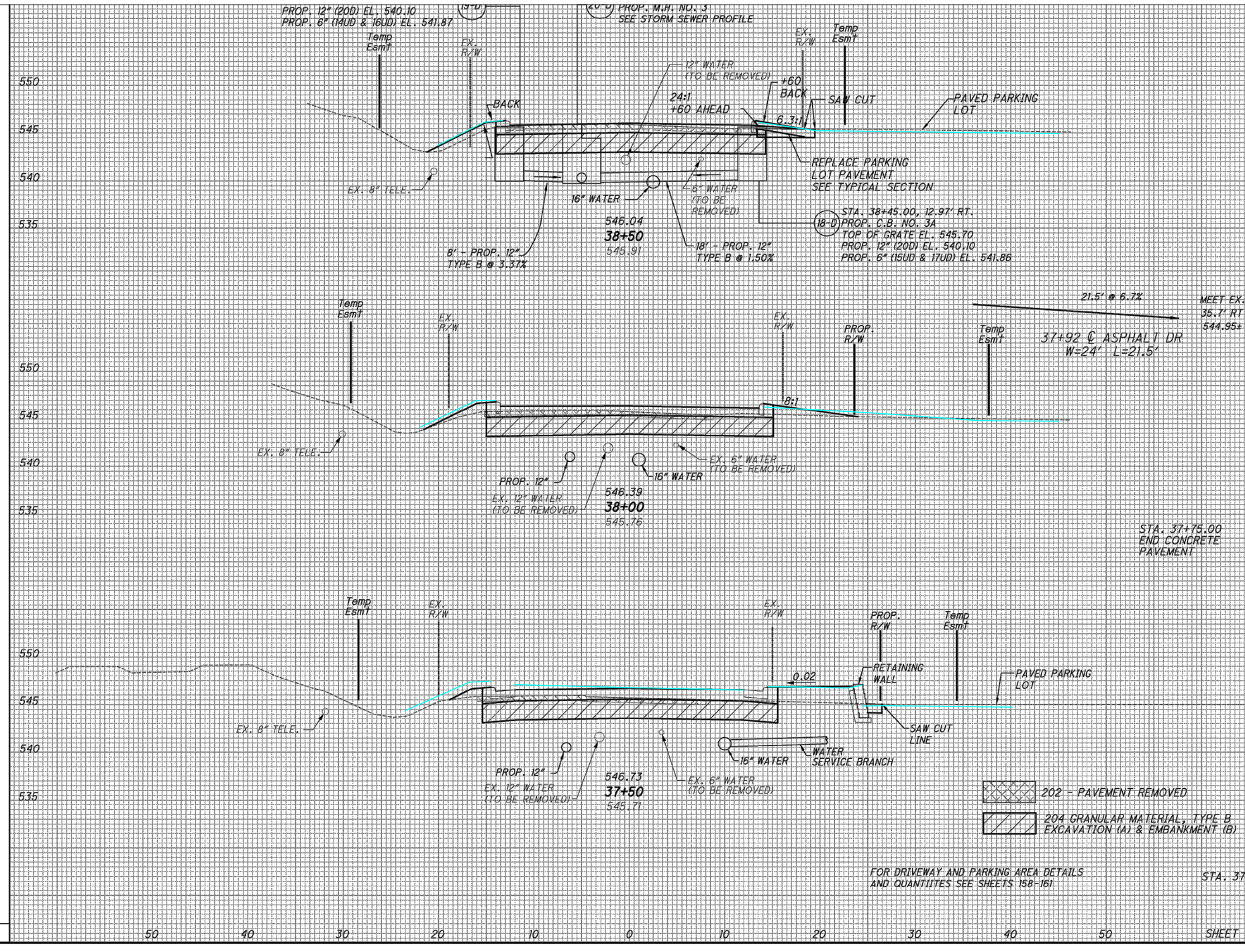

FOR SEEDING QUANTITIES SEE SHEET 347

57 A	57 B					
11	7					
		107 A	110 B			
		13	17			
58 A	61 B					
3	11					
		107 A	114 B			
		5	27			
57 A	62 B					
2	18					
		102 A	119 B			
		7	18			
53 A	66 B					
5	1					
		316 A	343 B			
		25	62			

SHEET TOTAL

CROSS SECTIONS - CAMPBELL AVE. STA. 37+50 TO STA. 38+50

LAW-93-0.00

128
788

J:\Project\0\ODOT\15005112 Ironton Russell\LAW\81595\roadway\sheets\81595XS038.dgn - 4/25/2011 6:54:17 AM - jon_wanstrath

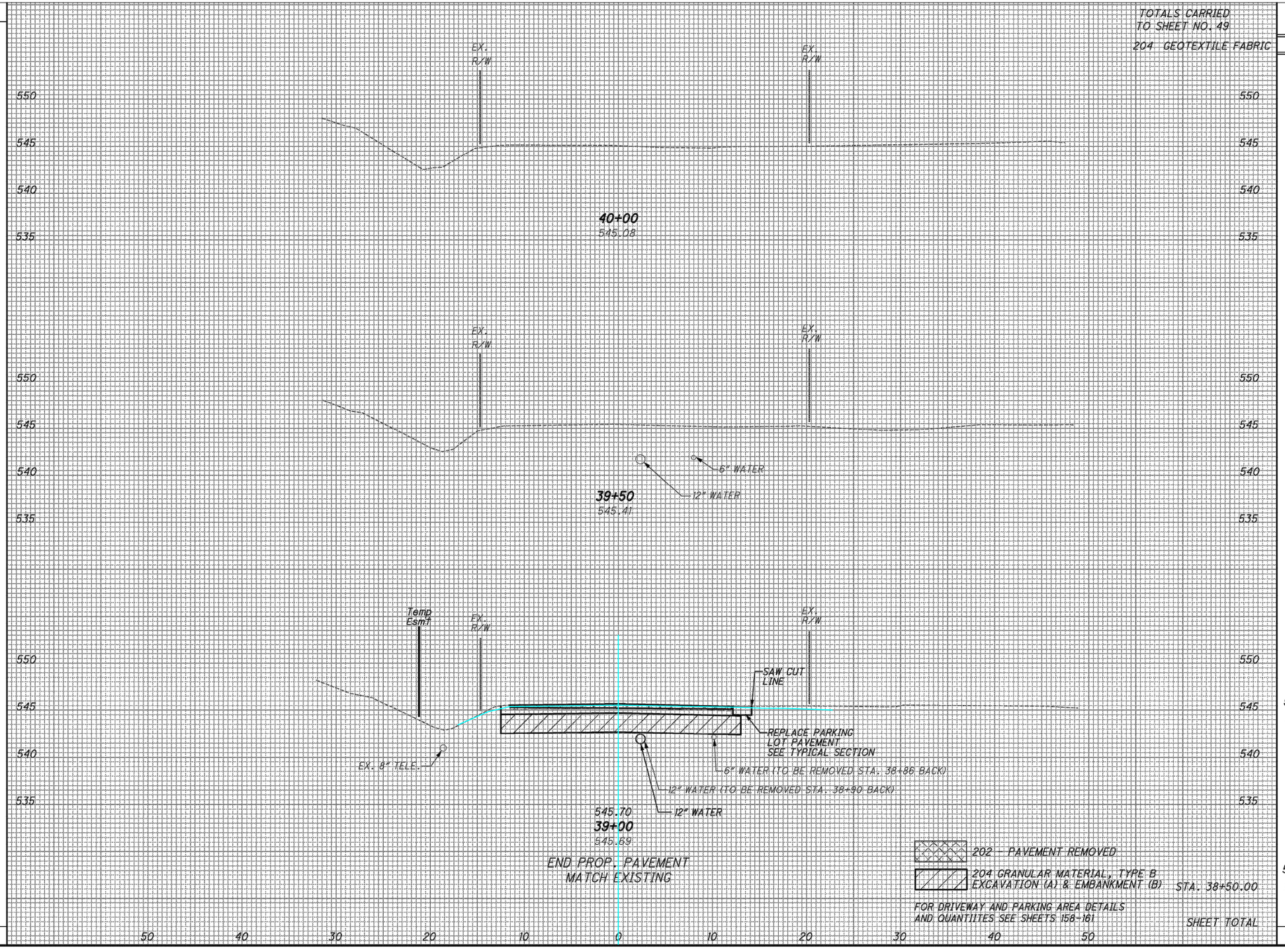

FOR SEEDING QUANTITIES SEE SHEET 347

		827A	882B
		122	125
		1328	SY
51A	51B		
14	2		
		100A	100B
		24	9
57A	57B		
11	7		
		100A	100B
		24	9

CROSS SECTIONS - CAMPBELL AVE.
STA. 39+00 TO STA. 40+00

LAW-93-0.00

J:\Project\O\ODOT\15005112 Ironton Russell\LAW\81595\roadway\sheets\81595XS039.dgn - 4/25/2011 6:54:18 AM - jon_wanstrath

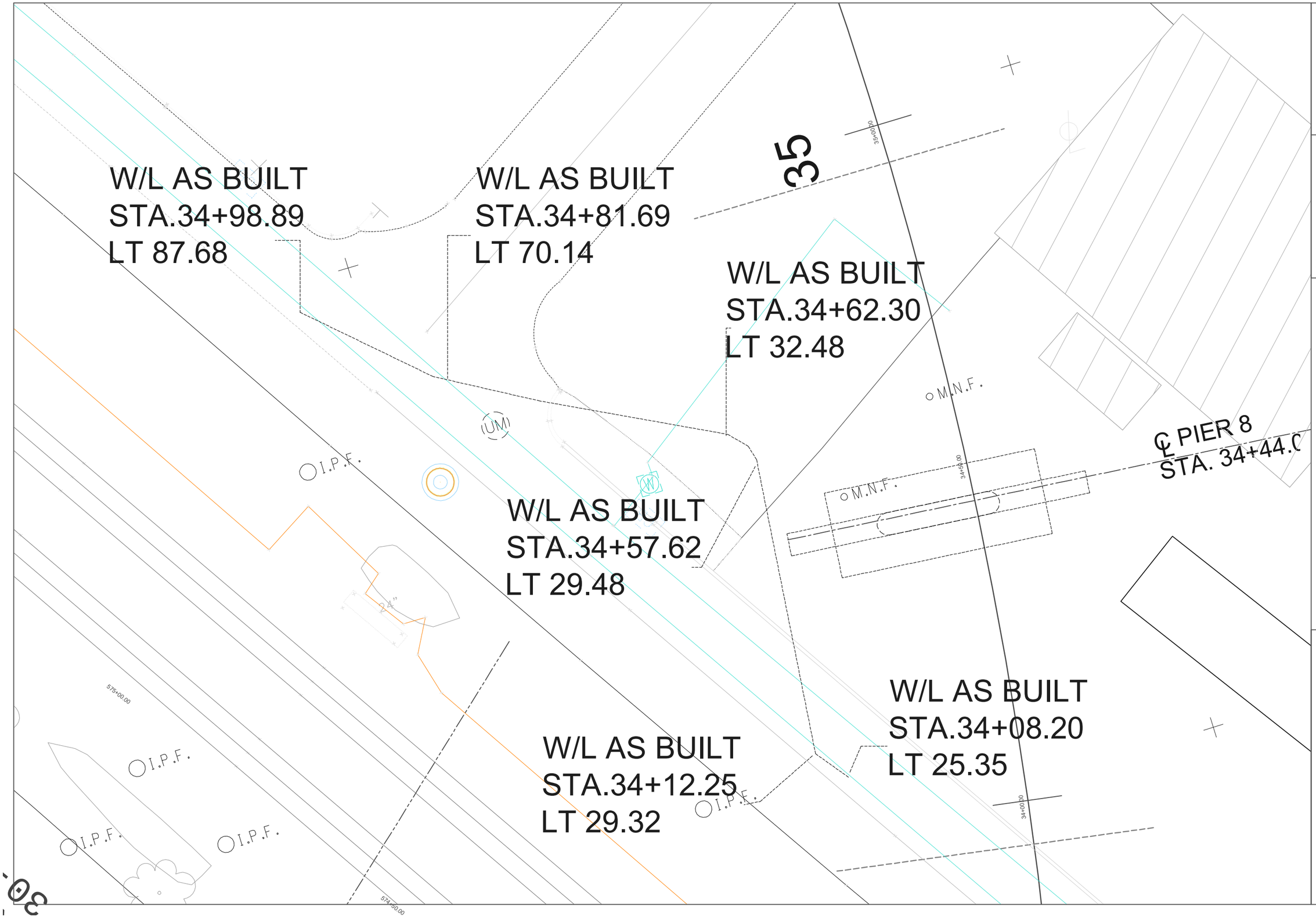

Notes:

LAW-93C-0000
IRONTON RUSSELL BRIDGE
OVER OHIO RIVER

AS BUILT WATER LINE
AT PIER 8

Drawn By: MS

Date: 5/10/2012

Scale: 1"=30'

You created this PDF from an application that is not licensed to print to novaPDF printer (http://www.novapdf.com)

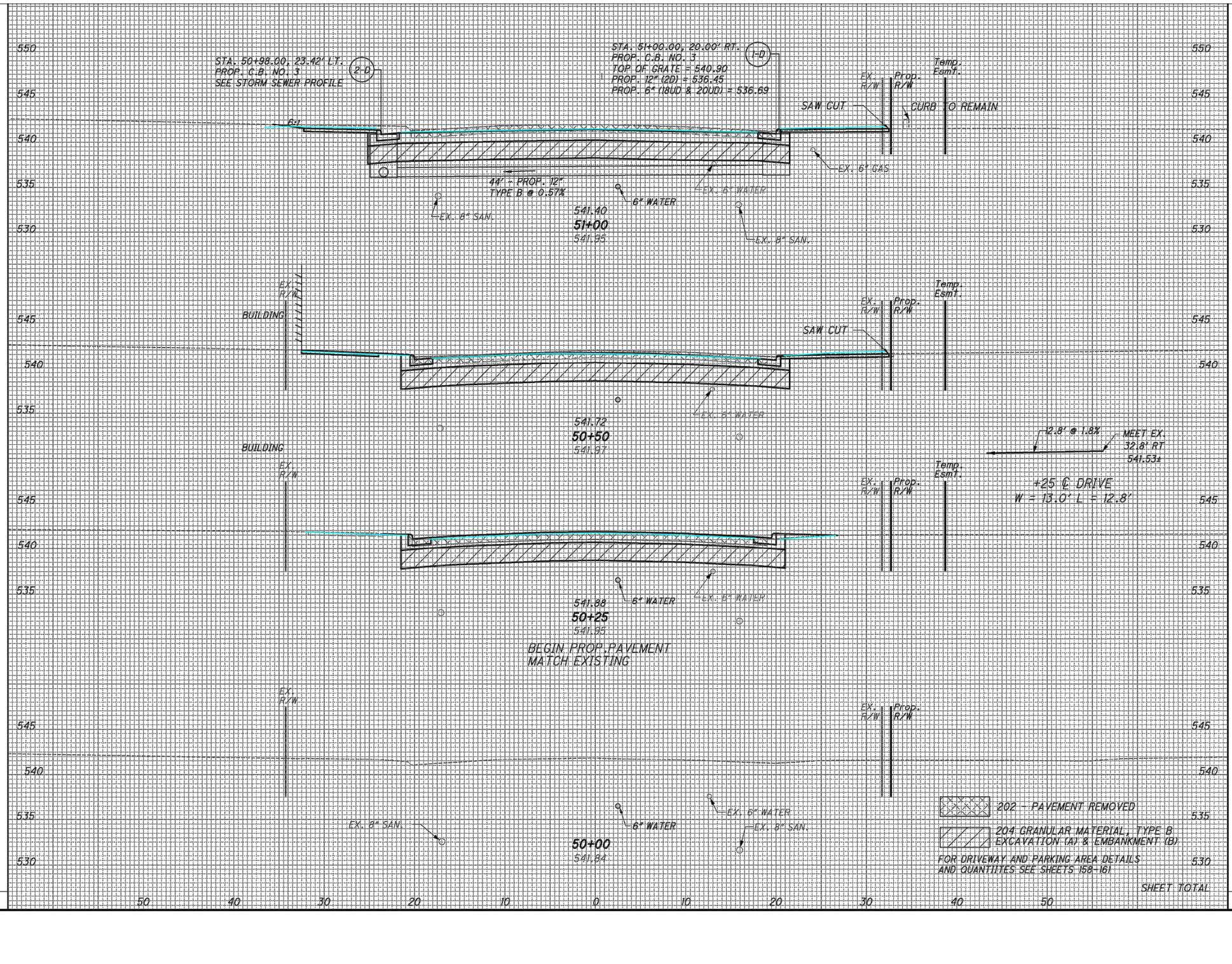

94^A 50	94^B 3		
		168^A 72	168^B 7
87^A 27	87^B 4		
		81^A 21	81^B 4
86^A 17	86^B 3		
		249^A 93	249^B 11

FOR SEEDING QUANTITIES SEE SHEET 347

CROSS SECTIONS - 3RD ST.
STA. 50+00 TO STA. 51+00

LAW-93-0.00

J:\Project\O\ODOT\15005112 Ironton Russell\LAW\81595\roadway\sheets\81595XS041.dgn - 4/25/2011 6:54:20 AM - jon_wanstrath

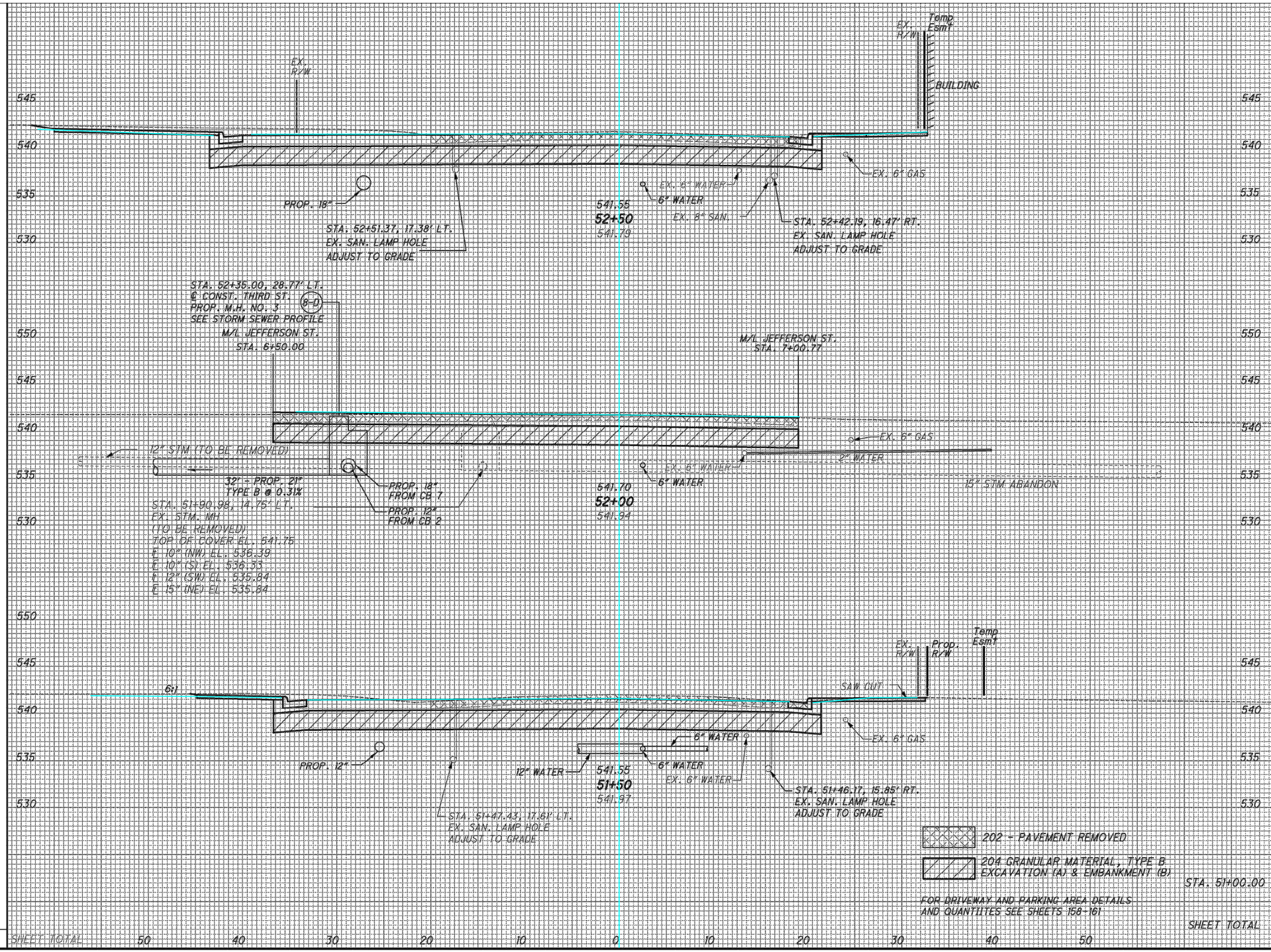

130A 71	130B 3		
		225A 88	225B 3
112A 24	112B 0		
		213A 72	213B 3
117A 53	117B 3		
		196A 96	196B 6
94A 50	94B 3		
		634A 256	634B 12

FOR SEEDING QUANTITIES SEE SHEET 347

CROSS SECTIONS - 3RD ST.
STA. 51+50 TO STA. 52+50

LAW-93-0.00

J:\Project\O\ODOT\15005112 Ironton Russell\LAW\81595\roadway\sheets\81595XS042.dgn - 4/25/2011 6:54:21 AM - jon_wanstrath

J:\Project\O\ODOT\15005112 Ironton Russell\LAW\81595\roadway\sheets\81595XS043.dgn - 4/25/2011 6:54:22 AM - jon_wanstrath

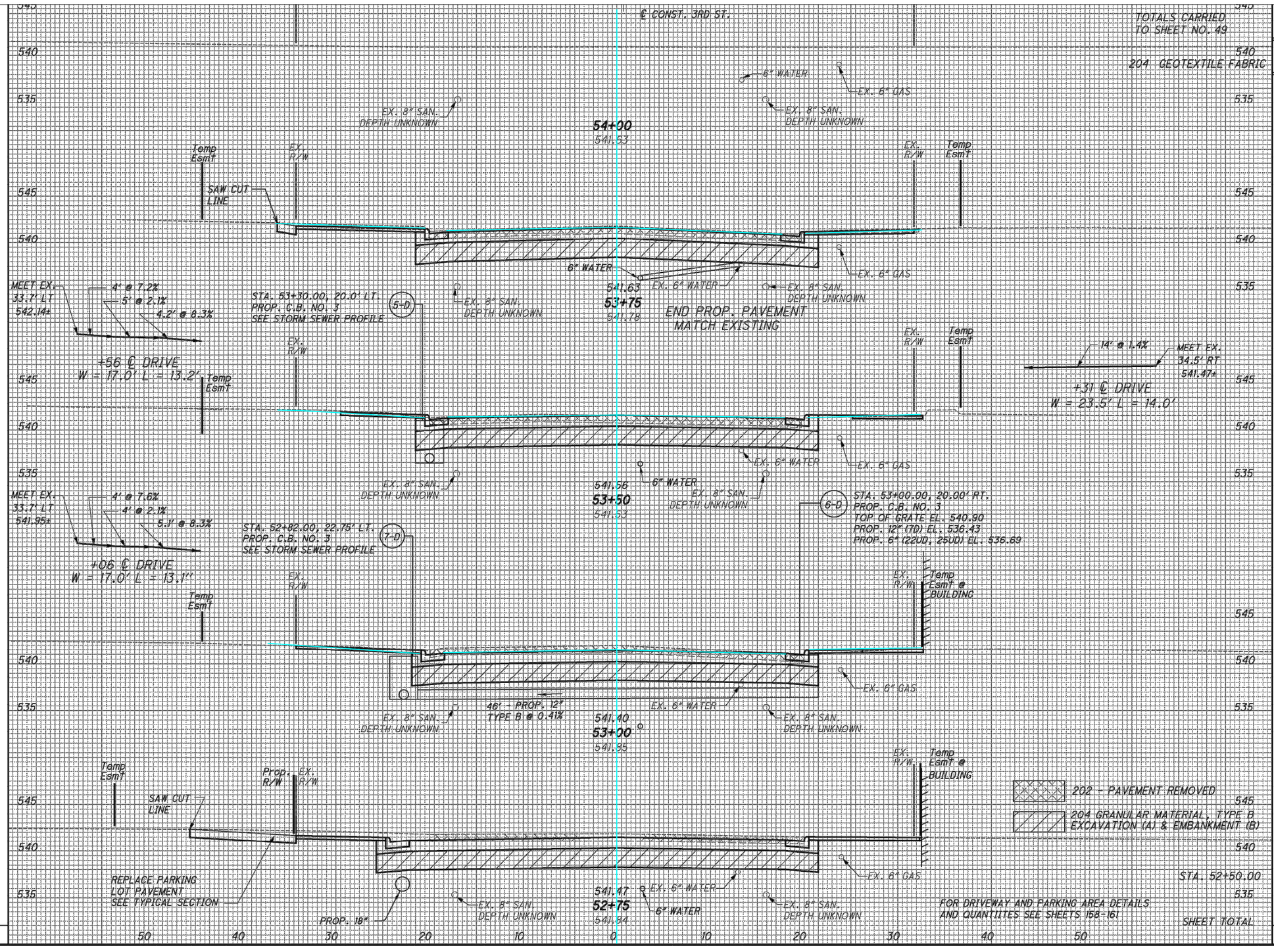

		1314[A] 530	1314[B] 40
TOTALS CARRIED TO SHEET NO. 49			
204 GEOTEXTILE FABRIC		1829	SY
	86[A] 28	86[B] 3	
		80[A] 24	80[B] 4
	86[A] 22	86[B] 4	
		161[A] 56	161[B] 7
	87[A] 38	87[B] 3	
		85[A] 43	85[B] 3
	95[A] 53	95[B] 3	
		105[A] 58	105[B] 3
	130[A] 71	130[B] 3	
		431[A] 181	431[B] 17

CROSS SECTIONS - 3RD ST.
STA. 52+75 TO STA. 54+00

LAW-93-0.00

133
788

J:\Project\0\ODOT\15005112 Ironton Russell\LAW\81595\roadway\sheets\81595XS044.dgn - 4/25/2011 6:54:23 AM - jon_wanstrath

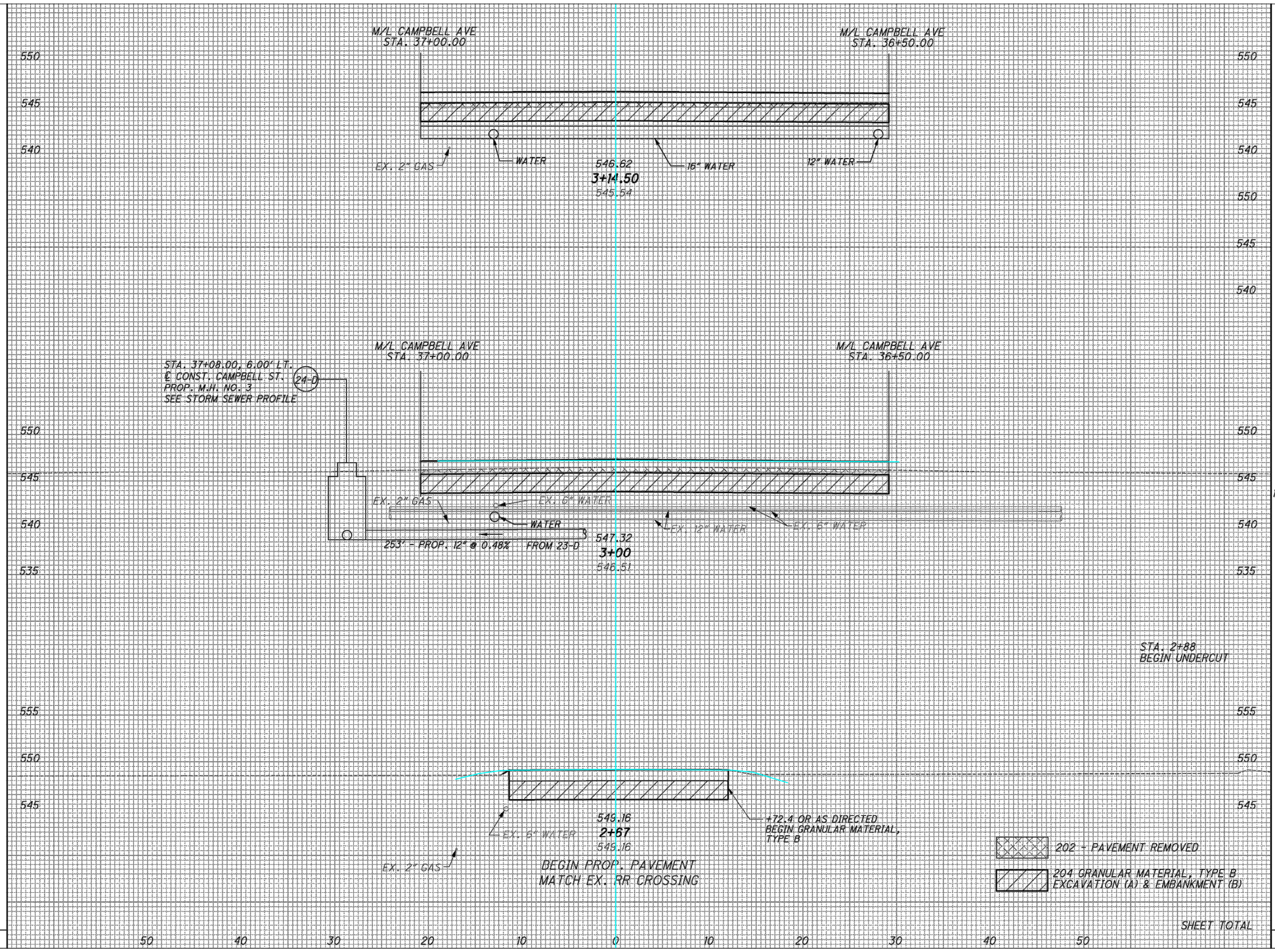

75^{A} 0	100^{B} 0		
		47^{A} 2	54^{B} 0
100^{A} 5	100^{B} 0		
		45^{A} 8	45^{B} 0
100^{A} 28	100^{B} 0		
		92^{A} 10	99^{B} 0

FOR SEEDING QUANTITIES SEE SHEET 347

CROSS SECTIONS - JEFFERSON ST.
STA. 3+50 TO STA. 4+50

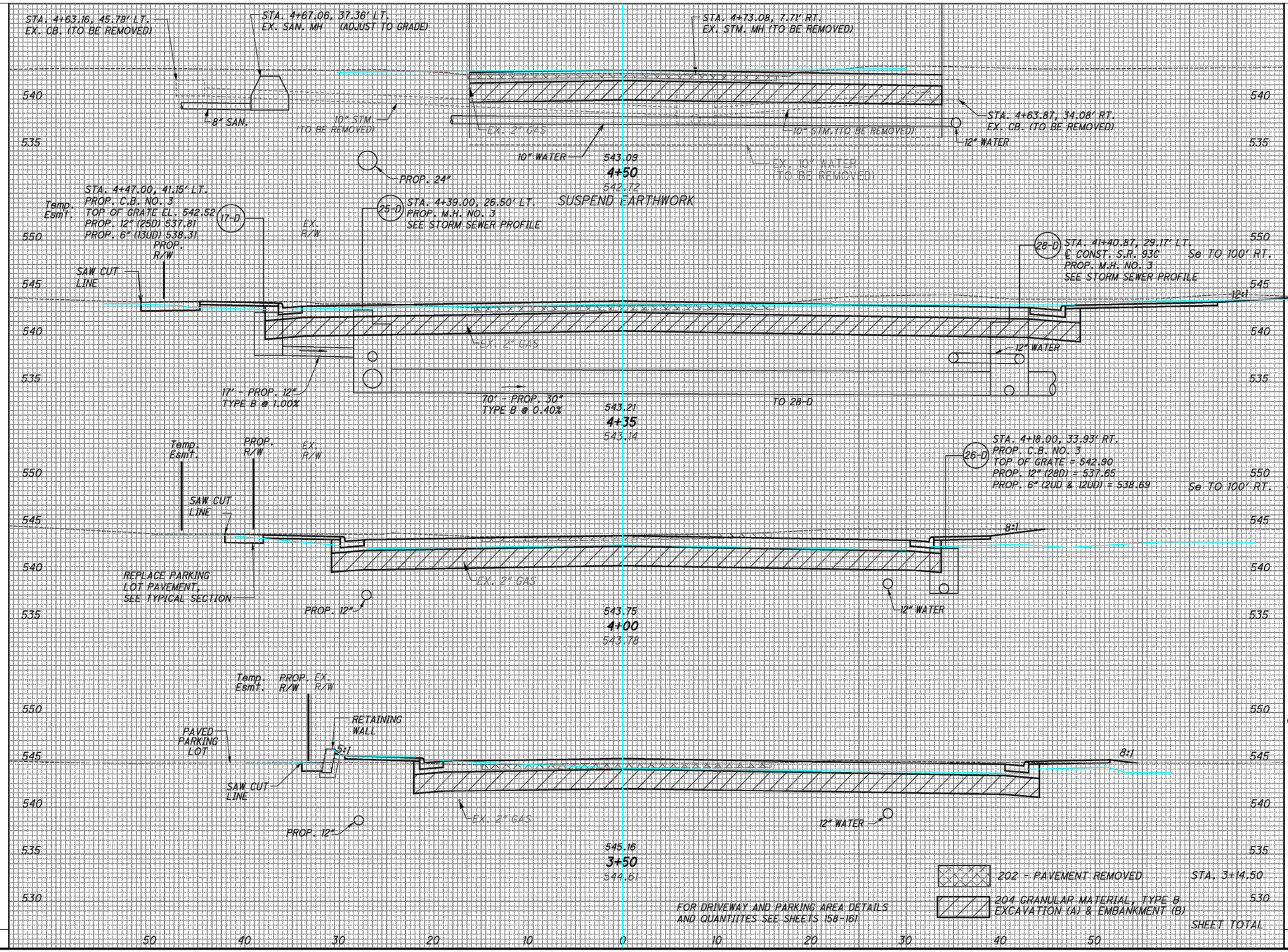

100A	100B			
40A	0B			
		76A	76B	
		46	1	
173A	173B			
125	3			
		197A	197B	
		149	4	
130A	130B			
104	3			
		244A	244B	
		145	9	
133A	133B			
52	6			
		137A	154B	
		35	4	
75A	100B			
0	0			
		654A	671B	
		375	18	

LAW-93-0.00

135
788

FOR SEEDING QUANTITIES SEE SHEET 347

J:\Project\ODOT\15005112 Ironton Russell\LAW\81595\roadway\sheets\81595XS045.dgn - 4/25/2011 6:54:24 AM - jon_wanstrath

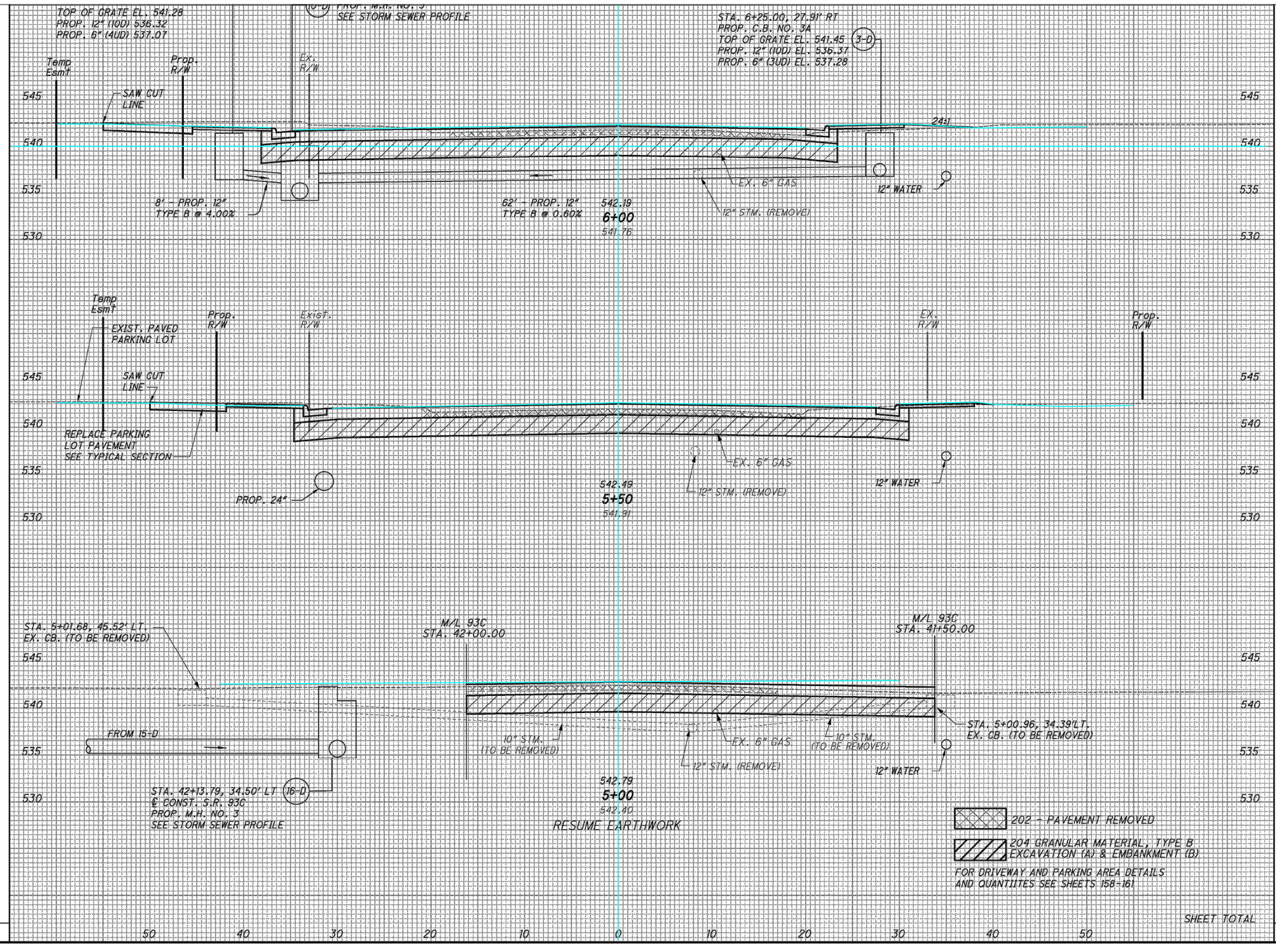

123A	123B	237A	237B
53	7	89	10
132A	132B		
43	3		
100A	100B	215A	215B
22	0	61	3
		452A	452B
		150	13

FOR SEEDING QUANTITIES SEE SHEET 347

SHEET TOTAL

CROSS SECTIONS - JEFFERSON ST. STA. 5+00 TO STA. 6+00

LAW-93-0.00

136
788

J:\Project\O\ODOT\15005112 Ironton Russell\LAW\81595\roadway\sheets\81595XS046.dgn - 4/25/2011 6:54:25 AM - jon_wanstrath

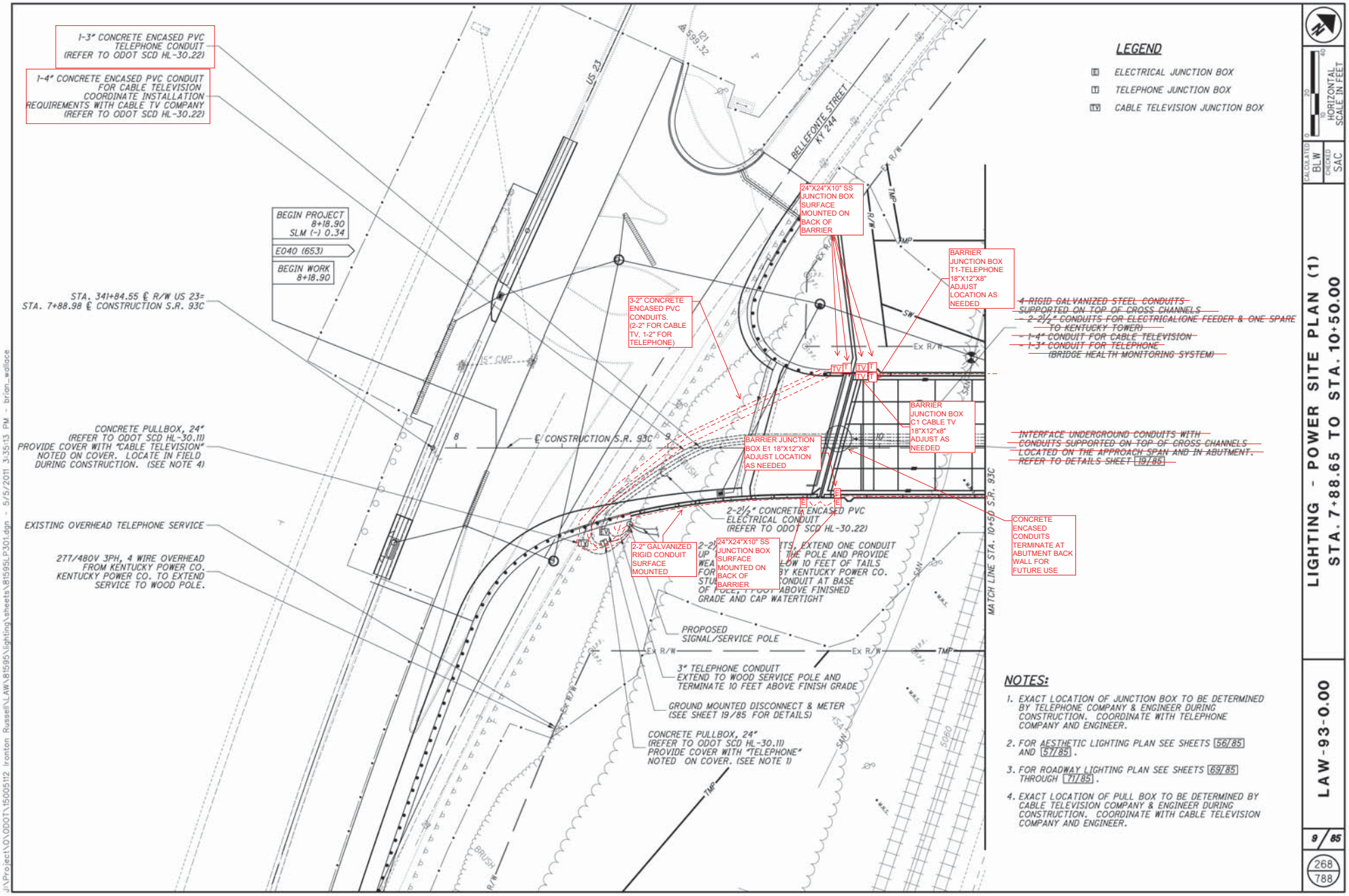

J:\Project\OV\ODOT\15005112 Ironton Russell\LAW\81595\lighting\sheets\81595LP301.dgn - 5/5/2011 3:35:13 PM - brian_wallace

HORIZONTAL SCALE IN FEET

CALCULATED BLW
CHECKED SAC

LIGHTING - POWER SITE PLAN (1)
STA. 7+88.65 TO STA. 10+50.00

LAW-93-0.00

9 / 85

268
788

NOTES:

1. FOR AESTHETIC LIGHTING PLAN SEE SHEETS 56/85 AND 57/85.
2. FOR ROADWAY LIGHTING PLAN SEE SHEETS 69/85 THROUGH 71/85.
3. FOR BRIDGE HEALTH MONITORING SYSTEM JUNCTION BOX PLACEMENT DETAILS AT PIER 2 SEE SHEET 46/85.
4. PROVIDE SUFFICIENT SLACK CABLE IN JUNCTION BOX TO ALLOW FOR 24" OF EXPANSION AND CONTRACTION AT ABUTMENT.
5. PROVIDE A 2" WATERTIGHT FLEXIBLE METAL CONDUIT FROM A MINIMUM OF 6" EMBEDMENT IN CONCRETE, WHERE THE GAGE CABLES COME TOGETHER AND CONTINUE TO THE HEALTH MONITORING SYSTEM JUNCTION BOXES FOR TERMINATION.

LEGEND

- E — ELECTRICAL JUNCTION BOX
- T — TELEPHONE JUNCTION BOX
- TV — CABLE TELEVISION JUNCTION BOX
- HM — BRIDGE HEALTH MONITORING SYSTEM JUNCTION BOX

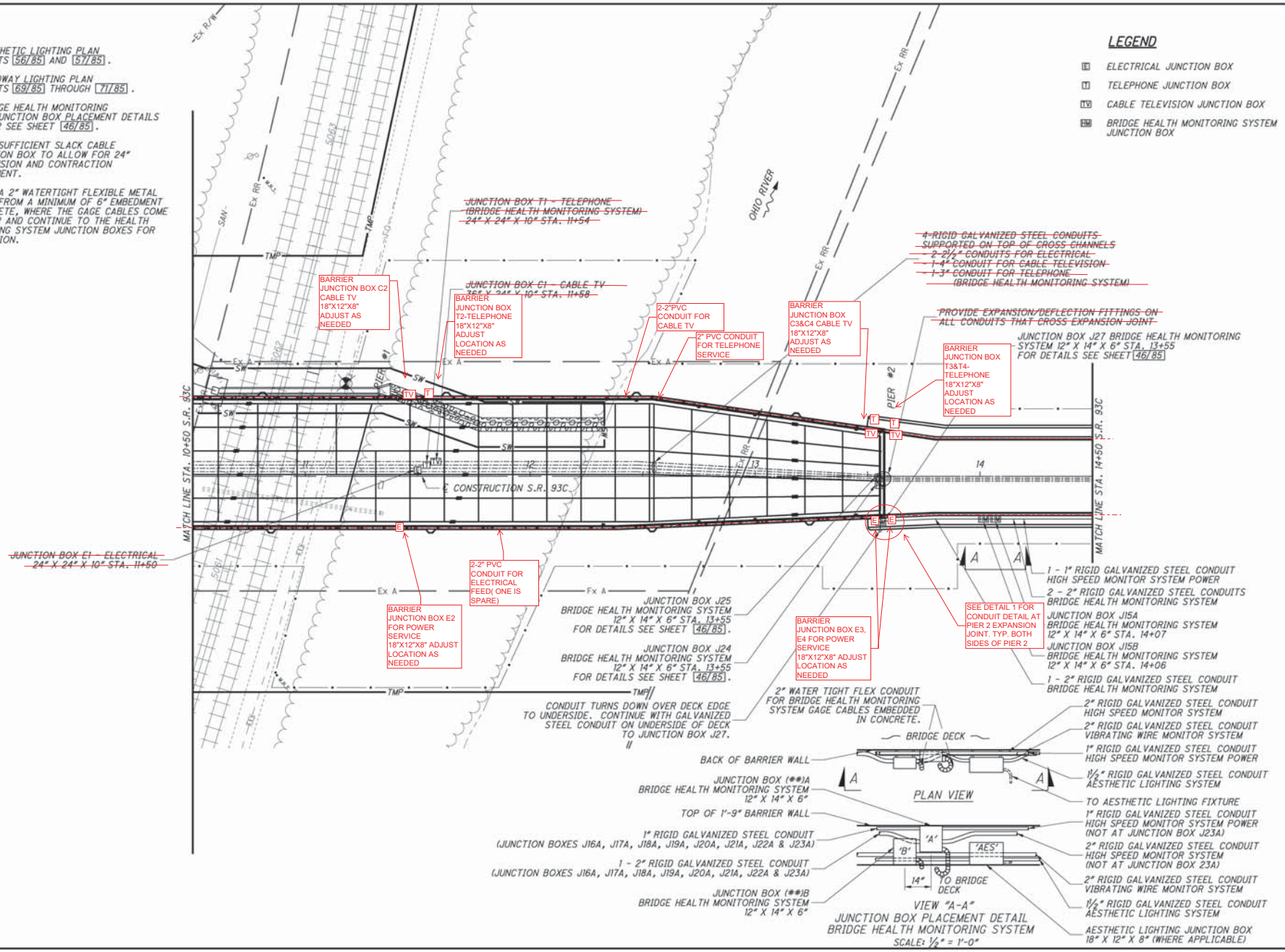

HORIZONTAL SCALE IN FEET
0 10 20 40

CALCULATED BLW
CHECKED SAC

LIGHTING - POWER SITE PLAN (2)
STA. 10+50.00 TO STA. 14+50.00

LAW-93-0.00

10 / 85

269 / 788

J:\Project\ODOT\15005112 Ironton Russell\LAW-81595\lighting\sheets\81595LP302.dgn - 5/5/2011 3:35:52 PM - brian_wallace

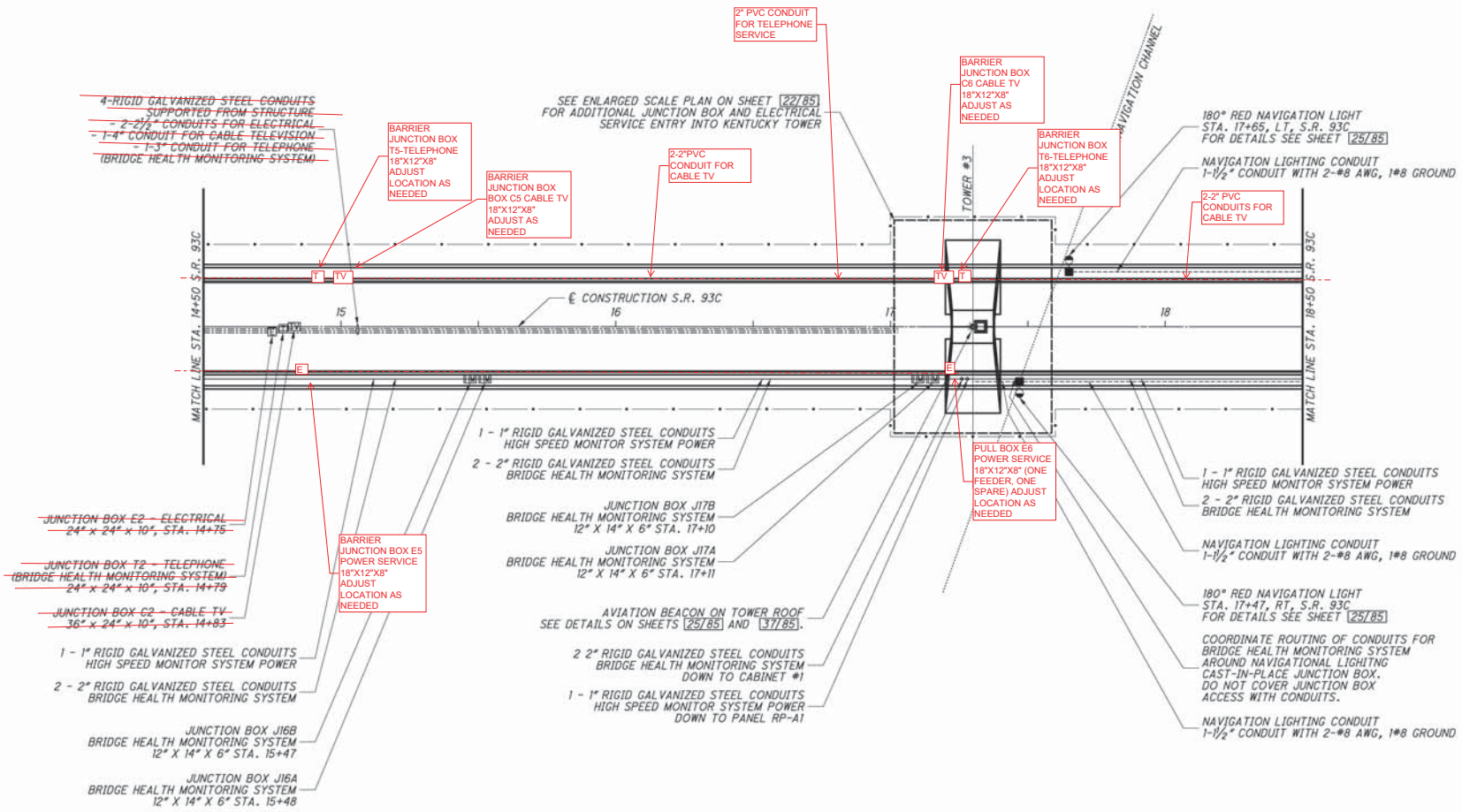

LEGEND

- E — ELECTRICAL JUNCTION BOX
- T — TELEPHONE JUNCTION BOX
- TV — CABLE TELEVISION JUNCTION BOX
- BHM — BRIDGE HEALTH MONITORING SYSTEM JUNCTION BOX
- 180° RED NAVIGATION LIGHT
- 360 GREEN NAVIGATION LIGHT
- AVIATION BEACON

NOTES:

1. FOR AESTHETIC LIGHTING PLAN SEE SHEETS 56/85 AND 57/85.
2. FOR ROADWAY LIGHTING PLAN SEE SHEETS 69/85 THROUGH 71/85.
3. FOR TOWER INSPECTION LIGHTING/RECEPTACLE PLAN SEE SHEET 28/85 AND 29/85.
4. FOR BRIDGE HEALTH MONITORING SYSTEM JUNCTION BOX PLACEMENT DETAIL SEE SHEET 10/85.
5. PROVIDE A 2" WATERTIGHT FLEXIBLE METAL CONDUIT FROM A MINIMUM OF 6" EMBEDMENT IN CONCRETE, WHERE THE GAGE CABLES COME TOGETHER AND CONTINUE TO THE HEALTH MONITORING SYSTEM JUNCTION BOXES FOR TERMINATION.

HORIZONTAL SCALE IN FEET 0 10 20 40

CALCULATED BLW CHECKED SAC

LIGHTING - POWER SITE PLAN (3)
STA. 14+50.00 TO STA. 18+50.00

LAW-93-0.00

11/85

270/788

J:\Project\OVODOT\15005112 Ironton Russell\LAW\81595\lighting\sheets\81595LP303.dgn - 5/5/2011 3:36:26 PM - brian_wallace

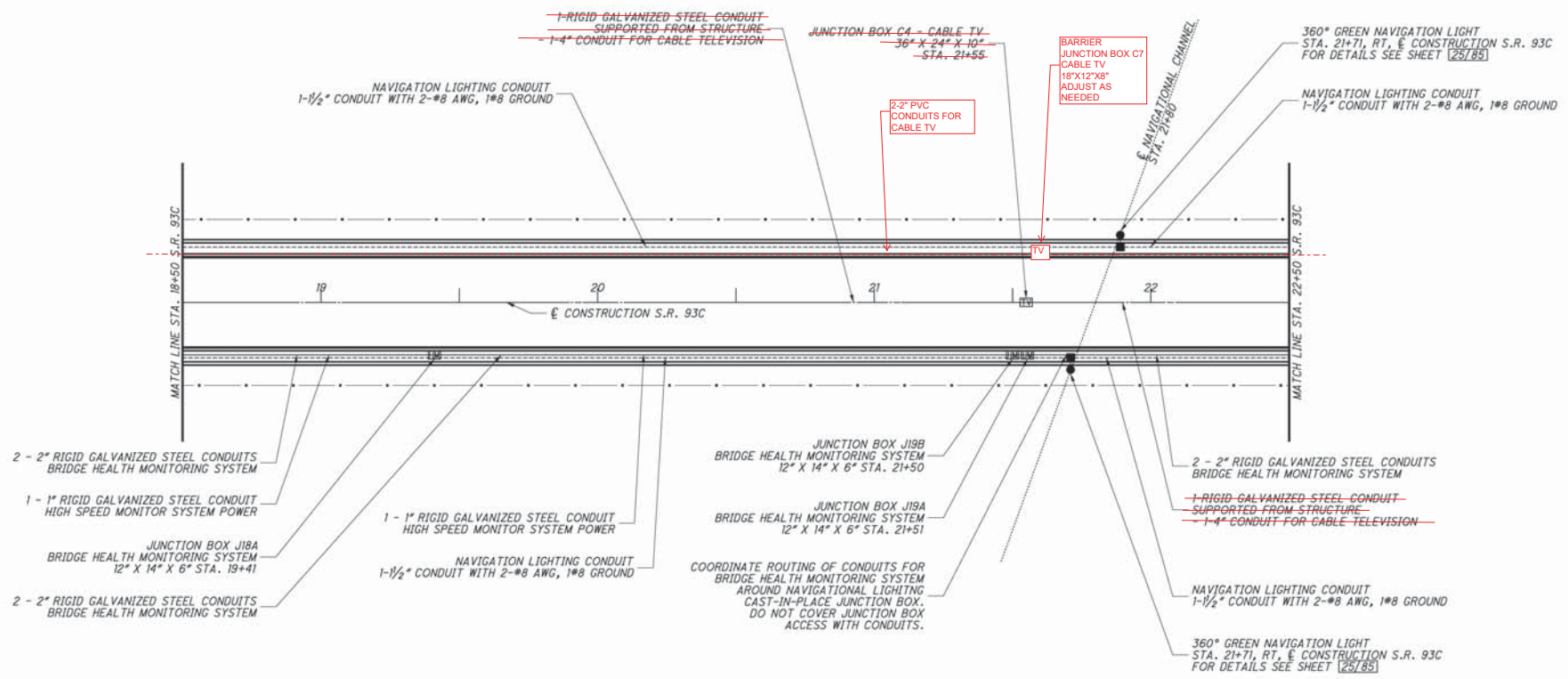

LEGEND

- E — ELECTRICAL JUNCTION BOX
- T — TELEPHONE JUNCTION BOX
- TV — CABLE TELEVISION JUNCTION BOX
- BHM — BRIDGE HEALTH MONITORING SYSTEM JUNCTION BOX
- 180° RED NAVIGATION LIGHT
- 360 GREEN NAVIGATION LIGHT
- AVIATION BEACON

NOTES:

1. FOR AESTHETIC LIGHTING PLAN SEE SHEETS 56/85 AND 57/85.
2. FOR ROADWAY LIGHTING PLAN SEE SHEETS 69/85 THROUGH 71/85.
3. FOR BRIDGE HEALTH MONITORING SYSTEM JUNCTION BOX PLACEMENT DETAIL SEE SHEET 10/85.
4. PROVIDE A 2" WATERTIGHT FLEXIBLE METAL CONDUIT FROM A MINIMUM OF 6" EMBEDMENT IN CONCRETE, WHERE THE GAGE CABLES COME TOGETHER AND CONTINUE TO THE HEALTH MONITORING SYSTEM JUNCTION BOXES FOR TERMINATION.

HORIZONTAL SCALE IN FEET
0 10 20 40

CALCULATED BLW
CHECKED SAC

LIGHTING - POWER SITE PLAN (4)
STA. 18+50.00 TO STA. 22+50.00

LAW-93-0.00

12/85

271
788

J:\Project\OY\ODOT\150051\2 Ironton Russell\LAW\81595\lighting\sheets\81595LP304.dgn - 5/5/2011 3:37:02 PM - brian_wallace

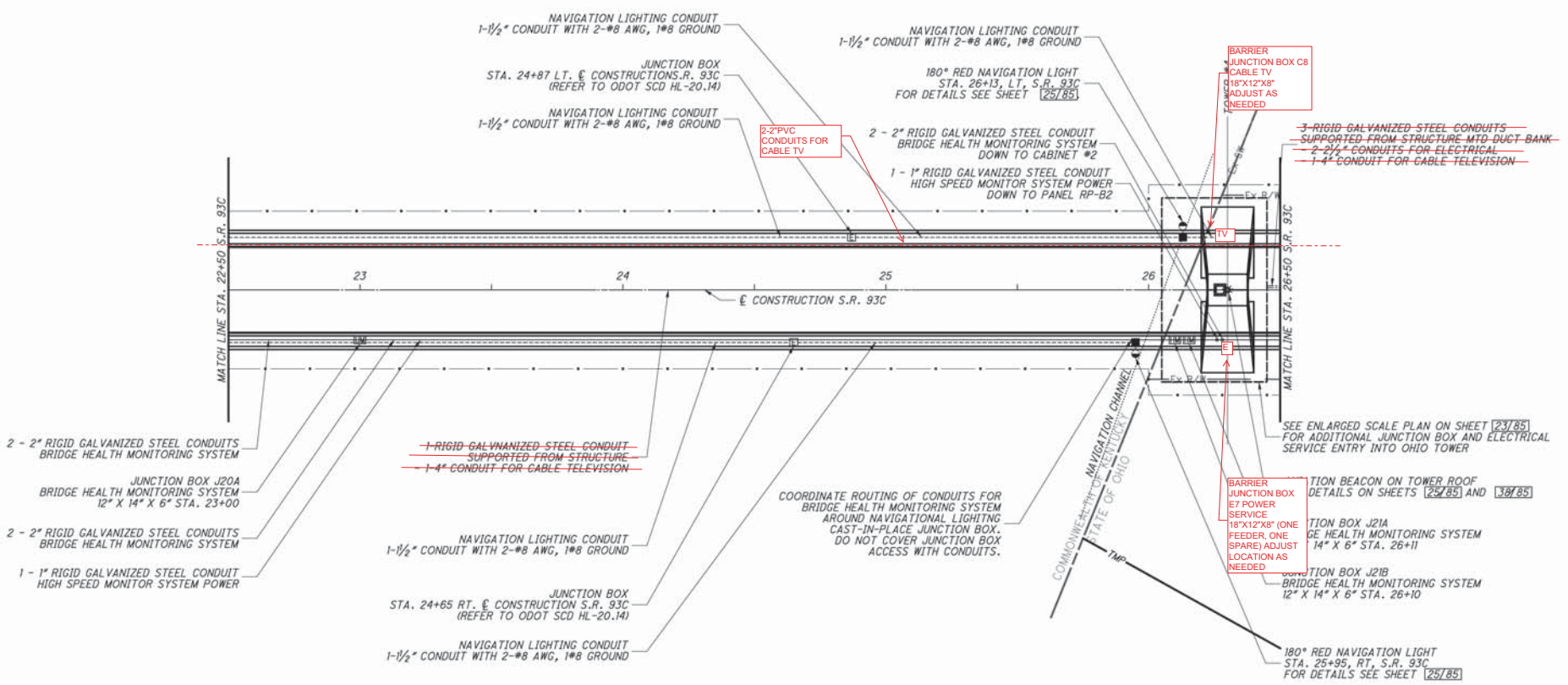

LEGEND

- E — ELECTRICAL JUNCTION BOX
- T — TELEPHONE JUNCTION BOX
- TV — CABLE TELEVISION JUNCTION BOX
- HM — BRIDGE HEALTH MONITORING SYSTEM JUNCTION BOX
- 180° RED NAVIGATION LIGHT
- 360 GREEN NAVIGATION LIGHT
- AVIATION BEACON

NOTES:

1. FOR AESTHETIC LIGHTING PLAN SEE SHEETS 56/85 AND 57/85.
2. FOR ROADWAY LIGHTING PLAN SEE SHEETS 69/85 THROUGH 71/85.
3. FOR TOWER INSPECTION LIGHTING/RECEPTACLE PLAN SEE SHEET 28/85 AND 29/85.
4. FOR BRIDGE HEALTH MONITORING SYSTEM JUNCTION BOX PLACEMENT DETAIL SEE SHEET 10/85.
5. PROVIDE A 2" WATERTIGHT FLEXIBLE METAL CONDUIT FROM A MINIMUM OF 6" EMBEDMENT IN CONCRETE, WHERE THE GAGE CABLES COME TOGETHER AND CONTINUE TO THE HEALTH MONITORING SYSTEM JUNCTION BOXES FOR TERMINATION.

HORIZONTAL SCALE IN FEET
0 10 20 40

CALCULATED BLW
CHECKED SAC

LIGHTING - POWER SITE PLAN (5)
STA. 22+50.00 TO STA. 26+50.00

LAW-93-0.00

13/85

272
788

J:\Project\OJODOT\15005112 Ironton Russell\LAW\81595\lighting\sheets\81595LP305.dgn - 5/6/2011 3:37:35 PM - brian_wallace

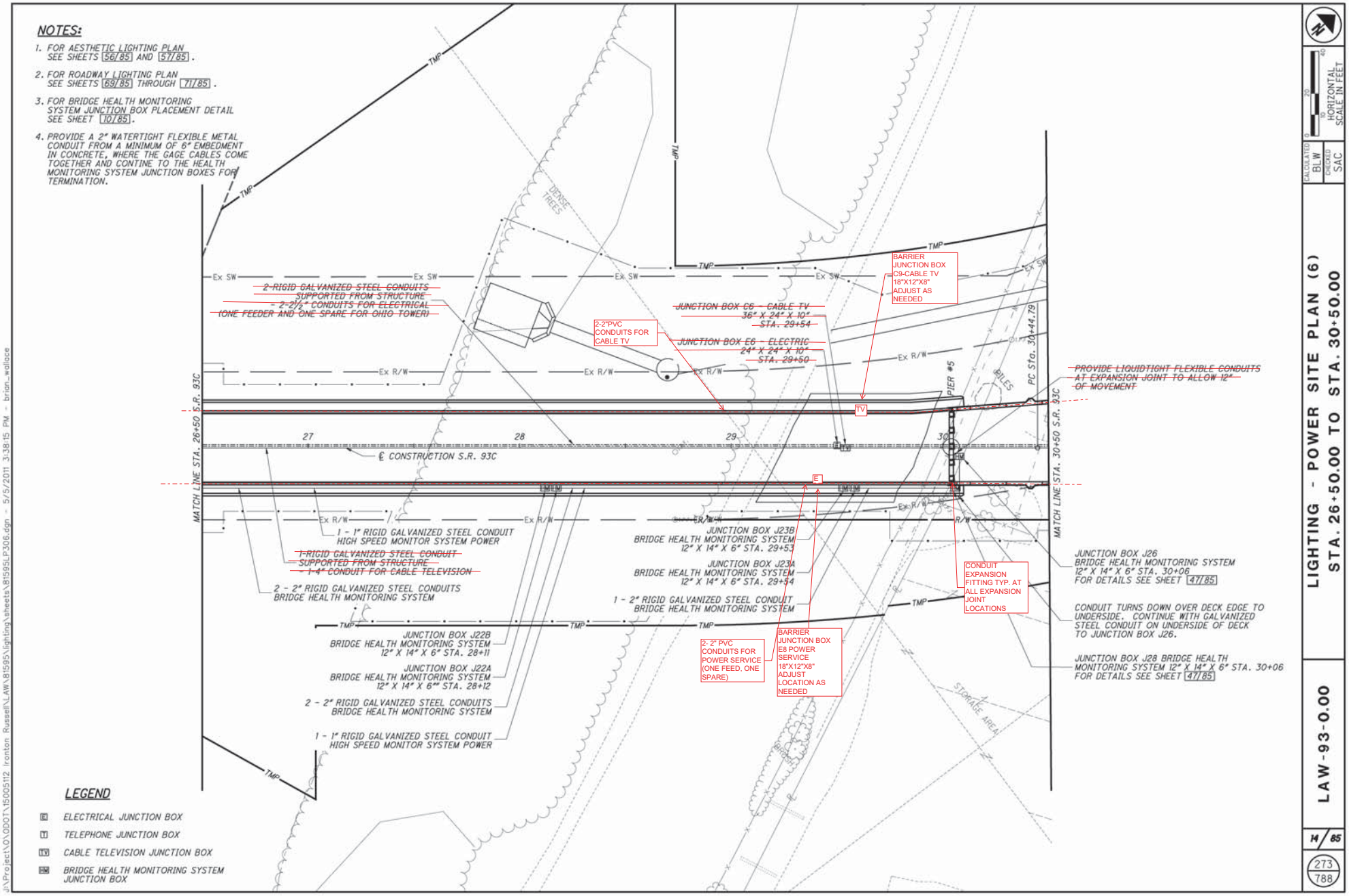
NOTES:
1. FOR AESTHETIC LIGHTING PLAN SEE SHEETS 56/85 AND 57/85.
2. FOR ROADWAY LIGHTING PLAN SEE SHEETS 69/85 THROUGH 71/85.
3. FOR BRIDGE HEALTH MONITORING SYSTEM JUNCTION BOX PLACEMENT DETAIL SEE SHEET 10/85.
4. PROVIDE A 2" WATERTIGHT FLEXIBLE METAL CONDUIT FROM A MINIMUM OF 6" EMBEDMENT IN CONCRETE, WHERE THE GAGE CABLES COME TOGETHER AND CONTINE TO THE HEALTH MONITORING SYSTEM JUNCTION BOXES FOR TERMINATION.
LEGEND
E ELECTRICAL JUNCTION BOX
T TELEPHONE JUNCTION BOX
TV CABLE TELEVISION JUNCTION BOX
HM BRIDGE HEALTH MONITORING SYSTEM JUNCTION BOX
TMP
Ex SW
Ex R/W
DENSE TREES
MATCH LINE STA. 26+50 S.R. 93C
MATCH LINE STA. 30+50 S.R. 93C
℄ CONSTRUCTION S.R. 93C
27
28
29
30
PIER #5
BILES
PC Sta. 30+44.79
2-RIGID GALVANIZED STEEL CONDUITS SUPPORTED FROM STRUCTURE - 2-2½" CONDUITS FOR ELECTRICAL (ONE FEEDER AND ONE SPARE FOR OHIO TOWER)
2-2"PVC CONDUITS FOR CABLE TV
JUNCTION BOX C6 - CABLE TV 36" X 24" X 10" STA. 29+54
JUNCTION BOX E6 - ELECTRIC 24" X 24" X 10" STA. 29+50
BARRIER JUNCTION BOX C9-CABLE TV 18"X12"X8" ADJUST AS NEEDED
PROVIDE LIQUIDTIGHT FLEXIBLE CONDUITS AT EXPANSION JOINT TO ALLOW 12" OF MOVEMENT
1 - 1" RIGID GALVANIZED STEEL CONDUIT HIGH SPEED MONITOR SYSTEM POWER
1-RIGID GALVANIZED STEEL CONDUIT SUPPORTED FROM STRUCTURE - 1-4" CONDUIT FOR CABLE TELEVISION
2 - 2" RIGID GALVANIZED STEEL CONDUITS BRIDGE HEALTH MONITORING SYSTEM
JUNCTION BOX J22B BRIDGE HEALTH MONITORING SYSTEM 12" X 14" X 6" STA. 28+11
JUNCTION BOX J22A BRIDGE HEALTH MONITORING SYSTEM 12" X 14" X 6" STA. 28+12
2 - 2" RIGID GALVANIZED STEEL CONDUITS BRIDGE HEALTH MONITORING SYSTEM
1 - 1" RIGID GALVANIZED STEEL CONDUIT HIGH SPEED MONITOR SYSTEM POWER
JUNCTION BOX J23B BRIDGE HEALTH MONITORING SYSTEM 12" X 14" X 6" STA. 29+53
JUNCTION BOX J23A BRIDGE HEALTH MONITORING SYSTEM 12" X 14" X 6" STA. 29+54
1 - 2" RIGID GALVANIZED STEEL CONDUIT BRIDGE HEALTH MONITORING SYSTEM
2- 2" PVC CONDUITS FOR POWER SERVICE (ONE FEED, ONE SPARE)
BARRIER JUNCTION BOX E8 POWER SERVICE 18"X12"X8" ADJUST LOCATION AS NEEDED
CONDUIT EXPANSION FITTING TYP. AT ALL EXPANSION JOINT LOCATIONS
JUNCTION BOX J26 BRIDGE HEALTH MONITORING SYSTEM 12" X 14" X 6" STA. 30+06 FOR DETAILS SEE SHEET 47/85
CONDUIT TURNS DOWN OVER DECK EDGE TO UNDERSIDE. CONTINUE WITH GALVANIZED STEEL CONDUIT ON UNDERSIDE OF DECK TO JUNCTION BOX J26.
JUNCTION BOX J28 BRIDGE HEALTH MONITORING SYSTEM 12" X 14" X 6" STA. 30+06 FOR DETAILS SEE SHEET 47/85
STORAGE AREA
BRIDGE
HORIZONTAL SCALE IN FEET
0 10 20 40
CALCULATED BLW
CHECKED SAC
LIGHTING - POWER SITE PLAN (6)
STA. 26+50.00 TO STA. 30+50.00
LAW-93-0.00
14/85
273/788
J:\Project\ODOT\15005112 Ironton Russell\LAW.81595\lighting\sheets\81595LP306.dgn - 5/6/2011 3:38:15 PM - brian_wallace

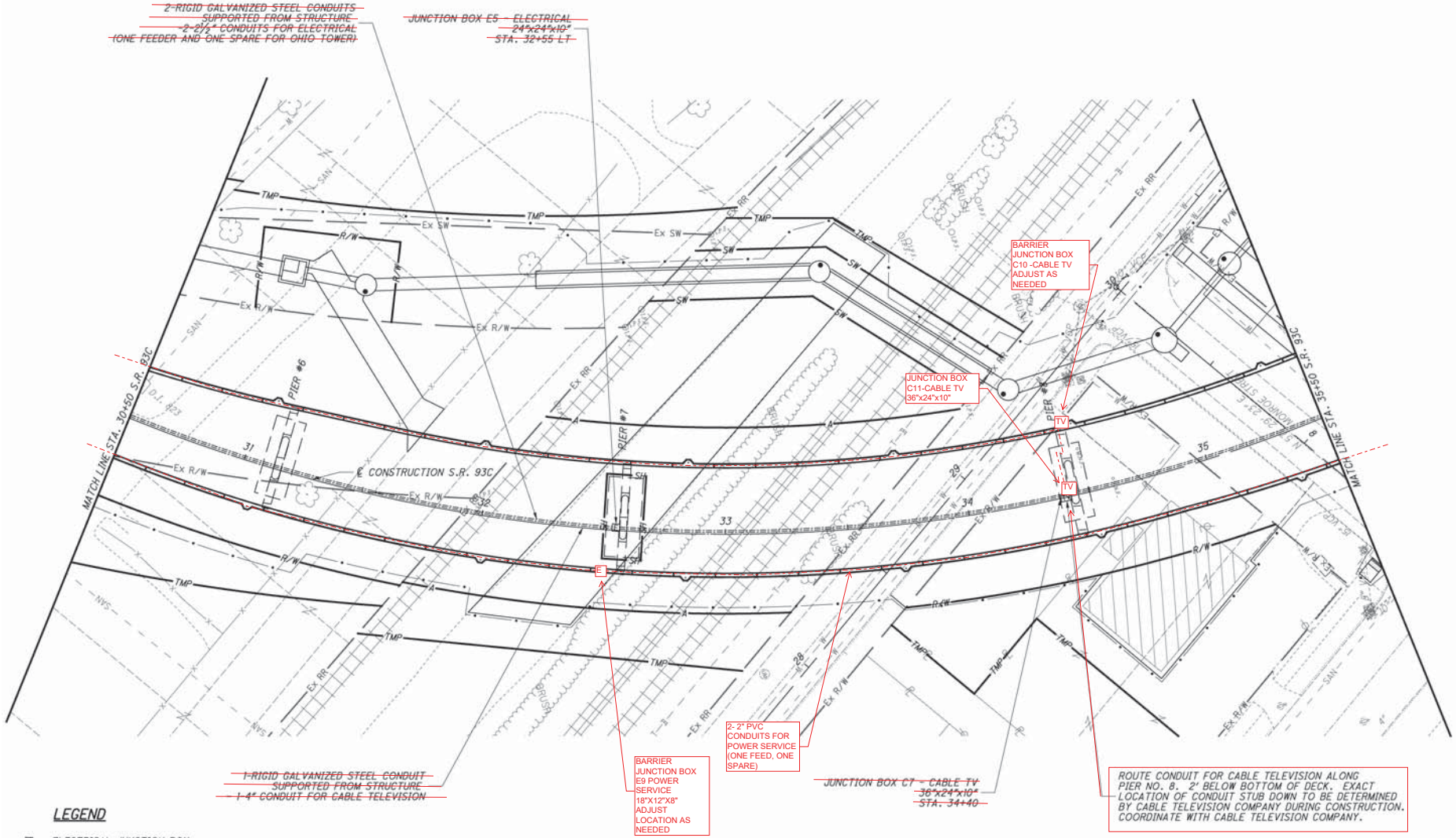

HORIZONTAL SCALE IN FEET

CALCULATED BLW
CHECKED SAC

LIGHTING- POWER SITE PLAN (7)
STA. 30+50.00 TO STA. 35+50.00

LAW-93-0.00

15 / 85

274 788

J:\Project\ODOT\15005112 Ironton Russell\LAW\81595\lighting\sheets\81595LP307.dgn - 5/5/2011 3:38:48 PM - brian_wallace

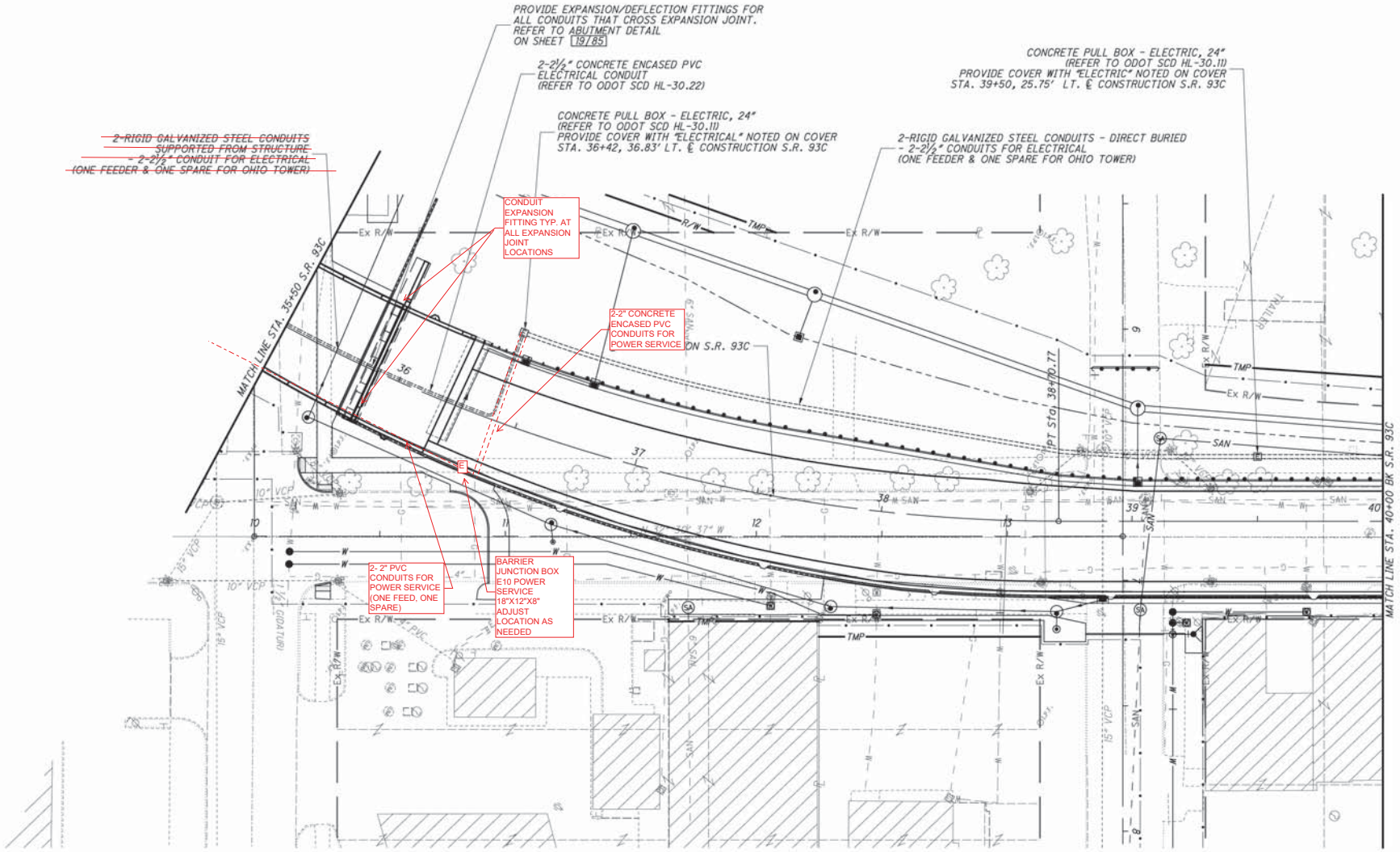

HORIZONTAL SCALE IN FEET 0 10 20 40

CALCULATED BLW CHECKED SAC

LIGHTING - POWER SITE PLAN (8)
STA. 35+50.00 TO STA. 40+00.00

LAW-93-0.00

16/85

275
788

J:\Project\OY\ODOT\15005112 Ironton Russell\LAW\81595\lighting\sheets\81595LP308.dgn - 5/5/2011 3:39:24 PM - brian_wallace

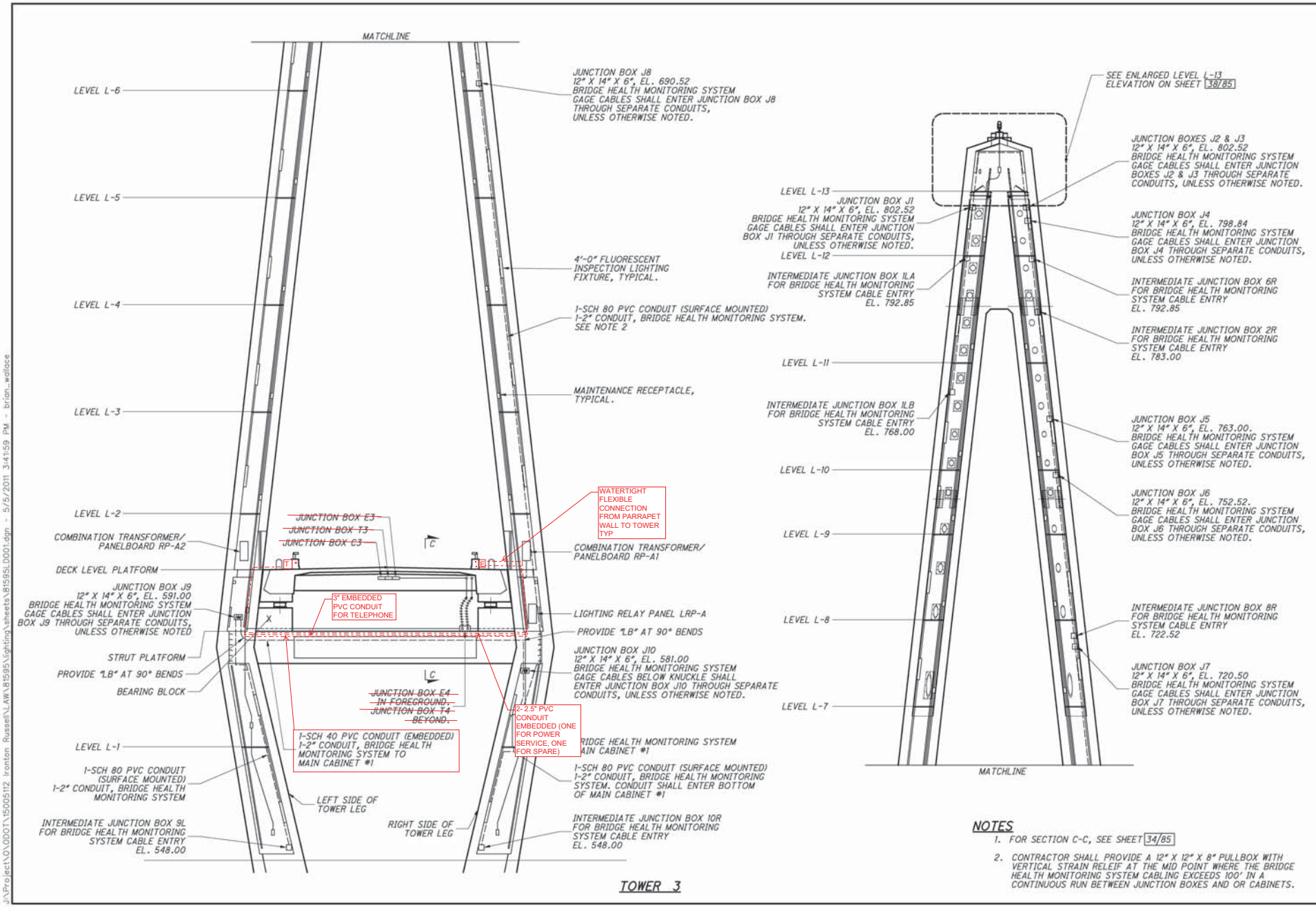

TOWER 3

NOTES

1. FOR SECTION C-C, SEE SHEET 34/85
2. CONTRACTOR SHALL PROVIDE A 12" X 12" X 8" PULLBOX WITH VERTICAL STRAIN RELEIF AT THE MID POINT WHERE THE BRIDGE HEALTH MONITORING SYSTEM CABLING EXCEEDS 100' IN A CONTINUOUS RUN BETWEEN JUNCTION BOXES AND OR CABINETS.

CALCULATED BLW
CHECKED JRK

LIGHTING - TOWER INSPECTION LIGHTING AND RECEPTACLES
PLATFORM DETAILS - TOWER 3

LAW-93-0.00

27/85

286
788

J:\Project\OVODOT\15005112 Ironton Russell\LAW-81595\lighting\sheets\81595LD001.dgn - 5/5/2011 3:41:59 PM - brian_wallace

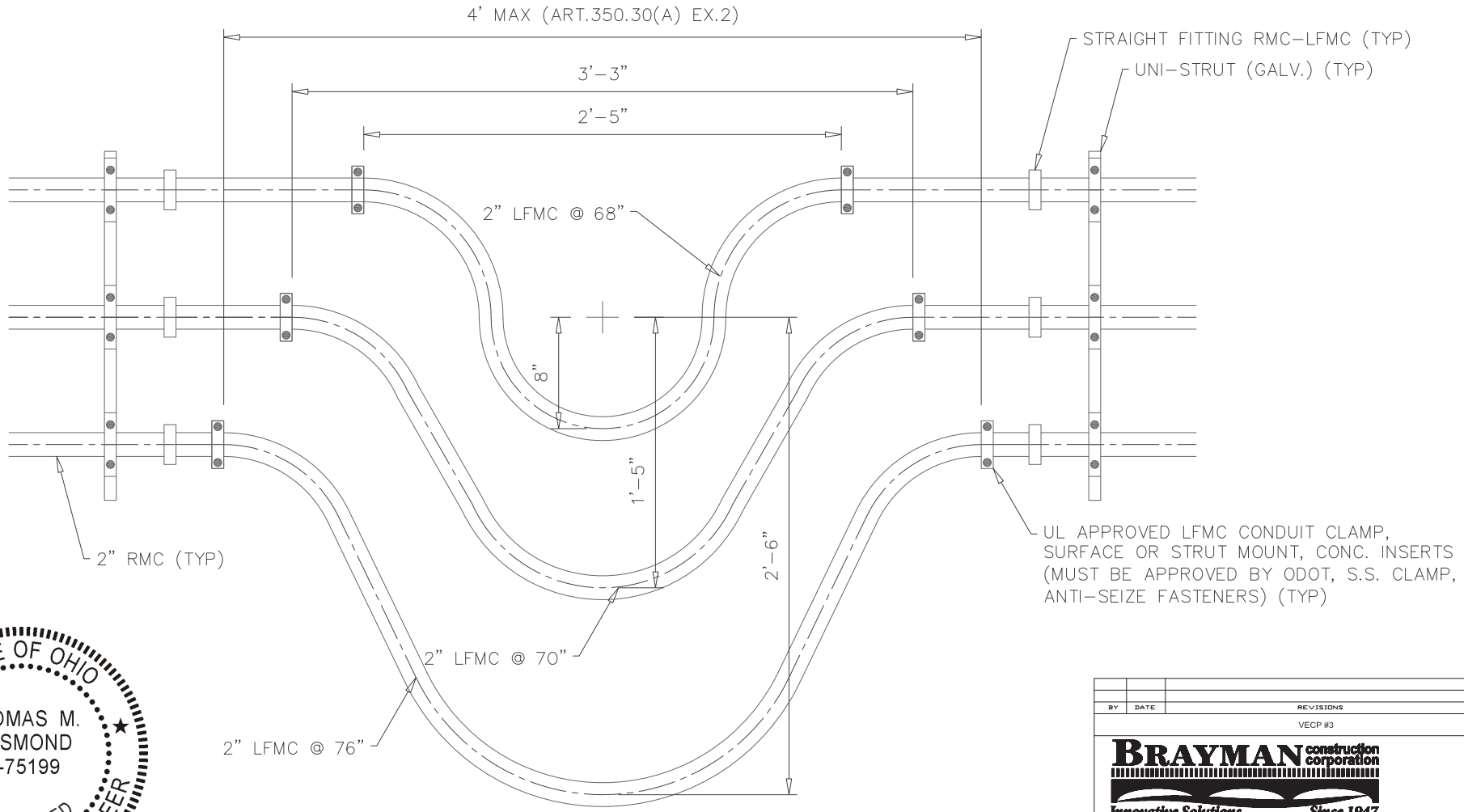

STATE OF OHIO
THOMAS M. HESMOND
E-75199
REGISTERED PROFESSIONAL ENGINEER

BY	DATE	REVISIONS	NO.

VECP #3

BRAYMAN construction corporation
Innovative Solutions Since 1947

DRAWN BY JLS	8/14/14	CONDUIT EXPANSION DETAIL AT REAR ABUTMENT	JOB NUMBER
CHECKED BY			
APPROVED		OHIO DEPARTMENT OF TRANSPORTATION	DRAWING NUMBER 1 REV.
SCALE DO NOT SCALE PRINT			

TYPICAL APPROACH BARRIER WALL SECTION

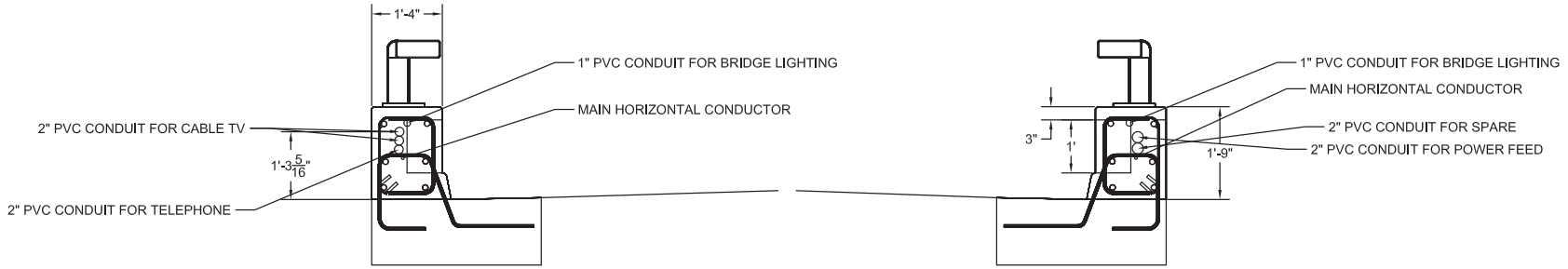

STATE OF OHIO
THOMAS M. HESMOND
E-75199
REGISTERED PROFESSIONAL ENGINEER

BY	DATE	REVISIONS	NO.
		VECP #3	

BRAYMAN construction corporation
Innovative Solutions Since 1947

DRAWN BY AMD	4/18/14	VECP #3 APPROACH BARRIER WALL SECTION	JOB NUMBER
CHECKED BY			LAW-93C-0000 11-0628
APPROVED		OHIO DEPARTMENT OF TRANSPORTATION	DRAWING NUMBER / REV.
SCALE – DO NOT SCALE PRINT			

STATE OF OHIO
THOMAS M. HESMOND
E-75199
REGISTERED PROFESSIONAL ENGINEER

PIER 2 DETAIL

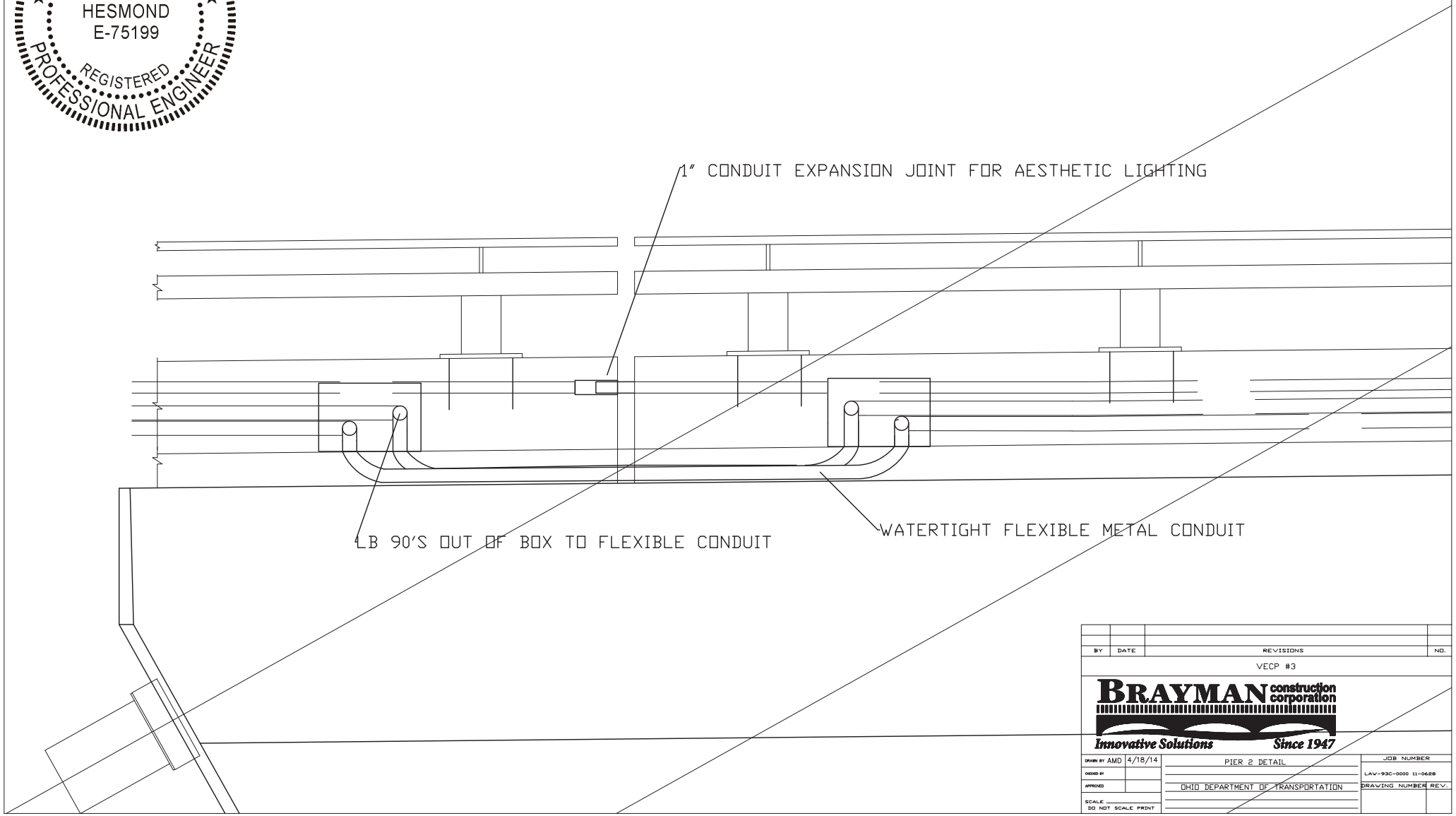

BY	DATE	REVISIONS	NO.

VECP #3

BRAYMAN construction corporation
Innovative Solutions Since 1947

DRAWN BY AMD	4/18/14
CHECKED BY	
APPROVED	
SCALE – DO NOT SCALE PRINT	

PIER 2 DETAIL

OHIO DEPARTMENT OF TRANSPORTATION

JOB NUMBER
LAW-93C-0000 11-0628

DRAWING NUMBER REV.

BACKSPAN/MAINSPAN BARRIER WALL DETAIL

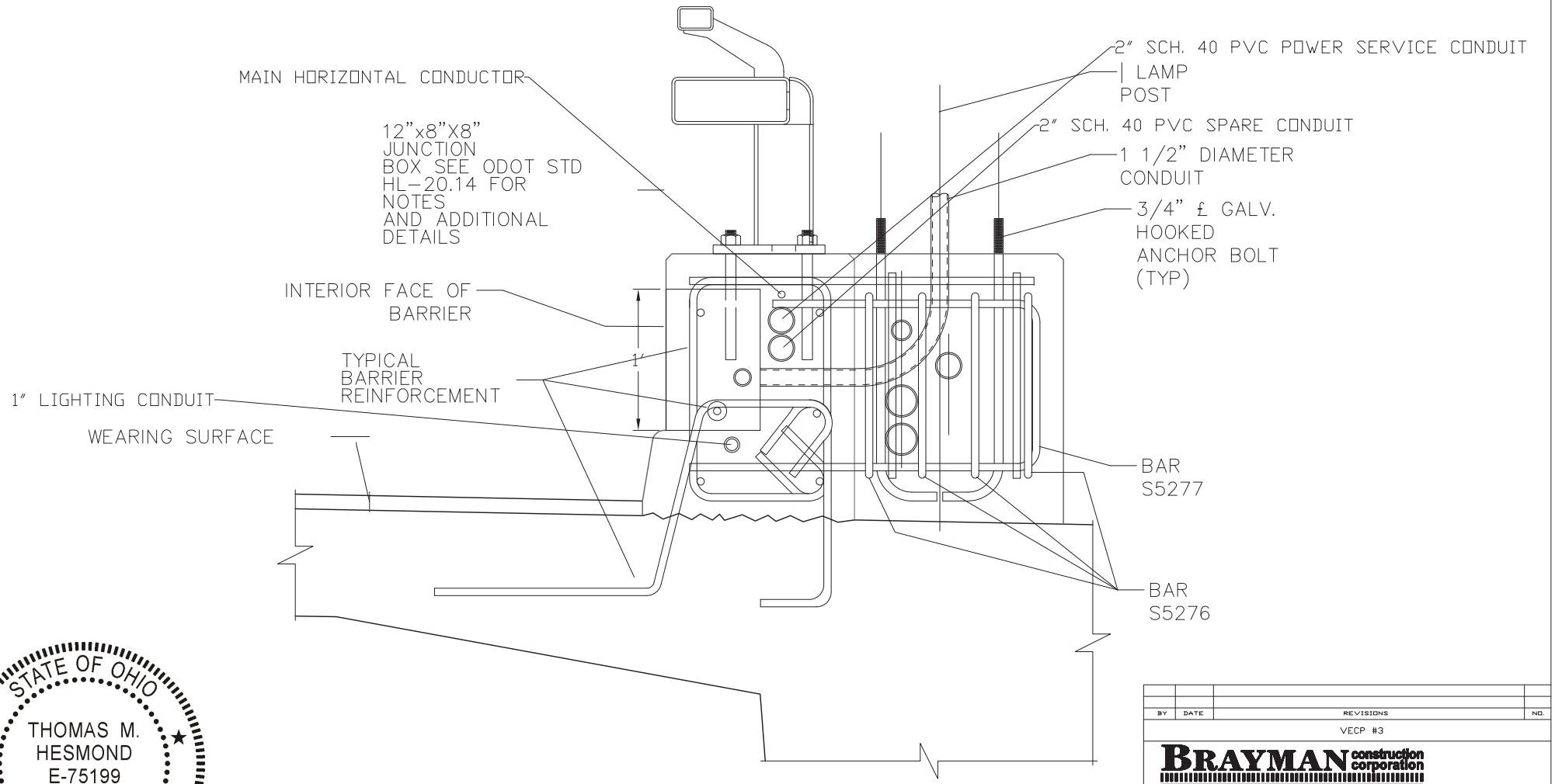

STATE OF OHIO
THOMAS M. HESMOND
E-75199
REGISTERED PROFESSIONAL ENGINEER

BY	DATE	REVISIONS	NO.
		VECP #3	

BRAYMAN construction corporation
Innovative Solutions Since 1947

DRAWN BY AMD	4/18/14	BACKSPAN/MAINSPAN BARRIER WALL DETAIL	JOB NUMBER
CHECKED BY			LAW-93C-0000 11-0628
APPROVED		OHIO DEPARTMENT OF TRANSPORTATION	DRAWING NUMBER REV.
SCALE — DO NOT SCALE PRINT			

VECP #3 ITEMIZED SUMMARY OF CHANGES

Non-Performed Items

Line #	Item Code	Description	Unit	Bid Qty	Proposed Qty	Unit Bid Price	Net Change
0210	625E23308	Distribution Cable, Misc. No. 250 KCMIL	FT	11,504.00	-	$8.00	-$92,032.00
0219	625E25920	2.5" Liqud tight Flex Conduit	FT	12	-	$225.00	-$2,700.00
0220	625E25920	3" Liquidtight Flex Conduit	FT	18	-	$105.00	-$1,890.00
0221	625E25920	4" Liquidtight Flex Conduit	FT	24	-	$90.00	-$2,160.00
0222	625E25930	2.5" Expansion/Deflection	EA	14	-	$365.00	-$5,110.00
0223	625E25930	3" Expansio/Deflection	EA	2	-	$670.00	-$1,340.00
0224	625E25930	4" Expansion/Deflection	EA	3	-	$835.00	-$2,505.00
0257	625E25300	Conduit, 1.5" Lighting	FT	6,306	-	$13.00	-$81,978.00
0258	625E25930	1.5" Expansion Deflection Fitting	EA	6	-	$325.00	-$1,950.00
						NON-PERFORMED TOTAL =	-$191,665.00

Quantity Change Items Items

Line #	Item Code	Description	Unit	Bid Qty	Proposed Qty	Unit Bid Price	Net Change
0211	625E25404	Conduit, 2.5" GRC 725.04	FT	4,628	200	$32.00	-$141,696.00
0212	625E25500	Conduit, 3" GRC 725.04	FT	788	100	$46.00	-$31,648.00
0214	625E25600	Conduit, 4" GRC 725.04	FT	2,565	100	$50.00	-$123,250.00
0228	625E29901	Junction Box, 36"x24"x10"	EA	6	1	$2,100.00	-$10,500.00
						QUANTITY ADJUSTED TOTAL=	-$307,094.00

New / Additional Work Items

Line #	Item Code	Description	Unit	****	Proposed Qty	Proposed Unit Cost	SubTotal
*		Conduit, 2" PVC 725.05 (Telephone)	FT		688	$12.46	$8,572.48
*		Conduit, 2" PVC 725.05 (Cable TV)	FT		4,930	$12.46	$61,427.80
*		Conduit, 2" PVC 725.05 (Power/Spare)	FT		4,428	$12.46	$55,172.88
*		1" Expansion Deflection Fitting	EA		6	$210.00	$1,260.00
*		2" Expansion Deflection Fitting	EA		6	$363.00	$2,178.00
*		3/O AWG 600Volt Distr. Cable	FT		11,504	$6.00	$69,024.00
*		Conduit, 1" PVC 725.05 (Lighting)	FT		6,306	$7.45	$46,979.70
0199	625E25401	2" Galvanized Rigid Conduit	FT		300	$19.00	$5,700.00
0200	625E25403	2" Concrete Encased PVC Conduit	FT		500	$12.00	$6,000.00
0203	625E25920	Conduit , Misc. 2" Liquidtight Flexible Conduit	FT		200	$31.00	$6,200.00
0261	625E29940	Barrier Junction Box 18"x12"x8"	EA		26	$1,250.00	$32,500.00
						ADDITIONAL ITEMS WORK TOTAL=	$295,014.86
						Proposed Guaranteed Minimum Savings =	-$203,744.14

CONCRETE PULLBOX, 24", STA. 40+95
(REFER TO ODOT SCD HL-30.11)
PROVIDE COVER WITH "ELECTRIC"
NOTED ON COVER.

2 - RIGID GALVANIZED STEEL DIRECT BURIED CONDUITS
2-2½" CONDUIT FOR ELECTRICAL
(ONE FEEDER & ONE SPARE FOR OHIO TOWER)

2-3" CONCRETE ENCASED, PVC CONDUITS
FOR ELECTRICAL SERVICE
(REFER TO ODOT SCD HL-30.22)

2-2½" CONCRETE ENCASED, PVC CONDUITS
FOR ELECTRICAL SERVICE
(REFER TO ODOT SCD HL-30.22)

Sta. 40+45.75 BACK =
Sta. 40+00.00 AHEAD

℄ CONSTRUCTION S.R. 93C

℄ CONSTRUCTION-R/W JEFFERSON STREET

℄ CONSTRUCTION THIRD STREET

℄ CONST. SR 93C
STATION EQUATION

MATCH LINE STA. 40+00 BK S.R. 93C

CONC. PULLBOX, 24", STA. 40+95
(REFER TO ODOT SCD HL-30.11)
PROVIDE COVER WITH "ELECTRIC"
NOTED ON COVER.

GROUND MOUNTED DISCONNECT & METER
(SEE SHEET 19785 FOR DETAILS)

2-4" CONCRETE ENCASED PVC CONDUITS, R/W
EXTEND ONE CONDUIT UP THE LENGTH
OF THE POLE AND PROVIDE WEATHERHEAD.
ALLOW 10 FEET OF TAILS FOR
CONNECTION BY AEP POWER CO.
STUB UP SECOND CONDUIT AT BASE
OF POLE, 1 FOOT ABOVE FINISHED
GRADE AND CAP WATERTIGHT

EXISTING ELECTRIC (OHIO POWER)
SERVICE POLE

277/480V 3PH, 4-WIRE OVERHEAD ELECTRIC
SERVICE. AEP SHALL EXTEND
SERVICE TO WOOD POLE

Lamp Hole

LEGEND

- ELECTRICAL JUNCTION BOX
- TELEPHONE JUNCTION BOX
- CABLE TELEVISION JUNCTION BOX

LIGHTING - POWER SITE PLAN(S)

LAW-93-0.00

17

276
788

Bridge Diagnostics Inc

LONG-TERM MONITORING OF IRONTON-RUSSELL BRIDGE - PIER 5 AS-BUILT - IRONTON, OH

Approved By:
Organization:_____
Name: _____
Date: _____
Signature: _____
*Initial or stamp each page of this document

INDEX OF REVISIONS AND SUBMITTALS

NO.	DATE	REVISION DESCRIPTION
1	5/11/2012	PIER 5 INSTRUMENTATION AS BUILT SUBMITAL

BDI REFERENCE NO.	CLIENT PROJECT NO.	DRAWING NO.
120103-OH	93C	CS-01

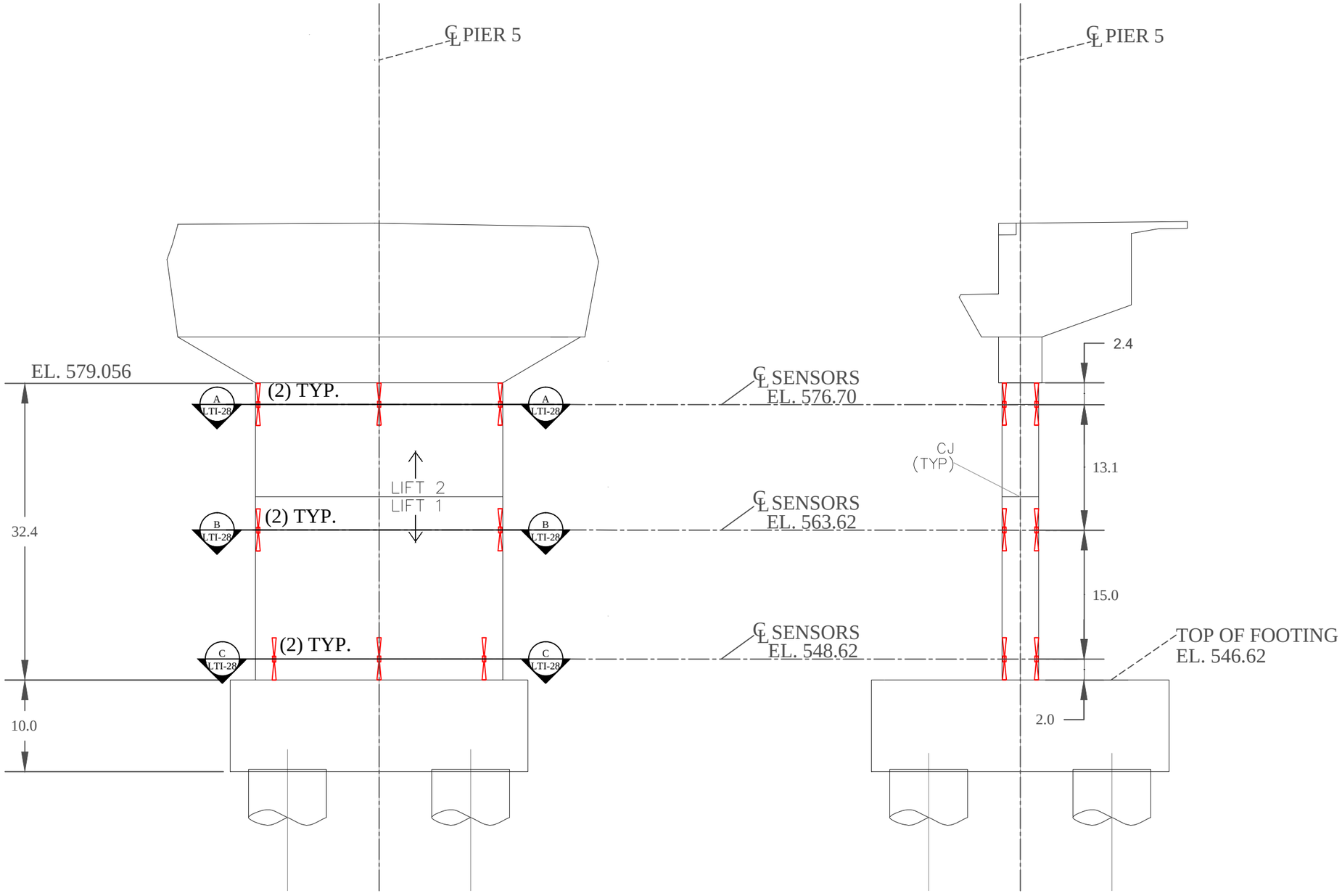

A PIER 5 FRONT VIEW
SCALE: N.T.S

B PIER 5 SIDE VIEW
SCALE: N.T.S

LEGEND:

VW SISTERBAR

© 2012 BRIDGE DIAGNOSTICS INC.

BDI
Bridge Diagnostics, Inc.
1995 57th Court North Suite 100
Boulder, Colorado 80301
303-494-3230

NO.	DATE	REVISION DESCRIPTION	BY

IRONTON-RUSSELL BRIDGE - LONG TERM MONITORING- IRONTON, OH

T□e □ser ac□nowled□es t□at t□e Instr□□entation Doc□□ents are Instr□□ents o□ Ho□es.broad ser□ice□ and are □rotected □y Co□□on Co□y□□t. T□is doc□□ent is t□e □ro□erty o□ Bridge Diagnostics Inc.□ and s□all not □e □odified□ □ended or altered in any way. It is □ot□ed □or □ot□er □□r□oses only. T□e User a□rees to □old □ar□less□ Inde□□ity and de□end Bridge Diagnostics Inc. a□ainst any and all da□a□es□cla□□s and losses□ incl□di□□ de□ense costs□ari□i□□ o□t o□ any □se□ re□se or co□y□i□□ o□ t□is doc□□ent.

BDI NO.	
120103-OH	
CLIENT NO.	
93C	
CHECKED BY: ACP	SCALE: N.T.S.
DRAWN BY: FAA	DATE: 11/20/2012

INSTRUMENTATION - PIER 5 ELEVATION

LTI-27

DRAWING NO.

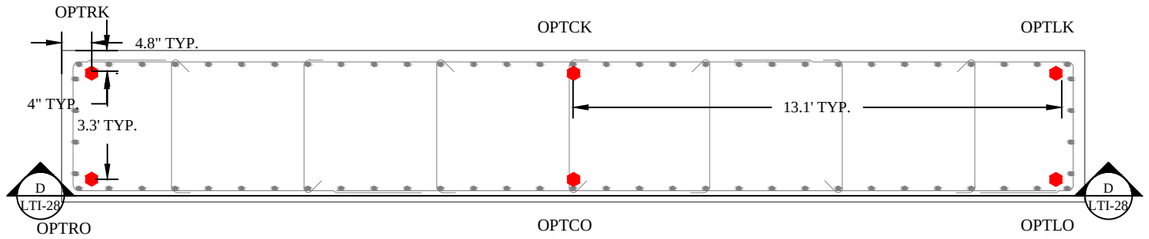

A LTI-27 PIER 5 CROSS SECTION A-A EL. 576.70
SCALE: N.T.S

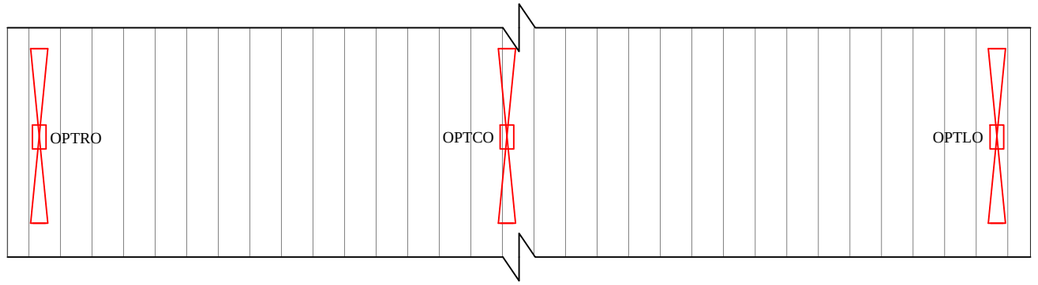

D PIER 5 ELEVATION D-D EL. 576.70
SCALE: N.T.S

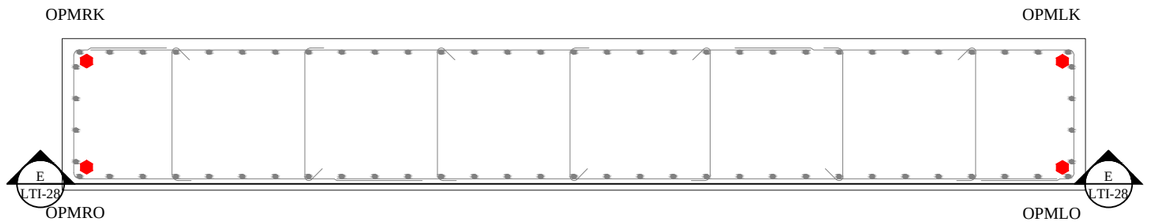

B LTI-27 PIER 5 CROSS SECTION B-B EL. 563.62
SCALE: N.T.S

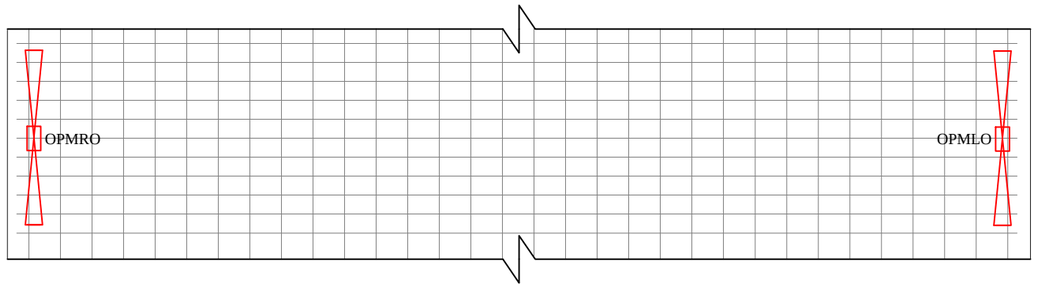

E PIER 5 ELEVATION E-E EL. 563.62
SCALE: N.T.S

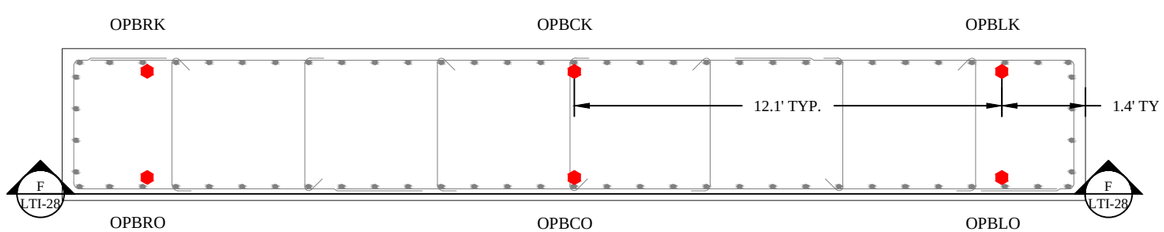

C LTI-27 PIER 5 CROSS SECTION C-C EL. 548.62
SCALE: N.T.S

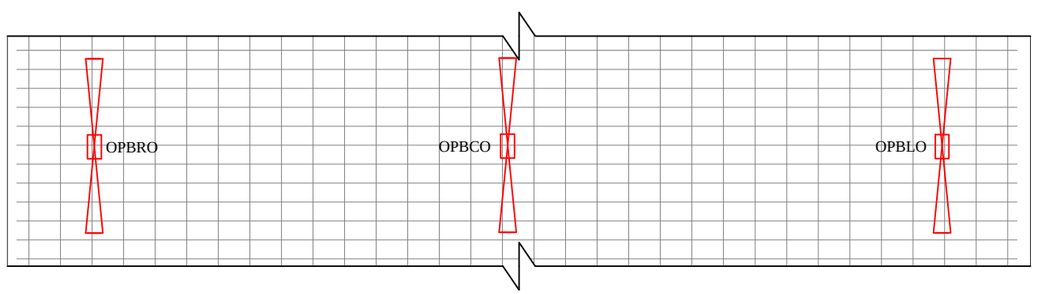

F PIER 5 ELEVATION F-F EL. 548.62
SCALE: N.T.S

BDI Bridge Diagnostics, Inc.
1995 57th Court North Suite 100
Boulder, Colorado 80301
303-494-3230

NO.	DATE	REVISION DESCRIPTION	BY

IRONTON-RUSSELL BRIDGE - LONG TERM MONITORING- IRONTON, OH

The user acknowledges that the Instrumentation Documents are instruments of Professional service and are protected by Copyright Law. This document is the property of Bridge Diagnostics Inc. and shall not be modified, amended or altered in any way. It is issued for information purposes only. The User agrees to hold Bridge Diagnostics Inc. and Bridge Diagnostics Inc. and its affiliates and all claims and losses including defense costs arising out of any use, reuse or copying of this document.

BDI NO. 120103-OH
CLIENT NO. 93C

CHECKED BY: ACP	SCALE: N.T.S.
DRAWN BY: FAA	DATE: 11/20/2012

INSTRUMENTATION - PIER 5 CROSS SECTIONS

LTI-28

DRAWING NO.

© 2012 BRIDGE DIAGNOSTICS INC.

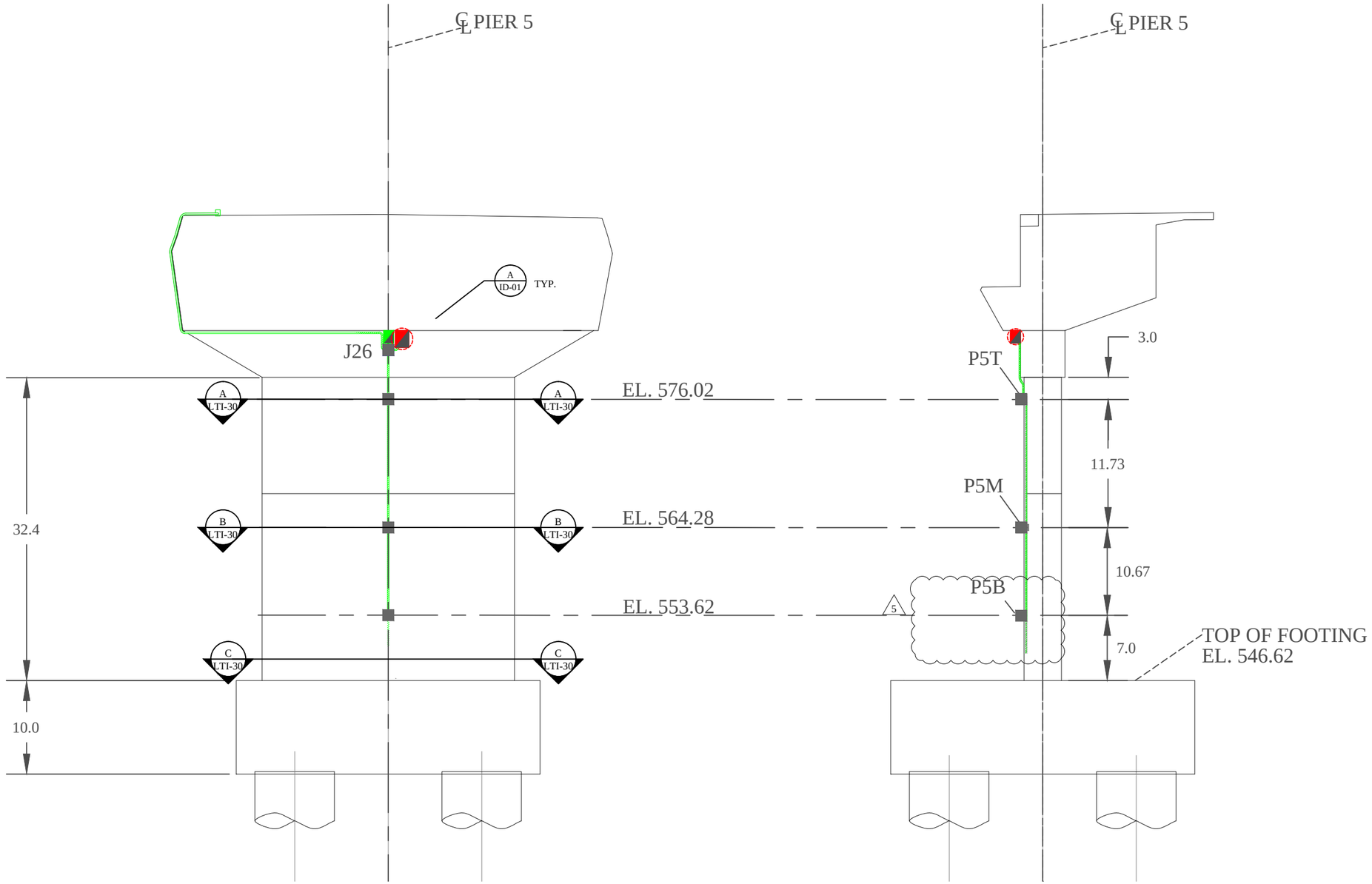

A PIER 5 FRONT VIEW
SCALE: N.T.S

B PIER 5 SIDE VIEW
SCALE: N.T.S

LEGEND:

- J-BOX OR MULTIPLEXER CABINET
- TEMP. DATA LOGGER
- CONDUIT

© 2012 BRIDGE DIAGNOSTICS INC.

BDI
Bridge Diagnostics, Inc.
1995 57th Court North Suite 100
Boulder, Colorado 80301
303-494-3230

NO.	DATE	REVISION DESCRIPTION	BY

IRONTON-RUSSELL BRIDGE -
LONG TERM MONITORING-
IRONTON, OH

The user acknowledges that the Instrumentation Documents are instruments of Professional service and are protected by Copyright Law. This document is the property of Bridge Diagnostics Inc. and shall not be modified, altered or altered in any way. It is issued for information purposes only. The User agrees to hold harmless indemnity and defend Bridge Diagnostics Inc. against any and all claims, liabilities and losses, including defense costs, arising out of any use, reuse or copying of this document.

BDI NO.
120103-OH

CLIENT NO.
93C

CHECKED BY:	SCALE:
ACP	N.T.S.
DRAWN BY:	DATE:
FAA	11/20/2012

PIER 5 JUCTION BOX
LAYOUT

LTI-29

DRAWING NO.

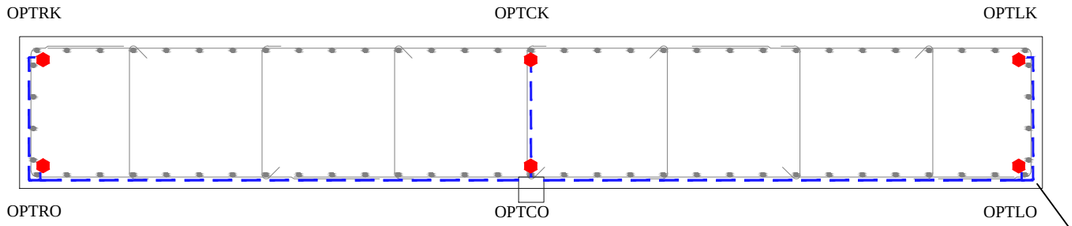

A PIER 5 CROSS SECTION A-A EL. 576.70
SCALE: N.T.S

F ID-01 TYP.

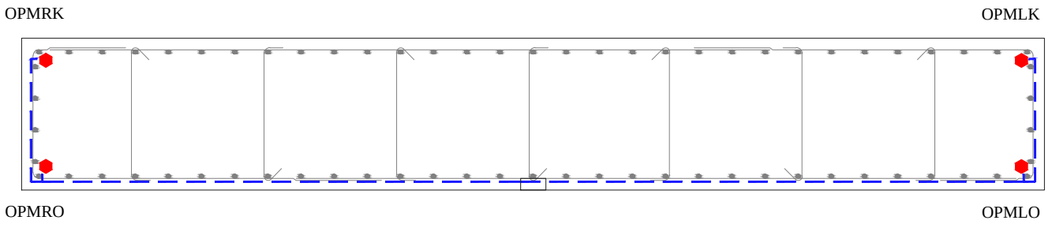

B PIER 5 CROSS SECTION B-B EL. 563.62
SCALE: N.T.S

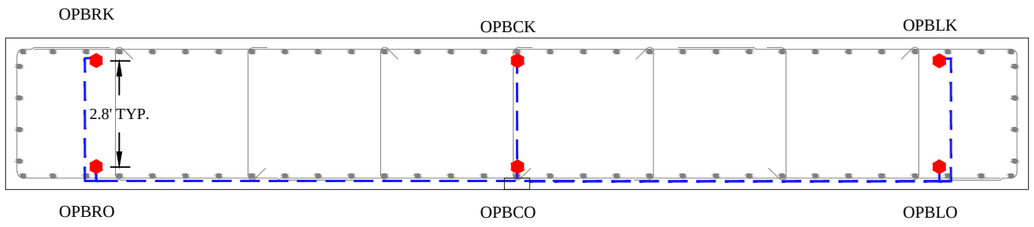

C PIER 5 CROSS SECTION C-C EL. 548.62
SCALE: N.T.S

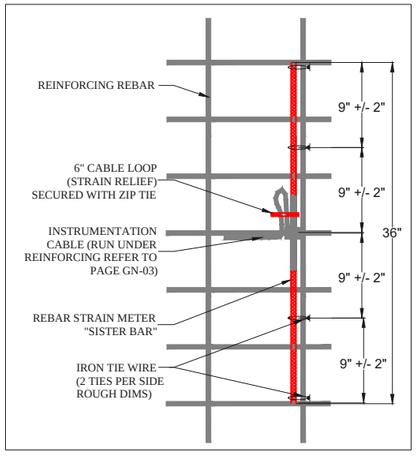

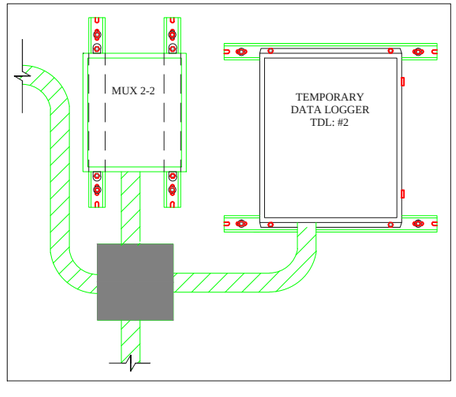

Sensor Name	Mux Channel	Serial Number	Sensor Type	Cable Length	Calibration File	1st Reading – Time & Date	2nd Reading – Time & Date	3rd Reading – Time & Date
OPBRK	1	1208976	Sisterbar	70	0.347	6933 Dg / 2.2 °C - 3.13.13 1030		
OPBRO	2	1208971	Sisterbar	70	0.347	7210 Dg / 1.1 °C - 3.13.13 1030		
OPBCK	3	1208982	Sisterbar	60	0.343	7080 Dg / 1.5 °C - 3.13.13 1030		
OPBCO	4	1208983	Sisterbar	60	0.35	7152 Dg / 1.0 °C - 3.13.13 1030		
OPBLK	5	1208984	Sisterbar	70	0.35	7049 Dg / 2.2 °C - 3.13.13 1030		
OPBLO	6	1208975	Sisterbar	70	0.345	7174 Dg / 2.2 °C - 3.13.13 1030		
OPMRK	7	1208974	Sisterbar	55	0.353	7077 Dg / 2.2 °C - 3.13.13 1300		
OPMRO	8	1208977	Sisterbar	55	0.349	6938 Dg / 2.4 °C - 3.13.13 1300		
OPMLK	9	1208978	Sisterbar	55	0.343	7226 Dg / 3.0°C - 3.13.13 1300		
OPMLO	10	1208979	Sisterbar	55	0.346	7064 Dg / 3.2 °C - 3.13.13 1300		
OPTRK	11	1208980	Sisterbar	40	0.348	6751 Dg / 2.8 °C - 3.13.13 1630		
OPTRO	12	1208981	Sisterbar	40	0.351	6885 Dg / 3.1 °C - 3.13.13 1630		
OPTCK	13	1208972	Sisterbar	30	0.345	7101 Dg / 4.5 °C - 3.13.13 1630		
OPTCO	14	1208973	Sisterbar	30	0.346	6828Dg / 2.9 °C - 3.13.13 1630		
OPTLK	15	1208970	Sisterbar	40	0.355	6940 Dg / 3.8 °C - 3.13.13 1630		
OPTLO	16	1208985	Sisterbar	40	0.347	7018 Dg / 4.5 °C - 3.13.13 1630		
I9B	B			525	DATA LINE TO VW INTERFACE #9, FROM TOWER 4 CABINET			
I9C	C			90	CONTROL LINE TO VW INTERFACE #9, CHAIN FROM JBOX #23B			

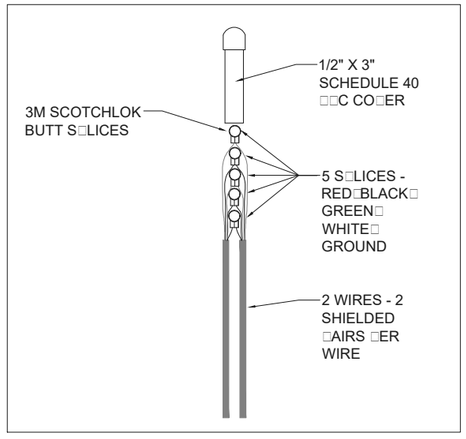

NOTE:
- ONCE ALL 5 LEAD WIRES ARE CONNECTED TO CABLE EXTENSION USING 3M SCOTCHLOK BUTT S□LICES□THEY ARE INSERTED INTO □□C CO□ER. TO ENSURE THAT THE S□LICES ARE WATER□ROOF AND NON-DESTRUCTIBLE AN E□OXY IS IN□ECTED TO FILL IN THE □OIDS.

- FOR ADDITIONAL INFORMATION CONCERNING THE 3M SCOTCHLOK S□LICES AND E□OXY LOCTITE E 05MR REFER TO THE A□□ENDIX.

LEGEND:
VW SISTERBAR
CABLE

© 2012 BRIDGE DIAGNOSTICS INC.

BDI Bridge Diagnostics, Inc.
1995 57th Court North Suite 100
Boulder, Colorado 80301
303-494-3230

NO.	DATE	REVISION DESCRIPTION	BY

IRONTON-RUSSELL BRIDGE -
LONG TERM MONITORING-
IRONTON, OH

T□e □ser ac□nowled□es t□at t□e Instr□□entation Doc□□ents are Instr□□ents o□ □o□ess bnoi ser□ice□ and are □otected □y Co□□on Co□y□□t. T□is doc□□ent is t□e □ro□erty o□ Br□d□e Dia□nostics Inc.□ and is□all not □e □od□□ed□a□ended or altered□is any way. It□is□ex□ected□or its□□□ation □□r□oses only. T□e User a□rees to □old □ar□less□ its□e□ n□y and de□end Br□d□e Dia□nost□s Inc. a□ainst any and all da□a□es□cla□□s and losses□ incl□d□n□ de□ense costs□ar□s□n□ o□ t□e any□se□ re□se or co□y□□o□t□is doc□□ent.

BDI NO. 120103-OH	
CLIENT NO. 93C	
CHECKED BY: ACP	SCALE: N.T.S.
DRAWN BY: FAA	DATE: 11/20/2012

INSTRUMENTATION - PIER 5 CONDUIT AND WIRING

LTI-30

DRAWING NO.

3M

Scotchlok™

UR2, UY2 and UB2A Connectors

Proven splicing technology designed for your specific splicing applications.



1

Over 30 years ago, 3M introduced the industry's original IDC Connector, the 3M™ Scotchlok UR Connector. The latest series of connectors, the Scotchlok UR2, UY2, and UB2A Connectors, feature that same originality in technological advantages. Building on the successful Scotchlok Connector's design, shape, color-coded cap concepts, and element technology, the Scotchlok Series 2 Connectors additionally incorporate full wire range capability, increased port size to accommodate up to .082" (2.08 mm) insulation sizes, double elements in all products and a new solvent resistant plastic construction.

The UR2 Connector for general butt splicing

The UR2 Connector accepts any two or three solid copper conductor combinations of 19-26 AWG (0.9mm - 0.4 mm) air core or filled cable with a maximum insulation O.D. of .082" (2.08 mm). The wires joined can be of different wire gauges.

Its three ports accept two or three conductors for butt splicing. And like most Scotchlok Connectors, the UR2 is filled with a sealant to provide moisture resistance. A dry version of the UR2, the UR2-D, is also available.

The UR2 and UR2-D Connectors are available in box, bulk, bin, jumbo package and cartridge. The cartridges, containing ten connectors each, are for use with the Scotchlok E-9C Series Tools.

The UY2 Connector for smaller splice bundles

Approximately half the size of the UR2, the UY2 Connector can handle a higher pair count cable and keep the splicing bundle O.D. to a minimum.

The UY2's two ports accept any two solid copper conductor combinations of 19-26 AWG (0.9 mm - 0.4 mm) filled or air core cable with a maximum insulation O.D. of .082" (2.08 mm). The wires joined can be of different wire gauges. Factory inserted sealant insulates the connections, protects against corrosion, and seals out moisture. In addition, the UY2 is available in a dry version, the UY2-D.

The UY2 and UY2-D are available in box, bulk, bin and cartridge.

The UB2A Connector: a unique time-saver for tap splicing

The pre-crimp feature of this compact bridging connector gives the craftsperson a time saving edge. By positioning the UB2A on the conductor and pre-crimping, the conductor is prevented from slipping out of the connector before the crimp is completed. A thin membrane molded into the tap wire entry port also assists the craftsperson by securing the tap wire until the crimp is completed. Like the UR2, a factory-installed sealant insulates against corrosion, and seals out moisture. The UB2A-D, a dry version, is available as well.

The UB2A permits tapping directly onto an existing conductor without interrupting service. In ready access closures, the UB2A eliminates cutting cable pairs, opening pairs, and piecing out wires.

Fast and easy to work with, the UB2A accepts 19-26 AWG (0.9 mm - 0.4 mm) plastic-, paper-, or pulp-insulated solid copper wire with a maximum O.D. of .082" (2.08 mm). The wires joined can be of different wire gauges.

The UB2A and UB2A-D are available in box, bulk and bin.

Dry versions of connectors

The UR2-D, UY2-D and UB2A-D are dry versions of the UR2, UY2 and UB2A. They are designed for splicing PIC, pulp and paper conductors where a nonfilled connector is preferred.

3M™ Scotchlok™ UR2, UY2 and UB2A Connectors

Ordering Information



2



3

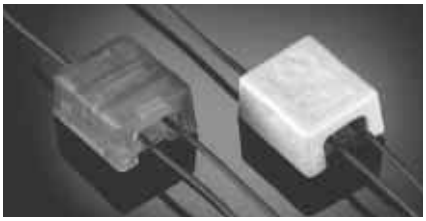

4

Scotchlok UR2/UR2-D
Butt Connector
Box (UR2 only)
Packing: 100/box, 1000/cs., 3 lbs. (1.36 kg.)/cs
Shipping Unit: 1000 connectors
Bulk
Packing: 500/box, 5000/cs., 15.2 lbs. (6.7 kg)/cs.
Shipping Unit: 5000 connectors
Bin
Packing: 20/bag, 1000/bin, 3.0 lbs. (1.4 kg)/cs.
Shipping Unit: 1000 connectors
Cartridge
Packing: 10/cart., 100/pk., 1000/cs., 4.6 lbs. (2.09 kg)/cs.
Shipping Unit: 1000 connectors (10 packs)

Scotchlok UY2/UY2-D
Butt Connector
Box (UY2 only)
Packing: 100/box, 1000/cs., 1.3 lbs. (0.9 kg)/cs.
Shipping Unit: 1000 connectors
Bulk
Packing: 1000/box, 5000/cs., 6.1 lbs. (2.8 kg)/cs.
Shipping Unit: 5000 connectors
Bin
Packing: 20/bag, 1000/bin, 1.5 lbs. (0.68 kg)/cs.
Shipping Unit: 1000 connectors
Cartridge
Packing: 12/cart., 120/pk., 1200/cs., 3.5 lbs. (1.4 kg)/cs.
Shipping Unit: 1200 connectors (10 packs)

Scotchlok UB2A/UB2A-D
Tap Connector
Box
Packing: 100/box, 1000/cs., 2.6 lbs. (1.2 kg)/cs.
Shipping Unit: 1000 connectors
Bin
Packing: 20/bag, 1000/bin, 2.5 lbs. (1.1 kg)/cs.
Shipping Unit: 1000 connectors
Bulk
Packing: 500/box, 5000/cs. 12.9 lbs. (5.9 kg)/cs.
Shipping Unit: 1000 connectors

Product Specifications

SCOTCHLOK CONNECTOR	TYPE CONNECTION	MAXIMUM INSULATION O.D.		CABLE TYPE				APPROVED TOOLS
				PIC-unfilled		PIC-filled		Pulp or Paper*		Mechanical advantage indicated in ( )
		in.	Metric (mm)	AWG	metric (mm)	AWG	metric (mm)	AWG	metric (mm)	
UR2 UR2-D		.082	2.08	19-26	0.9-0.4	19-26	0.9-0.4	19-26	0.9-0.4	E-9C/CW (7:1), E-9Y** (3:1)
UY2 UY2-D		.082	2.08	19-26	0.9-0.4	19-26	0.9-0.4	19-26	0.9-0.4	E-9B/E-9BM (10:1), E-9E (4:1)
UB2A UB2A-D		.082	2.08	19-26	0.9-0.4	19-26	0.9-0.4	19-26	0.9-0.4	

*Use caution to make sure insulation is pushed completely into connector before crimping. Scotchlok communication connectors may be used on standard polyethylene wire insulation, the polypropylene wire insulation of Filled Cable and on pulp. Use of a connector is limited only to port size. Wire sizes may be intermixed within a connector.

**The E-9BM and E-9C tools are recommended when splicing 19 AWG conductors.

Important Notice

All statements, technical information, and recommendations related to Seller's products are based on information believed to be reliable, but the accuracy or completeness thereof is not guaranteed. Before utilizing the product, the user should determine the suitability of the product for its intended use. The user assumes all risks and liability whatsoever in connection with such use.

Any statements or recommendations of the Seller which are not contained in the Seller's current publications shall have no force or effect unless contained in an agreement signed by an authorized officer of Seller. The statements contained herein are made in lieu of all warranties, expressed or implied, including but not limited to the implied warranties of merchantability and fitness for a particular purpose which warranties are hereby expressly disclaimed.

SELLER SHALL NOT BE LIABLE TO THE USER OR ANY OTHER PERSON UNDER ANY LEGAL THEORY, INCLUDING BUT NOT LIMITED TO NEGLIGENCE OR STRICT LIABILITY, FOR ANY INJURY OR FOR ANY DIRECT, INDIRECT, INCIDENTAL OR CONSEQUENTIAL DAMAGES SUSTAINED OR INCURRED BY REASON OF THE USE OF ANY OF THE SELLER'S PRODUCTS.

3M

Telecom Systems Division
6801 River Place Blvd.
Austin, TX 78726-9000
800/426 8688
FAX 800/626 0329
http://www.3M.com/telecom

40% Pre-consumer waste paper
10% Post-consumer waste paper

Litho in USA.

© 3M 1998 80-6107-4679-6(1085.0)SP-1

Mouser Electronics

Authorized Distributor

Click to View Pricing, Inventory, Delivery & Lifecycle Information:

3M:

UR2 (BX) UY2(BOXED) UR2-PK25 UY2-PK50 UY2-JAR500 UR2-JAR500 UR2-PK50 UB2A-25/PACK UY2-25/PACK UR2(BULK) UY2(BULK) UY2-D(CART)

LOCTITE®

Hysol® E-05MR™

June 2009

PRODUCT DESCRIPTION

Hysol® E-05MR™ provides the following product characteristics:

Technology	Epoxy
Chemical Type	Epoxy
Appearance (Resin)	Ultra clear
Appearance (Hardener)	Ultra clear
Appearance (Mixed)	Water white clear liquid[LMS]
Components	Two component - requires mixing
Viscosity	Medium
Mix Ratio, by volume - Resin : Hardener	1 : 1
Mix Ratio, by weight - Resin : Hardener	1 : 1
Cure	Room temperature cure after mixing
Application	Bonding

Hysol® E-05MR™ is a general purpose two-component epoxy adhesive which develops high strength on a wide range of substrates. The gap filling properties make this adhesive system suitable for rough and poorly fitting surfaces made from metal, ceramic, rigid plastics or wood. Once mixed, the two component epoxy cures at room temperature to form an ultra clear adhesive bondline with excellent impact resistance.

TYPICAL PROPERTIES OF UNCURED MATERIAL

Resin:

Specific Gravity @ 25 °C	1.17
Viscosity, Cone & Plate, mPa·s (cP):	
Cone CP50-1 @ shear rate 100 s^{-1}	18,000 to 25,000
Flash Point - See MSDS	

Hardener:

Specific Gravity @ 25 °C	1.16
Viscosity, Cone & Plate, mPa·s (cP):	
Cone CP50-1 @ shear rate 100 s^{-1}	18,000 to 25,000
Flash Point - See MSDS	

Mixed:

Specific Gravity @ 25 °C	1.16
Flash Point - See MSDS	
Gel Time @ 22 °C, minutes	7 to 12[LMS]

TYPICAL CURING PERFORMANCE

Fixture Time

Fixture time is defined as the time to develop a shear strength of 0.1 N/mm² .

Fixture Time, ISO 4587, minutes:	
Steel (grit blasted), @ 22 °C	10 to 15

Cure Speed vs. Time

The graph below shows shear strength developed with time on Aluminum (acid etched) lapshears @ 25 °C with an average bondline gap of 0.1 to 0.2 mm and tested according to ISO 4587.

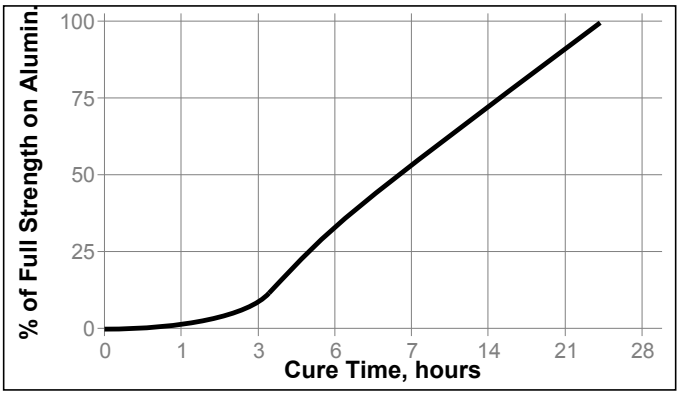

TYPICAL PROPERTIES OF CURED MATERIAL

Cured @ 22 °C for 5 days

Physical Properties:

Glass Transition Temperature (Tg) ISO 11359-2, °C	39
Shore Hardness, ISO 868, Durometer D	78
Coefficient of Thermal Expansion, ISO 11359-2, K^{-1}:	
Pre Tg	49×10^{-6}
Post Tg	188×10^{-6}
Linear Shrinkage, ASTM D 792, %	1.3
Volume Shrinkage, ASTM D 792, %	3.9

Electrical Properties:

Dielectric Breakdown Strength, IEC 60243-1, kV/mm	34

Cured @ 22 °C for 3 days

Physical Properties:

Elongation, at break, ISO 527-3, %		4.5
Tensile Strength, at break, ISO 527-3	N/mm² (psi)	50 (7,240)
Tensile Modulus, ISO 527-3	N/mm² (psi)	1,500 (217,440)

TYPICAL PERFORMANCE OF CURED MATERIAL

Adhesive Properties

Cured for 5 days @ 22 °C and 0.13 mm gap

Lap Shear Strength, ISO 4587:

Steel (grit blasted)	N/mm² (psi)	23 (3,380)
Aluminum (abraded)	N/mm² (psi)	7 (1,010)

Henkel

Aluminum (anodised)	N/mm² (psi)	14 (2,080)
Stainless steel	N/mm² (psi)	5 (770)
Polycarbonate	N/mm² (psi)	3 (380)
Nylon to Steel (grit blasted)	N/mm² (psi)	2 (320)
Wood (Pine) to Steel (grit blasted)	N/mm² (psi)	7 (1,020)

Block Shear Strength, ISO 13445:

PVC	N/mm² (psi)	1 (160)
ABS	N/mm² (psi)	5.7 (820)
Epoxy	N/mm² (psi)	11 (1,570)
Acrylic	N/mm² (psi)	1.5 (220)
Glass	N/mm² (psi)	6.6 (950)

Impact Strength, ISO 9653, J:

Steel (grit blasted)	5
Aluminum (etched)	6

Cured for 2 hours @ 65 °C

Lap Shear Strength, ISO 4587:

Aluminum (acid etched) 0.13 mm gap	N/mm² (psi)	24.0[LMS] (1,080)

TYPICAL ENVIRONMENTAL RESISTANCE

Cured for 5 days @ 22 °C

Lap Shear Strength, ISO 4587:

Steel (grit blasted), 0.13 mm gap

Chemical/Solvent Resistance

Aged under conditions indicated and tested @ 22 °C.

		% of initial strength	
Environment	**°C**	**500 h**	**1000 h**
Air	87	135	162
Motor oil (10W30)	87	124	133
Unleaded gasoline	87	12	21
Water/glycol 50/50	87	26	20
Water	22	140	126
Acetone	22	99	101
Isopropanol	22	99	88
Salt fog	22	98	90
Condensing Humidity	49	78	46
95% RH	40	110	108

GENERAL INFORMATION

This product is not recommended for use in pure oxygen and/or oxygen rich systems and should not be selected as a sealant for chlorine or other strong oxidizing materials

For safe handling information on this product, consult the Material Safety Data Sheet (MSDS).

Directions for use:

1. For high strength structural bonds, remove surface contaminants such as paint, oxide films, oils, dust, mold release agents and all other surface contaminants.
2. Use gloves to minimize skin contact. DO NOT use solvents for cleaning hands.
3. **Dual Cartridges:** To begin using a new cartridge, remove cartridge cap and dispense a small amount of adhesive, making sure both parts A&B are extruding. Attach nozzle and dispense approximately 25 to 50mm, before applying onto part to be bonded. Partially used cartridges can be stored with the mixing nozzle attached. To reuse, remove and discard old nozzle, attach the new nozzle, dispense approximately 25 to 50mm, before applying onto part to be bonded.
   Hand Mixing: Combine Part A & Part B in the correct ratio and mix thoroughly. Be sure to scrape both the sides and bottom of mixing container. Mix for approximately 15 seconds after uniform color is obtained. Heat build-up during or after mixing is normal. Do not mix quantities greater than 0.02kg as excessive exotherm or heat build up will develop. Mixing smaller amounts will minimize heat build-up
   Bulk Containers: Normally material is dispensed through volumetric metered mixing equipment, attached to static mix nozzles. It may also be mixed by weight or volume as described above.
4. For maximum bond strength apply adhesive evenly to both surfaces to be joined.
5. Application to the substrates should be made within 5 minutes. Larger quantities and/or higher temperatures will reduce this working time.
6. Join the adhesive coated surfaces and allow to cure. Higher temperatures will speed up curing.
7. Keep assembled parts from moving during cure. The bond should be allowed to develop full strength before subjecting to any service load.
8. Excessive uncured adhesive can be cleaned up with ketone type solvents.

Loctite Material Specification[LMS]

LMS dated June 16, 2009. Test reports for each batch are available for the indicated properties. LMS test reports include selected QC test parameters considered appropriate to specifications for customer use. Additionally, comprehensive controls are in place to assure product quality and consistency. Special customer specification requirements may be coordinated through Henkel Quality.

Storage

Store product in the unopened container in a dry location. Storage information may be indicated on the product container labeling.

Optimal Storage: 8 °C to 21 °C. Storage below 8 °C or greater than 28 °C can adversely affect product properties. Material removed from containers may be contaminated during use. Do not return product to the original container. Henkel Corporation cannot assume responsibility for product which has been contaminated or stored under conditions other than those previously indicated. If additional information is required, please contact your local Technical Service Center or Customer Service Representative.

Conversions
(°C x 1.8) + 32 = °F
kV/mm x 25.4 = V/mil
mm / 25.4 = inches
µm / 25.4 = mil
N x 0.225 = lb
N/mm x 5.71 = lb/in
N/mm² x 145 = psi
MPa x 145 = psi
N·m x 8.851 = lb·in
N·m x 0.738 = lb·ft
N·mm x 0.142 = oz·in
mPa·s = cP

Note
The data contained herein are furnished for information only and are believed to be reliable. We cannot assume responsibility for the results obtained by others over whose methods we have no control. It is the user's responsibility to determine suitability for the user's purpose of any production methods mentioned herein and to adopt such precautions as may be advisable for the protection of property and of persons against any hazards that may be involved in the handling and use thereof. In light of the foregoing, **Henkel Corporation specifically disclaims all warranties expressed or implied, including warranties of merchantability or fitness for a particular purpose, arising from sale or use of Henkel Corporation's products. Henkel Corporation specifically disclaims any liability for consequential or incidental damages of any kind, including lost profits.** The discussion herein of various processes or compositions is not to be interpreted as representation that they are free from domination of patents owned by others or as a license under any Henkel Corporation patents that may cover such processes or compositions. We recommend that each prospective user test his proposed application before repetitive use, using this data as a guide. This product may be covered by one or more United States or foreign patents or patent applications.

Trademark usage
Except as otherwise noted, all trademarks in this document are trademarks of Henkel Corporation in the U.S. and elsewhere. ® denotes a trademark registered in the U.S. Patent and Trademark Office.

Reference 0.4

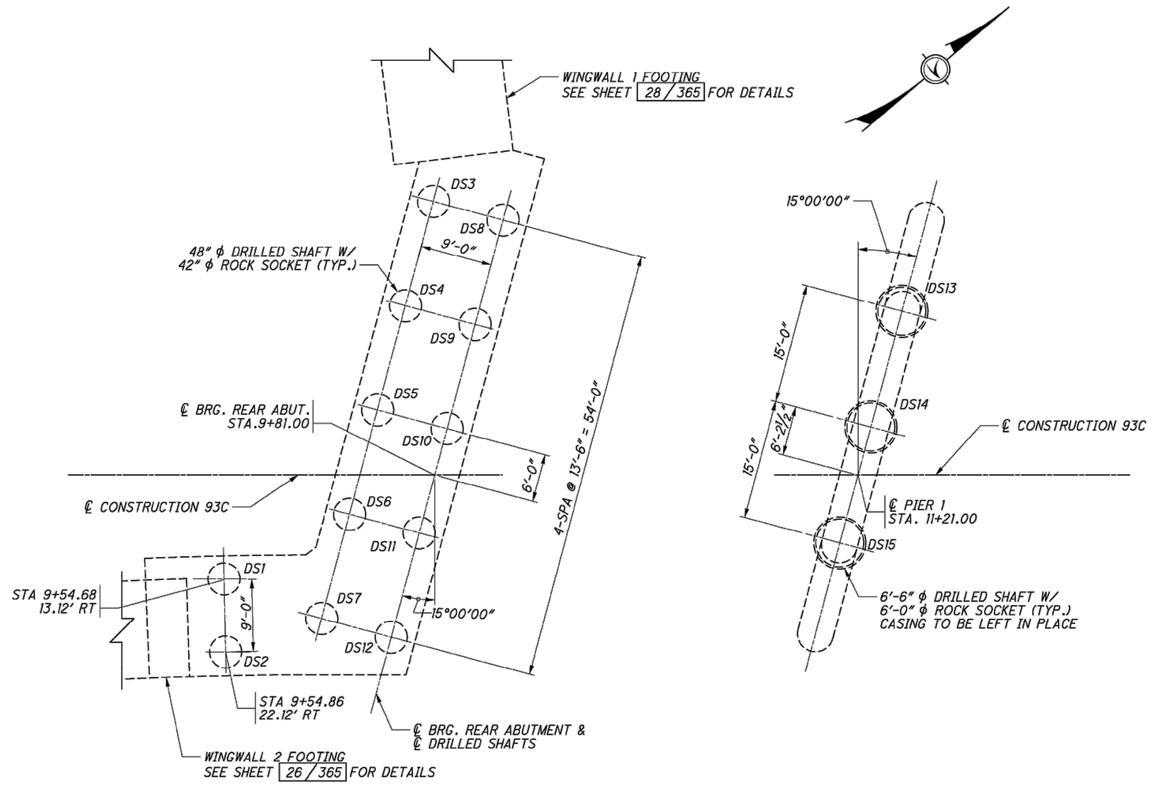

REAR ABUTMENT

PIER 1

DS 13 STATION OFFSET
PLAN 11+26.49 20.49 LT.
AS-BUILT 11+26.58 20.39 LT.

DS 14 STATION OFFSET
PLAN 11+22.61 6.00 LT.
AS-BUILT 11+22.58 5.95 LT.

DS 15 STATION OFFSET
PLAN 11+18.74 8.49 LT.
AS-BUILT 11+18.72 8.61 LT.

NOTES

1. DS DENOTES DRILLED SHAFT.
2. FOR GENERAL NOTES, SEE SHEETS 5 / 365 THRU 11 / 365
3. SEE APPROPRIATE FOUNDATION PLANS FOR LENGTHS AND REINFORCING FOR DRILLED SHAFTS.

J:\Project\0\ODOT\15005112 Ironton Russell\LAW\81595\structures\LAW093_1111C\sheets\Kentucky Approach\093_0000_fp002.dgn - 4/29/2011 9:25:09 AM - john_corley

DESIGN AGENCY
URS
36 EAST 7TH STREET
SUITE 2200
CINCINNATI OHIO 45202

DESIGNED	DRAWN	REVIEWED	DATE
MJZ	GJW	RWB	02-22-11
CHECKED	REVISED	STRUCTURE FILE NUMBER	
BKL		4401263	

KY APPROACH - FOUNDATION LAYOUT
BRIDGE NO. LAW-93-0000
IRONTON RUSSELL BRIDGE OVER OHIO RIVER

LAW-93-0.00
PID No. 81595

22 / 365

409
788

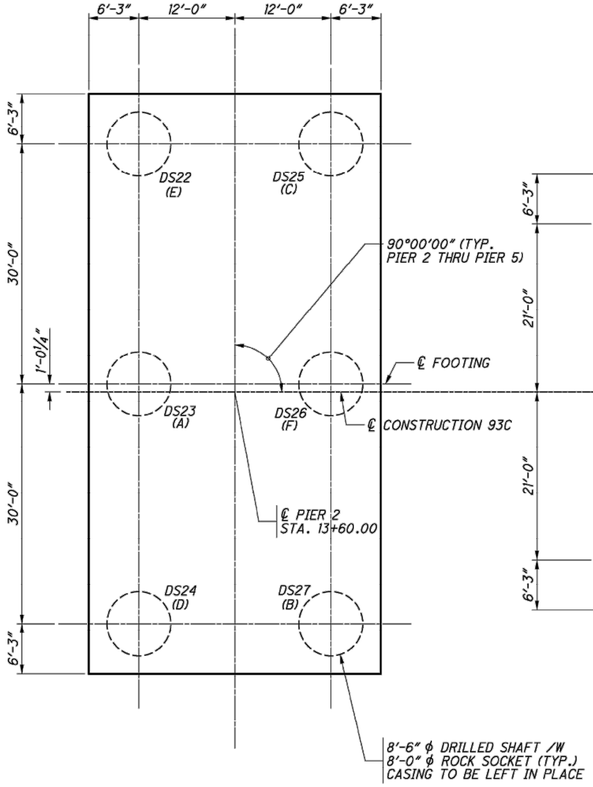

PIER 2

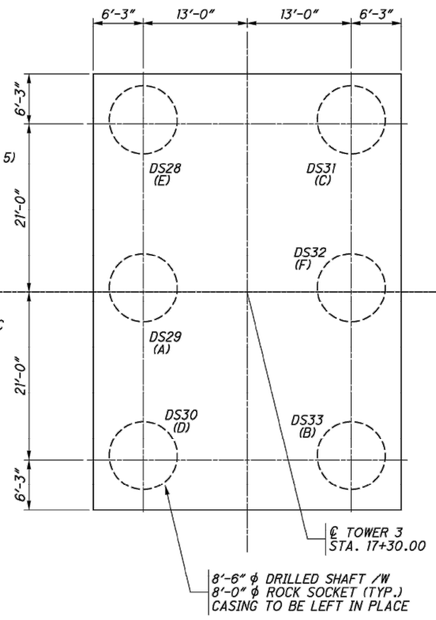

TOWER 3

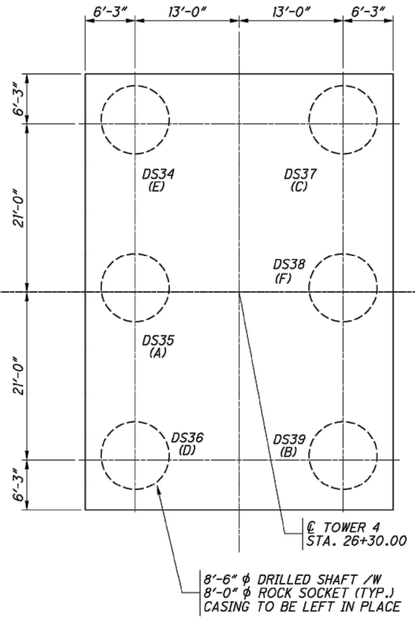

TOWER 4

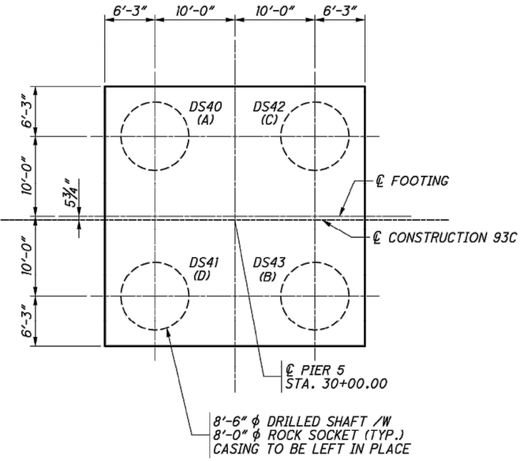

PIER 5

DS 22	STATION	OFFSET	DS 25	STATION	OFFSET
PLAN	13+48.00	31.02 LT.	PLAN	13+72.00	31.02 LT.
AS-BUILT	13+47.96	31.35 LT.	AS-BUILT	13+71.97	31.10 LT.
DS 23	STATION	OFFSET	DS 26	STATION	OFFSET
PLAN	13+48.00	1.02 LT.	PLAN	13+72.00	1.02 LT.
AS-BUILT	13+48.09	0.93 LT.	AS-BUILT	13+72.25	1.02 LT.
DS 24	STATION	OFFSET	DS 27	STATION	OFFSET
PLAN	13+48.00	28.98 RT.	PLAN	13+72.00	28.98 RT.
AS-BUILT	13+48.43	29.49 RT.	AS-BUILT	13+72.03	28.65 RT.

NOTES

1. DS DENOTES DRILLED SHAFT.
2. FOR GENERAL NOTES, SEE SHEET 5/365 THRU 11/365
3. SEE APPROPRIATE FOUNDATION PLANS FOR LENGTHS AND REINFORCING FOR DRILLED SHAFTS.
4. DRILLED SHAFTS SHALL BE CONSTRUCTED IN THE ORDER SHOWN A-F OR A-D UNLESS APPROVED BY THE ENGINEER.

J:\Project\O\ODOT\15005112 Ironton Russell\LAW\81595\structures\LAW093_1111C\sheets\Kentucky Approach\093_0000_fp003.dgn - 4/29/2011 9:27:38 AM - john_corley

DESIGN AGENCY
URS
36 EAST 7TH STREET SUITE 2200 CINCINNATI OHIO 45202

DESIGNED	DRAWN	REVIEWED	DATE
MJZ	GJW	RWB	02-22-11
CHECKED	REVISED	STRUCTURE FILE NUMBER	
BKL		44012263	

FOUNDATION LAYOUT - MAIN SPAN
BRIDGE NO. LAW-93-0000
IRONTON RUSSELL BRIDGE OVER OHIO RIVER

LAW-93-0.00
PID No. 81595

70/365

457
788

BRAYMAN construction corporation
1000 John Roebling Way Saxonburg, PA 16056
(724) 443-1533 FAX (724) 443-8733

Project IRONTON - RUSSELL SR 93
Subject PIER 1 DRILL SHAFT ASBUILT
Prepared By MS Approved By
Date Sheet No. 1 of 1

www.braymanconstruction.com

DS 13
ASBUILT STA 11+26 58
OFFSET 20 39 LT

PLAN STA 11+26 49
OFFSET 20 49 LT.

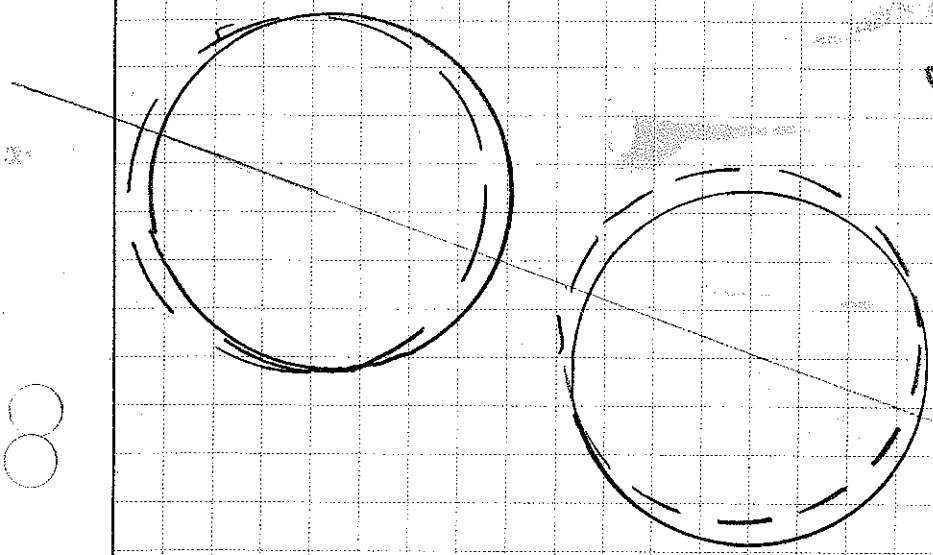

DS 14
ASBUILT STA 11+22 58
OFFSET 5 95 LT.

PLAN STA 11+22 61
OFFSET 6 00 LT.

DS 15
ASBUILT STA 11+18 72
OFFSET 8 61 RT

PLAN STA 11+18 72
OFFSET 8 49 RT

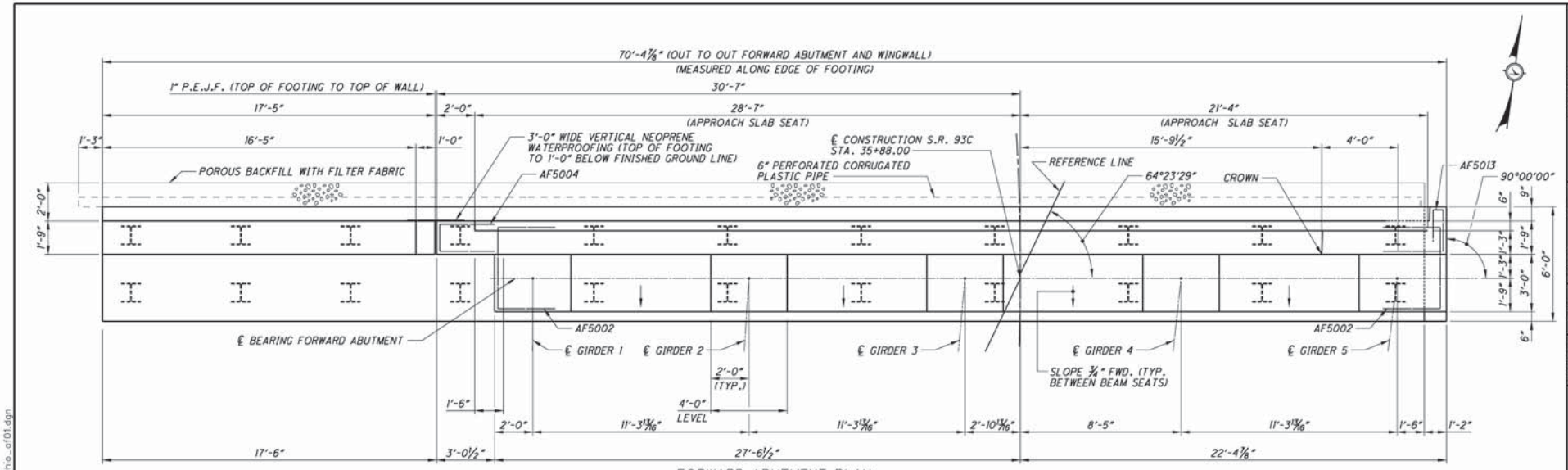

FORWARD ABUTMENT PLAN

MINIMUM LAP LENGTHS	
BAR SIZE	LENGTH
NO. 5	2'-9"
NO. 6	3'-4"
NO. 8	5'-6"

UNLESS NOTED OTHERWISE

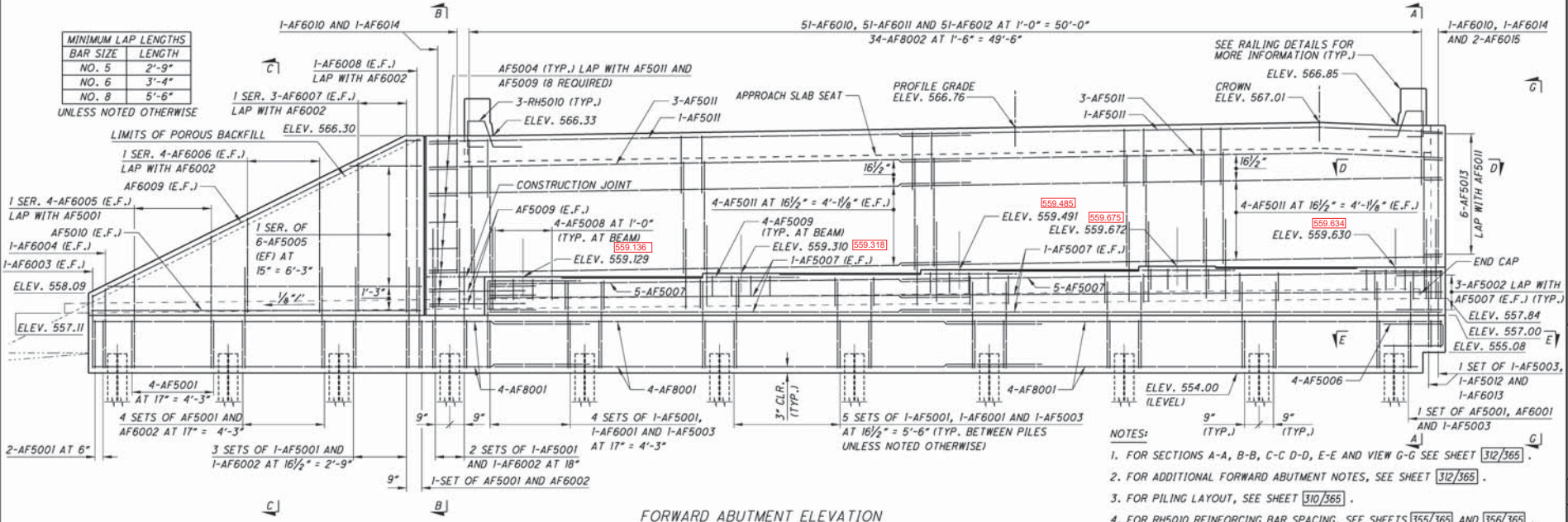

FORWARD ABUTMENT ELEVATION

NOTES:

1. FOR SECTIONS A-A, B-B, C-C D-D, E-E AND VIEW G-G SEE SHEET 312/365 .
2. FOR ADDITIONAL FORWARD ABUTMENT NOTES, SEE SHEET 312/365 .
3. FOR PILING LAYOUT, SEE SHEET 310/365 .
4. FOR RH5010 REINFORCING BAR SPACING, SEE SHEETS 355/365 AND 356/365 .
5. FOR LIGHTING CONDUIT PENETRATION, SEE SHEETS 278/788 AND 275/788 .

DESIGN AGENCY
URS
36 EAST 7TH STREET SUITE 2000 CINCINNATI, OHIO 45202

DESIGNED	DRAWN	REVIEWED	DATE
JJB	ALH/JJB	JTH	06-11-10
CHECKED	REVISED	STRUCTURE FILE NUMBER	
TES		4401263	

OHIO APPROACH - FORWARD ABUTMENT DETAILS (1 OF 2)
BRIDGE NO. LAW-93C-0000
IRONTON RUSSELL BRIDGE OVER OHIO RIVER

LAW-93-0.00
PID No. 81595

311/365
698/788

J:\Project\OV\000T\15005112 Ironton Russell\LAW\81595\structures\LAW093_111TC\sheets\Ohio Approach\093_0000_Ohio_af01.dgn

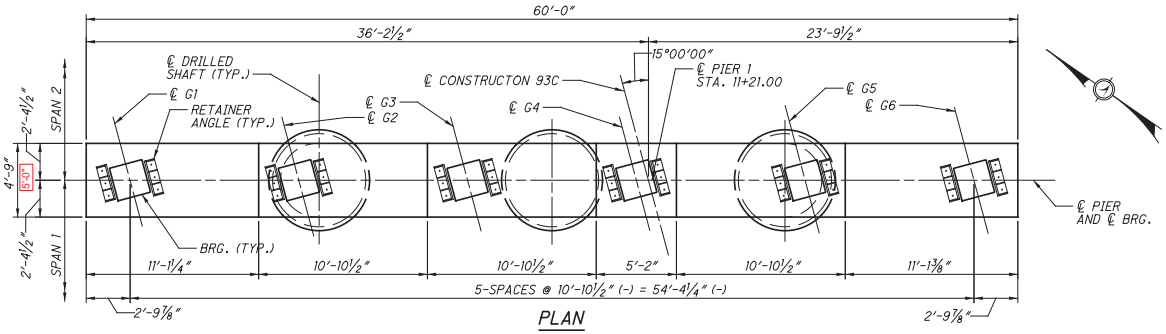

PLAN

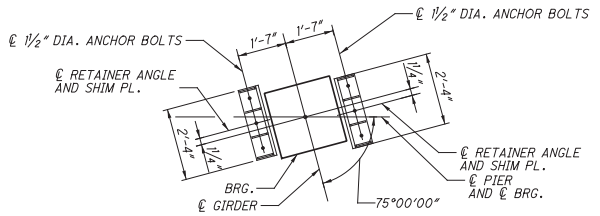

TYPICAL BEARING PLAN

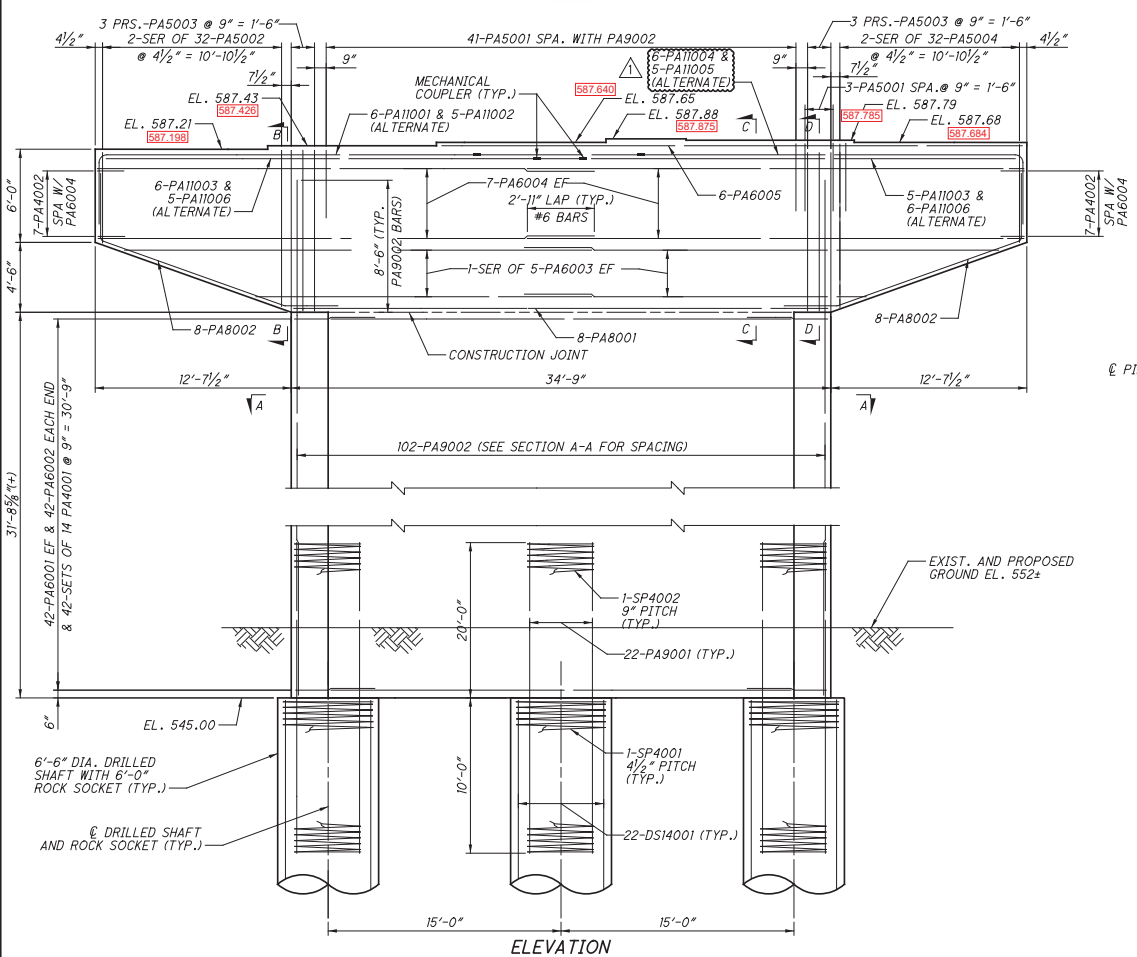

ELEVATION

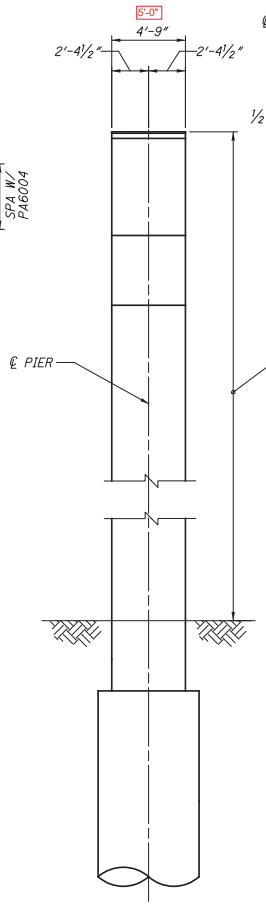

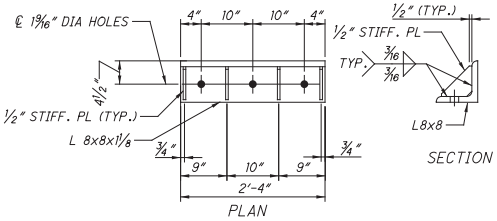

RETAINER ANGLE DETAILS

(12 RETAINING ANGLES AND SHIM PLATE REQUIRED)
DRILL 1"x8"x2'-0" SHIM PLATE TO MATCH RETAINING ANGLE.
FOR ADDITIONAL DETAILS NOT SHOWN, SEE BEARING DETAILS SHEETS 46/365 AND 47/365

NOTES

1. FOR REINFORCING STEEL LIST, SEE SHEET 66/365
2. FOR FOUNDATION LAYOUT, SEE SHEET 22/365
3. PRIOR TO BEGINNING CONSTRUCTION CONTRACTOR SHALL FIELD VERIFY LOCATION OF FIBER OPTIC CABLE APPROX. 13 FEET FROM CENTERLINE OF PIER. THE CONTRACTOR IS RESPONSIBLE FOR PROTECTING THIS FIBER OPTIC LINE DURING CONSTRUCTION. ANY DAMAGE TO THE FIBER OPTIC CABLE SHALL BE IMMEDIATELY REPAIRED AT THE CONTRACTORS EXPENSE.
4. FOR SECTIONS A-A THRU D-D, SEE SHEET 35/365
5. BRIDGE SEAT REINFORCING, SETTING ANCHORS: ACCURATELY PLACE REINFORCING STEEL IN THE VICINITY OF THE BRIDGE SEAT TO AVOID INTERFERENCE WITH THE DRILLING OF RETAINER ANGLE ANCHOR HOLES OR THE PRE-SETTING OF RETAINER ANGLE ANCHORS.

NO.	REVISIONS	DATE	REV. BY
1	QUANTITIES REVISED	6/12	BKL

DESIGN AGENCY
URS
36 EAST 7TH STREET SUITE 2300 CINCINNATI, OHIO 45202

DATE 02-22-11
REVIEWED RWB
STRUCTURE FILE NUMBER 4401263
DRAWN LNG
REVISED
DESIGNED LNG
CHECKED MJZ

KY APPROACH - PIER 1 REINFORCEMENT
BRIDGE NO. LAW-93-0000
IRONTON RUSSELL BRIDGE OVER OHIO RIVER

LAW-93-0.00
PID No. 81595

34/365
421/788

J:\Project\OVODOT\15005112 Ironton Russell\LAW\81595\structures\LAW093_1111C\sheets\Kentucky Approach\093_0000_pi101.dgn - 6/1/2012 8:30:29 AM - jon_wanstrath

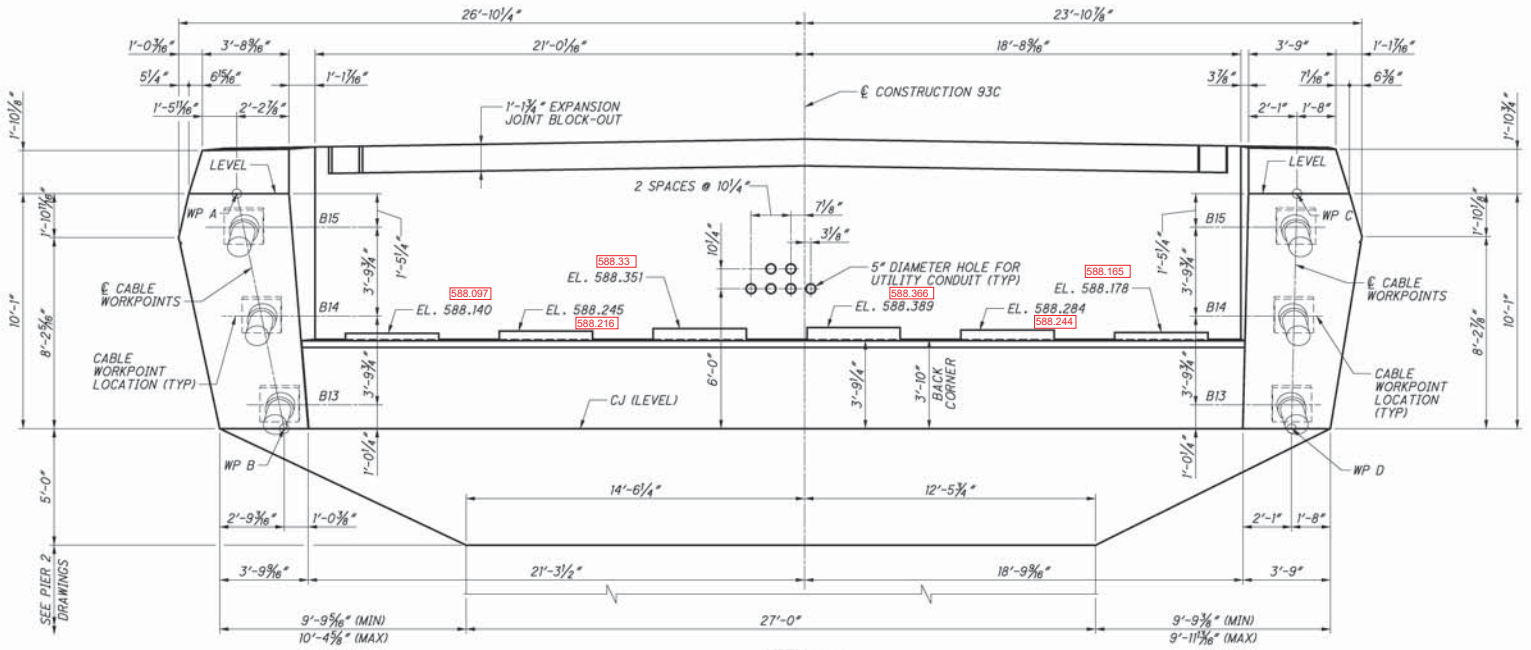

VIEW A-A

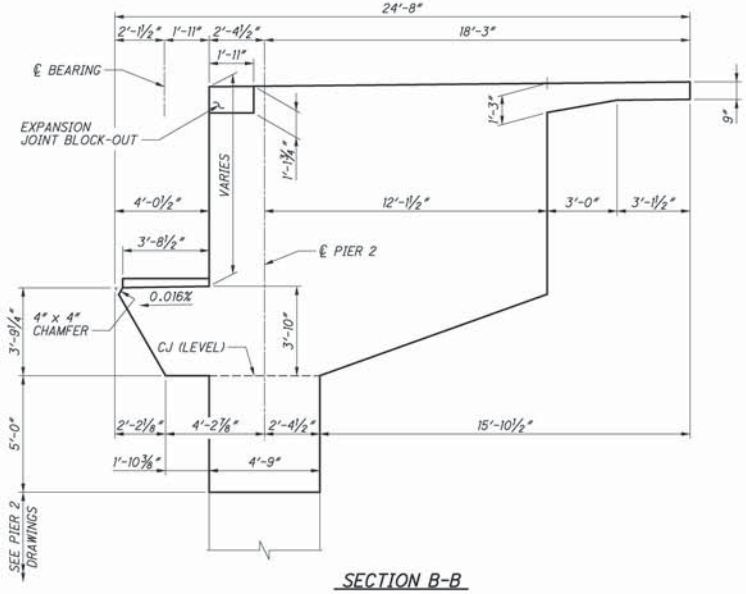

SECTION B-B

WORK POINTS	
LOCATION	ELEVATION
WP A & C	594.139
WP B & D	584.056

NOTES

1. WORK THIS SHEET WITH SHEET NO. 194/365

DESIGN AGENCY: URS, 36 EAST 7TH STREET SUITE 2200 CINCINNATI OHIO 45202
DESIGNED ASM | DRAWN CER | REVIEWED DLJ | DATE 6/2010
CHECKED BWJ | REVISED | STRUCTURE FILE NUMBER 4401263

KY DIAPHRAGM SEGMENT GEOMETRY (2 OF 4)
BRIDGE NO. LAW-93-0000
IRONTON RUSSELL BRIDGE OVER OHIO RIVER

LAW-93-0.00
PID No. 81595

195/365
582/788

E:\Bridges_XW\Ironton_Russell\LAW\81595\structures\LAW093_0000C\sheets\093_0000CSD017.dgn 4/25/2011 10:16:54 AM john_stahl

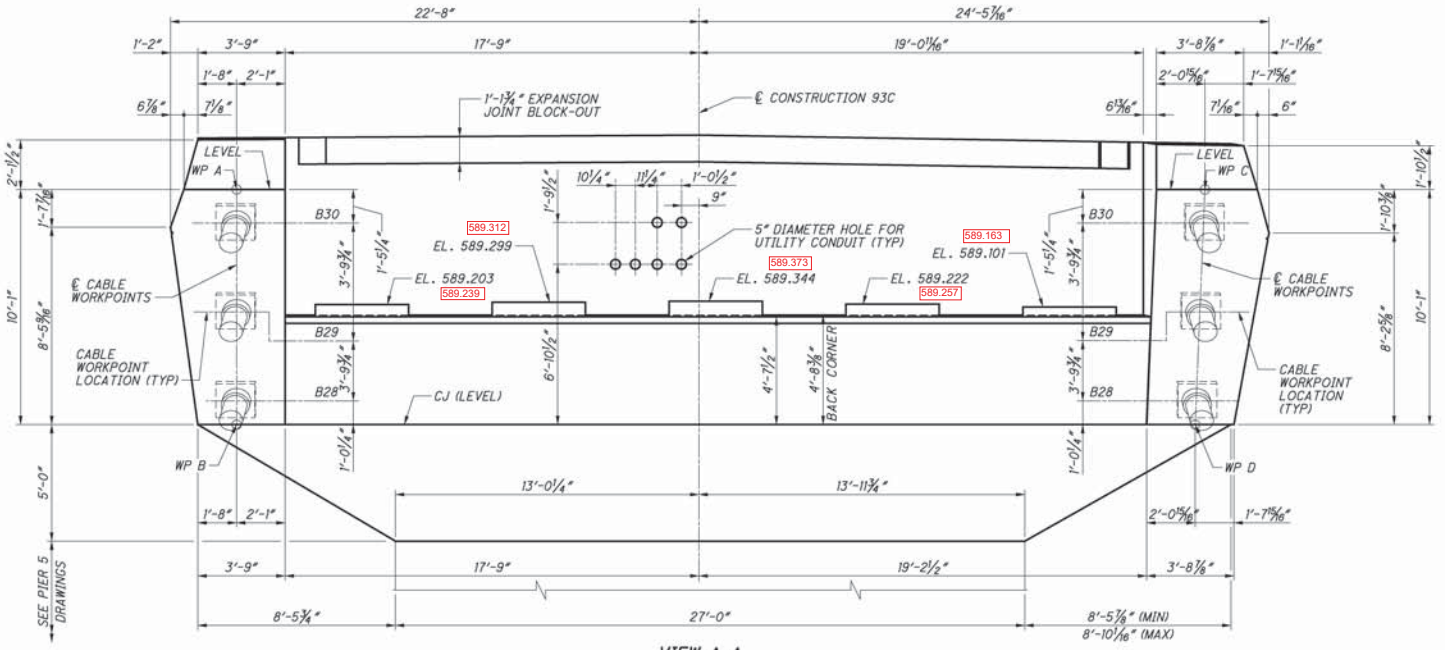

VIEW A-A

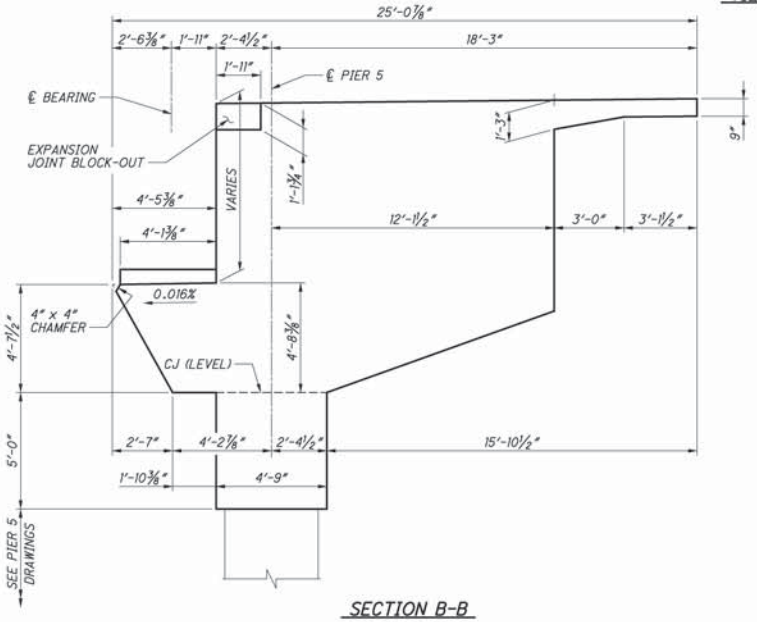

SECTION B-B

WORK POINTS	
LOCATION	ELEVATION
WP A & C	594.139
WP B & D	584.056

NOTES

1. WORK THIS SHEET WITH SHEET NO. 209/365

DESIGN AGENCY
URS
36 EAST 7TH STREET SUITE 2000 CINCINNATI OHIO 45202

DESIGNED ASM | DRAWN CER | REVIEWED DLJ | DATE 6/2010
CHECKED BWJ | REVISED | STRUCTURE FILE NUMBER 4401263

OH DIAPHRAGM SEGMENT GEOMETRY (2 OF 4)
BRIDGE NO. LAW-93-0000
IRONTON RUSSELL BRIDGE OVER OHIO RIVER

LAW-93-0.00
PID No. 81595

210/365
597
788

E:\Bridges_XW\Ironton_Russell\LAW\81595\structures\LAW093_0000C\sheets\093_0000CSD018.dgn 4/25/2011 10:20:22 AM john_stahl

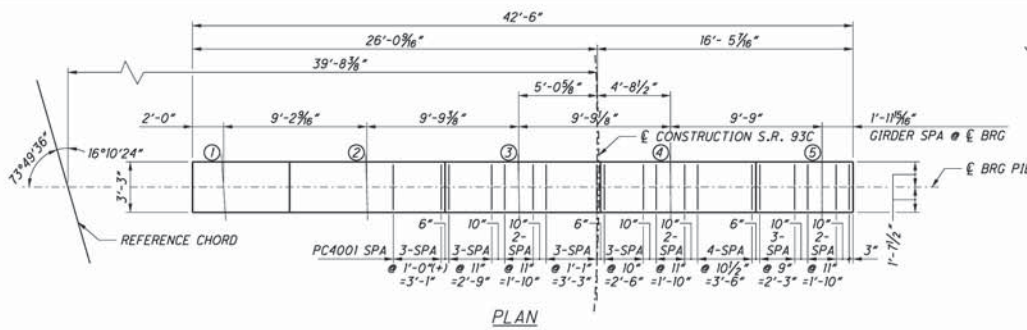

PLAN

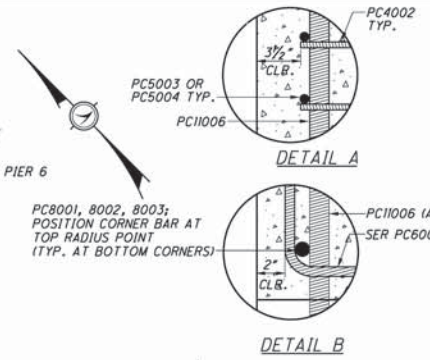

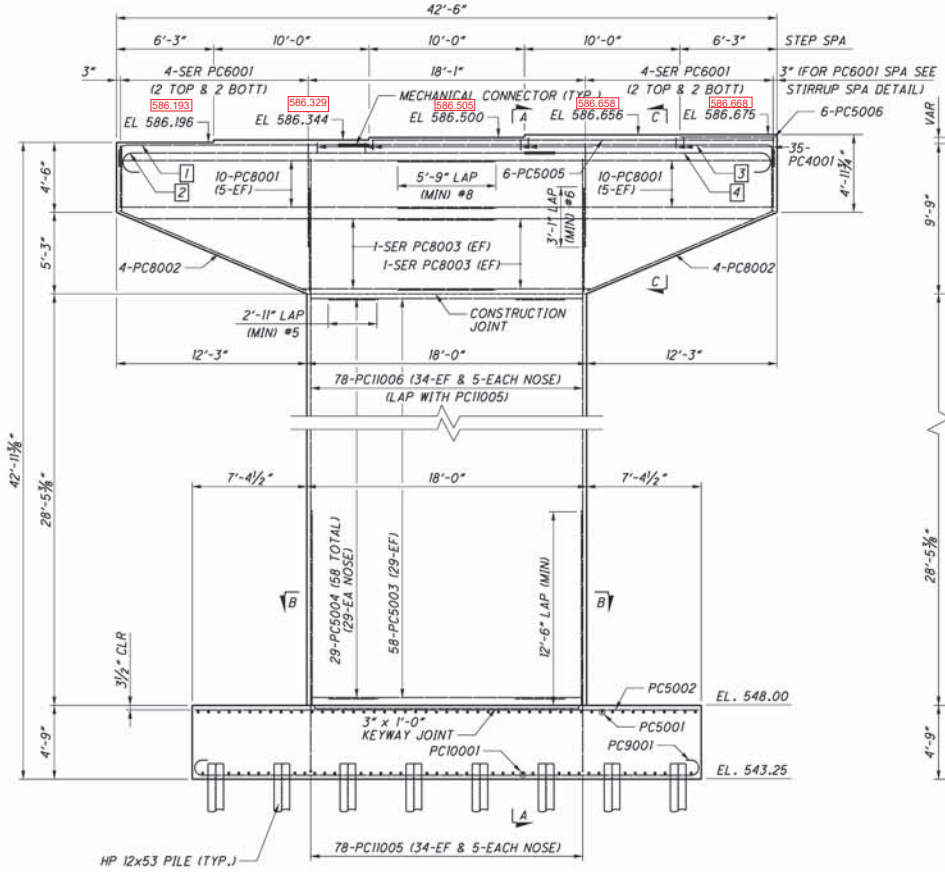

ELEVATION

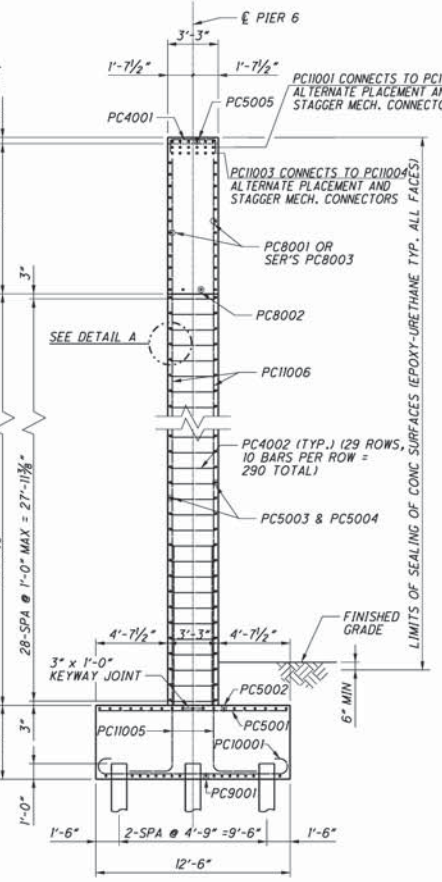

SECTION A-A

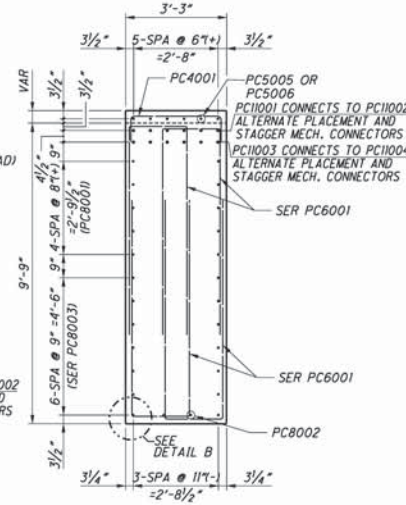

SECTION C-C

LEGEND

1. 3-PC11001 & 3-PC11002 (STAGGER MECHANICAL CONNECTORS)*
2. 3-PC11003 & 3-PC11004 (STAGGER MECHANICAL CONNECTORS)*
3. 3-PC11001 & 3-PC11002 (STAGGER MECHANICAL CONNECTORS)*
4. 3-PC11003 & 3-PC11004 (STAGGER MECHANICAL CONNECTORS)*

* STAGGER CONNECTORS VERTICALLY & HORIZONTALLY

NOTES

1. SPLICE #11 BARS IN PIER CAP USING APPROVED MECHANICAL CONNECTORS.
2. MECHANICAL CONNECTORS SHALL DEVELOP A MINIMUM ULTIMATE STRENGTH OF 125% OF THE REQUIRED YIELD STRENGTH OF THE REINFORCEMENT THEY CONNECT. MECHANICAL SPLICES SHALL MEET THE REQUIREMENTS OF ITEM 509 AND SHALL BE STAGGERED.
3. 3" MIN CLEAR COVER IN PIER STEM AND BOTTOM OF FOOTING, 2" FOR ALL OTHER SURFACES UNLESS NOTED.
4. FOR SECTION B-B, SEE SHEET 314/365.
5. FOR FOUNDATION PLAN AND FOOTING REINFORCING SEE SHEET 314/365.
6. FOR STIRRUP SPACING DETAIL, SEE SHEET 314/365.
7. FOR REINFORCING STEEL LIST, SEE SHEET 360/363.

DESIGN AGENCY: URS, 36 EAST 7TH STREET SUITE 2000 CINCINNATI OHIO 45202

DESIGNED	DRAWN	REVIEWED	DATE
JEH	KK	JTH	06-11-10
CHECKED	REVISED	STRUCTURE FILE NUMBER	
MKT		4401263	

OHIO APPROACH - PIER 6 DETAILS
BRIDGE NO. LAW-93C-0000
IRONTON RUSSELL BRIDGE OVER OHIO RIVER

LAW-93-0.00
PID No. 81595

313/365

700/788

J:\Project\OYO\ODOT\15005112 Ironton Russell\LAW\81595\structures\LAW093_111TC\sheets\Ohio Approach\093_0000_pl601.dgn

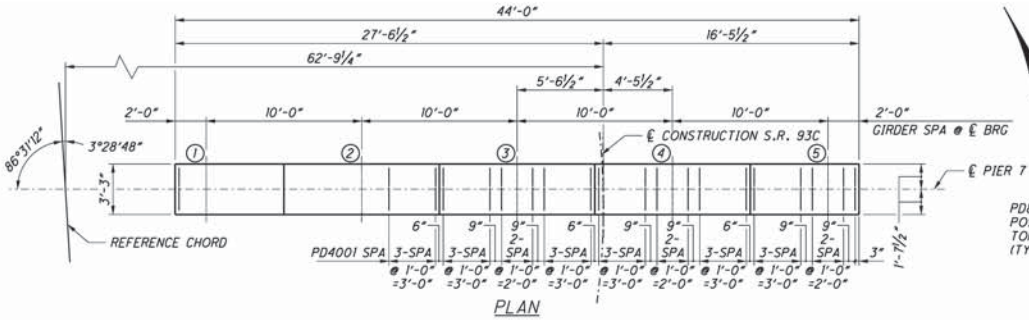

PLAN

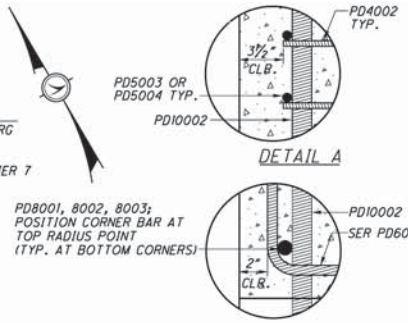

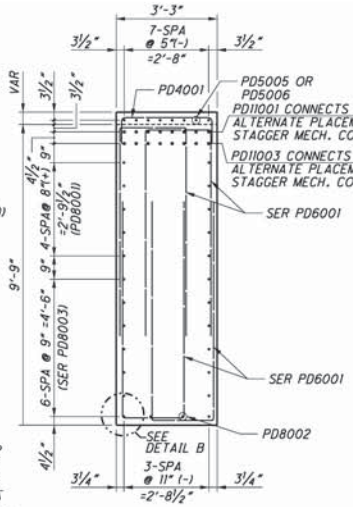

SECTION C-C

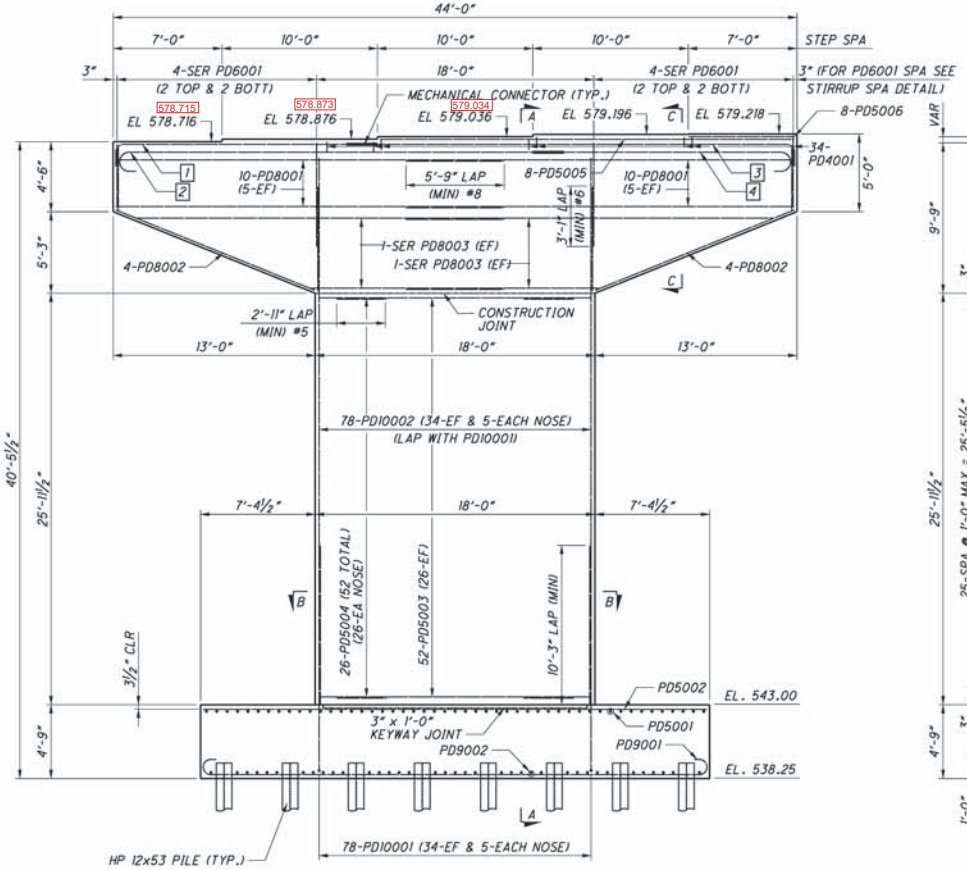

ELEVATION

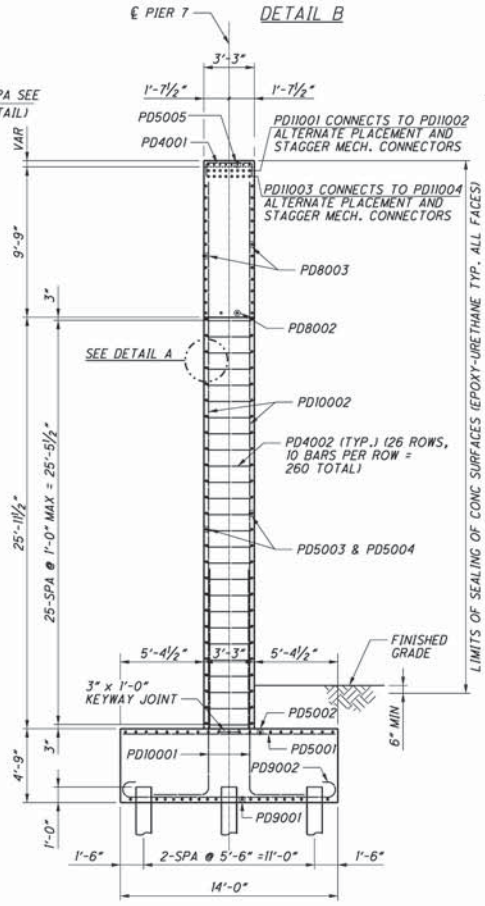

SECTION A-A

LEGEND

1. 4-PD11001 & 4-PD11002 (STAGGER MECHANICAL CONNECTORS)*
2. 4-PD11003 & 4-PD11004 (STAGGER MECHANICAL CONNECTORS)*
3. 4-PD11001 & 4-PD11002 (STAGGER MECHANICAL CONNECTORS)*
4. 4-PD11003 & 4-PD11004 (STAGGER MECHANICAL CONNECTORS)*

* STAGGER CONNECTORS VERTICALLY & HORIZONTALLY

NOTES

1. SPLICE #11 BARS IN PIER CAP USING APPROVED MECHANICAL CONNECTORS.
2. MECHANICAL CONNECTORS SHALL DEVELOP A MINIMUM ULTIMATE STRENGTH OF 125% OF THE REQUIRED YIELD STRENGTH OF THE REINFORCEMENT THEY CONNECT. MECHANICAL SPLICES SHALL MEET THE REQUIREMENTS OF ITEM 509 AND SHALL BE STAGGERED.
3. 3" MIN CLEAR COVER IN PIER STEM AND BOTTOM OF FOOTING, 2" FOR ALL OTHER SURFACES UNLESS NOTED.
4. FOR SECTION B-B, SEE SHEET 316/365.
5. FOR FOUNDATION PLAN AND FOOTING REINFORCING SEE SHEET 316/365.
6. FOR REINFORCING STEEL LIST SEE SHEET 361/365.
7. FOR STIRRUP SPACING DETAIL SEE SHEET 316/365.

DESIGN AGENCY: URS, 36 EAST 7TH STREET SUITE 2200 CINCINNATI OHIO 45202

DESIGNED MKT | DRAWN KK | REVIEWED JTH | DATE 06-11-10 | CHECKED JEH | REVISED | STRUCTURE FILE NUMBER 4401263

OHIO APPROACH - PIER 7 DETAILS
BRIDGE NO. LAW-93C-0000
IRONTON RUSSELL BRIDGE OVER OHIO RIVER

LAW-93-0.00
PID No. 81595

315/365

702/788

J:\Project\OY\ODOT\15005112 Ironton Russell\LAW\81595\structures\LAW093_111TC\sheets\Ohio Approach\093_0000_pi701.dgn

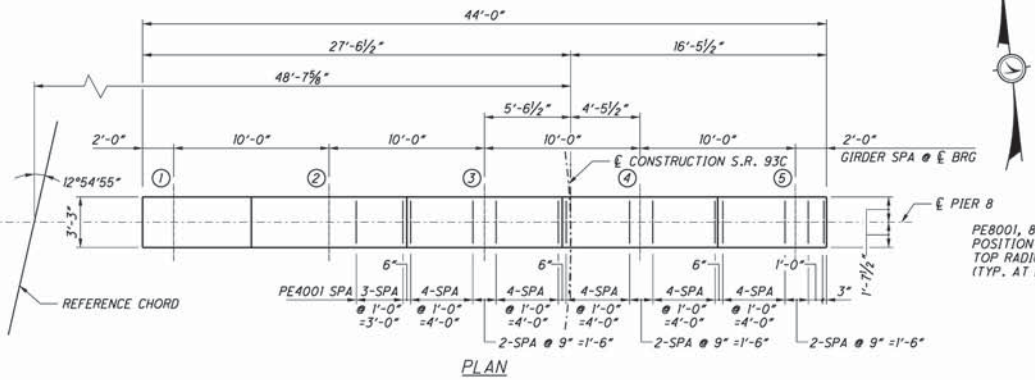

PLAN

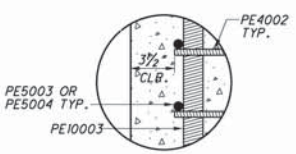

DETAIL A

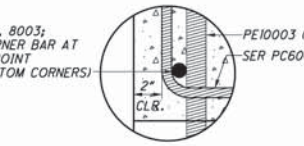

DETAIL B

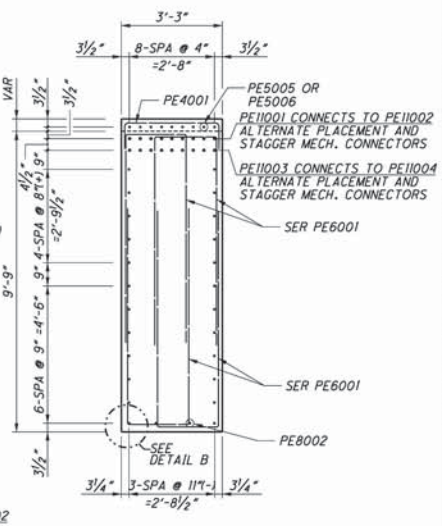

SECTION C-C

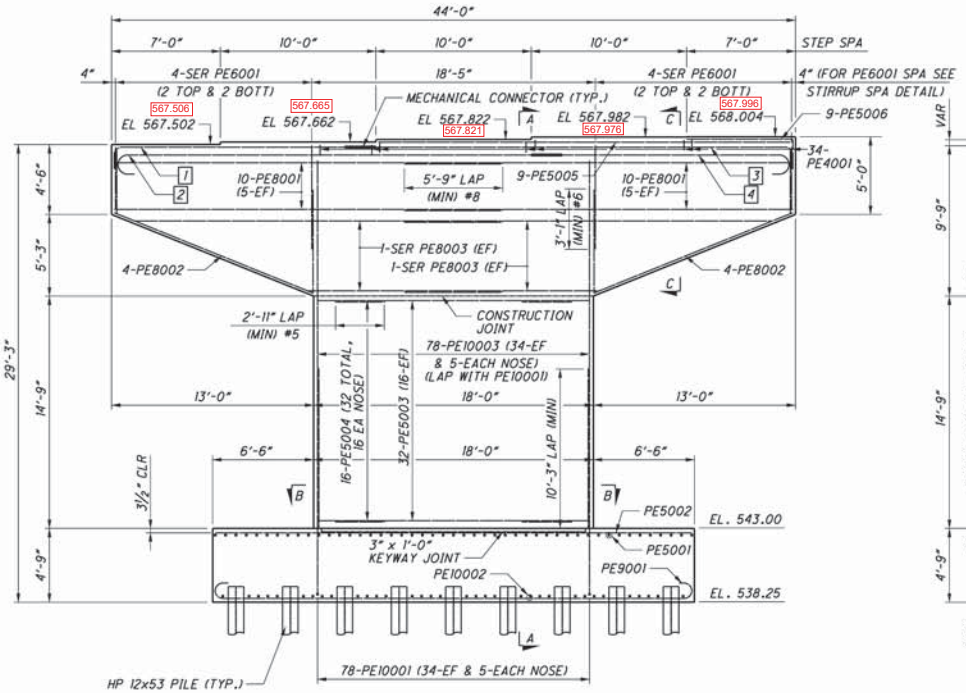

ELEVATION

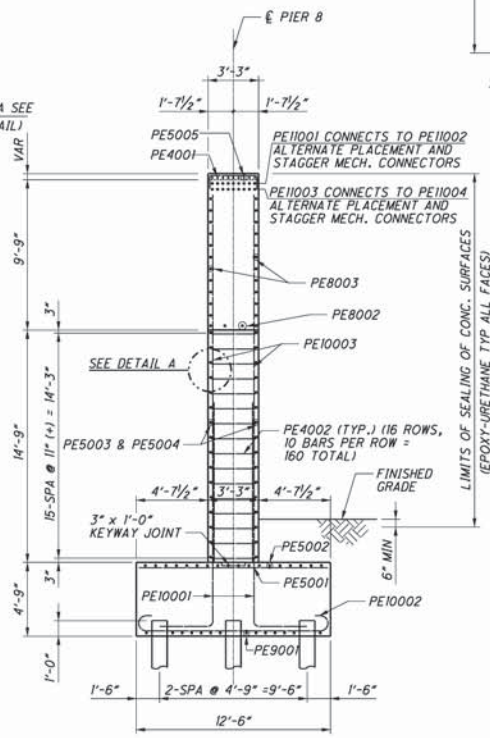

SECTION A-A

LEGEND

1. 5-PE11001 & 4-PE11002 (STAGGER MECHANICAL CONNECTORS)*
2. 5-PE11003 & 4-PE11004 (STAGGER MECHANICAL CONNECTORS)*
3. 4-PE11001 & 5-PE11002 (STAGGER MECHANICAL CONNECTORS)*
4. 4-PE11003 & 5-PE11004 (STAGGER MECHANICAL CONNECTORS)*

* STAGGER CONNECTORS VERTICALLY & HORIZONTALLY

NOTES

1. SPLICE #11 BARS IN PIER CAP USING APPROVED MECHANICAL CONNECTORS.
2. MECHANICAL CONNECTORS SHALL DEVELOP A MINIMUM ULTIMATE STRENGTH OF 125% OF THE REQUIRED YIELD STRENGTH OF THE REINFORCEMENT THEY CONNECT. MECHANICAL SPLICES SHALL MEET THE REQUIREMENTS OF ITEM 509 AND SHALL BE STAGGERED.
3. 3" MIN CLEAR COVER IN PIER STEM AND BOTTOM OF FOOTING, 2" FOR ALL OTHER SURFACES UNLESS NOTED.
4. FOR SECTION B-B, SEE SHEET 318/365.
5. FOR FOUNDATION PLAN AND FOOTING REINFORCING SEE SHEET 318/365.
6. FOR REINFORCING STEEL LIST SEE SHEET 362/365.
7. FOR STIRRUP SPACING DETAIL SEE SHEET 318/365.

DESIGN AGENCY: URS, 36 EAST 7TH STREET SUITE 2200 CINCINNATI OHIO 45202

DESIGNED MKT | DRAWN KK | REVIEWED JTH | DATE 06-11-10 | CHECKED JEH | REVISED | STRUCTURE FILE NUMBER 4401263

OHIO APPROACH - PIER 8 DETAILS
BRIDGE NO. LAW-93C-0000
IRONTON RUSSELL BRIDGE OVER OHIO RIVER

LAW-93-0.00
PID No. 81595

317/365

704
788

J:\Project\OV\000T\15005112 Ironton Russell\LAW\81595\structures\LAW093_111TC\sheets\Ohio Approach\093_0000_pi801.dgn

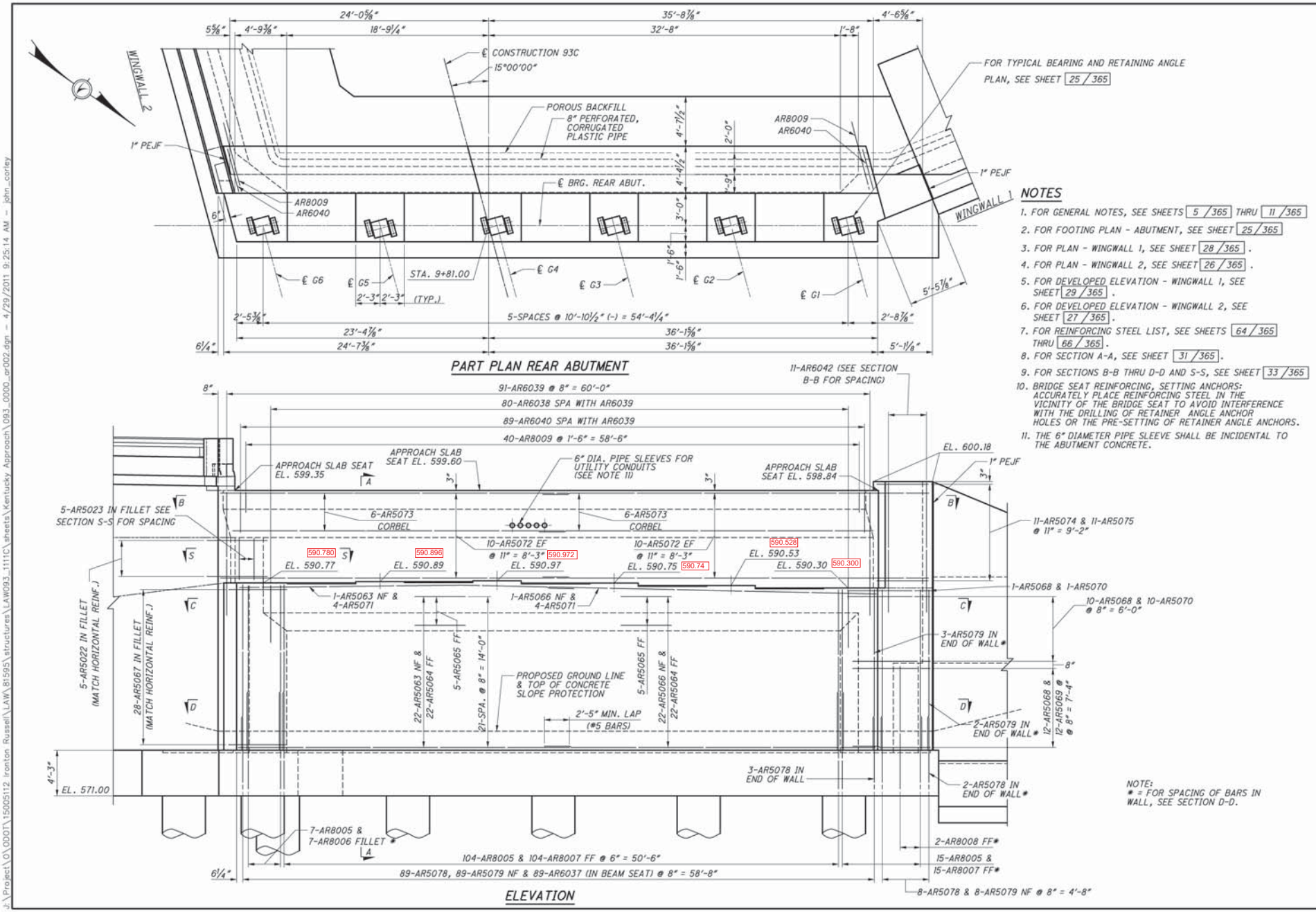

DESIGN AGENCY: URS, 36 EAST 7TH STREET SUITE 2000 CINCINNATI OHIO 45202

DESIGNED	DRAWN	REVIEWED	DATE
TJF	GJW	RWB	02-22-11
CHECKED	REVISED	STRUCTURE FILE NUMBER	
BER		4401263	

KY APPROACH - REAR ABUTMENT (2 OF 11)

BRIDGE NO. LAW-93-0000

IRONTON RUSSELL BRIDGE OVER OHIO RIVER

LAW-93-0.00

PID No. 81595

24/365

411/788

J:\Project\01\0001\15005112 Ironton Russell\LAW\81595\structures\LAW93_1111C\sheets\Kentucky Approach\093_0000_gr002.dgn — 4/29/2011 9:25:14 AM — john_corley

Pier 2 Caisson As-Builts

	DESIGN		AS-BUILT (BOTTOM)			
Caisson	STA	OFF	**STA**	**OFF**	**ERROR**	**ELEV**
DS22	13+48.	-31.02	**13+48.17**	**-30.95**	**2.21 "**	**487.04**
DS23	13+48.	-1.02	**13+48.28**	**-1.40**	**5.66 "**	**487.1**
DS24	13+48.	28.98	**13+48.16**	**29.80**	**10.04 "**	**486.86**
DS25	13+72.	-31.02	**13+71.75**	**-31.25**	**4.07 "**	**487.01**
DS26	13+72.	-1.02	**13+71.6**	**-0.85**	**5.22 "**	**487.03**
DS27	13+72.	28.98	**13+72.01**	**28.27**	**8.51 "**	**487.04**

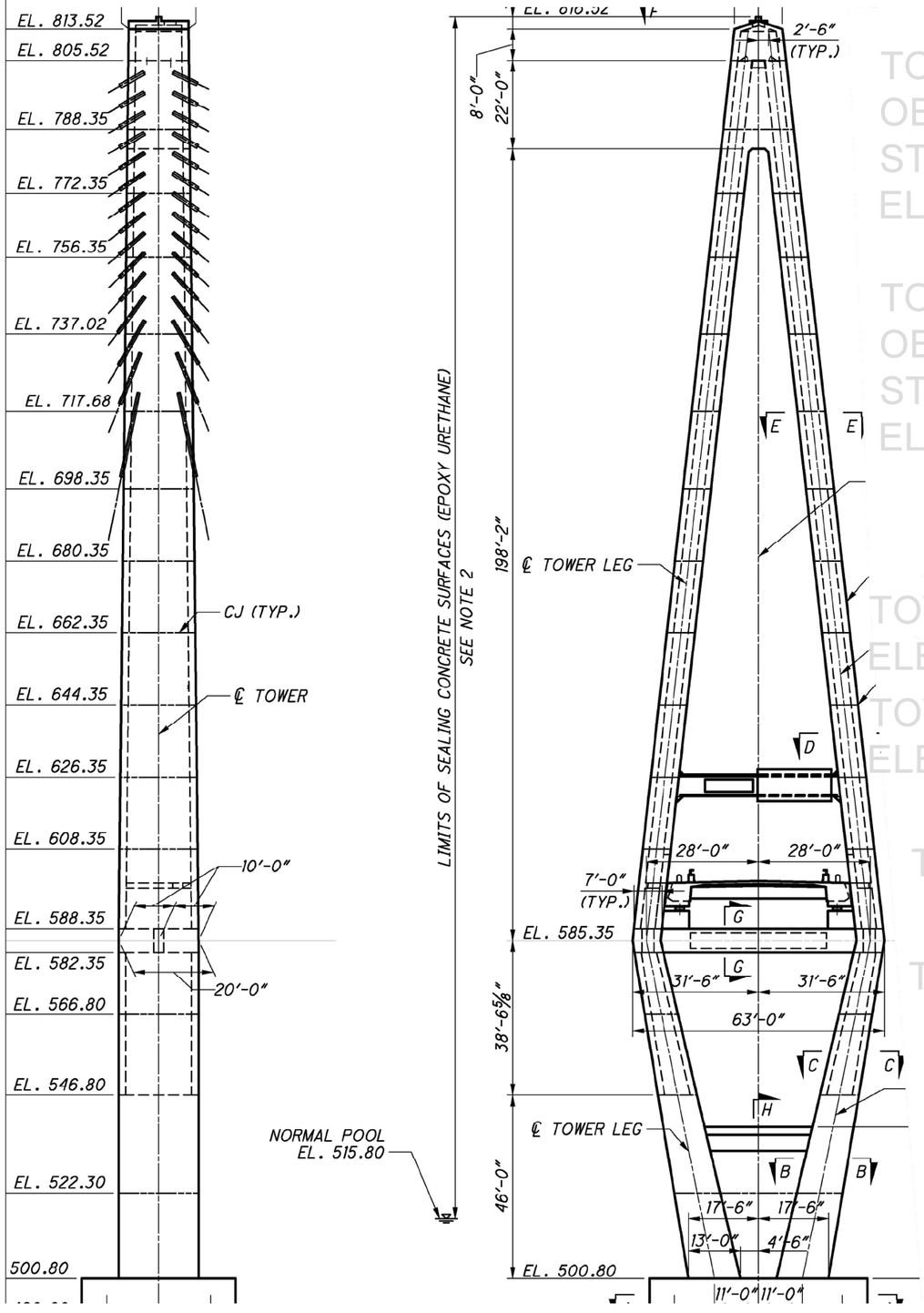

TOWER 3 AS-BUILT LOCATION OF CENTER AVIATION OBSTRUCTION BEACON
STATION 17+29.38 OFFSET FROM CENTER LINE 0.50 LEFT
ELEVATION 816.68

TOWER 4 AS-BUILT LOCATION OF CENTER AVIATION OBSTRUCTION BEACON
STATION 26+30.18 OFFSET FROM CENTER LINE 0.12 LEFT
ELEVATION 816.47

TOWER 3 SHEAR KEY BEAM SEAT AS-BUILT TOP PLATE ELEVATION 592.83

TOWER 4 SHEAR KEY BEAM SEAT AS-BUILT TOP PLATE ELEVATION 592.82

TOWER 3 AS-BUILT FOOTER ELEVATION 500.80

TOWER 4 AS-BUILT FOOTER ELEVATION 500.80

DESIGN AGENCY
URS
36 EAST 7T
SUITE
CINCINNATI,

DESIGNED	DRAWN	REVIEWED	DATE
MJZ	JDP	BA	6-10
CHECKED	REVISED	STRUCTURE FILE NUMBER	
BKL		4401263	

TOWER GEOMETRY (1 OF 3)
BRIDGE NO. LAW-93-0000
IRONTON RUSSEL BRIDGE OVER OHIO RIVER

I-R TOWER 3 TOP SEGMENT 2 AS BUILT

8-22-13

DESCRIPTION	STATION	OFFSET	ELEVATION
KY/DN. RIVER RT LEG	17+20.08	15.66 RT	546.74
KY/UP RIVER RT LEG	17+20.02	25.35 RT	546.66
OH/UP RIVER RT LEG	17+39.95	25.10 RT	546.74
OH/DN. RIVER RT LEG	17+40.05	15.43 RT	546.73
KY/DN. RIVER LT LEG	17+20.04	25.12 LT	546.8
KY/UP RIVER LT LEG	17+20.05	15.44 LT	546.8
OH/UP RIVER LT LEG	17+40.04	15.40 LT	546.78
OH/DN. RIVER LT LEG	17+40.00	25.08 LT	546.73

Loc #	Diff from Plan STA	OFFSET
1	+.08	+.275
2	+.02	+.235
3	-.05	-.015
4	+.05	+.045
5	+.04	+.005
6	+.05	+.055
7	+.04	+.015
8	.00	-.035

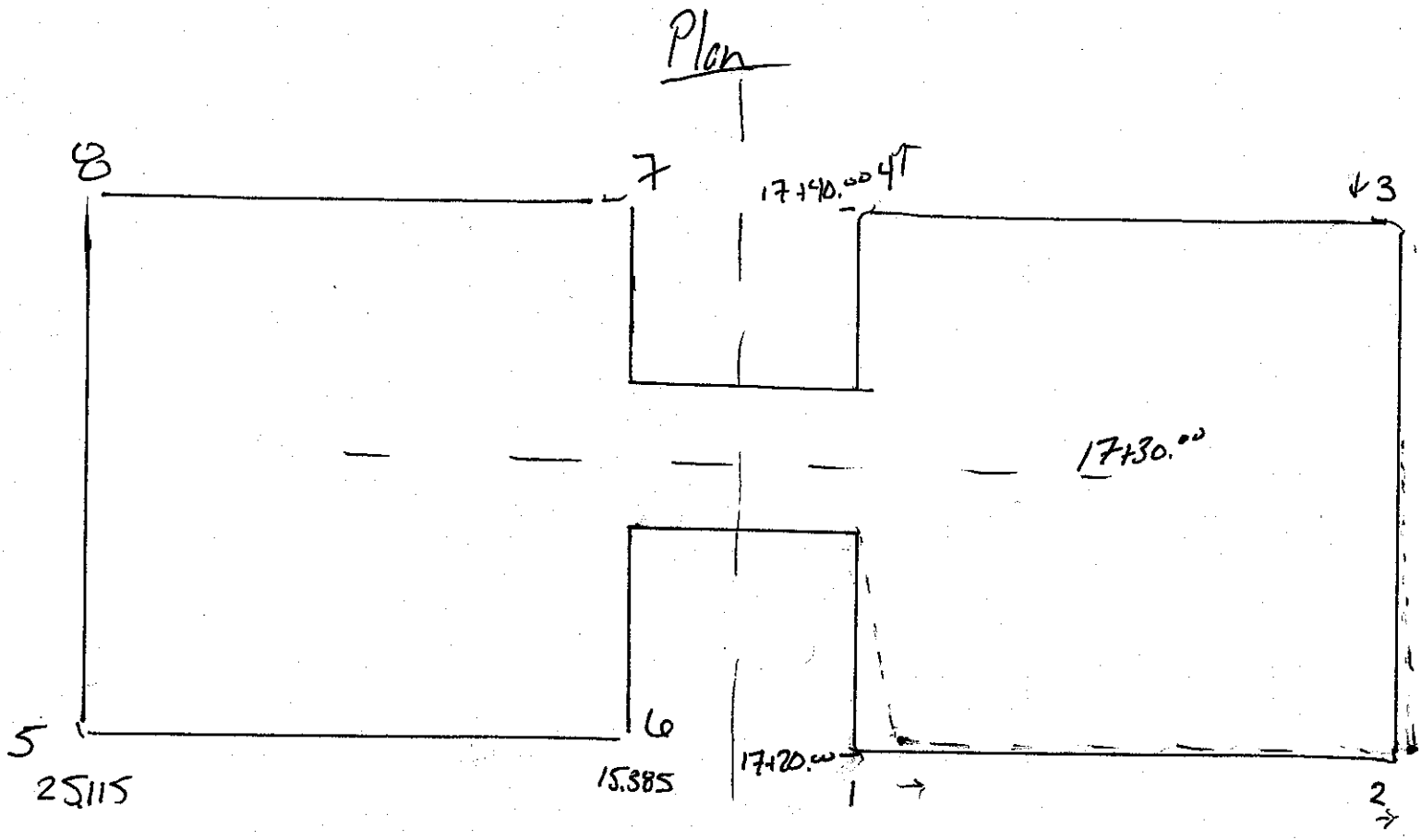

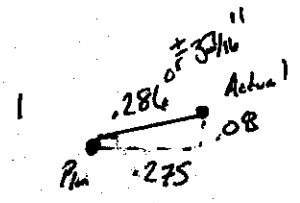

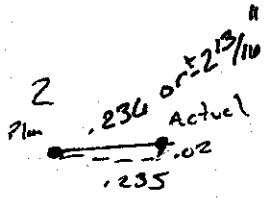

You created this PDF from an application that is not licensed to print to novaPDF printer (http://www.novapdf.com)

structural TECHNOLOGIES

A Structural Group Company

VSL

March 2, 2017

Mr. Tom Hesmond
Project Manager
Brayman Construction Company
Ironton Russell Bridge Project, SR-93-0.00

RE: Final Guide Deviator Installation

Dear Tom,

The attached spreadsheet outlines the originally planned versus the as-built guide deviator installations on the referenced project.

The originally anticipated locations were based on strand bundle to guide deviator surveys that were done prior to completing the final bridge deck overlay, barrier installation and final stay adjustments. Some of the locations originally planned came into tolerance for the friction damper installation and several went out of tolerance. In all, 101 guide deviators were installed out of the 120 stays on the project.

The following stays which originally did not require guide deviators, received one based on final conditions; M5L, M9L, M26L, M19L, M18L, M2R, M5R, M14R, M17R. The following originally planned guide deviators were not required based on final conditions; M6L, M7L, M11L, M12L, B28L, B13R, M22R, M21R, M20R.

For all locations except four, the original Lmin design criteria was maintained. Due to the existing alignment, the guide deviators for the following four stays M26L, B15L, B26L and B27L required installation slightly less than planned. These adjustments were required to ensure the friction damper was properly installed. We have no performance related concerns based on the final installed locations of the guide deviators. The previously submitted engineering data for the friction dampers is still applicable to all locations.

If you have any questions regarding the information provided, please let me know.

Sincerely,

Eric M. Sommer, P.E.
Vice President of Operations

Structural Technologies, LLC
15600 Trinity Boulevard, Suite 118 • Fort Worth, TX 76155 • Phone: 817-545-4807 • Fax: 817-545-4827
www.structuraltechnologies.com

Guide Deviator Installation Table [Right]

Tower 3						Tower 4					
Back Span			Main Span			Back Span			Main Span		
Stay #	Lmin Theoretical[in.] [-0+2"]	Lmin Actual [in]	Stay #	Lmin Theoretical[in.] [-0+2"]	Lmin Actual [in]	Stay #	Lmin Theoretical[in.] [-0+2"]	Lmin Actual [in]	Stay #	Lmin Theoretical[in.] [-0+2"]	Lmin Actual [in]
B15	37.5	37.5	M1	8.25	8.25	M30	37	37	B16	8.5	N/A
B14	32.5	32.5	M2	9.75	9.75	M29	34.25	34.25	B17	9.75	9.75
B13	44.25	N/A	M3	10.25	10.25	M28	35.75	35.75	B18	11.5	N/A
B12	41.25	41.25	M4	12.75	12.75	M27	34.25	34.25	B19	13	13
B11	37.75	37.75	M5	21.5	21.5	M26	32.75	32.75	B20	15.75	15.75
B10	34	34	M6	23.5	23.5	M25	31	31	B21	18.75	18.75
B9	34.5	34.5	M7	25.5	25.5	M24	29.25	N/A	B22	22	22
B8	32.75	32.75	M8	25.75	25.75	M23	25.75	N/A	B23	32.75	32.75
B7	22	22	M9	29.25	29.25	M22	25.5	N/A	B24	34.5	34.5
B6	18.75	18.75	M10	31	31	M21	23.5	N/A	B25	34	34
B5	15.75	15.75	M11	32.75	32.75	M20	21.5	N/A	B26	37.75	37.75
B4	13	13	M12	34.25	34.25	M19	12.75	12.75	B27	41.25	41.25
B3	11.5	11.5	M13	35.75	35.75	M18	10.25	10.25	B28	44.25	44.25
B2	9.75	9.75	M14	34.25	34.25	M17	9.75	9.75	B29	32.5	32.5
B1	8.5	8.5	M15	37	37	M16	8.25	8.25	B30	37.25	37.25

Guide Deviator Installation Table [Left]

Tower 3						Tower 4					
Back Span			Main Span			Back Span			Main Span		
Stay #	Lmin Theoretical[in.] [-0+2"]	Lmin Actual [in]	Stay #	Lmin Theoretical[in.] [-0+2"]	Lmin Actual [in]	Stay #	Lmin Theoretical[in.] [-0+2"]	Lmin Actual [in]	Stay #	Lmin Theoretical[in.] [-0+2"]	Lmin Actual [in]
B15	37.5	26.75	M1	8.25	8.25	M30	37	37	B16	8.5	8.5
B14	32.5	32.5	M2	9.75	9.75	M29	34.25	34.25	B17	9.75	9.75
B13	44.25	44.25	M3	10.25	10.25	M28	35.75	35.75	B18	11.5	11.5
B12	41.25	41.25	M4	12.75	12.75	M27	34.25	34.25	B19	13	13
B11	37.75	37.75	M5	21.5	21.5	M26	32.75	29.25"	B20	15.75	15.75
B10	34	34	M6	23.5	N/A	M25	31	31	B21	18.75	18.75
B9	34.5	34.5	M7	25.5	N/A	M24	29.25	29.25	B22	22	22
B8	32.75	32.75	M8	25.75	N/A	M23	25.75	25.75	B23	32.75	32.75
B7	22	22	M9	29.25	29.25	M22	25.5	25.5	B24	34.5	34.5
B6	18.75	18.75	M10	31	N/A	M21	23.5	23.5	B25	34	34
B5	15.75	15.75	M11	32.75	N/A	M20	21.5	21.5	B26	37.75	30"
B4	13	13	M12	34.25	N/A	M19	12.75	12.75	B27	41.25	35.5"
B3	11.5	11.5	M13	35.75	35.75	M18	10.25	10.25	B28	44.25	N/A
B2	9.75	9.75	M14	34.25	34.25	M17	9.75	N/A	B29	32.5	N/A
B1	8.5	8.5	M15	37	37	M16	8.25	N/A	B30	37.25	N/A

*N/A-No Deviator was needed

GUIDE DEVIATOR INSTALLATION PROCEDURE

1. RAISE THE AVP, WHICH WILL REQUIRE A PIECE OF EQUIPMENT AND APPROPRIATE RIGGING USING PROPER PRECAUTIONS NOT TO DAMAGE THE PIPE.
2. COMPACT THE STRAND BUNDLE WITH STRAND COMPACTING DEVICE USING PROPER PRECAUTIONS NOT TO DAMAGE THE SHEATHED STRAND.
4. INSTALL THE (2) SHAPE ADAPTERS AND (2) HALF ARMOR PIPES PERPENDICULAR TO ONE ANOTHER. SEE SHEET VSL-904.
5. INSTALL THE (2) CENTERING HALF RINGS WITH (2) STEEL HALF FLANGES ONTO THE HALF ARMOR PIPE/SHAPE ADAPTER ASSEMBLY. HALF RINGS AND HALF FLANGES WILL BOLT PERPENDICULAR TO ONE ANOTHER LOOSELY. SEE SHEET VSL-904.
6. ENSURE THAT THE CENTERING HALF RINGS AND THE SHAPE ADAPTER'S JOINTS ARE PARALLEL TO ONE ANOTHER BUT PERPENDICULAR TO THE STEEL HALF FLANGES. THE STEEL HALF FLANGES AND THE HALF ARMOR PIPE JOINTS SHALL BE PARALLEL TO ONE ANOTHER BUT PERPENDICULAR TO THE CENTERING HALF RINGS. SEE SHEET VSL-904.
7. ATTACH A NYLON SLING TO THE AVP. BY MEANS OF MECHANICAL ADVANTAGE (E.G. FORKLIFT, GRANE, LEVER HOIST) POSITION THE STAY BUNDLE SO THAT IT IS CENTERED IN THE GUIDE PIPE.
8. INSERT THE GUIDE DEVIATOR TO SPECIFIED LOCATION WITHIN THE GUIDE PIPE.
9. TIGHTEN BOLTS ON THE ASSEMBLY TO COMPRESS THE CENTERING HALF RINGS, WHICH PREVENTS SLIPPAGE OF THE ASSEMBLY.
10. REMOVE SIDE LOAD AND ALL RIGGING FROM THE AVP.
11. ASSEMBLE FRICTION DAMPER PER PLANS.

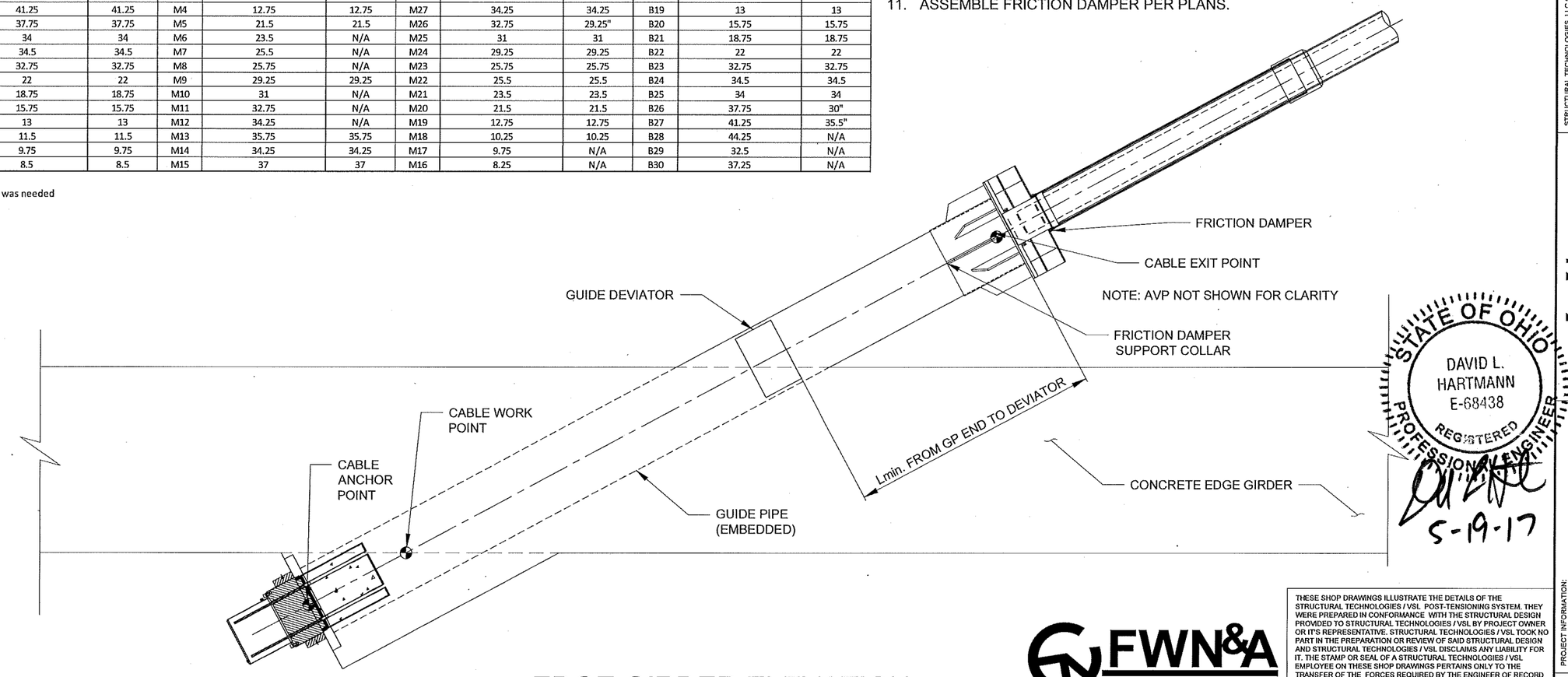

EDGE GIRDER ELEVATION

STATE OF OHIO
DAVID L. HARTMANN
E-68438
REGISTERED
PROFESSIONAL ENGINEER
5-19-17

NO	DESCRIPTION	BY	CHK	DATE
3	CHART UPDATED	CDL	ES	06FEB2017
2	PROCEDURE ADDED	CDL	ES	04OCT2016
1	DESIGN UPDATED	CDL	ES	16SEP2016
0	FOR APPROVAL	CDL	ES	05MAY2016

STRUCTURAL TECHNOLOGIES, LLC CLAIMS A STRICT PROPRIETARY RIGHT IN ALL DRAWINGS, SPECIFICATIONS AND CALCULATIONS PREPARED BY US SET FORTH ON THIS SHEET. THE USE OF SUCH INFORMATION IN WHOLE OR IN PART, OR ANY REPRODUCTION THEREOF, IS RESTRICTED TO THE SPECIFIC PROJECT FOR WHICH IT WAS PREPARED AND TO THE MATERIAL AND/OR SERVICE PROVIDED BY STRUCTURAL TECHNOLOGIES / VSL. ANY OTHER USE IS STRICTLY PROHIBITED, AND STRUCTURAL TECHNOLOGIES / VSL DISCLAIMS ANY LIABILITY THEREFORE.

structural TECHNOLOGIES
A Structural Group Company
Dallas, TX / Washington, DC / Denver, CO / Pompano Beach, FL
STRUCTURAL TECHNOLOGIES, LLC
DALLAS OFFICE
15600 TRINITY BLVD, SUITE 118
FORT WORTH, TX 76155
PHONE: (817) 545-4607
FAX: (817) 547-4627
WWW.VSL.NET

PROJECT INFORMATION:
IRONTON RUSSELL
IRONTON, OH

TITLE:
GUIDE DEVIATOR INSTALLATION

PROJECT NO: 320100
SCALE: NTS
SHEET NO: VSL-901

FWN&A
Frank W. Neal & Assoc., Inc.
1015 W. Broadway Ave.
Fort Worth, TX 76104
Ohio reg. no. 01513
817-332-1944
fwna-eng.com

THESE SHOP DRAWINGS ILLUSTRATE THE DETAILS OF THE STRUCTURAL TECHNOLOGIES / VSL POST-TENSIONING SYSTEM. THEY WERE PREPARED IN CONFORMANCE WITH THE STRUCTURAL DESIGN PROVIDED TO STRUCTURAL TECHNOLOGIES / VSL BY PROJECT OWNER OR IT'S REPRESENTATIVE. STRUCTURAL TECHNOLOGIES / VSL TOOK NO PART IN THE PREPARATION OR REVIEW OF SAID STRUCTURAL DESIGN AND STRUCTURAL TECHNOLOGIES / VSL DISCLAIMS ANY LIABILITY FOR IT. THE STAMP OR SEAL OF A STRUCTURAL TECHNOLOGIES / VSL EMPLOYEE ON THESE SHOP DRAWINGS PERTAINS ONLY TO THE TRANSFER OF THE FORCES REQUIRED BY THE ENGINEER OF RECORD ON THE STRUCTURAL DRAWINGS, AND NOT TO THE ADEQUACY OF THE STRUCTURAL DESIGN. NO WARRANTY, EXPRESSED OR IMPLIED, AS TO THE ADEQUACY OF THE STRUCTURAL DESIGN IS MADE BY VIRTUE OF ANY SUCH STAMP OR SEAL.

ELECTRONIC FILE LOCATION: K:\Jobs\A_Stay Cable Projects\320100 - Ironton Russell SCB\6 Drawings\Guide Deviator Concept

PLOT DATE/TIME: 06Feb2017 10:05 AM FILE NAME: 320100 - Ironton Russell SCB - Guide Deviator.dwg

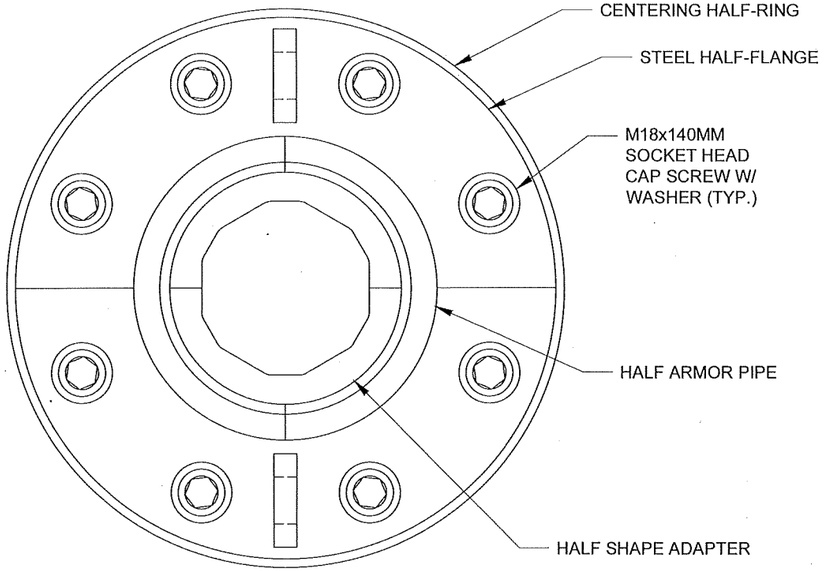

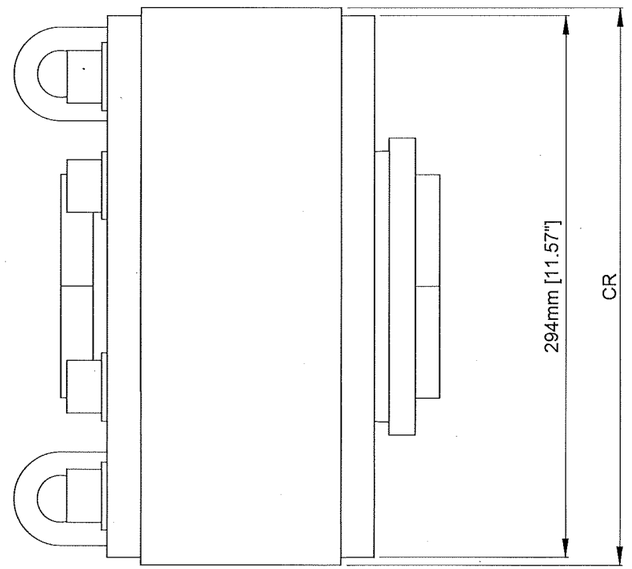

6-31 GUIDE DEVIATOR

NOTE: SOCKET HEAD CAP SCREWS MUST HAVE MINIMUM 40MM OF THREAD

6-31 GUIDE DEVIATOR CHART				
TYPE	CR OD [in.]	PIPE ID [in.]	SETS / TOWER	TOTAL # OF SETS
VER. B	11.81	12.00	24	48

6-31 GUIDE DEVIATOR BOM		
QTY.	DESCRIPTION	MATERIAL
104	CENTERING HALF-RING (VER. B)	CR NEOPRENE SHORE A 65 ±5
104	STEEL HALF-FLANGE	ASTM A572 GR 50 ASTM A123 GALVANIZED
104	HALF ARMOR PIPE	ASTM A572 GR 50 ASTM A123 GALVANIZED
104	HALF SHAPE ADAPTER	CR NEOPRENE SHORE A 65 ±5
416	M18x140MM SOCKET HEAD CAP SCREW W/ WASHER	DIN 912 GR 12.9 WITH FLUOROKOTE COATING

NO	DESCRIPTION	BY	CHK	DATE
3	MATERIAL SPEC ADDED	HMA	ES	11NOV2016
2	MATERIAL SPEC ADDED	CDL	ES	04OCT2016
1	DESIGN UPDATED	CDL	ES	16SEP2016
0	FOR APPROVAL	CDL	ES	05MAY2016

STRUCTURAL TECHNOLOGIES, LLC CLAIMS A STRICT PROPRIETARY RIGHT IN ALL DRAWINGS, SPECIFICATIONS AND CALCULATIONS ("INFORMATION") SET FORTH HEREIN. THIS INFORMATION OR ANY PART OF SUCH INFORMATION IN WHOLE OR IN PART, OR ANY REPRODUCTION THEREOF, IS RESTRICTED TO THE SITE FOR WHICH IT HAS BEEN PREPARED AND TO MATERIAL AND/OR SERVICE PROVIDED BY STRUCTURAL TECHNOLOGIES / VSL. ANY OTHER USE IS STRICTLY PROHIBITED, AND STRUCTURAL TECHNOLOGIES / VSL DISCLAIMS ANY LIABILITY THEREFORE.

structural TECHNOLOGIES
A Structural Group Company
Dallas, TX / Washington, DC / Denver, CO / Pompano Beach, FL
STRUCTURAL TECHNOLOGIES, LLC
DALLAS OFFICE
15005 TRINITY BLVD, SUITE 118
FORT WORTH, TX 76155
PHONE: (817) 545-4927
FAX: (817) 545-4627
WWW.VSL.NET

PROJECT INFORMATION: IRONTON RUSSELL IRONTON, OH

TITLE: GUIDE DEVIATOR DETAILS

PROJECT NO: 320100

SCALE: NTS

SHEET NO: VSL-902

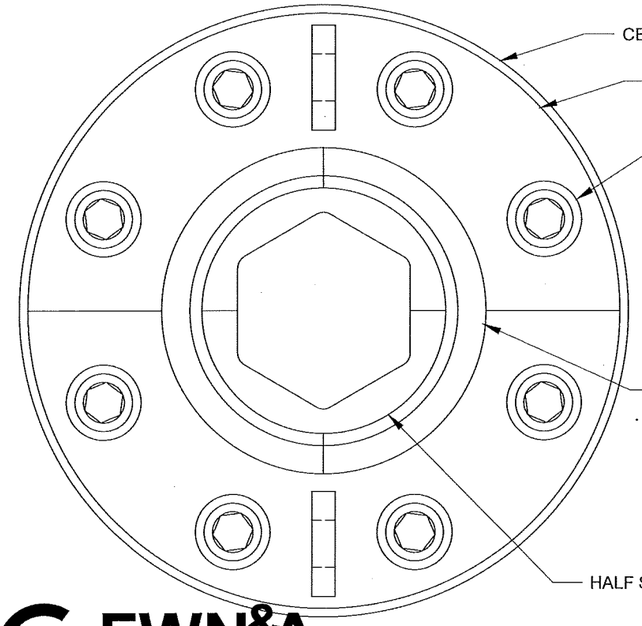

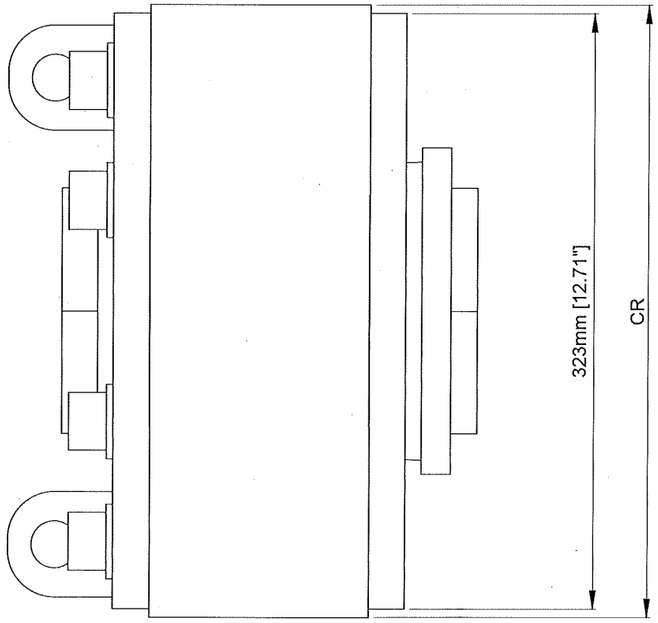

6-37 GUIDE DEVIATOR

NOTE: SOCKET HEAD CAP SCREWS MUST HAVE MINIMUM 40MM OF THREAD

6-37 GUIDE DEVIATOR CHART			
CR OD [in.]	PIPE ID [in.]	SETS / TOWER	TOTAL # OF SETS
12.95	13.25	2	4

6-37 GUIDE DEVIATOR BOM		
QTY.	DESCRIPTION	MATERIAL
8	CENTERING HALF-RING	CR NEOPRENE SHORE A 65 ±5
8	STEEL HALF-FLANGE	ASTM A572 GR 50 ASTM A123 GALVANIZED
8	HALF ARMOR PIPE	ASTM A572 GR 50 ASTM A123 GALVANIZED
8	HALF SHAPE ADAPTER	CR NEOPRENE SHORE A 65 ±5
16	M20x150MM SOCKET HEAD CAP SCREW W/ WASHER	DIN 912 GR 12.9 WITH FLUOROKOTE COATING

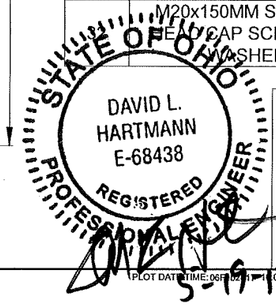

THESE SHOP DRAWINGS ILLUSTRATE THE DETAILS OF THE STRUCTURAL TECHNOLOGIES / VSL POST-TENSIONING SYSTEM. THEY WERE PREPARED IN CONFORMANCE WITH THE STRUCTURAL DESIGN PROVIDED TO STRUCTURAL TECHNOLOGIES / VSL BY PROJECT OWNER OR IT'S REPRESENTATIVE. STRUCTURAL TECHNOLOGIES / VSL TOOK NO PART IN THE PREPARATION OR REVIEW OF SAID STRUCTURAL DESIGN AND STRUCTURAL TECHNOLOGIES / VSL DISCLAIMS ANY LIABILITY FOR IT. THE STAMP OR SEAL OF A STRUCTURAL TECHNOLOGIES / VSL EMPLOYEE ON THESE SHOP DRAWINGS PERTAINS ONLY TO THE TRANSFER OF THE FORCES REQUIRED BY THE ENGINEER OF RECORD ON THE STRUCTURAL DRAWINGS, AND NOT TO THE ADEQUACY OF THE STRUCTURAL DESIGN. NO WARRANTY, EXPRESSED OR IMPLIED, AS TO THE ADEQUACY OF THE STRUCTURAL DESIGN IS MADE BY VIRTUE OF ANY SUCH STAMP OR SEAL.

5/19/17

FWN&A
Frank W. Neal & Assoc., Inc.
1015 W. Broadway Ave. 817-332-1944
Fort Worth, TX 76104 fwna-eng.com
Ohio reg. no. 01513

ELECTRONIC FILE LOCATION: I:\Jobs\A_Stay Cable Projects\320100 - Ironton Russell SCB\9. Drawings\Guide Deviator Concept

PLOT DATE/TIME: 06FEB2017 - 11:05 AM FILE NAME: 320100 - Ironton Russell SCB - Guide Deviator.dwg

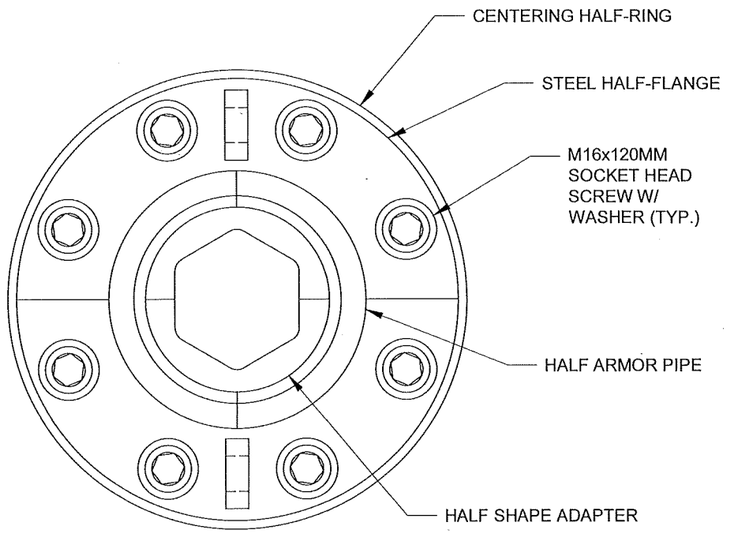

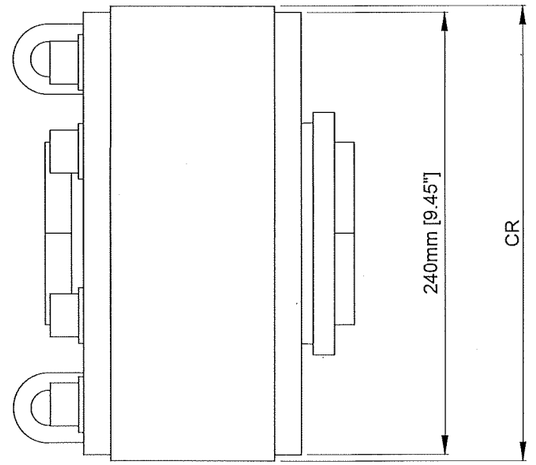

6-19 GUIDE DEVIATOR

NOTE: SOCKET HEAD CAP SCREWS MUST HAVE MINIMUM 40MM OF THREAD

6-19 GUIDE DEVIATOR CHART				
TYPE	CR OD [in.]	PIPE ID [in.]	SETS / TOWER	TOTAL # OF SETS
VER. B	9.72	10.02	16	32

6-19 GUIDE DEVIATOR BOM		
QTY.	DESCRIPTION	MATERIAL
88	CENTERING HALF-RING (VER. B)	CR NEOPRENE SHORE A 65 ±5
88	STEEL HALF-FLANGE	ASTM A572 GR 50 ASTM A123 GALVANIZED
88	HALF ARMOR PIPE	ASTM A572 GR 50 ASTM A123 GALVANIZED
88	HALF SHAPE ADAPTER	CR NEOPRENE SHORE A 65 ±5
352	M16x120MM SOCKET HEAD CAP SCREW W/ WASHER	DIN 912 GR 12.9 WITH FLUOROKOTE COATING

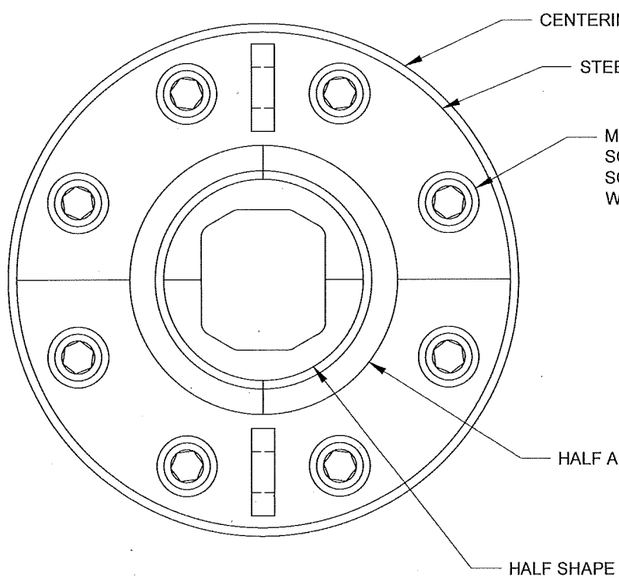

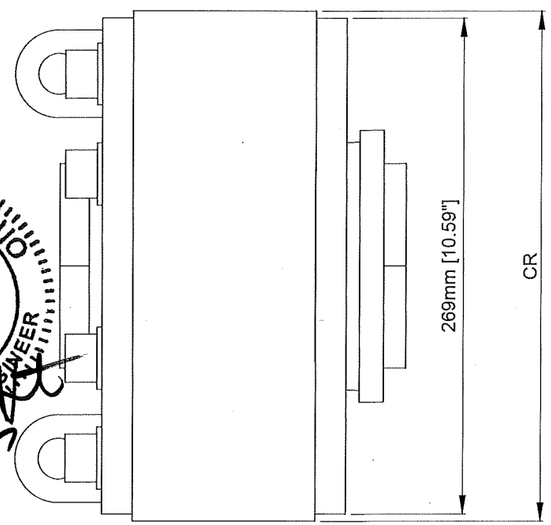

STATE OF OHIO
DAVID L. HARTMANN
E-68438
REGISTERED
PROFESSIONAL ENGINEER
5-19-17

6-22 GUIDE DEVIATOR

NOTE: SOCKET HEAD CAP SCREWS MUST HAVE MINIMUM 40MM OF THREAD

6-22 GUIDE DEVIATOR CHART				
TYPE	CR OD [in.]	PIPE ID [in.]	SETS / TOWER	TOTAL # OF SETS
VER. A	11.75	12.00	5	10

6-22 GUIDE DEVIATOR BOM		
QTY.	DESCRIPTION	MATERIAL
40	CENTERING HALF-RING (VER. A)	CR NEOPRENE SHORE A 65 ±5
40	STEEL HALF-FLANGE	ASTM A572 GR 50 ASTM A123 GALVANIZED
40	HALF ARMOR PIPE	ASTM A572 GR 50 ASTM A123 GALVANIZED
40	HALF SHAPE ADAPTER	CR NEOPRENE SHORE A 65 ±5
160	M16x140MM SOCKET HEAD CAP SCREW W/ WASHER	DIN 912 GR 12.9 WITH FLUOROKOTE COATING

THESE SHOP DRAWINGS ILLUSTRATE THE DETAILS OF THE STRUCTURAL TECHNOLOGIES / VSL POST-TENSIONING SYSTEM. THEY WERE PREPARED IN CONFORMANCE WITH THE STRUCTURAL DESIGN PROVIDED TO STRUCTURAL TECHNOLOGIES / VSL BY PROJECT OWNER OR IT'S REPRESENTATIVE. STRUCTURAL TECHNOLOGIES / VSL TOOK NO PART IN THE PREPARATION OR REVIEW OF SAID STRUCTURAL DESIGN AND STRUCTURAL TECHNOLOGIES / VSL DISCLAIMS ANY LIABILITY FOR IT. THE STAMP OR SEAL OF A STRUCTURAL TECHNOLOGIES / VSL EMPLOYEE ON THESE SHOP DRAWINGS PERTAINS ONLY TO THE TRANSFER OF THE FORCES REQUIRED BY THE ENGINEER OF RECORD ON THE STRUCTURAL DRAWINGS, AND NOT TO THE ADEQUACY OF THE STRUCTURAL DESIGN. NO WARRANTY, EXPRESSED OR IMPLIED, AS TO THE ADEQUACY OF THE STRUCTURAL DESIGN IS MADE BY VIRTUE OF ANY SUCH STAMP OR SEAL.

FWN&A
Frank W. Neal & Assoc., Inc.
1015 W. Broadway Ave.
Fort Worth, TX 76104
Ohio reg. no. 01513
817-332-1944
fwna-eng.com

NO	DESCRIPTION	BY	CHK	DATE
3	MATERIAL SPEC ADDED	HMA	ES	11NOV2016
2	MATERIAL SPEC ADDED	CDL	ES	04OCT2016
1	DESIGN UPDATED	CDL	ES	16SEP2016
0	FOR APPROVAL	CDL	ES	05MAY2016

STRUCTURAL TECHNOLOGIES, LLC CLAIMS A STRICT PROPRIETARY RIGHT IN ALL DRAWINGS, SPECIFICATIONS AND CALCULATIONS ("INFORMATION") SET FORTH ON THIS SHEET. USE OF SUCH INFORMATION IN WHOLE OR IN PART, OR ANY REPRODUCTION THEREOF, IS RESTRICTED TO THE SITE FOR WHICH IT WAS PREPARED AND TO THE MATERIAL AND WORK SPECIFIED. STRUCTURAL TECHNOLOGIES / VSL ANY OTHER USE IS STRICTLY PROHIBITED, AND STRUCTURAL TECHNOLOGIES / VSL DISCLAIMS ANY LIABILITY THEREFORE.

structural TECHNOLOGIES A Structural Group Company
Dallas, TX / Washington, DC / Denver, CO / Pompano Beach, FL
STRUCTURAL TECHNOLOGIES, LLC
DALLAS OFFICE
1555 NORTH BELT LINE BLVD, SUITE 118
FORT WORTH, TX 76155
PHONE: (817) 545-4807
FAX: (817) 545-4827
WWW.VSL.NET

PROJECT INFORMATION: IRONTON RUSSELL IRONTON, OH

TITLE: GUIDE DEVIATOR DETAILS

PROJECT NO: 320100

SCALE: NTS

SHEET NO: VSL-903

ELECTRONIC FILE LOCATION: I:\Jobs\A_Stay Cable Projects\320100 - Ironton Russell SCB\5. Drawings\Guide Deviator Concept

PLOT DATE/TIME: 06Feb2017 10:05 AM FILE NAME: 320100 - Ironton Russell SCB - Guide Deviator.dwg

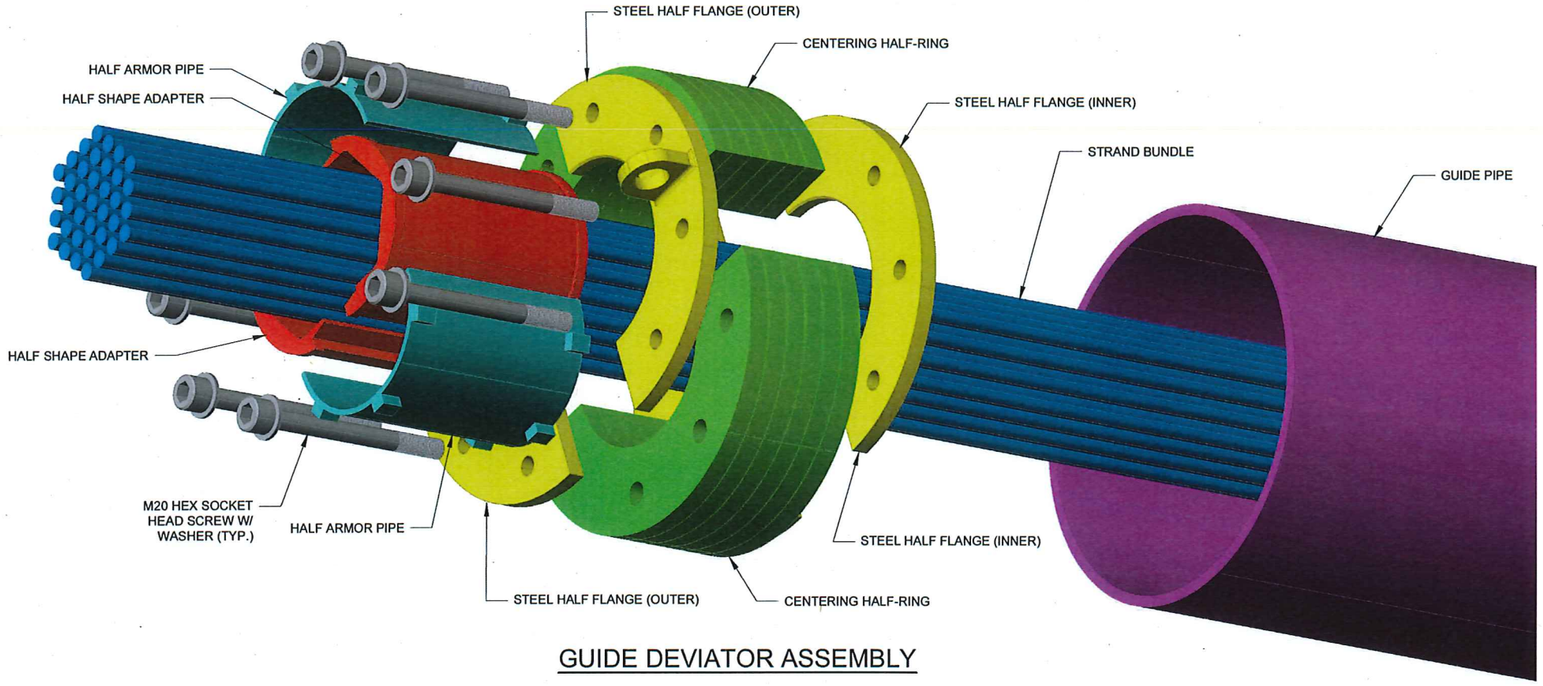

GUIDE DEVIATOR ASSEMBLY

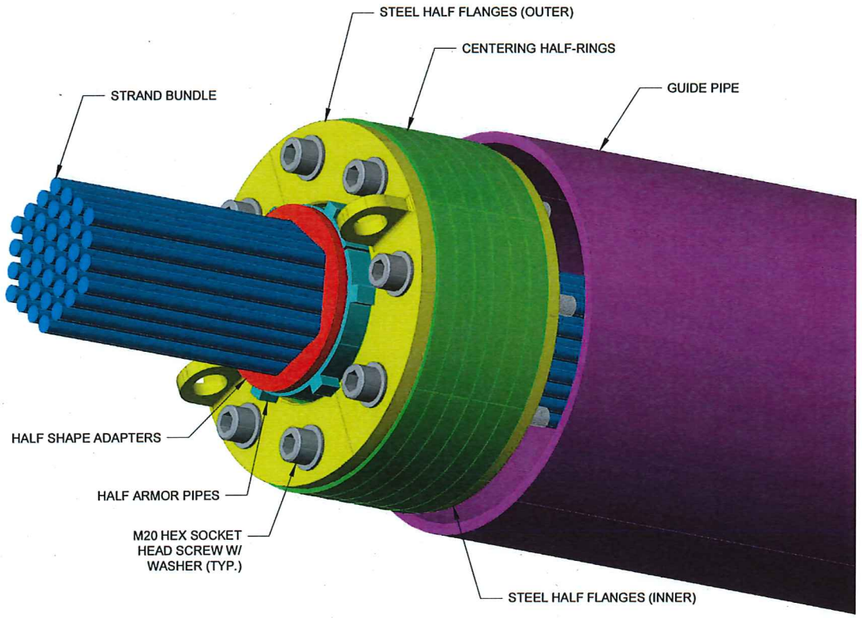

GUIDE DEVIATOR BEFORE INSERTION

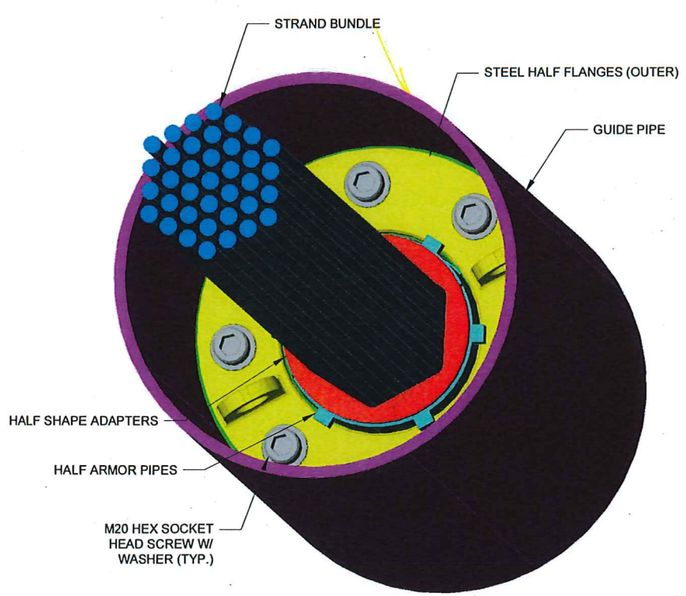

GUIDE DEVIATOR AFTER INSERTION

NO	DESCRIPTION	BY	CHK	DATE
1	DESIGN UPDATED	CDL	ES	16SEP2016
0	FOR APPROVAL	CDL	ES	05MAY2016

STRUCTURAL TECHNOLOGIES, LLC CLAIMS A STRICT PROPRIETARY RIGHT IN ALL DRAWINGS, SPECIFICATIONS AND CALCULATIONS PREPARED BY US AS SET FORTH IN THIS SHEET. THE USE OF SUCH INFORMATION IN WHOLE OR IN PART, OR ANY REPRODUCTION THEREOF, IS RESTRICTED TO THE SITE FOR WHICH IT WAS PREPARED AND TO THE MATERIAL AND/OR SERVICE PROVIDED BY STRUCTURAL TECHNOLOGIES / VSL. ANY OTHER USE IS STRICTLY PROHIBITED, AND STRUCTURAL TECHNOLOGIES / VSL DISCLAIMS ANY LIABILITY THEREFORE.

structural TECHNOLOGIES
A Structural Group Company
Dallas, TX / Washington, DC / Denver, CO / Pompano Beach, FL
PHONE: (817) 545-4807
FAX: (817) 545-4827
WWW.VSL.NET
STRUCTURAL TECHNOLOGIES, LLC
DALLAS OFFICE
15600 TRINITY BLVD, SUITE 118
FORT WORTH, TX 76155

STATE OF OHIO
DAVID L. HARTMANN
E-68438
REGISTERED
PROFESSIONAL ENGINEER
5-19-17

FWN&A
Frank W. Neal & Assoc., Inc.
1015 W. Broadway Ave. 817-332-1944
Fort Worth, TX 76104 fwna-eng.com
Ohio reg. no. 01513

THESE SHOP DRAWINGS ILLUSTRATE THE DETAILS OF THE STRUCTURAL TECHNOLOGIES / VSL POST-TENSIONING SYSTEM. THEY WERE PREPARED IN CONFORMANCE WITH THE STRUCTURAL DESIGN PROVIDED TO STRUCTURAL TECHNOLOGIES / VSL BY PROJECT OWNER OR IT'S REPRESENTATIVE. STRUCTURAL TECHNOLOGIES / VSL TOOK NO PART IN THE PREPARATION OR REVIEW OF SAID STRUCTURAL DESIGN AND STRUCTURAL TECHNOLOGIES / VSL DISCLAIMS ANY LIABILITY FOR IT. THE STAMP OR SEAL OF A STRUCTURAL TECHNOLOGIES / VSL EMPLOYEE ON THESE SHOP DRAWINGS PERTAINS ONLY TO THE TRANSFER OF THE FORCES REQUIRED BY THE ENGINEER OF RECORD ON THE STRUCTURAL DRAWINGS, AND NOT TO THE ADEQUACY OF THE STRUCTURAL DESIGN. NO WARRANTY, EXPRESSED OR IMPLIED, AS TO THE ADEQUACY OF THE STRUCTURAL DESIGN IS MADE BY VIRTUE OF ANY SUCH STAMP OR SEAL.

PROJECT INFORMATION:
IRONTON RUSSELL
IRONTON, OH

TITLE:
GUIDE DEVIATOR 3D ASSEMBLY DETAILS

PROJECT NO: 320100
SCALE: NTS
SHEET NO: VSL-904

ELECTRONIC FILE LOCATION: I:\Jobs\A_Stay Cable Projects\320100 - Ironton Russell SCB\9. Drawings\Guide Deviator Concept

PLOT DATE/TIME: 06Feb2017 10:05 AM FILE NAME: 320100 - Ironton Russell SCB - Guide Deviator.dwg

ODOT 628-11
Lawrence County
B/R #351
Qty: 8

FACE ARRANGEMENTS
VERTICAL

Signal Arrangements Qty. 8

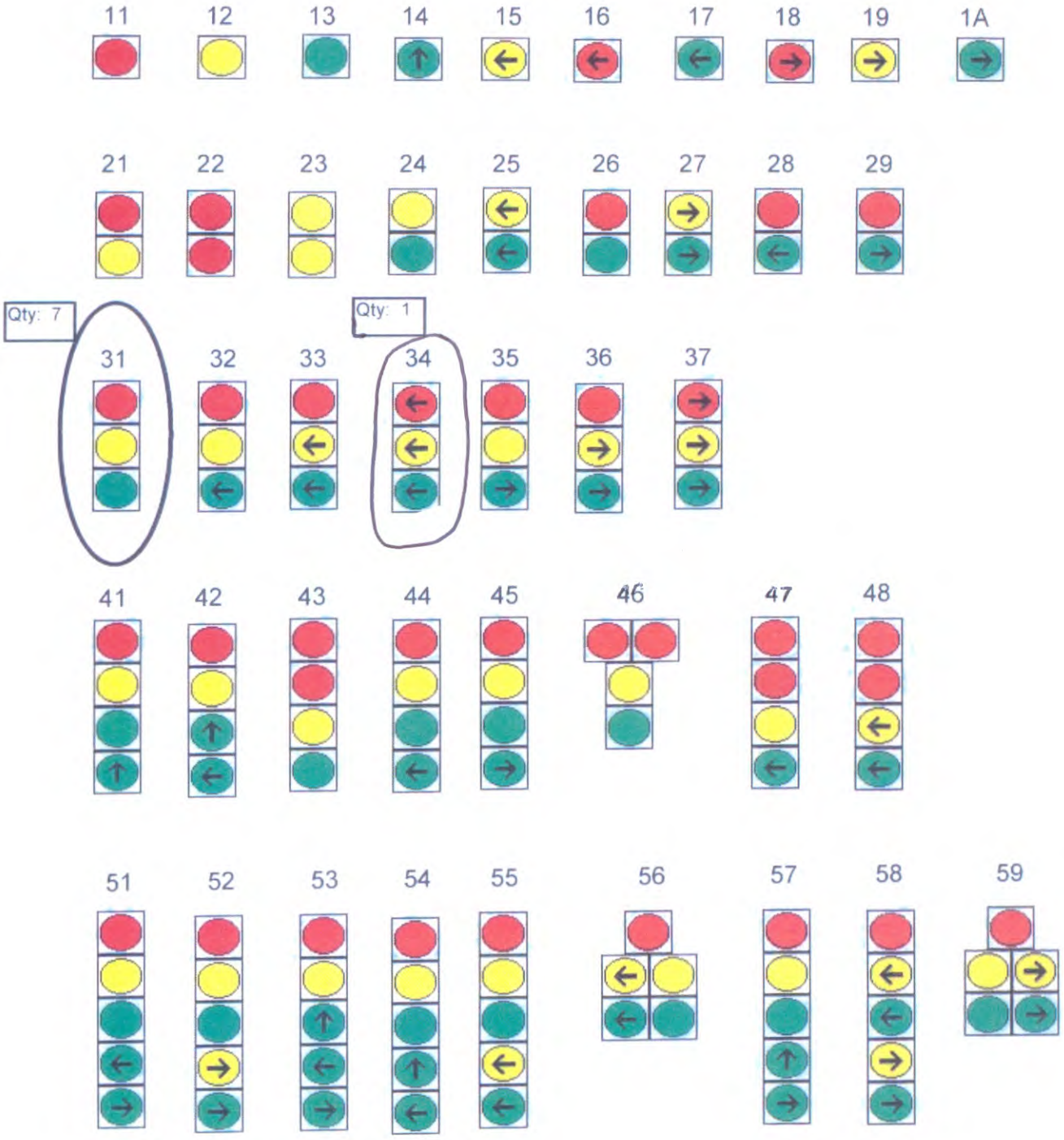

Dialight

ODOT 628-11
Lawrence County
B/R #351
Qty. 8

Red Ball LED Qty. 7
Yellow Ball LED Qty. 7
Green Ball LED Qty. 7
Yellow Arrow LED Qty. 1
Green Arrow LED Qty. 1

RED ARROW LED QTY. 1



ITE Compliant LED Signal Modules

ODOT 628-11
Lawrence County
B/R #369
Qty: 1

Model 170E Microcomputer/6800/68HC11

general notes call for 170 ATC Controller.





- **Multipurpose microcomputer**
  - **Traffic Control**
  - **Ramp Metering**
  - **Sign Control**
  - **Sprinkler Control**
- **Meets or exceed the CALTRANS Requirements**
- **Accepts 2 Plug-in Communication Modules**
- **Designed for ease of Maintenance**
- **Low Wattage, removable Power Supply**
- **HC11 CPU Board Option**
- **M170E Board Option**

DESCRIPTION

The Model 170E Microcomputer is Safetran's most successful family of Microcomputers. All applicable CALTRANS requirements are met. The model 170E incorporates the latest concepts in design for operation in hostile environments. The HC11 CPU can replace the 6800 CPU by simply removing the 6800 CPU board and sliding the new model HC-11 CPU in the same slot.

APPLICATIONS

The Model 170E has been designed to operate virtually all traffic applications; from two phase intersection control to computerized networked systems. In addition, with the implementation of various software packages, the Model 170E has found applications in ramp metering control, matrix sign control, sprinkler control, pump control, and changeable lane control.

MODULE DESIGN

All modules have been designed to increase reliability, reduce maintenance and lower power consumption, and are mounted in a vertical plane to facilitate heat dissipation. A unique module and chassis design ensure proper positioning of each module. All modules may be extended, for maintenance purposes, using extender cards.

SAFETRAN TRAFFIC SYSTEMS, INC

1485 GARDEN OF THE GODS ROAD. COLORADO SPRINGS. COLORADO 80907 719/599-5600 FAX 719/599-3853

Model 170E Microcomputer/6800/68HC11



The 170E controller provides an ideal combination of flexibility of open architecture hardware with the power and performance of 2070/170 controller software packages.

About the 170E Controller

The intelligence behind the signalized intersection is the traffic signal controller. The 2070/170 line of Safetran controllers represents some of the most widely used and trusted in the transportation industry. Combined with the traffic cabinet, the controller manages traffic flow and ensures safety for all roadway users.

For more than three decades, Safetran (an Econolite Group company) has provided industry leading innovation and service by maintaining a close alignment with its customers. Safetran's customer focus and employee experience in providing traffic management solutions for New York Department of Transportation (NYDOT), California Department of Transportation (CalTrans), Federal Highway Administration (FWHA), and Transportation Electrical Equipment Specifications (TEES) projects and standards is unequalled in the industry.

At A Glance

- Multipurpose microcomputer:
  - Traffic control
  - Ramp metering
  - Sign control
  - Sprinkler control
- Meets or exceed the Caltrans requirements
- Accepts two plug-in communication modules
- Designed for ease of maintenance
- Low wattage, removable power supply

Safetran

CPU Module

The CPU houses the 6800/68HC11 MPU, the quad Asynchronous Communication Interface Adapters (ACIA), up to 32K RAM, decode logic, and bus drivers. The optional HC11 board allows the installation of up to 128K of EPROM on the CPU, thus eliminating the requirement of a program module. The optional 470IB PROM module still communicates to the HC11 board from the communication link on the edge connector. An optional blank panel is available to cover the PROM module slot.

Input Module

The single input module draws heavily on High Speed CMOS, TTL Compatible (HCT) technology. Lightning protection devices have been added to enhance surge protection. All input circuits are resident on this module to facilitate maintenance. The power start-up and super capacitor circuitry are also located on the module.

Chassis

The model 170E chassis was designed on a CAD system. Numerically controlled production equipment guarantees perfectly matched assemblies. A printed circuit motherboard assembly provides reliable interconnect between modules and a separate bus for the I/O increases noise immunity. In addition, separate logic ground paths are supplied from the power supply to each module. Vertically mounted, the C1, C2, C20, C30, and C40 connectors are located on the back of the Model 170E. To facilitate the installation of the program module, card guides have been extended to the front panel. A hinged front panel is held in place by two thumb-screws. When closed, the front panel prevents the modules from backing out of the connectors. The Model 170E may be equipped with two communication modules.

Output Module

The single output module contains the entire output circuitry for the 170E. Operation can be easily diagnosed by simply exchanging output modules.

Power Supply Module

The Model 170E is equipped with a linear power supply. All components of the power supply, including capacitors, transformers, and power transistors are located on this removable module. Connection between the power supply and the motherboard is via a floating 15-pin, power-rated socket connector.

Standby Power

The Model 170E is supplied with super capacitors which supply standby power to volatile memory devices and the downtime accumulator circuitry.

M170E Module

An optional M170E Module can be provided to replace the 412C Program Module functions when the internal programming option is desired. The M170E Module has the 16 dip-switches and the real-time clock circuitry found on the 412C Program Module.

Applications

The Model 170E has been designed to manage virtually all traffic applications, from two-phase intersection control to computerized, networked systems. In addition, with the implementation of various software packages, the Model 170E has found applications in ramp-metering control, matrix sign control, sprinkler control, pump control, and changeable lane control.

Basic Specifications

- Temperature
  - -35°F to 165°F (-37°C to +74°C)
- Power
  - 115 VAC, 60 Hz (40 W)
- Dimensions
  - 7 in. H x 19 in. W x 11 in. D
- Weight
  - 19 lbs

Safetran

1485 Garden of the Gods Road, Colorado Springs, CO 80907 · 719-599-5600 · sales@safetran-traffic.com · www.safetran-traffic.com

382160214-2

© 2014 Econolite Group, Inc. All rights reserved. Safetran is an Econolite Group, Inc. company, certified to ISO 9001:2008, and reserves the right to change or update these specifications at any time without prior notification.

SPECIFICATIONS FOR MODEL 170 ATC CONTROLLER

THE ATC CHASSIS SHALL CONFORM TO THE STANDARDS DEVELOPED BY "TRAFFIC SIGNAL CONTROL EQUIPMENT SPECIFICATIONS," OREGON DEPARTMENT OF TRANSPORTATION, LATEST EDITION.

THE CHASSIS SHALL BE CONSTRUCTED OF .080 ALUMINUM BY NUMERICALLY CONTROLLED PRODUCTION EQUIPMENT TO GUARANTEE PERFECTLY MATCHED ASSEMBLIES. A PRINTED CIRCUIT MOTHERBOARD ASSEMBLY SHALL PROVIDE RELIABLE INTERCONNECT BETWEEN THE MODULES THAT PLUG INTO IT. WHILE A SEPARATE DAUGHTER BOARD SHALL PROVIDECONNECTIVITY BETWEEN THE MOTHERBOARD AND THE I/O
MODULES. THE REAR OF THE CHASSIS SHALL SUPPORT THE T-1 TERMINAL BLOCK AND C1, C2,C20,C30, AND C40 CONNECTORS. A HINGED FRONT PANEL SHALL BE HELD IN PLACE BY TWO THUMBSCREWS AND A LATCH.

THE HC11 CPU BOARD SHALL REPLACE THE 68360 MICROPROCESSOR IN THE 170 ATC CHASSIS. IT SHALL PROVIDE 128K EPROM AND 32K ZRAM. LIGHT EMITTING DIODE (LED) INDICATIONS SHALL BE USED TO INDICATE PROPER OPERATIONS. ALL POWER SUPPLIES SHALL BE TRANSORB PROTECTED ON THE BOARD. THE HC11 CPU SHALL BE USED FOR ALL APPLICATIONS THAT THE ORIGINAL 6800 PROCESSOR PROVIDE FOR 170 CONTROLLERS INCLUDING THE ABILITY TO RUN WAPITI W41KS SOFTWARE. THE MPU SHALL OPERATE AT A CRYSTAL FREQUENCY OF 8 MHZ.

THE FRONT PANEL SHALL BE THE STANDARD 170E HINGED FRONT PANEL, HELD IN PLACE BY (4) THUMBSCREWS. THE PROM MODULE SLOT SHALL BE COVERED BY A BLANK PLATE.

ALL INTEGRATED CIRCUITS SHALL BE SOCKET MOUNTED.

SOCKETS SHALL HAVE MACHINED BERYLLIUM COPPER CONTACTS WITH GOLD PLATING.

CONTROLLERS SHALL BE SUPPLIED WITHOUT SOFTWARE. ONE 128K EPROM SHALL BE SUPPLIED WITH THE CONTROLLER. EPROMS SHALL BE PROGRAMMED BY THE CENTRAL OFFICE ELECTRONIC SHOP.

CONTROLLERS SHALL BE WARRANTED FOR A PERIOD OF 1 YEAR OR FOR THE MANUFACTURERS STANDARD WARRANTY, WHICHEVER IS GREATER.

SPECIFICATIONS FOR MODEL 200 LOAD SWITCHES

MODEL 200 LOAD SWITCHES SHALL CONFORM TO "TRAFFIC SIGNAL CONTROL EQUIPMENT SPECIFICATIONS," CALIFORNIA DEPARTMENT OF TRANSPORTATION, LATEST EDITION.

LOAD SWITCHES MAY EMPLOY DISCRETE COMPONENTS OR RELAY MODULES. A SINGLE POTTED CIRCUIT ASSEMBLY IS NOT ACCEPTABLE. LOAD SWITCHES SHALL HAVE OUTPUTS RATED AT 15 AMPS CONTINUOUS. LOAD SWITCH INDICATORS SHALL DISPLAY THE STATUS OF THE INPUT SIGNAL TO THE SWITCH.

SPECIFICATIONS FOR MODEL 204 FLASHERS

MODEL 204 FLASHERS SHALL CONFORM TO "TRAFFIC SIGNAL CONTROL EQUIPMENT SPECIFICATIONS," CALIFORNIA DEPARTMENT OF TRANSPORTATION, LATEST EDITION. FLASHERS MAY EMPLOY DISCRETE COMPONENTS OR RELAY MODULES. A SINGLE POTTED CIRCUIT ASSEMBLY IS NOT ACCEPTABLE. FLASHERS SHALL HAVE OUTPUTS RATED AT 15 AMPS CONTINUOUS.

SPECIFICATIONS FOR MODEL 210 CONFLICT MONITORS

SPECIFICATIONS FOR MODEL 210 CONFLICT MONITOR SHALL CONFORM TO "TRAFFIC SIGNAL CONTROL EQUIPMENT SPECIFICATIONS", CALIFORNIA DEPARTMENT OF TRANSPORTATION, LATEST EDITION, AS WELL AS THE FOLLOWING REQUIREMENTS:

ANY DARK SIGNAL HEAD (I.E. LOSS OF SIGNAL OUTPUT TO FIELD TERMINALS) SHALL CAUSE THE MONITOR TO TRIP.

THE GREEN, YELLOW AND RED INDICATIONS FOR EACH PHASE SHALL BE BROUGHT INTO THE MONITOR INDIVIDUALLY AND SHALL BE MONITORED SEPARATELY WITH RESPECT TO A LOSS OF SIGNAL ON ANY OF THE THREE INPUTS PER CHANNEL.

THE MONITOR SHALL ALLOW EARLY DETECTION OF A CONFLICT CAUSED BY A CONTINUED GREEN SIGNAL AFTER THE YELLOW SIGNAL IS ENERGIZED, OR A YELLOW SIGNAL WHICH STAYS ENERGIZED AFTER THE RED IS ENERGIZED. THE FAULT TIMERS SHALL START IMMEDIATELY INSTEAD OF WAITING FOR ANOTHER CONFLICTING SIGNAL. THIS SHALL PRECLUDE THE PRESENTATION OF A CONFLICTING SIGNAL DISPLAY AT THE INTERSECTION.

DURING THE "ALL RED" CLEARANCE PERIOD (IF USED) THE MONITOR SHALL CHECK ALL INPUTS FOR FAULTY SIGNAL DISPLAY AND SHALL REACT TO THESE FAULTY INDICATIONS DURING THE ALL RED CLEARANCE PERIOD. DURING THIS PERIOD THE ONLY INPUTS THAT SHOULD BE ACTIVE WOULD BE THE REDS. THE MONITOR SHALL DETECT ANY FAULTS SUCH AS RED/GREEN, RED/YELLOW AND GREEN/RED/YELLOW.

THE MONITOR SHALL BE CAPABLE OF MONITORING FOR INCORRECT SIGNALS APPLIED AT THE FIELD TERMINALS OF EACH VEHICULAR MOVEMENT (GREEN, YELLOW, RED). SHOULD A VOLTAGE BE PRESENT ON MORE THAN ONE, OR NONE, OF THE INPUTS (GREEN, YELLOW, RED) OF A CHANNEL, THE UNIT SHALL
BEGIN TIMING THE DURATION OF THIS CONDITION. IF THIS CONDITION EXISTS FOR LESS THAN 700 MILLISECONDS, THE UNIT WILL NOT TRIGGER. IF THE CONDITION LASTS FOR MORE THAN 1000 MILLISECONDS, THE UNIT WILL TRIGGER. THE UNIT MAY OR MAY NOT TRIGGER IF THE CONDITION EXISTS FOR
MORE THAN 700 MILLISECONDS OR LESS THAN 1000 MILLISECONDS.

WHEN THE UNIT TRIGGERS, IT S
TO TRANSFER. THESE CONTAC
UNIT IS RESET BY THE ACTIVAT
ACTIVATION OF THE EXTERNAL
NOT RESET THE CONFLICT MON.
DETECTION OF A FAULTY LOAD

THE MINIMUM INDICATORS SHAL

1. AC POWER - SHALL BE ILL
VAC, WILL BLINK WHEN AC+
2. DC POWER - SHALL ILLUMI
MINIMUM THRESHOLD VOLTA
3. WATCH DOG ERROR - SHAL
DETECTED.
4. CONFLICT - SHALL ILLUMI
BY THE MONITOR.
5. PC AJAR - SHALL ILLUMIN
INSTALLED OR NOT SEATED
6. RED FAIL - SHALL ILLUMIN
7. SWITCH FAIL - SHALL ILLU
BEEN DETECTED BY THE MO
8. YELLOW FAIL - SHALL ILL
CYCLE IS DETECTED.
9. THE MONITOR SHALL INCLU
(ONE PER CHANNEL) SHALL
PRESENT ON THE CORRESPO
IF THE UNIT TRIPS DUE TO
AND DISPLAY THE STATUS
OCCURRED. SHOULD THE M
A FAULTY LOAD SWITCH OU
DISPLAY THE CHANNEL(S) W

IF THE MONITOR DETECTS A LO
FAIL INDICATOR SHALL BE ILLU
DISPLAY THE EXACT CHANNEL O

AFTER A POWER OUTAGE, BEFO
SHALL CORRECTLY SHOW THE PI
TYPE AND CHANNEL WHICH WAS

THE MONITOR SHALL INCORPOR

THE MONITOR SHALL TRIP IF TH
SEQUENCE IS LESS THAN THREE

THE MONITOR SHALL INCLUDE M
TO THE CONTROLLER. WATCHD
TO COMMUNICATE THE INFORMA
USED BY WAPITI MICRO SYSTEM
SIGNALS OR CABLES SHALL BE

MONITORS SHALL BE WARRANTE
MANUFACTURERS STANDARD WAR
WARRANTY PERIOD SHALL BEGIN
BY THE KENTUCKY TRANSPORTA
DOCUMENTATION SHALL BE INCL
DOCUMENTATION PACKAGE SHAL
OF OPERATION, AND SCHEMATIC
LABEL OR STAMP INDICATING TI

SPECIFICATIONS FOR CABINETS

SPECIFICATIONS FOR CABINETS
CONTROL EQUIPMENT SPECIFICA
TRANSPORTATION, LATEST EDI

BASE MOUNTED CABINETS SHALL
SHALL BE MODEL 336.

ALL CABINETS SHALL BE CONST
UNPAINTED. CABINETS SHALL B
FLASHERS, FLASH TRANSFER RE
OPERATION AS SHOWN ON THE

ALL CABINETS SHALL INCLUDE A
LIGHT.

J:\Project\O\ODOT\15005112 Ironton Russell\LAW\81595\signals\sheets\81595KGN002.dgn - 4/25/2011 6:56:51 AM - jon_wanstrath

MODEL 170E MICROCOMPUTER

OPERATION & MAINTENANCE MANUAL

Safetran Traffic Systems, Inc.
1485 Garden of the Gods Road
Colorado Springs, CO 80907

MAY 2008

Serial Number 450750+

Part No: 2920001120 REV N

TABLE OF CONTENTS

Model 170E Controller 1
- Introduction 1
- General Specifications 1
- Central Processor Unit (CPU) 1
- System Address Map 2
- Communication System 4
- M170E Module Description 4
- Input and Output Module Description 4
  - Input Module 5
  - Output Module 5
- M170E Module Slot 6
- Front Panel, Display and Keyboard Interface 6
- Power Supply Module Assembly 6
- Controller Installation 7
- Adjustments and Calibration 7
  - AC Line Level Calibration 7

Theory of Operation 8
- CPU Module 8
  - 6802 Microprocessor 8
  - System Addressing 8
  - Data Bus 8
  - SRAM Memory 9
  - ACIAs 1-4 9
    - TABLE OF BAUD RATE SELECTIONS 9
    - C20/30 ORIENTATION 11
  - ACIA Clock Generation 11
  - Power Back Up Configuration 11
  - Power Up/Down Sequence 12
  - IRQ Generation and Clearing (write to $5FFF) 13
  - Address Decoding 13
    - U28 - Most Significant Address Decode 14
    - U33 - Least Significant Address Decode 15
    - MAP #1 EXTERNAL RAM / EXTERNAL EPROM 16
    - MAP #2 INTERNAL RAM / INTERNAL EPROM 16
- M170E Module 18
  - Introduction 18
  - Address Bus Interface 18
  - Data Bus Interface 18
  - Module Decoding Logic 18
  - Backup Power Supply 19
  - Location and Feature DIP Switches 20
  - Real Time Clock Adjustor 20
- Input Module 21

Input Interface 21
Line Sensing and RTCA Timing Clock Filter 21
Super Capacitor Circuits 23
Down Time Accumulator 23
Output Module 25
Output Interface 25
Keyboard and Display Module 26
Seven Segment Display and Call Indicators 26
Display Segment Codes 26
Keyboard Interface and Decoding Logic 27

Maintenance 28
Introduction 28
Troubleshooting 28
Troubleshooting Analysis Chart 29
General Troubleshooting Chart 30

170E Controller Bill of Materials 32

170E Controller Block and Timing Diagrams 78

170E Controller Schematic and Assembly Drawings 90
Motherboard 91
C1 Connector Board 93
CPU Board 94
M170E Module 96
Input Module 101
Output Module 105
Keyboard and Display Module 107
Power Supply Module 111

Model 170E Controller

Introduction

The model 170E Controller is specifically intended for hostile environmental applications that may range from traffic intersection control, ramp control, surveillance applications and other installations where a hardened microprocessor may be required.

The controller consists of a chassis seven inches high by seventeen inches wide designed for nineteen inch rack mounting. The unit is eleven and one half inches deep (fourteen inches deep when the cabinet C1 connector is installed). The unit weight is approximately nineteen pounds. The unit includes a Case, Motherboard Assembly, removable Linear Power Supply, M170 Program Module slot, Auxiliary Module slot for the M170E Auxiliary Module, Central Processor Module, two Model 400 modem slots MC1 and MC2, four serial ports with corresponding connectors C2 through C40, Input Module, Output Module and a Front Panel with Display and Keyboard Interface.

General Specifications

Operating Temperature Range	-37 degrees C to +74 degrees C
Relative Humidity	0 to 95% non-condensing
Power Consumption	40 Watts
Operating Voltage	90 VAC to 135 VAC
Weight	25 lbs.
Size	12.25"D X 19.00"W X 7.00"H

Central Processor Unit (CPU)

The 6802 microprocessor is the heart of the CPU module. The 6802 features a 16-bit address bus, and 8-bit bidirectional data bus, 3-16 bit and 3-8 bit program registers, 72 basic instructions with 197 variations, 7 different addressing modes, and an 8-bit word size. The main CPU clock is derived from a 6.144 MHZ clock oscillator. A 3.072 MHz clock is derived from the 6.144 MHz clock by a divide by 2 circuit. A jumper selection allows the 6802 to utilize the 6.144 MHz clock or the 3.072 MHz clock for the system clock.

The RAM Memory used on the CPU module is a 32K x 8 bit nonvolatile SRAM which does not require battery backup. The CPU module contains the control circuits for NMI and RESET. These circuits are provided with back-up power from the system super capacitor.

Specific information concerning the 6802 as well as other basic integrated circuit components may be obtained from the component manufacturer's data sheets or reference manuals.

System Address Map

The 170E has two jumper selectable system address map configurations as shown below. Configuration 1 allows the use of a Model 412C program module.

CONFIGURATION #1 ADDRESS ORGANIZATION

ADDRESS RANGE	FUNCTION	COMMENTS
0000-0FFF	CPU SRAM	
1000-3FFF	EXT U4 MEMORY	412C
4000-4FFF	RESERVED	
5000 READ	DTA MINUTES	
5000 WRITE	DTA RESET	
5001-5007	INPUT/OUTPUT	
5008-500A WRITE		FRONT PANEL DISPLAY
5004 BIT 1 READ	RESTART STATE	
500F READ	DTA SECONDS	
5009-500E READ	RESERVED	
500B-500F WRITE	RESERVED	
5010-5FFE	RESERVED	
5FFF READ	CPU STATUS	BIT1 - ACIA #1 IRQ BIT2 - ACIA #2 IRQ BIT3 - ACIA #3 IRQ BIT4 - ACIA #4 IRQ BIT5 - RESERVED BIT6 - ADDRESS CONFIG BIT7 - DTA TIMEOUT BIT8 - RTC IRQ
5FFF WRITE	RTC RESET	
6000	ACIA #1	WRITE CR, READ SR
6001	ACIA #1	WRITE TDR, READ RDR
6002	ACIA #2	WRITE CR, READ SR
6003	ACIA #2	WRITE TDR, READ RDR
6004	ACIA #3	WRITE CR, READ SR
6005	ACIA #3	WRITE TDR, READ RDR

6006	ACIA #4	WRITE CR, READ SR
6007	ACIA #4	WRITE TDR, READ RDR
ADDRESS RANGE	FUNCTION	COMMENTS
6008-600F	RESERVED	
6010-6FFF	CPU SRAM	
PROGRAM MODULE		
7000 WRITE	MEMORY WRITE PROTECT	
7000 READ	I.D. FEATURE	
7001 READ	I.D. LOCATION	
7001 WRITE	RESERVED	
7002-7009	RESERVED	
700B-700E WRITE	RESERVED	
700F READ	RESERVED	
700A	RTCA VALID/RESET	
700B-700E READ	RTCA COUNTERS 1 TO 4	
7010-7FFF	U3 MEMORY	
8000-FFFF	U1 & U2 MEMORY	

CONFIGURATION #2 ADDRESS ORGANIZATION

Configuration 2 provides all Model 412C Program Module features internal to the controller unit. The address organization is the same as CONFIGURATION #1 with the following exceptions:

ADDRESS RANGE	FUNCTION	COMMENTS
0000-3FFF	CPU SRAM	U3 & U4 MEMORY INTERNAL
6010-6FFF	INT RAM	
7010-7FFF	INT RAM	
8000-FFFF	CPU EPROM	U1 & U2 MEMORY INTERNAL

Address decoding is accomplished on th e CPU module by two PAL20V8s. See the CPU board theory of operat ion section for information on selecting the desired configuration.

Communication System

The communications system is made up of four 68B50 Asynchronous Communications Interface Adaptors. The baud rate clocks for the four ACIAs are jumper selectable on an individual basis. The baud rate clocks range from 19.2KHz to 307.2Khz in five steps. The actual ACIA baud rate is determined by the clock jumper setting, and the ACIA divide ratio selected by the software.

The ACIA units are capable of receiving and transmitting up to 8 bits of data from the microprocessor for serial data communication. The ACIAs have four registers which may be addressed by the processor. The processor is capable of reading the Status Register (SR) and Receiver Data Register (RDR), and writing to the Transmit Data Register (TDR) and the Control Register (CR). This system is capable of supporting two 400 modem modules.

M170E Module Description

The M170E Module may be installed in the M170E slot, thereby providing the capabilities of the Features and Location identification switches, and the RTCA in the event that a user wishes to operate the unit without a Model 412C Program Module installed. The M170E slot is just to the left of the CPU module slot. The M170E module is automatically disabled when a Model 412C Program Module is installed in the unit.

Input and Output Module Description

The Input and Output Modules use ground true logic on all I/O pins on the C1 connector and C3 front panel connector. All data transfer is in parallel 8 bit words. Input data is derived from 12 volt logic input via CMOS gates to the internal 5 volt system. Output data is provided through open collector drivers and a common cabinet ground with a maximum of 40 volts DC out put and capable of sinking up to 100ma per output

Input Module

The Input Module contains a 64 bit input interface. The interface consists of 44 bits assigned to the C1 connector, 6 bits assigned to the front panel for keyboard interface and 14 unused bits.

Each logic level input is true when the input voltage is less than 3.5 VDC, and false when the input voltage exceeds 8.5 VDC. Each input is pulled up to 12VDC and will not deliver in excess of 20ma if shorted to logic level common.

When the logic level is true or within 3.5 VDC of logic level common, the voltage level seen by the microprocessor will be a logic level 1.

Additional circuitry is installed on the input module to provide the AC line voltage sensing control, 60Hz real-time clock circuits, super capacitor circuits, down time accumulator circuits, and internal 5VDC power sensing. One adjustment is found on the front of the input module. This is the AC line level sense threshold adjustment.

The Down Time Accumulator (DTA) is used to accumulate time during power failures. Upon restoration of power, the DTA provides two 8 bit registers indicating the number of minutes and seconds of down time over a 255 minute range. For time greater than 255 minutes, the DTA will present FF (all ones) for the minute and second register outputs.

Output Module

The Output Module operates an 80 bit output interface. Fifty-six bits are assigned to the C1 connector and 24 bits are assigned to C3 the front panel interface connector.

The output interface consists of an NPN open collector transistor with the ability to "sink" current via the logic level common ground system. The NPN transistors are part of ten ULN 2803 driver units. These units have common diode sink circuits that are attached to Transorb protectors placed near the units to provide EMI, generated spike and noise protection.

A logic level 1 developed at the microprocessor will be latched via the ten 8 bit latches that are input to the ULN drivers and will produce and "on" or "sink" condition to the output interface.

When the unit power is removed and the output module receives a RESET signal for termination of activity, the RESET signal will clear the latches and turn off all of the outputs.The latches will remain in the off state until addressed and the data is strobed into each of the units. The output latches will remain in the state set by the input data until changed by a new instruction or cleared by the RESET command.

M170E Module Slot

The M170E Slot provides access to the 16 bit address bus, the 8 bit data bus, VMA/C Clock input, read/write, +/- 12VDC, +/- 5VDC, DC common, and equipment ground. This interface provides the memory needed to operate the various programs on the Model 412C Program Module.

Front Panel, Display and Keyboard Interface

The Front Panel is securely fastened to the controller chassis by thumb screws, and is removable without special tools. A spring-loaded plastic latch to the right of the panel allows the panel to swing open to provide access to the internal modules. The thumb screws to the left allow removal of the panel from the hinge.

A display module is installed on the metal front panel and it contains 6 seven-segment character display units. These units are visible through two removable windows that provide access to the display units for maintenance.

The seven-segment character display units are arranged to show FUNCTION in the top units (PHASE and INTERVAL individually) and TIMING/DATA collectively on the four bottom units in the lower window. The PHASE and INTERVAL display is visible in the top window.

Ten LED's arranged in a vertical row are, from the top down, CALL/ACTIVE indicators 0-9.

One ON/OFF toggle switch is provided on the panel to operate the STOP TIMING command for the controller.

A sixteen pad keyboard is located on the front panel to allow the operator the capability to address the controller. The key pad contains pads from 0 to F representing "hex coded" signals used in the operator interface. The 16 keys are coded in binary 4-bit codes and are input to the Input Module via the C3 connector. In addition to the display and keyboard units, the front panel has provisions for holding an instruction card.

Power Supply Module Assembly

The DC power is developed on the Power Supply Module. Transient protection and EMI/RFI filtering is provided to the input AC power and the rectified DC component. Transorbs, Movistors, Capacitors and Wire Wound Resistors that absorb energy and provide inductance to slow the wavefront on any transients are used.

The Power Supply Module provides +/- 12 VDC, +/- 5VDC, AC line level sense and isolation power, +5VDC to the front panel logic and C2, C20, C30 and C40

connectors, and logic common to the controller via a 16 wire plug and socket connector.

The power cord is attached to the power supply, to allow operation of the unit when detached or extended from the controller. The fuse and on/off switch are on the front of the unit.

The power transformer, storage capacitors, diode bridges, regulator transistors and all other components needed to provide the power to the controller are contained on this unit.

Controller Installation

When installing the controller, be sure that the power switch is in the "OFF" position, verify the desired user program is installed and the Stop Time switch position is correct. Check that the CPU, Input and Output Modules are installed and the modules are properly seated. Check that the mating connectors such as the C1, C2/40 and T1 are secured. Verify source power is 95 to 135 VAC and plug the line cord into the service outlet. Switch power on at the front of the power supply and verify proper program execution.

Adjustments and Calibration

There is one adjustment that requires calibration within the 170E Controller. The line level adjustment can be accomplished with the use of an AC meter, and a Variac (rated for 2 amperes).

AC Line Level Calibration

The CPU, Input, Output and Program Module are required for proper line level calibration. Voltages measured on the front of the CPU must be within the following tolerances.

+/- 5VDC	+/-4.75VDC to +/-5.25VDC
+/- 12VDC	+/-12.6VDC to +/-11.4VDC

Plug the controller power supply into the Variac and adjust the voltage output to 115VAC. Adjust R24 (on the front edge of the input module) until LED L1 lights. Readjust the Variac to 92VAC and move R24 until the LED goes off. Re adjust the Variac to 97VAC and rotate R24 until the LED lights again. This procedure is complete when CPU operation falls within the following parameters: OFF 92 (+/- 2), ON 97 (+/- 2) VAC. The hysteresis shall be a minimum of 5VAC.

Theory of Operation

CPU Module

6802 Microprocessor

The 6802 processor (U17) operates on a 6. 144MHz crystal oscillator (U16). The input frequency to the processor can be divided to 3.072MHz by a 74HC390 Dual-Stage Binary Ripple Counter (U14A). The input frequency is determined by the CPU CLO CK SPEED jumper (JP27). The selection is defined in terms of the MPU clock speed, which is divided by four inter nally. Therefore, Fast Speed is labeled as 1.536 MHz and Normal Speed is labeled as 768KHz. The 16 address lines are output through pins 9 (A0) to 25 (A15) excluding pin 21 (VSS). The bidirectional data bus is located at pins 33 (D0) through 26 (D7). The RESET line is located at pin 40 and is an active low or 0 volts during times of power down or up conditi ons. The processor or "E" clock is the result of the divided input selected by JP27 and will hav e a frequency of 1.536MHz or 768KHz. The read/write line is located on pin 34, with read being active high (1) and write being active low (0). Pin 36 (RE) and 38 (X1) are tied to logic level common, or ground. The non-maskable interrupt (NMI), pin 6, is triggered on a low going transition. It is used for interrupting the processor on a power down sequence. The interrupt request line (IRQ), pin 4, is in itiated by an active low level from either the ACIA devices or RTC generation. The valid memory address (V MA), pin 5, is used to verify that a legitimate address exists on the address lines. The HALT line, pin 2, and the MR line, pin 3, are not used and are tied high.

System Addressing

The address lines originate with U17 and are input to U1 2 and U15, Prom Address Bus Drivers. U12 and U15 are 74 HC244 non-inverting buffers that produce address signals to the edge connector for contro l of the System Memory Module. The address lines are also sent to Internal EPROM Memory (U22) and Internal RAM Memory (U27). Address lines A1 and A2 ar e sent to U32 ACIA Address Decoder to enable the proper ACIA. Address lines A0 th rough A3 are sent to the I/O buffer (U24) for operation of the Input and Output Modules. R/W- and VMA/E are also s ent through U24 from U21A (VMA/E) and U25B and U25C (R/W-).

Data Bus

The bidirectional data from the CPU U17 is buffered by U20, 74LS640 and applied to the edge connector for use with the System Memory Module, during specific decode conditions. Both address and data signals are held in tri-state until the decoder provides the enable signals t o insure di sconnect of the System Memory Module interface from the CPU Module until selected.

Further buffering of the data bus for external use includes U23, 74HCT245 where D0-D7 are sent to th e I/O sys tem. Ga ting for this buffer is provided when specific decoding of the I/O system is generated. Int this way, onl y I/O data is exposed to the I/O system when it is necessary to address the field and front panel interface. When the system is running, 95% of the instruction ac tivity takes place with the PROM and RAM system. Since the I/O interfa ce may be t he source of transient noise and other interruption, special effort has been expended on this module to improve the reliability of data transfer and system operation by providi ng special buffering for both th e address and the data system to the Input and Outpu t Modules. Included in this bus system are the four ACIA units since these elements are also exposed to the outside environment.

SRAM Memory

The DS1230Y U27 is a 32K NOVRAM. The address lines are A0 to A14 occupying pins 1-10, 21 and 23- 26. Chip Enable (CE) pin 20 is tied to the decode buffer and enabled during proper internal RAM addr essing. Output Enable (OE) pin 22 is tied to U24, an "AND gate" that produces the VMA/E control signal. W rite Enable (WE) pin 27 is tied to the R/W buffer U30. When power is removed this NOVRAM will automatically go to the low pow er state and retain RAM memory for a sustained period. These elements have a shelf life of 10 years.

ACIAs 1-4

The four 68B50 units are Asynchronous Communications Interface A daptor devices and are specifically des igned for use with the 6800 family of microprocessors. The data lines are loc ated at pins 15 (D7) to 22 (D0), and are ac cessed through the I/O buffer. The transmit (TXCLK) and receive (R XCLK) clocks are located at pins 4 and 3 respectively. Both clocks run at a preselected rate dependent upon which jumper "shunt" position is used.

TABLE OF BAUD RATE SELECTIONS

	307.2 KHz DIV 16/64 19200/4800	153.6 KHz DIV 16/64 9600/2400	76.8 KHz DIV 16/64 4800/1200	38.4 KHz DIV 16/64 2400/600	19.2 KHz DIV 16/64 1200/300
ACIA 1	JP1	JP2	JP3	JP4	JP5
ACIA 2	JP6	JP7	JP12	JP15	JP16
ACIA 3	JP8	JP9	JP13	JP17	JP18
ACIA 4	JP10	JP11	JP14	JP19	JP20

Chip selection is made by pins 8 (CS0), 9 (CS2) and 10 (CS1). CS2 must be low, and additionally, CS0 and CS1 must be active high to select the ACIA. CS0 and SC1 are tied active high. The four CS2 input signals for the ACIAs are decoded by U32, a 16V8 decoder. Only one of these decodes will be active, based on the position of JP25, which swaps ACIAs 2 and 3. The input to U32A and U32B consists of the base $6000 decode (CS7) and addresses A1 and A2. Address A0 is tied to ACIA pin 11 (RS) to determine the condition of transmit or receive. The read/write (R/W) line located at pin 13 is activated via the CPU read/write line, read being an active high, and write being an active low. The data bus enable line (E) located at pin 14, is provided by the CPU via U21 and U25. The interrupt requires (IRQ) is generated from ACIA pin 7 when allowed by software through the maskable interrupt at the processor. The IRQ outputs from the ACIAs should be selected depending on the software program being used since some programs are responsive to only the one or two ACIA units.

IRQ ACTIVE CONNECTION

ACIA 1	JP24
ACIA 2	JP23
ACIA 3	JP22
ACIA 4	JP21

INTERRUPT STATUS BUFFER
READ 5FFF

The selection and active/inactive condition of the four IRQ outputs from ACIAs 1-4 are supplied to a buffer U1 74HC540 and assigned to DIO0 through DIO3 respectively. This buffer is activated by a read to $5FFF. Additionally, DIO4 and DIO5 are assigned to jumper selection JP26 for DIO4 and JP29 for DIO5. These jumpers may be used to alert the software of some special board configuration. DIO6 of this buffer is assigned to record the DTA Timeout condition. When DTA Timeout is active, the input to the buffer is a low state. DIO7 of this buffer is assigned to the RTC interrupt condition register.

** It should be noted that as in the case of the I/O system, any input that is low active will be translated to the 6802 processor as a logic 1 or high input.

The receive data input (RXDATA) pin 2 is transformed from +/-12 VDC logic to 5 VDC logic via U5C for ACIA 1, U5D for ACIA 2, U7C for ACIA 3 and U19D for ACIA 4. U5, U7 and U19 are 1489 devices used for the purpose of translating RS232 signal levels to 5 VDC signal levels for use within the internal system. The CTS clear to sen located at pin 24 indicates that the peripheral is ready with an active low. The data carrier detect (DCD) pin 23 signals the presence of carrier from an external device with an active low state. The transmit data (TXDATA) pin 6 is transformed from 5 volt logic to +/-12 VDC RS232 levels through U4A for ACIA1, U4C for ACIA 2, U8A for ACIA 3 and U8C for ACIA 4. U4 and U8 are 1488 devices used for converting 5 VDC levels to RS232 levels. Request To Send (RTS) located at pin 5 is also converted to RS232 levels by U4B, U4D, U8B and U8D. If this pin is low then the ACIA is requesting permission to send.

C20/30 ORIENTATION

ACIA 2-20/3-30JP25 POSITION 1-2
ACIA 3-20/2-30JP25 POSITION 2-3

Since the 170E is equipped with dual Model 400 modem card capability and does have options for use of standard Model 400 modem cards in two slots, some considerations must be given to the assignment of C2, C20, C30 and C40. Standard application assigns ACIA 1 to C2 and ACIA 2 to C20. In order to accommodate the dual modem structure, MC1 is assigned to C2 and C20 while MC2 is assigned to C30 and C 40. JP25 provides this condition when placed in the 1-2 position.

However, it may be desirable to operate two single Model 400 modems in the MC1 and MC2 slots. To accommodate th is assignment, JP25 should be placed in the 2-3 (SWAP) position. Boxes are provided on the rear cover of the 170E Controller for proper documentation of this condition.

ACIA Clock Generation

The E clock and ACIA clock generation logic consists of a divide by 2, divide by 5 design that is accomplished with U14A, 74HC390. U13, 74HC4040 provides further division to accomplish four basic frequencies, these are in order of generation 307.2 KHz, 153.6 KHz, 76.8 KHz, 38.4 KHz and 19.2 KHz.

Power Back Up Configuration

The Down Time Accumulator and Power Control logic are held up by the use of a Super Capacitor located on the Input Module. The RAM memory is held up internally with the use of the NOVRAM design. Power Control logic on the CPU is CMOS and separately powered by VB, during power down and VCC during normal o peration. No special programming is required since this feature is accomplished with the use of diode logic.

Power Up/Down Sequence

a) NMI to go true 50-67ms following AC loss:

U18, MC4020 binary counter, provides the timing count for the power down detection circuit. U30, MC4001 2 input NOR gate, provides the gating control for the counter. Gate A controls the clock and gate B controls the reset. The 60Hz clocks will "reset" the counter and keep it from accumulating a significant count. U18 is clocked at a 32KHz rate via U30A and advances every 31 microseconds unless reset by the 60Hz power condition clock.

During a power down state, or low line condition the 60 Hz power condition clock will stop. U18 continues to count until the Q8, Q10 and Q11 output are at a high state. The accumulated time will be 50.7 milliseconds. The output of U31B will clock U26A to a "true" latched state. The Q-bar output set to a high state is input to U30B to prevent additional 60Hz power condition clocks from resetting the U18 counter until 4 additional milliseconds of time have elapsed. This will occur when U18 Q7 transitions to a high state then back to a low state.

U31C, the NMI timing gate, is output to invertor U30C. The U30C output will transition from a high to low state and back to a high state during the 4 millisecond interval created by the U18 counter. When U30C transitions to a high, the Reset Latch U26B Q output will stop further 32KHz clocks from advancing the U18 counter by placing a high on the input to the U30A control gate. U18 power down control counter remains in this condition until released at the termination of the reset cycle.

When the RESET U26B latch is set, the NMI latch U26A will clear. The setting and clearing of the NMI latch resets and holds the Power Up counter U34 in a reset condition through U35C and U37C.

During the time the NMI latch was in the set condition, the input to U35A NMI/RESET "AND" gate will cause the output to go to a logic low state. Capacitor C17 Restart Timer timing capacitor discharges through R15 and the low state of U35A.

The Q output of the NMI latch is inverted through isolation FET Q4 to U17 pin 6 of the microprocessor to initiate the Non-Maskable Interrupt routine. Additionally the output of U35A is buffered through U31D and output to the Input Module as the NMI RST signal. This signal will initiate the DTA Timer on the Input Module.

U35A Q output is input to Q1 FET isolation transistor. The output of Q1 is SYSTEM RESET and is wired to the various gates and pin 40 of U17 microprocessor. Additionally, U35A Q output is used to initiate the Power Up Sequence logic. U35B power up sequence AND gate output will go to a logic low when U35A Q output is true. The result, D inputs to U36A CYCLE CONTROL latch and U36B POWER UP CONTROL latch, will be moved to a logic low state.

The next subsequent 32 KHz clock will set the Q-bar output to a logic one state of U36A. This signal will hold the U35B power up sequence AND gate output at a logic low until the power up sequence is completed. Additionally, U36B Q output will be clocked to a logic low by the first 60 Hz power condition clock, following the resumption of power.

The logic low state of U36B Q output will enable the operation of U34 power up sequence counter. U34 is a ring counter producing a logic high output on each of the Q outputs in sequence according to the number of clocks input to the CLK pin of this counter.

b) RESET to go false (high) 116.6ms after power is restored:

When the NMI latch was released and RESET initiated, only the ENABLE pin input prevented the operation of U34. Now the counter will advance each time a clock is generated, at a rate of 16.6ms per clock. When 116.6ms has transpired or 6 transitions of the power condition clocks, the Q7 output transitions to a logic high. This output will reset the U26B latch and terminate the SYSTEM RESET condition. At this time, the RESET input to U35B will drop to a logic low state. However, U34 will continue to advance until the Q9 or final stage of the counter is reached. When Q9 advances to a logic high state, U36A is cleared and U35B output will transition to a logic high allowing the next 60Hz power condition clock to clock U36B POWER CONTROL Q output to transition to the logic one state and inhibit further advance of the U34 ring counter.

c) RESTART TIMER to terminate 33.3ms after SYSTEM RESET is completed:

When the U34 power up sequence counter Q9 output reaches a logic one, state capacitor C17 is restored to a full charge through R26 resistor and D5 diode. This function will restore the input to U37B to a logic high state and terminate the RESTART TIMER input to Q2 FET. Q2 FET serves as an isolation driver to the input module.

IRQ Generation and Clearing (write to $5FFF)

U37A is an invertor gate used to buffer the 60Hz IRQ signal that is generated on the Input Module. The clock will set the IRQ LATCH U29A. The Q output of U29A is inverted and buffered via U25A 74HC04, and ANDED with the IRQ outputs of the ACIA's through U21B. It is then sent through buffer U25D to the microprocessor input pin 4 IRQ. The IRQ LATCH is cleared by addressing $5FFF during a microprocessor instruction. The system decoder provides a clear strobe to the U30D invertor which is also gated by the READ/WRITE signal of the microprocessor. The strobe will clear the IRQ LATCH during a write instruction.

Address Decoding

Operation of the various bus control gates and the selection of the internal RAM and ROM is accomplished with the use of two decoder PALs, U28 and U33. U28 provides most significant bit address decoding and U33 provides least significant bit decoding.

The decoder PALs are programmed as follows:

U28 - Most Significant Address Decode

PIN	DESCRIP.	FUNCTION	PIN	DESCRIP.	FUNCTION	PIN	DESCRIP.	FUNCTION
1	A4	INPUT	8	A11	INPUT	16	CS6EN	OUTPUT
2	A5	INPUT	9	A12	INPUT	17	CS34EN	OUTPUT
3	A6	INPUT	10	A13	INPUT	18	CS2EN	OUTPUT
4	A7	INPUT	11	A14	INPUT	19	CS1EN	OUTPUT
5	A8	INPUT	13	A15	INPUT	20	CS0EN	OUTPUT
6	A9	INPUT	14	CONFIG	INPUT	22	IORW	OUTPUT
7	A10	INPUT	15	CS7EN	OUTPUT	23	RW	INPUT

EQUATIONS

```
IORW = RW*/A15* A14*/A13* A12*/A11*/A10*/A9*/A8*/A7*/A6*/A5*/A4
IF CONFIG = 1 THEN
        BEGIN
                /CS0EN =/A15*/A14*/A13* A12 +/A15*/A14* A13 +/A15* A14*/A13*/A12
                        +/A15* A14* A13* A12 + A15
                /CS1EN =/A15*/A14*/A13*/A12
                        +/A15* A14* A13*/A12* A4  + /A15* A14* A13*/A12* A5
                        +/A15* A14* A13*/A12* A6  + /A15* A14* A13*/A12* A7
                        +/A15* A14* A13*/A12* A8  + /A15* A14* A13*/A12* A9
                        +/A15* A14* A13*/A12* A10 + /A15* A14* A13*/A12* A11
                /CS2EN =/A15* A14*/A13* A12*/A11*/A10*/A9*/A8*/A7*/A6*/A5*/A4
                /CS34EN=/A15* A14*/A13* A12*/A11*/A10*/A9*/A8*/A7*/A6*/A5*/A4
                /CS6EN =/A15* A14*/A13* A12* A11* A10* A9* A8* A7* A6* A5* A4
                 CS7EN =/A15* A14* A13*/A12*/A11*/A10*/A9*/A8*/A7*/A6*/A5*/A4
        END
ELSE
        BEGIN
                /CS0EN =/A15* A14* A13* A12*/A11*/A10*/A9*/A8*/A7*/A6*/A5*/A4
                /CS1EN =/A15*/A14*/A13*/A12      + /A15*/A14*/A13* A12
                        +/A15*/A14* A13          + /A15* A14*/A13*/A12
                        +/A15* A14* A13*/A12* A4  + /A15* A14* A13*/A12* A5
                        +/A15* A14* A13*/A12* A6  + /A15* A14* A13*/A12* A7
                        +/A15* A14* A13*/A12* A8  + /A15* A14* A13*/A12* A9
                        +/A15* A14* A13*/A12* A10 + /A15* A14* A13*/A12* A11
```

```
                +/A15* A14* A13* A12* A4  + /A15* A14* A13* A12* A5
                 +/A15* A14* A13* A12* A6  + /A15* A14* A13* A12* A7
                 +/A15* A14* A13* A12* A8  + /A15* A14* A13* A12* A9
                 +/A15* A14* A13* A12* A10 + /A15* A14* A13* A12* A11
        /CS2EN =/A15* A14*/A13* A12*/A11*/A10*/A9*/A8*/A7*/A6*/A5*/A4
        /CS34EN=/A15* A14*/A13* A12*/A11*/A10*/A9*/A8*/A7*/A6*/A5*/A4
        /CS6EN =/A15* A14*/A13* A12* A11* A10* A9* A8* A7* A6* A5* A4
        /CS7EN =/A15* A14* A13*/A12*/A11*/A10*/A9*/A8*/A7*/A6*/A5*/A4
END
```

U33 - Least Significant Address Decode

PIN	DESCRIP.	FUNCTION	PIN	DESCRIP.	FUNCTION	PIN	DESCRIP.	FUNCTION
1	VMAE	INPUT	8	CS1EN	INPUT	16	CS34	OUTPUT
2	A0	INPUT	9	CS2EN	INPUT	17	CS6	OUTPUT
3	A1	INPUT	10	CS34EN	INPUT	18	CS1	OUTPUT
4	A2	INPUT	11	CS6EN	INPUT	19	CS7	OUTPUT
5	A3	INPUT	13	CS7EN	INPUT	20	IOBEN	OUTPUT
6	A15	INPUT	14	CONFIG	INPUT	21	INTROM	OUTPUT
7	CS0EN	INPUT	15	IO1A	OUTPUT	22	CS0	OUTPUT

EQUATIONS

```
/IO1A =(/A3*/A2*/A1* A0 + /A3*/A2* A1*/A0 + /A3*/A2*/A1* A0 + /A3* A2*/A1*/A0
        + /A3* A2*/A1* A0 + /A3* A2* A1*/A0 + /A3* A2* A1* A0 +  A3*/A2*/A1*/A0
        +  A3*/A2*/A1* A0 +  A3*/A2* A1*/A0)* /VMAE*/CS2EN
/CS34 =(/A3*/A2*/A1*/A0 +  A3* A2* A1* A0)* /VMAE*/CS34EN
/CS6  =  A3* A2* A1* A0* /VMAE*/CS6EN
/CS1  = /CS1EN*/VMAE
 CS7  = /A3*/VMAE* CS7EN
/IOBEN = ((/A3*/A2*/A1* A0 + /A3*/A2* A1*/A0 + /A3*/A2* A1* A0 + /A3* A2*/A1*/A0
         +   /A3* A2*/A1* A0 + /A3* A2* A1*/A0 + /A3* A2* A1* A0 + A3*/A2*/A1*/A0
         +    A3*/A2*/A1* A0 +  A3*/A2* A1*/A0)* /VMAE*/CS2EN) + CS7 + /CS34 + /CS6
/INTROM= A15*/CONFIG*/VMAE
/CS0= /CS0EN*/VMAE
```

The two selectable configurations are mapped as follows:

MAP #1 EXTERNAL RAM / EXTERNAL EPROM
CALTRANS CONFIGURATION #1 JP29 1-2 (EXT)

ADDRESS	DECODE ROM ADDRESS	COMMENTS	CHIP SELECT
$0-0FFF	$0000-0FFF	INT RAM	CS1
$1000-4FFF	$1000-4FFF	EXT RAM	CS0
$5000	$5000	DTA MINUTES	CS3/4
$5001-500A	$5001-500A	INPUT/OUTPUT	CS2
$500F	$500F	DTA SECONDS	CS3/4
$5FFF	$5FFF	RTC RESET	CS6
$6000-6007	$6000-6007	ACIA 1-4	CS7
$6010-6FFF	$6010-6FFF	INT RAM	CS1
$7000-700F	$7000-700F	EXT 412C I/O	CS0
$7010-7FFF	$7010-7FFF	EXT RAM	CS0
$8000-FFFF	$8000-FFFF	EXT EPROM	CS0

MAP #2 INTERNAL RAM / INTERNAL EPROM
CALTRANS CONFIGURATION #2 JP29 2-3 (INT)

ADDRESS	DECODE ROM ADDRESS	COMMENTS	CHIP SELECT
$0-4FFF	$30000-34FFF	INT RAM	CS1
$5000	$35000	DTA MINUTES	CS3/4
$5001-	$35001-3500A	INPUT/OUTPUT	CS2

500A			
$500F	$3500F	DTA SECONDS	CS3/4
$5FFF	$35FFF	RTC RESET	CS6
$6000-6007	$36000-36007	ACIA 1-4	CS7
$6010-6FFF	$36010-36FFF	INT RAM	CS1
$7000-700F	$37000-3700F	INT 412C I/O (M170E MOD)	CS0
$7010-7FFF	$37010-37FFF	INT RAM	CS1
$8000-FFFF	$38000-3FFFF	INT EPROM	---

Selection of the two configurations is accomplished by positioning jumper JP29 as shown below:

CONFIGURATION		JUMPER POSITION
1	1-2	(EXT)
2		2-3 (INT)

Note: JP 30 is a spare jumper and is not used.

M170E Module

Introduction

The M170E module contains two eight position dip switches (labeled FEATURE and LOCATION), that may be read by the MPU. These switches may be used to set up variable modes of operation of software in the controller based on switch settings. The M170E Module also contains a twenty-four bit Real Time Clock Adjustor (RTCA).

Address Bus Interface

The module interface to the M170 address bus is through edge connector pins 1 through 16. These signals are fed directly to the address inputs of the address decode PAL U11. Address lines A12 through A15 are fed to a 74HC138 1-of-8 decoder to create a 7XXX signal that is also input to PAL U11.

Data Bus Interface

Data from the module is buffered and driven by a 74LS540 buffer U10.

Module Decoding Logic

The module decoding logic is comprised of U12, 74HC138 and U11, PAL20V8. U12 decodes the upper four address lines and generates a 7XXX major decode signal to U11. U11 decodes the 7XXX major decode and the lower 12 address lines to generate chip selects 0, 1, A-E and -BDSEL. By using U12 to decode the upper four address lines, decoding of the entire address bus is accomplished.

If the decode logic recognizes an address within the range of the 170E module, the appropriate chip select signal will go low and cause a device to be selected. The U11 -VMA02 input, pin 23, qualifies the chip select with the VMA02 clock. The -BDSEL board select signal is generated and sent to U10, 74LS540, data bus buffer to enable passing the incoming data to the 170E module data bus.

The M170 RESET signal is used by a two input OR gate U16D to disconnect the reset signal from the RTCA counter chain during a power off condition. This allows the RTCA counter to count during a power interruption.

The decode PAL, U11, is programmed as follows:

PIN	DESCRIP.	FUNCTION	PIN	DESCRIP.	FUNCTION	PIN	DESCRIP.	FUNCTION
1	I7XXX	INPUT	9	A7	INPUT	18	CSC	OUTPUT
2	A0	INPUT	10	A8	INPUT	19	CSB	OUTPUT
3	A1	INPUT	11	A9	INPUT	20	CSA	OUTPUT
4	A2	INPUT	13	A10	INPUT	21	CS1	OUTPUT
5	A3	INPUT	14	A11	INPUT	22	CS0	OUTPUT
6	A4	INPUT	15	BDSEL	OUTPUT	23	VMA02	INPUT
7	A5	INPUT	16	CSE	OUTPUT			
8	A6	INPUT	17	CSD	OUTPUT			

EQUATIONS

/CS0 = /I7XXX*/A0*/A1*/A2*/A3*/A4*/A5*/A6*/A7*/A8*/A9*/A10*/A11*/VMA02
/CS1 = /I7XXX* A0*/A1*/A2*/A3*/A4*/A5*/A6*/A7*/A8*/A9*/A10*/A11*/VMA02
/CSA = /I7XXX*/A0* A1*/A2* A3*/A4*/A5*/A6*/A7*/A8*/A9*/A10*/A11*/VMA02
/CSB = /I7XXX* A0* A1*/A2* A3*/A4*/A5*/A6*/A7*/A8*/A9*/A10*/A11*/VMA02
/CSC = /I7XXX*/A0*/A1* A2* A3*/A4*/A5*/A6*/A7*/A8*/A9*/A10*/A11*/VMA02
/CSD = /I7XXX* A0*/A1* A2* A3*/A4*/A5*/A6*/A7*/A8*/A9*/A10*/A11*/VMA02
/CSE = /I7XXX*/A0* A1* A2* A3*/A4*/A5*/A6*/A7*/A8*/A9*/A10*/A11*/VMA02
/BDSEL =(/17XXX*/A0*/A1*/A2*/A3*/A4*/A5*/A6*/A7*/A8*/A9*/A10*/A11*/VMA02)
+ /CS1+/CSA+/CSB+/CSC+/CSD+/CSE

Backup Power Supply

The M170E Module has a backup supply voltage when power is removed from the module. This backup suppl y consists of a 1.0F super capacitor, C13. The super capacitor is used to generate the backup supply voltage (VDD) used to power the RTCA circuit during a power off condition. The total current drain on the backup supply is approximately 100 microamperes. The VDD supp ly circuit consists of the following elements. A 1.0F super capac itor, to power the supply duri ng a power down condition, a reverse blocking/switching diode D1 to prevent the super capacitor from discharging

into the +5V supply battery when controller power is off.

The switching action of D1 provides a sm ooth transfer of power as the controller power is decaying. This will eliminate any concerns of power supply decay threshold and transistor switching time problems. Wi th controller power on, the VDD supply circuit consists of the 170 +12V voltage "r egulated" down to +5.6V by Zener diode D2 and resistor R7. VDD is then supplied to the VDD circuit through diode D1.

Location and Feature DIP Switches

The M170E Module has two 8-position di p switches that are mounted on the module. These switches are labeled LO CATION and FEAT URE. They reside at locations 7001 and 7000 respec tively. The out puts for these switches are buffered to the data bus by octal tristate buffers U1 and U2. These dev ices are activated by decode outputs from the decode PAL U11, and the read/write signal gener ated by the MPU.

Real Time Clock Adjustor

The real time clock adjustor is a 24 bit CMOS binary counter chain consisting of U13 and U14 4040 c ounter, 60Hz CMOS clock osci llator U4, and four tristate data bus buffers U6, U7, U8 and U9. The counters and the 60Hz clock oscillator are powered from the V DD power supply. T he 24 bits of the RTCA are re ad by the MPU in four groups of 6 bits at locations 700B, 700C, 700D and 700E. Loc ation 700B is the leas t significant 6 bits and 700E is the most signifi cant 6 bits. The 60Hz clock is disabled when the counter bits 21, 22, 23 and 24 reach the "1" st ate, and the count remains frozen there until the RTCA counters are reset by perfo rming a write operation to location 700A. A write to 700A resets all counters to zero.

Input Module

Input Interface

The Input Interface consists of eight one-of-eight data selectors MC4512. The eight inputs to the MC4512 units are level set by a resistor divider made up of a 10K resistor to the controller +12VDC power supply and a 150K series resistor that it used to provide input protection. The eight devices are assigned to the input address range 5001 to 5008. These units operate from a 12VDC supply voltage.

When an I/O address has been selected by the CPU, the buffered addresses AIO/0, AIO/1 and AIO/2 are activated and will operate the MC4512 units for selection of input bits 1-8 for a specific word. For example, if AIO/1, AIO/2 and AIO/3 are selected to a logic (1), the result would be a determination of word 5007. At this time, the MC4512 units would enable D7 or pin 9 of each unit. Pin 9 of each of the units is wired via the edge connector, to the C1 board. Inputs assigned to the C1 connector for address 5006 will be at a (1) or (0) state, depending on the cable attached to the controller.

Pin 9 of the MC4512 units, will be selected representing bits 1-8 of address 5007, and passed through to the output of each device on pin 14. Pin 14 of each MC4512 is routed through a resistor divider network to the output buffer U24, 74HCT 540. The outputs of the MC4512 units are at a 12V level and are shifted to a 5VDC level by a 3.3K and 2.2K divider in series with each input to U24 (U24 is operated from the 5VDC logic supply).

AIO/0-AIO/3 are addresses used for both the Input Module and Output Module, and will result in activating devices on both modules. However, the input and output buffers of each module respond to the IO Read/Write signal and the IO Select signal. When the IO Read/Write signal is in the logic (1) state and the IO Select signal is in the logic (0) state, buffer U24 on the Input Module is activated. At this time, bits 1-8 of word 5007 will be presented to the CPU Module to complete the read cycle.

If AIO/0-AIO/2 addresses were at the logic (0) state, and address AIO/3 at the logic (1) state, word 5008 would be selected and D0, pin 1 of each unit will be selected instead. The system is offset by one since the input range is 5001-5008 instead of 5000-5007.

U20 4504 is a device that is used to buffer and level shift the AIO/0-AIO/2 signals that operate at +5VDC logic levels to +12VDC logic levels that the MC4512 unit operate at.

Line Sensing and RTCA Timing Clock Filter

A Line Sensing Winding is located on the transformer in the Power Supply Unit of the controller. The ratio of this winding is approximately 5:1, producing an AC level that

varies depending on the level of the AC line. The line sensing circuit produces pulses at a 60 Hz rate, as long as the AC line level is above 97VAC. When the level falls below 92VAC, the sensing circuit will stop producing pulses, and initiate a power down sequence.

U10A LM393 is used to detect the line level condition. The input from the Power Supply is filtered, half-wave rectified, applied to an input divider consisting of R7 and R21 and finally applied to the non-inverting input of U10A. The inverting, or reference input is developed by a resistor divider network consisting of R24, the adjustment potentiometer, and R33. A precision reference voltage of 7.1VDC is provided by the network consisting of R25, D4, D3, and C11, and is applied to the reference input of U10A.

The input 60 Hz half-wave pulses are peak sensed as they exceed the reference voltage input to U10A. When the pulses are greater than the reference voltage, the output of U10A will swing to a logic (1). Capacitor C10 and R20 provide the hysteresis needed to provide a five volt span for the line sensing circuit.

The RTCA Filter Circuit is provided to prevent the IRQ pulses that are used for controller timing from responding to noise and irregular pulsing that sometime occur on a noisy AC line. The AC line input used to operate the LEVEL SENSE AMPLIFIER U10B. This amplifier is biased to respond sooner than the PEAK DETECTOR and initiates the timing sequence of the filter.

U2A and U2B are FILTER CONTROL LATCHES for the filter circuit. U4 is the FILTER COUNTER, and provides the timing required for each filter cycle. U1 and Y1 make up the 32KHz oscillator circuit needed to provide the filter timing and the 32KHz clock required for the DTA.

When the minus input to U10B is biased on by the incoming line level signal, the D input to U2A is held to a logic (0). At the next transition of the 32KHz clock, U2A is latched low and the D input to U2B is held at a logic (0). On the next transition of the clock, U2B output goes to a logic (0). This condition allows U4 FILTER COUNTER to start counting.

During the 180 to 270 degree transition of the AC line, U10B enables the FILTER COUNTER. The Q7 output of U4 will go to a logic (1) 2 milliseconds into the cycle and is ANDED (by three input NAND gate U9A) with the output of the peak detector, and the IRQ latch -Q output, which is at a logic (1) level. When the output of the peak detector goes to a logic level (1), the output of the U9A goes low, and within the next 250USEC, the Q4 output of the FILTER COUNTER clocks the low level into the FILTER LATCH U8B. The -Q output of U8B is routed to an input on NAND gate U9C, and is ANDED with the +5VDC power supply monitor. If the +5VDC power supply is within acceptable limits, the NAND gate feeds the 60Hz signal to the CPU module power up and down logic.

The Q8 output of the FILTER COUNTER clocks the IRQ LATCH U8A, causing the Q output to go to a logic level (1), and the -Q output to go to a logic level (0). The Q output feeds NAND gate U9B which inverts and buffers the IRQ signal to the CPU module. The -Q output of U8A disables NAND gate U9A, and prevents the filter latch U8B from being clocked.

When 15 milliseconds has elapsed, the Q10 output of the filter counter will transition to a logic (1) and terminate the filter cycle by setting U2A which causes U2B to be clocked to a high state on the next transition of the 32KHz clock. This resets the FILTER COUNTER, and the IRQ LATCH, and sets the FILTER LATCH in preparation for the next 60Hz cycle.

An important feature of the filter is it will continue to produce IRQ pulses even if the input AC line has dropped in amplitude, momentarily, as happens during power loads.

The +5VDC supply monitor U11 is a device that monitors the +5VDC power supply for an under voltage condition. The circuit is adjusted to react when the +5VDC falls below a safe operating level, (4.6VDC). This provides an orderly shut down of the controller in the event of an out of tolerance power supply.

Super Capacitor Circuits

Super Capacitor C26 (1.0F) provides power down backup voltage to the Down Time Accumulator on the input module, and the power up/down circuits on the input module and the CPU module. C26 is charged from the + 12VDC power supply through R44. Zener diode D7 regulates the +12VDC to 5.6VDC, and diode D8 feeds this voltage to the super capacitor. D8 also prevents the super capacitor from discharging back into the +12VDC supply during a power down situation.

Diodes D10 and D11 provide the VB output to the controller circuits. D5 provides the back up voltage source from the super capacitor, and D6 provides the +5VDC source when the Power Supply is in operation.

Down Time Accumulator

The Down Time Accumulator (DTA) consists of a 32KHz clock divider U27, seconds counter U23, minutes counter U22, data bus multiplexors U18 and U19, counter decoding logic U21 and U28, and DTA control logic U17 and U26. All of these devices are operated from the super capacitor backup supply voltage during a power down condition.

When the NMIRST signal from the CPU module is low the 32KHz clock divider is enabled. The Q14 output (.5 second clock) is normally connected through JP2 to the clock input of the seconds counter U23, causing the seconds counter to clock at a .5 second rate. The SECONDS COUNTER will advance until 60 seconds has elapsed, Q1-Q6 outputs are at a logic (1). U28A, a 4 input AND gate MC4082, will pass the logic (1) to U26C, a 2 input OR gate 74HCT32, where the OR gate output will reset U23 SECONDS COUNTER and clock one minute on the MINUTES COUNTER U22.

The MINUTES COUNTER will continue to count until a count of 255 is reached, Q1-Q8 at logic (1). AND gates U28B, U21A and U21B will complete the comparison. The output of U21B inhibits further clocks by forcing the clock divider U27 into the reset state. The output of U21B also clocks the DTA timeout flipflop U12A. The Q output of this flipflop drives the gate input to FET Q2. Q2 output is routed to the CPU board where it is connected to input bit 6 of the CPU status register. This allows the DTA status to be read at location $5FFF. This same signal drives the input to R/W inhibit gate U26A via transistor Q3. This forces 255 to be read from the DTA when the DTA timeout flipflop is set. CMOS OR gate U17C and resistors R34 and R54 form a supercap voltage monitor. When the supercap voltage falls below 3 volts, the DTA timeout flipflop is set. This is done to eliminate DTA errors if power has been removed from the controller for a longer time period than the super capacitor back up capacity.

Resetting through software is accomplished by writing to address $5000 which is decoded by the SYSTEM DECODER on the CPU module (CS3). CS3 and the write strobe are both inputs to OR gate U26B. The output of U26B is ANDED with the RESET INHIBIT output from invertor gate U17A at gate U17B. U17B outputs a logic (1) when the inputs are at a logic (0). The output of U17B is routed to the reset inputs on the minutes and seconds counters.

Reading the DTA MINUTES and DTA SECONDS counters is accomplished by the use of A/B select buffers U18 and U18, 74LS257 gates. Address signal AIO0 controls the A/B selection. U18 represents the lower nibble and U18 the upper nibble. Address $5000 enables the minutes accumulated, and address $500F enables the seconds accumulated. At $5000, AIO0 will be logic (0), and at $500F AIO0 will be logic (1). The system decoder provides the decode for $5000 and $500F and read/write provides the enable control via U26A.

Output Module

Output Interface

The Output Interface consists of ten octal latches and ten ULN 2803 open collector output drivers. The output drivers are used to operate Switch packs in the cabinet and LED indicators on the Front Panel. Fifty six of the outputs are directed to the C1 connector and 16 outputs are used to operate the Front Panel.

The output range of addresses is 5001- 5009 and 500A. Addresses A0, A1, A2 and A3 are input to U3 a four to sixteen convertor, to produce the latch clocks needed to latch the data provided by the CPU Module to each of the ten latches. U26, U27 and U28 are two input OR gates that combine an individual select, logic 0, and a write enable, logic 0, to provide a transition to logic 0 to the appropriate clock input pin 11 on the latches.

During the time the clock input is at a logic 0, the data will be transferred to the latch output. When the clock input returns to the logic 1 state, the latched data will be retained. The output of the latches will bring the ULN 2803 transistor drivers to a logic 0, representing a logic 1 selection from the CPU.

As in the Input Module, the function of reading and writing is determined by the Read/Write signal. The Output Module responds to the Write signal command, as well as the I/O 1-A signal. The Reset command signal will clear all ten latches to a logic 0 when issued. The result will be to turn off the ULN drivers and return the outputs to a logic 1.

For the purpose of maintenance to the Output Module, the association of address to latch will aid in fault determination.

ADDRESS	LATCH	OUTPUT
5001	U11	U4
5002	U12	U5
5003	U13	U6
5004	U14	U7
5005	U15	U8

ADDRESS	LATCH	OUTPUT
5006	U16	U9
5007	U17	U10
5008	U23	U22
5009	U24	U21
500A	U25	U20

Keyboard and Display Module

Seven Segment Display and Call Indicators

The seven segment display units are arranged as Phase, Interval, and Timing Data. One seven segment display represents Phase, U2, and another represents Interval, U3. The remaining four seven segment display units represent Timing Data. The most significant data U9, next to most significant data U6, next to least significant data U7 and least significant data U8. Additional signals are used to drive the seven segments: CHMS (character most significant), CHNMS (character next to most significant), CHNLS (character next to least significant) and CHLS (character least significant). These four commands are input to a decoder PAL U1. U1 is programmed to provide the individual segment data corresponding to the data supplied by the Output Module.

A segment data bus is wired to six 74LS373 latches that hold the data selected by each of the latch strobes. The outputs of each latch will go to a logic 0 when a segment is to be illuminated. Each output is wired through a 150 ohm resistor to the cathode of the segments. The anodes of the segments are tied in common to the +5VDC power source.

BLPI and BLTIM signals provide the blanking of the Phase and Interval Displays, and the Timing Displays. BLPI will tri-state U4 and U5. BLTIM will tri-state U10, U11, U12 and U13. A DP command will operate a Decimal Point resident on U7. Transistors Q1 and Q2 coordinate the blanking signal and the decimal point command. When the BLTIM signal is "true" or logic 0, diode D1 will clamp the output of Q1 and prevent the decimal point from illuminating by turning off Q2. CLT0-CLT9 are static signals provided by the Output Module to illuminate the corresponding call lights. The CLT0-CLT9 signals are wired to the cathodes of call lites 0-9, via 240 ohm resistors. The anodes are wired to +5VDC power.

U1 - Seven Segment Decode PAL

PIN	PIN NAME	DEFINITION
1	D0	INPUT
2	D1	INPUT
3	D2	INPUT
4	D3	INPUT
12	S0	OUTPUT
13	S1	OUTPUT
14	S2	OUTPUT
15	S3	OUTPUT
16	S4	OUTPUT
17	S5	OUTPUT
18	S6	OUTPUT
10	GND	INPUT
20	VCC	INPUT

EQUATIONS

SO = /D0* D1*/D2*/D3 + /D0*/D1* D2*/D3 + D0* D1*/D2* D3 + /D0* D1* D2* D3

S1 = /D0*/D1*/D2*/D3 + D0*/D1*/D2*/D3 + D0* D1*/D2*/D3 + /D0*/D1* D2*/D3 + D0*/D1*/D2* D3 + /D0* D1*/D2* D3

S2 = /D0*/D1*/D2*/D3 + D0*/D1*/D2*/D3 + D0* D1*/D2*/D3 + D0*/D1* D2* D3

S3 = /D0*/D1*/D2*/D3 + D0*/D1* D2*/D3 + /D0* D1* D2*/D3 + /D0*/D1*/D2* D3 + D0* D1*/D2* D3 + /D0* D1* D2* D3

S4 = /D0* D1* D2*/D3 + /D0*/D1*/D2* D3 + /D0* D1*/D2* D3 + D0* D1*/D2* D3 + /D0*/D1* D2* D3 + /D0* D1* D2* D3

S5 = /D0* D1*/D2*/D3 + /D0*/D1*/D2* D3 + /D0*/D1* D2* D3 + DO*/D1* D2* D3 + /D0* D1* D2* D3

S6 = D0* D1*/D2*/D3 + /D0*/D1*/D2* D3 + /D0* D1* D2* D3 + DO* D1* D2* D3

Keyboard Interface and Decoding Logic

The Keyboard is arranged in Hexadecimal, or one-of-sixteen code, and contains 16 individual key-pads labeled 0-9 and A- F. When each key is depressed, a switch attached to +5VDC will produce a logic 1 input to U16 or U17, MC14532, 8-bit priority encoders. These encoders conv ert inputs 1 to 8 to binary code. Q0, Q1, Q2 and Q3 output a binary count of 1-7. At count 8, E0 is output. E0 from U16 is wired to E1 of U17. U16 and U17 outputs are combined via two input NOR gates, U18.

U17 E0 output is acti ve when one of th e keys are depressed. This output is called KBCON. U18B provid es the KBLS, U18A provides KBNLS, U18D provides KBNMS and U18C provides the KBMS signal to the Input Module.

A Stop Time Switch is located on the Front Panel and is wir ed to the Input Module.

Maintenance

Introduction

This section contains maintenance information for use in isolating a controller malfunction on the module or circuit board level. Once the defective module is located it may be replaced with a spare. The controller is partitioned into the Power Supply, CPU, Input, Output and Front Panel Modules to facilitate easy isolation of a particular problem.

Defective modules can be returned to the manufacturer for repair. If the user prefers to develop local module repair capability, most module parts are available as off-the-shelf items from electronic parts distributors. Alternatively, parts can be ordered from Safetran Traffic Systems, Inc.

Troubleshooting

Detailed troubleshooting information is presented in the Troubleshooting Analysis Chart and the General Troubleshooting Chart. These charts give a general procedure to be followed, and provide specific corrective action for certain symptoms.

CAUTION:

The power should always be removed from the controller before removing or installing the circuit boards or modules in order to avoid damage to integrated circuits.

A list of preliminary checks that should be made prior to other troubleshooting efforts follows:

a. Ensure that all modules are inserted properly and that each is securely seated in its mating connector.

b. Ensure that cable connectors are mated correctly and that holding screws are tightened.

c. Ensure that the Program Module is installed and that it contains the proper program.

d. Ensure that the Battery is connected and the Stop Time Switch is in the proper position.

e. After power is applied to the unit, observe the display to determine proper operation.

It is possible to perform a more complete test of the 170 microprocessor using special diagnostic software available from Safetran, along with a printing terminal designed for standard RS232 interface and a 1200 baud communication rate.

Troubleshooting Analysis Chart

This Troubleshooting Analysis Chart will be helpful when Diagnostic Modules or programs are not available or special Diagnostic Programs can not be run, due to the state or condition of the controller.

Most symptoms occur and can be evaluated while observing the front panel of the controller. This type of evaluation is listed in the Analysis Chart. Additional analysis can be accomplished by using the Block Diagrams provided, following the charts as guidelines for the basic signal flow. The appropriate integrated circuit or component is listed in or near the blocks on the diagram.

The Block Diagrams should be used when reading the functional description of the individual modules. These diagrams are arranged to follow the schematic pages provided in the next section of this manual as well.

Other helpful hints include the use of meters or oscilloscopes on the test points found on the Input Module and CPU Module fronts. For example, alignment procedures are provided in section 2.0 that describe the use of these devices.

When troubleshooting a system, watchdog failure would indicate an inoperative program.

Some problems may be dynamic and random in appearance. At this point, an analyzer may be a necessary tool.

If the problem is a "field problem", replacement of the whole processor may be advisable. Using the interchangeable Program Module (if operative) will prove an expedient procedure.

Be careful to TURN OFF POWER to the controller when REMOVING OR INSTALLING MODULES.

Stop Time "on" will stop timing and cycling of some traffic programs, and in other cases cause a "mode" change in a diagnostic program.

A John Fluke system 9010, equipped with the 6802 compatible Test Pod, will provide a technician with the most convenient tool available for evaluating the controller for proper operation, on in malfunction analysis.

General Troubleshooting Chart

SYMPTOM	PROBABLE CAUSE	CORRECTIVE ACTION
Controller power on, all display segments are lit and read zero.	Program Module not installed.	Install Program Module.
	Power Supply or CPU not operative.	Perform tests to determine defective area. Replace CPU or Power Supply.
	I/O inoperative.	Replace the Input or Output Module.
Controller operational, one or more outputs on continuously.	Output shorted.	Turn off controller, replace Output Module.
Controller not responding to keyboard.	Keyboard and Display Module defective.	Replace Front Panel.
	Input Module defective.	Replace Input Module.
	Defective Cable to Front Panel.	Replace Front Panel Cable.
Segment missing on display.	LED display defective.	Remove window on front panel and replace display.
	Defective decoder chip on module.	Replace Module.
	Output Module defective.	Replace Output Module.
Incorrect segment display indications.	Defective Module.	Replace Front Panel.
Keyboard response wrong or erratic results.	Defective CPU Module.	Replace CPU Module.
	Defective Input or Output Module.	Replace Input or Output Module.

Single Level BOM Report

Safetran Traffic Systems, Inc.

Production BOM No. 085582D170-00 -Rev. D

170E CONTROLLER

Item	Part Number	Rev.	Description	Qty.	UOM	Reference Designator	Manufacturer	Manufacturer Part	Envir. Compl.
9	012190B170-00		HINGE 170-SV	1	EA				
							MIDLAKE	012190B170-00	
1	012560D170-01	-	BTM 170E	1	EA				
2	012560D170-02	-	TOP 170E	1	EA				
6	012562D170-01	-	SIDE LT 170E	1	EA				
7	012562D170-02	-	SIDE RT 170E	1	EA				
21	012564D170-00	A	PNL REAR 170E	1	EA				
16	012567C170-01	-	BRKT PROM TOP 170E	1	EA				
17	012567C170-02	-	BRKT PROM BTM 170E	1	EA				
10	0732460030		NUT KEPS 6-32	2	EA				
11	0736941560		S 632X1/4 PH PH	6	EA				

Single Level BOM Report

Safetran Traffic Systems, Inc.

Production BOM No. 085582D170-00 -Rev. D

170E CONTROLLER

Item	Part Number	Rev.	Description	Qty.	UOM	Reference Designator	Manufacturer	Manufacturer Part	Envir. Compl.
8	0736951560		S 632X1/4 FH PH	13	EA				
19	0738807050		WSHR LK INT #6	6	EA				
27	0750200040	C	LABEL MOD & SER NO	1	EA				
5	0750220280		LABEL 170E BD ID	1	EA				
18	0765522090		GUIDE CARD 1450F	4	EA				
							SAE	1450F	
3	0765522100		GUIDE CARD 1600F	4	EA				
							BIVAR	SFS-600	
							SAE	1600F	
4	0765522140		GUIDE CARD 1800F	8	EA				
							BIVAR	SFS-800	
							SAE	1800F	
15	0792226020		CLMP CBL FL	1	EA				
							PANDUIT	FCC-A-D8	
							3M	3484-1000	

Single Level BOM Report

Safetran Traffic Systems, Inc.

Production BOM No. 085582D170-00 -Rev. D

170E CONTROLLER

Item	Part Number	Rev.	Description	Qty.	UOM	Reference Designator	Manufacturer	Manufacturer Part	Envir. Compl.
14	0792280350		CBL RIBBON 170-SV	1	EA				
26	085464D170-00	L	170E PCBA CPU	1	EA				
25	085465D170-00	E	M170E MOD PCBA	1	EA				
24	085477D170-00	R	170E PCBA INPUT MOD	1	EA				
13	085500D170-00	J	170E C1 PCBA	1	EA				
20	085513D170-00	T	170E PWR SUPPLY PCBA	1	EA				
12	085572D170-00	E	170E M/B SUPPORT	1	EA				
23	085581D170-00		170E OUTPUT MOD	1	EA				
22	085800D170-00	-	170E FT PNL SCKTD	1	EA				

Proprietary and Confidential to Safetran Traffic Systems, Inc.

Single Level BOM Report

Safetran Traffic Systems, Inc.

Production BOM No. 085500D170-00 -Rev. J

170E C1 PCBA WITH PLATES

Item	Part Number	Rev.	Description	Qty.	UOM	Reference Designator	Manufacturer	Manufacturer Part	Envir. Compl.
10	012563C170-00	A	PLT C1 170E	2	EA				
1	085500D170-01	-	170E C1 PCBA	1	EA				R
2	0715320210		PIN F GUIDE	2	EA				
							AMP	202174-4	
3	0715320220		PIN M GUIDE	2	EA				
							AMP	202173-1	

Proprietary and Confidential to Safetran Traffic Systems, Inc.

Single Level BOM Report

Safetran Traffic Systems, Inc.

Production BOM No. 085479D170-00 -Rev. K

170E MTHR BD PCBA W/CABLE ASSY

Item	Part Number	Rev.	Description	Qty.	UOM	Reference Designator	Manufacturer	Manufacturer Part	Envir. Compl.
1	085479D170-01	-	170E MOTHER BD PCBA	1	EA				
9	085550C170-00	-	170E PS1S CABLE	1	EA				
						J2 5			
10	085551A170-00	A	WP 179SIB PS1S CBL	1	EA				

Proprietary and Confidential to Safetran Traffic Systems, Inc.

Single Level BOM Report

Safetran Traffic Systems, Inc.

Production BOM No. 085464D170-00 -Rev. L

170E PCBA CPU

Item	Part Number	Rev.	Description	Qty.	UOM	Reference Designator	Manufacturer	Manufacturer Part	Envir. Compl.
1	045464D170-00	EF	PCB 170E CPU	1	EA				
11	0709003760		CAP 100PF 500V DM	9	EA				
						C1 38 39 40 41 42 43 44 45			
							ARCO	DM15-101J	
							CORNELL DUBILER	CD15-FD101J03	
12	0709015100		CAP .047MF 100V	26	EA				
						C2 3 4 5 6 7 8 9 10			
						13 14 15 16 18 19			
						20 21 22 23 24 26 27			
						30 31 32 33			
							AVX	SR211C473KAA	
							KEMET	C322C473K1R5CA	
							MALLORY	M22R473K1	
13	0709022500		CAP 1MF 35V DT	1	EA				
						C37			
							KEMET	T354A105K035AS	
							SPRAGUE	199D105X9035AE3	
14	0709025000		CAP 3.3MF 35V ST	1	EA				
						C17			

Single Level BOM Report

Safetran Traffic Systems, Inc.

Production BOM No. 085464D170-00 -Rev. L

170E PCBA CPU

Item	Part Number	Rev.	Description	Qty.	UOM	Reference Designator	Manufacturer	Manufacturer Part	Envir. Compl.
							KEMET	T354D335K035AS	
15	0709027010		CAP 10MF 25V DT	2	EA				
						C11 12			
							KEMET	TDC106M025WLF	
							SPRAGUE	199D106X9025KA1	
							MALLORY	T354E106K025AS	
16	0709027280		CAP 10MF 25V EL	2	EA				
						C29 36			
							NICHICON	TVX1E100MAA	
							SIEMENS	80009-10-25	
17	0709030270		CAP 47MF 20V DT	1	EA				
						C25			
							SPRAGUE	199D476X9020EEZ	
18	0709032100		CAP 100MF 25V EL	3	EA				
						C28 34 35			
							MEPCO	3073EE101T025JP	
							NICHICON	TVX1E101MHA	
59	0714905010		CO SHUNT 2 POS	12	EA				
						JP5 16 18 20 21 22 23 24			

Single Level BOM Report

Safetran Traffic Systems, Inc.

Production BOM No. 085464D170-00 -Rev. L

170E PCBA CPU

Item	Part Number	Rev.	Description	Qty.	UOM	Reference Designator	Manufacturer	Manufacturer Part	Envir. Compl.
						25 27 29 30			
							H&T	4167-03-00-P1	
56	0714905110		CO HDR 2 POS	24	EA				
						JP1 2 3 4 5 6 7 8 9 10			
						11 12 13 14 15 16 17			
						18 19 20 21 22 23 24			
							AMP	103185-2	
57	0714905120		CO HDR 3 POS	4	EA				
						JP 25 27 29 30			
							AMP	103185-3	
24	0717501320		CLK OSC 6.144MHZ	1	EA				
						U16			
							MONITOR	970T-1B2A-6.144MHZ	
							VALPEY FISCHER	VF150-6.1440MHZ	
23	0759312600		LED 5750	1	EA				
						D4			
							GI	MV59021Q70002	
							LUMEX	SSL-LX5093IC	
							AMERICAN BRIGHT	BL-B4334	

Single Level BOM Report

Safetran Traffic Systems, Inc.

Production BOM No. 085464D170-00 -Rev. L

170E PCBA CPU

Item	Part Number	Rev.	Description	Qty.	UOM	Reference Designator	Manufacturer	Manufacturer Part	Envir. Compl.
60	0765510040		EJECTOR 6100	2	EA		SAE	6100	
3	0768120490		RES 100 1/4W5 CF	1	EA	R26			
4	0768120610		RES 330 1/4W5 CF	2	EA	R6 12			
5	0768120660		RES 510 1/4W5 CF	1	EA	R23			
6	0768120730		RES 1K 1/4W5 CF	6	EA	R11 13 16 17 19 24			
7	0768120810		RES 2.2K 1/4W5 CF	5	EA	R4 14 20 25 27			
8	0768120970		RES 10K 1/4W5 CF	4	EA	R1 8 22 28			

Single Level BOM Report

Safetran Traffic Systems, Inc.

Production BOM No. 085464D170-00 -Rev. L

170E PCBA CPU

Item	Part Number	Rev.	Description	Qty.	UOM	Reference Designator	Manufacturer	Manufacturer Part	Envir. Compl.
9	0768121380		RES 510K 1/4W5 CF	1	EA				
						R30			
10	0768121440		RES 910K 1/4W5 CF	1	EA				
						R15			
21	0769560550		RASIP 10PIN 3.3K	2	EA				
						R10 18			
							BECKMAN	770-101-R3-3K	
							BOURNS	4610X-101-332	
22	0769562320		RASIP 10PIN 10K	3	EA				
						R5 9 21			
							AVX	5RDSA10PC103GA	
							BECKMAN	L101S103	
							BOURNS	4610-101-103	
31	0771011600		SCKT IC 40 PIN SMC	1	EA				
						U17			
							AMP	1-1437540-7	
							FCI	DIP640-011B	

Single Level BOM Report

Safetran Traffic Systems, Inc.

Production BOM No. 085464D170-00 -Rev. L

170E PCBA CPU

Item	Part Number	Rev.	Description	Qty.	UOM	Reference Designator	Manufacturer	Manufacturer Part	Envir. Compl.
							PDI	SW1100-40	
							AUGAT	840-AG11D-ES	
							MIL-MAX	110-91-640-41-001	
30	0771011810		SCKT IC 28 PIN (ZIF)	1	EA				
						U22			
							GARRY	06-00084	
29	0771014110		SCKT IC 28 PIN SMC	1	EA				
						U27			
							TYCO/AMP	ICT-286-S-TG	
							PDI	SW1100-28	
							MILMAX	110-91-628-41-00100	
							AUGAT	828-AG11D-ES	
							MIL-MAX	110-91-628-41-001	
2	0771312700		DIODE 1N4148 SIG	5	EA				
						D1 2 3 5 6			
							JDEC	1N4148	
52	0771606835		IC DALLAS 1230 NVRAM 32KX8	1	EA				
						U27			
							BENCHMARQ	BQ4011YMA-200N	
							ST MICRO	M48Z35Y-70PC1	
							DALLAS	DS1230Y-200-IND	

Single Level BOM Report

Safetran Traffic Systems, Inc.

Production BOM No. 085464D170-00 -Rev. L

170E PCBA CPU

Item	Part Number	Rev.	Description	Qty.	UOM	Reference Designator	Manufacturer	Manufacturer Part	Envir. Compl.
48	0771607000		IC MC1488	2	EA				
						U4 8			
							MOTOROLA	MC1488N	
							NS	DS1488N	
49	0771607250		IC MC1489	3	EA				
						U5 7 19			
							MOTOROLA	MC1489N	
							SG	MC1489N	
							NS	DS1489N	
61	0771608100		IC 27C256	1	EA				
						U22			
							SG	M27C256B-20F1	
42	0771609250		IC MC14001	2	EA				
						U30 35			
							MOTOROLA	MC14001BCP	
							SG	HEF4001BPN	
							NS	CD4001BCN	
43	0771610750		IC MC14011	1	EA				
						U37			

Single Level BOM Report

Safetran Traffic Systems, Inc.

Production BOM No. 085464D170-00 -Rev. L

170E PCBA CPU

Item	Part Number	Rev.	Description	Qty.	UOM	Reference Designator	Manufacturer	Manufacturer Part	Envir. Compl.
							TI	MC14011BCP	
44	0771611500		IC MC14013	3	EA				
						U26 29 36			
							MOTOROLA	MC14013BCP	
							SG	HEF4013BPN	
							FAIRCHILD	CD4013BCN	
							NS	CD4013BCN	
45	0771612510		IC 14017 MOTOROLA	1	EA				
						U34			
							MOTOROLA (ONLY)	MC 14017BCP	
							MOTOROLA (ONLY)	MC14017BCP	
46	0771613000		IC MC14020	1	EA				
						U18			
							MOTOROLA	MC14020BCP	
							SG	HEF4020BPN	
							ST MICRO	HCF4020BEY	
							NS	CD4020BCN	
40	0771616300		IC 74HCT4040	1	EA				
						U13			
							MOTOROLA	MC74HCT4040	

Single Level BOM Report

Safetran Traffic Systems, Inc.

Production BOM No. 085464D170-00 -Rev. L

170E PCBA CPU

Item	Part Number	Rev.	Description	Qty.	UOM	Reference Designator	Manufacturer	Manufacturer Part	Envir. Compl.
							SG	74HCT4040N	
47	0771620250		IC MC14081	1	EA				
						U31			
							MOTOROLA	MC14081BCP	
							SG	HEF4081BPN	
							HARRIS	CD-4081	
50	0771630810		IC 68B08/68B02	1	EA				
						U17			
							BENEXL	0771630810	
							MOTOROLA	MC68B08P	
51	0771630850		IC 68B50	4	EA				
						U2 3 10 11			
							MOTOROLA	MC68B50P	
							SG	EF68B50P	
41	0771660930		IC 74LS640	1	EA				
						U20			
							ON SEMI	SN74LS640N	
							MOTOROLA	SN74LS640N	
							TI	SN74L640N	
							TI	SN74LS640N	

Single Level BOM Report

Safetran Traffic Systems, Inc.

Production BOM No. 085464D170-00 -Rev. L

170E PCBA CPU

Item	Part Number	Rev.	Description	Qty.	UOM	Reference Designator	Manufacturer	Manufacturer Part	Envir. Compl.
33	0771670000		IC 74HCT00	1	EA				
						U21			
							TOSHIBA	TC74HCT00AP	
							RCA	CD74HCT00E	
34	0771670010		IC 74HCT04	1	EA				
						U25			
							PHILIPS	74HCT04N	
							SAMSUNG	KS74HCTLS04	
35	0771670020		IC 74HCT08	1	EA				
						U6			
							SAMSUNG	KS74HCTLS08	
							SG	74HCT08	
30	0771670050		IC 74HCT32	1	EA				
						U9			
							PHILIPS	74HCT32N	
							RCA	CD74HCT32E	
39	0771670090		IC 74HCT540	1	EA				
						U1			

Single Level BOM Report

Safetran Traffic Systems, Inc.

Production BOM No. 085464D170-00 -Rev. L

170E PCBA CPU

Item	Part Number	Rev.	Description	Qty.	UOM	Reference Designator	Manufacturer	Manufacturer Part	Envir. Compl.
							SAMSUNG	KS74AHCT540	
							SG	74HCT540N	
37	0771670135		IC 74HCT244	3	EA				
						U12 15 24			
							SAMSUNG	74HCT244	
38	0771670140		IC 74HCT245	1	EA				
						U23			
							SG	74HCT245N	
							TI	SN74HCT245N	
32	0771670180		IC 74HC390	1	EA				
						U14			
							SAMSUNG	74HC390	
							SG	74HC390N	
20	0771910000		TRAN 2N3904	1	EA				
						Q3			
							PHILLIPS	2N3904	
							JDEC	2N3904	
19	0771915275		TRAN 2N7000	3	EA				
						Q1 2 4			

Single Level BOM Report

Safetran Traffic Systems, Inc.

Production BOM No. 085464D170-00 -Rev. L

170E PCBA CPU

Item	Part Number	Rev.	Description	Qty.	UOM	Reference Designator	Manufacturer	Manufacturer Part	Envir. Compl.
							SILICONIX	2N7000	
58	0784000020		POINT TEST	9	EA				
						TP1 2 3 4 5 6 7 8 9			
							KEYSTONE	1598-1	
53	3700060691-00		170E CPU PGM U28 M/F 0771630220	1	EA				
						U28			
55	3700060692-00		170E CPU PGM U33 M/F 0771630220	1	EA				
						U33			
54	3700060694-00		170E CPU PGM U32 M/F 0771630200	1	EA				
						U32			

Proprietary and Confidential to Safetran Traffic Systems, Inc.

Single Level BOM Report

Safetran Traffic Systems, Inc.

Production BOM No. 085465D170-00 -Rev. F

M170E MOD PCBA

Item	Part Number	Rev.	Description	Qty.	UOM	Reference Designator	Manufacturer	Manufacturer Part	Envir. Compl.
1	045465D170-00	AC	PCB M170E MOD	1	EA				
							MILPLX	045465D170-00	
13	0709001400		CAP 20PF 500V DM	2	EA				
						C1, 2			
							ARCO	DM15-100J	
							CORNELL DUBILER	CD15ED200J03	
12	0709015100		CAP .047MF 100V	9	EA				
						C3 4 5 6 7 8 9 10 11			
							AVX	SR211C473KAA	
							KEMET	C322C473K1R5CA	
							MALLORY	M22R473K1	
14	0709032100		CAP 100MF 25V EL	1	EA				
						C12			
							MEPCO	3073EE101T025JP	
							NICHICON	TVX1E101MHA	
28	0709050030		CAP 1F 5.5V SC	1	EA				
						C13			
							NEC/TOKIN	FSOH105Z	

Single Level BOM Report

Safetran Traffic Systems, Inc.

Production BOM No. 085465D170-00 -Rev. F

M170E MOD PCBA

Item	Part Number	Rev.	Description	Qty.	UOM	Reference Designator	Manufacturer	Manufacturer Part	Envir. Compl.
27	0717501240		CRYSTAL 15.36 KHZ	1	EA				
						Y1			
							STATEK	CX-1V15.36-A	
30	0765510040		EJECTOR 6100	2	EA				
							SAE	6100	
5	0768120730		RES 1K 1/4W5 CF	1	EA				
						R5			
8	0768120970		RES 10K 1/4W5 CF	2	EA				
						R3 4			
10	0768121360		RES 430K 1/4W5 CF	1	EA				
						R2			
11	0768121760		RES 20M 1/4W5 CF	1	EA				
						R1			
4	0768130530		RES 150 1/2W5 CF	2	EA				

Single Level BOM Report

Safetran Traffic Systems, Inc.

Production BOM No. 085465D170-00 -Rev. F

M170E MOD PCBA

Item	Part Number	Rev.	Description	Qty.	UOM	Reference Designator	Manufacturer	Manufacturer Part	Envir. Compl.
						R6 7			
15	0769562240		RASIP 10PIN 2.2K	2	EA				
						R8 9			
							BECKMAN	L101S222	
							DALE	CTS770-101-2.2K	
							BOURNS	4610X-101-222	
2	0771312700		DIODE 1N4148 SIG	1	EA				
						D1			
							JDEC	1N4148	
3	0771313250		DIODE 1N4734A ZEN	1	EA				
						D2			
							JDEC	1N4734A	
37	0771616300		IC 74HCT4040	2	EA				
						U14			
							MOTOROLA	MC74HCT4040	
							SG	74HCT4040N	
25	0771617540		IC MC14060	1	EA				
						U4			

Single Level BOM Report

Safetran Traffic Systems, Inc.

Production BOM No. 085465D170-00 -Rev. F

M170E MOD PCBA

Item	Part Number	Rev.	Description	Qty.	UOM	Reference Designator	Manufacturer	Manufacturer Part	Envir. Compl.
							MOTOROLA	MC14060BCP	
22	0771660910		IC 74LS540	1	EA				
						U10			
							TI	SN74LS540N	
23	0771660920		IC 74LS541	4	EA				
						R6 7 8 9			
							MOTOROLA	SN74LS541N	
							TI	SN74LS541N	
17	0771670010		IC 74HCT04	2	EA				
						U15 17			
							PHILIPS	74HCT04N	
							SAMSUNG	KS74HCTLS04	
18	0771670030		IC 74HCT20	1	EA				
						U5			
							PHILIPS	74HCT20N	
							SAMSUNG	KS74HCTLS20	
							TI	SN74HCT20	
19	0771670050		IC 74HCT32	1	EA				
						U16			

Single Level BOM Report

Safetran Traffic Systems, Inc.

Production BOM No. 085465D170-00 -Rev. F

M170E MOD PCBA

Item	Part Number	Rev.	Description	Qty.	UOM	Reference Designator	Manufacturer	Manufacturer Part	Envir. Compl.
							PHILIPS	74HCT32N	
							RCA	CD74HCT32E	
20	0771670090		IC 74HCT540	2	EA				
						U1, 2			
							SAMSUNG	KS74AHCT540	
							SG	74HCT540N	
21	0771670100		IC 74HCT541	1	EA				
						U3			
							SAMSUNG	KS74AHCT541	
							SG	74HCT541N	
16	0771670130		IC 74HCT138	1	EA				
						U12			
							MOTOROLA	MC74HCT244RN	
							SAMSUNG	KS74HCTLS138	
29	0774201100		SW DIP 8 POS PC/MT	2	EA				
						S1 2			
							APEM	DA08	
							CTS	CTS 206-8 RA	
							C&K	BD08-AV	

Single Level BOM Report

Safetran Traffic Systems, Inc.

Production BOM No. 085465D170-00 -Rev. F

M170E MOD PCBA

Item	Part Number	Rev.	Description	Qty.	UOM	Reference Designator	Manufacturer	Manufacturer Part	Envir. Compl.
26	3700060693-00		PGM M170E MOD (NEW)	1	EA				
						U11			

Proprietary and Confidential to Safetran Traffic Systems, Inc.

Single Level BOM Report

Safetran Traffic Systems, Inc.

Production BOM No. 085801D170-00 -Rev. F

170E PCBA FT PNL SD

Item	Part Number	Rev.	Description	Qty.	UOM	Reference Designator	Manufacturer	Manufacturer Part	Envir. Compl.
1	044062D170-00	F	PCB 170-SV DISPLAY MOD	1	EA				
10	0709009250		CAP .001MF 1KV CD	6	EA				
						C6 7 8 9 10 11			
							SPRAGUE	5HK-D10	
							SPRAGUE	VCS562R5HKD10	
9	0709015100		CAP .047MF 100V	4	EA				
						C1 2 3 4			
							AVX	SR211C473KAA	
							KEMET	C322C473K1R5CA	
							MALLORY	M22R473K1	
27	0709032100		CAP 100MF 25V EL	1	EA				
						C5			
							MEPCO	3073EE101T025JP	
							NICHICON	TVX1E101MHA	
28	0714901820		CO HDR 40 PIN	1	EA				
						J1			
							AMP	499910-9	
							ROBIN NUGENT	IDH40PK-2-S3-TG	

Single Level BOM Report

Safetran Traffic Systems, Inc.

Production BOM No. 085801D170-00 -Rev. F

170E PCBA FT PNL SD

Item	Part Number	Rev.	Description	Qty.	UOM	Reference Designator	Manufacturer	Manufacturer Part	Envir. Compl.
25	0714904010		CO WFR 36 POS	0.5	EA				
						JP1			
							APTRONICS	929974-01-36	
							3M	929974-01-36	
34	0736940100		S 256X3/8 PH PH	4	EA				
36	0737917010		SPCR 2-56X3/8 HEX	4	EA				
							AMATOM	8104-A-0256	
30	0738602360		SPCR 8CLX .437 R/N	10	EA				
						D3 4 5 6 7 8 9 10 11 12			
							H.H. SMITH	4017	
							CONCORD	750-1117	
35	0738807010		WSHR LK INT #2	4	EA				
29	0759312600		LED 5750	10	EA				
						D3 4 5 6 7 8 9 10 11 12			
							GI	MV59021Q70002	
							LUMEX	SSL-LX5093IC	
							AMERICAN BRIGHT	BL-B4334	

Single Level BOM Report

Safetran Traffic Systems, Inc.

Production BOM No. 085801D170-00 -Rev. F

170E PCBA FT PNL SD

Item	Part Number	Rev.	Description	Qty.	UOM	Reference Designator	Manufacturer	Manufacturer Part	Envir. Compl.
33	0759313220		LED MAN4610	6	EA				
						U2 3 6 7 8 9			
							MONSANTO	MAN4610A	
							LITE ON	LTS-4610AE	
8	0768120730		RES 1K 1/4W5 CF	4	EA				
						R15 16 17 18			
40	0768120770		RES 1.5K 1/4W5 CF	1	EA				
						R12			
4	0768120890		RES 4.7K 1/4W5 CF	2	EA				
						R8 10			
5	0768120970		RES 10K 1/4W5 CF	1	EA				
						R9			
6	0768130530		RES 150 1/2W5 CF	1	EA				
						R11			

Single Level BOM Report

Safetran Traffic Systems, Inc.

Production BOM No. 085801D170-00 -Rev. F

170E PCBA FT PNL SD

Item	Part Number	Rev.	Description	Qty.	UOM	Reference Designator	Manufacturer	Manufacturer Part	Envir. Compl.
7	0768130580		RES 240 1/2W5 CF	10	EA				
						R20 21 22 23 24 25 26 27 28 29			
39	0769562140		RASIP 10PIN 390	1	EA				
						R13			
							BOURNS	4310R-101-391	
							BOURNS	4310X-101-391	
12	0769562320		RASIP 10PIN 10K	3	EA				
						R14 30 31			
							AVX	5RDSA10PC103GA	
							BECKMAN	L101S103	
							BOURNS	4610-101-103	
13	0769570620		RADIP 14PIN 270	6	EA				
						R1 2 3 4 5 6			
							DALE	MDP1403271G	
							BOURNS	4114R-001-271	
38	0771011530		SCKT IC 14 PIN SMC	6	EA				
						U2 3 6 7 8 9			

Single Level BOM Report

Safetran Traffic Systems, Inc.

Production BOM No. 085801D170-00 -Rev. F

170E PCBA FT PNL SD

Item	Part Number	Rev.	Description	Qty.	UOM	Reference Designator	Manufacturer	Manufacturer Part	Envir. Compl.
							AMP	M814-311D	
							PDI	SW1100-14	
							MIL-MAX	110-91-314-41-001	
							ROBIN NUGENT	ICT-143-S-TG	
2	0771312700		DIODE 1N4148 SIG	1	EA				
						D1			
							JDEC	1N4148	
17	0771626500		IC MC14532	2	EA				
						U16 17			
							MOTOROLA	MC14532BCP	
							SG	HES4532BPN	
							NS	CD4532BCN	
18	0771636750		IC 7407	1	EA				
						U19			
							TI	SN7407N	
							NS	DM7407N	
19	0771660870		IC 74LS373	6	EA				
						U4 5 10 11 12 13			
							SG	N74LS373N	
							TI	SN74LS373N	

Single Level BOM Report

Safetran Traffic Systems, Inc.

Production BOM No. 085801D170-00 -Rev. F

170E PCBA FT PNL SD

Item	Part Number	Rev.	Description	Qty.	UOM	Reference Designator	Manufacturer	Manufacturer Part	Envir. Compl.
20	0771670005		IC 74HCT02	1	EA				
						U18			
							SAMSUNG	74HCTLS02	
							TI	74HCT02	
21	0771670090		IC 74HCT540	1	EA				
						U14			
							SAMSUNG	KS74AHCT540	
							SG	74HCT540N	
23	0771909150		TRAN 2N5138	1	EA				
						Q1			
							JDEC	2N5138	
24	0771910000		TRAN 2N3904	1	EA				
						Q2			
							PHILLIPS	2N3904	
							JDEC	2N3904	
37	0774394110		SW KEYBD GRAYHILL	1	EA				
						JP1			
							GRAYHILL	86YY3216B-510	

Single Level BOM Report

Safetran Traffic Systems, Inc.

Production BOM No. 085801D170-00 -Rev. F

170E PCBA FT PNL SD

Item	Part Number	Rev.	Description	Qty.	UOM	Reference Designator	Manufacturer	Manufacturer Part	Envir. Compl.
31	0774917110		SW TOG MTM-106D-PC	1	EA				
						S1			
							ALCO	MTM-106D-PC	
							CARLING	2M1-SP1-T1-B1-M2QE	
22	3700060570-00		PGM 170 DISP (16V8)	1	EA				
						U1			

Proprietary and Confidential to Safetran Traffic Systems, Inc.

Single Level BOM Report

Safetran Traffic Systems, Inc.

Production BOM No. 085477D170-00 -Rev. R

170E PCBA INPUT MOD

Item	Part Number	Rev.	Description	Qty.	UOM	Reference Designator	Manufacturer	Manufacturer Part	Envir. Compl.
1	045477D170-00	E	PCB 170E INPUT MOD	1	EA				
26	0709001000		CAP 10PF 500V DM	1	EA				
						C2			
							ARCO	DM15-100J	
							CORNELL DUBILER	CD15CD100J03	
27	0709001400		CAP 20PF 500V DM	1	EA				
						C1			
							ARCO	DM15-100J	
							CORNELL DUBILER	CD15ED200J03	
28	0709003760		CAP 100PF 500V DM	1	EA				
						C7			
							ARCO	DM15-101J	
							CORNELL DUBILER	CD15-FD101J03	
29	0709012600		CAP .01MF 200V CD	1	EA				
						C19			
							MALLORY	CK06BX103K	
30	0709015100		CAP .047MF 100V	19	EA				

Single Level BOM Report

Safetran Traffic Systems, Inc.

Production BOM No. 085477D170-00 -Rev. R

170E PCBA INPUT MOD

Item	Part Number	Rev.	Description	Qty.	UOM	Reference Designator	Manufacturer	Manufacturer Part	Envir. Compl.
						C6 9 10 11 12 13 14 15 16 17 20 21 22 23 24 25 26 27 28			
							AVX	SR211C473KAA	
							KEMET	C322C473K1R5CA	
							MALLORY	M22R473K1	
31	0709018250		CAP .1MF 50V DT	1	EA				
						C18			
							GE	TA01J104KC	
							AVX	TAP104K050SCS	
							SPRAGUE	199D104X9050HA1	
32	0709018500		CAP .1MF 100V DM	2	EA				
						C4 5			
							SPRAGUE	225P10491WD3	
							ASC	603A.1/10/100	
34	0709027010		CAP 10MF 25V DT	1	EA				
						C8			
							KEMET	TDC106M025WLF	
							SPRAGUE	199D106X9025KA1	
							MALLORY	T354E106K025AS	
35	0709032100		CAP 100MF 25V EL	3	EA				

Single Level BOM Report

Safetran Traffic Systems, Inc.

Production BOM No. 085477D170-00 -Rev. R

170E PCBA INPUT MOD

Item	Part Number	Rev.	Description	Qty.	UOM	Reference Designator	Manufacturer	Manufacturer Part	Envir. Compl.
						C29 30 31			
							MEPCO	3073EE101T025JP	
							NICHICON	TVX1E101MHA	
62	0709050050		CAP 2.2F 5.5V SC	1	EA				
						C3			
							NEC/TOKIN	FYDOH225Z	
							CESIWID	LC055225A	
43	0717501250		CRYSTAL 32.768 KHZ	1	EA				
						Y1			
							MONITOR	MM38L1C9832.768	
							VALPEY FISHER	NC38-12.5PF-32.768KHZ	
42	0759312600		LED 5750	1	EA				
						DS1			
							GI	MV59021Q70002	
							LUMEX	SSL-LX5093IC	
							AMERICAN BRIGHT	BL-B4334	
64	0765510040		EJECTOR 6100	2	EA				
							SAE	6100	
8	0768120660		RES 510 1/4W5 CF	1	EA				

Single Level BOM Report

Safetran Traffic Systems, Inc.

Production BOM No. 085477D170-00 -Rev. R

170E PCBA INPUT MOD

Item	Part Number	Rev.	Description	Qty.	UOM	Reference Designator	Manufacturer	Manufacturer Part	Envir. Compl.
						R12			
9	0768120730		RES 1K 1/4W5 CF	3	EA				
						R4 10 24			
10	0768120770		RES 1.5K 1/4W5 CF	2	EA				
						R18 23			
64	0768120820		RES 2.4K 1/4W5 CF	1	EA				
						R25			
65	0768120950		RES 8.2K 1/4W5 CF	1	EA				
						R22			
11	0768120970		RES 10K 1/4W5 CF	4	EA				
						R9 11 30 31			
12	0768121060		RES 24K 1/4W5 CF	2	EA				
						R14 20			

Single Level BOM Report

Safetran Traffic Systems, Inc.

Production BOM No. 085477D170-00 -Rev. R

170E PCBA INPUT MOD

Item	Part Number	Rev.	Description	Qty.	UOM	Reference Designator	Manufacturer	Manufacturer Part	Envir. Compl.
13	0768121090		RES 33K 1/4W5 CF	2	EA				
						R15 17			
14	0768121100		RES 36K 1/4W5 CF	1	EA				
						R29			
15	0768121150		RES 56K 1/4W5 CF	3	EA				
						R5 6 7			
16	0768121210		RES 100K 1/4W5 CF	2	EA				
						R3 8			
18	0768121380		RES 510K 1/4W5 CF	2	EA				
						R2 13			
19	0768121400		RES 620K 1/4W5 CF	1	EA				
						R28			
20	0768121450		RES 1M 1/4W5 CF	1	EA				

Single Level BOM Report

Safetran Traffic Systems, Inc.

Production BOM No. 085477D170-00 -Rev. R

170E PCBA INPUT MOD

Item	Part Number	Rev.	Description	Qty.	UOM	Reference Designator	Manufacturer	Manufacturer Part	Envir. Compl.
						R26			
21	0768121490		RES 1.5M 1/4W5 CF	1	EA				
						R21			
22	0768121530		RES 2.2M 1/4W5 CF	1	EA				
						R27			
23	0768121690		RES 10M 1/4W5 CF	1	EA				
						R16			
24	0768121760		RES 20M 1/4W5 CF	1	EA				
						R1			
25	0768130530		RES 150 1/2W5 CF	1	EA				
						R19			
39	0769560550		RASIP 10PIN 3.3K	1	EA				
						RA19			
							BECKMAN	770-101-R3-3K	

Single Level BOM Report

Safetran Traffic Systems, Inc.

Production BOM No. 085477D170-00 -Rev. R

170E PCBA INPUT MOD

Item	Part Number	Rev.	Description	Qty.	UOM	Reference Designator	Manufacturer	Manufacturer Part	Envir. Compl.
							BOURNS	4610X-101-332	
38	0769562240		RASIP 10PIN 2.2K	1	EA				
						RA18			
							BECKMAN	L101S222	
							DALE	CTS770-101-2.2K	
							BOURNS	4610X-101-222	
40	0769562320		RASIP 10PIN 10K	8	EA				
						RA2 4 6 8 9 11 13 15			
							AVX	5RDSA10PC103GA	
							BECKMAN	L101S103	
							BOURNS	4610-101-103	
44	0769583260		RADIP 16PIN 3.3K	1	EA				
						RA17			
							DALE	MDP1603-332G	
							BOURNS	4116R-001-332	
45	0769583460		RADIP 16PIN 150K	8	EA				
						RA1 3 5 7 10 12 14 16			
							DALE	MDP1603-154G	
							BOURNS	4116R-001-154	

Single Level BOM Report

Safetran Traffic Systems, Inc.

Production BOM No. 085477D170-00 -Rev. R

170E PCBA INPUT MOD

Item	Part Number	Rev.	Description	Qty.	UOM	Reference Designator	Manufacturer	Manufacturer Part	Envir. Compl.
41	0769600370		POT 25K TRM	1	EA				
						POT 1			
							BECKMAN	89WR-25K	
							BOURNS	3006-W-1-253	
4	0771310150		DIODE 1N4004	1	EA				
						D10			
							JDEC	1N4004	
							JDEC	1N4004 OR 1N4005	
							JDEC	1N4004/OR 1N4005	
3	0771312700		DIODE 1N4148 SIG	5	EA				
						D1 2 3 4 5			
							JDEC	1N4148	
2	0771313250		DIODE 1N4734A ZEN	1	EA				
						D7			
							JDEC	1N4734A	
5	0771313300		DIODE 1N4735A ZEN	1	EA				
						D6			
							JDEC	1N4735A	

Single Level BOM Report

Safetran Traffic Systems, Inc.

Production BOM No. 085477D170-00 -Rev. R

170E PCBA INPUT MOD

Item	Part Number	Rev.	Description	Qty.	UOM	Reference Designator	Manufacturer	Manufacturer Part	Envir. Compl.
6	0771315910		DIODE 1N5818	2	EA				
						D8 9			
							JDEC	1N5818	
7	0771316000		DIODE 1N6282A/1.5 KE 30A	1	EA				
						D11			
							GSI	1.5KE30A	
							JDEC	1N6282A	
46	0771608230		IC LM393N	1	EA				
						U6			
							NEC	UPC393C	
							MOTOROLA	LM393N	
							SAMSUNG	KA393N	
47	0771609250		IC MC14001	1	EA				
						U17			
							MOTOROLA	MC14001BCP	
							SG	HEF4001BPN	
							NS	CD4001BCN	
50	0771611500		IC MC14013	3	EA				
						U2 4 18			

Single Level BOM Report

Safetran Traffic Systems, Inc.

Production BOM No. 085477D170-00 -Rev. R

170E PCBA INPUT MOD

Item	Part Number	Rev.	Description	Qty.	UOM	Reference Designator	Manufacturer	Manufacturer Part	Envir. Compl.
							MOTOROLA	MC14013BCP	
							SG	HEF4013BPN	
							FAIRCHILD	CD4013BCN	
							NS	CD4013BCN	
51	0771613000		IC MC14020	1	EA				
						U8			
							MOTOROLA	MC14020BCP	
							SG	HEF4020BPN	
							ST MICRO	HCF4020BEY	
							NS	CD4020BCN	
61	0771616300		IC 74HCT4040	3	EA				
						U3 20 22			
							MOTOROLA	MC74HCT4040	
							SG	74HCT4040N	
52	0771620260		IC MC14082	2	EA				
						U21 25			
							MOTOROLA	MC14082BCP	
							HARRIS	CD4082BE	
							TI	CD4082BE	
53	0771623440		IC 14504	1	EA				
						U27			

Single Level BOM Report

Safetran Traffic Systems, Inc.

Production BOM No. 085477D170-00 -Rev. R

170E PCBA INPUT MOD

Item	Part Number	Rev.	Description	Qty.	UOM	Reference Designator	Manufacturer	Manufacturer Part	Envir. Compl.
							ON SEMI (MOTOROLA)	MC14504	
							TI	CD4540BE	
54	0771623500		IC MC14512	8	EA				
						U9 10 11 12 13 14 15 16			
							MOTOROLA	MC14512BCP	
							SG	HEF4512BPN	
							NS	CD4512BCN	
55	0771651020		IC MC33161	1	EA				
						U7			
							ON SEMICONDUCTOR	MC33161P	
56	0771659540		IC 74LS257	2	EA				
						U23 24			
							TI	SN74LS257N	
48	0771669010		IC 4069	1	EA				
						U1			
							ON SEMICONDUCTOR	MC14069UBCP	
							ON SEMICONDUCTOR	MC14069UBCPG	
							TEXAS INST	CD4069UBE	

Single Level BOM Report

Safetran Traffic Systems, Inc.

Production BOM No. 085477D170-00 -Rev. R

170E PCBA INPUT MOD

Item	Part Number	Rev.	Description	Qty.	UOM	Reference Designator	Manufacturer	Manufacturer Part	Envir. Compl.
57	0771670010		IC 74HCT04	1	EA				
						U28			
							PHILIPS	74HCT04N	
							SAMSUNG	KS74HCTLS04	
58	0771670040		IC 74HCT10	1	EA				
						U5			
							PHILIPS	74HCT10N	
							SAMSUNG	KS74HCTLS10	
							HARRIS	74HCTLS10	
59	0771670050		IC 74HCT32	1	EA				
						U19			
							PHILIPS	74HCT32N	
							RCA	CD74HCT32E	
60	0771670090		IC 74HCT540	1	EA				
						U26			
							SAMSUNG	KS74AHCT540	
							SG	74HCT540N	
36	0771910000		TRAN 2N3904	1	EA				
						Q3			

Single Level BOM Report

Safetran Traffic Systems, Inc.

Production BOM No. 085477D170-00 -Rev. R

170E PCBA INPUT MOD

Item	Part Number	Rev.	Description	Qty.	UOM	Reference Designator	Manufacturer	Manufacturer Part	Envir. Compl.
							PHILLIPS	2N3904	
							JDEC	2N3904	
37	0771915275		TRAN 2N7000	2	EA				
						Q1 2			
							SILICONIX	2N7000	
63	0784000020		POINT TEST	2	EA				
						TP1 2			
							KEYSTONE	1598-1	

Proprietary and Confidential to Safetran Traffic Systems, Inc.

Single Level BOM Report

Safetran Traffic Systems, Inc.

Production BOM No. 085513D170-00 -Rev. T

170E PWR SUPPLY ASSY

Item	Part Number	Rev.	Description	Qty.	UOM	Reference Designator	Manufacturer	Manufacturer Part	Envir. Compl.
37	012565D170-00	D	SUPT P/S 170E	1	EA				
1	085513D170-01	-	170E PWR SUPPPLY PCBA	1	EA				
30	0723731150		FILTER RIS 3A	1	EA				
						LF1			
							AREOVOX	A03DMS1C11	
							CORCOM	3VS1	
							QUALTEK	848-03/001	
							SAE	STA-3	
32	0727300300		GRMT RUB 1/2 ID	1	EA				
							MINOR RUBBER	Z-4083	
							WALDOM	G-406	
							GC	11-304-C	
29	0732460030		NUT KEPS 6-32	4	EA				
39	0736941560		S 632X1/4 PH PH	5	EA				
28	0736941600		S 632X3/8 PH PH	8	EA				
47	0736987830		S 6X1/2 TB PH PH	4	EA				

Single Level BOM Report

Safetran Traffic Systems, Inc.

Production BOM No. 085513D170-00 -Rev. T

170E PWR SUPPLY ASSY

Item	Part Number	Rev.	Description	Qty.	UOM	Reference Designator	Manufacturer	Manufacturer Part	Envir. Compl.
38	0738112210		SPCR 632X.375 H/B	1	EA				
							H.H. SMITH	2321	
							HH SMITH	2321	
40	0738807050		WSHR LK INT #6	9	EA				
33	0766892050		TUBING SHK S 3/16	0.33	FT				
43	0771020090		INSULATOR TRAN	4	EA				
						VR1 4 5			
						Q1			
							RICHCO	IEC-TO-220-18	
44	0771020700		INSUL TRAN SILPAD	2	EA				
						VR2 3			
							BERQUIST	3223-07FR-23	
							THERMALLOY	53-03-15	
42	0771020750		INSUL PAD	4	EA				
						VR1 4 5			
						Q1			
							BERQUIST	3223-07FR-68	
							RICHCO	TO-220-68	

Single Level BOM Report

Safetran Traffic Systems, Inc.

Production BOM No. 085513D170-00 -Rev. T

170E PWR SUPPLY ASSY

Item	Part Number	Rev.	Description	Qty.	UOM	Reference Designator	Manufacturer	Manufacturer Part	Envir. Compl.
45	0771607280		IC MC7812	1	EA				
						VR2			
							MOTOROLA	MC7812CK	
							SG	L7812CT	
							NS	LM340K-12	
46	0771649310		IC LM323AK	1	EA				
						VR3			
							NATIONAL	LM323AK STEEL	
36	0788904050		TRANSFMR 170E	1	EA				
						T1			
							PRECISION	US00352	
							TRANEX	14-7574	
34	0792243020		TYRAP SL 7"	3	EA				
							PANDUIT	PLT-2S-MO	
							TITAN	08388 BLK	
27	0792250030		MOUNT #8	3	EA				
						M2 3			
						SUPT1			
							PANDUIT	TA1S8M	

Single Level BOM Report

Safetran Traffic Systems, Inc.

Production BOM No. 085513D170-00 -Rev. T

170E PWR SUPPLY ASSY

Item	Part Number	Rev.	Description	Qty.	UOM	Reference Designator	Manufacturer	Manufacturer Part	Envir. Compl.
31	085571A170-00	B	WP 170E PWR SUPPLY	1	EA				

Proprietary and Confidential to Safetran Traffic Systems, Inc.

170-E CONTROLLER BLOCK DIAGRAM

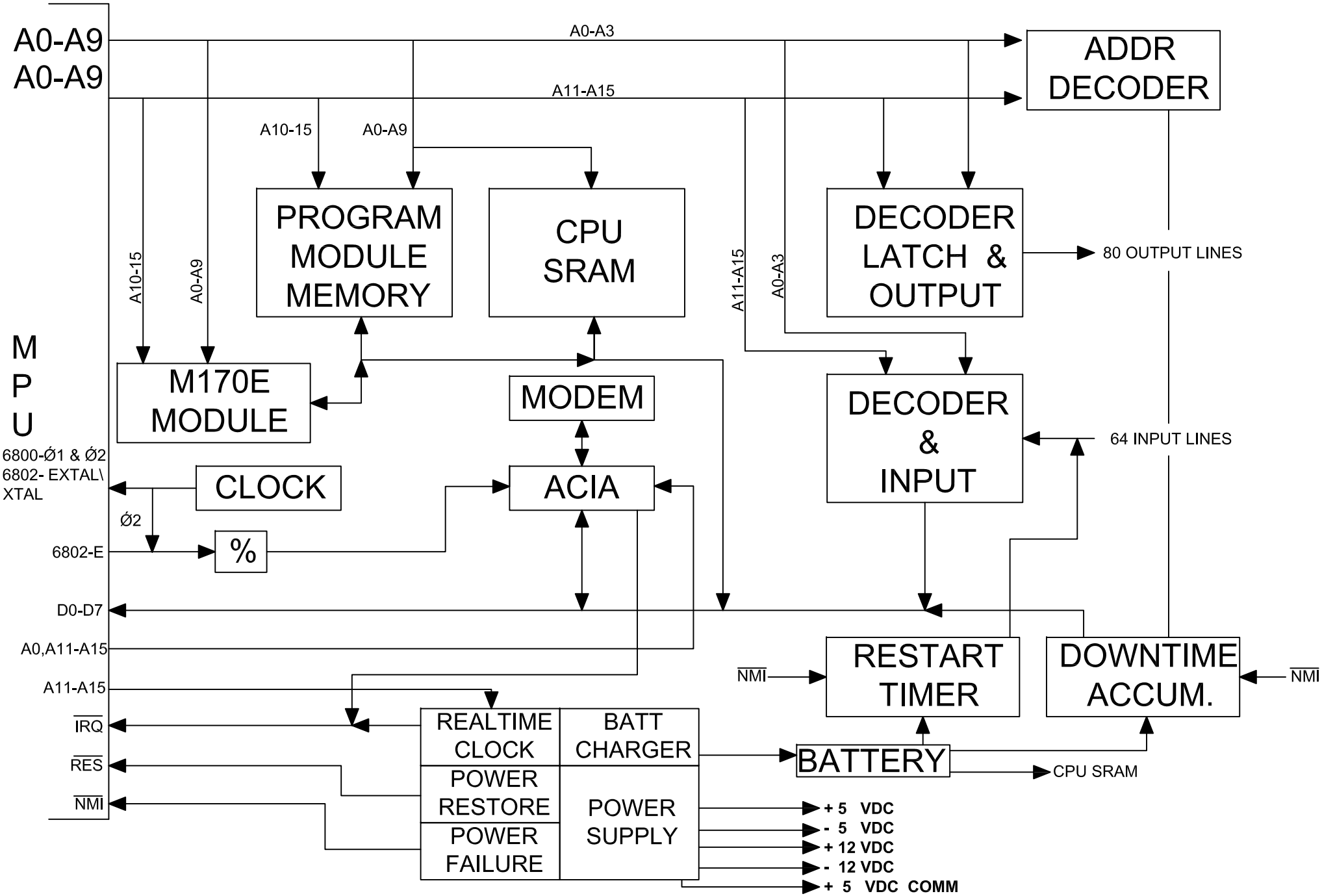

170-E POWER CONTROL LOGIC (CPU)

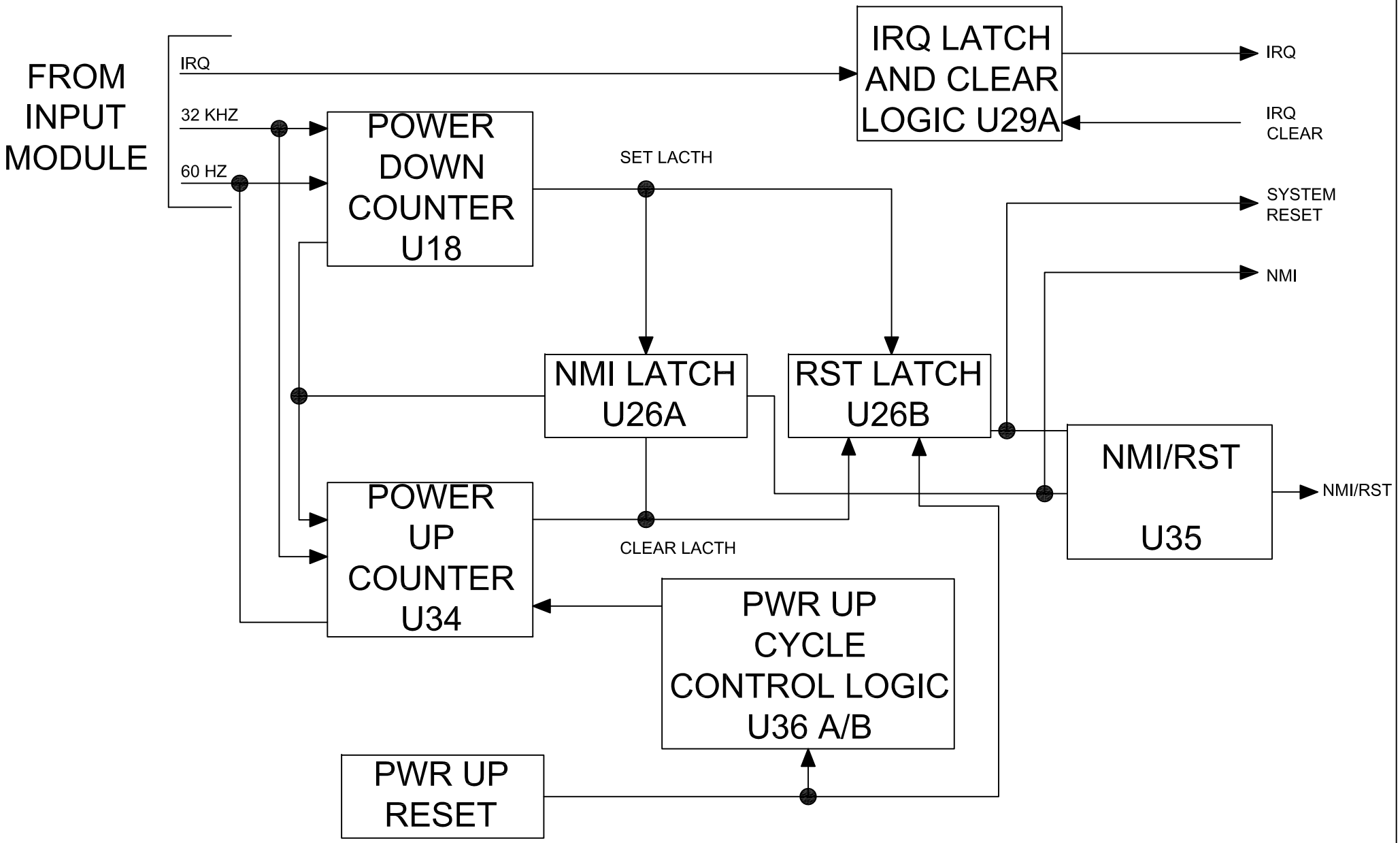

170-E POWER CONTROL LOGIC (CPU)

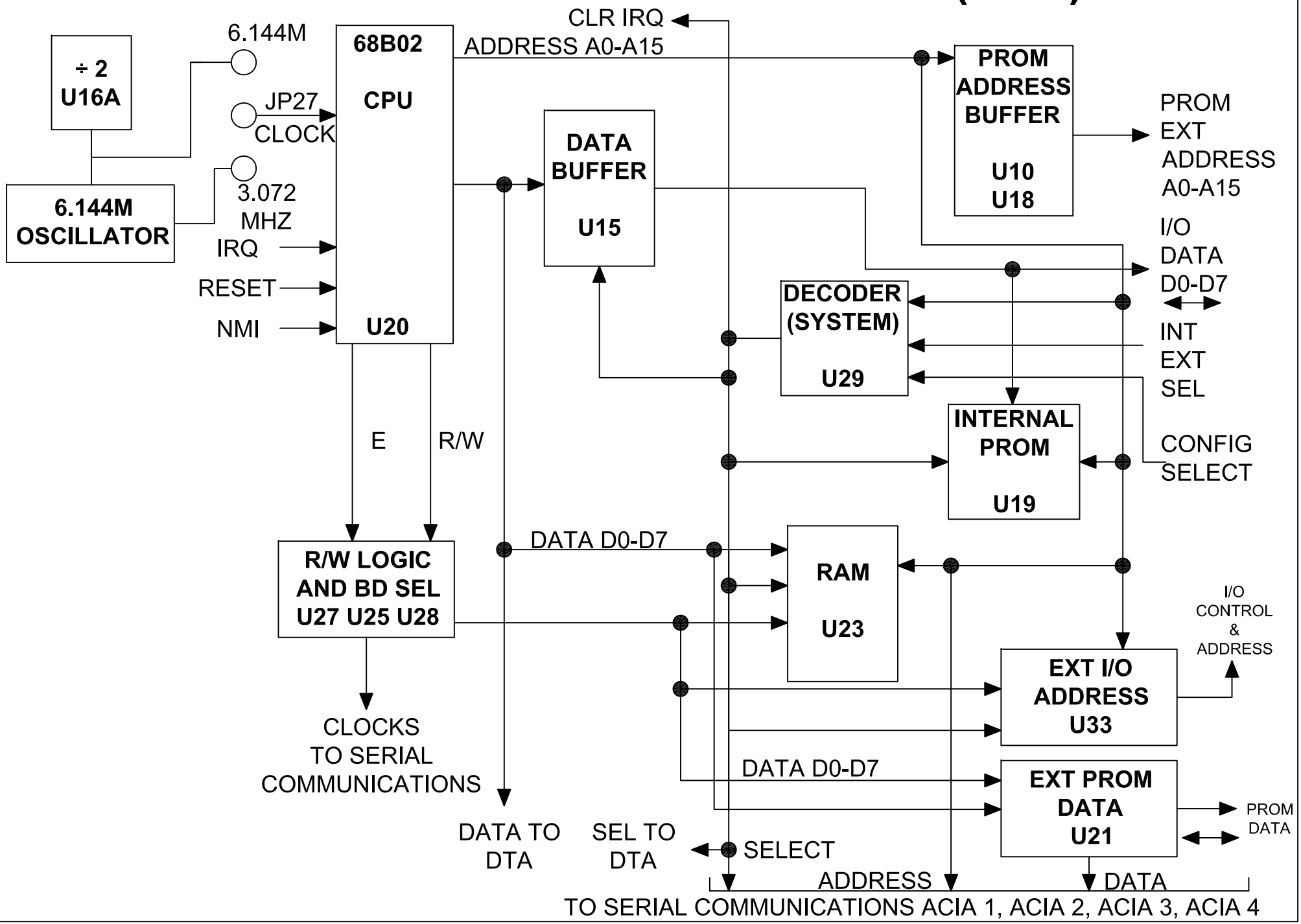

170-E KEYBOARD LOGIC (KEYBOARD & DISPLAY)

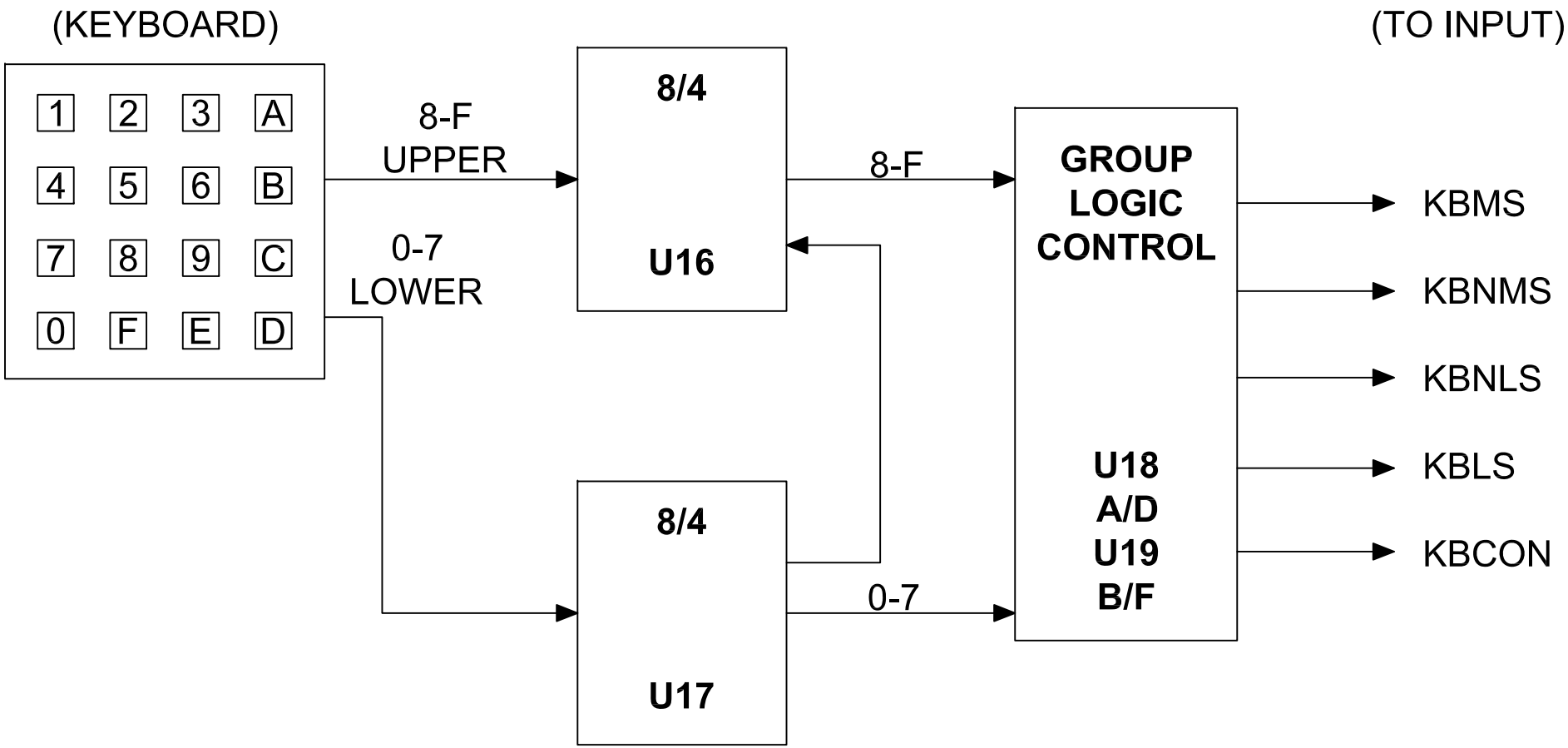

170-E INPUT CONTROL LOGIC (INPUT)

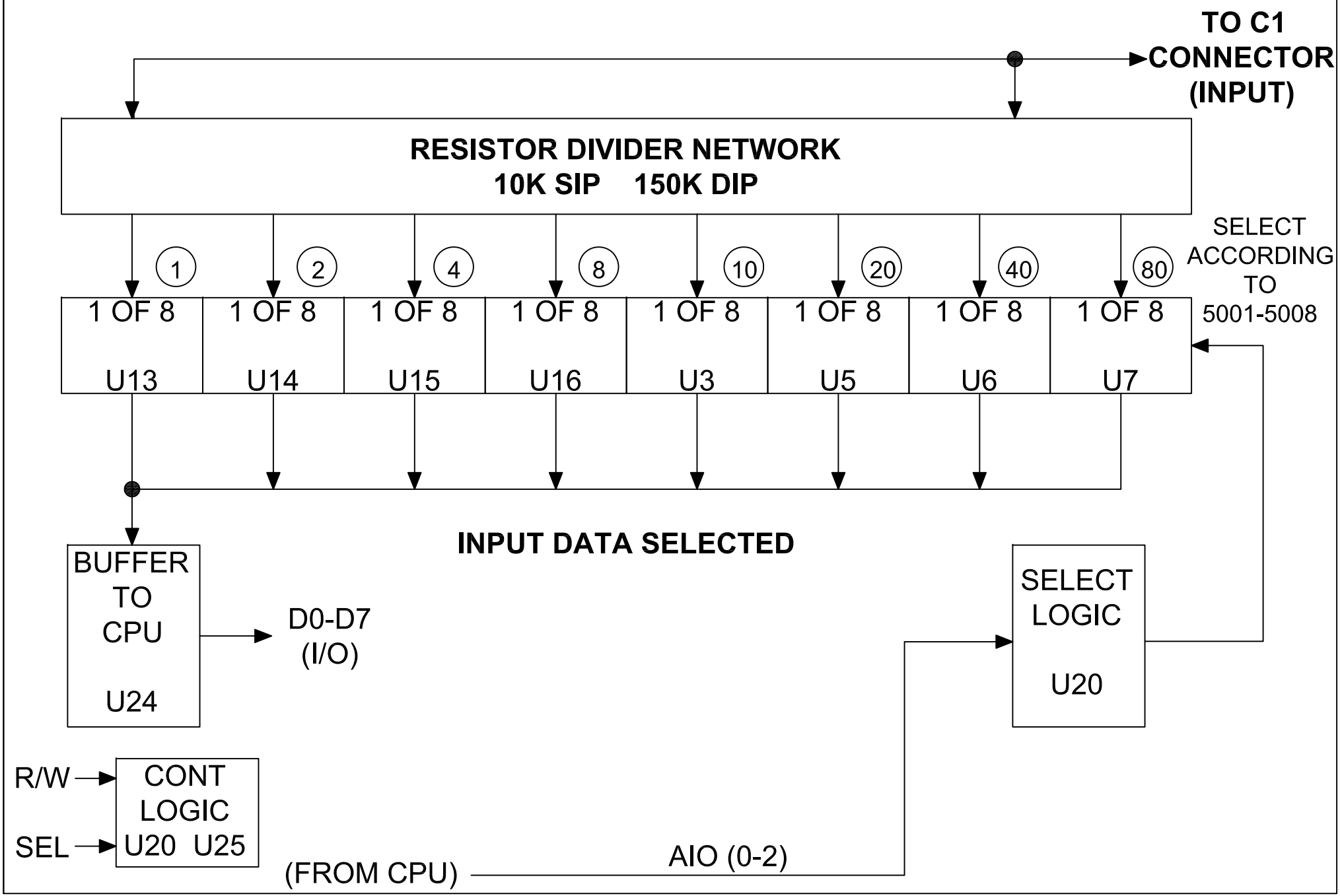

170-E POWER CONTROL LOGIC (INPUT)

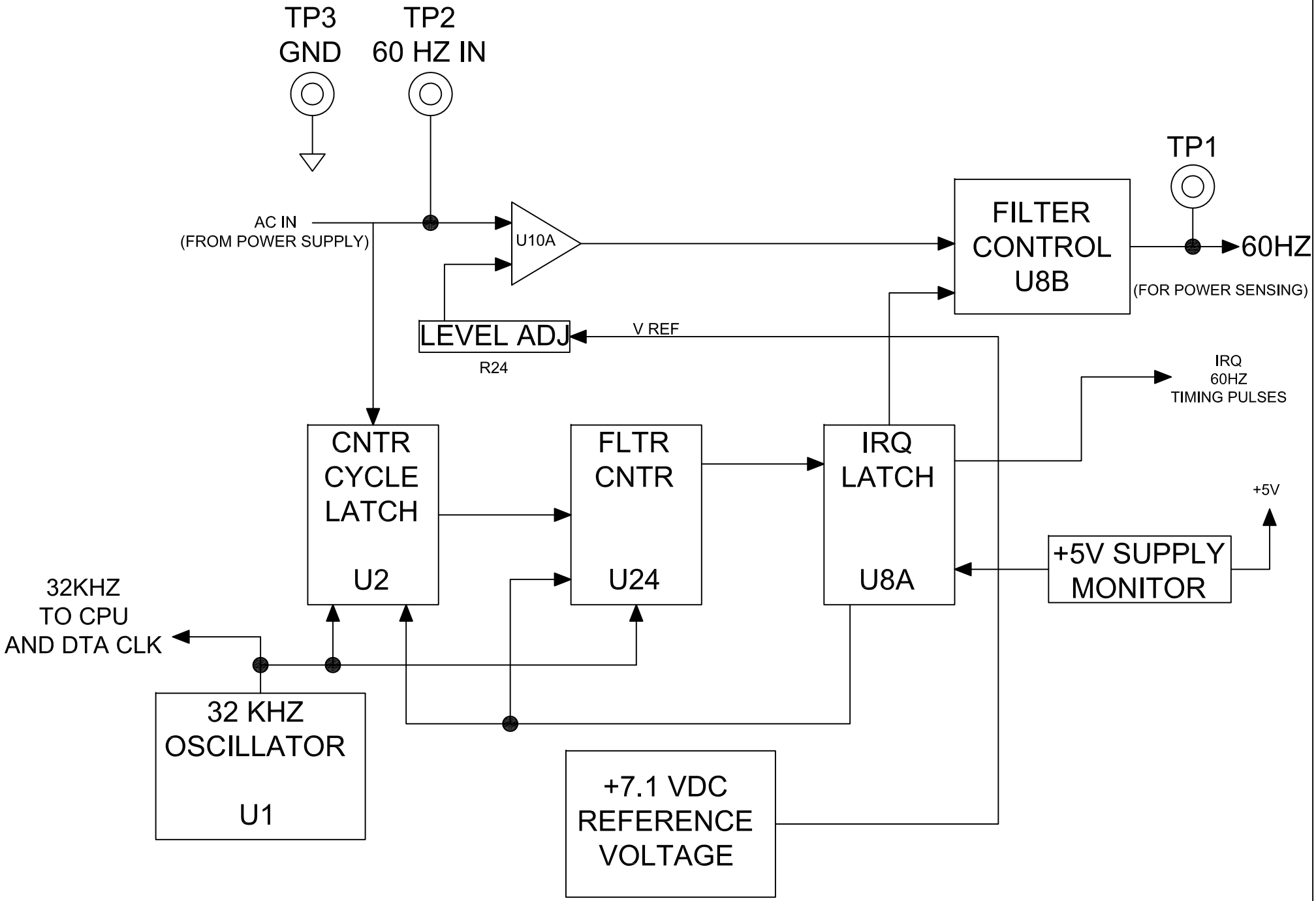

170-E OUTPUT LOGIC (OUTPUT)

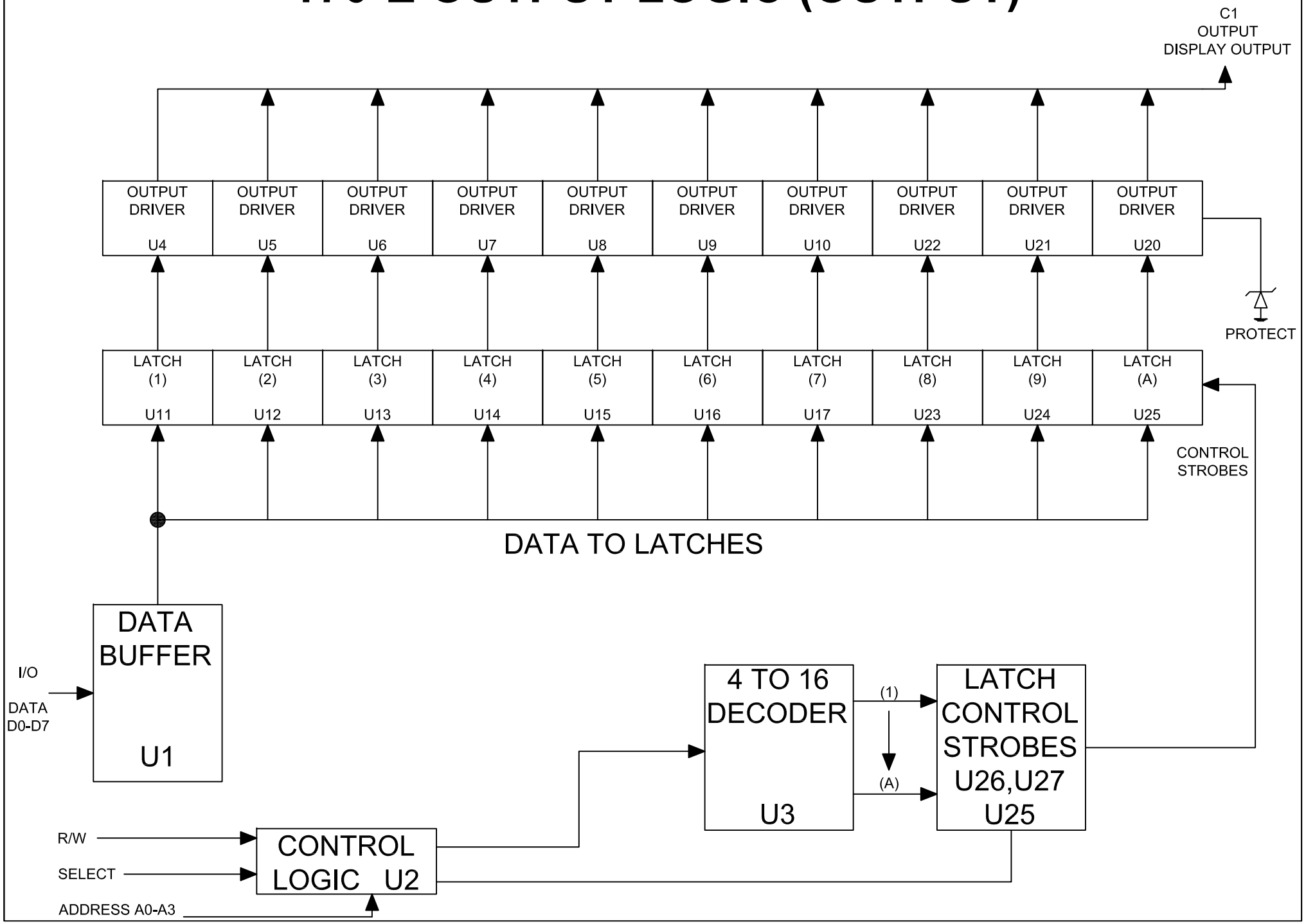

170-E DTA LOGIC (INPUT)

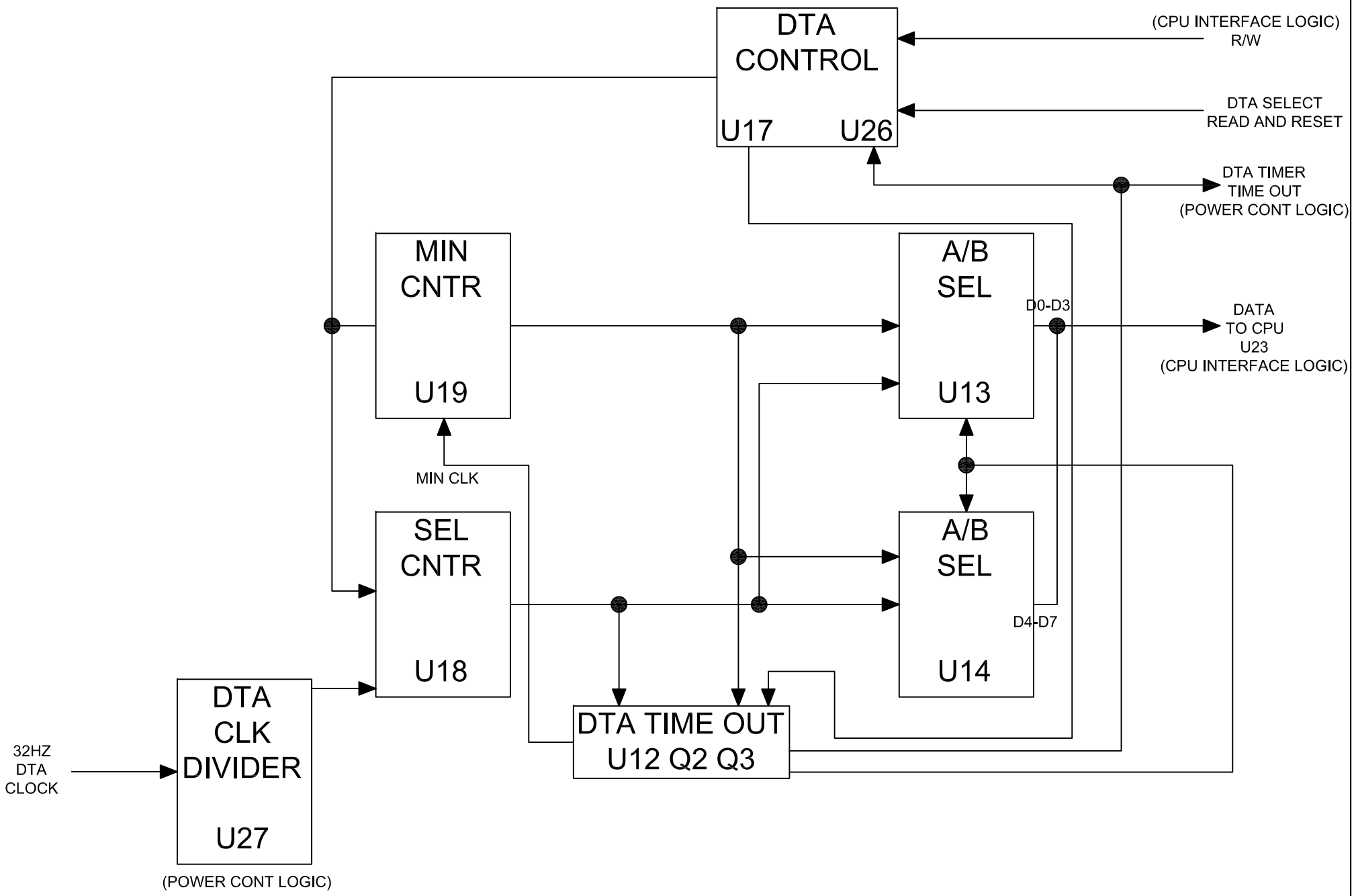

170-E DISPLAY LOGIC (KEYBD & DISPLAY)

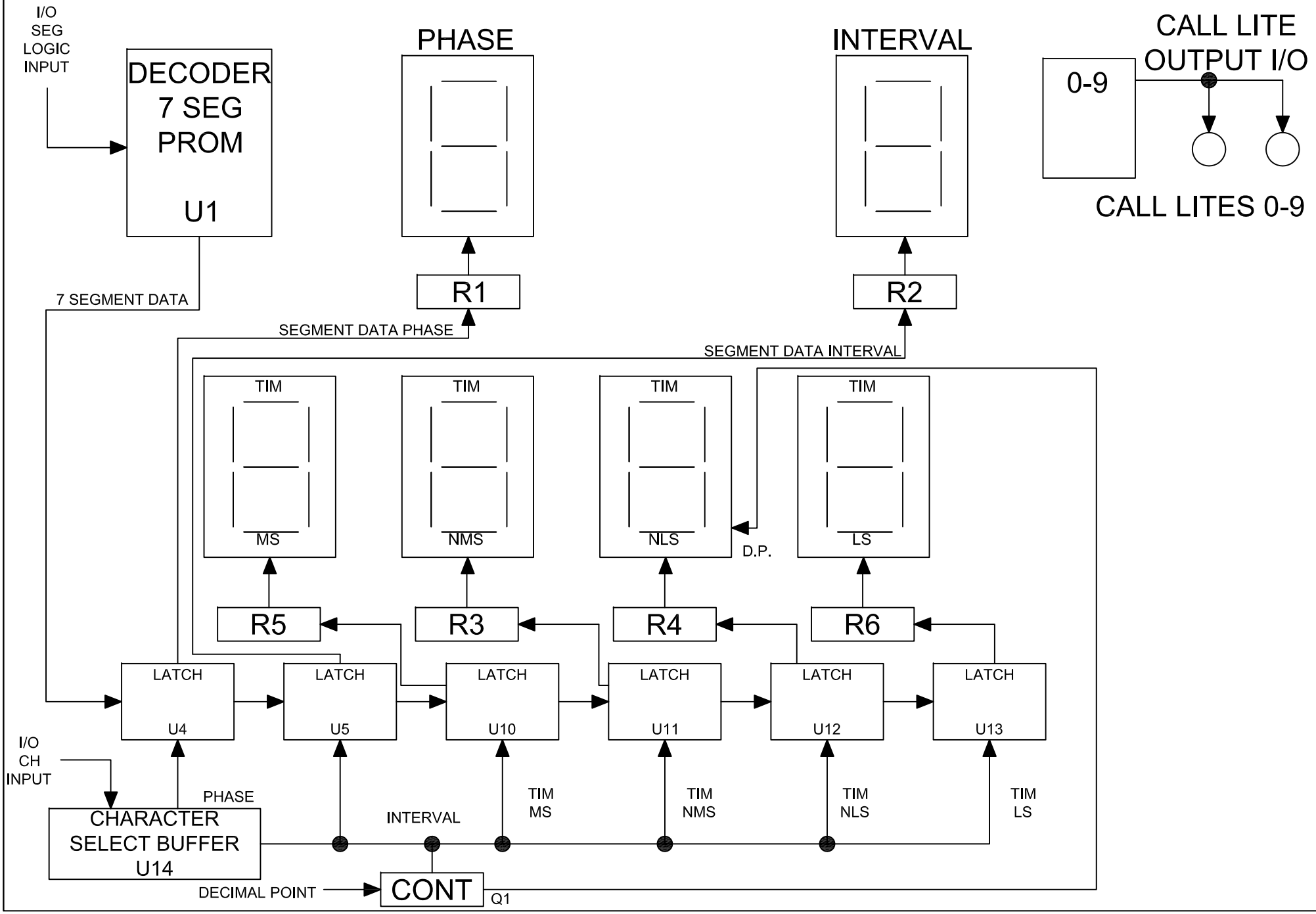

170-E CPU SERIAL COMMUNICATIONS LOGIC (CPU)

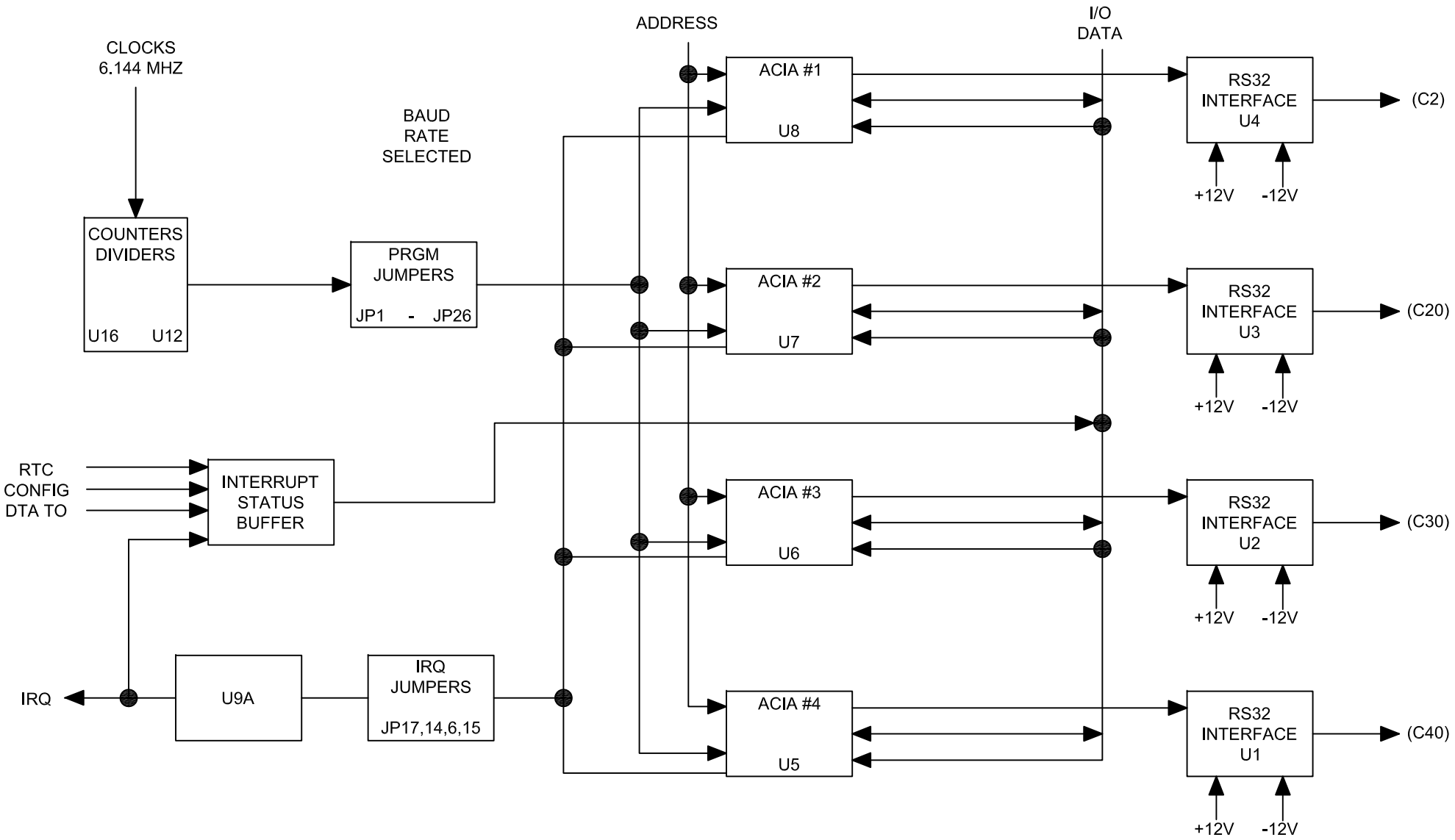

170-E POWER SUPPLY CIRCUITS (POWER SUPPLY)

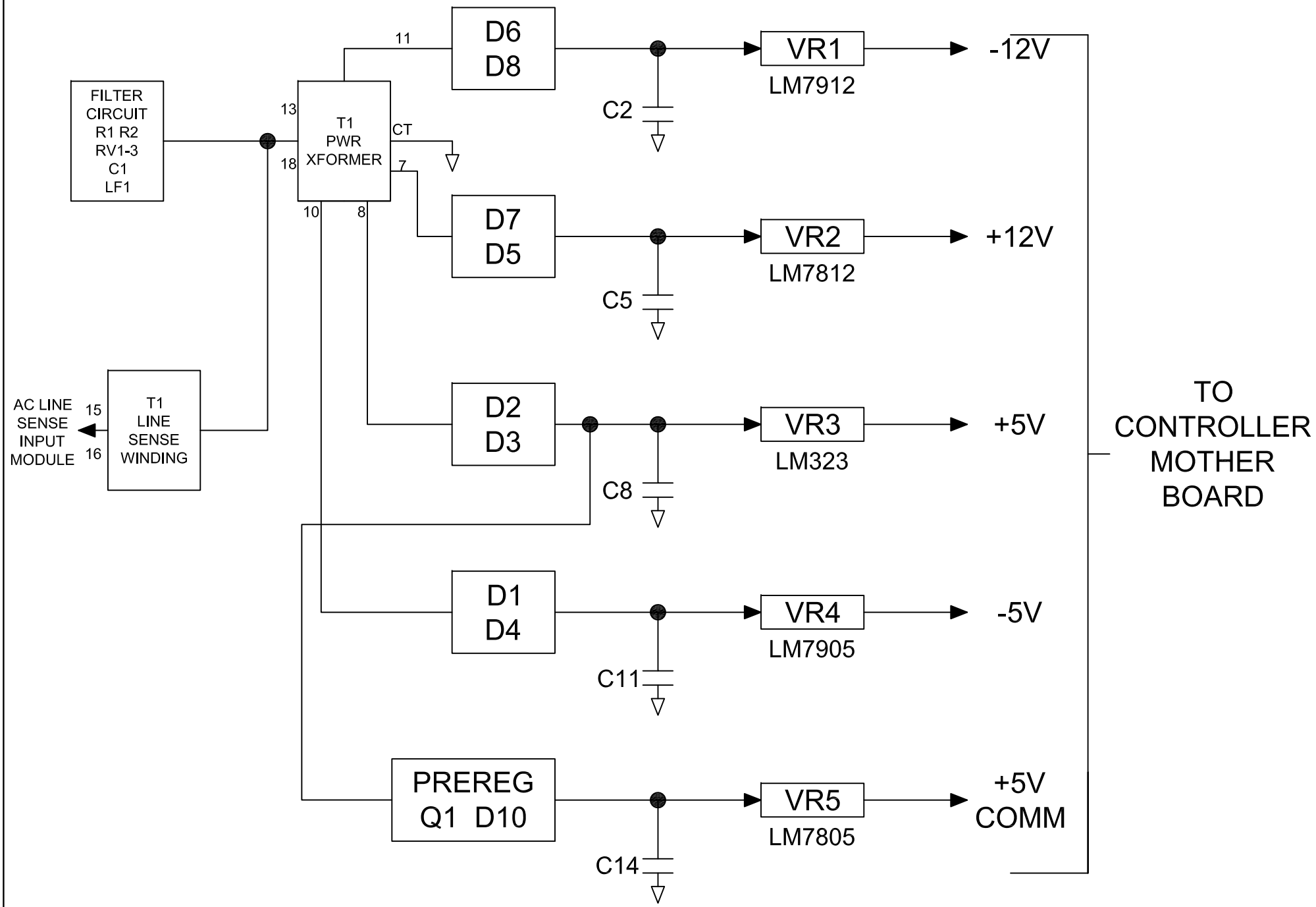

BUS TIMING CHARACTERISTICS

Ident. Number	Characteristic	Symbol	MC6802		MC68A02		MC68B02		Unit
			Min	Max	Min	Max	Min	Max	
1	Cycle Time	tcyc	1.0	10	0.667	10	0.5	10	ns
2	Pulse Width. E Low	PWEL	450	5000	280	500	210	500	ns
3	Pulse Width. E High	PWEH	450	9500	280	970	220	970	ns
4	Clock Rise and Fall Time	tr tf	-----	25	-----	25	-----	25	ns
9	Address Hold Time	tAH	20	-----	20	-----			ns
12	Non-Muxed Address Valid Time to E (see Note 4)	tAV1 tAV1	160 -----	----- 270	100 -----	----- ----	50 -----	----- -----	ns ns
17	Read Data Setup Time	tDSR	100	-----	70	-----	60	-----	ns
18	Read Data Hold Time	tDHR	10	-----	10	-----	10	-----	ns
19	Write Data Delay Time	tDDW	-----	225	-----	170	-----	160	ns
21	Write Data Hold Time	tDHW	30	-----	20	-----	20	-----	ns
29	Usable Access Time (see Note 4)	tACC	535	-----	335	----	235	-----	Ns

*Address and data hold times are periodically tested rather than 100% tested.

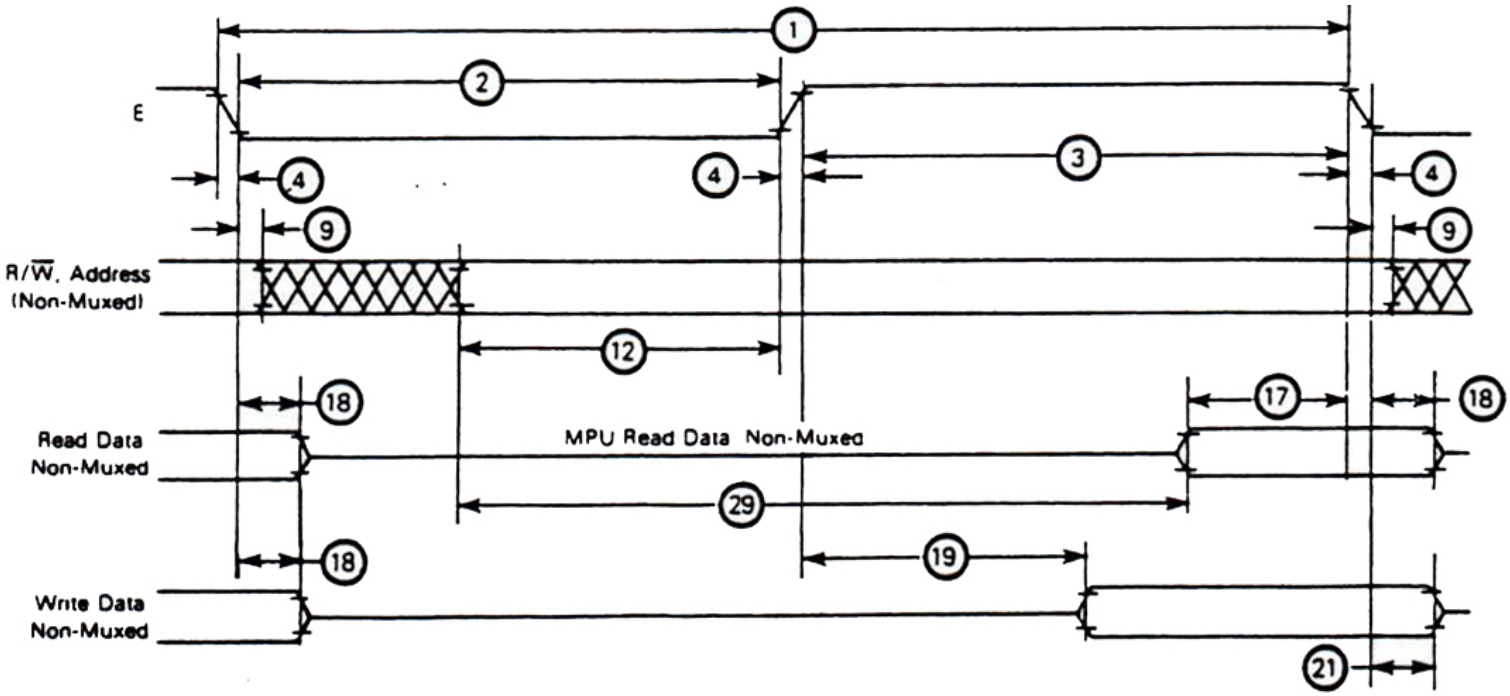

NOTES:

1. Voltage levels shown are VL<0.4 V, VH>2.4 V, unless otherwise specified.
2. Measurement points shown are 0.8 V and 2.0 V, unless otherwise noted.
3. Usable access time is computed by: 12+3+4-17.
4. If programs are not executed from on-board RAM, TAV1 applies. If programs are to be stored and executed from on-board RAM, TAV2 applies. For normal data storage in the on-board RAM, this extended delay does not apply. Programs cannot be executed from on-board RAM when using A and B parts (MC68A02, MC68B02). On-board RAM can be used for data storage with all parts.
5. All electrical and control characteristics are referenced from: TL=0*C minimum and TH=70*C maximum

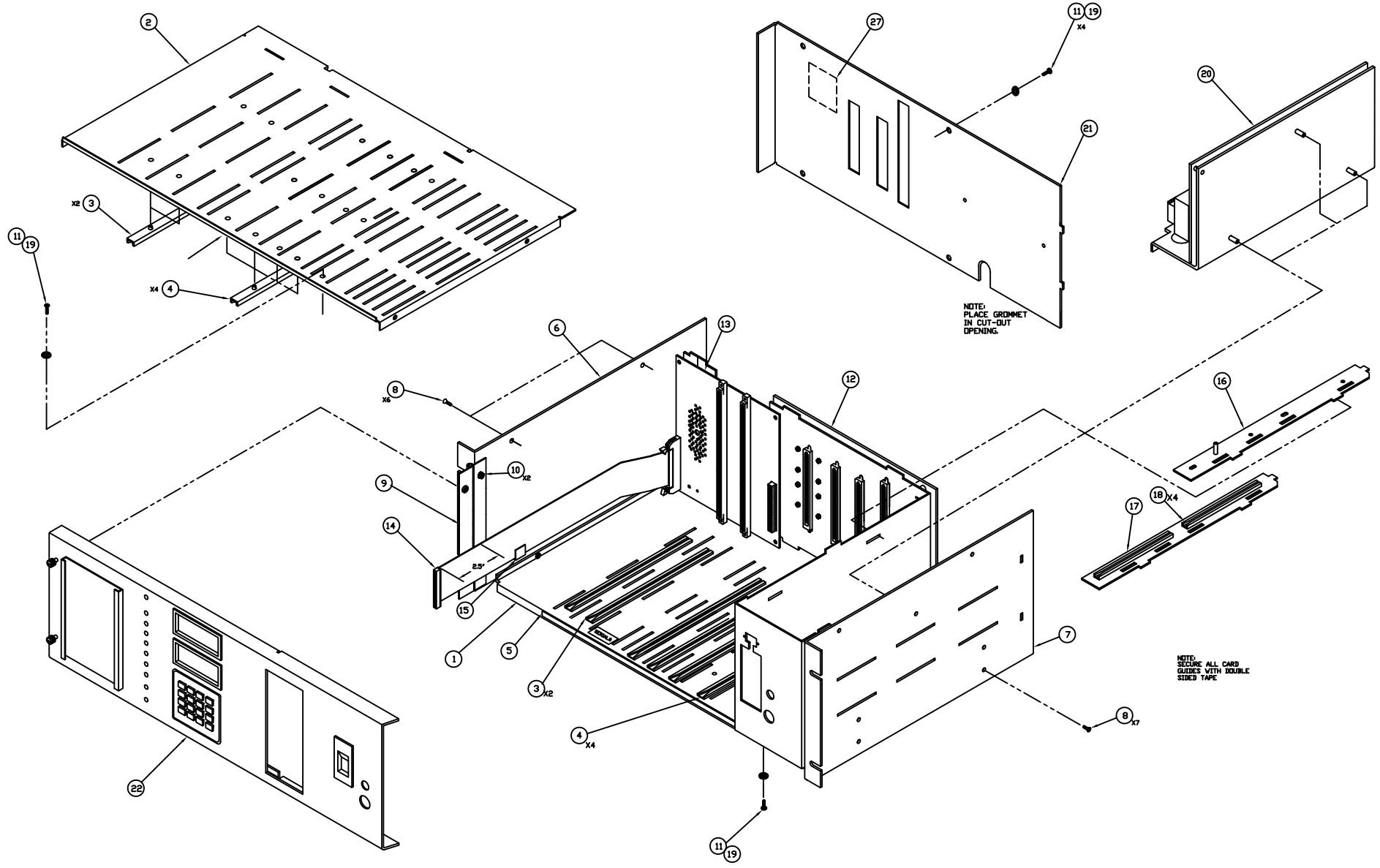

REV	ECR	DESCRIPTION	DATE	NAME	APPD.
D	1981	ADDED NOTE FOR ALL CARD GUIDES	5/11/05	RI	
C	9643	PRE-PRODUCTION CHANGES	11/11/94	RI	
B	9509	PRE-PRODUCTION CHANGES	11/11/94	RI	
A	–	PRE-PRODUCTION CHANGES	11/11/94	RI	

DR. IGNEY 5/11/05

SEE BOM

Safetran Traffic Systems, Inc.
1485 Garden of the Gods Rd. Colorado Springs, Co. 80907

TITLE:
170E CONTROLLER

SIZE D | 085582D170-00 | REV D

SCALE NONE | SHT 1 OF 1

AFTER ASSEMBLY AND SOLDERING OF COMPONENTS, MOISTURE AND FUNGUS PROOF BOTH SIDES OF P.C. BOARD WITH HUMISEAL 1B73 OR EQUIVALENT TO MIN. THICKNESS OF .002

AREAS TO BE FREE OF ALL CONFORMAL COATING, SHALL BE INSPECTED USING A BLACK LIGHT INSPECTION STATION OR EQUIVALENT TO. THE AREAS ARE AS FOLLOWS: ALL TEST POINTS, ALL CONNECTORS, ALL SOCKETS, ALL MOUNTING PADS AND LEDS.

SHOWS PLACEMENT OF SHUNTS.

INDICATES TAPE ON CIRCUIT SIDE BEFORE INSTALLING COMPONENTS. AFTER WAVE ADD COMPONENTS TO TAPED OFF AREAS.

BROKEN LINES INDICATES TO PLACE ON CIRCUIT SIDE.

*** DO NOT INSTALL HEADER AND SHUNT.

** -SMC TYPE SOCKET

* TAPE ONLY IF HOLE ARE PLATED.

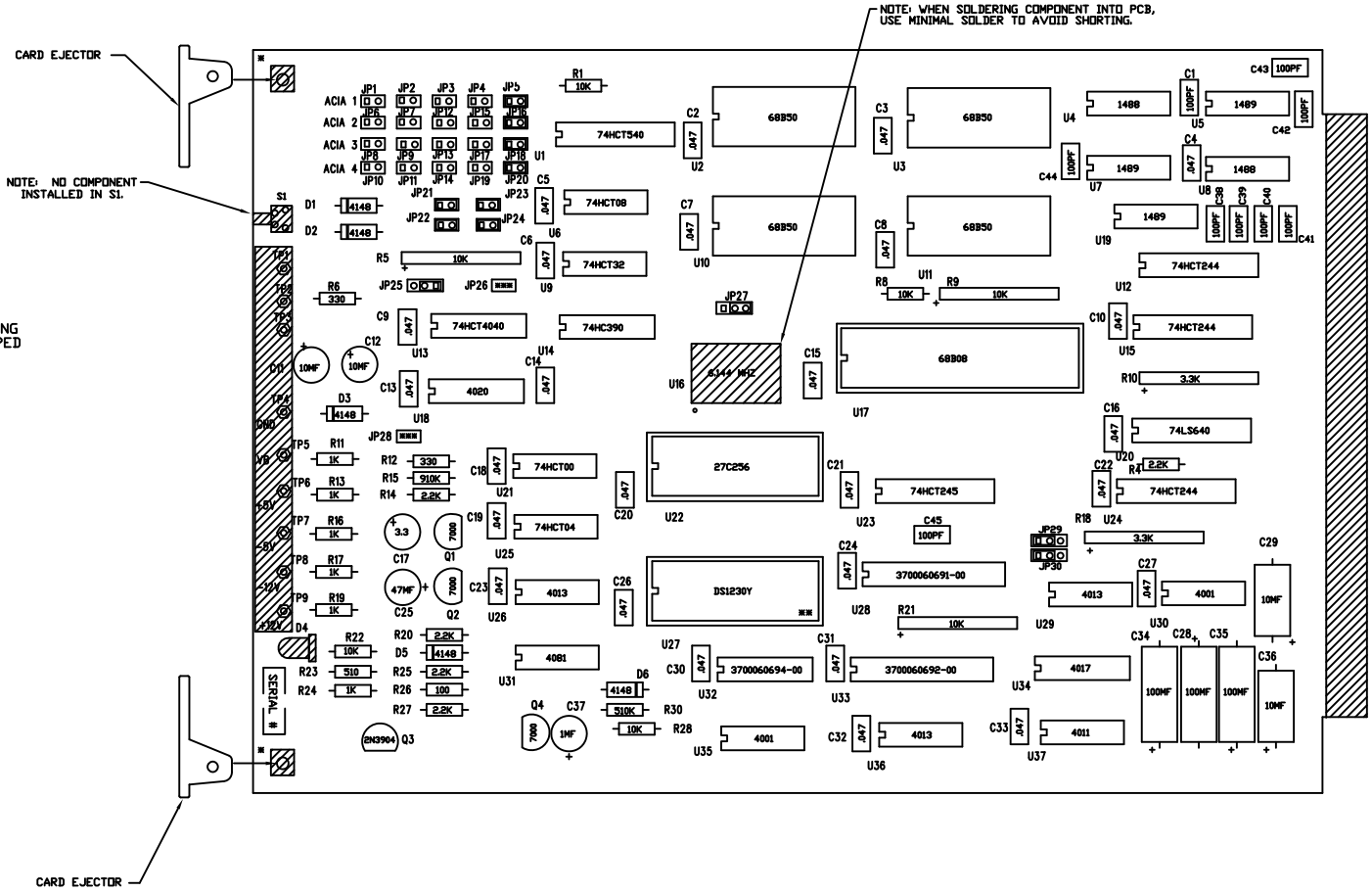

REV	ECR	DESCRIPTION	DATE	NAME	APPD.
L	2715	TECATE PRODUCTION	6/12/07	RI	HJ
K	2141	PUT IN TAPE DETAIL FOR CLK OSC	7/28/05	RI	
J	40	ADD TAPE DETAIL TO SWITCH AREA	12/23/99	LS	
N	10199	REVISED PER ECR	5/4/99	RI	
G	9532	REVISED PER ECR	8/12/96	-	
F	9311	REVISED PER ECR	2/7/96	-	
E	9045	REVISED PER ECR	7/28/95	-	
D	-	PRE-PRODUCTION CHANGES	11/9/94	-	
C	8601	REVISED PER ECR	10/14/94	-	
B	-	PER PROTO ARTWORK	9/21/94	-	
A	-	ARTWORK	8/4/94	-	

DRAWN: SNOW 12/23/99
ENGR: H. JOHNSON 6/12/07
MFG: SEE BOM

Safetran Traffic Systems, Inc.
1485 Garden of the Gods Rd. Colorado Springs, Co. 80907

TITLE: 170E PCBA CPU

SIZE D | DRAWING NO. 085464D170-00 | REV L
SCALE 1 TO 1 | SHT 1 OF 1

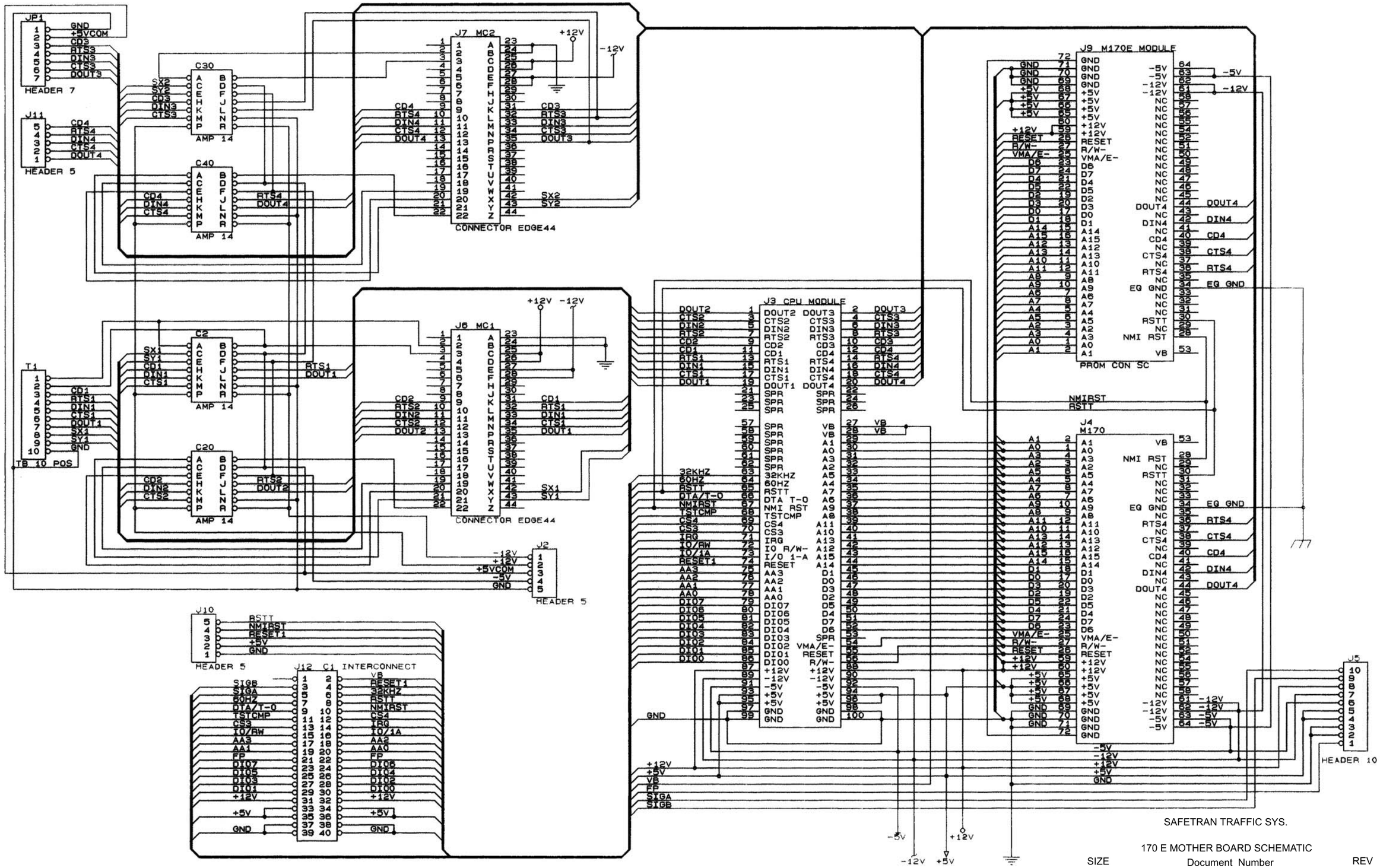
JP1
HEADER 7
J11
HEADER 5
C30
C40
AMP 14
J7 MC2
CONNECTOR EDGE44
+12V
-12V
T1
TB 10 POS
C2
C20
J6 MC1
J2
HEADER 5
J10
HEADER 5
J12 C1 INTERCONNECT
J3 CPU MODULE
J9 M170E MODULE
PROM CON SC
J4
M170
J5
HEADER 10
NMIRST
RSTT
SAFETRAN TRAFFIC SYS.
170 E MOTHER BOARD SCHEMATIC
SIZE
B
Document Number
055479B170-00
REV
A
Date:
March 6, 1997
Sheet 1 OF 1

C1 CONNECTOR

INPUT MODULE

J1

1	1	I5001-8
2	2	X1
3	3	I5001-6
4	4	X2
5	5	I5001-7
6	6	
7	7	I5001-5
8	8	
9	9	I5001-4
10	10	
11	11	I5001-3
12	12	
13	13	I5001-2
14	14	
15	15	I5001-1
16	16	
17	17	I5003-4
18	18	
19	19	
20	20	
21	21	I5003-2
22	22	I5003-8
23	23	I5003-1
24	24	I5003-7
25	25	I5003-3
26	26	I5003-6
27	27	I5005-5
28	28	I5003-5
29	29	I5005-2
30	30	I5005-3
31	31	I5006-4
32	32	I5006-5
33	33	I5005-4
34	34	I5006-6
35	35	I5006-7
36	36	
37	37	I5006-8
38	38	I5005-6
39	39	GND
40	40	GND
41	41	
42	42	
43	43	
44	44	
45	45	I5005-7
46	46	I5005-8
47	47	
48	48	
49	49	I5004-5
50	50	I5005-2
51	51	
52	52	I5006-3
53	53	I5004-6
54	54	I5005-1
55	55	I5004-7
56	56	
57	57	I5004-8
58	58	I5006-1
59	59	
60	60	I5002-8
61	61	I5002-7
62	62	I5002-6
63	63	I5002-5
64	64	VB
65	65	I5002-4
66	66	32KHZ
67	67	RSTT
68	68	60HZ
69	69	DTA T-O
70	70	
71	71	NMI RST
72	72	
73	73	-CS4
74	74	
75	75	-CS3
76	76	
77	77	IRQ
78	78	
79	79	I5002-3
80	80	
81	81	I5002-2
82	82	
83	83	I5002-1
84	84	IO R/W-
85	85	
86	86	I/O 1-A
87	87	
88	88	RESET
89	89	
90	90	
91	91	
92	92	AA2
93	93	
94	94	AA1
95	95	
96	96	AA0
97	97	
98	98	
99	99	
100	100	
101	101	
102	102	
103	103	DI07
104	104	DI06
105	105	DI05
106	106	DI04
107	107	DI03
108	108	DI02
109	109	DI01
110	110	DI00
111	111	+12V
112	112	+12V
113	113	+5V
114	114	+5V
115	115	+5V
116	116	+5V
117	117	GND
118	118	GND
119	119	GND
120	120	GND

CON120\100

KBCON
KBLS
KBNMS
KBNLS
STIME
KBMS
SPARE
SPARE
BFAIL

OUTPUT MODULE

J2

1	1	O5001-8
2	2	
3	3	O5001-7
4	4	
5	5	O5001-6
6	6	
7	7	O5001-5
8	8	
9	9	O5001-4
10	10	
11	11	O5001-3
12	12	O5004-7
13	13	O5001-2
14	14	O5004-6
15	15	O5001-1
16	16	O5004-5
17	17	O5004-3
18	18	O5004-4
19	19	O5004-8
20	20	O5004-2
21	21	O5004-1
22	22	O5002-4
23	23	O5003-8
24	24	O5002-3
25	25	O5003-7
26	26	O5002-2
27	27	O5003-6
28	28	O5002-1
29	29	O5003-4
30	30	O5003-5
31	31	GND
32	32	GND
33	33	O5002-8
34	34	O5003-1
35	35	O5002-6
36	36	O5002-5
37	37	O5003-2
38	38	O5002-7
39	39	GND
40	40	GND
41	41	O5003-3
42	42	
43	43	O5007-2
44	44	
45	45	O5007-4
46	46	O5007-3
47	47	O5007-5
48	48	O5007-1
49	49	O5007-6
50	50	O5006-1
51	51	O5007-7
52	52	O5006-2
53	53	O5007-8
54	54	O5006-3
55	55	O5005-5
56	56	O5006-4
57	57	O5005-6
58	58	O5006-5
59	59	O5005-7
60	60	O5006-6
61	61	O5005-8
62	62	O5006-7
63	63	O5005-1
64	64	O5006-8
65	65	O5005-2
66	66	
67	67	O5005-3
68	68	
69	69	O5005-4
70	70	
71	71	
72	72	
73	73	GND
74	74	GND
75	75	
76	76	
77	77	
78	78	
79	79	
80	80	
81	81	
82	82	
83	83	
84	84	
85	85	
86	86	
87	87	
88	88	
89	89	
90	90	
91	91	
92	92	
93	93	
94	94	
95	95	
96	96	IO R/W-
97	97	RESET
98	98	I/O 1-A
99	99	AA2
100	100	AA3
101	101	AA0
102	102	AA1
103	103	DI06
104	104	DI07
105	105	DI04
106	106	DI05
107	107	DI02
108	108	DI03
109	109	DI00
110	110	DI01
111	111	+12V
112	112	+12V
113	113	+5V
114	114	+5V
115	115	+5V
116	116	+5V
117	117	GND
118	118	GND
119	119	GND
120	120	GND

CON120\100

CLT1
CLT3
CLT2
CLT0
CLT4
CLT5
CLT6
CLT7
CCPHS
CCINT
CCLS
CCNLS
CCNMS
CCMS
CLT8
CHLS
CHNLS
CHNMS
CHMS
BP
BLPT
BLTIM
SPARE

J3

GND	1	1
O5001-1	2	2
O5001-2	3	3
O5001-3	4	4
O5001-4	5	5
O5001-5	6	6
O5001-6	7	7
O5001-7	8	8
O5001-8	9	9
O5002-1	10	10
O5002-2	11	11
O5002-3	12	12
O5002-4	13	13
GND	14	14
O5002-5	15	15
O5002-6	16	16
O5002-7	17	17
O5002-8	18	18
O5003-1	19	19
O5003-2	20	20
O5003-3	21	21
O5003-4	22	22
O5003-5	23	23
O5003-6	24	24
O5003-7	25	25
O5003-8	26	26
O5004-1	27	27
O5004-2	28	28
O5004-3	29	29
O5004-4	30	30
O5004-5	31	31
O5004-6	32	32
O5004-7	33	33
O5004-8	34	34
O5005-1	35	35
O5005-2	36	36
O5005-3	37	37
O5005-4	38	38
I5001-1	39	39
I5001-2	40	40
I5001-3	41	41
I5001-4	42	42
I5001-5	43	43
I5001-6	44	44
I5001-7	45	45
I5001-8	46	46
I5002-1	47	47
I5002-2	48	48
I5002-3	49	49
I5002-4	50	50
I5002-5	51	51
I5002-6	52	52
I5002-7	53	53
I5002-8	54	54
I5003-1	55	55
I5003-2	56	56
I5003-3	57	57
I5003-4	58	58
I5003-5	59	59
I5003-6	60	60
I5003-7	61	61
I5003-8	62	62
I5004-5	63	63
I5004-6	64	64
I5004-7	65	65
I5004-8	66	66
I5005-1	67	67
I5005-2	68	68
I5005-3	69	69
I5005-4	70	70
I5005-5	71	71
I5005-6	72	72
I5005-7	73	73
I5005-8	74	74
I5006-1	75	75
I5006-2	76	76
I5006-3	77	77
I5006-4	78	78
I5006-5	79	79
I5006-6	80	80
I5006-7	81	81
I5006-8	82	82
O5006-1	83	83
O5006-2	84	84
O5006-3	85	85
O5006-4	86	86
O5006-5	87	87
O5006-6	88	88
O5006-7	89	89
O5006-8	90	90
O5007-1	91	91
GND	92	92
O5007-2	93	93
O5007-3	94	94
O5007-4	95	95
O5007-5	96	96
O5007-6	97	97
O5007-7	98	98
O5007-8	99	99
O5006-5	100	100
O5005-6	101	101
O5005-7	102	102
O5005-8	103	103
GND	104	104

AMP104

MOTHERBOARD INTERCONNECT

JP1

	1 2	VB
X2	3 4	RESET
X1	5 6	32KHZ
60HZ	7 8	RSTT
DTA T-O	9 10	NMI RST
	11 12	-CS4
-CS3	13 14	IRQ
IO R/W-	15 16	I/O 1-A
AA3	17 18	AA2
AA1	19 20	AA0
FP	21 22	FP
DI07	23 24	DI06
DI05	25 26	DI04
DI03	27 28	DI02
DI01	29 30	DI00
+12V	31 32	+12V
+5V	33 34	+5V
+5V	35 36	+5V
GND	37 38	GND
GND	39 40	GND

HDR40X2

FRONT PANEL INTERCONNECT

JP2

KBCON	1 2	KBLS
KBNLS	3 4	KBNMS
KBMS	5 6	STIME
BFAIL	7 8	SPARE
CLT0	9 10	CLT1
CLT2	11 12	CLT3
CLT4	13 14	CLT5
CLT6	15 16	CLT7
CCPHS	17 18	CCINT
CCLS	19 20	CCNLS
CCNMS	21 22	CCMS
CLT8	23 24	CLT9
CHLS	25 26	CHNLS
CHNMS	27 28	CHMS
BP	29 30	BLPT
BLTIM	31 32	SPARE
GND	33 34	GND
GND	35 36	GND
	37 38	
	39 40	

QIKHD-40V

SAFETRAN TRAFFIC SYS.		
Title	170E C1 CONNECTOR BOARD	
Size C	Document Number 055500C170-00	REV A
Date: November 2, 1994	Sheet 1 of 1	

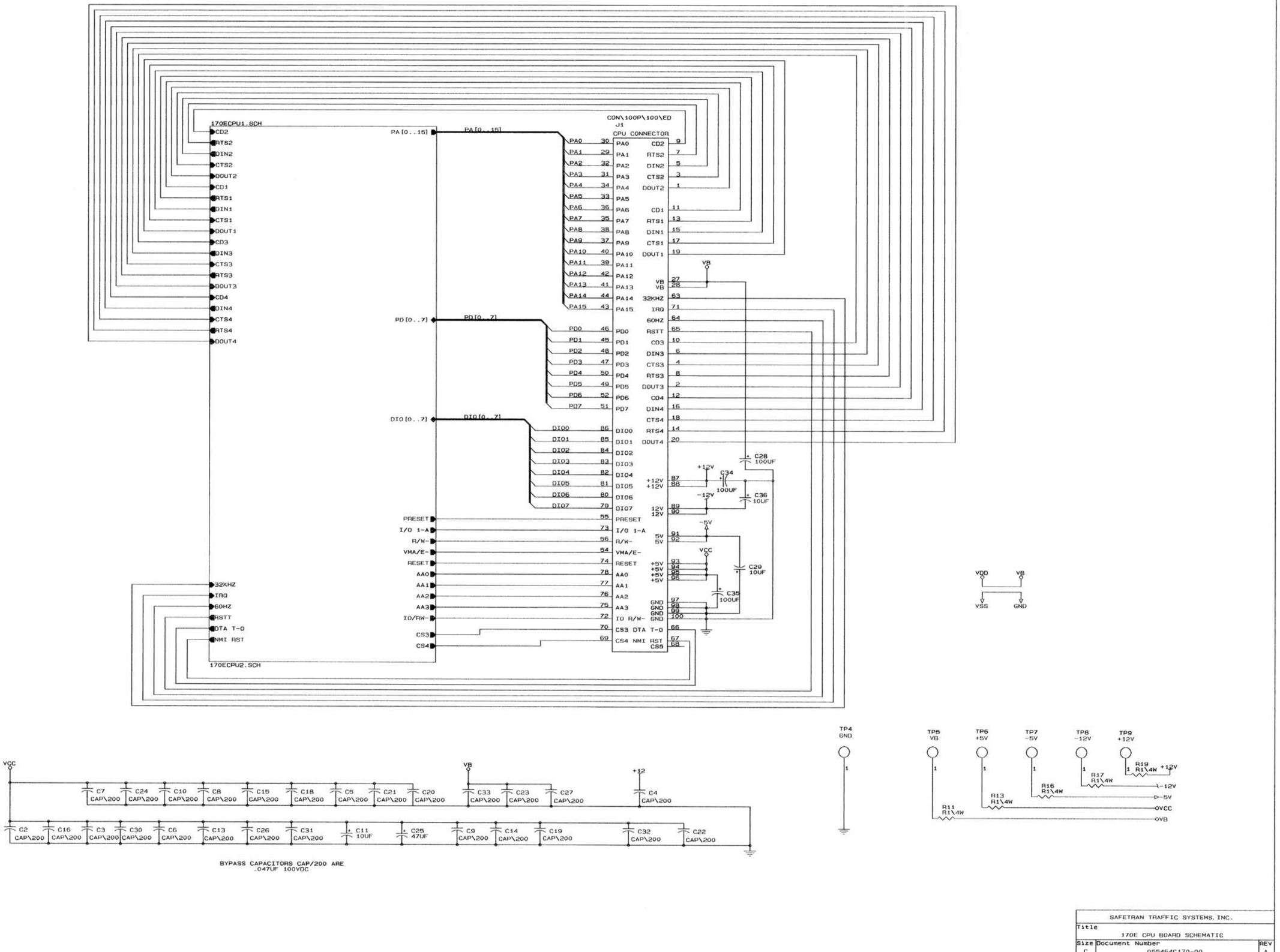
170ECPU1.SCH
CD2
RTS2
DIN2
CTS2
DOUT2
CD1
RTS1
DIN1
CTS1
DOUT1
CD3
DIN3
CTS3
RTS3
DOUT3
CD4
DIN4
CTS4
RTS4
DOUT4
32KHZ
IRQ
60HZ
RSTT
DTA T-0
NMI RST
170ECPU2.SCH
PA[0..15]
PD[0..7]
DIO[0..7]
PRESET
I/O 1-A
R/W-
VMA/E-
RESET
AA0
AA1
AA2
AA3
IO/RW-
CS3
CS4
CON\100P\100\ED
J1
CPU CONNECTOR
PA0 30
PA1 29
PA2 32
PA3 31
PA4 34
PA5 33
PA6 36
PA7 35
PA8 38
PA9 37
PA10 40
PA11 39
PA12 42
PA13 41
PA14 44
PA15 43
PD0 46
PD1 45
PD2 48
PD3 47
PD4 50
PD5 49
PD6 52
PD7 51
DIO0 86
DIO1 85
DIO2 84
DIO3 83
DIO4 82
DIO5 81
DIO6 80
DIO7 79
55
73
56
54
74
78
77
76
75
72
70
69
PA0 CD2 9
PA1 RTS2 7
PA2 DIN2 5
PA3 CTS2 3
PA4 DOUT2 1
PA5
PA6 CD1 11
PA7 RTS1 13
PA8 DIN1 15
PA9 CTS1 17
PA10 DOUT1 19
PA11
PA12
PA13 VB 27
VB 28
PA14 32KHZ 63
PA15 IRQ 71
60HZ 64
PD0 RSTT 65
PD1 CD3 10
PD2 DIN3 6
PD3 CTS3 4
PD4 RTS3 8
PD5 DOUT3 2
PD6 CD4 12
PD7 DIN4 16
CTS4 18
DIO0 RTS4 14
DIO1 DOUT4 20
DIO2
DIO3
DIO4
DIO5 +12V 87
+12V 86
DIO6
DIO7 12V 89
12V 90
PRESET
I/O 1-A 5V 91
R/W- 5V 92
VMA/E-
RESET +5V 93
+5V 94
AA0 +5V 95
+5V 96
AA1
AA2
AA3 GND 97
GND 98
IO R/W- GND 99
GND 100
CS3 DTA T-0 66
CS4 NMI RST 67
CS5 68
VB
C28 100UF
+12V
C34 100UF
-12V
C36 10UF
-5V
VCC
C29 10UF
C35 100UF
VDD VB
VSS GND
TP4 GND
TP5 VB
TP6 +5V
TP7 -5V
TP8 -12V
TP9 +12V
R19 R1\4W +12V
R17 R1\4W
R16 R1\4W -12V
R13 R1\4W -5V
R11 R1\4W VCC
VB
VCC
VB
+12
C7 C24 C10 C8 C15 C18 C5 C21 C20 CAP\200
C33 C23 C27 CAP\200
C4 CAP\200
C2 C16 C3 C30 C6 C13 C26 C31 CAP\200
C11 10UF
C25 47UF
C9 C14 C19 CAP\200
C32 C22 CAP\200
BYPASS CAPACITORS CAP/200 ARE
.047UF 100VDC
SAFETRAN TRAFFIC SYSTEMS, INC.
Title
170E CPU BOARD SCHEMATIC
Size C
Document Number 055464C170-00
REV A
Date: July 10, 1995 Sheet 1 of 5

SPARE DEVICES

TP2 IRQ
TP3 NMI
TP1 RESET
VCC
U17 68B02
MPU
DIP40\600
R9A 10K SIP\10P
R21A 10K SIP\10P
U12
U15
DIP20 74HCT244
PROM ADDR BUS DRIVERS
PA[0..15]
R10A SIP\10P 3.3K
U20
DIP20 74LS640
PROM DATA BUS DRIVER
p.1 (all)
PROM ADDR AND DATA BUS
U25B
U25C
DIP14 74HC04
U21A
DIP14 74HC00
-VMA/E
R/W-
R18A 3.3K SIP\10P
I/O BUS DRIVER
U23
DIP20 74HCT245
U22
DIP28\600 27C256
INTERNAL EEPROM MEMORY
U32
16V8
ACIA ADDR DECODER
U27 DIP28\600
DS1230Y 6264/62256
INTERNAL RAM MEMORY
U33
DIP24 20V8
LS ADDR DECODER
-CS0 - PROM MODULE SEL
-CS1 - INTERVAL RAM SEL
-CS2 - I/O SELECT
-CS3 - DTA RESET
-CS4 - DTA READ
-CS6 - RTC RESET
CS7 - ACIA ENABLE (HIGH ENABLE)
-INTROM - INTERNAL ROM ENABLE
-IOBEN - IO BUS ENABLE
U28
DIP24 20V8
MS ADDR DECODER
IO/RW-
C45 100PF
CONFIGURATION SELECT
CONFIG 1
JP29
CONFIG 2
INTERNAL
JP30 4000-4FFF
EXTERNAL
ACIA SWAP
NORMAL
JP25
SWAP

170E CPU SCHEMATIC		
Size B	Document Number 055464B170-00	REV A
Date: July 10, 1995	Sheet 3 of 5	

p.1 (all)
DIO0 DIO1 DIO2 DIO3 DIO4 DIO5 DIO6 DIO7
I/O DATA BUS

p.3 DD
p.3 X
p.5 J
p.5 A
U
p.2, 3

U25E
DIP14
74HC04

ACIA1
U3
E
CS0
CS1
CS2
IRQ
RS
R/W
RXCLK
TXCLK
RXDATA
DCD
CTS
TXDATA
RTS
D0 D1 D2 D3 D4 D5 D6 D7
DIO0 DIO1 DIO2 DIO3 DIO4 DIO5 DIO6 DIO7
VCC
AC1
A0
DIP24\600
6850A

U5C
U5B
U5A
DIP14
1489
p.1 DOUT1
p.1 CD1
p.1 CTS1

U4A
U4B
DIP14
1488
p.1 DIN1
p.1 RTS1
C44 100PF
C1 100PF
ACIA 1 RS232 DRIVERS

EE p.3
VCC
R4 R1\4W 2.2K
R25 R1\4W 2.2K
U24
DIP24
74HCT244
R/W-- VMA/E
A0 A1 A2 A3
p.3 Y
1G 2G
R/W- p.1
VMA/E- p.1
AA0 AA1 AA2 AA3 p.1
I/O ADDR BUS

p.5 F
p.5 B

ACIA2
U2
AC2
A0
p.1 DOUT2
p.1 CD2
p.1 CTS2
U5D
U7A
U7B
U4C
U4D
p.1 DIN2
p.1 RTS2
C43 100PF
C42 100PF
ACIA 2 RS232 DRIVERS

JP28
PROM RESET
PRESET p.1
p.2, 3 W
RESET p.1
EXT. RESET

ACIA3
U11
AC3
A0
p.1 DOUT3
p.1 CD3
p.1 CTS3
U7C
U7D
U19A
U8A
U8B
p.1 DIN3
p.1 RTS3
C38 100PF
C39 100PF
ACIA 3 RS232 DRIVERS

p.5 G
p.5 C

ACIA4
U10
AC4
A0
p.1 DOUT4
p.1 CD4
p.1 CTS4
U19D
U19C
U19B
U8C
U8D
p.1 DIN4
p.1 RTS4
C40 100PF
C41 100PF
ACIA 4 RS232 DRIVERS

p.5 K
p.3 AA
p.5 D

VCC
R28 R1\4W 10K
5FFF STATUS REG.
U1
DIP20
74HCT540
p.5 O
p.5 N
p.5 M
p.5 L
p.3 CC
p.2 R
p.3 Z
p.2, 3 T
DIO0 DIO1 DIO2 DIO3 DIO4 DIO5 DIO6 DIO7
BB p.3
5FFF-F
JP26
R6 R1\4W 330
p.1 DTA T-O
DTA TIMEOUT

V+ +12V
V- -12V

170E CPU SCHEMATIC		
Size B	Document Number 0554648170-00	REV B
Date: August 18, 1998	Sheet 4 of 5	

U16 DIPOSC 6.144MHZ
1.536 MHZ
768 KHZ
JP27 CPU CLOCK SPEED
U14A DIP16 74HC390
ACIA BAUD RATE GENERATOR
U13 DIP16 74HCT4040
JP1 JP2 JP3 JP4 JP5 ACIA #1
JP6 JP7 JP12 JP15 JP16 ACIA #2
JP8 JP9 JP13 JP17 JP18 ACIA #3
JP10 JP11 JP14 JP19 JP20 ACIA #4
R8 R1\4W 10K
R1 R1\4W 10K
U9A U9B U9C U9D DIP14 74HCT32
U6A U6B DIP14 74HCT08
R5E SIP\10P 10K
R5C SIP\10P 10K
IRQ4 JP21
JP22 IRQ3/2
IRQ2/3 JP23
JP24 IRQ1
ACIA IRQ ENABLE JUMPERS
U6C U6D DIP14 74HCT08
D2 D1 D041
ACIA IRQ
CPU ACTIVITY CIRCUIT
U14B DIP16 74HC390
R1\4W R23 510
D4 LED
R24 R1\4W 1K
Q3 TO-92 2N3904
U29B DIP14 4013
U37D DIP14 4011

SPARE DEVICES

170E CPU SCHEMATIC		
Size B	Document Number 055464B170-00	REV A
Date: July 10, 1995	Sheet 5 of 5	

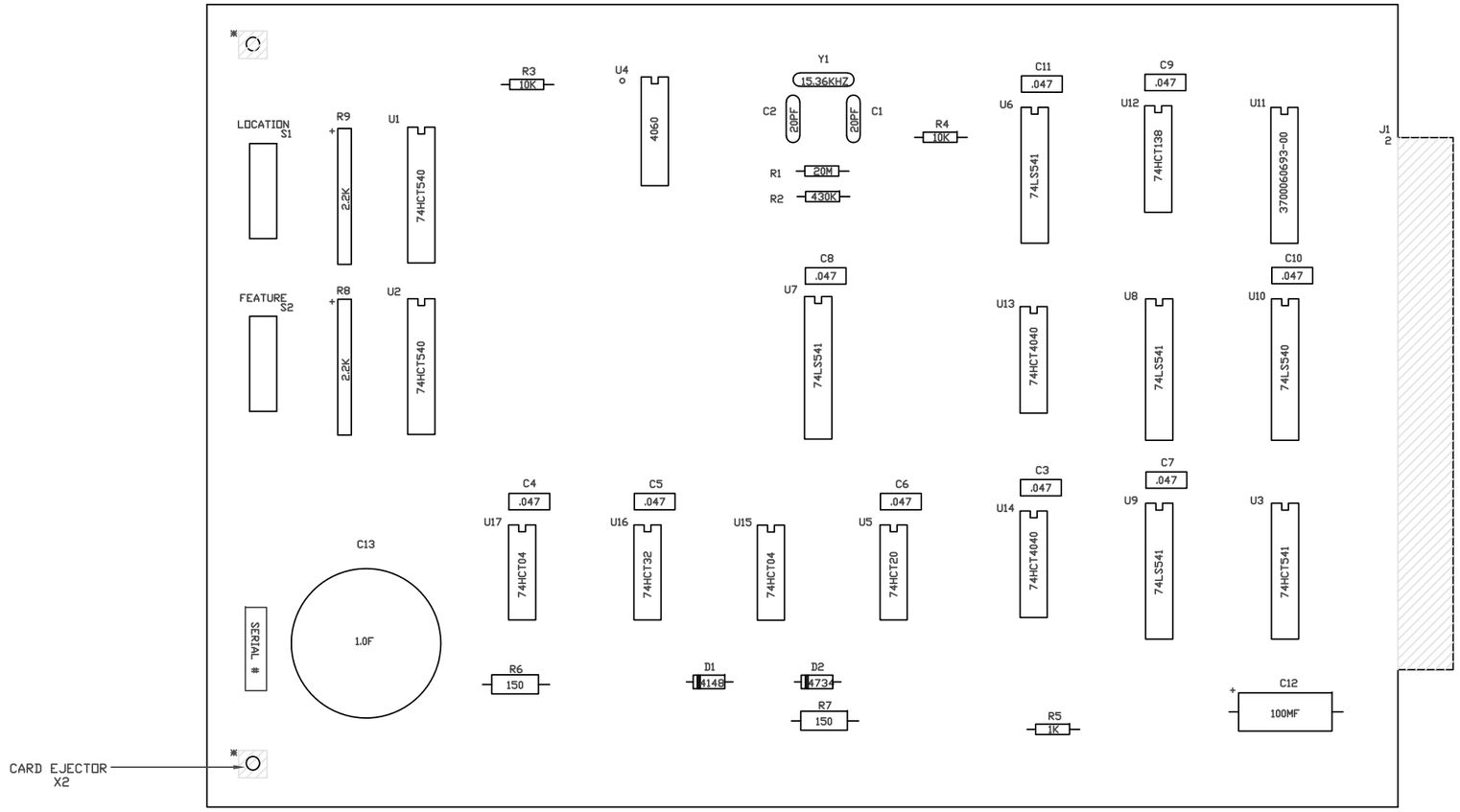

*TAPE ONLY IF HOLES ARE PLATED.

REV.-D REVISED PER ECR 9668 2/13/97
REV.-C REVISED PER ECR 9198 11/13/95
REV.-B REVISED PER ECR 9145 9/21/95
REV.-A PRE-PRODUCTION CHANGES 11/9/94

UNLESS OTHERWISE SPECIFIED DIMENSIONS ARE IN INCHES
TOLERANCES
X.XX +/- 0.02
X.XXX +/- 0.010
HOLES + 0.005 - 0.002
ANGLES +/- 1 DEGREE
SURFACES OF PART SHALL BE FREE OF NICKS, DENTS, SCRATCHES, BURRS, ECT.
THIS DWG APPLIES TO PC. BD. REV.

DRAWN
CHECKED
APPROVED
MATERIAL
FINISH
NEXT ASSEMBLY

Safetran Traffic Systems, Inc.
1485 Garden of the Gods Rd. Colorado Springs, Co. 80907

TITLE:
M170E MOD PCBA

SIZE D | DRAWING NO. 085465D170-00 | REV D
SCALE | SHT 1 OF 1

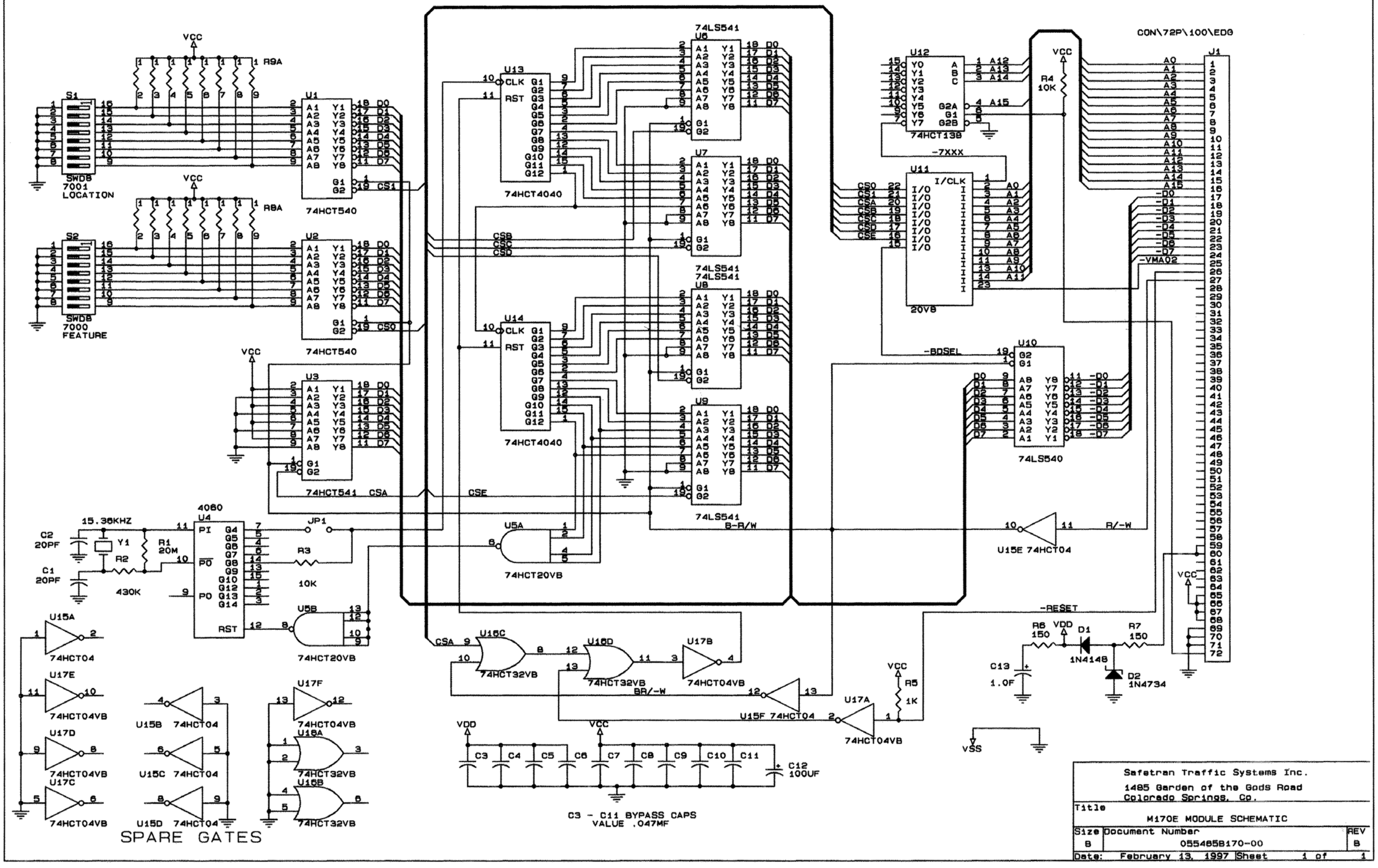

CON\72P\100\EDG
J1
S1
SWDB
7001
LOCATION
S2
SWDB
7000
FEATURE
R9A
R8A
U1
U2
U3
74HCT540
74HCT541
U13
U14
74HCT4040
U6
U7
U8
U9
74LS541
U12
74HCT138
U11
20V8
U10
74LS540
R4
10K
-7XXX
-BDSEL
-VMA02
-RESET
R/-W
B-R/W
BR/-W
U15E 74HCT04
U5A
74HCT20VB
U5B
74HCT20VB
U4
4060
15.36KHZ
Y1
R1
20M
R2
430K
C2
20PF
C1
20PF
JP1
R3
10K
U15A
74HCT04
U17E
74HCT04VB
U17D
74HCT04VB
U17C
74HCT04VB
U15B 74HCT04
U15C 74HCT04
U15D 74HCT04
U17F
74HCT04VB
U16A
74HCT32VB
U16B
74HCT32VB
U16C
74HCT32VB
U16D
74HCT32VB
U17B
74HCT04VB
U15F 74HCT04
U17A
74HCT04VB
R5
1K
R6
150
R7
150
D1
1N4148
D2
1N4734
C13
1.0F
VDD
VCC
VSS
C3 - C11 BYPASS CAPS
VALUE .047MF
C12
100UF
SPARE GATES
Safetran Traffic Systems Inc.
1485 Garden of the Gods Road
Colorado Springs, Co.
Title
M170E MODULE SCHEMATIC
Size
B
Document Number
055465B170-00
REV
B
Date: February 13, 1997
Sheet 1 of 1

AFTER ASSEMBLY AND SOLDERING OF COMPONENTS, MOISTURE AND FUNGUS PROOF BOTH SIDES OF P.C. BOARD WITH HUMISEAL 1B73 OR EQUIVALENT TO MIN. THICKNESS OF .002

AREAS TO BE FREE OF ALL CONFORMAL COATING, SHALL BE INSPECTED USING A BLACK LIGHT INSPECTION STATION OR EQUIVALENT TO. THE AREAS ARE AS FOLLOWS: ALL TEST POINTS, ALL CONNECTORS, ALL SOCKETS, ALL MOUNTING PADS AND LEDS.

INDICATES TAPE ON CIRCUIT SIDE BEFORE INSTALLING COMPONENTS. AFTER WAVE ADD COMPONENTS TO TAPED OFF AREAS.

BROKEN LINES INDICATES TO PLACE ON CIRCUIT SIDE.

* TAPE ONLY IF HOLE ARE PLATED.

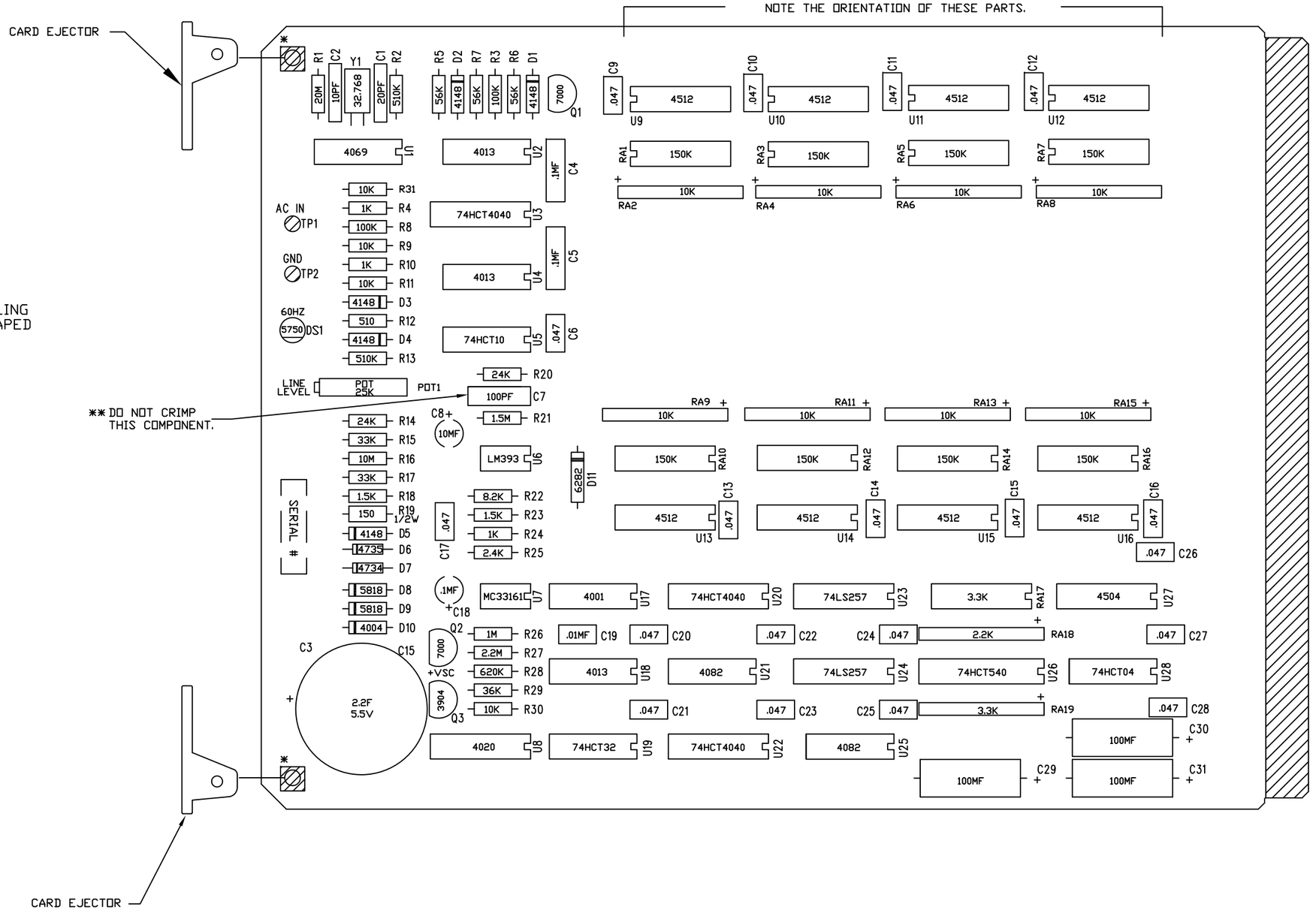

REV	ECR	DESCRIPTION	DATE	NAME	APPD.
R	2750S	FOR TECATE PRODUCTION	6/13/07	RI	LS
P	2122	CHANGED VALUE OF R23 FROM 1K TO 1.5K	7/6/05	RI	
N	1962	CHANGED U1 TO 4069	5/25/05	RI	
M	1807	CHANGED PER ARTWORK REV. -E	12/14/04	RI	
K	1597	CHANGED R2 TO 510K RESISTOR	4/2/04	RI	
J	1334	REVISED PER ARTWORK REV.-C	6/3/03	RI	
H	108	REMOVED 2N7000 FROM DRAWING	2/22/00	RI	
G	10199	PRODUCTION CHANGES	5/4/99	RI	
F	9666	PRODUCTION CHANGES	2/10/97	RI	
E	9582	PRODUCTION CHANGES	10/7/96	RI	
D	9498	PRODUCTION CHANGES	6/24/96	RI	
C	NUMBER	PRE PRODUCTION CHANGES	11/8/94	PN	
B	NUMBER	PROTO	9/21/94	PN	
A	NUMBER	REV.-A ARTWORK	8/4/94	PN	

DRAWN P. IGNEY 3/25/03
CHECKED
APPROVED L. Snow 6/18/07
MATERIAL SEE BOM
FINISH

Safetran Traffic Systems, Inc.
1485 Garden of the Gods Rd. Colorado Springs, Co. 80907

TITLE: 170E INPUT MODULE

SIZE D | DRAWING NO. 085477D170-00 | REV R
SCALE NONE | SHT 1 OF 1
NEXT ASSEMBLY

SHT 1 & 2 RESET RESET

SHT 2 X1 X1

AC IN TP1

GND TP2

R6 56K

C4 .1UF

C5 .1UF

D2 1N4148

R7 56K

R8 100K

D1 1N4148

R5 56K

R13 510K

R21 1.5M

C7 100PF

R20 24K

POT1 25K

R14 24K

+5V

R10 1K

+12V

U6A LM393

7.1V REF.

R18 1.5K

D5 1N4148

D6 1N4735

C8 10UF

R9 10K

U6B LM393

R17 33K

R16 10M

R15 33K

R3 100K

U5B 74HCT10 IRQ IRQ SHT 2

U5A 74HCT10

C6 .047uf

U5C 74HCT10

D4 1N4148

D3 1N4148

60HZ 60HZ SHT 2

R12 510Ω

DS1

U2A U2B 4013

U3 74HCT4040 .25MS 2MS 4MS 16MS

U4A U4B 4013

R4 1K

Q1 2N7000

U1A U1B U1C 74HC04

+VB

R31 10K

SHT 1 & 2 32KHZ 32KHZ

R1 20M

R2 510K

Y1 32.768KHZ

C1 20PF

C2 10PF

C18 .1UF

U7 MC33161 2.54V Reference Mode Select Input 1 Input 2 Output 1 Output 2 GND

R22 8.2K

R23 1.5K

R25 2.4K

R24 1K

R11 10K

Title	SCHEMATIC, 170E INPUT MODULE	
Size	Document Number 055477D170-00	Rev F
Date: Thursday, July 07, 2005	Sheet 3 of 3	

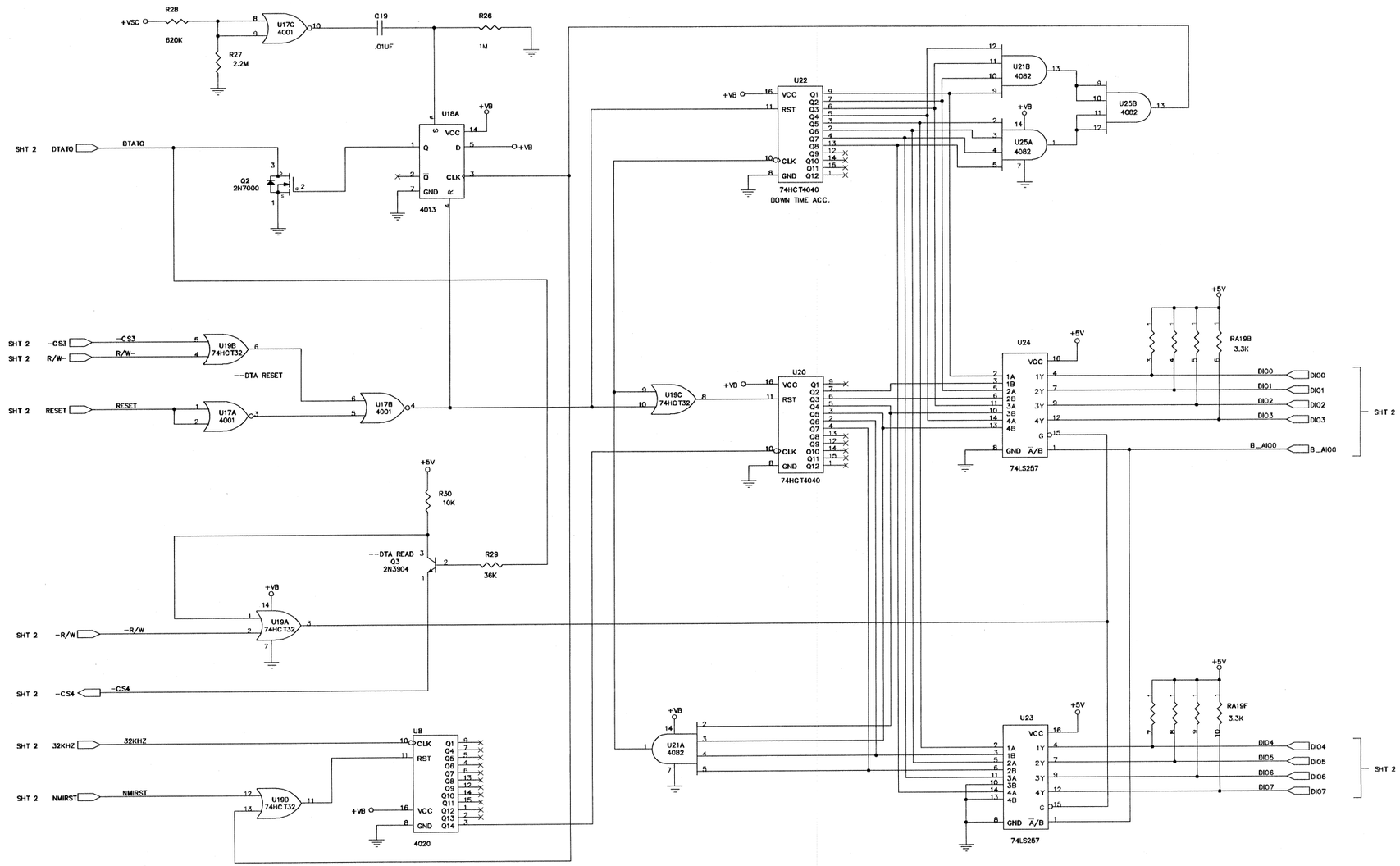
R28
620K
U17C
4001
C19
.01UF
R26
1M
R27
2.2M
U18A
Q2
2N7000
SHT 2 DTATO
DTATO
4013
+VB
+VSC
U22
74HCT4040
DOWN TIME ACC.
U21B
4082
U25B
4082
U25A
4082
U20
74HCT4040
U19B
74HCT32
SHT 2 -CS3
SHT 2 R/W-
--DTA RESET
U17A
4001
U17B
4001
SHT 2 RESET
U19C
74HCT32
U24
74LS257
RA19B
3.3K
DIO0
DIO1
DIO2
DIO3
B_AIO0
SHT 2
R30
10K
--DTA READ
Q3
2N3904
R29
36K
U19A
74HCT32
SHT 2 -R/W
SHT 2 -CS4
U21A
4082
U23
74LS257
RA19F
3.3K
DIO4
DIO5
DIO6
DIO7
U8
4020
SHT 2 32KHZ
SHT 2 NMIRST
U19D
74HCT32
+12V
R19
150Ω
1/2W
D10
1N4004
D7
1N4734
C3
2.2F
SUPER CAP
D8
1N5818
D9
1N5818
+5V
+VB
+VSC
SPARE GATES
U28C
74HCT04
U28F
74HCT04
U1D
74HC04
U1E
74HC04
U1F
74HC04
U18B
4013
DECOUPLER CAPACITORS
TYPICAL : .047UF 100VDC
C24 .047uf
C25 .047uf
C26 .047uf
C27 .047uf
C28 .047uf
C20 .047uf
C21 .047uf
C22 .047uf
C23 .047uf
C9 .047uf
C10 .047uf
C11 .047uf
C12 .047uf
C13 .047uf
C14 .047uf
C15 .047uf
C16 .047uf
C17 .047uf
SPARE RESISTORS ELEMENTS
RA2I 10K
RA4I 10K
RA6I 10K
RA8I 10K
RA9I 10K
RA11I 10K
RA13I 10K
RA15I 10K
RA19A 3.3K
RA18I 2.2K
NOTES: Unless otherwise specified;
1. All resistors are 1/4W, 5% CF.
2. All .047uf Capacitors are 100V.
3. All .01uf Capacitors are 100V.
Title
SCHEMATIC, 170E INPUT MODULE
Size
Document Number
055477D170-00
Rev
F
Date: Tuesday, July 12, 2005
Sheet 1 of 3

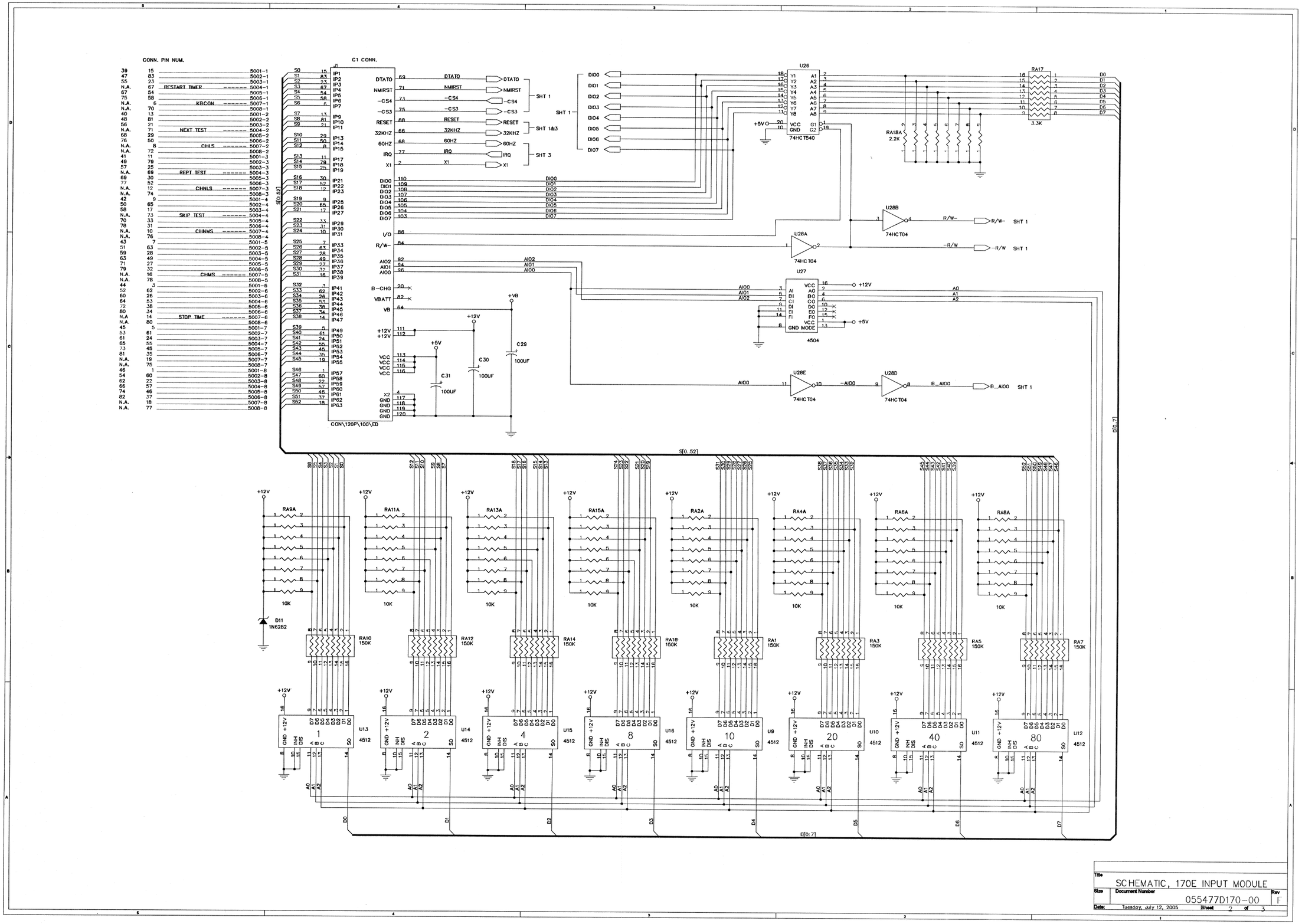
CONN. PIN NUM.
C1 CONN.
RESTART TIMER
KBCON
NEXT TEST
CHLS
REPT TEST
CHNLS
SKIP TEST
CHNMS
CHMS
STOP TIME
CON\120P\100\ED
U26
74HCT540
U27
4504
U28A
U28B
U28D
U28E
74HCT04
RA17
3.3K
RA18A
2.2K
RA9A
RA11A
RA13A
RA15A
RA2A
RA4A
RA6A
RA8A
RA10
RA12
RA14
RA16
RA1
RA3
RA5
RA7
150K
10K
D11
1N6282
U13
U14
U15
U16
U9
U10
U11
U12
4512
S[0..52]
D[0..7]
Title
SCHEMATIC, 170E INPUT MODULE
Size
Document Number
055477D170-00
Rev
F
Date:
Tuesday, July 12, 2005
Sheet 2 of 3

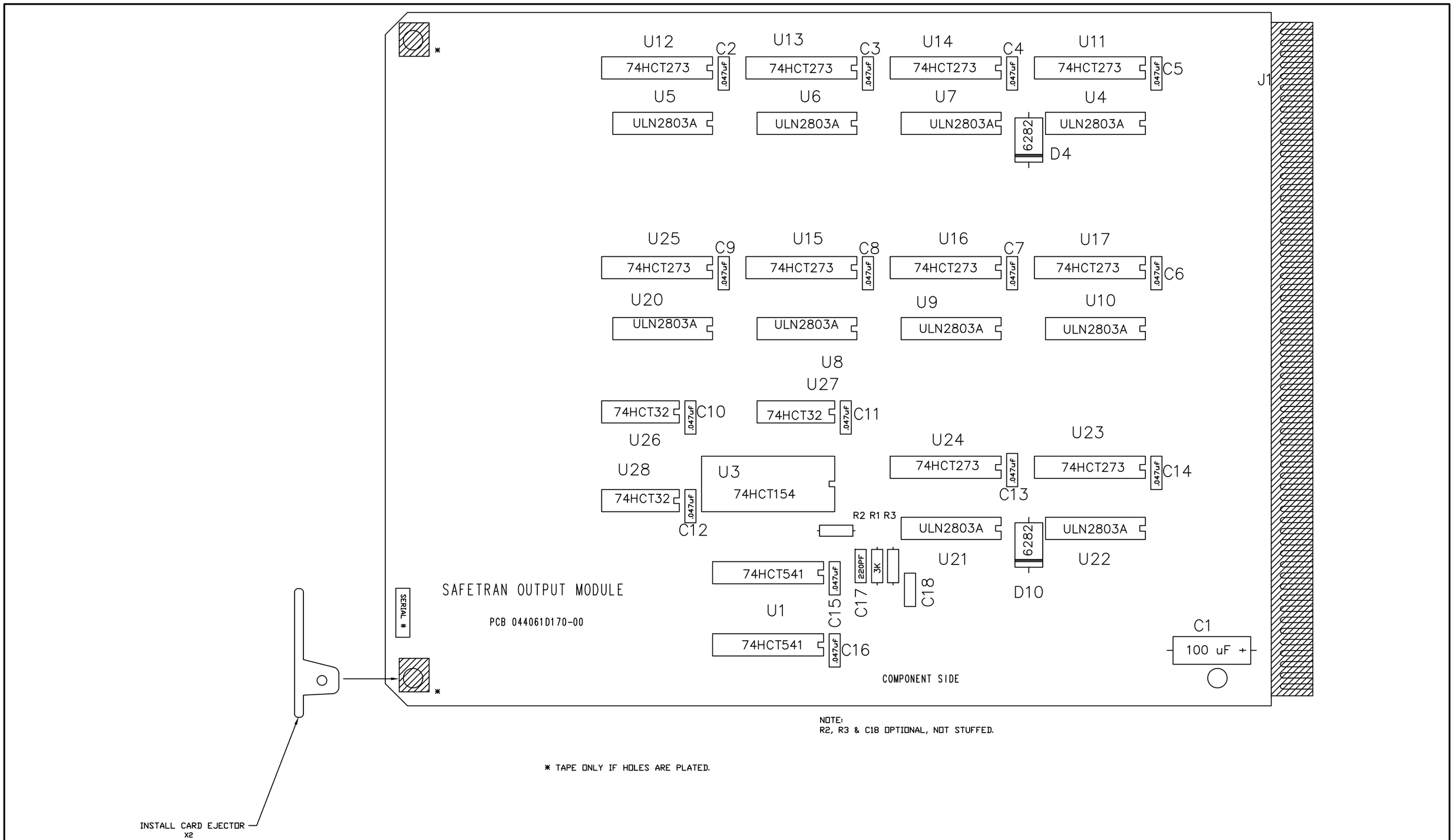

NOTE:
R2, R3 & C18 OPTIONAL, NOT STUFFED.

* TAPE ONLY IF HOLES ARE PLATED.

REV	ECR	DESCRIPTION	DATE	NAME	APPD.
D	2058	ADDED R1, R2, R3 & C18	5/9/05	RI	
C	9638	PRODUCTION CHANGE	10/20/94	RI	
B	8613	PRE-PRODUCTION CHANGE	11/9/94	RI	
A	8613	PRODUCTION CHANGE	10/20/94	RI	

DRAWN R. IGNEY 5/9/05
CHECKED
APPROVED
MATERIAL SEE BOM
FINISH
NEXT ASSEMBLY

Safetran Traffic Systems, Inc.
1485 Garden of the Gods Rd. Colorado Springs, Co. 80907

TITLE:
170E OUTPUT MOD

SIZE D | DRAWING NO. 085581D170-00 | REV D
SCALE NONE | SHT 1 OF 1

D4
1N6282

D10
1N6282

U4 ULN2803A (5001) — OP0–OP7 — T — 10 — A
U5 ULN2803A (5002) — OP8–OP15 — T — 10 — A
U6 ULN2803A (5003) — OP16–OP23 — T — 10 — A
U7 ULN2803A (5004) — OP24–OP31 — T — 10 — A
U8 ULN2803A (5005) — OP32–OP39 — T — 10 — A
U9 ULN2803A (5006) — OP40–OP47 — T — 10 — B
U10 ULN2803A (5007) — OP48–OP55 — T — 10 — B

U11 74HC273 — D1–D8 — CLK — CLR — Q1–Q8
U12 74HC273
U13 74HC273
U14 74HC273
U15 74HC273
U16 74HC273
U17 74HC273

U1 74HC541
DIO/0
DIO/1
DIO/2
DIO/3
DIO/4
DIO/5
DIO/6
DIO/7
G1
G2

U26A 74HCT32
U26B 74HCT32
U26C 74HCT32
U26D 74HCT32
U27A 74HCT32
U27B 74HCT32
U26C 74HCT32

CS1
CS2
CS3
CS4
CS5
CS6
CS7

VCC
R2
Optional Not Stuffed

U2 74HC541
I/O 1-A
R/W-
RESET-
A0
A1
A2
A3

U3 74HC154
CS1
CS2
CS3
CS4
CS5
CS6
CS7
CS8
CS9
CSA

R1
3K
R/W-
C17
220pf
R3
Optional Not Stuffed
RESET-
C18
Optional Not Stuffed

U22 — DS0–DS7 — 5008 — T — 10 — B
U21 — DS8–DS15 — 5009 — T — 10 — B
U20 — DS16–DS23 — 500A — T — 10 — B
ULN2803A

U23 74HC273
U24 74HC273
U25 74HC273

U27D 74HCT32
U28A 74HCT32
U28B 74HCT32

CS8
CS9
CSA

DS[0..23]

CONN. PIN NUM.

OP0	15	5001-1	DS0	78	8-1
OP1	13	5001-2	DS1	79	8-2
OP2	11	5001-3	DS2	80	8-3
OP3	9	5001-4	DS3	81	8-4
OP4	7	5001-5	DS4	82	8-5
OP5	5	5001-6	DS5	83	8-6
OP6	3	5001-7	DS6	84	8-7
OP7	1	5001-8	DS7	85	8-8
OP8	28	5002-1	DS8	86	9-1
OP9	26	5002-2	DS9	87	9-2
OP10	24	5002-3	DS10	88	9-3
OP11	22	5002-4	DS11	89	9-4
OP12	36	5002-5	DS12	90	9-5
OP13	35	5002-6	DS13	91	9-6
OP14	38	5002-7	DS14	92	9-7
OP15	33	5002-8	DS15	94	9-8
OP16	34	5003-1	DS16	71	A-1
OP17	37	5003-2	DS17	66	A-2
OP18	41	5003-3	DS18	70	A-3
OP19	29	5003-4	DS19	68	A-4
OP20	30	5003-5	DS20	72	A-5
OP21	27	5003-6	DS21	75	A-6
OP22	25	5003-7	DS22	76	A-7
OP23	23	5003-8	DS23	77	A-8
OP24	21	5004-1	A3	100	IOA3
OP25	20	5004-2	A2	99	IOA2
OP26	17	5004-3	A1	102	IOA1
OP27	18	5004-4	A0	101	IOA0
OP28	16	5004-5	I/O 1-A	98	I/O
OP29	14	5004-6	R/W-	96	R/W
OP30	12	5004-7	RESET-	97	RST
OP31	19	5004-8	DIO/7	104	IOD7
OP32	63	5005-1	DIO/6	103	IOD6
OP33	65	5005-2	DIO/5	106	IOD5
OP34	67	5005-3	DIO/4	105	IOD4
OP35	69	5005-4	DIO/3	108	IOD3
OP36	55	5005-5	DIO/2	107	IOD2
OP37	57	5005-6	DIO/1	110	IOD1
OP38	59	5005-7	DIO/0	109	IOD0
OP39	61	5005-8			
OP40	50	5006-1			
OP41	52	5006-2			
OP42	54	5006-3			
OP43	56	5006-4			
OP44	58	5006-5			
OP45	60	5006-6			
OP46	62	5006-7			
OP47	64	5006-8			
OP48	48	5007-1			
OP49	43	5007-2			
OP50	46	5007-3			
OP51	45	5007-4			
OP52	47	5007-5			
OP53	49	5007-6			
OP54	51	5007-7			
OP55	53	5007-8			
		5008-1			
		5008-2			
		5008-3			
		5008-4			
		5008-5			
		5008-6			
		5008-7			
		5008-8			
		5009-1			
		5009-2			
		5009-3			
		5009-4			
		5009-5			
		5009-6			
		5009-7			
		5009-8			
		500A-1			
		500A-2			
		500A-3			
		500A-4			
		500A-5			
		500A-6			
		500A-7			
		500A-8			

J1

+12V
+12V
VCC
+5V
+5V
+5V
+5V
GND
GND
GND
GND

VCC
C1 100UF
C2 C3 C4 C5 C6 C7 C8 C9 C10 C11 C12 C13 C14 C15 C16
C2-16 - .047UF 50VDC

SAFETRAN TRAFFIC SYSTEM, INC.

Title: 170E OUTPUT BOARD SCHEMATIC

Size: B | Document Number: 055581D170-00 | Rev: B

Date: Tuesday, July 26, 2005 | Sheet 1 of 1

AFTER ASSEMBLY AND SOLDERING OF COMPONENTS, MOISTURE AND FUNGUS PROOF BOTH SIDES OF P.C. BOARD WITH HUMISEAL 1B73 OR EQUIVALENT TO MIN. THICKNESS OF .002

AREAS TO BE FREE OF ALL CONFORMAL COATING, SHALL BE INSPECTED USING A BLACK LIGHT INSPECTION STATION OR EQUIVALENT TO. THE AREAS ARE AS FOLLOWS: ALL TEST POINTS, ALL CONNECTORS, ALL SOCKETS, ALL MOUNTING PADS AND LEDS.

INDICATES TAPE ON CIRCUIT SIDE BEFORE INSTALLING COMPONENTS. AFTER WAVE ADD COMPONENTS TO TAPED OFF AREAS.

BROKEN LINES INDICATES TO INSTALL ON CIRCUIT SIDE AFTER WAVE..

* TAPE ONLY IF HOLE ARE PLATED.

DO NOT INSTALL - D2, R19, C12, C13, C14 & C15.

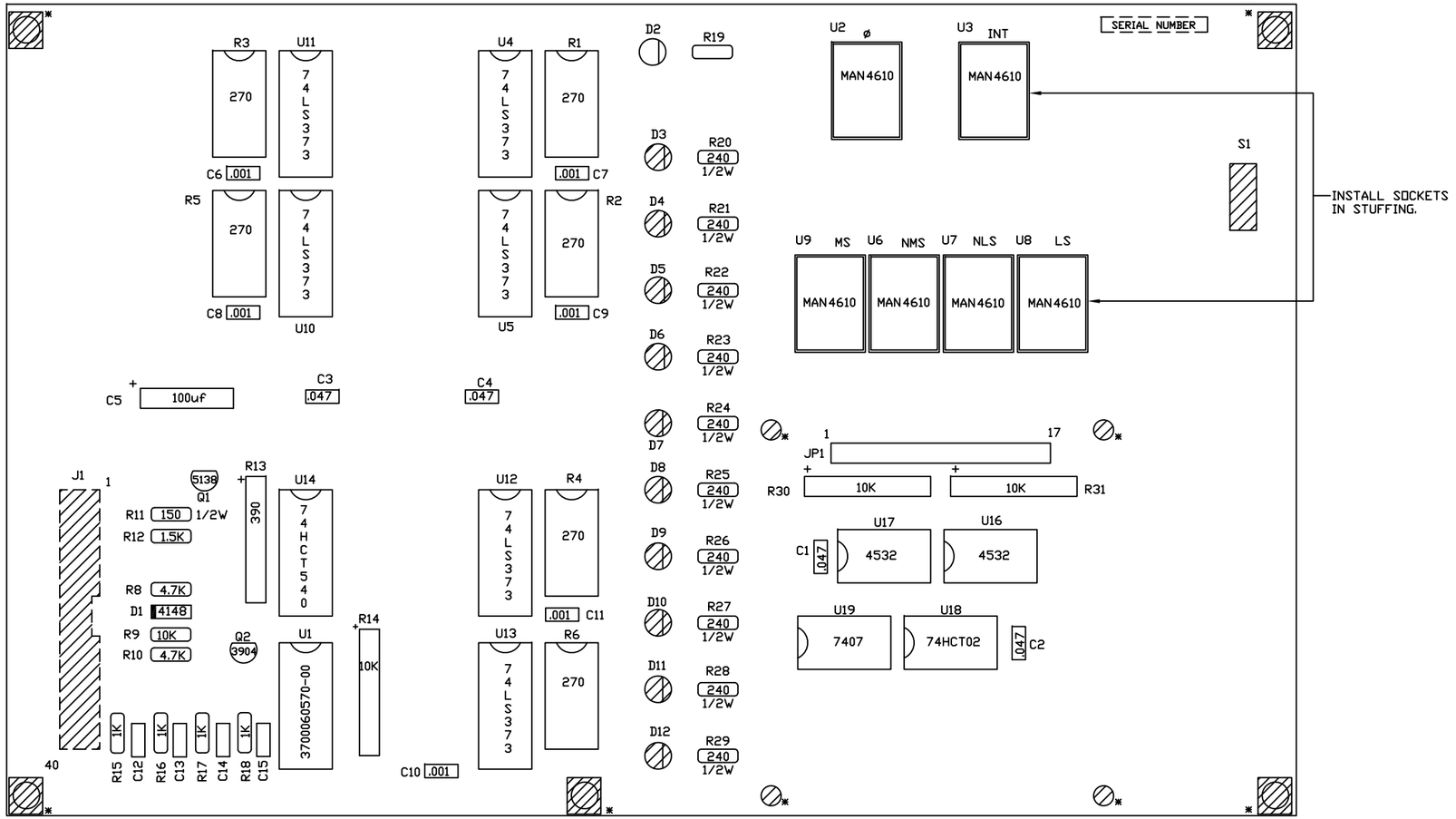

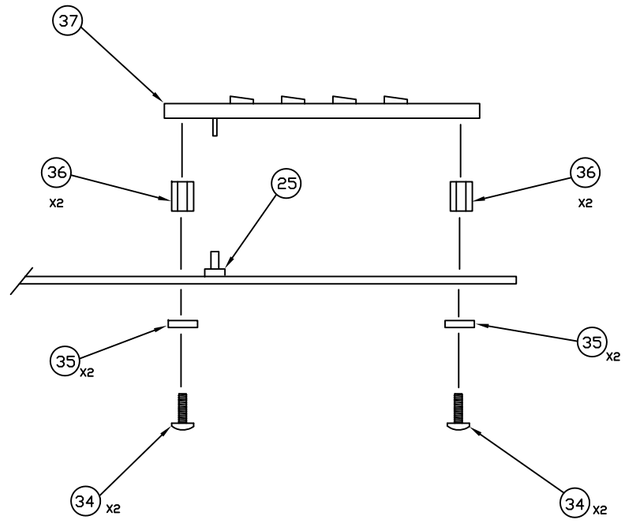

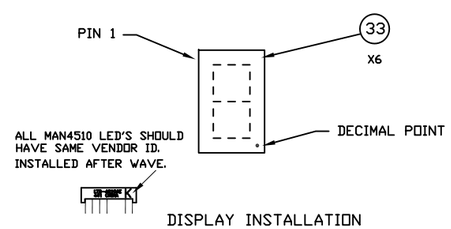

DISPLAY INSTALLATION DETAIL

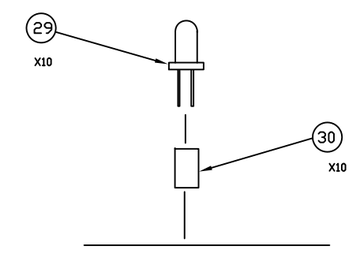

REV	ECR	DESCRIPTION	DATE	NAME	APPD.
F	2761S	FOR TECATE PTODUCTION	6/14/07	RI	LS
-	8950	PRODUCTION RELEASE	5/11/95	RI	
A	9052	PRODUCTION CHANGE	8/8/95	RI	
B	9412	CHANGE	5/24/96	RI	
C	420	REVISED PER REV.-F ARTWORK	1/24/02	RI	
D	1006	CHANGED POLARITY ON R31	4/9/02	RI	
E	1893	CHANGED R13 TO 390 ohm/R12 TO 1.5K	3/3/05	RI	

DRAWN R. IGNEY 5/11/95
CHECKED
APPROVED L. Snow 6/18/07
MATERIAL SEE BOM
FINISH
NEXT ASSEMBLY

Safetran Traffic Systems, Inc.
1485 Garden of the Gods Rd. Colorado Springs, Co. 80907

TITLE: 170E PCBA FT PNL SD

SIZE D | DRAWING NO. 085801D170-00 | REV F
SCALE NONE | SHT 1 OF 1

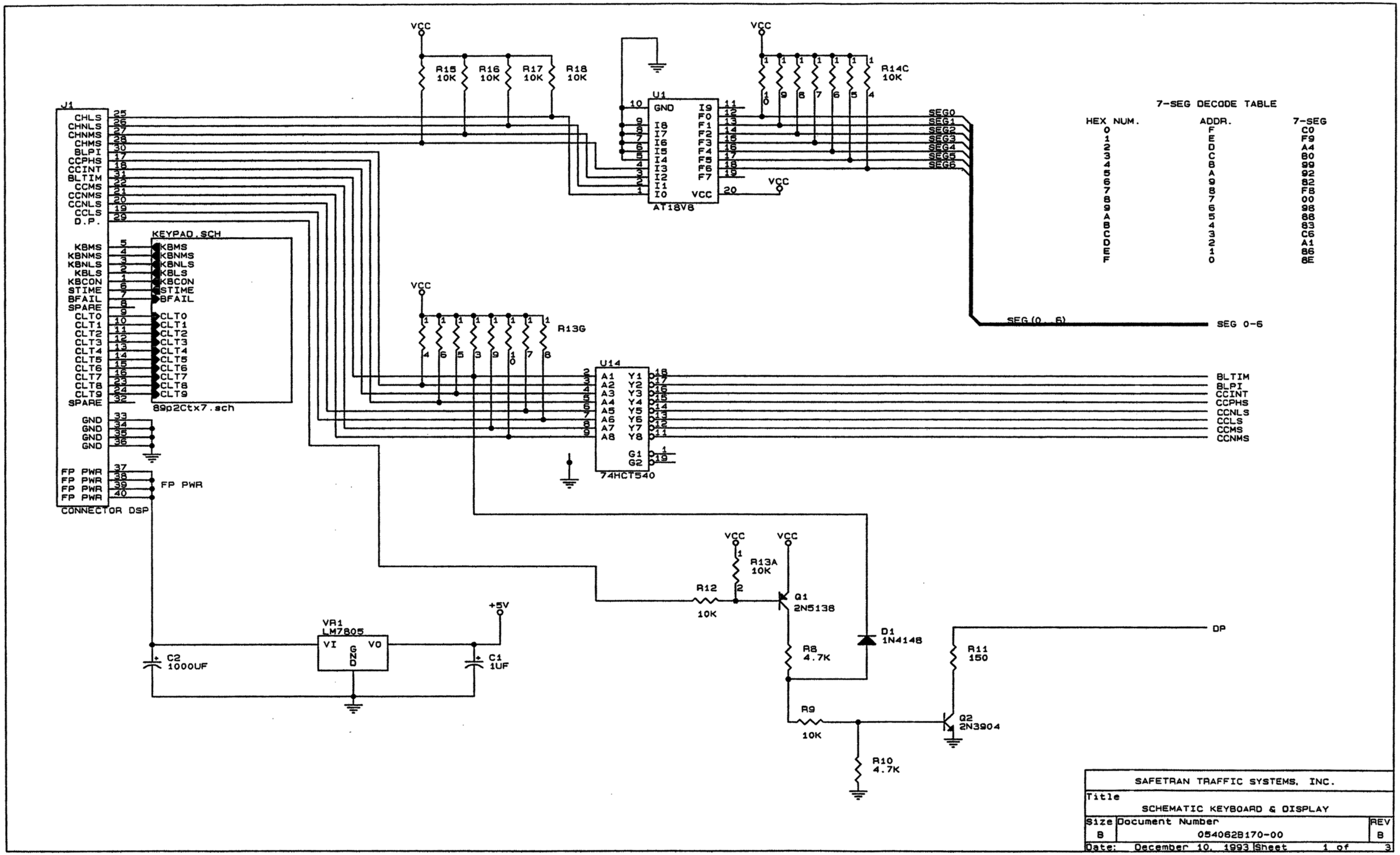
J1
CHLS 25
CHNLS 26
CHNMS 27
CHMS 28
BLPI 30
CCPHS 17
CCINT 18
BLTIM 31
CCMS 22
CCNMS 21
CCNLS 20
CCLS 19
D.P. 29
KEYPAD.SCH
KBMS 5
KBNMS 4
KBNLS 3
KBLS 2
KBCON 1
STIME 6
BFAIL 7
SPARE 8
CLT0 9
CLT1 10
CLT2 11
CLT3 12
CLT4 13
CLT5 14
CLT6 15
CLT7 16
CLT8 24
CLT9 32
SPARE 33
89p2Ctx7.sch
GND 33
GND 34
GND 35
GND 36
FP PWR 37
FP PWR 38
FP PWR 39
FP PWR 40
FP PWR
CONNECTOR DSP
VCC
R15 10K
R16 10K
R17 10K
R18 10K
U1
GND
I8
I7
I6
I5
I4
I3
I2
I1
I0
I9
F0
F1
F2
F3
F4
F5
F6
F7
VCC
AT18V8
R14C 10K
SEG0
SEG1
SEG2
SEG3
SEG4
SEG5
SEG6
SEG(0..6)
SEG 0-6
7-SEG DECODE TABLE
HEX NUM. ADDR. 7-SEG
0 F C0
1 E F9
2 D A4
3 C B0
4 B 99
5 A 92
6 9 82
7 8 F8
8 7 00
9 6 98
A 5 88
B 4 83
C 3 C6
D 2 A1
E 1 86
F 0 8E
R13G
U14
A1 A2 A3 A4 A5 A6 A7 A8
Y1 Y2 Y3 Y4 Y5 Y6 Y7 Y8
G1 G2
74HCT540
BLTIM
BLPI
CCINT
CCPHS
CCNLS
CCLS
CCMS
CCNMS
VR1
LM7805
VI GND VO
+5V
C2 1000UF
C1 1UF
R13A 10K
R12 10K
Q1 2N5138
D1 1N4148
R8 4.7K
R9 10K
R10 4.7K
R11 150
Q2 2N3904
DP
SAFETRAN TRAFFIC SYSTEMS, INC.
Title
SCHEMATIC KEYBOARD & DISPLAY
Size B
Document Number 054062B170-00
REV B
Date: December 10, 1993 Sheet 1 of 3

VCC

U2 7-SEG — PHASE

U3 7-SEG — INTERVAL

U9 7-SEG — TIM-MS

U6 7-SEG — TIM-NMS

U7 7-SEG — TIM-NLS

U8 7-SEG — TIM-LS

R1 150

R2 150

R5 150

R3 150

R4 150

R6 150

U4 74LS373

U5 74LS373

U10 74LS373

U11 74LS373

U12 74LS373

U13 74LS373

SEG 0-6

BLPI

CCHPS

CCMS

CCINT

BLTIM

CCNLS

CCLS

CCNMS

DP

SAFETRAN TRAFFIC SYSTEMS, INC.

Title

SCHEMATIC KEYBOARD & DISPLAY

Size Document Number REV

B 054062B170-00 B

Date: Au ust 20, 1990 Sheet 2 of 3

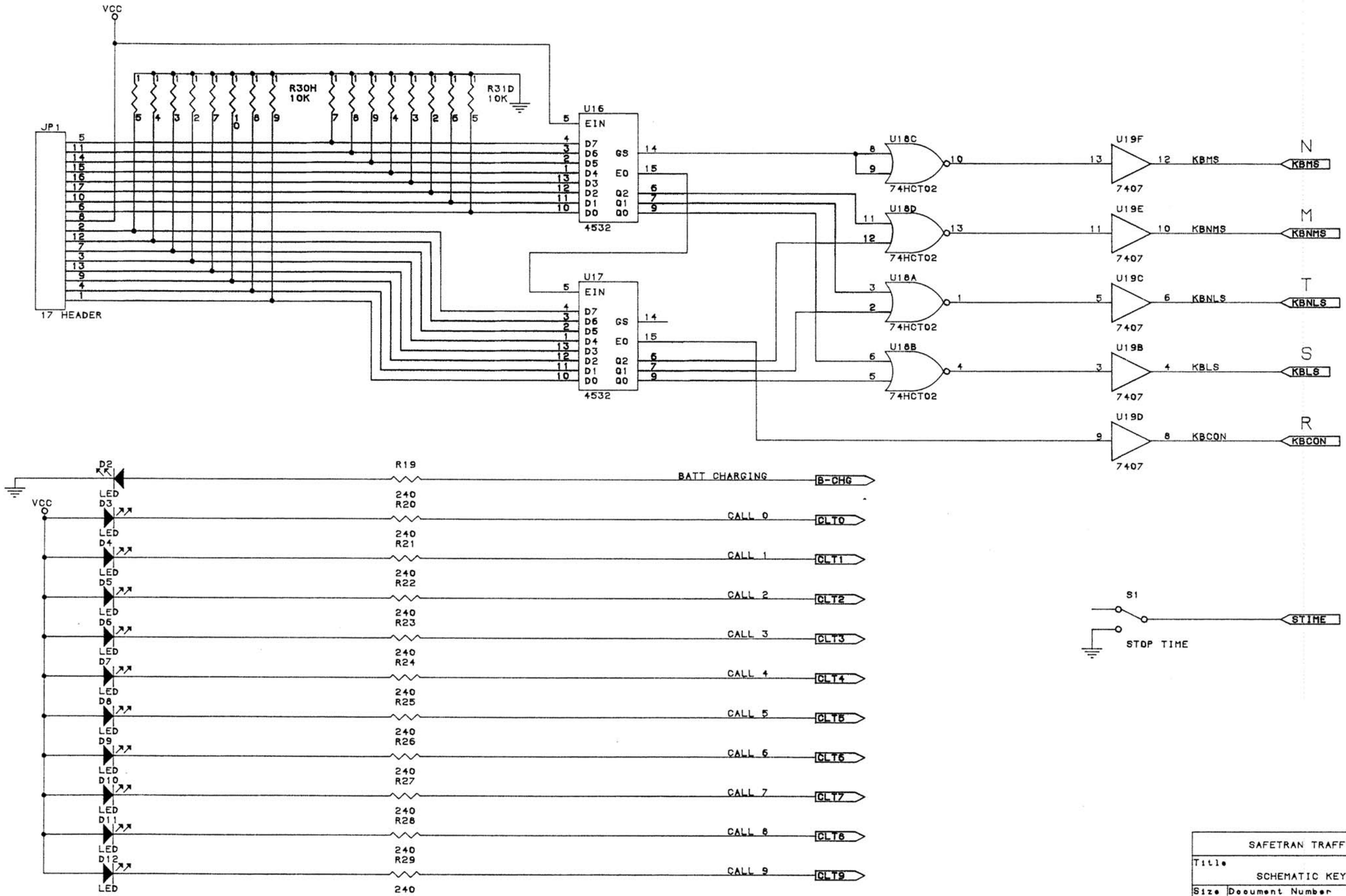

SAFETRAN TRAFFIC SYSTEMS, INC.		
Title: SCHEMATIC KEYBOARD & DISPLAY		
Size: B	Document Number: 054062B170-00	REV: B
Date: August 20, 1990	Sheet 3 of 3	

NOTES:

1. SEE BOM FOR REVISION.
2. RTV C2 AND C11.

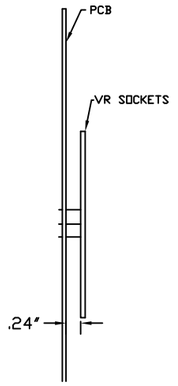

VR SOCKET DETAIL

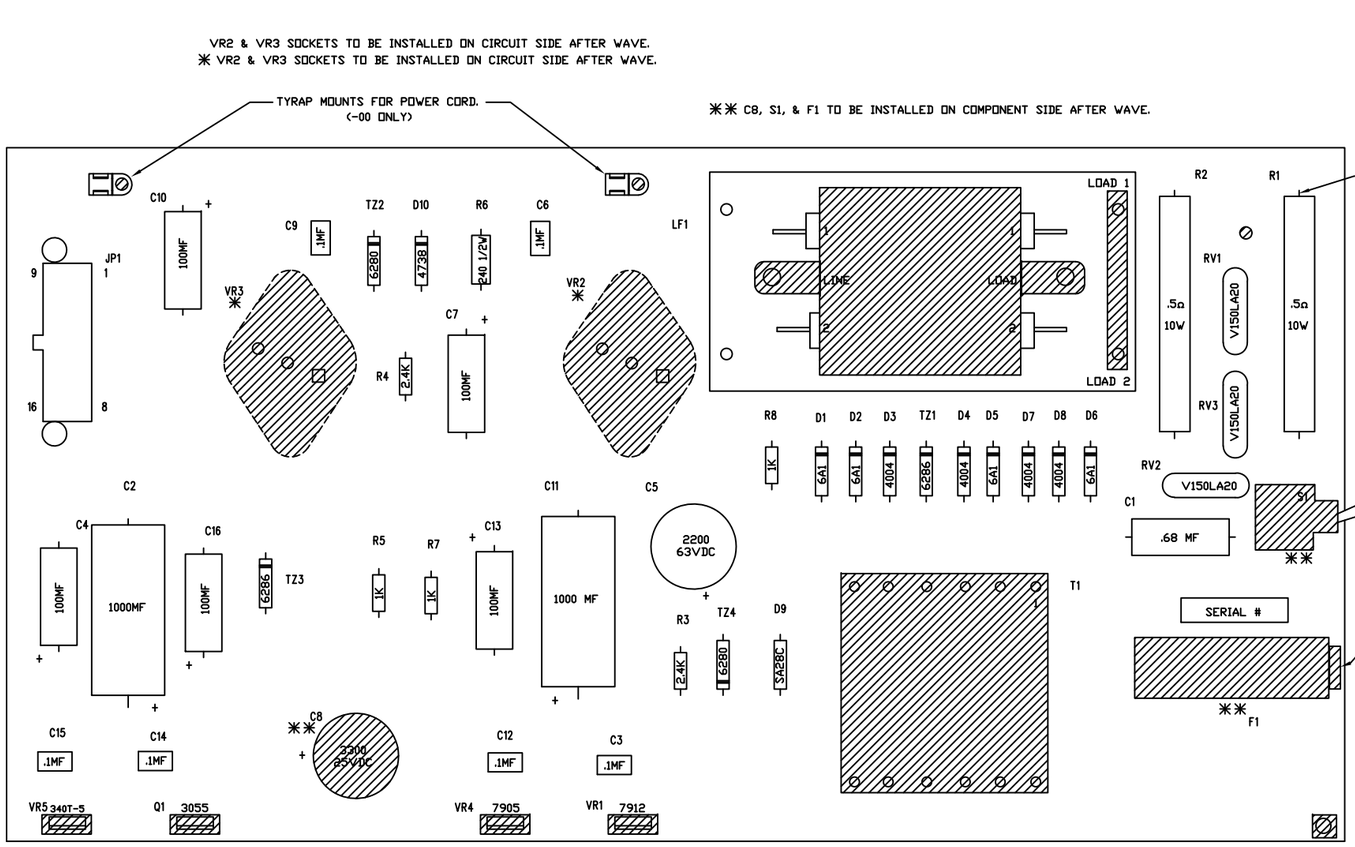

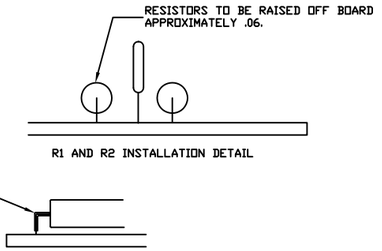

NOTE:
CHECK THAT P/N 20D241K
IS PRINTED ON MOVISTORS.

▨ = TAPE DETAIL ON CIRCUIT SIDE OF PCBA FOR WAVE SOLDER OPERATION.

SPRAY PCB WITH ACRYLIC COATING, LOCTITE 3900, OR EQUIVALENT. REFERENCE DOCUMENT 150353AXXX-00 REB.-B.

INSTALL FUSE IN FUSEHOLDER.

-01

DRAWINGS NEEDED TO COMPLETE THIS ASSEMBLY.
1. 085571A170-00 WP 170E PWR SUPPLY

REV	ECR	DESCRIPTION	DATE	NAME	APPD.
S	2879S	DETAIL NEEDED FOR OUT OUURCE MANUFACTURER	5/22/07	RI	H.J.
R	2768S	FOR TECATE PRODUCTION	2-15-07	R. McL	H.J.
P	2736S	FOR TECATE PRODUCTION	1/18/07	RI	
O	2244	ADD NOTE FOR MOVISTORS	12/1/05	RI	
N	1252	REMOVED WASHERS FROM VR3	12/16/02	RI	
M	1050	CHANGES DWG FOR SOCKET & HARDWARE	6/28/02	RI	
L	9986	PRODUCTION CHANGES	8/27/98	RI	
K	9969	PRODUCTION CHANGES	8/18/98	RI	
J	9465	PRODUCTION CHANGES	6/4/96	RI	
H	9055	PRODUCTION CHANGES	8/8/95	RI	
G	9023	PRODUCTION CHANGES	7/10/95	RI	
F	8827	PRODUCTION CHANGES	2/24/95	RI	
E	8749	PRODUCTION CHANGES	1/11/95	RI	
D	8737	PRODUCTION CHANGES	1/3/95	RI	
C	8603	PRODUCTION CHANGES	12/13/94	RI	
B	NUMBER	PREPRODUCTION CHANGES	11/8/94	RI	
A	NUMBER	REVISED PER PROTO	9/20/94	RI	

DASH	REV	DESCRIPTION
01	1	170E PWR SUPPLY PCB
00	R	170E PWR SUPPLY ASSY

DRAWN R. IGNEY 9/20/94
CHECKED
APPROVED H. JOHNSON 5/30/07
MATERIAL SEE BOM
FINISH
NEXT ASSEMBLY

Safetran Traffic Systems, Inc.
1485 Garden of the Gods Rd. Colorado Springs, Co. 80907

TITLE: 170E PCBA POWER SUPPLY

SIZE D | DRAWING NO. 085513D170-00 | REV T
SCALE NONE | SHT 1 OF 2

PUT GROMMET (32) ON POWER CORD BEFORE ATTACHING TO FILTER.

USE SHRINK TUBING (33) TO COVER LF1 CONNECTIONS.

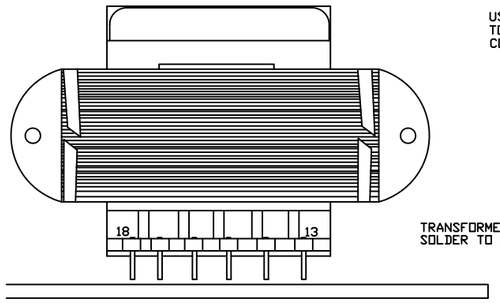

TRANSFORMER INSTALLATION: SOLDER TO PCB

LINE FILTER INSTALLATION DETAIL

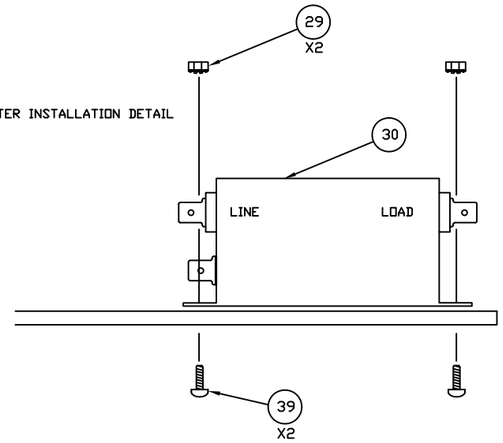

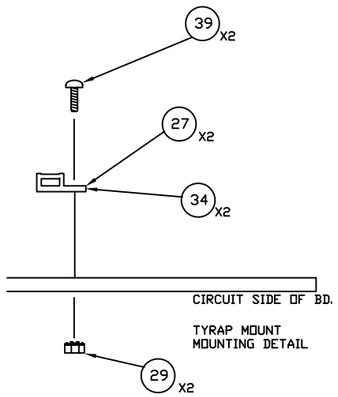

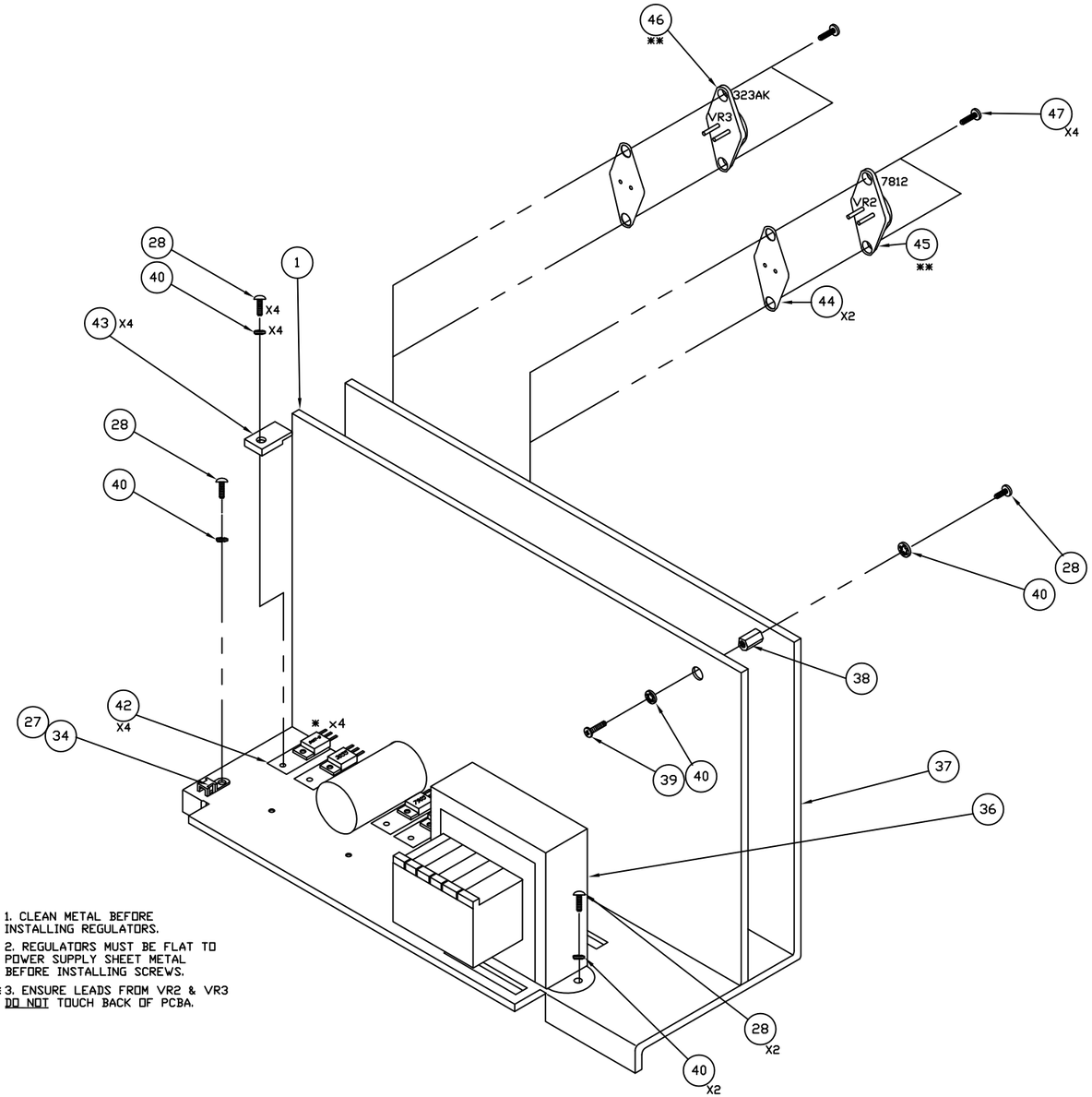

* ×4 1. CLEAN METAL BEFORE INSTALLING REGULATORS.

2. REGULATORS MUST BE FLAT TO POWER SUPPLY SHEET METAL BEFORE INSTALLING SCREWS.

** 3. ENSURE LEADS FROM VR2 & VR3 DO NOT TOUCH BACK OF PCBA.

—00

DRAWN R. IGNEY 9/20/94 CHECKED	Safetran Traffic Systems, Inc. 1485 Garden of the Gods Rd. Colorado Springs, Co. 80907
APPROVED H. JOHNSON 5/30/07 MATERIAL SEE BOM	TITLE: 170E PCBA POWER SUPPLY
FINISH	SIZE D · DRAWING NO. 085513D170-00 · REV T NEXT ASSEMBLY · SCALE NONE · SHT 2 OF 2

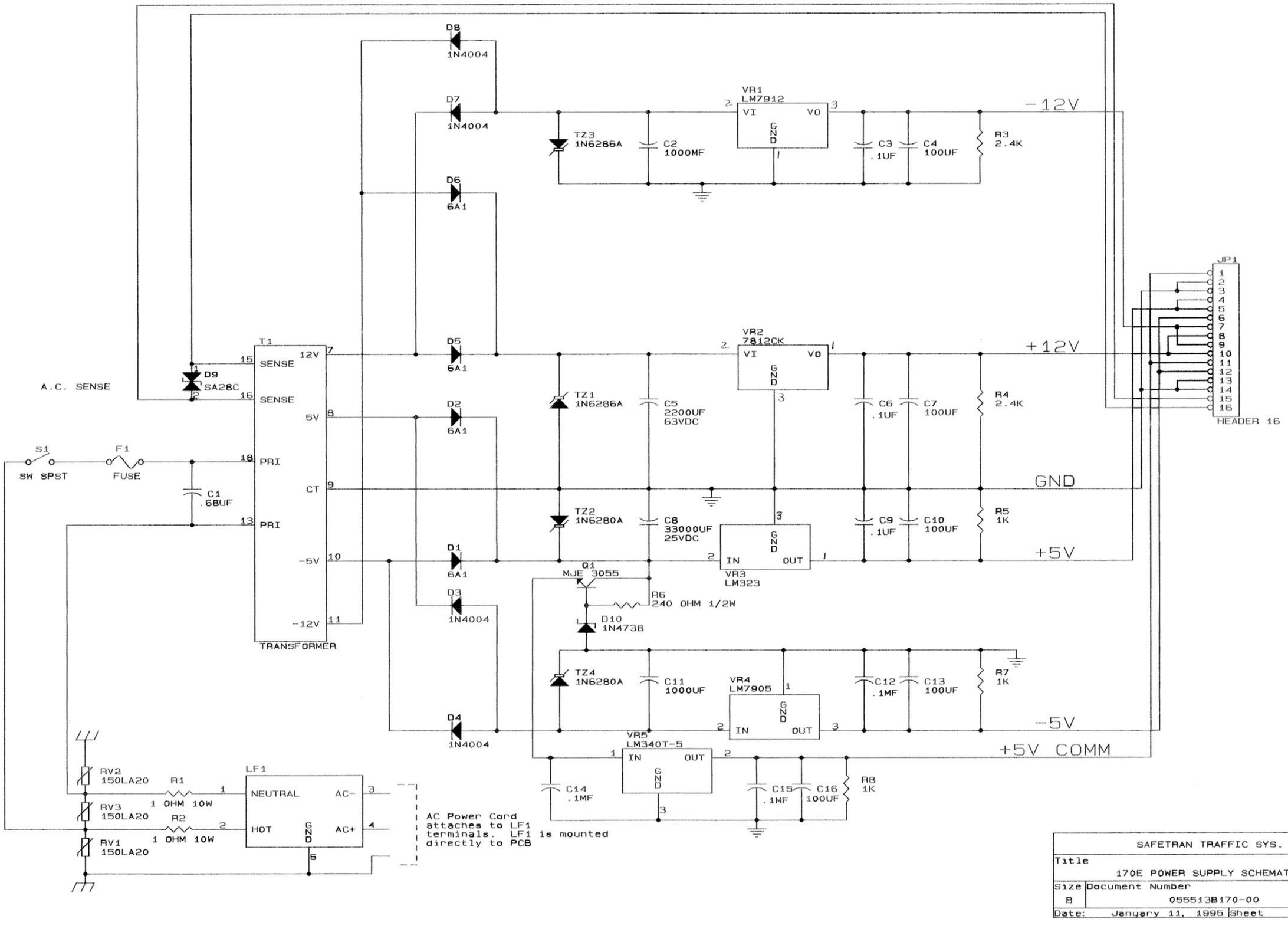

SAFETRAN TRAFFIC SYS.		
Title: 170E POWER SUPPLY SCHEMATIC		
Size: B	Document Number: 055513B170-00	REV: B
Date: January 11, 1995	Sheet 1 of 1	

MODEL HC-11 CPU MODULE



Safetran Traffic Systems Inc
1485 Garden of the Gods Road
Colorado Springs, Co 80907

JANUARY 2008

Part No: 292001430

Model HC-11 Central Processor Unit (CPU)

The Model HC-11 CPU Module is designed to replace the 6800 CPU Module used in current Safetran 170E Controllers. The HC-11 Module easily replaces the 6800 CPU Module by simply removing the 6800 Module and inserting the HC-11 CPU Module into the same slot.

The 68HC11F1 microprocessor is the heart of the HC-11 CPU module. The 68HC11F1 features a 16-bit address bus, and an 8-bit bi-directional data bus, 4-16 bit and 3-8 bit program registers. The 68HC11F1 is essentially a proper extension of the 6800 CPU. It can execute all 6800 instructions. A paged opcode map provides 91 new opcodes. Major functional additions include a second 16-bit index register (Y), two types of 16-by-16 divide instructions, STOP and WAI instructions, and bit manipulation instructions. Existing programs may be easily modified to run on the HC-11 CPU Module.

Additional 68HC11F1 hardware features include an expanded 16-bit timer system with a Four-Stage Programmable Prescaler, and an enhanced Serial Communications Interface (SCI).

The main CPU clock is derived from an 8.000 MHz clock oscillator. A 2.000 MHz internal clock is derived from the 8.000 MHz clock by a divide by 4 circuit that is internal to the 68HC11F1. The 2 MHz bus clock speed is 2.6 times faster than the original 170 clock speed.

The RAM Memory used on theHC-11 CPU module is a 32K x 8-bit nonvolatile SRAM, which does not require battery backup. EPROM memory may be either a 32K X 8-bit device or a 128K X 8-bit device. There is an EPROM memory bank switch feature that allows the use of two 64K banks of EPROM memory.

System Address Map

LOCATION	BLOCK SIZE	FUNCTION	NOTES
0000-5FFF	24K	170 RAM	CPU BOARD RAM
6000-6FFF	4K	INT/EXT RAM	INTERNAL/EXTERNAL (* See Note 1 Below)
7000-73FF	1K	CONFIG REG + RAM	SEE DETAILED BLOCK ALLOCATION BELOW
7400-75FF	512 BYTES	I/O	SEE DETAILED BLOCK ALLOCATION BELOW
7600-7FFF	2K	RAM	CPU BOARD RAM
8000-FFFF	32K	EPROM	CPU BOARD PROM MEMORY
DETAILED BLOCK ALLOCATION			
LOCATION	**BLOCK SIZE**	**FUNCTION**	**NOTES**
700A	1 BYTE	SWITCH	FEATURE SWITCH/HC11 PORT E
7000	1 BYTE	SWITCH	LOCATION SWITCH/HC11 PORT A
7002	1 BYTE	BANK SELECT	PROM BANK SWITCH SELECT PORT G - BIT 1
7002	1 BYTE	STATUS IND.	HC11 PORT G - BIT 3 1=ON
7000-705F	96 BYTES	CONFIG. REG.	68HC11 CONFIG REG (* See Note 2 Below)
7060-73FF	1K (-96)	RAM	68HC11 RAM
7400	1 BYTE	DTA MINUTES	I/O DTA READ MINUTES
740F	1 BYTE	DTA SECONDS	I/O DTA READ SECONDS
7401-740A	10 BYTES	I/O	I/O READ AND WRITE
7410-7417	8 BYTES	ACIA	SERIAL PORTS 1-4
7500-7507	8 BYTES	DPR	DUAL PORT SEMAPHORES
75FF	1 BYTE	IRQ/STAT	60 HZ. RESET AND IRQ STATUS
7600-7FF7	2K	RAM	CPU BOARD RAM
7FF8-7FFF	8 BYTES	RESERVED	RESERVED CLOCK/CALENDAR OPERATION

Note 1 – This 4K-byte block of RAM may be set for external access to allow the use of an external memory module.
Note 2 – The 96-byte 68HC11F1 control block default address is Hex 1000-105F after power up. This block must be re-mapped via software to Hex 7000-705F within the first 64 clock cycles after power-up. See Motorola 68HC11 documentation for further details.

The module provides two 8-bit DIP switches to emulate the Features and Location switches found on a 412C Program Module.

Specific information concerning the 68HC11F1 as well as other basic integrated circuit components may be obtained from the component manufacturer's data sheets or reference manuals.

Communication System

The communications system is made up of four 68B50 Asynchronous Communications Interface Adapters. The baud rate clocks for the four ACIAs are jumper selectable on an individual basis. The baud rate clocks range from 19.2KHz to 307.2Khz in five steps. The actual ACIA baud rate is determined by the clock jumper setting, and the ACIA divide ratio selected by the software.

The ACIA units are capable of receiving and transmitting up to 8 bits of data from the microprocessor for serial data communication. The ACIAs have four registers, which may be addressed by the processor. The processor is capable of reading the Status Register (SR) and Receiver Data Register (RDR), and writing to the Transmit Data Register (TDR) and the Control Register (CR).

Theory of Operation HC-11 CPU Module

68HC11F1 Microprocessor

The 68HC11F1 processor (U5) operates at a frequency of 8.000Mhz, provided by clock oscillator Y1. The input frequency to the processor is divided internally to 2.000Mhz, providing a bus cycle time of 500 nanoseconds.

The 16 address lines are output through pins 43 (A15) to 58 (A0). The bi-directional data bus is located at pins 9 (D0) through 16 (D7). The RESET line is located at pin 17 and is an active low (0 volts) during power down. The E clock output pin 4 is the result of the divided clock input, and has a frequency of 2Mhz. The E clock is buffered to provide active high and low signals for external peripheral bus timing synchronization. The read/write signal is output on pin 5, with read being active high (1) and write being active low (0). The non-maskable interrupt (XIRQ), pin 18, is triggered on a low going transition. It is used for interrupting the processor on a power down sequence. The interrupt request line (IRQ), pin 19, is initiated by an active low level from either the ACIA devices or 60HZ RTC generation. The features and location switches are input to ports E and A respectively. Port G bit 0 is utilized for the prom bank 2 select, and port G bit 2 is utilized for the CPU status LED.

System Addressing

The address lines originate with U5 and are input to U34 and U35. U34 and U35 are 74HCT244 non-inverting buffers that produce address signals to the edge connector for control of the Program Module. These signals are only active when the Internal/External jumper JP21 is set to External, and an address in the Hex 6000-6FFF range is addressed. The address lines are also sent to EPROM Memory (U9) and RAM Memory (U36). Address lines A0 through A3 are sent to the I/O buffer (U41) for operation of the Input and Output Modules. R/W- and E- are also sent through U41 to the I/O system.

All 16 address lines are input to the system address decoder made up of U37 and U38. These devices decode the address lines and generate enables for the memory and I/O devices attached to the data bus.

Data Bus

The bi-directional data from the CPU U5 is buffered by U7, 74HCT640 and applied to the edge connector for use with the Program Module, during specific decode conditions outlined above. Both address and data signals are held in tri-state until the decoder provides the enable signals to insure disconnect of the Program Module interface from the CPU Module until selected.

Further buffering of the data bus for external use includes U39, 74HCT245 where D0-D7 are sent to the I/O system. Gating for this buffer is provided when specific decoding of the I/O system is generated.

SRAM Memory

The DS1230Y U36 is a 32K NOVRAM. The address lines are A0 to A14 occupying pins 1-10, 21 and 23-26. Chip Enable (CE) pin 20 is tied to the address decode and enabled during proper internal RAM addressing. Output Enable (OE) pin 22 is controlled by the system E- clock signal. Write Enable (WE) pin 27 is controlled by the R/-W signal. When power is removed this NOVRAM will automatically go to the low power state and retain RAM memory for a sustained period.

ACIAs 1-4

The four 68B50 units are Asynchronous Communications Interface Adapter devices and are specifically designed for use with the 68XX family of microprocessors. The data lines are located at pins 15 (D7) to 22 (D0), and are accessed through the I/O buffer. The transmit (TXCLK) and receive (RXCLK) clocks are located at pins 4 and 3 respectively. Both clocks run at a preselected rate dependent upon which jumper "shunt" position is used.

TABLE OF ACIA BAUD RATE SELECTIONS

	307.2 KHz DIV 16/64 19200/4800	153.6 KHz DIV 16/64 9600/2400	76.8 KHz DIV 16/64 4800/1200	38.4 KHz DIV 16/64 2400/600	19.2 KHz DIV 16/64 1200/300
ACIA 1	JP1	JP2	JP3	JP4	JP5
ACIA 2	JP6	JP7	JP8	JP9	JP10
ACIA 3	JP12	JP11	JP13	JP14	JP15
ACIA 4	JP16	JP17	JP18	JP19	JP20

ACIA chip selection is made by pins 8 (CS0), 9 (CS2) and 10 (CS1). CS2 must be low, and additionally, CS0 and CS1 must be active high to select the ACIA. CS0 and CS1 are tied active high. The four CS2 input signals for the ACIAs are decoded by U37, a 22V10 decoder. Only one of these decodes will be active, based on the position of JP22, which swaps ACIAs 2 and 3. Address A0 is tied to each ACIA pin 11 (RS) to select the proper register internal to the ACIA. The read/write (R/W) line located at pin 13 is activated via the CPU read/write line, read being an active high, and write being an active low. The CPU via U3 provides the data bus enable line (E) located at pin 14. The interrupt request (IRQ) is generated from ACIA pin 7 when allowed by software through the maskable interrupt at the processor (IRQ).

The selection and active/inactive condition of the four IRQ outputs from ACIAs 1-4 are supplied to a buffer U40 74HC540 and assigned to DIO0 through DIO3 respectively. This buffer is activated by a read to $75FF. DIO4 is assigned to the INT/EXT select jumper JP21 so the software may determine when an external memory module is in use. DIO5 is used to alert the software that bank 2 of the EPROM is selected. DIO6 of this buffer is assigned to record the DTA Timeout condition. When DTA Timeout is active, the input to the buffer is a low state. DIO7 of this buffer is assigned to the RTC interrupt condition register.

The receive data input (RXDATA) pin 2 is transformed from +/-12 VDC logic to 5 VDC logic via U23A for ACIA 1, U23D for ACIA 2, U24C for ACIA 3 and U25B for ACIA 4. U23, U24 and U25 are 1489 devices used for the purpose of translating RS232 signal levels to 5 VDC signal levels for use within the internal system. The CTS clear to send located at pin 24 indicates that the peripheral is ready with an active low. The data carrier detect (DCD) pin 23 signals the presence of carrier from an external device with an active low state. The transmit data (TXDATA) pin 6 is transformed from 5 volt logic to +/-12 VDC RS232 levels through U1A for ACIA1, U1C for ACIA 2, U2A for ACIA 3 and U2C for ACIA 4. U1 and U2 are 1488 devices used for converting 5 VDC levels to RS232 levels. Request To Send (RTS) located at pin 5 is also converted to RS232 levels by U1B, U1D, U2B and U2D. If this pin is low then the ACIA is requesting permission to send.

Since the 170E is equipped with dual Model 400 modem card capability and does have options for use of standard Model 400 modem cards in two slots, some considerations must be given to the assignment of C2, C20, C30 and C40. Standard application assigns ACIA 1 to C2 and ACIA 2 to C20. In order to accommodate the dual modem structure, MC1 is assigned to C2 and C20 while MC2 is assigned to C30 and C40. JP22 provides this condition when placed in the 1-2 position.

However, it may be desirable to operate two single Model 400 modems in the MC1 and MC2 slots. To accommodate this assignment, JP22 should be placed in the 2-3 (SWAP) position.

C20/30 ORIENTATION

ACIA 2-20/3-30 JP22 POSITION 1-2
ACIA 3-20/2-30 JP22 POSITION 2-3

ACIA Clock Generation

The ACIA clock generation logic consists of a 6.144 MHz clock oscillator Y2, and a divide by 2, divide by 5 circuit that is accomplished with U17A, 74HC390. U18, 74HC4040 provides further division to accomplish four basic frequencies, these are in order of generation 307.2 KHz, 153.6 KHz, 76.8 KHz, 38.4 KHz and 19.2 KHz. The baud rate clock inpout to each ACIA may be independently set to on e of these frequencies by jumpers JP1-JP20.

Power Back Up Configuration

The Down Time Accumulator and Power Control logic are held up by the use of a Super Capacitor located on the Input Module. The RAM memory is held up internally with the use of the NOVRAM design. Power Control logic on the CPU is CMOS and separately powered by VB, during power down and VCC during normal operation. No special programming is required since this feature is accomplished with the use of diode logic.

Power Up/Down Sequence

a) NMI to go true 50-67ms following AC loss:

U12, MC4020 binary counter, provides the timing count for the power down detection circuit. U11, MC4001 2 input NOR gate, provides the gating control for the counter. Gate A controls the clock and gate B controls the reset. The 60Hz clocks will "reset" the counter and keep it from accumulating a significant count. U12 is clocked at a 32KHz rate via U11A and advances every 31 microseconds unless reset by the 60Hz power condition clock.

During a power down state, or low line condition the 60 Hz power condition clock will stop. U12 continues to count until the Q8, Q10 and Q11 output are at a high state. The accumulated time will be 50.7 milliseconds. The output of U13B will clock U14B to a "true" latched state. The Q-bar output set to a high state is input to U11B to prevent additional 60Hz power condition clocks from resetting the U12 counter until 4 additional milliseconds of time have elapsed. This will occur when U12 Q7 transitions to a high state then back to a low state.

U13C, the NMI timing gate, is output to inverter U11C. The U11C output will transition from a high to low state and back to a high state during the 4 millisecond interval created by the U12 counter. When U11C transitions to a high, the Reset Latch U14A Q bar output will stop further 32KHz clocks from advancing the U12 counter by placing a high on the input to the U11A control gate. U12 power down control counter remains in this condition until released at the termination of the reset cycle.

When the RESET U14A latch is set, the NMI latch U14B will clear. The setting and clearing of the NMI latch resets and holds the Power Up counter U15 in a reset condition through U19D and U10C.

During the time the NMI latch was in the set condition, the input to U13D NMI/RESET "AND" gate will cause the output to go to a logic low state. Capacitor C35 Restart Timer timing capacitor discharges through R12 and the low state of U19B.

The Q bar output of the NMI latch is inverted through isolation FET Q2 to U5 pin 18 of the microprocessor to initiate the Non-Maskable Interrupt routine. Additionally the output of U19B is buffered through U13D and output to the Input Module as the NMI RST signal. This signal will initiate the DTA Timer on the Input Module.

U14A Q bar output is input to Q3 FET isolation transistor. The output of Q3 is SYSTEM RESET and is wired to the various gates and pin 17 of U5 microprocessor. Additionally, U14A Q baroutput is used to initiate the Power Up Sequence logic. U11D power up sequence AND gate output will go to a logic low when U14A Q BAR output is true. The result, D inputs to U16A CYCLE CONTROL latch and U16B POWER UP CONTROL latch, will be moved to a logic low state.

The next subsequent 32 KHz clock will set the Q-bar output to a logic one state of U16B. This signal will hold the U11D power up sequence AND gate output at logic low until the power up sequence is completed. The first 60 Hz power condition clock, following the resumption of power will clock U16A Q output to logic low.

The logic low state of U16A Q output will enable the operation of U15 power up sequence counter. U15 is a ring counter producing a logic high output on each of the Q outputs in sequence according to the number of clocks input to the CLK pin of this counter.

b) RESET to go false (high) 116.6ms after power is restored:

When the NMI latch was released and RESET initiated, only the ENABLE pin input prevented the operation of U15. Now the counter will advance each time a clock is generated, at a rate of 16.6ms per clock. When 116.6ms has transpired or 6 transitions of the power condition clocks, the Q7 output transitions to a logic high. This output will reset the U14A latch and terminate the SYSTEM RESET condition. At this time, the RESET input to U11D will drop to a logic low state. However, U15 will continue to advance until the Q9 or final stage of the counter is reached. When Q9 advances to a logic high state, U16B is cleared and U11D output will transition to a logic high allowing the next 60Hz power condition clock to clock U16A POWER CONTROL Q output to transition to the logic one state and inhibit further advance of the U15 ring counter.

c) RESTART TIMER to terminate 33.3ms after SYSTEM RESET is completed:

When the U15 power up sequence counter Q9 output reaches a logic one, state capacitor C35 is restored to a full charge through R13 resistor and D1 diode. This function will restore the input to U10B to a logic high state and terminate the RESTART TIMER input to Q1 FET. Q1 FET serves as an isolation driver to the input module.

IRQ Generation and Clearing

U10A is an inverter gate used to buffer the 60Hz IRQ signal that is generated on the Input Module. The clock will set the IRQ LATCH U26A. The Q output of U26A is inverted and buffered via Q4, and ANDED with the IRQ outputs of the ACIA's U4A. It is then input to the microprocessor IRQ input pin 19. The IRQ LATCH is cleared by a write operation to address $75FF. The system decoder provides a clear strobe to u19c, which is also gated by the READ/WRITE signal of the microprocessor.

Address Decoding

Operation of the various bus control gates and the selection of the internal RAM and ROM is accomplished with the use of two decoder PALs, U37 and U38. U38 provides most significant bit address decoding and U37 provides least significant bit decoding.

The decoder PALs are programmed as follows:

U38 - Most Significant Address Decode

PIN	DESCRIP.	FUNCTION	PIN	DESCRIP.	FUNCTION	PIN	DESCRIP.	FUNCTION
1	A4	INPUT	8	A11	INPUT	16	CS6EN	OUTPUT
2	A5	INPUT	9	A12	INPUT	17	CS34EN	OUTPUT
3	A6	INPUT	10	A13	INPUT	18	CS2EN	OUTPUT
4	A7	INPUT	11	A14	INPUT	19	RAMSEL	OUTPUT
5	A8	INPUT	13	A15	INPUT	20	CS0EN	OUTPUT
6	A9	INPUT	14	CONFIG	INPUT	21	PROMEN	OUTPUT
7	A10	INPUT	15	ACIAEN	OUTPUT	22	E CLK	INPUT

EQUATIONS

```
/ACIAEN=/A15*A14*A13*A12*/A11*A10*/A9*/A8*/A7*/A6*/A5*A4          ;ACIA 1-4
741X
/CS6EN=/A15*A14*A13*A12*/A11*A10*/A9*A8*A7*A6*A5*A4               ;RTCRST
75FX
/CS34EN=/A15*A14*A13*A12*/A11*A10*/A9*/A8*/A7*/A6*/A5*/A4             ;DTA
740X
/CS2EN=/A15*A14*A13*A12*/A11*A10*/A9*/A8*/A7*/A6*/A5*/A4          ;IO 740X
/RAMSEL=(/A15*/A14*/A13*/A12+/A15*/A14*/A13*A12+/A15*/A14*A13*/A12+
      /A15*/A14*A13*A12+/A15*A14*/A13*/A12+/A15*A14*/A13*A12+
      (/A15*A14*A13*/A12*/MAPSEL)+/A15*A14*A13*A12*/A11*A10*A9*/A8+
      /A15*A14*A13*A12*/A11*A10*A9*A8+/A15*A14*A13*A12*A11*/A10*/A9*/A8+
      /A15*A14*A13*A12*A11*/A10*/A9*A8+/A15*A14*A13*A12*A11*/A10*A9*/A8+
      /A15*A14*A13*A12*A11*/A10*A9*A8+/A15*A14*A13*A12*A11*A10*/A9*/A8+
      /A15*A14*A13*A12*A11*A10*/A9*A8+/A15*A14*A13*A12*A11*A10*A9*/A8+
      /A15*A14*A13*A12*A11*A10*A9*A8)*/E
/CS0EN=/A15*A14*A13*/A12*MAPSEL
/PROMSEL=A15
```

U37 - Least Significant Address Decode

PIN	DESCRIP.	FUNCTION	PIN	DESCRIP.	FUNCTION	PIN	DESCRIP.	FUNCTION
1	E CLK	INPUT	8	CS2EN	INPUT	16	AC2	OUTPUT
2	A0	INPUT	9	CS34EN	INPUT	17	AC1	OUTPUT
3	A1	INPUT	10	CS6EN	INPUT	18	CS6	OUTPUT
4	A2	INPUT	11	ACIAEN	INPUT	19	CS4	OUTPUT
5	A3	INPUT	13	ASWP	INPUT	20	CS3	OUTPUT
6	GND	INPUT	14	AC4	OUTPUT	21	CS2	OUTPUT
7	CS0EN	INPUT	15	AC3	OUTPUT	22	IOBEN	OUTPUT
						23	CS0	OUTPUT

EQUATIONS

```
/AC4=/E*/ACIAEN*(/A3*A2*A1*/A0+/A3*A2*A1*A0)
/AC3=/E*/ACIAEN*(((/A3*A2*/A1*/A0+/A3*A2*/A1*A0)*ASWP)
    +((/A3*/A2*A1*/A0+/A3*/A2*A1*A0)*/ASWP))
/AC2=/E*/ACIAEN*(((/A3*/A2*A1*/A0+/A3*/A2*A1*A0)*ASWP)
    +((/A3*A2*/A1*/A0+/A3*A2*/A1*A0)*/ASWP))
/AC1=/E*/ACIAEN*(/A3*/A2*/A1*/A0+/A3*/A2*/A1*A0)
/CS6=/E*/CS6EN*A3*A2*A1*A0
/CS4=/E*/CS34EN*(/A3*/A2*/A1*/A0+A3*A2*A1*A0)
/CS3=/E*/CS34EN*(/A3*/A2*/A1*/A0)
/CS2=(/A3*/A2*/A1*A0 + /A3*/A2*A1*/A0 + /A3*/A2*A1*A0 + /A3*A2*/A1*/A0
    + /A3*A2*/A1*A0 + /A3*A2*A1*/A0 + /A3*A2*A1*A0 + A3*/A2*/A1*/A0
    + A3*/A2*/A1*A0 + A3*/A2*A1*/A0)*/CS2EN*/E
/IOBEN=/CS2+/CS3+/CS4+/CS6+/AC1+/AC2+/AC3+/AC4
/CS0=/E*/CS0EN
```

Single Level BOM Report

Safetran Traffic Systems, Inc.

Production BOM No. 086411D170-00 -Rev. K

170E 68HC11 CPU PCBA

Item	Part Number	Rev.	Description	Qty.	UOM	Reference Designator	Manufacturer	Manufacturer Part	Envir. Compl.
1	046411D170-00	CC	PCB 170E 68HC11 CPU PCB	1	EA				
15	0709006500		CAP 330PF 500V DM	8	EA				
						C37 38 39 40 41 42 43 44			
							ARCO	DM15-331J	
							CORNELL DUBILER	CD15-FD331-J03	
16	0709015100		CAP .047MF 100V	41	EA				
						C1 2 3 4 5 6 7 9 10 11 12 13 14 15 16 17 18 19 20 21 22 23 24 25 26 42 45 46 47 48 49 50 51 52 53 54 55 56 57 58 59			
							AVX	SR211C473KAA	
							KEMET	C322C473K1R5CA	
							MALLORY	M22R473K1	
17	0709022500		CAP 1MF 35V DT	1	EA				
						C36			
							KEMET	T354A105K035AS	
							SPRAGUE	199D105X9035AE3	

Single Level BOM Report

Safetran Traffic Systems, Inc.

Production BOM No. 086411D170-00 -Rev. K

170E 68HC11 CPU PCBA

Item	Part Number	Rev.	Description	Qty.	UOM	Reference Designator	Manufacturer	Manufacturer Part	Envir. Compl.
18	0709025000		CAP 3.3MF 35V ST	1	EA				
						C35			
							KEMET	T354D335K035AS	
19	0709027010		CAP 10MF 25V DT	1	EA				
						C34			
							KEMET	TDC106M025WLF	
							SPRAGUE	199D106X9025KA1	
							MALLORY	T354E106K025AS	
20	0709027280		CAP 10MF 25V EL	3	EA				
						C29 30 32			
							NICHICON	TVX1E100MAA	
							SIEMENS	80009-10-25	
21	0709030270		CAP 47MF 20V DT	1	EA				
						C33			
							SPRAGUE	199D476X9020EEZ	
22	0709032100		CAP 100MF 25V EL	3	EA				
						C27 28 31			
							MEPCO	3073EE101T025JP	

Single Level BOM Report

Safetran Traffic Systems, Inc.

Production BOM No. 086411D170-00 -Rev. K

170E 68HC11 CPU PCBA

Item	Part Number	Rev.	Description	Qty.	UOM	Reference Designator	Manufacturer	Manufacturer Part	Envir. Compl.
							NICHICON	TVX1E101MHA	
58	0714905010		CO SHUNT 2 POS	7	EA				
						JP5 10 15 20 21 22 24			
							H&T	4167-03-00-P1	
51	0714905110		CO HDR 2 POS	20	EA				
						JP1 2 3 4 5 6 7 8 9 10 11 12 13 14 15 16 17 18 19 20			
							AMP	103185-2	
52	0714905120		CO HDR 3 POS	3	EA				
						JP21 22 24			
							AMP	103185-3	
49	0717501320		CLK OSC 6.144MHZ	1	EA				
						Y2			
							MONITOR	970T-1B2A-6.144MHZ	
							VALPEY FISCHER	VF150-6.1440MHZ	
50	0717501360		CLK OSC 8.000 MHZ	1	EA				
						Y1			

Single Level BOM Report

Safetran Traffic Systems, Inc.

Production BOM No. 086411D170-00 -Rev. K

170E 68HC11 CPU PCBA

Item	Part Number	Rev.	Description	Qty.	UOM	Reference Designator	Manufacturer	Manufacturer Part	Envir. Compl.
							PLETRONICS	SQ2245-8.000MHZ	
							M-TROM	MH13FAD-8.000	
							FOX	F3020-8.000MHZ	
53	0759312600		LED 5750	1	EA				
						D2			
							GI	MV59021Q70002	
							LUMEX	SSL-LX5093IC	
							AMERICAN BRIGHT	BL-B4334	
59	0765510040		EJECTOR 6100	2	EA				
							SAE	6100	
5	0768120490		RES 100 1/4W5 CF	1	EA				
						R13			
6	0768120610		RES 330 1/4W5 CF	2	EA				
						R23 26			
7	0768120660		RES 510 1/4W5 CF	1	EA				
						R17			
8	0768120730		RES 1K 1/4W5 CF	5	EA				

Single Level BOM Report

Safetran Traffic Systems, Inc.

Production BOM No. 086411D170-00 -Rev. K

170E 68HC11 CPU PCBA

Item	Part Number	Rev.	Description	Qty.	UOM	Reference Designator	Manufacturer	Manufacturer Part	Envir. Compl.
						R7 8 9 10 11			
9	0768120810		RES 2.2K 1/4W5 CF	5	EA				
						R21 22 27 28 34			
10	0768120970		RES 10K 1/4W5 CF	8	EA				
						R14 15 18 24 29 30 31 33			
11	0768121380		RES 510K 1/4W5 CF	1	EA				
						R25			
12	0768121440		RES 910K 1/4W5 CF	1	EA				
						R12			
13	0769560550		RASIP 10PIN 3.3K	2	EA				
						R3 6			
							BECKMAN	770-101-R3-3K	
							BOURNS	4610X-101-332	
14	0769562320		RASIP 10PIN 10K	5	EA				

Single Level BOM Report

Safetran Traffic Systems, Inc.

Production BOM No. 086411D170-00 -Rev. K

170E 68HC11 CPU PCBA

Item	Part Number	Rev.	Description	Qty.	UOM	Reference Designator	Manufacturer	Manufacturer Part	Envir. Compl.
						R1 2 4 5 16			
							AVX	5RDSA10PC103GA	
							BECKMAN	L101S103	
							BOURNS	4610-101-103	
23	0771011560		SCKT IC 32 PIN SMC	1	EA				
						U9			
							PDI	SW1100-32	
							AUGAT	832-AG11D-ES	
							MIL-MAX	110-91-632-41-001	
							ROBIN NUGENT	ICT-326-S-TG	
60	0771014110		SCKT IC 28 PIN SMC	1	EA				
						U36			
							TYCO/AMP	ICT-286-S-TG	
							PDI	SW1100-28	
							MILMAX	110-91-628-41-00100	
							AUGAT	828-AG11D-ES	
							MIL-MAX	110-91-628-41-001	
24	0771014200		SCKT IC 68 PIN PLCC	1	EA				
						U5			
							AMP	821574-1	
							FCI	54020-68030LF	
							PWD	PDSN503W068	
							PDI	PDSN-503W-068	

Single Level BOM Report

Safetran Traffic Systems, Inc.

Production BOM No. 086411D170-00 -Rev. K

170E 68HC11 CPU PCBA

Item	Part Number	Rev.	Description	Qty.	UOM	Reference Designator	Manufacturer	Manufacturer Part	Envir. Compl.
							MOLEX	871-24-6801	
							METHODE	213-068-501	
2	0771312700		DIODE 1N4148 SIG	3	EA				
						D1 3 4			
							JDEC	1N4148	
3	0771315980		DIODE 1N6267/1.5 KE 6.8A	2	EA				
						TZ2 3			
							WORLD PROD	1.5KE6.8A	
							JDEC	1N6267	
4	0771315990		DIODE 1N6276/1.5 KE 16A	2	EA				
						TZ1 4			
							GSI	1.5E16A	
							GSI	1.5KE16A	
							JDEC	1N6276	
25	0771606835		IC DALLAS 1230 NVRAM 32KX8	1	EA				
						U36			
							BENCHMARQ	BQ4011YMA-200N	
							ST MICRO	M48Z35Y-70PC1	
							DALLAS	DS1230Y-200-IND	

Single Level BOM Report

Safetran Traffic Systems, Inc.

Production BOM No. 086411D170-00 -Rev. K

170E 68HC11 CPU PCBA

Item	Part Number	Rev.	Description	Qty.	UOM	Reference Designator	Manufacturer	Manufacturer Part	Envir. Compl.
26	0771607000		IC MC1488	2	EA				
						U1 2			
							MOTOROLA	MC1488N	
							NS	DS1488N	
27	0771607250		IC MC1489	3	EA				
						U23 24 25			
							MOTOROLA	MC1489N	
							SG	MC1489N	
							NS	DS1489N	
28	0771607850		IC 27C010	1	EA				
						U9			
							SG	M27C1001-12F1	
29	0771609250		IC MC14001	2	EA				
						U11 19			
							MOTOROLA	MC14001BCP	
							SG	HEF4001BPN	
							NS	CD4001BCN	
30	0771610750		IC MC14011	1	EA				
						U10			

Single Level BOM Report

Safetran Traffic Systems, Inc.

Production BOM No. 086411D170-00 -Rev. K

170E 68HC11 CPU PCBA

Item	Part Number	Rev.	Description	Qty.	UOM	Reference Designator	Manufacturer	Manufacturer Part	Envir. Compl.
							TI	MC14011BCP	
31	0771611500		IC MC14013	3	EA				
						U14 16 26			
							MOTOROLA	MC14013BCP	
							SG	HEF4013BPN	
							FAIRCHILD	CD4013BCN	
							NS	CD4013BCN	
32	0771612510		IC 14017 MOTOROLA	1	EA				
						U15			
							MOTOROLA (ONLY)	MC 14017BCP	
							MOTOROLA (ONLY)	MC14017BCP	
33	0771613000		IC MC14020	1	EA				
						U12			
							MOTOROLA	MC14020BCP	
							SG	HEF4020BPN	
							ST MICRO	HCF4020BEY	
							NS	CD4020BCN	
34	0771616300		IC 74HCT4040	1	EA				
						U18			
							MOTOROLA	MC74HCT4040	

Single Level BOM Report

Safetran Traffic Systems, Inc.

Production BOM No. 086411D170-00 -Rev. K

170E 68HC11 CPU PCBA

Item	Part Number	Rev.	Description	Qty.	UOM	Reference Designator	Manufacturer	Manufacturer Part	Envir. Compl.
							SG	74HCT4040N	
35	0771620250		IC MC14081	1	EA				
						U13			
							MOTOROLA	MC14081BCP	
							SG	HEF4081BPN	
							HARRIS	CD-4081	
36	0771630850		IC 68B50	4	EA				
						U29 30 31 32			
							MOTOROLA	MC68B50P	
							SG	EF68B50P	
37	0771630900		IC 68HC11F1	1	EA				
						U5			
							MOTOROLA	MC68HC11F1CFN3	
38	0771670010		IC 74HCT04	2	EA				
						U3 8			
							PHILIPS	74HCT04N	
							SAMSUNG	KS74HCTLS04	
39	0771670020		IC 74HCT08	2	EA				
						U4 20			

Single Level BOM Report

Safetran Traffic Systems, Inc.

Production BOM No. 086411D170-00 -Rev. K

170E 68HC11 CPU PCBA

Item	Part Number	Rev.	Description	Qty.	UOM	Reference Designator	Manufacturer	Manufacturer Part	Envir. Compl.
							SAMSUNG	KS74HCTLS08	
							SG	74HCT08	
40	0771670050		IC 74HCT32	1	EA				
						U22			
							PHILIPS	74HCT32N	
							RCA	CD74HCT32E	
41	0771670090		IC 74HCT540	1	EA				
						U40			
							SAMSUNG	KS74AHCT540	
							SG	74HCT540N	
42	0771670110		IC 74HCT640	1	EA				
						U7			
							SAMSUNG	KS74AHCT640	
							SG	74HCT640N	
							HARRIS	CD74HCT640E	
43	0771670135		IC 74HCT244	3	EA				
						U34 35 41			
							SAMSUNG	74HCT244	

Single Level BOM Report

Safetran Traffic Systems, Inc.

Production BOM No. 086411D170-00 -Rev. K

170E 68HC11 CPU PCBA

Item	Part Number	Rev.	Description	Qty.	UOM	Reference Designator	Manufacturer	Manufacturer Part	Envir. Compl.
44	0771670140		IC 74HCT245	1	EA				
						U39			
							SG	74HCT245N	
							TI	SN74HCT245N	
45	0771670180		IC 74HC390	1	EA				
						U17			
							SAMSUNG	74HC390	
							SG	74HC390N	
48	0771915275		TRAN 2N7000	4	EA				
						Q1 2 3 4			
							SILICONIX	2N7000	
54	0774201100		SW DIP 8 POS PC/MT	2	EA				
						S2 3			
							APEM	DA08	
							CTS	CTS 206-8 RA	
							C&K	BD08-AV	
56	0784000020		POINT TEST	9	EA				
						TP1 2 3 4 5 6 7 8 9			

Single Level BOM Report

Safetran Traffic Systems, Inc.

Production BOM No. 086411D170-00 -Rev. K

170E 68HC11 CPU PCBA

Item	Part Number	Rev.	Description	Qty.	UOM	Reference Designator	Manufacturer	Manufacturer Part	Envir. Compl.
							KEYSTONE	1598-1	
47	3700060850-00		PGM 170E HC11 U37	1	EA				
						U37			
46	3700060860-00		PGM 170E HC11 U38	1	EA				
						U38			

Proprietary and Confidential to Safetran Traffic Systems, Inc.

HC-11 CPU MODULE BLOCK DIAGRAM

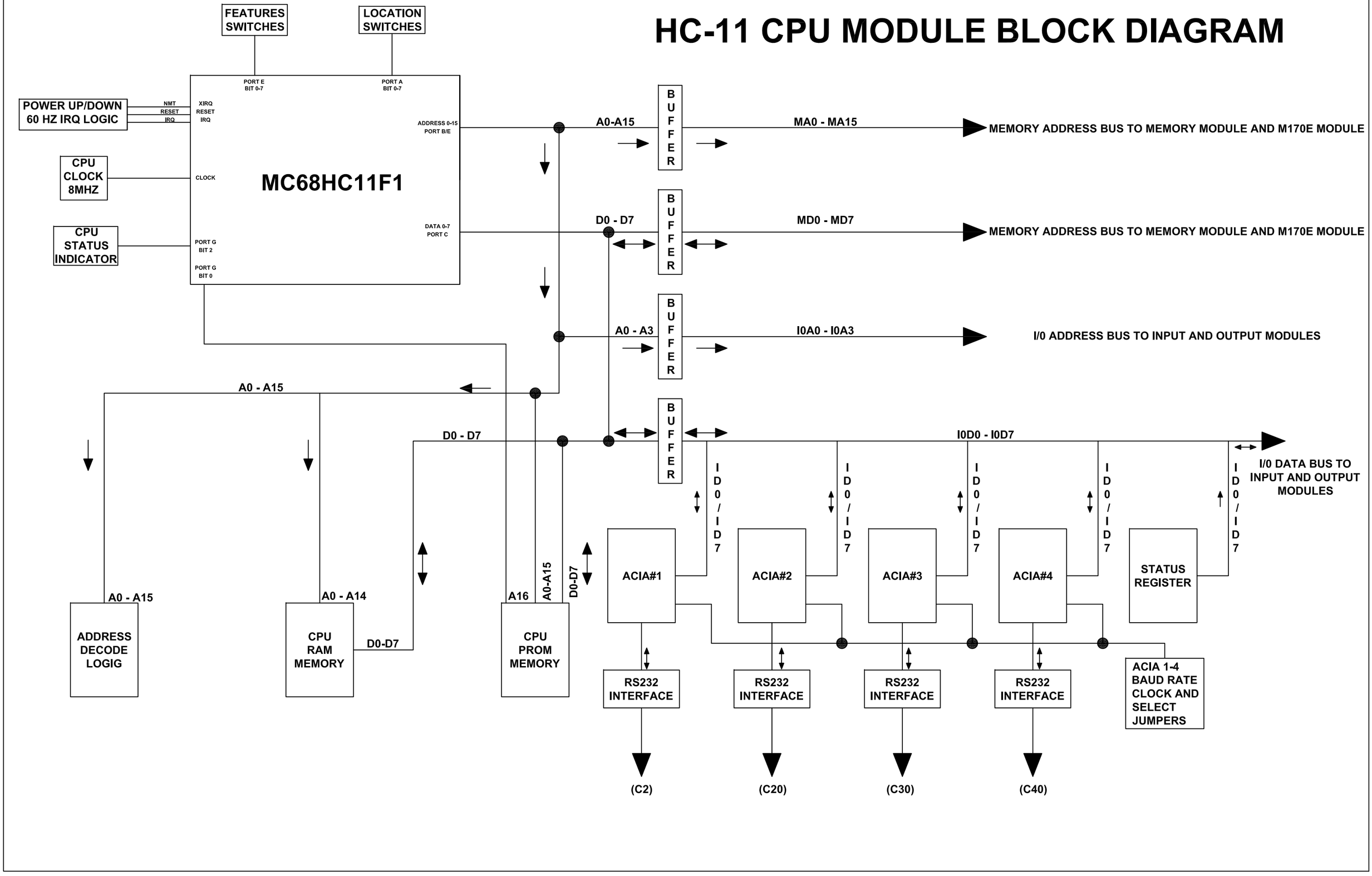

AFTER ASSEMBLY AND SOLDERING OF COMPONENTS, MOISTURE AND FUNGUS PROOF BOTH SIDES OF P.C. BOARD WITH HUMISEAL 1B73 OR EQUIVALENT TO MIN. THICKNESS OF .002

AREAS TO BE FREE OF ALL CONFORMAL COATING, SHALL BE INSPECTED USING A BLACK LIGHT INSPECTION STATION OR EQUIVALENT TO. THE AREAS ARE AS FOLLOWS: ALL TEST POINTS, ALL CONNECTORS, ALL SOCKETS, ALL MOUNTING PADS AND LEDS.

SHOWS PLACEMENT OF SHUNTS.

INDICATES TAPE ON CIRCUIT SIDE BEFORE INSTALLING COMPONENTS. AFTER WAVE ADD COMPONENTS TO TAPED OFF AREAS.

BROKEN LINES INDICATES TO PLACE ON CIRCUIT SIDE.

* TAPE ONLY IF HOLE ARE PLATED.

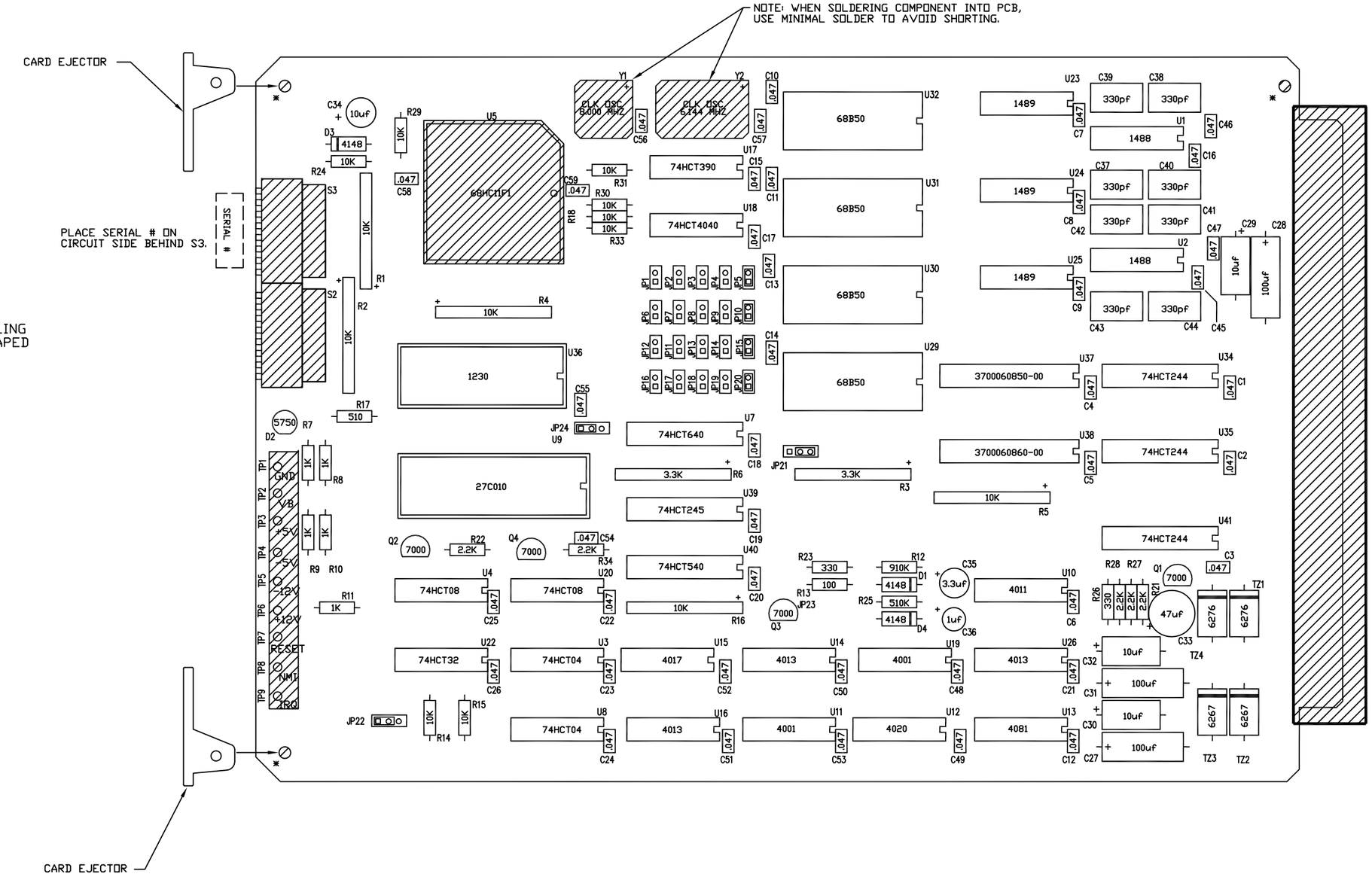

REV	ECR	DESCRIPTION	DATE	NAME	APPD.
K	2756S	FOR TECATE PRODUCTION	6/14/07	RI	LS
J	2141	PUT IN TAPE DETAIL FOR CLK OSC	7/26/05	RI	
H	1961	CHANGED 10PF TO 330PF CAPS 37 THRU 44	5/25/05	RI	
G	1313	MOVED PLACEMENT OF SERIAL #	2/26/03	RI	
F	601	SHOW VALUE OF D2	5/30/01	RI	
E	409	ADDED TAPE DETAIL & CIRCLES FOR CAPS	2/22/01	RI	
D	10199	PRODUCTION CHANGES	5/7/99	RI	
C	10125	PRODUCTION CHANGES	3/24/99	RI	
B	10125	PRODUCTION CHANGES	3/23/99	RI	
A	10125	PRODUCTION CHANGES	2/3/99	RI	
-	10007	PRODUCTION RELEASE	11/2/98	RI	

DRAWN R. IGNEY 11/2/98
CHECKED
APPROVED L. Snow 6/18/07
MATERIAL SEE BOM
FINISH
NEXT ASSEMBLY

Safetran Traffic Systems, Inc.
1485 Garden of the Gods Rd. Colorado Springs, Co. 80907

TITLE: 170E 68HC11 CPU PCBA

SIZE D | DRAWING NO. 086411D170-00 | REV K
SCALE NONE | SHT 1 OF 1

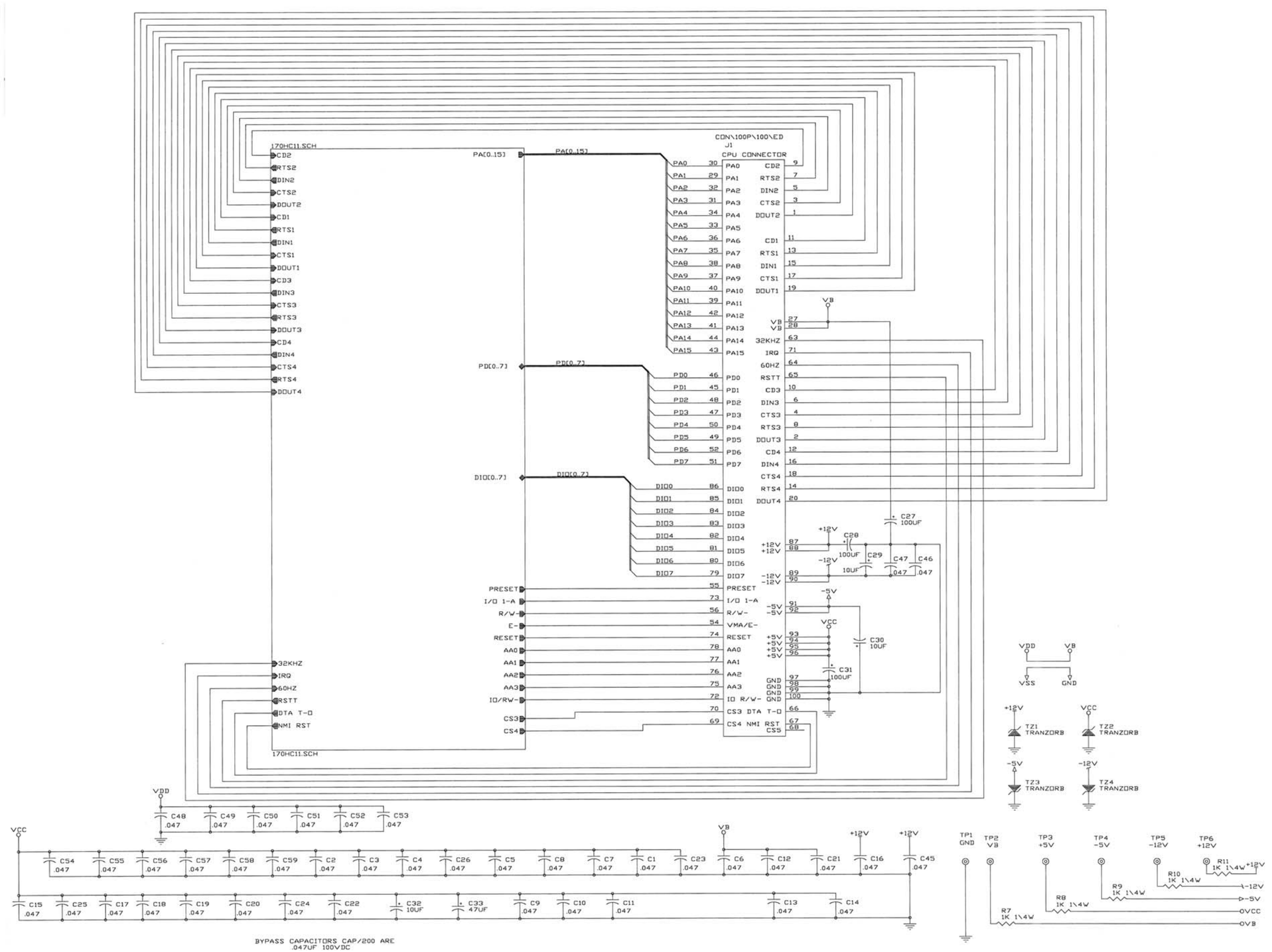

SAFETRAN TRAFFIC SYSTEMS,INC.		
Title	170E 68HC11 CPU BOARD SCHEMATIC	
Size C	Document Number 056411D170-00	REV B
Date: June 14, 2001	Sheet 1 of 2	

SPARE DEVICES

SAFETRAN TRAFFIC SYSTEMS,INC.

Title 170E 68HC11 CPU BOARD SCHEMATIC

Size Document Number REV

D 056411D170-00 B

Date: June 14 2001 Sheet 2 of 2

A.3 Select RFIs

LETTER OF TRANSMITTAL

BRAYMAN CONSTRUCTION CORP.
1000 John Roebling Way
Saxonburg, PA 16056
Phone: (724) 443-1533
Fax: (724) 443-8733

BRAYMAN construction corporation

To: Ohio Dept. of Transportation
District 9
650 Eastern Avenue
Chillicothe, OH 45601

Project: SR-93-0.00
Ironton Russell Bridge
Lawrence County, OH
Project No. 110628

BCC # 078

Attention: Dave Bame

Date: May 11, 2012

We are sending you the following items:

- ☐ Under Separate Cover
- ☑ Attached
- ☐ Copy of Letter
- ☐ Prints
- ☐ Specifications
- ☐ Change Order
- ☐ Shop Drawings
- ☐ Plans
- ☐ _____

Copies	Date	Description
1	5/11/12	RFI 012 Formwork at Pier 6,7,8

Transmitted for the following purpose:

- ☑ For Approval
- ☐ Approved as Submitted
- ☐ Resubmit __ copies for approval
- ☐ For Your Use
- ☐ Approved as Noted
- ☐ Submit __ copies for distribution
- ☐ As Requested
- ☐ Returned for Corrections
- ☐ Return __ corrected prints
- ☐ For Review & Comment
- ☐ For Certification

MAIL: ◯ Regular ◯ Overnight ◯ Certified ✓ Email | **FAX:** ◯

Remarks:

Aaron Downs

Signed: Aaron Downs
Project Engineer

cc: File/arb
Dan Beasley
Edwin Callicutt
Eric McLaughlin

Ironton Russell Bridge over Ohio River

LAW-93C-0000

RFI 012 Pier 6,7,8 Formwork

For:



District 9

Submitted By:



1000 John Roebling Way

Saxonburg, Pa 16056

May 11, 2012

Brayman Construction Corporation
1000 John Roebling Way
Saxonburg, PA 16056
Ph. 724-443-1533
Fax 724-443-8733

Field Office
702 S. 1st Street
Ironton, OH 45638
Ph. 740-414-4315
Fax 740-414-4316

Request For Information

BCC Job #: **12-0001** Date: 5/11/2012 Author: Aaron Downs

RFI# 012

BCC# 078

Project: Bridge No. LAW-93-0.00
Ironton Russell Bridge
Lawrence County, OH
ODOT Project No. 110628

Bridge No.: LAW-93-0.00

Re: The plans call out that Pier 6, 7, and 8 stems are to be 3'-3" thick. Brayman Construction Corp. is requesting to increase the column forms at Pier 6, 7, and 8 from 3'-3" to 3'-6" due to availability of 3'-3" column forms.

Ref. Sheets- 700-705

Response:

The RFI did not provide ~~any~~ detail of any changes to pier stem & cap reinforcing. However, assuming that there would be no changes other than to increase the concrete cover due to the stem widening from 3'-3" to 3'-6", we have no objection to the proposed request. It is also assumed that this modification will be done at no additional cost to the project.

Issued By: Bejan K. Dapasia **Date:** 5/17/12

LETTER OF TRANSMITTAL

BRAYMAN CONSTRUCTION CORP.
1000 John Roebling Way
Saxonburg, PA 16056
Phone: (724) 443-1533
Fax: (724) 443-8733

To: Ohio Dept. of Transportation
District 9
650 Eastern Avenue
Chillicothe, OH 45601

Project: SR-93-0.00
Ironton Russell Bridge
Lawrence County, OH
Project No. 110628

BCC # 080

Attention: Dave Bame

Date: May 14, 2012

We are sending you the following items:

- ☐ Under Separate Cover
- ☑ Attached
- ☐ Copy of Letter
- ☐ Prints
- ☐ Specifications
- ☐ Change Order
- ☐ Shop Drawings
- ☐ Plans
- ☐ _____

Copies	Date	Description
1	5/14/12	RFI 014 Main Span Floor Beam Geometry

Transmitted for the following purpose:

- ☑ For Approval
- ☐ Approved as Submitted
- ☐ Resubmit __ copies for approval
- ☐ For Your Use
- ☐ Approved as Noted
- ☐ Submit __ copies for distribution
- ☐ As Requested
- ☐ Returned for Corrections
- ☐ Return __ corrected prints
- ☐ For Review & Comment
- ☐ For Certification

MAIL: ◯ Regular ◯ Overnight ◯ Certified ☑ Email **FAX:** ◯

Remarks:

Aaron Downs

Signed: Aaron Downs
Project Engineer

cc: File/arb
Dan Beasley
Edwin Callicutt
Eric McLaughlin

Ironton Russell Bridge over Ohio River

LAW-93C-0000

RFI 014 Main Span Floor Beam Geometry

For:

District 9

Submitted By:

1000 John Roebling Way

Saxonburg, Pa 16056

May 14, 2012

RFI – #4 **Via:** Email

To: **Tom Hesmond**
Project Manager
Brayman Construction Corporation

Date: 05/14/12

From: **Robert Alonso, S.E., P.E.** **Phone:** (850) 894-1600

Subject: **Main Span Floor Beam Geometry Changes**
Ironton-Russell Bridge
FINLEY Project No. 11-60260

As illustrated in the attached sketches, VSL has requested slight modifications to the main span floor beam geometry as part of their means and methods to construct the beams and to facilitate form stripping with their traveler operations.

FINLEY has performed preliminary calculations evaluating the capacity of the revised cross-section to the cross-section shown in the Contract plans and determined that the same bending and shear capacity can be achieved and it meets Brayman's construction loading requirements.

Please have URS confirm that the proposed cross-section is acceptable.

URS Response:

We have no initial objections to the revised main span floor beam geometry as shown in the attached sketch to this RFI. The preliminary calculations noted by Finley above were not submitted as part of this RFI, thus our review is limited to the floor beam geometry only. We anticipate a future submittal that includes design verification calculations. The Contractor will need to get ODOT approval for these proposed geometry changes as this will reflect a change in the aesthetics of the bridge and deviation from the Contract Plans. In addition, this change in dead load will need to be reflected in Finley's Global Model of erection analysis.

Additional Notes:

1. The holes for the utility conduits shown on sheet 137/365 of the Contract Plans will need to be addressed in this self stripping scheme.
2. Please address the potential conflict shown in attached sketch (Section - "At Mid-Span") with the lowest side reinforcement bar in the future submittal. As the PT duct moves up, there appears to be a conflict between the PT duct and this bar.

Signature:_____ Date:__5/18/2012__

1589 Metropolitan Boulevard • Tallahassee, FL 32308-3776 • (850) 894-1600 • (850) 894-1614 fax
www.finleyengineeringgroup.com

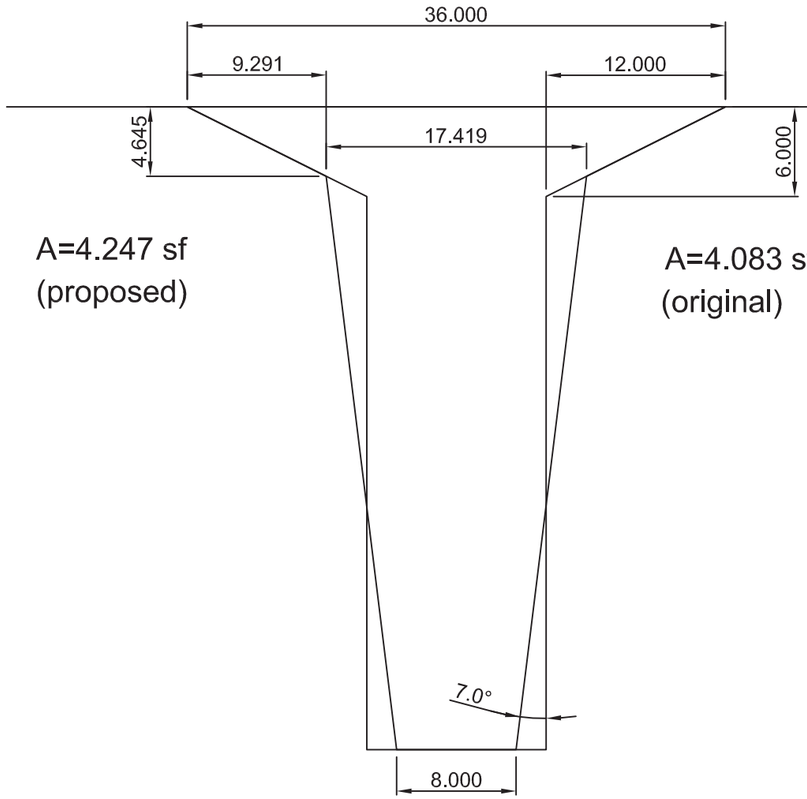

Area comparison

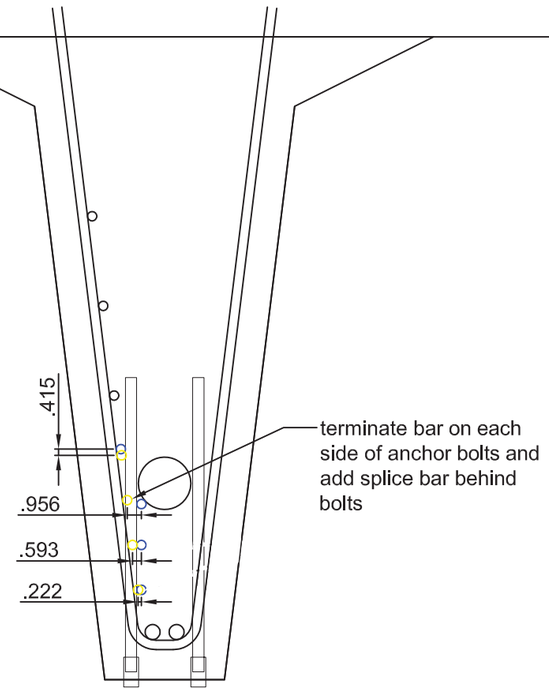

At anchor bolts

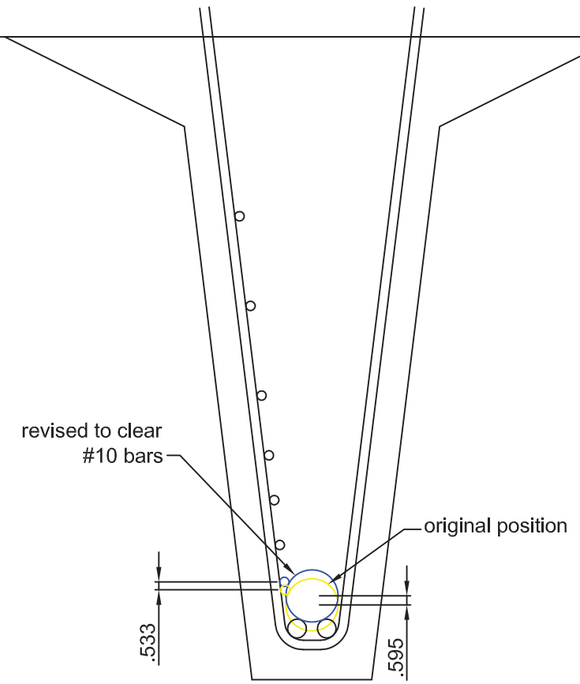

At mid-span

Self-Stripping floor beam proposal

LETTER OF TRANSMITTAL

BRAYMAN CONSTRUCTION CORP.
1000 John Roebling Way
Saxonburg, PA 16056
Phone: (724) 443-1533
Fax: (724) 443-8733

To: Ohio Dept. of Transportation
District 9
650 Eastern Avenue
Chillicothe, OH 45601

Project: SR-93-0.00
Ironton Russell Bridge
Lawrence County, OH
Project No. 110628

BCC # 094-000

Attention: Dave Bame

Date: June 27, 2012

We are sending you the following items:

☐ Under Separate Cover ☑ Attached

☐ Copy of Letter ☐ Prints ☐ Specifications ☐ Change Order

☐ Shop Drawings ☐ Plans ☐ _____

Copies	Date	Description
1	6/27/12	RFI 020 West End Electric

Transmitted for the following purpose:

☐ For Approval ☐ Approved as Submitted ☐ Resubmit __ copies for approval

☐ For Your Use ☐ Approved as Noted ☐ Submit __ copies for distribution

☐ As Requested ☐ Returned for Corrections ☐ Return __ corrected prints

☑ For Review & Comment ☐ For Certification

MAIL: ◯ Regular ◯ Overnight ◯ Certified ✓ Email **FAX:** ◯

Remarks:

Aaron Downs

Signed: Aaron Downs
Project Engineer

cc: File/arb
Dan Beasley
Edwin Callicutt
Eric McLaughlin

Ironton Russell Bridge over Ohio River

LAW-93C-0000

RFI 020 West End Electric

For:

District 9

Submitted By:

1000 John Roebling Way

Saxonburg, Pa 16056

6/27/2012

WEST END ELECTRIC CO., *Incorporated*

SERVING THE TRI-STATE AREA SINCE 1924

ELECTRICAL CONTRACTORS

640 SECOND STREET - : - PORTSMOUTH, OHIO 45662

Phone (740) 354-8671
Fax (740) 353-5145

OHIO LICENSE NO. 16489

www.WestEndElectricCo.com

June 27, 2012

BRAYMAN CONSTRUCTION CORPORATION
Attn. Mr. Aaron Downs
702 – South First Street
Ironton, Ohio 45638

Re.: LAW-93-0.00 Ironton-Russell Bridge
RFI: Decorative Pole Luminaire Lamp Size & Anchor Bolt Size

Mr. Downs,

I have a request for information concerning the lamp wattage and anchor bolt size for the Decorative Light Pole assemblies on the above referenced project.

Anchor Bolt Sizes: Detail A-A on plan drawing 336/788 (attached) indicates the light pole foundations shall use the pole manufacturer's recommended ¾" x 17" x 3" anchor bolts. Section A-A on plan drawing 446/788 (attached) indicates the light pole foundations shall use 1" x 17" x 3" anchor bolts. Question is, do we use the manufacturer's recommended anchor bolt size (3/4"), or the size listed on plan drawing 446/788?

Sternberg Luminaire lamp and ballast size: See "ITEM 625 – Luminaire Decorative, As Per Plan", on plan drawing 326/788 (attached). Part of this description of the luminaire says, "The High Pressure Sodium Lamp shall be 70 Watt, unless noted otherwise." One of the manufacturer's catalog number listed (Sternberg "Old town" #A850A/508PT/XX/XX/100HPS480/RE3G/VG) indicates this will be a 100 Watt HPS lamp, but the other part numbers list 70 Watt HPS. The same thing is written on plan drawing 339/788 (attached). Do we provide these luminaires with 70 Watt HPS lamps or 100 Watt HPS lamps?

BRAYMAN CONSTRUCTION CORPORATION
Attn. Mr. Aaron Downs

Re.: LAW-93-0.00 Ironton-Russell Bridge
RFI: Decorative Pole Luminaire Lamp Size & Anchor Bolt Size

If you have any questions, please feel free to call me at 740-354-8671.

Sincerely,

West End Electric Co., Inc.

Miles Ferguson
President

1. The anchor bolts shall be 3/4" x 1'-8" x 3". Anchor bolts shall also be galvanized.

2. The lamp rating for the "Sternberg" luminaire shall be a 100 Watt HPS. The other listed manufacturers require a 70 Watt HPS. The reason being the "Sternberg" luminaire does not perform quite as well as the other listed manufacturers and requires a higher wattage lamp to meet ODOT lighting requirements.

Answered by: Keith Porter - URS (7-2-2012)

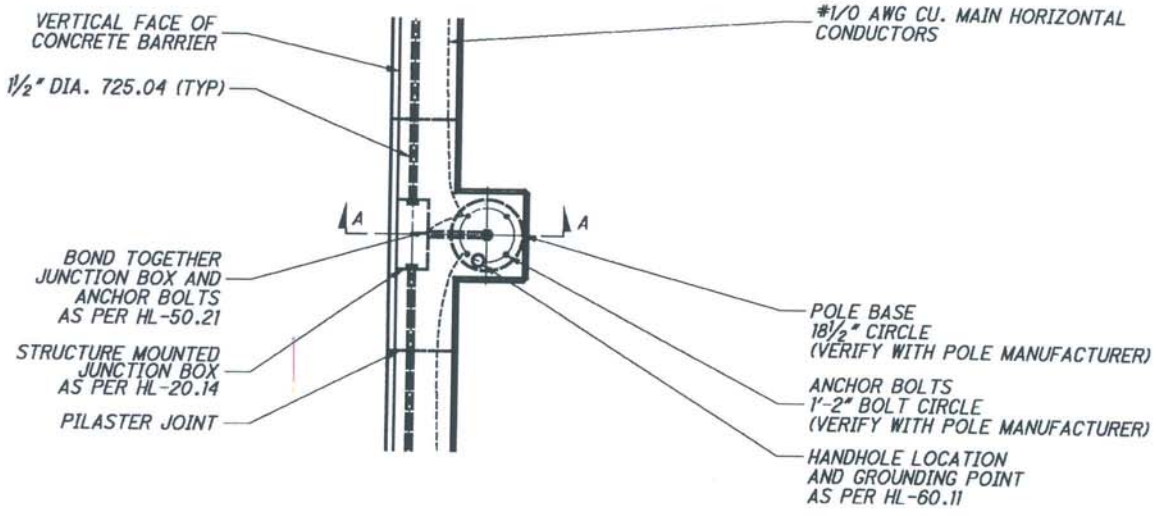

PLAN

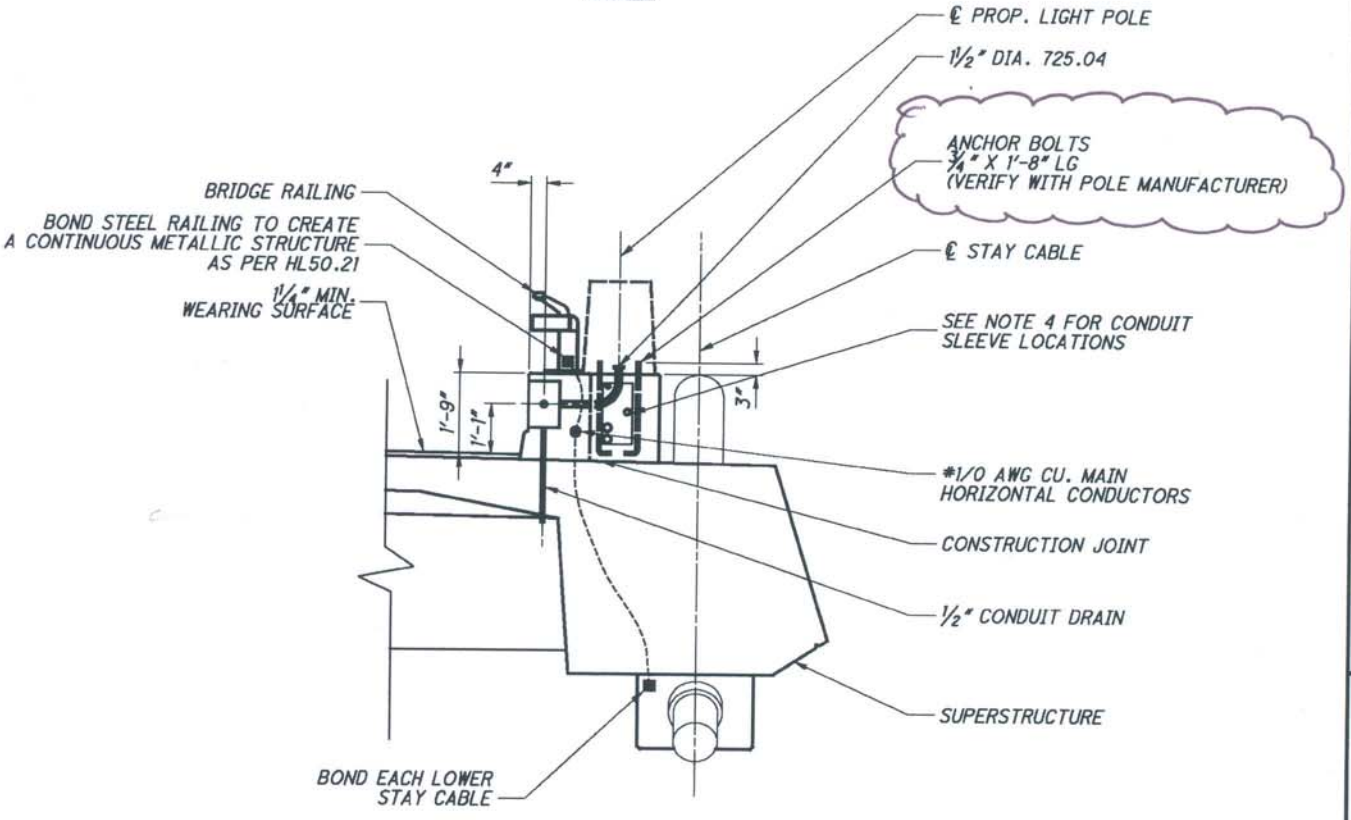

SECTION A-A

LIGHT POLE PILASTER FOR PRECAST BRIDGE WITH CONCRETE BARRIER AND STEEL RAILING

NOTES

1. ALL JUNCTION BOXES ARE PER HL-20.14 AND 725.10. CAP ALL UNUSED OPENINGS.
2. ALL STRUCTURE GROUNDING PER HL-50.21.
3. FOR APPROACH SPAN PILASTER DETAILS, SEE SHEET 446/788
4. FOR MAIN SPAN PILASTER DETAILS, SEE SHEET 631/788

CALCULATED BLW CHECKED SAC

LIGHTING - MAIN AND APPROACH SPAN ROADWAY LIGHTING DETAILS (1)

LAW-93-0.00

77/85

336/788

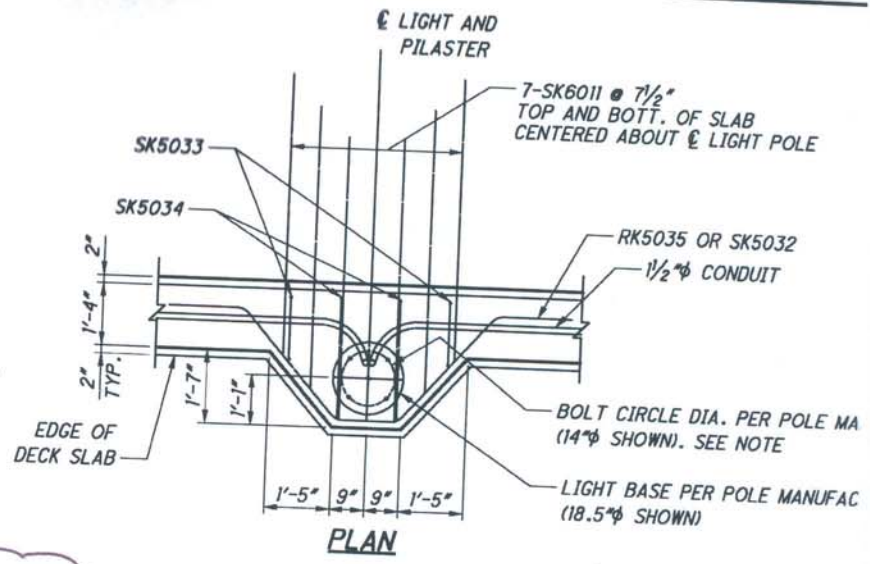

PLAN

NOTE:
CONFIRM ANCHOR BOLT REQUIREMENTS INCLUDING SIZE, BOLT CIRCLE DIAMETER, AND PROJECTION WITH CERTIFIED MANUFACTURER'S DRAWINGS.

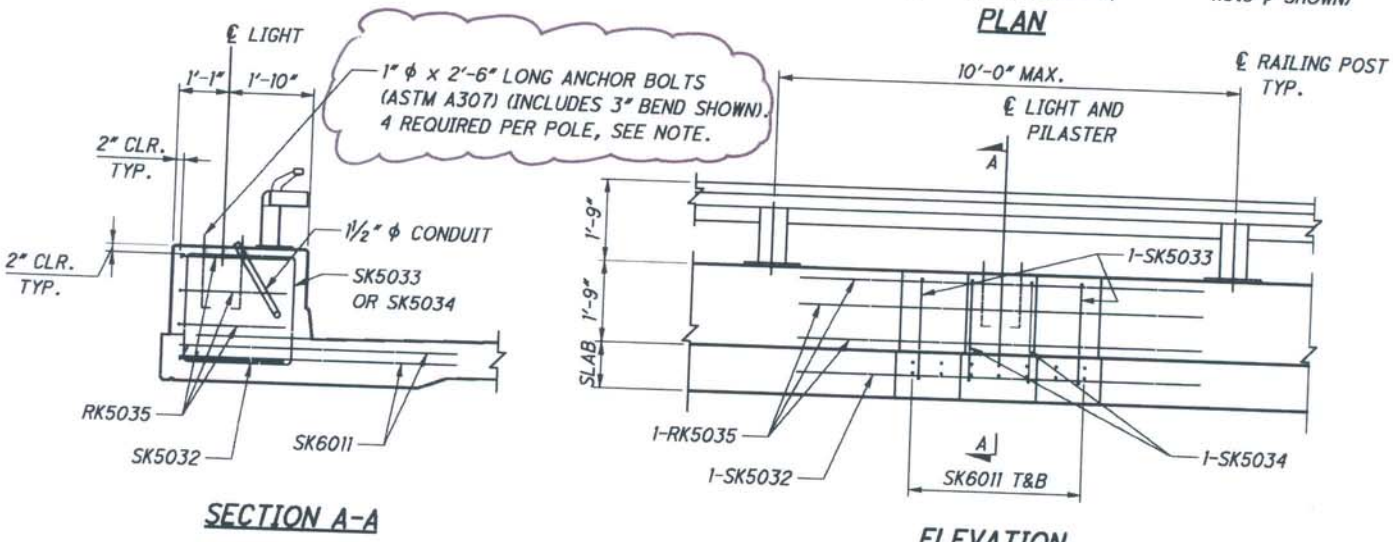

SECTION A-A

ELEVATION

LIGHT PILASTER DETAIL
(10 REQUIRED)

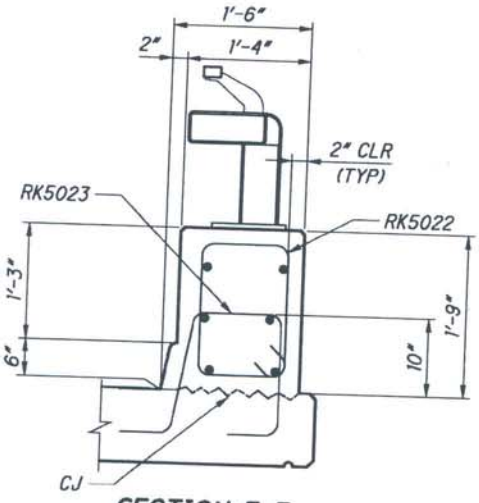

SECTION E-E
(TYPICAL PARAPET SECTION)
(KY APPROACH)

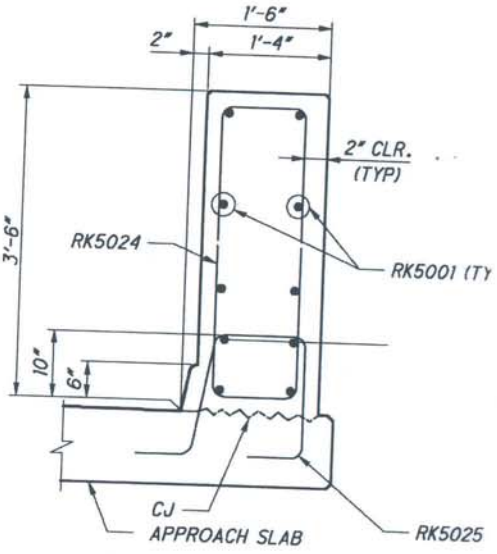

SECTION F-F

DWG 446/788

WORK LIMITS

THE WORK LIMITS FOR THE LIGHTING PORTION OF THIS PROJECT ARE FOR THE PHYSICAL CONSTRUCTION OF THE LIGHTING ITEMS LISTED. THE CONTRACTOR SHALL COORDINATE HIS WORK WITH THE PRIME CONTRACTOR AND THE MAINTENANCE OF TRAFFIC PLANS SO AS TO LIMIT ANY ADDITIONAL CLOSURES.

ITEM 625 - LIGHT POLE, DECORATIVE, AS PER PLAN

THIS ITEM SHALL INCLUDE ALL LABOR AND MATERIALS NECESSARY TO FURNISH AND INSTALL A DECORATIVE LIGHT POLE IN ACCORDANCE WITH 625, AS DETAILED IN THE PLANS AND DESCRIBED HEREIN.

THE 12-FOOT OR 14 1/2-FOOT TALL DECORATIVE POST SHALL BE ALUMINUM, ONE PIECE CONSTRUCTION. THE 17 1/2-INCH DIAMETER CAST ALUMINUM TALL DECORATIVE FLUTED BASE SHALL BE CONSTRUCTED WITH A 5-INCH DIAMETER ALUMINUM SHAFT. THE MODEL SHALL BE STERNBERG "KENILWORTH" (531XXFP5/XXX/XX/VG), ANTIQUE STREET LAMPS "CENTRAL PARK" (PX CP18 XX F5 ANVG), OR APPROVED EQUAL.

THE POLE FACTORY FINISH SHALL BE "VERDE GREEN" COLOR MATCHING THAT OF THE EXISTING DECORATIVE POLES IN THE CITY OF IRONTON.

FOUR, 3/4-INCH, HOT-DIPPED GALVANIZED "L" TYPE ANCHOR BOLTS SHALL BE PROVIDED WITH THE POST FOR ANCHORAGE, WHERE REQUIRED. A DOOR SHALL BE PROVIDED FOR WIRING AND ANCHOR BOLT ACCESS. IT SHALL BE SECURED WITH TAMPER PROOF, STAINLESS STEEL HARDWARE. POST WILL BE PROVIDED WITH GROUNDING STUD MOUNTED ON THE BASE FLOOR OPPOSITE THE ACCESS DOOR.

ITEM 625 - LAMPS

HIGH PRESSURE SODIUM LAMPS SHALL BE GENERAL ELECTRIC "LUCALOX," OSRAM SYLVANIA "LUMALUX," PHILIPS "CEREMALUX," OR EQUAL APPROVED BY THE ENGINEER.

ITEM 625 - LIGHT POLE ANCHOR BOLTS, MISC.: SET FOR PILASTER MOUNTED LIGHT POLE

WHEN A LIGHT POLE IS MOUNTED ON A PILASTER ON A BRIDGE PARAPET OR ON A RETAINING WALL, THE REQUIRED ANCHOR BOLTS MAY DIFFER IN LENGTH AND/OR SHAPE FROM THOSE REQUIRED WHEN THE POLE IS MOUNTED ON A CAST-IN-PLACE DRILLED SHAFT FOUNDATION. THE COST DIFFERENTIAL FOR FURNISHING SUCH BOLTS IS INCLUDED HEREIN.

IN ADDITION, THERE IS NO FOUNDATION CONSTRUCTION ITEM IN WHICH TO INCLUDE THE SETTING OF THE ANCHOR BOLTS. THUS, THE SETTING OF THE ANCHOR BOLTS INTO THE PILASTER IS ALSO PART OF THIS WORK.

PAYMENT WILL BE MADE AT EACH SUCH POLE LOCATION AT THE UNIT PRICE BID FOR EACH CMS "ITEM 625 - LIGHT POLE ANCHOR BOLTS, MISC.: SET FOR PILASTER MOUNTED LIGHT POLE" AND SHALL BE FULL COMPENSATION FOR FURNISHING AND PLACING THE SET OF ANCHOR BOLTS REQUIRED.

ITEM 625 - LUMINAIRE DECORATIVE, AS PER PLAN

THIS ITEM SHALL INCLUDE ALL LABOR AND MATERIALS NECESSARY TO FURNISH AND INSTALL AN ORNAMENTAL POST TOP LUMINAIRE IN ACCORDANCE WITH 625, AS DETAILED IN THESE PLANS, AND AS DESCRIBED HEREIN.
THE LUMINAIRE SHALL BE A TRADITIONAL ACORN FIXTURE COMPRISING OF A DECORATIVE CAST ALUMINUM FITTER, CAST BALLAST HOUSING ASSEMBLY AND POLYCARBONATE OR ACRYLIC CLEAR TEXTURED ACORN GLOBE. IT SHALL BE APPOINTED WITH A CAST ALUMINUM DECORATIVE FOUR-VANE FINIAL. THE LUMINAIRE SHALL BE GENERAL ELECTRIC "AMERICANA" (AM9F07S5XX1HAAFGRNX), HOLOPHANE "ACRYLIC WASHINGTON POSTLITE" (AW070HP48N3XXX), STERNBERG "OLD TOWN" (A850A/508PT/XX/XX/100HPS480/RE3G/VG), OR APPROVED EQUAL. THE HIGH PRESSURE SODIUM LAMP SHALL BE 70 WATTS, UNLESS NOTED OTHERWISE.

ITEM 625 - LUMINAIRE DECORATIVE, AS PER PLAN (CONT'D)

THE OPTICAL SYSTEM SHALL CONSIST OF PRECISELY MOLDED THERMAL RESISTANCE BOROSILICATE GLASS REFRACTOR AND TOP REFLECTOR WITH A TYPE III DISTRIBUTION.

THE LUMINAIRE BODY FACTORY FINISH SHALL BE "VERDE GREEN" COLOR MATCHING THAT OF THE DECORATIVE LUMINAIRES IN THE CITY OF IRONTON.

ITEM 625 - LIGHT POLE FOUNDATION, 24" X 6' DEEP, AS PER PLAN

FOUNDATION FOR LIGHT POLES NOT INSTALLED TO STRUCTURES SHALL BE CONSTRUCTED IN ACCORDANCE WITH ODOT SDC HL-20.11.

DWG 326/788

J:\Project\O\ODOT\15005112 Ironton Russell\LAW\81595\lighting\sheets\81595_N101.dgn - 5/5/2011 3:49:38 PM - brian_wallace

WORK LIMITS

THE WORK LIMITS FOR THE LIGHTING PORTION OF THIS PROJECT ARE FOR THE PHYSICAL CONSTRUCTION OF THE LIGHTING ITEMS LISTED. THE CONTRACTOR SHALL COORDINATE HIS WORK WITH THE PRIME CONTRACTOR AND THE MAINTENANCE OF TRAFFIC PLANS SO AS TO LIMIT ANY ADDITIONAL CLOSURES.

ITEM 625 - LIGHT POLE, DECORATIVE, AS PER PLAN

THIS ITEM SHALL INCLUDE ALL LABOR AND MATERIALS NECESSARY TO FURNISH AND INSTALL A DECORATIVE LIGHT POLE IN ACCORDANCE WITH 625, AS DETAILED IN THE PLANS AND DESCRIBED HEREIN.

THE 12-FOOT TALL DECORATIVE POST SHALL BE ALUMINUM, ONE PIECE CONSTRUCTION. THE 17 1/2-INCH DIAMETER CAST ALUMINUM TALL DECORATIVE FLUTED BASE SHALL BE CONSTRUCTED WITH A 5-INCH DIAMETER ALUMINUM SHAFT AND DESIGNED WITH A DECORATIVE CURVED PEDESTAL BOTTOM SECTION AND TRANSITION TO A TWELVE-FLUTE BASE SECTION. THE BASE SHALL BE MADE OF HEAVY WALL CAST ALUMINUM AND ASTM 6061 EXTRUDED ALUMINUM. THE FLOOR SHALL BE CAST INTEGRALLY WITH THE BASE. THE BASE TOP WILL HAVE A DECORATIVE CURVED TRANSITION TO THE SHAFT. THE SHAFT SHALL BE DOUBLE CIRCUMFERENTIALLY WELDED INTERNALLY AND EXTERNALLY TO THE BASE FOR ADDED STRENGTH. THE STRAIGHT FLUTED SHAFT SHALL BE MADE OF ASTM 6061 EXTRUDED ALUMINUM, TEMPERED TO A T6 CONDITION. IT SHALL HAVE A DECORATIVE FLUTED 3-INCH OUTSIDE DIAMETER FLUTED TENON FOR LUMINAIRE MOUNTING. THE SHAFT SHALL BE DOUBLE CIRCUMFERENTIALLY WELDED INTERNALLY AND EXTERNALLY TO THE BASE FOR ADDED STRENGTH. THE MODEL SHALL BE STERNBERG "KENILWORTH" (531XXFP5/XXX/XX/VG), ANTIQUE STREET LAMPS "CENTRAL PARK" (PX CP18 XX F5 ANVG), OR APPROVED EQUAL.

THE POLE FACTORY FINISH SHALL BE "VERDE GREEN" COLOR MATCHING THAT OF THE EXISTING DECORATIVE POLES IN THE CITY OF IRONTON.

FOUR, 3/4-INCH, HOT-DIPPED GALVANIZED "L" TYPE ANCHOR BOLTS SHALL BE PROVIDED WITH THE POST FOR ANCHORAGE. A DOOR SHALL BE PROVIDED FOR WIRING AND ANCHOR BOLT ACCESS. IT SHALL BE SECURED WITH TAMPER PROOF, STAINLESS STEEL HARDWARE. POST WILL BE PROVIDED WITH GROUNDING STUD MOUNTED ON THE BASE FLOOR OPPOSITE THE ACCESS DOOR.

ITEM 625 - LAMPS

HIGH PRESSURE SODIUM LAMPS SHALL BE GENERAL ELECTRIC "LUCALOX," OSRAM SYLVANIA "LUMALUX," PHILIPS "CEREMALUX," OR EQUAL APPROVED BY THE ENGINEER.

ITEM 625 - LUMINAIRE DECORATIVE, AS PER PLAN

THIS ITEM SHALL INCLUDE ALL LABOR AND MATERIALS NECESSARY TO FURNISH AND INSTALL AN ORNAMENTAL POST TOP LUMINAIRE IN ACCORDANCE WITH 625, AS DETAILED IN THESE PLANS, AND AS DESCRIBED HEREIN.
THE LUMINAIRE SHALL BE A TRADITIONAL ACORN FIXTURE COMPRISING OF A DECORATIVE CAST ALUMINUM FITTER, CAST BALLAST HOUSING ASSEMBLY AND POLYCARBONATE OR ACRYLIC CLEAR TEXTURED ACORN GLOBE. IT SHALL BE APPOINTED WITH A CAST ALUMINUM DECORATIVE FOUR-VANE FINIAL. THE LUMINAIRE SHALL BE GENERAL ELECTRIC "AMERICANA" (AM9F07S5XX1HAAFGRNX), HOLOPHANE "ACRYLIC WASHINGTON POSTLITE" (AW070HP48N3XXX), STERNBERG "OLD TOWN" (A850A/508PT/XX/XX/100HPS480/RE3G/VG), OR APPROVED EQUAL. THE HIGH PRESSURE SODIUM LAMP SHALL BE 70 WATTS, UNLESS NOTED OTHERWISE.

ITEM 625 - LUMINAIRE DECORATIVE, AS PER PLAN (CONT'D)

THE OPTICAL SYSTEM SHALL CONSIST OF PRECISELY MOLDED THERMAL RESISTANCE BOROSILICATE GLASS REFRACTOR AND TOP REFLECTOR WITH A TYPE III DISTRIBUTION.

THE LUMINAIRE BODY FACTORY FINISH SHALL BE "VERDE GREEN" COLOR MATCHING THAT OF THE DECORATIVE LUMINAIRES IN THE CITY OF IRONTON.

ITEM 625 - LUMINAIRE DECORATIVE, AS PER PLAN - ALTERNATE BID

THE DECORATIVE LUMINAIRE SHALL BE FURNISHED WITH ALL THE DESIGN FEATURES, AUXILIARY EQUIPMENT, AND ACCESSORIES AS REQUIRED IN THE STANDARD BID ITEM, UNLESS NOTES OTHERWISE IN THIS DESCRIPTION.

THE DECORATIVE LUMINAIRE SHALL BE STERNBERG "OLD TOWN" (A850A/508PT/XX/XX/100HPS480/RE3G/VG). THE HIGH PRESSURE SODIUM LAMP SHALL BE 100 WATTS.

ITEM 625 - LIGHT POLE FOUNDATION, 24" X 6" DEEP, AS PER PLAN

FOUNDATION FOR LIGHT POLES NOT INSTALLED TO STRUCTURES SHALL BE CONSTRUCTED IN ACCORDANCE WITH ODOT SDC HL-20.11.

ITEM 625 - POWER SERVICE, AS PER PLAN

IN ADDITION TO THE REQUIREMENTS OF THE SPECIFICATIONS, THE FOLLOWING IS ADDED.

THE POWER SUPPLYING AGENCY FOR THE JEFFERSON STREET ROADWAY LIGHTING PORTION OF THIS PROJECT (CONTROL CENTER "Z") IS:

AEP, OHIO POWER
701 HARDING DRIVE
P.O. BOX 468
CHILLICOTHE, OH 45601
(740) 774-7035
CONTACT: LEE GRIFFITH

THE CONTRACTOR SHALL BE RESPONSIBLE FOR ANY CHARGES MADE BY THE POWER COMPANY FOR WORK BY THE COMPANY IN CONJUNCTION WITH THE ESTABLISHMENT OF THE REQUIRED SERVICE.

ELECTRICAL ENERGY FROM EXISTING POWER SERVICES SHALL CONTINUE TO BE CHARGED TO THE MAINTAINING AGENCY.

POWER SERVICE SHALL BE POLE MOUNTED IN ACCORDANCE WITH ODOT'S STANDARD CONSTRUCTION DRAWINGS (SCD) HL-40.10 AND SHALL INCLUDE A TYPE TC-81.10 DESIGN I, STRAIN POLE AND FOUNDATION IN LIEU OF A WOOD POLE. POLE, ENCLOSURE, CONDUITS AND ALL OTHER MISCELLANEOUS HARDWARE ATTACHED TO THE POLE SHALL BE HOT DIP GALVANIZED AND THEN PAINTED IN ACCORDANCE WITH "LIGHTING GENERAL: PAINT SPECIFICATION" ON SHEET XX/XX. THE FINISH COAT COLOR SHALL MATCH THAT OF THE VERDE GREEN DECORATIVE POLES IN THE CITY OF IRONTON. THE METER BASE SHALL BE EQUIPPED WITH A MANUAL BY-PASS.

PAYMENT SHALL BE MADE AT THE UNIT PRICE BID FOR EACH CMS ITEM 625, "POWER SERVICE, AS PER PLAN" WHICH SHALL BE FULL COMPENSATION FOR ALL LABOR, MATERIALS AND INCIDENTALS REQUIRED TO COMPLETE THIS ITEM IN A SATISFACTORY AND WORKMANLIKE MANNER.

ITEM 625 -

THIS W
ALL MA
COMPL
HL-40.
HEREIN

THE PC
CENTEF
JEFFER
POWER
FOUR-

ITEM 625 -

TRENCH
TRENCH
THE PL

ITEM 625 -

THE EX
BE CON
APPRO

ITEM 625 -

ALL LC
NONME
CONTIN
ABOVE
MATERI
POLYE
ACIDS
ENCOUI
WITH IL
ONE SI
ROLLS
CONTIN
TAPE S
ONE ST
AND LC
FINAL
TRENCH
ESSENT
CONTR
INSURE
OTHER
THE TA
SPECIA

ITEM 625 -

A HIGH
PERFOI
SYSTEM
BE PER

Dwg 339/788

J:\Project\O\ODOT\15005112 Ironton Russell\LAW\81595\lighting\sheets\81595_LN103.dgn - 5/5/2011 3:53:49 PM - brian_wallace

Brayman Construction Corporation
1000 John Roebling Way
Saxonburg, PA 16056
Ph. 724-443-1533
Fax 724-443-8733

Field Office
702 S. 1st Street
Ironton, OH 45638
Ph. 740-414-4315
Fax 740-414-4316

Request For Information

BCC Job #: **12-0001** Date: 7/31/2012 Author: Aaron Downs

RFI# 023

BCC# 114-000-000

Project: Bridge No. LAW-93-0.00
Ironton Russell Bridge
Lawrence County, OH
ODOT Project No. 110628

Bridge No.: LAW-93-0.00

Re: Attached to this RFI please find a drawing outlining the changes to the field splice locations that Brayman intends to make on the tower anchor boxes at Pier 3&4. In addition to this Brayman is requesting approval or responses on the following cable box related issues:

1.The location of possible welded shop splices that is also shown on the attached drawings.

2.VSL does not require the upper guide pipes to extend outside the limits of the concrete in the tower for their stay cable system. As such Brayman is requesting to have the guide pipes end flush with the face of the concrete.

3.Due to fabrication tolerances the minimum gap that must be detailed at the field spice locations is ¼".

4.What is the minimum edge distance for the bolted connections at the guide pipe hole openings (where the guide pipe mounting plate attaches to the cable box)?

Response:

We have no objection the the contractor's request to provide four fiels sections instead of three shown on the plans.

1. Currently, the lowest shop splice shown in field section #1 and the shop splice shown in field section #2 are detailed at a tower anchorage point. The tower anchorages are welded to the side anchor box plates with a full penetration weld. Thus you would have a full joint penetration weld occurring at the same spot as a full penetration weld for the anchorages. Please revise the locations of these two shop splices to avoid this condition.
2. No objections, Contractor will need to submit details regarding the proposed free-floating tension ring and the sealing of the guide pipe ends. This response was also made on RFI 006.
3. ODOT directive states "No gap is to exist at splices". However, we have no objection to a 1/4" gap.
4. Edge distance can be determined from sheet 111/365.

All the changes to the anchor box shall be subject to ODOT's approval and shall be done at no additional cost to project.

Issued By: Bipin Lapasia | **Date:** 08-07-2012

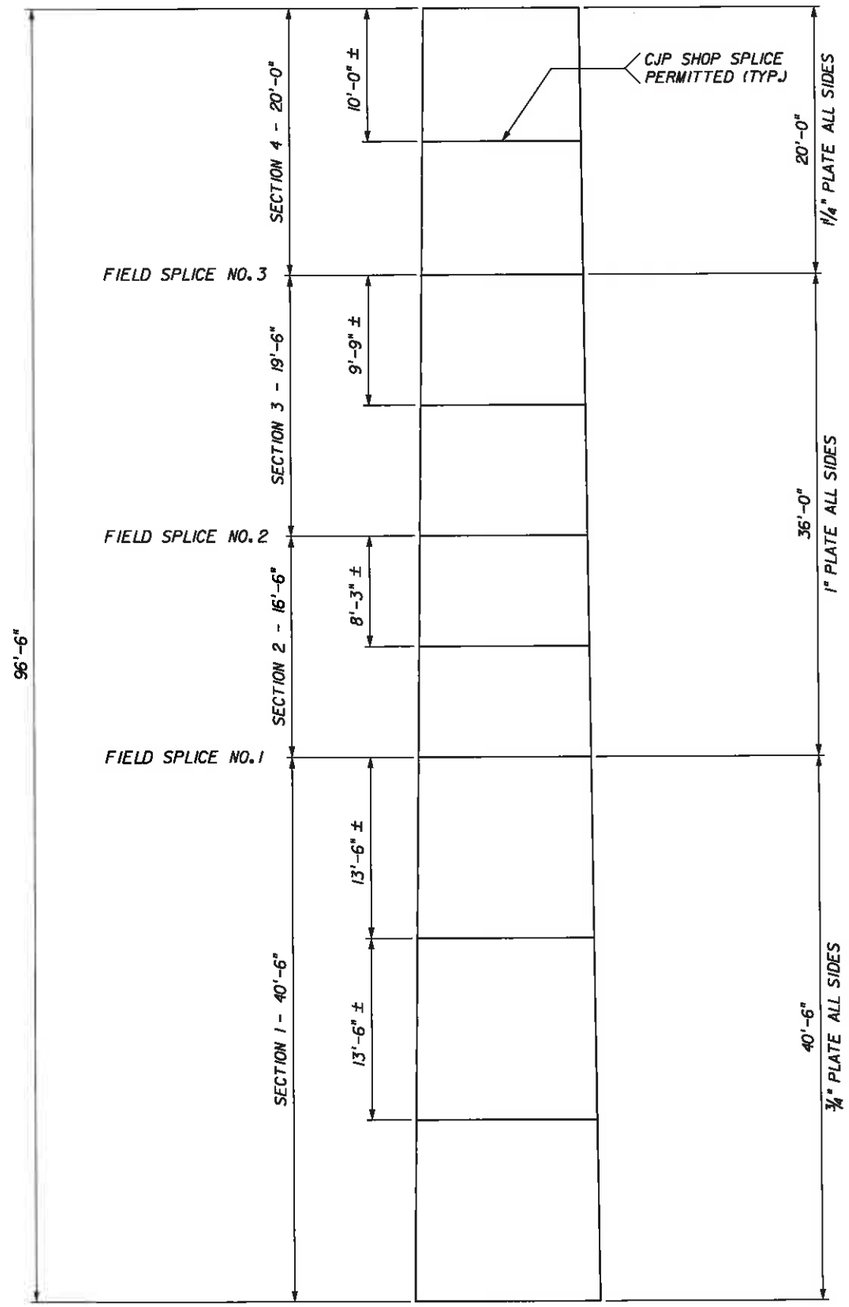

ANCHOR BOX SIDE ELEVATION

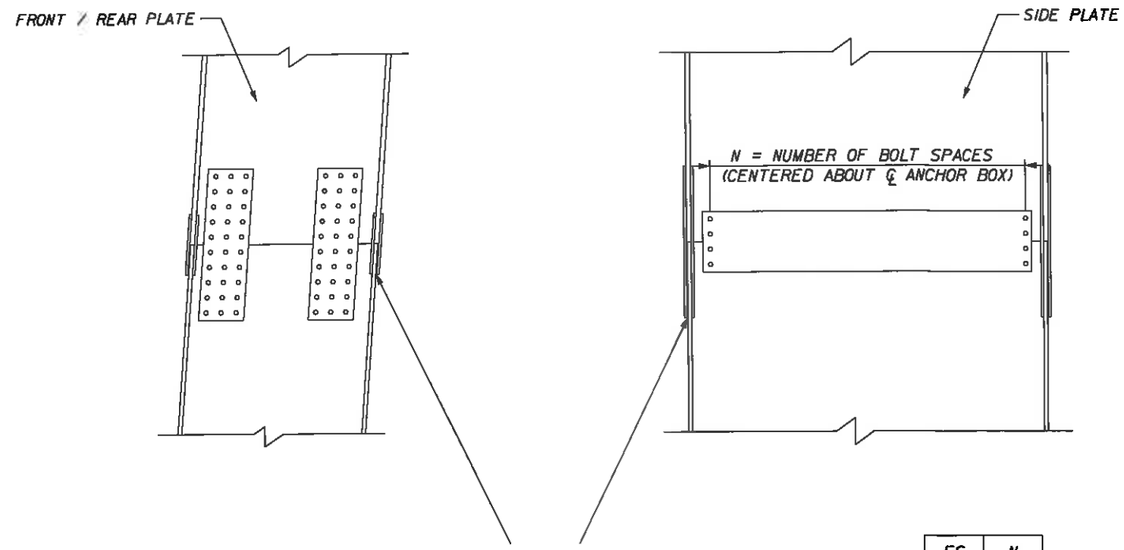

FS	N
1	36
2	35
3	34

LIFTING WEIGHTS			
SECTION	FABRICATED STEEL BOX*	COMPONENTS**	TOTAL WEIGHT ***
1	42.3 kips	13.3 kips	55.6 kips
2	22.1 kips	10.0 kips	32.2 kips
3	25.5 kips	12.5 kips	38.0 kips
4	31.8 kips	10.1 kips	42.0 kips
TOTAL	121.8 kips	45.9 kips	167.8 kips

NOTES:

1. THIS DRAWING OUTLINES THE CHANGES NECESSARY TO CONTRACT DRAWINGS $^{104}/_{365}$ THRU $^{109}/_{365}$ TO SHOW THE ADDITIONAL SPLICES REQUIRED FOR BRAYMAN'S MEANS AND METHODS. ALL OTHER DETAILS ARE PER THE CONTRACT DRAWINGS.
2. SHOP SPLICES PERMITTED IN SIDE PLATES ONLY.

* WEIGHT OF FRONT, REAR AND SIDE PLATES.

** INCLUDES WEIGHT OF STUDS, SPLICE PLATES AND ANCHOR BOX ASSEMBLIES. THIS WEIGHT DOES NOT INCLUDE GUIDE PIPES.

*** INCLUDES WEIGHT OF FRONT, REAR, SIDE PLATES, STUDS, SPLICE PLATES AND ANCHOR BOX ASSEMBLIES. THIS WEIGHT DOES NOT INCLUDE GUIDE PIPES.

This plan was prepared in compliance with contract documents.

Revision	Drawn By	Date	Description

	Name	Date
Drawn By:	CK	07/12
Checked By:	RAA	07/12
Approved By:	JMP	07/12

FINLEY Engineering Group, Inc.
1589 Metropolitan Blvd.
Tallahassee, FL. 32308
850-894-1600
Fax: 850-894-1614

Client: BRAYMAN construction corporation

Project: IRONTON RUSSELL BRIDGE OVER THE OHIO RIVER

Title: ANCHOR BOX FIELD SPLICE 3 FIELD SPLICE CONFIGURATION

Sheet No. 1 of 1

Plotted By: marty.ritchie 7/25/2012 5:05:12 PM G:\Ironton-Russell\CADD\Study\ROBYN_L\stayanchorbox_061512.dgn

LETTER OF TRANSMITTAL

BRAYMAN CONSTRUCTION CORP.
1000 John Roebling Way
Saxonburg, PA 16056
Phone: (724) 443-1533
Fax: (724) 443-8733

To: Ohio Dept. of Transportation
District 9
650 Eastern Avenue
Chillicothe, OH 45601

Project: SR-93-0.00
Ironton Russell Bridge
Lawrence County, OH
Project No. 110628

BCC # 124-000-000

Attention: Dave Bame

Date: September 4, 2012

We are sending you the following items:

☐ Under Separate Cover ☑ Attached

☐ Copy of Letter ☐ Prints ☐ Specifications ☐ Change Order

☐ Shop Drawings ☐ Plans ☐ _____

Copies	Date	Description
1	9/4/12	RFI 029 Anchor Box Bolt Holes (Wabash Steel)

Transmitted for the following purpose:

☐ For Approval ☐ Approved as Submitted ☐ Resubmit __ copies for approval

☐ For Your Use ☐ Approved as Noted ☐ Submit __ copies for distribution

☐ As Requested ☐ Returned for Corrections ☐ Return __ corrected prints

☑ For Review & Comment ☐ For Certification

MAIL: ◯ Regular ◯ Overnight ◯ Certified ✓ Email **FAX:** ◯

Remarks:

Aaron Downs

Signed: Aaron Downs
Project Engineer

cc: File/arb
Dan Beasley
Edwin Callicutt
Eric McLaughlin

Ironton Russell Bridge over Ohio River

LAW-93C-0000

RFI 029

Anchor Box Bolt Holes

For:

STATE OF OHIO DEPARTMENT OF TRANSPORTATION

District 9

Submitted By:

BRAYMAN construction corporation

1000 John Roebling Way

Saxonburg, Pa 16056

September 4, 2012

Wabash Steel LLC

ENGINEERING & ESTIMATING
6235 Westerville Road
Westerville, OH 43081
Ph. 614-212-5838
Fax 614-212-5799

FABRICATION PLANT
2007 Oliphant Drive
Vincennes, IN 47591
Ph. 812-882-4550
Fax 812-882-4525

Request For Information

Wabash Job #: **17083** **RFI# 008** Date: 9/4/12 Author: Morgan Gillett

Project Data: ODOT Project No. 628(11)
Bridge No. LAW-93-0000, Ironton Russell Bridge Over Ohio River
MAIN SPAN – Tower Cable Anchor Boxes
Ref. No. 429 ; Structural Steel *(Fabrication/Furnish Only)*

Bridge No.: LAW-93-0000 ; MAIN SPAN ; Tower Cable Anchor Boxes

Re: Anchor Box Holes

It has been our previous experience that with galvanized structures, the designs typically allow for a minimum of 1/8" oversized holes, due to the extra thickness of galv. coating in conjunction with field fit-up, etc... The current designs don't allow for oversized holes.

Is it acceptable to oversize the bolt hole connections to 1-1/8" (ie. field splices, guide pipe mounting plate connections, etc…)? ODOT specification will be followed, by providing 2 washers for each bolt connection.

Additionally, is it acceptable to oversize any misc. holes by 1/8" located on the anchor boxes for instrumentation and any other misc. connections?

A response by Monday September 10th, 2012 or sooner is requested.

Response: We have no objection to using 1 1/8" diameter holes for 1" diameter bolts for field splices, subject to approval by ODOT.

Issued By: Bejin K. Kapasi **Date:** 9/5/12

LETTER OF TRANSMITTAL

BRAYMAN CONSTRUCTION CORP.
1000 John Roebling Way
Saxonburg, PA 16056
Phone: (724) 443-1533
Fax: (724) 443-8733

To: Ohio Dept. of Transportation
District 9
650 Eastern Avenue
Chillicothe, OH 45601

Project: SR-93-0.00
Ironton Russell Bridge
Lawrence County, OH
Project No. 110628

BCC # 132-000-000

Attention: Dave Bame

Date: October 9, 2012

We are sending you the following items:

- ☐ Under Separate Cover
- ☑ Attached
- ☐ Copy of Letter
- ☐ Prints
- ☐ Specifications
- ☐ Change Order
- ☐ Shop Drawings
- ☐ Plans
- ☐ _____

Copies	Date	Description
1	10/8/12	RFI 034 Elastomeric Bearing Materials

Transmitted for the following purpose:

- ☑ For Approval
- ☐ Approved as Submitted
- ☐ Resubmit __ copies for approval
- ☐ For Your Use
- ☐ Approved as Noted
- ☐ Submit __ copies for distribution
- ☐ As Requested
- ☐ Returned for Corrections
- ☐ Return __ corrected prints
- ☐ For Review & Comment
- ☐ For Certification

MAIL: ○ Regular ○ Overnight ○ Certified ✓ Email **FAX:** ○

Remarks:

Aaron Downs

Signed: Aaron Downs
Project Engineer

cc: File/arb
Dan Beasley
Edwin Callicutt
Eric McLaughlin

Ironton Russell Bridge over Ohio River

LAW-93C-0000

RFI 034 Elastomeric Bearing Materials

For:

District 9

Submitted By:

1000 John Roebling Way

Saxonburg, Pa 16056

October 9, 2012

DS Brown Company
300 East Cherry Street
North Baltimore, OH 45872
(419) 257-3561
(419) 257-0332 [Engineering Fax #]

D.S. BROWN
A GIBRALTAR INDUSTRIES COMPANY

Request for Information

Date Sent: 10/3/12 Response Requested by: ASAP

DS Brown RFI #: 36086-1104-RFI#2
(File name format: DS Brown Project # - Product Code – RF# or #####-####-RF#)

Contractor:	**Brayman Construction**
To:	**Aaron Downs**
Project Description:	**Ironton Russell Bridge over the Ohio River, Bridge LAW-93-0000**
Project #:	**81595 / PID 110628 / FAP # E040 (653)**
Email Address:	**a_downs@brayman.com**
DS Brown Project #:	**36086-1104**
Reply to:	**Alecia Kuhn**
E-mail Address:	**akuhn@dsbrown.com**
Phone Number:	**419-257-5409**
Subject:	**5/16" Stainless Steel Sheet Substitution Request**

Shop Drawing Status:

- ☐ Able to Proceed
- ☐ Able to Proceed BUT requested information needed prior to drawing submittal
- ☒ **ON HOLD** until receipt of requested information

Please provide the following items:

- ☐ Special Provisions
- ☐ Field Measurements (sketch provided—please complete)
- ☐ Structural Steel Drawings
- ☐ "As Built" Shop Drawings
- ☐ Finish Details
  - ☐ Federal Color Number
  - ☐ Paint System
- ☒ Contract Document Clarification (explanation provided below)
- ☐ Other (explanation provided below)

Explanation: During purchasing of the 5/16" stainless steel sheet for the bearings on Pier 1 of the Kentucky Approach, it was discovered that the lead time for this material is much longer than what was originally anticipated. A 5/16" #8 mirror stainless steel sheet is not a standard stock item and has to be specially made. Because of this, the lead time is 4 weeks longer than normal. DS Brown requests the substitution of 1/4" stainless steel in lieu of 5/16". Because this sheet is welded to the bottom of the load plate there is no structural concern with a thinner sheet. The load plate thickness will be increased 1/16" in order to maintain the total bearing height. These bearings are a critical part of the contractors schedule and we do not want to delay construction. Please advise if this substitution and adjustment to the load plate is acceptable.

We have no objection to the Contractor's request as outline in this RFI. Bipin K. Kapasi
ORS / 10-9-12

LETTER OF TRANSMITTAL

BRAYMAN CONSTRUCTION CORP.
1000 John Roebling Way
Saxonburg, PA 16056
Phone: (724) 443-1533
Fax: (724) 443-8733

To: Ohio Dept. of Transportation
District 9
650 Eastern Avenue
Chillicothe, OH 45601

Project: SR-93-0.00
Ironton Russell Bridge
Lawrence County, OH
Project No. 110628

BCC # 133-000-000

Attention: Dave Bame

Date: October 10, 2012

We are sending you the following items:

- ☐ Under Separate Cover
- ☑ Attached
- ☐ Copy of Letter
- ☐ Prints
- ☐ Specifications
- ☐ Change Order
- ☐ Shop Drawings
- ☐ Plans
- ☐ _____

Copies	Date	Description
1	10/10/12	RFI 035 Field Bolts for Structural Steel

Transmitted for the following purpose:

- ☑ For Approval
- ☐ Approved as Submitted
- ☐ Resubmit __ copies for approval
- ☐ For Your Use
- ☐ Approved as Noted
- ☐ Submit __ copies for distribution
- ☐ As Requested
- ☐ Returned for Corrections
- ☐ Return __ corrected prints
- ☐ For Review & Comment
- ☐ For Certification

MAIL: ◯ Regular ◯ Overnight ◯ Certified ☑ Email **FAX:** ◯

Remarks:

Aaron Downs

Signed: Aaron Downs
Project Engineer

cc: File/arb
Dan Beasley
Edwin Callicutt
Eric McLaughlin

Ironton Russell Bridge over Ohio River

LAW-93C-0000

RFI 035

Field Bolts for Structural Steel

For:

District 9

Submitted By:

1000 John Roebling Way

Saxonburg, Pa 16056

October 10, 2012

Brayman Construction Corporation
1000 John Roebling Way
Saxonburg, PA 16056
Ph. 724-443-1533
Fax 724-443-8733

Field Office
702 S. 1st Street
Ironton, OH 45638
Ph. 740-414-4315
Fax 740-414-4316

Request For Information

BCC Job #: **12-0001** Date: October 10, 2012 Author: Aaron Downs

RFI# 035

BCC# 133-000-000

Project: Bridge No. LAW-93-0.00
Ironton Russell Bridge
Lawrence County, OH
ODOT Project No. 110628

Bridge No.: LAW-93-0.00

Re:

In preparation for ordering the field bolts for the structural steel, Wabash Steel would like to address the following,

1. KY APPROACH designs 40/365 says “all bolts in field splices shall be 7/8” diameter high strength bolts per ASTM A325 Type III”.

2. OH APPROACH designs 320/365 says “high strength bolts shall be 1” diameter A325 type 3”, and 327/365 says “all bolts in field splices shall be 1” diameter high strength bolts per ASTM A325 type III”.

Typically, when there is painted portions of the steel, Type 1 GALV. bolts are specified. Since the facia girders are painted, Wabash Steel is asking if the facia girders require galvanized bolts.

A response if these bolts in the facia girders should be galvanized is requested by 10/12/2012.

Response:

We agree that the bolts in the fascia girders should be A-325, Type 1, Galvanized bolts.
Bipin Lapasia/URS October 10, 2012.

Issued By:	**Date:**

Lapasia, Bipin

From: Lapasia, Bipin
Sent: Saturday, January 12, 2013 2:17 PM
To: 'Callicutt, Ed'
Cc: Bame, Dave (Dave.Bame@dot.state.oh.us); Rhodes, Brian; Johnston, Brian
Subject: RE: DS-43. Pier 5

Ed:

URS and our geotechnical sub-consultant Stantec have reviewed the issue and our response is as follows.

Leaving the casing in-place would not result in a decrease in the capacity of the drilled shaft. The contractor can leave the casing in-place if that is how the Contractor wishes to proceed however, it should be done at no additional cost to the project

We request that the future inquiries like these should be submitted as RFIs.

Please let me know If you have any questions.

Thanks.

Bipin

Bipin K. Lapasia, P. E.
Senior Project Manager

525 Vine Street, Suite 1800 Cincinnati, OH 45202 Website | Map

Office: 513-651-3440
Direct: 513-419-3519
Fax: 877.660.7727

Email: bipin.lapasia@urs.com

-----Original Message-----
From: Callicutt, Ed [mailto:ecallicutt@figgbridge.com]
Sent: Thursday, January 10, 2013 1:26 PM
To: Lapasia, Bipin; Rhodes, Brian
Cc: Bame, Dave; Davidson, Brian
Subject: DS-43. Pier 5

Gentlemen...Brayman was unable to fully extract the temporary casing at the referenced shaft, hence the casing will now be permanent. That is the Brayman proposal, leave it in place. Shaft as built parameters:

Elevation at bottom of hole: +463.8

Elevation at lower tip of casing: +477.9

Brayman was able to move the casing approximately 3.5 ft while extracting immediately following concrete placement, but it hung and they were not able to move it any further.

Please review the as built condition and confirm adequacy. Please call if additional information is required.

Edwin W. Callicutt, III, P.E.
Construction Manager
FIGG
54 South Greeno Rd.
Suite B
Fairhope, AL 36532
Ph.: (251) 929-7720
Cell: (912) 399-1569
Fax: (251) 929-7730
ecallicutt@figgbridge.com
http://www.figgbridge.com

This email and any files transmitted with it are confidential and intended solely for the use of the individual or entity to whom they are addressed. If you have received this email in error please notify the system manager. Please note that any views or opinions presented in this email are solely those of the author and do not necessarily represent those of FIGG Engineering Group. Finally, the recipient should check this email and any attachments for the presence of viruses. FIGG accepts no liability for any damage caused by any virus transmitted by this email.

Lapasia, Bipin

From: Lapasia, Bipin
Sent: Wednesday, January 16, 2013 8:43 AM
To: 'Callicutt, Ed'
Cc: Bame, Dave (Dave.Bame@dot.state.oh.us); Johnston, Brian; Rhodes, Brian
Subject: RE: Rebar Projections at Pier 5 (RFI # 42)

Ed:

Based on our response to RFI 039 we called for the drilled shaft reinforcement to extend a minimum of 8'-6" into the foundation. From Brayman's email below, only 4'-9 ½" was provided. Lapping additional #14 bars is not feasible as the 4'-9 ½" would not provide enough for a Class "C" splice. Coupling additional #14 bars would be expensive as Pier 5 would require 152 #14 bar couplers for the four drilled shafts. Based on this information and to find an economical solution, URS reviewed the original design and provides the following solution. Provide an addition 8'-6" long #10 bar to be lapped with each #14 bar in all four drilled shafts. These bars are sufficient to transfer the drilled shaft moment into the foundation (ie. A fixed connection) and to provide a load path for the pier loads into the shafts. These additional bars should be provided at no additional cost to the project.

Please let me know if you have any questions.

Thanks.

Bipin

Bipin K. Lapasia, P. E.
Senior Project Manager

URS

525 Vine Street, Suite 1800
Cincinnati, OH 45202
Website | Map

Office: 513-651-3440
Direct: 513-419-3519
Fax: 877.660.7727

Email: bipin.lapasia@urs.com

From: Callicutt, Ed [mailto:ecallicutt@figgbridge.com]
Sent: Saturday, January 12, 2013 7:47 AM
To: Lapasia, Bipin; Rhodes, Brian
Cc: Ed Callicutt; Brian Davidson
Subject: Fwd: Rebar Projections at Pier 5

Hello Bipin...please comment on the attached query by Brayman. This is a high priority issue. Thanks

Edwin Callicutt, III
912.399.1569

Sent from my iPhone

Begin forwarded message:

From: Tom Hesmond <t_hesmond@brayman.com>
Date: January 11, 2013, 4:19:36 PM EST
To: "Bame, Dave" <Dave.Bame@dot.state.oh.us>
Cc: "Callicutt, Ed" <ecallicutt@figgbridge.com>, Aaron Downs <a_downs@brayman.com>
Subject: Rebar Projections at Pier 5

Dave,

As you know the rebar was received prior to the change in depth for the caissons at pier 5. Also there was some slight over drilling and with the hooks having to be removed do to the design error we have the following average rebar projection lengths at Pier 5:

DS40 - 5'-4"
DS41 - 4'-9.5"
DS42 - 5'-8.5"
DS43 - 4'-9.75"

Please advise if these projections are acceptable of if additional rebar will need to be spliced on.

Thanks,
Tom

Sincerely,

Thomas M. Hesmond, P.E.
Superintendent/Project Manager
Brayman Construction Corp.
Phone: 724-443-1533 ext. 50131
Fax: 740-414-4316
Cell: 412-292-3219

Confidentiality Message for Email:

PRIVILEGE AND CONFIDENTIALITY NOTICE: This electronic material and the information contained in it is intended only for the use of the individual or entity to which it is addressed and may contain information that is privileged, confidential and exempt from disclosure. If the reader of this message is not the intended recipient or an employee or agent responsible for delivering the message to the intended recipient, you are hereby notified that any dissemination, distribution or copying of this communication is strictly prohibited. If you have received this communication in error, please notify Brayman Construction Corporation immediately at 724.443.1533 or notify the sender immediately by replying to this message.

LETTER OF TRANSMITTAL

BRAYMAN CONSTRUCTION CORP.
1000 John Roebling Way
Saxonburg, PA 16056
Phone: (724) 443-1533
Fax: (724) 443-8733

To: Ohio Dept. of Transportation
District 9
650 Eastern Avenue
Chillicothe, OH 45601

Project: SR-93-0.00
Ironton Russell Bridge
Lawrence County, OH
Project No. 110628

BCC # 150-000-000

Attention: Dave Bame

Date: February 4, 2013

We are sending you the following items:

- [ ] Under Separate Cover
- [x] Attached
- [ ] Copy of Letter
- [ ] Prints
- [ ] Specifications
- [ ] Change Order
- [ ] Shop Drawings
- [ ] Plans
- [ ] _____

Copies	Date	Description
1	2/4/13	RFI 045 Pier 5 Footing Rebar

Transmitted for the following purpose:

- [x] For Approval
- [ ] Approved as Submitted
- [ ] Resubmit __ copies for approval
- [ ] For Your Use
- [ ] Approved as Noted
- [ ] Submit __ copies for distribution
- [ ] As Requested
- [ ] Returned for Corrections
- [ ] Return __ corrected prints
- [ ] For Review & Comment
- [ ] For Certification

MAIL: ◯ Regular ◯ Overnight ◯ Certified ✓ Email **FAX:** ◯

Remarks:

Aaron Downs

Signed: Aaron Downs
Project Engineer

cc: File/arb
Dan Beasley
Edwin Callicutt
Eric McLaughlin

Ironton Russell Bridge over Ohio River

LAW-93C-0000

RFI 045 Pier 5 Footing Rebar

For:

District 9

Submitted By:

1000 John Roebling Way

Saxonburg, Pa 16056

February 4, 2013

Brayman Construction Corporation
1000 John Roebling Way
Saxonburg, PA 16056
Ph. 724-443-1533
Fax 724-443-8733

Field Office
702 S. 1st Street
Ironton, OH 45638
Ph. 740-414-4315
Fax 740-414-4316

Request For Information

BCC Job #: **12-0001** Date: February 4, 2013 Author: Aaron Downs

RFI# 045

BCC# 150-000-000

Project: Bridge No. LAW-93-0.00
Ironton Russell Bridge
Lawrence County, OH
ODOT Project No. 110628

Bridge No.: LAW-93-0.00

Re: Pier 5 Footing Rebar

Due to the design length of the single 90 degree bend in the Pier 5 Footer, several of the bars are unable to be shipped to the job due to the max with of the trailers being 8'-0". The bars that are affected in the footing are:
PF503
PF504
See Finley Engineering Approved Shop Drawing F-30& F-31 for footing details.

Brayman suggests to add a lap bar in the top mat to correct this issue. The drawing calls for a minimum of 7'-1" lap on the top mat for these bars. We suggest leaving the vertical bar lengths the same and shorten up the long dimensions to 7'-1". There would then need to be an additional straight bar to create the necessary 7'-1" lap length on each end. Please provide revised contract drawings to address this issue.

Response:

We have no objection to the contractor's proposed revision to 8PF503 and 8PF504 reinforcing bars in the top mat of the Pier 5 footing. The additional lap lengths of these bars and additional bars with 90 degree hooks shall be provided at no additional cost to the project and the change shall be reflected on the As-Built drawings.

Issued By: Bipin Lapasia **Date:** 02/04/2013

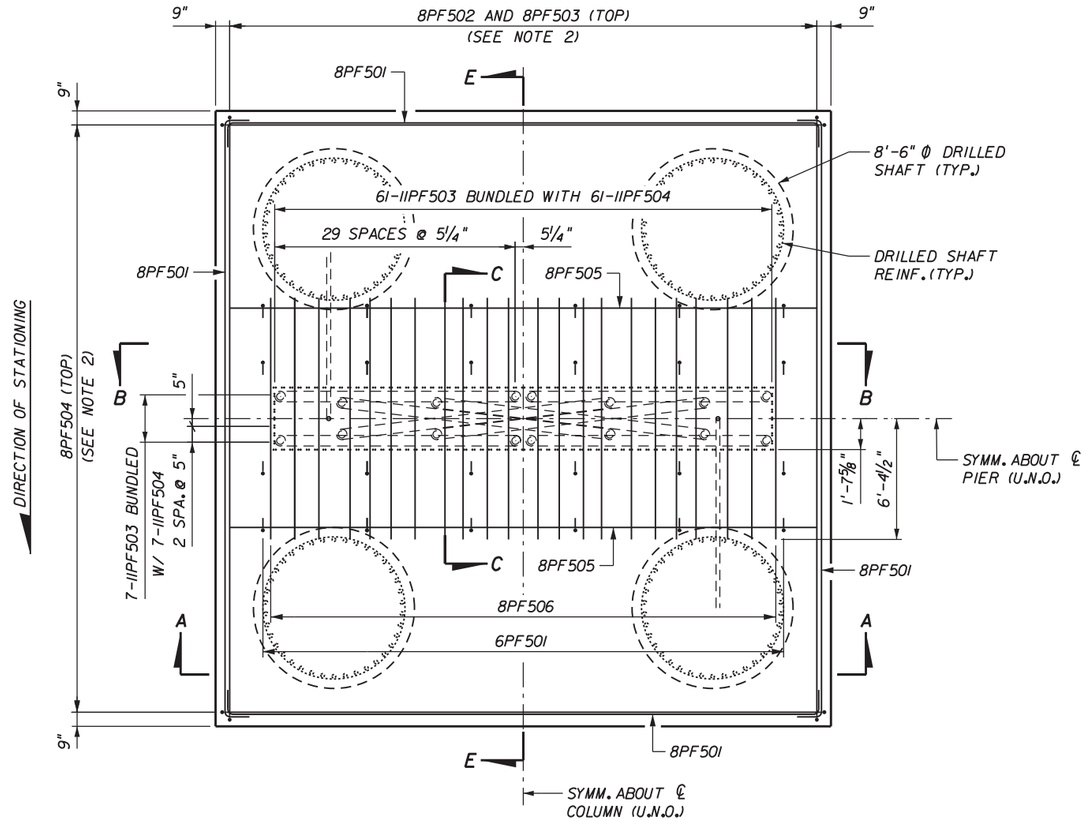

PLAN
(AT TOP OF FOOTING)

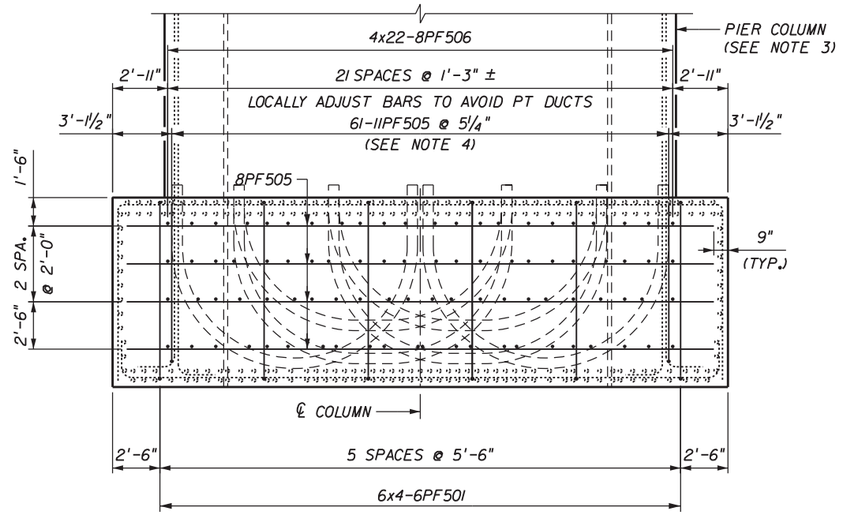

SECTION B-B

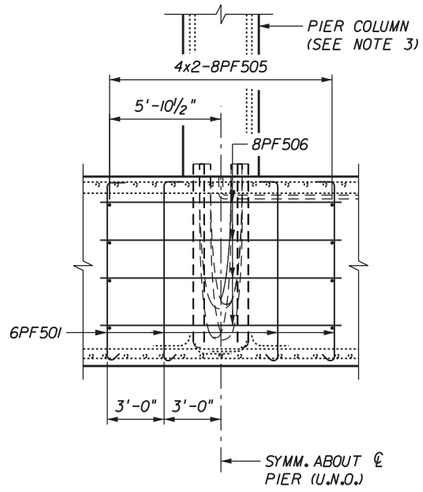

SECTION C-C

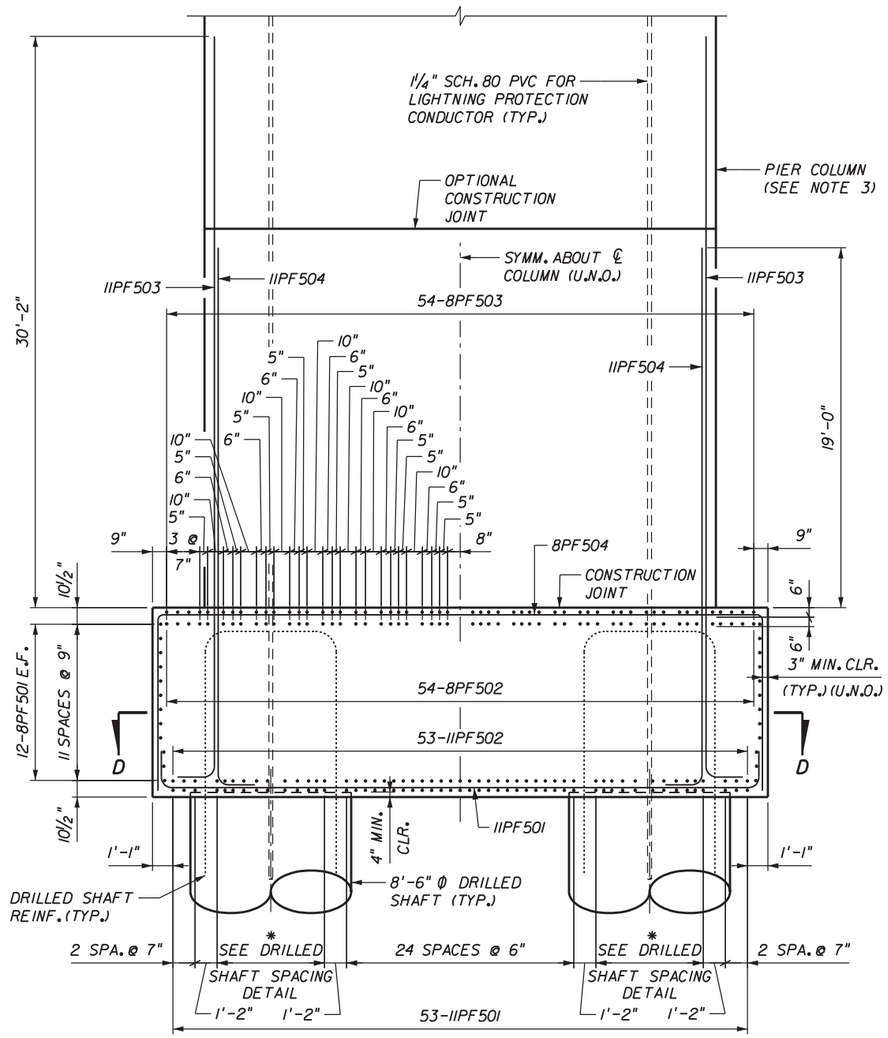

SECTION A-A

NOTES:

1. FOR FOOTING DIMENSIONS, SEE "PIER 5 FOOTING DIMENSIONS AND PT DETAILS" SHEET.
2. LOCALLY ADJUST BAR SPACING TO AVOID CONFLICT WITH IIPF503 AND IIPF504 BARS.
3. PIER COLUMN REINFORCING NOT SHOWN. FOR PIER COLUMN REINFORCEMENT, SEE "PIER 5 COLUMN REINFORCEMENT" SHEET.
4. BARS IIPF505 ARE PROVISIONAL REINFORCEMENT TO BE USED FOR FUTURE PIER STRENGTHENING.
5. U.N.O. DENOTES UNLESS NOTED OTHERWISE.
6. FOR SECTION D-D, SEE "PIER 5 REINFORCMENT II" SHEET.

* FOR "DRILLED SHAFT SPACING DETAIL", SEE "PIER 5 REINFORCEMENT II" SHEET.

Review is only for conformance with the design concept. Review does not cover dimensions, quantities, accuracy, fit, or any assembly for which this item may be a component. Review does not authorize deviation from Contract Documents or substitution of materials. Requests for deviations from the Contract Documents will only be addressed thru the Change Order Process.

REVIEWED

CONFORMS WITH CONCEPT	(✓)
CONFORMS AS NOTED	( )
RESUBMIT	( )
NO ACTION	( )
DOES NOT CONFORM	( )

URS

DATE 8/6/12 BY

STATE OF OHIO
R. CRAIG FINLEY, JR.
REGISTERED PROFESSIONAL ENGINEER
7/13/2012

I HAVE REVIEWED THESE SHOP DRAWINGS FOR CONSISTENCY WITH THE CONTRACT DRAWINGS AND MY ENDORSEMENT IS LIMITED TO COMPLIANCE WITH SECTION 104, 'SHOP DRAWINGS', IN THE CONTRACT SPECIAL PROVISIONS FOR CONCRETE AND SEGMENT PRODUCTION FOR CABLE-STAYED CONSTRUCTION.
R. CRAIG FINLEY, JR., P.E. E59149

This plan was prepared in compliance with contract documents.

Revision	Drawn By	Date	Description

	Name	Date
Drawn By:	BAB	03/12
Checked By:	MWR	03/12
Approved By:	RCF	03/12

FINLEY Engineering Group, Inc.
1589 Metropolitan Blvd.
Tallahassee, FL. 32308
850-894-1600
Fax: 850-894-1614

Client: BRAYMAN construction corporation — Innovative Solutions — Since 1947

Project: IRONTON RUSSELL BRIDGE OVER THE OHIO RIVER

Title: PIER 5 FOOTING REINFORCMENT I

Sheet No. F-30

Plotted By: marty.ritchie 7/13/2012 4:18:03 PM G:\Ironton-Russell\CADD\Shop_Drawings\SubStructure\Pier_5\P5_FootingReInf.dgn

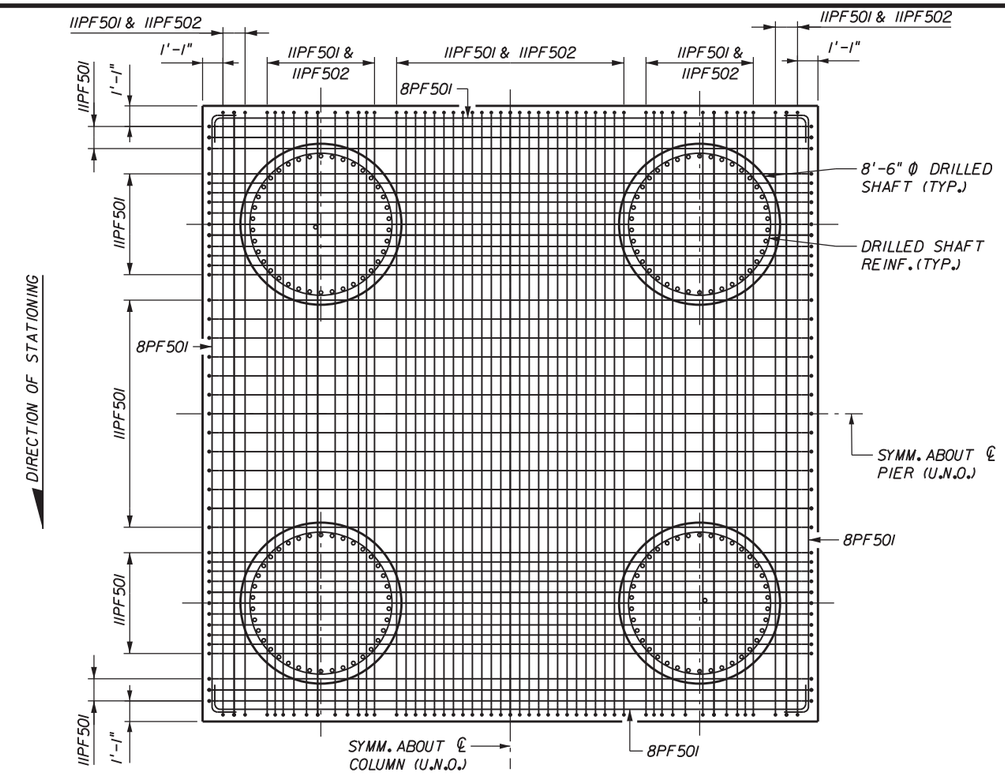

SECTION D-D

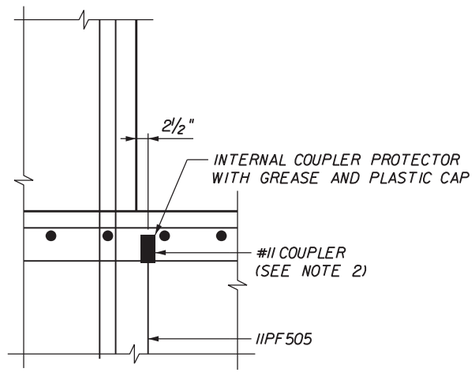

DETAIL 1

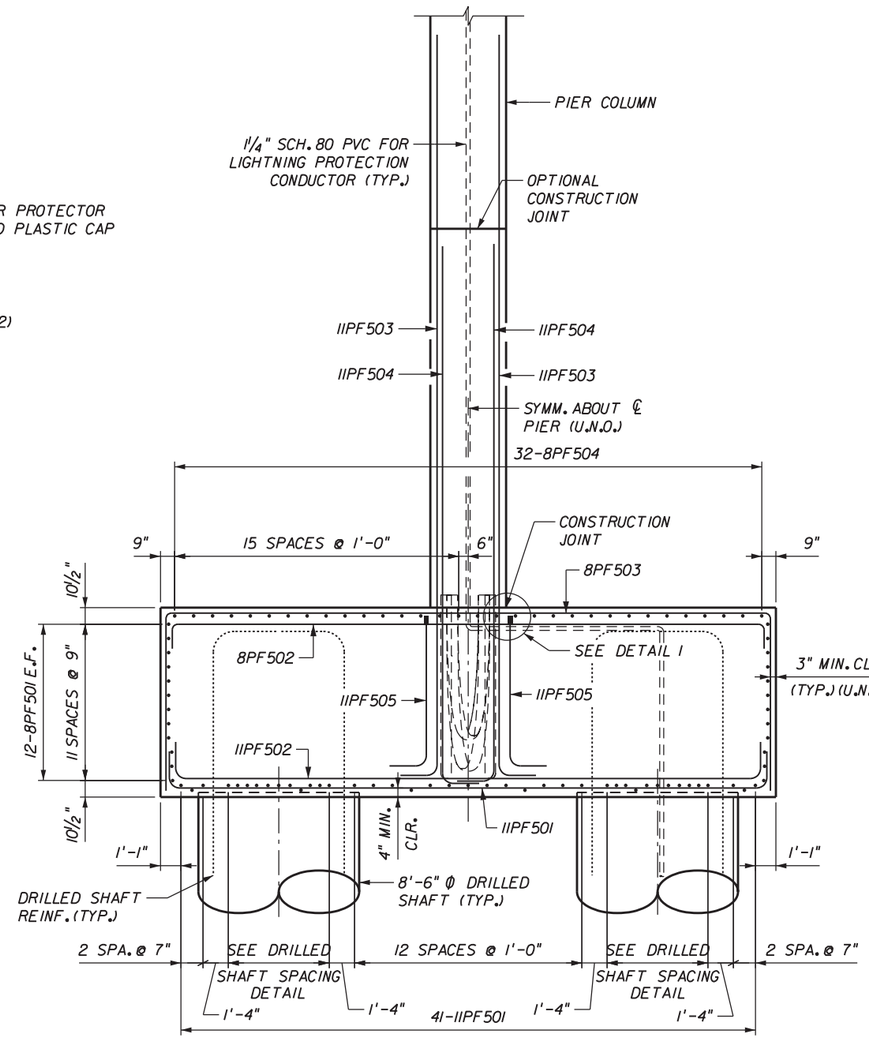

SECTION E-E

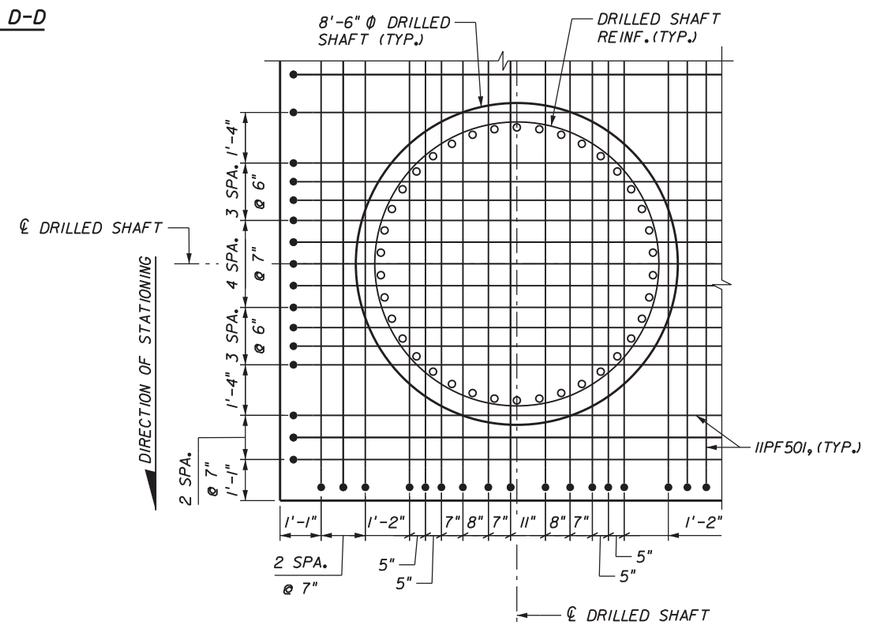

DRILLED SHAFT SPACING DETAIL

NOTES:

1. FOR GENERAL REINFORCMENT NOTES, SEE "PIER 5 REINFORCEMENT I" SHEET.
2. MECHANICAL COUPLERS SHALL BE CAPABLE OF DEVELOPING 125 PERCENT YIELD STRENGTH OF THE BARS BEING SPLICED.
3. ALTERNATE ENDS OF 5PF503 TIES.

Bars 5PF503 are not shown in any detail?

Review is only for conformance with the design concept. Review does not cover dimensions, quantities, accuracy, fit, or any assembly for which this item may be a component. Review does not authorize deviation from Contract Documents or substitution of materials. Requests for deviations from the Contract Documents will only be addressed thru the Change Order Process.

REVIEWED

CONFORMS WITH CONCEPT	( )
CONFORMS AS NOTED	(✓)
RESUBMIT	( )
NO ACTION	( )
DOES NOT CONFORM	( )

URS

DATE 8/6/12 BY

STATE OF OHIO R. CRAIG FINLEY, JR. REGISTERED PROFESSIONAL ENGINEER

7/13/2012

I HAVE REVIEWED THESE SHOP DRAWINGS FOR CONSISTENCY WITH THE CONTRACT DRAWINGS AND MY ENDORSEMENT IS LIMITED TO COMPLIANCE WITH SECTION 04, 'SHOP DRAWINGS', IN THE CONTRACT SPECIAL PROVISIONS FOR CONCRETE AND SEGMENT PRODUCTION FOR CABLE-STAYED CONSTRUCTION.
R. CRAIG FINLEY, JR., P.E. E59149

This plan was prepared in compliance with contract documents.

Revision	Drawn By	Date	Description

	Name	Date
Drawn By:	BAB	03/12
Checked By:	MWR	03/12
Approved By:	RCF	03/12

FINLEY Engineering Group, Inc.
1589 Metropolitan Blvd.
Tallahassee, FL. 32308
850-894-1600
Fax: 850-894-1614

Client: BRAYMAN construction corporation — Innovative Solutions Since 1947

Project: IRONTON RUSSELL BRIDGE OVER THE OHIO RIVER

Title: PIER 5 FOOTING REINFORCEMENT II

Sheet No. F-31

Plotted By: marty.ritchie 7/13/2012 4:18:30 PM G:\Ironton-Russell\CADD\Shop_Drawings\SubStructure\Pier_5\P5_FootingReInf.dgn

LETTER OF TRANSMITTAL

BRAYMAN CONSTRUCTION CORP.
1000 John Roebling Way
Saxonburg, PA 16056
Phone: (724) 443-1533
Fax: (724) 443-8733

To: Ohio Dept. of Transportation
District 9
650 Eastern Avenue
Chillicothe, OH 45601

Project: SR-93-0.00
Ironton Russell Bridge
Lawrence County, OH
Project No. 110628

BCC # 151-000-000

Attention: Dave Bame

Date: February 6, 2013

We are sending you the following items:

☐ Under Separate Cover ☑ Attached

☐ Copy of Letter ☐ Prints ☐ Specifications ☐ Change Order

☐ Shop Drawings ☐ Plans ☐ _____

Copies	Date	Description
1	2/6/13	RFI 046 Rear Abutment Rebar at Wingwall 2

Transmitted for the following purpose:

☐ For Approval ☐ Approved as Submitted ☐ Resubmit __ copies for approval

☐ For Your Use ☐ Approved as Noted ☐ Submit __ copies for distribution

☐ As Requested ☐ Returned for Corrections ☐ Return __ corrected prints

☑ For Review & Comment ☐ For Certification

MAIL: ◯ Regular ◯ Overnight ◯ Certified ✓ Email **FAX:** ◯

Remarks:

Aaron Downs

Signed: Aaron Downs
Project Engineer

cc: File/arb
Dan Beasley
Edwin Callicutt
Eric McLaughlin

Ironton Russell Bridge over Ohio River

LAW-93C-0000

RFI 046 Rear Abutment Rebar at Wingwall 2

For:

District 9

Submitted By:

1000 John Roebling Way

Saxonburg, Pa 16056

February 6, 2013

Brayman Construction Corporation
1000 John Roebling Way
Saxonburg, PA 16056
Ph. 724-443-1533
Fax 724-443-8733

Field Office
702 S. 1st Street
Ironton, OH 45638
Ph. 740-414-4315
Fax 740-414-4316

Request For Information

BCC Job #: **12-0001** Date: February 6, 2013 Author: Aaron Downs

RFI# 046

BCC# 151-000-000

Project: Bridge No. LAW-93-0.00
Ironton Russell Bridge
Lawrence County, OH
ODOT Project No. 110628

Bridge No.: LAW-93-0.00

Re: Rear Abutment Rebar at Wingwall 2

Please reference plan sheets 414/788, 452/788. Per the contract drawings bar MK AR6005 was fabricated to go from construction joint to construction joint. The 2'-3" required to embed these bars in the previous pour was not detailed in the cut sheets, therefore all verticals are 2'3" short.

J&B suggests adding a lap splice bar onto each of the AR6005s

Please advise as to how Brayman should proceed with construction of the next pour.

Response:

We agree that the AR 6005 bars are short. We recommend adding a #5 x 4'-8" long bar on to each AR 6005 bar with a lap splice of 2' - 5".

Issued By: Bipin Lapasia **Date:** Feb. 06, 2013

LETTER OF TRANSMITTAL

BRAYMAN CONSTRUCTION CORP.
1000 John Roebling Way
Saxonburg, PA 16056
Phone: (724) 443-1533
Fax: (724) 443-8733

To: Ohio Dept. of Transportation
District 9
650 Eastern Avenue
Chillicothe, OH 45601

Project: SR-93-0.00
Ironton Russell Bridge
Lawrence County, OH
Project No. 110628

BCC # 153-000-000

Attention: Dave Bame

Date: February 14, 2013

We are sending you the following items:

☐ Under Separate Cover ☑ Attached

☐ Copy of Letter ☐ Prints ☐ Specifications ☐ Change Order

☐ Shop Drawings ☐ Plans ☐ _____

Copies	Date	Description
1	2/14/13	RFI 047 Pier 2 Elevations

Transmitted for the following purpose:

☑ For Approval ☐ Approved as Submitted ☐ Resubmit __ copies for approval

☐ For Your Use ☐ Approved as Noted ☐ Submit __ copies for distribution

☐ As Requested ☐ Returned for Corrections ☐ Return __ corrected prints

☐ For Review & Comment ☐ For Certification

MAIL: ○ Regular ○ Overnight ○ Certified ✓ Email **FAX:** ○

Remarks:

Aaron Downs

Signed: Aaron Downs
Project Engineer

cc: File/arb
Dan Beasley
Edwin Callicutt
Eric McLaughlin

Ironton Russell Bridge over Ohio River

LAW-93C-0000

RFI 047 Pier 2 Elevations

For:

District 9

Submitted By:

1000 John Roebling Way

Saxonburg, Pa 16056

February 14, 2013

Brayman Construction Corporation
1000 John Roebling Way
Saxonburg, PA 16056
Ph. 724-443-1533
Fax 724-443-8733

Field Office
702 S. 1st Street
Ironton, OH 45638
Ph. 740-414-4315
Fax 740-414-4316

Request For Information

BCC Job #: **12-0001** Date: February 14, 2013 Author: Aaron Downs

RFI# 047

BCC# 153-000-000

Project: Bridge No. LAW-93-0.00
Ironton Russell Bridge
Lawrence County, OH
ODOT Project No. 110628

Bridge No.: LAW-93-0.00

Re: Pier 2 Elevations

Brayman requests to raise the bottom of footer elevation 1' to 486.80 at Pier 2. This will effectively shorten the column 1' to 77'-3 1/8". Brayman expects all PT profiling and sensor locations to remain as per plan. The reduction by 1' will come from the straight run of PT duct and the rebar lap splices will be adjusted so no chance in bar schedule is anticipated. Brayman proposes to chip the concrete down within the caissons to expose enough rebar to maintain the development length called for in the plans. Please advise if this is acceptable.

URS Response:

We have no objections to raising the bottom of footing elevation to 486.80 ft. at Pier 2. The post-tensioning quantities at Pier 2 will be slightly less as the column will be 1 foot shorter than what was shown in the Contract Plans.

We have no objections with Brayman's proposed method to increase the lap splice lengths for the column reinforcement at Pier 2 to avoid changes to the Pier 2 shop drawings.

We have reviewed the minimum required development length for the drilled shaft bars. A revised minimum development length of 10'-6" shall be provided. Based on the minimum average top of rebar elevation of 499.09 ft. given with RFI 047A, the actual minimum development length should be 499.09 - 486.80 - 0.25 = 12.04 ft. Thus, based on the information given in RFI 047A, no chipping of the drilled shaft concrete should be necessary. If chipping is required to provide a minimum development length of 10'-6", any damage to the epoxy coating will need to be repaired prior to concrete placement.

To ensure proper clearance between the lowest set of sensors in the pier leg and the top of footing, Dr. Helemicki with UC is recommending that the lowest set of sensors in the pier leg be raised by 1' at Pier 2. Thus any shop drawings that show the location of these sensors and the Bridge Health Monitoring Shop Drawings will need to be revised to reflect this change in sensor location.

Signature: _____ Date: 2/21/13

LETTER OF TRANSMITTAL

BRAYMAN CONSTRUCTION CORP.
1000 John Roebling Way
Saxonburg, PA 16056
Phone: (724) 443-1533
Fax: (724) 443-8733

To: Ohio Dept. of Transportation
District 9
650 Eastern Avenue
Chillicothe, OH 45601

Project: SR-93-0.00
Ironton Russell Bridge
Lawrence County, OH
Project No. 110628

BCC # 157-000-000

Attention: Dave Bame

Date: March 1, 2013

We are sending you the following items:

- ☐ Under Separate Cover
- ☑ Attached
- ☐ Copy of Letter
- ☐ Prints
- ☐ Specifications
- ☐ Change Order
- ☐ Shop Drawings
- ☐ Plans
- ☐ _____

Copies	Date	Description
1	3/1/13	RFI 049 Guide Pipe Mounting Plate Assemblies

Transmitted for the following purpose:

- ☑ For Approval
- ☐ Approved as Submitted
- ☐ Resubmit __ copies for approval
- ☐ For Your Use
- ☐ Approved as Noted
- ☐ Submit __ copies for distribution
- ☐ As Requested
- ☐ Returned for Corrections
- ☐ Return __ corrected prints
- ☐ For Review & Comment
- ☐ For Certification

MAIL: ◯ Regular ◯ Overnight ◯ Certified ☑ Email **FAX:** ◯

Remarks:

Aaron Downs

Signed: Aaron Downs
Project Engineer

cc: File/arb
Dan Beasley
Edwin Callicutt
Eric McLaughlin

Ironton Russell Bridge over Ohio River

LAW-93C-0000

RFI 049 Guide Pipe Mounting Plate Assemblies

For:

District 9

Submitted By:

1000 John Roebling Way

Saxonburg, Pa 16056

March 1, 2013

Wabash Steel LLC

ENGINEERING & ESTIMATING
6235 Westerville Road
Westerville, OH 43081
Ph. 614-212-5838
Fax 614-212-5799

FABRICATION PLANT
2007 Oliphant Drive
Vincennes, IN 47591
Ph. 812-882-4550
Fax 812-882-4525

Request For Information

Wabash Job #: **17083** **RFI# 016** Date: 3/1/13 Author: Morgan Gillett

Project Data: ODOT Project No. 628(11)
Bridge No. LAW-93-0000, Ironton Russell Bridge Over Ohio River
MAIN SPAN – Tower Cable Anchor Boxes
Ref. No. 429 ; Structural Steel *(Fabrication/Furnish Only)*

Bridge No.: LAW-93-0000 ; MAIN SPAN ; Tower Cable Anchor Boxes

Re: Guide Pipe/Mounting Plate Assemblies

Reference sheet 497 of the design drawings, section F-F. Additionally, reference can also be made to VSL's shop drawing no. VSL-304.

1. The guide pipe "Mounting Plate" appears to show a compound beveled/skewed cut for the pipe opening. This will be practically impossible to obtain due to the multiple variables apparent with the fabrication of these assemblies.

   It is requested to change the detail to a squared cut (90 degrees to the plate), in lieu of the compound bevel/skew cut.

2. The weld of the mounting plate to the guide pipe is shown as 1/4" all around, 1 side. It would be best if the fabricator were allowed to apply a non structural seal weld to the opposite side, since these assemblies will be galvanized.

   Is this acceptable if the fabricator chooses to do so?

These proposals would come at no additional cost to the Contractor or ODOT.

A response by Tuesday March 5th, 2013 or sooner is requested.

Response:
1. We have no objection to using a square cut for the guide pipe mounting plate in lieu of skew cut.
2. We have no objection to applying a non-structural seal weld on the other side, in addition to the mounting plate to the guide pipe weld shown in the plans on side 1.
The above change shall be done at no additional cost to the project.

Issued By: Bipin Lapasia **Date:** March 04, 2013

LETTER OF TRANSMITTAL

BRAYMAN CONSTRUCTION CORP.
1000 John Roebling Way
Saxonburg, PA 16056
Phone: (724) 443-1533
Fax: (724) 443-8733

To: Ohio Dept. of Transportation
District 9
650 Eastern Avenue
Chillicothe, OH 45601

Project: SR-93-0.00
Ironton Russell Bridge
Lawrence County, OH
Project No. 110628

BCC # 158-000-000

Attention: Dave Bame

Date: March 1, 2013

We are sending you the following items:

- [ ] Under Separate Cover
- [x] Attached
- [ ] Copy of Letter
- [ ] Prints
- [ ] Specifications
- [ ] Change Order
- [ ] Shop Drawings
- [ ] Plans
- [ ] _____

Copies	Date	Description
1	3/1/13	RFI 050 Tower Platform Materials

Transmitted for the following purpose:

- [x] For Approval
- [ ] Approved as Submitted
- [ ] Resubmit __ copies for approval
- [ ] For Your Use
- [ ] Approved as Noted
- [ ] Submit __ copies for distribution
- [ ] As Requested
- [ ] Returned for Corrections
- [ ] Return __ corrected prints
- [ ] For Review & Comment
- [ ] For Certification

MAIL: ◯ Regular ◯ Overnight ◯ Certified ✓ Email **FAX:** ◯

Remarks:

Aaron Downs

Signed: Aaron Downs
Project Engineer

cc: File/arb
Dan Beasley
Edwin Callicutt
Eric McLaughlin

Ironton Russell Bridge over Ohio River

LAW-93C-0000

RFI 050 Tower Platform Materials

For:

District 9

Submitted By:

1000 John Roebling Way

Saxonburg, Pa 16056

March 1, 2013

Dura-Bond Steel
P.O. Drawer 518, 2658 Puckety Street
Export, Pennsylvania 15632
Phone: 724-327-0280 Fax: 724-327-0113

STEEL FABRICATION AND
COATING SERVICES FOR THE
STEEL INDUSTRY

AISC CERTIFICATION

REQUEST FOR INFORMATION

Job No.: 12-12-021		DATE:	2/27/2013
Job Name:	Ironton Russell Bridge LAW-93C-0000 BCC#084	RFI #	1
Customer:	Brayman Construction	DWG #	12-12-021-13 Rev 2

Existing Condition(s) / Solution(s):

Angles 6x4x5/16 MK A8 and A9 (Stainless Steel Type-304 is unavailable in domestic material)
Request to use 5/i6" bent plate in place of angle, plate would be domestic material
Drawing is revised and resubmitted for approval

Date Information Required: ASAP Signed: Michael D. Mazzeo

Response:

We have no objection to using 5/16" stainless steel bent plate in place of the 6"x4"x5/16" angle marked A8 and A9. This change should be done at no additional cost to the project.

Date Information Required: 03/04/2013 Signed: N Hamadani

Response:

CC:

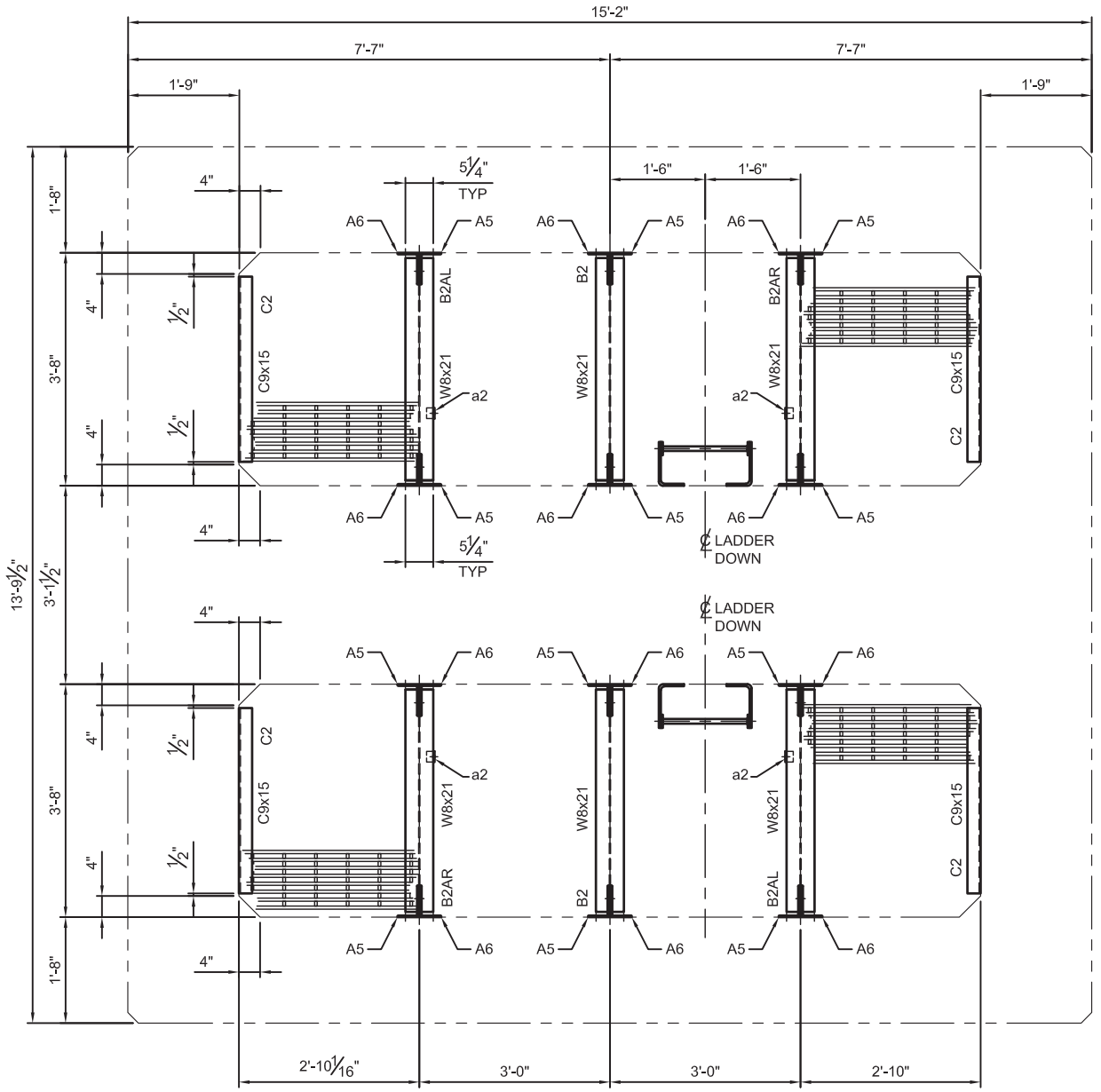

2 - PLATFORMS ~ LEVEL L-13
TOP/GRATING EL 805.52'

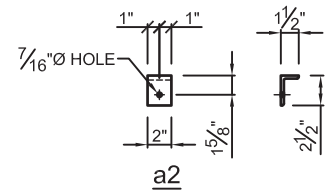

a2

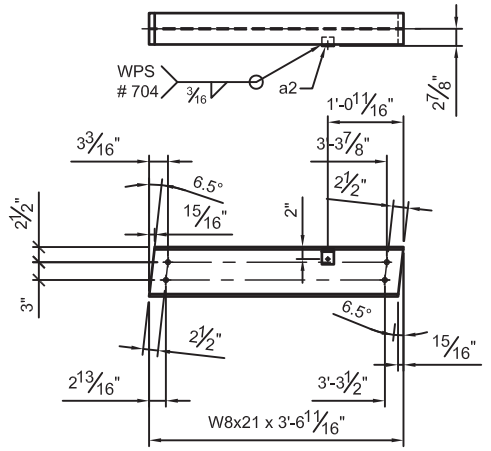

4 - BEAMS ~ B2AR (AS SHOWN)
4 - BEAMS ~ B2AL (OPP HAND)
WT= 75 LBS EA

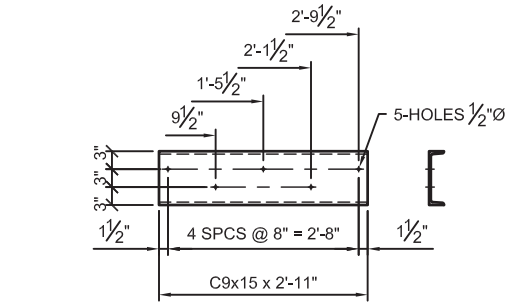

8 - CHANNELS ~ C2
WT= 44 LBS EA

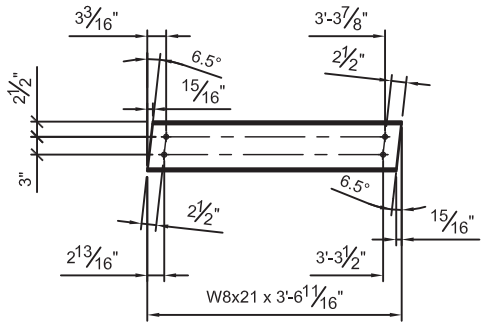

4 - BEAMS ~ B2
WT= 75 LBS EA

MARK	QTY	DESCRIPTION	FT	IN	REMARKS	WT
C2	8	C9x15	2	11	A709-36 / A36	350
.	.	.	.	.	.	.
B2	4	W8x21 (B2E)	3	6 11/16	A709-36 / A36	300
.	.	.	.	.	.	.
B2AR/L	4/4	W8x21 (B2E)	3	6 11/16	A709-36 / A36	598
a2	8	L2 1/2x1 1/2x1/4	0	2	A36	4
.	.	.	.	.	.	.
A5	24	L6x4x5/16 (B2E)	0	6 11/16	A36	137
.	.	.	.	.	.	.
A6	24	L6x4x5/16 (B2E)	0	6 11/16	A36	137
.	.	.	.	.	.	.
L13L	2	1 1/2" DP FIBERGLASS GRATING	.	.	AS SHOWN	.
L13R	2	1 1/2" DP FIBERGLASS GRATING	.	.	OPP HAND	.
.	.	.	.	.	.	.
B3	2	W8x21 (B2E)	8	9 3/8	304 SST	360
.	.	.	.	.	.	.
A8	4	PL 5/16 x 6 11/16	0	9 1/4	304 SST	23
.	.	.	.	.	.	.
A9	4	PL 5/16 x 6 11/16	0	9 1/4	304 SST	23
.	.	.	.	.	.	.
.	.	FIELD BOLTS	.	.	.	.
.	48	3/4" Ø BOLT A325	.	2 1/4	HOT DIP GALV	34
.	48	3/4" HVY HEX NUT A563	.	.	HOT DIP GALV	.
.	96	3/4" FLAT WASHER F436	.	.	HOT DIP GALV	.
.	.	.	.	.	.	.
.	8	3/4" Ø BOLT 304 SST	.	2 1/4	.	6
.	8	3/4" HVY HEX NUT 304 SST	.	.	.	.
.	16	3/4" FLAT WASHER 304 SST	.	.	.	.

NOTE:
1) STEEL STAMP ALL MARK NUMBERS
2) BUNDLE PARTS FOR EACH PLATFORM FOR SHIPPING
3) FOR GRATING DETAILS SEE VENDOR DRAWINGS 71891-25, 26 & D

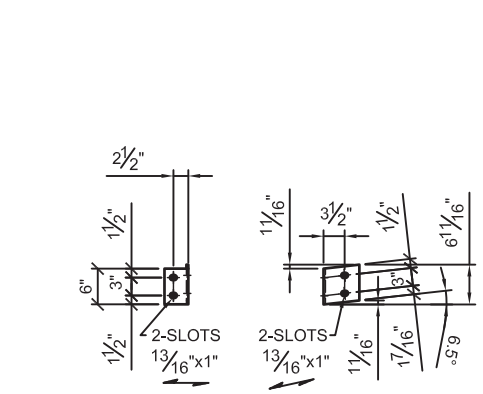

24 - ANGLES ~ A5 (AS SHOWN)
24 - ANGLES ~ A6 (OPP HAND)
WT= 5.7 LBS EA

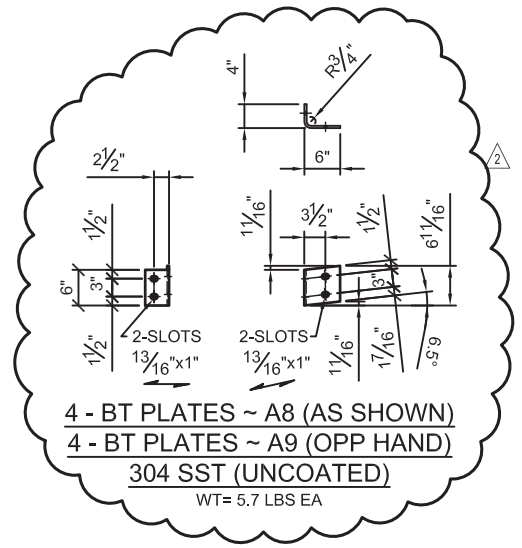

4 - BT PLATES ~ A8 (AS SHOWN)
4 - BT PLATES ~ A9 (OPP HAND)
304 SST (UNCOATED)
WT= 5.7 LBS EA

FOR CONSTRUCTION
2-4-13

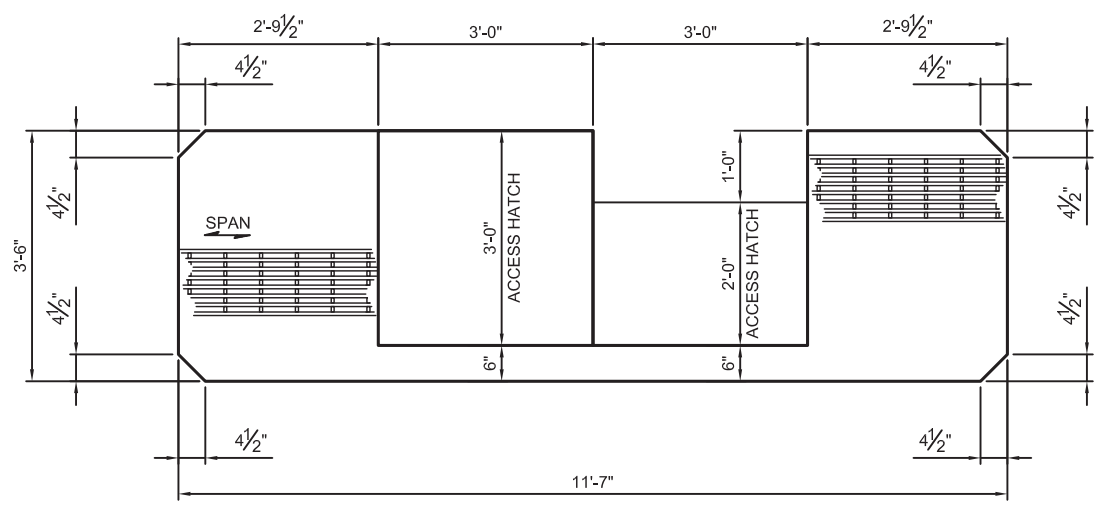

2 - GRATINGS ~ LEVEL - L13L (AS SHOWN)
2 - GRATINGS ~ LEVEL - L13R (OPP HAND)
WT= LBS EA
(UNCOATED)

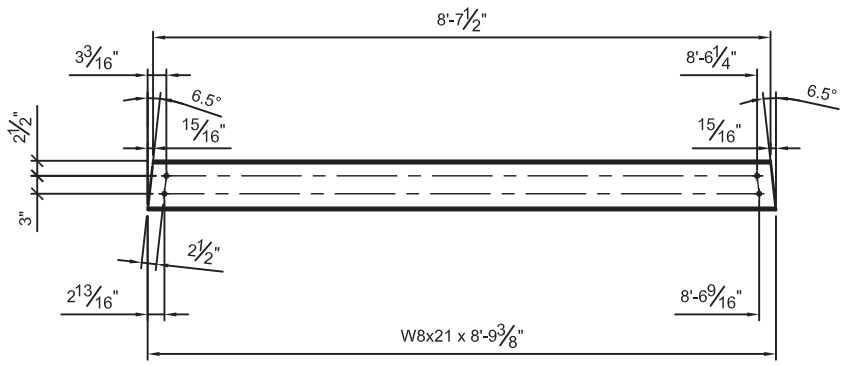

2 - BEAMS ~ B3
304 SST (UNCOATED)
WT= 180 LBS EA

NO.	REVISION	DATE	BY
.	.	.	.
2	CHANGED ANGLES a8 & a9 TO BT PLATE	2-27-13	MB
1	ADDED GRATING HATCH ANGLE a2	5-15-12	GJH

Dura-Bond Steel
STEEL FABRICATION AND COATING SERVICES FOR THE CONSTRUCTION INDUSTRY
P.O. Drawer 518, 2658 Puckety Street
Export, Pennsylvania 15632
Phone: 724-327-0280 Fax: 724-327-0113
AISC CERTIFICATION

TOLERANCES	
LENGTH	N/A
SQ TOP	N/A
SQ BTM	N/A
COPES	N/A
HOLES	±1/16"
DIMENSIONS	±1/8"

JOB: IRONTON RUSSELL BRIDGE SR-93-0.00 PROJECT#110628
LOCATION: IRONTON, LAWRENCE COUNTY, OHIO
CUSTOMER: BRAYMAN CONSTRUCTION CORP PO# 12-0001-008
ARCH./ENG: URS DESIGN AGENCY
DESCRIPTION: PLATFORM LEVEL L-13 DETAILS
BOLTS: 3/4" Ø ASTM A325 HOT DIP GALV A153 HOLES: 13/16"Ø (U.N.O.)
WELD-A.W.S. CODE: D1.1 E7XTX FCAW
PAINT: HOT DIP GALVANIZE PER ASTM A123 (U.N.O.) DRN: GJH 3-26-12
CHKD: MB 4-5-12
JOB NO.: 12-12-021 SHT. NO.: 13

LETTER OF TRANSMITTAL

BRAYMAN CONSTRUCTION CORP.
1000 John Roebling Way
Saxonburg, PA 16056
Phone: (724) 443-1533
Fax: (724) 443-8733

To: Ohio Dept. of Transportation
District 9
650 Eastern Avenue
Chillicothe, OH 45601

Project: SR-93-0.00
Ironton Russell Bridge
Lawrence County, OH
Project No. 110628

BCC # 159-000-000

Attention: Dave Bame

Date: March 11, 2013

We are sending you the following items:

- ☐ Under Separate Cover
- ☑ Attached
- ☐ Copy of Letter
- ☐ Prints
- ☐ Specifications
- ☐ Change Order
- ☐ Shop Drawings
- ☐ Plans
- ☐ _____

Copies	Date	Description
1	3/11/13	RFI 051 Guide Pipe Mounting Plate Assembly

Transmitted for the following purpose:

- ☑ For Approval
- ☐ Approved as Submitted
- ☐ Resubmit __ copies for approval
- ☐ For Your Use
- ☐ Approved as Noted
- ☐ Submit __ copies for distribution
- ☐ As Requested
- ☐ Returned for Corrections
- ☐ Return __ corrected prints
- ☐ For Review & Comment
- ☐ For Certification

MAIL: ◯ Regular ◯ Overnight ◯ Certified ✓ Email **FAX:** ◯

Remarks:

Aaron Downs

Signed: Aaron Downs
Project Engineer

cc: File/arb
Dan Beasley
Edwin Callicutt
Eric McLaughlin

Ironton Russell Bridge over Ohio River

LAW-93C-0000

RFI 051 Guide Pipe Mounting Plate Assembly

For:

District 9

Submitted By:

1000 John Roebling Way

Saxonburg, Pa 16056

March 11, 2013

Wabash Steel LLC

ENGINEERING & ESTIMATING
6235 Westerville Road
Westerville, OH 43081
Ph. 614-212-5838
Fax 614-212-5799

FABRICATION PLANT
2007 Oliphant Drive
Vincennes, IN 47591
Ph. 812-882-4550
Fax 812-882-4525

Request For Information

Wabash Job #: **17083** **RFI# 017** Date: 3/6/13 Author: Morgan Gillett

Project Data: ODOT Project No. 628(11)
Bridge No. LAW-93-0000, Ironton Russell Bridge Over Ohio River
MAIN SPAN – Tower Cable Anchor Boxes
Ref. No. 429 ; Structural Steel *(Fabrication/Furnish Only)*

Bridge No.: LAW-93-0000 ; MAIN SPAN ; Tower Cable Anchor Boxes

Re: Guide Pipe/Mounting Plate Assemblies

Reference sheet 498 of the design drawings, Detail D. Additionally, reference can also be made to VSL's shop drawing no. VSL-304.

1. The guide pipe "Mounting Plate" is listed as 1/2" thick plate. After discussions with various galvanizers, we are concerned that once these guide pipe assemblies are fully fabricated to very tight tolerances, the 1/2" thick plate may be subject to distortion during the galvanization process.

   At the fabricators option, is it acceptable to change the Mounting Plates to a 3/4" thickness, in lieu of the 1/2" thickness that is currently shown?

2. After discussions with various galvanizers we were informed that holes on each end, and on the same side, of the guide pipe will be required, so the galvanizer has means of hanging these guide pipe assemblies for the galvanization process.

   At the fabricators option, is it acceptable to drill a 1" hole on each end of the pipe? If so, does the designer have preference where the holes are located on the pipe, as long as the fabricator holds these as a constant distance from the ends of each pipe (and on same side as one another)?

A response by Friday March 8th, 2013 or sooner is requested.

Response:
1. We have no objection to using a 3/4" mounting plate in lieu of 1/2" thick plate shown on the plans.
2. We have no objection to adding a 1" diameter drilled hole at each end of guide pipe (no preference for location).
The above modifications, requested by the contractor, shall be done at no additional cost to the project.

Issued By: Bipin Lapasia **Date:** March 11, 2013

FINLEY
Engineering Group, Inc.

March 22, 2013

Via: E-mail
t_hesmond@brayman.com

Tom Hesmond, P.E.
Project Manager
Brayman Construction Corp.
702 South First Street
Ironton, OH 45638
Tel: (724) 443-1533

RE: **P2 & P5 Camber**
Ironton Russell Cable-Stayed Bridge
FINLEY Project No. 11-60260

Tom:

It is has been brought to our attention that pier 2 and pier 5 do not have camber incorporated into the construction geometry. As discussed, cambering of these piers was not a requirement of the Contract Plans and FINLEY did not address this in our LCA submittal. FINLEY has reviewed the final longitudinal deformation of these piers and Pier 5 has a deformation at the top of the pier of approximately 1 ½", Pier 2 is approximately 4" (see attached deflection plots). From our experience, CEB90 is conservative by 20% and confined concrete sections in compression do not deform as much as theoretical, for example, column vertical camber is typically not even considered in construction elevations.

Based on the above, FINLEY believes it prudent to not camber Pier 5 and to provide a camber in Pier 2 from 0" at the bottom of the column to 2 1/2" towards downstation at the top of pier-column. FINLEY's recommendation is not a design issue and is based purely on enhancing the aesthetics of the bridge pier columns.

Should you have any questions or would like to discuss any of these items further, please do not hesitate in contacting us.

Sincerely,

Finley Engineering Group, Inc.

Jerry Pfuntner, P.E.
Regional Bridge Engineer

Attachments

URS Response:
Based on the following statement provided by Finley Engineering in an email dated 3/26/2013:

"Finley confirms that the temperature jacking as required in the Contract Plans will be performed as part of Brayman's construction sequence."

We have no objection to the proposed camber sequence outlined in the letter above for anchor pier 2.

Signature:_____

Date: 3/27/2013

1589 Metropolitan Boulevard • Tallahassee, FL 32308-3776 • (850) 894-1600 • (850) 894-1614 fax
www.finleyengineeringgroup.com

PIER 2 - LONGITUDINAL DISPLACEMENT DUE TO PERMANENT LOADS (DC + DW + PT + CS + CAB)

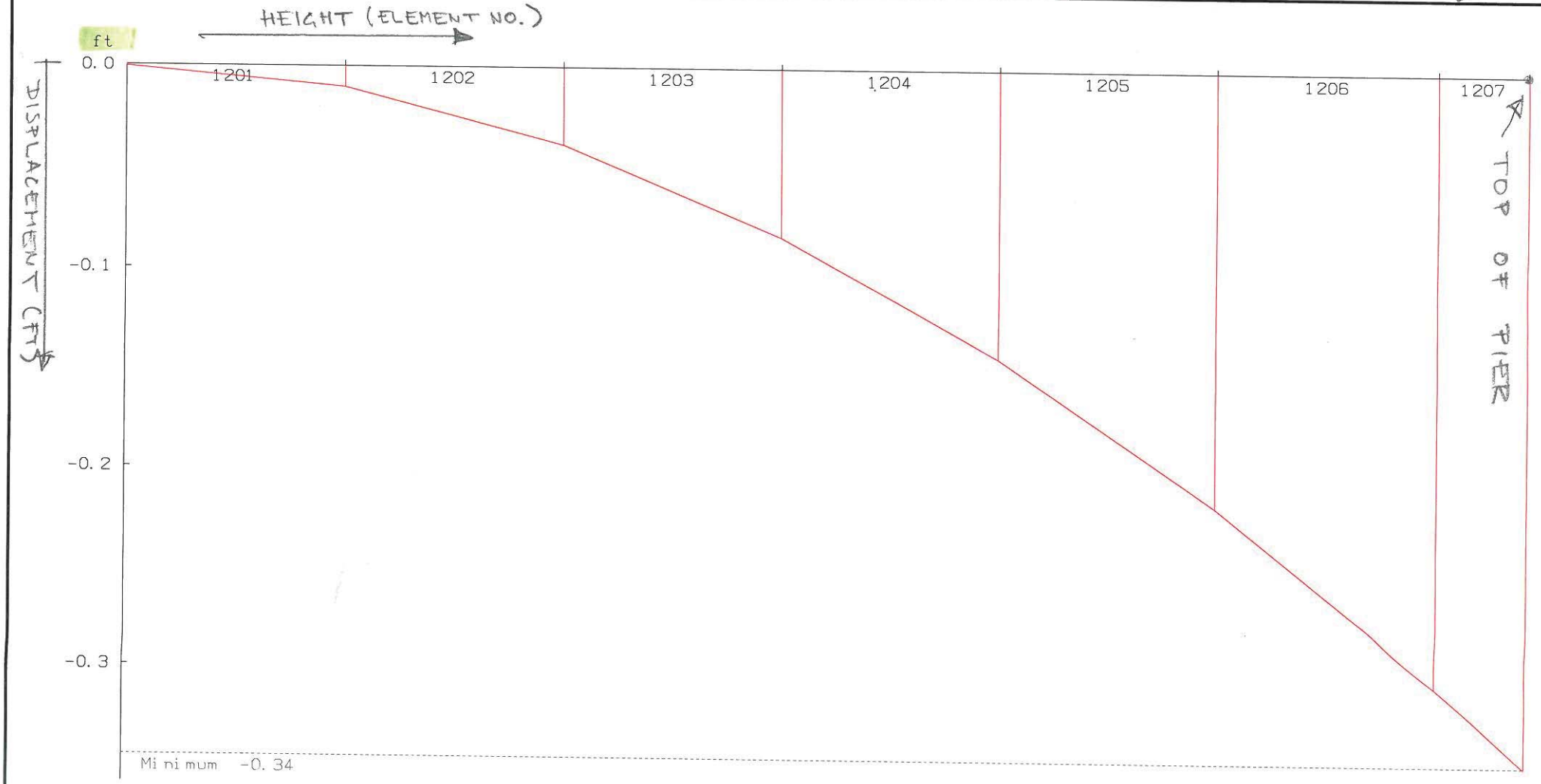

RM Bridge V8i 08.10.07.01	Author: Finley Engineering Group Project: Ironton-Russel 11.60260	Interactiv diagram plot Results: LC: Vy, total local normal : GUI-PLOT, Load case: SUM (DefaultSchedule)/dia÷SUM÷def÷Vy 1 cm Plot = 0.0273 ft 0 0.0273 0.0546 0.0819 0.1092 0.1365	21/03/2013 13:37

PIER 5 - LONGITUDINAL DISPLACEMENT DUE TO PERMANENT LOADS (DC + DW + PT + CS + CAB)

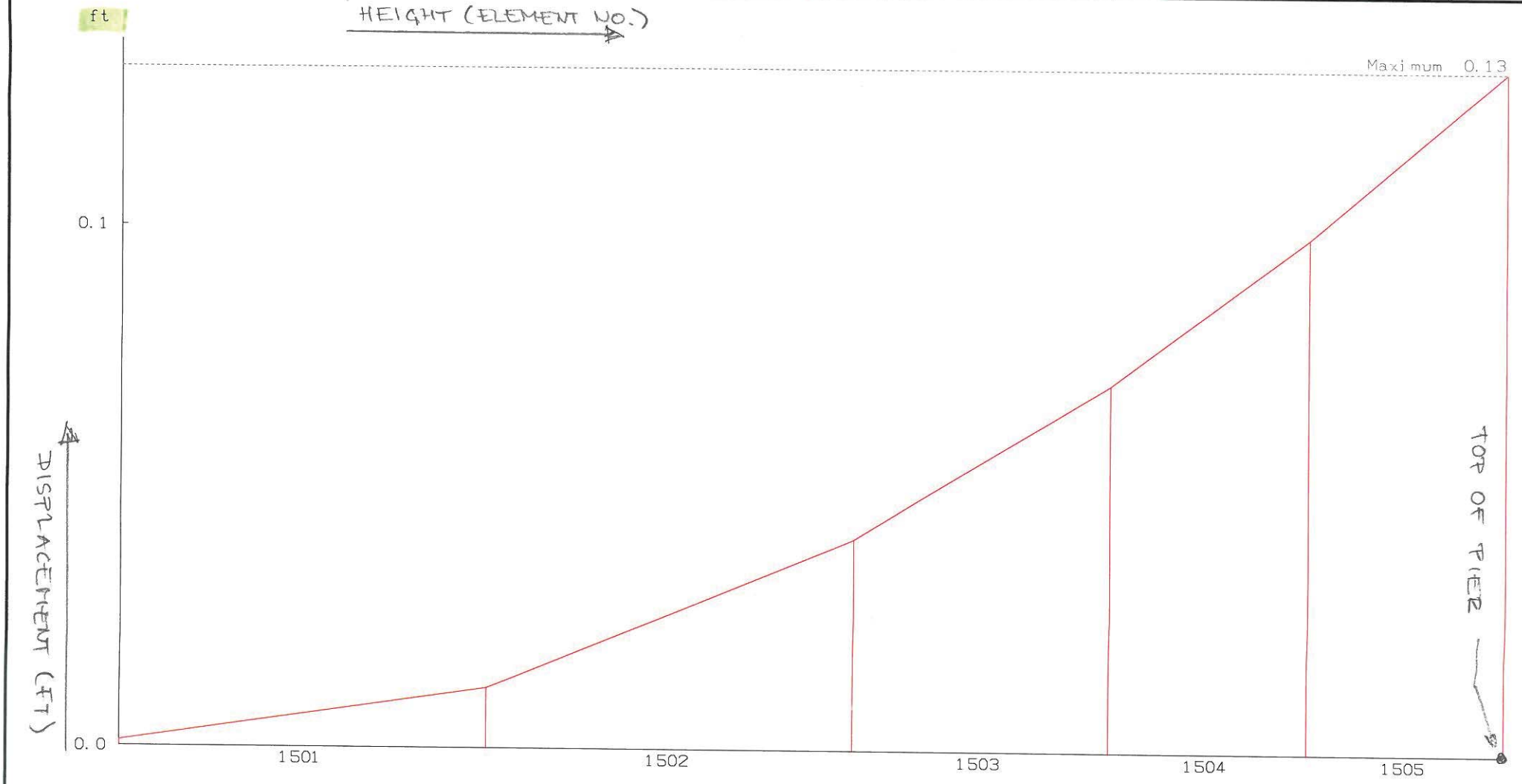

RM Bridge V8i 08.10.07.01	Author: Finley Engineering Group Project: Ironton-Russel 11.60260	Interactiv diagram plot Results: LC: Vy, total local normal : GUI-PLOT, Load case: SUM (DefaultSchedule)/dia÷SUM÷def÷Vy 1 cm Plot = 0.0103 ft 0 0.0103 0.0206 0.0309 0.0412 0.0516	21/03/2013 13:37

Brayman Construction Corporation
1000 John Roebling Way
Saxonburg, PA 16056
Ph. 724-443-1533
Fax 724-443-8733

Field Office
702 S. 1st Street
Ironton, OH 45638
Ph. 740-414-4315
Fax 740-414-4316

Request For Information

BCC Job #: **12-0001** Date: 4/3/2013 Author: Aaron Downs

RFI# 056

BCC# 166-000-000

Project: Bridge No. LAW-93-0.00
Ironton Russell Bridge
Lawrence County, OH
ODOT Project No. 110628

Bridge No.: LAW-93-0.00

Re: Ohio Electrical Service for Tower 4 and Ironton Street Lighting

These two Electric Services are to be installed on the same Electric Rack. Both of these Electric Services are 480/277 Volt, 3-Phase, 4-Wire. The Electric Service for Tower 4 is 200 Amp, and the Electric Service for the street lighting on Jefferson Street is 100 Amps. The 22 ea. decorative light pole assemblies (ref. #266) being installed on Jefferson Street, are matching the other decorative light pole assemblies installed in the business districts of Ironton, Ohio. The existing lights poles are fed with 120V power service. West End Electric would like to propose that a 120/240 Volt Single Phase Electric Service be installed to power and control these 22ea. decorative light pole assemblies. This Electric Service could even share with the 120/240 Volt Electric Service being installed for the two traffic signal controllers being installed at 2nd & Jefferson St. and 3rd & Jefferson St. If the City of Ironton is going to be responsible to maintain these lights, it would be better for Ironton, if the voltage for these 22ea. decorative light fixtures was the same as it is at all of their other decorative light pole assemblies.
AEP has indicated the Electric Services will be fed from a pole or poles located on 2nd Street, just East of Jefferson Street. Contract drawing 276/788 shows this Electric Service Rack to be located on the East side of Jefferson Street, between 2nd and 3rd Streets; but closer to 3rd Street. This location will require more underground service conduit and wire from AEP's service pole on 2nd Street. West End Electric proposes the Electric Service Racks be installed near the North-East corner of 2nd and Jefferson Streets, with underground service conduits installed from the Electric Service Racks; to AEP's riser poles on 2nd Street.
Please advise if this change to the power service is acceptable. Thanks

Response:

We have no objection to the Contractor's proposed change. Please note these changes with the 'as-built' information being compiled at the project site.
URS
Keith Porter
Bipin Lapasia
04/10/2013

Issued By:	**Date:**

Brayman Construction Corporation
1000 John Roebling Way
Saxonburg, PA 16056
Ph. 724-443-1533
Fax 724-443-8733

Field Office
702 S. 1st Street
Ironton, OH 45638
Ph. 740-414-4315
Fax 740-414-4316

Request For Information

BCC Job #: **12-0001** Date: 4/23/2013 Author: Aaron Downs

RFI# 058

BCC# 170-000-000

Project: Bridge No. LAW-93-0.00
Ironton Russell Bridge
Lawrence County, OH
ODOT Project No. 110628

Bridge No.: LAW-93-0.00

Re: Drainage Structure 35-D & 37-D

Catch basins 35-D and 37-D are shown on Sheet 163. 35-D is labeled as a CB No 7 on cross section sheet 116. 37-D is labeled as a "side ditch inlet" on cross section sheet 114.

The standard drawing (CB-4.1) for a side ditch inlet shows the inlet sitting on top of a pipe that runs through the inlet. 37-D does not have pipe running through it. It appears that it should also be a CB Type 7 since it is in the same situation as 35-D.

Please verify that these structures are to be Side Ditch Catch Basin No. 7.

Also the standard drawings for both of these CB show a modified concrete pipe as the basis for the CB's. The local approved pre-casters have indicated that they do not make these structures.

Please advise if an approved plastic pipe is acceptable to be installed and grouted in place.

Thank You

Response:

See attached sheet for URS response.

Issued By:	**Date:**

URS Response to BCC#170-000-000 RFI 058

In response to the first question regarding the pipe not continuing through 37-D, SCD CB-4.2 (Side Ditch Inlet) has a note on the right side that says, “TEE: Where sewer line is not continuous through the inlet, plug the upstream opening of the tee properly using a preformed stopper and sealed joint.”

The second part of the RFI asks whether or not the pipe riser can be plastic. For structure 37-D, SCD CB-4.2 (Side Ditch Inlet) has a note on the right side that says, “RISER AND TEE: Meet the requirements of CMS 603 Type B Pipe Material or furnish precast as noted above.” Type B pipe material allows the use of a plastic pipe material as requested. Conversely, for structure 35-D, SCD CB-4.1 (Side Ditch Catch Basin No. 7) does not provide the same flexibility – a note on the right side says, “RISER AND CROSS: Shall be constructed of standard strength vitrified clay pipe or standard strength non-reinforced concrete pipe, having bell and spigot ends.” The primary functional difference between CB No. 7 and a Side Ditch Inlet is the diameter of the riser pipe (12” vs. 18”) and CB No. 7 has a sump. There is no compelling reason for structure 35-D to have a diameter of 18” or a sump so there is no problem changing this to Side Ditch Inlet which would allow the plastic riser pipe.

To summarize, both 35-D and 37-D can be constructed as a Side Ditch Inlet according to SCD CB-4.2 and the riser pipe can be a plastic material meeting the requirements of CMS 603 Type B. The upstream end of the pipe under the inlet should be plugged using a preformed stopper and sealed joint.

By; Jason Ramler
URS Corporation
04/24/2013

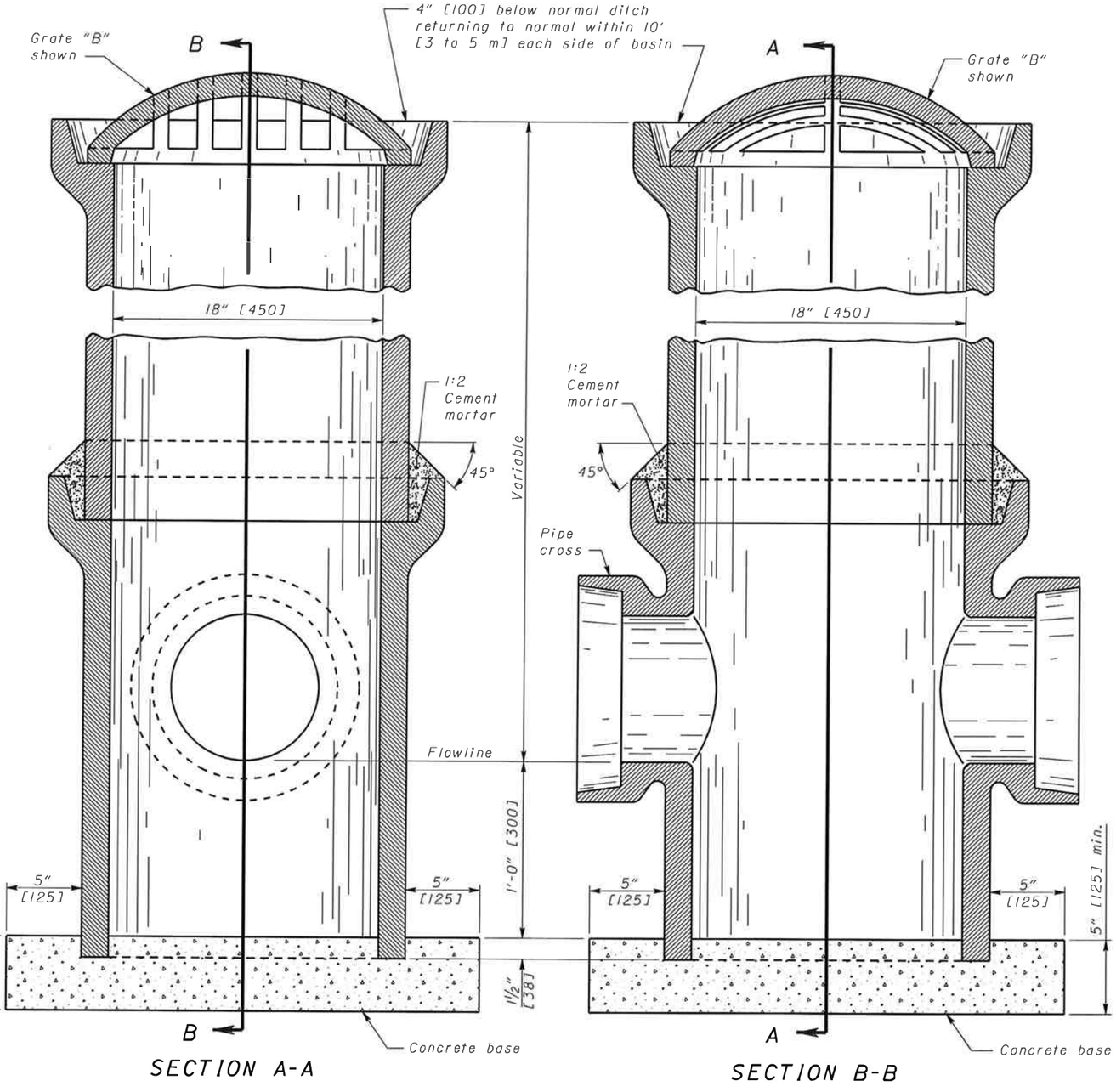

NOTES

GENERAL: Care shall be exercised to construct this catch basin to the proper grade, and in a true vertical position. No cutting of holes inside of pipe will be permitted.

GRATES: Grate "A" shall be provided unless the plans specify Grate "B".

CASTINGS: Castings shall meet the requirements of CMS 604. The design shall be essentially the same and equally as strong as the one shown, or meets AASHTO M 306. Minimum weight [mass] shall be 70 lbs. [31.5 kg] for Grate "A", and 75 lbs. [34 kg] for Grate "B".

LOCATION AND ELEVATION: When given on the plans the location is at the center of the grate. The elevation is at the lowest point on the grate.

CONCRETE BASE: Bases are to be Class C.

CROSS: Where the sewer line is not continuous through a catch basin, the upstream opening of the cross shall be properly plugged using a vitrified or concrete stopper and a sealed joint.

RISER AND CROSS: Shall be constructed of standard strength vitrified clay pipe or standard strength non-reinforced concrete pipe, having bell and spigot ends.

RISER PIPE: Diameter shall be 18" [450] regardless of size of sewer pipe.

PAYMENT: All materials and labor, including excavation and backfilling, shall be paid for under **Item 604 - Catch Basin, No. 7.**

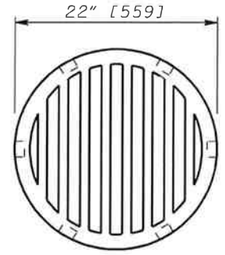

PLAN

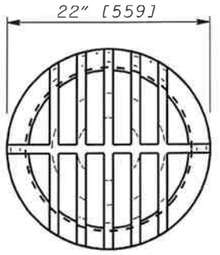

PLAN

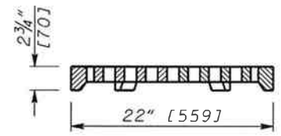

ELEVATION
GRATE "A"
All edges to be rounded

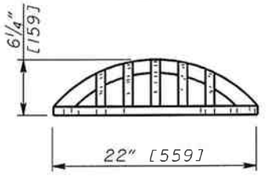

ELEVATION
GRATE "B"

THIS DRAWING REPLACES CB-4.1M DATED 7-12-95.

OHIO DEPARTMENT OF TRANSPORTATION
Brad Fogell — ENGINEER OF BRIDGES — 7-20-01 DATE

REVISIONS

MTOR. ENGR. D. Gruver
DRAWN D. Focke

All metric dimensions (in brackets [ ]) are in millimeters unless otherwise noted.

OFFICE OF STRUCTURAL ENGINEERING

STANDARD HYDRAULIC CONSTRUCTION DRAWING
SIDE DITCH CATCH BASIN No. 7

NUMBER CB-4.1

1 / 1

SIDE DITCH CATCH BASIN No. 7

LETTER OF TRANSMITTAL

BRAYMAN CONSTRUCTION CORP.
1000 John Roebling Way
Saxonburg, PA 16056
Phone: (724) 443-1533
Fax: (724) 443-8733

To: Ohio Dept. of Transportation
District 9
650 Eastern Avenue
Chillicothe, OH 45601

Project: SR-93-0.00
Ironton Russell Bridge
Lawrence County, OH
Project No. 110628

BCC # 175-000-000

Attention: Dave Bame

Date: June 3, 2013

We are sending you the following items:

- [ ] Under Separate Cover
- [x] Attached

- [ ] Copy of Letter
- [ ] Prints
- [ ] Specifications
- [ ] Change Order
- [ ] Shop Drawings
- [ ] Plans
- [ ] _____

Copies	Date	Description
1	6/3/13	RFI 061 Deflection and Expansion Conduits at Abutments (West End Electric)

Transmitted for the following purpose:

- [x] For Approval
- [ ] Approved as Submitted
- [ ] Resubmit __ copies for approval
- [ ] For Your Use
- [ ] Approved as Noted
- [ ] Submit __ copies for distribution
- [ ] As Requested
- [ ] Returned for Corrections
- [ ] Return __ corrected prints
- [ ] For Review & Comment
- [ ] For Certification

MAIL: ◯ Regular ◯ Overnight ◯ Certified ✓ Email **FAX:** ◯

Remarks:

Aaron Downs

Signed: Aaron Downs
Project Engineer

cc: File/arb
Dan Beasley
Edwin Callicutt
Eric McLaughlin

Ironton Russell Bridge over Ohio River

LAW-93C-0000

RFI 061 Deflection and Expansion Conduits at Abutments

For:

District 9

We have no objection to the contractor's proposed modification. This modification should be done at no additional cost to the project.
Bipin Lapasia
URS
06/06/2013

Submitted By:

1000 John Roebling Way

Saxonburg, Pa 16056

June 3, 2013

WEST END ELECTRIC CO., *Incorporated*

SERVING THE TRI-STATE AREA SINCE 1924

ELECTRICAL CONTRACTORS

640 SECOND STREET - : - PORTSMOUTH, OHIO 45662

Phone (740) 354-8671
Fax (740) 353-5145

OHIO LICENSE NO. 16489

www.WestEndElectricCo.com

June 3, 2013

BRAYMAN CONSTRUCTION CORPORATION
Attn. Mr. Aaron Downs
702 – South First Street
Ironton, Ohio 45638

Re.: LAW-93-0.00 Ironton-Russell Bridge
RFI: Deflection Fittings & Liquidtight Flexible Conduit Expansion Joints

Mr. Downs,

We have a concern with the conduit deflection/expansion fittings and liquidtight flexible conduits to be used as expansion fittings at the bridge deck expansion joints and abutments, as shown and described on contract drawings 268/788, 269/788, 273/788, and 275/788.

Details on contract drawing 278/788 show the deflection fittings being installed in 6" PVC Schedule 40 pipe sleeves. We have two concerns with this installation. First of all, the OD of a 4" GRC deflection fitting is 6¼", which will not fit in a 6" PVC pipe sleeve. Conduit sizes that will be passing through these abutment walls are: *Kentucky side* - 2ea. 2 ½" GRC, 1ea. 3" GRC, and 1ea. 4' GRC. *Ohio side* – 2ea. 2 ½" GRC, 1ea. 4' GRC. These conduit sizes will either not fit in a 6" PVC Schedule 40 pipe sleeve, or it will fit so tight there will be no room for movement (deflection). I would like to recommend that we install the deflection fittings immediately outside of the 6" PVC pipe sleeves. This would not only allow free movement of the deflection fittings, it would also allow access to the deflection fitting; should it ever need to be replaced.

Another concern is the liquidtight flexible conduit called for at the two bridge deck expansion joints. The detail shown on drawing 278/788 calls for a liquidtight flexible conduit with enough slack in it to allow for 30" of movement. Our concerns for this installation is the drag on the conductors being pulled through the liquidtight flexible conduit could possible damage or scratch the insulation on the wires we they pass through that much liquidtight flexible conduit.

BRAYMAN CONSTRUCTION CORPORATION
Attn. Mr. Aaron Downs

Re.: LAW-93-0.00 Ironton-Russell Bridge
RFI: Deflection Fittings & Liquidtight Flexible Conduit Expansion Joints

Another concern is the exposure to the weather and movement will eventually cause the outer jacket on the liquidtight flexible conduit to crack; allowing water to get to the flexible steel conduit and causing it to rust. The liquidtight flexible conduit would also get very stiff over time, and put undue stress on the liquidtight flexible conduit fittings; causing the liquidtight flexible conduit to pull out of and away from the fittings and exposing the conductors. We would propose that conduit expansion sleeves be made and supported to allow expansion of the conduits, and a pullbox be installed at one end of the expansion, with coiled conductors inside; to allow the loops in the conductors to provide movement through the conduit expansions. When the bridge deck expands, the coil of conductors in the pullboxes gets larger. When the bridge deck contracts, the coil of conductors in the pullboxes gets smaller.

Your consideration in this matter is greatly appreciated.

If you have any questions, please feel free to call me at 740-354-8671.

Sincerely,

West End Electric Co., Inc.

Miles Ferguson
President

Lapasia, Bipin

From: Porter, Keith
Sent: Monday, August 05, 2013 1:55 PM
To: Lapasia, Bipin
Cc: Johnston, Brian
Subject: RE: Ironton Russell

Bipin,

I spoke to Brian on the below e-mail. We are fine with the alternate grounding methods #2 and #3. Since they will be attaching to the guide pipe above the deck level now we can ignore comment #1.

Please give me a call if you have any questions.

Thanks,

Keith Porter
Senior Electrical Designer
URS Corporation
Architects, Engineers, Planners
277 West Nationwide Boulevard
Columbus, OH 43215
T: 614-600-5910, F: 614-464-0588
Keith.porter@urs.com

8/6/13
Brian Johnston & I discussed our response with Dave Bame & Ed Callicutt. No need to send a written response, per EC. 8/8/13

This e-mail and any attachments contain URS Corporation confidential information that may be proprietary or privileged. If you receive this message in error or are not the intended recipient, you should not retain, distribute, disclose or use any of this information and you should destroy the e-mail and any attachments or copies.

From: Lapasia, Bipin
Sent: Friday, August 02, 2013 3:13 PM
To: Porter, Keith
Subject: FW: Ironton Russell

Keith:

Please the attached drawings and the questions sent below by Brian Johnston of our Tampa office. These questions have originally come from Dave Bame, who is the ODOT Project Engineer.

If you have any questions, please call Brian.

Thanks.

Bipin

Bipin K. Lapasia, P. E.
Senior Project Manager

URS

525 Vine Street, Suite 1800
Cincinnati, OH 45202
Website | Map

Office: 513-651-3440
Direct: 513-419-3519
Fax: 877.660.7727

Email: bipin.lapasia@urs.com

From: Johnston, Brian
Sent: Friday, August 02, 2013 3:03 PM
To: Lapasia, Bipin
Cc: Bame, Dave (Dave.Bame@dot.state.oh.us)
Subject: Ironton Russell

Bipin

I received a call today from Dave Bame with ODOT. He had a few questions regarding the lightening protection for the edge girders and anchor piers. I have attached sheet 336/788 for our Contract Plans for your reference. Please forward these questions to whomever in your office did the lightening protection.

1. In Section A-A on Contract Plan sheet 336/788, is the conductor leading down to the bottom of the edge girder to be welded to the exposed surface of the anchor plate or the internal surface of the anchor plate?
2. In Section A-A on Contract Plan sheet 336/788, the Contractor would like to just attach the conductor out the back side of the barrier and weld to the guide pipe above the deck level instead of running the conductor internal in the edge girder to the anchor plate. Is this acceptable.
3. Currently the lightening protection runs from the bottom of the anchor piers up to the barrier and then back down to the six stay cables that are anchored in the pier diaphragm. The Contractor would like to branch the conductor off as it comes into the pier diaphragm and go straight to the stay cables instead of going to the barrier first. Is this acceptable.

Please get answers to these questions and provide our responses back to Dave Bame as soon as possible. Please let me know if you have any questions.

Thanks
Brian

Brian Johnston P.E. | Senior Structural Engineer | URS Corporation
7650 West Courtney Campbell Causeway | Tampa, FL 33607-1462
813.286.1711 (Main) | 813.675.6646 (Direct) | 813.287.8229 (Fax)
brian.johnston@urs.com

URS

This e-mail and any attachments contain URS Corporation confidential information that may be proprietary or privileged. If you receive this message in error or are not the intended recipient, you should not retain, distribute, disclose or use any of this information and you should destroy the e-mail and any attachments or copies.

Brayman Construction Corporation
1000 John Roebling Way
Saxonburg, PA 16056
Ph. 724-443-1533
Fax 724-443-8733

Field Office
702 S. 1st Street
Ironton, OH 45638
Ph. 740-414-4315
Fax 740-414-4316

Request For Information

BCC Job #: **12-0001** Date: 8/8/2013 Author: Aaron Downs

RFI# 064

BCC# 180-000-000

Project: Bridge No. LAW-93-0.00
Ironton Russell Bridge
Lawrence County, OH
ODOT Project No. 110628

Bridge No.: LAW-93-0.00

Re: Pier 2 Stressing Forces

Finley Engineering believes there is an issue with the stressing force specified for the vertical tendons. The Contract Drawings specify these tendons are to be stressed to 80% GUTS, however, since they are basically two straight tendons, the stressing end lock off force is well above the allowable of 70% GUTS. These tendons will likely have to be stressed to a maximum of 72% GUTS with the design profiles. See the attached supporting document for more information.

Please provide information on how to proceed with this issue.

Thank You

Response:

URS Response:

We concur with Finley's findings. The vertical post-tensioning tendons in Pier 2 shall be jacked to 72% GUTS with a jacking force of 1139 kips.

8/9/2013

Issued By:	**Date:**

Project: Ironton-Russell
Project No.: 11.60260
Subject: PT Stressing Data

FINLEY Engineering Group, Inc.

Designed By: JP
Date: 7/2/2013
Checked By:

Stressing end force at lock off exceeds 70% GUTS.

Tendon Number	Tendon Size	Tendon Length	Stressing	Force	93%	Elongation 100%	Elongation 107%	Force After Anchor Set Live	Force After Anchor Set Dead
T1	27Ø15.7	224.7	Left	1266	8.87	9.54	10.21	1234	948
T1			Right	1266	8.88	9.55	10.21	1234	962
T2	27Ø15.7	222.3	Left	1266	8.85	9.52	10.18	1233	960
T2			Right	1266	8.86	9.53	10.20	1233	974
T3	27Ø15.7	224.7	Left	1266	8.88	9.54	10.21	1234	962
T3			Right	1266	8.87	9.54	10.21	1234	948
T4	27Ø15.7	222.3	Left	1266	8.85	9.52	10.19	1233	974
T4			Right	1266	8.86	9.52	10.19	1233	960
T5	27Ø15.7	221.1	Left	1266	8.40	9.03	9.67	1232	934
T5			Right	1266	8.55	9.19	9.84	1233	934
T6	27Ø15.7	226.8	Left	1266	8.68	9.34	9.99	1233	945
T6			Right	1266	8.69	9.34	10.00	1234	922
T7	27Ø15.7	223.1	Left	1266	8.57	9.21	9.86	1233	922
T7			Right	1266	8.55	9.20	9.84	1233	945
T8	27Ø15.7	226.6	Left	1266	8.67	9.32	9.97	1233	934
T8			Right	1266	8.69	9.35	10.00	1234	933

The following parameters were used to calculate the above values:

Grade 270 Tendons:

Modulus of Elasticity =	28,500	ksi	Anchor Set =	0.25	in
Strand Area =	0.217	in^2	Allowable Jacking Stress =	80%	f_{pu}
Friction Coefficient =	0.14	PT-PLUS PP Duct	Allowable Anchor Stress (After Set) =	70%	f_{pu}
Friction Coefficient =	0.20	Steel Pipe	Allowable Tendon Stress (After Set) =	74%	f_{pu}
Wobble Coefficient =	0.0002	ft^{-1}			

Notes:

1. Tendon lengths are given in feet and are defined from anchor plate to anchor plate. Any additional length beyond the plates shall be added for jacking, installation of wedges, and potential lift-off verification if needed.
2. Elongations are given in inches. NO additional elongation has been added for the tendon length in the jack.
3. Live end refers to the end of the tendon to be jacked, and dead end to the estimated point of zero movement in the loop Jacking and anchorage foces are in kips.
4. Left and right are indicated while looking upstation.

WEST END ELECTRIC CO., *Incorporated*

SERVING THE TRI-STATE AREA SINCE 1924

ELECTRICAL CONTRACTORS

640 SECOND STREET - : - PORTSMOUTH, OHIO 45662

Phone (740) 354-8671
Fax (740) 353-5145

OHIO LICENSE NO. 16489

www.WestEndElectricCo.com

September 10, 2013

BRAYMAN CONSTRUCTION CORPORATION
Attn. Mr. Aaron Downs
702 – South First Street
Ironton, Ohio 45638

Re.: LAW-93-0.00 Ironton-Russell Bridge
Ohio Side Electrical Distribution Cabling

Mr. Downs,

Pursuant to Mr. Edwin Callicutt's email dated 9/09/13, concerning Ref. No. 0268: "Distribution Cable, Misc.: No. 8 AWG 5000 Volt Distribution Cable". We did install a No. 8 AWG 600 Volt Distribution Cable to the new street lighting in the City of Ironton, instead of the 5000 Volt Distribution Cable. Honestly, this was an oversight on our part; but I believe what was installed is more than acceptable to the National Electrical Code and this project. I would like to offer several explanations as to why the wire we installed should be acceptable for this situation.

- The ODOT Wire & Cable spec. 725.02 calls for 5000 Volt cable to be non-shielded. The 2005 National Electrical Code no longer allows the production and installation of 5000 Volt cable without a shield.
- The Electric Service that will be feeding the 22ea. decorative luminaire pole lights (Ref. No. 0266) has been changed to a 120/240 Volt Single Phase Service. The plans called for a 480 Volt Electric Service to feed these decorative luminaire poles, but the voltage was changed to match the voltage requirements for all of the other decorative light poles in downtown Ironton. Consequently, the voltage actually feeding the 22ea. street light fixtures being installed in the City of Ironton will be 120 Volt. A 600 Volt rated Distribution Cable is more than capable of safely handling this voltage.

BRAYMAN CONSTRUCTION CORPORATION
Attn. Mr. Aaron Downs

Re.: LAW-93-0.00 Ironton-Russell Bridge
Ohio Side Electrical Distribution Cabling

- The Distribution Cable that is feeding the decorative luminaire pole lights on the bridge is Ref. No. 0255: No. 6 AWG 600 Volt Distribution Cable (not 5000 Volt rated). These are the same exact decorative luminaire pole lights that are installed in the City of Ironton. The only difference is the bridge and approach decorative luminaire pole lights will be fed with 277 Volts. The voltage to the bridge lights is actually higher than the lights in the City of Ironton, and the plans only called for 600 Volt distribution cable to feed these pole lights.

Your consideration in this matter is greatly appreciated.

If you have any questions, please feel free to call me at 740-354-8671.

Sincerely,

West End Electric Co., Inc.

Miles Ferguson
President

URS has no objection to the substitute cable provided by the contractor as far as the functionality is concerned because the cable meets the NEC requirements for this type of installation.
Keith Porter
URS
09/11/2013

Lapasia, Bipin

From: Lapasia, Bipin
Sent: Monday, October 07, 2013 1:58 PM
To: 'Callicutt, Ed'
Cc: Bame, Dave (Dave.Bame@dot.state.oh.us); Hamadani, Nabil; Johnston, Brian
Subject: RE: RFI F110 Rear Abutment Mild Reinforcing Layout

Ed:

We have reviewed RFI F110 and provide the following responses:

KY Approach Rear Abutment:

The distance between support boxes shown on Contract Plans sheet 447/788 is about 1', but the distance between support boxes shown on shop drawing sheet B-29830 is about 4'. Thus, additional #4 bars @ 6" spacing shall be installed to fill in the gap between support boxes. These #4 bars shall be installed on both sides of the expansion joint as shown on sheet 448/788 of the Contract Plans.

Pier 5:

The distance between support boxes shown on Contract Plans sheet 657/788 is about 2', but the distance between support boxes shown on shop drawing sheet B-29823 is about 4'. Thus, additional #4 bars @ 10 1/2" spacing shall be installed to fill in the gap between support boxes. To ease installation, these additional bars can be bent in a "U" shape and do not need to be post drilled into the concrete. These #4 bars shall be installed on both sides of the expansion joint as shown on sheet 658/788 of the Contract Plans.

Please let Brian Johnston (813-675-6646) or me know if you have any questions.

Thanks.

Bipin

Bipin K. Lapasia, P. E.
Senior Project Manager

525 Vine Street, Suite 1800 Cincinnati, OH 45202 Website | Map

Office: 513-651-3440
Direct: 513-419-3519
Fax: 877.660.7727

Email: bipin.lapasia@urs.com

-----Original Message-----
From: Callicutt, Ed [mailto:ecallicutt@figgbridge.com]
Sent: Thursday, October 03, 2013 3:22 PM

To: Lapasia, Bipin
Cc: Dave.Bame@dot.state.oh.us; Hamadani, Nabil
Subject: RE: RFI F110 Rear Abutment Mild Reinforcing Layout

Bipin...1) the block out size has not changed, it's the same as in the plans; 2) location to review is the secondary pour concrete that encapsulates the embedment boxes and the resteel that is drilled and grouted; 3) yes, the goal is to confirm that due to the changes in the size of the support box as noted in the plans, that the 2 or 3 #4 resteel at 6" shown between the support boxes per location remain sufficient.

Call if a discussion would be easier. THX EWC

Edwin W. Callicutt, III, P.E.
Construction Manager
FIGG
54 South Greeno Rd.
Suite B
Fairhope, AL 36532
Ph.: (251) 929-7720
Cell: (912) 399-1569
Fax: (251) 929-7730
ecallicutt@figgbridge.com
http://www.figgbridge.com

This email and any files transmitted with it are confidential and intended solely for the use of the individual or entity to whom they are addressed. If you have received this email in error please notify the system manager. Please note that any views or opinions presented in this email are solely those of the author and do not necessarily represent those of FIGG Engineering Group. Finally, the recipient should check this email and any attachments for the presence of viruses. FIGG accepts no liability for any damage caused by any virus transmitted by this email.

-----Original Message-----
From: Lapasia, Bipin [mailto:bipin.lapasia@urs.com]
Sent: Thursday, October 03, 2013 2:55 PM
To: Callicutt, Ed
Cc: Bame, Dave (Dave.Bame@dot.state.oh.us); Hamadani, Nabil
Subject: FW: RFI F110 Rear Abutment Mild Reinforcing Layout

Ed:

Please see Brian Johnston's questions below (in the forwarded email) & respond.

Thanks.

Bipin

Bipin K. Lapasia, P. E.
Senior Project Manager

525 Vine Street, Suite 1800 Cincinnati, OH 45202 Website | Map

Office: 513-651-3440

Direct: 513-419-3519
Fax: 877.660.7727

Email: bipin.lapasia@urs.com

-----Original Message-----
From: Johnston, Brian
Sent: Thursday, October 03, 2013 1:27 PM
To: Lapasia, Bipin
Cc: Hamadani, Nabil
Subject: RE: RFI F110 Rear Abutment Mild Reinforcing Layout

Bipin,

I have a few questions that you may want Ed to answer.

KY Approach:

1. Have the dimensions of the block-out changed?
2. Where is the concern of being un or under reinforced?
3. Is the concern with respect to the #4 bars that are to be spaced at 6" between support boxes?

Pier 5:

1. Have the dimensions of the block-out changed?
2. Where is the concern of being un or under reinforced?
3. Is the concern with respect to the S4313 bars that are to be spaced at 10 1/2" between support boxes?

Please let me know if you have any questions.

Thanks
Brian

Brian Johnston P.E. | Senior Structural Engineer | URS Corporation
7650 West Courtney Campbell Causeway | Tampa, FL 33607-1462
813.286.1711 (Main) | 813.675.6646 (Direct) | 813.287.8229 (Fax) brian.johnston@urs.com

-----Original Message-----
From: Lapasia, Bipin
Sent: Thursday, October 03, 2013 12:15 PM
To: Johnston, Brian
Cc: Hamadani, Nabil
Subject: FW: RFI F110 Rear Abutment Mild Reinforcing Layout

Brian:

Please review the attached FRI F110.

Thanks.

Bipin

Bipin K. Lapasia, P. E.
Senior Project Manager

525 Vine Street, Suite 1800
Cincinnati, OH 45202
Website | Map

Office: 513-651-3440
Direct: 513-419-3519
Fax: 877.660.7727

Email: bipin.lapasia@urs.com

-----Original Message-----
From: Callicutt, Ed [mailto:ecallicutt@figgbridge.com]
Sent: Thursday, October 03, 2013 11:32 AM
To: Lapasia, Bipin; Hamadani, Nabil
Cc: Bame, Dave
Subject: RFI F110 Rear Abutment Mild Reinforcing Layout

<<B29830 - KY Approach -apprvd.pdf.pdf>> <<B29823-modular at pier 5 apprvd.pdf.pdf>>

Hello Bipin...the attached shop drawings for the expansion joint at the KY abutment have been reviewed by the contractors independent engineer
as required by CMS. You will note that the shape of the joint differs
from what was included in the contact documents, page 447 of 788. This leads us to question whether or not the plan reinforcing in the block out is adequate...obviously no one wants an "excessive" quantity of un
or under reinforced concrete adjacent to the expansion device. Please
review the joint size change and comment on the plan resteel adequacy.

The similar situation exists w/ the Modular Joint at Pier 5. Please
check the mild resteel here as well.

Please track this issue as RFI F110.

THX EWC

Edwin W. Callicutt, III, P.E.
Construction Manager
FIGG
54 South Greeno Rd.
Suite B
Fairhope, AL 36532
Ph.: (251) 929-7720
Cell: (912) 399-1569

Fax: (251) 929-7730
ecallicutt@figgbridge.com
http://www.figgbridge.com

This email and any files transmitted with it are confidential and intended solely for the use of the individual or entity to whom they are addressed. If you have received this email in error please notify the system manager. Please note that any views or opinions presented in this email are solely those of the author and do not necessarily represent those of FIGG Engineering Group. Finally, the recipient should check this email and any attachments for the presence of viruses. FIGG accepts no liability for any damage caused by any virus transmitted by this email.

This e-mail and any attachments contain URS Corporation confidential information that may be proprietary or privileged. If you receive this message in error or are not the intended recipient, you should not retain, distribute, disclose or use any of this information and you should destroy the e-mail and any attachments or copies.

Lapasia, Bipin

From: Lapasia, Bipin
Sent: Monday, October 07, 2013 9:04 AM
To: 'Callicutt, Ed'
Cc: Bame, Dave (Dave.Bame@dot.state.oh.us); Hamadani, Nabil
Subject: RE: KY Deck Detail conflict RFI F111

Good Morning, Ed.

Based on the picture provided in your second email, the 5' - 4 1/2" dimension proposed for the bottom of the expansion joint block-out for the KY rear abutment seems reasonable. As the block-out only over-hangs the girders by approximately 3" and the support boxes for the expansion joint are set back from this over-hang (See approved shop drawings for expansion joint provided in RFI F110), no additional reinforcement is necessary in this over-hang.

Please let me know if you have any questions.

Thanks.

Bipin

Bipin K. Lapasia, P. E.
Senior Project Manager

525 Vine Street, Suite 1800 Cincinnati, OH 45202 Website | Map

Office: 513-651-3440
Direct: 513-419-3519
Fax: 877.660.7727

Email: bipin.lapasia@urs.com

-----Original Message-----
From: Callicutt, Ed [mailto:ecallicutt@figgbridge.com]
Sent: Friday, October 04, 2013 11:53 AM
To: Lapasia, Bipin; Hamadani, Nabil
Cc: Dave.Bame@dot.state.oh.us
Subject: FW: KY Deck Detail conflict RFI F111

Bipin...Brayman has presented an issue as noted below. BCC has formed
the section in accordance with Section AA of plan sheet 435/788 except that the bottom dimension from edge of concrete to the 1:1 slope portion is 5'-4.5", not the 5'-1.5" shown. Their concern is that if they modify the forms to give the 5'-1.5" dimension shown, it will not work with the holes that have been placed in the girders for the transverse SK5023 haunch reinforcing. Similarly, should there be another set of SK5023 bars placed at the end of the structural steel to reinforce the 3"
haunch extension that projects beyond edge of girder as shown in AA of sheet 435? Please confirm which detail is correct and advise on any needed resteel adjustments.

Please call is a discussion would be easier. THX EWC

Edwin W. Callicutt, III, P.E.
Construction Manager
FIGG
54 South Greeno Rd.
Suite B
Fairhope, AL 36532
Ph.: (251) 929-7720
Cell: (912) 399-1569
Fax: (251) 929-7730
ecallicutt@figgbridge.com
http://www.figgbridge.com

This email and any files transmitted with it are confidential and intended solely for the use of the individual or entity to whom they are addressed. If you have received this email in error please notify the system manager. Please note that any views or opinions presented in this email are solely those of the author and do not necessarily represent those of FIGG Engineering Group. Finally, the recipient should check this email and any attachments for the presence of viruses. FIGG accepts no liability for any damage caused by any virus transmitted by this email.

-----Original Message-----
From: Tom Hesmond [mailto:t_hesmond@brayman.com]
Sent: Friday, October 04, 2013 9:30 AM
To: Callicutt, Ed
Subject: KY Deck Detail conflict

Ed,

There is an issue with the details for the expansion dam blockout and haunch dimensions at the KY abutment. On sheet 425 of 788 "Detail B"
shows the blockout, 3'-10 1/2", measured from the end of beam. On sheet
435 of 788 "Section A-A" shows the blockout measured from the end of deck at 3'-10 1/2". By my calculations the end of deck is 3" different from the end of beam so there is a 3" bust in this dimensioning.
Normally I would say the end of deck measurement is correct but that creates an issue with the haunch and the holes drilled in the beams for the rebar. Once you've had a chance to review please give me a call and I can explain it better.

Thanks,
Tom

Sincerely,

Thomas M. Hesmond, P.E.
Superintendent/Project Manager
Brayman Construction Corp.
Phone: 724-443-1533 ext. 50131
Fax: 740-414-4316
Cell: 412-292-3219

Confidentiality Message for Email:

PRIVILEGE AND CONFIDENTIALITY NOTICE: This electronic material and the information contained in it is intended only for the use of the individual or entity to which it is addressed and may contain information that is privileged, confidential and exempt from disclosure.
If the reader of this message is not the intended recipient or an employee or agent responsible for delivering the message to the intended recipient, you are hereby notified that any dissemination, distribution or copying of this communication is strictly prohibited. If you have received this communication in error, please notify Brayman Construction Corporation immediately at 724.443.1533 or notify the sender immediately by replying to this message.

Lapasia, Bipin

From: Lapasia, Bipin
Sent: Friday, October 11, 2013 8:32 AM
To: 'Callicutt, Ed'
Cc: Bame, Dave (Dave.Bame@dot.state.oh.us); Hamadani, Nabil
Subject: RE: Pour 1 KY Approach Bridge - RFI F112

Ed:

We take no exception to the Contractor's request to reduce the length of Pour 1 for the KY Approach from 80.353' to 79.103'.

Please let me know if you have any questions.

Thanks.

Bipin

Bipin K. Lapasia, P. E.
Senior Project Manager

525 Vine Street, Suite 1800 Cincinnati, OH 45202 Website | Map

Office: 513-651-3440
Direct: 513-419-3519
Fax: 877.660.7727

Email: bipin.lapasia@urs.com

-----Original Message-----
From: Callicutt, Ed [mailto:ecallicutt@figgbridge.com]
Sent: Thursday, October 10, 2013 12:04 PM
To: Lapasia, Bipin; Johnston, Brian; Hamadani, Nabil
Cc: Dave.Bame@dot.state.oh.us
Subject: Pour 1 KY Approach Bridge - RFI F112

Gentlemen...BCC has asked that the referenced deck pour be shortened by 15"; change the length from 80.353' at PGL to 79.103'. This request is made to ease resteel placement...if the pour is terminated as noted, the SK6001 bars that are additional over the top of pier 1 don't have to be placed until later. Please review and comment.
THX EWC

Edwin W. Callicutt, III, P.E.
Construction Manager
FIGG
54 South Greeno Rd.

Suite B
Fairhope, AL 36532
Ph.: (251) 929-7720
Cell: (912) 399-1569
Fax: (251) 929-7730
ecallicutt@figgbridge.com
http://www.figgbridge.com

This email and any files transmitted with it are confidential and intended solely for the use of the individual or entity to whom they are addressed. If you have received this email in error please notify the system manager. Please note that any views or opinions presented in this email are solely those of the author and do not necessarily represent those of FIGG Engineering Group. Finally, the recipient should check this email and any attachments for the presence of viruses. FIGG accepts no liability for any damage caused by any virus transmitted by this email.

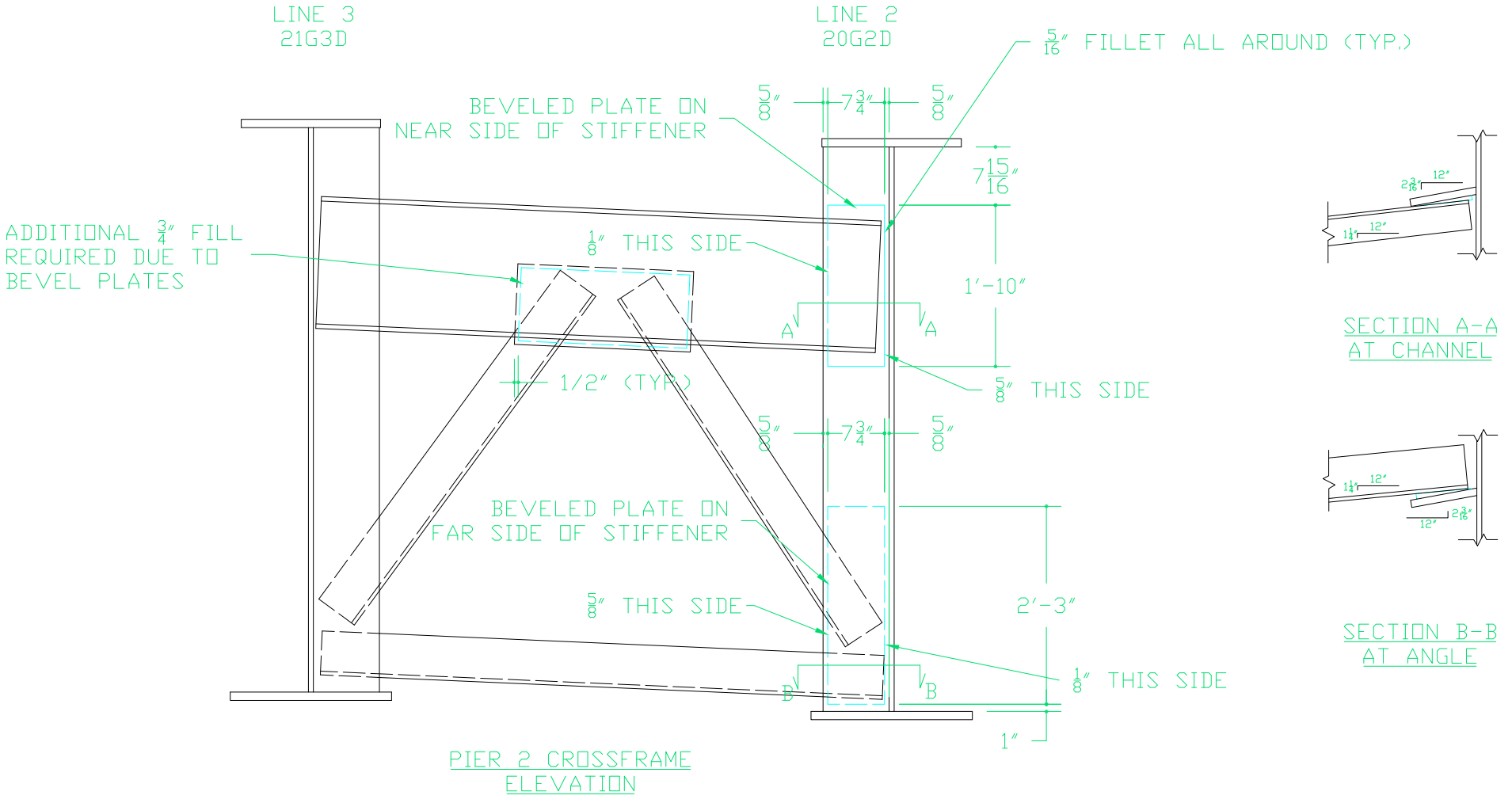

PIER 2 CROSSFRAME
ELEVATION

SECTION A-A
AT CHANNEL

SECTION B-B
AT ANGLE

Lapasia, Bipin

From: Lapasia, Bipin
Sent: Thursday, October 31, 2013 4:08 PM
To: 'Callicutt, Ed'
Cc: Bame, Dave (Dave.Bame@dot.state.oh.us); Stroh, Steve; Johnston, Brian; Hamadani, Nabil
Subject: RE: KY Approach deck RFI F114

Ed:

Here are our responses to RFI F114 (See below). It appears from the data provided from Brayman for the haunch elevations that girder #1 was not cambered as much as shown in the Contract Plans and thus resulted in the need for additional concrete.

#1. The exterior girder stresses were checked with the additional slab weight and found to be less than the allowable stresses. The slab between the exterior and interior girder will not be an issue, as the deck is held at 9 1/4" between the girders. It is understood that based on an email from Ed Callicutt dated 10/29/2013, the Brayman has already started to form the deck cantilever with a slope. This results in less additional weight on the exterior girder and alleviates any concerns with the deck overhang. One issue that Brayman will need to address is the shear stud embedment into the deck. At the maximum location of 18" provided in an email from Ed Callicutt dated 10/30/2013, the shear studs will have 0" of embedment into the slab. Per AASHTO LRFD 6.10.10.1.4, the minimum required embedment is 2". The commentary goes on to say "Stud shear connectors should penetrate through the haunch between the bottom of the deck and the top flange, if present, and into the deck. Otherwise, the haunch should be reinforced to contain the stud connector and develop its load in the deck". Please ensure this requirement is met at all locations on all girders when Brayman submits their proposed fix for this issue.

#2. The deck pouring sequence shown on sheet 52/365 of the Contract Plans is provided as one possible pouring sequence. Per note #2 on this sheet "This is a suggested sequence for pouring the deck concrete. Should the contractor propose to use a different sequence, the submittal shall be made in accordance with CMS Items 501 and 511". Please ensure that Brayman includes the additional weight of the pump truck on Pour 1 should they elect to modify the pouring sequence from what is provided on sheet 52/365 of the Contract Plans.

Please let Brian Johnston of our Tampa office (813-6756646) or me know if you have any questions.

Bipin K. Lapasia, P. E.
Senior Project Manager

525 Vine Street, Suite 1800 Cincinnati, OH 45202 Website | Map

Office: 513-651-3440
Direct: 513-419-3519
Fax: 877.660.7727

Email: bipin.lapasia@urs.com

-----Original Message-----

From: Callicutt, Ed [mailto:ecallicutt@figgbridge.com]
Sent: Monday, October 28, 2013 2:30 PM
To: Lapasia, Bipin; Hamadani, Nabil
Cc: Bame, Dave
Subject: KY Approach deck RFI F114

Bipin....a couple of questions.

1) The overhang thickness for the left fascia girder between approximate piers 1 and 2 varies in depth from the plan thickness of 1.135' up to a max of 18". This is with the soffit form sucked up tight to the bottom of the top flange and projected out flat. Does this additional thickness pose a structural problems for the girder? Does this additional thickness pose a problem with the configuration of the deck reinforcing should the decision be to keep the additional thickness? Please advise. I do not currently have precise limits on the start and stop of the additional thickness but will get that info if you say its needed.
2) Brayman has asked if it would be possible to cast deck pours 2 and 3 on the same day...cast the remaining deck in one operation. They are alluding to placing a concrete pump truck on the pour 1 deck and then using a slick line for concrete delivery. I don't know the weight on the pump but can get that info if needed. Please advise if this scheme is feasible or if there is a fatal flaw.

Let me know if I need to get you additional info on either questions. Thanks EWC

Question #1 takes priority over #2. Please track these questions as RFI F114

Edwin W. Callicutt, III, P.E.
Construction Manager
FIGG
54 South Greeno Rd.
Suite B
Fairhope, AL 36532
Ph.: (251) 929-7720
Cell: (912) 399-1569
Fax: (251) 929-7730
ecallicutt@figgbridge.com
http://www.figgbridge.com

This email and any files transmitted with it are confidential and intended solely for the use of the individual or entity to whom they are addressed. If you have received this email in error please notify the system manager. Please note that any views or opinions presented in this email are solely those of the author and do not necessarily represent those of FIGG Engineering Group. Finally, the recipient should check this email and any attachments for the presence of viruses. FIGG accepts no liability for any damage caused by any virus transmitted by this email.

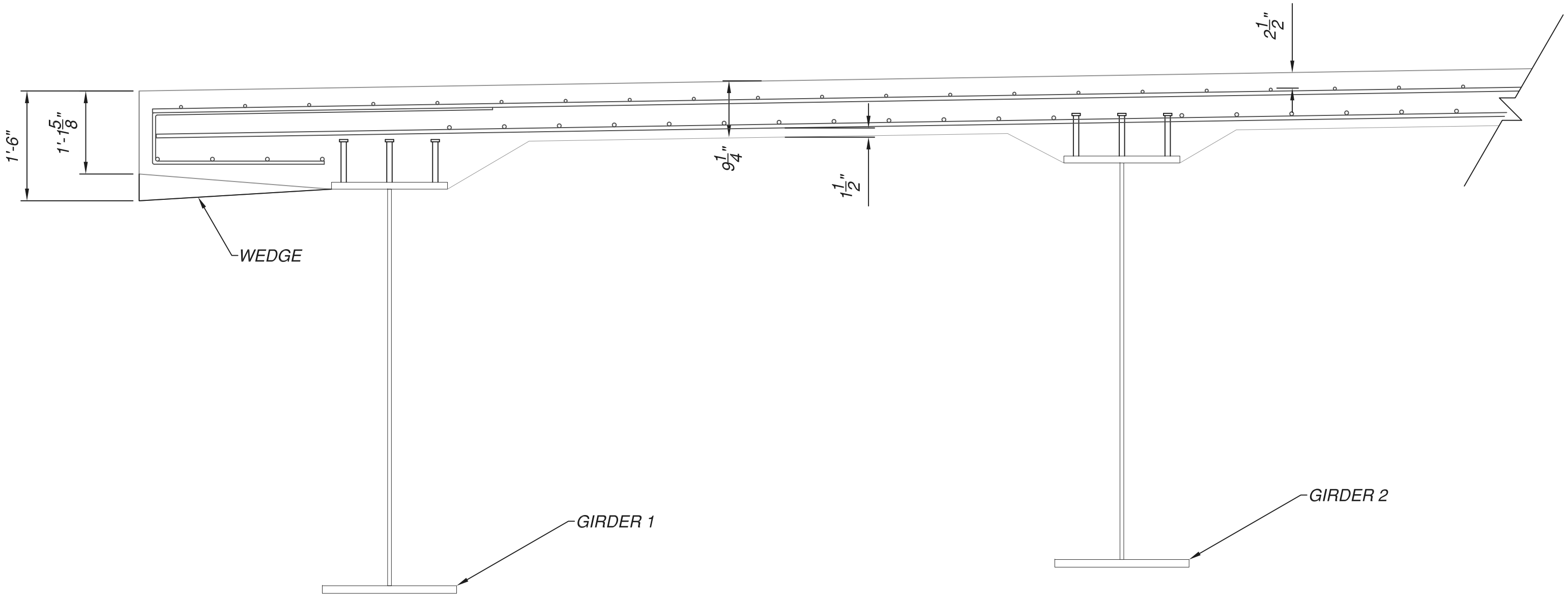

BY	DATE	REVISIONS	NO.

BRAYMAN construction corporation

Innovative Solutions Since 1947

DRAWN BY DWW	10/30/13	JOB NUMBER
CHECKED BY		
APPROVED		DRAWING NUMBER REV.
SCALE DO NOT SCALE PRINT		LAY-1

Lapasia, Bipin

From: Lapasia, Bipin
Sent: Thursday, November 07, 2013 8:36 AM
To: 'Callicutt, Ed'
Cc: Bame, Dave (Dave.Bame@dot.state.oh.us); Hamadani, Nabil; Johnston, Brian
Subject: RE: Existing Weld Condition of Bottom Chord of KY Abutment Diaphragms RFI F115

Ed:

A quick review of the design calculations shows that the proposed connection with the elimination of the bottom welds for the type D21 diaphragms (which is highly eccentric) does not meet design stress limits. Thus, the bottom weld cannot be omitted.

Please let me know if you have any questions.

Thanks.

Bipin

Bipin K. Lapasia, P. E.
Senior Project Manager

URS

525 Vine Street, Suite 1800
Cincinnati, OH 45202
Website | Map

Office: 513-651-3440
Direct: 513-419-3519
Fax: 877.660.7727

Email: bipin.lapasia@urs.com

From: Callicutt, Ed [mailto:ecallicutt@figgbridge.com]
Sent: Monday, November 04, 2013 10:33 AM
To: Lapasia, Bipin; Hamadani, Nabil
Cc: Bame, Dave; eric mclaughlin; Ed Broomall
Subject: FW: Existing Weld Condition of Bottom Chord of KY Abutment Diaphragms RFI F115

Bipin…BCC is seeking relief on some welds at the lower portions of the diaphragms of KY approach girders. These are the type D21 (plan sheet 426/788) diaphragms located directly over the KY Abutment. The bottom weld between top of lower flange and the bottom of the 6x6x1/2 angle is what they want to omit. Access is the issue, the 2" clear shown on the plans has been encroached upon a bit and as such getting the welds placed is problematic. The attached sheet details weld that is currently in place. Please advise if these welds are sufficient and the lower weld can be omitted. Please track this issue as RFI F115

Edwin W. Callicutt, III, P.E.
Construction Manager
FIGG

54 South Greeno Rd.
Suite B
Fairhope, AL 36532
Ph.: (251) 929-7720
Cell: (912) 399-1569
Fax: (251) 929-7730
ecallicutt@figgbridge.com
http://www.figgbridge.com

This email and any files transmitted with it are confidential and intended solely for the use of the individual or entity to whom they are addressed. If you have received this email in error please notify the system manager. Please note that any views or opinions presented in this email are solely those of the author and do not necessarily represent those of FIGG Engineering Group. Finally, the recipient should check this email and any attachments for the presence of viruses. FIGG accepts no liability for any damage caused by any virus transmitted by this email.

From: Tom Hesmond [mailto:t_hesmond@brayman.com]
Sent: Monday, November 04, 2013 10:01 AM
To: Callicutt, Ed
Cc: Aaron Downs; Jeff Schellhammer; Bame, Dave
Subject: FW: Existing Weld Condition of Bottom Chord of KY Abutment Diaphragms

Ed,

Attached is a detailed review of the weld length on the diaphragms at the KY abutment. Brayman requests to leave the connection installed as is. Please advise if this is acceptable.

Thanks,
Tom

From: Jeff Schellhammer
Sent: Monday, November 04, 2013 9:44 AM
To: Tom Hesmond
Subject: Existing Weld Condition of Bottom Chord of KY Abutment Diaphragms

Jeff Schellhammer | Construction Engineer
Brayman Construction Corporation
1000 John Roebling Way, Saxonburg, PA 16056
T 724 443 1533 Ext 50150 **M** 412 316 6264 **F** 724 443 8733
j_schellhammer@brayman.com
www.braymanconstruction.com

Confidentiality Message for Email:

PRIVILEGE AND CONFIDENTIALITY NOTICE: This electronic material and the information contained in it is intended only for the use of the individual or entity to which it is addressed and may contain information that is privileged, confidential and exempt from disclosure. If the reader of this message is not the intended recipient or an employee or agent responsible for delivering the message to the intended recipient, you are hereby notified that any dissemination, distribution or copying of this communication is strictly prohibited. If you have received this communication in error, please notify Brayman Construction Corporation immediately at 724.443.1533 or notify the sender immediately by replying to this message.

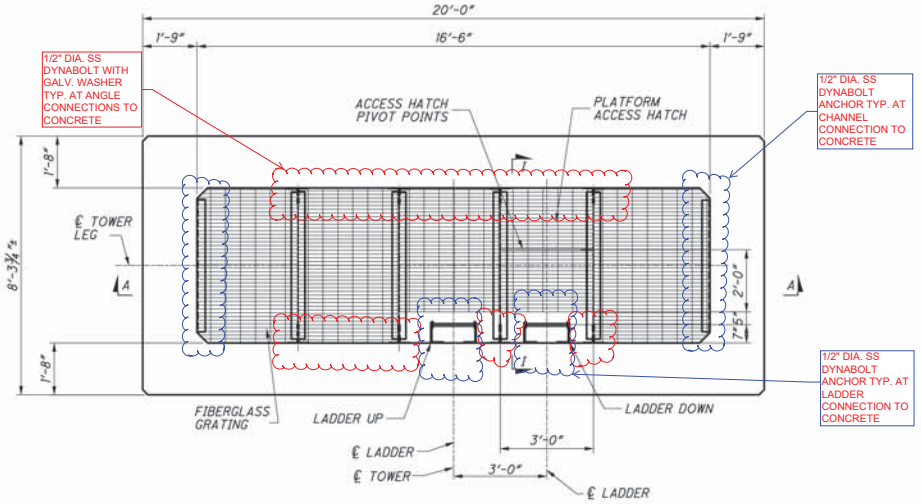

PLAN AT PLATFORM LEVEL L-1

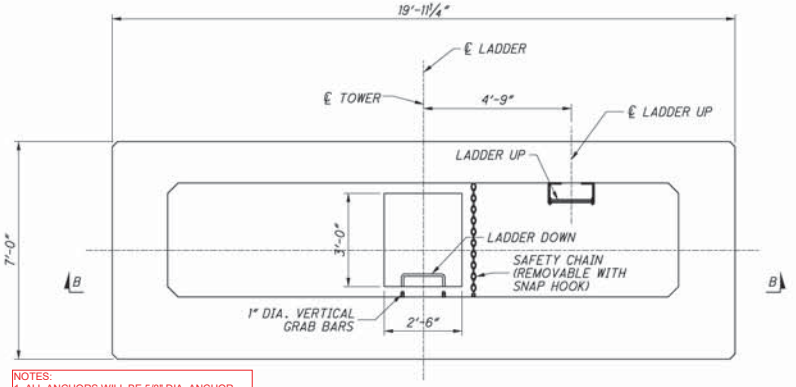

PLAN AT TOWER STRUT

NOTES:
1. ALL ANCHORS WILL BE 5/8" DIA. ANCHOR WITH A 1/2" DIA. BOLT
2. ALL ANCHORS WILL BE 304 STAINLESS STEEL
3. ALL WASHERS AT THE ANGLE CONNECTION TO CONCRETE WILL BE HOT DIP GALVANIZED PER ASTM A153 OR F2329
4. ALL LADDER HOLE DIA. ARE TO BE 5/8" DIA. WHERE CONNECTING TO CONCRETE
5. ALL C9X15 ARE TO HAVE A 5/8" DIA. HOLE
6. ALL L6X4X5/6 ARE TO HAVE A 13/16" DIA. HOLE
7.ALL PLATFORM MATERIAL HAS BEEN FABRICATED AND DELIVERED TO THE PROJECT. THE LADDERS HAVE NOT BEEN FABRICATED. THE HOLES FOR THE LADDERS WILL BE 5/8" DIA. APPROVED SHOP DRAWINGS FOR THE LADDERS WILL FOLLOW.

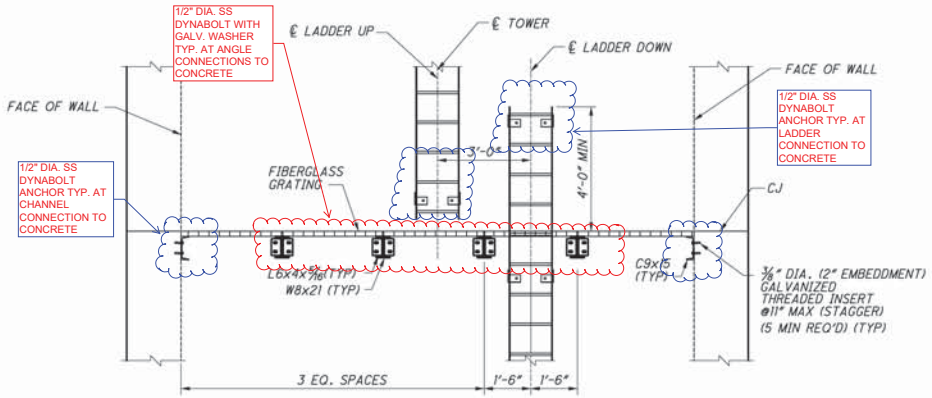

SECTION A-A

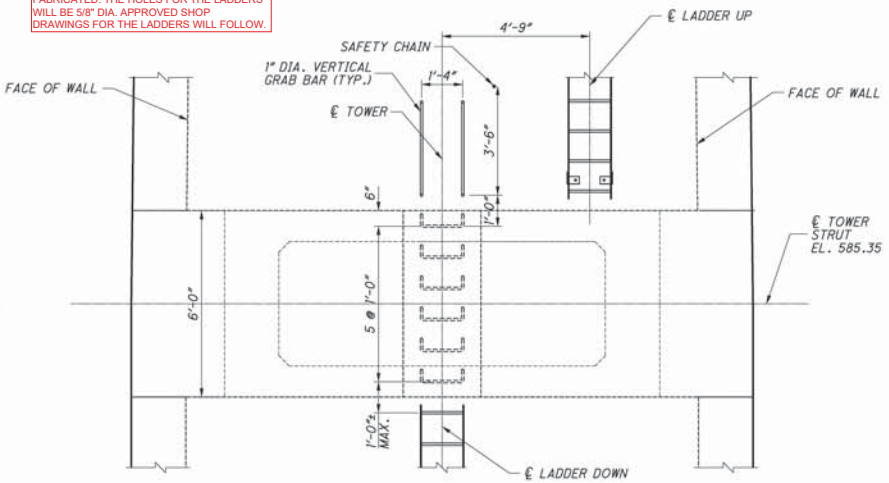

SECTION B-B

NOTES

1. FOR INDIVIDUAL RUNG AND VERTICAL GRAB BAR DETAILS SEE SHEET 119/365
2. FOR ADDITIONAL NOTES SEE SHEET 113/365
3. FOR LOCATION OF ELECTRICAL EQUIPMENT, INSPECTION LIGHTING AND CONDUIT SEE SHEETS 285 THRU 297 OF 788.
4. FOR SECTION 1-1, SEE SHEET 118/365

DESIGN AGENCY: URS, 36 EAST 7TH STREET SUITE 2200 CINCINNATI OHIO 45202

DESIGNED	DRAWN	REVIEWED	DATE
DRC	MHR	BA	6-10
CHECKED	REVISED	STRUCTURE FILE NUMBER	
BKL		4401263	

TOWER LADDER AND PLATFORM DETAILS (1 OF 8)
BRIDGE NO. LAW-93-0000
IRONTON RUSSEL BRIDGE OVER OHIO RIVER

LAW-93-0.00
PID No. 81595

114/365
501/788

J:\Project\01\0001\15005112 Ironton Russell\LAW\81595\structures\LAW93_1111C\sheets\Towers\093_0000_pi362.dgn — 4/29/2011 9:30:21 AM — john_corley

LETTER OF TRANSMITTAL

BRAYMAN CONSTRUCTION CORP.
1000 John Roebling Way
Saxonburg, PA 16056
Phone: (724) 443-1533
Fax: (724) 443-8733

To: Ohio Dept. of Transportation
District 9
650 Eastern Avenue
Chillicothe, OH 45601

Project: SR-93-0.00
Ironton Russell Bridge
Lawrence County, OH
Project No. 110628

BCC # 196-000-000

Attention: Dave Bame

Date: November 26, 2013

We are sending you the following items:

- ☐ Under Separate Cover
- ☑ Attached
- ☐ Copy of Letter
- ☐ Prints
- ☐ Specifications
- ☐ Change Order
- ☐ Shop Drawings
- ☐ Plans
- ☐ _____

Copies	Date	Description
1	11/26/13	RFI 070 Guide Pipe Flange Orientation

Transmitted for the following purpose:

- ☑ For Approval
- ☐ Approved as Submitted
- ☐ Resubmit __ copies for approval
- ☐ For Your Use
- ☐ Approved as Noted
- ☐ Submit __ copies for distribution
- ☐ As Requested
- ☐ Returned for Corrections
- ☐ Return __ corrected prints
- ☐ For Review & Comment
- ☐ For Certification

MAIL: ◯ Regular ◯ Overnight ◯ Certified ☑ Email **FAX:** ◯

Remarks:

Aaron Downs

Signed: Aaron Downs
Project Engineer

cc: File/arb
Dan Beasley
Edwin Callicutt
Eric McLaughlin

Ironton Russell Bridge over Ohio River

LAW-93C-0000

RFI 070 Guide Pipe Flange Orientation

For:

District 9

Submitted By:

1000 John Roebling Way

Saxonburg, Pa 16056

November 26, 2013

Wabash Steel LLC

ENGINEERING & ESTIMATING
6235 Westerville Road
Westerville, OH 43081
Ph. 614-212-5838
Fax 614-212-5799

FABRICATION PLANT
2007 Oliphant Drive
Vincennes, IN 47591
Ph. 812-882-4550
Fax 812-882-4525

Request For Information

Wabash Job #: **17083** **RFI# 020** Date: 11/26/13 Author: John Rose

Project Data: ODOT Project No. 628(11)
Bridge No. LAW-93-0000, Ironton Russell Bridge Over Ohio River
MAIN SPAN – Tower Cable Anchor Boxes
Ref. No. 429 ; Structural Steel *(Fabrication/Furnish Only)*

Bridge No.: LAW-93-0000 ; MAIN SPAN ; Tower Cable Anchor Boxes

Re: Guide pipe flange orientation at B1L, M1L, B1R and M1R of tower 3 section 1

Approved guide pipe flange plate shop drawings GP01 and GP05, attached, detail the center of elliptical holes for the pipe as being closer to the bottom of the plate than the top for these flanges; for example, bGP01 at B1L ellipse is detailed 3'-10 9/16" from center to top of plate, and is thus 3'-5 1/16" from center to bottom. The designs don't specify these dimensions, they were calculated by our detailer to avoid interferences plus a wide margin. This plate has been erroneously installed in tower 3 section 1 boxes at B1L, M1L, B1R and M1R in the reverse of that orientation, so that the larger dimension is from center to bottom, relocating the bolt holes.

All flange plates have been cut and drilled to use as templates. Being symmetrical and fit in assembly with the pipe and box, the flange plate ellipse is oriented correctly with the pipe and front/rear plate ellipse. The flange plates have been fully welded to guide pipes and all bolt holes are drilled at B1L and M1L (tower 3 left leg section 1). The flange has not yet been welded to guide pipes and some holes have been drilled at B1R and M1R (tower 3 right leg section 1).

The shifted hole pattern would place a few bolts through the web of platform L7 support channel on the interior of the box in some places. There would be no interference with the channel flange or any other part of the platform. The edge distance between relocated holes and ends of the box front/rear plate ellipse is at least 5". There is sufficient room to install bolts in all holes as fabricated without interference.

Is this acceptable as fabricated?

A response by Friday 11/29/13 is requested

Based on the information presented in this RFI and the additional information submitted on 12/02/2013, we have no objection to the contractor's proposed solution, provided the guide pipe locations and orientation at each of the exit points has not changed from the details shown in the contact plans.
Bipin Lapasia
URS Corp.
Date:12/3/2013

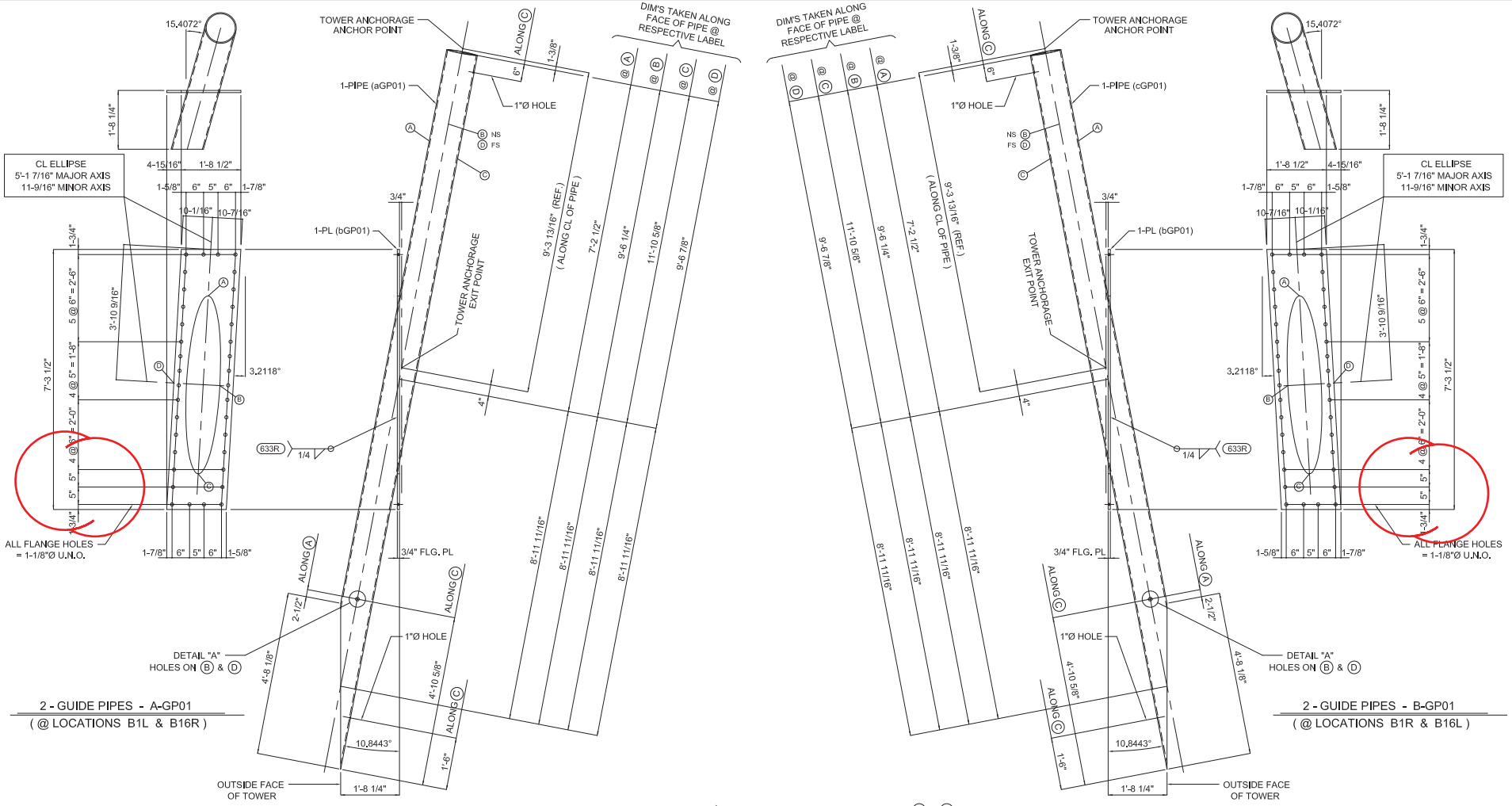

BILL OF MATERIAL

Kind	Section	Length	Req.	Mark	Grade	Remarks
		GUIDE PIPES	2	A-GP01		
PIPE	10" Ø SCH. 40	20'-10 5/8"	2	aGP01	A500 GRADE C	1 691
PL	3/4" x 25-7/16"	7'-3 1/2"	2	bGP01	A709-50	946
BOLT	⅝"Ø x 1-¼" UNC SOCKET HD. CAP SCREW	0'-1 1/4"	4	dGP01	A449 W / NUT	1
		GUIDE PIPES	2	B-GP01		2 638
PIPE	10" Ø SCH. 40	20'-10 5/8"	2	cGP01	A500 GRADE C	1 691
PL	3/4" x 25-7/16"	7'-3 1/2"	2	bGP01	A709-50	946
BOLT	⅝"Ø x 1-¼" UNC SOCKET HD. CAP SCREW	0'-1 1/4"	4	dGP01	A449 W / NUT	1
						2 638

Review is only for conformance with the design concept. Review does not cover dimensions, quantities, accuracy, fit, or any assembly for which this item may be a component. Review does not authorize deviation from Contract Documents or substitution of materials. Requests for deviations from the Contract Documents will only be addressed thru the Change Order Process.

REVIEWED
CONFORMS WITH CONCEPT ( )
CONFORMS AS NOTED (✔)
RESUBMIT ( )
NO ACTION ( )
DOES NOT CONFORM ( )

URS

DATE 07/25/2013 BY N Hamadani

No changes marked. Revision checked for clouded items against previous submission.

SHOP NOTES:

1) SEE SHEET GN1 FOR GENERAL NOTES.

GUIDE PIPE DETAILS

WABASH STEEL, LLC
2007 OLIPHANT DRIVE
VINCENNES, INDIANA 47591

Drawn	Checked	Approved	Revised
DJW 04-15-13	DMW 04-15-13		

STATE PROJ. NO. LAW-93-0.00
ODOT PROJ. NO. 110628 ~ PID NO. 81595
REF. NO. 429
BRIDGE NO. LAW-93-0000
IRONTON RUSSELL BRIDGE
OVER OHIO RIVER
LAWRENCE COUNTY, OHIO
CONTRACTOR: BRAYMAN CONST. CORP.
OWNER: OHIO DEPT. OF TRANSPORTATION

Shop Paint:	GALVANIZED	
Edge Distance: AS NOTED		Holes: AS NOTED
WSLLC No.: 17083		Sh. GP01 of 30

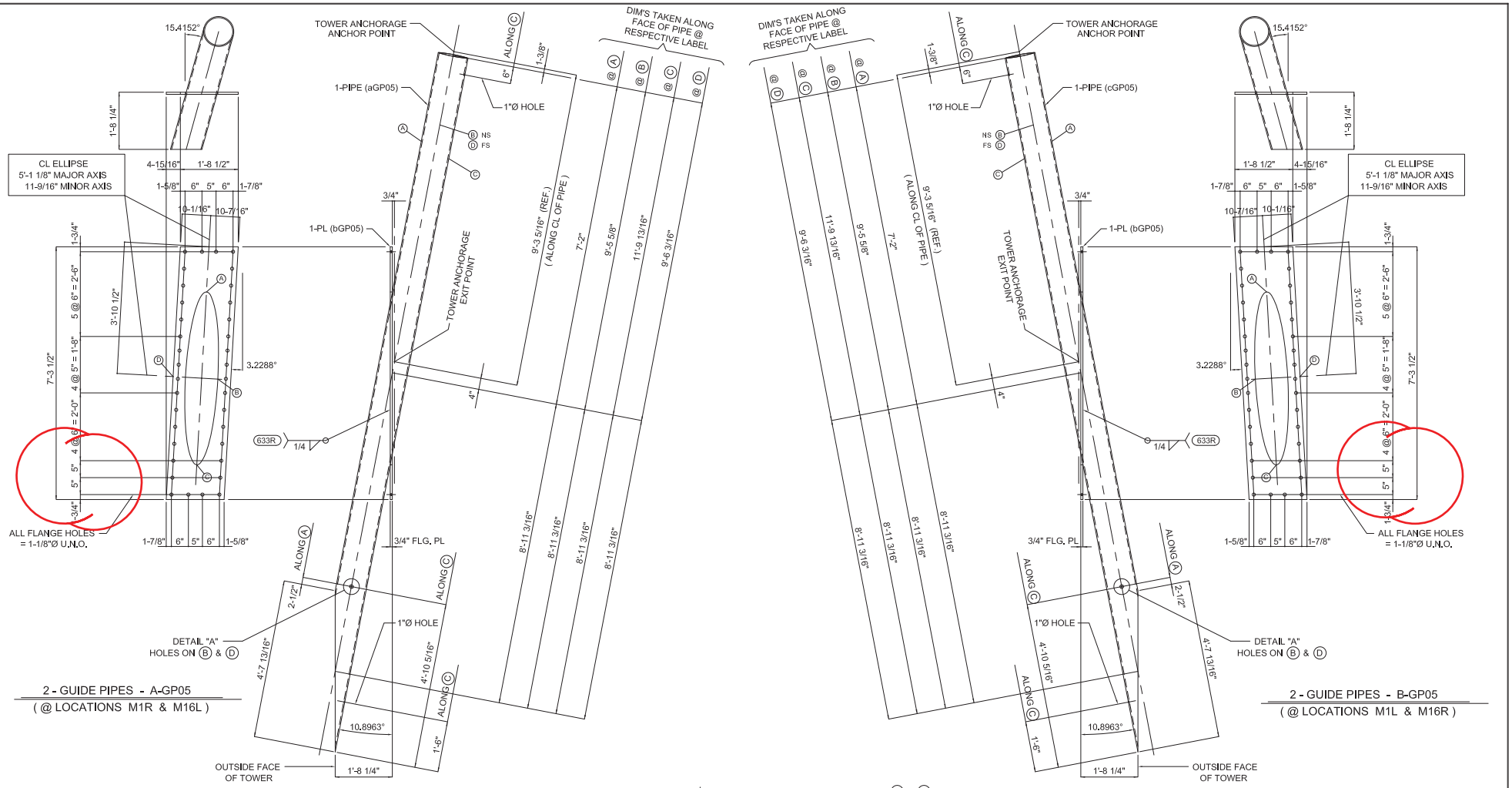

BILL OF MATERIAL

Kind	Section	Length	Req.	Mark	Grade	Remarks
		GUIDE PIPES	2	A-GP05		
PIPE	10" Ø SCH. 40	20'-9 5/16"	2	aGP05	A500 GRADE C	1 682
PL	3/4" x 25-7/16"	7'-3 1/2"	2	bGP05	A709-50	946
BOLT	⅝"Ø x 1-¼" UNC SOCKET HD. CAP SCREW	0'-1 1/4"	4	dGP01	A449 W / NUT	1
		GUIDE PIPES	2	B-GP05		2 638
PIPE	10" Ø SCH. 40	20'-9 5/16"	2	cGP05	A500 GRADE C	1 682
PL	3/4" x 25-7/16"	7'-3 1/2"	2	bGP05	A709-50	946
BOLT	⅝"Ø x 1-¼" UNC SOCKET HD. CAP SCREW	0'-1 1/4"	4	dGP01	A449 W / NUT	1
						2 638

Review is only for conformance with the design concept. Review does not cover dimensions, quantities, accuracy, fit, or any assembly for which this item may be a component. Review does not authorize deviation from Contract Documents or substitution of materials. Requests for deviations from the Contract Documents will only be addressed thru the Change Order Process.

REVIEWED

CONFORMS WITH CONCEPT ( )
CONFORMS AS NOTED (✔)
RESUBMIT ( )
NO ACTION ( )
DOES NOT CONFORM ( )

URS

DATE 07/25/2013 BY NHamadani

11/16" Ø HOLES ON (B) & (D)
2-BOLTS (dGP01)
3/16 (633R)
(WELD NUT TO O.D. OF PIPE)
DETAIL "A"

No changes marked. Revision checked for clouded items against previous submission.

SHOP NOTES:

1) SEE SHEET GN1 FOR GENERAL NOTES.

GUIDE PIPE DETAILS

WABASH STEEL, LLC
2007 OLIPHANT DRIVE
VINCENNES, INDIANA 47591

Drawn	Checked	Approved	Revised
DJW 04-21-13	DMW 04-22-13		

STATE PROJ. NO. LAW-93-0.00
ODOT PROJ. NO. 110628 ~ PID NO. 81595
REF. NO. 429
BRIDGE NO. LAW-93-0000
IRONTON RUSSELL BRIDGE
OVER OHIO RIVER
LAWRENCE COUNTY, OHIO
CONTRACTOR: BRAYMAN CONST. CORP.
OWNER: OHIO DEPT. OF TRANSPORTATION

Shop Paint: GALVANIZED	
Edge Distance: AS NOTED	Holes: AS NOTED
WSLLC No.: 17083	Sh. GP05 of 30

LETTER OF TRANSMITTAL

BRAYMAN CONSTRUCTION CORP.
1000 John Roebling Way
Saxonburg, PA 16056
Phone: (724) 443-1533
Fax: (724) 443-8733

To: Ohio Dept. of Transportation
District 9
650 Eastern Avenue
Chillicothe, OH 45601

Project: SR-93-0.00
Ironton Russell Bridge
Lawrence County, OH
Project No. 110628

BCC # 197-000-000

Attention: Dave Bame

Date: December 10, 2013

We are sending you the following items:

☐ Under Separate Cover ☑ Attached

☐ Copy of Letter ☐ Prints ☐ Specifications ☐ Change Order

☐ Shop Drawings ☐ Plans ☐ _____

Copies	Date	Description
1	12/10/13	RFI 071 Tower Anchor Box

Transmitted for the following purpose:

☑ For Approval ☐ Approved as Submitted ☐ Resubmit __ copies for approval

☐ For Your Use ☐ Approved as Noted ☐ Submit __ copies for distribution

☐ As Requested ☐ Returned for Corrections ☐ Return __ corrected prints

☐ For Review & Comment ☐ For Certification

MAIL: ◯ Regular ◯ Overnight ◯ Certified ☑ Email **FAX:** ◯

Remarks:

Aaron Downs

Signed: Aaron Downs
Project Engineer

cc: File/arb
Dan Beasley
Edwin Callicutt
Eric McLaughlin

Ironton Russell Bridge over Ohio River

LAW-93C-0000

RFI 071 Tower Anchor Box

For:

District 9

Submitted By:

1000 John Roebling Way

Saxonburg, Pa 16056

December 10, 2013

Wabash Steel LLC

ENGINEERING & ESTIMATING
6235 Westerville Road
Westerville, OH 43081
Ph. 614-212-5838
Fax 614-212-5799

FABRICATION PLANT
2007 Oliphant Drive
Vincennes, IN 47591
Ph. 812-882-4550
Fax 812-882-4525

Request For Information

Wabash Job #: **17083** **RFI# 021** Date: 12/10/13 Author: John Rose

Project Data: ODOT Project No. 628(11)
Bridge No. LAW-93-0000, Ironton Russell Bridge Over Ohio River
MAIN SPAN – Tower Cable Anchor Boxes
Ref. No. 429 ; Structural Steel *(Fabrication/Furnish Only)*

Bridge No.: LAW-93-0000 ; MAIN SPAN ; Tower Cable Anchor Boxes

Re: Mislocated hole in anchor box 11-T3R-3 flange

A welded stud layout mark was mistaken for a splice plate bolt hole layout mark in anchor box 11-T3R-3 (tower 3 right, section 3, shop drawings 11AH-11H) flange plate f11 near cable anchorage M8R and a single 1 1/8" diameter hole was erroneously drilled here.

See attached sketch.

We propose to install a 1" bolt in the hole to seal from concrete and install the stud approximately 3" away. There is no interference with splice plates, guide pipe flange, guide pipe, or any other component.

Is this acceptable as proposed?

A response by Thursday 12/12/13 is requested

Response: We take no exception to the proposal by Wabash Steel to install a 1" diameter bolt and nut in the 1 1/8" diameter hole that was erroneously drilled in anchor box 11-T3R-3. To alleviate a potential conflict with the main vertical reinforcement in the tower, we would suggest that the stud that was located at this location be moved in the same vertical line as was currently detailed on the shop drawings.

Issued By: URS **Date:** 12/11/2013

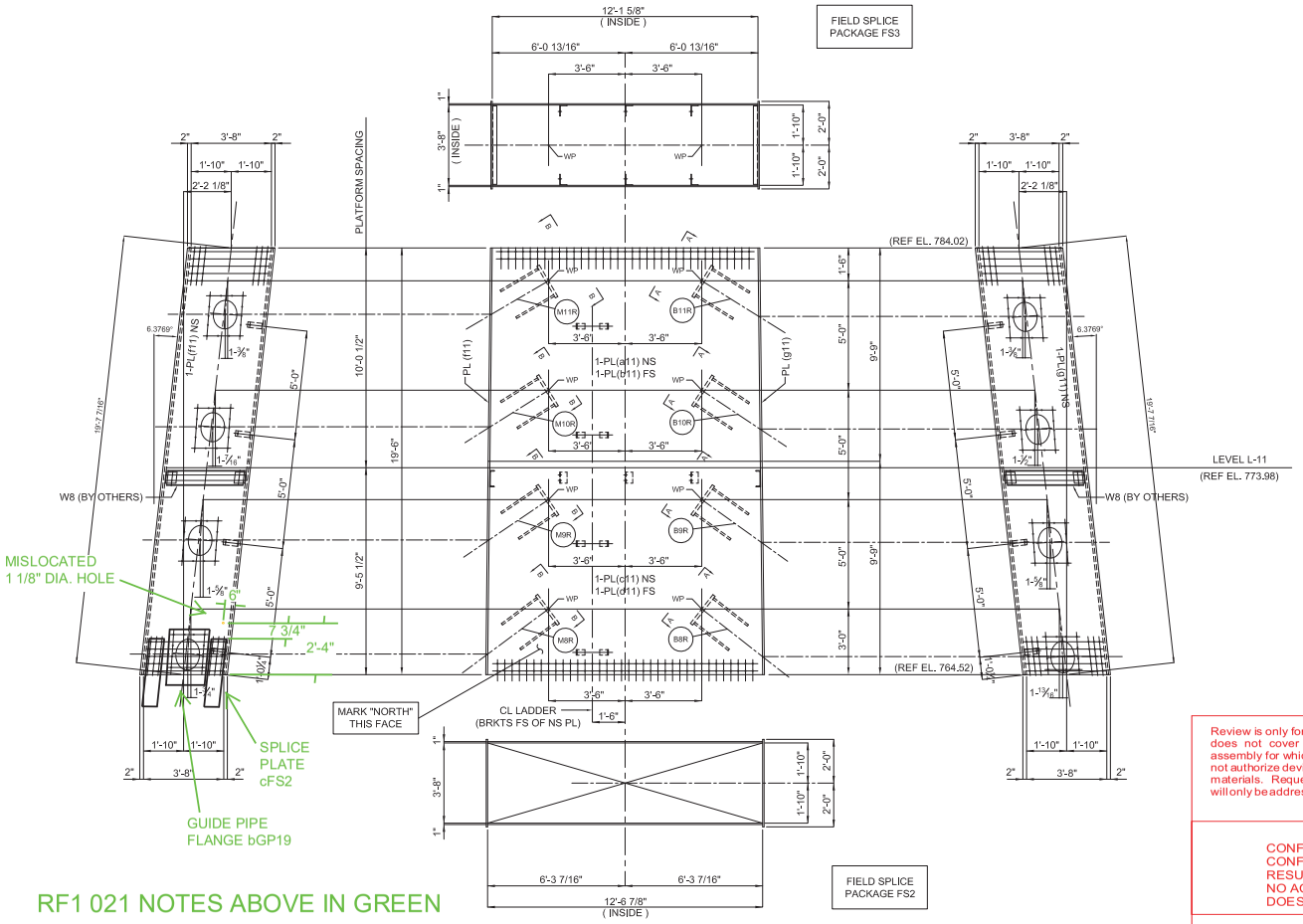

RF1 021 NOTES ABOVE IN GREEN

ONE - TOWER BOX - 11-T3(R)-3
(OVERALL VIEW - IN FINAL POSITION)

Sheet "H" is not a part of this submittal

FOR UNISTRUT ATTACHMENT DETAILS, SEE SHEET "H"

BILL OF MATERIAL

Kind	Section	Length	Req.	Mark	Grade	Remarks
		TOWER BOX	ONE	11-T3(R)-3		(35 213 #)
PL	1" x 117-3/4"	12'-4 1/4"	1	a11	A709-50-FCM	4 946
PL	1" x 117-3/4"	12'-4 1/4"	1	b11	A709-50-FCM	4 946
PL	1" x 117-3/4"	12'-6 7/8"	1	c11	A709-50-FCM	5 034
PL	1" x 117-3/4"	12'-6 7/8"	1	d11	A709-50-FCM	5 034
PL	1" x 47-11/16"	20'-0 3/4"	1	f11	A709-50-FCM	3 253
PL	1" x 47-11/16"	20'-0 3/4"	1	g11	A709-50-FCM	3 253
PL	1" x 24"	3'-8"	2	h11	A709-50-FCM	598
PL	1" x 24"	3'-8 1/16"	2	k11	A709-50-FCM	599
PL	1" x 24"	3'-8 1/8"	2	m11	A709-50-FCM	600
PL	1" x 24"	3'-8 1/8"	2	n11	A709-50-FCM	600
PL	1" x 24"	3'-8 1/16"	2	p11	A709-50-FCM	599
PL	1" x 24"	3'-8 1/8"	2	r11	A709-50-FCM	600
PL	1" x 24"	3'-8 1/8"	2	s11	A709-50-FCM	600
PL	1" x 24"	3'-8 3/16"	2	t11	A709-50-FCM	601
PL	1-1/2" x 20"	2'-6"	2	v11	A709-50-FCM	510
PL	1-1/2" x 20"	2'-6"	2	w11	A709-50-FCM	510
PL	2" x 20"	2'-6"	4	x11	A709-50-FCM	1 360
PL	3/4" x 12"	1'-4"	16	y11	A709-50-FCM	653
L	6 x 4 x 5/16"	0'-6 11/16"	6	ad1	A36 BY OTHERS	35
C	9 x 15	3'-6"	2	af1	A36 BY OTHERS	105
STUD	7/8"Ø	0'-6"	658	ag1	ASTM-A108	(1.13# ea) 744
PL	3/8" x 3"	1'-0 3/8"	8	ah1	A709-50 (BENT) (BY OTHERS)	33

Review is only for conformance with the design concept. Review does not cover dimensions, quantities, accuracy, fit, or any assembly for which this item may be a component. Review does not authorize deviation from Contract Documents or substitution of materials. Requests for deviations from the Contract Documents will only be addressed thru the Change Order Process.

REVIEWED
CONFORMS WITH CONCEPT ( )
CONFORMS AS NOTED (✔)
RESUBMIT ( )
NO ACTION ( )
DOES NOT CONFORM ( )

URS
DATE 03/07/2013 BY N Hamadani

SHOP NOTES:

1) WORK ALL SHEETS (11AH THRU 11H) TOGETHER.
2) SEE SHEET 11AH FOR BILL OF MATERIAL.
3) SEE SHEET GN1 FOR GENERAL NOTES.
4) SEE SHEET GN2 FOR GIRDER ASSEMBLY WELD DETAILS AND WELD TERMINATION DETAILS.
5) SEE SHEETS FS1 THRU FS3 FOR FIELD SPLICE PACKAGES.

TOWER BOX 11-T3(R)-3

WABASH STEEL, LLC
2007 OLIPHANT DRIVE
VINCENNES, INDIANA 47591

Drawn	Checked	Approved	Revised
DJW 01-28-13	DMW 02-03-13		

STATE PROJ. NO. LAW-93-0.00
ODOT PROJ. NO. 110628 ~ PID NO. 81595
REF. NO. 429
BRIDGE NO. LAW-93-0000
IRONTON RUSSELL BRIDGE
OVER OHIO RIVER
LAWRENCE COUNTY, OHIO
CONTRACTOR: BRAYMAN CONST. CORP.
OWNER: OHIO DEPT. OF TRANSPORTATION

Shop Paint: GALVANIZED
Edge Distance: AS NOTED Holes: AS NOTED
WSLLC No.: 17083 Sh. 11AH of 16

Hamadani, Nabil

From: Klusman, Craig
Sent: Thursday, February 06, 2014 12:08 PM
To: Callicutt, Ed
Cc: Bame, Dave; Lapasia, Bipin; Hamadani, Nabil
Subject: RE: RFI F127 Ohio girders/bearings

Ed -

As we discussed, the "theta" angles shown on Sheet 335/365 of the plans are correct. However, we noticed that the load plate was not specified to be wide enough at Pier 5 and the Forward Abutment, which presents two problems:

1. The restrainer angles are too tall; and, therefore are in conflict with the bottom flange. We do not object to shortening the restrainer angle, with a method acceptable to ODOT, to provide approximately 1/2" clearance under the bottom flange.
2. A continuous weld cannot be made between the load plate and the bottom flange. We do not object to welding from above and below (where the bottom flanges extends past the load plate), in an effort to provide the approximate length of weld specified in the plans, if acceptable to ODOT.

We realize there are potentially other solutions to this problem and we can provide comment if needed. Let me know if there are any questions regarding this response.

Thanks - Craig

Craig R. Klusman, PE
Structural Engineering Manager
325 West Main Street, Suite 1200
Louisville, KY 40202
(P) 502.569.2301 | (D) 502.217.1502
Website | craig.klusman@urs.com

-----Original Message-----
From: Callicutt, Ed [mailto:ecallicutt@figgbridge.com]
Sent: Tuesday, February 04, 2014 8:47 AM
To: Klusman, Craig; Hamadani, Nabil
Cc: Bame, Dave
Subject: RFI F127 Ohio girders/bearings

Craig...the attached photos show the way the Ohio approach girders are sitting atop the bearing assemblies at abutment forward. This is girder line 4. Please confirm this is the design intent...that the bearing is not perpendicular to longitudinal centerline of girder. What is installed seems to be what the plans are showing on sheet 312/365 as well as 335/365.

Please call w/ questions. Thanks EWC

Edwin W. Callicutt, III, P.E.
Construction Manager
FIGG
54 South Greeno Rd.

Suite B
Fairhope, AL 36532
Ph.: (251) 929-7720
Cell: (912) 399-1569
Fax: (251) 929-7730
ecallicutt@figgbridge.com
http://www.figgbridge.com

This email and any files transmitted with it are confidential and intended solely for the use of the individual or entity to whom they are addressed. If you have received this email in error please notify the system manager. Please note that any views or opinions presented in this email are solely those of the author and do not necessarily represent those of FIGG Engineering Group. Finally, the recipient should check this email and any attachments for the presence of viruses. FIGG accepts no liability for any damage caused by any virus transmitted by this email.

-----Original Message-----
From: Callicutt, Ed
Sent: Tuesday, February 04, 2014 8:27 AM
To: Callicutt, Ed
Subject: Ohio girder pics

This e-mail and any attachments contain URS Corporation confidential information that may be proprietary or privileged. If you receive this message in error or are not the intended recipient, you should not retain, distribute, disclose or use any of this information and you should destroy the e-mail and any attachments or copies.

Brayman Construction Corporation
1000 John Roebling Way
Saxonburg, PA 16056
Ph. 724-443-1533
Fax 724-443-8733

Field Office
702 S. 1st Street
Ironton, OH 45638
Ph. 740-414-4315
Fax 740-414-4316

Request For Information

BCC Job #: **12-0001** Date: 2/17/2014 Author: Aaron Downs

RFI# 074

BCC# 202-000-000

Project: Bridge No. LAW-93-0.00
Ironton Russell Bridge
Lawrence County, OH
ODOT Project No. 110628

Bridge No.: LAW-93-0.00

Re: Ohio Back Span Scuppers

Per plan sheet 630/788 the proposed scuppers 15&16 are to be located at Sta.29+90.00 Right and Sta.29+95.00 Right. Please see attached sheets for reference. Due to the locations in the contract drawings the proposed scuppers are not long enough to project through the diaphragm. Brayman proposes to relocate scupper 15 to Sta.29+83.00 and scupper 16 to Sta.29+85.50 to make them function properly.

Please advise if this proposed fix is acceptable for implementation into the project.

Thank You

Response:

URS takes no exception to the scuppers shown in the Contract Plans (Sheet 630/788) at Sta. 29 +90.00 Right and Sta. 29+95.00 Right being moved to Sta. 29+83.00 Right and Sta. 29+85.50 Right, respectively. The depressed area around the scupper in the overlay may be constructed per plan as shown on Contract Plan sheet 630/788 or made larger to accommodate both scuppers in a single larger depressed area.

Issued By:	**Date:** 2/18/2014

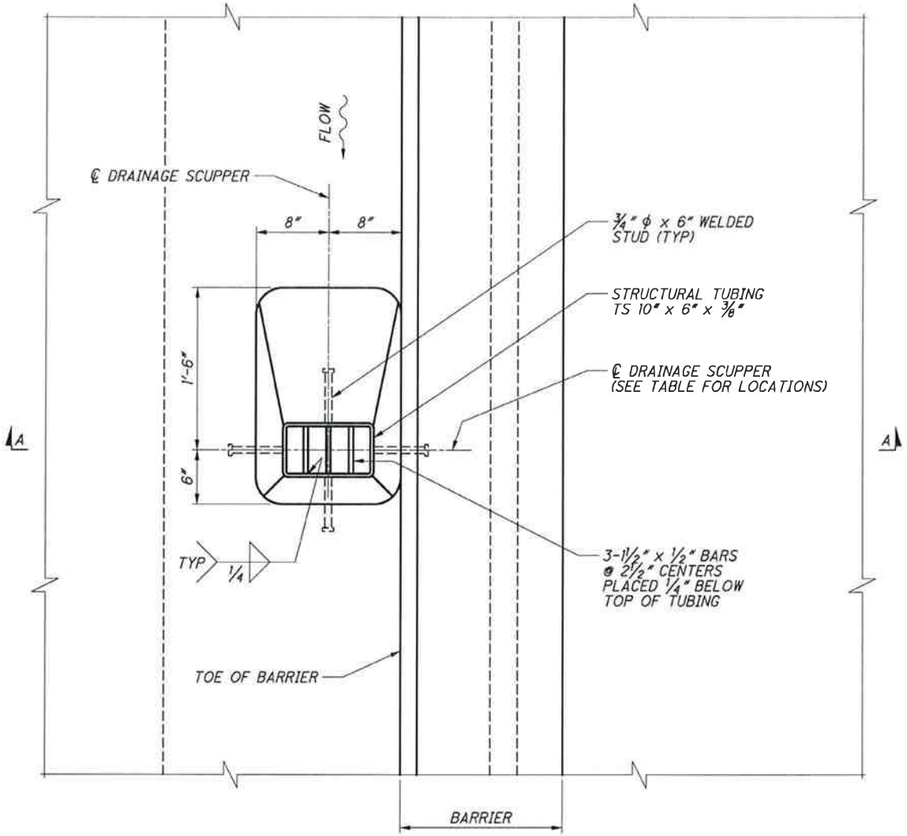

DRAINAGE SCUPPER PLAN

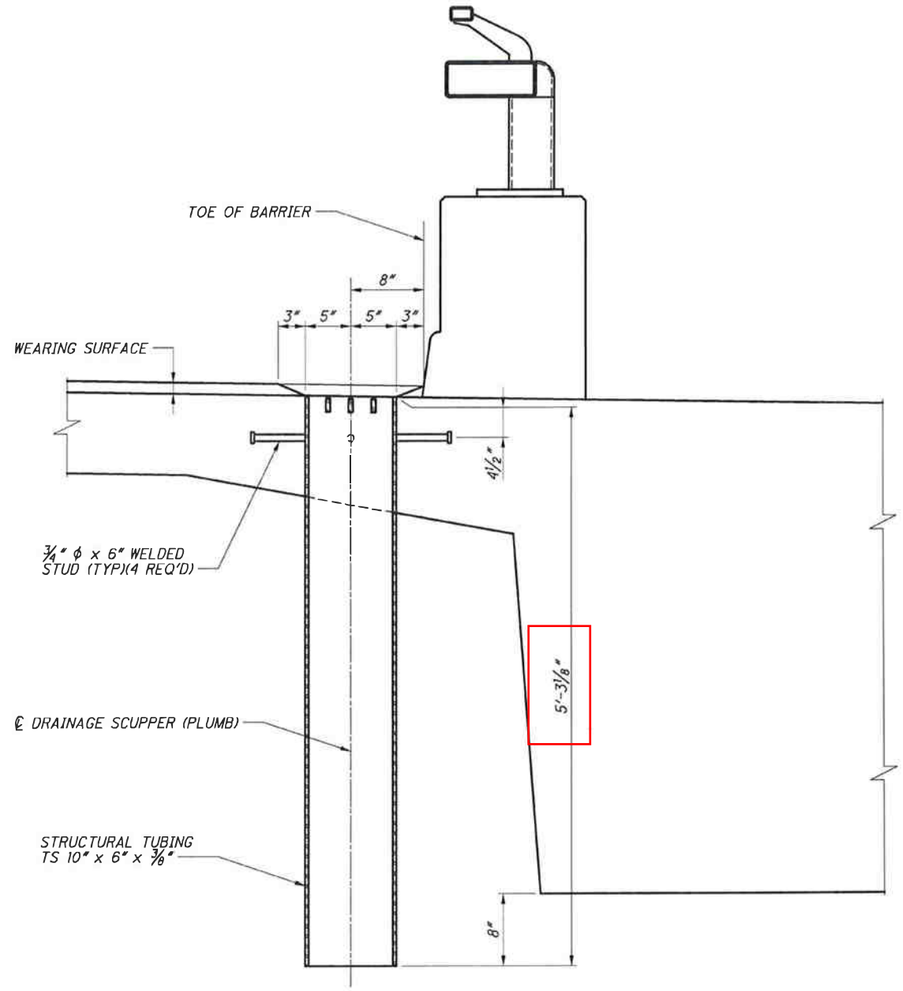

SECTION A-A

PORPOSED SCUPPER LOCATIONS

NO.	STATION	SHOULDER
9	13+75.00	LEFT
10	17+20.00	LEFT
11	17+20.00	RIGHT
12	26+20.00	RIGHT
13	26+40.00	LEFT
14	26+40.00	RIGHT
15	29+90.00	RIGHT
16	29+95.00	RIGHT

26+83
26+85.5

NOTES

1. THE CONCRETE DECK AT THE TWO SCUPPER CORNERS OPPOSITE THE CURB LINE SHALL BE REINFORCED WITH ONE #4 BAR, 3'-0" LONG ORIENTED AT 45 DEGREES TO THE LONG AXIS OF THE SCUPPER.
2. STRUCTURAL STEEL TUBING SHALL BE ASTM A500 GRADE B OR A501. ALL OTHER MATERIAL SHALL BE ASTM A709 GRADE 50. ASSEMBLY SHALL BE GALVANIZED IN ACCORDANCE WITH CMS 711.02.
3. THE TOP OF THE TUBING SHALL BE CUT SQUARE.
4. MEASUREMENT AND PAYMENT IS PER ITEM 518 AND INCLUDES ALL LABOR, MATERIALS, COATINGS AND EQUIPMENT NECESSARY TO COMPLETE INSTALLATION OF THE SCUPPER.

DESIGN AGENCY
URS
30 EAST 7TH STREET SUITE 2800 CINCINNATI, OHIO 45202

DESIGNED	DRAWN	REVIEWED	DATE
AR	CER	DLJ	6/2010
CHECKED	REVISED	STRUCTURE FILE NUMBER	
BWJ		4401263	

DRAINAGE DETAILS - MAINSPAN UNIT
BRIDGE NO. LAW-93-0000
IRONTON RUSSELL BRIDGE OVER OHIO RIVER

LAW-93-0.00
PID No. 81595

243/365

630
788

E:\Bridges_XM\Ironton_Russell\LAW\81595\structures\LAW093_0000C\sheets\093_0000CMD008.dgn 4/25/2011 10:24:38 AM john_stahl

9/28/12

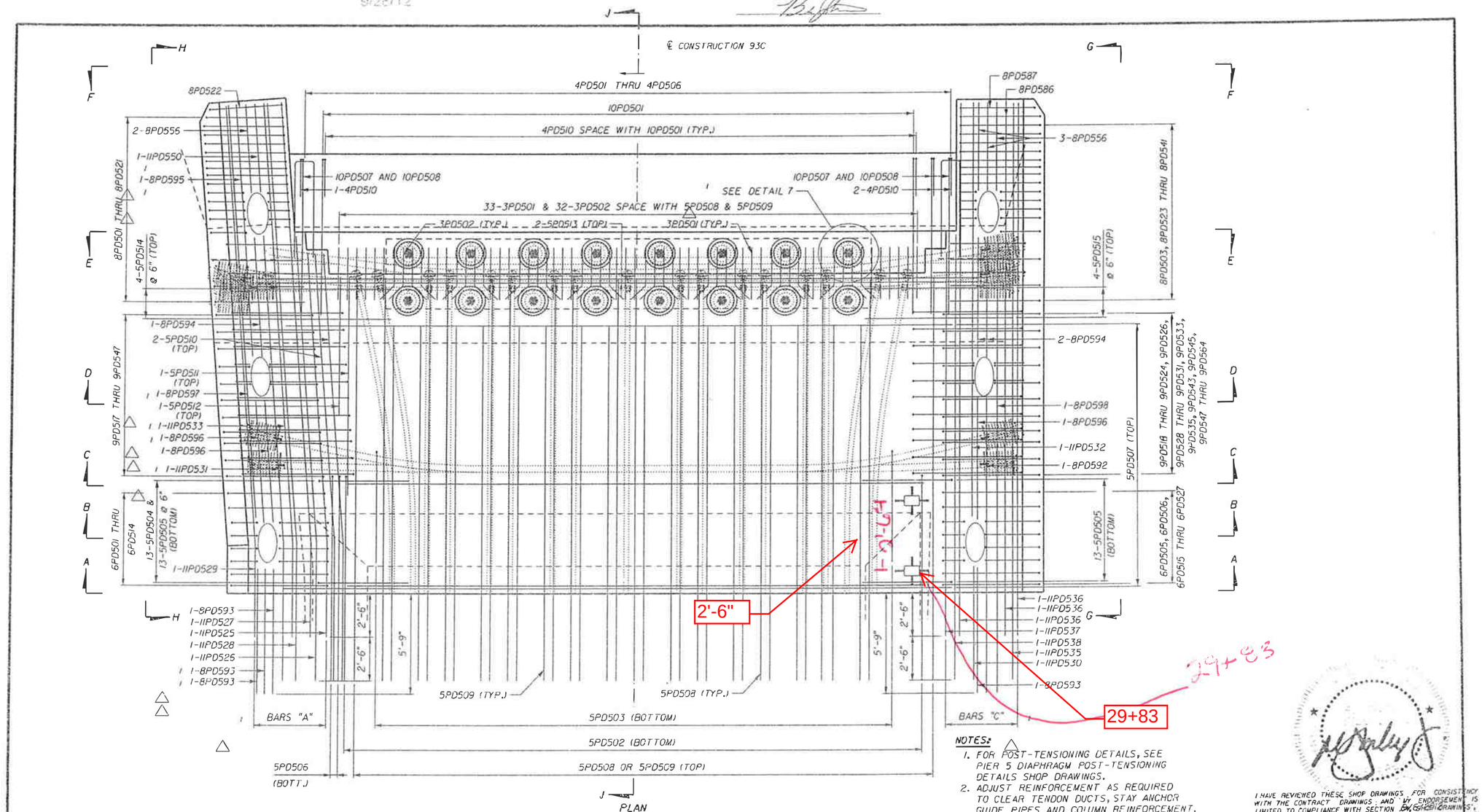

PLAN

(ALL REINFORCEMENT NOT SHOWN FOR CLARITY)

NOTES:

1. FOR POST-TENSIONING DETAILS, SEE PIER 5 DIAPHRAGM POST-TENSIONING DETAILS SHOP DRAWINGS.
2. ADJUST REINFORCEMENT AS REQUIRED TO CLEAR TENDON DUCTS, STAY ANCHOR GUIDE PIPES AND COLUMN REINFORCEMENT.
3. N.F. DENOTES NEAR FACE. F.F DENOTES FAR FACE.

I HAVE REVIEWED THESE SHOP DRAWINGS FOR CONSISTENCY WITH THE CONTRACT DRAWINGS AND MY ENDORSEMENT IS LIMITED TO COMPLIANCE WITH SECTION 5A, SHOP DRAWINGS, IN THE CONTRACT SPECIAL PROVISIONS FOR CONCRETE SEGMENT PRODUCTION FOR CABLE-STAYED CONSTRUCTION.
R. CRAIG FINLEY, JR., P.E. 65949

This plan was prepared in compliance with contract documents.

Revision	Drawn By	Date	Description
1	MWR	09/05/12	GENERAL REVIEW COMMENT REVISIONS.

	Name	Date
Drawn By:	MWR	06/12
Checked By:	RAA	06/12
Approved By:	RCF	06/12

Plotted By: marty ritchie 9/6/2012 8:26:22 AM G:\Ironton-Russell\CADD\Shop_Drawings\SuperStructure\PS_DiaphragmSegment\PS_DiaphragmReinf.dgn

1599 Metropolitan Blvd
Tallmadge, OH 44278
330-634-1600
Fax. 330-634-1611

Client:

Project: IRONTON RUSSELL BRIDGE OVER THE OHIO RIVER

Title: PIER 5 DIAPHRAGM REINFORCEMENT I

Sheet No. F-16

Consider adding a note referencing sheet 243/365 of the Contract Plans for drainage scupper locations and details

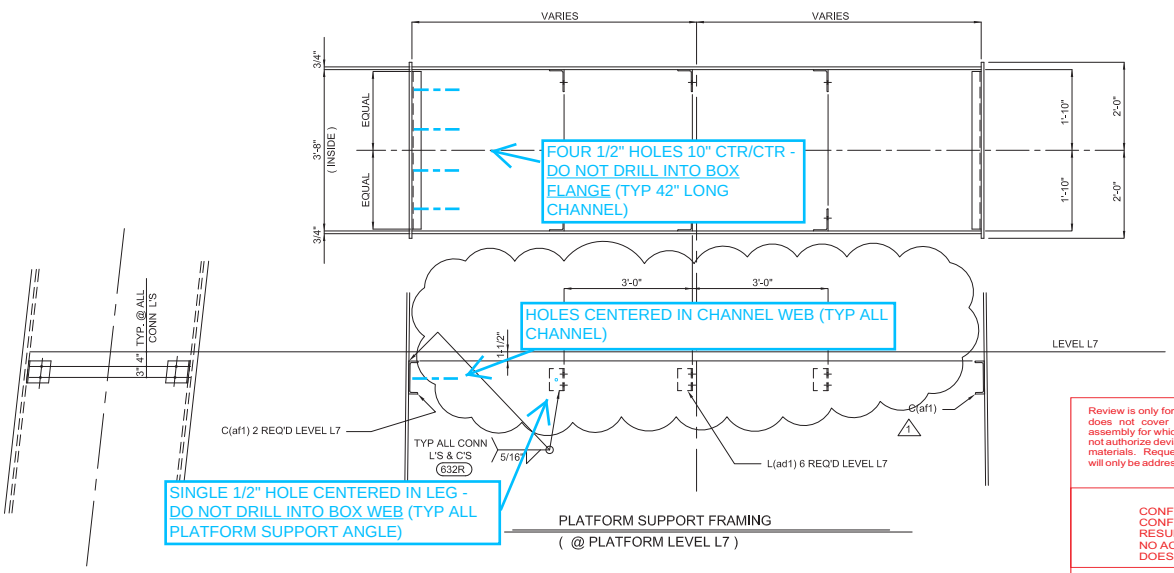

PLATFORM SUPPORT FRAMING

(@ PLATFORM LEVEL L7)

Review is only for conformance with the design concept. Review does not cover dimensions, quantities, accuracy, fit, or any assembly for which this item may be a component. Review does not authorize deviation from Contract Documents or substitution of materials. Requests for deviations from the Contract Documents will only be addressed thru the Change Order Process.

REVIEWED

CONFORMS WITH CONCEPT (✔)
CONFORMS AS NOTED ( )
RESUBMIT ( )
NO ACTION ( )
DOES NOT CONFORM ( )

URS

DATE 10/28/2013 BY N Hamadani

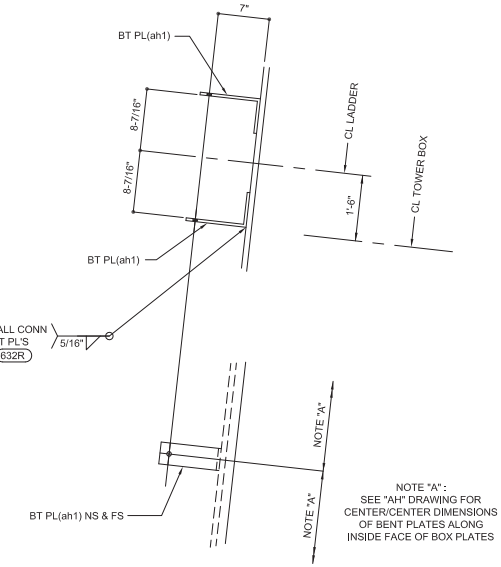

TYPICAL LADDER CONNECTION PLATE DETAIL

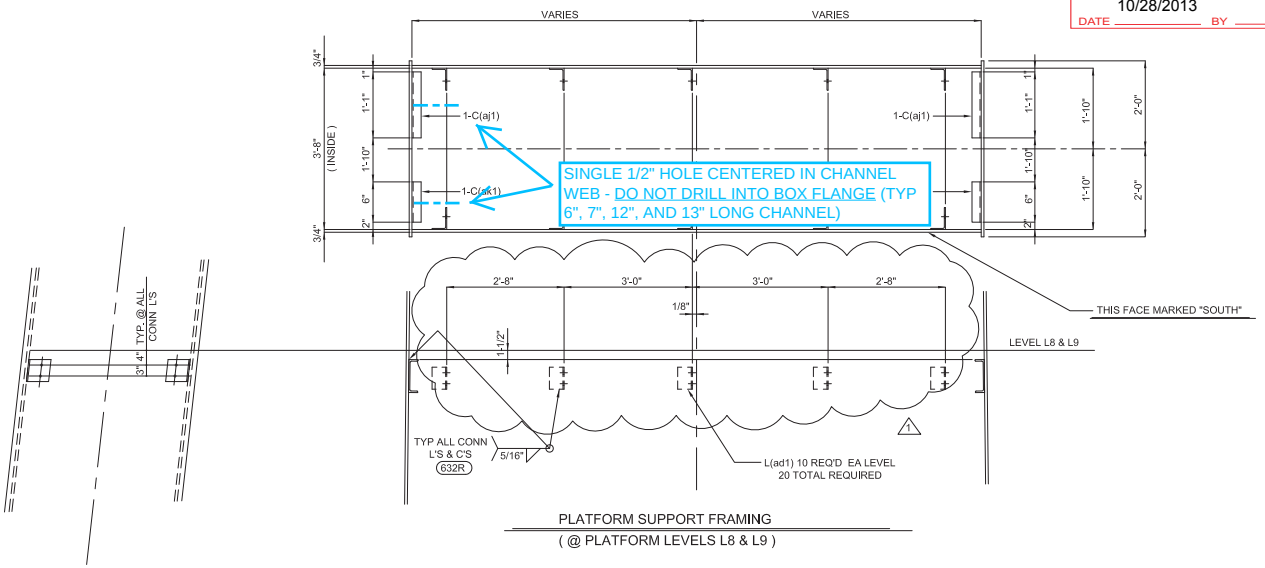

PLATFORM SUPPORT FRAMING

(@ PLATFORM LEVELS L8 & L9)

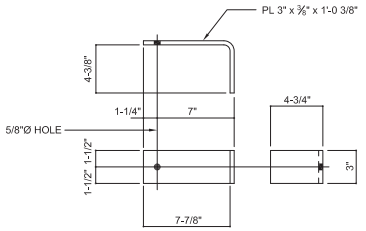

DETAIL OF BENT PL (ah1) - 16 REQUIRED

RFI O22 NOTES ABOVE IN BLUE

SHOP NOTES:

1) WORK ALL SHEETS (1AH THRU 1H) TOGETHER.
2) SEE SHEET 1AH FOR BILL OF MATERIAL.
3) SEE SHEET GN1 FOR GENERAL NOTES.
4) SEE SHEET GN2 FOR GIRDER ASSEMBLY WELD DETAILS AND WELD TERMINATION DETAILS.
5) SEE SHEETS FS1 THRU FS3 FOR FIELD SPLICE PACKAGES.

1	REV. TO FRAMING ANGLES	10-09-13

TOWER BOX 1-T3(L)-1

WABASH STEEL, LLC
2007 OLIPHANT DRIVE
VINCENNES, INDIANA 47591

Drawn	Checked	Approved	Revised
DJW 10-06-12	WBC 10-15-12		

STATE PROJ. NO. LAW-93-0,00
ODOT PROJ. NO. 110628 ~ PID NO. 81595
REF. NO. 429
BRIDGE NO. LAW-93-0000
IRONTON RUSSELL BRIDGE
OVER OHIO RIVER
LAWRENCE COUNTY, OHIO
CONTRACTOR; BRAYMAN CONST. CORP.
OWNER; OHIO DEPT. OF TRANSPORTATION

Shop Paint:	GALVANIZED
Edge Distance: AS NOTED	Holes: AS NOTED
WSLLC No.: 17083	Sh. 1FH of 16

Brayman Construction Corporation
1000 John Roebling Way
Saxonburg, PA 16056
Ph. 724-443-1533
Fax 724-443-8733

Field Office
702 S. 1st Street
Ironton, OH 45638
Ph. 740-414-4315
Fax 740-414-4316

Request For Information

BCC Job #: **12-0001** Date: 3/5/2014 Author: Aaron Downs

RFI# 080

BCC# 209-000-000

Project: Bridge No. LAW-93-0.00
Ironton Russell Bridge
Lawrence County, OH
ODOT Project No. 110628

Bridge No.: LAW-93-0.00

Re: Tower Anchor Box Lifting Lugs at Field Section 4 for Tower 3/4

Please see attached lifting lug details for reference.

In order to erect the tower anchor box field section 4, lifting lugs must be attached to the anchor box. The locations required to place the lifting lugs interfere with one shear stud per lug location. Brayman proposes to move the shear stud below the plate in order to erect the anchor box section.

Please advise if this change is acceptable for implementation on the tower anchor boxes.

Thank You

Response:

Issued By:	**Date:**

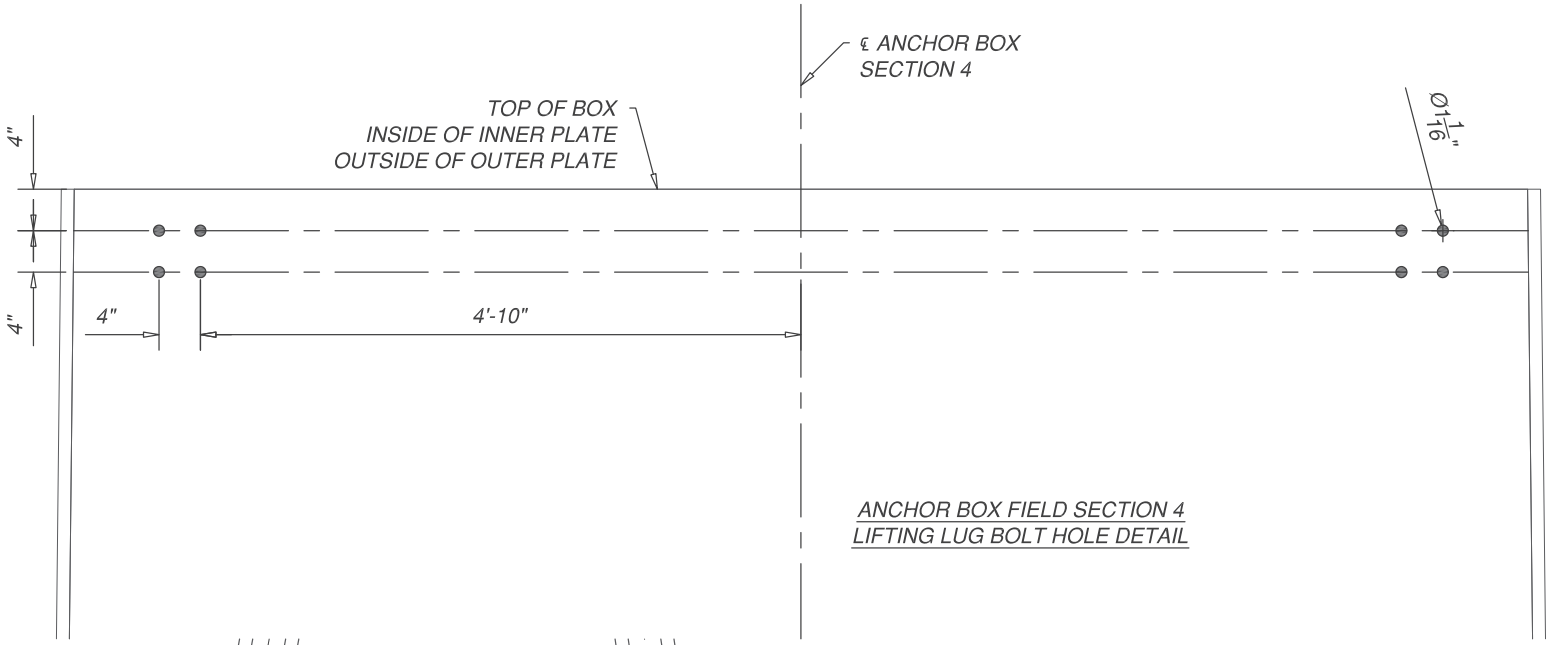

ANCHOR BOX FIELD SECTION 4
LIFTING LUG BOLT HOLE DETAIL

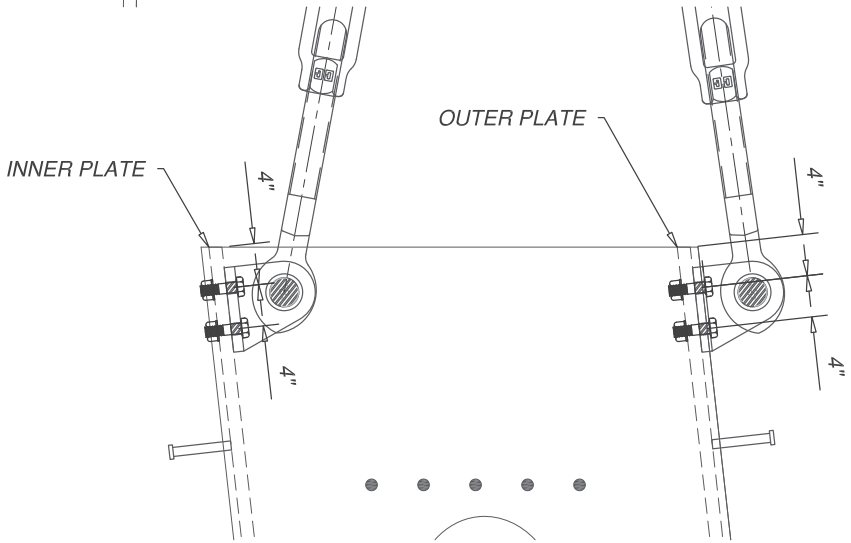

ANCHOR BOX FIELD SECTION 4
ELEVATION AT TOP

BY	DATE	REVISIONS	NO.

FIELD SECTION 4

BRAYMAN construction corporation
Innovative Solutions Since 1947

DRAWN BY JLS	2/26/12	LIFTING LUG BOLT HOLE DETAIL	JOB NUMBER
CHECKED BY JLS	2/26/12		
APPROVED JLS	2/26/12	OHIO DEPT. OF TRANSPORTATION	DRAWING NUMBER 1 / REV.
SCALE DO NOT SCALE PRINT			

BOX 13-T3(L)-4 (ALL SECTION 4 BOXES SIMILAR)
VIEW IS EXTERIOR OF WEB PLATE a13
WEB PLATE b13 ON FAR SIDE OF a13, NOT SHOWN BUT SIMILAR
INTERIOR LUG IS MOUNTED TO a13
EXTERIOR LUG IS MOUNTED TO b13
DIMENSIONS BASED ON 8" X 8" LUG BASEPLATE

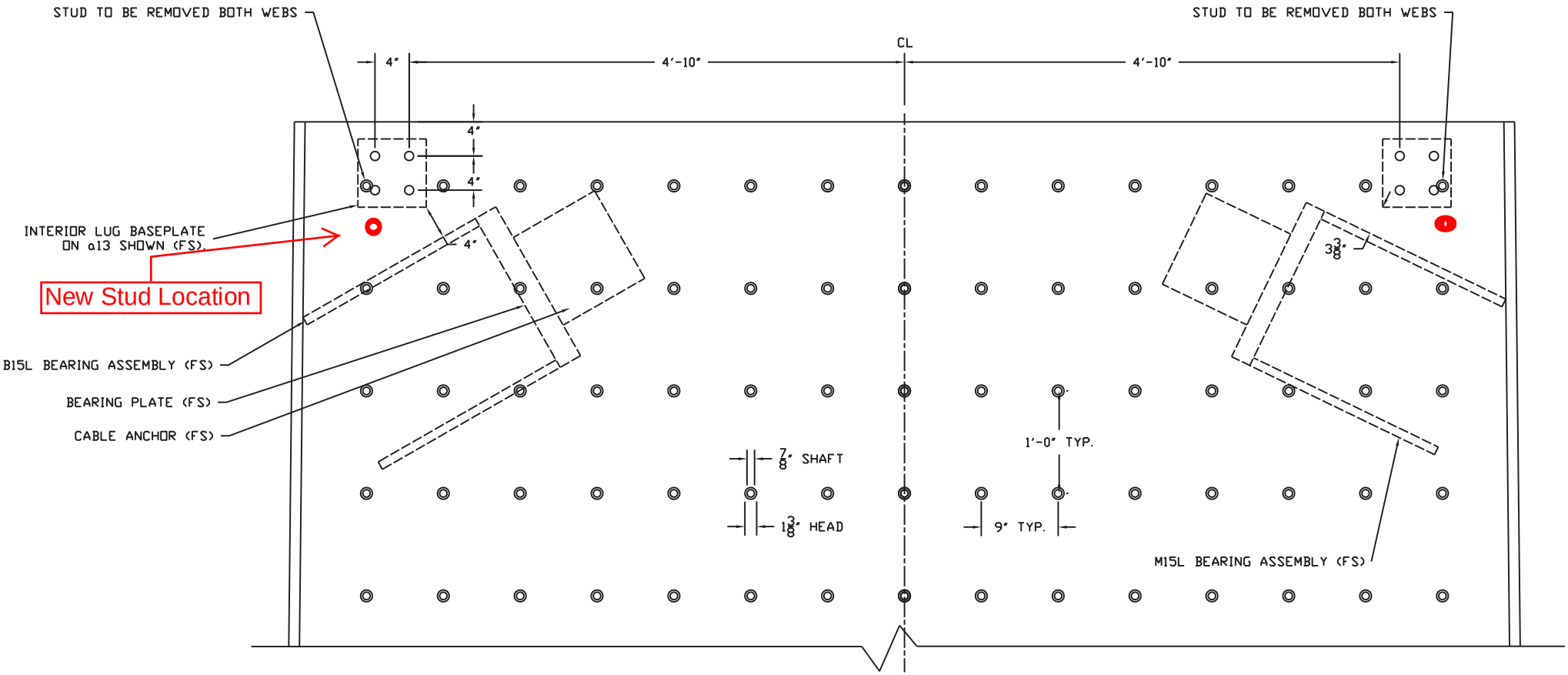

Hamadani, Nabil

From: Callicutt, Ed <ecallicutt@figgbridge.com>
Sent: Thursday, March 27, 2014 4:44 PM
To: Klusman, Craig; Hamadani, Nabil
Cc: Bame, Dave
Subject: RFIF133 Pier 5 Bearing Restraint Angle Modification Detail
Attachments: Pier 5 Restraint Angle Modification_032714.pdf

Craig …please review the attached as RFIF133. As noted, BCC requests to modify the angles to match the holes cast in the pier cap. Please advise. THX EWC

Edwin W. Callicutt, III, P.E.
Construction Manager
FIGG
54 South Greeno Rd.
Suite B
Fairhope, AL 36532
Ph.: (251) 929-7720
Cell: (912) 399-1569
Fax: (251) 929-7730
ecallicutt@figgbridge.com
http://www.figgbridge.com

This email and any files transmitted with it are confidential and intended solely for the use of the individual or entity to whom they are addressed. If you have received this email in error please notify the system manager. Please note that any views or opinions presented in this email are solely those of the author and do not necessarily represent those of FIGG Engineering Group. Finally, the recipient should check this email and any attachments for the presence of viruses. FIGG accepts no liability for any damage caused by any virus transmitted by this email.

From: Tom Hesmond [mailto:t_hesmond@brayman.com]
Sent: Thursday, March 27, 2014 4:35 PM
To: Callicutt, Ed
Cc: Bame, Dave; Aaron Downs
Subject: FW: Pier 5 Bearing Restraint Angle Modification Detail

Ed,

Please see the attached. Brayman proposes to drill 2 new holes in the restraint angles at Pier 5 to match the holes cast into the pier. The new holes in the angle would be touched up with the cold galvanizing approved for use on this project. Please advise if this is acceptable.

Thanks,
Tom

From: Jeff Schellhammer
Sent: Thursday, March 27, 2014 4:31 PM
To: Tom Hesmond
Subject: Pier 5 Bearing Restraint Angle Modification Detail

Jeff Schellhammer, PE | Construction Engineer
Brayman Construction Corporation
1000 John Roebling Way, Saxonburg, PA 16056
T 724 443 1533 Ext 50150 **M** 412 316 6264 **F** 724 443 8733
j_schellhammer@brayman.com
www.braymanconstruction.com

Confidentiality Message for Email:

PRIVILEGE AND CONFIDENTIALITY NOTICE: This electronic material and the information contained in it is intended only for the use of the individual or entity to which it is addressed and may contain information that is privileged, confidential and exempt from disclosure. If the reader of this message is not the intended recipient or an employee or agent responsible for delivering the message to the intended recipient, you are hereby notified that any dissemination, distribution or copying of this communication is strictly prohibited. If you have received this communication in error, please notify Brayman Construction Corporation immediately at 724.443.1533 or notify the sender immediately by replying to this message.

7B	10	LONG
7b1	10	L5
7b2	30	0.50
7C	1	SAMPLE
7a1	1	2.5
7a2	4	1/4 GR

.313" DIMPLES
DRILLED 0.094"
DEEP (TYP.)

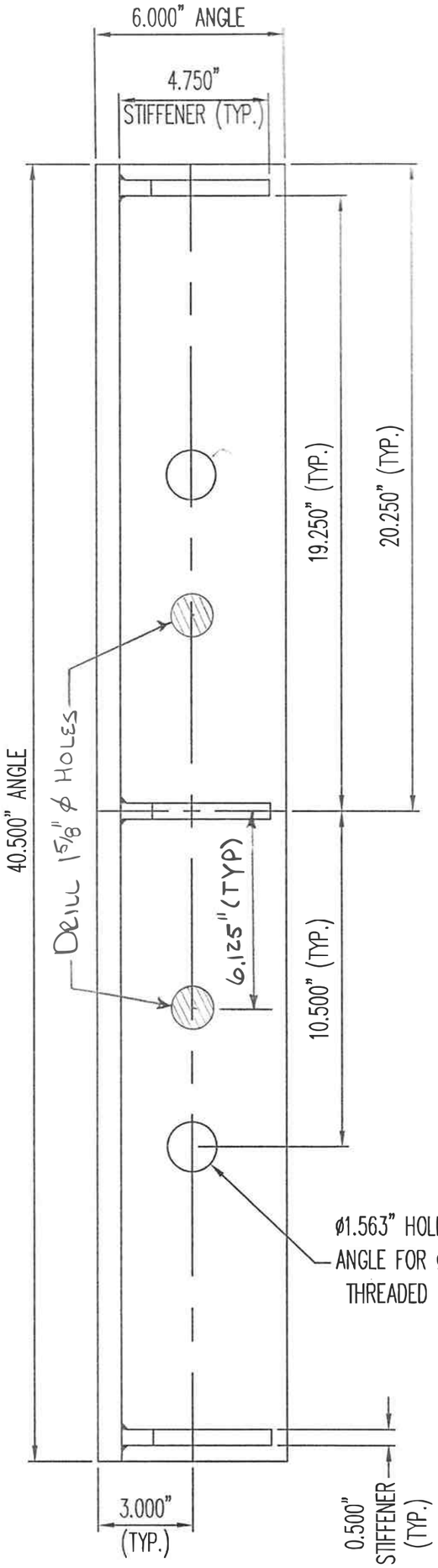

PLAN VIEW

LONGITUDINAL RESTRAINT
(2) REQ'D PER BEARING
(10) REQ'D @ PIER 5; G1-G5

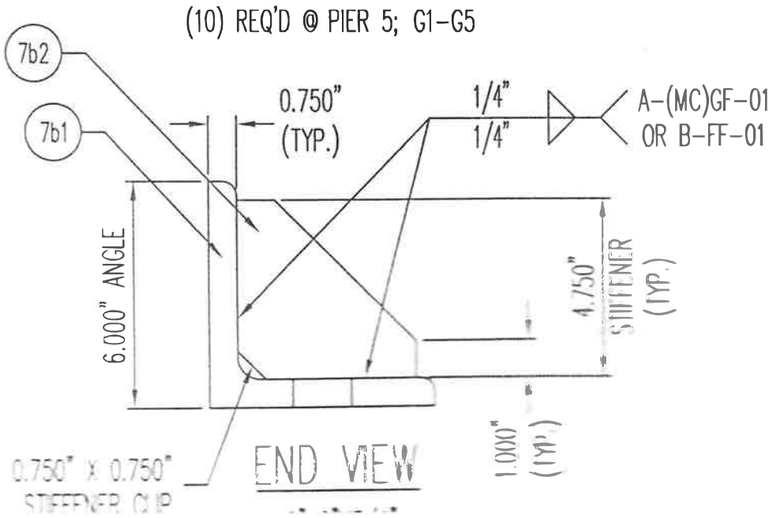

END VIEW

LOAD TABLE
DEAD LOAD
LIVE LOAD
TOTAL LOADS

SEE SHEET
SEE SHEET

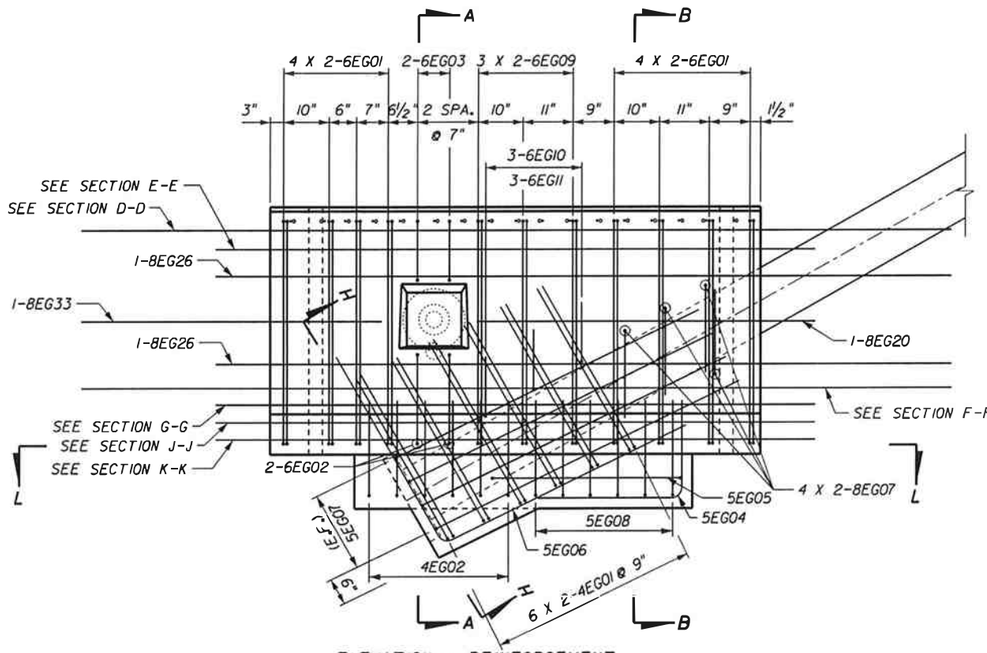

ELEVATION - REINFORCEMENT

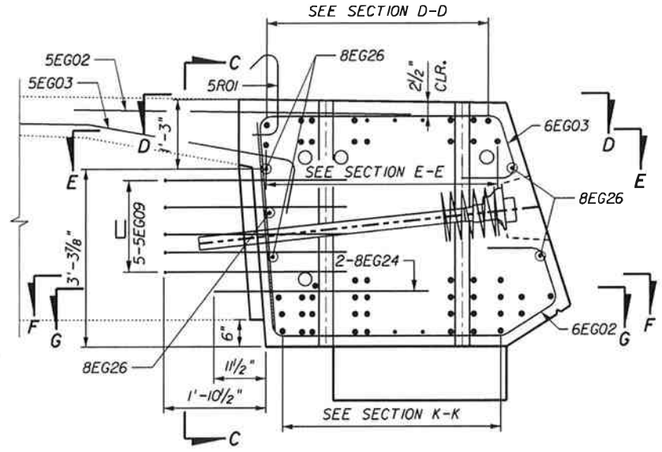

SECTION A-A

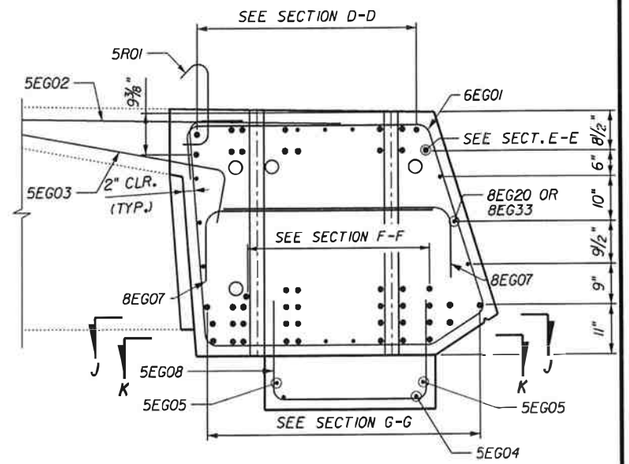

SECTION B-B

NOTES:

1. CONTRACTOR SHALL VERIFY BAR LENGTH AND FIELD CUT AS NEEDED.
2. FOR SECTION D-D AND SECTION E-E, SEE SHEET 71R.
3. FOR SECTION F-F, SECTION G-G, SECTION J-J AND SECTION K-K, SEE SHEET 72R.
4. MIN. LAP FOR 6EG02 AND 6EG03 EQUALS 3'-10".
5. E.F. DENOTES EACH FACE.
6. FOR EMBEDMENT OF BARS 5EG02 AND 5EG03, SEE SHEET 71R.
7. FOR BLOCKOUT REINFORCEMENT DETAIL, SEE SHEET 71R.

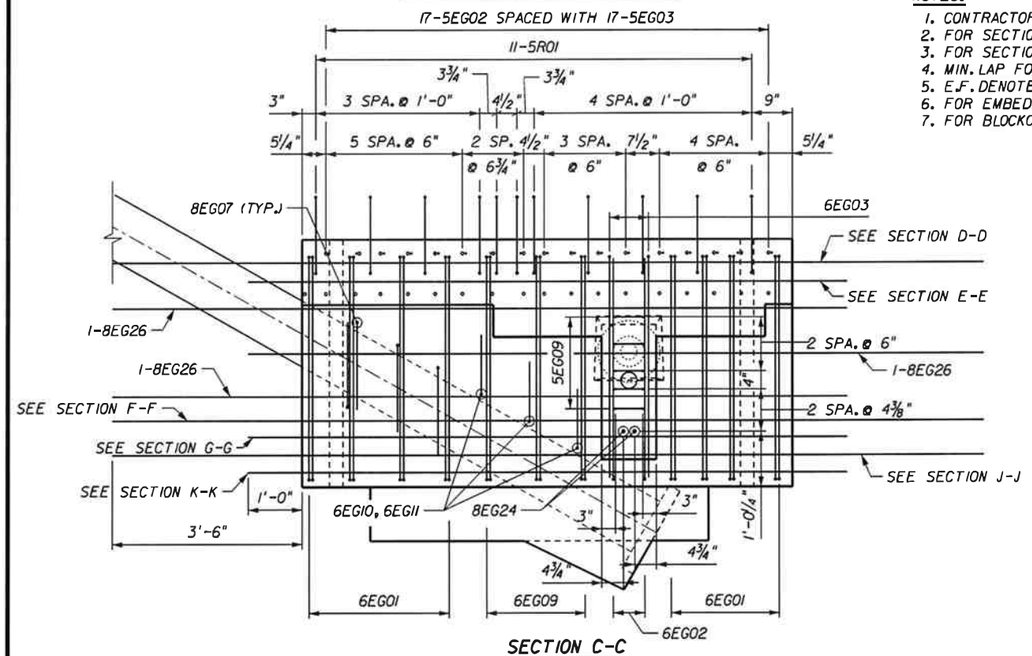

SECTION C-C

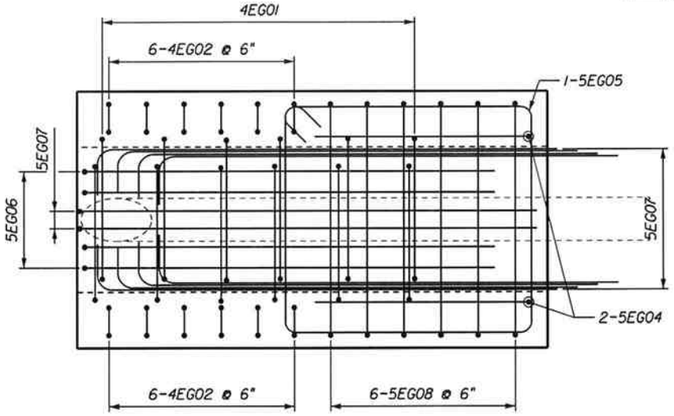

SECTION L-L

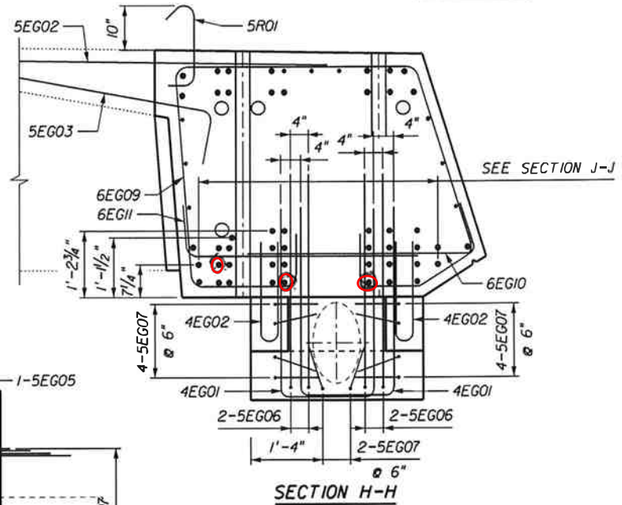

SECTION H-H

FOR INFORMATION ONLY

This plan was prepared in compliance with contract documents.

Revision	Drawn By	Date	Description

	Name	Date
Drawn By:	RHL	10/12
Checked By:	MWR	10/12
Approved By:	RCF	10/12

FINLEY Engineering Group Inc.
1589 Metropolitan Blvd.
Tallahassee, FL. 32308
850-894-1600
Fax: 850-894-1614

Client: BRAYMAN construction corporation

Project: IRONTON RUSSELL BRIDGE OVER THE OHIO RIVER

Title: SIDE SPAN PRECAST STAY ANCHOR BLOCK B12 RIGHT SIDE REINFORCEMENT I

Sheet No. 70R

Plotted By: marty.ritchie 8/26/2013 3:59:09 PM G:\Ironton-Russell\CADD\Shop_Drawings\SuperStructure\Stay Anchor Blocks\Flipped Blocks\SS_KY_Sidelnew1\PCAB12.dgn

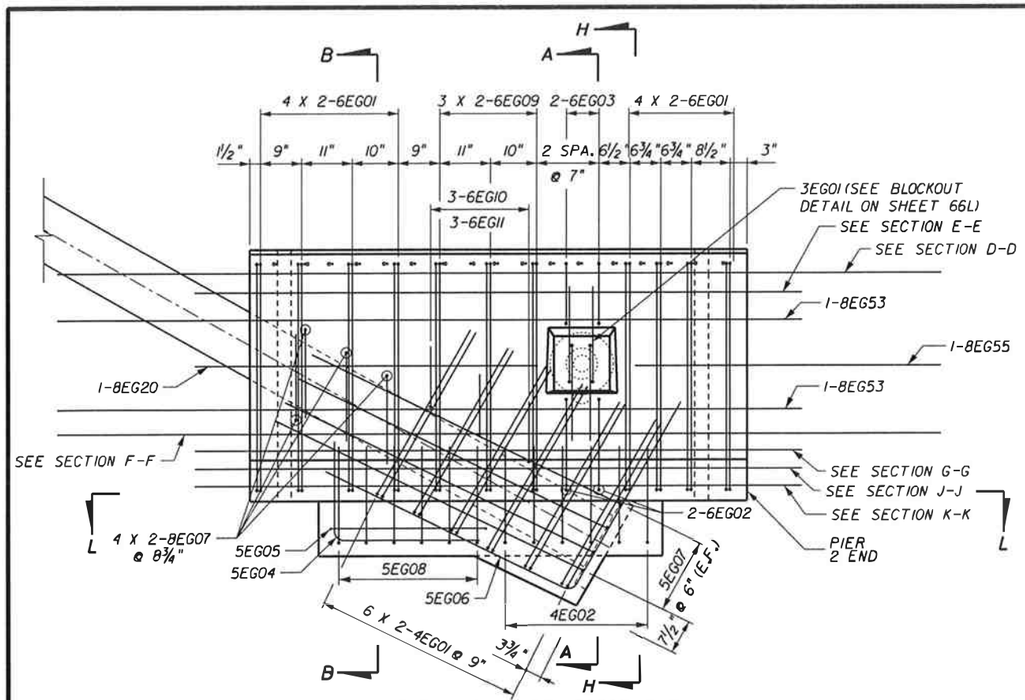

ELEVATION - REINFORCEMENT

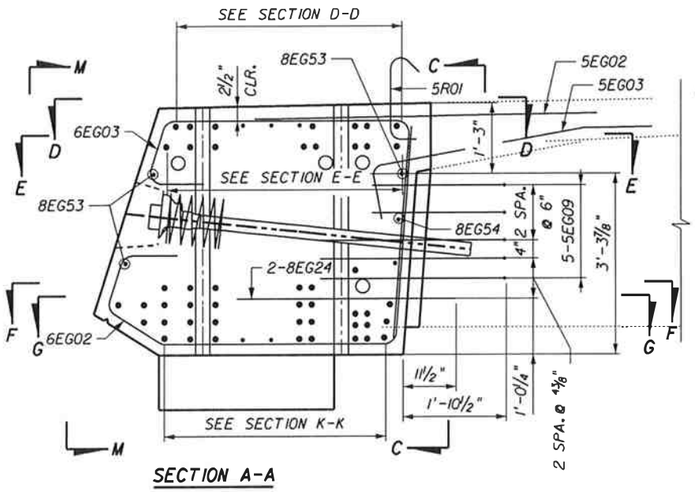

SECTION A-A

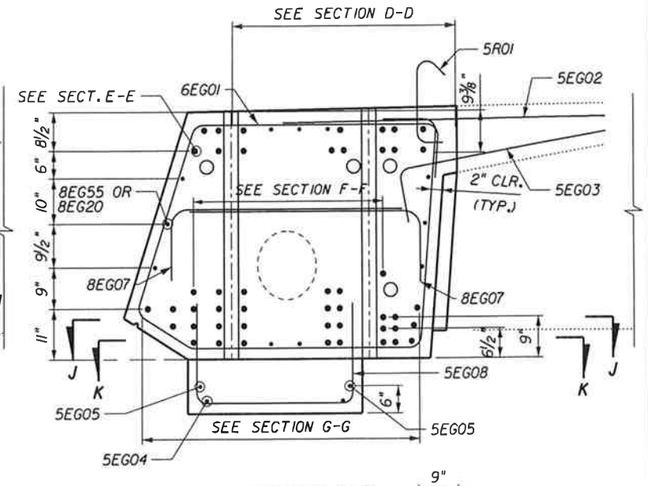

SECTION B-B

NOTES:
1. CONTRACTOR SHALL VERIFY BAR LENGTH AND FIELD CUT AS NEEDED.
2. FOR SECTION D-D AND SECTION E-E, SEE SHEET 71L.
3. FOR SECTION F-F, SECTION G-G, SECTION J-J AND SECTION K-K, SEE SHEET 72L.
4. MIN. LAP FOR 6EG02 AND 6EG03 EQUALS 3'-10".
5. E.F. DENOTES EACH FACE.
6. FOR EMBEDMENT OF BARS 5EG02 AND 5EG03, SEE SHEET 71L.
7. FOR BLOCKOUT REINFORCEMENT DETAIL, SEE SHEET 71L.

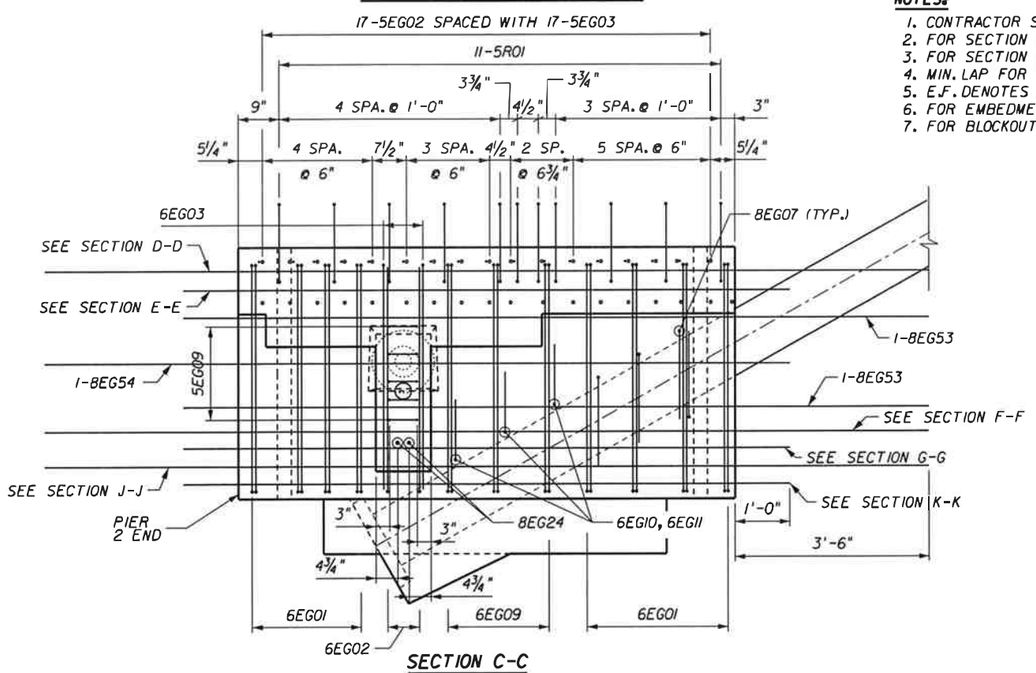

SECTION C-C

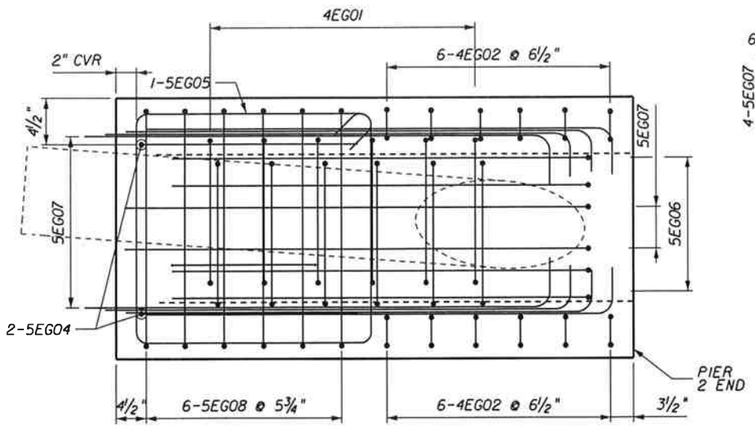

SECTION L-L

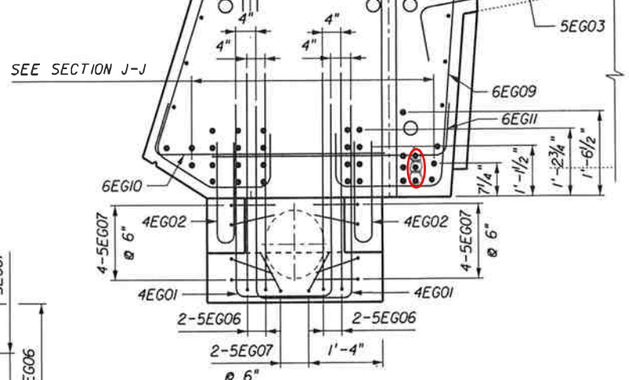

SECTION H-H

FOR INFORMATION ONLY

This plan was prepared in compliance with contract documents.

Revision	Drawn By	Date	Description
1	IRF	10/17/13	REVISED TO CLARIFY REBAR PLACEMENT

	Name	Date
Drawn By:	RHL	10/12
Checked By:	MWR	10/12
Approved By:	RCF	10/12

FINLEY Engineering Group, Inc.
1589 Metropolitan Blvd.
Tallahassee, FL. 32308
850-894-1600
Fax: 850-894-1614

Client:

Project: IRONTON RUSSELL BRIDGE OVER THE OHIO RIVER

Title: SIDE SPAN PRECAST STAY ANCHOR BLOCK B12 LEFT SIDE REINFORCEMENT I

Sheet No. 70L

Plotted By: Steel Pencil 10/18/2013 5:52:19 PM G:\Steel Pencil\Ironton Russell\FINLEY Shops\SS_KY_Sidefnew\PCABI2.dgn

Hamadani, Nabil

From: Klusman, Craig
Sent: Thursday, May 08, 2014 8:45 AM
To: Hamadani, Nabil
Subject: FW: RFI F135 Pier 2/B12 Closure
Attachments: Closure bars.pdf

Please track accordingly.

Craig Klusman
502.217.1502

From: Johnston, Brian
Sent: Wednesday, May 07, 2014 9:23 AM
To: Callicutt, Ed (ecallicutt@figgbridge.com)
Cc: Klusman, Craig
Subject: FW: RFI F135 Pier 2/B12 Closure

Ed,

We have reviewed the edge girders in the area of the Pier 2 closure and have found them to be adequate with the three bars as indicated by Brayman (see attached) not extended to the face of the pier diaphragm. Thus, Brayman's proposal to not extend these three bars (both left and right) into the closure is acceptable to us. Please let me know if you have any questions.

Thanks,
Brian

Brian Johnston P.E. | Senior Structural Engineer | URS Corporation
7650 West Courtney Campbell Causeway | Tampa, FL 33607-1462
813.286.1711 (Main) | 813.675.6646 (Direct) | 813.287.8229 (Fax)
brian.johnston@urs.com



From: Callicutt, Ed [mailto:ecallicutt@figgbridge.com]
Sent: Tuesday, May 06, 2014 8:23 AM
To: Johnston, Brian; Hamadani, Nabil; Klusman, Craig
Cc: Bame, Dave; Davidson, Brian
Subject: RFI F135 Pier 2/B12 Closure

Brian…please see the attached request from BCC. I have asked for a sketch that locates the bars in question and will forward that upon receipt, however please review and comment on their proposal. Let's track this issue as RFI F135. Thanks EWC

Edwin W. Callicutt, III, P.E.
Construction Manager
FIGG

54 South Greeno Rd.
Suite B
Fairhope, AL 36532
Ph.: (251) 929-7720
Cell: (912) 399-1569
Fax: (251) 929-7730
ecallicutt@figgbridge.com
http://www.figgbridge.com

This email and any files transmitted with it are confidential and intended solely for the use of the individual or entity to whom they are addressed. If you have received this email in error please notify the system manager. Please note that any views or opinions presented in this email are solely those of the author and do not necessarily represent those of FIGG Engineering Group. Finally, the recipient should check this email and any attachments for the presence of viruses. FIGG accepts no liability for any damage caused by any virus transmitted by this email.

From: Tom Hesmond [mailto:t_hesmond@brayman.com]
Sent: Tuesday, May 06, 2014 7:48 AM
To: Callicutt, Ed
Cc: Bame, Dave; Aaron Downs
Subject: FW: Pier 2/B12 Closure

Ed,

There are 3 bars on each side (left and right) that cannot be extended to the face of Pier 2. Both left and right sides have 2 of the 1' projection bars and 1 of the 3.5' projection bars that cannot be extended. See below and attached for Finley's confirmation that this is acceptable. As we have discussed it is not physically possible to extend these 3 bars do to conflicts with PT ducts and other reinforcing. Please advise if it is acceptable to ODOT/URS to leave these bars as is.

Thanks,
Tom

From: Jindrich Potucek [mailto:Jindrich.Potucek@finleyengineeringgroup.com]
Sent: Monday, May 05, 2014 6:17 PM
To: Tom Hesmond
Cc: Jerry Pfuntner
Subject: Pier 2/B12 Closure

Tom,

FINLEY has reviewed your request concerning the uncoupled reinforcement bars on C.P. at Pier 2 as per you description. Even with the 3 rebars (per edge girder) being uncoupled, the section still satisfy the strength and service requirements of the AASHTO during construction. We have no objection to proceeding and casting the closure pour leaving those bars uncoupled.

I have attached a sheet with the calculation of the section's ultimate capacity during construction for your reference.

Regards, JP

Bridging Challenges With Solutions®

Jindrich Potucek
Office: 850.894.1600
Mobile: 850.556.5692
email: jindrich.potucek@finleyengineeringgroup.com
www.finleyengineeringgroup.com

Like Us Follow Us

Please consider the environment before printing this e-mail.



Confidentiality Message for Email:

PRIVILEGE AND CONFIDENTIALITY NOTICE: This electronic material and the information contained in it is intended only for the use of the individual or entity to which it is addressed and may contain information that is privileged, confidential and exempt from disclosure. If the reader of this message is not the intended recipient or an employee or agent responsible for delivering the message to the intended recipient, you are hereby notified that any dissemination, distribution or copying of this communication is strictly prohibited. If you have received this communication in error, please notify Brayman Construction Corporation immediately at 724.443.1533 or notify the sender immediately by replying to this message.

This e-mail and any attachments contain URS Corporation confidential information that may be proprietary or privileged. If you receive this message in error or are not the intended recipient, you should not retain, distribute, disclose or use any of this information and you should destroy the e-mail and any attachments or copies.

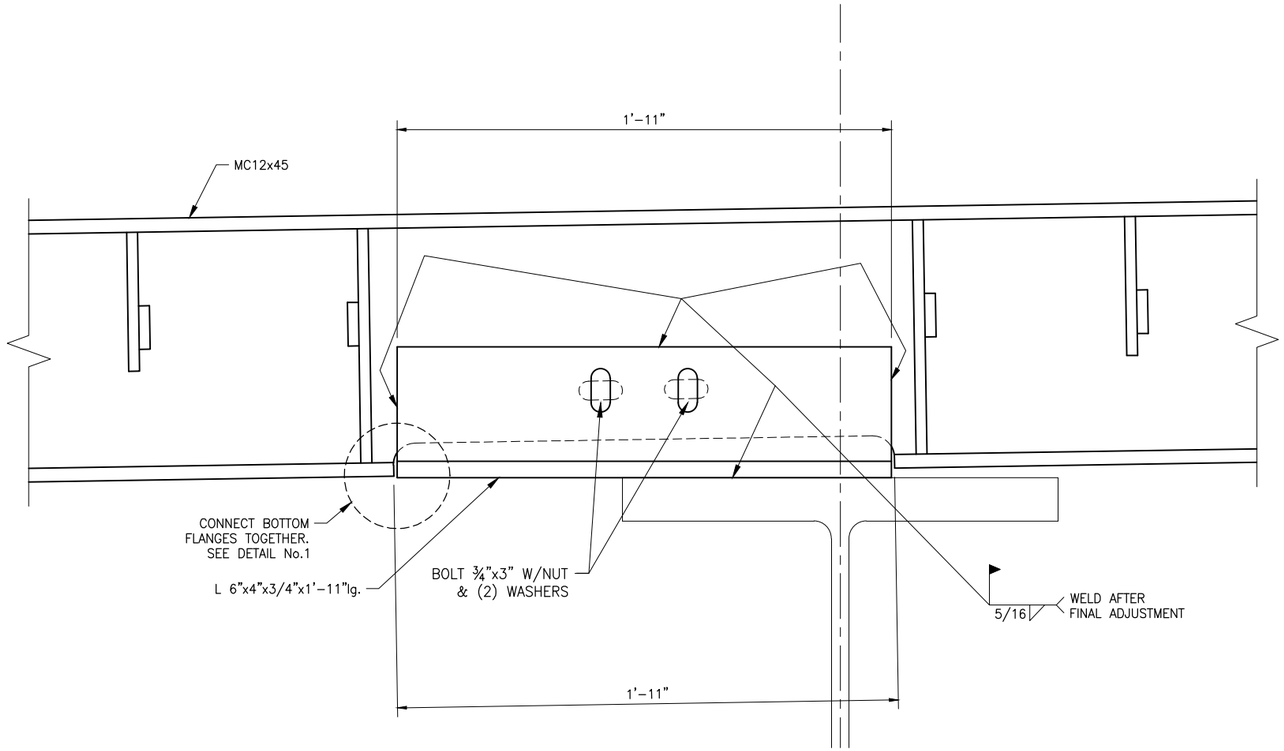

SSA142543SA3 QTY: 5 REQ'D. STRUCTURED BILL OF MATERIALS

LV	PART NO.	QTY	UM	DESCRIPTION	MATERIAL	REVISION
0	SSA142543SA3	1.00	EA	SUPPORT ANGLE (6A1) (X		
1	4090	1.92	FT	ANGLE 6x4x3/4 A588		

ANGLES SHALL BE PAINTED AT WBA

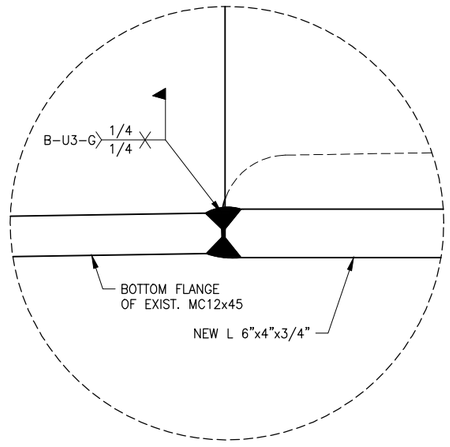

DETAIL No.1

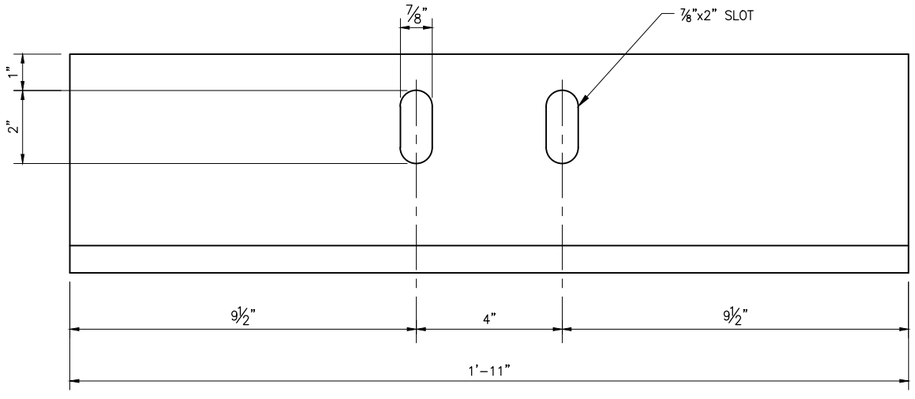

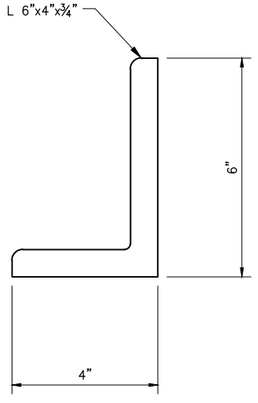

SUPPORT ANGLE – 6A1

INSPECTION REQUIRED

SHEET NUMBER.
ITEM DESIGNATION.
ITEM NUMBER.
2e1
MARK SYSTEM

STATE: OHIO
COUNTY: LAWRENCE
FED. PROJECT ID: E040 (653)
BRIDGE NO.: LAW–93–0.00
STRUCTURE FILE No. 4401263
PRODUCT NO.: SSA142543AB

DRAWING ACTION:

DATE:

NO.	DESCRIPTION	NAME	DATE
3			
2			
1			

Information provided herein, including but not limited to, any drawing, design, photograph, graphic, or statement(s) ("Materials") are proprietary and the property of Watson Bowman Acme Corporation ("Company"). Reproduction, translation, or reduction to any electronic medium or machine readable form, in whole or part, is strictly prohibited, except for the express purpose for which it has been furnished, without prior written consent of Company. All Materials contained herein are provided by Company for information purposes only. Company reserves the right to amend or withdraw any information contained in the Materials without notice. All technical or other advice by Company, whether verbal or written, concerning products, or the use of products in specific situations ("Advice") is given by Company and is used at the Users own risk.

Watson Bowman Acme Corp.
95 Pineview Drive
Amherst, NY 14228
phone: (716)691-7566
fax: (716)691-9239
www.wbacorp.com

BASF The Chemical Company

PROJECT:
IRONTON RUSSELL BRIDGE
OVER OHIO RIVER
STRIP SEAL EXPANSION JOINT AT FWD ABUT.
WABO SSA EXPANSION JOINT DETAILS

DETAILED BY: TEB	DATE: 4/12/12
CHECKED BY: TPL	DATE: 4/12/12
SCALE: NTS	WBA JOB NO.: 142543
SHEET NO.: 6 OF 5	DRAWING NO.: B–29868

LETTER OF TRANSMITTAL

BRAYMAN CONSTRUCTION CORP.
1000 John Roebling Way
Saxonburg, PA 16056
Phone: (724) 443-1533
Fax: (724) 443-8733

To: Ohio Dept. of Transportation
District 9
650 Eastern Avenue
Chillicothe, OH 45601

Project: SR-93-0.00
Ironton Russell Bridge
Lawrence County, OH
Project No. 110628

BCC # 221-000-000

Attention: Dave Bame

Date: September 18, 2014

We are sending you the following items:

- ☐ Under Separate Cover
- ☑ Attached
- ☐ Copy of Letter
- ☐ Prints
- ☐ Specifications
- ☐ Change Order
- ☐ Shop Drawings
- ☐ Plans
- ☐ _____

Copies	Date	Description
1	9/18/14	RFI 083 Duplex GFCI Receptacle

Transmitted for the following purpose:

- ☐ For Approval
- ☐ Approved as Submitted
- ☐ Resubmit __ copies for approval
- ☐ For Your Use
- ☐ Approved as Noted
- ☐ Submit __ copies for distribution
- ☐ As Requested
- ☐ Returned for Corrections
- ☐ Return __ corrected prints
- ☑ For Review & Comment
- ☐ For Certification

MAIL: ◯ Regular ◯ Overnight ◯ Certified ☑ Email **FAX:** ◯

Remarks:

Aaron Downs

Signed: Aaron Downs
Project Engineer

cc: File/arb
Dan Beasley
Edwin Callicutt
Eric McLaughlin

Ironton Russell Bridge over Ohio River

LAW-93C-0000

RFI 083 Duplex GFCI Receptacle

For:

STATE OF OHIO DEPARTMENT OF TRANSPORTATION

District 9

Submitted By:

BRAYMAN construction corporation

1000 John Roebling Way

Saxonburg, Pa 16056

September 18, 2014

WEST END ELECTRIC CO., *Incorporated*

SERVING THE TRI-STATE AREA SINCE 1924

ELECTRICAL CONTRACTORS
640 SECOND STREET -:- PORTSMOUTH, OHIO 45662
OHIO LICENSE NO. 16489
KY LICENSE NO. CE31606

Phone (740) 354-8671
Fax (740) 353-5145

www.WestEndElectricCo.com

September 18, 2014

BRAYMAN CONSTRUCTION CORPORATION
Attn. Mr. Aaron Downs
702 – South First Street
Ironton, Ohio 45638

Re.: LAW-93-0.00 Ironton-Russell Bridge
RFI: Ref. No. 0241 – Duplex GFCI Receptacle, 20A 120V

Mr. Downs,

I have a request for information concerning the number of and locations of receptacles inside of towers 3 and 4. Contract drawings 290/788 and 291/788 show the maintenance receptacles located on Levels L-1 through L-12. These drawings do not show or call for maintenance receptacles at the Deck Level Platforms or Level L-13, and we feel it makes good sense to install Maintenance Receptacles at these two levels in each tower.

The Deck Level Platform is where the door enters the towers, and is also the location of the 120/240 Volt Electric Panels. If any maintenance work requiring 120 Volt power had to be performed in Deck Level Platforms, the nearest Maintenance Receptacle is currently located at Level L-2. A Maintenance Receptacle installed at the Deck Level Platforms would service that level as well as areas outside of the towers at the roadway level. This would be typical for four (4ea.) locations, the two tower legs for Tower 3 and the two tower legs for Tower 4.

Level L-13 is the highest level where the Obstruction Beacon Controllers are located. If any maintenance work requiring 120 Volt power had to be performed on top of the towers, the nearest Maintenance Receptacle is currently located on Level L-12. A Maintenance Receptacle located on Level L-13 would service that level as well as the top of the towers. This would be typical for two (2ea.) locations, one in Tower 3 and one in Tower 4.

BRAYMAN CONSTRUCTION CORPORATION
Attn. Mr. Aaron Downs

Re.: LAW-93-0.00 Ironton-Russell Bridge
RFI: Ref. No. 0241 – Duplex GFCI Receptacle, 20A 120V

Would ODOT want Maintenance Receptacles installed at the Deck Level Platforms and Level L-13 in each Tower?

If you have any questions, please feel free to call me at 740-354-8671.

Sincerely,

West End Electric Co., Inc.

Miles Ferguson
President

WEST END ELECTRIC CO., *Incorporated*

SERVING THE TRI-STATE AREA SINCE 1924

ELECTRICAL CONTRACTORS
640 SECOND STREET -:- PORTSMOUTH, OHIO 45662
OHIO LICENSE NO. 16489
KY LICENSE NO. CE31606

Phone (740) 354-8671
Fax (740) 353-5145

www.WestEndElectricCo.com

October 17, 2014

BRAYMAN CONSTRUCTION CORPORATION
Attn. Mr. Aaron Downs
702 – South First Street
Ironton, Ohio 45638

Re.: LAW-93-0.00 Ironton-Russell Bridge
RFI: Ref. No. 0243 – Inspection Lighting, 4' Fluorescent

Mr. Downs,

Pursuant to the September 23, 2014 comments by Mr. Craig Klusman of URS. Mr. Klusman clarified there are no code issues with the design of the Inspection Lighting installation shown on the contract drawings, and ballast replacement in these light fixtures would not be an issue as well. I never meant to question that aspect of the design or ballast replacement. I only wanted to point out how difficult it would be to replace one of these light fixtures sometime in the future. There's always a possibility that workers carrying tools or wearing tool belts while climbing up the ladders inside of those towers, may damage one of these light fixtures. Something could be accidently dropped that could damage a light fixture as well. With the 4' Fluorescent Inspection Light Fixtures in Towers 3 and 4 installed in line with the conduits, the time and cost of replacing a light fixture more than doubles. In other words, if one of these light fixtures was ever damaged and needs to be replaced, wiring passing through the light fixture will have to be removed back to the nearest light fixtures; as well as the conduit needing to be cut and replaced on one end of the light fixture. The lighting circuit would have to be turned off in order to perform this work, putting the tower in the dark. This can be avoided by installing a "T-Condulet" beside each light fixture and installing a short piece of conduit or a short piece of flexible liquidtight conduit between the "T-Condulet" and light fixture. This would allow replacement of any of the light fixtures without interrupting wiring going on to other light fixtures, while maintaining lighting with all of the other light fixtures in the tower.

BRAYMAN CONSTRUCTION CORPORATION
Attn. Mr. Aaron Downs

Re.: LAW-93-0.00 Ironton-Russell Bridge
RFI: Ref. No. 0243 – Inspection Lighting, 4' Fluorescent

There would be a cost for this installation, but it would be far less than the cost incurred to replace these light fixtures in the future.

This change would need to take place at 58ea. of the 66ea. light fixtures.

Would ODOT want to consider making these changes in the conduit and Inspection Lighting Fixtures in Towers #3 and #4?

If you have any questions, please feel free to call me at 740-354-8671.

Sincerely,

West End Electric Co., Inc.

Miles Ferguson
President

BRAYMAN CONSTRUCTION STRESSING AND ELONGATION RECORD

IRONTON-RUSSELL BRIDGE PROJECT

Inspector: Brian Davidson

LOCATION: PIER 5 DIAPHRAGM- TRANSVERSE

BCC: Chris Gunlock

STRESSING OPERATION #: 2

WSL (DE) ASSUMED =1/8"

Δ Jack = .15"

DATE INSTALL	DATE STRESS	TENDON ID	STRESS SEQUENCE	# OF STRAND	COIL #	HEAT #	RAM & GAUGE #	JACKING FORCE (KIPS)		GAUGE PRESSURE (PSI)		MEASUREABLE ELONGATION (IN)					ELONGATION (IN)				
												END 1		END 2		TOTAL					
								INITIAL	FINAL	INITIAL	FINAL	FINAL	WSL (LE)	FINAL	WSL (DE)	ELONGATION	THEOR. ELONG. (IN)	FIELD ELONG. (IN)	-7%	7%	VARIATION (%)
9/30/2014	10/1/2014	D7	1	19	D25061	D639910	5-4-027 w/ GAUGE A	163	813	1,400	6,850	3 1/4	1/4		1/8	3 7/16	3.45	3.04	2 7/8	3 1/4	107.08%
9/30/2014	10/1/2014	D8	2	19	D25061	D639910	5-4-027 w/ GAUGE A	163	813	1,400	6,850	3 1/8	1/4		1/8	3 9/16	3.56	3.12	2 15/16	3 3/8	100.06%
9/30/2014	10/1/2014	D9	3	19	D25061	D639910	5-4-027 w/ GAUGE A	163	813	1,400	6,850	3 1/4	1/4		1/8	3 9/16	3.56	3.12	2 15/16	3 3/8	104.07%
9/30/2014	10/1/2014	D10	4	19	D25061	D639910	5-4-027 w/ GAUGE A	163	813	1,400	6,850	3 3/16	1/4		1/8	3 4/16	3.27	2.93	2 3/4	3 3/16	108.68%
9/30/2014	10/1/2014	D11	5	19	D25061	D639910	5-4-027 w/ GAUGE A	163	813	1,400	6,850	3 1/4	1/4		1/8	3 8/16	3.47	3.05	2 7/8	3 5/16	106.52%
9/30/2014	10/1/2014	D12	6	19	D25061	D639910	5-4-027 w/ GAUGE A	163	813	1,400	6,850	3 5/16	1/4		1/8	3 5/16	3.3	2.96	2 3/4	3 3/16	111.62%

NOTE: D10 and D12 WERE STRESSED WITH AN EXTRA 6" OF SHIM BETWEEN THE ANCHOR PLATE AND RAM, THEREFORE ADDING AN ELONGATION OF .0415" TO THE FIELD ELONGATION.

Field Elongation taken as : $\left[\frac{P_{Jack} - Pi_{Jack}}{P_{Jack}}\right]\Delta_{100\%} + \Delta_{Jack} + WSL_{DE}$

Valid for measuring elongations at 100% Stressing force, from back of jack, before releasing load from jack.

LETTER OF TRANSMITTAL

BRAYMAN CONSTRUCTION CORP.
1000 John Roebling Way
Saxonburg, PA 16056
Phone: (724) 443-1533
Fax: (724) 443-8733

To: Ohio Dept. of Transportation
District 9
650 Eastern Avenue
Chillicothe, OH 45601

Project: SR-93-0.00
Ironton Russell Bridge
Lawrence County, OH
Project No. 110628

BCC # 222-000-000

Attention: Dave Bame

Date: September 30, 2014

We are sending you the following items:

- ☐ Under Separate Cover
- ☑ Attached
- ☐ Copy of Letter
- ☐ Prints
- ☐ Specifications
- ☐ Change Order
- ☐ Shop Drawings
- ☐ Plans
- ☐ _____

Copies	Date	Description
1	9/30/14	RFI 084 Anchorage Shims & Reamed Holes (Wabash Steel)

Transmitted for the following purpose:

- ☑ For Approval
- ☐ Approved as Submitted
- ☐ Resubmit __ copies for approval
- ☐ For Your Use
- ☐ Approved as Noted
- ☐ Submit __ copies for distribution
- ☐ As Requested
- ☐ Returned for Corrections
- ☐ Return __ corrected prints
- ☐ For Review & Comment
- ☐ For Certification

MAIL: ◯ Regular ◯ Overnight ◯ Certified ☑ Email **FAX:** ◯

Remarks:

Aaron Downs

Signed: Aaron Downs
Project Engineer

cc: File/arb
Dan Beasley
Edwin Callicutt
Eric McLaughlin

Ironton Russell Bridge over Ohio River

LAW-93C-0000

Anchorage Shims & Reamed Holes (Wabash Steel)

For:

District 9

Submitted By:

1000 John Roebling Way

Saxonburg, Pa 16056

September 30, 2014

Wabash Steel LLC

ENGINEERING & ESTIMATING
6235 Westerville Road
Westerville, OH 43081
Ph. 614-212-5838
Fax 614-212-5799

FABRICATION PLANT
2007 Oliphant Drive
Vincennes, IN 47591
Ph. 812-882-4550
Fax 812-882-4525

Request For Information

Wabash Job #: **17083** **RFI# 025** Date: 9/29/14 Author: John Rose

Project Data: ODOT Project No. 628(11)
Bridge No. LAW-93-0000, Ironton Russell Bridge Over Ohio River
MAIN SPAN – Tower Cable Anchor Boxes
Ref. No. 429 ; Structural Steel *(Fabrication/Furnish Only)*

Bridge No.: LAW-93-0000 ; MAIN SPAN ; Tower Cable Anchor Boxes
Re: Bearing plate shims at M7L and M12L

Per VSL letter of 9/10/14, attached, anchors at bearing plates at M7L and M12L must be shimmed. Shim thickness dimensions were provided by Brayman at a distance from the anchor point which is not convenient for a shim plate, as they overlap the edges of the bearing plate. We propose shims whose thickness matches Brayman's dimensions at a smaller radius from the anchor point and which exceeds the minimum thickness and width required by VSL and fits well on the bearing plate (see attached sketches). Shims to be installed with a 5/16" fillet weld all around the exterior to the bearing plate. Material to be A709-50W. Shim faying surface to be cold galvanized before installation, the remainder to be cold galvanized after welding.

Is this acceptable? A response as soon as possible as requested so we may proceed forward.

Re: Reaming holes in guide pipe flanges/box flanges

Some bolt holes through guide pipe flanges and box flanges became slightly misaligned following adjustments to the angle of the guide pipes. We propose to ream full size as necessary to make these connections fit.

Is this acceptable? A response as soon as possible as requested so we may proceed forward.

Response:

Issued By: **Date:**

structural TECHNOLOGIES

A Structural Group Company

VSL

September 10th, 2014

Tom Hesmond
Brayman Construction
702 South First Street
Ironton, OH 45638

Dear Tom:

In answer to the information provided regarding the survey of the Pier 3 tower box bearing plates, VSL can offer the following guidance.

In general, a maximum angular error between the tower bearing plate and the theoretical perpendicular to the stay path of 10 mrad (0.573 degrees) will meet our system design and testing requirements.

In the case of a discrepancy that exceeds this limit slightly, VSL can evaluate on a case by case Basis whether the bearing plate will require a shim to align the stay. Specifically the bearing plates for stays B13L, B9L, M8L and M10L are acceptable to VSL based on the survey results provided on 8/11/2014. Bearing plates M7L and M12L require shims to correctly align the bearing plate with the stay.

The shims must be at least 1” larger than the diameter of the DS anchorage bearing on the plate, and the thickness should be between 1” and 0.5”. Shim dimensions are largely arbitrary and alternate dimensions may be proposed.

The guide pipe alignment does not affect the stay, provided that the exit end working point is within 0.25” for the 6-31 anchorages and 0.375” for all other anchorages of the theoretical stay path. Small discrepancies beyond the tolerance above (up to approximately 1/2”) may be allowed by either moving the tension ring farther from the anchorage and/or modifications to the mounting shim to provide clearance. Currently, M7, B7, B12 and M13 survey at 1/16” to 3/16” out of tolerance. These are acceptable to VSL as described above.

The guide pipe does not need to be parallel to the stay provided that the upper end does not obstruct the DS anchorage transition tube. If the guide pipe does not obscure the hole in the bearing plate, this will be accomplished.

Sincerely,

Ben Forbes
Senior Project Manager
Structural Technologies / VSL

Attachments: survey results

Confidential: Any unauthorized use or distribution is prohibited.

VStructural, LLC
4825 Van Gordon Street • Wheat Ridge, CO 80033 • Phone: 303-456-9887 • Fax: 303-456-9796
www.structuraltechnologies.com

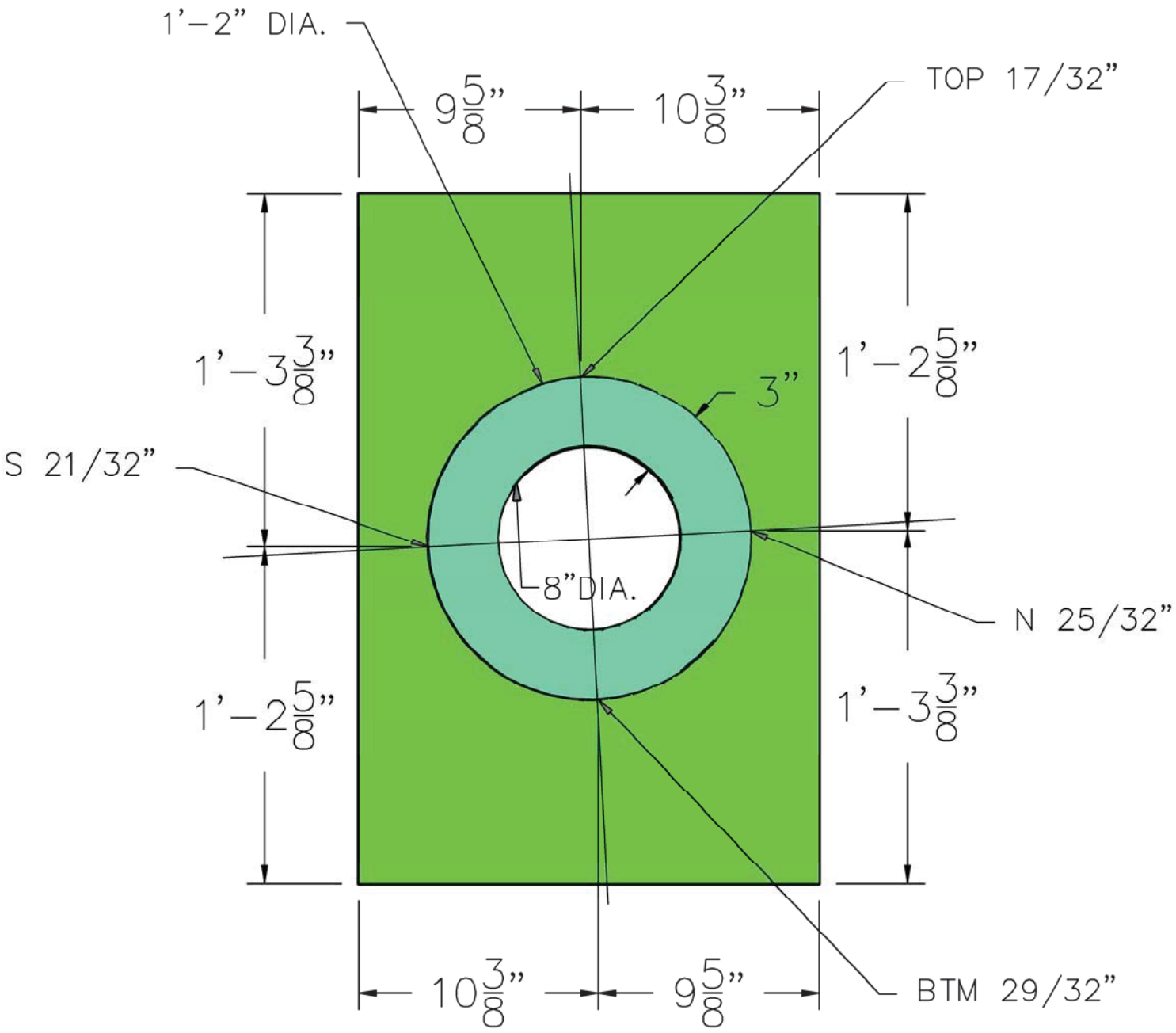

ORIENTATION OF SHIM
ON BEARING PLATE

M7L

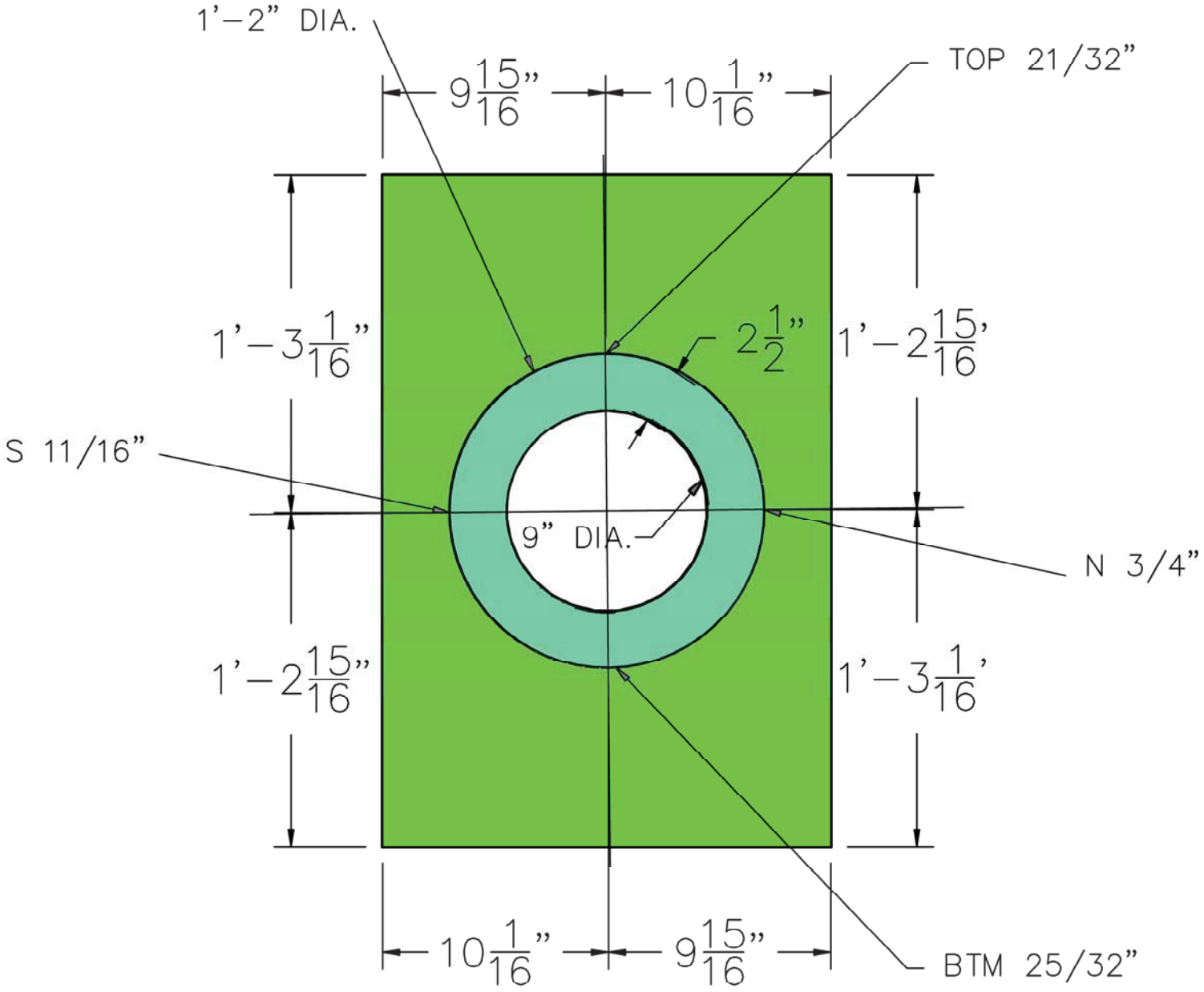

ORIENTATION OF SHIM
ON BEARING PLATE

M12L

Hamadani, Nabil

From: Klusman, Craig
Sent: Monday, October 06, 2014 2:36 PM
To: Callicutt, Ed
Cc: Bame, Dave; Hamadani, Nabil
Subject: RE: RFIF146 Pier 5 Stressing Data

URS has no objections to the elongations as shown. Thanks and please let me know if you have any questions regarding this response.

Craig Klusman
502.217.1502

-----Original Message-----
From: Callicutt, Ed [mailto:ecallicutt@figgbridge.com]
Sent: Thursday, October 02, 2014 12:52 PM
To: Klusman, Craig; Hamadani, Nabil
Cc: Bame, Dave
Subject: RFIF146 Pier 5 Stressing Data

Craig...please review the attached and confirm that we don't have an issue. 2 of the transverse tendons at the Pier 5 cap are noted as having elongations slightly outside of the 7% allowable. Finley has provided the review comment below. Thanks EWC

Edwin W. Callicutt, III, P.E.
Construction Manager
FIGG
54 South Greeno Rd.
Suite B
Fairhope, AL 36532
Ph.: (251) 929-7720
Cell: (912) 399-1569
Fax: (251) 929-7730
ecallicutt@figgbridge.com
http://www.figgbridge.com

This email and any files transmitted with it are confidential and intended solely for the use of the individual or entity to whom they are addressed. If you have received this email in error please notify the system manager. Please note that any views or opinions presented in this email are solely those of the author and do not necessarily represent those of FIGG Engineering Group. Finally, the recipient should check this email and any attachments for the presence of viruses. FIGG accepts no liability for any damage caused by any virus transmitted by this email.

-----Original Message-----
From: Tom Hesmond [mailto:t_hesmond@brayman.com]
Sent: Thursday, October 02, 2014 12:33 PM
To: Callicutt, Ed
Cc: Davidson, Brian; Aaron Downs
Subject: Pier 5 Stressing Data

Ed,

Attached please find the stressing logs from Pier 5 diaphragm tendons along with the email below from Finley regarding the 2 that elongated beyond the 7%. Please let me know if you need anything else.

Thanks,
Tom

-----Original Message-----
From: Jerry Pfuntner [mailto:jerry.pfuntner@finleyengineeringgroup.com]
Sent: Thursday, October 02, 2014 10:35 AM
To: Tom Hesmond
Subject: RE: PT Stressing Issue

Tom:

FINLEY has reviewed the attached PT stressing logs and finds these tendons to be acceptable.

Tendons D10, D12 are slightly over the maximum elongation range (+1/16" and +1/8"), however, given the short tendon length and consistency with the actual stressing results of the other tendons, FINLEY has no issue with these tendons as-is with no further action required.

Regards,

Bridging Challenges With Solutions®

Jerry M. Pfuntner, P.E.
Principal/Senior Bridge Engineer
1589 Metropolitan Boulevard
Tallahassee, Florida 32308-3776
Office: 850.894.1600 | Mobile: 850.933.8750
email: jerry.pfuntner@finleyengineeringgroup.com
www.finleyengineeringgroup.com

FINLEY 10th Anniversary 2004-2014
Like Us
Follow Us

Please consider the environment before printing this e-mail.
-----Original Message-----
From: Tom Hesmond [mailto:t_hesmond@brayman.com]
Sent: Thursday, October 2, 2014 7:05 AM
To: Jerry Pfuntner
Subject: PT Stressing Issue

Jerry,

We have 2 tendons in Pier 2 Diaphragm that came up slightly long.

Thanks,

Tom

-----Original Message-----
From: BESAdmin
Sent: Wednesday, October 01, 2014 3:08 PM
To: Tom Hesmond
Subject: Attached Image

Confidentiality Message for Email:

PRIVILEGE AND CONFIDENTIALITY NOTICE: This electronic material and the information contained in it is intended only for the use of the individual or entity to which it is addressed and may contain information that is privileged, confidential and exempt from disclosure. If the reader of this message is not the intended recipient or an employee or agent responsible for delivering the message to the intended recipient, you are hereby notified that any dissemination, distribution or copying of this communication is strictly prohibited. If you have received this communication in error, please notify Brayman Construction Corporation immediately at 724.443.1533 or notify the sender immediately by replying to this message.

Confidentiality Message for Email:

PRIVILEGE AND CONFIDENTIALITY NOTICE: This electronic material and the information contained in it is intended only for the use of the individual or entity to which it is addressed and may contain information that is privileged, confidential and exempt from disclosure. If the reader of this message is not the intended recipient or an employee or agent responsible for delivering the message to the intended recipient, you are hereby notified that any dissemination, distribution or copying of this communication is strictly prohibited. If you have received this communication in error, please notify Brayman Construction Corporation immediately at 724.443.1533 or notify the sender immediately by replying to this message.

This e-mail and any attachments contain URS Corporation confidential information that may be proprietary or privileged. If you receive this message in error or are not the intended recipient, you should not retain, distribute, disclose or use any of this information and you should destroy the e-mail and any attachments or copies.

Modified Section

From Finley shop dwg. P-34A

X indicates cut 9TS1201 bars

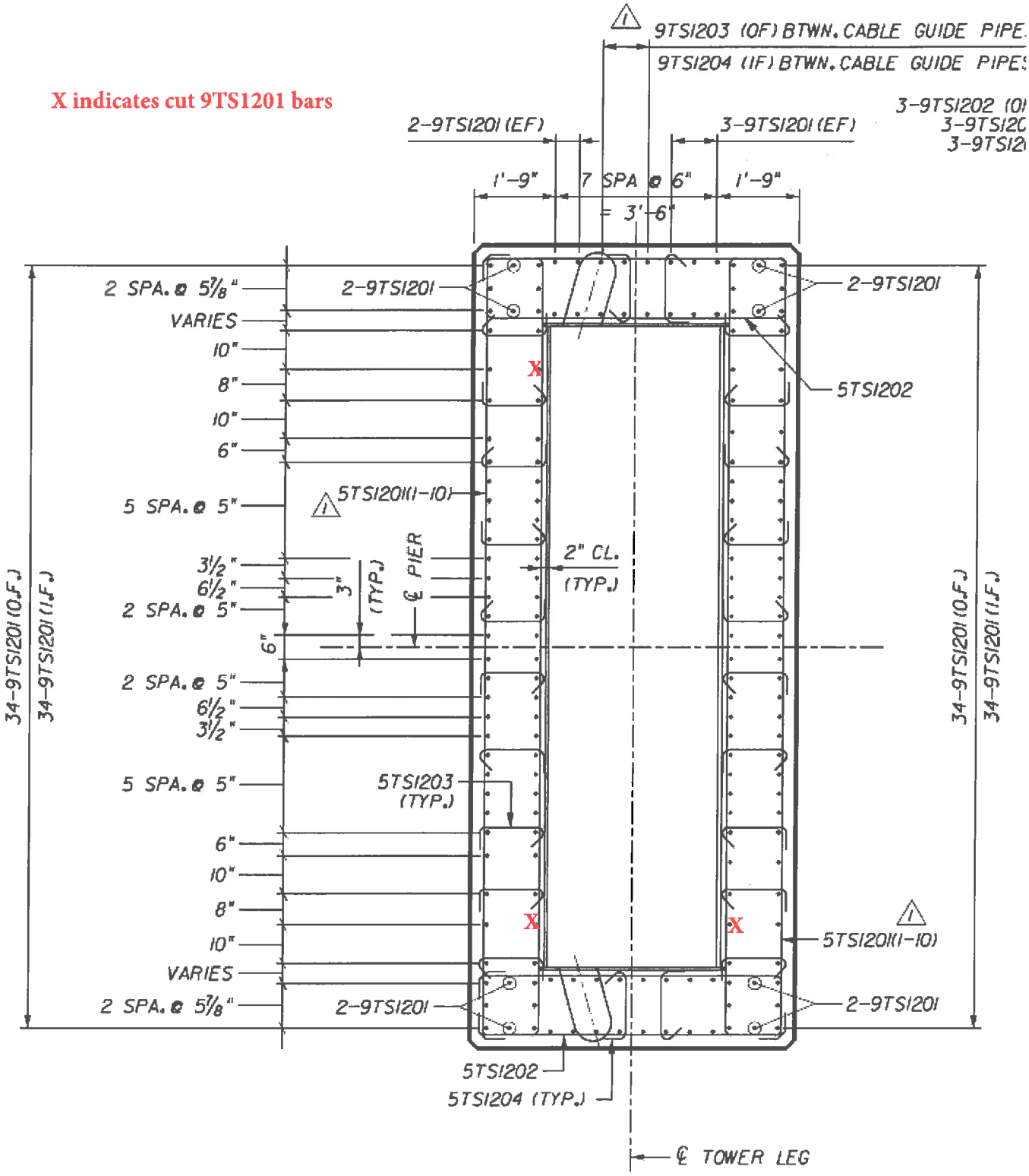

SECTION B-B

(AT BOTTOM OF SEGMENT 12)

LETTER OF TRANSMITTAL

BRAYMAN CONSTRUCTION CORP.
1000 John Roebling Way
Saxonburg, PA 16056
Phone: (724) 443-1533
Fax: (724) 443-8733

To: Ohio Dept. of Transportation
District 9
650 Eastern Avenue
Chillicothe, OH 45601

Project: SR-93-0.00
Ironton Russell Bridge
Lawrence County, OH
Project No. 110628

BCC # 226-000-002

Attention: Dave Bame

Date: December 9, 2014

We are sending you the following items:

☐ Under Separate Cover ☑ Attached

☐ Copy of Letter ☐ Prints ☐ Specifications ☐ Change Order

☐ Shop Drawings ☐ Plans ☐ _____

Copies	Date	Description
1	12/9/14	RFI 086 Anchor Box Instrumentation Holes Resubmittal

Transmitted for the following purpose:

☐ For Approval ☐ Approved as Submitted ☑ Resubmit 1 copies for approval

☐ For Your Use ☐ Approved as Noted ☐ Submit __ copies for distribution

☐ As Requested ☐ Returned for Corrections ☐ Return __ corrected prints

☐ For Review & Comment ☐ For Certification

MAIL: ◯ Regular ◯ Overnight ◯ Certified ✓ Email **FAX:** ◯

Remarks:

Aaron Downs

Signed: Aaron Downs
Project Engineer

cc: File/arb
Dan Beasley
Edwin Callicutt
Eric McLaughlin

Ironton Russell Bridge over Ohio River

LAW-93C-0000

RFI 086 Anchor Box Instrumentation Holes Resubmittal

For:

District 9

Submitted By:

1000 John Roebling Way

Saxonburg, Pa 16056

December 9, 2014

Wabash Steel LLC

ENGINEERING & ESTIMATING
6235 Westerville Road
Westerville, OH 43081
Ph. 614-212-5838
Fax 614-212-5799

FABRICATION PLANT
2007 Oliphant Drive
Vincennes, IN 47591
Ph. 812-882-4550
Fax 812-882-4525

Request For Information

Wabash Job #: **17083** **RFI# 033** Date: 12/08/14 Author: John Rose

Project Data: ODOT Project No. 628(11)
Bridge No. LAW-93-0000, Ironton Russell Bridge Over Ohio River
MAIN SPAN – Tower Cable Anchor Boxes
Ref. No. 429; Structural Steel *(Fabrication/Furnish Only)*

Bridge No.: **LAW-93-0000; MAIN SPAN; Tower Cable Anchor Boxes**
Re: **Mislocated instrumentation hole anchor box 14-T4R-4 (see RFI 026 & RFI 031)**

Per engineer's response to our RFI# 026, we must redrill a 3/8" dia. instrumentation hole in anchor box 14-T4R-4 (tower 4, right leg, top section) flange d14 that was mislocated ¼". Per engineer's response to our RFI# 031, our procedure should not include a welded repair. After a conversation with the engineer we propose to drill a 1-1/16" dia. hole centered on the mislocated hole, manufacture a slug of the same material as the flange 1 ½" thick (1/4" greater than the flange), apply two part epoxy to the hole, press fit this slug into the flange, then grind flush both sides. The instrumentation hole will then be drilled per detail, the hole being completely within the repaired area.

Is this acceptable? A response by Monday 12/15/14 is requested

Response:

The revised procedure using epoxy is acceptable.
Nabil Hamadani
12/10/2014
URS

Issued By: **Date:**

LETTER OF TRANSMITTAL

BRAYMAN CONSTRUCTION CORP.
1000 John Roebling Way
Saxonburg, PA 16056
Phone: (724) 443-1533
Fax: (724) 443-8733

To: Ohio Dept. of Transportation
District 9
650 Eastern Avenue
Chillicothe, OH 45601

Project: SR-93-0.00
Ironton Russell Bridge
Lawrence County, OH
Project No. 110628

BCC # 227-000-000

Attention: Dave Bame

Date: November 3, 2014

We are sending you the following items:

☐ Under Separate Cover ☑ Attached

☐ Copy of Letter ☐ Prints ☐ Specifications ☐ Change Order

☐ Shop Drawings ☐ Plans ☐ _____

Copies	Date	Description
1	11/3/14	RFI 087 Anchor Box Instrumentation Holes

Transmitted for the following purpose:

☑ For Approval ☐ Approved as Submitted ☐ Resubmit __ copies for approval

☐ For Your Use ☐ Approved as Noted ☐ Submit __ copies for distribution

☐ As Requested ☐ Returned for Corrections ☐ Return __ corrected prints

☐ For Review & Comment ☐ For Certification

MAIL: ○ Regular ○ Overnight ○ Certified ✓ Email **FAX:** ○

Remarks:

Aaron Downs

Signed: Aaron Downs
Project Engineer

cc: File/arb
Dan Beasley
Edwin Callicutt
Eric McLaughlin

Ironton Russell Bridge over Ohio River

LAW-93C-0000

RFI 087 Anchor Box Instrumentation Holes

For:

District 9

Submitted By:

1000 John Roebling Way

Saxonburg, Pa 16056

November 3, 2014

Wabash Steel LLC

ENGINEERING & ESTIMATING
6235 Westerville Road
Westerville, OH 43081
Ph. 614-212-5838
Fax 614-212-5799

FABRICATION PLANT
2007 Oliphant Drive
Vincennes, IN 47591
Ph. 812-882-4550
Fax 812-882-4525

Request For Information

Wabash Job #: **17083** **RFI# 027** Date: 10/31/14 Author: John Rose

Project Data: ODOT Project No. 628(11)
Bridge No. LAW-93-0000, Ironton Russell Bridge Over Ohio River
MAIN SPAN – Tower Cable Anchor Boxes
Ref. No. 429 ; Structural Steel *(Fabrication/Furnish Only)*

Bridge No.: **LAW-93-0000 ; MAIN SPAN ; Tower Cable Anchor Boxes**
Re: **Instrument holes anchor box 8-T4L-2 web plate b8**

Two 3/8" dia. instrument holes in anchor box 8-T4L-2 web plate b8 were mislocated 9-9/16" lower in the web than per design, see attached sketch. The holes are drilled 7-1/2" apart per design. Is this location acceptable as drilled? If not, we propose to install galvanized bolts in these holes and redrill in the correct location.

A response by Friday 11/7/14, or sooner, is requested

Response:

Please re drill hole as per approved shop drawings.
The proposed installation of galvanized bolts is acceptable.
Please let us know if you have any questions.

Issued By: NHamadani **Date:** 11/10/2014

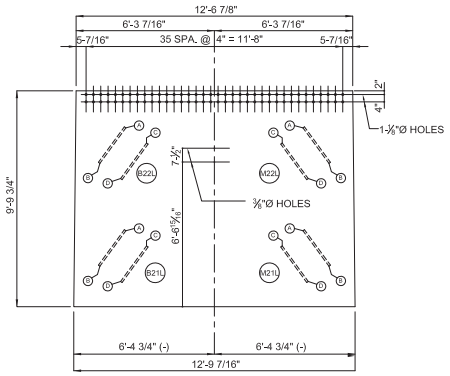

DETAIL OF WEB PLATE (a8)

		"X"	"Y"
B22L	"A"	4'-1 1/8"	8'-2 1/16"
B22L	"B"	5'-7 3/16"	6'-10 1/4"
B22L	"C"	3'-2 5/8"	7'-1 15/16"
B22L	"D"	4'-8 11/16"	5'-10 1/8"

		"X"	"Y"
M22L	"A"	4'-1"	8'-2 1/4"
M22L	"B"	5'-7 1/2"	6'-10 15/16"
M22L	"C"	3'-2 13/16"	7'-1 13/16"
M22L	"D"	4'-9 5/16"	5'-10 1/2"

		"X"	"Y"
B21L	"A"	4'-1 7/16"	3'-1 3/16"
B21L	"B"	5'-6 1/2"	1'-8 5/16"
B21L	"C"	3'-2 3/16"	2'-1 3/4"
B21L	"D"	4'-7 1/4"	0'-8 7/8"

		"X"	"Y"
M21L	"A"	4'-1 5/16"	3'-1 3/8"
M21L	"B"	5'-6 13/16"	1'-8 15/16"
M21L	"C"	3'-2 3/8"	2'-1 5/8"
M21L	"D"	4'-7 7/8"	0'-9 3/16"

"X" DIMENSIONS = HORIZONTAL DIM. FROM CENTERLINE
"Y" DIMENSIONS = VERTICAL DIM. FROM BOTTOM OF PLATE

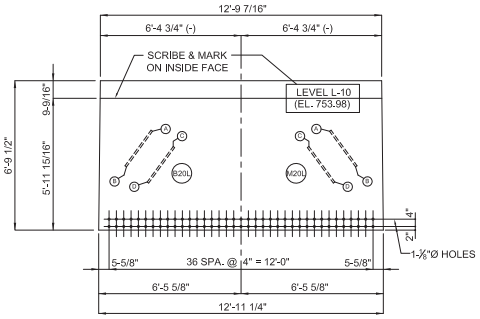

DETAIL OF WEB PLATE (c8)

		"X"	"Y"
B20L	"A"	4'-1 1/2"	4'-10"
B20L	"B"	5'-5 1/4"	3'-3 7/8"
B20L	"C"	3'-1 7/16"	3'-11 7/16"
B20L	"D"	4'-5 3/16"	2'-5 5/16"

		"X"	"Y"
M20L	"A"	4'-1 5/8"	4'-9 7/8"
M20L	"B"	5'-5 7/8"	3'-4 3/16"
M20L	"C"	3'-1 13/16"	3'-11"
M20L	"D"	4'-6 1/16"	2'-5 5/16"

"X" DIMENSIONS = HORIZONTAL DIM. FROM CENTERLINE
"Y" DIMENSIONS = VERTICAL DIM. FROM BOTTOM OF PLATE

Review is only for conformance with the design concept. Review does not cover dimensions, quantities, accuracy, fit, or any assembly for which this item may be a component. Review does not authorize deviation from Contract Documents or substitution of materials. Requests for deviations from the Contract Documents will only be addressed thru the Change Order Process.

REVIEWED

CONFORMS WITH CONCEPT	(✔)
CONFORMS AS NOTED	( )
RESUBMIT	( )
NO ACTION	( )
DOES NOT CONFORM	( )

URS

DATE 03/12/2013 BY NHamadani

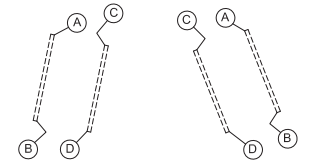

CLARIFICATION OF DIMENSION LOCATIONS

6'-2 5/16" AS DRILLED

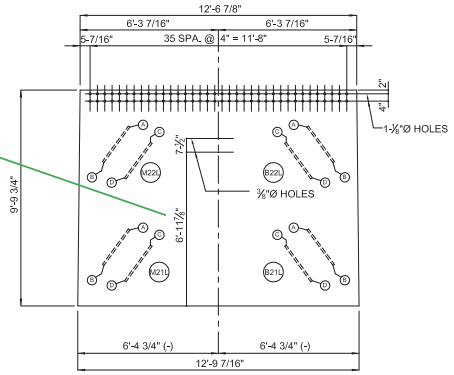

DETAIL OF WEB PLATE (b8)

		"X"	"Y"
M22L	"A"	3'-11 1/2"	8'-3 7/16"
M22L	"B"	5'-6"	7'-0 1/8"
M22L	"C"	3'-1 5/16"	7'-3 1/16"
M22L	"D"	4'-7 13/16"	5'-11 3/4"

		"X"	"Y"
B22L	"A"	3'-11 11/16"	8'-3 5/16"
B22L	"B"	5'-5 3/4"	6'-11 1/2"
B22L	"C"	3'-1 1/8"	7'-3 3/16"
B22L	"D"	4'-7 3/16"	5'-11 7/16"

		"X"	"Y"
M21L	"A"	3'-11 13/16"	3'-2 3/4"
M21L	"B"	5'-5 5/16"	1'-10 5/16"
M21L	"C"	3'-0 7/8"	2'-3 1/16"
M21L	"D"	4'-6 3/8"	0'-10 5/8"

		"X"	"Y"
B21L	"A"	3'-11 15/16"	3'-2 5/8"
B21L	"B"	5'-5 1/16"	1'-9 3/4"
B21L	"C"	3'-0 11/16"	2'-3 3/16"
B21L	"D"	4'-5 13/16"	0'-10 5/16"

"X" DIMENSIONS = HORIZONTAL DIM. FROM CENTERLINE
"Y" DIMENSIONS = VERTICAL DIM. FROM BOTTOM OF PLATE

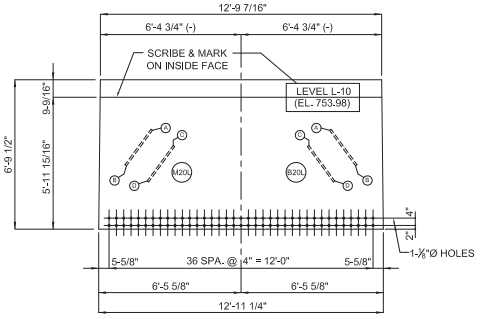

DETAIL OF WEB PLATE (d8)

		"X"	"Y"
M20L	"A"	4'-0 3/16"	4'-11 1/2"
M20L	"B"	5'-4 3/8"	3'-5 3/4"
M20L	"C"	3'-0 3/8"	4'-0 5/8"
M20L	"D"	4'-4 9/16"	2'-6 15/16"

		"X"	"Y"
B20L	"A"	4'-0 1/16"	4'-11 5/8"
B20L	"B"	5'-3 7/8"	3'-5 1/2"
B20L	"C"	3'-0"	4'-1 1/16"
B20L	"D"	4'-3 13/16"	2'-6 15/16"

"X" DIMENSIONS = HORIZONTAL DIM. FROM CENTERLINE
"Y" DIMENSIONS = VERTICAL DIM. FROM BOTTOM OF PLATE

Revised sheet is reviewed for the written revision explanation received 3/11/13

SHOP NOTE:
ALL REFERENCE LINES AND SCRIBING TO BE ON THE N.S. OF PLATE AS DETAILED

SHOP NOTES:
1) WORK ALL SHEETS (8AH THRU 8H) TOGETHER.
2) SEE SHEET 8AH FOR BILL OF MATERIAL.
3) SEE SHEET GN1 FOR GENERAL NOTES.
4) SEE SHEET GN2 FOR GIRDER ASSEMBLY WELD DETAILS AND WELD TERMINATION DETAILS.
5) SEE SHEETS FS1 THRU FS3 FOR FIELD SPLICE PACKAGES.

TOWER BOX 8-T4(L)-2

WABASH STEEL, LLC
2007 OLIPHANT DRIVE
VINCENNES, INDIANA 47591

Drawn	Checked	Approved	Revised
DJW 11-16-12	WBC 11-19-12		

STATE PROJ. NO. LAW-93-0.00
ODOT PROJ. NO. 110628 ~ PID NO. 81595
REF. NO. 429
BRIDGE NO. LAW-93-0000
IRONTON RUSSELL BRIDGE
OVER OHIO RIVER
LAWRENCE COUNTY, OHIO
CONTRACTOR: BRAYMAN CONST. CORP.
OWNER: OHIO DEPT. OF TRANSPORTATION

Shop Paint:	GALVANIZED
Edge Distance: AS NOTED	Holes: AS NOTED
WSLLC No.: 17083	Sh. 8DH of 16

LETTER OF TRANSMITTAL

BRAYMAN CONSTRUCTION CORP.
1000 John Roebling Way
Saxonburg, PA 16056
Phone: (724) 443-1533
Fax: (724) 443-8733

To: Ohio Dept. of Transportation
District 9
650 Eastern Avenue
Chillicothe, OH 45601

Project: SR-93-0.00
Ironton Russell Bridge
Lawrence County, OH
Project No. 110628

BCC # 230-000-000

Attention: Dave Bame

Date: November 20, 2014

We are sending you the following items:

☐ Under Separate Cover ☑ Attached

☐ Copy of Letter ☐ Prints ☐ Specifications ☐ Change Order

☐ Shop Drawings ☐ Plans ☐ _____

Copies	Date	Description
1	11/20/14	RFI 089 Pier 3 Right Anchor Box Section 2&4 Bolt Holes

Transmitted for the following purpose:

☑ For Approval ☐ Approved as Submitted ☐ Resubmit __ copies for approval

☐ For Your Use ☐ Approved as Noted ☐ Submit __ copies for distribution

☐ As Requested ☐ Returned for Corrections ☐ Return __ corrected prints

☐ For Review & Comment ☐ For Certification

MAIL: ○ Regular ○ Overnight ○ Certified ✓ Email **FAX:** ○

Remarks:

Aaron Downs

Signed: Aaron Downs
Project Engineer

cc: File/arb
Dan Beasley
Edwin Callicutt
Eric McLaughlin

Ironton Russell Bridge over Ohio River

LAW-93C-0000

RFI 089 Pier 3 Right Anchor Box Section 2&4 Bolt Holes

For:

District 9

Submitted By:

1000 John Roebling Way

Saxonburg, Pa 16056

November 20, 2014

Wabash Steel LLC

ENGINEERING & ESTIMATING
6235 Westerville Road
Westerville, OH 43081
Ph. 614-212-5838
Fax 614-212-5799

FABRICATION PLANT
2007 Oliphant Drive
Vincennes, IN 47591
Ph. 812-882-4550
Fax 812-882-4525

Request For Information

Wabash Job #: **17083** **RFI# 030** Date: 11/19/14 Author: John Rose

Project Data: ODOT Project No. 628(11)
Bridge No. LAW-93-0000, Ironton Russell Bridge Over Ohio River
MAIN SPAN – Tower Cable Anchor Boxes
Ref. No. 429 ; Structural Steel *(Fabrication/Furnish Only)*

Bridge No.: LAW-93-0000 ; MAIN SPAN ; Tower Cable Anchor Boxes
Re: Tower 3 right section 2 and 4 reaming

Some guide pipes in tower 3 right sections 2 and 4 (7-T3R-2 and 15-T3R-4) had to be adjusted and shimmed to meet exit point tolerances, as a result these guide pipes have been shifted and some holes have to be reamed to bolt up. We propose to ream the following:

7-T3R-2
M5R 8 holes (of 16) up to 3/16”
M6R 2 holes (of 14) up to 1/8”
M7R 8 holes (of 14) up to 1/8”
B5R 10 holes (of 14) up to 1/4”

15-T3R-4
M12R 7 holes (of 14) up to 1/8”
B12R 9 holes (of 14) up to 1/4”
B13R 5 holes (of 14) up to 1/8”
B14R 2 holes (of 14) up to 3/16”
B15R 2 holes (of 16) up to 3/16”

There is no reaming necessary in section 3 (11-T3R-3).

Is this acceptable as proposed? A response is requested as soon as possible

Response:

Issued By: **Date:**

LETTER OF TRANSMITTAL

BRAYMAN CONSTRUCTION CORP.
1000 John Roebling Way
Saxonburg, PA 16056
Phone: (724) 443-1533
Fax: (724) 443-8733

To: Ohio Dept. of Transportation
District 9
650 Eastern Avenue
Chillicothe, OH 45601

Project: SR-93-0.00
Ironton Russell Bridge
Lawrence County, OH
Project No. 110628

BCC # 233-000-000

Attention: Dave Bame

Date: December 8, 2014

We are sending you the following items:

☐ Under Separate Cover ☑ Attached

☐ Copy of Letter ☐ Prints ☐ Specifications ☐ Change Order

☐ Shop Drawings ☐ Plans ☐ _____

Copies	Date	Description
1	12/8/14	RFI 090 Mislocated Splice Plate Holes Tower 4 Left, Section 1/Section 2

Transmitted for the following purpose:

☑ For Approval ☐ Approved as Submitted ☐ Resubmit __ copies for approval

☐ For Your Use ☐ Approved as Noted ☐ Submit __ copies for distribution

☐ As Requested ☐ Returned for Corrections ☐ Return __ corrected prints

☐ For Review & Comment ☐ For Certification

MAIL: ○ Regular ○ Overnight ○ Certified ✓ Email **FAX:** ○

Remarks:

Aaron Downs

Signed: Aaron Downs
Project Engineer

cc: File/arb
Dan Beasley
Edwin Callicutt
Eric McLaughlin

Ironton Russell Bridge over Ohio River

LAW-93C-0000

Mislocated Splice Plate Holes
Tower 4 Left, Section 1/ Section 2

For:

STATE OF OHIO DEPARTMENT OF TRANSPORTATION

District 9

Submitted By:

BRAYMAN construction corporation

1000 John Roebling Way

Saxonburg, Pa 16056

December 8, 2014

Wabash Steel LLC

ENGINEERING & ESTIMATING
6235 Westerville Road
Westerville, OH 43081
Ph. 614-212-5838
Fax 614-212-5799

FABRICATION PLANT
2007 Oliphant Drive
Vincennes, IN 47591
Ph. 812-882-4550
Fax 812-882-4525

Request For Information

Wabash Job #: **17083** **RFI# 032** Date: 12/08/14 Author: John Rose

Project Data: ODOT Project No. 628(11)
Bridge No. LAW-93-0000, Ironton Russell Bridge Over Ohio River
MAIN SPAN – Tower Cable Anchor Boxes
Ref. No. 429 ; Structural Steel *(Fabrication/Furnish Only)*

Bridge No.: LAW-93-0000 ; MAIN SPAN ; Tower Cable Anchor Boxes
Re: Mislocated splice plate holes tower 4 left, section 1/section 2

Fill plate d-FS1 and one pair of splice plates c-FS1 at tower 4 left section 1/section 2 field splice were incorrectly clamped 1" too near the edge of the flange plate for drilling in laydown. Five holes were misdrilled through splice plates and box flanges before the error was discovered (see sketch). Two of these holes come near to the box web and as a result the washers foul on the flange to web fillet weld.

We propose to discard the misdrilled splice plates and make new from the same material (see sketch). We propose to leave the two misdrilled holes near the box web in place and not drill these in the replacement splice plates. The exterior replacement splice plate and fill will be ¼" wider to cover these holes to seal from concrete. We propose to drill the other three misdrilled holes in replacement splice plates where they are by using the misdrilled splice plate as a template, and drill two of the detailed holes in revised locations to maintain minimum hole distance. One detailed hole near the splice can not be drilled as detailed due to minimum hole distance. To make up for these 3 holes, the replacement splice plates will be 8" longer to accommodate an extra column of 3 holes each at both ends. There are no interference issues with lengthening the splice plates.

Is this acceptable? A response by Monday 12/15/14 is requested

Response:

URS has no objection to the proposed repair procedure. We would recommend sealing the misdrilled holes near the box web, from the inside of the box, either by using a widened "inside" splice plate or by press fitting a slug with epoxy.
Nabil Hamadani
URS Corp.
12/11/2014

Issued By: **Date:**

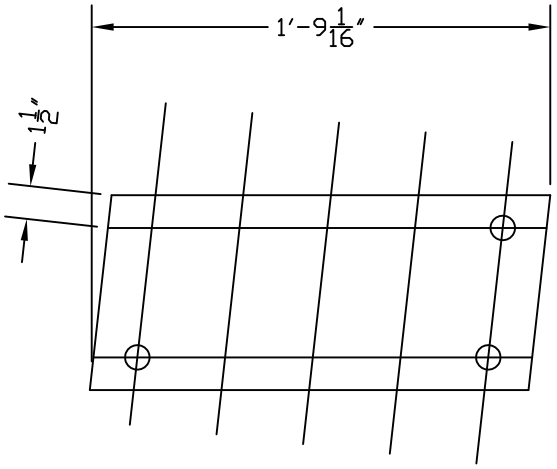

FILL PL d-FS1

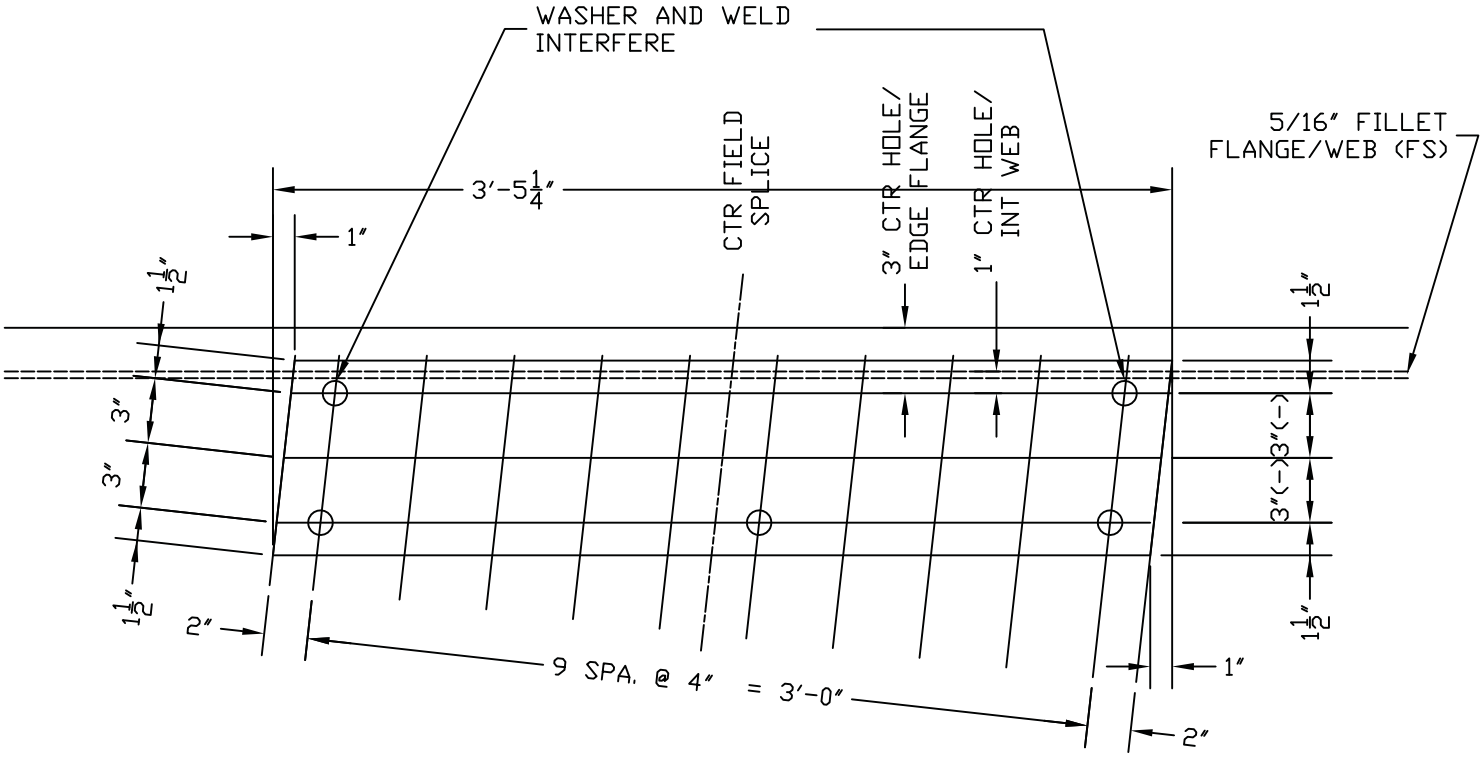

SPLICE PLATES MISLOCATED 1″ TOO CLOSE TO FLANGE EDGE, 5 HOLES DRILLED 1″ TOO CLOSE TO FLANGE EDGE BEFORE RECOGNIZED. BOLT WASHERS AT THE TOP TWO HOLES FOUL ON THE FLANGE/WEB FILLET WELD.

SPLICE PL c-FS1 (NS/FS) TOWER 4 L, SECT. 1/SECT. 2 AS DRILLED IN ASSEMBLY

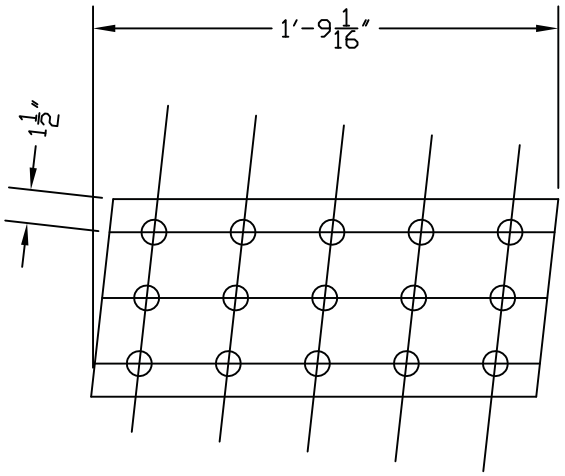

FILL PL d-FS1

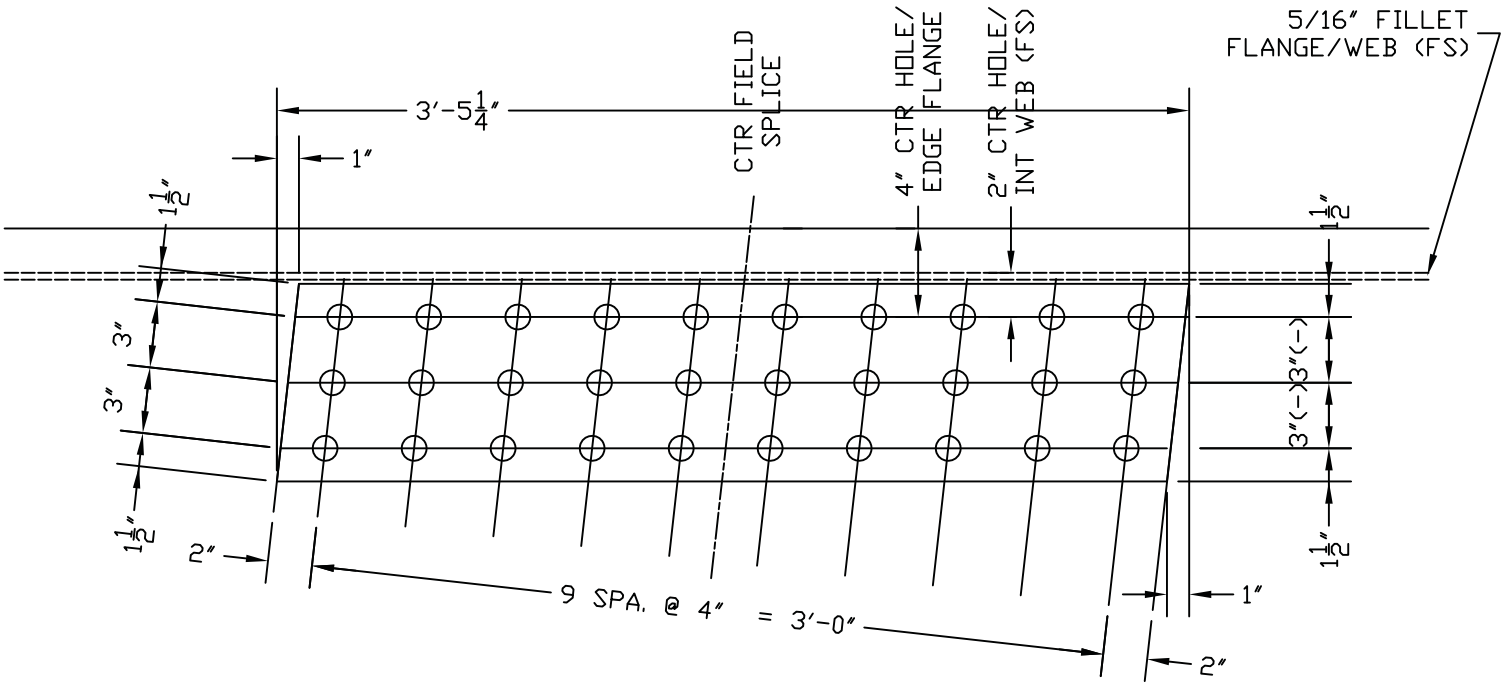

SPLICE PL c-FS1 (NS/FS)
TOWER 4 L, SECT. 1/SECT. 2
AS DETAILED IN ASSEMBLY

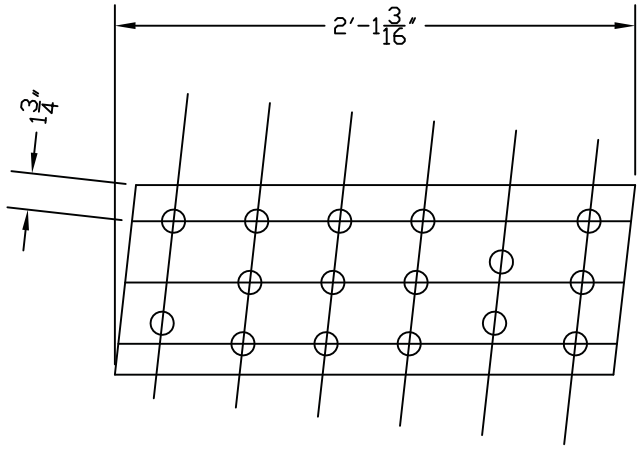

PROPOSED FILL PL d-FS1

FILL PLATE WIDENED AND LENGTHENED TO MATCH REVISED EXTERIOR SPLICE PL

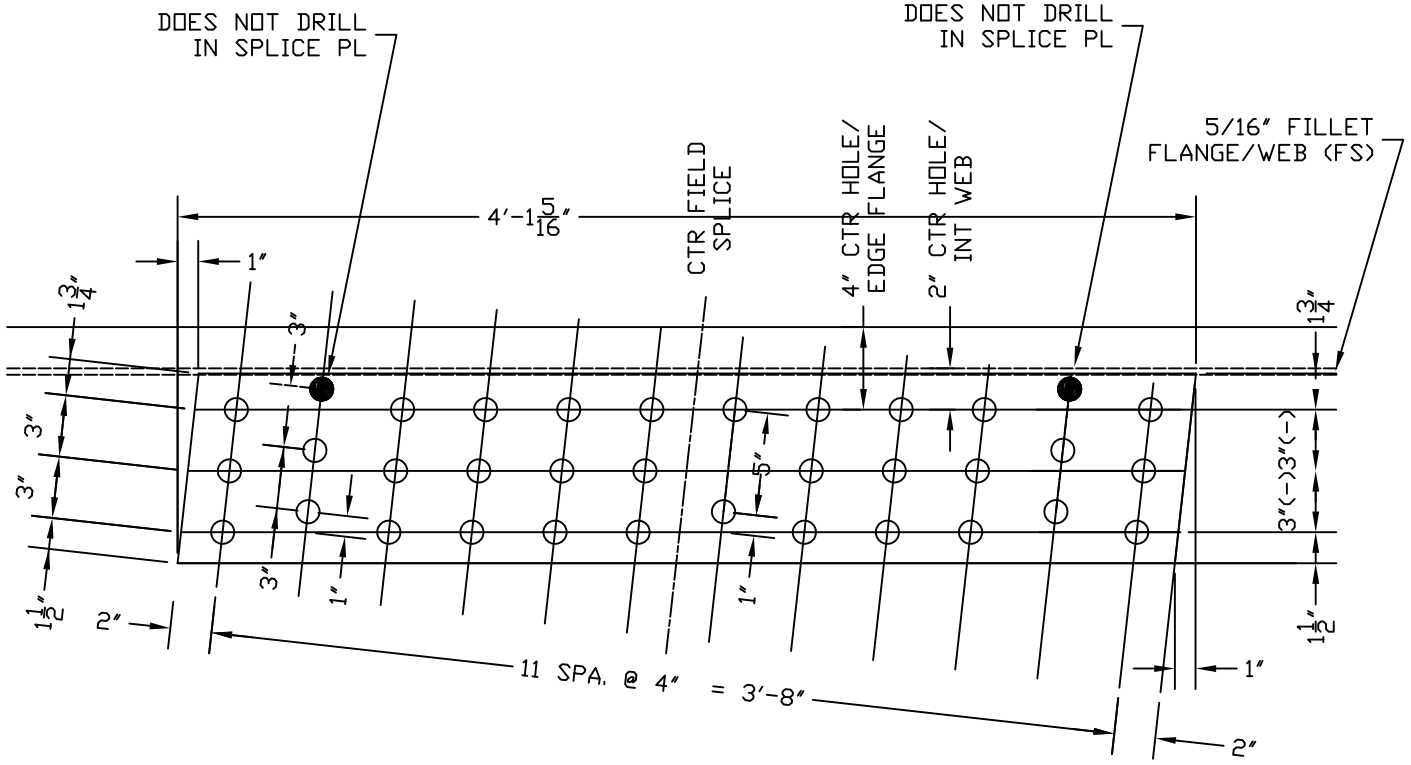

REVISED SPLICE PLATES DO NOT DRILL AT THE TWO INCORRECT HOLE LOCATIONS FILLED IN IN THE SKETCH. ONE HOLE NEAR CENTER IS NOT DRILLED DUE TO INSUFFICIENT EDGE DISTANCE CAUSED BY MISDRILLED HOLE. THE LENGTH OF THE PLATE IS INCREASED 8″ AND AN ADDITIONAL COLUMN OF HOLES IS ADDED TO BOTH ENDS TO MAKE UP FOR THESE. THE WIDTH OF THE EXTERIOR SPLICE PLATE IS INCREASED 1/4″ TO COVER MISDRILLED HOLES IN FLANGE TO SEAL FROM CONCRETE; INTERIOR SPLICE PLATE WIDTH DOES NOT CHANGE TO AVOID INTERFERENCE WITH FLANGE/WEB WELD (EDGE DISTANCE REMAINS 1-1/2″ TOP AND BOTTOM).

PROPOSED SPLICE PL c-FS1 (NS/FS) TOWER 4 L, SECT. 1/SECT. 2

TOWER 3

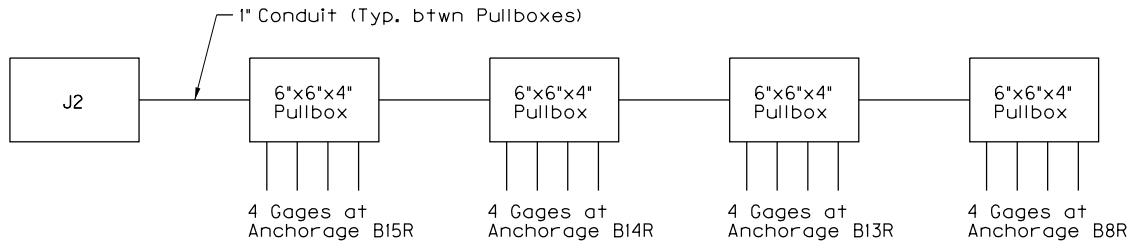

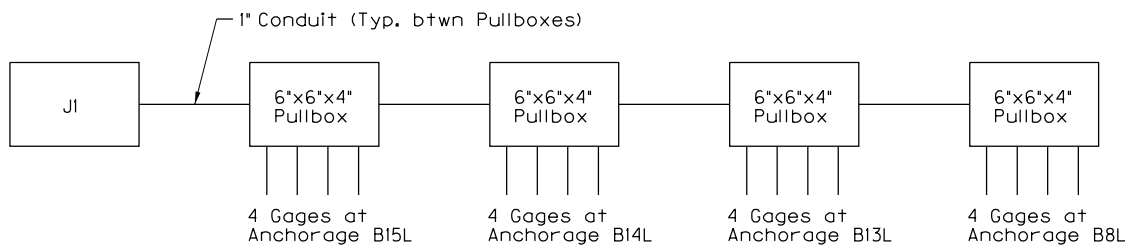

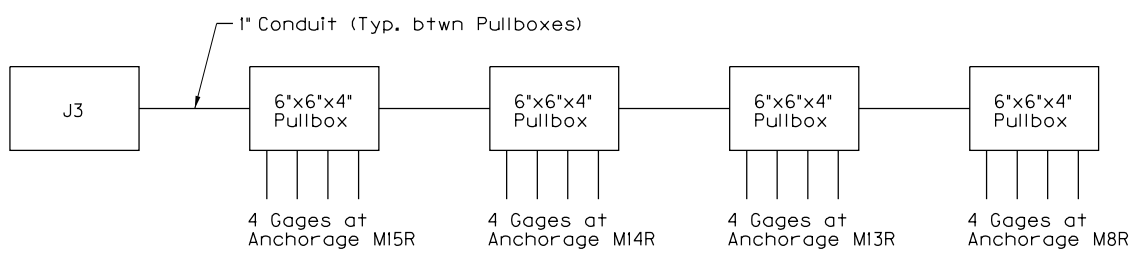

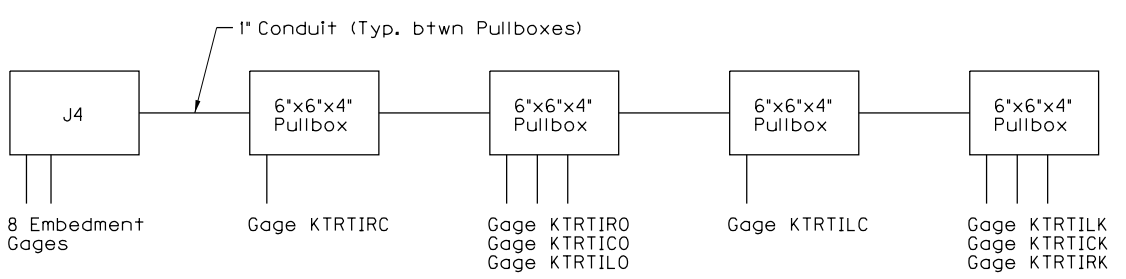

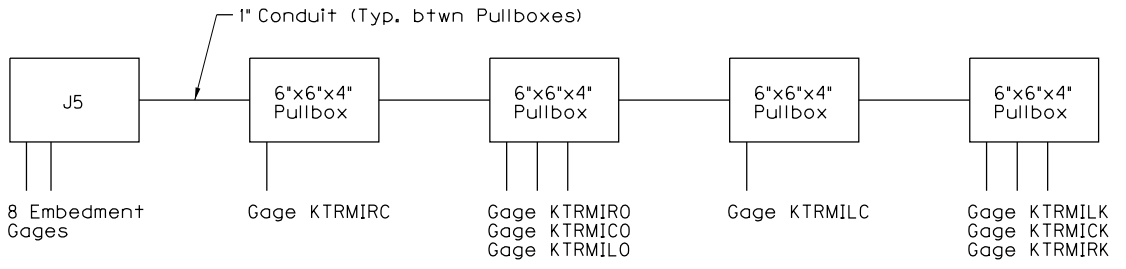

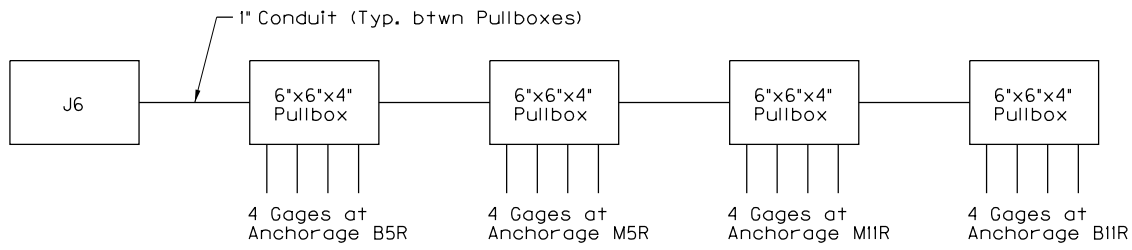

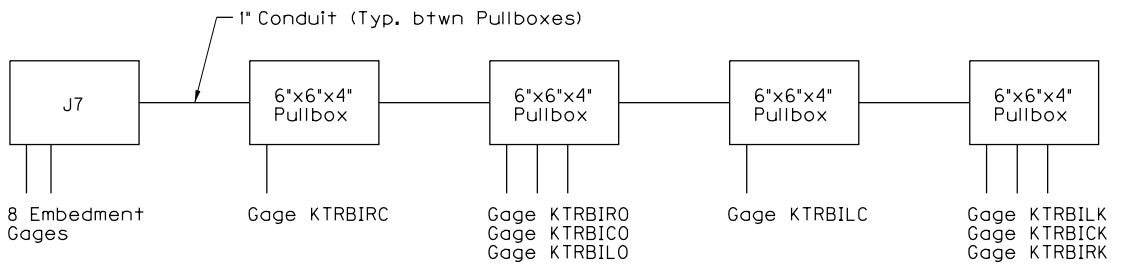

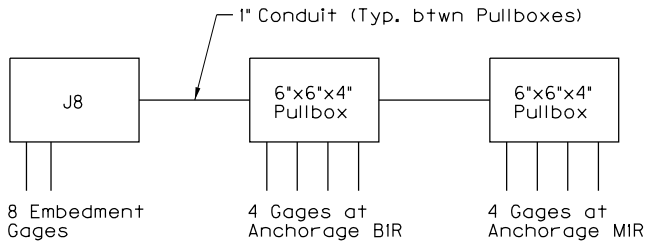

TOWER 4

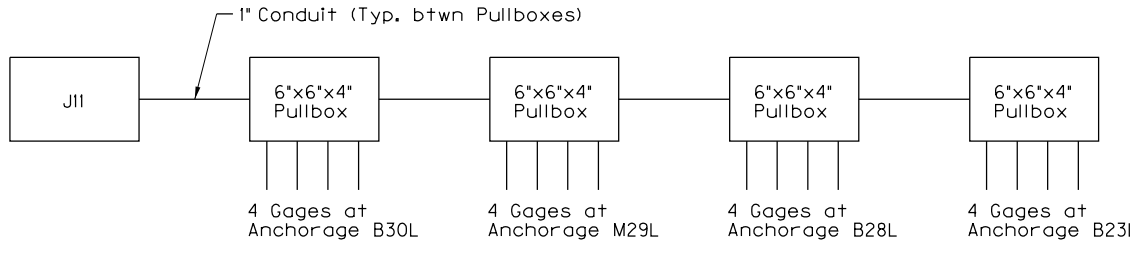

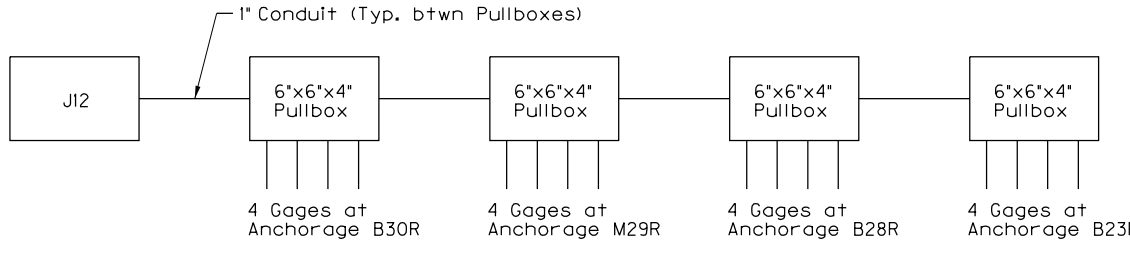

Klusman, Craig

From: Johnston, Brian (Tampa)
Sent: Friday, June 12, 2015 9:09 AM
To: 'Callicutt, Ed'
Cc: Klusman, Craig
Subject: FW: RFI F150 Pier 4 Pier Table PT Bar Failure

Ed,

Please see below for our response to RFI F150. I send our response to Craig Klusman, but his email is not working so he asked if I would forward our response to you. Please let me know if you have any questions.

Thanks,
Brian

Brian Johnston P.E.
Senior Structural Engineer
D 1-813-675-6646
brian.johnston@aecom.com

AECOM
7650 W. Courtney Campbell Cswy, Tampa, FL 33607 T 1-813-286-1711 F 1-813-287-8229 www.aecom.com

Twitter I Facebook I LinkedIn I Google+

-----Original Message-----
From: Johnston, Brian (Tampa)
Sent: Friday, June 12, 2015 8:57 AM
To: Klusman, Craig
Subject: FW: RFI F150 Pier 4 Pier Table PT Bar Failure

Craig,

We have reviewed Brayman/Finley's repair procedures (RFI F150) outlined below for the Pier 4 Pier Table PT Bar Failure and take no exception to these repair procedures. Please let me know if you have any questions.

Thanks,
Brian

Brian Johnston P.E.
Senior Structural Engineer
D 1-813-675-6646
brian.johnston@aecom.com

AECOM
7650 W. Courtney Campbell Cswy, Tampa, FL 33607 T 1-813-286-1711 F 1-813-287-8229 www.aecom.com

Twitter I Facebook I LinkedIn I Google+

-----Original Message-----
From: Callicutt, Ed [mailto:ecallicutt@figgbridge.com]
Sent: Monday, June 08, 2015 9:05 AM
To: Klusman, Craig; Baker, Travis; Johnston, Brian (Tampa)
Cc: Davidson, Brian
Subject: RFI F150 Pier 4 Pier Table PT Bar Failure

Craig...please review the proposal below that I am tracking as RFI F150. This is the Brayman proposal for addressing the left edge girder PT bar that failed during the stressing operation. (see photo for specific bar, left side edge girder, looking upstation view). Please call w/ questions, THX EWC

Edwin W. Callicutt, III, P.E.
Construction Manager
FIGG
54 South Greeno Rd.
Suite B
Fairhope, AL 36532
Ph.: (251) 929-7720
Cell: (912) 399-1569
Fax: (251) 929-7730
ecallicutt@figgbridge.com
http://www.figgbridge.com

This email and any files transmitted with it are confidential and intended solely for the use of the individual or entity to whom they are addressed. If you have received this email in error please notify the system manager. Please note that any views or opinions presented in this email are solely those of the author and do not necessarily represent those of FIGG Engineering Group. Finally, the recipient should check this email and any attachments for the presence of viruses. FIGG accepts no liability for any damage caused by any virus transmitted by this email.

-----Original Message-----
From: Tom Hesmond [mailto:t_hesmond@brayman.com]
Sent: Saturday, June 06, 2015 6:45 AM
To: Callicutt, Ed
Cc: 'Bame, Dave'; Aaron Downs
Subject: FW: Pier 4 PT Bar Failure

Ed,

Please see below for FEG's proposed repair procedure for the broken bar at Pier 4. Please note that it is Brayman's intention to leave the backspan side half of the broken bar in the duct and grout the entire duct full as part of this process. Please advise if this is acceptable.

Thanks,
Tom

-----Original Message-----
From: Jerry Pfuntner [mailto:jerry.pfuntner@finleyengineeringgroup.com]
Sent: Thursday, June 04, 2015 10:12 AM

To: Tom Hesmond
Cc: Ivan Liu
Subject: RE: Pier 4 PT Bar Failure

Tom:

This PT bar is not required for the pier table allowable stress limits, it was anchored through the pier table for Brayman's option of the stressing end, the 35 ft of embedment provided will be sufficient to anchor the PT bar force.

Please follow the repair procedure outlined below for the broken PT bar:

1. Confirm that the PT bar broke at the coupler location.
2. Re-install bar and grout PT bar within the duct.
3. Proof load bar to 280 kips.
4. Continue with segment erection as per CM.

Regards,

Bridging Challenges With Solutions®

Jerry M. Pfuntner, P.E.
Principal/Senior Bridge Engineer
1589 Metropolitan Boulevard
Tallahassee, Florida 32308-3776
Office: 850.300.7212 | Mobile: 850.933.8750
email: jerry.pfuntner@finleyengineeringgroup.com
www.finleyengineeringgroup.com
Like Us
Follow Us

P Please consider the environment before printing this e-mail.
-----Original Message-----
From: Tom Hesmond [mailto:t_hesmond@brayman.com]
Sent: Friday, May 22, 2015 2:33 PM
To: Jerry Pfuntner
Subject: Pier 4 PT Bar Failure

Jerry,

As discussed during stressing operations one bar on the left edge girder broke. All other bars in both edge girders were successfully stressed to the required force. We believe this bar broke at the coupler location which is approximately the midpoint of the pier table. Please advise.

Thanks,
Tom

Sincerely,

Thomas M. Hesmond, P.E.
Superintendent/Project Manager

Brayman Construction Corp.
Phone: 724-443-1533 ext. 50131
Fax: 740-414-4316
Cell: 412-292-3219

Confidentiality Message for Email:

PRIVILEGE AND CONFIDENTIALITY NOTICE: This electronic material and the information contained in it is intended only for the use of the individual or entity to which it is addressed and may contain information that is privileged, confidential and exempt from disclosure. If the reader of this message is not the intended recipient or an employee or agent responsible for delivering the message to the intended recipient, you are hereby notified that any dissemination, distribution or copying of this communication is strictly prohibited. If you have received this communication in error, please notify Brayman Construction Corporation immediately at 724.443.1533 or notify the sender immediately by replying to this message.

Confidentiality Message for Email:

PRIVILEGE AND CONFIDENTIALITY NOTICE: This electronic material and the information contained in it is intended only for the use of the individual or entity to which it is addressed and may contain information that is privileged, confidential and exempt from disclosure. If the reader of this message is not the intended recipient or an employee or agent responsible for delivering the message to the intended recipient, you are hereby notified that any dissemination, distribution or copying of this communication is strictly prohibited. If you have received this communication in error, please notify Brayman Construction Corporation immediately at 724.443.1533 or notify the sender immediately by replying to this message.

This e-mail and any attachments contain AECOM confidential information that may be proprietary or privileged. If you receive this message in error or are not the intended recipient, you should not retain, distribute, disclose or use any of this information and you should destroy the e-mail and any attachments or copies.

Brayman Construction Corporation
1000 John Roebling Way
Saxonburg, PA 16056
Ph. 724-443-1533
Fax 724-443-8733

Field Office
702 S. 1st Street
Ironton, OH 45638
Ph. 740-414-4315
Fax 740-414-4316

Request For Information

BCC Job #: **12-0001** Date: 8/14/2015 Author: Aaron Downs

RFI# 097 Revised

BCC# 242-000-002

Project: Bridge No. LAW-93-0.00
Ironton Russell Bridge
Lawrence County, OH
ODOT Project No. 110628

Bridge No.: LAW-93-0.00

Re: Broken Strand Evaluation

Please see attached for the revised Strand Evaluation

Thank You

Response:

Issued By:	**Date:**

FINLEY
Engineering Group, Inc.

Tendon E13 Broken Strand Evaluation

IRONTON-RUSSELL BRIDGE

OVER OHIO RIVER

PREPARED FOR:

Brayman Construction Corporation

August 2015

Rev 1

FINLEY Project No. 11-60260



1589 Metropolitan Boulevard • Tallahassee, FL 32308-3776 • (850) 894-1600 • (850) 894-1614 fax
www.finleyengineeringgroup.com

During stressing, the E13 longitudinal edge girder tendon had one strand break at a stressing force of 548 kips. The dead end was then stressed to 515 kips to maximize the final tendon fore throughout the tendon. This evaluation is for the E13 tendon containing only 11 strands, double end stressed as stated above.

Conclusion:

The analysis shows that the edge girder stresses are negligibly different and strength moment capacity remains adequate for both construction and service conditions. Based on the analysis results the E13 tendon is acceptable as an 11 strand tendon.

BRAYMAN construction corporation

1000 John Roebling Way
Saxonburg, PA 16056
PH (724) 443-1533
FAX (724) 443-8733
www.braymanconstruction.com

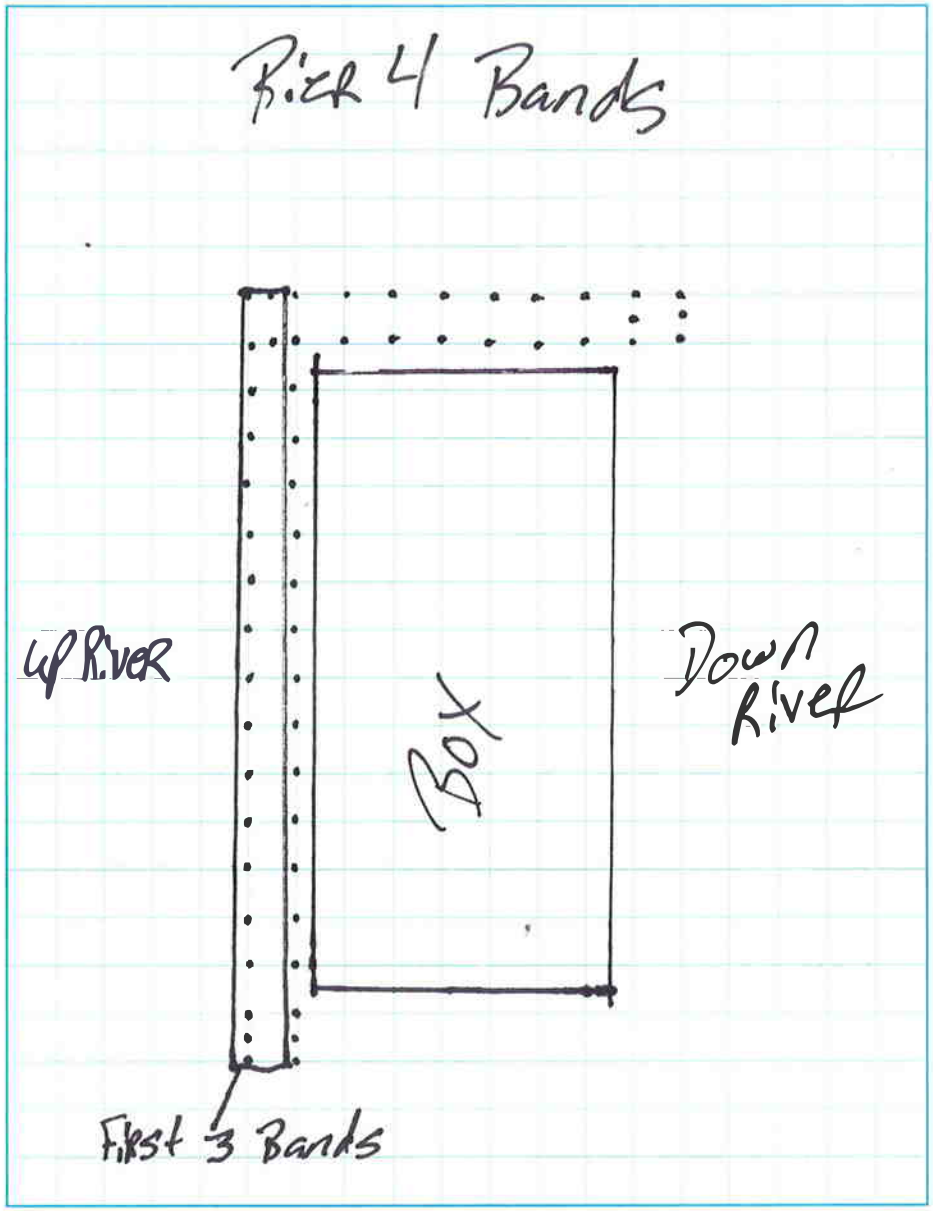

- Bridge & Concrete Structures
- Caissons
- Earth Retention Systems
- Marine Construction
- Design/Build Foundations
- Driven/Drilled Piling
- Ground Anchors
- Minipiles
- Rock & Soil Nailing

Klusman, Craig

From: Klusman, Craig
Sent: Friday, August 21, 2015 5:42 PM
To: 'Callicutt, Ed'
Subject: RE: Pier 4 Segment 12 Right

Ed - We do not take objections to FINLEY considering the anchor box as confinement to the interior longitudinal bars as described below.

Craig Klusman, PE
Structural Engineering Manager
D 1-502-217-1502
craig.klusman@aecom.com

-----Original Message-----
From: Callicutt, Ed [mailto:ecallicutt@figgbridge.com]
Sent: Friday, August 21, 2015 5:07 PM
To: Klusman, Craig
Subject: Fwd: Pier 4 Segment 12 Right

Craig...see the missive below. Thx

Edwin Callicutt, III
912.399.1569

Sent from my iPhone

Begin forwarded message:

From: Tom Hesmond <t_hesmond@brayman.com<mailto:t_hesmond@brayman.com>>
Date: August 21, 2015 at 3:38:17 PM CDT
To: "Callicutt, Ed" <ecallicutt@figgbridge.com<mailto:ecallicutt@figgbridge.com>>
Cc: "Bame, Dave" <Dave.Bame@dot.state.oh.us<mailto:Dave.Bame@dot.state.oh.us>>, Aaron Downs <a_downs@brayman.com<mailto:a_downs@brayman.com>>
Subject: FW: Pier 4 Segment 12 Right

Ed,

See below from FEG.

Thanks,
Tom

-----Original Message-----
From: Jerry Pfuntner [mailto:jerry.pfuntner@finleyengineeringgroup.com]
Sent: Friday, August 21, 2015 4:36 PM
To: Tom Hesmond

Subject: FW: Pier 4 Segment 12 Right

Tom:

As discussed, it was not clear below that FINLEY is intending for the confinement of the interior Longitudinal bars to be provided by the anchor box plate and studs that extend into the column walls. The lateral ties are per plans and remain to confine the longitudinal bars on the outside. This ensures complete confinement of this local region of the pier-column wall.

Regards,

Bridging Challenges With Solutions®

Jerry M. Pfuntner, S.E., P.E.
Principal/Senior Bridge Engineer
1589 Metropolitan Boulevard
Tallahassee, Florida 32308-3776
Office: 850.300.7212 | Mobile: 850.933.8750
email: jerry.pfuntner@finleyengineeringgroup.com<mailto:jerry.pfuntner@finleyengineeringgroup.com>
www.finleyengineeringgroup.com<http://www.finleyengineeringgroup.com>
Like Us
Follow Us

Please consider the environment before printing this e-mail.
-----Original Message-----
From: Jerry Pfuntner
Sent: Wednesday, August 19, 2015 12:01 PM
To: 'Tom Hesmond' <t_hesmond@brayman.com<mailto:t_hesmond@brayman.com>>
Subject: RE: Pier 4 Segment 12 Right

Tom:

FINLEY has reviewed the position of the relocated reinforcing bars (3 lower bands of lateral bars on one face of the column segment) as described in the sketch. FINLEY understands that the cross ties have been installed as per the shop drawings at this location.

This modification applies to Tower 4, Segment 11 only, which is not in a plastic hinge region of the column. Given that the cross ties are placed as required and that the lateral bars will provide the same shear resistance, FINLEY as no issues with the re-positioning locally of these three bars for this segment.

Regards,

Bridging Challenges With Solutions®

Jerry M. Pfuntner, S.E., P.E.
Principal/Senior Bridge Engineer
1589 Metropolitan Boulevard
Tallahassee, Florida 32308-3776
Office: 850.300.7212 | Mobile: 850.933.8750
email: jerry.pfuntner@finleyengineeringgroup.com<mailto:jerry.pfuntner@finleyengineeringgroup.com>

www.finleyengineeringgroup.com<http://www.finleyengineeringgroup.com>
Like Us
Follow Us

Please consider the environment before printing this e-mail.
-----Original Message-----
From: Tom Hesmond [mailto:t_hesmond@brayman.com]
Sent: Tuesday, August 18, 2015 3:45 PM
To: Jerry Pfuntner <jerry.pfuntner@finleyengineeringgroup.com<mailto:jerry.pfuntner@finleyengineeringgroup.com>>
Subject: Pier 4 Segment 12 Right

Jerry,

The first 3 rebar bands on one wall above the joint with segment 11 had relocated as shown on the attached sketch to avoid a conflict with the anchor box. ODOT is requesting that you confirm that the rebar is acceptable being installed as depicted on the attached.

Thanks,
Tom

-----Original Message-----
From: BESAdmin
Sent: Tuesday, August 18, 2015 3:39 PM
To: Tom Hesmond
Subject: Attached Image

Confidentiality Message for Email:

PRIVILEGE AND CONFIDENTIALITY NOTICE: This electronic material and the information contained in it is intended only for the use of the individual or entity to which it is addressed and may contain information that is privileged, confidential and exempt from disclosure. If the reader of this message is not the intended recipient or an employee or agent responsible for delivering the message to the intended recipient, you are hereby notified that any dissemination, distribution or copying of this communication is strictly prohibited. If you have received this communication in error, please notify Brayman Construction Corporation immediately at 724.443.1533 or notify the sender immediately by replying to this message.

Confidentiality Message for Email:

PRIVILEGE AND CONFIDENTIALITY NOTICE: This electronic material and the information contained in it is intended only for the use of the individual or entity to which it is addressed and may contain information that is privileged, confidential and exempt from disclosure. If the reader of this message is not the intended recipient or an employee or agent responsible for delivering the message to the intended recipient, you are hereby notified that any dissemination, distribution or copying of this communication is strictly prohibited. If you have received this communication in error, please notify Brayman Construction Corporation immediately at 724.443.1533 or notify the sender immediately by replying to this message.

Klusman, Craig

From: Johnston, Brian (Tampa)
Sent: Thursday, October 08, 2015 8:50 AM
To: 'Callicutt, Ed'; Klusman, Craig
Subject: RE: Edge Girder Spall Repair RFIF156

Ed,

We have no additional comments regarding RFI F156. Please let me know if you have any questions.

Thanks,
Brian

Brian Johnston P.E.
Senior Structural Engineer
D 1-813-675-6646
brian.johnston@aecom.com

AECOM
7650 W. Courtney Campbell Cswy, Tampa, FL 33607
T 1-813-286-1711 F 1-813-287-8229
www.aecom.com

Twitter I Facebook I LinkedIn I Google+

From: Callicutt, Ed [mailto:ecallicutt@figgbridge.com]
Sent: Thursday, October 08, 2015 8:42 AM
To: Klusman, Craig; Johnston, Brian (Tampa)
Cc: Bame, Dave
Subject: FW: Edge Girder Spall Repair RFIF156

Gentlemen…see the trail below wherein FEG states that the spall at segment M2 alluded to the captioned RFI is of no consequence with the anticipated construction loads. Please confirm this statement closes the issue. Thanks EWC

Edwin W. Callicutt, III, P.E.
Construction Manager
FIGG
54 South Greeno Rd.
Suite B
Fairhope, AL 36532
Ph.: (251) 929-7720
Cell: (912) 399-1569
Fax: (251) 929-7730
ecallicutt@figgbridge.com
http://www.figgbridge.com

This email and any files transmitted with it are confidential and intended solely for the use of the individual or entity to whom they are addressed. If you have received this email in error please notify the system manager. Please note that any views or opinions presented in this email are solely those of the author and do not necessarily represent those of FIGG Engineering Group. Finally, the recipient should check this email and any attachments for the presence of viruses. FIGG accepts no liability for any damage caused by any virus transmitted by this email.

From: Tom Hesmond [mailto:t_hesmond@brayman.com]
Sent: Thursday, October 08, 2015 8:28 AM
To: Callicutt, Ed

Cc: Aaron Downs; Dave.Bame@dot.state.oh.us
Subject: Fwd: Edge Girder Spall Repair RFIF156

Ed,

Please see below from FEG.

Thanks,
Tom

Begin forwarded message:

> **From:** Jerry Pfuntner <jerry.pfuntner@finleyengineeringgroup.com>
> **Date:** October 8, 2015 at 8:26:29 AM EDT
> **To:** Tom Hesmond <t_hesmond@brayman.com>
> **Subject: RE: Edge Girder Spall Repair**
>
> Tom:
>
> FINLEY has reviewed the repair area and proposed repair procedure and have no comments. This repair does not impact FINLEY's construction engineering – no modifications required.
>
> Regards
>
> ***Bridging Challenges With Solutions®***
>
> ---
>
> **Jerry M. Pfuntner, S.E., P.E.**
> Principal/Senior Bridge Engineer
> 1589 Metropolitan Boulevard
> Tallahassee, Florida 32308-3776
> Office: 850.300.7212 | Mobile: 850.933.8750
> email: jerry.pfuntner@finleyengineeringgroup.com
> www.finleyengineeringgroup.com
>
> Like Us Follow Us
>
> **Please consider the environment before printing this e-mail.**
>
> ---
>
> **From:** Tom Hesmond [mailto:t_hesmond@brayman.com]
> **Sent:** Thursday, September 10, 2015 8:46 AM
> **To:** Jerry Pfuntner <jerry.pfuntner@finleyengineeringgroup.com>
> **Subject:** FW: Edge Girder Spall Repair
>
> Jerry,
>
> Please see below and attached. The spalls in question happened under both edge girders at the intermediate floor beams between M1 and M2. It was caused by a problem with the form traveler design, the concrete edge girders poured up against part of the steel structure right under the intermediate floor beams. When the floor beam PT was stressed it squeezed the edge girders against the traveler and the concrete spalled as shown in the attached. Please respond to the adequacy during construction as requested by ODOT below.

Thanks,
Tom

From: Callicutt, Ed [mailto:ecallicutt@figgbridge.com]
Sent: Thursday, September 10, 2015 8:07 AM
To: Aaron Downs; Tom Hesmond
Cc: Bame, Dave
Subject: RE: Edge Girder Spall Repair

Aaron…URS has reviewed the repair procedure for the main span edge girder spall and has no comments. Under end-of-construction loadings, this section of edge girder has a capacity to demand ratio of over 2. Thus the edge girder has adequate capacity for the end-of-construction loads. Please have Finley provide an adequacy statement with respect to construction loadings for this section of edge girder. Upon ODOT receipt of the FEG statement (assuming FEG finds the construction loading to be satisfactory) the repair procedure will be acceptable.

Please work aggressively to bring closure to this issue. Thanks EWC

Edwin W. Callicutt, III, P.E.
Construction Manager
FIGG
54 South Greeno Rd.
Suite B
Fairhope, AL 36532
Ph.: (251) 929-7720
Cell: (912) 399-1569
Fax: (251) 929-7730
ecallicutt@figgbridge.com
http://www.figgbridge.com

This email and any files transmitted with it are confidential and intended solely for the use of the individual or entity to whom they are addressed. If you have received this email in error please notify the system manager. Please note that any views or opinions presented in this email are solely those of the author and do not necessarily represent those of FIGG Engineering Group. Finally, the recipient should check this email and any attachments for the presence of viruses. FIGG accepts no liability for any damage caused by any virus transmitted by this email.

From: Aaron Downs [mailto:a_downs@brayman.com]
Sent: Thursday, September 03, 2015 12:51 PM
To: Callicutt, Ed
Cc: Bame, Dave
Subject: Edge Girder Spall Repair

Ed,
Please see attached for the Edge Girder Spall Repair procedure. Please contact me if you have any questions. Thanks

Aaron Downs
Brayman Construction Corporation
Ironton Russell Bridge Project
702 South 1st St. Ironton, OH 45638
T (724) 524-0190 **F** 740 414 4316
A_Downs@Brayman.com
www.braymanconstruction.com

Confidentiality Message for Email:

PRIVILEGE AND CONFIDENTIALITY NOTICE: This electronic material and the information contained in it is intended only for the use of the individual or entity to which it is addressed and may contain information that is privileged, confidential and exempt from disclosure. If the reader of this message is not the intended recipient or an employee or agent responsible for delivering the message to the intended recipient, you are hereby notified that any dissemination, distribution or copying of this communication is strictly prohibited. If you have received this communication in error, please notify Brayman Construction Corporation immediately at 724.443.1533 or notify the sender immediately by replying to this message.

Confidentiality Message for Email:

PRIVILEGE AND CONFIDENTIALITY NOTICE: This electronic material and the information contained in it is intended only for the use of the individual or entity to which it is addressed and may contain information that is privileged, confidential and exempt from disclosure. If the reader of this message is not the intended recipient or an employee or agent responsible for delivering the message to the intended recipient, you are hereby notified that any dissemination, distribution or copying of this communication is strictly prohibited. If you have received this communication in error, please notify Brayman Construction Corporation immediately at 724.443.1533 or notify the sender immediately by replying to this message.

Main Span Edge Girder Spall Repair Procedure

1. Saw-cut the edges of the area to be repaired to provide a beveled edge for the patch.
2. Remove any latency or unsound concrete, if sound concrete is found up to and between the rebar do not remove any concrete behind the rebar.
3. Ensure substrate, including the area where additional cover is needed, is prepared to MasterEmaco N 425 (formerly Gel Patch) manufacturers recommendations and no areas are left that could potentially entrap air in the patched area.
4. Install ½" taper bolts in the spalled and additional cover areas to secure the patch to the structure. Taper bolts will be installed to a minimum depth of 2" and will be spaced a maximum of 24" apart through the entire area to be patched.
5. Apply Cretelox bonding agent to area to be patched. Be sure to follow manufacturer's recommendations.
6. Install metal lath and secure to the concrete anchors
7. Using the MasterEmaco repair material build up the area to approx. 2" cover over the rebar to meet the required profile. Be sure to follow all manufacturer's recommendations on the use of Gel Coat.
8. Cure patch as per manufacturer's recommendations.

Attachments:

- Sketch of spall and repair area


Approx. 4'-6"
Approx. 2'-6"

BASF

The Chemical Company

Technical Data Guide

3 | 03 01 00
Maintenance of Concrete

MasterEmaco® N 425

Non-sag concrete repair mortar with integral corrosion inhibitor for vertical and overhead applications

FORMERLY GEL PATCH

PACKAGING
43 lb (19.5 kg) polyethylene-lined bags

YIELD
0.43 ft^3 per 43 lb bag
(0.012 m^3/19.5 kg)

STORAGE
Store in unopened containers in a cool, clean, dry area

SHELF LIFE
12 months when properly stored

VOC CONTENT
0 g/L less water and exempt solvents

DESCRIPTION
MasterEmaco N 425 is a trowel-grade, lightweight, polymer-modified, silica fume-enhanced repair mortar with an integral corrosion inhibitor.

PRODUCT HIGHLIGHTS
- Non-sag consistency able to be placed in 2" (51 mm) thick lifts
- Readily sculpted, shaved, and finished to match existing substrate
- Very low chloride permeability and an integral corrosion inhibitor protects reinforcing steel
- Only requires the addition of potable water
- Low shrinkage produces stable, durable bond
- Lightweight microscopic beads improve vertical and overhead workability
- Polymer modification improves adhesion and provides increased freeze/thaw stability

APPLICATIONS
- Interior and exterior
- Vertical and overhead
- Above and below grade
- Spalls or holes in concrete
- Deteriorated edges

SUBSTRATES
- Concrete
- Masonry
- Structural Concrete

HOW TO APPLY

SURFACE PREPARATION

1. Substrate must be structurally sound and fully cured (28 days).
2. Saw cut the perimeter of the area being repaired into a square with a minimum depth of ¼" (6 mm).
3. The surface to be repaired must be clean, free of laitance and saturated surface-dry (SSD) following ICRI Guideline no. 310.2 to permit proper bond.

REINFORCING STEEL

1. Remove all oxidation and scale from the exposed reinforcing steel in accordance with ICRI Technical Guideline No. 310.1R.
2. For additional protection from future corrosion, coat the prepared reinforcing steel with MasterProtect P 8100 AP.

Technical Data

Composition

MasterEmaco N 425 is composed of crystalline (quartz) silica and Portland cement.

Typical Properties

PROPERTY	VALUE
Working time, min at 70° F (21° C)	20–30

Test Data

PROPERTY	RESULTS	TEST METHODS
Compressive strength, psi (MPa)		ASTM C 109, modified*
1 day	2,150 (14.8)	
7 days	5,600 (38.6)	
28 days	6,750 (46.5)	
Modulus of elasticity, psi (MPa)	5.6 x 10^5 (3,861)	ASTM C 215
Splitting tensile strength, psi (MPa)		ASTM C 496, modified* (wet cure)
1 day	310 (2.1)	
7 days	560 (3.9)	
28 days	610 (4.2)	
Flexural strength, psi (MPa)		ASTM C 348, modified*
1 day	500 (3.4)	
7 days	800 (5.5)	
28 days	1,110 (7.7)	
Bond strength, psi (MPa)		ASTM C 882, modified*
1 day	900 (6.2)	(mortar scrubbed into substrate)
7 days	1,900 (13.1)	
28 days	2,450 (16.9)	
Water absorption, %, 28 days	4	ASTM C 642
Chloride permeability, coulombs	Very low range	AASHTO T-277 (According to ASTM C 1202, table 1)
Length change, %, in/in, wet cure		ASTM C 157
1 day	+0.019	
7 days	+0.028	
28 day	+0.034	
Length change, %, in/in, dry cure*		ASTM C 157
1 day	–0.026	
7 days	–0.11	
28 days	–0.15	
Linear coefficient of thermal expansion, in/in/° F	5.3×10^{-6}	ASTM C 531
Freeze / Thaw Resistance, % RDM	98.8%	ASTM C 666 A
Scaling Resistance, lbs/ft² (kg/m²) 50 Cycles	0.0 (0.0) No Scaling	ASTM C 672

*At 50% relative humidity
Test results are averages obtained under laboratory conditions. Reasonable variations can be expected.

MIXING

1. Precondition material to 70° F ±5° (21° C ±3°) before mixing.
2. Mechanically mix at slow speed with a ¾" drill and mixing paddle.
3. Add approximately 2¾ quarts (2.6 L) of potable water into a clean mixing container. Gradually sift in powder ⅓ at a time while mixing continuously at slow speed (high speeds may entrain air). Mix for a minimum of 3 minutes to ensure a uniform, lump-free consistency. Do not exceed a total of 3 quarts (2.8 L) of mixing water per 43 lb (19.8 kg) bag.

APPLICATION

1. Dampen the surface with potable water; it must be saturated surface-dry (SSD) with no standing water.
2. With a gloved hand, scrub a small quantity of mixed material into the SSD substrate. Thoroughly key in and work the material throughout the cavity to promote bond. Do not apply more of the bond coat than can be covered with mortar before the bond coat dries.
3. Apply material in lifts of ¼–2" (6–51 mm). Avoid featheredging. For optimum mechanical bond on successive lifts, thoroughly score each lift and allow to reach initial set before the next layer is applied. Placement time is 20–30 minutes at 70° F (21° C) and 50% relative humidity.
4. Trowel, shave or shape material to the desired finish after initial set.
5. The recommended application range of MasterEmaco N 425 is from 40 to 90° F (4 to 32° C). Follow ACI 305 and 306 for hot or cold weather guidelines.

CURING

Cure with an approved water based curing compound compliant with ASTM C 309 or preferably ASTM C 1315. If the repair area will receive a coating, wet curing is recommended.

CLEAN UP

Clean tools and equipment with clean water immediately after use. Cured material must be removed mechanically.

FOR BEST PERFORMANCE

- Do not bridge moving cracks or joints.
- Do not overwork material
- Do not add plasticizers, accelerators, retarders, or other additives.
- Do not extend with aggregate.
- Bonding agents are recommended for large areas as well as permanently damp areas.
- Protect from freezing for 24 hours after application.
- For professional use only; not for sale to or use by the general public.
- Make certain the most current versions of product data sheet and SDS are being used; visit www.master-builders-solutions.BASF.us to verify the most current versions.
- Proper application is the responsibility of the user. Field visits by BASF personnel are for the purpose of making technical recommendations only and not for supervising or providing quality control on the jobsite.

HEALTH, SAFETY AND ENVIRONMENTAL

Read, understand and follow all Safety Data Sheets and product label information for this product prior to use. The SDS can be obtained by visiting www.master-builders-solutions.basf.us, e-mailing your request to basfbscst@basf.com or calling 1(800)433-9517. Use only as directed. **For medical emergencies only, call ChemTrec® 1(800)424-9300.**

LIMITED WARRANTY NOTICE

BASF warrants this product to be free from manufacturing defects and to meet the technical properties on the current Technical Data Guide, if used as directed within shelf life. Satisfactory results depend not only on quality products but also upon many factors beyond our control. BASF MAKES NO OTHER WARRANTY OR GUARANTEE, EXPRESS OR IMPLIED, INCLUDING WARRANTIES OF MERCHANTABILITY OR FITNESS FOR A PARTICULAR PURPOSE WITH RESPECT TO ITS PRODUCTS. The sole and exclusive remedy of Purchaser for any claim concerning this product, including but not limited to, claims alleging breach of warranty, negligence, strict liability or otherwise, is the replacement of product or refund of the purchase price, at the sole option of BASF. Any claims concerning this product must be received in writing within one (1) year from the date of shipment and any claims not presented within that period are waived by Purchaser. BASF WILL NOT BE RESPONSIBLE FOR ANY SPECIAL, INCIDENTAL, CONSEQUENTIAL (INCLUDING LOST PROFITS) OR PUNITIVE DAMAGES OF ANY KIND.

Purchaser must determine the suitability of the products for the intended use and assumes all risks and liabilities in connection therewith. This information and all further technical advice are based on BASF's present knowledge and experience. However, BASF assumes no liability for providing such information and advice including the extent to which such information and advice may relate to existing third party intellectual property rights, especially patent rights, nor shall any legal relationship be created by or arise from the provision of such information and advice. BASF reserves the right to make any changes according to technological progress or further developments. The Purchaser of the Product(s) must test the product(s) for suitability for the intended application and purpose before proceeding with a full application of the product(s). Performance of the product described herein should be verified by testing and carried out by qualified experts.

ChemMasters

SPE CIALTY CONSTRUCTION PRODUCTS

CRETELOX

HIGH SOLIDS AcRYUc LATEX
BONDING AGENT AND ADMIXTURE

P R O D U C T D A T A

OesaaPTION

CRETELox is e non-reemulsifiable, acrylic latex bonding agent and admixture. This high performance polymer is formulated as a bonding agent for cementitious mortars end toppings and as an admixture to site mixed or prepackaged cement based mortars including thin set cement mortars and mortar beds.

USES

- CRe:n:LOx is used in place of all or a portion of the mixing water to improve the phsical properties of any cement mix.
- Performance enhancing admixture for stucco, cement plaster, cementIdous toppings and overlays, prepackaged mortar or site mix mortars
- Cyclically damp environments, food processing plants, weterstorage facilitl es, swimming pools
- Polymer modified concrete (PMC) for bridge decks and white toppings

ADvANrAGm

- Forms permanent, positive chemical and mechanical bond to sound surfaces
- Improves the compressive, tensile, flexural and bond strength of any cement or mortar mix
- Increases abrasion end impact resistance
- Improves chemical resistance to fertilizers, acids and alkalies
- Aids in controlling shrinkage cracking
- Reduces pennaabtty for excellent freeze-thaw resistmce
- Deepens and enhances colored mortars, resists fading and is non-yellowing under UV exposure
- Higher quality polymer has no strong ammonia odor
- Significantly reduces chloride ion penetration to protect reinforcing steel from corrosion

TECHNICAL DATA

Meets the requirements of ASTM C-1059, Type II, Standard Specification for Latex Agents for Bonding Fresh to Hardened Concrete when tested in accordance with ASTM C-1042.

PHYSICAL PROPERTIES OF PORTLAtl> C'EMEHT #SAND MoRrAR Mix

TEST	TEST ME1HDD	WATER ONLY	112 CRETEL.OX*
Compressive Strength	ASTM C-109		
28 days - psi		3,650	4,000
Tensle Strength	ASlM C-190		
28 days - psi		24()	420
Flexural Strength	ASTMC-348		
28 days - psi		680	1,025
Shear Bond Strength	ASTMC-1042		
14 days - psi		1,500	2,850

- 112. of 1he water used in the mortar mix replaced wi1h Cretelox

PACKAOINB

CRETELOX is packaged in 55 U.S. gallon (208lter) drums, 5 gallon (18.9 liter) pails and in 1 gallon (3.8lter} plastic jugs (packed 4 per case).

ESTIMATINO GUDE

Usage of Cretelox depends on the application

- For use as a bonding agent
  200-250 sqft per gallon (5-6 Ml/liter)
- For producing scrub coats before patches and overlay
  replace 100% of the water witti Cretelox
- /Vs an admixture for prepackaged mixes or site monars
  replace 25-100% of lhe water wi1h Cretelox

DIRECTIONS

M1x1NG: Gently shake or slfr CRETELOX before using. If using Cretelox as an admixture, determine the amount of water normally required for the prepackaged mortar or site mix. Calculate the percent of Cret81ox for water replacement to be used for the situation and blend the appropriate amount of Cretelox end water together first to achieve the proper total mixing liquid required. Always add dry cement or mortar mix to liquid to reduce lumps.

As an admixture for packaged or ste mix mortars, use CRETELOX to replace 25% to 100% of the normal water required. Cement based masonry coaUngs or other thin mortars endtoppings may be mixed with CRETELOX alone for optimum adhesion and durability.

HORIZONTAL REPAIRS: Replace 50% of the normal water with Cretelox. Mix and piece es usual. Over working or over trowelling surface may cause blisters or peeling.

VERTICAL AND OVERHEAD REPAIRS: Replace 50%-75% Of the normal water wittl CRETELOX. Place as usual. Best results ere obtained if repairs ere made in 0.5 inch (1.25 cm) lifts. A stiff mix Is easier to place.

CEMENT PLASTER Ce1u111Gs: Use 100% CRETELOX as the mixing llquid. Build up in thin coats of 0.25 inches (0.62 cm) but do not exceed 0.5inches {1.25 cm) in depth.

MORTAR .Beos: Use CRETELOX as 100% of the mixing liquid. Mix mortar to asemkfry consistency and apply over a slurry bondcoat (see above)

THN SET MXES: Use CRETELQX as 100% of the mixing liquld. Mix mortar to a creamy consistency

T1LE GRour: Use CRETELOX as 100% of the mixing lquid for industrial or exterior applications. For other applcations, CRETELox should make up 50% of the mixing liquid. Mix in mortar to a smooth, but stiff consistency

BONDJNG AGENT APPLICATION: Apply CRETELOX at a rate of 200-250 Ft^2 per gallon (>6 M^2 per liter) with a garden type sprayer or solvent resistant roller. Place fresh concrete or mortar while Cretelox is wet.

BoNONG SRY APPIICATION: {Preferred method) Use CRETELOX as 100% of the mixing lfquid. Siurry should have the consistency of pancake batter. Apply to substrate with a stiff bristle brush, working bond coat inlD voids, cracks and comers. Place repair mortar or topping while slurry is wet or damp.

CuRJNCI

When CRETELOX modified concrete is exposed to rapid drying conditions due to lgh temperaturs, rapid air movement or wind, it is recommended that the surface be covered with wet burlap to retain moisture. For normal use, allow a 24 hour curing period. For heavy wheeled traffic, allow a 4 day curing period.

CLEANUP

Clean tods and eqipment mmedately with water. Cured material will require mechanical removal

STawz:

Store tighUy sealed containers at room ternperature. Keep from freezing. If CRETELOX freezes, allow it to thaw normally at room temperature. SheHlife of properly stored materials one yea r from date of manufacture.

LMTATIONI

- Do not use with air entraining agents or other admixtures.
- Do not apply when the surface or air temperature is, or is expected to go, below 40D F (4°C). Do not apply to frozen or frost filled surfaces.
- Overworking or over trowelhg surface may cause blisters or delaminations.
- Donotseal surface with solvent based products. Orgenic solvents of high solvency power (xylene, toluene, lacquer thinner, etc.} will soften the surface f spills are not removed quickly.
- Do not use as a bonding agent h eiderior applications unless es part of e slurry application

CN.nue

May cause skin, eye end respatory tract irritation. Do not take internally. Keep out of reach of chtdren.

All label precautions end MSDS must be fulty understood before using this product.

Thi• Product Is Formulared and Labeled tor Industrial and Cammerc/a/ *Uae Oflly*
RJRlIEST Ri;slJl.TSANO SAFEST USAGE USER IS *SPECIACALLY DEC1CD 10cav81A.T*
THECURRENT"47ERIALSAR:TYOA SHEET ANOA'CKAOcl.AllCL.FOR *THIS PROOUCT*

W.....nra....pnidIJCU1D....laa,,,

Clark Dietrich.
IUIL.OI HG SYSTE.MS

Products > Metal Lath / Accessories > Metal Lath

DIAMOND MESH LATH

A GALVANIZED EXPANDED STEEL PLASTER/STUCCO BASE

A superior multi-purpose expanded steel base widely used for interior and exterior plaster and stucco reinforcement. The ff at surface is easily cut and formed for use with flat or contoured surfaces. It is an excellent base for stone, spray on structural fireproofing. ornamental work, and under ceramic tile. Expanded metal lath is formed from sheet steel that has been slit and expanded to form thousands of plaster "keys" per square yard. Its time proven exceptional strength and flexibility makes it the preferred metal base requested by contractors and design professionals.

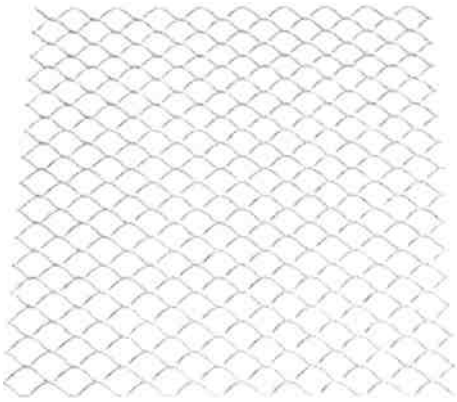

Diamond mesh metal lath is available with *or* without a Grade-D Hphalt paper-backing breather sheet.

Proclucl Da ta & Ordering lnform•tion

Material: G-60 Galvanized Steel
Packaged: 50 bundles or 500 pieces per pallet

Finish	Weight per Scf. ycl.	Sheet Size	Pcs./Bdl.	Yds./Bdl.	Ycls./P1llet
Galv.	2.5 lbs.	*I'l" x 91'*	10	20	1000
Galv.	3.4.lbs.	27" x 97'	10	20	1000

ASTM 6 Code Stanchrtb:

- Material: ASfM C847
- Installation: C1063 (exterior), ASTM C841 (interior) and EMLA-920
- ICC-ES ESR-2698 & ESR-2161
- MSDS & Product Certification Information

2013Oarkwestern Dietrich Building Systems LLC

Taper Bolt®



Taper Bolt®



THE FIRST IS STILL THE SIMPLEST, THE STRONGEST AND MOST VERSATILE

Available Materials

- Grade 5, zinc plated
- Other metals and finishes are available by special quote
- Eye bolt version available by special quote

Features/Advantages

- Required hole diameter equals anchor diameter
- Variation in hole size can be accommodated by turning the expander nut
- Equipment may be removed and replaced. The bolt is simply re-inserted and torqued to obtain original holding power (the nut stays in the hole)
- Bolt can be removed and re-used with a new nut after cleaning and lubricating the threads
- Strength – the highest shear strength of any expansion anchor
- Withstands vibratory loads
- Works in a bottomless hole

Concerns

- Do not use in brick or block

Approvals/Listings

- Tested by Pittsburgh Testing Laboratory PG-2170
- Contact customer service for approvals/ listings for state D.O.T.'s



Made in USA

Order Detail

							Ultimate Tensile & Shear Loads in Lbs.					
							3000 P.S.I.		5000 P.S.I.			
Order Code Grade 5 Hex Hd. Bolt	Anchor Dia. & Length	Hole Dia.	Min. Embed.	Required Torque to set (ft. lbs.)	Head Size	Required Head Clearance	Tension (lbs.)	Shear (lbs.)	Tension (lbs.)	Shear (lbs.)	Box Qty.	Master Qty
3420000	3/8" x 2-1/4"	3/8"	1-7/8"	40	9/16"	3/16"	4,030	7,177	4,987	8,567	50	400
3421000	3/8" x 2-5/8"	3/8"	1-7/8"	40	9/16"	3/16"	4,030	7,177	4,987	8,567	50	400
3422000	3/8" x 3"	3/8"	1-7/8"	40	9/16"	3/16"	4,030	7,177	4,987	8,567	50	400
3423000	3/8" x 4"	3/8"	1-7/8"	40	9/16"	3/16"	4,030	7,177	4,987	8,567	50	400
3430000	1/2" x 2-7/8"	1/2"	2-3/8"	90	3/4"	1/4"	8,165	12,177	9,346	15,217	25	200
3431000	1/2" x 4"	1/2"	2-3/8"	90	3/4"	1/4"	8,165	12,177	9,346	15,217	25	200
3432000	1/2" x 5"	1/2"	2-3/8"	90	3/4"	1/4"	8,165	12,177	9,346	15,217	20	100
3440000	5/8" x 3-1/2"	5/8"	2-7/8"	125	15/16"	5/16"	9,990	17,030	10,470	17,257	20	75
3441000	5/8" x 4-1/2"	5/8"	2-7/8"	125	15/16"	5/16"	9,990	17,030	10,470	17,257	25	75
3442000	5/8" x 6"	5/8"	2-7/8"	125	15/16"	5/16"	9,990	17,030	10,470	17,257	25	75
3443000	5/8" x 7"	5/8"	2-7/8"	125	15/16"	5/16"	9,990	17,030	10,470	17,257	25	75
3450000	3/4" x 4-1/8"	3/4"	3-3/8"	250	1-1/8"	7/16"	11,906	27,916	17,073	28,110	20	60
3451000	3/4" x 5-1/2"	3/4"	3-3/8"	250	1-1/8"	7/16"	11,906	27,916	17,073	28,110	20	60
3452000	3/4" x 7"	3/4"	3-3/8"	250	1-1/8"	7/16"	11,906	27,916	17,073	28,110	15	45
3453000	3/4" x 8"	3/4"	3-3/8"	250	1-1/8"	7/16"	11,906	27,916	17,073	28,110	15	45
3460000	1" x 5-5/8	1"	4-5/8"	550	1-1/2"	5/8"	28,263	36,257	30,817	38,487	10	30
3461000	1" x 6-3/4"	1"	4-5/8"	550	1-1/2"	5/8"	28,263	36,257	30,817	38,487	10	30
3462000	1" x 7-1/4"	1"	4-5/8"	550	1-1/2"	5/8"	28,263	36,257	30,817	38,487	10	20

Additional Nuts

Order Code	Size	Box Quantity	Master Quantity
3420200	3/8"	100	3,000
3430200	1/2"	50	600
3440200	5/8"	50	400
3450200	3/4"	50	400
3460200	1"	10	120

Installation

1 Drill hole the same diameter as the Taper-Bolt using fixture as a template.
2 Clean hole of debris.
3 Drive Taper-Bolt into place leaving recommended head clearance. If hole is oversized simply remove and pre-expand the expander nut to fit hole.
4 Tighten Taper-Bolt to recommended torque.
5 For big jobs, set Taper-Bolt with an impact wrench. This method offers speed, consistency and greater installer productivity.

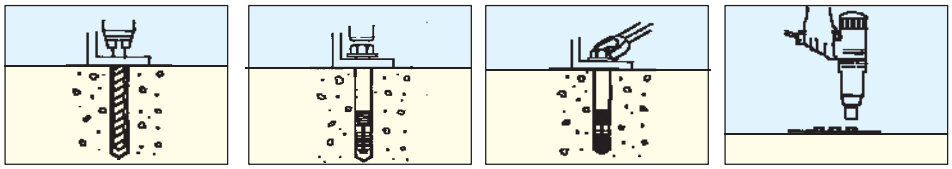

Brayman Construction Corporation
1000 John Roebling Way
Saxonburg, PA 16056
Ph. 724-443-1533
Fax 724-443-8733

Field Office
702 S. 1st Street
Ironton, OH 45638
Ph. 740-414-4315
Fax 740-414-4316

Request For Information

BCC Job #: **12-0001** Date: 9/23/2015 Author: Dustin Williamson

RFI# 099

BCC# 244-000-000

Project: Bridge No. LAW-93-0.00
Ironton Russell Bridge
Lawrence County, OH
ODOT Project No. 110628

Bridge No.: LAW-93-0.00

Re: OH Abutment Footer Cut To Accommodate MSE Wall Coping

Per plan sheet 379/788 the top of the pre-cast panel coping is at 555.50. The coping then wraps around the corner at that elevation underneath a notch out in abutment footer see 699/788 (Attached). The elevation for the top of the notch out is 555.08, which is 5 inches too low to allow for the coping in this area.

Brayman proposes to cut into the notch out area of the OH Abutment footer 8 inches vertically and 6 inches wide along the entire 6 foot length of the footer, rebar in this affected area will be cut. We will then apply a 2 inch thick grout pad along the horizontal and vertical faces of the cut area to cover any exposed rebar. The vertical cut will allow for the 2 inch grout pad as well as 1 inch of PEJF and the 5 inches of elevation difference. The width of the cut will allow for the 2 inch grout pad as well as 2 inches of PEJF and 2 inches of concrete beneath the footer. The horizontal coping on the MSE wall in this area will be 5 inches thick with 2 inches beneath the footer, and the remaining 3 inches sticking out past the the abutment footer on the mural wall side. Additional rebar will be added to the coping in this area with sufficient coverage.

The horizontal coping will run an additional 3 inches past its normal ending location see marked up plan sheet 699/788 attached for clarification. The vertical coping on the MSE wall side will be built per plan, this will create a 3 inch lip where the horizontal coping meets in this area, see attached marked up plan sheet 699/788.

Thank You

Response:

Issued By:	**Date:**

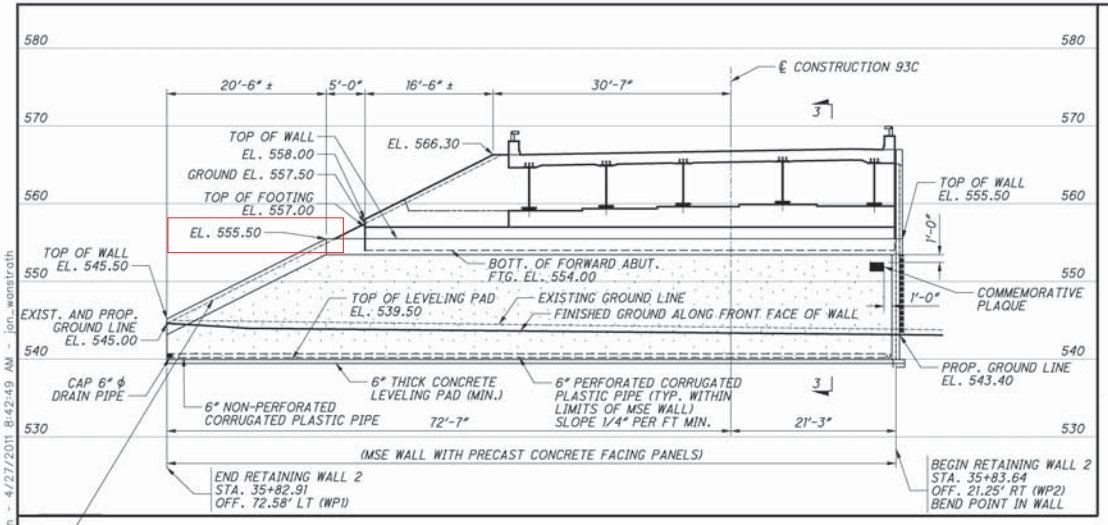

ELEVATION - RETAINING WALL 2

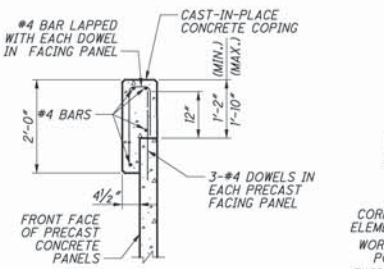

COPING DETAIL

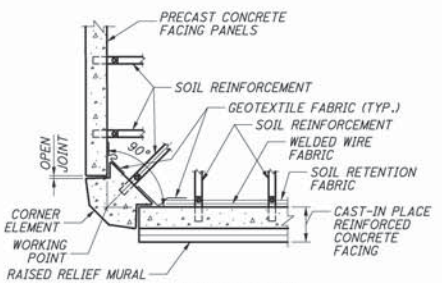

CORNER ELEMENT DETAIL

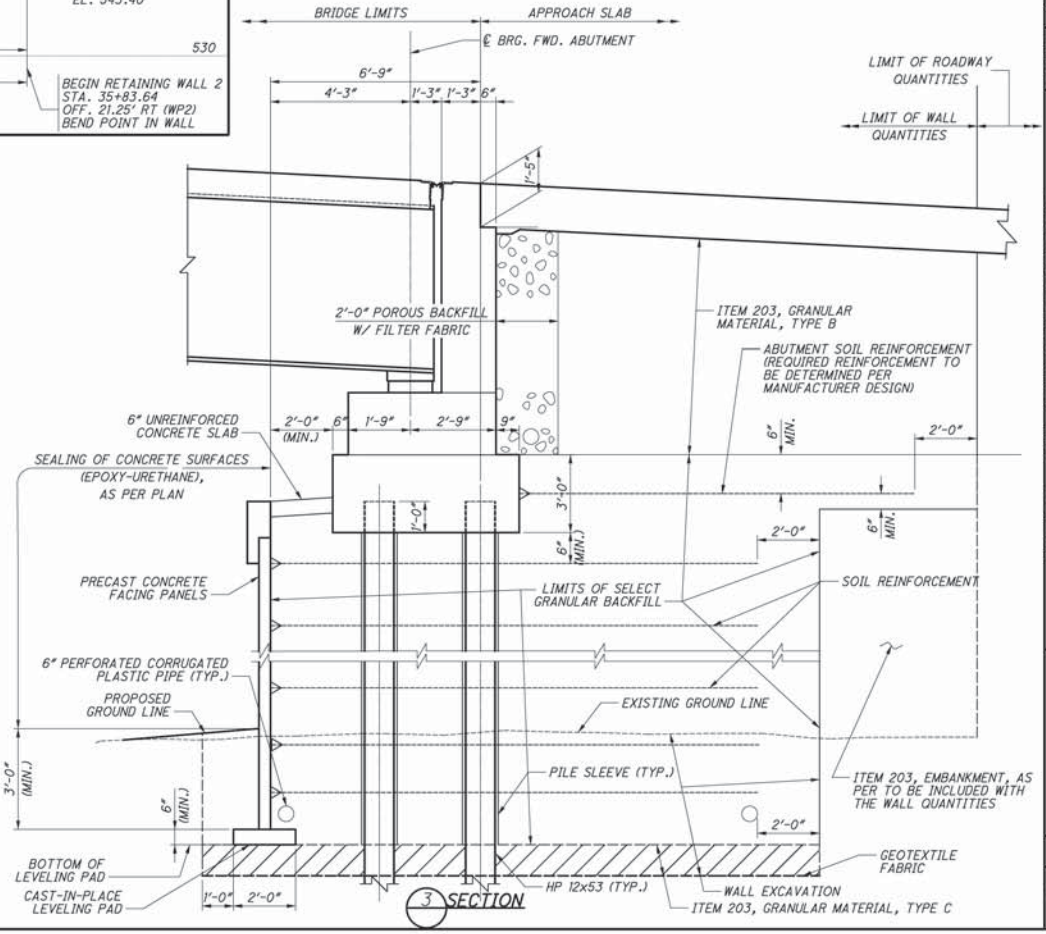

3 SECTION

NOTES

1. ALL STATIONS, OFFSETS & WORKING POINTS ARE REFERENCED TO BACK FACE OF WALL PANELS.
2. FOR DRAINAGE DETAILS, SEE SHEET 10/17.

DESIGN AGENCY
URS
36 EAST 7TH STREET
SUITE 2200
CINCINNATI, OHIO 45202

REVIEWED RWB
DATE 02-21-2011
STRUCTURE FILE NUMBER 4401263

DRAWN CJW
REVISED

DESIGNED BKL
CHECKED MJZ

MSE WALL - WALL 2 ELEVATION AND SECTION
BRIDGE NO. LAW-93-0000
IRONTON RUSSEL BRIDGE OVER OHIO RIVER

LAW-93-0.00
PID No. 81595

9 / 17

379
788

J:\Project\OY\ODOT\15005112 Ironton Russell\LAW\81595\structures\LAW093_11TFC\sheets\MSE Wall Plans\81595_001WE002.dgn - 4/27/2011 8:42:49 AM - jon_wonstroth

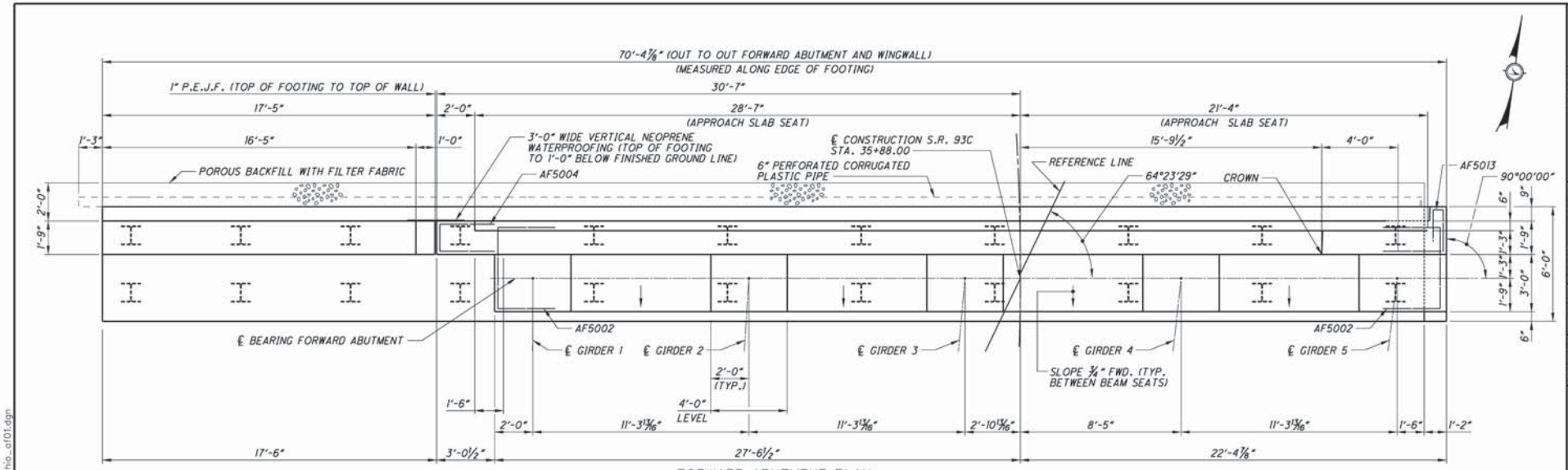

FORWARD ABUTMENT PLAN

MINIMUM LAP LENGTHS	
BAR SIZE	LENGTH
NO. 5	2'-9"
NO. 6	3'-4"
NO. 8	5'-6"

UNLESS NOTED OTHERWISE

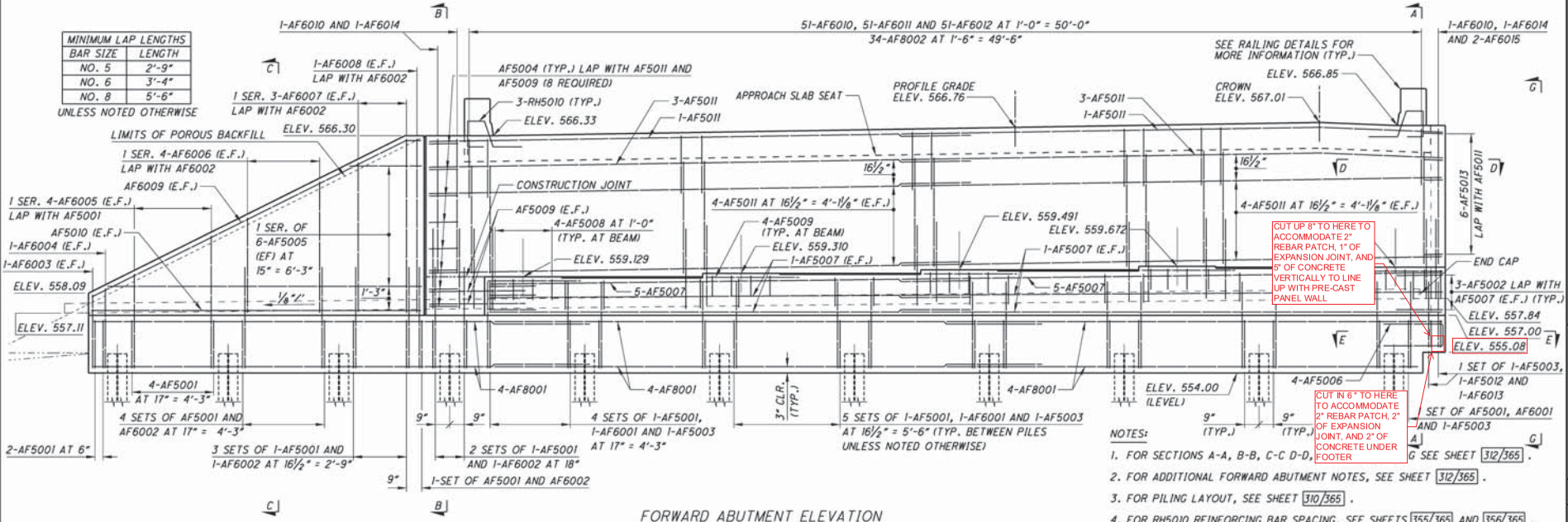

FORWARD ABUTMENT ELEVATION

NOTES:

1. FOR SECTIONS A-A, B-B, C-C D-D, G SEE SHEET 312/365 .
2. FOR ADDITIONAL FORWARD ABUTMENT NOTES, SEE SHEET 312/365 .
3. FOR PILING LAYOUT, SEE SHEET 310/365 .
4. FOR RH5010 REINFORCING BAR SPACING, SEE SHEETS 355/365 AND 356/365 .
5. FOR LIGHTING CONDUIT PENETRATION, SEE SHEETS 278/788 AND 275/788 .

DESIGN AGENCY
URS
36 EAST 7TH STREET SUITE 2000 CINCINNATI, OHIO 45202

DESIGNED	DRAWN	REVIEWED	DATE
JJB	ALH/JJB	JTH	06-11-10
CHECKED	REVISED	STRUCTURE FILE NUMBER	
TES		4401263	

OHIO APPROACH - FORWARD ABUTMENT DETAILS (1 OF 2)
BRIDGE NO. LAW-93C-0000
IRONTON RUSSELL BRIDGE OVER OHIO RIVER

LAW-93-0.00
PID No. 81595

311/365
698/788

J:\Project\OV\000T\15005112 Ironton Russell\LAW\81595\structures\LAW093_111TC\sheets\Ohio Approach\093_0000_Ohio_ap01.dgn

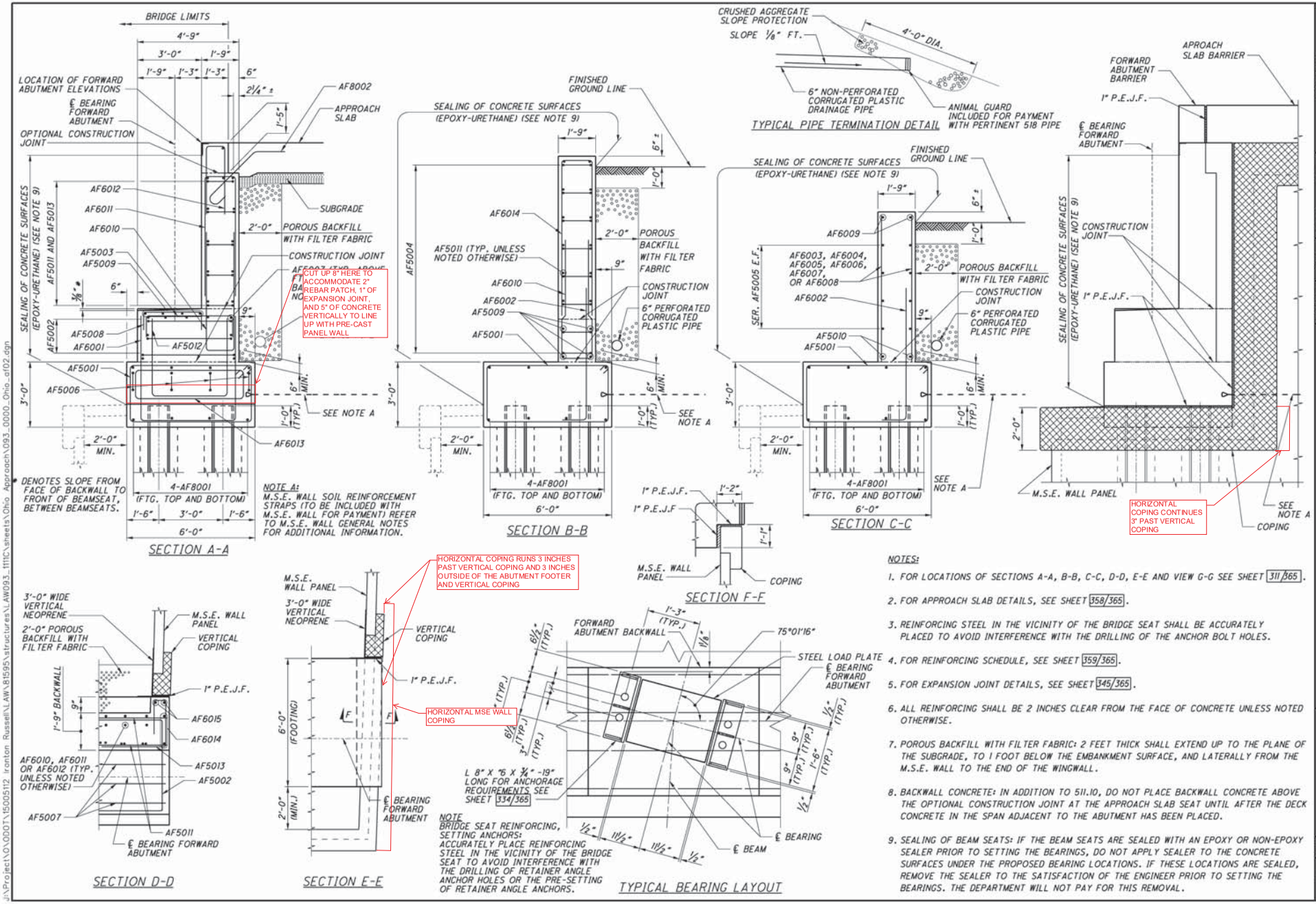

NOTES:

1. FOR LOCATIONS OF SECTIONS A-A, B-B, C-C, D-D, E-E AND VIEW G-G SEE SHEET 311/365.
2. FOR APPROACH SLAB DETAILS, SEE SHEET 358/365.
3. REINFORCING STEEL IN THE VICINITY OF THE BRIDGE SEAT SHALL BE ACCURATELY PLACED TO AVOID INTERFERENCE WITH THE DRILLING OF THE ANCHOR BOLT HOLES.
4. FOR REINFORCING SCHEDULE, SEE SHEET 359/365.
5. FOR EXPANSION JOINT DETAILS, SEE SHEET 345/365.
6. ALL REINFORCING SHALL BE 2 INCHES CLEAR FROM THE FACE OF CONCRETE UNLESS NOTED OTHERWISE.
7. POROUS BACKFILL WITH FILTER FABRIC: 2 FEET THICK SHALL EXTEND UP TO THE PLANE OF THE SUBGRADE, TO 1 FOOT BELOW THE EMBANKMENT SURFACE, AND LATERALLY FROM THE M.S.E. WALL TO THE END OF THE WINGWALL.
8. BACKWALL CONCRETE: IN ADDITION TO 511.10, DO NOT PLACE BACKWALL CONCRETE ABOVE THE OPTIONAL CONSTRUCTION JOINT AT THE APPROACH SLAB SEAT UNTIL AFTER THE DECK CONCRETE IN THE SPAN ADJACENT TO THE ABUTMENT HAS BEEN PLACED.
9. SEALING OF BEAM SEATS: IF THE BEAM SEATS ARE SEALED WITH AN EPOXY OR NON-EPOXY SEALER PRIOR TO SETTING THE BEARINGS, DO NOT APPLY SEALER TO THE CONCRETE SURFACES UNDER THE PROPOSED BEARING LOCATIONS. IF THESE LOCATIONS ARE SEALED, REMOVE THE SEALER TO THE SATISFACTION OF THE ENGINEER PRIOR TO SETTING THE BEARINGS. THE DEPARTMENT WILL NOT PAY FOR THIS REMOVAL.

DESIGN AGENCY: URS, 36 EAST 7TH STREET SUITE 2200 CINCINNATI 45202

DESIGNED	DRAWN	REVIEWED	DATE
JJB	ALH/JJB	JTH	06-11-10
CHECKED	REVISED	STRUCTURE FILE NUMBER	
TES		4401263	

OHIO APPROACH - FORWARD ABUTMENT DETAILS (2 OF 2)
BRIDGE NO. LAW-93C-0000
IRONTON RUSSELL BRIDGE OVER OHIO RIVER

LAW-93-0.00
PID No. 81595

312/365

699/788

J:\Project\OY\000T\150051\2 Ironton Russell\LAW\81595\structures\LAW093_111TC\sheets\Ohio Approach\093_0000_Ohio_a102.dgn

Brayman Construction Corporation
1000 John Roebling Way
Saxonburg, PA 16056
Ph. 724-443-1533
Fax 724-443-8733

Field Office
702 S. 1st Street
Ironton, OH 45638
Ph. 740-414-4315
Fax 740-414-4316

Request For Information

BCC Job #: **12-0001** Date: 10/6/2015 Author: Dustin Williamson

RFI# 100

BCC# 245-000-000

Project: Bridge No. LAW-93-0.00
Ironton Russell Bridge
Lawrence County, OH
ODOT Project No. 110628

Bridge No.: LAW-93-0.00

Re: MSE Wall Mural Expansion Joint

As with the first expansion joint, the second formliner expansion joint and the second joint in the 3' section of wall do not line up, the joint in the formliner lands approximately 2'-6" ahead of where the existing joint in the 3' section of wall is (See Attached). In lieu of cutting in a new expansion joint per the previously approved repair at the first expansion joint, Brayman proposes to fill in the expansion joint slot in the formliner (using Bondo as a patch recommended by the manufacturer) in its current location and then cut into the formliner to match the existing 3' wall expansion location. At this proposed location, the relocated expansion joint will have minimal effect on the mural wall relief. Please see the attached drawing for reference.

Please advise if this proposed change is acceptable.

Thank You

Response:

Issued By:	**Date:**

BRAYMAN construction corporation
Innovative Solutions Since 1947

Drawn By: Dustin Williamson

Date: 10/5/15 | Scale:NTS

Mural Wall

Notes:

Brayman Construction Corporation
1000 John Roebling Way
Saxonburg, PA 16056
Ph. 724-443-1533
Fax 724-443-8733

Field Office
702 S. 1st Street
Ironton, OH 45638
Ph. 740-414-4315
Fax 740-414-4316

Request For Information

BCC Job #: **12-0001** Date: 12/16/2015 Author: Dustin Williamson

RFI# 103

BCC# 248-000-000

Project: Bridge No. LAW-93-0.00
Ironton Russell Bridge
Lawrence County, OH
ODOT Project No. 110628

Bridge No.: LAW-93-0.00

Re: Pier 4 Ladder and Platform Anchorages

It has recently come to our attention that it will be a 4 month lead time to receive more of the stainless steel sleeve anchors used when installing the permanent ladders and platforms inside the tower legs. Due to the lengthy lead time, Brayman formally requests the use of 304 Stainless Steel, 5/8" diameter threaded rod in conjunction with the previously approved A7 epoxy to continue installing the ladders and platforms. Using a 5/8" diameter threaded rod with the A7 epoxy with a minimum of 5-5/8" drill depth results in a 6,625 lb. allowable tension load based on the adhesive bond strength in 4,000 psi. concrete (see attached chart). The 6,625 lb. allowable tension load exceeds the 5,000 lb. tension safe working capacity set by Special Provisions for Ladders, Platforms, and Access Doors. Where the 5-5/8" drill depth is not achievable, we will use the remainder of the previously approved stainless sleeve anchors.

If this change is acceptable Brayman will proceed as explained above.

Thank You

Response:

Issued By:	**Date:**

PERFORMANCE TABLE

A7
Acrylic Adhesive

Allowable Tension Loads[1] for Threaded Rod Installed in Solid Concrete

THREADED ROD DIA. In. (mm)	DRILL HOLE DIAMETER In. (mm)	MIN. EMBEDMENT DEPTH In. (mm)	ALLOWABLE TENSION LOAD BASED ON ADHESIVE BOND STRENGTH				ALLOWABLE TENSION LOAD BASED ON STEEL STRENGTH					
			2000 PSI (13.8 MPa) CONCRETE Lbs. (kN)		4000 PSI (27.6 MPa) CONCRETE Lbs. (kN)		ASTM A307 (SAE 1018) Lbs. (kN)		ASTM A193 GR. B7 (SAE 4140) Lbs. (kN)		ASTM F593 AISI 304 SS Lbs. (kN)	
3/8 (9.5)	7/16 (11.1)	1-1/2 (38.1)	—	—	934	(4.2)	2,080	(9.3)	4,340	(19.3)	3,995	(17.8)
		3-3/8 (85.7)	1,460	(6.5)	2,740	(12.2)	2,080	(9.3)	4,340	(19.3)	3,995	(17.8)
		4-1/2 (114.3)	1,930	(8.6)	2,915	(13.0)	2,080	(9.3)	4,340	(19.3)	3,995	(17.8)
1/2 (12.7)	9/16 (14.3)	2 (50.8)	—	—	1,505	(6.7)	3,730	(16.6)	7,780	(34.6)	7,155	(31.8)
		4-1/2 (114.3)	2,700	(12.0)	4,290	(19.1)	3,730	(16.6)	7,780	(34.6)	7,155	(31.8)
		6 (152.4)	3,550	(15.8)	4,340	(19.3)	3,730	(16.6)	7,780	(34.6)	7,155	(31.8)
5/8 (15.9)	11/16 (17.5)	2-1/2 (63.5)	—	—	1,832	(8.2)	5,870	(26.1)	12,230	(54.4)	11,250	(50.0)
	or	5-5/8 (142.9)	4,100	(18.3)	6,625	(29.5)	5,870	(26.1)	12,230	(54.4)	11,250	(50.0)
	3/4 (19.1)	7-1/2 (190.5)	4,685	(20.8)	7,345	(32.7)	5,870	(26.1)	12,230	(54.4)	11,250	(50.0)
3/4 (19.1)	13/16 (20.6)	3 (76.2)	—	—	2,158	(9.6)	8,490	(37.8)	17,690	(78.7)	14,860	(66.1)
	or	6-3/4 (171.5)	4,655	(20.7)	7,430	(33.1)	8,490	(37.8)	17,690	(78.7)	14,860	(66.1)
	7/8 (22.2)	9 (228.6)	5,980	(26.6)	9,430	(42.0)	8,490	(37.8)	17,690	(78.7)	14,860	(66.1)
7/8 (22.2)	15/16 (23.8)	3-1/2 (88.9)	—	—	3,413	(15.2)	11,600	(51.6)	25,510	(113.5)	20,835	(92.7)
	or	7-7/8 (200.0)	—	—	11,230	(49.9)	11,600	(51.6)	25,510	(113.5)	20,835	(92.7)
	1 (25.4)	10-1/2 (266.7)	9,220	(41.0)	12,080	(53.7)	11,600	(51.6)	25,510	(113.5)	20,834	(92.7)
1 (25.4)	1-1/16 (27.0)	4 (101.6)	—	—	4,067	(18.1)	15,180	(67.5)	31,620	(140.7)	26,560	(118.1)
	or	9 (228.6)	8,050	(35.8)	12,050	(53.6)	15,180	(67.5)	31,620	(140.7)	26,560	(118.1)
	1-1/8 (28.6)	12 (304.8)	11,515	(51.2)	15,985	(71.1)	15,180	(67.5)	31,620	(140.7)	26,560	(118.1)
1-1/4 (31.8)	1-5/16 (33.3)	5 (127.0)	—	—	5,460	(24.3)	23,800	(105.9)	49,580	(220.6)	34,670	(154.2)
	or	11-1/4 (285.8)	11,490	(51.1)	14,175	(63.1)	23,800	(105.9)	49,580	(220.6)	34,670	(154.2)
	1-3/8 (34.9)	15 (381.0)	15,550	(69.2)	21,095	(93.8)	23,800	(105.9)	49,580	(220.6)	34,670	(154.2)

1 Use lower value of either bond or steel strength for allowable tensile load.

WEST END ELECTRIC CO., *Incorporated*

SERVING THE TRI-STATE AREA SINCE 1924

ELECTRICAL CONTRACTORS
640 SECOND STREET -:- PORTSMOUTH, OHIO 45662
OHIO LICENSE NO. 16489
KY LICENSE NO. CE31606

Phone (740) 354-8671
Fax (740) 353-5145

www.WestEndElectricCo.com

January 21, 2016

BRAYMAN CONSTRUCTION CORPORATION
Attn. Mr. Tom Hesmond
702 – South First Street
Ironton, Ohio 45638

Re.: Ohio Abutment Deflection Fittings
LAW-93.00 Ironton-Russell Bridge
ODOT Project No. 110628

Mr. Hesmond,

We have a concern with the ODOT detail on drawing 278/788 calling for 6" sleeves to be installed over the embedded portion of the deflection fittings in the barrier walls at the Ohio abutment. This detail is shown for thicker walls and we don't have a concern with the abutment walls shown in these details. Our concern is with ODOT requiring us to use this same detail for conduits in the barrier walls at the Ohio abutment. The barrier wall is only 16" thick and a 6" sleeve takes up a lot of room in the wall. One of the barrier walls has 1ea. 1" conduit and the barrier wall on the other side has 1ea. 1" conduit and 2ea. 2" conduits. We're especially concerned with installing 3ea. 6" sleeves in a 16" thick barrier wall. With the amount and spacing of the rebar inside of these barrier walls, installation of each of these 6" sleeves will require some of the rebar steel to be cut out or modified.

I would like to propose that we install a section of foam rubber insulation over the embedded section of the deflection fittings instead of the 6" sleeve. The thickness of the foam rubber could be ¾" to 1". This would allow enough movement for the deflection fitting and at the same time, lessen the volume of space these 6" sleeves would take up. These deflection fittings only allow up to ¾" movement for misalignment anyway, and the amount of space the foam rubber insulation would provide would be more than enough for movement.

Re.: Ohio Abutment Deflection Fittings
LAW-93.00 Ironton-Russell Bridge
ODOT Project No. 110628

If this option is not acceptable, we will probably have to go with the detail of exiting the conduits from the barrier walls on each side of the expansion, and install flexible liquid-tight conduit loops outside of the barrier walls with junction boxes on each side of the expansion, on both sides of the roadway; similar to what we are doing at the bridge expansions at piers 2 and 5.

Your consideration in this matter is greatly appreciated.

If you have any questions, please feel free to call me at 740-354-8671.

Sincerely,

West End Electric Co., Inc.

Miles Ferguson
President

Brayman Construction Corporation
1000 John Roebling Way
Saxonburg, PA 16056
Ph. 724-443-1533
Fax 724-443-8733

Field Office
702 S. 1st Street
Ironton, OH 45638
Ph. 740-414-4315
Fax 740-414-4316

Request For Information

BCC Job #: **12-0001** Date: 4/19/16 Author: Dustin Williamson

RFI# 106

BCC# 253-000-000

Project: Bridge No. LAW-93-0.00
Ironton Russell Bridge
Lawrence County, OH
ODOT Project No. 110628

Bridge No.: LAW-93-0.00

Re: Scruton Number Revision

Please see the attached letter from VSL. Brayman is requesting the Scruton number for damper design be lowered to 5 for the reasons stated in the attached request from VSL.

Please advise if this would be acceptable.

Thank You

Response:

Issued By:	**Date:**

structural TECHNOLOGIES

A Structural Group Company

VSL

April 15, 2016

Mr. Thomas Hesmond, P.E.
Superintendent/Project Manager
Brayman Construction Corp.
1000 John Roebling Way
Saxonburg, PA 16056

RE: Guide Pipe Alignment

Dear Tom,

As previously discussed, we have been reviewing the guide pipe alignment issues for Ironton Russell and are working on recommendations.

The contract drawing damping notes (contract plan sheet 619 of 788, note 10) for this project requires a Scruton number (Sc) or the mass-damping parameter of 10 to be used in damper design. This value was based on older design related parameters associated with smooth circular stay pipe.

Based on other more recent projects and current industry specifications (PTI 6th Edition, Recommendations for Stay Cable Design, Testing, and Installation – PTI DC45.1-12) we request approval from the engineer to utilize a revised value for the Scruton number. Since current stay pipe utilizes a helical rib along the free length, most projects allow a Scruton number of 5. Ironton Russell utilizes helical rib stay pipe and therefore may be allowed to utilize the lesser value.

If you need additional information, please give me a call.

Sincerely,

Eric M. Sommer, P.E.
Vice President of Operations
VStructural, LLC

Brayman Construction Corporation
1000 John Roebling Way
Saxonburg, PA 16056
Ph. 724-443-1533
Fax 724-443-8733

Field Office
702 S. 1st Street
Ironton, OH 45638
Ph. 740-414-4315
Fax 740-414-4316

Request For Information

BCC Job #: **12-0001** Date: 9/25/2017 Author: Dustin Williamson

RFI# 118

BCC# 278-000-000

Project: Bridge No. LAW-93-0.00
Ironton Russell Bridge
Lawrence County, OH
ODOT Project No. 110628

Bridge No.: LAW-93-0.00

Re: Pier Table Shear Key Ramps

Per previous discussions with the Department, Brayman was made aware the area in front of each tower access door (4 locations, above pier table shear keys) were not constructed per the plans with a 0 to 2.5" "ramp" extending from the top of the edge girder to the bottom of the access door block-out (see attached Detail 1 on Sheet 622/788). To accomplish this "ramp", Brayman proposes to bush hammer the area to provide a better surface for grout to bond to, install 1/4" SS anchors with SS wire mesh for reinforcement, and form and pour back (with gel patch) the "ramps" to closer resemble the plan sheet. Where the ramp starts at the edge girder, we plan on taking down the concrete approximately 1-1/2". This proposed fix is similar to what was accepted on Pier 2, just on a smaller scale. The patches will be re-painted following the fix.

Please let us know if the proposed is acceptable and we will proceed. Your timely review is greatly appreciated.

Thank You.

Response:

AECOM does not object to the proposed repair scheme with the following changes: 1) Maintain a minimum patch depth repair of 1 1/2" by removing the appropriate "wedge" of existing concrete. 2) Follow the applicable procedures and material specifications provided in the "Pier 2 Spall Repair Procedure (Rev)".

Issued By: Enency Jean-Mary	**Date:** 10/2/17

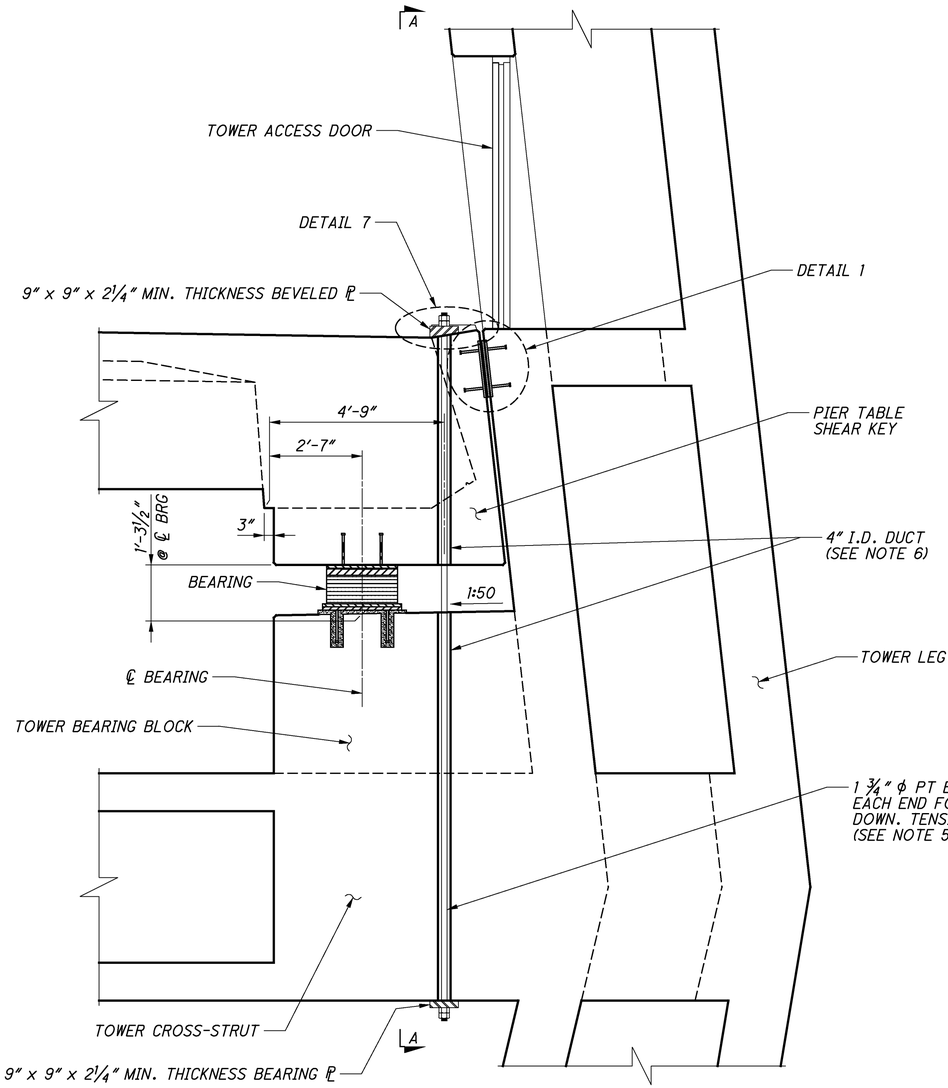

SECTION AT ℄ TOWER 3

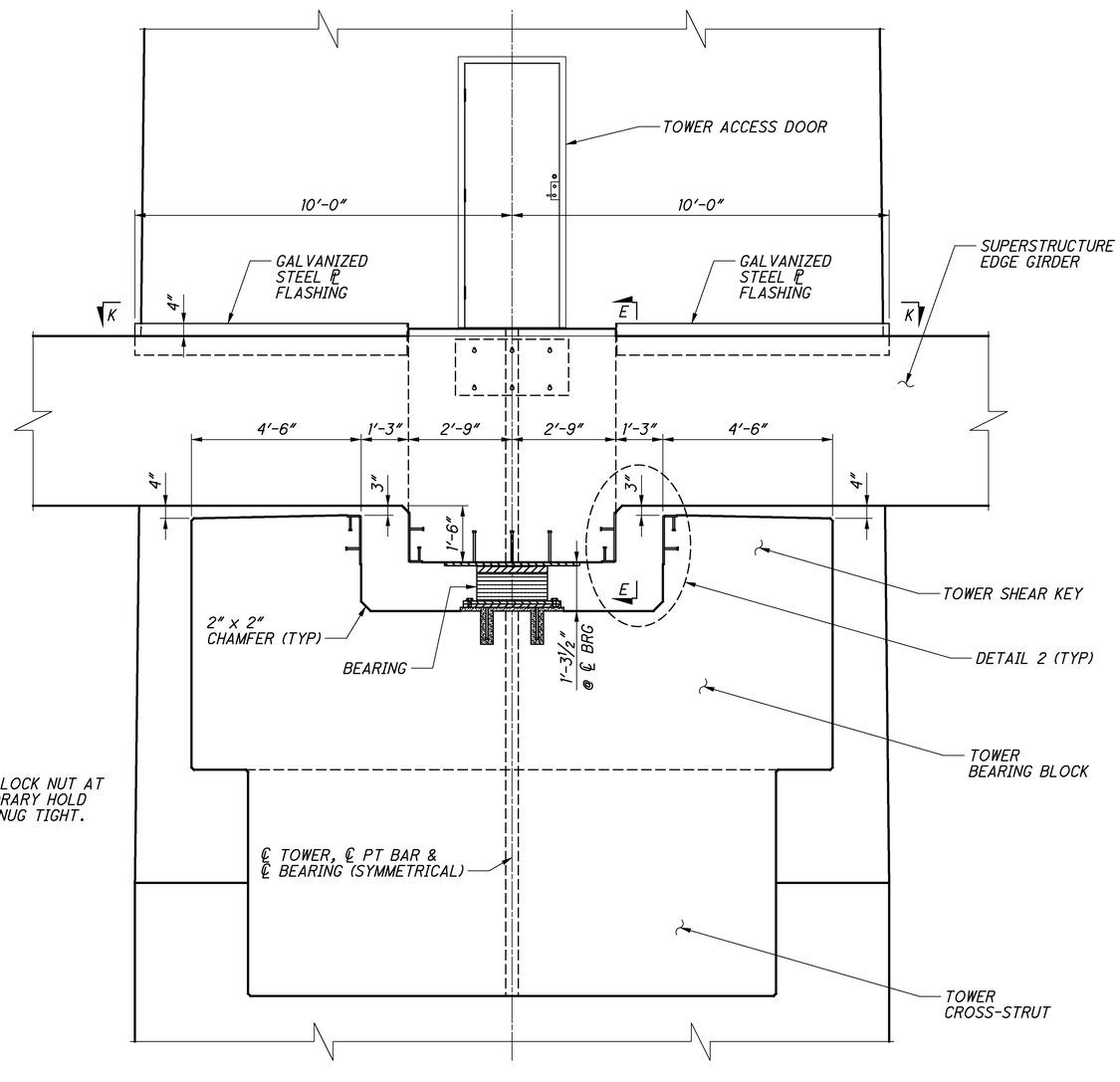

SECTION A-A (TOWER 3)

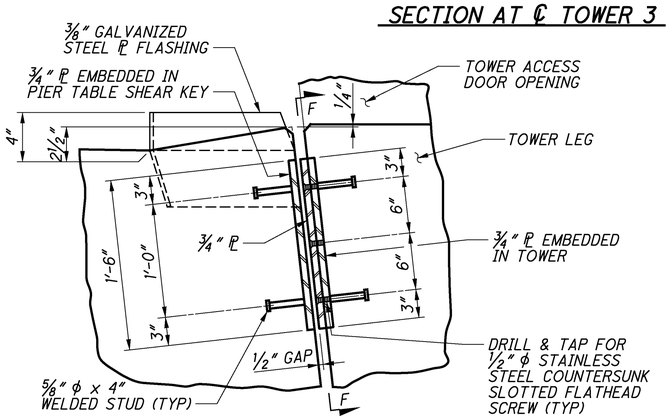

DETAIL 1 (TOWER 3 & 4)

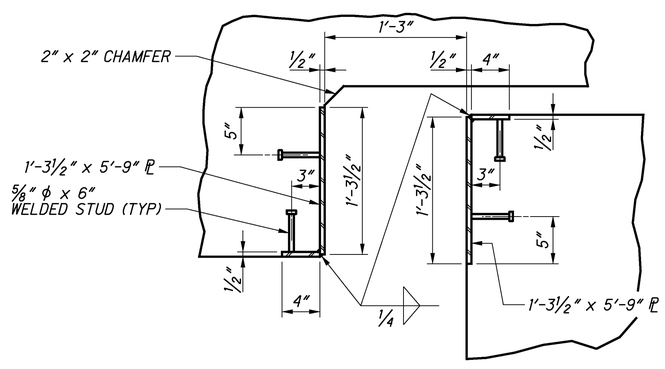

DETAIL 2 (TOWER 3)

NOTES

1. PLATES EMBEDDED IN TOWER LEG AND SUPERSTRUCTURE SHEAR KEY SHALL BE STAINLESS STEEL TYPE 316. WELDED STUDS SHALL BE STAINLESS STEEL.
2. SHIM TO ¼" NOMINAL GAP AT UNCOMPRESSED SIDE. SHIM TO BEAR AT COMPRESSED SIDE. A TEMPORARY GAP OF ⅛" IS ALLOWABLE DURING CONSTRUCTION TO FACILITATE INSTALLATION OF SHIM PACK BEARING PLATES. SEE ERECTION SEQUENCE DRAWINGS.
3. ⅜" STAINLESS STEEL ADHESIVE ANCHOR WITH 3" MIN. EMBEDMENT INSTALLED IN STRICT ACCORDANCE WITH MANUFACTURERS RECOMMENDATIONS.
4. FOR ADDITIONAL SECTIONS AND DETAILS, SEE SHEET NOS. 236/365 THRU 238/365
5. POST-TENSIONING BAR SHALL BE REMOVED PRIOR TO JACKING SUPERSTRUCTURE LONGITUDINALLY BEFORE CLOSURE POUR. SEE ERECTION SEQUENCE DRAWINGS.
6. ALL DUCTS SHALL BE GROUTED AFTER REMOVAL OF PT BAR.
7. THE COST OF GALVANIZED STEEL FLASHING PLATE, BOLTS AND INSTALLATION SHALL BE CONSIDERED INCIDENTAL TO THE MAIN SPAN SUPERSTRUCTURE CONCRETE.
8. COST OF STAINLESS STEEL PLATES EMBEDDED IN TOWER LEGS AND SUPERSTRUCTURE SHEAR KEY, INCLUDING BOLTS AND INSTALLATION, SHALL BE CONSIDERED INCIDENTAL TO THE MAINSPAN SUPERSTRUCTURE CONCRETE.

DESIGN AGENCY
URS
36 EAST 7TH STREET
SUITE 2300
CINCINNATI, OHIO 45202

DESIGNED	DRAWN	REVIEWED	DATE
BTC	CER	DLJ	6/2010
CHECKED	REVISED	STRUCTURE FILE NUMBER	
BWJ		4401263	

PIER TABLE SHEAR KEY GEOMETRY (1 OF 4)
BRIDGE NO. LAW-93-0000
IRONTON RUSSELL BRIDGE OVER OHIO RIVER

LAW-93-0.00
PID No. 81595

235/365

622
788

E:\Bridges_XM\Ironton_Russell\LAW\81595\structures\LAW093_0000C\sheets\093_0000CPI005.dgn 4/25/2011 10:23:41 AM john_stahl

Pier 2 Spall Repair Procedure (Rev)

1. Saw-cut the edges of the area to be repaired to provide a square edge for the patch.
2. Remove any latency or unsound concrete, if sound concrete is found up to and between the rebar do not remove any concrete behind the rebar.
3. Ensure substrate, including the area where additional cover is needed, is prepared to Gel Coat manufacturers recommendations and no areas are left that could potentially entrap air in the patched area.
4. Install ½" drop in anchors w/S.S. bolts in the spalled and additional cover areas to secure the patch to the structure. Anchors will be installed to a minimum depth of 2" and will be spaced a maximum of 24" apart through the entire area to be patched.
5. Apply Cretelox bonding agent to area to be patched. Be sure to follow manufacturer's recommendations.
6. Using the Gel Coat repair material build up the area to approx. 1" cover over the rebar. Be sure to follow all manufacturer's recommendations on the use of Gel Coat.
7. Install screed boards on the outside edges of the patch to fill/finish too.
8. Install S.S. lath and secure to the concrete anchors
9. Continue to build up the patch with Gel Coat until the required 3" cover is met.
10. Cure patch as per manufacturer's recommendations.

Attachments:

- Sketch of spall and repair area
- Concurrence from FEG
- Data sheets on the proposed repair materials

BRAYMAN construction corporation
1000 John Roebling Way Saxonburg, PA 16056
(724) 443-1533 FAX (724) 443-8733

Project Ironton Russell SR
Subject P2 Spall Limits
Prepared By T. M. H. Approved By
Date Sheet No. of

www.braymanconstruction.com

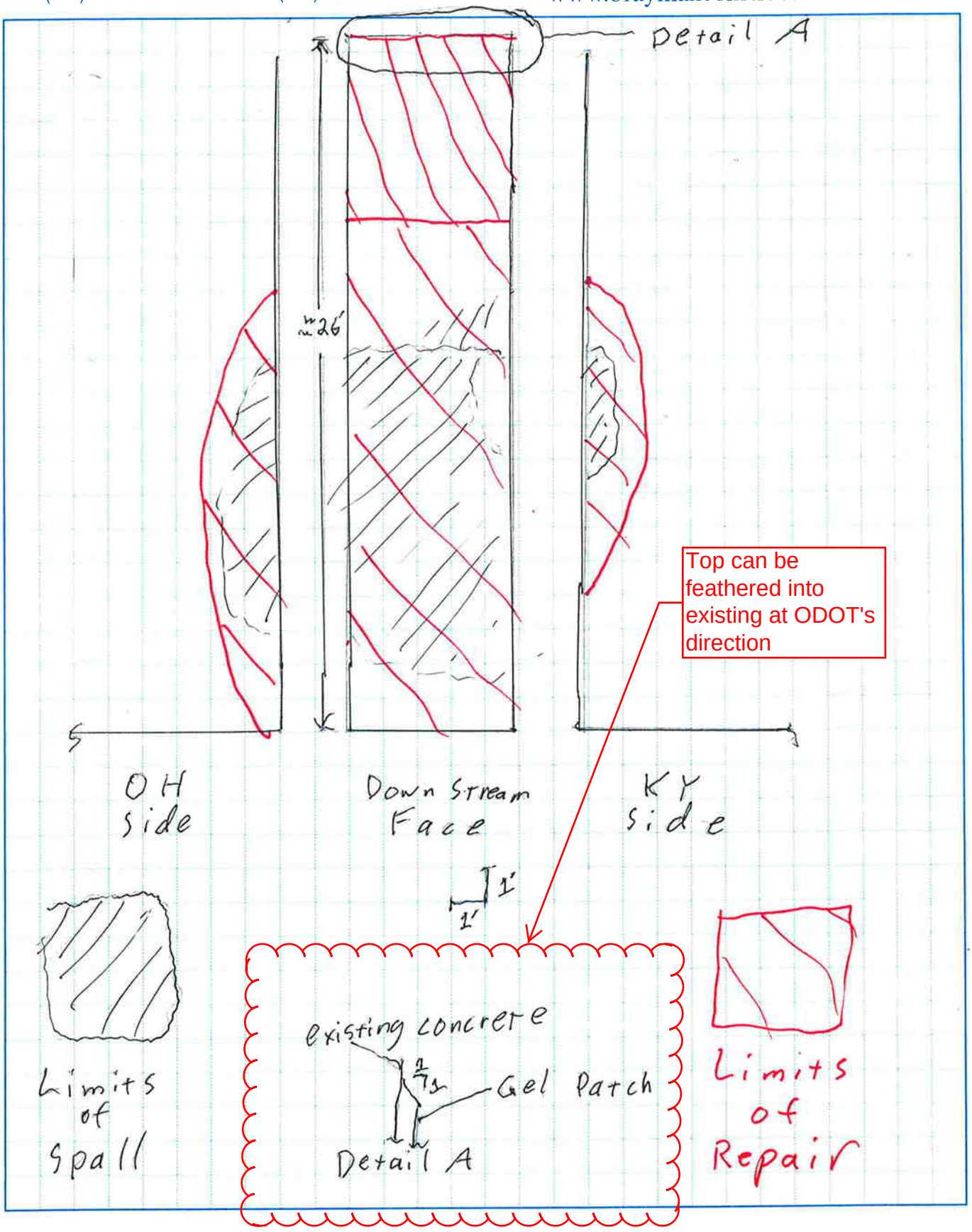

Top can be feathered into existing at ODOT's direction

Tom Hesmond

From: Jerry Pfuntner [jerry.pfuntner@finleyengineeringgroup.com]
Sent: Thursday, May 16, 2013 9:37 AM
To: Tom Hesmond
Subject: RE: P2 Repair Repair

Tom:

I reviewed the drawings and the lap splice region is above the concrete void region. The repair outlined below will not impact the capacity or performance of the column and will be acceptable.

Regards,

Bridging Challenges With Solutions®

Jerry M. Pfuntner, P.E.
Office: 850.894.1600
Mobile: 850.933.8750
email: jerry.pfuntner@finleyengineeringgroup.com
www.finleyengineeringgroup.com

Like Us Follow Us

Please consider the environment before printing this e-mail.

From: Tom Hesmond [mailto:t_hesmond@brayman.com]
Sent: Thursday, May 16, 2013 6:51 AM
To: Jerry Pfuntner
Subject: P2 Repair Repair

Jerry,

As a follow up to our conversation last night, the procedure I'd like to use to repair P2 is as follows:

-Saw cut the edges of the repair area.

-Remove any latency or unsound concrete, if sound concrete is found up to and between the rebar do not remove any concrete behind the rebar.

-Install ½" concrete anchors to secure the patch to the structure.

-Using the Gel Coat repair mortor build up the area to 1" cover over the rebar.

-Install metal lath (data below) and secure to the concrete anchors

-Continue to build up the patch with the Gel Coat until the required 3" cover is met.

Let me know what you think.

Thanks,
Tom

BASF

The Chemical Company

PRODUCT DATA

3 03 01 00 **Maintenance of Concrete**

GEL PATCH

Nonsag concrete repair mortar with integral corrosion inhibitor for vertical and overhead applications

Description

Sonocrete® Gel Patch is a lightweight, one-component, high-strength, polymer-modified, silica-fume-enhanced repair mortar with an integral corrosion inhibitor. It can be placed in lifts up to 2" without forming. Its cementitious formula incorporates microscopic glass-bead technology for excellent workability and superior finishing.

Yield

0.43 ft^3/43 lb bag (0.012 m^3/19.5 kg)

Packaging

43 lb (19.5 kg) polyethylene-lined bags

Color

Concrete gray

Shelf Life

1 year when properly stored

Storage

Store in unopened containers in a clean, dry area.

Features	Benefits
• Nonsag	Place in 2" (51 mm) thick lifts; readily sculpted, shaved, and finished
• Very low chloride permeability	Protects reinforcing steel from corrosion
• One component	Mixes easily with water
• Superior workability	Enhances finishing and aesthetic appearance
• Low shrinkage	Produces stable, durable bond
• Light microscopic beads	Hangs without sagging
• Polymer modified	Improves adhesion; provides increased freeze/thaw stability
• Precise blend of aggregate	Easy to trowel; enhances quality control
• Contains an integral corrosion inhibitor	Prevents corrosion from a wide range of sources and environments

Where to Use

APPLICATION

- Spalls or holes in concrete
- Deteriorated edges

LOCATION

- Vertical or overhead
- Interior or exterior
- Above or below grade

SUBSTRATE

- Concrete
- Masonry
- Block

How to Apply

Surface Preparation

1. Surfaces must be clean, sound, free of laitance, standing water, dust, grease, dirt, oil, efflorescence, paint, curing compounds, form oils, and other surface contaminants.

2. Mechanically remove all loose materials with chipping hammer, chisel, sandblast, waterblast, or similar methods.

3. For proper adhesion, the concrete substrate must have a fractured aggregate profile.

4. Clean any exposed steel reinforcement to a white metal finish and prime with an anti-corrosion coating.

5. Repair areas should have saw-cut straight edges with a minimum of 1/4" (6 mm) depth (avoid featheredging).

Protection and Repair

Technical Data

Composition

Gel Patch is composed of crystalline (quartz) silica and Portland cement.

Typical Properties

PROPERTY	VALUE
Working time, min, at 70° F (21° C)	20 – 30

Test Data

PROPERTY	RESULTS	TEST METHODS (CRITERIA)
Compressive strength, psi (MPa)		ASTM C 109, modified*
1 day	2,150 (14.8)	
7 days	5,600 (38.6)	
28 days	6,750 (46.5)	
Modulus of elasticity, psi (MPa)	5.6×10^5 (3,861)	ASTM C 215
Splitting tensile strength, psi (MPa)		ASTM C 496, modified* (wet cure)
1 day	310 (2.1)	
7 days	560 (3.9)	
28 days	610 (4.2)	
Flexural strength, psi (MPa)		ASTM C 348, modified*
1 day	500 (3.4)	
7 days	800 (5.5)	
28 days	1,110 (7.7)	
Bond strength, psi (MPa)		ASTM C 882, modified*
1 day	900 (6.2)	(mortar scrubbed into substrate)
7 days	1,900 (13.1)	
28 days	2,450 (16.9)	
Water absorption, %, 28 days	4	ASTM C 642
Chloride permeability, coulombs	Very low range	AASHTO T-277 (According to ASTM C 1202, table 1)
Length change, %, in/in, wet cure		ASTM C 157
1 day	+0.019	
7 days	+0.028	
28 day	+0.034	
Length change, %, in/in, dry cure*		ASTM C 157
1 day	-0.026	
7 days	-0.11	
28 days	-0.15	
Linear coefficient of thermal expansion, in/in/° F	5.3×10^{-6}	ASTM C 531

*At 50% relative humidity

Test results are averages obtained under laboratory conditions. Reasonable variations can be expected.

Mixing

1. Precondition Gel Patch to 70° F ±5° (21° C ±3°) before mixing.

2. For best results, mechanically mix at slow speed with a 3/4" drill and mixing paddle. Hand mix for small repairs.

3. Add approximately 2-3/4 quarts (2.6 L) of potable water into a clean mixing container. Gradually sift in powder 1/3 at a time while mixing continuously at slow speed (high speeds may entrain air). Mix for a minimum of 3 minutes to ensure a uniform, lump-free consistency. Do not exceed a total of 3 quarts (2.8 L) of mixing water per 43 lb (19.8 kg) bag.

4. Placement time is 20 – 30 minutes at 70° F (21° C) and 50% relative humidity.

5. Multiple units may be mixed in a mortar mixer as follows: (a) predampen mortar mixer; (b) remove any excess water; (c) add 2-3/4 quarts (2.6 L) of clean water per 43 lb (19.8 kg) unit; (d) add units gradually; (e) mix for 3 – 5 minutes to a uniform, lump-free consistency; (f) add remaining water as required, not to exceed 3 quarts (2.8 L) per 43 lb (19.8 kg) unit.

Application

1. Dampen the surface with clean water; it must be saturated surface-dry (SSD) with no standing water.

2. Apply a small quantity of mixed Gel Patch to the SSD substrate. Thoroughly key in and work the material throughout the cavity to promote bond.

3. Place mortar and key in and compact thoroughly to secure bond.

4. Apply material in lifts of 1/4 – 2" (6 – 51 mm). Avoid featheredging. For optimum mechanical bond on successive lifts, thoroughly score each lift and allow to reach initial set before the next layer is applied.

5. Trowel material to the desired finish after initial set.

Curing

Curing is mandatory. Damp cure for 3 days. If the surface cannot be damp cured, use an appropriate curing compound.

Clean Up

Clean all tools and equipment immediately with water. Cured material can only be removed by mechanical means.

For Best Performance

- Do not bridge moving cracks or joints.
- Do not add any admixtures or extend with aggregate.
- Bonding agents are recommended for large areas as well as permanently damp areas.
- Do not apply below 40° F (4° C) or above 90° F (32° C).
- Protect from freezing for 24 hours after application.
- Do not exceed water requirements.
- Featheredge installations may suffer from reduced durability.
- Failure to follow good trade practices may result in decreased material performance.
- Make certain the most current versions of product data sheet and MSDS are being used; call Customer Service (1-800-433-9517) to verify the most current versions.
- Proper application is the responsibility of the user. Field visits by BASF personnel are for the purpose of making technical recommendations only and not for supervising or providing quality control on the jobsite.

Health and Safety

GEL PATCH

Warning

Gel Patch contains silica, crystalline quartz; portland cement; alumina cement; silica, amorphous; silica, fume; aluminum oxide; calcium oxide; anhydrite; iron oxide; lithium carbonate

Risks

Product is alkaline on contact with water and may cause injury to skin or eyes. Ingestion or inhalation of dust may cause irritation. Contains small amount of free respirable quartz which has been listed as a suspected human carcinogen by NTP and IARC. Repeated or prolonged overexposure to free respirable quartz may cause silicosis or other serious and delayed lung injury.

Precautions

Avoid contact with skin, eyes and clothing. Prevent inhalation of dust. Wash thoroughly after handling. Keep container closed when not in use. DO NOT take internally. Use only with adequate ventilation. Use impervious gloves, eye protection and if the TLV is exceeded or used in a poorly ventilated area, use NIOSH/MSHA approved respiratory protection in accordance with applicable Federal, state and local regulations.

First Aid

In case of eye contact, flush thoroughly with water for at least 15 minutes. In case of skin contact, wash affected areas with soap and water. If irritation persists, SEEK MEDICAL ATTENTION. Remove and wash contaminated clothing. If inhalation causes physical discomfort, remove to fresh air. If discomfort persists or any breathing difficulty occurs or if swallowed, SEEK IMMEDIATE MEDICAL ATTENTION.

Refer to Material Safety Data Sheet (MSDS) for further information.

Proposition 65

This product contains material listed by the State of California as known to cause cancer, birth defects or other reproductive harm.

VOC Content

0 g/L or 0 lbs/gal less water and exempt solvents.

For medical emergencies only, call ChemTrec (1-800-424-9300).

BASF Construction Chemicals, LLC – Building Systems

889 Valley Park Drive
Shakopee, MN, 55379

www.BuildingSystems.BASF.com

Customer Service 800-433-9517
Technical Service 800-243-6739

BASF Construction Chemicals, LLC
Registered to ISO 9001:2008
Certificate No. A14282

LIMITED WARRANTY NOTICE Every reasonable effort is made to apply BASF exacting standards both in the manufacture of our products and in the information which we issue concerning these products and their use. We warrant our products to be of good quality and will replace or, at our election, refund the purchase price of any products proved defective. Satisfactory results depend not only upon quality products, but also upon many factors beyond our control. Therefore, except for such replacement or refund, BASF MAKES NO WARRANTY OR GUARANTEE, EXPRESS OR IMPLIED, INCLUDING WARRANTIES OF FITNESS FOR A PARTICULAR PURPOSE OR MERCHANTABILITY, RESPECTING ITS PRODUCTS, and BASF shall have no other liability with respect thereto. Any claim regarding product defect must be received in writing within one (1) year from the date of shipment. No claim will be considered without such written notice or after the specified time interval. User shall determine the suitability of the products for the intended use and assume all risks and liability in connection therewith. Any authorized change in the printed recommendations concerning the use of our products must bear the signature of the BASF Technical Manager.

This information and all further technical advice are based on BASF's present knowledge and experience. However, BASF assumes no liability for providing such information and advice including the extent to which such information and advice may relate to existing third party intellectual property rights, especially patent rights. In particular, BASF disclaims all CONDITIONS AND WARRANTIES, WHETHER EXPRESS OR IMPLIED, INCLUDING THE IMPLIED WARRANTIES OF FITNESS FOR A PARTICULAR PURPOSE OR MERCHANTABILITY. BASF SHALL NOT BE RESPONSIBLE FOR CONSEQUENTIAL, INDIRECT OR INCIDENTAL DAMAGES (INCLUDING LOSS OF PROFITS) OF ANY KIND. BASF reserves the right to make any changes according to technological progress or further developments. It is the customer's responsibility and obligation to carefully inspect and test any incoming goods. Performance of the product(s) described herein should be verified by testing and carried out only by qualified experts. It is the sole responsibility of the customer to carry out and arrange for any such testing. Reference to trade names used by other companies is neither a recommendation, nor an endorsement of any product and does not imply that similar products could not be used.

For professional use only. Not for sale to or use by the general public.

Form No. 1017889 2/08
Printed on recycled paper including 10% post-consumer fiber.

© 2008 BASF
Printed in U.S.A.

ChemMasters

SPECIALTY CONSTRUCTION PRODUCTS

CRETELOX

HIGH SOLIDS ACRYLIC LATEX BONDING AGENT AND ADMIXTURE

PRODUCT DATA

DESCRIPTION

CRETELOX is a non-reemulsifiable, acrylic latex bonding agent and admixture. This high performance polymer is formulated as a bonding agent for cementitious mortars and toppings and as an admixture to site mixed or prepackaged cement based mortars including thin set cement mortars and mortar beds.

USES

- CRETELOX is used in place of all or a portion of the mixing water to improve the physical properties of any cement mix.
- Performance enhancing admixture for stucco, cement plaster, cementitious toppings and overlays, prepackaged mortar or site mix mortars
- Cyclically damp environments, food processing plants, water storage facilities, swimming pools
- Polymer modified concrete (PMC) for bridge decks and white toppings

ADVANTAGES

- Forms permanent, positive chemical and mechanical bond to sound surfaces
- Improves the compressive, tensile, flexural and bond strength of any cement or mortar mix
- Increases abrasion and impact resistance
- Improves chemical resistance to fertilizers, acids and alkalies
- Aids in controlling shrinkage cracking
- Reduces permeability for excellent freeze-thaw resistance
- Deepens and enhances colored mortars, resists fading and is non-yellowing under UV exposure
- Higher quality polymer has no strong ammonia odor
- Significantly reduces chloride ion penetration to protect reinforcing steel from corrosion

TECHNICAL DATA

Meets the requirements of ASTM C-1059, Type II, Standard Specification for Latex Agents for Bonding Fresh to Hardened Concrete when tested in accordance with ASTM C-1042.

PHYSICAL PROPERTIES OF PORTLAND CEMENT/SAND MORTAR MIX

TEST	TEST METHOD	WATER ONLY	1/2 CRETELOX*
Compressive Strength 28 days - psi	ASTM C-109	3,650	4,000
Tensile Strength 28 days - psi	ASTM C-190	240	420
Flexural Strength 28 days - psi	ASTM C-348	680	1,025
Shear Bond Strength 14 days - psi	ASTM C-1042	1,500	2,850

* 1/2 of the water used in the mortar mix replaced with Cretelox

PACKAGING

CRETELOX is packaged in 55 U.S. gallon (208 liter) drums, 5 gallon (18.9 liter) pails and in 1 gallon (3.8 liter) plastic jugs (packed 4 per case).

ESTIMATING GUIDE

Usage of Cretelox depends on the application

- For use as a bonding agent
  200-250 sqft per gallon (5-6 M^2 / liter)
- For producing scrub coats before patches and overlay
  replace 100% of the water with Cretelox
- As an admixture for prepackaged mixes or site mortars
  replace 25-100% of the water with Cretelox

DIRECTIONS

MIXING: Gently shake or stir CRETELOX before using. If using Cretelox as an admixture, determine the amount of water normally required for the prepackaged mortar or site mix. Calculate the percent of Cretelox for water replacement to be used for the situation and blend the appropriate amount of Cretelox and water together first to achieve the proper total mixing liquid required. Always add dry cement or mortar mix to liquid to reduce lumps.

ChemMasters
An American Owned & Operated Company
300 EDWARDS STREET • MADISON, OHIO 44057-3112
(440) 428-2105 • FAX (440) 428-7091 • ORDER LINE: (800) 486-7866 * www.chemmasters.net

Revised Jan 2012

As an admixture for packaged or site mix mortars, use **Cretelox** to replace 25% to 100% of the normal water required. Cement based masonry coatings or other thin mortars and toppings may be mixed with **Cretelox** alone for optimum adhesion and durability.

Horizontal Repairs: Replace 50% of the normal water with Cretelox. Mix and place as usual. Over working or over trowelling surface may cause blisters or peeling.

Vertical and Overhead Repairs: Replace 50%-75% of the normal water with **Cretelox**. Place as usual. Best results are obtained if repairs are made in 0.5 inch (1.25 cm) lifts. A stiff mix is easier to place.

Cement Plaster Ceilings: Use 100% **Cretelox** as the mixing liquid. Build up in thin coats of 0.25 inches (0.62 cm) but do not exceed 0.5 inches (1.25 cm) in depth.

Mortar Beds: Use **Cretelox** as 100% of the mixing liquid. Mix mortar to a semi-dry consistency and apply over a slurry bond coat (see above)

Thin Set Mixes: Use **Cretelox** as 100% of the mixing liquid. Mix mortar to a creamy consistency

Tile Grout: Use **Cretelox** as 100% of the mixing liquid for industrial or exterior applications. For other applications, **Cretelox** should make up 50% of the mixing liquid. Mix in mortar to a smooth, but stiff consistency

Bonding Agent Application: Apply **Cretelox** at a rate of 200-250 Ft.^{2} per gallon (5-6 M^2 per liter) with a garden type sprayer or solvent resistant roller. Place fresh concrete or mortar while Cretelox is wet.

Bonding Slurry Application: (Preferred method) Use **Cretelox** as 100% of the mixing liquid. Slurry should have the consistency of pancake batter. Apply to substrate with a stiff bristle brush, working bond coat into voids, cracks and corners. Place repair mortar or topping while slurry is wet or damp.

Curing

When **Cretelox** modified concrete is exposed to rapid drying conditions due to high temperaturs, rapid air movement or wind, it is recommended that the surface be covered with wet burlap to retain moisture. For normal use, allow a 24 hour curing period. For heavy wheeled traffic, allow a 4 day curing period.

Clean Up

Clean tools and equipment immediately with water. Cured material will require mechanical removal

Storage

Store tightly sealed containers at room temperature. Keep from freezing. If **Cretelox** freezes, allow it to thaw normally at room temperature. Shelf life of properly stored material is one year from date of manufacture.

Limitations

- Do not use with air entraining agents or other admixtures.
- Do not apply when the surface or air temperature is, or is expected to go, below 40°F (4°C). Do not apply to frozen or frost filled surfaces.
- Overworking or over trowelling surface may cause blisters or delaminations.
- Do not seal surface with solvent based products. Organic solvents of high solvency power (xylene, toluene, lacquer thinner, etc.) will soften the surface if spills are not removed quickly.
- Do not use as a bonding agent in exterior applications unless as part of a slurry application

Cautions

May cause skin, eye and respiratory tract irritation. Do not take internally. Keep out of reach of children.

All label precautions and MSDS must be fully understood before using this product.

This Product is Formulated and Labeled for Industrial and Commercial Use Only

FOR BEST RESULTS AND SAFEST USAGE, USER IS SPECIFICALLY DIRECTED TO CONSULT THE CURRENT MATERIAL SAFETY DATA SHEET AND PACKAGE LABEL FOR THIS PRODUCT

We warrant our products to meet our published specifications and to be free from defects in materials and workmanship to the acceptable quality levels defined in these specifications. If acceptable quality levels are not specified, the acceptable quality levels will be those normally supplied by us for the product. We make no guarantee of the results to be obtained from the use of our products. The determination as to the adaptability of any of our products to the specific needs of the Buyer is solely Buyer's prerogative and responsibility. We are glad to offer suggestions on the use of our products. Nevertheless, there are no warranties given except such expresses warranties offered in connection with the sale of a particular product. Our liability shall be limited to replacement of, or refund of an amount not to exceed the purchase price attributed to, the goods as to which such claim is made. Our selection of one of these alternatives shall be Buyer's exclusive remedy. IN NO CASE SHALL WE BE LIABLE FOR CONSEQUENTIAL OR SPECIAL DAMAGES, EVEN IF WE HAVE BEEN ADVISED OF THE POSSIBILITY OF SUCH DAMAGES. THE FOREGOING WARRANTIES ARE IN LIEU OF ALL OTHER WARRANTIES, GUARANTEES, CO-CONDITIONS AND REPRESENTATIONS, EITHER EXPRESSED OR IMPLIED, WHETHER ARISING UNDER ANY STATUTE, COMMON LAW, USAGE OR TRADE, COURSE OF DEALING OR OTHERWISE, INCLUDING, BUT NOT LIMITED TO, THE IMPLIED WARRANTIES OF MERCHANTABILITY OR FITNESS FOR A PARTICULAR PURPOSE.

©1996 ChemMasters, Inc.

Printed in U.S.A.

Specialty Metal Products

N093 Drywall/DEFS Control Joint is similar to the control joint for veneer finish drywall installations or DEFS applications. It is produced in **zinc alloy only** and comes with a removable tape across the joint to keep joint clean during installation.

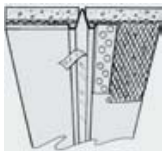

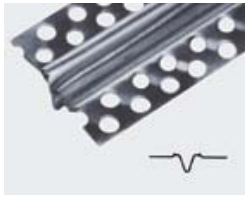

Grounds	Length	Pieces/ carton	Weight/ carton	Cartons/ pallet	Pallet weight
3/32"	10'	25	27 lbs.	20	540 lbs.

Wire Corners provide for rounder corners, embedding all reinforcement. They are manufactured from zinc coated wire, electronically wired to form the corners. Bullnose, arch and short flange configurations come standard in 10' lengths, but are also available in 8' and 9' lengths. They are packaged 40 pieces per carton with 24 cartons per pallet.



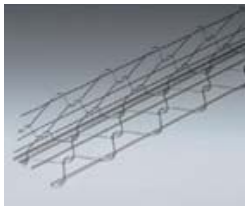

Style	Flange size	Weight/ carton
Straight	2.5" x 2.5"	48.0 lbs
Straight BN (7/8")	2.5" x 2.5"	36.8 lbs
Straight 2-wire	2.5" x 2.5"	49.4 lbs
Arch	2.5" x 2.5"	34.0 lbs
Arch BN	2.5" x 1.5"	34.0 lbs

Style	Flange size	Weight/ carton
Bullnose	2.5" x 2.5"	48.0 lbs
Bullnose short	2.5" x 1.5"	40.0 lbs
Bullnose 2-wire	2.5" x 2.5"	49.4 lbs
Short Flange	2.5" x 1.5"	48.0 lbs
Short Flange BN (7/8")	2.5" x 1.5"	40.0 lbs

Galvanized Hanger and Tie Wire are used to support CRC gridwork for stucco and acoustical or drywall ceilings. Hanger wire is produced in #8, #9 and #12 gauge galvanized soft annealed steel in 12' lengths. Tie wire is produced in #16 and #18 gauge galvanized soft annealed steel in 28" lengths.

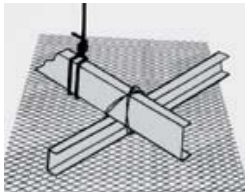

Product	Gauges	Length	Weight/package
Hanger Wire	8, 9, 12	12'	50 lb. hanks
Tie Wire	16, 18	28"	25 lb. hanks

Galvanized Cold Rolled Channel is used to form suspended ceiling grids for lath and plaster applications and for horizontal bridging in steel framing.

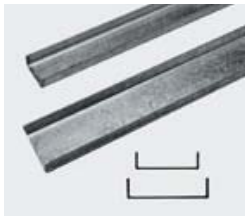

Size	Pieces/ bundle	Weight/ 16' piece	Weight/ 20' piece	Weight/ bundle (16')	Weight/ bundle (20')
3/4"	20	4.9 lbs.	6.1 lbs.	98 lbs.	122 lbs.
1 1/2"	20	7.7 lbs.	9.6 lbs.	154 lbs.	192 lbs.

SS304/316 Lath By AMICO Max Protection Anywhere! Stainless Steel

Alloy SS304 provides excellent corrosion resistance for specialty lath applications. SS304 Lath can be used over sheathing boards to carry conventional stucco/stone finishes and for external insulation requirements. SS304 Lath is used in coastal environments, near water, where underspray, fireproofing or corrosion protection is desired. **Produced both ~~flat and~~ self-furred (Dimpled).**

Alloy SS316 is used for extreme corrosive environments, around chlorine or pool splash-zones or construction of rock and water formations. It is also a good choice for water and wastewater treatment facilities, high-temperature installations and petrochemical fireproofing. **Produced both flat and self-furred (Dimpled).**

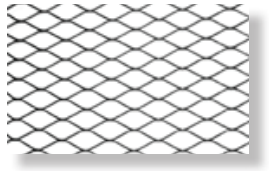

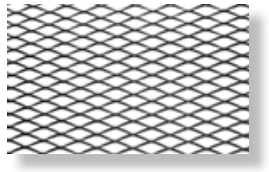

Weight/sq. yard	Alloy	Sheet weight	Nominal sheet size	Sheets/bundle
1.75 lbs.	304 or 316	approx. 3.5 lbs.	27" x 97"	10
2.5 lbs.	304 or 316	approx. 5.00 lbs.	27" x 97"	10
3.4 lbs.	304 or 316	approx. 6.80 lbs.	27" x 97"	10

Stainless Steel Lath is not in all AMICO distribution centers. Contact AMICO for availability and shipping.

Secura Lath® Spec Data

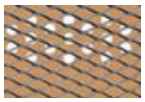

Section 09 22 00
Secura Lath Ceiling Penetration Barrier Meets "Buy American" Procurement

Finish	Sheet Size	Panel Size	Weight Per Sq. Ft.
Pre-Galvanized	27" x 97"	18.2 sq. ft.	.83 lbs.

Part 1 General

1.1 SECTION INCLUDES
A. Supply and install all materials required for a complete in-place security lath structural base for Portland cement stucco or high strength gypsum plaster and all complimentary accessories.

1.3 REFERENCES
A. ASTM A1011 Standard Specification for Steel
B. ASTM F1267 Standard Specification for Metal, Expanded, Steel
C. AMICO Secura Lath Installation Guidelines

1.4 QUALITY ASSURANCE
A. The contractor must have documented experience with the construction methods involved with plaster and stucco installations on ceilings.

Part 2 Products

2.1 MANUFACTURER
A. Physical penetration barrier for plaster applications shall conform to ASL .50-16R as manufactured and specified by Alabama Metal Industries Corporation (AMICO), Birmingham, AL; Telephone 205/783-9515; www.amicosecurityproducts.com/lath.htm

2.2 MATERIALS
A. The security lathing system shall comply with AMICO ASL .50-16R Secura Lath.

2.3 FINISH
A. Pre-Galvanized Finish – for standard installations lathing mesh shall be pregalvanized prior to expanding and the factory applied paper backing.
B. Perforated Kraft paper shall be vinyl coated one side and factory attached to the metal lathing.

Part 3 Execution

3.1 INSTALLATION
A. Installation and lay-out of the job shall be approved by the owner or general contractor prior to installation.
B. Recommended perimeter detailing for intersections can be found on AMICO's website.

Multi-Set II®

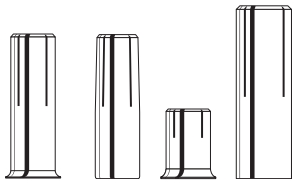

SPECIFIED FOR ANCHORAGE INTO CONCRETE

Drop-In, shell-type anchors feature an internally threaded, all-steel shell with expansion cone insert and flush embedment lip. "Anchors are manufactured from zinc-plated carbon steel, 18-8 stainless steel and 316 stainless steel.

Anchors should be installed with carbide tipped hammer drill bits made in accordance to ANSI B212.15-1994 specifications.

Anchors should be tested to ASTM E488 criteria and listed by ICC (formerly ICBO). Anchors should also be listed by the following agencies as required by the local building code: UL, FM, City of Los Angeles, California State Fire Marshal and Cal Trans.

APPROVALS/LISTINGS

Meets or exceeds U.S. Government G.S.A. Specification A-A-55614 Type 1 (Formerly GSA: FF-S-325 Group VIII)

Underwriters Laboratories

Factory Mutual

California State Fire Marshal

Caltrans

For the most current approvals/listings visit: www.itw-redhead.com

INSTALLATION STEPS

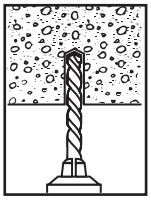

To set anchor flush with surface:

1. Drill hole to required embedment (see Table on page 73).

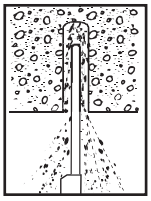

2. Clean hole with pressurized air.



3. Drive anchor flush with surface of concrete.

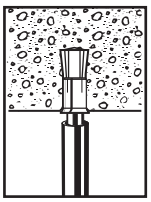

4. Expand anchor with setting tool provided (see chart). Anchor is properly expanded when shoulder of setting tool is flush with top of anchor.

To set anchor below surface:

Drill hole deeper than anchor length. Thread bolt into anchor. Hammer anchor into hole until bolt head is at desired depth. Remove bolt and set anchor with setting tool.

PERFORMANCE TABLE

Multi-Set II Drop-In Anchors — Ultimate Tension and Shear Values (Lbs/kN) in Concrete*

BOLT DIA. In. (mm)	ANCHOR DIA. In. (mm)	MIN. EMBEDMENT DEPTH In. (mm)	ANCHOR TYPE	TENSION Lbs. (kN) f'c = 2000 PSI (13.8 MPa)	TENSION Lbs. (kN) f'c = 4000 PSI (27.6 MPa)	TENSION Lbs. (kN) f'c = 6000 PSI (41.4 MPa)	SHEAR Lbs. (kN) f'c ≥2000 PSI (13.8 MPa)
1/4 (6.4)	3/8 (9.5)	1 (25.4)	RM, RL or CL Carbon or SRM-18-8 S.S. or SSRM-316 S.S.	1,680 (7.5)	2,360 (10.5)	2,980 (13.3)	1,080 (4.8)
3/8 (9.5)	1/2 (12.7)	1-5/8 (41.3)		2,980 (13.3)	3,800 (16.9)	6,240 (27.8)	3,160 (14.1)
1/2 (12.7)	5/8 (15.9)	2 (50.8)		3,300 (14.7)	5,840 (26.0)	8,300 (36.9)	4,580 (20.4)
5/8 (15.9)	7/8 (22.2)	2-1/2 (63.5)		5,500 (24.5)	8,640 (38.4)	11,020 (49.0)	7,440 (33.1)
3/4 (19.1)	1 (25.4)	3-3/16 (81.0)		8,280 (36.8)	9,480 (42.2)	12,260 (54.5)	10,480 (46.6)

*Allowable values are based upon a 4 to 1 safety factor. Divide by 4 for allowable load values.

*For continuous extreme low temperature applications, use stainless steel.

Combined Tension and Shear Loading—for Multi-Set Anchors

Allowable loads for anchors subjected to combined shear and tension forces are determined by the following equation:

$$(Ps/Pt)^{5/3} + (Vs/Vt)^{5/3} \leq 1$$

Ps = Applied tension load **Vs = Applied shear load** **Pt = Allowable tension load** **Vt = Allowable shear load**

Stainless Steel Hex Bolts Cont'd.

CAT. NO.	SIZE	U/M	STD. BOX	STD. CTN.	WT./UM
801067	3/8-16 X 3-1/2"	C	50	250	11.50
801069	3/8-16 X 4"	C	50	250	13.06
801070	3/8-16 X 4-1/2"	C	50	250	14.42
801071	3/8-16 X 5"	C	50	250	15.94
801072	3/8-16 X 5-1/2"	C	50	250	17.46
801073	3/8-16 X 6"	C	50	250	19.12
801075	3/8-16 X 7"	C	50	150	22.36
801101	1/2-13 X 3/4"	C	50	500	7.26
801103	1/2-13 X 1"	C	50	500	8.28
801104	1/2-13 X 1-1/4"	C	50	500	9.30
801105	1/2-13 X 1-1/2"	C	50	500	10.42
801107	1/2-13 X 2"	C	50	250	13.24
801109	1/2-13 X 2-1/2"	C	50	250	16.04
801111	1/2-13 X 3"	C	50	250	18.74
801113	1/2-13 X 3-1/2"	C	25	125	21.48
801115	1/2-13 X 4"	C	25	125	24.08
801116	1/2-13 X 4-1/2"	C	25	125	26.60
801117	1/2-13 X 5"	C	25	125	29.60
801118	1/2-13 X 5-1/2"	C	25	125	32.40
801119	1/2-13 X 6"	C	25	125	35.08
801121	1/2-13 X 7"	C	25	75	39.40
801123	1/2-13 X 8"	C	25	75	44.80
801127	1/2-13 X 10"	C	25	75	57.16
801130	1/2-13 X 12"	C	25	0	68.16
801141	5/8-11 X 1"	C	25	125	14.60
801142	5/8-11 X 1-1/4"	C	25	125	16.12
801143	5/8-11 X 1-1/2"	C	25	125	18.00
801144	5/8-11 X 1-3/4"	C	25	125	19.76
801145	5/8-11 X 2"	C	25	125	22.40
801147	5/8-11 X 2-1/2"	C	25	125	26.28
801148	5/8-11 X 2-3/4"	C	25	125	28.12
801149	5/8-11 X 3"	C	25	125	30.48
801151	5/8-11 X 3-1/2"	C	25	125	34.60
801152	5/8-11 X 3-3/4"	C	25	125	37.90
801153	5/8-11 X 4"	C	25	125	40.08
801154	5/8-11 X 4-1/2"	C	25	125	44.36
801155	5/8-11 X 5"	C	25	75	48.68
801156	5/8-11 X 5-1/2"	C	25	75	53.00
801157	5/8-11 X 6"	C	25	75	57.32
801179	3/4-10 X 1"	C	25	125	23.60
801180	3/4-10 X 1-1/4"	C	25	125	27.05
801181	3/4-10 X 1-1/2"	C	25	125	29.65
801182	3/4-10 X 1-3/4"	C	25	125	32.25
801183	3/4-10 X 2"	C	25	125	35.10
801185	3/4-10 X 2-1/2"	C	25	125	41.35
801187	3/4-10 X 3"	C	25	75	47.55
801188	3/4-10 X 3-1/4"	C	25	75	50.65
801189	3/4-10 X 3-1/2"	C	25	75	53.80
801191	3/4-10 X 4"	C	25	75	60.00
801192	3/4-10 X 4-1/2"	C	25	75	66.20
801193	3/4-10 X 5"	C	25	75	72.45
801195	3/4-10 X 6"	C	20	60	84.90
801196	3/4-10 X 6-1/2"	C	20	60	88.75
801197	3/4-10 X 7"	C	20	60	94.90
801199	3/4-10 X 8"	C	20	60	107.20
801200	3/4-10 X 8-1/2"	C	20	60	113.80
801201	3/4-10 X 9"	C	20	60	119.50
801221	7/8-9 X 2-1/2"	C	15	75	58.00
801223	7/8-9 X 3-1/2"	C	15	75	66.50
801224	7/8-9 X 3-1/4"	C	15	45	70.70
801226	7/8-9 X 3-3/4"	C	15	45	79.20
801227	7/8-9 X 4"	C	15	45	83.50
801228	7/8-9 X 4-1/2"	C	15	45	92.00
801229	7/8-9 X 5"	C	15	45	100.50
801230	7/8-9 X 5-1/2"	C	15	45	109.00
801231	7/8-9 X 6"	C	10	30	117.50
801232	7/8-9 X 6-1/2"	C	10	30	125.90
801233	7/8-9 X 7"	C	10	30	134.50
801256	1-8 X 2-3/4"	C	10	50	83.80
801261	1-8 X 4"	C	10	50	111.30
801263	1-8 X 5"	C	10	30	133.10
801291	1-1/4-7 X 4"	C	1	0	188.91



Stainless Steel Tap Bolt

CAT. NO.	SIZE	U/M	STD. BOX	STD. CTN.	WT./UM
801400	1/4-20 X 1/2"	C	100	2000	1.18
801401	1/4-20 X 3/4"	C	100	2000	1.44
801402	1/4-20 X 1"	C	100	2000	1.67
801403	1/4-20 X 1-1/4"	C	100	1000	2.01
801404	1/4-20 X 1-1/2"	C	100	1000	2.36
801405	1/4-20 X 2"	C	100	1000	3.07
801406	1/4-20 X 2-1/2"	C	100	1000	3.75
801407	1/4-20 X 3"	C	100	1000	4.35
801408	1/4-20 X 3-1/2"	C	100	500	5.10
801409	1/4-20 X 4"	C	100	500	5.75
801410	1/4-20 X 4-1/2"	C	100	500	6.36
801411	1/4-20 X 5"	C	100	500	6.92
801413	1/4-20 X 6"	C	100	500	8.39
801415	5/16-18 X 3/4"	C	100	2000	2.33
801416	5/16-18 X 1"	C	100	1000	2.74
801417	5/16-18 X 1-1/4"	C	100	1000	3.23
801418	5/16-18 X 1-1/2"	C	100	1000	3.82
801419	5/16-18 X 2"	C	100	1000	4.82
801420	5/16-18 X 2-1/2"	C	100	500	5.95
801421	5/16-18 X 3"	C	100	500	6.91
801422	5/16-18 X 3-1/2"	C	50	500	8.00
801423	5/16-18 X 4"	C	50	500	8.98
801424	5/16-18 X 4-1/2"	C	50	250	10.11
801425	5/16-18 X 5"	C	50	250	11.05
801426	5/16-18 X 5-1/2"	C	50	250	12.30
801427	5/16-18 X 6"	C	50	250	13.28
801428	3/8-16 X 3/4"	C	100	1000	3.56
801429	3/8-16 X 1"	C	100	1000	4.03
801430	3/8-16 X 1-1/4"	C	100	1000	4.78
801431	3/8-16 X 1-1/2"	C	100	1000	5.54
801432	3/8-16 X 2"	C	100	500	6.94
801433	3/8-16 X 2-1/2"	C	50	500	8.52
801434	3/8-16 X 3"	C	50	500	10.04
801435	3/8-16 X 3-1/2"	C	50	250	11.51
801436	3/8-16 X 4"	C	50	250	13.06
801437	3/8-16 X 4-1/2"	C	50	250	14.42
801438	3/8-16 X 5"	C	50	250	15.95
801439	3/8-16 X 5-1/2"	C	50	250	17.47
801440	3/8-16 X 6"	C	50	250	19.13
801441	1/2-13 X 3/4"	C	50	500	7.28
801442	1/2-13 X 1"	C	50	500	8.30
801443	1/2-13 X 1-1/4"	C	50	500	9.30
801444	1/2-13 X 1-1/2"	C	50	500	10.42
801445	1/2-13 X 2"	C	50	250	13.25
801446	1/2-13 X 21/2"	C	50	250	16.05
801447	1/2-13 X 3"	C	50	250	18.75
801451	1/2-13 X 5"	C	25	125	29.60
801452	1/2-13 X 5 1/2"	C	25	125	32.40
801453	1/2-13 X 6"	C	25	125	35.10

LETTER OF TRANSMITTAL

BRAYMAN CONSTRUCTION CORP.
1000 John Roebling Way
Saxonburg, PA 16056
Phone: (724) 443-1533
Fax: (724) 443-8733

To: Ohio Dept. of Transportation
District 9
650 Eastern Avenue
Chillicothe, OH 45601

Project: SR-93-0.00
Ironton Russell Bridge
Lawrence County, OH
Project No. 110628

BCC # 028-003-000

Attention: Dave Bame

Date: May 28, 2013

We are sending you the following items:

☐ Under Separate Cover ☑ Attached

☐ Copy of Letter ☐ Prints ☐ Specifications ☐ Change Order

☐ Shop Drawings ☐ Plans ☐ _____

Copies	Date	Description
1	5/28/13	VECP #1 Final Submittal

Transmitted for the following purpose:

☑ For Approval ☐ Approved as Submitted ☐ Resubmit __ copies for approval

☐ For Your Use ☐ Approved as Noted ☐ Submit __ copies for distribution

☐ As Requested ☐ Returned for Corrections ☐ Return __ corrected prints

☐ For Review & Comment ☐ For Certification

MAIL: ◯ Regular ◯ Overnight ◯ Certified ☑ Email **FAX:** ◯

Remarks:

URS Response:

We have no objections to any of the details presented in the Final VECP 1 attached.

Signature: _____ Date: 6/14/2013

Aaron Downs

Signed: Aaron Downs
Project Engineer

cc: File/arb
Dan Beasley
Edwin Callicutt
Eric McLaughlin

Ironton Russell Bridge over Ohio River

LAW-93C-0000

VECP #1 Final Submittal

For:

District 9

Submitted By:

1000 John Roebling Way

Saxonburg, Pa 16056

May 28, 2013

VECP 1 Itemized Summary of Changes

Non-Performed Items

Line #	Item Code	Description	Unit	Bid Qty	Proposed Qty	Unit Bid Price	Net Change
489	898E10000	QA/QC Concrete, Class QSC3 Cable Stayed	CY	400.00		$ 1,850.00	$ (740,000.00)
424	509E10000	Epoxy Coated Steel	LB	75,000.00		$ 1.30	$ (97,500.00)
						Non-Performed Total	$ (837,500.00)

Quantity Change Items

Line #	Item Code	Description	Unit	Bid Qty	Proposed Qty	Unit Bid Price	Net Change
						$ -	$ -
						$ -	$ -
						Quantity Adjustment Total	$ -

New / Additional Work Items

Line #	Item Code	Description	Unit	****	Proposed Qty	Proposed Unit Cost	Sub Total
		Precast Concrete T Beams	EA		52.00	$ 9,423.08	$ 490,000.00
		Stay in Place Formwork	SF		14,000.00	$ 7.00	$ 98,000.00
						Additional Items Work Total	$ 588,000.00
						Proposed Guaranteed Minimum Savings	**$ (249,500.00)**

ERECTOR NOTE:
D1 = 14 SHTS @ 9'-0½" (x22); 18GA, 3" x 8" FORMS
D2 = 2 SHTS @ 9'-0½" (x44); 20GA, 4.5" x 10" FORMS
D3 = 17 SHTS @ 10'-11" (x4); 19GA, 4.5" x 10" FORMS
D4 = 2 SHTS @ 10'-11" (x8); 17GA, 4.5" x 10" FORMS

ERECTOR NOTE:
UTILIZE ALL DROPS
FOR SUPPORT ANGLES
AND CLOSURE ANGLES

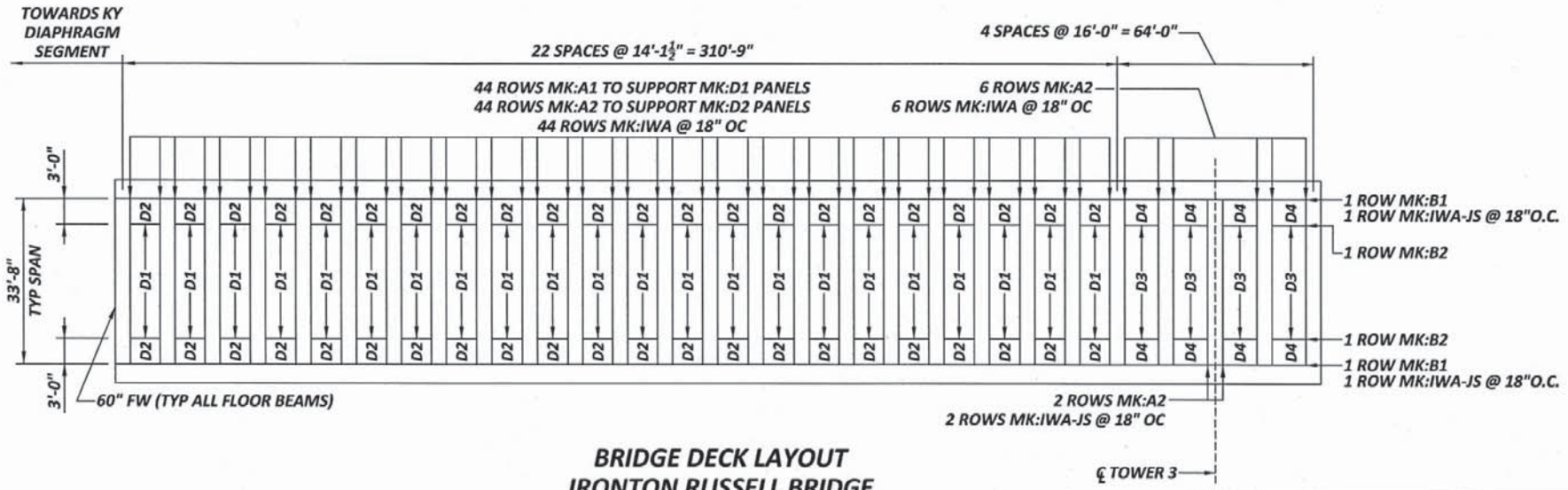

BRIDGE DECK LAYOUT
IRONTON RUSSELL BRIDGE
OVER THE OHIO RIVER

BRIDGE DECK GENERAL NOTES

1. Consolidated Systems, Inc. will furnish only that material listed in the Bill of Material.
2. All material for bridge deck forms (Grade 50) and accessories (Grade 40) shall conform to ASTM specification A-653 having a coating designation of G-235.
3. The contractor shall verify all dimensions.
4. Extra concrete poured on deck slab as a result of these metal forms shall be provided by the General Contractor and will not be the responsibility of or to the account of Consolidated Systems, Inc.
5. ALL DECK SHEETS SHALL HAVE A MINIMUM BEARING OF 1 1/2" AT EACH END OF THE DECK. CENTER FORMS ON SUPPORT ANGLES.
6. FOR THE SAFETY OF THE WORKMEN, ALL DECK SHEETS SHALL BE SECURELY FASTENED TO THE SUPPORT ANGLE AS THEY ARE PLACED, BEFORE CONSTRUCTION TRAFFIC IS PERMITTED.
7. Reinforcing steel and supports for reinforcing steel shall be placed in accordance with applicable drawings and in conformance with good reinforced concrete practice, and under the continuous supervision of a properly trained foreman.
8. CALCIUM CHLORIDE (OR ANY ADMIXTURE CONTAINING CHLORIDE SALTS) SHALL NOT BE USED IN THE CONCRETE PLACE ON THE BRIDGE DECK.
9. When pouring concrete, DO NOT allow overall depth to exceed the design slab depth plus three inches (3"), otherwise, pour concrete over supporting beams and girders and spread to proper depth over bridge forms.
10. If situations arise that are not specifically covered by these notes or placing plans, or if there is any doubt as to the correct procedure to be followed in erection, please contact Consolidated Systems, Inc. for additional instructions or clarification.
11. Vertical adjustment of support angles shall be determined in the field to maintain the correct slab thickness and roadway slope.
12. Closure angles shall not be used as supports for deck form panels.

STATE OF OHIO
DAVID A. DAY
63531
REGISTERED PROFESSIONAL ENGINEER

David A. Day
4/19/13

REVISIONS	COMMENTS	DATE
1	APPROVER ADJUST.	4-16-13

REMARKS
BRIDGE DECK LAYOUT AND GENERAL NOTES
IRONTON RUSSELL BRIDGE OVER THE OHIO RIVER

Metal Dek Group a unit of CSI
650 ROSEWOOD DRIVE COLUMBIA SC 29201
sdi

CUSTOMER	BRAYMAN CONSTRUCTION CORPORATION	FED. PROJ.	E040(653)
PROJECT NO	BRIDGE NO: LAW-93-0.00	PID NO:	81595
LOCATION	LAWRENCE CO, OH TO GREENUP CO, KY		
ENGINEER	OHIO DEPARTMENT OF TRANSPORTATION		

DRAWN	WMH	DATE	12/2012	CUST. ORDER NO.	CSI JOB NO.	DRAWING NO.
CHECKED	CM	DATE	02/2013	C23981	P03688	1 OF 3

Review is only for conformance with the design concept. Review does not cover dimensions, quantities, accuracy, fit, or any assembly for which this item may be a component. Review does not authorize deviation from Contract Documents or substitution of materials. Requests for deviations from the Contract Documents will only be addressed thru the Change Order Process.

REVIEWED

CONFORMS WITH CONCEPT	(✓)
CONFORMS AS NOTED	( )
RESUBMIT	( )
NO ACTION	( )
DOES NOT CONFORM	( )

URS

DATE 5/2/2013 BY [signature]

ERECTOR NOTE:
D1 = 14 SHTS @ 9'-0½" (x22); 18GA, 3" x 8" FORMS
D2 = 2 SHTS @ 9'-0½" (x44); 20GA, 4.5" x 10" FORMS
D3 = 17 SHTS @ 10'-11" (x4); 19GA, 4.5" x 10" FORMS
D4 = 2 SHTS @ 10'-11" (x8); 17GA, 4.5" x 10" FORMS

ERECTOR NOTE:
UTILIZE ALL DROPS
FOR SUPPORT ANGLES
AND CLOSURE ANGLES

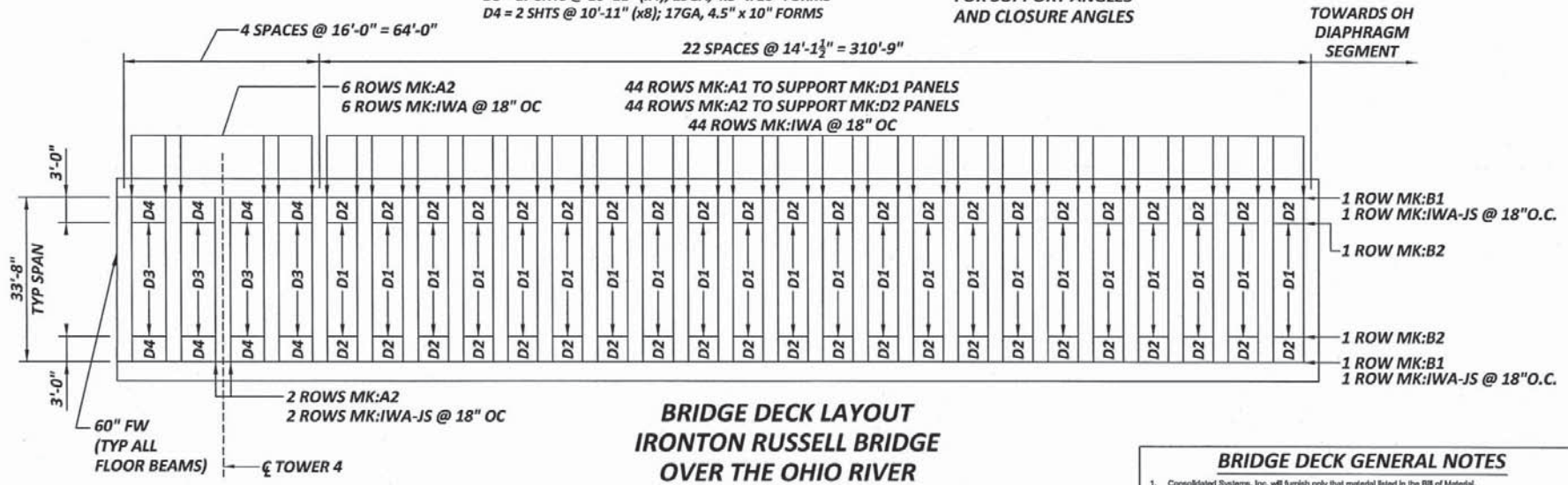

BRIDGE DECK LAYOUT
IRONTON RUSSELL BRIDGE
OVER THE OHIO RIVER

BRIDGE DECK GENERAL NOTES

1. Consolidated Systems, Inc. will furnish only that material listed in the Bill of Material.
2. All material for bridge deck forms (Grade 50) and accessories (Grade 40) shall conform to ASTM specification A-653 having a coating designation of G-235.
3. The contractor shall verify all dimensions.
4. Extra concrete poured on deck slab as a result of these metal forms shall be provided by the General Contractor and will not be the responsibility of or to the account of Consolidated Systems, Inc.
5. ALL DECK SHEETS SHALL HAVE A MINIMUM BEARING OF 1 1/2" AT EACH END OF THE DECK. CENTER FORMS ON SUPPORT ANGLES.
6. FOR THE SAFETY OF THE WORKMEN, ALL DECK SHEETS SHALL BE SECURELY FASTENED TO THE SUPPORT ANGLE AS THEY ARE PLACED, BEFORE CONSTRUCTION TRAFFIC IS PERMITTED.
7. Reinforcing steel and supports for reinforcing steel shall be placed in accordance with applicable drawings and in conformance with good reinforced concrete practice, and under the continuous supervision of a properly trained foreman.
8. CALCIUM CHLORIDE (OR ANY ADMIXTURE CONTAINING CHLORIDE SALTS) SHALL NOT BE USED IN THE CONCRETE PLACE ON THE BRIDGE DECK.
9. When pouring concrete, DO NOT allow overall depth to exceed the design slab depth plus three inches (3"), otherwise, pour concrete over supporting beams and girders and spread to proper depth over bridge forms.
10. If situations arise that are not specifically covered by these notes or placing plans, or if there is any doubt as to the correct procedure to be followed in erection, please contact Consolidated Systems, Inc. for additional instructions or clarification.
11. Vertical adjustment of support angles shall be determined in the field to maintain the correct slab thickness and roadway slope.
12. Closure angles shall not be used as supports for deck form panels.

Review is only for conformance with the design concept. Review does not cover dimensions, quantities, accuracy, fit, or any assembly for which this item may be a component. Review does not authorize deviation from Contract Documents or substitution of materials. Requests for deviations from the Contract Documents will only be addressed thru the Change Order Process.

REVIEWED

CONFORMS WITH CONCEPT	(✓)
CONFORMS AS NOTED	( )
RESUBMIT	( )
NO ACTION	( )
DOES NOT CONFORM	( )

URS

DATE 5/2/2013 BY

STATE OF OHIO
DAVID A. DAY
63531
REGISTERED
PROFESSIONAL ENGINEER
4/19/13

REVISIONS	COMMENTS	DATE
1	APPROVED ADJUST.	4-15-13

REMARKS
BRIDGE DECK LAYOUT, SECTIONS, BILL OF MATERIAL AND GENERAL NOTES
IRONTON RUSSELL BRIDGE OVER THE OHIO RIVER

Metal Dek Group
a unit of CSI
650 ROSEWOOD DRIVE
COLUMBIA SC 29201

CUSTOMER	BRAYMAN CONSTRUCTION CORPORATION			FED. PROJ. E040(653)	
PROJECT NO	BRIDGE NO: LAW-93-0.00			PID NO: 81595	
LOCATION	LAWRENCE CO, OH TO GREENUP CO, KY				
ENGINEER	OHIO DEPARTMENT OF TRANSPORTATION				
DRAWN WMH	DATE 12/2012	CUST. ORDER NO.	CSI JOB NO.	DRAWING NO.	
CHECKED CM	DATE 02/2013	C23981	P03688	2	9 3

BILL OF MATERIAL			
MARK	NO. PCS.	LENGTH	DESCRIPTION
SDS075	12,700	---	SELF DRILLING SCREWS 1/4" - 14 X 3/4" CADMIUM PLTD.
IWA (TO PRE-CASTER)	2452	2"	INSERT WELD ANCHORS 12 GAGE GALV. 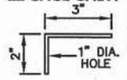
IWA-JS (TO JOBSITE)	857	2"	

BILL OF MATERIAL			
MARK	NO. PCS.	LENGTH	DESCRIPTION
D1	616	9'-0 1/2"	BRIDGE DECK 3" DEEP 8" PITCH 24" COVER CLOSED ENDS ASTM A-653 GRADE 50 18 GAGE GALV. G-235 I=1.360 IN^4 S=0.725 IN^3
D2	176	9'-0 1/2"	BRIDGE DECK 4 1/2" DEEP 10" PITCH 20" COVER CLOSED ENDS ASTM A-653 GRADE 50 20 GAGE GALV. G-235 I=2.754 IN^4 S=1.043 IN^3
D3	136	10'-11"	BRIDGE DECK 4 1/2" DEEP 10" PITCH 20" COVER CLOSED ENDS ASTM A-653 GRADE 50 17 GAGE GALV. G-235 I=4.462 IN^4 S=0.725 IN^3
D4	32	10'-11"	BRIDGE DECK 4 1/2" DEEP 10" PITCH 20" COVER OPEN ENDS ASTM A-653 GRADE 50 14 GAGE GALV. G-235 I=6.346 IN^4 S=2.184 IN^3

BILL OF MATERIAL			
MARK	NO. PCS.	LENGTH	DESCRIPTION
A1	264	10'-0"	SUPPORT ANGLE 10 GAGE GALV. GRADE 40 MIN. 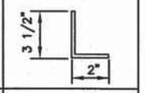
A2	152	10'-0"	SUPPORT ANGLE 8 GAGE GALV. GRADE 50 MIN. 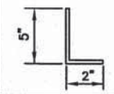
B1	108	10'-0"	CLOSURE ANGLE 18 GAGE GALV. 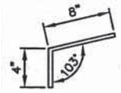
B2	108	10'-0"	CLOSURE ANGLE 18 GAGE GALV. 

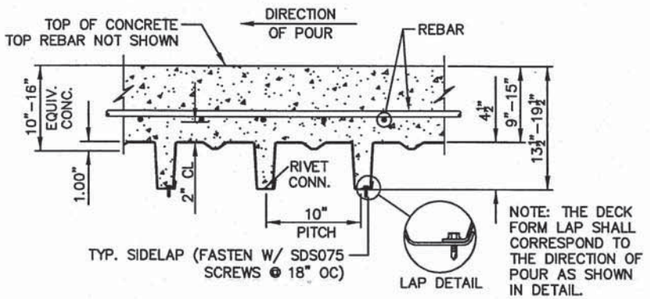

4 1/2" x 10" SLAB SECTION

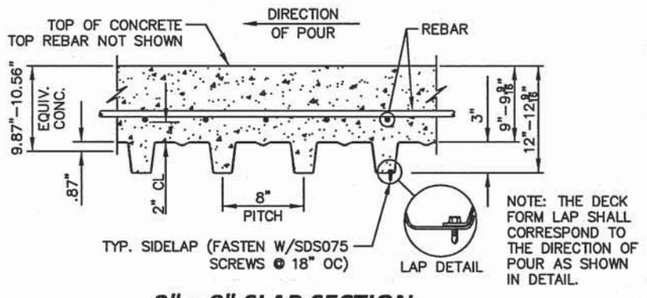

3" x 8" SLAB SECTION

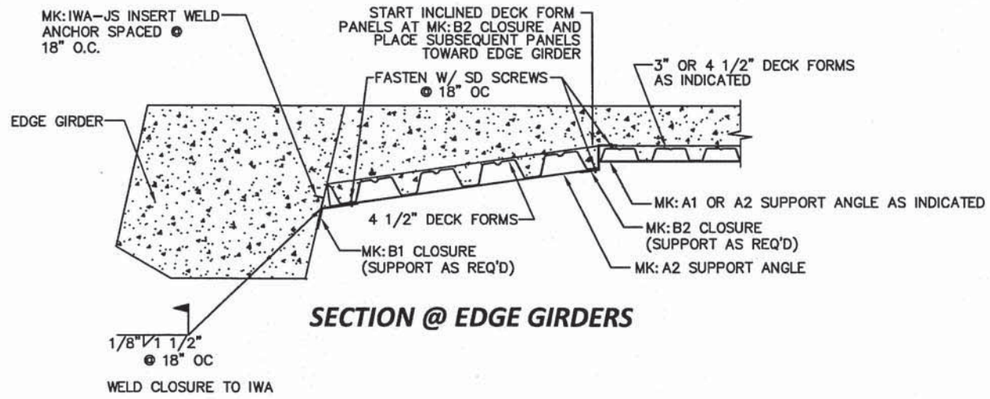

SECTION @ EDGE GIRDERS

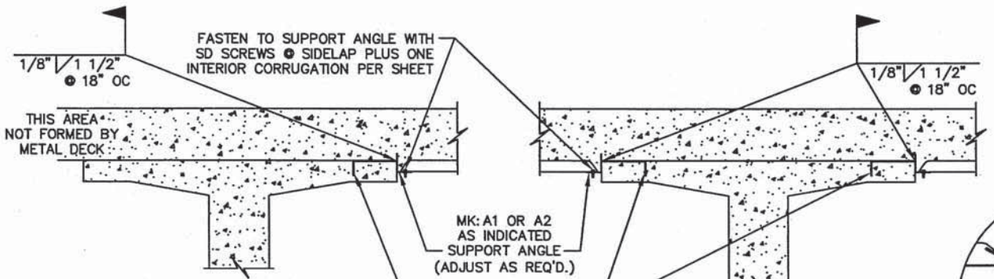

SECTION @ EXTERIOR FLOOR BEAMS

SECTION @ INTERIOR FLOOR BEAMS

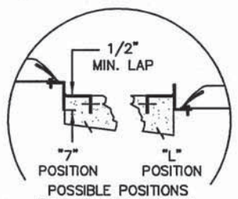

POSSIBLE POSITIONS FOR SUPPORT ANGLES

Review is only for conformance with the design concept. Review does not cover dimensions, quantities, accuracy, fit, or any assembly for which this item may be a component. Review does not authorize deviation from Contract Documents or substitution of materials. Requests for deviations from the Contract Documents will only be addressed thru the Change Order Process.

REVIEWED

CONFORMS WITH CONCEPT ( )
CONFORMS AS NOTED (✓)
RESUBMIT ( )
NO ACTION ( )
DOES NOT CONFORM ( )

URS

DATE 5/2/2013 BY

STATE OF OHIO
DAVID A. DAY
63531
REGISTERED PROFESSIONAL ENGINEER

4/19/13

BRIDGE DECK GENERAL NOTES

1. Consolidated Systems, Inc. will furnish only that material listed in the Bill of Material.
2. All material for bridge deck forms (Grade 50) and accessories (Grade 40) shall conform to ASTM specification A-653 having a coating designation of G-235.
3. The contractor shall verify all dimensions.
4. Extra concrete poured on deck slab as a result of these metal forms shall be provided by the General Contractor and will not be the responsibility of or to the account of Consolidated Systems, Inc.
5. ALL DECK SHEETS SHALL HAVE A MINIMUM BEARING OF 1 1/2" AT EACH END OF THE DECK. CENTER FORMS ON SUPPORT ANGLES.
6. FOR THE SAFETY OF THE WORKMEN, ALL DECK SHEETS SHALL BE SECURELY FASTENED TO THE SUPPORT ANGLE AS THEY ARE PLACED, BEFORE CONSTRUCTION TRAFFIC IS PERMITTED.
7. Reinforcing steel and supports for reinforcing steel shall be placed in accordance with applicable drawings and in conformance with good reinforced concrete practice, and under the continuous supervision of a properly trained foreman.
8. CALCIUM CHLORIDE (OR ANY ADMIXTURE CONTAINING CHLORIDE SALTS) SHALL NOT BE USED IN THE CONCRETE PLACE ON THE BRIDGE DECK.
9. When pouring concrete, DO NOT allow overall depth to exceed the design slab depth plus three inches (3"), otherwise, pour concrete over supporting beams and girders and spread to proper depth over bridge forms.
10. If situations arise that are not specifically covered by these notes or placing plans, or if there is any doubt as to the correct procedure to be followed in erection, please contact Consolidated Systems, Inc. for additional instructions or clarification.
11. Vertical adjustment of support angles shall be determined in the field to maintain the correct slab thickness and roadway slope.
12. Closure angles shall not be used as supports for deck form panels.

REVISIONS	COMMENTS	DATE
1	APPROVED ADJUST.	4-18-13

REMARKS

BRIDGE DECK LAYOUT, SECTIONS, BILL OF MATERIAL AND GENERAL NOTES
IRONTON RUSSELL BRIDGE OVER THE OHIO RIVER

Metal Dek Group a unit of CSI
650 ROSEWOOD DRIVE COLUMBIA SC 29201
SDI

CUSTOMER	BRAYMAN CONSTRUCTION CORPORATION		FED. PROJ. E040(653)
PROJECT NO	BRIDGE NO: LAW–93–0.00		PID NO: 81595
LOCATION	LAWRENCE CO, OH TO GREENUP CO, KY		
ENGINEER	OHIO DEPARTMENT OF TRANSPORTATION		

DRAWN	WMH	DATE	12/2012	CUST. ORDER NO.	CSI JOB NO.	DRAWING NO.
CHECKED	CM	DATE	02/2013	C23981	P03688	3 OF 3

Metal Dek Group
a unit of CSi

Metal Dek Group, a Unit of CSi
650 Rosewood Dr.
Columbia, SC 29201
(803) 771-7920

Date: 4/16/2013

CSi Job Number: P03688

Bridge Deck Product Submittal

BRIDGE: IRONTON RUSSELL BRIDGE OVER THE OHIO RIVER

PROJECT: FED. PROJ. E040(653); PID NO: 81595

BRIDGE NO: LAW-93-0.00

ENGINEER: OHIO DEPARTMENT OF TRANSPORTATION

CONTRACTOR: BRAYMAN CONSTRUCTION CORPORATION

SUBMITTED BY: CHRISTOPHER MCFARLAND

Review is only for conformance with the design concept. Review does not cover dimensions, quantities, accuracy, fit, or any assembly for which this item may be a component. Review does not authorize deviation from Contract Documents or substitution of materials. Requests for deviations from the Contract Documents will only be addressed thru the Change Order Process.

REVIEWED

CONFORMS WITH CONCEPT	(✓)
CONFORMS AS NOTED	( )
RESUBMIT	( )
NO ACTION	( )
DOES NOT CONFORM	( )

URS

DATE 5/2/2013 BY



Metal Dek Group
a unit of CSi

CONSOLIDATED SYSTEMS, INC.
P.O. BOX 1765
COLUMBIA, SC 29202
(888) DEK-DSGN

BRIDGE DECK DESIGN REVIEW

VER 2.1

PROJECT:
IRONTON RUSSELL BRIDGE OVER THE OHIO RIVER

PROJECT NUMBER:
FED. PROJ. E040(653); BRIDGE NO: LAW-93-0.00 | STATE: OH

LOCATION:
LAWRENCE CO, OH TO GREENUP CO, KY | CSI JOB NUMBER: P03688

ENGINEER:
OHIO DEPARTMENT OF TRANSPORTATION | DATE: 2/26/2013

DESCRIPTION:
BEAM CENTER TO CENTER = 14.125'

COMMENTS:
Slab Depth = 9 9/16"

DESIGN INFORMATION

Design Slab Depth, D =	9.56	in	Slab weight for Deflection, Wd		
Concrete Density, γ_{conc} =	150.00	pcf	Wd = max(120, Dc x gconc + Deck Wt) =	133.89	psf
Required deck height =	NA	in	Actual Concrete Weight		
			Wact = Dc x γ_{conc} + Deck Wt. =	133.89	psf
C to C Girders (ft) =	14.125	*14' - 1 1/2"*	Slab weight for Strength, Ws		
Flange Width, Fw =	60.00	in	Ws = Dc x γ_{conc} + Deck Wt. + 50 psf =	183.89	psf
			Slab Concrete Volume		
Clear Span Distance, Cs (ft) =	9.13	*9' - 1 1/2"*	Dc x 144/1728/27 x 100 =	3.22	cu.yd/ 100sf
Support Width, Sw =	2.00	in			
Design Span, L (ft) =Cs - 2 x Sw +2" =	8.96	*9' - 0"*	SELECT DECK COATING		
			Galvanized		
Average Concrete Depth, Dc					
Dc = D + Y	10.43	in			
Deck Yield Strength, Fy_{deck} =	50.00	ksi	ANALYSIS COMPLETE		
Deck Safety Factor, Ω_{deck} =	1.380	*1/SF=0.725*			
Modulus of Elasticity, E =	29,500	ksi			

☐ Include Weight of Concrete from Deflection

☐ Matching Rebar Design
Specified Rebar Pitch: - in o.c.

☐ VOID FILLERS
Void filler coverage: - %

Connection Design Information

Support Information

Support Angle Yield Strength, $Fy_{support}$ =	40.00	ksi
Support Angle Tensile Strength, $Fu_{support}$ =	55.00	ksi
Plate Bending Safety Factor, $\Omega_{support}$ =	1.380	*1/SF=0.725*
Deck Bearing Width, N =	1.50	in

Weld Information

Weld size, w =	0.125	in
Weld Length, Lw =	1.5	in
Weld Spacing =	18	in o.c.

REQUIRED DECK STRENGTH AND STIFFNESS PROPERTIES

Strength

Bending Moment, Mu
Mu = Ws x L^2 / 8 = 1844.6 ft-lbf/ft width

Req. Section Modulus, S_{req}
S_{req} = Mu/min(Fy_{deck} / W_{deck}, 36ksi) = 0.615 in^3 / ft width

Shear at Support Angle, R
R = Ws x L / 2 = 823.7 lb/ft of width

Deflection

Deflection Limit, Δ_{limt}
L/180 (0.50" max) = 0.500 in

Actual Calc. Deflection, Δ
Δ = 0.48 in

Required Moment of Inertia, I_{req}
I_{req} = 0.013 x Wd x L^4 / E x Δ = 1.313 in^4 / ft width

Deck Selected

Deck Type	BD183080	
Thickness	18	Gage
Depth	3	in
Pitch	8	in
Deck Wt	3.48	psf
Equivalent Conc in Flutes, Y =	0.87	in
I_{deck} =	1.36	in^4 / ft width
S_{deck} =	0.725	in^3 / ft width

USE: 18GA, 3"H x 8" PITCH, DECK PROFILE

I_{req} = 1.313 in^4 / ft width
S_{req} = 0.615 in^3 / ft width

Stress in Deck
Allowable Stress, Fy_{deck} / Ω_{deck} = 36.00 ksi
Applied Stress, Mu / S_{deck} = 30.53 ksi
OK

SUPPORT ANGLE CHECK

Moment Arm, e
e = Sw - t_s - N/2 = 1.12 in

Support angle design span, L_{spt}
L_{spt} = Cs - 2*t_s /12 = 9.10 ft

Applied Load, P
P = Ws x Cs /2 = 838.98 lbf/ft

USE: 10GA (0.1345") x 2" HORIZONTAL LEG SUPPORT ANGLE

Applied Moment @ Support, Msu
Msu = P x e = 935.9 in-lbf/ft width

Required Section Modulus of Support, S_{req_Spt}
S_{req_Spt} = Msu /($Fy_{support}$ / $\Omega_{support}$)= 0.0323 in^3 / ft width

Allowable Stress in Support
$Fy_{support}$ / $\Omega_{support}$ = 28.99 ksi

Calculated Thickness	0.1275	in
Calculated Section Modulus	0.0325	in^3 / ft width
Selected angle thickness, t_s	0.1345	in
	10	GAGE

Actual Section Modulus, S_{act}
S_{act} = b x t_s^2 /6 = 0.0362 in^3 / ft width
Applied Stress, Msu / S_{act} = 25.87 ksi

CONSOLIDATED SYSTEMS, INC.
P.O. BOX 1765
COLUMBIA, SC 29202
(888) DEK-DSGN

BRIDGE DECK DESIGN REVIEW

PROJECT: FED. PROJ. E040(653); BRIDGE NO: LAW-93-0.0
CSI JOB NUMBER: P03688

WELD SPACING CHECK *Nominal Weld Transverse Shear Capacity (Ref. AISI 2007 E2.4)*

PL embed or Flange thickness		0.1046	in
t_{s1} = min(t_s, PL embed or Flange thickness)		0.1046	in
Pn1 = t_{s1} x 1" x $Fu_{support}$ =	5753	lbf / in weld	AISI 2007, Eq. E2.4-3
Weld Safety Factor, Ω_{weld1} =	2.35		
Pn1 / Ω_{weld1} =	2448	lbf / in weld	
Electrode Strength, Fxx =	70.00	ksi	
Pn2 = 0.75 x 0.707w x 1" x Fxx =	4640	lbf / in weld	AISI 2007, Eq. E2.4-4
Weld Safety Factor, Ω_{weld2} =	2.55		
Pn2 / Ω_{weld2} =	1819	lbf / in weld	

Required Weld Check

R_{PLe} =	1235	lb / PL embed
R_{PLe} /Lw x min(Pn1 /Ω_{weld1},Pn2 /Ω_{weld2}) =	0.453	in weld req. /PL embed spacing
Weld Length Specified	1.5	in
Weld Check	OK	

Metal Dek Group
a unit of CSI

CONSOLIDATED SYSTEMS, INC.
P.O. BOX 1765
COLUMBIA, SC 29202
(888) DEK-DSGN

BRIDGE DECK DESIGN REVIEW

VER 2.1

PROJECT:
IRONTON RUSSELL BRIDGE OVER THE OHIO RIVER

PROJECT NUMBER:
FED. PROJ. E040(653); BRIDGE NO: LAW-93-0.00 | STATE: OH

LOCATION:
LAWRENCE CO, OH TO GREENUP CO, KY | CSI JOB NUMBER: P03688

ENGINEER:
OHIO DEPARTMENT OF TRANSPORTATION | DATE: 2/26/2013

DESCRIPTION:
BEAM CENTER TO CENTER = 14.125'

COMMENTS:
Slab Depth = 15"

DESIGN INFORMATION

Design Slab Depth, D =	15.00	in	Slab weight for Deflection, Wd		
Concrete Density, γ_{conc} =	150.00	pcf	Wd = max(120, Dc x gconc + Deck Wt) =	203.29	psf
Required deck height =	NA	in	Actual Concrete Weight		
			Wact = Dc x γ_{conc} + Deck Wt. =	203.29	psf
C to C Girders (ft) =	14.125	*14' - 1 1/2"*	Slab weight for Strength, Ws		
Flange Width, Fw =	60.00	in	Ws = Dc x γ_{conc} + Deck Wt. + 50 psf =	253.29	psf
			Slab Concrete Volume		
Clear Span Distance, Cs (ft) =	9.13	*9' - 1 1/2"*	Dc x 144/1728/27 x 100 =	4.94	cu.yd/ 100sf
Support Width, Sw =	2.00	in			
Design Span, L (ft) =Cs - 2 x Sw +2" =	8.96	*9' - 0"*	SELECT DECK COATING		
			Galvanized		
Average Concrete Depth, Dc					
Dc = D + Y	16.00	in			
Deck Yield Strength, Fy_{deck} =	50.00	ksi	ANALYSIS COMPLETE		
Deck Safety Factor, Ω_{deck} =	1.380	*1/SF=0.725*			
Modulus of Elasticity, E =	29,500	ksi			

☐ Include Weight of Concrete from Deflection

☐ Matching Rebar Design
Specified Rebar Pitch: - in o.c.

☐ VOID FILLERS
Void filler coverage: - %

Connection Design Information

Support Information

Support Angle Yield Strength, $Fy_{support}$ =	40.00	ksi
Support Angle Tensile Strength, $Fu_{support}$ =	55.00	ksi
Plate Bending Safety Factor, $\Omega_{support}$ =	1.380	*1/SF=0.725*
Deck Bearing Width, N =	1.50	in

Weld Information

Weld size, w =	0.125	in
Weld Length, Lw =	1.5	in
Weld Spacing =	18	in o.c.

REQUIRED DECK STRENGTH AND STIFFNESS PROPERTIES

Strength

Bending Moment, Mu
Mu = Ws x L^2 / 8 = 2540.9 ft-lbf/ft width

Req. Section Modulus, S_{req}
S_{req} = Mu/min(Fy_{deck} / W_{deck}, 36ksi) = 0.847 in^3 / ft width

Shear at Support Angle, R
R = Ws x L / 2 = 1134.5 lb/ft of width

Deflection

Deflection Limit, Δ_{limt}
L/180 (0.50" max) = 0.500 in

Actual Calc. Deflection, Δ
Δ = 0.36 in

Required Moment of Inertia, I_{req}
I_{req} = 0.013 x Wd x L^4 / E x Δ = 1.994 in^4 / ft width

Deck Selected

Deck Type	BD204510	
Thickness	20	Gage
Depth	4.5	in
Pitch	10	in
Deck Wt	3.29	psf
Equivalent Conc in Flutes, Y =	1.00	in
I_{deck} =	2.754	in^4 / ft width
S_{deck} =	1.043	in^3 / ft width

USE: 20GA, 4.5"H x 10" PITCH, DECK PROFILE

I_{req} = 1.994 in^4 / ft width
S_{req} = 0.847 in^3 / ft width

Stress in Deck
Allowable Stress, Fy_{deck} / Ω_{deck} = 36.00 ksi
Applied Stress, Mu / S_{deck} = 29.23 ksi
OK

SUPPORT ANGLE CHECK

Moment Arm, e
e = Sw - t_s - N/2 = 1.09 in

Support angle design span, L_{spt}
L_{spt} = Cs - 2*t_s /12 = 9.10 ft

Applied Load, P
P = Ws x Cs /2 = 1155.64 lbf/ft

Applied Moment @ Support, Msu
Msu = P x e = 1254.6 in-lbf/ft width

USE: 8GA (0.1644") x 2" HORIZONTAL LEG SUPPORT ANGLE

Required Section Modulus of Support, S_{req_Spt}
S_{req_Spt} = Msu /($Fy_{support}$ / $\Omega_{support}$)= 0.0433 in^3 / ft width

Allowable Stress in Support
$Fy_{support}$ / $\Omega_{support}$ = 28.99 ksi

Calculated Thickness = 0.1475 in
Calculated Section Modulus = 0.0435 in^3 / ft width
Selected angle thickness, t_s = 0.1644 in
8 GAGE

Actual Section Modulus, S_{act}
S_{act} = b x t_s^2 /6 = 0.0541 in^3 / ft width
Applied Stress, Msu / S_{act} = 23.21 ksi

CONSOLIDATED SYSTEMS, INC.
P.O. BOX 1765
COLUMBIA, SC 29202
(888) DEK-DSGN

BRIDGE DECK DESIGN REVIEW

PROJECT: FED. PROJ. E040(653); BRIDGE NO: LAW-93-0.0
CSI JOB NUMBER: P03688

WELD SPACING CHECK — *Nominal Weld Transverse Shear Capacity (Ref. AISI 2007 E2.4)*

PL embed or Flange thickness		0.1046	in
t_{s1} = min(t_s, PL embed or Flange thickness)		0.1046	in
Pn1 = t_{s1} x 1" x $Fu_{support}$ =	5753	lbf / in weld	AISI 2007, Eq. E2.4-3
Weld Safety Factor, Ω_{weld1} =	2.35		
Pn1 / Ω_{weld1} =	2448	lbf / in weld	
Electrode Strength, Fxx =	70.00	ksi	
Pn2 = 0.75 x 0.707w x 1" x Fxx =	4640	lbf / in weld	AISI 2007, Eq. E2.4-4
Weld Safety Factor, Ω_{weld2} =	2.55		
Pn2 / Ω_{weld2} =	1819	lbf / in weld	

Required Weld Check

R_{PLe} =	1702	lb / PL embed
R_{PLe} /Lw x min(Pn1 /Ω_{weld1},Pn2 /Ω_{weld2}) =	0.624	in weld req. /PL embed spacing
Weld Length Specified	1.5	in
Weld Check	OK	

Metal Dek Group
a unit of CSI

CONSOLIDATED SYSTEMS, INC.
P.O. BOX 1765
COLUMBIA, SC 29202
(888) DEK-DSGN

BRIDGE DECK DESIGN REVIEW

VER 2.1

PROJECT:
IRONTON RUSSELL BRIDGE OVER THE OHIO RIVER
PROJECT NUMBER:
FED. PROJ. E040(653); BRIDGE NO. LAW-93-0.00 — STATE: OH
LOCATION:
LAWRENCE CO, OH TO GREENUP CO, KY — CSI JOB NUMBER: P03688
ENGINEER:
OHIO DEPARTMENT OF TRANSPORTATION — DATE: 4/16/2013
DESCRIPTION:
BEAM CENTER TO CENTER = 16'-0" @ TOWER BAYS
COMMENTS:
Slab Depth = 9 9/16"

DESIGN INFORMATION

Design Slab Depth, D =	9.56	in	Slab weight for Deflection, Wd		
Concrete Density, γ_{conc} =	150.00	pcf	Wd = max(120, Dc x gconc + Deck Wt) =	135.87	psf
Required deck height =	NA	in	Actual Concrete Weight		
			Wact = Dc x γ_{conc} + Deck Wt. =	135.87	psf
C to C Girders (ft) =	16.000	*16' - 0"*	Slab weight for Strength, Ws		
Flange Width, Fw =	60.00	in	Ws = Dc x γ_{conc} + Deck Wt. + 50 psf =	185.87	psf
			Slab Concrete Volume		
Clear Span Distance, Cs (ft) =	11.00	*11' - 0"*	Dc x 144/1728/27 x 100 =	3.26	cu.yd/ 100sf
Support Width, Sw =	2.00	in			
Design Span, L (ft) =Cs - 2 x Sw +2" =	10.83	*10' - 10"*	**SELECT DECK COATING**		
			Galvanized		
Average Concrete Depth, Dc			Galvanized		
Dc = D + Y	10.56	in			
Deck Yield Strength, Fy_{deck} =	50.00	ksi	**ANALYSIS COMPLETE**		
Deck Safety Factor, Ω_{deck} =	1.380	*1/SF=0.725*			
Modulus of Elasticity, E =	29,500	ksi			

☐ Include Weight of Concrete from Deflection

☐ Matching Rebar Design
Specified Rebar Pitch: - in o.c.

☐ VOID FILLERS
Void filler coverage: - %

Connection Design Information

Support Information

Support Angle Yield Strength, $Fy_{support}$ =	40.00	ksi
Support Angle Tensile Strength, $Fu_{support}$ =	55.00	ksi
Plate Bending Safety Factor, $\Omega_{support}$ =	1.380	*1/SF=0.725*
Deck Bearing Width, N =	1.50	in

Weld Information

Weld size, w =	0.125	in
Weld Length, Lw =	1.5	in
Weld Spacing =	18	in o.c.

REQUIRED DECK STRENGTH AND STIFFNESS PROPERTIES

Strength

Bending Moment, Mu
Mu = Ws x L^2 / 8 = 2726.8 ft-lbf/ft width

Req. Section Modulus, S_{req}
S_{req} = Mu/min(Fy_{deck} / W_{deck}, 36ksi) = 0.909 in^3 / ft width

Shear at Support Angle, R
R = Ws x L / 2 = 1006.8 lb/ft of width

Deflection

Deflection Limit, Δ_{lmt}
L/180 (0.50" max) = 0.500 in

Actual Calc. Deflection, Δ
Δ = 0.43 in

Required Moment of Inertia, I_{req}
I_{req} = 0.013 x Wd x L^4 / E x Δ = 2.850 in^4 / ft width

Deck Selected

Deck Type	BD194510	
Thickness	19	Gage
Depth	4.5	in
Pitch	10	in
Deck Wt	3.84	psf
Equivalent Conc in Flutes, Y =	1.00	in
I_{deck} =	3.345	in^4 / ft width
S_{deck} =	1.239	in^3 / ft width

USE: 19GA, 4.5"H x 10" PITCH, DECK PROFILE

I_{req} = 2.850 in^4 / ft width
S_{req} = 0.909 in^3 / ft width

Stress in Deck
Allowable Stress, Fy_{deck} / Ω_{deck} = 36.00 ksi
Applied Stress, Mu / S_{deck} = 26.41 ksi
OK

SUPPORT ANGLE CHECK

Moment Arm, e
e = Sw - t_s - N/2 = 1.09 in

Support angle design span, L_{spt}
L_{spt} = Cs - 2*t_s /12 = 10.97 ft

Applied Load, P
P = Ws x Cs /2 = 1022.29 lbf/ft

Applied Moment @ Support, Msu
Msu = P x e = 1109.8 in-lbf/ft width

USE: 8GA (0.1644") x 2" HORIZONTAL LEG SUPPORT ANGLE

Required Section Modulus of Support, S_{req_Spt}
S_{req_Spt} = Msu /($Fy_{support}$ / $\Omega_{support}$)= 0.0383 in^3 / ft width

Allowable Stress in Support
$Fy_{support}$ / $\Omega_{support}$ = 28.99 ksi

Calculated Thickness	0.1385	in
Calculated Section Modulus	0.0384	in^3 / ft width
Selected angle thickness, t_s	0.1644	in
	8	GAGE

Actual Section Modulus, S_{act}
S_{act} = b x t_s^2 /6 = 0.0541 in^3 / ft width
Applied Stress, Msu / S_{act} = 20.53 ksi

CONSOLIDATED SYSTEMS, INC.
P.O. BOX 1765
COLUMBIA, SC 29202
(888) DEK-DSGN

BRIDGE DECK DESIGN REVIEW

PROJECT: FED. PROJ. E040(653); BRIDGE NO. LAW-93-0.0
CSI JOB NUMBER: P03688

WELD SPACING CHECK *Nominal Weld Transverse Shear Capacity (Ref. AISI 2007 E2.4)*

PL embed or Flange thickness	0.1046	in
t_{s1} = min(t_s, PL embed or Flange thickness)	0.1046	in
$Pn1 = t_{s1}$ x 1" x $Fu_{support}$ =	5753	lbf / in weld AISI 2007, Eq. E2.4-3
Weld Safety Factor, Ω_{weld1} =	2.35	
$Pn1 / \Omega_{weld1}$ =	2448	lbf / in weld
Electrode Strength, Fxx =	70.00	ksi
Pn2 = 0.75 x 0.707w x 1" x Fxx =	4640	lbf / in weld AISI 2007, Eq. E2.4-4
Weld Safety Factor, Ω_{weld2} =	2.55	
$Pn2 / \Omega_{weld2}$ =	1819	lbf / in weld

Required Weld Check

R_{PLe} =	1510	lb / PL embed
R_{PLe} /Lw x min(Pn1 /Ω_{weld1},Pn2 /Ω_{weld2}) =	0.553	in weld req. /PL embed spacing
Weld Length Specified	1.5	in
Weld Check	OK	

Metal Dek Group
a unit of CSI

CONSOLIDATED SYSTEMS, INC.
P.O. BOX 1765
COLUMBIA, SC 29202
(888) DEK-DSGN

BRIDGE DECK DESIGN REVIEW

VER 2.1

PROJECT:
IRONTON RUSSELL BRIDGE OVER THE OHIO RIVER

PROJECT NUMBER:
FED. PROJ. E040(653); BRIDGE NO: LAW-93-0.00 — STATE: OH

LOCATION:
LAWRENCE CO, OH TO GREENUP CO, KY — CSI JOB NUMBER: P03688

ENGINEER:
OHIO DEPARTMENT OF TRANSPORTATION — DATE: 4/16/2013

DESCRIPTION:
BEAM CENTER TO CENTER = 16' @ TOWER BAYS

COMMENTS:
Slab Depth = 15"

DESIGN INFORMATION

Design Slab Depth, D =	15.00	in	
Concrete Density, γ_{conc} =	150.00	pcf	
Required deck height =	NA	in	
C to C Girders (ft) =	16.000	16' - 0"	
Flange Width, Fw =	60.00	in	
Clear Span Distance, Cs (ft) =	11.00	11' - 0"	
Support Width, Sw =	2.00	in	
Design Span, L (ft) =Cs - 2 x Sw +2" =	10.83	10' - 10"	
Average Concrete Depth, Dc			
Dc = D + Y	16.00	in	
Deck Yield Strength, Fy_{deck} =	50.00	ksi	
Deck Safety Factor, Ω_{deck} =	1.380	1/SF=0.725	
Modulus of Elasticity, E =	29,500	ksi	

Slab weight for Deflection, Wd
Wd = max(120, Dc x gconc + Deck Wt) = 204.83 psf

Actual Concrete Weight
Wact = Dc x γ_{conc} + Deck Wt. = 204.83 psf

Slab weight for Strength, Ws
Ws = Dc x γ_{conc} + Deck Wt. + 50 psf = 254.83 psf

Slab Concrete Volume
Dc x 144/1728/27 x 100 = 4.94 cu.yd/ 100sf

SELECT DECK COATING
Galvanized
Galvanized

ANALYSIS COMPLETE

☐ Include Weight of Concrete from Deflection

☐ Matching Rebar Design
Specified Rebar Pitch - in o.c.

☐ VOID FILLERS
Void filler coverage - %

Connection Design Information

Support Information

Support Angle Yield Strength, $Fy_{support}$ =	40.00	ksi
Support Angle Tensile Strength, $Fu_{support}$ =	55.00	ksi
Plate Bending Safety Factor, $\Omega_{support}$ =	1.380	1/SF=0.725
Deck Bearing Width, N =	1.50	in

Weld Information

Weld size, w =	0.125	in
Weld Length, Lw =	1.5	in
Weld Spacing =	18	in o.c.

REQUIRED DECK STRENGTH AND STIFFNESS PROPERTIES

Strength

Bending Moment, Mu
Mu = Ws x L^2 / 8 = 3738.4 ft-lbf/ft width

Req. Section Modulus, S_{req}
S_{req} = Mu/min(Fy_{deck} / W_{deck}, 36ksi) 1.246 in^3 / ft width

Shear at Support Angle, R
R = Ws x L / 2 1380.3 lb/ft of width

Deflection

Deflection Limit, Δ_{lmt}
L/180 (0.50" max) = 0.500 in

Actual Calc. Deflection, Δ
Δ = 0.48 in

Required Moment of Inertia, I_{req}
I_{req} = 0.013 x Wd x L^4 / E x Δ = 4.297 in^4 / ft width

Deck Selected

Deck Type	BD174510	
Thickness	17	Gage
Depth	4.5	in
Pitch	10	in
Deck Wt	4.83	psf
Equivalent Conc in Flutes, Y =	1.00	in
I_{deck} =	4.462	in^4 / ft width
S_{deck} =	1.601	in^3 / ft width

USE: 17GA, 4.5"H x 10" PITCH, DECK PROFILE

I_{req} = 4.297 in^4 / ft width
S_{req} = 1.246 in^3 / ft width

Stress in Deck
Allowable Stress, Fy_{deck} / Ω_{deck} = 36.00 ksi
Applied Stress, Mu / S_{deck} = 28.02 ksi
OK

SUPPORT ANGLE CHECK

Moment Arm, e
e = Sw - t_s - N/2 = 1.09 in

Support angle design span, L_{spt}
L_{spt} = Cs - 2*t_s /12 10.97 ft

Applied Load, P
P = Ws x Cs /2 1401.57 lbf/ft

Applied Moment @ Support, Msu
Msu = P x e = 1521.5 in-lbf/ft width

USE: 8GA (0.1644") x 2" HORIZONTAL LEG SUPPORT ANGLE

Required Section Modulus of Support, S_{req_Spt}
S_{req_Spt} = Msu /($Fy_{support}$ / $\Omega_{support}$)= 0.0525 in^3 / ft width

Allowable Stress in Support
$Fy_{support}$ / $\Omega_{support}$ = 28.99 ksi

Calculated Thickness	0.1625	in
Calculated Section Modulus	0.0528	in^3 / ft width
Selected angle thickness, t_s	0.1644	in
	8	GAGE

Actual Section Modulus, S_{act}
S_{act} = b x t_s^2 /6 0.0541 in^3 / ft width
Applied Stress, Msu / S_{act} = 28.15 ksi

CONSOLIDATED SYSTEMS, INC.
P.O. BOX 1765
COLUMBIA, SC 29202
(888) DEK-DSGN

BRIDGE DECK DESIGN REVIEW

PROJECT: FED. PROJ. E040(653); BRIDGE NO: LAW-93-0.0
CSI JOB NUMBER: P03688

WELD SPACING CHECK *Nominal Weld Transverse Shear Capacity (Ref. AISI 2007 E2.4)*

PL embed or Flange thickness	0.1046	in
t_{s1} = min(t_s, PL embed or Flange thickness)	0.1046	in
$Pn1 = t_{s1}$ x 1" x $Fu_{support}$ =	5753	lbf / in weld AISI 2007, Eq. E2.4-3
Weld Safety Factor, Ω_{weld1} =	2.35	
$Pn1 / \Omega_{weld1}$ =	2448	lbf / in weld
Electrode Strength, Fxx =	70.00	ksi
Pn2 = 0.75 x 0.707w x 1" x Fxx =	4640	lbf / in weld AISI 2007, Eq. E2.4-4
Weld Safety Factor, Ω_{weld2} =	2.55	
$Pn2 / \Omega_{weld2}$ =	1819	lbf / in weld

Required Weld Check

R_{PLe} =	2070	lb / PL embed
R_{PLe} /Lw x min(Pn1 /Ω_{weld1},Pn2 /Ω_{weld2}) =	0.759	in weld req. /PL embed spacing
Weld Length Specified	1.5	in
Weld Check	OK	

Review is only for conformance with the design concept. Review does not cover dimensions, quantities, accuracy, fit, or any assembly for which this item may be a component. Review does not authorize deviation from Contract Documents or substitution of materials. Requests for deviations from the Contract Documents will only be addressed thru the Change Order Process.

REVIEWED

CONFORMS WITH CONCEPT (✓) RESUBMIT ( ) DOES NOT CONFORM ( )
CONFORMS AS NOTED ( ) NO ACTION ( )

URS

DATE 4/26/2013 BY

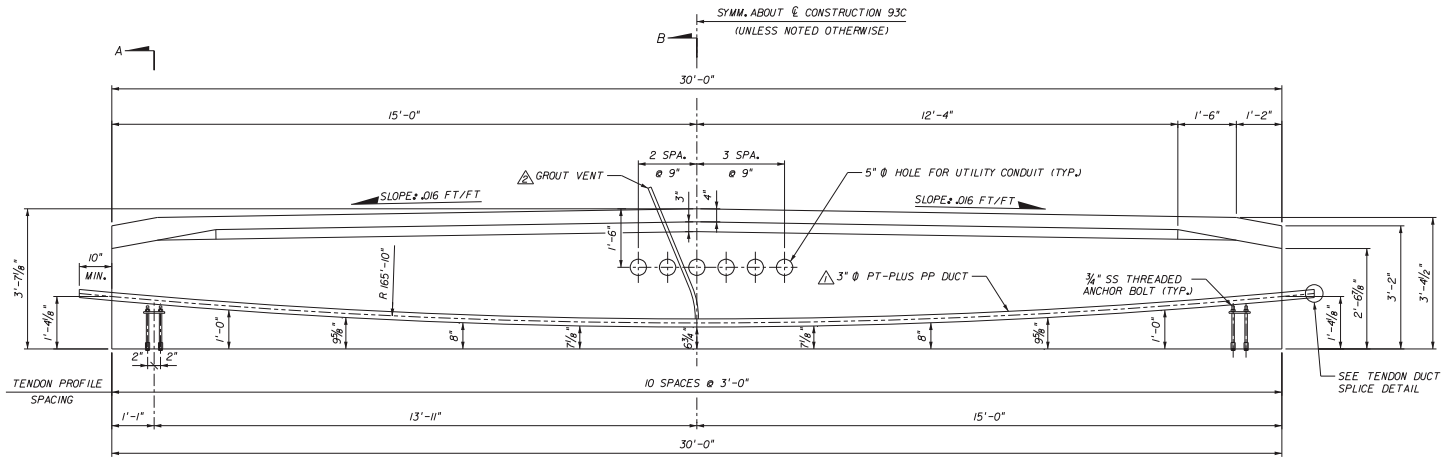

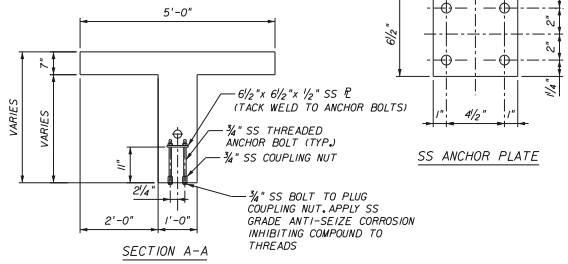

SECTION A-A

SS ANCHOR PLATE

PRECAST FLOORBEAM PBIA

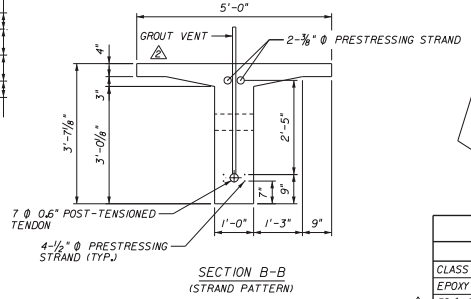

SECTION B-B
(STRAND PATTERN)

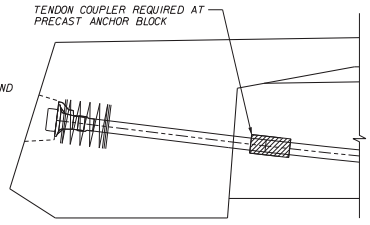

TENDON DUCT SPLICE DETAIL

PRESTRESSING DATA:

1. ALL PRESTRESS STRAND SHALL BE GRADE 270 LOW RELAXATION.
2. STRESSING DATA:
   - A. 7 ø 0.6" TENDON:
     INTIAL STRESSING FORCE = 145 KIPS (AFTER BEAM CLOSURE POUR)
     FINAL STRESSING FORCE= 308 KIPS (FOLLOWING DECK POUR)
   - B. ⅞" ø STRAND:
     STRESSING FORCE= 10 KIPS
   - C. ½" ø STRAND:
     STRESSING FORCE= 28 KIPS

NOTES:

1. STAINLESS STEEL ANCHOR BOLTS ARE PROVIDED FOR SUPPORT OF A FUTURE INSPECTION TRAVELER TO BE SUPPLIED BY OTHERS.
2. STAINLESS STEEL ANCHOR BOLTS SHALL BE IN ACCORDANCE WITH ASTM F593.
3. STAINLESS STEEL NUTS SHALL BE IN ACCORDANCE WITH ASTM F594.
4. THE COUPLING NUT SHALL BE CAPABLE OF DEVELOPING 125% OF THE YIELD STRENGTH OF THE ANCHOR BOLT.
5. MINIMUM CONCRETE STRENGTH AT RELEASE = 3,500 PSI
6. BEAM CAMBER AT RELEASE = +1/32" AT MID-SPAN.
7. BEAM DEFLECTION DUE TO SLAB POUR = -1/32" AT MID-SPAN.

ESTIMATED QUANTITIES

ITEM	UNIT	QUANTITY	
CLASS QSC3 CONCRETE (6,500 KSI)	C.Y.	5.8	
EPOXY COATED REINF. (GRADE 60)	LBS.	2,247	3
3" ø PT-PLUS PP DUCT	L.F.	32.4	1
LIFTING ASSEMBLY	EA.	2	
SAFETY SLEEVES	EA.	4	
¾" SS THREADED ANCHOR BOLT	EA.	8	
¾" SS COUPLING NUT	EA.	8	
¾" SS BOLT	EA.	8	
6½" x 6½" x ½" SS ℄	LB.	12	1
½" ø PRESTRESSING STRAND	L.F.	122.7	
⅞" ø PRESTRESSING STRAND	L.F.	61.3	

STATE OF OHIO
R. CRAIG FINLEY, JR.
REGISTERED PROFESSIONAL ENGINEER
4/23/2013

I HAVE REVIEWED THESE SHOP DRAWINGS FOR CONSISTENCY WITH THE CONTRACT DRAWINGS AND MY ENDORSEMENT IS LIMITED TO COMPLIANCE WITH SECTION 104 'SHOP DRAWINGS', IN THE CONTRACT SPECIAL PROVISIONS FOR CONCRETE AND SEGMENT PRODUCTION FOR CABLE-STAYED CONSTRUCTION.
R. CRAIG FINLEY, JR., P.E. E59149

This plan was prepared in compliance with contract documents.

Revision	Drawn By	Date	Description
1	MWR	11/09/12	Revised tendon hardware size and quantity, added grout vent.
2	MWR	11/19/12	Revised location of grout vent.
3	RHL	04/23/13	Revised bar quantities.

	Name	Date
Drawn By:	RHL	08/12
Checked By:	MWR	08/12
Approved By:	RCF	08/12

FINLEY Engineering Group, Inc.
1589 Metropolitan Blvd.
Tallahassee, FL 32308
850-894-1600
Fax: 850-894-1614

Client: BRAYMAN construction corporation — Innovative Solutions — Since 1947

Project: IRONTON RUSSELL BRIDGE OVER THE OHIO RIVER

Title: SIDE SPAN PRECAST FLOORBEAM PBIA DIMENSIONS

Sheet No. S-123

Plotted By: Robyn.Lombard 4/23/2013 1:21:00 PM G:\Ironton-Russell\CADD\Shop_Drawings\SuperStructure\Floorbeams\PBIA (NEW).dgn

Review is only for conformance with the design concept. Review does not cover dimensions, quantities, accuracy, fit, or any assembly for which this item may be a component. Review does not authorize deviation from Contract Documents or substitution of materials. Requests for deviations from the Contract Documents will only be addressed thru the Change Order Process.

REVIEWED

CONFORMS WITH CONCEPT (✓) RESUBMIT ( ) DOES NOT CONFORM ( )
CONFORMS AS NOTED ( ) NO ACTION ( )

URS

DATE 4/26/2013 BY

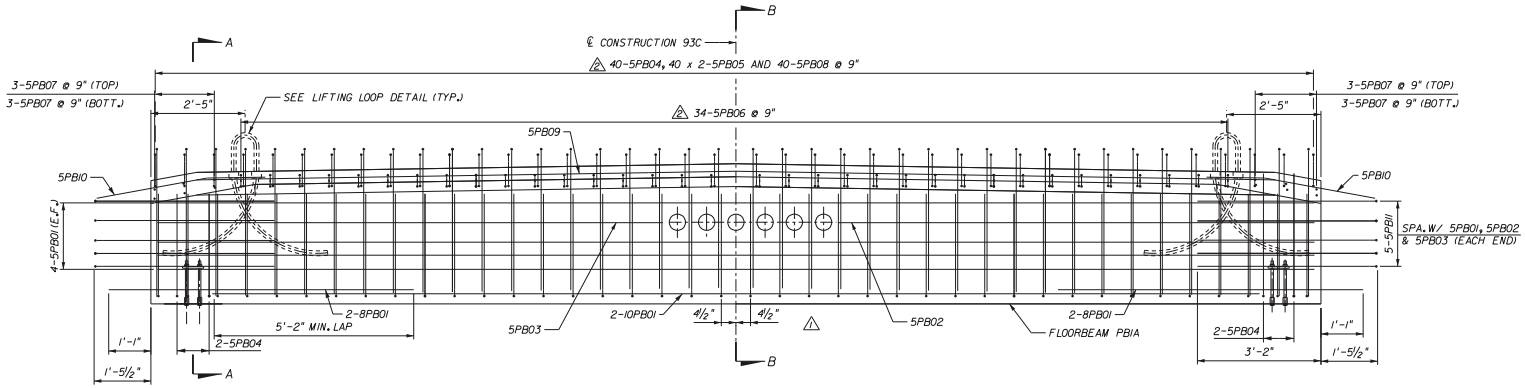

FLOORBEAM PBIA REINFORCEMENT

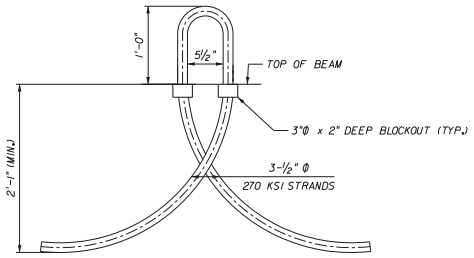

TYPICAL LIFTING LOOP

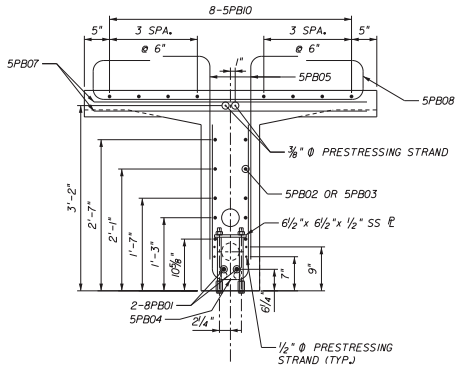

SECTION A-A

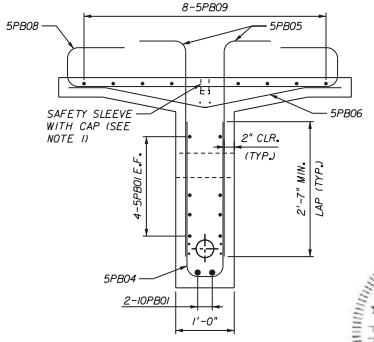

SECTION B-B

NOTES:
1. SAFETY SLEEVES ARE PERMITTED IN THIS TOP FLANGE. SAFTEY SLEEVE ALTERNATIVE SHOWN IS 2½"NPSx5" SCH 40 PVC PIPE WITH CAP 4'-0" FROM END AND SPACED AT 8'-0" ON CENTER MAX.

STATE OF OHIO R. CRAIG FINLEY, JR. REGISTERED PROFESSIONAL ENGINEER

4/23/2013

I HAVE REVIEWED THESE SHOP DRAWINGS FOR CONSISTENCY WITH THE CONTRACT DRAWINGS AND MY ENDORSEMENT IS LIMITED TO COMPLIANCE WITH SECTION 104 "SHOP DRAWINGS", IN THE CONTRACT SPECIAL PROVISIONS FOR CONCRETE AND SEGMENT PRODUCTION FOR CABLE-STAYED CONSTRUCTION.
R. CRAIG FINLEY, JR., P.E. 59149

This plan was prepared in compliance with contract documents.

Revision	Drawn By	Date	Description
1	MWR	11/09/12	Removed bar callout and added Note 1.
2	RHL	04/23/13	Revised bar quantities.

	Name	Date
Drawn By:	RHL	05/12
Checked By:	MWR	05/12
Approved By:	RCF	05/12

FINLEY Engineering Group, Inc.
1589 Metropolitan Blvd.
Tallahassee, FL 32308
850-894-1600
Fax: 850-894-1614

Client: BRAYMAN construction corporation

Project: IRONTON RUSSELL BRIDGE OVER THE OHIO RIVER

Title: SIDE SPAN PRECAST FLOORBEAM PBIA REINFORCEMENT

Sheet No. S-124

Plotted By: Robyn Lombardi 4/23/2013 1:21:39 PM G:\Ironton-Russell\CADD\Shop_Drawings\SuperStructure\Floorbeams\PBIA (NEW).dgn

IRONTON RUSSELL BRIDGE
OVER THE OHIO RIVER
BRIDGE NO. LAW-93-0000

FINLEY Engineering Group, Inc.
1589 Metropolitan Blvd.
Tallahassee, FL. 32308
850-894-1600
Fax: 850-894-1614

DETAILED	CHECKED	DATE	REV.
RHL	MWR	8/26/2012	-

ITEM: FLOORBEAM PBIA

	BAR		LENGTH		NO	TYPE	A			B			C			D			E			F			G			H			J			K			N	Ø		R		
REV	SIZE	MARK	FT	IN	BARS	BAR	FT	IN	FR	FT	IN	FR	FT	IN	FR	FT	IN	FR	FT	IN	FR	FT	IN	FR	FT	IN	FR	FT	IN	FR	FT	IN	FR	FT	IN	FR	NO. OR ANG	FT	IN	FR	FT	IN	FR
-	5	PB01	29'-8"		8	33				29'-8"																																	
-	5	PB02	12'-2"		2	33				12'-2"																																	
-	5	PB03	12'-11"		2	33				12'-11"																																	
2	5	PB04	6'-0"		44	17				2'-8"			8"			2'-8"																											
2	5	PB05	4'-8"		80	37				3'-8"			1'-0"																													
2	5	PB06	4'-9"		34	62				7 1/4"			1'-9 1/4"			7 1/4"												4 3/4"						1'-8 3/4"				4'-8"					
-	5	PB07	4'-8"		12	33				4'-8"																																	
2	5	PB08	8'-1"		40	S6	1'-0"			8 1/2"			4'-8"			8 1/2"									1'-0"																	
1	5	PB09	27'-8"		8	34				13'-10"			13'-10"			6"																								1.83°			
1	5	PB10	4'-4"		16	34				2'-10 1/2"			1'-6"			3 1/2"																								9.44°			
-	5	PB11	9'-9"		10	17				4'-7 1/2"			6 3/4"			4'-7 1/2"																											
-	8	PB01	7'-9"		4	33				7'-9"																																	
-	10	PB01	26'-10"		2	33				26'-10"																																	

Review is only for conformance with the design concept. Review does not cover dimensions, quantities, accuracy, fit, or any assembly for which this item may be a component. Review does not authorize deviation from Contract Documents or substitution of materials. Requests for deviations from the Contract Documents will only be addressed thru the Change Order Process.

REVIEWED

CONFORMS WITH CONCEPT	(✓)
CONFORMS AS NOTED	( )
RESUBMIT	( )
NO ACTION	( )
DOES NOT CONFORM	( )

URS

DATE 4/26/2013 BY

STATE OF OHIO
R. CRAIG FINLEY, JR.
PROFESSIONAL ENGINEER

I HAVE REVIEWED THESE SHOP DRAWINGS FOR CONSISTENCY WITH THE CONTRACT DRAWINGS AND MY ENDORSEMENT IS LIMITED TO COMPLIANCE WITH SECTION 24, 'SHOP DRAWINGS', IN THE CONTRACT SPECIAL PROVISIONS FOR CONCRETE AND SEGMENT PRODUCTION FOR CABLE-STAYED CONSTRUCTION.
R. CRAIG FINLEY, JR., P.E. E59949

REV:	DATE:	DESCRIPTION:
1	03/26/13	Revised dimensions.
2	04/23/13	Revised bar quantities.

NOTES:
1. ALL BAR BEND DIMENSIONS ARE OUT-TO-OUT.
2. LENGTH GIVEN IS THE ACTUAL BAR LENGTH.
3. FOR BAR BENDING DETAILS, SEE SHEET NO.'S S-01, S-02 AND S-03.

CLIENT:
BRAYMAN Construction Corporation
1000 John Roebling Way • Saxonburg, PA. 16056
Phone 724-443-1533 • Fax 724-443-8733

Review is only for conformance with the design concept. Review does not cover dimensions, quantities, accuracy, fit, or any assembly for which this item may be a component. Review does not authorize deviation from Contract Documents or substitution of materials. Requests for deviations from the Contract Documents will only be addressed thru the Change Order Process.

REVIEWED

CONFORMS WITH CONCEPT (✓) RESUBMIT ( ) DOES NOT CONFORM ( )
CONFORMS AS NOTED ( ) NO ACTION ( )

URS

DATE 4/26/2013 BY

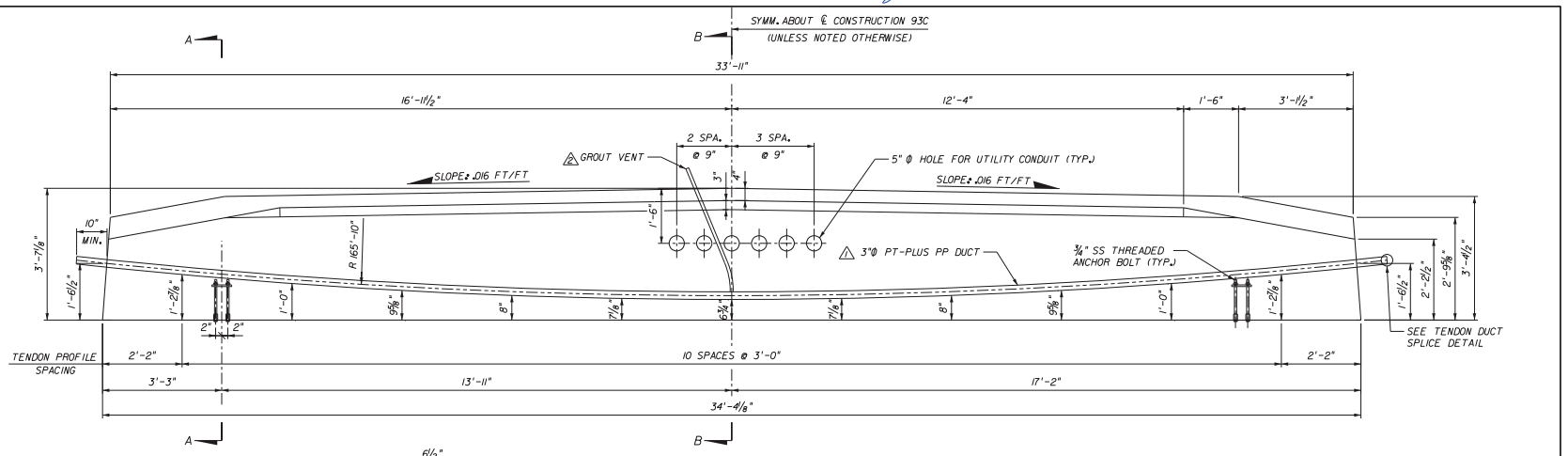

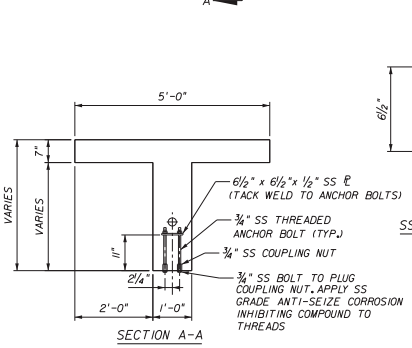

SECTION A-A

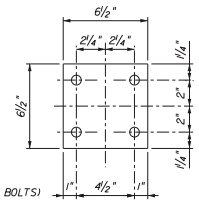

SS ANCHOR PLATE

PRECAST FLOORBEAM PBIB

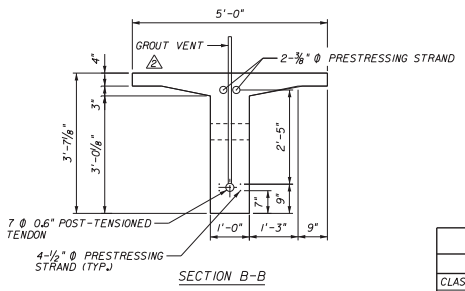

SECTION B-B
(STRAND PATTERN)

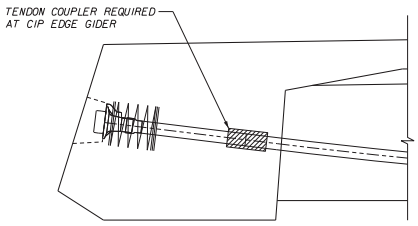

TENDON DUCT SPLICE DETAIL

PRESTRESSING DATA:

1. ALL PRESTRESS STRAND SHALL BE GRADE 270 LOW RELAXATION.
2. STRESSING DATA:
   - A. 7 Ø 0.6" TENDON:
     INTIAL STRESSING FORCE = 145 KIPS (AFTER BEAM CLOSURE POUR)
     FINAL STRESSING FORCE= 308 KIPS (FOLLOWING DECK POUR)
   - B. ⅜" Ø STRAND:
     STRESSING FORCE= 10 KIPS
   - C. ½" Ø STRAND:
     STRESSING FORCE= 28 KIPS

NOTES:

1. STAINLESS STEEL ANCHOR BOLTS ARE PROVIDED FOR SUPPORT OF A FUTURE INSPECTION TRAVELER TO BE SUPPLIED BY OTHERS.
2. STAINLESS STEEL ANCHOR BOLTS SHALL BE IN ACCORDANCE WITH ASTM F593.
3. STAINLESS STEEL NUTS SHALL BE IN ACCORDANCE WITH ASTM F594.
4. THE COUPLING NUT SHALL BE CAPABLE OF DEVELOPING 125% OF THE YIELD STRENGTH OF THE ANCHOR BOLT.
5. MINIMUM CONCRETE STRENGTH AT RELEASE = 3,500 PSI
6. BEAM CAMBER AT RELEASE = +1/32" AT MID-SPAN.
7. BEAM DEFLECTION DUE TO SLAB POUR = -1/32" AT MID-SPAN.

ESTIMATED QUANTITIES

	ITEM	UNIT	QUANTITY
	CLASS QSC3 CONCRETE (6,500 KSI)	C.Y.	6.9
2	EPOXY COATED REINF. (GRADE 60)	LBS.	2,474
1	3" Ø PT-PLUS PP DUCT	L.F.	35.8
	LIFTING ASSEMBLY	EA.	2
	SAFETY SLEEVES	EA.	5
	¾" SS THREADED ANCHOR BOLT	EA.	8
	¾" SS COUPLING NUT	EA.	8
	¾" SS BOLT	EA.	8
1	6½" x 6½" x ½" SS ℄	LB.	12
	½" Ø PRESTRESSING STRAND	L.F.	137.4
	⅜" Ø PRESTRESSING STRAND	L.F.	67.8

STATE OF OHIO
R. CRAIG FINLEY, JR.
REGISTERED PROFESSIONAL ENGINEER
4/23/2013

I HAVE REVIEWED THESE SHOP DRAWINGS FOR CONSISTENCY WITH THE CONTRACT DRAWINGS AND MY ENDORSEMENT IS LIMITED TO COMPLIANCE WITH SECTION 104 'SHOP DRAWINGS', IN THE CONTRACT SPECIAL PROVISIONS FOR CONCRETE AND SEGMENT PRODUCTION FOR CABLE-STAYED CONSTRUCTION.
R. CRAIG FINLEY, JR., P.E. E59149

This plan was prepared in compliance with contract documents.

Revision	Drawn By	Date	Description
1	MWR	11/09/12	Revised tendon hardware size and quantity, added grout vent.
2	MWR	11/19/12	Revised location of grout vent.
3	RHL	04/23/13	Revised quantities.

	Name	Date
Drawn By:	RHL	08/12
Checked By:	MWR	08/12
Approved By:	RCF	08/12

FINLEY Engineering Group, Inc.
1589 Metropolitan Blvd.
Tallahassee, FL 32308
850-894-1600
Fax: 850-894-1614

Client: BRAYMAN construction corporation

Project: IRONTON RUSSELL BRIDGE OVER THE OHIO RIVER

Title: SIDE SPAN PRECAST FLOORBEAM PBIB DIMENSIONS

Sheet No. S-125

Plotted By: Robyn.Lombard 4/23/2013 1:23:06 PM G:\Ironton-Russell\CADD\Shop_Drawings\SuperStructure\Floorbeams\PBIB Reinforcement.dgn

Review is only for conformance with the design concept. Review does not cover dimensions, quantities, accuracy, fit, or any assembly for which this item may be a component. Review does not authorize deviation from Contract Documents or substitution of materials. Requests for deviations from the Contract Documents will only be addressed thru the Change Order Process.

REVIEWED

CONFORMS WITH CONCEPT (✓) RESUBMIT ( ) DOES NOT CONFORM ( )
CONFORMS AS NOTED ( ) NO ACTION ( )

URS

DATE 4/26/2013 BY

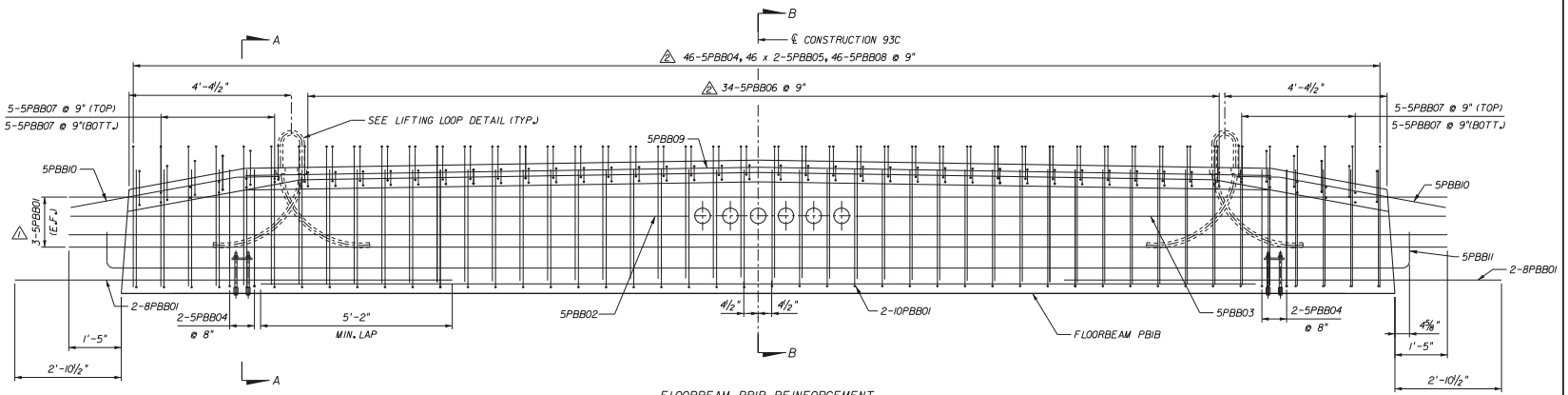

FLOORBEAM PBIB REINFORCEMENT

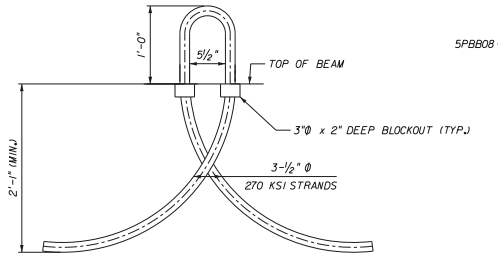

TYPICAL LIFTING LOOP

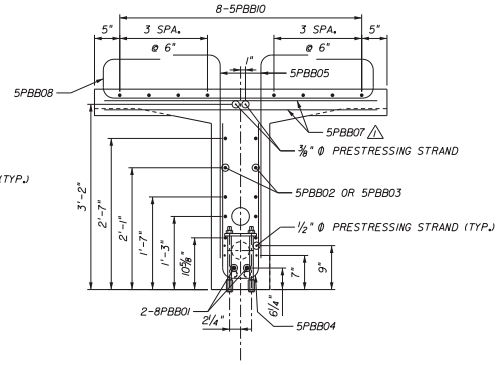

SECTION A-A

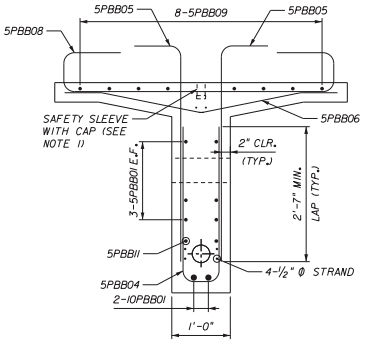

SECTION B-B

NOTES:

1. SAFETY SLEEVES ARE PERMITTED IN THIS TOP FLANGE. SAFTEY SLEEVE ALTERNATIVE SHOWN IS 2½"NPSx5" SCH 40 PVC PIPE WITH CAP 4'-0" FROM END AND SPACED AT 8'-0" ON CENTER MAX.

STATE OF OHIO R. CRAIG FINLEY, JR. REGISTERED PROFESSIONAL ENGINEER

4/23/2013

I HAVE REVIEWED THESE SHOP DRAWINGS FOR CONSISTENCY WITH THE CONTRACT DRAWINGS AND MY ENDORSEMENT IS LIMITED TO COMPLIANCE WITH SECTION 4, 'SHOP DRAWINGS', IN THE CONTRACT SPECIAL PROVISIONS FOR CONCRETE AND SEGMENT PRODUCTION FOR CABLE-STAYED CONSTRUCTION. R. CRAIG FINLEY, JR., P.E. 59149

This plan was prepared in compliance with contract documents.

Revision	Drawn By	Date	Description
1	MWR	11/09/12	Revised as noted.
2	RHL	04/23/13	Revised bar quantities.

	Name	Date
Drawn By:	RHL	06/12
Checked By:	MWR	06/12
Approved By:	RCF	06/12

FINLEY Engineering Group, Inc.
1589 Metropolitan Blvd.
Tallahassee, FL 32308
850-894-1600
Fax: 850-894-1614

Client: BRAYMAN construction corporation

Project: IRONTON RUSSELL BRIDGE OVER THE OHIO RIVER

Title: SIDE SPAN PRECAST FLOORBEAM PBIB REINFORCEMENT

Sheet No. S-126

Plotted By: Robyn Lombardi 4/23/2013 1:23:40 PM G:\Ironton-Russell\CADD\Shop_Drawings\SuperStructure\Floorbeams\PBIB Reinforcement.dgn

IRONTON RUSSELL BRIDGE
OVER THE OHIO RIVER
BRIDGE NO. LAW-93-0000

FINLEY Engineering Group, Inc.
1589 Metropolitan Blvd.
Tallahassee, FL. 32308
850-894-1600
Fax: 850-894-1614

DETAILED	CHECKED	DATE	REV.
RHL	MWR	6/12/2012	-

ITEM: PRECAST FLOORBEAM PBIB

	BAR		LENGTH		NO	TYPE	A			B			C			D			E			F			G			H			J			K			N	Ø		R		
REV	SIZE	MARK	FT	IN	BARS	BAR	FT	IN	FR	FT	IN	FR	FT	IN	FR	FT	IN	FR	FT	IN	FR	FT	IN	FR	FT	IN	FR	FT	IN	FR	FT	IN	FR	FT	IN	FR	NO. OR ANG	FT	IN	FR	FT	IN	FR
1	5	PBB01	37'-2"		6	33				37'-2"																																		
-	5	PBB02	15'-11"		2	33				15'-11"																																		
-	5	PBB03	16'-8"		2	33				16'-8"																																		
2	5	PBB04	6'-0"		50	17				2'-8"			8"			2'-8"																												
2	5	PBB05	4'-8"		92	37				3'-8"			1'-0"																														
2	5	PBB06	4'-9"		34	62				7 1/4"			1'-9 1/4"			7 1/4"													4 3/4"							1'-8 3/4"				4'-8"					
-	5	PBB07	4'-8"		20	33				4'-8"																																		
2	5	PBB08	8'-1"		46	S6	1'-0"			8 1/2"			4'-8"			8 1/2"									1'-0"																			
1	5	PBB09	27'-8"		8	34				13'-10"			13'-10"			6"																										1.83°			
1	5	PBB10	5'-8"		16	34				4'-6 3/4"			1'-2"			3"																										9.44°			
-	5	PBB11	37'-2"		2	17				1'-0"			35'-2"			1'-0"																												
-	8	PBB01	11'-9"		4	33				11'-9"																																		
-	10	PBB01	26'-10"		2	33				26'-10"																																		

Review is only for conformance with the design concept. Review does not cover dimensions, quantities, accuracy, fit, or any assembly for which this item may be a component. Review does not authorize deviation from Contract Documents or substitution of materials. Requests for deviations from the Contract Documents will only be addressed thru the Change Order Process.

REVIEWED

CONFORMS WITH CONCEPT	(✓)
CONFORMS AS NOTED	( )
RESUBMIT	( )
NO ACTION	( )
DOES NOT CONFORM	( )

URS

DATE 4/26/2013 BY

STATE OF OHIO
R. CRAIG FINLEY, JR.
PROFESSIONAL ENGINEER

I HAVE REVIEWED THESE SHOP DRAWINGS FOR CONSISTENCY WITH THE CONTRACT DRAWINGS AND MY ENDORSEMENT IS LIMITED TO COMPLIANCE WITH SECTION 24, 'SHOP DRAWINGS', IN THE CONTRACT SPECIAL PROVISIONS FOR CONCRETE AND SEGMENT PRODUCTION FOR CABLE-STAYED CONSTRUCTION.
R. CRAIG FINLEY, JR., P.E. 59949

REV:	DATE:	DESCRIPTION:
1	03/26/13	Revised dimensions.
2	04/23/13	Revised quantities.

NOTES:
1. ALL BAR BEND DIMENSIONS ARE OUT-TO-OUT.
2. LENGTH GIVEN IS THE ACTUAL BAR LENGTH.
3. FOR BAR BENDING DETAILS, SEE SHEET NO.'S S-01, S-02 AND S-03.

CLIENT:
BRAYMAN Construction Corporation
1000 John Roebling Way • Saxonburg, PA. 16056
Phone 724-443-1533 • Fax 724-443-8733

Review is only for conformance with the design concept. Review does not cover dimensions, quantities, accuracy, fit, or any assembly for which this item may be a component. Review does not authorize deviation from Contract Documents or substitution of materials. Requests for deviations from the Contract Documents will only be addressed thru the Change Order Process.

REVIEWED

CONFORMS WITH CONCEPT (✓) RESUBMIT ( ) DOES NOT CONFORM ( )
CONFORMS AS NOTED ( ) NO ACTION ( )

URS

DATE 4/26/2013 BY

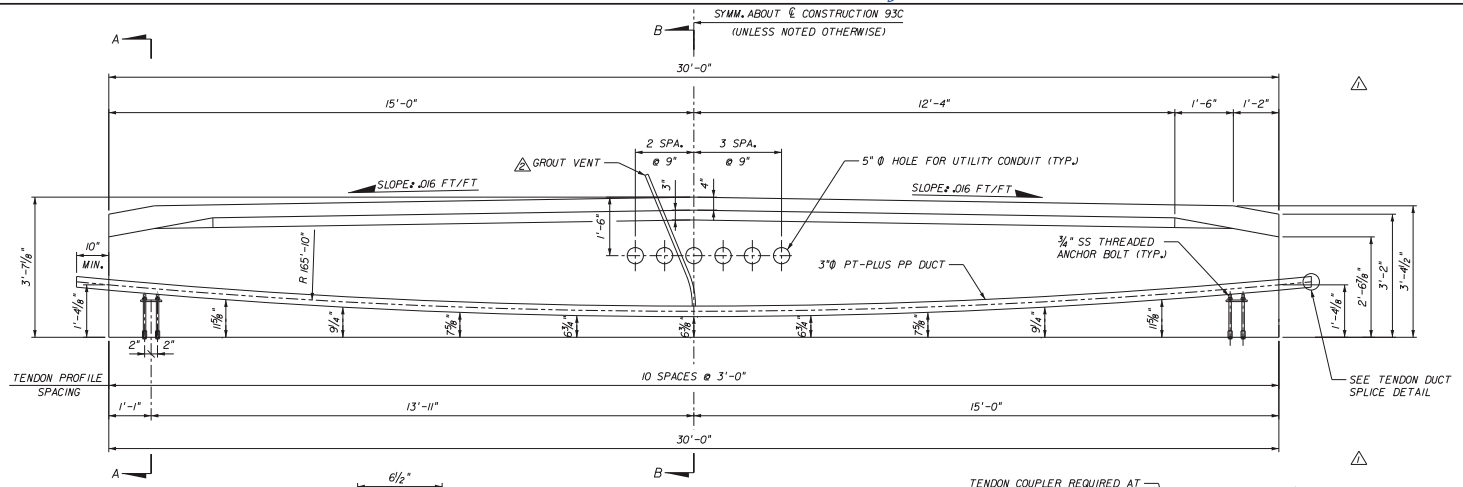

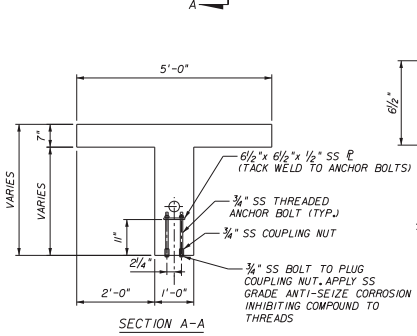

SECTION A-A

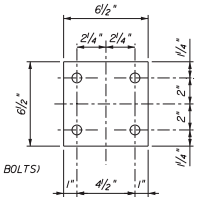

SS ANCHOR PLATE

PRECAST FLOORBEAM PB2A

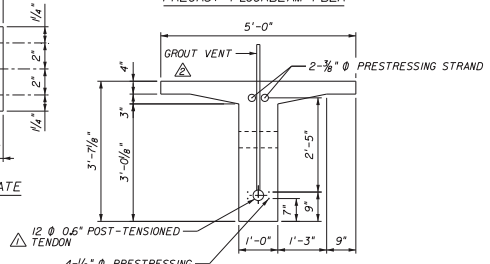

SECTION B-B
(STRAND PATTERN)

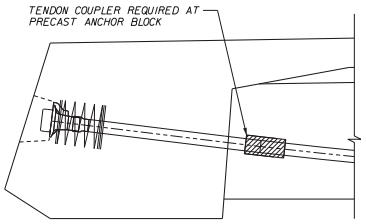

TENDON DUCT SPLICE DETAIL

PRESTRESSING DATA:

1. ALL PRESTRESS STRAND SHALL BE GRADE 270 LOW RELAXATION.
2. STRESSING DATA:
   - A. 12 Ø 0.6" TENDON:
     INTIAL STRESSING FORCE = 245 KIPS (AFTER BEAM CLOSURE POUR)
     FINAL STRESSING FORCE= 527 KIPS (FOLLOWING DECK POUR)
   - B. ⅜" Ø STRAND:
     STRESSING FORCE= 10 KIPS
   - C. ½" Ø STRAND:
     STRESSING FORCE= 28 KIPS

NOTES:

1. STAINLESS STEEL ANCHOR BOLTS ARE PROVIDED FOR SUPPORT OF A FUTURE INSPECTION TRAVELER TO BE SUPPLIED BY OTHERS.
2. STAINLESS STEEL ANCHOR BOLTS SHALL BE IN ACCORDANCE WITH ASTM F593.
3. STAINLESS STEEL NUTS SHALL BE IN ACCORDANCE WITH ASTM F594.
4. THE COUPLING NUT SHALL BE CAPABLE OF DEVELOPING 125% OF THE YIELD STRENGTH OF THE ANCHOR BOLT.
5. MINIMUM CONCRETE STRENGTH AT RELEASE = 3,500 PSI
6. BEAM CAMBER AT RELEASE = +1/16" AT MID-SPAN.
7. BEAM DEFLECTION DUE TO SLAB POUR = -1/32" AT MID-SPAN.

ESTIMATED QUANTITIES

ITEM	UNIT	QUANTITY
CLASS QSC3 CONCRETE (6,500 KSI)	C.Y.	5.8
EPOXY COATED REINF. (GRADE 60)	LBS.	3,326
3" Ø PT-PLUS PP DUCT	L.F.	32.4
LIFTING ASSEMBLY	EA.	2
SAFETY SLEEVES	EA.	4
¾" SS THREADED ANCHOR BOLT	EA.	8
¾" SS COUPLING NUT	EA.	8
¾" SS BOLT	EA.	8
6½" x 6½" x ½" SS ℄	LB.	12
½" Ø PRESTRESSING STRAND	L.F.	122.7
⅜" Ø PRESTRESSING STRAND	L.F.	61.3

STATE OF OHIO
R. CRAIG FINLEY, JR.
REGISTERED PROFESSIONAL ENGINEER

4/23/2013

I HAVE REVIEWED THESE SHOP DRAWINGS FOR CONSISTENCY WITH THE CONTRACT DRAWINGS AND MY ENDORSEMENT IS LIMITED TO COMPLIANCE WITH SECTION 104 "SHOP DRAWINGS", IN THE CONTRACT SPECIAL PROVISIONS FOR CONCRETE AND SEGMENT PRODUCTION FOR CABLE-STAYED CONSTRUCTION.
R. CRAIG FINLEY, JR., P.E. E59149

This plan was prepared in compliance with contract documents.

Revision	Drawn By	Date	Description
1	MWR	11/09/12	Revised as noted.
2	MWR	11/19/12	Revised location of grout vent.
3	RHL	04/23/13	Revised quantities.

	Name	Date
Drawn By:	RHL	08/12
Checked By:	MWR	08/12
Approved By:	RCF	08/12

FINLEY Engineering Group, Inc.
1589 Metropolitan Blvd.
Tallahassee, FL 32308
850-894-1600
Fax: 850-894-1614

Client: BRAYMAN construction corporation

Project: IRONTON RUSSELL BRIDGE OVER THE OHIO RIVER

Title: SIDE SPAN PRECAST FLOORBEAM PB2A DIMENSIONS

Sheet No. S-127

Plotted By: Robyn.Lombardi 4/23/2013 1:25:01 PM G:\Ironton-Russell\CADD\Shop_Drawings\SuperStructure\Floorbeams\PB2A(NEW).dgn

TYPICAL APPROACH BARRIER WALL SECTION

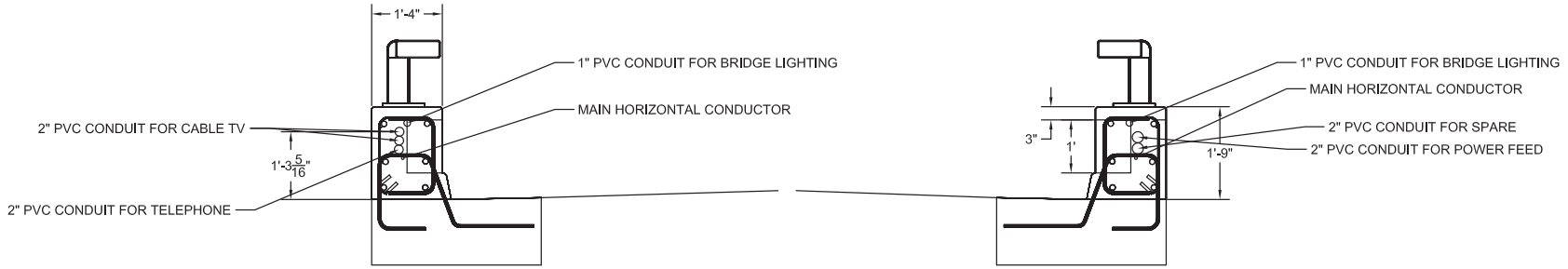

STATE OF OHIO
THOMAS M. HESMOND
E-75199
REGISTERED PROFESSIONAL ENGINEER

BY	DATE	REVISIONS	NO.
		VECP #3	

BRAYMAN construction corporation
Innovative Solutions Since 1947

DRAWN BY AMD	4/18/14	VECP #3 APPROACH BARRIER WALL SECTION	JOB NUMBER
CHECKED BY			LAW-93C-0000 11-0628
APPROVED		OHIO DEPARTMENT OF TRANSPORTATION	DRAWING NUMBER / REV.
SCALE – DO NOT SCALE PRINT			

STATE OF OHIO
THOMAS M. HESMOND
E-75199
REGISTERED PROFESSIONAL ENGINEER

PIER 2 DETAIL

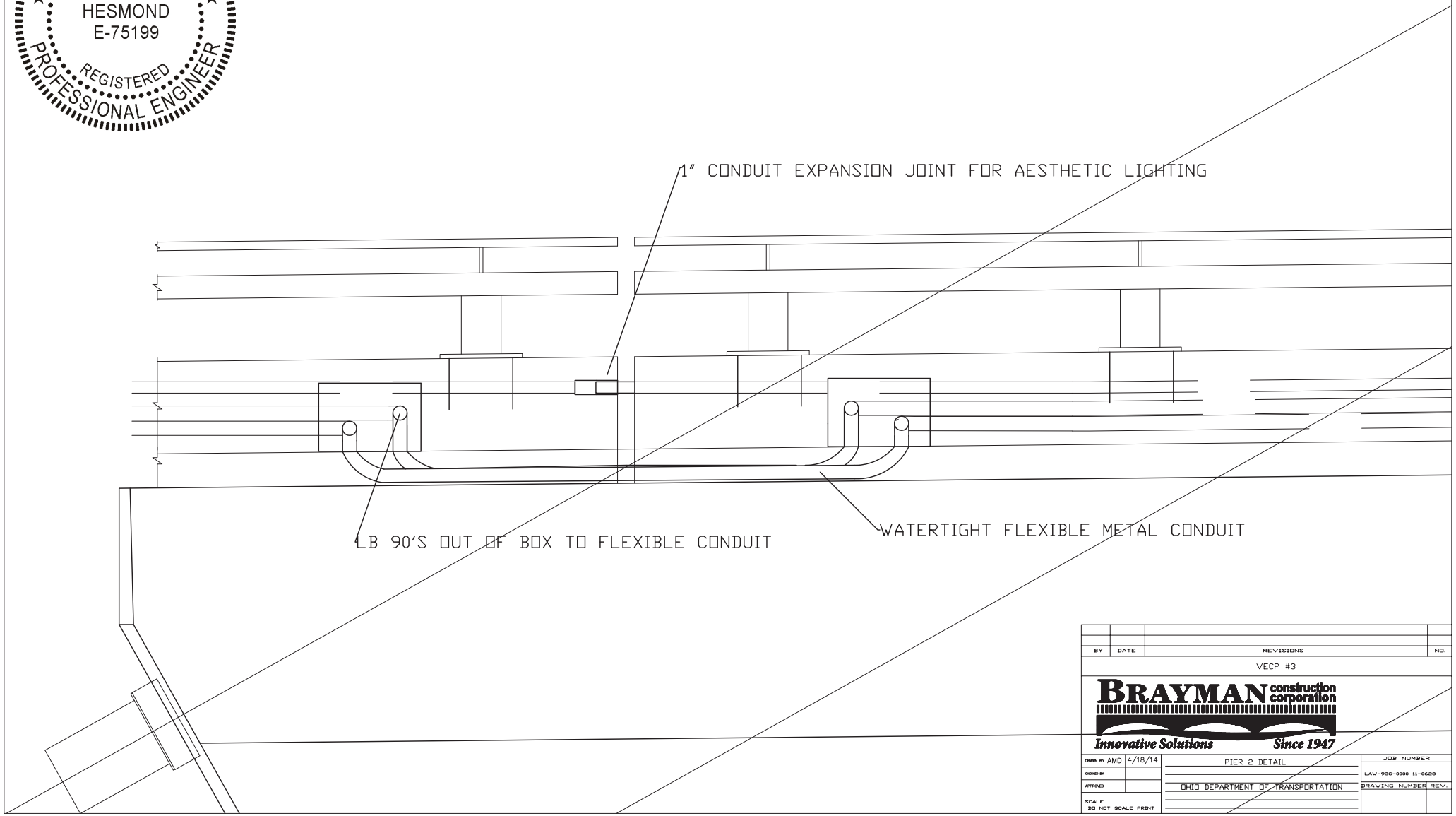

BY	DATE	REVISIONS	NO.

VECP #3

BRAYMAN construction corporation
Innovative Solutions Since 1947

DRAWN BY AMD	4/18/14
CHECKED BY	
APPROVED	
SCALE – DO NOT SCALE PRINT	

PIER 2 DETAIL

OHIO DEPARTMENT OF TRANSPORTATION

JOB NUMBER
LAW-93C-0000 11-0628

DRAWING NUMBER REV.

BACKSPAN/MAINSPAN BARRIER WALL DETAIL

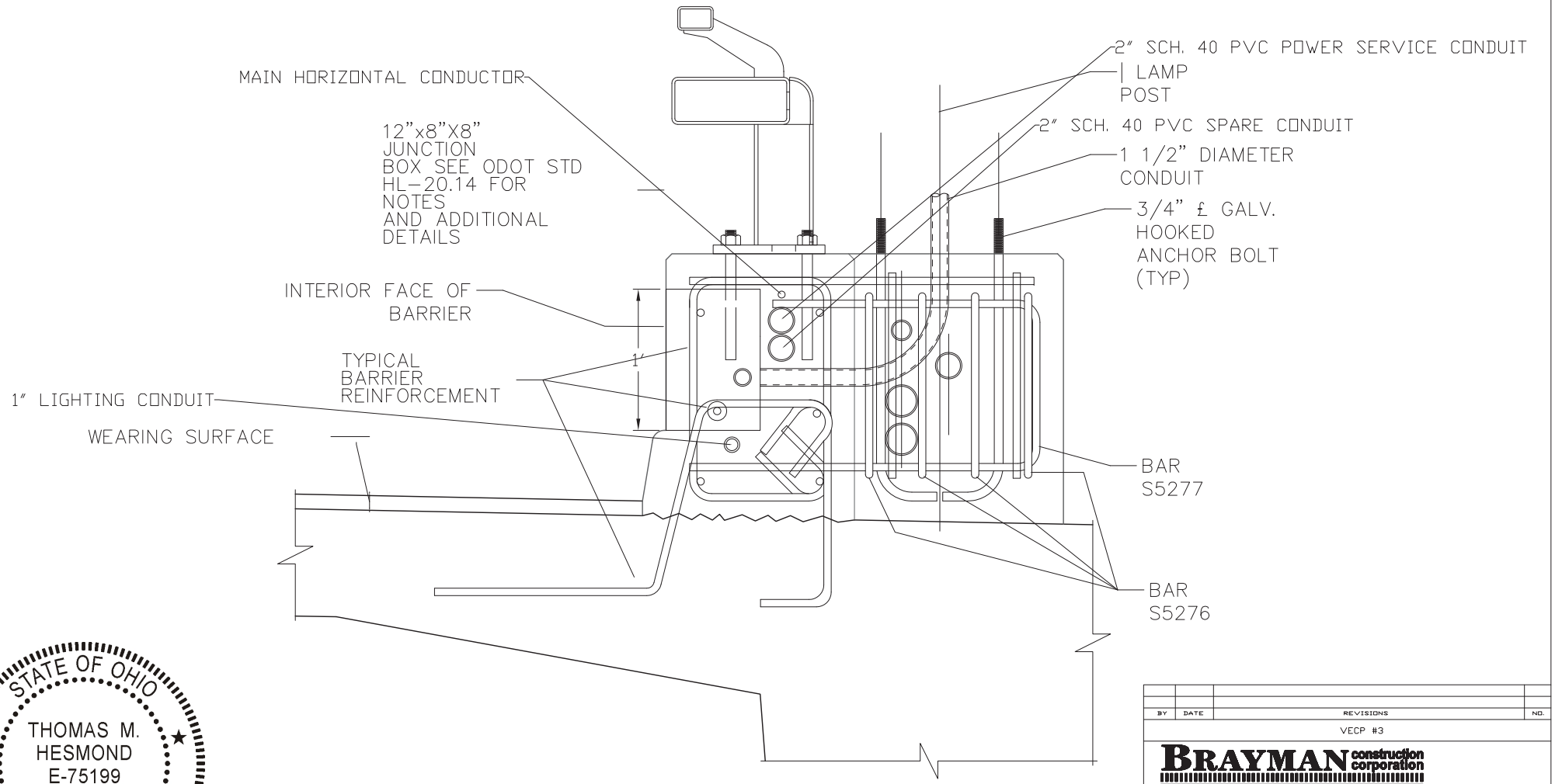

STATE OF OHIO
THOMAS M. HESMOND
E-75199
REGISTERED PROFESSIONAL ENGINEER

BY	DATE	REVISIONS	NO.
		VECP #3	

BRAYMAN construction corporation
Innovative Solutions Since 1947

DRAWN BY AMD	4/18/14	BACKSPAN/MAINSPAN BARRIER WALL DETAIL	JOB NUMBER
CHECKED BY			LAW-93C-0000 11-0628
APPROVED		OHIO DEPARTMENT OF TRANSPORTATION	DRAWING NUMBER REV.
SCALE — DO NOT SCALE PRINT			

VECP #3 ITEMIZED SUMMARY OF CHANGES

Non-Performed Items

Line #	Item Code	Description	Unit	Bid Qty	Proposed Qty	Unit Bid Price	Net Change
0210	625E23308	Distribution Cable, Misc. No. 250 KCMIL	FT	11,504.00	-	$8.00	-$92,032.00
0219	625E25920	2.5" Liqud tight Flex Conduit	FT	12	-	$225.00	-$2,700.00
0220	625E25920	3" Liquidtight Flex Conduit	FT	18	-	$105.00	-$1,890.00
0221	625E25920	4" Liquidtight Flex Conduit	FT	24	-	$90.00	-$2,160.00
0222	625E25930	2.5" Expansion/Deflection	EA	14	-	$365.00	-$5,110.00
0223	625E25930	3" Expansio/Deflection	EA	2	-	$670.00	-$1,340.00
0224	625E25930	4" Expansion/Deflection	EA	3	-	$835.00	-$2,505.00
0257	625E25300	Conduit, 1.5" Lighting	FT	6,306	-	$13.00	-$81,978.00
0258	625E25930	1.5" Expansion Deflection Fitting	EA	6	-	$325.00	-$1,950.00
						NON-PERFORMED TOTAL =	-$191,665.00

Quantity Change Items Items

Line #	Item Code	Description	Unit	Bid Qty	Proposed Qty	Unit Bid Price	Net Change
0211	625E25404	Conduit, 2.5" GRC 725.04	FT	4,628	200	$32.00	-$141,696.00
0212	625E25500	Conduit, 3" GRC 725.04	FT	788	100	$46.00	-$31,648.00
0214	625E25600	Conduit, 4" GRC 725.04	FT	2,565	100	$50.00	-$123,250.00
0228	625E29901	Junction Box, 36"x24"x10"	EA	6	1	$2,100.00	-$10,500.00
						QUANTITY ADJUSTED TOTAL=	-$307,094.00

New / Additional Work Items

Line #	Item Code	Description	Unit	****	Proposed Qty	Proposed Unit Cost	SubTotal
*		Conduit, 2" PVC 725.05 (Telephone)	FT		688	$12.46	$8,572.48
*		Conduit, 2" PVC 725.05 (Cable TV)	FT		4,930	$12.46	$61,427.80
*		Conduit, 2" PVC 725.05 (Power/Spare)	FT		4,428	$12.46	$55,172.88
*		1" Expansion Deflection Fitting	EA		6	$210.00	$1,260.00
*		2" Expansion Deflection Fitting	EA		6	$363.00	$2,178.00
*		3/O AWG 600Volt Distr. Cable	FT		11,504	$6.00	$69,024.00
*		Conduit, 1" PVC 725.05 (Lighting)	FT		6,306	$7.45	$46,979.70
0199	625E25401	2" Galvanized Rigid Conduit	FT		300	$19.00	$5,700.00
0200	625E25403	2" Concrete Encased PVC Conduit	FT		500	$12.00	$6,000.00
0203	625E25920	Conduit , Misc. 2" Liquidtight Flexible Conduit	FT		200	$31.00	$6,200.00
0261	625E29940	Barrier Junction Box 18"x12"x8"	EA		26	$1,250.00	$32,500.00
						ADDITIONAL ITEMS WORK TOTAL=	$295,014.86
						Proposed Guaranteed Minimum Savings =	-$203,744.14

Appendix B – Select Construction Data

B.1 Construction Manual

B.2 Stay Cable Inspection and Maintenance Manual

B.3 Stay Liftoff Analysis at End of Construction

B.4 Stay Liftoff Analysis at End of Construction – Pylon Calcs

B.5 Friction Damper Installation Manual

B.6 Ladder Safety Device

B.1 Construction Manual

CONSTRUCTION MANUAL

IRONTON-RUSSELL BRIDGE
OVER THE OHIO RIVER

Review is only for conformance with the design concept. Review does not cover dimensions, quantities, accuracy, fit, or any assembly for which this item may be a component. Review does not authorize deviation from Contract Documents or substitution of materials. Requests for deviations from the Contract Documents will only be addressed thru the Change Order Process.

REVIEWED

CONFORMS WITH CONCEPT	(X)
CONFORMS AS NOTED	( )
RESUBMIT	( )
NO ACTION	( )
DOES NOT CONFORM	( )

URS

DATE 07/20/2016 BY

INDEX OF SHEETS

CM-01 INDEX AND GENERAL NOTES
CM-02 CONSTRUCTION SEQUENCE (1 OF 30)
CM-03 CONSTRUCTION SEQUENCE (2 OF 30)
CM-04 CONSTRUCTION SEQUENCE (3 OF 30)
CM-05 CONSTRUCTION SEQUENCE (4 OF 30)
CM-06 CONSTRUCTION SEQUENCE (5 OF 30)
CM-07 CONSTRUCTION SEQUENCE (6 OF 30)
CM-08 CONSTRUCTION SEQUENCE (7 OF 30)
CM-09 CONSTRUCTION SEQUENCE (8 OF 30)
CM-10 CONSTRUCTION SEQUENCE (9 OF 30)
CM-11 CONSTRUCTION SEQUENCE (10 OF 30)
CM-12 CONSTRUCTION SEQUENCE (11 OF 30)
CM-13 CONSTRUCTION SEQUENCE (12 OF 30)
CM-14 CONSTRUCTION SEQUENCE (13 OF 30)
CM-15 CONSTRUCTION SEQUENCE (14 OF 30)
CM-16 CONSTRUCTION SEQUENCE (15 OF 30)
CM-17 CONSTRUCTION SEQUENCE (16 OF 30)
CM-18 CONSTRUCTION SEQUENCE (17 OF 30)
CM-19 CONSTRUCTION SEQUENCE (18 OF 30)
CM-20 CONSTRUCTION SEQUENCE (19 OF 30)
CM-21 CONSTRUCTION SEQUENCE (20 OF 30)
CM-22 CONSTRUCTION SEQUENCE (21 OF 30)
CM-23 CONSTRUCTION SEQUENCE (22 OF 30)
CM-24 CONSTRUCTION SEQUENCE (23 OF 30)
CM-25 CONSTRUCTION SEQUENCE (24 OF 30)
CM-26 CONSTRUCTION SEQUENCE (25 OF 30)
CM-27 CONSTRUCTION SEQUENCE (26 OF 30)
CM-28 CONSTRUCTION SEQUENCE (27 OF 30)
CM-29 CONSTRUCTION SEQUENCE (28 OF 30)
CM-30 CONSTRUCTION SEQUENCE (29 OF 30)
CM-31 CONSTRUCTION SEQUENCE (30 OF 30)
CM-32 BLOCKING DETAILS AT TOWER 3 & 4
CM-33 MAIN SPAN SEGMENT CYCLE

GENERAL NOTES:

1. ALL TENDONS SHALL BE GROUTED IN ACCORDANCE WITH THE GROUTING MANUAL AND CONTRACT SPECIFICATIONS.
2. CLOSURE POURS SHALL START AT THE BEGINNING OF THE PERIOD OF THE DAY WITH THE LEAST DIFFERENTIAL IN TEMPERATURE. THE INTENT IS TO MINIMIZE THERMAL DISPLACEMENTS IN THE STRUCTURE WHILE THE CLOSURE CONCRETE IS GAINING INITIAL STRENGTH.
3. STAYS SHOWN IN RED DEPICT TWO STRANDS STRESSED TO 15% GUTS AND STAY PIPE.
4. TOWER FORMING SYSTEM MAY BE ADVANCED AFTER NEWLY CAST SEGMENTS ACHIEVES A MINIMUM CONCRETE STRENGTH OF 3,500 PSI.

POST-TENSIONING NOTES:

3 1. SEGMENT SUPPORT FORMS THAT CARRY DEAD LOAD MAY NOT BE REMOVED UNTIL THE CONCRETE HAS ACHIEVED A MINIMUM COMPRESSIVE STRENGTH OF 3,500 PSI.
2. TOP SLAB LONGITUDINAL TENDONS SHALL NOT BE STRESSED UNTIL THE DECK CONCRETE HAS ACHIEVED A MINIMUM COMPRESSIVE STRENGTH OF 3,500 PSI.
3. TRANSVERSE BEAM TENDONS SHALL NOT BE STRESSED UNTIL THE EDGE GIRDER CONCRETE HAS ACHIEVED A MINIMUM COMPRESSIVE STRENGTH OF 3,500 PSI.
4. LONGITUDINAL EDGE GIRDER TENDONS SHALL NOT BE STRESSED UNTIL THE EDGE GIRDER CONCRETE HAS ACHIEVED A MINIMUM COMPRESSIVE STRENGTH OF 3,500 PSI (UNLESS NOTED OTHERWISE IN THIS MANUAL).

REFERENCES:

THE FOLLOWING DOCUMENTS ARE INCLUDED IN THIS CONSTRUCTION MANUAL BY REFERENCE ONLY, AND ARE TO BE USED IN COMPLETING THE CONSTRUCTION STEPS OUTLINED HEREIN:

1. TEMPORARY FALSEWORK DRAWINGS
2. PYLON TEMPORARY WORKS DRAWINGS
3. SEGMENT SHOP DRAWINGS (INCLUDES: FOOTINGS, PIER COLUMNS, TOWERS, AND SUPERSTRUCTURE DECK)
4. GEOMETRY CONTROL MANUAL, WITH FINLEYclp SOFTWARE
5. P.T. AND STAY CABLE STRESSING DATA
6. FORM TRAVELER DRAWINGS (BY VSL)
7. GROUTING MANUAL (BY BCC)
8. CONTRACT PLANS (BY ODOT)

ABBREVIATIONS:

1. CON - TASK MAY BE PERFORMED CONCURRENTLY WITH OTHER TASKS.
2. NON-SEQ - TASK IS NON-SEQUENTIAL, MAY BE PERFORMED AT ANY TIME.

STATE OF OHIO
JERRY M. PFUNTNER
E-76622
REGISTERED
PROFESSIONAL ENGINEER
6-28-16

THESE DRAWINGS ARE COLOR CODED
AND MUST BE REPRODUCED IN COLOR.

Revision	Drawn By	Date	Description
1	IL	12/18/13	GENERAL NOTES REVISION
2	IL	02/05/14	GENERAL NOTES REVISION
3	JP	04/29/14	PT NOTES REVISION

	Name	Date
Drawn By:	JP	07/13
Checked By:	JMP	07/13
Approved By:	RCF	07/13

FINLEY Engineering Group, Inc.
1589 Metropolitan Blvd.
Tallahassee, FL. 32308
850-894-1600
Fax: 850-894-1614

Client: BRAYMAN construction corporation

Project: IRONTON RUSSELL BRIDGE OVER THE OHIO RIVER

Title: CONSTRUCTION MANUAL INDEX AND GENERAL NOTES

Sheet No. CM-01

Plotted By: JIndrich.potucsk 5/22/2014 5:55:31 PM G:\Ironton-Russell\CADD\ConstructionManual\CM_01_ConstructionManual_IndexGenNotes.dgn Model: Default

Review is only for conformance with the design concept. Review does not cover dimensions, quantities, accuracy, fit, or any assembly for which this item may be a component. Review does not authorize deviation from Contract Documents or substitution of materials. Requests for deviations from the Contract Documents will only be addressed thru the Change Order Process.

REVIEWED

CONFORMS WITH CONCEPT	(X)
CONFORMS AS NOTED	( )
RESUBMIT	( )
NO ACTION	( )
DOES NOT CONFORM	( )

URS

DATE 07/20/2016 BY

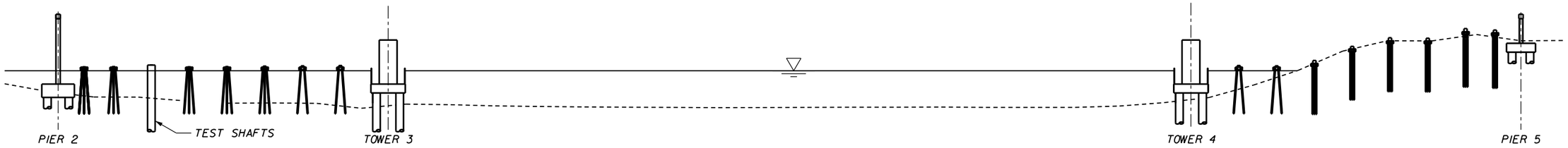

ELEVATION

STEP 1:

CONSTRUCT THE FOLLOWING ELEMENTS: (CON AND NON-SEQ)

A - PIER 2 FOUNDATION, FOOTING AND PIER COLUMN.
B - TWO (2) TEST SHAFTS IN KENTUCKY BACKSPAN (TO BE USED AS FALSEWORK FOUNDATIONS).
C - DRIVE HP PILES FOR KENTUCKY TEMPORARY FALSEWORK, CAST FOOTING CAPS.
D - TOWER 3 FOUNDATION, FOOTING AND TOWER SEGMENTS 1 THRU 4.
E - TOWER 4 FOUNDATION, FOOTING AND TOWER SEGMENTS 1 THRU 4.
F - DRIVE HP PILES FOR OHIO TEMPORARY FALSEWORK, CAST FOOTING CAPS.
G - PIER 5 FOUNDATION, FOOTING AND PIER COLUMN.

NOTE: THE STEPS HEREIN MAY COINCIDE WITH ERECTION PROCEDURES ON FOLLOWING SHEETS.

THESE DRAWINGS ARE COLOR CODED
AND MUST BE REPRODUCED IN COLOR.

Revision	Drawn By	Date	Description		Name	Date
				Drawn By:	JP	07/13
				Checked By:	JMP	07/13
				Approved By:	RCF	07/13

FINLEY Engineering Group, Inc.
1589 Metropolitan Blvd.
Tallahassee, FL 32308
850-894-1600
Fax: 850-894-1614

Client: BRAYMAN construction corporation — Innovative Solutions Since 1947

Project: IRONTON RUSSELL BRIDGE OVER THE OHIO RIVER

Title: CONSTRUCTION MANUAL
CONSTRUCTION SEQUENCE (1 OF 30)

Sheet No. CM-02

Plotted By: jindrich.potucek 5/22/2014 5:55:32 PM G:\Ironton-Russell\CADD\ConstructionManual\CM_02_ConstructionSeq(1of29).dgn Model: Default

Review is only for conformance with the design concept. Review does not cover dimensions, quantities, accuracy, fit, or any assembly for which this item may be a component. Review does not authorize deviation from Contract Documents or substitution of materials. Requests for deviations from the Contract Documents will only be addressed thru the Change Order Process.

REVIEWED
CONFORMS WITH CONCEPT (X)
CONFORMS AS NOTED ( )
RESUBMIT ( )
NO ACTION ( )
DOES NOT CONFORM ( )

URS

DATE 07/20/2016 BY

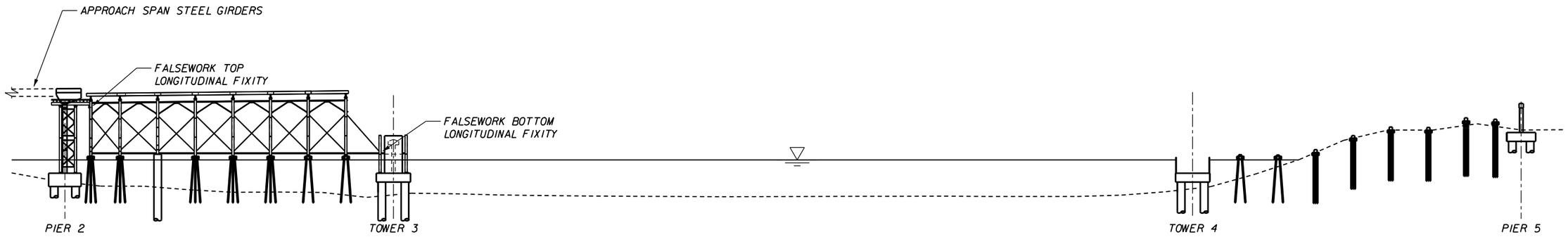

ELEVATION

STEP 2:

- INSTALL KENTUCKY SIDE BACKSPAN SECTION FALSEWORK AND TYPICAL SECTION KY FALSEWORK.
- INSTALL PYLON FALSEWORK PIPE BASE ON TOWER 3 FOOTING PRIOR TO COFFERDAM REMOVAL.(CON AND NON-SEQ)
- PROVIDE TWO POINTS OF LONGITUDINAL FIXITY AS MARKED. STABILIZE WITH THE FW CABLES.
- FORM POUR #1 OF TRANSITION DIAPHRAGM SEGMENT.
- PLACE REINFORCING AND POST-TENSIONING FOR POUR #1.
- CAST POUR #1 CONCRETE.
- FORM POUR #2 OF TRANSITION DIAPHRAGM SEGMENT.
- PLACE REINFORCEMENT AND POST-TENSIONING FOR POUR #2.
- CAST POUR #2 CONCRETE.
- FORM POUR #3 OF TRANSITION DIAPHRAGM SEGMENT.
- PLACE REINFORCEMENT AND POST-TENSIONING FOR POUR #3.
- CAST POUR #3 CONCRETE.
- AFTER CONCRETE ACHIEVES A MINIMUM STRENGTH OF 3,500 PSI, REMOVE FORMWORK.

NOTE: APPROACH SPAN STEEL GIRDERS MAY BE ERECTED ON PIER 2 DIAPHRAGM FOLLOWING COMPLETION OF STEP 2.

THESE DRAWINGS ARE COLOR CODED
AND MUST BE REPRODUCED IN COLOR.

Revision	Drawn By	Date	Description		Name	Date
				Drawn By:	JP	07/13
				Checked By:	JMP	07/13
				Approved By:	RCF	07/13

FINLEY Engineering Group, Inc.
1589 Metropolitan Blvd.
Tallahassee, FL 32308
850-894-1600
Fax: 850-894-1614

Client: BRAYMAN construction corporation — Innovative Solutions Since 1947

Project: IRONTON RUSSELL BRIDGE OVER THE OHIO RIVER

Title: CONSTRUCTION MANUAL CONSTRUCTION SEQUENCE (2 OF 30)

Sheet No. CM-03

Plotted By: jindrich.potucek 5/22/2014 5:55:33 PM G:\Ironton-Russell\CADD\ConstructionManual\CM_03_ConstructionSeq(3of29).dgn Model: Default

Review is only for conformance with the design concept. Review does not cover dimensions, quantities, accuracy, fit, or any assembly for which this item may be a component. Review does not authorize deviation from Contract Documents or substitution of materials. Requests for deviations from the Contract Documents will only be addressed thru the Change Order Process.

REVIEWED

CONFORMS WITH CONCEPT	(X)
CONFORMS AS NOTED	( )
RESUBMIT	( )
NO ACTION	( )
DOES NOT CONFORM	( )

URS

DATE 07/20/2016 BY

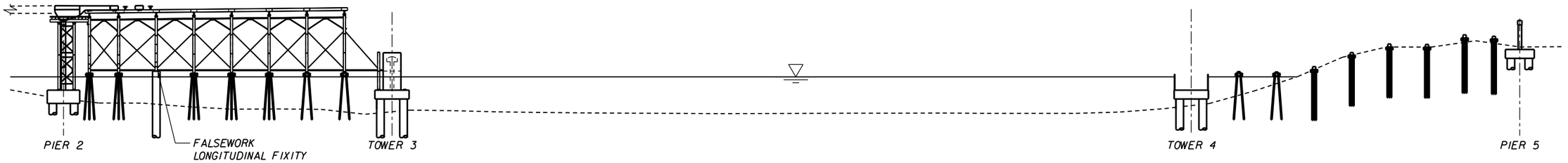

ELEVATION

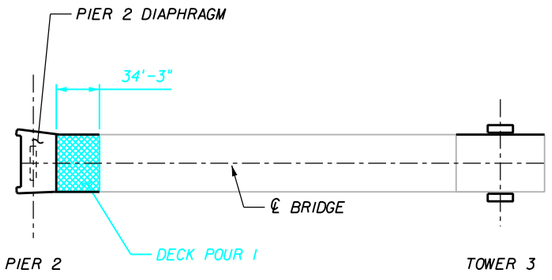

SIDE SPAN POUR SEQUENCE

STEP 3:

- PLACE PRECAST FLOORBEAMS ON TEMPORARY SUPPORTS FOR AT LEAST ONE DECK POUR UNIT IN ADVANCE (DECK POURS 1 AND 2)
- PLACE PRECAST STAY ANCHOR BLOCKS FOR AT LEAST ONE DECK POUR UNIT IN ADVANCE (BIO THRU BI2) ON SUPPORT BEAMS. INSTALL VERTICAL NAILING P.T. BARS.
- INSTALL FORMWORK AND PLACE REINFORCEMENT AND P.T. DUCTS FOR DECK POUR 1.
- FINAL ADJUST POSITION OF PRECAST ANCHOR BLOCKS AND PRECAST FLOORBEAMS OF DECK POUR 1 TO FINLEYcip DATA.
- CAST EDGE GIRDER CONCRETE FOR DECK POUR 1.
- REMOVE VERTICAL NAILING PT BARS AT ANCHOR BLOCKS OF DECK POUR 1.
- INSTALL AND STRESS TRANSVERSE FLOORBEAM P.T. THIS STEP MAY ALSO BE PERFORMED AFTER SIP DECK FORMORK IS INSTALLED (NEXT STEP).
- INSTALL SIP DECK FORMWORK BETWEEN FLOORBEAMS AND EDGE GIRDERS FOR DECK POUR 1. (CON- SIP FORMS AND REINFORCEMENT MAY BE PLACED AHEAD OF CURRENT DECK POUR.)
- CAST CONCRETE FOR DECK POUR 1.
- ONCE CONCRETE HAS REACHED 3,500psi, INSTALL AND STRESS LONGITUDINAL DECK TENDONS T1, T3, T4, T9, T14, T15, AND T17.
- STRESS VERTICAL POST-TENSIONING AND TRANSVERSE TENDONS AT PIER 2 PER POST-TENSIONING DATA. (NON-SEQ)
- REMOVE FORMWORK.

THESE DRAWINGS ARE COLOR CODED
AND MUST BE REPRODUCED IN COLOR.

Revision	Drawn By	Date	Description
1	IL	12/18/13	STEPS REVISED
2	IL	02/05/14	STEPS REVISED

	Name	Date
Drawn By:	JP	07/13
Checked By:	JMP	07/13
Approved By:	RCF	07/13

FINLEY Engineering Group, Inc.
1589 Metropolitan Blvd.
Tallahassee, FL. 32308
850-894-1600
Fax: 850-894-1614

Client: BRAYMAN construction corporation — Innovative Solutions Since 1947

Project: IRONTON RUSSELL BRIDGE OVER THE OHIO RIVER

Title: CONSTRUCTION MANUAL CONSTRUCTION SEQUENCE (3 OF 30)

Sheet No. CM-04

Plotted By: jlndrich.potucek 5/22/2014 5:55:34 PM G:\Ironton-Russell\CADD\ConstructionManual\CM_04_ConstructionSeq(4of29).dgn Model: Default

Review is only for conformance with the design concept. Review does not cover dimensions, quantities, accuracy, fit, or any assembly for which this item may be a component. Review does not authorize deviation from Contract Documents or substitution of materials. Requests for deviations from the Contract Documents will only be addressed thru the Change Order Process.

REVIEWED

CONFORMS WITH CONCEPT	(X)
CONFORMS AS NOTED	( )
RESUBMIT	( )
NO ACTION	( )
DOES NOT CONFORM	( )

URS

DATE 07/20/2016 BY

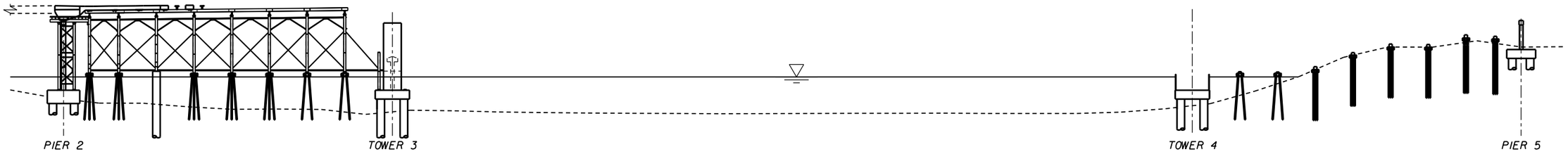

ELEVATION

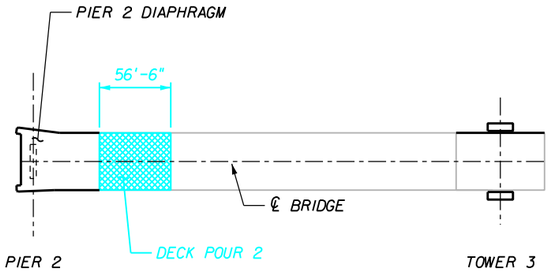

SIDE SPAN POUR SEQUENCE

STEP 4:

- PLACE PRECAST FLOORBEAMS ON TEMPORARY SUPPORTS FOR AT LEAST ONE DECK POUR UNIT IN ADVANCE (DECK POUR 3).
- PLACE PRECAST ANCHOR BLOCKS FOR AT LEAST ONE DECK POUR UNIT IN ADVANCE (B8 AND B9) ON SUPPORTS. INSTALL VERTICAL NAILING P.T. BARS.
- INSTALL FORMWORK AND PLACE REINFORCEMENT AND P.T. DUCTS FOR DECK POUR 2.
- FINAL ADJUST POSITION OF PRECAST ANCHOR BLOCKS AND PRECAST FLOORBEAMS OF DECK POUR 2 TO FINLEYclp DATA.
- CAST EDGE GIRDER CONCRETE FOR DECK POUR 2.
- REMOVE VERTICAL NAILING PT BARS FROM ANCHOR BLOCKS OF DECK POUR 2.
- ONCE CONCRETE HAS REACHED 3500 PSI, INSTALL AND STRESS LONGITUDINAL EDGE GIRDER TENDONS E2, E4, E6, AND E8.
- INSTALL AND STRESS TRANSVERSE FLOORBEAM P.T. THIS STEP MAY ALSO BE PERFORMED AFTER SIP DECK FORMORK IS INSTALLED (NEXT STEP).
- INSTALL SIP DECK FORMWORK BETWEEN FLOORBEAMS AND EDGE GIRDERS FOR DECK POUR 2. (CON- SIP FORMS AND REINFORCEMENT MAY BE PLACED AHEAD OF CURRENT DECK POUR.)
- CAST CONCRETE FOR DECK POUR 2.
- ONCE CONCRETE HAS REACHED 3500 PSI, INSTALL AND STRESS LONGITUDINAL DECK TENDONS T2, T5-T8, T10-T13, AND T16.
- REMOVE FORMWORK.

THESE DRAWINGS ARE COLOR CODED
AND MUST BE REPRODUCED IN COLOR.

Revision	Drawn By	Date	Description
1	IL	12/18/13	STEPS REVISED

	Name	Date
Drawn By:	JP	07/13
Checked By:	JMP	07/13
Approved By:	RCF	07/13

FINLEY Engineering Group, Inc.
1589 Metropolitan Blvd.
Tallahassee, FL 32308
850-894-1600
Fax: 850-894-1614

Client: BRAYMAN construction corporation — Innovative Solutions Since 1947

Project: IRONTON RUSSELL BRIDGE OVER THE OHIO RIVER

Title: CONSTRUCTION MANUAL CONSTRUCTION SEQUENCE (4 OF 30)

Sheet No. CM-05

Plotted By: jindrich.potucek 5/22/2014 5:55:35 PM G:\Ironton-Russell\CADD\ConstructionManual\CM_05_ConstructionSeq(5of29).dgn Model: Default

Review is only for conformance with the design concept. Review does not cover dimensions, quantities, accuracy, fit, or any assembly for which this item may be a component. Review does not authorize deviation from Contract Documents or substitution of materials. Requests for deviations from the Contract Documents will only be addressed thru the Change Order Process.

REVIEWED

CONFORMS WITH CONCEPT	(X)
CONFORMS AS NOTED	( )
RESUBMIT	( )
NO ACTION	( )
DOES NOT CONFORM	( )

URS

DATE 07/20/2016 BY

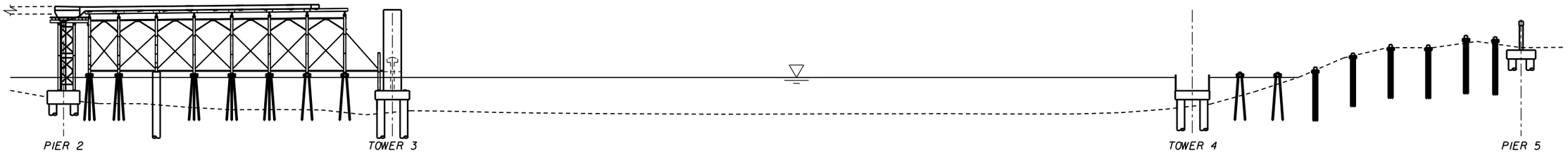

ELEVATION

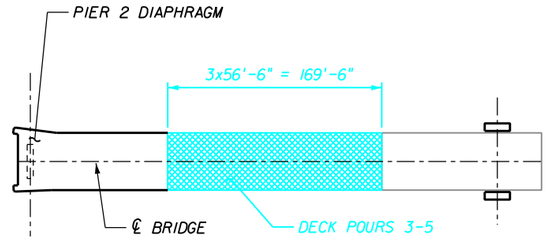

SIDE SPAN POUR SEQUENCE

STEP 5:

- PLACE PRECAST FLOORBEAMS ON TEMPORARY SUPPORTS FOR AT LEAST ONE DECK POUR UNIT IN ADVANCE (DECK POUR 4).
- PLACE PRECAST ANCHOR BLOCKS FOR AT LEAST ONE DECK POUR UNIT IN ADVANCE (B6 AND B7) ON SUPPORTS. INSTALL VERTICAL NAILING P.T. BARS.
- INSTALL FORMWORK AND PLACE REINFORCEMENT AND P.T. DUCTS FOR DECK POUR 3.
- FINAL ADJUST POSITION OF PRECAST ANCHOR BLOCKS AND PRECAST FLOORBEAMS OF DECK POUR 3 TO FINLEYclp DATA.
- CAST EDGE GIRDER CONCRETE FOR DECK POUR 3.
- REMOVE VERTICAL NAILING PT BARS FROM ANCHOR BLOCKS OF DECK POUR 3.
- INSTALL AND STRESS TRANSVERSE FLOORBEAM P.T. THIS STEP MAY ALSO BE PERFORMED AFTER SIP DECK FORMORK IS INSTALLED (NEXT STEP).
- INSTALL SIP DECK FORMWORK BETWEEN FLOORBEAMS AND EDGE GIRDERS FOR DECK POUR 3. (CON- SIP FORMS AND REINFORCEMENT MAY BE PLACED AHEAD OF CURRENT DECK POUR.)
- CAST CONCRETE FOR DECK POUR 3.
- REMOVE FORMWORK.
- REPEAT STEPS FOR DECK POURS 4 AND 5.

- FOR DECK POUR 5, PLACING OF ANCHOR BLOCK B2 IS NOT REQUIRED.

THESE DRAWINGS ARE COLOR CODED
AND MUST BE REPRODUCED IN COLOR.

Revision	Drawn By	Date	Description
1	IL	12/18/13	STEPS REVISED
2	IL	02/05/14	STEPS REVISED

	Name	Date
Drawn By:	JP	07/13
Checked By:	JMP	07/13
Approved By:	RCF	07/13

FINLEY Engineering Group, Inc.
1589 Metropolitan Blvd.
Tallahassee, FL. 32308
850-894-1600
Fax: 850-894-1614

Client: BRAYMAN construction corporation — Innovative Solutions Since 1947

Project: IRONTON RUSSELL BRIDGE OVER THE OHIO RIVER

Title: CONSTRUCTION MANUAL CONSTRUCTION SEQUENCE (5 OF 30)

Sheet No. CM-06

Plotted By: jlndrich.potucek 5/22/2014 5:55:36 PM G:\Ironton-Russell\CADD\ConstructionManual\CM_06_ConstructionSeq(6of29).dgn Model: Default

Review is only for conformance with the design concept. Review does not cover dimensions, quantities, accuracy, fit, or any assembly for which this item may be a component. Review does not authorize deviation from Contract Documents or substitution of materials. Requests for deviations from the Contract Documents will only be addressed thru the Change Order Process.

REVIEWED

CONFORMS WITH CONCEPT	(X)
CONFORMS AS NOTED	( )
RESUBMIT	( )
NO ACTION	( )
DOES NOT CONFORM	( )

URS

DATE 07/20/2016 BY

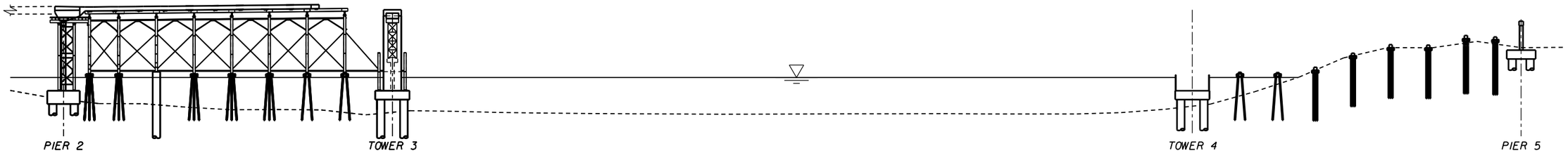

ELEVATION

STEP 6: (CON)

- CONSTRUCT PYLON SECTION STAGE I TEMPORARY FALSEWORK AND FORMWORK.
- PLACE TOWER SEGMENT 5 REINFORCING AND POST-TENSIONING.
- CAST TOWER SEGMENT 5.
- (2) STRESS TOWER SEGMENT 5 POST-TENSIONING AS PER FINLEY PT STRESSING DATA. (NON-SEQ: MUST BE COMPELETED PRIOR TO CASTING TOWER SEGMENT 10.)
- FORM AND CAST TOWER SEGMENT 6 STARTER SECTION. THIS STEP MAY BE PERFORMED PRIOR TO STRESSING SEGMENT 5 POST-TENSIONING.
- REMOVE PYLON SECTION STAGE I TEMPORARY FALSEWORK.

NOTE: THE STEPS HEREIN MAY CONINCIDE WITH ERECTION PROCEDURES ON OTHER SHEETS.

THESE DRAWINGS ARE COLOR CODED
AND MUST BE REPRODUCED IN COLOR.

Revision	Drawn By	Date	Description
1	IL	12/16/13	REVISED TOWER SEGMENT 5 POST-TENSIONING NOTES
2	JP	04/23/14	REVISED TOWER SEGMENT 5 POST-TENSIONING NOTES

	Name	Date
Drawn By:	JP	07/13
Checked By:	JMP	07/13
Approved By:	RCF	07/13

FINLEY Engineering Group, Inc.
1589 Metropolitan Blvd.
Tallahassee, FL. 32308
850-894-1600
Fax: 850-894-1614

Client: BRAYMAN construction corporation — Innovative Solutions Since 1947

Project: IRONTON RUSSELL BRIDGE OVER THE OHIO RIVER

Title: CONSTRUCTION MANUAL CONSTRUCTION SEQUENCE (6 OF 30)

Sheet No. CM-07

Plotted By: jindrich.potucek 5/22/2014 5:55:37 PM G:\Ironton-Russell\CADD\ConstructionManual\CM_07_ConstructionSeq(2of29).dgn Model: Default

Review is only for conformance with the design concept. Review does not cover dimensions, quantities, accuracy, fit, or any assembly for which this item may be a component. Review does not authorize deviation from Contract Documents or substitution of materials. Requests for deviations from the Contract Documents will only be addressed thru the Change Order Process.

REVIEWED

CONFORMS WITH CONCEPT	(X)
CONFORMS AS NOTED	( )
RESUBMIT	( )
NO ACTION	( )
DOES NOT CONFORM	( )

URS

DATE 07/20/2016 BY

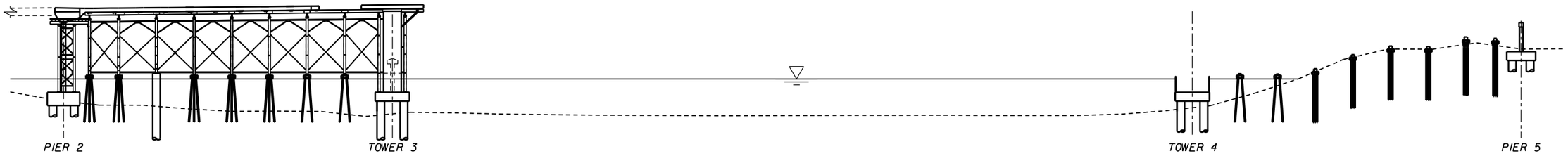

ELEVATION

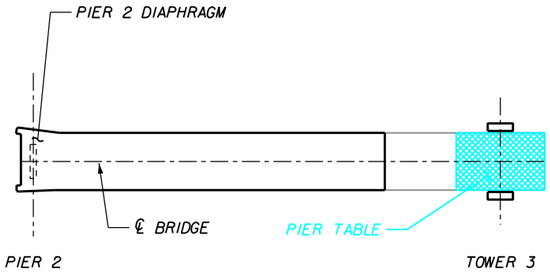

SIDE SPAN POUR SEQUENCE

STEP 7:

- COMPLETE KY9 BENT. SECURE FALSEWORK BY ANCHORS INTO PIER 3.
- INSTALL PYLON FALSEWORK AS PER THE FALSEWORK DRAWINGS.
- FORM AND CAST FLOORBEAM FB2.
- PLACE PRECAST FLOORBEAMS ON TEMPORARY SUPPORTS.
- PLACE MI AND BI PRECAST ANCHOR BLOCKS ON SUPPORT BEAMS. INSTALL VERTICAL NAILING P.T. BARS (LOOSE).
- FORM EDGE GIRDER, PLACE REINFORCEMENT AND POST-TENSIONING.
- FINAL ADJUST POSITION OF PRECAST ANCHOR BLOCKS AND PRECAST FLOORBEAMS TO FINLEYcip DATA.
- CAST THE EDGE GIRDER.
- 4 3 - INSTALL TRANSVERSE FLOORBEAM P.T AND PERFORM FIRST STAGE STRESSING. THIS STEP MAY ALSO BE PERFORMED AFTER SIP DECK FORMORK IS INSTALLED (NEXT STEP).
- INSTALL SIP FORMS BETWEEN FLOORBEAMS AND EDGE GIRDER. PLACE DECK REINFORCEMENT. (CON- SIP FORMS AND REINFORCEMENT MAY BE PLACED AHEAD OF CURRENT DECK POUR.)
- CAST THE DECK CONCRETE.
- 3 - PERFORM SECOND STAGE STRESSING OF THE TRANSVERSE FLOORBEAM P.T.
- STRESS PIER TABLE LONGITUDINAL P.T. BARS PER POST-TENSIONING STRESSING DATA.

THESE DRAWINGS ARE COLOR CODED
AND MUST BE REPRODUCED IN COLOR.

Revision	Drawn By	Date	Description
2	IL	01/06/14	STEPS REVISED
3	JP	04/23/14	PC BEAM TRANS. PT STAGING ADDED
4	JP	05/22/14	Syntax error corrected.

	Name	Date
Drawn By:	JP	07/13
Checked By:	JMP	07/13
Approved By:	RCF	07/13

FINLEY Engineering Group, Inc.
1589 Metropolitan Blvd.
Tallahassee, FL 32308
850-894-1600
Fax: 850-894-1614

Client: BRAYMAN construction corporation — Innovative Solutions Since 1947

Project: IRONTON RUSSELL BRIDGE OVER THE OHIO RIVER

Title: CONSTRUCTION MANUAL CONSTRUCTION SEQUENCE (7 OF 30)

Sheet No. CM-08

Plotted By: Jindrich.potucek 5/22/2014 5:55:38 PM G:\Ironton-Russell\CADD\ConstructionManual\CM_08_ConstructionSeq(7of29).dgn Model: Default

Review is only for conformance with the design concept. Review does not cover dimensions, quantities, accuracy, fit, or any assembly for which this item may be a component. Review does not authorize deviation from Contract Documents or substitution of materials. Requests for deviations from the Contract Documents will only be addressed thru the Change Order Process.

REVIEWED

CONFORMS WITH CONCEPT	(X)
CONFORMS AS NOTED	( )
RESUBMIT	( )
NO ACTION	( )
DOES NOT CONFORM	( )

URS

DATE 07/20/2016 BY

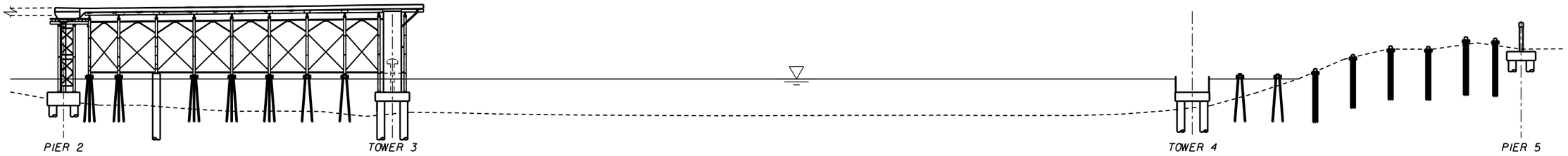

ELEVATION

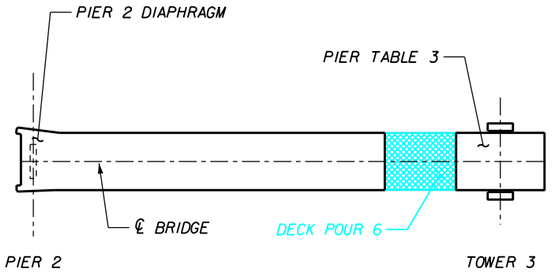

SIDE SPAN POUR SEQUENCE

STEP 8:

- PLACE PRECAST FLOORBEAMS PBIB, PB2A, AND PB2B AND ANCHOR STAY PRECAST BLOCK B2.
- INSTALL FORMWORK AND PLACE REINFORCEMENT AND P.T. DUCTS FOR DECK POUR 6.
- FINAL ADJUST POSITION OF PRECAST ANCHOR BLOCKS AND PRECAST FLOORBEAMS TO FINLEYcip DATA.
- CAST EDGE GIRDER CONCRETE FOR DECK POUR 6.
- REMOVE VERTICAL NAILING PT BARS FROM ANCHOR BLOCKS OF DECK POUR 6.
- ONCE CONCRETE HAS REACHED 3500 PSI, INSTALL AND STRESS LONGITUDINAL EDGE GIRDER TENDONS E1, E3, E5, AND E7.
- INSTALL AND STRESS TRANSVERSE FLOORBEAM P.T. THIS STEP MAY ALSO BE PERFORMED AFTER SIP DECK FORMORK IS INSTALLED (NEXT STEP). FOR ALL PB2 BEAMS PERFORM ONLY FIRST STAGE STRESSING.
- INSTALL SIP DECK FORMWORK BETWEEN FLOORBEAMS AND EDGE GIRDERS FOR DECK POUR 6.
- CAST CONCRETE FOR DECK POUR 6.
- REMOVE FORMWORK.
- PERFORM SECOND STAGE STRESSING OF THE TRANSVERSE PB2 TYPE FLOORBEAMS P.T.
- INSTALL TEMPORARY SHIM PACKS AT PIER 3 TO PROVIDE LONGITUDINAL FIXITY DURING CONSTRUCTION AS PER SHEET CM-32 OF THE CONSTRUCTION MANUAL.

THESE DRAWINGS ARE COLOR CODED
AND MUST BE REPRODUCED IN COLOR.

Revision	Drawn By	Date	Description
1	IL	12/18/13	STEPS REVISED.
2	JP	05/22/14	Staged stressing sequence added for PB2 type beams.

	Name	Date
Drawn By:	JP	07/13
Checked By:	JMP	07/13
Approved By:	RCF	07/13

FINLEY Engineering Group, Inc.
1589 Metropolitan Blvd.
Tallahassee, FL 32308
850-894-1600
Fax: 850-894-1614

Client: BRAYMAN construction corporation — Innovative Solutions Since 1947

Project: IRONTON RUSSELL BRIDGE OVER THE OHIO RIVER

Title: CONSTRUCTION MANUAL CONSTRUCTION SEQUENCE (8 OF 30)

Sheet No. CM-09

Plotted By: jlndrich.potucek 5/22/2014 5:55:39 PM G:\Ironton-Russell\CADD\ConstructionManual\CM_09_ConstructionSeq(8of29).dgn Model: Default

Review is only for conformance with the design concept. Review does not cover dimensions, quantities, accuracy, fit, or any assembly for which this item may be a component. Review does not authorize deviation from Contract Documents or substitution of materials. Requests for deviations from the Contract Documents will only be addressed thru the Change Order Process.

REVIEWED

CONFORMS WITH CONCEPT	(X)
CONFORMS AS NOTED	( )
RESUBMIT	( )
NO ACTION	( )
DOES NOT CONFORM	( )

URS

DATE 07/20/2016 BY

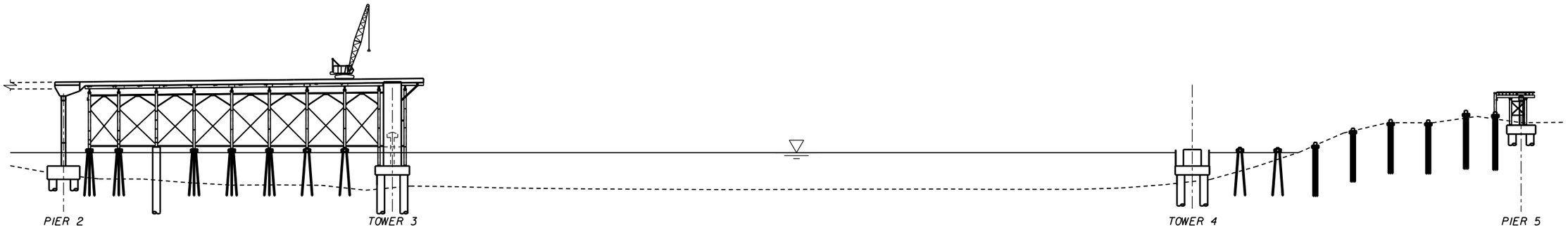

ELEVATION

STEP 9:

- REMOVE KENTUCKY SIDE BACKSPAN FALSEWORK FROM TRANSITION PIER 2.(CON)
- INSTALL OHIO SIDE BACKSPAN FALSEWORK AT TRANSITION PIER 5.(CON)
- ASSEMBLE MANITOWOC 888 CRANE AT CENTER OF DECK AT TOWER 3.(CON)

THESE DRAWINGS ARE COLOR CODED
AND MUST BE REPRODUCED IN COLOR.

Revision	Drawn By	Date	Description		Name	Date
1	IL	02/05/14	REVISED STEPS.	Drawn By:	JP	07/13
				Checked By:	JMP	07/13
				Approved By:	RCF	07/13

FINLEY Engineering Group, Inc.
1589 Metropolitan Blvd.
Tallahassee, FL. 32308
850-894-1600
Fax: 850-894-1614

Client: BRAYMAN construction corporation — Innovative Solutions Since 1947

Project: IRONTON RUSSELL BRIDGE OVER THE OHIO RIVER

Title: CONSTRUCTION MANUAL CONSTRUCTION SEQUENCE (9 OF 30)

Sheet No. CM-10

Plotted By: jindrich.potucek 5/22/2014 5:55:40 PM G:\Ironton-Russell\CADD\ConstructionManual\CM_10_ConstructionSeq(9of29).dgn Model: Default

Review is only for conformance with the design concept. Review does not cover dimensions, quantities, accuracy, fit, or any assembly for which this item may be a component. Review does not authorize deviation from Contract Documents or substitution of materials. Requests for deviations from the Contract Documents will only be addressed thru the Change Order Process.

REVIEWED
CONFORMS WITH CONCEPT (X)
CONFORMS AS NOTED ( )
RESUBMIT ( )
NO ACTION ( )
DOES NOT CONFORM ( )

URS

DATE 07/20/2016 BY

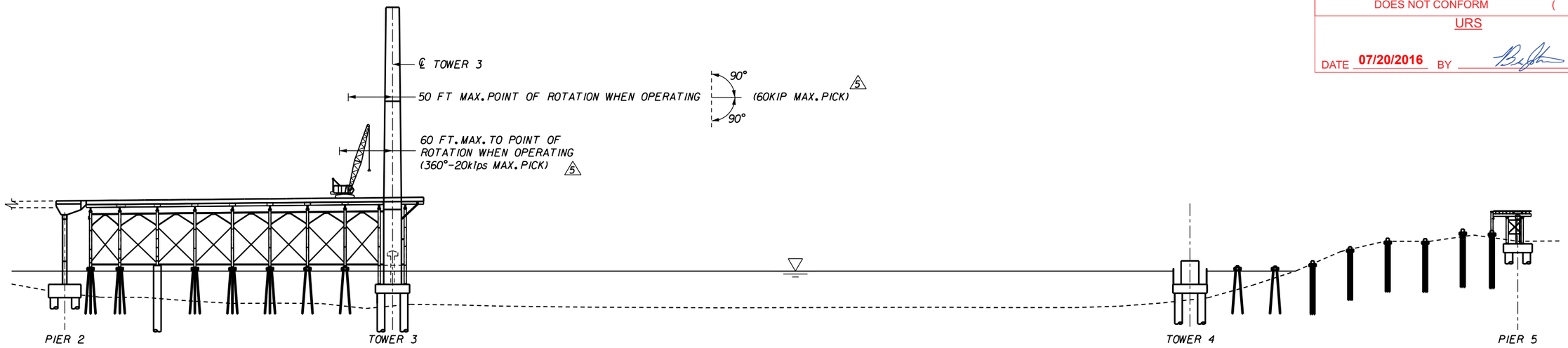

ELEVATION

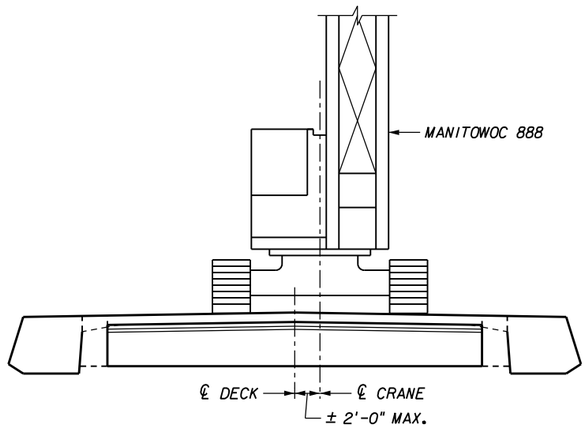

4 CRANE OPERATIONAL LIMIT ON THE DECK

STEP 10:

- START ERECTING TOWER 3 SEGMENTS USING A BARGE CRANE.
- CONTINUE WITH TOWER 3 ERECTION UP THRU TOWER SEGMENT 10.
- INSTALL LOWER TEMPORARY CROSS STRUT AT TOWER SEGMENT 8.
- CONTINUE WITH TOWER 3 ERECTION UP THRU TOWER SEGMENT 11.
- 3 4 FOR FOLLOWING SEGMENTS, THE MANITOWOC 888 CRANE MAY BE USED. STAY WITHIN THE CRANE OPERATION SHOWN ON THIS SHEET.
- ERECT FIRST STEEL ANCHOR BOX. ALIGN AND POSITION THE BOX PRIOR TO CASTING CONCRETE.
- USE JUMP FORMS TO CAST THE COMPOSITE SECTION.
- CONTINUE WITH TOWER 3 ERECTION, ERECTING SEGMENTS 12 THRU 13 ON THE WEST TOWER.
- ERECT WEST TOWER SEGMENT 14 AND EAST TOWER SEGMENT 12.
- ERECT SEGMENT 15 ON THE WEST TOWER.
- BEGIN DISMANTLING WEST TOWER FORM WHILE ERECTING SEGMENT 13 ON THE EAST TOWER.
- INSTALL UPPER TEMPORARY CROSS STRUT AT TOWER SEGMENT 11.
- CONTINUE WITH TOWER 3 ERECTION, ERECTING SEGMENTS 14 AND 15 ON THE EAST TOWER.
- INSTALL TOP TEMPORARY CROSS STRUT AT TOWER SEGMENT 15.
- ERECT TOWER SEGMENT 16 ON THE EAST TOWER.
- CONTINUE WITH TOWER 3 ERECTION UP THRU COMPLETION OF THE TOWER.
- REMOVE TOP, UPPER, AND LOWER TEMPORARY CROSS STRUTS.

- SEE PYLON TEMPORARY WORKS DRAWINGS, FOR INSTALLATION PROCEDURES.

NOTE: TOWER SEGMENT CASTING MAY BE STAGGERED BY UP TO TWO SEGMENTS.

THESE DRAWINGS ARE COLOR CODED
AND MUST BE REPRODUCED IN COLOR.

Revision	Drawn By	Date	Description		Name	Date
3	JP	04/29/14	STEP REVISED	Drawn By:	JMP	07/13
4	JP	05/22/14	Crane limits added.	Checked By:	RCF	07/13
5	IL	08/28/14	CRANE NOTES REVISED.	Approved By:	JMP	08/14

FINLEY Engineering Group, Inc.
1589 Metropolitan Blvd.
Tallahassee, FL 32308
850-894-1600
Fax: 850-894-1614

Client: BRAYMAN construction corporation — Innovative Solutions Since 1947

Project: IRONTON RUSSELL BRIDGE OVER THE OHIO RIVER

Title: CONSTRUCTION MANUAL CONSTRUCTION SEQUENCE (10 OF 30)

Sheet No. CM-11

Plotted By: Ivan.Liu 8/28/2014 9:06:41 AM G:\Ironton-Russell\CADD\ConstructionManual\CM_11_ConstructionSeq(10of29).dgn Model: Default

Review is only for conformance with the design concept. Review does not cover dimensions, quantities, accuracy, fit, or any assembly for which this item may be a component. Review does not authorize deviation from Contract Documents or substitution of materials. Requests for deviations from the Contract Documents will only be addressed thru the Change Order Process.

REVIEWED

CONFORMS WITH CONCEPT	(X)
CONFORMS AS NOTED	( )
RESUBMIT	( )
NO ACTION	( )
DOES NOT CONFORM	( )

URS

DATE 07/20/2016 BY

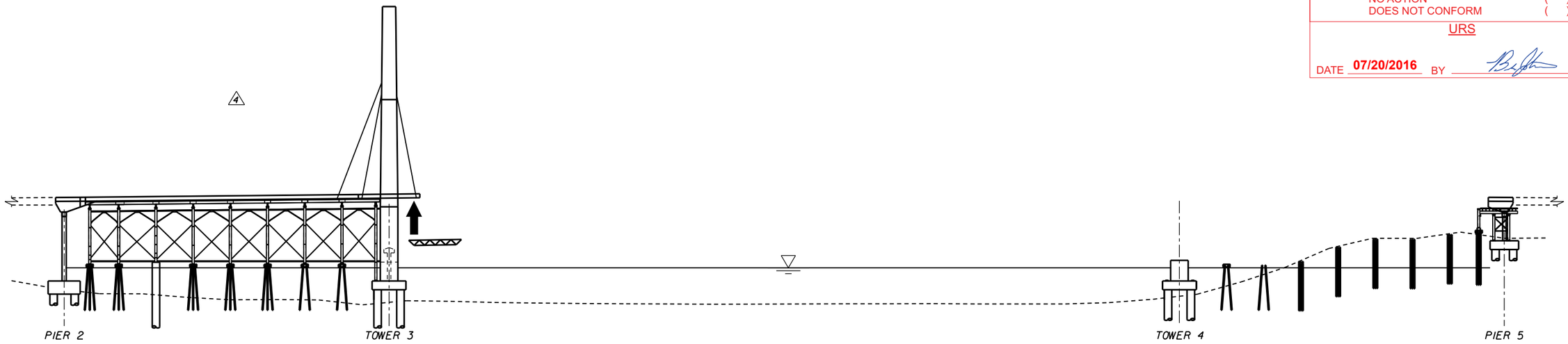

ELEVATION

4 STEP 11:

- INSTALL TEMPORARY HOLD DOWN PT BARS. SEE SHEET CM-32 FOR DETAILS.
- INSTALL STRANDS FOR CABLE B1 WITH STAY PIPE AND STRESS TO FINAL FORCE. (VSL PHASE 1A STRESSING) 3
- INSTALL STRANDS FOR CABLE M1 WITH STAY PIPE AND STRESS TO INITIAL FORCE. (VSL PHASE 1A STRESSING) 3
- REMOVE BOOM AND COUNTERWEIGHTS OFF OF MANITOWOC 888. TRANSPORT MANITOWOC 888 OFF THE DECK (NO RESTRICTIONS APPLY).
- REMOVE TOWER 3 PIER TABLE FALSEWORK, AND INSTALL TOWER 4 PIER TABLE FALSEWORK.
- CAST PIER 5 TRANSITION SEGMENT (SIMILAR TO STEP 3).
- RESTRESS STAY M1. (VSL PHASE 2 STRESSING) 3
- INSTALL STRAND IN STAY B2 AND STRESS. (VSL PHASE 1A STRESSING) 4
- ERECT FORM TRAVELER ONTO TOWER 3 PIER TABLE USING BARGE MOUNTED CRANES.

NOTES:

1. RED STAYS DENOTE TWO STRANDS STRESSED TO 15% GUTS AND STAY PIPE.

THESE DRAWINGS ARE COLOR CODED
AND MUST BE REPRODUCED IN COLOR.

Revision	Drawn By	Date	Description		Name	Date
2	IL	02/05/14	STEPS REVISED.	Drawn By:	JP	07/13
3	IL	06/23/15	ADDED VSL STRESSING STEPS.	Checked By:	JMP	07/13
4	IL	09/08/15	REVISED BACKSPAN STAY STRESSING.	Approved By:	RCF	07/13

FINLEY Engineering Group, Inc.
1589 Metropolitan Blvd.
Tallahassee, FL. 32308
850-894-1600
Fax: 850-894-1614

Client: BRAYMAN construction corporation — Innovative Solutions Since 1947

Project: IRONTON RUSSELL BRIDGE OVER THE OHIO RIVER

Title: CONSTRUCTION MANUAL CONSTRUCTION SEQUENCE (11 OF 30)

Sheet No. CM-12

Plotted By: Ivan.Liu 9/8/2015 10:23:59 AM G:\Ironton-Russell\CADD\ConstructionManual\CM_12_ConstructionSeq(11of29).dgn Model: Default

Review is only for conformance with the design concept. Review does not cover dimensions, quantities, accuracy, fit, or any assembly for which this item may be a component. Review does not authorize deviation from Contract Documents or substitution of materials. Requests for deviations from the Contract Documents will only be addressed thru the Change Order Process.

REVIEWED

CONFORMS WITH CONCEPT (X)
CONFORMS AS NOTED ( )
RESUBMIT ( )
NO ACTION ( )
DOES NOT CONFORM ( )

URS

DATE 07/20/2016 BY

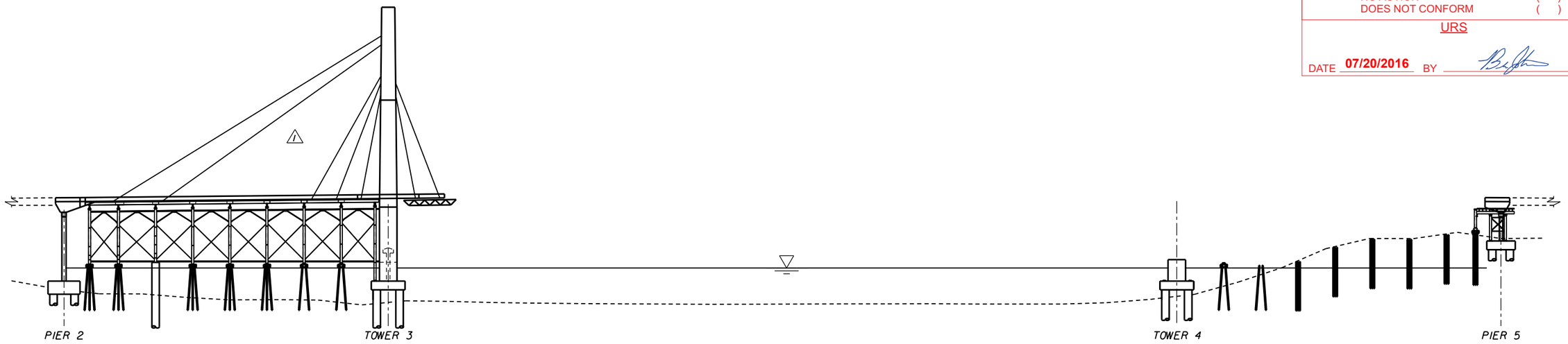

ELEVATION

⚠ **STEP 12:**

- CONSTRUCT SEGMENT M2 USING STEPS ON SHEET "CM-33 - MAIN SPAN SEGMENT CYCLE" WITH THE FOLLOWING EXCEPTION, INSTALL ALL STRAND IN STAY B3 AND STRESS PRIOR TO CASTING OF SEGMENT M2.(PHASE IA STRESSING)
- INSTALL ALL STRAND IN STAY B9 AND STRESS.(VSL PHASE IA STRESSING)
- INSTALL ALL STRAND IN STAY BII AND STRESS.(VSL PHASE IA STRESSING)

NOTES:

1. RED STAYS DENOTE TWO STRANDS STRESSED TO 15% GUTS AND STAY PIPE.

THESE DRAWINGS ARE COLOR CODED
AND MUST BE REPRODUCED IN COLOR.

Revision	Drawn By	Date	Description
1	IL	09/08/15	REVISED BACKSPAN STAY STRESSING.

	Name	Date
Drawn By:	JP	07/13
Checked By:	JMP	07/13
Approved By:	RCF	07/13

FINLEY Engineering Group, Inc.
1589 Metropolitan Blvd.
Tallahassee, FL. 32308
850-894-1600
Fax: 850-894-1614

Client: BRAYMAN construction corporation — Innovative Solutions Since 1947

Project: IRONTON RUSSELL BRIDGE OVER THE OHIO RIVER

Title: CONSTRUCTION MANUAL CONSTRUCTION SEQUENCE (12 OF 30)

Sheet No. CM-13

Plotted By: Ivan.Liu 9/8/2015 10:24:11 AM G:\Ironton-Russell\CADD\ConstructionManual\CM_13_ConstructionSeq(12of29).dgn Model: Default

Review is only for conformance with the design concept. Review does not cover dimensions, quantities, accuracy, fit, or any assembly for which this item may be a component. Review does not authorize deviation from Contract Documents or substitution of materials. Requests for deviations from the Contract Documents will only be addressed thru the Change Order Process.

REVIEWED

CONFORMS WITH CONCEPT	( )
CONFORMS AS NOTED	(X)
RESUBMIT	( )
NO ACTION	( )
DOES NOT CONFORM	( )

URS

DATE 07/20/2016 BY

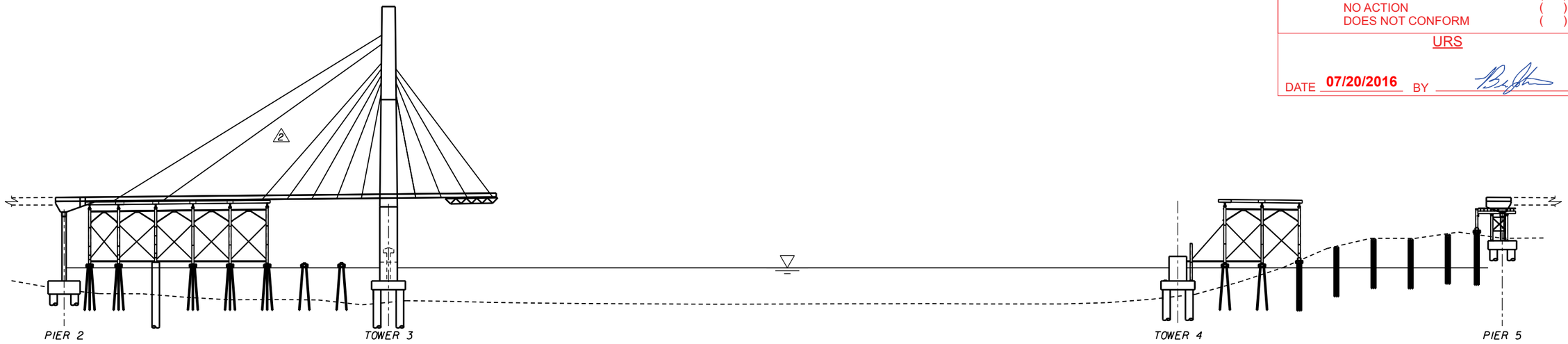

ELEVATION

STEP 13:

- CONTINUE ERECTING MAINSPAN SEGMENTS THRU SEGMENT M4 USING STEPS ON SHEET "CM-33 - MAIN SPAN SEGMENT CYCLE".
2 - AFTER STRESSING STAY B5 (AS PER VSL PHASE IA STRESSING), THE FIRST 1/3 OF TYPICAL FALSEWORK CAN BE REMOVED.
- INSTALL FIRST 1/3 OF TYPICAL FALSEWORK IN THE OHIO BACKSPAN.

First 1/3 falsework removed around segment M10

NOTES:

1. RED STAYS DENOTE TWO STRANDS STRESSED AT 15% GUTS AND STAY PIPE.

THESE DRAWINGS ARE COLOR CODED
AND MUST BE REPRODUCED IN COLOR.

Revision	Drawn By	Date	Description
1	IL	06/23/15	ADDED VSL STRESSING STEPS.
2	IL	09/08/15	REVISED BACKSPAN STAY STRESSING.

	Name	Date
Drawn By:	JP	07/13
Checked By:	JMP	07/13
Approved By:	RCF	07/13

FINLEY Engineering Group, Inc.
1589 Metropolitan Blvd.
Tallahassee, FL. 32308
850-894-1600
Fax: 850-894-1614

Client: BRAYMAN construction corporation — Innovative Solutions Since 1947

Project: IRONTON RUSSELL BRIDGE OVER THE OHIO RIVER

Title: CONSTRUCTION MANUAL CONSTRUCTION SEQUENCE (13 OF 30)

Sheet No. CM-14

Plotted By: Ivan.Liu 9/8/2015 10:24:26 AM G:\Ironton-Russell\CADD\ConstructionManual\CM_14_ConstructionSeq(13of29).dgn Model: Default

Review is only for conformance with the design concept. Review does not cover dimensions, quantities, accuracy, fit, or any assembly for which this item may be a component. Review does not authorize deviation from Contract Documents or substitution of materials. Requests for deviations from the Contract Documents will only be addressed thru the Change Order Process.

REVIEWED

CONFORMS WITH CONCEPT	( )
CONFORMS AS NOTED	(X)
RESUBMIT	( )
NO ACTION	( )
DOES NOT CONFORM	( )

URS

DATE 07/20/2016 BY

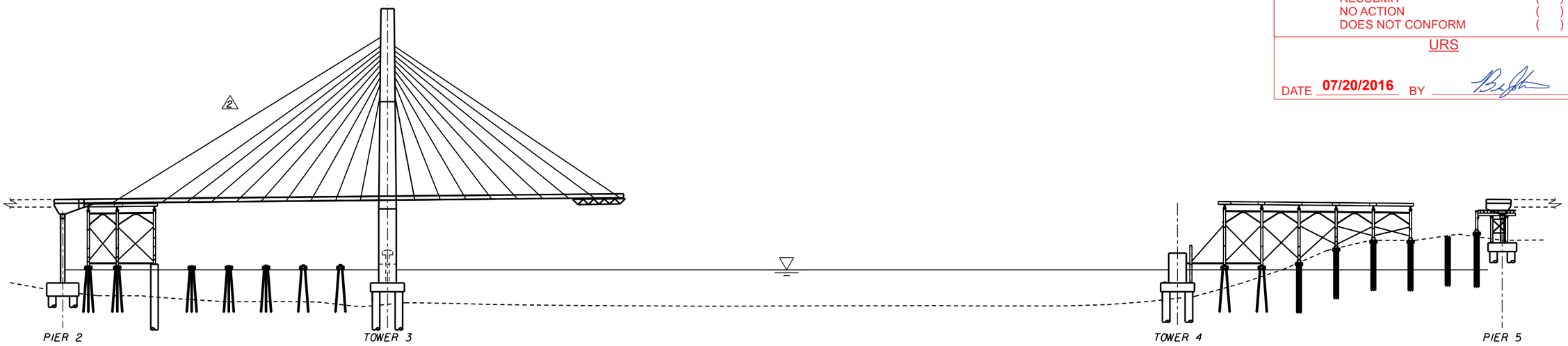

ELEVATION

STEP 14:

- CONTINUE ERECTING MAINSPAN SEGMENTS THRU SEGMENT M8 USING STEPS ON SHEET "CM-33 - MAIN SPAN SEGMENT CYCLE".
2 - RESTRESS STAY B9.(VSL PHASE 2 STRESSING)
- ADVANCE THE TRAVELER TO CAST M9, MIDDLE ⅓ OF TYPICAL FALSEWORK CAN NOW BE REMOVED.
- ERECT SEGMENT M9 AS PER SHEET CM-33.
- INSTALL MIDDLE ⅓ OF TYPICAL FALSEWORK IN THE OHIO BACKSPAN.

Middle 1/3 falsework removed around segment M12

NOTES:

1. RED STAYS DENOTE TWO STRANDS STRESSED TO 15% GUTS AND STAY PIPE.

THESE DRAWINGS ARE COLOR CODED
AND MUST BE REPRODUCED IN COLOR.

Revision	Drawn By	Date	Description
1	IL	02/05/14	REVISED STEPS.
2	IL	09/08/15	REVISED BACKSPAN STAY STRESSING.

	Name	Date
Drawn By:	JP	07/13
Checked By:	JMP	07/13
Approved By:	RCF	07/13

FINLEY Engineering Group, Inc.
1589 Metropolitan Blvd.
Tallahassee, FL. 32308
850-894-1600
Fax: 850-894-1614

Client: BRAYMAN construction corporation — Innovative Solutions Since 1947

Project: IRONTON RUSSELL BRIDGE OVER THE OHIO RIVER

Title: CONSTRUCTION MANUAL CONSTRUCTION SEQUENCE (14 OF 30)

Sheet No. CM-15

Plotted By: Ivan.Liu 9/8/2015 10:24:42 AM G:\Ironton-Russell\CADD\ConstructionManual\CM_15_ConstructionSeq(14of29).dgn Model: Default

Review is only for conformance with the design concept. Review does not cover dimensions, quantities, accuracy, fit, or any assembly for which this item may be a component. Review does not authorize deviation from Contract Documents or substitution of materials. Requests for deviations from the Contract Documents will only be addressed thru the Change Order Process.

REVIEWED

CONFORMS WITH CONCEPT	(X)
CONFORMS AS NOTED	( )
RESUBMIT	( )
NO ACTION	( )
DOES NOT CONFORM	( )

URS

DATE 07/20/2016 BY

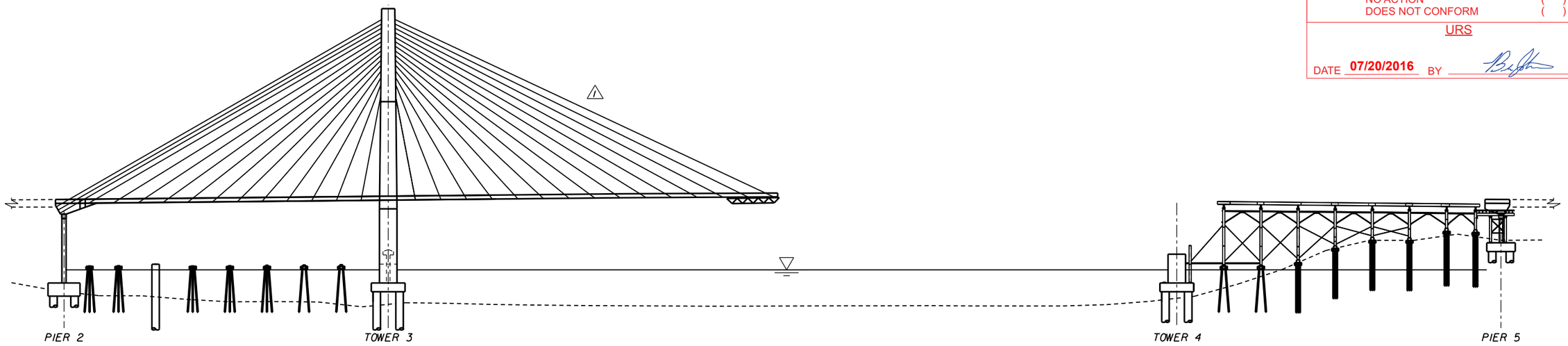

ELEVATION

STEP 15:

3 - CONTINUE ERECTING MAINSPAN SEGMENTS THRU SEGMENT MI2 USING STEPS ON SHEET "CM-33 - MAIN SPAN SEGMENT CYCLE".

3 - RESTRESS STAY BII FOLLOWING ERECTION OF SEGMENT MIO. (VSL PHASE 2 STRESSING)

- ADVANCE TO THE TRAVELER TO CAST MI3, THE REMAINING ⅓ OF TYPICAL FALSEWORK CAN NOW BE REMOVED.
- CAST SEGMENT MI3 AND STRESS STAY MI3 AS PER STEPS ON SHEET CM-33.

3 - INSTALL STRANDS AND STRESS STAY BI4. (VSL PHASE IA STRESSING)

- CONTINUE BY ERECTION OF SEGMENTS MI4 AND MI5 AS PER STEPS ON SHEET CM-33.
- FOLLOWING COMPLETION OF SEGMENT MI5, THE FORM TRAVELER MAY BE REMOVED.
- INSTALL REMAINING ⅓ TYPICAL FALSEWORK IN THE OHIO BACKSPAN.

THESE DRAWINGS ARE COLOR CODED
AND MUST BE REPRODUCED IN COLOR.

Revision	Drawn By	Date	Description		Name	Date
1	JP	05/22/14	Drawing updated to match the sequence	Drawn By:	JP	07/13
2	IL	06/23/15	ADDED VSL STRESSING STEPS.	Checked By:	JMP	07/13
3	IL	09/08/15	REVISED BACKSPAN STAY STRESSING.	Approved By:	RCF	07/13

FINLEY Engineering Group, Inc.
1589 Metropolitan Blvd.
Tallahassee, FL. 32308
850-894-1600
Fax: 850-894-1614

Client: BRAYMAN construction corporation — Innovative Solutions Since 1947

Project: IRONTON RUSSELL BRIDGE OVER THE OHIO RIVER

Title: CONSTRUCTION MANUAL CONSTRUCTION SEQUENCE (15 OF 30)

Sheet No. CM-16

Plotted By: Ivan.Liu 9/8/2015 10:24:55 AM G:\Ironton-Russell\CADD\ConstructionManual\CM_16_ConstructionSeq(15of29).dgn Model: Default

Review is only for conformance with the design concept. Review does not cover dimensions, quantities, accuracy, fit, or any assembly for which this item may be a component. Review does not authorize deviation from Contract Documents or substitution of materials. Requests for deviations from the Contract Documents will only be addressed thru the Change Order Process.

REVIEWED

CONFORMS WITH CONCEPT	(X)
CONFORMS AS NOTED	( )
RESUBMIT	( )
NO ACTION	( )
DOES NOT CONFORM	( )

URS

DATE 07/20/2016 BY

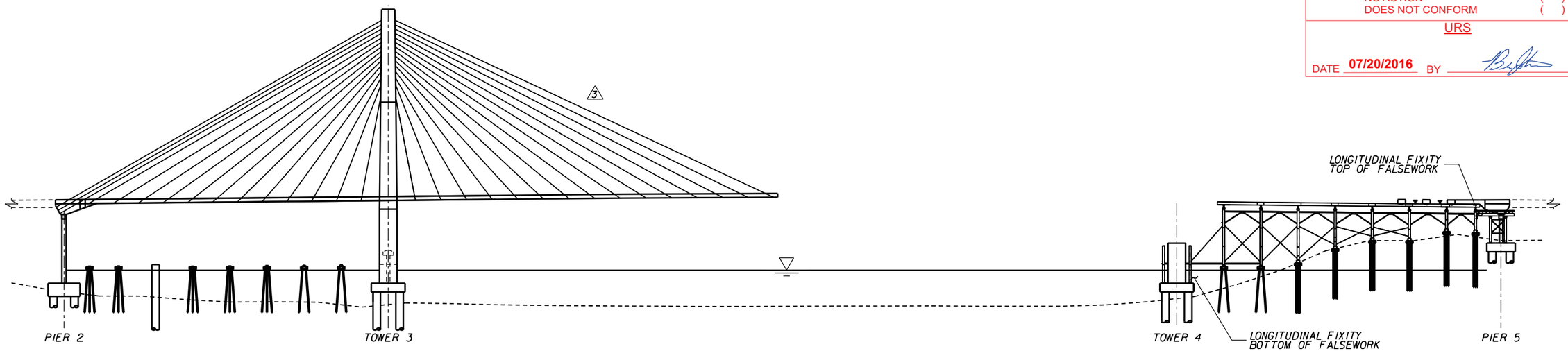

ELEVATION

STEP 16:

- INSTALL PYLON FALSEWORK PIPE BASE ON TOWER 4 FOOTING PRIOR TO COFFERDAM REMOVAL. (CON AND NON-SEQ)
- PLACE PRECAST FLOORBEAMS ON TEMPORARY SUPPORTS FOR AT LEAST ONE DECK POUR UNIT IN ADVANCE (DECK POURS 1 AND 2)
- PLACE PRECAST STAY ANCHOR BLOCKS FOR AT LEAST ONE DECK POUR UNIT IN ADVANCE (B25 THRU B27) ON SUPPORT BEAMS. INSTALL VERTICAL NAILING P.T. BARS.
- INSTALL FORMWORK AND PLACE REINFORCEMENT AND P.T. DUCTS FOR DECK POUR 1.
- FINAL ADJUST POSITION OF PRECAST ANCHOR BLOCKS AND PRECAST FLOORBEAMS OF DECK POUR 1 TO FINLEYclp DATA.
- CAST EDGE GIRDER CONCRETE FOR DECK POUR 1.
- REMOVE VERTICAL NAILING PT BARS AT ANCHOR BLOCKS OF DECK POUR 1.
- INSTALL AND STRESS TRANSVERSE FLOORBEAM P.T. THIS STEP MAY ALSO BE PERFORMED AFTER SIP DECK FORMORK IS INSTALLED (NEXT STEP).
- INSTALL SIP DECK FORMWORK BETWEEN FLOORBEAMS AND EDGE GIRDERS FOR DECK POUR 1. (CON- SIP FORMS AND REINFORCEMENT MAY BE PLACED AHEAD OF CURRENT DECK POUR.)
- CAST CONCRETE FOR DECK POUR 1.
- ONCE CONCRETE HAS REACHED 3,500psi, INSTALL AND STRESS LONGITUDINAL DECK TENDONS T1, T3, T4, T9, T14, T15, AND T17.
- STRESS VERTICAL POST-TENSIONING AND TRANSVERSE TENDONS AT PIER 5 PER POST-TENSIONING DATA.
- REMOVE FORMWORK.

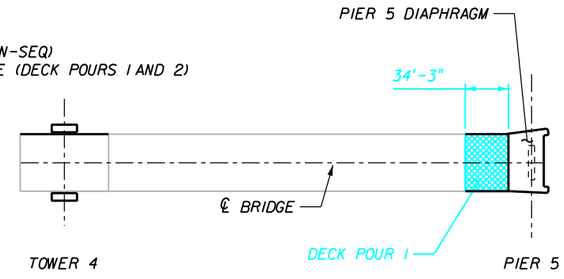

SIDE SPAN POUR SEQUENCE

THESE DRAWINGS ARE COLOR CODED
AND MUST BE REPRODUCED IN COLOR.

Revision	Drawn By	Date	Description
1	IL	12/18/13	STEPS REVISED.
2	IL	02/05/14	STEPS REVISED. REMOVED NOTE.
3	JP	05/22/14	Drawing updated to match the sequence.

	Name	Date
Drawn By:	JP	07/13
Checked By:	JMP	07/13
Approved By:	RCF	07/13

FINLEY Engineering Group, Inc.
1589 Metropolitan Blvd.
Tallahassee, FL. 32308
850-894-1600
Fax: 850-894-1614

Client: BRAYMAN construction corporation — Innovative Solutions Since 1947

Project: IRONTON RUSSELL BRIDGE OVER THE OHIO RIVER

Title: CONSTRUCTION MANUAL CONSTRUCTION SEQUENCE (16 OF 30)

Sheet No. CM-17

Plotted By: jlndrich.potucek 5/22/2014 5:55:46 PM G:\Ironton-Russell\CADD\ConstructionManual\CM_17_ConstructionSeq(16of29).dgn Model: Default

Review is only for conformance with the design concept. Review does not cover dimensions, quantities, accuracy, fit, or any assembly for which this item may be a component. Review does not authorize deviation from Contract Documents or substitution of materials. Requests for deviations from the Contract Documents will only be addressed thru the Change Order Process.

REVIEWED

CONFORMS WITH CONCEPT	(X)
CONFORMS AS NOTED	( )
RESUBMIT	( )
NO ACTION	( )
DOES NOT CONFORM	( )

URS

DATE 07/20/2016 BY

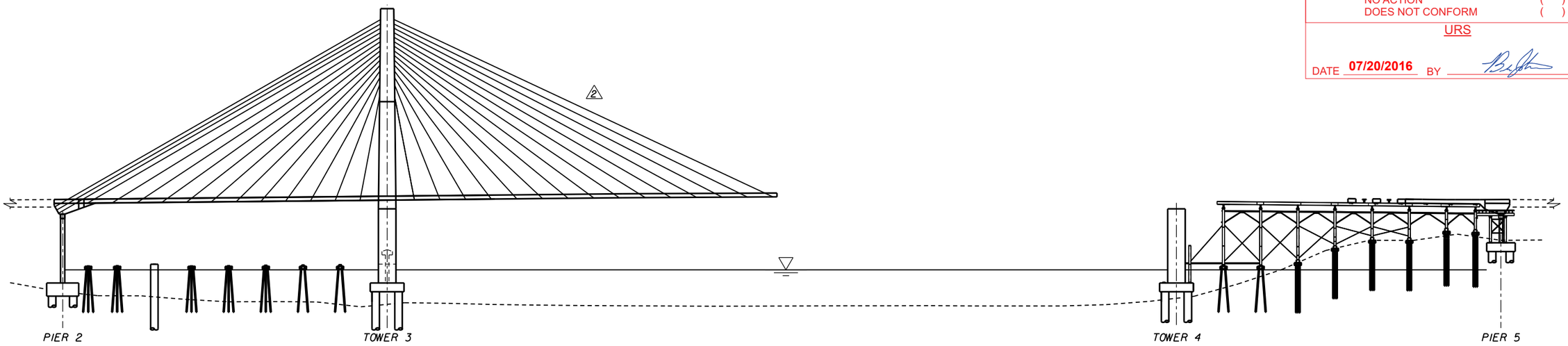

ELEVATION

STEP 17:

- PLACE PRECAST FLOORBEAMS ON TEMPORARY SUPPORTS FOR AT LEAST ONE DECK POUR UNIT IN ADVANCE (DECK POUR 3).
- PLACE PRECAST STAY ANCHOR BLOCKS FOR AT LEAST ONE DECK POUR UNIT IN ADVANCE (B23 AND B24) ON SUPPORT BEAMS. INSTALL VERTICAL NAILING P.T. BARS.
- INSTALL FORMWORK AND PLACE REINFORCEMENT AND P.T. DUCTS FOR DECK POUR 2.
- FINAL ADJUST POSITION OF PRECAST ANCHOR BLOCKS AND PRECAST FLOORBEAMS OF DECK POUR 2 TO FINLEYcip DATA.
- CAST EDGE GIRDER CONCRETE FOR DECK POUR 2.
- REMOVE VERTICAL NAILING PT BARS AT ANCHOR BLOCKS OF DECK POUR 2.
- ONCE CONCRETE HAS REACHED 3500 PSI, INSTALL AND STRESS LONGITUDINAL EDGE GIRDER TENDONS E10, E12, E14, AND E16.
- INSTALL AND STRESS TRANSVERSE FLOORBEAM P.T. THIS STEP MAY ALSO BE PERFORMED AFTER SIP DECK FORMWORK IS INSTALLED (NEXT STEP).
- INSTALL SIP DECK FORMWORK BETWEEN FLOORBEAMS AND EDGE GIRDERS FOR DECK POUR 2. (CON- SIP FORMS AND REINFORCEMENT MAY BE PLACED AHEAD OF CURRENT DECK POUR.)
- CAST CONCRETE FOR DECK POUR 2.
- ONCE CONCRETE HAS REACHED 3,500psi, INSTALL AND STRESS LONGITUDINAL DECK TENDONS T2, T5-T8, T10-T13, AND T16.
- REMOVE FORMWORK.

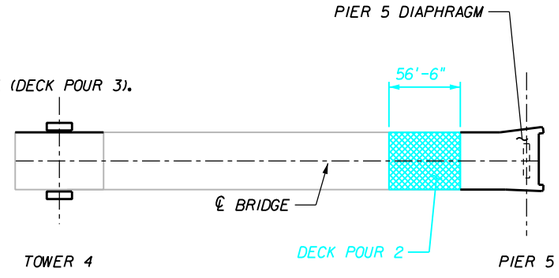

SIDE SPAN POUR SEQUENCE

THESE DRAWINGS ARE COLOR CODED
AND MUST BE REPRODUCED IN COLOR.

Revision	Drawn By	Date	Description
1	IL	12/18/13	STEPS REVISED.
2	JP	22/05/14	Drawing updated to match the sequence

	Name	Date
Drawn By:	JP	07/13
Checked By:	JMP	07/13
Approved By:	RCF	07/13

FINLEY Engineering Group, Inc.
1589 Metropolitan Blvd.
Tallahassee, FL. 32308
850-894-1600
Fax: 850-894-1614

Client: BRAYMAN construction corporation — Innovative Solutions Since 1947

Project: IRONTON RUSSELL BRIDGE OVER THE OHIO RIVER

Title: CONSTRUCTION MANUAL CONSTRUCTION SEQUENCE (17 OF 30)

Sheet No. CM-18

Plotted By: jlndrich.potucek 5/22/2014 5:55:47 PM G:\Ironton-Russell\CADD\ConstructionManual\CM_18_ConstructionSeq(17of29).dgn Model: Default

Review is only for conformance with the design concept. Review does not cover dimensions, quantities, accuracy, fit, or any assembly for which this item may be a component. Review does not authorize deviation from Contract Documents or substitution of materials. Requests for deviations from the Contract Documents will only be addressed thru the Change Order Process.

REVIEWED

CONFORMS WITH CONCEPT	(X)
CONFORMS AS NOTED	( )
RESUBMIT	( )
NO ACTION	( )
DOES NOT CONFORM	( )

URS

DATE 07/20/2016 BY

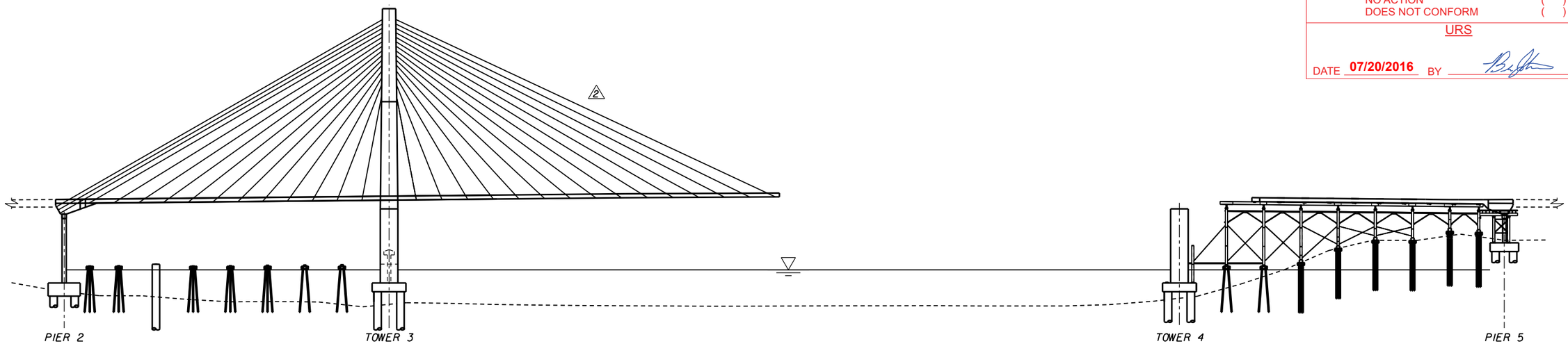

ELEVATION

STEP 18:

- PLACE PRECAST FLOORBEAMS ON TEMPORARY SUPPORTS FOR AT LEAST ONE DECK POUR UNIT IN ADVANCE (DECK POUR 4).
- PLACE PRECAST ANCHOR BLOCKS FOR AT LEAST ONE DECK POUR UNIT IN ADVANCE (B21 AND B22) ON SUPPORTS. INSTALL VERTICAL NAILING P.T. BARS.
- INSTALL FORMWORK AND PLACE REINFORCEMENT AND P.T. DUCTS FOR DECK POUR 3.
- FINAL ADJUST POSITION OF PRECAST ANCHOR BLOCKS AND PRECAST FLOORBEAMS OF DECK POUR 3 TO FINLEYcip DATA.
- CAST EDGE GIRDER CONCRETE FOR DECK POUR 3.
- REMOVE VERTICAL NAILING PT BARS FROM ANCHOR BLOCKS OF DECK POUR 3.
- INSTALL AND STRESS TRANSVERSE FLOORBEAM P.T. THIS STEP MAY ALSO BE PERFORMED AFTER SIP DECK FORMWORK IS INSTALLED (NEXT STEP).
- INSTALL SIP DECK FORMWORK BETWEEN FLOORBEAMS AND EDGE GIRDERS FOR DECK POUR 3. (CON- SIP FORMS AND REINFORCEMENT MAY BE PLACED AHEAD OF CURRENT DECK POUR.)
- CAST CONCRETE FOR DECK POUR 3.
- REMOVE FORMWORK.
- REPEAT STEPS FOR DECK POURS 4 AND 5.

- FOR DECK POUR 5, PLACING OF ANCHOR BLOCK B17 IS NOT REQUIRED.

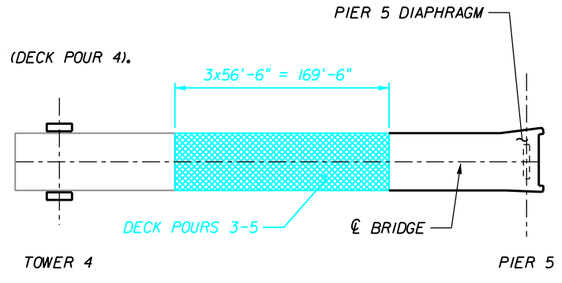

SIDE SPAN POUR SEQUENCE

THESE DRAWINGS ARE COLOR CODED
AND MUST BE REPRODUCED IN COLOR.

Revision	Drawn By	Date	Description
1	IL	12/18/13	STEPS REVISED.
2	JP	22/05/14	Drawing updated to match the sequence

	Name	Date
Drawn By:	JP	07/13
Checked By:	JMP	07/13
Approved By:	RCF	07/13

FINLEY Engineering Group, Inc.
1589 Metropolitan Blvd.
Tallahassee, FL. 32308
850-894-1600
Fax: 850-894-1614

Client: BRAYMAN construction corporation — Innovative Solutions Since 1947

Project: IRONTON RUSSELL BRIDGE OVER THE OHIO RIVER

Title: CONSTRUCTION MANUAL CONSTRUCTION SEQUENCE (18 OF 30)

Sheet No. CM-19

Plotted By: jlndrich.potucek 5/22/2014 5:55:48 PM G:\Ironton-Russell\CADD\ConstructionManual\CM_19_ConstructionSeq(18of29).dgn Model: Default

Review is only for conformance with the design concept. Review does not cover dimensions, quantities, accuracy, fit, or any assembly for which this item may be a component. Review does not authorize deviation from Contract Documents or substitution of materials. Requests for deviations from the Contract Documents will only be addressed thru the Change Order Process.

REVIEWED

CONFORMS WITH CONCEPT	(X)
CONFORMS AS NOTED	( )
RESUBMIT	( )
NO ACTION	( )
DOES NOT CONFORM	( )

URS

DATE 07/20/2016 BY

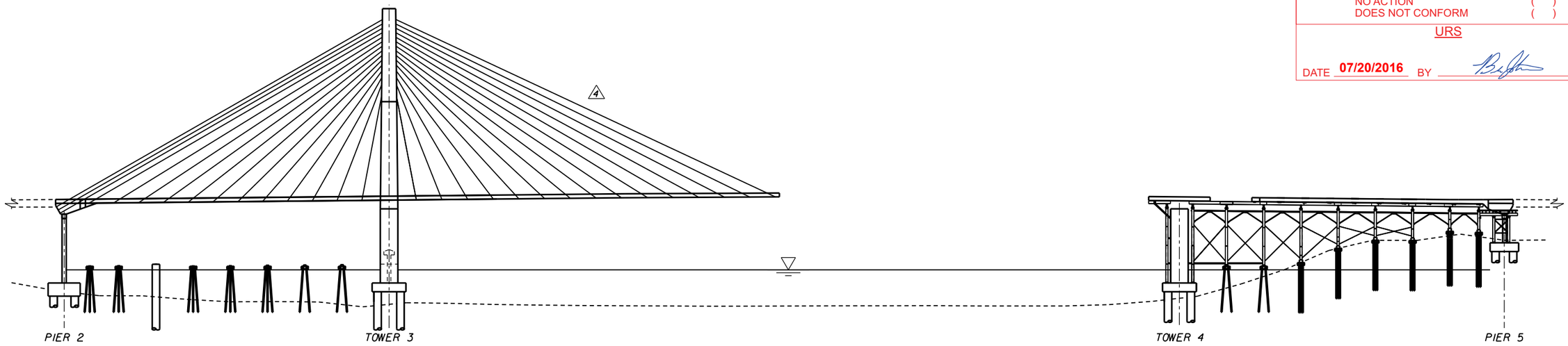

ELEVATION

STEP 19:

- COMPLETE OH9 BENT. SECURE FALSEWORK BY ANCHORS INTO PIER 4.
- INSTALL PYLON FALSEWORK AS PER THE FALSEWORK DRAWINGS.
- FORM AND CAST FLOORBEAM FB2.
- PLACE PRECAST FLOORBEAMS ON TEMPORARY SUPPORTS.
- PLACE MI6 AND BI6 PRECAST ANCHOR BLOCKS ON SUPPORT BEAMS. INSTALL VERTICAL NAILING P.T. BARS (LOOSE).
- FORM EDGE GIRDER, PLACE REINFORCEMENT AND POST-TENSIONING.
- FINAL ADJUST POSITION OF PRECAST ANCHOR BLOCKS AND PRECAST FLOORBEAMS TO FINLEYcip DATA.
- CAST THE EDGE GIRDER.
- 4 - INSTALL TRANSVERSE FLOORBEAM P.T. AND PERFORM FIRST STAGE STRESSING. THIS STEP MAY ALSO BE PERFORMED AFTER PLACING SIP FORMS (NEXT STEP)
- INSTALL SIP FORMS BETWEEN FLOORBEAMS AND EDGE GIRDER. PLACE DECK REINFORCEMENT. (CON- SIP FORMS AND REINFORCEMENT MAY BE PLACED AHEAD OF CURRENT DECK POUR.)
- CAST THE DECK CONCRETE.
- 4 - PERFORM SECOND STAGE STRESSING OF THE TRANSVERSE FLOORBEAM P.T.
- STRESS PIER TABLE LONGITUDINAL P.T. BARS PER POST-TENSIONING STRESSING DATA.

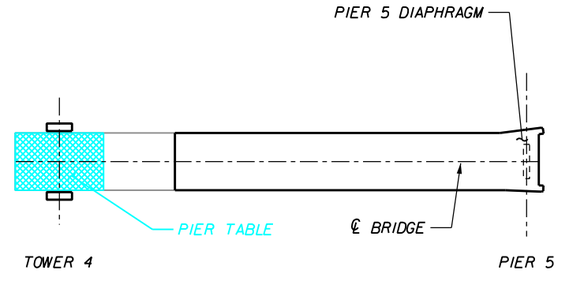

SIDE SPAN POUR SEQUENCE

THESE DRAWINGS ARE COLOR CODED
AND MUST BE REPRODUCED IN COLOR.

Revision	Drawn By	Date	Description		Name	Date
2	IL	01/06/14	STEPS REVISED.	Drawn By:	JP	07/13
3	IL	02/05/14	REMOVED NOTE.	Checked By:	JMP	07/13
4	JP	22/05/14	Drawing updated to match the sequence. PCB trans. PT sequenced.	Approved By:	RCF	07/13

FINLEY Engineering Group, Inc.
1589 Metropolitan Blvd.
Tallahassee, FL. 32308
850-894-1600
Fax: 850-894-1614

Client: BRAYMAN construction corporation — Innovative Solutions Since 1947

Project: IRONTON RUSSELL BRIDGE OVER THE OHIO RIVER

Title: CONSTRUCTION MANUAL CONSTRUCTION SEQUENCE (19 OF 30)

Sheet No. CM-20

Plotted By: Jindrich.potucek 5/22/2014 5:55:49 PM G:\Ironton-Russell\CADD\ConstructionManual\CM_20_ConstructionSeq(19of29).dgn Model: Default

Review is only for conformance with the design concept. Review does not cover dimensions, quantities, accuracy, fit, or any assembly for which this item may be a component. Review does not authorize deviation from Contract Documents or substitution of materials. Requests for deviations from the Contract Documents will only be addressed thru the Change Order Process.

REVIEWED

CONFORMS WITH CONCEPT (X)
CONFORMS AS NOTED ( )
RESUBMIT ( )
NO ACTION ( )
DOES NOT CONFORM ( )

URS

DATE 07/20/2016 BY

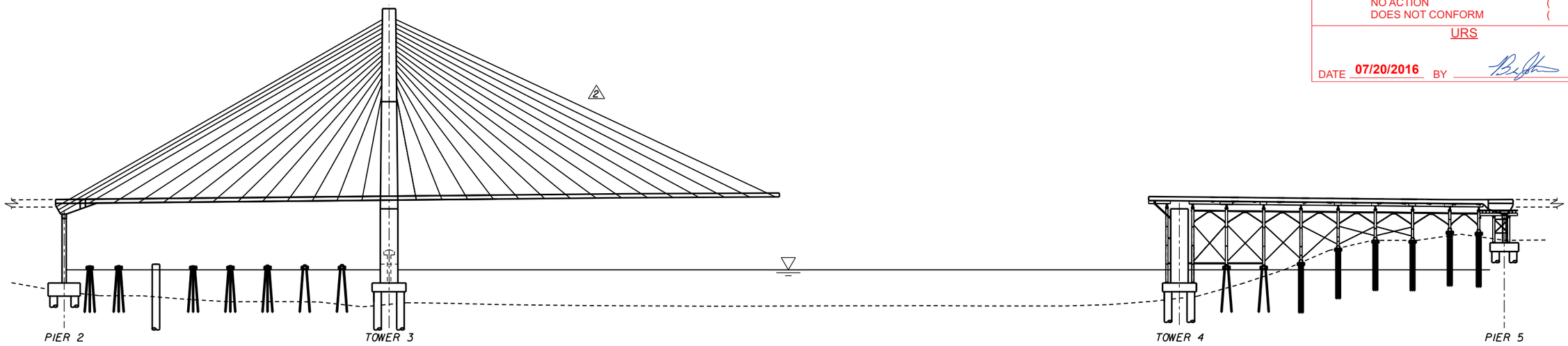

ELEVATION

STEP 20:

- PLACE PRECAST FLOOR BEAMS PBIB, PB2A, AND PB2B AND ANCHOR STAY PRECAST BLOCK BI7.
- INSTALL FORMWORK AND PLACE REINFORCEMENT AND P.T. DUCTS FOR DECK POUR 6.
- FINAL ADJUST POSITION OF PRECAST ANCHOR BLOCKS AND PRECAST FLOORBEAMS TO FINLEclp DATA.
- CAST EDGE GIRDER CONCRETE FOR DECK POUR 6.
- REMOVE VERTICAL NAILING PT BARS FROM ANCHOR BLOCKS OF DECK POUR 6.
- ONCE CONCRETE HAS REACHED 3500 PSI, INSTALL AND STRESS LONGITUDINAL EDGE GIRDER TENDONS E9, EII, EI3, AND EI5.
- (2) INSTALL AND STRESS TRANSVERSE FLOORBEAM P.T. THIS STEP MAY ALSO BE PERFORMED AFTER SIP DECK FORMORK IS INSTALLED (NEXT STEP). FOR ALL PB2 BEAMS PERFORM ONLY FIRST STAGE STRESSING.
- INSTALL SIP DECK FORMWORK BETWEEN FLOORBEAMS AND EDGE GIRDERS FOR DECK POUR 6.
- CAST CONCRETE FOR DECK POUR 6.
- (2) REMOVE FORMWORK.
- PERFORM SECOND STAGE STRESSING OF THE TRANSVERSE PB2 TYPE FLOORBEAMS P.T.
- INSTALL TEMPORARY SHIM PACKS AT PIER 4 TO PROVIDE LONGITUDINAL FIXITY DURING CONSTRUCTION, AS PER THE SHEET CM-32 OF CONSTRUCTION MANUAL.

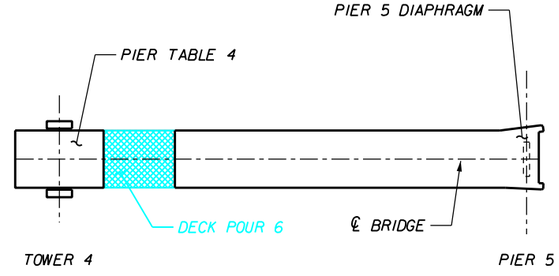

SIDE SPAN POUR SEQUENCE

THESE DRAWINGS ARE COLOR CODED
AND MUST BE REPRODUCED IN COLOR.

Revision	Drawn By	Date	Description
1	IL	12/18/13	STEPS REVISED.
2	JP	22/05/14	Drawing updated to match the sequence. Staged stressing added.

	Name	Date
Drawn By:	JP	07/13
Checked By:	JMP	07/13
Approved By:	RCF	07/13

FINLEY Engineering Group, Inc.
1589 Metropolitan Blvd.
Tallahassee, FL. 32308
850-894-1600
Fax: 850-894-1614

Client: BRAYMAN construction corporation — Innovative Solutions Since 1947

Project: IRONTON RUSSELL BRIDGE OVER THE OHIO RIVER

Title: CONSTRUCTION MANUAL CONSTRUCTION SEQUENCE (20 OF 30)

Sheet No. CM-21

Plotted By: jlndrich.potucek 5/22/2014 5:55:50 PM G:\Ironton-Russell\CADD\ConstructionManual\CM_2I_ConstructionSeq(20of29).dgn Model: Default

Review is only for conformance with the design concept. Review does not cover dimensions, quantities, accuracy, fit, or any assembly for which this item may be a component. Review does not authorize deviation from Contract Documents or substitution of materials. Requests for deviations from the Contract Documents will only be addressed thru the Change Order Process.

REVIEWED
CONFORMS WITH CONCEPT (X)
CONFORMS AS NOTED ( )
RESUBMIT ( )
NO ACTION ( )
DOES NOT CONFORM ( )

URS

DATE 07/20/2016 BY

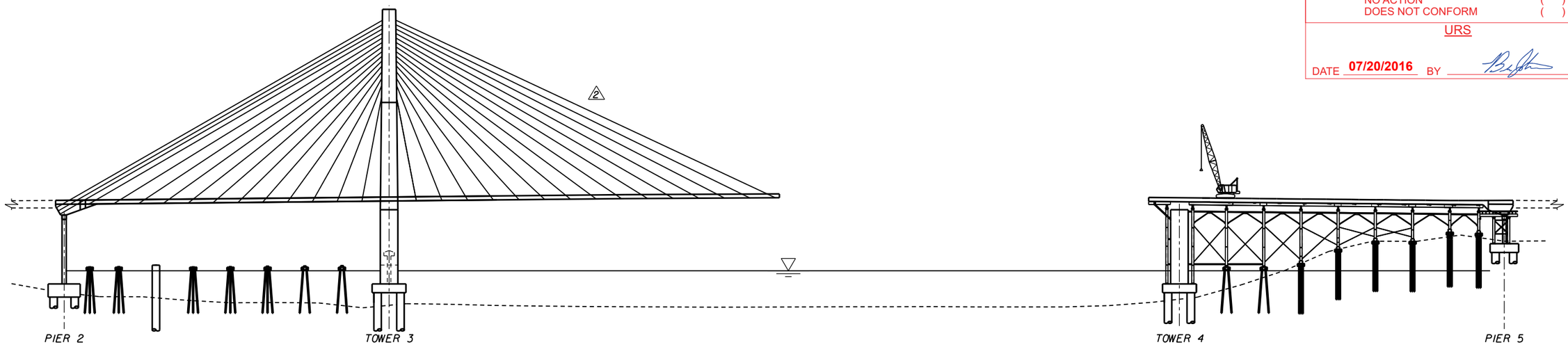

ELEVATION

STEP 21:

- REMOVE OHIO SIDE BACKSPAN FALSEWORK FROM TRANSITION PIER 5.(CON)
- ASSEMBLE MANITOWOC 888 CRANE AT CENTER OF DECK AT TOWER 4.(CON)

THESE DRAWINGS ARE COLOR CODED
AND MUST BE REPRODUCED IN COLOR.

Revision	Drawn By	Date	Description
1	IL	02/05/14	REMOVED NOTE.
2	JP	22/05/14	Drawing updated to match the sequence

	Name	Date
Drawn By:	JP	07/13
Checked By:	JMP	07/13
Approved By:	RCF	07/13

FINLEY Engineering Group, Inc.
1589 Metropolitan Blvd.
Tallahassee, FL. 32308
850-894-1600
Fax: 850-894-1614

Client: BRAYMAN construction corporation — Innovative Solutions Since 1947

Project: IRONTON RUSSELL BRIDGE OVER THE OHIO RIVER

Title: CONSTRUCTION MANUAL CONSTRUCTION SEQUENCE (21 OF 30)

Sheet No. CM-22

Plotted By: jlndrich.potucek 5/22/2014 5:55:51 PM G:\Ironton-Russell\CADD\ConstructionManual\CM_22_ConstructionSeq(21of29).dgn Model: Default

Review is only for conformance with the design concept. Review does not cover dimensions, quantities, accuracy, fit, or any assembly for which this item may be a component. Review does not authorize deviation from Contract Documents or substitution of materials. Requests for deviations from the Contract Documents will only be addressed thru the Change Order Process.

REVIEWED

CONFORMS WITH CONCEPT	(X)
CONFORMS AS NOTED	( )
RESUBMIT	( )
NO ACTION	( )
DOES NOT CONFORM	( )

URS

DATE 07/20/2016 BY

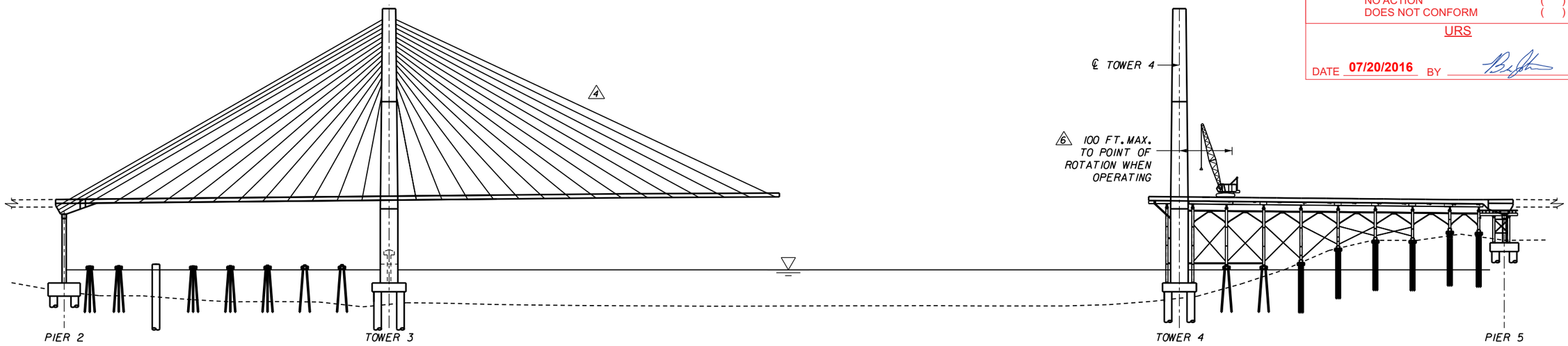

ELEVATION

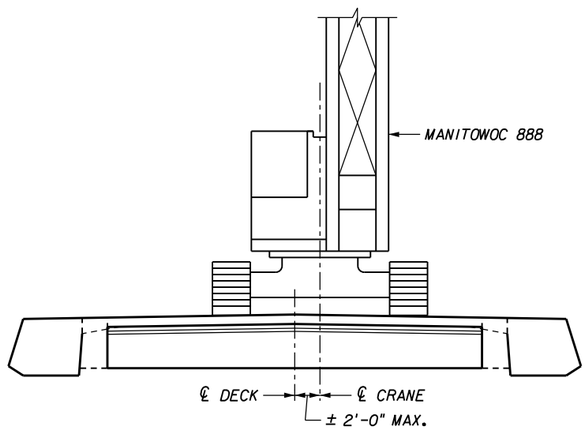

4 CRANE OPERATIONAL LIMIT ON THE DECK

STEP 22:

4 - ERECT TOWER 4 SEGMENTS WITH THE MANITOWOC 888 CRANE. STAY WITHIN CRANE OPERATION LIMINTS GIVEN ON THIS SHEET.
- CONTINUE WITH TOWER 4 ERECTION UP THRU TOWER SEGMENT 10.
- INSTALL LOWER TEMPORARY CROSS STRUT AT TOWER SEGMENT 8.
- CONTINUE WITH TOWER 4 ERECTION UP THRU TOWER SEGMENT 11.

4 - ERECT FIRST STEEL ANCHOR BOX. ALIGN AND POSITION THE BOX PRIOR TO CASTING CONCRETE.
- USE JUMP FORMS TO CAST THE COMPOSITE SECTION.
- CONTINUE WITH TOWER 4 ERECTION, ERECTING SEGMENTS 12 ON THE WEST TOWER.

7 - INSTALL UPPER PAIR TEMPORARY CROSS STRUTS AT TOWER SEGMENT 10.
- REMOVE LOWER PAIR TEMPORARY CROSS STRUTS AT TOWER SEGMENT 8.
- PERFORM JACKING BETWEEN TOWERS AT SEGMENT 10.
- ERECT WEST TOWER SEGMENT 13 AND 14 AND EAST TOWER SEGMENT 12.
- ERECT SEGMENT 15 ON THE WEST TOWER.
- BEGIN DISMANTLING WEST TOWER FORM WHILE ERECTING SEGMENT 13 ON THE EAST TOWER.
- CONTINUE WITH TOWER 4 ERECTION, ERECTING SEGMENTS 14 AND 15 ON THE EAST TOWER.

7 - INSTALL TOP TEMPORARY CROSS STRUT AT TOWER SEGMENT 15.
- PERFORM JACKING BETWEEN TOWERS AT SEGMENT 15.
- ERECT TOWER SEGMENT 16 ON THE EAST TOWER.
- CONTINUE WITH TOWER 4 ERECTION UP THRU COMPLETION OF THE TOWER.
- REMOVE TOP AND UPPER TEMPORARY CROSS STRUTS.

- SEE PYLON TEMPORARY WORKS DRAWINGS FOR INSTALLATION PROCEDURES.

NOTE: TOWER SEGMENT CASTING MAY BE STAGGERED BY UP TO THREE SEGMENTS. 5

THESE DRAWINGS ARE COLOR CODED
AND MUST BE REPRODUCED IN COLOR.

Revision	Drawn By	Date	Description
5	IL	13/05/15	STEPS REVISED.
6	IL	23/06/15	CRANE LIMITS REVISED.
7	IL	15/09/15	STEPS REVISED. JACKING PROCEDURE ADDED.

	Name	Date
Drawn By:	JP	07/13
Checked By:	JMP	07/13
Approved By:	RCF	07/13

FINLEY Engineering Group, Inc.
1589 Metropolitan Blvd.
Tallahassee, FL. 32308
850-894-1600
Fax: 850-894-1614

Client: BRAYMAN construction corporation — Innovative Solutions Since 1947

Project: IRONTON RUSSELL BRIDGE OVER THE OHIO RIVER

Title: CONSTRUCTION MANUAL CONSTRUCTION SEQUENCE (22 OF 30)

Sheet No. CM-23

Plotted By: Ivan.Ilu 9/15/2015 11:05:58 AM G:\Ironton-Russell\CADD\ConstructionManual\CM_23_ConstructionSeq(22of29).dgn Model: Default

Review is only for conformance with the design concept. Review does not cover dimensions, quantities, accuracy, fit, or any assembly for which this item may be a component. Review does not authorize deviation from Contract Documents or substitution of materials. Requests for deviations from the Contract Documents will only be addressed thru the Change Order Process.

REVIEWED

CONFORMS WITH CONCEPT	(X)
CONFORMS AS NOTED	( )
RESUBMIT	( )
NO ACTION	( )
DOES NOT CONFORM	( )

URS

DATE 07/20/2016 BY

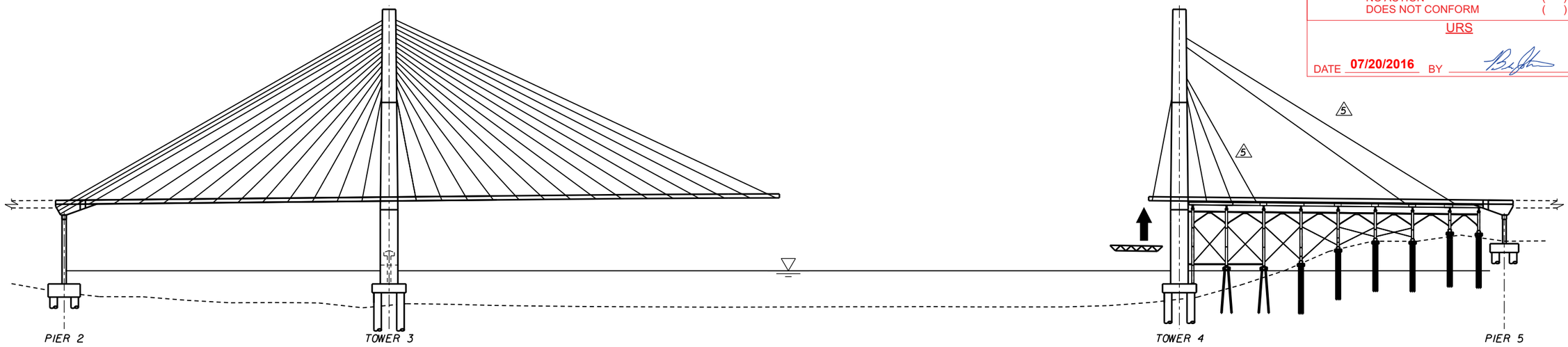

ELEVATION

STEP 23:

- INSTALL TEMPORARY HOLD DOWN PT BARS. SEE SHEET CM-32 FOR DETAILS.
- INSTALL STRANDS FOR CABLE BI6 WITH STAY PIPE AND STRESS TO FINAL FORCE. (VSL PHASE IA STRESSING) 3
- INSTALL STRANDS FOR CABLE MI6 WITH STAY PIPE AND STRESS TO INITIAL FORCE. (VSL PHASE IA STRESSING) 3
- REMOVE BOOM AND COUNTERWEIGHTS OFF OF MANITOWOC 888. TRANSPORT MANITOWOC 888 OFF THE DECK (NO RESTRICTIONS APPLY).
- REMOVE TOWER 4 PIER TABLE FALSEWORK.
- INSTALL STRAND IN STAY BI7 AND STRESS. (VSL PHASE IA STRESSING) 4
- INSTALL ALL STRAND IN STAY B24 AND STRESS. (VSL PHASE IA STRESSING)
- INSTALL ALL STRAND IN STAY B26 AND STRESS. (VSL PHASE IA STRESSING) 5
- INSTALL ALL STRAND IN STAY BI8 AND STRESS. (VSL PHASE IA STRESSING)
- ERECT FORM TRAVELER ONTO TOWER 4 PIER TABLE USING BARGE MOUNTED CRANES. 5

NOTES:

1. RED STAYS DENOTE TWO STRANDS STRESSED TO 15% GUTS AND STAY PIPE.

THESE DRAWINGS ARE COLOR CODED
AND MUST BE REPRODUCED IN COLOR.

Revision	Drawn By	Date	Description		Name	Date
3	IL	06/23/15	ADDED VSL STRESSING STEPS.	Drawn By:	JP	07/13
4	IL	09/08/15	REVISED BACKSPAN STAY STRESSING.	Checked By:	JMP	07/13
5	IL	03/03/16	REVISED BACKSPAN STAY STRESSING.	Approved By:	RCF	07/13

FINLEY Engineering Group, Inc.
1589 Metropolitan Blvd.
Tallahassee, FL. 32308
850-894-1600
Fax: 850-894-1614

Client: BRAYMAN construction corporation — Innovative Solutions — Since 1947

Project: IRONTON RUSSELL BRIDGE OVER THE OHIO RIVER

Title: CONSTRUCTION MANUAL
CONSTRUCTION SEQUENCE (23 OF 30)

Sheet No. CM-24

Plotted By: Ivan.Ilu 3/29/2016 11:58:19 AM G:\Ironton-Russell\CADD\ConstructionManual\CM_24_ConstructionSeq(23of29).dgn Model: Default

Review is only for conformance with the design concept. Review does not cover dimensions, quantities, accuracy, fit, or any assembly for which this item may be a component. Review does not authorize deviation from Contract Documents or substitution of materials. Requests for deviations from the Contract Documents will only be addressed thru the Change Order Process.

REVIEWED

CONFORMS WITH CONCEPT (X)
CONFORMS AS NOTED ( )
RESUBMIT ( )
NO ACTION ( )
DOES NOT CONFORM ( )

URS

DATE 07/20/2016 BY

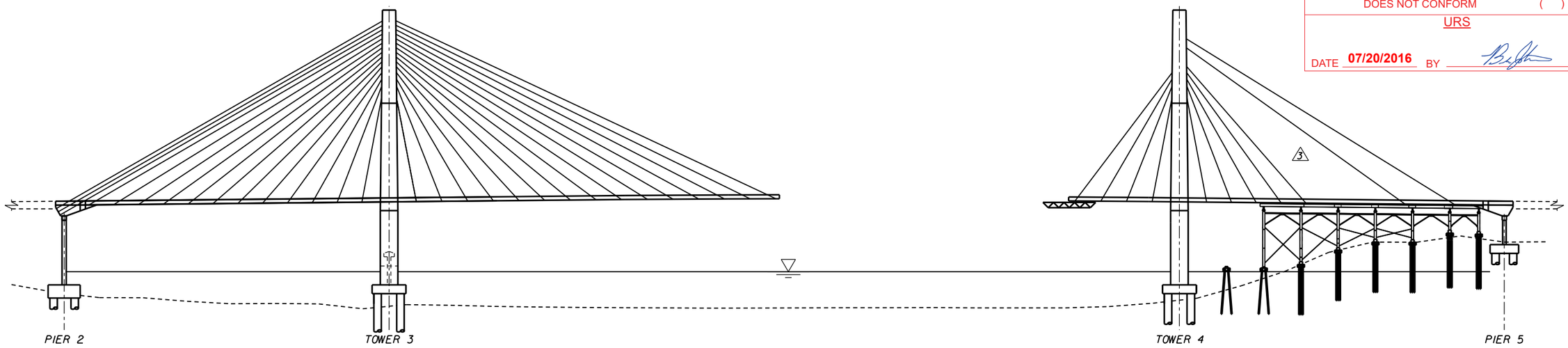

ELEVATION

△5 **STEP 24:**
- CONSTRUCT SEGMENT M17 USING STEPS ON SHEET "CM-33 - MAIN SPAN SEGMENT CYCLE".
- ERECT MAINSPAN SEGMENTS THRU SEGMENT M19 USING STEPS ON SHEET "CM-33 - MAIN SPAN SEGMENT CYCLE".
- PRIOR TO POURING SEGMENT M20, THE FIRST 1/3 OF TYPICAL FALSEWORK MAY BE REMOVED.

NOTES:
1. RED STAYS DENOTE TWO STRANDS STRESSED TO 15% GUTS AND STAY PIPE.

THESE DRAWINGS ARE COLOR CODED
AND MUST BE REPRODUCED IN COLOR.

Revision	Drawn By	Date	Description		Name	Date
3	IL	09/08/15	REVISED BACKSPAN STAY STRESSING.	Drawn By:	JP	07/13
4	IL	02/11/16	REVISED STAY STRESSING SEQUENCE.	Checked By:	JMP	07/13
5	IL	03/03/16	REVISED STAY STRESSING SEQUENCE.	Approved By:	RCF	07/13

FINLEY Engineering Group, Inc.
1589 Metropolitan Blvd.
Tallahassee, FL. 32308
850-894-1600
Fax: 850-894-1614

Client: BRAYMAN construction corporation — Innovative Solutions Since 1947

Project: IRONTON RUSSELL BRIDGE OVER THE OHIO RIVER

Title: CONSTRUCTION MANUAL
CONSTRUCTION SEQUENCE (24 OF 30)

Sheet No. CM-25

Plotted By: Ivan.Liu 3/24/2016 9:26:56 AM G:\Ironton-Russell\CADD\ConstructionManual\CM_25_ConstructionSeq(24of29).dgn Model: Default

Review is only for conformance with the design concept. Review does not cover dimensions, quantities, accuracy, fit, or any assembly for which this item may be a component. Review does not authorize deviation from Contract Documents or substitution of materials. Requests for deviations from the Contract Documents will only be addressed thru the Change Order Process.

REVIEWED

CONFORMS WITH CONCEPT	(X)
CONFORMS AS NOTED	( )
RESUBMIT	( )
NO ACTION	( )
DOES NOT CONFORM	( )

URS

DATE 07/20/2016 BY

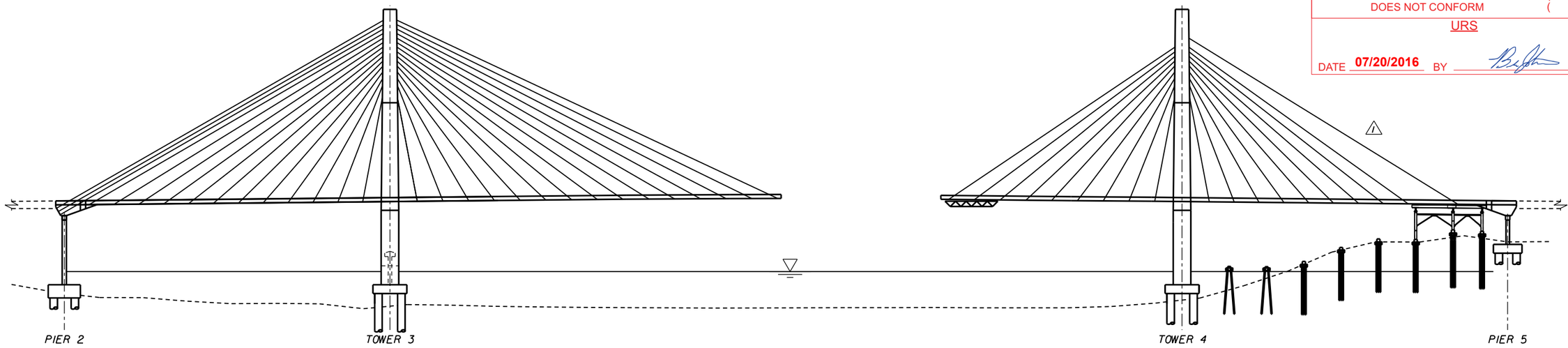

ELEVATION

△1 **STEP 25:**
- CONTINUE ERECTING MAINSPAN SEGMENTS THRU SEGMENT M23 USING STEPS ON SHEET "CM-33 - MAIN SPAN SEGMENT CYCLE".
- RESTRESS STAY B24 FOLLOWING ERECTION OF SEGMENT M23.(VSL PHASE 2 STRESSING)

△2 - PRIOR TO POURING SEGMENT M24, THE MIDDLE 1/3 OF TYPICAL FALSEWORK MAY BE REMOVED.

NOTES:

1. RED STAYS DENOTE TWO STRANDS STRESSED TO 15% GUTS AND STAY PIPE.

THESE DRAWINGS ARE COLOR CODED
AND MUST BE REPRODUCED IN COLOR.

Revision	Drawn By	Date	Description
1	IL	09/08/15	REVISED BACKSPAN STAY STRESSING.
2	IL	03/03/16	REVISED STEPS.

	Name	Date
Drawn By:	JP	07/13
Checked By:	JMP	07/13
Approved By:	RCF	07/13

FINLEY Engineering Group, Inc.
1589 Metropolitan Blvd.
Tallahassee, FL. 32308
850-894-1600
Fax: 850-894-1614

Client: BRAYMAN construction corporation — Innovative Solutions Since 1947

Project: IRONTON RUSSELL BRIDGE OVER THE OHIO RIVER

Title: CONSTRUCTION MANUAL CONSTRUCTION SEQUENCE (25 OF 30)

Sheet No. CM-26

Plotted By: Ivan.liu 3/24/2016 9:28:26 AM G:\Ironton-Russell\CADD\ConstructionManual\CM_26_ConstructionSeq(25of29).dgn Model: Default

Review is only for conformance with the design concept. Review does not cover dimensions, quantities, accuracy, fit, or any assembly for which this item may be a component. Review does not authorize deviation from Contract Documents or substitution of materials. Requests for deviations from the Contract Documents will only be addressed thru the Change Order Process.

REVIEWED

CONFORMS WITH CONCEPT	( )
CONFORMS AS NOTED	(X)
RESUBMIT	( )
NO ACTION	( )
DOES NOT CONFORM	( )

URS

DATE 07/20/2016 BY

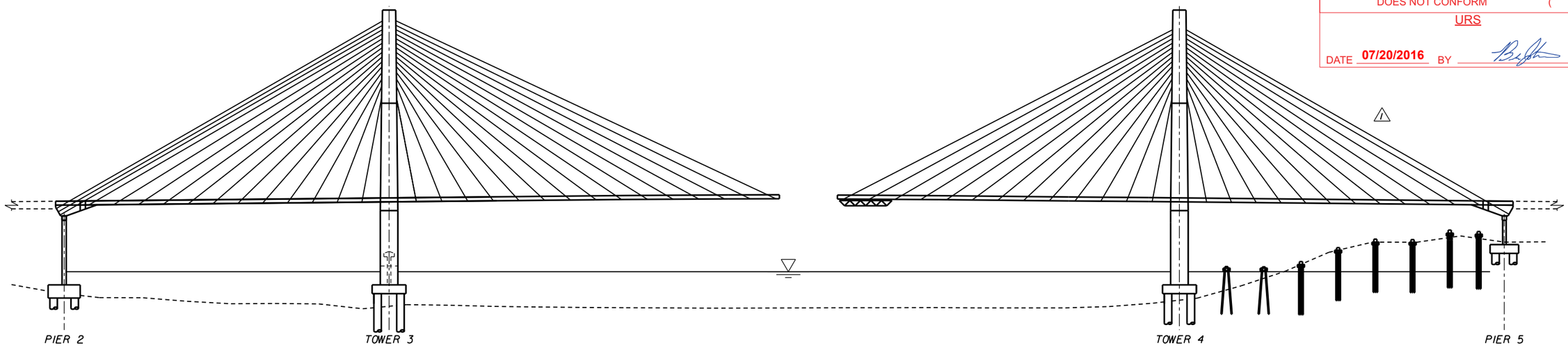

ELEVATION

STEP 26:

△1 - CONTINUE ERECTING MAINSPAN SEGMENTS THRU SEGMENT M28 USING STEPS ON SHEET "CM-33 - MAIN SPAN SEGMENT CYCLE".
△1 - RESTRESS STAY B26 FOLLOWING ERECTION OF SEGMENT M25. (VSL PHASE 2 STRESSING)
△2 - PRIOR TO POURING SEGMENT M28, ALL REMAINING TYPICAL FALSEWORK MAY BE REMOVED.

Add revision Note including description

NOTES:

1. RED STAYS DENOTE TWO STRANDS STRESSED TO 15% GUTS AND STAY PIPE.

THESE DRAWINGS ARE COLOR CODED
AND MUST BE REPRODUCED IN COLOR.

Revision	Drawn By	Date	Description		Name	Date
2	IL	03/03/16	REVISED STEPS.	Drawn By:	JP	07/13
				Checked By:	JMP	07/13
				Approved By:	RCF	07/13

FINLEY Engineering Group, Inc.
1589 Metropolitan Blvd.
Tallahassee, FL. 32308
850-894-1600
Fax: 850-894-1614

Client: BRAYMAN construction corporation — Innovative Solutions Since 1947

Project: IRONTON RUSSELL BRIDGE OVER THE OHIO RIVER

Title: CONSTRUCTION MANUAL CONSTRUCTION SEQUENCE (26 OF 30)

Sheet No. CM-27

Plotted By: Ivan.Liu 3/24/2016 9:55:14 AM G:\Ironton-Russell\CADD\ConstructionManual\CM_27_ConstructionSeq(26of29).dgn Model: Default

Review is only for conformance with the design concept. Review does not cover dimensions, quantities, accuracy, fit, or any assembly for which this item may be a component. Review does not authorize deviation from Contract Documents or substitution of materials. Requests for deviations from the Contract Documents will only be addressed thru the Change Order Process.

REVIEWED

CONFORMS WITH CONCEPT	(X)
CONFORMS AS NOTED	( )
RESUBMIT	( )
NO ACTION	( )
DOES NOT CONFORM	( )

URS

DATE 07/20/2016 BY

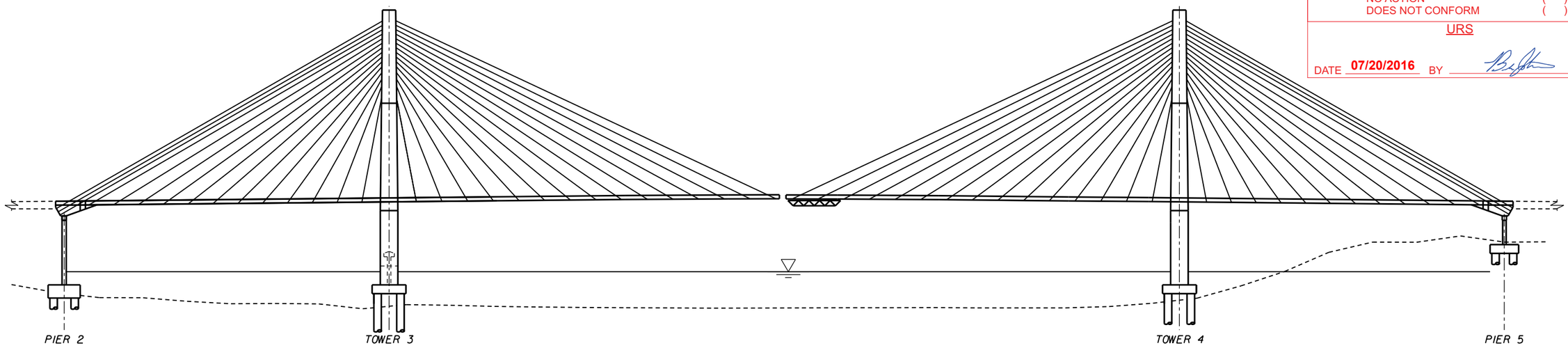

ELEVATION

STEP 27:

- COMPLETE CANTILEVER CONSTRUCTION CASTING SEGMENTS M28, M29 AND M30 AS PER STEPS ON SHEET CM-33.
- REMOVE TEMPORARY WORKS FOUNDATIONS.

NOTES:

1. RED STAYS DENOTE TWO STRANDS STRESSED TO 15% GUTS AND STAY PIPE.

THESE DRAWINGS ARE COLOR CODED
AND MUST BE REPRODUCED IN COLOR.

Revision	Drawn By	Date	Description

	Name	Date
Drawn By:	JP	07/13
Checked By:	JMP	07/13
Approved By:	RCF	07/13

FINLEY Engineering Group, Inc.
1589 Metropolitan Blvd.
Tallahassee, FL. 32308
850-894-1600
Fax: 850-894-1614

Client: BRAYMAN construction corporation — Innovative Solutions Since 1947

Project: IRONTON RUSSELL BRIDGE OVER THE OHIO RIVER

Title: CONSTRUCTION MANUAL CONSTRUCTION SEQUENCE (27 OF 30)

Sheet No. CM-28

Plotted By: jindrich.potucek 5/22/2014 5:55:55 PM G:\Ironton-Russell\CADD\ConstructionManual\CM_28_ConstructionSeq(27of29).dgn Model: Default

Review is only for conformance with the design concept. Review does not cover dimensions, quantities, accuracy, fit, or any assembly for which this item may be a component. Review does not authorize deviation from Contract Documents or substitution of materials. Requests for deviations from the Contract Documents will only be addressed thru the Change Order Process.

REVIEWED

CONFORMS WITH CONCEPT	(X)
CONFORMS AS NOTED	( )
RESUBMIT	( )
NO ACTION	( )
DOES NOT CONFORM	( )

URS

DATE 07/20/2016 BY

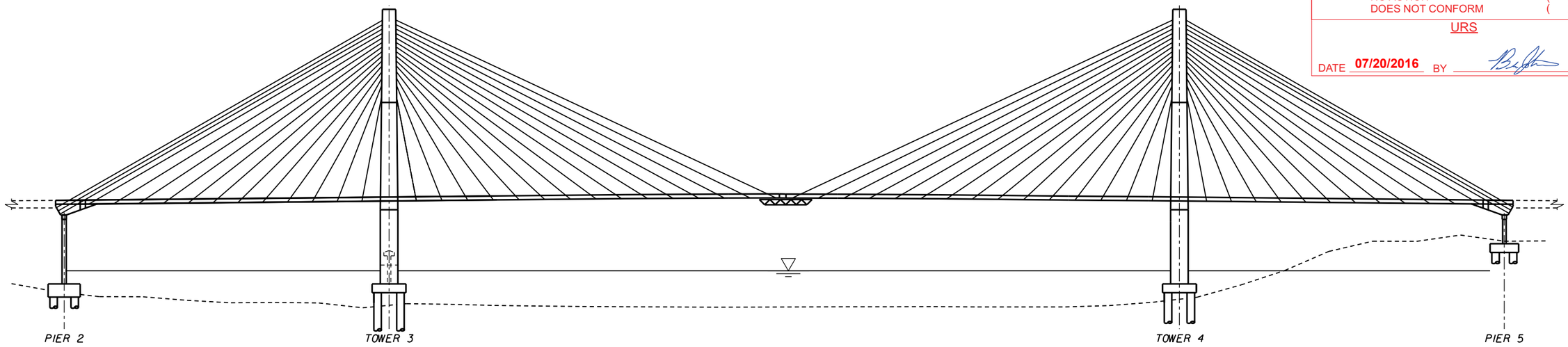

ELEVATION

STEP 28:

- REMOVE TEMPORARY HOLD DOWN PT BARS AT TOWER 3 AND 4. GROUT THE DUCTS.
- GRADUALLY RELEASE LONGITUDINAL FIXITY IN THE DIRECTION OF JACKING AT TOWER 3 AND TOWER 4. TO AVOID APPLICATION OF SUDDEN LOADS TO THE STRUCTURE.
- JACK SUPERSTRUCTURE LONGITUDINALLY AT TOWER 3 AND TOWER 4 FOR ADJUSTMENT AS PER THE TABLE ON THIS SHEET.
- REINSTALL TEMPORARY LONGITUDINAL FIXITY AT TOWER 3 AND INSTALL PERMANENT SHIMS AT TOWER 4.
- JACKS AT TOWER 4 MAY NOW BE REMOVED.
- SEE SHEET CM-32 FOR DETAILS OF THE ABOVE DESCRIBED PROCEDURES.

JACKING DATA

AVERAGE CONCRETE TEMPERATURE AT TIME OF MIDSPAN CLOSURE	TOWER 3		TOWER 4	
	REQ'D JACKING MOVEMENT	APPROX. JACKING FORCE PER EDGE GIRDER (kips)	REQ'D JACKING MOVEMENT	APPROX. JACKING FORCE PER EDGE GIRDER (kips)
15°F	-4.0"	248	-1.0"	233
25°F	-3.0"	186	-0.75"	175
35°F	-2.0"	124	-0.50"	117
45°F	-1.0"	62	-0.25"	58
55°F	0.0"	0	0.0"	0
65°F	+1.0"	62	+0.25"	58
75°F	+2.0"	124	+0.50"	117
85°F	+3.0"	186	+0.75"	175
95°F	+4.0"	248	+1.0"	233

THESE DRAWINGS ARE COLOR CODED
AND MUST BE REPRODUCED IN COLOR.

Revision	Drawn By	Date	Description
1	IL	02/05/14	REMOVED NOTE.

	Name	Date
Drawn By:	JP	07/13
Checked By:	JMP	07/13
Approved By:	RCF	07/13

FINLEY Engineering Group, Inc.
1589 Metropolitan Blvd.
Tallahassee, FL. 32308
850-894-1600
Fax: 850-894-1614

Client: BRAYMAN construction corporation — Innovative Solutions Since 1947

Project: IRONTON RUSSELL BRIDGE OVER THE OHIO RIVER

Title: CONSTRUCTION MANUAL CONSTRUCTION SEQUENCE (28 OF 30)

Sheet No. CM-29

Plotted By: jindrich.potucek 5/22/2014 5:55:56 PM G:\Ironton-Russell\CADD\ConstructionManual\CM_29_ConstructionSeq(28of29).dgn Model: Default

Review is only for conformance with the design concept. Review does not cover dimensions, quantities, accuracy, fit, or any assembly for which this item may be a component. Review does not authorize deviation from Contract Documents or substitution of materials. Requests for deviations from the Contract Documents will only be addressed thru the Change Order Process.

REVIEWED

CONFORMS WITH CONCEPT	(X)
CONFORMS AS NOTED	( )
RESUBMIT	( )
NO ACTION	( )
DOES NOT CONFORM	( )

URS

DATE 07/20/2016 BY

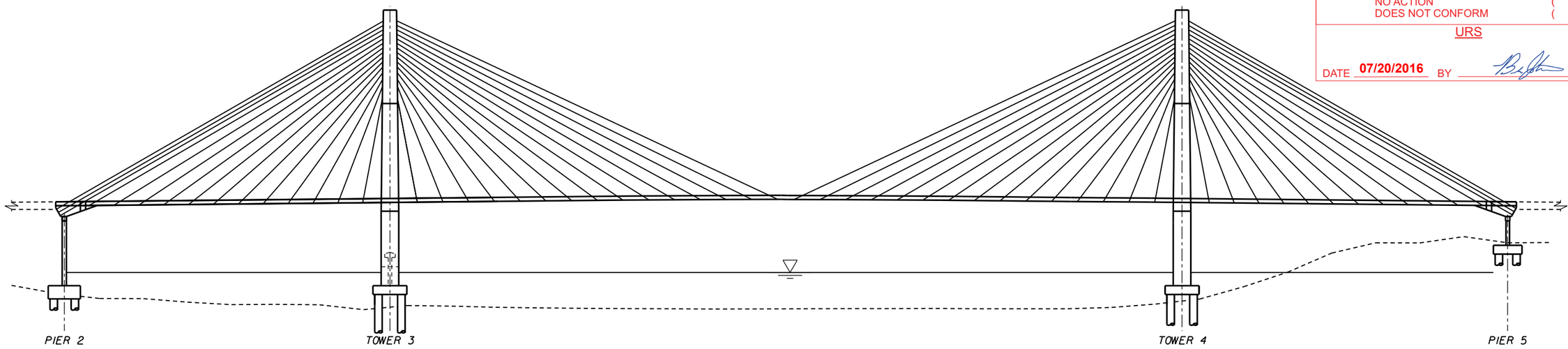

ELEVATION

STEP 29:

1. USE CLOSURE BEAMS TO MAKE VERTICAL CANTILEVER TIP ADJUSTEMENTS AS NECESSARY.
- FORM CLOSURE SEGMENT USING FORM TRAVELER, POUR CLOSURE SEGMENT.
- GRADUALLY RELEASE TEMPORARY JACK/FIXITY BETWEEN SUPERSTRUCTURE AND TOWER 3 TO AVOID ANY SUDDEN LOAD APPLICATION TO THE STRUCTURE. REMOVE JACKS AND ALL BLOCKING.
- STRESS MAIN SPAN DECK TENDONS AS PER POST-TENSIONING STRESSING DATA.
- REMOVE FORM TRAVELER.

THESE DRAWINGS ARE COLOR CODED
AND MUST BE REPRODUCED IN COLOR.

Revision	Drawn By	Date	Description		Name	Date
1	IL	03/03/16	ADDED STEP.	Drawn By:	JP	07/13
				Checked By:	JMP	07/13
				Approved By:	RCF	07/13

FINLEY Engineering Group, Inc.
1589 Metropolitan Blvd.
Tallahassee, FL 32308
850-894-1600
Fax: 850-894-1614

Client: BRAYMAN construction corporation — Innovative Solutions Since 1947

Project: IRONTON RUSSELL BRIDGE OVER THE OHIO RIVER

Title: CONSTRUCTION MANUAL CONSTRUCTION SEQUENCE (29 OF 30)

Sheet No. CM-30

Plotted By: Ivan.Liu 3/24/2016 10:00:55 AM G:\Ironton-Russell\CADD\ConstructionManual\CM_30_ConstructionSeq(29of29).dgn Model: Default

Review is only for conformance with the design concept. Review does not cover dimensions, quantities, accuracy, fit, or any assembly for which this item may be a component. Review does not authorize deviation from Contract Documents or substitution of materials. Requests for deviations from the Contract Documents will only be addressed thru the Change Order Process.

REVIEWED

CONFORMS WITH CONCEPT	(X)
CONFORMS AS NOTED	( )
RESUBMIT	( )
NO ACTION	( )
DOES NOT CONFORM	( )

URS

DATE 07/20/2016 BY

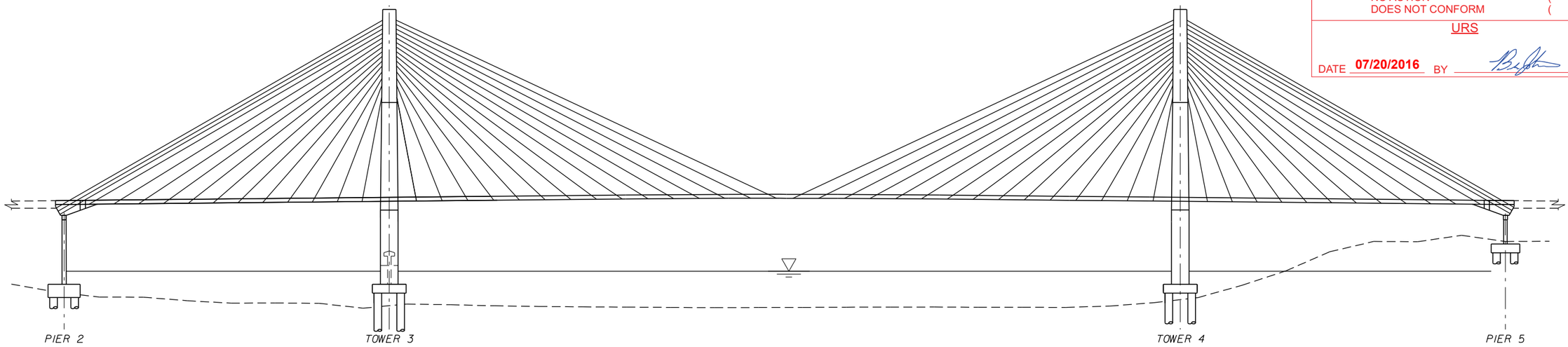

ELEVATION

4 STEP 30:

- STRESS MAIN SPAN STAYS M8, M9, M10, M11, M12, B10, B11, AND B12 TO FINAL STAY FORCES AS PER VSL PHASE 3 STRESSING.(AS DIRECTED BY FEG PER FINAL SURVEY).
- STRESS MAIN SPAN STAYS M13, M14, AND M15 TO FINAL STAY FORCES AS PER VSL PHASE 3 STRESSING.
- INSTALL BARRIERS, OVERLAYS, UTILITIES AND OTHER BRIDGE EQUIPMENT.
- DETERMINE AND RECORD END OF CONSTRUCTION FORCES IN ALL STAYS.
- CONSULT FINLEY FOR ANY REQUIRED STAY FORCES ADJUSTMENTS.

CONSTRUCTION COMPLETE

THESE DRAWINGS ARE COLOR CODED
AND MUST BE REPRODUCED IN COLOR.

Revision	Drawn By	Date	Description		Name	Date
2	IL	09/15/15	REVISED STEPS.	Drawn By:	JP	07/13
3	IL	03/03/16	ADDED ADDITIONAL STRESSING SEQUENCE.	Checked By:	JMP	07/13
4	IL	06/28/16	REVISED STEPS.	Approved By:	RCF	07/13

FINLEY Engineering Group, Inc.
1589 Metropolitan Blvd.
Tallahassee, FL. 32308
850-894-1600
Fax: 850-894-1614

Client: BRAYMAN construction corporation — Innovative Solutions — Since 1947

Project: IRONTON RUSSELL BRIDGE OVER THE OHIO RIVER

Title: CONSTRUCTION MANUAL
CONSTRUCTION SEQUENCE (30 OF 30)

Sheet No. CM-31

bryan.busby 6/28/2016 5:18:29 PM G:\Ironton-Russell\CADD\ConstructionManual\CM_31_ConstructionSeq(31of31).dgn Model: Default

Review is only for conformance with the design concept. Review does not cover dimensions, quantities, accuracy, fit, or any assembly for which this item may be a component. Review does not authorize deviation from Contract Documents or substitution of materials. Requests for deviations from the Contract Documents will only be addressed thru the Change Order Process.

REVIEWED
CONFORMS WITH CONCEPT (X)
CONFORMS AS NOTED ( )
RESUBMIT ( )
NO ACTION ( )
DOES NOT CONFORM ( )
URS
DATE 07/29/2016 BY

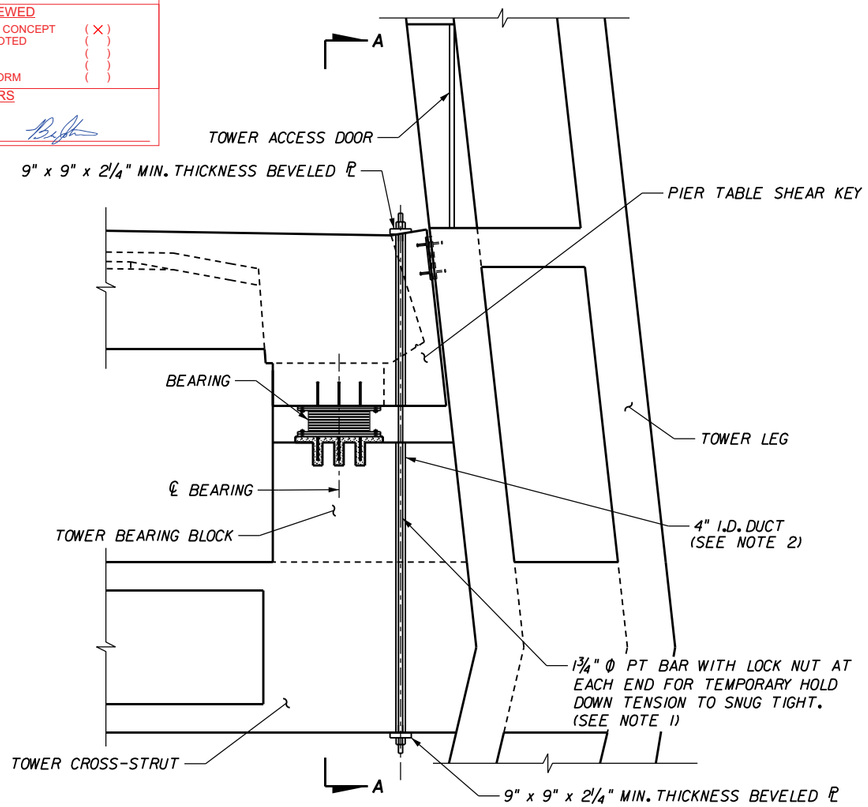

SECION AT ℄ TOWER 3&4

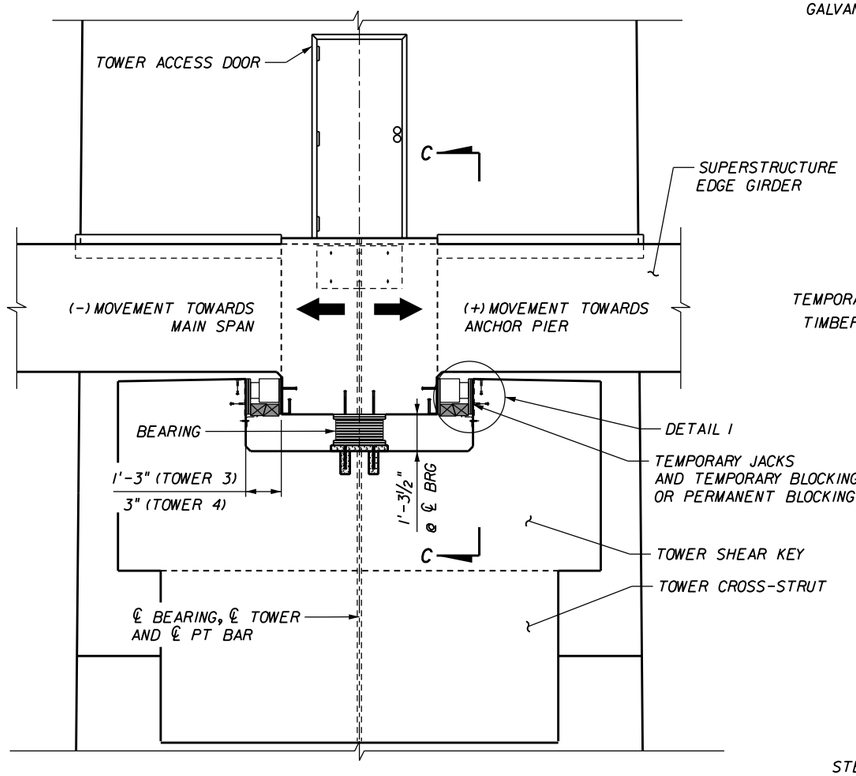

SECTION A-A
(LONGITUDINAL FIXITY AT TOWER 3&4)

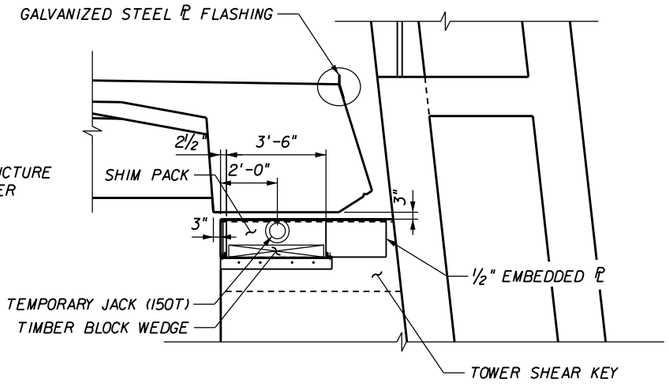

SECTION C-C

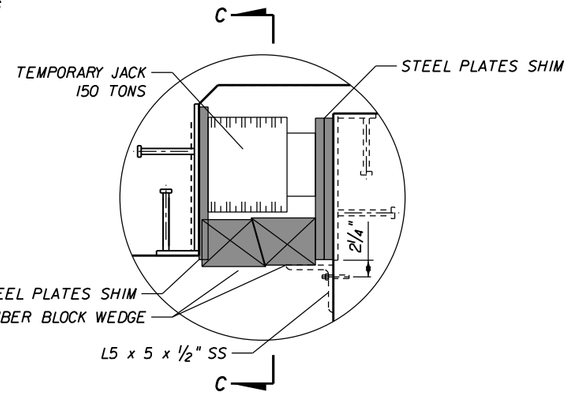

DETAIL I (TOWER 3)
(TEMPORARY BLOCKING AT TOWER 3)

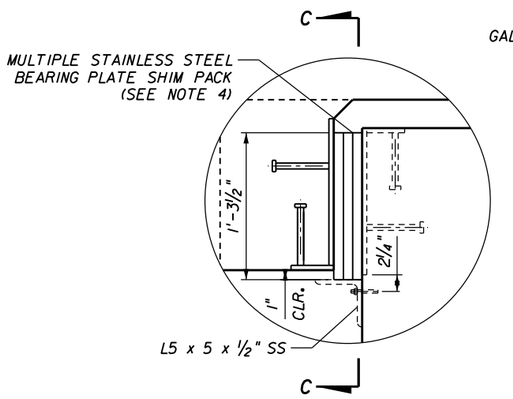

DETAIL I (TOWER 4)
(PERMANENT BLOCKING AT TOWER 4)

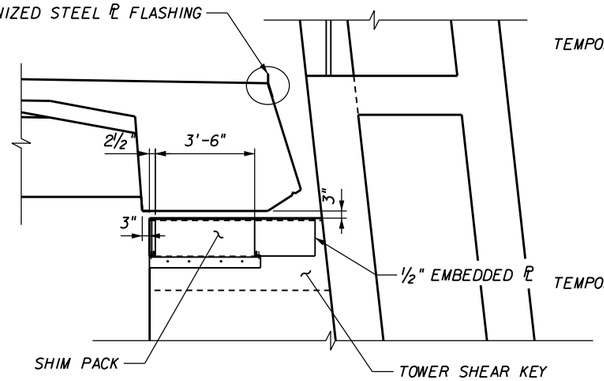

SECTION C-C

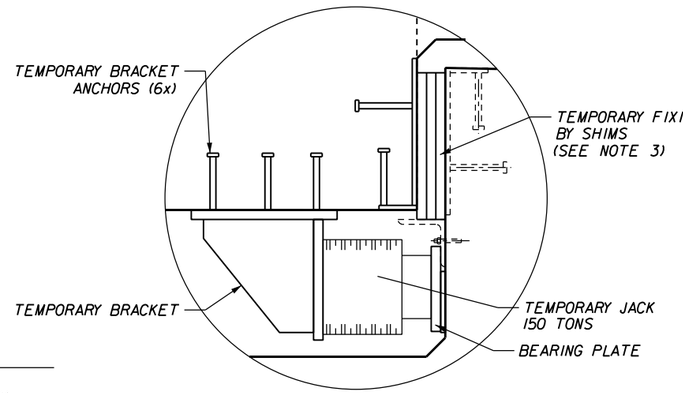

DETAIL I (TOWER 4)
(TEMPORARY BLOCKING AT TOWER 4)

NOTES:

1. POST-TENSIONING BAR SHALL BE REMOVED PRIOR TO JACKING SUPRESTRUCTURE LONGITUDINALLY BEFORE CLOSURE POUR.
2. ALL DUCTS SHALL BE GROUTED AFTER REMOVAL OF PT BAR.
3. SHIM TO ¼" NOMINAL GAP AT UNCOMPRESSED SIDE. SHIM TO BEAR AT COMPRESSED SIDE. A TEMPORARY GAP OF ⅛" IS ALLOWABLE DURING CONSTRUCTION TO FACILITATE INSTALLATION OF SHIM PACK BEARING PLATES.
4. PRIOR TO RELEASING THE JACKS BETWEEN THE OH PIER TABLE AND TOWER 4, THE GAP SHALL BE FULLY SHIMMED FOR THE PERMANENT CONFIGURAITON.

THESE DRAWINGS ARE COLOR CODED
AND MUST BE REPRODUCED IN COLOR.

Revision	Drawn By	Date	Description

	Name	Date
Drawn By:	JP	12/13
Checked By:		
Approved By:		

FINLEY Engineering Group, Inc.
1589 Metropolitan Blvd.
Tallahassee, FL. 32308
850-894-1600
Fax: 850-894-1614

Client: BRAYMAN construction corporation — Innovative Solutions — Since 1947

Project: IRONTON RUSSELL BRIDGE OVER THE OHIO RIVER

Title: BLOCKING DETAILS AT TOWER 3&4

Sheet No. CM-32

Plotted By: jlndrich.potucek 5/22/2014 5:55:58 PM G:\Ironton-Russell\CADD\ConstructionManual\CM_32_PylonBlockingDetails.dgn Model: Default

MAIN SPAN SEGMENT ERECTING CYCLE

(SEGMENT M(N), WHERE N IS THE NUMBER OF THE SEGMENT)

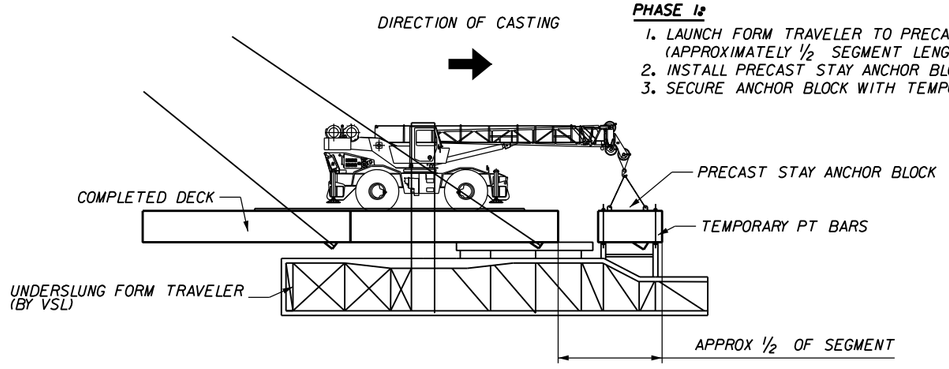

PHASE 1:

1. LAUNCH FORM TRAVELER TO PRECAST ANCHOR BLOCK SETTING POSITION (APPROXIMATELY ½ SEGMENT LENGTH)
2. INSTALL PRECAST STAY ANCHOR BLOCK BY RT CRANE
3. SECURE ANCHOR BLOCK WITH TEMPORARY PT BARS

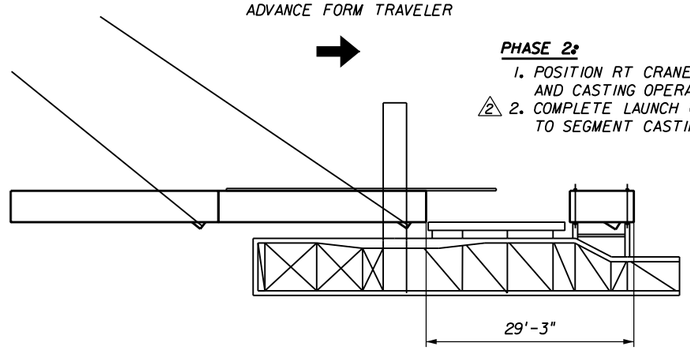

PHASE 2:

1. POSITION RT CRANE TO THE PIER TABLE FOR SURVEY AND CASTING OPERATIONS
2. COMPLETE LAUNCH OF FORM TRAVELER TO SEGMENT LENGTH AND TO SEGMENT CASTING PRE-SETUP ELEVATIONS.

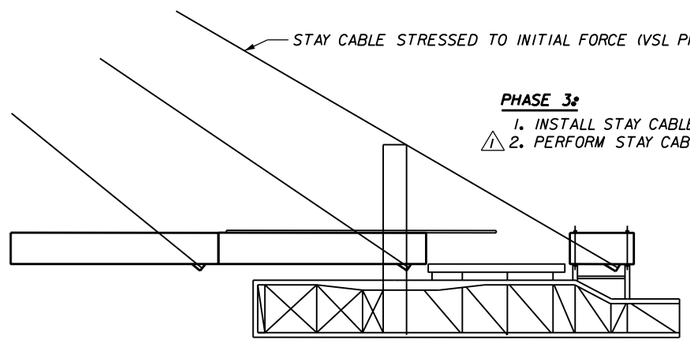

PHASE 3:

1. INSTALL STAY CABLE INTO PRECAST STAY ANCHOR BLOCK.
2. PERFORM STAY CABLE INITIAL STRESSING.(VSL PHASE IA STRESSING)

PHASE 4:

1. PLACE SEGMENT REINFORCEMENT AND CAST SEGMENT.
2. REMOVE VERTICAL TEMPORARY PT BARS AT ANCHOR BLOCKS, AFTER CONCRETE STRENGTH EXCEEDS 3500psi.
3. STRESS LONGITUDINAL POST-TENSIONING BARS AND TRANSVERSE POST-TENSIONING TENDONS.

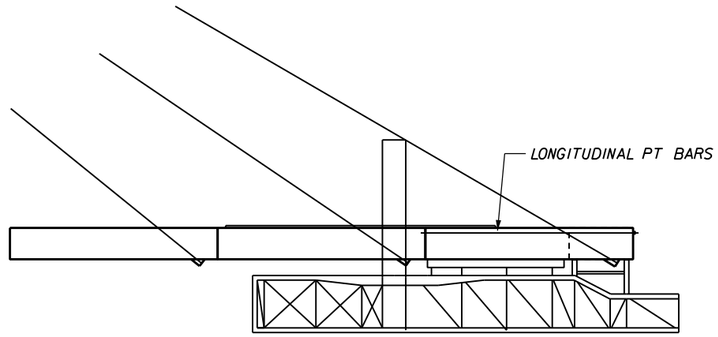

PHASE 5:

1. RELEASE FORMWORK
2. STRESS STAY TO FINAL STRESSING FORCE IN VSL PHASE 2 STRESSING.
3. START ERECTION OF SEGMENT M(N+1), (SEE PHASE 1)
4. INSTALL STRANDS IN BACKSPAN STAY OF SEGMENT B(N+1).

NOTE: BACKSPAN STAY STRANDS MAY BE INSTALLED IN 50% STRAND INTERVALS FROM LEFT TO RIGHT OF BRIDGE.

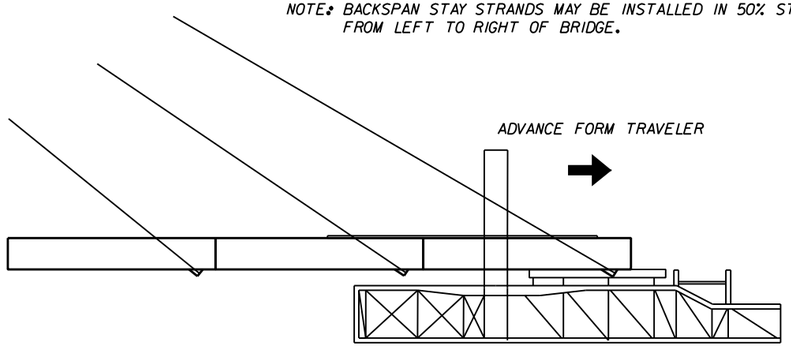

Review is only for conformance with the design concept. Review does not cover dimensions, quantities, accuracy, fit, or any assembly for which this item may be a component. Review does not authorize deviation from Contract Documents or substitution of materials. Requests for deviations from the Contract Documents will only be addressed thru the Change Order Process.

REVIEWED

CONFORMS WITH CONCEPT	(X)
CONFORMS AS NOTED	( )
RESUBMIT	( )
NO ACTION	( )
DOES NOT CONFORM	( )

URS

DATE 07/20/2016 BY

THESE DRAWINGS ARE COLOR CODED
AND MUST BE REPRODUCED IN COLOR.

Revision	Drawn By	Date	Description
1	IL	06/23/15	Revised as noted.
2	IL	09/08/15	Revised as noted.

	Name	Date
Drawn By:	JP	07/13
Checked By:	JMP	07/13
Approved By:	RCF	07/13

FINLEY Engineering Group, Inc.
1589 Metropolitan Blvd.
Tallahassee, FL. 32308
850-894-1600
Fax: 850-894-1614

Client: BRAYMAN construction corporation — Innovative Solutions — Since 1947

Project: IRONTON RUSSELL BRIDGE OVER THE OHIO RIVER

Title: MAIN SPAN SEGMENT CYCLE

Sheet No. CM-33

Plotted By: Ivan.Ilu 9/24/2015 5:38:03 PM G:\Ironton-Russell\CADD\ConstructionManual\CM_33_ConstructionSeq(TypMainSpan).dgn Model: Default

LETTER OF TRANSMITTAL

BRAYMAN CONSTRUCTION CORP.
1000 John Roebling Way
Saxonburg, PA 16056
Phone: (724) 443-1533
Fax: (724) 443-8733

To: Ohio Dept. of Transportation
District 9
650 Eastern Avenue
Chillicothe, OH 45601

Project: SR-93-0.00
Ironton Russell Bridge
Lawrence County, OH
Project No. 110628

BCC # 272-000-001

Attention: Dave Bame

Date: June 5, 2017

We are sending you the following items: ☐ Under Separate Cover ☑ Attached

☐ Copy of Letter ☐ Prints ☐ Specifications ☐ Change Order

☐ Shop Drawings ☐ Plans ☐ _____

Copies	Date	Description
1	6/5/17	Stay Cable Inspection and Maintenance Manual Resubmittal

Transmitted for the following purpose:

☑ For Approval ☐ Approved as Submitted ☐ Resubmit __ copies for approval

☐ For Your Use ☐ Approved as Noted ☐ Submit __ copies for distribution

☐ As Requested ☐ Returned for Corrections ☐ Return __ corrected prints

☐ For Review & Comment ☐ For Certification

MAIL: ◯ Regular ◯ Overnight ◯ Certified ☑ Email **FAX:** ◯

Remarks:

Dustin Williamson

Signed: Dustin Williamson
Project Engineer

cc: File/arb
Troy Huff
Edwin Callicutt
Chris Capper

B.2 Stay Cable Inspection and Maintenance Manual

Ironton Russell Bridge over Ohio River

LAW-93C-0000

Stay Cable Inspection and Maintenance Manual Resubmittal

For:

District 9

Review is only for conformance with the design concept. Review does not cover dimensions, quantities, accuracy, fit, or any assembly for which this item may be a component. Review does not authorize deviation from Contract Documents or substitution of materials. Requests for deviations from the Contract Documents will only be addressed thru the Change Order Process.

REVIEWED

CONFORMS WITH CONCEPT	(X)
CONFORMS AS NOTED	( )
RESUBMIT	( )
NO ACTION	( )
DOES NOT CONFORM	( )

URS

DATE 07/14/2017 BY Barry Chung

Submitted By:

1000 John Roebling Way

Saxonburg, Pa 16056

June 5, 2017

SSI 2000 SYSTEM

STAY CABLE INSPECTION AND MAINTENANCE

© Copyright Reserved
This document is property of Structural Group, Inc. (STRUCTURAL TECHNOLOGIES / VSL) and must not be copied, reproduced, duplicated nor disclosed totally or partially to any Third Party, nor use in any manner whatsoever without prior consent of Structural Group, Inc. (STRUCTURAL TECHNOLOGIES / VSL).

1.0 GENERAL 3
1.1 Bridge Description 3
1.2 General Layout 3
1.3 Construction Specific Changes 7
1.4 Schedule of Inspection 8
1.5 Maintenance 8
1.6 Objectives 9
1.7 Qualifications of Inspection and Maintenance Personnel 9
2.0 MANAGEMENT OF STRUCTURE 10
3.0 FREQUENCY OF INSPECTION VISITS 10
3.1 PTI Document 10
3.2 VSL SSI 2000 System 10
4.0 SSI 2000 – SCHEDULE OF INSPECTION 11
4.1 Annual 11
4.2 Every Six Years 11
5.0 SSI 2000 – SCHEDULE OF MAINTENANCE 14
6.0 LIFTING OF ANTI-VANDALISM PIPE 15
6.1 Lifting Procedure 15
6.2 AVP Replacement 15
7.0 FRICTION DAMPERS 15
8.0 STAY CABLE STRAND REPLACEMENT 16
8.1 Individual Strand Replacement 16
8.2 Complete Stay Removal 16
9.0 VERIFICATION OF CABLE TENSION 16
9.1 Lift-Off Operation 16
9.2 Vibration-Based Force Verification Procedure 19
10.0 REPAIR PROCEDURES 20
10.1 HDPE Repair Procedure 20
10.2 Strand Coating Repair Procedure 27
11.0 STAY ADJUSTMENT 32
12.0 PROTECTION CAP FILLER MATERIAL REPLACEMENT 33
13.0 CONTACTS 34
14.0 REFERENCE DOCUMENTS 34

© Copyright Reserved
This document is property of Structural Group, Inc. (STRUCTURAL TECHNOLOGIES / VSL) and must not be copied, reproduced, duplicated nor disclosed totally or partially to any Third Party, nor use in any manner whatsoever without prior consent of Structural Group, Inc. (STRUCTURAL TECHNOLOGIES / VSL).

1.0 GENERAL

1.1 Bridge Description

The Ironton Russell Cable Stay Bridge spans the Ohio River between Ironton Ohio and Russell Kentucky. This cable-stayed structure consists of two diamond-shaped pylons with 120 stay cables.

The construction project was awarded to Brayman Construction Corporation (State Project No. SR-93-0.00). Structural Technologies / VSL was selected by the Contractor in 2012 to provide and oversee installation of the stay cables for the Ironton Russell Bridge. Structural Technologies / VSL supplied the SSI 2000 stay cable system for each of the 120 stay cables on the bridge. The current document is intended to provide inspection and maintenance recommendations for the SSI 2000 system on the Ironton Russell Bridge.

1.2 General Layout

The Ironton Russell Bridge consists of 120 stays ranging in size from 14 strands each to 33 strands each (0.62" Diameter 270ksi ASTM A416). The table shown below provides a summary of the stay cable sizes and designations. In addition, an elevation view of the bridge and sections at the pylons are provided. The contract documents for erection of the new bridge are available separately. Design considerations and loads are shown in the General Notes of the Contract Plans.

		STAY CABLE IDENTIFICATION				
Tower	Span	Stay #	Anchor Size	No. Strand	VSL ID# North	VSL ID# South
TOWER 3 (Cable North/South)	BACK Span	B 15	6- 37	33	115	215
		B 14	6- 31	28	114	214
		B 13	6- 31	21	113	213
		B 12	6- 31	21	112	212
		B 11	6- 31	21	111	211
		B 10	6- 31	21	110	210
		B 9	6- 22	19	109	209
		B 8	6- 22	18	108	208
		B 7	6- 19	17	107	207
		B 6	6- 19	17	106	206
		B 5	6- 19	17	105	205
		B 4	6- 19	17	104	204
		B 3	6- 19	16	103	203
		B 2	6- 19	15	102	202
		B 1	6- 19	14	101	201
	MAIN Span	M 1	6- 19	14	301	401
		M 2	6- 19	15	302	402
		M 3	6- 19	17	303	403
		M 4	6- 19	17	304	404
		M 5	6- 22	18	305	405
		M 6	6- 22	19	306	406
		M 7	6- 22	20	307	407
		M 8	6- 31	22	308	408
		M 9	6- 31	22	309	409
		M 10	6- 31	23	310	410
		M 11	6- 31	24	311	411
		M 12	6- 31	25	312	412
		M 13	6- 31	26	313	413
		M 14	6- 31	29	314	414
		M 15	6- 31	29	315	415

		STAY CABLE IDENTIFICATION				
Tower	Span	Stay #	Anchor Size	No. Strand	VSL ID# North	VSL ID# South
TOWER 4 (Cable North/South)	MAIN Span	M 30	6- 31	29	530	630
		M 29	6- 31	29	529	629
		M 28	6- 31	26	528	628
		M 27	6- 31	25	527	627
		M 26	6- 31	24	526	626
		M 25	6- 31	23	525	625
		M 24	6- 31	22	524	624
		M 23	6- 31	22	523	623
		M 22	6- 22	20	522	622
		M 21	6- 22	19	521	621
		M 20	6- 22	18	520	620
		M 19	6- 19	17	519	619
		M 18	6- 19	17	518	618
		M 17	6- 19	15	517	617
		M 16	6- 19	14	516	616
	BACK Span	B 16	6- 19	14	716	816
		B 17	6- 19	15	717	817
		B 18	6- 19	16	718	818
		B 19	6- 19	17	719	819
		B 20	6- 19	17	720	820
		B 21	6- 19	17	721	821
		B 22	6- 19	17	722	822
		B 23	6- 22	18	723	823
		B 24	6- 22	19	724	824
		B 25	6- 31	21	725	825
		B 26	6- 31	21	726	826
		B 27	6- 31	21	727	827
		B 28	6- 31	21	728	828
		B 29	6- 31	28	729	829
		B 30	6- 37	33	730	823

Figure 1.1 – Stay Cable Identification Table

© Copyright Reserved
This document is property of Structural Group, Inc. (STRUCTURAL TECHNOLOGIES / VSL) and must not be copied, reproduced, duplicated nor disclosed totally or partially to any Third Party, nor use in any manner whatsoever without prior consent of Structural Group, Inc. (STRUCTURAL TECHNOLOGIES / VSL).

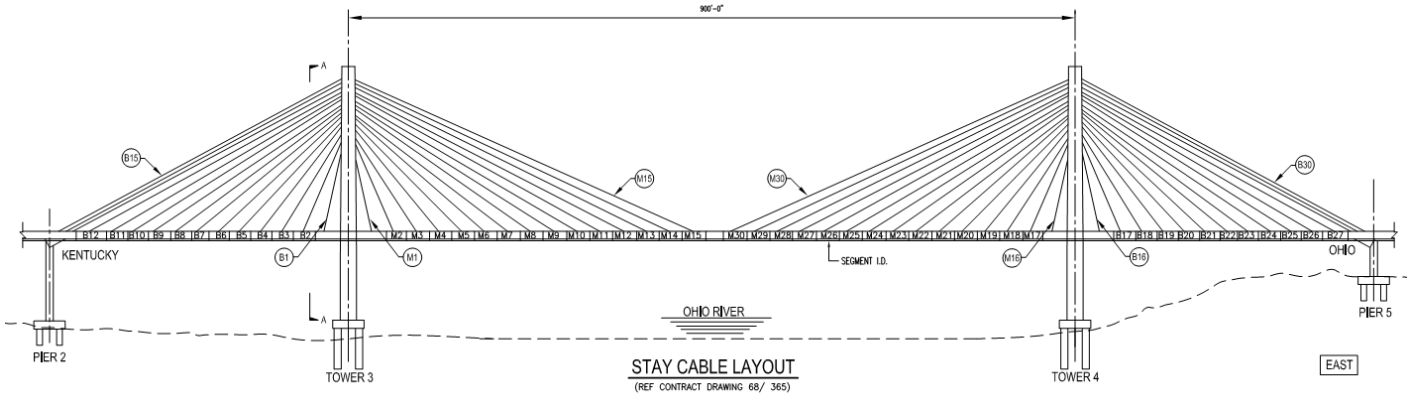

Figure 1.2 – Elevation View

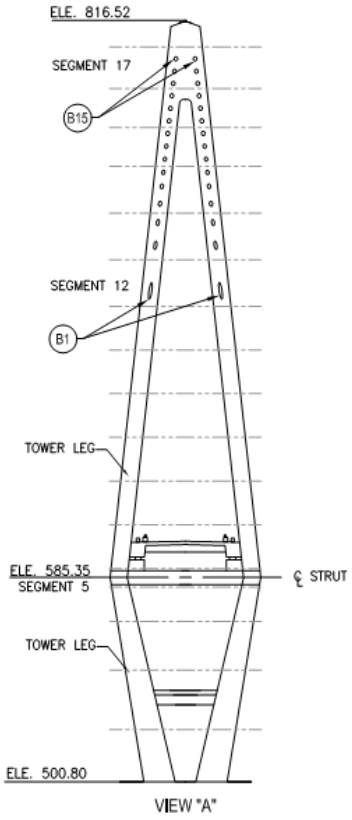

Figure 1.3 – Pylon Section Views

© Copyright Reserved
This document is property of Structural Group, Inc. (STRUCTURAL TECHNOLOGIES / VSL) and must not be copied, reproduced, duplicated nor disclosed totally or partially to any Third Party, nor use in any manner whatsoever without prior consent of Structural Group, Inc. (STRUCTURAL TECHNOLOGIES / VSL).

The typical stay arrangement is shown below:

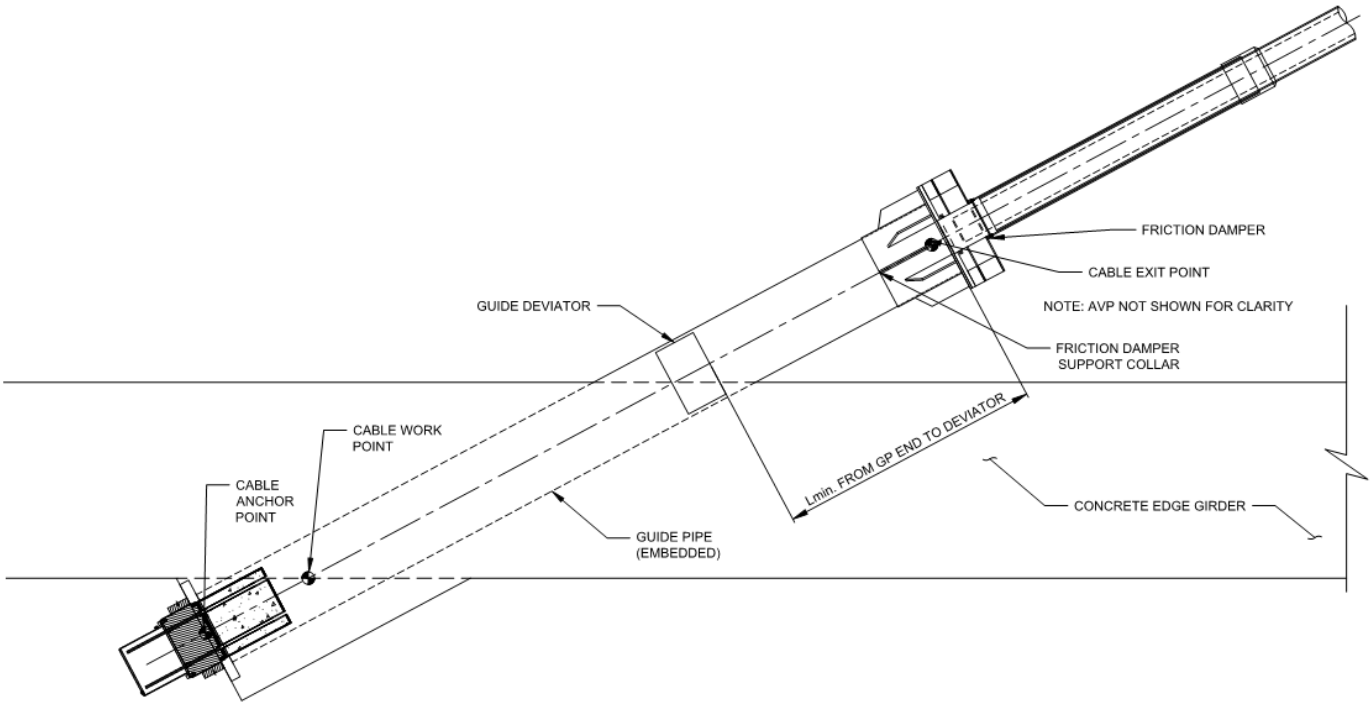

Figure 1.4 – SSI 2000 System Components at Deck

© Copyright Reserved
This document is property of Structural Group, Inc. (STRUCTURAL TECHNOLOGIES / VSL) and must not be copied, reproduced, duplicated nor disclosed totally or partially to any Third Party, nor use in any manner whatsoever without prior consent of Structural Group, Inc. (STRUCTURAL TECHNOLOGIES / VSL).

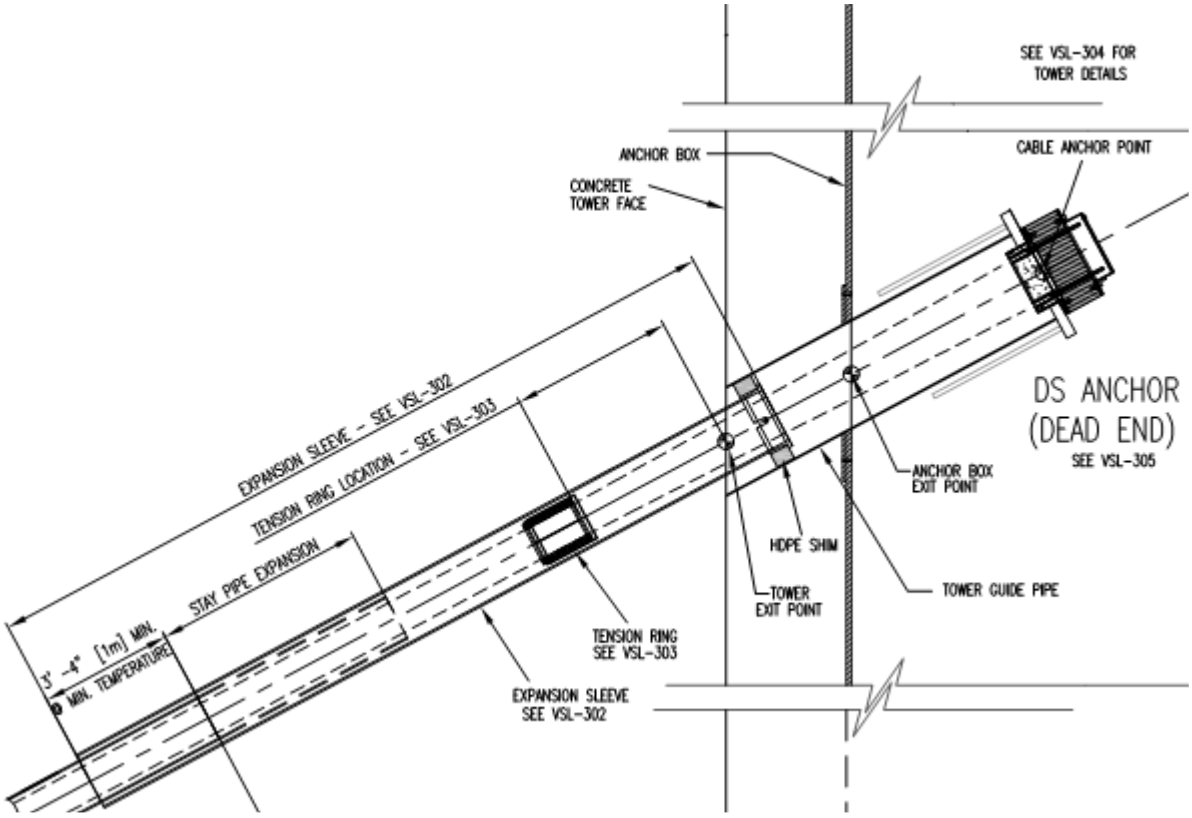

Figure 1.5 – SSI 2000 System Components at Pylon

© Copyright Reserved
This document is property of Structural Group, Inc. (STRUCTURAL TECHNOLOGIES / VSL) and must not be copied, reproduced, duplicated nor disclosed totally or partially to any Third Party, nor use in any manner whatsoever without prior consent of Structural Group, Inc. (STRUCTURAL TECHNOLOGIES / VSL).

1.3 Construction Specific Changes

1.3.1 Stay M18L, Strand 15

On March 21, 2016 the Phase 2 stressing was performed on Stay M18L. Strand #15 was found to be stressed to a load of 20.08kips, which was higher than the target 16.12kips. Since 20.08kips is only 32% of the minimum ultimate tensile strength (MUTS) of the strand and there was no risk to the structure regarding overall force calculation or for ultimate ductility the strand was left as is.

Strand #15 was painted bright orange, so in the event of a later re-stress of stay M18L, this strand will be skipped until all other strands are re-stressed, then lift-offs can determine if any re-stress is needed on strand #15.

1.3.2 Stay M29R, Strand 27

On June 6, 2016 the Phase 2 stressing was performed on Stay M29R. Strand #27 was stressed to a load of 26.01kips, which is higher than the target 19.55kips. During review it was determined to detension strand #27 and add a new strand stressed to the average force of stay. Strand 27 was left in place and painted bright orange for identification. Stay M29 is a 31 strand anchor with 29 stressed strands and one unstressed strand.

1.3.3 Guide Deviators

During construction miss-alignment of the deck level guide pipes were did not allow for proper assembly of the friction dampers. Guide Deviators were added within the guide pipe of 101 of the 120 stays. Figure 1.4 shows a schematic location of the guide deviators in relation to the deck level anchorage and the friction damper. The following table outlines the specific stays which received guide deviators and their installed location from end of guide pipe. Guide Deviator Shop Drawings are included on VSL-901 thru 904.

Guide Deviator Installation Table [Right]

Tower 3						Tower 4					
Back Span			Main Span			Back Span			Main Span		
Stay #	Lmin Theoretical[in.] [-0+2"	Lmin Actual [in]	Stay #	Lmin Theoretical[in.] [-0+2"	Lmin Actual [in]	Stay #	Lmin Theoretical[in.] [-0+2"	Lmin Actual [in]	Stay #	Lmin Theoretical[in.] [-0+2"	Lmin Actual [in]
B15	37.5	37.5	M1	8.25	8.25	M30	37	37	B16	8.5	N/A
B14	32.5	32.5	M2	9.75	9.75	M29	34.25	34.25	B17	9.75	9.75
B13	44.25	N/A	M3	10.25	10.25	M28	35.75	35.75	B18	11.5	N/A
B12	41.25	41.25	M4	12.75	12.75	M27	34.25	34.25	B19	13	13
B11	37.75	37.75	M5	21.5	21.5	M26	32.75	32.75	B20	15.75	15.75
B10	34	34	M6	23.5	23.5	M25	31	31	B21	18.75	18.75
B9	34.5	34.5	M7	25.5	25.5	M24	29.25	N/A	B22	22	22
B8	32.75	32.75	M8	25.75	25.75	M23	25.75	N/A	B23	32.75	32.75
B7	22	22	M9	29.25	29.25	M22	25.5	N/A	B24	34.5	34.5
B6	18.75	18.75	M10	31	31	M21	23.5	N/A	B25	34	34
B5	15.75	15.75	M11	32.75	32.75	M20	21.5	N/A	B26	37.75	37.75
B4	13	13	M12	34.25	34.25	M19	12.75	12.75	B27	41.25	41.25
B3	11.5	11.5	M13	35.75	35.75	M18	10.25	10.25	B28	44.25	44.25
B2	9.75	9.75	M14	34.25	34.25	M17	9.75	9.75	B29	32.5	32.5
B1	8.5	8.5	M15	37	37	M16	8.25	8.25	B30	37.25	37.25

© Copyright Reserved
This document is property of Structural Group, Inc. (STRUCTURAL TECHNOLOGIES / VSL) and must not be copied, reproduced, duplicated nor disclosed totally or partially to any Third Party, nor use in any manner whatsoever without prior consent of Structural Group, Inc. (STRUCTURAL TECHNOLOGIES / VSL).

Guide Deviator Installation Table [Left]

Tower 3						Tower 4					
Back Span			Main Span			Back Span			Main Span		
Stay #	Lmin Theoretical[in.] [-0+2"	Lmin Actual [in	Stay #	Lmin Theoretical[in.] [-0+2"	Lmin Actual [in	Stay #	Lmin Theoretical[in.] [-0+2"	Lmin Actual [in	Stay #	Lmin Theoretical[in.] [-0+2"	Lmin Actual [in
B15	37.5	26.75	M1	8.25	8.25	M30	37	37	B16	8.5	8.5
B14	32.5	32.5	M2	9.75	9.75	M29	34.25	34.25	B17	9.75	9.75
B13	44.25	44.25	M3	10.25	10.25	M28	35.75	35.75	B18	11.5	11.5
B12	41.25	41.25	M4	12.75	12.75	M27	34.25	34.25	B19	13	13
B11	37.75	37.75	M5	21.5	21.5	M26	32.75	29.25"	B20	15.75	15.75
B10	34	34	M6	23.5	N/A	M25	31	31	B21	18.75	18.75
B9	34.5	34.5	M7	25.5	N/A	M24	29.25	29.25	B22	22	22
B8	32.75	32.75	M8	25.75	N/A	M23	25.75	25.75	B23	32.75	32.75
B7	22	22	M9	29.25	29.25	M22	25.5	25.5	B24	34.5	34.5
B6	18.75	18.75	M10	31	N/A	M21	23.5	23.5	B25	34	34
B5	15.75	15.75	M11	32.75	N/A	M20	21.5	21.5	B26	37.75	30"
B4	13	13	M12	34.25	N/A	M19	12.75	12.75	B27	41.25	35.5"
B3	11.5	11.5	M13	35.75	35.75	M18	10.25	10.25	B28	44.25	N/A
B2	9.75	9.75	M14	34.25	34.25	M17	9.75	N/A	B29	32.5	N/A
B1	8.5	8.5	M15	37	37	M16	8.25	N/A	B30	37.25	N/A

*N/A-No Deviator was needed

1.4 Schedule of Inspection

This schedule will consist of periodic site visits to the Ironton Russell Bridge. Occasionally, particular inspection operations will require more laborious investigation. The purpose of these periodic visits will be to:

- Gain knowledge about the state of the system
- Confirm the absence of damage (e.g., corrosion, wear, etc.)
- Detect any potential maintenance or security issues
- Schedule maintenance operations on the various stay cable components (e.g., the damping systems, the anchorage protection caps, the corrosion protection systems, etc.)
- Record the history of the stay-cable system

1.5 Maintenance

Through observation and inspection, when damage or deficiencies are noted on the cable stays the following maintenance procedures may be employed and are described herein.

1. Replacement of the Anti-Vandalism Pipe
2. Strand / Stay Replacement
3. Friction Damper Maintenance
4. Stay Pipe Repairs and Stay Strand Repairs
5. Stay Adjustment
6. Protection Cap Filler Material Replacement

© Copyright Reserved
This document is property of Structural Group, Inc. (STRUCTURAL TECHNOLOGIES / VSL) and must not be copied, reproduced, duplicated nor disclosed totally or partially to any Third Party, nor use in any manner whatsoever without prior consent of Structural Group, Inc. (STRUCTURAL TECHNOLOGIES / VSL).

1.6 Objective

This document contains inspection, maintenance and repair procedures relevant primarily to the scope of the cable stays. It is intended to supplement existing recommendations for inspections and maintenance in order to tailor them for a particular system. In some cases other information is referenced to provide a better context, however the information herein should not replace, nor supersede, required maintenance procedures mandated by the governing agencies.

This Manual is to be viewed as a guideline only. The procedures and equipment outlined herein could change under actual job site conditions. The Contractor, at their option, may deviate from these methods and procedures. If other equipment or platforms already exist, then they also may be substituted. This document is in no way contractual in nature. This method statement is to be used for the Ironton Russell Cable Stay Bridge Project only.

It is the responsibility of the Contractor, its employees and applicable Subcontractors to be well informed of the content of this method statement and understand all of its content before operation is initiated. Failure to read and comprehend this information may result in incidents or loss in time or progress on site, for which Structural Technologies / VSL shall not be held responsible.

As noted above, the main objectives of the inspection and maintenance operations are:

- Gain knowledge about the condition of the system
- Confirm the absence of damage (e.g., corrosion, wear, etc.)
- Detect any potential maintenance or security issues
- Schedule maintenance operations on the various stay cable components (e.g., the damping systems, the anchorage protection caps, the corrosion protection systems, etc.)
- Record the history of the stay-cable system

1.7 Qualification of Inspection Teams

The inspection and maintenance contractor/consultant shall have direct recent experience in the installation and/or inspection of stay cable systems. At a minimum, the Project Manager and Field Manager shall have this experience. Documentation of the experience of these personnel shall be submitted to the ODOT for approval and be verifiable through references outside of the contractor or consultant's company. All other qualification requirements within the inspection and maintenance contract shall be met.

© Copyright Reserved
This document is property of Structural Group, Inc. (STRUCTURAL TECHNOLOGIES / VSL) and must not be copied, reproduced, duplicated nor disclosed totally or partially to any Third Party, nor use in any manner whatsoever without prior consent of Structural Group, Inc. (STRUCTURAL TECHNOLOGIES / VSL).

2.0 MANAGEMENT OF STRUCTURE

For the Owner, inspection of the stay cables must be a part of the inspection and management program of the structure. To achieve an efficient survey of the stay cables the responsible party should perform the following actions:

- Gain a solid knowledge of the bridge structure and systems, particularly to have an understanding and copies of the contract drawings and the designed movements of the structure due to the temperature condition, displacements of the bearings, calculated deformations of the deck and pylon, etc.
- Define a reference state of the structure, particularly the bridge profile and the cable forces
- Identify the risks due to the environment (chemical, UV, freeze/thaw, traffic, vandalism, temperatures, etc.)
- Identify existing vibrations

3.0 FREQUENCY OF INSPECTION VISITS

3.1 PTI Document

In the United States, the National Bridge Inspection Standards (NBIS) requires inspection of bridges every two years.

Per the PTI Recommendations for Stay Cable Design, Testing and Installation 5th Edition, the "frequency and level of inspection shall be conducted according to the specific features and needs of a structure." A sample inspection program similar to one listed within the PTI recommendations may follow the schedule of inspection below:

- Visual testing every two years
- Ultra-sonic testing of the cable in the anchorage zone every four years
- Survey of the deck geometry and/or verification of the cable stay load every six years
- Inspection along the free length of the cable every ten years
- Dampers and/or stabilizing cables visually inspected every two years

3.2 VSL SSI 2000 System

Except in the case of special or continuous monitoring, Structural Technologies / VSL recommends the following frequencies. These are in addition to any inspection requirements from the governing agency.

- Routine walk-through visual inspection every year
- Detailed inspection every six years (see Section 4 for breakdown)

© Copyright Reserved
This document is property of Structural Group, Inc. (STRUCTURAL TECHNOLOGIES / VSL) and must not be copied, reproduced, duplicated nor disclosed totally or partially to any Third Party, nor use in any manner whatsoever without prior consent of Structural Group, Inc. (STRUCTURAL TECHNOLOGIES / VSL).

4.0 VSL SSI 2000 - SCHEDULE OF INSPECTION

The proposed schedule is detailed in Tables 4.1, 4.2 & 4.3. It is based on an annual routine walk-through visual inspection, with more detailed inspections occurring every six years thereafter.

4.1 Annual Inspection (Visual Inspection)

The annual walk-through inspection generally can be completed by walking the length of the deck on each side of the bridge, noting potential concerns requiring follow-up investigation along the way. Binoculars may aid in visual inspection of certain components.

Evidence of intrusion or unauthorized access to the pylons or other restricted-access portions of the bridge should generate further, more detailed investigation in the areas potentially affected. For example, if it appears that the pylon access door has been forcibly opened, then the scope of the routine walk-through should expand to include a climb to review the overall condition of the stay cables in the upper anchorage zones. Any evidence of vandalism or other damage should be cause for further assessment and maintenance as necessary.

The inspection of the visible portions of the stay cable should consider the following items at a minimum:

- Changes to general layout and profile of stay cables and structure
- Evidence of intrusion into restricted-access portions of the bridge by non-authorized personnel (broken locks, damage to doors or chains, unusual signs of forced entry, etc.)
- Deformation of the stay pipe near the deck and the pylon
- Impact, deterioration, corrosion on the anti-vandalism pipe and/or deck guide pipe
- Integrity of HDPE stay pipe
- Removal of any accumulated debris from, or near, the stay cable components

4.2 Every Six Years (Detailed Inspection)

Structural Technologies / VSL recommends performing detailed inspections every six years in accordance with the information provided in Tables 4.1, 4.2, and 4.3 below. The intent is that all components would be inspected within the first eighteen-year cycle. Therefore, inspection teams should note which particular locations have been inspected in order that subsequent inspections will focus on other locations. Detailed inspections will require temporary access beyond the permanent system installed on the Ironton Russell Bridge.

© Copyright Reserved
This document is property of Structural Group, Inc. (STRUCTURAL TECHNOLOGIES / VSL) and must not be copied, reproduced, duplicated nor disclosed totally or partially to any Third Party, nor use in any manner whatsoever without prior consent of Structural Group, Inc. (STRUCTURAL TECHNOLOGIES / VSL).

Table 4.1 - Schedule of Inspection at the Deck
Reference Section 1.0 for Schematic

What to Check	What to Look For	Percentage of Total Quantity (%)				
		Routine (annual)	After 6 Years	After 12 Years	After 18 Years	Every 6 Years After
Anti-Vandalism Pipe	- Impact, deterioration. Replace if structural service of the AVP is compromised	100%				
	- Corrosion (no pitting, all corrosion protection coating intact)	100%				
Strand Sheathing at Friction Damper	- After removal of damper assembly, check for damage to sheathing (tearing, holes, etc.)		10%	30%	60%	10%
Stay Pipe	- No deformations, cracks, or breaks in HDPE pipes	100%				
	- Inspection of polyfusion element. No cracks	100%				
	- Marks from water flow	100%				
	- Discoloration			25%	25%	25%
Protection Cap	- Loose cap bolts - retighten if needed			30%	70%	25%
	- Corrosion (cap, bolts)			30%	70%	25%
	- Corrosion protection deterioration, re-apply corrosion protection if necessary to component			30%	70%	25%
	- Urethane epoxy slurry (Resipoly) leakage. No slurry should be present			30%	70%	25%
	- Seal Condition			30%	70%	25%
Anchorage	After removal of the protection cap :					
	- Ensure no presence of water			30%	70%	25%
	- Urethane epoxy (Resipoly) intact and solid			30%	70%	25%
	- Inspect strand end for corrosion; verify wires intact			30%	70%	25%
	- Inspect wedges for corrosion and slippage			30%	70%	25%
Guide Pipe End at Anchorage Bearing Location	- Rust staining		10%	30%	60%	25%
	- Corrosion protection coating deterioration, reapply if necessary		10%	30%	60%	25%
	- Drainage grooves, ensure they are open & free of any blockage		10%	30%	60%	25%
	- Deformation		10%	30%	60%	25%

© Copyright Reserved
This document is property of Structural Group, Inc. (STRUCTURAL TECHNOLOGIES / VSL) and must not be copied, reproduced, duplicated nor disclosed totally or partially to any Third Party, nor use in any manner whatsoever without prior consent of Structural Group, Inc. (STRUCTURAL TECHNOLOGIES / VSL).

Anchor Head	- Corrosion Protection. Reapply corrosion protection if the original protection shows signs of deterioration		10%	30%	60%	25%
Guide Deviator	- Corrosion Protection – confirm no pitting and galvanizing intact, reapply if necessary. Assembly – confirm all components are intact Displacement in Guide Pipe – confirm no movement from original installation		10%	30%	60%	25%
Friction Damper	- Refer to Friction Damper Method Statement for recommendations on damper inspection protocol		10%	30%	60%	25%

Table 4.2 - Schedule of Inspection at the Pylon

What to Check	What to Look For	Percentage of Total Quantity (%)				
		Routine (annual)	After 6 Years	After 12 Years	After 18 Years	Every 6 Years After
Anchor Head & Ring Nut	- Corrosion Protection. Reapply corrosion protection if the original protection shows signs of deterioration		10%	30%	60%	25%
Bearing Plate	- Rust staining		10%	30%	60%	25%
	- Paint deterioration		10%	30%	60%	25%
	- Deformation		10%	30%	60%	25%
Anchorage	After removal of the protection cap :					
	- Ensure no presence of water			30%	70%	25%
	- Urethane epoxy slurry (Resipoly) intact and solid			30%	70%	25%
	- Inspect strand end for corrosion; verify wires intact			30%	70%	25%
	- Inspect wedges for corrosion and slippage			30%	70%	25%
Protection Cap	- Loose cap bolts retighten if needed			30%	70%	25%
	- Corrosion (cap, bolts)			30%	70%	25%
	- Corrosion protection deterioration, re-apply corrosion protection if necessary to component			30%	70%	25%
	- Urethane epoxy slurry (Resipoly) leakage. No slurry should be present			30%	70%	25%
	- Seal condition			30%	70%	25%

© Copyright Reserved
This document is property of Structural Group, Inc. (STRUCTURAL TECHNOLOGIES / VSL) and must not be copied, reproduced, duplicated nor disclosed totally or partially to any Third Party, nor use in any manner whatsoever without prior consent of Structural Group, Inc. (STRUCTURAL TECHNOLOGIES / VSL).

Pylon Connection of Stay Pipe	- Free expansion of the stay pipe			30%	70%	25%
	- Sleeve connection to guide pipe			30%	70%	25%
	- HDPE pipe deformation			30%	70%	25%
	- Corrosion of screws & guide pipe			30%	70%	25%

Table 4.3 - Schedule of Inspection of the Bridge

What to Check	What to Look For	Percentage of Total Quantity (%)				
		Routine (annual)	After 6 Years	After 12 Years	After 18 Years	Every 6 Years After
Bridge Geometry	- Inspection of visual aspect of the bridge	100%				
Geometry Control / Survey of Structure	- Complete survey of deck and pylon geometry for comparison with previous surveys				100%	
Tension in Cable	- Measure of tension		10%	30%	60%	10%

5.0 MAINTENANCE SCHEDULE

The organization of the maintenance schedule will depend on the considered design life of the system and its components. The cable stay longevity will be achieved only if the cable stays are appropriately inspected and maintained. The SSI 2000 stay cable system is designed to be replaceable (strand by strand) and the anchors have a high level of corrosion protection.

The Owner should establish the frequency of replacement and maintenance based on such factors as the results of the inspections, information above, environmental conditions and general condition of the structure. Maintenance may consist of, but not limited to, the following items:

- Cleaning
- Tightening of bolts
- Replacement of some secondary components (i.e., dampers, protection caps, bolts, etc.)
- Cable force measurement
- Adjustment of the cable force (retensioning or detensioning)
- Renewal of corrosion protection
- Stay pipe repair
- Strand sheath repair
- Replacement of the damping system
- Strand replacement
- Stay pipe replacement
- Partial or total replacement of a stay cable

© Copyright Reserved
This document is property of Structural Group, Inc. (STRUCTURAL TECHNOLOGIES / VSL) and must not be copied, reproduced, duplicated nor disclosed totally or partially to any Third Party, nor use in any manner whatsoever without prior consent of Structural Group, Inc. (STRUCTURAL TECHNOLOGIES / VSL).

6.0 LIFTING OF ANTI-VANDALISM PIPE

6.1 AVP Lifting

The Anti-Vandalism Pipe (AVP) is lifted up using a steel frame (by Contractor) which is installed around the guide pipe at deck level and is attached to the cable stay above the AVP. The AVP with the HDPE stay pipe is then lifted up using a chain hoist or come-along. Insert a block between the AVP and the Guide pipe to keep the AVP from slipping down during Inspection.

As the AVP and stay pipe are being lifted, verify free movement between the pylon expansion sleeve and the stay pipe. The typical minimum working length **L** is 1.7m (5.58ft).

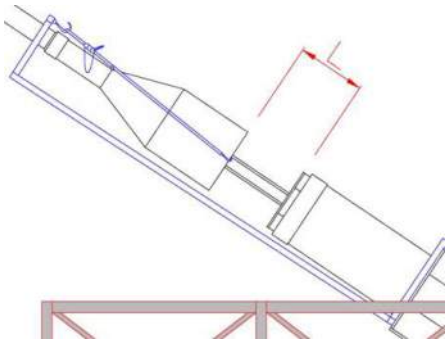

Figure 6.1: Lifting of both the Anti-Vandalism Pipe and HDPE Stay Pipe

6.2 AVP Replacement

If the AVP shows signs of deterioration or damage and must be replaced, additional planning and caution must be taken to protect the strands.

- Attach sling, stay pipe clamp or similar and lift the stay pipe away from the AVP.
- Protect strands inside and around the AVP from damage that could occur during the replacement process
- Use a grinder with a metal cutting wheel or similar to slit the AVP on opposite sides of the pipe. The cutting method must be approved by the Owner and Engineer before the AVP is cut.
- Carefully remove the two AVP halves and replace them with a two part AVP approved by the design engineer.

7.0 FRICTION DAMPERS

Friction damper inspection and maintenance protocol are provided in the Friction Damper Method Statement. Reference this document for more information on specific inspection procedures, timing of inspections, maintenance procedures, etc.

© Copyright Reserved
This document is property of Structural Group, Inc. (STRUCTURAL TECHNOLOGIES / VSL) and must not be copied, reproduced, duplicated nor disclosed totally or partially to any Third Party, nor use in any manner whatsoever without prior consent of Structural Group, Inc. (STRUCTURAL TECHNOLOGIES / VSL).

8.0 STAY CABLE STRAND REPLACEMENT

The procedures below describe strand replacement. All procedures shall be verified and approved by the Engineer prior to commencing work. For Maintenance of Traffic / Traffic Control examples, refer to the original contract drawings. All Maintenance of Traffic and Traffic Control shall be submitted to ODOT for approval prior to commencing work.

8.1 Individual Strand Replacement

If individual strands are required to be replaced, they may be replaced strand by strand. An entire stay may be replaced in this manner. However, subject to approval by the Engineer, if an entire stay needs to be replaced, it may be removed entirely in one operation and then replaced with the strand-by-strand install method.

8.2 Complete Stay Removal

If the entire stay needs to be replaced all strands may be removed within one stay. The stay pipe can be left in place and supported by a few strands that can be replaced after the reinstallation of at least one new strand. The remaining strands can then be installed in the typical strand-by-strand installation process.

All of the above procedures are at the discretion of the Engineer and no work should occur without such approval.

9.0 VERIFICATION OF CABLE TENSION

Two methods for determining cable tension will be shown. The first method, lift-off of the wedges, is explained below. This method can be used to verify the force when a strand is being replaced or if special circumstances apply. The lift-off operation and the correct implementation of the procedures are crucial in achieving a good result to judge the correct force in the cable stays. A second method is vibration-based testing. The basic principle is to measure the movement of the cable using an accelerometer or laser vibrometer, then determine the force in the cable through mathematical derivation. This type of testing will require special equipment and procedures with consideration given to the specific project.

9.1 Lift-off Operation

General Information regarding Lift-off Phenomena:

The lift-off operation is to determine the static force in the PE coated stay strand after the wedge has been lifted-off.

As soon as the wedges have been seated during installation, the wedge surface will slightly bond to the surface of the wedge seat cavity in the anchorage. This is called “wedge compression fusion”. This seating force is a combination of compression fusion and a bond-like phenomenon due to the two different metal compositions in the anchor seat cavity and the wedge.

If the wedges have been installed without specified lubricant, the lift-off value will, in most cases, be too high and the values within one anchorage will vary greatly.

The force in an anchorage with non-lubricated wedges cannot be recorded by normal lift-off operations. Normally, only 20 percent of all PE coated strands within an anchorage are lifted-off and the sum of these results is extrapolated to achieve a load value corresponding to the entire anchorage. In certain

© Copyright Reserved
This document is property of Structural Group, Inc. (STRUCTURAL TECHNOLOGIES / VSL) and must not be copied, reproduced, duplicated nor disclosed totally or partially to any Third Party, nor use in any manner whatsoever without prior consent of Structural Group, Inc. (STRUCTURAL TECHNOLOGIES / VSL).

cases, when there is reason to doubt an extrapolated result, all PE coated stay strands have to be lifted-off in order to get an exact value.

The calibration of the equipment is an important aspect in achieving good lift-off results. Normally this is done onsite using a master gauge and a digital gauge. Presumably, the master gauge and load cell have been calibrated together in advance to an accuracy within 0.5 percent.

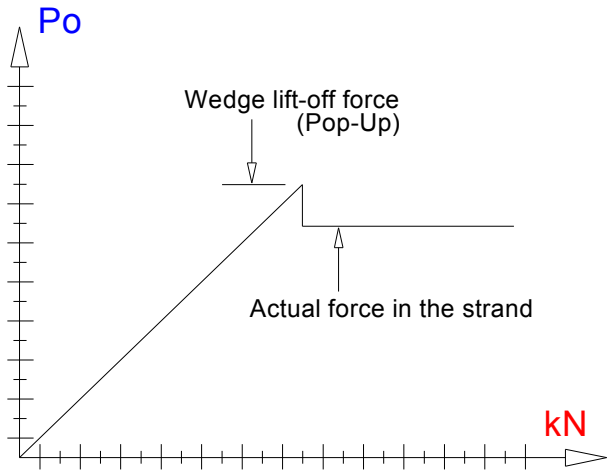

Figure 9.1 - Wedge Lift-off Force verses Actual Force in the Stay Strand

To lift-off the wedge will require a small additional force higher than the force by which the PE coated stay strand is actually seated.

For example, if the PE coated stay strand is anchored with approximately 100KN (22.48kips), you might have to use 115kN (25.85kips) to lift-off the wedge. The wedge will then "pop up" as soon as you have reached the wedge seating force and the force recorded on the gauge will drop slightly.

If the outer surface of the wedge has been coated with a layer of specified lubricant at the time of installation, the “pop up” effect will be much lower and it is now possible to determine the lift-off force.

Lift-off Operation Procedure:

The lift-off operation can be done in two different ways:

a. Automatic Lift-off by AMS
b. Manual lift-off

Automatic Lift-off:

The initial lift-offs (construction phase) were performed by the VSL Automatic Mono-strand Stressing (AMS) System. This equipment will automatically sense the peak created by the “pop out” of the

© Copyright Reserved
This document is property of Structural Group, Inc. (STRUCTURAL TECHNOLOGIES / VSL) and must not be copied, reproduced, duplicated nor disclosed totally or partially to any Third Party, nor use in any manner whatsoever without prior consent of Structural Group, Inc. (STRUCTURAL TECHNOLOGIES / VSL).

wedge and compensate for this and only record the actual force in the PE coated stay strand after wedge pop out.

Detailed description of operating the AMS will not be described in this method statement; instead please refer to the AMS User Manual provided with the equipment.

Manual Lift-off: (Explained for Information Only)

With manual lift-off, the lift-off can also be done in two different ways, either by slow increase of pressure or by fast increase of pressure; both ways work well but with slightly varying behavior. Normally the fast increase of pressure seems to give more accurate results for some technicians, while a slow increase of pressure can give more accurate result for others. Due to this, it is up to each individual technician to use the method by which they feel they can control the PE coated stay strand lift-off in the best way. The slow increase of pressure is more time consuming.

Note that the pressure values shown below are given only as an example. The particular pressures to be used in actual lift-offs will be directly related to the type of jack used at the time.

Slow Increase of Pressure

- Bolt the recess ring onto the anchorage, using the bolt holes provided for the protection cap.
- Check the height of the recess to verify that it is approximately 4 – 6mm (0.16 - 0.24inch).
- Place the fork over the line of cable stay strands to be lifted-off.
- Extend the piston of the jack to approximately 70mm (2.75inches) before placing the jack onto the PE coated stay strand.
- Place the jack onto the PE coated stay strand and push the jack against the fork.
- Illuminate the wedge area using a flashlight and make sure you have full visual view of both wedge halves.
- Start the pump and close the needle valve.
- Verify that the pressure-regulating valve is fully opened (counter-clockwise), i.e. no oil flow even though the stressing handle is put into stressing position.
- Slightly increase the pressure by turning the regulator valve.
- In the beginning, if you suspect the force to be approximately 245bars (3,353psi) in the PE coated stay strand, you can turn the regulator in large increments until you reach approximately 220 or 230bars (3,191 – 3,336psi).
- Immediately as the wedge looses its grip and pops up, the Technician has to move the stressing handle into the neutral position. The pressure will naturally descend approximately 2 - 3bars (29 – 44psi) due to the static pressure after which it shall stay constant.
- Very slowly release the pressure with the needle valve until the wedge begins to seat. This is very difficult and should be studied carefully. As soon as the wedge shows a tendency to move backwards into the wedge cavity again, stop and record the pressure. This is the lift-off pressure of the PE coated stay strand that shall be recorded.

© Copyright Reserved
This document is property of Structural Group, Inc. (STRUCTURAL TECHNOLOGIES / VSL) and must not be copied, reproduced, duplicated nor disclosed totally or partially to any Third Party, nor use in any manner whatsoever without prior consent of Structural Group, Inc. (STRUCTURAL TECHNOLOGIES / VSL).

Fast Increase of Pressure

- Bolt the recess ring onto the anchorage, using the bolt holes provided for the protection cap.
- Check the height of the recess to be approximately 4 – 6mm (0.16 - 0.24inch).
- Place the fork over the line of cable stay strands to be lifted-off.
- Extend the piston of the jack with approximately 70mm (2.75inches) before placing the jack onto the PE coated stay strand.
- Place the jack onto the PE coated stay strand and push the jack against the fork.
- Illuminate the wedge area using a flashlight and make sure you have full visual contact with wedge halves.
- Start the pump and close the needle valve.
- Verify that the pressure-regulating valve is tightened to a pressure, which is higher, then the suspected lift-off pressure.
- Increase the pressure in the jack with small fast movements of the stressing handle between the stressing position and the neutral position.
- Immediately, as the wedge looses its grip and pops up, the Technician has to move the stressing handle into the neutral position. The pressure will naturally descend approximately 2 - 3bars (29 – 44psi) due to the static pressure after which it shall remain constant.
- Slowly release the pressure with the needle valve until the wedge begins to seat. This is difficult and should be studied carefully. As soon as the wedge shows a tendency to move backwards into the wedge cavity again, stop and record the pressure. This is the lift-off pressure of the PE coated stay strand that shall be recorded.

9.2 Vibration-Based Force Verification Procedure

As an option, a vibration-based force verification procedure may be employed. The typical benefit over the lift-off method is most systems will not require removal of the caps and other components. This potentially makes the procedure more efficient and less intrusive than by lift-off. Procedures for force verification should to be provided by the supplier of the system. The force verification can be performed by VCE Consulting or similar.

© Copyright Reserved
This document is property of Structural Group, Inc. (STRUCTURAL TECHNOLOGIES / VSL) and must not be copied, reproduced, duplicated nor disclosed totally or partially to any Third Party, nor use in any manner whatsoever without prior consent of Structural Group, Inc. (STRUCTURAL TECHNOLOGIES / VSL).

10.0 REPAIR PROCEDURES

10.1 HDPE Repair Procedure

HDPE is durable and forgiving in most applications.

By using proper fusion methods, HDPE joints should have sufficient strength to avoid failure. Polyethylene pipe is quite flexible, and has great impact resistance. However, for various reasons, there may be situations where the stay pipe needs repair.





Figure 10.1 – Example Damage to HDPE Pipe

If a polyethylene pipe is in need of repair, there are various methods available to perform a durable repair; however, from an aesthetic point of view, they are not 100 % invisible. It should be noted that it is basically only repairs near the deck that will be noticeably visible. While repairs along the stay pipe, even if they are very visible at close range, will often be less noticeable at longer range.

Most common methods of repairing stay pipe damage:

- Electro fusion coupling
- Painted stainless steel clamp-around repair couplings
- Fusion Patching
- Power Wrap

Electro Fusion Couplers:

This coupler is similar to a normal fusion coupler, but made in two separate half shells which can be positioned over a damaged HDPE stay pipe.

Supplier: PE-Specialisten GmbH (PESTEC)

© Copyright Reserved
This document is property of Structural Group, Inc. (STRUCTURAL TECHNOLOGIES / VSL) and must not be copied, reproduced, duplicated nor disclosed totally or partially to any Third Party, nor use in any manner whatsoever without prior consent of Structural Group, Inc. (STRUCTURAL TECHNOLOGIES / VSL).

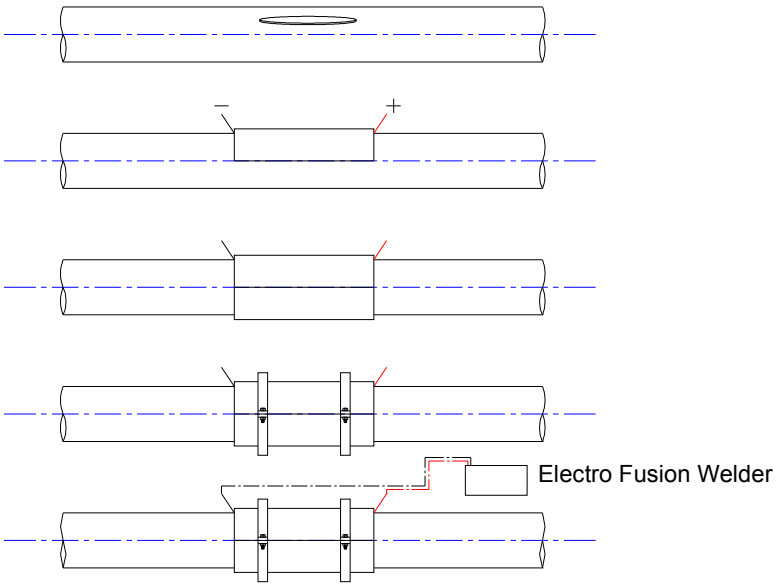

Figure 10.2 – Installation of Electro Fusion Coupler

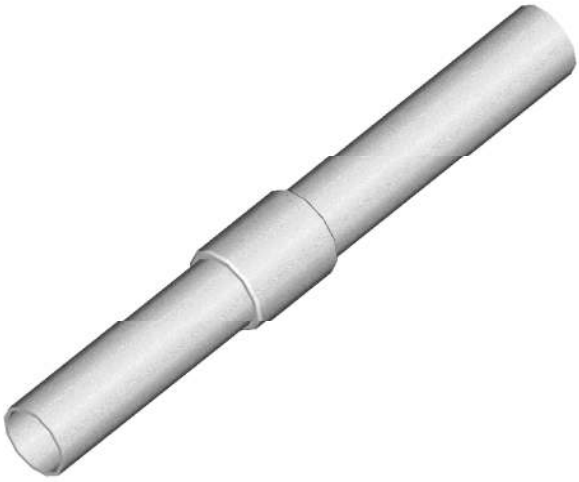

Figure 10.3 – Example of Completed Fusion Coupler

© Copyright Reserved
This document is property of Structural Group, Inc. (STRUCTURAL TECHNOLOGIES / VSL) and must not be copied, reproduced, duplicated nor disclosed totally or partially to any Third Party, nor use in any manner whatsoever without prior consent of Structural Group, Inc. (STRUCTURAL TECHNOLOGIES / VSL).

Painted Stainless Steel Clamp:

A traditional and easy method of pipe repair is to clamp a stainless steel clamp over the damage, and paint the clamp with suitable color.

Supplier: Smith-Blair, Inc.

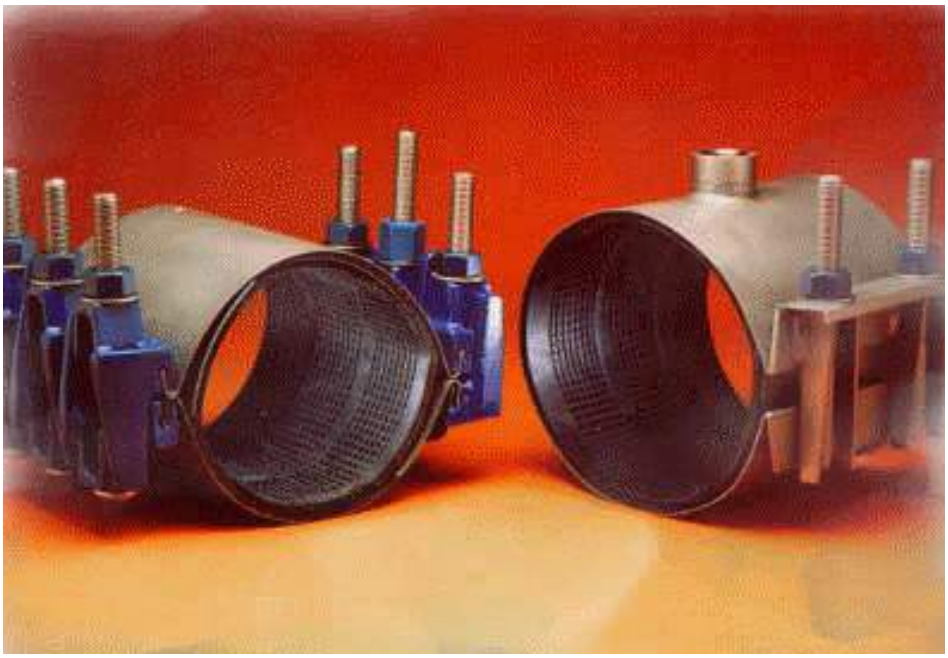

Figure 10.4 – Example Stainless Steel Clamps

The coupler is clamped over the damaged area and then the bolts are tightened. The coupler is internally lined with a rubber seal to be watertight. The length of the bolts can be adjusted (cut) to minimize the visible impact from the bridge deck. Once the coupler has been installed, it can be painted with the same color as the stay pipe to minimize the visual impact of the repair.

Fusion Patching:

Fusion Patching is a relatively new method. It has shown some reasonable results. The long term durability of the repair has not yet been confirmed. However, it should be similar to fusion welded joints. It would likely be the least noticeable repair of the different options.

The method is based on the same procedure as “butt-welding” the stay pipes.

As a welding element, a modified soldering iron is used. Normally the heating element is locally made out of brass or copper and attached to a large size soldering iron. This can usually be fabricated locally.

© Copyright Reserved
This document is property of Structural Group, Inc. (STRUCTURAL TECHNOLOGIES / VSL) and must not be copied, reproduced, duplicated nor disclosed totally or partially to any Third Party, nor use in any manner whatsoever without prior consent of Structural Group, Inc. (STRUCTURAL TECHNOLOGIES / VSL).

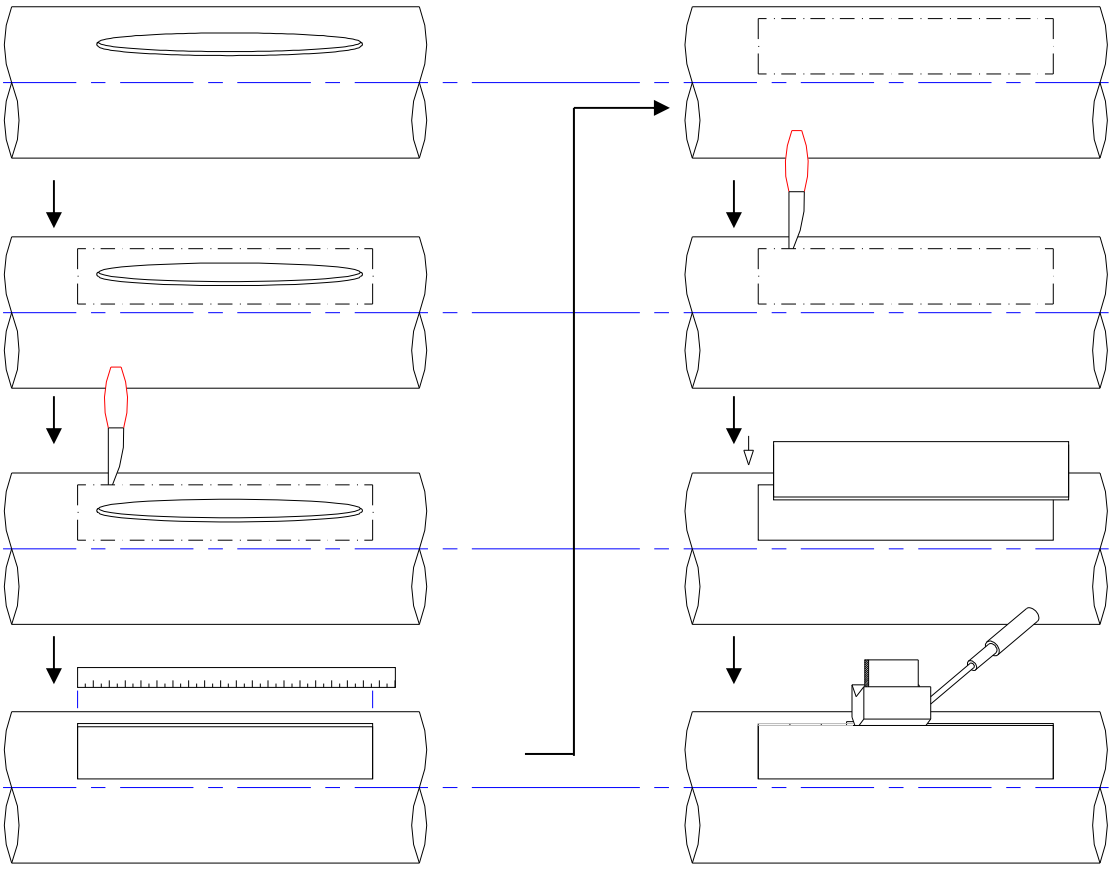

Figure 10.5 – Fusion Patching Process

Basic procedure:

- A straight square is marked with a pen onto the HDPE pipe surrounding the damage
- The square part is cut out using a sharp knife, taking care to not damage the strands
- The square is re-measured and again re-marked (+ 3 mm - .12 in) onto a piece of pipe with the same diameter and wall thickness as the damaged pipe.
- A new and slightly larger part is cut out from the piece of pipe and installed on top of the damaged area. The patch is cut to the shape to the hole.
- The patch is again re-welded using the soldering iron and the method describe below

© Copyright Reserved
This document is property of Structural Group, Inc. (STRUCTURAL TECHNOLOGIES / VSL) and must not be copied, reproduced, duplicated nor disclosed totally or partially to any Third Party, nor use in any manner whatsoever without prior consent of Structural Group, Inc. (STRUCTURAL TECHNOLOGIES / VSL).

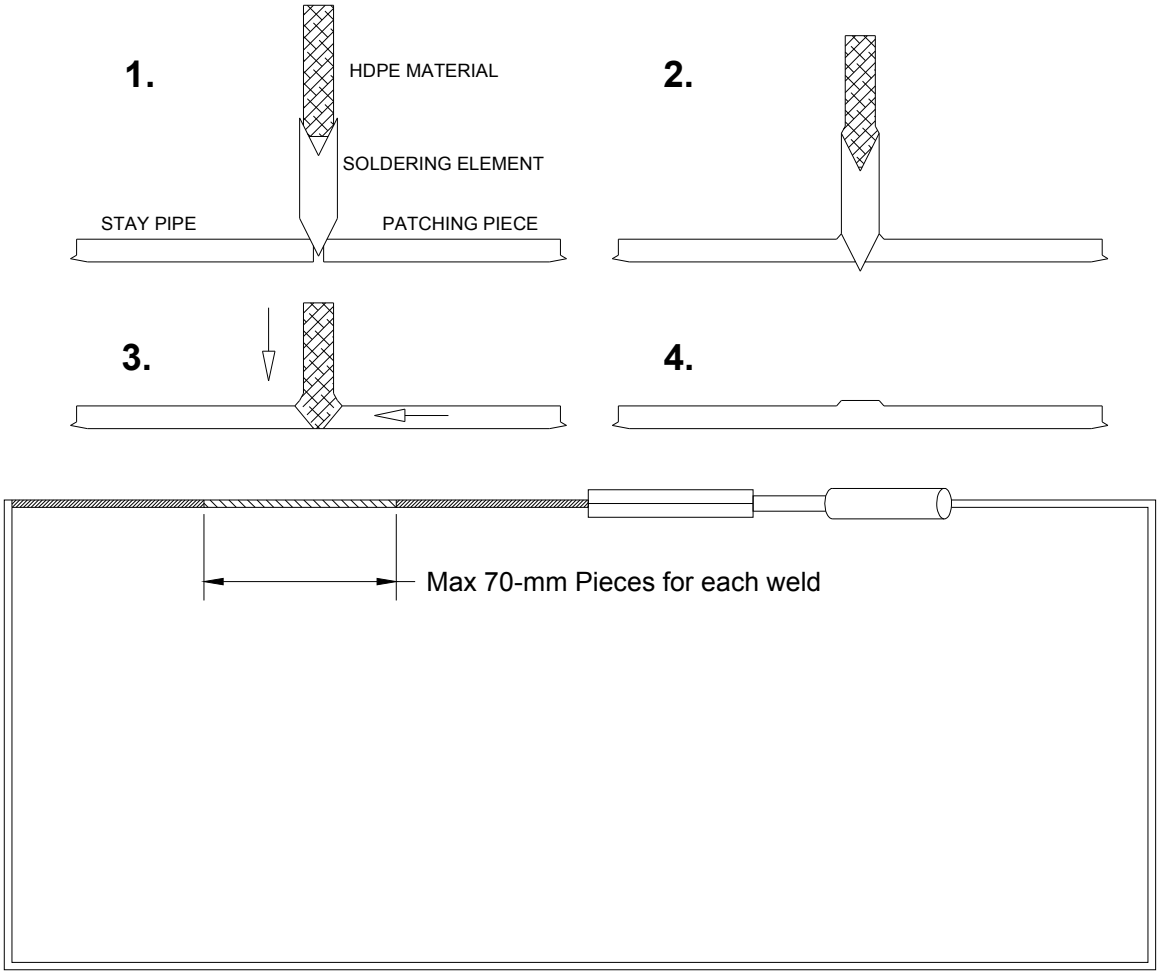

Figure 10.6 – Soldering Method in Detail (I)

Once the whole piece is welded, each seam in-between the longitudinal pieces must be re-welded.

© Copyright Reserved
This document is property of Structural Group, Inc. (STRUCTURAL TECHNOLOGIES / VSL) and must not be copied, reproduced, duplicated nor disclosed totally or partially to any Third Party, nor use in any manner whatsoever without prior consent of Structural Group, Inc. (STRUCTURAL TECHNOLOGIES / VSL).

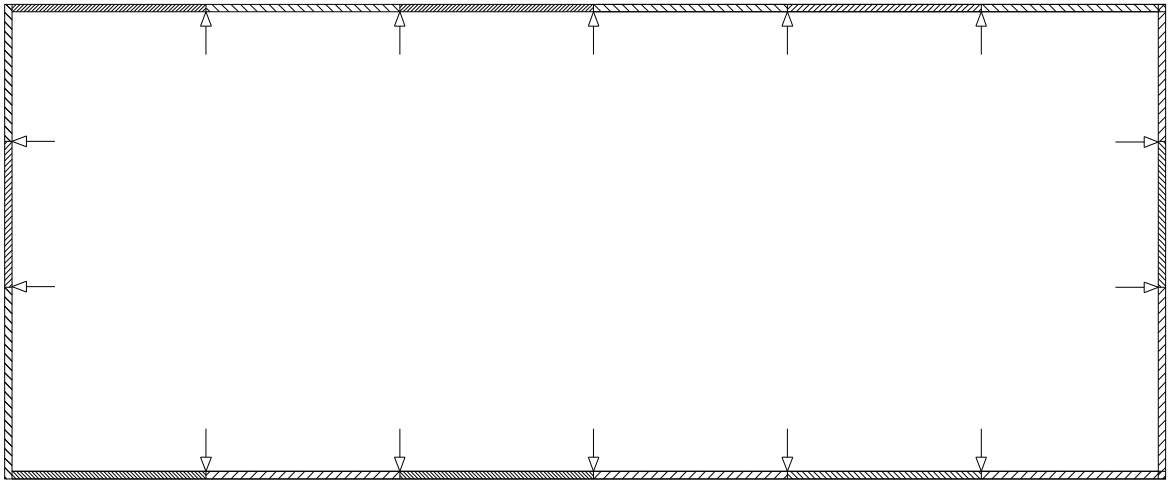

Figure 10.7 – Soldering Method in Detail (II)

This is done with a cone shaped soldering piece.



Figure 10.8 – Example Soldering Equipment

© Copyright Reserved
This document is property of Structural Group, Inc. (STRUCTURAL TECHNOLOGIES / VSL) and must not be copied, reproduced, duplicated nor disclosed totally or partially to any Third Party, nor use in any manner whatsoever without prior consent of Structural Group, Inc. (STRUCTURAL TECHNOLOGIES / VSL).

Heat Shrink/Power Wrap/Aqua Wrap:

Other repairs such as sleeves are another option. The long term durability of each, including the one listed here, should be confirmed with the manufacturer to ensure it meets the specified requirements. Sleeves available may be attached through adhesive, heat shrink, etc. Some may be a repair for minor damage.

AIR LOGISTICS CORPORATION
Field-Applied Composite Systems Group
925 North Todd Avenue.
Azusa, CA 91702 USA
Phone: 626-633-0294
Fax: 626-633-0791

INSTALLATION PROCEDURE FOR PIPING

Aquawrap®, Aquapreg® – Standard, WR, or Bear™ types

READ AND UNDERSTAND ALL MSDS's FOR THESE PRODUCTS PRIOR TO HANDLING OR INSTALLING THEM. CHEMICAL GLOVES AND SAFETY GLASSES ARE MANDATORY.

A. Clean as appropriate. See Surface Preparation Procedure instructions (separate document.)

B. All sharp corners, dents, leak repairing patches and wall/diameter offsets greater than 1/8th-inch (3mm) (1/16th-inch for fluid-tight installations) should be smoothed with Air Log Filleting Compound or similar high compressive and flexural strength filleting and filling compound. Most circumferential piping welds and the like require no special filleting or smoothing.

C. Apply primer. Selection of proper Air Log primer grade is important. Contact tech support at 626-633-0294 if there are any questions.

D. Tear open the foil pouch that the Aquawrap® is shipped in and remove any inner wrapper.

E. Press the end of the roll down onto the pipe surface to be wrapped. An assistant will have to hold this starting point in tight contact with the pipe.

F. Proceed to pull significant tension on the roll and wind it around and around the pipe until the requisite number of layers is applied, thoroughly spraying with water, EVERY layer, as it is being wrapped. For coverage that is more than a single width of the Aquawrap®, it is often found that a bias wrapping method works best, with no overlap of the adjacent wraps; and then biasing back on the opposite angle as each succeeding layer is installed. Keep tension at all times.

Exceptions: a). When passing around or over obstructions, relax the tension while pressing downwards into the repair surface. Continue on around and do not start pulling tension again until you are certain that you are not pulling the Aquawrap® off of the obstruction. Apply extra layers in these regions. b). When transitioning from a large diameter down to a smaller diameter (for example, a concentric reducer) do not pull tension in the area of the transition, or the Aquawrap® will slip off of the larger diameter.

G. As a roll is used up and a new one is begun, lap the new starting point back over the previous roll's end by a distance equal to at least the width of the Aquawrap® product being applied.

H. While wrapping, tiny droplets of water should be visible squeezing through the weave of the Aquawrap® fabric. If at any time there is a lack of such droplets visible, more activating water should be misted over the Aquawrap® surfaces with any appropriate atomizing sprayer.

I. If wrapping is interrupted, and the applied material cures to the "dry to touch" stage, Primer #3 or AG22 Resin should be lightly brushed or rolled onto the dry surfaces before continuing with wrapping.

J. Tack the termination of the final layer of the final roll to the composite structure with Stricture Banding™ or Air Log Tiger Tabs™. All high performance repairs should be over-wrapped with Stricture Banding™. Apply the first wrap of Stricture Banding™ smoothly and loosely; subsequent layers should be tightly stretched while wrapping.

For areas of diameter transition (see Exceptions, above) the Stricture Banding™ should be applied first, tightly, only to the large diameter. A very light tension must be used in the actual transition area; followed by a full tension application in the smaller diameter area. Special techniques are available to overcome this situation where warranted. Contact Air Log Technical Support for details.

K. Perforate the surfaces of Stricture Banding™ using any suitable pointed object, such as the Perforator Tool, available from Air Logistics.

L. When cured to the touch, remove all Stricture Banding™. After the installation is fully dry (about 6 hours at 50% RH), paint all Aquawrap® surfaces or provide other coating protection from the elements. Air Log can furnish a high quality paint for this over-coating. Special UV-protected resin matrix is available on special order. For water-submerged applications, a special primer and over-coating is required.

© Copyright Reserved
This document is property of Structural Group, Inc. (STRUCTURAL TECHNOLOGIES / VSL) and must not be copied, reproduced, duplicated nor disclosed totally or partially to any Third Party, nor use in any manner whatsoever without prior consent of Structural Group, Inc. (STRUCTURAL TECHNOLOGIES / VSL).

10.2 Strand Coating Repair Procedure

Should the PE coating on the strands be damaged the following procedures may be used to repair them. In cases of significant damage (i.e. vehicular damage, vandalism, etc.), it may be decided to replace the entire strand. There are two primary methods for repair – The use of tape or the use of PE filler.

Tape Repair:

- Cut away edges with sharp knife, taking care to not damage the wires
- Rub the area with very fine sandpaper, cover the strand and clean with non-oily acetone.
- Wrap the area using self-vulcanizing rubber tape type: 3M Temflex 2155 or similar.
- Wrap by stretching tape 2-3 times its length and wrap around with an overlap of 50%.
- Once the strand has been wrapped with the self-amalgamating tape, the surface of the repaired area has to be covered with a secondary tape with smooth surface, typically a standard smooth electrical tape.
- The self-amalgamating tape creates a surface with quite a lot of friction and if not covered, the tape will peel off during installation of the strand.

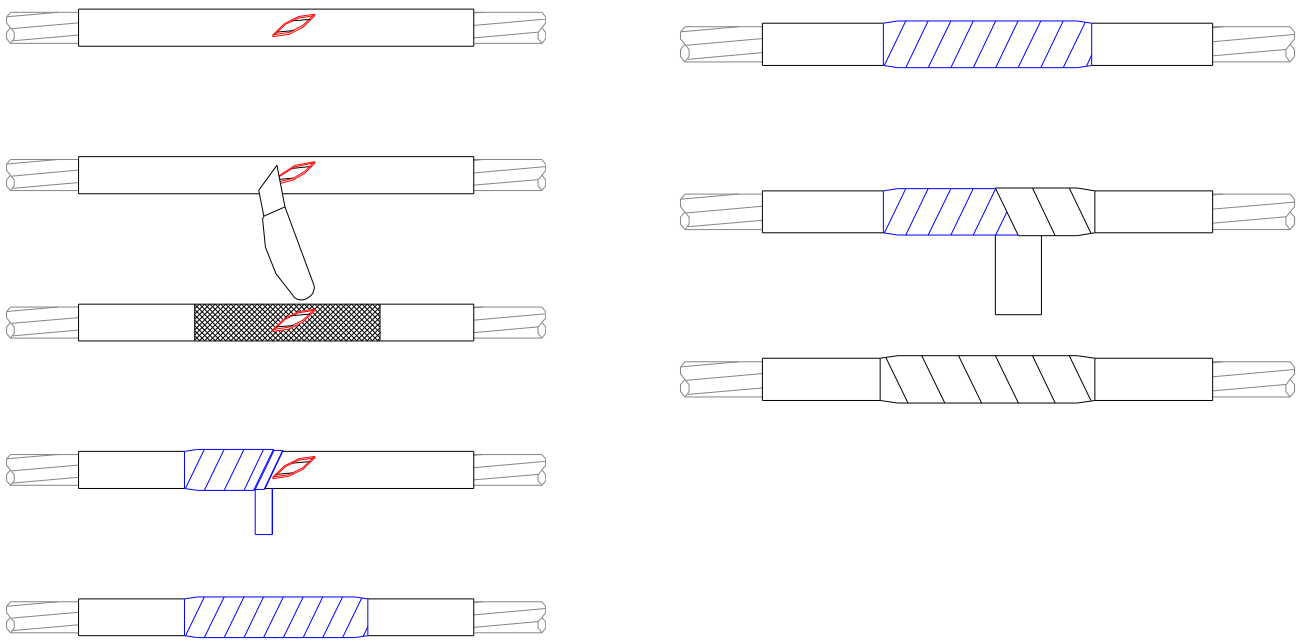

Figure 10.9 – Example Repair Procedure

© Copyright Reserved
This document is property of Structural Group, Inc. (STRUCTURAL TECHNOLOGIES / VSL) and must not be copied, reproduced, duplicated nor disclosed totally or partially to any Third Party, nor use in any manner whatsoever without prior consent of Structural Group, Inc. (STRUCTURAL TECHNOLOGIES / VSL).

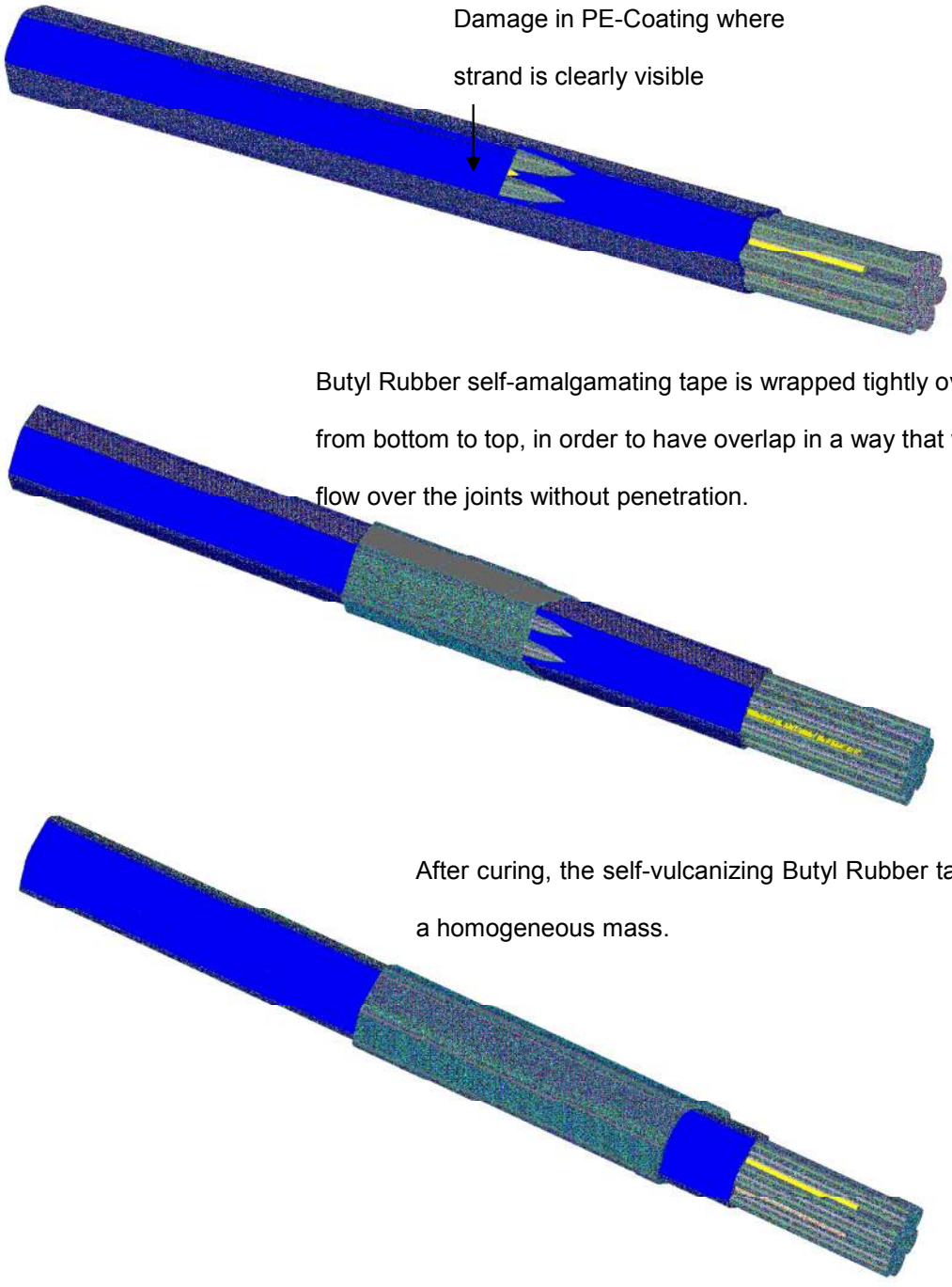

Figure 10.10 – Taping Procedure

© Copyright Reserved
This document is property of Structural Group, Inc. (STRUCTURAL TECHNOLOGIES / VSL) and must not be copied, reproduced, duplicated nor disclosed totally or partially to any Third Party, nor use in any manner whatsoever without prior consent of Structural Group, Inc. (STRUCTURAL TECHNOLOGIES / VSL).

Repair of Strand with Filler or Patch

Damage to the strand may be repaired using a “PERP” stick or melt stick. An example procedure is presented below. For more significant damage a repair patch or heat-shrink sleeve should be considered.

Pipeline Repair Products

Mainline coating repair products for corrosion protection

For more than 35 years, Canusa-CPS has been a leading developer and manufacturer of specialty pipeline coatings for the sealing and corrosion protection of pipeline joints and other substrates. Canusa-CPS high performance products are manufactured to the highest quality standards and are available in a number of configurations to accommodate many specific project applications.

Product Description

Canusa's Pipeline Repair Products are used to add corrosion protection and/or fill voids in damaged coatings. A full line of products provides the flexibility to make a variety of repairs to mainline coatings, ranging from minor coating damage to holidays and exposed steel.

Features & Benefits

All of Canusa's Pipeline Repair Products offer flexibility of installation, exhibit excellent adhesion to steel and are compatible with common pipeline coatings. These products also remain permanently flexible and provide superior resistance to moisture infiltration, resulting in a sound corrosion protection layer.

The Coating Repair Patch (CRP)

CRP consists of an irradiated, cross-linked polyolefin sheet coated with a heat-activated adhesive. It is designed specifically for sealing and protection of damaged pipeline coatings up to 150mm x 150mm in size. The patch can be installed quickly with no special tools required. The installed patch provides a barrier to moisture and corrosion and is resistant to abrasion and shear forces during pipeline installation and while in-service.

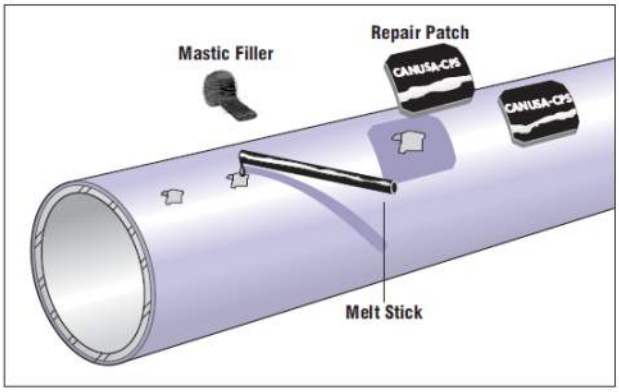

Melt Sticks (MS)

Melt Sticks are heat-activated adhesives supplied as a rod for ease of application. They are ideal for small coating repairs ranging from superficial damage to holidays and cracks up to 10mm x 10mm. Melt sticks may also be used as a filler material below Coating Repair Patches.

Mastic Filler (MF)

Mastic Filler is used to fill larger voids and deep crevices in damaged coatings prior to the application of Canusa Repair Patches.

Note: For damage greater than 150mm x 150mm, a new sleeve is recommended.

Applications

- Oil & Gas
- Water Pipelines
- Repair & Rehab

Configurations

- Patch
- Melt Stick
- Mastic Filler
- Epoxy

Pipe Sizes

- All Sizes

Temperature Range

- up to 65°C (150°F)

© Copyright Reserved
This document is property of Structural Group, Inc. (STRUCTURAL TECHNOLOGIES / VSL) and must not be copied, reproduced, duplicated nor disclosed totally or partially to any Third Party, nor use in any manner whatsoever without prior consent of Structural Group, Inc. (STRUCTURAL TECHNOLOGIES / VSL).

Revised 7/8/11 RJ

Covalence Heat Shrinkable Products

PERP Melt Stick

Repair System for Damaged PE-Coatings
Installation Instructions

AG-PERP-MS-REV5-0300

Materials and equipment
1. PERP MELTSTICK
2. Wire brush, knife
~~3. Propane tank regulator, torch~~ N/A
4. Standard safety equipment as prescribed by local regulations

Installation has to be done according to local government regulations and usual safety precautions.

Ref. Note

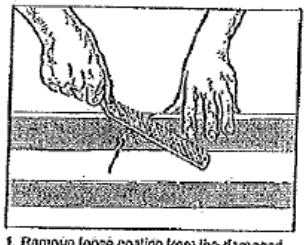

1. Remove loose coating from the damaged area with a knife, scraper or wire brush. Eliminate all sharp edges and clean the damaged area and adjacent coating to remove all foreign material such as dirt, rust, oil, grease and moisture.

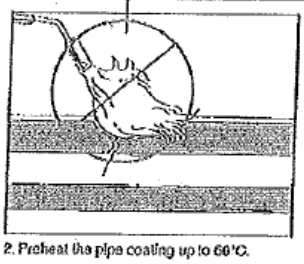

2. Preheat the pipe coating up to 60°C.

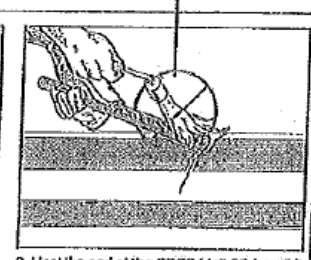

3. Heat the end of the PERP Melt Stick until it becomes glossy.

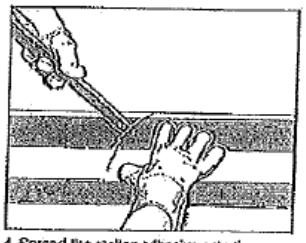

4. Spread the molten adhesive onto the damaged area.

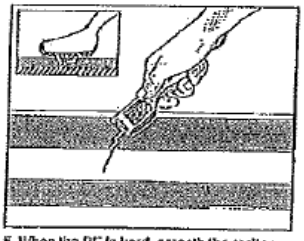

5. When the PE is hard, smooth the molten adhesive flush with the PE line coating by use of a point scraper.

THE USE OF TORCH SHALL BE AVOIDED.

HEATING CAN BE PERFORMED BY AIR HEAT GUN.

Berry Plastics warrants that the product conforms to its chemical and physical description and is appropriate for the use stated on the technical data sheet when used in compliance with Berry Plastics written instructions. Since many installation factors are beyond the control of Berry Plastics, the user shall determine the suitability of the products for the intended use and assume all risks and liabilities in connection herewith. Berry Plastics' liability is stated in its standard terms and conditions of sale. Berry Plastics makes no other warranty either expressed or implied. All information contained in this technical data sheet is based on a guide and is subject to change without notice. This technical data sheet supersedes all previous data sheets on this product.

BERRY PLASTICS CORPORATION AND SUBSIDIARIES
CORROSION PROTECTION GROUP
www.berrycpg.com

Local Distributor / Representative:

For contact details of local Distributors / Representatives Please visit www.berrycpg.com.

Headquarters: Berry Plastics Tapes & Coatings Division, Franklin MA, USA

Franklin, MA, USA
Tel: +1 508 918 1714
US Toll Free: +1 800 248 0149
Fax: +1 508 918 1910
CPG@berryplastics.com

Houston, TX, USA
Tel: +1 713 676 0035
US Toll Free: 01 888 678 7202
Fax: +1 713 676 0088
CPGH@berryplastics.com

Tijuana, Mexico
Tel USA 858 633 9787
Fax US: +858 633 9740
Tel Mexico: +52 664 647 4397
Fax Mexico: +52 664 647 4370
CPGTJ@berryplastics.com

Aarschot, Belgium
Tel: +32 16 55 36 00
Fax: +32 16 55 36 74
CPGE@berryplastics.com

Baroda, India
Tel: +91 2667 284721
Fax: +91 2667 284724
CPGIN@berryplastics.com

© Copyright Re
This document is property of Structural Group, Inc. (STRUCTURAL TECHNOLOGIES / VSL) and must not be copied, reproduced, duplicated nor disclosed totally or partially to any Third Party, nor use in any manner whatsoever without prior consent of Structural Group, Inc. (STRUCTURAL TECHNOLOGIES / VSL).

© Copyright Reserved
This document is property of Structural Group, Inc. (STRUCTURAL TECHNOLOGIES / VSL) and must not be copied, reproduced, duplicated nor disclosed totally or partially to any Third Party, nor use in any manner whatsoever without prior consent of Structural Group, Inc. (STRUCTURAL TECHNOLOGIES / VSL).

11.0 STAY ADJUSTMENT / CABLE RETENSIONING

In case de-tensioning is required, a multi-strand jack attached to a de-tensioning chair is utilized. Removal of the protection cap filler material in the DR cap (stressing anchorage) will be necessary. Negative adjustments are then performed by turning the ring-nut. The standard SSI 2000 anchorage has a maximum adjustment of 40mm or 1.57 inches. The ring nuts were installed in a position for detensioning only, however, it is important to inspect the actual field condition (i.e., ring nut position) in order to determine the allowable stay adjustment at a given time. If additional force is required, this shall be conducted by means of the AMS mono-strand jack. Additional strand tail and / or couplers may be required to be added to perform the stay adjustment.

NOTE: Performing force adjustments to the Ironton Russell stay cables is a significantly complex and potentially costly undertaking. Anchorage protection caps would need to be removed and the protective filler material removed to gain access to the strand tails. In addition, extra tail length would need to be welded onto the current tails in order to allow the jack to function. If stay adjustment is necessary, information must also be provided by the Design Engineer & substantial preplanning must take place before attempting the operation. Additional requirements such as the minimum elongation must be addressed as well.

© Copyright Reserved
This document is property of Structural Group, Inc. (STRUCTURAL TECHNOLOGIES / VSL) and must not be copied, reproduced, duplicated nor disclosed totally or partially to any Third Party, nor use in any manner whatsoever without prior consent of Structural Group, Inc. (STRUCTURAL TECHNOLOGIES / VSL).

12.0 PROTECTION CAP FILLER MATERIAL REPLACEMENT

- Remove protection cap by removing bolts secured to the anchor head. Remove injection and vent plugs and clean threaded area to prepare for plug replacement.
- Using cutting tools, remove all old filler from around cables.
- Perform necessary maintenance (i.e., cap repair or replacement, strand inspection, strand monitoring).
- Replace protection cap and seal cap.
- Inject new filler material. Refer to Anchorage Cap Filler Injection Method Statement.
- Replace plugs.

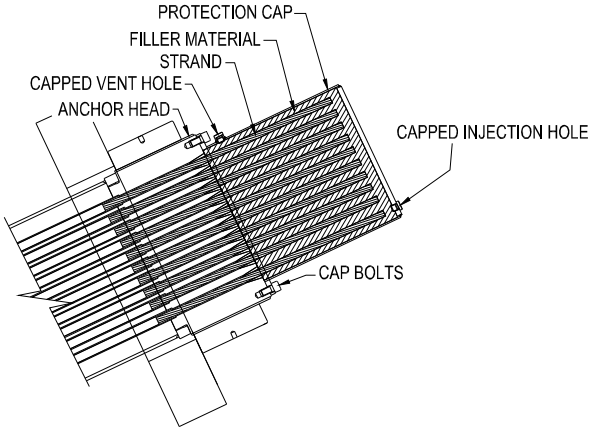

EXISTING

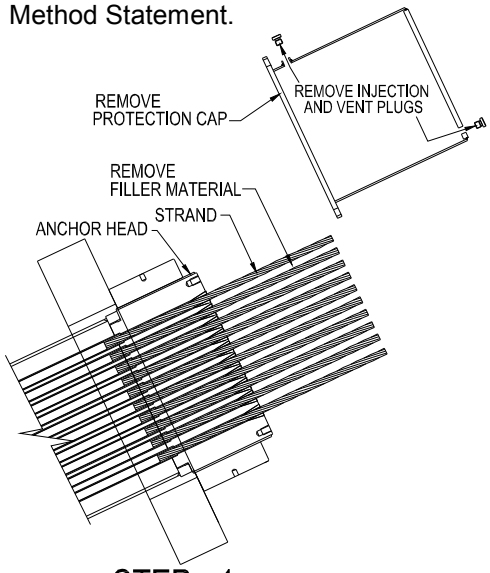

STEP - 1

- REMOVE CAP
- REMOVE FILLER MATERIAL
- REPLACE REQUIRED STRAND

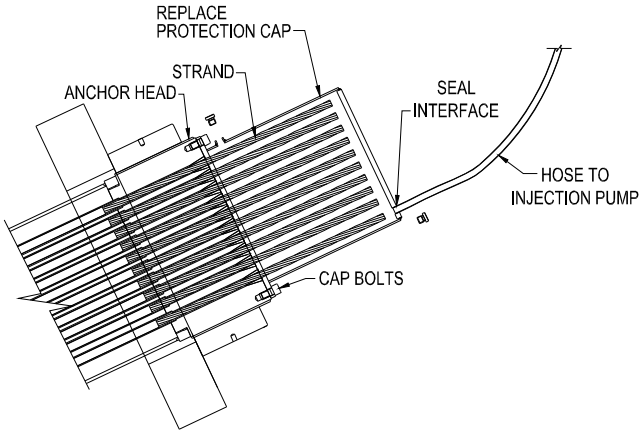

STEP - 2

- REPLACE CAP
- INJECT NEW FILLER MATERIAL
- REPLACE INJECTION AND VENT PLUGS

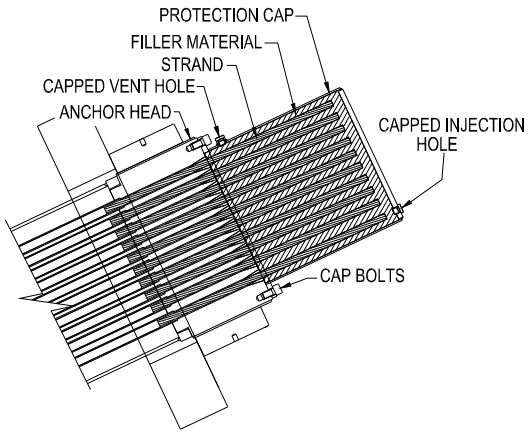

COMPLETED

© Copyright Reserved
This document is property of Structural Group, Inc. (STRUCTURAL TECHNOLOGIES / VSL) and must not be copied, reproduced, duplicated nor disclosed totally or partially to any Third Party, nor use in any manner whatsoever without prior consent of Structural Group, Inc. (STRUCTURAL TECHNOLOGIES / VSL).

13.0 CONTACTS

The following represent selected companies and personnel that were involved with the stay cables on the project:

Owner and Associated Parties:

Owner: Ohio DOT (ODOT), Dave Bame

Consultant: AECOM (Engineer of Record)

CEI: Figg Bridge, Edwin Callicutt

Contractor and Associated Parties:

Contractor: Brayman Construction Corp., Tom Hesmond (Project Manager)

Stay Cable Supplier: Structural Technologies / VSL, Eric Sommer (VP of Operations)

Construction Engineer: Finley Engineering Group, Jerry Pfunter (Principal and Regional Bridge Engineer)

14.0 REFERENCES

14.1 Contract Drawings and As-Built Drawings for structure

14.2 Structural Technologies / VSL Shop Drawings

14.3 Structural Technologies / VSL Test Results – Static and Fatigue Tests and Barrier Tests, MTE Tests

14.4 Structural Technologies / VSL Stay Installation Method Statement

14.5 Structural Technologies / VSL Friction Damper Method Statement

14.6 Structural Technologies / VSL Anchorage Cap Filler Injection Method Statement

14.7 Structural Technologies / VSL Guide Deviator Shop Drawings

14.8 VSL SSI2000 Stay Cable System Brochure

© Copyright Reserved
This document is property of Structural Group, Inc. (STRUCTURAL TECHNOLOGIES / VSL) and must not be copied, reproduced, duplicated nor disclosed totally or partially to any Third Party, nor use in any manner whatsoever without prior consent of Structural Group, Inc. (STRUCTURAL TECHNOLOGIES / VSL).

B.3 Stay Liftoff Analysis at End of Construction

LETTER OF TRANSMITTAL

BRAYMAN CONSTRUCTION CORP.
1000 John Roebling Way
Saxonburg, PA 16056
Phone: (724) 443-1533
Fax: (724) 443-8733

To: Ohio Dept. of Transportation
District 9
650 Eastern Avenue
Chillicothe, OH 45601

Project: SR-93-0.00
Ironton Russell Bridge
Lawrence County, OH
Project No. 110628

BCC # 265-000-000

Attention: Dave Bame

Date: November 3, 2016

We are sending you the following items:

☐ Under Separate Cover ☑ Attached

☐ Copy of Letter ☐ Prints ☐ Specifications ☐ Change Order

☐ Shop Drawings ☐ Plans ☐ _____

Copies	Date	Description
1	11/3/16	Stay Liftoff Analysis at End of Construction

Transmitted for the following purpose:

☑ For Approval ☐ Approved as Submitted ☐ Resubmit __ copies for approval

☐ For Your Use ☐ Approved as Noted ☐ Submit __ copies for distribution

☐ As Requested ☐ Returned for Corrections ☐ Return __ corrected prints

☐ For Review & Comment ☐ For Certification

MAIL: ○ Regular ○ Overnight ○ Certified ☑ Email **FAX:** ○

Remarks: SEE ATTACHED SHEET

Dustin Williamson

Signed: Dustin Williamson
Project Engineer

cc: File/arb
J. Troy Huff
Edwin Callicutt
Chris Capper

Ironton Russell Bridge over Ohio River

LAW-93C-0000

Stay Liftoff Analysis at End of Construction

For:

Review is only for conformance with the design concept. Review does not cover dimensions, quantities, accuracy, fit, or any assembly for which this item may be a component. Review does not authorize deviation from Contract Documents or substitution of materials. Requests for deviations from the Contract Documents will only be addressed thru the Change Order Process.

REVIEWED

CONFORMS WITH CONCEPT	( )
CONFORMS AS NOTED	(X)
RESUBMIT	( )
NO ACTION	( )
DOES NOT CONFORM	( )

URS

DATE 12/20/2016 BY Barry Chung

District 9

Please include updated check calculations for the pylon design analysis that has been included in the previous Longitudinal Construction Analysis submittals.

Submitted By:

BRAYMAN construction corporation

1000 John Roebling Way

Saxonburg, Pa 16056

November 3, 2016

FINLEY
Engineering Group, Inc.

IRONTON-RUSSELL CABLE-STAYED

Over the Ohio River, KY/OH

STAY LIFTOFF ANALYSIS AT END OF CONSTRUCTION

November 2016

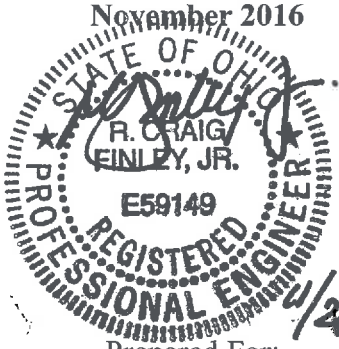

Prepared For:

BRAYMAN construction corporation

Brayman Construction Corporation

1000 John Roebling Way
Saxonburg, PA 16056

FINLEY Project No. 11.60260

1589 Metropolitan Boulevard • Tallahassee, FL 32308-3776 • (850) 894-1600 • (850) 894-1614 fax
www.finleyengineeringgroup.com

STAY LIFTOFF ANALYSIS AT END OF CONSTRUCTION

IRONTON-RUSSELL CABLE-STAYED

Over the Ohio River, KY/OH

November 2016

Table of Contents

Volume I	Description	Pages
Section 1.0:	Summary	1 – 3
Section 2.0:	Stay Liftoff Comparisons	4 – 8
Section 3.0:	Design Model Stay Adjustments	9 – 11
Section 4.0:	Liftoff Analysis Results	12 – 16
Appendix:	VSL Stay Liftoffs	17 – 138

1.0 Summary

This document contains the analysis of the Ironton-Russell bridge for Stay Force values provided by BRAYMAN on October 6th, 2016. The stay force liftoffs provided by BRAYMAN were compared to the Target values (at End of Construction) provided within the AMS Input (Dated 03282016, calculated from LCA Rev2 Supplement 04042016). Once compared, if the difference in stay force magnitudes at EOC were greater than 5%, the stays are adjusted within the latest Longitudinal Construction Model and reanalyzed for service and ultimate level conditions.

In summary, Target force differentials between 10042016 liftoffs and AMS values @ EOC are within a +/-5% DIFF for the majority of stay cables, with the maximum %DIFF of +15.5% and a minimum %DIFF of -14.9%. From the LCA model results, Service Level crack control checks and strength moment checks remain adequate.

From a memo provided on November 1st, 2016 by BRAYMAN from VSL (attached), the response from VSLI regarding possible concerns of over stressing in stay strand due to use of guide deviators is summarized as follows; Because the bedding within the guide deviator is softer than at the exit of the stay anchorage transition box, the stresses due to angular deviation at the guide deviator section are not controlling when compared to other sections. The controlling case for the strand has be verified with testing of the anchorage. In addition, there has not been any reported issues by VSL on using the guide deviators in stays for any previous VSL projects.

Ivan Liu

From: Jerry Pfuntner
Sent: Tuesday, November 1, 2016 4:15 PM
To: Ivan Liu; Craig Finley
Subject: Fwd: Deviator strand stress

Sent from my iPhone

Begin forwarded message:

> **From:** Tom Hesmond <t_hesmond@brayman.com>
> **Date:** November 1, 2016 at 4:13:40 PM EDT
> **To:** Jerry Pfuntner <jerry.pfuntner@finleyengineeringgroup.com>
> **Subject: Fwd: Deviator strand stress**
>
> See below from VSL. Let me know if that is sufficient.
>
> Thanks,
>
> Tom
>
> Begin forwarded message:
>
> > **From:** Eric Sommer <esommer@structuraltec.com>
> > **Date:** November 1, 2016 at 2:06:52 PM EDT
> > **To:** Tom Hesmond <t_hesmond@brayman.com>, Gary Saltsman <g_saltsman@brayman.com>, Michael Way <mway@structuraltec.com>
> > **Subject: Deviator strand stress**
> >
> > Tom
> > I received the information below back from VSLI regarding possible concerns over stresses in the strand due to the use of the guide deviators.
> >
> > *The bedding in the deviator is softer than at the exit of the anchorage's transition box. Hence stresses due to a given angular deviation at the deviator section are not controlling when compared to stresses due to the same angular deviation at the anchorage's exit section. The more controlling situation has been verified with the testing of the anchorage.*
> >
> > Also, they had told me over the phone yesterday that they have to date not seen any strand issues on projects where deviators have been used.
> >
> > Hopefully this information will be adequate for ODOT. I have requested a letter from VSLI for the above information, but I'm not sure when that will be received - I've expressed the urgency.

Let me know if you think this is adequate.

Thanks

Eric M. Sommer
Structural Technologies / VSL
817-657-5653 cell

Sent from my iPhone

The information contained in this transmission and any attachments are for the sole use of the intended recipient(s) and may be confidential, privileged, copyrighted or may constitute intellectual property. Any unauthorized review, use, disclosure or distribution of this transmission and any attachments is strictly prohibited. If you have received this transmission in error, please contact the sender and destroy all paper and/or electronic copies of this transmission.

Confidentiality Message for Email: PRIVILEGE AND CONFIDENTIALITY NOTICE: This electronic material and the information contained in it is intended only for the use of the individual or entity to which it is addressed and may contain information that is privileged, confidential and exempt from disclosure. If the reader of this message is not the intended recipient or an employee or agent responsible for delivering the message to the intended recipient, you are hereby notified that any dissemination, distribution or copying of this communication is strictly prohibited. If you have received this communication in error, please notify Brayman Construction Corporation immediately at 724.443.1533 or notify the sender immediately by replying to this message.

2.0 Stay Liftoff Comparisons

This section provides a comparison chart of stay forces and %DIFF between target values from the AMS Input (Dated 03282016, calculated from LCA Rev2 Supplement 04042016) and BRAYMAN provided liftoff values (10062016).

Project: Ironton-Russell
Project No.: 11.60260
Subject: Stay Final Restress Data
Revision No. 1

FINLEY Engineering Group

Designed By: IL
Date: 10/31/16
Checked By:

Cable	Number of Strands	Liftoff (10/04/16)		Target @ EOC Rev3		EOC Contract Plans		Difference vs. Rev3		Difference vs. CP		At 10,000 Days Rev3		Adjusted 10,000 Days		Max Stay Force	
		Force (kips)	% GUTS	Force (kips)	% GUTS	Force (kips)	% GUTS	Force (kips)	% Diff of EOC R3	Force (kips)	% Diff of EOC CP	Force (kips)	% GUTS	Force (kips)	% GUTS	Force (kips)	% GUTS
B15L	33	557.7	27.0%	610	29.5%	620	30.0%	-52	-8.6%	-62	-10.0%	579	28.0%	527	25.5%	558	27.0%
B14L	28	512.6	29.2%	506	28.8%	522	29.7%	7	1.3%	-9	-1.7%	485	27.7%	492	28.0%	513	29.2%
B13L	21	440.3	33.5%	425	32.3%	411	31.3%	15	3.6%	29	7.0%	413	31.4%	428	32.6%	440	33.5%
B12L	21	442.3	33.6%	439	33.4%	402	30.6%	3	0.8%	40	10.0%	440	33.4%	443	33.7%	443	33.7%
B11L	21	481.4	36.6%	465	35.3%	399	30.3%	16	3.5%	83	20.8%	477	36.3%	493	37.5%	493	37.5%
B10L	21	422.0	32.1%	430	32.7%	383	29.1%	-8	-1.9%	39	10.2%	448	34.1%	440	33.4%	440	33.4%
B9L	19	410.3	34.5%	419	35.2%	372	31.2%	-9	-2.1%	39	10.4%	436	36.6%	427	35.9%	427	35.9%
B8L	18	325.6	28.9%	369	32.7%	361	32.0%	-43	-11.8%	-36	-9.8%	382	33.9%	339	30.0%	339	30.0%
B7L	17	282.4	26.5%	318	29.9%	272	25.6%	-36	-11.2%	10	3.7%	328	30.8%	292	27.5%	292	27.5%
B6L	17	304.0	28.5%	322	30.2%	271	25.4%	-18	-5.6%	34	12.4%	328	30.8%	310	29.1%	310	29.1%
B5L	17	330.2	31.0%	344	32.3%	264	24.8%	-14	-4.0%	66	25.0%	346	32.5%	332	31.2%	332	31.2%
B4L	17	299.5	28.1%	320	30.1%	256	24.0%	-21	-6.4%	44	17.2%	318	29.9%	298	27.9%	300	28.1%
B3L	16	281.0	28.0%	264	26.3%	229	22.8%	17	6.4%	53	23.0%	260	25.9%	277	27.6%	281	28.0%
B2L	15	250.6	26.7%	236	25.1%	204	21.7%	15	6.2%	46	22.7%	227	24.2%	242	25.7%	251	26.7%
B1L	14	191.9	21.9%	187	21.3%	182	20.7%	5	2.6%	10	5.7%	173	19.7%	178	20.3%	192	21.9%
M1L	14	176.6	20.1%	170	19.4%	181	20.7%	7	3.9%	-5	-2.6%	158	18.0%	165	18.8%	177	20.1%
M2L	15	289.4	30.8%	276	29.4%	208	22.2%	13	4.9%	81	39.0%	275	29.3%	288	30.7%	289	30.8%
M3L	17	253.5	23.8%	236	22.2%	229	21.5%	18	7.4%	25	10.8%	240	22.5%	258	24.2%	258	24.2%
M4L	17	258.2	24.2%	267	25.1%	263	24.7%	-9	-3.3%	-4	-1.6%	271	25.4%	262	24.6%	262	24.6%
M5L	18	265.8	23.6%	276	24.5%	282	25.0%	-10	-3.7%	-16	-5.7%	278	24.7%	268	23.8%	268	23.8%
M6L	19	308.3	25.9%	309	26.0%	294	24.7%	-1	-0.2%	15	4.9%	309	26.0%	308	25.9%	308	25.9%
M7L	20	368.9	29.4%	375	29.9%	314	25.1%	-6	-1.6%	55	17.5%	373	29.8%	367	29.3%	369	29.4%
M8L	22	369.1	26.8%	391	28.4%	330	24.0%	-22	-5.6%	39	11.7%	388	28.2%	366	26.6%	369	26.8%
M9L	22	383.0	27.8%	408	29.6%	354	25.7%	-25	-6.1%	29	8.2%	407	29.5%	382	27.7%	383	27.8%
M10L	23	395.5	27.5%	414	28.7%	380	26.4%	-19	-4.5%	16	4.2%	415	28.8%	397	27.5%	397	27.5%
M11L	24	515.9	34.3%	474	31.5%	412	27.4%	42	8.8%	104	25.1%	478	31.8%	520	34.6%	520	34.6%
M12L	25	431.6	27.6%	452	28.9%	435	27.8%	-20	-4.5%	-4	-0.8%	457	29.2%	437	27.9%	437	27.9%
M13L	26	471.8	29.0%	478	29.3%	446	27.4%	-6	-1.3%	26	5.8%	483	29.7%	477	29.3%	477	29.3%
M14L	29	514.9	28.3%	532	29.3%	492	27.1%	-17	-3.2%	23	4.6%	536	29.5%	519	28.6%	519	28.6%
M15L	29	563.8	31.0%	531	29.2%	508	27.9%	33	6.2%	56	11.1%	531	29.2%	564	31.0%	564	31.0%
							Min Diff =	-52	-11.8%	-62	-10.0%				Max =	B11L	37.5%
							Max Diff =	42	8.8%	104	39.0%						

Project: Ironton-Russell
Project No.: 11.60260
Subject: Stay Final Restress Data
Revision No. 1

FINLEY Engineering Group

Designed By: IL
Date: 10/31/16
Checked By:

Cable	Number of Strands	Liftoff (10/04/16)		Target @ EOC Rev3		EOC Contract Plans		Difference vs. Rev3		Difference vs. CP		At 10,000 Days Rev3		Adjusted 10,000 Days		Max Stay Force	
		Force (kips)	% GUTS	Force (kips)	% GUTS	Force (kips)	% GUTS	Force (kips)	% Diff of EOC R3	Force (kips)	% Diff of EOC CP	Force (kips)	% GUTS	Force (kips)	% GUTS	Force (kips)	% GUTS
B15R	33	578.8	28.0%	610	29.5%	620	30.0%	-31	-5.1%	-41	-6.6%	579	28.0%	548	26.5%	579	28.0%
B14R	28	505.7	28.8%	506	28.8%	522	29.7%	0	-0.1%	-16	-3.0%	485	27.7%	485	27.6%	506	28.8%
B13R	21	438.3	33.3%	425	32.3%	411	31.3%	13	3.1%	27	6.5%	413	31.4%	426	32.4%	438	33.3%
B12R	21	446.8	34.0%	439	33.4%	402	30.6%	8	1.8%	45	11.1%	440	33.4%	448	34.0%	448	34.0%
B11R	21	467.2	35.5%	465	35.3%	399	30.3%	2	0.5%	69	17.2%	477	36.3%	479	36.4%	479	36.4%
B10R	21	432.8	32.9%	430	32.7%	383	29.1%	3	0.7%	50	13.1%	448	34.1%	451	34.3%	451	34.3%
B9R	19	430.6	36.2%	419	35.2%	372	31.2%	12	2.8%	59	15.9%	436	36.6%	448	37.6%	448	37.6%
B8R	18	332.7	29.5%	369	32.7%	361	32.0%	-36	-9.8%	-28	-7.9%	382	33.9%	346	30.7%	346	30.7%
B7R	17	296.4	27.8%	318	29.9%	272	25.6%	-22	-6.8%	24	8.8%	328	30.8%	306	28.8%	306	28.8%
B6R	17	282.2	26.5%	322	30.2%	271	25.4%	-40	-12.4%	12	4.3%	328	30.8%	288	27.1%	288	27.1%
B5R	17	325.5	30.6%	344	32.3%	264	24.8%	-19	-5.4%	61	23.2%	346	32.5%	328	30.8%	328	30.8%
B4R	17	302.8	28.4%	320	30.1%	256	24.0%	-17	-5.4%	47	18.5%	318	29.9%	301	28.2%	303	28.4%
B3R	16	282.7	28.2%	264	26.3%	229	22.8%	19	7.1%	54	23.7%	260	25.9%	279	27.8%	283	28.2%
B2R	15	236.8	25.2%	236	25.1%	204	21.7%	1	0.3%	33	16.0%	227	24.2%	228	24.2%	237	25.2%
B1R	14	201.7	23.0%	187	21.3%	182	20.7%	15	7.9%	20	11.1%	173	19.7%	188	21.4%	202	23.0%
M1R	14	196.4	22.4%	170	19.4%	181	20.7%	26	15.5%	15	8.3%	158	18.0%	184	21.0%	196	22.4%
M2R	15	287.5	30.6%	276	29.4%	208	22.2%	12	4.2%	79	38.1%	275	29.3%	287	30.5%	288	30.6%
M3R	17	240.5	22.6%	236	22.2%	229	21.5%	5	1.9%	12	5.1%	240	22.5%	245	23.0%	245	23.0%
M4R	17	262.9	24.7%	267	25.1%	263	24.7%	-4	-1.5%	0	0.2%	271	25.4%	267	25.1%	267	25.1%
M5R	18	268.9	23.8%	276	24.5%	282	25.0%	-7	-2.6%	-13	-4.6%	278	24.7%	271	24.0%	271	24.0%
M6R	19	316.9	26.6%	309	26.0%	294	24.7%	8	2.6%	23	7.9%	309	26.0%	317	26.6%	317	26.6%
M7R	20	373.8	29.8%	375	29.9%	314	25.1%	-1	-0.3%	60	19.0%	373	29.8%	372	29.7%	374	29.8%
M8R	22	377.7	27.4%	391	28.4%	330	24.0%	-13	-3.4%	47	14.4%	388	28.2%	375	27.2%	378	27.4%
M9R	22	383.5	27.8%	408	29.6%	354	25.7%	-25	-6.0%	30	8.3%	407	29.5%	383	27.8%	384	27.8%
M10R	23	402.4	27.9%	414	28.7%	380	26.4%	-12	-2.8%	23	6.0%	415	28.8%	403	28.0%	403	28.0%
M11R	24	486.6	32.4%	474	31.5%	412	27.4%	13	2.7%	74	18.0%	478	31.8%	491	32.6%	491	32.6%
M12R	25	435.1	27.8%	452	28.9%	435	27.8%	-17	-3.7%	0	0.0%	457	29.2%	440	28.1%	440	28.1%
M13R	26	508.8	31.2%	478	29.3%	446	27.4%	31	6.4%	63	14.1%	483	29.7%	514	31.5%	514	31.5%
M14R	29	537.1	29.6%	532	29.3%	492	27.1%	5	1.0%	45	9.1%	536	29.5%	541	29.8%	541	29.8%
M15R	29	561.9	30.9%	531	29.2%	508	27.9%	31	5.8%	54	10.7%	531	29.2%	562	30.9%	562	30.9%
							Min Diff =	-40	-12.4%	-41	-7.9%				Max =	B9R	37.6%
							Max Diff =	31	15.5%	79	38.1%						

Project: Ironton-Russell
Project No.: 11.60260
Subject: Stay Final Restress Data
Revision No. 1

FINLEY Engineering Group

Designed By: IL
Date: 10/31/16
Checked By:

Cable	Number of Strands	Liftoff (10/04/16)		Target @ EOC Rev3		EOC Contract Plans		Difference vs. Rev3		Difference vs. CP		At 10,000 Days Rev3		Adjusted 10,000 Days		Max Stay Force	
		Force (kips)	% GUTS	Force (kips)	% GUTS	Force (kips)	% GUTS	Force (kips)	% Diff of EOC R3	Force (kips)	% Diff of EOC CP	Force (kips)	% GUTS	Force (kips)	% GUTS	Force (kips)	% GUTS
M30L	29	544.1	30.0%	499	27.5%	492	27.1%	45	9.0%	52	10.5%	483	26.6%	528	29.1%	544	30.0%
M29L	29	606.0	33.4%	601	33.1%	482	26.5%	5	0.8%	124	25.7%	591	32.5%	596	32.8%	606	33.4%
M28L	26	495.7	30.4%	538	33.0%	441	27.1%	-42	-7.9%	54	12.3%	533	32.7%	491	30.1%	496	30.4%
M27L	25	466.6	29.8%	468	29.9%	434	27.7%	-1	-0.3%	33	7.6%	467	29.8%	466	29.7%	467	29.8%
M26L	24	419.5	27.9%	454	30.2%	413	27.5%	-35	-7.6%	7	1.6%	455	30.3%	421	28.0%	421	28.0%
M25L	23	374.1	26.0%	412	28.6%	381	26.4%	-38	-9.2%	-7	-1.8%	415	28.8%	377	26.2%	377	26.2%
M24L	22	352.4	25.6%	380	27.6%	355	25.8%	-28	-7.3%	-3	-0.8%	384	27.9%	356	25.9%	356	25.9%
M23L	22	354.8	25.7%	353	25.6%	331	24.0%	2	0.5%	24	7.2%	358	26.0%	360	26.1%	360	26.1%
M22L	20	338.7	27.0%	339	27.1%	314	25.1%	0	-0.1%	24	7.7%	344	27.5%	344	27.4%	344	27.4%
M21L	19	315.1	26.5%	323	27.1%	294	24.7%	-8	-2.4%	21	7.2%	326	27.4%	318	26.7%	318	26.7%
M20L	18	280.5	24.9%	310	27.5%	282	25.0%	-30	-9.5%	-1	-0.4%	310	27.5%	281	24.9%	281	24.9%
M19L	17	306.5	28.8%	293	27.5%	261	24.5%	14	4.6%	46	17.4%	292	27.4%	306	28.7%	307	28.8%
M18L	17	222.7	20.9%	255	23.9%	226	21.2%	-32	-12.7%	-3	-1.3%	252	23.7%	220	20.6%	223	20.9%
M17L	15	267.1	28.4%	247	26.3%	207	22.0%	20	8.1%	60	29.0%	242	25.8%	262	27.9%	267	28.4%
M16L	14	196.8	22.4%	190	21.7%	185	21.1%	7	3.6%	12	6.3%	176	20.1%	183	20.8%	197	22.4%
B16L	14	154.1	17.6%	160	18.2%	184	21.0%	-6	-3.7%	-30	-16.3%	141	16.1%	135	15.4%	154	17.6%
B17L	15	237.9	25.3%	230	24.5%	207	22.0%	8	3.4%	31	15.0%	219	23.3%	227	24.1%	238	25.3%
B18L	16	311.6	31.1%	320	31.9%	230	23.0%	-8	-2.6%	81	35.4%	313	31.2%	305	30.4%	312	31.1%
B19L	17	303.1	28.5%	310	29.1%	256	24.0%	-7	-2.2%	47	18.4%	307	28.8%	300	28.2%	303	28.5%
B20L	17	310.7	29.2%	324	30.4%	264	24.8%	-13	-4.1%	47	17.6%	327	30.7%	314	29.5%	314	29.5%
B21L	17	301.9	28.4%	312	29.3%	271	25.4%	-10	-3.2%	31	11.6%	319	30.0%	309	29.0%	309	29.0%
B22L	17	300.0	28.2%	316	29.7%	272	25.5%	-16	-5.1%	28	10.4%	325	30.5%	309	29.0%	309	29.0%
B23L	18	371.8	33.0%	370	32.8%	360	31.9%	2	0.5%	12	3.4%	382	33.9%	384	34.0%	384	34.0%
B24L	19	447.1	37.6%	400	33.6%	368	30.9%	47	11.8%	79	21.4%	414	34.8%	461	38.7%	461	38.7%
B25L	21	426.2	32.4%	420	31.9%	375	28.5%	6	1.5%	51	13.6%	433	32.9%	439	33.4%	439	33.4%
B26L	21	443.7	33.7%	421	32.0%	398	30.2%	23	5.4%	46	11.5%	428	32.5%	451	34.3%	451	34.3%
B27L	21	434.2	33.0%	426	32.4%	400	30.4%	8	1.9%	34	8.6%	424	32.2%	432	32.9%	434	33.0%
B28L	21	446.3	33.9%	461	35.0%	415	31.5%	-15	-3.2%	31	7.6%	450	34.2%	435	33.1%	446	33.9%
B29L	28	534.9	30.5%	564	32.2%	527	30.0%	-29	-5.2%	8	1.6%	545	31.1%	516	29.4%	535	30.5%
B30L	33	606.4	29.3%	686	33.2%	625	30.2%	-80	-11.6%	-19	-3.0%	658	31.8%	578	28.0%	606	29.3%
							Min Diff =	-80	-12.7%	-30	-16.3%				Max =	B24L	38.7%
							Max Diff =	47	11.8%	124	35.4%						

Project: Ironton-Russell
Project No.: 11.60260
Subject: Stay Final Restress Data
Revision No. 1

FINLEY Engineering Group

Designed By: IL
Date: 10/31/16
Checked By:

Cable	Number of Strands	Liftoff (10/04/16)		Target @ EOC Rev3		EOC Contract Plans		Difference vs. Rev3		Difference vs. CP		At 10,000 Days Rev3		Adjusted 10,000 Days		Max Stay Force	
		Force (kips)	% GUTS	Force (kips)	% GUTS	Force (kips)	% GUTS	Force (kips)	% Diff of EOC R3	Force (kips)	% Diff of EOC CP	Force (kips)	% GUTS	Force (kips)	% GUTS	Force (kips)	% GUTS
M30R	29	558.5	30.7%	499	27.5%	492	27.1%	60	11.9%	66	13.4%	483	26.6%	543	29.9%	559	30.7%
M29R	29	622.4	34.3%	601	33.1%	482	26.5%	21	3.6%	140	29.1%	591	32.5%	612	33.7%	622	34.3%
M28R	26	507.9	31.2%	538	33.0%	441	27.1%	-30	-5.6%	67	15.1%	533	32.7%	503	30.9%	508	31.2%
M27R	25	460.9	29.4%	468	29.9%	434	27.7%	-7	-1.5%	27	6.3%	467	29.8%	460	29.4%	461	29.4%
M26R	24	428.6	28.5%	454	30.2%	413	27.5%	-25	-5.6%	16	3.8%	455	30.3%	430	28.6%	430	28.6%
M25R	23	381.9	26.5%	412	28.6%	381	26.4%	-30	-7.3%	1	0.2%	415	28.8%	385	26.7%	385	26.7%
M24R	22	356.4	25.9%	380	27.6%	355	25.8%	-24	-6.2%	1	0.4%	384	27.9%	360	26.2%	360	26.2%
M23R	22	346.9	25.2%	353	25.6%	331	24.0%	-6	-1.7%	16	4.8%	358	26.0%	352	25.5%	352	25.5%
M22R	20	328.6	26.2%	339	27.1%	314	25.1%	-10	-3.1%	14	4.5%	344	27.5%	334	26.6%	334	26.6%
M21R	19	310.9	26.1%	323	27.1%	294	24.7%	-12	-3.7%	17	5.8%	326	27.4%	314	26.4%	314	26.4%
M20R	18	263.9	23.4%	310	27.5%	282	25.0%	-46	-14.9%	-18	-6.3%	310	27.5%	264	23.4%	264	23.4%
M19R	17	302.9	28.4%	293	27.5%	261	24.5%	10	3.4%	42	16.1%	292	27.4%	302	28.4%	303	28.4%
M18R	17	227.1	21.3%	255	23.9%	226	21.2%	-28	-10.9%	1	0.6%	252	23.7%	224	21.0%	227	21.3%
M17R	15	279.4	29.7%	247	26.3%	207	22.0%	32	13.1%	72	35.0%	242	25.8%	274	29.2%	279	29.7%
M16R	14	189.8	21.6%	190	21.7%	185	21.1%	0	-0.1%	5	2.5%	176	20.1%	176	20.0%	190	21.6%
B16R	14	165.3	18.8%	160	18.2%	184	21.0%	5	3.3%	-19	-10.2%	141	16.1%	146	16.7%	165	18.8%
B17R	15	248.6	26.5%	230	24.5%	207	22.0%	19	8.1%	42	20.2%	219	23.3%	238	25.3%	249	26.5%
B18R	16	305.4	30.5%	320	31.9%	230	23.0%	-15	-4.6%	75	32.7%	313	31.2%	298	29.8%	305	30.5%
B19R	17	305.1	28.7%	310	29.1%	256	24.0%	-5	-1.6%	49	19.2%	307	28.8%	302	28.4%	305	28.7%
B20R	17	318.1	29.9%	324	30.4%	264	24.8%	-6	-1.8%	54	20.4%	327	30.7%	321	30.2%	321	30.2%
B21R	17	301.2	28.3%	312	29.3%	271	25.4%	-11	-3.5%	31	11.3%	319	30.0%	308	28.9%	308	28.9%
B22R	17	307.4	28.9%	316	29.7%	272	25.5%	-9	-2.7%	36	13.1%	325	30.5%	316	29.7%	316	29.7%
B23R	18	372.6	33.0%	370	32.8%	360	31.9%	3	0.7%	13	3.6%	382	33.9%	385	34.1%	385	34.1%
B24R	19	445.9	37.5%	400	33.6%	368	30.9%	46	11.5%	78	21.1%	414	34.8%	460	38.6%	460	38.6%
B25R	21	424.4	32.3%	420	31.9%	375	28.5%	4	1.0%	49	13.1%	433	32.9%	437	33.3%	437	33.3%
B26R	21	454.6	34.6%	421	32.0%	398	30.2%	34	8.0%	57	14.2%	428	32.5%	462	35.1%	462	35.1%
B27R	21	448.9	34.1%	426	32.4%	400	30.4%	23	5.4%	49	12.2%	424	32.2%	447	34.0%	449	34.1%
B28R	21	453.7	34.5%	461	35.0%	415	31.5%	-7	-1.6%	39	9.4%	450	34.2%	443	33.7%	454	34.5%
B29R	28	525.1	29.9%	564	32.2%	527	30.0%	-39	-6.9%	-1	-0.3%	545	31.1%	506	28.9%	525	29.9%
B30R	33	611.6	29.6%	686	33.2%	625	30.2%	-74	-10.8%	-14	-2.2%	658	31.8%	584	28.2%	612	29.6%
							Min Diff =	-74	-14.9%	-19	-10.2%				Max =	B24R	38.6%
							Max Diff =	60	13.1%	140	35.0%						

3.0 Design Model Stay Adjustments

Stay force adjustments made within the LCA model for the liftoff analysis were generated by using the Difference in force between the 100316 Liftoff values provided and the AMS Target EOC values (03282016). These force differentials are then added as an additional load case within the LCA model and applied just prior to closure within the model staging.

In the design model, the magnitude of stressing force input for the load case does not result in the same magnitude of force applied in the stay cable element when calculated. The cable element has a lower force value after the load case is calculated. This means that if a specific stay force value is required, the "reduction" factor must be determined based on the stiffness of the structure and the input force is increased by said "reduction" factor.

For example, in Stay Cable Element B8 (#2081):

- Load Case "CB_B8-0" has an input value of 255 kips (force applied to cable element).
- Resulting force in cable element after calculation of "CB_B8-0" is 189 kips.
- Reduction Factor = 0.741 (189/255)
- Force differential for B8 = 40 kips (see Section 2.0 tables, averaged Left and Right Stays)
- Create load case "CB_B8-4" which will applied the differential to the cable element, calculated load case prior to closure.
- Input value of "CB_B8-4" = 40 kips / 0.741 = 54 kips.
- Cable element force is now adjusted for 40 kips after model recalculation.

The following table provides force differential, reduction factors, and adjustment LC inputs for the stay cables that contain a %DIFF > +/-4%.

Project: Ironton-Russell
Project No.: 11.60260
Subject: Stay Final Restress Data
Revision No. 1

FINLEY Engineering Group

Designed By: IL
Date: 10/31/16
Checked By:

Stay Force Tolerance			4.00%	Adjustment Load Case Input			
Cable	Element	Load Case	Differential Force (kips)	Input Force (kips)	Resulting Force (kips)	Reduction Factor	Adjusted LC Input (kips)
B15R	2151	CB_B15-0	-42	429	660	0.649	-64
B14R	2141		0				
B13R	2131		0				
B12R	2121		0				
B11R	2111		0				
B10R	2101		0				
B9R	2091		0				
B8R	2081	CB_B8-0	-40	189	255	0.741	-54
B7R	2071	CB_B7-0	-29	132	185	0.716	-40
B6R	2061	CB_B6-0	-29	122	170	0.715	-40
B5R	2051	CB_B5-0	-16	138	185	0.744	-22
B4R	2041	CB_B4-0	-19	121	162	0.745	-25
B3R	2031	CB_B3-0	18	137	180	0.759	24
B2R	2021	CB_B2-0	8	155	186	0.832	9
B1R	2011	CB_B1-0	10	149	165	0.902	11
M1R	3011	CB_M1-1	17	97	129	0.751	22
M2R	3021	CB_M2-1	12	110	226	0.487	26
M3R	3031	CB_M3-1	11	80	192	0.419	26
M4R	3041		0				
M5R	3051		0				
M6R	3061		0				
M7R	3071		0				
M8R	3081	CB_M8-1	-18	149	299	0.498	-35
M9R	3091	CB_M9-1	-25	151	287	0.526	-47
M10R	3101	CB_M10-1	-15	176	331	0.531	-28
M11R	3111	CB_M11-1	27	205	381	0.538	51
M12R	3121	CB_M12-1	-19	182	335	0.544	-34
M13R	3131	CB_M13-1	12	197	359	0.550	22
M14R	3141		0				
M15R	3151	CB_M15-1	32	96	173	0.554	57

Project: Ironton-Russell
Project No.: 11.60260
Subject: Stay Final Restress Data
Revision No. 1

FINLEY Engineering Group

Designed By: IL
Date: 10/31/16
Checked By:

Stay Force Tolerance			4.00%	Adjustment Load Case Input			
Cable	Element	Load Case	Differential Force (kips)	Input Force (kips)	Resulting Force (kips)	Reduction Factor	Adjusted LC Input (kips)
M30R	3301	CB_M30-1	52	155	280	0.555	94
M29R	3291		0				
M28R	3281	CB_M28-1	-36	236	430	0.550	-66
M27R	3271		0				
M26R	3261	CB_M26-1	-30	215	400	0.538	-56
M25R	3251	CB_M25-1	-34	199	375	0.531	-64
M24R	3241	CB_M24-1	-26	184	350	0.525	-49
M23R	3231		0				
M22R	3221		0				
M21R	3211		0				
M20R	3201	CB_M20-1	-38	121	196	0.615	-61
M19R	3191	CB_M19-1	12	125	257	0.488	24
M18R	3181	CB_M18-1	-30	119	285	0.419	-72
M17R	3171	CB_M17-1	26	170	346	0.491	53
M16R	3161		0				
B16R	2161		0				
B17R	2171	CB_B17-0	13	194	228	0.849	16
B18R	2181	CB_B18-0	-12	178	218	0.818	-14
B19R	2191		0				
B20R	2201	CB_B20-0	-10	139	186	0.745	-13
B21R	2211		0				
B22R	2221	CB_B22-0	-12	132	185	0.711	-17
B23R	2231		0				
B24R	2241	CB_B24-0	47	146	171	0.853	54
B25R	2251		0				
B26R	2261	CB_B26-0	28	116	143	0.809	35
B27R	2271	CB_B27-0	16	307	436	0.704	22
B28R	2281		0				
B29R	2291	CB_B29-0	-34	374	564	0.663	-51
B30R	2301	CB_B30-0	-77	434	660	0.658	-117

4.0 Liftoff Analysis Results

This section provides Service Level crack control and strength moment checks similar from the Longitudinal Construction Analysis. All Service Level checks are within allowable limitations.

Envelope of Bending Moment in Service

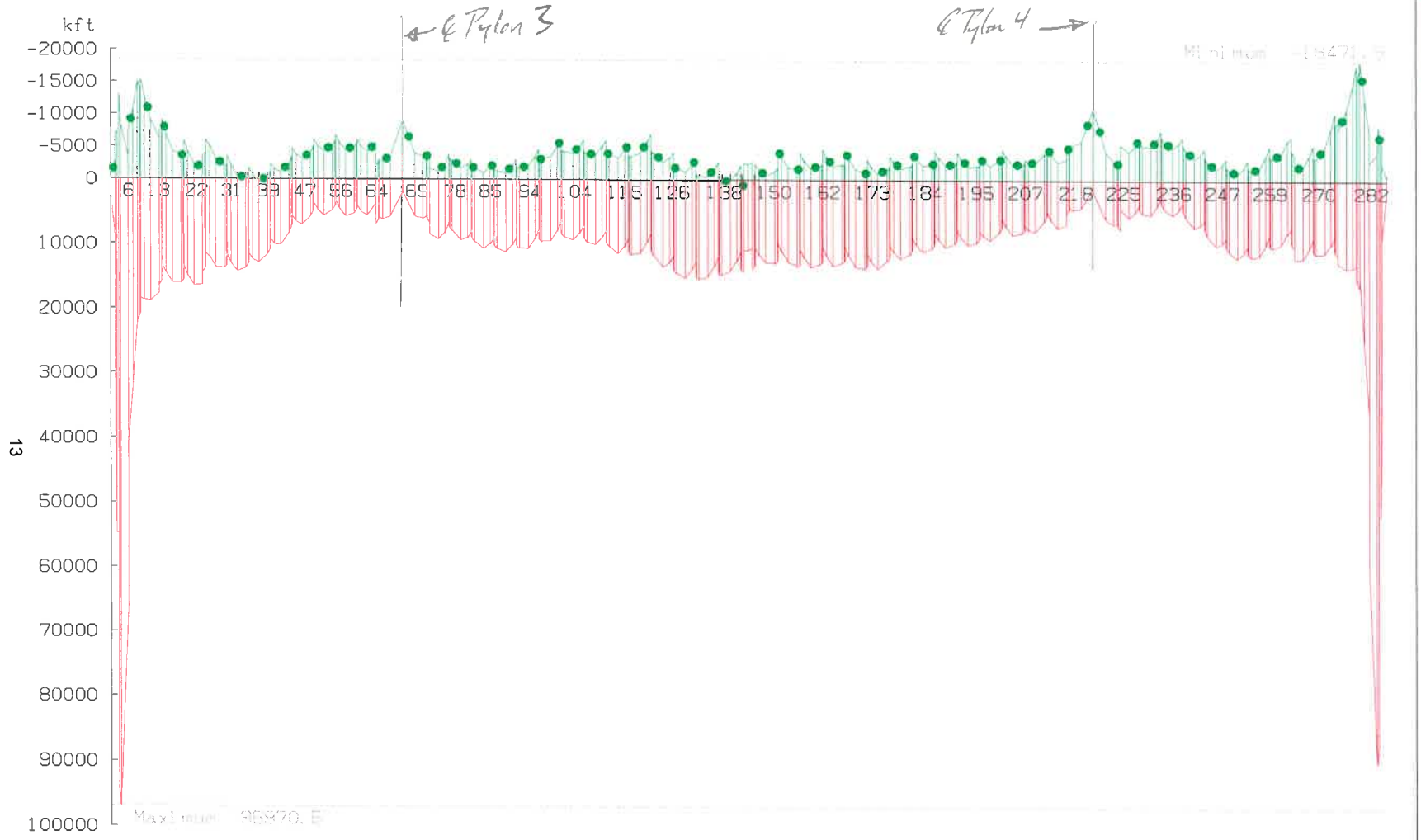

SVCI.sup
MaxMz: Mz
total: local: normal
(967 , 96970)

SVCI.sup
MinMz: Mz
total: local: normal
(-18471 , 1015)

11/2/16

13

RM Bridge Advanced V8i
08.11.28.02

Author: Finley Engineering Group

Project: Ironton-Russel REV3 Reseq
11.60260

RmSet: 03DeckMomEnv

Dgm-03DeckMomEnv

1 cm Plot = 9143.9 kft

0 9143.9 18287.8 27431.7 36575.6 45719.5

31/10/2016
14:00

Envelope of SVCIII Combination Stresses

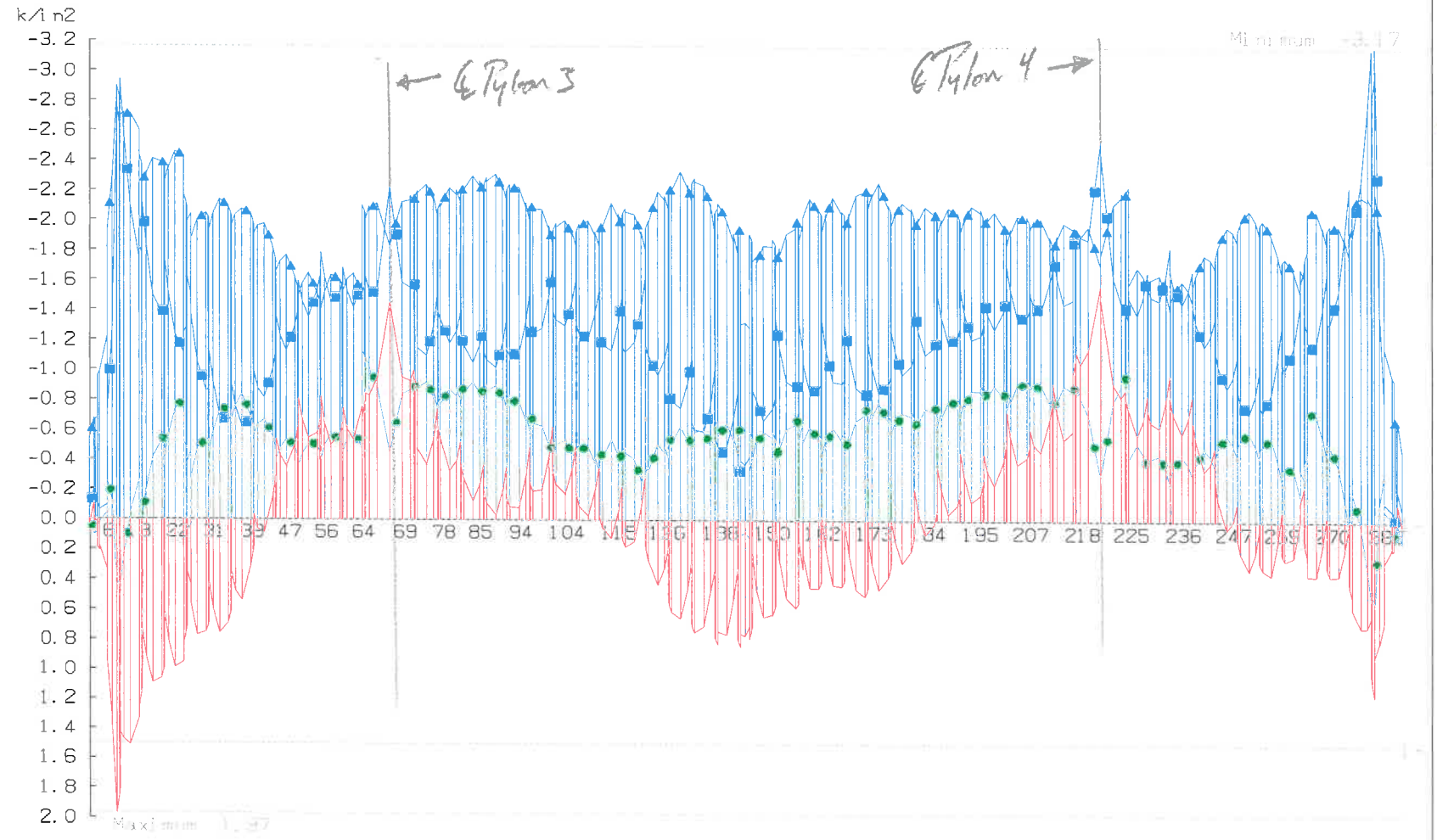

SVCIII.sup
Max
Stress:FiB
(-1.6 , 2.0)

SVCIII.sup
Max
Stress:FiT
(-1.1 , 0.6)

SVCIII.sup
Min
Stress:FiB
(-3.2 , 0.0)

SVCIII.sup
Min
Stress:FiT
(-2.9 , -0.5)

11/2/16

14

RM Bridge Advanced V8i
08.11.28.02

Author: Finley Engineering Group

Project: Ironton-Russel REV3 Reseq
11.60260

RmSet: 03DeckSvcIIIEnv

Dgm-03DeckSvcIIIEnv

1 cm Plot = 0.407 k/in2

0 0.407 0.814 1.221 1.628 2.035

31/10/2016
16:34

Envelope of Stresses in Service

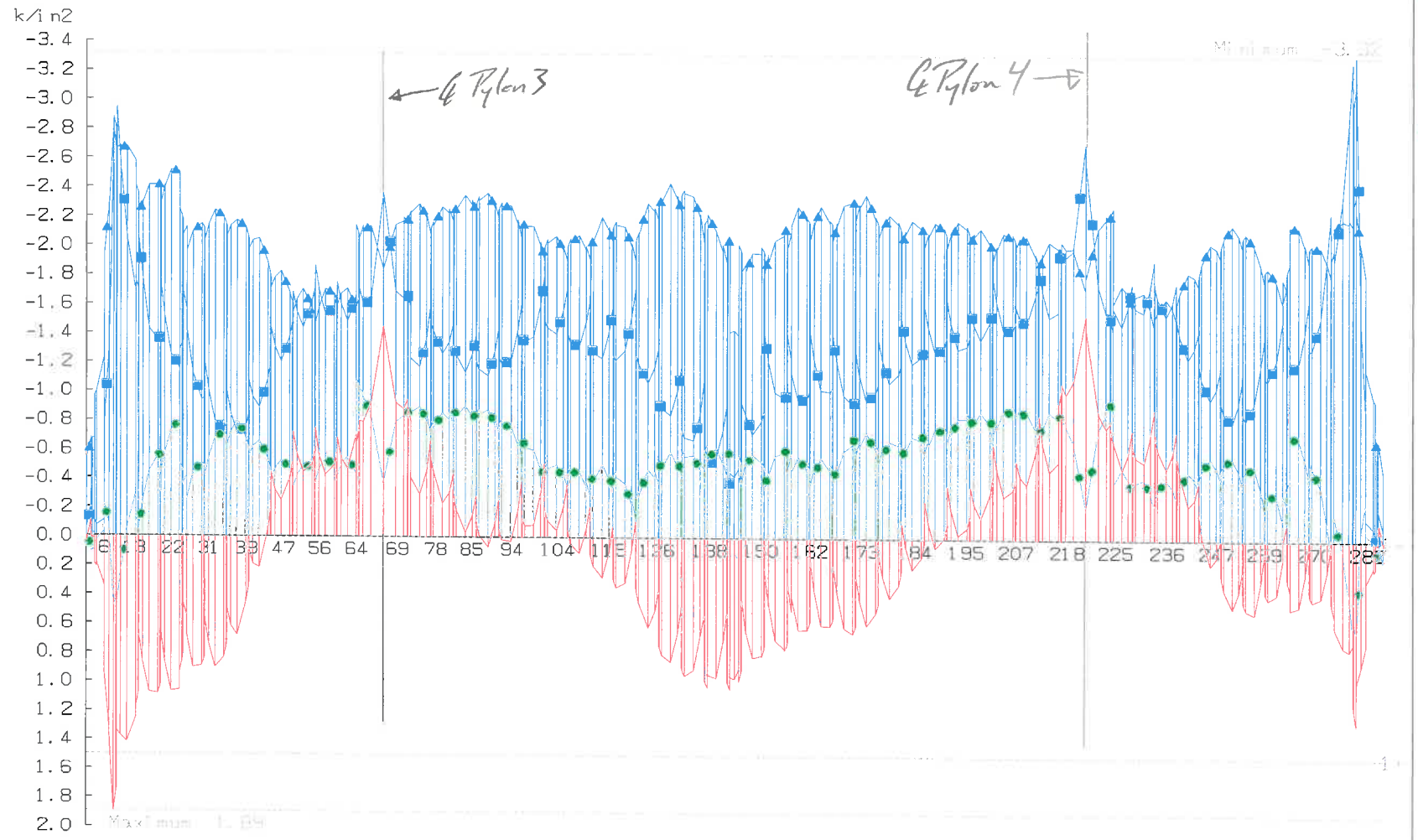

SVCI.sup
Max
Stress: FiB
(-1.5 , 1.9)

SVCI.sup
Max
Stress: FiT
(-1.1 , 0.7)

SVCI.sup
Min
Stress: FiB
(-3.3 , 0.0)

SVCI.sup
Min
Stress: FiT
(-2.9 , -0.5)

4/2/16

15

RM Bridge Advanced V8i
08.11.28.02

Author: Finley Engineering Group

Project: Ironton-Russel REV3 Reseq
11.60260

RmSet: 03DeckStrEnv

Dgm-03DeckStrEnv

1 cm Plot = 0.413 k/in2

0 0.413 0.827 1.240 1.653 2.066

31/10/2016
14:01

Project: Ironton-Russell
Project No.: 11.60260
Subject: Crack Control Calculations In Service

FINLEY Engineering Group, Inc.

Designed By: IL
Date: 10/31/16
Checked By: MJ

Maximum Positive Moment (per Edge Girder)								
Section*	Axial Force (kips)	Moment (kip-ft)	Bottom Fiber Stress (ksi)	Max Rebar Stress (ksi)	Depth to neutral axis (in)	Required Rebar Spacing (in)	Number of bars in extreme tension	Theoretical Projected Crack Width (in)
S-S:BP	-5658	10981	2.377	23.0	29.5	20.8	10	0.010
U-U:B	-5659	10330	2.147	20.3	30.5	24.5	8	0.010
C-C:B	-5567	8230	1.432	10.9	35.6	51.7	8	0.005
G-G:B	-5821	8046	1.301	10.2	36.4	55.3	8	0.005
L-L:B	-6297	4207	-0.176	-	-	-	-	-
L-L:M**	-7707	5607	-0.055	-	-	-	-	-
G-G:M	-4730	7122	1.262	11.7	33.2	47.8	8	0.006
AA-AA:B	-5459	8151	1.433	11.0	35.3	51.3	8	0.005

Maximum Negative Moment (Per Edge Girder)								
Section*	Axial Force (kips)	Moment (kip-ft)	Top Fiber Stress (ksi)	Max Rebar Stress (ksi)	Depth to neutral axis (in)	Required Rebar Spacing (in)	Number of bars in extreme tension	Theoretical Projected Crack Width (in)
S-S:BN	-4084	-7525	1.290	11.0	33.2	28.3	10	0.005
V-V:B	-4446	-7836	1.293	10.7	34.1	28.3	7	0.005
D-D:B	-4408	-5250	0.490	-	-	-	-	-
H-H:B	-3528	-3140	0.058	-	-	-	-	-
M-M:B	-4675	-3849	-0.021	-	-	-	-	-
M-M:M	-6325	-5659	0.114	-	-	-	-	-
H-H:M	-509	-1432	0.316	4.9	24.6	124.7	7	0.002
BB-BB:B	-4625	-8918	1.586	16.2	31.1	32.4	7	0.008
Y-Y:B	-4254	-8598	1.583	16.3	31.1	28.3	10	0.007

* Note: Section callouts refer to the sections called out in the original contract plans on sheets 558-567. The additional labels after the colon refer to whether the section is a mainspan and backspan section with the key difference being the edge girder prestressing.

** Note: Section L-L from the contract plans has one layer of rebar in the bottom of the section. To control cracking in the section, an additional layer has been added similar to section G-G.

Section Properties (per Edge Girder)		
Cross-Section Area	26.38	ft^2
Moment of Inertia	48.17	ft^4
Centroid from Top Fiber	2.18	ft
Centroid from Bottom Fiber	2.44	ft

Crack Control Properties (per Edge Girder)		
Depth of bar in tension	3.50	in
Exposure coefficient	1.00	-
Depth of section	55.47	in
Are of concrete in tension	350	in^2

Project: Ironton-Russell
Project No.: 11.60260
Subject: Strength Moment Checks In Service

FINLEY Engineering Group, Inc.

Designed By: IL
Date: 10/31/16
Checked By:

RED indicates revised values

Maximum Positive Moment (per Edge Girder)						
Section*	Axial Force (kips)	Moment (kip-ft)	Axial Force x η (kips)	Moment x η (kip-ft)	Capacity (kip-ft)	Unity Ratio
U-U:B	-811	10216	-852	10727	13267	80.9%
C-C:B	-1357	7179	-1425	7538	10018	75.2%
G-G:B	-2919	8654	-3065	9087	11455	79.3%
L-L:B	-3183	5047	-3342	5299	6232	85.0%
L-L:M**	-3264	5120	-3427	5376	9329	57.6%
G-G:M	602	6655	632	6988	9804	71.3%
AA-AA:B	-516	9415	-542	9886	13122	75.3%

Maximum Negative Moment (Per Edge Girder)						
Section*	Axial Force (kips)	Moment (kip-ft)	Axial Force x η (kips)	Moment x η (kip-ft)	Capacity (kip-ft)	Unity Ratio
V-V:B	-1558	-11564	-1636	-12142	-13495	90.0%
D-D:B	-1972	-7041	-2071	-7393	-8874	83.3%
H-H:B	-2382	-3970	-2501	-4169	-7601	54.8%
M-M:B	-5606	-4449	-5886	-4671	-8946	52.2%
M-M:M	-4982	-12903	-5231	-13548	-15781	85.9%
H-H:M	-2173	-10577	-2282	-11106	-14184	78.3%
BB-BB:B	-1686	-11693	-1770	-12278	-13372	91.8%
AA-AA:BN	-1745	-13553	-1832	-14231	-14730	96.6%
Y-Y:B	-1423	-13636	-1494	-14318	-14923	95.9%

* Note: Section callouts refer to the sections called out in the original contract plans on sheets 558-567. The additional labels after the colon refer to whether the section is a mainspan and backspan section with the key difference being the edge girder prestressing.

** Note: Section L-L from the contract plans has one layer of rebar in the bottom of the section. To control cracking in the section, an additional layer has been added similar to section G-G.

Importance factor AASHTO LRFD (η)	1.05

Section Properties(per Edge Girder)		
Cross-Section Area	26.38	ft^2
Moment of Inertia	48.17	ft^4
Centroid from Top Fiber	2.18	ft
Centroid from Bottom Fiber	2.44	ft

Appendix: VSL Stay Lifoffs

The following are stay cable liftoffs performed by VSL and provided to FINLEY by BRAYMAN on October 6th, 2016.

structural TECHNOLOGIES
A Structural Group Company

VSL

Ironton Russell Bridge - Stay Cable Installation Data

Stay	M16L		
	516		
Strands No.	14		
Date	October 4, 2016		
Strand #	Lift Off		
	kN	kips	Scatter
1	61.8	13.89	-0.3%
6	64.5	14.50	0.7%
10	62.2	13.98	-0.1%
11	63.5	14.28	0.3%
14	60.7	13.65	-0.7%
Stay force	875.6	196.8	

Target Force per Stay	845	189.97
Target Variance	3.6%	

Last Lift Off:	kips	kN
	196.8	875.6
Date	October 4, 2016	

structural TECHNOLOGIES

A Structural Group Company

VSL

Ironton Russell Bridge - Stay Cable Installation Data

Stay	M16R		
	616		
Strands No.	14		
Date	October 4, 2016		
Strand #	Lift Off		
	kN	kips	Scatter
1	60	13.49	-0.1%
5	58.1	13.06	-0.8%
8	60.8	13.67	0.2%
11	63.1	14.19	1.0%
13	59.6	13.40	-0.3%
Stay force	844.5	189.8	

Target Force per Stay	845	189.97
Target Variance	-0.1%	

Last Lift Off:	kips	kN
	189.8	844.5
Date	October 4, 2016	

structural TECHNOLOGIES

A Structural Group Company

VSL

Ironton Russell Bridge - Stay Cable Installation Data

Stay	M17L		
	517		
Strands No.	15		
Date	October 4, 2016		
Strand #	Lift Off		
	kN	kips	Scatter
1	81.4	18.30	0.8%
5	77.3	17.38	-0.7%
10	74.1	16.66	-1.8%
11	82.4	18.52	1.1%
15	80.8	18.16	0.6%
Stay force	1188.0	267.1	

Target Force per Stay	1099	247.07
Target Variance	8.1%	

Last Lift Off:	kips	kN
	267.1	1188.0
Date	October 4, 2016	

structural TECHNOLOGIES
A Structural Group Company

VSL

Ironton Russell Bridge - Stay Cable Installation Data

Stay	M17R		
	617		
Strands No.	15		
Date	October 4, 2016		
Strand #	Lift Off		
	kN	kips	Scatter
1	84.8	19.06	0.7%
2	82.9	18.64	0.0%
10	81	18.21	-0.7%
11	81.7	18.37	-0.4%
15	83.9	18.86	0.4%
Stay force	1242.9	279.4	

Target Force per Stay	1099	247.07
Target Variance	13.1%	

Last Lift Off:	kips	kN
	279.4	1242.9
Date	October 4, 2016	

structural TECHNOLOGIES
A Structural Group Company

VSL

Ironton Russell Bridge - Stay Cable Installation Data

Stay	M18L		
	518		
Strands No.	17		
Date	October 4, 2016		
Strand #	Lift Off		
	kN	kips	Scatter
1	56.9	12.79	-0.5%
3	57.4	12.90	-0.3%
11	57.8	12.99	-0.2%
12	57.2	12.86	-0.4%
17	62.1	13.96	1.4%
Stay force	990.8	222.7	

Target Force per Stay	1134	254.94
Target Variance	-12.6%	

Last Lift Off:	kips	kN
	222.7	990.8
Date	October 4, 2016	

structural TECHNOLOGIES
A Structural Group Company

VSL

Ironton Russell Bridge - Stay Cable Installation Data

Stay	M18R		
	618		
Strands No.	17		
Date	October 4, 2016		
Strand #	Lift Off		
	kN	kips	Scatter
1	59.4	13.35	0.0%
3	57	12.81	-0.9%
9	60.7	13.65	0.5%
15	59.2	13.31	-0.1%
17	60.8	13.67	0.5%
Stay force	1010.1	227.1	

Target Force per Stay	1134	254.94
Target Variance	-10.9%	

Last Lift Off:	kips	kN
	227.1	1010.1
Date	October 4, 2016	

structural TECHNOLOGIES
A Structural Group Company

VSL

Ironton Russell Bridge - Stay Cable Installation Data

Stay	M19L		
	519		
Strands No.	17		
Date	October 4, 2016		
Strand #	Lift Off		
	kN	kips	Scatter
1	80.2	18.03	0.0%
3	80.3	18.05	0.0%
11	80.6	18.12	0.1%
12	79.3	17.83	-0.3%
17	80.6	18.12	0.1%
Stay force	1363.4	306.5	

Target Force per Stay	1303	292.93
Target Variance	4.6%	

Last Lift Off:	kips	kN
	306.5	1363.4
Date	October 4, 2016	

structural TECHNOLOGIES
A Structural Group Company

VSL

Ironton Russell Bridge - Stay Cable Installation Data

Stay	M19R		
	619		
Strands No.	17		
Date	October 4, 2016		
Strand #	Lift Off		
	kN	kips	Scatter
1	78.8	17.72	-0.2%
3	79.4	17.85	0.1%
9	80.4	18.07	0.4%
15	79.5	17.87	0.1%
17	78.2	17.58	-0.4%
Stay force	1347.4	302.9	

Target Force per Stay	1303	292.93
Target Variance	3.4%	

Last Lift Off:	kips	kN
	302.9	1347.4
Date	October 4, 2016	

structural TECHNOLOGIES

A Structural Group Company

VSL

Ironton Russell Bridge - Stay Cable Installation Data

Stay	M20L		
	520		
Strands No.	18		
Date	October 4, 2016		
Strand #	Lift Off		
	kN	kips	Scatter
2	67.8	15.24	-0.5%
3	68.2	15.33	-0.4%
11	67	15.06	-0.8%
12	71.1	15.98	0.6%
18	72.5	16.30	1.1%
Stay force	1247.8	280.5	

Target Force per Stay	1379	310.02
Target Variance	-9.5%	

Last Lift Off:	kips	kN
	280.5	1247.8
Date	October 4, 2016	

structural TECHNOLOGIES
A Structural Group Company

VSL

Ironton Russell Bridge - Stay Cable Installation Data

Stay	M20R		
	620		
Strands No.	18		
Date	October 4, 2016		
Strand #	Lift Off		
	kN	kips	Scatter
1	64.7	14.55	-0.2%
7	65.6	14.75	0.1%
12	66.6	14.97	0.5%
16	64.9	14.59	-0.1%
18	64.3	14.46	-0.3%
Stay force	1174.0	263.9	

Target Force per Stay	1379	310.02
Target Variance	-14.9%	

Last Lift Off:	kips	kN
	263.9	1174.0
Date	October 4, 2016	

structural TECHNOLOGIES
A Structural Group Company

VSL

Ironton Russell Bridge - Stay Cable Installation Data

Stay	M21L		
	521		
Strands No.	19		
Date	October 4, 2016		
Strand #	Lift Off		
	kN	kips	Scatter
1	72.6	16.32	-0.4%
3	71.1	15.98	-1.0%
11	74.3	16.70	0.2%
12	74.9	16.84	0.4%
19	76	17.09	0.8%
Stay force	1401.8	315.1	

Target Force per Stay	1437	323.06
Target Variance	-2.4%	

Last Lift Off:	kips	kN
	315.1	1401.8
Date	October 4, 2016	

structural TECHNOLOGIES
A Structural Group Company

VSL

Ironton Russell Bridge - Stay Cable Installation Data

Stay	M21R		
	621		
Strands No.	**19**		
Date	**October 4, 2016**		
Strand #	**Lift Off**		
	kN	**kips**	Scatter
3	70.7	15.89	-0.7%
7	72.3	16.25	-0.2%
16	74.3	16.70	0.5%
18	74.5	16.75	0.6%
12	72.1	16.21	-0.2%
Stay force	1382.8	310.9	

Target Force per Stay	1437	323.06
Target Variance	-3.8%	

Last Lift Off:	kips	kN
	310.9	1382.8
Date	October 4, 2016	

structural TECHNOLOGIES
A Structural Group Company

VSL

Ironton Russell Bridge - Stay Cable Installation Data

Stay	M22L		
	522		
Strands No.	20		
Date	October 4, 2016		
Strand #	Lift Off		
	kN	kips	Scatter
1	75.5	16.97	0.1%
8	73.6	16.55	-0.6%
9	75.6	17.00	0.1%
17	74.9	16.84	-0.2%
20	77	17.31	0.6%
Stay force	1506.4	338.7	

Target Force per Stay	1508	339.02
Target Variance	-0.1%	

Last Lift Off:	kips	kN
	338.7	1506.4
Date	October 4, 2016	

structural TECHNOLOGIES
A Structural Group Company

VSL

Ironton Russell Bridge - Stay Cable Installation Data

Stay	M22R		
	622		
Strands No.	20		
Date	October 4, 2016		
Strand #	Lift Off		
	kN	kips	Scatter
1	72.4	16.28	-0.2%
8	74	16.64	0.3%
9	73.7	16.57	0.2%
17	72.7	16.34	-0.1%
18	72.6	16.32	-0.2%
Stay force	1461.6	328.6	

Target Force per Stay	1508	339.02
Target Variance	-3.1%	

Last Lift Off:	kips	kN
	328.6	1461.6
Date	October 4, 2016	

structural TECHNOLOGIES
A Structural Group Company

VSL

Ironton Russell Bridge - Stay Cable Installation Data

Stay	M23L		
	523		
Strands No.	22		
Date	October 4, 2016		
Strand #	Lift Off		
	kN	kips	Scatter
1	68.5	15.40	-1.2%
9	71.8	16.14	0.0%
15	71.1	15.98	-0.2%
21	73.3	16.48	0.6%
22	74	16.64	0.8%
Stay force	1578.3	354.8	

Target Force per Stay	1570	352.96
Target Variance	0.5%	

Last Lift Off:	kips	kN
	354.8	1578.3
Date	October 4, 2016	

structural TECHNOLOGIES

A Structural Group Company

VSL

Ironton Russell Bridge - Stay Cable Installation Data

Stay	M23R		
	623		
Strands No.	22		
Date	October 4, 2016		
Strand #	Lift Off		
	kN	kips	Scatter
1	68.6	15.42	-0.6%
9	70.5	15.85	0.1%
10	70.6	15.87	0.2%
18	69.6	15.65	-0.2%
19	71.4	16.05	0.5%
Stay force	1543.1	346.9	

Target Force per Stay	1570	352.96
Target Variance	-1.7%	

Last Lift Off:	kips	kN
	346.9	1543.1
Date	October 4, 2016	

structural TECHNOLOGIES
A Structural Group Company

VSL

Ironton Russell Bridge - Stay Cable Installation Data

Stay	M24L		
	524		
Strands No.	22		
Date	October 4, 2016		
Strand #	Lift Off		
	kN	kips	Scatter
1	71.2	16.01	0.0%
5	68.9	15.49	-0.8%
10	71.1	15.98	-0.1%
18	73.8	16.59	0.9%
Stay force	1567.5	352.4	

Target Force per Stay	1690	379.93
Target Variance	-7.2%	

Last Lift Off:	kips	kN
	352.4	1567.5
Date	October 4, 2016	

structural TECHNOLOGIES
A Structural Group Company

VSL

Ironton Russell Bridge - Stay Cable Installation Data

Stay	M24R		
	624		
Strands No.	22		
Date	October 4, 2016		
Strand #	Lift Off		
	kN	kips	Scatter
1	71.2	16.01	-0.3%
5	70.8	15.92	-0.5%
10	72.7	16.34	0.2%
18	70.6	15.87	-0.5%
22	75	16.86	1.1%
Stay force	1585.3	356.4	

Target Force per Stay	1690	379.93
Target Variance	-6.2%	

Last Lift Off:	kips	kN
	356.4	1585.3
Date	October 4, 2016	

structural TECHNOLOGIES
A Structural Group Company

VSL

Ironton Russell Bridge - Stay Cable Installation Data

Stay	M25L		
	525		
Strands No.	23		
Date	October 4, 2016		
Strand #	Lift Off		
	kN	kips	Scatter
1	70.3	15.80	-0.7%
6	72.2	16.23	-0.1%
14	72.9	16.39	0.2%
19	74	16.64	0.6%
Stay force	1664.1	374.1	

Target Force per Stay	1833	412.08
Target Variance	-9.2%	

Last Lift Off:	kips	kN
	374.1	1664.1
Date	October 4, 2016	

structural TECHNOLOGIES
A Structural Group Company

VSL

Ironton Russell Bridge - Stay Cable Installation Data

Stay	M25R		
	625		
Strands No.	23		
Date	October 4, 2016		
Strand #	Lift Off		
	kN	kips	Scatter
1	71.9	16.16	-0.7%
6	74.4	16.73	0.2%
14	74	16.64	0.1%
16	73.9	16.61	0.0%
22	75.1	16.88	0.4%
Stay force	1698.8	381.9	

Target Force per Stay	1833	412.08
Target Variance	-7.3%	

Last Lift Off:	kips	kN
	381.9	1698.8
Date	October 4, 2016	

structural TECHNOLOGIES
A Structural Group Company

VSL

Ironton Russell Bridge - Stay Cable Installation Data

Stay	M26L		
	526		
Strands No.	24		
Date	October 4, 2016		
Strand #	Lift Off		
	kN	kips	Scatter
1	77.3	17.38	-0.2%
7	76.9	17.29	-0.3%
15	78.2	17.58	0.2%
20	78.6	17.67	0.3%
Stay force	1866.0	419.5	

Target Force per Stay	2019	453.90
Target Variance	-7.6%	

Last Lift Off:	kips	kN
	419.5	1866.0
Date	October 4, 2016	

structural TECHNOLOGIES

A Structural Group Company

VSL

Ironton Russell Bridge - Stay Cable Installation Data

Stay	M26R		
	626		
Strands No.	24		
Date	October 4, 2016		
Strand #	Lift Off		
	kN	kips	Scatter
1	82.9	18.64	1.2%
7	79.4	17.85	0.0%
15	77.9	17.51	-0.6%
20	79.3	17.83	-0.1%
24	77.7	17.47	-0.6%
Stay force	1906.6	428.6	

Target Force per Stay	2019	453.90
Target Variance	-5.6%	

Last Lift Off:	kips	kN
	428.6	1906.6
Date	October 4, 2016	

structural TECHNOLOGIES
A Structural Group Company

VSL

Ironton Russell Bridge - Stay Cable Installation Data

Stay	M27L		
	527		
Strands No.	25		
Date	October 4, 2016		
Strand #	Lift Off		
	kN	kips	Scatter
1	81.8	18.39	-0.4%
10	81.1	18.23	-0.7%
11	81.6	18.34	-0.5%
23	87.6	19.69	1.6%
Stay force	2075.6	466.6	

Target Force per Stay	2082	468.06
Target Variance	-0.3%	

Last Lift Off:	kips	kN
	466.6	2075.6
Date	October 4, 2016	

structural TECHNOLOGIES
A Structural Group Company

VSL

Ironton Russell Bridge - Stay Cable Installation Data

Stay	M27R		
	627		
Strands No.	25		
Date	October 4, 2016		
Strand #	Lift Off		
	kN	kips	Scatter
2	81.3	18.28	-0.3%
10	81.8	18.39	-0.1%
11	80.9	18.19	-0.4%
23	84.1	18.91	0.8%
24	81.9	18.41	0.0%
Stay force	2050.0	460.9	

Target Force per Stay	2082	468.06
Target Variance	-1.5%	

Last Lift Off:	kips	kN
	460.9	2050.0
Date	October 4, 2016	

structural TECHNOLOGIES
A Structural Group Company

VSL

Ironton Russell Bridge - Stay Cable Installation Data

Stay	M28L		
	528		
Strands No.	26		
Date	October 4, 2016		
Strand #	Lift Off		
	kN	kips	Scatter
1	83.9	18.86	-0.3%
3	83.9	18.86	-0.3%
16	84.1	18.91	-0.3%
21	87.3	19.63	0.9%
Stay force	2204.8	495.7	

Target Force per Stay	2393	537.98
Target Variance	-7.9%	

Last Lift Off:	kips	kN
	495.7	2204.8
Date	October 4, 2016	

structural TECHNOLOGIES
A Structural Group Company

VSL

Ironton Russell Bridge - Stay Cable Installation Data

Stay	M28R		
	628		
Strands No.	26		
Date	October 4, 2016		
Strand #	Lift Off		
	kN	kips	Scatter
1	87.4	19.65	0.2%
3	86.1	19.36	-0.3%
16	85.5	19.22	-0.5%
21	86.9	19.54	0.0%
25	88.6	19.92	0.6%
Stay force	2259.4	507.9	

Target Force per Stay	2393	537.98
Target Variance	-5.6%	

Last Lift Off:	kips	kN
	507.9	2259.4
Date	October 4, 2016	

structural TECHNOLOGIES
A Structural Group Company

VSL

Ironton Russell Bridge - Stay Cable Installation Data

Stay	M29L		
	529		
Strands No.	29		
Date	October 4, 2016		
Strand #	Lift Off		
	kN	kips	Scatter
1	92.2	20.73	-0.3%
7	91	20.46	-0.7%
18	93.4	21.00	0.2%
27	95.2	21.40	0.8%
Stay force	2695.6	606.0	

Target Force per Stay	2673	600.92
Target Variance	0.8%	

Last Lift Off:	kips	kN
	606.0	2695.6
Date	October 4, 2016	

structural TECHNOLOGIES
A Structural Group Company

VSL

Ironton Russell Bridge - Stay Cable Installation Data

Stay	M29R		
	629		
Strands No.	29		
Date	October 4, 2016		
Strand #	Lift Off		
	kN	kips	Scatter
1	95.6	21.49	0.1%
7	96.6	21.72	0.4%
18	97.5	21.92	0.7%
27	93.4	21.00	-0.7%
28	94.2	21.18	-0.5%
Stay force	2768.3	622.4	

Target Force per Stay	2673	600.92
Target Variance	3.6%	

Last Lift Off:	kips	kN
	622.4	2768.3
Date	October 4, 2016	

structural TECHNOLOGIES
A Structural Group Company

VSL

Ironton Russell Bridge - Stay Cable Installation Data

Stay	M30L		
	530		
Strands No.	29		
Date	October 4, 2016		
Strand #	Lift Off		
	kN	kips	Scatter
1	84.3	18.95	0.3%
7	82	18.43	-0.5%
18	83.6	18.79	0.1%
27	83.9	18.86	0.2%
Stay force	1936.0	544.1	

Target Force per Stay	2220	499.08
Target Variance	-12.8%	

Last Lift Off:	kips	kN
	435.2	1936.0
Date	October 4, 2016	

structural TECHNOLOGIES
A Structural Group Company

VSL

Ironton Russell Bridge - Stay Cable Installation Data

Stay	M30R		
	630		
Strands No.	29		
Date	October 4, 2016		
Strand #	Lift Off		
	kN	kips	Scatter
1	87.2	19.60	0.6%
7	86	19.33	0.1%
18	84.3	18.95	-0.5%
27	85.2	19.15	-0.2%
28	85.6	19.24	0.0%
Stay force	2484.1	558.5	

Target Force per Stay	2220	499.08
Target Variance	11.9%	

Last Lift Off:	kips	kN
	558.5	2484.1
Date	October 4, 2016	

structural TECHNOLOGIES
A Structural Group Company

VSL

Ironton Russell Bridge - Stay Cable Installation Data

Stay	B16L		
	716		
Strands No.	14		
Date	October 4, 2016		
Strand #	Lift Off		
	kN	kips	Scatter
1	49.2	11.06	0.1%
6	48.7	10.95	-0.1%
10	48.8	10.97	-0.1%
11	47.9	10.77	-0.4%
14	50.2	11.29	0.4%
Stay force	685.4	154.1	

Target Force per Stay	712	160.07
Target Variance	-3.7%	

Last Lift Off:	kips	kN
	154.1	685.4
Date	October 4, 2016	

structural TECHNOLOGIES

A Structural Group Company

VSL

Ironton Russell Bridge - Stay Cable Installation Data

Stay	B16R		
	816		
Strands No.	14		
Date	October 4, 2016		
Strand #	Lift Off		
	kN	kips	Scatter
1	51.7	11.62	-0.3%
6	52.5	11.80	0.0%
10	52.3	11.76	-0.1%
11	53	11.92	0.2%
14	53.1	11.94	0.2%
Stay force	735.3	165.3	

Target Force per Stay	712	160.07
Target Variance	3.3%	

Last Lift Off:	kips	kN
	165.3	735.3
Date	October 4, 2016	

structural TECHNOLOGIES

A Structural Group Company

VSL

Ironton Russell Bridge - Stay Cable Installation Data

Stay	B17L		
	717		
Strands No.	15		
Date	October 4, 2016		
Strand #	Lift Off		
	kN	kips	Scatter
1	69.6	15.65	-0.3%
5	71.3	16.03	0.3%
10	71	15.96	0.2%
11	69.9	15.71	-0.2%
15	71	15.96	0.2%
Stay force	1058.4	237.9	

Target Force per Stay	1023	229.98
Target Variance	3.5%	

Last Lift Off:	kips	kN
	237.9	1058.4
Date	October 4, 2016	

structural TECHNOLOGIES

A Structural Group Company

VSL

Ironton Russell Bridge - Stay Cable Installation Data

Stay	B17R		
	817		
Strands No.	15		
Date	October 4, 2016		
Strand #	Lift Off		
	kN	kips	Scatter
1	73.6	16.55	0.0%
5	73.5	16.52	-0.1%
10	71.4	16.05	-0.8%
11	74.4	16.73	0.2%
15	75.7	17.02	0.7%
Stay force	1105.8	248.6	

Target Force per Stay	1023	229.98
Target Variance	8.1%	

Last Lift Off:	kips	kN
	248.6	1105.8
Date	October 4, 2016	

structural TECHNOLOGIES

A Structural Group Company

VSL

Ironton Russell Bridge - Stay Cable Installation Data

Stay	B18L		
	718		
Strands No.	16		
Date	October 4, 2016		
Strand #	Lift Off		
	kN	kips	Scatter
1	87.7	19.72	0.4%
3	83.6	18.79	-1.1%
11	89.5	20.12	1.0%
12	85.1	19.13	-0.5%
16	87.2	19.60	0.2%
Stay force	1385.9	311.6	

Target Force per Stay	1423	319.91
Target Variance	-2.6%	

Last Lift Off:	kips	kN
	311.6	1385.9
Date	October 4, 2016	

structural TECHNOLOGIES
A Structural Group Company

VSL

Ironton Russell Bridge - Stay Cable Installation Data

Stay	B18R		
	818		
Strands No.	16		
Date	October 4, 2016		
Strand #	Lift Off		
	kN	kips	Scatter
1	83.5	18.77	-0.5%
3	86.6	19.47	0.6%
11	84.4	18.97	-0.2%
12	85.4	19.20	0.2%
16	84.6	19.02	-0.1%
Stay force	1358.4	305.4	

Target Force per Stay	1423	319.91
Target Variance	-4.5%	

Last Lift Off:	kips	kN
	305.4	1358.4
Date	October 4, 2016	

structural TECHNOLOGIES
A Structural Group Company

VSL

Ironton Russell Bridge - Stay Cable Installation Data

Stay	B19L		
	719		
Strands No.	17		
Date	October 4, 2016		
Strand #	Lift Off		
	kN	kips	Scatter
1	79.3	17.83	0.0%
3	78.9	17.74	-0.1%
11	78.9	17.74	-0.1%
12	81.6	18.34	0.8%
17	77.8	17.49	-0.5%
Stay force	1348.1	303.1	

Target Force per Stay	1379	310.02
Target Variance	-2.2%	

Last Lift Off:	kips	kN
	303.1	1348.1
Date	October 4, 2016	

structural TECHNOLOGIES
A Structural Group Company

VSL

Ironton Russell Bridge - Stay Cable Installation Data

Stay	B19R		
	819		
Strands No.	17		
Date	October 4, 2016		
Strand #	Lift Off		
	kN	kips	Scatter
1	80.7	18.14	0.3%
3	78.7	17.69	-0.4%
11	80.4	18.07	0.2%
12	78.4	17.63	-0.5%
17	80.9	18.19	0.4%
Stay force	1356.9	305.1	

Target Force per Stay	1379	310.02
Target Variance	-1.6%	

Last Lift Off:	kips	kN
	305.1	1356.9
Date	October 4, 2016	

structural TECHNOLOGIES
A Structural Group Company

VSL

Ironton Russell Bridge - Stay Cable Installation Data

Stay	B20L		
	720		
Strands No.	17		
Date	October 4, 2016		
Strand #	Lift Off		
	kN	kips	Scatter
1	83.6	18.79	0.8%
3	80.9	18.19	-0.1%
11	81.2	18.25	0.0%
12	81.2	18.25	0.0%
17	79.6	17.90	-0.6%
Stay force	1382.1	310.7	

Target Force per Stay	1441	323.95
Target Variance	-4.1%	

Last Lift Off:	kips	kN
	310.7	1382.1
Date	October 4, 2016	

structural TECHNOLOGIES
A Structural Group Company

VSL

Ironton Russell Bridge - Stay Cable Installation Data

Stay	B20R		
	820		
Strands No.	17		
Date	October 4, 2016		
Strand #	Lift Off		
	kN	kips	Scatter
1	83.2	18.70	0.0%
3	84.2	18.93	0.3%
11	82.4	18.52	-0.3%
12	83.3	18.73	0.0%
17	83.1	18.68	-0.1%
Stay force	1415.1	318.1	

Target Force per Stay	1441	323.95
Target Variance	-1.8%	

Last Lift Off:	kips	kN
	318.1	1415.1
Date	October 4, 2016	

structural TECHNOLOGIES

A Structural Group Company

VSL

Ironton Russell Bridge - Stay Cable Installation Data

Stay	B21L		
	721		
Strands No.	17		
Date	October 4, 2016		
Strand #	Lift Off		
	kN	kips	Scatter
1	81.9	18.41	1.0%
3	78.9	17.74	0.0%
11	77.8	17.49	-0.4%
12	79.2	17.81	0.1%
17	77.2	17.36	-0.6%
Stay force	1343.0	301.9	

Target Force per Stay	1388	312.04
Target Variance	-3.2%	

Last Lift Off:	kips	kN
	301.9	1343.0
Date	October 4, 2016	

structural TECHNOLOGIES
A Structural Group Company

VSL

Ironton Russell Bridge - Stay Cable Installation Data

Stay	B21R		
	821		
Strands No.	17		
Date	October 4, 2016		
Strand #	Lift Off		
	kN	kips	Scatter
1	80.8	18.16	0.7%
3	78.9	17.74	0.0%
11	75.8	17.04	-1.1%
12	80.2	18.03	0.5%
17	78.4	17.63	-0.2%
Stay force	1339.9	301.2	

Target Force per Stay	1388	312.04
Target Variance	-3.5%	

Last Lift Off:	kips	kN
	301.2	1339.9
Date	October 4, 2016	

structural TECHNOLOGIES

A Structural Group Company

VSL

Ironton Russell Bridge - Stay Cable Installation Data

Stay	B22L		
	722		
Strands No.	17		
Date	October 4, 2016		
Strand #	Lift Off		
	kN	kips	Scatter
1	80.2	18.03	0.6%
3	77	17.31	-0.5%
11	78.5	17.65	0.0%
12	77.3	17.38	-0.4%
17	79.5	17.87	0.4%
Stay force	1334.5	300.0	

Target Force per Stay	1406	316.09
Target Variance	-5.1%	

Last Lift Off:	kips	kN
	300.0	1334.5
Date	October 4, 2016	

structural TECHNOLOGIES
A Structural Group Company

VSL

Ironton Russell Bridge - Stay Cable Installation Data

Stay	B22R		
	822		
Strands No.	17		
Date	October 4, 2016		
Strand #	Lift Off		
	kN	kips	Scatter
1	82.1	18.46	0.6%
3	79.3	17.83	-0.4%
11	79.5	17.87	-0.3%
12	80.9	18.19	0.2%
17	80.4	18.07	0.0%
Stay force	1367.5	307.4	

Target Force per Stay	1406	316.09
Target Variance	-2.7%	

Last Lift Off:	kips	kN
	307.4	1367.5
Date	October 4, 2016	

structural TECHNOLOGIES

A Structural Group Company

VSL

Ironton Russell Bridge - Stay Cable Installation Data

Stay	B23L		
	723		
Strands No.	18		
Date	October 4, 2016		
Strand #	Lift Off		
	kN	kips	Scatter
1	95	21.36	1.1%
3	89.4	20.10	-0.9%
11	91.5	20.57	-0.1%
12	89.8	20.19	-0.7%
18	93.7	21.06	0.7%
Stay force	1653.8	371.8	

Target Force per Stay	1646	370.04
Target Variance	0.5%	

Last Lift Off:	kips	kN
	371.8	1653.8
Date	October 4, 2016	

structural TECHNOLOGIES
A Structural Group Company

VSL

Ironton Russell Bridge - Stay Cable Installation Data

Stay	B23R		
	823		
Strands No.	18		
Date	October 4, 2016		
Strand #	Lift Off		
	kN	kips	Scatter
1	91.8	20.64	-0.1%
3	90.3	20.30	-0.6%
11	92	20.68	0.0%
12	92.4	20.77	0.1%
18	93.9	21.11	0.7%
Stay force	1657.4	372.6	

Target Force per Stay	1646	370.04
Target Variance	0.7%	

Last Lift Off:	kips	kN
	372.6	1657.4
Date	October 4, 2016	

structural TECHNOLOGIES

A Structural Group Company

VSL

Ironton Russell Bridge - Stay Cable Installation Data

Stay	B24L		
	724		
Strands No.	19		
Date	October 4, 2016		
Strand #	Lift Off		
	kN	kips	Scatter
1	101.2	22.75	-1.2%
3	103.3	23.22	-0.5%
11	107.1	24.08	0.9%
12	106.3	23.90	0.6%
19	105.5	23.72	0.3%
Stay force	1988.9	447.1	

Target Force per Stay	1779	399.94
Target Variance	11.8%	

Last Lift Off:	kips	kN
	447.1	1988.9
Date	October 4, 2016	

structural TECHNOLOGIES

A Structural Group Company

VSL

Ironton Russell Bridge - Stay Cable Installation Data

Stay	B24R		
	824		
Strands No.	19		
Date	October 4, 2016		
Strand #	Lift Off		
	kN	kips	Scatter
1	100.8	22.66	-1.3%
3	102	22.93	-0.9%
11	107	24.05	0.9%
12	106.5	23.94	0.8%
19	105.7	23.76	0.5%
Stay force	1983.6	445.9	

Target Force per Stay	1779	399.94
Target Variance	11.5%	

Last Lift Off:	kips	kN
	445.9	1983.6
Date	October 4, 2016	

structural TECHNOLOGIES
A Structural Group Company

VSL

Ironton Russell Bridge - Stay Cable Installation Data

Stay	B25L		
	725		
Strands No.	21		
Date	October 4, 2016		
Strand #	Lift Off		
	kN	kips	Scatter
1	95.9	21.56	2.0%
5	84.5	19.00	-2.1%
13	89.5	20.12	-0.3%
18	90.6	20.37	0.1%
21	90.9	20.44	0.2%
Stay force	1895.9	426.2	

Target Force per Stay	1868	419.95
Target Variance	1.5%	

Last Lift Off:	kips	kN
	426.2	1895.9
Date	October 4, 2016	

structural TECHNOLOGIES

A Structural Group Company

VSL

Ironton Russell Bridge - Stay Cable Installation Data

Stay	B25R		
	825		
Strands No.	21		
Date	October 4, 2016		
Strand #	Lift Off		
	kN	kips	Scatter
1	94.1	21.15	1.5%
5	89	20.01	-0.3%
13	85.9	19.31	-1.4%
18	89.9	20.21	0.0%
21	90.6	20.37	0.3%
Stay force	1887.9	424.4	

Target Force per Stay	1868	419.95
Target Variance	1.1%	

Last Lift Off:	kips	kN
	424.4	1887.9
Date	October 4, 2016	

structural TECHNOLOGIES
A Structural Group Company

VSL

Ironton Russell Bridge - Stay Cable Installation Data

Stay	B26L		
	726		
Strands No.	21		
Date	October 4, 2016		
Strand #	Lift Off		
	kN	kips	Scatter
1	91.8	20.64	-0.8%
5	94.8	21.31	0.3%
13	92.6	20.82	-0.5%
18	96.1	21.60	0.8%
21	94.6	21.27	0.2%
Stay force	1973.6	443.7	

Target Force per Stay	1873	421.07
Target Variance	5.4%	

Last Lift Off:	kips	kN
	443.7	1973.6
Date	October 4, 2016	

structural TECHNOLOGIES

A Structural Group Company

VSL

Ironton Russell Bridge - Stay Cable Installation Data

Stay	B26R		
	826		
Strands No.	21		
Date	October 4, 2016		
Strand #	Lift Off		
	kN	kips	Scatter
1	100.6	22.62	1.5%
5	94.5	21.24	-0.6%
13	92.5	20.80	-1.4%
18	96.2	21.63	0.0%
21	97.7	21.96	0.5%
Stay force	2022.3	454.6	

Target Force per Stay	1873	421.07
Target Variance	8.0%	

Last Lift Off:	kips	kN
	454.6	2022.3
Date	October 4, 2016	

structural TECHNOLOGIES
A Structural Group Company

VSL

Ironton Russell Bridge - Stay Cable Installation Data

Stay	B27L		
	727		
Strands No.	21		
Date	October 4, 2016		
Strand #	Lift Off		
	kN	kips	Scatter
1	103.8	23.34	4.2%
5	88.9	19.99	-1.1%
13	90.1	20.26	-0.7%
18	87.2	19.60	-1.7%
21	89.9	20.21	-0.7%
Stay force	1931.6	434.2	

Target Force per Stay	1895	426.02
Target Variance	1.9%	

Last Lift Off:	kips	kN
	434.2	1931.6
Date	October 4, 2016	

structural TECHNOLOGIES

A Structural Group Company

VSL

Ironton Russell Bridge - Stay Cable Installation Data

Stay	B27R		
	827		
Strands No.	21		
Date	October 4, 2016		
Strand #	Lift Off		
	kN	kips	Scatter
1	100.5	22.59	1.9%
5	92.1	20.71	-1.1%
13	94.7	21.29	-0.1%
18	93.2	20.95	-0.7%
21	94.9	21.33	-0.1%
Stay force	1996.7	448.9	

Target Force per Stay	1895	426.02
Target Variance	5.4%	

Last Lift Off:	kips	kN
	448.9	1996.7
Date	October 4, 2016	

structural TECHNOLOGIES
A Structural Group Company

VSL

Ironton Russell Bridge - Stay Cable Installation Data

Stay	B28L		
	728		
Strands No.	21		
Date	October 4, 2016		
Strand #	Lift Off		
	kN	kips	Scatter
1	96.6	21.72	0.7%
5	94.9	21.33	0.1%
13	93.5	21.02	-0.4%
18	92	20.68	-0.9%
21	95.7	21.51	0.4%
Stay force	1985.3	446.3	

Target Force per Stay	2051	461.09
Target Variance	-3.2%	

Last Lift Off:	kips	kN
	446.3	1985.3
Date	October 4, 2016	

structural TECHNOLOGIES
A Structural Group Company

VSL

Ironton Russell Bridge - Stay Cable Installation Data

Stay	B28R		
	828		
Strands No.	21		
Date	October 4, 2016		
Strand #	Lift Off		
	kN	kips	Scatter
1	95.6	21.49	-0.2%
5	95.8	21.54	-0.1%
13	95	21.36	-0.4%
18	96	21.58	0.0%
21	98.1	22.05	0.7%
Stay force	2018.1	453.7	

Target Force per Stay	2051	461.09
Target Variance	-1.6%	

Last Lift Off:	kips	kN
	453.7	2018.1
Date	October 4, 2016	

structural TECHNOLOGIES

A Structural Group Company

VSL

Ironton Russell Bridge - Stay Cable Installation Data

Stay	B29L		
	729		
Strands No.	28		
Date	October 4, 2016		
Strand #	Lift Off		
	kN	kips	Scatter
1	90.3	20.30	1.9%
8	82.2	18.48	-1.0%
16	82.6	18.57	-0.9%
27	84.4	18.97	-0.2%
28	85.4	19.20	0.2%
Stay force	2379.4	534.9	

Target Force per Stay	2509	564.05
Target Variance	-5.2%	

Last Lift Off:	kips	kN
	534.9	2379.4
Date	October 4, 2016	

structural TECHNOLOGIES

A Structural Group Company

VSL

Ironton Russell Bridge - Stay Cable Installation Data

Stay	B29R		
	829		
Strands No.	28		
Date	October 4, 2016		
Strand #	Lift Off		
	kN	kips	Scatter
1	90.7	20.39	2.6%
8	82.5	18.55	-0.3%
16	82.5	18.55	-0.3%
27	78.2	17.58	-1.9%
28	83.2	18.70	-0.1%
Stay force	2335.8	525.1	

Target Force per Stay	2509	564.05
Target Variance	-6.9%	

Last Lift Off:	kips	kN
	525.1	2335.8
Date	October 4, 2016	

structural TECHNOLOGIES

A Structural Group Company

VSL

Ironton Russell Bridge - Stay Cable Installation Data

Stay	B30L		
	730		
Strands No.	33		
Date	October 4, 2016		
Strand #	Lift Off		
	kN	kips	Scatter
1	85.6	19.24	1.4%
8	80.5	18.10	-0.4%
20	79.8	17.94	-0.7%
27	82	18.43	0.1%
33	80.8	18.16	-0.3%
Stay force	2697.4	606.4	

Target Force per Stay	3051	685.90
Target Variance	-11.6%	

Last Lift Off:	kips	kN
	606.4	2697.4
Date	October 4, 2016	

structural TECHNOLOGIES

A Structural Group Company

VSL

Ironton Russell Bridge - Stay Cable Installation Data

Stay	B30R		
	830		
Strands No.	33		
Date	October 4, 2016		
Strand #	Lift Off		
	kN	kips	Scatter
1	87.4	19.65	1.8%
8	78.1	17.56	-1.6%
20	82.4	18.52	0.0%
27	82.7	18.59	0.1%
33	81.6	18.34	-0.3%
Stay force	2720.5	611.6	

Target Force per Stay	3051	685.90
Target Variance	-10.8%	

Last Lift Off:	kips	kN
	611.6	2720.5
Date	October 4, 2016	

structural TECHNOLOGIES

A Structural Group Company

VSL

Ironton Russell Bridge - Stay Cable Installation Data

Stay	M1L		
	301		
Strands No.	14		
Date	October 4, 2016		
Strand #	Lift Off		
	kN	kips	Scatter
1	53.6	12.05	-0.9%
6	52.4	11.78	-1.3%
10	57.5	12.93	0.5%
11	58.2	13.08	0.8%
14	58.8	13.22	1.0%
Stay force	763.0	176.6	

Target Force per Stay	756	169.96
Target Variance	3.9%	

Last Lift Off:	kips	kN
	176.6	763.0
Date	October 4, 2016	

structural TECHNOLOGIES

A Structural Group Company

VSL

Ironton Russell Bridge - Stay Cable Installation Data

Stay	M1R		
	401		
Strands No.	14		
Date	October 4, 2016		
Strand #	Lift Off		
	kN	kips	Scatter
2	61.1	13.74	-0.5%
5	62.6	14.07	0.1%
10	65.2	14.66	1.0%
11	58.6	13.17	-1.4%
14	64.5	14.50	0.8%
Stay force	881.5	196.4	

Target Force per Stay	756	169.96
Target Variance	15.6%	

Last Lift Off:	kips	kN
	196.4	881.5
Date	October 4, 2016	

structural TECHNOLOGIES

A Structural Group Company

VSL

Ironton Russell Bridge - Stay Cable Installation Data

Stay	M2L		
	302		
Strands No.	15		
Date	October 4, 2016		
Strand #	Lift Off		
	kN	kips	Scatter
1	83.9	18.86	-0.7%
5	88.3	19.85	0.9%
10	85.6	19.24	-0.1%
11	90.3	20.30	1.6%
15	81	18.21	-1.7%
Stay force	1289.0	289.4	

Target Force per Stay	1228	276.07
Target Variance	4.8%	

Last Lift Off:	kips	kN
	289.4	1289.0
Date	October 4, 2016	

structural TECHNOLOGIES

A Structural Group Company

VSL

Ironton Russell Bridge - Stay Cable Installation Data

Stay	M2R		
	402		
Strands No.	15		
Date	October 4, 2016		
Strand #	Lift Off		
	kN	kips	Scatter
1	85	19.11	-0.1%
5	83.7	18.82	-0.6%
10	84.8	19.06	-0.2%
11	87	19.56	0.6%
15	85.8	19.29	0.2%
Stay force	1267.5	287.5	

Target Force per Stay	1228	276.07
Target Variance	4.1%	

Last Lift Off:	kips	kN
	287.5	1267.5
Date	October 4, 2016	

structural TECHNOLOGIES

A Structural Group Company

VSL

Ironton Russell Bridge - Stay Cable Installation Data

Stay	M3L		
	303		
Strands No.	17		
Date	October 4, 2016		
Strand #	Lift Off		
	kN	kips	Scatter
2	66	14.84	-0.1%
3	65.8	14.79	-0.2%
11	70	15.74	1.3%
12	65.5	14.73	-0.3%
17	64.3	14.46	-0.7%
Stay force	1143.5	253.5	

Target Force per Stay	1050	236.05
Target Variance	7.4%	

Last Lift Off:	kips	kN
	253.5	1143.5
Date	October 4, 2016	

structural TECHNOLOGIES

A Structural Group Company

VSL

Ironton Russell Bridge - Stay Cable Installation Data

Stay	M3R		
	403		
Strands No.	17		
Date	October 4, 2016		
Strand #	Lift Off		
	kN	kips	Scatter
2	61.2	13.76	-0.6%
3	65.8	14.79	1.0%
11	65.2	14.66	0.8%
12	61.7	13.87	-0.4%
17	60.7	13.65	-0.8%
Stay force	1089.1	240.5	

Target Force per Stay	1050	236.05
Target Variance	1.9%	

Last Lift Off:	kips	kN
	240.5	1089.1
Date	October 4, 2016	

structural TECHNOLOGIES

A Structural Group Company

VSL

Ironton Russell Bridge - Stay Cable Installation Data

Stay	M4L		
	304		
Strands No.	17		
Date	October 4, 2016		
Strand #	Lift Off		
	kN	kips	Scatter
1	63.2	14.21	-1.6%
3	66.8	15.02	-0.3%
11	68	15.29	0.2%
12	70.5	15.85	1.1%
17	69.3	15.58	0.6%
Stay force	1122.0	258.2	

Target Force per Stay	1188	267.08
Target Variance	-3.3%	

Last Lift Off:	kips	kN
	258.2	1122.0
Date	October 4, 2016	

structural TECHNOLOGIES

A Structural Group Company

VSL

Ironton Russell Bridge - Stay Cable Installation Data

Stay	M4R		
	404		
Strands No.	17		
Date	October 4, 2016		
Strand #	Lift Off		
	kN	kips	Scatter
1	67.6	15.20	-0.4%
3	68.6	15.42	-0.1%
11	68.9	15.49	0.0%
12	68.9	15.49	0.0%
17	70	15.74	0.4%
Stay force	1162.2	262.9	

Target Force per Stay	1188	267.08
Target Variance	-1.5%	

Last Lift Off:	kips	kN
	262.9	1162.2
Date	October 4, 2016	

structural TECHNOLOGIES
A Structural Group Company

VSL

Ironton Russell Bridge - Stay Cable Installation Data

Stay	M5L		
	305		
Strands No.	18		
Date	October 4, 2016		
Strand #	Lift Off		
	kN	kips	Scatter
1	63.4	14.25	-0.8%
3	67.1	15.08	0.5%
11	68.2	15.33	0.9%
12	63.1	14.19	-0.9%
18	66.6	14.97	0.3%
Stay force	1192.2	265.8	

Target Force per Stay	1228	276.07
Target Variance	-3.7%	

Last Lift Off:	kips	kN
	265.8	1192.2
Date	October 4, 2016	

structural TECHNOLOGIES

A Structural Group Company

VSL

Ironton Russell Bridge - Stay Cable Installation Data

Stay	M5R		
	405		
Strands No.	18		
Date	October 4, 2016		
Strand #	Lift Off		
	kN	kips	Scatter
1	65.4	14.70	-0.4%
3	68.7	15.44	0.8%
11	70.3	15.80	1.4%
12	64.2	14.43	-0.8%
18	63.7	14.32	-1.0%
Stay force	1226.4	268.9	

Target Force per Stay	1228	276.07
Target Variance	-2.6%	

Last Lift Off:	kips	kN
	268.9	1226.4
Date	October 4, 2016	

structural TECHNOLOGIES

A Structural Group Company

VSL

Ironton Russell Bridge - Stay Cable Installation Data

Stay	M6L		
	306		
Strands No.	19		
Date	October 4, 2016		
Strand #	Lift Off		
	kN	kips	Scatter
10	70.7	15.89	-0.5%
16	73.7	16.57	0.5%
18	72.1	16.21	0.0%
Stay force	1371.2	308.3	

Target Force per Stay	1375	309.12
Target Variance	-0.3%	

Last Lift Off:	kips	kN
	308.3	1371.2
Date	October 4, 2016	

structural TECHNOLOGIES

A Structural Group Company

VSL

Ironton Russell Bridge - Stay Cable Installation Data

Stay	M6R		
	406		
Strands No.	19		
Date	October 4, 2016		
Strand #	Lift Off		
	kN	kips	Scatter
1	73.9	16.61	-0.1%
3	73	16.41	-0.4%
10	75	16.86	0.3%
11	75.8	17.04	0.6%
18	73.3	16.48	-0.3%
Stay force	1405.4	316.9	

Target Force per Stay	1375	309.12
Target Variance	2.5%	

Last Lift Off:	kips	kN
	316.9	1405.4
Date	October 4, 2016	

structural TECHNOLOGIES

A Structural Group Company

VSL

Ironton Russell Bridge - Stay Cable Installation Data

Stay	M7L		
	307		
Strands No.	20		
Date	October 4, 2016		
Strand #	Lift Off		
	kN	kips	Scatter
2	82.7	18.59	0.2%
4	83.1	18.68	0.4%
12	81.7	18.37	-0.1%
13	81.7	18.37	-0.1%
19	81	18.21	-0.4%
Stay force	1650.0	368.9	

Target Force per Stay	1668	374.99
Target Variance	-1.6%	

Last Lift Off:	kips	kN
	368.9	1650.0
Date	October 4, 2016	

structural TECHNOLOGIES

A Structural Group Company

VSL

Ironton Russell Bridge - Stay Cable Installation Data

Stay	M7R		
	407		
Strands No.	20		
Date	October 4, 2016		
Strand #	Lift Off		
	kN	kips	Scatter
2	77.7	17.47	-1.9%
4	82.2	18.48	-0.3%
12	79.1	17.78	-1.4%
13	87.4	19.65	1.5%
19	89.3	20.08	2.2%
Stay force	1593.3	373.8	

Target Force per Stay	1668	374.99
Target Variance	-0.3%	

Last Lift Off:	kips	kN
	373.8	1593.3
Date	October 4, 2016	

structural TECHNOLOGIES

A Structural Group Company

VSL

Ironton Russell Bridge - Stay Cable Installation Data

Stay	M8L		
	308		
Strands No.	22		
Date	October 4, 2016		
Strand #	Lift Off		
	kN	kips	Scatter
12	77.7	17.47	1.1%
19	70.7	15.89	-1.4%
22	75.5	16.97	0.3%
Stay force	1641.9	369.1	

Target Force per Stay	1739	390.95
Target Variance	-5.6%	

Last Lift Off:	kips	kN
	369.1	1641.9
Date	October 4, 2016	

structural TECHNOLOGIES

A Structural Group Company

VSL

Ironton Russell Bridge - Stay Cable Installation Data

Stay	M8R		
	408		
Strands No.	22		
Date	October 4, 2016		
Strand #	Lift Off		
	kN	kips	Scatter
2	75.4	16.95	-0.3%
5	80.4	18.07	1.4%
12	78	17.54	0.6%
19	74.5	16.75	-0.7%
22	73.5	16.52	-1.0%
Stay force	1714.5	377.7	

Target Force per Stay	1739	390.95
Target Variance	-3.4%	

Last Lift Off:	kips	kN
	377.7	1714.5
Date	October 4, 2016	

structural TECHNOLOGIES

A Structural Group Company

VSL

Ironton Russell Bridge - Stay Cable Installation Data

Stay	M9L		
	309		
Strands No.	22		
Date	October 4, 2016		
Strand #	Lift Off		
	kN	kips	Scatter
3	81.4	18.30	1.4%
9	82	18.43	1.6%
15	86.9	19.54	3.4%
18	59.2	13.31	-6.5%
19	77.7	17.47	0.1%
Stay force	1835.5	383.0	

Target Force per Stay	1815	408.03
Target Variance	-6.1%	

Last Lift Off:	kips	kN
	383.0	1835.5
Date	October 4, 2016	

structural TECHNOLOGIES

A Structural Group Company

VSL

Ironton Russell Bridge - Stay Cable Installation Data

Stay	M9R		
	409		
Strands No.	22		
Date	October 4, 2016		
Strand #	Lift Off		
	kN	kips	Scatter
3	76.2	17.13	-0.5%
9	76.7	17.24	-0.3%
15	77.5	17.42	0.0%
18	78.7	17.69	0.4%
19	78.6	17.67	0.4%
Stay force	1689.6	383.5	

Target Force per Stay	1815	408.03
Target Variance	-6.0%	

Last Lift Off:	kips	kN
	383.5	1689.6
Date	October 4, 2016	

structural TECHNOLOGIES
A Structural Group Company

VSL

Ironton Russell Bridge - Stay Cable Installation Data

Stay	M10L		
	310		
Strands No.	23		
Date	October 4, 2016		
Strand #	Lift Off		
	kN	kips	Scatter
3	75.8	17.04	-0.2%
9	76.2	17.13	-0.1%
15	75.6	17.00	-0.3%
18	77.3	17.38	0.3%
19	77.5	17.42	0.4%
Stay force	1744.9	395.5	

Target Force per Stay	1842	414.10
Target Variance	-4.5%	

Last Lift Off:	kips	kN
	395.5	1744.9
Date	October 4, 2016	

structural TECHNOLOGIES

A Structural Group Company

VSL

Ironton Russell Bridge - Stay Cable Installation Data

Stay	M10R
	410
Strands No.	23
Date	October 4, 2016

Strand #	Lift Off		
	kN	kips	Scatter
3	76.2	17.13	-0.6%
9	77.7	17.47	0.0%
15	77.5	17.42	-0.1%
19	78	17.54	0.1%
18	79.7	17.92	0.7%
Stay force	1774.1	402.4	

Target Force per Stay	1842	414.10
Target Variance	-2.8%	

Last Lift Off:	kips	kN
	402.4	1774.1
Date	October 4, 2016	

structural TECHNOLOGIES
A Structural Group Company

VSL

Ironton Russell Bridge - Stay Cable Installation Data

Stay	M11L		
	311		
Strands No.	24		
Date	October 4, 2016		
Strand #	Lift Off		
	kN	kips	Scatter
2	92.5	20.80	-1.1%
3	94	21.13	-0.6%
15	106	23.83	3.7%
16	91.5	20.57	-1.5%
24	94.1	21.15	-0.5%
Stay force	2340.0	515.9	

Target Force per Stay	2108	473.90
Target Variance	8.9%	

Last Lift Off:	kips	kN
	515.9	2340.0
Date	October 4, 2016	

structural TECHNOLOGIES
A Structural Group Company

VSL

Ironton Russell Bridge - Stay Cable Installation Data

Stay	M11R		
	411		
Strands No.	24		
Date	October 4, 2016		
Strand #	Lift Off		
	kN	kips	Scatter
2	88.5	19.90	-0.6%
3	89.1	20.03	-0.4%
15	89.8	20.19	-0.1%
16	90.7	20.39	0.2%
24	92.8	20.86	0.9%
Stay force	2139.2	486.6	

Target Force per Stay	2108	473.90
Target Variance	2.7%	

Last Lift Off:	kips	kN
	486.6	2139.2
Date	October 4, 2016	

structural TECHNOLOGIES
A Structural Group Company

VSL

Ironton Russell Bridge - Stay Cable Installation Data

Stay	M12L		
	312		
Strands No.	25		
Date	October 4, 2016		
Strand #	Lift Off		
	kN	kips	Scatter
2	74.7	16.79	-0.8%
3	75.1	16.88	-0.6%
15	77.4	17.40	0.2%
16	77.2	17.36	0.1%
25	79.6	17.90	1.0%
Stay force	1893.3	431.6	

Target Force per Stay	2011	452.10
Target Variance	-4.5%	

Last Lift Off:	kips	kN
	431.6	1893.3
Date	October 4, 2016	

structural TECHNOLOGIES
A Structural Group Company

VSL

Ironton Russell Bridge - Stay Cable Installation Data

Stay	M12R		
	412		
Strands No.	25		
Date	October 4, 2016		
Strand #	Lift Off		
	kN	kips	Scatter
2	77.2	17.36	-0.1%
3	74.7	16.79	-1.0%
15	77.7	17.47	0.1%
16	78.7	17.69	0.5%
25	78.8	17.72	0.5%
Stay force	1913.3	435.1	

Target Force per Stay	2011	452.10
Target Variance	-3.8%	

Last Lift Off:	kips	kN
	435.1	1913.3
Date	October 4, 2016	

structural TECHNOLOGIES
A Structural Group Company

VSL

Ironton Russell Bridge - Stay Cable Installation Data

Stay	M13L		
	313		
Strands No.	26		
Date	October 4, 2016		
Strand #	Lift Off		
	kN	kips	Scatter
2	78	17.54	-1.0%
3	77.5	17.42	-1.2%
14	80.5	18.10	-0.1%
25	81.1	18.23	0.1%
26	86.5	19.45	2.1%
Stay force	2045.3	471.8	

Target Force per Stay	2126	477.95
Target Variance	-1.3%	

Last Lift Off:	kips	kN
	471.8	2045.3
Date	October 4, 2016	

structural TECHNOLOGIES
A Structural Group Company

VSL

Ironton Russell Bridge - Stay Cable Installation Data

Stay	M13R		
	413		
Strands No.	29		
Date	October 4, 2016		
Strand #	Lift Off		
	kN	kips	Scatter
2	75	16.86	-1.1%
3	77.2	17.36	-0.3%
14	76.9	17.29	-0.4%
25	78.8	17.72	0.3%
26	82.3	18.50	1.5%
Stay force	2214.6	508.8	

Target Force per Stay	2126	477.95
Target Variance	6.5%	

Last Lift Off:	kips	kN
	508.8	2214.6
Date	October 4, 2016	

structural TECHNOLOGIES
A Structural Group Company

VSL

Ironton Russell Bridge - Stay Cable Installation Data

Stay	M14L		
	314		
Strands No.	29		
Date	October 4, 2016		
Strand #	Lift Off		
	kN	kips	Scatter
1	76.7	17.24	-0.8%
7	79.1	17.78	0.0%
18	78.7	17.69	-0.1%
27	81.4	18.30	0.9%
Stay force	2266.8	514.9	

Target Force per Stay	2366	531.91
Target Variance	-3.2%	

Last Lift Off:	kips	kN
	514.9	2266.8
Date	October 4, 2016	

structural TECHNOLOGIES
A Structural Group Company

VSL

Ironton Russell Bridge - Stay Cable Installation Data

Stay	M14R		
	414		
Strands No.	29		
Date	October 4, 2016		
Strand #	Lift Off		
	kN	kips	Scatter
1	81.4	18.30	-0.4%
7	78.7	17.69	-1.3%
18	83.2	18.70	0.3%
27	83	18.66	0.2%
28	85.6	19.24	1.2%
Stay force	2351.9	537.1	

Target Force per Stay	2366	531.91
Target Variance	1.0%	

Last Lift Off:	kips	kN
	537.1	2351.9
Date	October 4, 2016	

structural TECHNOLOGIES
A Structural Group Company

VSL

Ironton Russell Bridge - Stay Cable Installation Data

Stay	M15L		
	315		
Strands No.	29		
Date	October 4, 2016		
Strand #	Lift Off		
	kN	kips	Scatter
3	84.3	18.95	-0.8%
12	86.9	19.54	0.2%
13	86.1	19.36	-0.1%
22	88.6	19.92	0.8%
Stay force	2487.2	563.8	

Target Force per Stay	2362	531.01
Target Variance	6.2%	

Last Lift Off:	kips	kN
	563.8	2487.2
Date	October 4, 2016	

structural TECHNOLOGIES
A Structural Group Company

VSL

Ironton Russell Bridge - Stay Cable Installation Data

Stay	M15R		
	415		
Strands No.	29		
Date	October 4, 2016		
Strand #	Lift Off		
	kN	kips	Scatter
3	86.2	19.38	0.0%
12	84.5	19.00	-0.6%
13	85	19.11	-0.4%
22	87	19.56	0.3%
23	88.2	19.83	0.7%
Stay force	2471.8	561.9	

Target Force per Stay	2362	531.01
Target Variance	5.8%	

Last Lift Off:	kips	kN
	561.9	2471.8
Date	October 4, 2016	

structural TECHNOLOGIES
A Structural Group Company

VSL

Ironton Russell Bridge - Stay Cable Installation Data

Stay	B1L		
	101		
Strands No.	14		
Date	October 4, 2016		
Strand #	Lift Off		
	kN	kips	Scatter
1	59.6	13.40	-0.5%
6	60.3	13.56	-0.2%
10	60.9	13.69	0.0%
11	61.4	13.80	0.2%
14	62.6	14.07	0.6%
Stay force	853.4	191.9	

Target Force per Stay	832	187.04
Target Variance	2.6%	

Last Lift Off:	kips	kN
	191.9	853.4
Date	October 4, 2016	

structural TECHNOLOGIES

A Structural Group Company

VSL

Ironton Russell Bridge - Stay Cable Installation Data

Stay	B1R		
	201		
Strands No.	14		
Date	October 4, 2016		
Strand #	Lift Off		
	kN	kips	Scatter
1	62.3	14.01	-0.6%
6	62.2	13.98	-0.7%
10	64.8	14.57	0.3%
11	63.3	14.23	-0.3%
14	67.8	15.24	1.3%
Stay force	897.1	201.7	

Target Force per Stay	832	187.04
Target Variance	7.8%	

Last Lift Off:	kips	kN
	201.7	897.1
Date	October 4, 2016	

structural TECHNOLOGIES

A Structural Group Company

VSL

Ironton Russell Bridge - Stay Cable Installation Data

Stay	B2L		
	102		
Strands No.	15		
Date	October 4, 2016		
Strand #	Lift Off		
	kN	kips	Scatter
2	73.8	16.59	-0.2%
5	74.8	16.82	0.2%
10	73	16.41	-0.5%
11	73.6	16.55	-0.3%
15	76.3	17.15	0.7%
Stay force	1114.5	250.6	

Target Force per Stay	1050	236.05
Target Variance	6.1%	

Last Lift Off:	kips	kN
	250.6	1114.5
Date	October 4, 2016	

structural TECHNOLOGIES
A Structural Group Company

VSL

Ironton Russell Bridge - Stay Cable Installation Data

Stay	B2R		
	202		
Strands No.	15		
Date	October 4, 2016		
Strand #	Lift Off		
	kN	kips	Scatter
2	68.9	15.49	-0.5%
5	72.5	16.30	0.8%
10	68.9	15.49	-0.5%
11	70.4	15.83	0.1%
15	70.4	15.83	0.1%
Stay force	1053.3	236.8	

Target Force per Stay	1050	236.05
Target Variance	0.3%	

Last Lift Off:	kips	kN
	236.8	1053.3
Date	October 4, 2016	

structural TECHNOLOGIES

A Structural Group Company

VSL

Ironton Russell Bridge - Stay Cable Installation Data

Stay	B3L		
	103		
Strands No.	16		
Date	October 4, 2016		
Strand #	Lift Off		
	kN	kips	Scatter
1	78.2	17.58	0.0%
3	75.1	16.88	-1.1%
11	80.2	18.03	0.7%
12	79.3	17.83	0.4%
16	77.8	17.49	-0.1%
Stay force	1249.9	281.0	

Target Force per Stay	1174	263.93
Target Variance	6.5%	

Last Lift Off:	kips	kN
	281.0	1249.9
Date	October 4, 2016	

structural TECHNOLOGIES

A Structural Group Company

VSL

Ironton Russell Bridge - Stay Cable Installation Data

Stay	B3R
	203
Strands No.	16
Date	October 4, 2016

Strand #	Lift Off		
	kN	kips	Scatter
1	78.3	17.60	-0.1%
3	76.1	17.11	-0.9%
11	77.9	17.51	-0.3%
12	81	18.21	0.9%
16	79.7	17.92	0.4%
Stay force	1257.6	282.7	

Target Force per Stay	1174	263.93
Target Variance	7.1%	

Last Lift Off:	kips	kN
	282.7	1257.6
Date	October 4, 2016	

structural TECHNOLOGIES
A Structural Group Company

VSL

Ironton Russell Bridge - Stay Cable Installation Data

Stay	B4L		
	104		
Strands No.	17		
Date	October 4, 2016		
Strand #	Lift Off		
	kN	kips	Scatter
1	83.1	18.68	1.7%
3	80.1	18.01	0.6%
11	75.9	17.06	-0.9%
12	76.9	17.29	-0.5%
17	75.8	17.04	-0.9%
Stay force	1332.1	299.5	

Target Force per Stay	1423	319.91
Target Variance	-6.4%	

Last Lift Off:	kips	kN
	299.5	1332.1
Date	October 4, 2016	

structural TECHNOLOGIES

A Structural Group Company

VSL

Ironton Russell Bridge - Stay Cable Installation Data

Stay	B4R		
	204		
Strands No.	17		
Date	October 4, 2016		
Strand #	Lift Off		
	kN	kips	Scatter
1	79.8	17.94	0.2%
3	76.7	17.24	-0.9%
11	81.6	18.34	0.9%
12	81.7	18.37	0.9%
17	76.3	17.15	-1.0%
Stay force	1346.7	302.8	

Target Force per Stay	1423	319.91
Target Variance	-5.4%	

Last Lift Off:	kips	kN
	302.8	1346.7
Date	October 4, 2016	

structural TECHNOLOGIES

A Structural Group Company

VSL

Ironton Russell Bridge - Stay Cable Installation Data

Stay	B5L		
	105		
Strands No.	17		
Date	October 4, 2016		
Strand #	Lift Off		
	kN	kips	Scatter
1	89	20.01	0.9%
3	84.7	19.04	-0.6%
11	86.4	19.42	0.0%
12	85.4	19.20	-0.4%
17	86.5	19.45	0.0%
Stay force	1468.8	330.2	

Target Force per Stay	1530	343.96
Target Variance	-4.0%	

Last Lift Off:	kips	kN
	330.2	1468.8
Date	October 4, 2016	

structural TECHNOLOGIES

A Structural Group Company

VSL

Ironton Russell Bridge - Stay Cable Installation Data

Stay	B5R		
	205		
Strands No.	17		
Date	October 4, 2016		
Strand #	Lift Off		
	kN	kips	Scatter
1	87.5	19.67	0.8%
3	83.7	18.82	-0.5%
11	85.2	19.15	0.0%
12	85.6	19.24	0.2%
17	83.8	18.84	-0.5%
Stay force	1447.7	325.5	

Target Force per Stay	1530	343.96
Target Variance	-5.4%	

Last Lift Off:	kips	kN
	325.5	1447.7
Date	October 4, 2016	

structural TECHNOLOGIES

A Structural Group Company

VSL

Ironton Russell Bridge - Stay Cable Installation Data

Stay	B6L		
	106		
Strands No.	17		
Date	October 4, 2016		
Strand #	Lift Off		
	kN	kips	Scatter
1	85.3	19.18	2.1%
3	77.7	17.47	-0.7%
11	77.1	17.33	-0.9%
12	80.6	18.12	0.4%
17	77	17.31	-0.9%
Stay force	1352.2	304.0	

Target Force per Stay	1432	321.93
Target Variance	-5.6%	

Last Lift Off:	kips	kN
	304.0	1352.2
Date	October 4, 2016	

structural TECHNOLOGIES

A Structural Group Company

VSL

Ironton Russell Bridge - Stay Cable Installation Data

Stay	B6R		
	206		
Strands No.	17		
Date	October 4, 2016		
Strand #	Lift Off		
	kN	kips	Scatter
3	74	16.64	0.1%
11	72	16.19	-0.7%
12	71.7	16.12	-0.8%
17	77.1	17.33	1.2%
2	74.4	16.73	0.2%
Stay force	1255.3	282.2	

Target Force per Stay	1432	321.93
Target Variance	-12.3%	

Last Lift Off:	kips	kN
	282.2	1255.3
Date	October 4, 2016	

structural TECHNOLOGIES

A Structural Group Company

VSL

Ironton Russell Bridge - Stay Cable Installation Data

Stay	B7L		
	107		
Strands No.	17		
Date	October 4, 2016		
Strand #	Lift Off		
	kN	kips	Scatter
1	79.5	17.87	2.0%
3	73.2	16.46	-0.3%
11	71.8	16.14	-0.8%
12	73.4	16.50	-0.2%
17	71.6	16.10	-0.8%
Stay force	1256.3	282.4	

Target Force per Stay	1415	318.11
Target Variance	-11.2%	

Last Lift Off:	kips	kN
	282.4	1256.3
Date	October 4, 2016	

structural TECHNOLOGIES

A Structural Group Company

VSL

Ironton Russell Bridge - Stay Cable Installation Data

Stay	B7R		
	207		
Strands No.	17		
Date	October 4, 2016		
Strand #	Lift Off		
	kN	kips	Scatter
1	81.4	18.30	1.4%
3	76.3	17.15	-0.5%
11	76.4	17.18	-0.4%
12	77.2	17.36	-0.1%
17	76.5	17.20	-0.4%
Stay force	1318.5	296.4	

Target Force per Stay	1415	318.11
Target Variance	-6.8%	

Last Lift Off:	kips	kN
	296.4	1318.5
Date	October 4, 2016	

structural TECHNOLOGIES

A Structural Group Company

VSL

Ironton Russell Bridge - Stay Cable Installation Data

Stay	B8L		
	108		
Strands No.	18		
Date	October 4, 2016		
Strand #	Lift Off		
	kN	kips	Scatter
1	84.4	18.97	1.4%
3	82.7	18.59	0.8%
11	79.3	17.83	-0.4%
12	79.5	17.87	-0.3%
18	76.4	17.18	-1.5%
Stay force	1448.3	325.6	

Target Force per Stay	1641	368.92
Target Variance	-11.7%	

Last Lift Off:	kips	kN
	325.6	1448.3
Date	October 4, 2016	

structural TECHNOLOGIES

A Structural Group Company

VSL

Ironton Russell Bridge - Stay Cable Installation Data

Stay	B8R		
	208		
Strands No.	18		
Date	October 4, 2016		
Strand #	Lift Off		
	kN	kips	Scatter
1	81	18.21	-0.4%
3	81.6	18.34	-0.2%
11	88.1	19.81	2.1%
12	83.3	18.73	0.4%
18	77.1	17.33	-1.8%
Stay force	1480.0	332.7	

Target Force per Stay	1641	368.92
Target Variance	-9.8%	

Last Lift Off:	kips	kN
	332.7	1480.0
Date	October 4, 2016	

structural TECHNOLOGIES

A Structural Group Company

VSL

Ironton Russell Bridge - Stay Cable Installation Data

Stay	B9L		
	109		
Strands No.	19		
Date	October 4, 2016		
Strand #	Lift Off		
	kN	kips	Scatter
1	96.7	21.74	0.2%
3	95.1	21.38	-0.3%
11	96.8	21.76	0.3%
12	95.6	21.49	-0.2%
19	96.1	21.60	0.0%
Stay force	1825.1	410.3	

Target Force per Stay	1864	419.05
Target Variance	-2.1%	

Last Lift Off:	kips	kN
	410.3	1825.1
Date	October 4, 2016	

structural TECHNOLOGIES

A Structural Group Company

VSL

Ironton Russell Bridge - Stay Cable Installation Data

Stay	B9R		
	209		
Strands No.	19		
Date	October 4, 2016		
Strand #	Lift Off		
	kN	kips	Scatter
1	100	22.48	-0.3%
3	97.4	21.90	-1.2%
11	101	22.71	0.1%
12	104.4	23.47	1.3%
19	101.3	22.77	0.2%
Stay force	1915.6	430.6	

Target Force per Stay	1864	419.05
Target Variance	2.8%	

Last Lift Off:	kips	kN
	430.6	1915.6
Date	October 4, 2016	

structural TECHNOLOGIES
A Structural Group Company

VSL

Ironton Russell Bridge - Stay Cable Installation Data

Stay	B10L		
	110		
Strands No.	21		
Date	October 4, 2016		
Strand #	Lift Off		
	kN	kips	Scatter
1	93.2	20.95	1.4%
5	89.9	20.21	0.2%
13	85.8	19.29	-1.3%
18	85.2	19.15	-1.5%
21	92.8	20.86	1.2%
Stay force	1877.0	422.0	

Target Force per Stay	1913	430.07
Target Variance	-1.9%	

Last Lift Off:	kips	kN
	422.0	1877.0
Date	October 4, 2016	

structural TECHNOLOGIES

A Structural Group Company

VSL

Ironton Russell Bridge - Stay Cable Installation Data

Stay	B10R		
	210		
Strands No.	21		
Date	October 4, 2016		
Strand #	Lift Off		
	kN	kips	Scatter
1	95.3	21.42	1.3%
5	93.2	20.95	0.5%
13	87.5	19.67	-1.5%
18	91.1	20.48	-0.2%
21	91.3	20.53	-0.1%
Stay force	1925.3	432.8	

Target Force per Stay	1913	430.07
Target Variance	0.6%	

Last Lift Off:	kips	kN
	432.8	1925.3
Date	October 4, 2016	

structural TECHNOLOGIES
A Structural Group Company

VSL

Ironton Russell Bridge - Stay Cable Installation Data

Stay	B11L		
	111		
Strands No.	21		
Date	October 4, 2016		
Strand #	Lift Off		
	kN	kips	Scatter
1	105	23.61	1.1%
5	97	21.81	-1.8%
13	102.6	23.07	0.2%
18	101.4	22.80	-0.2%
21	103.8	23.34	0.7%
Stay force	2141.2	481.4	

Target Force per Stay	2068	464.91
Target Variance	3.5%	

Last Lift Off:	kips	kN
	481.4	2141.2
Date	October 4, 2016	

structural TECHNOLOGIES
A Structural Group Company

VSL

Ironton Russell Bridge - Stay Cable Installation Data

Stay	B11R		
	211		
Strands No.	21		
Date	October 4, 2016		
Strand #	Lift Off		
	kN	kips	Scatter
1	98.7	22.19	-0.1%
5	99.4	22.35	0.2%
13	102.2	22.98	1.2%
18	92.6	20.82	-2.3%
21	101.9	22.91	1.1%
Stay force	2078.2	467.2	

Target Force per Stay	2068	464.91
Target Variance	0.5%	

Last Lift Off:	kips	kN
	467.2	2078.2
Date	October 4, 2016	

structural TECHNOLOGIES
A Structural Group Company

VSL

Ironton Russell Bridge - Stay Cable Installation Data

Stay	B12L		
	112		
Strands No.	21		
Date	October 4, 2016		
Strand #	Lift Off		
	kN	kips	Scatter
1	96.7	21.74	1.1%
5	93.7	21.06	0.0%
13	93.4	21.00	-0.1%
18	93.9	21.11	0.1%
21	90.7	20.39	-1.1%
Stay force	1967.3	442.3	

Target Force per Stay	1953	439.06
Target Variance	0.7%	

Last Lift Off:	kips	kN
	442.3	1967.3
Date	October 4, 2016	

structural TECHNOLOGIES

A Structural Group Company

VSL

Ironton Russell Bridge - Stay Cable Installation Data

Stay	B12R		
	212		
Strands No.	21		
Date	October 4, 2016		
Strand #	Lift Off		
	kN	kips	Scatter
1	93.1	20.93	-0.6%
5	94.9	21.33	0.1%
13	96	21.58	0.5%
18	93.6	21.04	-0.4%
21	95.6	21.49	0.3%
Stay force	1987.4	446.8	

Target Force per Stay	1953	439.06
Target Variance	1.8%	

Last Lift Off:	kips	kN
	446.8	1987.4
Date	October 4, 2016	

structural TECHNOLOGIES

A Structural Group Company

VSL

Ironton Russell Bridge - Stay Cable Installation Data

Stay	B13L		
	113		
Strands No.	21		
Date	October 4, 2016		
Strand #	Lift Off		
	kN	kips	Scatter
1	93.4	21.00	0.1%
5	94.5	21.24	0.4%
13	93.6	21.04	0.1%
18	91.4	20.55	-0.7%
21	93.4	21.00	0.1%
Stay force	1958.5	440.3	

Target Force per Stay	1890	424.90
Target Variance	3.6%	

Last Lift Off:	kips	kN
	440.3	1958.5
Date	October 4, 2016	

structural TECHNOLOGIES

A Structural Group Company

VSL

Ironton Russell Bridge - Stay Cable Installation Data

Stay	B13R		
	213		
Strands No.	21		
Date	October 4, 2016		
Strand #	Lift Off		
	kN	kips	Scatter
1	91	20.46	-0.7%
5	92.8	20.86	0.0%
13	94.5	21.24	0.6%
18	94.1	21.15	0.5%
21	91.8	20.64	-0.4%
Stay force	1949.6	438.3	

Target Force per Stay	1890	424.90
Target Variance	3.2%	

Last Lift Off:	kips	kN
	438.3	1949.6
Date	October 4, 2016	

structural TECHNOLOGIES

A Structural Group Company

VSL

Ironton Russell Bridge - Stay Cable Installation Data

Stay	B14L		
	114		
Strands No.	28		
Date	October 4, 2016		
Strand #	Lift Off		
	kN	kips	Scatter
1	81	18.21	-0.2%
8	78.6	17.67	-1.0%
16	80.9	18.19	-0.2%
27	84.6	19.02	1.1%
28	82.1	18.46	0.2%
Stay force	2280.3	512.6	

Target Force per Stay	2251	506.05
Target Variance	1.3%	

Last Lift Off:	kips	kN
	512.6	2280.3
Date	October 4, 2016	

structural TECHNOLOGIES

A Structural Group Company

VSL

Ironton Russell Bridge - Stay Cable Installation Data

Stay	B14R		
	214		
Strands No.	28		
Date	October 4, 2016		
Strand #	Lift Off		
	kN	kips	Scatter
1	79.9	17.96	-0.2%
8	81.4	18.30	0.4%
16	80.1	18.01	-0.1%
27	79.3	17.83	-0.4%
28	81	18.21	0.2%
Stay force	2249.5	505.7	

Target Force per Stay	2251	506.05
Target Variance	-0.1%	

Last Lift Off:	kips	kN
	505.7	2249.5
Date	October 4, 2016	

structural TECHNOLOGIES

A Structural Group Company

VSL

Ironton Russell Bridge - Stay Cable Installation Data

Stay	B15L		
	115		
Strands No.	33		
Date	October 4, 2016		
Strand #	Lift Off		
	kN	kips	Scatter
1	77.5	17.42	0.8%
8	75.6	17.00	0.2%
20	76.2	17.13	0.4%
27	74.9	16.84	-0.1%
33	71.7	16.12	-1.2%
Stay force	2480.9	557.7	

Target Force per Stay	2713	609.92
Target Variance	-8.6%	

Last Lift Off:	kips	kN
	557.7	2480.9
Date	October 4, 2016	

structural TECHNOLOGIES

A Structural Group Company

VSL

Ironton Russell Bridge - Stay Cable Installation Data

Stay	B15R		
	215		
Strands No.	33		
Date	October 4, 2016		
Strand #	Lift Off		
	kN	kips	Scatter
1	78.1	17.56	0.0%
8	79.2	17.81	0.4%
20	78.2	17.58	0.1%
27	77.6	17.45	-0.2%
33	77	17.31	-0.4%
Stay force	2574.7	578.8	

Target Force per Stay	2713	609.92
Target Variance	-5.1%	

Last Lift Off:	kips	kN
	578.8	2574.7
Date	October 4, 2016	

B.4 Stay Liftoff Analysis at End of Construction – Pylon Calcs

LETTER OF TRANSMITTAL

BRAYMAN CONSTRUCTION CORP.
1000 John Roebling Way
Saxonburg, PA 16056
Phone: (724) 443-1533
Fax: (724) 443-8733

To: Ohio Dept. of Transportation
District 9
650 Eastern Avenue
Chillicothe, OH 45601

Project: SR-93-0.00
Ironton Russell Bridge
Lawrence County, OH
Project No. 110628

BCC # 265-000-001

Attention: Dave Bame

Date: August 15, 2017

We are sending you the following items:

☐ Under Separate Cover ☑ Attached

☐ Copy of Letter ☐ Prints ☐ Specifications ☐ Change Order

☐ Shop Drawings ☐ Plans ☐ _____

Copies	Date	Description
1	8/15/17	Stay Liftoff Analysis at End of Construction - Pylon Calculations

Transmitted for the following purpose:

☑ For Approval ☐ Approved as Submitted ☐ Resubmit __ copies for approval

☐ For Your Use ☐ Approved as Noted ☐ Submit __ copies for distribution

☐ As Requested ☐ Returned for Corrections ☐ Return __ corrected prints

☐ For Review & Comment ☐ For Certification

MAIL: ○ Regular ○ Overnight ○ Certified ✔ Email **FAX:** ○

Remarks: SEE ATTACHED SHEET

Dustin Williamson

Signed: Dustin Williamson
Project Engineer

cc: File/arb
J. Troy Huff
Edwin Callicutt
Chris Capper

Ironton Russell Bridge over Ohio River

LAW-93C-0000

Stay Liftoff Analysis at End of Construction - Pylon Calcs.

For:

District 9

Submitted By:

1000 John Roebling Way

Saxonburg, Pa 16056

August 15, 2017

IRONTON-RUSSELL CABLE-STAYED

Over the Ohio River, KY/OH

(Reedy Creek Improvement District)

LONGITUDINAL CONSTRUCTION ANALYSIS

REVISION 2 – SUPPLEMENT #2

August 2017

Prepared For:

Brayman Construction Corporation

1000 John Roebling Way
Saxonburg, PA 16056

Review is only for conformance with the design concept. Review does not cover dimensions, quantities, accuracy, fit, or any assembly for which this item may be a component. Review does not authorize deviation from Contract Documents or substitution of materials. Requests for deviations from the Contract Documents will only be addressed thru the Change Order Process.

REVIEWED

CONFORMS WITH CONCEPT	(✔)
CONFORMS AS NOTED	( )
RESUBMIT	( )
NO ACTION	( )
DOES NOT CONFORM	( )

URS

DATE 9/28/2017 BY Travis Baker



FINLEY Project No. 11.60260

1.0 Summary

This supplement contains an update of "Section 6.0 – Pylon Design Analysis" from the Ironton Russel Longitudinal Construction Analysis (Rev 2) for the latest cable force values provided within the LCA Rev 2 Supplement #1 submitted on March 2016.

In summary, all Pylon design results and analysis have been updated to reflect the latest results from LCA Rev 2 – Supplement #1. All Pylon analysis for construction and strength level loads remain adequate.

Note: Previous submittal results and analysis has been included in this supplement for reference.

6.0 Pylon Design Analysis

This section includes analysis results and strength checks of the pylon design. Two stages are considered, namely:

- Construction
- Service

In the construction stage, the pylon is analyzed and checked for the effect of anticipated construction loads prior to, and after completion of the pylon head. In the service stage, the pylon is analyzed and checked for the effect of anticipated loads while the entire bridge is fully operational. Strength checks are conducted using the software "spColumn v4.80", developed by STRUCTUREPOINT, LLC. SpColumn is a software that can be used to design reinforced concrete columns or investigate the ability of reinforced concrete columns to support anticipated loads.

6.1 Construction

This section contains analysis results and strength checks of the pylon during construction.

6.1.1 Pylon Prior to Head Completion

This section contains the forces and moments due to the weight of the pylon and wind pressure. It is assumed that Segment 1 through Segment 15 of a single pylon have been completed at this time. The pylon is analyzed as a cantilever for the forces and moments at the base of Segment 6, which is at the deck level. The base of Segment 6 is also the critical section of the pylon. The factored loads and design section at the base of Segment 6 are input into the column analysis software, spColumn, to check the adequacy of the design.

Change Log

This worksheet calculates forces and moments at the base of Segment 6 due to self-weight and wind prior to, and after head completion of the pylon. The analysis is limited to a single pylon leg taken as a cantilever. Note that Segment 15 is assumed to be the last segment completed prior to head completion.

path := CWD

path = "G:\Ironton-Russell\Engineering\Pylon Checks\Pylon Analysis\"

Data Import

- **Pressure functions**

Nr1 := rows(PressureData)	(# of rows of data)
HPvec := submatrix(PressureData, 2, Nr1, 1, 1)	[ft] (pressure height vector)
PTvec := submatrix(PressureData, 2, Nr1, 5, 5)	[ksf] (transverse pressure vector)
PLvec := submatrix(PressureData, 2, Nr1, 7, 7)	[ksf] (longitudinal pressure vector)
$P_{trans}(y)$:= linterp(HPvec, PTvec, y)	[ksf] (transverse pressure function)
$P_{long}(y)$:= linterp(HPvec, PLvec, y)	[ksf] (longitudinal pressure function)

- **Self weight**

Nr2 := rows(WeightData)	(# of rows of data)
R_phc := 10	(rows of data prior to head completion)
SW := submatrix(WeightData, 2, Nr2, 2, 2)	[kips] (segment weights)
CG_v := submatrix(WeightData, 2, Nr2, 3, 3)	[ft] (segment centers of gravity measured from Segment 6 vertically)
CG_h := submatrix(WeightData, 2, Nr2, 4, 4)	[ft] (segment centers of gravity measured from Segment 6 horizontally)

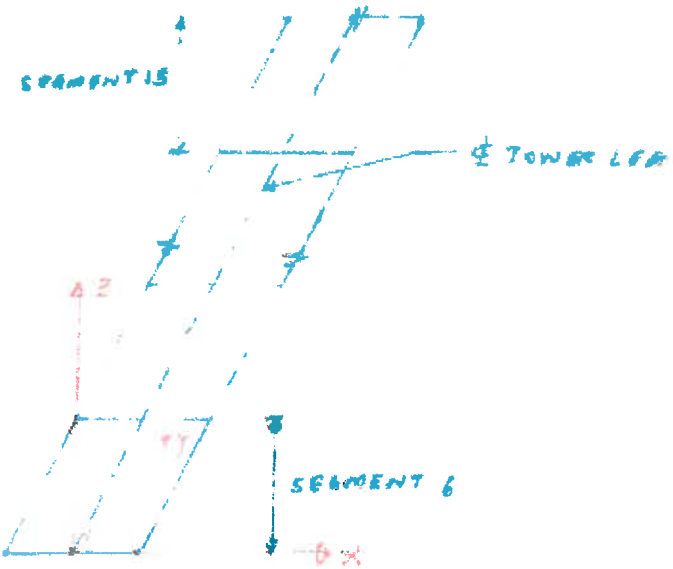

FRONT ELEVATION OF TOWER LEG

- **Width and inclined height functions for pressure integration**

$Nr3 := rows(DimData)$	(# of rows of dimension data)
$Ls := submatrix(DimData, 2, Nr3, 1, 1)$	[ft] (segment lengths --- in transverse direction)
$Ws := submatrix(DimData, 2, Nr3, 2, 2)$	[ft] (segment widths --- in longitudinal direction)
$Hvec := submatrix(HeightData, 2, Nr3, 2, 2)$	[ft] (segment elevations relative to Segment 6)
$w_{tr}(z) := linterp(Hvec, Ls, z)$	[ft] (width of section at vertical height "z" from Segment 6 in transverse direction)
$w_{lo}(z) := linterp(Hvec, Ws, z)$	[ft] (width of section at height "z" from Segment 6 in longitudinal direction)
$z\_tr_{INC}(z) := z \cdot \sqrt{1 + \left(\frac{306}{2738}\right)^2}$	[ft] (height measured in plane of inclined segment surface in transverse direction)
$z\_lo_{INC}(z) := z \cdot \sqrt{1 + \left(\frac{5.25}{240}\right)^2}$	[ft] (height measured in plane of inclined segment surface in longitudinal direction)

PRIOR TO HEAD COMPLETION

- **Axial load prior to head completion**

$N_{strut} := 0.5 \cdot (190 + 335)$ [kips] (half the weight of upper and lower temporary struts)

$P := \sum_{i=1}^{R\_phc} SW_i + N_{strut}$ (nominal dead load)

$P = 2.332 \times 10^3$ [kips]

$P_u := 1.25 \cdot P$ (factored dead load)

$P_u = 2.915 \times 10^3$ [kips]

- **Self weight moment prior to head completion**

$$M_{SW} := \sum_{i=1}^{R\_phc} \left(SW_i \cdot CG_{h_i} \right)$$

$M_{SW} = 2.062 \times 10^4$ [kip-ft] (in Y "longitudinal" direction)

- **Moments due to wind pressure prior to head completion**

$$M_{WL\_trans} := \int_0^{Hvec_{R\_phc+1}} P_{trans}(z) \cdot w_{tr}(z) \cdot \sqrt{1 + \left(\frac{306}{2738}\right)^2} \cdot z \, dz$$ (moment due to transverse pressure)

$M_{WL\_trans} = 9.922 \times 10^3$ [kip-ft] (in Y "longitudinal" direction)

$$M_{WL\_long} := \int_0^{Hvec_{R\_phc+1}} P_{long}(z) \cdot w_{lo}(z) \cdot \sqrt{1 + \left(\frac{5.25}{240}\right)^2} \cdot z \, dz$$ (moment due to longitudinal pressure)

$M_{WL\_long} = 5.359 \times 10^3$ [kip-ft] (in X "transverse" direction)

- **Total factored moments prior to head completion**

$M_{u\_X} := 1.25 \cdot M_{WL\_long}$

$M_{u\_X} = 6.699 \times 10^3$ [kip-ft]

$M_{u\_Y} := 1.25 \cdot M_{SW} + 1.25 \cdot M_{WL\_trans}$

$M_{u\_Y} = 3.818 \times 10^4$ [kip-ft]

AFTER HEAD COMPLETION

- **Axial load after head completion**

$N2_{strut} := 0$ [kips] (temporary struts removed)

$P2 := \sum_{i=1}^{Nr2-1} SW_i + N2_{strut}$ (nominal dead load)

$P2 = 2.53 \times 10^3$ [kips]

$P2_u := 1.25 \cdot P2$ (factored dead load)

$P2_u = 3.162 \times 10^3$ [kips]

- **Self weight moment after head completion**

$M2_{SW} := \sum_{i=1}^{Nr2-1} \left(SW_i \cdot CG_{h_i} \right)$

$M2_{SW} = 3.081 \times 10^4$ [kip-ft] (in Y "longitudinal" direction)

- **Moments due to wind pressure after head completion**

$$M2_{WL\_trans} := \int_0^{Hvec_{Nr3-1}} P_{trans}(z) \cdot w_{tr}(z) \cdot \sqrt{1 + \left(\frac{306}{2738}\right)^2} \cdot z \, dz$$ (moment due to transverse pressure)

$M2_{WL\_trans} = 1.486 \times 10^4$ [kip-ft] (in Y "longitudinal" direction)

$$M2_{WL\_long} := \int_0^{Hvec_{Nr3-1}} P_{long}(z) \cdot w_{lo}(z) \cdot \sqrt{1 + \left(\frac{5.25}{240}\right)^2} \cdot z \, dz$$ (moment due to longitudinal pressure)

$M2_{WL\_long} = 8.604 \times 10^3$ [kip-ft] (in X "transverse" direction)

- **Total factored moments after head completion**

$M2_{u\_X} := 1.25 \cdot M2_{WL\_long}$

$M2_{u\_X} = 1.076 \times 10^4$ [kip-ft]

$M2_{u\_Y} := 1.25 \cdot M2_{SW} + 1.25 \cdot M2_{WL\_trans}$

$M2_{u\_Y} = 5.709 \times 10^4$ [kip-ft]

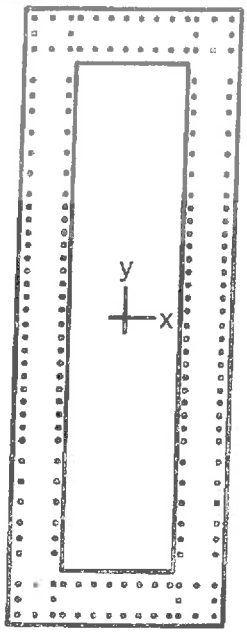

84 x 239.25 in

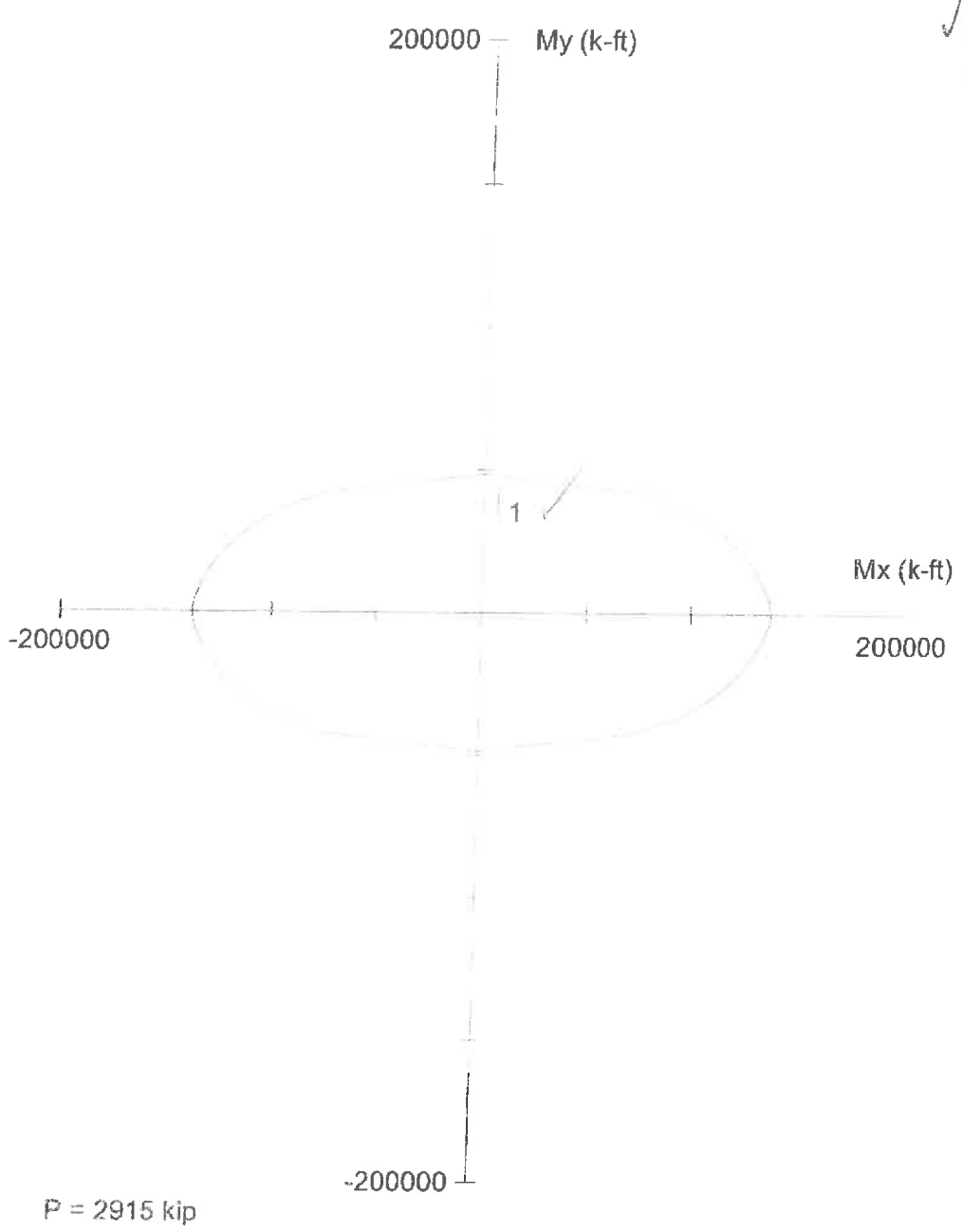

Code: ACI 318-11

Units: English

Run axis: Biaxial

Run option: Investigation

Slenderness: Not considered

Column type: Structural

Bars: ASTM A615

Date: 07/27/12

Time: 11:25:51

spColumn v4.80. Licensed to: FINLEY Engineering Group, Inc.. License ID: 58588-1028124-4-17CCF-2AA7D

File: G:\Ironton-Russell\Engineering\Pylon Checks\SectionCapacity\Segment 6 Section.col

Project: Ironton-Russel 11.60260

Column: Pylon Seg16

Engineer: FM

f'c = 6.5 ksi	fy = 60 ksi	Ag = 11418 in^2	192 bars
Ec = 4595 ksi	Es = 29000 ksi	As = 235.62 in^2	rho = 2.06%
fc = 5.525 ksi		Xo = 0.00 in	Ix = 6.77237e+007 in^4
_u = 0.003 in/in		Yo = 0.00 in	Iy = 1.04168e+007 in^4
Beta1 = 0.725		Min clear spacing = 2.38 in	Clear cover = N/A

Confinement: Tied

phi(a) = 0.8, phi(b) = 0.9, phi(c) = 0.65

6.1.2 Pylon Strength Force Envelopes

This section contains the forces and moments on the bridge pylons after completion of the pylon head, which effectively ties the east and west pylons together. The analysis is conducted using RM Bridge. The following forces and time dependent phenomena are considered:

- Self-weight
- Cable forces
- Loads due to construction equipment (form traveler, etc.)
- Creep and shrinkage

It should be noted that the strength envelopes do not include the effects of wind loads.

Pylon Axial Force Envelope During Construction (LCA Rev 2 04/16 Supplement, After EOC Restress)

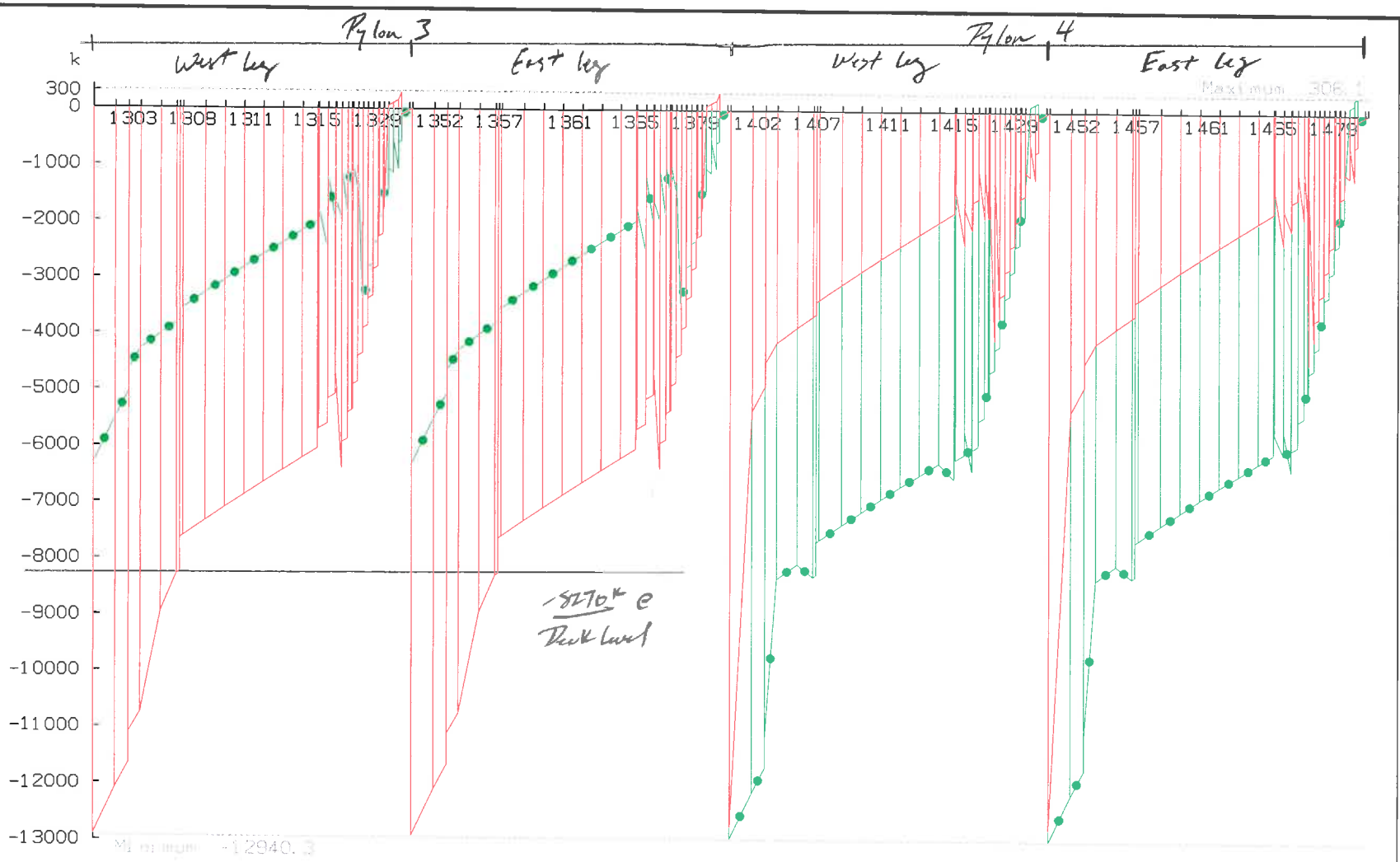

Env. sup
MinMz: Nx
total: local: normal
(-12905 , 306)

Env. sup
MaxMz: Nx
total: local: normal
(-12940 , 306)

RM Bridge Advanced V8i
08.11.28.02

Author: Finley Engineering G , TALLAHA

Project: Ironton-Russel REV3 Reseq
11.60260

RmSet: 02PylonAxialEnv

Dgm-02PylonAxialEnv

1 cm Plot = 1049.2 k

0 1049.2 2098.4 3147.7 4196.9 5245.1

12/08/2017
21:36

Pylon Moment Envelope During Construction (LCR Rev 2 04/16 Supplement, After EOC Restress)

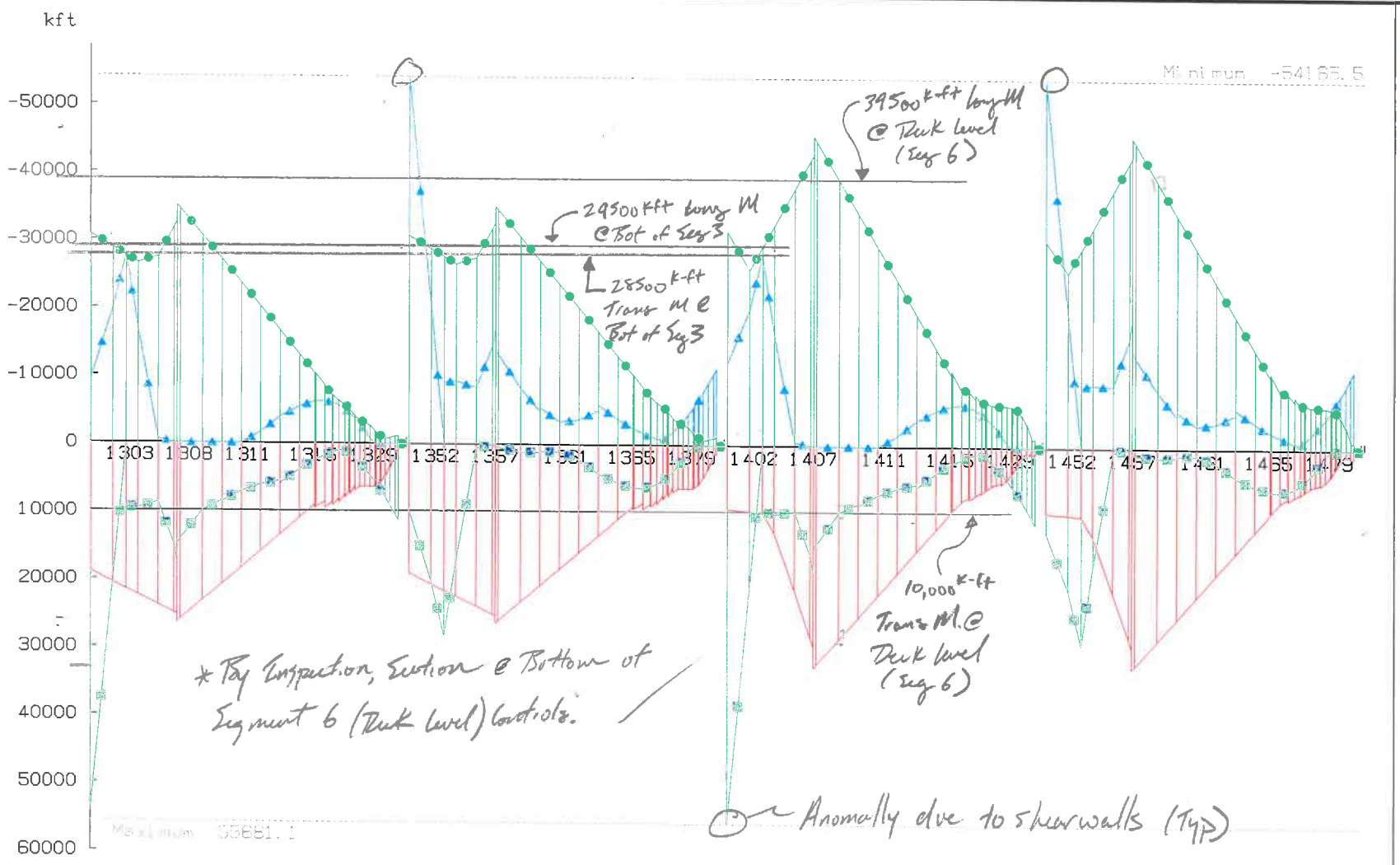

Env. sup
MaxMz: Mz
total: local: normal
(0 , 32617)

Env. sup
MinMz: Mz
total: local: normal
(-45641 , 0)

Env. sup
MaxMy: My
total: local: normal
(0 , 55681)

Env. sup
MinMy: My
total: local: normal
(-54166 , 0)

RM Bridge Advanced V8i
08.11.28.02

Author: Finley Engineering G , TALLAHA

Project: Ironton-Russel REV3 Reseq
11.60260

RmSet: 02PylonMomEnv

Dgm-02PylonMomEnv

1 cm Plot = 8700.7 kft

0 8700.7 17401.4 26102.2 34802.9 43503.6

12/08/2017
18:27

Pylon Axial Force Envelope During Construction

* Previous Submitted LCA Rev 2 (for Reference)

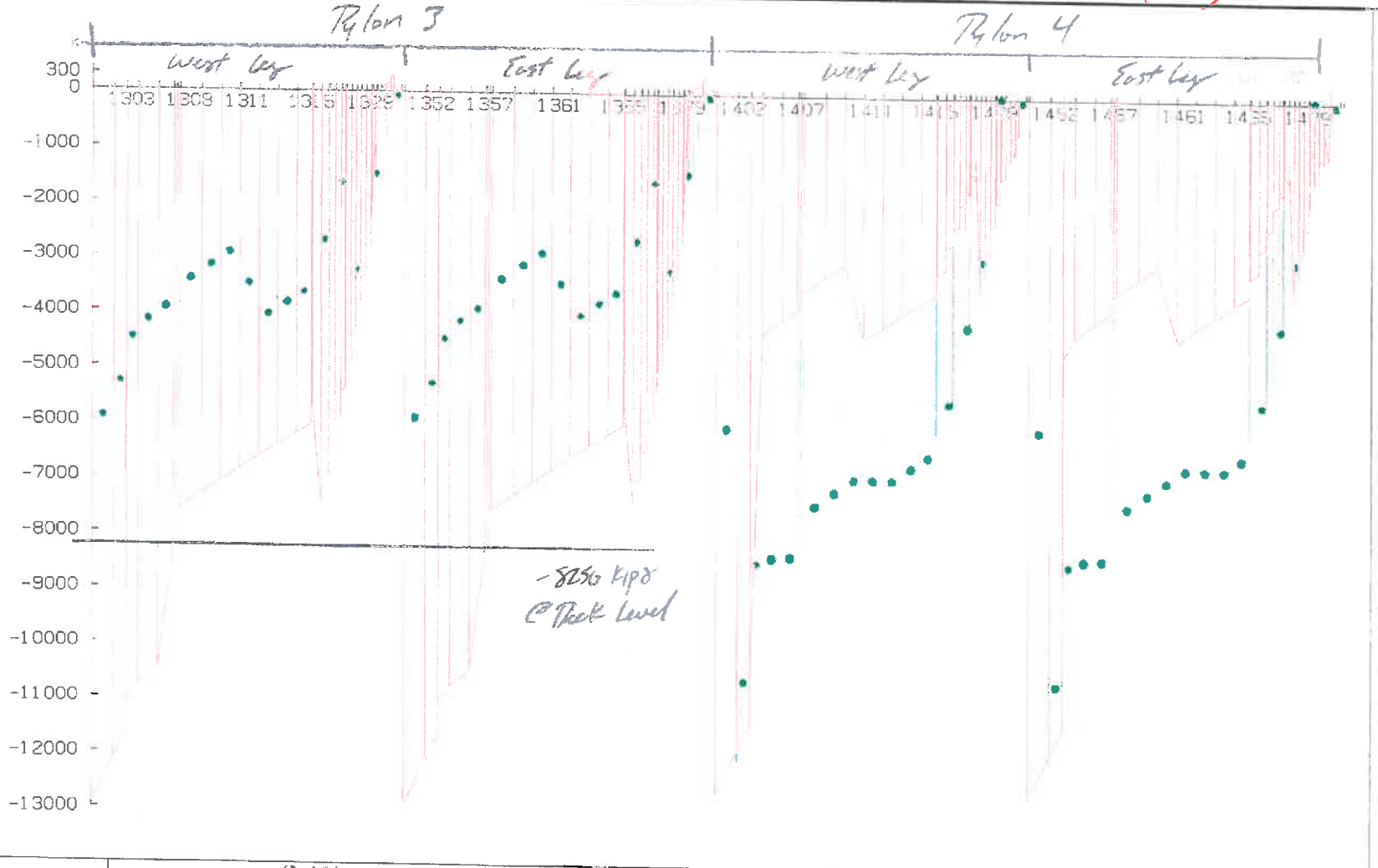

RM Bridge V8i 08.10.07.01	Author: Finley Engineering Group Project: Ironton-Russel REV2 Reseq 11.60260	: 02PylonAxialEnv Dgm-02PylonAxialEnv 1 cm Plot = 1049.7 k	27/08/2015 15:46

Pylon Moment Envelope During Construction

*Previous Submitted LCA REV 2 (For Reference)

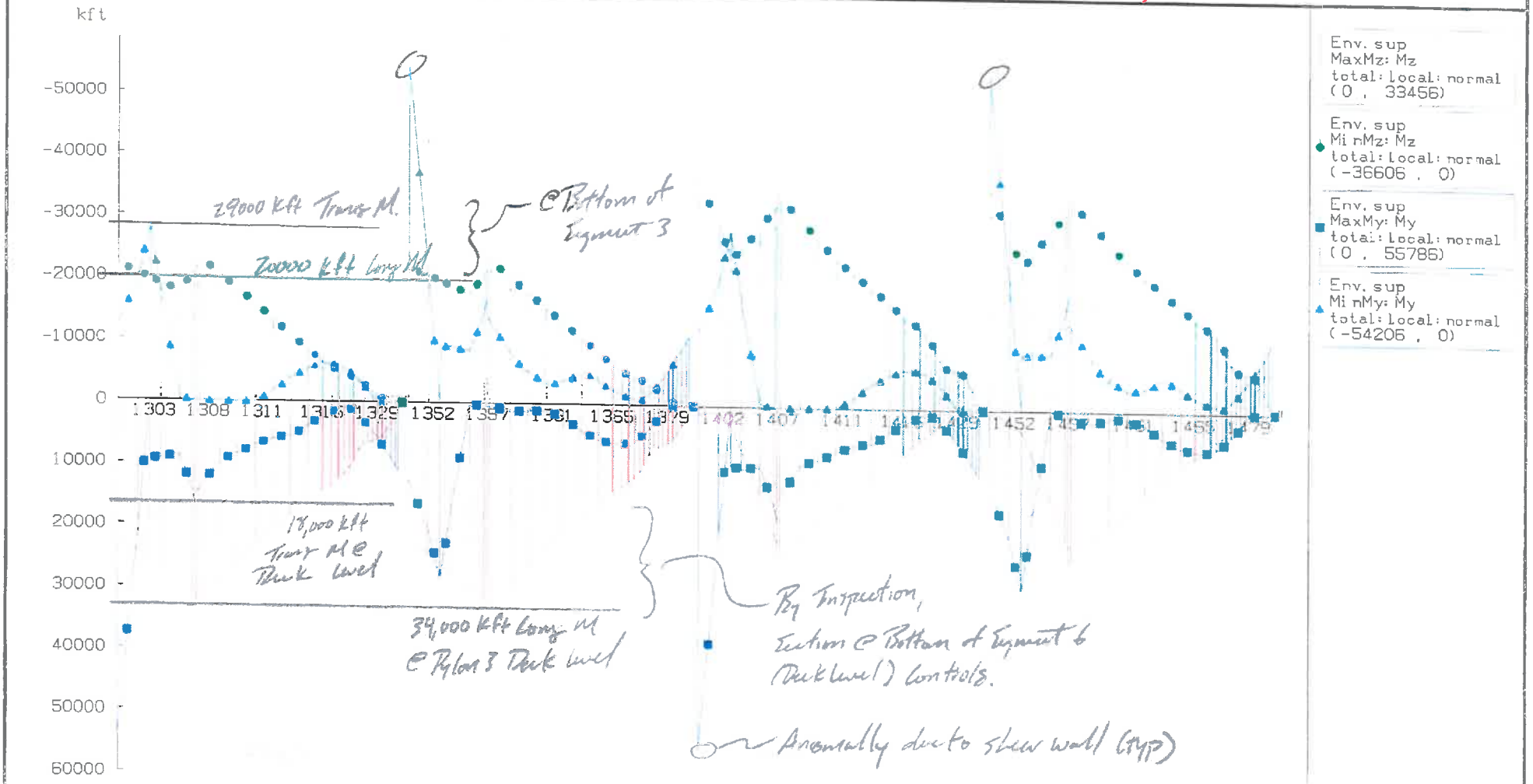

RM Bridge V8i 08.10.07.01

Author: Finley Engineering Group

Project: Ironton-Russel REV2 Reseq 11.60260

: 02PylonMomEnv

Dgn-02PylonMomEnv

1 cm Plot = 8712.2 kft

0 8712.2 17424.5 26136.7 34849.0 43561.2

27/08/2015 15:47

6.1.3 Pylon Strength Checks

In this section the forces and moments determined from the strength envelope are compared with the capacity of the pylon to check the adequacy of the design. The strength check is performed by comparing the capacity at the base of Segment 6, which is the critical section, with the corresponding factored forces and moments. Since the strength envelope presented in the previous section does not include the effects of wind loads during construction, the two sets of forces and moments were combined and factored prior to being input into spColumn for the strength check.

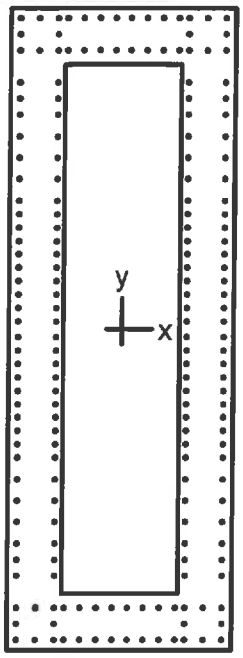

84 x 239.25 in

Code: ACI 318-11

Units: English

Run axis: Biaxial

Run option: Investigation

Slenderness: Not considered

Column type: Structural

Bars: ASTM A615

Date: 08/14/17

Time: 10:30:18

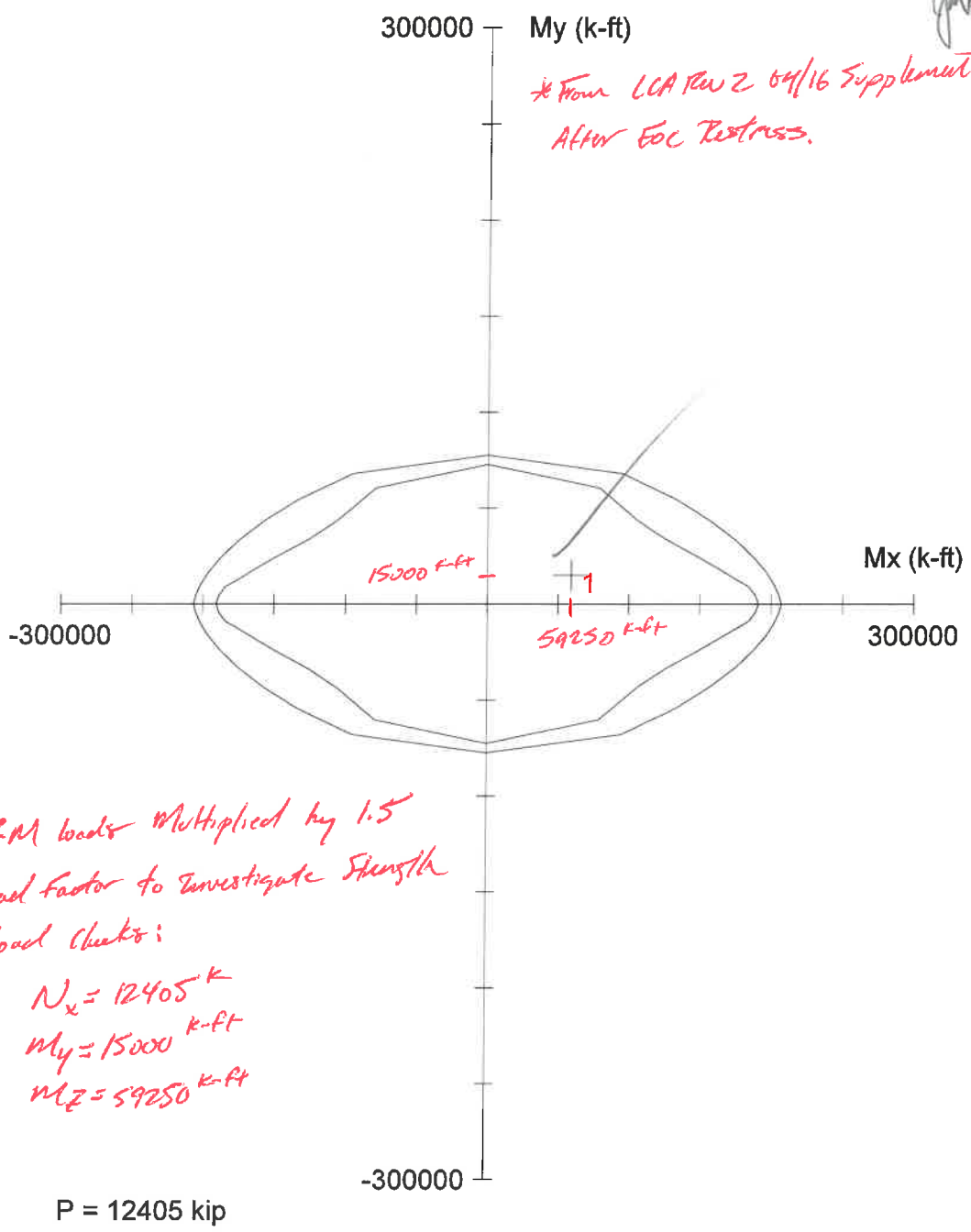

* From LCA Rev 2 04/16 Supplement, After EOC Restress.

RM loads Multiplied by 1.5 load factor to Investigate Strength Load Checks:

$N_x = 12405^{K}$

$M_y = 15000^{k\text{-}ft}$

$M_z = 59250^{k\text{-}ft}$

P = 12405 kip

spColumn v5.00. Licensed to: FINLEY Engineering Group, Inc.. License ID: 65153-1051483-4-17CCF-XXXXX

File: G:\Ironton-Russell\Engineering\Pylon Checks\SectionCapacity\Segment 6 Section FINAL.cti

Project: Ironton-Russel 11.60260

Column: Pylon Seg 6

Engineer: DRC

f'c = 6.5 ksi	fy = 60 ksi	Ag = 11418 in^2	192 #10 bars
Ec = 4595 ksi	Es = 29000 ksi	As = 243.84 in^2	rho = 2.14%
fc = 5.525 ksi	e_yt = 0.00206897 in/in	Xo = 0.00 in	Ix = 6.77237e+007 in^4
e_u = 0.003 in/in		Yo = 0.00 in	Iy = 1.04168e+007 in^4
Beta1 = 0.725		Min clear spacing = 2.35 in	Clear cover = N/A

Confinement: Tied

phi(a) = 0.8, phi(b) = 0.9, phi(c) = 0.65

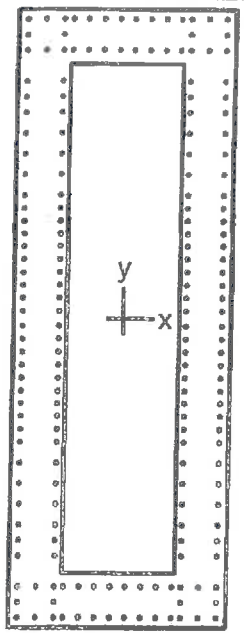

84 x 239.25 in

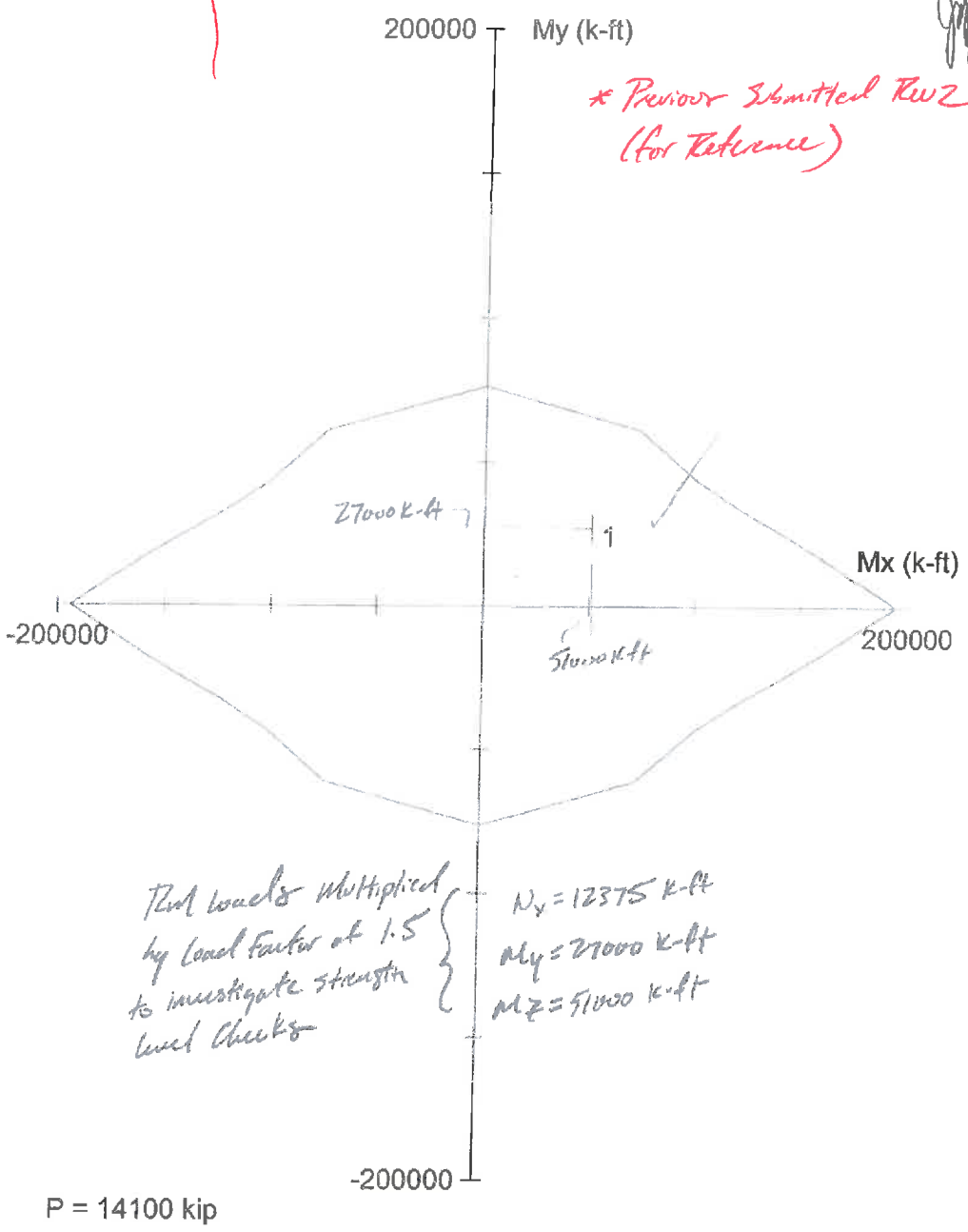

* Previous Submitted RW2 (for Reference)

Code: ACI 318-11

Units: English

Run axis: Biaxial

Run option: Investigation

Slenderness: Not considered

Column type: Structural

Bars: ASTM A615

Date: 08/27/15

Time: 16:13:42

Ref loads multiplied by Load Factor of 1.5 to investigate strength load checks

N_y = 12375 k-ft
M_y = 27000 k-ft
M_z = 51000 k-ft

spColumn v4.80. Licensed to: FINLEY Engineering Group, Inc.. License ID: 61845-1040789-4-17CCF-29299

File: g:\ironton-russell\engineering\rm-lca rev 2 reseq\pylon\spcolumn checks\segment 6 section - in-service.cti

Project: Ironton-Russel 11.60260

Column: Pylon Seg 6

Engineer: DRC

f'c = 6.5 ksi	fy = 60 ksi	Ag = 11418 in^2	192 #10 bars
Ec = 4595 ksi	Es = 29000 ksi	As = 243.84 in^2	rho = 2.14%
fc = 5.525 ksi		Xo = 0.00 in	Ix = 6.77237e+007 in^4
e_u = 0.003 in/in		Yo = 0.00 in	Iy = 1.04168e+007 in^4
Beta1 = 0.725		Min clear spacing = 2.35 in	Clear cover = N/A

Confinement: Tied

phi(a) = 0.8, phi(b) = 0.9, phi(c) = 0.65

6.2 In Service

This section contains the analysis results and strength checks for the pylon in service.

6.2.1 Pylon Strength Force Envelopes

This section contains the forces and moments on the pylon towers in service. This analysis is conducted using RM v8i, the results from which include the controlling strength limit state load case.

6.2.2 Pylon Strength Checks

In this section the forces and moments determined from the strength envelope are compared with the capacity of the pylon to check the adequacy of the design. The strength check is performed by comparing the capacity at the base of Segment 6, which is the critical section, with the corresponding factored forces and moments.

Longitudinal Moment Strength Level Envelope (LCA Rev 2 04/16 Supplement, After EOC Restress)

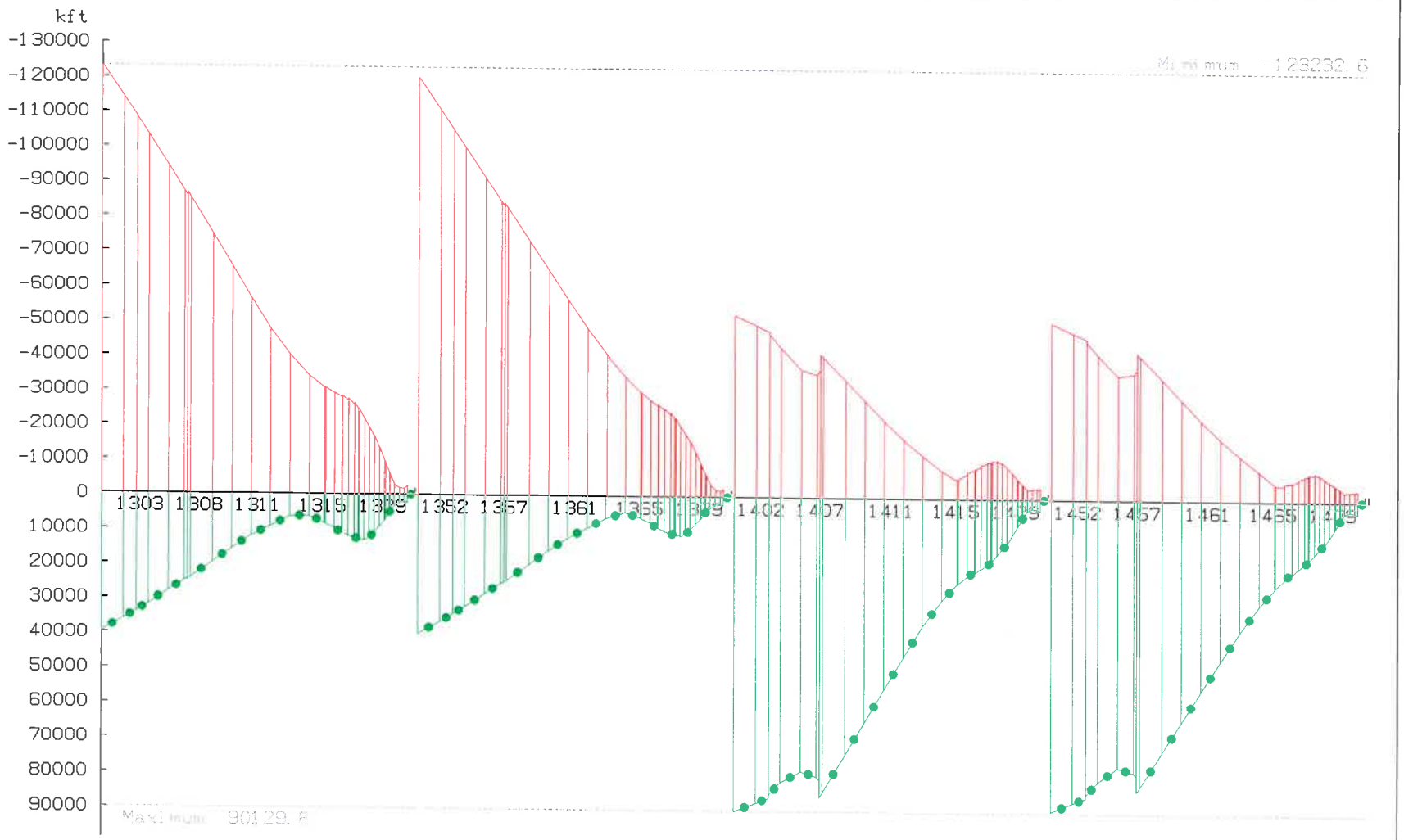

RM Bridge Advanced V8i 08.11.28.02	Author: Finley Engineering G , TALLAHA Project: Ironton-Russel REV3 Reseq 11.60260	RmSet: 03PylonMomEnv Dgm-03PylonMomEnv 1 cm Plot = 16900.0 kft 0 16900.0 33800.0 50699.9 67599.9 84499.9	12/08/2017 21:35

Longitudinal Moment Strength Level Envelope

* Previous Submitted LCA Rev2 (for Reference)

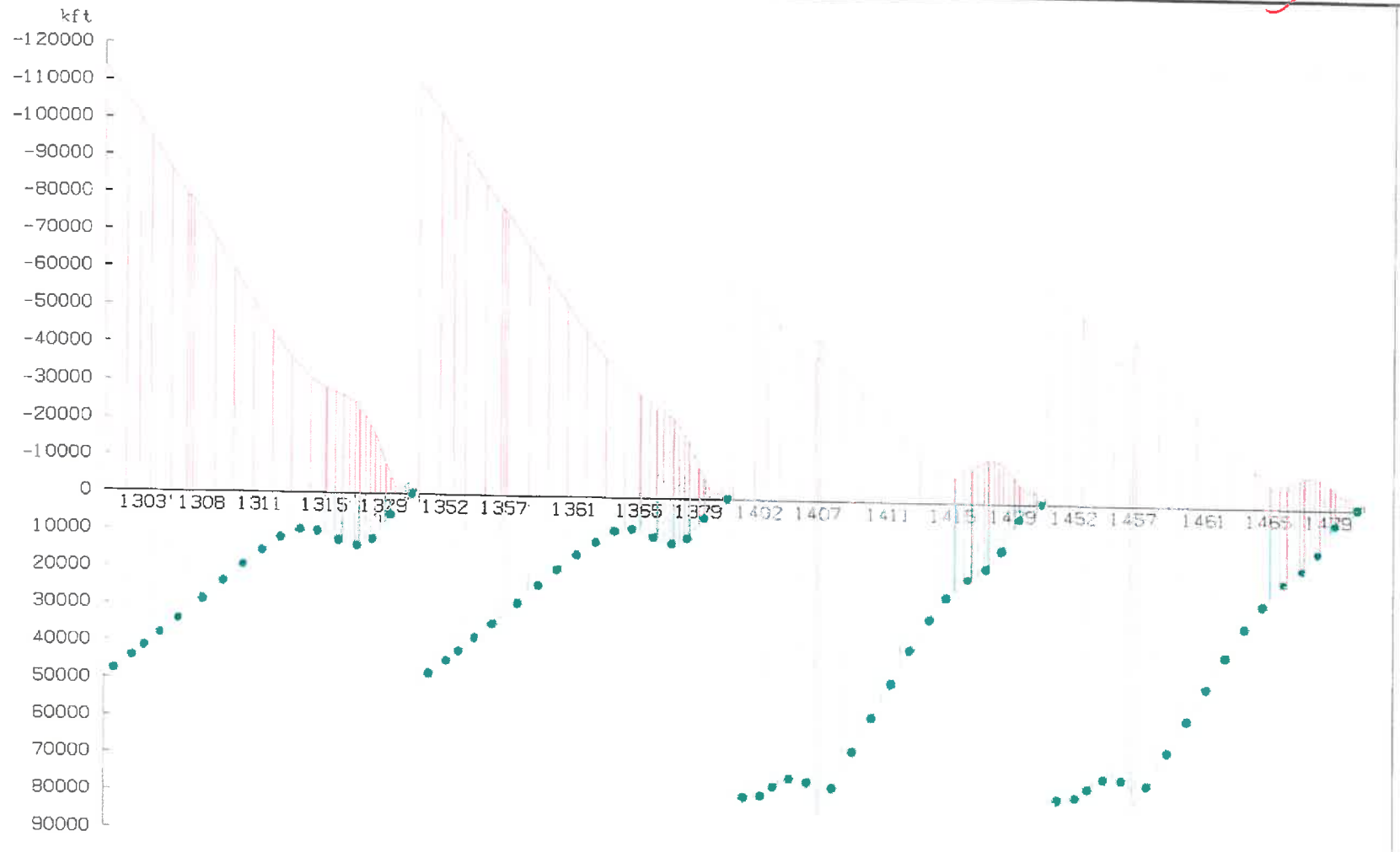

RM Bridge V8i
08.10.07.01

Author: Finley Engineering Group

Project: Ironton-Russel REV2 Reseq
11.60260

: 03PylonMomEnv

Dgm-03PylonMomEnv

1 cm Plot = 15639.2 kft

27/08/2015
15:47

Prog.:RMV8I REV. 08.11.28.02 Date :12/08/2017 21:39 Page : 1
Auth.: ** BENTLEY Systems Austria **
Finley Engineering G , TALLAHA

Ironton-Russel REV3 Reseq
11.60260

RESULT REPORT
P:PRIMARY S:SECONDARY T:TOTAL S/R:SPLIT J/R:JOINED N:NORMAL
L:LOCAL G:GLOBAL

ELEM	X/L	STR.sup MinMz T:N:L Nx k	MinMz T:N:L Qy k	MinMz T:N:L Qz k	MinMz T:N:L Mx kft	MinMz T:N:L My kft	MinMz T:N:L Mz kft
1306	0.000	-14270	-454	392	10872	[illegible]	-86806
1306	1.000	-14224	-454	383	10873	11122	-85424

ELEM	X/L	STR.sup MaxMz T:N:L Nx k	MaxMz T:N:L Qy k	MaxMz T:N:L Qz k	MaxMz T:N:L Mx kft	MaxMz T:N:L My kft	MaxMz T:N:L Mz kft
1306	0.000	-9901	186	612	-2441	10610	25129
1306	1.000	-9868	186	606	-2441	12474	24560

← Nx - My - Mz @ Critical Section (Bottom of Segment 6)
* less than "Initial"
OK ✓

Prog.:RMV8I REV. 08.10.07.01 Date :27/08/2015 15:47 Page : 5853
Auth.: ** BENTLEY Systems Austria **
Finley Engineering Group

Ironton-Russel REV2 Reseq
11.60260

* Previous Submitted LCA Rev 2 (for Reference)

RESULT REPORT
P:PRIMARY S:SECONDARY T:TOTAL S/R:SPLIT J/R:JOINED N:NORMAL
L:LOCAL G:GLOBAL

STR.sup MinMz

ELEM	X/L	T:N:L Nx k	Qy k	Qz k	Mx kft	My kft	Mz kft
1306	0.000	-14307	-415	398	9900	10130	-79548
1306	1.000	-14260	-415	389	9901	11344	-78253

← My-Mz @ Critical Section (Bottom of Segment 6)

STR.sup MaxMz

ELEM	X/L	T:N:L Nx k	Qy k	Qz k	Mx kft	My kft	Mz kft
1306	0.000	-9930	217	636	-3438	11358	32437
1306	1.000	-9897	217	629	-3438	13294	31772

+ less than Initial, OK ✓

Prog.:RMV8I REV. 08.10.07.01 Date :04/09/2012 18:31 Page : 4881
Auth.: ** BENTLEY Systems Austria **
Finley Engineering Group

* Previous Submitted LCA Rev 2 (For Reference)

* Initial Values

Ironton-Russel
11.60260

RESULT REPORT
P:PRIMARY S:SECONDARY T:TOTAL S/R:SPLIT J/R:JOINED N:NORMAL
L:LOCAL G:GLOBAL

ELEM	X/L	STR.sup MinMz T:N:L Mz kft	MinMz T:N:L My kft	MinMz T:N:L Nx k
1306	0.000	-101771	6236	-13674

forces @ bottom of segment 6
(initial run, included for reference)

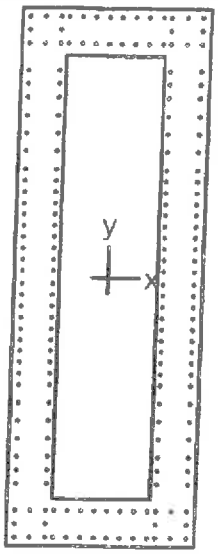

84 x 239.25 in

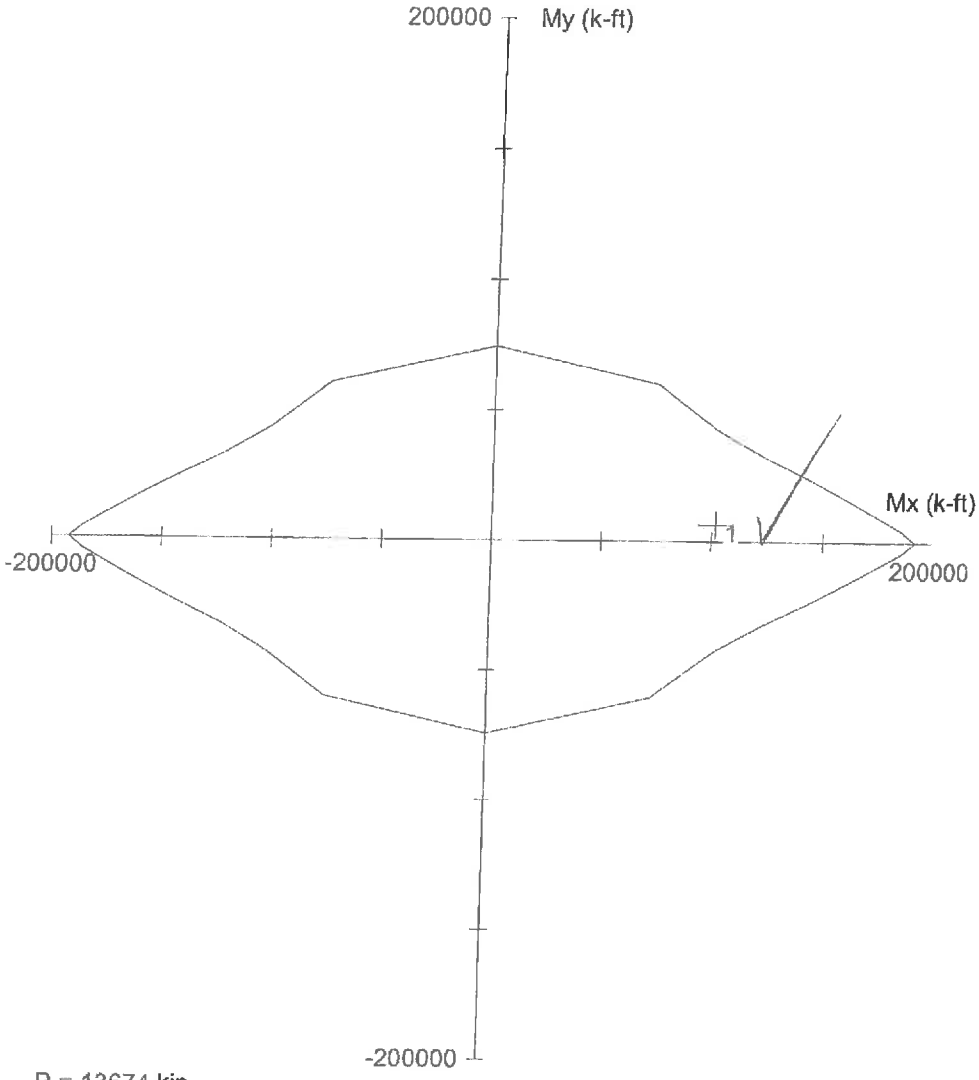

P = 13674 kip

Code: ACI 318-11

Units: English

Run axis: Biaxial

Run option: Investigation

Slenderness: Not considered

Column type: Structural

Bars: ASTM A615

Date: 09/04/12

Time: 18:14:51

spColumn v4.80. Licensed to: FINLEY Engineering Group, Inc.. License ID: 58588-1028124-4-17CCF-2299F

File: G:\Ironton-Russell\Engineering\Pylon Checks\SectionCapacity\Segment 6 Section InService.col

Project: Ironton-Russel 11.60260

Column: Pylon Seg16

Engineer: FM

f'c = 6.5 ksi	fy = 60 ksi	Ag = 11418 in^2	192 bars
Ec = 4595 ksi	Es = 29000 ksi	As = 235.62 in^2	rho = 2.06%
fc = 5.525 ksi		Xo = 0.00 in	Ix = 6.77237e+007 in^4
e_u = 0.003 in/in		Yo = 0.00 in	Iy = 1.04168e+007 in^4
Beta1 = 0.725		Min clear spacing = 2.38 in	Clear cover = N/A

Confinement: Tied

phi(a) = 0.8, phi(b) = 0.9, phi(c) = 0.65

B.5 Friction Damper Installation Manual

LETTER OF TRANSMITTAL

BRAYMAN CONSTRUCTION CORP.
1000 John Roebling Way
Saxonburg, PA 16056
Phone: (724) 443-1533
Fax: (724) 443-8733

To: Ohio Dept. of Transportation
District 9
650 Eastern Avenue
Chillicothe, OH 45601

Project: SR-93-0.00
Ironton Russell Bridge
Lawrence County, OH
Project No. 110628

BCC # 271-000-001

Attention: Dave Bame

Date: May 31, 2017

We are sending you the following items:

☐ Under Separate Cover ☑ Attached

☐ Copy of Letter ☐ Prints ☐ Specifications ☐ Change Order

☐ Shop Drawings ☐ Plans ☐ _____

Copies	Date	Description
1	5/31/17	Friction Damper Installation Manual Resubmittal

Transmitted for the following purpose:

☑ For Approval ☐ Approved as Submitted ☐ Resubmit __ copies for approval

☐ For Your Use ☐ Approved as Noted ☐ Submit __ copies for distribution

☐ As Requested ☐ Returned for Corrections ☐ Return __ corrected prints

☐ For Review & Comment ☐ For Certification

MAIL: ○ Regular ○ Overnight ○ Certified ☑ Email **FAX:** ○

Remarks:

Dustin Williamson

Signed: Dustin Williamson
Project Engineer

cc: File/arb
Troy Huff
Edwin Callicutt
Chris Capper

Ironton Russell Bridge over Ohio River

LAW-93C-0000

Friction Damper Installation Manual Resubmittal

For:

District 9

Review is only for conformance with the design concept. Review does not cover dimensions, quantities, accuracy, fit, or any assembly for which this item may be a component. Review does not authorize deviation from Contract Documents or substitution of materials. Requests for deviations from the Contract Documents will only be addressed thru the Change Order Process.

REVIEWED

CONFORMS WITH CONCEPT	(X)
CONFORMS AS NOTED	( )
RESUBMIT	( )
NO ACTION	( )
DOES NOT CONFORM	( )

URS

DATE 07/14/2017 BY Barry Chung

Submitted By:

1000 John Roebling Way

Saxonburg, Pa 16056

May 31, 2017

structural TECHNOLOGIES
Exclusive Licensee of VSL - U.S.A.

VStructural LLC
(T) (817) 545-4807
(F) (817) 545-4827
15600 Trinity Blvd., Suite 118
Fort Worth, TX 76155

Transmittal - No: 249

To: Tom Hesmond

Brayman Construction Corp
702 S. 1st St.
Ironton, OH 45638
724-443-1533

Project : Ironton Russell Bridge Project
702 S. 1st St.
Ironton OH, 45638

VSL Project: 320100-Ironton Russell Bridge - Stays

Subject: Friction Damper Installation Manual - Rev 1

Date Created: May 19, 2017

Transmittal Method: E-mail

☑ Copies	☐ Calculations	☐ Certificates	☐ Samples
☐ Vellums	☐ Data Sheets	☐ Brochures	☐ Other _____

Dwg./Sht. No.	Rev.	Sets	Description	For
320100-FD-01	1		Friction Damper Installation Manual	A

Please returr 1 reviewed set for our files.

FOR	
Approval	A
Final Approval	FA
Construction	C
Your Use	U
Information	I

VSTRUCTURAL LLC ("VSL") claims a strict proprietary right in all drawings, specifications, and calculations ("information") contained in this submittal. The use of such information in whole or in part, or any reproduction thereof, is restricted to the site for which it was prepared and to the material and/or service provided by VSL. Any other use is strictly prohibited, and VSL DISCLAIMS ANY LIABILITY therefore.

Signed:

Eric M. Sommer

SSI 2000 SYSTEM

Friction Damper Installation

© Copyright Reserved

This document is property of Structural Group, Inc. (STRUCTURAL TECHNOLOGIES / VSL) and must not be copied, reproduced, duplicated nor disclosed totally or partially to any Third Party, nor use in any manner whatsoever without prior consent of Structural Group, Inc. (STRUCTURAL TECHNOLOGIES / VSL).

1 VSL FRICTION DAMPER 4

1.1 INTRODUCTION 4

1.1.1 Description of Main Friction Damper Components 4

2 PRE-INSTALLATION WORKS 10

2.1 FRICTION DAMPER SHIPPING AND HANDLING 10
2.2 INSTALLATION EQUIPMENT 10
2.3 GENERAL EQUIPMENT AND WORK AREA 11
2.4 SECURING STAY PIPE AND ANTI-VANDALISM PIPE 11

3 CENTERING OF CABLE STAY STRAND BUNDLE 13

4 CLAMPING OF CABLE STAY STRANDS (INCLUDING DUMMY STRANDS) 14

5 DETAILED INSTALLATION WORK OF THE VSL FRICTION DAMPER 17

5.1 INSTALLATION OF FRICTION DAMPER COLLAR (ASSEMBLY 1) 17

5.1.1 Shape Adapter Installation 17

5.2 FRICTION DAMPER SUPPORT ASSEMBLY INSTALLATION 18
5.3 BUFFER PLATE INSTALLATION 20
5.4 SPRING BLADE ASSEMBLY 20
5.5 ADJUSTING THE DAMPER ASSEMBLY ALIGNMENT 21

6 STRESSING OF THE FRICTION DAMPER BLADES 23

6.1 OPTION 1 23
6.2 OPTION 2 27

7 LOWER PIPE HALF INSTALLATION 31

8 FRICTION DAMPER MAINTENANCE 35

8.1 INTRODUCTION 35
8.2 DESIGN LIFE OF THE FRICTION DAMPER 35
8.3 INSPECTION PERIOD 35
8.4 VISUAL INSPECTION PROCEDURE 36
8.5 IN-DEPTH INSPECTION PROCEDURE 37

© Copyright Reserved

This document is property of Structural Group, Inc. (STRUCTURAL TECHNOLOGIES / VSL) and must not be copied, reproduced, duplicated nor disclosed totally or partially to any Third Party, nor use in any manner whatsoever without prior consent of Structural Group, Inc. (STRUCTURAL TECHNOLOGIES / VSL).

FIGURE 1: VSL FRICTION DAMPER ASSEMBLY. 1 4
FIGURE 2: VSL FRICTION DAMPER COLLAR (ASSEMBLY 1) 5
FIGURE 3: VSL FRICTION BUFFER PLATE ASSEMBLY 1 6
FIGURE 4: SUPPORT ASSEMBLY 1 7
FIGURE 5: BLADE ASSEMBLY 1 8
FIGURE 6: HOLDING ASSEMBLY 8
FIGURE 7: VSL FRICTION DAMPER SPRING BLADE ASSEMBLY (ASSEMBLY 3). 9
FIGURE 8A: STAY PIPE TIE-OFF AT TOWER 12
FIGURE 8B: AVP IS SECURED TO DECK CONNECTOR 12
FIGURE 9: CENTERING OF CABLE STAY STRAND BUNDLE. 13
FIGURE 10: CLAMPING THE CABLE STAY STRAND BUNDLE. 14
TABLE 1: FRICTION DAMPER PLACEMENT DIMENSIONS. 15
FIGURE 11A: PACKER TOOLS 16
FIGURE 12: SHAPE ADAPTER ORIENTATION 17
FIGURE 13: COLLAR INSTALLATION 18
FIGURE 14: DAMPER SUPPORT COLLAR INSTALLATION 19
FIGURE 15: BUFFER PLATE INSTALLATION 20
FIGURE 16: SPRING BLADE ASSEMBLY 21
FIGURE 17: ALIGNMENT OF FRICTION DAMPER SPRING BLADES 22
FIGURE 18: DAMPER STRESSING SETUP 23
FIGURE 19: JACK ADAPTER 24
FIGURE 20: MEASURING DEFLECTION 24
FIGURE 21: FINAL STRESSED POSITION 26
FIGURE 22: WEDGE STYLE HYDRAULIC CYLINDER 27
FIGURE 23: WEDGE CYLINDER EXTENDED 28
FIGURE 24: DAMPER STRESSING COMPLETE 29
FIGURE 25: TIGHTENING COUNTER-NUT 29
FIGURE 26: LOWER PIPE HALVES INSTALLATION 31
FIGURE 27: LOWER PIPE HALF BOLT INSTALLATION 32
FIGURE 28: LOWER PIPE HALF ROTATION 33
FIGURE 29: LOWER PIPE HALF COMPLETED 34
TABLE 2: RECOMMENDATION INSPECTION PERIOD 35
TABLE 3: FRICTION DAMPER STRESSING VALUES (LEFT) 39
TABLE 4: DAMPER BLADE STRESSING VALUES (RIGHT) 40
TABLE 5: FRICTION DAMPER QUANTITIES 41

© Copyright Reserved

This document is property of Structural Group, Inc. (STRUCTURAL TECHNOLOGIES / VSL) and must not be copied, reproduced, duplicated nor disclosed totally or partially to any Third Party, nor use in any manner whatsoever without prior consent of Structural Group, Inc. (STRUCTURAL TECHNOLOGIES / VSL).

1 VSL FRICTION DAMPER

1.1 Introduction

The purpose of this Method Statement is to provide recommendations and general information on:

- The friction damper assembly components.
- The jobsite preparation and safety.
- The detailed installation process of the friction damper.
- The inspection and maintenance of the damper.

1.1.1 Description of Main Friction Damper Components

The VSL Friction Damper has three symmetrical sub-assemblies; Collar, Buffer, and Spring Blade. The **Collar Assembly** is attached around the bundled cable strands (not shown for clarity). The **Buffer Assembly** is bolted to the **Support Assembly** at the end of the deck guide pipe. The **Blade Assembly** is bolted to the Buffer Assembly.

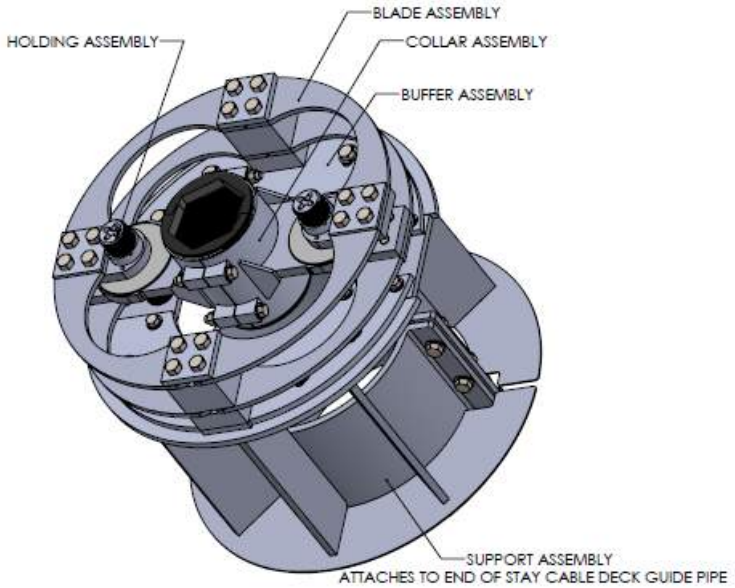

Figure 1: VSL Friction Damper Assembly. 1

ASSEMBLY 1 – Collar Assembly
The Collar Assembly is mechanically attached to the cable stay and moves together with the cable stay strand bundle. The main components of Assembly 1 are the **Collar Halves** and the **Shape**

© Copyright Reserved

This document is property of Structural Group, Inc. (STRUCTURAL TECHNOLOGIES / VSL) and must not be copied, reproduced, duplicated nor disclosed totally or partially to any Third Party, nor use in any manner whatsoever without prior consent of Structural Group, Inc. (STRUCTURAL TECHNOLOGIES / VSL).

Adapters. The shape adapter is made of neoprene and makes the strand bundle pattern inside the collar. The collar half has supports projecting transverse (horizontal) to the cable stay plane. The supports house the **Stainless Steel Friction Partner**. The friction partner is the contact surface for the friction pads in the Blade Assembly (fig 5). The plane surface of the Stainless Steel friction partner lies at a right angle to the cable stay axis.

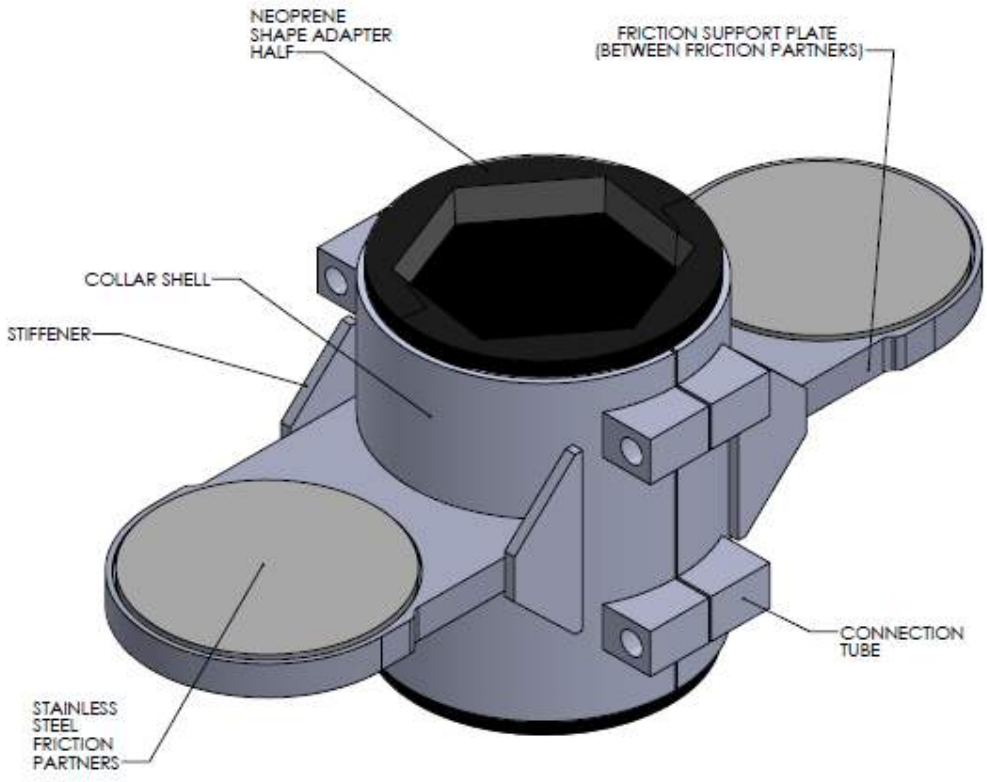

Figure 2: VSL Friction Damper Collar (Assembly 1)

© Copyright Reserved

This document is property of Structural Group, Inc. (STRUCTURAL TECHNOLOGIES / VSL) and must not be copied, reproduced, duplicated nor disclosed totally or partially to any Third Party, nor use in any manner whatsoever without prior consent of Structural Group, Inc. (STRUCTURAL TECHNOLOGIES / VSL).

Assembly 2 – Buffer Assembly

The Buffer Assembly is connected to the bridge structure by bolting it to the Support Assembly pipe support (fig 4). The main components of Assembly 2 are the **Buffer Halves** and the **Connection Plates**. The buffer assembly serves two purposes. It is housing for the Spring Blade Assembly and it provides a "buffer zone" that is sized to limit the movement of the damper collar so that the friction pads and friction partners are always in contact. The Buffer Halves use oversized holes for installation adjustment and **Plate Washers** are used for connection to the pipe supports. The Connection Plates are used to hold the buffer assembly together and center the assembly during installation. The Connection Plates will be removed after the Friction Damper assembly is completed.

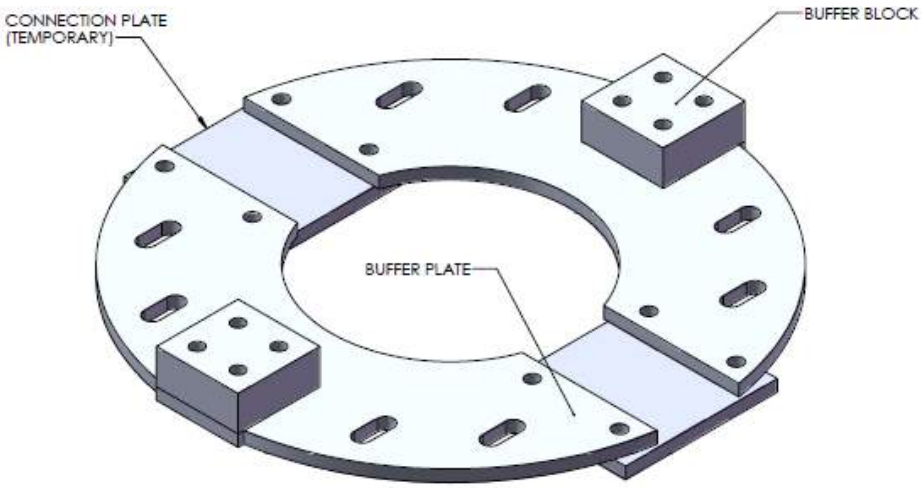

Figure 3: VSL Friction Buffer Plate Assembly 1

© Copyright Reserved

This document is property of Structural Group, Inc. (STRUCTURAL TECHNOLOGIES / VSL) and must not be copied, reproduced, duplicated nor disclosed totally or partially to any Third Party, nor use in any manner whatsoever without prior consent of Structural Group, Inc. (STRUCTURAL TECHNOLOGIES / VSL).

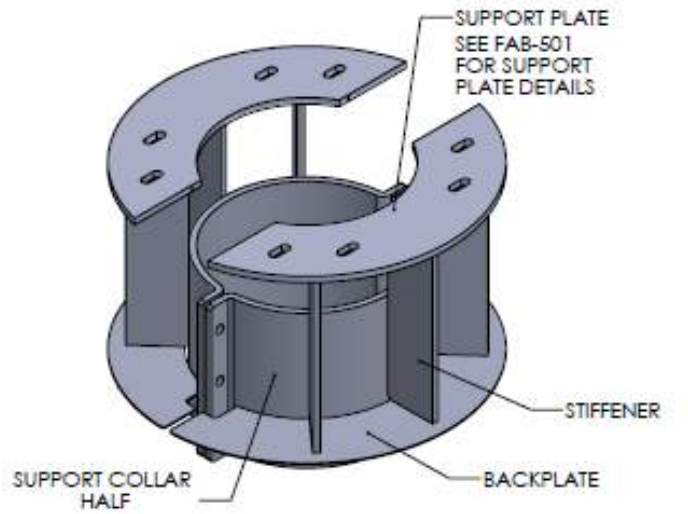

FIGURE 4: Support Assembly 1

ASSEMBLY 3 – Spring Blade Assembly

The Spring Blade Assembly is bolted to the Buffer Assembly. The main components of the Spring Blade Assembly are the **Spring Blades**, the **Holding Plates**, and the **Holding Shafts** which hold the friction pads. The Friction Partners of the Collar Assembly fit between the holding plates and Holding Shafts. The Holding Shafts can be removed during stressing of the blades and re-installed in the final assembly. When the Spring Blades are stressed, the spring force in the blades transfers to the shafts and creates friction between the friction pad and the S.S. partners on the collar.

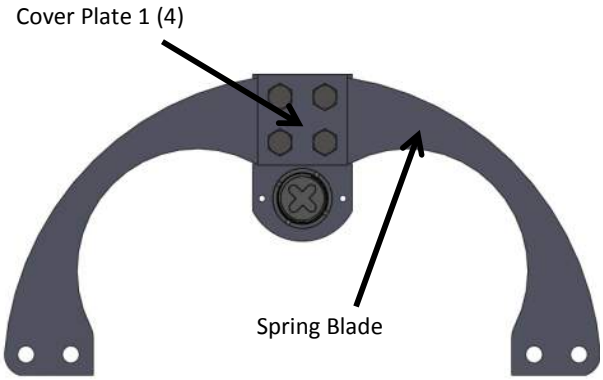

© Copyright Reserved

This document is property of Structural Group, Inc. (STRUCTURAL TECHNOLOGIES / VSL) and must not be copied, reproduced, duplicated nor disclosed totally or partially to any Third Party, nor use in any manner whatsoever without prior consent of Structural Group, Inc. (STRUCTURAL TECHNOLOGIES / VSL).

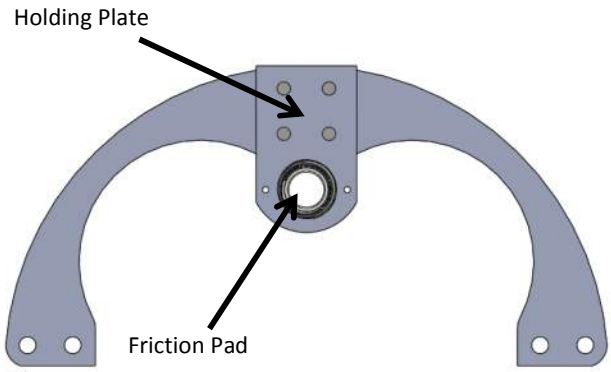

BOTTOM

FIGURE 5: Blade Assembly 1

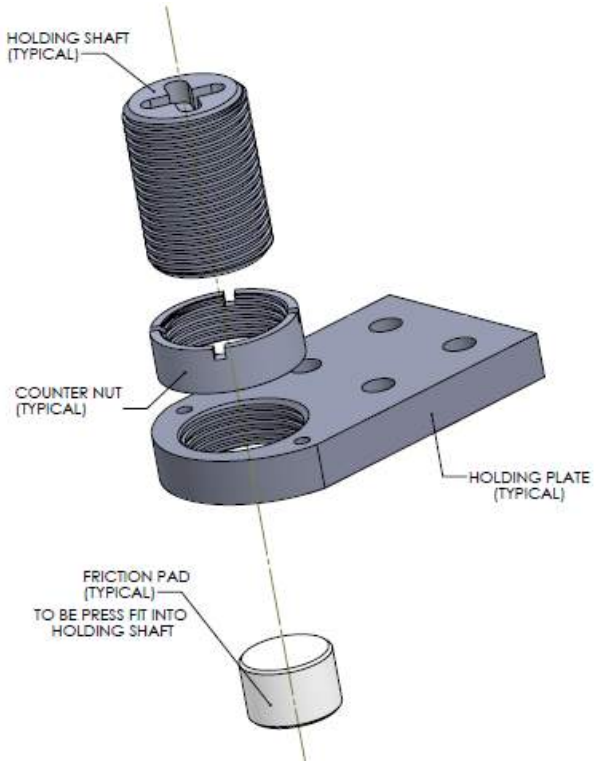

FIGURE 6: Holding Assembly

© Copyright Reserved

This document is property of Structural Group, Inc. (STRUCTURAL TECHNOLOGIES / VSL) and must not be copied, reproduced, duplicated nor disclosed totally or partially to any Third Party, nor use in any manner whatsoever without prior consent of Structural Group, Inc. (STRUCTURAL TECHNOLOGIES / VSL).

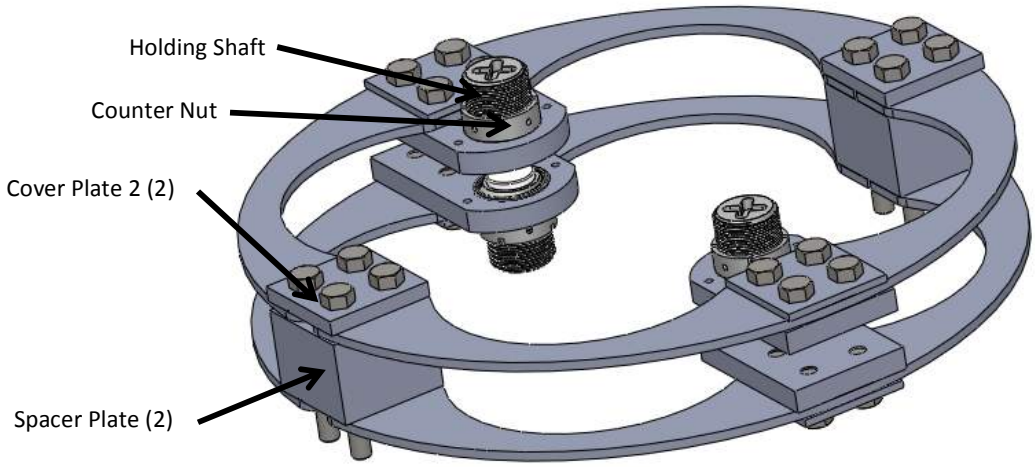

FIGURE 7: VSL Friction Damper Spring Blade Assembly (Assembly 3).

© Copyright Reserved

This document is property of Structural Group, Inc. (STRUCTURAL TECHNOLOGIES / VSL) and must not be copied, reproduced, duplicated nor disclosed totally or partially to any Third Party, nor use in any manner whatsoever without prior consent of Structural Group, Inc. (STRUCTURAL TECHNOLOGIES / VSL).

2 PRE-INSTALLATION WORK

2.1 Friction Damper Shipping and Handling

Each element of the friction damper, Assembly 1, 2, and 3, will be marked and supplied to the site.

Assemblies 1, 2, and 3 are typically delivered in boxes/ crates. Boxes and/ or crates will be used with clear identification. Both crates and boxes (pallet mounted) shall be able to be handled by fork lift.

2.2 Installation Equipment

The following items shall be used as required for installation of the Friction Dampers:

- General OSHA approved safety equipment for work in traffic (bridges in service stage) like warning signs and lights, cones, barriers, etc.
- Lifting equipment to raise and lower the Anti-Vandalism Pipe and the Stay Pipe.
- Ratchet /Sockets and Open Wrenches for nuts and bolts ranging from 1/2” to 5/8”.
- Hex Wrenches, Crescent Wrench, Paint Pen/Marker.
- Electric /Cordless Impact wrench.
- ½” smooth rods for ease of installation of the blade assembly.
- Hydraulic hand pump with wedge style hydraulic ram.
- Brake cleaner and rags.
- Dummy strands.

OPTIONAL:

- Ratchet Straps to assist clamping the strands together for the installation of Assembly 1.
- Guide bolts to assist the assembly of the Spring Blades to the Buffer Halves.

The following items will be required for the friction damper installation:

- Packer Tools for compacting the stay cable strand. (3 minimum)
- Damper Stressing Setup
  - (2) – 5 Ton Jacks
  - (2) – Jack Thread Adapters
  - (1) – “T” Hose Assembly
  - (1) – Hand Pump w/ gauge
- Resting Bolts used during blade stressing operations. (8 ea)

© Copyright Reserved

This document is property of Structural Group, Inc. (STRUCTURAL TECHNOLOGIES / VSL) and must not be copied, reproduced, duplicated nor disclosed totally or partially to any Third Party, nor use in any manner whatsoever without prior consent of Structural Group, Inc. (STRUCTURAL TECHNOLOGIES / VSL).

2.3 General Equipment and Work Area

General equipment shall include lifting equipment and any access platforms or scaffolds needed to access the Friction Damper location at its required height. The work area shall be free of any remaining construction debris or snow/ice in the winter months.

2.4 Securing Stay Pipe and Anti-Vandalism Pipe

(This is the VSL recommended method. Other methods that provide the same results and can be performed safely are acceptable)

The HDPE Stay Pipe should be held in place by the lifting collar at a distance from the tower such that there is adequate working room at the deck between the AVP and the Friction Damper Support. The AVP is held in place by using tie-offs from the bell of the Deck Connector. The means of the AVP tie-offs are at the discretion of the Contractor.

© Copyright Reserved

This document is property of Structural Group, Inc. (STRUCTURAL TECHNOLOGIES / VSL) and must not be copied, reproduced, duplicated nor disclosed totally or partially to any Third Party, nor use in any manner whatsoever without prior consent of Structural Group, Inc. (STRUCTURAL TECHNOLOGIES / VSL).



FIGURE 8a: Stay Pipe tie-off at Tower

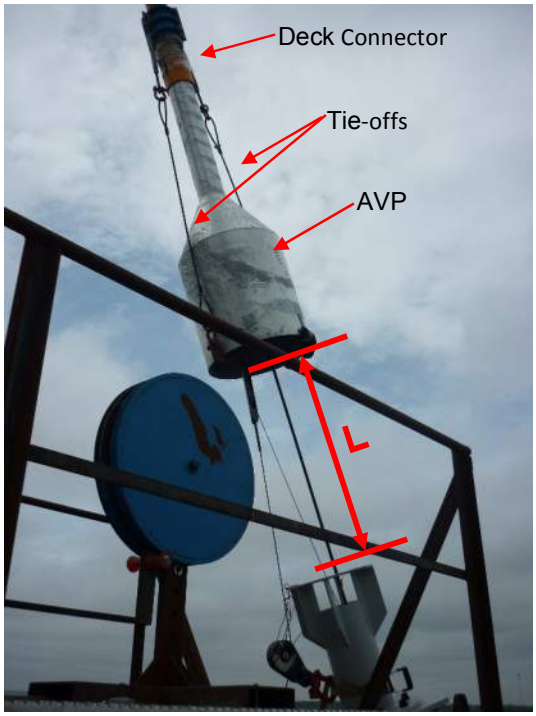

FIGURE 8b: AVP is secured to Deck Connector

© Copyright Reserved

This document is property of Structural Group, Inc. (STRUCTURAL TECHNOLOGIES / VSL) and must not be copied, reproduced, duplicated nor disclosed totally or partially to any Third Party, nor use in any manner whatsoever without prior consent of Structural Group, Inc. (STRUCTURAL TECHNOLOGIES / VSL).

3 CENTERING OF CABLE STAY STRAND BUNDLE

Check if the cable stay strand bundle is centered to the extension pipe. There is an adjustment on the buffer of +/- 1/2” inches in any direction from center. Therefore, the stay must be within the adjustment capability or the deck exit pipe must be centered using shims or other methods available. Cable bundles that are not centered within the adjustability of the Friction Damper will be assessed and resolved on a case by case basis.

The compacted strand bundle should be orientated as shown in Figure 9.

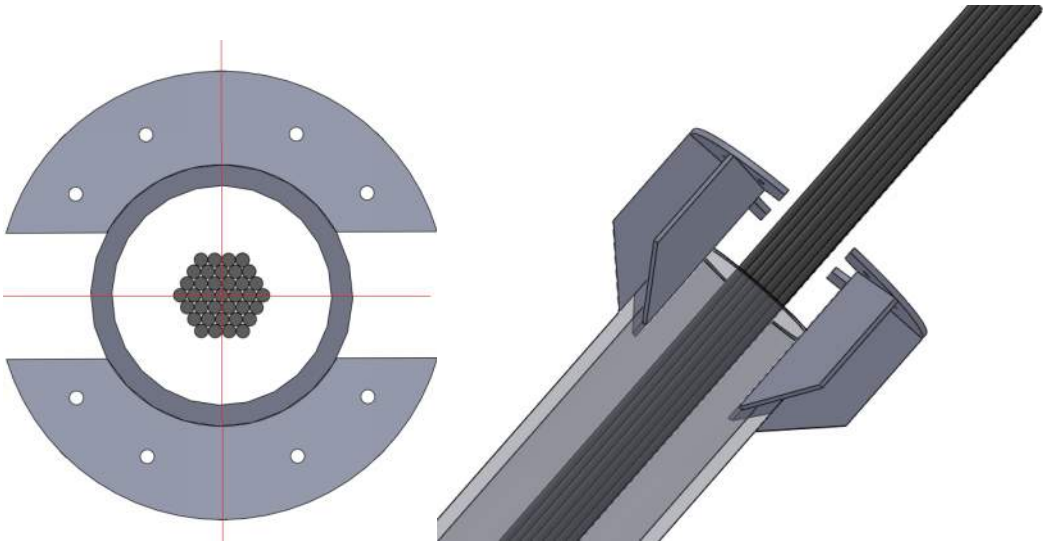

FIGURE 9: Centering of Cable Stay Strand Bundle.

© Copyright Reserved

This document is property of Structural Group, Inc. (STRUCTURAL TECHNOLOGIES / VSL) and must not be copied, reproduced, duplicated nor disclosed totally or partially to any Third Party, nor use in any manner whatsoever without prior consent of Structural Group, Inc. (STRUCTURAL TECHNOLOGIES / VSL).

4 CLAMPING OF CABLE STAY STRANDS (INCLUDING DUMMY STRANDS)

The packer tools should be used to compact the strand bundle to ensure the strand pattern is correct. Install the packer tools at a distance X that allows for working room and for the collar to be installed. Typically, “X” is the height of the Damper Collar + approx. 4”. The closer you put the packer tools to where the Collar will be installed, the more tightly bundled the strands will be. This will make Collar installation easier. You can use a paint marker to mark the strands for reference. “H” is the distance from the surface of the damper support to the bottom Friction Partner.

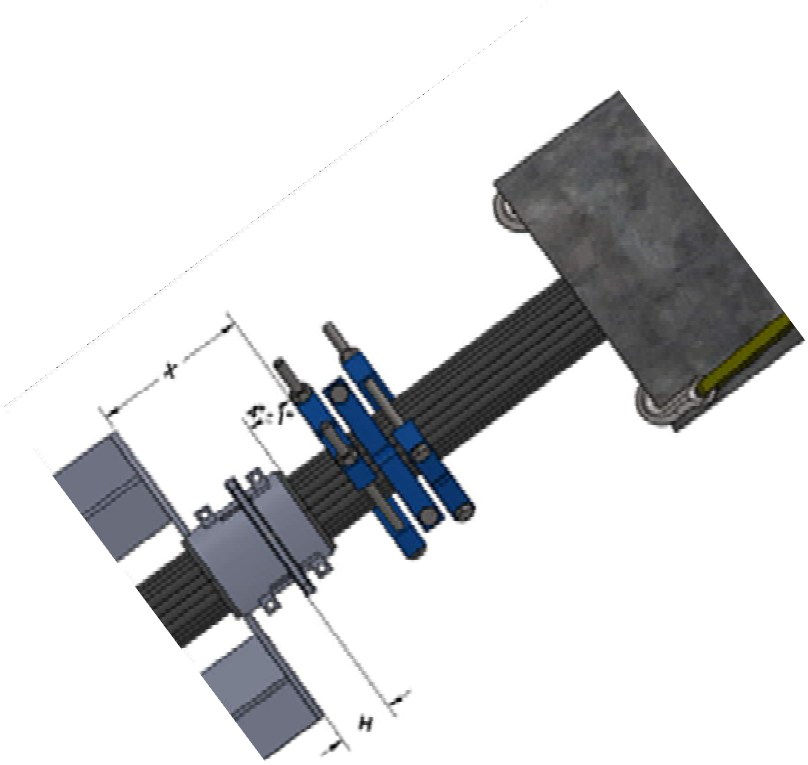

FIGURE 10: Clamping the Cable Stay Strand Bundle.

© Copyright Reserved

This document is property of Structural Group, Inc. (STRUCTURAL TECHNOLOGIES / VSL) and must not be copied, reproduced, duplicated nor disclosed totally or partially to any Third Party, nor use in any manner whatsoever without prior consent of Structural Group, Inc. (STRUCTURAL TECHNOLOGIES / VSL).

Damper Size	X (in)	H (in)
6-19	11 1/2	3 5/16
6-22	11 1/2	3 5/16
6-31	11 1/2	3 5/16
6-37	11 1/2	3 5/16

TABLE 1: Friction Damper Placement Dimensions.

Be sure to include the dummy strands (if any) when compacting the strand bundle. Refer to your anchor head diagrams for the locations (marked with an X) where the dummy strands should go. (Fig 9b).

Paint marking the primary corners of the bundle will help make sure the pattern is correct.

© Copyright Reserved

This document is property of Structural Group, Inc. (STRUCTURAL TECHNOLOGIES / VSL) and must not be copied, reproduced, duplicated nor disclosed totally or partially to any Third Party, nor use in any manner whatsoever without prior consent of Structural Group, Inc. (STRUCTURAL TECHNOLOGIES / VSL).

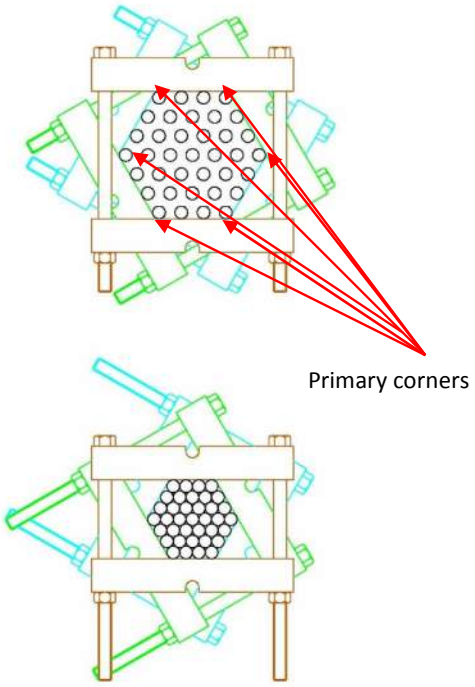

FIGURE 11a: Packer Tools

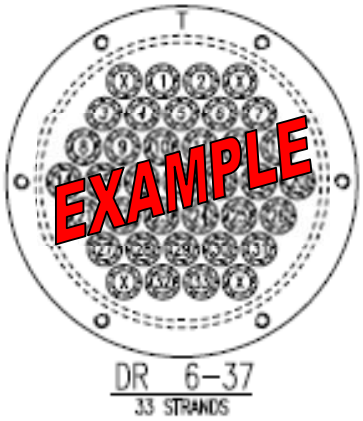

FIGURE 11b: Dummy Strands (X) Example

© Copyright Reserved

This document is property of Structural Group, Inc. (STRUCTURAL TECHNOLOGIES / VSL) and must not be copied, reproduced, duplicated nor disclosed totally or partially to any Third Party, nor use in any manner whatsoever without prior consent of Structural Group, Inc. (STRUCTURAL TECHNOLOGIES / VSL).

5 DETAILED INSTALLATION WORK OF THE VSL FRICTION DAMPER

After lifting the anti-vandalism pipe/ HDPE stay pipe and ensuring the cable stay strand is centered in the extension pipe, the installation of the friction damper can begin.

5.1 Installation of Friction Damper Collar (Assembly 1)

5.1.1 Shape Adapter Installation

Measure up from the top of the guide pipe and make a mark on the strands using a paint marker at ~6". Lay the two halves of the neoprene shape adapters around the cable stay strand bundle so that the mark is at the bottom of the neoprene. Electrical tape can be used to help hold the shape adapters in place until the Collar is placed. The seams of the Shape Adapters should be aligned as shown below. This is to prevent the seams of the Shape Adapters and the seams of the Collar Halves from lining up, which may cause issues during Collar installation.

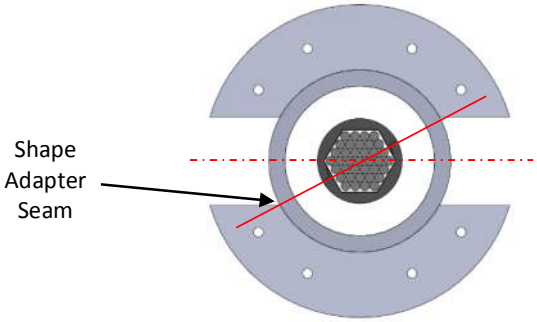

FIGURE 12: Shape Adapter Orientation

© Copyright Reserved

This document is property of Structural Group, Inc. (STRUCTURAL TECHNOLOGIES / VSL) and must not be copied, reproduced, duplicated nor disclosed totally or partially to any Third Party, nor use in any manner whatsoever without prior consent of Structural Group, Inc. (STRUCTURAL TECHNOLOGIES / VSL).

Collar Installation

Place the two halves of the collar onto the shape adapters and install the bolts. Tighten the bolts until the gap between the collar halves closes completely. Alignment of the damper is not critical during this step. You will want to get the wings of the collar fairly close to horizontal.



FIGURE 13: Collar Installation

5.2 Friction Damper Support Assembly Installation

Make sure that the guide pipe is free from all exterior debris. This will ease adjustment of the collar. Place the two halves of the collar around the pipe and bolt together loosely. Adjust the collar so that the bottom of the support plate is aligned with the bottom of the damper collar (steel). The rotation of the collar is very important in this step. The center stiffener of the support collar should line up with the seam of the damper collar. This will ease adjustment of the friction pads prior to stressing. Tighten the bolts on the support collar. This is a compression collar so the flanges the bolts run through shall not touch and the gap between each side shall be uniform. See figure 14 below.

© Copyright Reserved

This document is property of Structural Group, Inc. (STRUCTURAL TECHNOLOGIES / VSL) and must not be copied, reproduced, duplicated nor disclosed totally or partially to any Third Party, nor use in any manner whatsoever without prior consent of Structural Group, Inc. (STRUCTURAL TECHNOLOGIES / VSL).



FIGURE 14: Damper Support Collar Installation

© Copyright Reserved

This document is property of Structural Group, Inc. (STRUCTURAL TECHNOLOGIES / VSL) and must not be copied, reproduced, duplicated nor disclosed totally or partially to any Third Party, nor use in any manner whatsoever without prior consent of Structural Group, Inc. (STRUCTURAL TECHNOLOGIES / VSL).

5.3 Buffer Plate Installation

Install each half of the buffer plate on the support collar. Loosely fit the bolts as you will need to make adjustments prior to stressing the spring blades.



FIGURE 15: Buffer Plate Installation

5.4 Spring Blade Assembly

- Place ½" smooth rod cut to 8" in length into the four innermost holes in the buffer block (2 in each buffer block). This will allow you to install the remaining components without having to hold them as well as alignment of the bolts.
- Place the lower spring blades over the rods, resting on the buffer block.
- Install the spacer blocks on top and bottom, resting on the lower blades.
- Install the upper spring blades over the rods, resting on the spacer blocks.
- Install the ½" cover plates over the rods, resting on the upper blades.
- Loosely install the 5/8" x 5" bolts in the four outermost holes.
- Removes the rods from the four innermost holes and replace with the remaining 5/8" x 5" bolts.
- Tighten all 8 of the blade assembly bolts.

© Copyright Reserved

This document is property of Structural Group, Inc. (STRUCTURAL TECHNOLOGIES / VSL) and must not be copied, reproduced, duplicated nor disclosed totally or partially to any Third Party, nor use in any manner whatsoever without prior consent of Structural Group, Inc. (STRUCTURAL TECHNOLOGIES / VSL).



FIGURE 16: Spring Blade Assembly

5.5 Adjusting the Damper Assembly Alignment

Adjust the Buffer Plate /Spring Blade assembly to where the Friction Pad is centered over the stainless steel Friction Partner. Tighten the bolts on the Buffer Plate /Support Collar connection.

There are two means of adjustment for correcting the alignment of the damper.

© Copyright Reserved

This document is property of Structural Group, Inc. (STRUCTURAL TECHNOLOGIES / VSL) and must not be copied, reproduced, duplicated nor disclosed totally or partially to any Third Party, nor use in any manner whatsoever without prior consent of Structural Group, Inc. (STRUCTURAL TECHNOLOGIES / VSL).

Adjustment 1:

If you have left the Packer Tools in place, you can loosen the Collar slightly and rotate it into alignment. Otherwise, the Packer Tools or another device to help keep the strands bundled needs to be in place if adjustment to the Collar are to be made.

Adjustment 2:

Since the Buffer Assembly bolts are only finger-tight, you can adjust the Buffer / Blade Assembly by hitting it with a rubber mallet (or similar) on the Spacer Plates to “tap” it into alignment. This makes use of the oversized holes in the buffer assembly. If the assembly does not move, loosen the bolts slightly.



FIGURE 17: Alignment of Friction Damper Spring Blades

IF CORRECT ALIGNMENT IS NOT ATTAINABLE, CONSULT VSL FOR CASE-BY-CASE ASSESMENT AND ISSUE RESOLUTION.

© Copyright Reserved

This document is property of Structural Group, Inc. (STRUCTURAL TECHNOLOGIES / VSL) and must not be copied, reproduced, duplicated nor disclosed totally or partially to any Third Party, nor use in any manner whatsoever without prior consent of Structural Group, Inc. (STRUCTURAL TECHNOLOGIES / VSL).

6 STRESSING OF THE FRICTION DAMPER BLADES

6.1 Option 1

The damper stressing setup consist of two 5 ton Jacks, two Jack thread adapters, a “T” hose assembly, and a hand pump w/ gauge.

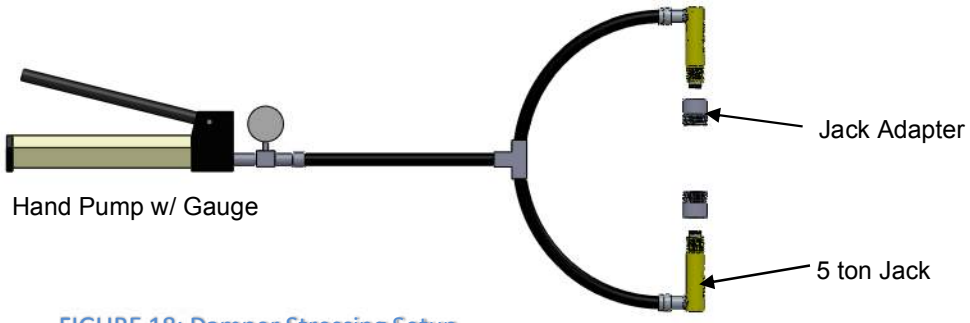

FIGURE 18: Damper Stressing Setup

STEP 1: Start on one side of the Damper.

Install the provided Resting Bolts into the small holes on each sides of the holding plate.

STEP 2:

If not already installed, screw the Jack Adapter onto the 5 ton Jack. Then, install the 5 ton Jack with the Adapter into the top and bottom Holding Plates by screwing them into the threads for the Holding Shaft. Screw the Adapter all the way down until it touches the Holding Plate

© Copyright Reserved

This document is property of Structural Group, Inc. (STRUCTURAL TECHNOLOGIES / VSL) and must not be copied, reproduced, duplicated nor disclosed totally or partially to any Third Party, nor use in any manner whatsoever without prior consent of Structural Group, Inc. (STRUCTURAL TECHNOLOGIES / VSL).

STEP 3:

Connect the hose assembly and pump to the Jacks *(not shown)*

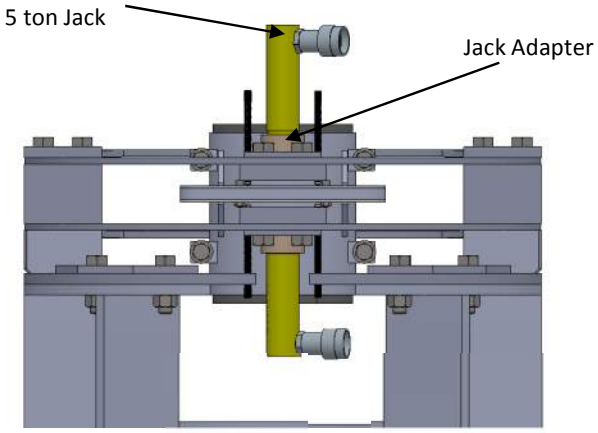

Figure 19: Jack Adapter

STEP 4:

Stress the Spring Blades to the required deflection per the table provided in Appendix A.

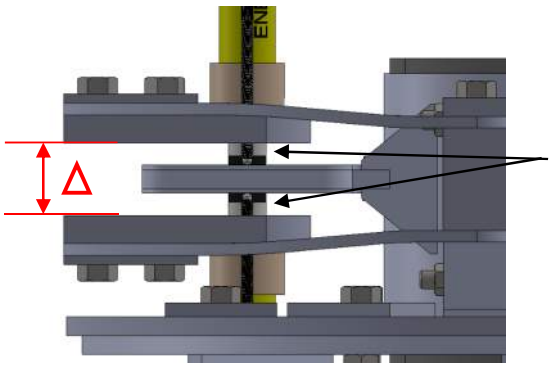

Note: The deflection of each Holding Plate relative to the Friction Partner should be approximately equal.

FIGURE 20: Measuring deflection.

© Copyright Reserved

This document is property of Structural Group, Inc. (STRUCTURAL TECHNOLOGIES / VSL) and must not be copied, reproduced, duplicated nor disclosed totally or partially to any Third Party, nor use in any manner whatsoever without prior consent of Structural Group, Inc. (STRUCTURAL TECHNOLOGIES / VSL).

STEP 5:

Screw all four of the Resting Bolts down until the rounded tip sits on the Friction Partner. Then give a half turn more on each bolt. You should notice a drop in the force on the blades when you do this.

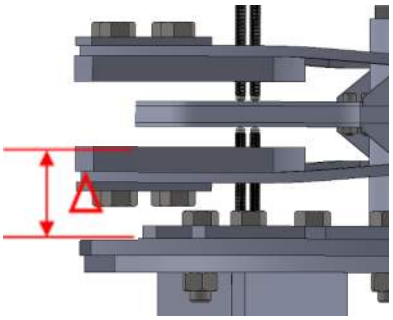

STEP 6:

Release the pressure at the Pump and disconnect the hoses. Remove the Jacks and Jack Adapters from the Holding Plates.

****MAKE SURE THE S.S. FRICTION PARTNER IS FREE FROM OIL, GREASE, ETC. PRIOR TO STEP 7. USE BRAKE CLEANER OR ACETONE TO CLEAN IF NECESSARY****

STEP 7:

Install the Holding Shafts into the Holding Plates. Screw the Shafts down until the Friction Pads are in contact with the Friction Partners.

STEP 8:

Remove the Resting Bolts.

STEP 9:

Install the Locking Nuts over the Holding Shafts and tighten using a Spanner wrench or similar tool.

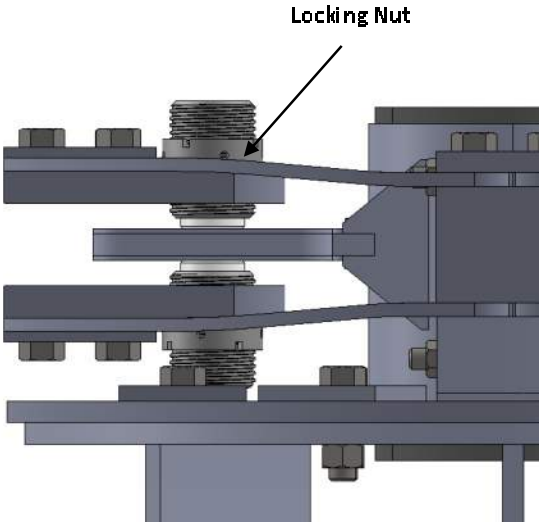

© Copyright Reserved

This document is property of Structural Group, Inc. (STRUCTURAL TECHNOLOGIES / VSL) and must not be copied, reproduced, duplicated nor disclosed totally or partially to any Third Party, nor use in any manner whatsoever without prior consent of Structural Group, Inc. (STRUCTURAL TECHNOLOGIES / VSL).

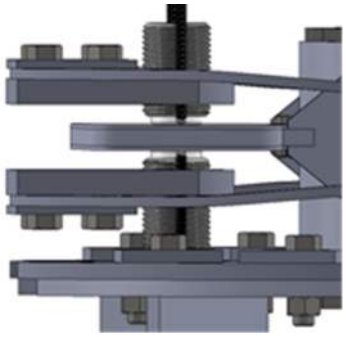

FIGURE 21: Final Stressed Position

STEP 10:

Repeat Steps 1 through 10 on the opposite side of the Friction Damper.

© Copyright Reserved

This document is property of Structural Group, Inc. (STRUCTURAL TECHNOLOGIES / VSL) and must not be copied, reproduced, duplicated nor disclosed totally or partially to any Third Party, nor use in any manner whatsoever without prior consent of Structural Group, Inc. (STRUCTURAL TECHNOLOGIES / VSL).

6.2 Option 2

The damper stressing setup includes one hand pump with gauge, one hydraulic hose, and one hydraulic wedge style cylinder. You will find the WR-5 cylinder at the following link. http://www.enerpac.com/en-us/industrial-tools-imperial/mechanical-hydraulic-bolting-tools/joint-separation-tools/wr-a-series-hydraulic-wedgie-and-spread-cylinders

STEP 1:

Place the wedge spreader in between the Holding Plates.



FIGURE 22: Wedge Style Hydraulic Cylinder

STEP 2:

Increase the pressure with the hand pump to the desired pressure or until you have the correct deflection depending on the method used (stress to force vs. stress to elongation).

© Copyright Reserved

This document is property of Structural Group, Inc. (STRUCTURAL TECHNOLOGIES / VSL) and must not be copied, reproduced, duplicated nor disclosed totally or partially to any Third Party, nor use in any manner whatsoever without prior consent of Structural Group, Inc. (STRUCTURAL TECHNOLOGIES / VSL).



FIGURE 23: Wedge Cylinder Extended

STEP 3:

- Stress to Force - Tighten the Holding Shafts until the Friction Pads are touching the Friction Partners.
- Stress to Elongation – Tighten the Holding Shafts until you have the desired amount of projection of the Holding Shaft through the Holding Plate.

****All Spring Blades stressed on the Ironton Russell Bridge shall be 10mm per blade.**

© Copyright Reserved

This document is property of Structural Group, Inc. (STRUCTURAL TECHNOLOGIES / VSL) and must not be copied, reproduced, duplicated nor disclosed totally or partially to any Third Party, nor use in any manner whatsoever without prior consent of Structural Group, Inc. (STRUCTURAL TECHNOLOGIES / VSL).

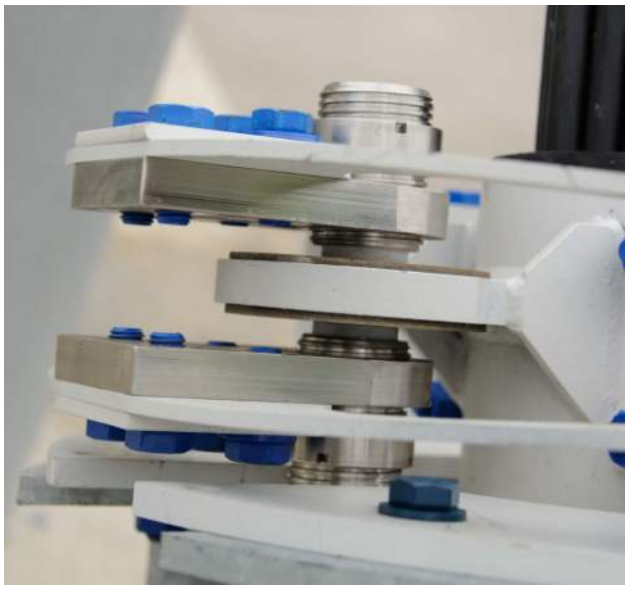

FIGURE 24: Damper Stressing Complete

STEP 4:

Tighten the Counter-nuts on the Holding Shafts by tapping with a screwdriver and a hammer.



FIGURE 25: Tightening Counter-nut

© Copyright Reserved

This document is property of Structural Group, Inc. (STRUCTURAL TECHNOLOGIES / VSL) and must not be copied, reproduced, duplicated nor disclosed totally or partially to any Third Party, nor use in any manner whatsoever without prior consent of Structural Group, Inc. (STRUCTURAL TECHNOLOGIES / VSL).

STEP 5:

Repeat steps 1-4 on the opposite side of the Friction Damper.

© Copyright Reserved

This document is property of Structural Group, Inc. (STRUCTURAL TECHNOLOGIES / VSL) and must not be copied, reproduced, duplicated nor disclosed totally or partially to any Third Party, nor use in any manner whatsoever without prior consent of Structural Group, Inc. (STRUCTURAL TECHNOLOGIES / VSL).

7 LOWER PIPE HALF INSTALLATION

The Lower Pipe Half assembly is the protective cover for the Friction Damper assembly. It consists of two halves and eight bolts.

STEP 1: Place the first half of the Lower Pipe Half assembly around the damper with the threaded backing plate towards the top.



Note: *There is a flange welded to the inside of the pipe that rests on the Damper Support Collar.*

FIGURE 26: Lower Pipe Halves Installation

STEP 2: Place the second half onto the first so that the through holes line up with the threaded holes in the backing plate.

© Copyright Reserved

This document is property of Structural Group, Inc. (STRUCTURAL TECHNOLOGIES / VSL) and must not be copied, reproduced, duplicated nor disclosed totally or partially to any Third Party, nor use in any manner whatsoever without prior consent of Structural Group, Inc. (STRUCTURAL TECHNOLOGIES / VSL).



FIGURE 27: Lower Pipe Half Bolt Installation

STEP 3: Insert a small Philips-head screw driver into the holes to hold the alignment. Install the four bolts for that side.

Note: Do not tighten the bolts until you have them all installed. You may need to tighten the first three while holding the alignment of the forth.

© Copyright Reserved

This document is property of Structural Group, Inc. (STRUCTURAL TECHNOLOGIES / VSL) and must not be copied, reproduced, duplicated nor disclosed totally or partially to any Third Party, nor use in any manner whatsoever without prior consent of Structural Group, Inc. (STRUCTURAL TECHNOLOGIES / VSL).

STEP 4: Rotate the two partially assemble halves around the Friction Damper assembly until the un-bolted holes are on the top side.



FIGURE 28: Lower Pipe Half Rotation

STEP 5: Pull the two halves together at the bottom until the holes line up enough to install a Phillips-head screw driver. Work together to get the top pulled together and pinned with another screw driver.

Note: You may have to use a flat-head screwdriver to pry between the pieces to get them to overlap. Also a ratchet strap wrapped around the top might be needed to pull the two halves together.

STEP 6: Install the remaining four bolts and tighten. Refer to the note in step 3.

Note: The second bolt from the top shall not be tightened until you have rotated the collar around to its final position. This bolt may come in contact with the flange of the Damper Support Collar.

© Copyright Reserved

This document is property of Structural Group, Inc. (STRUCTURAL TECHNOLOGIES / VSL) and must not be copied, reproduced, duplicated nor disclosed totally or partially to any Third Party, nor use in any manner whatsoever without prior consent of Structural Group, Inc. (STRUCTURAL TECHNOLOGIES / VSL).





FIGURE 29: Lower Pipe Half Completed

© Copyright Reserved

This document is property of Structural Group, Inc. (STRUCTURAL TECHNOLOGIES / VSL) and must not be copied, reproduced, duplicated nor disclosed totally or partially to any Third Party, nor use in any manner whatsoever without prior consent of Structural Group, Inc. (STRUCTURAL TECHNOLOGIES / VSL).

8 FRICTION DAMPER MAINTENANCE

8.1 Introduction

One of the main advantages of the VSL friction damper, compared to other damping systems, is the fact that the friction damper is not activated at very small amplitudes of cable stay vibrations. These movements are not critical for the cable stay durability. Consequently the number of fatigue cycles is reduced and the durability of the friction damper is increased.

8.2 Design Life of the Friction Damper

All the different parts of the friction damper have a different designed lifetime. The following elements will be distinguished:

- Steel blades, collar and specifically manufactured connection elements
- Bolting
- Corrosion protection and/or painting
- Friction pads

8.3 Inspection Period

The Client has to understand that this period may change according to observation on site. For instance, if the first observations show abnormal wearing of any component, the maintenance period will need to be shortened. On the other hand, if the observed wearing corresponds to a very low level, the maintenance period may be extended. Below is a table of recommended inspection periods.

Element	Frequency	Percentage of Total Quantity
External visual inspection of covers. (this inspection should be done by the client)	Every year	**100%**
Visual checking procedure (Refer to Section 8.4)	Every 6 years. The first visual checking occurs on the 3rd year	**25%** 34 Dampers, including at least one from each of the six stay sizes.
Deep control procedure (Dismantling checking) (Refer to Section 8.5)	Every 6 years. The dismantling checking occurs on the 6th year	**25%** 34 other Dampers (not inspected during the previous visual check cycle), including at least one from each of the six stay sizes.

TABLE 2: Recommendation Inspection Period

© Copyright Reserved

This document is property of Structural Group, Inc. (STRUCTURAL TECHNOLOGIES / VSL) and must not be copied, reproduced, duplicated nor disclosed totally or partially to any Third Party, nor use in any manner whatsoever without prior consent of Structural Group, Inc. (STRUCTURAL TECHNOLOGIES / VSL).

8.4 Visual Inspection Procedure

The Visual Inspection Procedure consists of controlling the following points:

- Existence of corrosion spots
- Existence of cracks on the blades
- Elements of connection
- Wearing of the friction pad

STEP 1:
Uncover the friction damper (Move anti-vandalism pipe) Refer to maintenance manual for example of equipment used to uncover the Damper.

STEP 2:
Examination of all components of the damper. Any spot of corrosion should be annotated on the inspection notes.

STEP 3:
The wearing of the friction pad is deducted from the measurement of the DELTA value as shown. Subtracting this DELTA value from the measurement recorded during installation and dividing by 2 will yield the average wear on each friction pad.

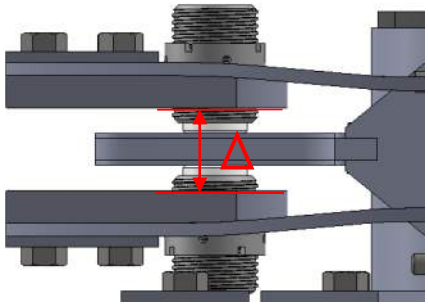

STEP 4:

Reinstallation of the covering elements (anti-vandalism pipe).

© Copyright Reserved

This document is property of Structural Group, Inc. (STRUCTURAL TECHNOLOGIES / VSL) and must not be copied, reproduced, duplicated nor disclosed totally or partially to any Third Party, nor use in any manner whatsoever without prior consent of Structural Group, Inc. (STRUCTURAL TECHNOLOGIES / VSL).

8.5 In-Depth Inspection Procedure

The in-depth inspection of the friction damper is performed by dismantling the whole friction damper, except the buffer plate(s) and examining all the parts.

In addition to the visual checking elements, a special care has to be put on:

- Accurate measurement of the friction pad wear
- Control of the sliding plates
- Control of the geometry of the blades (check of possible remaining deformation)

The most important part of this procedure consists in the resetting of the friction force according to design values.

STEP 1: Uncover the friction damper by removing the Lower Pipe Halves.
STEP 2: Loosen the Locking Nuts on the Holding Shafts and remove.
STEP 3: Install the Resting Bolts as shown in STEP 5 of stressing the Damper Blades. Tighten the bolts (alternating) until the Holding Shafts are no longer under any load. Observation of the Friction Pad “lifting off” the Friction partner will indicate the Holding Shaft is unloaded.
STEP 4: Remove the Holding Shafts.
STEP 5: Loosen the Resting Bolts until there is no contact with the Friction Partner. This operation should be done slowly and carefully by alternating back and forth between the bolts every full turn. **Note: Repeat steps 2 through 5 on the other side of the damper to fully disengage.**
STEP 6: Checking of the Spring Blades: • Presence of cracks in the steel • Proper positioning • Corrosion

© Copyright Reserved

This document is property of Structural Group, Inc. (STRUCTURAL TECHNOLOGIES / VSL) and must not be copied, reproduced, duplicated nor disclosed totally or partially to any Third Party, nor use in any manner whatsoever without prior consent of Structural Group, Inc. (STRUCTURAL TECHNOLOGIES / VSL).

STEP 7:
Checking of the Friction Pads:

- Unbalanced wearing
- Excessive wearing
- Cracks on the composite material

Change the Friction Pad/ Holding Shaft if necessary.

STEP 8:
Checking of the Connection Bolts:

- Corrosion
- Proper positioning

STEP 9:
Checking of the Collar

- Corrosion
- Wearing of the Friction Partner
- Embedment of the sliding plates into the collar supports
- Neoprene shape adapter wear

STEP 10:
Reassemble the friction damper according to the installation method.

STEP 11:
Re-install the Lower Pipe Halves.

© Copyright Reserved

This document is property of Structural Group, Inc. (STRUCTURAL TECHNOLOGIES / VSL) and must not be copied, reproduced, duplicated nor disclosed totally or partially to any Third Party, nor use in any manner whatsoever without prior consent of Structural Group, Inc. (STRUCTURAL TECHNOLOGIES / VSL).

APPENDIX “A”

DAMPER BLADE STRESSING TABLE

ATTACHMENT "T"

Project: Ironton-Russel Bridge
Contractor: Brayman
Engineer: Finley Engineering Group
Owner: ODOT
Revision Date: 2/22/2017

FRICTION DAMPER STRESSING DATA LEFT

structural TECHNOLOGIES
Exclusive Licensee of VSL - U.S.A.

15600 Trinity Blvd, Ste 118
Fort Worth, TX 76155
Phone : 817-545-4807
Fax : 817-545-4827

Pylon	Span	Stay #	Anchor Size	DESIGN FORCE (N)	DESIGN DISPL. (mm)	ACTUAL FORCE (N)	ACTUAL DISPL. (mm)
Tower 4 Left (North)	Back Span	B16	6- 19	3708	10	2781	10
		B17	6- 19	3708	10	2781	10
		B18	6- 19	3708	10	2781	10
		B19	6- 19	3708	10	2781	10
		B20	6- 19	3708	10	2781	10
		B21	6- 19	3708	10	2781	10
		B22	6- 19	3708	10	2781	10
		B23	6- 22	3708	10	2781	10
		B24	6- 22	3708	10	2781	10
		B25	6- 31	3958	10	2969	10
		B26	6- 31	3958	10	2969	10
		B27	6- 31	3958	10	2969	10
		B28	6- 31	3958	10	2969	10
		B29	6- 31	3958	10	2969	10
		B30	6- 37	4833	10	3625	10
	Main Span	M16	6- 19	3708	10	2781	10
		M17	6- 19	3708	10	2781	10
		M18	6- 19	3708	10	2781	10
		M19	6- 19	3708	10	2781	10
		M20	6- 22	3708	10	2781	10
		M21	6- 22	3708	10	2781	10
		M22	6- 22	3708	10	2781	10
		M23	6- 31	3958	10	2969	10
		M24	6- 31	3958	10	2969	10
		M25	6- 31	3958	10	2969	10
		M26	6- 31	3958	10	2969	10
		M27	6- 31	3958	10	2969	10
		M28	6- 31	3958	10	2969	10
		M29	6- 31	3958	10	2969	10
		M30	6- 31	3958	10	2969	10

Pylon	Span	Stay #	Anchor Size	DESIGN FORCE (N)	DESIGN DISPL. (mm)	ACTUAL FORCE (N)	ACTUAL DISPL. (mm)
Tower 3 Left (North)	Back Span	B1	6- 19	3708	10	2781	10
		B2	6- 19	3708	10	2781	10
		B3	6- 19	3708	10	2781	10
		B4	6- 19	3708	10	2781	10
		B5	6- 19	3708	10	2781	10
		B6	6- 19	3708	10	2781	10
		B7	6- 19	3708	10	2781	10
		B8	6- 22	3708	10	2781	10
		B9	6- 22	3708	10	2781	10
		B10	6- 31	3958	10	2969	10
		B11	6- 31	3958	10	2969	10
		B12	6- 31	3958	10	2969	10
		B13	6- 31	3958	10	2969	10
		B14	6- 31	3958	10	2969	10
		B15	6- 37	4833	10	3625	10
	Main Span	M1	6- 19	3708	10	2781	10
		M2	6- 19	3708	10	2781	10
		M3	6- 19	3708	10	2781	10
		M4	6- 19	3708	10	2781	10
		M5	6- 22	3708	10	2781	10
		M6	6- 22	3708	10	2781	10
		M7	6- 22	3708	10	2781	10
		M8	6- 31	3958	10	2969	10
		M9	6- 31	3958	10	2969	10
		M10	6- 31	3958	10	2969	10
		M11	6- 31	3958	10	2969	10
		M12	6- 31	3958	10	2969	10
		M13	6- 31	3958	10	2969	10
		M14	6- 31	3958	10	2969	10
		M15	6- 31	3958	10	2969	10

Table 3: Friction Damper Stressing Values (Left)

© Copyright Reserved

This document is property of Structural Group, Inc. (STRUCTURAL TECHNOLOGIES / VSL) and must not be copied, reproduced, duplicated nor disclosed totally or partially to any Third Party, nor use in any manner whatsoever without prior consent of Structural Group, Inc. (STRUCTURAL TECHNOLOGIES / VSL).

Project: Ironton-Russel Bridge
Contractor: Brayman
Engineer: Finley Engineering Group
Owner: ODOT
Revision Date: 2/22/2017

FRICTION DAMPER STRESSING DATA RIGHT

structural TECHNOLOGIES
Exclusive Licensee of VSL - U.S.A.

15600 Trinity Blvd, Ste 118
Fort Worth, TX 76155
Phone : 817-545-4807
Fax : 817-545-4827

Pylon	Span	Stay #	Anchor Size	DESIGN FORCE (N)	DESIGN DISPL. (mm)	ACTUAL FORCE (N)	ACTUAL DISPL. (mm)
Tower 4 Right (South)	Back Span	B16	6- 19	3708	10	2781	10
		B17	6- 19	3708	10	2781	10
		B18	6- 19	3708	10	2781	10
		B19	6- 19	3708	10	2781	10
		B20	6- 19	3708	10	2781	10
		B21	6- 19	3708	10	2781	10
		B22	6- 19	3708	10	2781	10
		B23	6- 22	3708	10	2781	10
		B24	6- 22	3708	10	2781	10
		B25	6- 31	3958	10	2969	10
		B26	6- 31	3958	10	2969	10
		B27	6- 31	3958	10	2969	10
		B28	6- 31	3958	10	2969	10
		B29	6- 31	3958	10	2969	10
		B30	6- 37	4833	10	3625	10
	Main Span	M16	6- 19	3708	10	2781	10
		M17	6- 19	3708	10	2781	10
		M18	6- 19	3708	10	2781	10
		M19	6- 19	3708	10	2781	10
		M20	6- 22	3708	10	2781	10
		M21	6- 22	3708	10	2781	10
		M22	6- 22	3708	10	2781	10
		M23	6- 31	3958	10	2969	10
		M24	6- 31	3958	10	2969	10
		M25	6- 31	3958	10	2969	10
		M26	6- 31	3958	10	2969	10
		M27	6- 31	3958	10	2969	10
		M28	6- 31	3958	10	2969	10
		M29	6- 31	3958	10	2969	10
		M30	6- 31	3958	10	2969	10

Pylon	Span	Stay #	Anchor Size	DESIGN FORCE (N)	DESIGN DISPL. (mm)	ACTUAL FORCE (N)	ACTUAL DISPL. (mm)
Tower 3 Right (South)	Back Span	B1	6- 19	3708	10	2781	10
		B2	6- 19	3708	10	2781	10
		B3	6- 19	3708	10	2781	10
		B4	6- 19	3708	10	2781	10
		B5	6- 19	3708	10	2781	10
		B6	6- 19	3708	10	2781	10
		B7	6- 19	3708	10	2781	10
		B8	6- 22	3708	10	2781	10
		B9	6- 22	3708	10	2781	10
		B10	6- 31	3958	10	2969	10
		B11	6- 31	3958	10	2969	10
		B12	6- 31	3958	10	2969	10
		B13	6- 31	3958	10	2969	10
		B14	6- 31	3958	10	2969	10
		B15	6- 37	4833	10	3625	10
	Main Span	M1	6- 19	3708	10	2781	10
		M2	6- 19	3708	10	2781	10
		M3	6- 19	3708	10	2781	10
		M4	6- 19	3708	10	2781	10
		M5	6- 22	3708	10	2781	10
		M6	6- 22	3708	10	2781	10
		M7	6- 22	3708	10	2781	10
		M8	6- 31	3958	10	2969	10
		M9	6- 31	3958	10	2969	10
		M10	6- 31	3958	10	2969	10
		M11	6- 31	3958	10	2969	10
		M12	6- 31	3958	10	2969	10
		M13	6- 31	3958	10	2969	10
		M14	6- 31	3958	10	2969	10
		M15	6- 31	3958	10	2969	10

Table 4: Damper Blade Stressing Values (Right)

© Copyright Reserved

This document is property of Structural Group, Inc. (STRUCTURAL TECHNOLOGIES / VSL) and must not be copied, reproduced, duplicated nor disclosed totally or partially to any Third Party, nor use in any manner whatsoever without prior consent of Structural Group, Inc. (STRUCTURAL TECHNOLOGIES / VSL).

APPENDIX "B"

Ironton Russell Friction Damper Quantities

VSL JOB #: 320100

IRONTON RUSSELL C.S.B. - Friction Damper

Damper Qty	44	20	52	4	Total=	120
Size	6-19	6-22	6-31	6-37		
DESCRIPTION	**QTY.**	**QTY.**	**QTY.**	**QTY.**		**TOTAL QTY**
SPRING BLADES						
Type A - 21" OD	176					176
Type B - 22" OD		80	208			288
Type C - 24" OD				16		16
BUFFER HALVES						
6-19	88					88
6-22		40				40
6-31			104			104
6-37				8		8
COVER PLATE 1						
TYPICAL	176	80	208	16		480
COVER PLATES 2						
TYPICAL	88	40	104	8		240
SPACER BLOCK						
TYPICAL	88	40	104	8		240
HOLDING PLATES						
TYPICAL	176	80	208	16		480
FRICTION PAD & SHAFT						
TYPICAL	176	80	208	16		480
COUNTER NUT						
TYPICAL	176	80	208	16		480
CONNECTION PL						
TYPICAL	AS NEEDED					AS NEEDED
DAMPER COLLAR HALVES						
6-19	88					88
6-22		40				40
6-31			104			104
6-37				8		8
S.S. FRICTION PARTNER						
4.5"	176	80				256
5.5"			208	16		224
SUPORT COLLAR HALVES						
6-19	88					88
6-22		40				40
6-31			104			104
6-37				8		8
HARDWARE - FLUOROPOLYMER COATED - DOMESTIC						
BLADE BOLT						
5/8"-11 x 5" HEX BOLT	352	160	416	32		960
HOLDING BOLT						
5/8"-11 x 1 1/2" HEX BOLT	704	320	832	64		1920
BUFFER BOLT						
5/8"-11x 2 1/4" HEX BOLT	176	80	208	16		480
5/8" Hex Nuts	176	80	208	16		480
5/8" Flat Washers	352	160	416	32		960
COLLAR BOLT						
1/2"-13 x 4" HEX BOLT	176	80	208	16		480
1/2" Hex Nuts	176	80	208	16		480
1/2" Flat Washers	352	160	416	32		960
HARDWARE - A325 - GALVANIZED - DOMESTIC						
SUPPORT BOLT						
5/8"-11x 2" HEX BOLT	176	80	208	16		480
5/8" Hex Nuts	176	80	208	16		480
5/8" Flat Washers	352	160	416	32		960
TEMPORARY HARDWARE - NO REQUIREMENTS						
CONNECTION PL. BOLT						
1/2"-13 x 4" HEX BOLT	AS NEEDED					AS NEEDED
1/2" Hex Nuts	AS NEEDED					AS NEEDED
1/2" Flat Washers	AS NEEDED					AS NEEDED

Table 5: Friction Damper Quantities

© Copyright Reserved

This document is property of Structural Group, Inc. (STRUCTURAL TECHNOLOGIES / VSL) and must not be copied, reproduced, duplicated nor disclosed totally or partially to any Third Party, nor use in any manner whatsoever without prior consent of Structural Group, Inc. (STRUCTURAL TECHNOLOGIES / VSL).

B.6 Ladder Safety Device

LETTER OF TRANSMITTAL

BRAYMAN CONSTRUCTION CORP.
1000 John Roebling Way
Saxonburg, PA 16056
Phone: (724) 443-1533
Fax: (724) 443-8733

To: Ohio Dept. of Transportation
District 9
650 Eastern Avenue
Chillicothe, OH 45601

Project: SR-93-0.00
Ironton Russell Bridge
Lawrence County, OH
Project No. 110628

BCC # 194-000-000

Attention: Dave Bame

Date: October 24, 2013

We are sending you the following items:

☐ Under Separate Cover ☑ Attached

☐ Copy of Letter ☐ Prints ☐ Specifications ☐ Change Order

☐ Shop Drawings ☐ Plans ☐ _____

Copies	Date	Description
1	10/24/13	Ladder Safety Device

Transmitted for the following purpose:

☑ For Approval ☐ Approved as Submitted ☐ Resubmit __ copies for approval

☐ For Your Use ☐ Approved as Noted ☐ Submit __ copies for distribution

☐ As Requested ☐ Returned for Corrections ☐ Return __ corrected prints

☐ For Review & Comment ☐ For Certification

MAIL: ◯ Regular ◯ Overnight ◯ Certified ☑ Email **FAX:** ◯

Remarks:

Aaron Downs

Signed: Aaron Downs
Project Engineer

cc: File/arb
Dan Beasley
Edwin Callicutt
Eric McLaughlin

Ironton Russell Bridge over Ohio River

LAW-93C-0000

Ladder Safety Device

For:

District 9

Submitted By:

1000 John Roebling Way

Saxonburg, Pa 16056

October 24, 2013

capital SAFETY

Capital Safety USA • 3833 SALA Way • Red Wing, MN 55066-1837 • Phone 651.388.8282 • Fax 651.388.5065



Lad-Saf™ Specification

Standard System 6116280, 6110000, 6100400, 6116540, 6100090

Review is only for conformance with the design concept. Review does not cover dimensions, quantities, accuracy, fit, or any assembly for which this item may be a component. Review does not authorize deviation from Contract Documents or substitution of materials. Requests for deviations from the Contract Documents will only be addressed thru the Change Order Process.

REVIEWED

CONFORMS WITH CONCEPT	(✔)
CONFORMS AS NOTED	( )
RESUBMIT	( )
NO ACTION	( )
DOES NOT CONFORM	( )

URS

DATE 11/11/2013 BY Bipin K. Lapasia

Review is only for conformance with the design concept. Review does not cover dimensions, quantities, accuracy, fit, or any assembly for which this item may be a component. Review does not authorize deviation from Contract Documents or substitution of materials. Requests for deviations from the Contract Documents will only be addressed thru the Change Order Process.

REVIEWED
CONFORMS WITH CONCEPT (✔)
CONFORMS AS NOTED ( )
RESUBMIT ( )
NO ACTION ( )
DOES NOT CONFORM ( )

URS
DATE 11/11/2013 BY Bijan K. Kapasi

PRODUCT SPECIFICATION

DBI SALA®

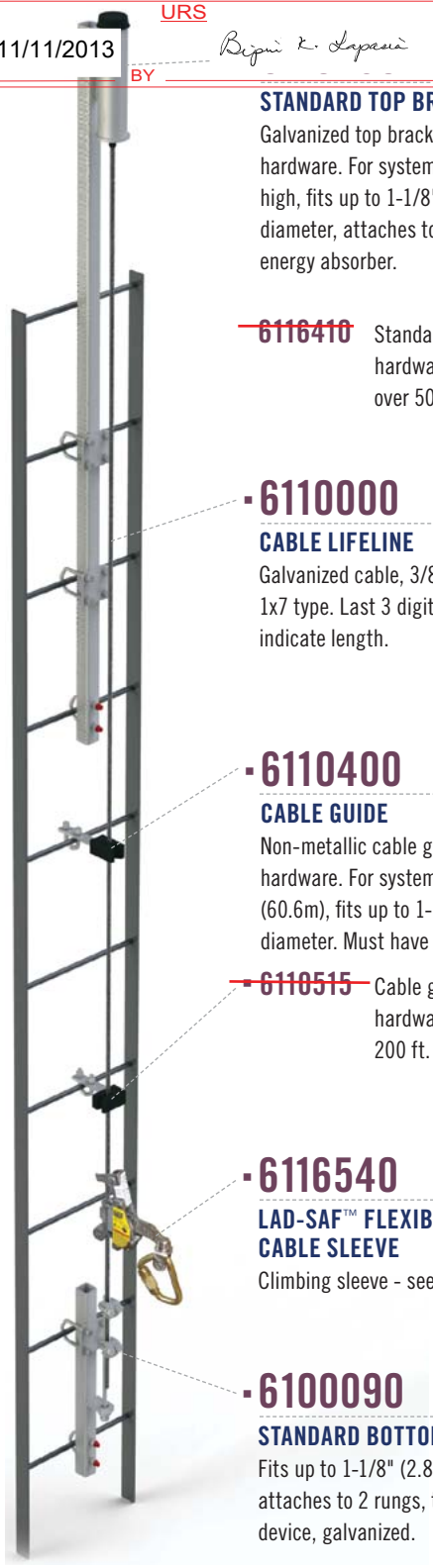

Lad-Saf™ Flexible Cable Ladder Safety System

Description:

The Lad-Saf™ flexible cable system consists of a top and bottom bracket that act as anchors for a steel cable that runs the length of the climbing area. A Lad-Saf™ sleeve connects theworker to the system, automatically follows the user during the climb and locks onto the cable in the event of a fall, allowing the user to regain their footing. Designed for ease of use, economy and versatility, optional brackets/designs are available for bolting or welding the system, choose rung clamp sizes/styles, choose systems for straight or curved ladders and for connection to wood, concrete or steel structures.

STANDARD TOP BRACKET

Galvanized top bracket with mounting hardware. For systems up to 499 ft. (152m) high, fits up to 1-1/8" (2.85cm) rung diameter, attaches to 3 rungs, built-in energy absorber.

~~6116410~~ Standard top bracket and hardware for systems over 500 ft. (152.4m).

6110000
CABLE LIFELINE

Galvanized cable, 3/8" (9.5mm) diameter, 1x7 type. Last 3 digits in part number indicate length.

6110400
CABLE GUIDE

Non-metallic cable guide with mounting hardware. For systems up to 199 ft. (60.6m), fits up to 1-1/8" (2.85cm) rung diameter. Must have 1 every 25 ft. (7.6m).

~~6110515~~ Cable guide ("L" shaped) and hardware for systems over 200 ft. (61m).

6116540
LAD-SAF™ FLEXIBLE CABLE SLEEVE

Climbing sleeve - see product details to right.

6100090
STANDARD BOTTOM BRACKET

Fits up to 1-1/8" (2.85cm) rung diameter, attaches to 2 rungs, tensioning device, galvanized.

Features and Benefits:

• HANDS-FREE CLIMBING AND PROTECTION

The Lad-Saf™ sleeve automatically follows the user, can be attached anywhere along the cable and locks in the event of a fall.

• TENSION INDICATOR

Integrated tension indicating bottom bracket takes the guesswork out of installation.

• CUSTOMIZABLE

Hundreds of different brackets, styles and configurations for any application.

• CORROSION RESISTANT CONSTRUCTION

Galvanized and stainless steel construction stands up to harsh environments for maintenance free longevity.

• SHOCK ABSORBING DESIGN

Integrated shock absorbing top bracket reduces forces imposed on ladder structure during a fall.

• INTERMEDIATE CABLE GUIDES

Non-metalic cable guides prevent cable wear against the ladder and permits the climber to bypass without disconnecting.

• MEETS GLOBAL STANDARDS

Compliant with OSHA, ANSI A14.3, CSA Z259.1.1.
CE EN 353-1:2002 and AS/NZS 1891.3:1997 compliant models also available.

Capital Safety
USA : 800 328 6146 • Canada : 800 387 7484 • Latin America: +1 651 385 4301 • Asia : +65 6558 7758 Australia: 1800 245 002 • New Zealand: 0800 212 505 • Europe, Middle East, Africa : +33 (0)4 97 10 00 10 Northern Europe : +44 (0) 1527 548000 • Germany: +49 (0)30 92 03 83 87 00
www.capitalsafety.com • info@capitalsafety.com

ISO 9001 REGISTERED

©2013, Capital Safety

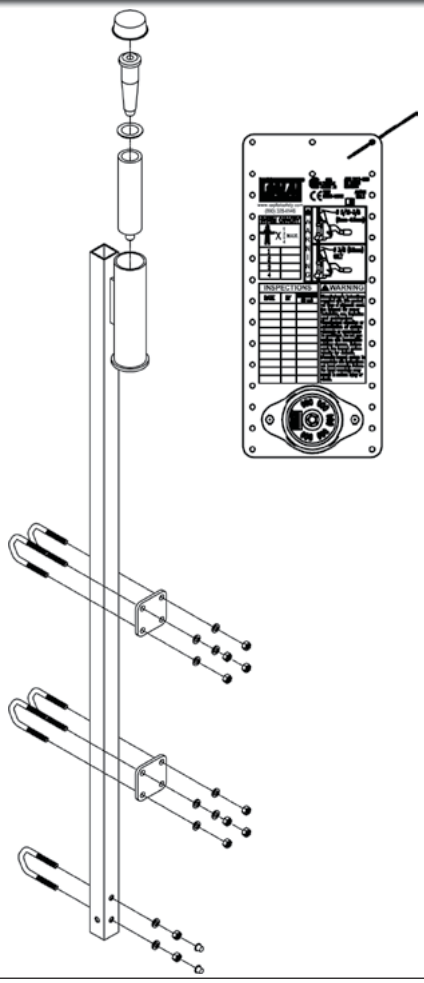

Model: 6116280
Lad-Saf™ Top Bracket

Description:

Standard galvanized top bracket with mounting hardware. For systems up to 499 ft. (152m) high, fits up to 1-1/8" (2.85cm) rung diameter, attaches to 3 rungs, built-in energy absorber.

Features and Benefits:

• CORROSION RESISTANT CONSTRUCTION

Galvanized construction stands up to harsh environments for maintenance free longevity.

• SHOCK ABSORBING DESIGN

Integrated shock absorbing top bracket reduces forces imposed on ladder structure during a fall. Bracket distributes load over several rungs of ladder.

• EASY TO INSTALL

Standard tools installs bracket to ladder. No swaging necessary, system carrier clamp (strandvise) provides easy top bracket cable termination with no tools.

• I-SAFE™ EQUIPED

Includes an i-Safe™ radio frequency identification (RFID) to simplify inspection and inventory control and provide records for your fall protection equipment

General Specifications:

- Load Requirements; the top bracket is supplied with three rung connections, the load required for each run for a single user system is 1,125 lbs. (5.0 kN) per rung (3,375 lbs. {15.0 kN}/3) - see details below
- Capacity = 1 to 4 user(s) at 310 lbs. (140.6 kg) each.
- Ladder rung strength requirements for;
  - -One user on system; *3,375 lbs. (15.0 kN)
  - -Two users on system; *4,350 lbs. (19.3 kN)
  - -Three users on system; *5,325 lbs. (23.7 kN)
  - -Four users on system; *6,300 lbs. (28.0 kN)
  - *includes safety factor
- Size = 1-1/2 inch (3.81 cm) x 62 inches (157.48 cm)
- Weight = 23 lbs. (10.43 kg)
- Standards = Complete system is compliant with OSHA, ANSI A14.3, CSA Z259.1.1. CE EN 353-1:2002 and AS/NZS 1891.3:1997 compliant models also available.

Materials and Construction:

- Galvanized 1-1/2" (3.81 cm) square 11 guage hot rolled ASTM-A-500 Grade B tube
- Galvanized 2" SCH. 40 pipe
- SAE Grade 2, U-bolt galvanized per ASTM-A-153
- Elastomeric impact attenuator
- Carrier clamp (cable grip strandvise)
- Stainless steel system label with i-Safe™ RFID tag

Associated Products:

- Must use as part of a complete Lad-Saf™, the following is a list of standard components;

  - 6116280 Top Bracket, 6110000 Cable Lifeline, 6100400 Cable Guide, 6116540 Lad-Saf™ Flexible Cable Sleeve, 6100090 Bottom Bracket

Capital Safety
USA : 800 328 6146 • Canada : 800 387 7484 • Latin America: +1 651 385 4301 • Asia : +65 6558 7758 Australia: 1800 245 002 • New Zealand: 0800 212 505 • Europe, Middle East, Africa : +33 (0)4 97 10 00 10 Northern Europe : +44 (0) 1527 548000 • Germany: +49 (0)30 92 03 83 87 00
www.capitalsafety.com • info@capitalsafety.com

ISO 9001 REGISTERED

©2013, Capital Safety

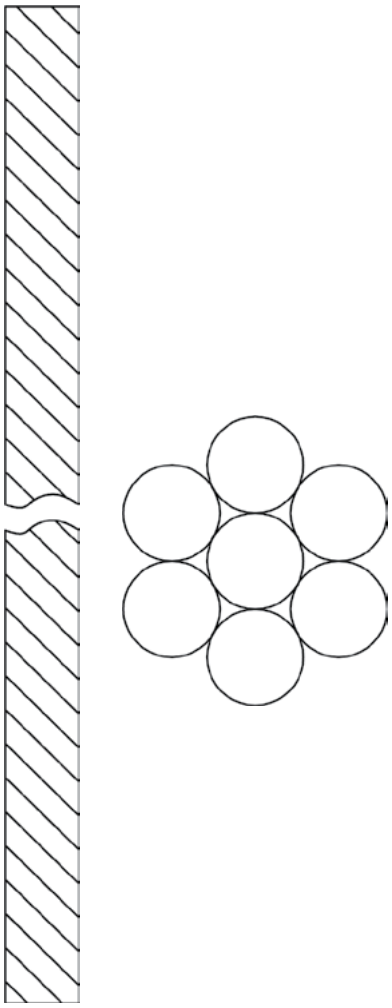

Model: 6110000
Lad-Saf™ Cable Lifeline

Description:

3/8" (9.5 mm) diameter 1x7 strand (standard) type, extra high strength solid core cable lifeline. NOTE: When ordering, the last three digits in the part number detail length (ex. 6110100 is a 100 ft {30.5 m} length).

Features and Benefits:

• DURABLE HIGH STRENGTH STEEL CONSTRUCTION

High strength 15,400 lb. (68.5 kN) solid core steel construction for maximum durability, longevity and added safety.

• 1 X 7 STRAND TYPE

Larger strands are less suceptible to damage, wear and tear providing added longevity - also incorporate a thicker layer of galvanizing for added corrosion resistance.

• CORROSION RESISTANT CONSTRUCTION

Galvanized construction stands up to harsh environments for maintenance free longevity.

General Specifications:

- Cable Size: 3/8" (9.5 mm) diameter 1x7 strand
- Cable Grade: Extra high strength solid core
- Length: Per customer requirements
- Weight = 0.27 lbs. per foot (0.12 kg/ft)
- Standards = Complete system is compliant with OSHA, ANSI A14.3, CSA Z259.1.1. CE EN 353-1:2002 and AS/NZS 1891.3:1997 compliant models also available.

Materials and Construction:

- Galvanized 3/8" diameter (9.5mm) 1x7 strand
- Preformed, left regular lay, in accordance with wire rope and strand ASTM A475
- Lubrication: Dry
- Breaking Strength: 15,400 lbs. minimum (68.5 kN)

Associated Products:

- Must use as part of a complete Lad-Saf™, the following is a list of standard components;

  - 6116280 Top Bracket, 6110000 Cable Lifeline, 6100400 Cable Guide, 6116540 Lad-Saf™ Flexible Cable Sleeve, 6100090 Bottom Bracket

Capital Safety
USA : 800 328 6146 • Canada : 800 387 7484 • Latin America: +1 651 385 4301 • Asia : +65 6558 7758 Australia: 1800 245 002 • New Zealand: 0800 212 505 • Europe, Middle East, Africa : +33 (0)4 97 10 00 10 Northern Europe : +44 (0) 1527 548000 • Germany: +49 (0)30 92 03 83 87 00
www.capitalsafety.com • info@capitalsafety.com

ISO 9001 REGISTERED
©2013, Capital Safety

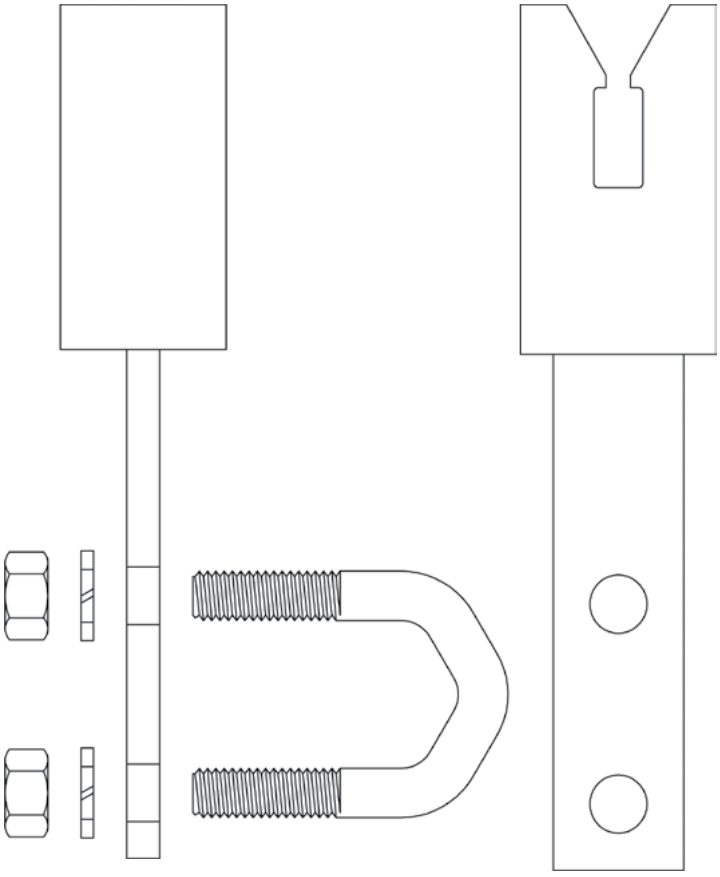

Model: 6100400
Lad-Saf™ Cable Guide

Description:

Non-metallic cable guide with mounting hardware. For systems up to 199 ft. (60.6m), fits up to 1-1/8" (2.85cm) rung diameter. Must have 1 every 25 ft. (7.6m).

Features and Benefits:

• INTERMEDIATE CABLE GUIDE
Prevents cable wear against the ladder and permits the climber to bypass without disconnecting.

• NON-METALIC DESIGN
Prevents metal-to-metal contact and abrasion, cable rests in guide slot and does not rub on abrasive objects.

• EASY TO INSTALL
Standard tools installs bracket to ladder. Complete with necessary fastening hardware.

General Specifications:

- Molded polyurethane elastomer guide with steel fastening hardware
- Protects cable from rubbing on abrasive objects
- Slight body pressure releases cable from guide and allows climber to pass by
- One cable guide is positioned approximately every 25 feet of length of system (7.6 m)
- Size = 6.875 inches (17.5 cm) x 1.25" (3.17 cm)
- Weight = 0.70 lbs. (0.32 kg)
- Standards = Complete system is compliant with OSHA, ANSI A14.3, CSA Z259.1.1. CE EN 353-1:2002 and AS/NZS 1891.3:1997 compliant models also available.

Materials and Construction:

- Guide Material: Urethane - TU 901 or equivalent
- Bar Material: 1/4 inch x 1 inch (0.635 cm x 2.54 cm) HR steel
- Galvanized bar per ASTM A123/A123M or A153/A153M

Associated Products:

- Must use as part of a complete Lad-Saf™, the following is a list of standard components;

  - 6116280 Top Bracket, 6110000 Cable Lifeline, 6100400 Cable Guide, 6116540 Lad-Saf™ Flexible Cable Sleeve, 6100090 Bottom Bracket

Capital Safety
USA : 800 328 6146 • Canada : 800 387 7484 • Latin America: +1 651 385 4301 • Asia : +65 6558 7758 Australia: 1800 245 002 • New Zealand: 0800 212 505 • Europe, Middle East, Africa : +33 (0)4 97 10 00 10 Northern Europe : +44 (0) 1527 548000 • Germany: +49 (0)30 92 03 83 87 00
www.capitalsafety.com • info@capitalsafety.com

ISO 9001 REGISTERED
©2013, Capital Safety



Model: 6116540
Lad-Saf™ Flexible Cable Sleeve

Description:

The Lad-Saf™ sleeve (fall arrester) is designed to be used as part of a complete personal fall arrest ladder safety system. It provides a portable connection point to a ladder safety system. The sleeve is easily attached or removed anywhere along the cable and automatically follows you as you climb or descend. In the event of a fall, the device locks onto the cable lifeline allowing you to regain your footing and continue to climb.

Features and Benefits:

• HANDS-FREE CLIMBING
The Lad-Saf™ sleeve automatically follows the user during ascent or descent.

• EASY TO INSTALL AND DETACHABLE
One-handed attachment/removal from cable for fast, easy and safe connections. The sleeve can be attached anywhere along the cable for added versatility.

• LOCKING SYSTEM
Cam locking system locks within inches in the event of a fall, and a built-in gravity lock prevents unintentional installation upside down for added safety.

• COMPACT AND CORROSION RESISTANT
Compact and lightweight design has a stainless steel construction for added durability and longevity.

General Specifications:

- For use with 3/8 inch (9.5 mm) or 5/16 inch (8 mm) diameter 1x7 or 7x19 solid core cable
- Capacity = 1 user of 310 lbs. (140.6 kg)
- Cam locking system with gravity latch
- Size = 5-1/2 inches (14 cm) x 5-1/2 inches (14 cm)
- Weight = 2.2 lbs. (1.0 kg)
- Standards = Complete system is compliant with OSHA, ANSI A14.3, CSA Z259.1.1. CE EN 353-1:2002 and AS/NZS 1891.3:1997 compliant models also available.

Materials and Construction:

- Body: Type 17-4 PH stainess steel, heat treated
- Rivets: Type 430 stainless steel
- Shaft and Brake Shoe: Type 17-4 PH stainless steel
- Bushing: Bronze
- Springs: Stainless steel
- Side Plates and Ext. Pieces: Type 304 stainless steel
- Construction: Riveted assembly

Associated Products:

- Must use as part of a complete Lad-Saf™, the following is a list of standard components;

  - 6116280 Top Bracket, 6110000 Cable Lifeline, 6100400 Cable Guide, 6116540 Lad-Saf™ Flexible Cable Sleeve, 6100090 Bottom Bracket

Capital Safety
USA : 800 328 6146 • Canada : 800 387 7484 • Latin America: +1 651 385 4301 • Asia : +65 6558 7758 Australia: 1800 245 002 • New Zealand: 0800 212 505 • Europe, Middle East, Africa : +33 (0)4 97 10 00 10 Northern Europe : +44 (0) 1527 548000 • Germany: +49 (0)30 92 03 83 87 00
www.capitalsafety.com • info@capitalsafety.com

ISO 9001 REGISTERED

©2013, Capital Safety

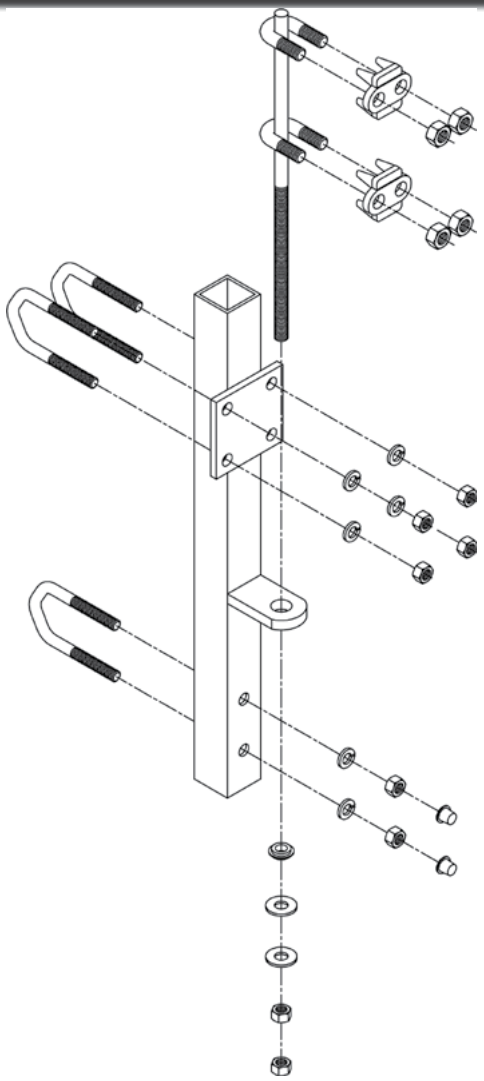

Model: 6100090
Lad-Saf™ Bottom Bracket

Description:

Standard galvanized bottom bracket with mounting hardware. Fits up to 1-1/8" (2.85cm) rung diameter, attaches to 2 rungs, built-in tensioning device.

Features and Benefits:

• CORROSION RESISTANT CONSTRUCTION

Galvanized construction stands up to harsh environments for maintenance free longevity.

• INTEGRATED CABLE TENSION SYSTEM

Integrated cable lifeline adjustment system provides a fast, easy and visual indication of a properly tensioned system.

• EASY TO INSTALL

Standard tools installs bracket to ladder. No swaging necessary, carrier cable tensioner and saddle clips provide easy bottom bracket cable termination.

General Specifications:

- Simple bolt and clamp plate fasteners install bracket to 2 rungs of ladder
- Bottom bracket should be positioned to allow user(s) safe access when connecting/disconnecting from the system
- Bottom bracket must be mounted in-line (vertically) with the top bracket (6116280)
- Size = 1-1/2 inch (3.81 cm) x 19 inches (48.26 cm)
- Weight = 8 lbs. (3.63 kg)
- Standards = Complete system is compliant with OSHA, ANSI A14.3, CSA Z259.1.1. CE EN 353-1:2002 and AS/NZS 1891.3:1997 compliant models also available.

Materials and Construction:

- Galvanized 1-1/2" (3.81 cm) square 11 guage hot rolled ASTM-A-500 Grade B tube
- Fasteners: U-bolts, nuts and washers are galvanized per ASTM-A-153

Associated Products:

- Must use as part of a complete Lad-Saf™, the following is a list of standard components;

  - 6116280 Top Bracket, 6110000 Cable Lifeline, 6100400 Cable Guide, 6116540 Lad-Saf™ Flexible Cable Sleeve, 6100090 Bottom Bracket

Capital Safety
USA : 800 328 6146 • Canada : 800 387 7484 • Latin America: +1 651 385 4301 • Asia : +65 6558 7758 Australia: 1800 245 002 • New Zealand: 0800 212 505 • Europe, Middle East, Africa : +33 (0)4 97 10 00 10 Northern Europe : +44 (0) 1527 548000 • Germany: +49 (0)30 92 03 83 87 00
www.capitalsafety.com • info@capitalsafety.com

ISO 9001 REGISTERED
©2013, Capital Safety

Appendix C – Select Construction Photos



Figure 1. Previous Ironton Russell Bridge



Figure 2. Drilled shaft construction



Figure 3. Foundation construction



Figure 4. General progress photo



Figure 5. End span falsework supporting precast floorbeams



Figure 6. Ohio approach construction



Figure 7. Typical precast floorbeams



Figure 8. Typical precast anchor block



Figure 9. Typical precast anchor block instalation



Figure 10. Kentucky end span construction



Figure 11. Kentucky end span construciton



Figure 12. Ohio end span construciton



Figure 13. Ohio end span construciton



Figure 14. End span deck construction



Figure 15. Typical post-tentioning cap



Figure 16. Tower anchor box



Figure 17. Tower anchor box installation



Figure 18. Tower leg construction



Figure 19. Tower 3 construction



Figure 20. General progress photo



Figure 21. Construction from Ohio approach



Figure 22. Main span form traveler



Figure 23. Stay cable pipe preparation



Figure 24. Stay cable anchorage at edge girder



Figure 25. Stay cable anchorages at pier diaphragm



Figure 26. Stay cable strand instalation



Figure 27. Stay cable pipe preparation



Figure 28. Main span construciton



Figure 29. Main span construciton



Figure 30. Main span construciton



Figure 31. Barrier construction



Figure 32. Opening ceremony

Appendix D – Inspection Forms

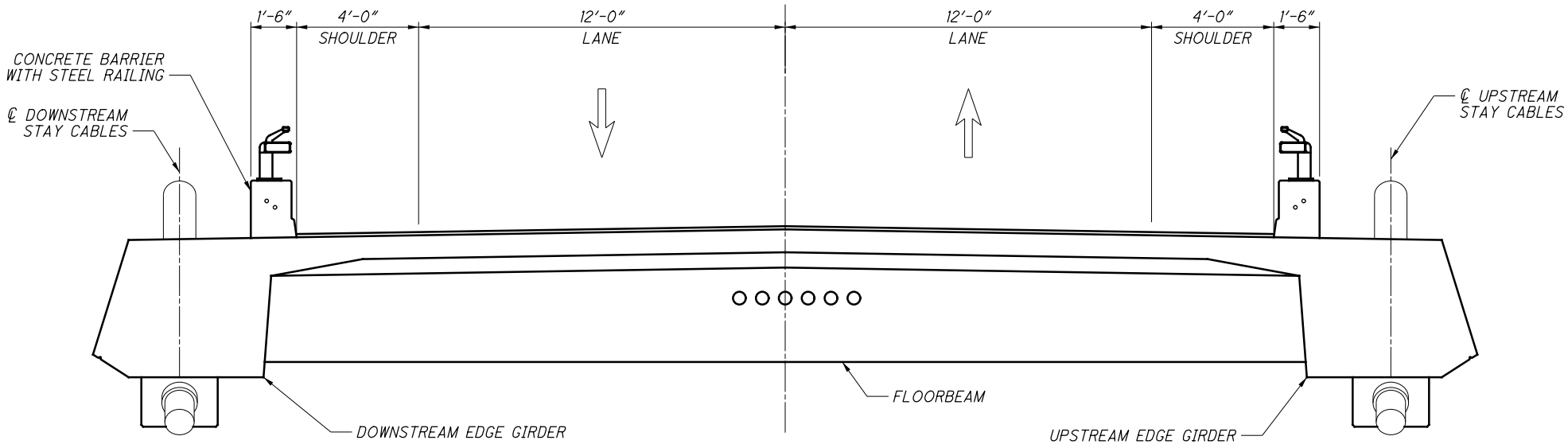

TYPICAL SECTION

(LOOKING TOWARD OHIO)

NOTES:	TYPICAL SECTION INSPECTION FORM IRONTON RUSSELL BRIDGE OVER OHIO RIVER SFN: 4401263	INSPECTOR CAMERA DATE

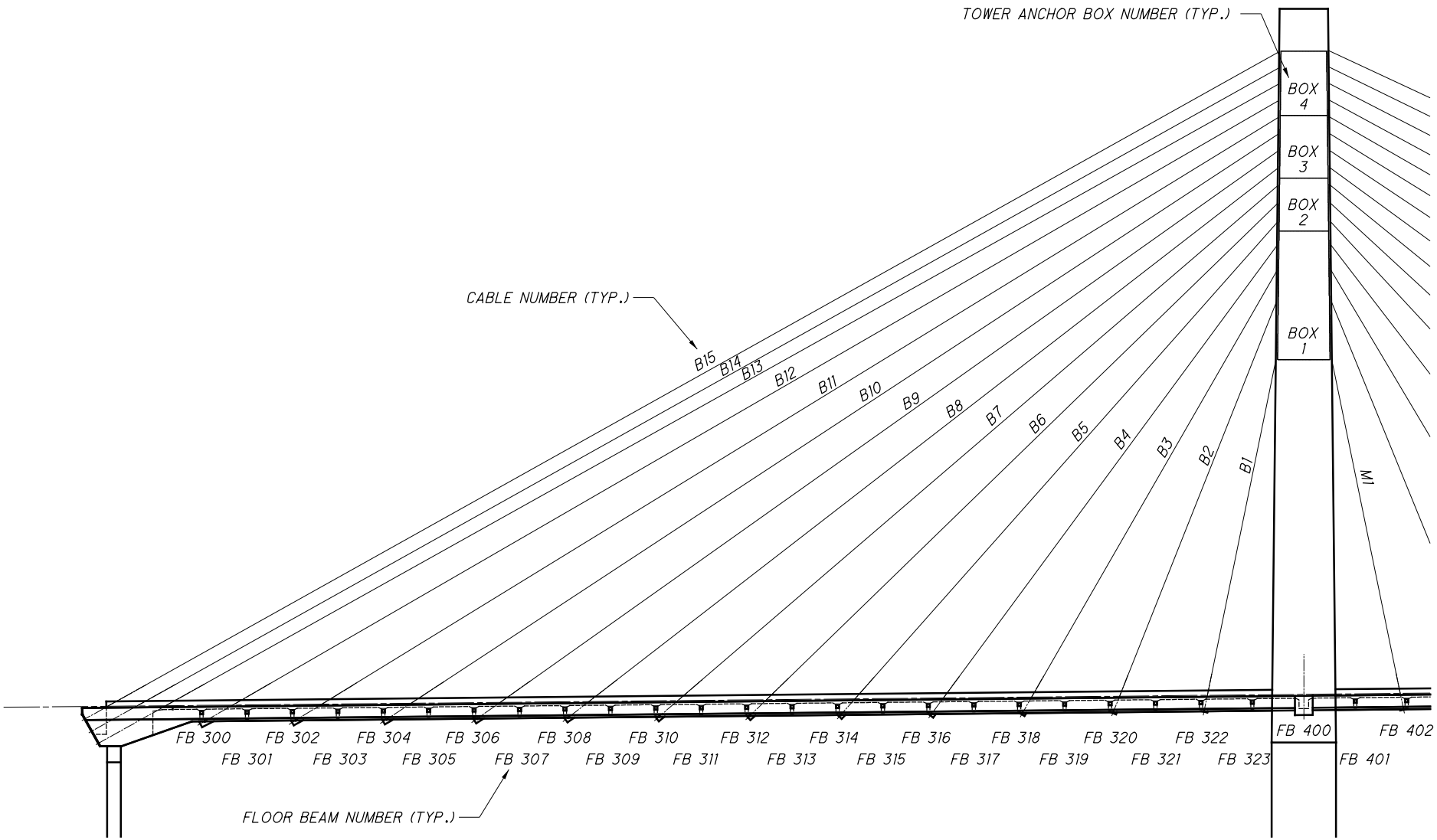

NOTES:

FLOORBEAM AND CABLE NUMBERING - SPAN 3

IRONTON RUSSELL BRIDGE OVER OHIO RIVER

SFN: 4401263

INSPECTOR

CAMERA

DATE

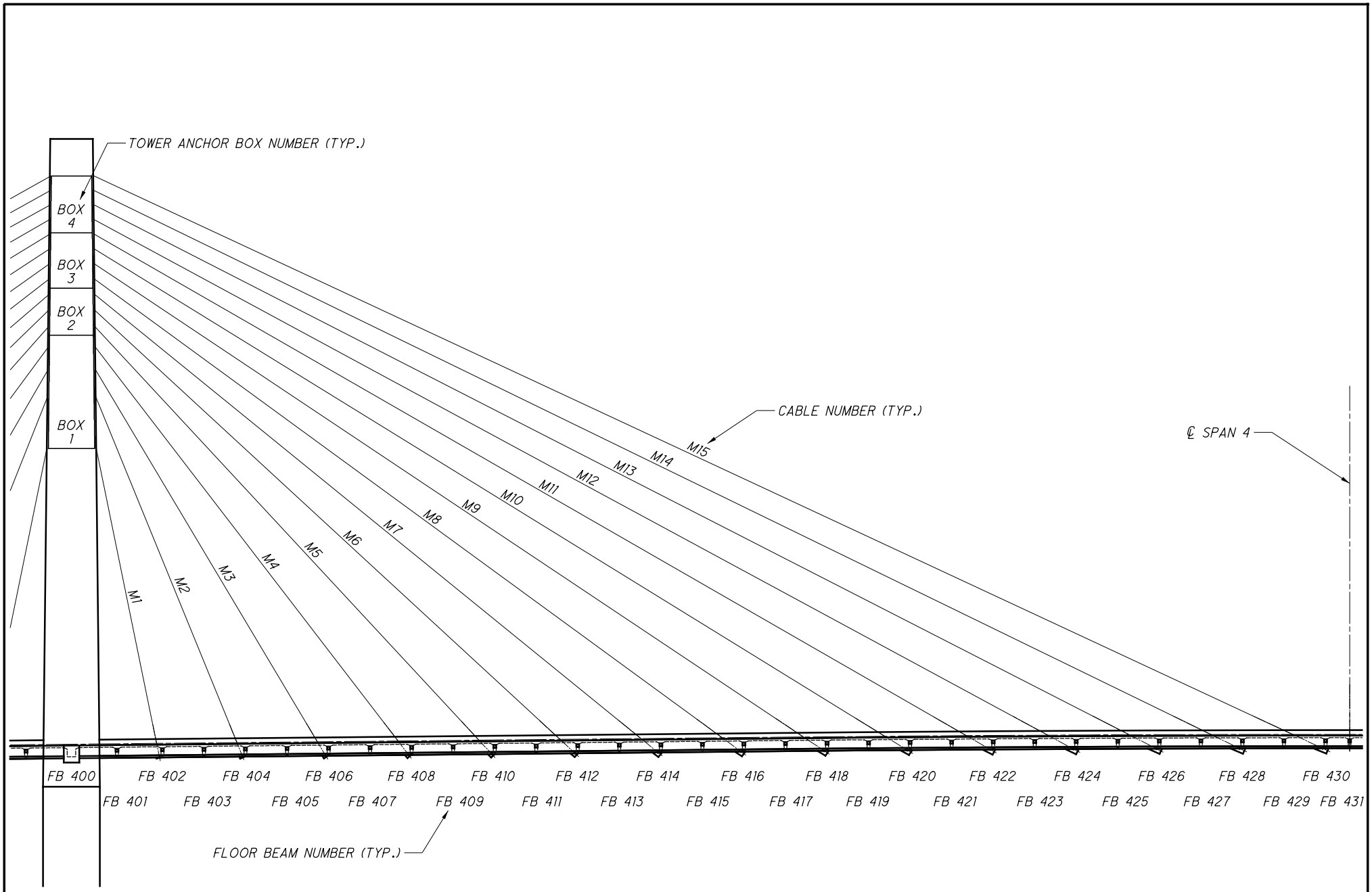

NOTES:

FLOORBEAM AND CABLE NUMBERING
SPAN 4 (1 OF 2)

IRONTON RUSSELL BRIDGE OVER OHIO RIVER

SFN: 4401263

INSPECTOR

CAMERA

DATE

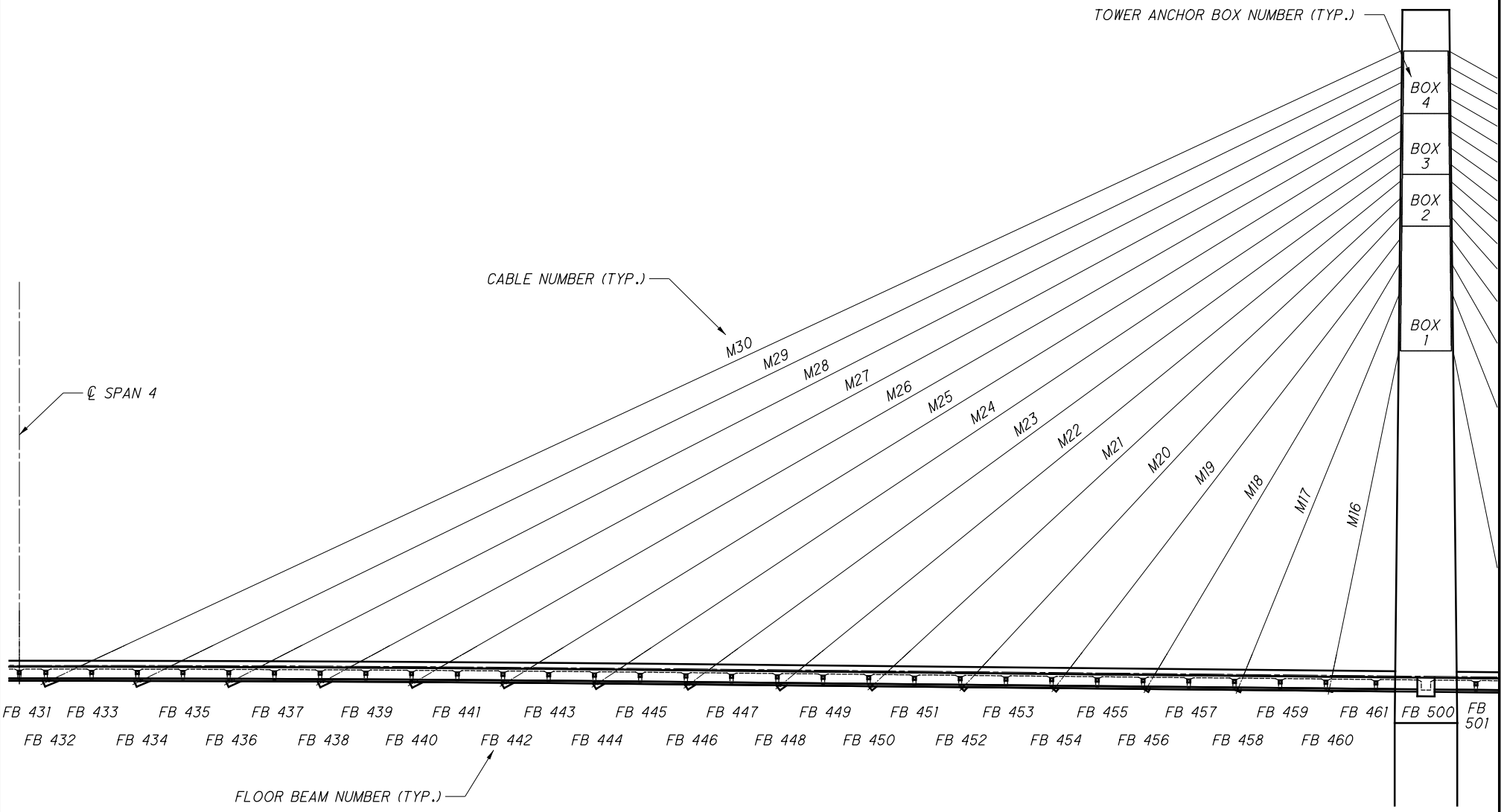

NOTES:

FLOORBEAM AND CABLE NUMBERING
SPAN 4 (2 OF 2)

IRONTON RUSSELL BRIDGE OVER OHIO RIVER

SFN: 4401263

INSPECTOR

CAMERA

DATE

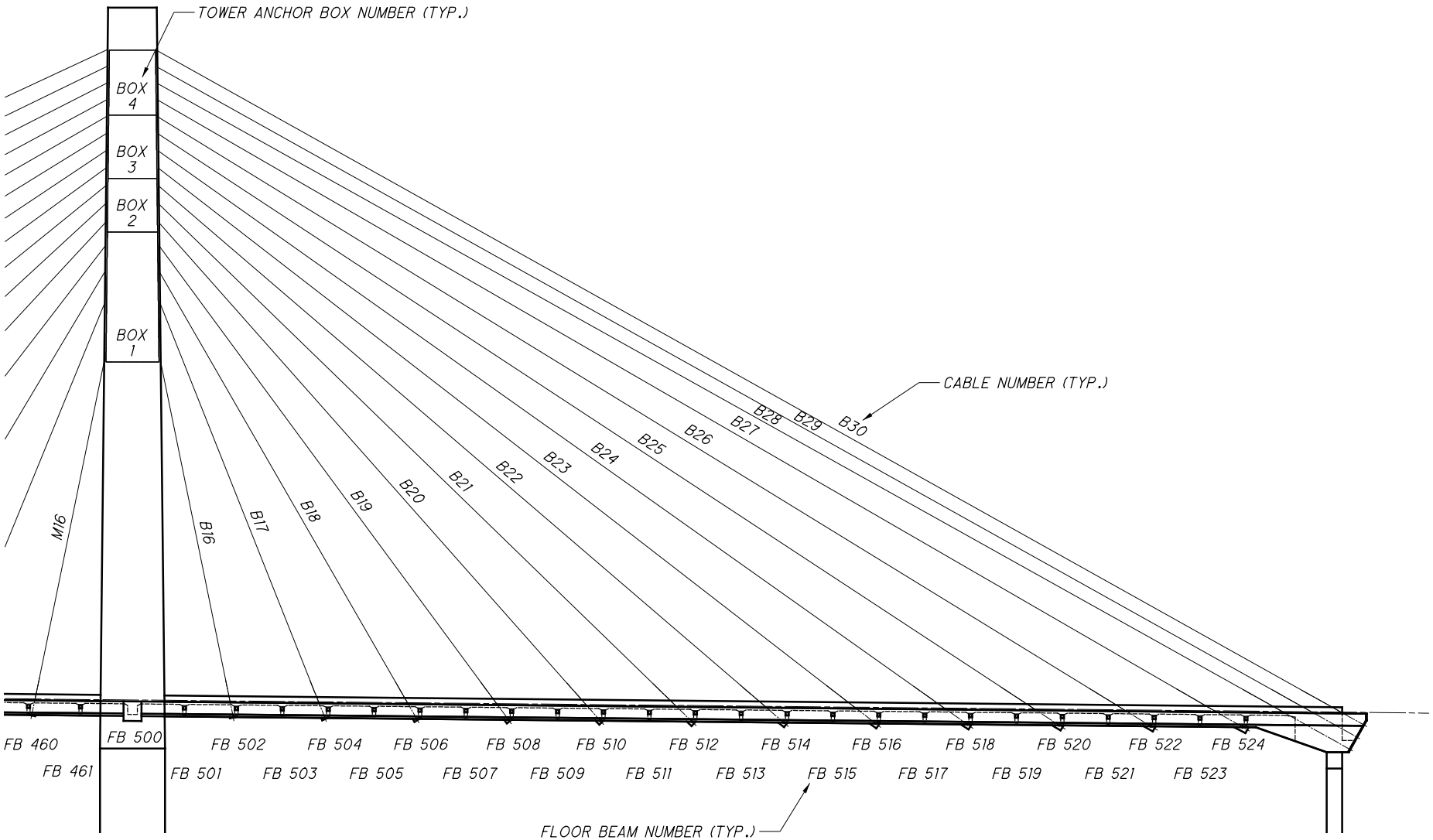

NOTES:

FLOORBEAM AND CABLE NUMBERING - SPAN 5

IRONTON RUSSELL BRIDGE OVER OHIO RIVER

SFN: 4401263

INSPECTOR

CAMERA

DATE

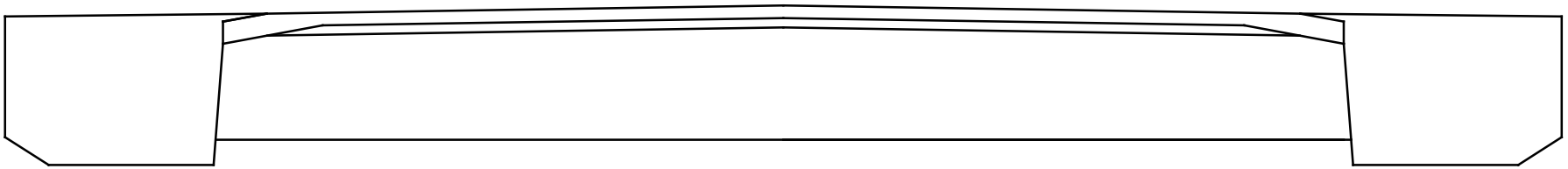

OHIO FACE



BOTTOM FLANGE

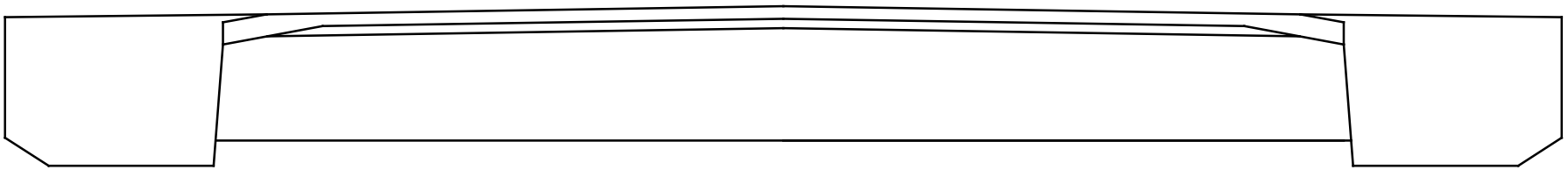

KENTUCKY FACE

FLOORBEAM: _____

NOTES:	FLOORBEAM INSPECTION FORM IRONTON RUSSELL BRIDGE OVER OHIO RIVER SFN: 4401263	INSPECTOR CAMERA DATE

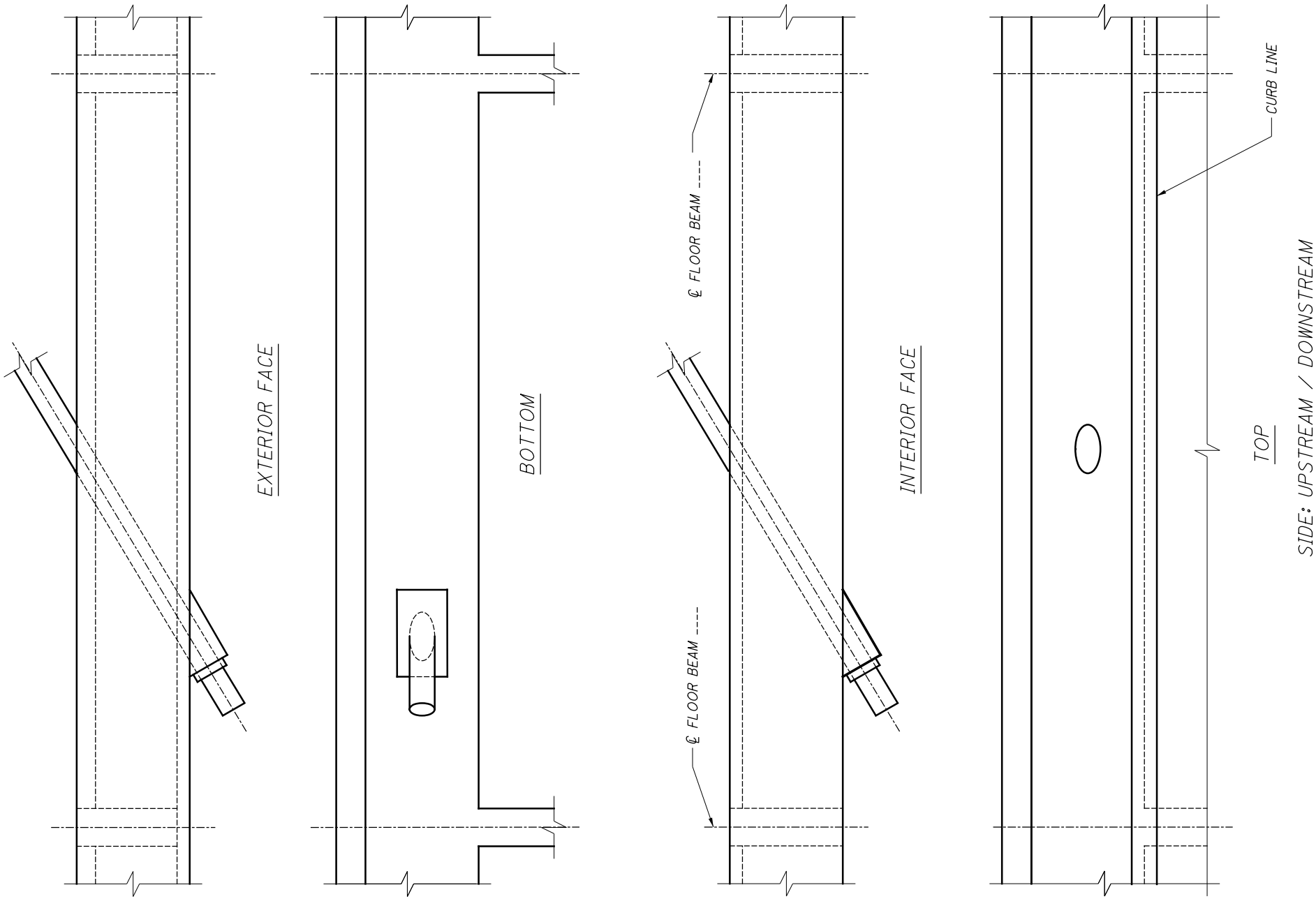

NOTES:

EDGE GIRDER INSPECTION FORM

IRONTON RUSSELL BRIDGE OVER OHIO RIVER

SFN: 4401263

INSPECTOR
CAMERA
DATE

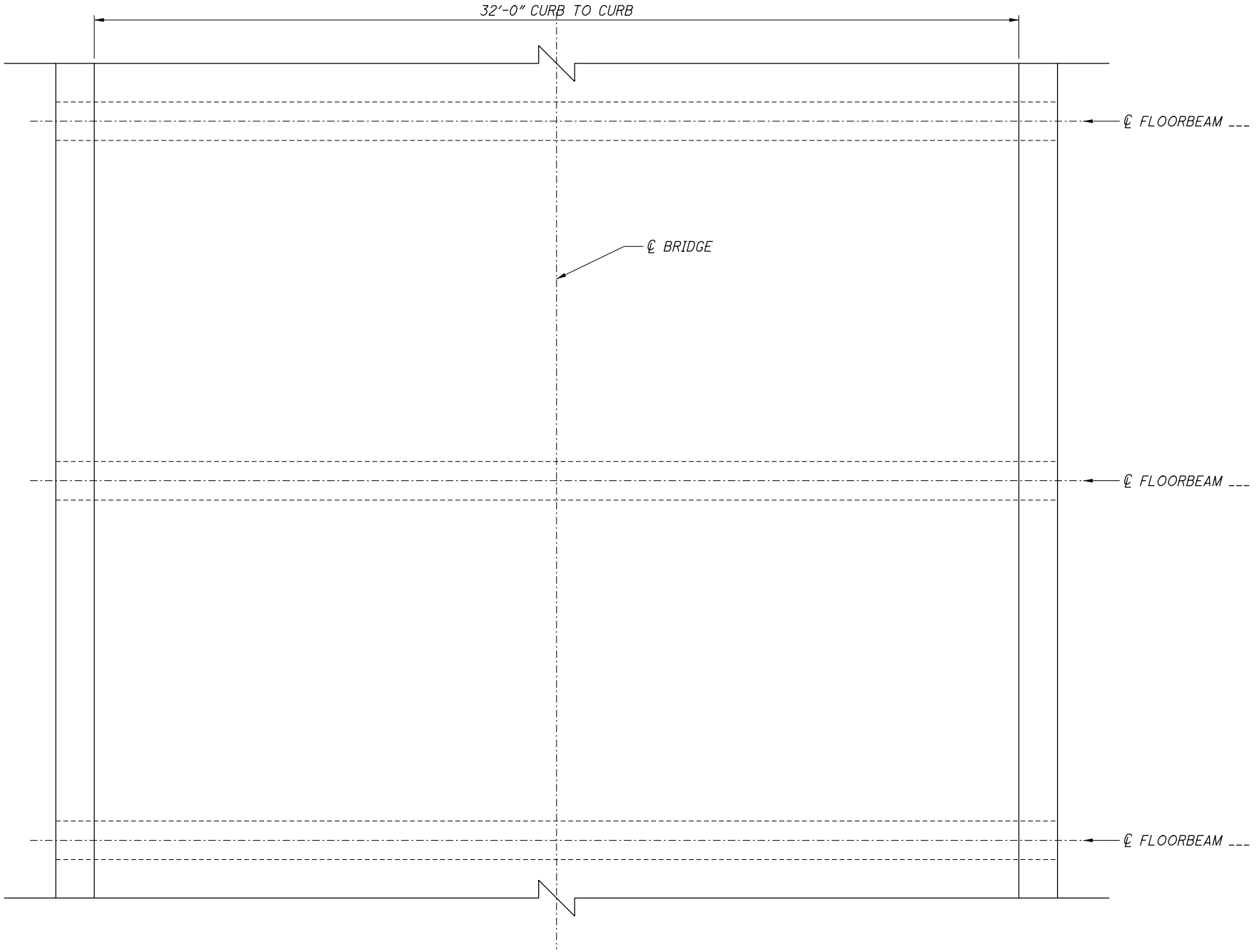

NOTES:

SLAB PLAN INSPECTION FORM

IRONTON RUSSELL BRIDGE OVER OHIO RIVER

SFN: 4401263

INSPECTOR

CAMERA

DATE

TOWER: 3 / 4 FACE: KENTUCKY / OHIO

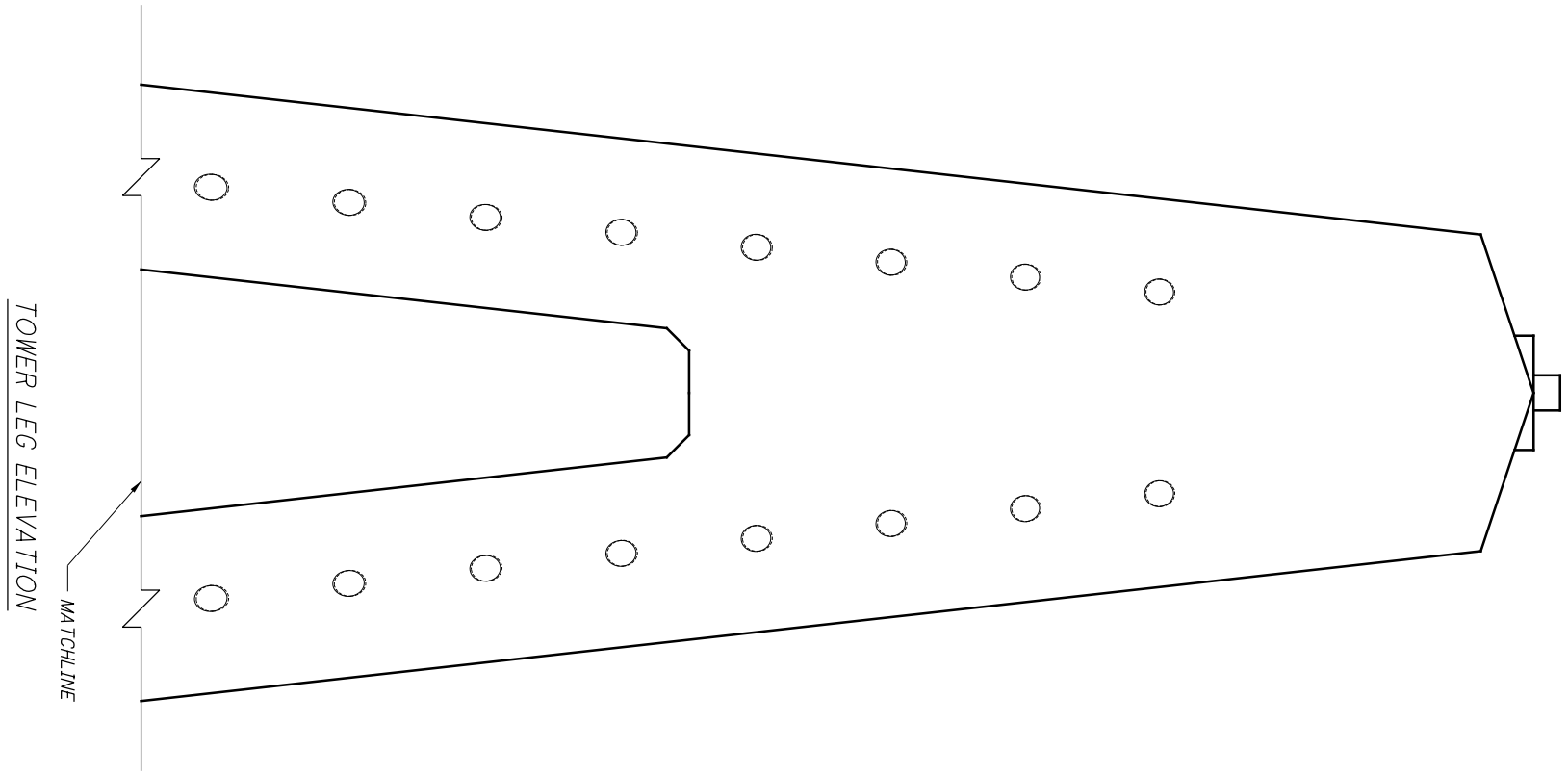

TOWER LEG ELEVATION

NOTES:

TOWER LEG INSPECTION FORM (1 OF 2)

IRONTON RUSSELL BRIDGE OVER OHIO RIVER

SFN: 4401263

INSPECTOR

CAMERA

DATE

TOWER: 3 / 4 FACE: KENTUCKY / OHIO

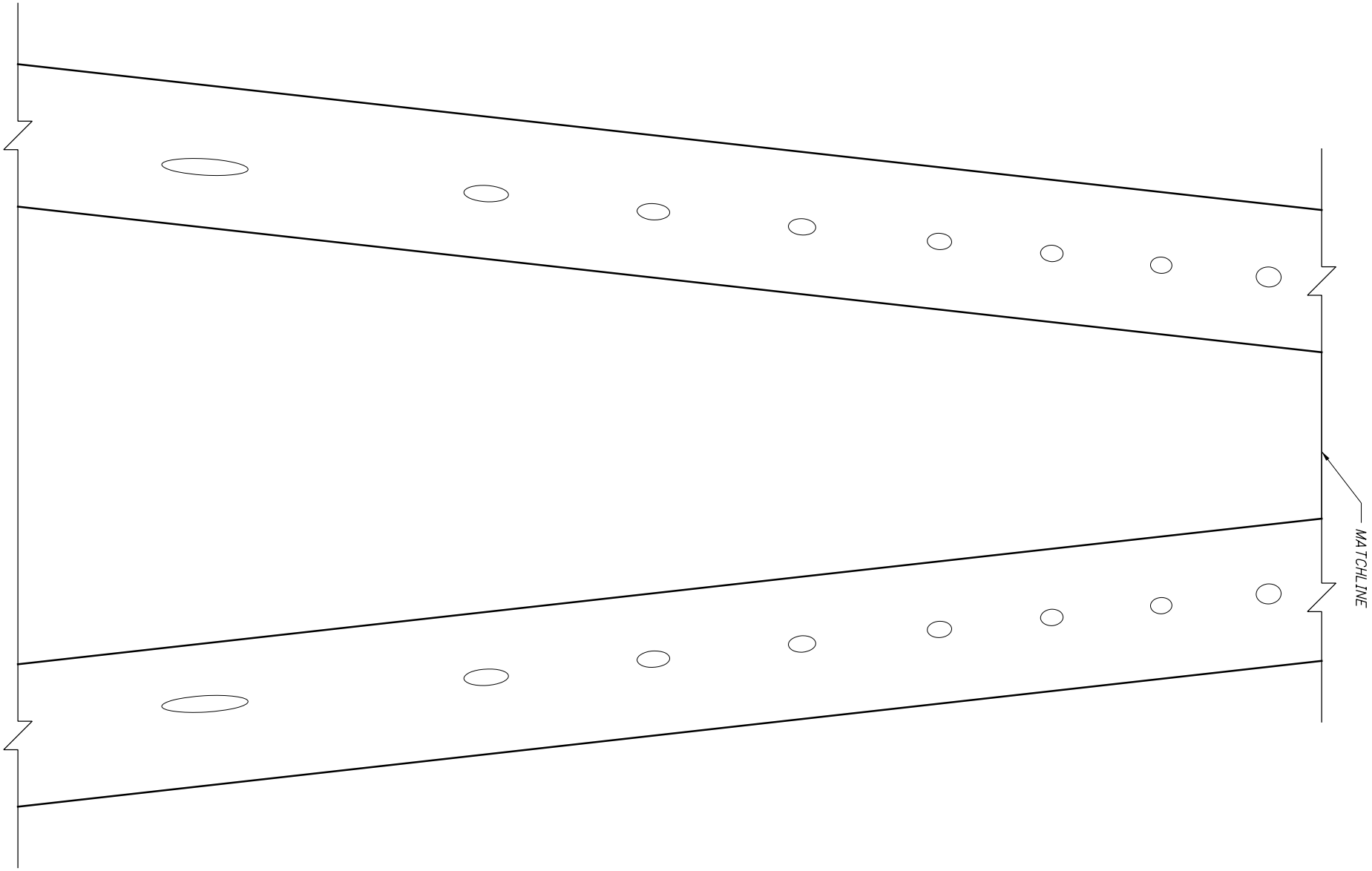

TOWER LEG ELEVATION

NOTES:

TOWER LEG INSPECTION FORM (2 OF 2)

IRONTON RUSSELL BRIDGE OVER OHIO RIVER

SFN: 4401263

INSPECTOR

CAMERA

DATE

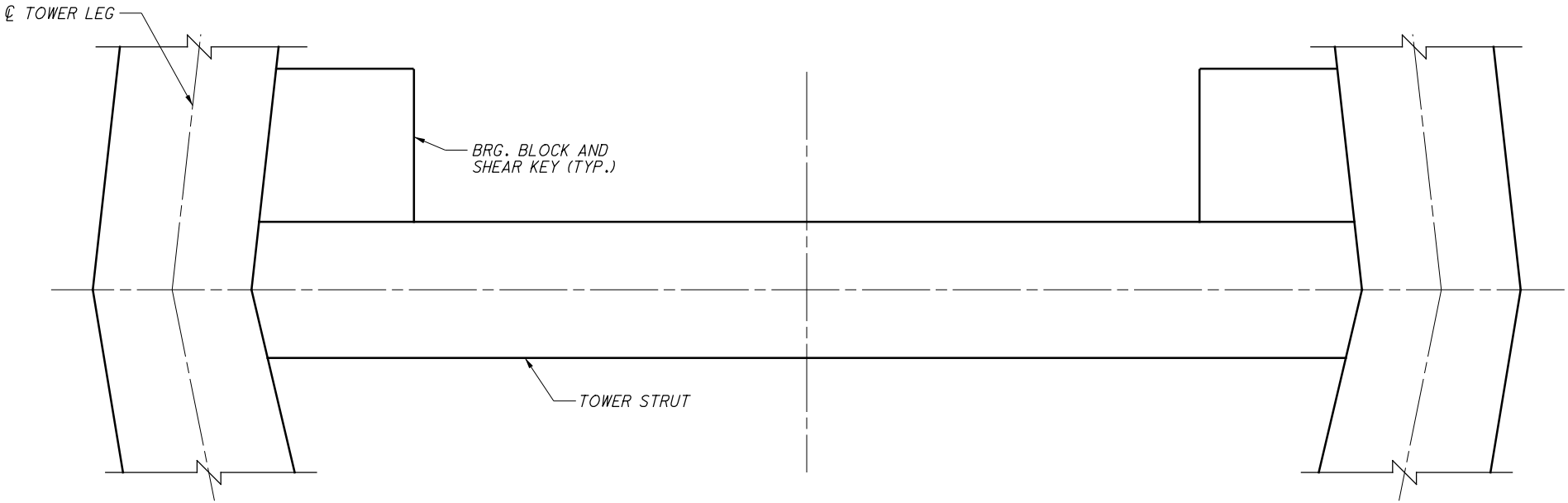

TOWER: 3 / 4 FACE: KENTUCKY / OHIO

TOWER STRUT ELEVATION

NOTES:	TOWER STRUT INSPECTION FORM IRONTON RUSSELL BRIDGE OVER OHIO RIVER SFN: 4401263	INSPECTOR CAMERA DATE

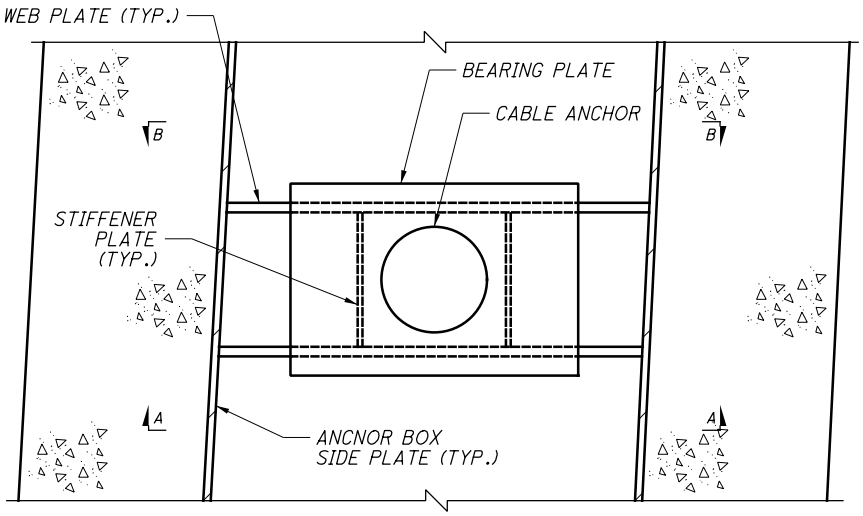

TOWER CABLE ANCHOR - END VIEW

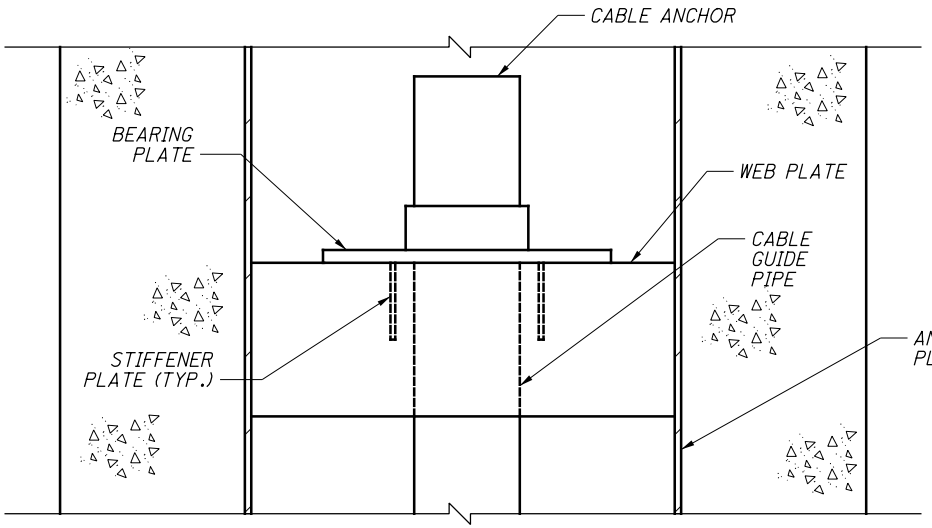

SECTION A-A

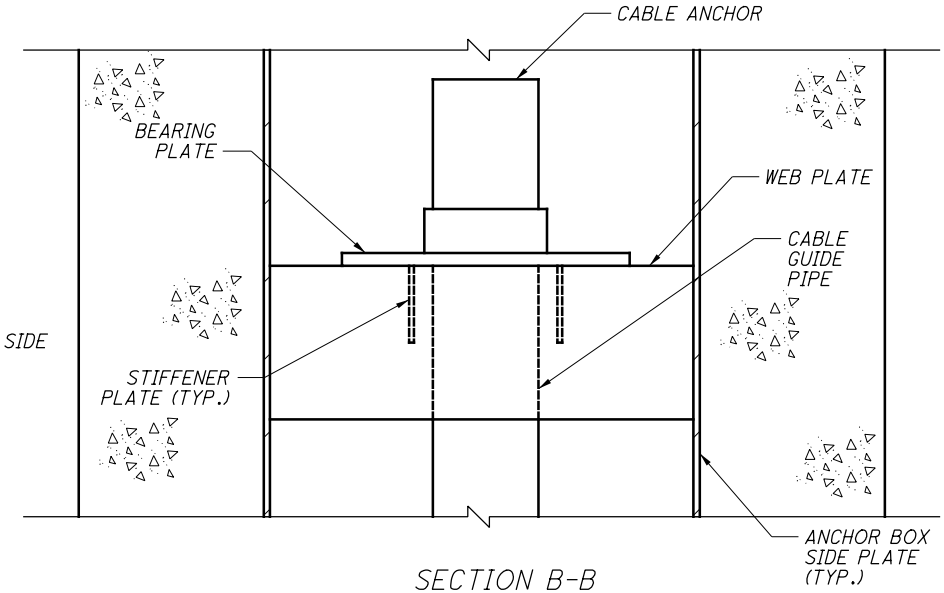

SECTION B-B

CABLE: _____ SIDE: UPSTREAM / DOWNSTREAM

NOTES:

TOWER CABLE ANCHORAGE INSPECTION FORM
IRONTON RUSSELL BRIDGE OVER OHIO RIVER
SFN: 4401263

INSPECTOR
CAMERA
DATE

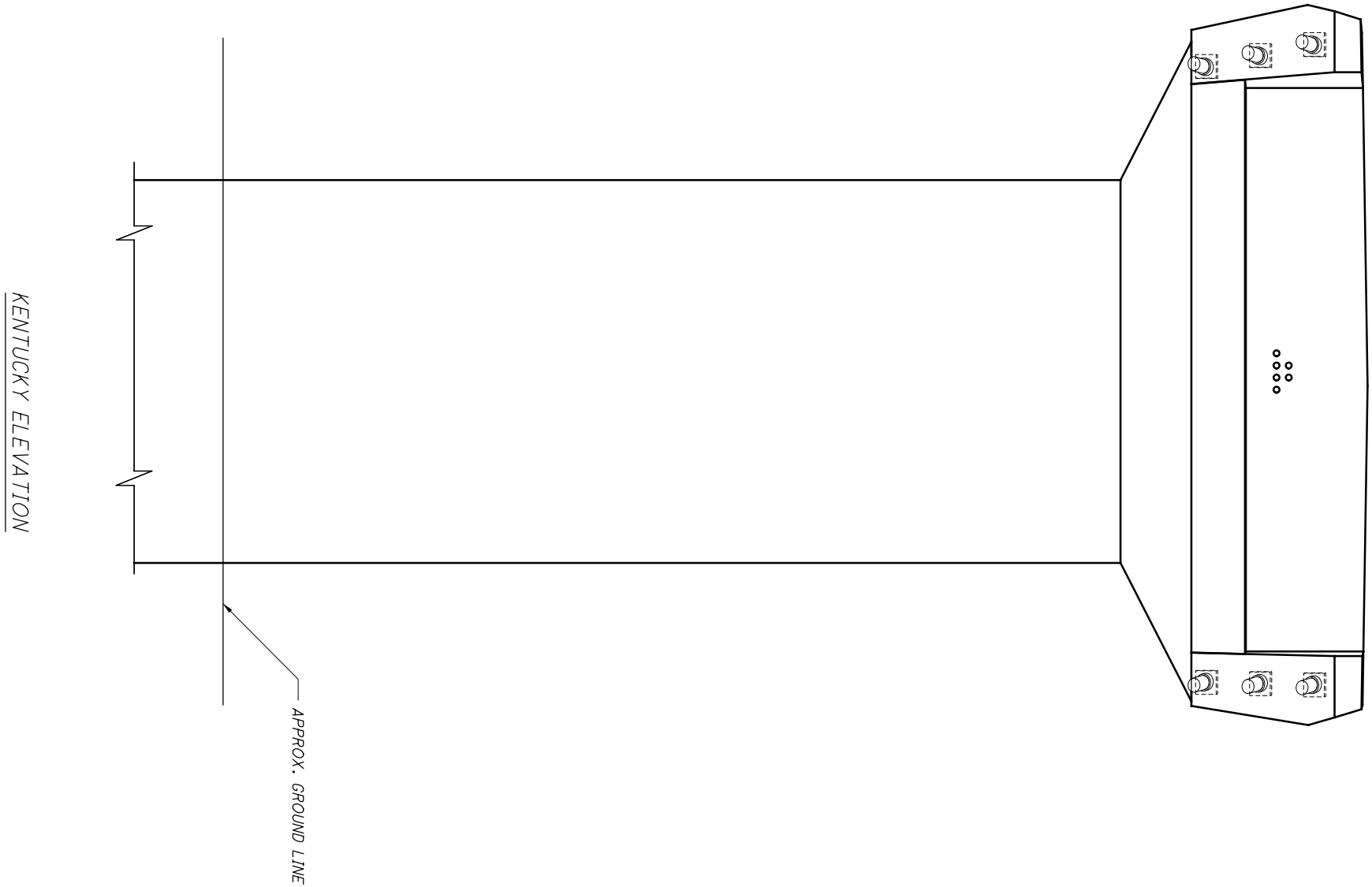

NOTES:

PIER 2 INSPECTION FORM

IRONTON RUSSELL BRIDGE OVER OHIO RIVER

SFN: 4401263

INSPECTOR

CAMERA

DATE

UPSTREAM ELEVATION

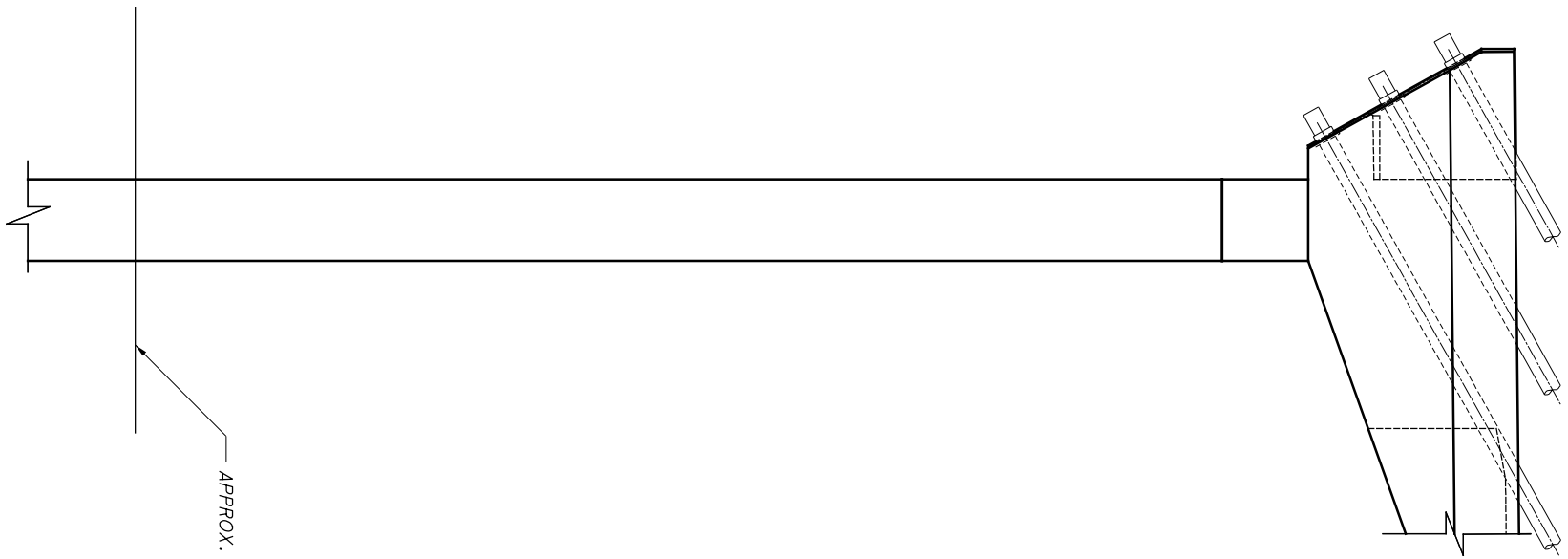

NOTES:

PIER 2 INSPECTION FORM

IRONTON RUSSELL BRIDGE OVER OHIO RIVER

SFN: 4401263

INSPECTOR

CAMERA

DATE

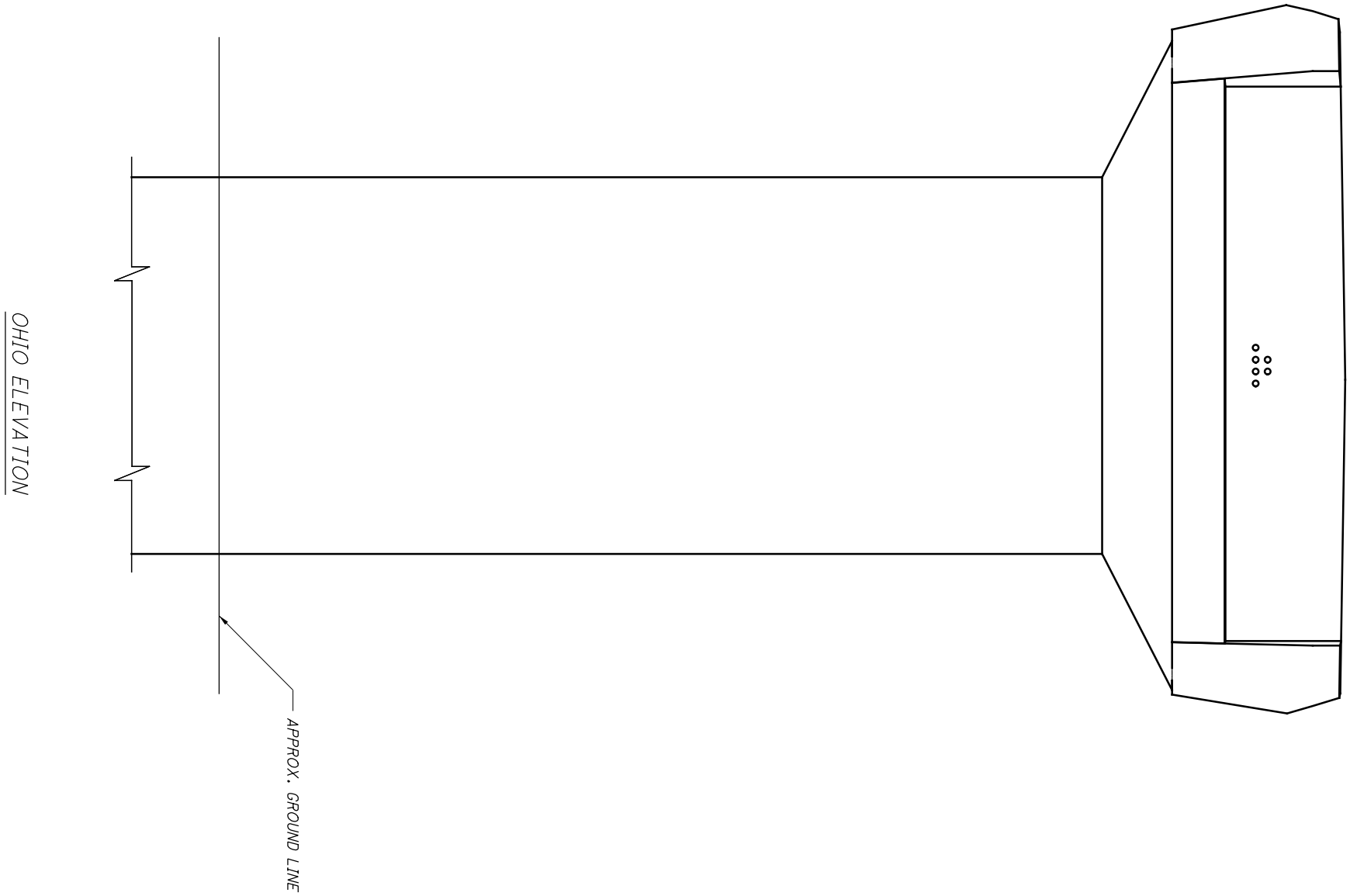

NOTES:

PIER 2 INSPECTION FORM

IRONTON RUSSELL BRIDGE OVER OHIO RIVER

SFN: 4401263

INSPECTOR

CAMERA

DATE

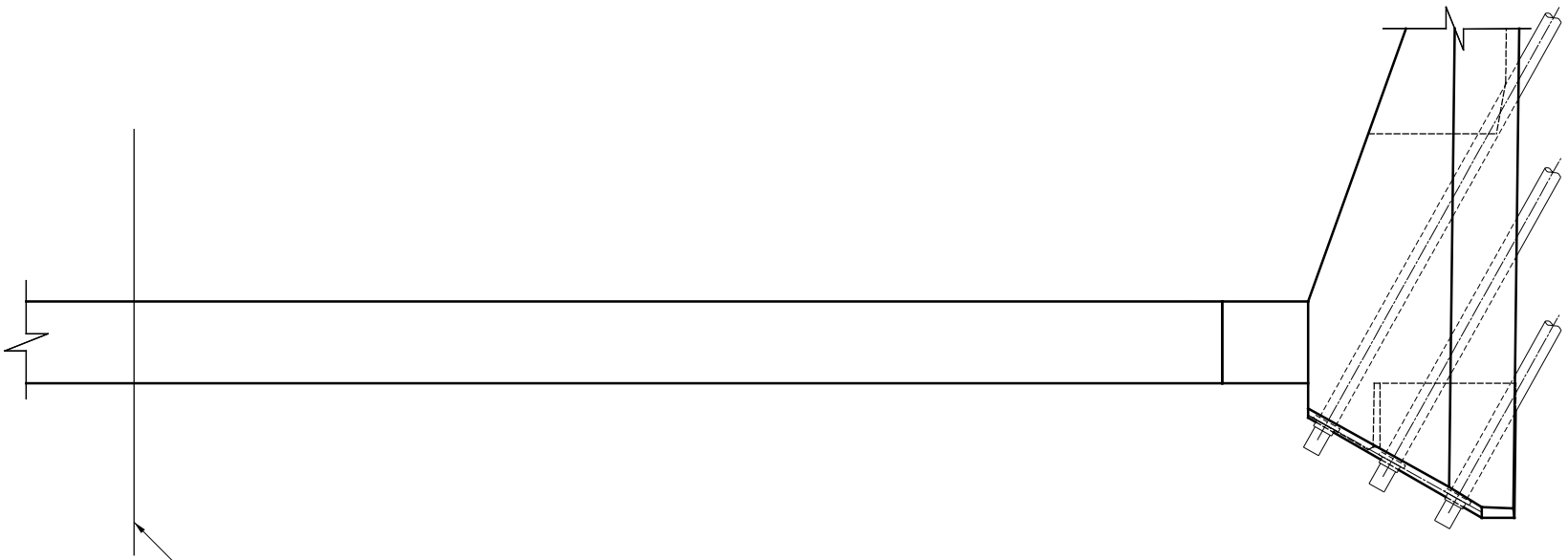

DOWNSTREAM ELEVATION

NOTES:

PIER 2 INSPECTION FORM

IRONTON RUSSELL BRIDGE OVER OHIO RIVER

SFN: 4401263

INSPECTOR

CAMERA

DATE

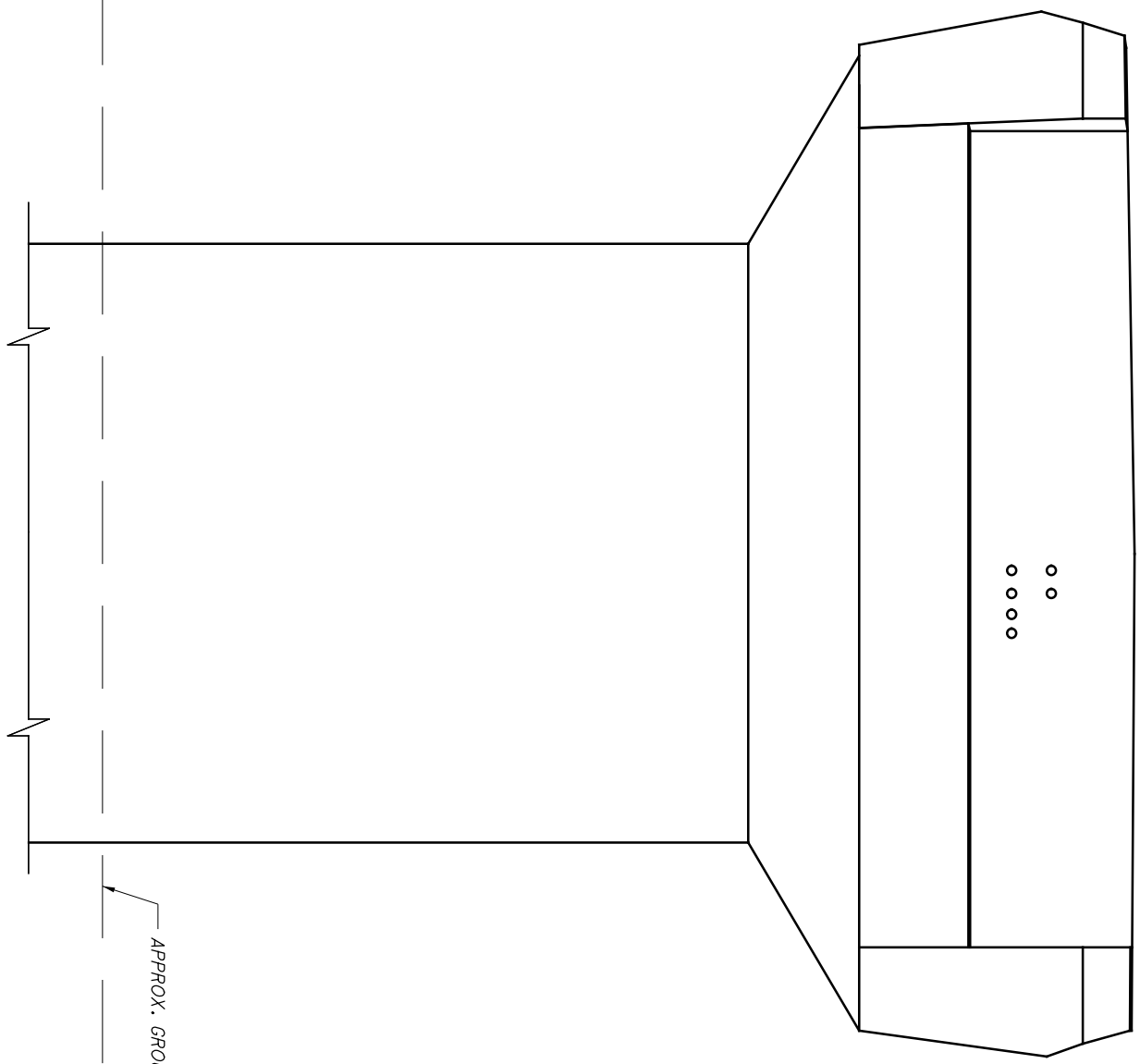

NOTES:

PIER 5 INSPECTION FORM

IRONTON RUSSELL BRIDGE OVER OHIO RIVER

SFN: 4401263

INSPECTOR

CAMERA

DATE

UPSTREAM ELEVATION

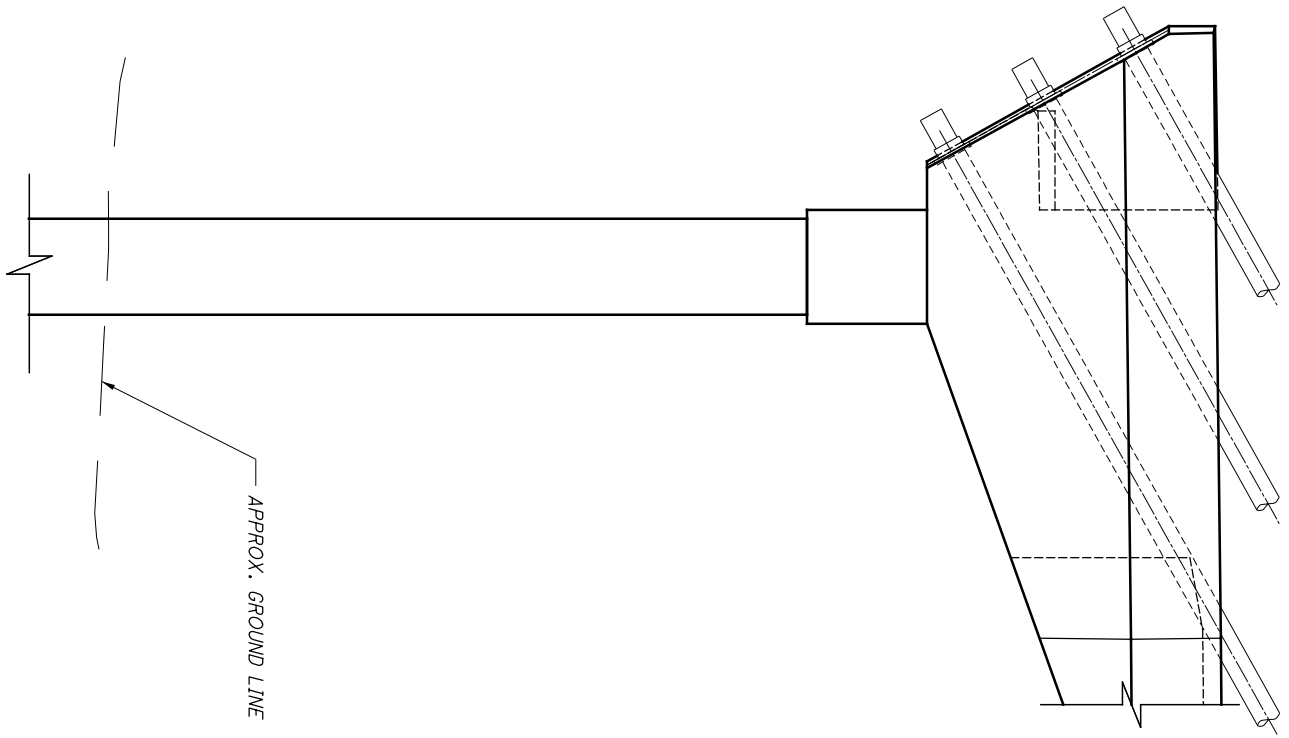

NOTES:

PIER 5 INSPECTION FORM

IRONTON RUSSELL BRIDGE OVER OHIO RIVER

SFN: 4401263

INSPECTOR

CAMERA

DATE

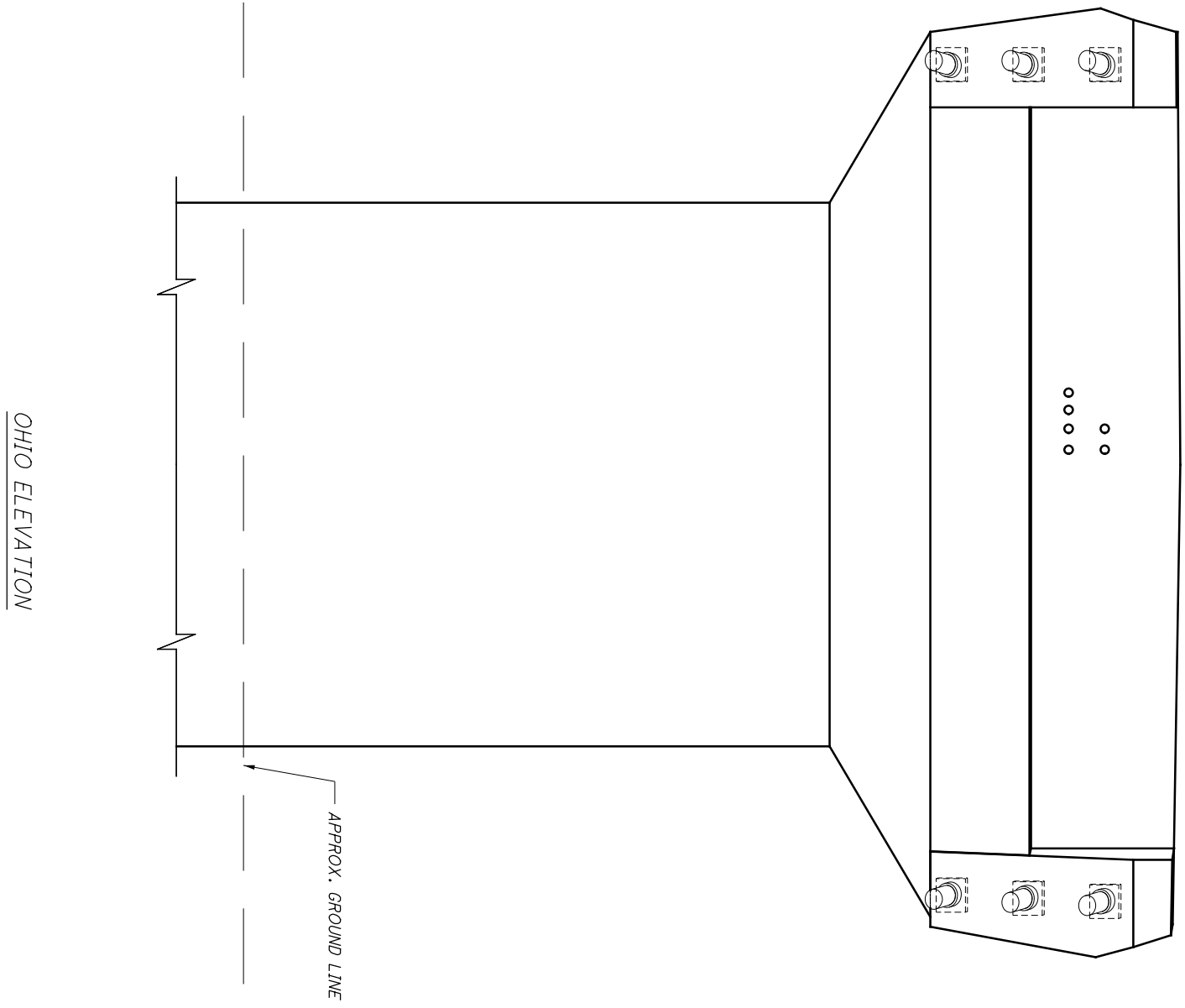

NOTES:

PIER 5 INSPECTION FORM

IRONTON RUSSELL BRIDGE OVER OHIO RIVER

SFN: 4401263

INSPECTOR

CAMERA

DATE

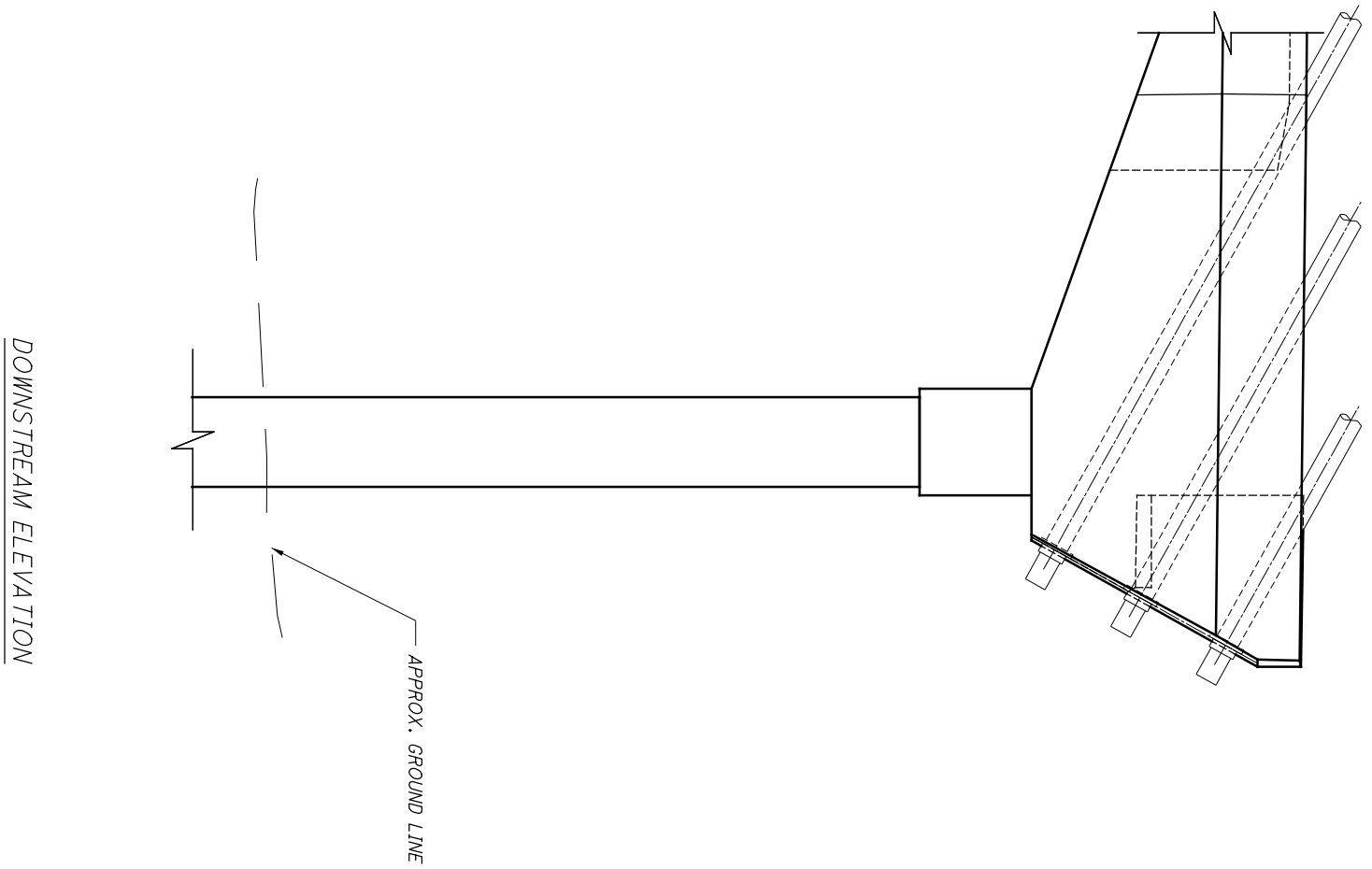

DOWNSTREAM ELEVATION

NOTES:

PIER 5 INSPECTION FORM

IRONTON RUSSELL BRIDGE OVER OHIO RIVER

SFN: 4401263

INSPECTOR

CAMERA

DATE