STATE OF OHIO
DEPARTMENT OF TRANSPORTATION
DEL-23-13.17
CITY OF DELAWARE
DELAWARE TOWNSHIP
DELAWARE COUNTY

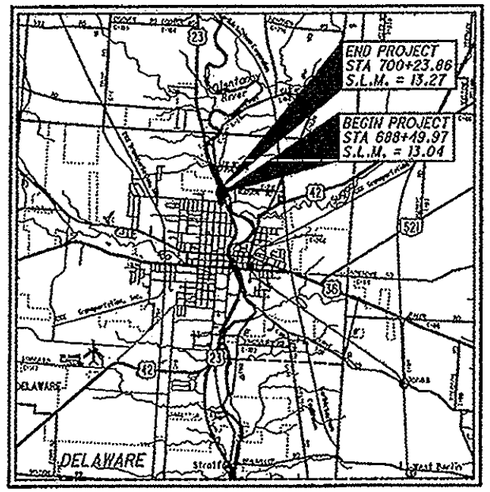

LOCATION MAP

LATITUDE: 40° 18' 56" LONGITUDE: 83° 04' 01"

SCALE IN MILES

0 1 2 3 4

PORTION TO BE IMPROVED
INTERSTATE & DIVIDED HIGHWAY
UNDIVIDED STATE & FEDERAL ROUTES
OTHER ROADS

DESIGN DESIGNATION	US 23	SANDUSKY STREET EXTENSION
CURRENT ADT (2012)	32,400	2,610
DESIGN YEAR ADT (2035)	43,700	10,600
DESIGN HOURLY VOLUME (2035)	5,200	950
DIRECTIONAL DISTRIBUTION	53.7%	70.3%
TRUCKS (24 HOUR B&C)	13%	2%
DESIGN SPEED	45 MPH	35 MPH
LEGAL SPEED	45 MPH	35 MPH
DESIGN FUNCTIONAL CLASSIFICATION:	PRINCIPAL ARTERIAL	MINOR ARTERIAL
NHS PROJECT	YES	

DESIGN EXCEPTIONS	APPROVAL DATE	SHEET NUMBERS
HORIZONTAL ALIGNMENT - DEGREE OF CURVE	04/01/2014	2, 11
SUPERELEVATION RATE	04/01/2014	2

UNDERGROUND UTILITIES
CONTACT BOTH SERVICES
CALL TWO WORKING DAYS
BEFORE YOU DIG
CALL
1-800-362-2764
(TOLL FREE)
OHIO UTILITIES PROTECTION SERVICE
NON-MEMBERS
MUST BE CALLED DIRECTLY
OIL & GAS PRODUCERS PROTECTIVE SERVICE CALL: 1-800-925-0988

ENGINEERS SEAL:
STATE OF OHIO THOMAS J. HUSMANN E-54971 REGISTERED PROFESSIONAL ENGINEER
SIGNED:
DATE:

PLAN PREPARED BY:
ms consultants, inc.
engineers, architects & planners
2221 Schrock Road
Columbus, Ohio 43229-1547
Tel 614.898.7100 Fax 614.898.7570
www.msconsultants.com

INDEX OF SHEETS:

STANDARD CONSTRUCTION DRAWINGS

BP-1.1	7/28/00	DM-2.1	1/18/13	TC-41.20	10/18/13		
BP-3.1	7/18/14	DM-4.3	7/19/13	TC-81.21	7/17/15		
BP-4.1	7/19/13	DM-4.4	7/20/12	TC-83.10	1/17/14		
BP-5.1	7/19/13			TC-83.20	7/17/15		
BP-7.1	7/18/14	MQ-1.1	1/18/13	TC-85.20	1/18/15		
		MQ-1.2	1/18/13				
CB-1.1	1/18/13						
CB-1.2	1/18/13	RM-1.1	7/18/14				
CB-1.3	1/18/13	RM-4.4	7/18/14				
CB-2.1	1/18/13	RM-4.6	7/19/13				
CB-2.2	1/17/14						
		LA-1.1	10/15/10				
MM-1.2	1/18/13	LA-1.2	1/16/09				
DM-1.1	1/18/13	MT-101.70	1/17/14				
DM-1.2	1/18/13	MT-101.90	1/17/15				

SUPPLEMENTAL SPECIFICATIONS

800	10/16/15
809	1/16/15
832	1/17/14
902	12/31/12
839	7/17/15
939	7/17/15
878	10/18/13

SPECIAL PROVISIONS

SP. OLEHTANGY..
NPDES-06-02-14

PROJECT DESCRIPTION

REMOVE THE SOUTHBOUND US-23 EXIT AND EXTEND SANDUSKY STREET TO A SIGNALIZED INTERSECTION AT US-23, ADD A SOUTHBOUND RIGHT TURN LANE AND A NORTHBOUND LEFT TURN LANE AT THE PROPOSED US-23 / SANDUSKY STREET INTERSECTION.

PROJECT EARTH DISTURBED AREA:	4.66 ACRES
ESTIMATED CONTRACTOR EARTH DISTURBED AREA:	0.25 ACRES
NOTICE OF INTENT EARTH DISTURBED AREA:	4.91 ACRES

LIMITED ACCESS

THIS IMPROVEMENT IS ESPECIALLY DESIGNED FOR THROUGH TRAFFIC AND HAS BEEN DECLARED A LIMITED ACCESS HIGHWAY OR FREEWAY BY ACTION OF THE DIRECTOR IN ACCORDANCE WITH THE PROVISIONS OF SECTION 5511.02 OF THE OHIO REVISED CODE.

2013 SPECIFICATIONS

THE STANDARD SPECIFICATIONS OF THE STATE OF OHIO, DEPARTMENT OF TRANSPORTATION, INCLUDING CHANGES AND SUPPLEMENTAL SPECIFICATIONS LISTED IN THE PROPOSAL SHALL GOVERN THIS IMPROVEMENT.

I HEREBY APPROVE THESE PLANS AND DECLARE THAT THE MAKING OF THIS IMPROVEMENT WILL NOT REQUIRE THE CLOSING TO TRAFFIC OF THE HIGHWAY, EXCEPT FOR THE SIDE ROADS AS DESCRIBED ON SHEET 11, AND THAT PROVISIONS FOR THE MAINTENANCE AND SAFETY OF TRAFFIC WILL BE AS SET FORTH ON THE PLANS AND ESTIMATES.

APPROVED
DATE 10/13/15 DEPUTY CITY ENGINEER, CITY OF DELAWARE

APPROVED
DATE 10-15-15 DISTRICT DEPUTY DIRECTOR

APPROVED
DATE 11-12-15 DIRECTOR, DEPARTMENT OF TRANSPORTATION

FEDERAL PROJECT NO. E130 (216)
PID NO. 94527
CONSTRUCTION PROJECT NO.
RAILROAD INVOLVEMENT NONE
DEL-23-13.17

PLOT.CEL

ms consultants, inc.
msconsultants.com

www.msconsultants.com

Ohio DOT Workspace
DEL-23

UGF: ohdot\V8i
PCF: 60-06655_Columbus

Batchplot Spec: \\0330share\n\60\06655\standards\plotdrv\batchplt.spc
Pen Table: S:\std\plotting\usth\V8\pen\V8_ms_std.tbl
Plot Driver: S:\std\plotting\usth\V8\PDP.pltcfg

34" x 22"

View: FENCE_VIEW1
By: hbrendinger

Model: Sheet
Printed: 10/8/2015 @ 4:24:10 PM
File: \\0330share\n\60\06655\roadway\sheets\06655B001.dgn

(C1) US 23
P.I.Sta. 693+80.16
Δ = 4° 40′ 32″ (LT)
Dc = 0° 28′ 00″
R = 12,277.67′
T = 501.23′
L = 1,001.91′
E = 10.23′
C = 1,001.63′
C.B. = N 23° 43′ 35″ W
e_{max} = MATCH EXISTING

(C2) SANDUSKY ST.
P.I.Sta. 305+90.87
Δ = 35° 12′ 45″ (LT)
Dc = 11° 00′ 00″
R = 520.87′
T = 165.29′
L = 320.11′
E = 25.60′
C = 315.10′
C.B. = N 13° 52′ 29″ W
e_{max} = N.C.

(C3) SANDUSKY ST.
P.I.Sta. 311+33.35
Δ = 97° 06′ 30″ (RT)
Dc = 49° 49′ 21″ (NDC= 15° 30′)
R = 115.00′
T = 130.23′
L = 194.91′
E = 58.74′
C = 172.40′
C.B. = N 17° 04′ 24″ E
e_{max} = R.C. (NDC= 0.040)

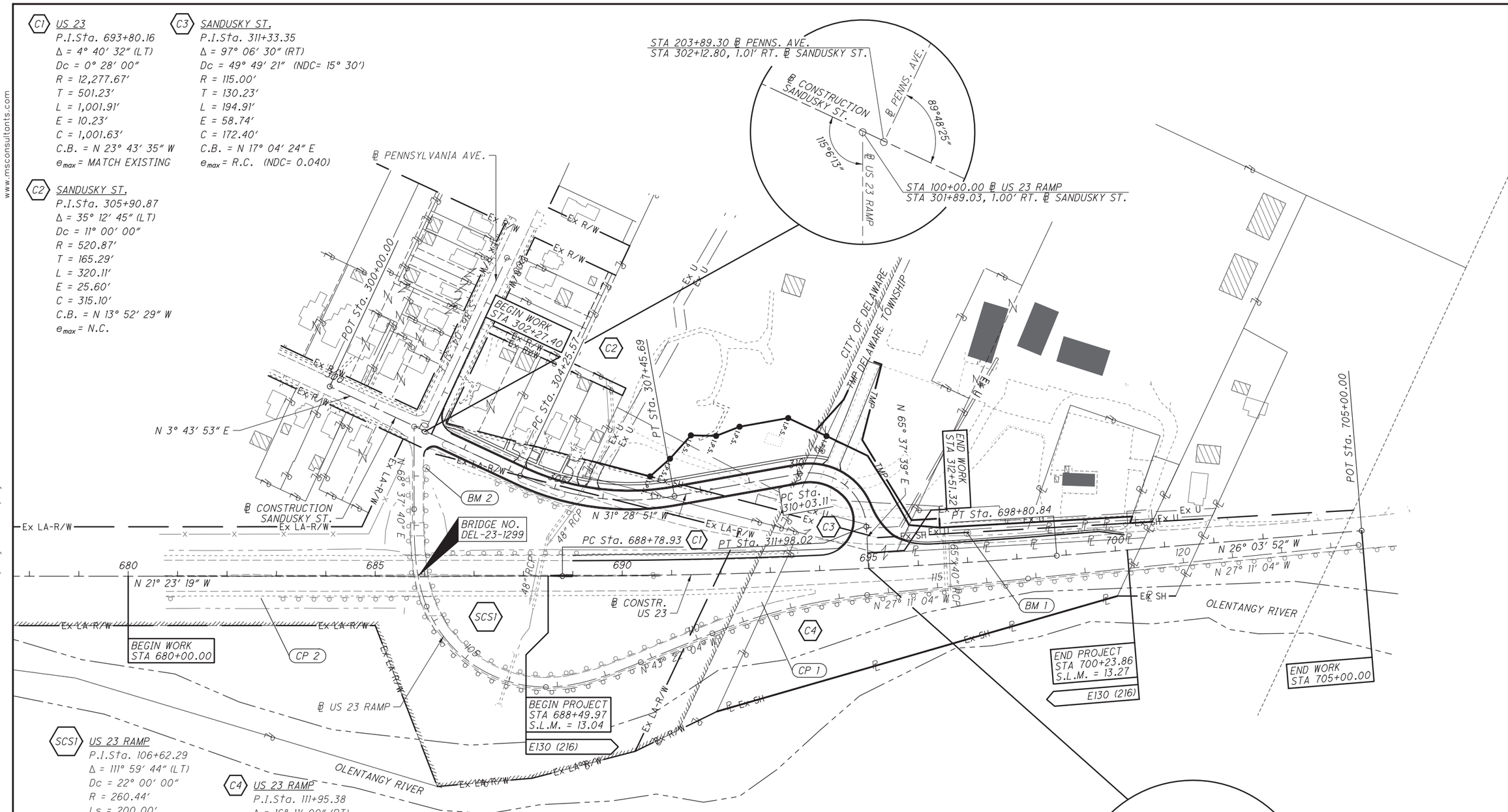

(SCS1) US 23 RAMP
P.I.Sta. 106+62.29
Δ = 111° 59′ 44″ (LT)
Dc = 22° 00′ 00″
R = 260.44′
Ls = 200.00′
θs = 22° 00′ 00″
LT = 134.38′
ST = 67.62′
x = 197.07′
y = 25.33′
k = 99.51′
p = 6.37′
Δc = 67° 59′ 44″ (LT)
Lc = 309.07′
Ts = 495.03′
Es = 216.66′
C = 291.25′
C1 = C2 = 198.69′
C.B.1 = N 61° 18′ 13″ E
C.B. = N 12° 37′ 48″ E
C.B.2 = S 36° 02′ 37″ E

(C4) US 23 RAMP
P.I.Sta. 111+95.38
Δ = 16° 11′ 00″ (RT)
Dc = 5° 00′ 00″
R = 1,145.92′
T = 162.92′
L = 323.67′
E = 11.52′
C = 322.59′
C.B. = N 35° 16′ 34″ W

PRIMARY PROJECT CONTROL INFORMATION

POINT	NORTHING	EASTING	FEATURE	ELEVATION	DESCRIPTION
BM 1	236996.859	1810301.397	BM	873.41	TBM 1
BM 2	235929.350	1810578.617	BM	889.29	TBM 2
CP 1	236660.362	1810583.585	--	875.15	CONTROL POINT 1
CP 2	235713.893	1810945.535	--	868.99	CONTROL POINT 2

HORIZONTAL SCALE IN FEET
0 50 100 200

SCHEMATIC PLAN

DEL-23-13.17

ms consultants, inc.

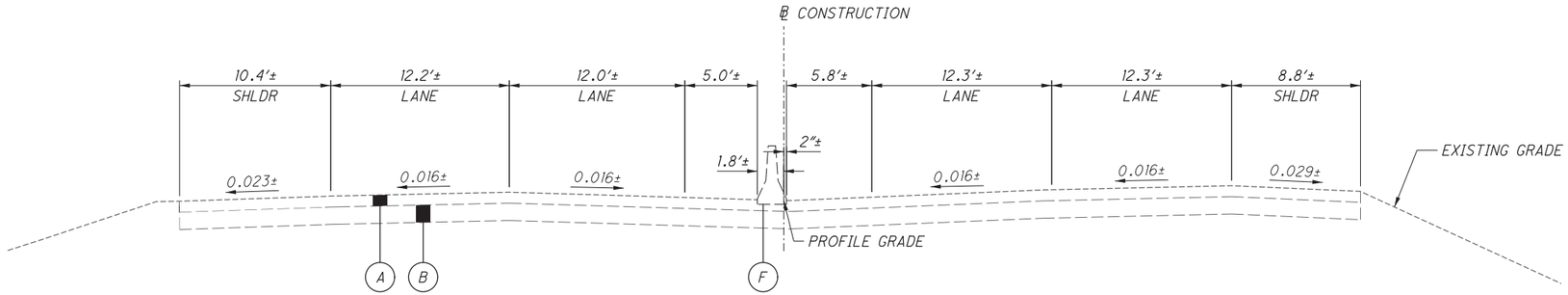

US 23 - ADJOINING SECTION

SECTION APPLIES: STA 688+50.00

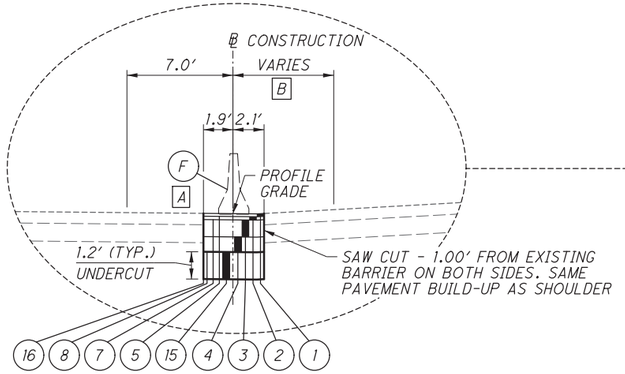

US 23 - MEDIAN PAVEMENT BUILDUP DETAIL

SECTION APPLIES:
STA 688+54.95 TO STA 690+81.17

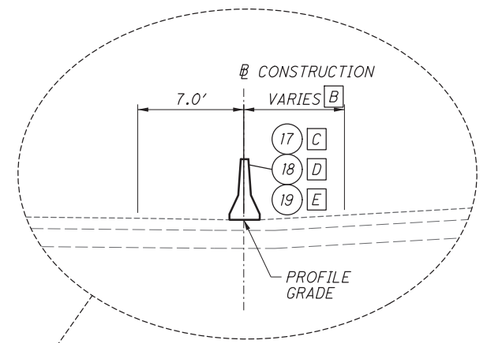

US 23 - CONCRETE BARRIER TRANSITION

SECTION APPLIES:
STA 688+54.95 TO STA 688+99.96

C 688+54.95 TO 688+61.45

D 688+61.45 TO 688+85.71

E 688+85.71 TO 688+99.96

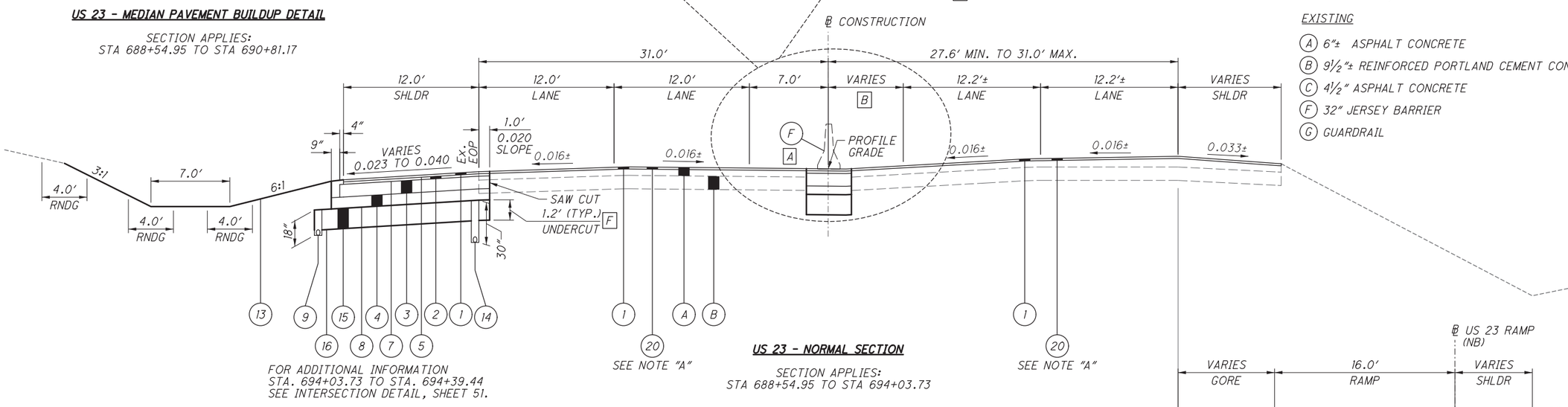

FOR ADDITIONAL INFORMATION
STA. 694+03.73 TO STA. 694+39.44
SEE INTERSECTION DETAIL, SHEET 51.

US 23 - NORMAL SECTION

SECTION APPLIES:
STA 688+54.95 TO STA 694+03.73

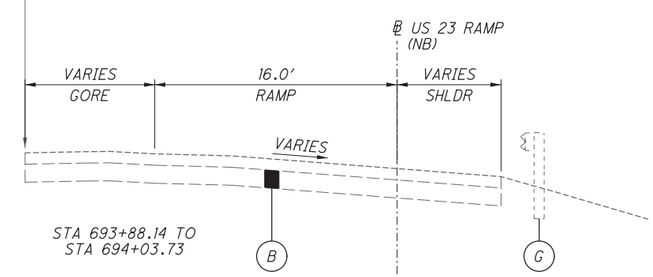

STA 693+88.14 TO
STA 694+03.73

A REMOVE EXISTING BARRIER FROM STA 688+54.95 TO STA 690+81.17

B STA 689+00.00 TO STA 689+10.00 = 6.0'
STA 689+10.00 TO STA 689+60.00 = 6.0' - 4.0'
STA 689+60.00 TO STA 695+02.42 = 4.0'

F EXTEND AND END 1.2' UNDERCUT TO STA 695+00.00

NOTE "A"
PAVEMENT PLANING SHALL BE A CONSTANT DEPTH OF 1 ¼" ON US 23, INCLUDING PAVED SHOULDERS, AND EXCLUDING RAMP AND GORE AREAS ON NORTHBOUND US 23. FOR THE OUTSIDE LANE ON SOUTHBOUND US 23, FROM STA 694+03.73 TO STA 700+20.00, PAVEMENT PLANING SHALL BE A VARIABLE DEPTH WITH 1 ¼" BEING PLANED AT THE LANE LINE AND DECREASING IN DEPTH AS PLANING APPROACHES THE SAW CUT LINE. THIS IS TO ESTABLISH A MAXIMUM PAVEMENT CROSS SLOPE OF 0.020.

LEGEND:

PROPOSED

1. ITEM 442 - 1 ½" ASPHALT CONCRETE SURFACE COURSE, 12.5mm, TYPE A (446)
2. ITEM 442 - 1 ¾" ASPHALT CONCRETE INTERMEDIATE COURSE, 19mm, TYPE A (446)
3. ITEM 301 - 9" ASPHALT CONCRETE BASE, PG64-22
4. ITEM 304 - 8" AGGREGATE BASE
5. ITEM 407 - TACK COAT FOR INTERMEDIATE COURSE @ 0.04 GAL/SY
6. ITEM 301 - 7" ASPHALT CONCRETE BASE, PG64-22
7. ITEM 407 - TACK COAT @ 0.075 GAL/SY
8. ITEM 204 - SUBGRADE COMPACTION
9. ITEM 605 - 4" BASE PIPE UNDERDRAINS
10. ITEM 608 - 4" CONCRETE WALK
11. ITEM 609 - COMBINATION CURB AND GUTTER, TYPE 2
12. ITEM 620 - DELINEATOR MISC.: REBOUNDABLE TUBULAR PYLON
13. ITEM 659 - SEEDING AND MULCHING, CLASS 1
14. ITEM 605 - 4" SHALLOW PIPE UNDERDRAINS
15. ITEM 204 - GRANULAR MATERIAL TYPE B, 703.16
16. ITEM 204 - GEOTEXTILE FABRIC, 712.09, TYPE D
17. ITEM 622 - BARRIER, MISC.: NEW JERSEY STYLE, TYPE A, AS PER PLAN
18. ITEM 622 - BARRIER TRANSITION, AS PER PLAN
19. ITEM 606 - IMPACT ATTENUATOR, TYPE 2 (BIDIRECTIONAL)
20. ITEM 254 - PAVEMENT PLANING, ASPHALT CONCRETE
21. ITEM 448 - 1 ½" ASPHALT CONCRETE SURFACE COURSE, TYPE 1, PG64-22
22. ITEM 448 - 1 ¾" ASPHALT CONCRETE INTERMEDIATE COURSE, TYPE 2, PG64-22
23. ITEM 442 - ASPHALT CONCRETE INTERMEDIATE COURSE, 19mm, TYPE A (448) VARIABLE DEPTH (0" MIN., 1 ¼" MAX.)

EXISTING

- A 6"± ASPHALT CONCRETE
- B 9½"± REINFORCED PORTLAND CEMENT CONCRETE PAVEMENT
- C 4½" ASPHALT CONCRETE
- F 32" JERSEY BARRIER
- G GUARDRAIL

TYPICAL SECTIONS - US 23

DEL-23-13.17

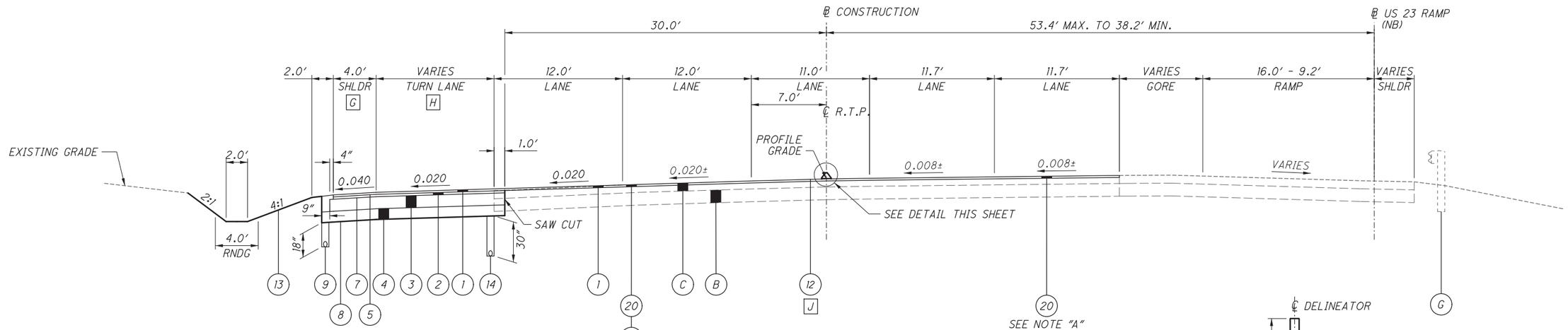

FOR ADDITIONAL INFORMATION
STA. 694+03.73 TO STA. 696+28.80
SEE INTERSECTION DETAIL, SHEET 51.

SEE NOTE "A"

SEE NOTE "A"

LEGEND:

PROPOSED

1. ITEM 442 - 1 ½″ ASPHALT CONCRETE SURFACE COURSE, 12.5mm, TYPE A (446)
2. ITEM 442 - 1 ¾″ ASPHALT CONCRETE INTERMEDIATE COURSE, 19mm, TYPE A (446)
3. ITEM 301 - 9″ ASPHALT CONCRETE BASE, PG64-22
4. ITEM 304 - 8″ AGGREGATE BASE
5. ITEM 407 - TACK COAT FOR INTERMEDIATE COURSE @ 0.04 GAL/SY
6. ITEM 301 - 7″ ASPHALT CONCRETE BASE, PG64-22
7. ITEM 407 - TACK COAT @ 0.075 GAL/SY
8. ITEM 204 - SUBGRADE COMPACTION
9. ITEM 605 - 4″ BASE PIPE UNDERDRAINS
10. ITEM 608 - 4″ CONCRETE WALK
11. ITEM 609 - COMBINATION CURB AND GUTTER, TYPE 2
12. ITEM 620 - DELINEATOR MISC.: REBOUNDABLE TUBULAR PYLON
13. ITEM 659 - SEEDING AND MULCHING, CLASS 1
14. ITEM 605 - 4″ SHALLOW PIPE UNDERDRAINS
15. ITEM 204 - GRANULAR MATERIAL TYPE B, 703.16
16. ITEM 204 - GEOTEXTILE FABRIC, 712.09, TYPE D
17. ITEM 622 - BARRIER, MISC.: NEW JERSEY STYLE, TYPE A, AS PER PLAN
18. ITEM 622 - BARRIER TRANSITION, AS PER PLAN
19. ITEM 606 - IMPACT ATTENUATOR, TYPE 2 (BIDIRECTIONAL)
20. ITEM 254 - PAVEMENT PLANING, ASPHALT CONCRETE
21. ITEM 448 - 1 ½″ ASPHALT CONCRETE SURFACE COURSE, TYPE 1, PG64-22
22. ITEM 448 - 1 ¾″ ASPHALT CONCRETE INTERMEDIATE COURSE, TYPE 2, PG64-22
23. ITEM 442 - ASPHALT CONCRETE INTERMEDIATE COURSE, 19mm, TYPE A (448) VARIABLE DEPTH (0″ MIN., 1 ¼″ MAX.)

EXISTING

- (A) 6″± ASPHALT CONCRETE
- (B) 9½″± REINFORCED PORTLAND CEMENT CONCRETE PAVEMENT
- (C) 4½″ ASPHALT CONCRETE
- (F) 32″ JERSEY BARRIER
- (G) GUARDRAIL

US 23 - NORMAL SECTION

SECTION APPLIES:
STA 694+03.73 TO STA 700+20.00

- [G] BEGIN SHOULDER AT STA 695+87.23
- [H] BEGIN TURN LANE AT STA 695+50.00
  STA 695+50.00 TO STA 699+70.00 = 11.0′
  699+70.00 TO STA 700+20.00 = 11.0′ - 0.0′
- [J] DELINEATOR FROM STA 695+00.00 TO STA 695+50.00

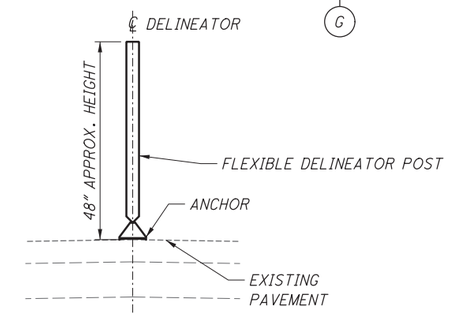

DELINEATOR: REBOUNDABLE TUBULAR PYLONS

NOT TO SCALE

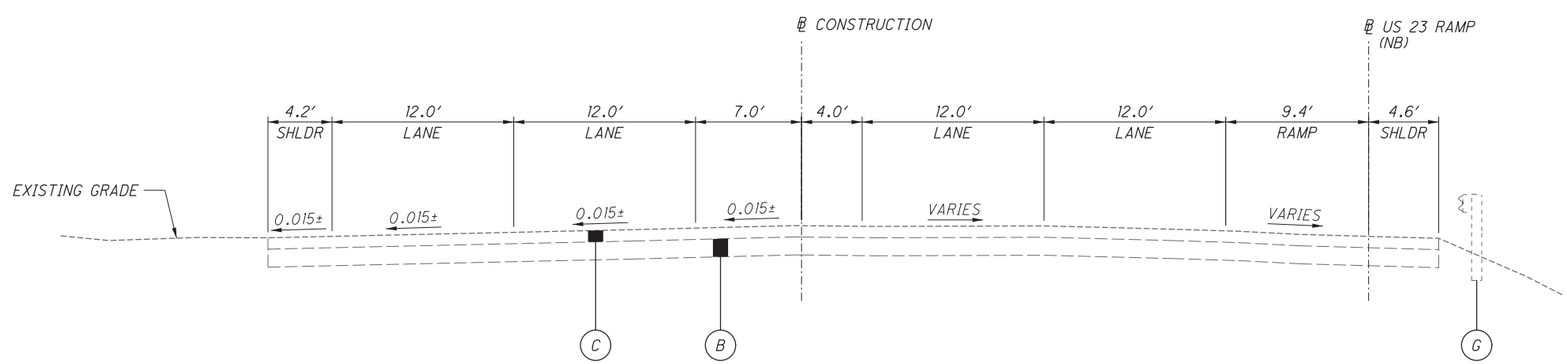

US 23 - ADJOINING SECTION

SECTION APPLIES: STA 700+20.00

NOTE "A"
PAVEMENT PLANING SHALL BE A CONSTANT DEPTH OF 1 ¼″ ON US 23, INCLUDING PAVED SHOULDERS, AND EXCLUDING RAMP AND GORE AREAS ON NORTHBOUND US 23. FOR THE OUTSIDE LANE ON SOUTHBOUND US 23, FROM STA 694+03.73 TO STA 700+20.00, PAVEMENT PLANING SHALL BE A VARIABLE DEPTH WITH 1 ¼″ BEING PLANED AT THE LANE LINE AND DECREASING IN DEPTH AS PLANING APPROACHES THE SAW CUT LINE. THIS IS TO ESTABLISH A MAXIMUM PAVEMENT CROSS SLOPE OF 0.020.

TYPICAL SECTIONS - US 23

DEL-23-13.17

FOR ADDITIONAL INFORMATION
STA. 302+28.30 TO STA. 302+63.32
SEE INTERSECTION DETAIL, SHEET 50.

℄ CONSTRUCTION

FOR ADDITIONAL INFORMATION
STA. 302+32.15 TO STA. 302+50.09
SEE INTERSECTION DETAIL, SHEET 50.

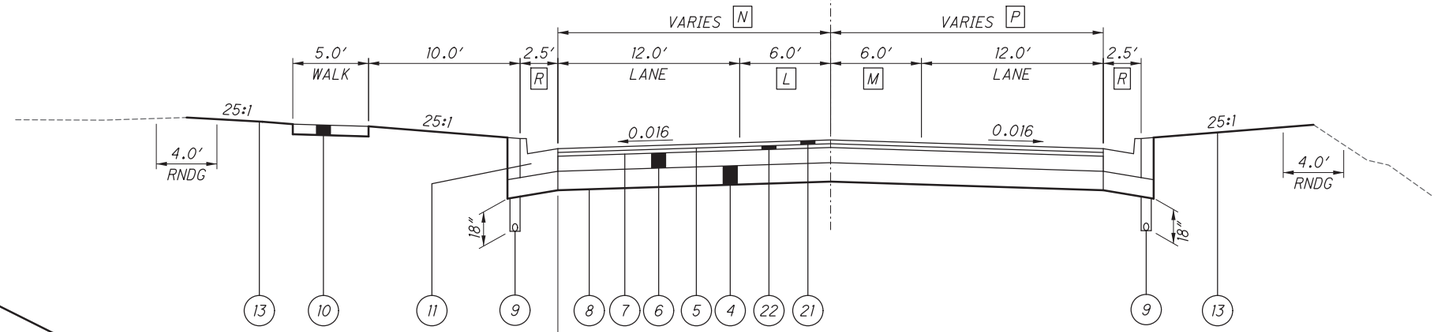

SANDUSKY STREET - NORMAL SECTION

SECTION APPLIES:
STA 302+28.30 TO STA 309+38.97

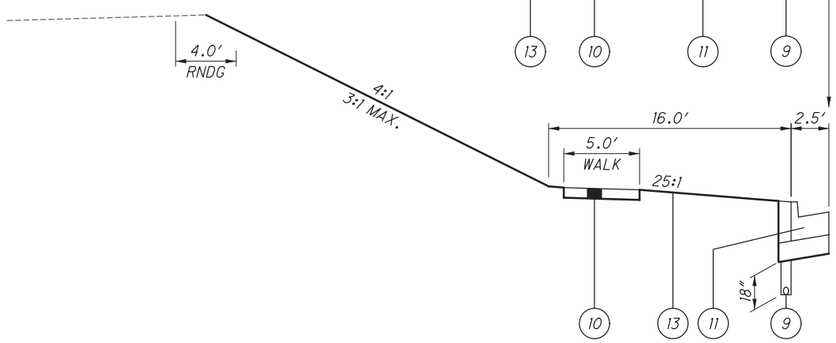

STA 305+66.78 TO STA 309+38.97

℄ CONSTRUCTION

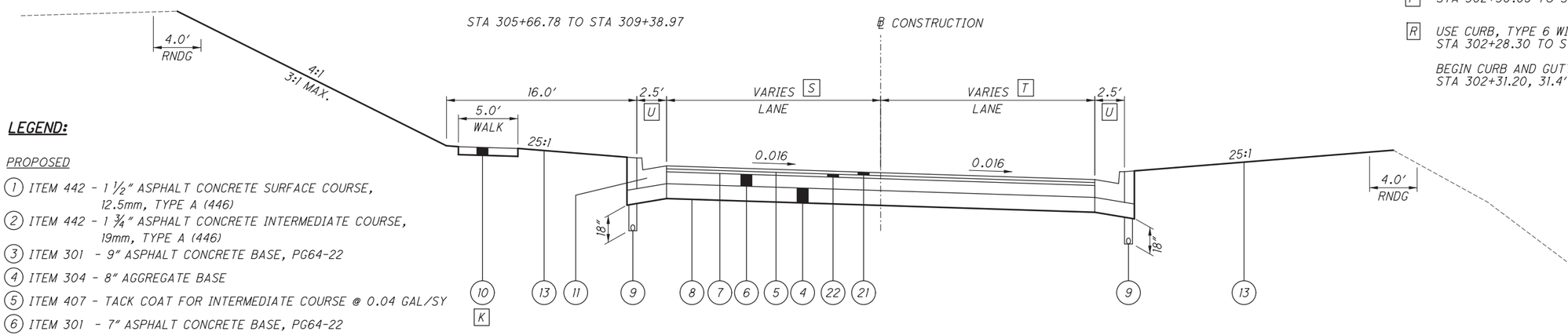

FOR ADDITIONAL INFORMATION
STA. 311+60.63 TO STA. 312+51.32
SEE INTERSECTION DETAIL, SHEET 51.

SANDUSKY STREET - SUPERELEVATED SECTION V

SECTION APPLIES:
STA 309+38.97 TO STA 312+51.32

FOR ADDITIONAL INFORMATION
STA. 311+18.52 TO STA. 312+51.32
SEE INTERSECTION DETAIL, SHEET 51.

K END SIDEWALK AT STA 310+55.12, 35.5′ LT.

L STA 302+28.30 TO STA 306+32.21 = 6.0′
STA 306+32.21 TO STA 307+45.69 = 6.0′ - 0.0′
STA 307+45.69 TO STA 309+38.97 = 0.0′

M STA 302+28.30 TO STA 306+32.21 = 6.0′
STA 306+32.21 TO STA 307+45.69 = 6.0′ - 0.0′
STA 307+45.69 TO STA 309+38.97 = 0.0′

N STA 302+28.30 TO STA 302+63.32 = 57.8′ - 20.0′

P STA 302+30.09 TO STA 302+50.09 = 38.0′ - 18.0′

R USE CURB, TYPE 6 WITHIN RADIUS RETURN
STA 302+28.30 TO STA 302+63.32, LT.

BEGIN CURB AND GUTTER, TYPE 2
STA 302+31.20, 31.4′ RT.

S STA 309+38.97 TO STA 311+60.63 = 18.0′
STA 311+60.63 TO STA 312+39.84 = 18.0′ - 129.5′

T STA 309+38.97 TO STA 311+18.52 = 18.0′
STA 311+18.52 TO STA 312+51.32 = 18.0′ - 94.9′

U END COMBINATION CURB AND GUTTER, TYPE 2
STA 312+34.07, 87.0′ LT.
STA 312+40.80, 58.1′ RT.

V FOR SUPERELEVATION TRANSITIONS
SEE SUPERELEVATION TABLE, SHEET 49.

LEGEND:

PROPOSED

1. ITEM 442 - 1 ½″ ASPHALT CONCRETE SURFACE COURSE, 12.5mm, TYPE A (446)
2. ITEM 442 - 1 ¾″ ASPHALT CONCRETE INTERMEDIATE COURSE, 19mm, TYPE A (446)
3. ITEM 301 - 9″ ASPHALT CONCRETE BASE, PG64-22
4. ITEM 304 - 8″ AGGREGATE BASE
5. ITEM 407 - TACK COAT FOR INTERMEDIATE COURSE @ 0.04 GAL/SY
6. ITEM 301 - 7″ ASPHALT CONCRETE BASE, PG64-22
7. ITEM 407 - TACK COAT @ 0.075 GAL/SY
8. ITEM 204 - SUBGRADE COMPACTION
9. ITEM 605 - 4″ BASE PIPE UNDERDRAINS
10. ITEM 608 - 4″ CONCRETE WALK
11. ITEM 609 - COMBINATION CURB AND GUTTER, TYPE 2
12. ITEM 620 - DELINEATOR MISC.: REBOUNDABLE TUBULAR PYLON
13. ITEM 659 - SEEDING AND MULCHING, CLASS 1
14. ITEM 605 - 4″ SHALLOW PIPE UNDERDRAINS
15. ITEM 204 - GRANULAR MATERIAL TYPE B, 703.16
16. ITEM 204 - GEOTEXTILE FABRIC, 712.09, TYPE D
17. ITEM 622 - BARRIER, MISC.: NEW JERSEY STYLE, TYPE A, AS PER PLAN
18. ITEM 622 - BARRIER TRANSITION, AS PER PLAN
19. ITEM 606 - IMPACT ATTENUATOR, TYPE 2 (BIDIRECTIONAL)
20. ITEM 254 - PAVEMENT PLANING, ASPHALT CONCRETE
21. ITEM 448 - 1 ½″ ASPHALT CONCRETE SURFACE COURSE, TYPE 1, PG64-22
22. ITEM 448 - 1 ¾″ ASPHALT CONCRETE INTERMEDIATE COURSE, TYPE 2, PG64-22
23. ITEM 442 - ASPHALT CONCRETE INTERMEDIATE COURSE, 19mm, TYPE A (448) VARIABLE DEPTH (0″ MIN., 1 ¼″ MAX.)

EXISTING

- A 6″± ASPHALT CONCRETE
- B 9½″± REINFORCED PORTLAND CEMENT CONCRETE PAVEMENT
- C 4½″ ASPHALT CONCRETE
- F 32″ JERSEY BARRIER
- G GUARDRAIL

TYPICAL SECTIONS - SANDUSKY STREET

DEL-23-13.17

UTILITIES

THE LOCATION OF THE UNDERGROUND UTILITIES SHOWN ON THE PLANS ARE AS OBTAINED FROM THE OWNERS AS REQUIRED BY SECTION 153.64 O.R.C.

LISTED BELOW ARE ALL UTILITIES LOCATED WITHIN THE PROJECT CONSTRUCTION LIMITS TOGETHER WITH THEIR RESPECTIVE OWNERS:

ELECTRIC
AEP
850 TECH CENTER DRIVE
GAHANNA, OH 43230-6605
ATTN: PAUL PAXTON
(614) 883-6831
ptpaxton@aep.com

GAS
COLUMBIA GAS OF OHIO
3550 JOHNNY APPLESEED CT.
COLUMBUS, OH 43231
ATTN: HEIDI ZACHER
(614) 818-2107
hzacher@nisource.com

WATER
CITY OF DELAWARE
PUBLIC UTILITIES
225 CHERRY STREET
DELAWARE, OH 43015
ATTN: BRAD STANTON &
PERRY MICKLEY
(740) 203-1900

COMMUNICATIONS
TIME WARNER CABLE
3760 INTERCHANGE DRIVE
COLUMBUS, OH 43216
ATTN: RAY MAURER
(614) 481-5262
ray.maurer@twcable.com

FRONTIER COMMUNICATIONS
1300 COLUMBUS-SANDUSKY ROAD N.
MARION, OH 43302
ATTN: CHRIS AVERY
(740) 262-2098
ira.avery@ftr.com

SANITARY & STORM SEWER
DELAWARE COUNTY REGIONAL
SEWER DISTRICT
50 CHANNING STREET
DELAWARE, OH 43015
(740) 833-2240 (SANITARY)
(740) 833-2400 (STORM)

ENDANGERED BAT HABITAT REMOVAL

THE PROJECT IS LOCATED WITHIN THE KNOWN HABITAT RANGES OF THE FEDERALLY LISTED AND PROTECTED INDIANA BAT AND NORTHERN LONG-EARED BAT. NO TREES SHALL BE REMOVED UNDER THIS PROJECT FROM APRIL 1 THROUGH SEPTEMBER 30. ALL NECESSARY TREE REMOVAL SHALL OCCUR FROM OCTOBER 1 THROUGH MARCH 31. THIS REQUIREMENT IS NECESSARY TO AVOID AND MINIMIZE IMPACTS TO THESE SPECIES AS REQUIRED BY THE ENDANGERES SPECIES ACT. FOR THE PUOPOSES OF THIS NOTE, A TREE IS DEFINED AS A LIVE, DYING OR DEAD WOODY PLANT, WITH A TRUCK THREE INCHES OR GREATER IN DIAMETER AT A HEIGHT OF 4.5 FEET ABOVE THE GROUND SURFACE, AND WITH A MINIMUM HEIGHT OF 13 FEET.

CULTURAL RESOURCES AND ENVIRONMENTAL COMMITMENTS

NO CONSTRUCTION STAGING SHALL BE PERMITTED WITHIN THE BOUNDARIES OF THE HISTORIC NORTHWEST DISTRICT (NRHP #96000225).

SURVEYING PARAMETERS

PRIMARY PROJECT CONTROL MONUMENTS GOVERN ALL POSITIONING ON ODOT PROJECTS. SEE SHEET 2 OF THE PLANS FOR A TABLE CONTAINING PROJECT CONTROL INFORMATION.

USE THE FOLLOWING PROJECT CONTROL, VERTICAL POSITIONING, AND HORIZONTAL POSITIONING PARAMETERS FOR ALL SURVEYING:

PROJECT CONTROL

POSITIONING METHOD: VRS/GPS

HORIZONTAL POSITIONING

REFERENCE FRAME: NAD83 (CORS 96)
COORDINATE SYSTEM: STATE PLANE COORDINATE, NORTH ZONE
COMBINED SCALE FACTOR: 1.000023762
ORIGIN OF COORDINATE
SYSTEM: 0, 0, 0

USE THE POSITIONING METHODS AND MONUMENT TYPE USED IN THE ORIGINAL SURVEY TO RESTORE ALL MONUMENTS RELATED TO PRIMARY PROJECT CONTROL THAT ARE DAMAGED OR DESTROYED BY CONSTRUCTION ACTIVITIES. RESTORE THE DAMAGED OR DESTROYED MONUMENTS IN ACCORDANCE WITH SUPPLEMENTAL SPECIFICATION 823.

UNITS ARE IN U.S. SURVEY FEET. USE THE FOLLOWING CONVERSION FACTOR: 1 METER = 3.280833333 U.S. SURVEY FEET.

MONUMENT ASSEMBLIES

CONSTRUCT MONUMENT ASSEMBLIES IN ACCORDANCE WITH THE DETAILS SHOWN ON THE STANDARD CONSTRUCTION DRAWINGS AND AT THE LOCATIONS SHOWN ON SHEET NO. 96 (2/9 OF THE RIGHT OF WAY PLANS).

CONSTRUCTION NOISE

ACTIVITIES AND LAND USE ADJACENT TO THIS PROJECT MAY BE AFFECTED BY CONSTRUCTION NOISE. IN ORDER TO MINIMIZE ANY ADVERSE CONSTRUCTION NOISE IMPACTS, DO NOT OPERATE POWER-OPERATED CONSTRUCTION-TYPE DEVICES BETWEEN THE HOURS OF 7:00 PM AND 7:00 AM. IN ADDITION, DO NOT OPERATE AT ANY TIME ANY DEVICE IN SUCH A MANNER THAT THE NOISE CREATED SUBSTANTIALLY EXCEEDS THE NOISE CUSTOMARILY AND NECESSARILY ATTENDANT TO THE REASONABLE AND EFFICIENT PERFORMANCE OF SUCH EQUIPMENT.

WORK LIMITS

THE WORK LIMITS SHOWN ON THESE PLANS ARE FOR PHYSICAL CONSTRUCTION ONLY. PROVIDE THE INSTALLATION AND OPERATION OF ALL WORK ZONE TRAFFIC CONTROL AND WORK ZONE TRAFFIC CONTROL DEVICES REQUIRED BY THESE PLANS WHETHER INSIDE OR OUTSIDE THESE WORK LIMITS.

ITEM 204 - PROOF ROLLING

THE FOLLOWING QUANTITY IS PROVIDED IN THE GENERAL SUMMARY TO ADDRESS LOCATIONS REQUIRING PROOF ROLLING.

ITEM 204 - PROOF ROLLING 3 HOUR

CLEARING AND GRUBBING

REMOVE ALL TREES AND STUMPS SPECIFICALLY MARKED FOR REMOVAL WITHIN THE CONSTRUCTION LIMITS UNDER THE LUMP SUM BID FOR ITEM 201, CLEARING AND GRUBBING. THE FOLLOWING IS AN APPROXIMATE ESTIMATE OF THE NUMBER OF TREES AND STUMPS TO BE REMOVED.

SIZES	NO. TREES	NO. STUMPS	TOTAL
18"	20	0	20
30"	4	0	4

REVIEW OF DRAINAGE FACILITIES

BEFORE ANY WORK IS STARTED ON THE PROJECT AND AGAIN BEFORE FINAL ACCEPTANCE BY THE STATE, REPRESENTATIVES OF THE STATE AND THE CONTRACTOR, ALONG WITH LOCAL REPRESENTATIVES, SHALL MAKE AN INSPECTION OF ALL EXISTING SEWERS WHICH ARE TO REMAIN IN SERVICE AND WHICH MAY BE AFFECTED BY THE WORK. THE CONDITION OF THE EXISTING CONDUITS AND THEIR APPURTENANCE SHALL BE DETERMINED FROM FIELD OBSERVATIONS. RECORDS OF THE INSPECTION SHALL BE KEPT IN WRITING BY THE STATE.

ALL NEW CONDUITS, INLETS, CATCH BASINS, AND MANHOLES CONSTRUCTED AS A PART OF THE PROJECT SHALL BE FREE OF ALL FOREIGN MATTER AND IN A CLEAN CONDITION BEFORE THE PROJECT WILL BE ACCEPTED BY THE STATE.

ALL EXISTING SEWERS INSPECTED INITIALLY BY THE ABOVE MENTIONED PARTIES SHALL BE MAINTAINED AND LEFT IN A CONDITION REASONABLY COMPARABLE TO THAT DETERMINED BY THE ORIGINAL INSPECTION. ANY CHANGE IN THE CONDITION RESULTING FROM THE CONTRACTOR'S OPERATIONS SHALL BE CORRECTED BY THE CONTRACTOR TO THE SATISFACTION OF THE ENGINEER.

PAYMENT FOR ALL OPERATIONS DESCRIBED ABOVE SHALL BE INCLUDED IN THE CONTRACT PRICE FOR THE PERTINENT 611 CONDUIT ITEMS.

CROSSINGS AND CONNECTIONS TO EXISTING PIPES AND UTILITIES

WHERE PLANS PROVIDE FOR A PROPOSED CONDUIT TO BE CONNECTED TO, OR CROSS OVER OR UNDER AN EXISTING SEWER OR UNDERGROUND UTILITY, THE CONTRACTOR SHALL LOCATE THE EXISTING PIPES OR UTILITIES BOTH AS TO LINE AND GRADE BEFORE STARTING TO LAY THE PROPOSED CONDUIT.

IF IT IS DETERMINED THAT THE ELEVATION OF THE EXISTING CONDUIT, OR EXISTING APPURTENANCE TO BE CONNECTED, DIFFERS FROM THE PLAN ELEVATION OR RESULTS IN A CHANGE IN THE PLAN CONDUIT SLOPE, THE ENGINEER SHALL BE NOTIFIED BEFORE STARTING CONSTRUCTION OF ANY PORTION OF THE PROPOSED CONDUIT WHICH WILL BE AFFECTED BY THE VARIANCE IN THE EXISTING ELEVATIONS.

IF IT IS DETERMINED THAT THE PROPOSED CONDUIT WILL INTERSECT AN EXISTING SEWER OR UNDERGROUND UTILITY IF CONSTRUCTED AS SHOWN ON THE PLAN, THE ENGINEER SHALL BE NOTIFIED BEFORE STARTING CONSTRUCTION OF ANY PORTION OF THE PROPOSED CONDUIT WHICH WOULD BE AFFECTED BY THE INTERFERENCE WITH AN EXISTING FACILITY.

PAYMENT FOR ALL THE OPERATIONS DESCRIBED ABOVE SHALL BE INCLUDED IN THE CONTRACT PRICE FOR THE PERTINENT 611 CONDUIT ITEM.

UNRECORDED STORM WATER DRAINAGE

FURNISH A CONTINUANCE FOR ALL UNRECORDED STORM WATER DRAINAGE, SUCH AS ROOF DRAINS, FOOTER DRAINS, OR YARD DRAINS, DISTURBED BY THE WORK. FURNISH EITHER AN OPEN CONTINUANCE OR AN UNOBSTRUCTED CONTINUANCE BY CONNECTING A CONDUIT THROUGH THE CURB OR INTO A DRAINAGE STRUCTURE. THE LOCATION, TYPE, SIZE AND GRADE OF THE NEEDED CONDUIT TO REPLACE OR EXTEND AN EXISTING DRAIN WILL BE DETERMINED BY THE ENGINEER. ALL SUCH CONTINUANCE REQUIRES A RIGHT OF WAY USE PERMIT.

THE FOLLOWING CONDUIT TYPES MAY BE USED: 707.33, 707.41 NON-PERFORATED, 707.42, 707.43, 707.45, 707.46, 707.47, 707.51, 707.52 SDR35.

THE FOLLOWING ESTIMATED QUANTITIES HAVE BEEN INCLUDED IN THE GENERAL SUMMARY FOR USE AS DIRECTED BY THE ENGINEER FOR THE WORK NOTED ABOVE:

611, 6" CONDUIT, TYPE E, FOR DRAINAGE CONNECTION
150 FT.

611, 6" CONDUIT, TYPE F, FOR DRAINAGE CONNECTION
150 FT.

EXISTING UNDERDRAINS

PROVIDE UNOBSTRUCTED OUTLETS FOR ALL EXISTING UNDERDRAINS ENCOUNTERED DURING CONSTRUCTION.

PROVIDE AN OUTLET PER STANDARD CONSTRUCTION DRAWING DM-1.1 FOR ALL UNDERDRAINS THAT OUTLET TO A SLOPE.

UNDERDRAINS THAT CAN BE CONNECTED TO THE NEW OR EXISTING UNDERDRAINS AT THE END OF THE PROJECT LIMITS AS WELL AS ALL NECESSARY BENDS OR BRANCHES REQUIRED FOR CONNECTION ARE INCLUDED IN THE BASIS OF PAYMENT FOR UNCLASSIFIED PIPE UNDERDRAINS.

THE FOLLOWING ESTIMATED QUANTITIES HAVE BEEN INCLUDED IN THE GENERAL SUMMARY FOR THE WORK NOTED ABOVE:

605 4" UNCLASSIFIED PIPE UNDERDRAINS 50 FT.

SEEDING AND MULCHING

THE FOLLOWING QUANTITIES ARE PROVIDED TO PROMOTE GROWTH AND CARE OF PERMANENT SEEDED AREAS:

659, SOIL ANALYSIS TEST 2 EACH

659, TOPSOIL 1,427 CU. YD.

659, SEEDING AND MULCHING, CLASS 1 13,084 SQ. YD.
659, SEEDING AND MULCHING, CLASS 3C 357 SQ. YD.

659, REPAIR SEEDING AND MULCHING 643 SQ. YD

659, INTER-SEEDING 643 SQ. YD.

659, COMMERCIAL FERTILIZER 1.79 TON

659, LIME 2.65 ACRES

659, WATER 72 M. GAL.

SEEDING AND MULCHING SHALL BE APPLIED TO ALL AREAS OF EXPOSED SOIL BETWEEN THE RIGHT-OF-WAY LINES, AND WITHIN THE CONSTRUCTION LIMITS FOR AREAS OUTSIDE THE RIGHT-OF-WAY LINES COVERED BY WORK AGREEMENT OR SLOPE EASEMENT. QUANTITY CALCULATIONS FOR SEEDING AND MULCHING ARE BASED ON THESE LIMITS.

CALCULATED RDW
CHECKED JSS

GENERAL NOTES

DEL-23-13.17

ITEM 204 - SUBGRADE COMPACTION AND PROOF ROLLING

CONSTRUCT THE SUBGRADE AS FOLLOWS AND IN THE FOLLOWING SEQUENCE:

1. SHAPE THE SUBGRADE TO WITHIN 0.2 FEET OF THE PLAN SUBGRADE ELEVATION.

2. EXCAVATE AND REPLACE UNSUITABLE SUBGRADE BEFORE PROOF ROLLING. THE EXCAVATION LIMITS ARE SHOWN AND LABELED ON THE CROSS SECTIONS AS UNSUITABLE SUBGRADE. UNSUITABLE SUBGRADE INCLUDES UNSUITABLE SOIL (A-4B, A-2-5, A-5, A-7-5, AND SOIL WITH A LIQUID LIMIT GREATER THAN 65) AND ANY COAL, SHALE, OR ROCK WHICH NEEDS TO BE REMOVED ACCORDING TO 204.05.

   IF THERE IS UNSUITABLE SUBGRADE IN A SHALLOW FILL LOCATION, EXCAVATE AND REPLACE THE UNSUITABLE SUBGRADE BEFORE CONSTRUCTING THE SHALLOW FILL AND SHAPING THE SUBGRADE.

3. COMPACT THE SUBGRADE ACCORDING TO 204.03.

4. APPROXIMATE LIMITS FOR EXCAVATION OF UNSTABLE SUBGRADE ARE SHOWN AND LABELED ON THE CROSS SECTIONS AS UNSTABLE SUBGRADE. THE ENGINEER WILL IDENTIFY THE ACTUAL LIMITS OF EXCAVATION FOR UNSTABLE SUBGRADE BASED ON THE PROOF ROLLING RESULTS AND VISUAL OBSERVATIONS.

   PROOF ROLL THE COMPACTED SUBGRADE ACCORDING TO 204.06.

5. EXCAVATE UNSTABLE SUBGRADE AS DIRECTED BY THE ENGINEER AND STABILIZE BY REPLACING WITH THE SPECIFIED MATERIALS ACCORDING TO 204.07. EXCAVATIONS WILL EXTEND 18 INCHES BEYOND THE EDGE OF THE SURFACE OF THE PAVEMENT, PAVED SHOULDERS, OR PAVED MEDIANS.

6. PROOF ROLL THE STABILIZED AREAS ACCORDING TO 204.06 TO VERIFY STABILITY.

7. FINE GRADE THE SUBGRADE TO THE SPECIFIED GRADE.

THE QUANTITIES FOR EXCAVATING THE UNSUITABLE SUBGRADE AND UNSTABLE SUBGRADE ARE BOTH PAID UNDER ITEM 204 EXCAVATION OF SUBGRADE.

ITEM 606 - IMPACT ATTENUATOR, TYPE 2, (BIDIRECTIONAL)

THIS ITEM SHALL CONSIST OF FURNISHING AND INSTALLING ANY OF THE TYPE 2 IMPACT ATTENUATORS AS LISTED ON THE OFFICE OF ROADWAY ENGINEERING'S WEB PAGE. WHEN BI-DIRECTIONAL DESIGNS ARE SPECIFIED, THE CONTRACTOR SHALL SUPPLY APPROPRIATE TRANSITIONS. PAYMENT FOR THE ABOVE WORK SHALL BE MADE AT THE UNIT PRICE BID FOR ITEM 606, IMPACT ATTENUATOR, TYPE 2 (BIDIRECTIONAL), EACH, AND SHALL INCLUDE ALL LABOR, TOOLS, EQUIPMENT AND MATERIALS NECESSARY TO CONSTRUCT A COMPLETE AND FUNCTIONAL IMPACT ATTENUATOR SYSTEM, INCLUDING ALL RELATED BACKUPS/BACKSTOPS, TRANSITIONS, HARDWARE AND GRADING, NOT SEPARATELY SPECIFIED, AS REQUIRED BY THE MANUFACTURER. INSTALLATION SHALL BE AT THE LOCATIONS SPECIFIED IN THE PLANS, IN ACCORDANCE WITH THE MANUFACTURER'S SPECIFICATIONS.

ITEM 670 - SLOPE EROSION PROTECTION, AS PER PLAN

ALL WORK SHALL BE IN CONFORMANCE WITH ITEM 670 EXCEPT INSTEAD OF A POLYPROPYLENE NETTING, THE CONTRACTOR SHALL USE A MAT THAT IS MANUFACTURED USING A SINGLE OR DOUBLE NET THAT IS STITCHED TO THE TOPSIDE OR BOTH SIDES OF THE EROSION CONTROL MAT. THE NET SHALL BE MADE WITH JUTE YARN AND BE 100% BIODEGRADABLE.

THE CONTRACTOR SHALL INSTALL THIS ITEM ALONG THE WEST SIDE OF SANDUSKY STREET BETWEEN STA 307+00 TO STA 312+00, AS WELL AS ALONG THE SIDE SLOPES FOR THE DRIVE LOCATED AT STA 310+61.2.

THE FOLLOWING ESTIMATED QUANTITY HAS BEEN CARRIED TO THE GENERAL SUMMARY.

ITEM 670 - SLOPE EROSION PROTECTION, AS PER PLAN
4,133 SQ. YD.

ITEM 670 - DITCH EROSION PROTECTION, AS PER PLAN

ALL WORK SHALL BE IN CONFORMANCE WITH ITEM 671 EROSION CONTROL MAT, TYPE B EXCEPT INSTEAD OF A POLYPROPYLENE NETTING, THE CONTRACTOR SHALL USE A MAT THAT IS MANUFACTURED USING A SINGLE OR DOUBLE NET THAT IS STITCHED TO THE TOPSIDE OR BOTH SIDES OF THE EROSION CONTROL MAT. THE NET SHALL BE MADE WITH JUTE YARN AND BE 100% BIODEGRADABLE.

THE CONTRACTOR SHALL INSTALL THE DITCH EROSION PROTECTION IN THE AREA OF THE POST CONSTRUCTION BMP, ALONG US 23 FROM STA 689+00.00 TO STA 694+32.00, AS SHOWN IN THE PLANS.

EROSION CONTROL PAD

THE EROSION CONTROL PAD ADJACENT THE RIGHT SIDE OF THE COMMERCIAL DRIVE AT SANDUSKY STREET STA. 310+61.21 LT., SHALL CONSIST OF A TWO (2) FOOT WIDE BY ONE (1) FOOT DEEP LAYER OF STONE AS SHOWN IN THE DEPICTION BELOW, AND IS DESIGNED TO CAPTURE DRAINAGE OFF THE DRIVEWAY AND THE SURROUNDING SLOPES.

THE STONE PAD SHALL HAVE A 6" UNDERDRAIN DIRECTLY BELOW THE RUNNING LOW POINT, TO COLLECT AND DIRECT FLOW TO THE DOWNSTREAM CATCH BASIN. THIS SYSTEM IS DESIGNED TO AID THE NEARBY TRENCH DRAIN IN EVACUATING FLOWS OFF THE DRIVEWAY AND SURROUNDING SLOPES.

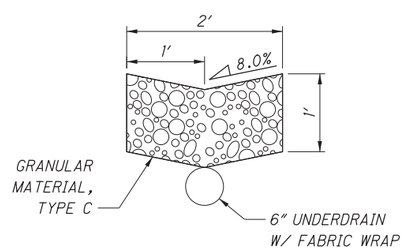

PAYMENT FOR THE INSTALLATION OF THE ABOVE-MENTIONED PAD SHALL BE INCLUDED IN THE UNIT PRICE BID FOR THE PERTINENT 204 ITEM AND SHALL INCLUDE ALL MATERIAL, LABOR AND INCIDENTALS REQUIRED TO COMPLETE THE INSTALLATION.

WATER QUALITY PROTECTION

NO TOXIC OR HAZARDOUS MATERIALS SUCH AS SEALANTS, SOLVENTS, CLEANING AGENTS, WASTE-WATER, FUELS OR DEBRIS OF ANY KIND SHALL BE DISCHARGED TO ANY STREAMS, DRAINAGE COURSES, OR BODIES OF WATER. NO DEBRIS SHALL BE PLACED WITHIN THE 100-YEAR FLOODPLAIN BOUNDARY OF ANY WATER COURSE.

THE CONTRACTOR SHALL TAKE GREAT CARE TO MINIMIZE THE POTENTIAL TO CONTAMINATE THE PUBLIC DRINKING WATER SUPPLY. ALL PROJECT RELATED REFUELING AND MAINTENANCE ACTIVITIES SHALL BE PERFORMED IN AN ENVIRONMENTALLY RESPONSIBLE MANNER.

THE CONTRACTOR SHALL TAKE THE APPROPRIATE ACTIONS IN THE EVENT OF A RELEASE AND WILL BE HELD RESPONSIBLE FOR THE CLEAN UP AND REMEDIATION OF ANY AND ALL SPILLS.

CALCULATED RDW
CHECKED JSS

GENERAL NOTES

DEL-23-13.17

ITEM 614 - MAINTAINING TRAFFIC

THE CONTRACTOR SHALL MAINTAIN TRAFFIC AT ALL TIMES ON THE PROJECT IN ACCORDANCE WITH ITEM 614 MAINTAINING TRAFFIC AND AS DESCRIBED BELOW.

1. ALL SIGNS, BARRICADES, SIGN SUPPORTS, DRUMS, FLAGGERS AND INCIDENTALS FOR TRAFFIC CONTROL SHALL BE FURNISHED, ERECTED, MAINTAINED AND REMOVED BY THE CONTRACTOR IN CONFORMANCE WITH THE MOST RECENT REVISION, CURRENT EDITION OF THE OHIO MANUAL OF UNIFORM TRAFFIC CONTROL DEVICES FOR STREETS AND HIGHWAYS (OMUTCD). ALL SIGNS USED FOR THE MAINTENANCE OF TRAFFIC SHALL BE NEW OR LIKE NEW CONDITION SUBJECT TO THE APPROVAL OF THE ENGINEER. DEVICES USED TO MAINTAIN TRAFFIC SHALL BE REMOVED IMMEDIATELY AFTER THE TERMINATION OF SAID WORK. PAYMENT SHALL BE INCLUDED IN THE LUMP SUM BID FOR ITEM 614 MAINTAINING TRAFFIC.

2. FOR WORK WHICH IS CONFINED TO THE SHOULDER, TRAFFIC CONTROL SHALL CONFORM TO FIGURES TA-1 AND TA-3 OF THE OMUTCD. IF THE CONTRACTOR FAILS TO COMPLY WITH THE PROVISIONS FOR TRAFFIC CONTROL AS SET FORTH IN THESE PLANS AND PROVISION OF THE OMUTCD AND THE FAILURE RESULTS IN A CONDITION AT THE WORK SITE WHICH IS UNSAFE FOR TRAFFIC, THE ENGINEER HAS THE AUTHORITY TO SUSPEND WORK UNTIL THE CONTRACTOR COMPLIES WITH THE NECESSARY REQUIREMENTS.

3. TWO-WAY TRAFFIC SHALL BE MAINTAINED BY USE OF THE EXISTING AND PROPOSED PAVEMENT. ONE WAY TRAFFIC MAY BE PERMITTED DURING PLACEMENT OF LOOPS, SIGNAL SUPPORTS, LIGHT POLES, OVERHEAD SIGNS, AND TRAFFIC SIGNAL HEADS, SUBJECT TO THE APPROVAL OF THE ENGINEER. SHORT DURATION CLOSURE (10 MINUTES) MAY BE PERMITTED UNDER THE DIRECTION OF FLAGGER(S) OR LAW ENFORCEMENT OFFICER(S) (LEO) TO ERECT MAST ARMS. ALL QUEUED TRAFFIC SHALL CLEAR THE WORK AREA PRIOR TO ESTABLISHING ANOTHER CLOSURE.

WITH THE EXCEPTION OF SEPARATE PAY ITEMS, PAYMENTS FOR ALL OF THE ABOVE SHALL BE INCLUDED IN THE CONTRACT BID PRICE FOR THE APPLICABLE MAINTAINING TRAFFIC ITEMS.

NOTIFICATION OF CONSTRUCTION INITIATION

AT LEAST FOURTEEN (14) DAYS PRIOR TO ANY CONSTRUCTION ACTIVITIES, THE CONTRACTOR SHALL ADVISE THE DISTRICT OFFICE OF COMMUNICATIONS VIA EMAIL AT d06.pio@dot.state.oh.us AND THE WORK ZONE TRAFFIC MANAGER AT d06.mot@dot.state.oh.us OF THE ANTICIPATED START DATE OF ANY CONSTRUCTION ACTIVITIES, INCLUDING BUT NOT LIMITED TO THE PLACING OF WORK ZONE SIGNS. THE NOTIFICATION SHALL ALSO INCLUDE THE PROJECT NUMBER, PID, NAME AND PHONE NUMBER OF THE CONTRACTOR, A POINT OF CONTACT AND THE ANTICIPATED IMPACT ON TRAFFIC. THE CONTRACTOR WILL IMMEDIATELY INFORM THE DISTRICT OFFICE WORK ZONE TRAFFIC MANAGER OF ANY AND ALL DELAYS AND/OR CHANGES REGARDING THE CONSTRUCTION INITIATION DATE.

ODOT WILL NOTIFY PROPERTY OWNERS, EMERGENCY SERVICE PROVIDERS AND MOTORISTS IN ADVANCE OF THE ROAD CLOSURE AND DETOUR.

PEDESTRIAN SAFETY

THE SAFETY OF PEDESTRIAN TRAFFIC SHALL BE CONSIDERED AT ALL TIMES. IT SHALL BE THE CONTRACTOR'S RESPONSIBILITY TO PROVIDE LIGHTS, SIGNS, BARRICADES AND OTHER DEVICES TO WARN AND TO PHYSICALLY SEPARATE THE PEDESTRIAN FROM HAZARDS INCIDENTAL TO THE CONSTRUCTION AND/OR INSTALLATION OF THE REQUIRED TRAFFIC CONTROL AND ROADWAY ITEMS SUCH AS ANCHOR BOLTS, OPEN EXCAVATIONS, ETC. UNLESS OTHERWISE DIRECTED BY THE ENGINEER, SUCH PEDESTRIAN PROTECTION SHALL UTILIZE, BUT NOT BE LIMITED TO, DRUMS, TEMPORARY FENCE, TYPE 1, TYPE 2 OR TYPE 3 BARRICADES.

LANES OPEN DURING HOLIDAYS AND SPECIAL EVENTS

NO WORK SHALL BE PERFORMED AND THE SAME NUMBER OF LANES AS WERE AVAILABLE AT THE START OF THE PROJECT SHALL BE OPEN TO TRAFFIC DURING THE FOLLOWING DESIGNATED HOLIDAYS OR EVENTS:

HOLIDAYS
CHRISTMAS
FOURTH OF JULY
NEW YEARS EVE
LABOR DAY
MEMORIAL DAY
THANKSGIVING

SPECIAL EVENTS
DELAWARE COUNTY FAIR
JUG DAY

THE PERIOD OF TIME THAT THE LANES ARE TO BE OPEN DEPENDS ON THE DAY OF THE WEEK ON WHICH THE HOLIDAY FALLS. THE FOLLOWING SCHEDULE SHALL BE USED TO DETERMINE THIS PERIOD:

DAY OF HOLIDAY	TIME ALL LANES MUST BE OPEN TO TRAFFIC
SUNDAY	12:00 NOON FRIDAY THROUGH 6:00 AM MONDAY
MONDAY	12:00 NOON FRIDAY THROUGH 6:00 AM TUESDAY
TUESDAY	12:00 NOON MONDAY THROUGH 6:00 AM WEDNESDAY
WEDNESDAY	12:00 NOON TUESDAY THROUGH 6:00 AM THURSDAY
THURSDAY	12:00 NOON WEDNESDAY THROUGH 6:00 AM FRIDAY
THANKSGIVING	5:00 AM WEDNESDAY THROUGH 6:00 AM MONDAY
FRIDAY	12:00 NOON THURSDAY THROUGH 6:00 AM MONDAY
SATURDAY	12:00 NOON FRIDAY THROUGH 6:00 AM MONDAY

NO EXTENSIONS OF TIME SHALL BE GRANTED FOR DELAYS IN MATERIAL DELIVERIES, UNLESS SUCH DELAYS ARE INDUSTRY-WIDE, OR FOR LABOR STRIKES, UNLESS SUCH STRIKES ARE AREA-WIDE.

SHOULD THE CONTRACTOR FAIL TO MEET ANY OF THESE REQUIREMENTS, THE CONTRACTOR SHALL BE ASSESSED A DISINCENTIVE IN ACCORDANCE WITH THE UNAUTHORIZED LANE USE TABLE.

NOTIFICATION OF TRAFFIC RESTRICTIONS

THROUGHOUT THE DURATION OF THE PROJECT, THE CONTRACTOR SHALL NOTIFY THE PROJECT ENGINEER IN WRITING OF ALL TRAFFIC RESTRICTIONS AND UPCOMING MAINTENANCE OF TRAFFIC CHANGES. THE CONTRACTOR SHALL ENSURE THE WRITTEN NOTIFICATION IS SUBMITTED IN A TIMELY MANNER TO ALLOW THE PROJECT ENGINEER TO MEET THE REQUIRED TIME FRAMES SET FORTH IN THE TABLE BELOW. THIS NOTIFICATION SHALL BE RECEIVED BY THE PROJECT ENGINEER PRIOR TO THE PHYSICAL SETUP OF ANY APPLICABLE SIGNS OR MESSAGE BOARDS.

INFORMATION SHOULD INCLUDE BUT IS NOT LIMITED TO ALL CONSTRUCTION ACTIVITIES THAT IMPACT OR INTERFERE WITH TRAFFIC AND SHOULD LIST THE SPECIFIC LOCATIONS, TYPE OF WORK, ROAD STATUS, DATE AND TIME OF RESTRICTION, DURATION OF RESTRICTION, NUMBER OF LANES MAINTAINED, DETOUR ROUTES IF APPLICABLE, AND ANY OTHER INFORMATION REQUESTED BY THE PROJECT ENGINEER.

NOTIFICATION TIME FRAME TABLE		
ITEM	DURATION OF CLOSURE	NOTIFICATION DUE TO DISTRICT 6 COMMUNICATIONS OFFICE
RAMP AND ROAD CLOSURES	>= 2 WEEKS	14 BUSINESS DAYS PRIOR TO CLOSURE
	> 12 HOURS AND < 2 WEEKS	7 BUSINESS DAYS PRIOR TO CLOSURE
	< 12 HOURS	2 BUSINESS DAYS PRIOR TO CLOSURE
LANE CLOSURES/ RESTRICTIONS	>= 2 WEEKS	7 BUSINESS DAYS PRIOR TO CLOSURE
	< 2 WEEKS	2 BUSINESS DAYS PRIOR TO CLOSURE

ANY UNFORESEEN CONDITIONS NOT SPECIFIED IN THE PLANS REQUIRING TRAFFIC RESTRICTIONS SHALL ALSO BE REPORTED TO THE PROJECT ENGINEER USING THE NOTIFICATION TIME FRAME TABLE.

LANE CLOSURE/REDUCTION REQUIRED

LENGTH AND DURATION OF LANE CLOSURES AND RESTRICTIONS ON US-23 SHALL BE AT THE APPROVAL OF THE ENGINEER. IT IS THE INTENT TO MINIMIZE THE IMPACT TO THE TRAVELING PUBLIC. LANE CLOSURES OR RESTRICTIONS OVER SEGMENTS OF THE PROJECT IN WHICH NO WORK IS ANTICIPATED WITHIN A REASONABLE TIME FRAME, AS DETERMINED BY THE ENGINEER, SHALL NOT BE PERMITTED. THE LEVEL OF UTILIZATION OF MAINTENANCE OF TRAFFIC DEVICES SHALL BE COMMENSURATE WITH THE WORK IN PROGRESS.

UNAUTHORIZED LANE USE

THE CONTRACTOR SHALL BE ASSESSED A DISINCENTIVE AS DESIGNATED IN THE UNAUTHORIZED LANE USE TABLE FOR EACH UNIT OF TIME A LANE/SHOULDER/RAMP IS CLOSED BY THE CONTRACTOR'S ACTION WHILE NOT OTHERWISE PERMITTED BY THE UNAUTHORIZED LANE USE TABLE.

UNAUTHORIZED LANE USE CHART						
Section (SLM)	Existing Number of Through Lanes per Direction	Lane Reduction	Lane Closures are **NOT** permitted:			Disincentive Amounts per minute per lane
			Mon to Fri	Sat	Sun	
DEL-23						
SR 315 (8.77) to Coover Road (15.60)	2	2 to 1	6AM-9AM & 3PM-6PM	No Restriction	No Restriction	$75
Short term shoulder closures are not permitted 6AM-9AM and 3PM-7PM Monday-Friday.						

DROP-OFFS IN WORK ZONES

ALL DROP-OFFS DURING CONSTRUCTION SHALL BE ADEQUATELY MAINTAINED AND PROTECTED AS PER STANDARD CONSTRUCTION DRAWING MT-101.90.

CALCULATED
CHECKED

MAINTENANCE OF TRAFFIC NOTES

DEL-23-13.17

PLOT.CEL
ms consultants, inc.
msconsultants.com
www.msconsultants.com
Ohio DOT Workspace
DEL-23
UCF: ohdot1V8i
PCF: 60-06655_Columbus
Batchplot Spec: \\0330shore\n\60\06655\standards\plotdrv\batchpltl.spc
Pen Table: S:\std\plotting\usin\V8i\pen\V8i_ms_std.tbl
Plot Driver: S:\std\plotting\usin\V8i\PDF.pltcfg
Model: Sheet View: FENCE_VIEW1
Printed: 10/8/2015 @ 4:24:15 PM By: hbrendinger
File: \\0330shore\n\60\06655\mat\sheets\06655MN001.dgn
34" x 22"
ms consultants, inc.

SEQUENCE OF CONSTRUCTION

PHASE 1

N. SANDUSKY ST.
THIS PHASE INCLUDES A SUB-PHASE FOR HALF-WIDTH CONSTRUCTION ALONG N. SANDUSKY ST. PHASE 1 AND PHASE 1A ARE INDEPENDENT OF THE TRAFFIC CONTROL FOR US-23 IN PHASE 1.

CLOSE N. SANDUSKY ST. AS INDICATED IN THE PLANS. MAINTAIN BI-DIRECTIONAL LOCAL TRAFFIC ON THE WESTERN HALF OF THE ROADWAY WHILE PERFORMING CONSTRUCTION ACTIVITIES ON THE EASTERN HALF OF THE ROADWAY. MAINTAIN VEHICULAR AND PEDESTRIAN ACCESS TO THE EXISTING PROPERTIES AND DRIVEWAYS AS SHOWN ON THE PLANS AT ALL TIMES.

US-23
CLOSE THE TWO-WAY LEFT-TURN LANE AS INDICATED IN THE PLANS. SHIFT SOUTHBOUND US-23 TRAVEL LANES TO THE EAST AS INDICATED IN THE PLANS. CLOSE THE N. SANDUSKY ST. EXIT RAMP WITH PORTABLE BARRIER AND IMPLEMENT THE DETOUR AS SHOWN IN THE PLANS. MAINTAIN NORTHBOUND US-23 AND RAMP TRAFFIC IN THE EXISTING LANES. MAINTAIN RIGHT-IN, RIGHT-OUT ACCESS TO ALL DRIVEWAYS ALONG US-23 UNLESS INDICATED IN THE PLANS TO BE CLOSED WITH PORTABLE BARRIER.

CONSTRUCT US-23 SOUTHBOUND WIDENING AND THE EXTENSION OF N. SANDUSKY ST. AS SHOWN IN THE ROADWAY PLANS. PERFORM ALL NECESSARY GRADING, LIGHTING, UTILITY, SIGNAL AND ANY OTHER REQUIRED OFF-ALIGNMENT WORK ACCORDING TO THE APPLICABLE PLANS DURING THIS PHASE. INSTALL THE TRAFFIC SIGNAL EQUIPMENT AND SUPPORTS LOCATED EAST OF THE ON-RAMP UTILIZING SHOULDER CLOSURES AND LANE REDUCTIONS IN ACCORDANCE WITH THE LANE CLOSURE/REDUCTION REQUIREMENTS LISTED ABOVE.

PHASE 1A

N. SANDUSKY ST.
CLOSE N. SANDUSKY ST. AS INDICATED IN THE PLANS. MAINTAIN BI-DIRECTIONAL LOCAL TRAFFIC ON THE NEWLY CONSTRUCTED EASTERN HALF OF THE ROADWAY WHILE PERFORMING CONSTRUCTION ACTIVITIES ON THE WESTERN HALF OF THE ROADWAY. MAINTAIN VEHICULAR AND PEDESTRIAN ACCESS TO THE EXISTING PROPERTIES AND DRIVEWAYS AS SHOWN ON THE PLANS AT ALL TIMES. NOTIFY LOCAL PROPERTY OWNERS 48 HOURS BEFORE BEGINNING ANY WORK THAT WILL AFFECT THE PROPERTY OWNER'S DRIVEWAY OR WALKWAY. UTILIZE HALF-WIDTH CONSTRUCTION AND TRAFFIC COMPACTED SURFACES TO MAINTAIN DRIVEWAY ACCESS AT ALL TIMES.

PHASE 2

N. SANDUSKY ST.
MAINTAIN THE CLOSURE OF THE N. SANDUSKY ST. EXTENSION. MAINTAIN LOCAL TRAFFIC TO THE LIMITS SHOWN ON THE PLANS AT ALL TIMES.

US-23
MAINTAIN THE N. SANDUSKY ST. DETOUR THAT WAS ESTABLISHED IN PHASE 1. CLOSE THE TWO-WAY LEFT-TURN LANE AS INDICATED IN THE PLANS. SHIFT NORTHBOUND AND SOUTHBOUND TRAFFIC TO THE OUTSIDE OF THE ROADWAY AS SHOWN IN THE PLANS BY UTILIZING THE NEW PAVEMENT CONSTRUCTED IN PHASE 1 FOR SOUTHBOUND TRAFFIC AND THE EXISTING SHOULDER FOR NORTHBOUND TRAFFIC. ESTABLISH THE WORK ZONE IN THE CENTER OF US-23 WITH PORTABLE BARRIER AS INDICATED IN THE PLANS.

PERFORM TRENCH DRAIN, MEDIAN BARRIER AND IMPACT ATTENUATOR CONSTRUCTION ACTIVITIES AS INDICATED IN THE ROADWAY PLANS. INSTALL THE LANE SEPARATOR WITH REBOUNDABLE POSTS AS SHOWN IN THE SIGNING AND MARKING PLANS.

PHASE 3 (NO SHEETS PROVIDED)

REMOVE ALL TRAFFIC CONTROL FROM THE PREVIOUS PHASES, INCLUDING THE N. SANDUSKY ST. DETOUR, AND INSTALL PERMANENT PAVEMENT MARKINGS. PLACE THE NEW TRAFFIC SIGNAL INTO OPERATION AND OPEN N. SANDUSKY ST. TO TRAFFIC.

METHOD OF PAYMENT

ALL WORK AND TRAFFIC CONTROL DEVICES SHALL BE IN ACCORDANCE WITH CMS 614 AND OTHER APPLICABLE PORTIONS OF THE SPECIFICATIONS, AS WELL AS THE OMUTCD.

PAYMENT FOR ALL LABOR, EQUIPMENT AND MATERIALS SHALL BE INCLUDED IN THE LUMP SUM CONTRACT PRICE FOR ITEM 614, MAINTAINING TRAFFIC, UNLESS SEPARATELY ITEMIZED IN THE PLAN.

ITEM 614 MAINTAINING TRAFFIC LUMP SUM

MAINTAINING TRAFFIC (ESTIMATED QUANTITIES)

ACCESS TO ALL DRIVEWAYS WITHIN THE WORK AREA SHALL BE MAINTAINED USING ITEM 410, TRAFFIC COMPACTED SURFACE, TYPE A OR B, AS DIRECTED BY THE ENGINEER.

THE FOLLOWING ESTIMATED QUANTITIES HAVE BEEN INCLUDED IN THE GENERAL SUMMARY FOR USE AS DETERMINED BY THE ENGINEER FOR THE MAINTENANCE OF TRAFFIC.

ITEM 410, TRAFFIC COMPACTED SURFACE, TYPE A OR B - 50 CU. YD.

ITEM 616, WATER - 1 M. GAL.

DUST CONTROL

THE CONTRACTOR SHALL FURNISH AND APPLY WATER FOR DUST CONTROL AS DIRECTED BY THE ENGINEER. THE FOLLOWING ESTIMATED QUANTITIES HAVE BEEN INCLUDED FOR DUST CONTROL PURPOSES:

ITEM 616, WATER - 60 M. GAL.

MAINTENANCE OF TRAFFIC SIGNAL/FLASHER INSTALLATION

THE CONTRACTOR SHALL BE RESPONSIBLE FOR MAINTAINING TRAFFIC SIGNAL/FLASHER INSTALLATIONS WITHIN THE PROJECT UNDER THE FOLLOWING CONDITIONS:

1. EXISTING SIGNAL/FLASHER INSTALLATIONS WHICH THE PLANS REQUIRE THE CONTRACTOR TO ADJUST, MODIFY, ADD ONTO OR REMOVE, OR WHICH THE CONTRACTOR ACTUALLY ADJUSTS, MODIFIES OR OTHERWISE DISTURBS. THE CONTRACTOR SHALL BE RESPONSIBLE FOR THE ENTIRE INSTALLATION (AT AN INTERSECTION) FROM THE TIME HIS OPERATIONS FIRST DISTURB THE INSTALLATION UNTIL THE INSTALLATION HAS BEEN SUBSEQUENTLY REMOVED OR MODIFIED AND THE WORK IS ACCEPTED.

2. NEW OR REUSED SIGNAL/FLASHER INSTALLATIONS OR DEVICES, INSTALLED BY THE CONTRACTOR. THE CONTRACTOR SHALL BE RESPONSIBLE FOR MAINTENANCE OF THESE FROM THE TIME OF INSTALLATION UNTIL THE WORK IS ACCEPTED.

THE CONTRACTOR SHALL CORRECT AS QUICKLY AS POSSIBLE ALL OUTAGES OR MALFUNCTIONS. HE SHALL PROVIDE THE MAINTAINING AGENCY AND THE ENGINEER SUCH ADDRESSES AND PHONE NUMBERS WHERE HIS MAINTENANCE FORCES CAN BE CONTACTED. THE CONTRACTOR SHALL PROVIDE ONE OR MORE PERSONS TO RECEIVE ALL CALLS AND DISPATCH THE NECESSARY MAINTENANCE FORCES TO CORRECT OUTAGES. SUCH A PERSON OR PERSONS MAY BE USED TO PERFORM OTHER DUTIES AS LONG AS PROMPT ATTENTION IS GIVEN TO THESE CALLS AND A PERSON IS READILY AVAILABLE CONTINUOUSLY 24 HOURS A DAY, 7 DAYS A WEEK. ALL LAMP OUTAGES, CABLE OUTAGES, ELECTRICAL FAILURES, EQUIPMENT MALFUNCTIONS AND MISALIGNED SIGNAL HEADS SHALL BE CORRECTED TO THE SATISFACTION OF THE ENGINEER WITH THE SIGNAL BACK TO SERVICE WITHIN FOUR HOURS AFTER THE CONTRACTOR HAS BEEN NOTIFIED OF THE OUTAGE.

IN THE EVENT NEW SIGNALS ARE DAMAGED PRIOR TO ACCEPTANCE, ALL DAMAGED EQUIPMENT EXCEPT POLES AND CONTROL EQUIPMENT SHALL BE REPLACED BY THE CONTRACTOR TO THE SATISFACTION OF THE ENGINEER WITH THE SIGNAL BACK IN SERVICE WITHIN 8 HOURS AFTER THE CONTRACTOR'S NOTIFICATION OF THE OUTAGE. THE CONTRACTOR SHALL ARRANGE FOR FULL TRAFFIC CONTROL UNTIL THE SIGNAL IS BACK IN OPERATION.

IF POLES AND/OR CONTROL EQUIPMENT ARE DAMAGED AND MUST BE REPLACED, THE CONTRACTOR SHALL MAKE TEMPORARY REPAIRS AS NECESSARY TO BRING THE SIGNAL BACK INTO FULL OPERATION WITHIN THE ALLOWED 8-HOUR PERIOD, AND SHALL MAKE PERMANENT REPAIRS OR REPLACEMENT AS SOON THEREAFTER AS POSSIBLE.

NONE OF THE ABOVE SHALL BE CONSTRUED AS COLLECTIVE OR CONSECUTIVE OUTAGE TIME PERIODS AT ANY ONE LOCATION. THAT IS, WHERE MORE THAN ONE OUTAGE OCCURS AT ANY ONE LOCATION THEN THE ALLOTTED TIME LIMIT SHALL BE FOR THE WORST SINGLE OUTAGE.

WHERE OUTAGES ARE THE DIRECT RESULT OF A VEHICLE ACCIDENT THE RESPONSE OF THE CONTRACTOR SHALL BE AS OUTLINED ABOVE. THE CONTRACTOR SHALL BE RESPONSIBLE FOR COLLECTION OF ANY COMPENSATION FOR THIS WORK FROM THOSE PARTIES RESPONSIBLE FOR THE DAMAGE.

WHERE THE CONTRACTOR HAS FAILED TO, OR CANNOT RESPOND TO, AN OUTAGE OR SIGNAL EQUIPMENT MALFUNCTION, AT THESE LOCATIONS WITHIN HIS RESPONSIBILITY, WITHIN PERIODS AS SPECIFIED ABOVE, THE ENGINEER MAY INVOKE THE PROVISIONS OF SECTION 105.15 AND ANY SUBSEQUENT BILLINGS TO THE STATE OR THE CITY OF DELAWARE FOR POLICE SERVICES AND MAINTENANCE SERVICES BY CITY FORCES SHALL BE DEDUCTED FROM MONIES DUE OR TO BECOME DUE THE CONTRACTOR IN ACCORDANCE WITH PROVISIONS OF SECTION 105.15.

THE CONTRACTOR SHALL PROVIDE THE MAINTENANCE SERVICE ENTIRELY WITH HIS FORCES OR HE MAY CHOOSE TO ENTER INTO A COOPERATIVE UNDERSTANDING WITH THE LOCAL MAINTAINING AGENCY TO PROVIDE THE MAINTENANCE. THE CONTRACTOR SHALL INFORM THE ENGINEER, IN WRITING, OF THE MAINTENANCE METHOD SELECTED.

THE CONTRACTOR SHALL BE RESPONSIBLE FOR ANY DAMAGE TO ANY TRAFFIC SIGNAL COMPONENTS REQUIRED TO BE HANDLED DURING THE RELOCATION OF POLES AND REVISIONS TO THE SIGNAL SYSTEM. WHEN A TRAFFIC SIGNAL MUST BE TAKEN OUT OF SERVICE BY THE CONTRACTOR, DUE TO CONSTRUCTION PROCEDURES, THIS OUTAGE SHALL NOT EXCEED 4 HOURS AND SHALL NOT INCLUDE THE HOURS OF 6:00 AM TO 9:00 AM AND 3:00 PM TO 6:00 PM. ANY SIGNALIZED INTERSECTION, WHERE THE SIGNAL IS OUT OF SERVICE DUE TO CONSTRUCTION PROCEDURES, OR DUE TO AN OUTAGE OR MALFUNCTION OF EQUIPMENT AS DESCRIBED ABOVE, SHALL BE PROTECTED, BY THE CONTRACTOR, BY THE INSTALLATION OF TEMPORARY "STOP" SIGNS.

ANY VEHICULAR TRAFFIC SIGNAL HEAD, EITHER NEW OR EXISTING WHICH WILL BE OUT OF OPERATION SHALL BE COVERED IN THE MANNER DESCRIBED IN 632.25.

THE CONTRACTOR SHALL MAINTAIN COMPLETE RECORDS OF MALFUNCTIONS INCLUDING:

1. TIME OF NOTIFICATION OF MALFUNCTION;
2. TIME OF WORK CREWS ARRIVAL TO CORRECT THE MALFUNCTION;
3. ACTIONS TAKEN TO CORRECT THE MALFUNCTION, INCLUDING A LIST OF PARTS REPAIRED OR REPLACED;
4. A DIAGNOSIS OF REASON FOR THE MALFUNCTION AND PROBABILITY OF REOCCURRENCE;
5. TIME OF COMPLETION OF THE REPAIR AND SYSTEM RESTORED TO FULL SERVICE.

A COPY OF THESE RECORDS SHALL BE PROVIDED TO THE ENGINEER WITHIN THREE (3) WORKING DAYS FOLLOWING COMPLETION OF EACH REPAIR.

ALL COSTS RESULTING FROM THE ABOVE REQUIREMENTS SHALL BE CONSIDERED TO BE INCLUDED IN THE LUMP SUM PRICE BID FOR ITEM 614, MAINTAINING TRAFFIC.

CALCULATED MGS
CHECKED JML

MAINTENANCE OF TRAFFIC NOTES

DEL-23-13.17

ITEM 614 WORK ZONE IMPACT ATTENUATOR FOR 24" WIDE HAZARDS (UNIDIRECTIONAL)

THIS ITEM SHALL CONSIST OF FURNISHING AND INSTALLING A NON-GATING IMPACT ATTENUATOR. FURNISH AN IMPACT ATTENUATOR FROM THE OFFICE OF ROADWAY ENGINEERING'S APPROVED LIST FOR WORK ZONE IMPACT ATTENUATORS, FROM THE ROADWAY STANDARD'S WEB PAGE FOR ROADWAY STANDARDS APPROVED PRODUCTS.

INSTALLATION SHALL BE AT THE LOCATIONS SPECIFIED IN THE PLANS IN ACCORDANCE WITH THE MANUFACTURER'S SPECIFICATIONS.

THE CONTRACTOR SHALL REPAIR OR REPLACE A DAMAGED UNIT WITHIN 24 HOURS OF A DAMAGING IMPACT.

WHEN BIDIRECTIONAL DESIGNS ARE SPECIFIED, THE CONTRACTOR SHALL SUPPLY APPROPRIATE TRANSITIONS.

WHEN GATING IMPACT ATTENUATORS ARE DESIRED, THE CONTRACTOR SHALL SUBMIT DOCUMENTATION TO THE ENGINEER FOR ACCEPTANCE.

THE COST FOR THE ADDITIONAL BARRIER REQUIRED FOR A GATING IMPACT ATTENUATOR SHALL BE INCLUDED IN THE COST OF THE GATING IMPACT ATTENUATOR.

PAYMENT FOR THE ABOVE WORK SHALL BE MADE AT THE UNIT PRICE BID AND SHALL INCLUDE ALL LABOR, TOOLS, EQUIPMENT AND MATERIALS NECESSARY TO CONSTRUCT AND MAINTAIN A COMPLETE AND FUNCTIONAL IMPACT ATTENUATOR SYSTEM, INCLUDING ALL RELATED BACKUPS, TRANSITIONS, LEVELING PADS, HARDWARE AND GRADING, NOT SEPARATELY SPECIFIED, AS REQUIRED BY THE MANUFACTURER.

ITEM 614 DELINEATION OF PORTABLE AND PERMANENT BARRIER

BARRIER REFLECTORS AND OBJECT MARKERS SHALL BE INSTALLED ON ALL PORTABLE BARRIER (PB) USED FOR TRAFFIC CONTROL AND ON PERMANENT CONCRETE BARRIER (INCLUDING BRIDGE PARAPETS) LOCATED WITHIN 5 FEET OF THE EDGE OF THE ADJACENT TRAVEL LANE.

BARRIER REFLECTORS SHALL CONFORM TO C&MS 626, EXCEPT THAT THE SPACING SHALL BE AS PER TRAFFIC SCD MT-101.70. OBJECT MARKERS AND THEIR INSTALLATION SHALL CONFORM TO C&MS 614.03 AND SCD MT-101.70. WHEN THE PB CONTAINS GLARE SCREEN, ONE SET OF THREE VERTICAL STRIPES OF SHEETING SHALL BE CONSIDERED EQUIVALENT TO AN OBJECT MARKER, ONE-WAY.

THE FOLLOWING ESTIMATED QUANTITIES HAVE BEEN INCLUDED IN THE PLANS AND CARRIED TO THE GENERAL SUMMARY:

ITEM 614, BARRIER REFLECTOR, TYPE B - 70 EACH
ITEM 614, OBJECT MARKER, ONE-WAY - 70 EACH

PAYMENT SHALL BE FULL COMPENSATION FOR ALL MATERIAL, LABOR, INCIDENTALS AND EQUIPMENT NECESSARY FOR FURNISHING, INSTALLING, MAINTAINING AND REMOVING EACH OF THE ABOVE ITEMS.

ITEM 614 - LAW ENFORCEMENT OFFICER WITH PATROL CAR FOR ASSISTANCE

USE OF LAW ENFORCEMENT OFFICERS (LEOS) BY CONTRACTORS OTHER THAN THE USES SPECIFIED BELOW WILL NOT BE PERMITTED AT PROJECT COST. LEOS SHOULD NOT BE USED WHERE THE OMUTCD INTENDS THAT FLAGGERS BE USED.

IN ADDITION TO THE REQUIREMENTS OF C&MS 614 AND THE OMUTCD, A UNIFORMED LEO WITH AN OFFICIAL PATROL CAR (CAR WITH TOP-MOUNTED EMERGENCY FLASHING LIGHTS AND COMPLETE MARKINGS OF THE APPROPRIATE LAW ENFORCEMENT AGENCY) SHALL BE PROVIDED FOR THE FOLLOWING TRAFFIC CONTROL TASKS:

- DURING THE ENTIRE ADVANCE PREPARATION AND CLOSURE SEQUENCE WHERE COMPLETE BLOCKAGE OF TRAFFIC IS REQUIRED.

- DURING A TRAFFIC SIGNAL INSTALLATION WHEN IMPACTING THE NORMAL FUNCTION OF THE SIGNAL OR THE FLOW OF TRAFFIC OR WHEN TRAFFIC NEEDS TO BE DIRECTED THROUGH AN ENERGIZED TRAFFIC SIGNAL CONTRARY TO THE SIGNAL DISPLAY (E.G., DIRECTING MOTORISTS THROUGH A RED LIGHT).

IN ADDITION TO THE REQUIREMENT OF C&MS 614 AND THE OMUTCD, A UNIFORMED LEO WITH AN OFFICIAL PATROL CAR (CAR WITH TOP-MOUNTED EMERGENCY FLASHING LIGHTS AND COMPLETE MARKINGS OF THE APPROPRIATE LAW ENFORCEMENT AGENCY) SHOULD BE PROVIDED FOR THE FOLLOWING TRAFFIC CONTROL TASKS:

- FOR LANE CLOSURES: DURING INITIAL SET-UP PERIODS, TEAR DOWN PERIODS, SUBSTANTIAL SHIFTS OF A CLOSURE POINT OR WHEN NEW LANE CLOSURE ARRANGEMENTS ARE INITIATED FOR LONG-TERM LANE CLOSURES/SHIFTS (FOR THE FIRST AND LAST DAY OF MAJOR CHANGES IN TRAFFIC CONTROL SETUP). IN GENERAL, LEOS SHOULD BE POSITIONED AT THE POINT OF LANE RESTRICTION OR ROAD CLOSURE AND TO MANUALLY CONTROL TRAFFIC MOVEMENTS THROUGH INTERSECTIONS IN WORK ZONES.

- WHEN CONSTRUCTION VEHICLES ARE ENTERING/EXITING THE ZONE DIRECTLY FROM/INTO AN OPEN LANE OF TRAFFIC. IF A LANE HAS BEEN CLOSED TO PROVIDE AN ACCELERATION/DECELERATION LANE FOR THE VEHICLE, THE LEO WILL NOT BE REQUIRED.

LEOS SHOULD NOT FORGO THEIR TRAFFIC CONTROL RESPONSIBILITIES TO APPREHEND MOTORISTS FOR ROUTINE TRAFFIC VIOLATIONS. HOWEVER, IF A MOTORIST'S ACTIONS ARE CONSIDERED TO BE RECKLESS, THEN PURSUIT OF THE MOTORIST IS APPROPRIATE.

THE LEOS WORK AT THE DIRECTION OF THE CONTRACTOR. THE CONTRACTOR IS RESPONSIBLE FOR SECURING THE SERVICES OF THE LEOS WITH THE APPROPRIATE AGENCIES AND COMMUNICATING THE INTENTIONS OF THE PLANS WITH RESPECT TO DUTIES OF THE LEOS. THE ENGINEER SHALL HAVE FINAL CONTROL OVER THE LEOS' DUTIES AND PLACEMENT, AND WILL RESOLVE ANY ISSUES THAT MAY ARISE BETWEEN THE TWO PARTIES.

THE LEO SHALL REPORT IN TO THE CONTRACTOR PRIOR TO THE START OF THE SHIFT, IN ORDER TO RECEIVE INSTRUCTIONS REGARDING SPECIFIC WORK ASSIGNMENTS DURING HIS/HER SHIFT. THE LEO IS EXPECTED TO STAY AT THE PROJECT SITE FOR THE ENTIRE DURATION OF HIS/HER SHIFT. THE LEO SHALL REPORT TO THE CONTRACTOR AT THE END OF HIS/HER SHIFT. ONCE THE LEO HAS COMPLETED THE DUTIES DESCRIBED ABOVE AND STILL HAS TIME REMAINING ON HIS/HER SHIFT, THE LEO MAY BE ASKED TO PATROL THROUGH THE WORK ZONE (WITH FLASHING LIGHTS OFF) OR BE PLACED AT A LOCATION TO DETER MOTORISTS FROM SPEEDING. SHOULD IT BE NECESSARY TO LEAVE THE PROJECT SITE, THE LEO SHALL NOTIFY THE ENGINEER. THE CONTRACTOR SHALL PROVIDE THE LEO WITH A TWO-WAY COMMUNICATION DEVICE WHICH SHALL BE RETURNED TO THE CONTRACTOR AT THE END OF HIS/HER SHIFT.

LEOS (WITH PATROL CAR) REQUIRED BY THE TRAFFIC MAINTENANCE TASKS ABOVE SHALL BE PAID FOR ON A UNIT PRICE (HOURLY) BASIS UNDER ITEM 614, LAW ENFORCEMENT OFFICER (WITH PATROL CAR) FOR ASSISTANCE. THE FOLLOWING ESTIMATED QUANTITIES HAVE BEEN CARRIED TO THE GENERAL SUMMARY.

ITEM 614, LAW ENFORCEMENT OFFICER WITH PATROL CAR FOR ASSISTANCE - 60 HOURS

THE HOURS PAID SHALL INCLUDE ANY MINIMUM SHOW-UP TIME REQUIRED BY THE LAW ENFORCEMENT AGENCY INVOLVED.

ANY ADDITIONAL COSTS (ADMINISTRATIVE OR OTHERWISE) INCURRED BY THE CONTRACTOR TO OBTAIN THE SERVICES OF AN LEO ARE INCLUDED WITH THE BID UNIT PRICE FOR ITEM 614, LAW ENFORCEMENT OFFICER WITH PATROL CAR FOR ASSISTANCE.

ITEM 614 DETOUR SIGNING

DETOUR SIGNING SHALL BE AS PER 614.06(B). DETOUR PLANS ARE INCLUDED ON SHEET 11. PAYMENT FOR ALL LABOR, EQUIPMENT AND MATERIALS SHALL BE INCLUDED IN THE LUMP SUM CONTRACT PRICE FOR ITEM 614, DETOUR SIGNING, UNLESS SEPARATELY ITEMIZED IN THE PLAN.

CALCULATED MGS
CHECKED JML

PLOT.CEL
ms consultants, inc.
msconsultants.com
www.msconsultants.com
Ohio DOT Workspace
DEL-23
UGF: ohdot\V8i
PCF: 60-06655_Columbus
Batchplot Spec: \\0330share\n\60\06655\standards\plotdrv\batchplt.spc
Pen Table: S:\std\plotting\usth\V8\pen\V8_ms_std.tbl
Plot Driver: S:\std\plotting\usth\V8\PDF.pltcfg
Model: Sheet View: FENCE_VIEW1
Printed: 10/8/2015 @ 4:24:18 PM By: hbrendinger
File: \\0330share\n\60\06655\mot\sheets\06655MN003.dgn
34" x 22"

PLOT.CEL

ms consultants, inc.
msconsultants.com

www.msconsultants.com

Ohio DOT Workspace
DEL-23

UCF: ohdot\V8i
PCF: 60-06655_Columbus

Batchplot Spec: \\0330share\n\60\06655\standards\plotdrv\batchplt.spc
Pen Table: S:\std\plotting\usth\V8\pen\V8_ms_std.tbl
Plot Driver: S:\std\plotting\usth\V8\PDF.pltcfg

34" x 22"

View: FENCE_VIEW1
By: hbrendinger

Model: Sheet @ 4:24:19 PM
Printed: 10/8/2015
File: \\0330share\n\60\06655\mot\sheets\06655MS001.dgn

SHEET NO.	STATION FROM	STATION TO	SIDE	614 WORK ZONE IMPACT ATTENUATOR (UNIDIRECTIONAL) EA	614 BARRIER REFLECTOR, TYPE B EA	614 OBJECT MARKER, ONE WAY EA	614 LL WORK ZONE LANE LINE, CLASS I FT/MI	614 DY WORK ZONE CENTER LINE, DOUBLE YELLOW, CLASS I FT/MI	614 CL WORK ZONE CENTER LINE, DASHED & SOLID DOUBLE, CLASS I FT/MI	614 WE WORK ZONE EDGE LINE, WHITE, CLASS I FT/MI	614 YE WORK ZONE EDGE LINE, YELLOW, CLASS I FT/MI	614 CH WORK ZONE CHANNELIZING LINE, CLASS I FT	614 WD WORK ZONE DOTTED LINE, WHITE, CLASS I FT	622 PORTABLE BARRIER, 32" FT
	U.S. 23													
12	682+70	683+00	LT									30		
13	683+00	694+00	LT									1100		
	685+70	694+00	LT							830				
	685+70	690+81	LT								511			
	688+40	694+00	LT		11	11								560
	690+81	694+00	LT					319						
14	694+00	704+00	LT							1000				
	694+00	704+00	LT									1000		
	694+00	704+00	LT/CL					1000						
	694+00	700+00	LT		12	12								600
	700+00		LT	1										
15	704+00	706+10	LT							210				
	704+00	709+10	LT									510		
	704+00	706+10	CL					210						
18	681+35	683+00	LT									165		
	682+70	683+00	RT				30							
19	683+00	694+00	RT									1100		
	683+00	684+50	LT				150							
	684+35	694+00	RT							965	965			
	684+50	694+00	LT									950		
	685+70	694+00	LT							830	830			
	687+75		RT	1										
	688+40	694+00	LT		11	11								560
	688+00	694+00	RT		12	12								600
20	694+00	704+00	LT							1000		1000		
	694+00	699+80	LT								580			
	694+00	700+20	LT		12	12								620
	694+00	699+80	RT		12	12					580			580
	694+00	704+00	RT									1000		
	694+00	695+29	RT							129				
	695+29	701+24	RT										595	
	699+80	704+00	LT					420						
	699+80	704+00	RT					420						
	700+20		LT	1										
21	704+00	706+85	LT							285		285		
	704+00	704+24	LT					24						
	704+00	704+24	RT					24				24		
	704+24	706+85	LT						261					
	706+85	709+09	LT				224							
	GRAND TOTAL			3	70.4	70.4	404	2417	261	5249	3466	7164	595	3520
	TOTAL (FT)						404	2678		8715				
	TOTAL (MI)						0.08	0.51		1.65				
TOTAL CARRIED TO GENERAL SUMMARY				3	70	70	0.08	0.51		1.65		7164	595	3520

CALCULATED MGS
CHECKED JML

MAINTENANCE OF TRAFFIC SUBSUMMARY

DEL-23-13.17

10A
103

ms consultants, inc.

PLOT.CEL

ms consultants, inc.
msconsultants.com

www.msconsultants.com

Ohio DOT Workspace
DEL-23

UCF: ohdot\V8i
PCF: 60-06655_Columbus

0 0.5" 1"

34" x 22"

Batchplot Spec: \\0330share\n\60\06655\standards\plotdrv\batchplt.spc
Pen Table: S:\std\plotting\austin\V8\pen\V8_ms_std.tbl
Plot Driver: S:\std\plotting\austin\V8\PDF.pltcfg

Model: Sheet
Printed: 10/8/2015 @ 4:24:28 PM View: FENCE_VIEW1
By: hbrendinger
File: \\0330share\n\60\06655\mot\sheets\06655MD001.dgn

CALCULATED

CHECKED

DETOUR PLAN - U.S. 23 OFF RAMP CLOSURE

LEGEND

- WORK AREA
- TRAFFIC SIGNAL
- VEHICLE DETOUR
- DETOUR SIGN

NOTE:

1. TEMPORARY SIGNAL TIMING ADJUSTMENTS MAY BE REQUIRED AT US-23 SB OFF-RAMP AND E. CENTRAL AVENUE AND E. CENTRAL AVENUE AND SANDUSKY STREET. CITY OF DELAWARE WILL MONITOR AND PERFORM ANY REQUIRED TIMING ADJUSTMENTS.

①	②	③	④	⑤	⑥
D3-1 48" X 12" BLACK/ORANGE	D3-1 48" X 12" BLACK/ORANGE	D3-1 48" X 12" BLACK/ORANGE	D3-1 48" X 12" BLACK/ORANGE	D3-1 48" X 12" BLACK/ORANGE	D3-1 48" X 12" BLACK/ORANGE
N. Sandusky St / END DETOUR	N. Sandusky St / DETOUR	N. Sandusky St / DETOUR	N. Sandusky St / DETOUR	N. Sandusky St / DETOUR	N. Sandusky St / DETOUR
M4-8A-24	M4-9R-30	M4-9(MOD)-30	M4-9(MOD)-30	M4-9(MOD)-30	M4-9-30

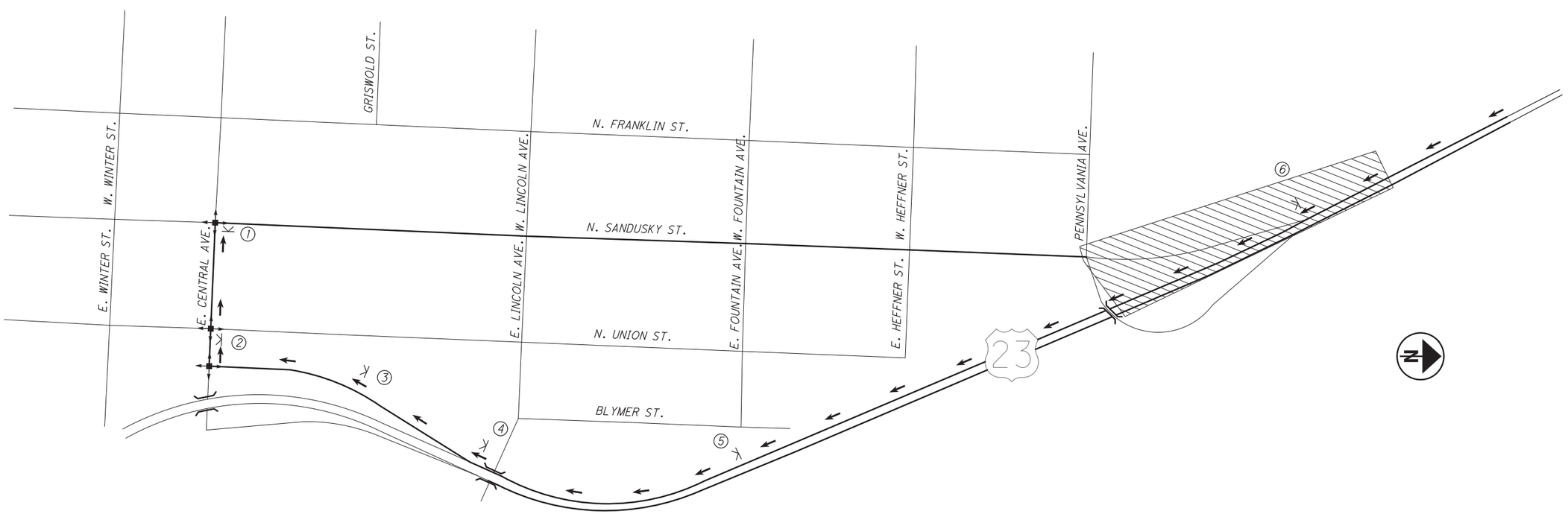

DEL-23-13.17

ms consultants, inc.

PLOT.CEL

ms consultants, inc.
msconsultants.com

www.msconsultants.com

Ohio DOT Workspace
DEL-23

UGF: ohdot\V8i
PCF: 60-06655_Columbus

Batchplot Spec: \\0330share\n\60\06655\standards\plotdrv\batchplt.spc
Pen Table: S:\std\plotting\usin\V8\pen\V8_ms_std.tbl
Plot Driver: S:\std\plotting\usin\V8\PDF.pltcfg

Model: Sheet
Printed: 10/8/2015 @ 4:24:32 PM
File: \\0330share\n\60\06655\mel\sheets\06655MP101.dgn

View: FENCE_VIEW1
By: hbrendlinger

34" x 22"

LEGEND

- WORK ZONE SIGN
- PORTABLE BARRIER, 32"
- WORK ZONE IMPACT ATTENUATOR
- TYPE "A" WARNING LIGHT
- DRUMS
- TYPE 3 BARRICADE W/ SIGN
- TYPE 3 BARRICADE
- TRAFFIC FLOW ARROW (FOR REFERENCE ONLY)
- WORK AREA

- YE WORK ZONE EDGE LINE, YELLOW, 6"
- WE WORK ZONE EDGE LINE, WHITE, 6"
- LL WORK ZONE LANE LINE, 6"
- CH WORK ZONE CHANNELIZING LINE
- SL WORK ZONE STOP LINE, CLASS I
- WD WORK ZONE DOTTED LINE, WHITE, 6"
- A WORK ZONE LANE ARROW, CLASS I
- DY WORK ZONE CENTER LINE, SOLID DOUBLE, YELLOW, 4"
- CL WORK ZONE CENTER LINE,DASHED, YELLOW, 4"

DRUM SPACING TABLE

TANGENT = 80'
TAPER = 45'
INTERSECTION RADII = 5'

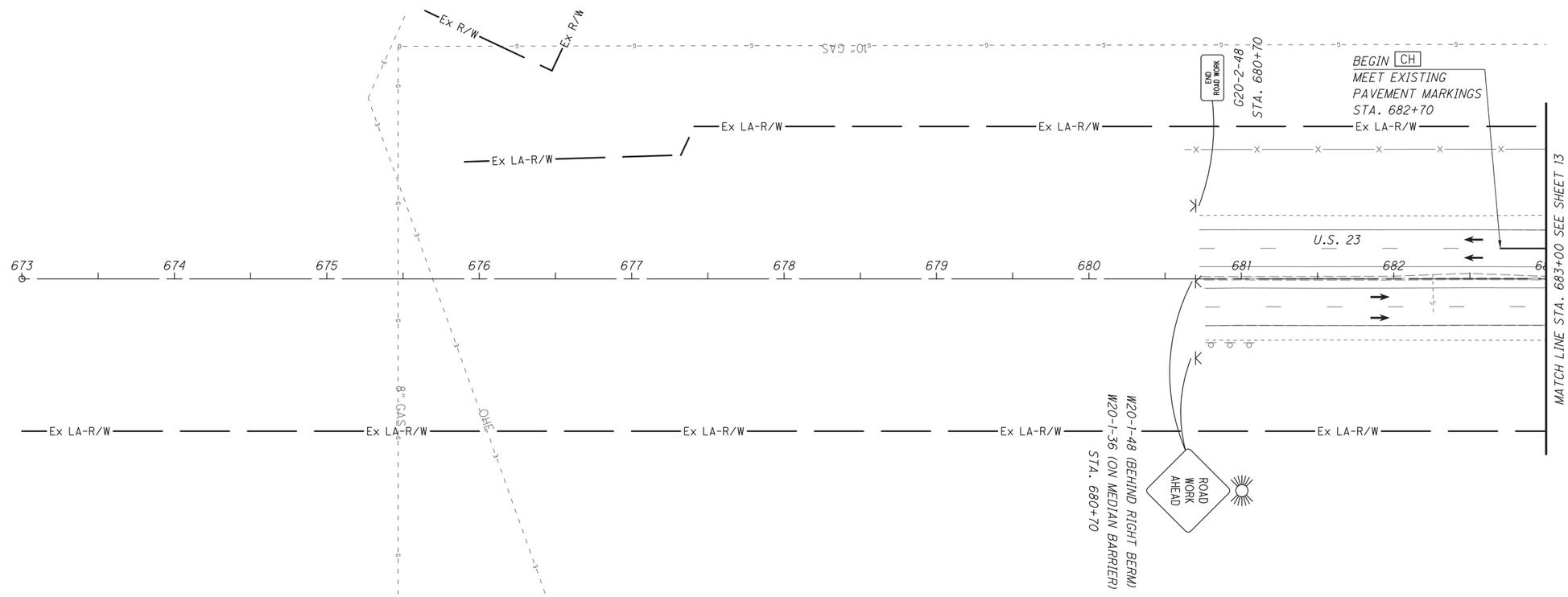

HORIZONTAL SCALE IN FEET
0 20 40 80

CALCULATED
CHECKED

MAINTENANCE OF TRAFFIC - PHASE 1
U.S. 23 - BEGIN PROJECT TO STA. 683+00

DEL-23-13.17

ms consultants, inc.

PLOT.CEL

ms consultants, inc.
msconsultants.com

www.msconsultants.com

Ohio DOT Workspace
DEL-23

UGF: ohdot\V8i
PGF: 60-06655_Columbus

Batchplot Spec: \\0330share\n\60\06655\standards\plotdrv\batchplt.spc
Pen Table: S:\std\plotting\ustn\V8\pen\V8_ms_std.tbl
Plot Driver: S:\std\plotting\ustn\V8\PDF.pltcfg

Model: Sheet
Printed: 10/8/2015 @ 4:24:32 PM
File: \\0330share\n\60\06655\mot\sheets\06655MP102.dgn
View: FENCE_VIEW1
By: Nbrendinger

34" x 22"

DRUM SPACING TABLE
TANGENT = 80′
TAPER = 45′
INTERSECTION RADII = 5′

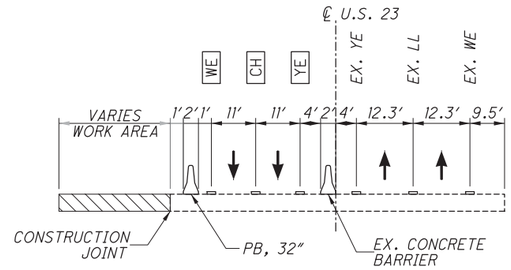

TYPICAL SECTION A1-A1
NOT TO SCALE

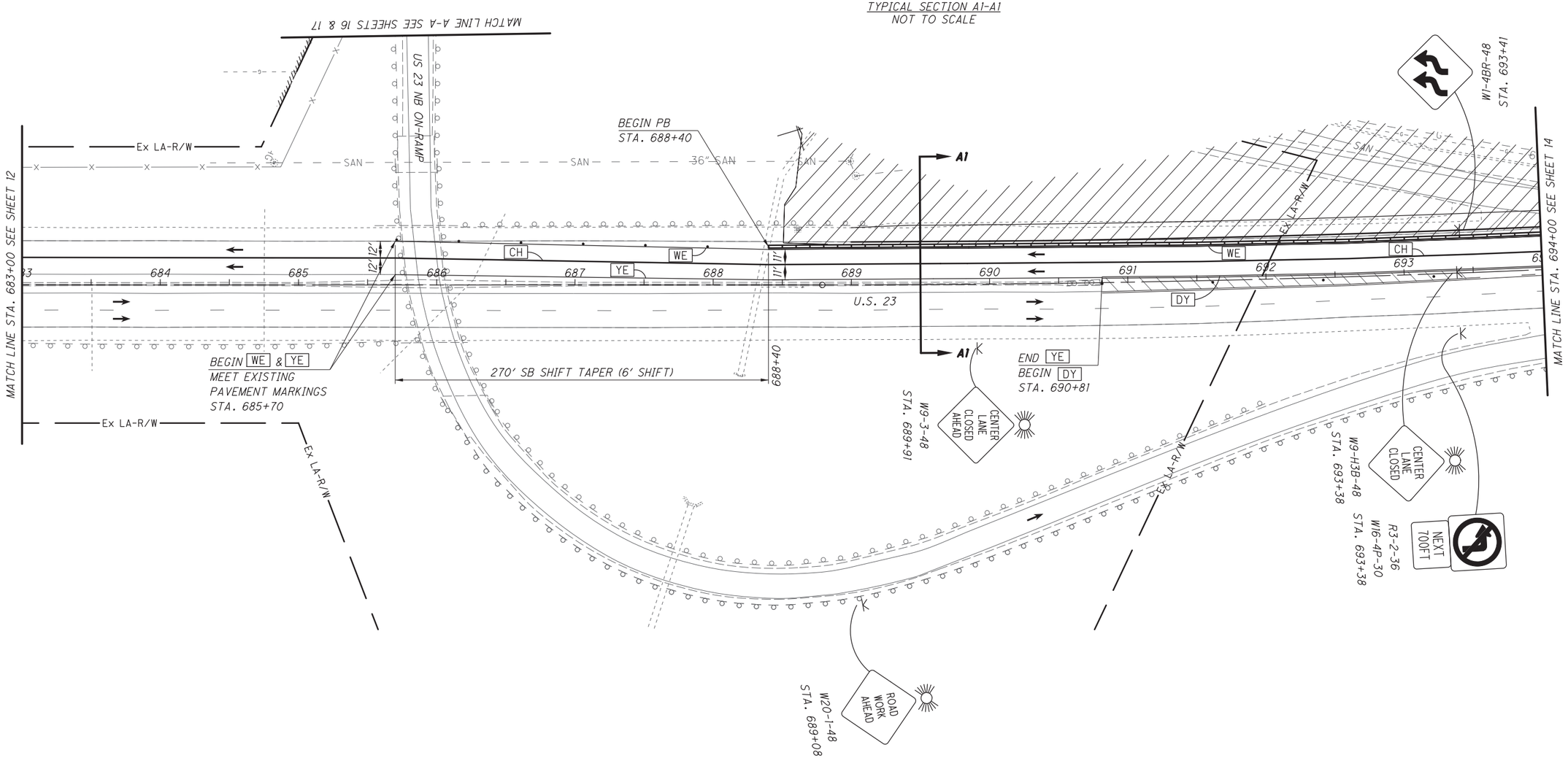

FOR LEGEND SEE SHEET 12

CALCULATED
CHECKED

0 20 40 80
HORIZONTAL SCALE IN FEET

MAINTENANCE OF TRAFFIC - PHASE 1
U.S. 23 - STA. 683+00 TO STA. 694+00

DEL-23-13.17

ms consultants, inc.

PLOT.CEL

ms consultants, inc.
msconsultants.com

www.msconsultants.com

Ohio DOT Workspace
DEL-23

UGF: ohdot\V8i
PCF: 60-06655_Columbus

Batchplot Spec: \\0330share\n\60\06655\standards\plotdrv\batchplt.spc
Pen Table: S:\std\plotting\usfn\V8\pen\V8_ms_std.tbl
Plot Driver: S:\std\plotting\usfn\V8\PDF_pltcfg

Model: Sheet
Printed: 10/8/2015 @ 4:24:34 PM
File: \\0330share\n\60\06655\mot\sheets\06655MP103.dgn
View: FENCE_VIEW1
By: hbrendinger

34" x 22"

DRUM SPACING TABLE

TANGENT = 80'
TAPER = 45'
INTERSECTION RADII = 5'

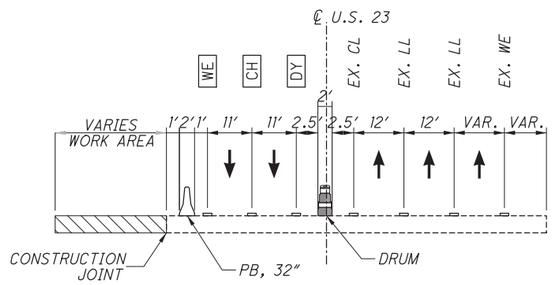

TYPICAL SECTION B-B
NOT TO SCALE

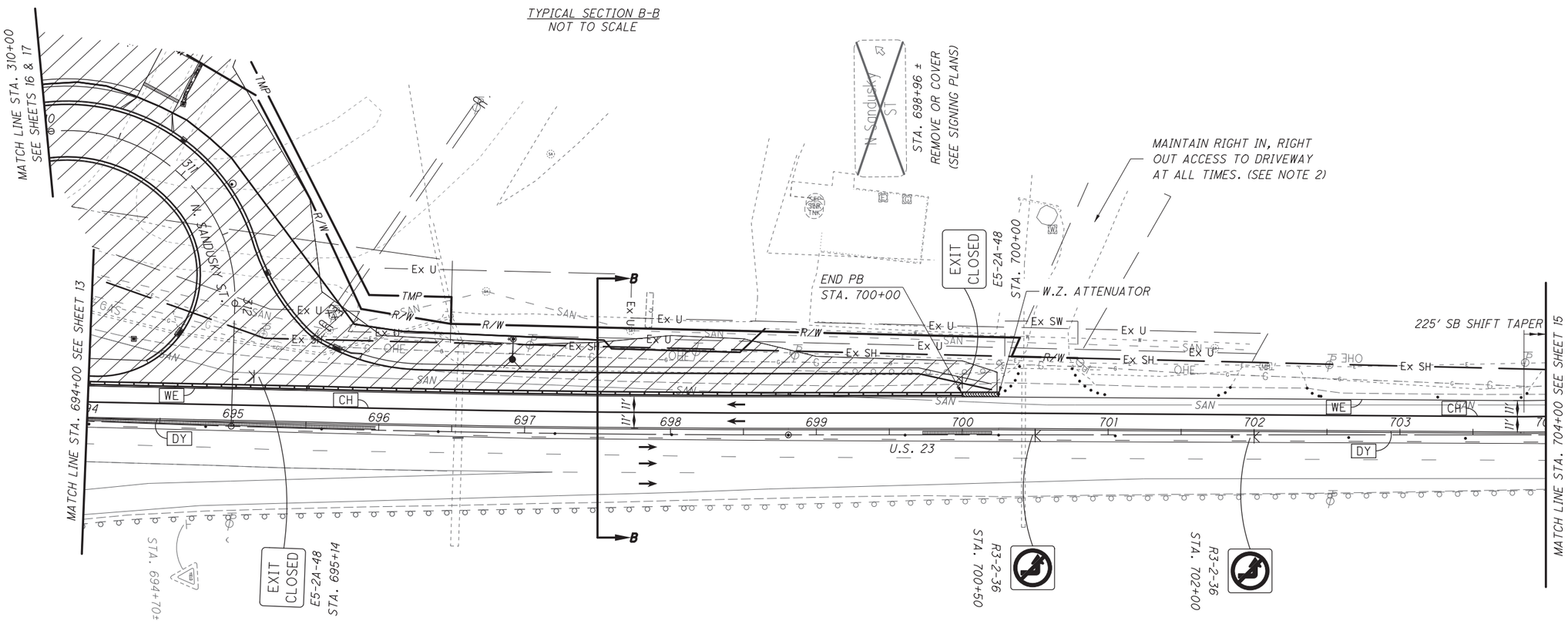

NOTES:

1. SEE DETOUR PLAN SHEET 11 FOR ADDITIONAL SIGNS.

2. NOTIFY AFFECTED PROPERTY OWNERS OF RIGHT IN, RIGHT OUT ACCESS RESTRICTIONS AT LEAST 48 HOURS BEFORE IMPLEMENTING TEMPORARY TRAFFIC CONTROL THAT LIMITS LEFT TURNS.

FOR LEGEND SEE SHEET 12

HORIZONTAL SCALE IN FEET
0 20 40 80

CALCULATED
CHECKED

MAINTENANCE OF TRAFFIC - PHASE 1
U.S. 23 - STA. 694+00 TO STA. 704+00

DEL-23-13.17

ms consultants, inc.

PLOT.CEL

ms consultants, inc.
msconsultants.com

www.msconsultants.com

Ohio DOT Workspace
DEL-23

UGF: ohdot1V8i
PCF: 60-06655_Columbus

Batchplot Spec: \\0330share\n\60\06655\standards\plotdrv\batchplt.spc
Pen Table: S:\std\plotdrg\ustin\V8\pen\V8i_ms_std.tbl
Plot Driver: S:\std\plotdrg\ustin\V8\PDF.pltcfg

Model: Sheet
Printed: 10/8/2015 @ 4:24:35 PM View: FENCE_VIEW1
By: hbrendinger
File: \\0330share\n\60\06655\mot\sheets\06655MP104.dgn

34" x 22"

DRUM SPACING TABLE
TANGENT = 80′
TAPER = 45′
INTERSECTION RADII = 5′

0 20 40 80
HORIZONTAL SCALE IN FEET

CALCULATED
CHECKED

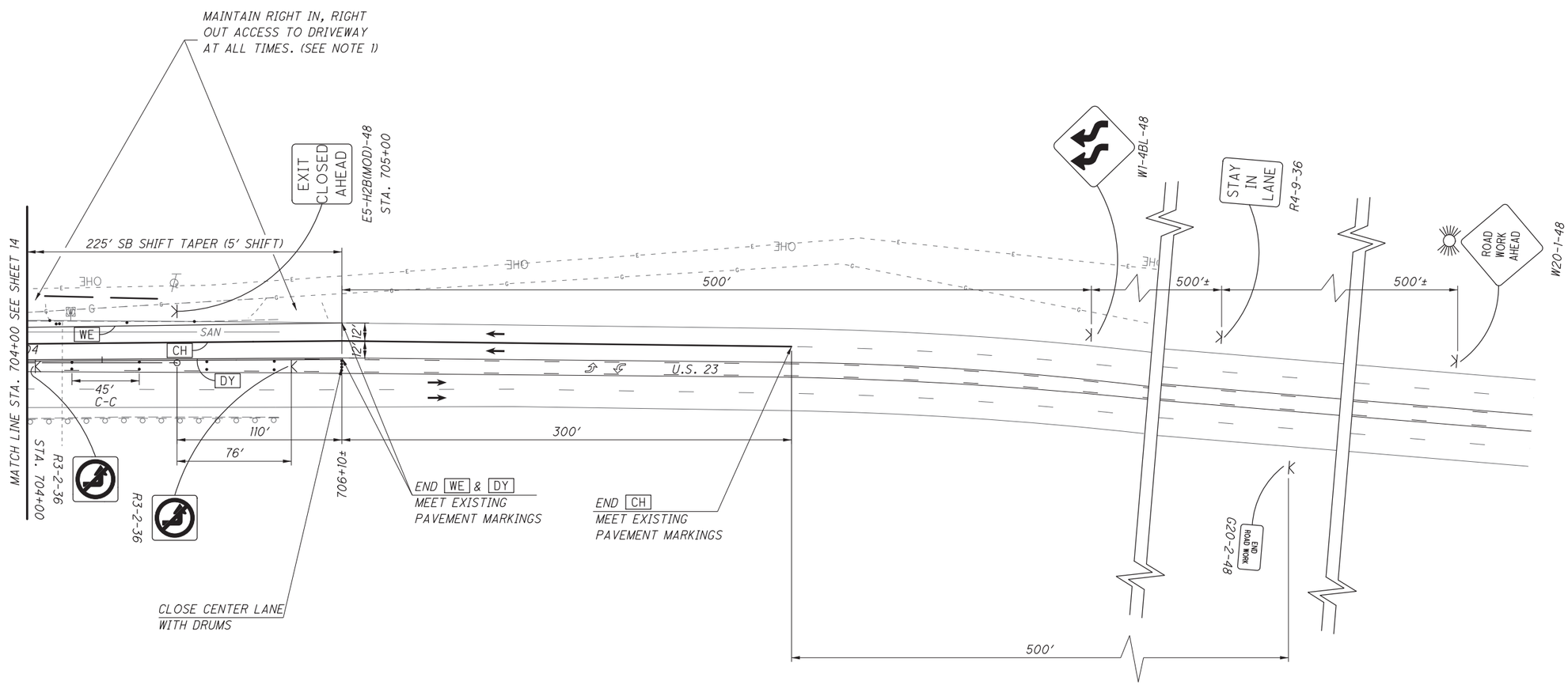

NOTES:

1. NOTIFY AFFECTED PROPERTY OWNERS OF RIGHT IN, RIGHT OUT ACCESS RESTRICTIONS AT LEAST 48 HOURS BEFORE IMPLEMENTING TEMPORARY TRAFFIC CONTROL THAT LIMITS LEFT TURNS.

FOR LEGEND SEE SHEET 12

MAINTENANCE OF TRAFFIC - PHASE 1
U.S. 23 - STA. 704+00 TO END PROJECT

DEL-23-13.17

ms consultants, inc.

PLOT.CEL

ms consultants, inc.
msconsultants.com

www.msconsultants.com

Ohio DOT Workspace
DEL-23

UGF: ohdot\V8i
PCF: 60-06655_Columbus

Batchplot Spec: \\0330share\n\60\06655\standards\plotdrv\batchplt.spc
Pen Table: S:\std\plotting\usth\V8\pen\V8i_ms_std.tbl
Plot Driver: S:\std\plotting\usth\V8\PDF_pltcfg

Model: Sheet
Printed: 10/8/2015 @ 4:24:37 PM
File: \\0330share\n\60\06655\mot\sheets\06655MP105.dgn

View: FENCE_VIEW1
By: hbrendinger

34" x 22"

DRUM SPACING TABLE
TANGENT = 35'
TAPER = 45'
INTERSECTION RADII = 5'

NOTES:

1. DURING STAGED CONSTRUCTION OF N. SANDUSKY ST., MAINTAIN ACCESS TO HOMES, BUSINESSES AND DRIVEWAYS AT ALL TIMES.

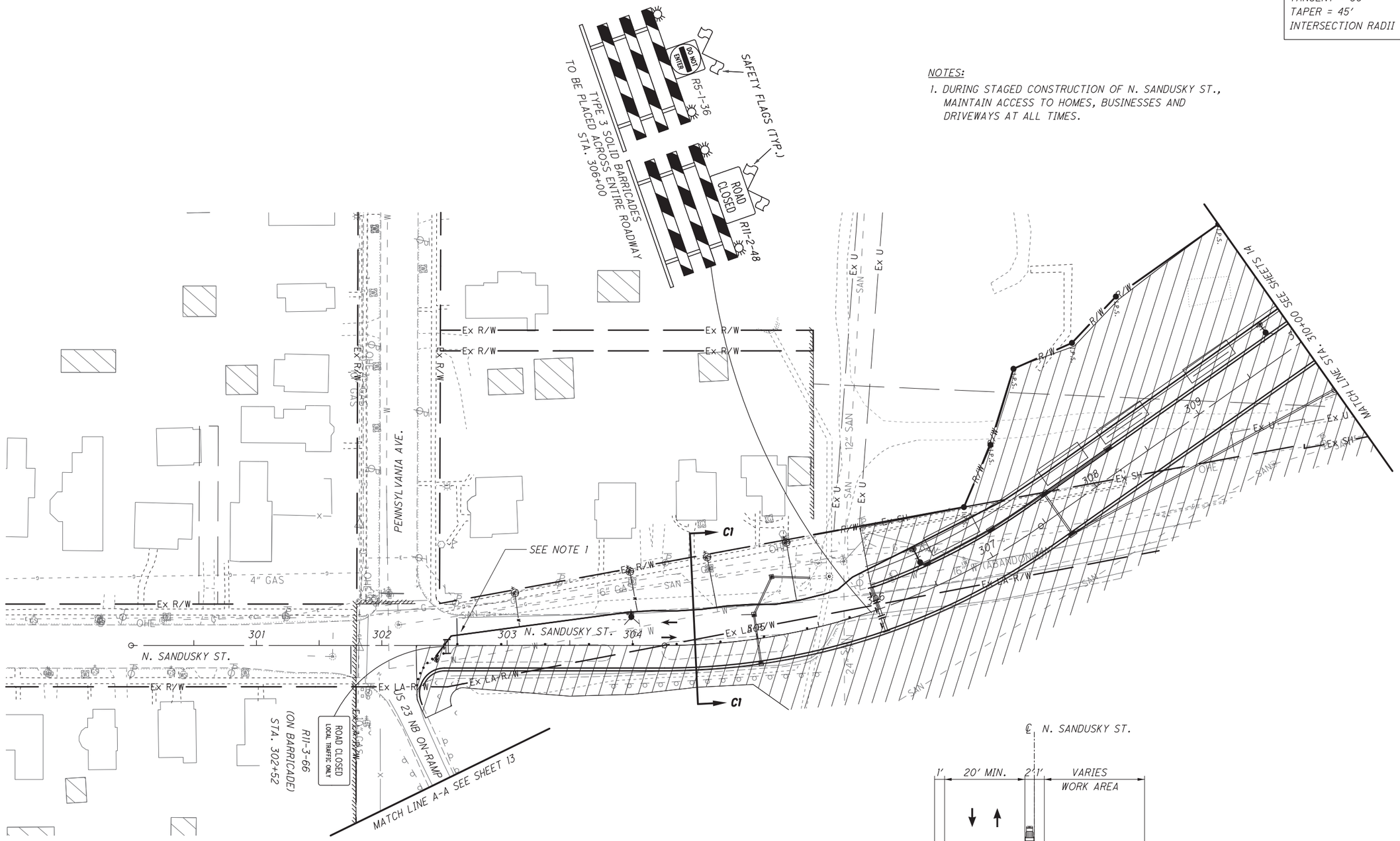

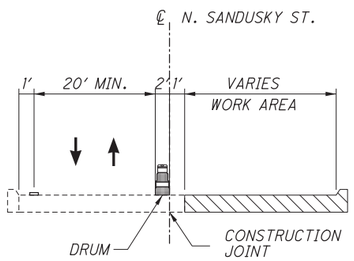

TYPICAL SECTION C1-C1
NOT TO SCALE

FOR LEGEND SEE SHEET 12

N

0 20 40 80
HORIZONTAL SCALE IN FEET

CALCULATED
CHECKED

MAINTENANCE OF TRAFFIC - PHASE 1
N. SANDUSKY ST. - STA. 300+00 TO STA. 310+00

DEL-23-13.17

PLOT.CEL

ms consultants, inc.
msconsultants.com

www.msconsultants.com

Ohio DOT Workspace
DEL-23

UGF: ohdot\V8i
PCF: 60-06655_Columbus

Batchplot Spec: \\0330share\n\60\06655\standards\plotdrv\batchplt.spc
Pen Table: S:\std\plotting\usth\V8\pen\V8_ms_std.tbl
Plot Driver: S:\std\plotting\usth\V8\PDF_pltcfg

Model: Sheet
Printed: 10/8/2015 @ 4:24:38 PM
File: \\0330share\n\60\06655\mot\sheets\06655MP106.dgn

View: FENCE_VIEW1
By: hbrendinger

34" x 22"

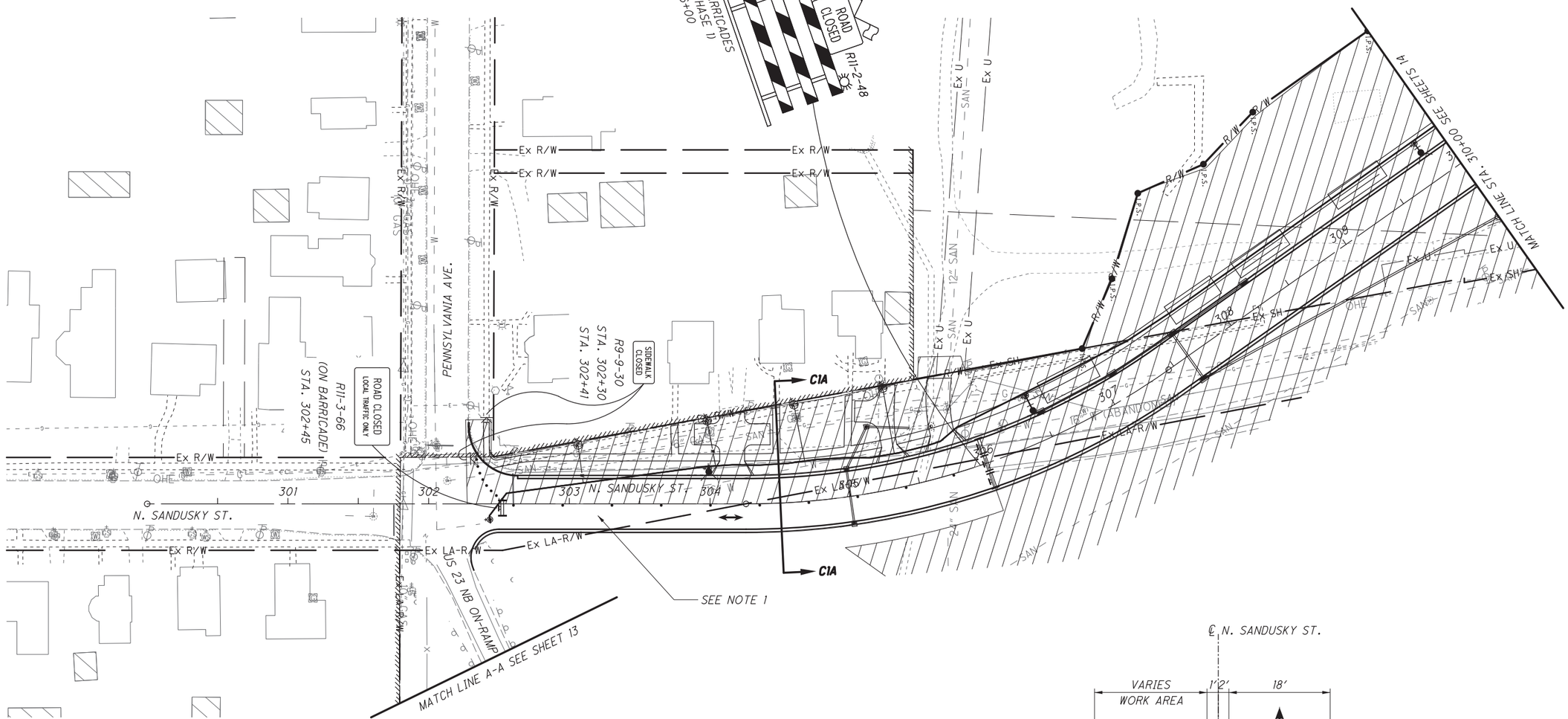

DRUM SPACING TABLE

TANGENT = 35′
TAPER = 45′
INTERSECTION RADII = 5′

NOTES:

1. DURING STAGED CONSTRUCTION OF N. SANDUSKY ST., MAINTAIN ACCESS TO HOMES, BUSINESSES AND DRIVEWAYS AT ALL TIMES. CONTRACTOR TO NOTIFY PROPERTY OWNERS 48 HOURS BEFORE PERFORMING ANY DRIVEWAY OR WALKWAY WORK.

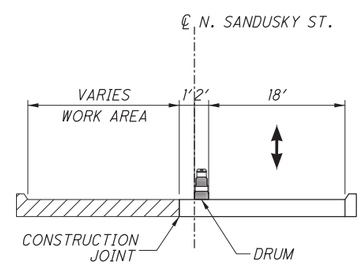

TYPICAL SECTION C1A-C1A
NOT TO SCALE

FOR LEGEND SEE SHEET 12

N

0 20 40 80
HORIZONTAL
SCALE IN FEET

CALCULATED
CHECKED

MAINTENANCE OF TRAFFIC - PHASE 1A
N. SANDUSKY ST. - STA. 300+00 TO STA. 310+00

DEL-23-13.17

ms consultants, inc.

PLOT.CEL

ms consultants, inc.
msconsultants.com

www.msconsultants.com

Ohio DOT Workspace
DEL-23

UGF: ohdot\V8i
PCF: 60-06655_Columbus

Batchplot Spec: \\0330share\n\60\06655\standards\plotdrv\batchplt.spc
Pen Table: S:\std\plotting\usth\V8\pen\V8_ms_std.tbl
Plot Driver: S:\std\plotting\usth\V8\PDF.pltcfg

Model: Sheet
Printed: 10/8/2015 @ 4:24:39 PM
File: \\0330share\n\60\06655\mot\sheets\06655MP201.dgn
View: FENCE_VIEW1
By: hbrendinger

34" x 22"

DRUM SPACING TABLE

TANGENT = 80'
TAPER = 45'
INTERSECTION RADII = 5'

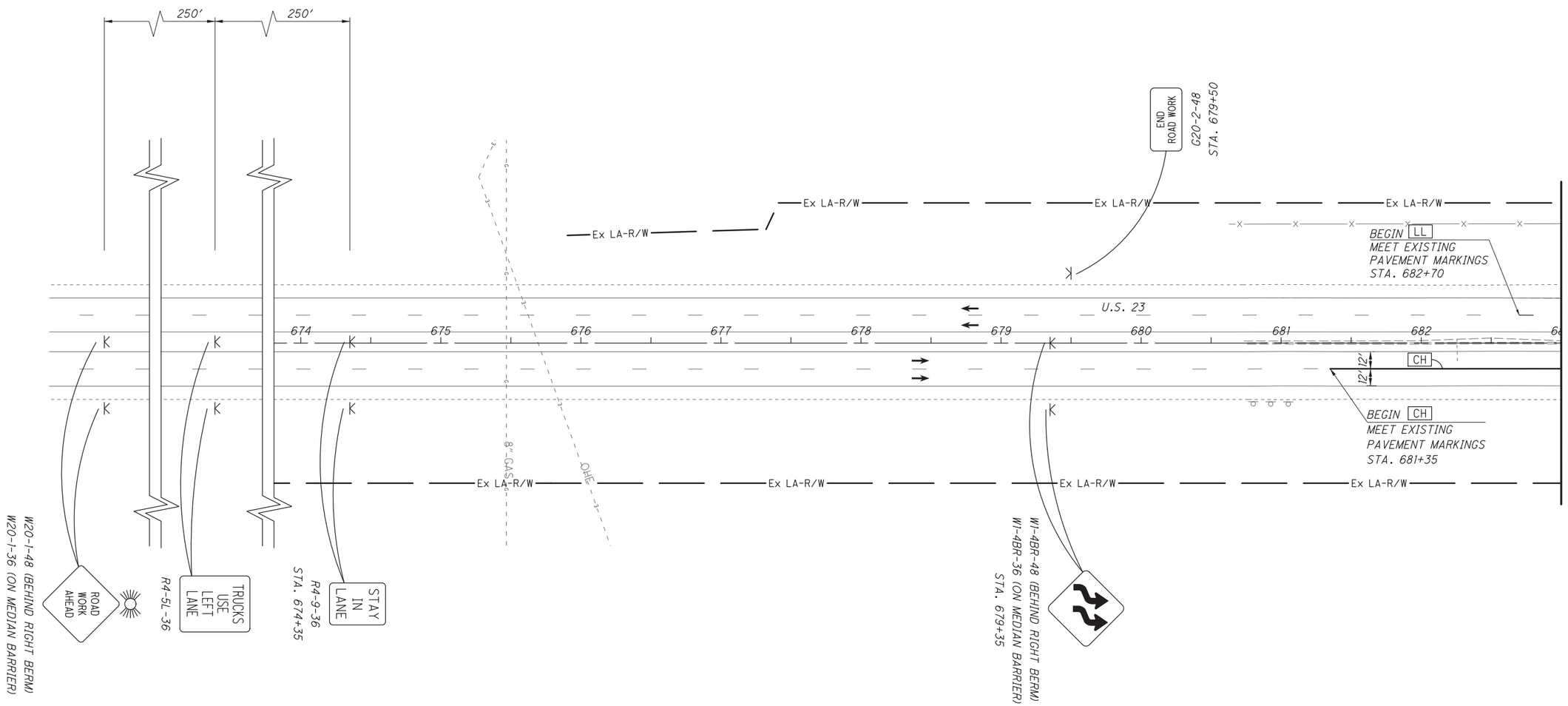

FOR LEGEND SEE SHEET 12

0 20 40 80
HORIZONTAL SCALE IN FEET

CALCULATED
CHECKED

MAINTENANCE OF TRAFFIC - PHASE 2
U.S. 23 - BEGIN PROJECT TO STA. 683+00

DEL-23-13.17

PLOT.CEL

ms consultants, inc.
msconsultants.com

www.msconsultants.com

Ohio DOT Workspace
DEL-23

UGF: ohdot\V8i
PCF: 60-06655_Columbus

Batchplot Spec: \\0330shore\n\60\06655\standards\plotdrv\batchplt.spc
Pen Table: S:\std\plotting\usth\V8\pen\V8_ms_std.tbl
Plot Driver: S:\std\plotting\usth\V8\PDF.pltcfg

Model: Sheet
Printed: 10/8/2015 @ 4:24:40 PM
File: \\0330shore\n\60\06655\mot\sheets\06655MP202.dgn
View: FENCE_VIEW1
By: rbrendinger

34" x 22"

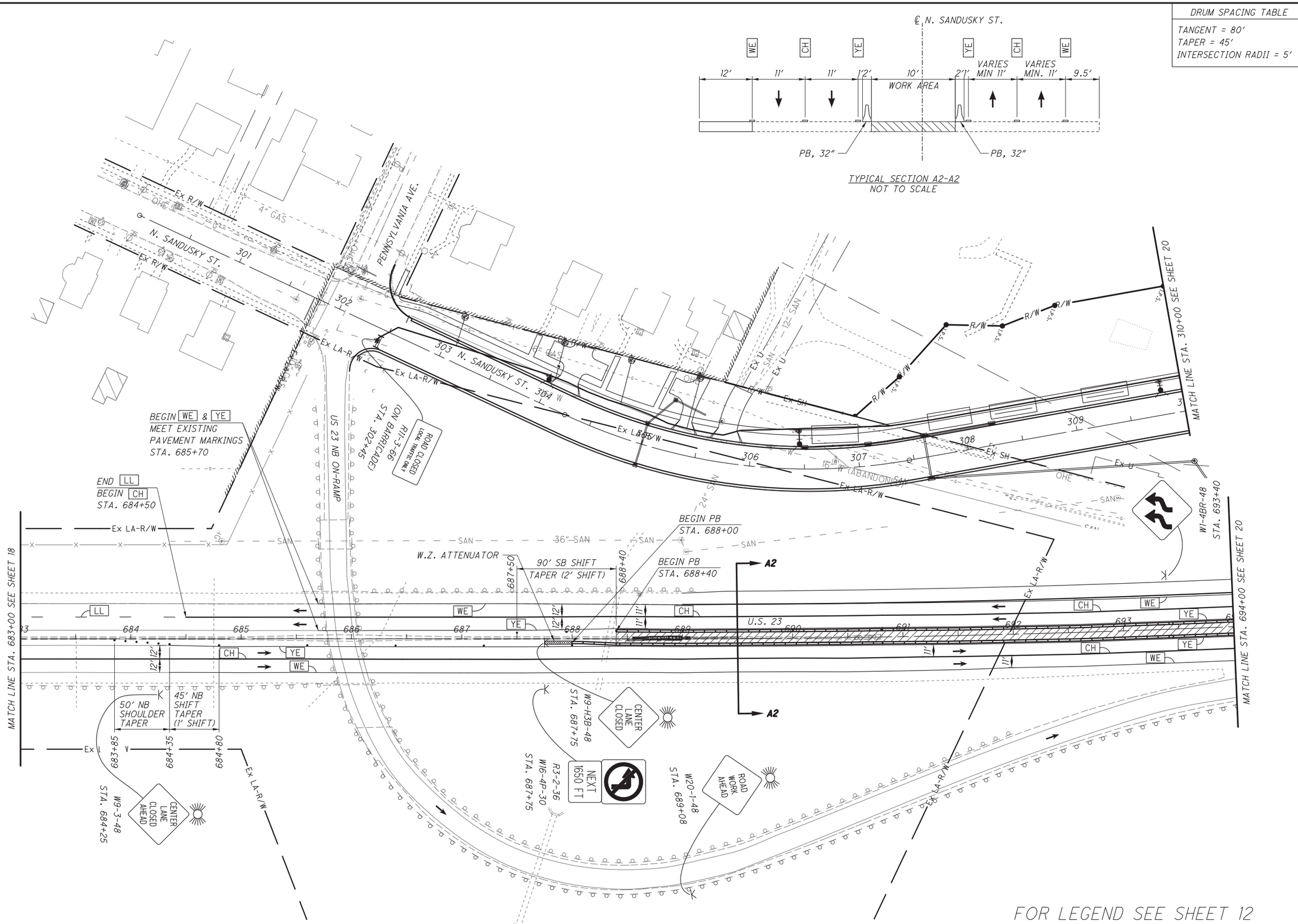

FOR LEGEND SEE SHEET 12

CALCULATED

CHECKED

MAINTENANCE OF TRAFFIC - PHASE 2
U.S. 23 - STA. 683+00 TO STA. 694+00

DEL-23-13.17

ms consultants, inc.

PLOT.CEL

ms consultants, inc.
msconsultants.com

www.msconsultants.com

Ohio DOT Workspace
DEL-23

UGF: ohdot\V8i
PCF: 60-06655_Columbus

Batchplot Spec: \\033share\n\60\06655\standards\plotdrv\batchplt.spc
Pen Table: S:\std\plotting\usin\V8\pen\V8_ms_std.tbl
Plot Driver: S:\std\plotting\usin\V8\PDF.pltcfg

Model: Sheet
Printed: 10/8/2015 @ 4:24:41 PM
File: \\033share\n\60\06655\mot\sheets\06655MP203.dgn

View: FENCE_VIEW1
By: hbrendinger

34" x 22"

DRUM SPACING TABLE
TANGENT = 80'
TAPER = 45'
INTERSECTION RADII = 5'

NOTES:

1. SEE DETOUR PLAN SHEET 11 FOR ADDITIONAL SIGNS.
2. NOTIFY AFFECTED PROPERTY OWNERS OF RIGHT IN, RIGHT OUT ACCESS RESTRICTIONS AT LEAST 48 HOURS BEFORE IMPLEMENTING TEMPORARY TRAFFIC CONTROL THAT LIMITS LEFT TURNS.

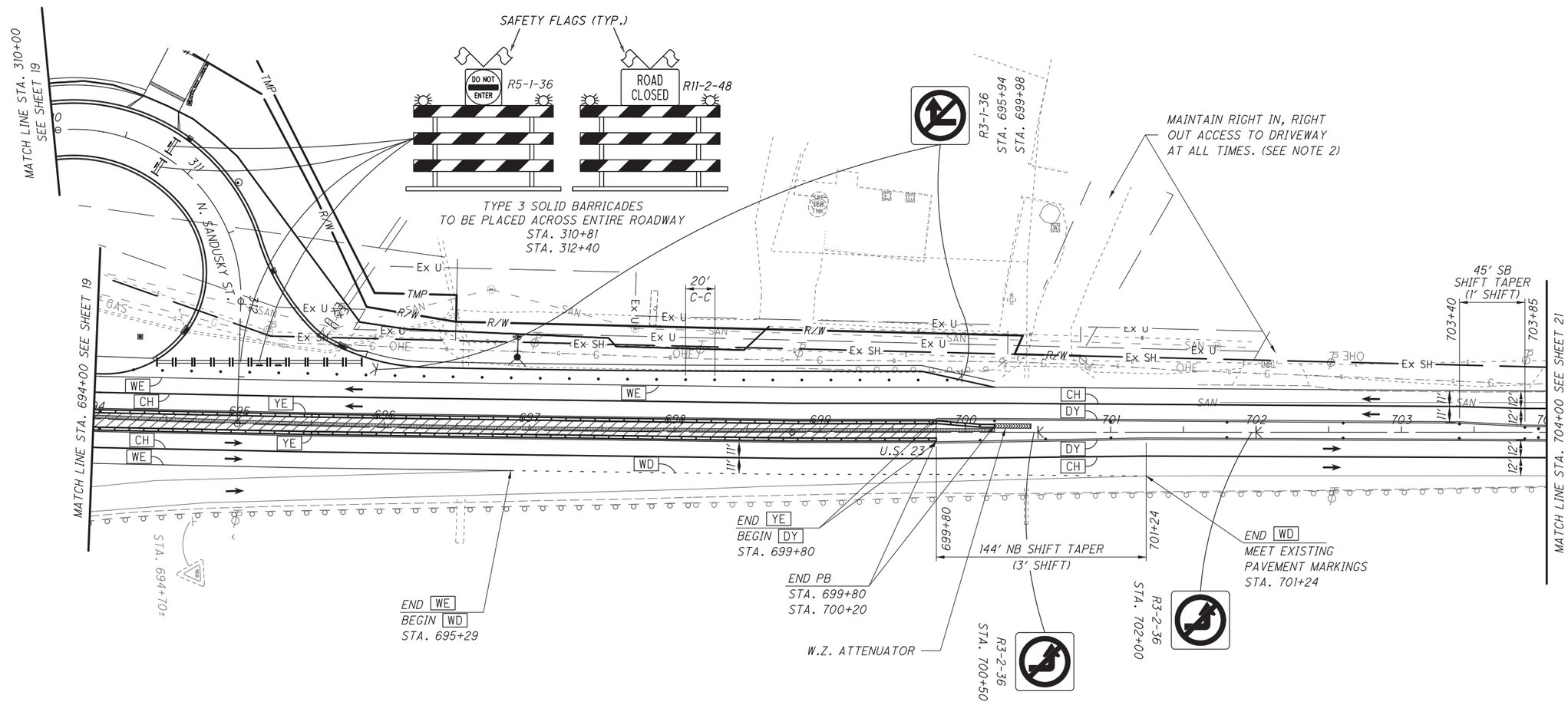

FOR LEGEND SEE SHEET 12

CALCULATED
CHECKED

0 20 40 80
HORIZONTAL SCALE IN FEET

MAINTENANCE OF TRAFFIC - PHASE 2
U.S. 23 - STA. 694+00 TO STA. 704+00

DEL-23-13.17

ms consultants, inc.

PLOT.CEL

ms consultants, inc.
msconsultants.com

www.msconsultants.com

Ohio DOT Workspace
DEL-23

UGF: ohdot\V8i
PCF: 60-06655_Columbus

Batchplot Spec: \\0330share\n\60\06655\standards\plotdrv\batchplt.spc
Pen Table: S:\std\plotting\usth\V8\pen\V8_ms_std.tbl
Plot Driver: S:\std\plotting\usth\V8\PDF.pltcfg

Model: Sheet
Printed: 10/8/2015 @ 4:24:42 PM
File: \\0330share\n\60\06655\mel\sheets\06655MP204.dgn

View: FENCE_VIEW1
By: hbrendinger

34" x 22"

DRUM SPACING TABLE

TANGENT = 80'
TAPER = 45'
INTERSECTION RADII = 5'

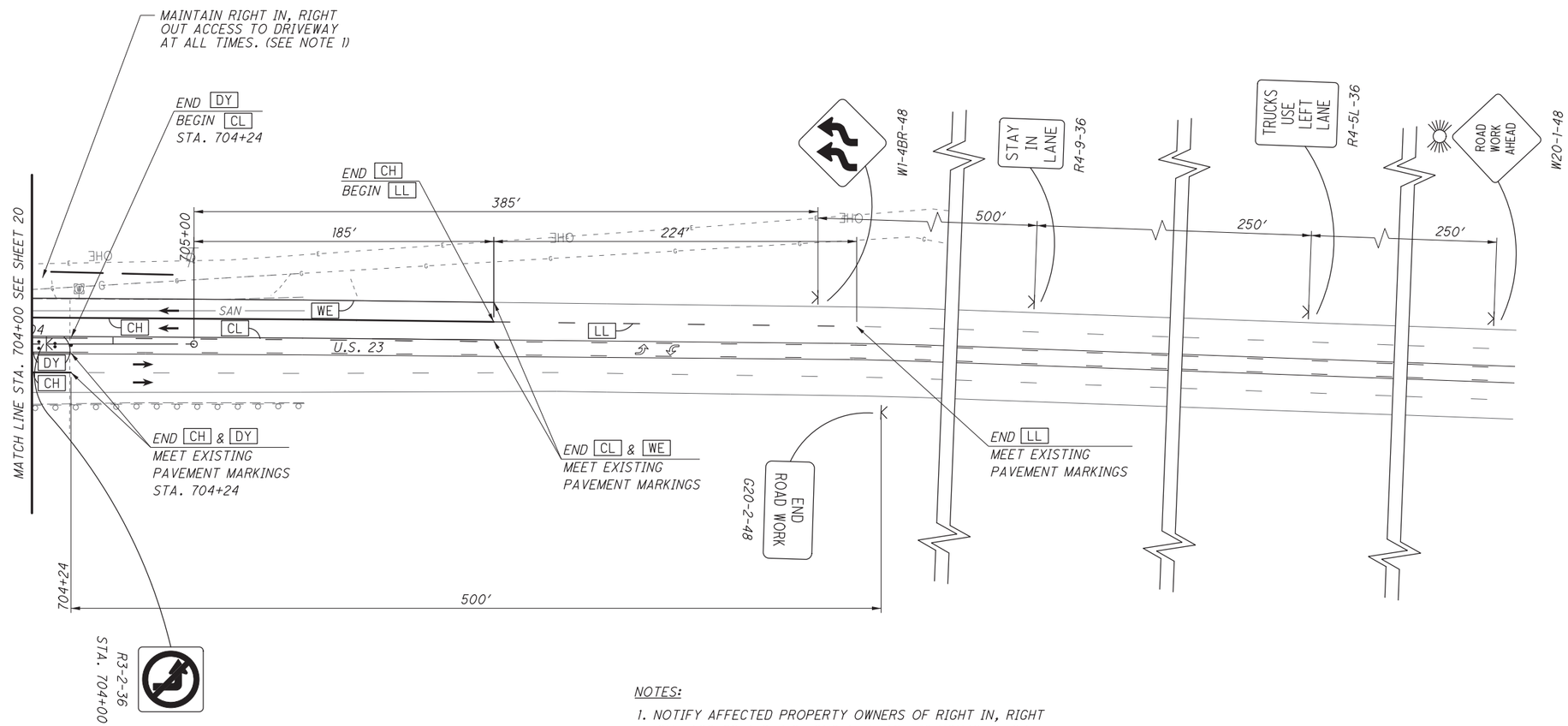

NOTES:

1. NOTIFY AFFECTED PROPERTY OWNERS OF RIGHT IN, RIGHT OUT ACCESS RESTRICTIONS AT LEAST 48 HOURS BEFORE IMPLEMENTING TEMPORARY TRAFFIC CONTROL THAT LIMITS LEFT TURNS.

FOR LEGEND SEE SHEET 12

0 20 40 80
HORIZONTAL SCALE IN FEET

CALCULATED
CHECKED

MAINTENANCE OF TRAFFIC - PHASE 2
U.S. 23 - STA. 704+00 TO END PROJECT

DEL-23-13.17

ms consultants, inc.

SHEET NUMBER															PARTICIPATION		ITEM	ITEM EXT.	GRAND TOTAL	UNIT	DESCRIPTION	SEE SHEET
OFFICE CALCS	6	7	25	26	27	41	48	96							01/MPO/OT	01/MPO/OT/DEL						
																					ROADWAY	
	LUMP														*LUMP*		*201*	*11000*	*LUMP*		*CLEARING AND GRUBBING*	
			2553												*2553*		*202*	*30000*	*2553*	*SQ FT*	*WALK REMOVED*	
			333												*333*		*202*	*30600*	*333*	*SQ YD*	*CONCRETE MEDIAN REMOVED*	
			236												*236*		*202*	*30700*	*236*	*FT*	*CONCRETE BARRIER REMOVED*	
			147												*147*		*202*	*32000*	*147*	*FT*	*CURB REMOVED*	
			705												*705*		*202*	*35100*	*705*	*FT*	*PIPE REMOVED, 24" AND UNDER*	
			287												*287*		*202*	*38000*	*287*	*FT*	*GUARDRAIL REMOVED*	
			1												*1*		*202*	*47800*	*1*	*EACH*	*IMPACT ATTENUATOR REMOVED*	
			7												*7*		*202*	*58100*	*7*	*EACH*	*CATCH BASIN REMOVED*	
			1												*1*		*202*	*98100*	*1*	*EACH*	*REMOVAL MISC.:CITY OF DELAWARE SIGN REMOVED AND STORED*	
					1671	*1915*	*25389*								*28975*		*203*	*10000*	*28975*	*CU YD*	*EXCAVATION*	
						285	*437*								*722*		*203*	*20000*	*722*	*CU YD*	*EMBANKMENT*	
							2990								*2990*		*203*	*23010*	*2990*	*SQ YD*	*PAVEMENT REMOVED, ASPHALT*	
7072															*7072*		*204*	*10000*	*7072*	*SQ YD*	*SUBGRADE COMPACTION*	
						478									*478*		*204*	*13000*	*478*	*CU YD*	*EXCAVATION OF SUBGRADE*	
						478									*478*		*204*	*30010*	*478*	*CU YD*	*GRANULAR MATERIAL, TYPE B, 703.16*	
				3											*3*		*204*	*30020*	*3*	*CU YD*	*GRANULAR MATERIAL, TYPE C*	
	3														*3*		*204*	*45000*	*3*	*HOUR*	*PROOF ROLLING*	
1073															*1073*		*204*	*50000*	*1073*	*SQ YD*	*GEOTEXTILE FABRIC*	
			1												*1*		*606*	*60028*	*1*	*EACH*	*IMPACT ATTENUATOR, TYPE 2 (BIDIRECTIONAL), 45 MPH/26" WIDTH*	*7*
			4371												*4371*		*608*	*10000*	*4371*	*SQ FT*	*4" CONCRETE WALK*	
			1												*1*		*622*	*10201*	*1*	*EACH*	*BARRIER TRANSITION, AS PER PLAN*	*61, 62*
			7												*7*		*622*	*90000*	*7*	*FT*	*BARRIER, MISC.: NEW JERSEY STYLE, TYPE A, AS PER PLAN*	*61,62*
								5							*5*		*623*	*38500*	*5*	*EACH*	*MONUMENT ASSEMBLY*	
																					EROSION CONTROL	
	2														*2*		*659*	*00100*	*2*	*EACH*	*SOIL ANALYSIS TEST*	
	1427			*100*											*1527*		*659*	*00300*	*1527*	*CU YD*	*TOPSOIL*	
	13084														*13084*		*659*	*00500*	*13084*	*SQ YD*	*SEEDING AND MULCHING, CLASS 1*	
	357														*357*		*659*	*00540*	*357*	*SQ YD*	*SEEDING AND MULCHING, CLASS 3C*	
	643														*643*		*659*	*14000*	*643*	*SQ YD*	*REPAIR SEEDING AND MULCHING*	
	643														*643*		*659*	*15000*	*643*	*SQ YD*	*INTER-SEEDING*	
	1.79														*1.79*		*659*	*20000*	*1.79*	*TON*	*COMMERCIAL FERTILIZER*	
	2.65														*2.65*		*659*	*31000*	*2.65*	*ACRE*	*LIME*	
	72														*72*		*659*	*35000*	*72*	*M GAL*	*WATER*	
		4133													*4133*		*670*	*00501*	*4133*	*SQ YD*	*SLOPE EROSION PROTECTION, AS PER PLAN*	*7*
				1457											*1457*		*670*	*00701*	*1457*	*SQ YD*	*DITCH EROSION PROTECTION, AS PER PLAN*	*7*
															LUMP		*832*	*15000*	*LUMP*		*STORM WATER POLLUTION PREVENTION PLAN*	
															43694		*832*	*30000*	*43694*	*EACH*	*EROSION CONTROL*	

CALCULATED RDW
CHECKED JSS

GENERAL SUMMARY

DEL-23-13.17

PLOT.CEL

ms consultants, inc.
msconsultants.com

www.msconsultants.com

Ohio DOT Workspace
DEL-23

UCF: ohdot\V8i
PCF: 60-06655_Columbus

Batchplot Spec: \\033share\n\60\06655\standards\plotdrv\batchplt.spc
Pen Table: S:\std\plotting\ustn\V8\pen\V8_ms_std.tbl
Plot Driver: S:\std\plotting\ustn\V8\PDF.pltcfg

34" x 22"

View: FENCE_VIEW1
By: hurendinger
Model: Sheet
Printed: 10/8/2015 @ 4:24:52 PM
File: \\033share\n\60\06655\roadway\sheets\06655GC002.dgn

SHEET NUMBER															PARTICIPATION		ITEM	ITEM EXT.	GRAND TOTAL	UNIT	DESCRIPTION	SEE SHEET
OFFICE CALCS	6	25	26	27	28	54									01/MPO/OT	02/MPO/OT/DEL						
																					DRAINAGE	
					653										653		605	05100	653	FT	4" SHALLOW PIPE UNDERDRAINS	
	50				489										539		605	05200	539	FT	4" UNCLASSIFIED PIPE UNDERDRAINS	
					2238										2238		605	06000	2238	FT	4" BASE PIPE UNDERDRAINS	
			23												23		605	14020	23	FT	6" BASE PIPE UNDERDRAINS WITH FABRIC WRAP	
			54												54		611	00406	54	FT	4" CONDUIT, TYPE F	
					70										70		611	00410	70	FT	4" CONDUIT, TYPE F FOR UNDERDRAIN OUTLET	
			9		40										49		611	00510	49	FT	6" CONDUIT, TYPE F FOR UNDERDRAIN OUTLETS	
	150														150		611	01400	150	FT	6" CONDUIT, TYPE E	
	150														150		611	01500	150	FT	6" CONDUIT, TYPE F	
			448												448		611	04400	448	FT	12" CONDUIT, TYPE B	
			88												88		611	04600	88	FT	12" CONDUIT, TYPE C	
			279												279		611	05900	279	FT	15" CONDUIT, TYPE B	
			141												141		611	06100	141	FT	15" CONDUIT, TYPE C	
			109												109		611	07400	109	FT	18" CONDUIT, TYPE B	
			84												84		611	09100	84	FT	21" CONDUIT, TYPE C	
			7												7		611	98150	7	EACH	CATCH BASIN, NO. 3	
			4												4		611	98180	4	EACH	CATCH BASIN, NO. 3A	
			1												1		611	98370	1	EACH	CATCH BASIN, NO. 6	
			3												3		611	98470	3	EACH	CATCH BASIN, NO. 2-2B	
			2												2		611	99574	2	EACH	MANHOLE, NO. 3	
			2												2		611	99654	2	EACH	MANHOLE ADJUSTED TO GRADE	
			1091												1091		839	30000	1091	FT	TRENCH DRAIN WITH STANDARD GRATE	
																					PAVEMENT	
		1514													1514		252	01500	1514	FT	FULL DEPTH PAVEMENT SAWING	
7643															7643		254	01000	7643	SQ YD	PAVEMENT PLANING, ASPHALT CONCRETE	
1321															1321		301	46000	1321	CU YD	ASPHALT CONCRETE BASE, PG64-22	
1572				145											1717		304	20000	1717	CU YD	AGGREGATE BASE	
470															470		407	10000	470	GAL	TACK COAT	
251															251		407	14000	251	GAL	TACK COAT INTERMEDIATE COURSE	
388															388		442	10000	388	CU YD	ASPHALT CONCRETE SURFACE COURSE, 12.5MM, TYPE A (446)	
452															452		442	10100	452	CU YD	ASPHALT CONCRETE INTERMEDIATE COURSE, 19MM, TYPE A (446)	
14															14		442	20200	14	CU YD	ASPHALT CONCRETE INTERMEDIATE COURSE, 19MM, TYPE A (448)	
224															224		448	46050	224	CU YD	ASPHALT CONCRETE INTERMEDIATE COURSE, TYPE 2, PG64-22	
192															192		448	47020	192	CU YD	ASPHALT CONCRETE SURFACE COURSE, TYPE 1, PG64-22	
				514											514		452	12010	514	SQ YD	8" NON-REINFORCED CONCRETE PAVEMENT, CLASS QC1	
		2025													2025		609	12000	2025	FT	COMBINATION CURB AND GUTTER, TYPE 2	
		58													58		609	26000	58	FT	CURB, TYPE 6	
																					WATER WORK	
						50										50	638	00600	50	FT	6" WATER MAIN DUCTILE IRON PIPE ANSI CLASS 52, PUSH-ON JOINTS AND FITTINGS	
						1341										1341	638	01200	1341	FT	8" WATER MAIN DUCTILE IRON PIPE ANSI CLASS 52, PUSH-ON JOINTS AND FITTINGS	
						152										152	638	04801	152	FT	3/4" COPPER SERVICE BRANCH, AS PER PLAN	56
						4										4	638	07800	4	EACH	6" GATE VALVE AND VALVE BOX	
						1										1	638	09894	1	EACH	16" X 8" TAPPING SLEEVE, VALVE, AND VALVE BOX	
						4										4	638	10200	4	EACH	6" FIRE HYDRANT	
		1														1	638	10480	1	EACH	FIRE HYDRANT REMOVED	
						4										4	638	98000	4	EACH	WATER WORK, MISC.: SERVICE BRANCH BOX, AS PER PLAN	56

CALCULATED RDW
CHECKED JSS

GENERAL SUMMARY

DEL-23-13.17

SHEET NUMBER: OFFICE CALCS	8	9	10	10A	94	PARTICIPATION 01/MPO/OT	PARTICIPATION 02/MPO/OT/DEL	ITEM	ITEM EXT.	GRAND TOTAL	UNIT	DESCRIPTION	SEE SHEET
												LIGHTING	
												FOR QUANTITIES SEE SHEET 69B & 82	
												TRAFFIC CONTROL	
												FOR QUANTITIES SEE SHEET 69A, 69B	
												LANDSCAPING	
					174	174		661	00501	174	CU YD	MULCH, AS PER PLAN	92, 93
					4111	4111		661	12000	4111	EACH	GROUNDCOVER AND VINES, 1 YEAR, POTTED THYMUS PRAECOX ARTICUS 'COCCINEUS' - RED CREEPING THYME	
					43	43		661	14000	43	EACH	PERENNIALS, ECHINACEA PURPUREA - PURPLE CONEFLOWER	
					54	64		661	14000	64	EACH	PERENNIALS, HEMEROCALLIS HYBRID 'STELLA DE ORO' - STELLA DE ORO DAYLILY	
					59	59		661	14000	59	EACH	PERENNIALS, RUDBECKIA FULGIDA 'GOLDSTURM' - BLACK EYED SUSAN	
					94	84		661	14000	84	EACH	PERENNIALS, SEDUM X ±ANGELINA± ANGELINA SEDUM	
					10	10		661	20080	10	EACH	DECIDUOUS SHRUB, 4' HEIGHT, CORNUS BAILEYI - BAILEY'S RED - TWIG DOGWOOD	
					28	28		661	20080	28	EACH	DECIDUOUS SHRUB, 4' HEIGHT, EUONYMUS ATLUS 'COMPACTUS' - COMPACT BURNING BUSH	
					55	55		661	30070	55	EACH	EVERGREEN SHRUB, 2.5' HEIGHT, TAXUS X MEDIA 'DENISFORMIS' - DENSE YEW	
					13	13		661	40060	13	EACH	DECIDUOUS TREE, 1-1/2" CALIPER, MALUS HYBRID 'SPRING SNOW' - SPRING SNOW CRAB	
					14	14		661	40080	14	EACH	DECIDUOUS TREE, 2" CALIPER, ACER RUBRUM 'RED SUNSET' - RED SUNSET MAPLE	
					291	291		661	99900	291	EACH	PLANTING, MISC.: JUNIPERUS HORIZONTALIS 'MOTHER LODE' - MOTHER LODE JUNIPER	
					26	26		661	99900	26	EACH	PLANTING, MISC.: CALAMAGROSTIC ACUTIFLORA 'KARL FOERSTER - CARL FOERSTER FEATHER REED GRASS	
					16	16		661	99900	16	EACH	PLANTING, MISC.: MISCANTHUS SINENSIS 'VARIEGATUS' - VARIEGATED MAIDEN GRASS	
					50	50		661	99900	50	EACH	PLANTING, MISC.: PENNISETUM ALOPECUROIDES 'HAMELN' - HAMELN DWARF FOUNTAIN GRASS	
					LUMP	LUMP		SPECIAL	690E98400	LUMP		MISC.: DECORATIVE WALLS	89
					LUMP	LUMP		SPECIAL	690E98400	LUMP		MISC.: MONOLITH	90
												MAINTENANCE OF TRAFFIC	
		50				50		410	12000	50	CU YD	TRAFFIC COMPACTED SURFACE, TYPE A OR B	
			60			60		614	11110	60	HOUR	LAW ENFORCEMENT OFFICER WITH PATROL CAR FOR ASSISTANCE	
				3		3		614	12336	3	EACH	WORK ZONE IMPACT ATTENUATOR (UNIDIRECTIONAL)	
			LUMP			LUMP		614	12420	LUMP		DETOUR SIGNING	
				70		70		614	13300	70	EACH	BARRIER REFLECTOR, TYPE B	
				70		70		614	13350	70	EACH	OBJECT MARKER, ONE WAY	
				0.08		0.08		614	20000	0.08	MILE	WORK ZONE LANE LINE, CLASS I	
				0.51		0.51		614	21000	0.51	MILE	WORK ZONE CENTER LINE, CLASS I	
				1.65		1.65		614	22000	1.65	MILE	WORK ZONE EDGE LINE, CLASS I	
				7164		7164		614	23000	7164	FT	WORK ZONE CHANNELIZING LINE, CLASS I	
				595		595		614	24000	595	FT	WORK ZONE DOTTED LINE, CLASS I	
		61				61		616	10000	61	M GAL	WATER	
				3520		3520		622	41000	3520	FT	PORTABLE BARRIER, 32"	
						LUMP		614	11000	LUMP		MAINTAINING TRAFFIC	
						9		619	16010	9	MONTH	FIELD OFFICE, TYPE B	
						LUMP		623	10000	LUMP		CONSTRUCTION LAYOUT STAKES	
						LUMP		624	10000	LUMP		MOBILIZATION	

CALCULATED RDW
CHECKED JSS

GENERAL SUMMARY

DEL-23-13.17

PLOT.CEL

ms consultants, inc.
msconsultants.com

www.msconsultants.com

Ohio DOT Workspace
DEL-23

UCF: ohdot\V8i
PCF: 60-06655_Columbus

Batchplot Spec: \\033share\n\60\06655\standards\plotdrv\batchplt.spc
Pen Table: S:\std\plotting\usa\V8\pen\V8_ms_std.tbl
Plot Driver: S:\std\plotting\usa\V8\PDF.pltcfg

34" x 22"

View: FENCE_VIEW1
By: hurendinger
Model: Sheet @ 4:25:13 PM
Printed: 10/8/2015 \\033share\n\60\06655\roadway\sheets\06655G0001.dgn
File: \\033share\n\60\06655\roadway\sheets\06655G0001.dgn

REF. NO.	SHEET NO.	STATION FROM (U.S. ROUTE 23 - (US23) SANDUSKY STREET - (SAND))	STATION TO	SIDE	202 WALK REMOVED SQ FT	202 CONCRETE MEDIAN REMOVED SQ YD	202 CONCRETE BARRIER REMOVED FT	202 CURB REMOVED FT	202 PIPE REMOVED, 24" AND UNDER FT	202 GUARDRAIL REMOVED FT	202 IMPACT ATTENUATOR REMOVED EACH	202 CATCH BASIN REMOVED EACH		202 REMOVAL MISC.: CITY OF DELAWARE SIGN REMOVED AND STORED EACH	252 FULL DEPTH PAVEMENT SAWING FT		606 IMPACT ATTENUATOR, TYPE 2 (BIDIRECTIONAL) EACH	608 4" CONCRETE WALK SQ FT	609 CURB, TYPE 6 FT	609 COMBINATION CURB AND GUTTER, TYPE 2 FT		622 BARRIER, MISC.: NEW JERSEY STYLE, TYPE A, AS PER PLAN FT	622 BARRIER TRANSITION, AS PER PLAN EACH	638 FIRE HYDRANT REMOVED EACH	
R1	30	688+54.95 (US23)	690+53.17 (US23)	L/R			198																			
R2	30	689+00.00 (US23)	690+81.21 (US23)	L/R											372											
R3	30	690+54.18 (US23)	690+79.86 (US23)	L/R							1															
R4	30	689+00.00 (US23)	700+20.00 (US23)	LT											1142											
R5	30	694+61.38 (US23)	696+47.30 (US23)	LT					189			1														
R6	30	698+83.32 (US23)	699+21.67 (US23)	LT			38																			
R7	30	699+22.96 (US23)	700+30.51 (US23)	LT						111																
R8	31	302+28.30 (SAND)	303+07.71 (SAND)	LT				97																		
R9	31	302+29.36 (SAND)	302+40.95 (SAND)	RT				15																		
R10	31-32	302+39.02 (SAND)	305+66.32 (SAND)	LT	1581																					
R11	31	302+55.50 (SAND)	303+83.59 (SAND)	RT		184																				
R12	31	303+00.28 (SAND)	303+74.08 (SAND)	LT					75			1														
R13	31-32	303+74.08 (SAND)	305+03.27 (SAND)	LT					124			1														
R13A	32	305+03.27 (SAND)	305+52.33 (SAND)	LT					46			1														
R14	31-32	303+81.30 (SAND)	305+49.71 (SAND)	RT						176																
R15	31-32	304+23.55 (SAND)	305+23.47 (SAND)	L/R		149																				
R16	32	305+38.19 (SAND)	305+64.31 (SAND)	RT				35																		
R17	32	306+07.52 (SAND)	308+24.05 (SAND)	L/R	972																					
R18	32	306+23.64 (SAND)	306+31.84 (SAND)	LT										1												
R19	32	308+25.75 (SAND)	309+45.88 (SAND)	RT					132			2														
R20	33	309+45.88 (SAND)	312+19.92 (SAND)	RT					139			1														
R21	32	306+09.30 (SAND)		LT																					1	
G1	30	688+85.71(US23)	688+99.96 (US23)	L/R													1									
SW1	31	302+39.04(SAND)	304+06.86 (SAND)	LT														1044								
SW2	31-32	304+24.52 (SAND)	305+28.72 (SAND)	LT														830								
SW3	32	305+40.54 (SAND)	305+66.78 (SAND)	LT														123								
SW4	32-33	305+84.60 (SAND)	310+55.12 (SAND)	LT														2374								
C1	31	302+28.30 (SAND)	302+63.32 (SAND)	LT															58							
C2	31-33	302+63.32 (SAND)	312+30.23 (SAND)	LT																1025						
C3	31-33	302+33.09 (SAND)	312+39.09 (SAND)	RT																1000						
B1	30	688+54.95 (US23)	688+61.45 (US23)	L/R																		7				
B2	30	688+61.45 (US23)	688+85.71(US23)	L/R																			1			
TOTALS CARRIED TO GENERAL SUMMARY					2553	333	236	147	705	287	1	7		1	1514		1	4371	58	2025		7	1	1	

CALCULATED JAP
CHECKED JSS

SUB SUMMARY

DEL-23-13.17

PLOT.CEL

ms consultants, inc.
msconsultants.com

www.msconsultants.com

Ohio DOT Workspace
DEL-23

UGF: ohdot\V8i
PCF: 60-06655_Columbus

Batchplot Spec: \\0330share\n\60\06655\standards\plotdrv\batchpll.spc
Pen Table: S:\std\plotting\astn\V8\pen\V8_ms_std.tbl
Plot Driver: S:\std\plotting\astn\V8\PDF.pltcfg

Model: Sheet
Printed: 10/8/2015 @ 4:25:23 PM
File: \\0330share\n\60\06655\roadway\sheets\0665SQ0002.dgn

View: FENCE_VIEW1
By: hbrendinger

34" x 22"

REF. NO.	SHEET NO.	STATION FROM (U.S. ROUTE 23 - (US23) SANDUSKY STREET - (SAND))	STATION TO	SIDE	204 GRANULAR MATERIAL, TYPE C (CU YD)	605 6" BASE PIPE UNDERDRAINS WITH FABRIC WRAP (FT)	611 4" CONDUIT, TYPE F (FT)	611 6" CONDUIT, TYPE F FOR UNDERDRAIN OUTLETS (FT)	611 12" CONDUIT, TYPE B (FT)	611 12" CONDUIT, TYPE C (FT)	611 15" CONDUIT, TYPE B (FT)	611 15" CONDUIT, TYPE C (FT)	611 18" CONDUIT, TYPE B (FT)	611 21" CONDUIT, TYPE C (FT)	611 CATCH BASIN, NO. 3 (EACH)	611 CATCH BASIN, NO. 3A (EACH)	611 CATCH BASIN, NO. 6 (EACH)		611 CATCH BASIN, NO. 2-2B (EACH)	611 MANHOLE, NO. 3 (EACH)	611 MANHOLE ADJUSTED TO GRADE (EACH)	839 TRENCH DRAIN WITH STANDARD GRATE (FT)	670 DITCH EROSION PROTECTION, AS PER PLAN (SQ YD)	659 TOPSOIL (CU YD)	
D1	30	688+49.97 (US23)	689+05.00 (US23)	R/L					55																
D2	30	689+05.00 (US23)	689+50.00 (US23)	R/L			47										1								
D3	30	689+50.00 (US23)	696+54.71 (US23)	LT																		705			
D4	30	696+54.71 (US23)	700+20.00 (US23)	LT			7															366			
D5	30	694+30.00 (US23)	694+60.72 (US23)	LT								31							1						
D6	30	694+60.72 (US23)	695+70.32 (US23)	LT									109		1										
D7	30	695+70.32 (US23)	696+55.48 (US23)	LT										84	1										
D8	32	305+00.00 (SAND)	305+00.00 (SAND)	R/L					40							1									
D9	32	305+00.00 (SAND)	305+20.00 (SAND)	LT						33						1									
D10	32	305+20.00 (SAND)	305+52.33 (SAND)	LT						30									1						
D11	32	305+68.87 (SAND)		LT																	1				
D12	32	306+50.00 (SAND)	307+10.00 (SAND)	LT					58						1										
D13	32	307+10.00 (SAND)	307+62.50 (SAND)	LT					51						1										
D14	32	307+62.50 (SAND)	308+25.00 (SAND)	LT					63						1										
D15	32	307+62.50 (SAND)	307+62.50 (SAND)	L/R							40				1										
D16	32-33	307+62.50 (SAND)	310+00.00 (SAND)	RT							239				1										
D17	33	310+00.00 (SAND)	312+24.44 (SAND)	RT								110								1					
D18	33	310+54.33 (SAND)	310+73.24 (SAND)	LT				3														20			
D19	33	310+75.95 (SAND)	310+87.00 (SAND)	LT						25									1						
D20	33	310+87.00 (SAND)	311+25.00 (SAND)	LT					45							1									
D21	33	311+25.00 (SAND)	311+80.00 (SAND)	LT					66											1					
D22	33	311+80.00 (SAND)	312+26.44 (SAND)	LT					70							1									
D23	33	312+14.56 (SAND)		LT																	1				
E1	30	689+00.00 (US23)	694+32.00 (US23)	LT																			1457	100	
E2	33	310+73.84 (SAND)	310+75.71 (SAND)	LT	3	23		6																	
TOTALS CARRIED TO GENNERAL SUMMARY					3	23	54	9	448	88	279	141	109	84	7	4	1		3	2	2	1091	1457	100	

CALCULATED RDW
CHECKED JSS

SUB SUMMARY

DEL-23-13.17

ms consultants, inc.

PLOT.CEL

ms consultants, inc.
msconsultants.com

www.msconsultants.com

Ohio DOT Workspace
DEL-23

UCF: ohdot\V8i
PCF: 60-06655_Columbus

Batchplot Spec: \\033share\n\60\06655\standards\plotdrv\batchplt.spc
Pen Table: S:\std\plotting\usth\V8\pen\V8_ms_std.tbl
Plot Driver: S:\std\plotting\usth\V8\PDF.pltcfg

34" x 22"

View: FENCE_VIEW1
By: hdendinger
Model: Sheet
Printed: 10/8/2015 @ 4:25:32 PM
File: \\033share\n\60\06655\roadway\sheets\06655DS001.dgn

SHEET NO.	REF. NO.	STATION	SIDE	DRIVE TYPE	DRIVE ANGLE	APRON LENGTH "L1"	DRIVE LENGTH "L2"	WIDTH "W"	R1 (LEFT SIDE OF DRIVE LOOKING I CL)	R2 (RIGHT SIDE OF DRIVE LOOKING FROM CL)	CADD GENERATED SURFACE AREA	203 EXCAVATION			304 10" AGGREGATE BASE			452 8" NON-REINFORCED CONCRETE PAVEMENT, CLASS QC1	
					DEG.	FT.	FT.	FT.	FT.	FT.	SQ. FT.	CU YD			CU YD			SQ YD	
52		304+15.75	LT	2	90°	10	33.1	18.0	6.5	6.5	1388.2	40						154	
52		305+34.49	LT	2	90°	10	42.8	11.3	6.5	6.5	938.9	38						104	
52		305+75.30	LT	2	90°	10	38.8	17.4	6.6	6.3	893.5	37						100	
53		310+61.21	LT	2	94°	10	215.6	26.8	6.5	6.5	6117.4	1556			145			156	
TOTALS CARRIED TO GENERAL SUMMARY												1671			145			514	

TYPE 1 DRIVEWAY PLAN VIEW (TYPICAL)

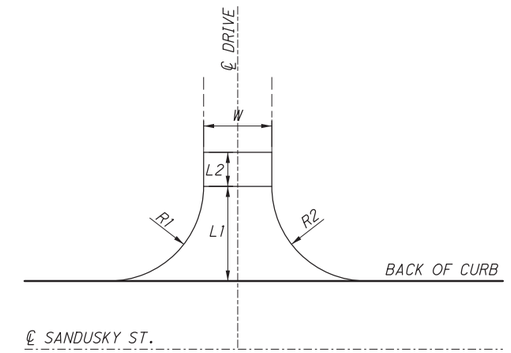

TYPE 2 DRIVEWAY PLAN VIEW (TYPICAL)

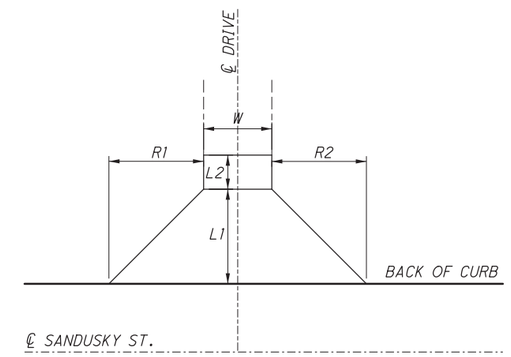

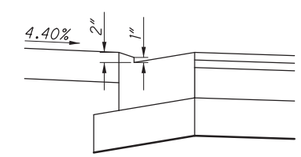

DROPPED CURB DETAIL

CALCULATED DWH
CHECKED RDW

DRIVEWAY SUBSUMMARY

DEL-23-13.17

PLOT.CEL

ms consultants, inc.
msconsultants.com

www.msconsultants.com

Ohio DOT Workspace
DEL-23

1" 0 0.5"

UCF: ohdot\V8i
PCF: 60-06655_Columbus

Batchplot Spec: \\0330share\n\60\06655\standards\plotdrv\batchplt.spc
Pen Table: S:\std\plotting\usin\V8\pen\V8_ms_std.tbl
Plot Driver: S:\std\plotting\usin\V8\PDF.pltcfg

34" x 22"

View: FENCE_VIEW1
By: hbrendinger
Model: Sheet @ 4:25:40 PM
Printed: 10/8/2015
File: \\0330share\n\60\06655\drainage\sheets\06655DS001.dgn

REF NO.	STATION TO STATION * STATIONING REFERS TO SIDE STREET ALIGNMENTS.	SIDE	SHEET NO.	UNDERDRAIN OUTLET ELEV.	UNDERDRAIN OUTLET STA.	UNDERDRAIN OUTLET TYPE	605 4" BASE PIPE UNDERDRAINS	605 4" SHALLOW PIPE UNDERDRAINS	605 4" UNCLASSIFIED PIPE UNDERDRAIN	611 4" CONDUIT TYPE F FOR UNDERDRAIN OUTLET	611 6" CONDUIT TYPE F FOR UNDERDRAIN OUTLET					STANDARD BENDS AND BRANCHES FOR INFORMATION ONLY: END CAP	6" X 6" 45° WYE	4" X 4" TEE	4" X 6" 90°	4" 90°	4 X 4" 45°	4" X 6" TEE
							FT	FT	FT	FT	FT					EA	EA	EA	EA	EA	EA	
U1	302+29.21 TO 305+00.00 (SANDUSKY)	LT	31-32	877.22	305+00.00	CB - 3A	280			10						1						
U2	302+33.72 TO 305+00.00 (SANDUSKY)	RT	31-32	877.22	305+00.00	CB - 3A	264			10						1						
U3	305+01.82 TO 306+50.00 (SANDUSKY)	LT	32	873.98	306+50.00	CB - 3	132			10						1						
U4	305+01.68 TO 307+62.50 (SANDUSKY)	RT	32	873.17	307+62.50	CB - 3	261			10						1						
U5	307+62.50 TO 309+50.00 (SANDUSKY)	RT	32	873.17	307+62.50	CB - 3	178			10						1						
U6	308+25.00 TO 310+03.11 (SANDUSKY)	LT	32-33	873.42	308+25.00	CB - 3	168			10						1						
U7	309+50.00 TO 312+18.89 (SANDUSKY)	RT	33	869.80	312+18.89	CB - 3	224			10						1						
U9	689+00.00 TO 693+50.00 (US23)	LT	30	TIE INTO EXISTING			448									1						
U10	689+00.00 TO 693+50.00 (US23)	LT	30	TIE INTO EXISTING				448								1						
U11	693+50.00 TO 694+30.00 (US23)	LT	30	870.38	693+50.00	U.D.			80							1						
U12	693+50.00 TO 694+30.00 (US23)	LT	30	869.95	693+50.00	U.D.			80							1						
U13	695+73.41 TO 696+50.00 (US23)	LT	30	870.46	696+50.00	U.D.	77														2	
U14	696+50.00 TO 698+15.00 (US23)	LT	30	869.89	696+50.00	U.D.			165		30						1		1			
U15	696+50.00 TO 698+15.00 (US23)	LT	30	870.46	696+50.00	U.D.			164		10											1
U16	698+15.00 TO 700+20.00 (US23)	LT	30	870.46	698+15.00	U.D.		205								1						
U17	698+15.00 TO 700+20.00 (US23)	LT	30	869.89	698+15.00	U.D.	206									1					1	
TOTALS CARRIED TO GENERAL SUMMARY							2238	653	489	70	40											

CALCULATED KOD
CHECKED RDW

UNDERDRAIN DATA AND QUANTITIES - US 23/ SANDUSKY ST.

DEL-23-13.17

ms consultants, inc.

PLOT.CEL

ms consultants, inc.
msconsultants.com

www.msconsultants.com

Ohio DOT Workspace
DEL-23

UCF: ohdot\Bi
PCF: 60-06655_Columbus

Batchplot Spec: \\033share\n\60\06655\standards\plotdrv\batchplt.spc
Pen Table: S:\std\plotting\usth\PB\pen\PB_ms_std.tbl
Plot Driver: S:\std\plotting\usth\PB\PDF.pltcfg

View: FENCE_VIEW1
By: hbrendinger
\06655\06001.dgn

Model: Sheet
Printed: 10/8/2015 @ 4:25:56 PM
File: \\033share\n\60\06655\drainage\sheets

34" x 22"

SEDIMENT BASINS

BASIN	UPSTREAM LOCATION	SURFACE DIMENSIONS	DEPTH	CONTRIBUTING AREA* TOTAL	CONTRIBUTING AREA* FROM EDA	TREATMENT REQUIRED	TREATMENT PROVIDED
SB-1	STA. 689+56 LT, US-23	18′ x 56′	4′	0.57 AC.	0.57 AC.	1596 CF	1632 CF
SB-2	STA. 691+76 LT, US-23	16′ x 52′	3′	0.87 AC.	0.87 AC.	2436 CF	1218 CF
SB-3	STA. 692+99 LT, US-23	16′ x 52′	3′				1218 CF
SB-4	STA. 303+79 LT, SANDUSKY	13′ x 28′	2′	0.18 AC.	0.04 AC.	364 CF	368 CF
SB-5	STA. 306+55 LT, SANDUSKY	16′ x 42′	3′	0.45 AC.	0.08 AC.	890 CF	918 CF
SB-6	STA. 308+08 LT, SANDUSKY	15′ x 39′	3′	0.34 AC.	0.13 AC.	742 CF	747 CF
SB-7	STA. 308+67 LT, SANDUSKY	13′ x 42′	2′	0.47 AC.	0.38 AC.	1226 CF	620 CF
SB-8	STA. 309+52 LT, SANDUSKY	13′ x 42′	2′				620 CF

* TOTAL CONTRIBUTING AREA DETERMINES THE DEWATERING ZONE VOLUME WHILE THE SEDIMENT STORAGE ZONE SIZING IS DETERMINED BY FLOWS FROM WITHIN THE EARTH DISTURBED AREA (EDA).

PROJECT DATA

Total Area (Right-of-Way) ------- 13.93 Acres	Runoff Coefficient for Pre-Construction Site ---------- 0.46
Project Earth Disturbed Area --- 4.60 Acres	Runoff Coefficient for Post Construction Site ---------- 0.50
Estimated Contractor Earth Disturbed Area ----- 0.25 Acres	Post Construction BMP: Vegetated biofilters shown on this sheet were provided to meet NPDES post-construction requirements. See cross section sheets for additional details.
Notice of Intent Earth Disturbed Area ---------- 4.90 Acres	
Impervious (Paved) Area for Pre-Construction Site ------ 3.82 Acres	Immediate Receiving Waters ----- Olentangy River
Impervious (Paved) Area for Post Construction Site ------ 4.61 Acres	Subsequent Receiving Water ----- Scioto River

VEGETATED BIOFILTERS

BMP	LOCATION BEGIN LAT./LONG.		LOCATION END LAT./LONG.		WIDTH	EDA CREDIT (ACRES)
VBF 1	40.313730	83.066349	40.314908	83.067013	7′	1.43
VBF 2	40.314908	83.067013	40.315063	83.067105	7′	0.22
			REQ'D TREATMENT (4.60Ac x 0.24)			1.10
			TREATMENT PROVIDED			1.65

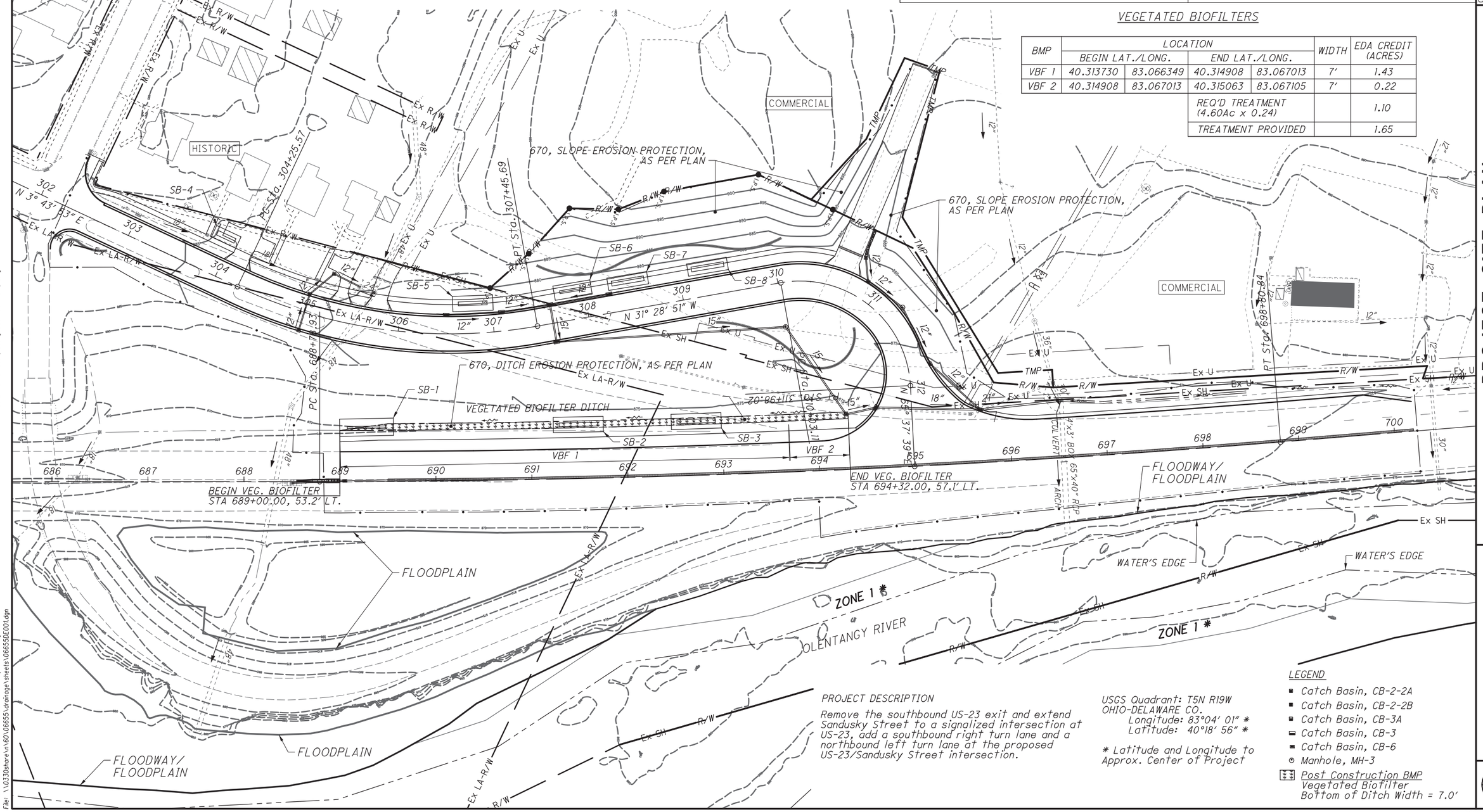

PROJECT DESCRIPTION

Remove the southbound US-23 exit and extend Sandusky Street to a signalized intersection at US-23, add a southbound right turn lane and a northbound left turn lane at the proposed US-23/Sandusky Street intersection.

USGS Quadrant: T5N R19W
OHIO-DELAWARE CO.
Longitude: 83°04′ 01″ *
Latitude: 40°18′ 56″ *

* Latitude and Longitude to Approx. Center of Project

LEGEND

- Catch Basin, CB-2-2A
- Catch Basin, CB-2-2B
- Catch Basin, CB-3A
- Catch Basin, CB-3
- Catch Basin, CB-6
- Manhole, MH-3
- Post Construction BMP Vegetated Biofilter Bottom of Ditch Width = 7.0′

HORIZONTAL SCALE IN FEET 0 25 50 100

CALCULATED DNO
CHECKED RDW

PROJECT SITE PLAN
US 23/ SANDUSKY STREET/ PENNSYLVANIA AVE.

DEL-23-13.17

ms consultants, inc.

PLOT.CEL

ms consultants, inc.
msconsultants.com

www.msconsultants.com

Ohio DOT Workspace
DEL-23

UGF: ohdot\Bi
PCF: 60-06655_Columbus

Batchplot Spec: \\0330share\n\60\06655\standards\plotdrv\batchplt.spc
Pen Table: S:\std\plotting\ustn\V8\pen\V8_ms_std.tbl
Plot Driver: S:\std\plotting\ustn\V8\PDF.pltcfg

Model: Sheet
Printed: 10/8/2015 @ 4:25:58 PM
File: \\0330share\n\60\06655\roadway\sheets\06655GP001.dgn

View: FENCE_VIEW1
By: hurendinger

34" x 22"

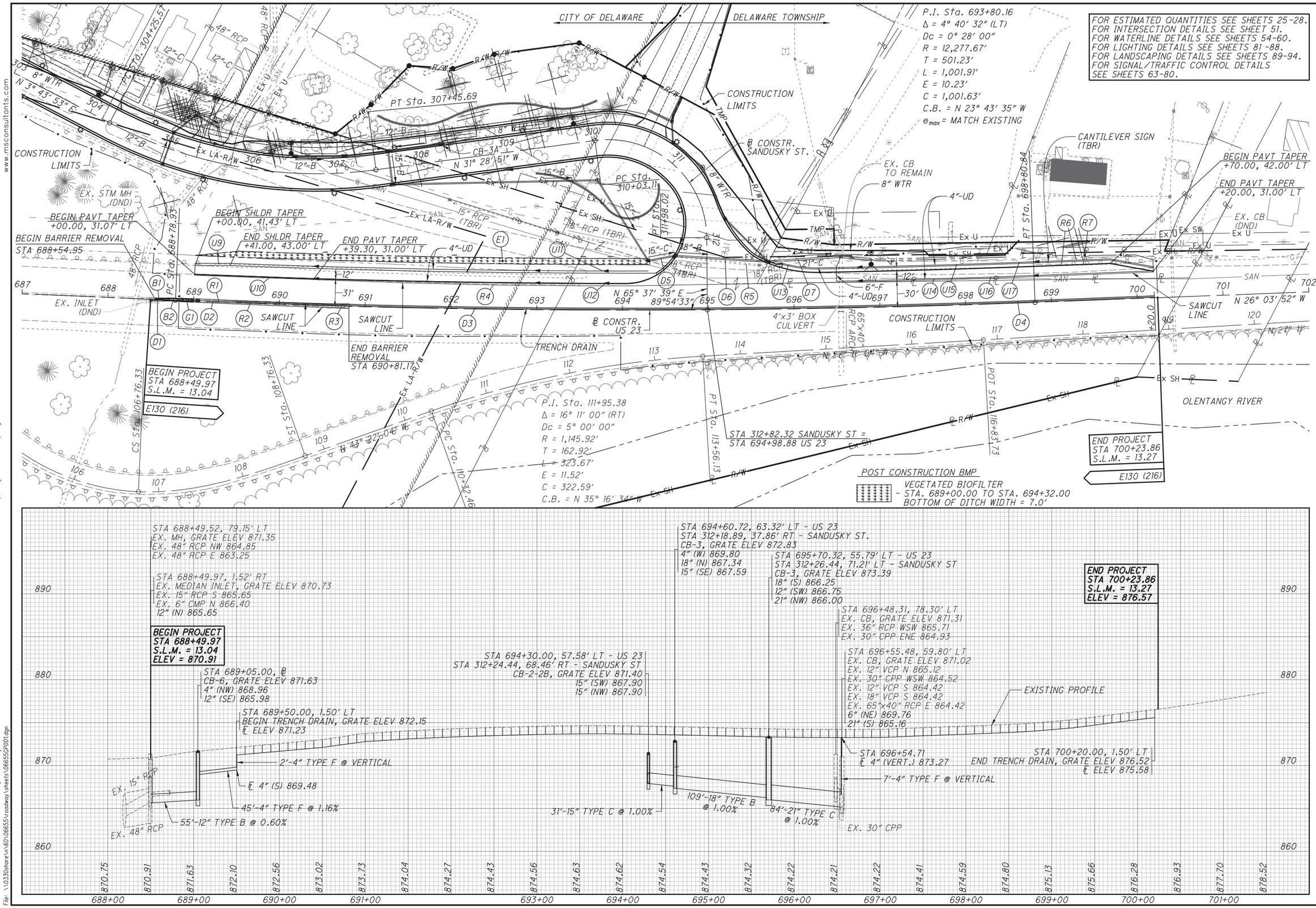

PLAN AND PROFILE - US 23
STA 687+00 TO STA 702+00

CALCULATED
CHECKED

DEL-23-13.17

ms consultants, inc.

PLOT.CEL

ms consultants, inc.
msconsultants.com

www.msconsultants.com

Ohio DOT Workspace
DEL-23

UGF: ohdot1V8i
PCF: 60-06655_Columbus

Batchplot Spec: \\0330share\n\60\06655\standards\plotdrv\batchplt.spc
Pen Table: S:\std\plotting\usin\V8\pen\V8i_ms_std.tbl
Plot Driver: S:\std\plotting\usin\V8\PDF.pltcfg

Model: Sheet
Printed: 10/8/2015 @ 4:25:59 PM
File: \\0330share\n\60\06655\roadway\sheets\06655GP002.dgn

View: FENCE_VIEW1
By: hoerendinger

34" x 22"

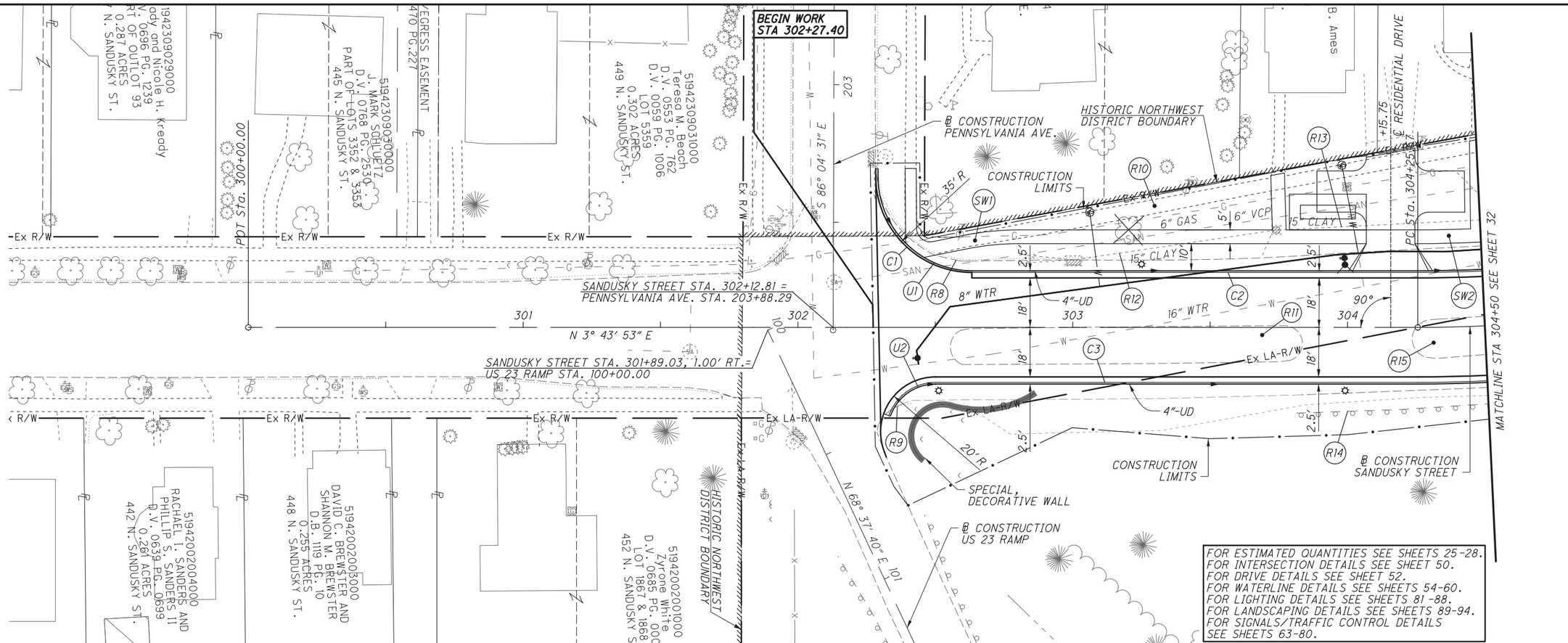

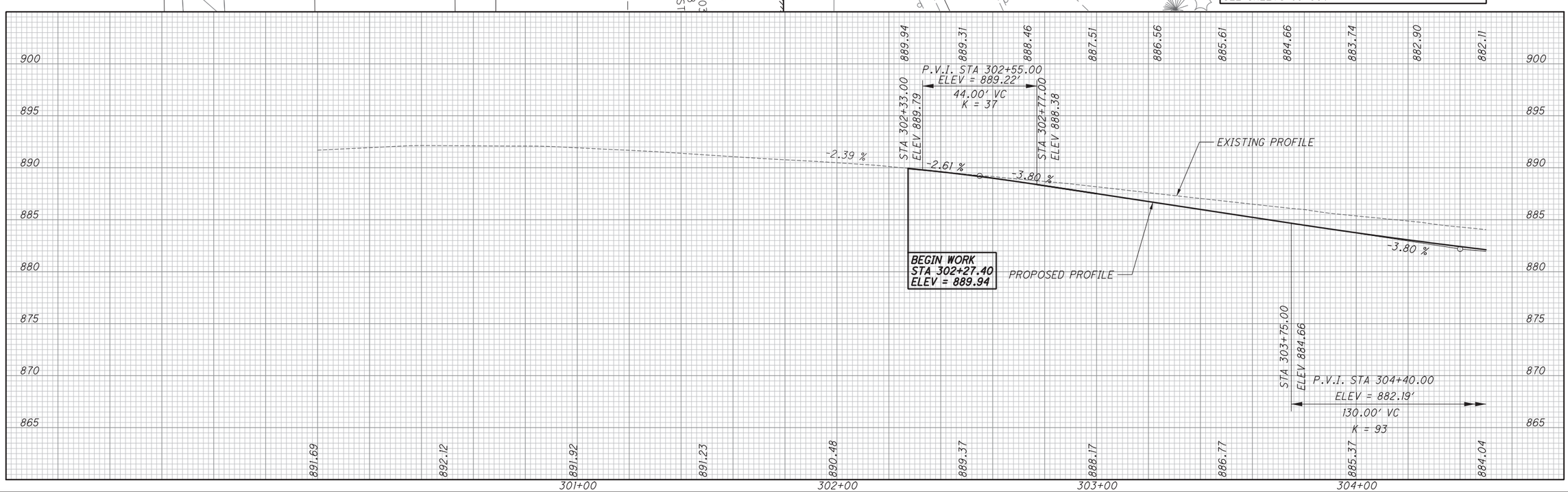

HORIZONTAL SCALE IN FEET 0 10 20 40

CALCULATED

CHECKED

PLAN AND PROFILE - SANDUSKY STREET
STA 300+00 TO STA 304+50

DEL-23-13.17

ms consultants, inc.

PLOT.CEL

ms consultants, inc.
msconsultants.com

www.msconsultants.com

Ohio DOT Workspace
DEL-23

UGF: ohdot\V8i
PCF: 60-06655_Columbus

Batchplot Spec: \\0330share\n\60\06655\standards\plotdrv\batchplt.spc
Pen Table: S:\std\plotting\usth\V8\pen\V8i_ms_std.tbl
Plot Driver: S:\std\plotting\usth\V8\PDF.pltcfg

Model: Sheet @ 4:26:00 PM View: FENCE_VIEW1
Printed: 10/8/2015 By: hbrendinger
File: \\0330share\n\60\06655\roadway\sheets\06655CP003.dgn

34" x 22"

C2 P.I. Sta. 305+90.87
Δ = 35° 12′ 45″ (LT)
Dc = 11° 00′ 00″
R = 520.87′
T = 165.29′
L = 320.11′
E = 25.60′
C = 315.10′
C.B. = N 13° 52′ 29″ W
e_{max} = N.C.

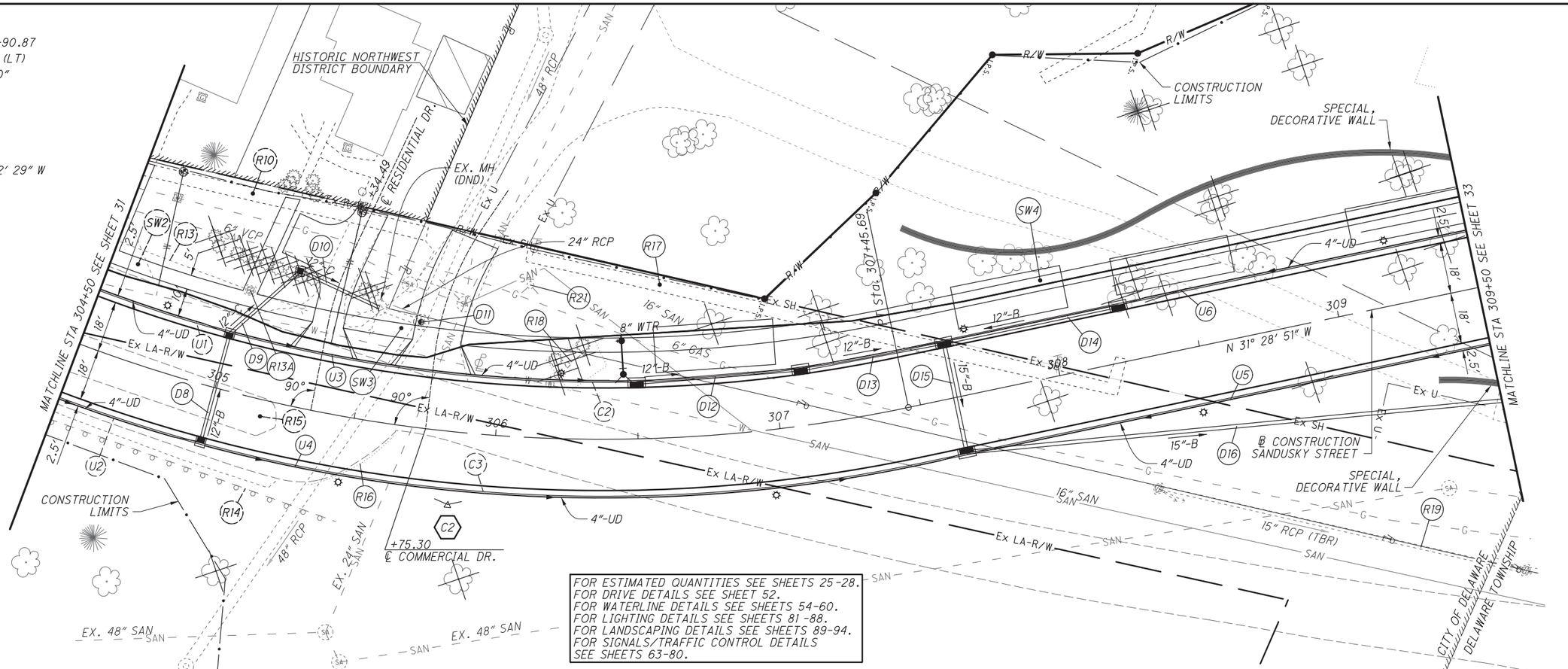

FOR ESTIMATED QUANTITIES SEE SHEETS 25-28.
FOR DRIVE DETAILS SEE SHEET 52.
FOR WATERLINE DETAILS SEE SHEETS 54-60.
FOR LIGHTING DETAILS SEE SHEETS 81-88.
FOR LANDSCAPING DETAILS SEE SHEETS 89-94.
FOR SIGNALS/TRAFFIC CONTROL DETAILS SEE SHEETS 63-80.

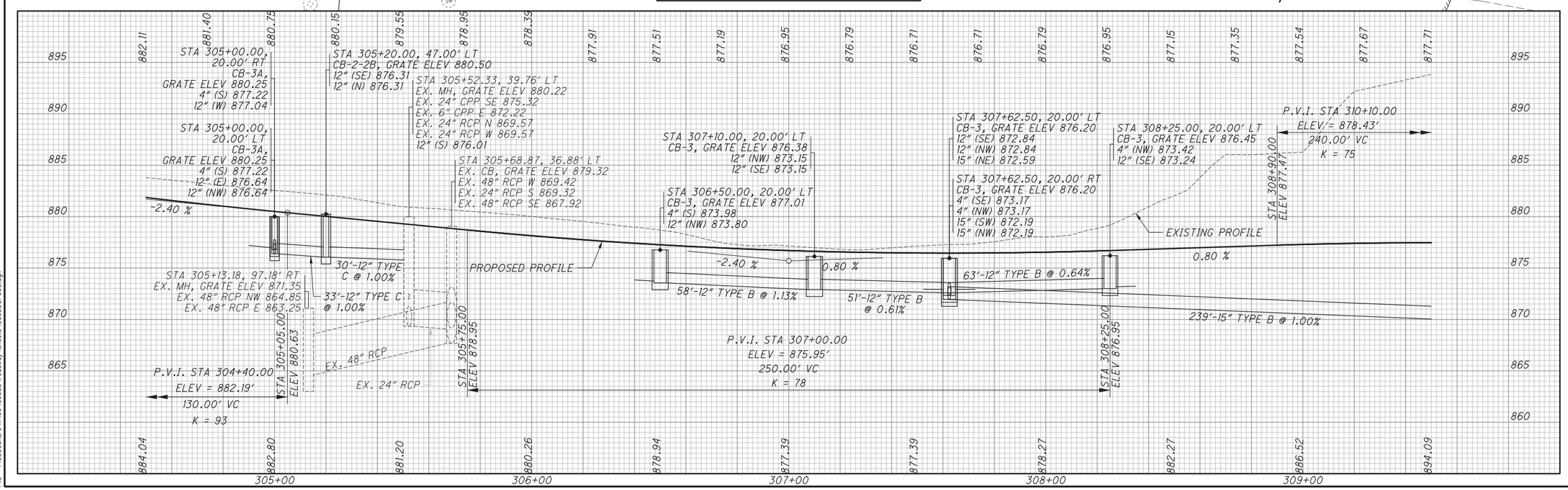

PLAN AND PROFILE - SANDUSKY STREET
STA 304+50 TO STA 309+50

HORIZONTAL SCALE IN FEET 0 10 20 40

CALCULATED
CHECKED

DEL-23-13.17

ms consultants, inc.

PLOT.CEL

ms consultants, inc.
msconsultants.com

www.msconsultants.com

Ohio DOT Workspace
DEL-23

UGF: ohdot1V8i
PCF: 60-06655_Columbus

Batchplot Spec: \\033share\n\60\06655\standards\plotdrv\batchplt.spc
Pen Table: S:\std\plotting\austin\V8i\pen\V8i_ms_std.tbl
Plot Driver: S:\std\plotting\austin\V8i\PDF_pltcfg

Model: Sheet
Printed: 10/8/2015 @ 4:26:01 PM
File: \\033share\n\60\06655\roadway\sheets\06655GP004.dgn

View: FENCE_VIEW1
By: harendinger

34" x 22"

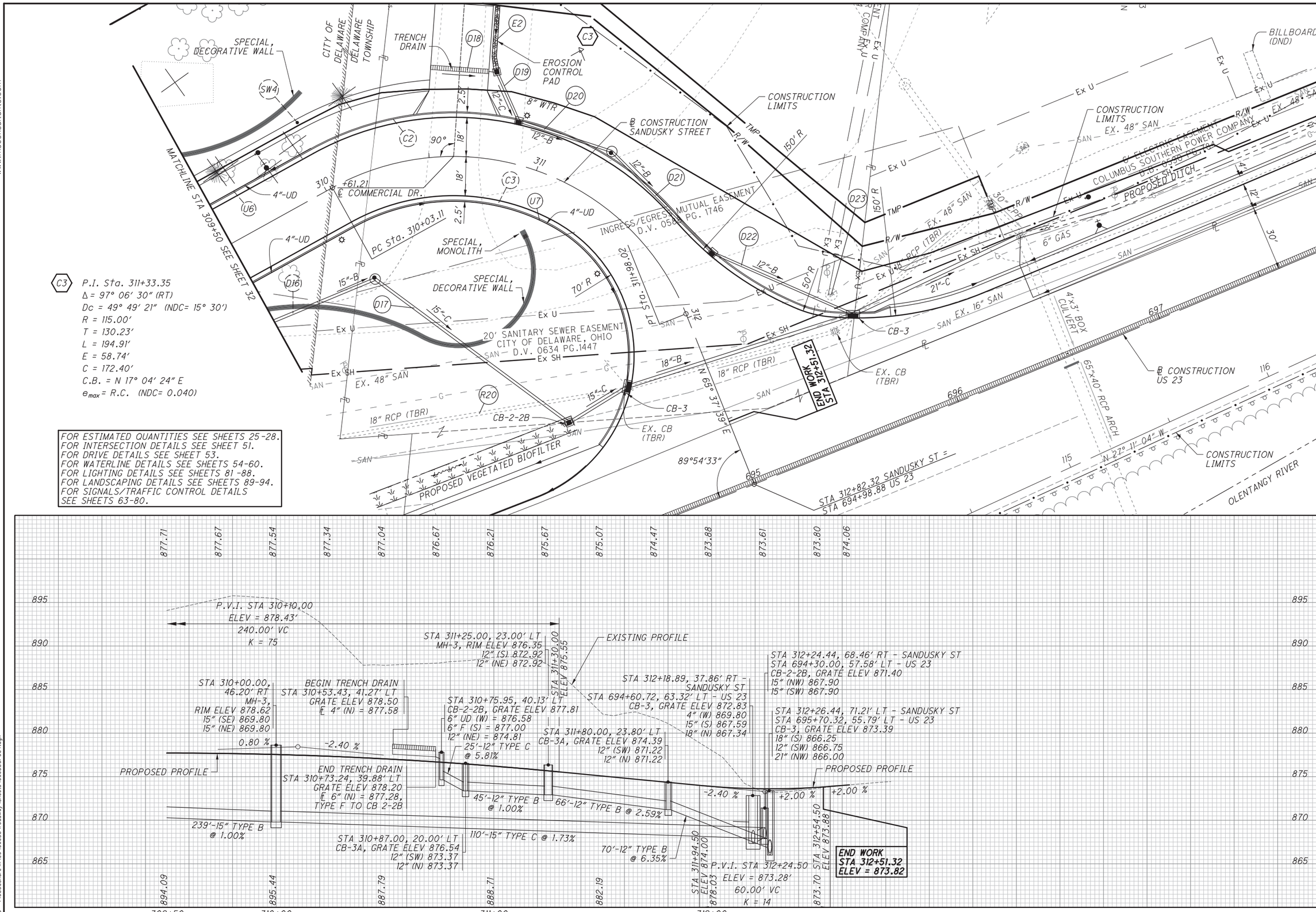

HORIZONTAL SCALE IN FEET 0 10 20 40

CALCULATED

CHECKED

PLAN AND PROFILE - SANDUSKY STREET
STA 309+50 TO STA 312+82.32

DEL-23-13.17

ms consultants, inc.

PLOT.CEL

ms consultants, inc.
msconsultants.com

www.msconsultants.com

Ohio DOT Workspace
DEL-23

UGF: ohdotV8i
PCF: 60-06655_Columbus

Batchplot Spec: \\0330share\n\60\06655\standards\plotdrv\batchpll.spc
Pen Table: S:\std\plotting\astn\V8\pen\V8_ms_std.tbl
Plot Driver: S:\std\plotting\astn\V8\PDF.pltcfg

34" x 22"

Model: XS_SHEET_688+50.00_TO_690+00.00 Fence: FENCE_VIEW1
Printed: 10/8/2015 @ 4:26:02 PM By: hbrendinger
File: \\0330share\n\60\06655\roadway\sheets\06655XS001.dgn

SEEDING END WIDTH	SEEDING SQ. YDS.	END AREA CUT	END AREA FILL	VOLUME CUT	VOLUME FILL
24	133	38	3	68	5
23	89	35	2	62	2
9	0	32	0	0	0
0	0	0	0	0	0
	222			130	7

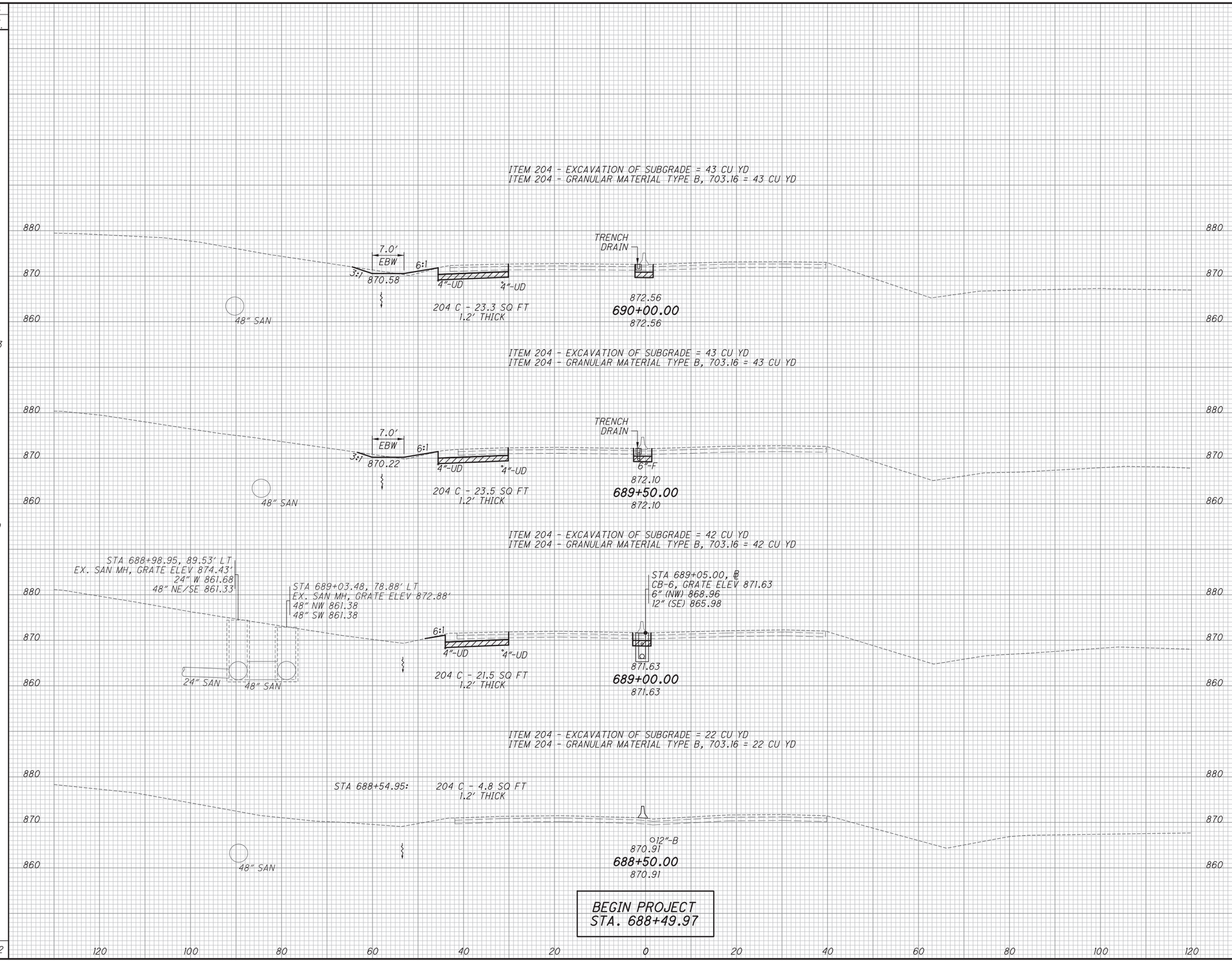

CALCULATED DWH
CHECKED RDW

CROSS SECTIONS - US 23
STA. 688+50.00 TO STA. 690+00.00

DEL-23-13.17

ms consultants, inc.

PLOT.CEL

ms consultants, inc.
msconsultants.com

www.msconsultants.com

Ohio DOT Workspace
DEL-23

UGF: ohdot\V8i
PGF: 60-06655_Columbus

Batchplot Spec: \\0330share\n\60\06655\standards\plotdrv\batchplt.spc
Pen Table: S:\std\plotting\usit\V8i\pen\V8i_ms_std.tbl
Plot Driver: S:\std\plotting\usit\V8i\PDF.pltcfg

Model: XS_SHEET_690+50.00_TO_691+50.00dgn
Printed: 10/8/2015 @ 4:26:03 PM
File: \\0330share\n\60\06655\roadway\sheets\06655XS001.dgn

34" x 22"

SEEDING END WIDTH	SEEDING SQ. YDS.	END AREA CUT	END AREA FILL	VOLUME CUT	VOLUME FILL
56		77	21		
	300			130	41
52		63	23		
	217			98	22
26		43	1		
	139			75	4
	656			303	67

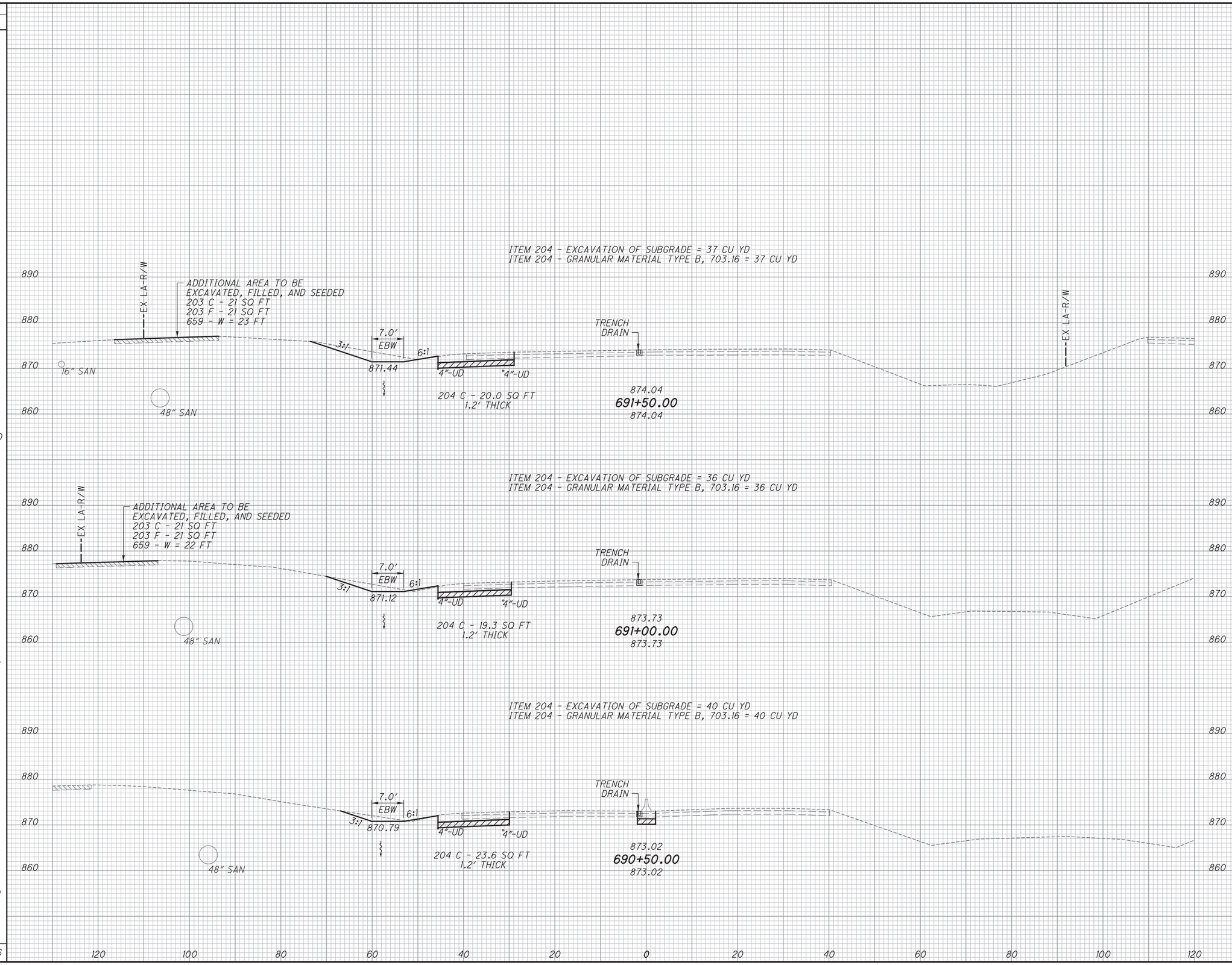

CALCULATED DWH
CHECKED RDW

CROSS SECTIONS - US 23
STA. 690+50.00 TO STA. 691+50.00

DEL-23-13.17

ms consultants, inc.

PLOT.CEL

ms consultants, inc.
msconsultants.com

www.msconsultants.com

Ohio DOT Workspace
DEL-23

UGF: ohdot\V8i
PCF: 60-06655_Columbus

Batchplot Spec: \\0330share\n\60\06655\standards\plotdrv\batchplt.spc
Pen Table: S:\std\plotting\usti\V8\pen\V8_ms_std.tbl
Plot Driver: S:\std\plotting\usti\V8\PDF.pltcfg

Model: XS_SHEET_692+00.00_TO_693+00.00 Wx: FENCE_VIEW1
Printed: 10/8/2015 @ 4:26:04 PM By: hbrendinger
File: \\0330share\n\60\06655\roadway\sheets\06655XS001.dgn

34" x 22"

SEEDING END WIDTH	SEEDING SQ. YDS.	END AREA CUT	END AREA FILL	VOLUME CUT	VOLUME FILL
42	267	92	14	169	32
53	328	90	21	153	38
64	333	75	22	141	38
	928			463	108

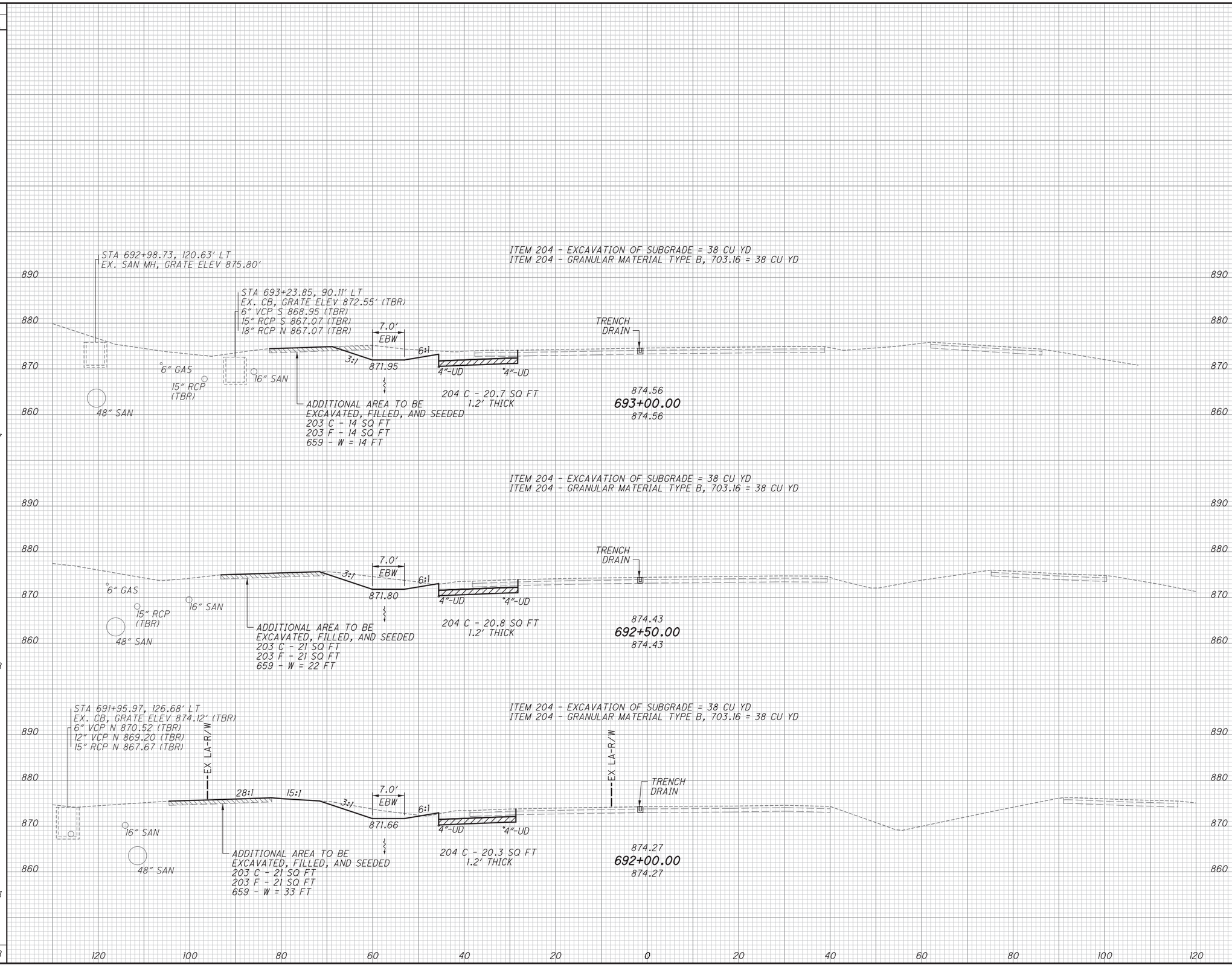

CALCULATED DWH
CHECKED RDW

CROSS SECTIONS - US 23
STA. 692+00.00 TO STA. 693+00.00

DEL-23-13.17

ms consultants, inc.

PLOT.CEL

ms consultants, inc.
msconsultants.com

www.msconsultants.com

Ohio DOT Workspace
DEL-23

UGF: ohdot\V8i
PCF: 60-06655_Columbus

Batchplot Spec: \\0330shore\n\60\06655\standards\plotdrv\batchplt.spc
Pen Table: S:\std\plotting\usit\V8\pen\V8_ms_std.tbl
Plot Driver: S:\std\plotting\usit\V8\PDF.pltcfg

Model: XS_SHEET_693+50.00_TO_694+50.00 Mx: FENCE_VIEW1
Printed: 10/8/2015 @ 4:26:04 PM By: hbrendinger
File: \\0330shore\n\60\06655\roadway\sheets\06655XS001.dgn

34" x 22"

SEEDING END WIDTH	SEEDING SQ. YDS.	END AREA CUT	END AREA FILL	VOLUME CUT	VOLUME FILL
0	117	21	0	73	28
41	206	58	30	130	38
33	211	82	11	161	23
	534			364	89

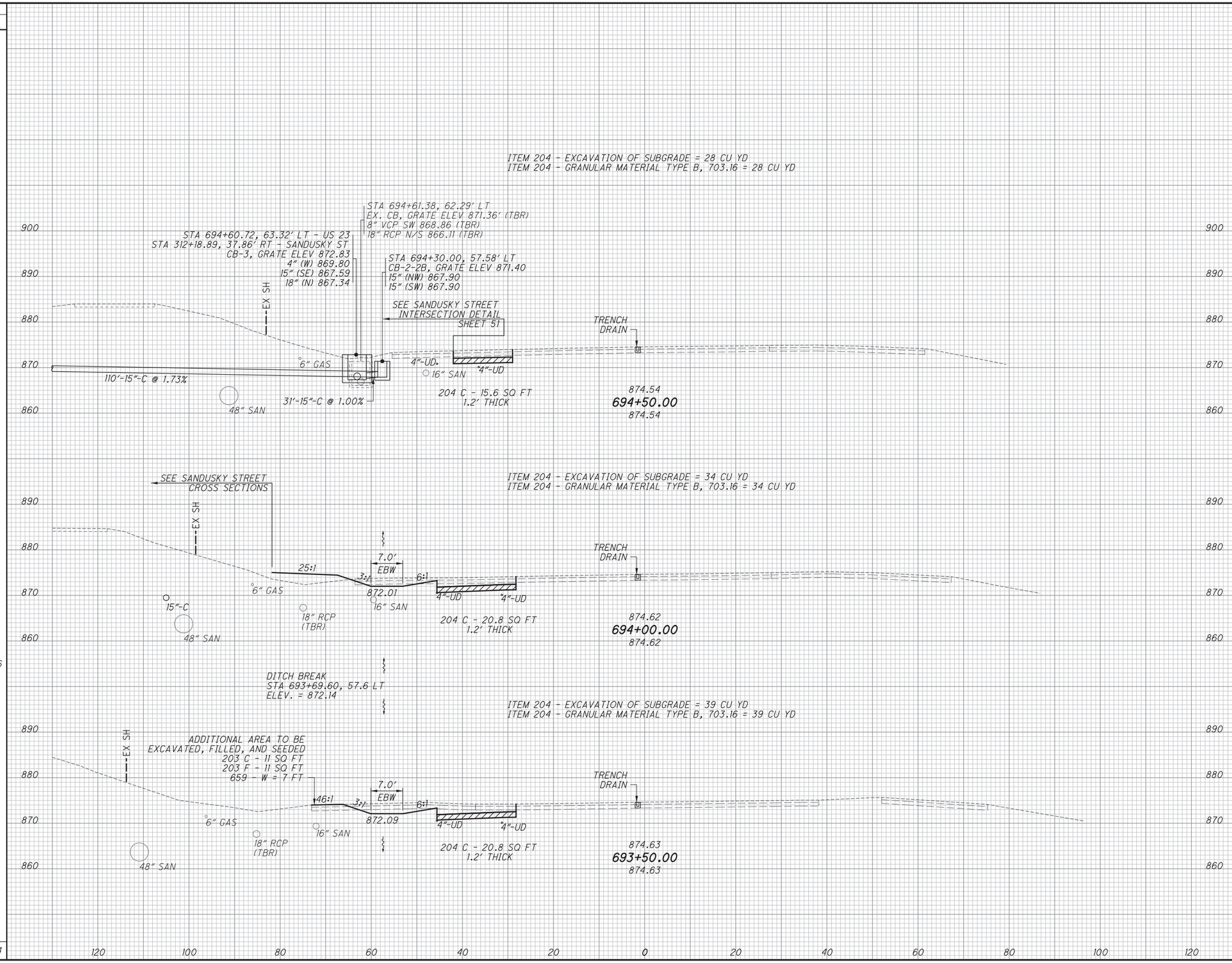

CALCULATED DWH
CHECKED RDW

CROSS SECTIONS - US 23
STA. 693+50.00 TO STA. 694+50.00

DEL-23-13.17

ms consultants, inc.

PLOT.CEL

ms consultants, inc.
msconsultants.com

www.msconsultants.com

Ohio DOT Workspace
DEL-23

UGF: ohdot\V8i
PCF: 60-06655_Columbus

Batchplot Spec: \\0330share\n\60\06655\standards\plotdrv\batchplt.spc
Pen Table: S:\std\plotting\usat\V8\pen\V8_ms_std.tbl
Plot Driver: S:\std\plotting\usat\V8\PDF.pltcfg

34" x 22"

Model: XS_SHEET_695+00.00_TO_696+00.00 Lay: FENCE_VIEW1
Printed: 10/8/2015 @ 4:26:05 PM By: hbrendinger
File: \\0330share\n\60\06655\roadway\sheets\06655XS001.dgn

SEEDING END WIDTH	SEEDING SQ. YDS.
8	22
0	0
0	0
0	0
22	

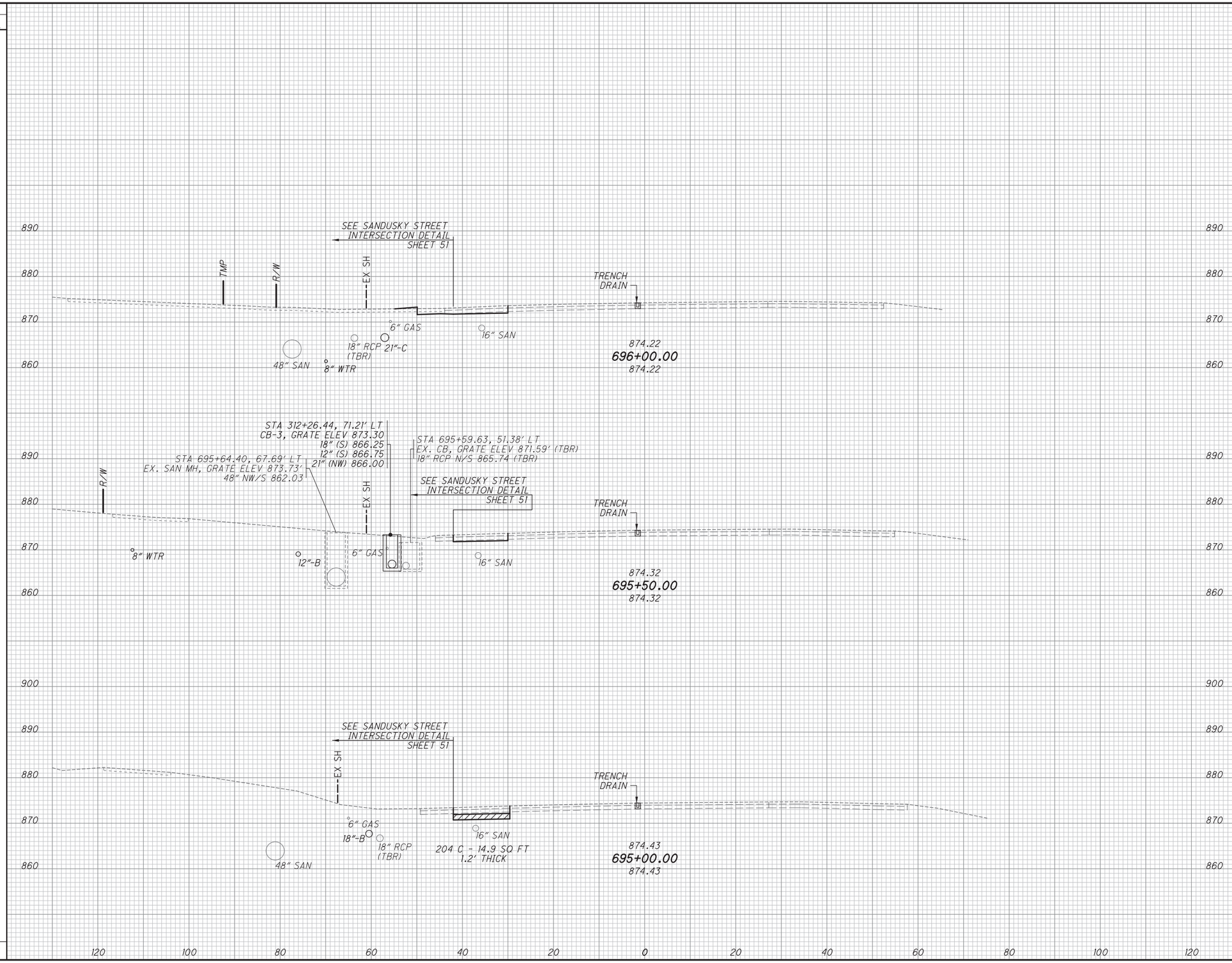

END AREA CUT	END AREA FILL	VOLUME CUT	VOLUME FILL
28	1	43	1
18	0	35	0
19	0	38	0
		116	1

CALCULATED DWH
CHECKED RDW

CROSS SECTIONS - US 23
STA. 695+00.00 TO STA. 696+00.00

DEL-23-13.17

ms consultants, inc.

PLOT.CEL

ms consultants, inc.
msconsultants.com

www.msconsultants.com

Ohio DOT Workspace
DEL-23

UGF: ohdot1V8i
PCF: 60-06655_Columbus

Batchplot Spec: \\0330shore\n\60\06655\standards\plotdrv\batchplt.spc
Pen Table: S:\std\plotting\usit\V8\pen\V8_ms_std.tbl
Plot Driver: S:\std\plotting\usit\V8\PDF.pltcfg

Model: XS_SHEET_696-50.00_TO_697-50.00 Date: FENCE_VIEW1
Printed: 10/8/2015 @ 4:26:05 PM By: hbrendinger
File: \\0330shore\n\60\06655\roadway\sheets\06655XS001.dgn

34" x 22"

SEEDING END WIDTH	SEEDING SQ. YDS.	END AREA CUT	END AREA FILL	VOLUME CUT	VOLUME FILL
17	89	31	1	56	2
15	67	29	1	50	2
8	44	24	1	48	2
200				154	6

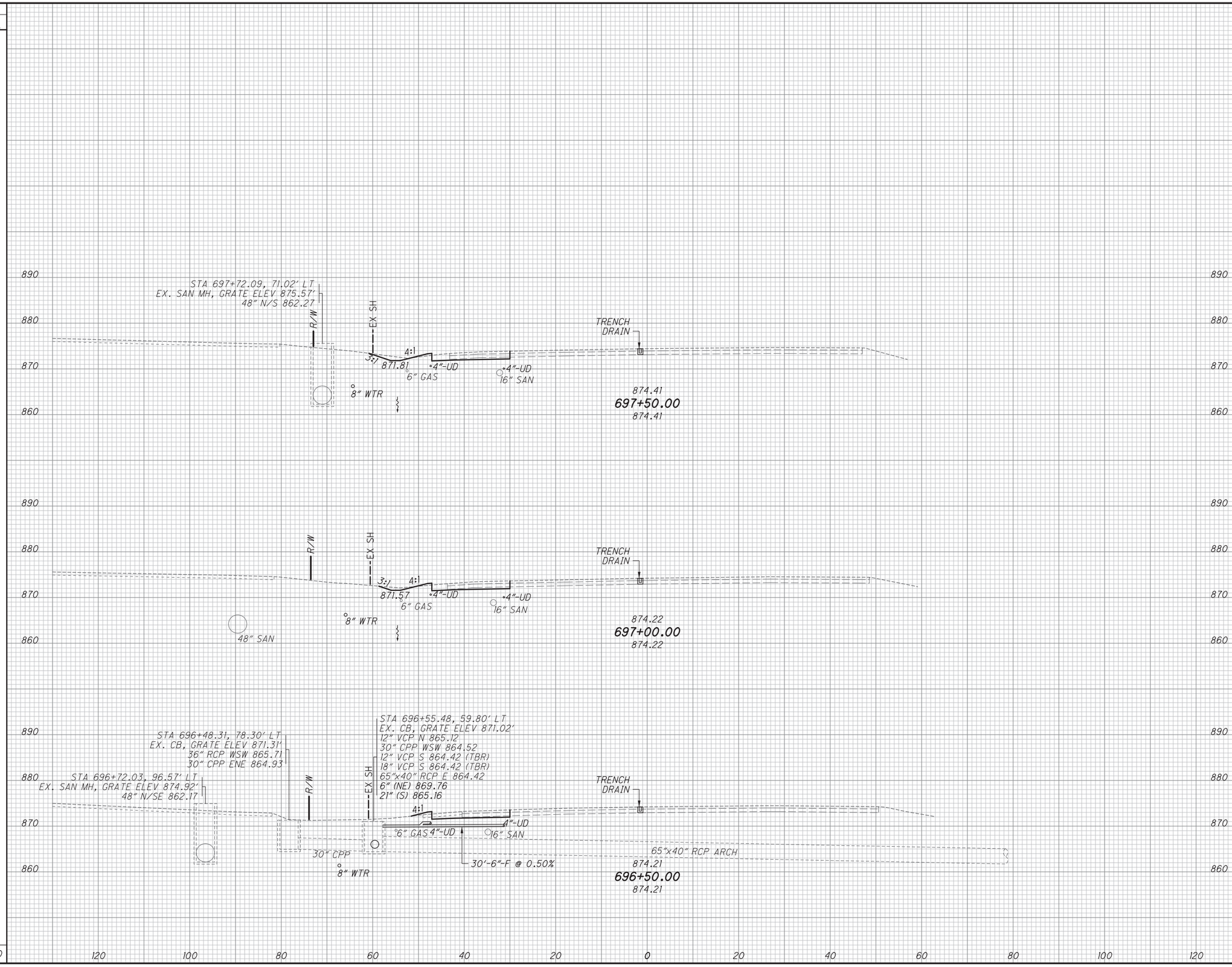

CALCULATED DWH
CHECKED RDW

CROSS SECTIONS - US 23
STA. 696+50.00 TO STA. 697+50.00

DEL-23-13.17

ms consultants, inc.

PLOT.CEL

ms consultants, inc.
msconsultants.com

www.msconsultants.com

Ohio DOT Workspace
DEL-23

UGF: ohdot1V8i
PCF: 60-06655_Columbus

Batchplot Spec: \\0330share\n\60\06655\standards\plotdrv\batchplt.spc
Pen Table: S:\std\plotting\usth\V8\pen\V8_ms_std.tbl
Plot Driver: S:\std\plotting\usth\V8\PDF.pltcfg

Model: XS_SHEET_698+00.00_TO_699+00.00 Dgn: FENCE_VIEW1
Printed: 10/8/2015 @ 4:26:06 PM By: hbrendinger
File: \\0330share\n\60\06655\roadway\sheets\06655XS001.dgn

34" x 22"

SEEDING END WIDTH	SEEDING SQ. YDS.	END AREA CUT	END AREA FILL	VOLUME CUT	VOLUME FILL
19	128	33	0	80	0
26	139	53	0	86	2
23	111	40	2	66	3
378				232	5

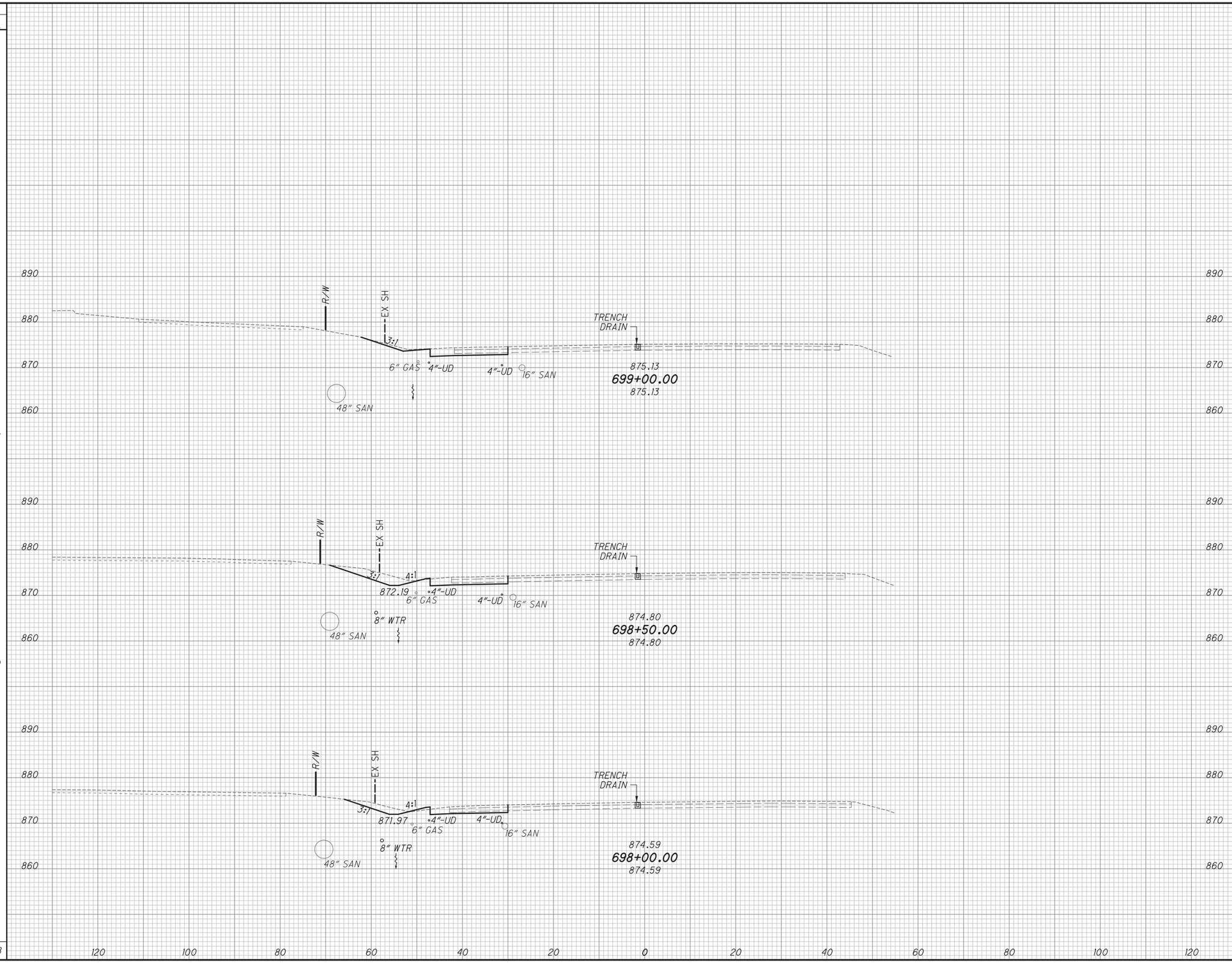

CALCULATED DWH
CHECKED RDW

CROSS SECTIONS - US 23
STA. 698+00.00 TO STA. 699+00.00

DEL-23-13.17

ms consultants, inc.

PLOT.CEL

ms consultants, inc.
msconsultants.com

www.msconsultants.com

Ohio DOT Workspace
DEL-23

UGF: ohdot\V8i
PCF: 60-06655_Columbus

Batchplot Spec: \\0330share\n\60\06655\standards\plotdrv\batchplt.spc
Pen Table: S:\std\plotting\usit\V8\pen\V8_ms_std.tbl
Plot Driver: S:\std\plotting\usit\V8\PDF.pltcfg

34" x 22"

Model: XS_SHEET_699+50.00_TO_700+50.00 Mx: FENCE_VIEW1
Printed: 10/8/2015 @ 4:26:06 PM By: hbrendinger
File: \\0330share\n\60\06655\roadway\sheets\06655XS001.dgn

SEEDING	
END WIDTH	SQ. YDS.
26	58
26	133
22	117
	308

TOTALS CARRIED TO GENERAL NOTES (SHEET 6)

ITEM 659 - SEEDING AND MULCHING, CLASS 1 = 3248 SQ YD

TOTALS CARRIED TO GENERAL SUMMARY

ITEM 204 - EXCAVATION OF SUBGRADE = 478 CU YD
ITEM 204 - GRANULAR MATERIAL TYPE B, 703.16 = 478 CU YD

TOTALS CARRIED TO GENERAL SUMMARY

ITEM 203 - EXCAVATION = 1915 CU YD
ITEM 203 - EMBANKMENT = 285 CU YD

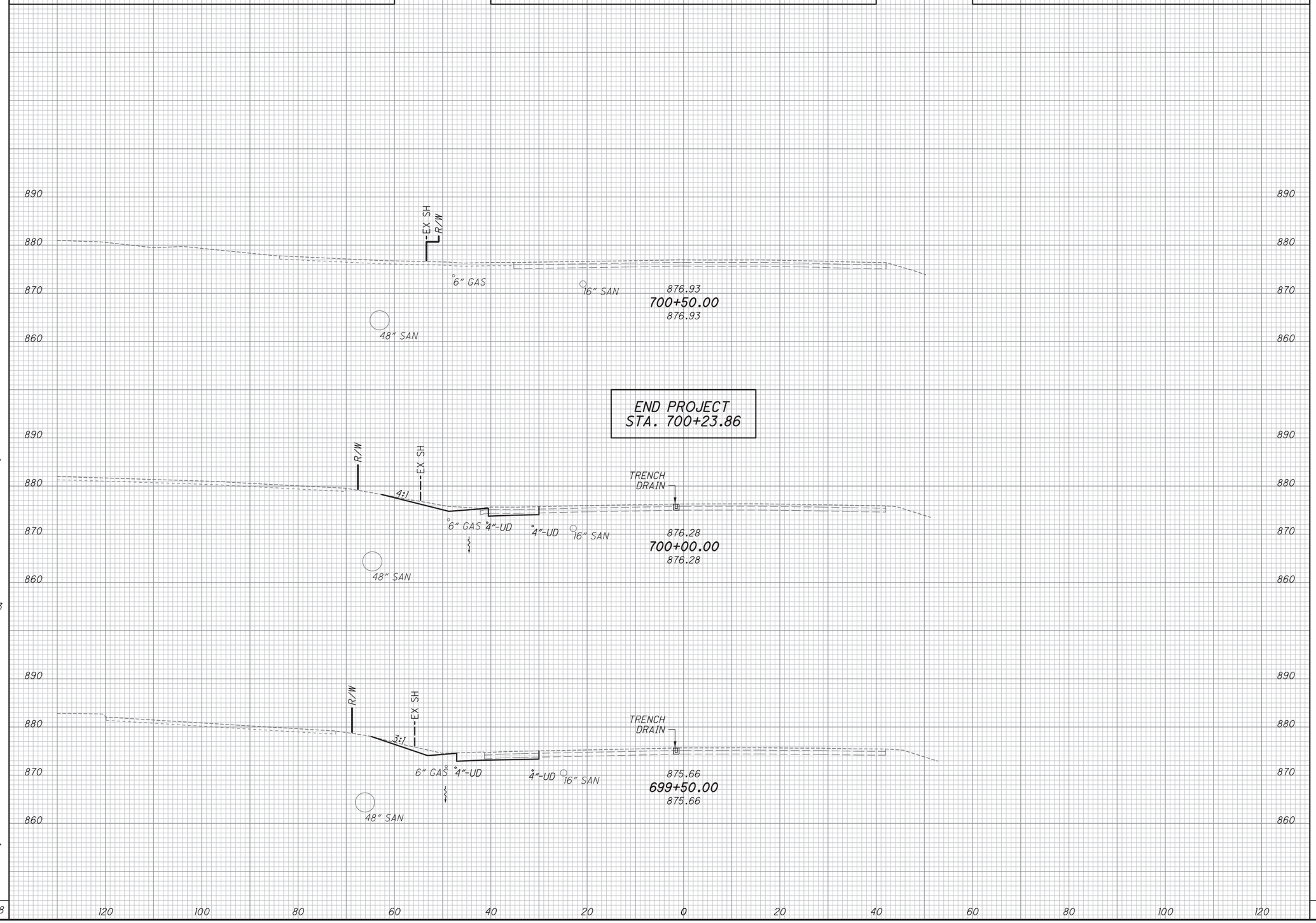

END AREA		VOLUME	
CUT	FILL	CUT	FILL
31	2		
31	2	23	1
		64	1
38	0		
		66	0
		153	2

CALCULATED DWH
CHECKED RDW

CROSS SECTIONS - US 23
STA. 699+50.00 TO STA. 700+50.00

DEL-23-13.17

ms consultants, inc.

PLOT.CEL

ms consultants, inc.
msconsultants.com

www.msconsultants.com

Ohio DOT Workspace
DEL-23

UGF: ohdot1V8i
PCF: 60-06655_Columbus

Batchplot Spec: \\0330share\n\60\06655\standards\plotdrv\batchplt.spc
Pen Table: S:\std\plotting\usit\V8\pen\V8_ms_std.tbl
Plot Driver: S:\std\plotting\usit\V8\PDF.pltcfg

Model: XS_SHEET_302+50.00_TO_303+50.00 Mdx: FENCE_VIEW1
Printed: 10/8/2015 @ 4:26:08 PM By: hbrendinger
File: \\0330share\n\60\06655\roadway\sheets\06655XS002.dgn

34" x 22"

SEEDING END WIDTH	SEEDING SQ. YDS.	END AREA CUT	END AREA FILL	VOLUME CUT	VOLUME FILL
32	194	136	2	230	17
38	150	112	16	184	21
14	35	86	6	72	5
14		86	6		
379				486	43

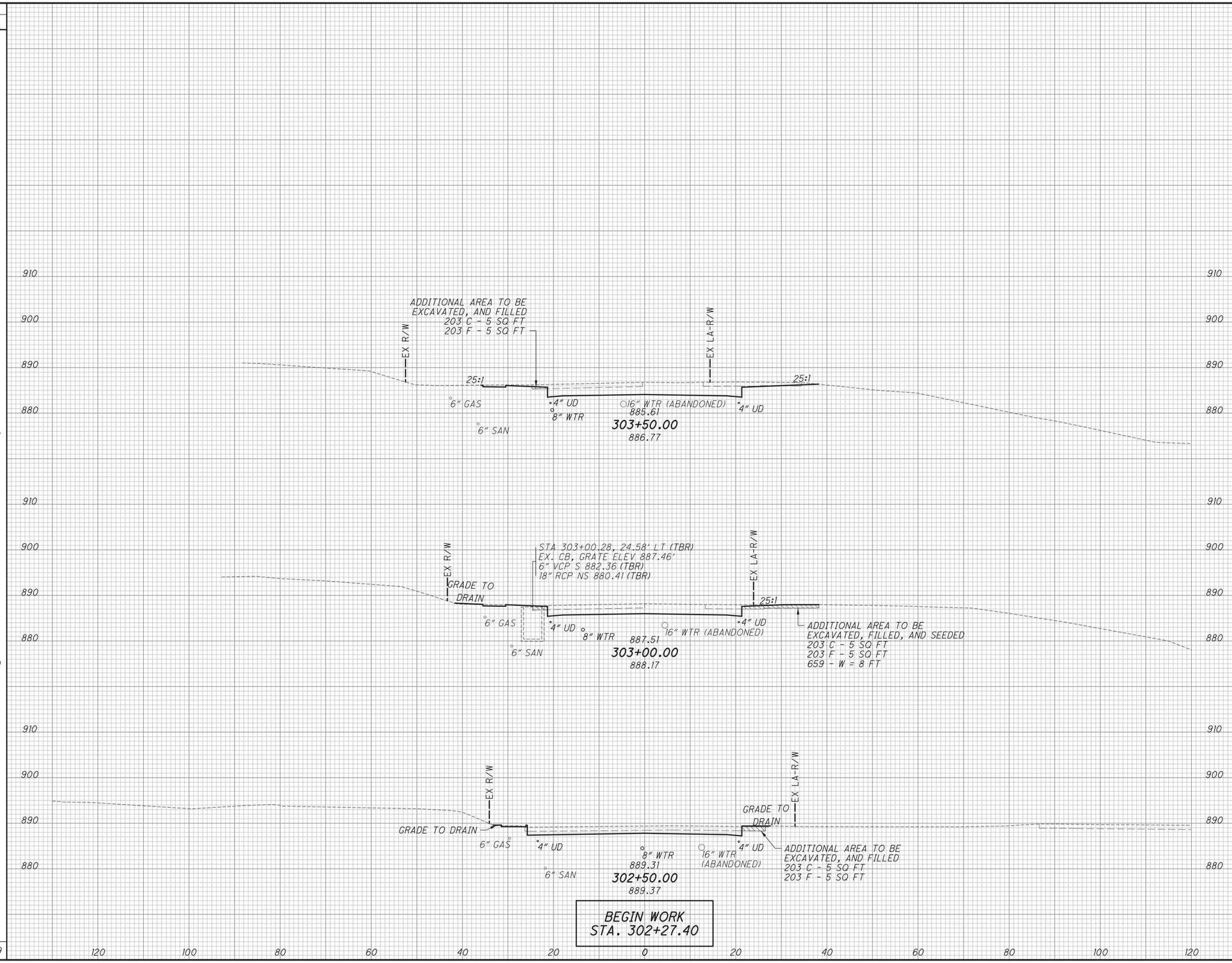

CALCULATED DWH
CHECKED RDW

CROSS SECTIONS - SANDUSKY STREET
STA. 302+50.00 TO STA. 303+50.00

DEL-23-13.17

ms consultants, inc.

PLOT.CEL

ms consultants, inc.
msconsultants.com

www.msconsultants.com

Ohio DOT Workspace
DEL-23

UCF: ohdot1V8i
PCF: 60-06655_Columbus

Batchplot Spec: \\0330share\n\60\06655\standards\plotdrv\batchplt.spc
Pen Table: S:\std\plotting\usit\V8\pen\V8i_ms_std.tbl
Plot Driver: S:\std\plotting\usit\V8\PDF.pltcfg

Model: XS_SHEET_304+00.00_TO_305+00.00 Mdx: FENCE_VIEW1
Printed: 10/8/2015 @ 4:26:08 PM By: hbrendinger
File: \\0330share\n\60\06655\roadway\sheets\06655XS002.dgn

34" x 22"

SEEDING END WIDTH	SEEDING SQ. YDS.	END AREA CUT	END AREA FILL	VOLUME CUT	VOLUME FILL
59	234	188	11	353	10
25	222	193	0	331	6
55	244	165	6	277	6
700				961	22

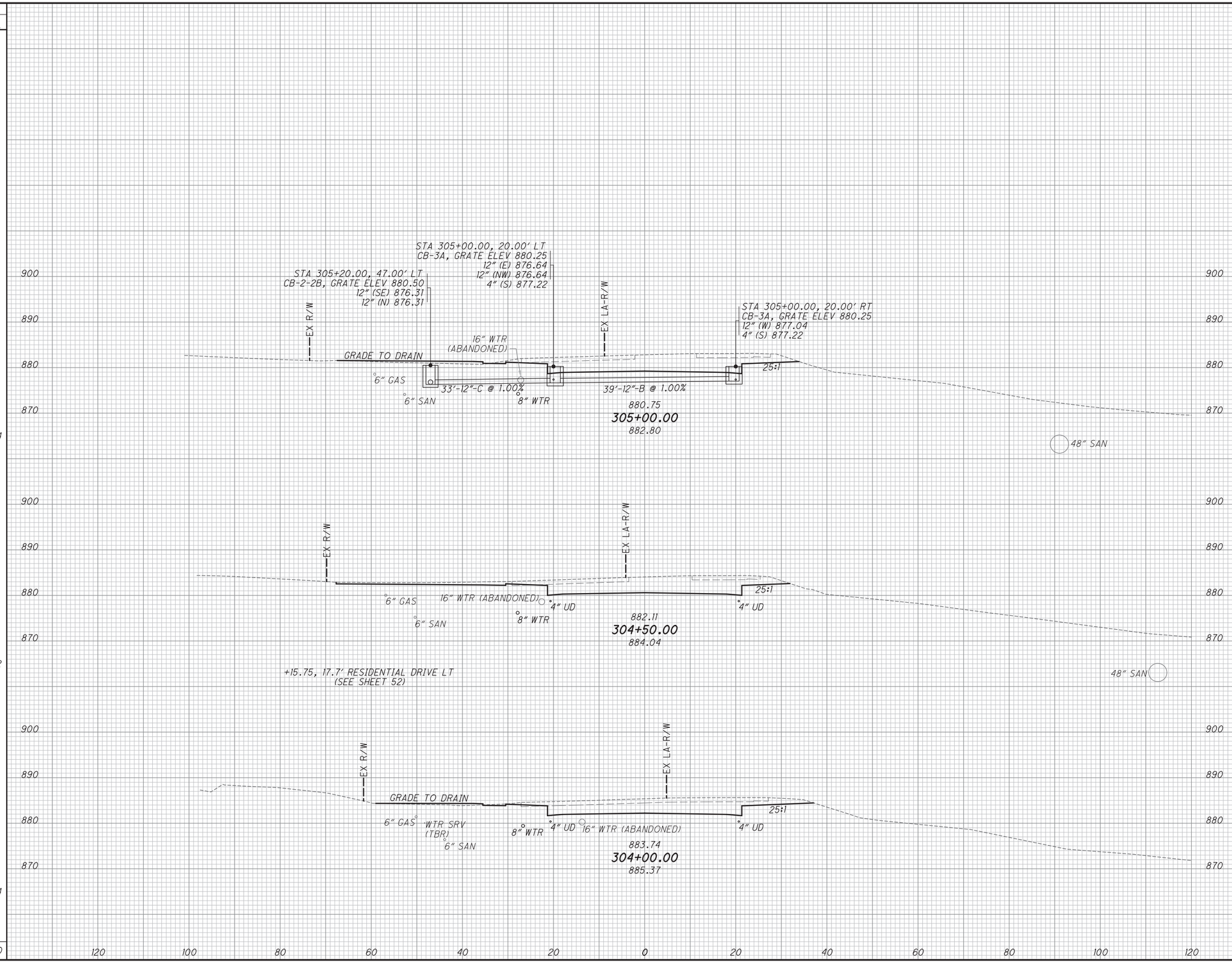

CALCULATED DWH
CHECKED RDW

CROSS SECTIONS - SANDUSKY STREET
STA. 304+00.00 TO STA. 305+00.00

DEL-23-13.17

ms consultants, inc.

PLOT.CEL

ms consultants, inc.
msconsultants.com

www.msconsultants.com

Ohio DOT Workspace
DEL-23

UGF: ohdot1V8i
PCF: 60-06655_Columbus

Batchplot Spec: \\0330share\n\60\06655\standards\plotdrv\batchplt.spc
Pen Table: S:\std\plotting\usth\V8\pen\V8_ms_std.tbl
Plot Driver: S:\std\plotting\usth\V8\PDF.pltcfg

Model: XS_SHEET_305+50.00_TO_306+50.00 By: FENCE_VIEW1
Printed: 10/8/2015 @ 4:26:09 PM By: hbrendinger
File: \\0330share\n\60\06655\roadway\sheets\06655XS002.dgn

34" x 22"

SEEDING END WIDTH	SEEDING SQ. YDS.	END AREA CUT	END AREA FILL	VOLUME CUT	VOLUME FILL
45	228	175	0	331	0
35	217	182	0	336	0
42	284	181	0	342	10
729				1,009	10

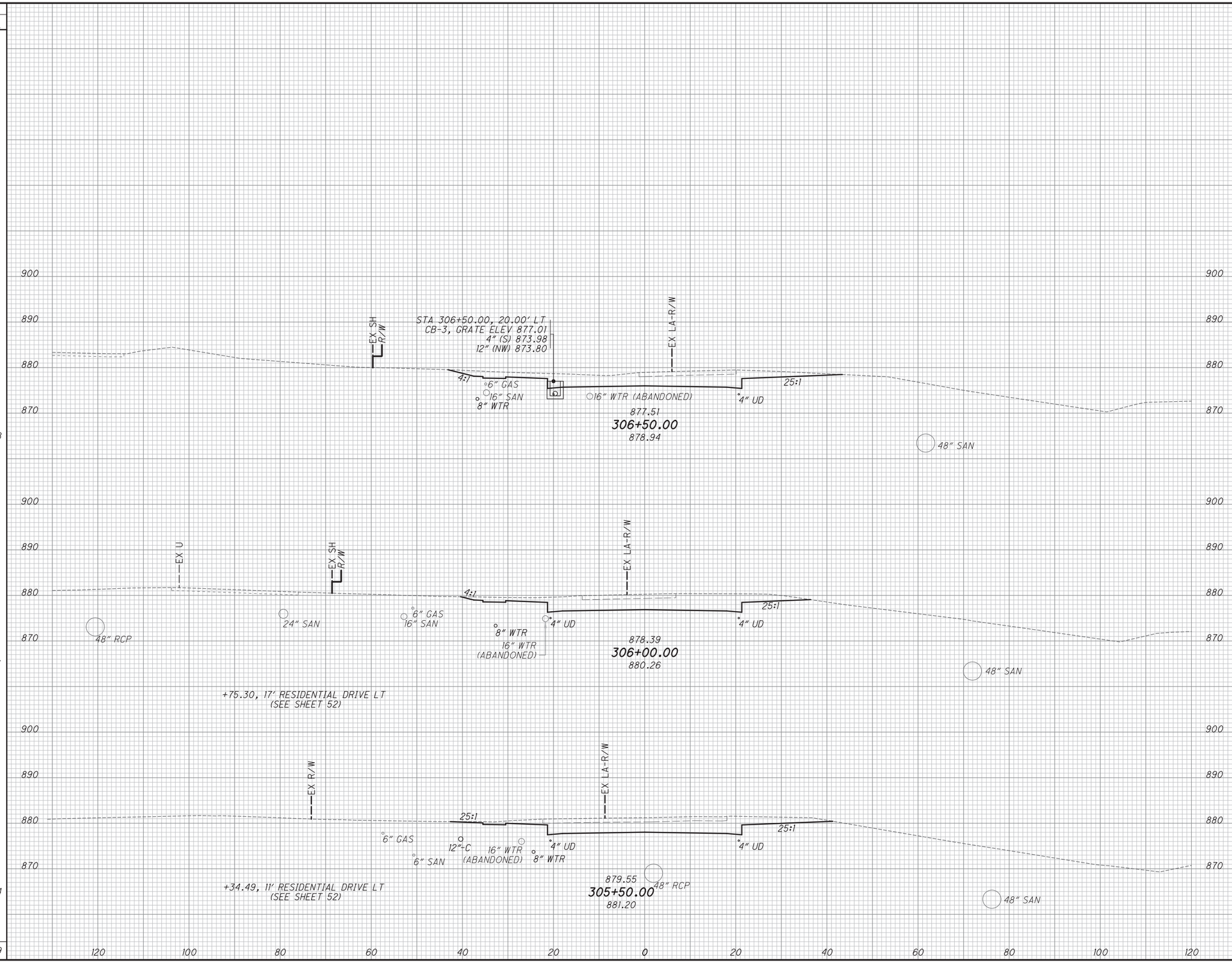

CALCULATED DWH
CHECKED RDW

CROSS SECTIONS - SANDUSKY STREET
STA. 305+50.00 TO STA. 306+50.00

DEL-23-13.17

ms consultants, inc.

PLOT.CEL

ms consultants, inc.
msconsultants.com

www.msconsultants.com

Ohio DOT Workspace
DEL-23

UGF: ohdot\V8i
PCF: 60-06655_Columbus

Batchplot Spec: \\0330shore\n\60\06655\standards\plotdrv\batchplt.spc
Pen Table: S:\std\plotting\ust\V8\pen\V8_ms_std.tbl
Plot Driver: S:\std\plotting\ust\V8\PDF.pltcfg

34" x 22"

Model: XS_SHEET_307+00.00_TO_308+00.00 Mx: FENCE_VIEW1
Printed: 10/8/2015 @ 4:26:09 PM By: hbrendinger
File: \\0330shore\n\60\06655\roadway\sheets\06655XS002.dgn

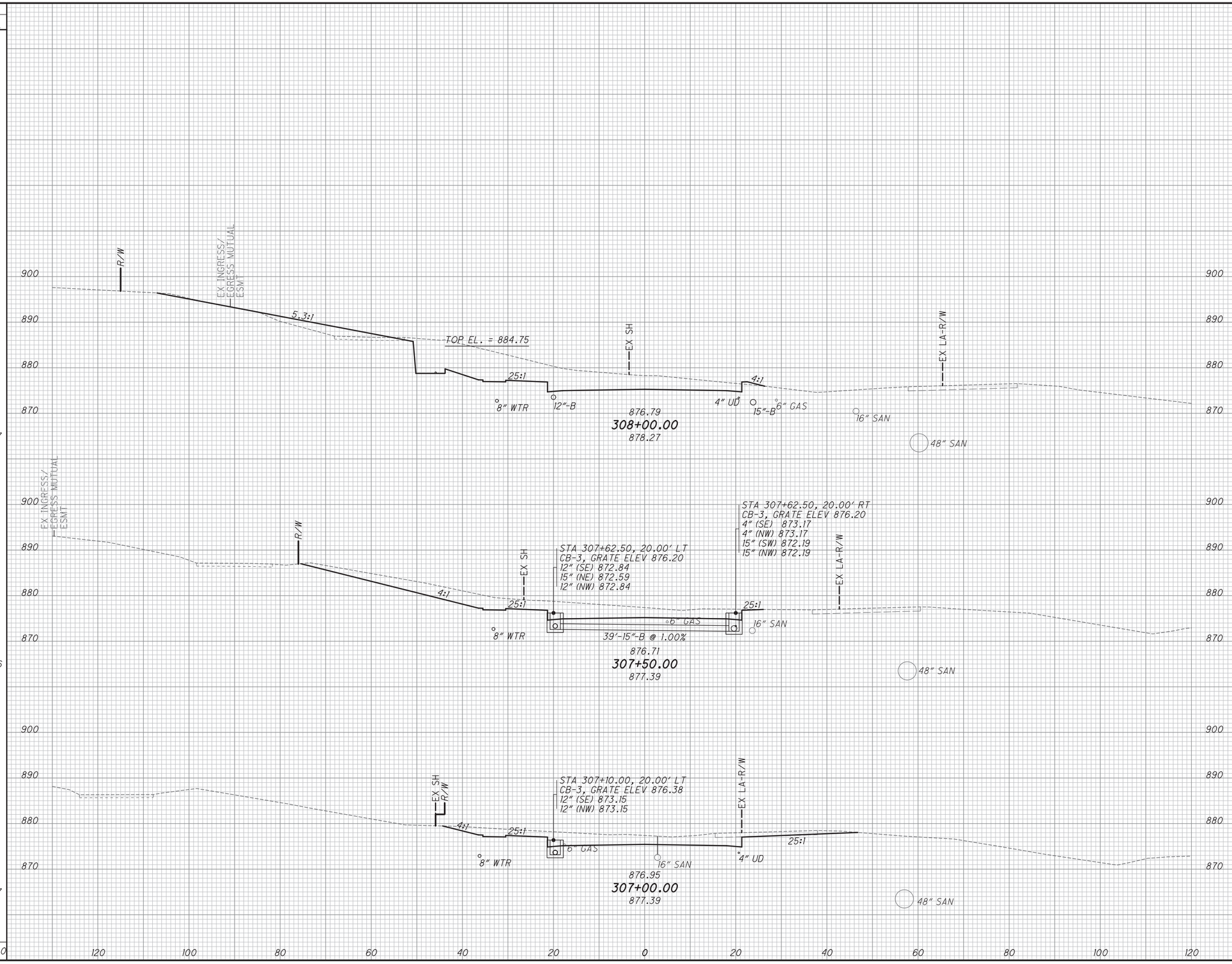

SEEDING END WIDTH	SEEDING SQ. YDS.	END AREA CUT	END AREA FILL	VOLUME CUT	VOLUME FILL
92	427	282	37	467	34
61	306	222	0	344	0
49	267	150	0	301	0
1,000				1,112	34

CALCULATED DWH
CHECKED RDW

CROSS SECTIONS - SANDUSKY STREET
STA. 307+00.00 TO STA. 308+00.00

DEL-23-13.17

ms consultants, inc.

PLOT.CEL

ms consultants, inc.
msconsultants.com

www.msconsultants.com

Ohio DOT Workspace
DEL-23

UGF: ohdot1V8i
PCF: 60-06655_Columbus

Batchplot Spec: \\0330share\n\60\06655\standards\plotdrv\batchplt.spc
Pen Table: S:\std\plotting\usin\V8i\pen\V8i_ms_std.tbl
Plot Driver: S:\std\plotting\usin\V8i\PDF.pltcfg

Model: XS_SHEET_308+50.00_TO_309+50.00x FENCE_VIEW1
Printed: 10/8/2015 @ 4:26:10 PM By: hbrendinger
File: \\0330share\n\60\06655\roadway\sheets\06655XS002.dgn

34" x 22"

SEEDING END WIDTH	SEEDING SQ. YDS.	END AREA CUT	END AREA FILL	VOLUME CUT	VOLUME FILL
194		2339	38		
	878			3742	35
122		1702	0		
	572			2310	0
82		793	0		
	489			995	34
1,939				7,047	69

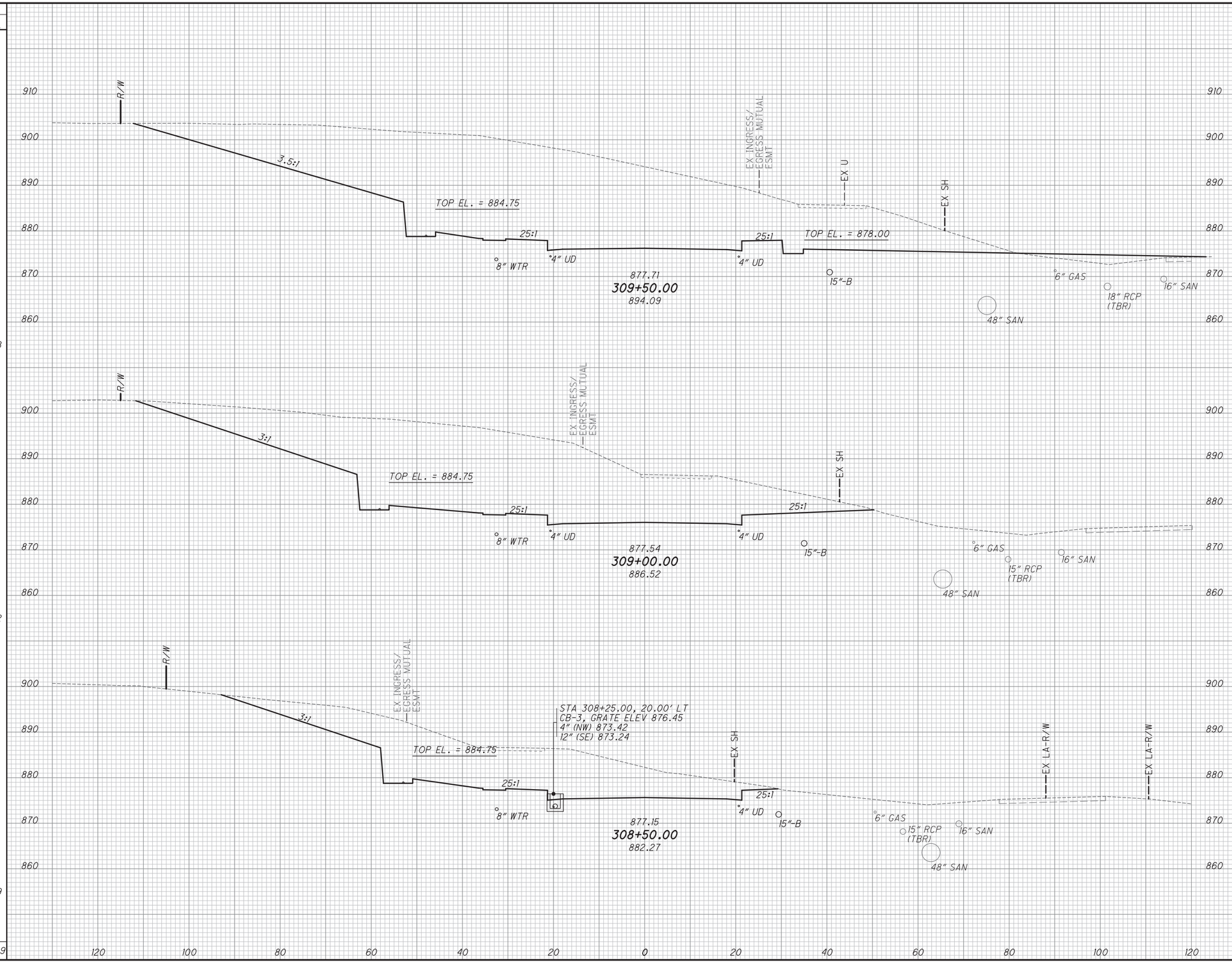

CALCULATED DWH
CHECKED RDW

CROSS SECTIONS - SANDUSKY STREET
STA. 308+50.00 TO STA. 309+50.00

DEL-23-13.17

ms consultants, inc.

PLOT.CEL

ms consultants, inc.
msconsultants.com

www.msconsultants.com

Ohio DOT Workspace
DEL-23

UGF: ohdot\V8i
PCF: 60-06655_Columbus

Batchplot Spec: \\033share\n\60\06655\standards\plotdrv\batchplt.spc
Pen Table: S:\std\plotting\ustn\V8\pen\V8_ms_std.tbl
Plot Driver: S:\std\plotting\ustn\V8\PDF.pltcfg

Model: XS_SHEET_310+00.00_TO_310+50.00 View: FENCE_VIEW1
Printed: 10/8/2015 @ 4:26:10 PM By: hurendinger
File: \\033share\n\60\06655\roadway\sheets\06655XS002.dgn

34" x 22"

SEEDING END WIDTH	SEEDING SQ. YDS.	END AREA CUT	END AREA FILL	VOLUME CUT	VOLUME FILL
156		1311	15		
186	955	2504	21	3532	33
	1061			4484	55
	2,016			8,016	88

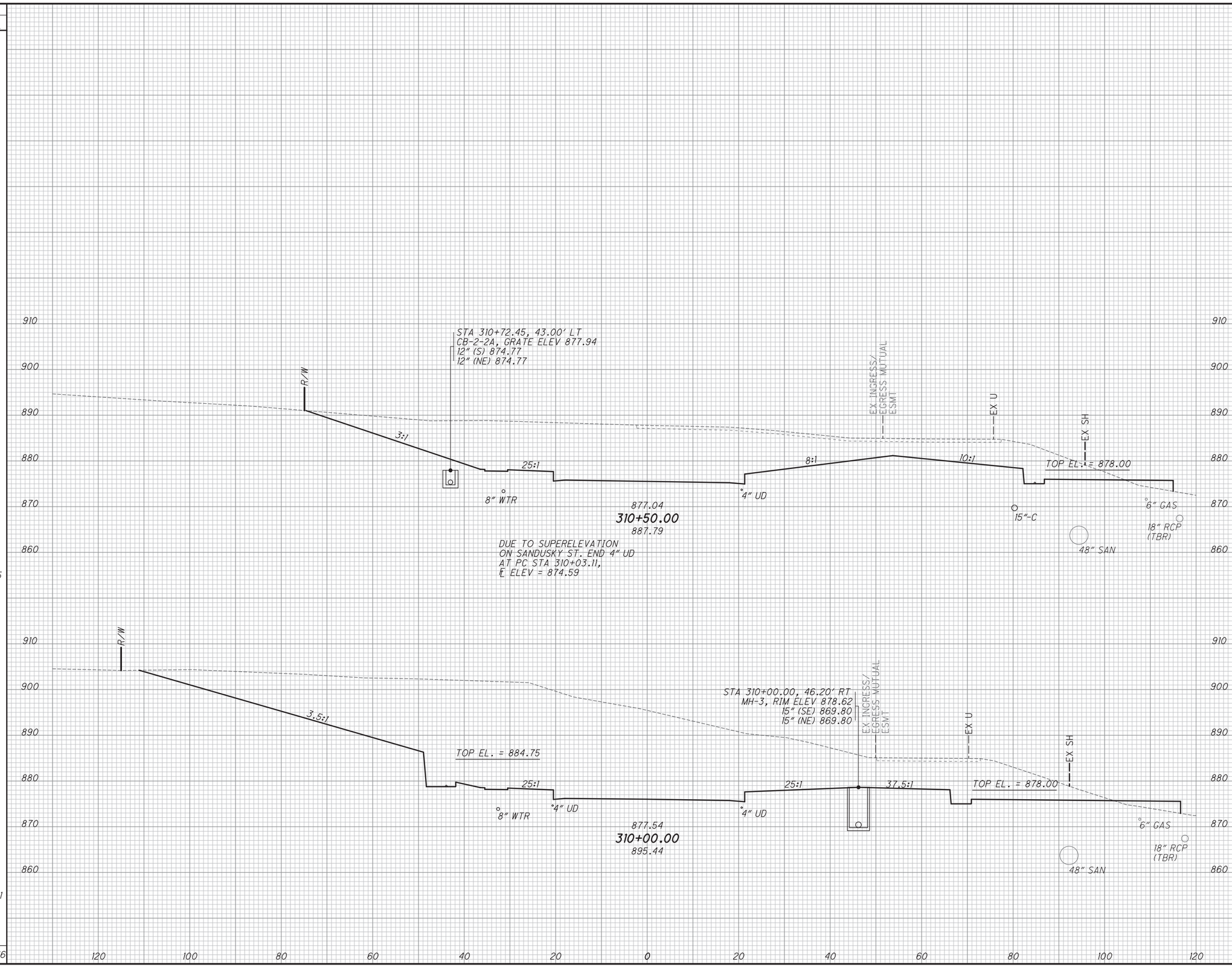

CALCULATED DWH
CHECKED RDW

CROSS SECTIONS - SANDUSKY STREET
STA. 310+00.00 TO STA. 310+50.00

DEL-23-13.17

ms consultants, inc.

PLOT.CEL

ms consultants, inc.
msconsultants.com

www.msconsultants.com

Ohio DOT Workspace
DEL-23

34" x 22"

Model: XS_SHEET_311+00.00_TO_311+50.00New SHEET
Printed: 1/20/2016 @ 9:52:28 AM By: awhite
File: \\0330share\n\60\06655\roadway\streets\06655XS002.dgn

Batchplot Spec: \\0330share\n\60\06655\standards\plotdrv\batchplt.spc
Pen Table: \\0330share\n\60\06655\deliverables\2016-01-20 Revised Per Addendum\clean\V8PDP.tbl
Plot Driver: S:\std\plotting\ustn\V8\PDP.pltcfg

SEEDING END WIDTH	SEEDING SQ. YDS.	END AREA CUT	END AREA FILL	VOLUME CUT	VOLUME FILL
66	376	481	0	915	0
66	511	481	0	1432	0
117	744	1066	0	2261	15
150	850	1363	16	2476	29
2,481				7,084	44

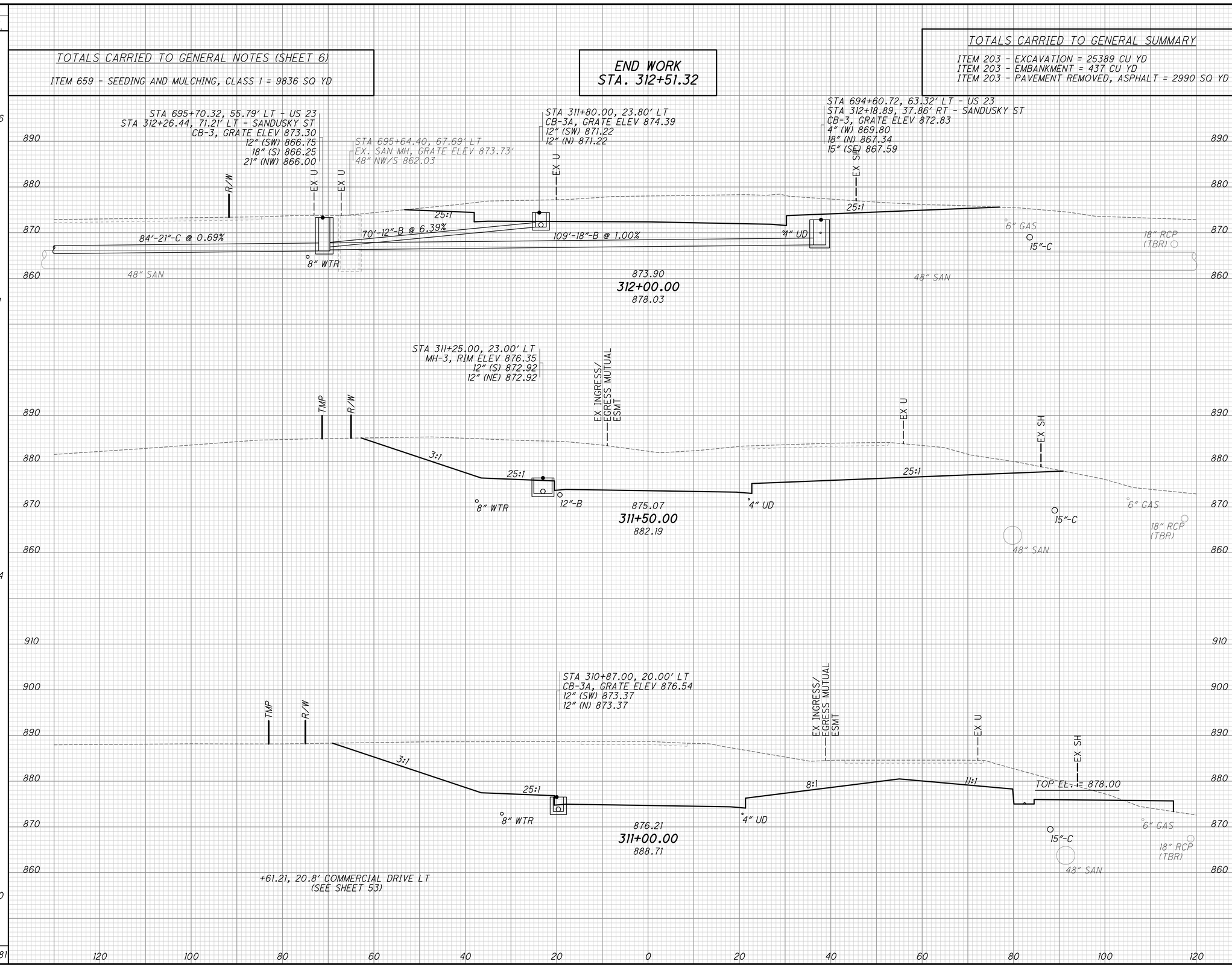

CALCULATED DWH
CHECKED RDW

CROSS SECTIONS - SANDUSKY STREET
STA. 311+00.00 TO STA. 311+50.00

DEL-23-13.17

ms consultants, inc.

PLOT.CEL

ms consultants, inc.
msconsultants.com

www.msconsultants.com

Ohio DOT Workspace
DEL-23

1" 0 0.5"

UGF: ohdot\V8i
PCF: 60-06655_Columbus

Batchplot Spec: \\033share\n\60\06655\standards\plotdrv\batchplt.spc
Pen Table: S:\std\plotting\ustin\V8\pen\V8_ms_std.tbl
Plot Driver: S:\std\plotting\ustin\V8\PDF.pltcfg

34" x 22"

View: FENCE_VIEW1
By: hurendinger
Model: Sheet
Printed: 10/8/2015 @ 4:26:11 PM
File: \\033share\n\60\06655\roadway\sheets\06655GE001.dgn

SUPERELEVATION TABLE

P.I. Station 311+33.35 | Dc = 49° 49′ 21″

LEFT SIDE					CENTERLINE CONTROL		RIGHT SIDE					REMARKS
EDGE ELEVATION	TRANSITION RATE	ELEVATION CORRECTION	CROSS SLOPE	WIDTH	STATION	PROFILE GRADE	WIDTH	CROSS SLOPE	ELEVATION CORRECTON	TRANSITION RATE	EDGE ELEVATION	
877.26		-0.29	-0.0160	18.00	309+00.00	877.54	18.00	-0.0160	-0.29		877.26	
877.38		-0.29	-0.0160	18.00	309+25.00	877.67	18.00	-0.0160	-0.29		877.38	
877.42		-0.29	-0.0160	18.00	309+38.97	877.70	18.00	-0.0160	-0.29		877.42	N.C.
877.51		-0.21	-0.0114	18.00	309+50.00	877.71	18.00	-0.0160	-0.29		877.42	
877.65	161:1	-0.02	-0.0010	18.00	309+75.00	877.67	18.00	-0.0160	-0.29		877.38	
877.66		0.00	0.0000	18.00	309+77.45	877.66	18.00	-0.0160	-0.29		877.37	½ FLAT
877.71		0.17	0.0094	18.00	310+00.00	877.54	18.00	-0.0160	-0.29		877.26	
877.72		0.19	0.0107	18.00	310+03.11	877.52	18.00	-0.0160	-0.29		877.24	PC
877.71		0.29	0.0160	18.00	310+15.94	877.42	18.00	-0.0160	-0.29		877.13	F.S.
877.62		0.29	0.0160	18.00	310+25.00	877.34	18.00	-0.0160	-0.29		877.05	
877.33		0.29	0.0160	18.00	310+50.00	877.04	18.00	-0.0160	-0.29		876.76	
876.96		0.29	0.0160	18.00	310+75.00	876.67	18.00	-0.0160	-0.29		876.38	
876.50		0.29	0.0160	18.00	311+00.00	876.21	18.00	-0.0160	-0.29		875.92	
875.96		0.29	0.0160	18.00	311+25.00	875.67	18.00	-0.0160	-0.29		875.38	
875.36		0.29	0.0160	18.00	311+50.00	875.07	FOR EDGE OF PAVEMENT ELEVATIONS, SEE SANDUSKY STREET/ US 23 INTERSECTION DETAIL SHEET 51.					
FOR EDGE OF PAVEMENT ELEVATIONS, SEE SANDUSKY STREET/ US 23 INTERSECTION DETAIL SHEET 51.					311+75.00	874.47						
					311+85.20	874.23						F.S.
					311+98.02	873.93						PT

SUPERELEVATION TABLE

LEFT SIDE					CENTERLINE CONTROL		RIGHT SIDE					REMARKS
EDGE ELEVATION	TRANSITION RATE	ELEVATION CORRECTION	CROSS SLOPE	WIDTH	STATION	PROFILE GRADE	WIDTH	CROSS SLOPE	ELEVATION CORRECTON	TRANSITION RATE	EDGE ELEVATION	

CALCULATED
CHECKED

SUPERELEVATION TABLE
SANDUSKY STREET

DEL-23-13.17

ms consultants, inc.

PLOT.CEL

ms consultants, inc.
msconsultants.com

www.msconsultants.com

Ohio DOT Workspace
DEL-23

UGF: ohdot\V8i
PCF: 60-06655_Columbus

Batchplot Spec: \\0330share\n\60\06655\standards\plotdrv\batchplt.spc
Pen Table: S:\std\plotting\usa\V8\pen\V8_ms_std.tbl
Plot Driver: S:\std\plotting\usa\V8\PDF.pltcfg

Model: Sheet
Printed: 10/8/2015 @ 4:26:13 PM
File: \\0330share\n\60\06655\roadway\sheets\06655G001.dgn

View: FENCE_VIEW1
By: hbrendinger

34" x 22"

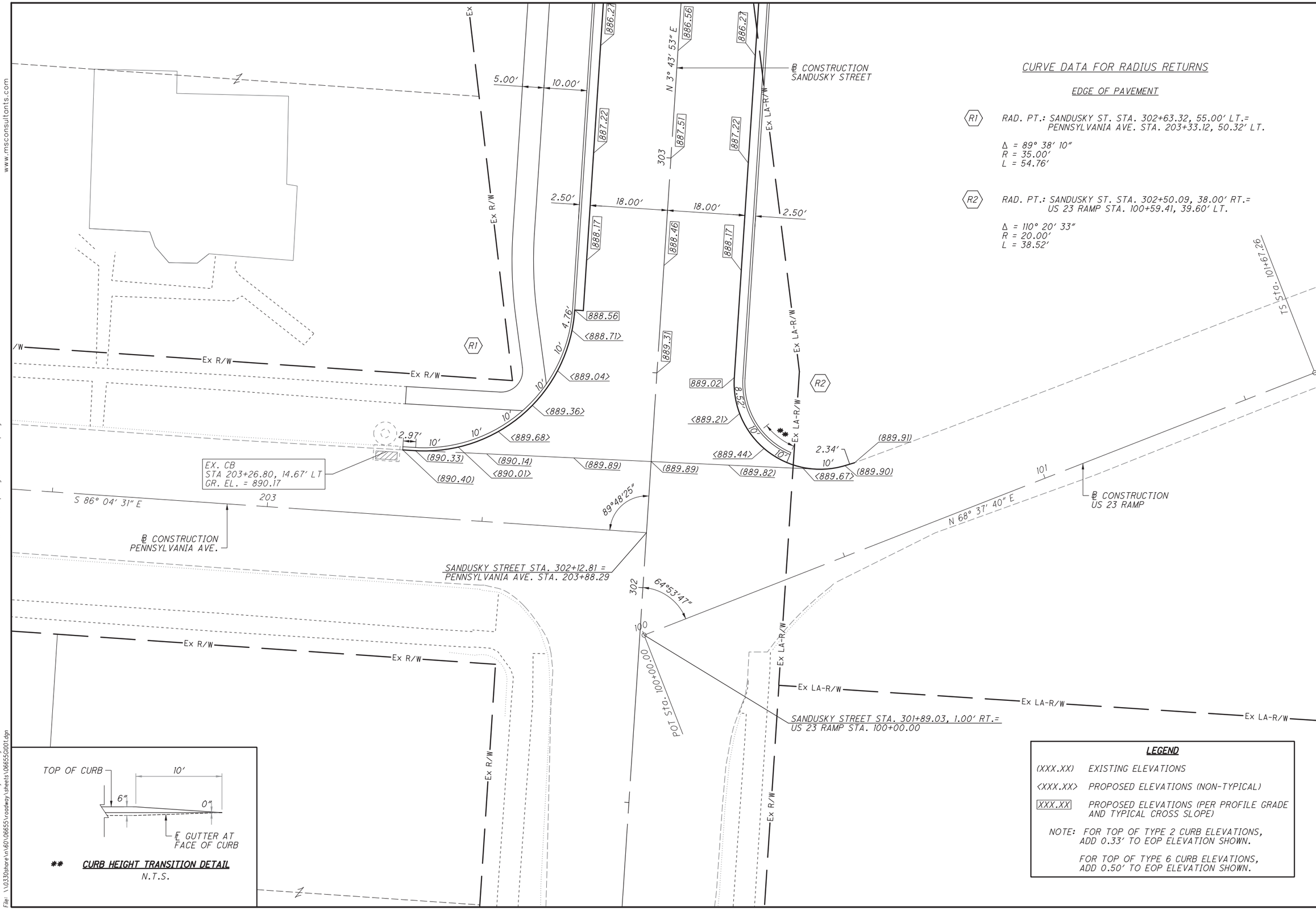

HORIZONTAL SCALE IN FEET 0 5 10 20

CALCULATED

CHECKED

INTERSECTION DETAIL - SANDUSKY STREET AT PENNSYLVANIA AVE/US 23 NB RAMP

DEL-23-13.17

ms consultants, inc.

PLOT.CEL

ms consultants, inc.
msconsultants.com

www.msconsultants.com

Ohio DOT Workspace
DEL-23

UGF: ohdot\8i
PCF: 60-06655_Columbus

Batchplot Spec: \\0330share\n\60\06655\standards\plotdrv\batchplt.spc
Pen Table: S:\std\plotting\usth\V8\pen\V8_ms_std.tbl
Plot Driver: S:\std\plotting\usth\V8\PDF.pltcfg

View: FENCE_VIEW1
By: hbrendinger
Sheets\06655C002.dgn

Model: Sheet
Printed: 10/8/2015 @ 4:26:14 PM
File: \\0330share\n\60\06655\roadway\sheets\06655C002.dgn

34" x 22"

LEGEND

(XXX.XX)	EXISTING ELEVATIONS
<XXX.XX>	PROPOSED ELEVATIONS (NON-TYPICAL)
XXX.XX	PROPOSED ELEVATIONS (PER PROFILE GRADE AND TYPICAL CROSS SLOPE)

NOTE: FOR TOP OF TYPE 2 CURB ELEVATIONS, ADD 0.33′ TO EOP ELEVATION SHOWN.

POST CONSTRUCTION BMP
VEGETATED BIOFILTER
BOTTOM OF DITCH WIDTH = 7.0′

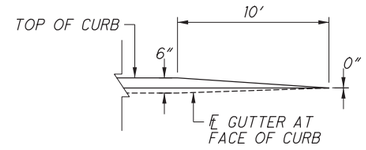

**** CURB HEIGHT TRANSITION DETAIL**
N.T.S.

CURVE DATA (ALIGNMENT)

US 23

P.I. Sta. 693+80.16
Δ = 4° 40′ 32″ (LT)
Dc = 0° 28′ 00″
R = 12,277.67′
T = 501.23′
L = 1,001.91′
E = 10.23′
C = 1,001.63′
C.B. = N 23° 43′ 35″ W
e_{MAX} = MATCH EXISTING

SANDUSKY STREET

P.I. Sta. 311+33.35
Δ = 97° 06′ 30″ (RT)
Dc = 49° 49′ 21″ (NDC = 15° 30′)
R = 115.00′
T = 130.23′
L = 194.91′
E = 58.74′
C = 172.40′
C.B. = N 17° 04′ 24″ E
e_{MAX} = 0.0160 (NDC = 0.040)

CURVE DATA FOR RADIUS RETURNS

EDGE OF PAVEMENT

R1 RAD. PT.: US 23 STA. 694+03.73, 101.00′ LT.= SANDUSKY ST. STA. 311+18.52, 88.00′ RT.
Δ = 130° 08′ 39″
R = 70.00′
L = 159.00′

R2 RAD. PT.: US 23 STA. 696+53.97, 173.98′ LT.= SANDUSKY ST. STA. 311+60.63, 168.00′ LT.
Δ = 27° 07′ 36″
R = 150.00′
L = 71.02′

R3 RAD. PT.: US 23 STA. 695+82.82, 102.91′ LT.= SANDUSKY ST. STA. 311+87.18, 84.29′ LT.
Δ = 17° 37′ 57″
R = 50.00′
L = 15.39′

R4 RAD. PT.: US 23 STA. 696+28.80, 192.00′ LT.= SANDUSKY ST. STA. 311+49.89, 151.17′ LT.
Δ = 27° 07′ 36″
R = 150.00′
L = 71.02′

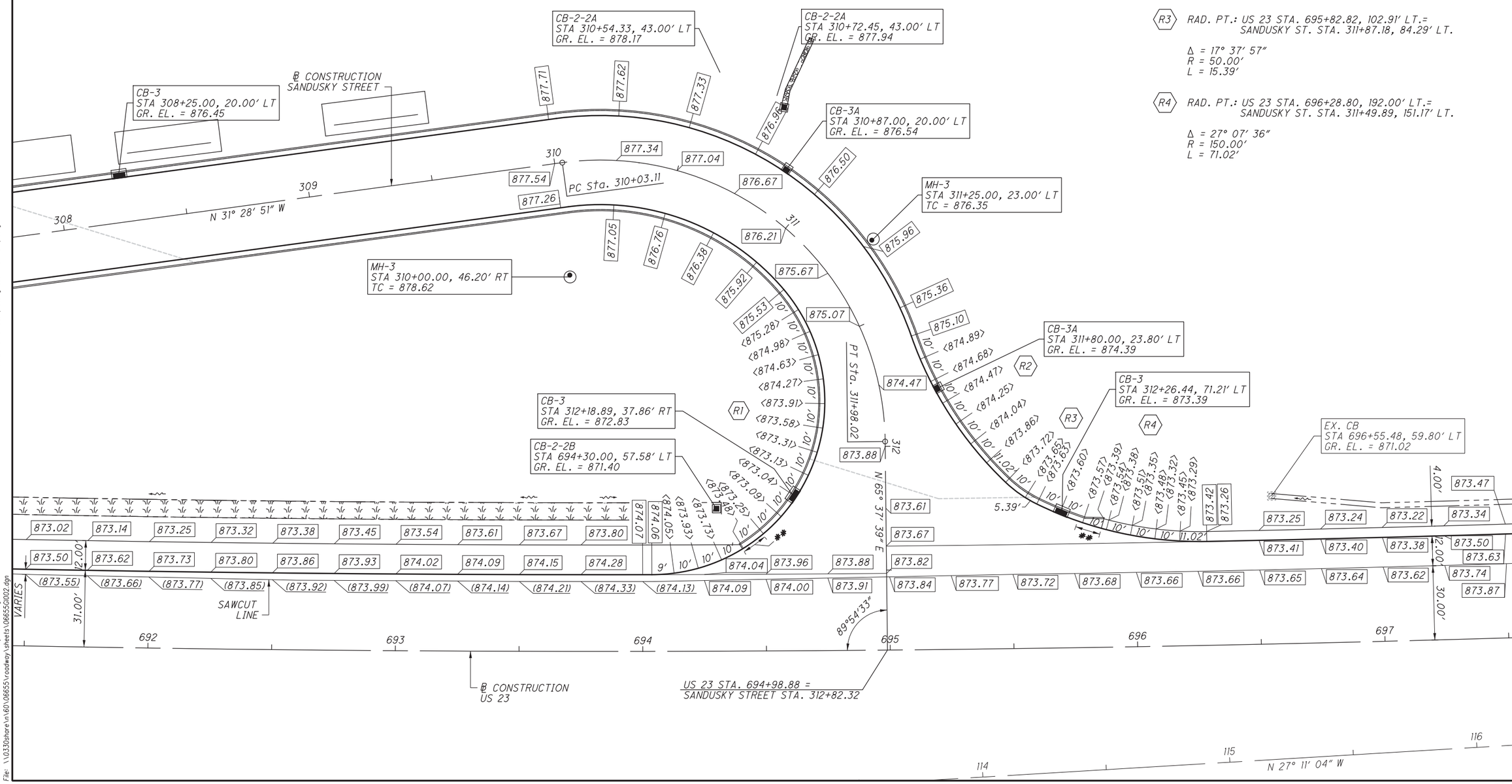

HORIZONTAL SCALE IN FEET
0 10 20 40

CALCULATED
CHECKED

INTERSECTION DETAIL
SANDUSKY STREET AT US 23

DEL-23-13.17

ms consultants, inc.

PLOT.CEL

ms consultants, inc.
msconsultants.com

www.msconsultants.com

Ohio DOT Workspace
DEL-23

UGF: ohdot\8i
PCF: 60-06655_Columbus

Batchplot Spec: \\0330share\n\60\06655\standards\plotdrv\batchplt.spc
Pen Table: S:\std\plotting\usth\V8\pen\V8_ms_std.tbl
Plot Driver: S:\std\plotting\usth\V8\PDF.pltcfg

Model: Sheet
Printed: 10/8/2015 @ 4:26:15 PM
File: \\0330share\n\60\06655\roadway\sheets\06655D001.dgn

View: FENCE_VIEW1
By: hbrendinger

34" x 22"

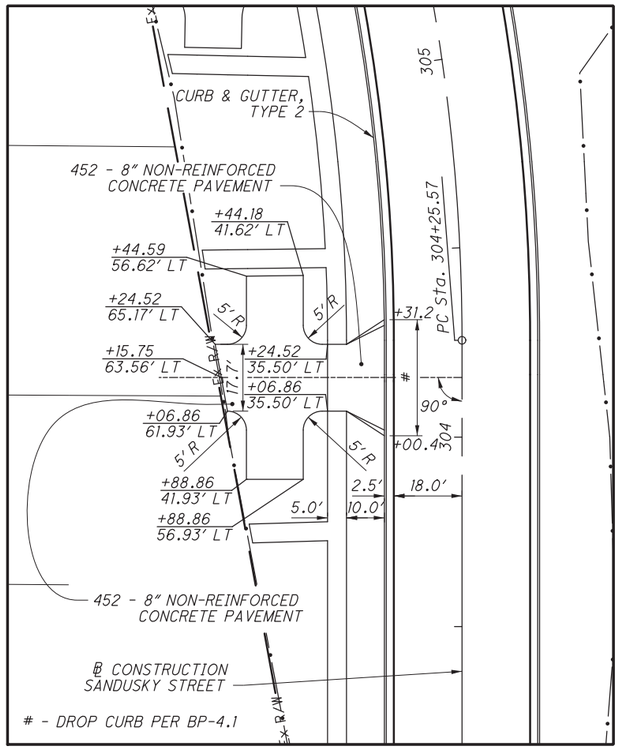

RESIDENTIAL DRIVE
STA 304+15.75

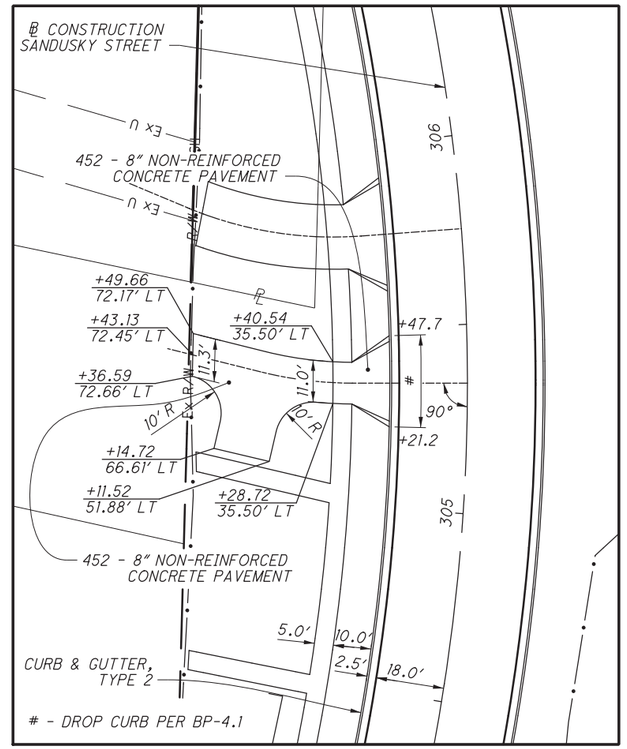

RESIDENTIAL DRIVE
STA 305+34.49

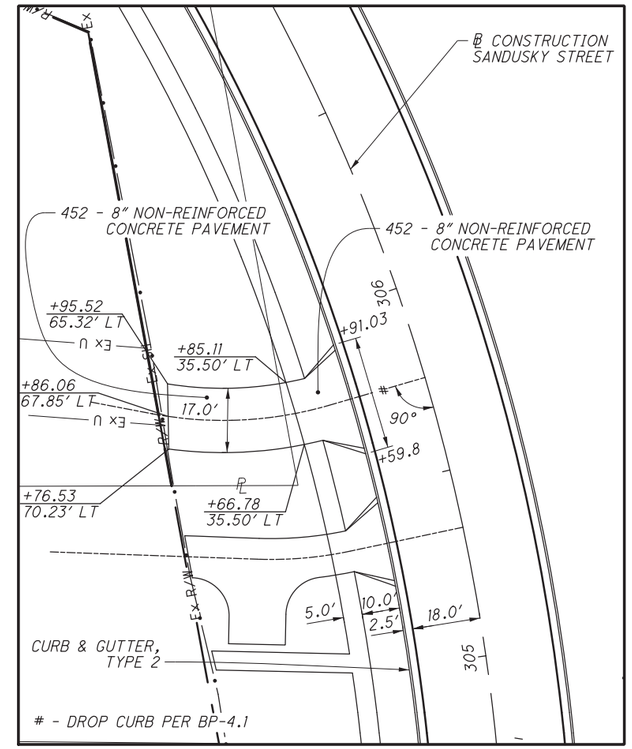

RESIDENTIAL DRIVE
STA 305+75.30

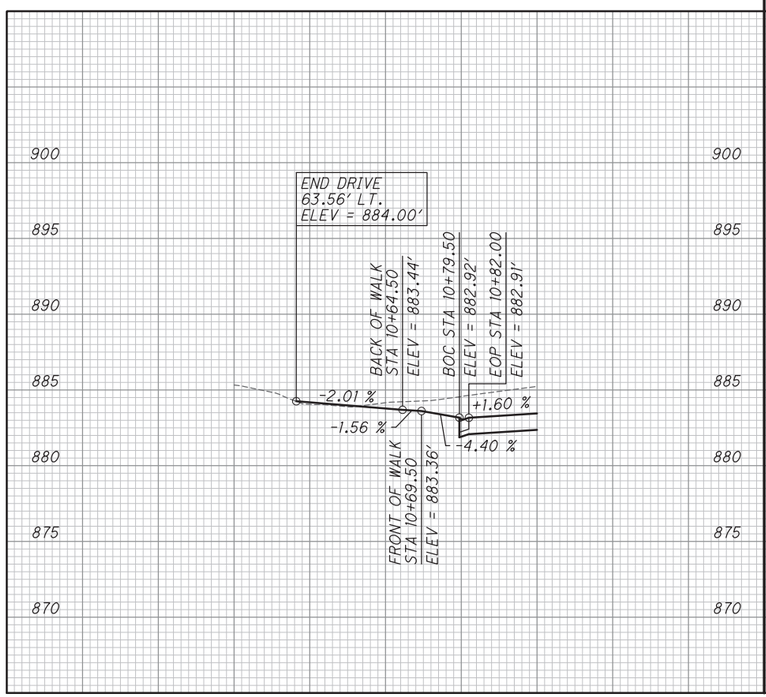

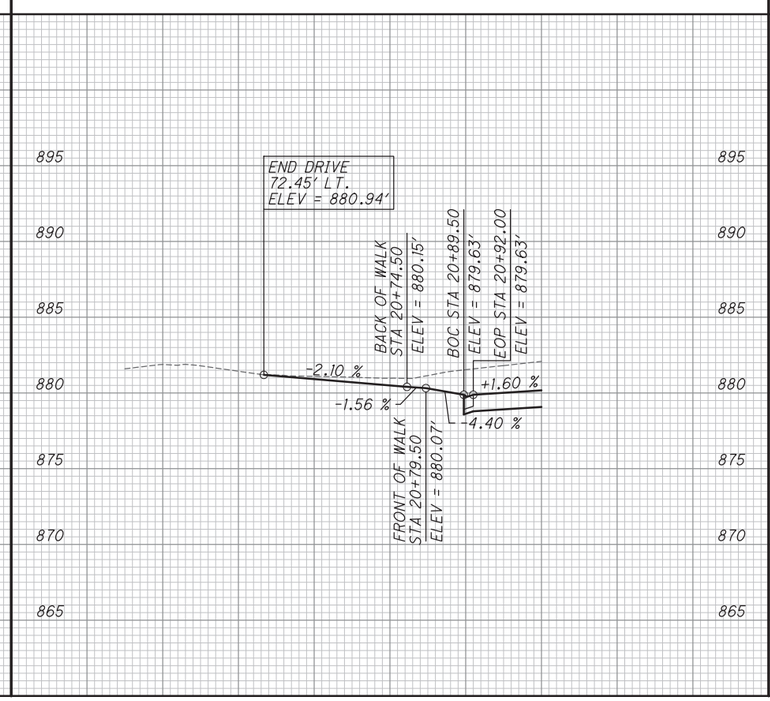

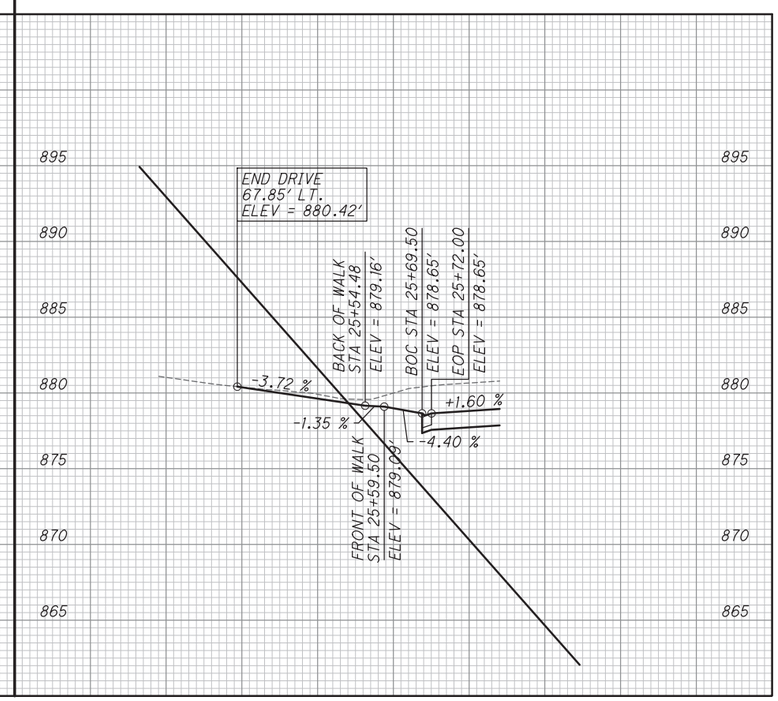

HORIZONTAL SCALE IN FEET
0 10 20 40

CALCULATED
CHECKED

DRIVE DETAILS - SANDUSKY STREET
STA 304+15.75 / STA 305+34.49 / STA 305+75.30

DEL-23-13.17

PLOT.CEL

ms consultants, inc.
msconsultants.com

www.msconsultants.com

Ohio DOT Workspace
DEL-23

UGF: ohdot\V8i
PCF: 60-06655_Columbus

Batchplot Spec: \\0330share\n\60\06655\standards\plotdrv\batchplt.spc
Pen Table: S:\std\plotting\usin\V8\pen\V8_ms_std.tbl
Plot Driver: S:\std\plotting\usin\V8\PDF.pltcfg

Model: Sheet
Printed: 10/8/2015 @ 4:26:16 PM
File: \\0330share\n\60\06655\roadway\sheets\06655G002.dgn

View: FENCE_VIEW1
By: hbrendinger

34" x 22"

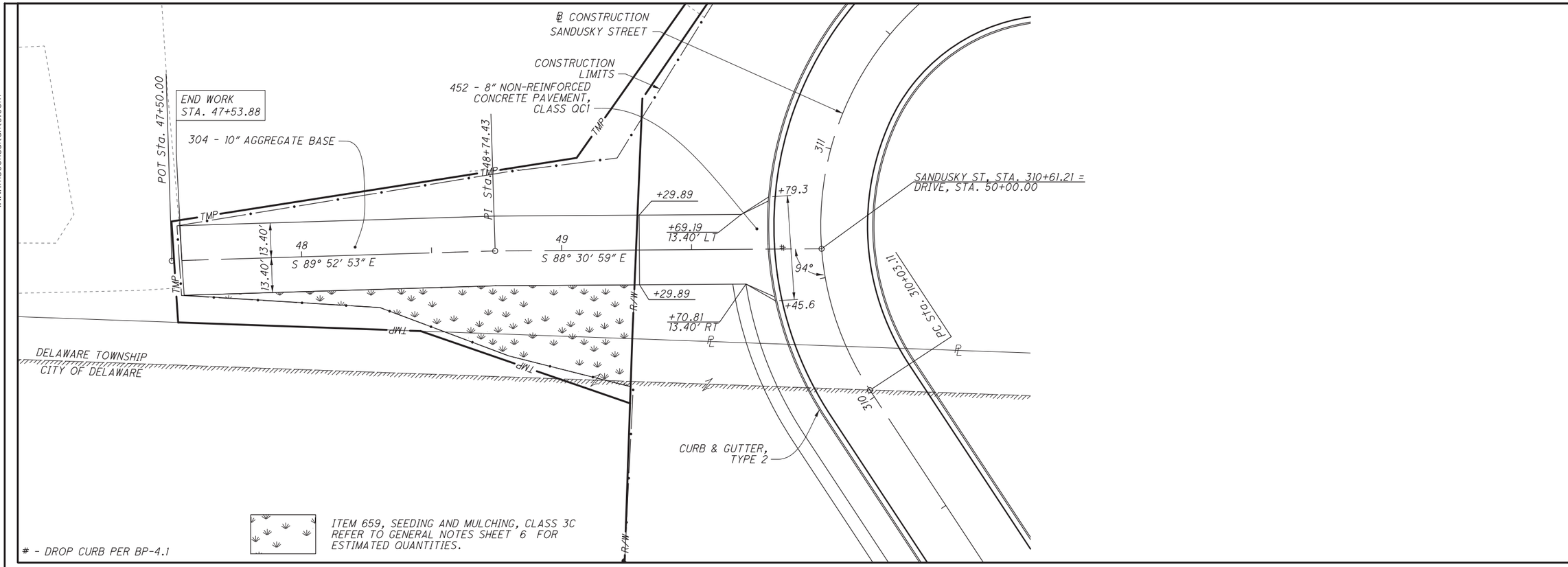

COMMERCIAL DRIVE

STA 310+61.21

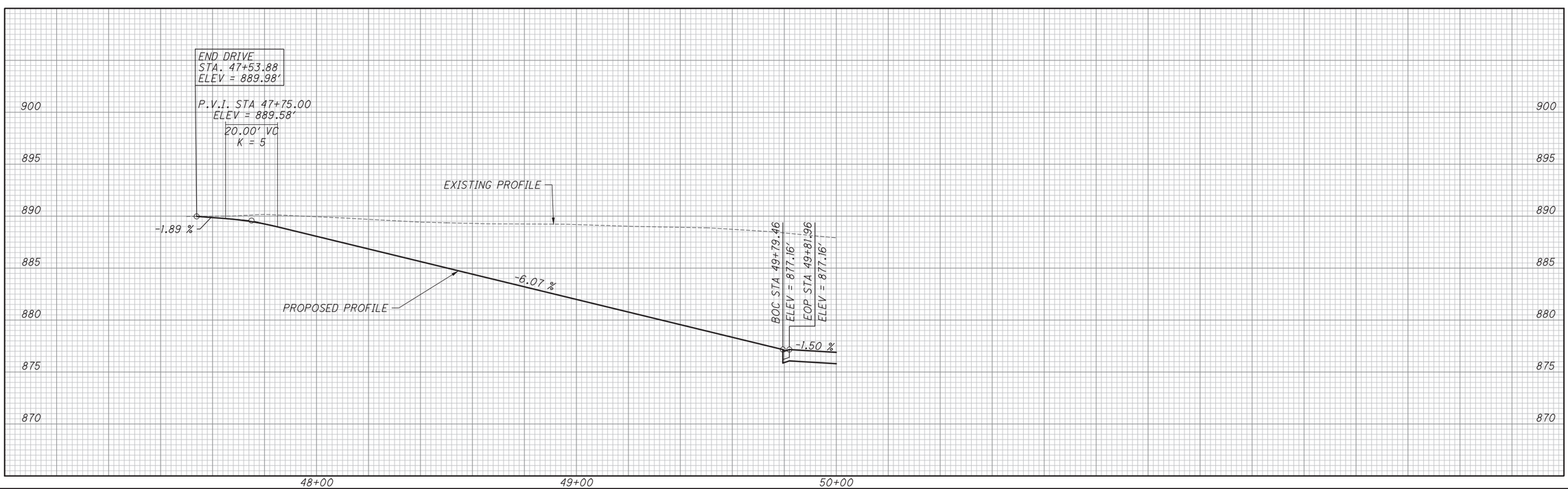

N

HORIZONTAL SCALE IN FEET
0 10 20 40

CALCULATED
CHECKED

DRIVE DETAIL - SANDUSKY STREET
STA 310+61.21

DEL-23-13.17

ms consultants, inc.

PLOT.CEL

ms consultants, inc.
msconsultants.com

www.msconsultants.com

Ohio DOT Workspace
DEL-23

UGF: ohdot1V8i
PCF: 60-06655_Columbus

Batchplot Spec: \\0330share\n\60\06655\standards\plotdrv\batchplt.spc
Pen Table: S:\std\plotting\usth\V8\pen\V8_ms_std.tbl
Plot Driver: S:\std\plotting\usth\V8\PDF.pltcfg

34" x 22"

Model: Sheet
Printed: 10/8/2015 @ 4:26:17 PM
File: \\0330share\n\60\06655\utilities\sheets\06655UGN001.dgn
View: FENCE_VIEW1
By: hbrendinger

STATE PLANE COORDINATES (OHIO NORTH ZONE)

SHT#	WATERLINE STATION	DESCRIPTION	AS-BUILT NORTHING	AS-BUILT EASTING	AS-BUILT C/L ELEV
57	0+00	16"x8" TAPPING SLEEVE			
57	0+02	8" VALVE			
57	0+05	8" 45° BEND (HORIZ)			
57	0+25	8" 45° BEND (HORIZ)			
57	0+80	3/4" WATER SERVICE, LONG (459 N. SANDUSKY AVE)			
57	1+66	JOINT DEF (HORIZ)			
57	1+70	8"x6" ANCHORING TEE			
57	1+70	6" VALVE			
57	1+70	FIRE HYDRANT			
57	1+75	3/4" WATER SERVICE, LONG (469 N. SANDUSKY AVE)			
57	1+86	JOINT DEF (HORIZ)			
57	2+06	JOINT DEF (HORIZ)			
58	2+26	JOINT DEF (HORIZ)			
58	2+39	3/4" WATER SERVICE, LONG (473 N. SANDUSKY AVE)			
58	2+46	JOINT DEF (HORIZ)			
58	2+66	JOINT DEF (HORIZ)			
58	2+85	JOINT DEF (HORIZ)			
58	3+03	3/4" WATER SERVICE, LONG (477 N. SANDUSKY AVE)			
58	3+06	JOINT DEF (HORIZ)			
58	3+26	JOINT DEF (HORIZ)			
58	3+36	8" 22.5° BEND (HORIZ)			
58	3+52	8" 22.5° BEND (HORIZ)			
58	4+05	6" ANCHORING TEE			
58	4+05	6" VALVE			
58	4+05	FIRE HYDRANT			
58	4+87	JOINT DEF (HORIZ)			
58	5+07	JOINT DEF (HORIZ)			
58	5+27	JOINT DEF (HORIZ)			
59	7+35	6" ANCHORING TEE			
59	7+35	6" VALVE			
59	7+35	FIRE HYDRANT			
59	7+40	JOINT DEF (VERT)			
59	7+58	JOINT DEF (HORIZ)			
59	7+78	JOINT DEF (HORIZ)			
59	7+98	8" 11.25° BEND (HORIZ)			
59	8+18	JOINT DEF (HORIZ)			
59	8+38	JOINT DEF (HORIZ)			
59	8+58	8" 11.25° BEND (HORIZ)			
59	8+98	JOINT DEF (HORIZ)			
59	8+98	8" 11.25° BEND (HORIZ)			
59	9+19	8" 11.25° BEND (HORIZ)			
59	10+17	8" 22.5° BEND (VERT)			
59	10+35	8" 22.5° BEND (VERT)			
59	10+40	8" 45° BEND (HORIZ)			
59	10+72	JOINT DEF (HORIZ)			
59	11+19	8" 22.5° BEND (VERT)			
59	11+31	8" 22.5° BEND (VERT)			
59	11+50	6" ANCHORING TEE			
59	11+50	6" VALVE			
59	11+50	FIRE HYDRANT			
60	12+12	8" 45° BEND (HORIZ)			
60	12+19	8" 45° BEND (HORIZ)			
60	13+07	8" 45° BEND (HORIZ)			
60	13+31	8" 45° BEND (VERT)			
60	13+37	8" 45° BEND (VERT)			
60	13+41	8" 45° BEND (HORIZ)			

ESTIMATE OF QUANTITIES

ITEM NO.	DESCRIPTION	QUANTITY	UNIT	AS-BUILT
638	6-IN WATER MAIN, DUCTILE IRON PIPE, ANSI CLASS 52, PUSH ON JOINTS AND FITTINGS	50	FT	
638	8-IN WATER MAIN, DUCTILE IRON PIPE, ANSI CLASS 52, PUSH ON JOINTS AND FITTINGS	1341	FT	
638	3/4-IN COPPER SERVICE BRANCH, AS PER PLAN	152	FT	
638	WATER WORK, MISC.: SERVICE BRANCH BOX, AS PER PLAN	4	EA	
638	6-IN GATE VALVE AND VALVE BOX	4	EA	
638	6-IN FIRE HYDRANT	4	EA	
638	16-IN x 8-IN TAPPING SLEEVE, VALVE, AND VALVE BOX	1	EA	

NOTES:
THE CURB BOX SHALL BE PLACED 1'-0 FROM THE EDGE OF THE SIDEWALK OR 2'-0 INSIDE THE RIGHT-OF-WAY OR EASEMENT LINE WHEN NO SIDEWALK IS PRESENT OR PROPOSED.

THE CURB STOP SHALL BE INSTALLED WITH VALVE OPENING FACING THE STRUCTURE TO BE SERVED. THE CURB STOP SHALL TURN '¼ TURN' CLOCKWISE ON TO OFF POSITION (TYPICAL).

CURB BOXES SHALL BE PLACED A MINIMUM OF 20'-0 FROM ANY EXISTING OR PROPOSED FOUNDATION OR STRUCTURE.

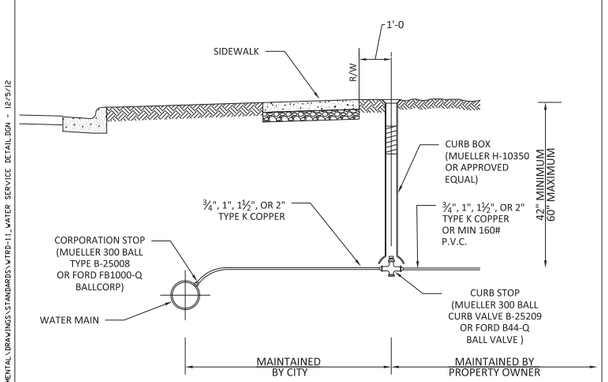

ENGINEERING
DEPARTMENT OF ENGINEERING SERVICES

STANDARD DETAIL

\\0330SHARE\N\60\06655\ENV\ENVIRONMENTAL\DRAWINGS\STANDARDS\VTRD-11_WATER SERVICE DETAIL.DGN - 12/5/12

RUN	BRANCH 3" L	D	Vc.f.	4" L	D	Vc.f.	6" L	D	Vc.f.	8" L	D	Vc.f.	12" L	D	Vc.f.	16" L	D	Vc.f.	20" L	D	Vc.f.	24" L	D	Vc.f.
3"	12	5	0.5																					
4"	10	6	0.5	11	8	0.8																		
6"	9	7	0.5	11	8	0.8	18	12	1.9															
8"	8	8	0.5	10	9	0.7	18	12	1.9	23	16	3.5												
12"	6	12	0.6	8	12	0.8	18	12	1.9	23	16	3.5	38	22	8.7									
16"	6	16	0.8	6	16	0.8	14	16	2.0	20	18	3.3	36	23	8.7	49	30	13.6						
20"	6	20	1.0	6	20	1.0	11	20	1.9	18	20	3.3	35	24	8.7	46	32	13.6	60	38	26.5			
24"	6	24	1.2	6	24	1.2	9	24	1.9	15	24	3.3	30	28	8.7	42	36	14.0	54	42	26.3	68	48	45.4

STEEL WILL BE USED AS REQUIRED BY THE ENGINEER

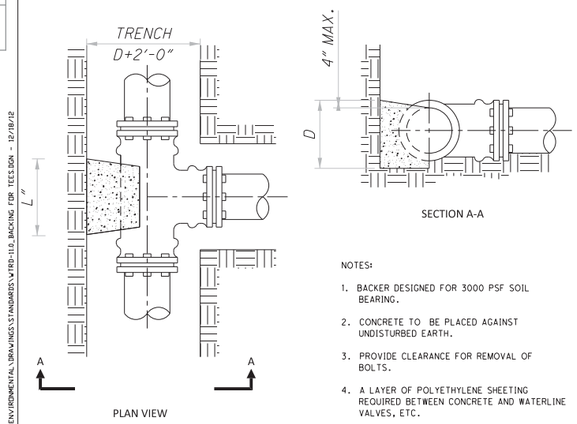

NOTES:

1. BACKER DESIGNED FOR 3000 PSF SOIL BEARING.
2. CONCRETE TO BE PLACED AGAINST UNDISTURBED EARTH.
3. PROVIDE CLEARANCE FOR REMOVAL OF BOLTS.
4. A LAYER OF POLYETHYLENE SHEETING REQUIRED BETWEEN CONCRETE AND WATERLINE VALVES, ETC.

ENGINEERING
DEPARTMENT OF ENGINEERING SERVICES

STANDARD DETAIL

\\0330SHARE\N\60\06655\ENV\ENVIRONMENTAL\DRAWINGS\STANDARDS\VTRD-10_BACKING FOR TEES.DGN - 12/18/12

LENGTH OF PIPE (FEET)	GALLONS PER HOUR PIPE SIZE (INCHES) 6"	8"	12"	16"	20"	24"	30"	36"	42"	48"
50	0.03	0.04	0.06	0.07	0.09	0.11	0.14	0.17	0.19	0.22
100	0.06	0.07	0.11	0.15	0.18	0.22	0.28	0.33	0.39	0.44
200	0.11	0.15	0.22	0.29	0.37	0.44	0.55	0.66	0.77	0.88
300	0.17	0.22	0.33	0.44	0.55	0.66	0.83	0.99	1.16	1.32
400	0.22	0.29	0.44	0.59	0.74	0.88	1.10	1.32	1.55	1.77
500	0.28	0.37	0.55	0.74	0.92	1.10	1.38	1.66	1.93	2.21
1000	0.55	0.74	1.10	1.47	1.84	2.21	2.76	3.31	3.86	4.41
5000	2.76	3.68	5.52	7.36	9.20	11.03	13.79	16.55	19.31	22.07
10000	5.52	7.36	11.03	14.71	18.39	22.07	27.58	33.10	38.62	44.14

NOTES:

FORMULA: $L = \frac{SD\sqrt{P}}{133{,}200}$

WHERE:
L= ALLOWABLE LEAKAGE (GAL./HR.)
S= LENGTH OF PIPE TESTED IN FEET.
D= NOMINAL PIPE DIAMETER IN INCHES.
P= TEST PRESSURE (150 PSI)

THESE CALCULATIONS ARE BASED ON "AWWA C-600" SPECIFICATIONS, SECTION 4, HYDROSTATIC TESTING, DATED APRIL 29, 1982.

WHEN TESTING AGAINST CLOSED METAL-SEATED VALVES, AN ADDITIONAL LEAKAGE PER CLOSED VALVE OF 0.0078 GAL./HR./IN. OF NOMINAL VALVE SIZE WILL BE ALLOWED.

ENGINEERING
DEPARTMENT OF ENGINEERING SERVICES

STANDARD DETAIL

\\0330SHARE\N\60\06655\ENV\ENVIRONMENTAL\DRAWINGS\STANDARDS\VTRD-70_ALLOWABLE LEAKAGE TABLE.DGN - 12/5/12

CALCULATED ADB
CHECKED BIV

WATER WORK DETAILS

DEL-23-13.17

ms consultants, inc.

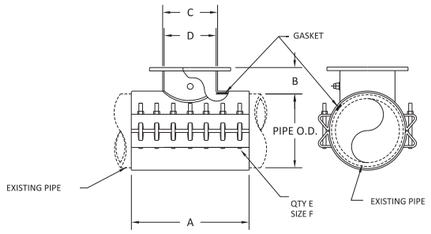

FLANGE SIZE	A	B	C	D	E	F
3	12	5	4-1/32	3-1/2	6	3/4
4	12	5	5-1/32	4-1/2	6	3/4
6	12	5	7-1/32	6-1/2	6	3/4
8	16	5-1/8	9-1/32	8-1/8	8	3/4
10	20	5-1/2	11-1/16	10-1/4	10	3/4
12	24	5-3/4	13-1/16	12-1/4	12	3/4

FOR OUTLETS 14" AND LARGER THE MANUFACTURER OF THE TAPPING VALVE MUST BE SPECIFIED TO ASSURE PROPER ALIGNMENT RECESS DIMENSION.
SIZE ON SIZE TAPPING SLEEVE REQUIRES 1/2" UNDERSIZE CUTTER TO ASSURE PROPER CUTTER CLEARANCE AND COMPLETE SEVERANCE OF THE COUPON ON NOMINAL PIPE SIZE 7.45 AND SMALLER DIMENSION D IS 6-1/8"

\\0330SHARE\N\60\06655\ENVIRONMENTAL\DRAWINGS\STANDARDS\WTRD-6.0_FULL BODY WATER TAP.DGN - 12/5/12

ENGINEERING
DEPARTMENT OF ENGINEERING SERVICES

STANDARD DETAIL

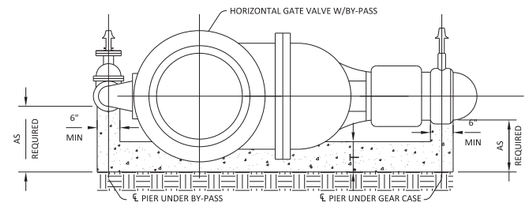

NOTES:

1. DIMENSIONS SHALL BE VARIED AS DIRECTED TO SUIT MAKE OF VALVE FURNISHED.
2. WIDTH SHALL BE AS REQUIRED TO ALLOW ACCESS TO BOLTS. (6" MIN.)
3. T = 6" MINIMUM
4. A LAYER OF POLYETHYLENE SHEETING REQUIRED BETWEEN CONCRETE AND WATERLINE, VALVES, ETC

\\0330SHARE\N\60\06655\ENVIRONMENTAL\DRAWINGS\STANDARDS\WTRD-8.0_VALVE SUPPORT.DGN - ####

ENGINEERING
DEPARTMENT OF ENGINEERING SERVICES

STANDARD DETAIL

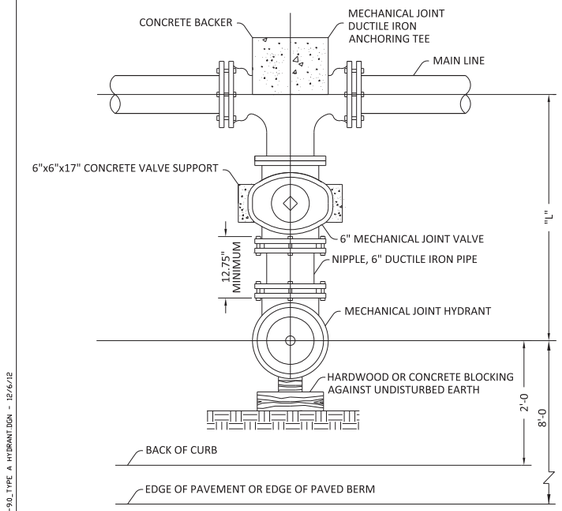

MAIN LINE	DIMENSION "L" (MINIMUM)
6"	35"
8"	36"
12"	39"
16"	42"

NOTES:

1. FIRE HYDRANT SHALL HAVE A MAXIMUM BURY DEPTH OF 7'-0.
2. MODIFICATION OF THE HYDRANT LEAD TO MEET THIS
3. REQUIREMENT SHALL BE MADE IN THAT SECTION FROM
4. THE VALVE TO THE HYDRANT AS PER STANDARD DETAIL
5. WTRD-10.
6. FIRE HYDRANTS SHALL BE SET A MINIMUM OF 6'-0 FROM ALL DRIVEWAY OPENINGS.
4. A LAYER OF POLYETHYLENE SHEETING REQUIRED BETWEEN CONCRETE AND WATERLINE, VALVES, ETC

\\0330SHARE\N\60\06655\ENVIRONMENTAL\DRAWINGS\STANDARDS\WTRD-9.0_TYPE A HYDRANT.DGN - 12/6/12

ENGINEERING
DEPARTMENT OF ENGINEERING SERVICES

STANDARD DETAIL

SECTION A-A

SIZE OF PIPE	DEGREE OF BEND											
	11 ¼°			22 ½°			45°			90°		
	L	D	V c.f.	L	D	V c.f.	L	D	V c.f.	L	D	V c.f.
3"	4	3	0.1	6	4	0.2	10	4	0.3	10	4	0.3
4"	5	4	0.2	9	5	0.4	14	5	0.6	14	5	0.6
6"	8	6	0.5	12	7	0.7	20	8	1.4	18	9	1.7
8"	9	8	0.7	16	9	1.4	24	12	2.7	25	11	4.0
12"	14	12	1.8	24	14	3.6	36	18	6.8	32	18	10.7
16"	18	16	3.4	32	18	6.7	36	32	13.4	41	26	25.4
20"	25	20	6.4	30	30	11.5	49	36	20.5	50	32	46.5
24"	27	24	9.0	39	34	18.4	60	42	35.0	58	40	77.7

STEEL WILL BE USED AS REQUIRED BY ENGINEER

PLAN VIEW

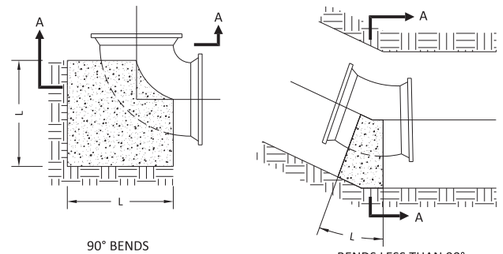

90° BENDS

BENDS LESS THAN 90°

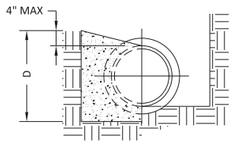

SECTION A-A

NOTES:

1. BACKER DESIGNED FOR 3000 PSF SOIL BEARING.
2. CONCRETE TO BE PLACED AGAINST UNDISTURBED EARTH.
3. A LAYER OF POLYETHYLENE SHEETING REQUIRED BETWEEN CONCRETE AND WATERLINE, VALVES, ETC.

\\0330SHARE\N\60\06655\ENVIRONMENTAL\DRAWINGS\STANDARDS\WTRD-13.0_BACKING FOR BENDS.DGN - 12/6/12

ENGINEERING
DEPARTMENT OF ENGINEERING SERVICES

STANDARD DETAIL

SIZE OF PIPE	DEGREE OF BEND											
	11 ¼°			22 ½°			45°			90°		
	L	W	H	V c.f.	L	W	H	V c.f.	L	W	H	V c.f.
3"	12	18	12	1.5	13	25	16	3.0	18	30	19	5.9
4"	12	24	16	2.6	16	30	18	5.0	22	36	24	11.0
6"	12	48	18	6.0	15	43	36	13.4	30	55	24	22.9
8"	12	63	24	10.5	18	57	34	20.2	36	57	33	39.2
12"	20	54	36	22.6	37	62	37	49.0	48	62	51	87.9
16"	31	65	38	44.3	60	65	39	88.1	65	65	65	159.2
20"	45	70	40	72.8	56	70	60	136.2	72	76	78	247.0
24"	41	72	54	92.3	67	74	69	198.0	88	84	84	359.1

STEEL WILL BE USED AS REQUIRED BY THE ENGINEER

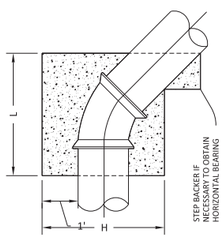

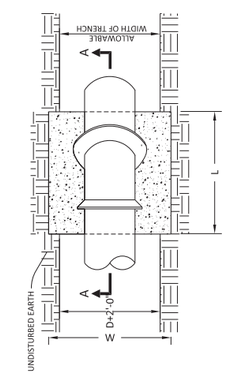

NOTES:

1. BACKER TO BE CENTERED HORIZONTALLY IN BEND.
2. A LAYER OF POLYETHYLENE SHEETING REQUIRED BETWEEN CONCRETE AND WATERLINE, VALVES, ETC.

\\0330SHARE\N\60\06655\ENVIRONMENTAL\DRAWINGS\STANDARDS\WTRD-12.0_BACKING FOR VERT BENDS.DGN - 12/6/12

ENGINEERING
DEPARTMENT OF ENGINEERING SERVICES

STANDARD DETAIL

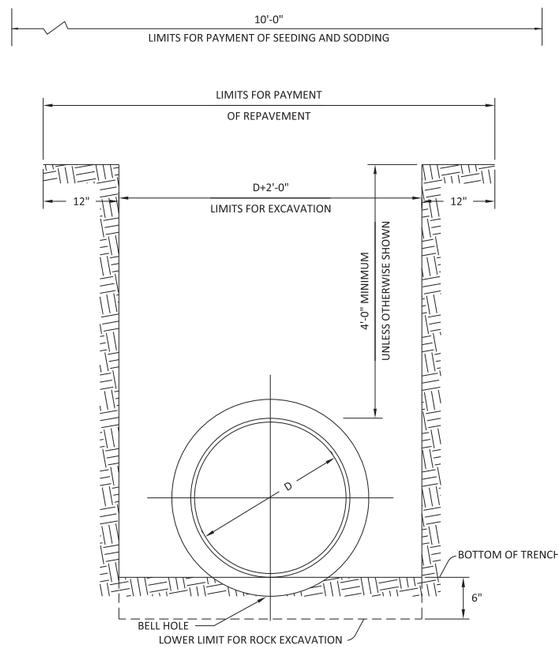

\\0330SHARE\N\60\06655\ENVIRONMENTAL\DRAWINGS\STANDARDS\WTRD-15.0_TYPICAL TRENCH.DGN - 12/6/12

ENGINEERING
DEPARTMENT OF ENGINEERING SERVICES

STANDARD DETAIL

CALCULATED
CHECKED

WATER WORK DETAILS

DEL-23-13.17

PLOT.CEL

ms consultants, inc.
msconsultants.com

www.msconsultants.com

Ohio DOT Workspace
DEL-23

UGF: ohdot1V8i
PCF: 60-06655_Columbus

Batchplot Spec: \\033share\n\60\06655\standards\plotdrv\batchplt.spc
Pen Table: S:\std\plotting\ustn\V8\pen\V8_ms_std.tbl
Plot Driver: S:\std\plotting\ustn\V8\PDF.pltcfg

34" x 22"

View: FENCE_VIEW1
By: hbrendinger

Model: Sheet
Printed: 10/8/2015 @ 4:26:20 PM
File: \\033share\n\60\06655\utilities\sheets\06655UCM003.dgn

WATER LINE NOTES

1 ALL WATER LINES, FITTINGS AND APPURTENANCES SHALL BE INSTALLED IN ACCORDANCE WITH THE SPECIFICATIONS CONTAINED WITHIN THE ODOT CMS 2013 VERSION, EXCEPT AS MODIFIED WITHIN THE CITY OF DELAWARE GENERAL NOTES, STANDARD DRAWINGS AND INFRASTRUCTURE DESIGN MANUAL.

2 ANY ACTIVITY RELATED TO THE MODIFYING, UPGRADING, OR EXPANDING THE PUBLIC WATER SYSTEM MUST HAVE PRE-APPROVAL OF THE DEPARTMENT OF ENGINEERING SERVICES AND UTILITY DEPARTMENT. WORK REQUIRING THE SHUTDOWN OF EXISTING WATER MAINS IS TO BE COORDINATED WITH THESE TWO DEPARTMENTS FORTY-EIGHT HOURS PRIOR TO THE SCHEDULED WORK BEING PERFORMED. ALL EFFECTED CUSTOMERS SHALL BE NOTIFIED, IN WRITING, BY THE CONTRACTOR AT LEAST TWENTY-FOUR HOURS PRIOR TO SHUT DOWN. CITY APPROVAL OF ALL CUSTOMER NOTIFICATIONS IS REQUIRED IN ADVANCE OF DISTRIBUTION.

3 WATER MAINS SHALL BE DUCTILE IRON PIPE, CLASS 53 FOR SIZES 3" TO 10" AND CLASS 54 FOR SIZES 12" TO 48" (AWWA C151) WITH CEMENT MORTAR LINING AND SEAL COATING (AWWA C104) IN ACCORDANCE WITH CITY SPECIFICATIONS, UNLESS CALLED OUT OTHERWISE BY THESE PLANS. JOINTS MUST BE RUBBER GASKET PUSH-ON MECHANICAL (AWWA C111). WATER MAIN FITTINGS MUST BE DUCTILE IRON WITH CEMENT MORTAR LINING AND SEAL COATING WITH MECHANICAL JOINTS AND MUST CONFORM TO AWWA C153, UNLESS SPECIFIED OTHERWISE BY THESE PLANS. JOINT RESTRAINTS MUST BE PER THE APPROVED PLANS.

4 ALL PIPING 2" OR LESS IN DIAMETER BETWEEN THE WATER MAIN AND THE CONTROL VALVE OR METER PIT SHALL BE TYPE K, SOFT TEMPERED COPPER TUBING CONFORMING IN ALL RESPECTS TO ASTM B88. FITTINGS SHALL BE FORD OR MUELLER HIGH QUALITY COPPER BRASS WITH AWWA APPROVED COMPRESSION TYPE JOINTS. THERE WILL BE NO FITTINGS PERMITTED BETWEEN THE WATER MAIN CONNECTION AND THE CONTROL VALVE.

5 DEAD-END WATER LINES SHALL TERMINATE WITH A FIRE HYDRANT AND WATCH VALVE FOLLOWED BY A MAIN LINE VALVE AND AN ADDITIONAL SECTION OF WATER LINE PLUGGED AND BLOCKED PER THE STANDARD DRAWINGS.

6 WATER LINES SHALL BE INSTALLED WITH A MINIMUM OF 4'-0 OF COVER MEASURED FROM THE FINISHED GRADE TO THE TOP OF THE WATER MAIN, OR AS INDICATED ON THE APPROVED CONSTRUCTION PLANS.

7 ALL MAIN LINE VALVES, HYDRANT WATCH VALVES, CURB BOXES, AND DEAD END LINES ARE TO BE MARKED WITH A 4"X 4"X 10"-0 PRESSURE TREATED WOOD WYE-POLE PROJECTING 4'-0 ABOVE THE FINISHED GRADE AND WITH THE TOP 1'-0" PAINTED BLUE ON FOUR SIDES. POSTS ARE TO BE MAINTAINED UNTIL THE AREA IS HAS UNDERGONE FINAL GRADING AND SEEDING. THE COST SHALL BE INCLUDED IN THE VARIOUS WATER ITEMS.

8 IF THERE ARE ANY CONFLICTS IN GRADE BETWEEN WATER LINE AND SEWERS, THE WATER LINES SHALL BE LOWERED DURING CONSTRUCTION.

9 THE CONTRACTOR SHALL BE RESPONSIBLE FOR THE HORIZONTAL AND VERTICAL DEFLECTIONS OR BEND IN THE WATER LINE IN ACCORDANCE WITH THE MANUFACTURER'S SPECIFICATIONS. WATER LINES ARE TO MAINTAIN 1'-6" VERTICAL, AND 10'-0 HORIZONTAL CLEARANCE FROM SANITARY SEWERS AND STORM SEWERS.

10 PRIOR TO MAKING A CONNECTION TO THE PUBLIC WATER SYSTEM, THE CONTRACTOR SHALL COORDINATE ANY NECESSARY OPERATION OF THE PUBLIC WATERLINE VALVES DIRECTLY WITH THE DEPARTMENT OF PUBLIC UTILTIES.

11 THE WATER SERVICE TAPS SHALL CONSIST OF ALL PIPE, VALVES, FITTINGS, AND APPURTENANCES NECESSARY TO CONNECT TO THE PUBLIC WATER MAIN AND COMPLETE THE INSTALLATION ACCORDING TO THE STANDARDS SET FORTH IN THE APPROVED CONSTRUCTION PLANS.

12 THE VALVE COVERS AND INSIDE OF ALL MAINLINE WATER VALVE BOXES SHALL BE PAINTED BLUE, AND THE VALVE COVERS AND INSIDE OF ALL FIRE HYDRANT WATCH VALVE BOXES SHALL BE PAINTED RED WITH 2 COATS OF RUST INHIBITIVE PAINT. PUBLIC FIRE HYDRANTS ARE TO BE PAINTED WITH TWO COATS OF FEDERAL SAFETY YELLOW. PRIVATE FIRE HYDRANTS ARE TO BE PAINTED FEDERAL SAFETY RED, WITH WHITE BONNETS AND NOZZLE COVERS.

13 ALL MECHANICAL FASTENERS, BOLTS, ALL THREAD ROD, ETC. ARE TO RECEIVE ONE COAT OF RUST INHIBITIVE PAINT OR COATING.

14 IF THE TOP OF THE VALVE OPERATING NUT IS MORE THAN 36" BELOW FINISHED GRADE, AN EXTENSION STEM SHALL BE FURNISHED TO BRING THE TOP OF THE OPERATING NUT TO WITHIN 24" OF FINISHED GRADE ELEVATION. ALL VALVE STEM EXTENSIONS ARE TO BE INSTALLED WITH THE EXTENSION SECURED DIRECTLY TO THE VALVE OPERATING NUT WITH GALVANIZED BOLTS.

15 WATER LINE SHALL NOT BE INSTALLED IN ANY TRENCH FILLED WITH WATER. THE CONTRACTOR IS RESPONSIBLE FOR THE COST OF DEWATERING OPERATIONS REQUIRED FOR THE CONSTRUCTION OF THE WATER LINE.

16 ALL FITTINGS SHALL BE ADEQUATELY RESTRAINED WITH SOLID OR POURED IN PLACE CONCRETE BLOCKING PER THE CITY STANDARD DRAWINGS. ALL FITTINGS TO BE BACKED MUST BE THOROUGHLY WRAPPED IN PLASTIC SHEETING PRIOR TO PLACING CONCRETE.

17 FIRE HYDRANTS SHALL MEET AWWA STANDARDS AND ARE TO BE MUELLER "SUPER CENTURION 250" A-423 OR "CLOW MEDALLION" ON TYPE "A" SETTING WITH NATIONAL STANDARD THREADS FOR THE 2-1/2" HOSE NOZZLES AND WATCH VALVE DIRECTLY MOUNTED TO ANCHOR TEE. TYPE "B" SETTINGS SHALL NOT BE USED UNLESS APPROVED BY THE CITY. ALL PIPING BETWEEN THE WATCH VALVE AND HYDRANT SHALL BE MECHANICAL JOINT FITTINGS. THE CONNECTION TO THE HYDRANT SHALL BE A 5" STORTZ FITTING WITH A QUICK RELEASE LOCKING COUPLING. ALL SAFETY CHAINS ARE TO BE REMOVED FROM HYDRANTS.

18 ALL FIRE DEPARTMENT CONNECTIONS (STANDPIPES) SHALL HAVE A 45° DOWNTURN FITTING TO REDUCE KINKING IN THE FIRE HOSE. THE CONNECTION TO THE STANDPIPE SHALL BE A 5" STORTZ FITTING WITH A LOCKING COUPLING.

19 ALL NEW MAIN LINE AND HYDRANT WATCH VALVES ARE TO BE DIRECTLY BOLTED TO THE ANCHOR TEE WITH ANCHOR TYPE FITTINGS.

20 THE INSTALLATION OF 3/4" AND 1" WATER TAPS SHALL BE MADE BY DIRECT TAP ONLY. DIRECT TAPS ARE NOT PERMITTED TO ANY ASBESTOS MAINS. 1 1/2" AND 2" WATER TAPS SHALL BE MADE WITH A FORD STYLE FC-202. 3" AND 4" WATER TAPS SHALL BE MADE WITH A FORD STYLE FS-202. 6" WATER TAPS AND LARGER SHALL BE MADE WITH A FORD FTSS TAPPING SLEEVE. A JCM 432 IS AN APPROVED EQUAL.

21 ALL GATE VALVES MUST BE DUCTILE IRON RESILIENT WEDGE 250 PSI AS MANUFACTURED BY AMERICAN FLOW CONTROL OR APPROVED EQUIVALENT WHICH MEETS OR EXCEEDS THE REQUIREMENTS OF ANSI/ AWWA C515. CLOW VALVE COMPANY, MODEL NUMBER 2638 APPROVED FOR 16". 6" AND 8" MUST BE DUCTILE IRON AND EPOXY COATED.

22 VALVE BOXES ARE TO BE TYLER 6850 SERIES CAST IRON 2-PIECE SCREW TYPE FOR MAIN AND WATCH VALVES AND TYLER 6500 SERIES CAST IRON 2-PIECE SCREW TYPE SERVICE BOXES FOR CURB VALVES. STAR PIPE PRODUCTS 2-PIECE SCREW TYPE VALVE BOX ITEM CODE VB5645 39-50 APPROVED.

23 FOR WATER SERVICE TAPS; THE WATER MAIN CONNECTION SHALL BE MADE USING A MUELLER 300 BALL TYPE B-25008 OR FORD FB1000-Q BALLCORP CORPORATION STOP. CONTROL VALVES SHALL BE MUELLER 300 BALL CURB VALVE B-25209 OR FORD B44-Q BALL VALVE CURB STOPS (QUARTER TURN ONLY).

24 WATER SERVICE BOXES ARE TO BE INSTALLED IN PAIRS ALONG PROPERTY LINES, SET 8'-0 APART AND 2'-0 OUTSIDE OF THE RIGHT OF WAY LINE. A MINIMUM BURY DEPTH OF 48" BELOW TOP OF CURB MUST BE MAINTAINED FOR ALL WATER SERVICES IN THE RIGHT OF WAY.

25 ALL WATER LINES SHALL BE TESTED (AWWA 600) AND STERILIZED (AWWA C651) BY THE CONTRACTOR AT HIS EXPENSE IN ACCORDANCE WITH THE CITY AND AWWA SPECIFICATIONS. TESTING SHALL BE DONE UNDER THE SUPERVISION OF THE DEPARTMENT OF ENGINEERING SERVICES.

26 ALL METERS (OTHER THAN STANDARD 5/8" X 3/4" RESIDENTIAL METER) AND ALL BACKFLOW DEVICES SPECIFIED FOR THIS PROJECT MUST BE DELIVERED TO THE CITY DEPARTMENT OF PUBLIC UTILITIES FOR INSPECTIONS AND APPROVAL PRIOR TO INSTALLATION.

27 METER PITS, INCLUDING ALL PIPING, FITTINGS, EQUIPMENT, AND APPURTENANCES, MUST BE APPROVED BY THE CITY THROUGH A SCHEDULED FIELD INSPECTION DURING THE INSTALLATION. THE DEPARTMENT OF PUBLIC UTLITIES IS RESPONSIBLE FOR INSPECTING THE DOMESTIC WATER METER PIT, DOMESTIC WATER LINE, AND ASSOCIATED APPURTENANCES. THE DEPARTMENT OF PLANNING AND COMMUNITY DEVELOPMENT IS RESPONSIBLE FOR THE INSPECTION OF: THE FIRE LINE, THRUST BLOCKS FOR THE FIRE LINE, METER PIT-FIRE LINE CONNECTION, FIRE DEPARTMENT CONNECTION, AND VALVE MONITORING. PRIOR TO BURYING THE WATER SERVICE, THE APPROPRIATE DEPARTMENT REPRESENTATIVE SHALL BE CONTACTED BY THE CONTRACTOR TO ARRANGE FOR THE REQUIRED INSPECTION OF EACH PORTION OF THE SERVICE. FAILURE TO HAVING THE INSPECTION PERFORMED WILL RESULT IN HAVING TO UNCOVER THE SERVICE FOR INSPECTIONS AT CONTRACTOR EXPENSE.

28 THE PRESSURE REQUIRED TO PERFORM HYDROSTATIC TESTING ON WATER LINES IS 150 PSI FOR DOMESTIC LINES AND 200 PSI FOR FIRE SUPPRESSION LINES (PER NFPA 13).

29 THE CONTRACTOR AT HIS EXPENSE, SHALL CLEAN ALL WATER MAINS 12" AND LARGER BY PASSING A PROPERLY SIZED POLY PIG THROUGH THE PIPE.

30 ALL MECHANICAL JOINTS WITHIN THE METER VAULT SHALL INCLUDE FACTORY MANUFACTURED FLANGES. NO UNI-FLANGES ARE PERMITTED. ALL JOINTS AND FITTINGS LOCATED ON THE SUPPLY SIDE WITHIN 20-FEET OF THE METER VAULT SHALL BE RESTRAINED USING APPROVED MECHANICAL JOINT RESTRAINTS.

WATER SERVICE TAP TRANSFERRED

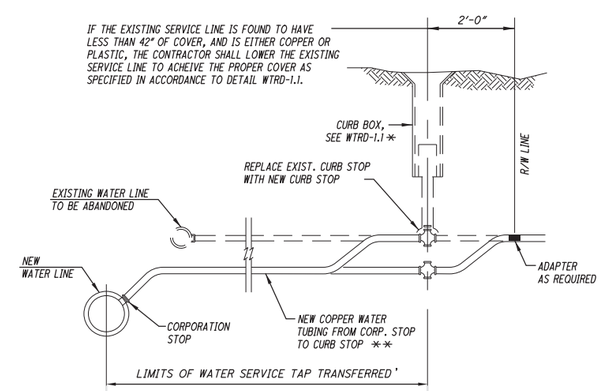

ALL SERVICES 2 INCHES AND UNDER SHALL BE TYPE "K" COPPER MEETING THE REQUIREMENTS OF SECTION 805.03.

CONTRACTOR SHALL REPLACE ALL CURB BOXES.

✱✱ PIPE SHALL BE COPPER TUBING SIZE (C.T.S.)

CALCULATED
CHECKED

WATER WORK NOTES & DETAIL

DEL-23-13.17

PLOT.CEL

ms consultants, inc.
msconsultants.com

www.msconsultants.com

Ohio DOT Workspace
DEL-23

UGF: ohdot\V8i
PCF: 60-06655_Columbus

Batchplot Spec: \\0330share\n\60\06655\standards\plotdrv\batchplt.spc
Pen Table: S:\std\plotting\usln\V8\pen\V8i_ms_std.tbl
Plot Driver: S:\std\plotting\usln\V8\PDF.pltcfg

Model: Sheet
Printed: 10/8/2015 @ 4:26:22 PM
File: \\0330share\n\60\06655\utilities\sheets\06655UP002.dgn

34" x 22"

View: FENCE_VIEW1
By: hbrendinger

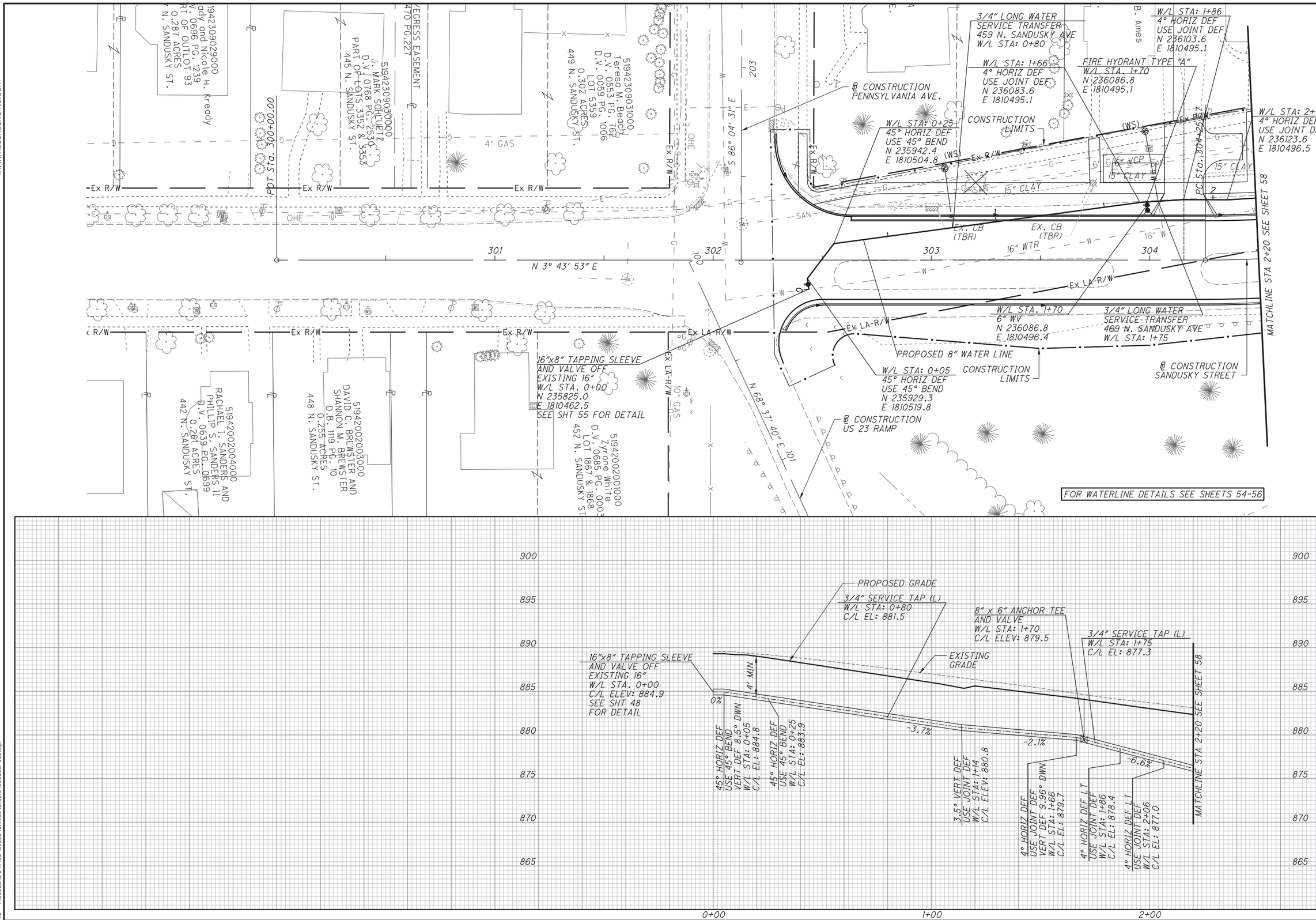

N

HORIZONTAL SCALE IN FEET
0 10 20 40

CALCULATED
CHECKED

WATER WORK
STA 0+00 TO STA 2+20

DEL-23-13.17

ms consultants, inc.

PLOT.CEL

ms consultants, inc.
msconsultants.com

www.msconsultants.com

Ohio DOT Workspace
DEL-23

UGF: ohdot\V8i
PCF: 60-06655_Columbus

Batchplot Spec: \\0330share\n\60\06655\standards\plotdrv\batchplt.spc
Pen Table: S:\std\plotting\usin\V8\pen\V8_ms_std.tbl
Plot Driver: S:\std\plotting\usin\V8\PDF.pltcfg

Model: Sheet
Printed: 10/8/2015 @ 4:26:23 PM
File: \\0330share\n\60\06655\utilities\sheets\06655UP003.dgn

View: FENCE_VIEW1
By: hbrendinger

34" x 22"

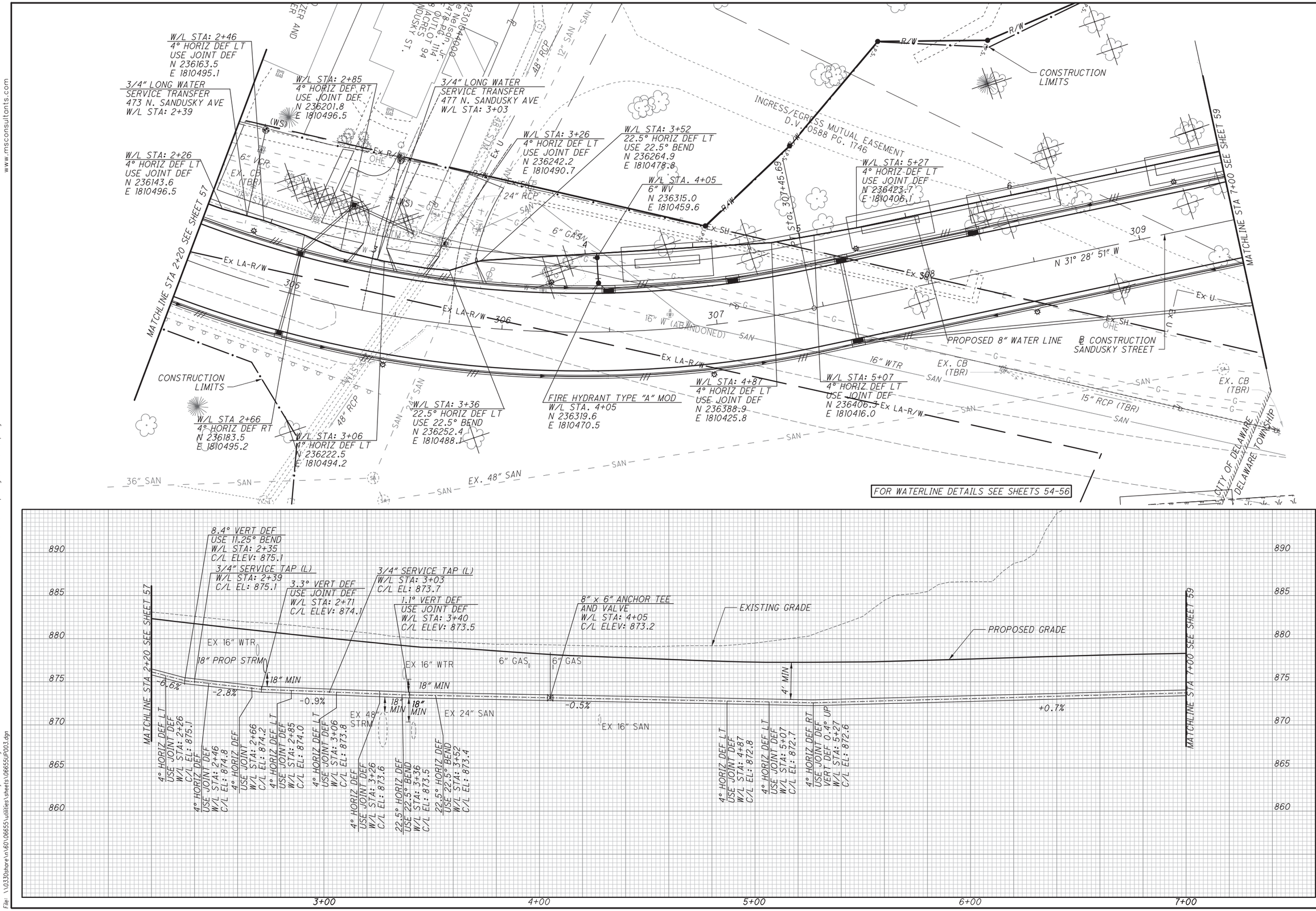

HORIZONTAL SCALE IN FEET
0 10 20 40

CALCULATED
CHECKED

WATER WORK
STA 2+20 TO STA 7+00

DEL-23-13.17

ms consultants, inc.

PLOT.CEL

ms consultants, inc.
msconsultants.com

www.msconsultants.com

Ohio DOT Workspace
DEL-23

UCF: ohdot1V8i
PCF: 60-06655_Columbus

Batchplot Spec: \\0330share\n\60\06655\standards\plotdrv\batchplt.spc
Pen Table: S:\std\plotting\usin\V8\pen\V8_ms_std.tbl
Plot Driver: S:\std\plotting\usin\V8\PDF.pltcfg

Model: Sheet
Printed: 10/8/2015 @ 4:26:25 PM
File: \\0330share\n\60\06655\utilities\sheets\06655UP004.dgn

34" x 22"

View: FENCE_VIEW1
By: hbrendinger

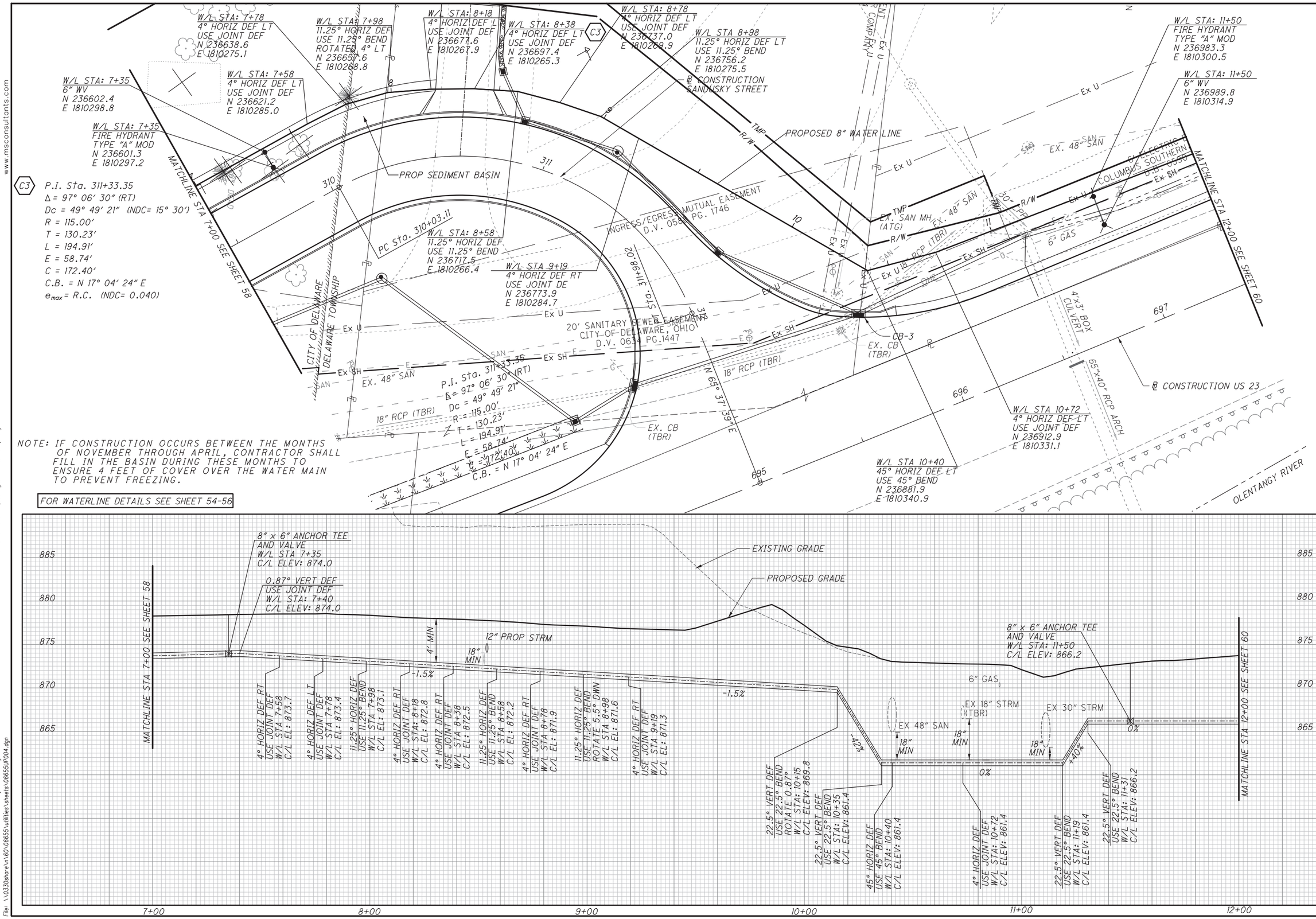

HORIZONTAL SCALE IN FEET
0 10 20 40

CALCULATED
CHECKED

WATER WORK
STA 7+00 TO STA 12+00

DEL-23-13.17

ms consultants, inc.

PLOT.CEL

ms consultants, inc.
msconsultants.com

www.msconsultants.com

Ohio DOT Workspace
DEL-23

UGF: ohdot\V8i
PCF: 60-06655_Columbus

Batchplot Spec: \\0330share\n\60\06655\standards\plotdrv\batchplt.spc
Pen Table: S:\std\plotting\usin\V8i\pen\V8i_ms_std.tbl
Plot Driver: S:\std\plotting\usin\V8i\PDF.pltcfg

Model: Sheet @ 4:26:26 PM View: FENCE_VIEW1
Printed: 10/8/2015 By: hbrendinger
File: \\0330share\n\60\06655\utilities\sheets\06655UP005.dgn

34" x 22"

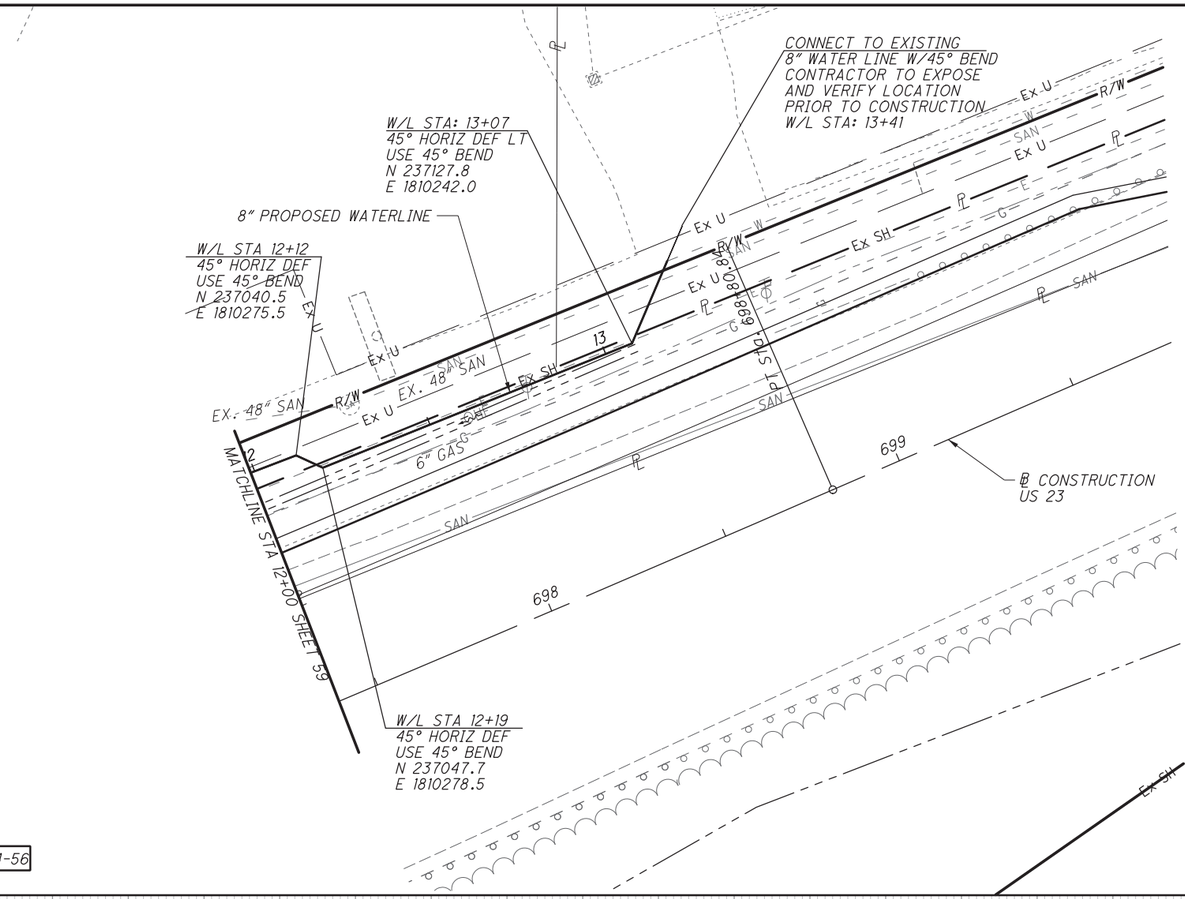

FOR WATERLINE DETAILS SEE SHEET 54-56

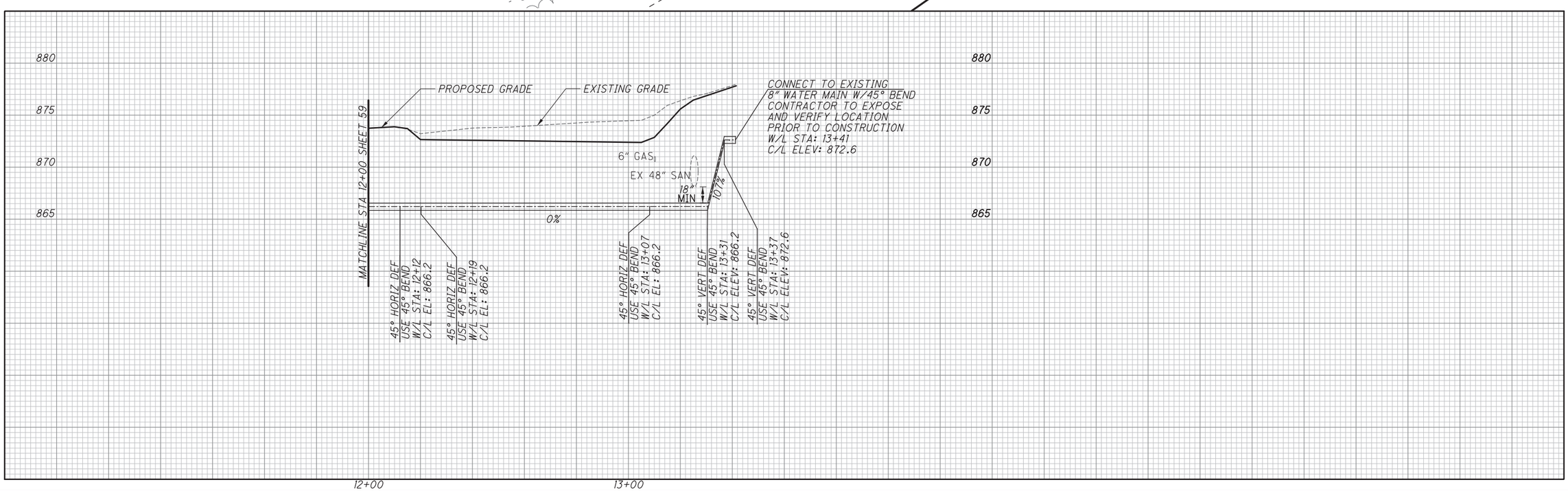

N

HORIZONTAL SCALE IN FEET
0 10 20 40

CALCULATED
CHECKED

WATER WORK
STA 12+00 TO STA 13+41.82

DEL-23-13.17

ms consultants, inc.

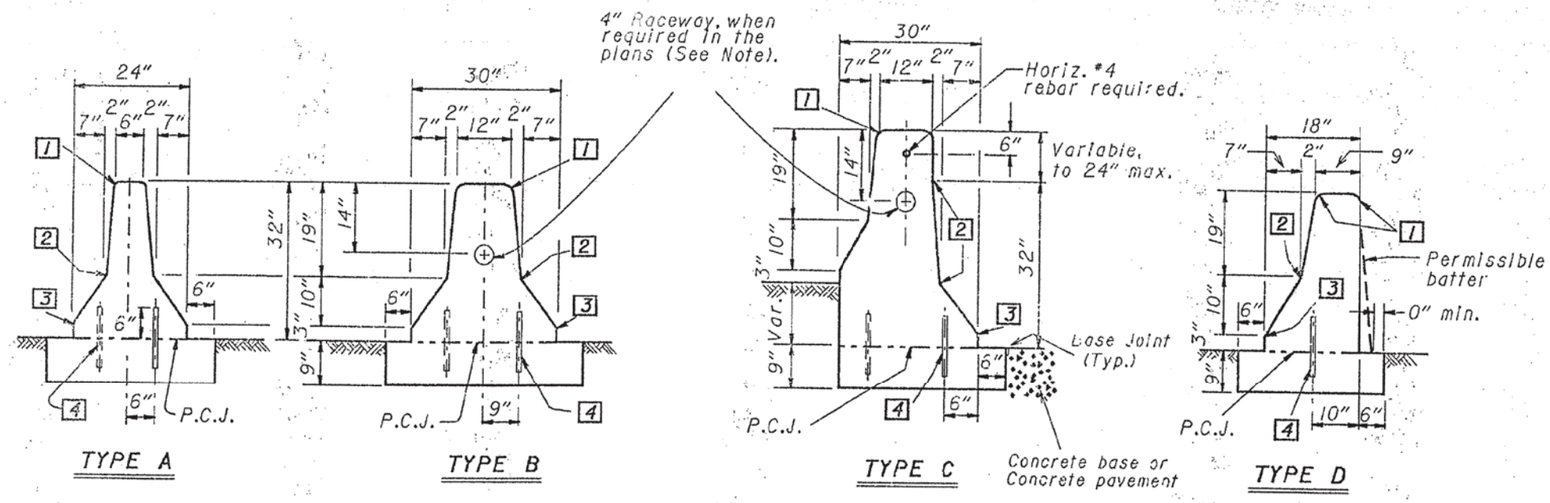

TYPE A TYPE B TYPE C TYPE D

NORMAL SECTIONS

LEGEND

1. 1" Radius or 3/4" chamfer.
2. Permissible 10" radius.
3. Permissible 1" radius.
4. No. 8 epoxy coated deformed steel bars, 12" long, spaced 4' between successive bars on a staggered (except Type D) pattern. Omit dowels when top is constructed integral with the base.

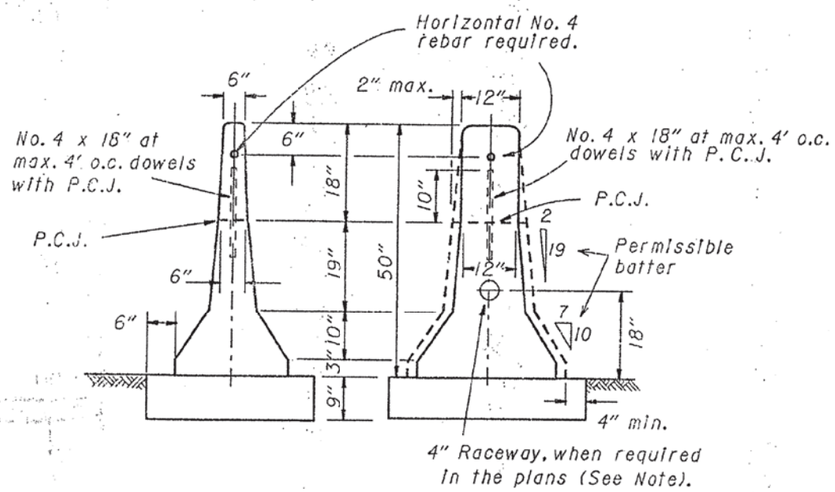

TYPE A50 TYPE B50

50" BARRIERS - TYPICAL SECTIONS

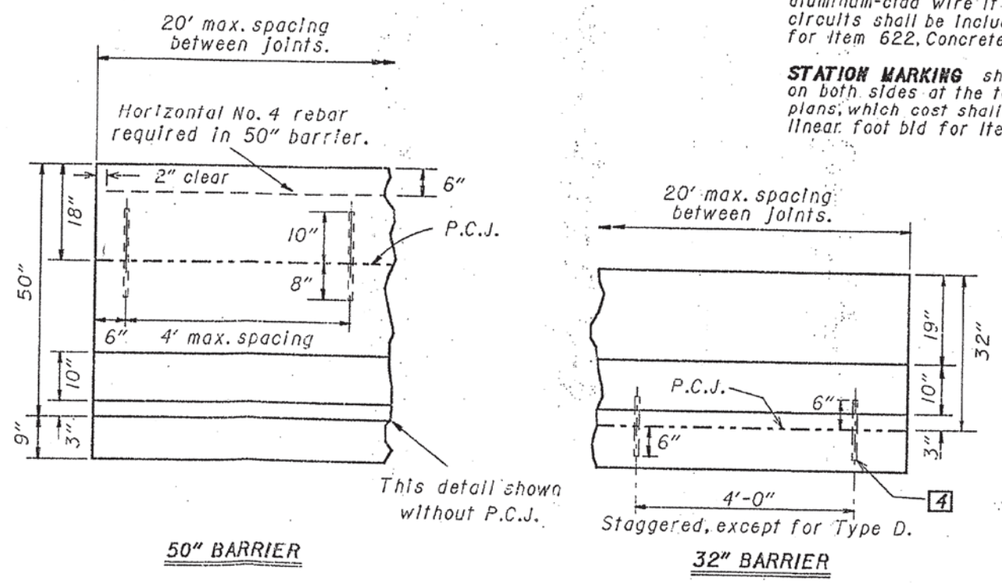

50" BARRIER 32" BARRIER

BARRIER ELEVATIONS

NOTES

JOINTS: Unsealed contraction joints spaced at 20' max. shall be constructed throughout the run of Concrete Barrier except that expansion joints shall be used at the center line of and around each bridge pier column and on either side of overhead sign supports, inlets and light pole foundations. If inlet top is slip formed, the expansion joints adjacent to it may be omitted.

Contraction joints may be constructed with metal inserts inside the forms, preformed full width joint filler, a grooving tool, or by sawing. Inserts, tooled or sawed joints shall have a 3" minimum depth. All joints shall be constructed for the full height of the barrier including the base. Sawing shall be done as soon as curing will allow, to prevent spalling.

BASE JOINTS: The vertical walls between the barrier base and a concrete pavement or concrete base shall be provided with a sealed, grooved joint as shown on Std. Const. Dwg. BP-2.1. Sealing material shall conform with CMS 705.04.

P.C.J. = Permissible Construction Joint

MEASUREMENT: 622 Concrete Barrier, including transitions and pier sections as per Standard Const. Drawing. MC-9.4, is paid for in linear feet as one of the four types (A,B,C or D) or as Type A50 and B50, (for 50" high barrier), with appropriate deductions for other items such as:

604 I-3 Median Inlet	20 Lin. Ft.
625 Light pole foundation or pullbox	2.5 Lin. Ft.
630 Overhead sign support foundation	10 Lin. Ft.
630 Barrier wall assembly	10 Lin. Ft.

50 INCH HIGH BARRIER shall be built in locations specified in the plans. Construct the lower 32" of the barrier and the barrier base using the same dimensions as shown in the corresponding Normal Section. The upper 18" may be constructed integral with the bottom, or separately with No. 4 rebar dowels at 4 foot maximum spacing. Start and end dowels 6" from barrier contraction joints.

RACEWAY: The contractor shall insure that the electrical raceway is clear of internal obstructions. Cost of the 4 inch polyvinyl chloride raceway and No. 10 AWG copper-clad or aluminum-clad wire if needed for future installation of circuits shall be included in the unit cost per lineal foot for Item 622, Concrete Barrier.

STATION MARKING shall be impressed in the "green" concrete on both sides at the top of the barrier if specified in the plans, which cost shall be incidental to the unit cost per linear foot bid for Item 622, Concrete Barrier.

CALCULATED
CHECKED

BARRIER MISC.: NEW JERSEY STYLE, TYPE A, AS PER PLAN

DEL-23-13.17

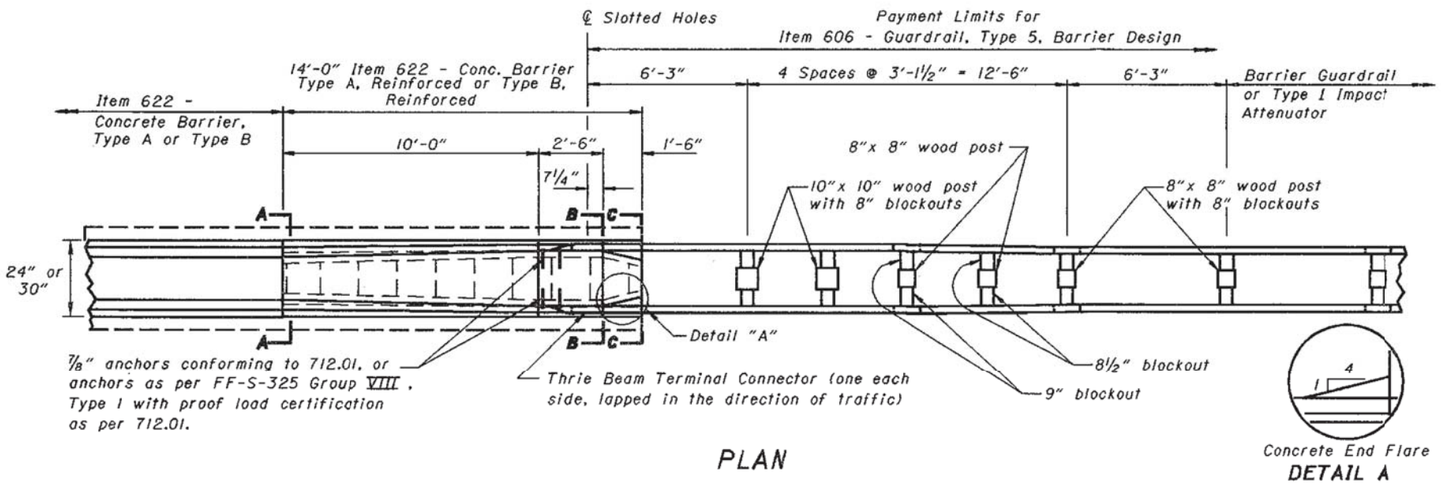

PLAN

Concrete End Flare
DETAIL A

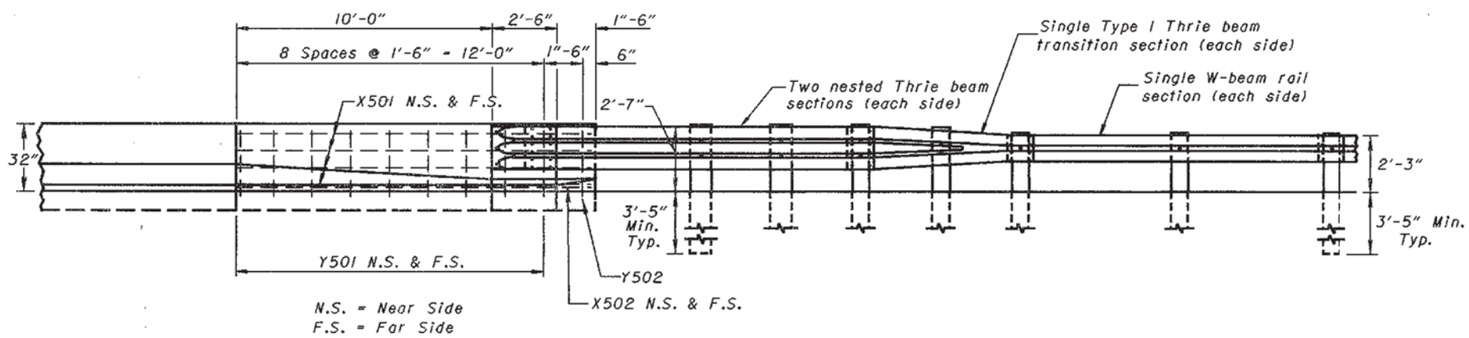

ELEVATION

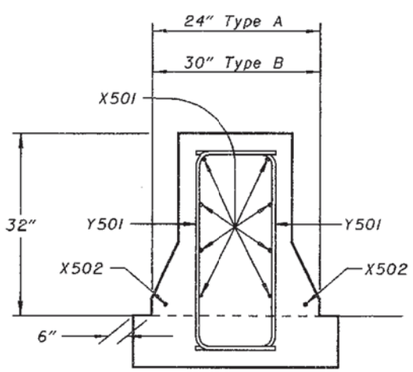

SECTION A-A

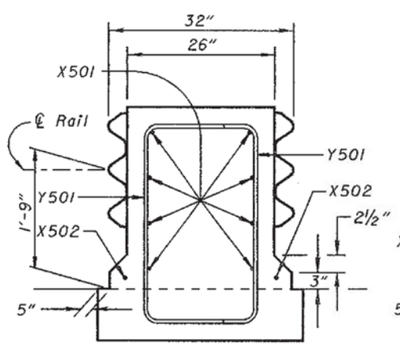

SECTION B-B

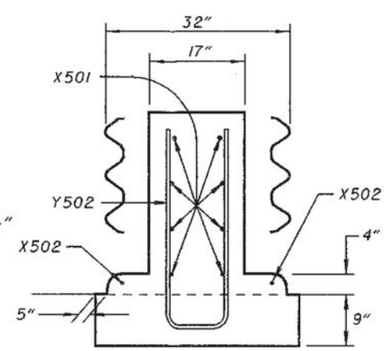

VIEW C-C

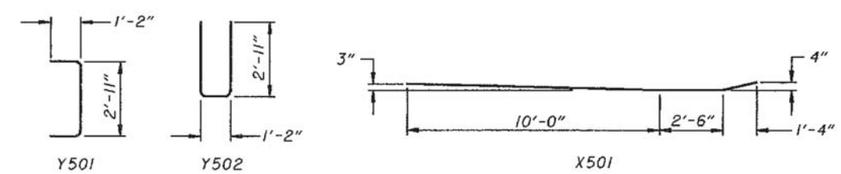

BENDING DIAGRAMS

REINFORCING BAR LIST

MARK	LENGTH	SHP.	QTY.	WEIGHT
X501	13'-11"	BT.	8 Ea.	116.12
X502	13'-10"	STR.	2 Ea.	28.86
Y501	5'-0"	BT.	18 Ea.	93.87
Y502	6'-9"	BT.	1 Ea.	7.04
TOTAL WT. (For Info. only):				245.89

GENERAL NOTES

GENERAL
For additional details, see Std. Const. Dwg's. GR-1.1, GR-1.2 and other Standard Drawings pertaining to design of specific guardrail types. See Standard Construction Drawing MC-9.3 for concrete barrier details.

APPLICATION
The Bridge Terminal Assembly, Type 1, Barrier Design, shall be used to connect Type 5 barrier design guardrail or Type 1 Impact Attenuators to concrete median barriers.

POSTS
GENERAL - Posts may be set in drilled holes or driven to grade.

WOOD POSTS shall be square-sawed pressure treated wood as per 710.14 and fabricated with square ends. Bolt holes shall be bored and tops of posts trimmed, if required, after posts are set.

STEEL POSTS and blockouts may be furnished as an alternate. The steel alternates for the wood posts are listed below.

WOOD POSTS	10"x10"	8"x8"
STEEL POSTS	W8x24	W6x25

REINFORCING
All reinforcing bars shall be epoxy coated and included in the cost of Item 622.

PAYMENT
Payment will be made at the unit price bid per Each for Item 606 - Bridge Terminal Assembly, Type 1, Barrier Design, and shall include the extra cost, in excess of normal guardrail costs, for additional and different type posts and blockouts, nested thrie beam sections, terminal connectors, thrie beam transition sections, bolts, anchors, washers, and other hardware.

Payment for Item 622, Concrete Barrier, Type ____ (A, Reinforced or B, Reinforced) shall be in Lin. Ft. for the length specified in the plans including materials, labor and reinforcing steel required to construct the barrier as shown.

CALCULATED
CHECKED

BARRIER MISC.: NEW JERSEY STYLE, TYPE A, AS PER PLAN

DEL-23-13.17

GENERAL NOTES

CONTINGENCY QUANTITIES

THE CONTRACTOR SHALL NOT ORDER MATERIAL OR PERFORM WORK FOR PLAN ITEMS SET UP TO BE USED "AS DIRECTED BY THE ENGINEER" UNLESS AUTHORIZED BY THE ENGINEER.

UTILITY NOTIFICATION

AT LEAST TWO (2) WORKING DAYS PRIOR TO COMMENCING CONSTRUCTION OPERATIONS IN AN AREA THAT MAY INVOLVE UTILITIES, THE CONTRACTOR SHALL NOTIFY THE ENGINEER, THE OHIO UTILITIES PROTECTION SERVICE, DISTRICT SIX ROADWAY SERVICES DEPARTMENT, AND THE OWNERS OF EACH UTILITY AFFECTED. A LIST OF UTILITIES AND OWNERS IS PROVIDED ON SHEET 6. THIS IS NOT TO BE CONSTRUED AS A COMPLETE LIST BUT RATHER A DIRECTOR OF THE MOST FREQUENTLY ENCOUNTERED COMPANIES.

WORK INSPECTION

THE CONTRACTOR SHALL PROVIDE THE ENGINEER WITH 72 HOUR NOTICE OF ANY WORK TO BE PERFORMED AT THE INTERSECTION SITE SO THAT INSPECTION SERVICES CAN BE SUPPLIED.

MATERIALS

ALL MATERIALS FURNISHED FOR THIS PROJECT SHALL BE IN ACCORDANCE WITH THE REQUIREMENTS OF THE OHIO DEPARTMENT OF TRANSPORTATION CONSTRUCTION AND MATERIAL SPECIFICATION (CMS) DATED AS SHOWN ON SHEET 1. FURNISH NEW MATERIALS AND EQUIPMENT OF FIRST QUALITY, OF CURRENT DESIGN AND FREE FROM DEFECTS. NO USED MATERIAL WILL BE PERMITTED.

CONTRACTOR SHALL SUPPLY A PAPER COPY AND AN ELECTRONIC COPY IN PDF FORMAT TO THE PROJECT AND DISTRICT TRAFFIC ENGINEER FOR APPROVAL.

SIGNING NOTES

ITEM 630 - GROUND MOUNTED SUPPORT, NO. 3 POST, AS PER PLAN

THIS ITEM SHALL BE PER ITEM 630 AND 730. INSTALLATION SHALL BE AS PER THE DETAIL SHOWN BELOW:

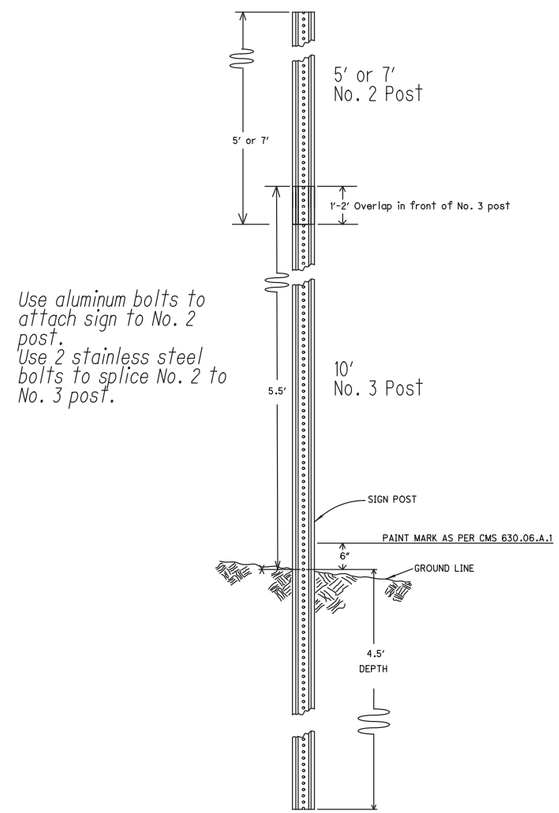

ITEM 630
GROUND MOUNTED SUPPORT,
NO. 3 POST, AS PER PLAN

ITEM 630 - SIGN, DOUBLE FACED, STREET NAME, AS PER PLAN

THIS ITEM CONSISTS OF PROVIDING AND INSTALLING POLE MOUNTED STREET NAME SIGNS AT THE LOCATIONS SHOWN IN THE PLANS.

THE SIGN, DOUBLE FACED, STREET NAME, AS PER PLAN SHALL BE MANUFACTURED AND INSTALLED ACCORDING TO THE CITY OF DELAWARE STREET SIGN DETAIL RDWD 36.0, INCLUDED BELOW.

PAYMENT FOR ITEM 630, SIGN, DOUBLE FACED, STREET NAME, AS PER PLAN SHALL BE MADE AT THE CONTRACT UNIT PRICE FOR EACH UNIT COMPLETE AND IN PLACE, AND SHALL INCLUDE ALL REQUIRED SIGNS, SUPPORTS, MOUNTING HARDWARE, LABOR, MATERIALS, TOOLS AND EQUIPMENT.

ITEM 630 - SIGN, STREET NAME, AS PER PLAN

THIS ITEM CONSISTS OF PROVIDING AND INSTALLING MAST ARM MOUNTED STREET NAME SIGNS AT THE LOCATIONS SHOWN IN THE PLANS.

THE SIGN, STREET NAME, AS PER PLAN SHALL BE MANUFACTURED AND INSTALLED ACCORDING TO ODOT CMS SECTION 630, ODOT'S TRAFFIC ENGINEERING MANUAL AND THE OMUTCD, EXCEPT AS FOLLOWS: THE BACKGROUND SHALL BE HEX COLOR #3875 BLUE.

PAYMENT FOR ITEM 630, SIGN, STREET NAME, AS PER PLAN SHALL BE MADE AT THE CONTRACT UNIT PRICE FOR EACH UNIT COMPLETE AND IN PLACE, AND SHALL INCLUDE THE FURNISHING OF IDENTIFICATION STICKERS, SIGN BACKING ASSEMBLIES, MOUNTING BOLTS, WASHERS, NUTS, BEARING PLATES, CLIPS AND RIVETS. SIGN ATTACHMENT ASSEMBLIES SHALL BE PAID FOR SEPARATELY.

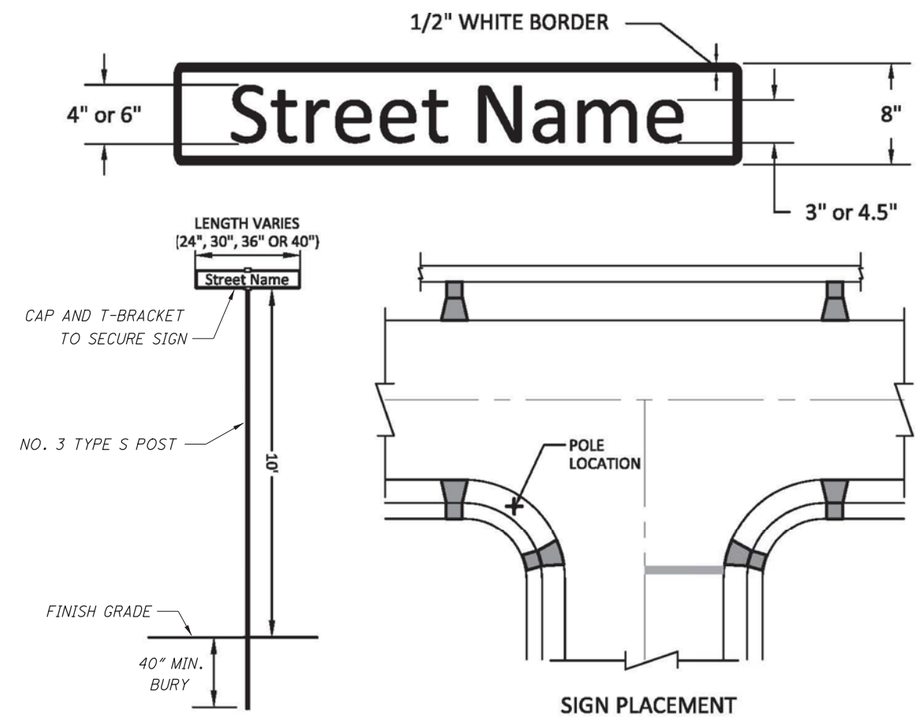

SIGN PLACEMENT

- SIGNS SHALL BE TWO SIDED MADE ON 8" ALUMINUM BLADES WITH RADIUS CORNERS AND STANDARD LENGTHS OF 24", 30", 36" OR 40"
- FOR STREETS WITH POSTED SPEED LIMITS AT 25 MPH OR LESS, LETTERING SHALL INCLUDE UPPER CASE LETTERS AT 4" AND LOWER CASE AT 3". FOR STREETS WITH POSTED SPEED LIMITS GREATER THAN 25 MPH, LETTERING SHALL BE 6" FOR UPPER CASE AND 4.5" FOR LOWER CASE
- STREET NAME SIGNS SHALL BE COVERED ON BOTH SIDES WITH BLUE PRISMATIC SHEETING (#3875 BLUE), MEETING THE RETROREFLECTIVITY REQUIREMENTS OF THE OMUTCD SECTION 2A.07
- SIGN LETTERING SHALL BE OF WHITE PRISMATIC SHEETING, MEETING THE RETROREFLECTIVITY REQUIREMENTS OF THE OMUTCD 2A.07
- LETTERING SHALL BE MADE IN FHWA STANDARD APPROVED "CLEARVIEW FONT"
- SIGNS SHALL INCLUDE A WHITE ½-INCH WHITE BORDER AT THE EDGE OF THE SIGN MADE OF WHITE PRISMATIC SHEETING
- SIGN POSTS SHALL BE MADE OF NO. 3 TYPE S POSTS WITH ANCHOR BASE INSTALLATION PER TC-41.20 AND A MINIMUM CLEARANCE FROM GRADE TO BOTTOM OF SIGN OF 10'-0"
- SIGNS SHALL BE SECURED TO POLE WITH A GALVANIZED CAP AND TEE BRACKETS
- SIGN POLES SHALL BE INSTALLED ON THE LEFT SIDE OF THE STREET, OPPOSITE FROM THE STOP SIGN WITHIN THE TREE LAWN RADIUS AREA, AND WITH THE EDGE OF THE SIGN 2'-0" FROM THE BACK OF CURB
- ALL STREET SIGNS SHALL BE INSTALLED AS REQUIRED IN ADVANCE OF OPENING ANY STREET TO PUBLIC ACCESS

CALCULATED | CHECKED

TRAFFIC CONTROL NOTES

DEL-23-13.17

SIGNAL NOTES

NEW TRAFFIC SIGNAL INSTALLATION

THIS WORK CONSISTS OF FURNISHING AND INSTALLING TRAFFIC SIGNAL EQUIPMENT, COMPLETE AND READY FOR SERVICE. THIS WORK ALSO INCLUDES NECESSARY EXCAVATION AND BACKFILL, DISPOSAL OF DISCARDED MATERIALS, RESTORATION OF DISTURBED FACILITIES AND SURFACES TO A CONDITION EQUAL TO THAT EXISTING BEFORE THE WORK STARTED, AND ELECTRICAL TESTING AS SPECIFIED.

PULL BOXES, CONDUITS, GROUND RODS, AND CABLE SPLICING KITS REQUIRED FOR TRAFFIC SIGNAL EQUIPMENT INSTALLATIONS ARE SPECIFIED IN ITEM 625.

BEFORE ANY WORK IS STARTED ON THE TRAFFIC SIGNAL, THE CITY OF DELAWARE PROJECT ENGINEER (740-203-1700) AND THE CONTRACTOR'S REPRESENTATIVE SHALL REVIEW AND RESOLVE ANY POTENTIAL PROBLEMS AT THE LOCATION WHERE THE NEW SIGNAL WILL BE CONSTRUCTED.

ALL OF THE REQUIRED PERMANENT SIGNS SHALL BE ERECTED AND THE REQUIRED PERMANENT PAVEMENT MARKINGS SHALL BE IN PLACE PRIOR TO THE FINAL ACCEPTANCE OF THE TRAFFIC SIGNAL.

PRIOR TO THE FINAL ACCEPTANCE OF THE COMPLETED TRAFFIC SIGNAL, THE DEPARTMENT OF ENGINEERING SERVICES REPRESENTATIVE AND THE CONTRACTOR'S REPRESENTATIVE, SHALL INSPECT AND RESOLVE ANY EXISTING PROBLEMS PRIOR TO THE ACCEPTANCE OF EACH NEW SIGNAL BY THE CITY OF DELAWARE.

MAINTENANCE OF TRAFFIC SIGNAL INSTALLATION

THE CONTRACTOR SHALL BE RESPONSIBLE FOR MAINTAINING TRAFFIC SIGNAL INSTALLATIONS WITHIN THE PROJECT UNDER THE FOLLOWING CIRCUMSTANCES:

1. EXISTING SIGNAL INSTALLATION WHICH THE PLANS REQUIRE THE CONTRACTOR TO ADJUST, MODIFY, ADD ONTO OR REMOVE OR WHICH THE CONTRACTOR ACTUALLY ADJUSTS, MODIFIES, OR OTHERWISE DISTURBS: THE CONTRACTOR SHALL BE RESPONSIBLE FOR THE ENTIRE INSTALLATION (AT AN INTERSECTION) FROM THE TIME THE CONTRACTOR'S OPERATIONS FIRST DISTURB THE INSTALLATION UNTIL THE INSTALLATION HAS BEEN SUBSEQUENTLY REMOVED OR MODIFIED AND THE WORK IS ACCEPTED.

2. NEW SIGNAL INSTALLATION OR DEVICE, INSTALLED BY THE CONTRACTOR: THE CONTRACTOR SHALL BE RESPONSIBLE FOR MAINTENANCE OF THIS FROM THE TIME OF INSTALLATION UNTIL THE WORK IS ACCEPTED.

THE CONTRACTOR SHALL CORRECT AS QUICKLY AS POSSIBLE ALL OUTAGES OR MALFUNCTIONS AND PROVIDE THE MAINTAINING AGENCY AND THE ENGINEER SUCH WITH THE NAME(S) AND PHONE NUMBER(S) OF THE CONTRACTOR'S REPRESENTATIVE(S) TO RECEIVE ALL CALLS AND DISPATCH THE NECESSARY MAINTENANCE FORCES TO CORRECT OUTAGES. SUCH A PERSON OR PERSONS MUST GIVE PROMPT ATTENTION TO THESE CALLS AND BE READILY AVAILABLE CONTINUOUSLY 24 HOURS A DAY, 7 DAYS A WEEK. ALL LAMP OUTAGES, CABLE OUTAGES, ELECTRICAL FAILURES, EQUIPMENT MALFUNCTIONS AND MISALIGNED SIGNAL HEADS SHALL BE CORRECTED TO THE SATISFACTION OF THE ENGINEER WITH THE SIGNAL BACK IN SERVICE WITHIN FOUR HOURS AFTER THE CONTRACTOR HAS BEEN NOTIFIED OF AN OUTAGE.

IN THE EVENT NEW SIGNALS ARE DAMAGED PRIOR TO ACCEPTANCE, ALL DAMAGED EQUIPMENT EXCEPT POLES AND CONTROL EQUIPMENT SHALL BE REPLACED BY THE CONTRACTOR TO THE SATISFACTION OF THE ENGINEER WITH THE NEW SIGNAL BACK IN SERVICE WITHIN 8 HOURS AFTER THE CONTRACTOR HAS BEEN NOTIFIED OF THE OUTAGE. THE CONTRACTOR SHALL ARRANGE FOR FULL TRAFFIC CONTROL UNTIL THE SIGNAL IS BACK IN OPERATION.

IF POLES AND/OR CONTROLLERS ARE DAMAGED AND MUST BE REPLACED, THE CONTRACTOR SHALL MAKE TEMPORARY REPAIRS AS NECESSARY TO BRING THE SIGNAL BACK INTO OPERATION WITHIN THE ALLOWED 8 HOUR TIME PERIOD, AND SHALL MAKE PERMANENT REPAIRS OR REPLACEMENT AS SOON THEREAFTER AS POSSIBLE.

NONE OF THE ABOVE SHALL BE CONSTRUED AS COLLECTIVE OR CONSECUTIVE OUTAGE TIME PERIODS AT ANY ONE LOCATION. THAT IS, WHERE MORE THAN ONE OUTAGE OCCURS AT ANY ONE LOCATION THEN THE ALLOTTED TIME LIMIT SHALL BE FOR THE WORST SINGLE OUTAGE.

WHERE OUTAGES ARE THE DIRECT RESULT OF A VEHICLE ACCIDENT THE RESPONSE OF THE CONTRACTOR SHALL BE AS OUTLINED ABOVE. THE CONTRACTOR SHALL BE RESPONSIBLE FOR THE COLLECTION OF ANY COMPENSATION FOR THIS WORK FROM THOSE PARTIES RESPONSIBLE FOR THE DAMAGE.

WHERE THE CONTRACTOR HAS FAILED OR CANNOT RESPOND TO AN OUTAGE OR SIGNAL EQUIPMENT MALFUNCTION, AT THESE LOCATIONS WITHIN HIS RESPONSIBILITY, WITHIN PERIODS AS SPECIFIED ABOVE, THE ENGINEER MAY INVOKE THE PROVISIONS OF SECTION 105.15 AND ANY SUBSEQUENT BILLINGS TO THE STATE FOR POLICE SERVICES AND MAINTENANCE SERVICES BY THE PROVIDING AGENCY FORCES SHALL BE DEDUCTED FROM MONIES DUE OR TO BECOME DUE THE CONTRACTOR IN ACCORDANCE WITH PROVISIONS OF SECTION 105.15.

ANY VEHICULAR TRAFFIC SIGNAL HEAD EITHER NEW OR EXISTING THAT WILL BE OUT OF OPERATION SHALL BE COVERED IN THE MANNER DESCRIBED IN 632.25.

THE CONTRACTOR SHALL MAINTAIN COMPLETE RECORDS OF MALFUNCTIONS
INCLUDING:

1. TIME OF NOTIFICATION OF MALFUNCTION;
2. TIME OF WORK CREWS ARRIVAL TO CORRECT THE MALFUNCTION;
3. ACTIONS TAKEN TO CORRECT THE MALFUNCTION, INCLUDING A LIST OF PARTS REPAIRED AND REPLACED;
4. A DIAGNOSIS OR REASON FOR THE MALFUNCTION AND PROBABILITY OF REOCCURRENCE;
5. TIME OF COMPLETION OF THE REPAIR AND SYSTEM RESTORED TO FULL SERVICE.

A COPY OF THESE RECORDS SHALL BE PROVIDED TO THE ENGINEER WITHIN THREE (3) WORKING DAYS FOLLOWING COMPLETION OF EACH REPAIR.

ALL COSTS RESULTING FROM THE ABOVE REQUIREMENTS SHALL BE CONSIDERED TO BE INCLUDED IN THE LUMP SUM PRICE BID FOR ITEM 614, MAINTAINING TRAFFIC.

PLOT.CEL
ms consultants, inc.
msconsultants.com
www.msconsultants.com
Ohio DOT Workspace
DEL-23
UGF: ohdot\V8i
PCF: 60-06655_Columbus
0 0.5" 1"
34" x 22"
Batchplot Spec: \\0330shore\n\60\06655\standards\plotdrv\batchplt.spc
Pen Table: S:\std\plotting\usth\V8\pen\V8i_ms_std.tbl
Plot Driver: S:\std\plotting\usth\V8\PDF.pltcfg
Model: Sheet
Printed: 10/8/2015 @ 4:26:56 PM
File: \\0330shore\n\60\06655\traffic\sheets\06655TN002.dgn
View: FENCE_VIEW1
By: hbrendinger
CALCULATED
CHECKED

TRAFFIC CONTROL NOTES

DEL-23-13.17

ms consultants, inc.

GROUNDING AND BONDING

THE REQUIREMENTS OF THE CONSTRUCTION AND MATERIAL SPECIFICATIONS (CMS) AND THE TC SERIES OF STANDARD CONSTRUCTION DRAWINGS ARE MODIFIED AS FOLLOWS:

1. ALL METALLIC PARTS CONTAINING ELECTRICAL CONDUCTORS SHALL BE PERMANENTLY JOINED TO FORM AN EFFECTIVE GROUND FAULT CURRENT PATH BACK TO THE GROUNDED CONDUCTOR IN THE POWER SERVICE DISCONNECT SWITCH.

   A. PROVIDE AN EQUIPMENT GROUNDING CONDUCTOR IN METALLIC CONDUITS (725.04) IN ADDITION TO THE CONDUCTORS SPECIFIED AND BOND THE CONDUIT TO THIS GROUNDING CONDUCTOR.
   B. WHEN AN EQUIPMENT GROUNDING CONDUCTOR IS REQUIRED IN PLASTIC CONDUIT (725.05), THE INSTALLATION SHALL INCLUDE A SEPARATE EQUIPMENT GROUNDING CONDUCTOR IN ADDITION TO THE CONDUCTORS SPECIFIED.
   C. METALLIC CONDUIT CARRYING THE LOOP WIRES FROM IN THE PAVEMENT TO THE PULL BOX SPLICE LOCATION WILL ONLY BE BONDED AT THE PULL BOX END, AND WILL NOT CONTAIN AN EQUIPMENT GROUNDING CONDUCTOR.
   D. IF MULTIPLE CONDUIT RUNS BEGIN AND END AT THE SAME POINTS, ONLY ONE EQUIPMENT GROUNDING CONDUCTOR IS REQUIRED.
   E. IF AN EQUIPMENT GROUNDING CONDUCTOR IS NEEDED IN CONDUIT BETWEEN SIGNALIZED INTERSECTIONS FOR UNDERGROUND INTERCONNECT CABLE, THE GROUNDING SYSTEM FOR EACH SIGNALIZED INTERSECTION WILL BE SEPARATED ABOUT MIDWAY BETWEEN THE INTERSECTIONS.
   F. THE MESSENGER WIRE AT SIGNALIZED INTERSECTIONS WILL BE USED AS THE CONDUCTIVE PATH FROM CORNER TO CORNER IF CONDUIT IS NOT PROVIDED UNDER THE ROADWAY. WHEN CONDUIT CONNECTS THE CORNERS OF AN INTERSECTION, AN EQUIPMENT GROUNDING CONDUCTOR SHALL BE USED IN THE CONDUIT.

2. CONDUITS.

   A. THE 725.04 CONDUIT SHALL HAVE GROUNDING BUSHINGS INSTALLED AT ALL TERMINATION POINTS. THE BUSHING MATERIAL SHALL BE COMPATIBLE WITH GALVANIZED STEEL CONDUIT AND THE GROUNDING LUG MATERIAL SHALL BE COMPATIBLE FOR USE WITH COPPER WIRE. THREADED OR COMPRESSION TYPE BUSHINGS MAY BE USED.
   B. THE 725.05 CONDUIT SHALL HAVE THE INSIDE AND OUTSIDE DIAMETERS OF THE CONDUIT DEBURRED AT ALL TERMINATION POINTS.
   C. BOTH ENDS OF METALLIC CONDUIT SHALL BE BONDED TO THE EQUIPMENT GROUNDING CONDUCTOR.
   D. METALLIC CONDUIT MAY BE BONDED TO METALLIC BOXES THROUGH THE USE OF CONDUIT FITTINGS UL APPROVED FOR THIS TYPE OF CONNECTION, WITH THE BOX BONDED TO THE EQUIPMENT GROUNDING CONDUCTOR.

3. WIRE FOR GROUNDING AND BONDING.

   A. USE INSULATED, COPPER WIRE FOR THE EQUIPMENT GROUNDING CONDUCTOR. BONDING JUMPERS IN BOXES AND ENCLOSURES MAY BE BARE OR INSULATED COPPER WIRE. WIRE SIZE SHALL BE AS FOLLOWS:
      I. USE 4 AWG BETWEEN THE POWER SERVICE AND SUPPORTS, POLES, PEDESTALS, CONTROLLER OR FLASHER CABINETS.
      II. USE A MINIMUM 8 AWG BETWEEN LOOP DETECTOR PULL BOXES AND THE FIRST CONDUIT THAT REQUIRES A LARGER SIZE AS SPECIFIED IN 3.A.I ABOVE.
      III. USE A MINIMUM 8 AWG BETWEEN THE "PREPARE TO STOP WHEN FLASHING" INSTALLATION (INCLUDING SUPPORT) AND THE FIRST CONDUIT THAT REQUIRES A LARGER SIZE AS SPECIFIED IN 3.A.I ABOVE.
      IV. THE INSULATION SHALL BE GREEN OR GREEN WITH YELLOW STRIPE(S). FOR 4 AWG OR LARGER, INSULATION MAY ALSO BE BLACK WITH GREEN TAPE/LABELS INSTALLED AT ALL ACCESS POINTS.
   B. IN A HIGHWAY LIGHTING SYSTEM, THE EQUIPMENT GROUNDING CONDUCTOR SHALL BE THE SAME WIRE SIZE AS THE DUCT CABLE OR DISTRIBUTION CABLE CIRCUIT CONDUCTORS, WITH THE MINIMUM CONDUCTOR SIZE OF 4 AWG. BONDING JUMPERS WILL BE MINIMUM SIZE 4 AWG.

4. GROUND ROD.

   A. A 3/4 INCH SCHEDULE 40 PVC CONDUIT WILL BE USED IN FOUNDATIONS AND CONCRETE WALLS FOR THE GROUNDING CONDUCTOR (GROUND WIRE) RACEWAY TO THE GROUND ROD. SHOULD METALLIC CONDUIT BE USED, BOTH ENDS OF THE CONDUIT SHALL BE BONDED TO THE GROUNDING CONDUCTOR.
   B. THE TYPICAL GROUNDING CONDUCTOR (GROUND WIRE) SHALL BE 4 AWG INSULATED, COPPER.

5. WHITE SHALL BE USED FOR THE COMMON. SPLICE ALL WIRES IN THE SIGNAL HEAD OR PED UNIT. USE A #14 AWG 2 WIRE SPADE TERMINAL FOR EVERY 2 WIRES PER CONNECTION AND A #14 AWG 1 WIRE SPADE TERMINAL FOR EACH SINGLE WIRE CONNECTION TO CONNECT ALL WIRES TO ALL FIELD TERMINALS. USE BUTT SPLICES ON ALL THROUGH WIRES. ALL UNUSED WIRES SHALL BE SPLICED THROUGH AND SHALL HAVE A DEAD-END TERMINAL AT THE END OF THE WIRE.

COLOR CHART - PED UNIT FIELD WIRING HOOKUP

PED UNIT LOCATION	CROSSWALK DISPALY	WIRE COLOR
SOUTH CROSSWALK	WALK	BLACK
	DONT WALK	ORANGE
WEST CROSSWALK	WALK	GREEN
	DONT WALK	RED
NORTH CROSSWALK	WALK	BLUE
	DONT WALK	WHITE W/ BLACK TRACER
EAST CROSSWALK	WALK	GREEN W/ BLACK TRACER
	DONT WALK	RED W/ BLACK TRACER

COLOR CHART - SIGNAL HEAD AND CABINET FIELD WIRING HOOKUP

SIGNAL DISPLAY	WIRE COLOR PER APPROACH
THRU R	RED
THRU Y	ORANGE
THRU G	GREEN
L/T R	BLACK (FUTURE USE ONLY)
L/T Y	WHITE W/ BLACK TRACER
L/T G	BLUE
R/T R	NOT USED BY CITY
R/T Y	RED W/ BLACK TRACER
R/T G	GREEN W/ BLACK TRACER

6. POWER SERVICE AND DISCONNECT SWITCH.

   A. AT THE POWER SERVICE LOCATION, THE GROUNDING CONDUCTOR (GROUND WIRE) FROM THE DISCONNECT SWITCH NEUTRAL (AC-) BAR TO THE GROUND ROD SHALL BE A CONTINUOUS, UNSPLICED CONDUCTOR. IF SPLICED, IT SHALL BE AN EXOTHERMIC WELD BUTT SPLICE.
   B. THE SERVICE NEUTRAL (AC-) SHALL ONLY BE CONNECTED TO GROUND AT THE PRIMARY POWER SERVICE DISCONNECT SWITCH.
      I. NEMA CONTROLLER CABINETS: IF A POWER SERVICE DISCONNECT SWITCH IS LOCATED BEFORE THE CONTROLLER CABINET, THE NEUTRAL (AC-) AND THE GROUNDING BARS IN THE CONTROLLER CABINET SHALL NOT BE CONNECTED TOGETHER AS SHOWN IN NEMA TS-2, FIGURE 5-4.
      II. IF SECONDARY DISCONNECT SWITCHES ARE CONNECTED AFTER THE PRIMARY DISCONNECT SWITCH, THE NEUTRAL (AC-) SHALL ONLY BE GROUNDED AT THE PRIMARY SWITCH. EQUIPMENT GROUNDING CONDUCTORS SHALL BE BROUGHT TO THE PRIMARY SWITCH, BUT SHALL BE GROUNDED AT BOTH SECONDARY AND PRIMARY SWITCHES.

7. PAYMENT ALL MATERIALS AND WORK REQUIRED TO COMPLETE THE EFFECTIVE GROUND FAULT CURRENT PATH SYSTEM ARE INCIDENTAL TO THE CONDUCTORS INSTALLED BY CONTRACT.

ITEM 632 - VEHICULAR SIGNAL HEAD, (LED), BLACK, (BY TYPE), WITH BACKPLATE, AS PER PLAN
AND
ITEM 632 - VEHICULAR SIGNAL HEAD, (LED), 1 SECTION, 12" LENS, 1-WAY, AS PER PLAN

IN ADDITION TO THE REQUIREMENTS OF CMS 632 AND 732, THE FOLLOWING SHALL APPLY:

1. SIGNAL HEADS AND VISORS SHALL BE CONSTRUCTED OF BLACK POLYCARBONATE PLASTIC WITH VISORS AS SPECIFIED AND MEET ITE SPECIFICATIONS.

2. PROPER EXTERIOR COLORS SHALL BE OBTAINED BY USE OF COLORED PLASTIC MATERIAL RATHER THAN PAINTING.

3. ALL UPPER SIGNAL SUPPORT HARDWARE AND PIPING UP TO AND INCLUDING THE WIRE INLET FITTING SHALL BE FERROUS METAL.

4. THE ENTRANCE FITTING SHALL BE OF THE TRI-STUD DESIGN WITH SERRATED RINGS IN ORDER TO ACHIEVE POSITIVE LOCKING.

5. ALUMINUM BACKPLATES SHALL BE IN ACCORDANCE WITH CMS 732.22 AND INCLUDE A FLUORESCENT YELLOW REFLECTIVE BORDER.

6. THE LIGHT EMITTING DIODE (LED) SIGNAL LAMP UNITS SHALL MEET THE REQUIREMENTS OF CMS 732.04-C. THE CONTRACTOR SHALL PROVIDE THE CITY OF DELAWARE, IN WRITING, WITH THE LED MANUFACTURER NAME, SERIAL NUMBER, PART NUMBER, DESCRIPTION OF LAMP, AND DATE OF MANUFACTURE FOR ALL LED UNITS THAT ARE TO BE USED IN THE SIGNAL HEAD PRIOR TO INSTALLATION, FOR ACCEPTANCE AND WARRANTY PURPOSES.

7. SIGNAL HEADS SHALL HAVE A MINIMUM WALL THICKNESS OF 0.117 INCHES.

8. SIGNAL HEADS SHALL INCLUDE CUTAWAY TYPE VISORS.

9. APPLY A BEAD OF SILICONE TO THE SIGNAL HEAD, WASHER, AND ENTRANCE ADAPTER SERRATIONS TO PREVENT WATER INTRUSION. ALSO, FILL THE SPACE BETWEEN CONCENTRIC SERRATION RINGS ON THE TOP OF THE SIGNAL HEAD TO COMPLETELY EXCLUDE WATER FROM THE SPACE BETWEEN THE CONCENTRIC RINGS.

PAYMENT FOR ITEM 632 VEHICULAR SIGNAL HEAD, (LED), BLACK, (BY TYPE), WITH BACKPLATE, AS PER PLAN AND ITEM 632 VEHICULAR SIGNAL HEAD, (LED), 1 SECTION, 12" LENS, 1-WAY, AS PER PLAN SHALL BE MADE FOR COMPLETE SIGNAL HEAD FURNISHED AND INSTALLED, INCLUDING ALL LABOR, EQUIPMENT, MATERIALS, AND NEW ATTACHMENT HARDWARE.

ITEM 632 - POWER SERVICE, AS PER PLAN

THE CONTRACTOR SHALL CONTACT THE METER SECTION OF AMERICAN ELECTRIC POWER (AEP) AT 614-883-6831 FOR INFORMATION REGARDING THE METER BASE INSTALLATION PRIOR TO ORDERING POLES. THE CONTRACTOR WILL BE RESPONSIBLE FOR REQUESTING AND SCHEDULING ANY INSPECTIONS THE POWER COMPANY MAY REQUIRE FOR THE POWER SERVICE HOOK UP. THE CONTRACTOR SHALL BE RESPONSIBLE TO CONTACT THE POWER COMPANY FOR THE ELECTRICAL SERVICE CONNECTION. UNDER NO CIRCUMSTANCES SHALL THE CONTRACTOR SPLICE POWER CABLE INTO THE POWER COMPANY'S CIRCUITS. THE VOLTAGE SUPPLIED SHALL BE NOMINALLY 120 VOLTS. THE CONTRACTOR IS RESPONSIBLE FOR OBTAINING ANY NECESSARY PERMITS AND THE PAYING OF ALL FEES WITH THE EXCEPTION OF NORMAL MONTHLY ENERGY CHARGES. WHERE A NEW SIGNAL IS BEING INSTALLED, THE CONTRACTOR SHALL ESTABLISH THE ACCOUNT IN THE CITY OF DELAWARE'S NAME FROM THE ONSET.

POWER SERVICE FOR THE TRAFFIC SIGNAL SHALL BE PER CMS 632.24 AND STANDARD DRAWING TC-83.10 EXCEPT AS FOLLOWS:

PROVIDE TWO POWER DISCONNECT SWITCHES. ONE SHALL DISCONNECT ONLY THE LIGHTING POWER CIRCUIT, THE OTHER SHALL DISCONNECT ONLY THE SIGNAL POWER CIRCUIT. LABEL THE DISCONNECT SWITCHES TO IDENTIFY WHICH IS FOR SIGNAL POWER AND WHICH IS FOR LIGHTING POWER.

CALCULATED
CHECKED

TRAFFIC CONTROL NOTES

DEL-23-13.17

ITEM 632 - COMBINATION SIGNAL SUPPORT, TYPE TC-81.21, (BY DESIGN), AS PER PLAN

THIS ITEM SHALL BE AS PER 632 AND 730 EXCEPT THE POLE AND MAST ARM SHALL BE POWDER COATED BLACK BY THE MANUFACTURER. A PAINT CHIP SHALL BE SUBMITTED TO THE DEPARTMENT OF ENGINEERING SERVICES FOR FINAL APPROVAL.

PAYMENT WILL BE MADE AT THE CONTRACT UNIT PRICE AND WILL BE FULL COMPENSATION FOR ALL LABOR, MATERIALS, TOOLS, EQUIPMENT AND OTHER INCIDENTALS NECESSARY FOR SIGNAL SUPPORT FURNISHED, IN PLACE, COMPLETE AND ACCEPTED.

ITEM 632 - SIGNAL SUPPORT, MECHANICAL DAMPER FOR TC-81.21 MAST ARM (GREATER THAN 59' IN LENGTH), AS PER PLAN

THIS ITEM SHALL CONSIST OF THE CONTRACTOR INSTALLING A TUNED MECHANICAL STOCKBRIDGE OR MASSSPRING TYPE DAMPER ON A TC-81.21 MAST ARM SIGNAL SUPPORT TO REDUCE THE POSSIBILITY OF HARMONIC VIBRATIONS CAUSED BY WIND LOADS. A MECHANICAL DAMPER SHALL BE APPLIED TO ALL MAST ARMS OVER 59 FEET IN LENGTH. THE INSTALLED DAMPER SHALL BE CAPABLE OF REDUCING THE LOADED MAXIMUM VERTICAL MOVEMENT AT THE TIP OF THE ARM TO 8 INCHES MEASURED FROM THE HIGHEST TO THE LOWEST POINT OF DEFLECTION AT WIND SPEEDS OF 5-20 MPH.

ALL ATTACHMENT HARDWARE CONNECTIONS SHALL BE STAINLESS STEEL. STOCKBRIDGE-TYPE DAMPERS SHALL HAVE A STAINLESS STEEL SAFETY CHAIN ANCHORED TO THE MAST ARM TO PREVENT WEIGHTS FROM FALLING SHOULD THEY BECOME SEPARATED FROM THE REST OF THE ASSEMBLY. THE DAMPER SHALL BE ATTACHED TO THE ARM WITHIN 8 FEET OF MAST ARM TIP. INSTALLATION SHALL BE PER THE MANUFACTURER'S GUIDELINES. STATIC DAMPERS SUCH AS HORIZONTAL FLAT SIGN MOUNTINGS SHALL NOT BE USED. ACCEPTABLE DEVICES INCLUDE THE FOLLOWING OR APPROVED EQUAL:

1. UNION METAL ALCOA DAMPER DEVICE DWG. NO. 2G-1817-C1
2. VALMONT STRUCTURES ALCOA DEVICE DWG. NO. OH104242P1
3. FLORIDA DOT SPRING-MASS DAMPER DRAWING INDEX NO. 17749

PAYMENT FOR ITEM 632 "SIGNAL SUPPORT, MECHANICAL DAMPER FOR TC-81.21 MAST ARM (GREATER THAN 59' IN LENGTH), AS PER PLAN" SHALL BE MADE AT THE CONTRACT UNIT PRICE PER EACH COMPLETE AND IN PLACE, AND SHALL INCLUDE ALL LABOR, MATERIALS, AND EQUIPMENT NECESSARY TO COMPLETE THE WORK.

ITEM 633 - CONTROLLER UNIT, TYPE TS2/A2, WITH CABINET TYPE TS2, AS PER PLAN

THE ELECTRICAL CONTROL EQUIPMENT PROVIDED SHALL MEET THE FOLLOWING SPECIFICATION AND BE MANUFACTURED BY EAGLE TRAFFIC CONTROL SYSTEMS. THE EQUIPMENT PROVIDED AS PART OF THIS CONTRACT SHALL BE THE LATEST MODEL CURRENTLY UNDER PRODUCTION AND NEW. THE CONTROLLER CABINET AND ACCESSORIES SHALL MEET THE NEMA TS2 STANDARD FOR ACTUATED CONTROLLER UNITS. THE CABINET SHALL BE A 36-INCH WIDE "M" CABINET. THE CABINET SHALL BE ALUMINUM, WITH THE NATURAL ALUMINUM FINISH INSIDE AND THE OUTSIDE SHALL BE POWDER COATED BLACK TO MATCH THE COLOR OF THE SIGNAL SUPPORTS. A PAINT CHIP SHALL BE SUBMITTED TO THE DEPARTMENT OF ENGINEERING SERVICES FOR FINAL APPROVAL. THE LOAD BAY SHALL BE THE TF5012 OR NEWER, WITH 12 LOAD SWITCH POSITIONS AND 12 LOAD SWITCHES PROVIDED (UNUSED LOAD SWITCHES SHALL BE IN A SEPARATE BOX IN THE CABINET). EACH LOAD SWITCH SHALL HAVE LIGHT EMITTING DIODES (LEDS) FOR THE CONTROLLER OUTPUT AND LOAD SWITCH OUTPUT, 8 FLASH RELAY POSITIONS (UNUSED FLASH RELAY SHALL BE IN A SEPARATE BOX IN THE CABINET), ONE NEMA 2-CIRCUIT FLASHER AND A MALFUNCTION MANAGEMENT UNIT (EBERLY DESIGN MMU16LE).

THERE SHALL BE NO LAG LEFT OPERATION. PHASE OMIT SHALL BE ACHIEVED THROUGH OMITTED CALL PROGRAMMING TO PREVENT A LAG LEFT SIGNAL OPERATION.

A POWER BACK/BC 100 UPS BATTERY BACKUP CABINET PBM-2000ITS UPS MODULE IS TO BE INSTALLED PER ODOT SPECIFICATIONS. THE BATTERY BACKUP SHALL BE PAID FOR SEPARATELY.

A GENERATOR POWER PANEL AND ENCLOSURE SHALL BE MOUNTED ON THE OUTSIDE OF THE UPPER SECTION OF THE CONTROLLER CABINET, ON THE SAME SIDE AS THE CIRCUIT BREAKERS. THE STANDARD DRAWING FOR THE GENERATOR POWER PANEL IS INCLUDED IN THIS PLAN AND SHALL MEET THOSE SPECIFICATIONS.

THE POLICE PANEL ON THE INSIDE OF THE CABINET DOOR SHALL HAVE VEHICLE DETECTOR AND PEDESTRIAN DETECTOR PUSH BUTTONS TO CALL PHASES 1 TO 8 INDIVIDUAL, A STOP TIMING SWITCH, CABINET LIGHT SWITCH, AND AN AUTO FLASH SWITCH SHALL ALSO BE SUPPLIED ON THE POLICE PANEL ON THE OUTSIDE OF THE CABINET DOOR.

A CABINET DOOR OPEN SWITCH AND A CABINET LIGHT ON/OFF SWITCH SHALL ALSO BE SUPPLIED.

THE CONTROLLER SHALL HAVE A LIQUID CRYSTAL DISPLAY WITH ADJUSTABLE BACKLIGHT. THE DISPLAY SHALL BE OF SUFFICIENT SIZE TO DISPLAY A MINIMUM OF FOUR (3) LINES OF TEXT WITH A MINIMUM OF 20 CHARACTERS PER LINE. THE DISPLAY SHALL BE READABLE IN DIRECT LIGHT OR DARKNESS.

THE FOLLOWING INFORMATION SHALL BE ON ALL LABELS IN THE CONTROLLER CABINET TO IDENTIFY THE WIRING FUNCTIONS:
LOOP DETECTOR LEADOIN CABLE: PHASE NUMBER SERVICED, DIRECTION, MOVEMENT TYPE, AND LOOP PLAN NUMBER.
SIGNAL HEAD FIELD WIRING: PHASE NUMBER SERVICED, DIRECTION, MOVEMENT TYPE AND COLOR (RED YELLOW, GREEN YELLOW ARROW, GREEN ARROW) OR PEDESTRIAN MOVEMENT.

THE CONTROLLER TIMER SHALL BE SIEMENS MODEL EPAC M52 WITH INTEGRAL LATEST VERSION SEPAC LOCAL CONTROLLER SOFTWARE AND LATEST VERSION SEMARC MASTER CONTROLLER SOFTWARE AND SHALL HAVE A BUILT-IN EXTERNAL 10 BASE-T ETHERNET PORT WITH CONFIGURABLE IP. EACH CONTROLLER TIMER SHALL HAVE 6 MODES OF COORDINATION, ADAPTIVE TRAFFIC CONTROL, REPORTS, PREEMPTION/PRIORITY, DIAGNOSTICS AND INTERNAL TIME BASE CONTROL.

EACH CONDUIT ENTRANCE TO THE CABINET SHALL BE SEALED WITH A RUBBER PIPE/CONDUIT SEAL GASKET. THE SEAL SHALL BE OF A MATERIAL AND TYPE TIGHTLY FITTING AND ABLE TO SEAL OUT WATER, INSECTS, RODENTS, AND DIRT. THE SEAL SHALL BE EASILY REMOVED FOR SERVICE INSTALLATIONS OR CABLE REPLACEMENTS.

PAYMENT FOR ITEM 633 - CONTROLLER UNIT TYPE TSA/A2, WITH CABINET TYPE TS2 TYPE 1, AS PER PLAN, WILL BE AT THE CONTRACT BID PRICE COMPLETE AND IN PLACE INCLUDING ALL CONNECTIONS TESTED AND ACCEPTED.

ITEM 633 - UNINTERRUPTIBLE POWER SUPPLY (UPS), AS PER PLAN

IT IS THE INTENT OF THESE PLANS THAT A BATTERY BACKUP SYSTEM BE PROVIDED AND SHALL MEET THE FOLLOWING:

THE UNIT SHALL BE AN ALPHA TECHNOLOGIES BRAND ALPHA FXM UNINTERRUPTIBLE POWER SUPPLY MODULE FXM 1100, A MEYERS BRAND POWER BACK/BC 100 UPS BATTERY BACKUP CABINET PBM-2000ITS UPS MODULE OR APPROVED EQUAL, IN ALL CASES, THIS ITEM SHALL MEET ODOT SPECIFICATIONS.

A MANUAL BY-PASS/DISCONNECT SWITCH INTERNAL TO THE CABINET SHALL BE INCLUDED.

THE BATTERY BACKUP CABINET SHALL BE ATTACHED TO THE LEFT SIDE OF THE CONTROLLER CABINET (TO THE LEFT OF THE CABINET DOOR), AND THE EXTERIOR OF THE CABINET SHALL MATCH THE COLOR OF THE CONTROLLER CABINET. ALL HOOKUPS, CABLE, ATTACHMENT HARDWARE, AND MISCELLANEOUS MATERIALS FOR BOTH ATTACHING THE CABINETS AND FOR FULL OPERATION OF THE BATTERY BACKUP SYSTEM SHALL BE INCLUDED IN THE UNIT PRICE BID FOR THIS ITEM.

THE BACKUP CABINET SHALL BE MOUNTED ON A FOUNDATION PAD TO MATCH THE HEIGHT ABOVE GRADE OF THE ADJACENT CONTROLLER CABINET. THE WORK PAD IN FRONT OF THE FOUNDATION SHALL MATCH THE 35-INCH DIMENSION FOR THE CONTROLLER WORK PAD. THE FOUNDATION AND WORK PADS SHALL BE PAID SEPARATELY.

PAYMENT SHALL BE MADE AT THE UNIT PRICE BID FOR EACH, COMPLETE AND IN PLACE, ALL CONNECTIONS TESTED AND ACCEPTED.

ITEM 633 - UNINTERRUPTIBLE POWER SUPPLY (UPS), AS PER PLAN, ALPHA TECHNOLOGIES - ALTERNATE BID

THIS ITEM REPLACES THE ITEM 633 UNINTERRUPTIBLE POWER SUPPLY, AS PER PLAN PER THE ALPHA TECHNOLOGIES SPECIFICATION LISTED BELOW.

THE UNINTERRUPTABLE POWER SUPPLY SHALL MEET ALL REQUIREMENTS IN THE ALPHA TECHNOLOGIES SPECIFICATION FOR ALPHA FXM UNINTERRUPTIBLE POWER SUPPLY MODULE FXM 1100, DOCUMENT 0480013-00 REV D.

PAYMENT FOR ITEM 633 UNINTERRUPTIBLE POWER SUPPLY (UPS), AS PER PLAN, ALPHA TECHNOLOGIES ALTERNATE BID SHALL BE MADE AT THE CONTRACT UNIT PRICE FOR EACH UNIT, COMPLETE AND IN PLACE INCLUDING ALL REQUIRED CABINET HARDWARE, MOUNTING HARDWARE, PROCESSOR CARD(S), CABLES, CONDUIT, AND CONNECTIONS TESTED AND ACCEPTED, SETUP SUPPORT AND SYSTEM TRAINING.

CALCULATED
CHECKED

TRAFFIC CONTROL NOTES

DEL-23-13.17

ITEM 633 - PREEMPTION, AS PER PLAN

THIS ITEM CONSISTS OF PROVIDING AND INSTALLING PREEMPTION EQUIPMENT IN THE LOCATIONS AND LOCAL CONTROLLER AS SHOWN ON THE PLANS.

THE PREEMPTION SHALL CONFORM TO ODOT SPECIFICATION 633 AND SHALL UTILIZE COMMUNICATIONS TO IDENTIFY THE PRESENCE OF AN EMERGENCY VEHICLE. THE SYSTEM SHALL CAUSE THE SIGNAL CONTROLLER TO SELECT A PRE-PROGRAMMED PREEMPTION PLAN THAT WILL DISPLAY AND HOLD THE DESIRED SIGNAL PHASE FOR THE DIRECTION OF THE EMERGENCY VEHICLE.

THE COMMUNICATIONS MEDIUM SHALL EMPLOY RADIO/GPS DETECTION TECHNIQUES TO DETERMINE AND LOG THE PRESENCE OF THE VEHICLE BY DETECTING THE RF/GPS LOCATION OF THE APPROACHING VEHICLE. THE SYSTEM SHALL BE COMPLETELY COMPATIBLE WITH NEMA CONTROLLERS AND BE COMPLETELY WIRED AND TESTED. THE SYSTEM SHALL BE ABLE TO DETECT THE DIRECTION AND ETA OF APPROACHING VEHICLES FROM A DISTANCE OF 2,500 FEET OR MORE.

THE INTERSECTION SHALL BE EQUIPPED WITH THE FOLLOWING COMPONENTS:

1. PREEMPTION ANTENNA.
2. PREEMPTION ANTENNA WIRING.
3. PREEMPTION PHASE SELECTOR UNIT AND WIRING INTERFACE PANEL (IF REQUIRED).
4. CONFIRMATION LIGHT AND WIRING.

THE DETECTION ANTENNA AND CONFIRMATION LIGHTS SHALL BE RIGID MOUNTED TO THE MAST ARMS WITH MOUNTING HARDWARE AS RECOMMENDED BY THE EQUIPMENT SUPPLIER. THE SYSTEM SHALL BE CAPABLE OF DETECTING ALL EQUIPPED VEHICLES BY DIRECTION, ETA, SPEED, AND TURN SIGNAL STATUS. THE CONFIRMATION LIGHTS SHALL HAVE LED BULBS.

THE CONFIRMATION LIGHTS SHALL BE RIGID MOUNTED TO THE MAST ARMS AND ARE FOR THE PURPOSE OF PROVIDING MOTORISTS A VISUAL INDICATION THAT AN EMERGENCY VEHICLE IS APPROACHING THE INTERSECTION. THE CONFIRMATION LIGHT FACING THE APPROACH FROM WHICH THE VEHICLE HAS BEEN DETECTED SHALL BE A FLASHING WHITE LIGHT WHILE THE CONFIRMATION LIGHTS FOR ALL OTHER APPROACHES SHALL DISPLAY A STEADY WHITE LIGHT DURING PREEMPTION.

THE LIGHT FIXTURES SHALL BE A DUAL INDICATION, WEATHERPROOF FIXTURE UTILIZING A STANDARD OUTDOOR SPOTLIGHT.

THE CONTRACTOR SHALL THOROUGHLY INSPECT THE INSTALLED SYSTEM. AT A MINIMUM THE CONTRACTOR SHALL VERIFY THAT ALL CONNECTIONS ARE PROPERLY MADE TO THE CONTROLLER CABINET. THE CONTRACTOR SHALL CHECK THAT THE PHASE SELECTOR STATUS LIGHTS FOR RADIO AND GPS ARE CORRECT, AND THE CONTRACTOR SHALL ENSURE THAT THE PHASE SELECTOR IS SELECTING THE PROPER PHASE AND TIMING.

THE PREEMPTION SYSTEM SHALL BE RADIO/GPS. THE SYSTEM SHALL INCLUDE; RADIO/GPS POWER SUPPLY (IF NEEDED), PHASE SELECTOR, AND RADIO/GPS ANTENNA.

PAYMENT SHALL BE MADE AT THE CONTRACT UNIT PRICE FOR EACH ITEM 633 PREEMPTION SYSTEM, AS PER PLAN, IN PLACE AND FULLY OPERATIONAL AS SHOWN ON THE PLANS.

PAYMENT FOR ITEM 633 PREEMPTION, AS PER PLAN, SHALL INCLUDE CABLES, ALL MOUNTING HARDWARE, ALL LABOR, MATERIALS, TOOLS, EQUIPMENT AND INCIDENTALS TO FURNISH AND INSTALL THE UNIT, TESTED AND ACCEPTED.

ITEM 633 - PREEMPTION, AS PER PLAN, OPTICOM - ALTERNATE BID

THIS ITEM REPLACES THE ITEM 633 PREEMPTION, AS PER PLAN, PER THE OPTICOM EQUIPMENT SPECIFIED BELOW.

THE SIGNAL PREEMPTION SHALL MEET ALL REQUIREMENTS IN THE OPTICOM SPECIFICATION FOR THE FOLLOWING OPTICOM EQUIPMENT:

- OPTICOM MODEL 1010 GPS RADIO UNIT CONTAINING A GPS RECEIVER WITH ANTENNA AND A 2.4 GHZ SPREAD SPECTRUM TRANSCEIVER WITH ANTENNA
- OPTICOM MODEL 764 MULTIMODE PHASE SELECTOR
- OPTICOM MODEL 1070 GPS INSTALLATION CABLE
- OPTICOM MODEL 575 CONFIRMATION LIGHTS

PAYMENT FOR ITEM 633 PREEMPTION, AS PER PLAN, OPTICOM, SHALL BE MADE AT THE CONTRACT UNIT PRICE FOR EACH UNIT, COMPLETE AND IN PLACE INCLUDING ALL REQUIRED CABINET HARDWARE, MOUNTING HARDWARE, PROCESSOR CARD(S), CABLES, CONDUIT, AND CONNECTIONS TESTED AND ACCEPTED, SETUP SUPPORT AND SYSTEM TRAINING.

ITEM 809 - ADVANCE DETECTION

THIS ITEM OF WORK SHALL CONSIST OF FURNISHING AND INSTALLING AN ADVANCE DETECTION UNIT CAPABLE OF INTERSECTION ADVANCE DETECTION CONTROL UTILIZING ABOVE GROUND DIGITAL WAVE RADAR TECHNIQUES. THE UNIT SHALL BE NON-INTRUSIVE AND SHALL DETECT VEHICLES FROM 50 FT. (15.2 M) UP TO 600 FT. (182.8 M) FROM THE UNIT AND THE ABILITY TO DETECT HIGH REFLECTIVE VEHICLES UP TO 900' FROM THE UNIT. THE SYSTEM SHALL DYNAMICALLY TRACK THE SPEED, ARRIVAL TIME AND RANGE OF ALL VEHICLES AS THEY APPROACH THE STOP LINE. THE SYSTEM SHALL CALCULATE ON A CONTINUOUS BASIS WHICH VEHICLES ARE WITHIN THE PREDETERMINED DILEMMA ZONE AND PLACE A CALL TO THE CONTROLLER. GAPS WITHIN THE DILEMMA ZONE SHALL THEN BE IDENTIFIED SUCH THAT THE CORRESPONDING PHASE CALL WILL BE DROPPED AND THE PHASE SAFELY TERMINATED. THE UNIT SHALL PROVIDE UP TO 8 DETECTION ZONES SIMULTANEOUSLY FOR INTERSECTION CONTROL. ONE UNIT SHALL BE PROVIDED PER APPROACH, WHERE SPECIFIED IN THE PLANS, COVERING MULTIPLE LANES WHERE ADVANCE DETECTION IS REQUIRED. THE DETECTION UNIT SHALL INCLUDE THE FOLLOWING LIST OF FEATURES AND CAPABILITIES:

- THE UNIT SHALL PROVIDE ACCURATE PRESENCE-DETECTION OF BOTH STOPPED AND MOVING VEHICLES. THE UNIT SHALL BE MOUNTED IN A FORWARD-FIRE, LOOKING AT EITHER APPROACHING OR DEPARTING TRAFFIC AND SHALL ONLY DETECT VEHICLES IN ONE DIRECTION OF TRAVEL.
- THE UNIT SHALL BE TESTED TO MEET NEMA TS2 ENVIRONMENTAL STANDARDS AND MAINTAIN ACCURATE PERFORMANCE IN THE FOLLOWING OPERATING CONDITIONS:
  - * RAIN UP TO 4 IN. (10.2 CM) PER HOUR
  - * FREEZING RAIN
  - * SNOW
  - * WIND
  - * DUST
  - * FOG
  - * CHANGING TEMPERATURE
  - * CHANGING LIGHTING
- THE RADAR DESIGN FOR EACH UNIT SHALL CONFORM TO THE FOLLOWING:
  - * OPERATING FREQUENCY: 10.510.55 GHZ (X-BAND)
  - * NO MANUAL TUNING TO CIRCUITRY
  - * TRANSMITS MODULATED SIGNALS GENERATED DIGITALLY
  - * NO TEMPERATURE-BASED COMPENSATION NECESSARY
  - * BANDWIDTH STABLE WITHIN 1%
  - * PRINTED CIRCUIT BOARD ANTENNAS
  - * ANTENNA VERTICAL 6 DB BEAM WIDTH (TWO-WAY PATTERN): 80 DEGREES
  - * ANTENNA HORIZONTAL 6 DB BEAM WIDTH (TWO-WAY PATTERN): 10.5 DEGREES
  - * ANTENNA TWO-WAY SIDELOBES: -40 DB
  - * TRANSMIT BANDWIDTH: 45 MHZ
  - * UN-WINDOWED RESOLUTION: 11 FT. (3.4 M)
  - * RF CHANNELS: 4
- THE UNIT SHALL INCLUDE A SIMPLE SETUP ROUTINE THAT SHALL AUTOMATICALLY CONFIGURE AND CALIBRATE THE UNIT FOR PROPER OPERATION DURING INSTALLATION. THE UNIT SHALL ALSO BE CAPABLE OF BEING PROGRAMMED AND UPDATED FROM A LAPTOP COMPUTER OR OTHER PORTABLE PROGRAMMING DEVICE, SUCH AS A POCKET PC, VIA A LOCAL OR REMOTE ETHERNET CONNECTION USING VENDOR SUPPLIED SOFTWARE. THE SOFTWARE SHALL SUPPORT TCP/IP CONNECTIVITY, UNIT CONFIGURATION BACK-UP AND RESTORE, AND VIRTUAL SENSOR CONNECTIONS. THE GRAPHICAL USER INTERFACE SHALL OPERATE ON A WINDOWS PLATFORM.
- THE UNIT SHALL HAVE ONE FULL-DUPLEX RS2-232 AND ONE HALF-DUPLEX RS-485 COMMUNICATION PORTS AND SHALL HAVE THE ABILITY TO UPGRADE FIRMWARE OVER ANY COMMUNICATION PORT.
- THE UNIT SHALL BE CAPABLE OF ETHERNET COMMUNICATION.
- THE UNIT SHALL BE MOUNTED DIRECTLY TO A POLE OR MAST ARM, AS RECOMMENDED BY THE MANUFACTURER. CABLE(S) SHALL BE PROVIDED AS REQUIRED AND RECOMMENDED BY THE MANUFACTURER.
- SURGE PROTECTION DEVICES, AS RECOMMENDED BY THE MANUFACTURER, SHALL BE INCLUDED BOTH AT THE POLE WHERE THE UNIT IS LOCATED TO PROTECT THE UNIT AND IN THE TRAFFIC CABINET TO PROTECT THE CABINET ELECTRONICS.
- POWER SHALL BE PROVIDED FROM THE TRAFFIC CABINET. THE UNIT SHALL CONSUME LESS THAN 10 WATTS AND OPERATE FROM A DC INPUT BETWEEN 9 VDC AND 28 VDC. COMPLETE AND AUTOMATIC RECOVERY FROM A POWER FAILURE SHALL BE WITHIN 15 SECONDS AFTER RESUMPTION OF NORMAL POWER.
- ALL REQUIRED INPUTS CARDS SHALL BE INCLUDED IN THE TRAFFIC CABINET AND SHALL BE COMPATIBLE WITH CALTRANS, NEMA TS1 AND NEMA TS2 DETECTOR RACKS. THE CARDS SHALL PROVIDE TRUE PRESENCE DETECTOR CALLS OR CONTACT CLOSURE TO THE TRAFFIC CONTROLLER.
- THE MANUFACTURER'S REPRESENTATIVE SHALL BE ON SITE DURING INSTALLATION AND TESTING AND SHALL PROVIDE ONSITE TRAINING ON THE SETUP, OPERATION, AND MAINTENANCE OF THE UNIT.
- THE UNIT SHALL COME WITH A 2-YEAR MANUFACTURER SUPPLIED WARRANTY.
- PRIOR TO PROGRAMMING, THE CONTRACTOR SHALL CONTACT THE CITY OF DELAWARE PROJECT ENGINEER (740-203-1700). A DEPARTMENT OF ENGINEERING SERVICES REPRESENTATIVE SHALL BE PRESENT DURING THE PROGRAMMING OF THE SYSTEM.

PAYMENT FOR ITEM 809 ADVANCE DETECTION SHALL BE MADE AT THE CONTRACT UNIT PRICE FOR EACH UNIT, COMPLETE AND IN PLACE INCLUDING ALL REQUIRED CABINET HARDWARE, MOUNTING BRACKETS, CABLES, CONDUIT, CONNECTIONS TESTED AND ACCEPTED, AND ANY OTHER NECESSARY HARDWARE TO ESTABLISH A FULLY FUNCTIONAL DETECTION SYSTEM.

CALCULATED
CHECKED

TRAFFIC CONTROL NOTES

DEL-23-13.17

ITEM 809 - STOP-BAR DETECTION

THIS ITEM OF WORK SHALL CONSIST OF FURNISHING AND INSTALLING A STOP-BAR DETECTION UNIT CAPABLE OF INTERSECTION DETECTION CONTROL UTILIZING ABOVE GROUND DIGITAL WAVE RADAR TECHNIQUES. THE UNIT SHALL BE NONINTRUSIVE AND SHALL DETECT VEHICLES FROM 6 FT. (1.8 M) UP TO 140 FT. (42.7 M) FOR A 90 DEGREE FIELD OF VIEW FROM THE UNIT. THE UNIT SHALL PROVIDE REAL-TIME PRESENCE DATA FOR AT LEAST 10 LANES. THE UNIT SHALL PROVIDE AT LEAST SIXTEEN DETECTION ZONES SIMULTANEOUSLY FOR INTERSECTION CONTROL. ONE UNIT SHALL BE PROVIDED PER APPROACH, WHERE SPECIFIED IN THE PLANS, COVERING MULTIPLE LANES WHERE STOP-BAR DETECTION IS REQUIRED. THE DETECTION UNIT SHALL INCLUDE THE FOLLOWING LIST OF FEATURES AND CAPABILITIES:

- THE UNIT SHALL PROVIDE ACCURATE PRESENCE-DETECTION OF BOTH MOVING AND STOPPED VEHICLES. THE UNIT SHALL BE MOUNTED IN A FORWARD-FIRE OR SIDE-FIRE POSITION, LOOKING AT EITHER APPROACHING OR DEPARTING TRAFFIC AND SHALL ONLY DETECT VEHICLES IN ONE DIRECTION OF TRAVEL.
- THE UNIT SHALL BE TESTED TO MEET NEMA TS2 ENVIRONMENTAL STANDARDS AND MAINTAIN ACCURATE PERFORMANCE IN THE FOLLOWING OPERATING CONDITIONS:
  - * RAIN UP TO 1 IN. (2.5 CM) PER HOUR
  - * FREEZING RAIN
  - * SNOW
  - * WIND
  - * DUST
  - * FOG
  - * CHANGING TEMPERATURE
  - * CHANGING LIGHTING
- THE RADAR DESIGN FOR EACH UNIT SHALL CONFORM TO THE FOLLOWING:
  - * OPERATING FREQUENCY: 24.024.25 GHZ (K-BAND)
  - * MATRIX OF 16 RADARS
  - * NO MANUAL TUNING TO CIRCUITRY
  - * TRANSMITS MODULATED SIGNALS GENERATED DIGITALLY
  - * NO TEMPERATURE-BASED COMPENSATION NECESSARY
  - * BANDWIDTH STABLE WITHIN 1%
  - * PRINTED CIRCUIT BOARD ANTENNAS
  - * ANTENNA VERTICAL 6 DB BEAM WIDTH (TWO-WAY PATTERN): 65 DEGREES
  - * HORIZONTAL FIELD OF VIEW: 90 DEGREES
  - * ANTENNA TWO-WAY SIDELOBES: -40 DB
  - * TRANSMIT BANDWIDTH: 245 MHZ
  - * UN-WINDOWED RESOLUTION: 2 FT. (0.6 M)
  - * RF CHANNELS: 8
  - * SELF-TEST FOR VERIFYING HARDWARE FUNCTIONALITY
  - * DIAGNOSTICS MODE FOR VERIFYING SYSTEM FUNCTIONALITY
- THE UNIT SHALL INCLUDE A SIMPLE SETUP ROUTINE THAT SHALL AUTOMATICALLY CONFIGURE AND CALIBRATE THE UNIT FOR PROPER OPERATION DURING INSTALLATION. THE UNIT SHALL ALSO BE CAPABLE OF BEING PROGRAMMED AND UPDATED FROM A LAPTOP COMPUTER OR OTHER PORTABLE PROGRAMMING DEVICE, SUCH AS A POCKET PC, VIA A LOCAL OR REMOTE ETHERNET CONNECTION USING VENDOR SUPPLIED SOFTWARE. THE SOFTWARE SHALL SUPPORT TCP/IP CONNECTIVITY, UNIT CONFIGURATION BACK-UP AND RESTORE, AND REAL-TIME TRAFFIC VISUALIZATION FOR PERFORMANCE VERIFICATION AND TRAFFIC DISPLAY. THE GRAPHICAL USER INTERFACE SHALL OPERATE ON A WINDOWS PLATFORM.
- THE UNIT SHALL HAVE TWO HALF-DUPLEX RS-485 COMMUNICATION PORTS AND SHALL HAVE THE ABILITY TO UPGRADE FIRMWARE OVER ANY COMMUNICATION PORT.
- THE UNIT SHALL BE CAPABLE OF ETHERNET COMMUNICATION.
- THE UNIT SHALL BE MOUNTED DIRECTLY TO A POLE OR MAST ARM, AS RECOMMENDED BY THE MANUFACTURER. CABLE(S) SHALL BE PROVIDED AS REQUIRED AND RECOMMENDED BY THE MANUFACTURER.
- SURGE PROTECTION DEVICES, AS RECOMMENDED BY THE MANUFACTURER, SHALL BE INCLUDED BOTH AT THE POLE WHERE THE UNIT IS LOCATED TO PROTECT THE UNIT AND IN THE TRAFFIC CABINET TO PROTECT THE CABINET ELECTRONICS.
- POWER SHALL BE PROVIDED FROM THE TRAFFIC CABINET. THE UNIT SHALL CONSUME LESS THAN 10 WATTS AND OPERATE FROM A DC INPUT BETWEEN 9 VDC AND 28 VDC. COMPLETE AND AUTOMATIC RECOVERY FROM A POWER FAILURE SHALL BE WITHIN 15 SECONDS AFTER RESUMPTION OF NORMAL POWER.
- ALL REQUIRED INPUTS CARDS SHALL BE INCLUDED IN THE TRAFFIC CABINET AND SHALL BE COMPATIBLE WITH CALTRANS, NEMA TS1 AND NEMA TS2 DETECTOR RACKS. THE CARDS SHALL PROVIDE TRUE PRESENCE DETECTOR CALLS OR CONTACT CLOSURE TO THE TRAFFIC CONTROLLER.
- THE MANUFACTURER'S REPRESENTATIVE SHALL BE ON SITE DURING INSTALLATION AND TESTING AND SHALL PROVIDE ONSITE TRAINING ON THE SETUP, OPERATION, AND MAINTENANCE OF THE UNIT.
- THE UNIT SHALL COME WITH A 2-YEAR MANUFACTURER SUPPLIED WARRANTY.
- PRIOR TO PROGRAMMING, THE CONTRACTOR SHALL CONTACT THE CITY OF DELAWARE PROJECT ENGINEER AT 740-203-1700. A CITY ENGINEERING DEPARTMENT REPRESENTATIVE SHALL BE PRESENT DURING THE PROGRAMMING OF THE SYSTEM.

PAYMENT FOR ITEM 809 STOP-BAR DETECTION SHALL BE MADE AT THE CONTRACT UNIT PRICE FOR EACH UNIT, COMPLETE AND IN PLACE INCLUDING ALL REQUIRED CABINET HARDWARE, MOUNTING BRACKETS, CABLES, CONDUIT, AND CONNECTIONS TESTED AND ACCEPTED.

ITEM 633 - CONTROLLER WORK PAD, AS PER PLAN

WORK PADS FOR THE UNINTERRUPTIBLE POWER SUPPLY (UPS) AND CONTROLLER CABINETS SHALL BE AS SHOWN ON THIS SHEET. EXCAVATE A MINIMUM OF 9" BELOW GRADE. PLACE AND COMPACT 6" OF MATERIAL CONFORMING TO 304.02. INSTALL A CAST-IN-PLACE WORK PAD THAT IS A MINIMUM OF 4" THICK.

ITEM 633 - CABINET FOUNDATION, AS PER PLAN

THIS ITEM SHALL PROVIDE A FOUNDATION FOR THE CONTROLLER AND UNINTERRUPTIBLE POWER SUPPLY (UPS) AS SHOWN ON THIS SHEET. THE FOUNDATION SHALL BE CONSTRUCTED IN ACCORDANCE WITH NEMA CABINET FOUNDATIONS SHOWN ON TC-83.20.

PAYMENT FOR ITEM 633 "CABINET FOUNDATION, AS PER PLAN" SHALL INCLUDE ALL EQUIPMENT, LABOR AND MATERIALS TO INSTALL THE FOUNDATION, INCLUDING CONDUIT ELLS AND ANCHOR BOLTS. RESTORATION OF DISTURBED AREA AND DISPOSAL OF SURPLUS MATERIAL AS POWER CMS 104.04.

ITEM 625 - LUMINAIRE, CONVENTIONAL, AS PER PLAN

IN ADDITION TO THE REQUIREMENTS OF ODOT'S CONSTRUCTION AND MATERIAL SPECIFICATIONS, LUMINAIRES FOR CONVENTIONAL LIGHTING UNITS SHALL BE AS FOLLOWS:

LUMINAIRES FOR CONVENTIONAL LIGHTING UNITS WITH AN IES III-MC DISTRIBUTION AND 250 WATT METAL HALIDE LAMPS SHALL BE AMERICAN ELECTRIC "SERIES 125" COOPER "OVF" (FLAT GLASS), GENERAL ELECTRIC "M-400" (CUTOFF), OR EQUAL AS APPROVED BY THE ENGINEER AND SHALL HAVE A BLACK HOUSING FROM THE MANUFACTURER. THE LUMINAIRE SHALL INCLUDE INDIVIDUAL PHOTOELECTRIC CONTROL.

PAYMENT WILL BE MADE AT THE UNIT BID PRICE FOR EACH CMS ITEM 625, "LUMINAIRE, CONVENTIONAL, AS PER PLAN (250 W MH, 120 VOLT, TYPE III, WITH PE CELL)" FOR EACH LUMINAIRE WHICH SHALL BE FULL COMPENSATION FOR ALL LABOR, MATERIALS AND INCIDENTALS REQUIRED TO COMPLETE THIS ITEM IN A SATISFACTORY AND WORKMANLIKE MANNER.

ITEM 625 - BRACKET ARM, (BY SIZE), AS PER PLAN

THIS ITEM SHALL BE AS PER 625 AND 713 EXCEPT THE ARM SHALL HAVE A BLACK FINISH AND SHALL BE TREATED AND PAINTED BLACK BY THE MANUFACTURER AS PER ITEM 632 COMBINATION SIGNAL SUPPORT, TYPE TC-81.21, (BY DESIGN), AS PER PLAN.

PAYMENT WILL BE MADE AT THE CONTRACT UNIT PRICE AND WILL BE FULL COMPENSATION FOR ALL LABOR, MATERIALS, TOOLS, EQUIPMENT AND OTHER INCIDENTALS NECESSARY FOR EACH SUPPORT FURNISH, IN PLACE, COMPLETE AND ACCEPTED.

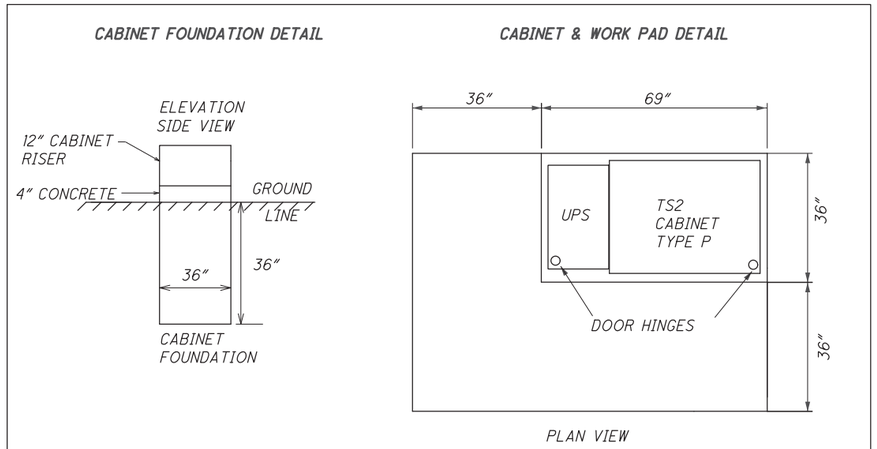

NOTES:

1) THE SIZE OF THE UPS FOUNDATION MAY VARY BASED ON THE CABINET SIZE PROVIDED.

2) UPS FOUNDATION ELEVATION SHOULD MATCH CABINET FOUNDATION ELEVATION.

3) THE UPS CABINET SHALL BE MOUNTED FLUSH UP AGAINST THE SIGNAL CABINET AND SEALED.

4) CONDUIT AND WIRING FROM THE SIGNAL CABINET TO THE UPS SHALL BE INSTALLED THROUGH THE CABINET RISER.

CALCULATED
CHECKED

TRAFFIC CONTROL NOTES

DEL-23-13.17

PLOT.CEL

ms consultants, inc.
msconsultants.com

www.msconsultants.com

Ohio DOT Workspace
DEL-23

UCF: ohdot V8i
PCF: 60-06655_Columbus

Batchplot Spec: \\0330share\n\60\06655\standards\plotdrv\batchplt.spc
Pen Table: S:\std\plotting\usin\V8\pen\V8i_ms_std.tbl
Plot Driver: S:\std\plotting\usin\V8\PDF.pltcfg

34" x 22"

View: FENCE_VIEW1
By: hbrendinger

Model: Sheet
Printed: 10/8/2015 @ 4:27:00 PM
File: \\0330share\n\60\06655\traffic\sheets\PIS_203012_Battery Backup System.dgn

MATERIAL SPECIFICATIONS FOR BBS GENERATOR POWER PANEL EQUIPMENT

GENERATOR INLET --- The inlet shall be 30 amp, 125/250V, locking, four (4) wire grounding and meet the NEMA configuration number L14-30-P 30A 125/250V specification. The inlet shall be a Hubbell catalog #2715.

LINE VOLTAGE GENERATOR SWITCH --- The switch shall be 30 amp, 125/250V AC, two (2) pole, three (3) position (On, Off, On). The switch shall be a Hubbell catalog #1388.

LINE VOLTAGE INDICATOR LIGHT --- The indicator light shall be a 125V AC light emitting diode with a red lens.

LINE VOLTAGE CIRCUIT BREAKER --- The circuit breaker shall be single pole single throw and a minimum of 30 amps. The amperage shall be increased to accomodate greater loads, if necessary. The gauge of the power cable shall be of proper size per the N.E.C.

EXTERNAL LINE VOLTAGE INDICATOR LIGHT --- The indicator light shall be a 1-inch (25mm) waterproof NEMA 4X or IP66 LED lamp with a GREEN lens.

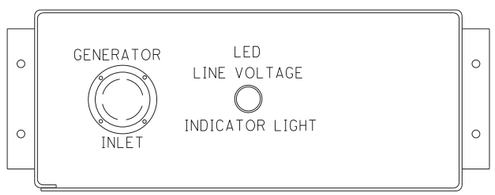

FRONT VIEW OF GENERATOR POWER PANEL

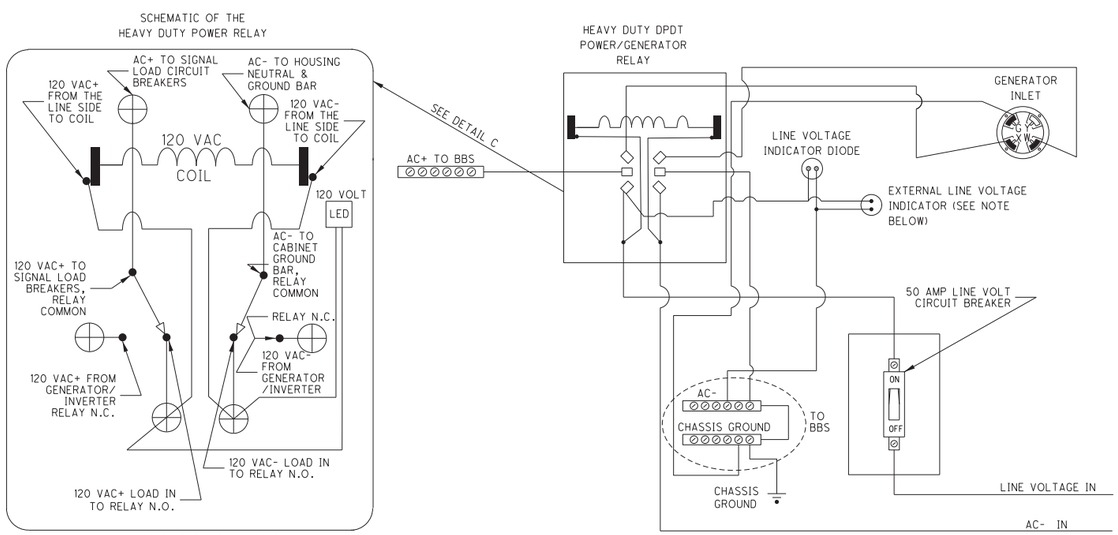

ELECTRICAL HOOKUP DETAIL FOR THE BBS GENERATOR POWER PANEL

NOTE : EXTERNAL LINE VOLTAGE INDICATOR LIGHT required when called for in the plans.
EXTERNAL LINE VOLTAGE INDICATOR LIGHT shall be located on the enclosure exterior for visibility from the adjacent roadway when all cabinet, and generator panel doors are closed.

GENERATOR POWER PANEL ENCLOSURE

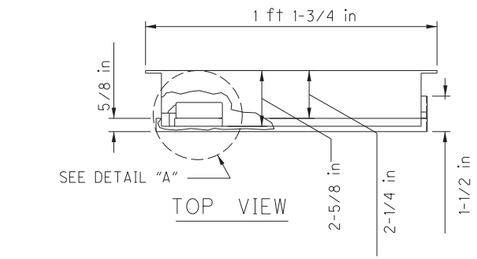

TOP VIEW

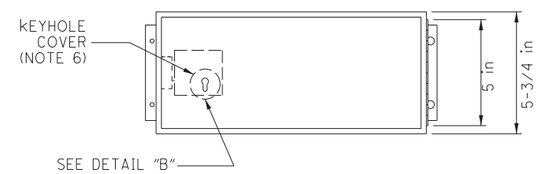

FRONT VIEW CLOSED DOOR

NOTES

1. The enclosure shall be constructed Of 1/8 inch thick aluminum.
2. The lock shall be the standard police door type, keyed with the standard flasher door skeleton key.
3. The door shall be sealed with a foam rubber gasket to prevent moisture from entering the enclosure.
4. The enclosure shall be mounted onto the outside of the controller cabinet with non-accessible bolts and sealed with a high quality silicon caulk at all surfaces touching the cabinet.
5. The hinge shall be of stainless steel or equivalent corrosive-resistant material.
6. Keyhole shall be covered with a movable circular aluminum or brass cover with top pivot pin.

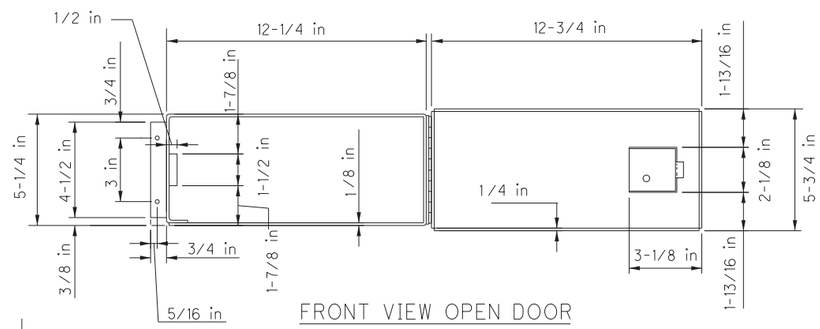

FRONT VIEW OPEN DOOR

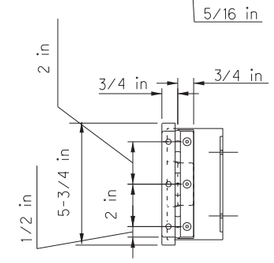

RIGHT SIDE VIEW CLOSED DOOR

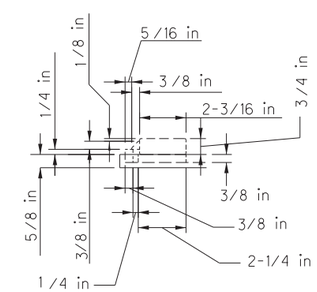

DETAIL "A"

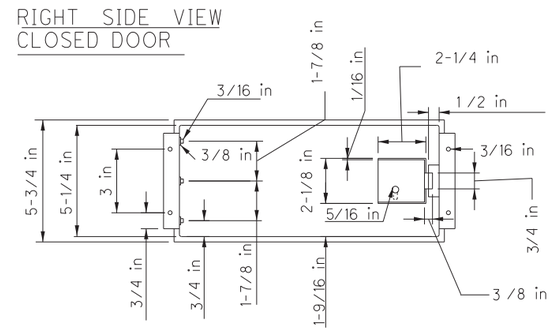

BACK VIEW CLOSED DOOR

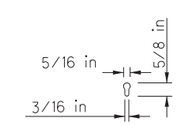

DETAIL "B"

OFFICE OF TRAFFIC ENGINEERING
PIS 203012 04/20/12

DESIGNED
REVIEWED KRD

BATTERY BACKUP SYSTEM - GENERATOR POWER PANEL

DEL-23-13.17

ms consultants, inc.

SHEET NUMBER									PARTICIPATION			ITEM	ITEM EXT	GRAND TOTAL	UNIT	DESCRIPTION	SEE SHEET NO.
		71		74		79			01/MPO/OT		02/MPO/OT/DEL						
																TRAFFIC CONTROL	
		17							17			620	60000	17	EACH	REBOUNDABLE TUBULAR PYLON	
		110							110			621	00100	110	EACH	RPM	
		38							38			621	54000	38	EACH	RAISED PAVEMENT MARKER REMOVED	
				201.6					201.6			630	02100	201.6	FT	GROUND MOUNTED SUPPORT, NO. 2 POST	
				187.4					187.4			630	03100	187.4	FT	GROUND MOUNTED SUPPORT, NO. 3 POST	
				124.5					124.5			630	03101	124.5	FT	GROUND MOUNTED SUPPORT, NO. 3 POST, AS PER PLAN	63
				33					33			630	04100	33	FT	GROUND MOUNTED SUPPORT, NO. 4 POST	
				9					9			630	08600	9	EACH	SIGN POST REFLECTOR	
				5					5			630	79100	5	EACH	SIGN HANGER ASSEMBLY, MAST ARM	
				12					12			630	79500	12	EACH	SIGN SUPPORT ASSEMBLY, POLE MOUNTED	
				284.1					284.1			630	80100	284.1	SF	SIGN, FLAT SHEET	
				1					1			630	80501	1	EACH	SIGN, DOUBLE FACED, STREET NAME, AS PER PLAN	63
				2					2			630	80511	2	EACH	SIGN, STREET NAME, AS PER PLAN	63
				26					26			630	84900	26	EACH	REMOVAL OF GROUND MOUNTED SIGN AND DISPOSAL	
				2					2			630	85100	2	EACH	REMOVAL OF GROUND MOUNTED SIGN AND REERECTION	
				15					15			630	86002	15	EACH	REMOVAL OF GROUND MOUNTED POST SUPPORT AND DISPOSAL	
				6					6			630	86102	6	EACH	REMOVAL OF GROUND MOUNTED STRUCTURAL BEAM SUPPORT AND DISPOSAL	
				1					1			630	87400	1	EACH	REMOVAL OF OVERHEAD MOUNTED SIGN AND DISPOSAL	
				1					1			630	87500	1	EACH	REMOVAL OF POLE MOUNTED SIGN AND DISPOSAL	
				1					1			630	89706	1	EACH	REMOVAL OF OVERHEAD SIGN SUPPORT AND DISPOSAL, TYPE TC-12.30	
		0.69							0.69			644	00104	0.69	MILE	EDGE LINE, 6"	
		0.93							0.93			644	00204	0.93	MILE	LANE LINE, 6"	
		0.88							0.88			644	00300	0.88	MILE	CENTER LINE	
		1260							1260			644	00404	1260	FT	CHANNELIZING LINE, 12"	
		80							80			644	00500	80	FT	STOP LINE	
		92							92			644	00600	92	FT	CROSSWALK LINE	
		533							533			644	00700	533	FT	TRANSVERSE/DIAGONAL LINE	
		20							20			644	01300	20	EACH	LANE ARROW	
		405							405			644	01510	405	FT	DOTTED LINE, 6"	
		0.02							0.02			644	30020	0.02	EACH	REMOVAL OF PAVEMENT MARKING	

CALCULATED MGS
CHECKED JML

TRAFFIC CONTROL GENERAL SUMMARY

DEL-23-13.17

SHEET NUMBER									PARTICIPATION			ITEM	ITEM EXT	GRAND TOTAL	UNIT	DESCRIPTION	SEE SHEET NO.
		71		74		79			01/MPO/OT		02/MPO/OT/DEL						
																TRAFFIC SIGNALS	
						39			39			625	25400	39	FT	CONDUIT, 2", 725.04	
						280			280			625	25500	280	FT	CONDUIT, 3", 725.04	
						296			296			625	25900	296	FT	CONDUIT, JACKED OR DRILLED, 3"	
						3			3			625	30706	3	EACH	PULL BOX, 725.08, 24"	
						158			158			625	29000	158	FT	TRENCH	
						4			4			625	32000	4	EACH	GROUND ROD	
						2			2			632	04801	2	EACH	VEHICULAR SIGNAL HEAD, (LED), 1 SECTION, 12" LENS, 1-WAY, AS PER PLAN	65
						5			5			632	04911	5	EACH	VEHICULAR SIGNAL HEAD, (LED) BLACK, 3-SECTION, 12" LENS, 1-WAY, WITH BACKPLATE, AS PER PLAN	65
						1			1			632	04921	1	EACH	VEHICULAR SIGNAL HEAD, (LED) BLACK, 5-SECTION, 12" LENS, 1-WAY, WITH BACKPLATE, AS PER PLAN	65
						8			8			632	25000	8	EACH	COVERING OF VEHICULAR SIGNAL HEAD	
						971			971			632	40700	971	FT	SIGNAL CABLE, 7 CONDUCTOR, NO. 14 AWG	
						3			3			632	64010	3	EACH	SIGNAL SUPPORT FOUNDATION	
						23			23			632	68200	23	FT	POWER CABLE, 2 CONDUCTOR, NO. 6 AWG	
						18			18			632	68300	18	FT	POWER CABLE, 3 CONDUCTOR, NO. 6 AWG	
						1			1			632	70001	1	EACH	POWER SERVICE, AS PER PLAN	65
						3			3			632	77231	3	EACH	SIGNAL SUPPORT, MECHANICAL DAMPER FOR TC-81.21 MAST ARM (GREATER THAN 59' IN LENGTH), AS PER PLAN	66
						1			1			632	81091	1	EACH	COMBINATION SIGNAL SUPPORT, TYPE TC-81.21, DESIGN 13, AS PER PLAN	66
						2			2			632	81095	2	EACH	COMBINATION SIGNAL SUPPORT, TYPE TC-81.21, DESIGN 14, AS PER PLAN	66
						1			1			633	01551	1	EACH	CONTROLLER UNIT, TYPE TS2/A2, WITH CABINET, TYPE TS2, AS PER PLAN	66
						2			2			633	67000	2	EACH	CABINET RISER	
						1			1			633	67101	1	EACH	CABINET FOUNDATION, AS PER PLAN	68
						1			1			633	67201	1	EACH	CONTROLLER WORK PAD, AS PER PLAN	68
						1			1			633	74001	1	EACH	UNINTERRUPTIBLE POWER SUPPLY (UPS), AS PER PLAN	66
						1			1			633	67301	1	EACH	PREEMPTION, AS PER PLAN	67
						1			1			809	69000	1	EACH	ADVANCE DETECTION	67
						2			2			809	69100	2	EACH	STOP-BAR DETECTION	68
						1			1			633	74001	1	EACH	UNINTERRUPTIBLE POWER SUPPLY (UPS), AS PER PLAN, ALPHA TECHNOLOGIES - ALTERNATE BID	60
						1			1			633	67301	1	EACH	PREEMPTION, AS PER PLAN, OPTICOM - ALTERNATE BID	67
																LIGHTING	
						1			1			625	18201	1	EACH	BRACKET ARM, 15', AS PER PLAN	68
						2			2			625	18511	2	EACH	BRACKET ARM, 30', AS PER PLAN	68
						3			3			625	26251	3	EACH	LUMINAIRE, CONVENTIONAL, AS PER PLAN	68
						529			529			632	30980	529	FT	SIGNAL CABLE, 3 CONDUCTOR, NO. 10 AWG	
																FOR ADDITIONAL LIGHTING QUANTITIES SEE SHEET 82	

CALCULATED MGS
CHECKED JML

TRAFFIC CONTROL GENERAL SUMMARY

DEL-23-13.17

PLOT.CEL

ms consultants, inc.
msconsultants.com

www.msconsultants.com

Ohio DOT Workspace
DEL-23

UCF: ohdot\V8i
PCF: 60-06655_Columbus

Batchplot Spec: \\0330share\n\60\06655\standards\plotdrv\batchplt.spc
Pen Table: S:\std\plotting\usft\V8\pen\V8_ms_std.tbl
Plot Driver: S:\std\plotting\usft\V8\PDF.pltcfg

34" x 22"

View: FENCE_VIEW1
By: hbrendinger

Model: Sheet
Printed: 10/8/2015 @ 4:27:21 PM
File: \\0330share\n\60\06655\traffic\sheets\06655TS001.dgn

SHEET NO.	STATION FROM	STATION TO	SIDE	620 REBOUNDABLE TUBULAR PYLONS (EACH)	621 RPM, 2-WAY, YELLOW/YELLOW (EACH)	621 RPM, 2-WAY, WHITE/RED (EACH)	621 RAISED PAVEMENT MARKER REMOVAL (EACH)	644 WE EDGE LINE, WHITE, 6" (FT/MI)	644 YE EDGE LINE, YELLOW, 6" (FT/MI)	644 LL LANE LINE, 6" (FT/MI)	644 DY CENTER LINE, DOUBLE SOLID, YELLOW (FT/MI)	644 CL CENTER LINE, DASHED & DOUBLE SOLID (FT/MI)	644 CH CHANNELIZING LINE, 12" (FT)	644 SL STOP LINE (FT)	644 XW CROSSWALK LINE (FT)	644 YT TRANSVERSE/ DIAGONAL LINE, YELLOW (FT)	644 A LANE ARROW (EACH)	644 WD DOTTED LINE, 6", WHITE (FT)	644 REMOVAL OF PAVEMENT MARKING (MILE)
75	U.S. 23																		
	681+35	683+00	RT							165									
	682+70	683+00	LT							30									
	703+00	706+10	LT					310											
	703+00	709+10	LT							610									
	703+00	706+10	LT									310							
	703+00	704+24	RT							124									
	703+00	704+24	RT									124							
76	U.S. 23																		
	683+00	688+83	LT							583									
	683+00	693+00	RT							1000									
	684+35	688+86	RT						451										
	684+35	693+00	RT					865											
	685+70	693+00	LT					730											
	685+70	688+86	LT						316										
	688+83	693+00	LT			6	6			417									
	688+86	693+00	LT		6						414								
	688+86	689+61	LT/RT		4						75								
	689+81	693+00	RT			9							319						
	690+68		LT/RT														1		
	690+81	693+00	LT/RT				6												
	690+84	693+00	LT/RT																
	691+56		LT/RT														1		
	692+44		LT/RT														1		
	N. SANDUSKY ST.																		
	301+95	302+41	LT												92			86	
	302+57	303+50	LT/RT		4						188								
	302+57	303+50	LT/RT													131			
	302+63		LT											14					
	303+50	309+00	LT/RT		14							1100							
	304+00		LT/RT														2		
	306+75		LT/RT														2		
TOTAL					28	15	12	1905	767	2929	677	1534	319	14	92	131	7		86

CALCULATED MGS
CHECKED JML

PAVEMENT MARKING SUBSUMMARY

DEL-23-13.17

ms consultants, inc.

PLOT.CEL

ms consultants, inc.
msconsultants.com

www.msconsultants.com

Ohio DOT Workspace
DEL-23

UCF: ohdot\V8i
PCF: 60-06655_Columbus

Batchplot Spec: \\0330share\n\60\06655\standards\plotdrv\batchplt.spc
Pen Table: S:\std\plotting\usft\V8\pen\V8_ms_std.tbl
Plot Driver: S:\std\plotting\usft\V8\PDF.pltcfg

34" x 22"

View: FENCE_VIEW1
By: hbrendinger

Model: Sheet @ 4:27:31 PM
Printed: 10/8/2015
File: \\0330share\n\60\06655\traffic\sheets\0665575002.dgn

SHEET NO.	STATION FROM	STATION TO	SIDE	620 REBOUNDABLE TUBULAR PYLONS (EACH)	621 RPM, 2-WAY, YELLOW/YELLOW (EACH)	621 RPM, 2-WAY, WHITE/RED (EACH)	621 RAISED PAVEMENT MARKER REMOVAL (EACH)	644 WE EDGE LINE, WHITE, 6" (FT/MI)	644 YE EDGE LINE, YELLOW, 6" (FT/MI)	644 LL LANE LINE, 6" (FT/MI)	644 DY CENTER LINE, DOUBLE SOLID, YELLOW (FT/MI)	644 CL CENTER LINE, DASHED & DOUBLE SOLID (FT/MI)	644 CH CHANNELIZING LINE, 12" (FT)	644 SL STOP LINE (FT)	644 XW CROSSWALK LINE (FT)	644 YT TRANSVERSE/ DIAGONAL LINE, YELLOW (FT)	644 A LANE ARROW (EACH)	644 WD DOTTED LINE, 6", WHITE (FT)	644 REMOVAL OF PAVEMENT MARKING (MILE)
77	U.S. 23																		
	693+00	694+40	LT					140											
	693+00	700+24	LT			10				724									
	693+00	694+50	LT		2						150								
	693+00	695+00	RT			4							200						
	693+00	703+00	RT							1000									
	693+00	693+88	RT					88											
	693+00	700+24	LT/RT				18												
	693+32		LT/RT														1		
	693+57	695+13	LT				8												
	693+88	697+19	RT										331						
	694+20		LT/RT														1		
	694+50		LT/RT											11					
	694+76	699+00	RT		6						424								
	695+00	699+00	LT		6						400								
	695+00	695+50	CL	17															
	695+00	699+00	LT/RT													240			
	695+86	703+00	LT			14		714											
	696+00		LT											38					
	696+00	696+29	LT										29						
	696+00	699+50	LT			9							350						
	696+30		LT														1		
	696+88	697+19	RT										31						
	697+18		LT														1		
	697+19	701+24	RT															405	
	698+07		LT														1		
	698+95		LT														1		
	699+00	700+24	LT		3							124							
	699+00	700+24	RT		3							124							
	699+50		LT/RT														2		
	700+24	703+00	LT							276									
	700+24	703+00	LT									276							
	700+24	703+00	RT									276							
	N. SANDUSKY ST.																		
	309+00	310+75	LT/RT		6							350							
	309+75		LT/RT														2		
	309+96		RT														1		
	310+75	312+34	LT/RT		4						320								
	310+75	312+34	LT/RT													162			
	310+84		RT														1		
	311+72		RT														1		
	312+03	312+08	RT											17					
	TOTAL THIS SHEET			17	30	37	26	942		2000	1294	1150	941	66		402	13	405	
	TOTAL SHEET 70				28	15	12	1905	767	2929	677	1534	319	14	92	131	7		86
	TOTAL			17	58	52	38	2847	767	4929	1971	2684	1260	80	92	533	20	405	86
	TOTAL (FT.)							2847	767	4929	1971	2684		80	92	533		405	86
	TOTAL (MI.)							0.54	0.15	0.93	0.37	0.51							0.02
	GRAND TOTAL			17	110		38	0.68		0.93	0.88		1260	80	92	533	20	405	0.02
	TOTAL CARRIED TO GENERAL SUMMARY			**17**	**110**		**38**	**0.68**		**0.93**	**0.88**		**1260**	**80**	**92**	**533**	**20**	**405**	**0.02**

CALCULATED MGS
CHECKED JML

PAVEMENT MARKING SUBSUMMARY

DEL-23-13.17

ms consultants, inc.

PLOT.CEL

ms consultants, inc.
msconsultants.com

www.msconsultants.com

Ohio DOT Workspace
DEL-23

UGF: ohdot\V8i
PCF: 60-06655_Columbus

Batchplot Spec: \\0330share\n\60\06655\standards\plotdrv\batchplt.spc
Pen Table: S:\std\plotting\usth\V8\pen\V8_ms_std.tbl
Plot Driver: S:\std\plotting\usth\V8\PDF.pltcfg

34" x 22"

View: FENCE_VIEW1
By: hbrendinger

Model: Sheet
Printed: 10/8/2015 @ 4:27:41 PM
File: \\0330share\n\60\06655\traffic\sheets\06655TS101.dgn

NOTE:
POST LENGTHS WERE CALCULATED WITH A 7' CLEARANCE EXCEPT AS FOLLOWS: EXPRESSWAY SIGNS WITH SECONDARY SIGNS WERE CALCULATED WITH A 6' CLEARANCE - SEE TC-42.20

630

SHEET NO.	REFERENCE NO.	LOCATION	STATION	SIDE	CODE	SIGN SIZE (INCHES)	GROUND MOUNTED SUPPORT, NO. 2 POST	GROUND MOUNTED SUPPORT, NO. 3 POST	GROUND MOUNTED SUPPORT, NO. 3 POST, AS PER PLAN	GROUND MOUNTED SUPPORT, NO. 4 POST	SIGN POST REFLECTOR	SIGN HANGER ASSEMBLY, MAST ARM	SIGN SUPPORT ASSEMBLY, POLE MOUNTED	SIGN, FLAT SHEET	SIGN, DOUBLE FACED, STREET NAME, AS PER PLAN	SIGN, STREET NAME, AS PER PLAN	REMOVAL OF GROUND MOUNTED SIGN AND DISPOSAL	REMOVAL OF GROUND MOUNTED SIGN AND REERECTION	REMOVAL OF GROUND MOUNTED POST SUPPORT AND DISPOSAL	REMOVAL OF GROUND MOUNTED STRUCTURAL BEAM SUPPORT AND DISPOSAL	REMOVAL OF OVERHEAD MOUNTED SIGN AND DISPOSAL	REMOVAL OF POLE MOUNTED SIGN AND DISPOSAL	REMOVAL OF OVERHEAD SIGN SUPPORT AND DISPOSAL, TYPE TC-12.30
							FT	FT	FT	FT	EA	EA	EA	SQ FT	EA	EA	EA	EA	EA	EA	EA	EA	EA
75		U.S. 23																					
	S1		704+50	LT	W3-3-48	48" X 48"			14.5/14.9					18.7									
					W16-H8P-48	48" X 8"																	
76	S2		685+50	RT	W3-3-48	48" X 48"				16.2/16.8				18.7									
					W16-H8P-48	48" X 8"																	
	S3		689+80	RT	R3-H8CA-48	48" X 30"			16.0/16.9					10.0									
	S4		691+00	LT	M3-3-36	36" X 18"			17.5/17.8					13.5									
					M1-4-36-2	36" X 36"																	
	S5		692+41	RT	I-H2C-36	36" X 24"	12.5							6.0									
	S6		692+90	LT	I-H2A-48	48" X 24"	14.1/14.4							8.0									
		N. SANDUSKY ST.																					
	S7		301+69	RT	R1-3P-18	18" X 6"					2			0.8									
	S8		301+94	LT	R1-3P-18	18" X 6"					1			0.8									
	S9		302+35	LT	D3-MOD-8	VAR.									1								
					D3-MOD-8	VAR.																	
	S10		302+37±	RT	SPECIAL		8.0											1	1				
	S11		302+49	RT	M3-3-24	24" X 12"																	
					M1-4-24-2	24" X 24"		14.8						8.2									
					M6-3-21	21" X 15"																	
	S12		302+49	RT	M3-1-24	24" X 12"																	
					M1-4-24-2	24" X 24"		14.8						8.2									
					M6-1-21	21" X 15"																	
	S13		302+61	RT	R9-3-18	18" X 18"	12.0							2.3									
	S14		302+61	RT	R9-3-18	18" X 18"	12.0							2.3									
	S15		302+63	LT	R1-1-30	30" X 30"		13.5			1			7.0									
					R1-3P-18	18" X 6"																	
	S16		303+10±	LT	SPECIAL													1					
	S17		303+50	LT	R3-9DP-24	24" X 6"		14.0						7.0									
					R3-9B-24	24" X 36"																	
	S18		303+50	RT	R3-9CP-24	24" X 6"		14.0						7.0									
					R3-9B-24	24" X 36"																	
	S19		305+54	LT	D9-2-24	24" X 24"		13.8						6.2									
					M6-1-21	21" X 15"																	
	S20		307+00	RT	W1-11-30	30" X 30"		15.5						8.5									
					W13-1P-18	18" X 18"																	
	S21		307+50	LT	W11-1-30	30" X 30"		16.0						9.3									
					W16-1P-18	18" X 24"																	
	S44		303+25	LT	R7-2(MOD)-12	12" X 18"							1	1.5									
	S45		303+99	RT	R7-2(MOD)-12	12" X 18"							1	1.5									
	S46		304+75	LT	R7-2(MOD)-12	12" X 18"							1	1.5									
	S47		305+48	RT	R7-2(MOD)-12	12" X 18"							1	1.5									
	S48		306+22	LT	R7-2(MOD)-12	12" X 18"							1	1.5									
	S49		306+96	RT	R7-2(MOD)-12	12" X 18"							1	1.5									
					TOTAL		**73.0**	**116.4**	**97.6**	**33.0**	**4**		**6**	**151.5**	**1**			**2**	**1**				

CALCULATED MGS
CHECKED JML

SIGNING SUBSUMMARY

DEL-23-13.17

ms consultants, inc.

NOTE:
POST LENGTHS WERE CALCULATED WITH A 7' CLEARANCE EXCEPT AS FOLLOWS: EXPRESSWAY SIGNS WITH SECONDARY SIGNS WERE CALCULATED WITH A 6' CLEARANCE - SEE TC-42.20

630

SHEET NO.	REFERENCE NO.	LOCATION	STATION	SIDE	CODE	SIGN SIZE (INCHES)	GROUND MOUNTED SUPPORT, NO. 2 POST (FT)	GROUND MOUNTED SUPPORT, NO. 3 POST (FT)	GROUND MOUNTED SUPPORT, NO. 3 POST, AS PER PLAN (FT)	GROUND MOUNTED SUPPORT, NO. 4 POST (FT)	SIGN POST REFLECTOR (EA)	SIGN HANGER ASSEMBLY, MAST ARM (EA)	SIGN SUPPORT ASSEMBLY, POLE MOUNTED (EA)	SIGN, FLAT SHEET (SQ FT)	SIGN, DOUBLE FACED, STREET NAME, AS PER PLAN (EA)	SIGN, STREET NAME, AS PER PLAN (EA)	REMOVAL OF GROUND MOUNTED SIGN AND DISPOSAL (EA)	REMOVAL OF GROUND MOUNTED SIGN AND REERECTION (EA)	REMOVAL OF GROUND MOUNTED POST SUPPORT AND DISPOSAL (EA)	REMOVAL OF GROUND MOUNTED STRUCTURAL BEAM SUPPORT AND DISPOSAL (EA)	REMOVAL OF OVERHEAD MOUNTED SIGN AND DISPOSAL (EA)	REMOVAL OF POLE MOUNTED SIGN AND DISPOSAL (EA)	REMOVAL OF OVERHEAD SIGN SUPPORT AND DISPOSAL, TYPE TC-12.30 (EA)
77		U.S. 23																					
					R9-3-18	18" X 18"							1	2.3									
	S22		694+15	LT	R9-3-18	18" X 18"							1	2.3									
					R5-10B-30	30" X 18"							1	3.8									
	S23		695+07	RT	R10-12-24	24" X 30"						1		5.0									
	S24		695+07	RT	D3-MOD-12	VAR.						1				1							
	S25		695+10	LT	R9-3-18	18" X 18"							1	2.3									
	S26		695+50	LT	D3-MOD-12	VAR.						1				1							
	S27		695+55	LT	R9-3-18	18" X 18"							1	2.3									
					R9-3-18	18" X 18"							1	2.3									
	S28		696+00	LT	R3-H8CB-48	48" X 30"	13.4/13.5							10.0									
	S29		699+70	LT	R3-H8CB-48	48" X 30"	12.9/13.3							10.0									
	S30		701+50	LT	D1-H1A-120	120" X 24"			13.3/13.6					20.0									
		N. SANDUSKY ST.																					
	S31		309+50	RT	W3-3-30	30" X 30"		14.0						6.3									
	S32		309+50	LT	R2-1-24	24" X 30"	13.0							5.0									
	S33		310+45	LT	W1-8R-18	18" X 24"	12.5				1			3.0									
	S34		310+45	LT	W1-8L-18	18" X 24"	12.5				1			3.0									
	S35		310+62	RT	R3-9DP-24	24" X 6"		14.0						7.0									
					R3-9B-24	24" X 36"																	
	S36		310+77	LT	R3-9CP-24	24" X 6"		14.0						7.0									
					R3-9B-24	24" X 36"																	
	S37		311+12	LT	W1-8R-18	18" X 24"	12.5				1			3.0									
	S38		311+12	LT	W1-8L-18	18" X 24"	12.5				1			3.0									
	S39		311+77	LT	W1-8R-18	18" X 24"	12.5				1			3.0									
	S40		311+77	LT	W1-1L-18	30" X 30"		15.5						8.5									
					W13-1P-18	18" X 18"																	
	S41		312+00	RT	R3-5R-30	30" X 36"		13.5						7.5									
	S42		312+42	RT	R3-2-24	24" X 24"						1		4.0									
	S43		312+42	RT	R10-17A-36	36" X 48"						1		12.0									
		TOTAL					**128.6**	**71.0**	**26.9**		**5**	**5**	**6**	**132.6**		**2**							

CALCULATED MGS
CHECKED JML

SIGNING SUBSUMMARY

DEL-23-13.17

NOTE:
POST LENGTHS WERE CALCULATED WITH A 7' CLEARANCE EXCEPT AS FOLLOWS: EXPRESSWAY SIGNS WITH SECONDARY SIGNS WERE CALCULATED WITH A 6' CLEARANCE - SEE TC-42.20

SHEET NO.	REFERENCE NO.	LOCATION	STATION	SIDE	CODE	SIGN SIZE (INCHES)	630 GROUND MOUNTED SUPPORT, NO. 2 POST (FT)	GROUND MOUNTED SUPPORT, NO. 3 POST (FT)	GROUND MOUNTED SUPPORT, NO. 3 POST, AS PER PLAN (FT)	GROUND MOUNTED SUPPORT, NO. 4 POST (FT)	SIGN POST REFLECTOR (EA)	SIGN HANGER ASSEMBLY, MAST ARM (EA)	SIGN SUPPORT ASSEMBLY, POLE MOUNTED (EA)	SIGN, FLAT SHEET (SQ FT)	SIGN, DOUBLE FACED, STREET NAME, AS PER PLAN (EA)	SIGN, STREET NAME, AS PER PLAN (EA)	REMOVAL OF GROUND MOUNTED SIGN AND DISPOSAL (EA)	REMOVAL OF GROUND MOUNTED SIGN AND REERECTION (EA)	REMOVAL OF GROUND MOUNTED POST SUPPORT AND DISPOSAL (EA)	REMOVAL OF GROUND MOUNTED STRUCTURAL BEAM SUPPORT AND DISPOSAL (EA)	REMOVAL OF OVERHEAD MOUNTED SIGN AND DISPOSAL (EA)	REMOVAL OF POLE MOUNTED SIGN AND DISPOSAL (EA)	REMOVAL OF OVERHEAD SIGN SUPPORT AND DISPOSAL, TYPE TC-12.30 (EA)
75		US 23																					
	R1		726+00±	LT													2			2			
	R2																						
	R3		741+00±	LT													3			2			
	R4																						
	R5																						
76		N. SANDUSKY ST.																					
	R6		301+69±	RT													1						
	R7		301+94±	LT													1						
	R8		302+34±	LT													2		1				
	R9																						
	R10		302+35±	RT													3		1				
	R11																						
	R12																						
	R13		302+59±	LT													1		1				
	R14		302+61±	RT													1		1				
	R15		302+61±	RT													1		1				
	R16		303+40±	LT													2		1				
	R17																						
	R18		305+84±	RT													1		1				
	R19		305+91±	LT													1		1				
	R20		305+94±	RT													1		1				
	R21		306+01±	LT													1		1				
	R22		307+32±	LT													1		1				
77		US 23																					
	R23		693+07±	RT													1		1				
	R24		693+13±	LT													1		2				
	R25		693+32±	LT													2			2			
	R26																						
	R27		698+96±	LT																	1		1
	R28		698+96±	LT																		1	
			TOTAL THIS SHEET														26		14	6	1	1	1
			TOTAL SHEET 72				73.0	116.4	97.6	33.0	4		6	151.5	1			2	1				
			TOTAL SHEET 73				128.6	71.0	26.9		5	5	6	132.6		2							
			TOTAL CARRIED TO GENERAL SUMMARY				**201.6**	**187.4**	**124.5**	**33.0**	**9**	**5**	**12**	**284.1**	**1**	**2**	**26**	**2**	**15**	**6**	**1**	**1**	**1**

CALCULATED MGS
CHECKED JML

SIGNING SUBSUMMARY

DEL-23-13.17

PLOT.CEL

ms consultants, inc.
msconsultants.com

ITEM 644	LINE SPECIFICATIONS
WE	EDGE LINE, WHITE, 6"
YE	EDGE LINE, YELLOW, 6"
LL	LANE LINE, 6"
DY	CENTER LINE, SOLID DOUBLE (4")
CL	CENTER LINE, DASHED & SOLID DOUBLE (4")
CH	CHANNELIZING LINE, 12"
SL	STOP LINE, 24"
WD	DOTTED LINE, 6", WHITE
WT	TRANSVERSE/DIAGONAL LINE, WHITE
YT	TRANSVERSE/DIAGONAL LINE, YELLOW
A	LANE ARROW
XW	CROSSWALK LINE

SIGN LEGEND

- PROPOSED
- EXISTING TO REMAIN
- EXISTING TO BE REMOVED

LEGEND

- SIGN POST (1 POST)
- SIGN POST (2 POST)
- REBOUNDABLE TUBULAR PYLONS, YELLOW, 3' C-C

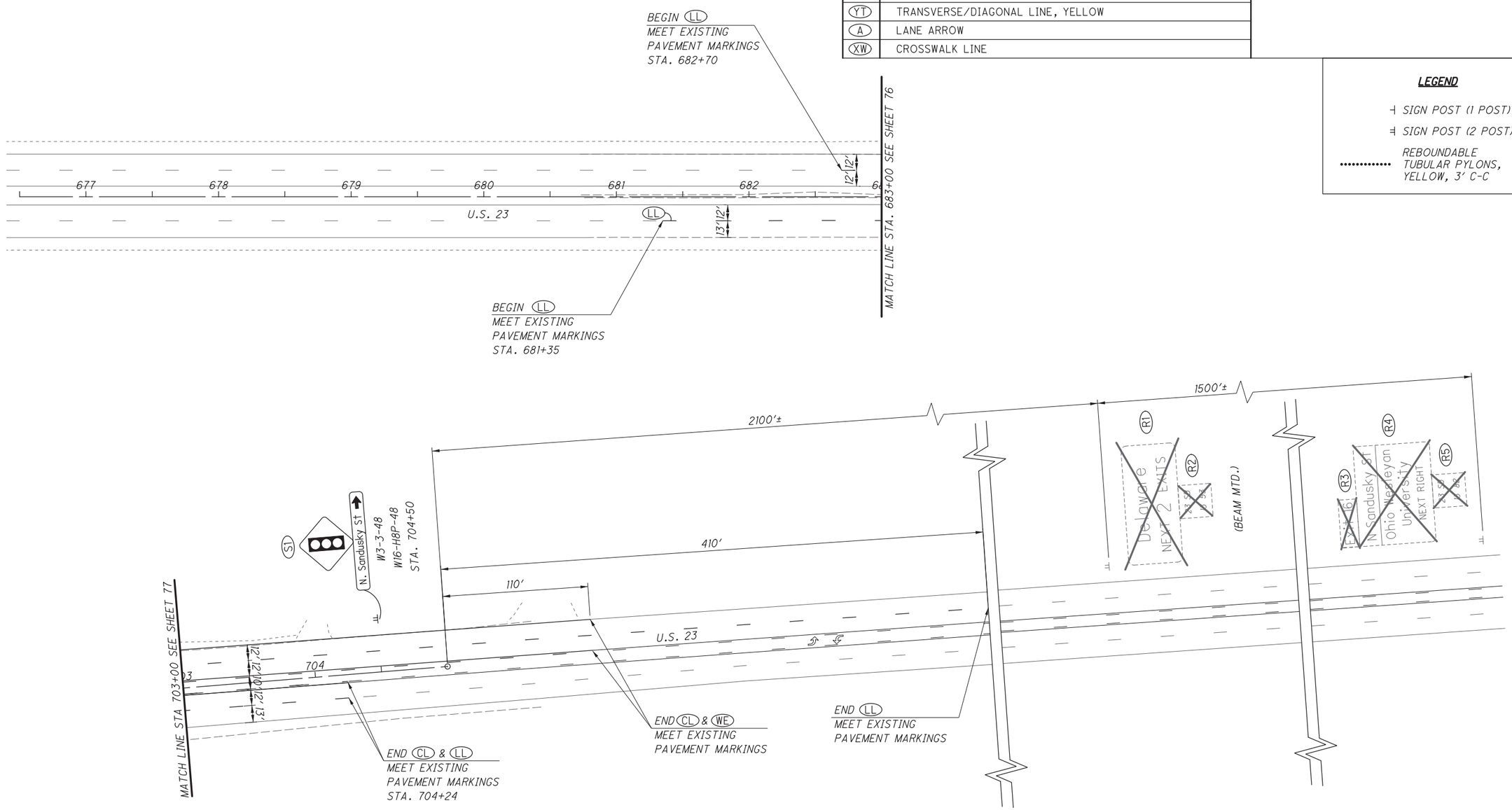

HORIZONTAL SCALE IN FEET 0 20 40 80

CALCULATED

CHECKED

SIGNING AND PAVEMENT MARKING PLAN
US 23

DEL-23-13.17

PLOT.CEL

ms consultants, inc.
msconsultants.com

www.msconsultants.com

Ohio DOT Workspace
DEL-23

UCF: ohdot\V8i
PCF: 60-06655_Columbus

Batchplot Spec: \\033share\n\60\06655\standards\plotdrv\batchplt.spc
Pen Table: S:\std\plotting\usa\V8\pen\V8_ms_std.tbl
Plot Driver: S:\std\plotting\usa\V8\PDF.pltcfg

Model: Sheet
Printed: 10/8/2015 @ 4:28:14 PM
File: \\033share\n\60\06655\traffic\sheets\06655TP002.dgn

View: FENCE_VIEW1
By: hbrendinger

34" x 22"

NOTE:

1. PLACE (S44) - (S49) ON LIGHT POLES AT STATIONS 303+25, 303+99, 304+75, 305+48, 306+22, 306+96 AT 45° ANGLES.

R7-2(MOD)-12

(S44) (S45)
(S46) (S47)
(S48) (S49)

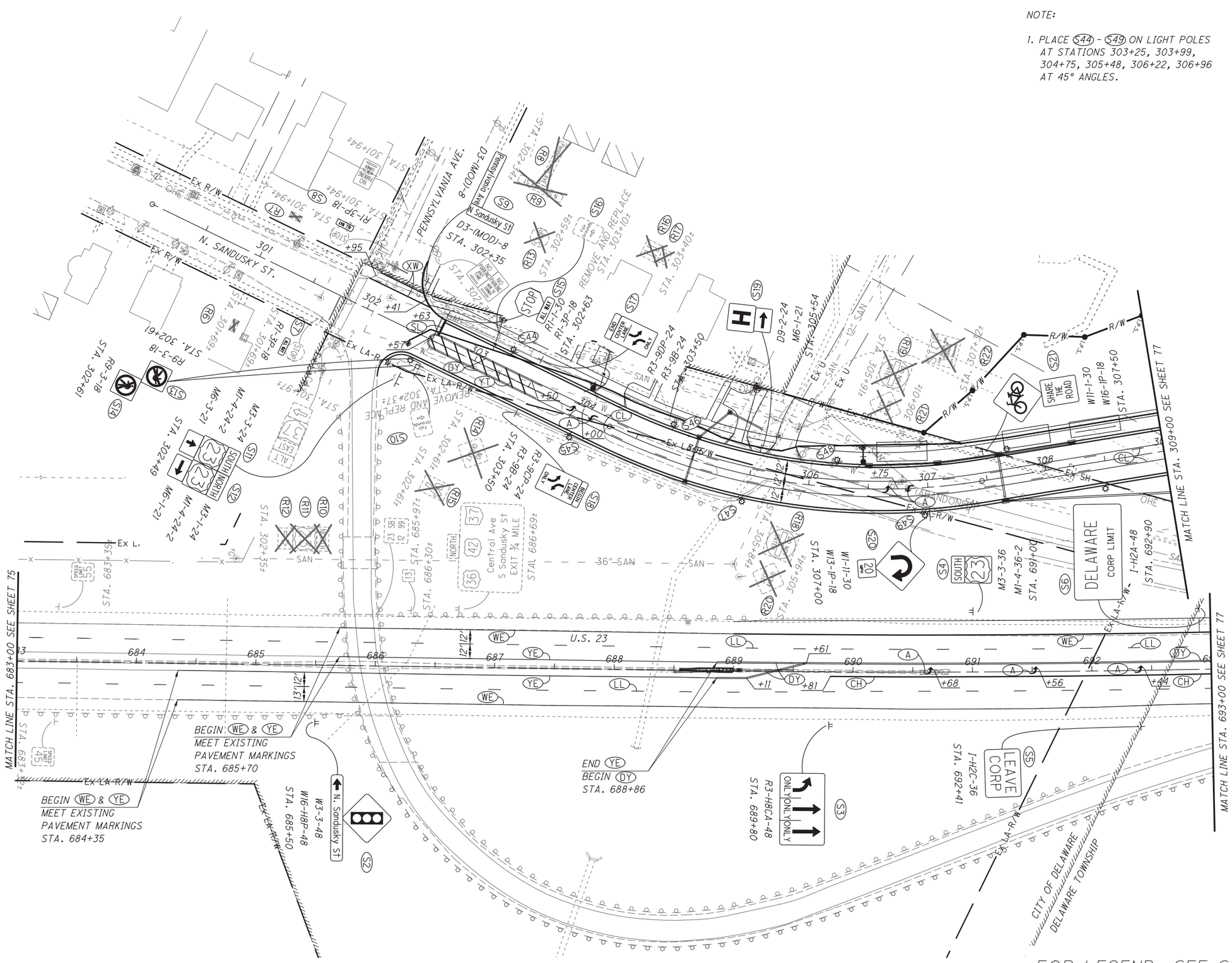

FOR LEGEND, SEE SHEET 75

CALCULATED
CHECKED

0 20 40 80
HORIZONTAL SCALE IN FEET

SIGNING AND PAVEMENT MARKING PLAN
U.S. 23 - STA. 683+00 TO ST. 693+00

DEL-23-13.17

ms consultants, inc.

PLOT.CEL

ms consultants, inc.
msconsultants.com

www.msconsultants.com

Ohio DOT Workspace
DEL-23

UGF: ohdot\V8i
PCF: 60-06655_Columbus

Batchplot Spec: \\0330share\n\60\06655\standards\plotdrv\batchplt.spc
Pen Table: S:\sta\plotting\ustn\V8\pen\V8i_ms_std.tbl
Plot Driver: S:\sta\plotting\ustn\V8\PDF_plotcfg

Model: Sheet
Printed: 10/8/2015 @ 4:28:15 PM
File: \\0330share\n\60\06655\traffic\sheets\06655TP003.dgn

View: FENCE_VIEW1
By: hbrendinger

34" x 22"

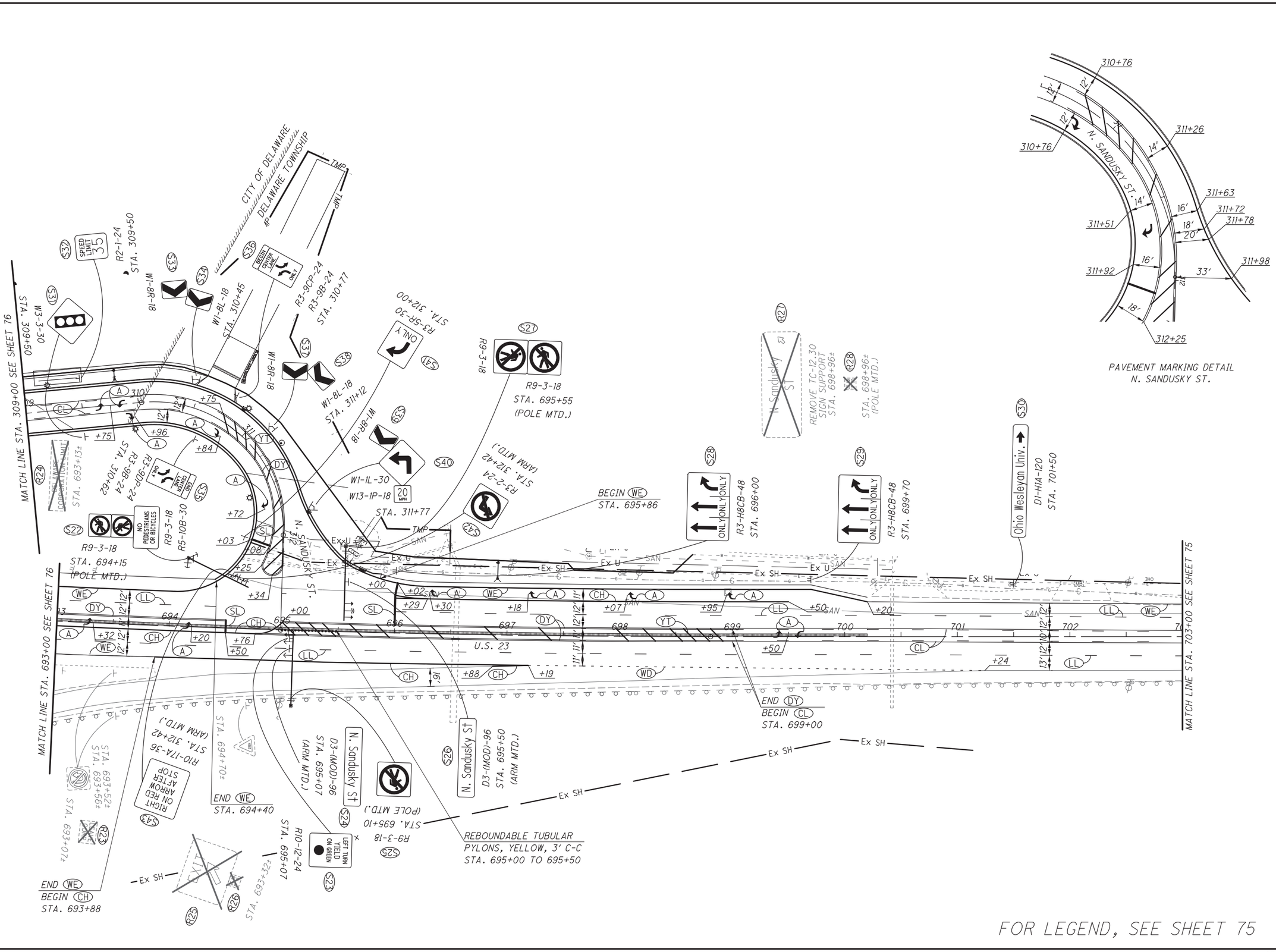

FOR LEGEND, SEE SHEET 75

CALCULATED

CHECKED

SIGNING AND PAVEMENT MARKING PLAN
U.S. 23 - STA. 693+00 TO STA. 703+00

DEL-23-13.17

ms consultants, inc.

PLOT.CEL

ms consultants, inc.
msconsultants.com

www.msconsultants.com

Ohio DOT Workspace
DEL-23

UGF: ohdot\V8i
PCF: 60-06655_Columbus

Batchplot Spec: \\0330share\n\60\06655\standards\plotdrv\batchplt.spc
Pen Table: S:\std\plotting\ustn\V8\pen\V8_ms_std.tbl
Plot Driver: S:\std\plotting\ustn\V8\PDF_pltcfg

Model: Sheet
Printed: 10/8/2015 @ 4:28:17 PM
File: \\0330share\n\60\06655\signals\sheets\06655CP001.dgn

View: FENCE_VIEW1
By: harendinger

34" x 22"

NOTES:

1. FOR SIGNING AND PAVEMENT MARKING SEE SHEET 75.
2. SIGNAL HEADS 1,2,3,4,5,7,8 SHALL BE SUSPENDED BELOW THE MAST ARM.
3. SIGNAL HEAD 6 SHALL BE RIGIDLY MOUNTED TO THE SIGNAL POLE SUCH THAT THE GREEN LENS IS 15' ABOVE THE POLE BASE.
4. WIRELESS COMMUNICATION (ANTENNA AND CABLES) TO BE INSTALLED BY OTHERS.

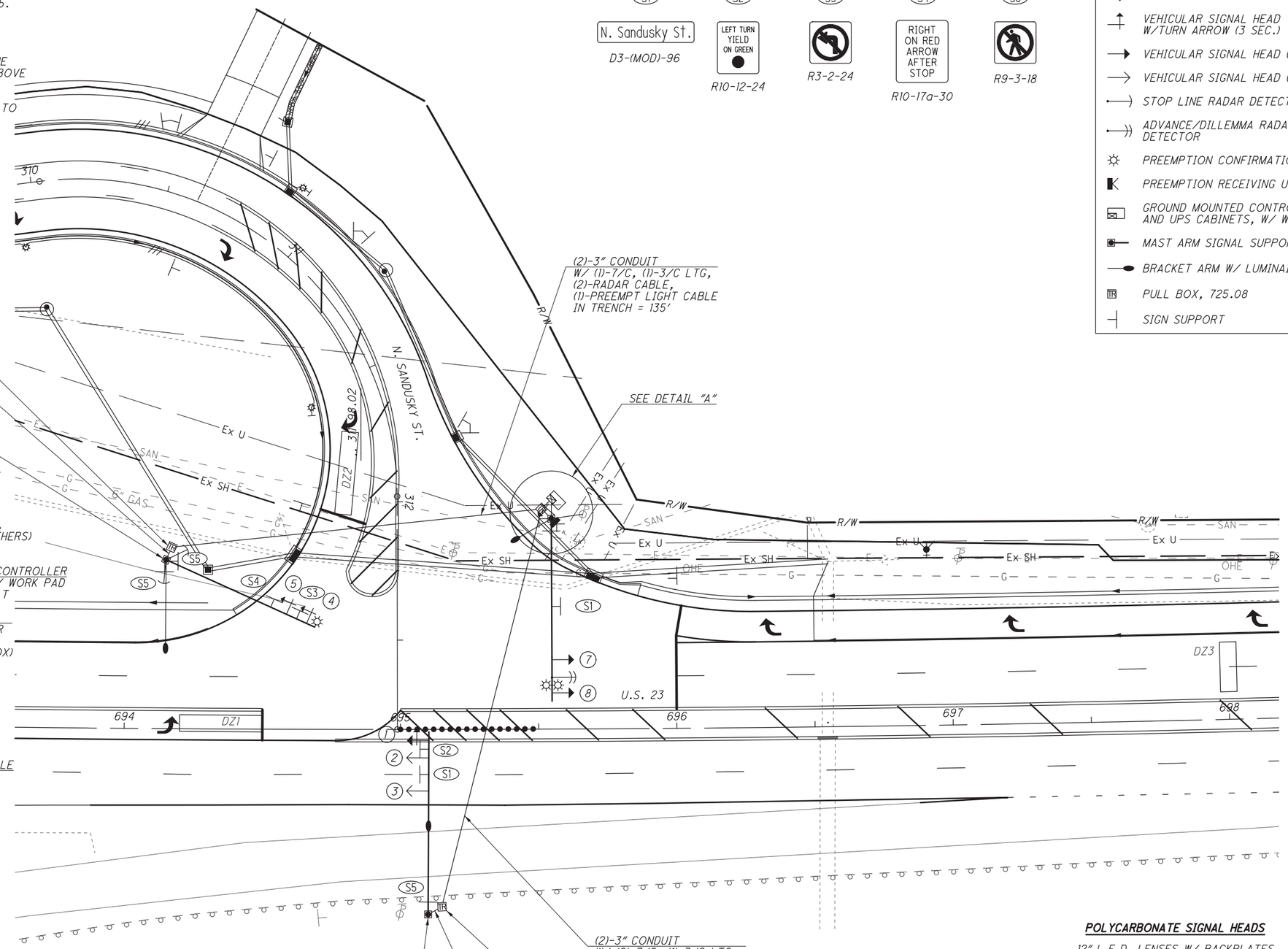

SIGNS

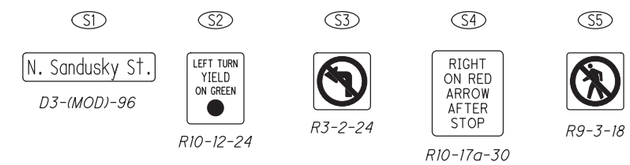

TRAFFIC SIGNAL LEGEND

- VEHICULAR SIGNAL HEAD W/TURN ARROW (5 SEC.)
- VEHICULAR SIGNAL HEAD W/TURN ARROW (3 SEC.)
- VEHICULAR SIGNAL HEAD (3 SEC.)
- VEHICULAR SIGNAL HEAD (1 SEC.)
- STOP LINE RADAR DETECTOR
- ADVANCE/DILLEMMA RADAR DETECTOR
- PREEMPTION CONFIRMATION LIGHT
- PREEMPTION RECEIVING UNIT
- GROUND MOUNTED CONTROLLER AND UPS CABINETS, W/ WORKPAD
- MAST ARM SIGNAL SUPPORT
- BRACKET ARM W/ LUMINAIRE
- PULL BOX, 725.08
- SIGN SUPPORT

POLYCARBONATE SIGNAL HEADS

12" L.E.D. LENSES W/ BACKPLATES

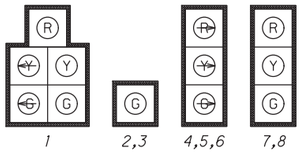

HORIZONTAL SCALE IN FEET 0 10 20 40

CALCULATED

CHECKED

TRAFFIC SIGNAL PLAN
U.S. 23 & N. SANDUSKY ST.

DEL-23-13.17

ms consultants, inc.

PLOT.CEL

ms consultants, inc.
msconsultants.com

www.msconsultants.com

Ohio DOT Workspace
DEL-23

UCF: ohdot1V8i
PCF: 60-06655_Columbus

Batchplot Spec: \\0330share\n\60\06655\standards\plotdrv\batchplt.spc
Pen Table: S:\std\plotting\usin\V8i\pen\V8i_ms_std.tbl
Plot Driver: S:\std\plotting\usin\V8i\PDF.pltcfg

Model: Sheet
Printed: 10/8/2015 @ 4:28:17 PM
File: \\0330share\n\60\06655\signals\sheets\06655C0001.dgn
View: FENCE_VIEW1
By: hbrendinger

34" x 22"

VEHICULAR ZONE DETECTORS

ZONE NUMBER	RADAR	SIZE (WXL)	ASSOC. PHASE	DELAY (SEC.)	EXT. (SEC.)	DELAY INHIBITED DURING	LABEL
DZ1	SL1	6'X30'	ϕ1	4	-	ϕ1	NBLT
DZ2	SL2	6'X30'	ϕ1	12	-	ϕ1	EBRT
DZ3	A1	6'X18'	ϕ2	-	2	-	SB ADV.

SIGNAL TIMING IN SECONDS

TIMING INTERVAL	NBLT/EB	SB				NB		
	ϕ1	ϕ2	ϕ3	ϕ4	ϕ5	ϕ6	ϕ7	ϕ8
MIN. GREEN	10	30				-		
VEH. EXTENSION	3	3				-		
MAX. GREEN I	25	60				-		
MAX. GREEN II	-	-				-		
YELLOW CLEAR	4.3	4.5				-		
RED CLEAR	2.0	2.5				-		
WALK	-	-	-	-	-	-	-	-
PED CLEAR	-	-	-	-	-	-	-	-
RECALL	NONE	MAX				MAX		
LOCK/NON-LOCK	NON-LOCK	LOCK				LOCK		

SIGNAL PHASING

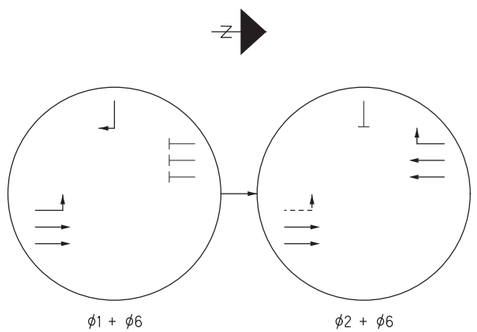

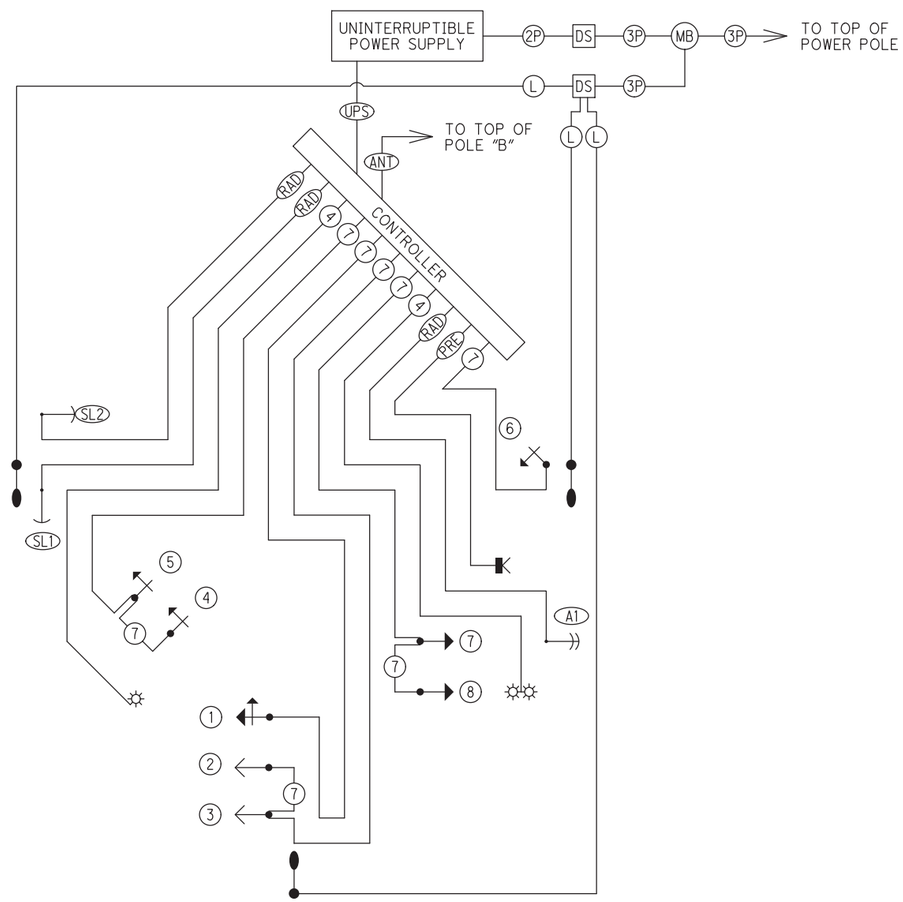

FIELD WIRING HOOK-UP CHART

SIGNAL HEAD #	INDICATION	FIELD TERMINAL	FLASH
1 (NBLT)	R	ϕ6 R	R
	Y	ϕ6 Y	
	G	ϕ6 G	
	~~Y~~	ϕ1 Y	
	~~G~~	ϕ1 G	
2,3 (NB)	G	ϕ6 G	G*
4,5,6 (EBRT)	~~R~~	ϕ1 R	R
	~~Y~~	ϕ1 Y	
	~~G~~	ϕ1 G	
7,8 (SB)	R	ϕ2 R	R
	Y	ϕ2 Y	
	G	ϕ2 G	

*NON-FLASH GREEN INDICATION

LEGEND

- VEHICULAR SIGNAL HEAD (1 SEC.)
- VEHICULAR SIGNAL HEAD (3 SEC.)
- VEHICULAR SIGNAL HEAD W/ TURN ARROWS (3 SEC.)
- VEHICULAR SIGNAL HEAD W/ TURN ARROWS (5 SEC.)
- ADVANCE RADAR SENSOR
- STOP LINE RADAR SENSOR
- LUMINAIRE
- PREEMPTION RECEIVING EQUIPMENT
- PREEMPTION CONFIRMATION LIGHT
- 2P — 2-1/C (POWER) #6 AWG
- 3P — 3-1/C (POWER) #6 AWG
- L — 3/C #10 AWG (FOR LUMINAIRE POWER)
- 4 — 3/C #14 AWG
- 7 — 7/C #14 AWG
- MB — METER BASE
- DS — DISCONNECT SWITCH
- RAD — RADAR CABLE
- UPS — UNINTERRUPTIBLE POWER SUPPLY CABLE
- ANT — ANTENNA CABLE (BY OTHERS)
- PRE — PREEMPTION RECEIVING UNIT CABLE

SUBSUMMARY OF TRAFFIC SIGNAL ITEMS

ITEM	QUANTITY	UNIT	ITEM DESCRIPTION	REFERENCE
625	39	FT	CONDUIT, 2", 725.04	
625	280	FT	CONDUIT, 3", 725.04	
625	296	FT	CONDUIT, JACKED OR DRILLED, 3"	
625	3	EA	PULL BOX, 725.08, 24"	
625	158	FT	TRENCH	
625	4	EA	GROUND ROD	
632	2	EA	VEHICULAR SIGNAL HEAD, (LED), 1 SECTION, 12"	
			LENS, 1-WAY, AS PER PLAN	
632	5	EA	VEHICULAR SIGNAL HEAD, (LED), BLACK, 3-SECTION, 12"	
			LENS, 1-WAY, WITH BACKPLATE, AS PER PLAN	
632	1	EA	VEHICULAR SIGNAL HEAD, (LED), BLACK, 5-SECTION, 12"	
			LENS, 1-WAY, WITH BACKPLATE, AS PER PLAN	
632	8	EA	COVERING OF VEHICULAR SIGNAL HEAD	
632	971	FT	SIGNAL CABLE, 7-CONDUCTOR, No. 14 AWG	
632	3	EA	SIGNAL SUPPORT FOUNDATION	
632	23	FT	POWER CABLE, 2-CONDUCTOR, NO. 6 AWG	
632	18	FT	POWER CABLE, 3-CONDUCTOR, NO. 6 AWG	
632	1	EA	POWER SERVICE, AS PER PLAN	
632	3	EA	SIGNAL SUPPORT, MECHANICAL DAMPER FOR TC-81.21	
			MAST ARM (GREATER THAN 59' IN LENGTH)	
632	2	EA	COMBINATION SIGNAL SUPPORT, TYPE TC-81.21, DESIGN 14,	B,C
			AS PER PLAN	
632	1	EA	COMBINATION SIGNAL SUPPORT, TYPE TC-81.21, DESIGN 13,	A
			AS PER PLAN	
633	1	EA	CONTROLLER UNIT, TYPE TS2/A2, WITH CABINET,	
			TYPE TS2, AS PER PLAN	
633	2	EA	CABINET RISER	
633	1	EA	CABINET FOUNDATION, AS PER PLAN	
633	1	EA	CONTROLLER WORK PAD, AS PER PLAN	
633	1	EA	UNINTERRUPTIBLE POWER SUPPLY (UPS), AS PER PLAN	
633	1	EA	PREEMPTION, AS PER PLAN	
809	1	EA	ADVANCE DETECTION	
809	2	EA	STOP-BAR DETECTION	
633	1	EA	UNINTERRUPTABLE POWER SUPPLY (UPS), AS PER PLAN,	
			ALPHA TECHNOLOGIES - ALTERNATE BID	
633	1	EA	PREEMPTION, AS PER PLAN, OPTICOM -	
			ALTERNATE BID	
			LIGHTING ITEMS	
625	1	EA	BRACKET ARM, 15', AS PER PLAN	
625	2	EA	BRACKET ARM, 30', AS PER PLAN	
625	3	EA	LUMINAIRE, CONVENTIONAL, AS PER PLAN	
633	529	FT	SIGNAL CABLE, 3 CONDUCTOR, NO. 10 AWG	

CALCULATED JML
CHECKED DRB

TRAFFIC SIGNAL DETAILS AND SUBSUMMARY

DEL-23-13.17

PLOT.CEL

ms consultants, inc.
msconsultants.com

www.msconsultants.com

Ohio DOT Workspace
DEL-23

UCF: ohdot\V8i
PCF: 60-06655_Columbus

Batchplot Spec: \\033share\n\60\06655\standards\plotdrv\batchplt.spc
Pen Table: S:\std\plotting\ustn\V8\pen\V8_ms_std.tbl
Plot Driver: S:\std\plotting\ustn\V8\PDF.pltcfg

Model: Sheet
Printed: 10/8/2015 @ 4:28:21 PM
File: \\033share\n\60\06655\signals\sheets\06655CD002.dgn

View: FENCE_VIEW1
By: hbrendinger

34" x 22"

SUPPORT LOCATION					SUPPORT DATA				MAST ARM "A" DATA						POLE FABRICATION ACCESSORY LOCATIONS - CLOCKWISE FROM MAST ARM "A"						FIELD ORIENTATION		
INTERSECTION	SHEET NO.	SUPPORT	STATION	OFFSET (FEET) & SIDE	TC-81.21 DESIGN NO.	ARM ATTACHMENT HEIGHT (FEET)	TOTAL HEIGHT (FEET)		OVERALL LENGTH (FEET)	SIGNAL NUMBER	SIGN CODE	DISTANCE FROM ARM BUTT TO CENTER OF HEAD OR SIGN (FEET) ①			HANDHOLE	POLE MOUNTED SIGNAL NUMBER 1 1/2" B.H.C. 11.5' FROM BASE	LUMINAIRE ARM				MAST ARM "A" ORIENTATION ANGLE	ANCHOR BOLT REFERENCE ②	
	58	A	694+15	61 LT	13	23	30		59	4		56			180		66				294	24	
										5		48											
											S3	52											
											S4	42											
US-23	58	B	695+55	76 LT	14	20.5	30		66	6					270	180	60				0	0	
										7		51											
&										8		63											
											S1	32											
N. SANDUSKY ST.																							
	58	C	695+10	67 RT	14	24	32		66	1		63			180		0				0	0	
										2		57											
										3		45											
											S1	37											
											S2	60											

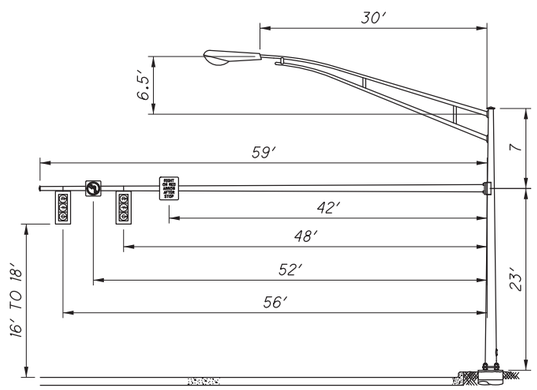

POLE A ELEVATION DETAIL

NOT TO SCALE

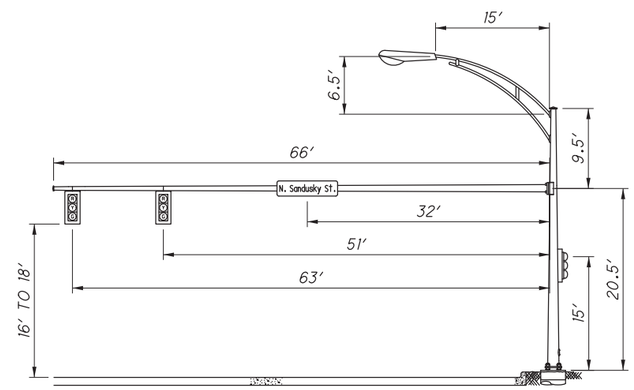

POLE B ELEVATION DETAIL

NOT TO SCALE

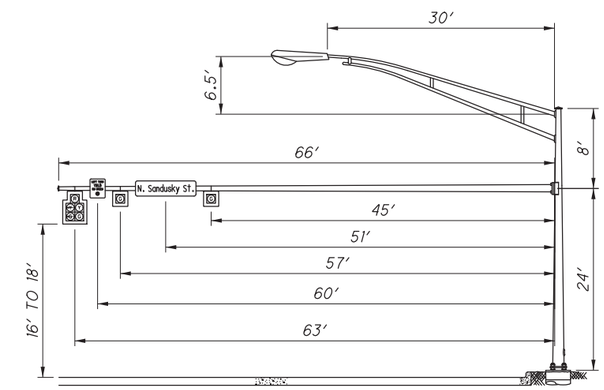

POLE C ELEVATION DETAIL

NOT TO SCALE

NOTES:

① VEHICULAR SIGNAL HEADS SHALL BE SUSPENDED BELOW THE MAST ARM AS PER TC-85.20.

② THE FORMED TOPS OF THE PROPOSED FOUNDATIONS SHALL BE SQUARE TO THE ADJACENT SIDEWALKS OR CURB RAMP LANDINGS. THE ANCHOR BOLTS ARE NOT REQUIRED TO BE SQUARE TO THE FOUNDATIONS.

SIGNAL SUPPORT ORIENTATION DETAIL

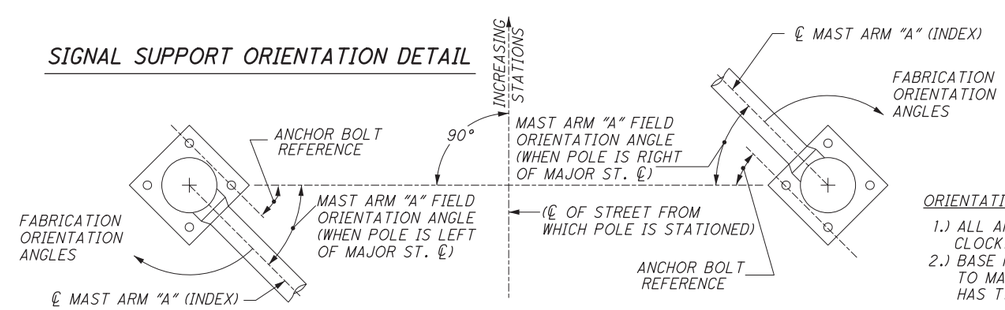

ORIENTATION DETAIL NOTES:

1.) ALL ANGLES MEASURED CLOCKWISE.
2.) BASE PLATE IS ORIENTED SQUARE TO MAST ARM "A" EVEN IF SUPPORT HAS TWO MAST ARMS.

CALCULATED JML
CHECKED DRB

MAST ARM ORIENTATION SHEET

DEL-23-13.17

PLOT.CEL

ms consultants, inc.
msconsultants.com

www.msconsultants.com

Ohio DOT Workspace
DEL-23

UGF: ohdot1V8i
PCF: 60-06655_Columbus

Batchplot Spec: \\033share\n\60\06655\standards\plotdrv\batchplt.spc
Pen Table: S:\std\plotting\usin\V8\pen\V8_ms_std.tbl
Plot Driver: S:\std\plotting\usin\V8\PDF.pltcfg

34" x 22"

View: FENCE_VIEW1
By: hurendinger

Model: Sheet
Printed: 10/8/2015 @ 4:28:22 PM
File: \\033share\n\60\06655\lighting\sheets\06655LN001.dgn

UNDERGROUND UTILITIES

THE LOCATIONS OF THE UNDERGROUND UTILITIES SHOWN ON THE PLANS ARE AS OBTAINED FROM THE OWNERS OF THE UTILITY AS REQUIRED BY SECTION 153.64 ORC. AT LEAST 48 HOURS BEFORE DIGGING, THE CONTRACTOR SHALL CALL THE OHIO UTILITIES PROTECTION SERVICE, TOLL-FREE, 800-362-2764, NON-MEMBER UTILITY COMPANIES MUST BE CALLED DIRECTLY. SEE SHEET 6 FOR ADDITIONAL UTILITY INFORMATION.

CONTINGENCY QUANTITIES

THE CONTRACTOR SHALL NOT ORDER MATERIAL OR PERFORM WORK FOR PLAN ITEMS SET UP TO BE USED "AS DIRECTED BY THE ENGINEER" UNLESS AUTHORIZED BY THE ENGINEER.

ITEM 625 - TRENCH

TRENCH SHALL BE AS PER 625.13. IN ADDITION, ALL TRENCHING IN PAVED AREAS SHALL BE PERFORMED PRIOR TO THE PLACEMENT OF PAVEMENT.

ITEM 625 - POWER SERVICE, AS PER PLAN

IN ADDITION TO THE REQUIREMENTS OF THE SPECIFICATIONS, THE FOLLOWING IS ADDED.

THE POWER SUPPLYING AGENCY FOR THIS PROJECT IS:

AMERICAN ELECTRIC POWER
850 TECH CENTER DRIVE
GAHANNA, OH 43230-6605
(614) 883-7948
CONTACT: MAGGIE BEGGS

POWER SERVICE: 120/240 VOLT, 3-WIRE, GROUNDED NEUTRAL. POWER SERVICE SHALL BE METERED.

POWER SERVICE 'A' SHALL INCLUDE A PAD MOUNT CONTROL SITE AS PER CITY OF COLUMBUS MATERIAL AND INSTALLATION SPECIFICATIONS (MIS) NO. 119 EXCEPT THE SERVICE IS 120/240 VOLT.

THE ENGINEER SHALL ENSURE THAT EACH POWER SERVICE ELECTRICAL ENERGY ACCOUNT IS IN THE NAME OF AND THAT THE BILLING ADDRESS IS TO THE MAINTAINING AGENCY NOTED IN THE PLANS. THIS SHALL BE DONE NOT ONLY FOR EACH NEW POWER SERVICE ESTABLISHED BY THIS PROJECT BUT ALSO FOR EACH EXISTING POWER SERVICE, SINCE THERE MAY BE A REASSIGNMENT OF THE RESPONSIBILITY FOR AN EXISTING SERVICE AS A RESULT OF THE WORK PERFORMED BY THIS PROJECT.

PAYMENT WILL BE MADE AT THE UNIT BID PRICE FOR EACH CMS ITEM 625, "POWER SERVICE, AS PER PLAN" WHICH SHALL BE FULL COMPENSATION FOR ALL LABOR, MATERIALS AND INCIDENTALS REQUIRED TO COMPLETE THIS ITEM IN A SATISFACTORY AND WORKMANLIKE MANNER.

PADLOCKS AND KEYS

PADLOCKS FURNISHED SHALL BE EITHER BRASS OR BRONZE, EQUAL TO MASTER NO. 4BKA OR WILSON BOHANNAN 660A, AND SHALL BE KEYED IN ACCORDANCE WITH CMS 631.06. PAYMENT SHALL BE INCLUDED IN THE BID FOR THE ITEM(S) BEING LOCKED.

ITEM 625 - LUMINAIRE, DECORATIVE, 100 W HPS, 240 VOLT, AS PER PLAN

LUMINAIRE SHALL BE GRANVILLE SERIES LUMINAIRE, MODEL GV100HP24FB3RSG P GV1A73B AS MANUFACTURED BY UNIQUE SOLUTIONS, A DIVISION OF HOLOPHANE.

(100 W HIGH PRESSURE SODIUM, MOGUL BASE, 240 VOLT, FLUTED HOUSING FOR 7-INCH CAPITAL, (Q015545) PAINTED BLACK, 37031, IES TYPE 3, RIBS AND BANDS, STANDARD FINIAL PAINTED CAST ALUMINUM, GOLD TRIM, PROTECTED STARTER, POST CAPITAL, CONVERTS 3-INCH POST TOP TENON TO FLARED 7-INCH POST CAPITAL.)

PAYMENT FOR THIS ITEM SHALL BE AT THE UNIT PRICE BID, COMPLETE AND IN PLACE, CONNECTIONS TESTED AND ACCEPTED.

LAMPS

HIGH PRESSURE SODIUM LAMPS SHALL BE GENERAL ELECTRIC "LUCALOX," OSRAM SYLVANIA "LUMALUX," PHILIPS "CERAMALUX," OR EQUAL APPROVED BY THE ENGINEER.

ITEM 625 - LIGHT POLE, DECORATIVE, AS PER PLAN

THIS ITEM SHALL BE AS PER CMS ITEM 625 EXCEPT THAT THE POLE SHALL BE A DECORATIVE POST TOP, TAPERED (FROM APPROXIMATELY 7 TO 4 INCHES), FLUTED, WITH A CAST ALUMINUM DECORATIVE BASE. THE POLE SHALL BE 15 FEET (NOM.) IN HEIGHT WITH A POWDER COAT BLACK FINISH (FEDERAL COLOR NO. 37031). THE LIGHT POLE SHALL BE MAIN STREET ALLENTOWN IV SERIES, HAPCO YORK SERIES, HOLOPHANE NORTH YORKSHIRE SERIES, OR APPROVED EQUAL. IN ADDITION, THE POLE SHALL INCLUDE A CAST BRASS FLAG BRACKET INSTALLED 10-INCHES FROM THE TOP OF POLE (STREETSIDE) AND TWO BANNER ARMS EXTENDING 18-INCHES BEYOND THE POLE, SPACED 36 INCHES APART WITH THE TOP ARM INSTALLED 14-INCHES FROM THE TOP OF POLE ALLOWING HOUSE SIDE OR STREETSIDE. THE POLE SHALL HAVE AN APPROVED CABLE GRIP ON THE TOP INTERIOR OF THE POLE TO SUPPORT THE WEIGHT OF THE WIRING CABLES. ON THE INSIDE OF THE ACCESS DOOR OVER THE HANDHOLE, A PERMANENT LABEL SHALL CLEARLY INDICATE 240 VOLTS.

SHOP DRAWINGS OF THE POLE SHALL BE SUBMITTED TO THE CITY OF DELAWARE (JESSICA ORMEROID) AND APPROVED PRIOR TO ORDERING. A PAINT CHIP SHALL BE SUBMITTED WITH THE SHOP DRAWINGS.

PAYMENT WILL BE MADE AT THE UNIT PRICE BID FOR EACH CMS ITEM 625 LIGHT POLE, DECORATIVE, AS PER PLAN WHICH SHALL BE FULL COMPENSATION FOR ALL LABOR, MATERIALS, EQUIPMENT AND INCIDENTALS REQUIRED TO COMPLETE THIS ITEM IN A SATISFACTORY AND WORKMANLIKE MANNER.

ITEM 625 - LIGHT POLE, DECORATIVE, MAIN STREET BRAND, AS PER PLAN - ALTERNATE BID

THIS ITEM SHALL BE AS PER CMS ITEM 625 AND SHALL BE ALLENTOWN IV SERIES, MODEL NO. ATTF1515/FPB/BA10 MANUFACTURED BY MAIN STREET LIGHTING, INC. AS SHOWN IN THE DETAIL ON SHEET 84.

PAYMENT WILL BE MADE AT THE UNIT PRICE BID FOR EACH CMS ITEM 625 LIGHT POLE, DECORATIVE, MAIN STREET BRAND, AS PER PLAN - ALTERNATE BID WHICH SHALL BE FULL COMPENSATION FOR ALL LABOR, MATERIALS, EQUIPMENT AND INCIDENTALS REQUIRED TO COMPLETE THIS ITEM IN A SATISFACTORY AND WORKMANLIKE MANNER.

CALCULATED
CHECKED

LIGHTING NOTES

DEL-23-13.17

PLOT.CEL

ms consultants, inc.
msconsultants.com

TOTAL FROM SHEET NO.					PARTICIPATION				ITEM	EXT.	GRAND TOTAL	UNIT	DESCRIPTION	SEE SHEET NO.
		83			01/MPO/OT		02/MPO/OT/DEL							
													LIGHTING	
		26			26				625	00450	26	EACH	CONNECTION, FUSED PULL APART	
		3			3				625	00480	3	EACH	CONNECTION, UNFUSED PERMANENT	
		13			13				625	10481	13	EACH	LIGHT POLE, DECORATIVE, AS PER PLAN	81
		13			13				625	14501	13	EACH	LIGHT POLE FOUNDATION, AS PER PLAN	84
		5778			5778				625	23000	5778	FT	NO. 4 AWG 600 VOLT DISTRIBUTION CABLE	
		390			390				625	23410	390	FT	NO. 12 AWG POLE AND BRACKET CABLE	
		1739			1739				625	25400	1739	FT	CONDUIT, 2", 725.04	
		47			47				625	25500	47	FT	CONDUIT, 3", 725.04	
		13			13				625	27551	13	EACH	LUMINAIRE, DECORATIVE, 100 W HPS, 240 VOLT, AS PER PLAN	81
		1786			1786				625	29002	1786	FT	TRENCH, 24" DEEP	
		1			1				625	30700	1	EACH	PULL BOX, 725.08, 18"	
		13			13				625	32000	13	EACH	GROUND ROD	
		1			1				625	34001	1	EACH	POWER SERVICE, AS PER PLAN	81
		1786			1786				625	36000	1786	FT	PLASTIC CAUTION TAPE	
					13				625	10481	13	EACH	LIGHT POLE, DECORATIVE, MAIN STREET BRAND, AS PER PLAN - ALTERNATE BID	81
													FOR ADDITIONAL LIGHTING QUANTITIES SEE SHEET 69B	
													FOR ROADWAY QUANTITIES SEE SHEETS 22-24	
													FOR TRAFFIC CONTROL QUANTITIES SEE SHEET 69A	
													FOR TRAFFIC SIGNAL QUANTITIES SEE SHEET 69B	

CALCULATED PE,S 06/14
CHECKED DRB 06/14

LIGHTING GENERAL SUMMARY

DEL-23-13.17

PLOT.CEL

ms consultants, inc.
msconsultants.com

www.msconsultants.com

Ohio DOT Workspace
DEL-23

UCF: ohdot1V8i
PCF: 60-06655_Columbus

Batchplot Spec: \\0330shore\n\60\06655\standards\plotdrv\batchplt.spc
Pen Table: N:\60\06655\standards\tables\Lighting_V8i_ms_std.tbl
Plot Driver: S:\std\plotting\usstn\V8i\PDF.pltcfg

Model: Sheet
Printed: 10/8/2015 @ 4:28:34 PM
File: \\0330shore\n\60\06655\lighting\sheets\06655LS001.dgn
View: FENCE_VIEW1
By: hbrendinger

34" x 22"

SHEET NO.	STATION FROM	STATION TO	SIDE	POLE NO.	625 CONNECTION, FUSED PULL APART EACH	625 CONNECTION, UNFUSED PERMANENT EACH	625 LIGHT POLE, DECORATIVE, AS PER PLAN EACH	625 LIGHT POLE FOUNDATION, AS PER PLAN EACH	625 NO. 4 AWG 600 VOLT DISTRIBUTION CABLE FT	625 NO. 12 AWG POLE AND BRACKET CABLE FT	625 CONDUIT, 2", 725.04 FT	625 CONDUIT, 3", 725.04 FT	625 LUMINAIRE, DECORATIVE, 100 W HPS, 240 VOLT, AS PER PLAN EACH	625 TRENCH, 24" DEEP FT	625 PULL BOX, 725.08, 18" EACH	625 GROUND ROD EACH	625 POWER SERVICE, AS PER PLAN EACH	625 PLASTIC CAUTION TAPE FT
	N. SANDUSKY ST.																	
85	302+51		RT	AB-7	2		1	1		30			1			1		
	302+51	302+56	RT						45		5			5				5
	302+56		RT			3											1	
	302+56		LT/RT						171			47		47				47
	302+56		LT												1			
	302+56	303+25	LT						237		69			69				69
	303+25		LT	AA-6	2		1	1		30			1			1		
	303+25	304+75	LT						480		150			150				150
	304+75		LT	AA-5	2		1	1		30			1			1		
	304+75	305+00	LT						90		25			25				25
	302+56	303+99	RT						459		143			143				143
	303+99		RT	AB-6	2		1	1		30			1			1		
	303+99	305+00	RT						318		101			101				101
86	305+00	306+22	LT						381		122			122				122
	306+22		LT	AA-4	2		1	1		30			1			1		
	306+22	307+70	LT						474		148			148				148
	307+70		LT	AA-3	2		1	1		30			1			1		
	307+70	309+00	LT						405		130			130				130
	305+00	305+48	RT						159		48			48				48
	305+48		RT	AB-5	2		1	1		30			1			1		
	305+48	306+96	RT						474		148			148				148
	306+96		RT	AB-4	2		1	1		30			1			1		
	306+96	308+47	RT						483		151			151				151
	308+47		RT	AB-3	2		1	1		30			1			1		
	308+47	309+00	RT						174		53			53				53
87	309+00	309+21	LT						78		21			21				21
	309+21		LT	AA-2	2		1	1		30			1			1		
	309+21	310+90	LT						537		169			169				169
	310+90		LT	AA-1	2		1	1		30			1			1		
	309+00	309+95	RT						300		95			95				95
	309+95		RT	AB-2	2		1	1		30			1			1		
	309+95	311+56	RT						513		161			161				161
	311+56		RT	AB-1	2		1	1		30			1			1		
TOTAL CARRIED TO GENERAL SUMMARY					26	3	13	13	5778	390	1739	47	13	1786	1	13	1	1786

CALCULATED PES 06/14
CHECKED DRB 06/14

LIGHTING SUBSUMMARY

DEL-23-13.17

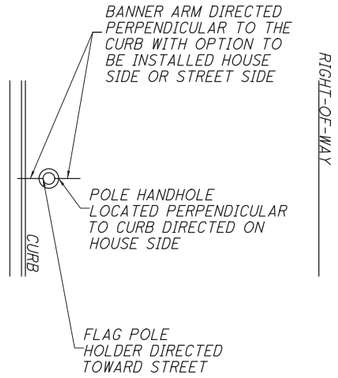

LIGHT POLE EQUIPMENT ORIENTATION
NTS

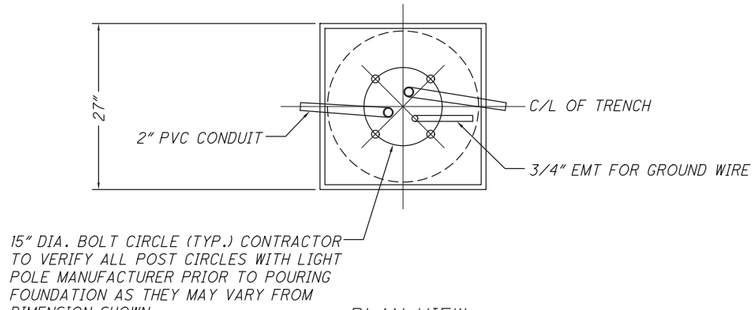

PLAN VIEW
NTS

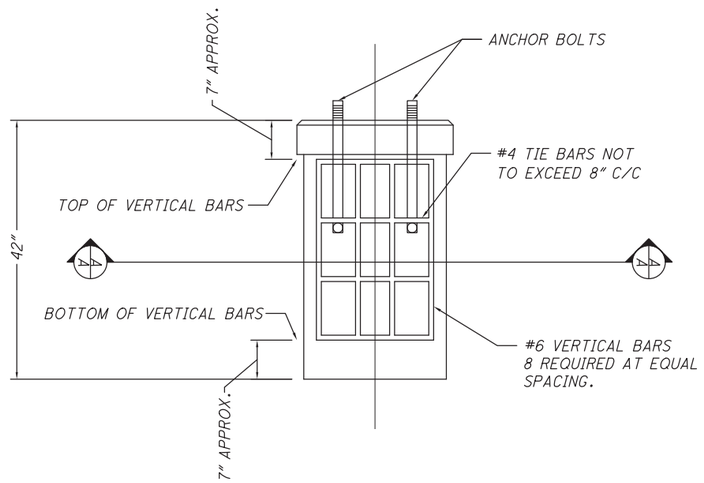

FOUNDATIONS SHALL BE:
* 42" DEEP
* 24" DIAMETER
* REINFORCED WITH #6 REBAR WITH #4 TIE BARS AS PER PLAN DETAIL
* TOP IS A 27" X 27" X 6" SQUARE WITH A 1" CHAMFER
* FOUNDATION TOP IS 4" ABOVE CURB ELEVATION.

LIGHT POLE FOUNDATION, AS PER PLAN
NTS

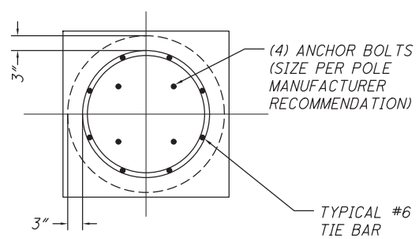

A SECTION A-A
SCALE: NONE

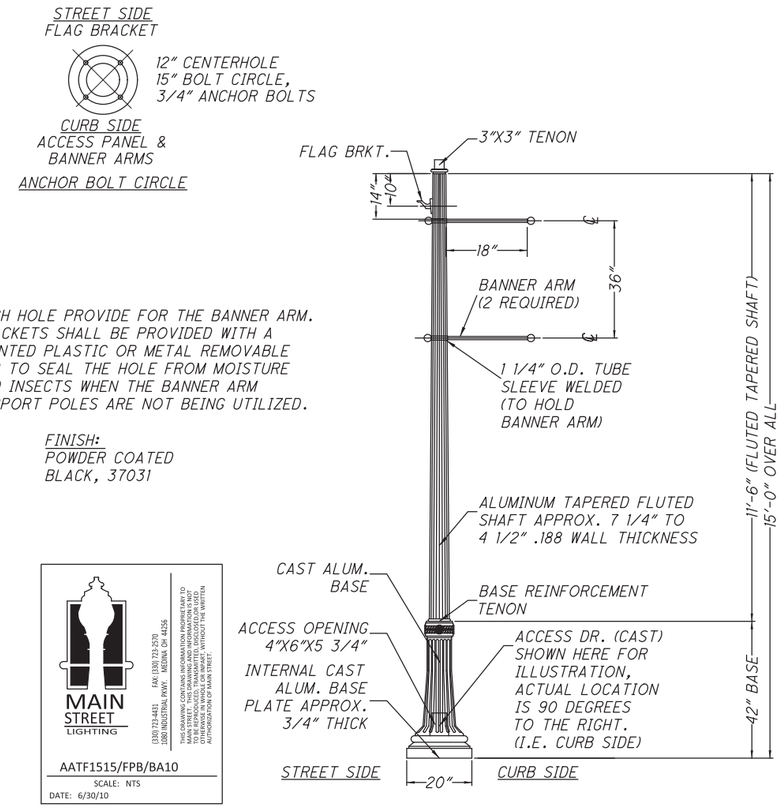

EACH HOLE PROVIDE FOR THE BANNER ARM. BRACKETS SHALL BE PROVIDED WITH A PAINTED PLASTIC OR METAL REMOVABLE CAP TO SEAL THE HOLE FROM MOISTURE AND INSECTS WHEN THE BANNER ARM SUPPORT POLES ARE NOT BEING UTILIZED.

FINISH:
POWDER COATED
BLACK, 37031

MAIN STREET LIGHTING
(330) 753-4431 FAX (330) 753-2570
2200 INDUSTRIAL DRIVE, AKRON, OH 44306
THIS DRAWING CONTAINS INFORMATION PROPRIETARY TO MAIN STREET LIGHTING. IT IS TRANSMITTED TO YOU FOR THE LIMITED PURPOSE OF REVIEW AND ESTIMATE. OTHER USES OR DISCLOSURE, WITHOUT PRIOR WRITTEN AUTHORIZATION OF MAIN STREET.
AATF1515/FPB/BA10
SCALE: NTS
DATE: 6/30/10

LIGHT POLE, DECORATIVE, MAIN STREET BRAND, AS PER PLAN - ALTERNATE BID
NTS

CALCULATED
CHECKED

LIGHTING DETAILS

DEL-23-13.17

PLOT.CEL

ms consultants, inc.
msconsultants.com

www.msconsultants.com

Ohio DOT Workspace
DEL-23

UGF: ohdot1V8i
PCF: 60-06655_Columbus

Batchplot Spec: \\0330share\n\60\06655\standards\plotdrv\batchplt.spc
Pen Table: N:\60\06655\standards\tables\Lighting_V8i_ms_std.tbl
Plot Driver: S:\std\plotting\ustn\V8\PDF.pltcfg

Model: Sheet
Printed: 10/8/2015 @ 4:28:48 PM
File: \\0330share\n\60\06655\lighting\sheets\06655LP001.dgn
View: FENCE_VIEW1
By: hbrendlinger

34" x 22"

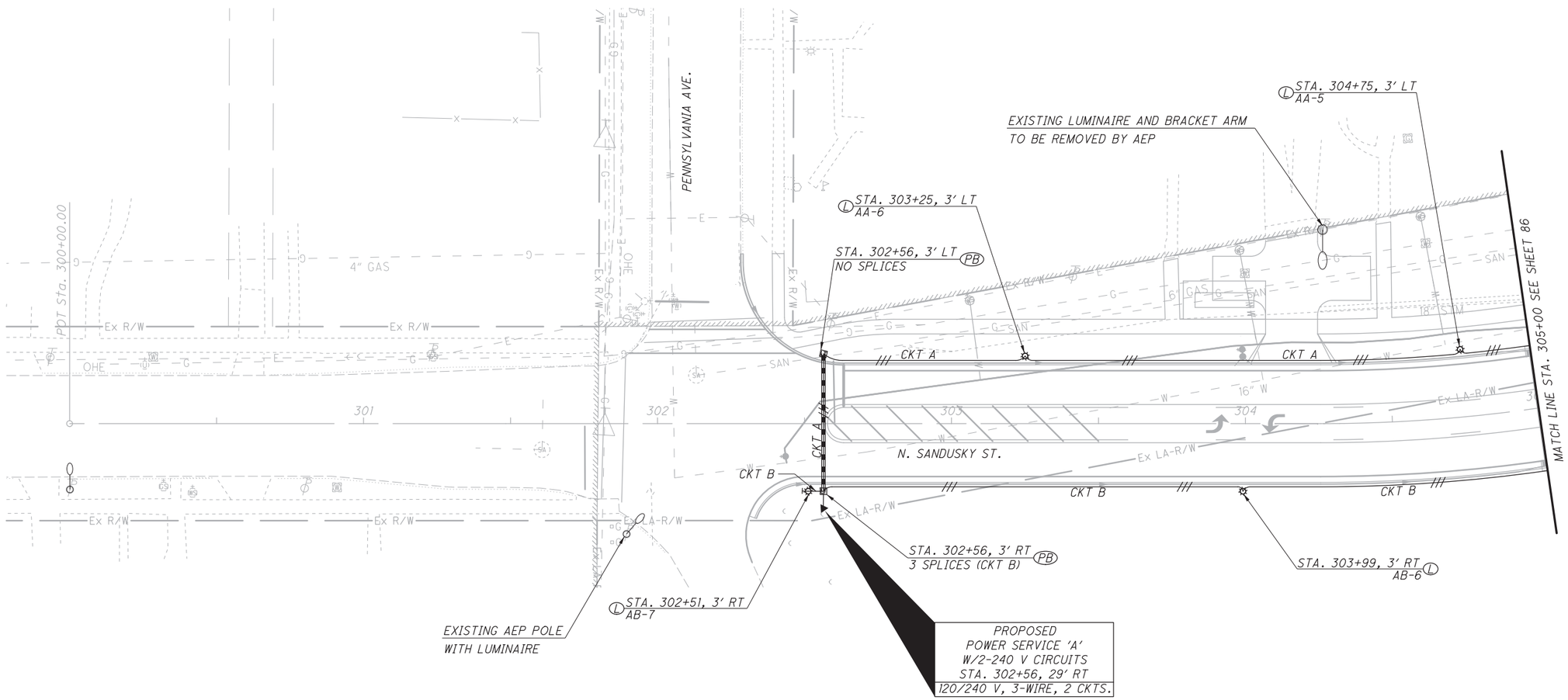

LEGEND

- POST TOP LIGHT POLE (100W HPS, 15' POLE)
- COMBINATION SIGNAL/LIGHT POLE
- LIGHTING PULL BOX, 725.08
- STUB & CAP CONDUIT ELL
- 2" CONDUIT (725.04) WITH NO. 4 AWG 600 VOLT CABLE
- 3" CONDUIT (725.04) WITH NO. 4 AWG 600 VOLT CABLE
- POWER SERVICE
- EXISTING LUMINAIRE

NOTES:

1. OFFSET TO POST TOP LIGHT POLES & PULL BOXES ARE FROM FACE OF CURB.
2. CONDUITS SHALL BE INSTALLED IMMEDIATELY BEHIND BACK OF CURB WHEN RUNNING PARALLEL TO CURB.

N

0 10 20 40
HORIZONTAL SCALE IN FEET

CALCULATED
CHECKED

LIGHTING PLAN
N. SANDUSKY ST. - STA. 300+00 TO STA. 305+00

DEL-23-13.17

PLOT.CEL

ms consultants, inc.
msconsultants.com

www.msconsultants.com

Ohio DOT Workspace
DEL-23

UGF: ohdot\V8i
PGF: 60-06655_Columbus

0 0.5" 1"

34" x 22"

Batchplot Spec: \\0330share\n\60\06655\standards\plotdrv\batchplt.spc
Pen Table: N:\60\06655\standards\tables\Lighting_V8i_ms_std.tbl
Plot Driver: S:\std\plotting\astn\V8\PDF.pltcfg

Model: Sheet
Printed: 10/8/2015 @ 4:28:50 PM
File: \\0330share\n\60\06655\lighting\sheets\06655LP002.dgn
View: FENCE_VIEW1
By: hbrendinger

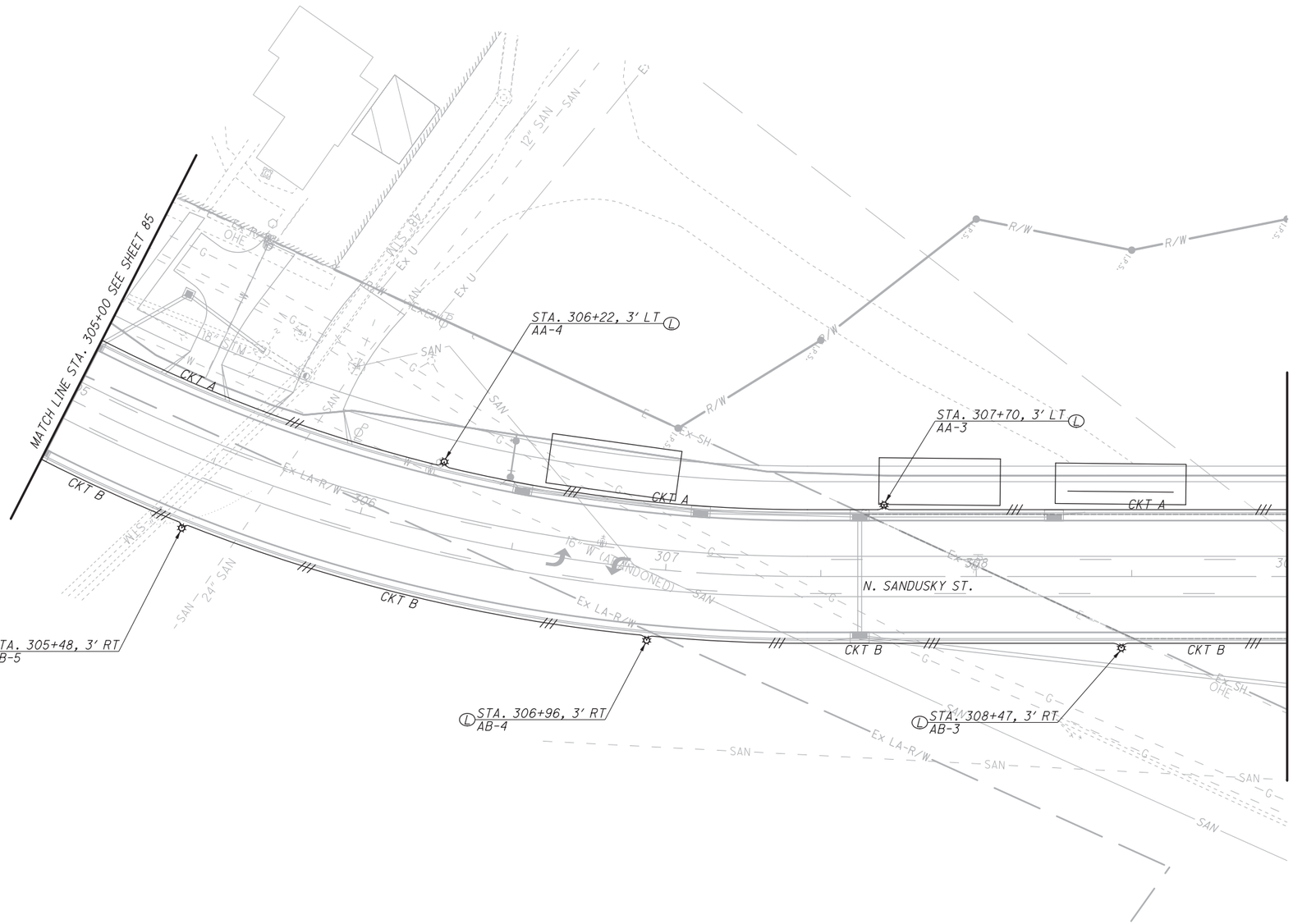

NOTES:

1. OFFSET TO POST TOP LIGHT POLES & PULL BOXES ARE FROM FACE OF CURB.

2. CONDUITS SHALL BE INSTALLED IMMEDIATELY BEHIND BACK OF CURB WHEN RUNNING PARALLEL TO CURB.

FOR LEGEND SEE SHEET 85

0 10 20 40
HORIZONTAL SCALE IN FEET

CALCULATED
CHECKED

LIGHTING PLAN
N. SANDUSKY ST. - STA. 305+00 TO STA. 309+00

DEL-23-13.17

ms consultants, inc.

PLOT.CEL

ms consultants, inc.
msconsultants.com

www.msconsultants.com

Ohio DOT Workspace
DEL-23

UGF: ohdot1V8i
PCF: 60-06655_Columbus

Batchplot Spec: \\0330share\n\60\06655\standards\plotdrv\batchplt.spc
Pen Table: N:\60\06655\standards\tables\Lighting_V8i_ms_std.tbl
Plot Driver: S:\std\plotting\usstn\V8\PDF.pltcfg

Model: Sheet
Printed: 10/8/2015 @ 4:28:52 PM
File: \\0330share\n\60\06655\lighting\sheets\06655LP003.dgn

View: FENCE_VIEW1
By: hbrendinger

34" x 22"

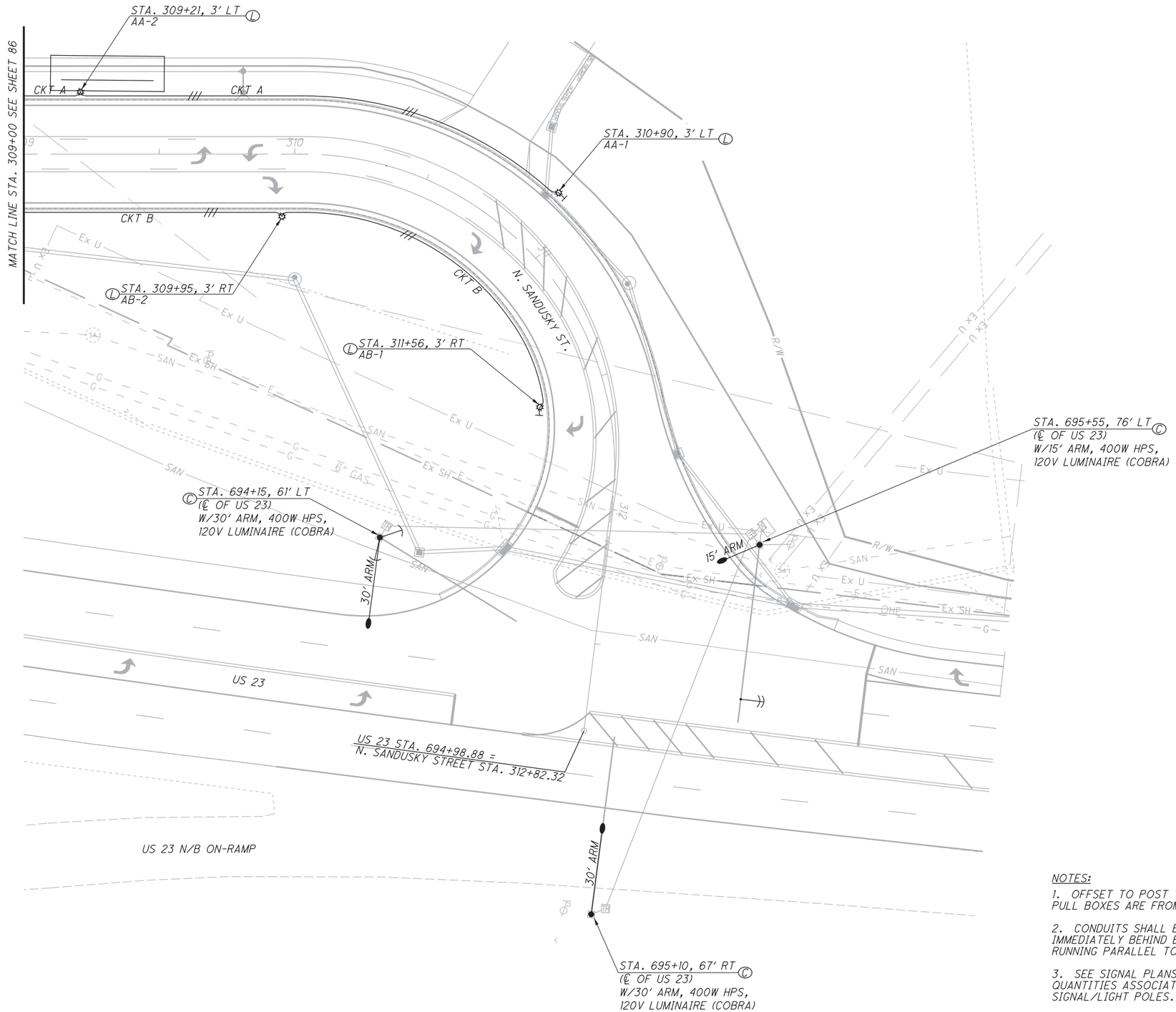

NOTES:

1. OFFSET TO POST TOP LIGHT POLES & PULL BOXES ARE FROM FACE OF CURB.

2. CONDUITS SHALL BE INSTALLED IMMEDIATELY BEHIND BACK OF CURB WHEN RUNNING PARALLEL TO CURB.

3. SEE SIGNAL PLANS FOR LIGHTING QUANTITIES ASSOCIATED WITH COMBINATION SIGNAL/LIGHT POLES.

FOR LEGEND SEE SHEET 85

HORIZONTAL SCALE IN FEET
0 10 20 40

CALCULATED
CHECKED

LIGHTING PLAN
N. SANDUSKY ST. - STA. 309+00 TO STA. 312+82

DEL-23-13.17

ms consultants, inc.

PLOT.CEL

ms consultants, inc.
msconsultants.com

www.msconsultants.com

Ohio DOT Workspace
DEL-23

UGF: ohdot1V8i
PCF: 60-06655_Columbus

Batchplot Spec: \\0330share\n\60\06655\standards\plotdrv\batchplt.spc
Pen Table: N:\60\06655\standards\tables\Lighting_V8i_ms_std.tbl
Plot Driver: S:\std\plotting\astn\V8\PDF.pltcfg

Model: Sheet
Printed: 10/8/2015 @ 4:28:53 PM View: FENCE_VIEW1
By: hbrendinger
File: \\0330share\n\60\06655\lighting\sheets\06655LE001.dgn

34" x 22"

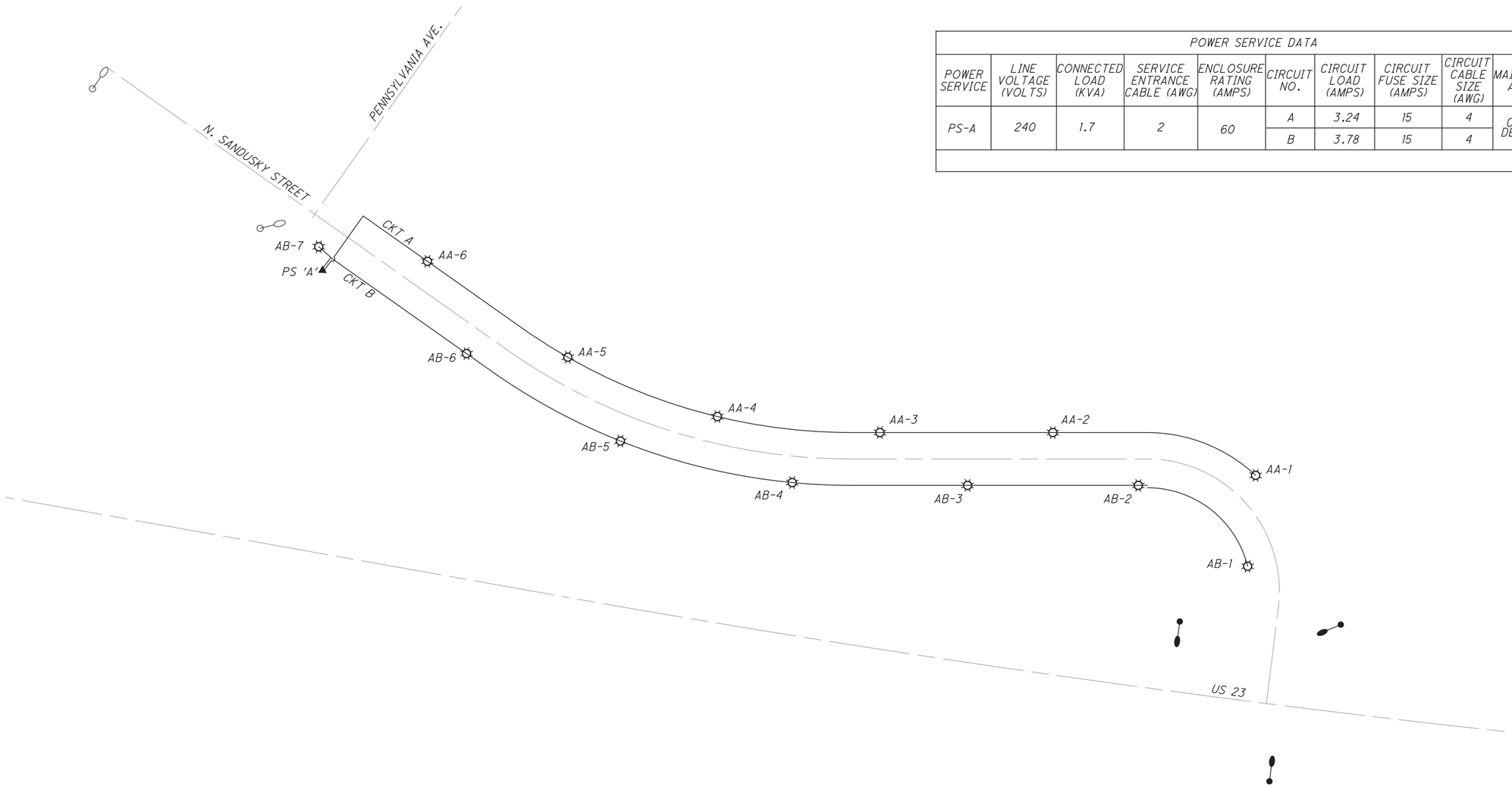

POWER SERVICE DATA									
POWER SERVICE	LINE VOLTAGE (VOLTS)	CONNECTED LOAD (KVA)	SERVICE ENTRANCE CABLE (AWG)	ENCLOSURE RATING (AMPS)	CIRCUIT NO.	CIRCUIT LOAD (AMPS)	CIRCUIT FUSE SIZE (AMPS)	CIRCUIT CABLE SIZE (AWG)	MAINTAINING AGENCY
PS-A	240	1.7	2	60	A	3.24	15	4	CITY OF DELAWARE
					B	3.78	15	4	

LEGEND

- POST TOP LIGHT POLE (100W HPS, 15' POLE)
- NO. 4 AWG 600 VOLT CABLE
- COMBINATION SIGNAL/LIGHT POLE
- EXISTING LUMINAIRE TO REMAIN
- POWER SERVICE

CALCULATED
CHECKED

LIGHTING CIRCUIT SCHEMATIC

DEL-23-13.17

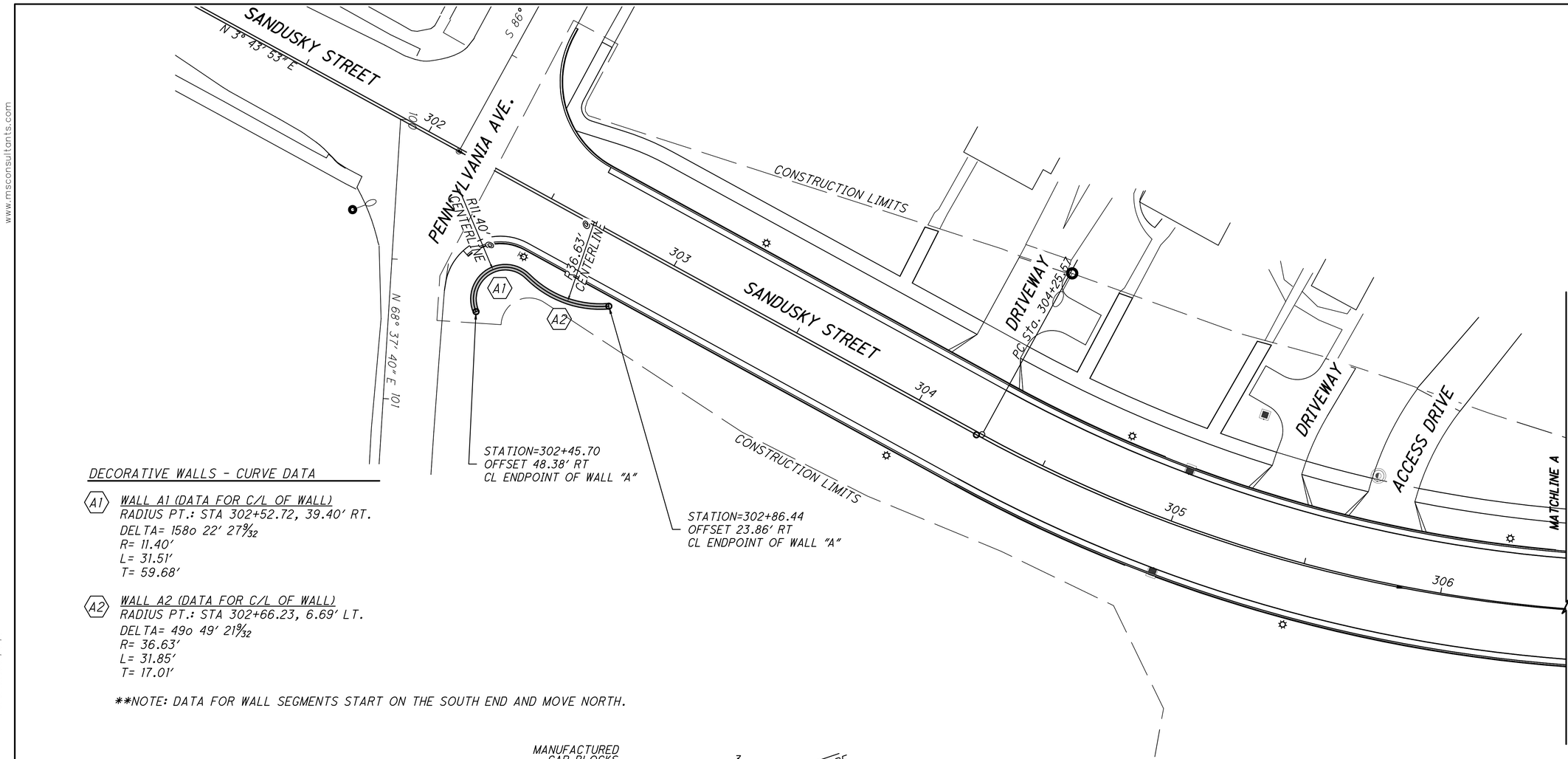

DECORATIVE WALLS - CURVE DATA

A1 WALL A1 (DATA FOR C/L OF WALL)
RADIUS PT.: STA 302+52.72, 39.40' RT.
DELTA= 158o 22' 27 9/32
R= 11.40'
L= 31.51'
T= 59.68'

A2 WALL A2 (DATA FOR C/L OF WALL)
RADIUS PT.: STA 302+66.23, 6.69' LT.
DELTA= 49o 49' 21 9/32
R= 36.63'
L= 31.85'
T= 17.01'

**NOTE: DATA FOR WALL SEGMENTS START ON THE SOUTH END AND MOVE NORTH.

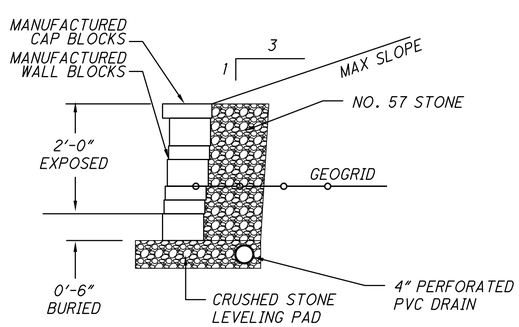

WALL A AND C

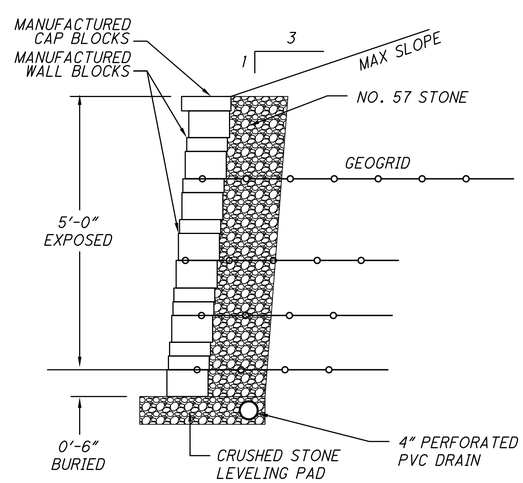

WALL B

ITEM SPECIAL- MISC: DECORATIVE WALLS

SANDUSKY STREET AND PENNSYLVANIA AVE INTERSECTION

LAYOUT NOTES:

A. SEE SHEETS 92-94 FOR PROPOSED LANDSCAPING AND DETAILS.

B. DECORATIVE WALLS ARE STATIONED TO CENTERLINE OF WALL.

ITEM SPECIAL- MISC. :DECORATIVE WALLS

THE DECORATIVE WALLS SHALL BE ROSETTA HARDSCAPES - BELVEDERE COLLECTION WALL SYSTEM COLORED NATURAL, REDI-ROCK REDI-SCAPES MCKINLEY TEXTURE WALL SYSTEM COLORED KENTUCKIANA BUFF OR APPROVED EQUAL. ALTERNATIVE WALL SYSTEMS SHALL BE SUBMITTED FOR APPROVAL BY ENGINEER. ALL APPROVED WALLS SHALL BE SUPPLIED BY THE SAME MANUFACTURER.

THE DECORATIVE WALL SYSTEM SHALL BE CONSTRUCTED USING THE MANUFACTURERS DETAILS AND SPECIFICATIONS. THE WALL ELEVATIONS CAN BE FOUND ON THE CROSS SECTION SHEETS.

PAYMENT FOR THE ABOVE WORK SHALL BE MADE AT THE LUMP SUM UNIT BID PRICE FOR ITEM SPECIAL- MISC: DECORATIVE WALLS, AND SHALL INCLUDE ALL LABOR, TOOLS, EQUIPMENT AND MATERIALS INCLUDING: EXCAVATION, CRUSHED AGGREGATE BASE, GEOGRID, MANUFACTURED WALL SYSTEM, PIPE, COARSE AGGREGATE, FINISHED GRADING AND NECESSARY HARDWARE REQUIRED TO CONSTRUCT THE COMPLETE FINISHED WALL.

HORIZONTAL SCALE IN FEET 1 10 20 40

CALCULATED EWF
CHECKED RDW

PID NO. 94527

SITE DIMENSION PLAN

DEL-23-13.17

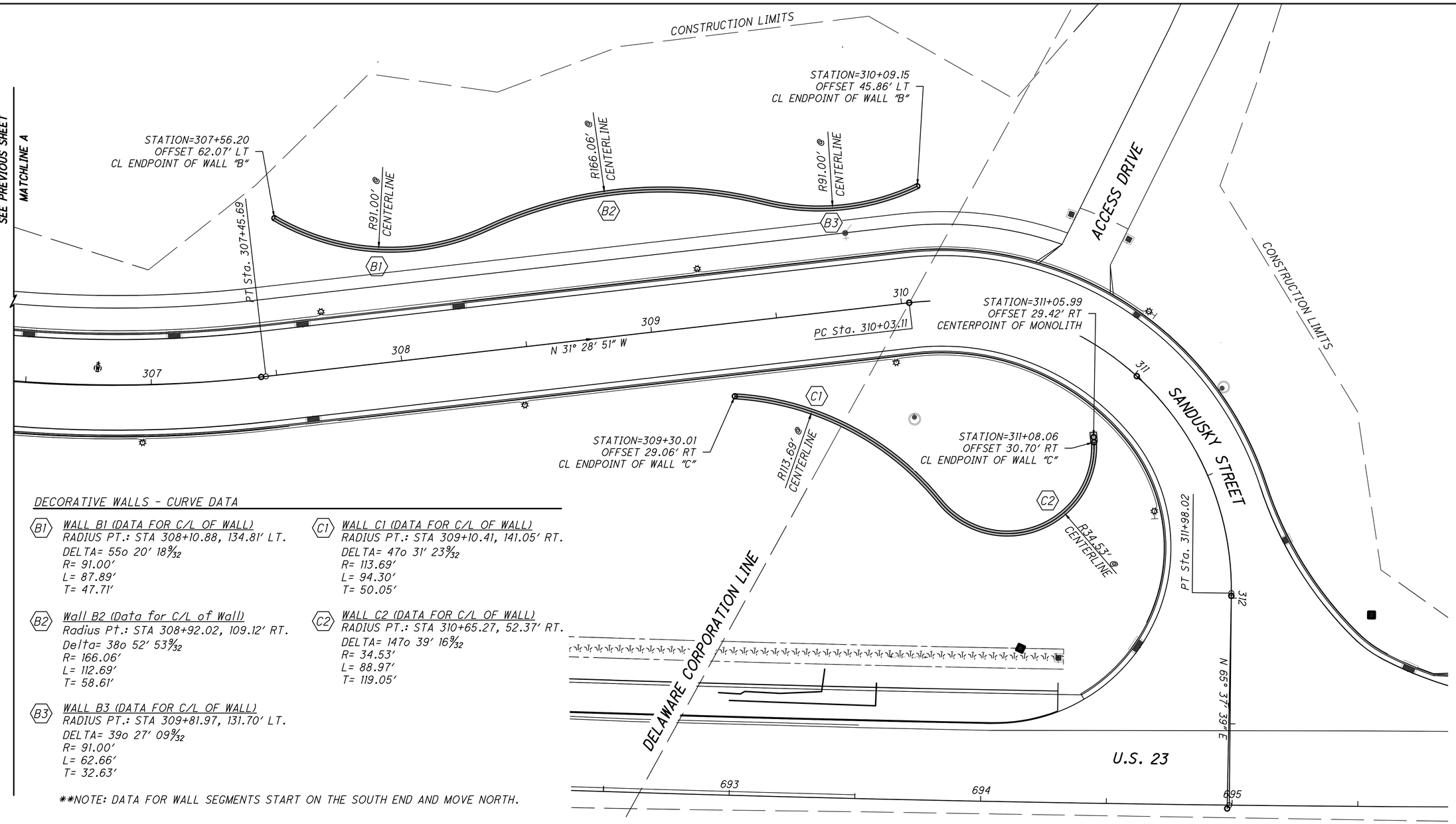

DECORATIVE WALLS - CURVE DATA

B1 WALL B1 (DATA FOR C/L OF WALL)
RADIUS PT.: STA 308+10.88, 134.81' LT.
DELTA= 55o 20' 18 9/32
R= 91.00'
L= 87.89'
T= 47.71'

B2 Wall B2 (Data for C/L of Wall)
Radius Pt.: STA 308+92.02, 109.12' RT.
Delta= 38o 52' 53 9/32
R= 166.06'
L= 112.69'
T= 58.61'

B3 WALL B3 (DATA FOR C/L OF WALL)
RADIUS PT.: STA 309+81.97, 131.70' LT.
DELTA= 39o 27' 09 9/32
R= 91.00'
L= 62.66'
T= 32.63'

C1 WALL C1 (DATA FOR C/L OF WALL)
RADIUS PT.: STA 309+10.41, 141.05' RT.
DELTA= 47o 31' 23 9/32
R= 113.69'
L= 94.30'
T= 50.05'

C2 WALL C2 (DATA FOR C/L OF WALL)
RADIUS PT.: STA 310+65.27, 52.37' RT.
DELTA= 147o 39' 16 9/32
R= 34.53'
L= 88.97'
T= 119.05'

**NOTE: DATA FOR WALL SEGMENTS START ON THE SOUTH END AND MOVE NORTH.

ITEM SPECIAL- MISC: DECORATIVE WALLS

THE DECORATIVE WALLS SHALL BE ROSETTA HARDSCAPES - BELVEDERE COLLECTION WALL SYSTEM COLORED NATURAL, REDI-ROCK REDI-SCAPES MCKINLEY TEXTURE WALL SYSTEM COLORED KENTUCKIANA BUFF OR APPROVED EQUAL. ALTERNATIVE WALL SYSTEMS SHALL BE SUBMITTED FOR APPROVAL BY ENGINEER. ALL APPROVED WALLS SHALL BE SUPPLIED BY THE SAME MANUFACTURER.

THE DECORATIVE WALL SYSTEM SHALL BE CONSTRUCTED USING THE MANUFACTURERS DETAILS AND SPECIFICATIONS. THE WALL ELEVATIONS CAN BE FOUND ON THE CROSS SECTION SHEETS.

PAYMENT FOR THE ABOVE WORK SHALL BE MADE AT THE LUMP SUM UNIT BID PRICE FOR ITEM SPECIAL- MISC: DECORATIVE WALLS, AND SHALL INCLUDE ALL LABOR, TOOLS, EQUIPMENT AND MATERIALS INCLUDING: EXCAVATION, CRUSHED AGGREGATE BASE, GEOGRID, MANUFACTURED WALL SYSTEM, PIPE, COARSE AGGREGATE, FINISHED GRADING AND NECESSARY HARDWARE REQUIRED TO CONSTRUCT THE COMPLETE FINISHED WALL.

ITEM SPECIAL- MISC: MONOLITH

THE MONOLITH SHALL BE CONSTRUCTED USING THE DETAILS AND SPECIFICATIONS PROVIDED ON SHEET 91.

PAYMENT FOR THE MONOLITH SHALL BE MADE AT THE LUMP SUM UNIT BID PRICE FOR ITEM SPECIAL- MISC.: MONOLITH AND SHALL INCLUDE ALL LABOR, TOOLS, EQUIPMENT AND MATERIALS SHOWN ON SHEET 91 THAT ARE REQUIRED TO CONSTRUCT THE COMPLETE FINISHED MONOLITH.

SANDUSKY STREET AND U.S. 23 INTERSECTION

LAYOUT NOTES:

A. SEE SHEETS 92-94 FOR PROPOSED LANDSCAPING AND DETAILS.

B. DECORATIVE WALLS ARE STATIONED TO CENTERLINE OF WALL.

HORIZONTAL SCALE IN FEET 1 10 20 40

CALCULATED EWF
CHECKED RDW

PID NO. 94527

SITE DIMENSION PLAN

DEL-23-13.17

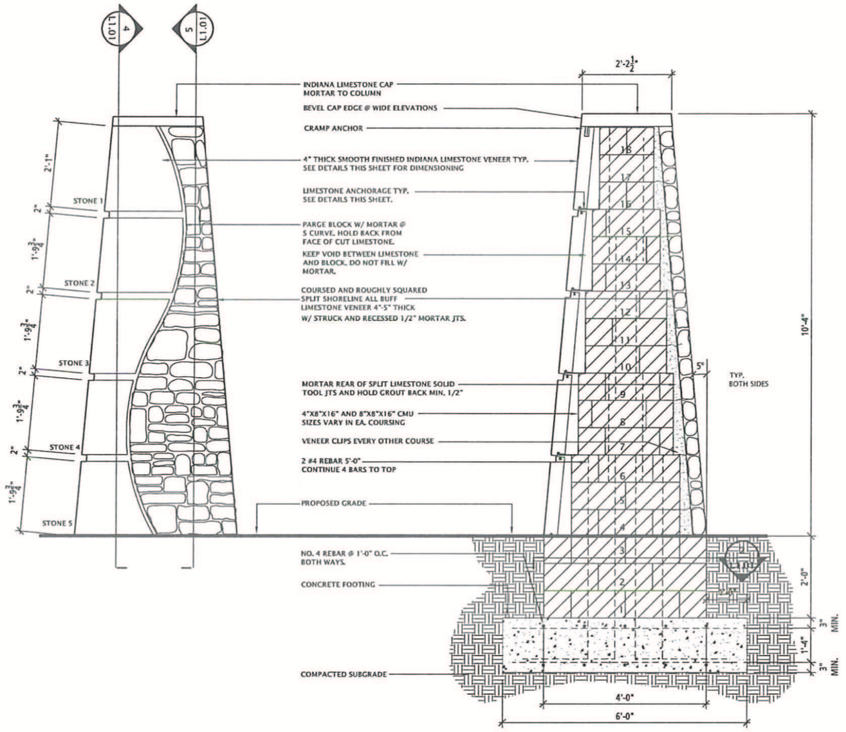

1 ELEVATION / SECTION: ENTRY MONOLITH FRONT VIEW
N.T.S.

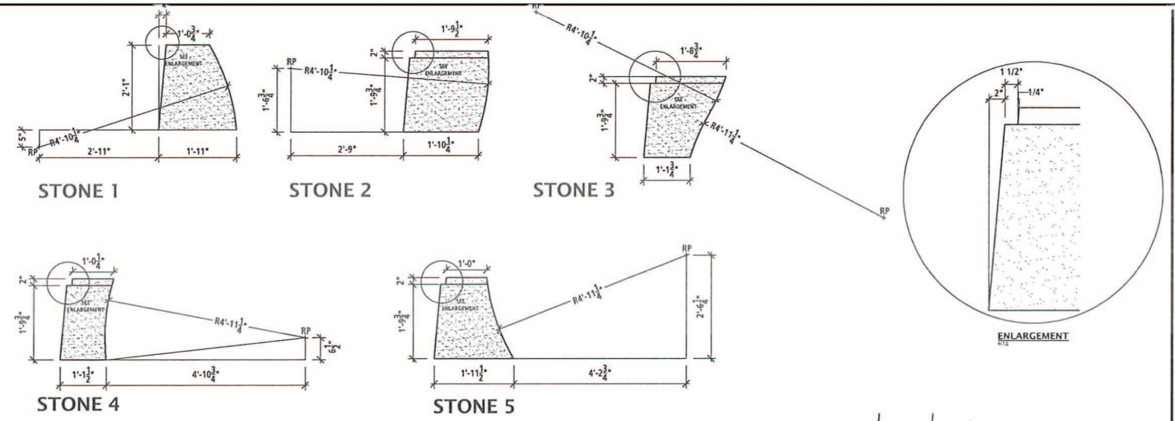

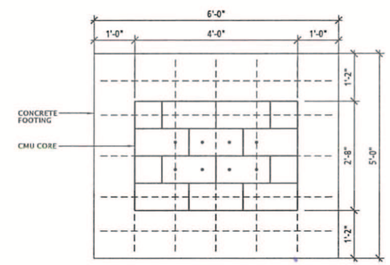

2 PLAN: ENTRY MONOLITH
N.T.S.

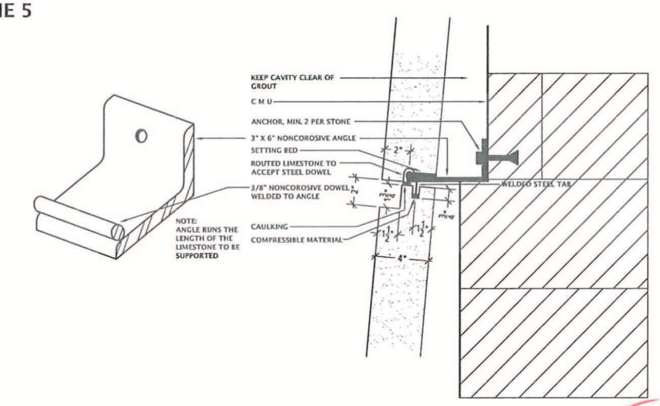

3 ORTHO / SECTION: CUT LIMESTONE ANCHORAGE
N.T.S.

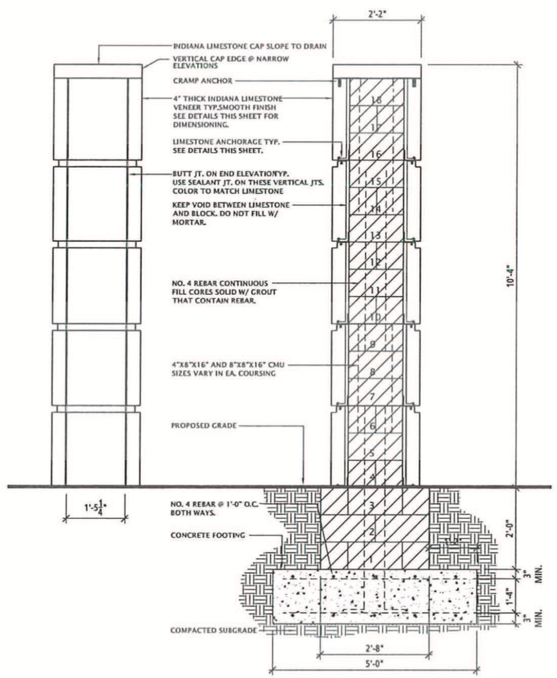

4 ELEVATION / SECTION: ENTRY MONOLITH END VIEW
N.T.S.

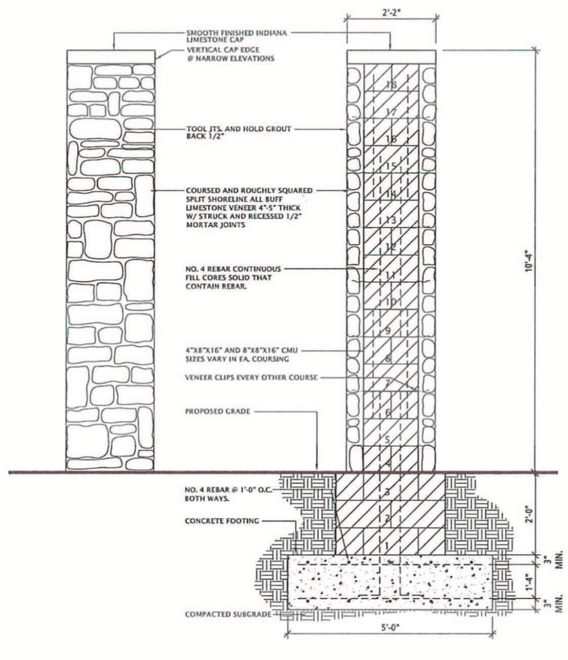

5 ELEVATION / SECTION: ENTRY MONOLITH END VIEW
N.T.S.

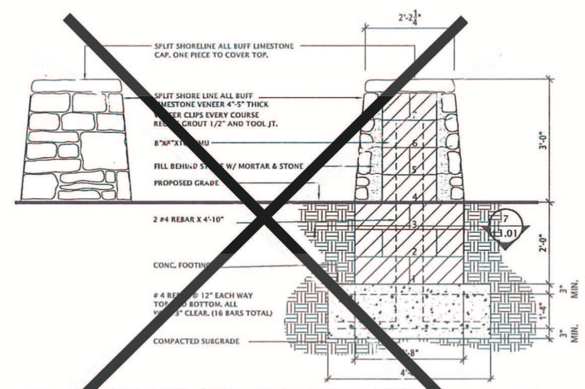

6 ELEVATION / SECTION: SMALL PIER
N.T.S.

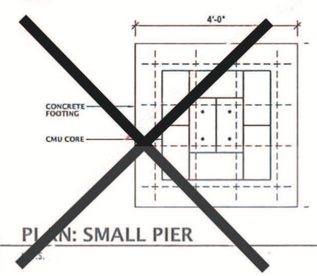

7 PLAN: SMALL PIER
N.T.S.

GENERAL NOTES

1. THESE DRAWINGS ARE PREPARED AS TYPICAL CONSTRUCTION DOCUMENTS AND ARE NOT SITE SPECIFIC. BEFORE ANY CONSTRUCTION IS UNDERTAKEN SOILS AND STRUCTURAL ENGINEERS SHOULD BE ENGAGED TO REVIEW AND REVISE THESE DRAWINGS AS REQUIRED TO INSURE THE HEALTH, SAFETY AND WELFARE OF THE PUBLIC AS WELL AS THE STRUCTURAL SOUNDNESS AND CONSTRUCTABILITY OF THESE ELEMENTS. THESE PROFESSIONAL REVIEWS SHOULD TAKE PLACE FOR EVERY NEW SITE WHERE THESE ELEMENTS ARE TO BE CONSTRUCTED.
2. EACH CONTRACTOR IS RESPONSIBLE FOR LOCATING AND PROTECTING ALL EXISTING UTILITIES. THE CONTRACTOR SHALL DETERMINE THE EXACT LOCATION OF ALL EXISTING UTILITIES PRIOR TO COMMENCING WORK AND AGREES TO BE FULLY RESPONSIBLE FOR ANY AND ALL DAMAGES WHICH MIGHT BE OCCASIONED BY THE CONTRACTOR'S FAILURE TO EXACTLY LOCATE AND PRESERVE ANY AND ALL UNDERGROUND UTILITIES.
3. EACH CONTRACTOR SHALL NOTIFY THE OWNER'S REPRESENTATIVE IMMEDIATELY IF A DISCREPANCY IS FOUND BETWEEN THE DIMENSION GIVEN AND ACTUAL DIMENSIONS IN THE FIELD, PRIOR TO CONSTRUCTION. USE DIMENSIONS SHOWN, DO NOT SCALE DRAWINGS.
4. ALL LAYOUT IN THE FIELD TO BE BY A REGISTERED SURVEYOR OF ENGINEER. THE OWNER'S REPRESENTATIVE WILL REVIEW THE LAYOUT FOR GENERAL CONFORMANCE PRIOR TO CONSTRUCTION.
5. THE CONTRACTOR SHALL PROVIDE TEMPORARY BARRIERS AT LIMITS OF CONSTRUCTION TO ASSURE PUBLIC SAFETY DURING CONSTRUCTION.
6. PROVIDE PRODUCT SUBMITTALS OF ALL STONE, BLOCK, METAL AND REINFORCING AND ANCHORING MATERIALS FOR APPROVAL BEFORE BEGINNING CONSTRUCTION.
7. PROVIDE SHOP DRAWINGS AS REQUESTED AND RECEIVE APPROVALS BEFORE BEGINNING CONSTRUCTION.
8. ADHERE TO ALL CITY OF DELEWARE, OHIO ZONING CODE REQUIREMENTS AND STANDARD CONSTRUCTION DOCUMENTS AND NOTES.
9. PROVIDE THE CITY OF DELEWARE WITH A LAYOUT, DIMENSIONING AND GRADING PLANS FOR APPROVAL BEFORE BEGINNING CONSTRUCTION.

THE EDGE GROUP
PLANNING LANDSCAPE ARCHITECTURE GRAPHIC DESIGN
6253 Riverside Drive, Suite 100
Dublin, OH 43017
P 614-718-0155 F 614-718-0156

CONSULTANTS

CALCULATED EWF
CHECKED RDW

PID NO. 94527

SEAL

PROJECT TITLE
GATEWAY AND CORRIDOR SITE ELEMENTS
TYPICAL INTERSECTION TREATMENT
TYPICAL CONSTRUCTION

CLIENT
CITY OF DELAWARE
OHIO
1 SOUTH SANDUSKY STREET
DELAWARE, OHIO 43015

PROJECT NO. 05016
Date 10/14/05
Revisions
1 XX/XX/XX
2 XX/XX/XX
3 XX/XX/XX
4 XX/XX/XX
5 XX/XX/XX
6 XX/XX/XX

Sheet Title
CONSTRUCTION DETAILS

Sheet Number
L1.01

SITE DETAILS

DEL-23-13.17

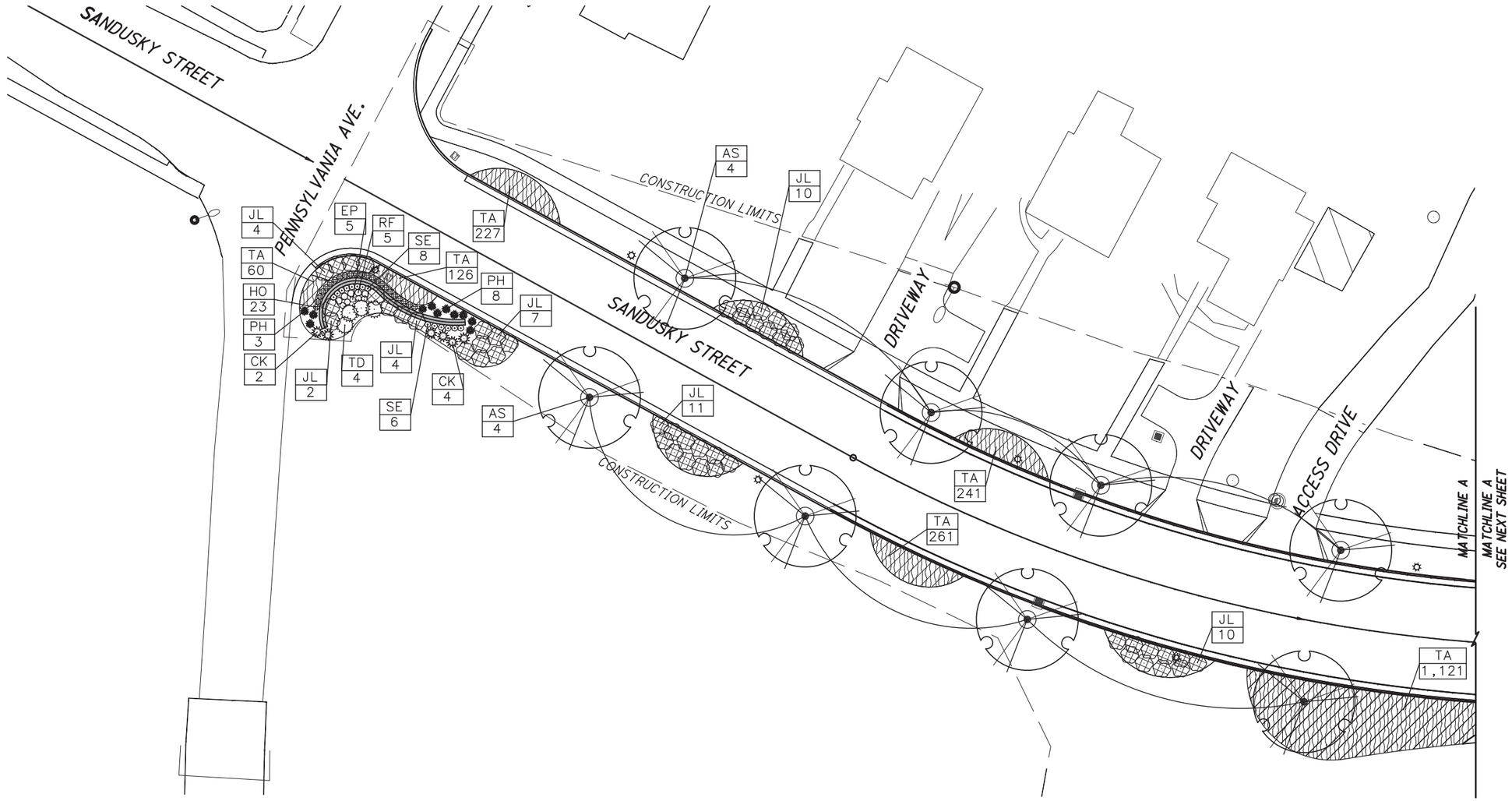

SANDUSKY STREET AND PENNSYLVANIA AVE. INTERSECTION

PLANTING NOTES:

A. SEE SHEET 94 FOR DETAILS AND PLANT SCHEDULE.

B. ALL PLANTING BEDS AND FREE STANDING TREES TO BE MULCHED WITH GRADE "A" DOUBLE PROCESSED 'ABSOLUTE BLACK' HARDWOOD MULCH.

HORIZONTAL SCALE IN FEET 1 10 20 40

CALCULATED EWF CHECKED RDW

PID NO. 94527

SITE LANDSCAPE PLAN

DEL-23-13.17

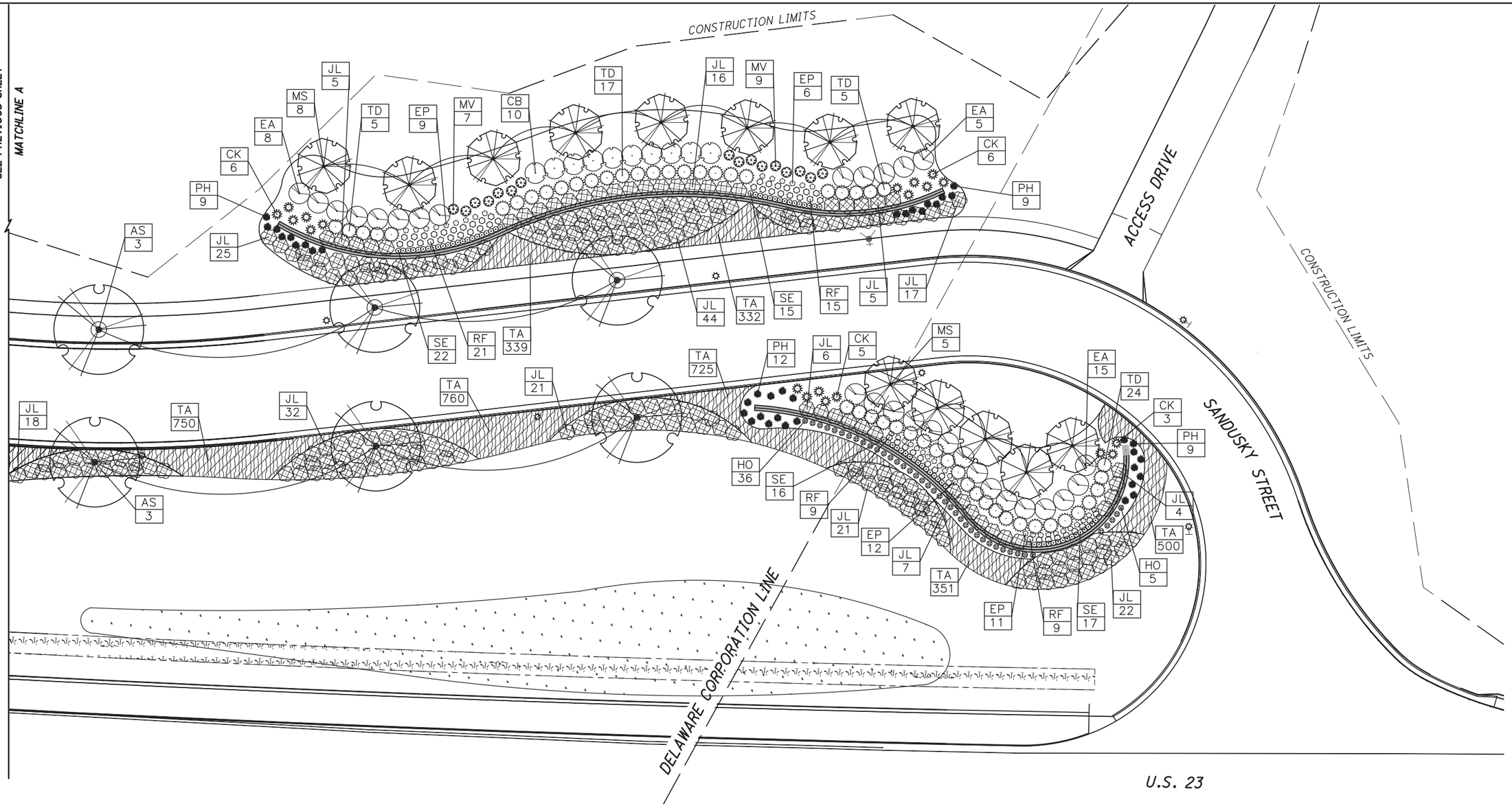

SANDUSKY STREET AND U.S. 23 INTERSECTION

PLANTING NOTES:

A. SEE SHEET 94 FOR DETAILS AND PLANT SCHEDULE.

B. ALL PLANTING BEDS AND FREE STANDING TREES TO BE MULCHED WITH GRADE "A" DOUBLE PROCESSED 'ABSOLUTE BLACK' HARDWOOD MULCH.

HORIZONTAL SCALE IN FEET 1 10 20 40

CALCULATED EWF
CHECKED RDW

PID NO. 94527

SITE LANDSCAPE PLAN

DEL-23-13.17

PLOT.CEL

ms consultants, inc.
msconsultants.com

Ohio DOT Workspace
US 23 PENN. AVE-SANDUSKY ST EXT
www.msconsultants.com

0 0.5" 1"

UCF: ohdot
PCF: 60-06655

Batchplot Spec: _
Pen Table: AIA STANDARD
Plot Driver: scroll.plot.pdf

34" x 22"

View: SHEET
By: eferguson

Model:
Printed:
File:

PLANT SCHEDULE:

KEY	LABEL	QUANT.	ITEM	UNIT	ODOT DESCRIPTION: BOTANICAL NAME-COMMON NAME	SIZE	SPACE	COND.	NOTES
	AS	14	661	EACH	DECIDUOUS TREE, 2" CALIPER ACER RUBRUM 'RED SUNSET' - RED SUNSET MAPLE			2" CAL.	SINGLE ROW.
	MS	13	661	EACH	DECIDUOUS TREE, 1-1/2" CALIPER MALUS HYBRID "SPRING SNOW" - SPRING SNOW CRAB			1.5" CAL.	SINGLE ROW.
	CB	10	661	EACH	DECIDUOUS SHRUB, 4' HEIGHT CORNUS BAILEYI - BAILEY'S RED-TWIG DOGWOOD	3'-4' HT	8.0' O.C.		
	EA	28	661	EACH	DECIDUOUS SHRUB, 4' HEIGHT EUONYMUS ALATUS 'COMPACTUS' - COMPACT BURNING BUSH	3'-4' HT	8.0' O.C.		
	JL	291	661	EACH	PLANTING, MISC.: JUNIPERUS HORIZONTALIS 'MOTHER LODE' - MOTHER LODE JUNIPER	3"-6" HT	6.0' O.C.		
	TD	55	661	EACH	EVERGREEN SHRUB, 2.5' HEIGHT TAXUS X MEDIA 'DENSIFORMIS' - DENSE YEW	2'-3' HT	6.0' O.C.		
	EP	43	661	EACH	PERENNIALS ECHINACEA PURPUREA - PURPLE CONEFLOWER	1'-2' HT	2.0' O.C.		
	HO	64	661	EACH	PERENNIALS HEMEROCALLIS HYBRID 'STELLA DE ORO' - STELLA DE ORO DAYLILY	1'-2' HT	2.0' O.C.		
	RF	59	661	EACH	PERENNIALS RUDBECKIA FULGIDA 'GOLDSTURM' - BLACK-EYED SUSAN	1'-2' HT	2.5' O.C.		
	SE	84	661	EACH	PERENNIALS SEDUM X ±ANGELINA± ANGELINA SEDUM	1'-2' HT	2.0' O.C.		
	CK	26	661	EACH	PLANTING, MISC.: CALAMAGROSTIS ACUTIFLORA 'KARL FOERSTER' - KARL FOERSTER FEATHER REED GRASS	2'-3' HT	4.0' O.C.		
	MV	16	661	EACH	PLANTING, MISC.: MISCANTHUS SINENSIS 'VARIEGATUS' - VARIEGATED MAIDEN GRASS	2'-3' HT	4.0' O.C.		
	PH	50	661	EACH	PLANTING, MISC.: PENNISETUM ALOPECUROIDES 'HAMELN' - HAMELN DWARF FOUNTAIN GRASS	2'-3' HT	3.0' O.C.		
	TA	4111	661	EACH	GROUNDCOVER AND VINES, 1 YEAR, POTTED THYMUS PRAECOX ARCTICUS 'COCCINEUS' - RED CREEPING THYME	3"-6" HT	1.25' O.C.		
		174	661	CY	MULCH, AS PER PLAN				
		1	690	LUMP SUM	ITEM SPECIAL, MISC.: MONOLITH				
		1	690	LUMP SUM	ITEM SPECIAL, MISC.: DECORATIVE WALLS				

PLANTING NOTES:

A. SEE SHEETS 92 & 93 FOR PLANTING PLANS.

B. ALL PLANTING BEDS AND FREE STANDING TREES TO BE MULCHED WITH GRADE "A" DOUBLE PROCESSED 'ABSOLUTE BLACK' HARDWOOD MULCH.

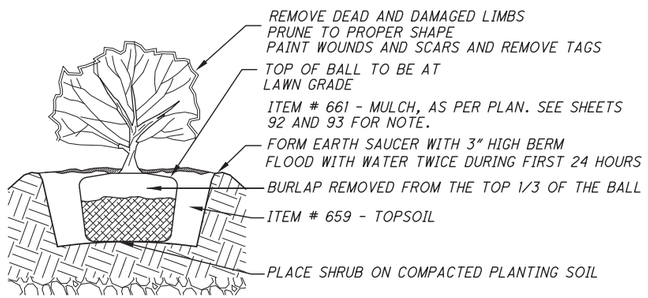

1 SHRUB PLANTING DETAIL

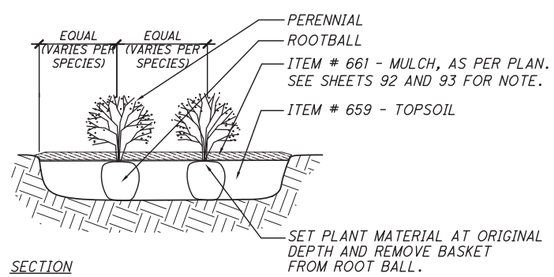

SECTION

NOTES:
1. DO NOT ALLOW AIR POCKETS TO FORM WHEN BACKFILLING.
2. DO NOT DISTURB ROOT BALL WHEN PLANTING OR STAKING.
3. WATER THOROUGHLY FOLLOWING PLANTING.

2 PERENNIAL PLANTING DETAIL

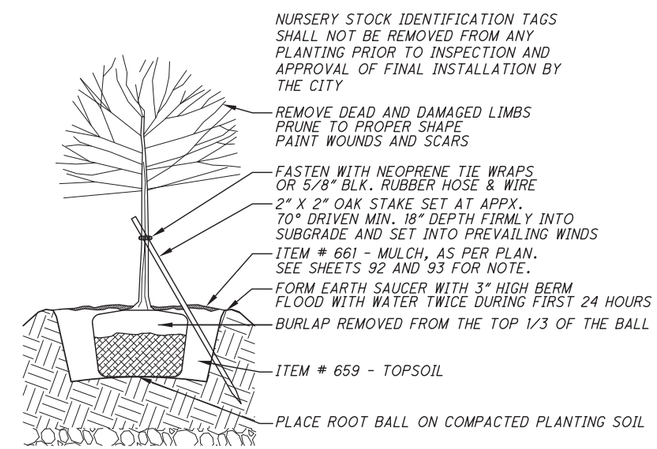

3 TREE PLANTING DETAIL

CALCULATED EWF
CHECKED RDW

PID NO. 94527

SITE LANDSCAPE DETAILS AND SCHEDULE

DEL-23-13.17

PLOT.CEL

ms consultants, inc.
msconsultants.com

RIGHT OF WAY LEGEND SHEET DEL-23-13.17

COUNTY OF DELAWARE
CITY OF DELAWARE & DELAWARE TOWNSHIP
FARM LOT 3, QTR. TWP.4, TWP.5, R.19
UNITED STATES MILITARY DISTRICT

LOCATION MAP

UTILITY LIST

ELECTRIC
AEP
850 TECH CENTER DRIVE
GAHANNA, OH 43230-6605
ATTN: PAUL PAXTON
(614) 883-6831

AEP (TRANSMISSION)
700 MORRISON ROAD
GAHANNA, OH 43230
ATTN: TINA HAIRSTON
(614) 552-1801

SANITARY & STORM SEWER
DELAWARE COUNTY REGIONAL SEWER DISTRICT
50 CHARRING STREET
DELAWARE, OH 43015
(740) 833-2240

WATER
DEL-CO WATER CO., INC.
6773 OLENTANGY RIVER ROAD
DELAWARE, OH 43015
ATTN: SHANE F. CLARK
(740) 548-7746/(800) 521-6779

TRAFFIC
ODOT DISTRICT 6
400 E. WILLIAM STREET
DELAWARE, OH 43015
(740) 833-8000

GAS
COLUMBIA GAS OF OHIO
3550 JOHNNY APPLESEED CT.
COLUMBUS, OH 43215
ATTN: HEIDI ZACHER
(614) 818-2107

COMMUNICATIONS
AT&T (LOCAL)
111 NORTH 4TH STREET
8TH FLOOR
COLUMBUS, OH 43215
ATTN: GARY VanAlmsick
(614) 223-7276

AT&T
(LONG DISTANCE & LS METRO)
5980-G WILCOX PLACE
DUBLIN, OH 43016
ATTN: TONY LYLE
(614) 760-8320

AT&T METRO
8372 EAST BROAD STREET
REYNOLDSBURG, OH 43068
ATTN: ANITA NUCKOLS
(614) 868-2347

TIME WARNER CABLE
3760 INTERCHANGE DRIVE
COLUMBUS, OH 43216
ATTN: RAY MAURER
(614) 481-5262

VERIZON
550 LEADER STREET
MARION, OH 43302
(740) 383-0575

CITY OF DELAWARE
PUBLIC UTILITIES
225 CHERRY STREET
DELAWARE, OH 43015
ATTN: BRAD STANTON &
PERRY MICKLEY
(740) 203-1900

INDEX OF SHEETS:

CONVENTIONAL SYMBOLS

County Line
Township Line
Section Line
Corporation Line or
Fence Line (Ex) (Pr)
Center Line
Right of Way (Ex) Ex R/W
Right of Way (Pr) R/W
Standard Highway Ease. (Ex) Ex SH
Temporary Right of Way TMP
Channel Ease. (Pr) CH
Utility Ease. (Ex) Ex U
Railroad or
Guardrail (Ex) (Pr)
Construction Limits
Edge of Pavement (Ex)
Edge of Pavement (Pr)
Edge of Shoulder (Ex)
Edge of Shoulder (Pr)
Ditch / Creek (Ex)
Ditch / Creek (Pr)
Tree Line (Ex)
Ownership Hook Symbol , Example
Property Line Symbol , Example
Break Line Symbol , Example
Tree (Pr) , Tree (Ex) , Shrub (Ex)
Tree (Remove) , Shrub (Remove)
Evergreen (Ex) , Stump
Evergreen (Remove) , Stump (Remove)
Wetland (Pr) , Grass (Pr) , Aerial Target
Post (Ex) , Mailbox (Ex) , Mailbox (Pr)
Light (Ex) , Telephone Marker (Ex) TEL
Fire Hydrant (Ex) , Water Meter (Ex)
Water Valve (Ex) , Utility Valve Unknown (Ex.)
Telephone Pole (Ex) , Power Pole (Ex)
Light Pole (Ex)

PROJECT DESCRIPTION

REMOVE THE SOUTHBOUND US-23 EXIT AND EXTEND SANDUSKY STREET TO A SIGNALIZED INTERSECTION AT US-23, ADD A SOUTHBOUND RIGHT TURN LANE AND A NORTHBOUND LEFT TURN LANE AT THE PROPOSED US-23 / SANDUSKY STREET INTERSECTION.

STRUCTURE KEY

RESIDENTIAL
COMMERCIAL
OUT-BUILDING

PARCEL IDENTIFIER LEGEND

WD - FEE SIMPLE RESERVATION OF ACCESS
T - TEMPORARY EASEMENT

PLANS PREPARED BY:

FIRM NAME: ms consultants, inc.
R/W DESIGNER: Chad S. Snow
R/W REVIEWER: Richard John Swan
FIELD REVIEWER: Alan Buck
PRELIMINARY FIELD REVIEW DATE: 09/27/13
TRACINGS FIELD REVIEW DATE: 04/07/14
OWNERSHIP UPDATED BY: Chad Snow
DATE COMPLETED: 04/08/14
PLAN COMPLETION DATE: 04/08/14

UNDERGROUND UTILITIES
CONTACT BOTH SERVICES
CALL TWO WORKING DAYS
BEFORE YOU DIG
CALL
1-800-362-2764
(TOLL FREE)
OHIO UTILITIES PROTECTION SERVICE
NON-MEMBERS
MUST BE CALLED DIRECTLY
OIL & GAS PRODUCERS PROTECTIVE SERVICE CALL: **1-800-925-0988**

NOTES: THE LOCATION OF THE UNDERGROUND UTILITIES SHOWN ON THE PLANS ARE OBTAINED FROM THE OWNER OF THE UTILITIES AS REQUIRED BY SECTION 153.64 O.R.C.

PLAN PREPARED BY:

ms consultants, inc.
engineers, architects & planners
2221 Schrock Road
Columbus, Ohio 43229-1547
Tel 614.898.7100 Fax 614.898.7570
www.msconsultants.com

I, Richard John Swan, P. S. have conducted a survey of the existing conditions for the Ohio Department of Transportation on April, 2012. The results of that survey are contained herein. The horizontal coordinates expressed herein are based on the Ohio State Plane Coordinates System North Zone on NAD 83(CORS 96) datum. The Project Coordinates (US Survey Feet) are relative to State Plane Grid Coordinates (Meters or US Survey Feet) by a Project Adjustment Factor of 1.000023762. As a part of this project I have reestablished the locations of the existing property lines and the existing centerline of Right of Way for property takes contained herein. As a part of this project I have established the proposed property lines, calculated the Gross Take, present roadway occupied (PRO), Net Take and Net Residue; as well as prepared the legal descriptions necessary to acquire the parcels as shown herein. As a part of this work I have set right of way monuments at the property corners, property line intersection, points along the right of way and/or angle points on the right of way, Section Corners and other points as shown herein. All of my work contained herein was conducted in accordance with Ohio Administrative Code 4733-37 commonly known as "Minimum Standards for Boundary Surveys in the State of Ohio" unless noted. The words I and my as used herein are to mean either myself or someone working under my direct supervision.

Richard John Swan, Professional Land Surveyor 6574

Date: 04/08/2014

SURVEYORS SEAL

STATE OF OHIO
RICHARD JOHN SWAN
6574
REGISTERED
PROFESSIONAL SURVEYOR

FEDERAL PROJECT NO. E130216
PID NO. 94527
CALCULATED CSS
CHECKED RJS

RIGHT OF WAY LEGEND SHEET
DEL - 23 - 13.17

1/9

95/103

Batchplot Spec: \\0330share\n\60\06655\standards\plotdrv\batchplt.spc
Pen Table: S:\std\plotting\ustn\V8\pen\V8_ms_std.tbl
Plot Driver: S:\std\plotting\ustn\V8\PDF.pltcfg

Ohio DOT Workspace
DEL-23
UCF: ohdot\V8i
PCF: 60-06655_Columbus
0 0.5" 1"
34" x 22"

Model: Sheet
Printed: 4/8/2014 @ 8:27:34 AM By: csnow
File: N:\60\06655\row\sheets\06655RL001.dgn
View: SHEET

www.msconsultants.com

PLOT.CEL

ms consultants, inc.
msconsultants.com

www.msconsultants.com

Ohio DOT Workspace
DEL-23

UCF: ohdot\V8i
PCF: 60-06655_Columbus

Batchplot Spec: \\0330share\n\60\06655\standards\plotdrv\batchplt.spc
Pen Table: S:\std\plotting\ustn\V8\pen\V8i_ms_std.tbl
Plot Driver: S:\std\plotting\ustn\V8\PDF_plt.cfg

34" x 22"

Model: Sheet
Printed: 4/8/2014 @ 8:27:36 AM
File: N:\60\06655\row\sheets\06655RC001.dgn
View: SHEET
By: csnow

COUNTY OF DELAWARE
PART OF FARM LOT 3, QTR. TWP. 4, TWP. 5, R. 19
UNITED STATES MILITARY DISTRICT
CITY OF DELAWARE & DELAWARE TOWNSHIP

RECEIVED _____, 20___
RECORDED _____, 20___
BOOK _____ PAGE _____
COUNTY RECORDER

FOUND MONUMENT TABLE

Point	North	East	Feature	Description
434	236996.859	1810301.397	BM	TBM 1
1316	235929.350	1810578.617	BM	TBM 2
3591	236122.605	1810271.799	IPIN	5/8" REBAR
1993	235486.284	1810449.783	IPIN	1" SOLID
2251	235517.032	1810517.615	IPIN	'DENNIS HAGAN RS 6917' - 5/8" REBAR
2771	237337.534	1810143.861	IPIN	5/8" REBAR
2863	237108.134	1810249.221	IPIN	5/8" REBAR
1845	235683.061	1810528.461	IPIN	1" SOLID
3248	236693.128	1809738.872	IPIN	5/8" REBAR
3249	236612.324	1810400.036	IPIN	5/8" REBAR (BENT)
1969	235758.164	1810467.555	IPIN	1"
2670	235971.178	1809948.285	IPIN	5/8" SOLID
2272	235462.146	1810514.053	IPIN	1/2"
2567	235953.012	1810211.766	IPIN	5/8" REBAR
2680	235897.387	1810059.023	IPIN	'STULTS & ASSOCIATES'* - 5/8" REBAR
2683	235894.693	1810099.029	IPIN	'STULTS & ASSOCIATES'* - 5/8" REBAR
3247	236865.495	1809970.943	IPIN	5/8" REBAR (BENT)
2325	235936.097	1810462.982	IPIN	5/8" REBAR
1732	236000.801	1810470.631	IPIN	5/8" REBAR
1736	236167.688	1810451.027	IPIN	'SLSS RS 6612' - 5/8" REBAR
3009	237097.028	1809984.284	IPIN	'GUIDER S 7752' - 5/8" REBAR
2812	237288.822	1809975.894	IPIPE	1" - UNREADABLE CAP (BENT)
2672	235901.932	1809992.967	IPIPE	1/2"
3619	235142.038	1810493.130	IPIPE	1"
1975	235677.337	1810462.313	IPIPE	1" - UNREADABLE CAP (BENT)
1982	235617.496	1810458.255	IPIPE	'ELSCO S5519' - 1"
3008	237095.286	1809984.461	IPIPE	'CGC ENGINEERS' - 3/4"
3605	236246.512	1810280.243	IPIPE	3/4"
3589	236063.563	1810285.005	IPIPE	3/4"
3590	236112.088	1810289.933	IPIPE	3/4" (BENT)
1505	236101.231	1810458.913	IPIPE	3/4"
1737	236236.343	1810443.009	IPIPE	2"
1734	235869.099	1810541.413	IPIPE	1/2"
3033	236831.116	1810376.456	IPIPE	
1730	236050.598	1810464.678	IPIPE	2"
2505	235949.843	1810260.878	IPIPE	1" (SQUARE TOP)
2493	235883.651	1810262.908	IPIPE	1/2"
2707	235887.758	1810197.010	IPIPE	'SLSS 6612' - 1/2"
2445	235875.863	1810373.014	IPIPE	'SLSS 6612' - 1/2"
1988	235537.496	1810453.392	IPIPE	1" (BENT)
2671	235905.253	1809943.579	IPIPE	2"
2770	237296.342	1810162.621	IPIPE	1"
2444	235879.910	1810313.133	IPIPE	'SLSS 6612' - 1/2"
3588	236014.113	1810281.993	IPIPE	3/4"
1916	235562.408	1810520.559	TBAR	

SETTING OF ALL MONUMENTS SHALL BE PERFORMED BY A SURVEYOR REGISTERED IN THE STATE OF OHIO. THE MONUMENT ASSEMBLIES AND REFERENCE MONUMENTS WILL BE INSTALLED BY THE CONTRACTOR AT THE TIME OF CONSTRUCTION. THE IRON PIN AND CAP (WHEN REQUIRED) ARE TO BE INSTALLED BY THE CONTRACTOR'S SURVEYOR.

CHANGES OR ALTERATIONS TO THE LOCATION OF ANY MONUMENTS SHOWN IN THIS TABLE, REQUIRE PRIOR APPROVAL FROM THE DISTRICT REAL ESTATE ADMINISTRATOR OF THE OHIO DEPARTMENT OF TRANSPORTATION. IN THE EVENT THAT CHANGES OR ALTERATIONS ARE APPROVED, A REVISED CENTERLINE PLAT WITH THE NEW LOCATIONS SHALL BE RECORDED IN THE APPLICABLE COUNTY RECORDS AND THE OHIO DEPARTMENT OF TRANSPORTATION. SPECIFICATIONS FOR MONUMENT ASSEMBLIES, REFERENCE MONUMENTS AND RIGHT OF WAY MONUMENTS ARE SHOWN ON STANDARD CONSTRUCTION DRAWING RM-1.1.

BASIS FOR EXISTING R/W:

THE EXISTING CENTERLINE OF RIGHT-OF-WAY AND RIGHT-OF-WAY WIDTHS FOR U.S. RT. 23 AND N. SANDUSKY ST. WERE DETERMINED USING FOUND MONUMENTATION AND FROM OHIO OF DEPARTMENT OF TRANSPORTATION R/W PLANS DEL-23-(12.80-12.94)(13.92-17.48), DEL-23-10.23, SURVEYS OF RECORD, SUBDIVISION PLATS, AND CURRENT DEEDS.

BASIS FOR BEARINGS:

ALL BEARINGS SHOWN ARE FOR PROJECT USE ONLY. THE BEARINGS FOR THIS PROJECT ARE BASED ON AN ODOT VRS/GPS DATA COLLECTION SURVEY AS PER SECTION 502, SUBPART H. OF SURVEY & MAPPING SPEC., JULY 15, 2011. THE BEARINGS ARE BASED ON THE OHIO STATE PLANE COORDINATE SYSTEM, NORTH ZONE, NAD 83 (CORS 96).

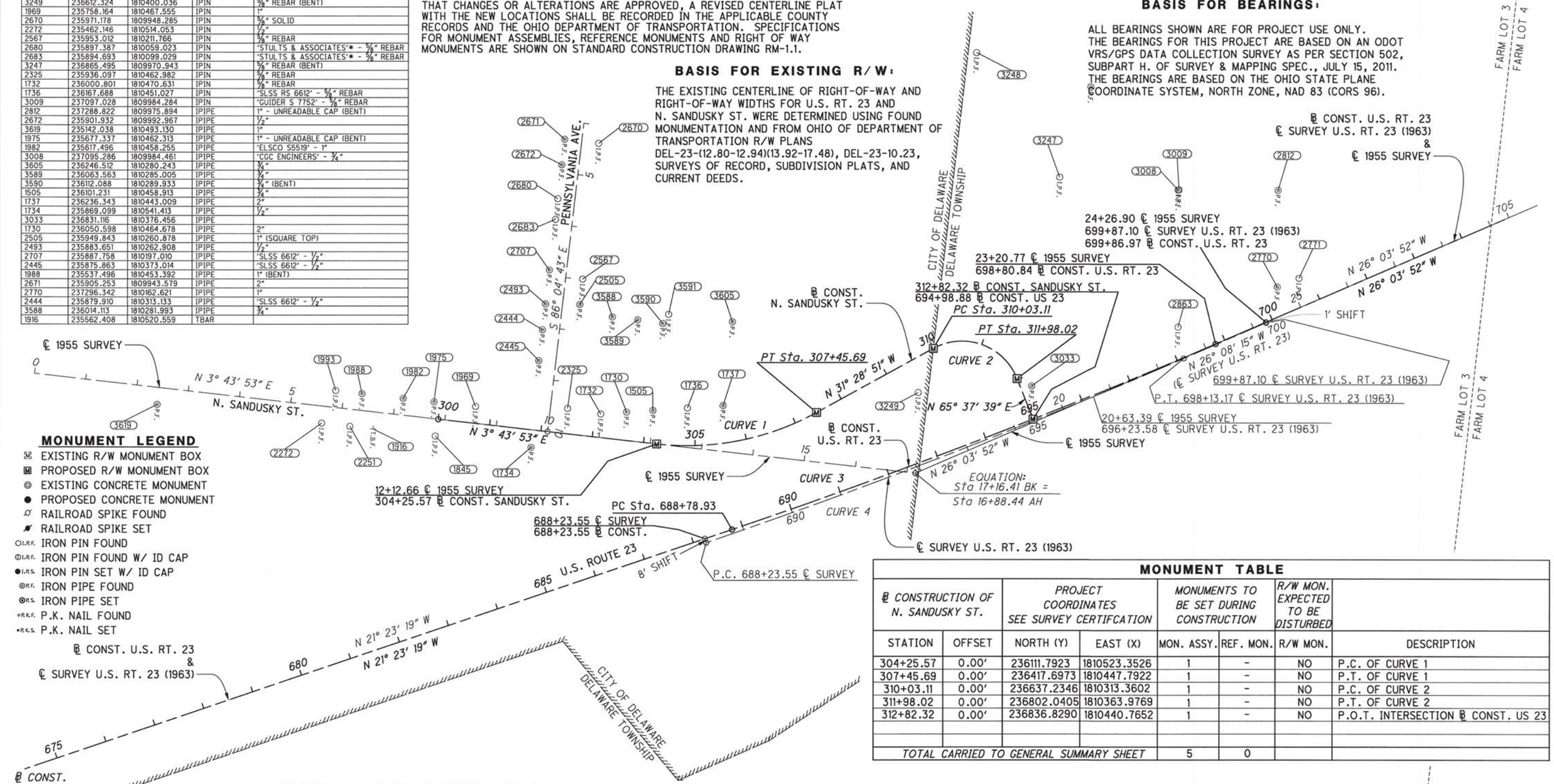

MONUMENT LEGEND

- EXISTING R/W MONUMENT BOX
- PROPOSED R/W MONUMENT BOX
- EXISTING CONCRETE MONUMENT
- PROPOSED CONCRETE MONUMENT
- RAILROAD SPIKE FOUND
- RAILROAD SPIKE SET
- I.R.F. IRON PIN FOUND
- I.R.F. IRON PIN FOUND W/ ID CAP
- I.R.S. IRON PIN SET W/ ID CAP
- R.F. IRON PIPE FOUND
- R.S. IRON PIPE SET
- P.K.F. P.K. NAIL FOUND
- P.K.S. P.K. NAIL SET

MONUMENT TABLE

℄ CONSTRUCTION OF N. SANDUSKY ST.		PROJECT COORDINATES SEE SURVEY CERTIFCATION		MONUMENTS TO BE SET DURING CONSTRUCTION		R/W MON. EXPECTED TO BE DISTURBED	
STATION	OFFSET	NORTH (Y)	EAST (X)	MON. ASSY.	REF. MON.	R/W MON.	DESCRIPTION
304+25.57	0.00'	236111.7923	1810523.3526	1	-	NO	P.C. OF CURVE 1
307+45.69	0.00'	236417.6973	1810447.7922	1	-	NO	P.T. OF CURVE 1
310+03.11	0.00'	236637.2346	1810313.3602	1	-	NO	P.C. OF CURVE 2
311+98.02	0.00'	236802.0405	1810363.9769	1	-	NO	P.T. OF CURVE 2
312+82.32	0.00'	236836.8290	1810440.7652	1	-	NO	P.O.T. INTERSECTION ℄ CONST. US 23
TOTAL CARRIED TO GENERAL SUMMARY SHEET				5	0		

℄ CONST. N. SANDUSKY ST.		℄ CONST. U.S. RT. 23	℄ SURVEY U.S. RT. 23
CURVE 1	CURVE 2	CURVE 3	CURVE 4
P.I.Sta. 305+90.87	P.I.Sta. 311+33.35	P.I.Sta. 693+80.16	P.I.Sta. 693+18.76
Δ = 35° 12' 45" (LT)	Δ = 97° 06' 30" (RT)	Δ = 4° 40' 32" (LT)	Δ = 4° 37' 10" (LT)
Dc = 11° 00' 00"	Dc = 49° 49' 21"	Dc = 0° 28' 00"	Dc = 0° 28' 00"
R = 520.87'	R = 115.00'	R = 12,277.67'	R = 12,277.67'
T = 165.29'	T = 130.23'	T = 501.23'	T = 495.21'
L = 320.11'	L = 194.91'	L = 1,001.91'	L = 989.88'
E = 25.60'	E = 58.74'	E = 10.23'	E = 9.98'
C = 315.10'	C = 172.40'	C = 1,001.63'	C = 989.62'
C.B. = N 13° 52' 29" W	C.B. = N 17° 04' 24" E	C.B. = N 23° 43' 35" W	C.B. = N 23° 49' 40" W

I, Richard John Swan, P. S. have conducted a survey of the existing conditions for the Ohio Department of Transportation on April, 2012. The results of that survey are contained herein. The horizontal coordinates expressed herein are based on the Ohio State Plane Coordinates System North Zone on NAD 83(CORS 96) datum. The Project Coordinates (US Survey Feet) are relative to State Plane Grid Coordinates (Meters or US Survey Feet) by a Project Adjustment Factor of 1.000023762. As a part of this project I have reestablished the locations of the existing property lines and the existing centerline of Right of Way for property takes contained herein. As a part of this project I have established the proposed property lines, calculated the Gross Take, present roadway occupied (PRO), Net Take and Net Residue; as well as prepared the legal descriptions necessary to acquire the parcels as shown herein. As a part of this work I have set right of way monuments at the property corners, property line intersection, points along the right of way and/or angle points on the right of way, Section Corners and other points as shown herein. All of my work contained herein was conducted in accordance with Ohio Administrative Code 4733-37 commonly known as "Minimum Standards for Boundary Surveys in the State of Ohio" unless noted. The words I and my as used herein are to mean either myself or someone working under my direct supervision.

Richard John Swan, Professional Land Surveyor 6574

Date: 04/08/2014

SURVEYORS SEAL

STATE OF OHIO
RICHARD JOHN SWAN
6574
REGISTERED
PROFESSIONAL SURVEYOR

HORIZONTAL SCALE IN FEET 0 50 100 200

PID NO. 94527

R/W DESIGNER CSS
R/W REVIEWER RJS

CENTERLINE PLAT

DEL - 23 - 13.17

PLOT.CEL

ms consultants, inc.
msconsultants.com

www.msconsultants.com

Ohio DOT Workspace
DEL-23

UGF: ohdot1V8i
PGF: 60-06655_Columbus

Batchplot Spec: \\0330share\n\60\06655\standards\plotdrv\batchplt.spc
Pen Table: S:\std\plotting\usin\V8\pen\V8i_ms_std.tbl
Plot Driver: S:\std\plotting\usin\V8\PDF.pltcfg

Model: Sheet
Printed: 4/8/2014 @ 8:28:50 AM
File: N:\60\06655\row\sheets\0665RMD01.dgn

View: SHEET
By: csnow

34" x 22"

COUNTY OF DELAWARE
PART OF FARM LOT 3, QTR. TWP. 4, TWP. 5, R. 19
UNITED STATES MILITARY DISTRICT
CITY OF DELAWARE & DELAWARE TOWNSHIP

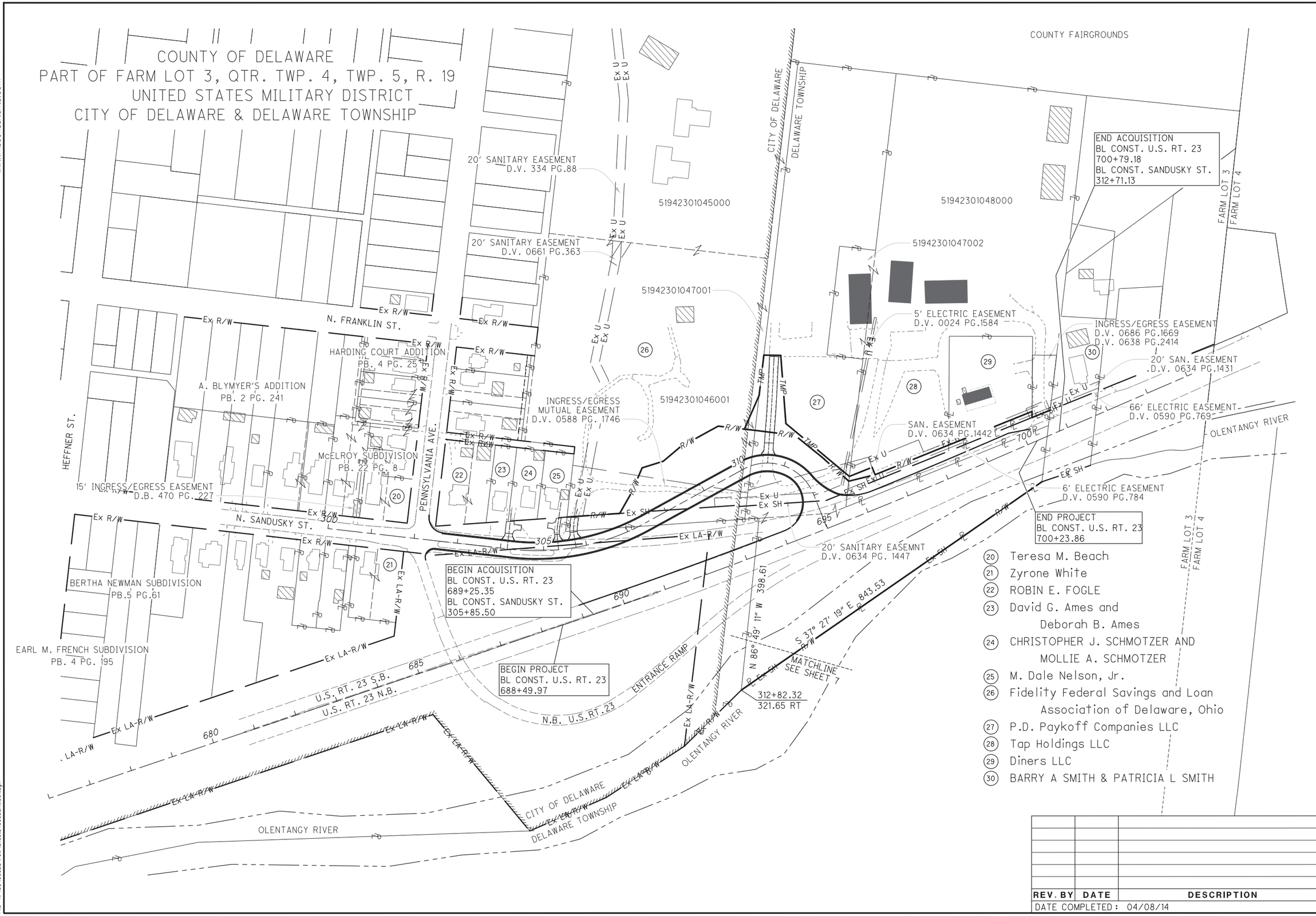

REV. BY	DATE	DESCRIPTION

DATE COMPLETED : 04/08/14

HORIZONTAL SCALE IN FEET 0 50 100 200

PID NO. 94527

R/W DESIGNER CSS
R/W REVIEWER RJS

PROPERTY MAP

DEL - 23 - 13.17

3 / 9

97 / 103

ms consultants, inc.

PLOT.CEL

ms consultants, inc.
msconsultants.com

TOTAL NUMBER OF :

4 OWNERSHIPS 0 TOTAL TAKES
7 PARCELS 1 OWNERSHIPS W/ STRUCTURES INVOLVED 'SIGN'

NET TAKE = GROSS TAKE - PRO IN TAKE
NET RESIDUE = RECORD AREA - TOTAL PRO - NET TAKE

ALL AREAS IN ACRES

PARCEL NO.	OWNER	SHEET NO.	OWNERS RECORD BOOK	OWNERS RECORD PAGE	AUDITOR'S PARCEL	RECORD AREA	TOTAL P.R.O.	GROSS TAKE	P.R.O. IN TAKE	NET TAKE	STRUCTURE	NET RESIDUE LEFT	NET RESIDUE RIGHT	TYPE FUND	REMARKS	AS ACQUIRED BOOK	AS ACQUIRED PAGE
1 - 19	NOT USED													CITY/ STATE			
20	Teresa M. Beach	5	D.V. 0553	PG. 762	51942309031000	0.302	0.0000				N				NO TAKE		
			D.V. 0059	PG. 1006													
21	Zyrone White	5	D.V. 0685	PG. 0003	51942002001000	0.4198 (c)	0.0000				N				NO TAKE		
22	ROBIN E. FOGLE	5	D.V. 0088	PG. 1580	51942301040000	0.497	0.0000				N				NO TAKE		
			D.B. 1214	PG. 1785													
23	David G. Ames and Deborah B. Ames	5	D.V. 0317	PG. 2494	51942301042000	0.197	0.0000				N				NO TAKE		
24	CHRISTOPHER J. SCHMOTZER AND	5 - 6	D.V. 0697	PG. 1714	51942301043000	0.239	0.0000				N				NO TAKE		
	MOLLIE A. SCHMOTZER																
25	M. Dale Nelson, Jr.	6	D.V. 0478	PG. 1114	51942301044000	0.218	0.0000				N				NO TAKE		
26 WD	Fidelity Federal Savings and Loan	6 - 7	D.V. 1000	PG. 2617	51942301046001	7.100	0.3015	1.1667	0.3015	0.8652	N	5.9333			ROADWAY IMPROVEMENTS - OVERLAPS MUTUAL EASEMENT		
	Association of Delaware, Ohio	6 - 7			51942301047001	0.400	0.0116	0.0784	0.0116	0.0668	N	0.3216			FOR IGRESS/EGRESS BETWEEN PARCELS 26, 27 & 28		
					TOTAL	7.500	0.3131	1.2451	0.3131	0.9320		6.2549			(D.V. 0588 PG. 1746).		
															*26 WD OVERLAPS W/MUTUAL & SANITARY		
															EASEMENTS BY 0.3597 ACRES		
26 T					51942301046001	7.100	0.3015	0.0027	0.0000	0.0027	N				DRIVEWAY IMPROVEMENTS & GRADING		
					51942301047001	0.400	0.0116	0.0206	0.0000	0.0206	N						
					TOTAL	7.500	0.3131	0.0233	0.0000	0.0233							
					51942301045000	7.400	0.0000				N				NO TAKE FROM THIS AUDITOR'S PARCEL NUMBER		
27 WD	P.D. Paykoff Companies LLC	7 - 9	D.V. 0658	PG. 0586	51942301047000	8.536	3.7345	4.3937	3.7345	0.6592	N	4.1423			ROADWAY IMPROVEMENTS - MUTUAL EASEMENT NOTE		
															*27 WD OVERLAPS W/MUTUAL, SANITARY & ELECTRIC		
															EASEMENTS BY 0.3138 ACRES		
27 T		7 - 9				8.536	3.7345	0.2637	0.0000	0.2637	N				DRIVEWAY IMPROVEMENTS, GRADING & WATERLINE		
28 WD	Tap Holdings LLC	7 - 8	D.V. 0658	PG. 0583	51942301048000	8.005	0.3600	0.4414	0.3600	0.0814	N	7.5636			DRAINAGE DITCH & SLOPE PROTECTION-MUTUAL EASE. NOTE		
															*28 WD OVERLAPS W/MUTUAL, SANITARY & ELECTRIC		
															EASEMENTS BY 0.0814 ACRES		
28 T		7 - 8			51942301048000	8.005	0.3600	0.0193	0.0000	0.0193	N				DRIVEWAY REMOVAL, GRADING & WATERLINE		
					51942301047002	0.485	0.0000				N				NO TAKE FROM THIS AUDITOR'S PARCEL NUMBER		
29 WD	Diners LLC	8	D.V. 0638	PG. 2418	51942301048001	0.995	0.0000	0.0618	0.0000	0.0618	Y "S(1)"	0.9332			GRADING, DRAINAGE DITCH & SLOPE PROTECTION		
															*29 WD OVERLAPS W/SAN. & ELECT. EASEMENTS BY		
															0.0618 ACRES		
30	BARRY A SMITH & PATRICIA L SMITH	8	D.V. 0572	PG. 346	51942301049000	1.310	0.4125				N				NO TAKE		
														CITY/ STATE			

NOTE: ALL TEMPORARY PARCELS TO BE OF 24 MONTH DURATION.

NOTE: UNDER NO CIRCUMSTANCES ARE TEMPORARY EASEMENTS TO BE USED FOR STORAGE OF MATERIAL OR EQUIPMENT BY THE CONTRACTOR UNLESS NOTED OTHERWISE.

PARCEL IDENTIFIER LEGEND
WD - FEE SIMPLE RESERVATION OF ACCESS
T - TEMPORARY CONSTRUCTION EASEMENT

GRANTEE:
ALL RIGHT OF WAY ACQUIRED IN THE NAME OF CITY OF DELAWARE & STATE OF OHIO, DEPARTMENT OF TRANSPORTATION UNLESS OTHERWISE SHOWN.

REV. BY	DATE	DESCRIPTION

FIELD REVIEW BY : ALAN BUCK DATE: 09/27/13
OWNERSHIP VERIFIED BY : CHAD SNOW DATE: 04/08/14
DATE COMPLETED : 04/08/14

FEDERAL PROJECT NO. E130216
PID NO. 94527
STATE JOB NO. 467283
R/W DESIGNER CSS
R/W REVIEWER RJS

SUMMARY OF ADDITIONAL RIGHT OF WAY

DEL - 23 - 13.17

PLOT.CEL

ms consultants, inc.
msconsultants.com

www.msconsultants.com

Ohio DOT Workspace
DEL-23

UGF: ohdot\V8i
PCF: 60-06655_Columbus

Batchplot Spec: \\033shore\n\60\06655\standards\plotdrv\batchplt.spc
Pen Table: S:\std\plotting\usstn\V8\pen\V8_ms_std.tbl
Plot Driver: S:\std\plotting\usstn\V8\PDF.pltcfg

Model: Sheet View: SHEET
Printed: 4/8/2014 @ 8:28:57 AM By: csnow
File: N:\60\06655\row\sheets\06655RD001.dgn

34" x 22"

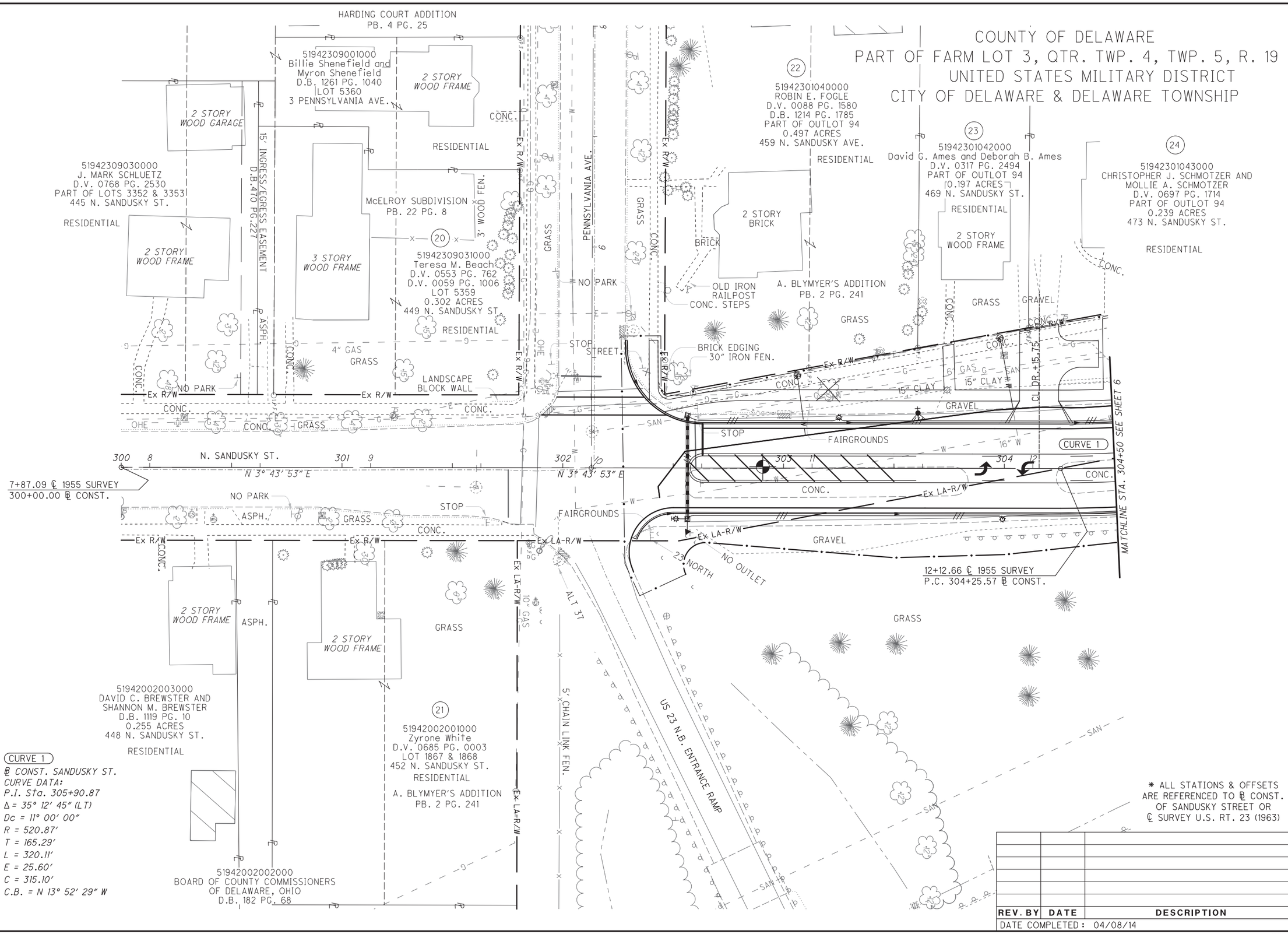

REV. BY	DATE	DESCRIPTION

DATE COMPLETED: 04/08/14

N

HORIZONTAL SCALE IN FEET
0 10 20 40

PID NO. 94527

R/W DESIGNER CSS
R/W REVIEWER RJS

RIGHT OF WAY PLAN
STA.300+00.00 TO STA.304+50.00

DEL - 23 - 13.17

5 / 9

99 / 103

ms consultants, inc.

PLOT.CEL

ms consultants, inc.
msconsultants.com

REV. BY	DATE	DESCRIPTION

DATE COMPLETED : 04/08/14

* ALL STATIONS & OFFSETS ARE REFERENCED TO ⅊ CONST. OF SANDUSKY STREET OR ℄ SURVEY U.S. RT. 23 (1963)

CURVE 1
⅊ CONST. SANDUSKY ST.
CURVE DATA:
P.I. Sta. 305+90.87
Δ = 35° 12′ 45″ (LT)
Dc = 11° 00′ 00″
R = 520.87′
T = 165.29′
L = 320.11′
E = 25.60′
C = 315.10′
C.B. = N 13° 52′ 29″ W

CURVE 3
⅊ CONST. US 23
CURVE DATA:
P.I. Sta. 693+80.16
Δ = 4° 40′ 32″ (LT)
Dc = 0° 28′ 00″
R = 12,277.67′
T = 501.23′
L = 1,001.91′
E = 10.23′
C = 1,001.63′
C.B. = N 23° 43′ 35″ W

CURVE 4
℄ SURVEY US 23 (1963)
CURVE DATA:
P.I. Sta. 693+18.76
Δ = 4° 37′ 10″ (LT)
Dc = 0° 28′ 00″
R = 12,277.67′
T = 495.21′
L = 989.88′
E = 9.98′
C = 989.62′
C.B. = N 23° 49′ 40″ W

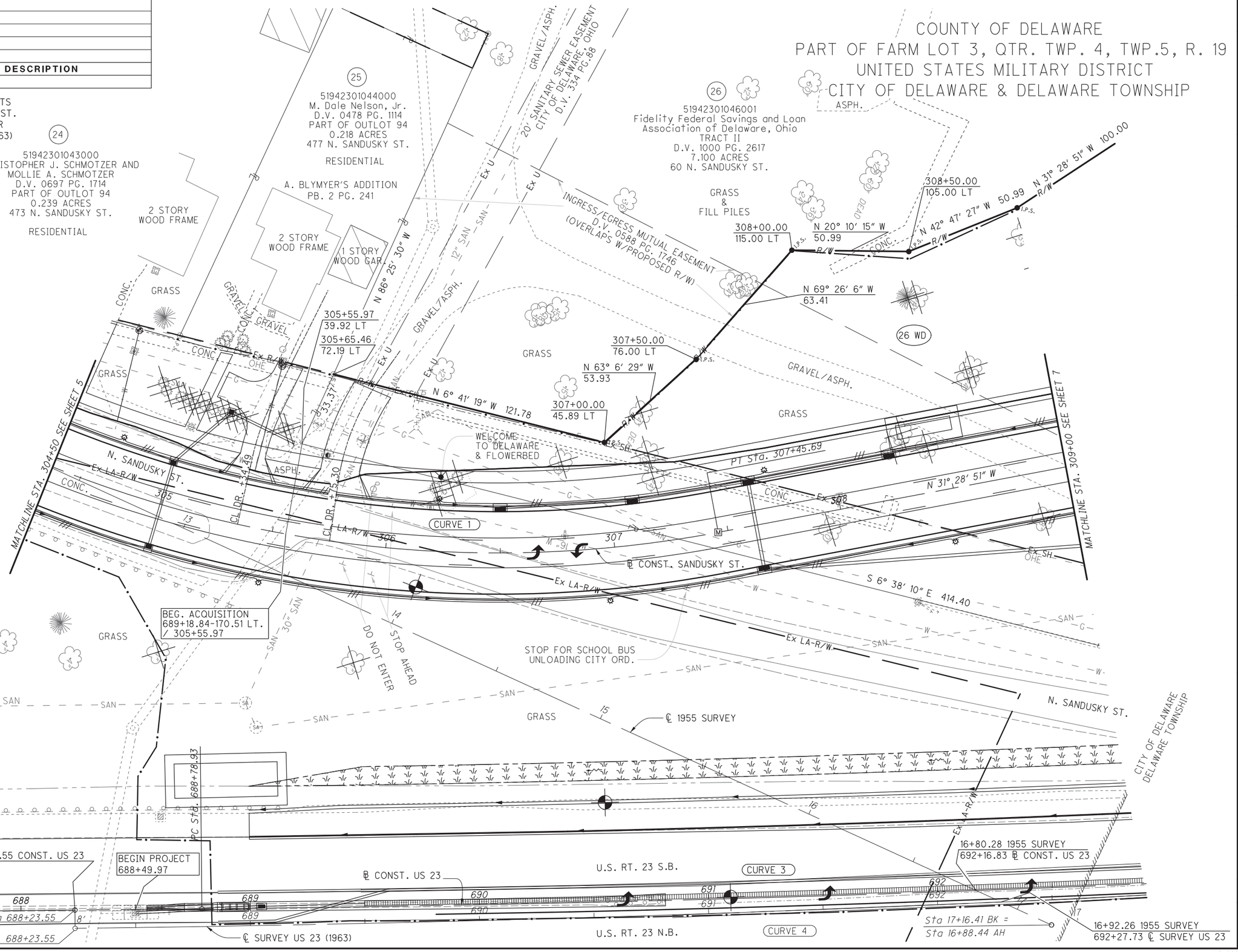

HORIZONTAL SCALE IN FEET 0 10 20 40

PID NO. 94527

R/W DESIGNER CSS
R/W REVIEWER RJS

RIGHT OF WAY PLAN
STA.304+50.00 TO STA.309+00.00

DEL - 23 - 13.17

6 / 9

100 / 103

Ohio DOT Workspace
DEL-23
UCF: ohdot\ROW\DEL\DEL-23\06655_Columbus
PCF: 60-06655_Columbus
www.msconsultants.com
Batchplot Spec: \\0330share\n\60\06655\standards\plotdrv\batchplt.spc
Pen Table: S:\std\plotting\usth\PEN\PB_ms_std.tbl
Plot Driver: S:\std\plotting\usth\PDF.pltcfg
34" x 22"
View: SHEET By: csnow
Model: Sheet Printed: 4/8/2014 @ 8:28:58 AM
File: N:\60\06655\row\sheets\06655R0002.dgn

ms consultants, inc.

PLOT.CEL

ms consultants, inc.
msconsultants.com

www.msconsultants.com

Ohio DOT Workspace
DEL-23

UGF: ohdot\V8i
PGF: 60-06655_Columbus

Batchplot Spec: \\0330share\n\60\06655\standards\plotdrv\batchplt.spc
Pen Table: S:\std\plotting\usin\V8\pen\V8_ms_std.tbl
Plot Driver: S:\std\plotting\usin\V8\PDF.pltcfg

34" x 22"

Model: Sheet
Printed: 4/8/2014 @ 8:29:00 AM
File: N:\60\06655\row\sheets\06655R0003.dgn

View: SHEET
By: csnow

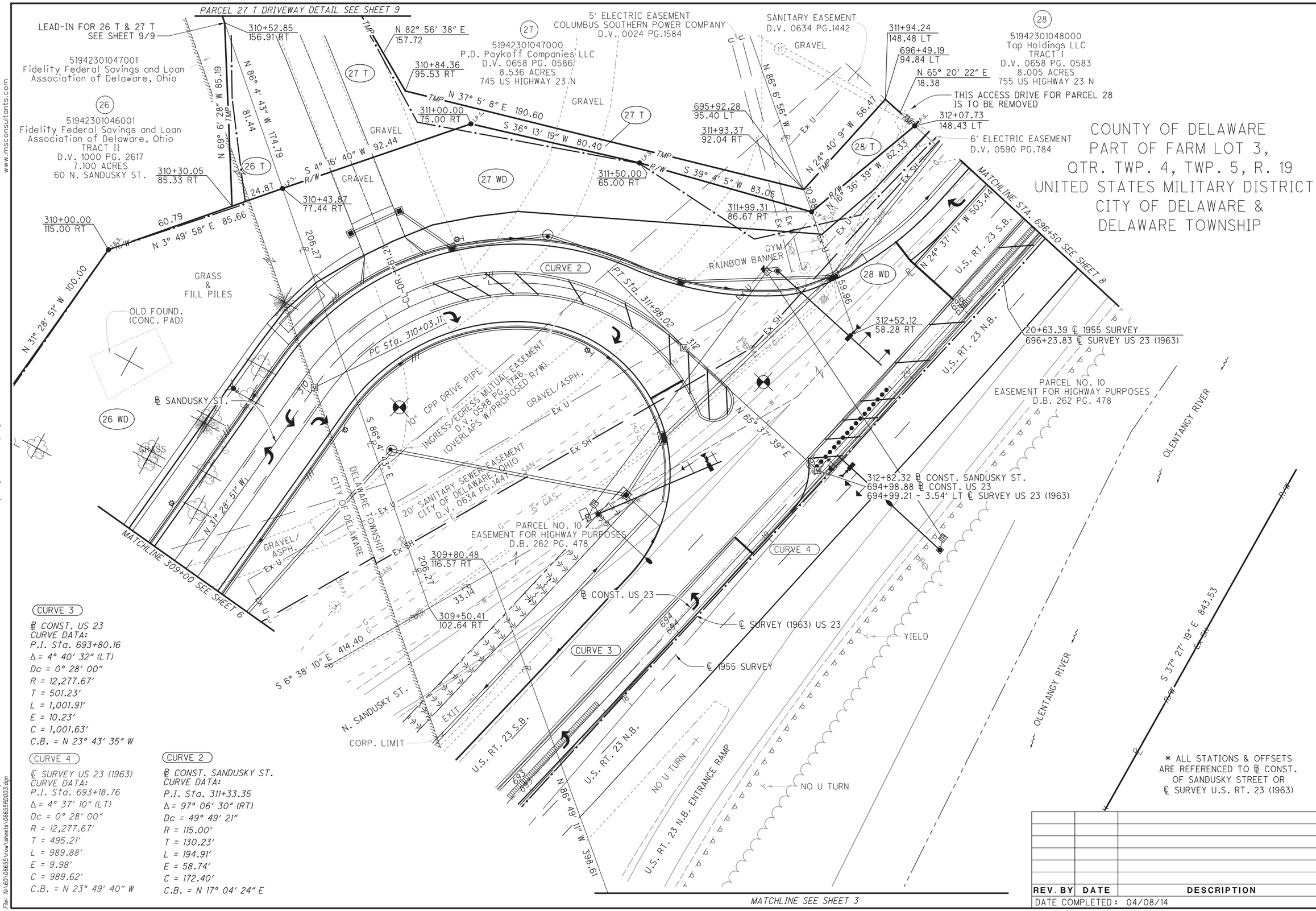

CURVE 3

℄ CONST. US 23
CURVE DATA:
P.I. Sta. 693+80.16
Δ = 4° 40' 32" (LT)
Dc = 0° 28' 00"
R = 12,277.67'
T = 501.23'
L = 1,001.91'
E = 10.23'
C = 1,001.63'
C.B. = N 23° 43' 35" W

CURVE 4

℄ SURVEY US 23 (1963)
CURVE DATA:
P.I. Sta. 693+18.76
Δ = 4° 37' 10" (LT)
Dc = 0° 28' 00"
R = 12,277.67'
T = 495.21'
L = 989.88'
E = 9.98'
C = 989.62'
C.B. = N 23° 49' 40" W

CURVE 2

℄ CONST. SANDUSKY ST.
CURVE DATA:
P.I. Sta. 311+33.35
Δ = 97° 06' 30" (RT)
Dc = 49° 49' 21"
R = 115.00'
T = 130.23'
L = 194.91'
E = 58.74'
C = 172.40'
C.B. = N 17° 04' 24" E

REV. BY	DATE	DESCRIPTION

DATE COMPLETED : 04/08/14

HORIZONTAL SCALE IN FEET 0 10 20 40

PID NO. 94527

R/W DESIGNER CSS
R/W REVIEWER RJS

RIGHT OF WAY PLAN
STA.309+00.00 TO STA.696+50.00

DEL - 23 - 13.17

7 / 9

101 / 103

ms consultants, inc.

PLOT.CEL

ms consultants, inc.
msconsultants.com

www.msconsultants.com

Ohio DOT Workspace
DEL-23

UCF: ohdot1V8i
PCF: 60-06655_Columbus

Batchplot Spec: \\0330share\n\60\06655\standards\plotdrv\batchplt.spc
Pen Table: S:\std\plotting\astn\V8\pen\V8_ms_std.tbl
Plot Driver: S:\std\plotting\astn\V8\PDF.pltcfg

34" x 22"

Model: Sheet
Printed: 4/8/2014 @ 8:29:02 AM
File: N:\60\06655\row\sheets\0665500004.dgn
View: SHEET
By: cshow

COUNTY OF DELAWARE
PART OF FARM LOT 3, QTR. TWP. 4, TWP. 5, R.19
UNITED STATES MILITARY DISTRICT
CITY OF DELAWARE & DELAWARE TOWNSHIP

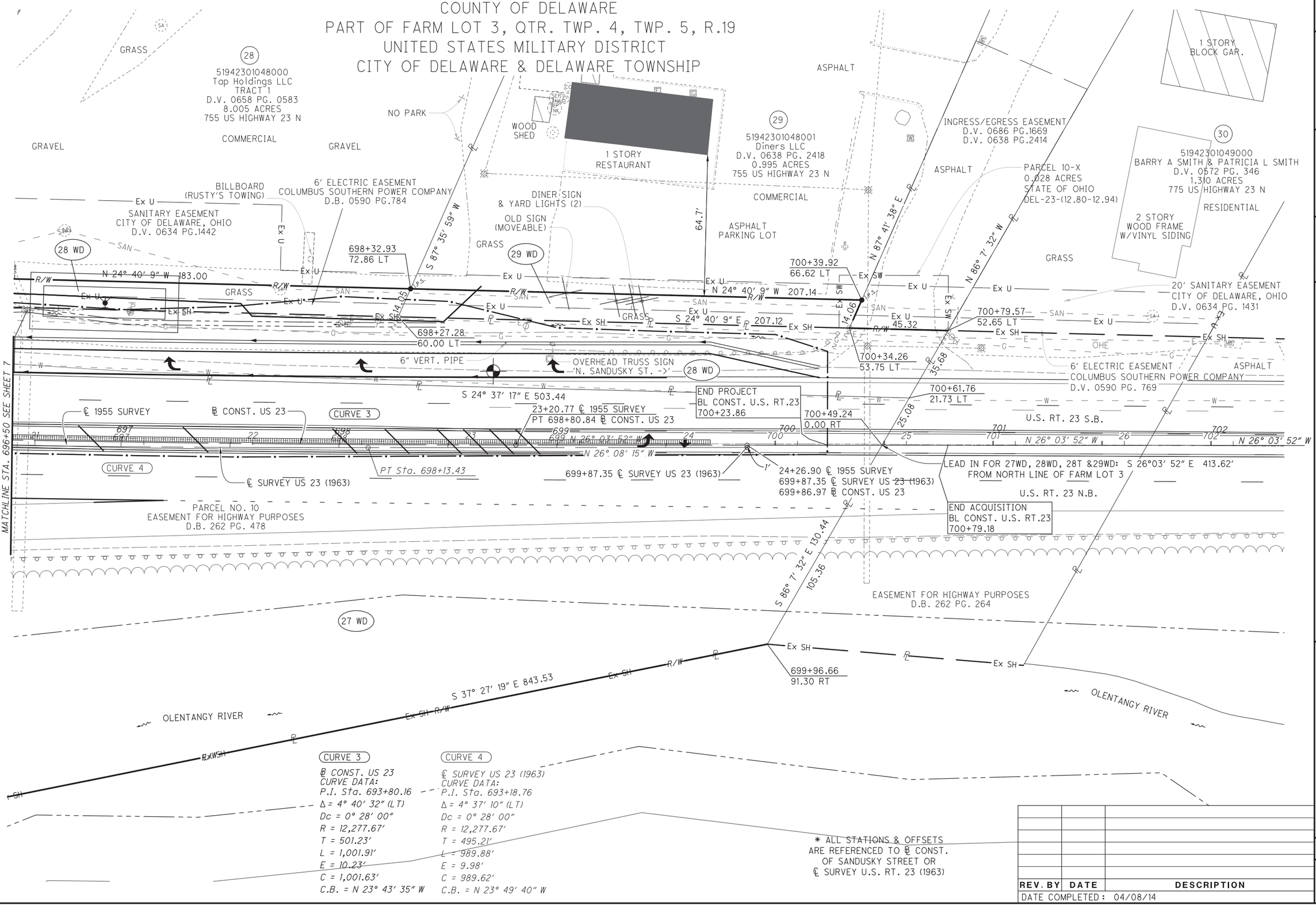

CURVE 3
℄ CONST. US 23
CURVE DATA:
P.I. Sta. 693+80.16
Δ = 4° 40' 32" (LT)
Dc = 0° 28' 00"
R = 12,277.67'
T = 501.23'
L = 1,001.91'
E = 10.23'
C = 1,001.63'
C.B. = N 23° 43' 35" W

CURVE 4
℄ SURVEY US 23 (1963)
CURVE DATA:
P.I. Sta. 693+18.76
Δ = 4° 37' 10" (LT)
Dc = 0° 28' 00"
R = 12,277.67'
T = 495.21'
L = 989.88'
E = 9.98'
C = 989.62'
C.B. = N 23° 49' 40" W

* ALL STATIONS & OFFSETS ARE REFERENCED TO ℄ CONST. OF SANDUSKY STREET OR ℄ SURVEY U.S. RT. 23 (1963)

REV. BY	DATE	DESCRIPTION

DATE COMPLETED: 04/08/14

HORIZONTAL SCALE IN FEET 0 10 20 40

PID NO. 94527

R/W DESIGNER CSS
R/W REVIEWER RJS

RIGHT OF WAY PLAN
STA.696+50.00 TO STA.702+50.00

DEL - 23 - 13.17

ms consultants, inc.

PLOT.CEL

ms consultants, inc.
msconsultants.com

www.msconsultants.com

Ohio DOT Workspace
DEL-23

UGF: ohdot\V8i
PGF: 60-06655_Columbus

Batchplot Spec: \\0330share\n\60\06655\standards\plotdrv\batchplt.spc
Pen Table: S:\std\plotting\astin\V8\pen\V8_ms_std.tbl
Plot Driver: S:\std\plotting\astin\V8\PDF.pltcfg

Model: Sheet
Printed: 4/8/2014 @ 8:29:12 AM
File: N:\60\06655\row\sheets\06655R0005.dgn

View: SHEET
By: csnow

34" x 22"

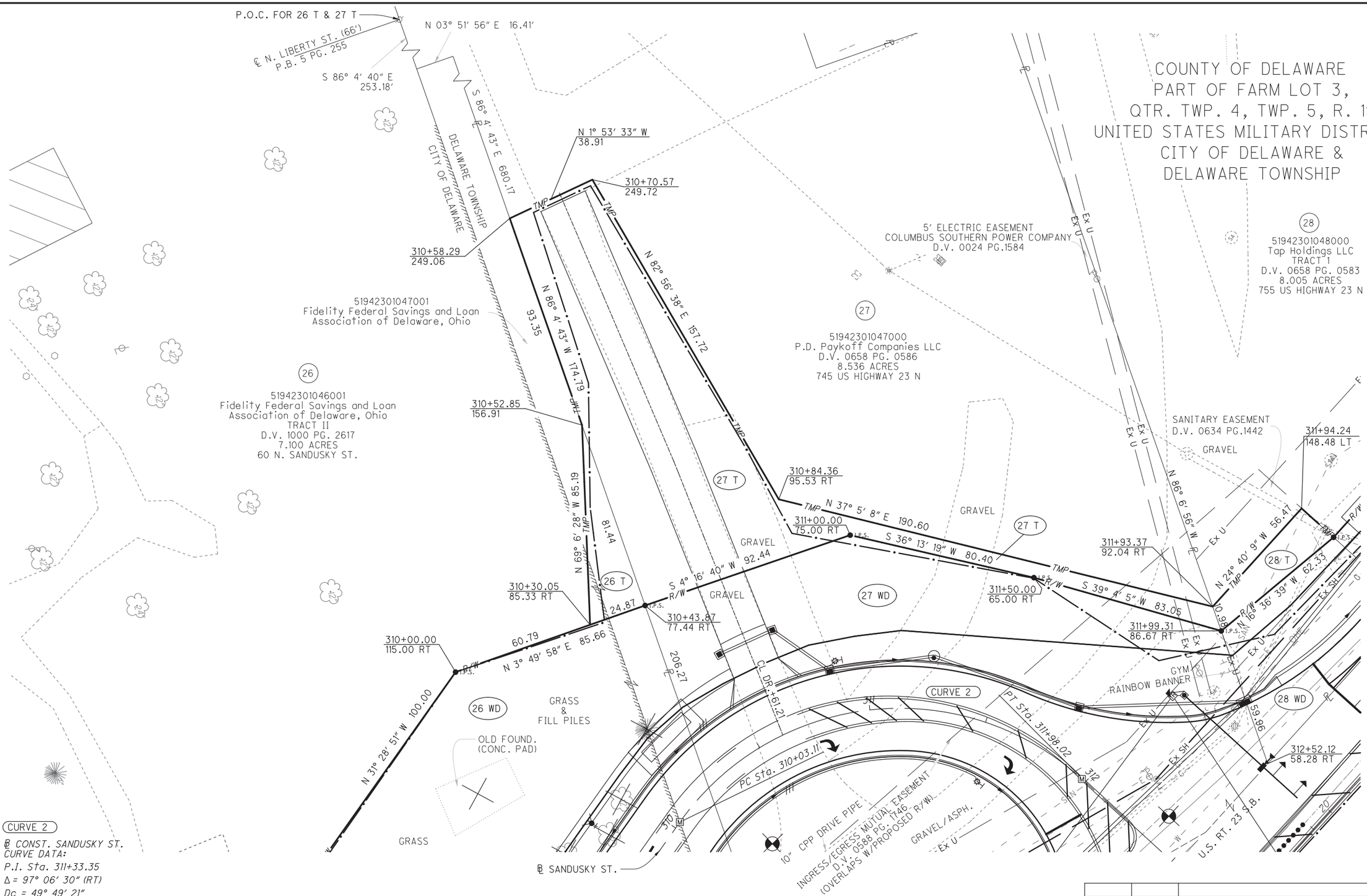

CURVE 2

℄ CONST. SANDUSKY ST.
CURVE DATA:
P.I. Sta. 311+33.35
Δ = 97° 06′ 30″ (RT)
Dc = 49° 49′ 21″
R = 115.00′
T = 130.23′
L = 194.91′
E = 58.74′
C = 172.40′
C.B. = N 17° 04′ 24″ E

* ALL STATIONS & OFFSETS
ARE REFERENCED TO ℄ CONST.
OF SANDUSKY STREET OR
℄ SURVEY U.S. RT. 23 (1963)

REV. BY	DATE	DESCRIPTION

DATE COMPLETED : 04/08/14

HORIZONTAL SCALE IN FEET 0 10 20 40

PID NO. 94527

R/W DESIGNER CSS
R/W REVIEWER RJS

RIGHT OF WAY PLAN
PARCEL 27 T DRIVEWAY DETAIL

DEL - 23 - 13.17

9 / 9

103 / 103

ms consultants, inc.

PROJECT DESCRIPTION

THE EXISTING SOUTHBOUND US 23 ROADWAY WILL BE WIDENED TO INCLUDE A TURN LANE AND THE EXISTING SANDUSKY STREET RAMP WILL BE REALIGNED TO ALLOW FOR TWO-WAY TRAFFIC FLOW. A CENTER TURN LANE WILL BE ADDED TO NORTHBOUND US 23. THE VERTICAL ALIGNMENT OF US 23 WILL REMAIN RELATIVELY UNCHANGED. THE NEW SANDUSKY STREET RAMP WILL BE CONSTURCTED BELOW EXISTING GRADE. UP TO APPROXIMATELY 18 FEET OF ROADWAY CUT IS EXPECTED BELOW EXISTING GRADE ALONG THE NEW ALIGNMENT.

HISTORIC RECORDS

PLAN AND PROFILE INFORMATION (CIRCA 1962) FOR THE US 23 RELOCATION THROUGH THE CITY OF DELAWARE WAS AVAILABLE, BUT DID NOT INCLUDE DETAILED GEOTECHNICAL INFORMATION FOR THE PROPOSED ALIGNMENT.

S&ME ACCESSED THE ODOT OFFICE OF GEOTECHNICAL ENGINEERING'S ON-LINE GEOTECHNICAL DOCUMENT MANAGEMENT SYSTEM TO SEARCH FOR ANY OTHER EXISTING HISTORICAL GEOTECHNICAL EXPLORATIONS WITHIN THE LIMITS OF THIS PROJECT; HOWEVER, NO EXISTING ADDITIONAL INFORMATION WAS LOCATED.

GEOLOGY

THIS PROJECT SITE IS LOCATED IN A PREVIOUSLY GLACIATED AREA. SILTY CLAY TILL OF LATE WISCONSINAN AGE THAT IS FLAT TO GENTLY UNDULATED IS PRESENT IN THE AREA OF THE SITE (QUARTERNARY GEOLOGY OF OHIO, OHIO DEPARTMENT OF NATURAL RESOURCES (ODNR), GEOLOGICAL SURVEY). GEOLOGIC BEDROCK MAPPING (ODNR, GEOLOGICAL SURVEY) INDICATES THE PRESENCE OF OLENTANGY SHALE CONSISTING OF GREENISH GRAY SHALE IN THE UPPER PORTIONS TO GRAY SHALE IN THE LOWER PORTIONS. THE ODNR "OHIO KARST AREAS" MAP DOES INDICATE THE PRESENCE OF ACTIVE KARST TERRAIN IN THE AREA. ODNR MAPPING INDICATES THAT UNDERGROUND MINES ARE NOT KNOWN TO BE IN THE PROJECT AREA.

RECONNAISSANCE

ON JULY 18, 2013 A SITE RECONNAISANCE WAS PERFORMED BY AN S&ME PROJECT ENGINEER. THE ROAD SURFACE OF BOTH THE SANDUSKY STREET RAMP AND US 23 VISUALLY APPEARED TO BE IN GOOD CONDITION.

SUBSURFACE EXPLORATION

DURING THE PERIOD OF JULY 24 TO JULY 26, 2013, FOUR (4) PAVEMENT CORES AND SIX (6) ROADWAY BORINGS WERE PERFORMED ALONG THE PROPOSED INTERCHANGE ALIGNMENT. THE BORING LOCATIONS WERE SELECTED AND FIELD LOCATED BY S&ME BASED A PROPOSED INTERCHANGE ALIGNMENT DRAWING PROVIDED BY MS CONSULTANTS. THE ROADWAY BORINGS (B-001-0-13, B-002-0-13, B-003-0-13, B-004-0-13, B-005-0-13 AND B-006-0-13) WERE ADVANCED TO BETWEEN 7.0 AND 25.0 FEET BELOW THE TOP OF THE EXISTING GROUND SURFACE BY AN ALL-TERRAIN VEHICLE-MOUNTED DRILL RIG USING 3-1/4-INCH I.D. HOLLOW-STEM AUGERS. AT REGULAR INTERVALS, DISTURBED, BUT REPRESENTATIVE, SOIL SAMPLES WERE OBTAINED BY LOWERING A 2-INCH O.D. SPLIT-BARREL SAMPLER TO THE BOTTOM OF THE BORING AND THEN DRIVING THE SAMPLER INTO THE SOIL WITH BLOWS FROM A 140-POUND HAMMER FREELY FALLING 30 INCHES (ASTM D1586 - STANDARD PENETRATION TEST). ALL DISTURBED SAMPLES WERE EXAMINED IN THE FIELD AND REPRESENTATIVE PORTIONS WERE PRESERVED IN AIRTIGHT GLASS JARS. THE RECOVERED SOIL SAMPLES WERE THEN TRANSPORTED TO THE SOILS LABORATORY OF S&ME FOR FURTHER EXAMINATION AND TESTING. UPON COMPLETION, WATER LEVELS WERE MEASURED AND THE BORINGS WERE BACKFILLED OR SEALED IN ACCORDANCE WITH ODOT REQUIREMENTS.

IN ACCORDANCE WITH ODOT SPECIFICATIONS, THE HAMMER SYSTEM ON THE DRILLING RIG WAS CALIBRATED ON MARCH 25, 2011, IN ACCORDANCE WITH ASTM D4633 TO DETERMINE THE DRILL ROD ENERGY RATIO (80.9%).

EXPLORATION FINDINGS

BORINGS B-005-0-13 AND B-006-0-13 ENCOUNTERED 4.5 INCHES OF ASPHALT AT THE SURFACE. BORING B-001-0-13 ENCOUNTERED 11 INCHES OF ASPHALT. CORE X-003-1-13 ENCOUNTERED 6 INCHES OF ASPHALT. CORE X-003-1-13 AND BORINGS B-005-0-13 AND B-006-0-13 ENCOUNTERED BETWEEN 9 AND 9.5 INCHES OF CONCRETE. BORINGS B-005-0-13 AND B-006-0-13 ENCOUNTERED BETWEEN 9 AND 9.5 INCHES OF GRANULAR BASE. BORING B-003-0-13 ENCOUNTERED 16 INCHES OF GRANULAR BASE AT THE GROUND SURFACE. BORING B-004-0-1 ENCOUNTERED APPROXIMATELY 10 INCHES OF GRAVEL FILL AT THE GROUND SURFACE. APPROXIMATELY 3 INCHES OF TOPSOIL WAS ENCOUNTERED AT THE GROUND SURFACE IN B-002-0-13.

BENEATH THE SURFICIAL MATERIALS, EXISTING FILL WAS ENCOUNTERED TO DEPTHS RANGING FROM 2.5 TO 5.5 FEET IN THE FIVE (5) BORINGS ALONG US 23 AND THE EXISTING EXIT RAMP. THE EXISTING FILL CONSISTED PRIMARILY OF VERY-STIFF TO HARD BROWN AND GRAY SILT AND CLAY (A-6A) CONTAINING DISCONTINUOUS SEAMS AND ZONES OF MEDIUM-DENSE BROWN AND GRAY GRAVEL WITH SAND (A-1-B), VERY-STIFF BROWN AND DARK-BROWN CLAY (A-7-6), AND HARD BROWN SANDY SILT (A-4A).

THE NATURAL SOILS ENCOUNTERED WITHIN THE BORINGS ALONG US 23 AND THE EXISTING EXIT RAMP GENERALLY CONSISTED OF VERY-STIFF TO HARD BROWN AND GRAY SILT AND CLAY (A-6A), WITH LAYERS OF MEDIUM-STIFF TO VERY-STIFF BROWN AND BROWN MOTTLED WITH GRAY CLAY (A-7-6), AND MEDIUM-DENSE BROWN AND GRAY GRAVEL WITH SAND, SILT AND CLAY (A-2-6).

LEGEND

DESCRIPTION	ODOT CLASS	CLASSIFIED MECH.	CLASSIFIED VISUAL
GRAVEL	A-1-a	0	2
GRAVEL WITH SAND	A-1-b	1	2
GRAVEL WITH SAND AND SILT	A-2-4	1	0
GRAVEL WITH SAND, SILT AND CLAY	A-2-6	0	1
COURSE AND FINE SAND	A-3a	0	1
SANDY SILT	A-4a	1	0
SILT AND CLAY	A-6a	7	10
CLAY	A-7-6	2	2
	TOTAL	12	18

PAVEMENT OR BASE = X = APPROXIMATE THICKNESS — VISUAL

SOD AND TOPSOIL = X = APPROXIMATE THICKNESS — VISUAL

BORING LOCATION - PLAN VIEW

CORING LOCATION - PLAN VIEW

DRIVE SAMPLE AND/OR ROCK CORE BORING PLOTTED TO VERTICAL SCALE ONLY. HORIZONTAL BAR INDICATES A CHANGE IN STRATIGRAPHY.

WC INDICATES WATER CONTENT IN PERCENT.

N_{60} INDICATES STANDARD PENETRATION RESISTANCE NORMALIZED TO 60% DRILL ROD ENERGY RATIO.

W— INDICATES FREE WATER ELEVATION.

* INDICATES A SAMPLE TAKEN WITHIN 3 FEET OF PROPOSED GRADE.

SS INDICATES A SPLIT SPOON SAMPLE, STANDARD PENETRATION TEST.

EXPLORATION FINDINGS CON'T

BORING B-004-0-13 ENCOUNTERED 9.7 FEET OF VERY -STIFF TO HARD GRAY OR GRAY MOTTLED WITH BROWN SILT AND CLAY (A-6A) BENEATH THE 10 INCHES OF COARSE AGGREGATE. THE BORING THEN ENCOUNTERED 7.5 FEET OF MEDIUM-DENSE BROWN AND GRAY GRAVEL WITH SAND AND SILT (A-2-4) OR BROWN GRAVEL WITH SAND (A-1-B). BENEATH THESE LAYERS WAS 2.9 FEET OF MEDIUM-DENSE BROWN AND GRAY COARSE AND FINE SAND (A-3A) AND 4.1 FEET OF VERY-DENSE GRAVEL (A-1-A). THE BORING WAS TERMINATED AFTER REACHING AUGER REFUSAL.

SEEPAGE WAS ENCOUNTERED IN ONLY ONE BORING, B-004-0-13, AT A DEPTH OF 18.5 FEET. GROUNDWATER WAS ENCOUNTERED AT 20.0 FEET BENEATH THE EXISTING GROUND SURFACE AT THE SAME BORING LOCATION. WATER DID NOT ACCUMULATE IN THE BORINGS PRIOR TO BACKFILLING. THE GROUNDWATER MEASUREMENTS OBTAINED DURING DRILLING SHOULD BE CONSIDERED SHORT-TERM INDICATIONS OF GROUNDWATER LEVELS AND MAY NOT REPRESENT THE LONG-TERM GROUNDWATER LEVELS BENEATH THE SITE.

SPECIFICATIONS

THE SUBSURFACE INVESTIGATION WAS GENERALLY PERFORMED IN ACCORDANCE WITH THE ODOT SPECIFICATIONS FOR GEOTECHNICAL EXPLORATIONS (SGE), REVISED JANUARY 20, 2012.

AVAILABLE INFORMATION

ALL AVAILABLE SOIL AND BEDROCK INFORMATION THAT CAN BE CONVENIENTLY SHOWN ON THE GEOTECHNICAL EXPLORATION SHEETS HAS BEEN SO REPORTED. ADDITIONAL EXPLORATIONS MAY HAVE BEEN MADE TO STUDY SOME SPECIAL ASPECT OF THE PROJECT. COPIES OF THIS DATA, IF ANY, MAY BE INSPECTED AT THE DISTRICT DEPUTY DIRECTOR'S OFFICE, THE OFFICE OF GEOTECHNICAL ENGINEERING AT 1600 WEST BROAD STREET OR THE OFFICE OF STRUCTURAL ENGINEERING AT 1980 WEST BROAD STREET.

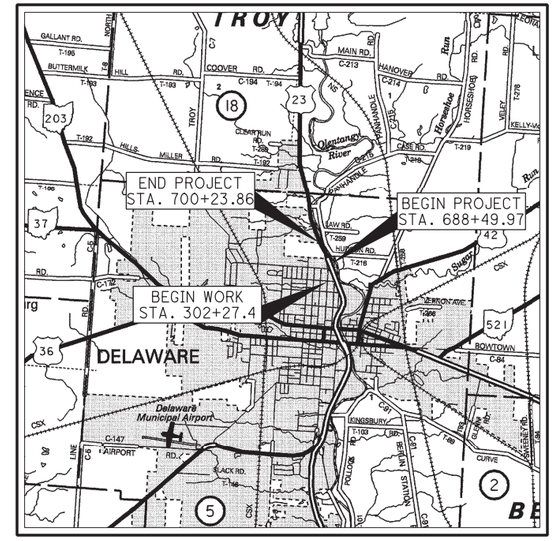

LOCATION MAP

SCALE IN MILES

0 1 2 3 4

N

PARTICLE SIZE DEFINITIONS

BOULDERS	12"	COBBLES	3"	GRAVEL	2.0 mm (No. 10 SIEVE)	COARSE SAND	0.42 mm (No. 40 SIEVE)	FINE SAND	0.074 mm (No. 200 SIEVE)	SILT	0.005 mm	CLAY

INDEX OF SHEETS

LOCATION FROM STA. TO STA.	PLAN VIEW SHEET	PROFILE SHEET	CUT MAX.	FILL MAX.
SANDUSKY STREET 302+27.4 TO 312+82.3	3	3	18.2'	0.6'
U.S. 23 688+49.97 TO 700+23.86	4	4	-	-

RECON. - JDR (7/18/13)

DRILLING - S&ME (7/24-26/13)

DRAWN - PRR (10/30/13-11/6/13) ZWA (10/30/13-11/6/13)

REVIEWED - JDR (4/3/14)

STATE OF OHIO JASON DONALD ROSS E-77403 REGISTERED PROFESSIONAL ENGINEER 10-13-14

DESIGN AGENCY S&ME

PID NO. 94527

SOIL PROFILE

DEL-23-13.17

SUMMARY OF SOIL TEST DATA
SANDUSKY STREET

EXPLORATION NUMBER AND LOCATION	SAMPLE INTERVAL (FROM - TO)	SAMPLE ID	% REC	% AGG	% CS	% FS	% SILT	% CLAY	LL	PL	PI	% WC	OHIO CLASS
B-001-0-13	1.0 - 2.5	SS-1	56	Hard gray and brown SILT AND Clay (Fill)								18	A-6a (V)*
STA 302+90.5, 0.7' Lt.	2.5 - 4.0	SS-2	100	4	5	12	38	41	30	19	11	16	A-6a (8)*
Latitude = 40.312961601 N	4.0 - 5.5	SS-3	100	4	4	11	40	41	33	18	15	15	A-6a (10)
Longitude = 83.066491999 W	5.5 - 7.0	SS-4	100	Same as SS-3								17	A-6a (V)
B-002-0-13	1.0 - 2.5	SS-1	100	Medium-dense brown & gray GRAVEL WITH SAND (FILL)								12	A-1-b (V)*
STA 306+14.2, 16.1' Rt.	2.5 - 4.0	SS-2	100	16	12	13	30	29	33	19	14	13	A-6a (6)*
Latitude = 40.313855470 N	4.0 - 5.5	SS-3	100	12	10	13	31	34	35	20	15	15	A-6a (8)*
Longitude = 83.066488570 W	5.5 - 7.0	SS-4	100	Very-stiff dark gray SILT AND CLAY								19	A-6a (V)
B-004-0-13	1.0 - 2.5	SS-1	100	Hard gray mottled with brown SILT AND CLAY								17	A-6a (V)*
STA 310+25.5, 36.0' Rt.	3.5 - 5.0	SS-2	100	Very-stiff gray SILT AND CLAY								16	A-6a (V)*
Latitude = 40.314859884 N	6.0 - 7.5	SS-3	100	Same as SS-2								16	A-6a (V)*
Longitude = 83.067141255 W	8.5 - 10.0	SS-4	67	Same as SS-2								16	A-6a (V)*
	11.0 - 12.5	SS-5	67	53	18	9	11	9	27	18	9	7	A-2-4 (0)*
	13.5 - 15.0	SS-6	33	46	24	11	12	7	25	19	6	7	A-1-b (0)
	16.0 - 17.5	SS-7	67	Medium-dense brown GRAVEL WITH SAND								11	A-1-b (V)
	18.5 - 20.0	SS-8	56	Medium-dense brown & gray COARSE AND FINE SAND								16	A-3a (V)
	21.0 - 22.5	SS-9	56	Very-dense gray GRAVEL								15	A-1-a (V)
	23.5 - 25.0	SS-10	67	Same as SS-9								8	A-1-a (V)

SUMMARY OF SOIL TEST DATA
U.S. ROUTE 23

EXPLORATION NUMBER AND LOCATION	SAMPLE INTERVAL (FROM - TO)	SAMPLE ID	% REC	% AGG	% CS	% FS	% SILT	% CLAY	LL	PL	PI	% WC	OHIO CLASS
B-003-0-13	2.0 - 3.5	SS-1	100	7	9	14	35	35	33	20	13	17	A-6a (8)*
STA 690+51.8, 46.8' Lt.	3.5 - 5.0	SS-2	89	4	5	10	38	43	46	23	23	20	A-7-6 (14)
Latitude = 40.314160229 N	5.0 - 6.5	SS-3	100	Very-stiff brown mottled with gray CLAY								21	A-7-6 (V)
Longitude = 83.066281624 W	6.5 - 8.0	SS-4	100	Same as SS-3								32	A-7-6 (V)
B-005-0-13	2.0 - 3.5	SS-1	56	22	13	15	28	22	24	15	9	10	A-4a (3)*
STA 695+10.1, 51.1' Lt.	3.5 - 5.0	SS-2	100	6	11	19	23	41	43	20	23	26	A-7-6 (11)
Latitude = 40.315299965 N	5.0 - 6.5	SS-3	67	Very-stiff brown and dark-brown SILT AND CLAY								22	A-6a (V)
Longitude = 83.066944930 W	6.5 - 8.0	SS-4	39	Medium-dense GRAVEL W/ SAND, SILT AND CLAY								22	A-2-6 (V)
B-006-0-13	2.0 - 3.5	SS-1	56	10	11	13	33	33	29	18	11	14	A-6a (7)*
STA 698+66.7, 39.8' Lt.	3.5 - 5.0	SS-2	44	36	14	10	21	19	28	16	12	11	A-6a (2)
Latitude = 40.316198965 N	5.0 - 6.5	SS-3	100	Very-stiff to hard brown and dark-br SILT and CLAY								21	A-6a (V)
Longitude = 83.067457052 W	6.5 - 8.0	SS-4	100	Same as SS-3								27	A-6a (V)

SUMMARY OF PAVEMENT SECTION COMPONENT THICKNESS

EXPLORATION ID	ROADWAY	ASPHALT (in)	CONCRETE (in)	GRANULAR BASE (in)	TOTAL SECTION THICKNESS (in)
B-001-0-13	US 23, SB EXIT RAMP	11.0	-	-	11.0
X-003-1-13	US 23 MEDIAN	6.0	9.5	◊	15.5◊
B-005-0-13	US 23, SB SHOULDER	4.5	9.0	9.5	23.0
B-006-0-13	US 23, SB SHOULDER	4.5	9.5	9.0	23.0

◊ Depth of base not determined.

DESIGN AGENCY S&ME

PID NO. 94527

SOIL PROFILE
SUMMARY OF SOIL TEST DATA

DEL-23-13.17

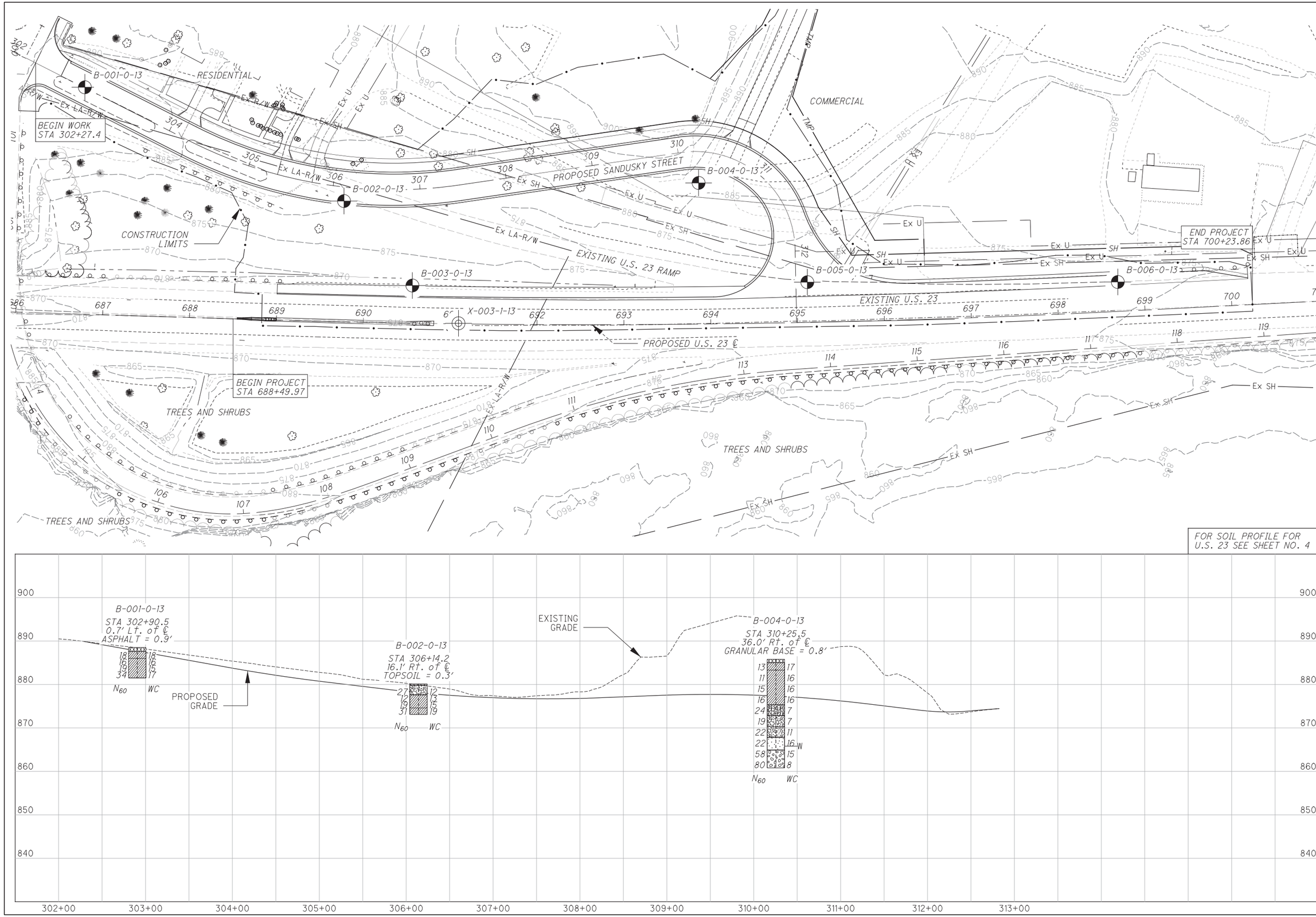

HORIZONTAL SCALE IN FEET

DRAWN ZWA
CHECKED JDR

SOIL PROFILE
SANDUSKY STREET

DEL-23-13.17

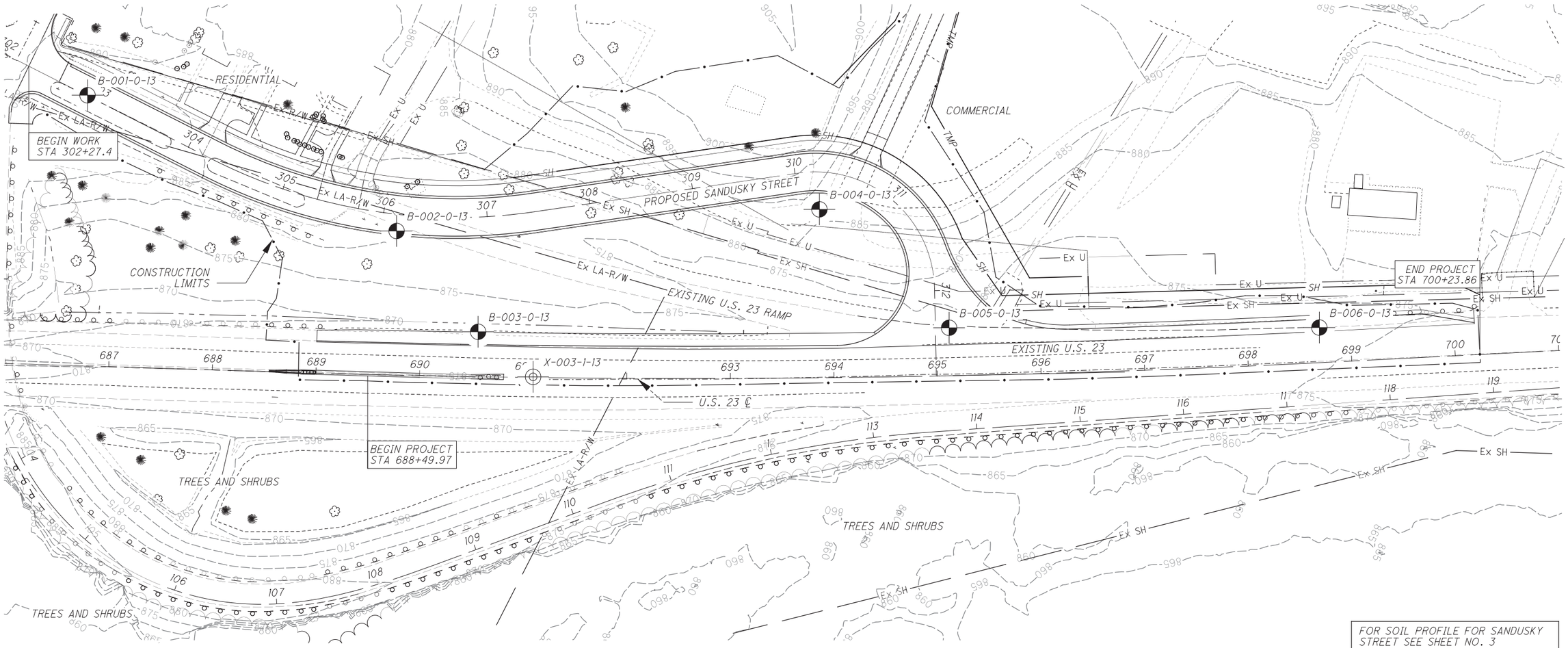

FOR SOIL PROFILE FOR SANDUSKY STREET SEE SHEET NO. 3

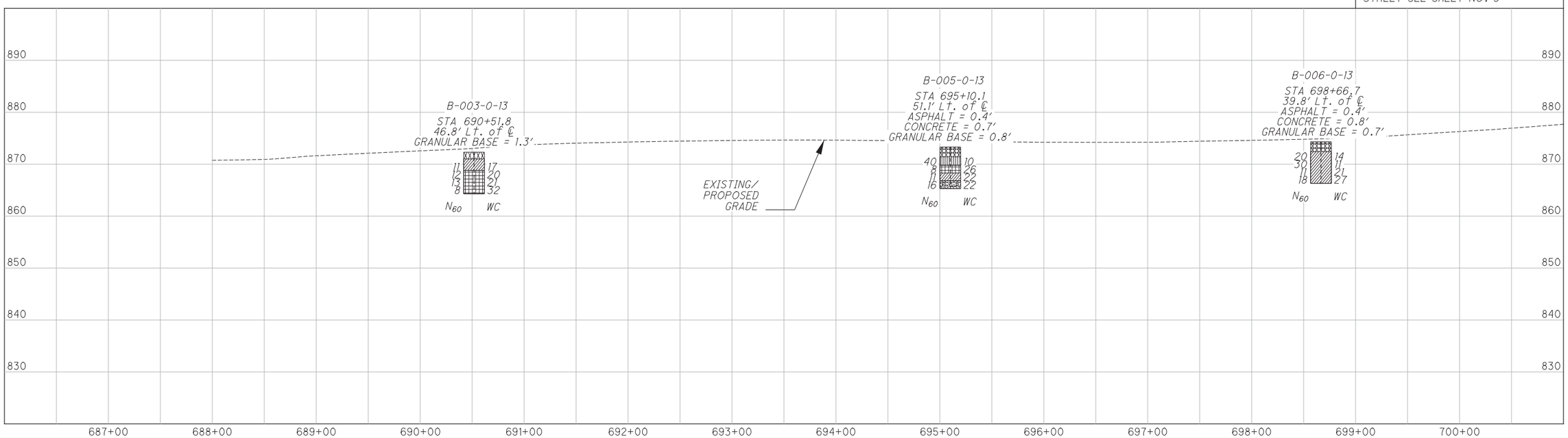

HORIZONTAL SCALE IN FEET
0 50 100

DRAWN PRR
CHECKED JDR

SOIL PROFILE U.S. ROUTE 23

DEL-23-13.17

SPECIAL PROVISIONS

OLENTANGY NPDES

CO-RT-SEC: DEL-23-13.17
PID: 94527

DATE: 6-2-2014

UPDATES FOR SUPPLEMENTAL SPECIFICATION 832 FOR COVERAGE UNDER OHIO EPA PERMIT NO. OHCO00002

ALL REFERENCES TO THE OHIO ENVIRONMENTAL PROTECTION AGENCY (OEPA) NATIONAL POLLUTANT DISCHARGE ELIMINATION SYSTEM (NPDES) STORM WATER CONSTRUCTION GENERAL PERMIT NO. OHC000004 IN SUPPLEMENTAL SPECIFICATION 832 (SS832) AND APPENDIX E WILL BE REPLACED WITH THE OEPA GENERAL PERMIT NO. OHCO00002, AUTHORIZATION FOR STORM WATER DISCHARGES ASSOCIATED WITH CONSTRUCTION ACTIVITY LOCATED WITHIN PORTIONS OF THE OLENTANGY RIVER WATERSHED UNDER THE NATIONAL POLLUTANT DISCHARGE ELIMINATION SYSTEM ("THE OHCO00002 PERMIT"). A COPY OF THE OHCO00002 PERMIT IS ATTACHED.

THE CONTRACTOR NEEDS TO FULLY UNDERSTAND ALL REQUIREMENTS OF THE OHCO00002 PERMIT BEFORE BEGINNING ANY WORK. FOR ANY DISCREPENCIES BETWEEN SS832 AND THIS SPECIAL PROVISION, RESOLUTION SHOULD BE BASED ON THE OHCO00002 PERMIT.

THE CONTRACTOR IS REQUIRED TO OBTAIN SEPARATE COVERAGE UNDER THE APPROPRIATE OHIO EPA NPDES GENERAL PERMIT FOR ANY OFFSITE CONTRACTOR EDA THAT REQUIRES NPDES COVERAGE AND STORM WATER MITIGATION. ONSITE CONTRACTOR EDA THAT DOES NOT REQUIRE MITIGATION MAY BE CONDUCTED UNDER THE PROJECT STORM WATER PERMIT COVERAGE.

ALL ITEMS COVERED IN SS832 WILL APPLY WITH THE EXCEPTION OF THE ITEMS NOTED BELOW:

A. SECTION 832.04 REQUIREMENTS AND PROVISIONS.

   1. POST CONSTRUCTION CONTROLS AND MITIGATION FOR RIPARIAN SETBACK DESCRIBED IN THE OHCO00002 PERMIT ARE NOT TEMPORARY EROSION CONTROL FEATURES. CONSTRUCTION REQUIREMENTS AND COMPENSATION FOR POST CONSTRUCTION CONTROLS AND STORM WATER RELATED MITIGATION FOR RIPARIAN SETBACK ARE DETAILED IN THE PROJECT PLANS.

B. SECTION 832.05(H) - LOCATE AND FURNISH BMP SEDIMENT BASINS AND DAMS

   1. CONSTRUCT BASINS ACCORDING TO THE CONDITIONS AND VOLUME REQUIREMENTS INDICATED IN THE OHCO00002 PERMIT.

   2. SEDIMENT BASINS MAY BE SHOWN ON THE PROJECT PLANS TO SHOW THAT CAPACITY FOR SEDIMENT IS AVAILABLE TO MEET PERMIT REQUIREMENTS. IF THE CONTRACTOR DETERMINES CAPACITY IS AVAILABLE OUTSIDE OF THE BASIN LOCATIONS SHOWN ON THE PROJECT PLANS, THE CONTRACTOR MAY ELECT TO LOCATE THE SEDIMENT BASINS IN OTHER LOCATIONS PROVIDED THE BASINS SATISFY THE PERMIT AND CONTRACT REQUIREMENTS. REVISED SEDIMENT BASIN LOCATIONS MUST BE SUBMITTED IN WRITING WITH APPROPRIATE CALCULATIONS FOR DISTRICT APPROVAL.

C. SECTION 832.09 STORMWATER POLLUTION PREVENTION PLAN (SWPPP)

1. SPECIFICALLY IDENTIFY THE LOCATION OF THE RIPARIAN SETBACKS AND SEDIMENT BASINS AS SHOWN IN THE PLANS ON THE SWPPP. THE CONTRACTOR CANNOT AMEND THE LOCATIONS OF THE RIPARIAN SETBACKS. MODIFICATION TO ANY SEDIMENT BASIN LOCATION REQUIRES WRITTEN DISTRICT APPROVAL.

2. FOR EACH SEDIMENT BASIN OR DAM, PROVIDE THE SETTLING VOLUME, CONTRIBUTING DRAINAGE AREA, AND DESIGNATE EACH WITH A UNIQUE THREE DIGIT NUMBER ON THE SWPPP.

3. ALL WATERSHEDS, AS IDENTIFIED ON THE STORM WATER SITE PLANS, MAY REQUIRE SITE SPECIFIC TEMPORARY BMP DESIGN AND IMPLEMENTATION THAT HAS THE CAPACITY TO CONTROL SEDIMENT AND EROSION IMPACTS WITHOUT UTILIZING FULL SEDIMENT POND VOLUME REQUIREMENTS. STORM WATER DESIGNER IS REQUIRED TO SHOW CALCULATIONS FOR ALL BMPs INSTALLED.

   THE SWPPP DESIGNER IS REQUIRED TO INCLUDE A DETAILED DESCRIPTION OF ALL STRUCTURAL BMP PRACTICES THAT STORE RUNOFF AND COLLECT SEDIMENT. DIVERT FLOWS AWAY FROM EXPOSED SOILS TO THE MAXIMUM EXTENT PRACTICAL. INSTALL COMPLIANT SEDIMENT CONTROL PRACTICES PRIOR TO THE INITIATION OF EARTH DISTURBANCE. THE SWPPP DESIGN IS REQUIRED TO INCLUDE A DETAILED SEQUENCE OF OPERATIONS THAT IS COORDINATED WITH THE CONTRACTOR'S PROGRESS SCHEDULE. THE SEQUENCE OF OPERATIONS IS REQUIRED TO DESCRIBE ALL CONSTRUCTION OPERATIONS THAT TAKE PLACE IN AND AROUND ANY EXPOSED SOIL AND HOW THE BMPs WILL BE SCHEDULED, IMPLEMENTED AND MAINTAINED. **ALL DISTURBED AREAS WILL BE STABLIZED WITHIN 14 DAYS WITH TEMPORARY OR PERMANENT MEANS INCLUDING BUT NOT LIMITED TO MULCH WITH TACTIFER OR NETTING, SOIL STABLIZERS AND/OR PERMANENT SEEDING & MULCH TO SERVE AS AN ALTERNATIVE SEDIMENT CONTROL MEASURE. ALL INSPECTION LOGS MUST CLEARLY REFLECT IF THIS CONDITION IS VOILATED.**

D. SECTION 832.11

1. IN ADDITION TO THE WEEKLY INSPECTION REPORTS, THE SWPPP DESIGNER SHALL SPECIFICALLY IDENTIFY THE % EDA AND % STABILIZED (PERMANENT AND TEMPORARY) IN THE WATERSHEDS, AS IDENTIFIED ON THE STORM WATER SITE PLANS. DOCUMENT THE % EDA AND % STABILIZATION VALUES FOR EACH OF THE SUBJECT WATERSHEDS IN THE WEEKLY INSPECTION REPORTS.

2. **ALL INSPECTION LOGS MUST CLEARLY REFLECT IF DISTURBED AREAS ARE NOT STABLIZED WITHIN 14 DAYS.**